6-L

S

LOANED 1991

## CONVENTIONAL SIGNS

| | | | |
|---|---|---|---|
| Center Line | | Existing Sewer | |
| Existing R/W | | Proposed Sewer | |
| Proposed R/W | | Existing Manhole | |
| Limited Access Line | —LA— | Proposed Manhole | |
| Temporary R/W | —T— | Existing Catch Basin | |
| Work Agreement Line | | Proposed Catch Basin | |
| Property Line | —PL— | Manhole Abandoned | |
| Original Lot Line | O.L. 78 / O.L. 79 | Catch Basin Abandoned | |
| Water Line | —W— | Guard Rail (Existing) | (Proposed) |
| Water Valve | | Retaining Wall (Existing) | (Proposed) |
| Water Hydrant | | Fence (Existing) | (Proposed) |
| Gas Line | —G— | Trees | |
| Gas Valve | | Railroad | |
| Telephone Underground | —T— | | |
| Electric Underground | —E— | | |
| Power Pole | | | |
| Light Pole | | | |
| Telephone Pole | | | |

## INDEX OF SHEETS

Sheets 31 & 32 deleted


| | | | |
|---|---|---|---|
| Title Sheet | 1 | Detention Basin Access Rd. | 102-103 |
| Schematic Plan & Design Designation | 2-4 | Detention Basin & Culvert Details | 104-110 |
| Temporary Erosion & Sediment Control | 5 | Relocated Big Creek Plan & Profile | 111 |
| Typical Sections | 6-10 | Grading Plan & Cross Section Index | 112 |
| General Notes | 11-15 | I-480 Cross Sections | 113-150 |
| General Summary | 16-22 | W 130th St. Interchange Cross Sections | 151-162 |
| Pavement Calculations | 23-26 | Tiedeman Rd. Interchange Cross Sections | 163-179 |
| Miscellaneous Details | 27-40 | W 130th St. Cross Sections | 180-183 |
| Superelevation Tables | 41-43 | Tiedeman Rd. Cross Sections | 184-191 |
| I-480 Plan & Profile | 44-56 | Summer Lane Cross Sections | 192-193 |
| W 130th St. Ramps-Plan & Profile | 57-59 | Service Rd. "A" Cross Sections | 194-196 |
| Tiedeman Rd. Ramps-Plan & Profile | 60-63 | Southwood Dr. Cross Sections | 197-200 |
| W 130th St. Plan & Profile | 64-66 | Autumn Lane Cross Sections | 201 |
| Tiedeman Rd. Plan & Profile | 67-70 | Idlewood Dr. Cross Sections | 202-208 |
| Summer Lane Plan & Profile | 71 | Relocated Big Creek Cross Sections | 209-211 |
| Service Rd. "A" Plan & Profile | 72 | Landscape Plans | 212-213 |
| Southwood Dr. Plan & Profile | 73-74 | Water Work Plans | 214-252 |
| Autumn Lane Plan & Profile | 75-76 | Lighting Plans | 253-282 |
| Idlewood Dr. Plan & Profile | 77-80 | Traffic Control Plans | 283-308 |
| W 139th St. Interchange | 81 | Retaining Wall | 309-311 |
| Tiedeman Rd. Temporary-Plan & Profile | 82 | Structures Over 20' | 312-477,477A |
| Pavement Details | 83-94 | Right-Of-Way Plans | 478-500 |
| Storm Sewer Profiles | 95-101 | | |


## LINE DATA

| | CLEVELAND | BROOKLYN | TOTAL |
|---|---|---|---|
| BEGIN PROJECT | 573+50.00 | 616+15.52 | 573+50.00 |
| END PROJECT | 616+15.52 | 698+50.00 | 698+50.00 |
| LENGTH OF PROJECT | 4265.52 L.F. 0.808 Mi. | 8234.48 L.F. 1.559 Mi | 12500.00 L.F. OR 2.367 Mi |
| ADDITIONAL WORK | | | |
| I-480 STA. 484+00.00 TO STA. 573+50.00 | 8950.00 L.F. | | 8950.00 L.F. |
| STA. 698+50.00 TO STA. 700+00.00 | | 150.00 L.F. | 150.00 L.F. |
| W130th ST. STA. 48+00.00 TO STA. 64+90.00 | 1690.00 L.F. | | 1690.00 L.F. |
| TIEDEMAN RD. STA. 42+80.00 TO STA. 82+00.00 | | 3920.00 L.F. | 3920.00 L.F. |
| IDLEWOOD DR. STA. 8+75.00 TO STA. 21+63.21 | | 1288.21 L.F. | 1288.21 L.F. |
| SOUTHWOOD DR. STA. 7+25.00 TO STA. 12+75.00 | | 550.00 L.F. | 550.00 L.F. |
| LENGTH OF WORK | 14,905.52 L.F. OR 2.823 Mi. | 14,142.69 L.F. OR 2.679 Mi. | 29,048.21 L.F. OR 5.502 Mi. |

| | | |
|---|---|---|
| FILE NUMBER | CUYAHOGA COUNTY | CUY-480-10.39 00384 |
| | DATE OF LETTING | |
| | CONTRACT NUMBER | |

# STATE OF OHIO
# DEPARTMENT OF TRANSPORTATION

MICROFILMED SEP 10 1991

I-480-4(9)163
Proj 783 (83)

| FHWA REGION | STATE | PROJECT | |
|---|---|---|---|
| 5 | OHIO | I-480-4(9)163 | |

1/500

CUYAHOGA COUNTY
CUY-480-10.39

# CUY-480-10.39

Sheets 313, 373, 398, 403, 404, 406, 407, 408, 409, 411, 458, & 472 revised 1-5-84 EBL

# CUYAHOGA COUNTY
## CITY OF CLEVELAND
## CITY OF BROOKLYN

GRADE SEPARATIONS WITH THE CONSOLIDATED RAIL CORPORATION AND THE BALTIMORE AND OHIO RAILROAD COMPANY

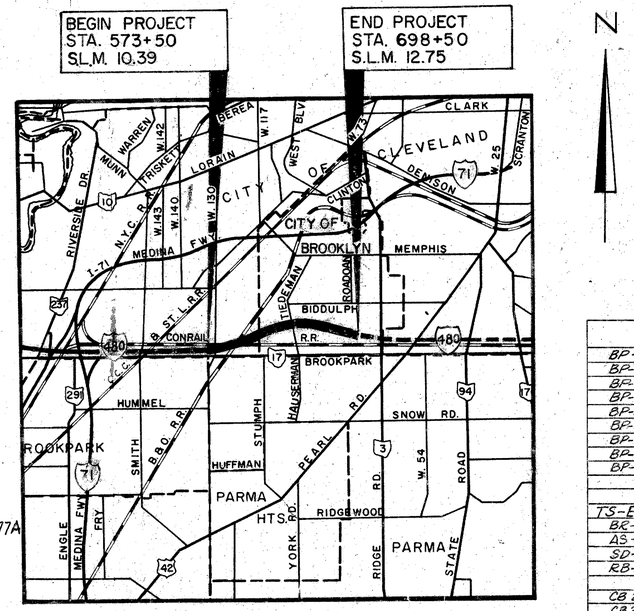


## LOCATION MAP

SCALE OF MILES 0 1 2 3

Portion To Be Improved
State Routes
U.S. Routes
Interstate Routes
City Streets
To Be Improved Under Separate Contract

## SCALE

| | | |
|---|---|---|
| PLAN | 0 50 | 1" = 50' |
| PROFILE: HORIZ. | 0 50 | 1" = 50' |
| VERT. | 0 10-20 | 1" = 10' 1" = 20' |
| CROSS SECTIONS | 0 10 | 1" = 10' |
| PAVEMENT DETAILS | 0 20 | 1" = 20' |

## SUPPLEMENTAL SPECIFICATIONS

| NUMBER | DATE |
|---|---|
| 803 | 5-27-83 |
| 843 | 10-25-76 |
| 847 | 4-3-76 |
| 848 | 2-17-83 |
| 939 | 6-28-82 |
| 934 | 1-1-69 |
| 948 | 2-19-74 |
| 839 | 11-25-70 |
| 936 | 4-19-82 |
| 829 | 10-8-82 |
| 836 | 3-12-75 |
| 845 | 3-2-81 |
| 849 | 10-19-81 |
| 953 | 8-21-80 |

## "LIMITED ACCESS"

This improvement is especially designed for thru traffic and has been declared a Limited Access Highway or Freeway by action of the Director of Transportation, in accordance with the provisions of Sec. 5511.02 of The Revised Code of Ohio.

1983 SPECIFICATIONS

The Standard Specifications of the State of Ohio, Department of Transportation, including changes and supplemental specifications listed in the proposal, shall govern this improvement.

I hereby approve these plans and declare that the making of this improvement will not require the closing of the highway to traffic and that provisions for maintenance and safety of traffic will be as set forth on the plans and estimates.

Approved Joseph L. Strapp
Date 3/15/83 Director of Public Service, City of Cleveland

Approved Martin A. Gabbe
Date 3-16-83 District Deputy Director of Transportation

Approved Robert B. Pfeifer
Date 6-6-83 Engineer, Bureau of Bridges and Structural Design

Approved Wayne H. Kauble
Date 6-6-83 Chief Engineer, Planning and Design

Approved Warren J. Smith
Date 6-6-83 Director, Department of Transportation

| | STANDARD | | CONSTRUCTION | | DRAWINGS |
|---|---|---|---|---|---|
| BP-1 | 6-1-65 | | GR-5 | 2-5-82 | MH-1 6-12-75 TC 7.65 3-1-79 TC 42.20 3-26-79 |
| BP-2 | 12-6-76 | CB-3A 5-1-79 | HW-3 | 6-1-65 | MH-3 6-12-75 TC 9.30 4-24-80 TC 31.10 3-20-79 |
| BP-3 | 12-6-76 | CB-4 5-1-79 | HW-4A | 4-1-80 | MH-5 6-12-75 TC 12.30 6-10-81 |
| BP-4 | 7-16-81 | CB-5 5-1-79 | HW-4B | 4-1-80 | MH-2 6-12-75 TC 16.20 3-1-79 TC 52.10 4-3-79 |
| BP-5 | 7-16-81 | CB-6 5-1-79 | | | HL-1 9-6-73 TC 18.26 5-31-79 TC 52.20 4-3-79 |
| BP-6 | 6-1-65 | CB-458A 5-1-79 | I-2A | 5-1-79 | HL-2 7-21-73 TC 21.10 5-24-79 TC 41.10 4-5-82 |
| BP-7 | 12-6-76 | | I-3A&B | 4-1-80 | HL-3 7-27-73 TC 21.20 5-31-79 TC 71.10 4-9-79 |
| BP-9 | 12-6-76 | | MC-9A | 5-1-81 | HL-4 1-21-76 TC 21.40 3-1-79 TC 72.20 2-26-82 |
| BP-10 | 1-3-75 | F-1 5-1-76 | LA-1 | 6-1-79 | HL-5 9-6-73 TC 22.10 3-1-79 |
| | | F-3 5-1-76 | LA-2 | 6-1-79 | HL-6 3-22-77 TC 22.20 3-1-79 TC 81.20 4-8-80 |
| | | F-5 5-1-76 | MC-1 | 6-13-69 | HL-7 1-21-76 TC 31.21 3-6-79 TC 82.10 4-1-79 |
| TS-EXJ-2-81 | 9-1-81 | F-6 5-1-76 | MC-3 | 6-1-79 | HL-8 1-21-76 TC 32.10 3-8-79 TC 83.10 4-18-79 |
| BR-1 | 5-29-79 | | MC-4 | 7-26-76 | HL-9 3-22-77 TC 32.11 3-21-79 TC 83.20 4-14-79 |
| AS-1-81 | 11-27-81 | GR-6 2-5-82 | MC-5 | 6-12-75 | HL-10 6-1-79 TC 35.10 10-5-77 |
| SD-1-69 | 6-12-69 | GR-1 2-5-82 | MC-6 | 6-1-65 | HL-11 6-1-79 TC 41.10 12-23-81 TC 85.20 4-18-79 |
| RB-1-55 | 2-2-59 | GR-2B 2-5-82 | MC-7 | 10-15-76 | HL-12 4-6-73 TC 41.20 3-26-79 |
| | | GR-3 2-5-82 | MC-9 | 11-1-77 | HL-15 1-21-76 |
| CB-2-2-A&B | 5-1-79 | | MC-10 | 5-1-76 | HL-16 4-6-73 TC 41.30 3-26-79 |
| CB2-342-4 | 5-1-79 | GR-4 2-5-82 | MC-11 | 8-1-78 | HL-19 3-22-77 TC 42.10 8-19-77 |
| CB2-342-6 | 5-1-79 | GR-4A 2-5-82 | MH-4 | 6-12-75 | HL-22 11-9-77 |

NOTE:
Project Designation CUY-80 Appearing Throughout This Plan Shall Be Considered To Read CUY-480.

PLANS PREPARED BY
ALDEN E. STILSON & ASSOCIATES
CONSULTING ENGINEERS
75 PUBLIC SQUARE
CLEVELAND, OHIO
FOR
STATE OF OHIO

DEPARTMENT OF TRANSPORTATION
FEDERAL HIGHWAY ADMINISTRATION

APPROVED:

DIVISION ADMINISTRATOR DATE

MICROFILMED
JAN 17 1991

# SCHEMATIC PLAN

| FED. RD. DIVISION | STATE | PROJECT | |
|---|---|---|---|
| 2 | OHIO | I 480-4(9)163 | |

2/500

CUYAHOGA COUNTY
CUY-480-10.39

N

TEMP RAMP BR-2
℄ I 480
MATCH LINE STA 565+00
RAMP BR-2
RAMP BR-1
BEGIN WORK STA 484+00.00
484 550 560
173 170 167 164
BROOKPARK. RD.
W139 ST.
CONRAIL R.R.
ENTERPRISE AVE
END WORK STA 64+90.00
130th ST.
SPRECHER AVENUE
END PAV'T. STA. 60+25.00
WEST
℄ I-480 CURVE DATA
Δ = 29° 46' 15" Lt.
D = 1° 15' 00"
R = 4,583.66'
T = 1,218.37'
C = 2,354.96'
L = 2,381.67'
E = 159.15'
P.T. Sta. 595+34.41
I.P. Set
STRUCTURE NO. CUY.480-10.88
OHIO R.R.
MATCH LINE STA. 610+00
47.050
47.050
L/A
600
AND
Proposed Inter-Connect Track
Detention Basin
R/W
I-480 4(9)163
RAMP W-3
(635) 5302
590
RAMP W-1
(300) 2,500
580
2000 (240)
RAMP W-2
STRUCTURE NO. CUY. 480-10.78
STRUCTURE NO. CUY. 480-10.54
CITY OF CLEVELAND
P.C. Sta. 571+52.74
I.P. Set
MATCH LINE STA 565+00
44248 ℄ I-80 570
45.050
CUY-80-8.54
BEGIN PROJECT STA 573+50.00 SLM 10.39
BEGIN PAV'T STA. 50+63.62
BEGIN WORK STA 48+00
BALTIMORE
Trailer Park
SR.17
BROOKPARK ROAD
Corporation Line
CITY OF BROOK PARK
CITY OF PARMA
CORP. LINE

| DESIGN DESIGNATION | |
|---|---|
| CURRENT ADT (1984) | 62,700 |
| DESIGN YEAR A.D.T (2,004) | 94,100 |
| DHV | 6,300 |
| D | 67% |
| T | 4% |
| V | 60 MPH |

0 200 400
Scale

MICROFILMED
JAN 17 1991

# SCHEMATIC PLAN

| FED. RD. DIVISION | STATE | PROJECT | |
|---|---|---|---|
| 2 | OHIO | 1480-4(9)163 | |

3
500

CUYAHOGA COUNTY
CUY-480-10.39

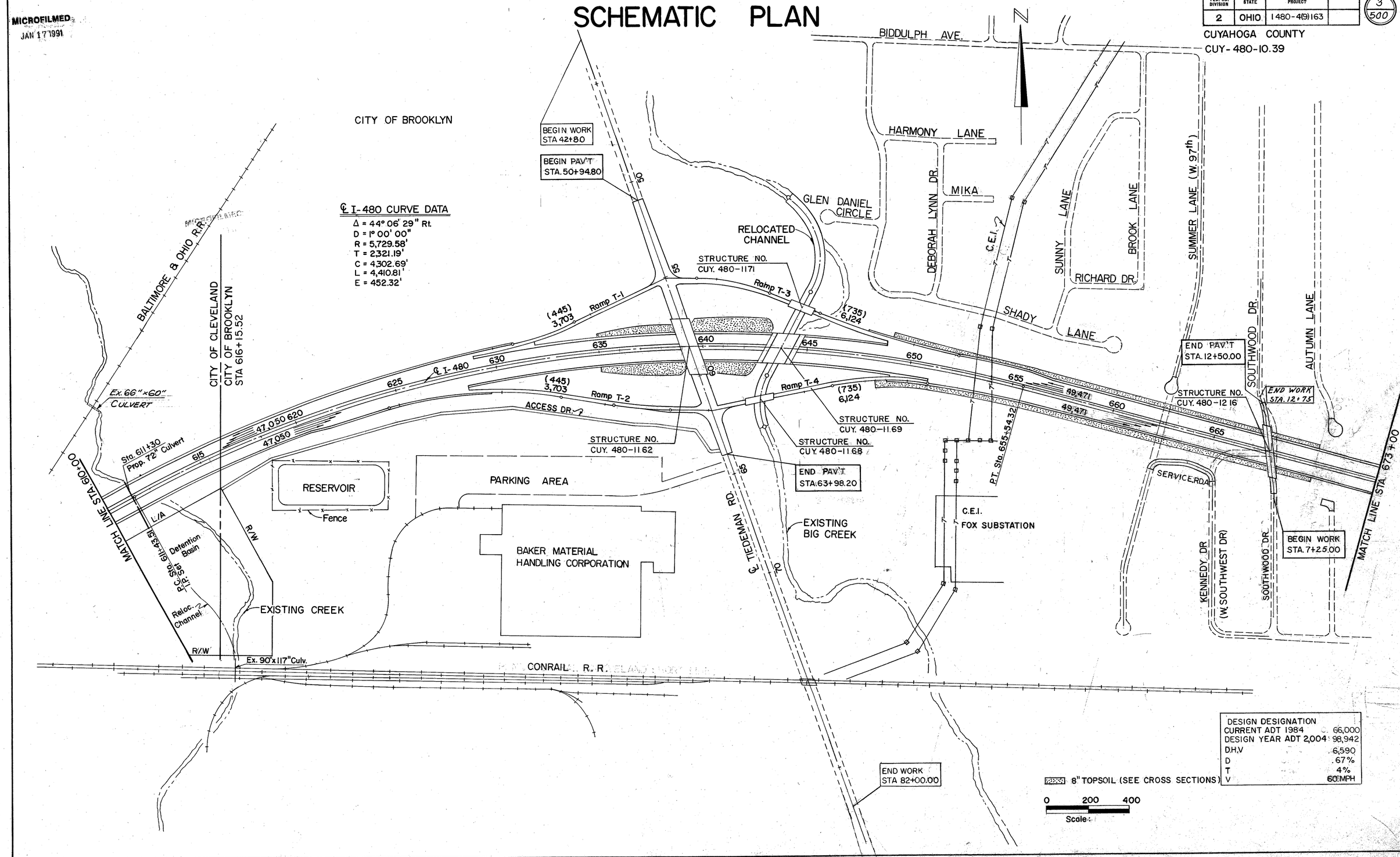


| DESIGN DESIGNATION | |
|---|---|
| CURRENT ADT 1984 | 66,000 |
| DESIGN YEAR ADT 2,004 | 98,942 |
| D.H.V | 6,590 |
| D | 67% |
| T | 4% |
| V | 60 MPH |

SCHEMATIC PLAN

MICROFILMED
JAN 17 1991

# SCHEMATIC PLAN

| FHWA REGION | STATE | PROJECT | |
|---|---|---|---|
| 5 | OHIO | I 480-4(9)163 | |

4/500

CUYAHOGA COUNTY
CUY - 480 - 10.39

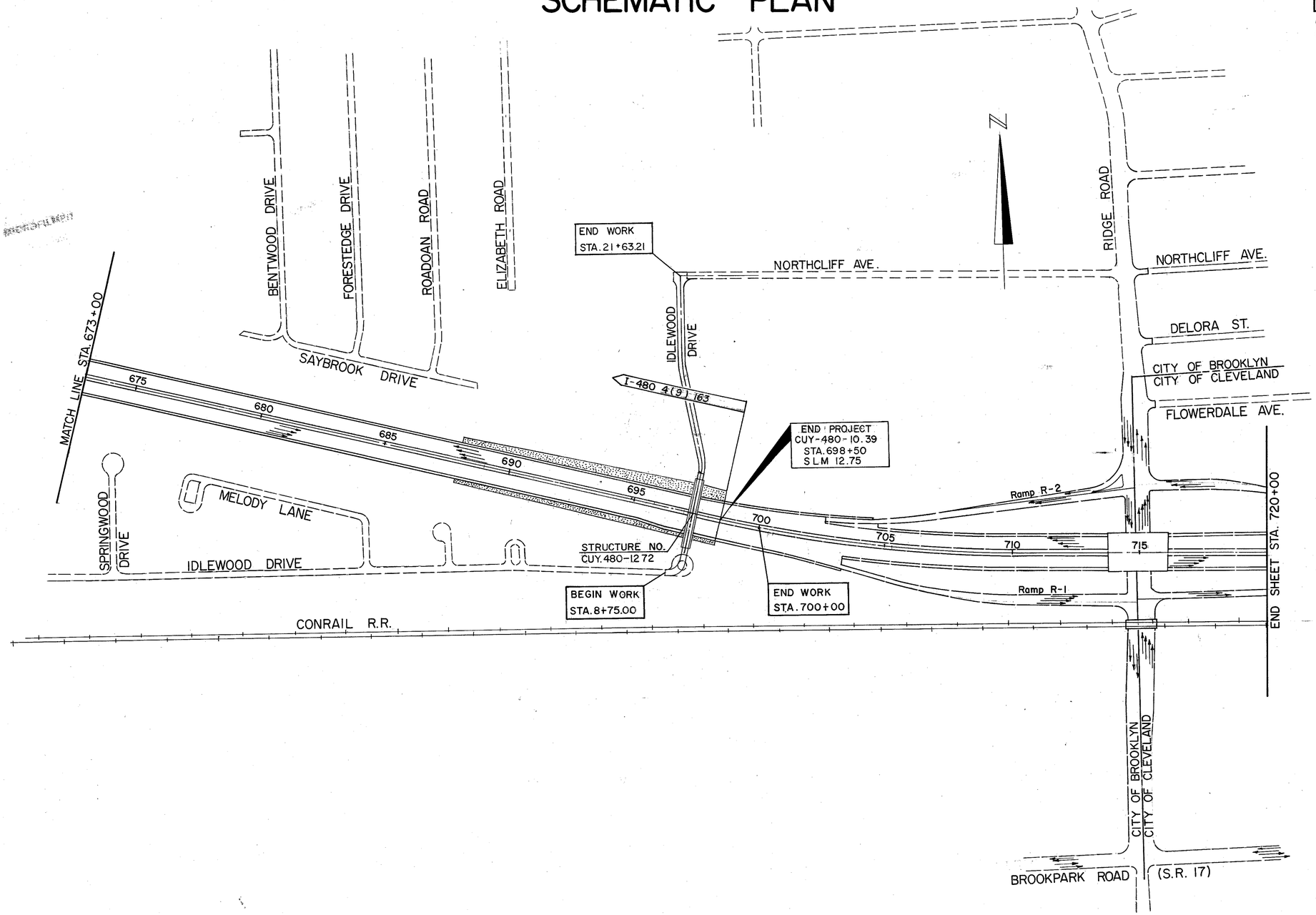


8" TOPSOIL (SEE CROSS SECTIONS)

0 200 400
SCALE

| CALC. BY WAM DATE 9 80 | CUYAHOGA COUNTY CUY-480-10.39 | OHIO FHWA REGION 5 | 5/500 |
|---|---|---|---|
| CHKD. BY TRB DATE 9 80 | | | |

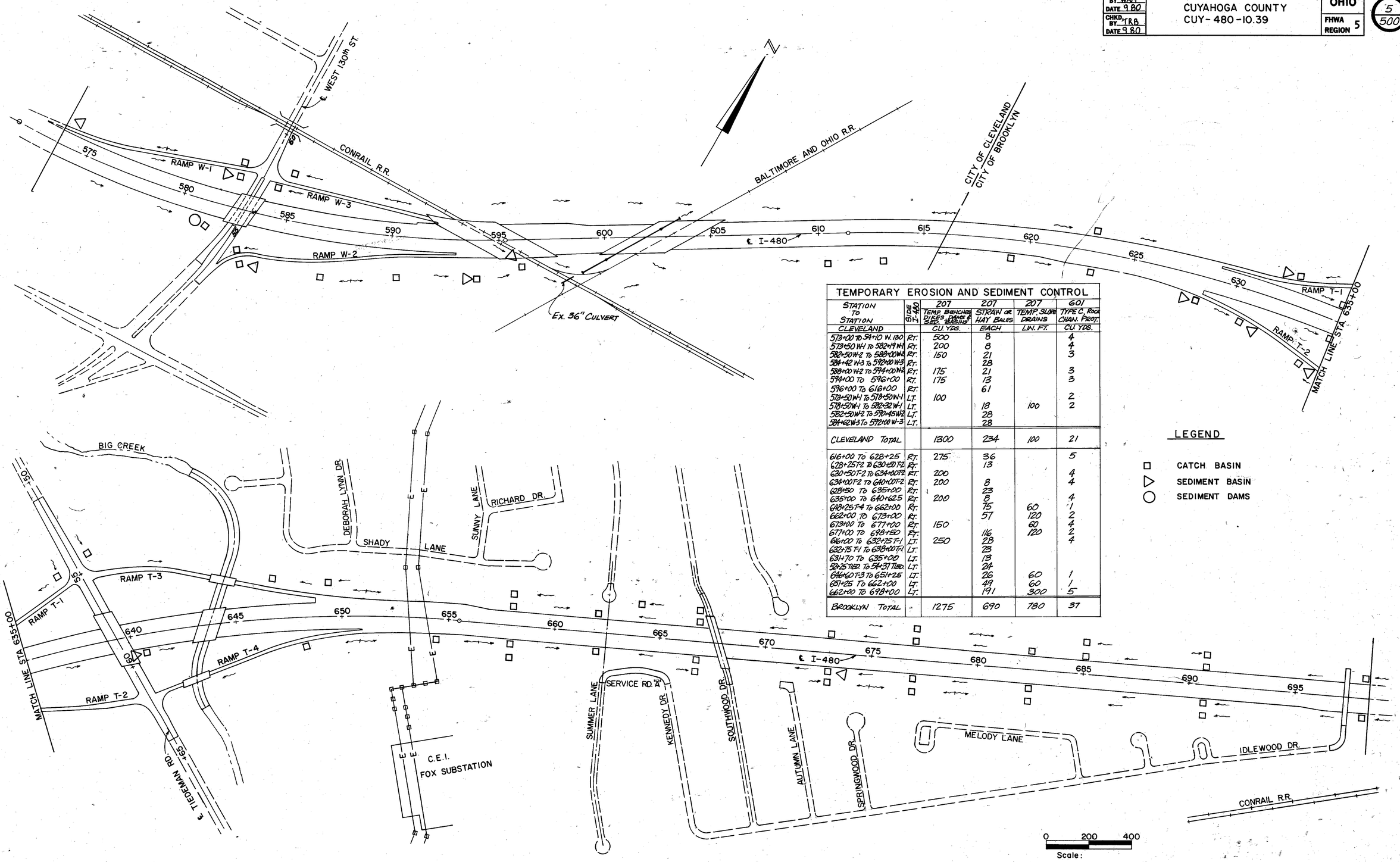


## TEMPORARY EROSION AND SEDIMENT CONTROL

| STATION TO STATION | SIDE I-480 | 207 TEMP. BRINCHES DIKES, DAMS & SED. BASINS | 207 STRAW OR HAY BALES | 207 TEMP. SLOPE DRAINS | 601 TYPE C, ROCK CHAN. PROT. |
|---|---|---|---|---|---|
| CLEVELAND | | CU. YDS. | EACH | LIN. FT. | CU. YDS. |
| 573+00 TO 574+10 W. 130 | RT. | 500 | 8 | | 4 |
| 573+50 W-1 TO 582+19 W-1 | RT. | 200 | 8 | | 4 |
| 582+50 W-2 TO 588+00 W-2 | RT. | 150 | 21 | | 3 |
| 584+42 W-3 TO 592+00 W-3 | RT. | | 28 | | |
| 588+00 W-2 TO 594+00 W-2 | RT. | 175 | 21 | | 3 |
| 594+00 TO 596+00 | RT. | 175 | 13 | | 3 |
| 596+00 TO 616+00 | RT. | | 61 | | |
| 573+50 W-1 TO 578+50 W-1 | LT. | 100 | | | 2 |
| 578+50 W-1 TO 582+32 W-1 | LT. | | 18 | 100 | 2 |
| 582+50 W-2 TO 592+45 W-2 | LT. | | 28 | | |
| 584+62 W-3 TO 592+00 W-3 | LT. | | 28 | | |
| CLEVELAND TOTAL | | 1300 | 234 | 100 | 21 |
| 616+00 TO 628+25 | RT. | 275 | 36 | | 5 |
| 628+25 T-2 TO 630+50 T-2 | RT. | | 13 | | |
| 630+50 T-2 TO 634+00 T-2 | RT. | 200 | | | 4 |
| 634+00 T-2 TO 640+00 T-2 | RT. | 200 | 8 | | 4 |
| 628+50 TO 635+00 | RT. | | 23 | | |
| 635+00 TO 640+62.5 | RT. | 200 | 8 | | 4 |
| 640+25 T-4 TO 662+00 | RT. | | 75 | 60 | 1 |
| 662+00 TO 673+00 | RT. | | 57 | 120 | 2 |
| 673+00 TO 677+00 | RT. | 150 | | 60 | 4 |
| 677+00 TO 698+50 | RT. | | 116 | 120 | 2 |
| 616+00 TO 632+75 T-1 | LT. | 250 | 28 | | 4 |
| 632+75 T-1 TO 638+00 T-1 | LT. | | 23 | | |
| 631+70 TO 635+00 | LT. | | 13 | | |
| 582+25 T-2 TO 584+37 T-2 | LT. | | 24 | | |
| 646+60 T-3 TO 651+25 | LT. | | 26 | 60 | 1 |
| 651+25 TO 662+00 | LT. | | 49 | 60 | 1 |
| 662+00 TO 698+00 | LT. | | 191 | 300 | 5 |
| BROOKLYN TOTAL | | 1275 | 690 | 780 | 37 |

LEGEND

- □ CATCH BASIN
- ▷ SEDIMENT BASIN
- ○ SEDIMENT DAMS

TEMPORARY EROSION AND SEDIMENT CONTROL

# TYPICAL SECTIONS
## TYPE 848 on 305

| FED. RD. DIVISION | STATE | PROJECT | |
|---|---|---|---|
| 2 | OHIO | | |

6/500

CUYAHOGA COUNTY
CUY-480-10.39

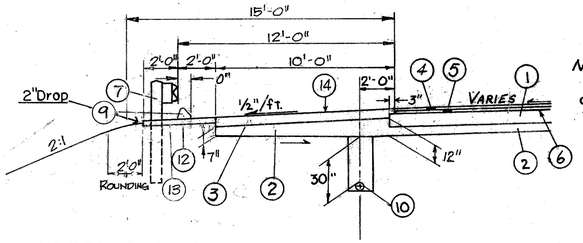


NOTE: Shoulder widths vary at bridge approaches.

**CURBED SHOULDER DETAIL**

| UNCLASSIFIED UNDERDRAIN - ROCK CUT | |
|---|---|
| LOCATION STA. TO STA. | SIDE |
| 638+75 TO 642+90 | RT. |

| DEEP UNDERDRAIN | |
|---|---|
| LOCATION STA. TO STA. | SIDE |
| 618+50 TO 638+75 | LT. |
| 648+77 TO 664+00 | LT. |
| 619+25 TO 628+52 | RT. |
| 628+52 TO 638+75 | RT. |
| 644+40 TO 698+50 | RT. |
| 649+00 TO 698+50 | LT. |

| SHALLOW UNDERDRAIN | |
|---|---|
| LOCATION STA. TO STA. | SIDE |
| 573+60 TO 582+05 | LT |
| 583+90 TO 591+83 | LT |
| 594+64 TO 602+11 | LT |
| 605+77 TO 609+50 | LT |
| 598+06 TO 599+47 | RT |
| 603+53 TO 619+25 | RT |
| 573+60 TO 581+90 | MED |
| 583+75 TO 593+08 | MED |
| 596+87 TO 600+60 | MED |
| 604+65 TO 642+90 | MED |
| 645+00 TO 698+50 | MED |

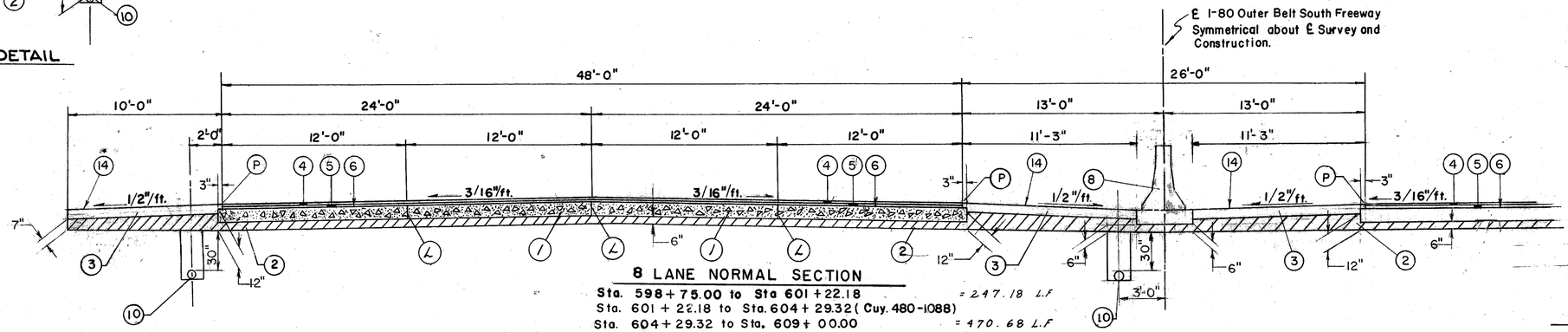


**8 LANE NORMAL SECTION**

| | | |
|---|---|---|
| Sta. 598+75.00 to Sta 601+22.18 | = 247.18 L.F | |
| Sta. 601+22.18 to Sta. 604+29.32 (Cuy. 480-1088) | = 470.68 L.F | |
| Sta. 604+29.32 to Sta. 609+00.00 | = 3726.49 L.F | |
| Sta. 658+00.00 to Sta. 695+26.49 | = 4,499.35 LIN. FT. | |
| TOTAL | | |

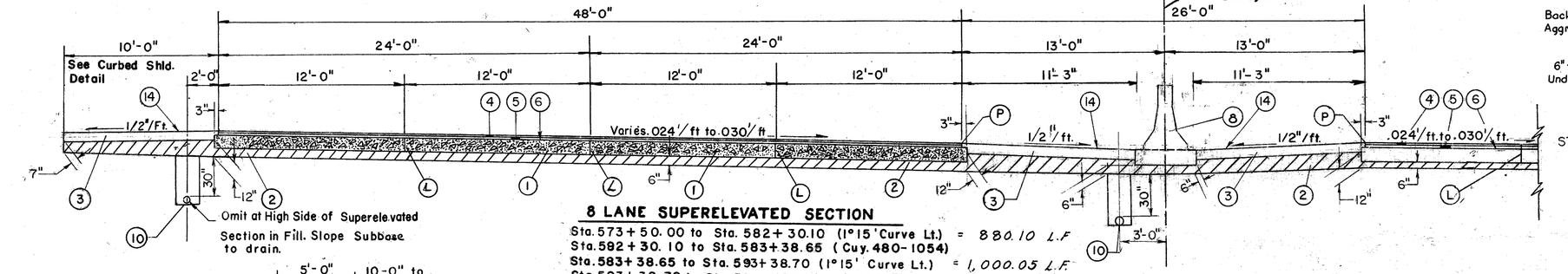


**8 LANE SUPERELEVATED SECTION**

| | |
|---|---|
| Sta. 573+50.00 to Sta. 582+30.10 (1°15' Curve Lt.) | = 880.10 L.F |
| Sta. 582+30.10 to Sta. 583+38.65 (Cuy. 480-1054) | |
| Sta. 583+38.65 to Sta. 593+38.70 (1°15' Curve Lt.) | = 1,000.05 L.F. |
| Sta. 593+38.70 to Sta. 596+50.96 (Cuy. 480-1078 | |
| Sta. 596+50.96 to Sta. 598+75.00 (1°15' Curve Lt.) | = 224.04 L.F. |
| Sta. 603+00.00 to Sta. 643+18.36 (1°00' Curve Rt.) | = 3,918.36 L.F. |
| Sta. 643+18.36 to Sta 644+31.62 (Cuy 480-1169) | |
| Sta 644+31.62 to Sta 658+00.00 | = 1,368.38 L.F. |
| Sta. 695+26.49 to Sta. 698+50.00 (1°00' CURVE LT.) | = 323.51 L.F. |
| TOTAL | = 7,219.44 LIN. Ft. |

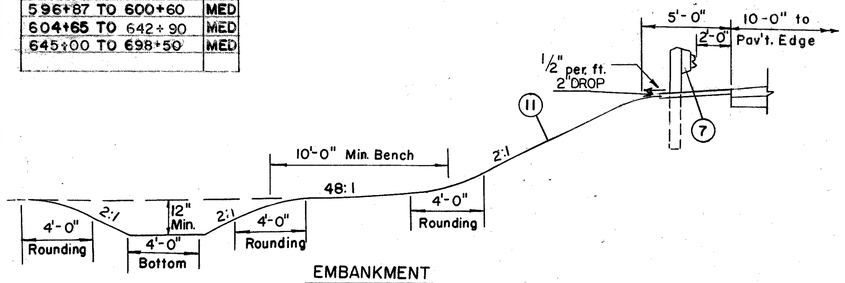


**EMBANKMENT**
(Over 16 Feet)

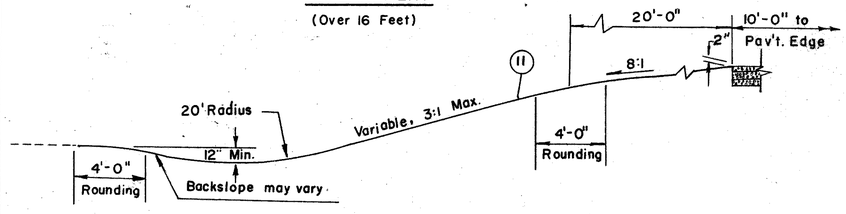


**EMBANKMENT**
(16 Feet & Under)

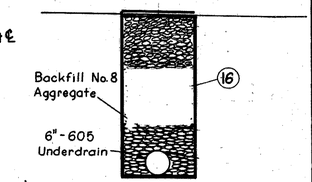


**UNDERDRAIN DETAIL**

STA 689+00 TO STA 689+00
(LEFT, RIGHT, MEDIAN)

**LEGEND**

1. 305 9" Portland Cement Concrete Base
2. 310 Subbase Type II (Thickness AS Shown)
3. 301 6" Bituminous Aggregate Base, AC-20 or Rt.11 or Rt 12
4. 848 1 1/4" Asphalt Concrete Surface Course Type I
5. 848 1 3/4" Asphalt Concrete Intermediate Course Type 2
6. 407 Tack Coat and Cover Aggregate See General Notes
7. 606 Guard Rail Type 5.
8. 622 Concrete Barrier, Type B-50.
9. 609 Asphalt Concrete Curb AC-20 Standard type I
10. 605 6" Underdrain, Shallow 30" Cover - Deep 50" Cover - 12" Cover In Rock Cut, Subgrade To Top Of Pipe
11. Seeding & Mulching AS PER PLAN
12. 301-3" Bituminous Aggregate Base (Weed Control)
13. Special — Herbicides for Weed Control
14. 409 Seal Coat Cover Aggregate No.8 @ .008 Cu.Yd./Sq.Yd.
    409 Seal Coat Bituminous Material @ 0.30 Gal./Sq.Yd.
15. 653 Topsoil Furnished and Placed, As Per Plan (See General Notes)
16. SPEC FILTER FABRIC (SEE SHEET 13)

(P) Profile Grade
(L) Standard Longitudinal Joint

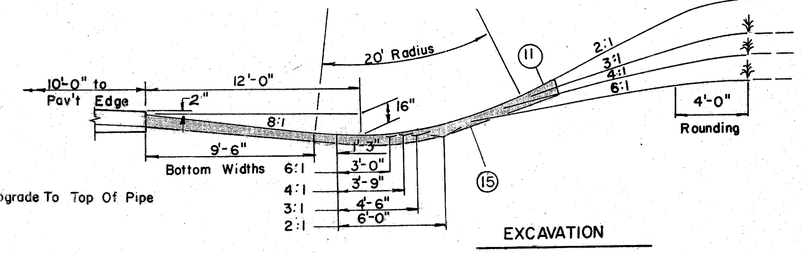


**EXCAVATION**

0 5
SCALE IN FEET

# TYPICAL SECTIONS

## TYPE 451

| FED. RD. DIVISION | STATE | PROJECT | |
|---|---|---|---|
| 2 | OHIO | | |

CUYAHOGA COUNTY
CUY-480-10.39

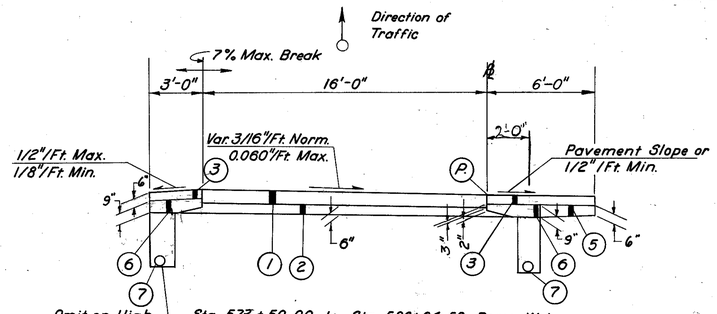


Sta. 573 + 50.00 to Sta. 582+04.50 Ramp W-1
Sta. 582 +52.48 to Sta. 584+76.00 Ramp W-2
Sta. 588 + 60.00 to Sta. 592+54.55 Ramp W-2
Sta. 588. + 60.00 to Sta. 591 +35.5 Ramp W-3 ⓑ
Sta. 630 + 00.00 to Sta. 637+77.37 Ramp T-1
Sta. 628 + 42.99 to Sta. 635+00.00 Ramp T-2
Sta. 642 + 94.50 to Sta. 643+47.94 Ramp T-3
Sta. 643 + 97.94 to Sta. 645+19.96 Ramp T-3 ⓐ
Sta. 646 +19. 96 to Sta. 648+72.99 Ramp T-3
Sta. 641 + 81. 53 to Sta. 643+74. 36 Ramp T-4 ⓐ
Sta. 643 + 74. 36 to Sta. 651+00. 00 Ramp T-4

ⓐ Structure and approach slab
ⓑ See curbed shoulder detail sheet No. 6

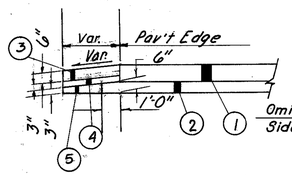


Shoulder Detail Without Underdrain

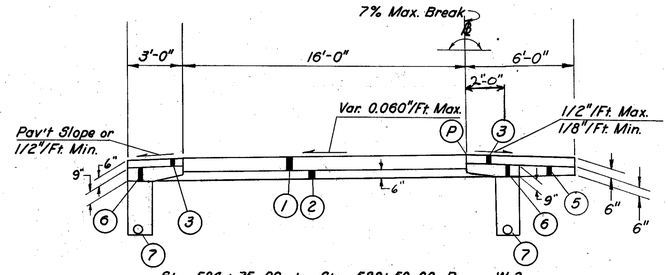


Sta. 584 + 75. 00 to Sta. 588+ 50. 00 Ramp W-2
Sta. 592 + 54. 55 to Sta. 593+ 00. 00 Ramp W-2
Sta. 629 + 00. 00 to Sta. 630+ 00. 00 Ramp T-1
Sta. 635 + 00. 00 to Sta. 636+ 65. 76 Ramp T-2
Sta. 642 + 63. 19 to Sta. 642+ 94. 5 Ramp T-3

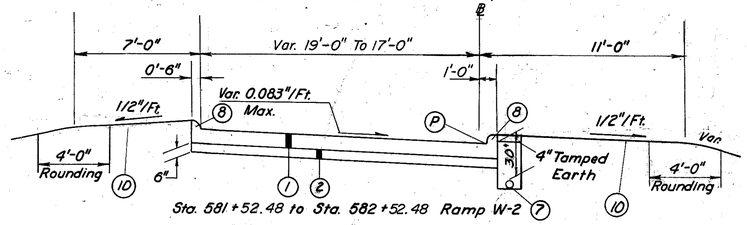


Sta. 581 + 52.48 to Sta. 582 + 52.48 Ramp W-2

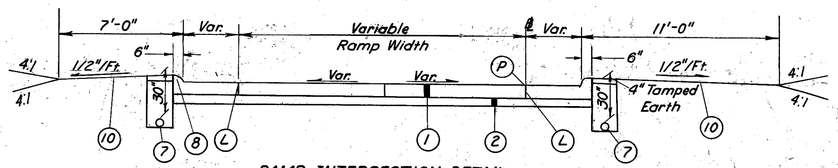


RAMP INTERSECTION DETAIL

Sta. 582 + 04. 5 to Sta. 582 + 81. 00 Ramp W-1
Sta. 584 + 07. 2 to Sta. 585 + 04. 00 Ramp W-3
Sta. 637 + 77. 37 to Sta. 638 + 66. 3 Ramp T-1
Sta. 639 + 05. 69 to Sta. 639+ 79. 3 Ramp T-2
Sta. 637 +92. 5 to Sta. 638+ 70. 45 Ramp T-3
Sta. 640 + 85. 3 to Sta. 641 + 81. 53 Ramp T-4

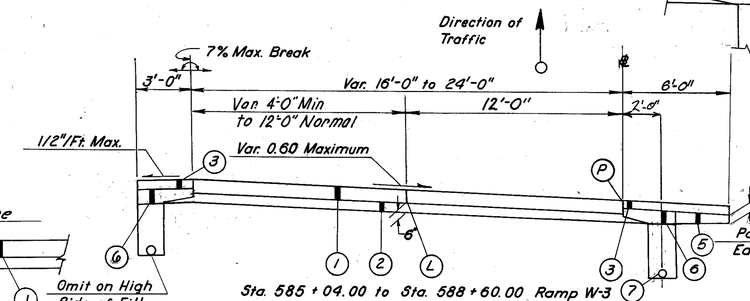


Sta. 585 + 04.00 to Sta. 588 + 60.00 Ramp W-3
Sta. 638 + 39.4 to Sta. 639 + 05.69 Ramp T-2 *
Sta. 638 + 70.45 to Sta. 639 + 04.76 Ramp T-3

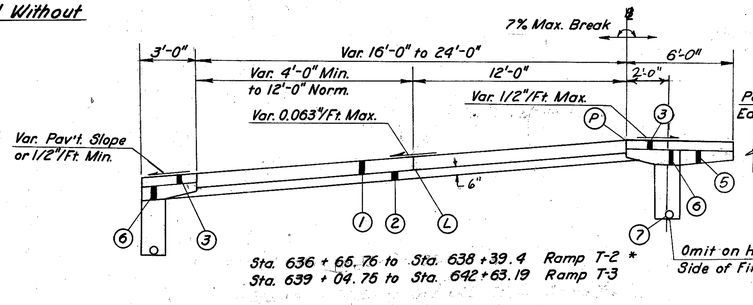


Sta. 636 + 65. 76 to Sta. 638 + 39.4 Ramp T-2 *
Sta. 639 + 04. 76 to Sta. 642 + 63. 19 Ramp T-3

* Right Pavement Edge 8'-0" Right of Baseline

| DEEP UNDERDRAIN | | |
|---|---|---|
| RAMP | LOCATION STA. TO STA. | SIDE |
| T-1 | 629+00 TO 634+50 | LT |
| T-2 | 634+75 TO 638+00 | LT |
| T-2 | 628+43 TO 638+00 | RT |
| T-3 | 648+50 TO 648+72.99 | LT |
| T-4 | 646+75 TO 651+00 | RT |
| | | |
| W-1 | 579+00 TO 582+32 | LT. |
| W-3 | 584+62 TO 585+75 | LT. |

| SHALLOW UNDERDRAIN | | |
|---|---|---|
| RAMP | LOCATION STA. TO STA. | SIDE |
| T-1 | 635+00 TO 637+75 | LT |
| T-2 | 638+50 TO 639+05.69 | RT |
| T-3 | 638+70.45 TO 639+13 | LT |
| T-3 | 639+13 TO 643+00 | RT |
| T-3 | 643+00 TO 643+40 | LT |
| T-3 | 645+30 TO 646+75 | LT |
| T-4 | 643+85 TO 646+25 | RT |
| | | |
| W-1 | 573+50 TO 578+50 | LT. |
| W-2 | 581+79 TO 584+62 | RT. |
| W-2 | 584+50 TO 588+62 | LT. |
| W-2 | 588+50 TO 593+00 | RT. |
| W-3 | 586+25 TO 591+25 | LT. |

| UNCLASSIFIED UNDERDRAIN | | |
|---|---|---|
| RAMP | LOCATION STA. TO STA. | SIDE |
| T-1 | 634+50 TO 635+00 | LT |
| T-2 | 638+00 TO 638+50 | RT |
| T-3 | 646+75 TO 648+50 | LT |
| T-4 | 646+25 TO 646+75 | RT |
| | | |
| W-1 | 578+50 TO 579+00 | LT. |
| W-3 | 585+75 TO 586+25 | LT. |

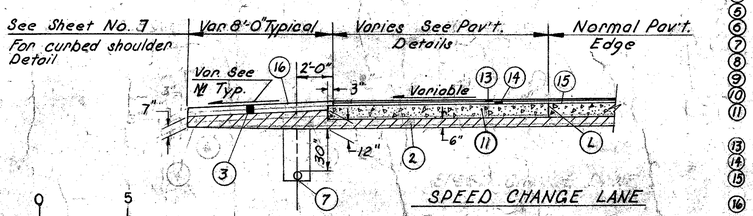


SPEED CHANGE LANE

0 5
SCALE IN FEET

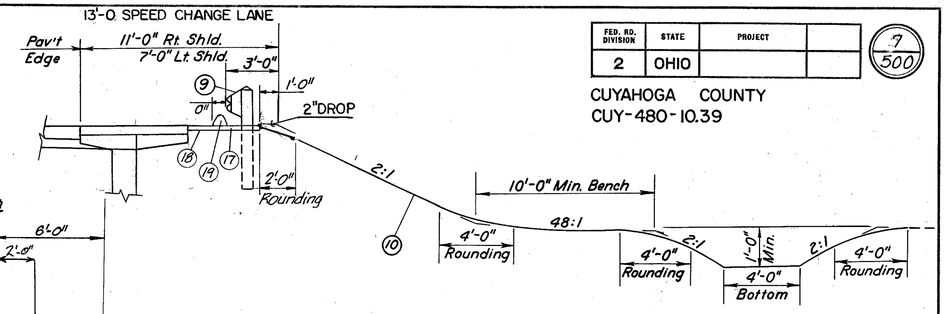


EMBANKMENT

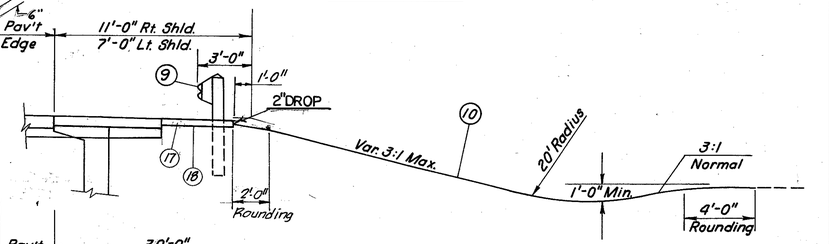


EMBANKMENT

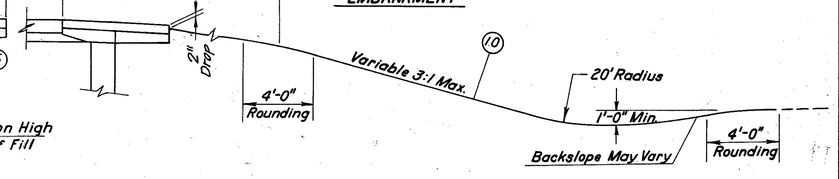


EMBANKMENT

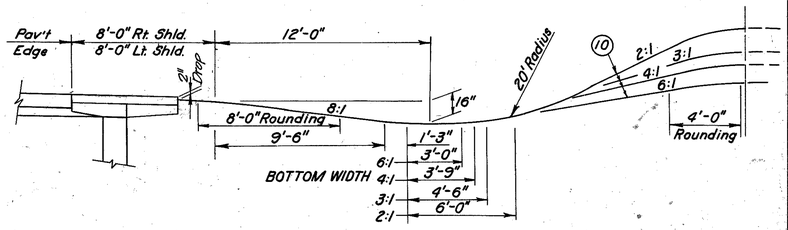


EXCAVATION

### LEGEND

(1) Item 451-9" Reinforced Portland Cement Concrete Pavement
(2) Item 310 Subbase Type II
(3) Item 301 6" Bituminous Aggregate Base, AC-20 or RT-11 or RT-12
(4) Item 304 Aggregate Base (Thickness as Shown)
(5) Item 310 Subbase (Thickness as Shown) Type 1
(6) Special Drainage Connection, Using No. 8 Aggregate, (See GENERAL NOTE FOR SEQUENCE OF OPERATION)
(7) Item 605 6" Underdrain, Shallow 30" Cover - Deep 50" Cover, Subgrade to top of Pipe.
(8) Item 609 6x7 Integral Curb, See Detail Sheet No. 8
(9) Item 606 Guard Rail, Type B
(10) Item 669 Seeding & Mulching, As Per Plan
(11) Item 305 9" Portland Cement Concrete Base

(13) Item 848 1 1/4" Asphalt CONCRETE Surface Course Type I
(14) Item 848 1 3/4" Asphalt Concrete Intermediate COURSE Type 2
(15) Item 407 Tack Coat And Cover Aggregate See general Note
(16) Item 409 Seal Coat Cover Aggregate No. 8 @ .008 Cu. Yd/Sq. Yd.
Item 409 Seal Coat Bituminous Material @ 0.30 Gal./Sq. Yd.
(17) Item 301 3" Bituminous Aggregate Base Weed control
(18) Special Herbicide for Weed Control
(19) Item 609 Asphalt Concrete Curb AC-20 Standard type I

(P) Profile Grade
(L) Standard Longitudinal Joint

| FED. RD. DIVISION | STATE | PROJECT | |
|---|---|---|---|
| 2 | OHIO | | |

8/500

CUYAHOGA COUNTY
CUY-480-10.39

# TYPICAL SECTION
## WEST 130 TH ST.
TYPE 451

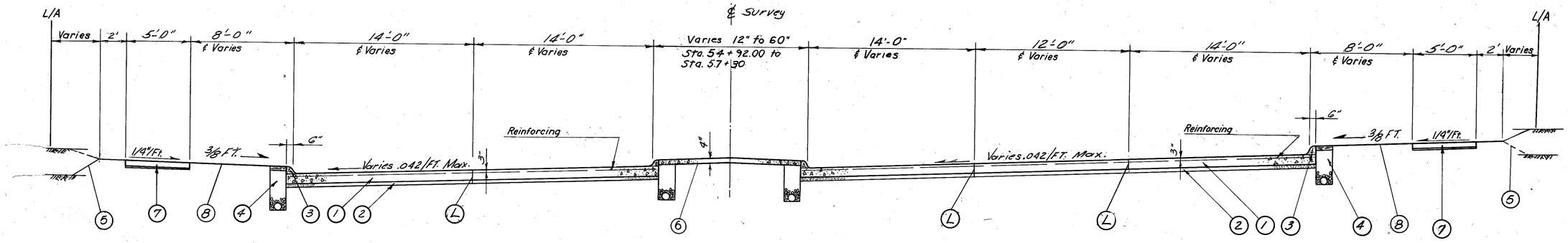


SOUTH BOUND
Sta. 52+25 to Sta. 60+25

SUPERELEVATED SECTION

NORTH BOUND
Sta. 51+50 to Sta. 60+25

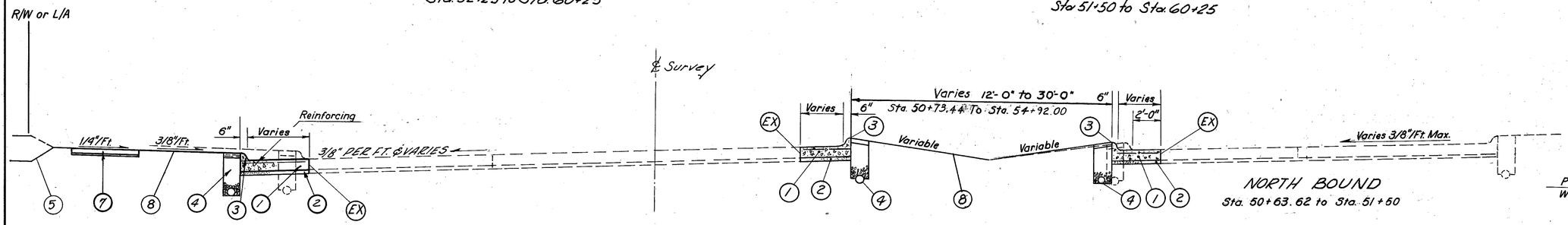


SOUTH BOUND
Sta. 50+73.94 to Sta. 52+25

SUPERELEVATED SECTION

NORTH BOUND
Sta. 50+63.62 to Sta. 51+50

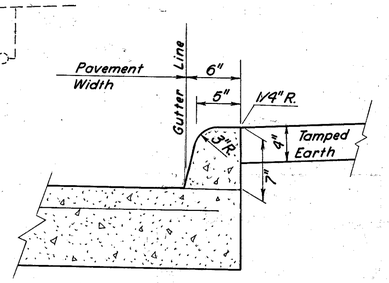


DETAIL 6"x7" INTEGRAL CONCRETE CURB

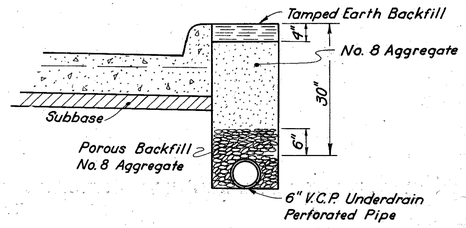


CURB & UNDERDRAIN DETAIL

| ITEM | | DESCRIPTION |
|---|---|---|
| (1) | 451 | 9" REINFORCED PORTLAND CEMENT CONCRETE PAVEMENT MODIFIED AS PER PLAN |
| (2) | 310 | 6" SUBBASE TYPE II |
| (3) | 609 | 6"x7" INTEGRAL CONCRETE CURB, (SEE DETAIL THIS SHEET) |
| (4) | 605 | 6" UNCLASSIFIED PIPE-UNDERDRAIN-706.08 PERFORATED BELL & SPIGOT AS PER PLAN (SEE DETAIL THIS SHEET) |
| (5) | 659 | SEEDING AND MULCHING, AS PER PLAN (2' BEYOND WORK LIMITS) |
| (6) | 612 | 4" CONCRETE MEDIAN (AS PER PLAN) |
| (7) | 608 | 4½" CONCRETE WALK W/2" GRANULATED SLAG OR SCREENINGS BED |
| (L) | | STANDARD LONGITUDINIAL JOINT |
| (EX) | | STANDARD EXPANSION BOLT JOINT |
| (8) | 660 | SODDING |

0 5
SCALE IN FEET

NOTE: ITEM 612 - CONCRETE MEDIAN JOINTS
Joints: 1/4" Expansion Joints Shall be Constructed at 20' Intervals. Metal Separator Plates or Templets Shall be Used if Necessary to hold the Joint Material in Accurate Position During the Placing of the Concrete.
Separator Plates or Templets, if Used, Shall be Removed As Soon As the Concrete is in Place to insure the Accurate Retention of the Joint Material. Expansion Joint Material Shall Meet the Requirements of 705.03. In Addition to the 1/4" Expansion Joints, Contraction Joints, Consisting of 1½" Minimum Depth Impressed Joint Formed and Sealed as Per Standard Drawing B.P.-3 Shall be Placed in the Concrete Median at Intervals Not to Exceed 10 Feet.

Note: Item 605
706.08 Perforated Bell & Spigot As Per Plan With Perforations in Accordance With AASHO M-65 Shall be Used For Pipe Underdrains. In Addition Three Lugs Designed to Center And Align the Pipe And Provide A 3/8" Gap Between Pipe Lengths Shall Be Provided in the Bell End of Each Unclassified PIPE. Payment Will be Included in Item 605-6" Pipe Underdrain 706.08 Perforated Bell and Spigot, As Per Plan

# TYPICAL SECTIONS

| FED. RD. DIVISION | STATE | PROJECT | |
|---|---|---|---|
| 2 | OHIO | | |

9
500

CUYAHOGA COUNTY
CUY-480-10.39

## TYPE 451

SCALE 1/4" = 1'-0"

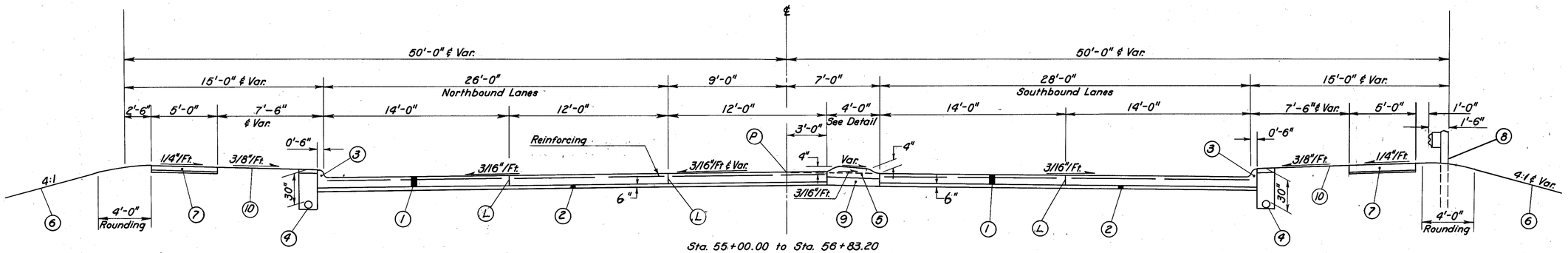


Sta. 55+00.00 to Sta. 56+83.20
Sta. 56+83.20 to Sta. 60+13.44 (Str. & Appr. Slabs)
Sta. 60+13.44 to Sta. 61+53.50 N.B. (Typ. Reversed)
Sta. 60+13.44 to Sta. 61+32.95 S.B. (Typ. Reversed)

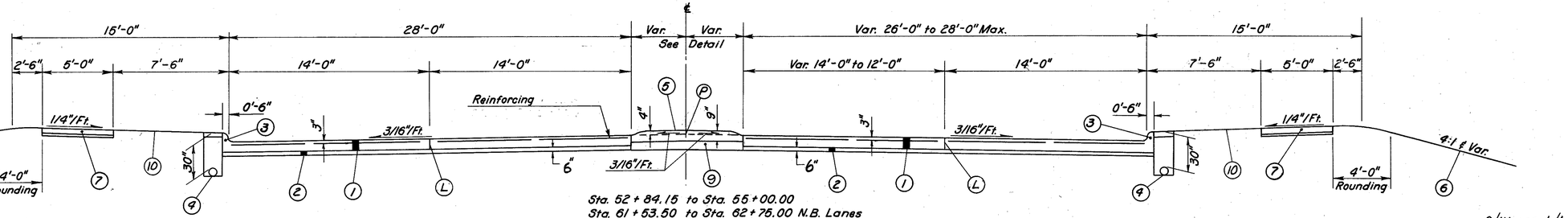


Sta. 52+84.15 to Sta. 55+00.00
Sta. 61+53.50 to Sta. 62+76.00 N.B. Lanes
Sta. 61+32.95 to Sta. 62+76.00 S.B. Lanes

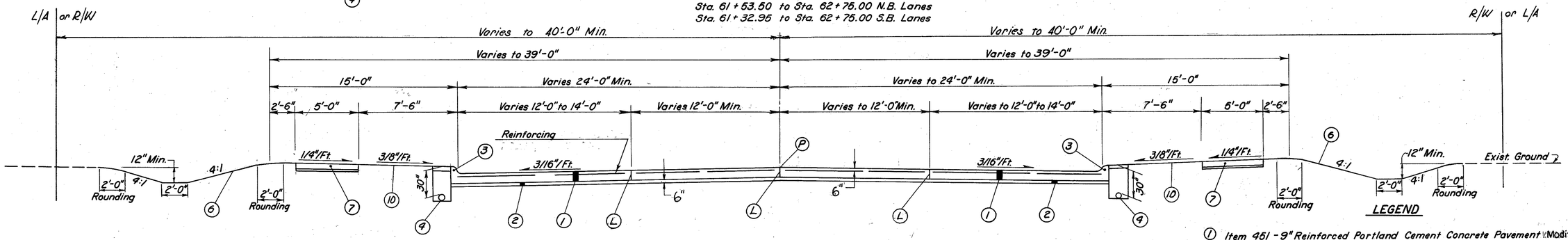


Sta. 50+94.8 to Sta. 52+84.15
Sta. 62+75.0 to Sta. 63+98.8

NOTE:
(1) Cross Section Shall Govern Over Typical Sections Where Variable Conditions Are Encountered.
(2) Location of Longitudinal Joints Vary in this Section As Shown on Pavement Details.
(3) For Location and Width of Concrete Median See Pavement Details
(4) Seeding & Mulching to right-of-way lines or 2 feet beyond work limits for areas outside the right-of-way.
(5) For Sidewalk location See Plan & Profile Sheets

0 5
SCALE IN FEET

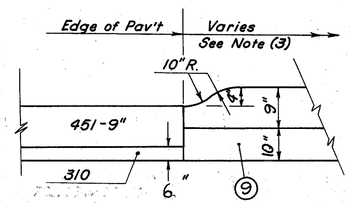


CONCRETE MEDIAN DETAIL
Joints: See Std. Drawing MC-6

LEGEND

(1) Item 451 - 9" Reinforced Portland Cement Concrete Pavement Modified as per plan
(2) Item 310 - 6" Subbase Type II
(3) Item 609 - 6"x7" Integral Concrete Curb (See Detail Sheet No. 8)
(4) Item 605 - 6" Unclassified Pipe Underdrain - 706.08 Perforated bell & Spigot as per Plan) See Detail Sheet No. 8
(5) Item 612 - Concrete Median As Per Plan (See Detail Sheet No. 8)
(6) Item 659 - Seeding & Mulching see note (4), As Per Plan
(7) Item 608 - 4½" Concrete walk w/2" Granulated Slag or Screening Bed
(8) Item 606 - Guard Rail, Type 5
(9) Item 310 - Subbase Type I
(10) Item 660 - Sodding
(P) Profile Grade
(L) Standard Longitudinal joint
Key 1 and Without To Scale

| FHWA REGION | STATE | PROJECT | |
|---|---|---|---|
| 5 | OHIO | | |

10
500

CUYAHOGA COUNTY
CUY-480-10.39

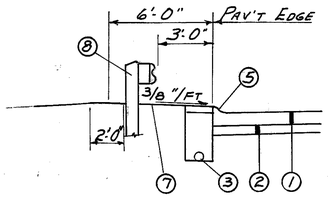


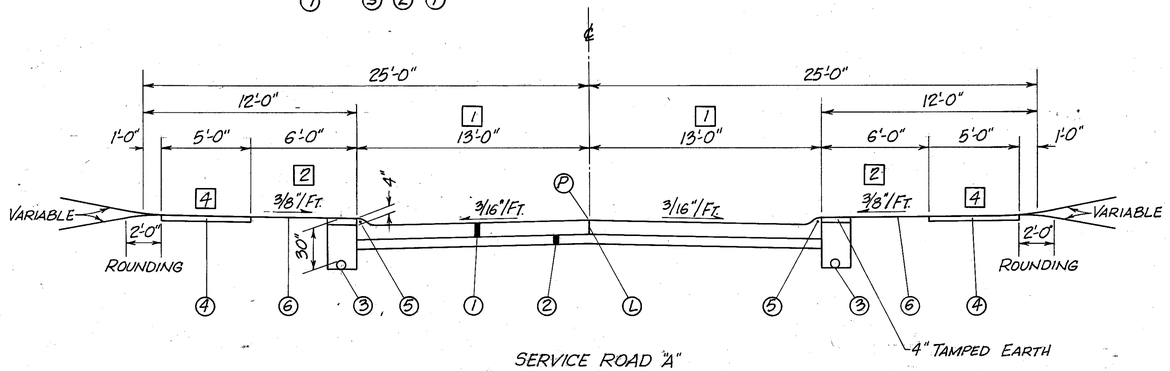


SERVICE ROAD "A"
STA. 8+02.93 TO STA. 11+57.58

SUMMER LANE
STA. 11+82.00 TO STA. 12+67.44

SOUTHWOOD DRIVE
STA. 7+50.00 TO STA. 12+75.00

AUTUMN LANE
STA. 7+87.78 TO STA. 8+41.00
STA. 11+63.00 TO STA. 12+50.65

IDLEWOOD DRIVE
STA. 8+75.00 TO STA. 10+84.06

(L) STANDARD LONGITUDINAL JOINT
(P) PROFILE GRADE

| ITEM | | DESCRIPTION |
|---|---|---|
| (1) | 451 | 7" REINFORCED PORTLAND CEMENT CONCRETE PAVEMENT |
| (2) | 310 | 6" SUBBASE, TYPE II |
| (3) | 605 | 6" SHALLOW UNDERDRAIN |
| (4) | 608 | 4½" CONCRETE WALK, AS PER PLAN |
| (5) | 609 | CURB, TYPE 3-A |
| (6) | 660 | SODDING |
| (7) | 659 | SEEDING AND MULCHING, AS PER PLAN |
| (8) | 606 | GUARDRAIL, TYPE 5 |
| (9) | 451 | 9" REINFORCED PORTLAND CEMENT CONCRETE PAVEMENT |

NOTE:
1. PAVEMENT WIDTH VARIES - SEE PAVEMENT DETAILS.
2. 3/8"/FT. SHOULDER SLOPE VARIES, SEE CROSS SECTIONS.
3. LOCATION OF LONGITUDINAL JOINTS VARY AS SHOWN ON PAVEMENT DETAILS.
4. FOR SIDEWALK AND GUARDRAIL SEE PLAN AND PROFILE SHEETS.
5. FOR SODDING LOCATIONS, SEE PLAN AND PROFILE SHEETS.
6. EXISTING TYPICAL SIMILAR TO PROPOSED.

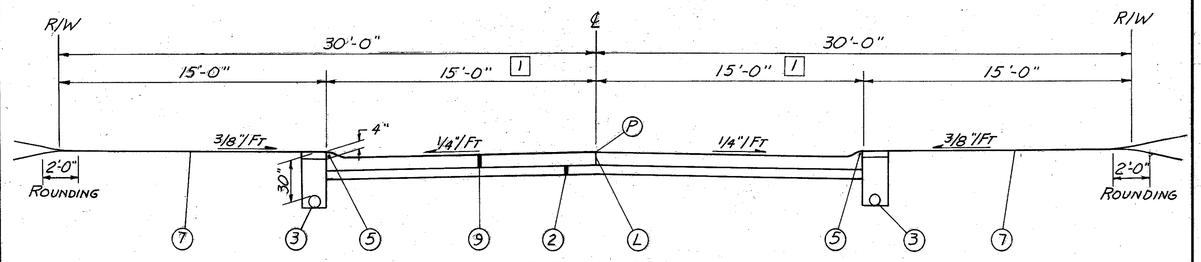


0 5
SCALE IN FEET

IDLEWOOD DRIVE
STA. 13+53.56 TO STA. 21+63.21

TYPICAL SECTION

# GENERAL NOTES

## MOBILIZATION AS PER PLAN

The Contractor shall provide a suitable field office having a minimum of 800 sq. ft. of floor space which shall be in accordance with 619.01 and 619.02. Payment shall be included in the lump sum price bid for Item 624, Mobilization, as per plan.

## CONTRACTION JOINTS

Although specific locations of certain contraction joints have been detailed on this plan, no waiver of specifications is intended and the maximum distance between contraction joints shall be in all cases in accordance with standard drawing BP-4.

## EXPANSION JOINTS

Although specific locations of certain expansion joints have been detailed on this plan, no waiver of the specifications is intended and expansion joints shall be provided at all major structures as required.

## ROUNDING OF CORNERS SHOWN ON CROSS SECTIONS

The rounded corners shown on the typical sections, apply to all cross sections, even though otherwise shown on these plans.

## CONTINGENCY QUANTITIES

The contractor shall not order materials or perform work for plan items set up to be used "as directed by the Engineer" unless authorized by the Engineer. (The actual work locations and quantities used at the Engineer's discretion shall be made a matter of record by incorporation into the final change order governing completion of this project.)

## ITEM 848 ASPHALT CONCRETE

Subsequent to the completion of plans, the asphalt concrete used on this project has been revised from items 402, 403, and 404 to supplemental specification 848. All reference to 402, 403, and 404 appearing on the plans shall be considered to read as follows:

402 becomes 848 Asphalt Concrete Intermediate Course, Type 2, AC-20
403 becomes 848 Asphalt Concrete Intermediate Course, Type 1, AC-20
404 becomes 848 Asphalt Concrete Surface Course, Type 1, AC-20

On this project, item 848, table 2-2, properties of mixtures shall be for heavy Traffic Volumes.

## DUST CONTROL

50 tons of 616 Calcium Chloride for dust control and 1500 M gallons of 616 Water for dust control are to be used at the direction of and in amounts requested by the engineer for dust control within the limits of the project.

## UNDERGROUND UTILITIES

THE LOCATIONS OF THE UNDERGROUND UTILITIES SHOWN ON THE PLANS ARE AS OBTAINED FROM THE OWNERS OF THE UTILITY AS REQUIRED BY SECTION 153.64 ORC

UTILITY NOTIFICATION

AT LEAST TWO WORKING DAYS PRIOR TO COMMENCING CONSTRUCTION OPERATIONS IN AN AREA WHICH MAY INVOLVE UNDERGROUND UTILITY FACILITIES THE CONTRACTOR SHALL NOTIFY THE PROJECT ENGINEER, THE REGISTERED UTILITY PROTECTION SERVICE AND THE OWNERS OF EACH UNDERGROUND UTILITY FACILITY SHOWN IN THE PLANS. THE OWNER OF THE UNDERGROUND UTILITY FACILITY SHALL, WITHIN FORTY-EIGHT HOURS, EXCLUDING SATURDAYS, SUNDAYS, AND LEGAL HOLIDAYS, AFTER NOTICE IS RECEIVED, STAKE, MARK OR OTHERWISE DESIGNATE THE LOCATION OF THE UNDERGROUND UTILITY FACILITIES IN THE CONSTRUCTION AREA IN SUCH A MANNER AS TO INDICATE THIER COURSE TOGETHER WITH THE APPROXIMATE DEPTH AT WHICH THEY WERE INSTALLED. THE MARKING OR LOCATING SHALL BE COORDINATED TO STAY APPROXIMATELY TWO DAYS AHEAD OF THE PLANNED CONSTRUCTION

## UTILITY OWNERSHIP

Department of Public Safety
Fire Signal System
310 Carnegie Avenue
Cleveland, Ohio 44115
PHONE: 621-1223

Department of Public Utilities
Div. of Water Pollution Control
1201 Lakeside Avenue
Cleveland, Ohio 44114
PHONE: 664-2513

Standard Oil Company
P. O. Box 189
Vandalia, Ohio 45377
PHONE: (513) 898-8121

Department of Public Service
Room 112 City Hall
601 Lakeside Avenue
Cleveland, Ohio 44114
PHONE: 664-2000

Department of Public Safety
Div. of Traffic Engineering & Parking
2001 Payne Avenue
Cleveland, Ohio 44114
PHONE: 664-3194

Department of Public Utilities
Division of Water and Heat
1201 Lakeside Avenue
Cleveland, Ohio 44114
PHONE: 664-3064

Cleveland Electric Illuminating Co
Illuminating Building
55 Public Square
Cleveland, Ohio 44113
PHONE: 622-9800, EXT. 3451

Cuyahoga County Sanitary
Engineering Department
75 Public Square
Cleveland, Ohio 44113
PHONE: 443-7600

Utility Protection Service
1-800-362-2764

East Ohio Gas Co.
1201 East 55th Street
Cleveland, Ohio 44114
PHONE: 361-2753

Cleveland Police Department
Traffic Division
1300 Ontario Street
Cleveland, Ohio 44114
PHONE: 623-5000

Regional Transit Authority
615 Superior Ave. N.W.
Cleveland, Ohio 44113
PHONE: 566-5100

Ohio Bell Telephone Co.
820 W. Superior, Room 703
Cleveland, Ohio 44113
PHONE: 822-6025

Fire Prevention Bureau
1645 Superior Avenue
Cleveland, Ohio 44113
PHONE: 621-1230

Dept. of Public Utilities
Div. of Water Pollution Control
Bureau of Sewer Maintenance
1201 Lakeside Avenue
Cleveland, Ohio 44114
PHONE: 664-2513

Dept. of Public Utilities
Div. of Light and Power
1201 Lakeside Avenue
Cleveland, Ohio 44114
PHONE: 664-4200

City of Brooklyn, City Hall
7619 Memphis Avenue
Brooklyn, Ohio 44144
PHONE: 351-2133

Buckeye Pipe Line Co
P.O. Box 368
Emmaus, Pennsylvania 18049
PHONE: (215) 898-3131

## REMOVAL OF TREES AND STUMPS

All trees and stumps specifically marked for removal within the construction limits of this project shall be removed under the lump sum price bid for Item 201 Clearing and Grubbing, except that those trees for which protection and preservation work is indicated elsewhere in these plans shall not be removed.

The following is an approximate estimate of the number of trees and stumps to be removed:

| SIZES | NO. TREES | NO. STUMPS |
|---|---|---|
| 18" | 174 | |
| 30" | 69 | |
| 48" | 3 | |
| 60" | 0 | |

The above estimate is approximate and the State of Ohio reserves the right to order the removal of additional trees or stumps outside of the limits of construction but within the right-of-way and/or easement lines. Payment for the removal of these additional trees or stumps shall be included in the lump sum price bid for Item 201 Clearing and Grubbing.

## EXISTING GAS WELLS

The following list of gas wells are located within the path of the Outer Belt South Freeway, or in close proximity thereto:

STa. 625+00, 100' RT. ℄ I-480
STa. 634+50, 15' LT. ℄ RAMP T-2

VENTING OIL AND GAS WELLS All oil and gas wells located within the right of way, whether previously plugged to the satisfaction of the Department of Natural Resources, or are to be plugged as part of this project shall be vented as detailed on Sheet No. 27

The following estimated quantities have been included in the General Summary for venting these wells:

Item 602 Concrete Masonry, Asper Plan 6.0 Cu. Yds.
Item 603 3" Conduit, Type F 707.08 Std. Wgt. Bituminous Coated 189 Lin. Ft.

## PLUGGING OIL AND GAS WELLS

Active gas wells located within the limits of the right-of-way shall be plugged by the contractor before any other construction is started in the vicinity of the wells. All work shall be done in accordance with the requirements of the State of Ohio, Department of Natural Resources, Division of Oil and Gas, , Columbus, Ohio. All work connected with plugging of the wells must be performed under the supervision of a representative of the Division of Oil and Gas. The contractor shall notify the project engineer and the Division of Oil and Gas at least 14 days in advance of the date on which he intends to begin work.

Recorded information regarding these wells and permits to plug the wells shall be obtained by the contractor at the Division of Oil and Gas.

Payment for the work shall be made per each under Item "Special Plugging Oil and Gas Well", which price and payment shall constitute full compensation for furnishing all material, labor, tools and equipment, and all incidentals necessary to complete this item.

The following estimated quantity of "Plugging Oil and Gas Wells" was carried to the general summary, in the event the Contractor encounters additional

# GENERAL NOTES

PLUGGING OIL AND GAS WELLS (continued)
wells requiring plugging, or the Engineer requires wells that were plugged prior to this project, to be replugged. All or part of this quantity may be nonperformed.

An estimated quantity of ITEM SPECIAL 4 Each Plugging Oil or Gas Wells has been included in the general summary.

## REVIEW OF DRAINAGE FACILITIES

Before any work is started on the project, and again before final acceptance by the State, representatives of the State and the Contractor, along with local representatives, shall make an inspection of the existing sewers within the work limits which are to remain in service and which may be affected by the work. The condition of the existing conduits and their appurtenances shall be determined from field observations. Records of the inspections shall be kept in writing by the State.

All new conduits, inlets, catch basins and manholes constructed as a part of the project shall be free of all foreign matter and in a clean condition before the project will be accepted by the State.

**All existing sewers inspected initially by the above mentioned parties shall be maintained and left in a conditioned reasonably comparable to that determined by the original inspection. Any change in the condition resulting from the Contractors operations shall be corrected by the Contractor to the satisfaction of the Engineer. Payment for all operations described above shall be included in the unit prices bid for the pertinent 603 conduit items of the contract.**

## EXISTING UNDERDRAINS

**Where existing underdrains are encountered and no provision has been made for new underdrains, they shall be connected to new inlet with 6 inch Type "F" pipe. A quantity of 100 feet has been provided in the general summary to be used as directed by the engineer for that purpose. The materials shall not be ordered by the contractor unless prior approval is received from the project engineer.**

## TOPSOIL

Topsoil shall be placed 8 inches in depth in areas where the presence of shale may prevent the establishment of the sod or seeding. The designated areas of topsoil that have been indicated on the Cross Sections and Schematic Plan may be adjusted by the Engineer. Excavation for this item shall be included in the cost of Item 653 - Topsoil Furnished and Placed As Per Plan. The provisions of 653.02 requiring ignition testing on samples may be waived for this item.

## LOCATION OF UNDERDRAIN

**605-Deep pipe underdrains have been provided in the plan for subgrade drainage in soil cuts. It is intended to provide pipe underdrains 707.01 Type III or 707.21 Type III with only 12" cover in rock or shale cuts.**

**The Engineer is therefore directed to adjust underdrain locations or nonperform quantities of underdrains, or both as applicable, depending upon conditions encountered during construction.**

## WATERING AND MOWING PERMANENT SEEDING AREAS

The following estimated quantities are to be used as directed by the Engineer to promote growth and to care for the permanent seeded areas, as per 659.09:

| | | CLEVELAND | BROOKLYN | |
|---|---|---|---|---|
| 659 | Water | 177 | 228 | M Gal. |
| 659 | Mowing | 368 | 475 | M Sq. Ft. |

## CONNECTIONS TO EXISTING SEWERS

At places where the plans provide for:
1) The connection of a new sewer to an existing sewer or appurtenance, or
2) The connection of an existing sewer to a new sewer or appurtenance, or
3) A new sewer to cross over or under an existing sewer or appurtenance,
it shall be the responsibility of the Contractor to locate the existing sewer pipe or appurtenance both as to line and grade before he starts to lay the proposed conduit. Payment for all operations described above shall be included in the unit price bid for the pertinent 603 item.

## MANHOLE COVERS

**The contractor shall set the frames for manhole covers at such an elevation and inclination as to place the surface of the cover in the plane of the finished surface except on slopes steeper than 1 on 4.**

## SANITARY FLOW INTO HIGHWAY DRAINAGE SYSTEMS

**This plan makes no provision for connecting, nor shall the engineer or contractor connect, any existing or new drainage into the highway drainage system when such drains carry flow from any plumbing fixtures including floor drains and sink drains or drains from livestock lots or barns.**

**Existing pipe carrying flow which comes within the category outlined above shall be plugged with Class "C" concrete at the right-of-way line. Payment for said plugging shall be included in the unit price bid for item 203 excavation, not including Embankment construction.**

## STANDARD I-2A INLET LOCATION

The Station location of an inlet as shown on the plans is to the center of the manhole cover, the offset shown is to the face of curb.

## INTERCEPTOR DRAIN

Reference is made to the detailed drawing on Sheet No. 35 showing the method to be used for interceptor cut slope seepage which may be encountered during construction. The location and limits shall be as determined by the Engineer. The following estimated quantities have been included in the General Summary for this purpose.

| | | CLEVE. | BROOK. | |
|---|---|---|---|---|
| Item 603 | 6" Conduit, Type "E" 707.01, 707.21 or 711.29 As Per Plan | 500 | 500 | LIN. FT. |
| Item 603 | 6" Conduit, Type "F" As Per Plan | 200 | 200 | LIN. FT. |
| Item 605 | 6" Unclassified Pipe Underdrain 707.01 Type III, 707.21 Type III, or 707.15 As Per Plan | 500 | 500 | LIN. FT. |

If none are needed the Item shall be nonpreformed.

## SPRING DRAINS

**Reference is made to the *Standard Drawing No. MC-1* showing the method of draining any spring *that may be shown* on the plan or encountered during construction as determined by the engineer. The following estimated quantities have been included in the general summary for this purpose: The exact length and location of the spring drains shall be determined by the Engineer in the field.**

Item 605 - 6" Unclassified Pipe Underdrain, 707.01, Type III or 707.21, Type III, as per plan 200 L.F.
Item 605- Aggregate Drains for springs, 10 L.F.

**The contractor shall not order materials for "Spring Drains" until authorized by the engineer and in the event no springs are encountered, the item shall be nonperformed.**

## EROSION CONTROL

Items 601, 660 and 667 are provided in the plans for erosion control. Rock and Turf of a stable nature will not be removed in order to place any of these items. The Engineer shall check and non-perform quantities or adjust locations and quantities for these items where indicated by field conditions during construction. Items 660 and 667 shall be placed on a minimum of 6" of soil. Additional excavation or embankment required to comply with the above shall be included for payment in Item 203.

ERODION CONTROL PADS AND ANIMAL GUARDS Erosion control pads and animal guards shall be provided at the outlet end of all pipe underdrains and farm drains, as per Standard Construction Drawing MC-4, except when they outlet into a drainage structure.

Payment for the erosion control pads and the animal guards shall be included in the price bid for Item 603, 6" conduit, type F.

CONDUIT END TREATMENT Immediately after placement of any conduits, the contractor shall construct the end treatments required by the plans at both the outlet and inlet ends. this shall include headwalls, concrete riprap, rock channel protection, sodding, etc.

## AGRICULTURAL LIMING, AS PER PLAN

The location and need for agricultural liming will be determined by laboratory tests, after rough grading operations have been performed. Quantites of agricultural liming, as shown on the plans, are sufficient for the entire project, but will be nonperformed for the areas where tests show that the liming is not required.

# GENERAL NOTES

MEDIAN PAVEMENT ON APPROACH SLAB

The width and type of median pavement on approach slabs shall be transitioned from the standard section used on the approch pavement to the section used on the bridge within the limits of the approach slab.

SEEDING

Quantities for seeding are calculated for the soil areas between the right-of-way fence lines, between the right-of-way lines in unfenced areas, and two feet minimum outside the construction limit as shown on the cross sections.

PAVEMENT ELEVATIONS

Pavement edge elevations where curb is used are at the face of the curb unless otherwise indicated.

GUARD RAIL LOCATION

Prior to the erection of the guard rail, the Engineer shall make a field inspection and, if neccessary, adjust the location of the end posts to accommodate field conditions and to provide better protection for traffic.

GUARD RAIL ADJUSTMENT

The stationing of individual runs of guard rail shall be adjusted, if necessary, by the Engineer at the time of construction to accommodate the standard panel lengths furnished.

ELEVATION DATUM

All elevations are based on U.S.G.S. datum.

ITEM 203 PROOF ROLLING

An estimated quantity for this item has been provided in the general summary for use in proof rolling of subgrade for the mainline and ramp pavements, and for paved shoulders.

UNSUITABLE EARTHWORK

Unsuitable surface soils encountered in embankment construction from approximately Sta. 575+00 to 602+00 shall be removed and disposed of as directed by the Engineer. In addition to specific volumes of unsuitable earth calculated from the cross-hatched areas on the cross-sections, estimated quantities of 5,000 C.Y. of item 203 excavation not including embankment construction and 5,000 C.Y. item 203 embankment are provided in the general summary to be used at the discretion of the Engineer.

ITEM 603 JACKING PIPE

As a part of this contract, it will be necessary to install a 36" Conduit under the existing B&O and Conrail R.R. at Sta. 1024+50 B&O and Sta. 887+00 Conrail R.R. by the method of boring and jacking.

No trench excavation or equipment shall be closer than 10 feet to the ℄ of track. Trenches shall be adequately supported and the specification requirement for Class B Bedding shall be disregarded.

UNRECORDED SANITARY CONNECTIONS

Any unrecorded active connection to a sanitary sewer encountered during construction shall be reconnected to the existing sewer, as directed by the Engineer. The following estimated quantities have been included in the General Summary for the work noted above:

Item 603 200-Lin. Ft. 6 "Conduit, Type C, 706.01, 706.02, 706.08 with joints as per 706.11 or 706.12

Item 603 200-Lin. Ft. 6 "Conduit, Type B, 706.01, 706.02, 706.08 with joints as per 706.11 or 706.12

None of the above materials shall be ordered by the contractor until authorized by the engineer.

HOUSE CONNECTIONS

Existing roof drains, footer drains or yard drains, disturbed by the proposed work, shall be provided with unobstructed outlets by connecting to a storm sewer, manhole, catch basin or through the curb.

The location, type, size and grade of required replacements will be determined by the engineer during construction.

The following estimated quantities have been included in the general summary for the work noted above:

200 Lin. Ft. Item 603 4" Conduit Type E, 711.29

200 Lin. Ft. Item 603 6" Conduit Type E, 706.01, 706.02 or 706.08

200 Lin. Ft. Item 603 6" Conduit Type F

None of the above materials shall be ordered by the contractor until authorized by the engineer.

CONTRACTION JOINTS IN PAVEMENT WIDENING

Where new pavement is placed adjacent to existing pavement, contraction joints shall be provided in the new pavement so as to form a continuous joint with that in the existing pavement.

MONUMENTS Monuments shall be constructed in accordance with details shown on Standard Construction Drawing MC-1. for locations, see Sheet No. 478. Monuments located on west 130th street and on all crossroads in the city of Brooklyn shall be Item 604 Cuyahoga County Monument box No. 36-B as detailed on Sheet No. 39

TRENCH FOR WIDENING Trench excavation for base widening shall be only on on one side of the pavement at a time. The open trench shall be adequately maintained and protected with drums or barricades at all times. Placement of proposed subbase and base material shall follow as closely as possible behind the excavation operations. The lenght of widening trench which is open at any one time shall be held to a minimum and shall at all times be subject to approval of the Engineer.

STANDARD HW-4 HEADWALL Where standard HW-4 headwalls are Indicated, standard headwalls HW-4a or HW-4b, as applicable, shall be constructed.

ITEM 604-MANHOLES WITH SPECIAL FRAME AND COVER, AND ITEM 604-MANHOLES WITH OPEN GRATE

Cuyahoga County No. 9 frame and No. 28 or No. 37 cover, as applicable, detailed on sheets (33) and (34) shall be used in lieu of the frame and cover detail shown on the standard construction drawing for the manhole type specified.

ITEM SPECIAL - FILTER FABRIC

This item shall consist of encasing the pipe underdrain and backfill material to the bottom of the subbase as detailed on sheet 6. The fabric shall meet the requirements of supplemental specification 939. Field splices shall consist of 12 inch overlap secured in any manner suitable to the Engineer that will assure the overlap is maintained. Overlap closure at the top of the trench shall be 18 inches, secured as above. If the trench width is less than 18 inches, the overlap shall equal the trench width. Payment for material and installation of the fabric shall be included in the linear foot price bid for item special, filter fabric.

Where existing soil conditions are encountered which require the use of filter fabric and none has been provided, a quantity of 2000 linear ft. of item special, filter fabric has been included in the general summary to be used as directed by the engineer. If none is needed, the item shall be nonperformed.

ITEM 203, EMBANKMENT, USING GRANULAR MATERIAL AS PER PLAN

Material furnished for this item shall be as defined in 203.02 except that at least 85 per cent by weight of the grains or particles shall be retained on a No. 200 sieve

REINFORCED CONCRETE CATCH BASINS

Concrete Catch Basins, over 12 feet in depth, shall be reinforced by placing 3/4" diameter bars 12" center to center as shown on Standard Construction Drawings CB 2-5 and 2-6. Payment for furnishing and placing the reinforcing steel shall be included in the unit price bid for Item 604, Catch Basin.

# GENERAL NOTES

WEST 130th ST. AND TIEDEMAN RD.
ITEM 451, 9" REINFORCED PORTLAND CEMENT CONCRETE PAVEMENT
MODIFIED AS PER PLAN

All applicable provisions of Item 451 as set forth in the Construction and and Material Specifications shall apply unless modified herein and the following shall be considered as supplemental to the provisions set forth therein.

451.02 MATERIALS: Curing material shall be 705.08 Type II Class 2. The reinforcing mesh fabric shall be 6 x 12 -(w8.6 x w4) conforming to 709.10 and Cuyahoga County construction drawing BP-2c on sheet 36

Bituminous Material (451.08) ---------- 702.01, 702.02, and 702.04.

JOINTS: Longitudinal joints and vertical faces of existing rigid pavement shall be cleaned of foreign material and given an application of bituminous material in a manner which results in a residual coating of 1/4 gallon per square yard before the adjoining slab is poured.

When not shown on the Plans, or provided for elsewhere, joints in the pavement within intersections shall be of the type, and at such locations, as designated by the Engineer.

In those areas where a pavement is being widened using a section consisting of a Portland Cement Concrete Pavement with or without an Asphalt Concrete Surface Course, transverse joints shall be placed in the base to match joints in the original concrete base, as shown on the Plans and/or as directed by the Engineer.
Transverse joints shall be as per Cuyahoga County construction drawing BP-4c on sheet 37
Contraction joint. The location of the joints should be clearly mark on the forms in such a manner that the center line can be readily determined for the sawing operation.

Unless otherwise approved by the Engineer the following method should be used. Immediately after the finishing machine has cleared the joint, and prior to any hand finishing, a transverse slot 2" in depth shall be cut into the plastic concrete with a steel plate 3/8" thick and of sufficient length to cut a slot the total width of the pavement in one operation. The plate shall have the cutting edge serrated and shall be moved longitudinally in such a manner as to provide a sawing action while it is being forced into the concrete. The plate shall be reinforced in such a manner as will keep it rigid and in straight alignment and it shall be suspended and guided from a movable bridge, of an approved design, so that the plate will be held rigidly perpendicular to the surface of the slab and at right angles to the center line of the pavement when it is inserted in the concrete.

Immediately following the removal of the steel cutting plate, a 1/4" x 2" premolded joint filler meeting the requirements of 705.03 shall be inserted in the slot so that the top edge of the filler is flush with the top of the concrete slab. The pavement shall then be finished as required elsewhere.

This joint shall be sawed within 3 days with a 5/16" thick blade cutting a kerf 2" deep. Any residual joint filler remaining in the slot shall be removed by a suitable means and the joint cleaned, protected and sealed as provided elsewhere.

(f) Hinge Joint. When called for on the Plans or in the Proposal, two hinge joints shall be sawed into the pavement, at the 1/3 points, between successive contraction joints or between adjacent contraction and expansion joints. Hinge joints shall not be placed as an extension of either a contraction, expansion or construction joint in an adjacent slab, but may be used to extend a longitudinal tied joint of a more or less perpendicular intersecting roadway when approved by the Engineer. In order to insure the correct indentification of the sawed joint for extension when adjacent or future lanes are placed, a 3" block letter, C, for contraction or construction and H. for hinge, shall be impressed 1/4" into the finished slab adjacent to and at each end of the joint. If it is not possible to place two successive hinge joints as herein specified, the sawed contraction joint described herein shall be used. When hinged joints are used the spacing between successive contraction and/or expansion joints shall not generally exceed 75 feet and the intermediate hinge joint spacing shall not exceed 25 feet except as approved by the Engineer.

Hinge joints shall be constructed in the same manner as the contraction joint described in (d) above except that no dowel assembly is required and the reinforcing mesh in the pavement or base shall be carried through the joint. Care shall be taken that the mesh reinforcement is not cut when the joint is being sawed.

(See Continuation, Column 3)

CONSOLIDATING AND FINISHING:

Unless otherwise specified the pavement shall be given a broom finish using a broom of an approved type, not less than 18 inches in width of bass or bassine fiber not more than 5 inches in length. The strokes shall be from edge to edge of the slab, one stroke per width of broom with adjacent strokes slightly overlapped and shall be drawn without "tearing" of the concrete and so as to produce regular corrugations approximately 1/16 inch depth.

Brooms shall be washed thoroughly at frequent intervals during each day. Any coarse or long bristles which cause irregularities shall be trimmed or removed.

PROTECTION AGAINST RAIN: In order that the concrete may be properly protected against the effects of rain before the concrete is sufficiently hardened, the Contractor will be required to have available at all times materials for the protection of the surface of the unhardened concrete. Such protective materials shall consist of standard covering material such as burlap or cotton mats, curing paper, or plastic sheeting material for the protection of the surface of the pavement. When rain appears imminent, all paving operations shall stop and all available personnel shall begin covering the surface of unhardened concrete with the protective covering.

SURFACE SMOOTHNESS: All sections of pavement that have been ground, repaired or replaced by the contractor shall be given a protective application of the specified curing compound.

JOINTS :(continued)

An Alternate to the method of providing the sawed joints for contraction and hinge joints as described above, shall be as per section 451.08 of the specifications with the following exceptions:

Contraction and hinge joints shall be sawed to a depth of 2 inches. Widths of saw cuts for contraction and hinge joints and widths of joint seal material shall be as indicated on Cuyahoga County Construction drawing BP-4c on sheet 37.

ITEM 659, SEEDING AND MULCHING, AS PER PLAN

All CUT slopes steeper than 3:1 (or 4:1 for short distances) are to be sown with wild flower seeds added to the mix at the rate recommended by the supplier provided these seeds are available. At least six (6) months prior to commencing seeding operations the Contractor shall notify the Project Engineer who will arrange to furnish the Contractor with wild flower seeds which shall be thoroughly mixed with the standard seed mixture per 659.09. This mixture shall be sown over the prepared area at the rate of three (3) pounds per 1000 square feet. The Project Engineer will determine the limits of the area to be sown with the wild flower seed mixture. The Contractor is advised that no mowing operations shall be performed in areas that have been sown with wild flower seeds.

In the event that the wild flower seeds will not be available, the Project Engineer will instruct the Contractor to seed these cut slopes with penngift crown vetch (coronilla varia). In no case shall crown vetch seed and wild flower seed be sown together. Crown vetch shall also be used to seed all FILL slopes steeper than 3:1 (or 4:1 for short distances). The crown vetch seed mixture shall consist of one (1) pound of penngift crown vetch which shall be thoroughly mixed with each three (3) pounds of the seed mixture per 659.09. This mixture shall be sown over the prepared area at the rate of four (4) pounds per 1000 square feet in lieu of the crown vetch application rate listed in 659.09. The Project Engineer will determine the limits of the area to be sown with crown vetch seeding.

The estimated quantity for Item 659, Seeding and Mulching, As Per Plan listed in the General Summary shall include the areas to be seeded with crown vetch, the areas to be seeded with wild flower seeds or crown vetch if wild flower seeds are not available, and all remaining seeding areas.

Payment for standard seeding, crown vetch seeding, or seeding with wild flower seeds furnished by the Department in locations to be determined by the Engineer shall be made at the unit price bid per square yard for:

Item 659, Seeding and Mulching, As Per Plan

| FED'L AID REGION | STATE | PROJECT | |
|---|---|---|---|
| 5 | OHIO | | |

15
500

CUYAHOGA COUNTY
CUY.-480- 10.39

# GENERAL NOTES

FENCE ERECTION - SCHEDULE OF OPERATIONS
FOR THE PROTECTION OF PEDESTRIANS, CHILDREN, AND ANIMALS, THE CONTRACTOR SHALL SO SCHEDULE AND PROSECUTE THE WORK THAT THE ERECTION OF THE RIGHT-OF-WAY FENCE SHALL BE PERFORMED PRIOR TO ANY OTHER OPERATION IN THE AREA. IN HIS PROGRESS SCHEDULE, THE CONTRACTOR SHALL INCLUDE A COMPLETE SCHEDULE OF HOW HE PROPOSES TO ERECT THE RIGHT OF WAY FENCE.

COATED DOWEL BARS
DOWEL BARS REQUIRED ON STANDARD DRAWING BP-4 SHALL BE COATED IN ACCORDANCE WITH SUPPLEMENTAL SPECIFICATION 948.

ITEM SPECIAL - HERBICIDE FOR WEED CONTROL AND ITEM 301 - BITUMINOUS AGGREGATE BASE (WEED CONTROL)

SPECIAL CARE SHALL BE EXERCISED BY COORDINATION OF WORK TO INSURE THE 301 BITUMINOUS AGGREGATE BASE IS INSTALLED IN THE PROPER LOCATIONS PRIOR TO ERECTING THE GUARDRAIL RUNS.

PREPARATION OF THE SUBGRADE SHALL INCLUDE AN APPLICATION OF SIMAZINE PRE-EMERGENCE HERBICIDE. THE RATE AND METHOD OF APPLICATION SHALL BE IN STRICT CONFORMANCE WITH THE MANUFACTURER'S INSTRUCTIONS. THE CONTRACTOR SHALL HAVE THE NECESSARY PERMIT FROM THE OHIO DEPARTMENT OF AGRICULTURE BEFORE APPLYING HERBICIDE.

AFTER SETTING THE GUARDRAIL POSTS BUT BEFORE ATTACHING THE RAIL ELEMENTS, ANY DAMAGE TO THE PAVEMENT RESULTING FROM THE POST-SETTING OPERATIONS SHALL BE REPAIRED AND ADDITIONAL PAVING MATERIAL SHALL BE COMPACTED AROUND THE POSTS SUFFICIENT TO PREVENT WATER FROM COLLECTING.

COST OF ALL MATERIALS, EQUIPMENT, AND LABOR NECESSARY TO ACCOMPLISH THE ABOVE SHALL BE INCLUDED IN THE UNIT PRICES BID FOR ITEM 301 - BITUMINOUS AGGREGATE BASE (WEED CONTROL) AND ITEM SPECIAL-HERBICIDES FOR WEED CONTROL. ESTIMATED QUANTITIES FOR THESE ITEMS ARE CALCULATED ON PAVEMENT CALCULATION SHEET NO. 25.

STATION MARKING
THE CONTRACTOR SHALL STENCIL STATION NUMBERS INTO BOTH SIDES OF THE CONCRETE BARRIER BEFORE IT TAKES ITS FINAL SET. THE COMPLETE STATION NUMBERS ARE TO BE MARKED EACH HUNDRED FEET. THE NUMERALS SHALL BE 3 TO 4 INCHES IN HEIGHT AND 1/4 INCH IN DEPTH. THE STATION NUMBERS SHALL BE PLACED PARALLEL TO AND 3 OR 4 INCHES BELOW THE TOP OF THE CONCRETE BARRIER. PAYMENT SHALL BE INCLUDED IN THE UNIT PRICE BID PER LINEAR FOOT FOR ITEM 622 CONCRETE BARRIER.

ITEM 407 TACK COAT
THE TACK COAT AND COVER AGGREGATE OPERATION SHALL BE AS DETERMINED PER SPEC. 407.05. PLAN QUANTITIES INDICATE AVERAGE APPLICATION RATES OF 0.10 GALLONS PER SQUARE YARD OF TACK COAT AND 7 POUNDS PER SQUARE YARD OF COVER AGGREGATE FOR ESTIMATING PURPOSES ONLY.

TEMPORARY SOIL EROSION AND SEDIMENT CONTROL
STRAW OR HAY BALE DITCH CHECKS SHALL HAVE A MAXIMUM SPACING OF 200 FEET WITH ONE CHECK IN THE LAST 50 FEET OF THE RUN.

ALL MOUND DITCHES SHALL BE STABILIZED IMMEDIATELY AFTER CONSTRUCTION AND TEMPORARY SLOPE DRAINS INSTALLED TO OUTLET THESE DITCHES UNTIL CATCH BASINS AND TYPE "E" CONDUITS CAN BE CONSTRUCTED.
SEDIMENT DAMS OR SEDIMENT BASINS: THE CONTRACTOR HAS THE OPTION OF BUILDING A SERIES OF SEDIMENT BASINS OR CONSTRUCTING DAMS AT THE TABULATED LOCATIONS WHEN APPROVED BY THE ENGINEER.

SEDIMENT DAMS OR SEDIMENT BASINS SHALL HAVE AN EFFECTIVE CAPACITY OF 67 CUBIC YARDS PER ACRE OF DRAINAGE AREA AND BUILT IN ACCORDANCE WITH STANDARD DRAWING MC - 11.

ITEM 608, 4½" CONCRETE WALK, AS PER PLAN
THE AREAS INDICATED FOR REMOVAL AND REPLACEMENT OF EXISTING WALKS ARE APPROXIMATE ONLY. WHEREVER THE NEW CONCRETE WALK CROSSES ANY NEW DRIVES OF FLEXIBLE PAVEMENT CONSTRUCTION, THE SPECIFIED 4½" WALK THICKNESS SHALL BE INCREASED TO 6". THE TRANSITION FROM THE 4½" TO 6" SHALL BE ACCOMPLISHED IN A DISTANCE OF ONE FOOT ON EITHER SIDE OF THE NEW DRIVE. THE COST OF THE ADDITIONAL THICKNESS AND THE COST OF ALL INCIDENTAL AND PERTINENT WORK NECESSARY TO OBTAIN THE INCREASED THICKNESS SHALL BE INCLUDED IN THE UNIT PRICE BID PER SQUARE FOOT FOR ITEM 608, 4½" CONCRETE WALK AS PER PLAN.

ITEM SPECIAL - DRAINAGE CONNECTION
SEQUENCE OF OPERATION FOR PLACING PIPE UNDERDRAINS - TYPE 451 RAMPS ONLY.
(1) INSTALL PIPE UNDERDRAIN ON OUTSIDE SHOULDER.
(2) PLACE SUBBASE OUT TO OUTSIDE EDGE OF UNDERDRAIN TRENCH.
(3) CONSTRUCT ITEM 451.
(4) REMOVE SUBBASE AND ANY CONTAMINATED BACKFILL OVER DRAIN AND REPLACE WITH "ITEM SPECIAL - DRAINAGE CONNECTION USING NO. 2 AGGREGATE" AS SHOWN ON THE TYPICAL SECTION.
(5) COMPLETE SHOULDER CONSTRUCTION.
(6) PAYMENT SHALL BE MADE FOR ALL SUBBASE PLACED UNDER THIS OPERATION.

TEMPORARY SOIL EROSION AND SEDIMENT CONTROL

THE FOLLOWING ESTIMATED QUANTITIES ARE TO BE USED AS DIRECTED BY THE ENGINEER FOR EROSION AND SEDIMENT CONTROL MEASURES

| | CLEVE. | BROOK. | |
|---|---|---|---|
| ITEM 207 - TEMPORARY SEEDING AND MULCHING | 35,000 | 45,000 | SQ. YD. |
| ITEM 659 - COMMERCIAL FERTILIZER | 1 | 1 | TON |
| ITEM 659 - WATER | 10 | 10 | M. GAL. |
| ITEM 207 - TEMPORARY SLOPE DRAINS | 350 | 700 | LIN. FT. |
| ITEM 207 - TEMPORARY BENCHES, DIKES, DAMS AND SEDIMENT BASINS | 1,750 | 3,500 | CU. YD. |
| ITEM 659 - MOWING | 45 | 55 | M. SQ. FT. |
| ITEM 207 - STRAW OR HAYBALES | 110 | 360 | EACH |
| ITEM 601 - ROCK CHANNEL PROTECTION, TYPE C | 15 | 30 | CU. YD. |
| ITEM 659 - REPAIR SEEDING AND MULCHING | 10,000 | 12,000 | SQ. YD. |

MAINTENANCE OF TRAFFIC
WHERE THE WORK CALLED FOR UNDER THIS CONTRACT INVOLVES THE CLOSING OF STREETS OR THE RE-ROUTING OF TRAFFIC, THE CONTRACTOR SHALL PROSECUTE TO THE FULLEST EXTENT THE WORK INVOLVED SO AS TO REDUCE TO A MINIMUM THE LENGTH OF TIME THE ROADWAY WILL BE CLOSED TO TRAFFIC. NO STREET WILL BE CLOSED TOTALLY OR PARTIALLY UNTIL NECESSARY FOR CONSTRUCTION AS DETERMINED BY THE ENGINEER. THE CONTRACTOR SHALL NOTIFY THE CITY OF CLEVELAND TRAFFIC ENGINEERING DIVISION, THE CHIEF OF POLICE OF THE CITY OF BROOKLYN AND THE PROJECT ENGINEER IN WRITING (14) FOURTEEN DAYS IN ADVANCE OF ANY CLOSING OR PARTIAL CLOSING OF AN EXISTING STREET. ALL TRAFFIC CONTROL MEASURES SHALL COMPLY WITH THE OHIO MANUAL OF UNIFORM TRAFFIC CONTROL DEVICES (OMUTCD). NO PERMANENT OR TEMPORARY ROAD CAN BE OPENED TO TRAFFIC UNTIL ALL PAVEMENT MARKING AND TRAFFIC CONTROL DEVICES ARE INSTALLED IN ACCORDANCE WITH THE OMUTCD.

WEST 130TH STREET
THE CONTRACTOR MUST MAINTAIN TWO WAY DIRECTIONAL TRAFFIC, A MINIMUM OF ONE TEN (10) FOOT LANE IN EACH DIRECTION AT ALL TIMES, EITHER BY THE USE OF EXISTING PAVEMENT OR THE PROPOSED PAVEMENT AND AS SHOWN ON SHEET NO. 306.

TIEDEMAN ROAD
THE CONTRACTOR MUST MAINTAIN TWO WAY DIRECTIONAL TRAFFIC, A MINIMUM OF ONE TEN (10) FOOT LANE IN EACH DIRECTION AT ALL TIMES, TWO TWELVE (12) FOOT LANES IN EACH DIRECTION DURING PHASE I AS SHOWN ON SHEET NO. 82, EITHER BY THE USE OF EXISTING PAVEMENT, THE PROPOSED PAVEMENT OR THE TEMPORARY PAVEMENT.

SUMMER LANE, SOUTHWOOD, AUTUMN LANE
THE CONTRACTOR MUST MAINTAIN PROPER INGRESS AND EGRESS TO THE AREA IN THE CITY OF BROOKLYN AND LOCATED SOUTH OF I-480 BY MAINTAINING TWO WAY TRAFFIC AT ALL TIMES AT EITHER SUMMER LANE, SOUTHWOOD OR AUTUMN LANE, PRIOR TO THE CLOSING OF SOUTHWOOD DRIVE, TRAFFIC MUST BE REROUTED TO THE TEMPORARY PAVEMENT PROVIDED FOR CONNECTING AUTUMN LANE, SERVICE ROAD "A" MUST BE CONSTRUCTED PRIOR TO THE CLOSING OF ANY ROAD. THE CONTRACTOR SHALL CONTACT THE CHIEF OF POLICE AND SERVICE DIRECTOR OF THE CITY OF BROOKLYN FOURTEEN (14) DAYS PRIOR TO THE CLOSING OF ANY ROAD AND THE REROUTING OF TRAFFIC. FOR TEMPORARY PAVEMENT SEE SHEET NO. 75 & 76.

IDLEWOOD DRIVE
THE CONTRACTOR SHALL SCHEDULE HIS WORK TO CONSTRUCT THE IDLEWOOD DRIVE STRUCTURE AND THE WORK ON IDLEWOOD DRIVE TO COINCIDE WITH THE CONSTRUCTION OF THE SOUTHWOOD DRIVE STRUCTURE.

ESTIMATED QUANTITIES OF THE FOLLOWING ITEMS HAVE BEEN INCLUDED IN THE GENERAL SUMMARY FOR USE AS DIRECTED BY THE ENGINEER:
ITEM 404 BITUMINOUS CONCRETE FOR MAINTAINING TRAFFIC - 50 C.Y.
ITEM 410 TRAFFIC COMPACTED SURFACE - TYPE A OR B - 100 C. Y.
ITEM 410 TRAFFIC COMPACTED SURFACE - TYPE C - 100 C. Y.
ITEM 614 MAINTAINING TRAFFIC - LUMP SUM
ITEM 616 CALCIUM CHLORIDE - 10 TONS
ITEM 616 WATER - 500 M GAL.

*ITEM 601 ROCK CHANNEL PROTECTION WITH FILTER*

*WHERE THIS ITEM IS CALLED FOR ON THE PLANS, THE QUANTITIES SHOWN ARE BASED ON THE DIMENSIONS OF THE ROCK ONLY AND DO NOT INCLUDE THE VOLUME OF A 6" STONE FILTER BED. THE COST OF THE FILTER (EITHER FABRIC OR STONE) SHALL BE INCLUDED IN THE UNIT PRICE BID FOR ITEM 601 ROCK CHANNEL PROTECTION WITH FILTER.*
*WHERE THE FABRIC FILTER OPTION IS USED THE FABRIC SHALL MEET THE REQUIREMENTS OF SUPPLEMENTAL SPECIFICATION 939 TYPE B.*
*THE SURFACE TO RECEIVE THE FABRIC SHALL BE PREPARED TO A RELATIVELY SMOOTH SURFACE FREE OF OBSTRUCTIONS AND DEBRIS. THE FABRIC SHALL BE PLACED WITH THE LONG DIMENSION PARALLEL TO THE DIRECTION OF FLOW AND SHALL BE LAID LOOSELY BUT WITHOUT WRINKLES AND CREASES. WHERE JOINTS ARE NECESSARY, STRIPS SHALL BE PLACED TO PROVIDE A 12" MINIMUM OVERLAP WITH THE UPSTREAM STRIP OVERLAPPING THE DOWNSTREAM STRIP. SECURING PINS WITH WASHERS SHALL BE PLACED AT 2' MINIMUM INTERVALS ALONG JOINTS AND AT (2', 3' OR 5'** INTERVALS ELSEWHERE TO PREVENT SLIPPAGE OF THE FABRIC. THE SECURING PINS SHALL BE 3/16" DIAMETER OF STEEL POINTED AT ONE END AND FABRICATED WITH A HEAD TO RETAIN A STEEL WASHER HAVING AN OUTSIDE DIAMETER NOT LESS THAN 1-1/2". PIN LENGTHS SHALL BE GREATER THAN OR EQUAL TO 18".*

*** 2' FOR FLOW DIRECTION SLOPES STEEPER THAN 3:1, 3' FOR SLOPES 3:1 TO 4:1, AND 5' FOR SLOPES LESS STEEP THAN 4:1.*

# GENERAL SUMMARY

CALC. BY WAM DATE 2/83
CHKD. BY JRB DATE 2/83

| | STATE | PROJECT | |
|---|---|---|---|
| | OHIO | | |

16/500

CUYAHOGA COUNTY
CUY-480-10.39

I - CITY OF CLEVELAND
II - CITY OF BROOKLYN

| ITEM | I | II SHEET NUMBERS | | |

# GENERAL SUMMARY

CALC. BY WAM DATE 2/83
CHKD. BY TRB DATE 2/83

| FHWA REGION | STATE | PROJECT | |
|---|---|---|---|
| 5 | OHIO | | |

17/500

CUYAHOGA COUNTY
CUY-480-10.39

I - City of Cleveland
II - City of Brooklyn

| ITEM | I | II SHEET NUMBERS 21 | 11-15 | 48 | 49 | 50 | 51 | 52 | 53 | 54 | 55 | 56 | 60 | 61 | 62 | 63 | 67 | 68 | 70 | 71 | 72 | 73 | 74 | 75 | 76 | 77 | 79 | 80 | 103 |
|---|---|---|---|---|---|---|---|---|---|---|---|---|---|---|---|---|---|---|---|---|---|---|---|---|---|---|---|---|---|
| 602 | 5.4 | | 6.0 | 0.3 | | | 1.6 | | | | | | | | 1.3 | | | | | | | | | | | | 0.3 | 0.3 |
| 602 | 19.3 | | | | | | | | | | | | | | | | | | | | | | | | | | | | |
| 603 | | | 189 | | | | | | | | | | | | | | | | | | | | | | | | | | |
| 603 | 100 | | 100 | | | | | | | | | | | | | | | | | | | | | | | | | | |
| 603 | 52 | | | | | 56 | | | 146 | | | | | 20 | | 25 | | | | | | | | | | | | | |
| 603 | | | | | | | | | | | | | | | | | | | | | 25 | | | | | | | | |
| 603 | 100 | | 100 | | | | | | | | | | | | | | | | | | | | | | | | | | |
| 603 | 500 | | 500 | | | | | | | | | | | | | | | | | | | | | | | | | | |
| 603 | 378 | | 150 | 20 | 50 | 50 | 115 | 70 | 80 | 60 | 40 | 60 | 20 | 30 | 40 | 30 | | | 20 | 20 | 20 | 20 | 20 | 20 | 40 | 10 | 40 | |
| 603 | 200 | | 200 | | | | | | | | | | | | | | | | | | | | | | | | | | |
| 603 | 100 | | | | | | | | | | | | | | | 92 | 46 | 123 | 432 | | | | | | | | | | |
| 603 | | | | | | | | | | | | | | | | | | | | | 129 | 35 | 126 | | | 23 | 54 | 54 | |
| 603 | 236 | | | | | | | | | | | | | | 93 | | 187 | 525 | 19 | | 14 | | 12 | | | 57 | 368 | 28 | |
| 603 | 659 | | | 84 | 304 | 99 | 504 | 352 | | 166 | | | | 26 | | | | | | | | | | | | | | | |
| 603 | | | | | | | | | | 30 | | | | | | | | | | | | | | | | | | | |
| 603 | 41 | | | | | | | | | | | | | | | | | 149 | | | | | | | | | | | |
| 603 | | | | 60 | | | 14 | | | | | 11 | | 164 | | | | | | | | | | | | | | 90 | |
| 603 | | | | | | | | | | | | | | | | 198 | | | | | | | | | | | | | |
| 603 | 219 | | | | | | | | | | | | | | | | | | | | | | | | | | 148 | | |
| 603 | | | | | | | 57 | 135 | 194 | 245 | 129 | 132 | | | | | | | | | | | | | | | | | |
| 603 | 596 | | | | | | | | | | | | | | | | | | | | | | | | | | | | |
| 603 | | | | | | | | | | | | | | | | | | | | | | | | | | | 89 | | |
| 603 | | | | | | | | | 169 | | | 188 | | | | | | | | | | | | | | | | | |
| 603 | 169 | | | | | | | | | | | | | | | | | | | | | | | | | | | | |
| 603 | 135 | | | | | | | | | | | | | | | | | | | | | | | | | | | | |
| 603 | | | | | | | | | | | | | | | 74 | | | | | | | | | | | | | | |
| 603 | | | | | | 195 | | | | | | | | | | | | | | | | | | | | | | | |
| 603 | | | | | | 218 | | | | 166 | | | | | | | | | | | | | | | | | | | |
| 603 | 212 | | | | | | | | | | | | | | | | | | | | | | | | | | | | |
| 603 | 239 | | | | | | | | | | | | | | | | | | | | | | | | | | | | |
| 603 | | | | | | | | | 111 | | | | | | | | | | | | | | | | | | | | |
| 603 | | | | | | | | | 166 | | 166 | 166 | | | | | | | | | | | | | | | | | |
| 603 | | | | | | | | | | | | 746 | | | | | | | | | | | | | | | | | |
| 603 | 768 | | | | | | | | | | | | | | | | | | | | | | | | | | | | |
| 603 | 638 | | | | | | | | | | | | | | | | | | | | | | | | | | | | |
| 603 | 481 | | | | | | | | | | | | | | | | | | | | | | | | | | | | |
| 603 | 583 | | | | | | | | | | | | | | | | | | | | | | | | | | | | |
| 603 | 163 | | | | | | | | | | | | | | | | | | | | | | | | | | | | |
| 603 | 948 | | | | | | | | | | | | | | | | | | | | | | | | | | | | |
| 603 | | | | | | 65 | | | | | | | | | | | | | | | | | | | | | | | |
| 603 | | | | | 689 | 439 | | | | | 500 | 75 | | | | | | | | | | | | | | | | | |
| 603 | 264 | | | 428 | 295 | | | | | | | | | | | | | | | | | | | | | | | | |
| 603 | | | | | | | | | 104 | | | | | | | | | | | | | | | | | | | | |
| 603 | | | | | | 544 | 233 | | | 309 | 500 | | | | | | | | | | | | | | | | | | |
| 603 | 32 | | | | | | | | | | | | | | | | | | | | | | | | | | | | |
| 603 | | | | | | | | | 752 | 700 | | | | | | | | | | | | | | | | | | | |
| 603 | | | | | | | 100 | 1000 | 200 | | | | | | 276 | | | | | | | | | | | | | | |
| 603 | 294 | | | | | | | | | | | | | | | | | | | | | | | | | | | | |
| 604 | 1 | | | | | | 2 | | | | | | | | | | | | | | | | | | | | | | |
| 604 | 2 | | | | | | | | | | | | | | | | | | | | | | | | | | | | |
| 604 | 2 | | | | | | | | | | | | | | | | | | | | | | | | | | | | |
| 604 | 2 | | | | | | | | | | | | | | | | | | | | | | | | | | | | |
| 604 | 1 | | | | | | | | | | | | | | | | | | | | | | | | | | | | |
| 604 | 1 | | | | | | | | | | | | | | | | | | | | | | | | | | | | |
| 604 | 6 | | | 1 | 2 | 1 | 2 | 1 | 2 | 1 | 1 | 2 | | | | | | | | | | | | | | | | | |
| 604 | | | | | | | 1 | | | | | | | | | | | | | | | | | | | | | | |
| 604 | | | | | | | | 2 | 3 | 3 | 2 | 2 | | | | | 1 | 3 | | | | | | | | | | | |
| 604 | 1 | | | | | | | | | | | | | | 1 | | | | | | | | | | | | | | |
| 604 | | | | | | | | | | | | | | | | 1 | | 2 | 1 | | | | | | | | | | |
| 604 | 10 | | | | | | | | | | | | | | | | 2 | 5 | 3 | | | | | | | | | | |
| 604 | 3 | | | | | | | | | | | | | | | | | | | | | | | | | | | | |

| PARTICIPATION I | PARTICIPATION II | GRAND TOTAL | ITEM | UNIT | DESCRIPTION |
|---|---|---|---|---|---|
| | | | | | DRAINAGE |
| 5.4 | 9.8 | 15.2 | 602 | C.Y. | CONCRETE MASONRY |
| 19.3 | | 19.3 | 602 | C.Y. | CONCRETE MASONRY, AS PER PLAN |
| | 189 | 189 | 603 | L.F. | 3 IN. CONDUIT, TYPE F, 707.08 STANDARD WEIGHT BITUMINOUS COATED |
| 100 | 100 | 200 | 603 | L.F. | 4 IN. CONDUIT, TYPE E, 711.29 |
| 52 | 247 | 299 | 603 | L.F. | 6 IN. CONDUIT, TYPE B |
| | 25 | 25 | 603 | L.F. | 6 IN. CONDUIT, TYPE C, 706.01, 706.02 OR 706.08 |
| 100 | 100 | 200 | 603 | L.F. | 6 IN. CONDUIT, TYPE E, 706.01, 706.02 OR 706.08 |
| 500 | 500 | 1000 | 603 | L.F. | 6 IN. CONDUIT, TYPE E, 707.01, 707.21 OR 711.29, AS PER PLAN |
| 378 | 1055 | 1433 | 603 | L.F. | 6 IN. CONDUIT, TYPE F |
| 200 | 200 | 400 | 603 | L.F. | 6 IN. CONDUIT, TYPE F, AS PER PLAN |
| 100 | 793 | 893 | 603 | L.F. | 12 IN. CONDUIT, TYPE B 706.02 |
| | 421 | 421 | 603 | L.F. | 12 IN. CONDUIT, TYPE B 706.01, 706.02 OR 706.08 |
| 236 | 1303 | 1539 | 603 | L.F. | 12 IN. CONDUIT, TYPE C 706.01, 706.02 OR 706.08 |
| 659 | 1535 | 2194 | 603 | L.F. | 15 IN. CONDUIT, TYPE B |
| | 30 | 30 | 603 | L.F. | 15 IN. CONDUIT, TYPE B 706.01, 706.02 OR 706.08 |
| 41 | 149 | 190 | 603 | L.F. | 15 IN. CONDUIT, TYPE B 706.02 |
| | 339 | 339 | 603 | L.F. | 15 IN. CONDUIT, TYPE C |
| | 198 | 198 | 603 | L.F. | 15 IN. CONDUIT, TYPE C 706.02 OR 707.13 |
| 219 | 148 | 367 | 603 | L.F. | 15 IN. CONDUIT, TYPE C 706.01, 706.02, OR 706.08 |
| | 892 | 892 | 603 | L.F. | 15 IN. CONDUIT, TYPE F |
| 596 | | 596 | 603 | L.F. | 15 IN. CONDUIT, TYPE F 707.05 |
| | 89 | 89 | 603 | L.F. | [4"x23" CONDUIT, TYPE C 706.04 CLASS HE-II |
| | 354 | 354 | 603 | L.F. | 18 IN. CONDUIT, TYPE B |
| 169 | | 169 | 603 | L.F. | 18 IN. CONDUIT, TYPE B 706.02 1500 D-LOAD |
| 135 | | 135 | 603 | L.F. | 18 IN. CONDUIT, TYPE C 706.01, 706.02, OR 706.08 |
| | 74 | 74 | 603 | L.F. | 18 IN. CONDUIT, TYPE C 706.02 2,000 D-LOAD |
| | 195 | 195 | 603 | L.F. | 21 IN. CONDUIT, TYPE C |
| | 384 | 384 | 603 | L.F. | 21 IN. CONDUIT, TYPE B |
| 212 | | 212 | 603 | L.F. | 21 IN. CONDUIT, TYPE B 706.02 1500 D-LOAD |
| 239 | | 239 | 603 | L.F. | 24 IN. CONDUIT, TYPE B 706.02 1500 D-LOAD |
| | 111 | 111 | 603 | L.F. | 24 IN. CONDUIT, TYPE F |
| | 498 | 498 | 603 | L.F. | 27 IN. CONDUIT, TYPE B |
| | 746 | 746 | 603 | L.F. | 27 IN. CONDUIT, TYPE C |
| 768 | | 768 | 603 | L.F. | 30 IN. CONDUIT, TYPE C |
| 638 | | 638 | 603 | L.F. | 36 IN. CONDUIT, TYPE C 706.02 1,250 D-LOAD OR 707.13 |
| 481 | | 481 | 603 | L.F. | 36 IN. CONDUIT, TYPE C 706.02 2,000 D-LOAD |
| 583 | | 583 | 603 | L.F. | 36 IN. CONDUIT, TYPE C 706.02 1,250 D-LOAD |
| 163 | | 163 | 603 | L.F. | 36 IN. CONDUIT, TYPE B 706.02 3,000 D-LOAD UNDER RAILROAD, AS PER PLAN |
| 948 | | 948 | 603 | L.F. | 36 IN. CONDUIT, TYPE C |
| | 65 | 65 | 603 | L.F. | 42 IN. CONDUIT, TYPE B |
| | 1703 | 1703 | 603 | L.F. | 42 IN. CONDUIT, TYPE C |
| 264 | 723 | 987 | 603 | L.F. | 42 IN. CONDUIT, TYPE C 706.02 1,250 D-LOAD OR 707.13 |
| | 104 | 104 | 603 | L.F. | 36 IN CONDUIT, TYPE F 707.05 |
| | 1577 | 1577 | 603 | L.F. | 48 IN. CONDUIT, TYPE C |
| 32 | | 32 | 603 | L.F. | 36 IN. CONDUIT, TYPE C 706.02 3,000 D-LOAD |
| | 1452 | 1452 | 603 | L.F. | 54 IN. CONDUIT, TYPE C |
| | 1576 | 1576 | 603 | L.F. | 60 IN. CONDUIT, TYPE C |
| 294 | | 294 | 603 | L.F. | 60 IN. CONDUIT, TYPE A 706.02 2000 D-LOAD OR 72" 707.07 |
| 1 | 2 | 3 | 604 | EA. | STANDARD NO. I-3B BARRIER MEDIAN INLET, MODIFIED AS PER PLAN |
| 2 | | 2 | 604 | EA | STANDARD NO. 2-A-6 PAVED SHOULDER INLET |
| 2 | | 2 | 604 | EA. | STANDARD NO. 2-A-8 PAVED SHOULDER INLET |
| 2 | | 2 | 604 | EA. | STANDARD NO. 2-A-10 PAVED SHOULDER INLET |
| 1 | | 1 | 604 | EA. | STANDARD NO. 2-A-12 PAVED SHOULDER INLET |
| 1 | | 1 | 604 | EA. | STANDARD NO. 2-6 CATCH BASIN, MODIFIED AS PER PLAN |
| 6 | 13 | 19 | 604 | EA. | STANDARD NO. I-3B-50 BARRIER MEDIAN INLET |
| | 1 | 1 | 604 | EA. | STANDARD NO. 2-2A CATCH BASIN |
| | 16 | 16 | 604 | EA. | STANDARD NO. 2-2-B CATCH BASIN |
| 1 | 1 | 2 | 604 | EA. | STANDARD NO. 2-4 CATCH BASIN |
| | 4 | 4 | 604 | EA. | STANDARD NO. 3-A CATCH BASIN WITH "V" GRATE |
| 10 | 10 | 20 | 604 | EA. | CUYAHOGA COUNTY NO. 3-C CATCH BASIN |
| 3 | | 3 | 604 | EA. | CUYAHOGA COUNTY NO. 3-C CATCH BASIN WITH TRAP |

# GENERAL SUMMARY

CALC. BY WAM DATE 2/83
CHKD. BY TRB DATE 2/83

| FHWA REGION | STATE | PROJECT | |
|---|---|---|---|
| 5 | OHIO | | |

18/500

CUYAHOGA COUNTY
CUY-480-10.39

I - City of Cleveland
II - City of Brooklyn

| ITEM | I | II SHEET NUMBERS | | |

# GENERAL SUMMARY

CALC. BY WAM DATE 2/83
CHKD. BY T.R.B. DATE 2/83

| | STATE | PROJECT | |
|---|---|---|---|
| | OHIO | | |

CUYAHOGA COUNTY
CUY-480-10.39

19/500

I - CITY OF CLEVELAND
II - CITY OF BROOKLYN

| ITEM | I | II SHEET NUMBERS | | |

# SUB SUMMARY

CALC. BY WAM DATE 2/83
CHKD. BY TRB DATE 2/83

| | STATE | PROJECT | |
|---|---|---|---|
| | OHIO | | |

20/500

CUYAHOGA COUNTY
CUY-480-10.39

II CITY OF BROOKLYN
I-CITY OF CLEVELAND

| ITEM | I SHEET NUMBERS | | | | | | | | | | | | | | | | | | | | | | | | | | II SHEET NUMBERS | | | | SHEET II | TOTAL I | ITEM | UNIT | DESCRIPTION |
|---|---|---|---|---|---|---|---|---|---|---|---|---|---|---|---|---|---|---|---|---|---|---|---|---|---|---|---|---|---|---|---|---|---|---|
| | 23-26 | | 44 | 45 | 46 | 47 | 48 | | | 58 | 59 | | 64 | 65 | | 81 | 83 | 84 | 85 | 86 | 87 | | | 290 | 309 | 478 | 483 | | 26 | | | 478 | 483 | | | | | |
| | | | | | | | | | | | | | | | | | | | | | | | | | | | | | | | | | | | | ROADWAY |
| 202 | | | | 2 | | | | | | | | | 3 | | | 1 | | | | | | | | | | | | | | | | | 6 | 202 | EA. | CATCH BASIN OR INLET REMOVED |
| 202 | | | | | | | | | | | | | 1 | 5 | | | | | | | | | | | | | | | | | | | 6 | 202 | EA. | CATCH BASIN OR INLET ABANDONED |
| 202 | | | | | | | | | | | | | | 2 | | | | | | | | | | | | | | | | | | | 2 | 202 | EA. | MANHOLE REMOVED |
| 202 | | | | | | | | | | | | | | 1 | | | | | | | | | | | | | | | | | | | 1 | 202 | EA. | MANHOLE ABANDONED |
| 202 | | | | | 41 | | | | | | | | | 13 | | | | | | | | | | | | | | | | | | | 54 | 202 | L.F. | PIPE REMOVED, 24" AND UNDER |
| 202 | | | | | | | | | | | | | | | | | | | | | | | 2255 | | | | | | | | | | 2255 | 202 | L.F. | TEMPORARY CONCRETE BARRIER REMOVED FOR REUSE OR STORAGE |
| 202 | | | | | | | | | | | | | | | | | | | | 3442 | 1580 | | | | | | | | | | | | 5022 | 202 | S.Y. | PAVEMENT REMOVED |
| 202 | | | | | | | | | | | | | | | | 342 | | | | | | | | | | | | | | | | | 342 | 202 | S.I. | WEARING COURSE REMOVED |
| 202 | | | | | | | | | | | | | | | | | | | | 5285 | 3010 | | | | | | | | | | | | 8295 | 202 | S.F. | SIDEWALK REMOVED |
| 202 | | | | | | | | | | | | | | | | | | | | | 650 | | | | | | | | | | | | 650 | 202 | L.F. | CURB REMOVED |
| 202 | | | | | | | | | | | | | | | | 28 | | | | | | | | | | | | | | | | | 28 | 202 | E.A. | TEMPOARY DRUMS REMOVED |
| 202 | | | | | | | | | | | | | | | | 980 | | | | | | | | | | | | | | | | | 980 | 202 | L.F | TEMPOARY CONCRETE BARRIER REMOVED |
| 203 | 101374 | | | | | | | | | | | | | | | | | | | | | | | 9,089 | | | | 1,038317 | | | | | 1038317 | 110465 | 203 | C.Y. | EXCAVATION NOT INCLUDING EMBANKMENT CONSTRUCTION |
| 203 | 714696 | | | | | | | | | | | | | | | | | | | | | | | | | | | 106815 | | | | | 106815 | 714,696 | 203 | C.Y. | EMBANKMENT |
| 203 | 54313 | | | | | | | | | | | | | | | 702 | 1336 | 2630 | 1572 | 6494 | 5857 | | | | | | | 132572 | | | | | 132,572 | 72,904 | 203 | C.Y. | SUBGRADE COMPACTION |
| 203 | 21.8 | | | | | | | | | | | | | | | | | | | | | | | 0.4 | | | | 48.6 | | | | | 48.6 | 22.2 | 203 | HOUR | PROOF ROLLING |
| 203 | | | | | | | | | | | | | | | | | | | | | | | | 7.999 | | | | | | | | | | 7999 | 203 | C.Y. | EMBANKMENT, USING GRANULAR MATERIAL, AS PER PLAN |
| 604 | | | | | | | | | | | | | | | | | | | | | | | | | 7 | | | | | | 16 | | 16 | 7 | 604 | EA. | REFERENCE MONUMENT, STANDARD |
| 604 | | | | | | | | | | | | | | 1 | | | | | | | | | | | | | | | | | | | | 1 | 604 | EA. | CUYAHOGA COUNTY ROADWAY MONUMENT ASSEMBLY |
| 604 | | | | | | | | | | | | | | 1 | | | | | | | | | | | | | | | | | | | | 1 | 604 | EA. | MONUMENT BOX ADJUSTED TO GRADE |
| 606 | | | 155 | 907.5 | 833 | 1360.7 | 646.9 | | | 591 | 437.5 | | | | | | | | | | | | | | | | | | | | | | | 4931.6 | 606 | L.F. | GUARD RAIL, TYPE 5 |
| 606 | | | | 2 | | | 1 | | | 1 | | | | | | | | | | | | | | | | | | | | | | | 4 | 606 | EA. | ANCHOR ASSEMBLY, TYPE A |
| 606 | | | 1 | 1 | | | 1 | | | | 1 | | | | | | | | | | | | | | | | | | | | | | | 4 | 606 | EA. | ANCHOR ASSEMBLY, TYPE T |
| 606 | | | | 4 | 4 | 3 | | | | | 1 | | | | | | | | | | | | | | | | | | | | | | | 12 | 606 | EA. | BRIDGE TERMINAL ASSEMBLY, TYPE A |
| 607 | | | | | | | | | | | | | | | | | | | | | | | | | | | | | | | 1 | | 1 | | 607 | E.A | 14' GATE, TYPE CL |
| 607 | | | | | | | | | | | | | | | | | | | | | | | | | | 6,683 | | | | | 16984 | | 16984 | 6683 | 607 | L.F. | FENCE, TYPE CL |
| 608 | | | | | | | | | | | | | | | | | | | | 6365 | 2500 | | | | | | | | | | | | 8865 | 608 | S.F. | 4-1/2 IN. CONCRETE WALK, AS PER PLAN |
| 608 | | | | | | | | | | | | | | | | | | | | 2 | 4 | | | | | | | | | | | | 6 | 608 | EA. | CURB RAMP, CUYAHOGA COUNTY TYPE 2 |
| 610 | | | | | | | | | | | | | | | | | | | | | | | | 7,275 | | | | | | | | | 7275 | 610 | S.F. | CELLULAR RETAINING WALL |
| SPEC | 1512 | | | | | | | | | | | | | | | | | 322 | 196 | | 115 | | | | | | | | | | | | 2145 | SPEC | S.Y. | HERBICIDES FOR WEED CONTROL |
| | | | | | | | | | | | | | | | | | | | | | | | | | | | | | | | | | | | | PAVEMENT |
| 301 | 2393 | | | | | | | | | | | | | | | 105 | 108 | 181 | 94 | 101 | 154 | | | | | | | | | | | | 3136 | 301 | C.Y. | BITUMINOUS AGGREGATE BASE; AC 20; OR RT-11 OR RT-12 |
| 301 | 126 | | | | | | | | | | | | | | | | | 27 | 13 | | 10 | | | | | | | | | | | | 176 | 301 | C.Y. | BITUMINOUS AGGREGATE BASE WEED CONTROL |
| 304 | | | | | | | | | | | | | | | | 2 | 5 | 11 | | 27 | 25 | | | | | | | | | | | | 70 | 304 | C.Y. | AGGREGATE BASE |
| 305 | 36,145 | | | | | | | | | | | | | | | | | 329 | 794 | | | | | | | | | | | | | | 37,268 | 305 | S.Y. | 9" PORTLAND CEMENT CONCRETE BASE |
| 310 | | | | | | | | | | | | | | | | 7 | 38 | 61 | | 31 | 95 | | | | | | | | | | | | 232 | 310 | C.Y. | SUBBASE, TYPE I |
| 310 | 10585 | | | | | | | | | | | | | | | 184 | 229 | 435 | 353 | 956 | 869 | | | | | | | | | | | | 13611 | 310 | C.Y. | SUBBASE, TYPE II |
| 848 | 1751 | | | | | | | | | | | | | | | | | 16 | 38 | | | | | | | | | | | | | | 1805 | 848 | C.Y. | ASPHALT CONCRETE INTERMEDIATE COURSE, TYPE 2 |
| 848 | 1251 | | | | | | | | | | | | | | | | | 11 | 27 | | | | | | | | | | | | | | 1289 | 848 | C.Y. | ASPHALT CONCRETE SURFACE COURSE, TYPE 1 |
| 407 | 3603 | | | | | | | | | | | | | | | | | 33 | 78 | | | | | | | | | | | | | | 3714 | 407 | GAL. | TACK COAT |
| 407 | 126 | | | | | | | | | | | | | | | | | 1 | 3 | | | | | | | | | | | | | | 130 | 407 | TONS | COVER AGGREGATE |
| 409 | 4358 | | | | | | | | | | | | | | | 180 | 68 | 104 | 114 | | | | | | | | | | | | | | 4824 | 409 | GAL. | SEAL COAT BITUMINOUS MATERIAL |
| 409 | 116 | | | | | | | | | | | | | | | 5 | 2 | 3 | 4 | | | | | | | | | | | | | | 130 | 409 | C.Y. | SEAL COAT COVER AGGREGATE NO. 8 |
| 451 | | | | | | | | | | | | | | | | | 667 | 1154 | | 1285 | 2533 | | | | | | | | | | | | 5639 | 451 | S.Y. | 9" REINFORCED PORTLAND CEMENT CONCRETE PAVEMENT |
| 451 | | | | | | | | | | | | | | | | | | | | 4183 | 2238 | | | | | | | | | | | | 6421 | 451 | S.Y. | 9" REINFORCED PORTLAND CEMENT CONCRETE PAVEMENT, MODIFIED AS PER PLAN |
| 609 | 182 | | | | | | | | | | | | | | | | | 26 | 78 | | | | | | | | | 240 | | | | 260 | 286 | 609 | L.F. | CURB, STANDARD TYPE 6 |
| 609 | 2257 | | | | | | | | | | | | | | | | | 167 | 463 | | 241 | | | | | | | | | | | | 3128 | 609 | L.F. | ASPHALT CONCRETE CURB, AC 20, STANDARD TYPE I |
| 609 | | | | | | | | | | | | | | | | | | | | 2601 | 956 | | | | | | | | | | | | 3557 | 609 | L.F. | CURB 6" X 7" INTEGRAL |
| 611 | 1423 | | | | | | | | | | | | | | | | | 68 | 217 | | | | | | | | | | | | | | 1708 | 611 | S.Y. | REINFORCED CONCRETE APPROACH SLABS (T=15") |
| 611 | 916 | | | | | | | | | | | | | | | | | | | | | | | | | | | | | | | | 916 | 611 | S.Y. | REINFORCED CONCRETE APPROACH SLABS (T=17") |
| 612 | | | | | | | | | | | | | | | | 21 | | | | 19 | | | | | | | | | | | | | 40 | 612 | S.Y. | CONCRETE MEDIAN, STANDARD TYPE |
| 612 | | | | | | | | | | | | | | | | | | | | 253 | 32 | | | | | | | | | | | | 285 | 612 | S.Y. | 4" CONCRETE MEDIAN, MODIFIED AS PER PLAN |
| 622 | 3363 | | | | | | | | | | | | | | | 189 | | | | | | | | | | | | | | | | | 3552 | 622 | L.F. | CONCRETE BARRIER, STANDARD TYPE B-50 |
| 622 | | | | | | | | | | | | | | | | | | | 94 | | | | | | | | | | | | | | 94 | 622 | L.F. | CONCRETE BARRIER, STANDARD TYPE D |
| SPEC | | | | | | | | | | | | | | | | | 25 | 42 | | 43 | 61 | | | | | | | | | | | | 171 | SPEC | C.Y. | DRAINAGE CONNECTION USING NO. 8 AGGREGATE |
| SPEC | 528 | | | | | | | | | | | | | | | | | | 21 | | | | | | | | | | | | | | 549 | SPEC | L.F. | PRESSURE RELIEF JOINT, STANDARD TYPE A |

# SUB SUMMARY

CALC BY WAM DATE 2/83
CHKD BY TRB DATE 2/83

| | STATE | PROJECT | |
|---|---|---|---|
| | OHIO | | |

21/500

CUYAHOGA COUNTY
CUY-480-10.39

I-CITY OF CLEVELAND

| ITEM | SHEET NUMBERS I | | | | | | | | | | | | | | | | SHEET TOTAL I | ITEM | UNIT | DESCRIPTION |
|---|---|---|---|---|---|---|---|---|---|---|---|---|---|---|---|---|---|---|---|---|
| | 11-15 | 44 | 45 | 46 | 47 | 48 | 57 | 58 | 59 | 64 | 65 | 66 | 105 | | | | | | | |
| | | | | | | | | | | | | | | | | | | | | DRAINAGE |
| 602 | | 0.5 | | 1.0 | 1.2 | | | | 0.3 | | | | 2.4 | | | | 5.4 | 602 | C.Y. | CONCRETE MASONRY |
| 602 | | | | | | | | | | | | | 19.3 | | | | 19.3 | 602 | C.Y. | CONCRETE MASONRY, AS PER PLAN |
| 603 | 100 | | | | | | | | | | | | | | | | 100 | 603 | L.F. | 4 IN. CONDUIT, TYPE E 711.29 |
| 603 | | 52 | | | | | | | | | | | | | | | 52 | 603 | L.F. | 6 IN. CONDUIT, TYPE B |
| 603 | 100 | | | | | | | | | | | | | | | | 100 | 603 | L.F. | 6 IN. CONDUIT, TYPE E 706.01, 706.02; OR 706.08 |
| 603 | 500 | | | | | | | | | | | | | | | | 500 | 603 | L.F. | 6 IN. CONDUIT, TYPE E 707.01, 707.21 ; OR 711.29 AS PER PLAN |
| 603 | 150 | 30 | 50 | 38 | 40 | 20 | 10 | 30 | 10 | | | | | | | | 378 | 603 | L.F. | 6 IN. CONDUIT, TYPE F |
| 603 | 200 | | | | | | | | | | | | | | | | 200 | 603 | L.F. | 6 IN. CONDUIT, TYPE F AS PER PLAN |
| 603 | | | | | | | | | | | | 100 | | | | | 100 | 603 | L.F. | 12 IN. CONDUIT, TYPE B 706.02 |
| 603 | | | | | | | | | | | 144 | 92 | | | | | 236 | 603 | L.F. | 12 IN. CONDUIT, TYPE C 706.01, 706.02; OR 706.08 |
| 603 | | 208 | 160 | | 223 | 68 | | | | | | | | | | | 659 | 603 | L.F. | 15 IN. CONDUIT, TYPE B |
| 603 | | | | | | | | | | | 41 | | | | | | 41 | 603 | L.F. | 15 IN. CONDUIT, TYPE B 706.02 |
| 603 | | | | | | | | | | 137 | 82 | | | | | | 219 | 603 | L.F. | 15 IN. CONDUIT, TYPE C 706.01, 706.02 ; OR 706.08 |
| 603 | | 32 | 71 | 94 | 187 | 186 | | | 26 | | | | | | | | 596 | 603 | L.F. | 15 IN. CONDUIT, TYPE F 707.05 |
| 603 | | | | | | | | | | | 77 | 92 | | | | | 169 | 603 | L.F. | 18 IN. CONDUIT, TYPE B 706.02 1,500 D-LOAD |
| 603 | | | | | | | | | | | 75 | 60 | | | | | 135 | 603 | L.F. | 18 IN. CONDUIT, TYPE C 706.01, 706.02; OR 706.08 |
| 603 | | | | | | | | | | | | 212 | | | | | 212 | 603 | L.F. | 21 IN. CONDUIT, TYPE B 706.02 1,500 D-LOAD |
| 603 | | | | | | | | | | | 239 | | | | | | 239 | 603 | L.F. | 24 IN. CONDUIT, TYPE B 706.02 1,500 D-LOAD |
| 603 | | | | | | | 768 | | | | | | | | | | 768 | 603 | L.F. | 30 IN. CONDUIT, TYPE C |
| 603 | | | | 210 | 428 | | | | | | | | | | | | 638 | 603 | L.F. | 36 IN. CONDUIT, TYPE C 706.02 1,250 D-LOAD OR 707.13 |
| 603 | | | | 85 | 396 | | | | | | | | | | | | 481 | 603 | L.F. | 36 IN. CONDUIT, TYPE C 706.02 2,000 D-LOAD |
| 603 | | | | 275 | 308 | | | | | | | | | | | | 583 | 603 | L.F. | 36 IN. CONDUIT, TYPE C 706.02 1,250 D-LOAD |
| 603 | | | | 163 | | | | | | | | | | | | | 163 | 603 | L.F. | 36 IN. CONDUIT, TYPE B 706.02 3,000 D-LOAD UNDER RAILROAD AS PER PLAN |
| 603 | | | | 205 | 273 | 300 | 170 | | | | | | | | | | 948 | 603 | L.F. | 36 IN. CONDUIT, TYPE C |
| | | | | 32 | | | | | | | | | | | | | 32 | 603 | L.F. | 36 IN. CONDUIT, TYPE C 706.02 3,000 D-LOAD |
| 603 | | | | | | 264 | | | | | | | | | | | 264 | 603 | L.F. | 42 IN. CONDUIT, TYPE C 706.02 1,250 D-LOAD OR 707.13 |
| 603 | | | | | | | | | | | | | 294 | | | | 294 | 603 | L.F. | 60 IN. CONDUIT, TYPE A 706.02 2,000 D-LOAD OR 672" 707.07 |
| 604 | | | | | 1 | | | | | | | | | | | | 1 | 604 | EA. | STANDARD NO. I-3B BARRIER MEDIAN INLET, MODIFIED AS PER PLAN |
| 604 | | | 1 | 1 | | | | | | | | | | | | | 2 | 604 | EA. | STANDARD NO. 2-A-6 PAVED SHOULDER INLET |
| 604 | | | | | | 1 | | | 1 | | | | | | | | 2 | 604 | EA. | STANDARD NO. 2-A-8 PAVED SHOULDER INLET |
| 604 | | 1 | | | 1 | | | | | | | | | | | | 2 | 604 | EA. | STANDARD NO. 2-A-10 PAVED SHOULDER INLET |
| 604 | | | | | | 1 | | | | | | | | | | | 1 | 604 | EA. | STANDARD NO. 2-A-12 PAVED SHOULDER INLET |
| 604 | | | | | | | | | | | | | 1 | | | | 1 | 604 | EA. | STANDARD NO. 2-6 CATCH BASIN MODIFIED AS PER PLAN |
| 604 | | 2 | 2 | | 1 | 1 | | | | | | | | | | | 6 | 604 | EA. | STANDARD NO. I-3B-50 BARRIER MEDIAN INLET |
| 604 | | | 1 | | | | | | | | | | | | | | 1 | 604 | EA. | STANDARD NO. 2-4 CATCH BASIN |
| 604 | | | | | | | | | | 2 | 6 | 2 | | | | | 10 | 604 | EA. | CUYAHOGA COUNTY NO. 3-C CATCH BASIN |
| 604 | | | | | | | | | | | 1 | 2 | | | | | 3 | 604 | EA. | CUYAHOGA COUNTY NO. 3-C CATCH BASIN WITH TRAP |

# SUB SUMMARY

CALD. BY WAM DATE 2/83
CHKD. BY TRB DATE 2/83

| FHWA REGION | STATE | PROJECT | |
|---|---|---|---|
| 5 | OHIO | | |

22/500

CUYAHOGA COUNTY
CUY-480-10.39

I - CITY OF CLEVELAND

| ITEM | SHEET NUMBERS I: 5 | 11-15 | 26 | 44 | 45 | 46 | 47 | 48 | 57 | 58 | 59 | 64 | 65 | 66 | 104 | 105 | SHEET TOTAL I | ITEM | UNIT | DESCRIPTION |
|---|---|---|---|---|---|---|---|---|---|---|---|---|---|---|---|---|---|---|---|---|
| | | | | | | | | | | | | | | | | | | | | DRAINAGE (CONTINUED) |
| 604 | | | | | | 1 | | | | | | | | | | | 1 | 604 | EA. | STANDARD NO. 4 CATCH BASIN |
| 604 | | | | | | | | | | 3 | | | 2 | 2 | | | 7 | 604 | EA. | STANDARD NO. 5 CATCH BASIN |
| 604 | | | | | | | | | | | | | | 1 | | | 1 | 604 | EA. | STANDARD NO. 5 CATCH BASIN MODIFIED AS PER PLAN |
| 604 | | | | | | | | 2 | | | | | | 1 | | | 3 | 604 | EA. | STANDARD NO. 5-A CATCH BASIN |
| 604 | | | | | | | | | | | | | | | | | | | | |
| 604 | | | | | | | | | | | | | 3 | | | | 3 | 604 | EA. | STANDARD NO. 1 MANHOLE WITH SPECIAL FRAME AND COVER |
| 604 | | | | | | | | | | | | | 1 | | | | 1 | 604 | EA. | STANDARD NO. 1 MANHOLE WITH OPEN GRATE COVER |
| 604 | | | | | | 1 | 2 | | | | | | | | | | 3 | 604 | EA. | STANDARD NO. 3 MANHOLE |
| 604 | | | | | | | | | | | | | | 1 | | | 1 | 604 | EA. | STANDARD NO. 5 MANHOLE WITH SPECIAL FRAME AND COVER |
| 604 | | | | | | | | | | | | 1 | 1 | | | | 2 | 604 | EA. | MANHOLES ADJUSTED TO GRADE |
| 604 | | | | | | | | | | | | | | 2 | | | 2 | 604 | EA. | CATCH BASIN ADJUSTED TO GRADE |
| 604 | | | | | | | | | | | | | 1 | 1 | | | 2 | 604 | EA. | MANHOLE RECONSTRUCTED TO GRADE |
| 605 | | | | | 225 | 241 | 156 | | | | | | | | | | 622 | 605 | L.F. | 6 IN. SHALLOW PIPE UNDERDRAIN, 707.01 TYPE III OR 707.21 TYPE III |
| 605 | | | | | | | | | 50 | | 50 | | | | | | 100 | 605 | L.F. | 6 IN. UNCLASSIFIED PIPE UNDERDRAINS |
| 605 | | | | 1,243 | 1587 | 1,382 | 1835 | 1171 | 490 | 1,156 | 500 | | | | | | 9364 | 605 | L.F. | 6 IN. SHALLOW PIPE UNDERDRAINS |
| 605 | | | | | | | | | 338 | | 120 | | | | | | 458 | 605 | L.F. | 6 IN. DEEP PIPE UNDERDRAINS |
| 605 | | | | | | | | | | | | 634 | 1838 | 772 | | | 3244 | 605 | L.F. | 6 IN. UNCLASSIFIED PIPE UNDERDRAIN 706.08 PERFORATED BELL AND SPIGOT, AS PER PLAN |
| 605 | | 500 | | | | | | | | | | | | | | | 500 | 605 | L.F. | 6 IN. UNCLASSIFIED PIPE UNDERDRAIN 707.01 TYPE III, 707.21 TYPE III, 707.15, AS PER PLAN |
| | | | | | | | | | | | | | | | | | | | | EROSION CONTROL |
| SPEC | | | | | | | | | | | | | | | | Lump | LUMP | SPEC. | LUMP | DEBRIS RACK |
| 601 | | | | | | | | | | | 23 | | | | | | 23 | 601 | S.Y. | RIPRAP, USING 6 IN. REINFORCED CONCRETE SLAB |
| 601 | | 15 | | | | | | | | | | | | | | | 36 | 601 | C.Y. | ROCK CHANNEL PROTECTION, TYPE C |
| 601 | | | | 6.9 | | 3 | 4.5 | | | | 4.2 | | | | | 21.7 | 40.3 | 601 | C.Y. | ROCK CHANNEL PROTECTION, TYPE B WITH FILTER |
| | | | | | | | | | | | | | | | 13 | | 13 | 601 | L.F. | PAVED GUTTER, STANDARD TYPE 1-6 |
| 659 | | 1.00 | 15.26 | | | | | | | | | | | | | | 16.26 | 659 | TON | COMMERCIAL FERTILIZER |
| 659 | | | 76.31 | | | | | | | | | | | | | | 76.31 | 659 | TON | AGRICULTURAL LIMING, AS PER PLAN |
| 659 | | | 163,488 | | | | | | | | | | | | | | 163,488 | 659 | S.Y. | SEEDING AND MULCHING, AS PER PLAN |
| 659 | | 10,000 | | | | | | | | | | | | | | | 10,000 | 659 | S.Y. | REPAIR SEEDING AND MULCHING |
| 659 | | 413 | | | | | | | | | | | | | | | 413 | 659 | S.Y. | MOWING |
| 659 | | 187 | | | | | | | | | | | | | | | 187 | 659 | MGAL | WATER |
| 660 | | | | 3 | 139 | 92 | 187 | | | 22 | | | | | | | 443 | 660 | S.Y. | REINFORCED SODDING |
| 660 | | | | | 125 | 125 | 83 | 167 | 481 | 508 | 542 | | | | 5 | | 2036 | 660 | S.Y. | SODDING |
| 668 | | | | | | 906 | 1193 | | | | | | | | | | 2099 | 668 | S.Y. | SEEDING AND EXCELSIOR MATTING |
| 207 | | 35,000 | | | | | | | | | | | | | | | 35,000 | 207 | S.Y. | TEMPORARY SEEDING AND MULCHING |
| 207 | 234 | 110 | | | | | | | | | | | | | | | 344 | 207 | EA. | STRAW AND HAY BALES |
| 207 | 100 | 350 | | | | | | | | | | | | | | | 450 | 207 | L.F. | TEMPORARY SLOPE DRAINS |
| 207 | 1300 | 1,750 | | | | | | | | | | | | | | | 3050 | 207 | C.Y. | TEMPORARY BENCHES, DIKES, DAMS AND SEDIMENT BASINS |
| | | | | | | | | | | | | | | | | | | | | SANITARY TYPE CODE-Y060 |
| 603 | | 100 | | | | | | | | | | | | | | | 100 | 603 | L.F. | 6 IN. CONDUIT, TYPE B 706.01, 706.02 OR 706.08 W/ 706.11 OR 706.12 JOINTS |
| 603 | | 100 | | | | | | | | | | | | | | | 100 | 603 | L.F. | 6 IN. CONDUIT, TYPE C 706.01, 706.02 OR 706.08 W/ 706.11 OR 706.12 JOINTS |

# PAVEMENT CALCULATIONS

CALC. BY TRB DATE 2/83 | CHKD. BY A.C. DATE 2/83 | CUYAHOGA COUNTY CUY-480-10.39 | OHIO FHWA REGION 5 | 23/500

## 305 9" PORTLAND CEMENT CONCRETE BASE

I-480

| | | | |
|---|---|---|---|
| Sta. 573+50.00 To Sta. 582+00.12 = 850.12 × 48.50 × 2 ÷ 9 | = | 9,162.4 | S.Y. |
| Sta. 583+68.62 To Sta. 593+13.70 = 945.08 × 48.50 × 2 ÷ 9 | = | 10,185.9 | S.Y. |
| Sta. 593+00.00 To Sta. 594+24.7 (Rt.) = 124.7 × .25 ÷ 9 | = | - 3.5 | S.Y. |
| Sta. 596+75.96 To Sta. 600+97.18 = 421.22 × 48.25 × 2 ÷ 9 | = | 4,516.4 | S.Y. |
| Sta. 604+54.32 To Sta. 616+15.52 = 1,161.20 × 48.50 × 2 ÷ 9 | = | 12,515.2 | S.Y. |
| Sta. 600+17.32 To Sta. 602+12.7 (Lt.) = 195.5 × .25 ÷ 9 | = | 5.4 | S.Y. |
| Sub Total | = | 36,381.8 | S.Y. |
| Deduct For Pressure Relief Joint (9 × 48.5 + 2 × 48.25) = 533 L.F. 4.00 ÷ 9 | = | - 236.9 | S.Y. |
| Total | = | 36,144.9 | S.Y. |

Total Item 305 9" PCC City Of Cleveland 36,145 S.Y.

| | | | |
|---|---|---|---|
| Sta. 616+15.52 To Sta. 642+98.36 = 2,682.84 × 48.5 × 2 ÷ 9 | = | 28,915.1 | S.Y. |
| Sta. 619+00.00 To Sta. 629+00.00 (Ramp T-1) = 1,000.00 × .25 ÷ 9 | = | - 27.8 | S.Y. |
| Sta. 620+49.66 To Sta. 628+49.66 (Ramp T-2) = 800.00 × .25 ÷ 9 | = | - 22.2 | S.Y. |
| Sta. 644+56.62 To Sta. 698+50.00 = 5,393.38 × 48.5 × 2 ÷ 9 | = | 58,128.6 | S.Y. |
| Sta. 648+76.90 To Sta. 656+76.90 (Ramp T-3) = 800 × .25 ÷ 9 | = | - 22.2 | S.Y. |
| Sta. 651+00.00 To Sta. 661+00.00 (Ramp T-4) = 1,000 × .25 ÷ 9 | = | - 27.8 | S.Y. |
| Sta. 695+39.39 To Sta. 698+50.00 (Ramp R-1) = 310.61 × .25 ÷ 9 | = | - 8.6 | S.Y. |
| Sta. 692+50.00 To Sta. 698+50.00 (Ramp R-2) = 600.00 × .25 ÷ 9 | = | - 16.7 | S.Y. |
| Sub Total | = | 86,918.4 | S.Y. |
| Deduct For Pressure Relief Joint (48.5 × 4.00) 4 ÷ 9 | = | - 86.2 | S.Y. |
| Total | = | 86,832.2 | S.Y. |

Total Item 305 9" PCC City Of Brooklyn 86,832 S.Y.

## 451 9" REINFORCED PORTLAND CEMENT CONCRETE PAVEMENT

RAMP T-1

| | | | |
|---|---|---|---|
| Sta. 632+75.00 To Sta. 637+77.37 = 502.37 × 16 ÷ 9 | = | 893.1 | S.Y. |
| RAMP T-2 | | | |
| Sta. 629+42.99 To Sta. 636+65.76 = 722.77 × 16 ÷ 9 | = | 1,284.9 | S.Y. |
| RAMP T-3 | | | |
| Sta. 642+63.19 To Sta. 643+47.94 = 84.75 × 16 ÷ 9 | = | 150.7 | S.Y. |
| Sta. 645+19.96 To Sta. 647+72.99 = 253.03 × 16 ÷ 9 | = | 449.8 | S.Y. |
| RAMP T-4 | | | |
| Sta. 643+74.36 To Sta. 648+00.00 = 425.64 × 16 ÷ 9 | = | 756.7 | S.Y. |
| Sub Total | = | 3,535.2 | S.Y. |
| IDLEWOOD DRIVE | | | |
| Sta. 13+78.56 To Sta. 14+41.48 = 62.92 × 26 ÷ 9 | = | 181.8 | S.Y. |
| Sta. 14+41.48 To Sta. 14+91.48 = 50.00 × (26 + 30) × ½ ÷ 9 | = | 155.6 | S.Y. |
| Sta. 14+91.48 To Sta. 21+10.71 = 619.23 × 30 ÷ 9 | = | 2,064.1 | S.Y. |
| Add For Intersection 7.36 sq.in. (Planimeter) × 20² ÷ 9 | = | 327.1 | S.Y. |
| Sub Total | = | 6,263.8 | S.Y. |
| Deduct For Pressure Relief Joint (3 × 16.00 + 26.00) × 4.00 ÷ 9 | = | - 32.9 | S.Y. |
| Total | = | 6,230.9 | S.Y. |

Total Item 451 9" RPCC City Of Brooklyn 6,231 S.Y.

## 451 7" REINFORCED PORTLAND CEMENT CONCRETE PAVEMENT

SOUTHWOOD DRIVE

| | | | |
|---|---|---|---|
| Sta. 7+50.00 To Sta. 8+51.47 = 101.47 × 26.00 ÷ 9 | = | 293.1 | S.Y. |
| Sta. 11+62.29 To Sta. 12+50.81 (Bk) = 88.52 × 26.00 ÷ 9 | = | 255.7 | S.Y. |
| Sta. 12+59.98 (Fwd.) To Sta. 12+75.00 = 15.02 × 26.00 ÷ 9 | = | 43.4 | S.Y. |
| IDLEWOOD DRIVE | | | |
| Sta. 8+75.00 To Sta. 10+59.06 = 184.06 × 26.00 ÷ 9 | = | 531.7 | S.Y. |
| Sub Total | = | 1,123.9 | S.Y. |
| Deduct For Pressure Relief Joint 3 × 26.00 × 4.00 ÷ 9 | = | - 34.7 | S.Y. |
| Total | = | 1,089.2 | S.Y. |

Total Item 451 7" RPCC City Of Brooklyn 1089 S.Y.

## 310 SUBBASE, TYPE II

I-480

MEDIAN SHOULDER

| | | | |
|---|---|---|---|
| Sta. 573+50.00 To Sta. 582+00.12 = 850.12 × 2 | = | 1,700.24 | L.F. |
| Sta. 583+68.62 To Sta. 593+13.70 = 945.08 × 2 | = | 1,890.16 | L.F. |
| Sta. 596+75.96 To Sta. 600+97.18 = 421.22 × 2 | = | 842.44 | L.F. |
| Sta. 604+54.32 To Sta. 616+15.52 = 1161.20 × 2 | = | 2,322.40 | L.F. |
| Total | = | 6,755.24 | L.F. |
| 6,755.24 L.F. × 11.00 × .875 ÷ 27 | = | 2,408.1 | C.Y. |

LT. & RT. SHOULDERS

| | | | |
|---|---|---|---|
| Sta. 573+50.00 To Sta. 575+55.00 (Rt.) = 205.00 × 4649.66 / 4583.66 | = | 207.95 | L.F. |
| Sta. 575+55.00 To Sta. 582+00.12 (Lt. & Rt.) = 645.12 × 2 | = | 1,290.24 | L.F. |
| Sta. 583+68.62 To Sta. 590+44.50 (Lt. & Rt.) = 675.88 × 2 | = | 1,351.76 | L.F. |
| Sta. 590+44.50 To Sta. 591+83.1 (Lt.) = 138.6 × 4649.66 / 4583.66 | = | 136.60 | L.F. |
| Sta. 600+17.32 To Sta. 602+22.2 (Lt.) | = | 204.88 | L.F. |
| Sta. 604+54.32 To Sta. 616+15.52 (Lt. & Rt.) = 1,1161.20 × 2 | = | 2,322.40 | L.F. |
| Total | = | 5,513.83 | L.F. |
| 5,513.83 L.F. × 9.75 × .7917 ÷ 27 | = | 1,576.4 | C.Y. |

I-480

| | | | |
|---|---|---|---|
| From Item 305 = 36,381.8 S.Y. × 6/36 | = | 6,063.6 | C.Y. |
| From Item 611 = (915.60 + 1422.94) × 6/36 | = | 389.8 | C.Y. |
| From Item 622 = 3,537.62 L.F. × 3.5 × .50 ÷ 27 | = | 229.3 | C.Y. |
| Deduct For Median Transition = 4 [(40 + 10) × 2 × .25] ÷ 27 | = | - 3.7 | C.Y. |
| Deduct For Pressure Relief Joint = 533 L.F. × 8 × .5 ÷ 27 | = | - 79.0 | C.Y. |
| Total | = | 10,584.5 | C.Y. |

Total Item 310 Subbase Type II City Of Cleveland 10,585 C.Y.

MEDIAN SHOULDERS

| | | | |
|---|---|---|---|
| Sta. 616+15.52 To Sta. 642+98.36 = 2,682.84 × 2 | = | 5,368.96 | L.F. |
| Sta. 644+56.62 To Sta. 698+50.00 = 5,393.38 × 2 | = | 10,786.76 | L.F. |
| Sub Total | = | 16,152.44 | L.F. |
| 16,152.44 L.F. × 11.00 × .875 ÷ 27 | = | 5,758.0 | C.Y. |

LT. & RT. SHOULDERS

| | | | |
|---|---|---|---|
| Sta. 616+15.52 To Sta. 619+00.00 (Lt. & Rt.) = 284.48 × 2 | = | 568.96 | L.F. |
| Sta. 619+00.00 To Sta. 620+49.66 (Rt.) = 149.66 × 5663.58 / 5729.58 | = | 147.94 | L.F. |
| Sta. 628+49.66 To Sta. 631+75.00 (Rt.) = 325.34 × 5663.58 / 5729.58 | = | 321.59 | L.F. |
| Sta. 631+75.00 To Sta. 638+52.8 (Lt. & Rt.) = 677.8 × 2 | = | 1,355.60 | L.F. |
| Sta. 644+56.62 To Sta. 648+76.90 (Lt. & Rt.) = 420.28 × 2 | = | 840.56 | L.F. |
| Sta. 648+76.90 To Sta. 649+10.00 (Rt.) | = | 33.10 | L.F. |
| Sta. 656+76.90 To Sta. 692+50.00 (Lt.) | = | 3,573.10 | L.F. |
| Sta. 661+00.00 To Sta. 695+39.39 (Rt.) | = | 3,439.39 | L.F. |
| Sub Total | = | 10,280.24 | L.F. |
| 10,280.24 L.F. × 9.75 × .7917 ÷ 27 | = | 2,939.0 | C.Y. |

| | | | |
|---|---|---|---|
| Sta. 638+52.8 To Sta. 639+00.00 (Lt. & Rt.) = 47.2 (10.67 + 9.75) | = | 963.8 | S.F. |
| Sta. 639+00.00 To Sta. 642+98.36 (Lt. & Rt.) = 398.36 (10.67) 2 | = | 8,501.0 | S.F. |
| ½ × 26.7 × 0.9 | = | 12.0 | S.F. |
| Sub Total | = | 9,476.8 | S.F. |
| 9,476.8 S.F. × .7917 ÷ 27 | = | 277.9 | C.Y. |

| | | | |
|---|---|---|---|
| From Item 305 = 86,918.4 S.Y. × 6/36 | = | 14,486.4 | C.Y. |
| From Item 611 = (392.61 + 314.09) S.Y. × 6/36 | = | 117.8 | C.Y. |
| From Item 622 = 8,121.22 S.Y. × 3.5 × 0.5 ÷ 27 | = | 526.4 | C.Y. |
| Deduct For Sign Structures = 2 × (40 + 10) × 2 = 200.00 S.F. | | | |
| Deduct For Bridge No. 1162 = (60 + 80.54) × 3 = 421.60 S.F. | | | |
| Deduct For Bridge No. 1216 = (60 + 35.50) × 3 = 286.50 S.F. | | | |
| Deduct For Bridge No. 1272 = (60 + 34.00 × 3 = 282.00 S.F. | | | |
| Sub Total = 1,190.10 S.F. | | | |
| 1,190.10 S.F. × .25 ÷ 27 | | | |
| Deduct For Pressure Relief Joint = 192 L.F. × 8 × .5 ÷ 27 | = | - 11.0 | C.Y. |
| | = | - 28.4 | C.Y. |

RAMP T-1

| | | | |
|---|---|---|---|
| Sta. 632+75.00 To Sta. 637+77.37 = 502.37 × (1 + 16 + 2.67) × .5 ÷ 27 | = | 183.0 | C.Y. |
| RAMP T-2 | | | |
| Sta. 629+42.99 To Sta. 634+75.00 = 532.01 × (1 + 16 + 2.67) × .5 ÷ 27 | = | 193.8 | C.Y. |
| Sta. 634+75.00 To Sta. 636+65.76 = 190.76 × (3 + 16 + 2.67) × .5 ÷ 27 | = | 76.6 | C.Y. |
| RAMP T-3 | | | |
| Sta. 642+63.19 To Sta. 643+00.00 = 36.81 × (1 + 16 + 3) × .5 ÷ 27 | = | 13.6 | C.Y. |
| Sta. 643+00.00 To Sta. 643+47.94 = 47.94 × (1 + 16 + 2.67) × .5 ÷ 27 | = | 17.5 | C.Y. |
| Sta. 645+19.96 To Sta. 647+72.99 = 253.03 × (1 + 16 + 2.67) × .5 ÷ 27 | = | 92.2 | C.Y. |
| From Item 611 149.06 S.Y. × 6/36 | = | 24.8 | C.Y. |
| Deduct For Pressure Relief Joint = 32.0 L.F. × 8 × .5 ÷ 27 | = | - 4.7 | C.Y. |
| RAMP T-4 | | | |
| Sta. 643+74.36 To Sta. 648+00.00 = 425.64 × (1 + 16 + 2.67) × .5 ÷ 27 | = | 155.0 | C.Y. |
| From Item 611 74.53 S.Y. × 6/36 | = | 12.4 | C.Y. |
| Deduct For Pressure Relief Joint = 16.0 L.F. × 8 × .5 ÷ 27 | = | - 2.4 | C.Y. |
| SOUTHWOOD DRIVE | | | |
| From Item 451 7" (293.1 + 255.7 + 43.4) S.Y. × 6/36 | = | 98.7 | C.Y. |
| From Item 611 147.22 S.Y. × 6/36 | = | 24.5 | C.Y. |
| Deduct For Pressure Relief Joint = 52.0 L.F. × 8 × .5 ÷ 27 | = | - 7.7 | C.Y. |
| IDLEWOOD DRIVE | | | |
| From Item 451 7" 531.7 S.Y. × 6/36 | = | 88.6 | C.Y. |
| From Item 451 9" (181.8 + 155.6 + 2,064.1 + 327.1) S.Y. × 6/36 | = | 454.8 | C.Y. |
| From Item 611 147.22 S.Y. × 6/36 | = | 24.5 | C.Y. |
| Deduct For Pressure Relief Joint = 52.0 L.F. × 8 × .5 ÷ 27 | = | - 7.7 | C.Y. |
| Total | = | 25,503.6 | C.Y. |

Total Item 310 Subbase Type II City Of Brooklyn 26,093 C.Y.

## 310 SUBBASE, TYPE I

RAMP T-1

| | | | |
|---|---|---|---|
| Sta. 632+75.00 To Sta. 637+77.37 = 502.37 × (2.08" + .67") ÷ 27 | = | 51.2 | C.Y. |
| RAMP T-2 | | | |
| Sta. 629+42.99 To Sta. 636+65.76 = 722.77 × 2.08" ÷ 27 | = | 55.7 | C.Y. |
| Sta. 629+42.99 To Sta. 634+75.00 = 532.01 × .67" ÷ 27 | = | 13.2 | C.Y. |
| RAMP T-3 | | | |
| Sta. 642+63.19 To Sta. 643+00.00 = 36.81 × 1.77 ÷ 27 | = | 2.4 | C.Y. |
| Sta. 643+00.00 To Sta. 643+47.94 = 47.94 × (2.08" + .67") ÷ 27 | = | 4.9 | C.Y. |
| Sta. 645+19.96 To Sta. 647+72.99 = 253.03 × (2.08" + .67") ÷ 27 | = | 25.8 | C.Y. |
| RAMP T-4 | | | |
| Sta. 643+74.36 To Sta. 648+00.00 = 425.64 × (2.08" + .67") ÷ 27 | = | 43.4 | C.Y. |
| Total | = | 196.6 | C.Y. |

Total Item 310 Subbase Type I City Of Brooklyn 197 C.Y.

## 301 BITUMINOUS AGGREGATE BASE

I-480 STA. 573+50.00 TO STA. 616+18.00

| | | | |
|---|---|---|---|
| From Item 310 Median Shoulder = 6,755.24 × [(11.25 × .5) - (.25)²] ÷ 27 | = | 1,391.7 | C.Y. |
| From Item 310 Lt. & Rt. Shoulders = 5,513.83 × [(10.00 × .5) - (.25)²] ÷ 27 | = | 1,008.3 | C.Y. |
| Deduct For Median Transition = 4 × (40 + 10) × 2 × .5 ÷ 27 | = | - 7.4 | C.Y. |
| Total | = | 2,392.6 | C.Y. |

Total Item 301 Bituminous Aggregate Base City Of Cleveland 2,393 C.Y.

I-480 STA. 616+18.00 TO STA. 698+50.00

| | | | |
|---|---|---|---|
| From 310 Median Shoulder = 16,152.44 × [(11.25 × .5) - (.25)²] ÷ 27 | = | 3,327.7 | C.Y. |
| From 310 Lt. & Rt. Shoulder = 10,280.24 × [(10.00 × .5) - (.25)²] ÷ 27 | = | 1,880.0 | C.Y. |
| Sta. 638+52.80 To Sta. 642+98.36 (Lt. & Rt.) = [9476.8 × .5 - (.25)² × 445.56 × 2] ÷ 27 | = | 173.4 | C.Y. |
| Deduct For Median Transition: From Item 310 = 1,190.1 × .5 ÷ 27 | = | - 22.0 | C.Y. |
| RAMP T-1 | | | |
| Sta. 632+75.00 To Sta. 637+77.37 = 502.37 L.F. | | | |
| RAMP T-2 | | | |
| Sta. 629+42.99 To Sta. 636+65.76 = 722.77 L.F. | | | |
| RAMP T-3 | | | |
| Sta. 642+63.19 To Sta. 643+47.94 = 84.75 L.F. | | | |
| Sta. 645+19.96 To Sta. 647+72.99 = 253.03 L.F. | | | |
| RAMP T-4 | | | |
| Sta. 643+74.36 To Sta. 648+00.00 = 425.64 L.F. | | | |
| Total = 1,988.56 L.F. × (3 + 6) × .5 ÷ 27 | = | 331.4 | C.Y. |
| Total | = | 5,690.5 | C.Y. |

Total Item 301 Bituminous Aggregate Base City Of Brooklyn 5691 C.Y.

# PAVEMENT CALCULATIONS

CALC. BY TRB DATE 2/83 | CHKD. BY A.C. DATE 2/83 | CUYAHOGA COUNTY CUY-480-10.39 | OHIO FHWA REGION 5 | 24/500

## 304 AGGREGATE BASE

RAMP T-1
STA. 632+75.00 To STA. 637+77.37 = 502.37 x 3 x .25 ÷ 27 = 14.0 C.Y.
RAMP T-2
STA. 629+42.99 To STA. 634+75.00 = 532.01 x 3 x .25 ÷ 27 = 14.8 C.Y.
RAMP T-3
STA. 642+63.19 To STA. 643+00.00 = 36.81 x 6 x .25 ÷ 27 = 2.0 C.Y.
STA. 643+00.00 To STA. 643+47.94 = 47.94 x 3 x .25 ÷ 27 = 1.3 C.Y.
STA. 645+19.96 To STA. 647+72.99 = 253.03 x 3 x .25 ÷ 27 = 7.0 C.Y.
RAMP T-4
STA. 643+74.36 To STA. 648+00.00 = 425.64 x 3 x .25 ÷ 27 = 11.8 C.Y.
TOTAL = 50.9 C.Y.

TOTAL ITEM 304 AGGREGATE BASE CITY OF BROOKLYN 51 C.Y.

## 409 - SEAL COAT BITUMINOUS MATERIAL
## I-480 STA. 573+50.00 TO STA. 616+15.52

FROM ITEM 310 MEDIAN SHOULDER = 6755.24 L.F. x 11.25 ÷ 9 = 8,444.1 S.Y.
FROM ITEM 310 Lt. & Rt. SHOULDERS = 5513.83 L.F. x 10.00 ÷ 9 = 6,126.5 S.Y.
SUB TOTAL = 14,570.6 S.Y.
DEDUCT FOR MEDIAN TRANSITION = 4 x [(40+10) x 2] ÷ 9 = - 44.4 S.Y.
TOTAL = 14,526.1 S.Y.
14,526.1 S.Y. @ 0.30 GAL/S.Y. = 4,357.8 GAL.

TOTAL ITEM 409 SEAL COAT BITUMINOUS MATERIAL CITY OF CLEVELAND 4,358 GAL.

## I-480 STA. 616+15.52 TO STA. 698+50.00

FROM ITEM 310 MEDIAN SHOULDER = 16,152.44 L.F. x 11.25 ÷ 9 = 20,190.6 S.Y.
FROM ITEM 310 Lt. & Rt. SHOULDERS = (10,280.24 L.F. x 10.00 + 9,476.8 S.F.) ÷ 9 = 12,475.5 S.Y.
SUB TOTAL = 32,666.1 S.Y.
DEDUCT FOR MEDIAN TRANSITION = 1190.1 S.F. ÷ 9 = - 132.2 S.Y.
TOTAL = 32,533.9 S.Y.
32,533.9 S.Y. x 0.30 GAL./S.Y. = 9,760.2 GAL.

TOTAL ITEM 409 SEAL COAT BITUMINUS MATERIAL CITY OF BROOKLYN 9,760 GAL.

## 409 SEAL COAT COVER AGGREGATE

FROM ITEM 409 = 14,526.1 S.Y. @ .008 C.Y./S.Y. = 116.2 C.Y.

TOTAL ITEM 409 SEAL COAT COVER AGGREGATE CITY OF CLEVELAND 116 C.Y.

FROM ITEM 409 = 32,533.9 S.Y. @ .008 C.Y./S.Y. = 260.3 C.Y.

TOTAL ITEM 409 SEAL COAT COVER AGGREGATE CITY OF BROOKLYN 260 C.Y.

## 848-1 1/4" ASPHALT CONCRETE SURFACE COURSE, TYPE 1

I-480
STA. 573+50.00 To STA. 582+00.12 = 850.12 x 48 x 2 ÷ 9 = 9,067.9 S.Y.
STA. 583+68.62 To STA. 593+13.70 = 945.08 x 48 x 2 ÷ 9 = 10,080.9 S.Y.
STA. 596+75.96 To STA. 600+97.18 = 421.22 x 48 x 2 ÷ 9 = 4,493.0 S.Y.
STA. 604+54.32 To STA. 616+15.52 = 1,161.20 x 48 x 2 ÷ 9 = 12,386.1 S.Y.
TOTAL = 36,027.9 S.Y.
36,027.9 S.Y. x 1.25/36 = 1,251.0 C.Y.

TOTAL ITEM 848-1 1/4" ASPHALT CONCRETE SURFACE COURSE, TYPE I CITY OF CLEVELAND 1,251 C.Y.

I-480
STA. 616+15.52 To STA. 642+98.36 = 2,682.84 x 48 x 2 ÷ 9 = 28,617.0 S.Y.
STA. 644+56.62 To STA. 698+50.00 = 5,393.38 x 48 x 2 ÷ 9 = 57,529.4 S.Y.
TOTAL = 86,146.4 S.Y.
86,146.4 S.Y. x 1.25/36 = 2,991.2 C.Y.

TOTAL ITEM 848-1 1/4" ASPHALT CONCRETE SURFACE COURSE, TYPE I CITY OF BROOKLYN 2,991 C.Y.

## 848-1 3/4" ASPHALT CONCRETE INTERMEDIATE COURSE, TYPE 2

FROM ITEM 848 36,027.9 S.Y. x 1.75/36 = 1,751.4 C.Y.

TOTAL ITEM 848-1 3/4" ASPHALT CONCRETE INTERMEDIATE COURSE, TYPE 2 CITY OF CLEVELAND 1,751 C.Y.

FROM ITEM 848 86,146.4 S.Y. x 1.75/36 = 4,187.7 C.Y.

TOTAL ITEM 848-1 3/4" ASPHALT CONCRETE INTERMEDIATE COURSE, TYPE 2 CITY OF BROOKLYN 4,188 C.Y.

## 407 TACK COAT

FROM ITEM 848 36,027.9 S.Y. x 0.1 GAL/S.Y. = 3,602.8 GAL.

TOTAL ITEM 407 TACK COAT CITY OF CLEVELAND 3,603 GAL.

FROM ITEM 848 86,146.4 S.Y. x 0.1 GAL/S.Y. = 8,614.6 GAL.

TOTAL ITEM 407 TACK COAT CITY OF BROOKLYN 8,615 GAL.

## 407 COVER AGGREGATE

FROM ITEM 848 36,027.9 S.Y. x 7 LB/S.Y. ÷ 2,000 = 126.1 TONS

TOTAL ITEM 407 COVER AGGREGATE CITY OF CLEVELAND 126 TONS

FROM ITEM 848 86,146.4 S.Y. x 7 LB/S.Y. ÷ 2,000 = 301.5 TONS

TOTAL ITEM 407 COVER AGGREGATE CITY OF BROOKLYN 302 TONS

## 611 REINFORCED CONCRETE APPROACH SLABS
## CITY OF CLEVELAND

T-17": BRIDGE No. CUY.-480-1054 = 30 x 4 x (11.25+48.00+9.42) ÷ 9 = 915.6 S.Y.

TOTAL ITEM 611 REINFORCED CONCRETE APPROACH SLABS (T-17") 916 S.Y.

T-15": BRIDGE No. CUY.-480-1078 = 25 x 1 x (11.25+48.00+10) ÷ 9 = 192.4 S.Y.
= 25 x 3 x (11.25+48.00) ÷ 9 = 493.8 S.Y.
BRIDGE No. CUY.-480-1088 = 25 x 3 x (11.25+48.00+9.42) ÷ 9 = 572.3 S.Y.
= 25 x 1 x (11.25+48.00) ÷ 9 = 164.6 S.Y.
TOTAL = 1,422.9 S.Y.

TOTAL ITEM 611 REINFORCED CONCRETE APPROACH SLABS (T-15") 1,423 S.Y.

## CITY OF BROOKLYN

T-15": BRIDGE No. CUY.-480-1169 = 25 x 2 x (11.25+48.00+11.42) ÷ 9 = 392.6 S.Y.
BRIDGE No. CUY.-480-1171 = 25 x 2 x (7.42+16.00+3.42) ÷ 9 = 149.1 S.Y.
BRIDGE No. CUY.-480-1168 = 25 x 1 x (7.42+16.00+3.42) ÷ 9 = 74.6 S.Y.
BRIDGE No. CUY.-480-1216 = (26+27) ÷ 2 x 25 ÷ 9 x 2 = 147.2 S.Y.
BRIDGE No. CUY.-480-1272 = (26+27) ÷ 2 x 25 ÷ 9 x 2 = 147.2 S.Y.
TOTAL = 910.7 S.Y.

TOTAL ITEM 611 REINFORCED CONCRETE APPROACH SLABS (T-15") 911 S.Y.

T-14" BRIDGE No. CUY.-480-1169 = 20 x 2 x (11.25+48.00+11.42) ÷ 9 = 314.1 S.Y.

TOTAL ITEM 611 REINFORCED CONCRETE APPROACH SLABS (T-14") 314 S.Y.

## 622 CONCRETE BARRIER, TYPE B-50

STA. 573+50.00 To STA. 582+30.12 = 880.1 L.F.
STA. 583+38.62 To STA. 593+38.70 = 1,000.1 L.F.
STA. 596+50.96 To STA. 601+22.18 = 471.2 L.F.
STA. 604+29.32 To STA. 616+15.52 = 1,186.2 L.F.
SUB TOTAL = 3,537.6 L.F.
DEDUCT FOR INLETS (6) x 20 = - 120.0 L.F.
" " MEDIAN LIGHT POLES (6) x 2.5 = - 15.0 L.F.
" " MEDIAN SIGN POLES (1) x 10 = - 10.0 L.F.
" " TOWER LIGHT POLES (3) x 10 = - 30.0 L.F.
TOTAL = 3,362.6 L.F.

TOTAL ITEM 622 CONCRETE BARRIER, TYPE B-50 CITY OF CLEVELAND 3,363 L.F.

STA. 616+15.52 To STA. 643+18.36 = 2,702.8 L.F.
STA. 644+31.62 To STA. 698+50.00 = 5,418.4 L.F.
SUB TOTAL = 8,121.2 L.F.
DEDUCT FOR INLETS (13) x 20 = - 260.0 L.F.
MEDIAN LIGHT POLES (27) x 2.5 = - 67.5 L.F.
MEDIAN SIGN POLES (2) x 10 = - 20.0 L.F.
TOTAL = 7,773.7 L.F.

TOTAL ITEM 622 CONCRETE BARRIER, TYPE B-50 CITY OF BROOKLYN 7,774 L.F.

## SPECIAL-PRESSURE RELIEF JOINT, TYPE "A"
## CITY OF CLEVELAND

BRIDGE No. CUY.-480-1054 = (4) x 48 = 192.0 L.F.
BRIDGE No. CUY.-480-1078 = (3) x 48 = 144.0 L.F.
BRIDGE No. CUY.-480-1088 = (4) x 48 = 192.0 L.F.
TOTAL = 528.0 L.F.

TOTAL ITEM SPECIAL PRESSURE RELIEF JOINT, TYPE "A" 528 L.F.

## CITY OF BROOKLYN

BRIDGE No. CUY.-480-1168 = (1) x 16 = 16.0 L.F.
BRIDGE No. CUY.-480-1169 = (4) x 48 = 192.0 L.F.
BRIDGE No. CUY.-480-1171 = (2) x 16 = 32.0 L.F.
BRIDGE No. CUY.-480-1216 = (2) x 26 = 52.0 L.F.
BRIDGE No. CUY.-480-1272 = (2) x 26 = 52.0 L.F.
TOTAL = 344.0 L.F.

TOTAL ITEM SPECIAL PRESSURE RELIEF JOINT, TYPE "A" 344 L.F.

## SPECIAL DRAINAGE CONNECTION NO. 8 AGGREGATE

RAMP T-1
STA. 632+75.00 To STA. 637+77.37 (Lt.) = 502.37 L.F. x 1.8518 S.F./L.F. ÷ 27 = 34.5 C.Y.
RAMP T-2
STA. 629+42.99 To STA. 636+65.76 (Rt.) = 722.77 L.F. x 1.8518 S.F./L.F. ÷ 27 = 49.6 C.Y.
STA. 634+75.00 To STA. 636+65.76 (Lt.) = 190.76 L.F. x 1.9722 S.F./L.F. ÷ 27 = 13.9 C.Y.
RAMP T-3
STA. 642+63.19 To STA. 643+00.00 (Rt.) = 36.81 L.F. x 1.9722 S.F./L.F. ÷ 27 = 2.7 C.Y.
STA. 643+00.00 To STA. 643+47.94 (Lt.) = 47.94 L.F. x 1.8518 S.F./L.F. ÷ 27 = 3.3 C.Y.
STA. 645+19.96 To STA. 647+72.99 (Lt.) = 253.03 L.F. x 1.8518 S.F./L.F. ÷ 27 = 17.4 C.Y.
RAMP T-4
STA. 643+74.36 To STA. 648+00.00 (Rt.) = 425.64 L.F. x 1.8518 S.F./L.F. ÷ 27 = 29.2 C.Y.
TOTAL 150.6 C.Y.

TOTAL ITEM SPECIAL DRAINAGE CONNECTION NO. 8 AGGREGATE CITY OF BROOKLYN 151 C.Y.

# PAVEMENT CALCULATIONS

| | | | |
|---|---|---|---|
| CALC. BY TRB DATE 2/83 | CUYAHOGA COUNTY | OHIC | 25 |
| CHKD. BY A.C. DATE 2/83 | CUY-480-10.39 | FHWA REGION 5 | 500 |

## 301 BITUMINOUS AGGREGATE BASE (WEED CONTROL)

I-480

| | | | | | |
|---|---|---|---|---|---|
| Sta. 578+33.0 | To | Sta. 582+44.9 (W.B.) | = | 414.5 | L.F. |
| Sta. 579+98.0 | To | Sta. 581+98.7 (E.B.) | = | 203.0 | L.F. |
| Sta. 583+18.6 | To | Sta. 584+69.0 (E.B.) | = | 152.0 | L.F. |
| Sta. 583+68.9 | To | Sta. 587+53.0 (W.B.) | = | 378.0 | L.F. |
| Sta. 600+17.3 | To | Sta. 602+49.9 (W.B.) | = | 232.6 | L.F. |
| Sta. 603+01.2 | To | Sta. 613+22.2 (E.B.) | = | 1,027.0 | L.F. |
| Sta. 605+70.7 | To | Sta. 613+55.2 (W.B.) | = | 790.5 | L.F. |
| Sta. 586+85.0 | To | Sta. 588+50.0 (W-2) | = | 165.0 | L.F. |
| | | Sub Total | = | 3,362.6 | L.F. |
| | | 3,362.6 L.F. × 4 ÷ 9 | = | 1,494.5 | S.Y. |
| Add For Guardrail Flair | | = 4 × 40 S.F. ÷ 9 | = | 17.8 | S.Y. |
| | | Total | = | 1,512.3 | S.Y. |
| | | 1,512.3 S.Y. × 3/36 | = | 126.0 | C.Y. |

Total Item 301 Bituminous Aggregate Base (Weed Control) City Of Cleveland 126 C.Y.

I-480

| | | | | | |
|---|---|---|---|---|---|
| Sta. 625+33.0 | To | Sta. 627+12.0 (E.B.) | = 180.0 L.F. | | |
| Sta. 643+99.4 | To | Sta. 644+51.4 (E.B.) | = 52.0 L.F. | | |
| Sta. 644+65.7 | To | Sta. 646+56.2 (W.B.) | = 190.5 L.F. | | |
| Sta. 649+88.0 | To | Sta. 651+68.0 (W.B.) | = 180.0 L.F. | | |
| Sta. 688+72.0 | To | Sta. 690+27.0 (E.B.) | = 155.0 L.F. | | |
| | | Sub Total | = 757.5 L.F. × 4 ÷ 9 | = 336.7 | S.Y. |
| Add For Guardrail Flair | | | = 40.0 S.F. × 4 ÷ 9 | = 17.8 | S.Y. |
| RAMP T-3 | | | | | |
| Sta. 642+63.2 | To | Sta. 643+73.0 (Lt.) | = 109.8 L.F. × 4 ÷ 9 | = 48.8 | S.Y. |
| Sta. 644+97.0 | To | Sta. 646+75.0 (Lt.) | = 178.0 L.F. × 4 ÷ 9 | = 79.1 | S.Y. |
| Sta. 644+94.0 | To | Sta. 646+72.0 (Rt.) | = 178.0 L.F. × 3 ÷ 9 | = 59.3 | S.Y. |
| Add For Guardrail Flair | | | = 40.0 S.F. × 2 ÷ 9 | = 8.9 | S.Y. |
| RAMP T-4 | | | | | |
| Sta. 643+54.5 | To | Sta. 644+44.0 (Lt.) | = 89.5 L.F. × 3 ÷ 9 | = 29.8 | S.Y. |
| Sta. 643+48.0 | To | Sta. 644+87.5 (Rt.) | = 139.5 L.F. × 4 ÷ 9 | = 62.0 | S.Y. |
| | | | Total | = 642.4 | S.Y. |
| | | | 642.4 S.Y. × 3/36 | = 53.5 | C.Y. |

Total Item 301 Bituminous Aggregate Base (Weed Control) City Of Brooklyn 54 C.Y.

## SPECIAL-HERBICIDES FOR WEED CONTROL

| | | |
|---|---|---|
| From Item 301 | = 1,512.3 | S.Y. |

Total Item Special-Herbicides For Weed Control City Of Cleveland 1,512 S.Y.

| | | |
|---|---|---|
| From Item 301 | = 642.4 | S.Y. |

Total Item Special-Herbicides For Weed Control City Of Brooklyn 642 S.Y.

## 609 CURB STANDARD TYPE 3-A

SOUTHWOOD DRIVE

| | | | | | |
|---|---|---|---|---|---|
| Sta. 7+50.00 | To | Sta. 8+51.47 | = (101.47-4.0) × 2 | = 194.9 | L.F. |
| Sta. 11+62.29 | To | Sta. 12+50.81 (Back) | = (88.52-4.0) × 2 | = 169.0 | L.F. |
| Sta. 12+59.98 (Fwd.) | To | Sta. 12+75.00 | = 15.02 × 2 | = 30.0 | L.F. |
| IDLEWOOD DRIVE | | | | | |
| Sta. 8+75.00 | To | Sta. 10+59.06 | = (184.06-4.0) × 2 | = 360.1 | L.F. |
| Sta. 13+78.56 | To | Sta. 21+10.71 | = (732.15-4.0) × 2 | = 1,456.3 | L.F. |
| Add For Intersection | | | = 34.77+58.90+40.00 | = 133.7 | L.F. |
| | | | Total | = 2,344.0 | L.F. |

Total Item 609 Curb Standard Type 3-A City Of Brooklyn 2,344 L.F.

## BUILDING REMOVALS
### CITY OF BROOKLYN PARTICIPATION

| ITEM | TOTAL | UNIT | DESCRIPTION |
|---|---|---|---|
| 202 | Lump | | Parcel No. 534 WL-2, WD-2, Removal of One 1½-Story Frame Residence, 2-Car Brick Garage and Septic Tank |
| 202 | Lump | | Parcel No. 538 AWL, Removal of One 2-Story Frame Residence, 2-Story Frame Garage, Frame Shed and Pool |
| 202 | Lump | | Parcel No. 544 WL, Removal of One 1-Story Brick Residence with Attached Brick Garage |
| 202 | Lump | | Parcel No. 545 WL, Removal of One 1-Story Frame Cottage |
| 202 | Lump | | Parcel No. 547 WL, EL, Removal of One 1½-Story Frame Residence, 2-Car Frame Garage |
| 202 | Lump | | Parcel No. 548 WL, Removal of One 1½-Story Frame Residence, 1-Car Frame Garage |
| 202 | Lump | | Parcel No. 549 WL, Removal of One 1½-Story Frame Residence, 2-Car Frame Garage |
| 202 | Lump | | Parcel No. 550 WL, Removal of One 1½-Story Frame Residence, 1-Car Frame Garage |
| 202 | Lump | | Parcel No. 551 WL, Removal of One 1½-Story Frame Residence, 2-car Frame Garage |
| 202 | Lump | | Parcel No. 552 WL, Removal of One 1½-Story Frame Residence, 2-Car Frame Garage |
| 202 | Lump | | Parcel No. 553 WL, Removal of One 1½-Story Frame Residence, 2-Car Frame Garage |
| 202 | Lump | | Parcel No. 554 WL, Removal of One 1½-Story Frame Residence, 2½-Car Frame Garage, Outdoor Brick Fireplace |
| 202 | Lump | | Parcel No. 555 WL, EL, Removal of One 1½-Story Frame Residence, 2-Car Frame Garage |
| 202 | Lump | | Parcel No. 557 WL, Removal of One 1½-Story Frame Residence, 2-Car Frame Garage |
| 202 | Lump | | Parcel No. 558 WL, Removal of One 1½-Story Frame Residence, 2-Car Frame Garage |
| 202 | Lump | | Parcel No. 559 WL, WD Removal of One 1½-Story Frame Residence, 2-Car Frame Garage |
| 202 | Lump | | Parcel No. 787 WL, T Removal of Two 1¾-Story Frame Residences, 2-Car Concrete Block Garage |
| 202 | Lump | | Parcel No. 788 WD, T Removal of One 1½-Story Frame Residence With Attached Frame Garage, Septic Tank |

# PAVEMENT CALCULATIONS

CALC. BY: T.R.B. DATE: 6/81
CKD. BY: W.A.M. DATE: 6/81

| FED. RD. DIVISION | STATE | PROJECT | |
|---|---|---|---|
| 2 | OHIO | | |

CUYAHOGA COUNTY
CUY-480-10.39

26
500

## 203-SUBGRADE COMPACTION
## CITY OF CLEVELAND

| | | | |
|---|---|---|---|
| TOTAL 848 - 1¼" | | = | 36,027.9 S.Y. |
| TOTAL 611 T-17" | | = | 915.6 S.Y. |
| TOTAL 611 T-15" | | = | 1,422.9 S.Y. |
| FROM 622 | = 3,537.6 L.F. × 3.50 L.F. ÷ 9 | = | 1,375.7 S.Y. |
| FROM 409 | | = | 145,170.6 S.Y. |
| | TOTAL | = | 54,312.7 S.Y. |

TOTAL ITEM 203 SUBGRADE COMPACTION 54,313 S.Y.

## CITY OF BROOKLYN

| | | | |
|---|---|---|---|
| TOTAL 848 | | = | 86,146.4 S.Y. |
| FROM 451 - 9" | | = | 3,535.2 S.Y. |
| FROM 611 T-15" | = (392.6 + 149.1 + 74.6) | = | 616.3 S.Y. |
| TOTAL 611 T-14" | | = | 314.1 S.Y. |
| FROM 622 | = 8121.2 L.F. × 3.5 ÷ 9 | = | 3,158.2 S.Y. |
| FROM 301 | = 1,988.66 L.F. × (3+6) ÷ 9 | = | 1,988.6 S.Y. |
| FROM 409 | | = | 32,666.1 S.Y. |
| | SUB TOTAL | = | 128,424.9 S.Y. |
| FROM 451 - 9" | | = | 2,728.6 S.Y. |
| FROM 451 - 7" | | = | 1,123.9 S.Y. |
| FROM 611 T-15" | = (147.2 + 147.2) | = | 294.4 S.Y. |
| | TOTAL | = | 132,571.8 S.Y. |

TOTAL ITEM 203 SUBGRADE COMPACTION 132,572 S.Y.

## 203-PROOF ROLLING

City of Cleveland

| Sheet No | 203 Subgrade Compaction |
|---|---|
| | |
| 26 | 54,313 S.Y. |
| 83 | 1,336 S.Y. |
| 84 | 2,630 S.Y. |
| 65 | 1,572 S.Y. |
| 86 | 1,908 S.Y. |
| 87 | 3,532 S.Y. |
| | |
| | |
| Total | 65,291 S.Y. |

City of Brooklyn

| Sheet No | 203 Subgrade Compaction |
|---|---|
| 26 | 128,425 S.Y. |
| 88 | 3,752 S.Y. |
| 89 | 2,450 S.Y. |
| 90 | 2,401 S.Y. |
| 91 | 3,402 S.Y. |
| 92 | 2,192 S.Y. |
| 93 | 1,550 S.Y. |
| 94 | 1668 S.Y. |
| | |
| Total | 145,840 S.Y. |

Total 203 Proof Rolling = 65,291 S.Y. ÷ 3,000 S.Y./Hr. = 21.76 Hrs.

Total 203 City of Cleveland = 21.8 Hrs.

Total 203 Proof Rolling = 145,840 S.Y. ÷ 3,000 S.Y./Hr. = 48.61 Hrs.

Total 203 City of Brooklyn = 48.6 Hrs.

## 609-CONCRETE CURB TYPE 6

City of Cleveland

| | | | |
|---|---|---|---|
| Bridge No Cuy-80-1054 | = 26.00 × 4 | = | 104.0 L.F. |
| Bridge No Cuy-80-1088 | = 26.00 × 3 | = | 78.0 L.F. |
| | Total | = | 1820 L.F. |

Total 609 Concrete Curb Type 6 City of Cleveland = 182 L.F.

City of Brooklyn

| | | | |
|---|---|---|---|
| Bridge No Cuy-80-1169 | = 26.00 × 4 | = | 104.0 L.F. |
| Bridge No Cuy-80-1171 | = 26.00 × 4 | = | 104.0 L.F. |
| Bridge No Cuy-80-1168 | = 26.00 × 2 | = | 52.0 L.F. |
| | Total | = | 260.0 L.F. |

Total 609 Concrete Curb Type 6 City of Brooklyn = 260 L.F.

## 203-EARTHWORK & 659 SEEDING & MULCHING, As Per Plan
## 653-TOPSOIL FURNISHED & PLACED, AS PER PLAN

| Sht. No. | 203 Excavation Not Including Embankment C.Y. | 203 Embankment C.Y. | 659 Seeding & Mulching S.Y. | 653 Topsoil Furnished & Placed, As Per Plan C.Y. |
|---|---|---|---|---|
| | City of Cleveland | | | |
| 44 | 553 | 18,230 | 8,849 | |
| 45 | 409 | 139,722 | 9,524 | |
| 46 | 1,248 | 218,350 | 21,943 | |
| 47 | 1,097 | 203,603 | 20571 | |
| 48 | 1,702 | 70,878 | 13,283 | |
| 57 | 12,278 | 700 | 9,247 | |
| 58 | 1,396 | 47,130 | 17,112 | |
| 59 | 3,548 | 11,762 | 7,283 | |
| 64 | 301 | 16 | 178 | |
| 65 | 3,410 | 278 | 832 | |
| 66 | 5,545 | 3 | 1,763 | |
| 104 | 69,226 | 3,706 | 57,729 | |
| 81 | 663 | 318 | 1,365 | |
| Total | 101,376 | 714,696 | 169,677 | |
| | City of Brooklyn | | | |
| 48 | 2,947 | 2,460 | 4577 | |
| 49 | 69,568 | 2 | 12,432 | |
| 50 | 107,953 | 48 | 9,689 | 1,006 |
| 51 | 44,305 | 10,255 | 7,326 | 746 |
| 52 | 155,388 | 1,380 | 17,767 | 1,146 |
| 53 | 170,229 | 1,267 | 18,174 | 1,275 |
| 54 | 120,830 | 3,877 | 18,919 | 0 |
| 55 | 85,841 | 8,619 | 18,832 | 203 |
| 56 | 161,704 | 3,275 | 20,891 | 1,193 |
| 60 | 16,143 | 7,730 | 12,408 | |
| 61 | 40,181 | 1,262 | 19,164 | |
| 62 | 5,658 | 29,909 | 18,080 | |
| 63 | 14,545 | 8,109 | 11,182 | 110 |
| 67 | 238 | 130 | 0 | |
| 68 | 82 | 10,432 | 1,364 | |
| 69 | 427 | 4,212 | 2,416 | |
| 70 | 270 | 1,284 | 1,578 | |
| 71 | 89 | 1 | 0 | |
| 72 | 715 | 89 | 404 | |
| 73 | 41 | 82 | 104 | |
| 74 | 63 | 119 | 0 | |
| 75 | 91 | 76 | 0 | |
| 76 | 266 | 9 | 307 | |
| 77 | 548 | 24 | 0 | |
| 78 | 529 | 19 | 752 | |
| 79 | 1,804 | 27 | 1,814 | |
| 80 | 539 | 18 | 712 | |
| | | | | |
| 102 | 709 | 0 | 1,156 | |
| 103 | 539 | 148 | 1,356 | |
| 104 | 22,625 | 1,170 | 18,230 | |
| 111 | 13,450 | 10,782 | 2,611 | |
| TOTAL | 1,038,317 | 106,815 | 222,245 | 5679 |

TOTAL 203 EXCAVATION CITY OF CLEVELAND = 101,376 C.Y.

TOTAL 203 EXCAVATION CITY OF BROOKLYN = 1,038,317 C.Y.

TOTAL 203 EMBANKMENT CITY OF CLEVELAND = 714,696 C.Y.

TOTAL 203 EMBANKMENT CITY OF BROOKLYN = 106,815 C.Y.

TOTAL 653 TOPSOIL FUNISHED & PLACED, AS PER PLAN CITY OF BROOKLYN = 5679 C.Y.

## 659 SEEDING & MULCHING, AS PER PLAN

| | | | |
|---|---|---|---|
| Total 659 Seeding & Mulching City of Cleveland | | = | 169,677 S.Y. |
| Deduct for Rip Rap | | = | - 23 S.Y. |
| Deduct for Rock Channel Protection | | = | - 76 S.Y. |
| | Sub Total | = | 169,578 S.Y. |
| DEDUCT FOR 301 (WEED CONTROL) | | = | - 1,512 S.Y. |
| DEDUCT FOR SEEDING & EXCELCIOR MATTING | | = | - 2,099 S.Y. |
| DEDUCT FOR SODDING | | = | - 2,479 S.Y. |
| | Total | = | 163,488 S.Y. |

Total 659 Seeding & Mulching City of Cleveland = 163,488 S.Y.

| | | | |
|---|---|---|---|
| Total 659 Seeding & Mulching City of Brooklyn | | = | 222,245 S.Y. |
| Deduct for Rip Rap | | = | - 6 S.Y. |
| Deduct for Rock Channel Protection | | = | - 342 S.Y. |
| | SUB TOTAL | = | 221,897 S.Y. |
| DEDUCT FOR 301 (WEED CONTROL) | | = | - 642 S.Y. |
| DEDUCT FOR SODDING | | = | -8,862 S.Y. |
| ADD FOR SODDING (CROSS ROADS) | | = | 3,955 S.Y. |
| | TOTAL | = | 216,348 S.Y. |

Total 659 Seeding & Mulching City of Brooklyn = 216,348 S.Y.

## 659-COMMERCIAL FERTILIZER

Sub Total 659 Seeding & Mulching City of Cleveland = 169,578 S.Y.

169,578 Sq.Yd. × 20 Lb. / 1,000 Sq.Ft. × 9 Sq.Ft. / Sq.Yd. × 1 Ton / 2,000 Lb. = 15.262 Ton.

Total 659 Commercial Fertilizer City of Cleveland = 15.26 Ton.

Sub Total 659 Seeding & Mulching City of Brooklyn = 221,897 S.Y.

221,897 Sq.Yd. × 20 Lb. / 1,000 Sq.Ft. × 9 Sq.Ft. / Sq.Yd. × 1 Ton / 2,000 Lb. = 19.971 Ton.

Total 659 Commercial Fertilizer City of Brooklyn = 19.97 Ton.

## 659-AGRICULTURAL LIMING, AS PER PLAN

Sub Total 659 Seeding & Mulching City of Cleveland = 169,578 S.Y.

169,578 Sq.Yd. × 100 Lb. / 1,000 Sq.Ft. × 9 Sq.Ft. / Sq.Yd. × 1 Ton / 2,000 Lb. = 76.310 Ton.

Total 659 Agricultural Liming City of Cleveland = 76.31 Ton.

Sub Total 659 Seeding & Mulching City of Brooklyn = 221,897 S.Y.

221,897 Sq.Yd. × 100 Lb. / 1,000 Sq.Ft. × 9 Sq.Ft. / Sq.Yd. × 1 Ton / 2,000 Lb. = 99,854 Ton.

Total 659 Agricultural Liming City of Brooklyn = 99,85 Ton.

## 609-ASPHALT CONCRETE CURB (TYPE 1)
## I-480

| | | | |
|---|---|---|---|
| STA. 578+97.0 To STA. 582+18.9 (W.B.) | = 321.9 × 4,510.66 ÷ 4,583.66 | = | 316.8 L.F. |
| STA. 583+94.9 To STA. 585+97.5 (W.B.) | = 202.6 × 4,510.66 ÷ 4,583.66 | = | 199.4 L.F. |
| STA. 600+17.3 To STA. 602+23.9 (W.B.) | | = | 206.6 L.F. |
| STA. 603+27.2 To STA. 613+03.0 (E.B.) | = 816.3 + 159.5 × 5656.58 ÷ 5729.57 | = | 973.8 L.F. |
| STA. 605+96.7 To STA. 612+03.0 (W.B.) | = 546.8 + 59.5 × 5,656.58 ÷ 5,729.57 | = | 605.4 L.F. |
| | SUB-TOTAL | = | 2,302.0 L.F. |
| DEDUCT FOR INLETS | = 9.33 + 2 × 11.33 + 13.33 | = | - 45.3 L.F. |
| | TOTAL | | 2,256.7 L.F. |

Total 609 Asphalt Concrete Curb City of Cleveland = 2,257 L.F.

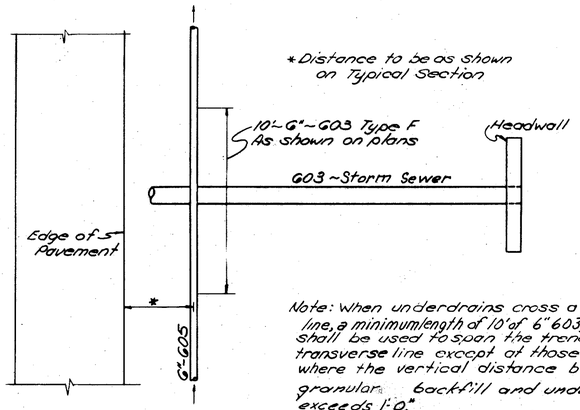


Note: When underdrains cross a transverse line, a minimum length of 10' of 6" 603, Type F pipe shall be used to span the trench of the transverse line except at those locations where the vertical distance between the granular backfill and underdrain pipe exceeds 1'-0".

## UNDERDRAIN CROSSOVER DETAIL 'A'

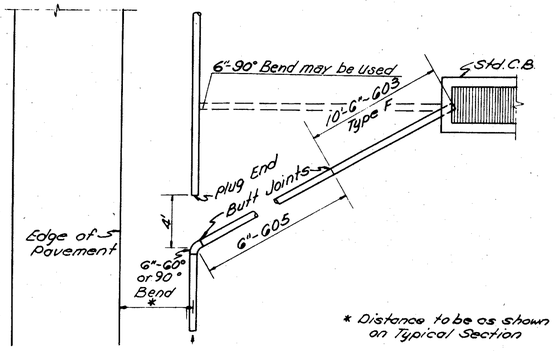


## UNDERDRAIN OUTLET DETAIL 'B'

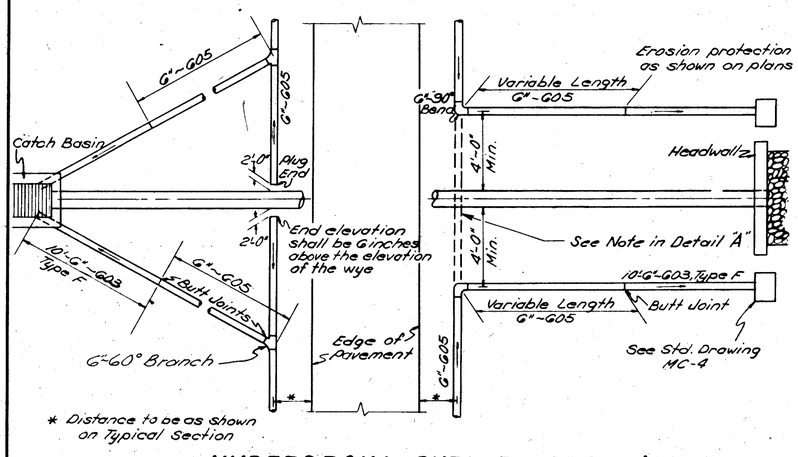


## UNDERDRAIN OUTLET DETAIL 'C'

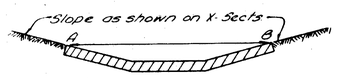


Points A & B are to be the same elev.

## ROADWAY DITCH SOD & E.M. DETAIL

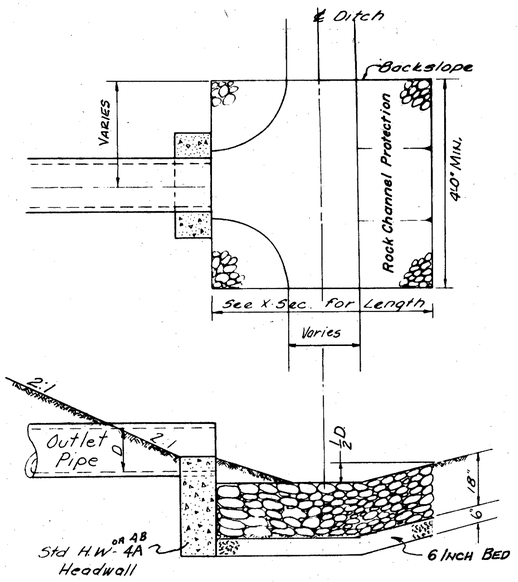


## ROCK CHANNEL PROTECTION FOR OUTLETS INTO SIDE DITCH

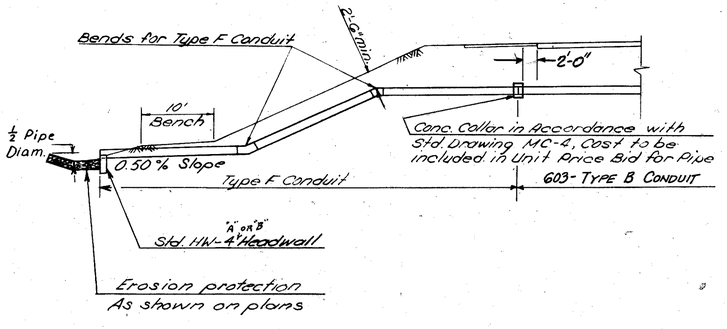


## STORM SEWER OUTLET DETAIL IN HIGH FILL

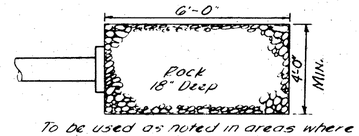


To be used as noted in areas where no ditches are to be constructed.

## MEDIAN OUTLET PROTECTION

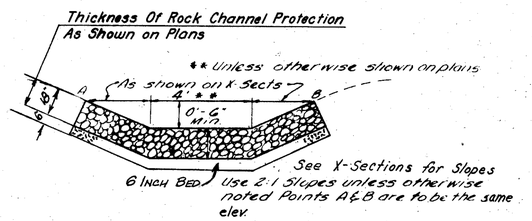


See X-Sections for Slopes
Use 2:1 Slopes unless otherwise noted Points A & B are to be the same elev.

## CHANNEL PROTECTION

If the vent pipe is adjacent to buildings, the pipe shall extend 14' above the ground line and shall be anchored in a concrete footing 18" in diameter and 36" deep. The pipe shall have a 3/4" hole with a threaded plug 3' above ground line. Concrete shall be paid for as item 602 Concrete Masonry.

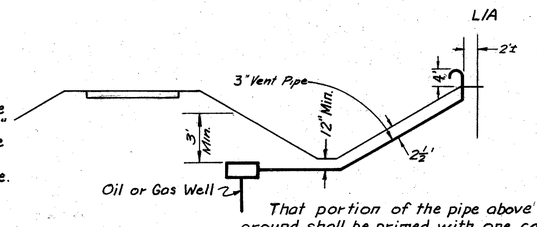


That portion of the pipe above ground shall be primed with one coat of 708.06 and painted with two coats of 708.08 in lieu of the coal tar paint. The pipe opening shall be protected with a wire screen.

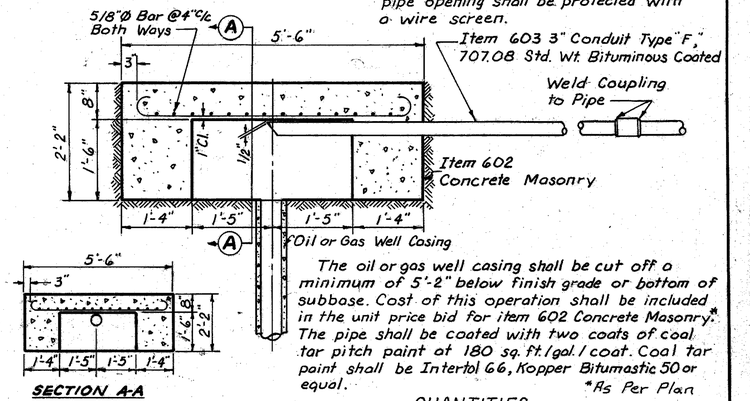


The oil or gas well casing shall be cut off a minimum of 5'-2" below finish grade or bottom of subbase. Cost of this operation shall be included in the unit price bid for item 602 Concrete Masonry.* The pipe shall be coated with two coats of coal tar pitch paint at 180 sq. ft./gal./coat. Coal tar paint shall be Intertol 66, Kopper Bitumastic 50 or equal. *As Per Plan

QUANTITIES
See Sheet No. 11

## OIL OR GAS WELL VENT DETAIL

| FED. RD. DIVISION | STATE | PROJECT | |
|---|---|---|---|
| 2 | OHIO | | |

28
500

CUYAHOGA COUNTY
CUY-480-10.39

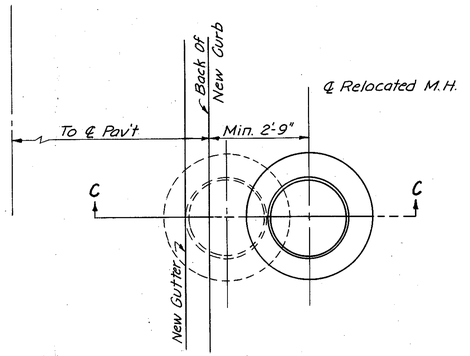


PLAN

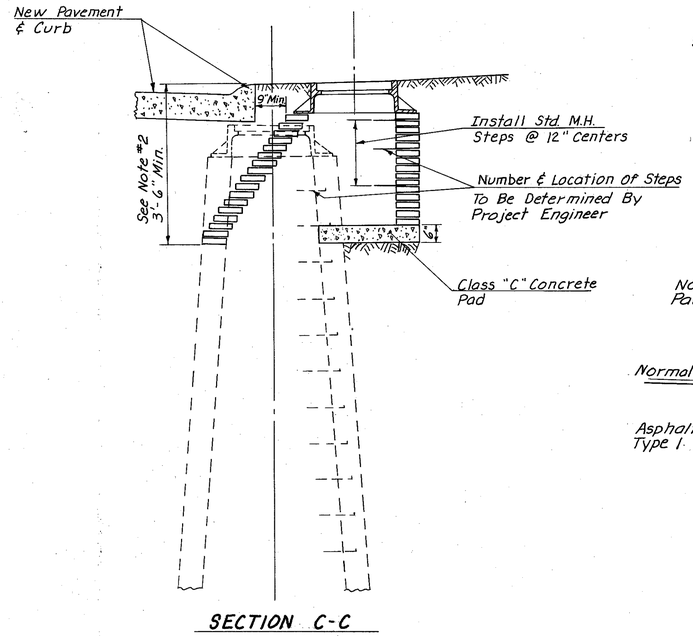


SECTION C-C

EXIST. M.H. RECONSTRUCT TO GRADE, AS PER PLAN

Notes:
(1) The Engineer Shall Investigate The Field Conditions Governing The Existing Manhole With Respect To The New Line And Elevation Of Pavement At Curb.
(2) Field Conditions Will Govern The Amount Of Structure To Be Demolished And Rebuilt. Corbelling Of The Brick Shall Not Exceed 1 1/2 Inches for Each Course.

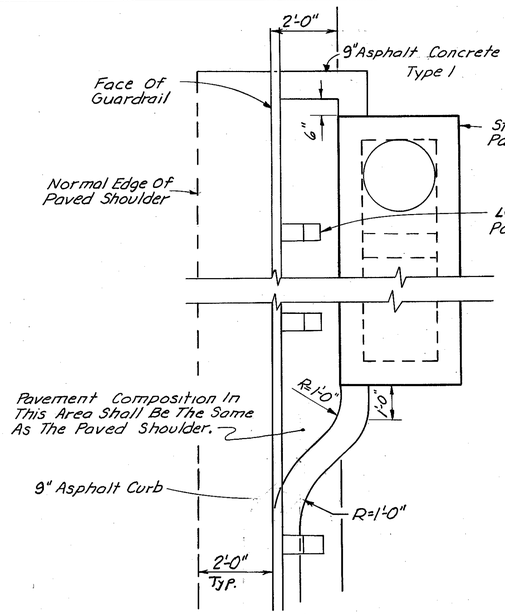


PLAN

NOTE:
For An Inlet Location Along Continuous Curb, Flare The Curb At Downstream End Of Inlet The Same As Upstream End.

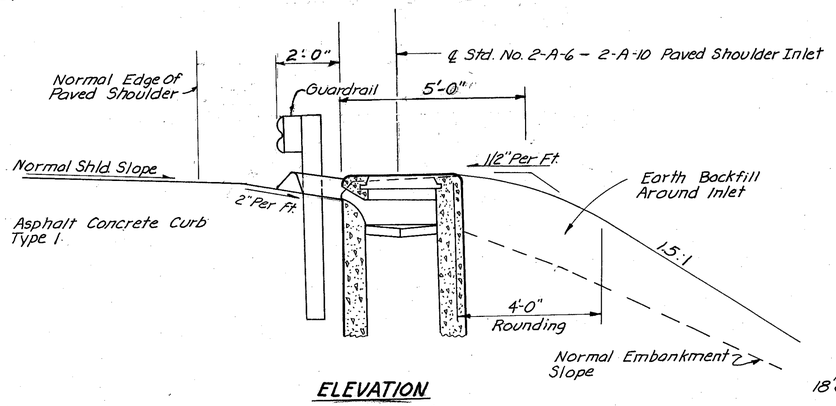


ELEVATION

I-2A INLETS MODIFIED AS PER PLAN

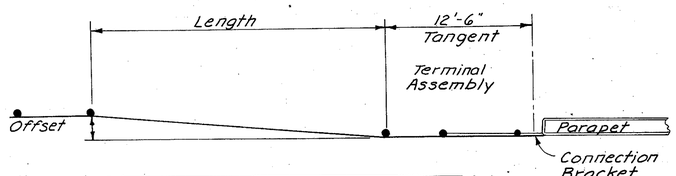


| Offset | Length | Offset | Length |
|---|---|---|---|
| 1'-0" | 25.00' | 5'-0" | 125.00' |
| 2'-0" | 50.00' | 6'-0" | 150.00' |
| 4'-0" | 100.00' | 7'-0" | 175.00' |

GUARDRAIL OFFSET DETAIL

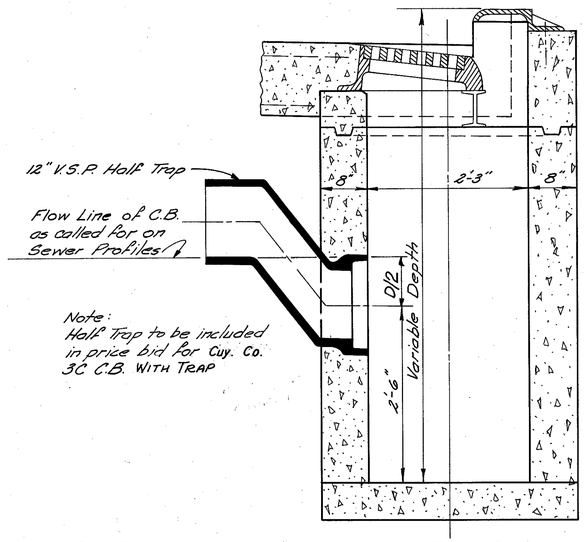


CUYAHOGA COUNTY Nº. 3C CATCH BASIN WITH TRAP

SECTION "B-B"

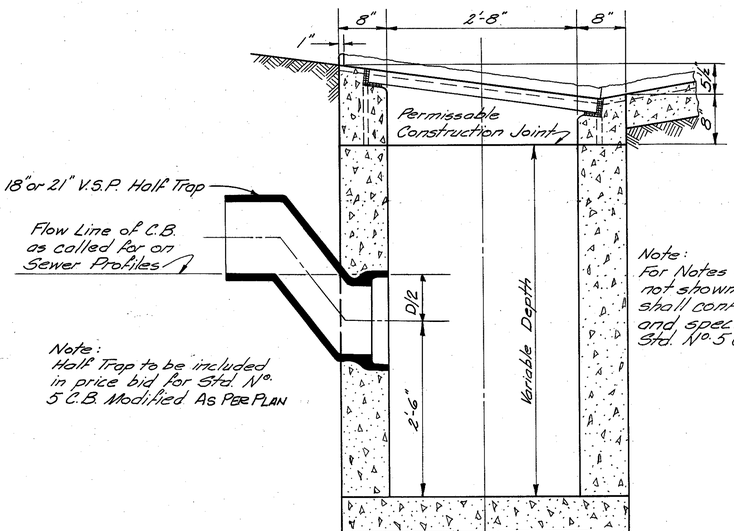


STANDARD Nº. 5 CATCH BASIN-MODIFIED AS PER PLAN

SECTION "A-A"

| FHWA REGION | STATE | PROJECT | |
|---|---|---|---|
| 5 | OHIO | | |

29
500

CUYAHOGA COUNTY
CUY-480-10.39

# 3-C CATCH BASIN

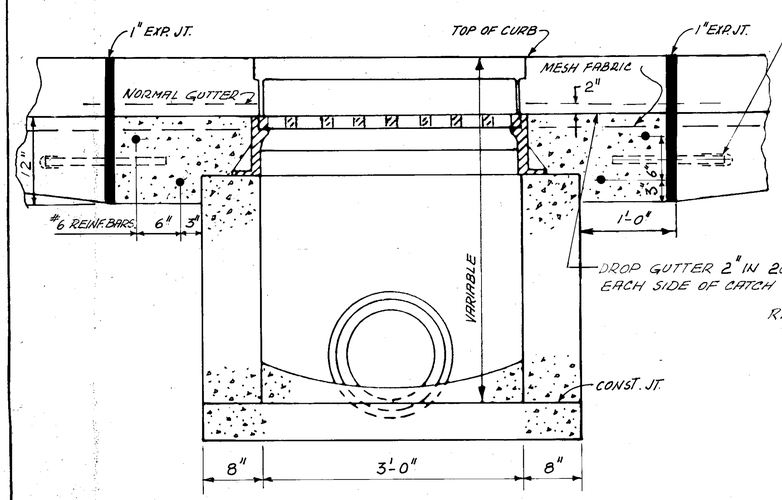


SECTION "B-B"

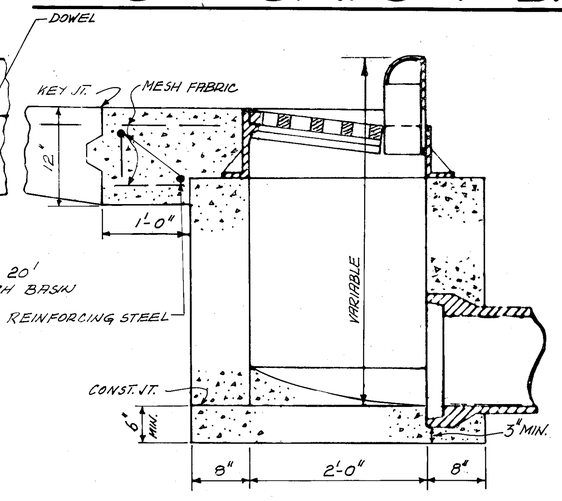


SECTION "A-A"

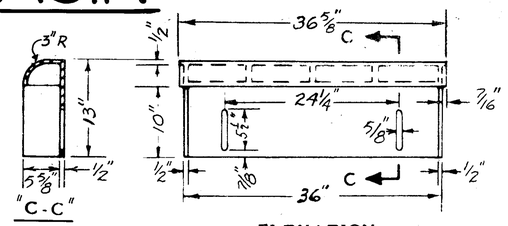


ELEVATION
RADIUS CURB BOX

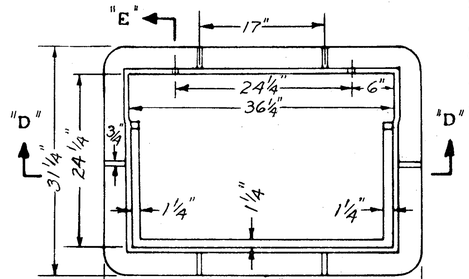


FRAME PLAN

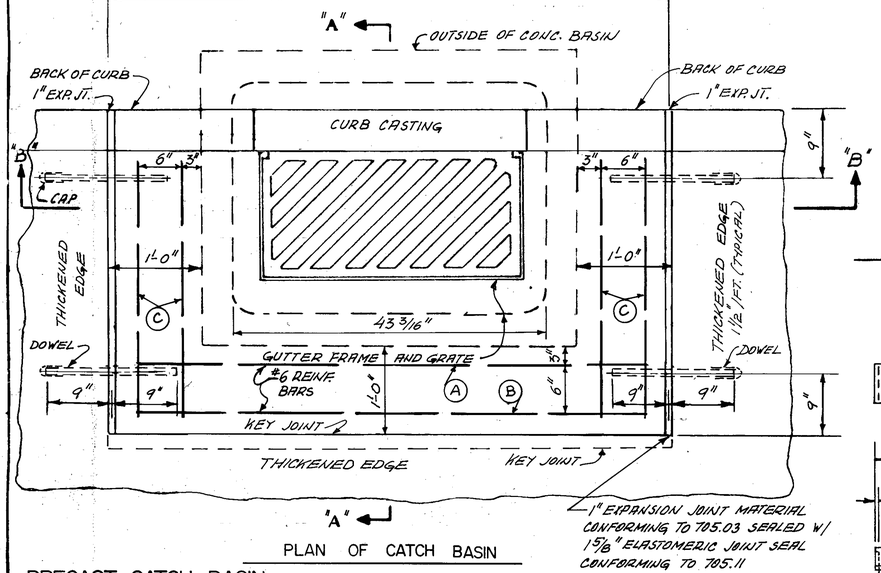


PLAN OF CATCH BASIN

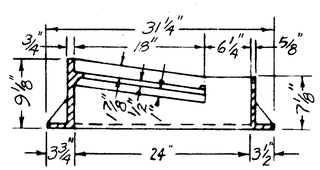


SECTION "E-E"

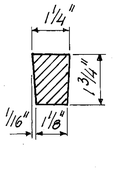


SECTION "F-F"

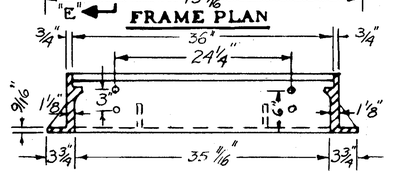


SECTION "D-D"

## CURB CASTING FOR CURB CUT IN DRIVEWAYS TYPE "A-2"

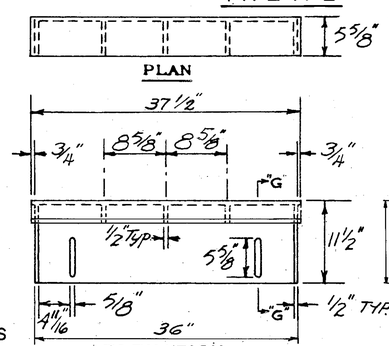


ELEVATION

SECTION "G-G"

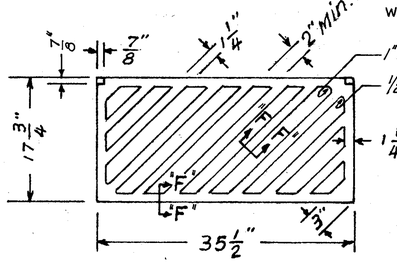


GRATE PLAN

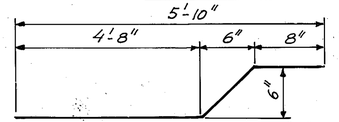


DETAIL - REINFORCING BAR "A"
BAR "B" OPPOSITE HAND

## BAR LIST

| MARK | NO. REQ'D. | SHAPE | LENGTH | WT. |
|---|---|---|---|---|
| A | 1 | BENT | 5'-10" | 9 # |
| B | 1 | BENT | 5'-10' | 9 # |
| C | 4 | STR. | 2'-10" | 4.25 # |

## NOTES:

CASTINGS shall meet the requirements of 604, except that the grate material shall be restricted to 711.13 ASTM A536 Grade 65-45-12. Exposed part of curb casting to be thoroughly cleaned and given one coat of asphalt varnish or coal tar pitch paint.

WEIGHTS minimum -

| | |
|---|---|
| Curb casting | 100 pounds |
| Gutter grate | 130 pounds |
| Gutter frame | 300 pounds |

BEARING AREAS or frame and grate shall be so fitted and finished as to provide a firm and even seat for the portions of the grate in the frame. No projections shall exist on bearing areas of either casting and the grate shall seat in its frame without rocking. The frame and grate shall be fitted, matched and marked before delivery to the project.

DOWELS shall be 1 1/4 inch round, smooth bars 18 inches long spaced as shown hereon and greased.

PAVEMENT: The portion blocked out of the pavement shall be placed after the casting has been set but shall be paid for as part of the pavement.

CONCRETE for brick and cast in place or precast chambers shall be CLASS "C".

EXPANSION JOINT - The elastomeric Expansion Joint seal shall be omitted when an asphalt concrete surface is part of pavement. The 1" expansion joint material shall be omitted when a flexible base is used.

## PRECAST CATCH BASIN

A PRECAST CONCRETE CHAMBER MAY BE USED. THE WALL THICKNESS SHALL BE A MINIMUM OF 6". REINFORCING STEEL SHALL BE USED IN ALL CASES. NO. 3 BARS SHALL BE USED WHERE THE WALL HEIGHT FROM THE TOP OF THE WALL TO BOTTOM OF SLAB IS 3 FEET OR LESS AND NO. 4 BARS SHALL BE USED WHEN THE WALL HEIGHT EXCEEDS 3 FEET. SHOP DRAWINGS SHALL BE REQUIRED IF PRECAST CONCRETE STRUCTURE IS USED.

CUYAHOGA COUNTY ENGINEER

# CATCH BASIN

DWG. NO.
C.B.-3C
DATE: 7-15-80

REV. DATE

MICELLANEOUS DETAIL

# CUYAHOGA COUNTY 3-C CATCH BASIN WITH SUMP & TRAP

| FHWA REGION | STATE | PROJECT | |
|---|---|---|---|
| 5 | OHIO | | |

CUYAHOGA COUNTY
CUY-480-10.39

30/500

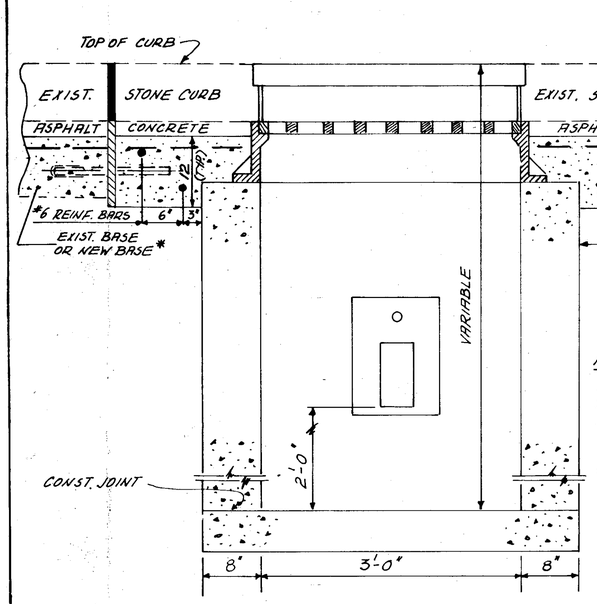


SECTION "B-B"

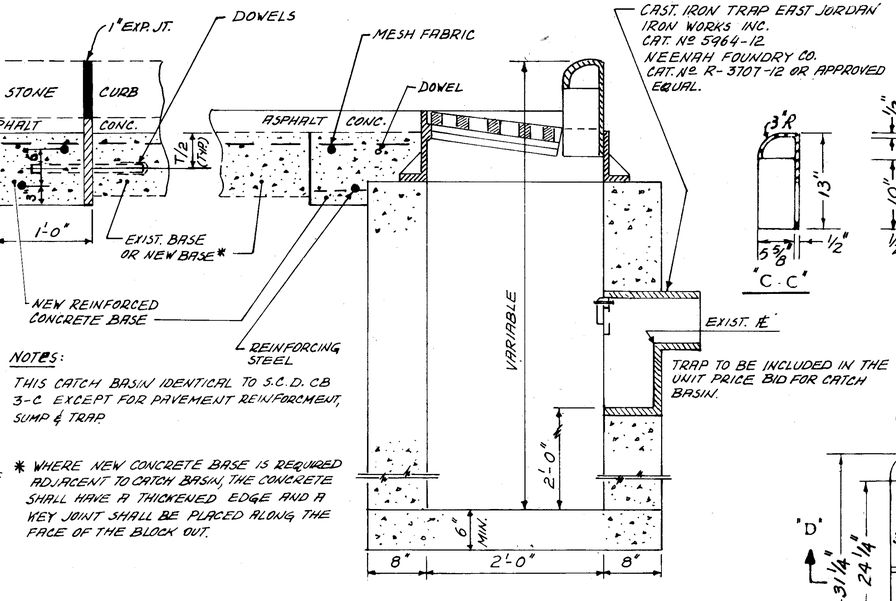


SECTION "A-A"

NOTES:

THIS CATCH BASIN IDENTICAL TO S.C.D. CB 3-C EXCEPT FOR PAVEMENT REINFORCMENT, SUMP & TRAP.

* WHERE NEW CONCRETE BASE IS REQUIRED ADJACENT TO CATCH BASIN, THE CONCRETE SHALL HAVE A THICKENED EDGE AND A KEY JOINT SHALL BE PLACED ALONG THE FACE OF THE BLOCK OUT.




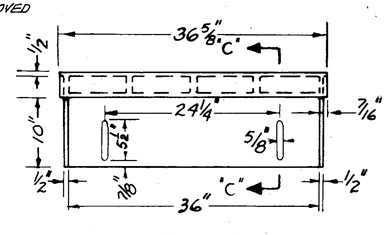


ELEVATION
RADIUS CURB BOX

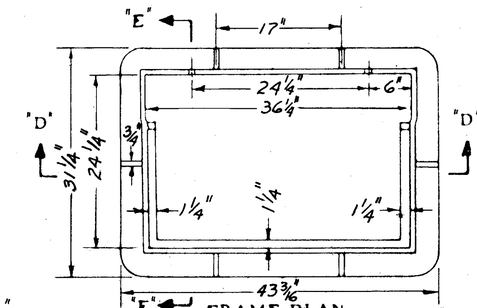


FRAME PLAN

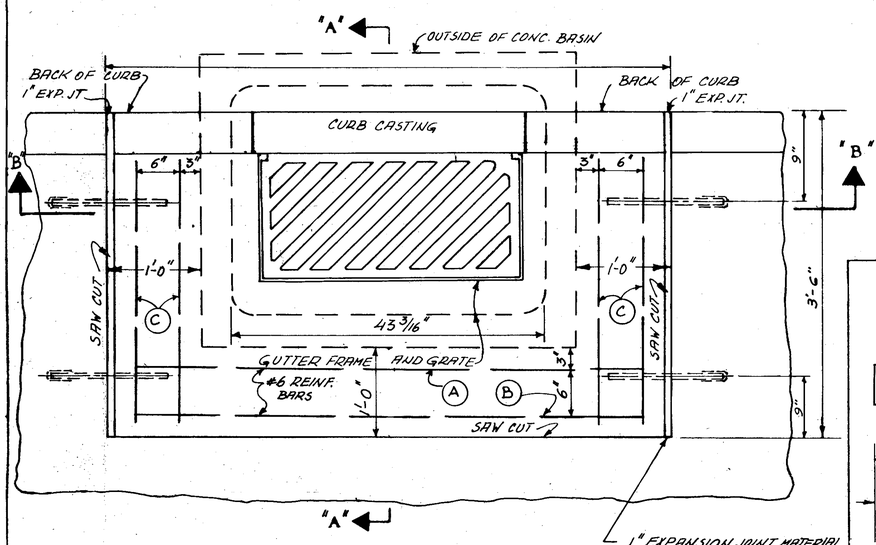


PLAN VIEW

1" EXPANSION JOINT MATERIAL CONFORMING TO 705.03 SEALED WITH 1 5/8" ELASTOMERIC JOINT SEAL CONFORMING TO 705.11

PRECAST CATCH BASIN

A PRECAST CONCRETE CHAMBER MAY BE USED. THE WALL THICKNESS SHALL BE A MINIMUM OF 6". REINFORCING STEEL SHALL BE USED IN ALL CASES. NO. 3 BARS SHALL BE USED WHERE THE WALL HEIGHT FROM THE TOP OF THE WALL TO BOTTOM OF SLAB IS 3 FEET OR LESS AND NO. 4 BARS SHALL BE USED WHEN THE WALL HEIGHT EXCEEDS 3 FEET. SHOP DRAWINGS SHALL BE REQUIRED IF PRECAST CONCRETE STRUCTURE IS USED.

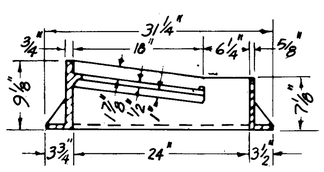


SECTION "E-E"

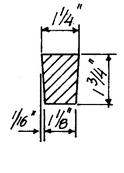


SECTION "F-F"

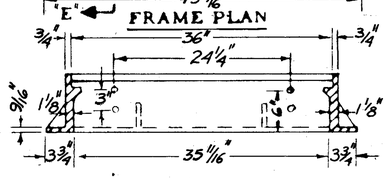


SECTION "D-D"

## CURB CASTING FOR CURB CUT IN CD-1 DRIVEWAYS TYPE "A-2"

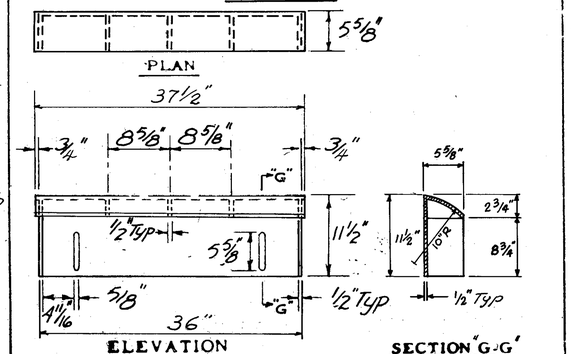


ELEVATION

SECTION "G-G"

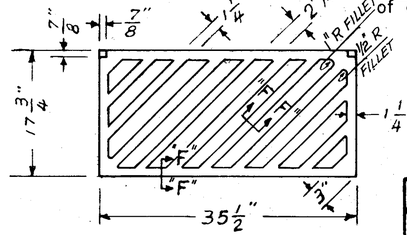


GRATE PLAN

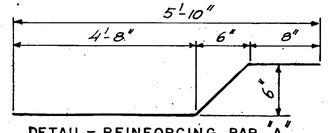


DETAIL - REINFORCING BAR "A"
BAR "B" OPPOSITE HAND

## NOTES:

CASTINGS shall meet the requirements of 604, except that the grate material shall be restricted to 711.13 ASTM A536 Grade 65-45-12. Exposed part of curb casting to be thoroughly cleaned and given one coat of asphalt varnish or coal tar pitch paint.

WEIGHTS minimum -

| | |
|---|---|
| Curb casting | 100 pounds |
| Gutter grate | 130 pounds |
| Gutter frame | 300 pounds |

BEARING AREAS or frame and grate shall be so fitted and finished as to provide a firm and even seat for the portions of the grate in the frame. No projections shall exist on bearing areas of either casting and the grate shall seat in its frame without rocking. The frame and grate shall be fitted, matched and marked before delivery to the project.

DOWELS shall be 1 1/4 inch round smooth bars 18 inches long spaced as shown hereon and greased. Drill hole in existing concrete to accept dowels. After placement of dowel, place grout in holes to secure dowels.

PAVEMENT: The portion blocked out of the pavement shall be placed after the casting has been set but shall be paid for as part of the pavement.

CONCRETE for brick and cast in place or precast chambers shall be CLASS "C"

EXPANSION JOINT - The 1" elastomeric EXP. JT. seal shall be omitted when an asphalt concrete surface is part of the pavement.

GUTTER shall be dropped 2" in 20' on each side of catch basin

| MARK | NO. | SHAPE | LENGTH | WT. |
|---|---|---|---|---|
| A | 1 | BENT | 5'-10" | 9# |
| B | 1 | BENT | 5'-10" | 9# |
| C | 4 | STR. | 2'-10" | 4.25# |

CUYAHOGA COUNTY ENGINEER

# CATCH BASIN

DWG. NO.
C.B.-3C S/T

DATE: 6-18-80

REV. | DATE

MICELLANEOUS DETAIL

| FHWA REGION | STATE | PROJECT | |
|---|---|---|---|
| 5 | OHIO | | |

33
500

CUYAHOGA COUNTY
CUY-480-10.39

# MANHOLE CASTINGS
## NO.9 FRAME & NO.28 COVER

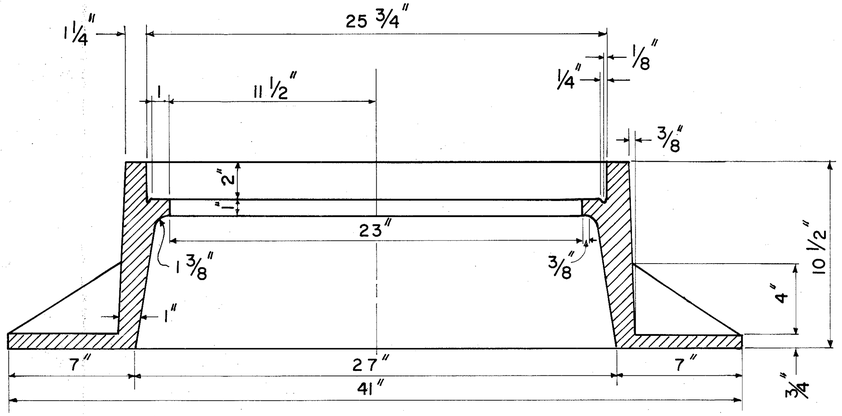


## SECTION "A-A"

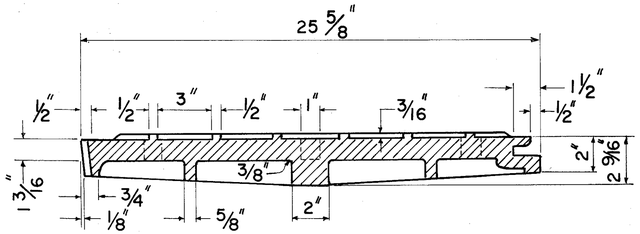


## SECTION "B-B"

NOTE:
A MAXIMUM OF 4-1Ø HOLES WILL BE PERMITTED IN THE FLANGE AS SHOWN.

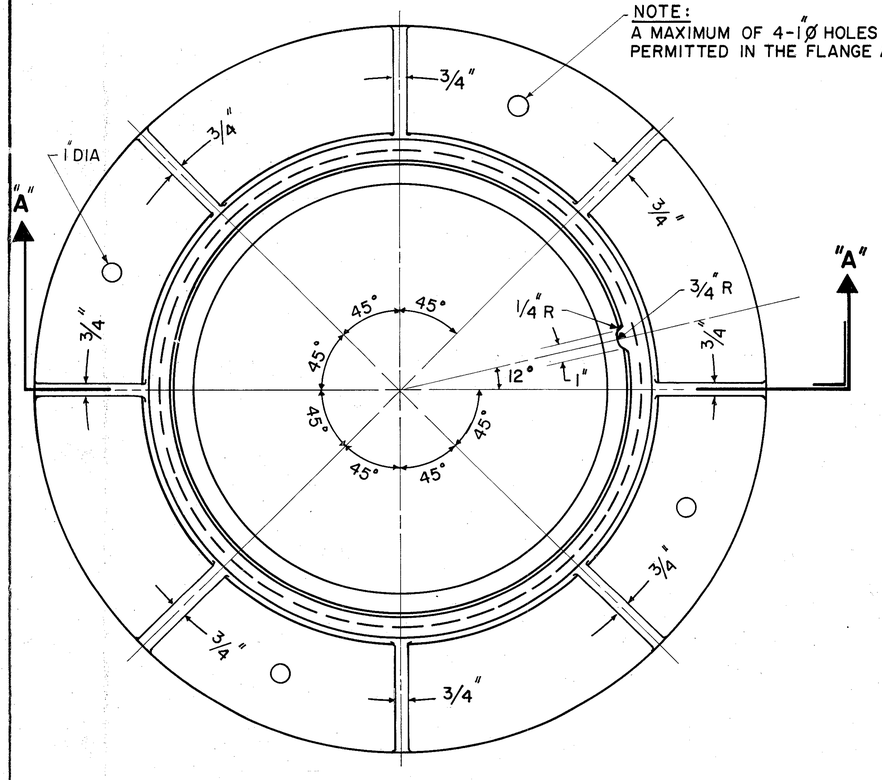


## PLAN DETAIL FOR NO.9 FRAME

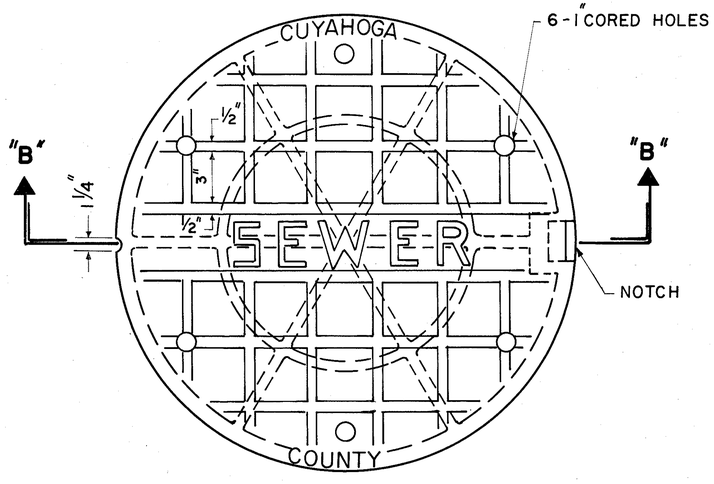


## PLAN NO.28 COVER

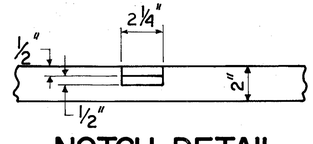


## NOTCH DETAIL

## NOTES:

CASTINGS SHALL MEET THE REQUIREMENTS OF ITEM 604-711.12 & 711.13. THE DESIGN SHALL BE ESSENTIALLY THE SAME AND EQUALLY AS STRONG AS THOSE SHOWN HEREON.

⚠ MINIMUM WEIGHTS:
FRAME 400 LBS., COVER 190 LBS.

BEARING AREAS OF FRAME AND COVER SHALL BE SO FITTED AND FINISHED AS TO PROVIDE A FIRM AND EVEN SEAT FOR ALL PORTIONS OF THE COVER IN THE FRAME. NO PROJECTIONS SHALL EXIST ON BEARING AREAS OF EITHER CASTING AND THE COVER SHALL SEAT IN ITS FRAME WITHOUT ROCKING. FRAME AND COVER SHALL BE FITTED, MATCHED AND MARKED BEFORE DELIVERY TO THE PROJECT.

HOLES - 6-1" CORED VENT HOLES SHALL BE IN THE COVER AND A MAXIMUM OF 4-1" DIA. HOLES WILL BE PERMITTED IN THE FLANGE OF THE FRAME AS SHOWN.

LUG - THE LUG ON THE FRAME IS TO BE BETWEEN THE TOP OF THE FRAME AND THE TOP OF THE COVER SEAT ONLY AND SHALL BE CAST WITHOUT BATTER. THE LUG MAY BE UNDERCUT OR OMITTED TO PERMIT PROPER MACHINING OF THE COVER SEAT.

ACCEPTABLE ASSEMBLIES ARE NEENAH NO.R-1729, EAST JORDAN NO.1700 OR EQUAL.

THIS DRAWING PREVIOUSLY 9F-9AF & 28 C

CUYAHOGA COUNTY ENGINEER

MANHOLE CASTINGS

DWG. NO.
MH-10C
DATE: 6-1-81

| REV. | DATE |
|---|---|
| ⚠ | 6-19-81 |

MICELLANEOUS DETAIL

# OPEN GRATE MANHOLE COVER Nº 37

| FHWA REGION | STATE | PROJECT | | 34 / 500 |
|---|---|---|---|---|
| 5 | OHIO | | | |

CUYAHOGA COUNTY
CUY-480-10.39

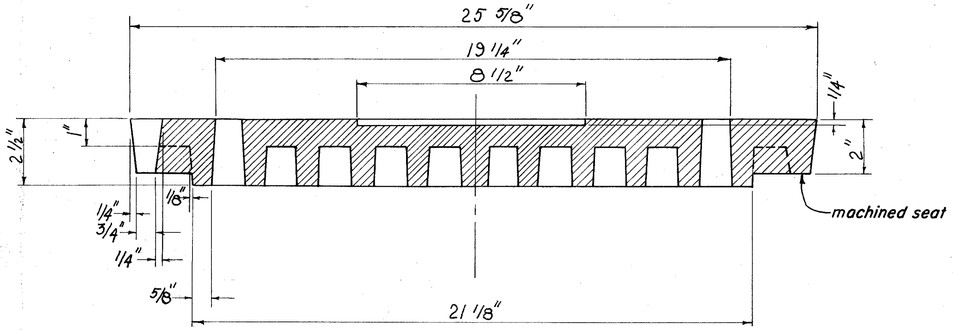


SECTION "A-A"

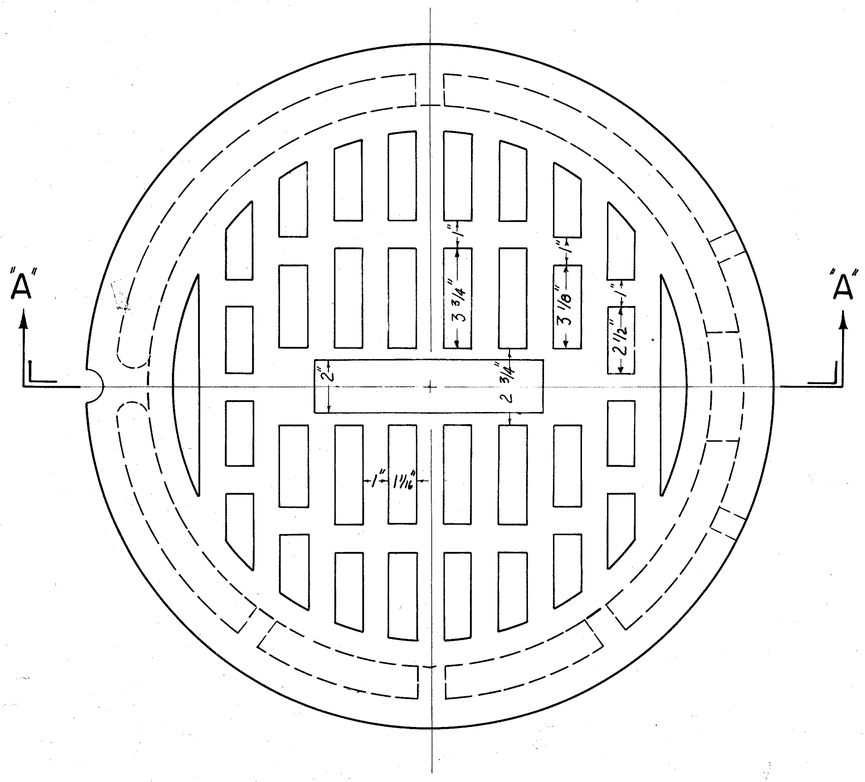


TOP PLAN DETAILS

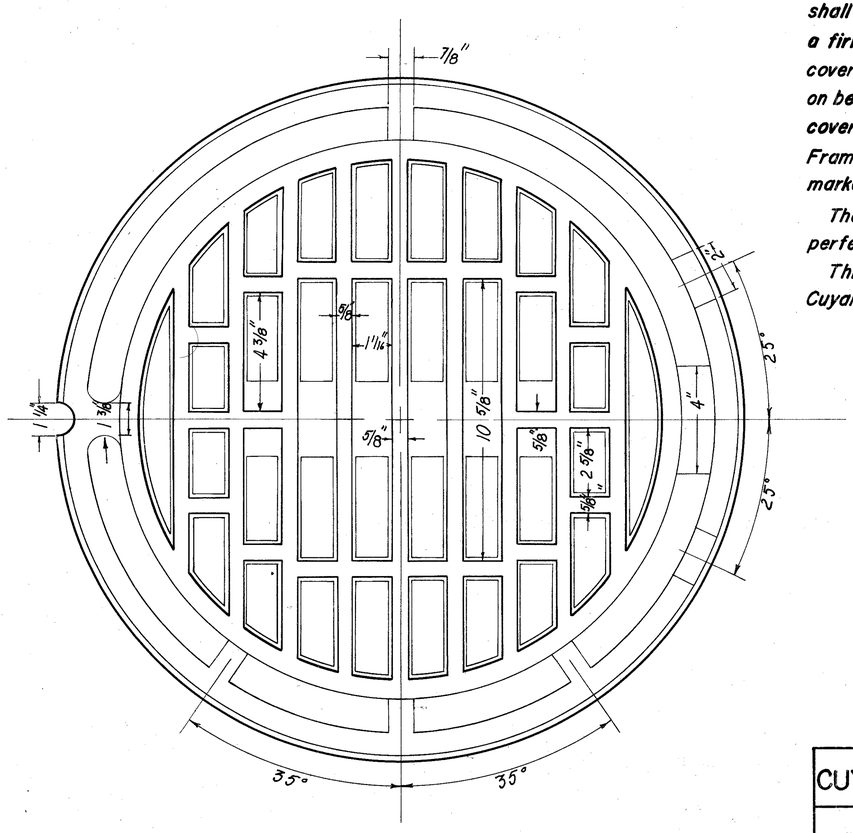


BOTTOM PLAN DETAILS

## NOTES

*CASTINGS shall meet the requirements of Item 604 – 711.12 . The design shall be essentially the same and equally as strong as those shown hereon.*

*WEIGHT - minimum - 190 lbs.*

*BEARING AREAS of frame and cover shall be so fitted and furnished as to provide a firm and even seat for all portions of the cover in the frame. No projections shall exist on bearing areas of either casting and the cover shall seat in its frame without rocking. Frame and cover shall be fitted, matched and marked before delivery to the project.*

*The COVER SEAT shall be machined for a perfect fit.*

*This Cover is used in conjunction with Cuyahoga County Standard Manhole Nº9 Frame.*

CUYAHOGA COUNTY ENGINEER

OPEN GRATE MANHOLE COVER NO. 37

DWG. NO.
MH-11C
DATE: 6-1-81

REV. | DATE

MICELLANEOUS DETIAL

| CALC. BY | | CUYAHOGA COUNTY | OHIO |
|---|---|---|---|
| DATE | | CUY-480-10.39 | FHWA REGION 5 |
| CHKD. BY | | | |
| DATE | | | |



*NOTE: Erosion Control Pad, As Per MC-4 Or Outlet Into Catch Basin

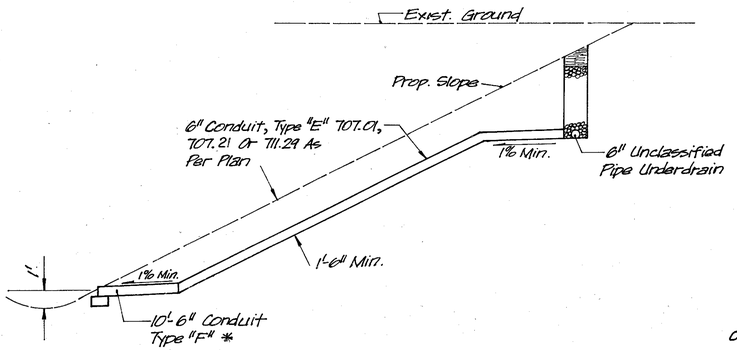


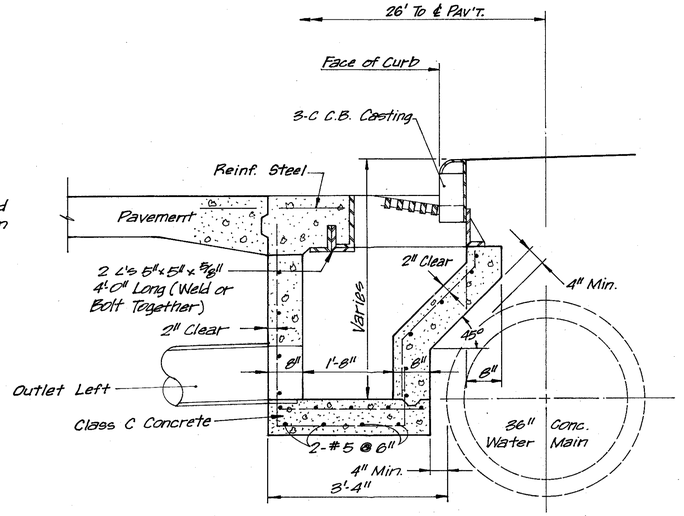


NOTES:
Resident Drives Having An Existing Hard Surface or Existing Aggregate Surface Shall be Replaced With a Pavement of Similar Type in so Far as Practicable, Using One of the Following Design For the Portion Beyond the Flared Apron.

(a) 6" Plain Portland Cement, Item 452
(b) 6" Item 304 Aggregate Base Surfaced with 408 Bituminous Prime Coat @ 0.40 Gal/S.Y. & 2-1" Course of Asphaltic Concrete, Item 848
(c) 8" Item 304 Aggregate Base, with 408 Prime Coat Using 702.09, RT-2 or 3.

For Asphaltic Concrete and Slag Drives, the Plan View Shown, Shall Be Used. Shape Drive Section to Provide For Proper Drainage, as Directed by Engineer.

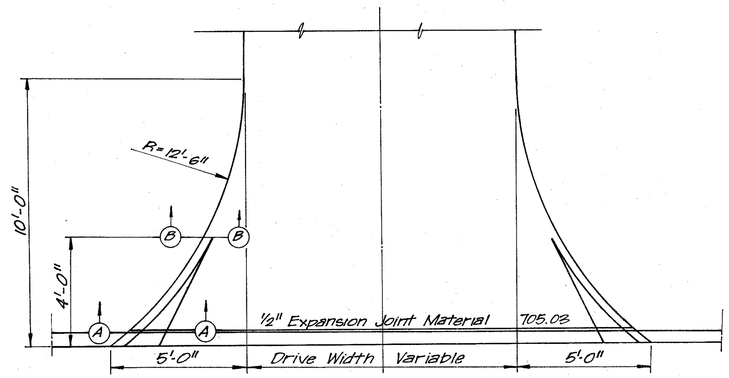


CONCRETE DRIVE DETAIL

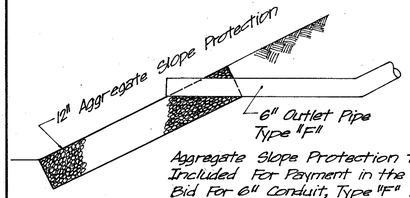


Aggregate Slope Protection to be Included For Payment in the Price Bid For 6" Conduit, Type "F" As Per Plan.

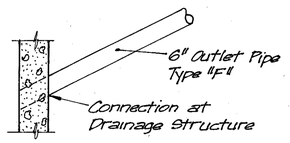


All Reinforcing #5@6" E.W. Unless Otherwise Noted.

NOTE: For Additional Details See Miscellaneous Detail Sheet Cuy. Co. No. 3C Catch Basin

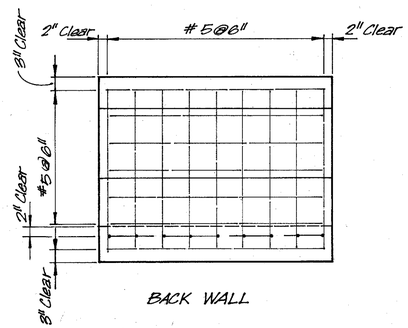


BACK WALL

CUYAHOGA COUNTY
No. 3C CATCH BASIN DETAIL A

STA. 51+00.00 (24.00' Rt.) ℄ Tiedeman Rd.
STA. 63+95.65 (24.13' Rt.) ℄ Tiedeman Rd.

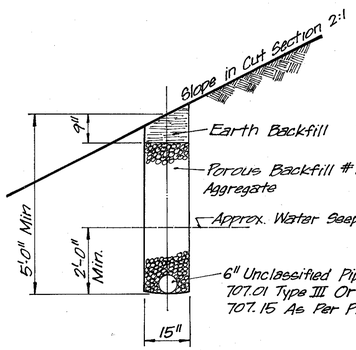


DETAILS FOR INTERCEPTOR DRAIN
No Scale

NOTE: Outlet Interceptor Drains Either Into Ditch Drainage Structure Or Onto Aggregate Slope Protection At Roadway Ditch Line. See General Note Sheet No. 12

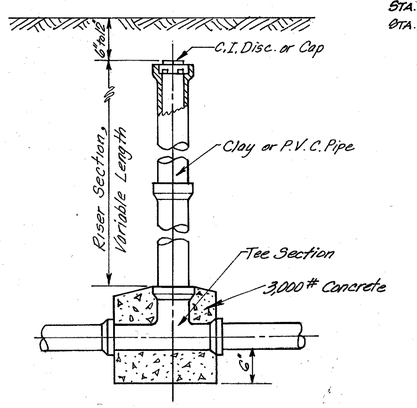


6"x6" CLEANOUT & 6" RISER FOR STORM AND SANITARY SEWERS

NOTES:
The cleanout riser section shall be installed when the connection is extended to the building.

Risers shall be furnished with stoppers upon which shall be placed a cast iron disc.

Cast iron disc shall be painted yellow on sanitary sewer.

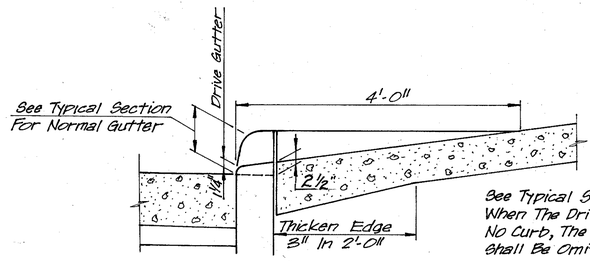


See Typical Section For Curb Specified. When The Drive Abuts A Pavement, With No Curb, The Drive Apron Curb Section Shall Be Omitted.

APRON CURB TRANSITION

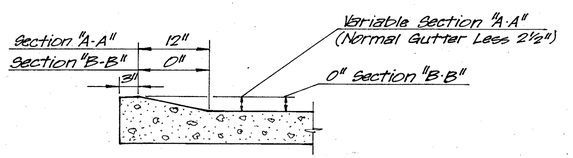


APRON CURB DETAIL
SECTION A-A SECTION B-B

# STEEL REINFORCING
# FOR REINFORCED CONCRETE BASE & PAVEMENT

| FHWA REGION | STATE | PROJECT | |
|---|---|---|---|
| 5 | OHIO | | |

36
500

CUYAHOGA COUNTY
CUY-480-10.39

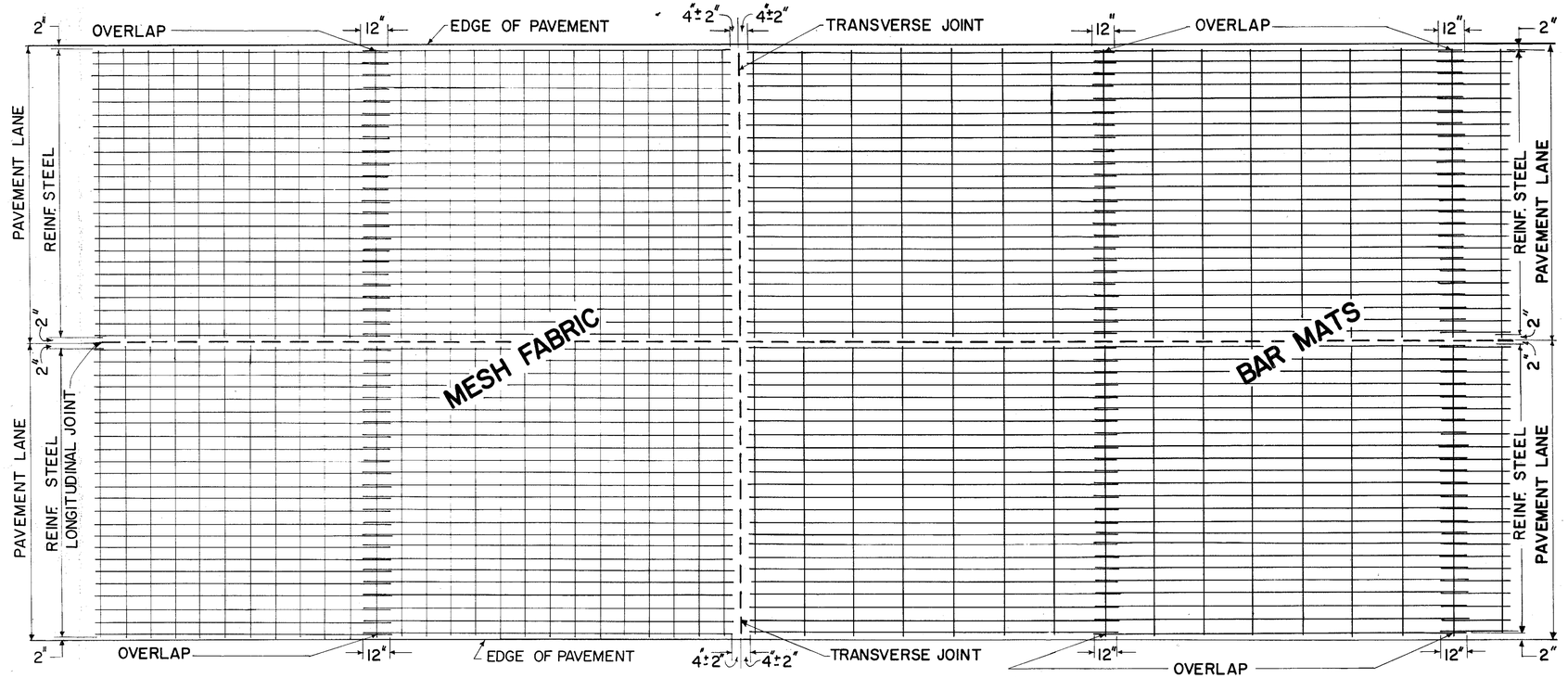


## MESH FABRIC

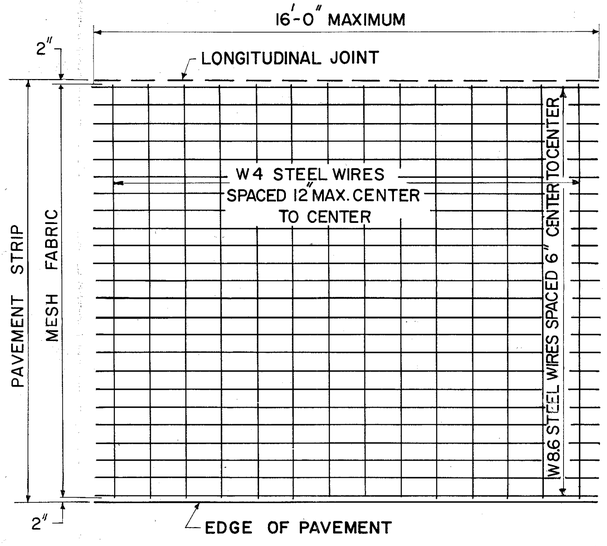


## BAR MATS

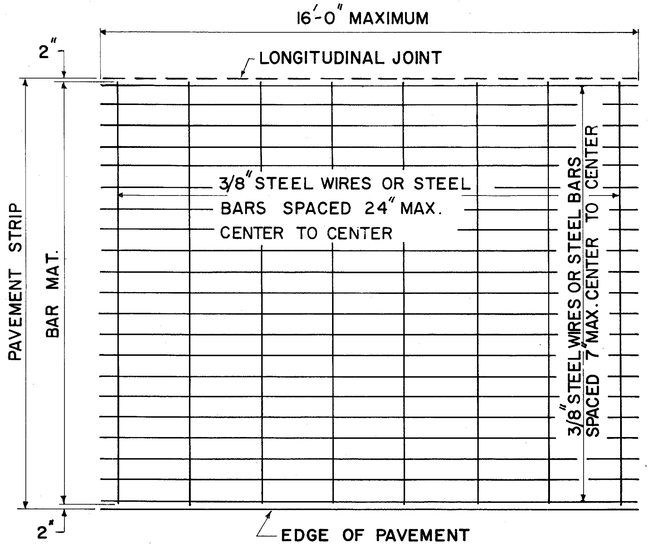


**NOTE:**

THE REINFORCING FOR A LANE IN EXCESS OF 12 FEET IN WIDTH PLACED AS A SINGLE OPERATION MAY CONSIST OF TWO UNITS. AN APPROVED HINGE WILL BE PERMITTED IN EACH SHEET TO PROVIDE FOR FOLDING THE SHEET LONGITUDINALLY THE HINGE SHALL NOT BE LESS THAN NO.4 GAGE STEEL WIRE AND SHALL BE DESIGNED TO PROVIDE A 7" LAP WHEN THE SHEETS ARE LAID FLAT.

THE DISTANCE FROM THE TOP OF THE CONCRETE PAVEMENT OR BASE COURSE TO THE REINFORCING STEEL MAY VARY FROM 3 INCHES TO T/3+1 INCH, WHERE T= THE THICKNESS OF THE CONCRETE PAVEMENT OR BASE COURSE.

ADJACENT SHEETS OF THE MESH FABRIC SHALL BE LAPPED NOTLESS THAN 12 INCHES WHEN THE LAP IS MADE PERPENDICULAR TO THE CENTERLINE OF THE PAVEMENT AND NOT LESS THAN 7 INCHES WHEN MADE PARALLEL TO THE CENTERLINE OF THE PAVEMENT.

REINFORCING WIRE FABRIC MESH SHALL MEET THE REQUIREMENTS OF 709.10 AND SHALL BE STYLE 6"X12" W8.6 X W4.

CUYAHOGA COUNTY ENGINEER

PAVEMENT REINFORCING

DWG. NO.
BP-2C
DATE: 6-1-81

| REV. | DATE |
|---|---|
| | |

MICELLANEOUS DETAIL

# TRANSVERSE PAVEMENT JOINTS

| FHWA REGION | STATE | PROJECT | |
|---|---|---|---|
| 5 | OHIO | | |

CUYAHOGA COUNTY
CUY-480-10.39

37
500

## CONTRACTION JOINTS

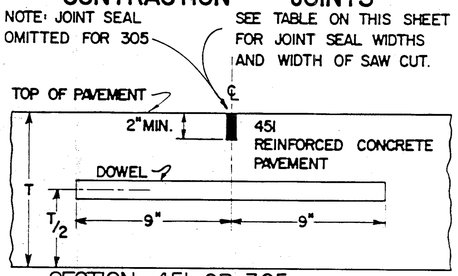


SECTION- 45I OR 305
REINFORCED P.C.C. BASE

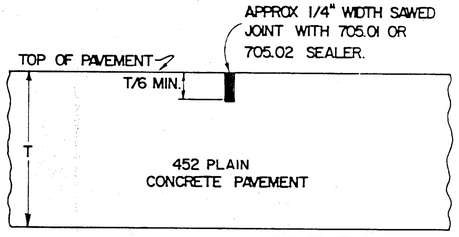


SECTION-452 PAVEMENT

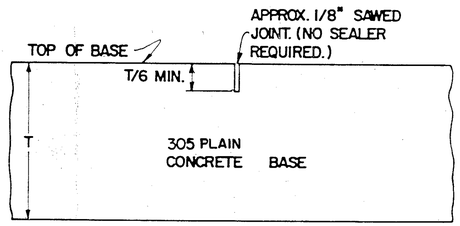


SECTION-305

## CONSTRUCTION JOINT

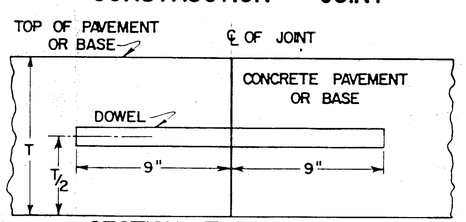


SECTION THROUGH
CONSTRUCTION JOINT

## EXPANSION JOINT

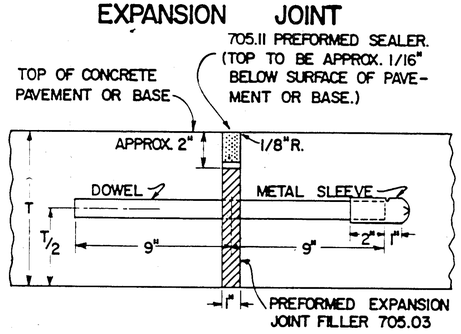


SECTION THROUGH
EXPANSION JOINT

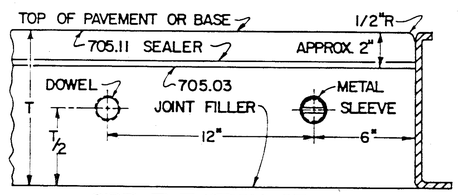


SIDE ELEVATION OF
EXPANSION JOINT

| TABLE I DOWEL SIZE | |
|---|---|
| THICKNESS OF PAVEMENT | DIAMETER OF DOWEL |
| 8.5" OR LESS | 1" |
| 8.6" TO 10" | 1-1/4" |
| OVER 10" | 1-1/4" OR AS SHOWN ON PLAN |

| TABLE II CONTRACTION JOINT SPACING | |
|---|---|
| TYPES OF PAVEMENT OR BASE | MAXIMUM SPACING BETWEEN JOINTS |
| 45I - REINFORCED PORTLAND CEMENT CONCRETE PAVEMENT, MOD. AS PER PLAN | 1.) AS PER PLAN<br>2.) 75' WHEN HINGE JTS. ARE USED<br>3.) 30' WHEN HINGE JTS. ARE NOT USED |
| 452 PLAIN PORTLAND CEMENT CONCRETE PAVEMENT, MOD. AS PER PLAN | 15' |
| 305 - PORTLAND CEMENT CONCRETE BASE, MOD. AS PER PLAN | 17' |
| 305 - REINFORCED PORTLAND CEMENT CONCRETE BASE, MOD. AS PER PLAN | 1.) AS PER PLAN<br>2.) 75' WHEN HINGE JTS. ARE USED<br>3.) 30' WHEN HINGE JTS. ARE NOT USED |

| TABLE III JOINT SEAL WIDTHS | | | |
|---|---|---|---|
| TYPE OF JOINT | SPACING BETWEEN JTS. (FT.) | WIDTH OF SAW CUT (IN.) | NEOPRENE COMP SEAL WIDTH (IN.) |
| CONTRACTION △ | 60-75 | 5/16 | 13/16 |
| CONTRACTION | 30 | 1/4 | 9/16 |
| CONTRACTION | 25' & LESS | 1/4 | 7/16 |
| HINGE | — | 1/4 | 7/16 □ |

FOR ADDITIONAL INFORMATION PERTINENT TO TRANSVERSE JOINTS, SEE GENERAL NOTES.

△ HINGE JOINTS ARE USED AT THE 1/3 POINTS.

□ THE 7/16 INCH WIDTH NEOPRENE COMPRESSION SEAL SHALL MEET THE REQUIREMENTS OF 705.11, EXCEPT THAT THE HIGH TEMPERATURE RECOVERY (70 HOURS AT 212°F UNDER 50% DEFLECTION) SHALL NOT BE LESS THAN 75%.

GENERAL: NOTES AND DETAILS SHOWN ON THIS DRAWING SHALL BE CONSIDERED IN CONJUNCTION WITH AND SUPPLEMENTAL TO THE PERTINENT SPECIFICATIONS FOR PORTLAND CEMENT CONCRETE PAVEMENTS AND BASES, AND INCIDENTALS RELATED THERETO.

ALL JOINTS SHALL BE CONSTRUCTED NORMAL TO THE CENTERLINE OF THE PAVEMENT LANE UNLESS OTHERWISE DIRECTED.

WHERE DOWELS ARE SPECIFIED, THEY SHALL BE ROUND, STRAIGHT STEEL BARS OF THE SIZE INDICATED IN TABLE (I), AND SHALL BE SHOP COATED WITH A SUITABLE RUST INHIBITOR. DOWELS SHALL BE SPACED AT 12" CENTERS, BEGINNING 6" FROM THE LONGITUDINAL JOINT.

ASSEMBLY: EACH JOINT ASSEMBLY USED TO HOLD DOWELS IN POSITION SHALL BE CONTINUOUS BETWEEN LONGITUDINAL JOINTS OR BETWEEN LONGITUDINAL JOINT AND PAVEMENT EDGE. THE ASSEMBLY SHALL BE FIRMLY HELD IN PROPER POSITION BY AT LEAST EIGHT 1/2" STEEL PINS DRIVEN AT AN ANGLE TO BRACE THE ASSEMBLY FROM LATERAL AND VERTICAL DISPLACEMENT DURING THE PLACING OF THE CONCRETE. THESE PINS SHALL BE AT LEAST 18" IN LENGTH. TWO OF THESE PINS SHALL BE DRIVEN OPPOSITE EACH OTHER AT EACH END OF THE ASSEMBLY AND THE REMAINING PINS SHALL BE DRIVEN IN STAGGERED POSITIONS ON EACH SIDE OF THE ASSEMBLY. IN EXCEPTIONAL CASES WHERE IT IS IMPRACTICAL TO USE THE 18" LENGTH PINS, SUCH AS WHERE HARDPAN OR ROCK IS ENCOUNTERED, THE ENGINEER MAY AUTHORIZE USE OF SHORTER PINS PROVIDED THE ASSEMBLY IS HELD FIRMLY. WHERE THE ASSEMBLY IS PLACED ON GRANULAR MATERIAL WHICH MAY ALLOW SETTLEMENT OR DISTORTION OF THE ASSEMBLY, A MINIMUM OF 6 STEEL PLATES, EACH HAVING A BEARING AREA OF APPROXIMATELY 25 SQUARE INCHES AND A CROSS-SECTION WHICH WILL NOT BEND UNDER THE IMPOSED LOAD, SHALL BE PLACED UNDER THE ASSEMBLY. ONE PLATE SHALL BE USED AT EACH OF THE FOUR END PINS. THE REMAINING PLATES SHALL BE SPACED UNIFORMLY ON EACH SIDE OF THE ASSEMBLY. THE METHOD OF STAKING AND PLACING BEARING PLATES SHALL BE APPROVED BY THE ENGINEER. DOWEL SPACING IS SHOWN FOR PAVEMENT LANES OF EVEN FOOT WIDTHS. WHERE OTHER WIDTHS ARE SPECIFIED, STANDARD CAGES MAY BE USED WITH DOWEL SPACINGS ADJUSTED AS FOLLOWS:

THE 6" DOWEL SPACING SHALL BE MAINTAINED AT THE LONGITUDINAL JOINT. THE SPACING AT THE OUTER EDGE OF THE LANE MAY BE INCREASED UP TO 12". WHERE AN ODD WIDTH OF LANE OCCURS, A DOWEL SHALL BE PLACED 6" FROM THE OUTER EDGE OF THE LANE IF THE STANDARD CAGE WOULD PROVIDE FOR A SPACE EXCEEDING 12". SUCH A DOWEL SHALL BE HELD RIGIDLY IN PROPER POSITION BY A METHOD SATISFACTORY TO THE ENGINEER, OR A DOWEL CAGE OF GREATER LENGTH THAN REQUIRED MAY BE USED BY CUTTING THE ASSEMBLY AND SPLICING TO ATTAIN THE REQUIRED LENGTH.

THIS DRAWING IS INTENDED FOR USE WITH A UNIFORM DEPTH PAVEMENT. WHEN THE PROJECT INVOLVES THE PLACING OF VARIABLE DEPTH PAVEMENT, THE JOINT COMPONENTS SHALL BE HELD IN PLACE IN ACCORDANCE WITH THE METHOD SHOWN IN THE PLAN OR AS APPROVED BY THE ENGINEER.

EXPANSION JOINT: EXPANSION JOINT FILLER SHALL BE PLACED AT 90° TO THE DOWELS, BOTH HORIZONTALLY AND VERTICALLY, AND SHALL BE HELD RIGIDLY IN POSITION. JOINT FILLER SHALL BE CONTINUOUS FOR THE FULL WIDTH OF EACH LANE.

SMOOTH DOWELS SHALL BE USED, AND FREE MOVEMENT SHALL BE PROVIDED BY APPLYING A COATING OF AN OIL SUCH AS S.A.E. 140 OR OTHER APPROVED "BOND-BREAKING" MATERIAL JUST PRIOR TO PLACING THE CONCRETE. ONE FREE END OF EACH DOWEL SHALL BE EQUIPPED, AFTER COATING, WITH A METAL SLEEVE APPROXIMATELY 3" LONG, DESIGNED WITH CRIMPED END AND OVERLAPPING SEAMS, FITTING CLOSELY AROUND THE DOWEL. EACH SLEEVE SHALL BE PROVIDED WITH A DEPRESSION OR INTERIOR PROJECTION TO ACT AS A STOP FOR THE DOWEL, SUFFICIENTLY DISTANT FROM THE CRIMPED END TO ALLOW 1" FOR LONGITUDINAL DOWEL MOVEMENT WITH PAVEMENT EXPANSION. IN LIEU OF THIS REQUIREMENT, ANY OTHER MEANS MAY BE USED IF APPROVED BY THE ENGINEER.

PROPER SIZE DOWEL HOLES SHALL BE PUNCHED OR DRILLED INTO THE PREFORMED EXPANSION JOINT FILLER IN ORDER TO INSURE TIGHT FITTING DOWELS.

CONTRACTION JOINT: DOWELS SHALL BE USED IN CONTRACTION JOINTS IN BOTH 45I AND 305 REINFORCED CONCRETE PAVEMENT OR BASE. THEY SHALL BE SMOOTH BARS, AND FREE MOVEMENT SHALL BE PROVIDED BY APPLYING A COATING OF AN OIL SUCH AS S.A.E. 140 OR OTHER "BOND-BREAKING" MATERIAL JUST PRIOR TO PLACING THE CONCRETE. THE USE OF PLASTIC COATED DOWELS FOR CONTRACTION JOINTS MAY BE PERMITTED PROVIDED THEIR USE IS APPROVED BY THE ENGINEER AND THAT THEY MEET THE REQUIREMENTS SET FORTH IN THE O.D.O.T. SUPPLEMENTAL SPECIFICATION 948 AND ITS APPENDIX.

CONTRACTION JOINTS OF THE TYPE SPECIFIED SHALL BE SPACED IN ACCORDANCE WITH TABLE II.

CONSTRUCTION JOINT: EITHER SMOOTH OR DEFORMED DOWELS SHALL BE USED IN CONSTRUCTION JOINTS IN ALL PORTLAND CEMENT CONCRETE PAVEMENT AND BASE. DOWELS SHALL BE THOROUGHLY CLEANED OF ALL OIL OR OTHER SUBSTANCE THAT WOULD BREAK THE BOND BETWEEN THE STEEL AND CONCRETE. THE JOINT SHALL BE FORMED BY USING A 2" MINIMUM THICKNESS WOOD BULKHEAD OR EQUAL, WITH OPENINGS PROVIDED FOR DOWEL BARS SPACED AT INTERVALS NOT TO EXCEED 12" AS DIRECTED. THE BULKHEAD SHALL BE SHAPED TO FIT THE TYPICAL SECTION OF THE PAVEMENT OR BASE, AND DOWELS SHALL BE HELD RIGIDLY IN POSITION DURING THE PLACING OF THE CONCRETE. THE CONCRETE SHALL BE CAREFULLY FINISHED SO AS TO PROVIDE A NEAT, TIGHT FITTING JOINT THAT WILL NOT REQUIRE SEALING.

CONSTRUCTION JOINTS IN REINFORCED CONCRETE PAVEMENT SHALL NOT BE LOCATED AT A CONTRACTION JOINT, NOR SHALL THEY BE LOCATED CLOSER THEN 10' TO ANY OTHER PARALLEL JOINT. IN PLAIN CONCRETE PAVEMENT OR BASE, THEY SHALL NOT BE LOCATED CLOSER THAN 5' TO ANOTHER PARALLEL JOINT.

JOINT FINISHING: A DOUBLE RADIUS EDGING TOOL SHALL BE USED IN FINISHING TRANSVERSE JOINTS.

CUYAHOGA COUNTY ENGINEER

TRANVERSE PAVEMENT JOINTS

12/11/82

DWG. NO.
BP-4C
DATE: 6-1-81

| REV. | DATE |
|---|---|
| | |

MICELLANEOUS DETAIL

# CURB RAMPS

| FHWA REGION | STATE | PROJECT | | 38 / 500 |
|---|---|---|---|---|
| 5 | OHIO | | | |

CUYAHOGA COUNTY
CUY-480-10.39

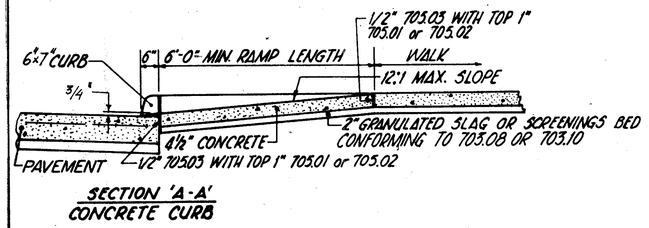


SECTION 'A-A'
CONCRETE CURB

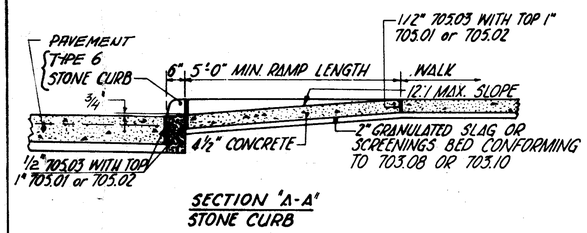


SECTION 'A-A'
STONE CURB

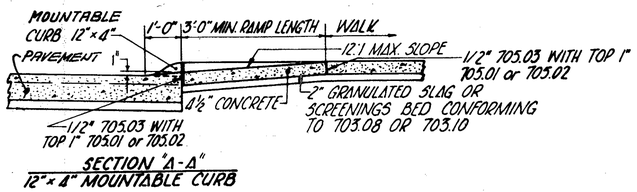


SECTION 'A-A'
12"x4" MOUNTABLE CURB

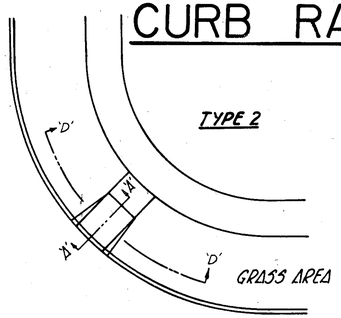


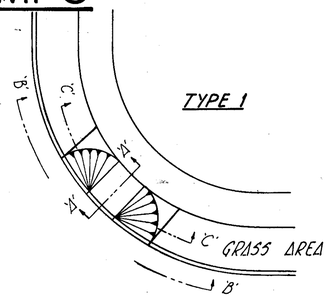


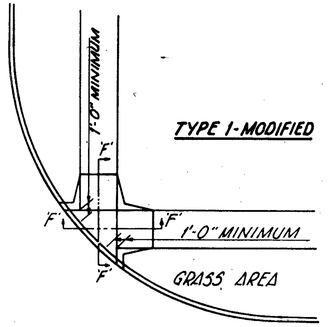


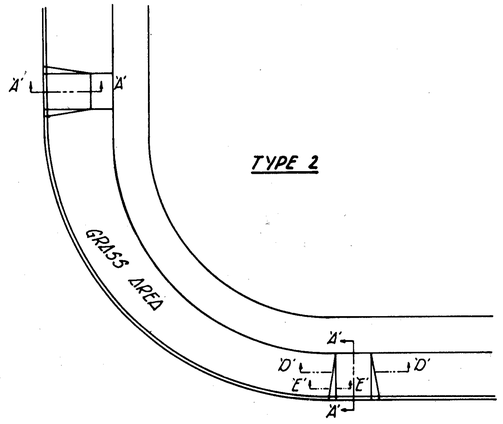


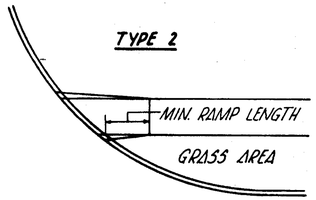


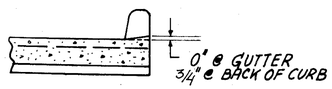


TYP. CURB DETAIL AT RAMP

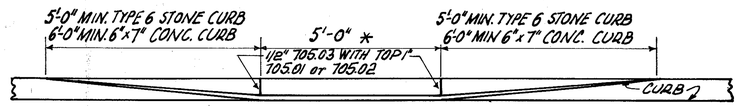


SECTION 'B-B'

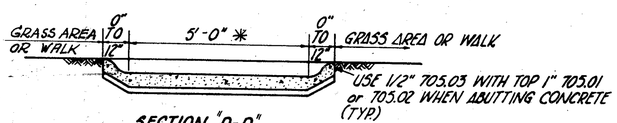


SECTION 'D-D'

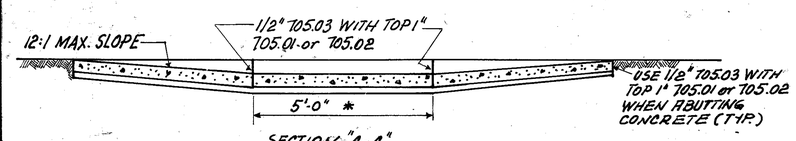


SECTION 'C-C'

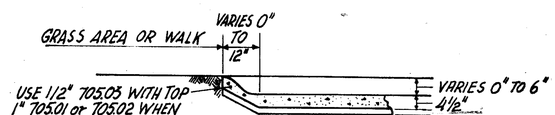


SECTION 'E-E'

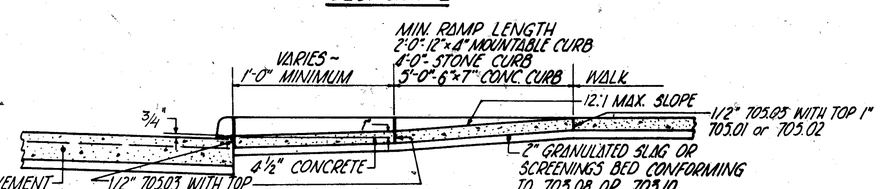


SECTION 'F-F'

PAYMENT: WALK AND CURB, ITEMS 608 & 609, SHALL BE MEASURED THROUGH THE CURB RAMP AREA AND PAID FOR UNDER THEIR RESPECTIVE ITEMS.

ITEM 608, EACH, CURB RAMP TYPE___, CONSTRUCTED IN NEW CURB AND WALK SHALL INCLUDE THE COST OF ANY ADDITIONAL MATERIALS, GRADING, FORMING AND FINISHING.

ITEM 608, SQUARE FOOT, CURB RAMP, TYPE____, CONSTRUCTED IN EXISTING CURB AND WALK SHALL INCLUDE THE TOTAL COST OF FURNISHING ALL MATERIALS AND CONSTRUCTING THE CURB AND WALK OF THE CURB RAMP.

REMOVAL OF EXISTING CURB AND WALK SHALL BE PAID FOR UNDER ITEM 202. REPLACEMENT OF EXISTING CONCRETE WALK BEYOND THE CURB RAMP AREAS NECESSARY TO EFFECT A PROPER GRADE TRANSITION SHALL BE PAID FOR UNDER ITEM 608, SQUARE FOOT, CONCRETE WALK.

SURFACE TEXTURE SHALL BE OBTAINED BY COARSE BROOMING TRANSVERSE TO THE RAMP SLOPES AND SHALL BE ROUGHER THAN ADJACENT WALK.

JOINTS SHALL BE PROVIDED IN THE CURB RAMP AS EXTENSIONS OF WALK JOINTS AND CONSISTANT WITH 608.03 REQUIREMENTS FOR NEW CONCRETE WALK. A ½" 705.03 EXPANSION JOINT FILLER SHALL BE PROVIDED AROUND THE EDGE OF RAMPS BUILT IN EXISTING CONCRETE WALK. LINES SHOWN ON THIS DRAWING TO INDICATE THE RAMP EDGE AND SLOPE CHANGES ARE NOT NECESSARILY JOINT LINES.

DIMENSIONS, LOCATION AND TYPE OF CURB RAMP MAY BE MODIFIED AS DIRECTED BY THE ENGINEER IN ACCORDANCE WITH THE FOLLOWING:

TYPE OF CURB RAMP BUILT SHALL BE THE TYPE THAT BEST FITS THE LOCATION UNLESS A SPECIFIC TYPE IS SPECIFIED. TYPE 1 IS PREFERRED BECAUSE OF THE FLATTER SIDE SLOPES. ANY COMBINATION OF TYPE 1, TYPE 1 MODIFIED, AND TYPE 2 SIDE SLOPES ON OPPOSITE SIDES OF A RAMP MAY BE USED TO BEST FIT THE SITE CONDITIONS.

SLOPE OF THE RAMP TOWARD THE CURB IS PREFERRED TO BE 12:1 OR FLATTER RELATED TO THE HORIZONTAL BUT THE MAXIMUM SLOPE SHALL BE 12:1 RELATED TO THE EXISTING OR PROPOSED WALK SLOPE. THE MINIMUM RAMP LENGTH IS 6' FROM THE BACK OF A 7" CURB, 5' FROM THE BACK OF A 6" CURB AND 3' FROM THE BACK OF A 4" CURB, AND MAY BE INCREASED WHERE FEASIBLE TO OBTAIN A FLATTER RAMP SLOPE OR TO BETTER BLEND WITH THE WALK CONFIGURATION.

WIDTH OF RAMP SHALL NORMALLY BE 5' BUT A MINIMUM WIDTH OF 4' MAY BE USED TO BETTER FIT THE WALK CONFIGURATION OR WHERE SITE CONDITIONS ARE RESTRICTED BY NARROW WALKS, POLE FOUNDATIONS, DRAINAGE INLETS, ETC. MAXIMUM WIDTH OF RAMP SHALL BE AS SHOWN ON THE PLANS OR AS DIRECTED BY THE ENGINEER. THE WIDTH MAY BE TAPERED.

WALK THICKNESS IN THE RAMP SLOPES SHALL BE 4½" MINIMUM OR THICKER AS NECESSARY TO MATCH ADJACENT WALK THICKNESS PLACED ON A 2" GRANULATED SLAG OR SCREENINGS BED.

* UNLESS OTHERWISE NOTED

THIS DWG. PREVIOUSLY BP-12.

CUYAHOGA COUNTY ENGINEER

CURB RAMPS

DWG. NO.
BP-12C
DATE: 2-14-78

REV. DATE

MICELLANEOUS DETAIL

# MONUMENT BOX

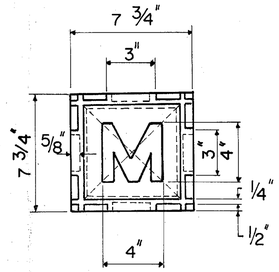


PLAN OF COVER

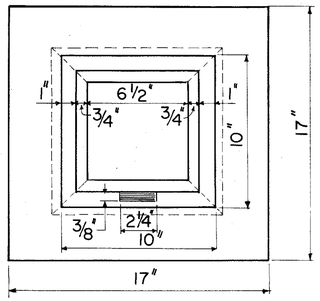


PLAN OF FRAME

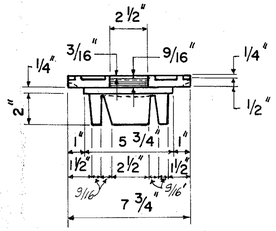


SIDE VIEW OF COVER

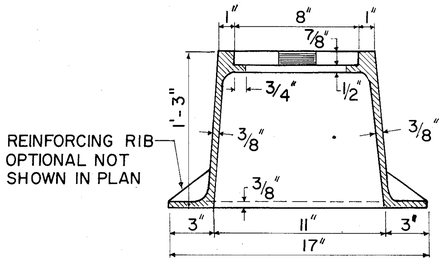


SECTION OF FRAME

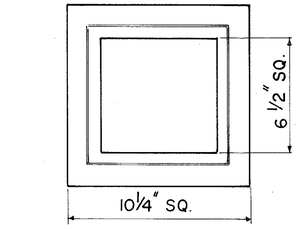


## ADJUSTING RING

| ADJUSTMENT HEIGHT | DIMENSION "A" |
|---|---|
| 1 1/2" | 2 3/8" |
| 2 1/2" | 3 3/8" |
| 3" | 3 7/8" |
| 3 1/2" | 4 3/8" |
| | |
| | |

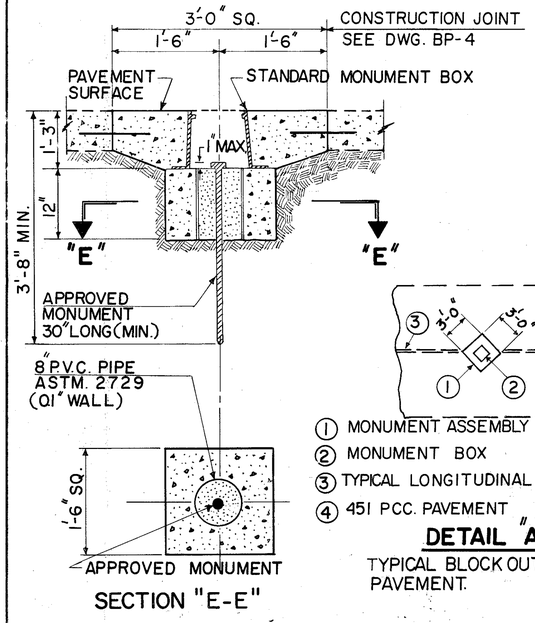


SECTION "E-E"

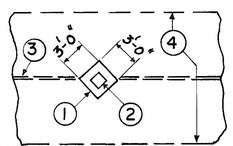


① MONUMENT ASSEMBLY BLOCK OUT
② MONUMENT BOX
③ TYPICAL LONGITUDINAL JOINT
④ 451 PCC. PAVEMENT

**DETAIL "A"**

TYPICAL BLOCK OUT IN RIGID PAVEMENT.

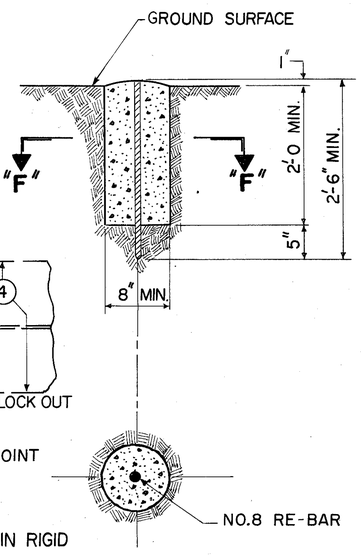


SECTION "F-F"

## ROADWAY MONUMENT ASSEMBLY

## RIGHT OF WAY MONUMENT

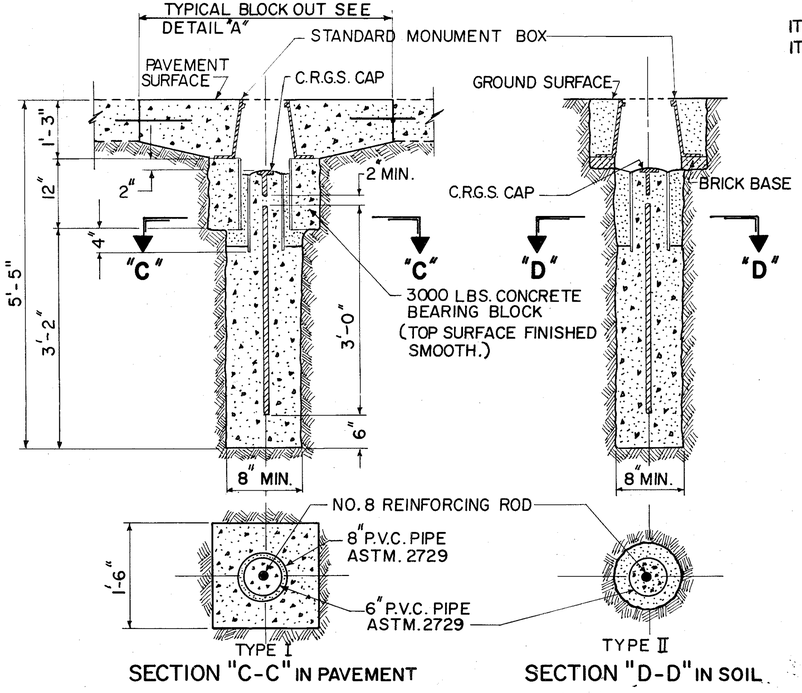


SECTION "C-C" IN PAVEMENT

SECTION "D-D" IN SOIL

## GEODETIC MONUMENT ASSEMBLY

| FHWA REGION | STATE | PROJECT | |
|---|---|---|---|
| 5 | OHIO | | |

39/500

CUYAHOGA COUNTY
CUY-480-10.39 -

## NOTES:

MATERIALS SHALL BE AS SPECIFIED IN SECTION 604.02 OF ITEM 604.

THE ASSEMBLY SHALL BE ESSENTIALLY THE SAME AND EQUALLY AS STRONG AS STRONG AS THOSE HEREON.

MINIMUM WEIGHTS:

| | |
|---|---|
| FRAME | 94 LBS. |
| COVER | 16 LBS. |
| ADJUSTING RINGS | 21 LBS. (2 3/8") |
| | 27 LBS. (3 3/8") |
| | 30 LBS. (3 7/8") |
| | 32 LBS. (4 3/8") |

BEARING AREAS SHALL BE FINISHED AS TO PROVIDE A FIRM AND EVEN SEAT. NO PROJECTION SHALL EXIST ON THE BEARING AREAS AND THE COVER SHALL SEAT IN ITS FRAME WITHOUT ROCKING.

PRIOR TO CONSTRUCTION OF PAVEMENT, THE FRAME SHALL BE SET TO GRADE IN SUCH A MANNER THAT WILL PREVENT ANY PAVEMENT MATERIAL FROM ENTERING THE CASTING.

MONUMENT CAPS WILL BE FURNISHED BY THE CLEVELAND REGIONAL GEODETIC SURVEY OFFICE (C.R.G.S.)

ALL MONUMENTS ARE TO BE SET UNDER THE DIRECTION OF A REGISTERED SURVEYOR.

PAY ITEMS:

ITEM 604-CUYAHOGA COUNTY MONUMENT BOX.
ITEM 604-CUYAHOGA COUNTY ROADWAY MONUMENT ASSEMBLY.
ITEM 604- CUYAHOGA COUNTY RIGHT OF WAY MONUMENT.
ITEM 604- CUYAHOGA COUNTY GEODETIC MONUMENT ASSEMBLY, TYPE I OR II.

## LEGEND:

= ITEM 499 CONCRETE, CLASS "C"

= SAND, ITEM 703.02 COMPACTED AS REQUIRED.

CUYAHOGA COUNTY ENGINEER

# MONUMENT BOX & ASSEMBLIES

DWG. NO.
MB-1
DATE: 6-1-81

| REV. | DATE |
|---|---|
| | |

MICELLANEOUS DETAIL

| CALC. BY | | CUYAHOGA COUNTY | OHIO |
|---|---|---|---|
| DATE | | CUY-480-10.39 | FHWA REGION 5 |
| CHKD. BY | | | |
| DATE | | | |

40/500

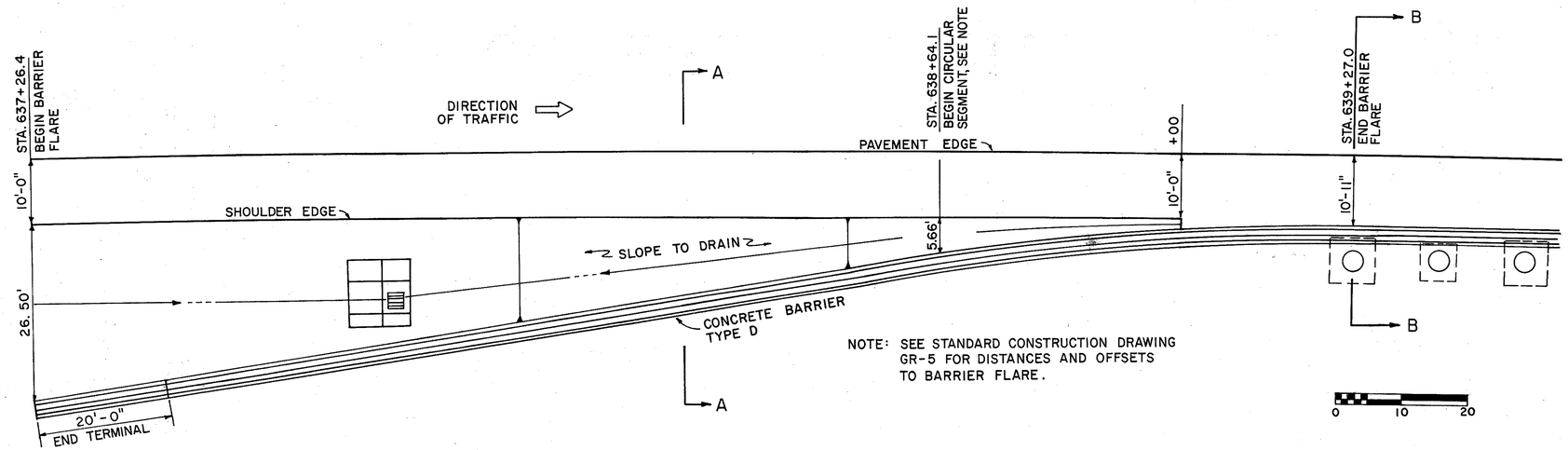


NOTE: SEE STANDARD CONSTRUCTION DRAWING GR-5 FOR DISTANCES AND OFFSETS TO BARRIER FLARE.

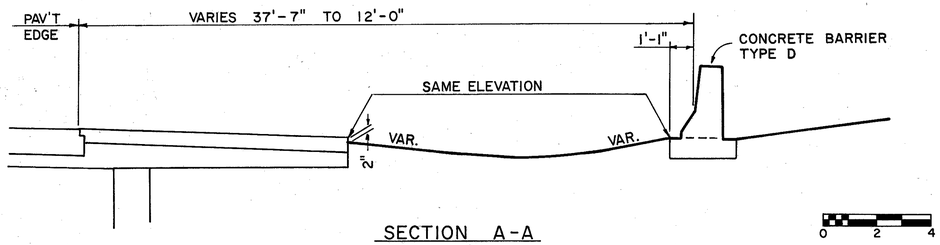


SECTION A-A

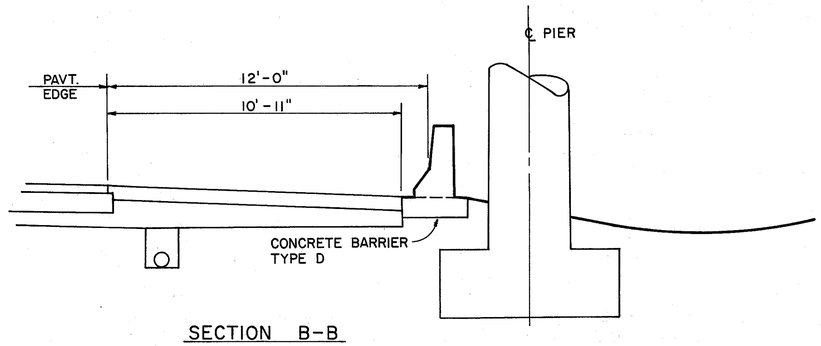


SECTION B-B

## CONCRETE BARRIER FLARE DETAIL

STA. 637+26.4 TO STA. 639+27.0

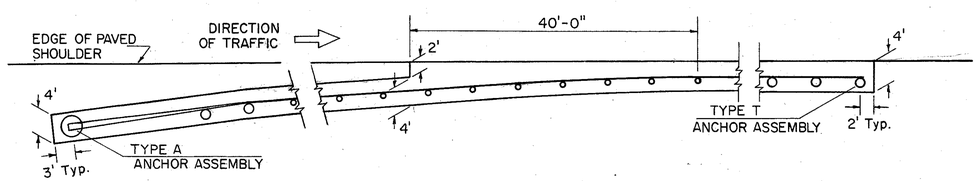


## ITEM 301 FOR WEED CONTROL WITH GUARDRAIL FLARE

| STEEL LIST | | | | | | | | |
|---|---|---|---|---|---|---|---|---|
| W | M-5a | | M-5b | | M-5c | | 6 I 12.5 | |
| | NO. | LIN. FT. | NO. | LIN. FT. | NO. | LIN. FT. | NO. | LIN. FT. |
| 9" | 10 | 4'-7" | 8 | 19'-8" | 10 | 2'-0" | 2 | 11'-0" |

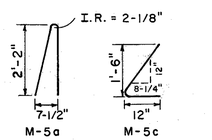


NOTES:

Placement of M-5b bars shall be done in field as directed by the Engineer.

For additional details see Standard Construction Drawing I-3A & B

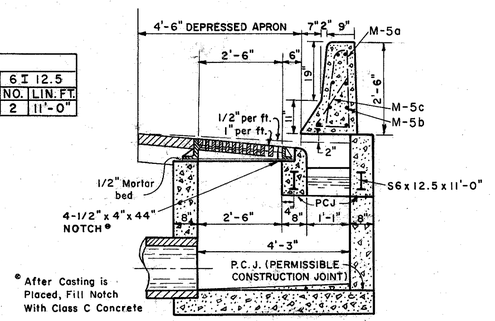


## STANDARD NO. I-3B MEDIAN INLET, AS PER PLAN

| FED. RD. DIVISION | STATE | PROJECT | |
|---|---|---|---|
| 2 | OHIO | | |

41/500

CUYAHOGA COUNTY
CUY-480-10.39

# SUPERELEVATION TABLES

Dc 1°15'00" STATION 569+25 TO STATION 591+00 Max. Super 0.030'/'

| WEST BOUND | | | STATION | | EAST BOUND | | |
|---|---|---|---|---|---|---|---|
| 61' Lt. | 37' Lt. | P.G. | | | P.G. | 37' Rt. | 61' Rt. |
| 795.01 | 795.39 | 795.03 | Begin Transition | 569+25 | Begin Transition 795.03 | 795.41 | 795.05 |
| 795.05 | 795.43 | 795.11 | | +50 | 795.11 | 795.49 | 795.17 |
| 795.07 | 795.45 | 795.19 | | +75 | 795.19 | 795.57 | 795.31 |
| 795.08 | 795.46 | 795.27 | | 570+00 | 795.27 | 795.65 | 795.46 |
| 795.10 | 795.48 | 795.35 | | +25 | 795.35 | 795.73 | 795.60 |
| 795.12 | 795.50 | 795.43 | | +50 | 795.43 | 795.81 | 795.74 |
| 795.12 | 795.50 | 795.51 | | +75 | 795.51 | 795.89 | 795.89 |
| 795.10 | 795.48 | 795.59 | | 571+00 | 795.59 | 795.97 | 796.08 |
| 795.05 | 795.43 | 795.67 | | +25 | 795.67 | 796.05 | 796.29 |
| 795.01 | 795.39 | 795.75 | | +50 | 795.75 | 796.13 | 796.49 |
| 794.97 | 795.40 | 795.83 | | +75 | 795.83 | 796.26 | 796.69 |
| 794.92 | 795.41 | 795.91 | | 572+00 | 795.91 | 796.41 | 796.90 |
| 794.88 | 795.43 | 795.99 | | +25 | 795.99 | 796.55 | 797.10 |
| 794.83 | 795.45 | 796.07 | | +50 | 796.07 | 796.69 | 797.31 |
| 794.79 | 795.47 | 796.15 | | +75 | 796.15 | 796.83 | 797.51 |
| 794.82 | 795.51 | 796.23 | | 573+00 | 796.23 | 796.93 | 797.65 |
| 794.88 | 795.60 | 796.32 | Begin Full Super | +25 | Begin Full Super 796.32 | 797.04 | 797.76 |
| 794.98 | 795.70 | 796.42 | | +50 | 796.42 | 797.14 | 797.86 |
| 795.10 | 795.82 | 796.54 | | +75 | 796.54 | 797.26 | 797.98 |
| 795.23 | 795.95 | 796.67 | | 574+00 | 796.67 | 797.39 | 798.11 |
| 795.38 | 796.10 | 796.82 | | +25 | 796.82 | 797.54 | 798.26 |
| 795.55 | 796.27 | 796.99 | | +50 | 796.99 | 797.71 | 798.43 |
| 795.73 | 796.45 | 797.17 | | +75 | 797.17 | 797.89 | 798.61 |
| 795.93 | 796.65 | 797.37 | | 575+00 | 797.37 | 798.09 | 798.81 |
| 796.14 | 796.86 | 797.58 | | +25 | 797.58 | 798.30 | 799.02 |
| 796.37 | 797.09 | 797.81 | | +50 | 797.81 | 798.53 | 799.25 |
| 796.61 | 797.33 | 798.05 | | +75 | 798.05 | 798.77 | 799.49 |
| 796.87 | 797.59 | 798.31 | | 576+00 | 798.31 | 799.03 | 799.75 |
| 797.14 | 797.86 | 798.58 | | +25 | 798.58 | 799.30 | 800.02 |
| 797.43 | 798.15 | 798.87 | | +50 | 798.87 | 799.59 | 800.31 |
| 797.73 | 798.45 | 799.17 | | +75 | 799.17 | 799.89 | 800.61 |
| 798.05 | 798.77 | 799.49 | | 577+00 | 799.49 | 800.21 | 800.93 |
| 798.39 | 799.11 | 799.83 | | +25 | 799.83 | 800.55 | 801.27 |
| 798.74 | 799.46 | 800.18 | | +50 | 800.18 | 800.90 | 801.62 |
| 799.11 | 799.83 | 800.55 | | +75 | 800.55 | 801.27 | 801.99 |
| 799.49 | 800.21 | 800.93 | | 578+00 | 800.93 | 801.65 | 802.37 |
| 799.88 | 800.60 | 801.32 | | +25 | 801.32 | 802.04 | 802.76 |
| 800.27 | 800.99 | 801.71 | | +50 | 801.71 | 802.43 | 803.15 |
| 800.66 | 801.38 | 802.10 | | +75 | 802.10 | 802.82 | 803.54 |
| 801.05 | 801.77 | 802.49 | | 579+00 | 802.49 | 803.21 | 803.93 |
| 801.44 | 802.16 | 802.88 | | +25 | 802.88 | 803.60 | 804.32 |
| 801.83 | 802.55 | 803.27 | | +50 | 803.27 | 803.99 | 804.71 |
| 802.22 | 802.94 | 803.66 | | +75 | 803.66 | 804.38 | 805.10 |
| 802.61 | 803.33 | 804.05 | | 580+00 | 804.05 | 804.77 | 805.49 |
| 803.00 | 803.72 | 804.44 | | +25 | 804.44 | 805.16 | 805.88 |
| 803.39 | 804.11 | 804.83 | | +50 | 804.83 | 805.55 | 806.27 |
| 803.78 | 804.50 | 805.22 | | +75 | 805.22 | 805.94 | 806.66 |
| 804.17 | 804.89 | 805.61 | | 581+00 | 805.61 | 806.33 | 807.05 |
| 804.56 | 805.28 | 806.00 | | +25 | 806.00 | 806.72 | 807.44 |
| 804.95 | 805.67 | 806.39 | | +50 | 806.39 | 807.11 | 807.83 |
| 805.34 | 806.06 | 806.78 | | +75 | 806.78 | 807.50 | 808.22 |
| 805.73 | 806.45 | 807.17 | | 582+00 | 807.17 | 807.89 | 808.61 |
| 806.12 | 806.84 | 807.56 | | +25 | 807.56 | | |
| | | 807.95 | | +50 | 807.95 | See Structure | |
| See Structure No. | | 808.34 | | +75 | 808.34 | Cuy. 480-1057 | |
| Cuy-480-1057 | | 808.73 | | 583+00 | 808.73 | | |
| | | 809.12 | | +25 | 809.12 | | 810.56 |
| | | 809.51 | | +50 | 809.51 | 810.23 | 810.95 |
| 808.46 | 809.18 | 809.90 | | +75 | 809.90 | 810.62 | 811.34 |
| 808.85 | 809.57 | 810.29 | | 584+00 | 810.29 | 811.01 | 811.73 |
| 809.24 | 809.96 | 810.68 | | +25 | 810.68 | 811.40 | 812.12 |
| 809.63 | 810.35 | 811.07 | | +50 | 811.07 | 811.79 | 812.51 |
| 810.02 | 810.74 | 811.46 | | +75 | 811.46 | 812.18 | 812.90 |
| 810.41 | 811.13 | 811.85 | | 585+00 | 811.85 | 812.57 | 813.29 |
| 810.80 | 811.52 | 812.24 | | +25 | 812.24 | 812.96 | 813.68 |
| 811.19 | 811.91 | 812.63 | | +50 | 812.63 | 813.35 | 814.07 |
| 811.58 | 812.30 | 813.02 | | +75 | 813.02 | 813.74 | 814.46 |
| 811.97 | 812.69 | 813.41 | | 586+00 | 813.41 | 814.13 | 814.85 |
| 812.36 | 813.08 | 813.80 | | +25 | 813.80 | 814.52 | 815.24 |
| 812.75 | 813.47 | 814.19 | | +50 | 814.19 | 814.91 | 815.63 |
| 813.14 | 813.86 | 814.58 | | +75 | 814.58 | 815.30 | 816.02 |
| 813.53 | 814.25 | 814.97 | | 587+00 | 814.97 | 815.69 | 816.41 |
| 813.92 | 814.64 | 815.36 | | +25 | 815.36 | 816.08 | 816.80 |
| 814.31 | 815.03 | 815.75 | | +50 | 815.75 | 816.47 | 817.19 |
| 814.70 | 815.42 | 816.14 | | +75 | 816.14 | 816.86 | 817.58 |
| 815.09 | 815.81 | 816.53 | | 588+00 | 816.53 | 817.25 | 817.97 |
| 815.48 | 816.20 | 816.92 | | +25 | 816.92 | 817.64 | 818.36 |
| 815.87 | 816.59 | 817.31 | | +50 | 817.31 | 818.03 | 818.75 |
| 816.26 | 816.98 | 817.70 | | +75 | 817.70 | 818.42 | 819.14 |
| 816.65 | 817.37 | 818.09 | | 589+00 | 818.09 | 818.81 | 819.53 |
| 817.04 | 817.76 | 818.48 | | +25 | 818.48 | 819.20 | 819.92 |
| 817.43 | 818.15 | 818.87 | | +50 | 818.87 | 819.59 | 820.31 |
| 817.82 | 818.54 | 819.26 | | +75 | 819.26 | 819.98 | 820.70 |
| 818.21 | 818.93 | 819.65 | | 590+00 | 819.65 | 820.37 | 821.09 |
| 818.60 | 819.32 | 820.04 | | +25 | 820.04 | 820.76 | 821.48 |
| 818.99 | 819.71 | 820.43 | | +50 | 820.43 | 821.15 | 821.87 |
| 819.38 | 820.10 | 820.82 | | +75 | 820.82 | 821.54 | 822.26 |
| 819.77 | 820.49 | 821.21 | | 591+00 | 821.21 | 821.93 | 822.65 |

STATION 591+25 TO STATION 597+75

| WEST BOUND | | | STATION | | | EAST BOUND | | |
|---|---|---|---|---|---|---|---|---|
| 61' Lt. | 37' Lt. | P.G. | | | | P.G. | 37' Rt. | 61' Rt. |
| 820.16 | 820.88 | 821.60 | | 591+25 | | 821.60 | 822.32 | 823.04 |
| 820.55 | 821.27 | 821.99 | | +50 | | 821.99 | 822.71 | 823.43 |
| 820.94 | 821.66 | 822.38 | | +75 | | 822.38 | 823.10 | 823.82 |
| 821.33 | 822.05 | 822.77 | | 592+00 | | 822.77 | 823.49 | 824.21 |
| | 822.44 | 823.16 | | +25 | | 823.16 | 823.88 | 824.60 |
| | 822.82 | 823.54 | | +50 | | 823.54 | 824.26 | 824.98 |
| | | 823.90 | | +75 | | 823.90 | 824.62 | 825.34 |
| | | 824.24 | | 593+00 | | 824.24 | 824.96 | 825.68 |
| See Structure No. | | 824.56 | | +25 | | 824.56 | 825.28 | 826.00 |
| Cuy. 480-1078 | | 824.86 | | +50 | | 824.86 | 825.58 | 826.30 |
| | | 825.14 | End Full | +75 | End Full | 825.14 | 825.86 | 826.58 |
| | | 825.40 | Super | 594+00 | Super | 825.40 | 826.10 | 826.80 |
| | | 825.65 | | +25 | | 825.65 | | 826.95 |
| | | 825.87 | | +50 | | 825.87 | | 827.04 |
| | | 826.07 | | +75 | | 826.07 | | 827.12 |
| | | 826.25 | | 595+00 | | 826.25 | | |
| | | 826.41 | | +25 | | 826.41 | | |
| 825.83 | | 826.56 | | +50 | | 826.56 | See Structure No. | |
| 826.03 | | 826.68 | | +75 | | 826.68 | Cuy. 480-1078 | |
| 826.19 | 826.57 | 826.78 | | 596+00 | | 826.78 | | |
| 826.33 | 826.71 | 826.86 | | +25 | | 826.86 | | |
| 826.46 | 826.84 | 826.93 | | +50 | | 826.93 | | |
| 826.57 | 826.95 | 826.97 | | +75 | | 826.97 | | |
| 826.65 | 827.03 | 826.99 | | 597+00 | | 826.99 | | |
| 826.72 | 827.10 | 827.00 | | +25 | | 827.00 | 827.38 | |
| 826.77 | 827.15 | 826.98 | | +50 | | 826.98 | 827.36 | |
| 826.80 | 827.18 | 826.95 | | +75 | | 826.95 | 827.33 | 827.10 |
| 826.80 | 827.18 | 826.89 | | 598+00 | | 826.89 | 827.27 | 826.98 |
| 826.77 | 827.15 | 826.82 | | +25 | | 826.82 | 827.20 | 826.86 |
| 826.70 | 827.08 | 826.72 | | +50 | | 826.72 | 827.10 | 826.73 |
| 826.60 | 826.98 | 826.60 | Normal | +75 | Normal | 826.60 | 826.98 | 826.60 |

STATION 695+00 TO STATION 698+50

Dc= 1°-00'-00" CURVE LEFT MAX. SUPER=0.024'/'

| WEST BOUND | | | | STATION | | EAST BOUND | | |
|---|---|---|---|---|---|---|---|---|
| 61' Lt. | 37' Lt. | P.G. | | | | P.G. | 37' Rt. | 61' Rt. |
| 771.78 | 772.15 | 771.78 | Normal | 695+00 | Normal | 771.78 | 772.15 | 771.78 |
| 772.09 | 772.48 | 772.11 | | +25 | | 772.11 | 772.48 | 772.14 |
| 772.38 | 772.76 | 772.44 | | +50 | | 772.44 | 772.81 | 772.50 |
| 772.65 | 773.02 | 772.77 | | +75 | | 772.77 | 773.14 | 772.89 |
| 772.92 | 773.33 | 773.10 | | 696+00 | | 773.10 | 773.47 | 773.26 |
| 773.19 | 773.56 | 773.43 | | +25 | | 773.43 | 773.80 | 773.68 |
| 773.46 | 773.83 | 773.76 | | +50 | | 773.76 | 774.13 | 774.06 |
| 773.70 | 774.09 | 774.09 | | +75 | | 774.09 | 774.44 | 774.49 |
| 773.93 | 774.30 | 774.42 | | 697+00 | | 774.42 | 774.79 | 774.91 |
| 774.13 | 774.53 | 774.75 | | +25 | | 774.75 | 775.14 | 775.37 |
| 774.34 | 774.75 | 775.08 | | +50 | | 775.08 | 775.49 | 775.83 |
| 774.54 | 774.98 | 775.41 | | +75 | | 775.41 | 775.84 | 776.28 |
| 774.75 | 775.24 | 775.74 | | 698+00 | | 775.74 | 776.24 | 776.74 |
| 774.97 | 775.51 | 776.07 | | +25 | | 776.07 | 776.63 | 777.17 |
| 775.25 | 775.82 | 776.40 | Begin Full Super | +50 | Begin Full Super | 776.40 | 776.98 | 777.55 |

CHKD. BY E.P.E. DATE 2-8-66
CHKD. BY F.J.K. DATE 2-8-66

# SUPERELEVATION TABLES

| FED. RD. DIVISION | STATE | PROJECT | |
|---|---|---|---|
| 2 | OHIO | | |

42/500

CUYAHOGA COUNTY
CUY-480-10.39

## I-480

Dc = 1° 00'00" CURVE RT. MAX. SUPER = 0.024 ft/ft

| WESTBOUND LANES | | | | | | PROFILE GRADE 13' LT. 13' RT. | EASTBOUND LANES | | | |
|---|---|---|---|---|---|---|---|---|---|---|
| 61' LT. | 49' LT. | 37' LT. | 25' LT. | NOTE | STATION | | 25' RT. | 37' RT. | 49' RT. | 61' RT. |
| 807.06 | 807.25 | 807.44 | 807.25 | Transition | 609+00 | 807.06 | 807.25 | 807.44 | 807.25 | 807.06 |
| 806.44 | 806.62 | 806.79 | 806.61 | | +25 | 806.42 | 806.60 | 806.78 | 806.59 | 806.40 |
| 805.86 | 806.01 | 806.15 | 805.97 | | +50 | 805.78 | 805.93 | 806.08 | 805.89 | 805.70 |
| 805.28 | 805.40 | 805.51 | 805.33 | | +75 | 805.14 | 805.26 | 805.37 | 805.19 | 805.00 |
| 804.70 | 804.79 | 804.87 | 804.69 | | 610+00 | 804.50 | 804.59 | 804.67 | 804.48 | 804.30 |
| 804.13 | 804.18 | 804.23 | 804.05 | | +25 | 803.86 | 803.91 | 803.97 | 803.78 | 803.59 |
| 803.55 | 803.57 | 803.59 | 803.41 | | +50 | 803.22 | 803.24 | 803.27 | 803.08 | 802.89 |
| 802.99 | 802.97 | 802.95 | 802.77 | | +75 | 802.58 | 802.56 | 802.55 | 802.36 | 802.17 |
| 802.47 | 802.39 | 802.31 | 802.13 | | 611+00 | 801.94 | 801.86 | 801.78 | 801.60 | 801.41 |
| 801.96 | 801.82 | 801.67 | 801.49 | | +25 | 801.30 | 801.16 | 801.02 | 800.83 | 800.64 |
| 801.57 | 801.39 | 801.20 | 801.01 | P.C. | +43.51 | 800.83 | 800.64 | 800.45 | 800.26 | 800.08 |
| 801.44 | 801.25 | 801.05 | 800.86 | | +50 | 800.66 | 800.46 | 800.27 | 800.07 | 799.88 |
| 800.93 | 800.70 | 800.47 | 800.25 | | +75 | 800.02 | 799.79 | 799.57 | 799.34 | 799.11 |
| 800.41 | 800.15 | 799.90 | 799.64 | | 612+00 | 799.38 | 799.12 | 798.86 | 798.61 | 798.35 |
| 799.87 | 799.60 | 799.30 | 799.03 | | +25 | 798.74 | 798.45 | 798.16 | 797.88 | 797.59 |
| 799.25 | 798.96 | 798.68 | 798.39 | | +50 | 798.10 | 797.81 | 797.52 | 797.24 | 796.95 |
| 798.61 | 798.32 | 798.04 | 797.75 | | +75 | 797.46 | 797.17 | 796.88 | 796.60 | 796.31 |
| 797.97 | 797.68 | 797.40 | 797.11 | | 613+00 | 796.82 | 796.53 | 796.24 | 795.96 | 795.67 |
| 797.33 | 797.04 | 796.76 | 796.47 | | +25 | 796.18 | 795.89 | 795.60 | 795.32 | 795.03 |
| 796.69 | 796.40 | 796.12 | 795.83 | | +50 | 795.54 | 795.25 | 794.96 | 794.68 | 794.39 |
| 796.05 | 795.76 | 795.48 | 795.19 | | +75 | 794.90 | 794.61 | 794.32 | 794.04 | 793.75 |
| 795.41 | 795.12 | 794.84 | 794.55 | | 614+00 | 794.26 | 793.97 | 793.68 | 793.40 | 793.11 |
| 794.77 | 794.48 | 794.20 | 793.91 | | +25 | 793.62 | 793.33 | 793.04 | 792.76 | 792.47 |
| 794.13 | 793.84 | 793.56 | 793.27 | | +50 | 792.98 | 792.69 | 792.40 | 792.12 | 791.83 |
| 793.49 | 793.20 | 792.92 | 792.63 | | +75 | 792.34 | 792.05 | 791.76 | 791.48 | 791.19 |
| 792.85 | 792.56 | 792.28 | 791.99 | | 615+00 | 791.70 | 791.41 | 791.12 | 790.84 | 790.55 |
| 792.21 | 791.92 | 791.64 | 791.35 | | +25 | 791.06 | 790.77 | 790.48 | 790.20 | 789.91 |
| 791.57 | 791.28 | 791.00 | 790.71 | | +50 | 790.42 | 790.13 | 789.84 | 789.56 | 789.27 |
| 790.93 | 790.64 | 790.36 | 790.07 | | +75 | 789.78 | 789.49 | 789.20 | 788.92 | 788.63 |
| 790.29 | 790.00 | 789.72 | 789.43 | | 616+00 | 789.14 | 788.85 | 788.56 | 788.28 | 787.99 |
| 789.66 | 789.37 | 789.08 | 788.80 | | +25 | 788.51 | 788.22 | 787.93 | 787.65 | 787.36 |
| 789.05 | 788.76 | 788.47 | 788.18 | | +50 | 787.90 | 787.61 | 787.32 | 787.03 | 786.74 |
| 788.45 | 788.16 | 787.88 | 787.59 | | +75 | 787.30 | 787.01 | 786.73 | 786.44 | 786.15 |
| 787.88 | 787.59 | 787.30 | 787.01 | | 617+00 | 786.72 | 786.44 | 786.15 | 785.86 | 785.57 |
| 787.32 | 787.03 | 786.74 | 786.45 | | +25 | 786.16 | 785.88 | 785.59 | 785.30 | 785.01 |
| 786.78 | 786.49 | 786.20 | 785.91 | | +50 | 785.62 | 785.34 | 785.05 | 784.76 | 784.47 |
| 786.25 | 785.96 | 785.68 | 785.39 | | +75 | 785.10 | 784.81 | 784.53 | 784.24 | 783.95 |
| 785.75 | 785.46 | 785.17 | 784.88 | | 618+00 | 784.60 | 784.31 | 784.02 | 783.73 | 783.44 |
| 785.26 | 784.97 | 784.68 | 784.40 | | +25 | 784.11 | 783.82 | 783.53 | 783.25 | 782.96 |
| 784.79 | 784.50 | 784.22 | 783.93 | | +50 | 783.64 | 783.35 | 783.06 | 782.78 | 782.49 |
| 784.34 | 784.05 | 783.76 | 783.48 | | +75 | 783.19 | 782.90 | 782.61 | 782.33 | 782.04 |
| 783.91 | 783.62 | 783.33 | 783.04 | | 619+00 | 782.76 | 782.47 | 782.18 | 781.89 | 781.60 |
| 783.49 | 783.20 | 782.92 | 782.63 | | +25 | 782.34 | 782.05 | 781.77 | 781.48 | 781.19 |
| 783.10 | 782.81 | 782.52 | 782.23 | | +50 | 781.94 | 781.66 | 781.37 | 781.08 | 780.79 |
| 782.72 | 782.43 | 782.14 | 781.85 | | +75 | 781.56 | 781.28 | 780.99 | 780.70 | 780.41 |
| 782.36 | 782.07 | 781.78 | 781.49 | | 620+00 | 781.20 | 780.92 | 780.63 | 780.34 | 780.05 |
| 782.01 | 781.72 | 781.44 | 781.15 | | +25 | 780.86 | 780.57 | 780.29 | 780.00 | 779.71 |
| 781.69 | 781.40 | 781.11 | 780.82 | | +50 | 780.54 | 780.25 | 779.96 | 779.67 | 779.38 |
| 781.38 | 781.09 | 780.80 | 780.52 | Full Super. = 0.024 ft/ft | +75 | 780.23 | 779.94 | 779.65 | 779.37 | 779.08 |

## I-480

Dc = 1° 00'00" CURVE RT. MAX. SUPER = 0.024 ft/ft

| WESTBOUND LANES | | | | | | PROFILE GRADE 13' LT. 13' RT. | EASTBOUND LANES | | | |
|---|---|---|---|---|---|---|---|---|---|---|
| 61' LT. | 49' LT. | 37' LT. | 25' LT. | NOTE | STATION | | 25' RT. | 37' RT. | 49' RT. | 61' RT. |
| 781.09 | 780.80 | 780.52 | 780.23 | | 621+00 | 779.94 | 779.65 | 779.36 | 779.08 | 778.79 |
| 780.81 | 780.52 | 780.24 | 779.95 | | +25 | 779.66 | 779.37 | 779.08 | 778.80 | 778.51 |
| 780.53 | 780.24 | 779.96 | 779.67 | | +50 | 779.38 | 779.09 | 778.80 | 778.52 | 778.23 |
| 780.25 | 779.96 | 779.68 | 779.39 | | +75 | 779.10 | 778.81 | 778.52 | 778.24 | 777.95 |
| 779.97 | 779.68 | 779.40 | 779.11 | | 622+00 | 778.82 | 778.53 | 778.24 | 777.96 | 777.67 |
| 779.69 | 779.40 | 779.12 | 778.83 | | +25 | 778.54 | 778.25 | 777.96 | 777.68 | 777.39 |
| 779.41 | 779.12 | 778.84 | 778.55 | | +50 | 778.26 | 777.97 | 777.68 | 777.40 | 777.11 |
| 779.13 | 778.84 | 778.56 | 778.27 | | +75 | 777.98 | 777.69 | 777.40 | 777.12 | 776.83 |
| 778.85 | 778.56 | 777.28 | 777.99 | | 623+00 | 777.70 | 777.41 | 777.12 | 776.84 | 776.55 |
| 778.57 | 778.28 | 778.00 | 777.71 | | +25 | 777.42 | 777.13 | 776.84 | 776.56 | 776.27 |
| 778.29 | 778.00 | 777.72 | 777.43 | | +50 | 777.14 | 776.85 | 776.56 | 776.28 | 775.99 |
| 778.01 | 777.72 | 777.44 | 777.15 | | +75 | 776.86 | 776.57 | 776.28 | 776.00 | 775.71 |
| 777.73 | 777.44 | 777.16 | 776.87 | | 624+00 | 776.58 | 776.29 | 776.00 | 775.72 | 775.43 |
| 777.45 | 777.16 | 776.88 | 776.59 | | +25 | 776.30 | 776.01 | 775.72 | 775.44 | 775.15 |
| 777.17 | 776.88 | 776.60 | 776.31 | | +50 | 776.02 | 775.73 | 775.44 | 775.16 | 774.87 |
| 776.89 | 776.60 | 776.32 | 776.03 | | +75 | 775.74 | 775.45 | 775.16 | 774.88 | 774.59 |
| 776.61 | 776.32 | 776.04 | 775.75 | | 625+00 | 775.46 | 775.17 | 774.88 | 774.60 | 774.31 |
| 776.33 | 776.04 | 775.76 | 775.47 | | +25 | 775.18 | 774.89 | 774.60 | 774.32 | 774.03 |
| 776.05 | 775.76 | 775.48 | 775.19 | | +50 | 774.90 | 774.61 | 774.32 | 774.04 | 773.75 |
| 775.77 | 775.48 | 775.20 | 774.91 | | +75 | 774.62 | 774.33 | 774.04 | 773.76 | 773.47 |
| 775.49 | 775.20 | 774.92 | 774.63 | | 626+00 | 774.34 | 774.05 | 773.76 | 773.48 | 773.19 |
| 775.21 | 774.92 | 774.64 | 774.35 | | +25 | 774.06 | 773.77 | 773.48 | 773.20 | 772.91 |
| 774.93 | 774.64 | 774.36 | 774.07 | | +50 | 773.78 | 773.49 | 773.20 | 772.92 | 772.63 |
| 774.65 | 774.36 | 774.08 | 773.79 | | +75 | 773.50 | 773.21 | 772.92 | 772.64 | 772.35 |
| 774.37 | 774.08 | 773.80 | 773.51 | | 627+00 | 773.22 | 772.93 | 772.64 | 772.36 | 772.07 |
| 774.09 | 773.80 | 773.52 | 773.23 | | +25 | 772.94 | 772.65 | 772.36 | 772.08 | 771.79 |
| 773.81 | 773.52 | 773.24 | 772.95 | | +50 | 772.66 | 772.37 | 772.08 | 771.80 | 771.51 |
| 773.53 | 773.24 | 772.96 | 772.67 | | +75 | 772.38 | 772.09 | 771.80 | 771.52 | 771.23 |
| 773.25 | 772.96 | 772.68 | 772.39 | | 628+00 | 772.10 | 771.81 | 771.52 | 771.24 | 770.95 |
| 772.97 | 772.68 | 772.40 | 772.11 | | +25 | 771.82 | 771.53 | 771.24 | 770.96 | 770.67 |
| 772.69 | 772.40 | 772.12 | 771.83 | | +50 | 771.54 | 771.25 | 770.96 | 770.68 | 770.39 |
| 772.41 | 772.12 | 771.84 | 771.55 | | +75 | 771.26 | 770.97 | 770.68 | 770.40 | 770.11 |
| 772.13 | 771.84 | 771.56 | 771.27 | | 629+00 | 770.98 | 770.69 | 770.40 | 770.12 | 769.83 |
| 771.85 | 771.56 | 771.28 | 770.99 | | +25 | 770.70 | 770.41 | 770.12 | 769.84 | 769.55 |
| 771.57 | 771.28 | 771.00 | 770.71 | | +50 | 770.42 | 770.13 | 769.84 | 769.56 | 769.27 |
| 771.29 | 771.00 | 770.72 | 770.43 | | +75 | 770.14 | 769.85 | 769.56 | 769.28 | 768.99 |
| 771.01 | 770.72 | 770.44 | 770.15 | | 630+00 | 769.86 | 769.57 | 769.28 | 769.00 | 768.71 |
| 770.73 | 770.44 | 770.16 | 769.87 | | +25 | 769.58 | 769.29 | 769.00 | 768.72 | 768.43 |
| 770.45 | 770.16 | 769.88 | 769.59 | | +50 | 769.30 | 769.01 | 768.72 | 768.44 | 768.15 |
| 770.17 | 769.88 | 769.60 | 769.31 | | +75 | 769.02 | 768.73 | 768.44 | 768.16 | 767.87 |
| 769.89 | 769.60 | 769.32 | 769.03 | | 631+00 | 768.74 | 768.45 | 768.16 | 767.88 | 767.59 |
| 769.61 | 769.32 | 769.04 | 768.75 | | +25 | 768.46 | 768.17 | 767.88 | 767.60 | 767.31 |
| 769.33 | 769.04 | 768.76 | 768.47 | | +50 | 768.18 | 767.89 | 767.60 | 767.32 | 767.03 |
| 769.05 | 768.76 | 768.48 | 768.19 | | +75 | 767.90 | 767.61 | 767.32 | 767.04 | 766.75 |
| 768.77 | 768.48 | 768.20 | 767.91 | | 632+00 | 767.62 | 767.33 | 767.04 | 766.76 | 766.47 |
| 768.49 | 768.20 | 767.92 | 767.63 | | +25 | 767.34 | 767.05 | 767.76 | 766.48 | 766.19 |
| 768.21 | 767.92 | 767.64 | 767.35 | | +50 | 767.06 | 766.77 | 766.48 | 766.20 | 765.91 |
| 767.93 | 767.64 | 767.36 | 767.07 | Full Super. = 0.024 ft/ft | +75 | 766.78 | 766.49 | 766.20 | 765.92 | 765.63 |

# SUPERELEVATION TABLES

| FED. RD DIVISION | STATE | PROJECT | |
|---|---|---|---|
| 2 | OHIO | | |

43/500

CUYAHOGA COUNTY
CUY-480-10.39

## I-480

Dc = 1°00'00" CURVE RT. MAX. SUPER = 0.024 ft/ft

| WESTBOUND LANES | | | | | | PROFILE GRADE 13' LT. 13' RT. | EASTBOUND LANES | | | |
|---|---|---|---|---|---|---|---|---|---|---|
| 61' LT. | 49' LT. | 37' LT. | 25' LT. | NOTE | STATION | | 25' RT. | 37' RT. | 49' RT. | 61' RT. |
| 767.65 | 767.36 | 767.08 | 766.79 | | 633+00 | 766.50 | 766.21 | 765.92 | 765.64 | 765.35 |
| 767.37 | 767.08 | 766.80 | 766.51 | | +25 | 766.22 | 765.93 | 765.64 | 765.36 | 765.07 |
| 767.09 | 766.80 | 766.52 | 766.23 | | +50 | 765.94 | 765.65 | 765.36 | 765.08 | 764.79 |
| 766.81 | 766.52 | 766.24 | 765.95 | | +75 | 765.66 | 765.37 | 765.08 | 764.80 | 764.51 |
| 766.53 | 766.24 | 765.96 | 765.67 | | 634+00 | 765.38 | 765.09 | 764.80 | 764.52 | 764.23 |
| 766.25 | 765.96 | 765.68 | 765.39 | | +25 | 765.10 | 764.81 | 764.52 | 764.24 | 763.95 |
| 765.97 | 765.68 | 765.40 | 765.11 | | +50 | 764.82 | 764.53 | 764.24 | 763.96 | 763.67 |
| 765.69 | 765.40 | 765.12 | 764.83 | | +75 | 764.54 | 764.25 | 763.96 | 763.68 | 763.39 |
| 765.41 | 765.12 | 764.84 | 764.55 | | 635+00 | 764.26 | 763.97 | 763.68 | 763.40 | 763.11 |
| 765.13 | 764.84 | 764.56 | 764.27 | | +25 | 763.98 | 763.69 | 763.40 | 763.12 | 762.83 |
| 764.85 | 764.56 | 764.28 | 763.99 | | +50 | 763.70 | 763.41 | 763.12 | 762.84 | 762.55 |
| 764.57 | 764.28 | 764.00 | 763.71 | | +75 | 763.42 | 763.13 | 762.84 | 762.56 | 762.27 |
| 764.29 | 764.00 | 763.72 | 763.43 | | 636+00 | 763.14 | 762.85 | 762.56 | 762.28 | 761.99 |
| 764.02 | 763.73 | 763.44 | 763.16 | | +25 | 762.87 | 762.58 | 762.29 | 762.00 | 761.72 |
| 763.76 | 763.47 | 763.19 | 762.90 | | +50 | 762.61 | 762.32 | 762.03 | 761.75 | 761.46 |
| 763.52 | 763.23 | 762.94 | 762.66 | | +75 | 762.37 | 762.08 | 761.79 | 761.50 | 761.22 |
| 763.29 | 763.00 | 762.72 | 762.43 | | 637+00 | 762.14 | 761.85 | 761.56 | 761.28 | 760.99 |
| 763.08 | 762.79 | 762.50 | 762.22 | | +25 | 761.93 | 761.64 | 761.35 | 761.06 | 760.78 |
| 762.88 | 762.59 | 762.31 | 762.02 | | +50 | 761.73 | 761.44 | 761.15 | 760.87 | 760.58 |
| 762.70 | 762.41 | 762.12 | 761.84 | | +75 | 761.55 | 761.26 | 760.97 | 760.68 | 760.40 |
| 762.53 | 762.24 | 761.96 | 761.67 | | 638+00 | 761.38 | 761.09 | 760.80 | 760.52 | 760.23 |
| 762.38 | 762.09 | 761.80 | 761.52 | | +25 | 761.23 | 760.94 | 760.65 | 760.36 | 760.08 |
| 762.24 | 761.95 | 761.67 | 761.38 | | +50 | 761.09 | 760.80 | 760.51 | 760.23 | 759.94 |
| 762.12 | 761.83 | 761.54 | 761.26 | | +75 | 760.97 | 760.68 | 760.39 | 760.10 | 759.82 |
| 762.01 | 761.72 | 761.44 | 761.15 | | 639+00 | 760.86 | 760.57 | 760.28 | 760.00 | 759.71 |
| 761.92 | 761.63 | 761.34 | 761.06 | | +25 | 760.77 | 760.48 | 760.19 | 759.90 | 759.62 |
| 761.84 | 761.55 | 761.27 | 760.98 | | +50 | 760.69 | 760.40 | 760.11 | 759.83 | 759.54 |
| 761.78 | 761.49 | 761.20 | 760.92 | | +75 | 760.63 | 760.34 | 760.05 | 759.76 | 759.48 |
| 761.73 | 761.44 | 761.16 | 760.87 | | 640+00 | 760.58 | 760.29 | 760.00 | 759.72 | 759.43 |
| 761.70 | 761.41 | 761.12 | 760.84 | | +25 | 760.55 | 760.26 | 759.97 | 759.68 | 759.40 |
| 761.68 | 761.39 | 761.11 | 760.82 | | +50 | 760.53 | 760.24 | 759.95 | 759.67 | 759.38 |
| 761.68 | 761.39 | 761.10 | 760.82 | | +75 | 760.53 | 760.24 | 759.95 | 759.66 | 759.38 |
| 761.69 | 761.40 | 761.12 | 760.83 | | 641+00 | 760.54 | 760.25 | 759.96 | 759.68 | 759.39 |
| 761.72 | 761.43 | 761.14 | 760.86 | | +25 | 760.57 | 760.28 | 759.99 | 759.70 | 759.42 |
| 761.76 | 761.47 | 761.19 | 760.90 | | +50 | 760.61 | 760.32 | 760.03 | 759.75 | 759.46 |
| 761.82 | 761.53 | 761.24 | 760.96 | | +75 | 760.67 | 760.38 | 760.09 | 759.80 | 759.52 |
| 761.89 | 761.60 | 761.32 | 761.03 | | 642+00 | 760.74 | 760.45 | 760.16 | 759.88 | 759.59 |
| 761.97 | 761.68 | 761.40 | 761.11 | | +25 | 760.82 | 760.53 | 760.24 | 759.96 | 759.67 |
| 762.05 | 761.76 | 761.48 | 761.19 | | +50 | 760.90 | 760.61 | 760.32 | 760.04 | 759.75 |
| 762.13 | 761.84 | 761.56 | 761.27 | | +75 | 760.98 | 760.69 | 760.40 | 760.12 | 759.83 |
| 762.21 | 761.92 | 761.64 | 761.35 | | 643+00 | 761.06 | 760.77 | 760.48 | 760.20 | 759.91 |
| 762.29 | 762.00 | 761.72 | 761.43 | | +25 | 761.14 | 760.85 | 760.56 | 760.28 | 759.99 |
| 762.37 | 762.08 | 761.80 | 761.51 | | +50 | 761.22 | 760.93 | 760.64 | 760.36 | 760.07 |
| 762.45 | 762.16 | 761.88 | 761.59 | | +75 | 761.30 | 761.01 | 760.72 | 760.44 | 760.15 |
| 762.53 | 762.24 | 761.96 | 761.67 | | 644+00 | 761.38 | 761.09 | 760.80 | 760.52 | 760.23 |
| 762.61 | 762.32 | 762.04 | 761.75 | | +25 | 761.46 | 761.17 | 760.88 | 760.60 | 760.31 |
| 762.69 | 762.40 | 762.12 | 761.83 | | +50 | 761.54 | 761.25 | 760.96 | 760.68 | 760.39 |
| 762.77 | 762.48 | 762.20 | 761.91 | | +75 | 761.62 | 761.33 | 761.04 | 760.76 | 760.47 |
| 762.85 | 762.56 | 762.28 | 761.99 | | 645+00 | 761.70 | 761.41 | 761.12 | 760.84 | 760.55 |
| 762.93 | 762.64 | 762.36 | 762.07 | | +25 | 761.78 | 761.49 | 761.20 | 760.92 | 760.63 |
| 763.01 | 762.72 | 762.44 | 762.15 | | +50 | 761.86 | 761.57 | 761.28 | 761.00 | 760.71 |
| 763.09 | 762.80 | 762.52 | 762.23 | | +75 | 761.94 | 761.65 | 761.36 | 761.08 | 760.79 |

Full Super = 0.024 ft/ft

## I-480

Dc = 1°00'00" CURVE RT. MAX. SUPER. = 0.024 ft/ft

| WESTBOUND LANES | | | | | | PROFILE GRADE 13' LT. 13' RT. | EASTBOUND LANES | | | |
|---|---|---|---|---|---|---|---|---|---|---|
| 61' LT. | 49' LT. | 37' LT. | 25' LT. | NOTE | STATION | | 25' RT. | 37' RT. | 49' RT. | 61' RT. |
| 763.17 | 762.88 | 762.60 | 762.31 | | 646+00 | 762.02 | 761.73 | 761.44 | 761.16 | 760.87 |
| 763.25 | 762.96 | 762.68 | 762.39 | | +25 | 762.10 | 761.81 | 761.52 | 761.24 | 760.95 |
| 763.33 | 763.04 | 762.76 | 762.47 | | +50 | 762.18 | 761.89 | 761.60 | 761.32 | 761.03 |
| 763.41 | 763.12 | 762.84 | 762.55 | | +75 | 762.26 | 761.97 | 761.68 | 761.40 | 761.11 |
| 763.49 | 763.20 | 762.92 | 762.63 | | 647+00 | 762.34 | 762.05 | 761.76 | 761.48 | 761.19 |
| 763.57 | 763.28 | 763.00 | 762.71 | | +25 | 762.42 | 762.13 | 761.84 | 761.56 | 761.27 |
| 763.65 | 763.36 | 763.08 | 762.79 | | +50 | 762.50 | 762.21 | 761.92 | 761.64 | 761.35 |
| 763.73 | 763.44 | 763.16 | 762.87 | | +75 | 762.58 | 762.29 | 762.00 | 761.72 | 761.43 |
| 763.81 | 763.52 | 763.24 | 762.95 | | 648+00 | 762.66 | 762.37 | 762.08 | 761.80 | 761.51 |
| 763.89 | 763.60 | 763.32 | 763.03 | | +25 | 762.74 | 762.45 | 762.16 | 761.88 | 761.59 |
| 763.97 | 763.68 | 763.40 | 763.11 | | +50 | 762.82 | 762.53 | 762.24 | 761.96 | 761.67 |
| 764.04 | 763.75 | 763.47 | 763.18 | | +75 | 762.89 | 762.60 | 762.31 | 762.03 | 761.74 |
| 764.10 | 763.81 | 763.53 | 763.24 | | 649+00 | 762.95 | 762.66 | 762.37 | 762.09 | 761.80 |
| 764.15 | 763.86 | 763.58 | 763.29 | | +25 | 763.00 | 762.71 | 762.42 | 762.14 | 761.85 |
| 764.19 | 763.90 | 763.62 | 763.33 | | +50 | 763.04 | 762.75 | 762.46 | 762.18 | 761.89 |
| 764.21 | 763.92 | 763.64 | 763.35 | | +75 | 763.06 | 762.77 | 762.48 | 762.20 | 761.91 |
| 764.22 | 763.93 | 763.65 | 763.36 | | 650+00 | 763.07 | 762.78 | 762.49 | 762.21 | 761.92 |
| 764.22 | 763.93 | 763.65 | 763.36 | | +25 | 763.07 | 762.78 | 762.49 | 762.21 | 761.92 |
| 764.21 | 763.92 | 763.64 | 763.35 | | +50 | 763.06 | 762.77 | 762.48 | 762.20 | 761.91 |
| 764.18 | 763.89 | 763.61 | 763.32 | | +75 | 763.03 | 762.74 | 762.45 | 762.17 | 761.88 |
| 764.14 | 763.85 | 763.57 | 763.28 | | 651+00 | 762.99 | 762.70 | 762.41 | 762.13 | 761.84 |
| 764.09 | 763.80 | 763.52 | 763.23 | | +25 | 762.94 | 762.65 | 762.36 | 762.08 | 761.79 |
| 764.03 | 763.74 | 763.46 | 763.17 | | +50 | 762.88 | 762.59 | 762.30 | 762.02 | 761.73 |
| 763.96 | 763.67 | 763.39 | 763.10 | | +75 | 762.81 | 762.52 | 762.23 | 761.95 | 761.66 |
| 763.89 | 763.60 | 763.32 | 763.03 | | 652+00 | 762.74 | 762.45 | 762.16 | 761.88 | 761.59 |
| 763.82 | 763.53 | 763.25 | 762.96 | | +25 | 762.67 | 762.38 | 762.09 | 761.81 | 761.52 |
| 763.75 | 763.46 | 763.18 | 762.89 | | +50 | 762.60 | 762.31 | 762.02 | 761.74 | 761.45 |
| 763.68 | 763.39 | 763.11 | 762.82 | | +75 | 762.53 | 762.24 | 761.95 | 761.67 | 761.38 |
| 763.61 | 763.32 | 763.04 | 762.75 | | 653+00 | 762.46 | 762.17 | 761.88 | 761.60 | 761.31 |
| 763.54 | 763.25 | 762.97 | 762.68 | | +25 | 762.39 | 762.10 | 761.81 | 761.53 | 761.24 |
| 763.47 | 763.18 | 762.90 | 762.61 | | +50 | 762.32 | 762.03 | 761.74 | 761.46 | 761.17 |
| 763.40 | 763.11 | 762.83 | 762.54 | | +75 | 762.25 | 761.96 | 761.67 | 761.39 | 761.10 |
| 763.33 | 763.04 | 762.76 | 762.47 | | 654+00 | 762.18 | 761.89 | 761.60 | 761.32 | 761.03 |
| 763.26 | 762.97 | 762.69 | 762.40 | | +25 | 762.11 | 761.82 | 761.53 | 761.25 | 760.96 |
| 763.19 | 762.90 | 762.62 | 762.33 | | +50 | 762.04 | 761.75 | 761.46 | 761.18 | 760.89 |
| 763.08 | 762.80 | 762.53 | 762.26 | | +75 | 761.97 | 761.68 | 761.40 | 761.12 | 760.85 |
| 762.92 | 762.67 | 762.41 | 762.16 | | 655+00 | 761.90 | 761.64 | 761.39 | 761.13 | 760.88 |
| 762.73 | 762.50 | 762.28 | 762.05 | | +25 | 761.83 | 761.61 | 761.38 | 761.16 | 760.93 |
| 762.53 | 762.34 | 762.15 | 761.95 | | +50 | 761.76 | 761.57 | 761.37 | 761.18 | 760.99 |
| 762.50 | 762.31 | 762.13 | 761.94 | P.T. | +54.37 | 761.75 | 761.57 | 761.38 | 761.19 | 761.01 |
| 762.34 | 762.20 | 762.06 | 761.88 | | +75 | 761.69 | 761.55 | 761.42 | 761.23 | 761.04 |
| 762.14 | 762.06 | 761.99 | 761.81 | | 656+00 | 761.62 | 761.55 | 761.47 | 761.29 | 761.10 |
| 761.95 | 761.94 | 761.92 | 761.74 | | +25 | 761.55 | 761.54 | 761.52 | 761.32 | 761.14 |
| 761.80 | 761.82 | 761.85 | 761.67 | | +50 | 761.48 | 761.50 | 761.53 | 761.34 | 761.16 |
| 761.66 | 761.72 | 761.78 | 761.60 | | +75 | 761.41 | 761.46 | 761.52 | 761.33 | 761.15 |
| 761.53 | 761.62 | 761.71 | 761.53 | | 657+00 | 761.34 | 761.43 | 761.51 | 761.32 | 761.14 |
| 761.40 | 761.52 | 761.64 | 761.46 | | +25 | 761.27 | 761.38 | 761.50 | 761.31 | 761.13 |
| 761.27 | 761.42 | 761.57 | 761.39 | | +50 | 761.20 | 761.35 | 761.49 | 761.30 | 761.12 |
| 761.14 | 761.32 | 761.50 | 761 32 | | +75 | 761.13 | 761.30 | 761.47 | 761.29 | 761.10 |
| 761.06 | 761.25 | 761.43 | 761.25 | | 658+00 | 761.06 | 761.25 | 761.43 | 761.25 | 761.06 |

Full Super = 0.024 ft/ft

Transition

MICROFILMED
JAN 17 1991



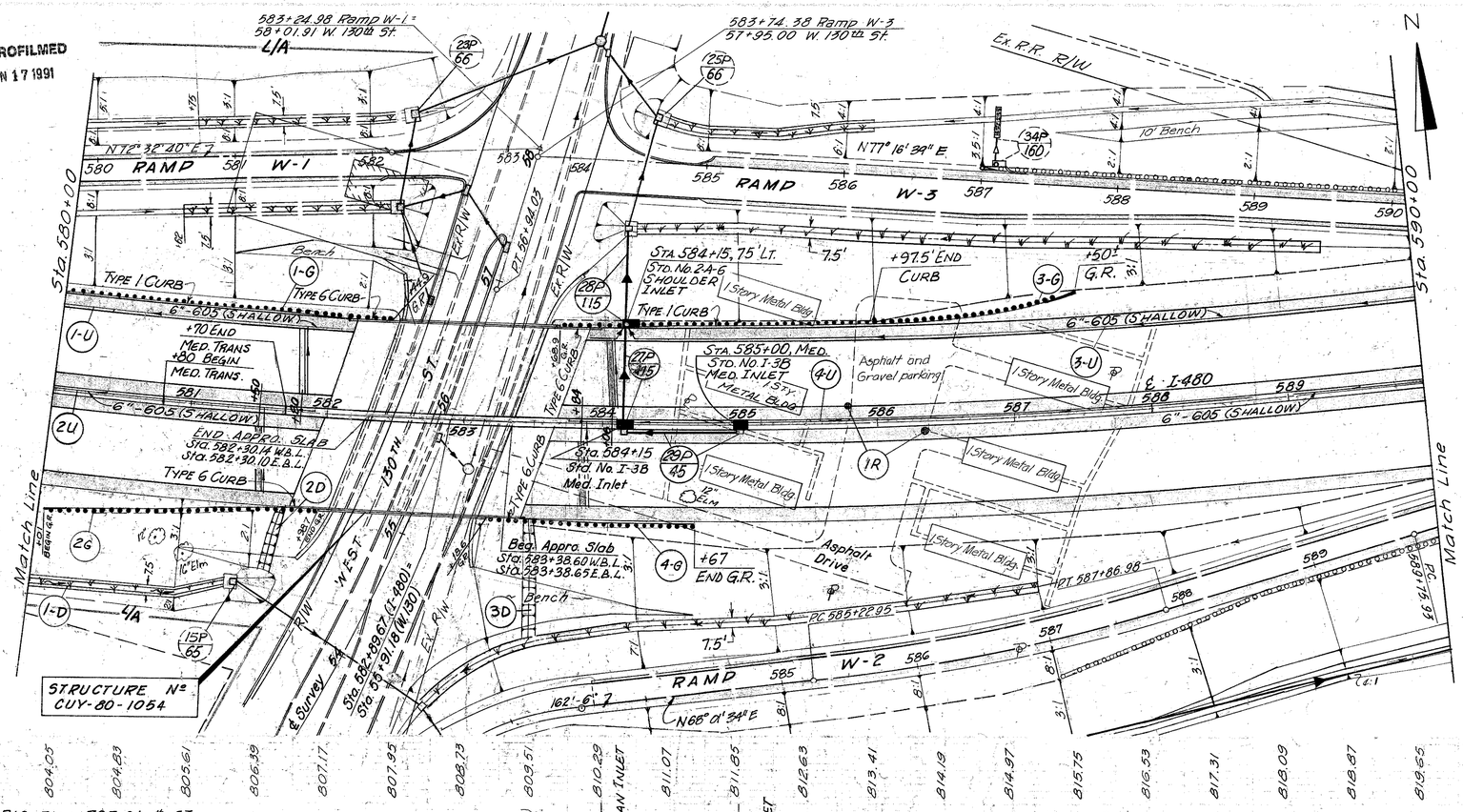


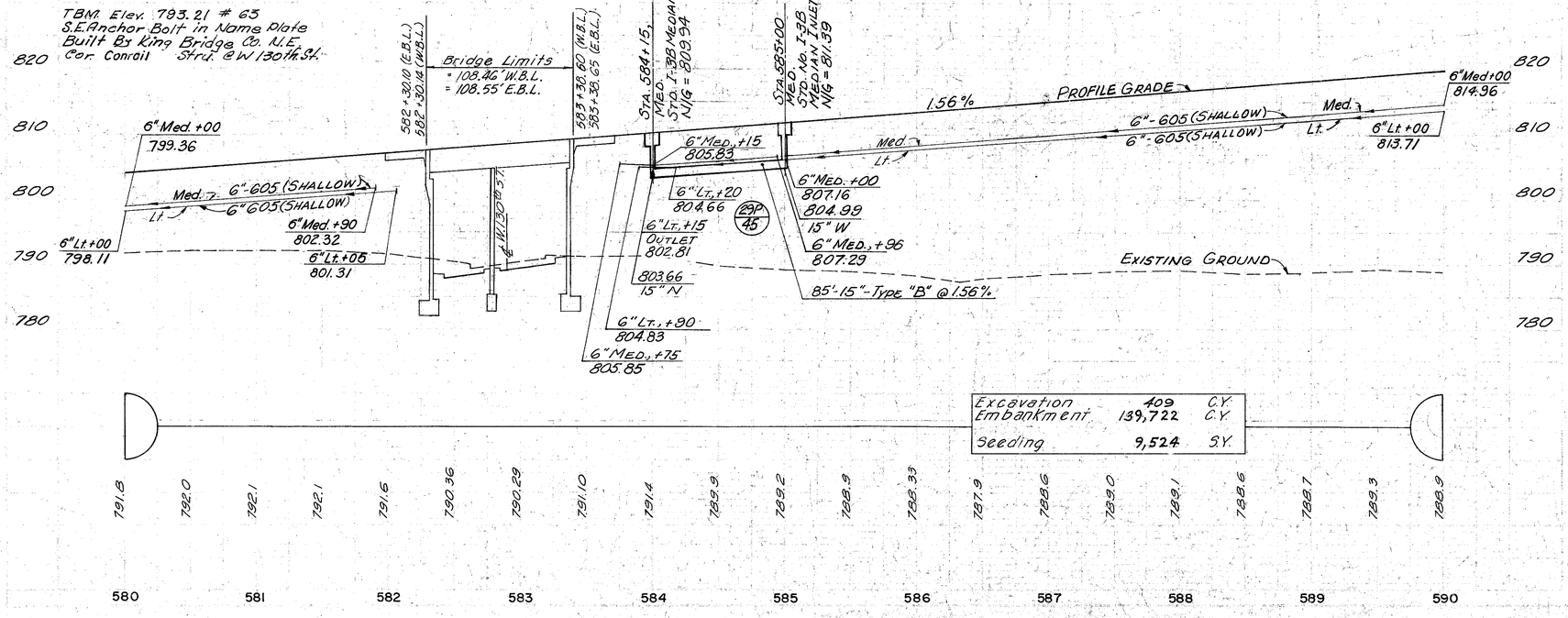


| Excavation | 409 | C.Y. |
|---|---|---|
| Embankment | 139,722 | C.Y. |
| Seeding | 9,524 | S.Y. |

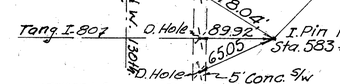


**I-480 CURVE DATA**

P.I. Sta. 583+16.04 (Back)
Sta. 583+71.11 (Forward)
Δ = 29° 46' 15"
Dc = 1° 15' 00"
R = 4,583.66'
T = 1218.37'
L = 2,381.67'
E = 139.15'

480 - 10.39

DRAWN BY WAM DATE 3/75
CHKD. BY EJK DATE 3/75

**DRAINAGE**

| REF. | SIDE | LOCATION | 202 Catch Basin Removed | 603 Type "A" 6" | 603 Type "B" 15" | 603 Type "F" 15" | 604 Std. No. 3B Median Inlet | 604 Std. No. 2A-6 Shoulder Inlet | 605 Shallow 707.01 Type III & 707.21 Type III 6" | 605 Shallow 6" | 605 Bends & Branches Ea. | 660 Sodding S.Y. | 660 Reinforced Sodding S.Y. |
|---|---|---|---|---|---|---|---|---|---|---|---|---|---|
| | | | Ea. | L.F. | L.F. | L.F. | Ea. | EA. | L.F. | L.F. | Ea. | S.Y. | S.Y. |
| 2P-P | Lt. | 584+15 To 584+08 | | | 75 | | 1 | | | | | | |
| 2B P | Lt. | 584+15 | | | | 71 | | 1 | 1 | | | | |
| 2 9P | Med. | 584+15 To 585+00 | | | 85 | | 1 | | | | | | |
| 1-D | Rt. | 580+00 To 581+50 | | | | | | | | | | 125 | |
| 1-R | Med. | 585+80 to 586+35 | 2 | | | | | | | | | | |
| 1-U | Lt. | 580+00 to 582+05 | | | | | | | 50 | 203 | 1 | | |
| 2-U | Med. | 580+00 to 581+90 | | | | | | | 62 | 192 | 1 | | |
| 3-U | Lt. | 583+90 to 590+00 | | 20 | | | | | 50 | 601 | 2 | | |
| 4-U | Med. | 583+75 to 590+00 | | 30 | | | | | 63 | 591 | 1 | | |
| 2-D | Rt. | 581+74 | | | | | | | | | | | 50 |
| 3-D | Rt. | 583+46 | | | | | | | | | | | 89 |
| | | TOTAL | 2 | 50 | 160 | 71 | 2 | 1 | 225 | 1587 | | 125 | 139 |

**ROADWAY**

| REF | SIDE | Location | 606 Anchor Assembly Type 2A Ea | 606 Bridge Term. Anchor Assy. Type A Ea | 606 Guard Rail Type 5 L.F. | 606 Anchor Assembly Type 4A EA. |
|---|---|---|---|---|---|---|
| 1-G | Lt. | 580+00 to 582+44.9 | | 1 | 245 | |
| 2-G | Rt. | 580+01 to 581+98.7 | 1 | 1 | 175 | |
| 3-G | Lt. | 583+68.9 to 587+50 | 1 | 1 | 350 | |
| 4-G | Rt. | 583+18.6 to 584+67 | | 1 | 132.5 | 1 |
| | | TOTAL | 2 | 4 | 907.5 | 1 |

**TREE REMOVAL**
580+00 to 590+00

| SIZE | No. |
|---|---|
| 18" | 1 |

**CROSS REFERENCE**

| Sht No. | Item |
|---|---|
| 83,84,85 | Ramp W-1, W-2, W-3 Pavement Details |
| 86, 87 | W. 130th Pavement Details |
| 64,65,66 | W. 130th Plan & Profile |
| 312 | Structure |
| 41 | Superelevation Tables |

**PROPOSED STRUCTURE - No. CUY-80-1054**

TYPE: Continuous steel beam with reinforced concrete deck and substructure.
SPANS: 47.141' & 56.611' c/c Brg.. E.B.L. along ℄ I-80
ROADWAY: 141'-8" f/f Parapets of BR-1 (Mod.) Railings with Concrete Barrier Median
LOADING: CF-2000 (1957), adequate for AASHO alternate loading.
WEARING SURFACE: 1¼" Latex Modified Concrete
SKEW: 17° 13'-17" and 20° 12'-55" left forward with respect to Reference Chord.
ALIGNMENT: 1°-15'-00" Curve left.
APPROACH SLABS: AS-1-81 (30'-0" long)
SUPERELEVATION: 0.030 ft. per ft.

580+00 590+00

CUYAHOGA COUNTY
CUY-480-10.39

| CROSS REFERENCE | |
|---|---|
| Sht No. | Item |
| 83 | Ramp W-1 Pavement Detail |
| 41 | Superelevation Table |
| 57 | Ramp W-1 Plan & Profile |
| | |
| | |
| | |

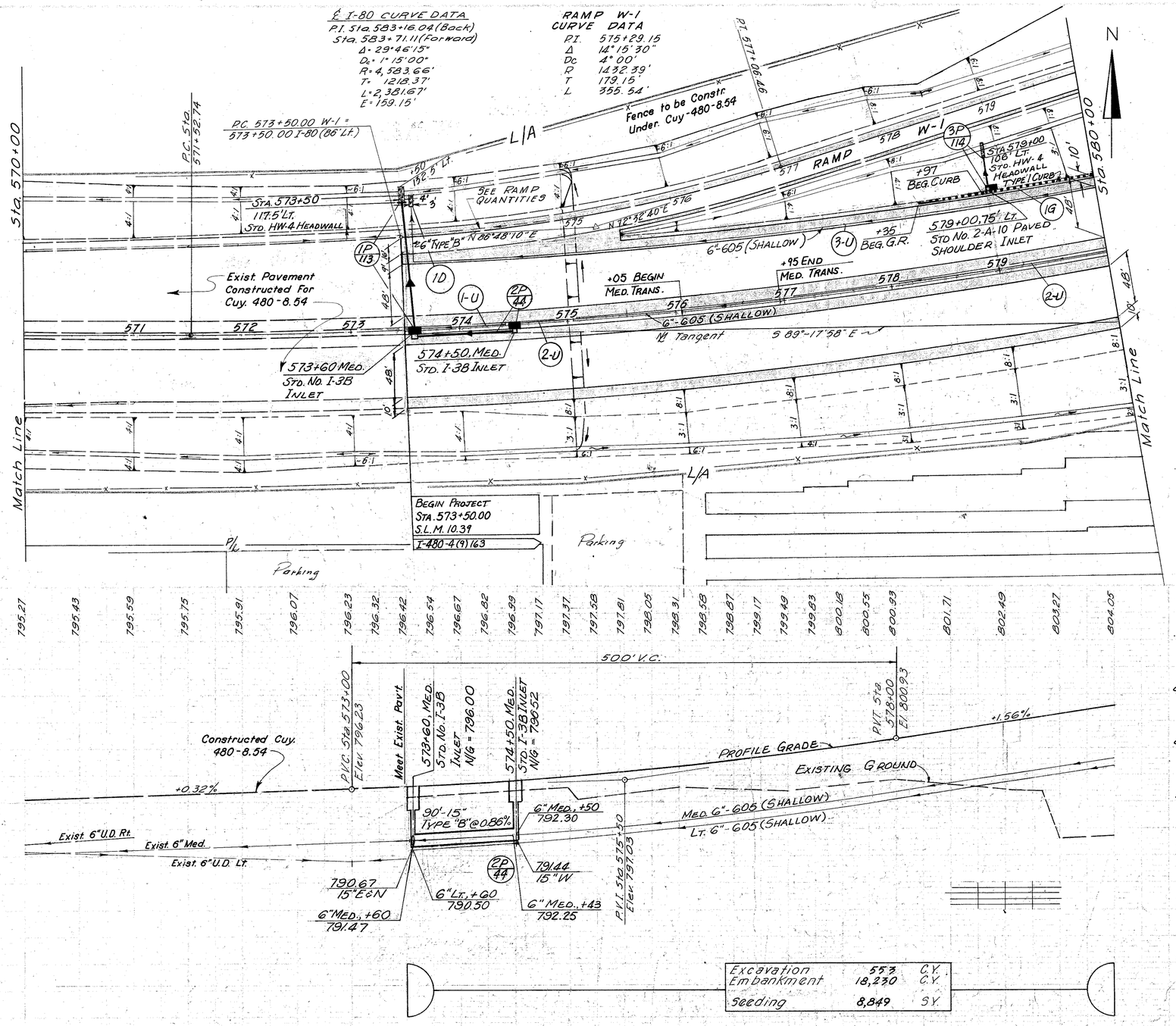


| ESTIMATED QUANTITIES | | | DRAINAGE | | | | | | | | | | | | | ROADWAY | | |
|---|---|---|---|---|---|---|---|---|---|---|---|---|---|---|---|---|---|---|
| | | | 601 | 602 | 603 | | | | | | 604 | | | | 605 | 660 | 606 | |
| REF | SIDE | LOCATION | Rock Channel Protection With Filter | Concrete Masonry | Type "F" 6" | Type "B" 15" | Type "F" 707.05 15" | Bends & Branches 15" | Type "B" 6" | | Std. No. I-3B Median Inlet | Std. No. 2-A-10 Inlet | Shallow | Bends & Branches | Reinforced Sodding | Anchor Assembly Type T | Guard Rail Type 5 | |
| | | | C.Y. | C.Y. | L.F. | L.F. | L.F. | Ea. | L.F. | | Ea. | Ea. | L.F. | Ea. | S.Y. | Ea. | L.F. | |
| 1P | Med. Lt. | 573+60 To 573+50 | 3.56 | 0.25 | | 118 | | | | | 1 | | | | | | | |
| 2P | Med. | 573+60 To 574+50 | | | | 90 | | | | | 1 | | | | | | | |
| 3P | Lt. | 579+00 | 3.33 | 0.25 | | | 32 | 2 | | | | 1 | | | | | | |
| 1U | Med. | 573+60 To 574+43 | | | 10 | | | | | | | | 73 | | | | | |
| 2U | Med. | 574+50 To 580+00 | | | 10 | | | | | | | | 540 | | | | | |
| 3U | Lt. | 573+60 To 580+00 | | | 10 | | | | 52 | | | | 630 | 1 | | | | |
| 1D | Lt. | 573+60 | | | | | | | | | | | | | 3 | | | |
| | | TOTAL | 6.89 | 0.50 | 30 | 208 | 32 | | 52 | | 2 | 1 | 1,243 | | 3 | | | |




| Excavation | 553 | C.Y. |
|---|---|---|
| Embankment | 18,230 | C.Y. |
| Seeding | 8,849 | S.Y. |

TREE REMOVAL
570+00 to 580+00

| Size | No. |
|---|---|
| 0 | 0 |

DSLD. BY WAM DATE 3/75
CHKD. BY EJK DATE 3/75

570+00 580+00

MICROFILMED
JAN 17 1991



CUYAHOGA COUNTY
CUY 480-10.39

DESIGNED BY WAM DATE 3/75
CHKD. BY EJK DATE 3/75

℄ I-480 CURVE DATA
P.I. Sta. 583+16.04 (Back) =
Sta. 583+71.11 (Forward)
Δ = 29°46'15"
$D_a$ = 1°15'00"
R = 4,583.66'
T = 1218.37'
L = 2,381.67'
E = 159.15'

Sta. 595+64, 171' Lt.
Std. HW-4 Headwall

P.T. 595+34.41 Ramp W-3 =
595+34.41 I-80, (73' Lt.)

Sta. 594+96.63 ℄ I-80
Sta. 893+13.62, ℄ Conrail R.R.

Sta 594+95.91 I 80
Sta 893+13.30 CONRAIL R.R.
(TACK IN HUB)

PK Nail in ℄ 3' Above Ground

PK Nail, 5th ℄ W. of B&O RR. 5' Above Ground

PK Nail in ℄ 7' Above Ground 6th ℄ W. of B&O RR.

Exist. R/W
6" Ohio Products Lines
℄ Conrail R.R.
Exist. ℄
RAMP W-3
Sta. 590+00
Sta. 600+00
Match Line
Match Line
TYPE 6 CURB
+30 BEGIN MED. TRANS
END 6" +08
6" "605 Shallow
+01.00 Pressure Relief Jt.
+73.00 Pressure Relief Jt.
End App. Slab Sta. 593+38.70 Along Tangent
+20 END MED. TRANS.
RAMP W-2
(SEE RAMP FOR QUAN.)
40:1 TAPER
593+00.00 W-2 = 593+00.00 I-80 (86' Lt.)
Ref. Line
L/A
L/A
L/A
TYPE 6 CURB
TYPE 1 CURB
6" "605 Shallow
595+04 (85' Lt.)
Std. No. 2-A-6 Shoulder Inlet
595+34.41 ± With Ref. Line
+64
+60.00 Pressure Relief Jt.
BEGIN APPROACH SLAB
Sta. 596+50.96
+80 BEGIN MED. TRANS
+70 END MED. TRANS.
+48.00 Press. Relief Jt.
Beg. 6"+87
6" "605 Shallow
N 60°55'47" E
Sta. 599+29.77 Rt.
Std I-3B Med. Inlet
Mod. As Per Plan
6" "605 Shallow
RETAINING WALL
℄ FUTURE CONNECTOR TRACK
Ex. 24" Apex
Sta. 1025+50.44 Lt.
℄ B&O RR. Std. HW-4 Headwall
TO REMAIN IN PLACE
Sta 598+52, 275' Rt.
℄ I-480 Or Sta 888+67
℄ CONRAIL R.R.
Std. No. 3 M.H.
Ex. R.R. DITCH
Ex. R/W
℄ B&O RR
30° Skew
41°
45'-36" CONC.
To Be Jacked As Per Plan
118'-36" CONC.
To Be Jacked As Per Plan
Sta. 596+00, 130 Lt. ℄ I-480 Or Sta 891+45, 56' Lt. ℄ CONRAIL R.R. Std. No. 2-4 C.B. w/o WINDOWS
Sta. 594+00, 165' Rt. Std. No. 4 C.B.
RETENTION BASIN
TBM Elev. 792.15 #61
S.E. Anchor Bolt on Signal Tower, on West Side B&O RR. Approx. 100' North, Conrail R.R.

| Sheet No. | CROSS REFERENCE ITEM |
|---|---|
| 58 | W-2 Plan & Profile |
| 59 | W-3 Plan & Profile |
| 84 | W-2 Pavt. Detail |
| 84 | W-3 Pavt. Detail |
| 332 | Structure |
| 41 | Superelevation Tables |

## DRAINAGE

| ESTIMATED QUANTITIES | | | 602 | 603 | | | | | | 604 | | | | 601 | 605 | | | 660 | 668 |
|---|---|---|---|---|---|---|---|---|---|---|---|---|---|---|---|---|---|---|---|
| | | | Concrete Masonry | 6" "F" | 15" Type "C" 707.05 | 36" Type "C" | 36" Type "C" 706.02 1250 D-Load or 707.13 | 36" Type "C" 706.02 2000 D-Load | 36" Type "C" 706.02 3000 D-Load | 36" Type "C" 706.02 1250 D-Load, At 2% Bend | 36" 30° Type "B" 706.02 Inverted, At 2% Bend | Std No 3 M.H. | Std. No. 2-4 C.B. | Std. No. 4 C.B. | Std No 2A C. Shoulder Inlet Rock Channel Protect. Type "S" With Filter | Shallow | Shallow Underdrain 707.01 Type III & 707.2 Type III | Bends & Branches | Seeding Reinforced Sodding and Sodding and Excelsior Matting | |
| Ref. No. | Side | Location | C.Y. | L.F. | L.F. | L.F. | L.F. | L.F. | L.F. | L.F. | L.F. | Ea. | Ea. | Ea. | Ea. | C.Y. | L.F. | L.F. | Ea. | S.Y. | S.Y. |
| 35P | Rt. | 592+00 To 594+00 | | | 205 | | | | | | | | | | | | | | | | |
| 36P | Rt. | 594+00 To 596+00 | | | | 210 | | | | | | | 1 | | | | | | 125 | | |
| 37P | Rt. | 596+00 To 598+52 | | | | | | | | 245 | 45 | | 1 | | | | | | | | |
| 38P | Rt. | 598+52 To 600+00 | | | | | | | | 30 | 118 | 1 | | | | | | | | | |
| 39P | Rt. | 1025+33 To 1026+44 | 0.63 | | | | 85 | 32 | | | | | | | | | | | | | |
| 1D | Rt. | 594+60 | | | | | | | | | | | | | | | | | | 32 | 906 |
| 2D | Lt. | 595+64 | 0.27 | | 94 | | | | | | | | | | 1 | 3 | | | | | |
| 1U | Lt. | 590+00 To 591+83 | | | | | | | | | | | | | | | 180 | 52 | 1 | | |
| 2U | Med. | 590+00 To 593+08 | | | | | | | | | | | | | | | 331 | 65 | 1 | | |
| 3U | Lt. | 595+64 To 600+00 | | 10 | | | | | | | | | | | | | 442 | 64 | 2 | | |
| 4U | Med | 596+87 To 600+00 | | | | | | | | | | | | | | | 313 | | | | |
| 5U | Rt. | 598+06 To 599+47 | | 28 | | | | | | | | | | | | | 116 | 60 | 3 | | |
| TOTALS TO GEN. SUM | | | 0.96 | 38 | 94 | 205 | 210 | 85 | 32 | 275 | 163 | 1 | 1 | 1 | 1 | 3 | 1,382 | 241 | | 125 | 32 906 |

TREE REMOVAL
590+00 to 600+00

| SIZE | Nº |
|---|---|
| 18" | 0 |

## ROADWAY

| Estimated Quantities | | | 606 | | 202 | | |
|---|---|---|---|---|---|---|---|
| | | | Guard Rail Type "S" | Bridge Terminal Assembly Type 21 | Pipe Removed 24" ℄ Under | | |
| Ref. Nº | Side | Location | L.F. | L.F. | L.F. | | |
| 1G | RT | 593+04 To 594+88 | 184 | 1 | | | |
| 2G | LT | 595+23 To 600+00 | 477 | 1 | | | |
| 3G | RT | 597+91 To 599+63 | 172 | 2 | | | |
| 1R | Rt | 599+44 ± | | | 41 | | |
| | | | | | | | |
| | | TOTAL | 833 | 4 | 41 | | |

Bridge Limits = 312.26'
P.V.I. Sta. 598+76
Elev. 833.30
75' Graphic Grade E.B.
-2.56%
+1.56%
1300' V.C.
6" Lt. +64 821.04
6" Lt. +64 Outlet 820.94
6" Lt. +75 822.11
6" Rt. +06 822.23
6" Rt. +23 821.70
6" Rt. +29 Outlet 821.58
6" Rt. +47 821.88
6" Med. +00 821.04
6" Lt. +00 821.19
6" Med. +00 814.96
6" Med. +08 819.65
6" Med. +87 822.29
6" Lt. +00 813.71
6" Lt. +16 815.52
6" Lt. +09 815.41
6" Lt. +83 816.57
PVC Sta. 592+25
Sta. 594+00, 185' Rt. ℄ I-480 Std. No. 4 C.B. T/G = 786.25
Sta. 596+00 130' Rt. ℄ I-480 Std. No. 2-4 C.B. w/o Windows T/G = 785.38
℄ CONRAIL R.R.
℄ B&O R.R.
Sta. 598+52, 275' Rt. ℄ I-480 Or Sta. 888+67 ℄ Penn. Cen. R.R. Std. No. 3 M.H. T/C = 786.70
℄ CONRAIL R.R.
GRADE LINE ABOVE STORM SEWER
FOR STORM SEWER PROFILE CONTINUATION SEE RAMP W-2 PLAN & PROFILE SHEET No. 58
205'-36" TYPE "C" @ 0.40%
210'-36" TYPE "C" 706.02, 1250 D-LOAD OR 707.13 @ 0.32%
45'-36" TYPE "B" 706.02, 3000 D LD. @ 0.32%
245'-36" TYPE "C" 706.02, 1250 D-LOAD @ 0.32%
118'-36" TYPE "B" 706.02, 3000 D-LOAD @ 0.32%
30'-36" TYPE "C" 706.02 1250 D-LOAD @ 0.32%
774.08 36" ℄
773.41
45° To Be Under Railroad
772.48
118'-36" To Be Under Railroad
Excavation 1,100 C.Y.
Embankment 236,646 C.Y.
Seeding 21,693 S.Y.
590
591
592
593
594
595
596
597
598
599
600
590+00
600+00

PROPOSED STRUCTURE - Nº CUY-80-10.78

TYPE: Continuous steel girder with reinforced concrete deck and substructure.
SPANS: 91'-0" - 121'-0" - 91'-0" % Brgs. on ℄ I-480
ROADWAY: Width varies ℄ ft Parapets. Average width = 169'-0" BR-1 Railing and conc. barrier median.
LOADING: HS 20-44 Case I and the Alternate Military Loading
WEARING SURFACE: 1½" Latex Modified Concrete
SKEW: 53°-41'-45" Right Fwd. with respect to Ref. Line
ALIGNMENT: 1°-15'-00" Curve and Tangent
APPROACH SLABS: AS-1-81 (25' long)
SUPERELEVATION: Varies (0.03 ft. per ft. max.)

* FOR QUANTITIES ON 40P SEE SHEET No. 47.

MICROFILMED
JAN 17 1991



CUYAHOGA COUNTY
CUY - 480-10.39

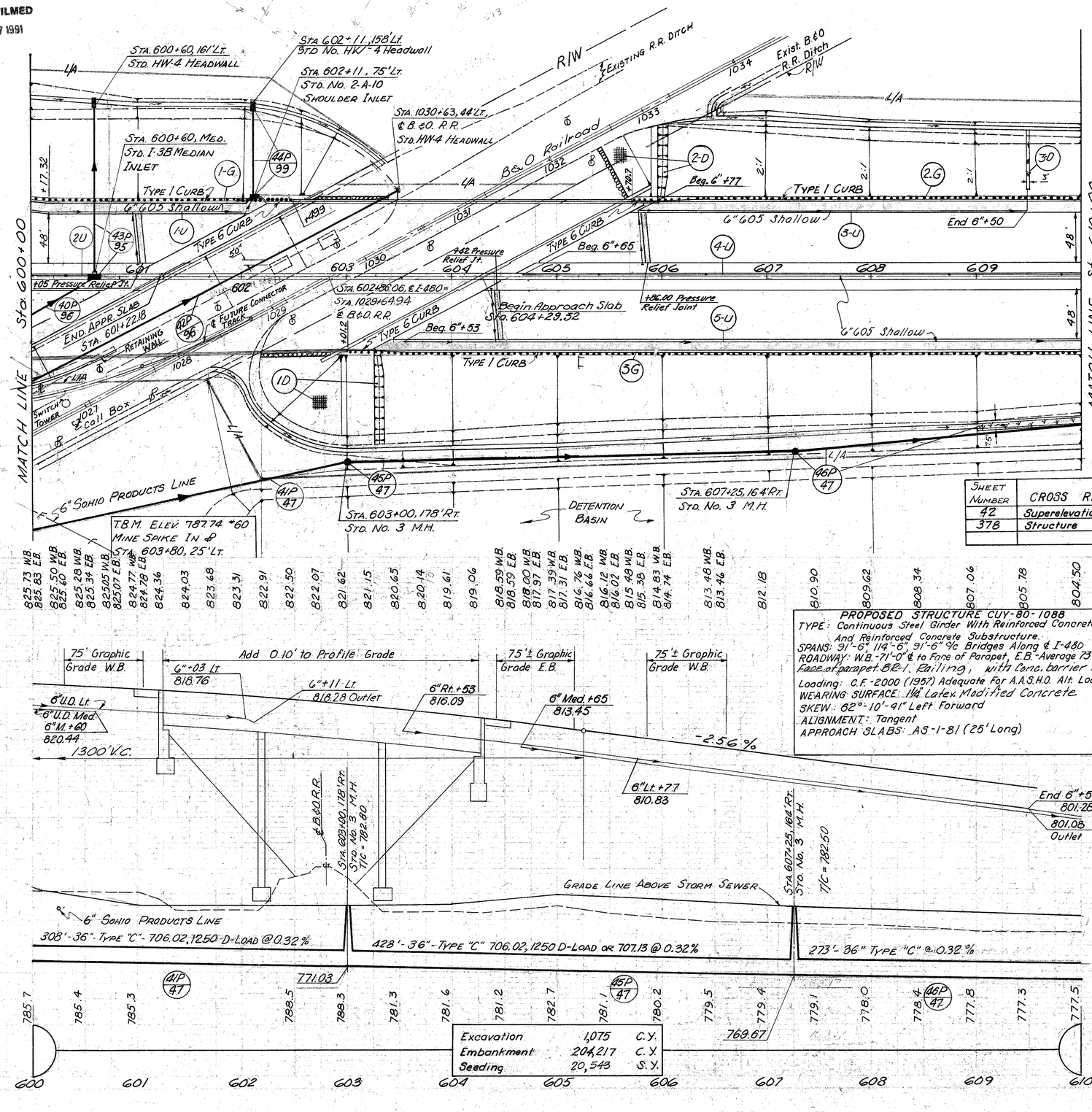


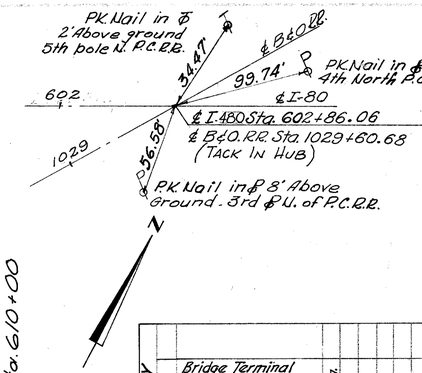


TREE REMOVAL
600+00 to 610+00

| SIZE | No |
|---|---|
| 18" | 0 |

CALC. BY WAM DATE 3/75
CHKD. BY EJK DATE 3/75

| SHEET NUMBER | CROSS REFERENCE |
|---|---|
| 42 | Superelevation Tables |
| 378 | Structure |
| | |




| Excavation | 1,075 | C.Y. |
|---|---|---|
| Embankment | 204,217 | C.Y. |
| Seeding | 20,543 | S.Y. |

PROPOSED STRUCTURE CUY-80-1088
TYPE: Continuous Steel Girder With Reinforced Concrete Deck And Reinforced Concrete Substructure.
SPANS: 91'-6", 114'-6", 91'-6" c/c Bridges Along ℄ I-480
ROADWAY: W.B.-71'-0" ℄ to Face of Parapet, E.B.-Average 73'-3½" ℄ to Face of parapet BR-1 Railing, with Conc. barrier Median
Loading: C.F.-2000 (1957) Adequate For A.A.S.H.O. Alt. Loading.
WEARING SURFACE: ½" Latex Modified Concrete.
SKEW: 62°-10'-41" Left Forward
ALIGNMENT: Tangent
APPROACH SLABS: AS-1-81 (25' Long)

| | | |

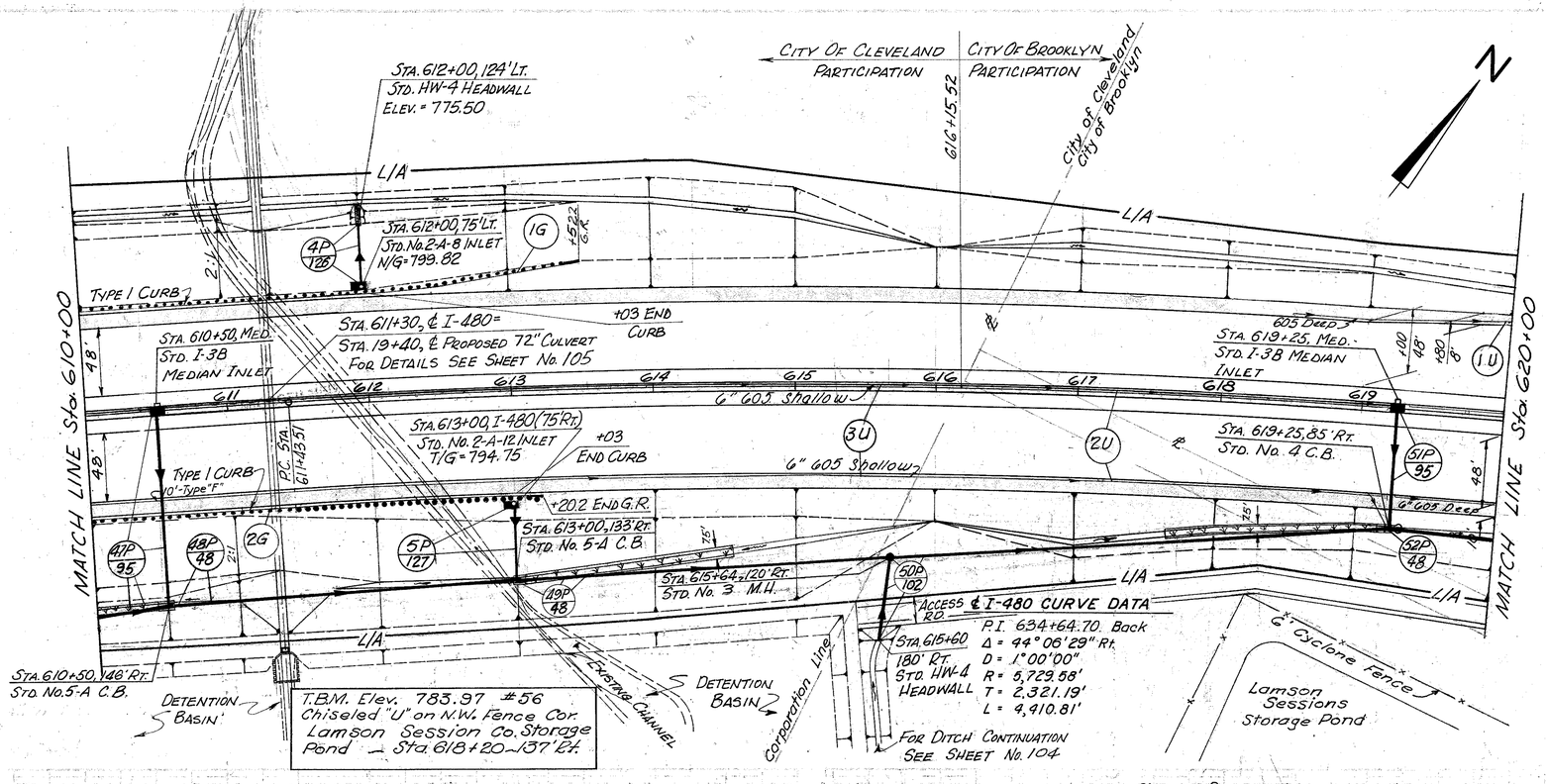


| CROSS REFERENCE | |
|---|---|
| Sht. No. | Item |
| 88 | Ramp T-1 Porement Detail |
| 42 | Superelevation Table |
| 105 | Culvert |
| 102 | Access Road |
| 104 | Detention Basin |

| | | | | 48 |
|---|---|---|---|---|
| 2 | OHIO | | | 500 |

CUYAHOGA COUNTY
CUY-480-10.39

CALD. BY WAM DATE 3/75
CHKD. BY EJK DATE 3/75

TREE REMOVAL
610+00 to 620+00

| Size | № |
|---|---|
| 18" | 0 |

| | | | |

| CROSS REFERENCE | |
|---|---|
| Sht. No. | Item |
| 88 | Ramp T-1 Pavement Detail |
| 89 | Ramp T-2 Pavement Detail |
| 60 | Ramp T-1 Plan & Profile |
| 61 | Ramp T-2 Plan & Profile |
| 42 | Superelevation Table |
| 102 | Access Road |

| STATE | DIST. | COUNTY | ROUTE | SHEET NO. | TOTAL SHEETS |
|---|---|---|---|---|---|
| | 12 | OHIO | | 49 | 500 |

CUYAHOGA COUNTY
CUY 480-10.39

TREE REMOVAL
620+00 to 630+00

| Size | No |
|---|---|
| | 0 |

CALC. BY WAM DATE 3/75
CHKD. BY EJK DATE 3/75

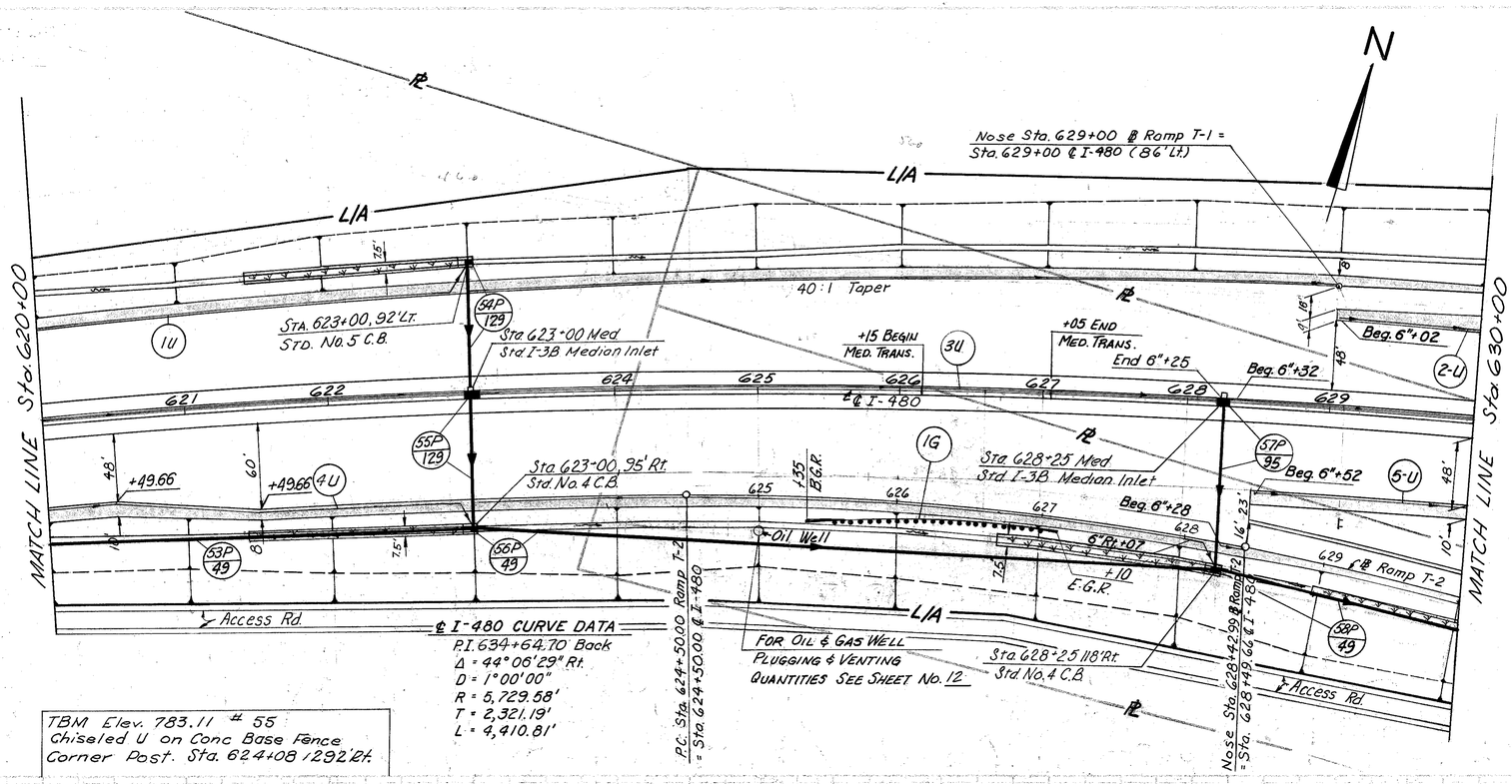


| | | | | | | | | | | | | | | | |
|---|---|---|---|---|---|---|---|---|---|---|---|---|---|---|---|
| ROADWAY 606 | Anchor Assembly Type T | | Ea. | | | | | | | | 1 | | | | 1 |
| | Anchor Assembly Type A | | Ea. | | | | | | | | 1 | | | | 1 |
| | Guard Rail Type 5 | | L.F. | | | | | 125 | | | 137.5 | | | | 137.5 |
| 660 | Sodding | | S.Y. | 125 | 125 | | 126 | | 88 | | | | | | 463 |
| 605 | Bends & Branches | | Ea. | | | | | | | 1 | | | | | |
| | Deep | 6" | L.F. | | | | | | | 900 | 98 | 817 | 2 | 148 | 1965 |
| | Shallow | 6" | L.F. | | | | | | | | | 966 | | | 966 |
| DRAINAGE 604 | Std No. 5 C.B. | | Ea. | | | | 1 | | | | | | | | 1 |
| | Std. No. 4 C.B | | Ea. | | | | | 1 | | 1 | | | | | 2 |
| | Std No. I-3B Median Inlet | | Ea. | | | | 1 | | 1 | | | | | | 2 |
| 603 | Type "C" 706.02 1250D-Load Or 707.13 | 42" | L.F. | 295 | | | | | | | | | | | 295 |
| | Type "C" | 15" | L.F. | | | 515 | | | 174 | | | | | | 689 |
| | Type "B" | | L.F. | | 92 | 94 | | | 118 | | | | | | 304 |
| | Type "F" | 6" | L.F. | | | | | | | 10 | | 20 | | | 30 |
| | | | | | | | | | | | | 20 | | | 20 |

Estimated Quantities

| Part No. | Side | Location | TOTAL |
|---|---|---|---|
| 53P | Rt. | 620+00 to 623+00 | |
| 54P | Lt. | 623+00 | |
| 55P | Med. | 623+00 | |
| 56P | Lt. | 623+00 to 628+25 | |
| 57P | Med. | 628+25 | |
| 58P | Rt. | 628+25 to 630+00 | |
| 1G | Rt. | 625+35 to 627+10 | |
| 1U | Lt. | 620+00 to 629+00 | |
| 2U | Lt. | 623+02 to 630+00 | |
| 3U | Med. | 620+00 to 630+00 | |
| 4U | Rt. | 620+00 to 626+45.46 | |
| 5U | Rt. | 628+52 to 629+97.72 | |

MICROFILMED
JAN 17 1991



CALC. BY WAM DATE 3/75
CHKD. BY EJK DATE 3/75

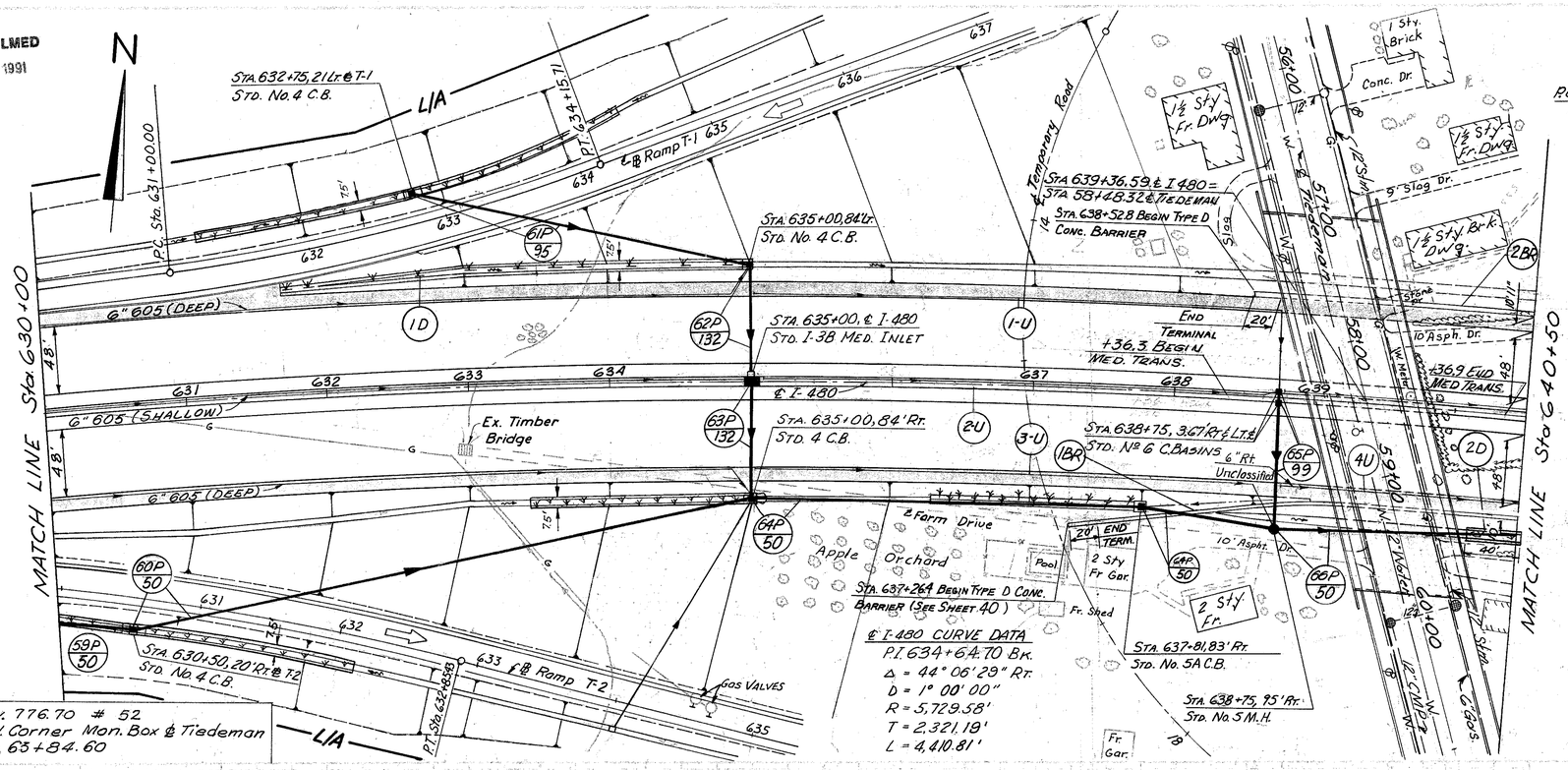


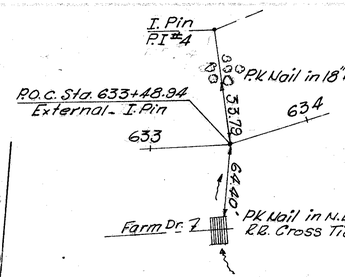


| CROSS REFERENCE | |
|---|---|
| Sht. No. | Item |
| 88 | Ramp T-1 Pavement Detail |
| 61 | Ramp T-2 Plan & Profile |
| 67-70 | Tiedeman Rd. Plan & Profile |
| 42 & 43 | Superelevation Table |
| 403 | Structure |
| 82 | Temporary Road |
| | Ramp T-1 Plan & Profile |

TREE REMOVAL ★
630+00 to 640+50

| Size | No. |
|---|---|
| 18" | 17 |
| 30" | 14 |
| 48" | 1 |

★ Includes Ramp Areas & Tiedeman Rd. (N. & S.)

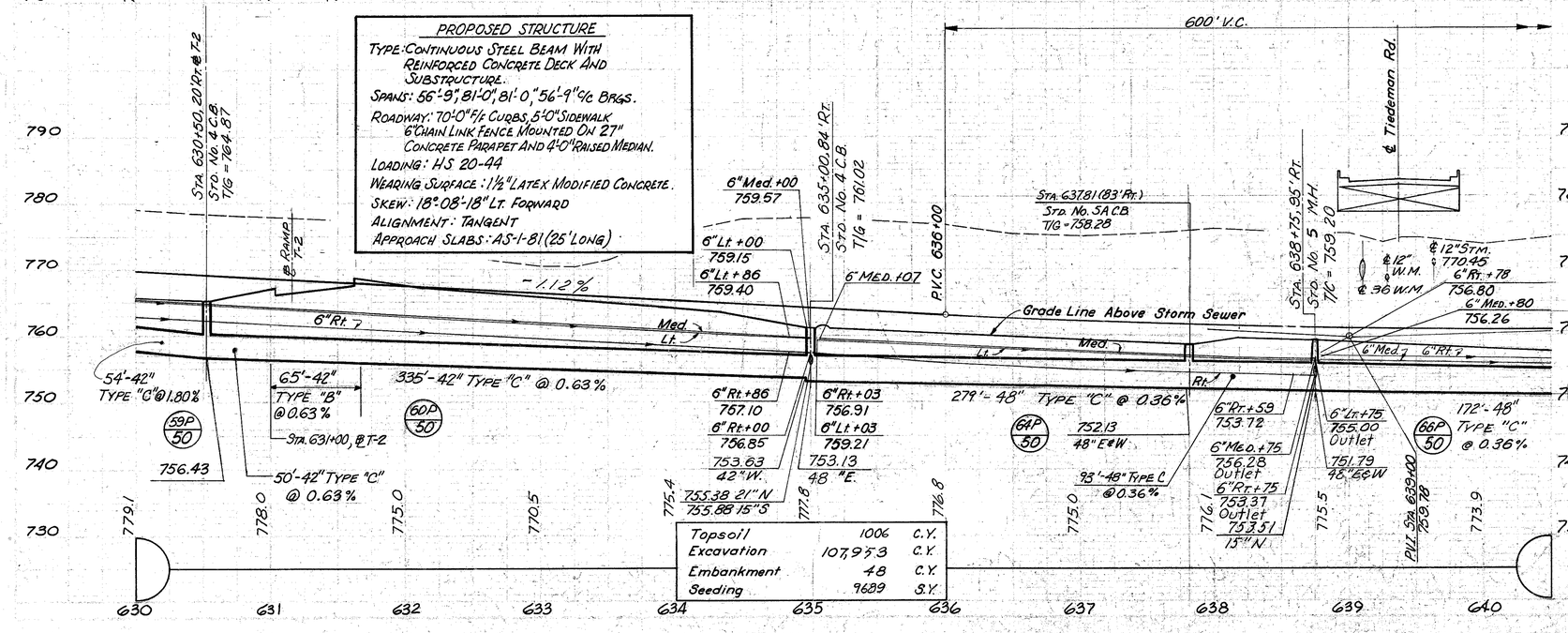


| | | |

MICROFILMED
JAN 17 1991

51
500

480-1039

BY WAM DATE 3/75
CHKD. BY EJK DATE 3/75

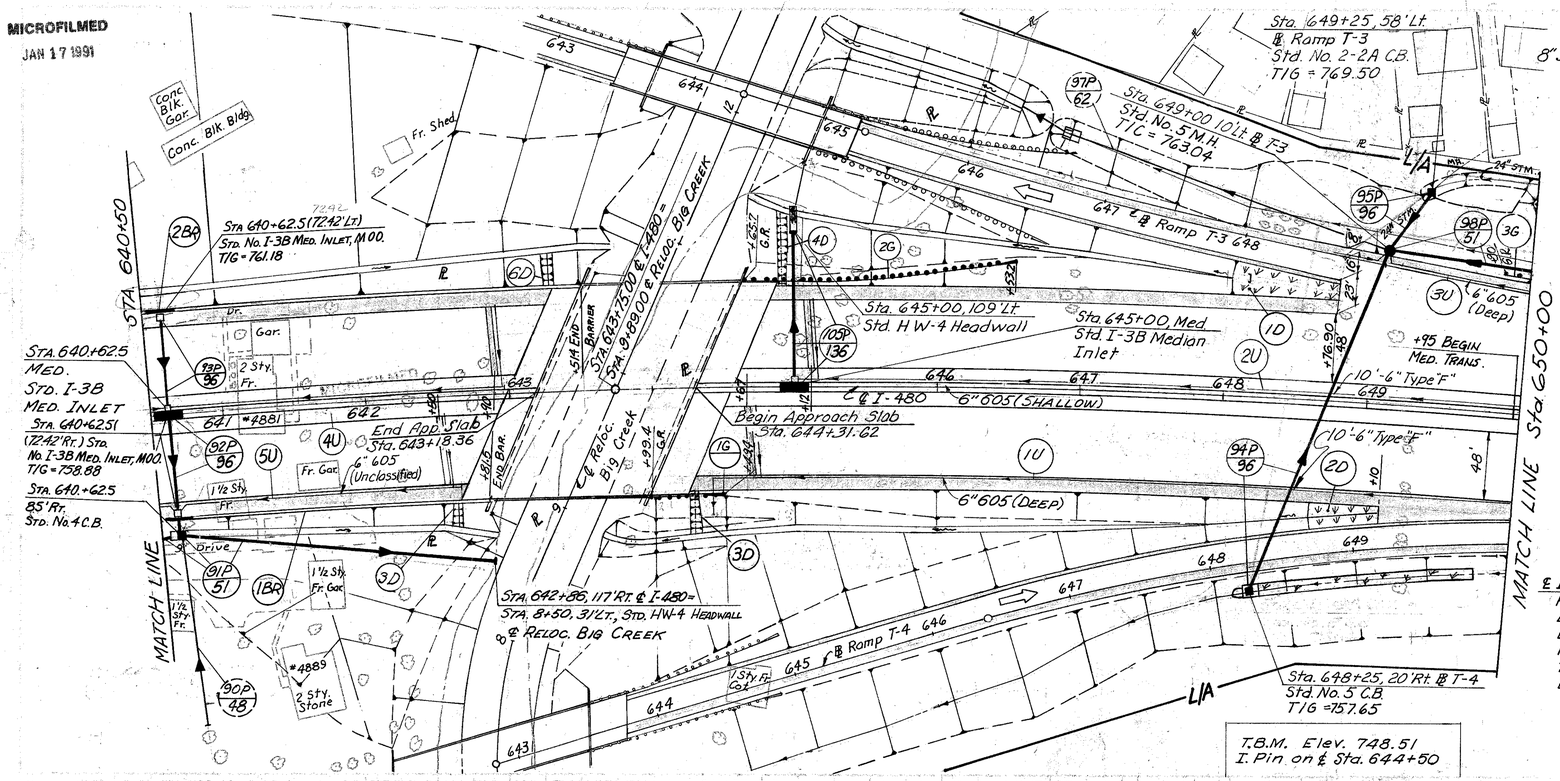


| TREE REMOVAL * 640+00 to 650+00 | |
|---|---|
| Size | Nº |
| 18" | 57 |
| 30" | 24 |
| 48" | 2 |

* Includes Ramp Areas

| CROSS REFERENCE | |
|---|---|
| Sht. No. | Item |
| 90 | Ramp T-3 Pavement Detail |
| 91 | Ramp T-4 Pavement Detail |
| 62 | Ramp T-3 Plan & Profile |
| 63 | Ramp T-4 Plan & Profile |
| 111 | Reloc. Big Creek Plan & Profile |
| 43 | Superelevation Table |
| 425 | Structure |

℄ I-80 CURVE DATA
P.I. 634+64.70 Back
Δ = 44° 06' 29" Rt.
D = 1° 00' 00"
R = 5,729.58'
T = 2,321.19'
L = 4,410.81'

T.B.M. Elev. 748.51
I. Pin on ℄ Sta. 644+50

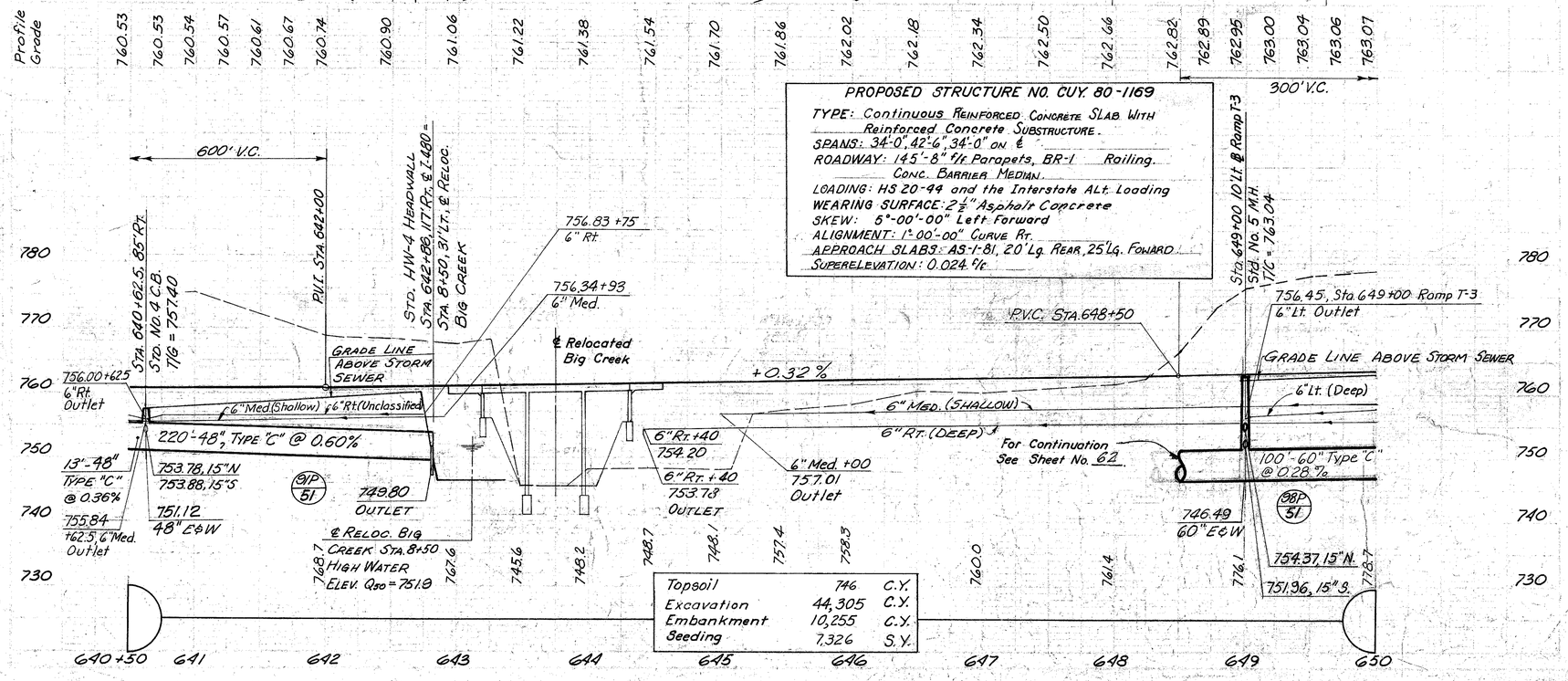


| Topsoil | 746 | C.Y. |
|---|---|---|
| Excavation | 44,305 | C.Y. |
| Embankment | 10,255 | C.Y. |
| Seeding | 7,326 | S.Y. |

| ESTIMATED QUANTITIES | | |

CUYAHOGA COUNTY
480 - 10.39

P.K. Nail - 15" Oak
21.66
24" Ash
14.43
P.K. Nail
657 ℄ I-80
P.O.T. Sta. 657+77.24
I. Pin

| CROSS REFERENCE | |
|---|---|
| Sht. No. | Item |
| 90 | Ramp T-3 Pavement Detail |
| 91 | Ramp T-4 Pavement Detail |
| 43 | Superelevation Table |

CALC. BY WAM DATE 3/75
CHKD. BY EJK DATE 3/75

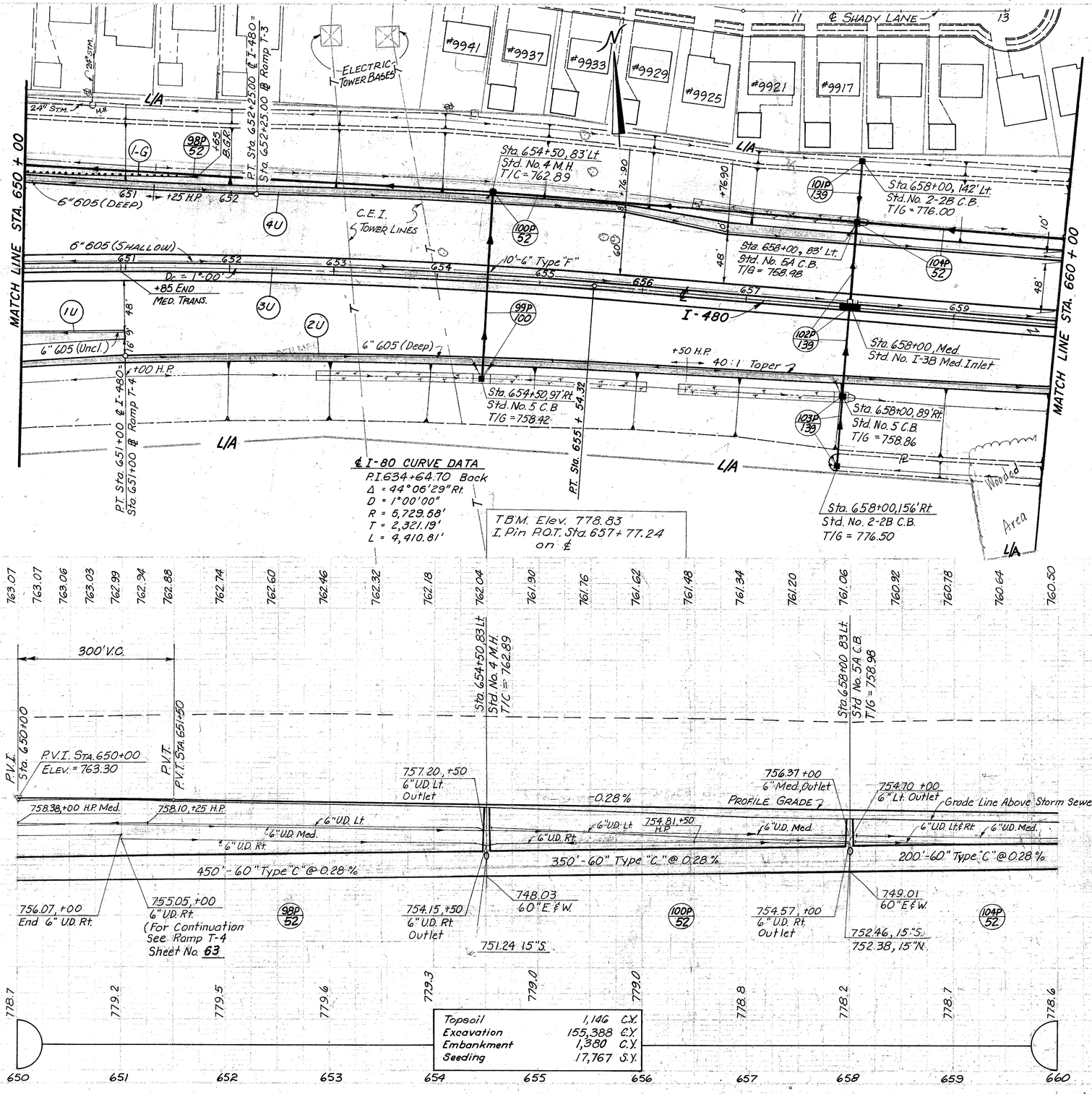


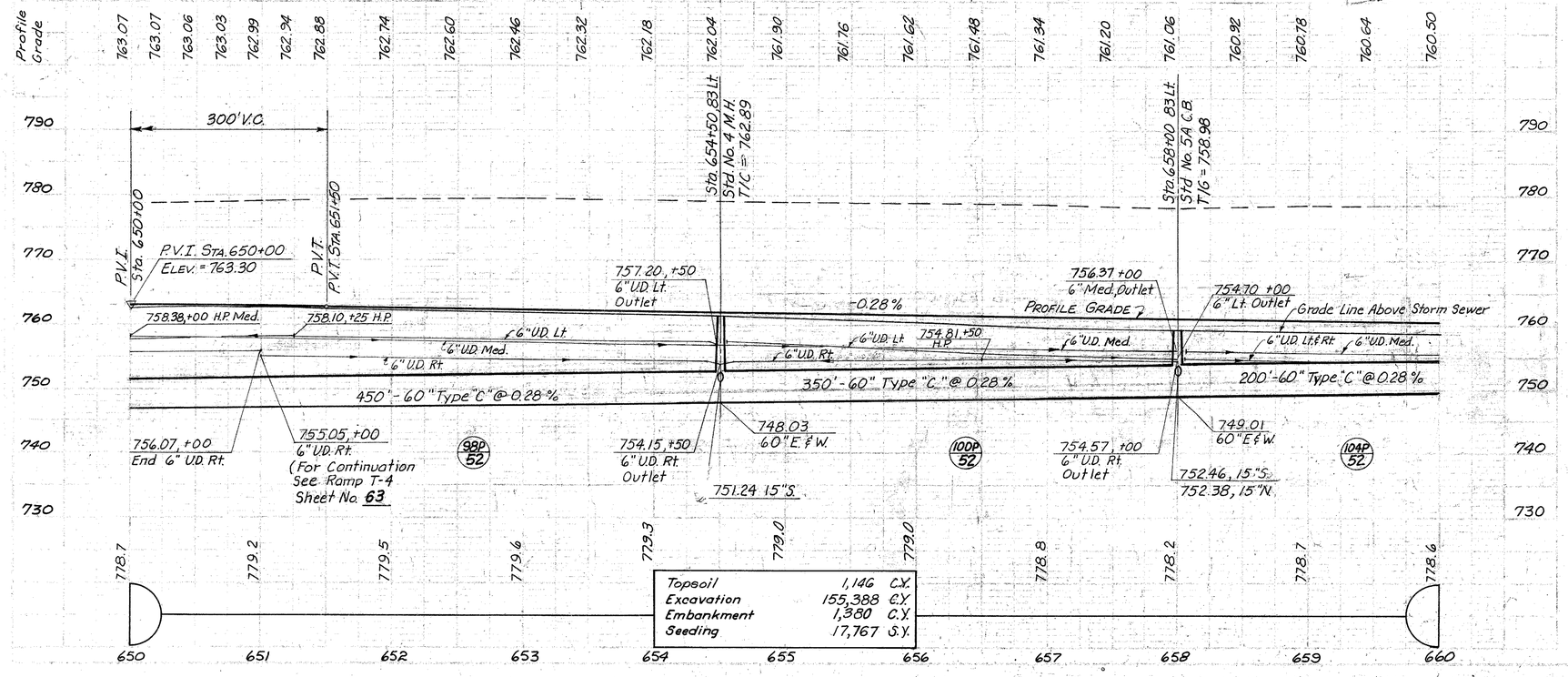


| | |
|---|---|
| Topsoil | 1,146 C.Y. |
| Excavation | 155,388 C.Y. |
| Embankment | 1,380 C.Y. |
| Seeding | 17,767 S.Y. |

TREE REMOVAL
650+00 to 660+00

| Size | No. |
|---|---|
| 18" | 19 |
| 30" | 5 |

| | | |

MICROFILMED
JAN 17 1991



CUYAHOGA COUNTY

480 - 10.39 CALC. BY WAM DATE 3/75
CHKD. BY EJK DATE 3/75

TBM Elev. 783.35
"O" in Open on Fire Hydt.
Sta. 668+26 / 64' Rt.

Tree Removal
660+00 To 670+00

| Size | No. |
|---|---|
| 18" | 6 |
| 30" | 4 |

Roofing Nail Set in
℘ # 63587

POT. Sta. 668+07.14
D. Hole In E. Curb
669 ℄ I-80

667

101.34

℄ SOUTHWOOD

EAST CURB

℄ 69.99

## PROPOSED STRUCTURE

TYPE: CONTINUOUS STEEL GIRDER WITH REINFORCED CONCRETE DECK AND SUBSTRUCTURE.
SPANS: 128'-0" ℄ 128'-0" c/c BRG'S.
ROADWAY: 26'-0" F/F CURBS. 5'-0" SIDEWALKS ℄ 6'-0" CHAINLINK FENCE MOUNTED ON 2'T" CONCRETE PARAPET.
LOADING: HS 20-44℄ THE ALTERNATE MILITARY LOADINGS. FATIGUE CASE II
WEARING SURFACE: MONOLITHIC CONCRETE
SKEW: 21°-10'-08" L.F.
ALIGNMENT: TANGENT
APPROACH SLABS: AS-1-72 (MOD.) 25'-0" LONG

## CROSS REFERENCE

| SHT. No. | ITEM |
|---|---|
| 91 | RAMP T-4 PAVEMENT DETAIL |
| 449 | STRUCTURE |
| 73℄74 | RELOC. SOUTHWOOD DR. |
| 71 | SUMMER LANE CUL-DE-SAC |
| 72 | SERVICE RD. "A" |
| 140-142 | CROSS SECTIONS |

*SEE DETAIL SHEET No. 100

Sta. 8+70, 19' Rt. ℄ Summer Lane
Std. No. 1 M.H. Build Over
Exist. 24" Storm Sewer
Inv. 773.43 T/C = 780.74

Sta. 662+00, 83' Lt.
Std. No. 5A C.B.-Mod.
T/G = 757.99

Sta. 662+48, 83' Lt.
STD. No. 5-A C.B.-Mod. (W/O DIKE)

Sta. 662+00 Med.
Std. No. I-3B Med. Inlet

Sta. 662+00, 83' Rt.
Std. No. 5 C.B.
T/G = 757.99

Sta. 664+90, 95' Lt.
STD. No. 2-2-B C.B.
T/G = 781.30

Sta. 666+75, 142' Lt.
STD. No. 2-2-B C.B.
T/G = 781.00

Sta. 666+75, 83' Lt.
Std. No. 5A C.B.
T/G = 759.19

Sta. 666+75, Med.
Std. No. I-3B Med. Inlet

Sta. 666+75, 83' Rt.
Std. No. 5 C.B.
T/G = 759.19

Sta. 666+75 (145 Rt.)
Std. 2-2B C.B.
T/G 779.10

+93 BEGIN MED. TRANS.

+48 END MED. TRANS.

Sta. 667+70.79 ℄ I-480
= Sta. 10+06.88 ℄ Reloc. Southwood Dr.

Sta. 666+75 (145 Rt.)
Std. 2-2B C.B.
T/G 779.10

Curb Ramp Meet Exist.

Ex. 24" Storm

R/W 7

℄ RELOC. SOUTHWOOD DR.

℄ Service Rd. "A"

KENNEDY DRIVE

SUMMER LANE

MATCH LINE

STA. 660+00

STA. 670+00

Wooded Area

146'-6" TYPE "B"

427'-54" Type "C" @ 0.28%

325'-54" Type "C" @ 0.28%

-0.28%

+0.28%

Grade Line Above Sewer

PROFILE GRADE

EXISTING GROUND

200' V.C.

P.V.C. STA. 661+00
760.22

P.V.T. STA. 663+00
760.22

Sta. 662+00, 83' Lt.
Std. No. 5A C.B.-Mod.
T/G = 757.99

Sta. 662+48, 83' Lt.
Std. No. 5A C.B.-Mod. (W/O DIKE)
T/G = 758.18

Sta. 666+75, 83' Lt.
Std. No. 5A C.B.
T/G = 759.19

Sta. 667+70.79
℄ Southwood Dr.
784.75

755.39, +00
6" Med. Outlet

753.95, +48, 6" U.D. Rt.
6" Med. U.D. Outlet, 753.70
6" Lt. U.D. INV. 753.45
6" Type "B" @ 0.4%
Outlet INV. 753.25

756.56, +67
6" Med.

756.58, +75
6" Med. Outlet

6" Med. U.D.

6" U.D. Rt. ℄ Lt.

750.63 54" E.

750.13 60" W.

745.50

750.77
Ex. 66" San.
Inv. 750.36

755.45, +58
6" MED. U.D.

52', 2-36 "Type F" 707.05 @ 0.0%

753.10, +00
6" U.D. Rt. ℄ Lt. Outlet

752.37
27" S.

P.V.I. Sta. 662+00
759.94

755.08, +71
6" U.D. Rt. ℄ Lt.

754.90, +75
6" U.D. Rt. ℄ Lt. Outlet

751.96
54" E & W.

753.34 18" S.
754.74 15" N.

| | |
|---|---|
| Topsoil | 1,275 C.Y. |
| Excavation | 170,229 C.Y. |
| Embankment | 1,267 C.Y. |
| Seeding | 18,174 S.Y. |

Profile Grade: 760.50, 760.36, 760.22, 760.16, 760.12, 760.09, 760.08, 760.09, 760.12, 760.16, 760.22, 760.36, 760.50, 760.64, 760.78, 760.92, 761.06, 761.20, 761.34, 761.48, 761.62, 761.76, 761.90, 762.04, 762.18

790 780 770 760 750 740 730

660 661 662 663 664 665 666 667 668 669 670

660 + 00 670 + 00

## ESTIMATED QUANTITIES

| | Spec. | | | Location | 660+00 To 662+00 | 662+00 To 664+00 | 664+00 To 666+00 | 666+00 To 667+00 | 667+00 To 668+00 | 668+00 To 669+00 | 669+00 To 670+00 | 660+00 To 670+00 | |
|---|---|---|---|---|---|---|---|---|---|---|---|---|---|
| ROADWAY | 608 | FILTER FABRIC | | L.F. | | | | | | | 200 | | 200 |
| | | CUY. CO. CURB RAMP TYPE 2 | | EA. | | | | | | | | | |
| | | CONCRETE WALK, AS PER PLAN | 4½" | S.F. | | | | | | | | | |
| | 202 | PAV'T REMOVED | | S.Y. | | | | | | | 932 | 1413 | 2345 |
| | 660 | SODDING | | S.Y. | 275 | 250 | 125 | 125 | | | | 735 | 1510 |
| DRAINAGE | 605 | DEEP | 6" | L.F. | 100 | 100 | | | | | | 872 | 1072 |
| | | SHALLOW | 6" | L.F. | 100 | 845 | 872 | | | | | | 1817 |
| | | BENDS AND BRANCHES | | EA. | | 1 | 3 | 1 | 3 | | | | 8 |
| | 604 | STD. No. 1 M.H. | | EA. | | | 1 | | | | | | 1 |
| | | STD. No. 2-2B C.B. | | EA. | | | | 1 | | | | | 1 |
| | | STD. No. I-3B MEDIAN INLET | | EA. | | | | | 1 | | | | 1 |
| | | STD. No. 5A C.B. | | EA. | | | | | | 1 | | | 1 |
| | | *STD. No. 5A C.B.-MOD. | | EA. | | | | | | | 1 | | 1 |
| | | STD. No. 5 C.B. | | EA. | | | | | | | | 1 | 1 |
| | 603 | TYPE "F" | | L.F. | | | 111 | 1 | | | | | 112 |
| | | TYPE "F" 707.05 | 36" | L.F. | | | | | | | | | |
| | | TYPE "F" | 15" | L.F. | | | | | | | | | |
| | | TYPE "F" | 6" | L.F. | | | | 104 | | | | | 104 |
| | | TYPE "C" | 60" | L.F. | 200 | | | | 63 | 64 | | | 327 |
| | | TYPE "C" | 54" | L.F. | | | 427 | | | | | | 427 |
| | | TYPE "B" | 27" | L.F. | | 83 | | | | | | | 83 |
| | | TYPE "B" | 18" | L.F. | | | | 166 | | | | | 166 |
| | | TYPE "B" | 15" | L.F. | | | | | | 67 | 325 | | 392 |
| | | TYPE "B" | 6" | L.F. | | | | | | | | 146 | 146 |

| Ref. | Side | |
|---|---|---|
| 104P | Lt. | 8" Conc. Curb Ramp |
| 106P | Rt. | 8" Conc. Curb Ramp |
| 107P | Rt. | Med. |
| 109P | Med. | |
| 110P | Lt. | |
| 111P | Lt. | |
| 112P | Lt. | |
| 113P | Rt. | Lt. |
| 114P | Rt. | |
| 115P | Lt. | |
| 4U | Lt. | End |
| 1D | Lt. | End |
| 2D | Rt. | |
| 3D | Lt. | |
| 4D | Rt. | |
| 1U | Lt. | |
| 2U | Med. | |
| 3U | Rt. | |
| 1PR | Rt. | |
| 1SW | Rt. | |
| 2SW | Rt. | |
| 5U | Rt. | |
| | | Total |

| SHEET NUMBER | CROSS REFERENCE |
|---|---|
| 142-145 | CROSS SECTIONS |
| 76 | AUTUMN LANE N. CUL-DE-SAC |
| 77 | AUTUMN LANE S. CUL-DE-SAC |

CUYAHOGA COUNTY
CUY - 480 - 10.39 CALC. BY B.B. DATE 1/81
CHKD. BY WAM DATE 1/81

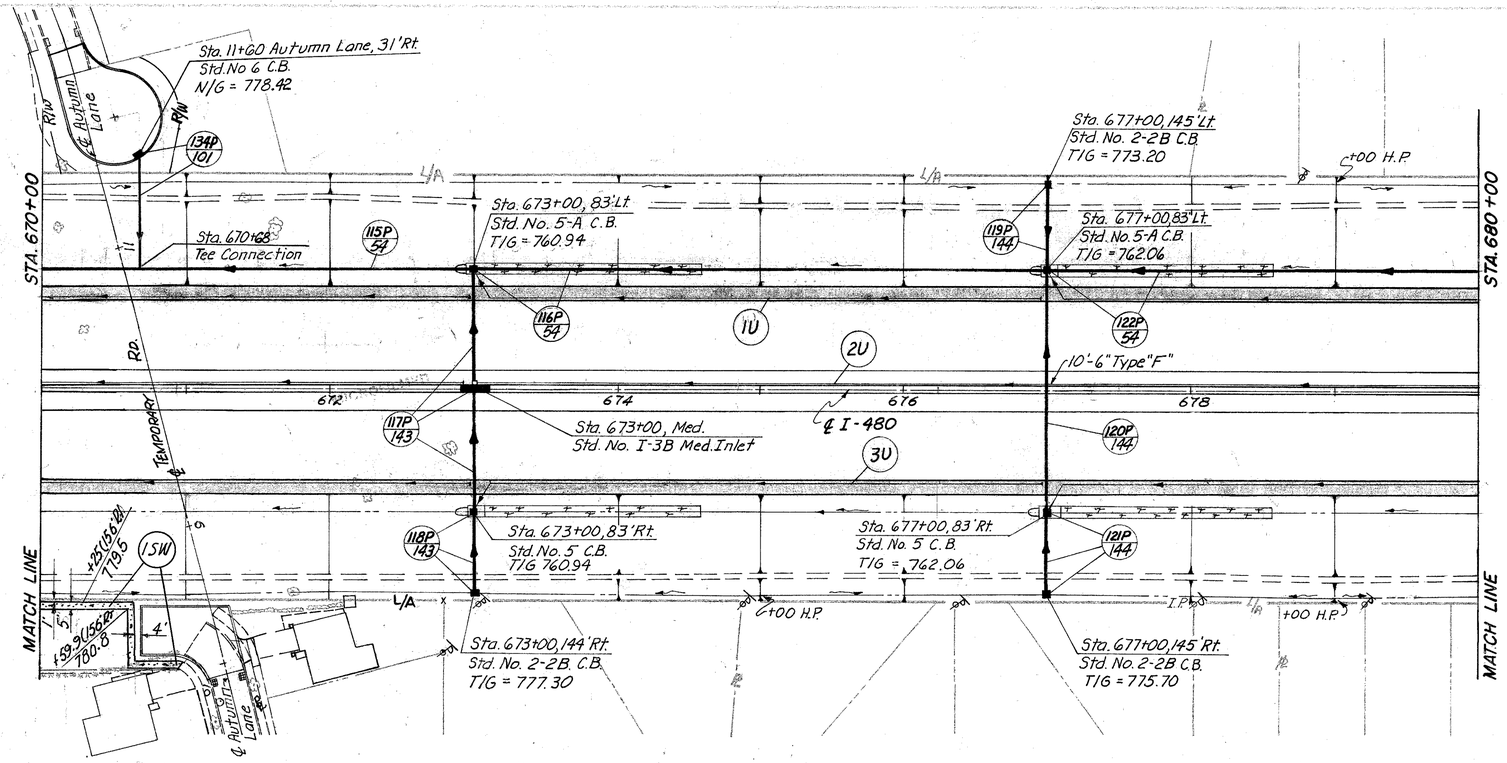


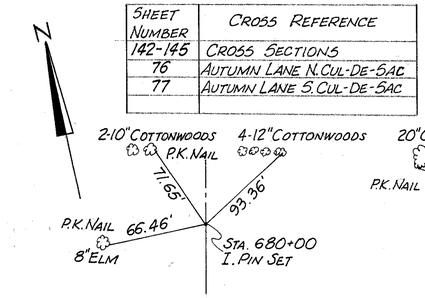


TREE REMOVAL
670+00 To 680+00

| Size | No. |
|---|---|
| 18" | 29 |
| 30" | 8 |

| | | |

| SHEET NUMBER | CROSS REFERENCE |
|---|---|
| 145-147 | CROSS SECTIONS |
| | |
| | |

55
500

CUYAHOGA COUNTY
480-10.39

DRAWN BY BB DATE 1/81
CHKD. BY WAM DATE 1/81

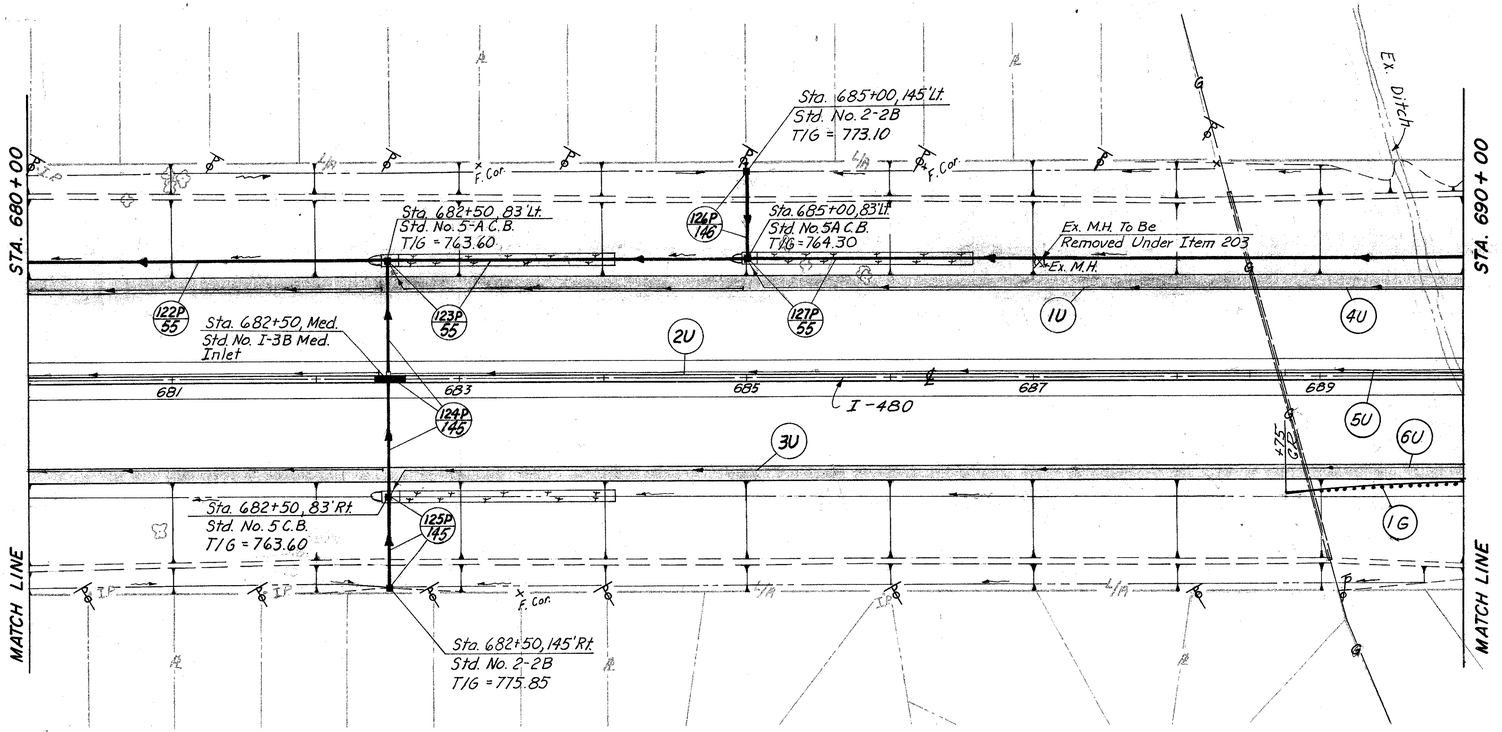


TREE REMOVAL
680+00 TO 690+00

| SIZE | No. |
|---|---|
| 18" | 10 |
| 30" | 2 |

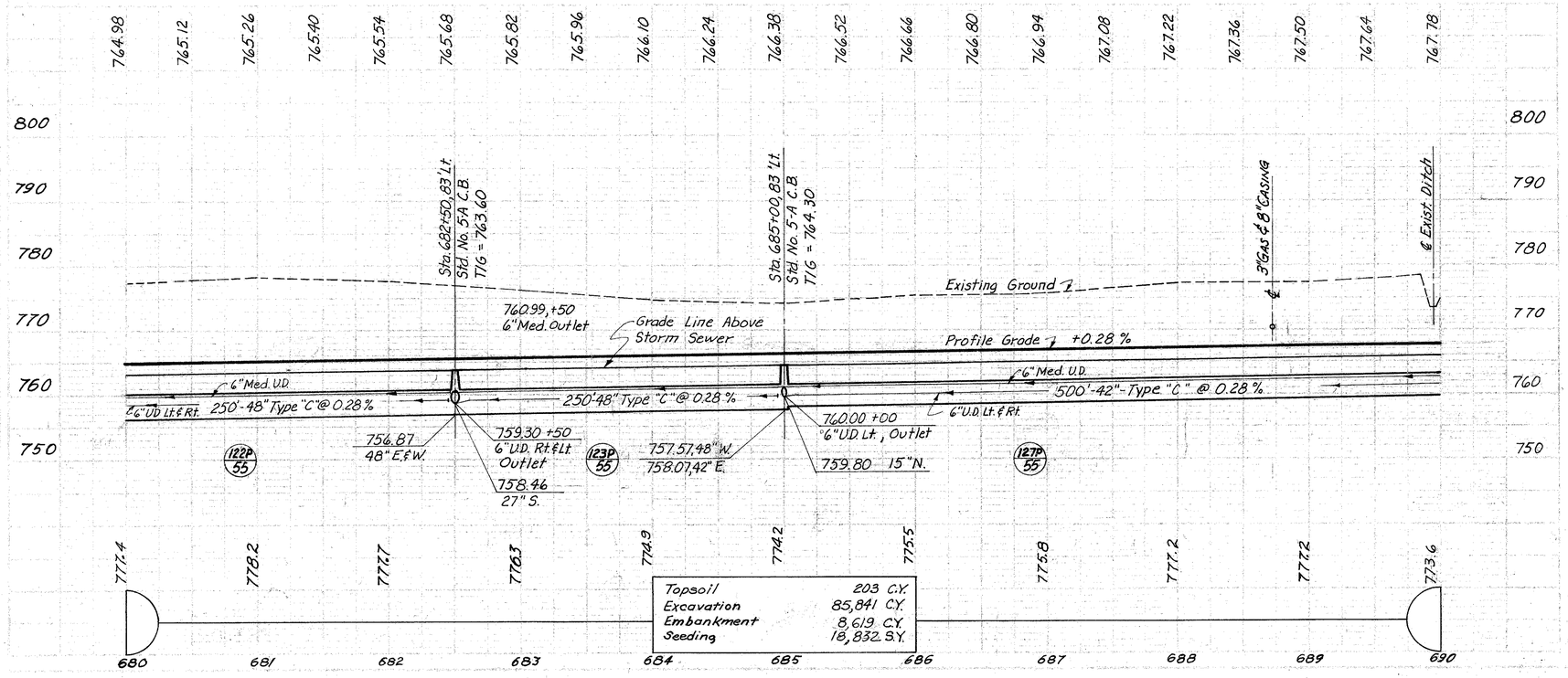


| Topsoil | 203 C.Y. |
|---|---|
| Excavation | 85,841 C.Y. |
| Embankment | 8,619 C.Y. |
| Seeding | 18,832 S.Y. |

| | | |

6-L

MICROFILMED
JAN 17 1991

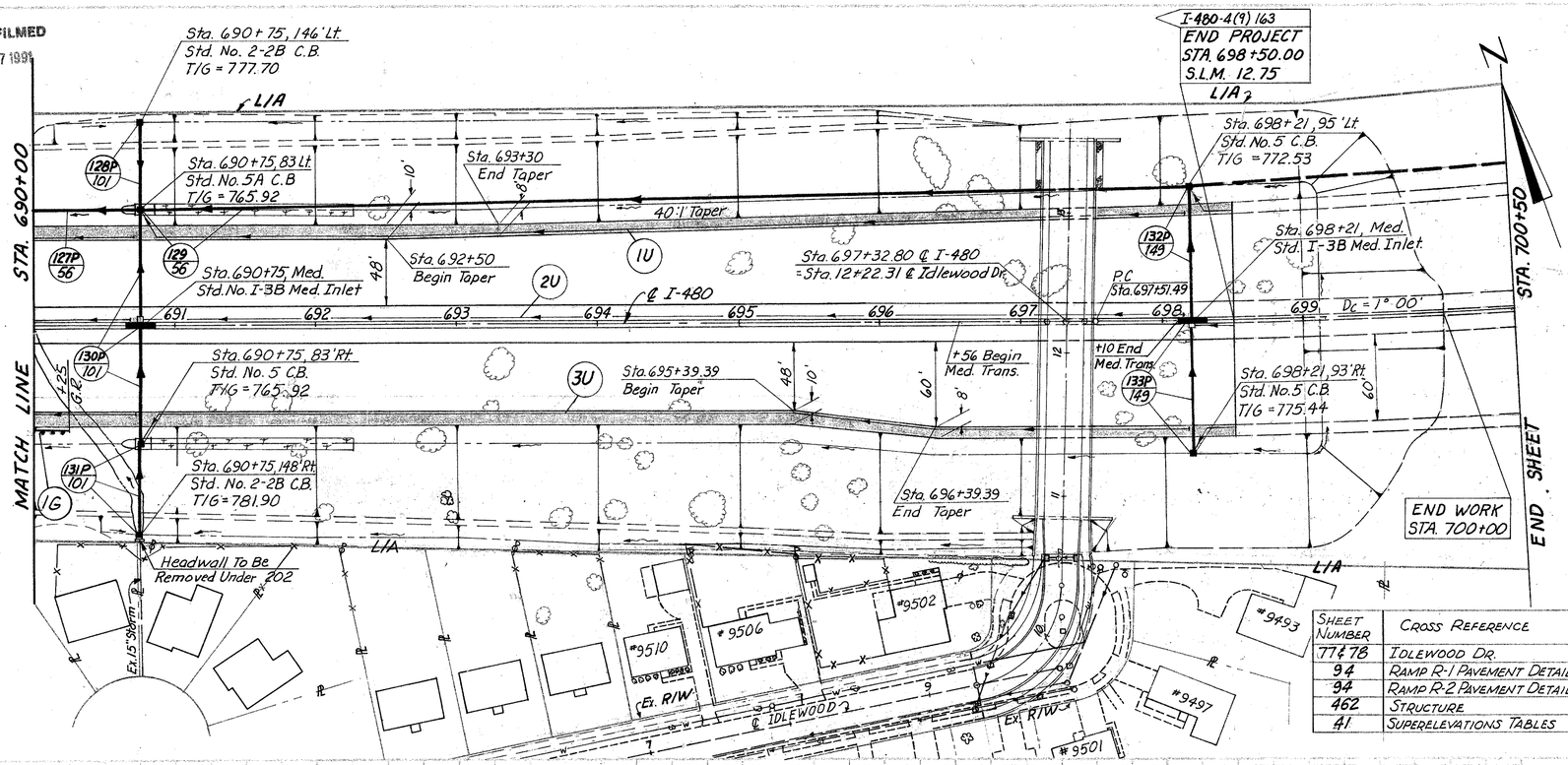


| Sheet Number | Cross Reference |
|---|---|
| 77 & 78 | Idlewood Dr. |
| 94 | Ramp R-1 Pavement Details |
| 94 | Ramp R-2 Pavement Details |
| 462 | Structure |
| 41 | Superelevations Tables |

## I-480 ℄ Curve Data

Δ = 13°19'-26"
D = 1°-00'
R = 5,729.58'
T = 669.21'
L = 1,332.39'
C = 1,329.39'

## Tree Removal 690+00 To 700+50

| Size | No. |
|---|---|
| 18" | 35 |
| 30" | 12 |

## PROPOSED STRUCTURE

TYPE: CONTINUOUS STEEL GIRDERS WITH REINFORCED CONCRETE DECK AND SUBSTRUCTURE.
SPANS: 136'-0" & 129'-0" c/c BRG'S.
ROADWAY: 26'-0" F/F CURBS 5'0 SIDEWALKS & 6'-0 CHAIN LINK FENCE MOUNTED ON 2'T" CONCRETE PARAPET.
LOADING: HS 20-44 & THE ALTERNATE MILITARY LOADING, FATIGUE CASE II
WEARING SURFACE: MONOLITHIC CONCRETE.
SKEW: 0°00'-00"
ALIGNMENT: TANGENT
APPROACH SLABS: AS-1-72 (MOD) 25'-0" LONG.

CALC. BY B.B DATE 1/81
CHKD. BY WAM DATE 1/81

| DIST. | STATE | FED. | PROJ. | NO. |
|---|---|---|---|---|
| 12 | OHIO | | | |

56
500

CUYAHOGA COUNTY
CUY-480-10.39

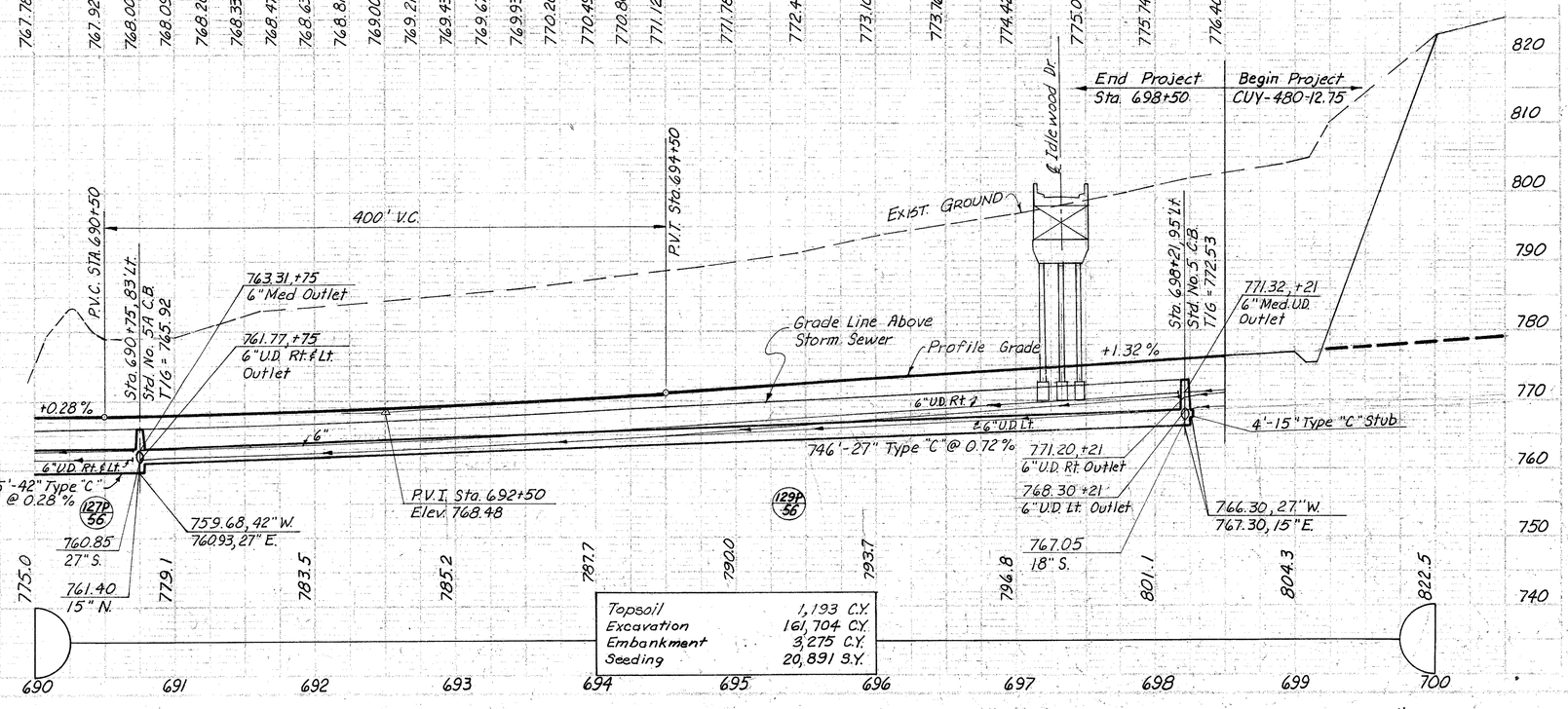


| Topsoil | 1,193 C.Y. |
|---|---|
| Excavation | 161,704 C.Y. |
| Embankment | 3,275 C.Y. |
| Seeding | 20,891 S.Y. |

## Estimated Quantities

| Ref. No. | Side | Location | | |

| | | | |
|---|---|---|---|
| 2 | OHIO | | |

CUYAHOGA COUNTY
CUY 480-10.39

| SHEET NUMBER | CROSS REFERENCE |
|---|---|
| 83 & 87 | RAMP W-1 PAVEMENT DETAILS |
| 312 | STRUCTURE |
| | |
| | |

CALC. BY WAM DATE 1/75
CHKD. BY EJK DATE 1/75

RAMP W-1
CURVE DATA

| | |
|---|---|
| P.I. | 575+29.15 |
| Δ | 14°15'30" |
| Dc | 4°00' |
| R | 1432.39' |
| T | 179.15' |
| L | 355.54' |

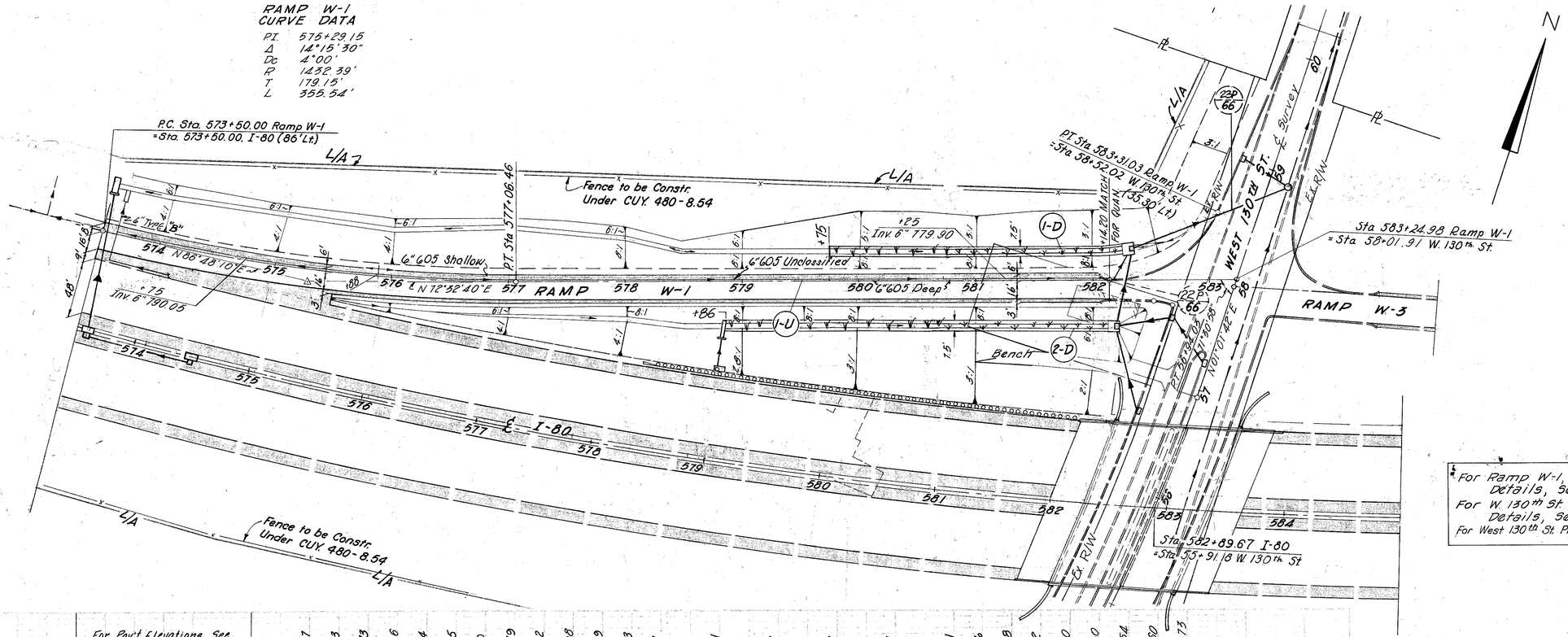


For Ramp W-1, Pavement Elevations & Pavement Details, See Sheet No. 83 & 94
For W. 130th St. Pavement Elevations & Pavement Details, See Sheet No. 86 & 87
For West 130th St. Plan & Profile See Sheet No. 64, 65, 66

For Pav't Elevations See Merger Detail Sheet No. 69

794.67 794.73 794.73 794.66 794.54 794.35 794.10 793.79 793.42 792.98 792.49 791.93 791.31 790.01 788.71 787.41 786.11 784.81 784.16 783.58 783.12 782.80 782.60 782.54 782.60 782.73

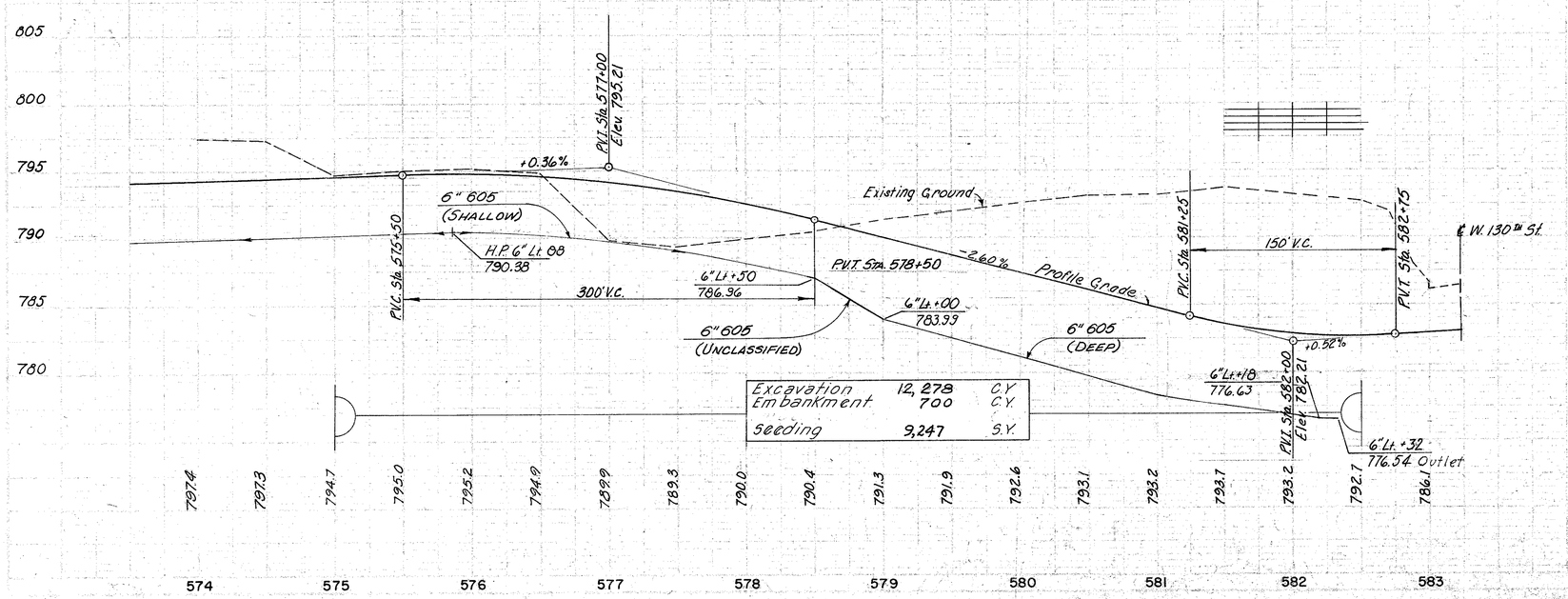


| ESTIMATED QUANTITIES | | | 605 | | | | 603 | 660 |
|---|---|---|---|---|---|---|---|---|
| | | | Shallow | Unclassified | Deep | Bends & Branches | Type "F" | Sodding |
| REF. | SIDE | LOCATION | 6" | 6" | 6" | | 6" | |
| | | | L.F. | L.F. | L.F. | Ea. | L.F. | S.Y. |
| 1-D | Lt. | 579+75 to C.B. | | | | | | 208 |
| 2-D | Rt. | 578+86 to C.B. | | | | | | 273 |
| 1-U | Lt. | 573+50 to 582+32 | 490 | 50 | 338 | 1 | 10 | |
| TOTAL | | | 490 | 50 | 338 | | 10 | 481 |

RAMP W-1 573+50 583+23

CALC. BY WAM DATE 1/75
CHKD. BY EJK DATE 1/75

| ED. DIV. | STATE | PROJECT | FED. FUNDS |
|---|---|---|---|
| 2 | OHIO | | |

58
500

CUYAHOGA COUNTY
CUY-480-10.39

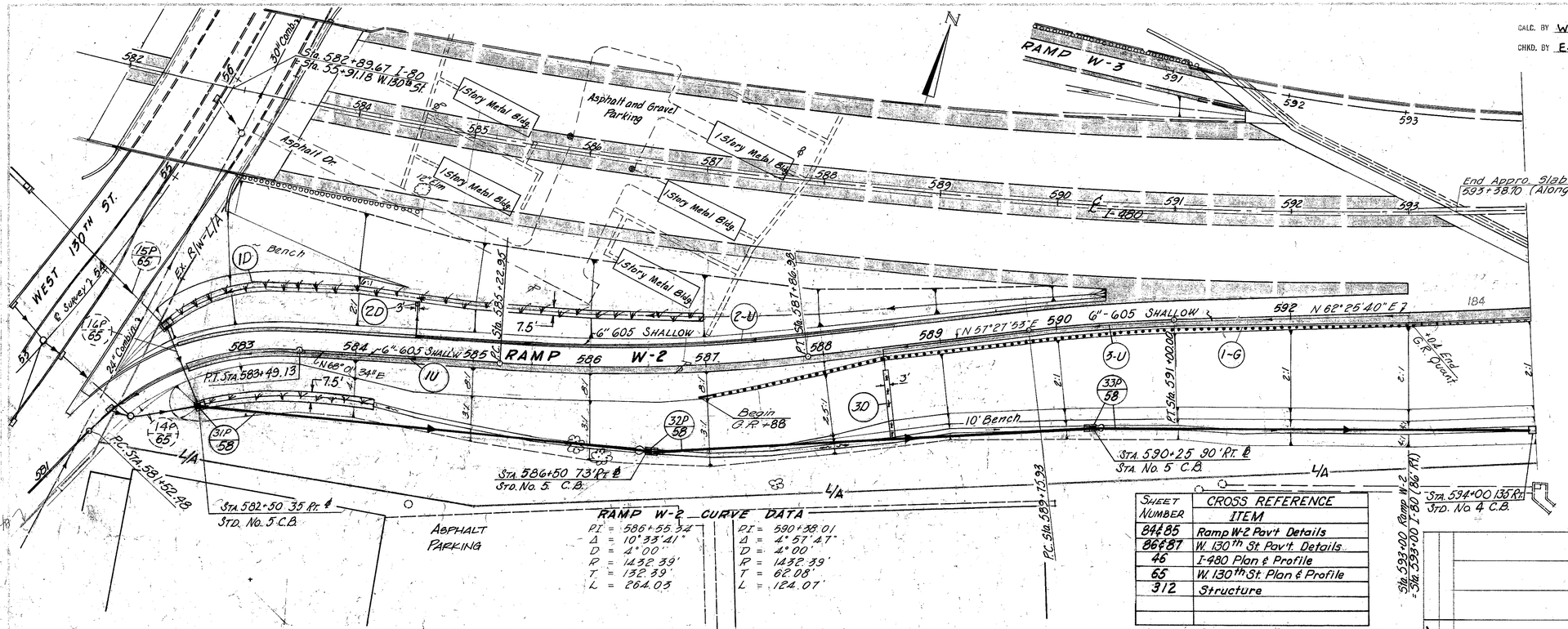


RAMP W-2 CURVE DATA

| | |
|---|---|
| PI = | 586+55.34 |
| Δ = | 10° 33' 41" |
| D = | 4° 00 |
| R = | 1432.39' |
| T = | 132.89' |
| L = | 264.05 |

| | |
|---|---|
| PI = | 590+38.01 |
| Δ = | 4° 57' 47" |
| D = | 4° 00 |
| R = | 1432.39' |
| T = | 62.08' |
| L = | 124.07' |

| SHEET NUMBER | CROSS REFERENCE ITEM |
|---|---|
| 84&85 | Ramp W-2 Pav't Details |
| 86&87 | W. 130th St. Pav't. Details |
| 46 | I-480 Plan & Profile |
| 65 | W. 130th St. Plan & Profile |
| 312 | Structure |
| | |
| | |

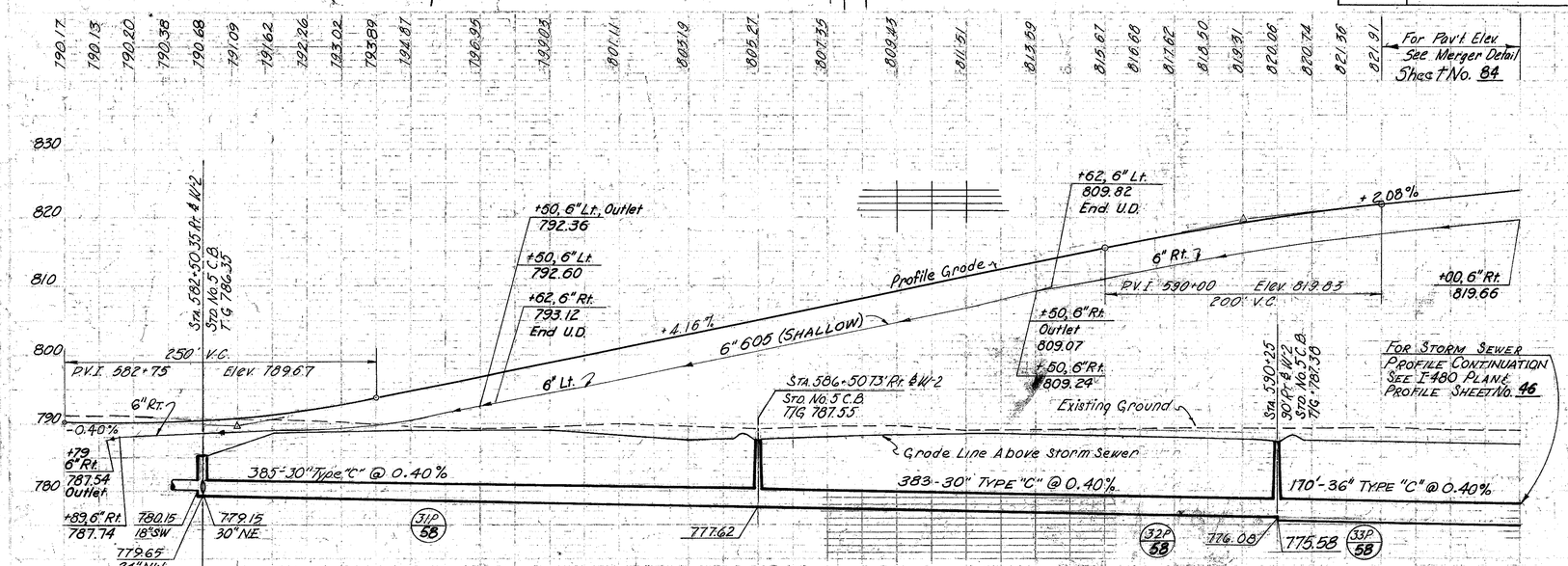


| | | | |
|---|---|---|---|
| Excavation | 1,396 | C.Y. | |
| Embankment | 47,130 | C.Y. | |
| Seeding | 17,142 | S.Y. | |

| | | |

| SHEET NO. | Cross Reference Item |
|---|---|
| 90 | W-3 Pav't Detail |
| 86187 | W-130TH ST. Pav't Detail |
| 64165 | W-130TH ℄ Plan & Profile |
| 45946 | I-480 Plan & Profile |
| | |
| | |

RAMP W-3
CURVE DATA

| | |
|---|---|
| PI | 593+31.47 |
| Δ | 16°20'52" |
| D | 4°00 |
| R | 1432.39' |
| T | 205.75' |
| L | 408.70 |

CALD. BY WAM DATE 1/75
CHKD. BY EJK DATE 1/75

| FED. RD. DIVISION | STATE | PROJECT | SHEET NO. | TOTAL SHEETS |
|---|---|---|---|---|
| 2 | OHIO | | 59 | 500 |

CUYAHOGA COUNTY
CUY-480-10.39

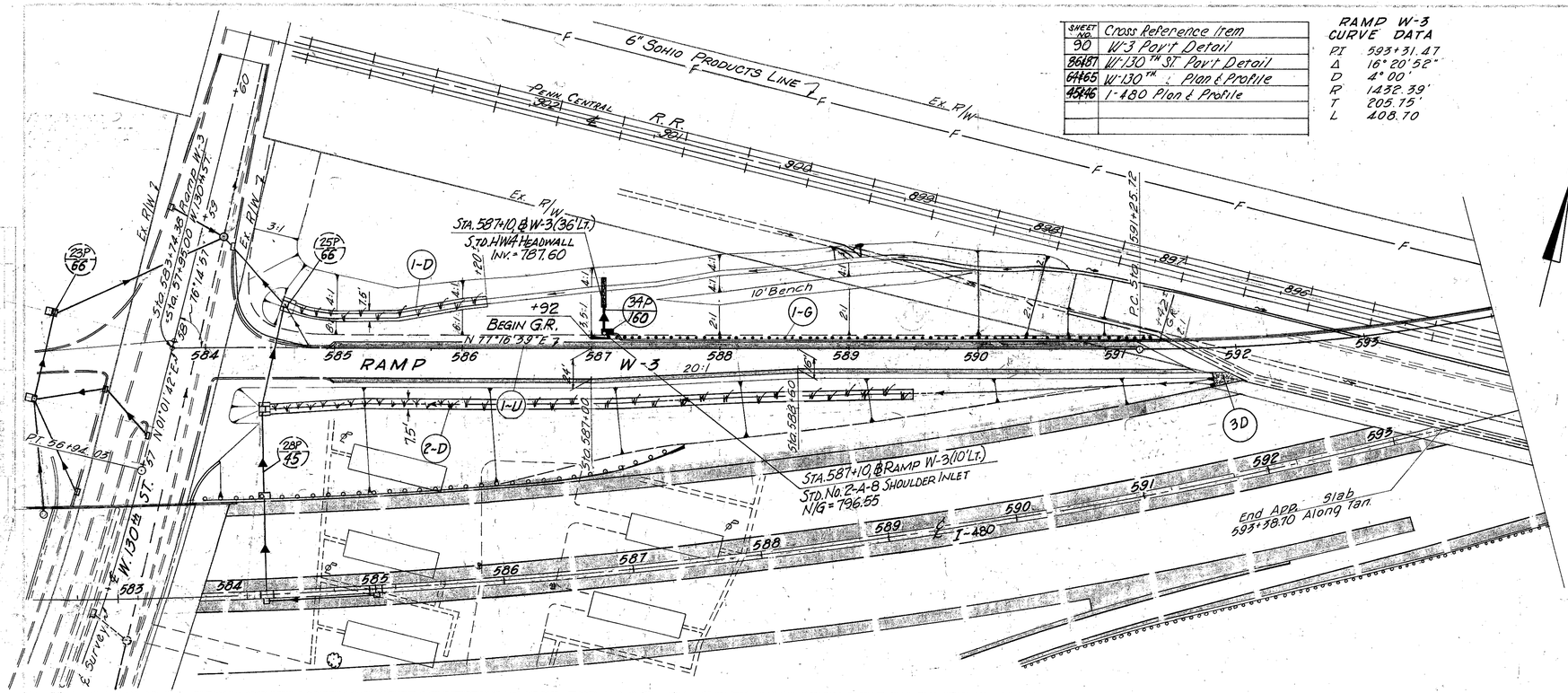


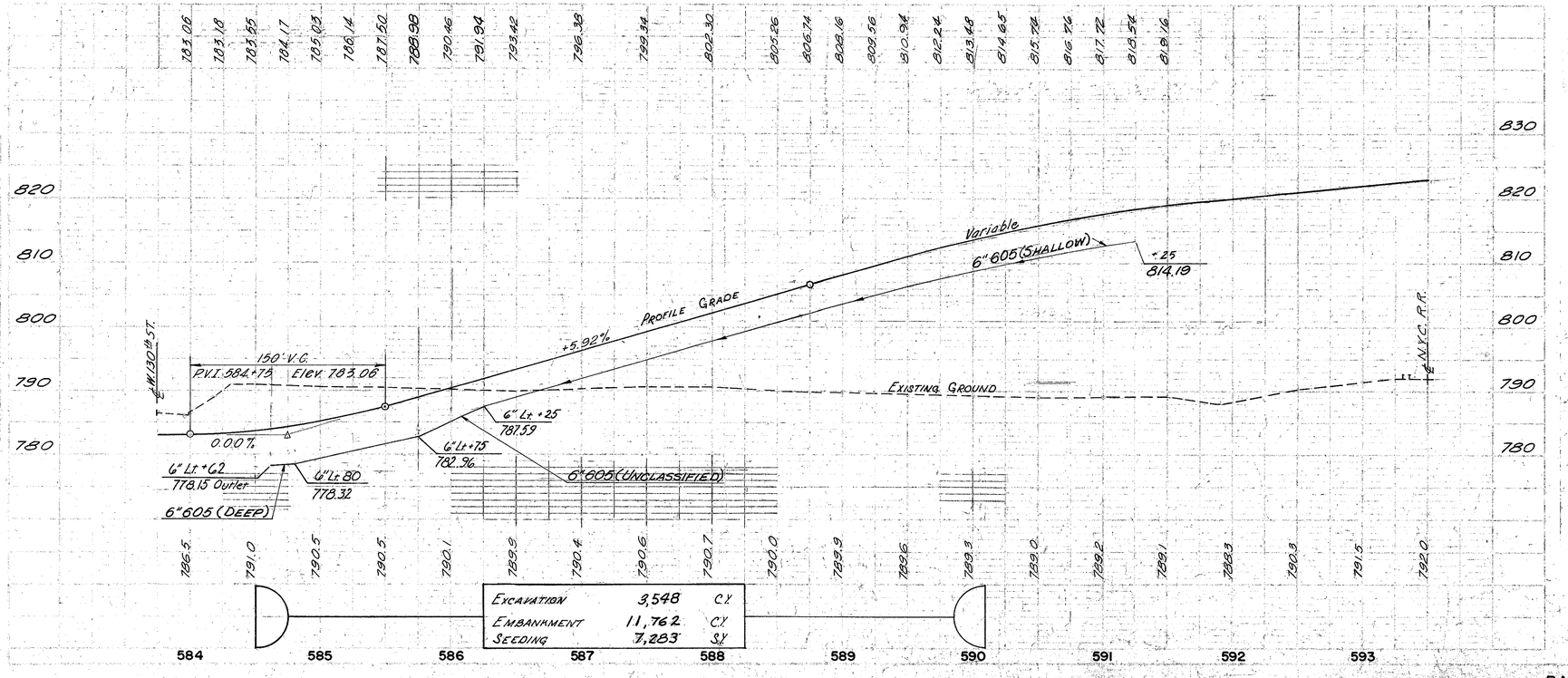


| Excavation | 3,548 | C.Y. |
|---|---|---|
| Embankment | 11,762 | C.Y. |
| Seeding | 7,283 | S.Y. |

| | | |

## RAMP T-1 CURVE DATA

P.I. Sta. 632+58.50
Δ = 12°-37'-42"
D = 4°-00'-00"
R = 1,432.40'
L = 315.71'
T = 158.50'

TBM Elev. 770.19 #53
X on N.W. Cor. Mon Box on ℄ Tiedeman Rd. Sta. 55+25.52

CALC. BY WAM DATE 1/75
CHKD. BY EJK DATE 1/75

| FED. ROAD | STATE | PROJECT | |
|---|---|---|---|
| 2 | OHIO | | |

60
500

CUYAHOGA COUNTY
CUY-480-10.39

Sta. 55+00 ℄ Tiedeman Rd. =
Sta. 639+01.98 ℄ Ramp T-1 =
Sta. 637+54.75 ℄ Ramp T-3

| Sheet Number | CROSS REFERENCE |
|---|---|
| 92, 93 | TIEDEMAN RD. PAVT. DETAIL |
| 67-70 | TIEDEMAN RD. PLAN & PROFILE |
| 88 | RAMP T-1 PAVT. DETAIL |
| 49, 50 | I-480 Plan & Profile |
| | |
| | |

Nose Sta. 629+00.00 Ramp T-1 = Sta. 628+00.00 ℄ I-480
P.C. Sta. 631+00.00
P.T. Sta. 634+15.71
L/A
6" 605 (DEEP)
6" 605 (SHALLOW)
10'-6" Type "F"
RAMP T-1
ST-1 ST-2 ST-3 ST-4 ST-5 ST-6 ST-7 ST-8 ST-9 ST-10 ST-11 ST-12 ST-13 ST-14
℄ I-480
Sta. 58+48.32 ℄ Tiedeman Rd.
= Sta. 639+36.59 ℄ I-480
12" Water Main
8" Water Main
Ex. Storm Sewer
Ex. Sanitary Sewer
Ex. Gas Line
Ex. Fiber Optic
Ex. Comm. Cable
Ex. Gas Valve
Ex. Fire Hydrant
Ex. Sign
Ex. Inlet
Ex. Manhole
Ex. Light Pole
Ex. Power Pole
Ex. Guy Anchor
Ex. Power Line
Ex. Comm. Line
Ex. Fence
Ex. Building
Ex. Pavement
Ex. Curb
Ex. Gutter
Ex. Drive
Ex. Shed
Ex. Garage
Ex. Pool
Ex. Septic Tank
Ex. Tree
Ex. Bush
Ex. Hedge
Ex. Grass
Ex. Ground
Ex. Rock
Ex. Water
Ex. Wetland
Ex. Woods
Ex. Brush
Ex. Swamp
Ex. Marsh
Ex. Bog
Ex. Peat
Ex. Muck
Ex. Clay
Ex. Silt
Ex. Sand
Ex. Gravel
Ex. Boulder
Ex. Bedrock
Ex. Soil
Ex. Topsoil
Ex. Subsoil
Ex. Parent Material
Ex. Glacial Till
Ex. Alluvium
Ex. Colluvium
Ex. Residual
Ex. Organic
Ex. Inorganic
Ex. Mineral
Ex. Metallic
Ex. Non-Metallic
Ex. Ferrous
Ex. Non-Ferrous
Ex. Alloy
Ex. Steel
Ex. Iron
Ex. Copper
Ex. Aluminum
Ex. Zinc
Ex. Lead
Ex. Tin
Ex. Nickel
Ex. Chrome
Ex. Manganese
Ex. Molybdenum
Ex. Vanadium
Ex. Tungsten
Ex. Cobalt
Ex. Titanium
Ex. Platinum
Ex. Gold
Ex. Silver
Ex. Mercury
Ex. Uranium
Ex. Radium
Ex. Thorium
Ex. Plutonium
Ex. Neptunium
Ex. Americium
Ex. Curium
Ex. Berkelium
Ex. Californium
Ex. Einsteinium
Ex. Fermium
Ex. Mendelevium
Ex. Nobelium
Ex. Lawrencium
Ex. Rutherfordium
Ex. Dubnium
Ex. Seaborgium
Ex. Bohrium
Ex. Hassium
Ex. Meitnerium
Ex. Darmstadtium
Ex. Roentgenium
Ex. Copernicium
Ex. Ununtrium
Ex. Flerovium
Ex. Ununpentium
Ex. Livermorium
Ex. Ununseptium
Ex. Ununoctium

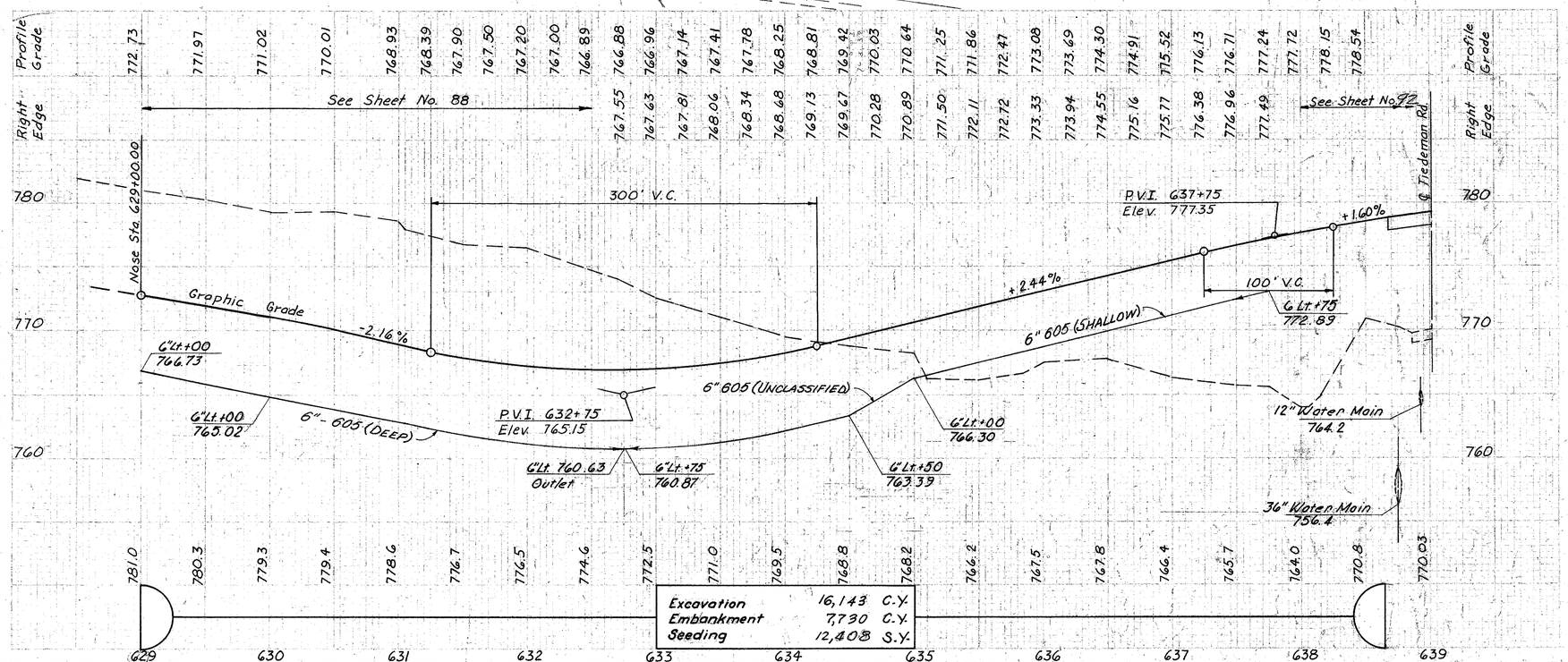


| Estimated Quantities | Acct. No. | Side | Location | | | | | | | | | | | | | | TOTAL |
|---|---|---|---|---|---|---|---|---|---|---|---|---|---|---|---|---|---|
| | 1U | Lt. | 629+00 to 637+75 T-1 | | | | | | | | | | | | | | |
| | ST-1 | Lt. | 544.80± Tiedeman Rd. | #1835 | / | | | | | | | | | | | | |
| | ST-2 | Rt. | 659.92± " " | #1860 | / | | | | | | | | | | | | |
| | ST-3 | Lt. | 562.85± " " | #1845 | / | | | | | | | | | | | | |
| | ST-4 | Lt. | 561.75± " " | #1855 | / | | | | | | | | | | | | |
| | ST-5 | Rt. | 577.60± " " | #538 WL | / | | | | | | | | | | | | |
| | ST-6 | Lt. | 28+00± " " | #1867 | / | | | | | | | | | | | | |
| | ST-7 | Lt. | 594.85± " " | #1875 | / | | | | | | | | | | | | |
| | ST-8 | Lt. | 60+00± " " | #1881 | / | | | | | | | | | | | | |
| | ST-9 | Rt. | 60+00± " " | #1896 | / | | | | | | | | | | | | |
| | ST-10 | Rt. | 604.75± " " | #536 WL | / | | | | | | | | | | | | |
| | ST-11 | Lt. | 611.60± " " | #1899 | / | | | | | | | | | | | | |
| | ST-12 | Rt. | 611.60± " " | #535 WL | / | | | | | | | | | | | | |
| | ST-13 | Rt. | 623.45± " " | #1904 | / | | | | | | | | | | | | |
| | ST-14 | Rt. | 631.10± " " | #1908 | / | | | | | | | | | | | | |
| | | | | | | | | | | | | | | | | | |
| DRAINAGE 603 | | | Bends & Branches | | Ea. | 1 | | | | | | | | | | | |
| | | | Deep | 6" | L.F. | | | | | | | | | | | | |
| | | | Shallow | 6" | L.F. | 275 | 550 | | | | | | | | | | 275 550 |
| | | | Unclassified | 6" | L.F. | 50 | | | | | | | | | | | 50 |
| | | | | | | | | | | | | | | | | | |
| | | | | | | | | | | | | | | | | | |
| | | | Type "F" | 6" | L.F. | 20 | | | | | | | | | | | 20 |
| ROADWAY 202 | | | Septic Tank Removed | | Ea. | | | | | | | | | | | | 14 |

RAMP T-1 PLAN & PROFILE STA. 629+00 TO STA. 639+01.98

| SHEET NO. | STATE | PROJECT | |
|---|---|---|---|
| 2 | OHIO | | |

61
500

CUYAHOGA COUNTY
CUY-480-10.39

| CROSS REFERENCE | |
|---|---|
| Sht. No. | Item |
| 89 | Ramp T-2 Pavement Detail |
| 92,93 | Tiedeman Rd. Pavement Detail |
| 67,70 | Tiedeman Rd. Plan & Profile |
| 49,50,51 | I-480 Plan & Profile |
| 102,103 | ACCESS RD. |

CALC. BY WAM DATE 1/75
CHKD. BY EJK DATE 1/75

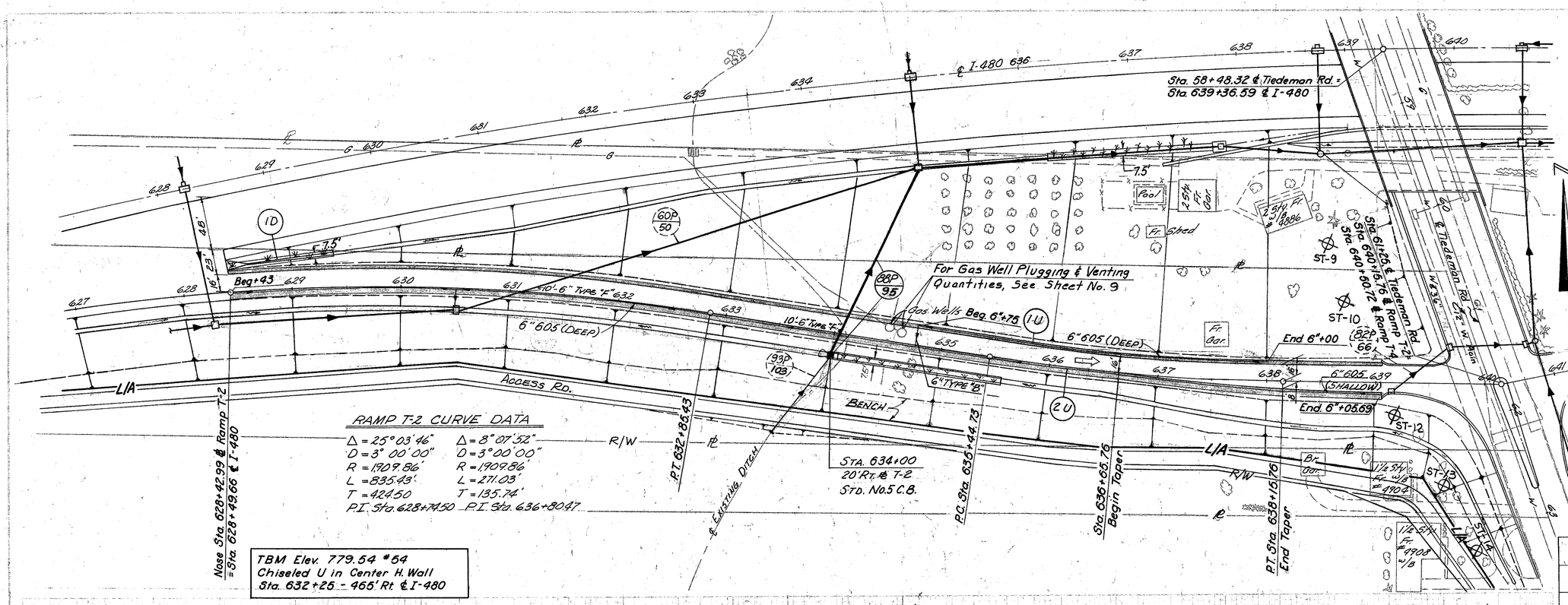


NOTE: SEPTIC TANK REMOVAL QUANTITIES SHOWN ON SHEET No. 60

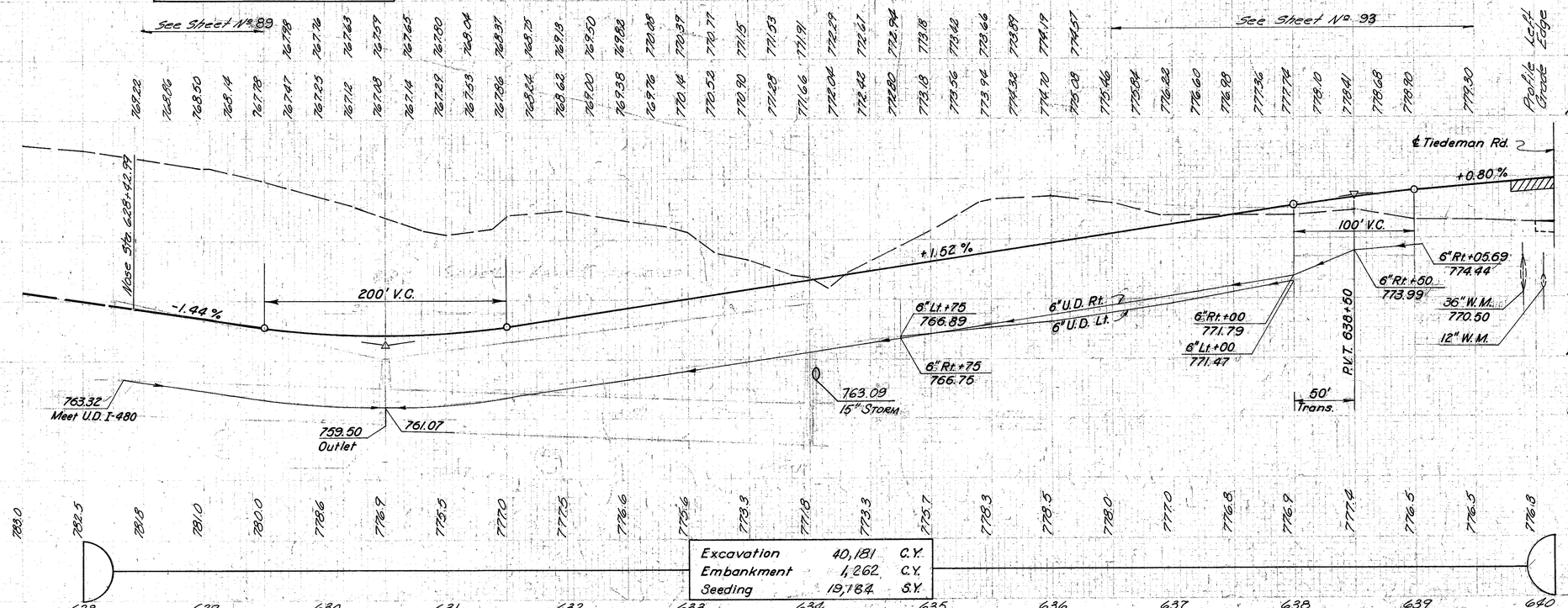


| Estimated Quantities | Item No. | Side | Location | | |

MICROFILMED
JAN 17 1991

62
500

CUYAHOGA COUNTY
CUY-480-10.39

CALC BY WAM DATE 1/75
CHKD. BY EJK DATE 1/75

Sta. 54+37.110 Lt. ℄ Tiedeman Rd. Std. No. 2-4 C.B.

Sta. 641+13.19 Begin Taper

CURVE DATA
RAMP T-3
Δ = 21°-30'-22"
D = 6°-00'-00"
R = 954.93'
L = 358.44'
T = 181.35'
P.I. 640+86.10
P.T. Sta. 642+63.19
End Taper

Sta. 644+36.70 ℄ Ramp T-3
Sta. 12+14.24 ℄ Reloc. Big Creek

| Estimated Quantities | | | 660 Reinforced Sodding |
|---|---|---|---|
| Ref. | Side | Location | S.Y. |
| 2-D | Lt. | 643+46 | 57 |
| 3-D | Rt. | 643+43 | 155 |
| 4-D | Rt. | 645+24 | 45 |
| 5-D | Lt. | 645+26 | 40 |
| | | Totals | 297 |

CURVE DATA
RAMP T-3
Δ = 10°-29'-01"
D = 1°-30'-00"
R = 3,819.72'
L = 698.91'
T = 350.43'
P.I. 648+76.52

| CROSS REFERENCE | |
|---|---|
| Sht. No. | Item |
| 90 | Ramp T-3 Pavement Detail |
| 92 | Tiedeman Rd. Pavt. Detail |
| 67-70 | Tiedeman Rd. Plan & Profile |
| 50,51,52 | I-480 Plan & Profile |
| 111 | Reloc. Big Creek Plan & Profile |
| 440 | Structure |

Sta. 55+00 ℄ Tiedeman Rd. =
Sta. 639+01.98 ℄ Ramp T-1 =
Sta. 637+54.75 ℄ Ramp T-3

Sta. 58+48.32 ℄ Tiedeman Rd. =
Sta. 639+36.59 ℄ I-480

Sta. 643+75.00 ℄ I-480 =
Sta. 9+89.00 ℄ Reloc. Big Creek

TBM Elev. 748.51
I. Pin on ℄ Sta. 644+50

NOTE:
SEPTIC TANK REMOVAL QUANTITIES SHOWN ON SHEET No. 60

Sta. 646+27.50 Lt.
Std. HW-4 Headwall

Sta. 646+60.42 Lt.
Std. No. 4 C.B.

Sta. 644+94.86
Beg. Appr. Slab

Sta. 645+26.09
P.C.

Sta. 643+73
End Appr. Slab

Sta. 639+04.75
P.C.

Sta. 639+25
P.V.I.
Elev. 777.88

Sta. 649+00, 10' Lt. ℄ T-3
Std. No. 3 M.H.
T/C = 763.04

Sta. 648+72.99
Nose

Sta. 652+25.00 ℄ Ramp T-3 =
Sta. 652+25.00 ℄ I-480
P.T.

Nose Sta. 648+72.99 Rt. ℄ Ramp T-3 =
Sta. 648+76.90 (84' Lt. ℄ I-480)

Electric Tower Base

RAMP T-3
6"-605 (SHALLOW)
6"-605 (UNCL.)
6"-605 (SHALL. Rev.)
BENCH
Fr. Shed
Conc. Gar.
Conc. Blk. Gar.
Conc. Blk. Bldg.
Brk. Bldg.
1 Sty. Brick w/o B
1½ Sty. Brick
1½ Sty. Fr. w/o B #4860
1½ Sty. Brick #4867
2 Sty. Fr.
Gar.
Slag Dr.
Stone Dr.
10" Asph.
Conc. Dr.
Yo. Conc. Dr.
9" Slag Dr.
10' Slag Dr.
℄ Tiedeman Rd.
12" St.
8" Water Main
12" Water Main
L.W. Vault
W.M.
ST-3
ST-4
ST-6
1U
2U
3U
1D
2D
3D
1G
2G
3G
4U
4D
5D
96P 62
97P 62
98P 51
99P 62
75P 68
78P 99
Reloc. Big Creek

| Profile Grade | Right Edge |
|---|---|
| 778.93 | 768.76 |
| 778.72 | 768.30 |
| 778.51 | 767.76 |
| 778.27 | 767.51 |
| 777.96 | 766.29 |
| 777.58 | 765.07 |
| 777.14 | 764.49 |
| 776.63 | 763.99 |
| 776.05 | 763.56 |
| 775.44 | 763.19 |
| 774.83 | 763.44 |
| 774.22 | 763.15 |
| 773.61 | 762.90 |
| 773.00 | 762.67 |
| 772.39 | 762.52 |
| 771.78 | 762.77 |
| 771.17 | 762.68 |
| 770.56 | 762.67 |
| 769.95 | 762.72 |
| 769.34 | 762.85 |
| 768.73 | 762.76 |
| 768.12 | 763.08 |
| 767.51 | 763.40 |

See Sheet No. 92
See Sheet No. 90

PROPOSED STRUCTURE CUY. 80-1171
TYPE: Continuous Steel Beam With Reinforced Concrete Deck And Substructure.
SPANS: 37'-0", 46'-0", 37'-0" ℅ brgs.
ROADWAY: 27'-8" ℄ft Parapets of BR-1-67 Railing
LOADING: HS 20-44
WEARING SURFACE 2½" Asphalt Concrete
SKEW: 6°-00'58" Lt. Fwd.
ALIGNMENT: Tangent
APPROACH SLABS: AS-1-81, 25'-0" lg.

℄ Tiedeman Rd.
℄ RELOC. BIG CREEK
Bridge Limit = 122.02
Grade Line Above Storm Sewer
-0.84%
150' V.C.
- 2.44 %
275' V.C.
+ 0.64%
6"Lt. +00 764.36
6"Lt. +70.45 673.97
6"Lt. +13 673.39
6"Lt. 773.19 Outlet
6"Rt. +13 773.32
6"Rt. (SHALLOW)
12" Storm 763.70
6"Rt. +00 764.38
6"Rt. +00 764.02 Outlet
6"Lt. +40 763.37
763.19 Outlet
6"Lt. +30 759.13
6"Lt. +75 758.07
P.V.I. 645+87.50 Elev. 761.715
6"Lt. 221' @ 0.40%
40'-60" TYPE "C" @ 0.32%
236'-60" TYPE "C" @ 0.32%
737.17 6" Lt. Outlet
Unclassified
745.74 60" E&W
745.61 Outlet
746.49 60" E&W
For Continuation Of 60" Storm Profile See Sheet No. 51
ROCK CHANNEL PROTECTION 145" Lg. x 20' W. x 30" Thk.
Sta. 646+27.50 Lt. Std. HW-4 Headwall
Sta. 646+60.42 Lt. Std. No. 4 C.B. T/C = 757.55
Nose Sta. 648+72.99
Sta. 649+00, 10' Lt. ℄ T-3 Std. No. 3 M.H. T/C = 763.04

| Excavation | 5,658 | C.Y. |
|---|---|---|
| Embankment | 29,909 | C.Y. |
| Seeding | 18,080 | S.Y. |

| ESTIMATED QUANTITIES | | |

MICROFILMED
JAN 17 1991



CUYAHOGA COUNTY
CUY- 480 - 10.39

Sta. 58+48.32 ℄ Tiedeman Rd. =
Sta. 639+36.59 ℄ I-480

Sta. 643+75.00 ℄ I-480
= Sta. 9+89.00 ℄ Reloc. Big Creek

℄ Reloc. Big Creek

℄ I-480

RAMP T-4 CURVE DATA

Δ = 20°-42'-41"
D = 4°-30'-00"
R = 1,273.24
L = 460.25'
T = 232.67'
P.I. 648+72.42

CALC. BY WAM DATE 1/75
CHKD. BY EJK DATE 1/75

P.T. Sta. 651+00.00 ℄ I-480 =
Sta. 651+00.00 ℄ Ramp T-4

| SHEET NUMBER | CROSS REFERENCE |
|---|---|
| 91 | RAMP T-4 PAV'T. DETAIL |
| 92-93 | TIEDEMAN RD. PAV'T. DETAIL |
| 67-70 | TIEDEMAN RD. PLAN & PROFILE |
| 51-52 | I-480 PLAN & PROFILE |
| 111 | RELOC. BIG CREEK PLAN & PR. |
| 311 | STRUCTURE |
| | |

RAMP T-4

Asphalt

9" Asphalt Dr.

10" Asph. Dr.

℄ Tiedeman Rd.

Beg. App Slab
643+49.36

End. Appr. Slab
Sta. 642+06.53

Sta. 642+82.07 ℄ Ramp T-4 =
Sta. 7+11.82 ℄ Reloc. Big Creek

P.C. Sta. 5+84.57
BEGIN WORK

Sta. 641+76.75 Rt.
Std. No. 3-A.C.B.
N/G 777.24
With "V" Grate

CONCRETE DAM
WALKWAY

Gravel
Snack Bar
Concession
Tickets
Foot Bridge
Walk

Sta. 61+75.00 ℄ Tiedeman Rd. =
Sta. 640+15.76 ℄ Ramp T-2 =
Sta. 640+50.72 ℄ Ramp T-4

P.C. Sta. 646+39.15
℄ Ramp T-4

Golf Course Area

Green

TBM. Elev. 748.51
I. Pin on ℄ Sta. 644+50

NOTE:
SEPTIC TANK REMOVAL QUANTITIES SHOWN ON SHEET No. 60

See Sheet No. 93

See Sheet No. 91

| | | |

| FED. RD. DIVISION | STATE | PROJECT | |
|---|---|---|---|
| 2 | OHIO | | |

64/500

CALC. BY AC DATE 1/80
CHKD. BY WAM DATE 1/80

CUYAHOGA COUNTY
CUY-480 - 10.39

| SHEET NUMBER | CROSS REFERENCE |
|---|---|
| 86 | W 130TH ST. PAV'T. DETAIL |
| | |
| | |
| | |

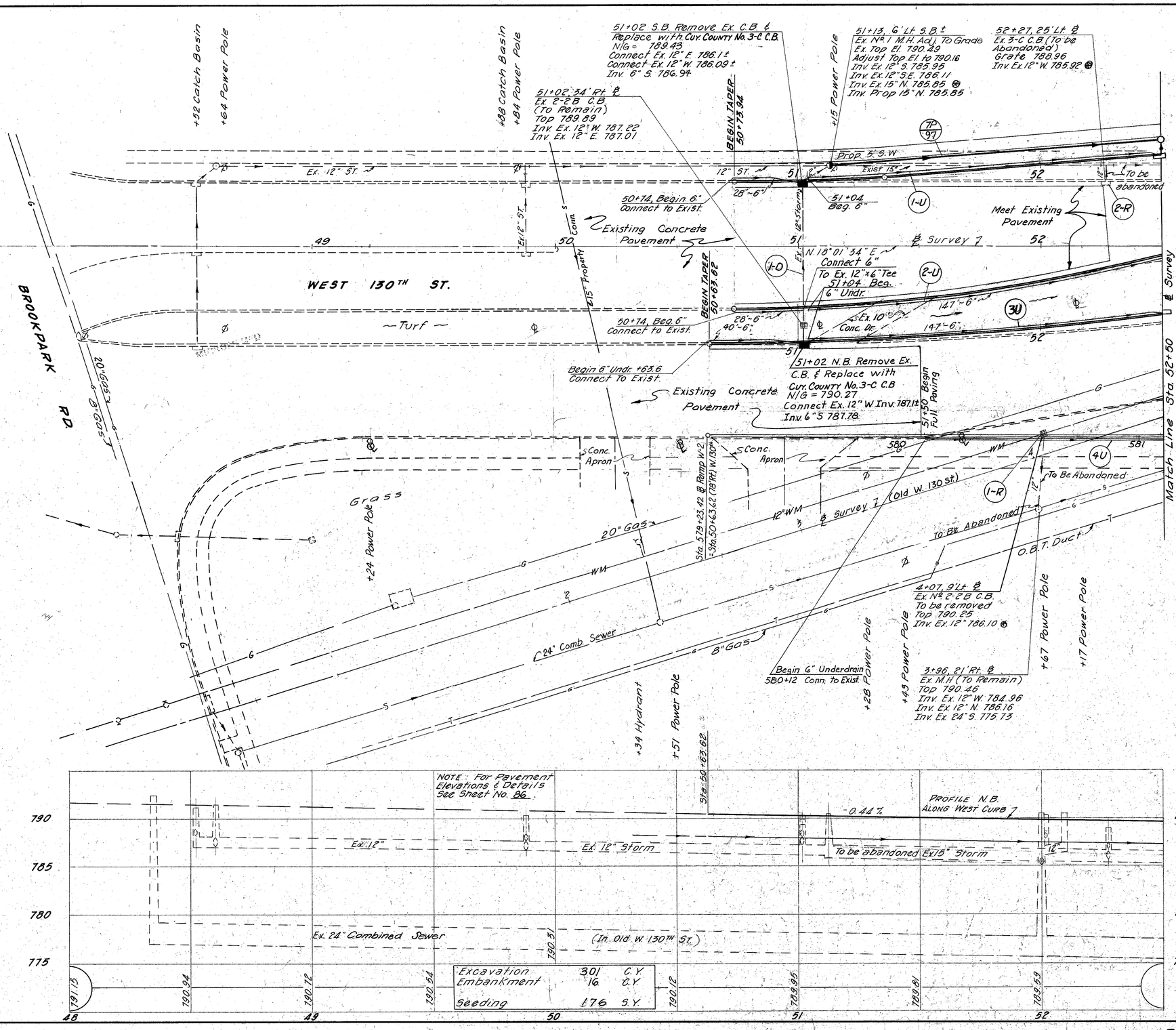


| Excavation | 301 | C.Y. |
|---|---|---|
| Embankment | 16 | C.Y. |
| Seeding | 176 | S.Y. |

| ESTIMATED QUANTITIES | | | 202 | | 603 | | | | 604 | | 605 | |
|---|---|---|---|---|---|---|---|---|---|---|---|---|
| REF. | SIDE | LOCATION | Catch Basins Removed | Catch Basin Abandoned | Type "C" Tee 01.706.02 Or 706.08 | | | | M.H. Adjusted To Grade | Cuy. County No. 3-C Catch Basin | Underdrain Perforated B&S As Per Plan | |
| | | | Ea. | Ea. | L.F. | | | | Ea. | Ea. | L.F. | |
| 7P | L | 51+13 to 52+50 | | | 137 | | | | 1 | | | |
| 1-D | L&R | 51+02 | 2 | | | | | | | 2 | | |
| 1-U | L | 50+74 to 52+50 | | | | | | | | | 174 | |
| 2-U | R | 50+74 to 52+50 | | | | | | | | | 175 | |
| 3-U | R | 50+63.6 to 52+50 | | | | | | | | | 187 | |
| 4-U | R | 580+12 to 581+10 (℄ W-2) | | | | | | | | | 98 | |
| 1-R | R | As Indicated | 1 | | | | | | | | | |
| 2-R | L | As Indicated | | 1 | | | | | | | | |
| | | TOTAL | 3 | 1 | 137 | | | | 1 | 2 | 634 | |

⊛ Existing inlet and outlet pipes shall be sealed with precast vitrified or concrete stoppers cost to be included under item 202.

DRAINAGE W. 130TH ST. - STA. 48+00 to 52+50

CALC. BY A.C. DATE 1/80
CHKD. BY WAM DATE 1/80

| FED. RD. DIVISION | STATE | PROJECT | |
|---|---|---|---|
| 2 | OHIO | | |

65/500

CUYAHOGA COUNTY
CUY 480-10.39

| | | |
|---|---|---|
| 1M | 604 | Monument Adjusted to Grade - ℄ Sta. 52+69.08 - 1 ea. |
| 2M | 604 | Cuy. Co. Mon. ASSEMBLY - ℄ Sta. 56+94.03 - 1 ea. |

52+50, 6' Lt. S.B., W Curb Std. No. 1 M.H. Sp. Fr & Cov.

52+50 S.B. W Curb Cuy. Co. No. 3-C C.B.

53+00, 14' Rt. ℄ Ex. 2-2B C.B. To Abandoned Top 793.11 Inv 12" N 785.32 ⊛ Inv 12" E 785.52 ⊛

Begin 6" +34 To Be Abandoned

PC 52+69.08 I.P. in Mon. Box

Sta. 52+50

52+50 N.B. W. Curb Cuy. Co. No. 3-C C.B.

53+12, 25' Lt. S.B. Ex. 3-C C.B. To Abandoned Grate 788.69 Inv. Ex. 12" 785.54 ⊛

53+19, Lt. S.B. Ex. No. 1 M.H. To Abandoned Top 789.28 Inv. Ex. 15" S 784.9 ⊛ Inv 15" E 784.85 ⊛ Inv 12" S.E. 785.24 ⊛

53+25, 6' Lt. S.B. Std. No. 1 M.H. Sp. Fr. & Cov.

53+25 S.B. West Curb Cuy. Co. No. 3-C C.B.

SEE SHEET No. 45 FOR QUANTITIES.

Type 3 CL Fence

53+78.25' Lt. ⊛ Ex. 3-C C.B. To Be Abandoned T/G = 788.89 Ex. 12" 784.04 ⊛

15" Storm 53 To Be Abandoned

53+20, 1' Lt. ℄ Survey Std. No. 1 M.H. With Open Grate Cover As Per Plan

54+10, 34' Lt. ℄ Survey Std. No. 5 C.B. Grate 785.35 Inv. 24" 781.85

53+74, 21' Rt. ℄ Ex. 3-C C.B. To Be Abandoned Grate 789.57 Inv. Ex. 12" W. 783.23 ⊛ Inv. Ex. 12" S. 783.24 ⊛

+95 Power Pole +32 Power Pole +83 Water Valve +94 Power Pole +17 Water Valve +22 Hydrant +47 Water Valve

Sta. 57+00

Prop. 5' S.W.

6" 605 Shallow

56+65.43' Lt. ℄ Survey Cuyahoga County No. 3-C Catch Basin 12" W.M.

WEST 130TH. ST.

Hi Pt. +25

Hi Pt. +65 20" Gas

Hi Pt. +23

6" 605 Shallow

56 55+64.4' Lt. ℄ Survey Cuyahoga County No. 3-C C.B. W/ Trap. Build Over Ex. 12" S.M.

℄ Survey & ℄ Const.

Ex. 15" 8" Gas 2 O.B.T. Ducts

Prop. S.W.

Notch Line

53+00, 27' Rt. ℄ Survey Ex. 3-C C.B. Abandoned Grate 789.17 Inv. Ex. 12" 786.11

53+20, 20' Rt. ℄ Survey Cuyahoga County No. 3-C Catch Basin To Be Abandoned

12" W.M.

+25 Hi. Pt.

6" 605 Shallow

+95 90° Tee Inv. 6" 787.43

Prop. 5' S.W.

O.B.T. M.H.

+15, Begin 6" Inv. 787.8

24" Comb. Sew.

8" Gas 2

O.B.T. Ducts

581+79, 1' Rt. ℄ W-2 Cuyahoga County No. 3-C Catch Basin

582+50, 38' Lt. W-2 Std. No. 5 C.B.

581+95, 11' Rt. W-2 Std. No. 1 M.H. Sp. Fr. & Cov.

53+36, 20' Rt. ℄ Constr. Ex. M.H. Adjusted To Gr.

℄ Ramp W-2

583+00

ABANDON

55+60, 25' Rt. ℄ Survey Ex. M.H Reconstr. To Grade

55+55, 47' Rt. ℄ Survey Ex. M.H. Removed

I-71-80

15" Conc.

+00 Power Pole

584

| Sheet Number | Cross Reference |
|---|---|
| 86 | W-130TH St. Pav't Detail |
| 45 | I-480 Plan & Profile |
| 89 | Ramp W-2 Pav't Detail |
| 58 | Ramp W-2 Plan & Profile |
| 312 | Structure |

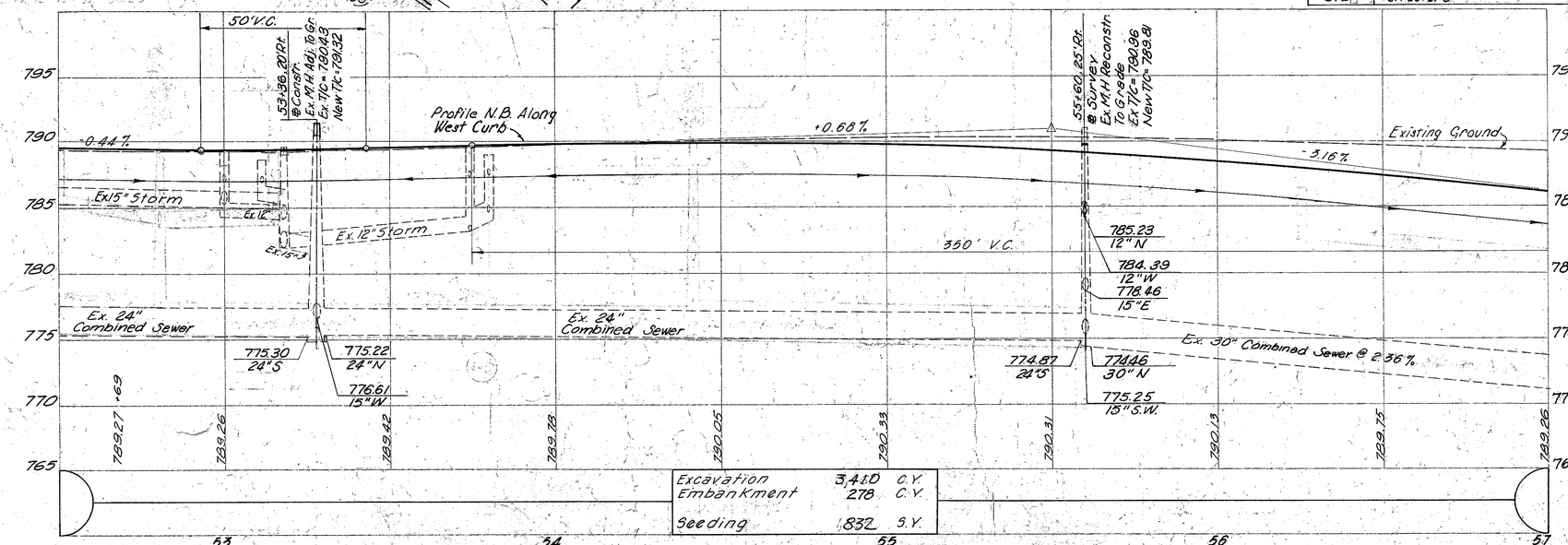


| | |
|---|---|
| Excavation | 3,410 C.Y. |
| Embankment | 278 C.Y. |
| Seeding | 1832 S.Y. |

| | | |

| FED. RD. DIVISION | STATE | PROJECT | |
|---|---|---|---|
| 2 | OHIO | | |

66/500

CALC. BY A.C DATE 1/80
CHKD. BY WAM DATE 1/80

CUYAHOGA COUNTY
CUY-480-10.39

| SHEET NUMBER | CROSS REFERENCE |
|---|---|
| 87 | W 130TH ST. PAV'T. DETAIL |
| | |
| | |
| | |

582+19.39' Rt. W-1
Std. No. 5-A C.B.

582+32.27 Lt. W-1
Std. No. 5 C.B. (Mod. As Per Plan)
Grate 780.50
INV. 21" SE. 776.26

59+00, 30.5' Lt.
Cuy. Co. No. 3-C C.B. (W/Trap)
NIG = 779.35
Inv. 6" S. 776.85
Inv. 12" 775.60

60+20, 17' Lt. Ex. C.B.
Ex. Grate 776.65
Adjust Grate to
Elev. 776.47
Reset Ex. Casting
Connect 6" Undr. South
Inv. Ex. 12" W. 772.33
Inv. Ex. 12" S.E. 771.07

+24 O.B.T. Pole #30515
+73 C.E.I.-O.B.T. Pole #229828
+58 C.E.I.-O.B.T. Pole #229827
CONRAIL
+37 Power Pole
+23 W. Valve & Hydrant
+55 C.E.I. Pole
+50 Inv. 6" 778.41
Begin G +04
Prop. 5' S.W.
Prop. 5' S.W.
+19 Power
+16 45° Bend
+07 Power Pole
Match Line
Sta. 57+00
Sta. 62+00
RAMP W-1
RAMP W-3
RAMP
1-U
2-U
3-U
4-U
5-U
1-D
19P/97
20P/97
21P/97
22P/97
23P/97
24P/97
25P/97
26P/97
57+56.44' Lt.
Cuyahoga County
No. 3C Catch Basin
57+35 W. 130th St.
583°74.38 Ramp
57+25.4' Lt. ℄ Survey
Cuyahoga County No. 3-C C.B.
N 0°01'42"E
58+01.91 W. 130th St.
583°24.98 Ramp
WEST 130th ST.
12" W.M.
6" Gas (Abn.)
Ex. 30" Comb. Sewer
6" Gas
O.B.T. Ducts
Ex. 42" Comb. Sew.
48" Comb. Sew.
8" Gas
O.B.T. Ducts
END WORK
STA. 60+25
+50 45° Bend
Inv. 778.65
584+41.5, 48' Rt. W-3
Std. No. 5 C.B.
Grate 782.25
N 44°19'39"E
58+88, 18.5' Rt ±
Std. No. 5 M.H. W/Sp. Frt & Cov.
58+81.27 Rt ±
Cuy. Co. No. 3-C C.B. (W/Trap)
+50.5'6" W.M.
Inv. 778.5
59+46, 18.5' Rt.
Ex. M.H., Ex. Top 779.18
Reconstruct Top to
Elev. 778.07
Inv. Ex. 30" S. 765.28
Inv. Ex. 42" N. 765.22
60+20, 17' Rt. Ex. C.B.
Ex. Grate 776.46
Adjust Gr. TO Elev. 776.20
Reset Ex. Casting
Connect 6" Und. South
Inv. Ex. 12" N. 772.45
Inv. Ex. 12" S. 771.47
+38 C.E.I. Pole #601534
+46 Manhole
+16 C.E.I. Pole #601535
+45 Manhole
+28 Power
+15
+76
584+62.34' Lt. W-3
Std. No. 5 C.B
SEE SHEET No. 45
SEE SHEET No. 59 FOR SODDING QUANTITY
SEE SHEET No. 59 FOR SODDING QUANTITY

NOTE: FOR Pavement Elevations & Details, See Sheet No. 87.

PROFILE & SURVEY
57+25 FORWARD
-3.16%
-1.20%
1 PROP. M.H. 18.5 Rt.
1 Ex. M.H. TO Be Reconstructed To Grade
100' V.C.
125
12.48' Cl.
Ex. 30" Combined Sewer Brick
Ex. 42" Combined Sewer (Brick)
Ex. 48" Combined Sewer (Brick)
790
785
780
775
770
765
739.26
738.05
736.36
734.25
731.98
730.11
727.55
726.98
727.58

| | |
|---|---|
| Excavation | 5,545 C.Y. |
| Embankment | 3 C.Y. |
| Seeding | 1,763 S.Y. |

57 58 59 60 61 62

| | | |

CALD. BY BB DATE 1/80
CHKD. BY WAM DATE 1/80

| FED. RD. DIVISION | STATE | PROJECT | |
|---|---|---|---|
| 2 | OHIO | | |

67/500

CUYAHOGA COUNTY
CUY-480-10.39

| Sheet No. | CROSS REFERENCE |
|---|---|
| 92 | Tiedeman Rd. Pav't Detail |
| 243 | Water Line Work |
| | |
| | |

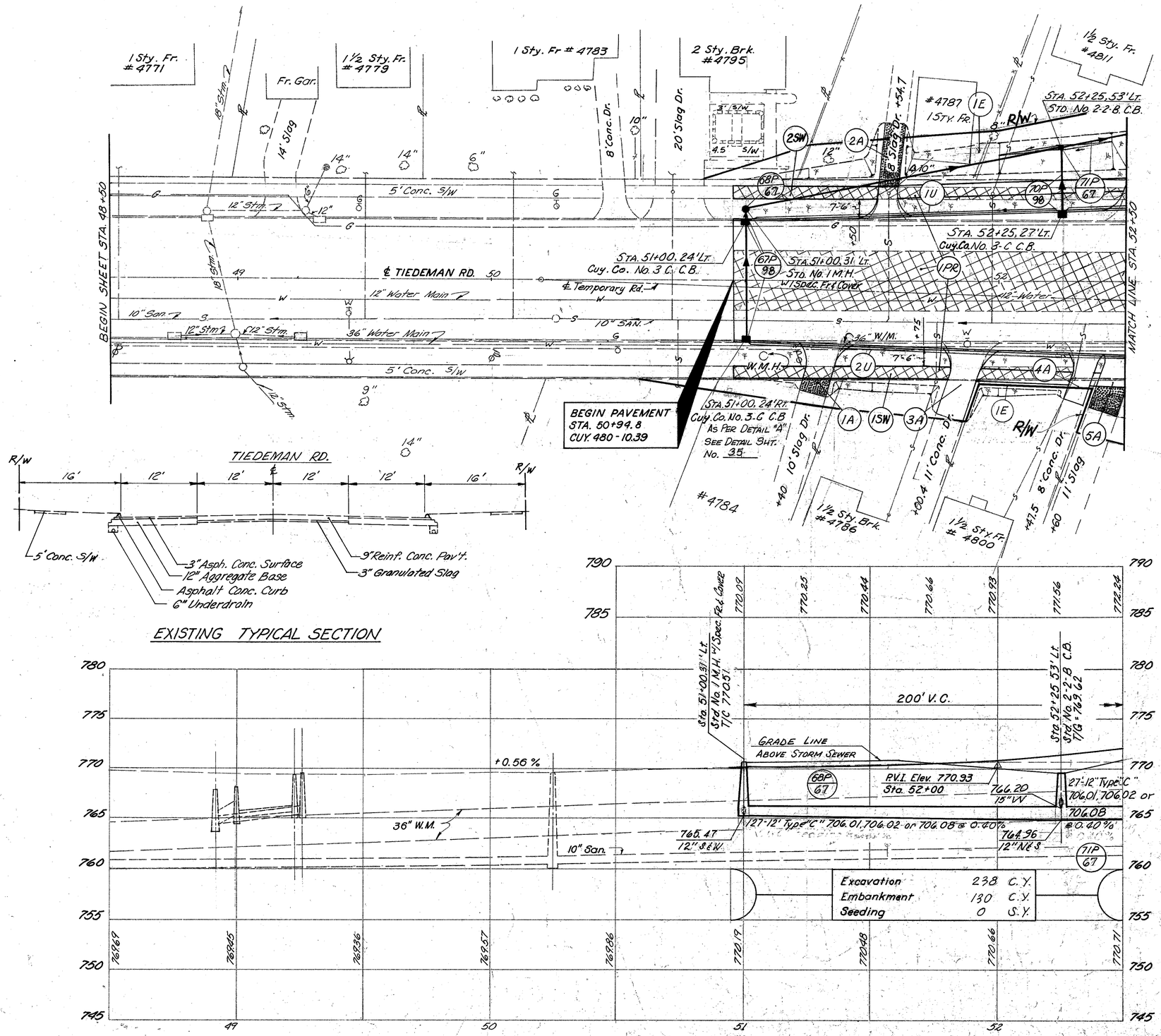





EXISTING TYPICAL SECTION




| Estimated Quantities | | | Location | Side | Ref. No. | | |

| CROSS REFERENCE | |
|---|---|
| Sht No. | Item |
| 78 | Tiedeman Rd. Pavement Detail |
| 243 | Water Line Work |
| | |
| | |

| FED. RD. DIVISION | STATE | PROJECT | |
|---|---|---|---|
| 2 | OHIO | | |

68/500

CUYAHOGA COUNTY
CUY-480-10.39

CALC. BY B.B. DATE 1/80
CHKD. BY WAM DATE 1/80

1M | 604 | CUY. CO. MON. ASSEMBLY - ℄ Sta. 55+25.52 - 1 ea.

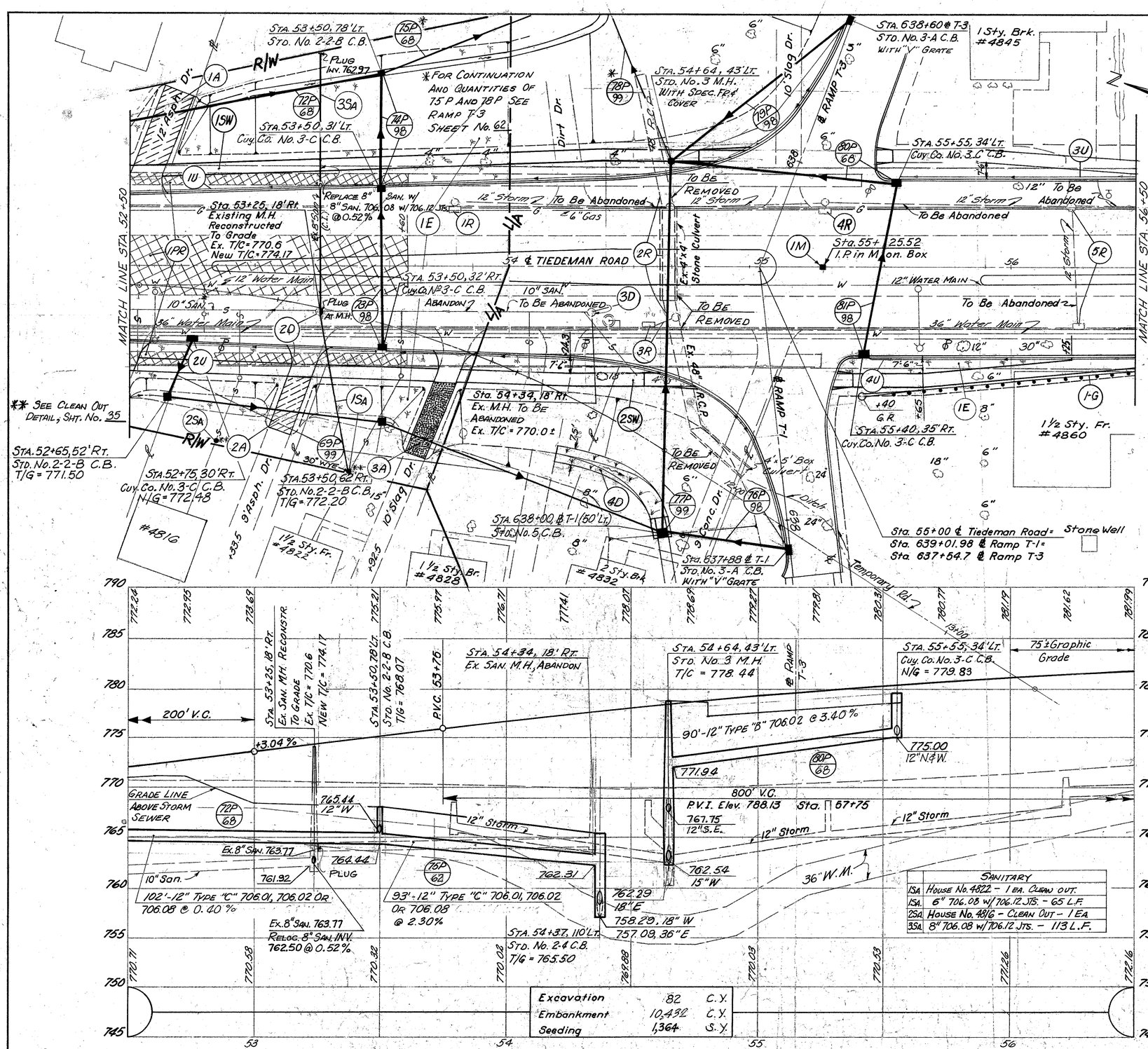


| | | |

CALC. BY B.P. DATE 1/80
CHKD. BY WAM DATE 1/80

| FED. RD. DIVISION | STATE | PROJECT | |
|---|---|---|---|
| 2 | OHIO | | |

CUYAHOGA COUNTY
CUY-480-10.39

69/500

## PROPOSED STRUCTURE — CUY-480-1162

TYPE: Continuous steel beam with reinforced concrete deck and substructure.
SPANS: 56'-9", 81'-0", 81'-0", 56'-9" c/c brgs.
ROADWAY: 70'-0" f/f curbs, 5'-0" sidewalk BR-2-67 Railing and 4'-0" raised median.
LOADING: HS 20-44
WEARING SURFACE: 1½" Asph. concrete.
SKEW: 18°08'-18" Lt. Foreward.
ALIGNMENT: Tangent
APPROACH SLABS: AS-1-72 (25' long) (Modified)

| CROSS REFERENCE | |
|---|---|
| Sht. No. | Item |
| 50 | I-480 Plan & Profile |
| 403 | Structure |
| | |
| | |
| | |

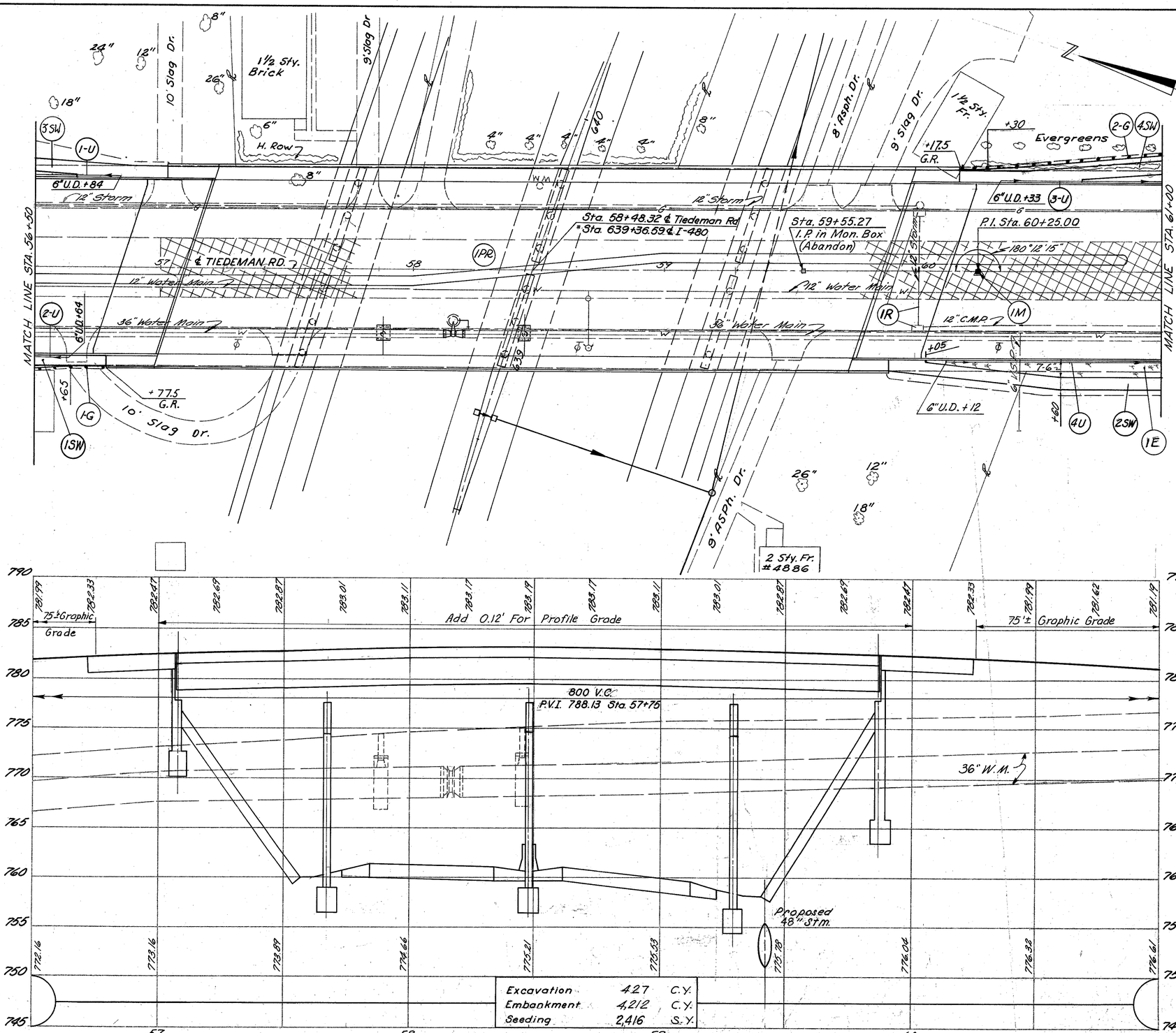


| | | |

CALC. BY B.B. DATE 1/80
CHKD. BY WRM DATE 1/80

| FED. RD. DIVISION | STATE | PROJECT | |
|---|---|---|---|
| 2 | OHIO | | |

CUYAHOGA COUNTY
CUY-480-10.39

70/500

| CROSS REFERENCE | |
|---|---|
| Sht. No. | Item |
| 93 | Tiedeman Rd. Pavement Detail |
| 62 | Ramp T-3 Plan & Profile |
| 63 | Ramp T-4 Plan & Profile |
| 103 | Access Rd. Plan & Profile |
| | |

| | | |
|---|---|---|
| 1M | 604 | Cuy. Co. Rdwy Mon. Assembly & Sta. 61+75.00 - 1ea. |
| 2M | 604 | Monument Adjusted to Grade - & Sta. 63+84.60 - 1ea. |

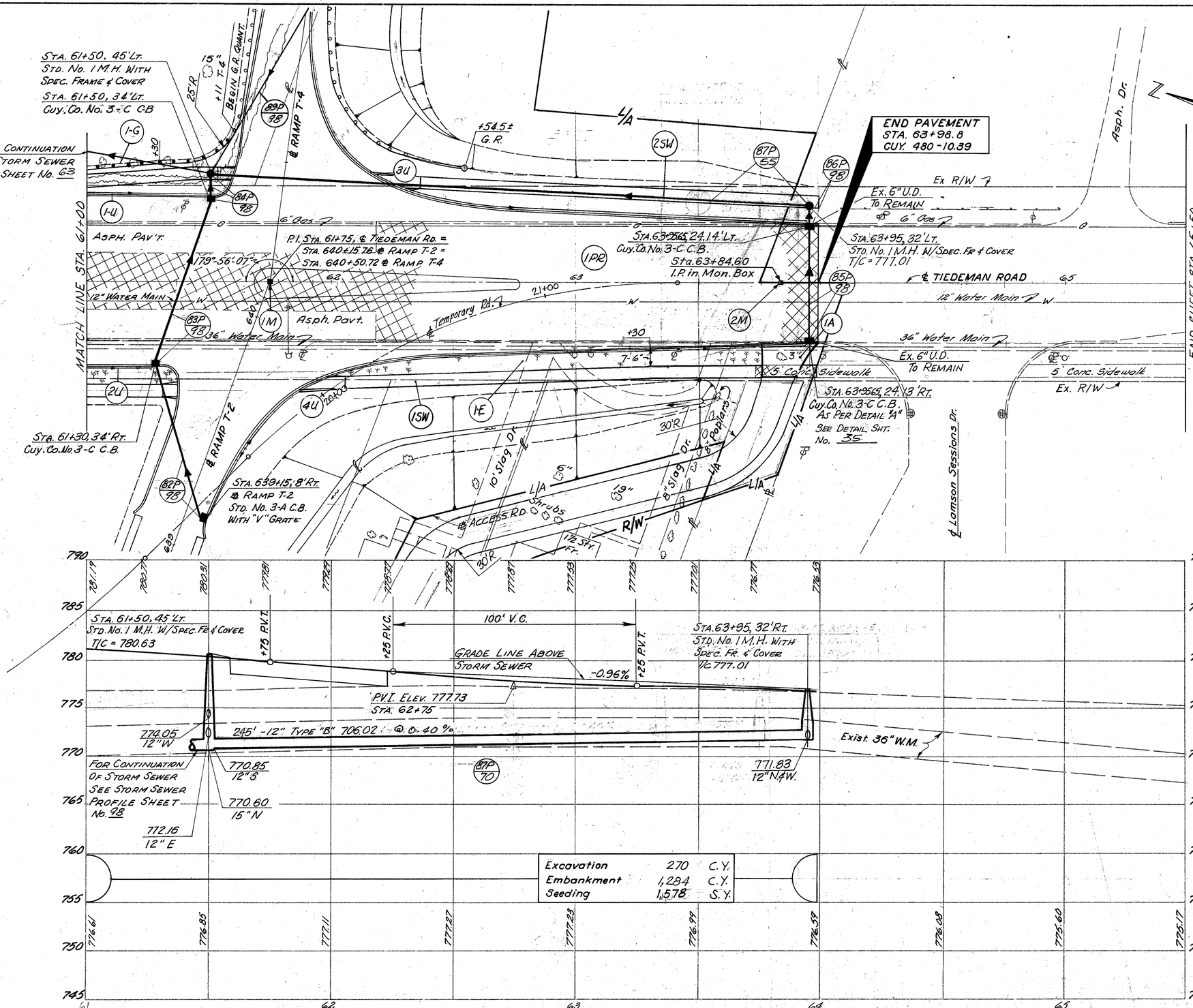


| Excavation | 270 | C.Y. |
|---|---|---|
| Embankment | 1,284 | C.Y. |
| Seeding | 1,578 | S.Y. |

| | | |

| CURVE NO. | CURB CURVE DATA Δ | R | L | C | T |
|---|---|---|---|---|---|
| 1 | 44°02'-55" | 50.00' | 38.44' | 37.50' | 20.23' |
| 2 | 32°-27'-42" | 50.00' | 28.33' | 27.95' | 14.56 |
| 3 | 256°30'37" | 30.00' | 134.31' | — | — |

| FHWA REGION | STATE | PROJECT | |
|---|---|---|---|
| 5 | OHIO | | |

71/500

CUYAHOGA COUNTY
CUY.-480-10.39

CALD. BY B.B DATE 1/80
CHKD. BY WAM DATE 3/80

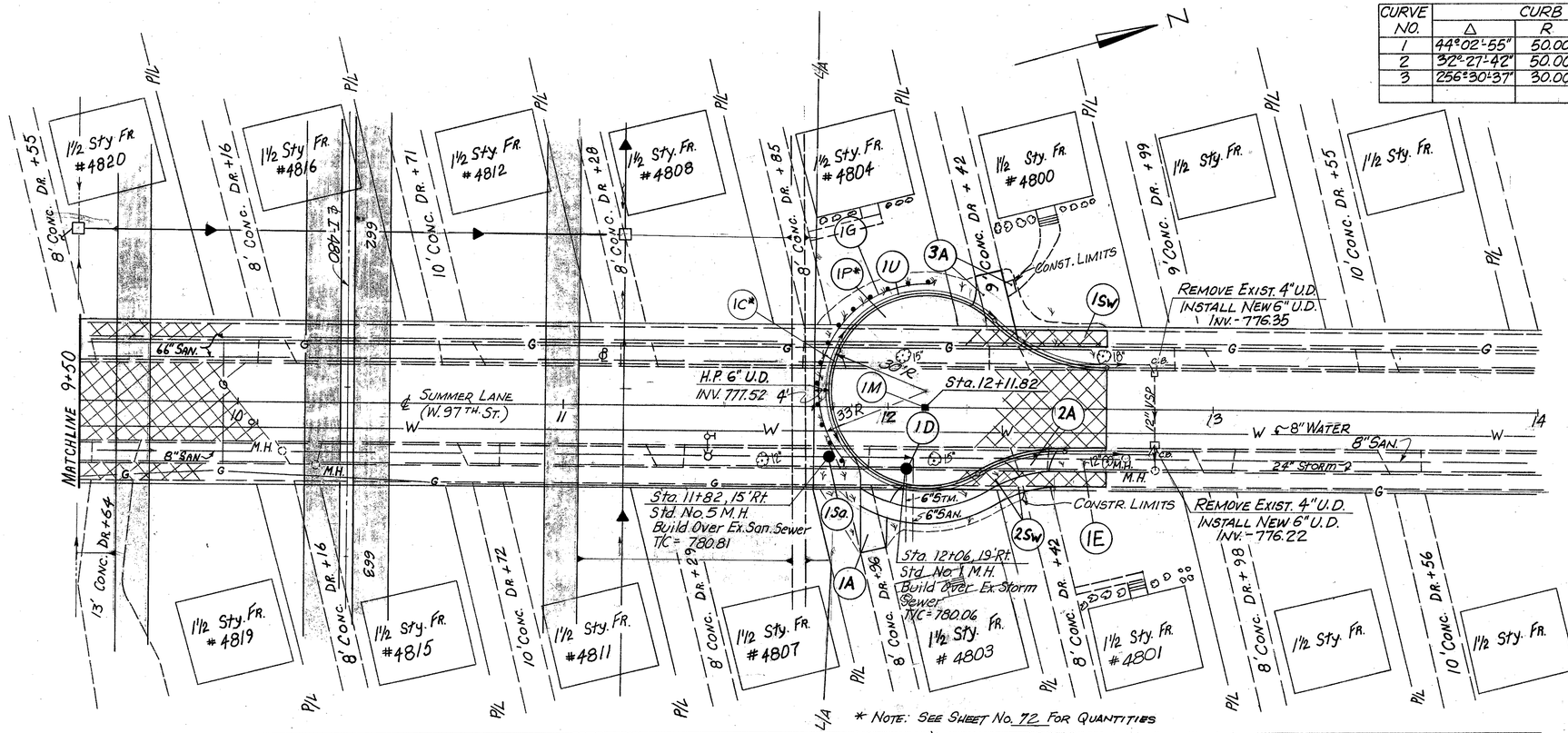


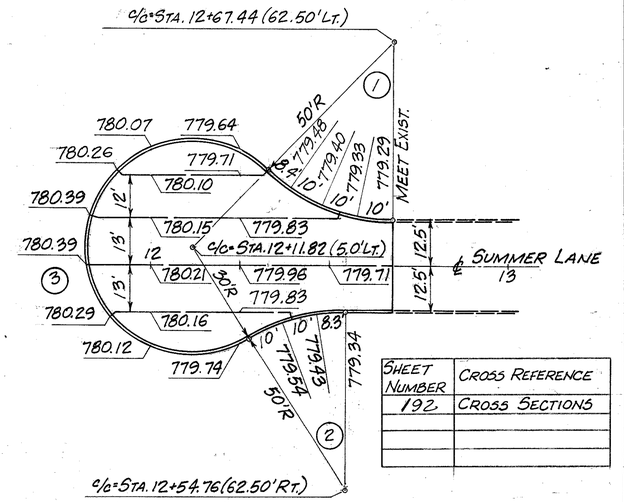


| SHEET NUMBER | CROSS REFERENCE |
|---|---|
| 192 | CROSS SECTIONS |

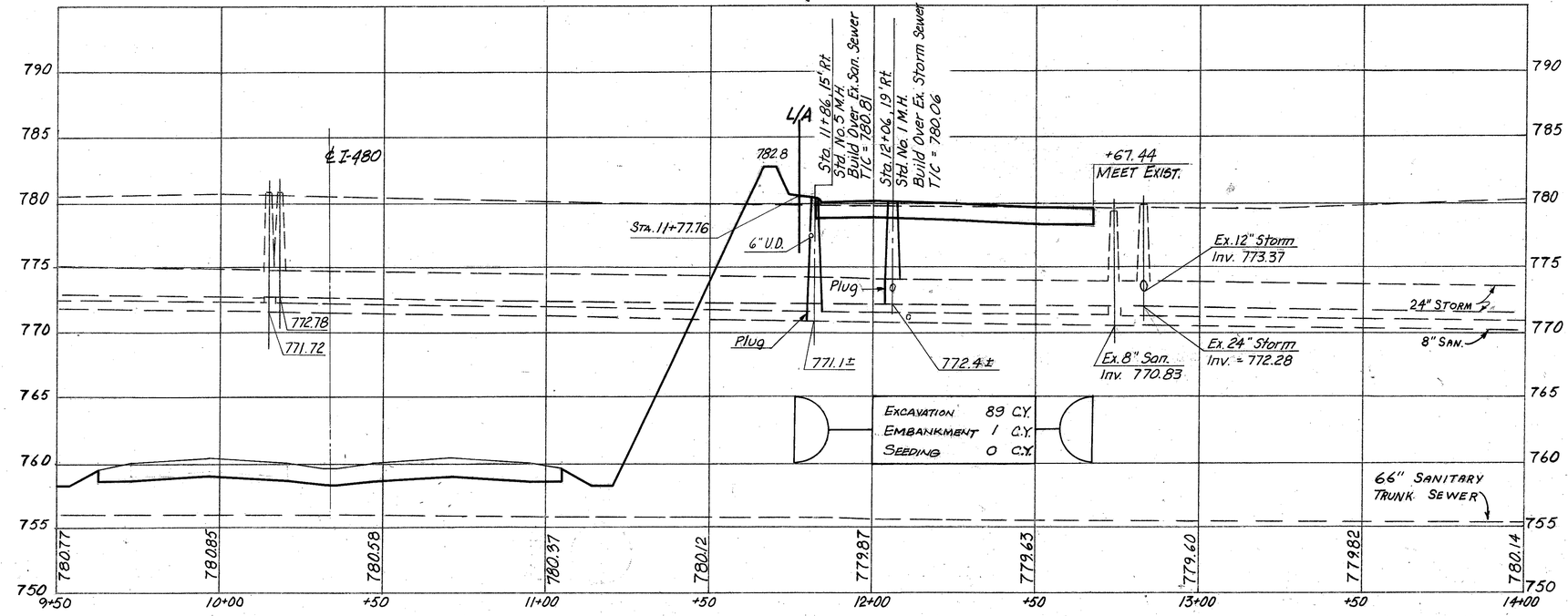


| ESTIMATED QUANTITIES | | | Roadway 202 Pav't Removed | 606 Guardrail Type 5 | 606 Anchor Assembly Type "T" | 660 Seeding | Drainage 603 Type "F" 6" | 604 Sta. No. 1 M.H. | 605 6" Shallow Underdrain Bends & Branches | San. 604 Sta. No. 5 M.H. w/ 706.11 Joints |
|---|---|---|---|---|---|---|---|---|---|---|
| Ref No. | Side | Location | S.Y. | L.F. | EA. | S.Y. | L.F. | EA | L.F. | Ea. | Ea. |
| 1D | Rt. | Sta. 12+06 | | | | | | 1 | | | |
| 1Sa | Rt. | Sta. 11+82 | | | | | | | | | 1 |
| 1U | Rt+Lt | Sta. 11+81 To Sta. 12+82 | | | | | 20 | | 227 | 2 | |
| 1PR | Rt.; Lt. | Sta. 9+50 To 12+67.44 | 882 | | | | | | | | |
| 1E | Rt.; Lt. | Sta. 11+77 To 12+67.44 | | | | 184 | | | | | |
| * | | FROM BELOW | 53 | | | | | | | | |
| 1G | Rt./Lt. | Sta. 11+86 To Sta. 12+12 | | 50 | 2 | | | | | | |
| Total | | | 935 | 50 | 2 | 184 | 20 | 1 | 227 | | 1 |

| ESTIMATED QUANTITIES | | | Roadway 604 Cuy. Co. Mon. Assembly | 202 Pav't Removal | 202 Walk Removed | 608 Concrete Walk 4½" | 452 Plain Conc. Pav't 6" |
|---|---|---|---|---|---|---|---|
| Ref No. | Side | Location | Ea. | S.Y. | S.F. | S.F. | S.Y. |
| 1SW | Lt. | Sta. 9+50 To 12+67.44 | | | 1587 | 165 | |
| 2SW | Rt. | Sta. 9+50 To 12+67.44 | | | 1587 | 393 | |
| 1M | ℄ | Sta. 12+11.82 | 1 | | | | |
| 1A | Rt. | Sta. 11+96 | | 21 | | | 19 |
| 2A | Rt. | Sta. 12+42 | | 7 | | | 9 |
| 3A | Lt. | Sta. 12+42 | | 25 | | 12 | 17 |
| Total | | | 1 | * | 3174 | 570 | 45 |

SUMMER LANE STA. 9+50 STA. 14+00

| FHWA REGION | STATE | PROJECT | |
|---|---|---|---|
| 5 | OHIO | | |

DRWN. BY B.B DATE 1/80
CHKD. BY WAM DATE 3/80

72/500

CUYAHOGA COUNTY
CUY.-480 - 10.39

| CURVE No. | CURB CURVE DATA | | | | |
|---|---|---|---|---|---|
| | Δ | R | L | C | T |
| 1 | 75°55'54" | 48.00' | 63.61' | 59.06' | 37.46' |
| 2 | 24°31'46" | 230.00' | 98.47' | 97.72' | 50.00' |
| 3 | 65°35'35" | 48.00' | 54.95' | 52.00' | 30.93' |

| SHEET NUMBER | CROSS REFERENCE |
|---|---|
| 194-196 | CROSS SECTIONS |

| ROADWAY 604 Cuy Co. Mon. Assembly | | | | |
|---|---|---|---|---|
| | 1M | ℄ Sta. 8+02.93 | 1 ea. | |
| | 2M | " " 8+66.54 | 1 ea. | |
| | 3M | " " 9+40.21 | 1 ea. | Total 6 |
| | 4M | " " 10+38.68 | 1 ea. | |
| | 5M | " " 11+02.63 | 1 ea. | |
| | 6M | " " 11+57.58 | 1 ea. | |

MATCH LINE STA. 9+50

FOR CONTINUATION SEE SHEET No. 53

STA. 8+82 SUMMER LANE (16' LT.)
STD. No. 5 M.H. 706.11 JOINTS W/DROP PIPE, BUILD OVER EX. 66" SAN. SWR.
T/C = 781.40

STA. 8+60, SUMMER LANE (15' RT.)
STD. No. 5 M.H. BUILD OVER EX. 8" SAN. SWR.
T/C = 780.52, INV. = 772.10

1½ STY. FR. #4828

6" SAN.

6" STM.

CONNECT EX. 6" TO NEW 8" SAN.

8' Conc. Dr. + 33

8' Conc. Dr. + 94

8' Conc. Dr. + 84

8' Conc. Dr. + 30

8' Conc. Dr. + 71

8' C Conc. Dr. + 80

P.C. STA. 8+02.93

1½ STY. FR. # 4832

1½ STY. FR. #4835

EX. 66" SAN. TRUNK SWR.

EX. 24" STM.

EX. 8" SAN.

EX. 8" WATER

C.B.

P.T. STA. 8+66.54

P.C. STA. 9+40.21

STA. 8+60, 12' LT. & RT.
STD. No. 6 C.B.
N/G = 779.97

STA. 9+70, 12' RT.
STD. No. 6 C.B.
N/G = 780.41

24' ø in-ground pool

GAR.

Shed

Pool

Pool Pump

CONNECT NEW U.D. LT. & RT., TO EX. 6" U.D.

CONNECT NEW U.D. LT. & RT., TO EX. 6" U.D.

CONSTR. LIMITS

R/W

4' C.L.

STA. 10+90 (215' RT.)

P.T. STA. 10+38.68

P.C. STA. 11+02.63

SERVICE RD. "A"

6" Wood Ties

CURB RAMP

STA. 9+66, KENNEDY DR. (8' LT.)
STD. No. 1 M.H. BUILD OVER EX. 12" STM. SWR.
T/C = 781.22, INV. = 773.8

STA. 9+60 ℄ KENNEDY DR.
STD. No. 5 M.H. BUILD OVER EX. 8" SAN. SWR.
T/C = 781.23, INV. = 772.1

P.T. STA. 11+57.58, SERVICE RD. "A" = ℄ STA. 9+14.43, ℄ KENNEDY DR.

FOR S/W QUANT. SEE SHEET 53

+55, 10' Conc. Dr.

14' C.L.

10"

1 STY. BRK. #4852

16' Conc. Dr., + 54

# 4863

℄ KENNEDY DR.

EX. 8" SAN.

EX. 12" WATER LINE

EX. 12" STM.

EX. 8" STM.

EX. 8" SAN.

EX. 24" STORM

12" N-775.77

106'-12" TYPE "B" 706.01, 706.02 OR 706.08 @ 1.0%

12"-776.83

P.V.C. STA. 10+75

50' V.C.

P.V.T. STA. 11+25

P.V.I. STA. 11+00
ELEV. = 781.01

+0.32%

-0.28%

PROFILE GRADE

STA. 8+02.93
MEET EXIST.

STA. 8+60, 12' RT.
STD. No. 6 C.B.
N/G = 779.97

STA. 9+70, 12' RT.
STD. No. 6 C.B.
N/G = 780.41

STA. 11+57.58
MEET EXIST.

EX. 12" STORM

EX. 8" SAN.

EX. 66" SAN. TRUNK SWR.

| Excavation | 715 c.y. |
|---|---|
| Embankment | 89 c.y. |
| Seeding | 404 S.Y. |

ESTIMATED QUANTITIES

| REF. NO. | SIDE | LOCATION | PAVEMENT 1¾" RMV. PCC. PAVEMENT S.Y. | SUBBASE GRADING II C.Y. | CURB TYPE 3-A L.F. | SUBGRADE COMPACTION S.Y. |
|---|---|---|---|---|---|---|
| 1P | Rt./Lt. | 11+82 To 12+67.44 | 402 | 67 | | 402 |
| 1C | Rt./Lt. | 11+82 To 12+67.44 | | | 214 | |
| 2P | Rt./Lt. | 8+02.93 To 11+57.58 | 1025 | 171 | | 1025 |
| 2C | Rt./Lt. | 8+02.93 To 11+57.58 | | | 710 | |
| TOTAL | | | 1427 | 238 | 924 | 1427 |

| | | | |

| SHEET NUMBER | CROSS REFERENCE |
|---|---|
| 197-198 | CROSS SECTIONS |
| 3/2 | STRUCTURE |
| | |

| FHWA REGION | STATE | PROJECT | |
|---|---|---|---|
| 5 | OHIO | | |

73/500

CUYAHOGA COUNTY
CUY.-480- 10.39

CALC. BY B.B DATE 1/80
CHKD. BY WAM DATE 3/80

## PROPOSED STRUCTURE

TYPE: CONTINUOUS STEEL GIRDER WITH REINFORCED CONCRETE DECK AND SUBSTRUCTURE.
SPANS: 128'-0" & 128'-0" ℄ BRG'S.
ROADWAY: 26'-0" F/F CURBS. 5'-0" SIDEWALKS & 4'-0" CHAINLINK FENCE MOUNTED ON 27" CONCRETE PARAPET.
LOADING: HS 20-44 & THE ALTERNATE MILITARY LOADINGS. FATIGUE CASE III.
WEARING SURFACE: MONOLITHIC CONCRETE.
SKEW: 21°-10'-08" L.F.
ALIGNMENT: TANGENT.
APPROACH SLABS. AS-1-72(MOD.) 25'-0" LONG.

TBM ELEV. = 783.35
"O" IN OPEN ON FIRE HYD.
STA. 668+25 (64' Rt.)

CONC. BLK. GAR.

CURVE DATA
Δ = 6°-58'-43"
R = 410.00'
L = 49.94'
T = 25.00'
C = 49.91'

FOR S/W QUANT. SEE SHT. No. 5-3

BEGIN SHEET STA. 6+00

MATCH LINE STA. 10+50

#4870 #4866 #4862 #4858 #4871 #4867 #4863

+29 ℄ 10' CONC. DR. +90 ℄ 10' CONC. DR. +40 CONC. DR. ℄ 10' CONC. DR. +53 ℄ 10' CONC. DR. +07 ℄ 10' CONC. DR.

5' Conc. S/W

3"M. 4"Gas 3"M. 3"M. 1"M. 3"M. 5"M. 4"Gas

18" Storm 8" San. ℄ SOUTHWOOD DR. 8" W.M.

STA. 7+55, 12' Lt. & Rt.
STD. No. 6 C.B.
N/G = 780.61

STA. 7+66, 7.5' Lt.
STD. No. 1 M.H.

6" San. 6" Stm.

P.T. STA. 8+49.94

℄ RELOC. SOUTHWOOD DR.

℄ 18" Storm 8" San.

(ABANDON) P.C. STA. 8+00.00

+50 MEET EXIST. BEGIN WORK CONNECT TO EXIST. M.H.

STA. 8+76.47 END APPROACH SLAB

Sandstone Cobble Shrubs

8" W.M. KENNEDY AVE. ℄ I-480

STA. 667+70.79 ℄ I-480

STA. 10+06.88 ℄ SOUTHWOOD

12" St. 10" 6" 4"Gas

1U 2Sw 2A 2M 1E 15A 1A 1M 135P 2U 1Sw 1PR

## PROFILE

P.V.C. STA. 7+50 MEET EXIST.
125' V.C.
P.V.T. STA. 8+75 (P.R.V.C.)
P.V.I. STA. 10+00 ELEV. = 786.68
-2.92%
+3.24%
-0.32%
+3.24%
PROFILE GRADE
250' V.C.
℄ KENNEDY AVE.
℄ I-480
STA. 7+66, 7.5' Lt. STD. No. 1 M.H. T/C = 780.69
EXIST. GROUND
12" N. 776.65
PLUG
18" 774.2
P.V.I. STA. 8+12.5 ELEV. = 780.61
ABANDON
Ex. 18" STORM
Ex. 8" SAN.
Ex. 12" St.

780.80 780.81 781.00 781.37 781.91 782.63 783.36 783.94 784.37 784.64 784.75 784.72 784.53
781.02 781.11 780.96 780.81 780.64 780.46 780.2 780.0 779.9

| | |
|---|---|
| Excavation | 41 c.y. |
| Embankment | 82 c.y. |
| Seeding | 104 S.Y. |

6+00 7+00 8+00 9+00 10+00 10+50

## ESTIMATED QUANTITIES

| | | | | REF. SIDE | LOCATION | TOTAL |
|---|---|---|---|---|---|---|
| ROADWAY | 202 | 660 | Sodding | | | 49 |
| | | 604 | Cuyahoga County Monument Assembly | Ea. | | 2 |
| | | | | | 1 | 1 |
| | | | | | 1 | 49 |
| | | | Pav't Removed | S.Y. | | 889 |
| | | | | | 873 | |
| | | | | | 8 | 8 |
| | | | | | 8 | 8 |
| | 452 | 608 | Plain Conc. Pav't 6" | S.Y. | | 16 |
| | | | Concrete Walk, As Per Plan 4½" | S.F. | | 896 |
| | | | | | 476 | |
| | | | | | 420 | |
| SAN. DRAINAGE | 603 | | Type "B" 706.01, 706.02 or 706.08 w/706.11 or 706.12 Joints 6" | L.F. | 30 | 30 |
| | 605 | | Shallow Underdrain Type III or 707.21 Type III 6" | L.F. | 26 | 26 |
| | | | Shallow Underdrain 6" | L.F. | 90 | 175 |
| | | | | | 85 | |
| | 604 | | Std. No. 6 C.B. | Ea. | 2 | 2 |
| | | | Std. No. 1 M.H. | Ea. | 1 | 1 |
| | 603 | | Type "B" 706.01, 706.02 or 706.08 12" | L.F. | 35 | 35 |
| | | | Type "F" 6" | L.F. | 10 | 20 |
| | | | | | 10 | |
| | | | | | | TOTAL |

| REF. SIDE | LOCATION |
|---|---|
| 135P Lt. & Rt. | 7+55 To 7+66 |
| 1SA Lt. & Rt. | 7+61 To 7+63 |
| 1U Lt. | 7+55 To 8+55 |
| 2U Rt. | 7+55 To 8+47 |
| 1A Rt. | 7+85 |
| 2A Lt. | 7+87.5 |
| 1Sw Rt. | 7+87 To 8+70 |
| 2Sw Lt. | 8+00 To 8+83 |
| 1PR Rt. & Lt. | 7+50 To 10+50 |
| 1M ℄ | 8+00.00 |
| 2M ℄ | 8+49.94 |
| 1E Rt. & Lt. | 7+50 To 7+90 |

SOUTHWOOD DR. STA. 6+00 TO STA. 10+50

| SHEET NUMBER | CROSS REFERENCE |
|---|---|
| 199 | CROSS SECTIONS |
| 312 | STRUCTURE |
| | |

| FHWA REGION | STATE | PROJECT | |
|---|---|---|---|
| 5 | OHIO | | |

74
500

CUYAHOGA COUNTY
CUY-480 - 10.39

CALC. BY B.B. DATE 1/80
CHKD. BY WAM DATE 3/80

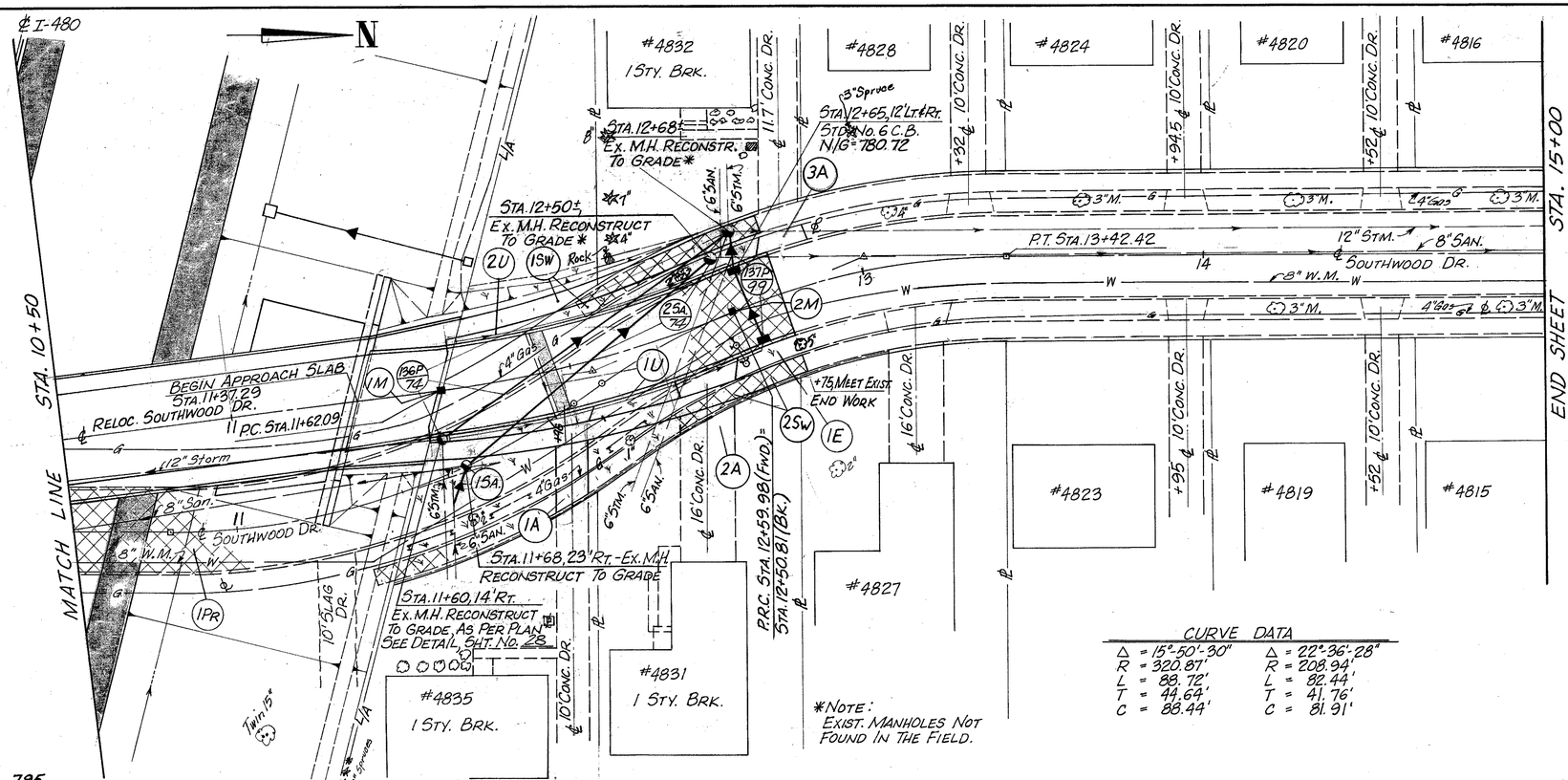


CURVE DATA

| | |
|---|---|
| △ = 15°-50'-30" | △ = 22°-36'-28" |
| R = 320.87' | R = 208.94' |
| L = 88.72' | L = 82.44' |
| T = 44.64' | T = 41.76' |
| C = 88.44' | C = 81.91' |

*NOTE: EXIST. MANHOLES NOT FOUND IN THE FIELD.

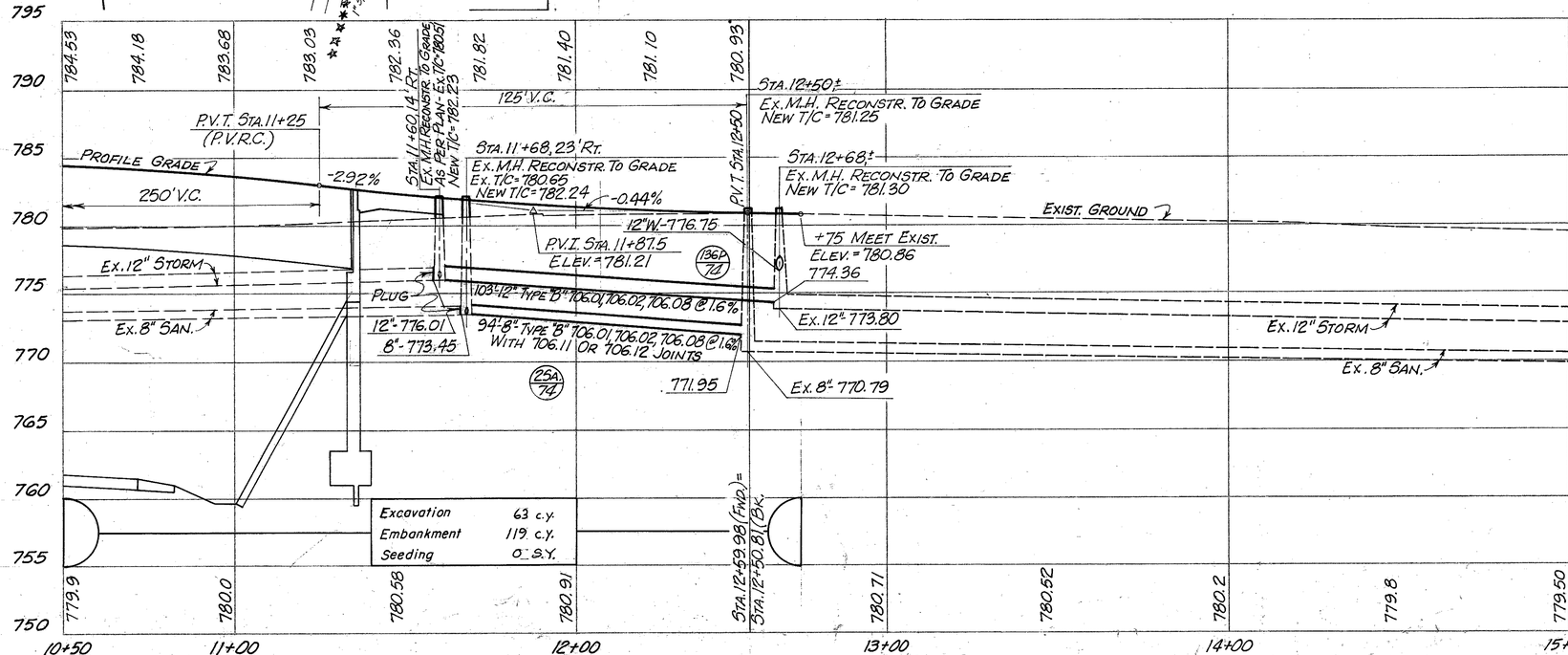


| | |
|---|---|
| Excavation | 63 c.y. |
| Embankment | 119 c.y. |
| Seeding | 0 S.Y. |

| | | |

| FED. RD. DIVISION | STATE | PROJECT | |
|---|---|---|---|
| 2 | OHIO | | |

75
500

CUYAHOGA COUNTY
CUY.-480- 10.39

CURB CURVE DATA *
(1) R = 25'
Δ = 75.60°
T = 19.39'
L = 32.99'
C = 30.64'

* CURB CURVE DATA FOR BACK OF CURB
c/c - STA. 7+87.78, 38' Lt.

CALC. BY B.B DATE 1/80
CHKD. BY WAM DATE 3/80

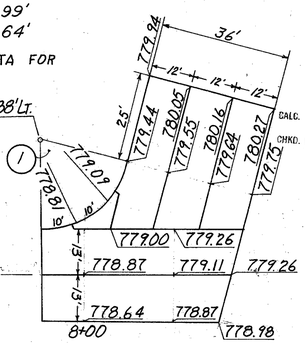


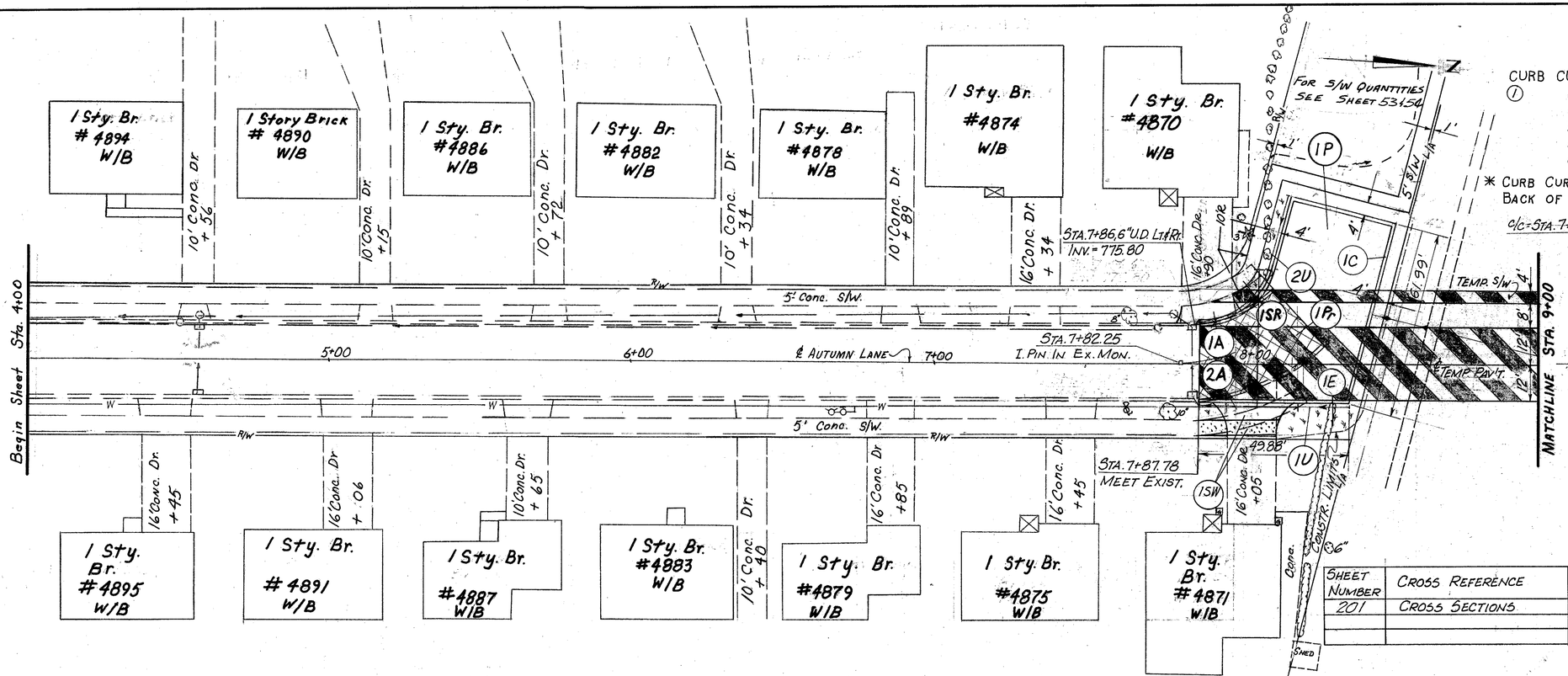


FOR S/W QUANTITIES SEE SHEET 534,54

| SHEET NUMBER | CROSS REFERENCE |
|---|---|
| 201 | CROSS SECTIONS |
| | |
| | |

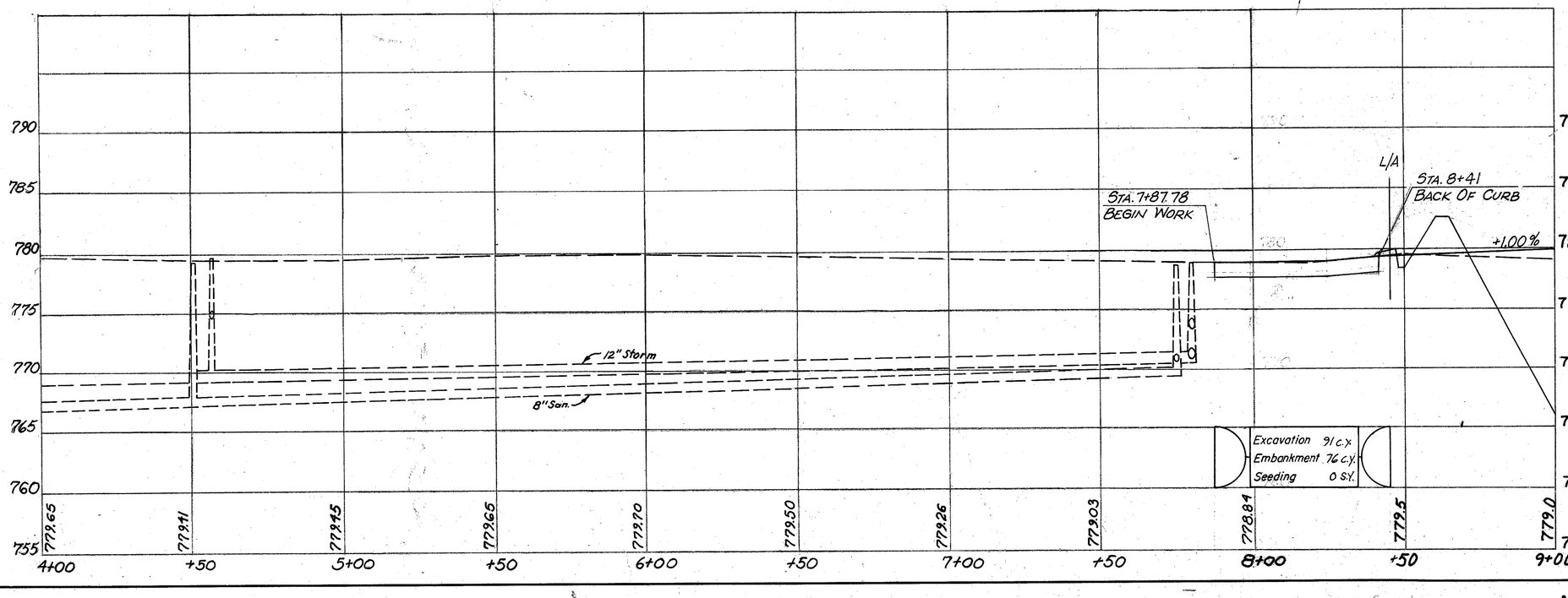


| | | |

| FHWA REGION | STATE | PROJECT | |
|---|---|---|---|
| 5 | OHIO | | |

76
500

CUYAHOGA COUNTY
CUY.-480 - 10.39

| CURVE No. | CURB CURVE DATA * | | | | |
|---|---|---|---|---|---|
| | △ | R | L | C | T |
| 1 | 64°52'20" | 30.00' | 33.97' | 32.18' | 19.07' |
| 2 | 4°30'14" | 199.00' | 15.64' | 15.64 | 7.83' |
| 3 | 249°21'14" | 33.00' | 143.62' | — | — |

* CURB CURVE DATA FOR BACK OF CURB

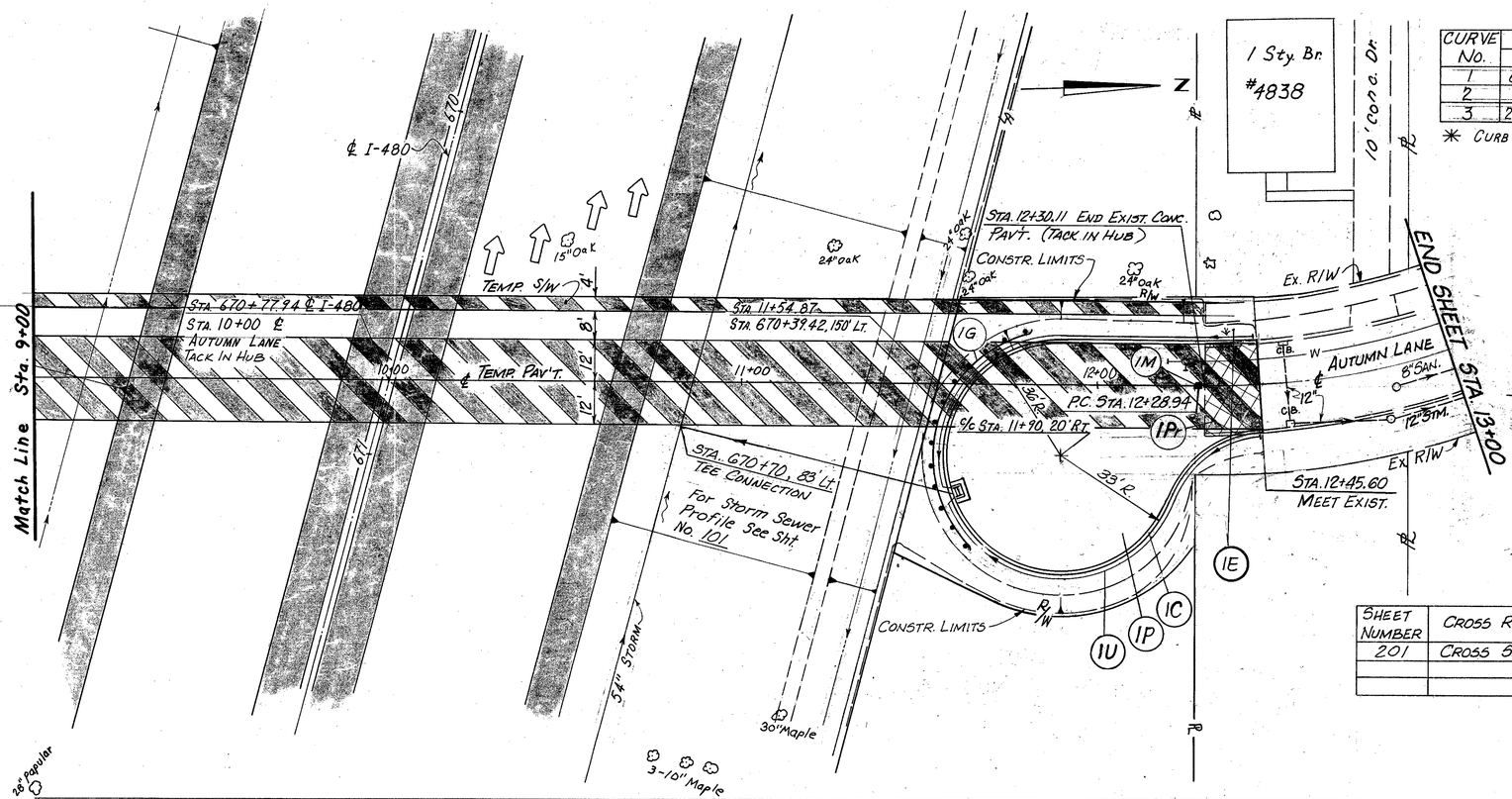


| SHEET NUMBER | CROSS REFERENCE |
|---|---|
| 201 | CROSS SECTIONS |
| | |
| | |

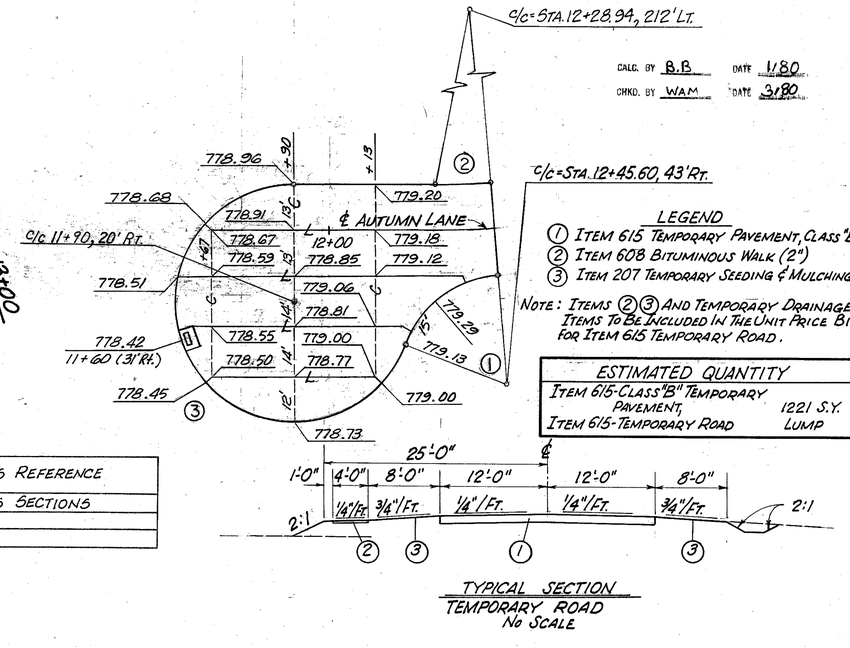


LEGEND
1. ITEM 615 TEMPORARY PAVEMENT, CLASS "B"
2. ITEM 608 BITUMINOUS WALK (2")
3. ITEM 207 TEMPORARY SEEDING & MULCHING

NOTE: ITEMS 2 3 AND TEMPORARY DRAINAGE ITEMS TO BE INCLUDED IN THE UNIT PRICE BID FOR ITEM 615 TEMPORARY ROAD.

ESTIMATED QUANTITY

| | |
|---|---|
| ITEM 615-CLASS "B" TEMPORARY PAVEMENT, | 1221 S.Y. |
| ITEM 615-TEMPORARY ROAD | LUMP |

TYPICAL SECTION
TEMPORARY ROAD
No SCALE

CALC. BY B.B DATE 1/80
CHKD. BY WAM DATE 3/80

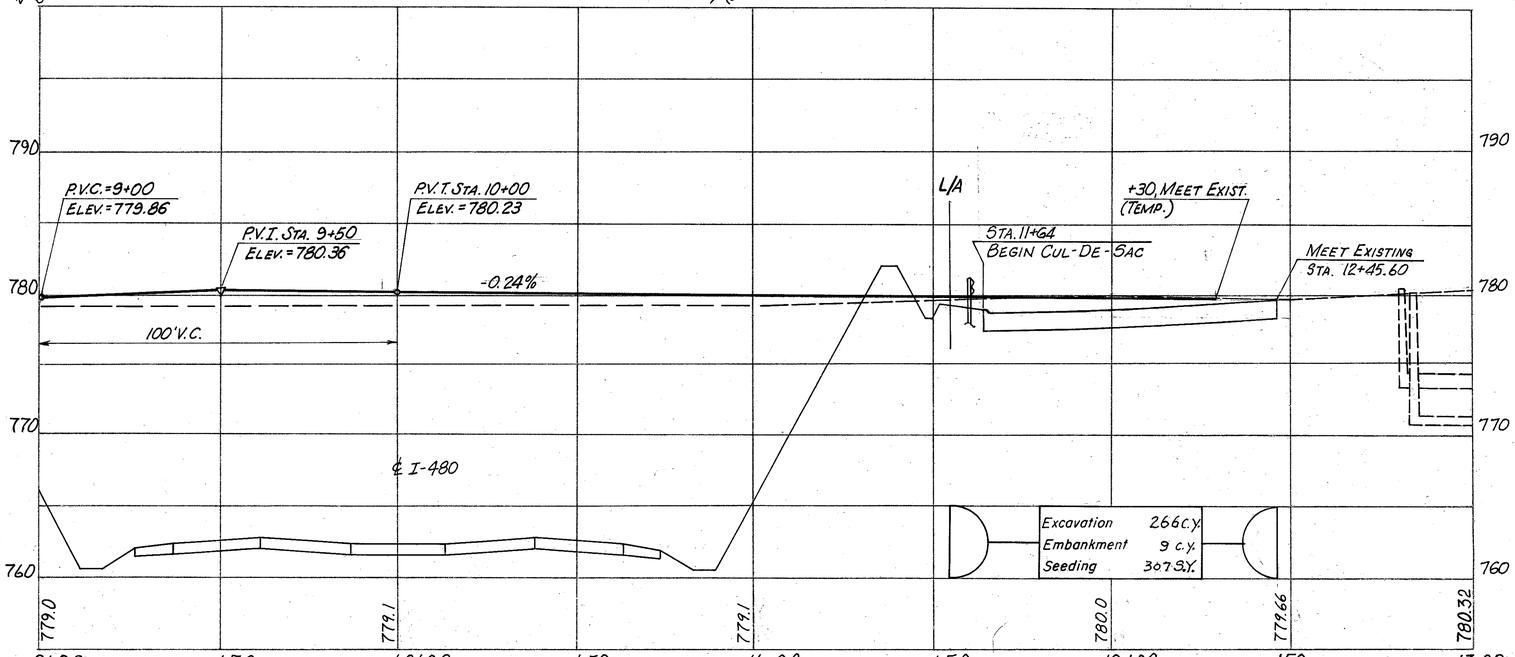


| Estimated Quantities | | | Drainage | | | | | | Roadway | | | | | | | | | | |
|---|---|---|---|---|---|---|---|---|---|---|---|---|---|---|---|---|---|---|---|
| | | | 603 | 605 | | 606 | | | 202 | | 604 | 660 | 451 | 310 | 609 | 203 | | | |
| | | | Type "F" 6" | Shallow Underdrain 6" | Bends & Branches 6" | Guardrail Type 5 | Anchor Assembly Type "T" | | Pav't Removal | | Cuyahoga County Monument Assembly | Sodding | 7" Reinf. P.C.C. Pavement | Subbase Grading II | Curb Type 3-A | Subgrade Compaction | | | |
| Ref. No. | Side | Location | L.F. | L.F. | Ea. | L.F. | Ea. | | S.Y. | | Ea. | S.Y. | S.Y. | C.Y. | L.F. | S.Y. | | | |
| 1U | Rt. | Sta. 11+54 to Sta. 12+45.60 | 20 | 210 | 2 | | | | | | | | | | | | | | |
| 1Pr | Rt./Lt. | 12+30.11 To 12+45.60 | | | | | | | 45 | | | | | | | | | | |
| 1M | ℄ | 12+28.94 | | | | | | | | | 1 | | | | | | | | |
| 1E | Lt. | 12+24 To 12+45.60 | | | | | | | | | | 17 | | | | | | | |
| 1P | Rt./Lt. | 11+57 To 12+45.60 | | | | | | | | | | | 483 | 80 | | 483 | | | |
| 1C | Rt./Lt. | 11+56 To 12+45.60 | | | | | | | | | | | | | 232 | | | | |
| 1G | Rt./Lt. | 11+57 To 11+80 | | | | 50 | 2 | | | | | | | | | | | | |
| | | Total | 20 | 210 | | 50 | 2 | | 45 | | 1 | 17 | 483 | 80 | 232 | 483 | | | |

AUTUMN LANE STA. 9+00 TO 13+00

| FHWA REGION | STATE | PROJECT | |
|---|---|---|---|
| 5 | OHIO | | |

77
500

CUYAHOGA COUNTY
CUY-480-10.39

| Sheet Number | Cross Reference |
|---|---|
| 309-311 | Cross Section |
| 313 | Structure |
| | Waterworks |
| | |
| | |

CALC. BY B.B DATE 1/80
CHKD. BY WAM DATE 3/80

CURVE DATA
Δ = 77°05'26"
R = 75'
L = 100.91'
T = 59.76'
C = 93.47'

MATCH LINE STA. 11+25

* NOTE: Manhole Not Located In Field.

| PAVEMENT EDGE ELEVATIONS | | | |
|---|---|---|---|
| 13' Left | Profile Grade | 13' Right | Station |
| Meet Ex. | Meet Ex. | Meet Ex. | 8+75 |
| 801.96 | 802.16 | 802.01 | 9+00 |
| 803.00 | 803.20 | 803.17 | +25 |
| 803.33 | 803.53 | 803.53 | +34.52 H.P.C. |
| 803.80 | 804.00 | 804.09 | +50 |
| 804.39 | 804.59 | 804.79 | +75 |
| 804.74 | 804.94 | 805.14 | 10+00 |
| 804.87 | 805.07 | 805.16 | +25 |
| 804.86 | 805.06 | 805.09 | +35.43 H.P.T. |
| 804.78 | 804.98 | 804.91 | +50 |
| 804.45 | 804.65 | 804.45 | +75 |

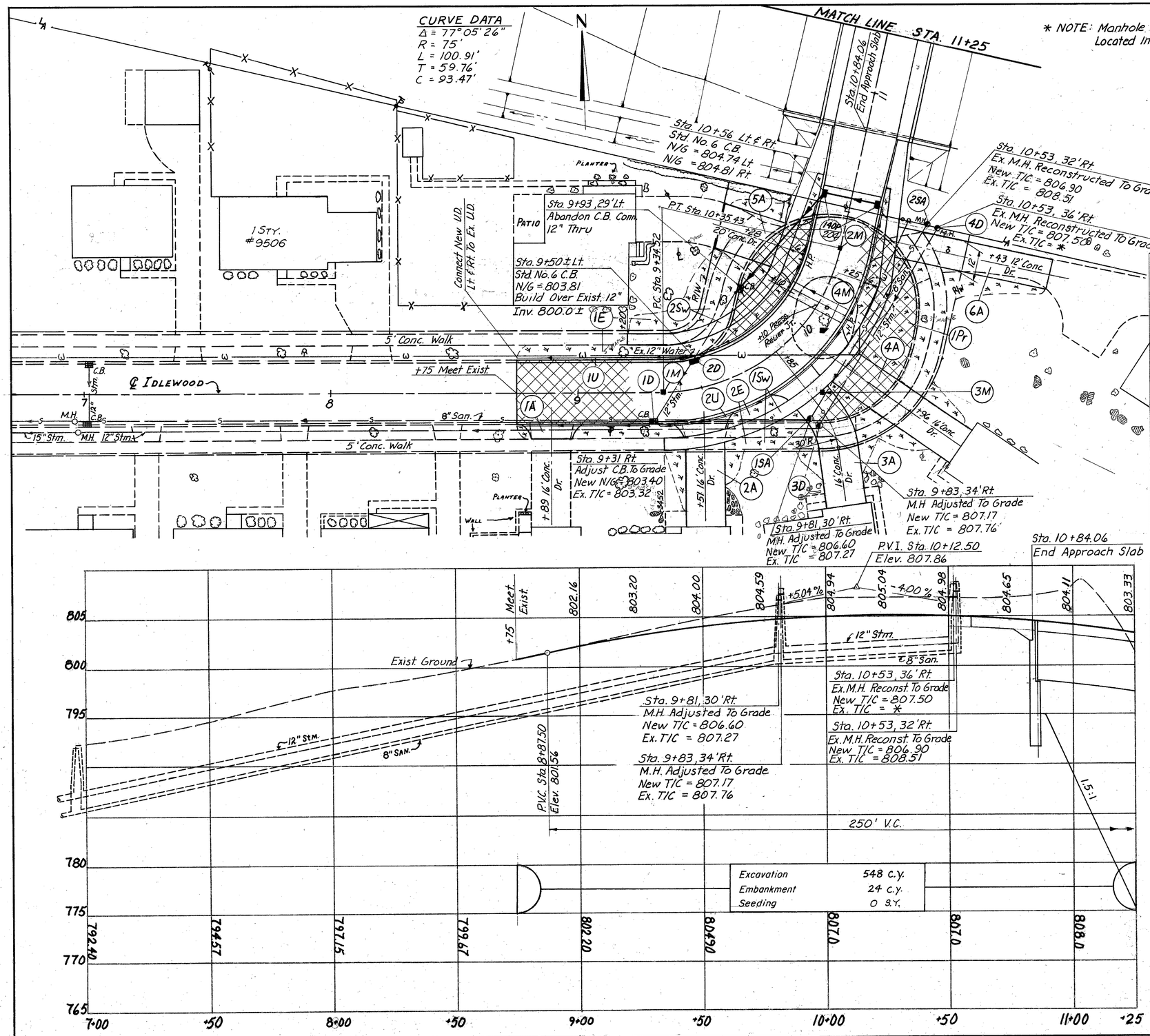





| Excavation | 548 c.y. |
|---|---|
| Embankment | 24 c.y. |
| Seeding | 0 S.Y. |

Estimated Quantities

| Ref. | Side | Location | 202 Roadway | | | 604 San. | | 605 Drainage | | | | 604 Drainage | | | | | 603 Drainage | | | |
|---|---|---|---|---|---|---|---|---|---|---|---|---|---|---|---|---|---|---|---|---|
| 140P | LT/RT | | Pav't Removal | Catch Basin Abandoned | Walk Removed | M.H Adjusted To Grade | M.H. Reconstructed To Grade | Shallow Underdrain 707.01 Type III 707.21 Type III | Shallow Underdrain | | | Catch Basin Adjusted To Grade | M.H. Adjusted To Grade | M.H. Reconstructed To Grade | Std. No. 6 C.B. | | Type C, 706.01 706.02 Or 706.08 | Type B, 706.01 706.02 Or 706.08 | Type F | |
| | | | S.Y. | Ea. | S.F. | Ea. | Ea. | L.F. | 6" | L.F. | | Ea. | Ea. | Ea. | Ea. | | 12" L.F. | 12" L.F. | 6" L.F. | |
| | | | | | | | | | | | | | | | 2 | | 57 | 23 | | |
| 1D | Rt | 9+31 To 10+56 | | | | | | | | | | | | | | | | | | |
| 2D | Lt | 9+50 | | | | | | | | | | | | | | | | | | |
| 3D | Rt | 9+83 | | | | | | | | | | | | | | | | | | |
| 4D | Rt | 10+53 | | | | | | | | | | | | | | | | | | |
| 1SA | Rt | 9+81 | | | | | | | | | | | | | | | | | | |
| 2SA | Rt | 10+53 | | | | | | | | | | | | | | | | | | |
| 1U | Lt | 8+75 To 10+56 | 20 | | | | | | 143 | | | | | | | | | | | |
| 2U | Rt | 8+75 To 10+56 | 20 | | | | | | 192 | | | | | | | | | | | |
| 1A | Rt | 8+89 | | | | | | | | | | | | | | | | | | |
| 2A | Rt | 9+51 | | | | | | | | | | | | | | | | | | |
| 3A | Rt | 9+85 | | | | | | | | | | | | | | | | | | |
| 4A | Rt | 9+96 | | | | | | | | | | | | | | | | | | |
| 5A | Lt | 10+28 | | | | | | | | | | | | | | | | | | |
| 6A | Rt | 10+43 | | | | | | | | | | | | | | | | | | |
| 1E | Lt | 8+75 To 10+63 | | | | | | | | | | | | | | | | | | |
| 1SW | Lt | 9+20 To 10+83 | | | | | | | | | | | | | | | | | | |
| 2SW | Rt | 9+34.52 To 10+83 | | | | | | | | | | | | | | | | | | |
| 2E | Rt | 8+75 To 10+63 | | | | | | | | | | | | | | | | | | |
| 1Pr | Rt/Lt | 8+75 To 10+48 | | | | | | | | | | | | | | | | | | |
| 1M | ℄ | 9+34.52 | | | | | | | | | | | | | | | | | | |
| 2M | ℄ | 10+35.43 | | | | | | | | | | | | | | | | | | |
| 3M | ℄ | 10+00 Tangent Ahead | | | | | | | | | | | | | | | | | | |
| 4M | 25' LT | 10+00 Tangent Ahead | | | | | | | | | | | | | | | | | | |
| | | Total | 40 | 1 | 1063 | 1 | 1 | 335 | 26 | | | 1 | 1 | 1 | 3 | | 57 | 23 | 40 | |

| | | | | | | | | | | | | | | | | | | | | |
|---|---|---|---|---|---|---|---|---|---|---|---|---|---|---|---|---|---|---|---|---|
| | | | | | | | | | | | | | | | | | | | | |
| | | | | | | | | | | | | | | | | | | | | |
| | | | | | | | | | | | | | | | | | | | | |

| Sheet Number | Cross Reference |
|---|---|
| 56 | I-480 Plan & Profile |
| 462 | Structure |
| | |
| | |

| FHWA REGION | STATE | PROJECT | |
|---|---|---|---|
| 5 | OHIO | | |

78/500

CUYAHOGA COUNTY.
CUY-480-10.39

## PROPOSED STRUCTURE No. CUY-480-1272

TYPE: Continuous steel girders with reinforced concrete deck and substructure
SPANS: 136'-0" & 129'-0" ℄ Brgs.
ROADWAY: 26'-0" f/f curbs, 5'-0" sidewalks & 4'-0" chain link fence mounted on 27" concrete parapet.
LOADING: HS20-44 & Alt. Military
WEARING SURFACE: Monolithic concrete.
SKEW: 0°-00'-00"
ALIGNMENT: Tangent
APPROACH SLABS: AS-1-72 (Mod.) 25'-0" long.

CALC. BY B.B DATE 1/80
CHKD. BY WAM DATE 3/80

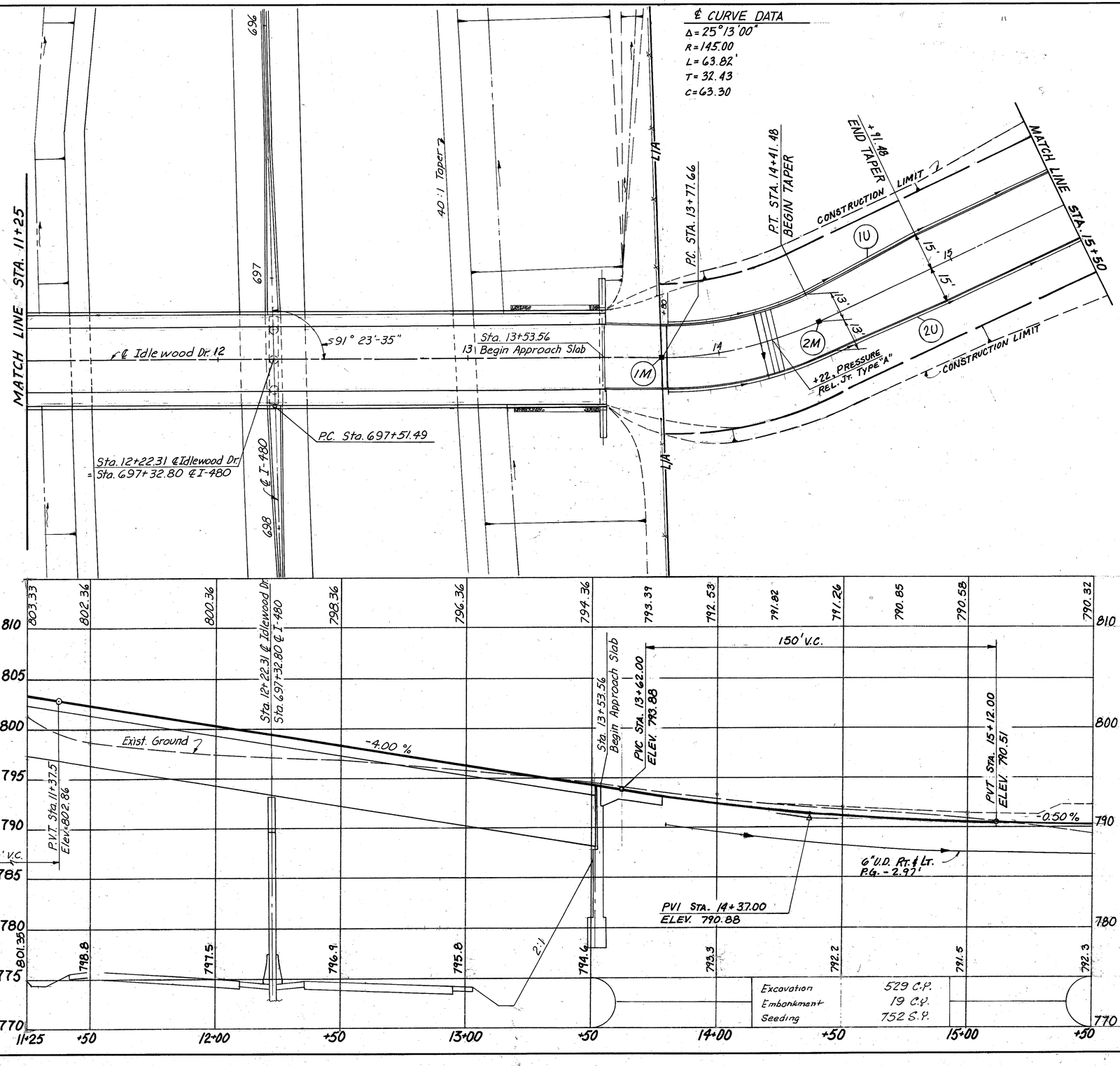


| Excavation | 529 C.Y. |
|---|---|
| Embankment | 19 C.Y. |
| Seeding | 752 S.Y. |

ESTIMATED QUANTITIES

| REF. NO. | SIDE | LOCATION | 605 Shallow Underdrain 707.01/Type III or 707.21 Type III 6" L.F. | 604 Cuy. Co. Mon. Assembly EA. | 605 Shallow Underdrain 6" L.F. |
|---|---|---|---|---|---|
| 1U | Lt. | 13+56 to 15+50 | 164 | | 175 |
| 2U | Rt. | 13+56 to 15+50 | | 1 | 27 |
| 1M | ℄ | 13+77.66 | | 1 | |
| 2M | ℄ | 14+41.48 | | | |
| TOTAL | | | 164 | 2 | 202 |

IDLEWOOD DR. STA. 11+25 TO STA. 15+50

| | | | |
|---|---|---|---|
| CALC. BY B.B DATE 1/80 | CUYAHOGA COUNTY | OHIO | 79 |
| CHKD. BY WAM DATE 3/80 | CUY 480-10.39 | FHWA REGION 5 | 500 |

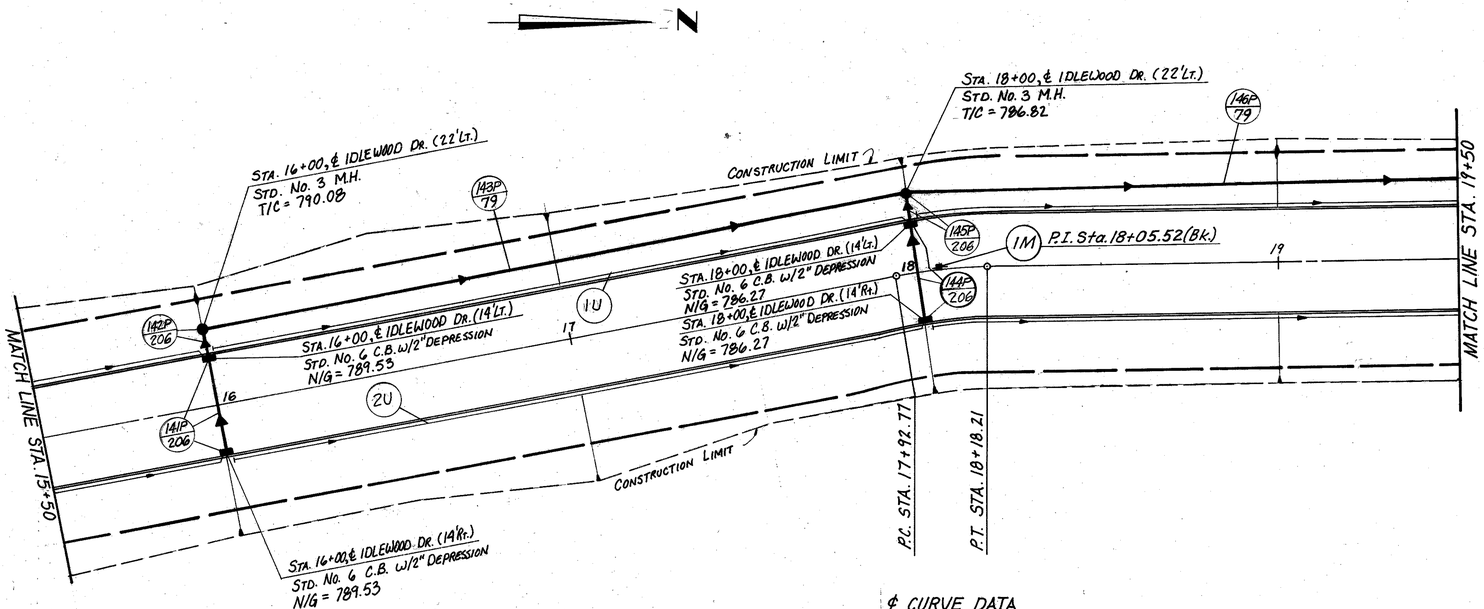


℄ CURVE DATA
Δ = 10°03'11"
R = 145.00'
L = 25.44'
T = 12.75'
C = 25.41'

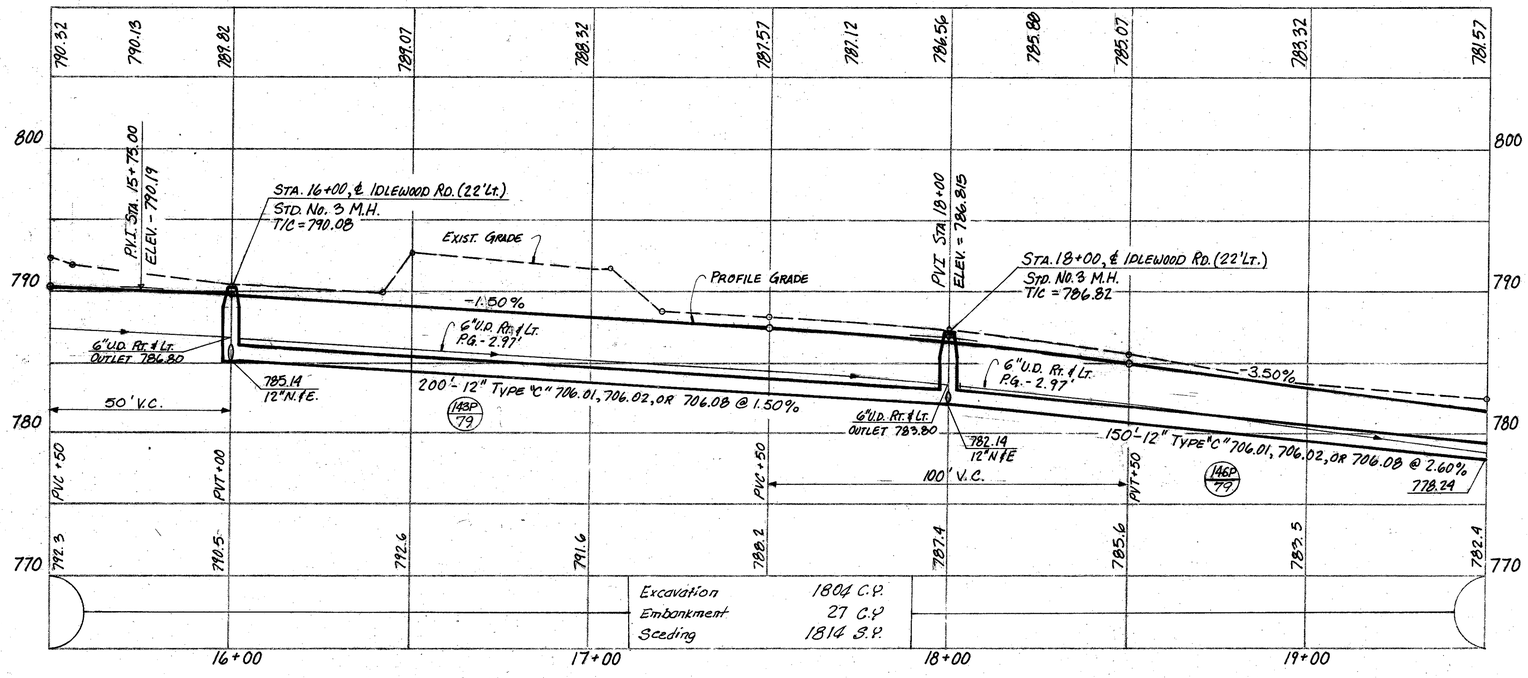


| | |
|---|---|
| Excavation | 1804 C.Y. |
| Embankment | 27 C.Y. |
| Seeding | 1814 S.Y. |

ESTIMATED QUANTITIES

| | | |

| CALC. BY WAM DATE 10/82 | CUYAHOGA COUNTY | OHIO |
|---|---|---|
| CHKD. BY AC DATE 10/82 | CUY 480-10.39 | FHWA REGION 5 |

80 / 500

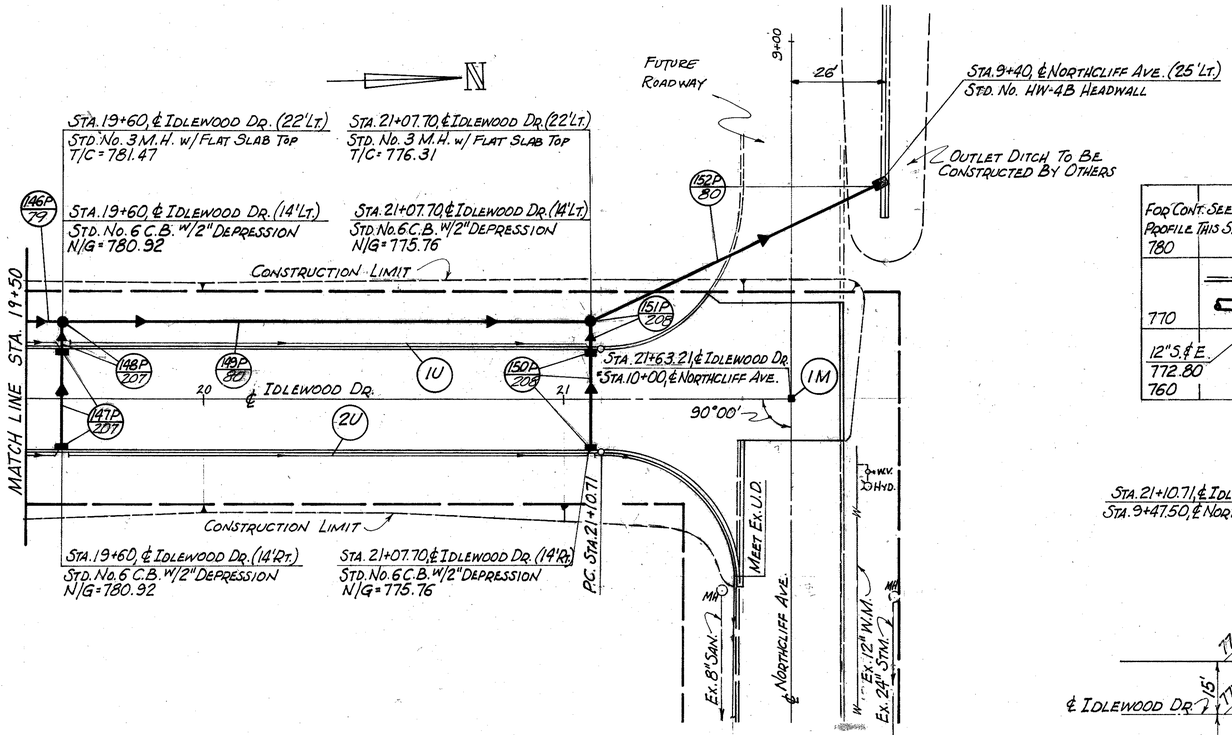


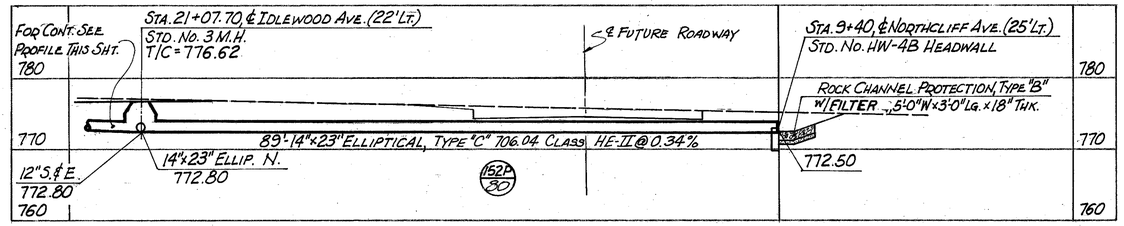


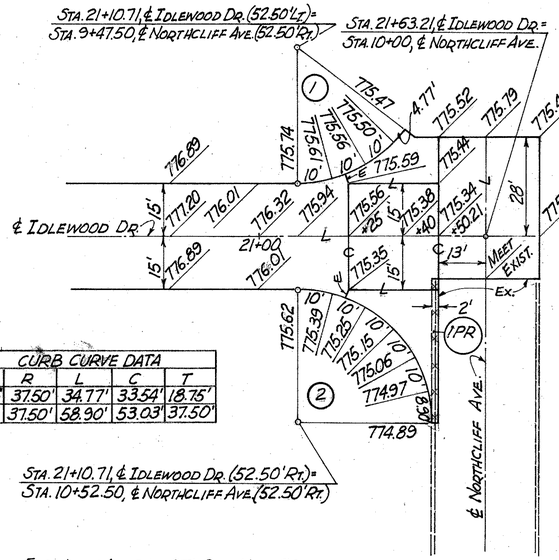


| CURVE No. | CURB CURVE DATA Δ | R | L | C | T |
|---|---|---|---|---|---|
| 1 | 53°01'48" | 37.50' | 34.77' | 33.54' | 18.75' |
| 2 | 90°00' | 37.50' | 58.90' | 53.03' | 37.50' |

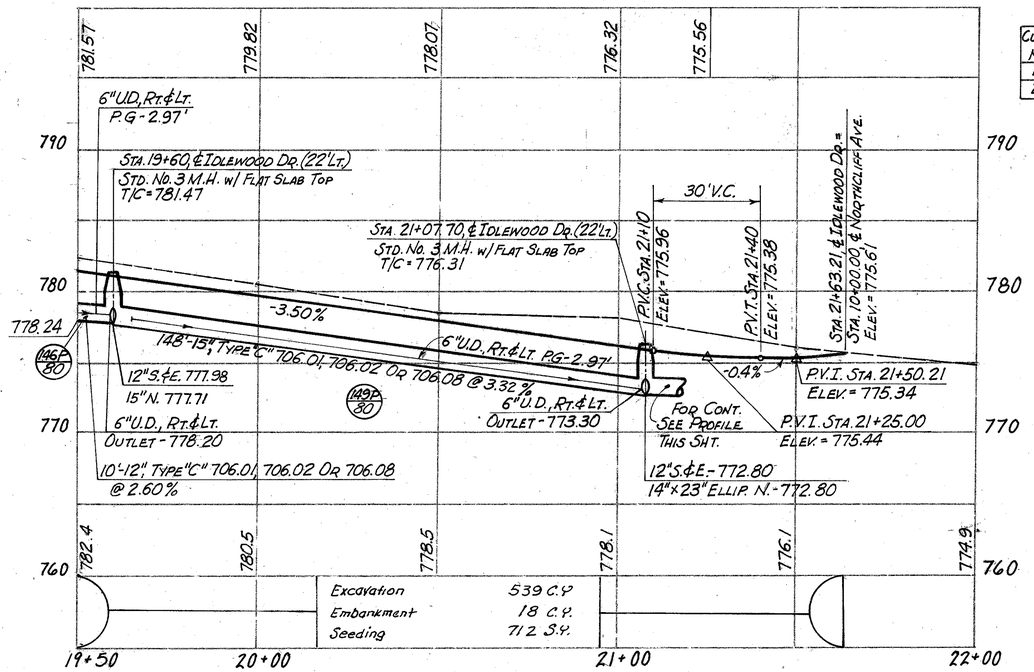


For Joint Legend see Sht. No. 86

| REF. NO. | ESTIMATED QUANTITIES | SIDE | LOCATION | | |

| CALC. BY B.B DATE 2-83 | CUYAHOGA COUNTY | OHIO | 81/500 |
|---|---|---|---|
| CHKD. BY TLB DATE 2/83 | CUY-480-10.39 | FHWA REGION 5 | |

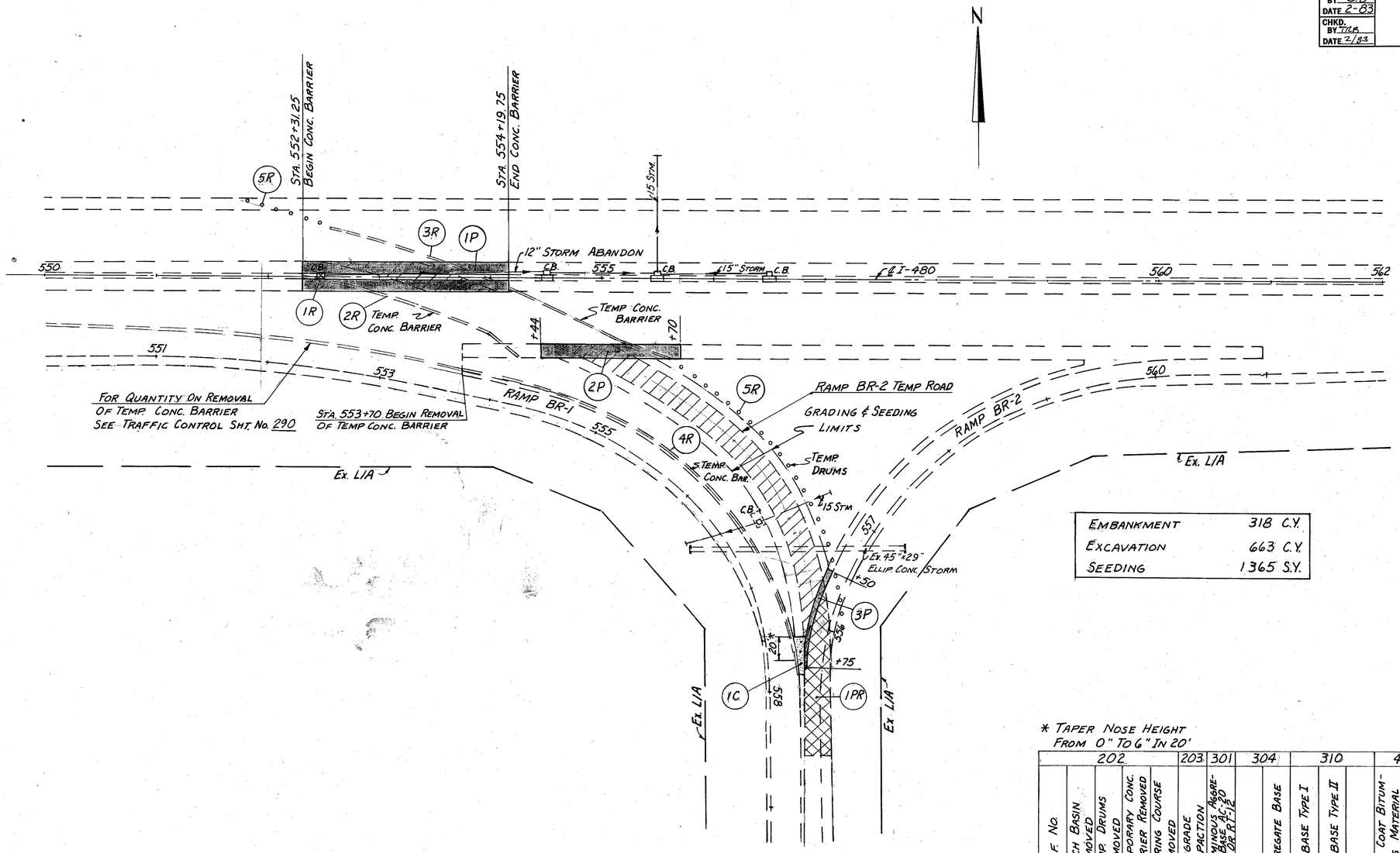


| | |
|---|---|
| EMBANKMENT | 318 C.Y. |
| EXCAVATION | 663 C.Y. |
| SEEDING | 1365 S.Y. |

* TAPER NOSE HEIGHT FROM 0" TO 6" IN 20'

| | 202 | | | | 203 | 301 | 304 | 310 | | | 409 | | 612 | 622 |
|---|---|---|---|---|---|---|---|---|---|---|---|---|---|---|
| REF. NO. | CATCH BASIN REMOVED | TEMP. DRUMS REMOVED | TEMPORARY CONC. BARRIER REMOVED | WEARING COURSE REMOVED | SUBGRADE COMPACTION | BITUMINOUS AGGREGATE BASE AC-20 RT-11 OR RT-12 | AGGREGATE BASE | SUBBASE TYPE I | SUBBASE TYPE II | SEAL COAT BITUMINOUS MATERIAL | SEAL COAT COVER AGGREGATE No. 8 | CONC. MEDIAN STANDARD TYPE | CONC. BARRIER STANDARD TYPE B-50 |
| | EA. | EA. | L.F. | S.Y. | S.Y. | C.Y. | C.Y. | C.Y. | C.Y. | GAL | C.Y. | S.Y. | L.F. |
| 1C | | | | | 21 | | | 5 | | | | 21 | |
| 1P | | | | | 534 | 77 | | | 147 | 138 | 4 | | 189 |
| 2P | | | | | 140 | 23 | | | 37 | 42 | 1 | | |
| 3P | | | | | 28 | 5 | 2 | 2 | | | | | |
| 1PR | | | | 342 | | | | | | | | | |
| 1R | 1 | | | | | | | | | | | | |
| 2R | | | 210 | | | | | | | | | | |
| 3R | | | 330 | | | | | | | | | | |
| 4R | | | 440 | | | | | | | | | | |
| 5R | | 28 | | | | | | | | | | | |
| TOTAL | 1 | 28 | 980 | 342 | 702 | 105 | 2 | 7 | 184 | 180 | 5 | 21 | 189 |

## LEGEND

- WEARING COURSE REMOVED
- ASPHALT SHOULDER, SEE TYPICAL SECTION SHEET NO'S 6 & 7.
- REMOVE TEMPORARY PAV'T UNDER ITEM 203
- STANDARD TYPE CONC. MEDIAN

WEST 139 ST INTERCHANGE DETAIL

| FED. ROAD DIV. NO. | STATE | PROJECT | |
|---|---|---|---|
| 2 | OHIO | | |

82
300

CUYAHOGA COUNTY
CUY- 480 - 10.39

CALC. BY WAM DATE 3.81
CHKD. BY TRB DATE 3.81

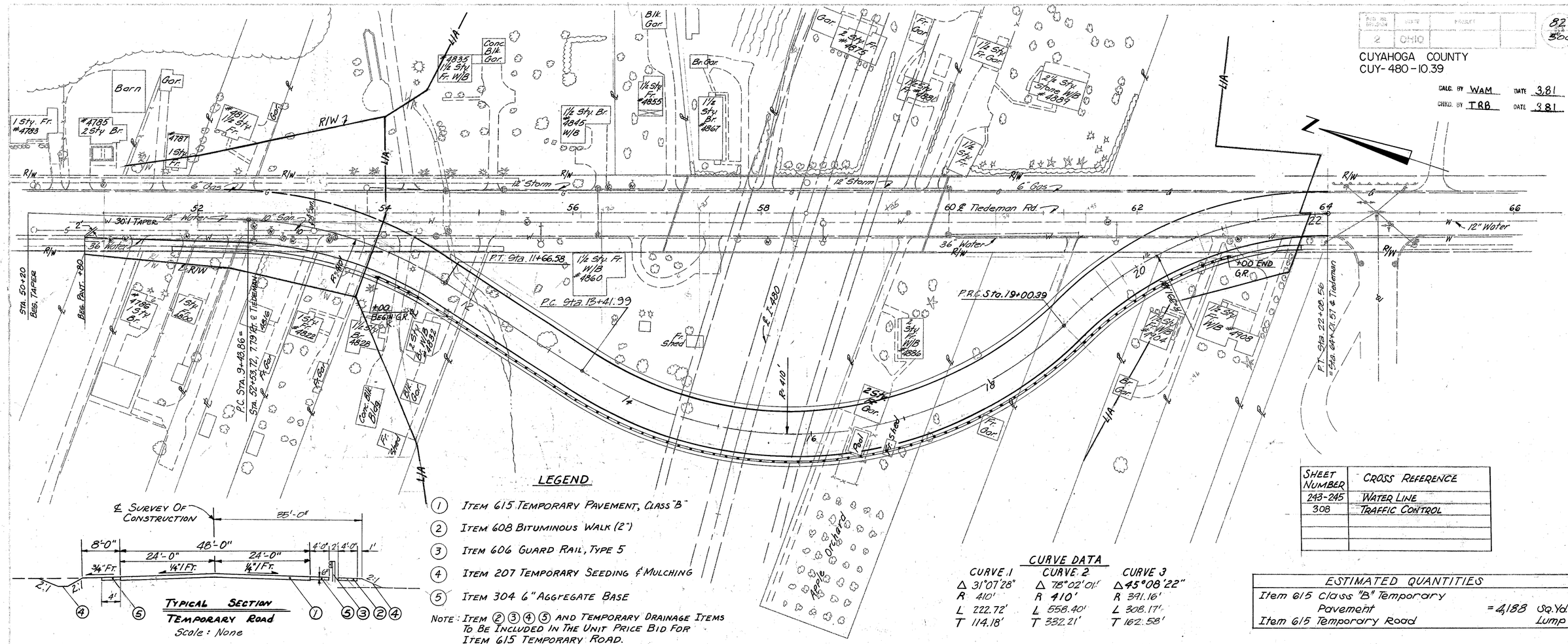





TYPICAL SECTION
TEMPORARY ROAD
Scale: None

## LEGEND

1. ITEM 615 TEMPORARY PAVEMENT, CLASS "B"
2. ITEM 608 BITUMINOUS WALK (2")
3. ITEM 606 GUARD RAIL, TYPE 5
4. ITEM 207 TEMPORARY SEEDING & MULCHING
5. ITEM 304 6" AGGREGATE BASE

NOTE: ITEM ②③④⑤ AND TEMPORARY DRAINAGE ITEMS TO BE INCLUDED IN THE UNIT PRICE BID FOR ITEM 615 TEMPORARY ROAD.




## CURVE DATA

| CURVE 1 | CURVE 2 | CURVE 3 |
|---|---|---|
| Δ 31°07'28" | Δ 78°02'01" | Δ 45°08'22" |
| R 410' | R 410' | R 391.16' |
| L 222.72' | L 556.40' | L 308.17' |
| T 114.18' | T 332.21' | T 162.58' |

| SHEET NUMBER | CROSS REFERENCE |
|---|---|
| 243-245 | WATER LINE |
| 308 | TRAFFIC CONTROL |
| | |
| | |
| | |
| | |

| ESTIMATED QUANTITIES | |
|---|---|
| Item 615 Class "B" Temporary Pavement | = 4,188 SQ.YD. |
| Item 615 Temporary Road | Lump |

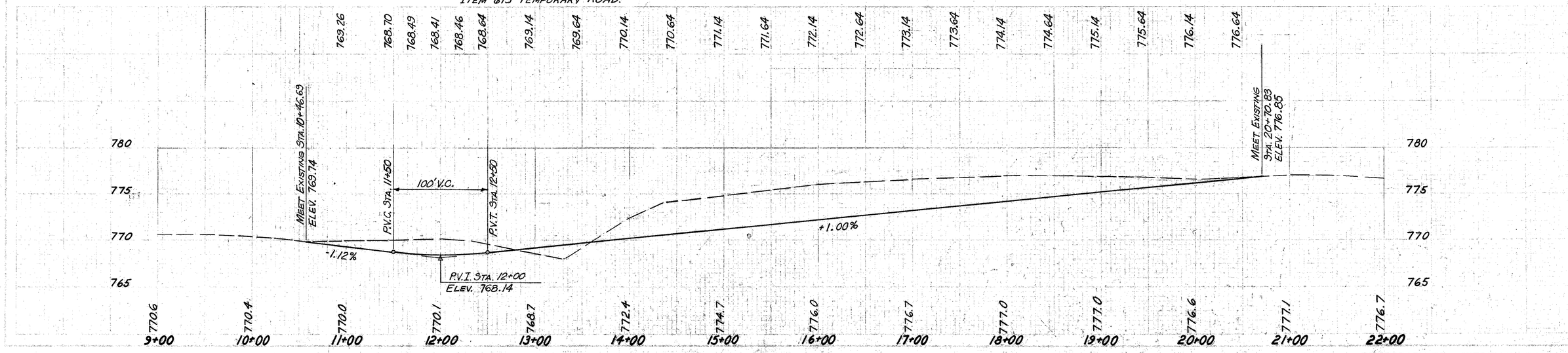


TEMPORARY RD. – TIEDEMAN RD.

| FED. RD. DIVISION | STATE | PROJECT | |
|---|---|---|---|
| 2 | OHIO | | |

83
500

CUYAHOGA COUNTY
CUY - 480- 10.39

CALC. BY B.B DATE 1/80
CHKD. BY AH DATE 1/80

RAMP W-1 CURVE DATA
P.I. = 575+29.15
Δ = 14°15'30"
Dc = 4°00'
R = 1432.39'
T = 179.15'
L = 355.54'

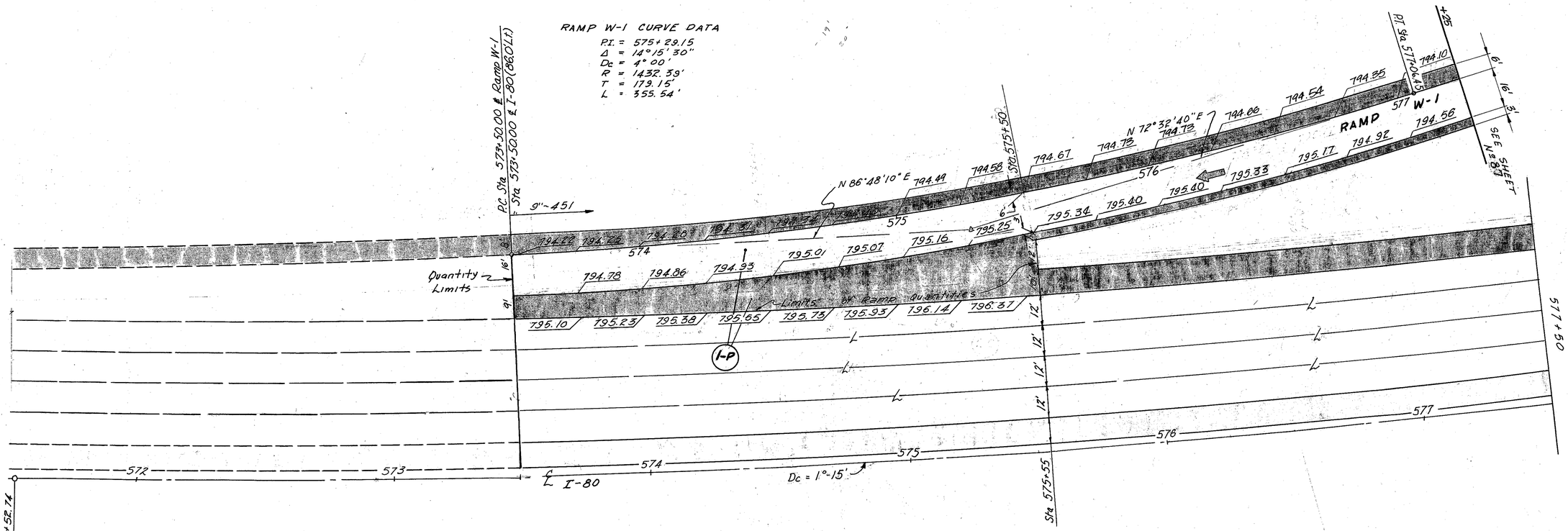


JOINT LEGEND
L Longitudinal Joints
C Contraction Joints
E Expansion Joints

| REF NO. | 451-9" Reinf. P.C. Conc. Pavt. | 310 Subbase II | 301 Bituminous Aggregate | SPECIAL DRAIN CONNECTION | 310 Subbase-I | 304 Aggregate Base | 203 Subgrade Preparation | 409 Seal Coat Cover Aggregate #8 | 409 Seal Coat Bit. Material | | |
|---|---|---|---|---|---|---|---|---|---|---|---|
| | S.Y. | C.Y. | C.Y. | C.Y. | C.Y. | C.Y. | S.Y. | C.Y. | Gal. | | |
| 1-P | 667 | 229 | 108 | 25 | 38 | 5 | 1336 | 2 | 68 | | |
| | | | | | | | | | | | |
| | | | | | | | | | | | |
| | | | | | | | | | | | |
| TOTAL | 667 | 229 | 108 | 25 | 38 | 5 | 1336 | 2 | 68 | | |

RAMP W-1 PAVEMENT DETAILS

| FED. RD. DIVISION | STATE | PROJECT | |
|---|---|---|---|
| 2 | OHIO | | |

84/500

CUYAHOGA COUNTY
CUY-480-10.39

B.B. 1/80
A.H. 1/80

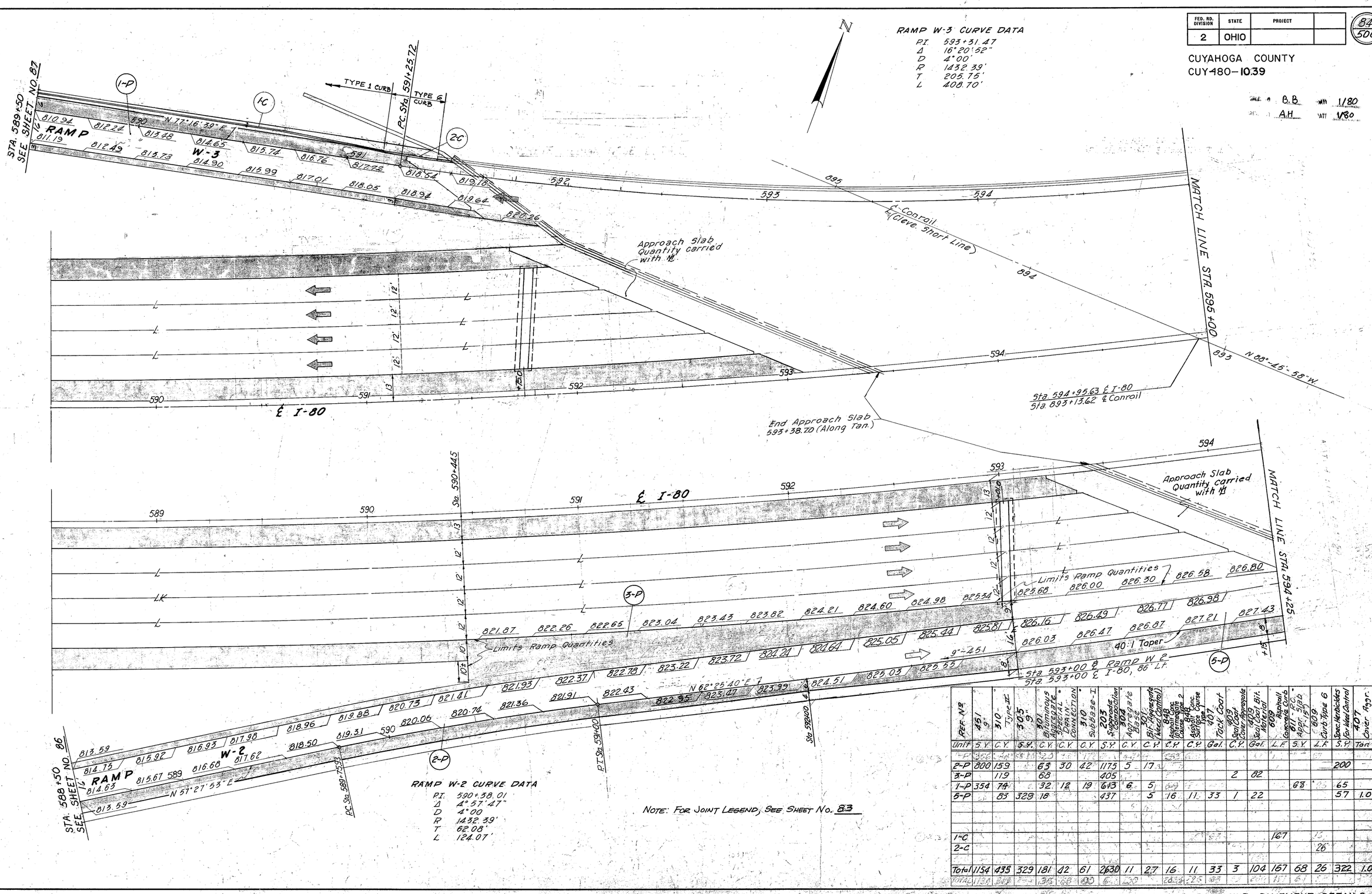


NOTE: FOR JOINT LEGEND, SEE SHEET NO. 83

| REF. Nº | 451 9" | 310 Type II | 305 9" | 301 Bituminous Aggregate | SPECIAL DRAIN CONNECTION | 310 Subbase-I | 203 Subgrade Compaction | 304 Aggregate Base | 301 Bit. Aggregate (Need Control) | 848 Asphalt Conc. Intermediate Course Type 2 | 848 Asphalt Conc. Surface Course Type 2 | 407 Tack Coat | 409 Seal Coat Cover Aggregate | 409 Seal Coat Bit. Material | 609 Asphalt Concrete Curb | 611 R.C. Appr. Slab (T-15") | 609 Curb Type 6 | Spec. Herbicides For Need Control | 407 Cover Aggr. |
|---|---|---|---|---|---|---|---|---|---|---|---|---|---|---|---|---|---|---|---|
| Unit | S.Y. | C.Y. | S.Y. | C.Y. | C.Y. | C.Y. | S.Y. | C.Y. | C.Y. | C.Y. | C.Y. | Gal. | C.Y. | Gal. | L.F. | S.Y. | L.F. | S.Y. | Tan |
| 2-P | 800 | 159 | | 63 | 30 | 42 | 1175 | 5 | 17 | | | | | | | | | 200 | |
| 3-P | | 119 | | 68 | | | 405 | | | | | | 2 | 82 | | | | | |
| 1-P | 354 | 74 | | 32 | 12 | 19 | 613 | 6 | 5 | | | | | | | 68 | | 65 | |
| 5-P | | 83 | 329 | 18 | | | 437 | | 5 | 16 | 11 | 33 | 1 | 22 | | | | 57 | 1.0 |
| 1-C | | | | | | | | | | | | | | | 167 | | | | |
| 2-C | | | | | | | | | | | | | | | | | 26 | | |
| Total | 1154 | 435 | 329 | 181 | 42 | 61 | 2630 | 11 | 27 | 16 | 11 | 33 | 3 | 104 | 167 | 68 | 26 | 322 | 1.0 |

RAMP W-2 & RAMP W-3 PAVEMENT DETAILS

| FED. RD. DIVISION | STATE | PROJECT | |
|---|---|---|---|
| 2 | OHIO | | |

85/500

CUYAHOGA COUNTY
CUY-480-10.39

CALC. BY B.B DATE 12/79
CHKD. BY A.H DATE 180

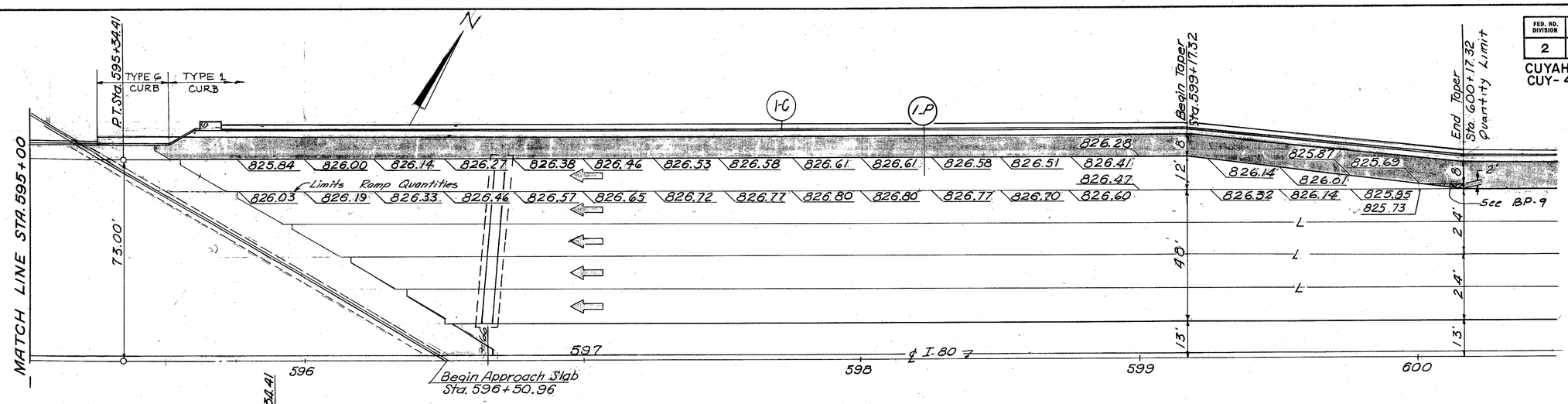


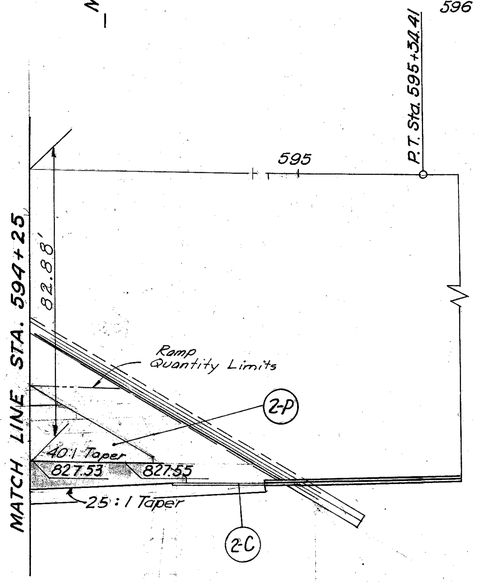


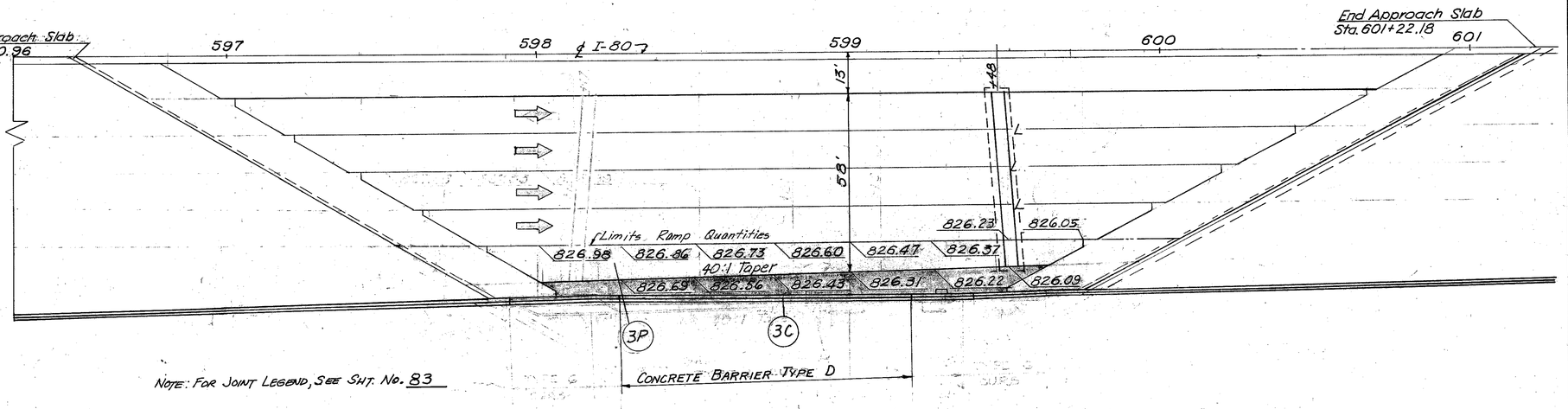


NOTE: FOR JOINT LEGEND, SEE SHT. No. 83

| EAST BOUND LANES | |
|---|---|
| Station | Pavt. Width |
| 598+00 | 60.50' |
| +25 | 59.87' |
| +50 | 59.25' |
| +75 | 58.62' |
| 599+00 | 58.00' |
| +25 | 57.37' |
| +50 | 56.75' |
| +75 | 56.12' |
| 600+00 | 55.50' |

| REFERENCE NO. | 203 | 301 | 301 | 310 | | 305 | | 609 | | 611 | 848 | 848 | 407 | | 409 | | | Spec | Spec | 622 |
|---|---|---|---|---|---|---|---|---|---|---|---|---|---|---|---|---|---|---|---|---|
| | Subbase Compaction | Bituminous Aggregate Base | Bit. Aggregate Base (Weed Control) | Subbase Type II | | 9" P.C. Conc. Base | | Asphalt Concrete Curb | Curb, Type 6 | Approach Slab 7"-P | Asphalt Concrete INTER. TYPE 2 | Asphalt Concrete SURFACE TYPE 1 | Tack Coat | Cover Aggregate | Seal Coat Cover Aggregate | Seal Coat Bit. Material | Herbicides For Weed Control | Pressure Relief Joint, Type A | Concrete Barrier STD. TYPE D | |
| | S.Y. | C.Y. | C.Y. | C.Y. | | S.Y. | | L.F. | L.F. | S.Y. | C.Y. | C.Y. | Gal | Ton | C.Y. | Gal | S.Y. | L.F. | L.F. | |
| 1-P | 1018 | 7 | 11 | 248 | | 549 | | | | 46 | 26 | 19 | 54 | 1.9 | 2 | 86 | 132 | 12 | | |
| 2-P | 146 | 5 | 2 | 27 | | 43 | | | | 74 | 2 | 1 | 4 | 0.1 | 1 | 6 | 26 | | | |
| 3-P | 408 | 18 | | 78 | | 202 | | | | 97 | 10 | 7 | 20 | 0.7 | 1 | 22 | 38 | 9 | | |
| 1-C | | | | | | | | 463 | 52 | | | | | | | | | | | |
| 2-C | | | | | | | | | 26 | | | | | | | | | | | |
| 3-C | | | | | | | | 115 | 52 | | | | | | | | | | | 94 |
| Total | 1572 | 94 | 13 | 353 | | 794 | | 463 | 78 | 217 | 38 | 27 | 78 | 2.7 | 4 | 114 | 196 | 21 | | 94 |

RAMP W-2 & RAMP W-3 PAVEMENT DETAILS

| FED. RD. DIVISION | STATE | PROJECT | |
|---|---|---|---|
| 2 | OHIO | | |

86/500

CUYAHOGA COUNTY
CUY-480-10.39

N

Sta. 50+73.94 = Sta. 579+23.42 ℄ Ramp W-2 = Sta. 50+63.62 W-130TH St. (78' Rt.)

BEGIN SHEET 50+55

PC 50+63.62

Sta. 50+73.94

PT = 51+35.75

51+50 BEGIN FULL PAVING

52+25 BEGIN FULL PAVING

℄ Const. ℄

℄ Survey ℄

N18°01'34"E

Meet Existing Concrete Pavement

Exist. Asphalt Pavet

Exist. Asphalt Curb

N18°01'34"E

Sta. 53+82.81 Back = Sta. 53+85.63 Ahead

N13°21'51"E

PRC 53+88.48 Back = 53+85.63 Ahead, 16 Rt.

PC 52+62.08

PRC 52+59.69

Nose Sta. 52+87.97 (36' Rt) = Sta. 581+52.46 (19' Lt.)

P.T. 53+04.20

Sta 53+82.42 Curb P.T.

130th ST. WEST

N8°23'22"E

Curb P.T. 54+92.00 R.W. 80th (4' Lt.)

300' reverse rad.

55+10.00

55+13.95

N8°23'22"E

Sta. 582+89.67 T-80 = Sta. 55+91.18 W. 130th

Profile Line N.B.

SEE SHEET No. 67 MATCH LINE 57+00

SEE SHEET No. 67

Sta. 55+13.95 Back = Sta. 55+10.00 Ahead

P.C. Sta. 581+52.48

451-9" as per plan

451-9"

+0 MAT END TAPER

Taper Nose Height From 0" to 7" in 20'

P.T. Sta. 583+49.18

Ramp W-2

P.C. 585+22.95

RAMP W-2

P.T. 587+86.98

N51°27'52"E

584+75.0

## JOINT LEGEND

L Longitudinal Joints

E Expansion Joint Without Tie Bar
ET Expansion Joint
EX Expansion Bolt Joint
C Contraction Joint
H Hinge Joint, See General Note, Sheet No. 14

| REF. No. | 451 5" Reinf. Conc. Pavement As Per Plan | 310 Subbase Grading II | | 301 Bituminous Aggregate Base | SPEC. SPECIAL DRAIN CONNECTION | 310 Subbase I | | 304 Aggregate Base | 203 Subgrade Compaction | 202 Pavement Removed | 608 Curb Ramp Dep. Co. 2 | 608 4" Concrete Walk | 202 Sidewalk Removed | 612 4" Conc. MEDIAN, NOSE & PAVT. REINF. | 451 5" Reinf. Conc. Pavt. |
|---|---|---|---|---|---|---|---|---|---|---|---|---|---|---|---|
| Unit | S.Y. | C.Y. | | C.Y. | C.Y. | C.Y. | | C.Y. | S.Y. | S.Y. | Ea. | S.F. | S.F. | S.Y. | S.Y. |
| 1-P | | 139 | | 43 | 27 | 25 | | 21 | 1082 | | | | | | 667 |
| 2-P | 2425 | 404 | | | | | | | 2621 | | | | | | |
| 3-P | 1758 | 293 | | | | | | | 1965 | | | | | | |
| 1-R | | | | | | | | | | 3442 | | | 5285 | | |
| 1-S | | | | | | | | | | | 1 | 141 | | | |
| 2-S | | | | | | | | | | | 1 | 2492 | | | |
| 3-S | | | | | | | | | | | | 3732 | | | |
| 4-S | | | | | | | | | | | | | | 253 | |
| 4-P | | 82 | | 38 | 16 | 6 | | 6 | 618 | | | | | | 401 |
| 5-P | | 38 | | | | | | | 248 | | | | | | 217 |
| TOTAL | 4183 | 956 | | 101 | 43 | 31 | | 27 | 6494 | 3442 | 2 | 6365 | 5285 | 253 | 1285 |

| REF. No. | 609 Spec. 617 Conb As Per Plan | 612 Concrete Median STD. 711.10 |
|---|---|---|
| | L.F. | S.Y. |
| 1-C | 100 | |
| 2-C | 84 | 19 |
| 3-C | 392 | |
| 4-C | 143 | |
| 5-C | 641 | |
| 6-C | 626 | |
| 7-C | 615 | |
| Total | 2601 | 19 |

## LEGEND

Concrete Median

4½" Concrete Walk Paving

Removal of Exist. Pav't. and Exist Conc. S.W.

## CURVE DATA

C1: P.I. = 51+04.86; Δ = 4°39'45"; D = 7°32'33"; R = 759.64'; T = 30.92'; L = 61.81'

C2: P.I. = 51+67.36; Δ = 15°12'14"; D = 8°11'06"; R = 700.00'; T = 93.42'; L = 185.75'

C3: P.I. = 53+24.27; Δ = 10°32'31"; D = 8°11'06"; R = 700.00'; T = 64.58'; L = 128.79'

C4: Exist. ℄ W. 130TH St. P.I. = 54+83.13; Δ = 16°59'52"; D = 4°00'00"; R = 1432.39'; T = 214.05'; L = 424.95

C5: P.I. = 51+84.20; Δ = 9°58'12"; D = 4°00'20"; R = 1430.42'; T = 120.58'; L = 240.58'

C6: P.I. = 582+57.56; Δ = 50°00'00"; D = 25°25'35"; R = 225.34'; T = 105.08'; L = 196.65'

## MEDIAN CURB CURVE DATA

C7: P.I. = 586+55.34; Δ = 10°33'41"; D = 4°00'; R = 1432.39'; T = 132.39'; L = 264.03'

C8: Δ = 10°32'47"; R = 3°00'00"; L = 55.22'; C = 55.14'; T = 27.69'

C9: Δ = 11°15'59"; R = 3°00'00"; L = 58.99'; C = 58.89'; T = 29.59'

Varies 52' Max. S.B. — Varies N.B. — 9" Reinf. Conc. — 3" Insulation Course — Conc. Cap Curb

EXISTING SECTION W. 130TH ST.
Sta. 50+55 to Sta. 56+94.03

CGD 12/79
A.H. DATE 1/80

WEST 130TH ST. INTERCHANGE

| FED. RD. DIVISION | STATE | PROJECT | |
|---|---|---|---|
| 2 | OHIO | | |

87/500

CUYAHOGA COUNTY
CUY-480 ~ 10.39

CALD. BY CGD DATE 1/80
CHKD. BY AH DATE 1/80

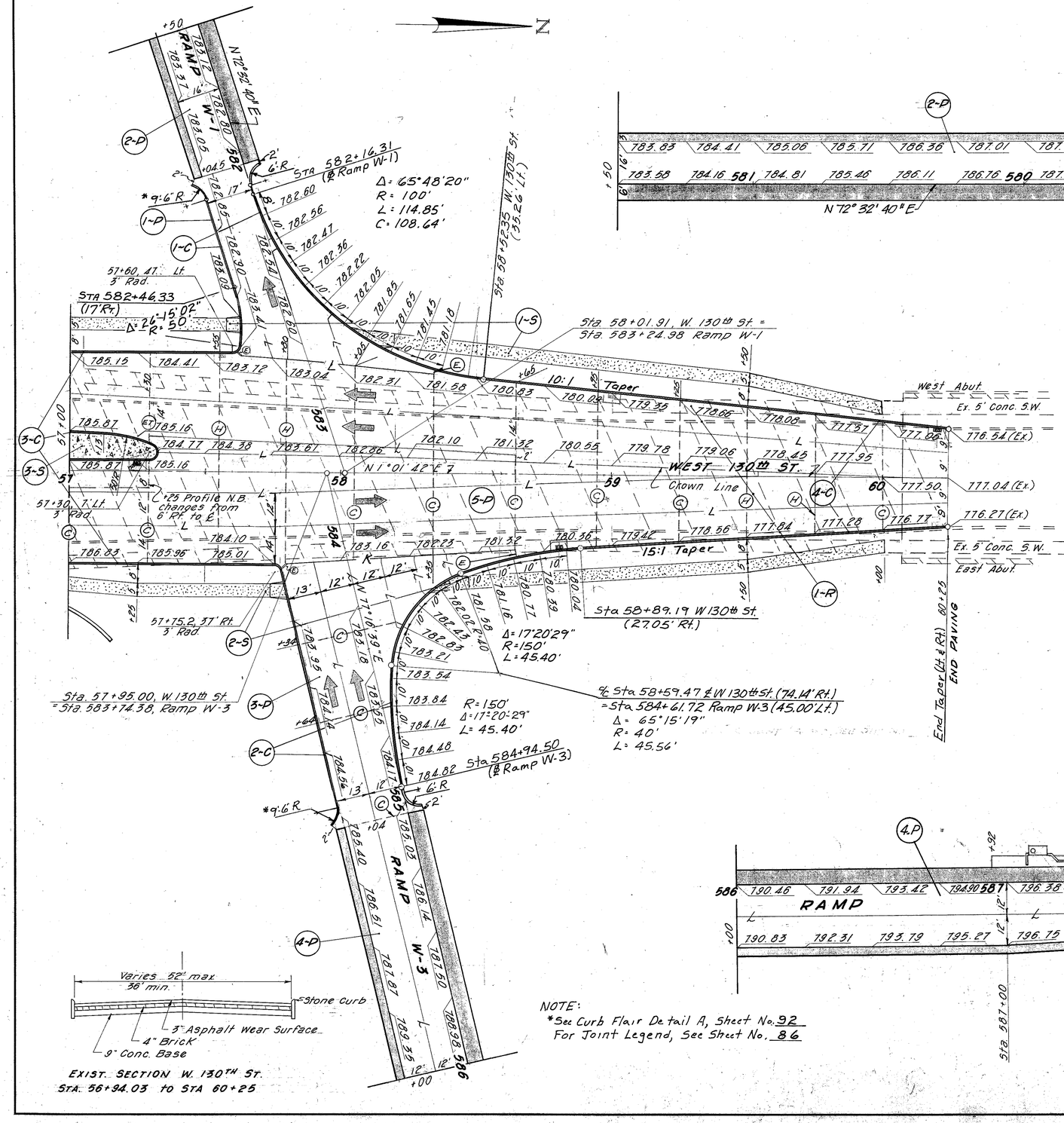


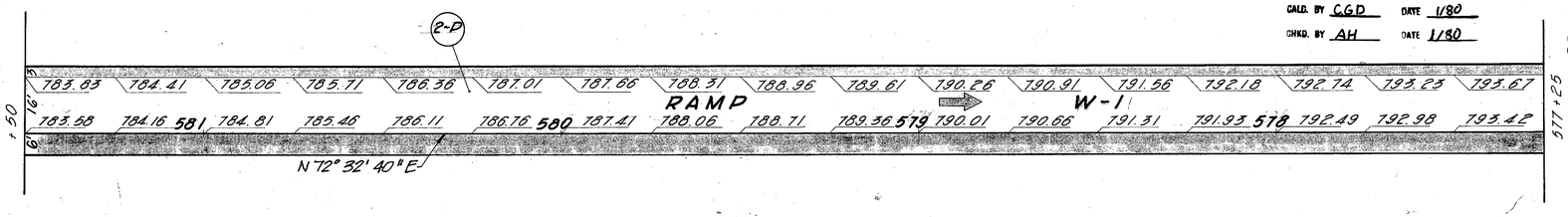


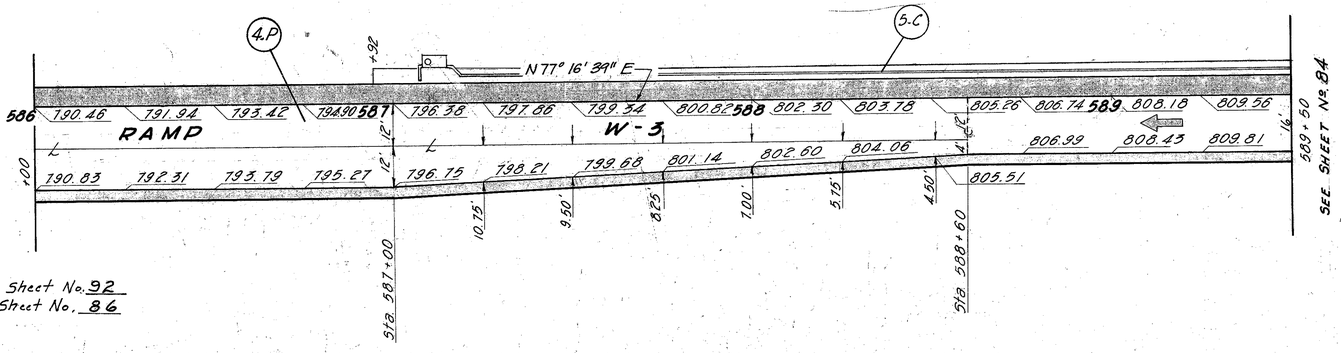


## LEGEND

4" Concrete Median.

Removal of Exist. Pavement and Concrete Sidewalk.

| | 451 | 310 | 301 | 301 | SPEC. | 310 | SPEC. | 304 | 609 | 203 | 202 | | 608 | 202 | 202 | 451 | 612 | 609 |
|---|---|---|---|---|---|---|---|---|---|---|---|---|---|---|---|---|---|---|
| REF. No. | 9" Reinf. Conc. Pavt. | Subbase Grading II | Bit. Aggregate (Weed Control) | Bituminous Aggregate Base | Special Drain Connection | Subbase I | Herbicide Weed Control | Aggregate Base | Spec. 6" Curb | Subgrade Compaction | Pavement Removed | Curb Ramp Cuy. Co. Typ. 2 | 4½" Concrete Walk | Walk Removed | Curb Removed | 9" Reinf. Conc. Pavt. As Per Plan | 4" Conc. Median | Bit. Conc. Curb |
| Unit | S.Y. | C.Y. | C.Y. | C.Y. | C.Y. | C.Y. | S.Y. | C.Y. | L.F. | S.Y. | S.Y. | | S.F. | S.F. | L.F. | S.Y. | S.Y. | L.F. |
| 1-P | 238 | 39.6 | | | | | | | | 270 | | | | | | | | |
| 2-P | 852 | 175 | | 80 | 32 | 50 | | 13 | | 1332 | | | | | | | | |
| 3-P | 405 | 67.5 | | | | | | | | 446 | | | | | | | | |
| 4-P | 1038 | 214 | 10 | 74 | 29 | 45 | 115 | 12 | | 1484 | | | | | | | | |
| 5-P | | 373 | | | | | | | | 2325 | | | | | | 2238 | | |
| | | | | | | | | | | | | | | | | | | |
| 1-R | | | | | | | | | | | 1580 | | | 3010 | 650 | | | |
| 1-S | | | | | | | | | | | | 2 | 1280 | | | | | |
| 2-S | | | | | | | | | | | | 2 | 1220 | | | | | |
| 3-S | | | | | | | | | | | | | | | | | 32 | |
| 1-C | | | | | | | | | 193 | | | | | | | | | |
| 2-C | | | | | | | | | 245 | | | | | | | | | |
| 3-C | | | | | | | | | 208 | | | | | | | | | |
| 4-C | | | | | | | | | 310 | | | | | | | | | |
| 5-C | | | | | | | | | | | | | | | | | | 241 |
| TOTAL | 2533 | 869 | 10 | 154 | 61 | 95 | 115 | 25 | 956 | 5857 | 1580 | 4 | 2500 | 3010 | 650 | 2238 | 32 | 241 |

NOTE:
*See Curb Flair Detail A, Sheet No. 92
For Joint Legend, See Sheet No. 86

WEST 130TH ST. INTERCHANGE

| FED. RD. DIVISION | STATE | PROJECT | |
|---|---|---|---|
| 2 | OHIO | | |

88/500

CUYAHOGA COUNTY
CUY-480-10.39 CALC. BY C.G.D. DATE 12/79
CHKD. BY A.H. DATE 1/80

## RAMP T-1 CURVE DATA

Δ = 12°37'42"
D = 4°00'00"
R = 1,432.40'
L = 315.71'
T = 158.50'
P.I. Sta. 632+58.50

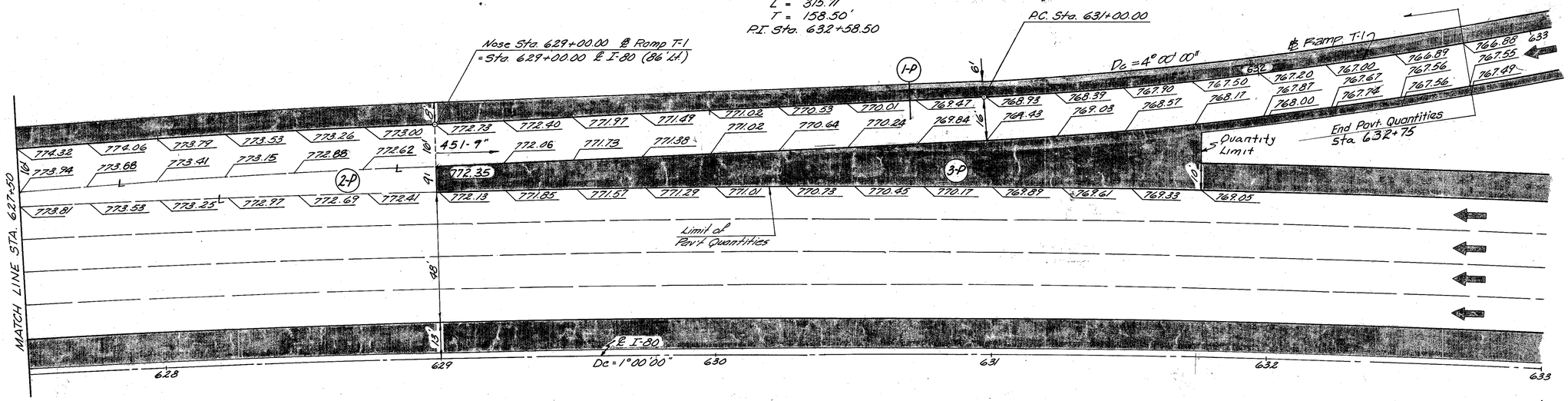


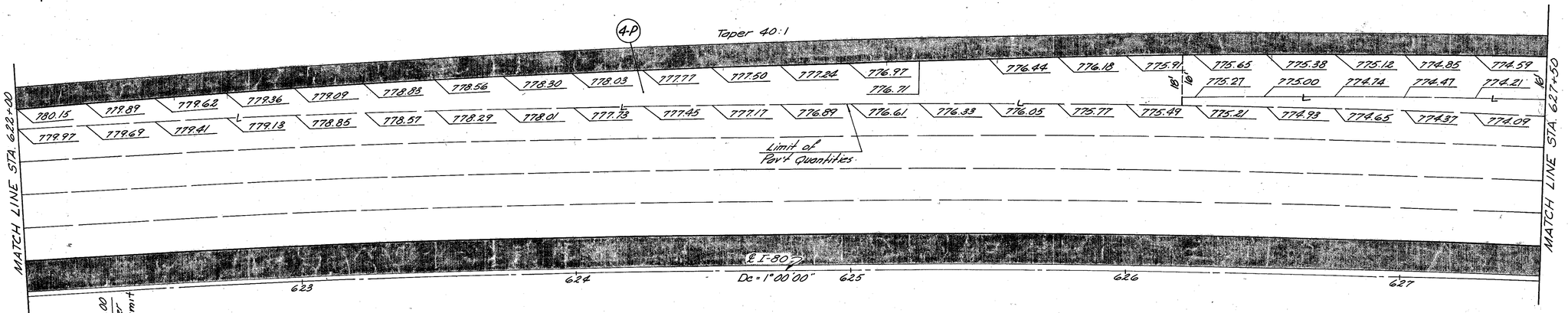


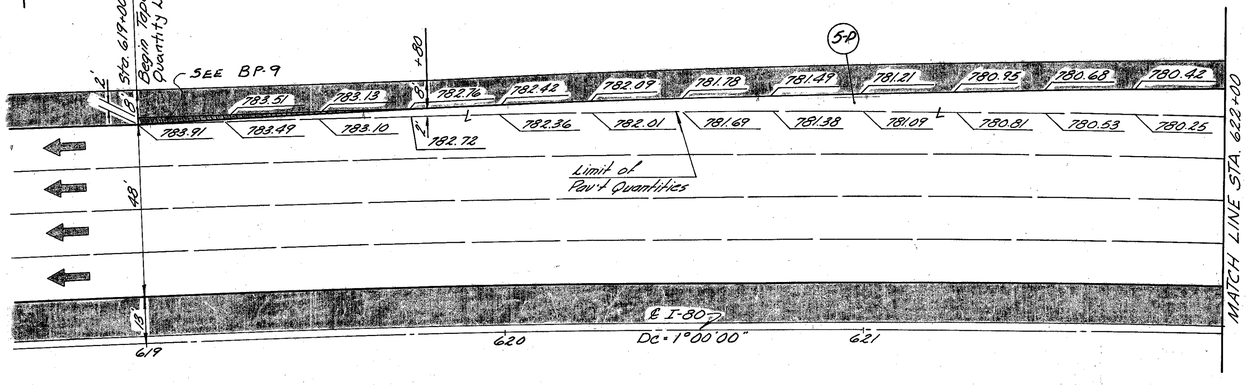


| REFERENCE NO. | 203 Subgrade Composition | 301 Bituminous Aggregate Base | 304 Aggregate Base | 310 Subbase Type II | 310 Subbase - I | | 451 9" Reinf. P.C. Conc. Pavt. | 305 9" P.C. Conc. | 848 Asphalt Conc. Intermediate Course Type 2 | 848 Asphalt Conc. Surface Course Type 1 | Spec. Spec. Drainage Connection | 407 Tack Coat | 409 Seal Coat Cover Aggregate #8 | 409 Seal Coat Bit. Material |
|---|---|---|---|---|---|---|---|---|---|---|---|---|---|---|
| | S.Y. | C.Y. | C.Y. | C.Y. | C.Y. | | S.Y. | S.Y. | C.Y. | C.Y. | C.Y. | Ton | Gal. | C.Y. | Gal. |
| 1-P | 971 | 51 | 3 | 131 | 36 | | 667 | | | | 25 | | | | |
| 2-P | 518 | 22 | | 99 | | | | 389 | 19 | 13 | | 1.3 | 39 | 1 | 27 |
| 3-P | 497 | 83 | | 145 | | | | | | | | | | 3 | 101 |
| 4-P | 1370 | 79 | | 274 | | | | 905 | 43 | 31 | | 3.1 | 89 | 2 | 99 |
| 5-P | 396 | 44 | | 93 | | | | 144 | 7 | 5 | | 0.5 | 14 | 1 | 54 |
| | | | | | | | | | | | | | | | |
| | | | | | | | | | | | | | | | |
| Total | 3752 | 279 | 3 | 742 | 36 | | 667 | 1438 | 69 | 49 | 25 | 4.9 | 142 | 7 | 281 |

NOTE: FOR JOINT LEGEND, SEE SHT. NO. 83

RAMP T-1 PAVEMENT DETAIL

| FED. RD. DIVISION | STATE | PROJECT | |
|---|---|---|---|
| 2 | OHIO | | |

89/500

CUYAHOGA COUNTY
CUY-480-10.39

CALC. BY ARH DATE 1/80
CHKD. BY CDG DATE 1/80

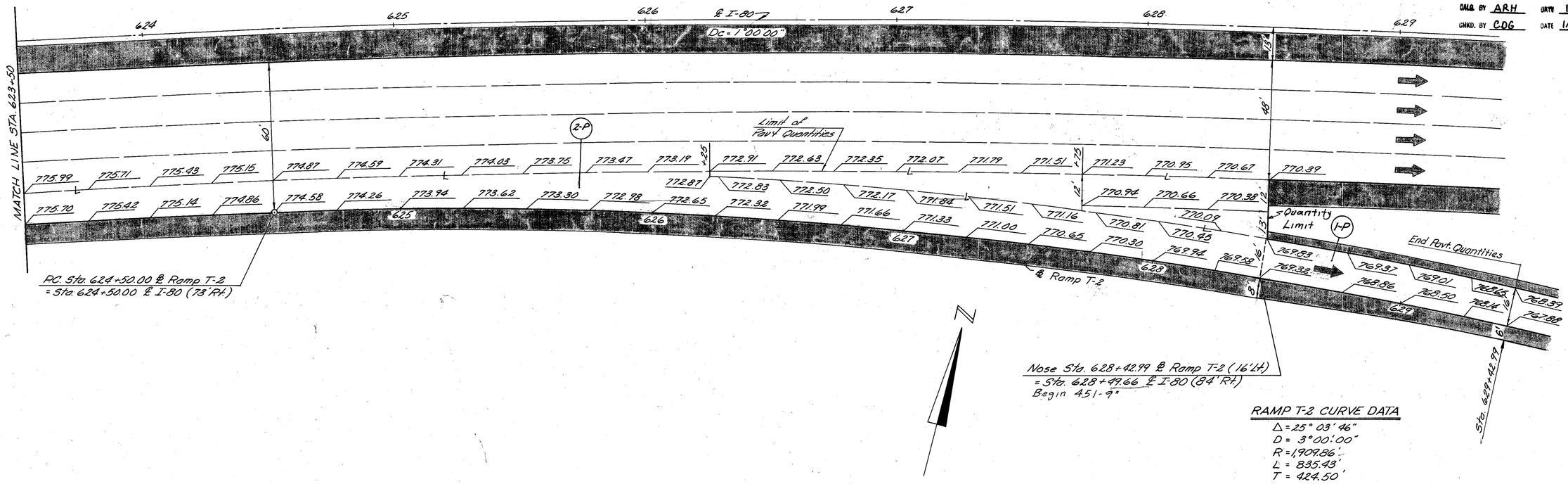


N

RAMP T-2 CURVE DATA
Δ = 25° 03' 46"
D = 3° 00' 00"
R = 1,909.86'
L = 835.43'
T = 424.50'
P.I. Sta. 628+74.50

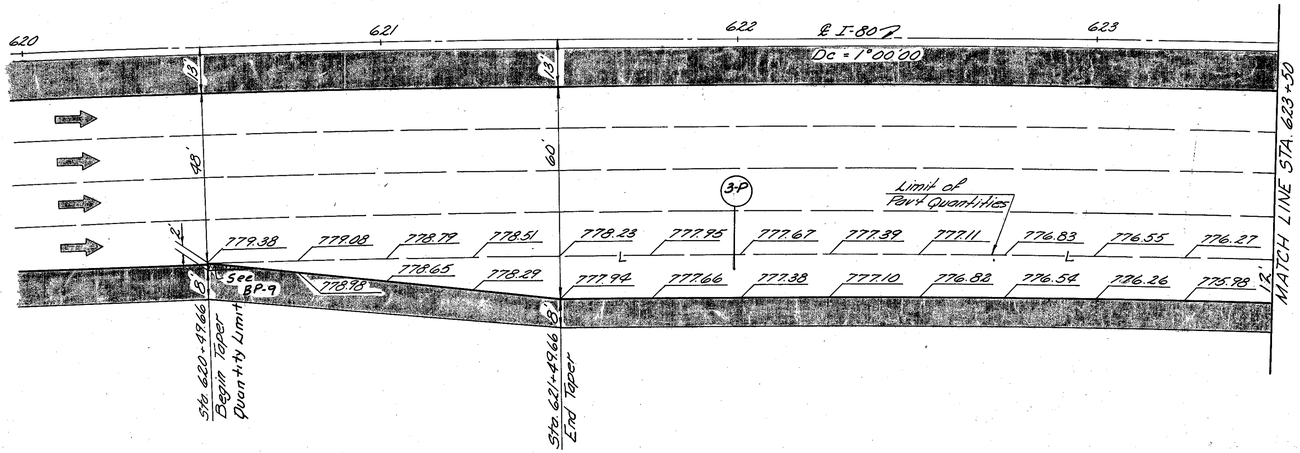


NOTE: FOR JOINT LEGEND, SEE SHT. NO. 83

| REFERENCE NO. | 203 Subbase Compaction C.Y. | 301 Bituminous Aggregate Base C.Y. | 304 Aggregate Base C.Y. | 310 Subbase Type II C.Y. | 310 Subbase - I C.Y. | 407 Cover Aggregate C.Y. | 451 9" Rem. P.C. Conc. Pavt. S.Y. | 305 9" P.C. Conc. S.Y. | Spec. Drainage Connection C.Y. | 848 Asphalt Conc. Intermediate Course Type 2 C.Y. | 848 Asphalt Conc. Surface Course Type 1 C.Y. | 407 Tack Coat Gal. | 409 Seal Coat Cover Aggregate #8 C.Y. | 409 Seal Coat Bit. Material Gal. |
|---|---|---|---|---|---|---|---|---|---|---|---|---|---|---|
| 1-P | 289 | 19 | 3 | 36 | 13 | | 178 | | 7 | | | | | |
| 2-P | 1547 | 72 | | 299 | | 3.9 | | 1122 | | 54 | 38 | 111 | 2 | 38 |
| 3-P | 614 | 45 | | 129 | | 1.2 | | 344 | | 16 | 12 | 34 | 1 | 56 |
| Total | 2450 | 136 | 3 | 464 | 13 | 5.1 | 178 | 1466 | 7 | 70 | 50 | 145 | 3 | 114 |

RAMP T-2 PAVEMENT DETAIL

CALC. BY ARH DATE 1/80
CHKD. BY COG DATE 1/80

| FED. RD. DIVISION | STATE | PROJECT | |
|---|---|---|---|
| 2 | OHIO | | |

CUYAHOGA COUNTY
CUY-480-10.39

90
500

## RAMP T-3 CURVE DATA

Δ = 10° 29' 01"
D = 1° 30' 00"
R = 3,819.72'
L = 698.91'
T = 350.43
P.I. Sta. 648+76.52

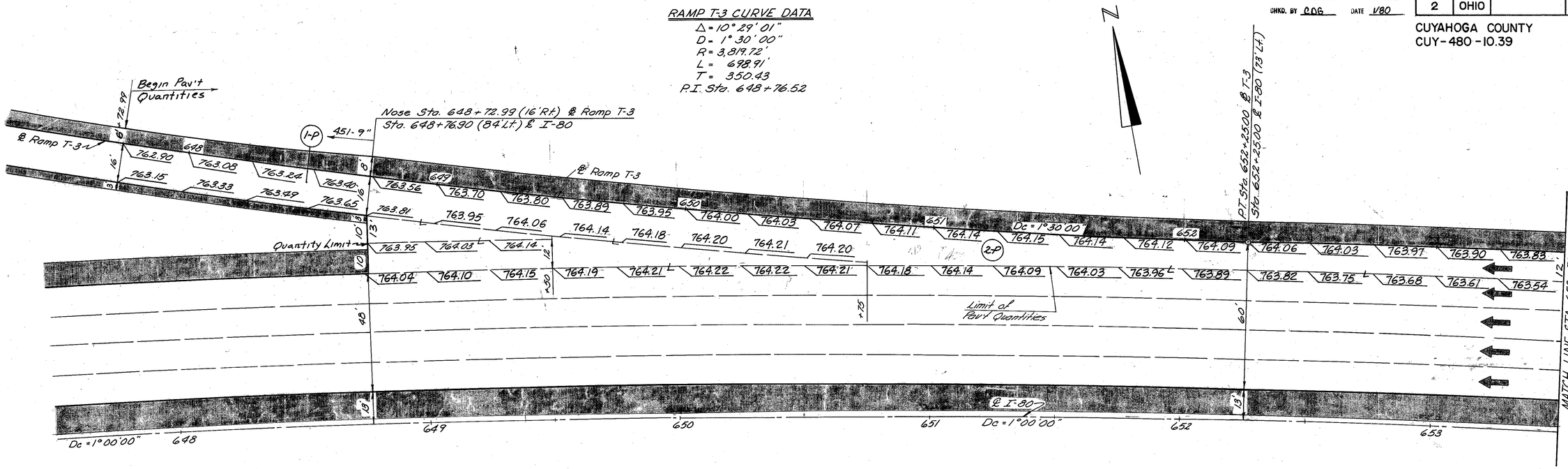


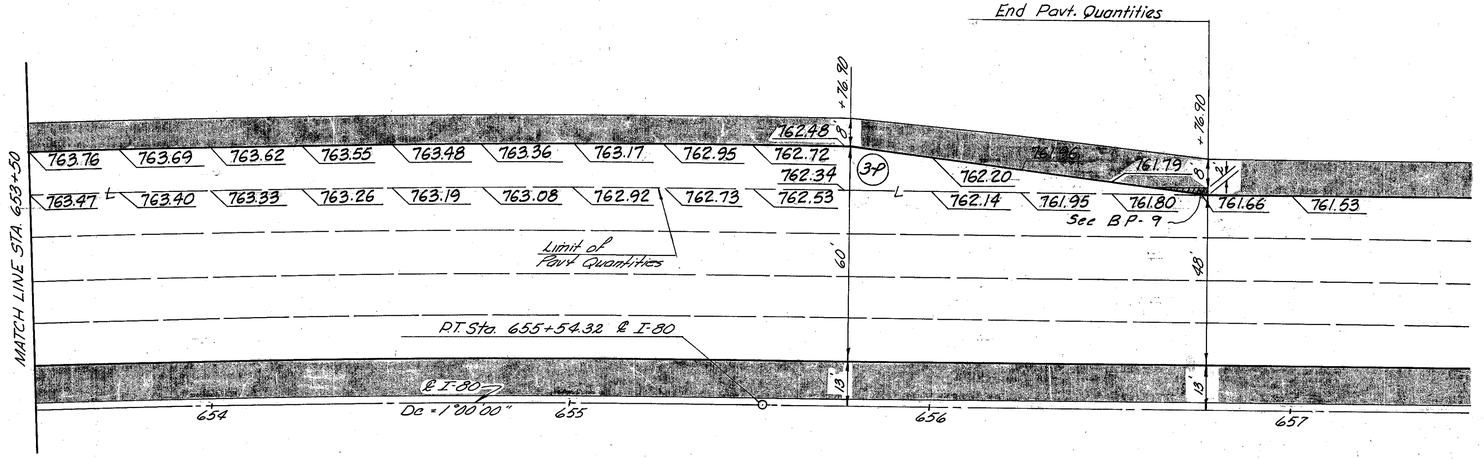


NOTE: FOR JOINT LEGEND, SEE SHT. No. 83

| REFERENCE NO. | 203 Subgrade Compaction | 301 Bituminous Base | 304 Aggregate Base | 310 Subbase Type II | 310 Subbase - I | 407 Cover Aggregate | 451 9" Reinf. P.C. Conc. Pavt. | 305 9" P.C. Conc. | Spec. Drainage Connection | 848 Asphalt Conc. Intermediate Course Type 2 | 848 Asphalt Conc. Surface Course Type 1 | 407 Tack Coat | 409 Seal Coat Cover Aggregate #8 | 409 Seal Coat Bit. Material |
|---|---|---|---|---|---|---|---|---|---|---|---|---|---|---|
| | S.Y. | C.Y. | C.Y. | C.Y. | C.Y. | Ton | S.Y. | S.Y. | C.Y. | C.Y. | C.Y. | Gal. | C.Y. | Gal. |
| 1-P | 289 | 19 | 3 | 36 | 12 | | 178 | | 7 | | | | | |
| 2-P | 441 | 69 | | 280 | | 3.6 | | 1030 | | 49 | 35 | 102 | 2 | 85 |
| 3-P | 671 | 51 | | 140 | | 1.3 | | 377 | | 18 | 13 | 37 | 2 | 60 |
| Total | 2401 | 139 | 3 | 456 | 12 | 4.9 | 178 | 1401 | 7 | 67 | 48 | 139 | 4 | 145 |

RAMP T-3 PAVEMENT DETAIL

CALC. BY ARH DATE 1/80
CHKD. BY B.B DATE 1/80

| FED. RD. DIVISION | STATE | PROJECT | |
|---|---|---|---|
| 2 | OHIO | | |

CUYAHOGA COUNTY
CUY-480-10.39

91/500

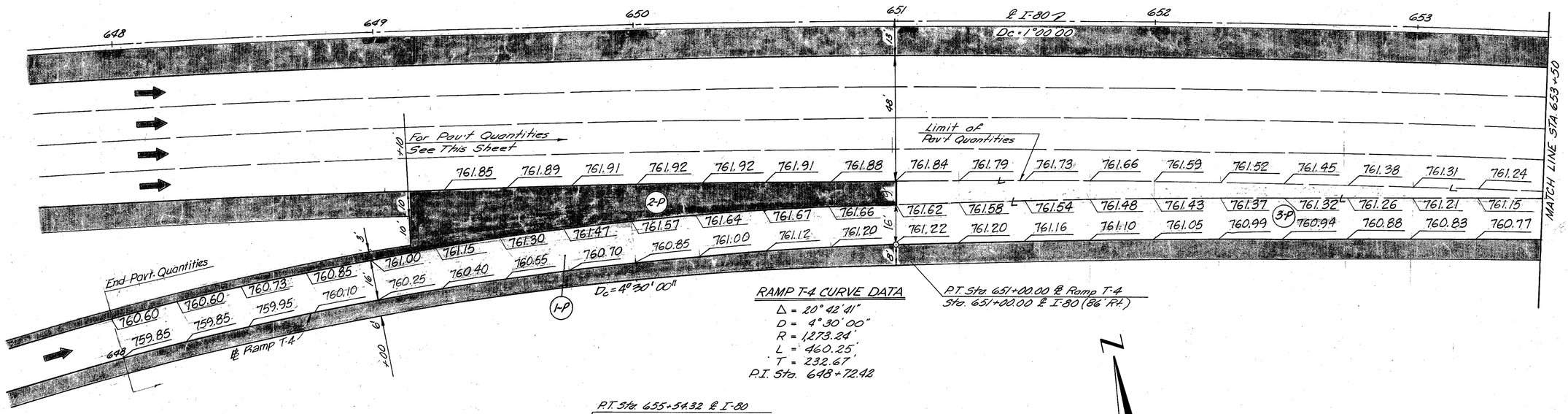


NOTE: FOR JOINT LEGEND, SEE SHT. No. 83

| REFERENCE NO. | 203 Subgrade Compaction | 301 Bituminous Aggregate Base | 304 Aggregate Base | 310 Subbase Type II | 310 Subbase Type I | Spec. Drainage Connection | 451 9" Reinf. P.C. Conc. Pav't. | 305 9" P.C. Conc. | 848 Asphalt Conc. Intermediate Course Type 2 | 848 Asphalt Conc. Surface Course Type 1 | 407 Tack Coat | 409 Seal Coat Cover Aggregate | 409 Seal Coat Bit. Material | 407 Cover Aggregate |
|---|---|---|---|---|---|---|---|---|---|---|---|---|---|---|
| | S.Y. | C.Y. | C.Y. | C.Y. | C.Y. | C.Y. | S.Y. | S.Y. | C.Y. | C.Y. | Gal. | C.Y. | Gal. | Ton. |
| 1-P | 794 | 43 | 3 | 106 | 29 | 20 | 533 | | | | | | | |
| 2-P | 321 | 53 | | 92 | | | | | | | | | | |
| 3-P | 830 | 36 | | 159 | | | | 614 | 30 | 21 | 61 | 1 | 44 | 2.1 |
| 4-P | 967 | 58 | | 195 | | | | 622 | 30 | 21 | 61 | 2 | 71 | 2.1 |
| 5-P | 490 | 53 | | 111 | | | | 189 | 9 | 6 | 18 | 2 | 62 | 0.6 |
| | | | | | | | | | | | | | | |
| | | | | | | | | | | | | | | |
| | | | | | | | | | | | | | | |
| Total | 3402 | 243 | 3 | 663 | 29 | 20 | 533 | 1425 | 69 | 48 | 140 | 5 | 177 | 4.8 |

RAMP T-4 PAVEMENT DETAIL

CALC. BY ARH DATE 1/80
CHKD. BY B.B DATE 1/80

| FED. RD. DIVISION | STATE | PROJECT | |
|---|---|---|---|
| 2 | OHIO | | |

92/500

CUYAHOGA COUNTY
CUY-480-10.39

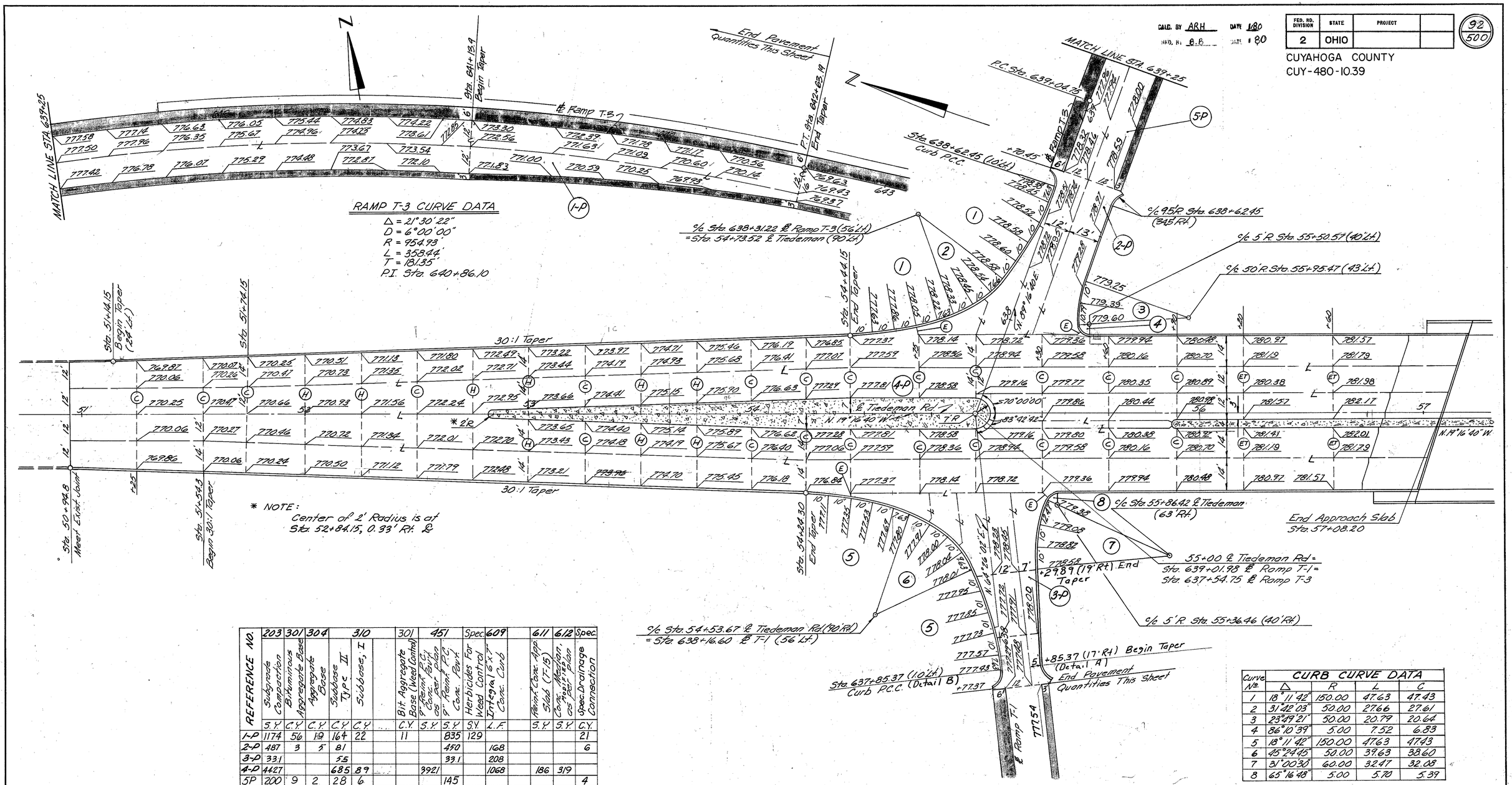


| REFERENCE NO. | 203 Subgrade Compaction | 301 Bituminous Aggregate Base | 304 Aggregate Base | 310 Subbase Type II | 310 Subbase, I | | 301 Bit. Aggregate Base (Weed Control) | 451 9" Reinf. P.C. Conc. Pavement | | Spec. Herbicides For Weed Control | 609 Integral 6"x7" Conc. Curb | | 611 Reinf. Conc. Approach Slab (T-15) | 612 Conc. Median, as per plan | Spec. Drainage Connection |
|---|---|---|---|---|---|---|---|---|---|---|---|---|---|---|---|
| | S.Y. | C.Y. | C.Y. | C.Y. | C.Y. | | C.Y. | S.Y. | S.Y. | S.Y. | L.F. | | S.Y. | S.Y. | C.Y. |
| 1-P | 1174 | 56 | 19 | 164 | 22 | | 11 | | 835 | 129 | | | | | 21 |
| 2-P | 487 | 3 | 5 | 81 | | | | | 450 | | 168 | | | | 6 |
| 3-P | 331 | | | 55 | | | | | 331 | | 208 | | | | |
| 4-P | 4427 | | | 685 | 89 | | | 3921 | | | 1068 | | 186 | 319 | |
| 5P | 200 | 9 | 2 | 28 | 6 | | | | 145 | | | | | | 4 |
| Total | 6619 | 68 | 26 | 1013 | 117 | | 11 | 3921 | 1761 | 129 | 1444 | | 186 | 319 | 31 |

| Curve No. | CURB CURVE DATA Δ | R | L | C |
|---|---|---|---|---|
| 1 | 18°11'42" | 150.00 | 47.63 | 47.43 |
| 2 | 31°42'03" | 50.00 | 27.66 | 27.61 |
| 3 | 23°49'21" | 50.00 | 20.79 | 20.64 |
| 4 | 86°10'39" | 5.00 | 7.52 | 6.83 |
| 5 | 18°11'42" | 150.00 | 47.63 | 47.43 |
| 6 | 45°22'45" | 50.00 | 39.63 | 38.60 |
| 7 | 31°00'30" | 60.00 | 32.47 | 32.08 |
| 8 | 65°16'48" | 5.00 | 5.70 | 5.39 |

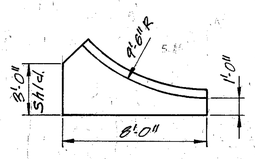

CURB FLAIR DETAIL "A"

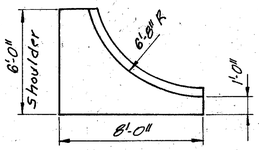

CURB FLAIR DETAIL "B"

JOINT LEGEND

L Longitudinal Joints
E Expansion Joint Without Tie Bar
ET Expansion Joint
C Contraction Joint
H Hinge Joint, See General Note, Sheet No. 14
KT Standard Key Joint

TIEDEMAN RD. PAVEMENT DETAILS

| CALC. BY ARH | DATE 1/80 | FED. RD. DIVISION | STATE | PROJECT | |
|---|---|---|---|---|---|
| CHKD. BY B.B. | DATE 1/80 | 2 | OHIO | | |

93/500

CUYAHOGA COUNTY
CUY- 480-10.39

| Curve No. | CURB CURVE DATA | | | |
|---|---|---|---|---|
| | Δ | R | L | C |
| 1 | 65° 16' 48" | 5.00 | 5.70 | 5.39 |
| 2 | 17° 17' 44" | 60.00 | 18.11 | 18.04 |
| 3 | 18° 11' 42" | 150.00 | 47.63 | 47.43 |
| 4 | 58° 31' 55" | 50.00 | 51.08 | 48.89 |
| 5 | 86° 10' 39" | 5.00 | 7.52 | 6.84 |
| 6 | 23° 49' 21" | 50.00 | 20.79 | 20.64 |
| 7 | 19° 05' 28" | 150.00 | 49.98 | 49.75 |
| 8 | 29° 23' 01" | 50.00 | 25.64 | 25.36 |
| 9 | 12°-15'-52" | 150.00 | 32.11 | 32.05 |

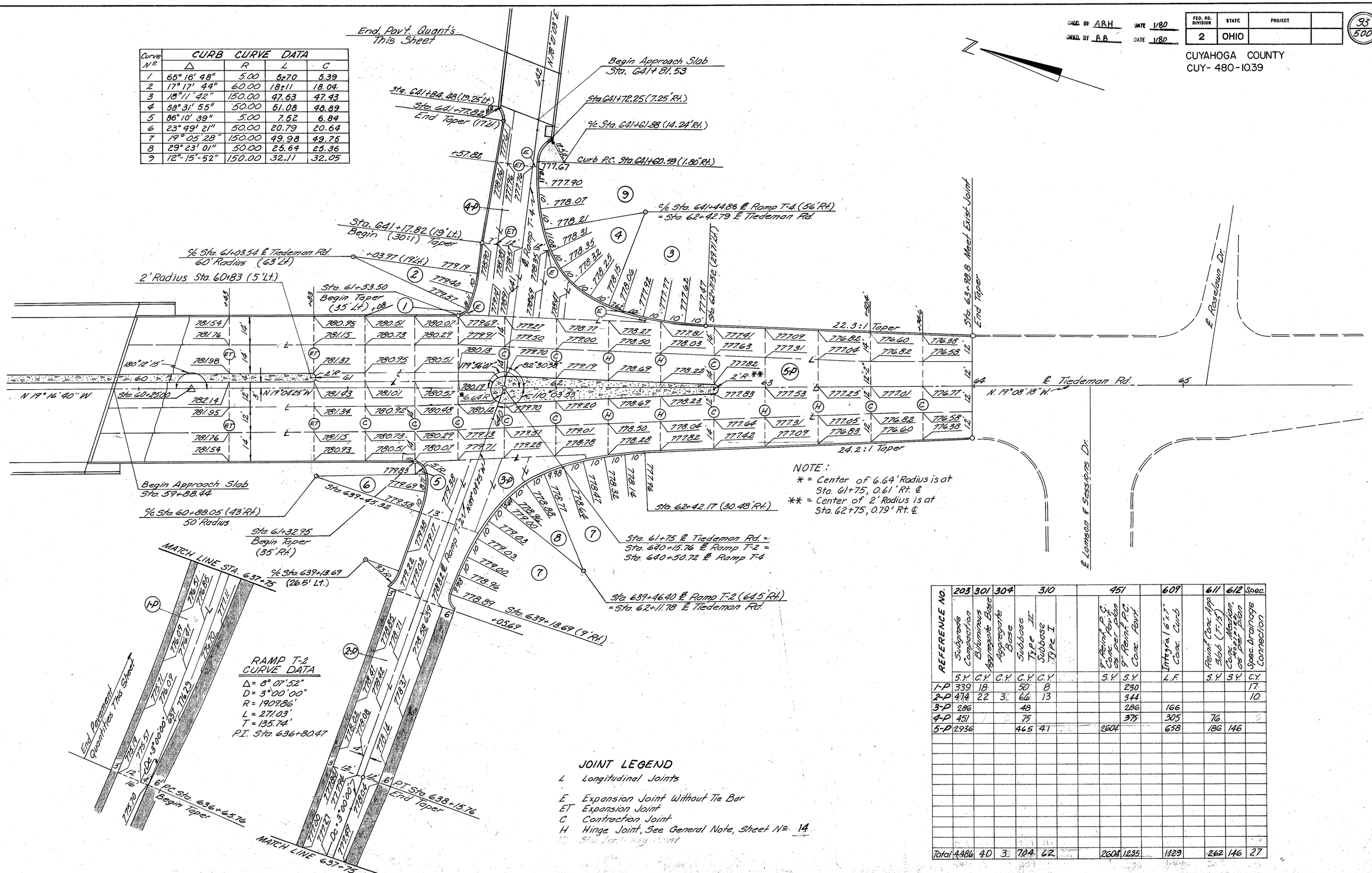


NOTE:
* = Center of 6.64' Radius is at Sta. 61+75, 0.61' Rt. ℄
** = Center of 2' Radius is at Sta. 62+75, 0.79' Rt. ℄

RAMP T-2 CURVE DATA
Δ = 8° 07' 52"
D = 3° 00' 00"
R = 1909.86'
L = 271.03'
T = 135.74'
P.I. Sta. 636+80.47

| REFERENCE NO. | 203 | 301 | 304 | 310 | | | 451 | | | 609 | | 611 | 612 | Spec. |
|---|---|---|---|---|---|---|---|---|---|---|---|---|---|---|
| | Subgrade Compaction | Bituminous Aggregate Base | Aggregate Base | Subbase Type II | Subbase Type I | | 9" Reinf. P.C. Conc. Pavt. as per plan | 9" Reinf. P.C. Conc. Pavt. | | Integral 6"x7" Conc. Curb | | Reinf. Conc. App. Slab (T-15) | Conc. Median, Mod. Pavt. as per plan | Spec. Drainage Connection |
| | S.Y. | C.Y. | C.Y. | C.Y. | C.Y. | | S.Y. | S.Y. | | L.F. | | S.Y. | S.Y. | C.Y. |
| 1-P | 339 | 18 | | 50 | 8 | | | 230 | | | | | | 17 |
| 2-P | 474 | 22 | 3 | 66 | 13 | | | 344 | | | | | | 10 |
| 3-P | 286 | | | 48 | | | | 286 | | 166 | | | | |
| 4-P | 451 | | | 75 | | | | 375 | | 305 | | 76 | | |
| 5-P | 2936 | | | 465 | 41 | | 2604 | | | 658 | | 186 | 146 | |
| Total | 4486 | 40 | 3 | 704 | 62 | | 2604 | 1235 | | 1129 | | 262 | 146 | 27 |

JOINT LEGEND
L Longitudinal Joints
E Expansion Joint Without Tie Bar
ET Expansion Joint
C Contraction Joint
H Hinge Joint, See General Note, Sheet No. 14
[illegible] Standard Key Joint

TIEDEMAN RD. PAVEMENT DETAILS

| CALC. BY A.H. | CUYAHOGA COUNTY | OHIO |
|---|---|---|
| DATE 1/80 | CUY-480-10.39 | FHWA REGION 5 |
| CHKD. BY B.B. | | |
| DATE 1/80 | | |

94
500

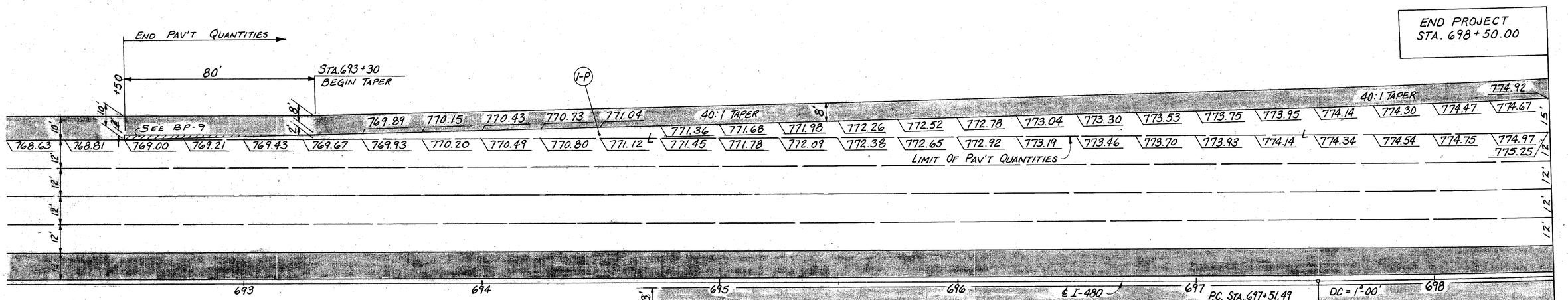


| REFERENCE NO. | 203 SUBGRADE COMPACTION S.Y. | 301 BITUMINOUS AGGREGATE BASE C.Y. | 305 9" P.C. CONC. BASE S.Y. | 310 SUBBASE TYPE II C.Y. | 407 TACK COAT GAL. | 407 COVER AGGREGATE C.Y. | 409 SEAL COAT COVER AGGREGATE C.Y. | 409 SEAL COAT BIT. MATERIAL GAL. | 848 ASPHALT CONC. INTERMEDIATE COURSE TYPE 2 C.Y. | 848 ASPHALT CONC. SURFACE COURSE TYPE 1 C.Y. | | | | | |
|---|---|---|---|---|---|---|---|---|---|---|---|---|---|---|---|
| 1-P | 1043 | 88 | 525 | 224 | 51 | 1.7 | 2 | 108 | 24 | 17 | | | | | |
| 2-P | 625 | 45 | 358 | 130 | 35 | 1.2 | 1 | 56 | 17 | 12 | | | | | |
| | | | | | | | | | | | | | | | |
| | | | | | | | | | | | | | | | |
| | | | | | | | | | | | | | | | |
| TOTAL | 1668 | 133 | 883 | 354 | 86 | 2.9 | 3 | 164 | 41 | 29 | | | | | |

NOTE: FOR JOINT LEGEND, SEE SHT. NO. 83

RAMP R-1 AND RAMP R-2 PAVEMENT DETAILS

| FED. HIGHWAY DIVISION | STATE | PROJECT | |
|---|---|---|---|
| 2 | OHIO | | |

95
500

CUYAHOGA COUNTY
CUY. 480-10.39

Sta. 600+60 ℄ I-80
Std. I-3B Median Inlet
N/G = 824.72

6" Under Drain

68'-15" Type "B" @ 1.50%

817.76

818.93
15" N & SW

10'-15" Type "F" 707.05 @ 1.50%

43P 47

FOR SEWER PROFILE CONT SEE 40P 46/47

Sta. 600+60, 161' Lt.
Sta. HW ⊄ Headwall

73'-15" Type "F" 707.05 @ 48.8%

785.95

786.04

Item 601.08
4'Wide × 13'Long × 18"Deep

18'-15"-Type "F" 707.05 @0.50%

Sta. 619+25 ℄ I-80
Std. No. 1-3B Median Inlet
N/G = 781.87

776.22

Sta. 619+26 (85' Rt.)
Std. No. 4 C.B.
T/C Elev. 779.40

84'-15" Type "B" @ 0.80%

775.55

764.43
42" E. & W.

51P 48

Sta. 573+60
70' Lt. ℄ I-480
Std. No. 6 C.B. (Mod.)
N/G = 794.52

Sta. 574+00
71.5' Lt. ℄ I-480
Std. No. 6 C.B. (Mod.)
N/G = 794.67

40'-15" Type "B" @ 0.80%

173'-15" Type "B" @ 0.80%

788.62
15" E, N & S

788.94

790.32

Sta. 575+73
75' Lt. ℄ I-480
Std. No. 3 C.B.
N/G = 796.01

4P 44

Sta. 610+50 ℄ I-80
Std. I-3B Median Inlet
N/G = 802.73

797.10

68'-15" Type "B" @ 0.80%

47P 48

796.48

10'-15" Type "F" 707.05 @ 0.80%

32'-15" Type "F" 707.05 @ 50.00%

Sta. 610+50, 146' Rt. ℄ I-480
Std. No. 5-A C.B.
T/G = 777.00

773.06

21'-15" Type "F" 707.05 @ 50.00%

772.95

768.64
36" E & W

Sta. 628+25 ℄ I-480
Std. I-3B Median Inlet
N/G = 777.35

766.27

℄ Ramp T-2

118'-15" Type "B" @ 1.80%

764.14

Sta. 628+25 118' Rt. ℄ I-480
Std. No. 4 C.B.
T/G = 767.86

760.53
42" E & W

51P 49

Sta. 632+75, 21' Lt. ℄ T-1
Std. No. 4 C.B.
T/G = 764.76

℄ Ramp T-1

758.65

33'-21" Type "C" @ 0.80%

50'-21" Type "B" @ 0.80%

Sta. 633+10 ℄ T-1

61P 50

162'-21" Type "C" @ 0.80 %

Sta. 635+00, 84' Lt. ℄ I-480
Std. No. 4 C.B.
T/G = 763.32

756.69
21" W & S

Sta. 635+00, 84' Rt. ℄ I-80
Std. No. 5A C.B.
T/G = 761.02

755.38
21" N.

755.88

753.13
48" E.

753.63
42" W.

149'-15" Type "C" @ 4.37 %

68P 61

26'-15" Type "B" @ 4.37%

15'-15" Type "C" @ 4.37%

Sta. 631+00, ℄ T-2

764.18

Sta. 634+00, 20' Rt. ℄ T-2
Std. No. 6 C.B.
T/G = 769.45

STORM SEWER PROFILES

| FED. ROAD PROJECT | STATE | SHEET | |
|---|---|---|---|
| 2 | OHIO | | |

96
500

CUYAHOGA COUNTY
CUY-480-10.39

820 / 810 / 800 / 790 / 780

FOR SEWER PROFILE CONT SEE 43P 47

15"N 818.93
15"S W 818.93

STA. 600+60, ℄ I-480
STD. I-3B MEDIAN INLET
N/G 824.72

155'-15" TYPE "B" @ 0.50 %

6" U.D. OUTLET 821.58

15" NE 819.71

40P 46P

STA. 599+29.77 Rt. ℄ I-480
STD. I-3B MEDIAN INLET
MOD. AS PER PLAN
N/G = 825.82

L/A

STA. 649+25, ℄ RAMP T-3 (58' LT.)
STD. No. 2-2A C.B.
T/G = 769.50
BUILD OVER EXIST. 24" STORM

EXIST. 24" RCP @ 0.24%

15"N. 765.50

57'-15" TYPE "F" @ 20.24 %

35P 51

INV. 15"-754.37

60" E&W. 746.49

STA. 649+00, ℄ RAMP T-3 (10' LT.)
STD. No. 5 M.H.
T/G = 763.04

℄ RAMP T-3

℄ I-480

215'-15", TYPE "B" @ 0.6%

15"N. 751.96

94P 51

STA. 648+25, ℄ RAMP T-4 (20' Rt.)
STD. No. 5 C.B.
T/G = 757.65

℄ RAMP T-4

42'-15" TYPE "B" @ 0.6 %

15"S. 753.50

A

PIER FOOTING

℄ 36" STORM

| | |
|---|---|
| A-A | 785.40 |
| B-B | 785.20 |
| C-C | 784.50 |
| D-D | 784.70 |
| E-E | 784.50 |
| F-F | 776.50 |

782.61 / 782.27 / 782.00 / 781.78 / 781.55 / 781.31

STA. 640+62.5 (12.42' LT.)
STD. No. 6 C.B.
T/G 761.18

757.24

71'-15" TYPE "B" @ 4.00 %

93P 51

STA. 640+62.5 ℄ I-480
STD. I-3B MEDIAN INLET
N/G = 760.07

754.40
15"S.F.N.

71'-15" TYPE "B" @ 0.73 %

92P 51

STA. 640+62.5 (12.42' Rt.)
STD. No. 6 C.B.
T/G 758.88

753.88

14'-15" TYPE "C" @ 0.73 %

753.78

751.12
48" E&W

STA. 640+62.5, 85' Rt.
STD. No. 4 C.B.
T/G = 757.40

753.88
15"S

FOR PROFILE CONT SEE 90 P

STA. 1025+50.44 Lt. ℄ B&O R.R.
STD. No. HW 4 HEADWALL

℄ FUTURE TRACK

783.52

32'-36" TYPE "C" 706.02 3000 D LOAD

39P 46

481'-36" Type "C" 706.02, 2,000 D-Load @ 0.44 %

A-A

MATCH LINE

STA. 603+53.65' Lt. ℄ I-480
Std No HW-4 Headwall

MATCH LINE

C-C

B-B

481'-36" Type "C" 706.02, 2,000 D-Load @ 0.44 %

D-D

E-E

781.25

F-F

42P 47

STORM SEWER PROFILE

CUYAHOGA COUNTY
CUY-480-10.39

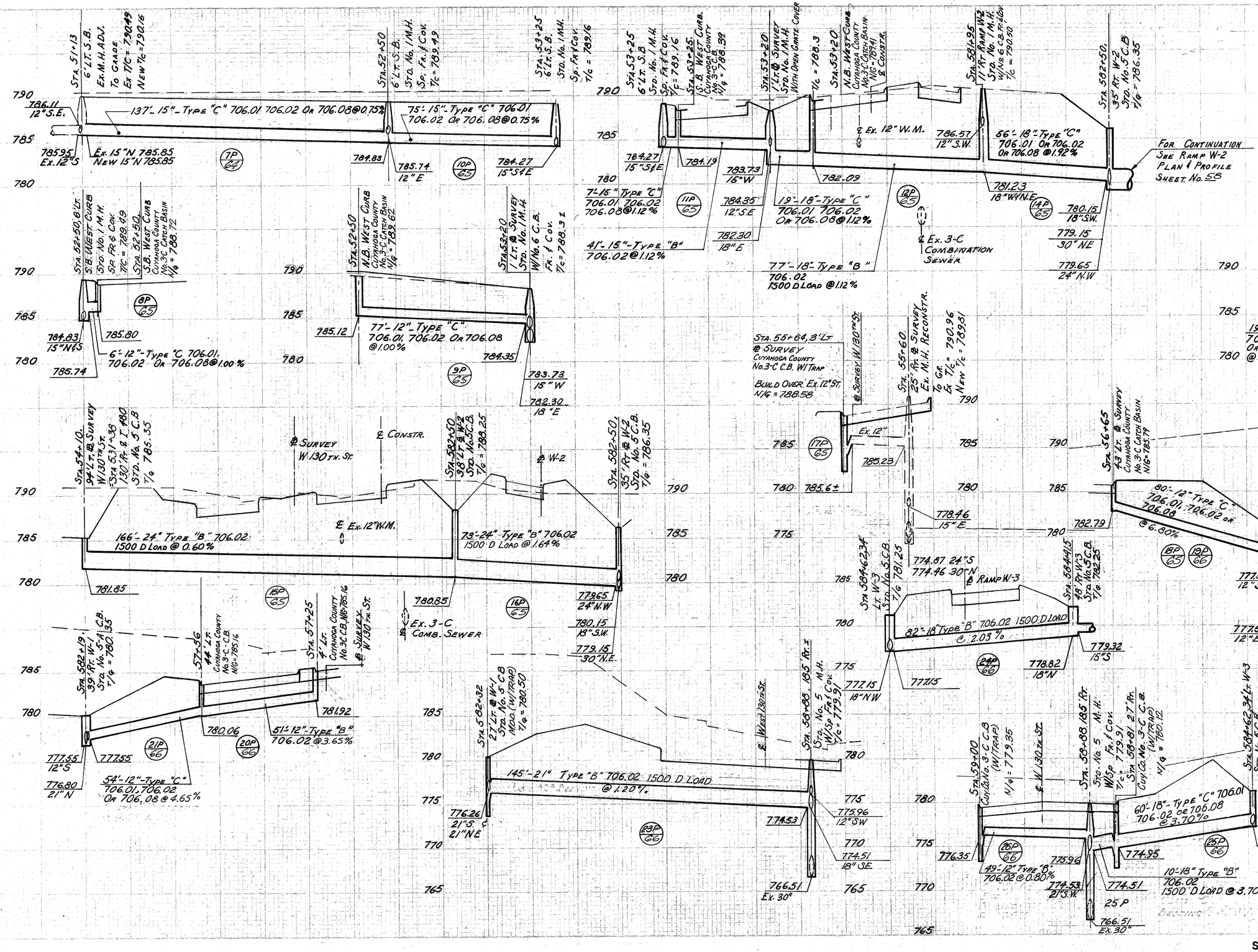


STORM SEWER PROFILE WEST 130th. ST.

| FED. RD. DIVISION | STATE | PROJECT | |
|---|---|---|---|
| 2 | OHIO | | |

98
500

CUYAHOGA COUNTY
CUYA80 - 10.39

Sta. 51+00, 31' Lt. Tiedeman Std. No.1 M.H. w/Spec. T/C = 770.51 12" & Cover

Sta. 51+00, 24' Lt. ℄ Cuy'd. No.3 C.B. N/G = 769.72

℄ Tiedeman Rd.

Sta. 51+00, 24' Rt. ℄ Cuy'd. No 3 C. C.B. AS PER DETAIL M N/G = 769.72

765.47 12" S & W

765.54

766.00

Ex. 10" San

Ex. 36" W.M.

Ex. 12" W.M.

7'-12" Type "C" 706.01, 706.02, or 706.08 @ 1.00 %

46'-12" Type "B" - 706.02 @ 1.00 %

Sta. 52+25, 53' Lt. Std. No. 2-2-8 C.B. T/G = 767.62

766.20

764.96 12" N & S

766.46

Sta. 52+25, 27' Lt. ℄ Cuy'd. No. 3C, C.B. N/G = 771.12

26'-12" - Type "C" 706.01, 706.02, or 706.08, @ 1.00 %

Sta. 53+30 78 Lt. Std. No. 2-2-8 C.B. T/G = 768.07

764.44

765.44

Sta. 53+30 31' Lt. ℄ Cuy. Co. No. 3-C C.B. N/G = 774.71

763.24

Sta. 53+50 32' Rt. ℄ Sp. No. 3C, C.B. N/G = 774.70

770.50

Existing 36" W.M.

Ex. 10" San

47'-12" Type "C" 706.01, 706.02 or 706.08 @ 8.1 %.

63 1/2" Type "B" 706.02 @ 2.00 %.

Sta. 54+64, 43' Lt. ℄ Tiedeman Std. No. 3 M.H. with Spec. ℄ Cover T/C = 783.44

90'-12" Type "C" 706.01, 706.02, or 706.08 @ 6.0 %

Sta. 638+60, ℄ T-3 Std. No. 3A C.B. N/G = 778.42

773.15

771.34 12" S.

767.75 12" S.E.

762.54 12" S.E.

762.29 18" E.

Sta. 638+00, 50' Lt. ℄ T-1 Std. No. 5 C.B. T/G = 769.00

765.00 - 12" S & 15" E.

51'-12" Type "C" 706.01, 706.02 or 706.08 @ 16.0 %

Sta. 637+88 ℄ T-1 Std. No. 3-A C.B. with "V" Grate N/G = 777.50

℄ Ramp T-1

773.22

Sta. 55+55, 35' Lt. ℄ Sp. No. 3C, C.B. N/G = 779.83

℄ Tiedeman Rd.

Sta. 55+40, 35' Rt. ℄ Cuy'd. No. 3C, C.B. N/G = 779.55

775.10

775.0 12" N & W.

70'-12" Type "B" @ 1.0% 706.02

Ex. 12" Storm

Sta. 640+62.5, 85' Rt. ℄ T-90 Std. No. 4 C.B. T/C = 757.40

For Sewer Profile Continuation See Sheet No. 51

81'-15" Type "C" 706.02 OR 707.13 @ 21.00%

753.60 21" N.

753.88

750.63 54" E & W

770.07

Sta. 61+50, 46' Lt. ℄ Tiedeman Rd. Std. No. 1 M.H. T/C = 780.63

117'-15" - TYPE "C" 706.02 OR 707.13 @ 0.45%

772.16

774.05 12" W.

770.85 12" S.

770.60

For Storm Sewer Profile Continuation See Plan & Profile Sheet No. 67

Sta. 63+95, 32' Lt. Std. No. 1 M.H. T/C = 777.01

Sta. 63+95.63 24.14' Lt. Sp. No. 3C, C.B. N/G = 776.18

℄ Tiedeman Rd.

Sta. 63+95.62 24.13' Rt. Cuy'd. No. 3C, C.B. AS PER Detail "A" N/G = 776.18

771.83 12" N.

771.86

48'-12" Type "B" 706.02 @ 0.40 %

Existing 12" W.M.

Ex. 36" W.M.

772.05

8'-12" Type "C" 706.01, 706.02, or 706.08 @ 0.40 %

Sta. 61+50, 45' Lt. Std. No. 1 M.H. with Spec. ℄ Cover T/C = 780.63

Sta. 61+50, 34' Lt. Cuy'd. No. 3C, C.B. N/G = 779.75

℄ Tiedeman Rd.

Sta. 61+30, 34' Rt. Cuy'd. No. 3C, C.B. N/G = 780.15

Sta. 639+15, 8' Rt. ℄ Ramp T-2 Std. No. 3A C.B. with "V" Grate N/G = 778.40

772.16 12" E.

770.85 12" S. 770.60 15" N.

774.05 12" W.

774.09

72'-12" Type "B" 706.02 @ 0.40%

67'-12" Type "B" 706.02 @ 0.40%

774.38

774.65

11'-12" Type "C" 706.01 706.02 or 706.08 @ 0.40%

Sta. 61+30 45' Lt. Std. No. 1 M.H. T/C 780.63

Sta. 64+76 7.30' Rt. ℄ T-4 Std. No. 3A C.B. N/G 777.24

774.05 12" W.

772.16

770.85 12" S. 770.60 15" N.

92'-12" Type "B" 706.02 @ 1.00%

773.08

STORM SEWER PROFILES - TIEDEMAN ROAD

CUYAHOGA COUNTY
CUY-480-10.39

Sta. 52+76, ℄ Tiedeman Rd. (30' Rt.)
Cuy. Co. No. 3-C C.B.
N/G = 772.48

Sta. 52+65, ℄ Tiedeman Rd. (62' Rt.)
Std. No. 2.2-2.B C.B.
T/G = 771.50

Sta. 53+50 ℄ Tiedeman Rd. (62' Rt.)
Std. No. 2.2-2.B C.B.
T/G = 772.20

℄ 10' Slag Dr.

Sta. 638+00, ℄ Ramp T-1 (50' Lt.)
Std. No. 5 C.B.
T/G = 769.00

℄ 9' Asph. Dr.

768.50
25'-12" Type "C" 706.01, 706.02 or 706.08 @ 4.6%
767.35
85'-12", Type "C" 706.01, 706.02 or 706.08 @ 1.0%
69P 68
766.50
125'-12", Type "C" 706.01, 706.02 or 706.08 @ 1.0 %
765.25
765.0
15" E. & 12" S.

Sta. 54+64, ℄ Tiedeman Rd. (43' Lt.)
Std. No. 3 M.H.
T/C = 778.44

℄ Tiedeman Rd.

Sta. 638+00, ℄ Ramp T-1 (50' Lt.)
Std. No. 5 C.B.
T/G = 769.00

Sta. 54+37, ℄ Tiedeman Rd. (110' Lt.)
Std. No. 2.4 C.B.
T/G = 765.50

767.75
12" S.E.
771.94
12" N.
℄ Ex. M.H.
12" Reloc. W.M.
770.80
℄ Ex. M.H.
74'-18" Type "C" 706.02, 2000 D-Load @ 5.40%
149'-15" Type "B" 706.02 @ 1.65 %
4'-4' Stone Culvert To Be Removed
48" R.C.P. To Be Removed
4'-5' Box Culvert To Be Removed
765.00
15" E. & 12" S.
765.25
12" N.
48" R.C.P. To Be Removed
78P 62
77P 68
762.54
15" W.
762.27
18" E
758.29
757.09
Exist. 36"
762.31
12" N.
Exist. 181'-36" Conc. Pipe @ 5.36%, Outlet Inv. = 747.38

Sta. 602+11.77 Lt.
Std. No. 2.4 C.B.
N/G = 822.55

Sta. 638+37.5 (3.67' Lt.) Std. No. 6 C.B.
Sta. 638+37.5 (3.67' Rt.) Std. No. 6 C.B.
N/G = 760.57
755.28-6" W.
755.00-6" N.
754.30
754.24
7'-15" Type "B" @ 0.80%
56'-6"-Type "B" @ 1.70%
65P 50
92'-15" Type "B" @ 0.80%
753.51
15" N
751.79
48" E & W

Sta. 638+25, 95 Rt.
Std. No. 5 M.H.
T/C = 795.20

818.28
817.53
2'-15" Type "F" @ 100 %
Sta. 602+11.158' Lt.
Std. HW.-4 Headwall
784.8
72'-15" Type "F" 707.05 @ 49.00%
44P 47
784.86
Rock Channel Protection 7' Lg. x 4' W. x 18" Dp.
12'-15" Type "F" 707.05 @ 0.50%

Sta. 595+64, 85' Lt.
Std. No. 2.4 C.B. Shldr. Inlet
N/G = 825.31
820.94-6" S.
819.90
2'-15" Type "F" @ 1.00%
72'-15" Type "F" 707.05 @ 49.50%
Sta. 595+64, 171' Lt.
Std. HW-4 Headwall
788.0
2D 46
788.20
Rock Channel Protection 4' W. x 10' Lg. x 18" Dp.
20'-15" Type "F" 707.05 @ 1.00%

Sta. 12+68± Southwood Dr. (Lt.)
Ex. M.H. Reconstruct To Grade

Sta. 12+65, Southwood Dr. (12' Lt.)
Std. No. 6 C.B.
N/G = 780.72

℄ Southwood Dr.

Sta. 12+65, Southwood Dr. (12' Rt.)
Std. No. 6 C.B.
N/G = 780.72

Ex. 6" House Connections
For Continuation See Sht. No. 74
776.75
774.36
773.80
Ex. 12" Stm. Swr.
12'-12" Type "C" 706.01, 706.02 or 706.08 @ 1.0%
23'-12" Type "B" 706.01, 706.02 or 706.08 @ 1.0%
776.87
777.10
137P 74

Sta. 7+66, Southwood Dr. (7.5' Lt.)
Std. No. 1 M.H.
T/C = 780.69

Sta. 7+55, Southwood Dr. (12' Lt.)
Std. No. 6 C.B.
N/G = 780.61

℄ Southwood Dr.

Sta. 7+55, Southwood Dr. (12' Rt.)
Std. No. 6 C.B.
N/G = 780.61

Ex. 6" House Connections
Ex. 18" Stm. Swr.
774.2
776.65
776.77
23'-12" Type "B" 706.01, 706.02 or 706.08 @ 1.0%
777.00
12'-12" Type "B" 706.01, 706.02 or 706.08 @ 1.0%
135P 73

STORM SEWER PROFILES – I-480 & TIEDEMAN RD.

| FED. RD. PROJECT | STATE | PROJECT | |
|---|---|---|---|
| 2 | OHIO | | |

100
500

CUYAHOGA COUNTY
CUY-480-10.39

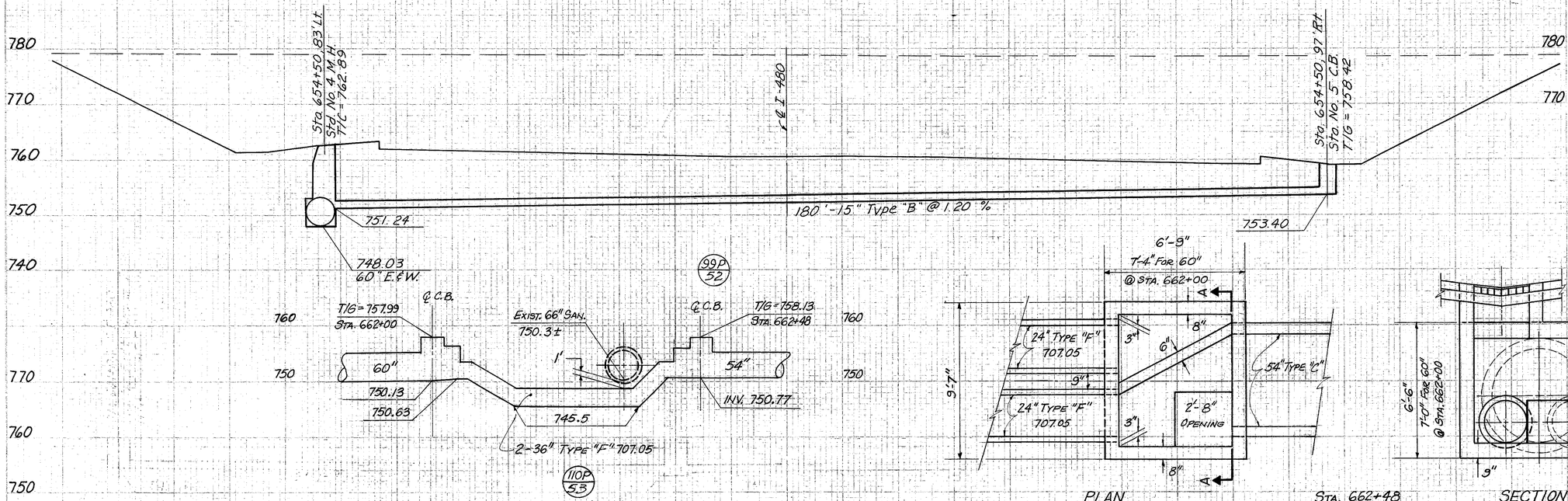


STANDARD No. 5-A CATCH BASIN - MODIFIED
SCALE: NONE

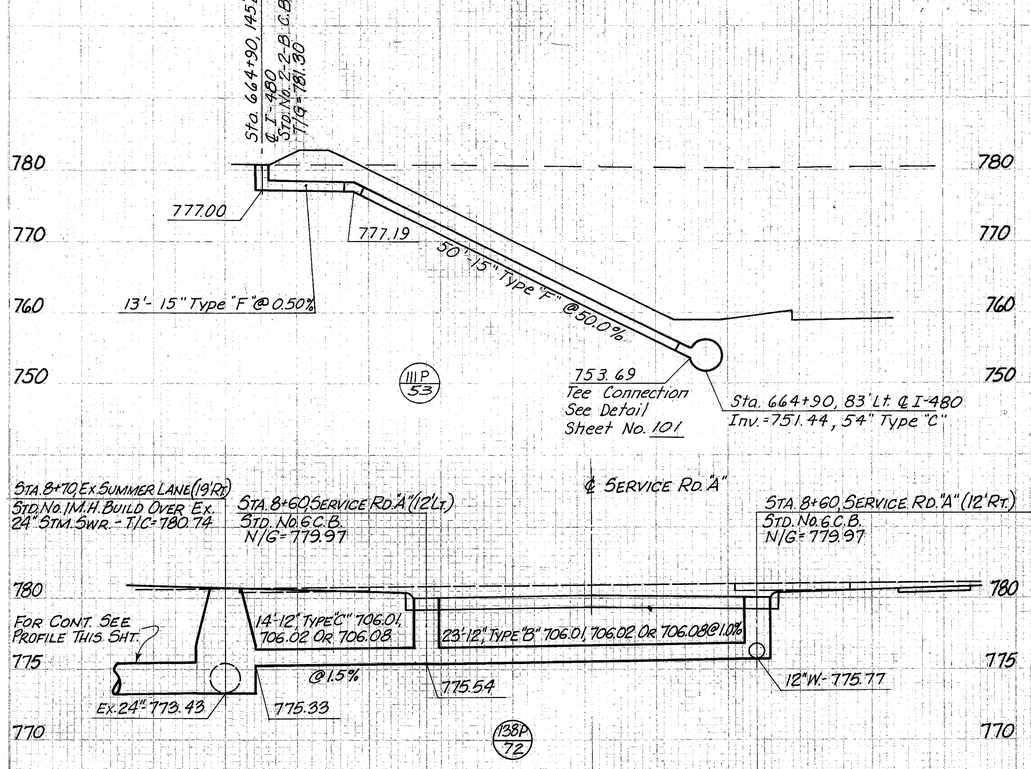


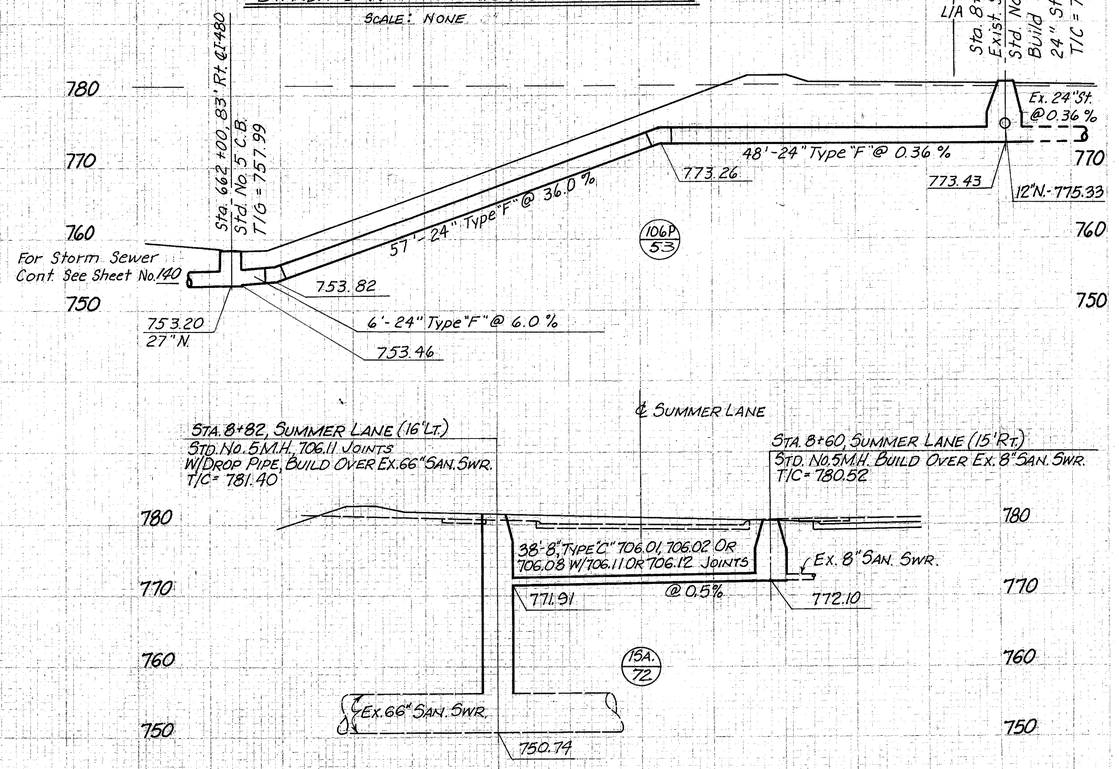


STORM SEWER PROFILES

| RTE. NO. OR SIGN | STATE | PROJECT | |
|---|---|---|---|
| 2 | OHIO | | |

101
500

CUYAHOGA COUNTY
CUY-480-10.39

STA. 11+60 ℄ AUTUMN LANE (31' RT.)
STD. NO. 6 C.B.
N/G = 778.42

L/A

EXIST. GROUND

774.23

30'-15" TYPE "B" 706.01, 706.02, 706.08 @ 1.6%

CONC. COLLAR

10'-15" TYPE "F" @ 1.6%

773.75

39'-15", TYPE "F" @ 50.0%

SEE TEE DETAIL
INV. ELEV. = 755.25

54" E.℄W.
753.06

134P 76

780 / 770 / 760 / 750

NOTE:
COST OF TEE TO BE INCLUDED WITH THE 54" PIPE.

2'-0" ±

15°-00'

1'-3"

54"

INV. 15"

2.25'

PREFABRICATED TEE DETAIL

STA. 690+75, I-480 (145' LT.)
STD. NO. 2-2B C.B.
T/G = 777.70

L/A

EXIST. GROUND

34'-15", TYPE "F" @ 0.5%

773.95

773.78

26'-15", TYPE "F" @ 53.7%

761.43

5'-15", TYPE "F" @ 0.5%

761.40

128P 56

760.85

27" E - 760.93

42" W - 759.68

STA. 690+75, I-480 (83' LT.)
STD. NO. 5-A C.B.
T/G = 765.92

83'-27", TYPE "B" @ 0.5%

STA. 690+75 ℄ I-480
STD. NO. I-3B MED. INLET
N/G = 767.53

761.27

130P 56

83'-27", TYPE "B" @ 0.4%

STA. 690+75, I-480 (83' RT.)
STD. NO. 5 C.B.
T/G = 765.92

761.60

762.60

6'-15", TYPE "F" @ 0.5%

762.63

STA. 690+75, I-480 (148' RT.)
STD. NO. 2-2B C.B.
T/G = 781.90

L/A

EX. 15" STM.

40'-15", TYPE "F" @ 2.0%

771.52

772.32

772.4

7'-15", TYPE "C" @ 1.08%

131P 56

790 / 780 / 770 / 760

STA. 666+75, I-480 (142' LT.)
STD. NO. 2-2B C.B.
T/G = 781.00

L/A

EXIST. GROUND

777.00

12'-15" TYPE "F" @ 0.5%

776.94

46'-15", TYPE "F" @ 54.0%

754.80

6'-15" TYPE "E" @ 1.0%

754.74

112P 53

753.34

54" E.℄W.
751.96

STA. 666+75, I-480 (83' LT.)
STD. NO. 5-A C.B.
T/G = 759.19

83'-18", TYPE "B" @ 1.0%

STA. 666+75 ℄ I-480
STD. NO. I-3B MED. INLET
N/G = 760.80

754.17

113P 53

83'-18", TYPE "B" @ 0.4%

STA. 666+75, I-480 (83' RT.)
STD. NO. 5 C.B.
T/G = 759.19

754.50

STA. 666+75, I-480 (145' RT.)
STD. NO. 2-2B C.B.
T/G = 779.1

L/A

44'-15", TYPE "F" @ 52.5%

754.80

5'-15", TYPE "F" @ 1.0%

754.75

18'-15" TYPE "F" @ 0.5%

775.26

775.35

114P 53

790 / 780 / 770 / 760 / 750

STORM SEWER PROFILES

CALC. BY E.J.K. DATE 6-17-75
CHKD. BY A.J.F. DATE 7-3-75

| FED. RD. DIVISION | STATE | PROJECT | |
|---|---|---|---|
| 2 | OHIO | | |

102
500

CUYAHOGA COUNTY
CUY-480-10.39

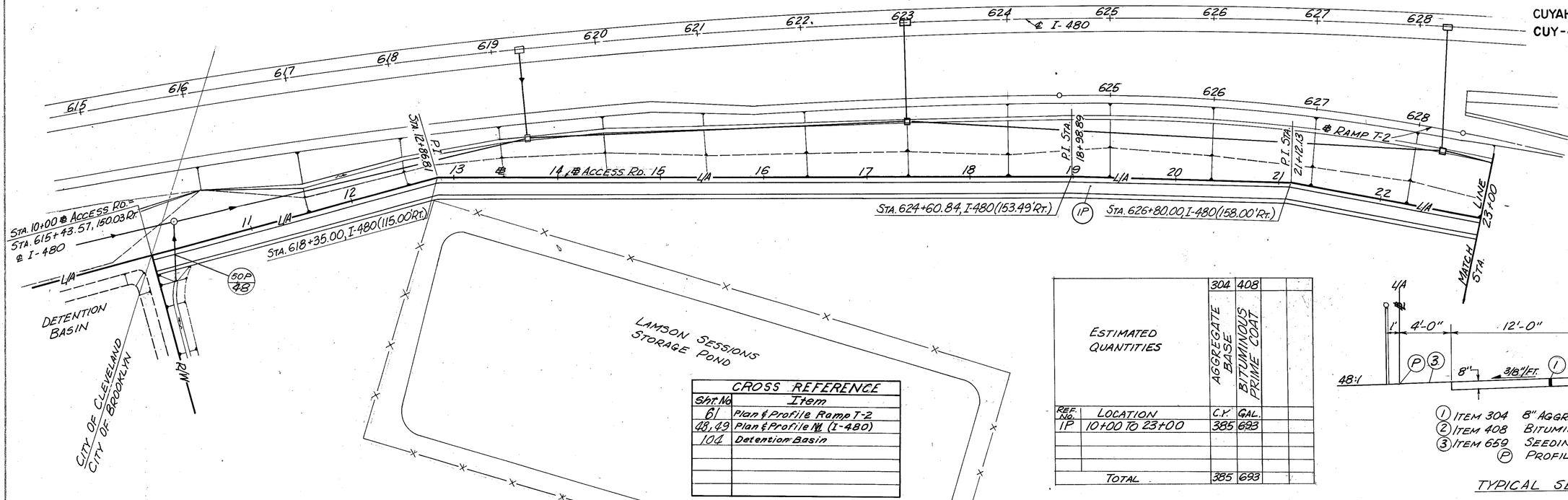


| CROSS REFERENCE | |
|---|---|
| Sht. No | Item |
| 61 | Plan & Profile Ramp T-2 |
| 48, 49 | Plan & Profile ℄ (I-480) |
| 104 | Detention Basin |

| ESTIMATED QUANTITIES | | 304 AGGREGATE BASE | 408 BITUMINOUS PRIME COAT | | |
|---|---|---|---|---|---|
| REF. No. | LOCATION | C.Y. | GAL. | | |
| IP | 10+00 TO 23+00 | 385 | 693 | | |
| | TOTAL | 385 | 693 | | |

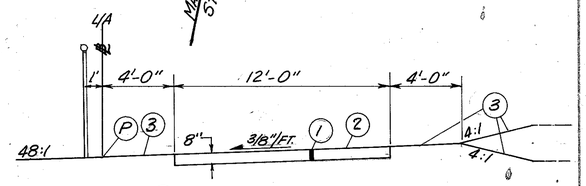


① ITEM 304 8" AGGREGATE BASE
② ITEM 408 BITUMINOUS PRIME COAT
③ ITEM 659 SEEDING AND MULCHING
Ⓟ PROFILE GRADE ON ℄ (L/A)

TYPICAL SECTION

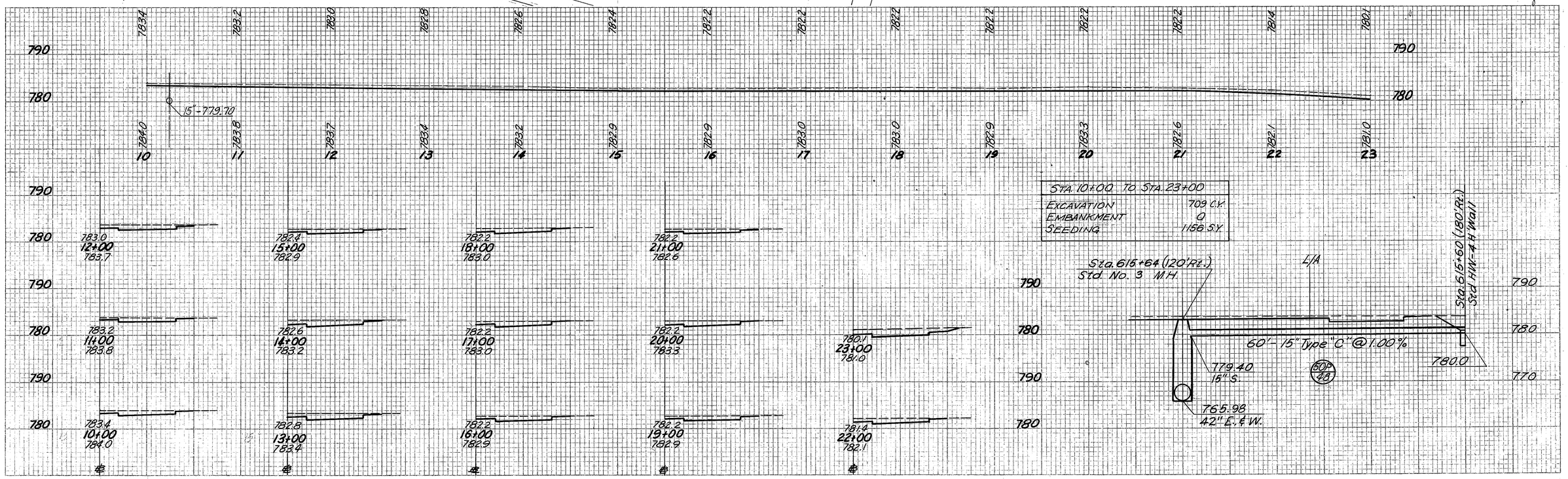


ACCESS RD. STA. 10+00 To STA. 23+00

CALC. BY E.J.K. DATE 6-17-75
CHKD. BY A.J.F. DATE 7-3-75

| FED. RD. DIVISION | STATE | PROJECT | |
|---|---|---|---|
| 2 | OHIO | | |

103/500

CUYAHOGA COUNTY
CUY-480-10.39

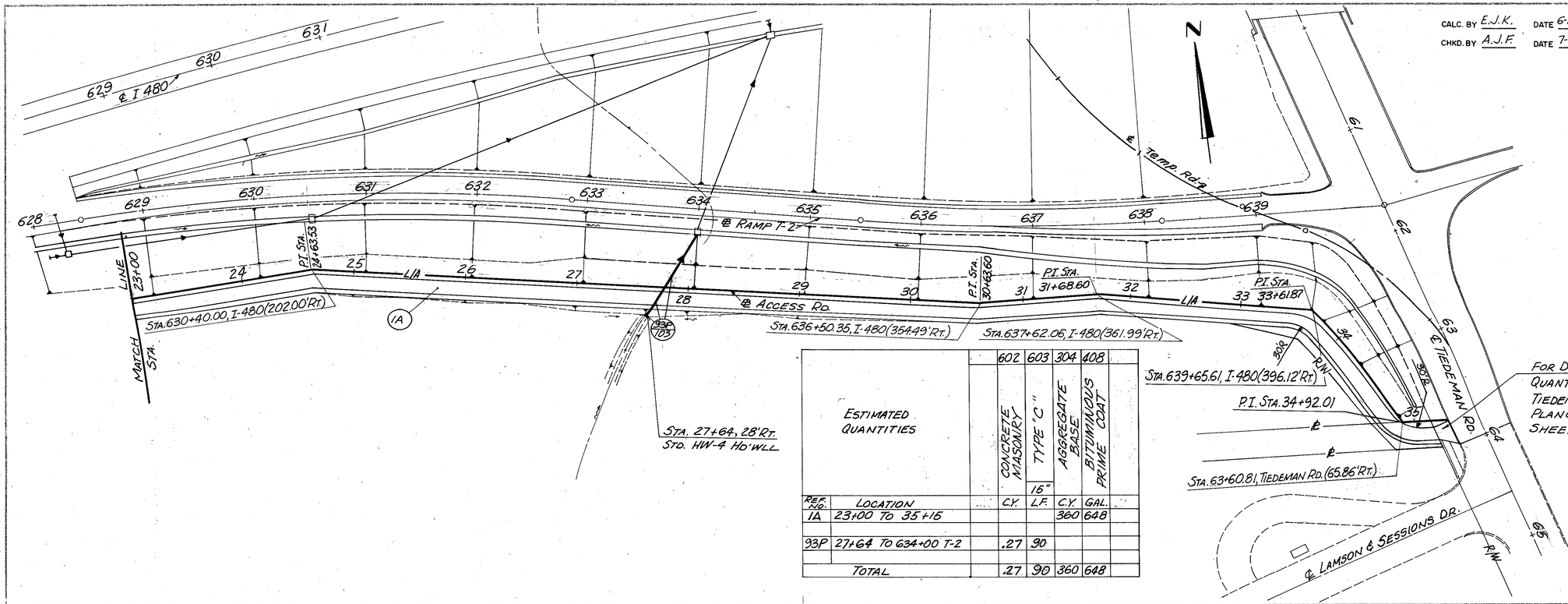


| CROSS REFERENCE | |
|---|---|
| Sht. No. | Item |
| 61 | Plan & Profile Ramp T-2 |
| 70 | Plan & Profile Tiedeman Rd. |
| 82 | Plan & Profile Temp. Rd. |
| 102 | Access Rd. Typical Section |

| ESTIMATED QUANTITIES | | | 602 | 603 | 304 | 408 | |
|---|---|---|---|---|---|---|---|
| | | | CONCRETE MASONRY | TYPE "C" 15" | AGGREGATE BASE | BITUMINOUS PRIME COAT | |
| REF. NO. | LOCATION | | C.Y. | L.F. | C.Y. | GAL. | |
| 1A | 23+00 TO 35+15 | | | | 360 | 648 | |
| 93P | 27+64 TO 634+00 T-2 | | .27 | 90 | | | |
| TOTAL | | | .27 | 90 | 360 | 648 | |

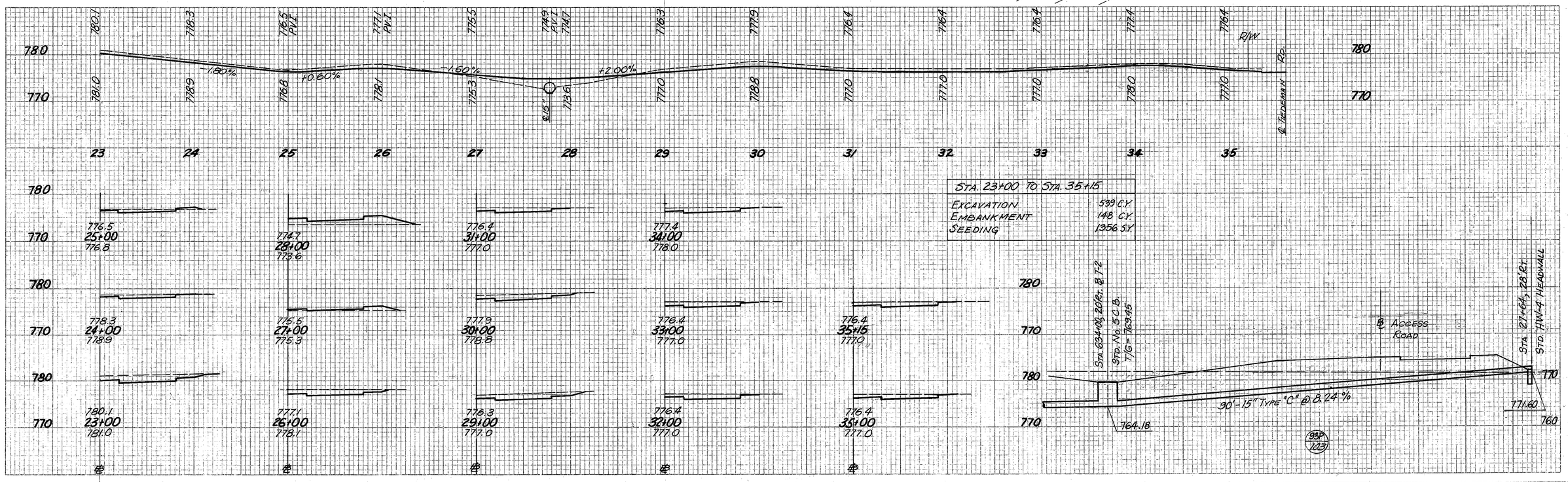


| STA. 23+00 TO STA. 35+15 | |
|---|---|
| EXCAVATION | 539 C.Y. |
| EMBANKMENT | 148 C.Y. |
| SEEDING | 1356 S.Y. |

ACCESS RD. STA. 23+00 To STA. 35+15

| FED. RD. DIVISION | STATE | PROJECT | |
|---|---|---|---|
| 2 | OHIO | | |

104
500

CUYAHOGA COUNTY
CUY-480-10.39 CALC. BY EJK DATE 6/75
CHKD. BY AJF DATE 6/75

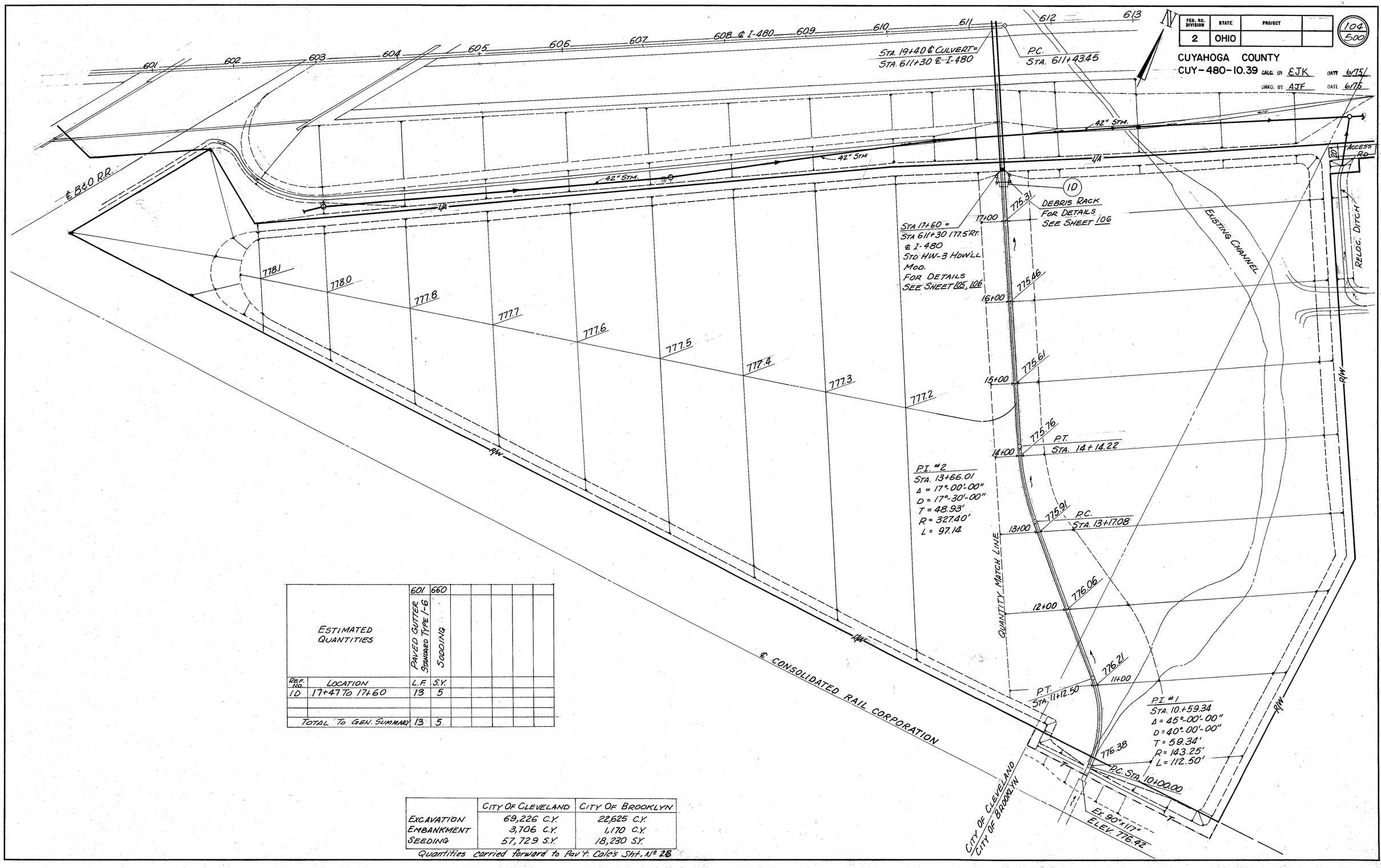


| ESTIMATED QUANTITIES | | 601 PAVED GUTTER STANDARD TYPE I-6 | 660 SODDING | | | | | |
|---|---|---|---|---|---|---|---|---|
| REF. NO. | LOCATION | L.F. | S.Y. | | | | | |
| 1D | 17+47 To 17+60 | 13 | 5 | | | | | |
| | | | | | | | | |
| | | | | | | | | |
| TOTAL To GEN. SUMMARY | | 13 | 5 | | | | | |

| | CITY OF CLEVELAND | CITY OF BROOKLYN |
|---|---|---|
| EXCAVATION | 69,226 C.Y. | 22,625 C.Y. |
| EMBANKMENT | 3,706 C.Y. | 1,170 C.Y. |
| SEEDING | 57,72.9 S.Y. | 18,230 S.Y. |

Quantities carried forward to Pav't. Cole's Sht. No 28

DETENTION BASIN

CALC. BY EJK DATE 6/75
CHKD. BY AJF DATE 6/75

| FED. RD. DIVISION | STATE | PROJECT | |
|---|---|---|---|
| 2 | OHIO | | |

105/500

CUYAHOGA COUNTY
CUY-480-10.39

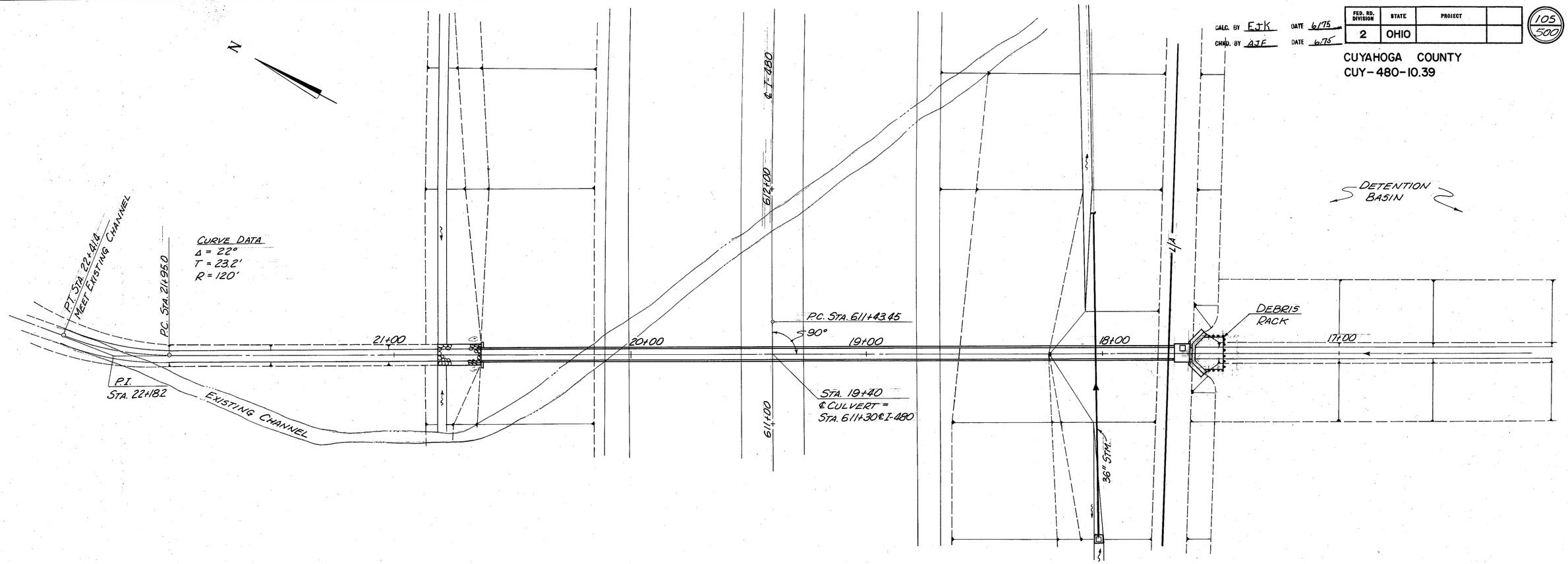


| DRAINAGE STRUCTURE STA. 611+30 ℄ I-480 | | |
|---|---|---|
| DESIGN INFORMATION | | |
| DA | *Q50 (MOD) | H.W. ELEVATION |
| 895 Ac. | 642 CFS | 782.0 |
| ESTIMATED QUANTITY | | |
| 601 | ROCK CHANNEL PROTECTION TYPE B WITH FILTER | 21.7 C.Y. |
| 602 | CONCRETE MASONRY, AS PER PLAN | 1.9.23 C.Y. |
| 603 | 60" TYPE A, 706.02, 2000 D-LOAD OR 72" 707.07 | 294 L.F. |
| 604 | STD. NO. 2-6 C.B. MOD. | 1 |
| SPEC. | DEBRIS RACK | LUMP SUM |
| 602 | CONCRETE MASONRY | 2.37 C.Y. |

NOTE:
FOR DETAILS OF STD. 2-6 C.B. MODIFIED, STD HW-3 HEADWALL MODIFIED AND DEBRIS RACK SEE DETAIL SHEET NO. 106

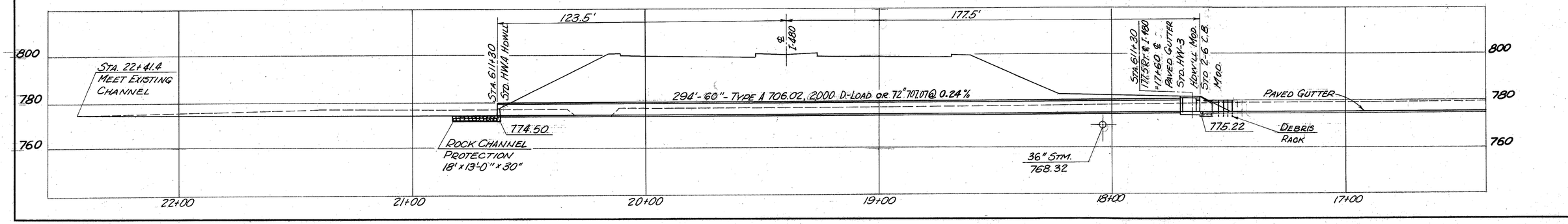


CULVERT DETAIL STA. 611+30 ℄ I-480

| FED. RD. DIVISION | STATE | PROJECT | |
|---|---|---|---|
| 2 | OHIO | | |

106
500

CUYAHOGA COUNTY
CUY-480-10.39

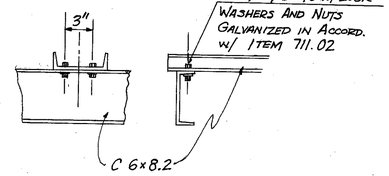


TOP RAIL CONNECTION

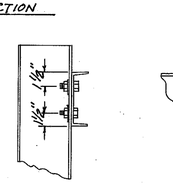


SIDE RAIL CONNECTION

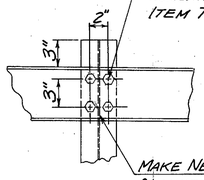


DEBRIS RACK CONNECTION DETAIL

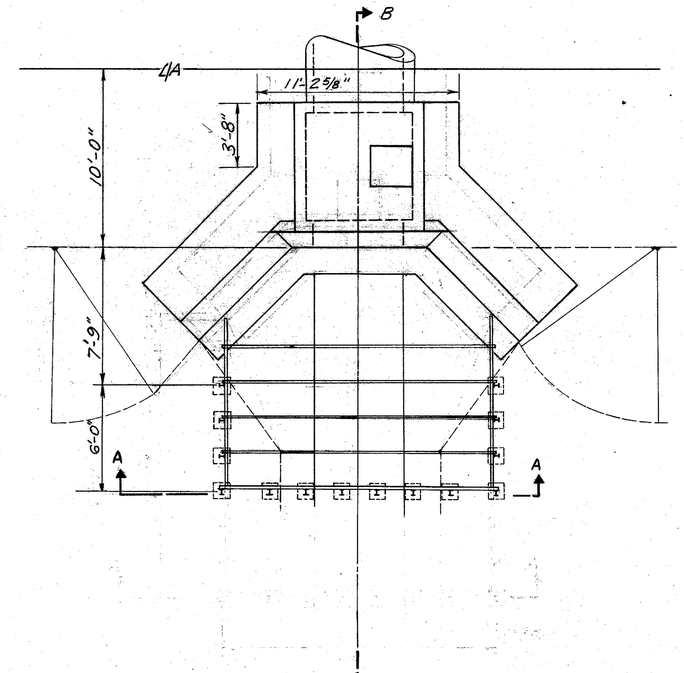


PLAN

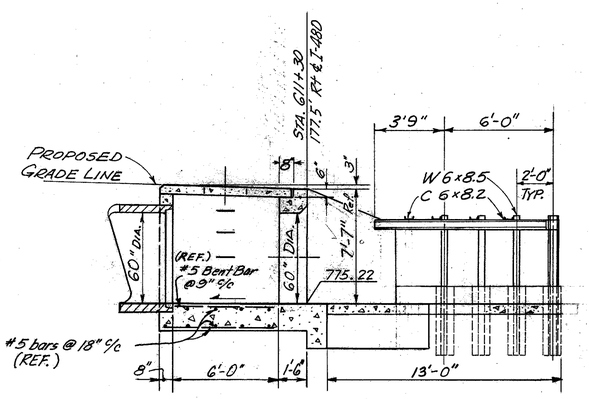


SECTION B-B

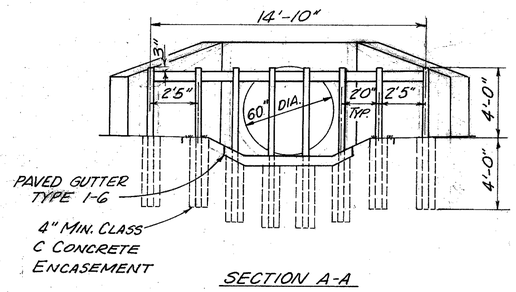


SECTION A-A

NOTES:
For Notes And Details Not Shown, Construction Shall Conform To Details And Specifications Of Std. No. 2-6 Catch Basin And Std. HW-3 Headwall.
Steel Posts And Channels Shall Be Galvanized In Accordance To Item 711.02.
Reinforcing Bars Shall Continue Through H'wall Footer Extension As Shown.

MODIFICATION DETAILS
Std. 2-6 Catch Basin
Std. HW-3 Headwall

Debris Rack Detail

DETENTION BASIN DETAILS

CALC. BY AJF DATE 6/75
CHKD. BY EJK DATE 6/78

FED. RD. DIVISION 2 | STATE OHIO | PROJECT

107
500

CUYAHOGA COUNTY
CUY-480 - 10.39

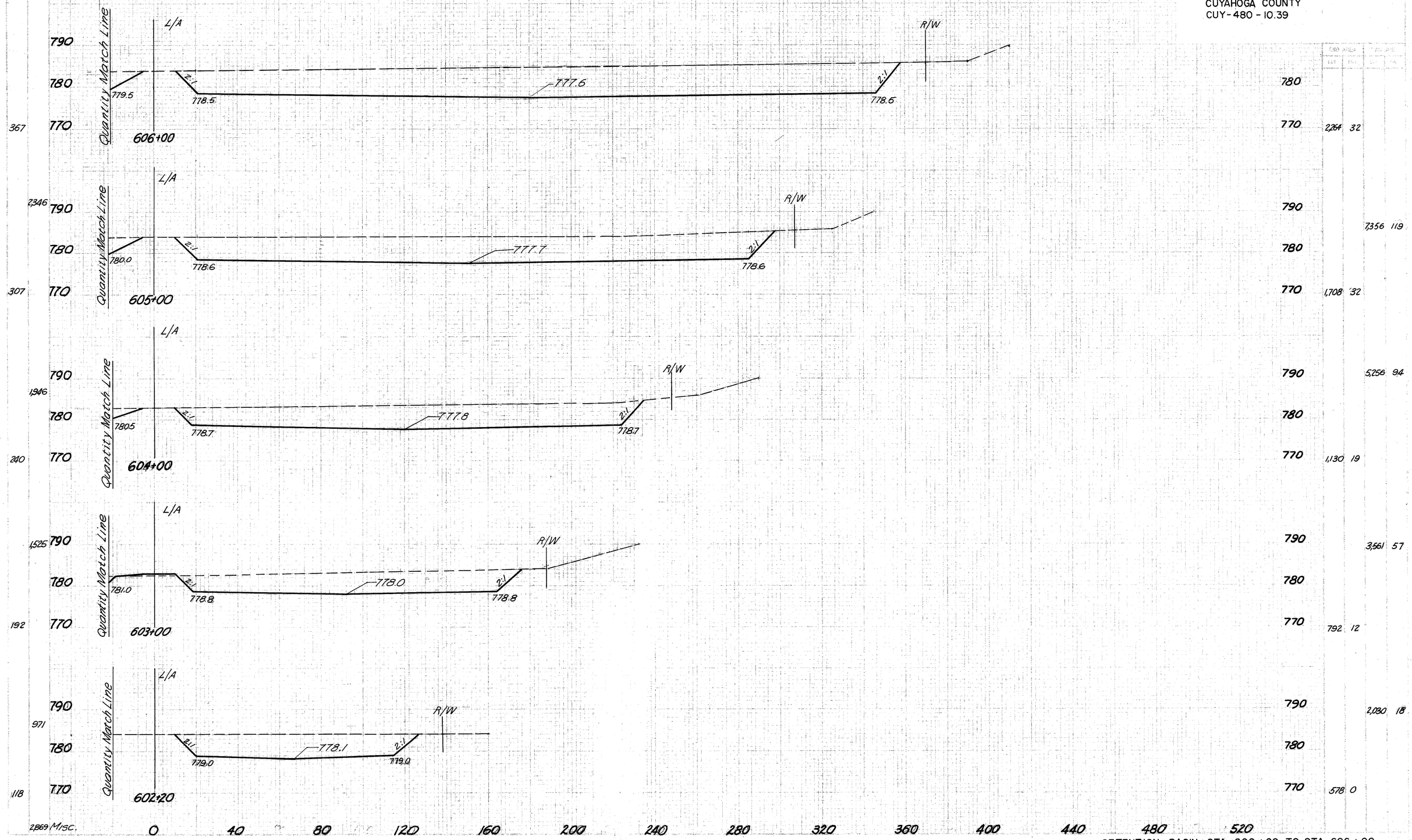


DETENTION BASIN STA. 602+20 TO STA. 606+00

| STATE | PROJECT | |
|---|---|---|
| OHIO | | |

108
500

CUYAHOGA COUNTY
CUY-480-10.39

DESIGNED BY AJF DATE 6/76
CHKD BY EJK DATE 6/78

| END AREA | | VOLUME | |
|---|---|---|---|
| CUT | FILL | CUT | FILL |

Quantity Match Line

L/A

611+00

783.0 2:1 778.0 778.0 777.1 2:1 R/W 783.0 778.0

740 770 780 790 540 580 620 680

2,300 100

610+00

783.0 2:1 777.5 778.1 777.2

638 770 780 790 540 580 620

Match Line

9999 241

609+00

783.0 2:1 778.0 778.2 777.3 2:1 778.2

577 770 780 790

2761 78

608+00

783.0 2:1 778.5 778.3 777.4 2:1 778.3 R/W

514 770 780 790

2515 36

607+00

783.0 2:1 779.0 778.4 777.5 2:1 778.4 R/W

432 770 780 790

2382 0

0 40 80 120 160 200 240 280 320 360 400 440 480 520

Sta. 606+00

DETENTION BASIN STA. 607+00 TO STA. 611+00

| | | | |
|---|---|---|---|
| 6750 | 10816 | 200 | |
| 6061 | 9770 | 211 | |
| 5256 | 9068 | 67 | |
| 4439 | 8603 | 59 | |
| 367 | 2264 | 32 | |

SEEDING

| END STATION | NO. FEET |
|---|---|
| 13+00 | 410 |
| 12+00 | 389 |
| 11+00 | 333 |
| 10+50 | 309 |
| 10+00 | 213 |
| Misc. | 978 |

CALC. BY AJF DATE 6/15
CHKD. BY EJK DATE 6/18

| FED. RD. DIVISION | STATE | PROJECT | |
|---|---|---|---|
| 2 | OHIO | | |

109
500

CUYAHOGA COUNTY
CUY-480-10.39

Quantity Match Line

13+00: 790 / 780 / 770 — 4,239
12+00: 790 / 780 / 770 — 4,011
11+00: 790 / 780 / 770 — 3,567
10+50: 790 / 780 / 770 — 1,450
10+00: 790 / 780 / 770

R/W
2:1
12" Tile
10" RCP
777.5
775.9
775
778.1
777.7
776.0
777
778.2
778.0
776.2
778.4
778.0
776.2
778.5
776.3
778.5

| END AREA CUT | END AREA FILL | VOLUME CUT | VOLUME FILL |
|---|---|---|---|
| 780 | | | |
| 770 | 720 | 156 | |
| 790 | | 2,522 | 700 |
| 780 | | | |
| 770 | 608 | 222 | |
| 790 | | 2,452 | 567 |
| 780 | | | |
| 770 | 716 | 84 | |
| 790 | | 2,708 | 352 |
| 780 | | | |
| 770 | 746 | 106 | |
| 790 | | 1,504 | 98 |
| 780 | | | |
| 770 | 878 | 0 | |

0 40 80 120 160 200 240 280 320 360 400 440 480 520

DETENTION BASIN STA. 10+00 TO STA. 13+00

CALC. BY: ATF DATE: 6/75
CHK'D BY: EJK DATE: 6/78

| FED. RD. DIVISION | STATE | PROJECT | |
|---|---|---|---|
| 2 | OHIO | | |

110
500

CUYAHOGA COUNTY
CUY-480-10.39

| SEEDING | | | | | END AREA | | VOLUME | |
|---|---|---|---|---|---|---|---|---|
| LINE WIDTH | SQ. YDS. | | | | CUT | FILL | CUT | FILL |
| | | 790 | | | | | | |
| | | 780 | | | | | | |
| 412 | | 770 | 17+60 | Quantity Match Line | 1000 | 146 | | |
| 2840 | | 790 | | | | | 2,356 | 340 |
| | | 780 | | | | | | |
| 440 | | 770 | 17+00 | Quantity Match Line | 812 | 160 | | |
| 4,900 | | 790 | | | | | 2,993 | 485 |
| | | 780 | | | | | | |
| 442 | | 770 | 16+00 | Quantity Match Line | 804 | 102 | | |
| 4,761 | | 790 | | | | | 3,104 | 311 |
| | | 780 | | | | | | |
| 415 | | 770 | 15+00 | Quantity Match Line | 872 | 66 | | |
| 4611 | | 790 | | | | | 2,974 | 394 |
| | | 780 | | | | | | |
| 415 | | 770 | 14+00 | Quantity Match Line | 734 | 148 | | |
| 4,583 | | | | | | | 2,691 | 563 |
| 410 | | STA. 13+00 | 0 | | 720 | 156 | | |

60" OR
℄ 72" Culvert
777.8
777.8
775.2
2:1
778.0
R/W

10"
TYP.
777.6
777.6
775.3
2:1
778.0
2:1
2:1
780.6
R/W

777.4
777.4
776.5
2:1
778.0
2:1
2:1
782.0
R/W

777.2
777.2
775.7
2:1
778.0
R/W

777.2
777.2
775.8
2:1
778.0
R/W

40 80 120 160 200 240 280 320 360 400 440 480 520 STA. 13+00

DETENTION BASIN STA. 14+00 TO STA. 17+60

| STATE DIVISION | STATE | PROJECT | |
|---|---|---|---|
| 2 | OHIO | | |

111
500

CUYAHOGA COUNTY
CUY-480-10.39

CALC. BY AJF DATE 6/75
CHKD. BY EJK DATE 6/78

NOTE: Items 1-D & 2-D = Variable Depths (As Per X-Sections)
Items 3-D, 4-D & 5-D = 24" Deep

| Sheet Number | Cross Reference Item |
|---|---|
| 51 | I-480 Plan & Profile |
| 62 | Ramp T-3 Plan & Profile |
| 63 | Ramp T-4 Plan & Profile |
| 209-211 | Channel X-Sections |
| 416-424 | Structures |
| 425-448 | " |

**CURVE DATA**
Δ = 82°00'00"
R = 360.00
L = 515.22
T = 312.94

**CURVE DATA**
Δ = 50°00'00"
R = 295.00
L = 257.43
T = 137.56

| ESTIMATED QUANTITIES | | | 601 DUMPED ROCK FILL TYPE "B", | 601 ROCK CHANNEL PROTECTION TYPE A WITH FILTER | 660 SODDING |
|---|---|---|---|---|---|
| REF. | SIDE | LOCATION | C.Y. | C.Y. | S.Y. |
| 1-D | Lt. | 5+84.5 to 10+00 | 538.1 | | |
| 2-D | Rt. | 5+84.5 to 7+60 | 303.9 | | |
| 3-D | Rt. | 9+15 to 10+93 | 144.1 | | |
| 4-D | Lt/Rt. | 11+84 to 12+32 | 89.6 | | |
| 5-D | Rt. | 13+50 to 18+00 | 233.3 | | |
| 6-D | Rt. | 13+55 | | 8 | 113 |
| | | | | | |
| | | | | | |
| TOTALS | | | 1,369.0 | 8 | 113 |

**HYDROLOGICAL DATA**
Drainage Area = 13.2 sq. mi.
Q 50 = 4950 c.f.s.
V 50 = 13.6 ft./sec.

| | | |
|---|---|---|
| Excavation | 13,450 | C.Y. |
| Embankment | 10,782 | C.Y. |
| Seeding | 2,611 | S.Y. |

RELOCATED BIG CREEK PLAN & PROFILE STA. 5+84.56 TO STA. 18+00.00

6-1

| FED. RD. DIVISION | STATE | PROJECT | |
|---|---|---|---|
| 2 | OHIO | | |

112
500

CUYAHOGA COUNTY
CUY-480-10.39

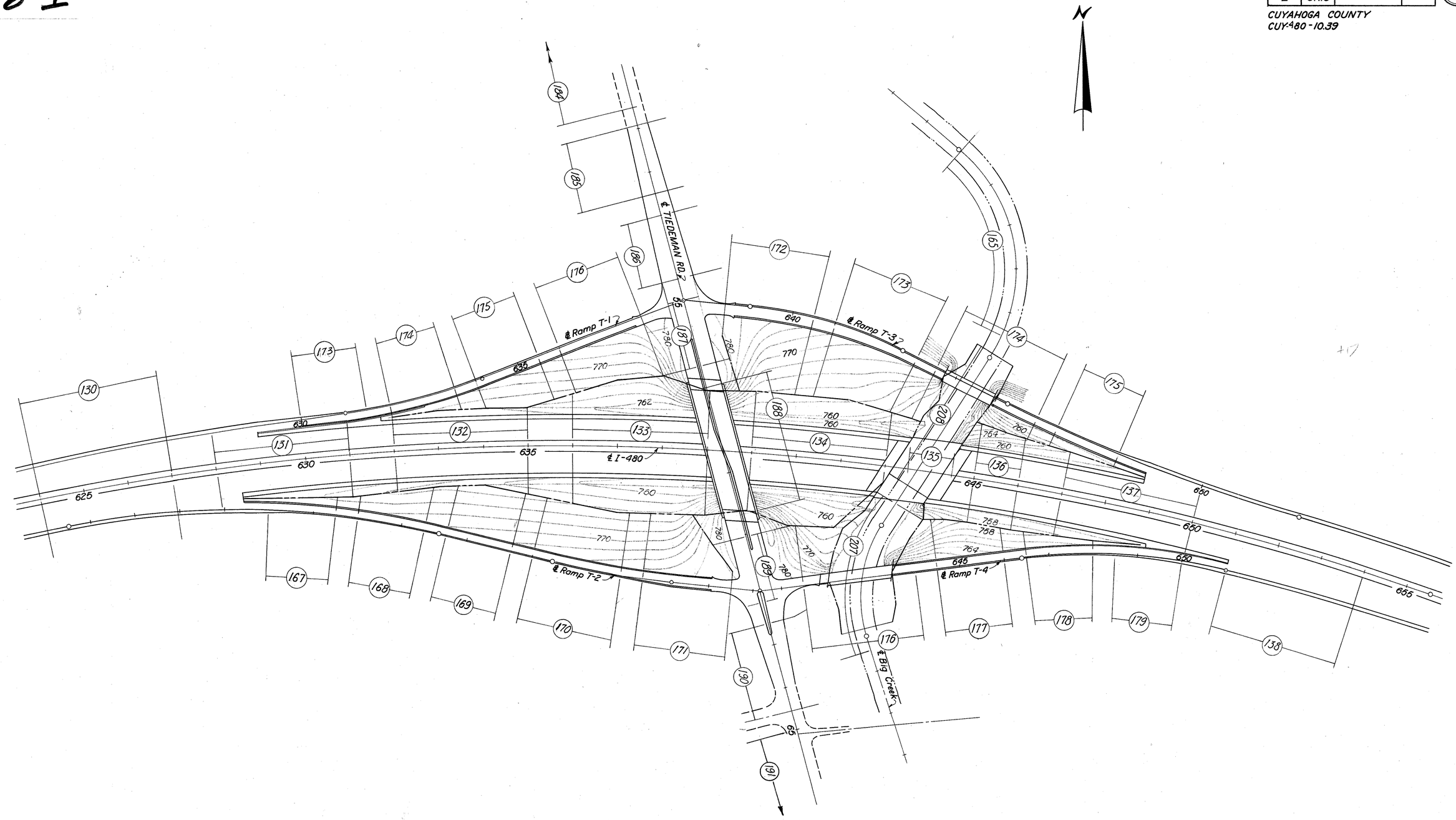


TIEDEMAN ROAD INTERCHANGE - GRADING PLAN & CROSS SECTION INDEX

| SEQUENCE | |
|---|---|
| STD. WIDTH | SUB TOTAL |
| 101 | |
| 1050 | |
| 88 | |
| 1394 | |
| 163 | |
| 1705 | |
| 144 | |
| 789 | |
| 140 | |
| 0 | |
| 0 | |
| 0 | |

| REGION | STATE | PROJECT | |
|---|---|---|---|
| 12 | OHIO | | |

113
500

CUYAHOGA COUNTY
CUY 480-10.39

| | END AREA | | VOLUME | |
|---|---|---|---|---|
| | CUT | FILL | CUT | FILL |
| | | | | |
| | | | Z3 | 835 |
| | | | | |
| | | | 70 | 2538 |
| | | | | |
| | | | 15 | 568 |
| | | | | |
| Misc. Quantity | | | 0 | 829 |
| | | | 39 | 1117 |
| | | | | |
| | | | | |
| | | | | |
| | | | 0 | 0 |
| | | | | |
| | | | 0 | 0 |
| | | | | |
| | | | 0 | 0 |
| | | | | |
| Fwd | | | 6 | 35 |
| Back | | | 0 | 0 |
| | | | | |
| | | | 0 | 0 |
| | | | | |
| | | | 0 | 0 |
| | | | | |
| | | | 0 | 0 |

150 140 130 120 110 100 90 80 70 60 50 40 30 20 10 ℄ 10 20 30 40 50 60 70 80 90 100 110

800 / 790 / 780

SEE RAMP W-1

℄A 219'

799.49
**577+00**
796.0

8:1 3:1 4:1

786.9

℄A 151'

SEE RAMP W-1

℄A 203'

798.31
**576+00**
796.4

8:1 3:1 6:1

787.2

℄A 150'

℄A 185'

786.8

797.37
**575+00**
795.2

Contr. Cuy 480-8.54

787.6

℄A 150'

℄A 164'

786.5

796.67
**574+00**
793.5

STA. 573+52
175' LT. ℄ E480
STD. MW-4
HEADWALL

STA. 573+60, ℄
STD. I-3B MEDIAN INLET
N/G = 796.00

4:1

FWD STA. 573+50
BACK

6:1

118"-15", TYPE "B" @ 3.15%

790.67
15" E℄N

IP 44

ROCK CHANNEL PROTECTION
16'Lg. x 4'W x 18"Dp.

786.95

Contr. Cuy 480-8.54

788.0

℄A

℄A

786.2

796.23
**573+00**
793.70

Contr. Cuy 480-8.54

788.0

℄A

C.G.D. 11-4-71
B.B. 12-13-71

150 140 130 120 110 100 90 80 70 60 50 40 30 20 10 0 10 20 30 40 50 60 70 80 90 100 110 120 130 Sta. 572+00

**CROSS-SECTIONS STA. 573+00 TO STA. 577+00**

SEEDING

| SEED LBS/1000 SQ FT | SEED LBS/ACRE |
|---|---|

| FED. DIV. NO. | STATE | PROJECT | |
|---|---|---|---|
| 2 | OHIO | | |

114
500

CUYAHOGA COUNTY
CUY 480–10.39

| END AREA | | VOLUME | |
|---|---|---|---|
| CUT | FILL | CUT | FILL |

150 140 130 120 110 100 90 80 70 60 50 40 30 20 10 ℄ 10 20 30 40 50 60 70 80 90 100 110

800
790
780

℄A Z63'

SEE RAMP W-1

3:1

805.61
**581+00**
792.1

℄A 159'

3:1

785.7

2:1

127 780 87 2308

℄A Z55'

804.05
**580+00**
791.8

℄A 159'

1401 248 8457

℄A 160'

786.0

125 780 47 2257

℄A Z46'

STA. 579+00, 106' LT.
STD. HW-4 HEADWALL

ROCK CHANNEL PROTECTION
15' LG x 4' W x 18" DP

789.40

10-15" TYPE "F" 107.05 @ 0.50%

789.45

15-15" TYPE "F" 107.05 @ 43.43%

795.53

STA 579+00, 75' LT.
STD. NO. 24-10
SHOULDER INLET
NG = 800.47

795.60

7-15" - TYPE "F" 107.05 @ 1.00%

3P/44

802.49
**579+00**
796.1

℄A 160'

786.3

1372 163 6297

122 780 41 1143

℄A Z34'

800.93
**578+00**
797.0

℄A 154'

786.6

1328 157 3980

117 780 44 1006

1211 124 3409

101 23 835

Sta. 577+00

150 140 130 120 110 100 90 80 70 60 50 40 30 20 10 ℄ 10 20 30 40 50 60 70 80 90 100 110 120 130 140

| | | | |
|---|---|---|---|
| DRAWN BY | C.G.D. | DATE | 11-4-71 |
| CHKD BY | B.B. | DATE | 12-13-71 |

**CROSS-SECTIONS STA. 578+00 TO STA. 581+00**

115
500

CUYAHOGA COUNTY
CUY-480-10.39

150 140 130 120 110 100 90 80 70 60 50 40 30 20 10 ℄ 10 20 30 40 50 60 70 80 90 100 110

820 810 800 790 780

L/A 220'

Sta. 584+41.5 40ft Ramp W-3
Std. No. 6 C.B.
T/G = 782.25

SEE RAMP W-3

VARIES

71'-15", TYPE "F" 707.05 @ 34.3%

28P 45

779.35
5'-15"-Type "F" 707.05 @ 0.50%
779.32
778.82
18" N.

For Continuation of Storm Sewer Profile Sheet No. 97

Sta. 584+15, 75' Lt.
Std. No. 2-A-6
Shoulder Inlet
N/G = 808.50

802.31

75'-15" Type "B" @ 1.80%

27P 45

Sta. 584+15 ℄
Std. No. I-35
Median Inlet
N/G = 809.94

803.66

3:1

SEE RAMP W-2

L/A 313'

99

662 Misc. - Quantity

810.29
584+00
791.4

Misc. Quantity 8413

END STRUCTURE 583+38.61

L/A 345'

809.73
583+00
790.29

L/A

188 Misc. - Quantity

Misc. Quantity 2338

BEGIN STRUCTURE 582+29.39

L/A 269'

SEE RAMP W-1

1:1

2:1

Wingwall

807.17
582+00
791.6

CALC. BY C.G.D. DATE 11-4-71
CHKD. BY B.B. DATE 12-13-71

Sta. 581+00

86 1183 127

0 2370 161 8570 87 2308

150 140 130 120 110 100 90 80 70 60 50 40 30 20 10 ℄ 10 20 30 40 50 60 70 80 90 100 110 120 130 140

CROSS-SECTIONS STA. 582+00 TO STA. 584+00

0 3730

CUYAHOGA COUNTY
CUY-480-10.39

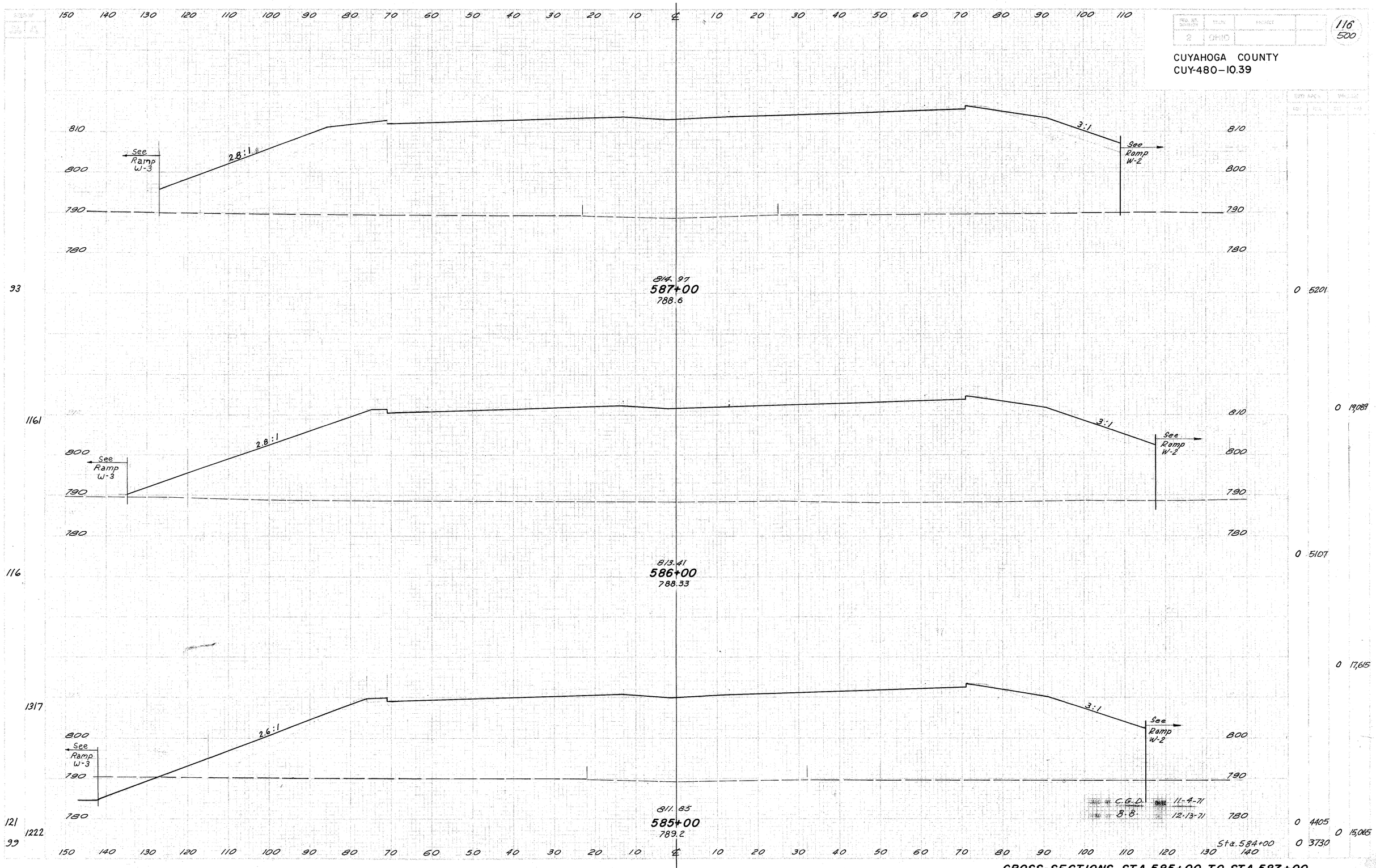


CROSS-SECTIONS STA. 585+00 TO STA. 587+00

CUYAHOGA COUNTY
CUY-480-10.39

150 140 130 120 110 100 90 80 70 60 50 40 30 20 10 ℄ 10 20 30 40 50 60 70 80 90 100 110

TOTAL AHEAD

590+03 RAMP W-3 BACK WITH 590+00

BACK WITH 589+00

8:1 3:1 8:1

SEE RAMP W-2

810 800 790 780

140 Ahead
39 Back

2:1 3:1 4/A 786.7

819.65
590+00
788.9

Ahead 35 6941
Back 0 5285

556 210 200 190 180 170 160 150 140

SEE RAMP W-2

0 19,969

See Ramp W-3

3.5:1 8:1 4:1

61

818.03
589+00
788.7

0 5498

0 20,318

828

8:1 3:1 8:1 3:1

See Ramp W-3

SEE RAMP W-2

816.53
588+00
789.1

DRAWN BY C.G.D. DATE 11-4-71
CHKD BY B.B. DATE 12-13-71

88 1006
93

0 5506

0 19,828

Sta. 587+00 0 5201

150 140 130 120 110 100 90 80 70 60 50 40 30 20 10 ℄ 10 20 30 40 50 60 70 80 90 100 110 120 130 140

CROSS-SECTIONS STA. 588+00 TO STA. 590+00

| SHEET NO. | STATE | PROJECT | |
|---|---|---|---|
| 2 | OHIO | | |

118
500

CUYAHOGA COUNTY
CUY-480-10.39

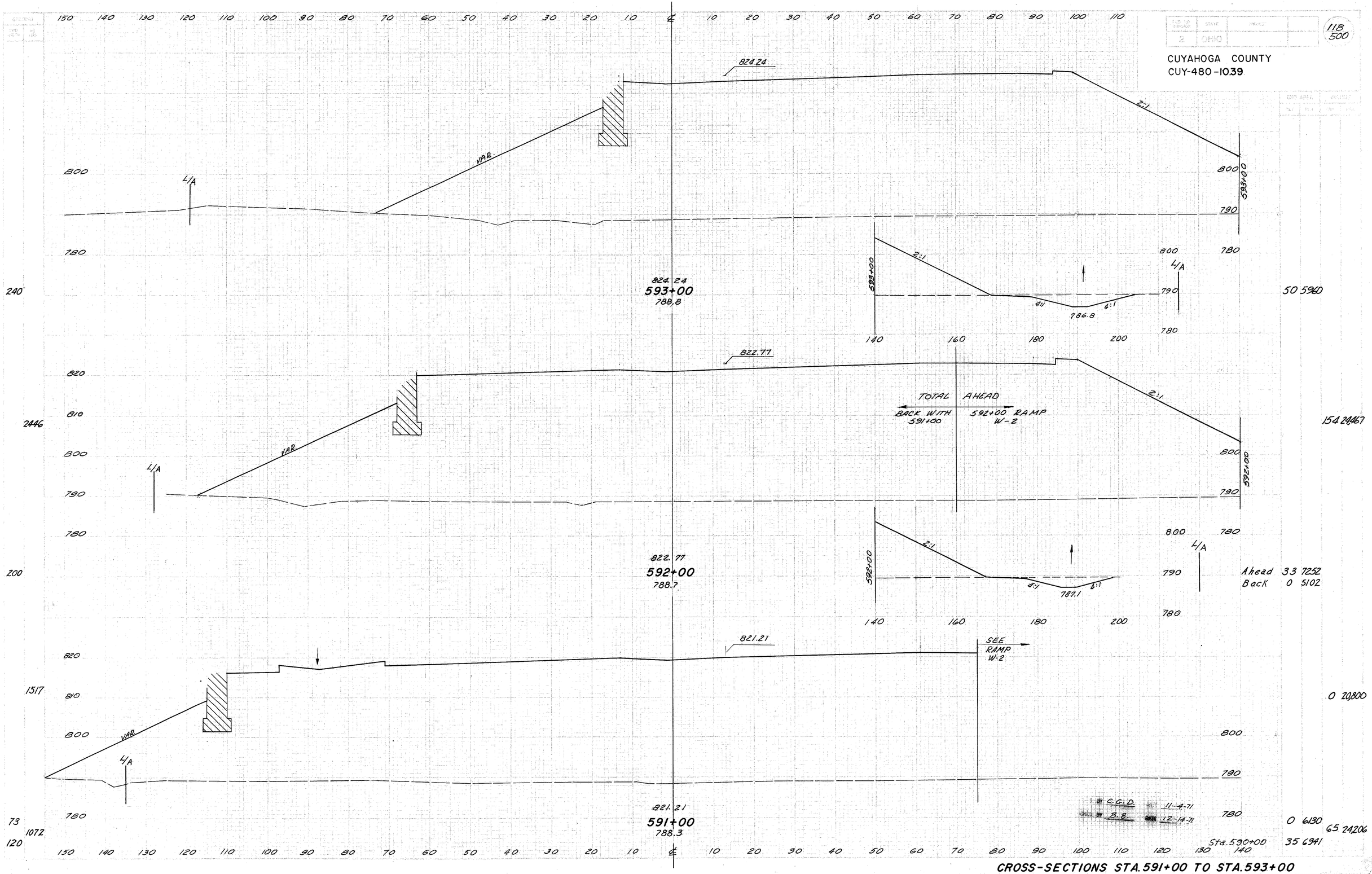


BY C.G.D. 11-4-71
CHKD. BY B.B. DATE 12-14-71

CROSS-SECTIONS STA. 591+00 TO STA. 593+00

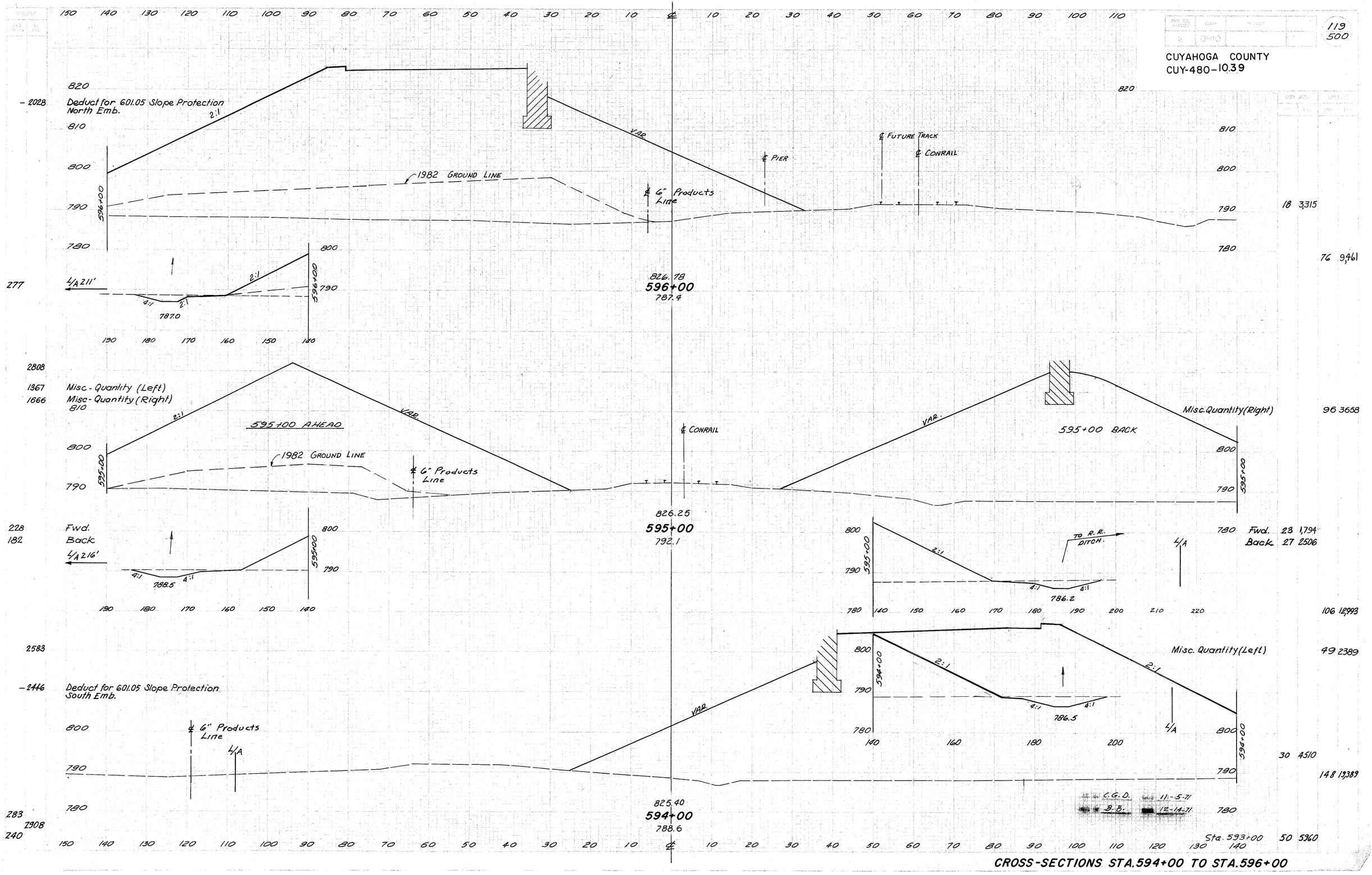


CROSS-SECTIONS STA.594+00 TO STA.596+00

CUYAHOGA COUNTY
CUY-480-10.39

120
500




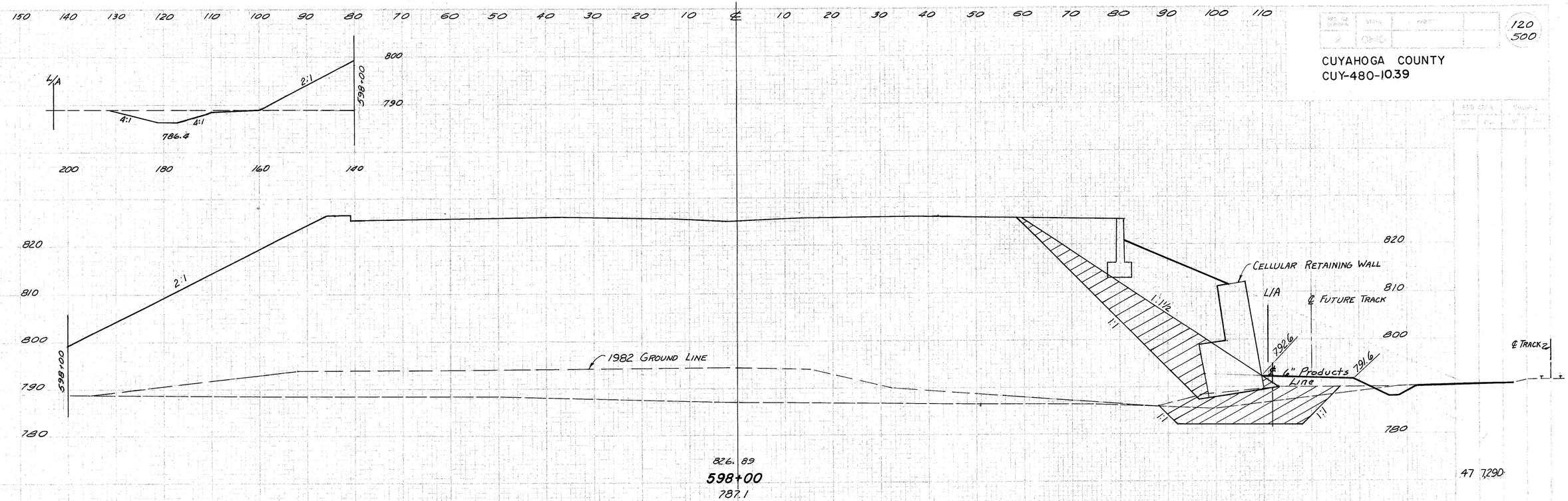


REMOVE UNDER ITEM 203 EXCAVATION NOT INCLUDING EMBANKMENT CONSTRUCTION REPLACE WITH ITEM 203 EMBANKMENT, USING GRANULAR MATERIAL, AS PER PLAN SEE SHEET NO. 309.

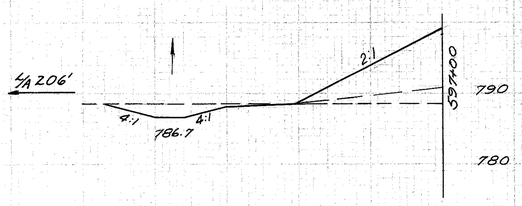


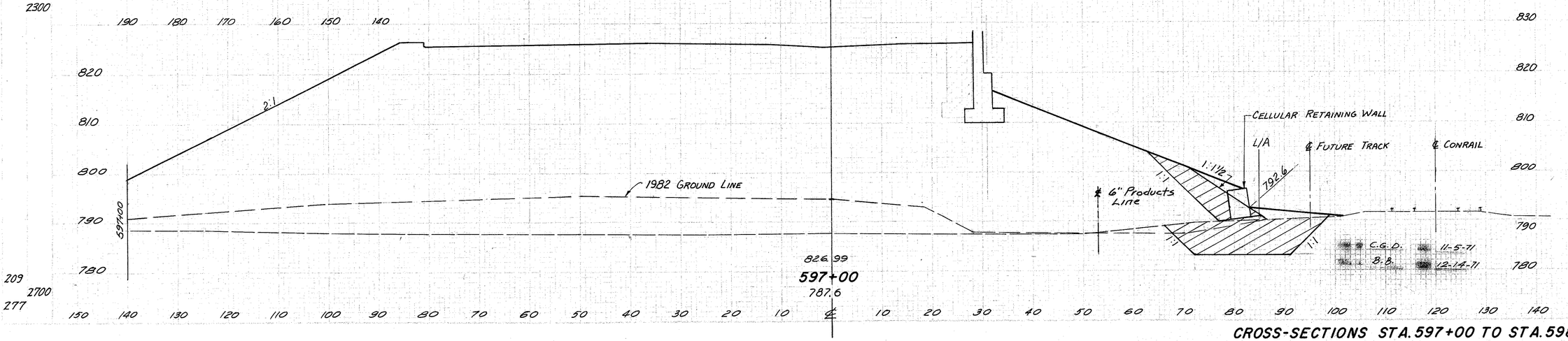


C.G.D. 11-5-71
B.B. 12-14-71

CROSS-SECTIONS STA. 597+00 TO STA. 598+00

CUYAHOGA COUNTY
CUY-480-10.39

150 140 130 120 110 100 90 80 70 60 50 40 30 20 10 ℄ 10 20 30 40 50 60 70 80 90 100 110

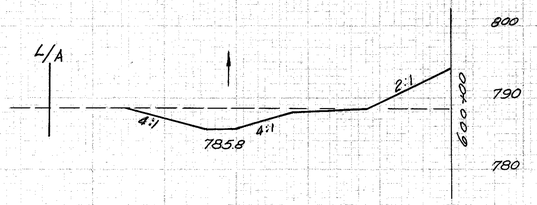


200 190 180 170 160 150 140

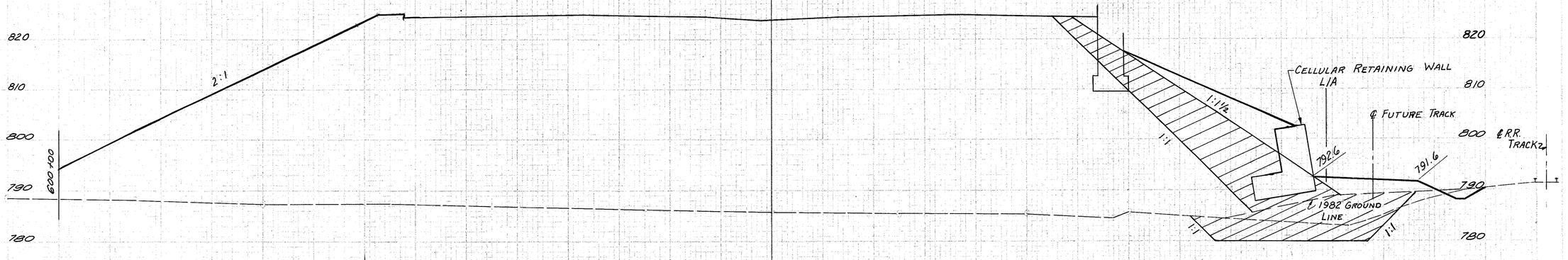


825.73 W.B. 825.85 E.B.
600+00
785.7

210 59 7764

SEE SHEET No. 86 FOR NOTE

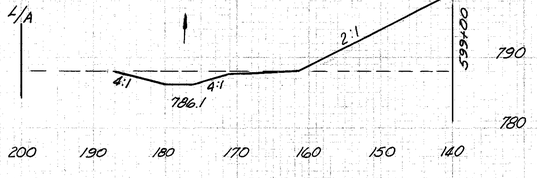


200 190 180 170 160 150 140

187 30,580

C.G.D. 11-5-71
B.B. 12-14-71

826.47
599+00
786.4

247 2511 205 42 8,749

Sta. 598+00 Sta. 598+00 165 29,702

150 140 130 120 110 100 90 80 70 60 50 40 30 20 10 ℄ 10 20 30 40 50 60 70 80 90 100 110 120 130 140 47 7,290

**CROSS-SECTIONS STA.599+00 TO STA.600+00**

150 140 130 120 110 100 90 80 70 60 50 40 30 20 10 ℄ 10 20 30 40 50 60 70 80 90 100 110

| FED. ROAD DIV. NO. | STATE | PROJECT | |
|---|---|---|---|
| 5 | OHIO | | |

122
500

CUYAHOGA COUNTY
CUY-480-10.39

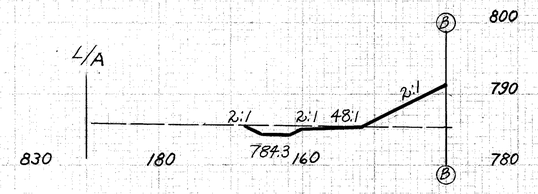


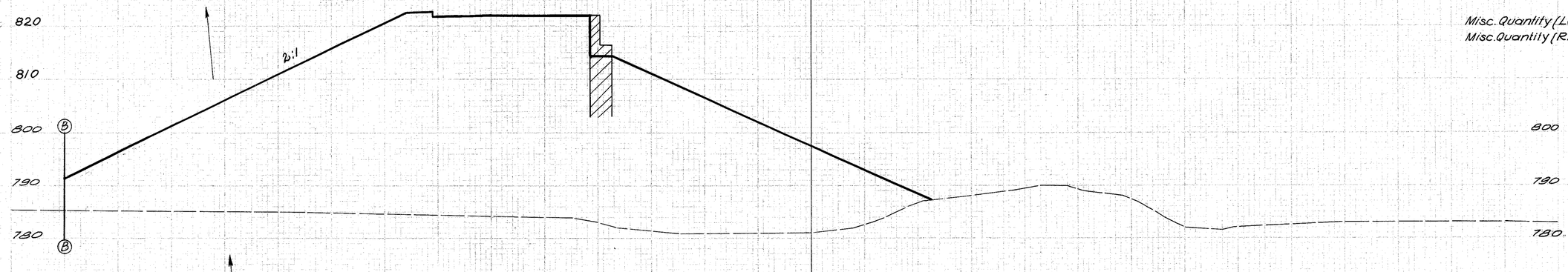


Misc. Quantity (Left) 67 11627
Misc. Quantity (Right) 95 4961

Fwd. 0 0
Back 10 3910

197

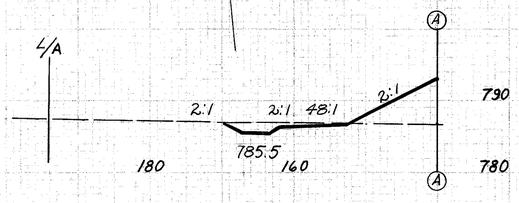


823.43
602+00
781.0

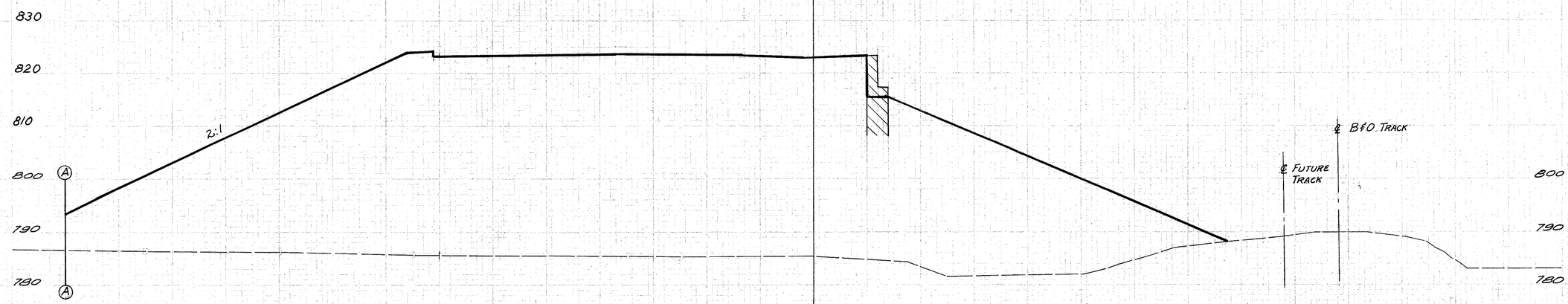


37 18171

2283

824.78 W.B. 824.80 E.B.
601+00
785.3

BY C.E.D. DATE 11-8-71
BY J.J. DATE 12-14-71

214
2356
210 STA. 600+00

10 5903

128 25,309

130 140 130 120 110 100 90 80 70 60 50 40 30 20 10 ℄ 10 20 30 40 50 60 70 80 90 100 110 120 Sta. 600+00

59 7164

CROSS-SECTIONS STA. 601+00 TO STA. 602+00

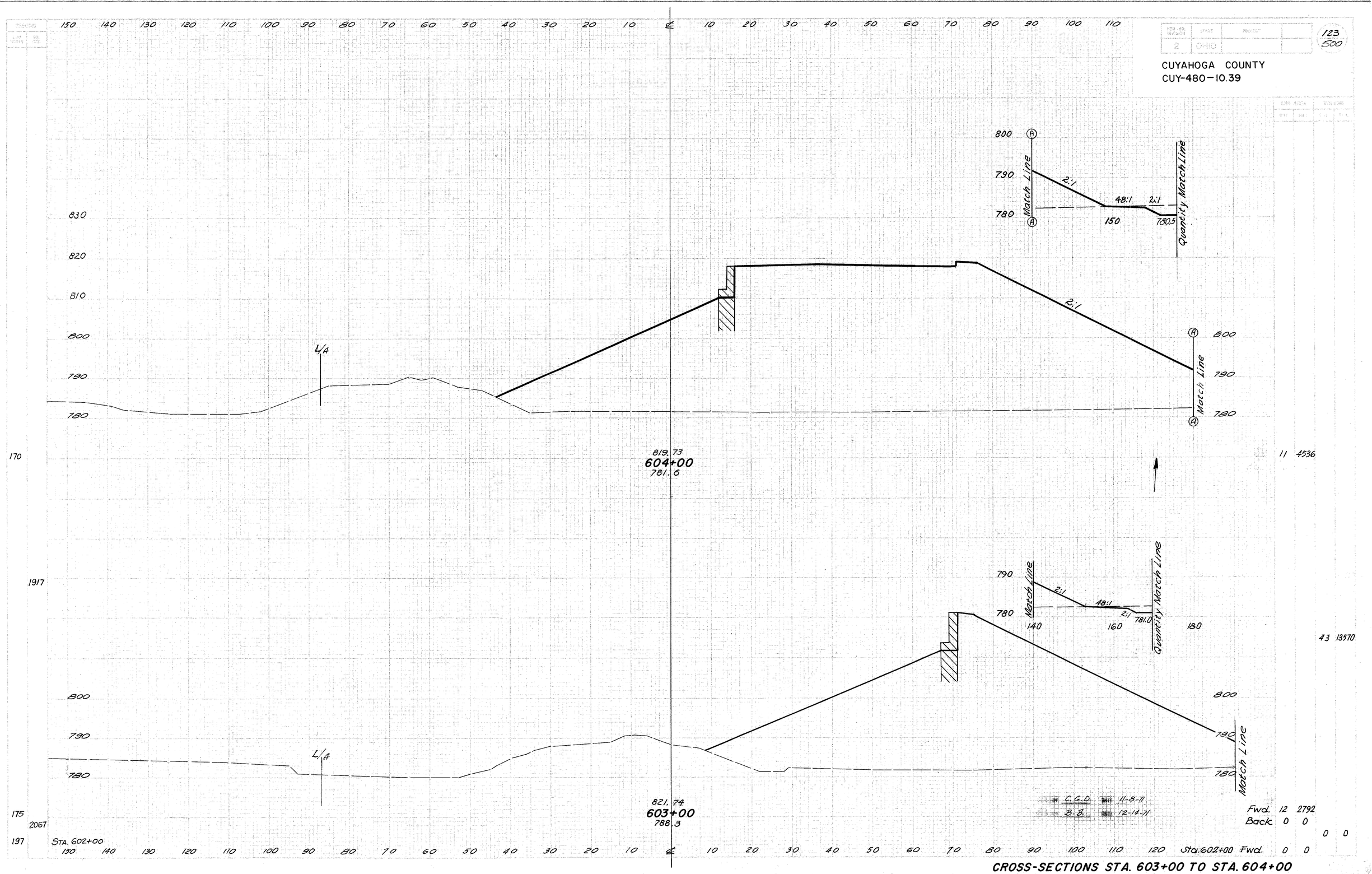


CROSS-SECTIONS STA. 603+00 TO STA. 604+00

| SHEET NO. | STATE | PROJECT | |
|---|---|---|---|
| 2 | OHIO | | |

124
500

CUYAHOGA COUNTY
CUY-480-10.39

150 140 130 120 110 100 90 80 70 60 50 40 30 20 10 ℄ 10 20 30 40 50 60 70 80 90 100 110

820
810
800
790
780

L/A

2:1

814.83 W.B 814.74 E.B.

606+00
780.2

2:1

800
790
780

Match Line (B)

40 6856

790
780

2:1 48:1 2:1

150 779.5 170

Quantity Match Line

179

1873

820
810
800
790
780

L/A

2:1

817.41 W.B. 817.31 E.B.

605+00
782.7

2:1

800
790
780

Match Line (A)

158

1823

170

790
780

2:1 48:1 2:1

150 780.0 170

Quantity Match Line

154 23,360

43 5758

100 19,063

11 4536

STA. 604+00

150 140 130 120 110 100 90 80 70 60 50 40 30 20 10 ℄ 10 20 30 40 50 60 70 80 90 100 110 120 130 Sta. 604+00

C.G.D. 11-8-71
B.B. 12-14-71

CROSS-SECTIONS STA.605+00 TO STA.606+00

CUYAHOGA COUNTY
CUY-480-10.39

150 140 130 120 110 100 90 80 70 60 50 40 30 20 10 ℄ 10 20 30 40 50 60 70 80 90 100 110

800
790
780
L/A 166
2:1
2:1 2:1 48:1
780.5
807.06
609+00
777.8
185
820
810
2034
800
790
780
L/A 168
2:1
2:1 2:1 48:1
781.0
809.62
608+00
779.0
181
820
2112
810
800
790
780
L/A 170'
2:1
2:1 2:1 48:1
781.5
812.18
607+00
779.4
199
2100
179
Sta. 606+00

2:1
Match Line
Quantity March Line
48:1 2:1
130 150
2:1 48:1 2:1
778.5

17 5479
80 21,099
26 5,914
139 22,642
49 6,312
165 24,386
40 6,856
Sta. 606+00

C.G.D. 11-8-71
B.B. 12-14-71

CROSS-SECTIONS STA. 607+00 TO STA. 609+00

CUYAHOGA COUNTY
CUY-480-10.39

126
500

150 140 130 120 110 100 90 80 70 60 50 40 30 20 10 ℄ 10 20 30 40 50 60 70 80 90 100 110

Sta. 612+00, I-480 (75' Lt.)
Std. No. 2-A-8 Inlet
N/G = 799.82

800
790
780
775.0

L/A 160

2:1
2:1
48:1
15"
794.82
44-15", Type "F" 707.05 @ 49.3 %
4P
48
775.59
9'-15", Type "F" 707.05 @ 1.0%

Sta. 612+00, I-480 (124' Lt.)
Std. HW-4 Headwall
Elev. = 775.5

799.38
612+00
778.0

24:1
790
780
778.0
Match Line

780
770
Match Line
6:1
4A
Quantity Match Line
Detention Basin Bottom
140 150 160 170 180 190

225
44 4320

2195
124 16608

Sta. 611+30
High Pt. 783.0

800
790
780
L/A 162
2:1
2:1
790
780
48:1 778.0
Quantity Match Line

801.94
611+00
777.61

170
23 4,648

1923
100 17,876

Sta. 610+30
Low Pt. 777.25

800
790
780
L/A 164
2:1
2:1
790
48:1
2:1
777.5
777.6
Quantity Match Line

804.50
610+00
777.5

31 5,005
89 19,415

176
2006
185
STA. 609+00

Sta. 609+00
17 5,479

150 140 130 120 110 100 90 80 70 60 50 40 30 20 10 ℄ 10 20 30 40 50 60 70 80 90 100 110 120 130 140

BY B.J. DATE 12-15-71
W.A.M. DATE 12-21-71

CROSS-SECTIONS STA. 610+00 TO STA. 612+00

150 140 130 120 110 100 90 80 70 60 50 40 30 20 10 ℄ 10 20 30 40 50 60 70 80 90 100 110

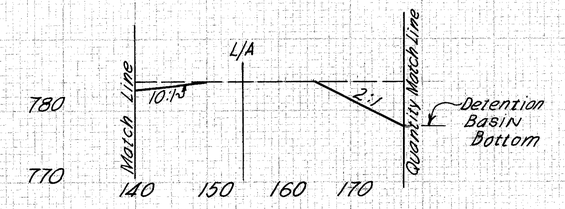


800
L/A 152
790
780
6:1
780.3
3:1
8:1
791.70
615+00
783.9
8:1
3:1
780.4
10:1
790
780
Match Line
191
186 1282

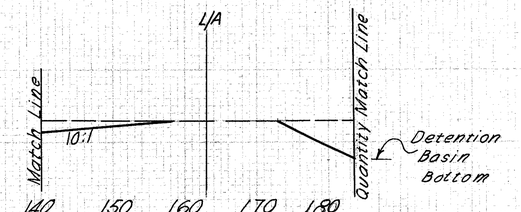


223A
643 6287

800
L/A 161
790
780
4:1
779.0
794.26
614+00
782.8
8:1
3:1
780.0
10:1
790
780
Match Line
211
162 2113

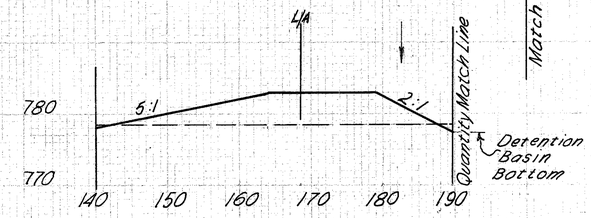


2356
341 11020

800
790
L/A 160
780
4:1
777.7
48:1
2:1
25:1
796.82
613+00
778.1
STA. 613+00, I-480 (75' Rt.)
STD. No. 2-A-12 INLET
N/G=794.75
8:1
2.5:1
790.60
54"15", TYPE "F" 707.05@3.0%
SP 48
STA. 613+00, I-480 (133' Rt.)
STD. No. 5-A C.B.
T/G=776.75
790
780
774.50
15" W.
774.15
767.14
B.B. 12-15-71
W.A.M. 12-21-71
54"15", TYPE "F" 707.05@1.0%
Match Line
213
2434
225
22 3838
122 15108

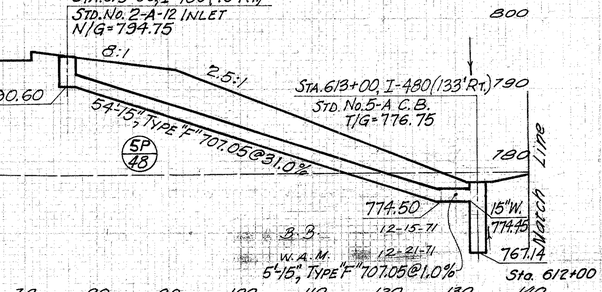


STA. 612+00
150 140 130 120 110 100 90 80 70 60 50 40 30 20 10 ℄ 10 20 30 40 50 60 70 80 90 100 110 120 130 140

## CROSS-SECTIONS STA. 613+00 TO STA. 615+00

| SHEET NO. | TOTAL SHEETS |
|---|---|
| 2 | OHIO |

128
500

CUYAHOGA COUNTY
CUY-480-10.39

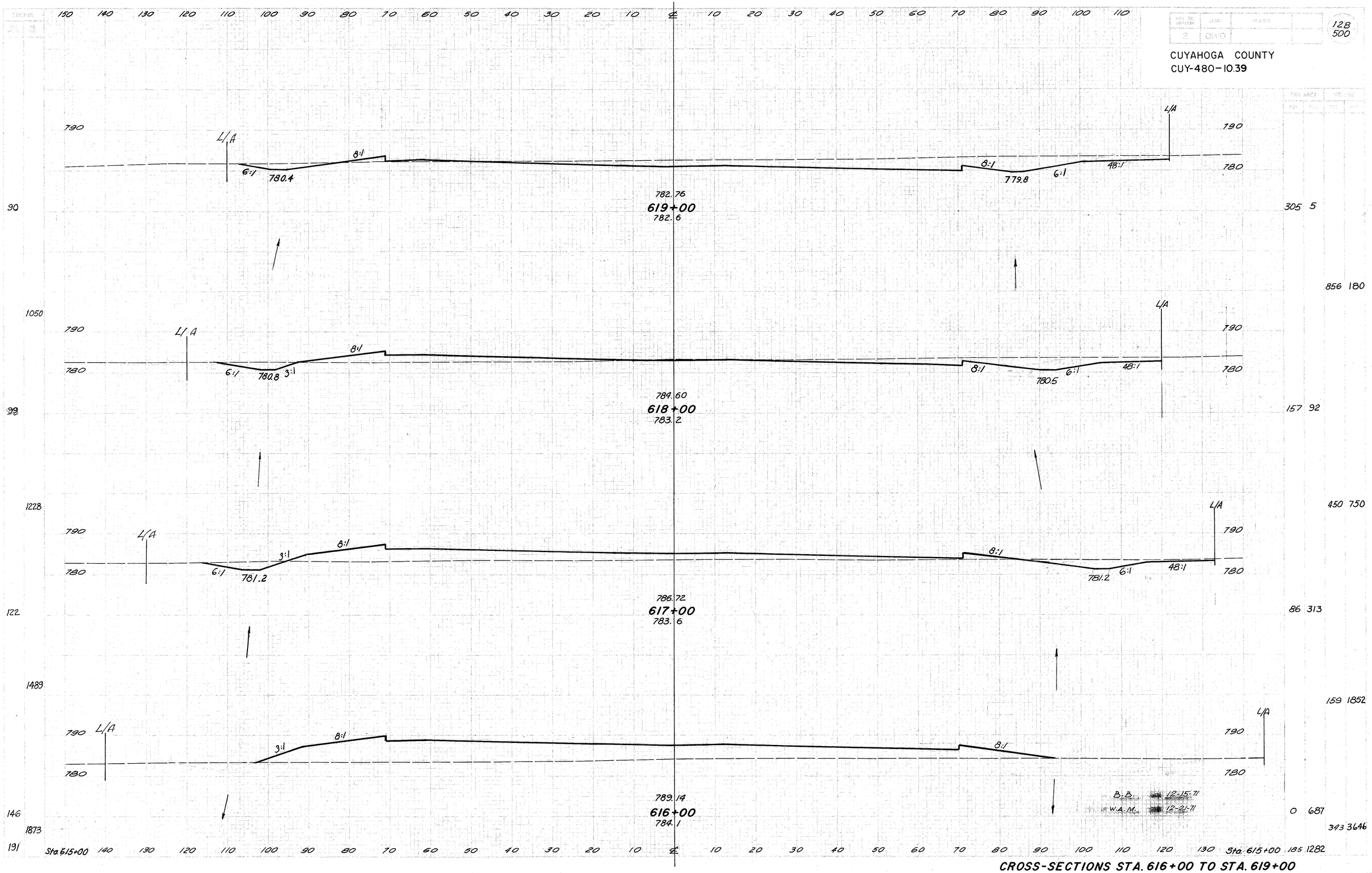


CROSS-SECTIONS STA. 616+00 TO STA. 619+00

| SHEET NO. | DATE | REVISION | BY |
|---|---|---|---|
| 2 | 12-21-71 | | |

129
500

CUYAHOGA COUNTY
CUY-480-10.39

| END AREA | | VOLUMES | |
|---|---|---|---|
| CUT | FILL | CUT | FILL |

150 140 130 120 110 100 90 80 70 60 50 40 30 20 10 ℄ 10 20 30 40 50 60 70 80 90 100 110

Sta. 623+00 (92' Lt.) Std. No. 5 C.B T/G = 777.09

Sta. 623+00 (Med.) Std. T-38 Median Inlet N/G = 777.23

Sta. 623+00 (94' Rt.) Std. No 4 C.B T/G = 774.26

790 780 770

L/A

5:1 8:1 92'-15" Type "B" @ 1.24% 8:1 94'-15" Type "B" @ 1.24% 4:1 48:1

772.13 777.3 770.99 774.5 769.82 762.80 42" E.F.W

54P/39 55P/39

777.70
**623+00**
783.1

127 6516 0

1356 4876 0

790 780 770

L/A

6:1 8:1 778.4 8:1 775.7 4:1 48:1

778.82
**622+00**
782.6

117 4117 0

1262 3582 0

790 780 770

L/A

6:1 8:1 779.5 8:1 8:1 776.8 5:1 48:1

779.94
**621+00**
782.4

110 817 0

1189 2459 2

790 780 770

L/A

6:1 8:1 780.0 8:1 8:1 778.2 6:1 48:1

781.20
**620+00**
782.3

104 1078 511 1

1511 11

90 Sta 619+00 140 130 120 110 100 90 80 70 60 50 40 30 20 10 ℄ 10 20 30 40 50 60 70 80 90 100 110 120 130 Sta. 619+00 305 5

B. B. 12-15-71
W. A. M. 12-21-71

**CROSS-SECTIONS STA. 620+00 TO STA. 623+00**

| SHEET NO. | STATE | PROJECT | | |
|---|---|---|---|---|
| 2 | OHIO | | | |

130
500

CUYAHOGA COUNTY
CUY-480-10.39

| AREA | AREA | VOLUME | |
|---|---|---|---|
| CUT | FILL | CUT | FILL |

150 140 130 120 110 100 90 80 70 60 50 40 30 20 10 ℄ 10 20 30 40 50 60 70 80 90 100 110

790 780 770

L/A

3:1 8:1 773.1

773.22
627+00
783.7

8:1 769.6 3:1

MATCH LINE

MATCH LINE L/A 790 780 150 160

MATCH LINE L/A 790 780 150 160

135 2,924 0

1534 2,503 0

141 8,148 0

1600 2,221 0

147 7,524 0

1595 1,842 0

140 6,219 0

1484 1,516 0

127 Sta. 623+00

3:1 8:1 774.2

774.34
626+00
783.7

8:1 770.9 3:1

MATCH LINE L/A 790 780 150 160

4:1 8:1 775.2

775.46
625+00
783.8

8:1 772.2 3:1

MATCH LINE L/A 790 780 150 160

4:1 8:1 776.4

776.58
624+00
783.3

8:1 773.4 4:1

B.B. 12-16-71
W.A.M. 12-21-71

Sta. 623+00

CROSS-SECTIONS STA. 624+00 TO STA. 627+00

CUYAHOGA COUNTY
CUY-480-10.39

150 140 130 120 110 100 90 80 70 60 50 40 30 20 10 ℄ 10 20 30 40 50 60 70 80 90 100 110

780
770
760

Match Line Ramp T-1

Match Line Ramp T-2

8:1

768.74
631+00
778.0

764.6

24

1817 0

233

Match Line Ramp T-1

Match Line Ramp T-2

8:1

769.86
630+00
779.1

766.3

18

6572 0

1732 0

100 L/A 790 780

Fwd.
Back

℄ Ramp T-1

3:1
8:1
771.0

10 Fwd-
74 Back-

770.98
629+00
780.9

8:1
768.0

Match Line Ramp T-2

790
780

MATCH LINE

L/A

150 160 170 180

Fwd 1755 0
Back 2314 0

6458 0

L/A 790 778 780

Fwd.
Back

℄ Ramp T-2

3:1
8:1
772.0

66 Fwd-
141 Back-

772.10
628+00
782.8

8:1
768.3

MATCH LINE

8,385 0

W.A.H. 8-8- 12-16-71 12-21-71

Fwd - 2214 0
Back - 3160 0

11,267 0

1534

135 Sta. 627+00 140 130 120 110 100 90 80 70 60 50 40 30 20 10 ℄ 10 20 30 40 50 60 70 80 90 100 110 120 130 Sta. 627+00

2924 0

CROSS-SECTIONS STA. 628+00 TO STA. 631+00

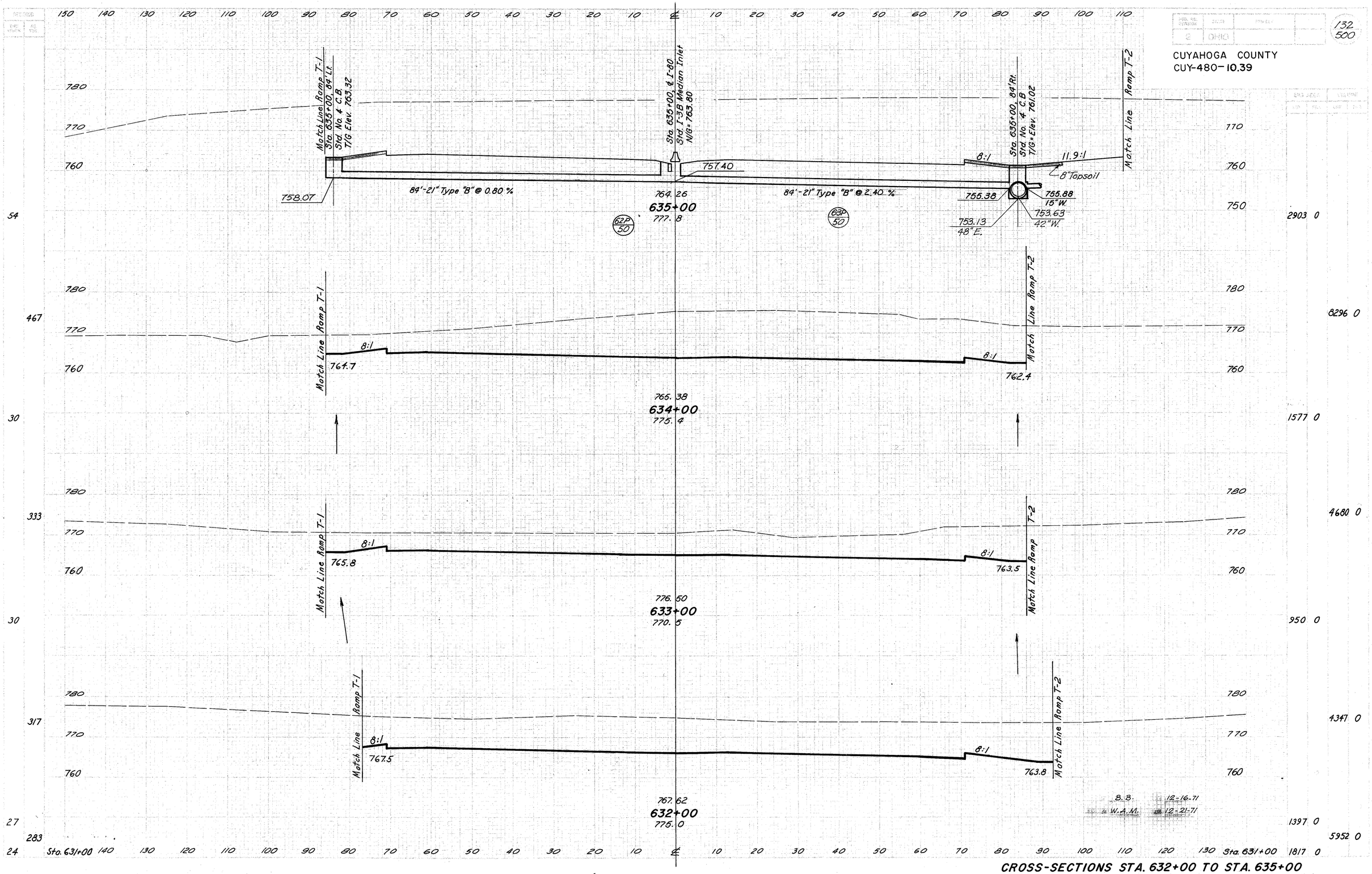


CROSS-SECTIONS STA. 632+00 TO STA. 635+00

| FED. AID PROJECT | STATE | PROJECT | |
|---|---|---|---|
| 2 | OHIO | | |

133
500

CUYAHOGA COUNTY
CUY-480-10.39

END AREA | VOLUME
CUT | FILL | CUT | FILL

150 140 130 120 110 100 90 80 70 60 50 40 30 20 10 ℄ 10 20 30 40 50 60 70 80 90 100 110

780
770
760

2:6:1
5:1
760.2
760.86
639+00
775.6
5:1
VARIES
757.9
760

Match Line Ramp T-2

136

3650 13

Match Line Ramp T-1

1683

780
760

8" Topsoil
8:1
760.7
761.38
638+00
776.1
12:1
6:1
10.4:1
758.8
780
770
760

Match Line Ramp T-2

14953 24

167

4425 0

1806

780
760

Match Line Ramp T-1

11:1
8:1
761.5
762.14
637+00
775.0
8:1
11.1:1
759.2
8" Topsoil
780
770
760

Match Line Ramp T-2

15506 0

158

3948 0

1461

780
770
760

Match Line Ramp T-1

11:1
8:1
762.5
763.14
636+00
776.8
8:1
11.3:1
760.2
780
770
760

Match Line Ramp T-2

14222 0

105

3732 0

883

12286 0

54 Sta. 635+00 140 130 120 110 100 90 80 70 60 50 40 30 20 10 ℄ 10 20 30 40 50 60 70 80 90 100 110 120 130 Sta. 635+00 2903 0

B. B. 12-17-71
W. A. M. 12-21-71

CROSS-SECTIONS STA. 636+00 TO STA. 639+00

150 140 130 120 110 100 90 80 70 60 50 40 30 20 10 ℄ 10 20 30 40 50 60 70 80 90 100 110

770 760 750 740

Match Line Ramp T-3 — 6:1 — 755.5 — 3:1

761.06
643+00
767.6

0 Fwd.-
49 Back-

Fwd 0 0
Back 1286 0

1056

Match Line Ramp T-3 — 15:1 — 759.3 — 6.5:1

760.74
642+00
768.7

6:1 VARIES 757.0 — Match Line

7638 0

141

2839 0

1617

Match Line Ramp T-3 — 15:1 — 8" Topsoil — 759.6 — 6.5:1

Bldg.

760.54
641+00
775.4

5:1 — 757.3 — 8" Topsoil — Match Line Tidemor Rd.

12,976 0

150

4168 0

1533

Match Line Ramp T-3 — BLDG. — 5:1 — 759.9

760.58
640+00
773.9

5:1 — 757.6 — 2.3:1

14,732 0

126

3788 0

1456

136 Sta. 639+00 140 130 120 110 100 90 80 70 60 50 40 30 20 10 ℄ 10 20 30 40 50 60 70 80 90 100 110 120 130 Sta. 639+00

3650 13

13,773 24

DRAWN BY W.A.M. DATE 12-2-71 CHKD. B.B. 12-17-71

CROSS-SECTIONS STA. 640+00 TO STA. 643+00

| SHEET NO. | STATE | | |
|---|---|---|---|
| 2 | OHIO | | |

135
500

CUYAHOGA COUNTY
CUY-480-10.39

| END AREA | | VOLUME | |
|---|---|---|---|
| CUT | FILL | CUT | FILL |

150 140 130 120 110 100 90 80 70 60 50 40 30 20 10 ℄ 10 20 30 40 50 60 70 80 90 100 110

760
750
740

Match Line - Relocated Big Creek

4:1 48:1 3:1

754.6

Match Line Ramp T-4

761.54
644+50
748.7

34

760
Misc- Quantity 0 48
750
740

0 1485

3 1556

208

760
750
740

Match Line - Relocated Big Creek

2:1 48:1 3:1

750.0

Match Line Ramp T-4

760
750
740

41 Fwd-
0 Back-

761.38
644+00
748.2

Fwd- 3 196
Back- 0 0

320 Misc- Quantity

770
0
760
750
740

761.21
643+49

Misc - Quantity 1324 0

770
760
0
750
740

0 0 0

Sta. 643+00 140 130 120 110 100 90 80 70 60 50 40 30 20 10 ℄ 10 20 30 40 50 60 70 80 90 100 110 120 130 Sta. 643+00 0 0

DESIGN BY B.B. DATE 12-17-71
CHECK BY W.A.M. CHECK 12-21-71

CROSS-SECTIONS STA. 643+49 TO STA. 644+50

CUYAHOGA COUNTY
CUY-480-10.39

150 140 130 120 110 100 90 80 70 60 50 40 30 20 10 ℄ 10 20 30 40 50 60 70 80 90 100 110

760
750
740

Match Line Ramp T-3
4:1
756.0
762.02
646+00
758.3
6:1
757.0
Match Line Ramp T-4

70 403 760 750 740

Match Line Ramp T-3
4:1
754.0
761.86
645+50
757.40
6.5:1
756.8
Match Line Ramp T-4

75 442 760 750 740

Line Ramp T-3
Match
750.5
Sta. 645+00, 109' Lt.
Std. HW-4 Headwall
4:1
105'-15" Type "B" @ 2.80%
753.00
105P 51
Rock Channel Protection
Type "B" 4'W x 18'Lg x 2'Dp.
Sta. 645+00, Med.
Std. T-3B Median Inlet
N/G = 761.08
756.00
5:1
756.5
Match Line Ramp T-4
761.70
645+00
748.10

84 328 34

770
760
750
740

10 434
33 1408
25 1086
46 2730
24 1862
22 3100
0 1485

Sta. 644+50 140 130 120 110 100 90 80 70 60 50 40 30 20 10 ℄ 10 20 30 40 50 60 70 80 90 100 110 120 130 Sta. 644+50

DRAWN BY B. B. DATE 12-17-71
CHKD BY W. A. M. DATE 12-21-71

CROSS-SECTIONS STA. 645+00 TO STA. 646+00

150 140 130 120 110 100 90 80 70 60 50 40 30 20 10 ℄ 10 20 30 40 50 60 70 80 90 100 110

| STATE | SHEET NO. | TOTAL SHEETS |
|---|---|---|
| OHIO | 2 | 137 |
| | | 500 |

CUYAHOGA COUNTY
CUY-480-10.39

4/A 180' →

780
770
760

77

763.07
650+00
778.7

Match Line Ramp T-4

3246 47

780
770
760

← 167' 4/A

2:1

8" Topsoil

762.3

8:1

Ramp T-3

Fwd.
Back

829

← 174' 4/A

3:1

761.9

8:1

762.95
649+00
776.1

8:1
760.8

Match Line Ramp T-4

10410 87

74 Fwd.-
6 Back-

Fwd- 2408 0
Back- 1953 0

206

← 198' L/A

Match Line Ramp T-3

8:1
761.8

762.66
648+00
761.4

8:1
758.7

Match Line Ramp T-4

3857 4

31

130 2

467

Match Line Ramp T-3

8:1
760.3

762.34
647+00
760.0

8:1
758.0

Match Line Ramp T-4

396 261

53

84 139

683

3-8 12-20-11
4-4 12-21-11

174 1061

70 Sta. 646+00 140 130 120 110 100 90 80 70 60 50 40 30 20 10 ℄ 10 20 30 40 50 60 70 80 90 100 110 120 130 Sta. 646+00 10 434

CROSS-SECTIONS STA. 647+00 TO STA. 650+00

| | | | |
|---|---|---|---|
| | STATE | PROJECT | |
| 2 | OHIO | | |

138
500

CUYAHOGA COUNTY
CUY-480-10.39

+50 Low Point
758.75

762.18
659+00
779.3

762.46
653+00
779.6

762.74
652+00
779.5

762.99
651+00
779.2

L/A
780
770
760
2:1
8:1
781.5
777.8
761.9
758.9
160
4547 11

L/A
780
770
760
2:1
782.0
1755
777.5
8"Topsoil
762.0
759.1
156
4448 27
16657 70

L/A 160'→
780
770
760

L/A
780
770
760
2:1
782.0
1778
777.3
762.4
759.3
164
4406 38
16396 120

℄ Ramp T-4

L/A 168'→
780
770
760

L/A
780
770
760
2:1
782.0
1839
777.0
8:1
762.4
759.5
167
80
872
Fwd-
Back-
77
Sta. 650+00

Fwd.
Back.

℄ Ramp T-4

L/A 176'→
780
770
760

8-8 12-20-71
W.P.M. 12-21-71

Fwd- 4438 47
Back- 3231 47
11994 174

140 120 100 80 60 40 20 0 20 40 60 80 100 120
Sta. 650+00 3246 47

CROSS-SECTIONS STA. 651+00 TO STA. 654+00

CUYAHOGA COUNTY
CUY-480-10.39

Sta. 658+00, 142' Lt.
Std. No. 2-2B C.B.
T/G = 776.00

Sta. 658+00 83' Lt.
Std. No. 5A C.B.
T/G = 758.98

Sta. 658+00, ℄ I-480
Std. No. I-3B Med. Inlet
N/G = 760.59

Sta. 658+00, 89' Rt.
Std. No. 5 C.B.
T/G = 758.86

Sta. 658+00, 156' Rt.
Std. No. 2-2B C.B.
T/G = 776.50

L/A 161' →

42'-15" Type "F" @ 54.00 %

14'-15" Type "F" @ 0.50 %

7'-15" Type "F" @ 1.00 %

83'-15" Type "B" @ 1.20 %

83'-15" Type "B" @ 0.40 %

39'-15" Type "F" @ 51.00 %

26'-15" Type "F" @ 0.50 %

7'-15" Type "F" @ 1.00 %

749.01 60" E.&W.

101P 52 · 102P 52 · 103P 52

177 · 4028 74

1917 · 15126 152

168 · 4140 8

1867 · 15548 39

168 · 4256 13

1855 · 15978 70

169 · 1829 · 16517 67

4372 25

4547 11

CROSS-SECTIONS STA. 655+00 TO STA. 658+00

140
500

CUYAHOGA COUNTY
CUY-480-10.39

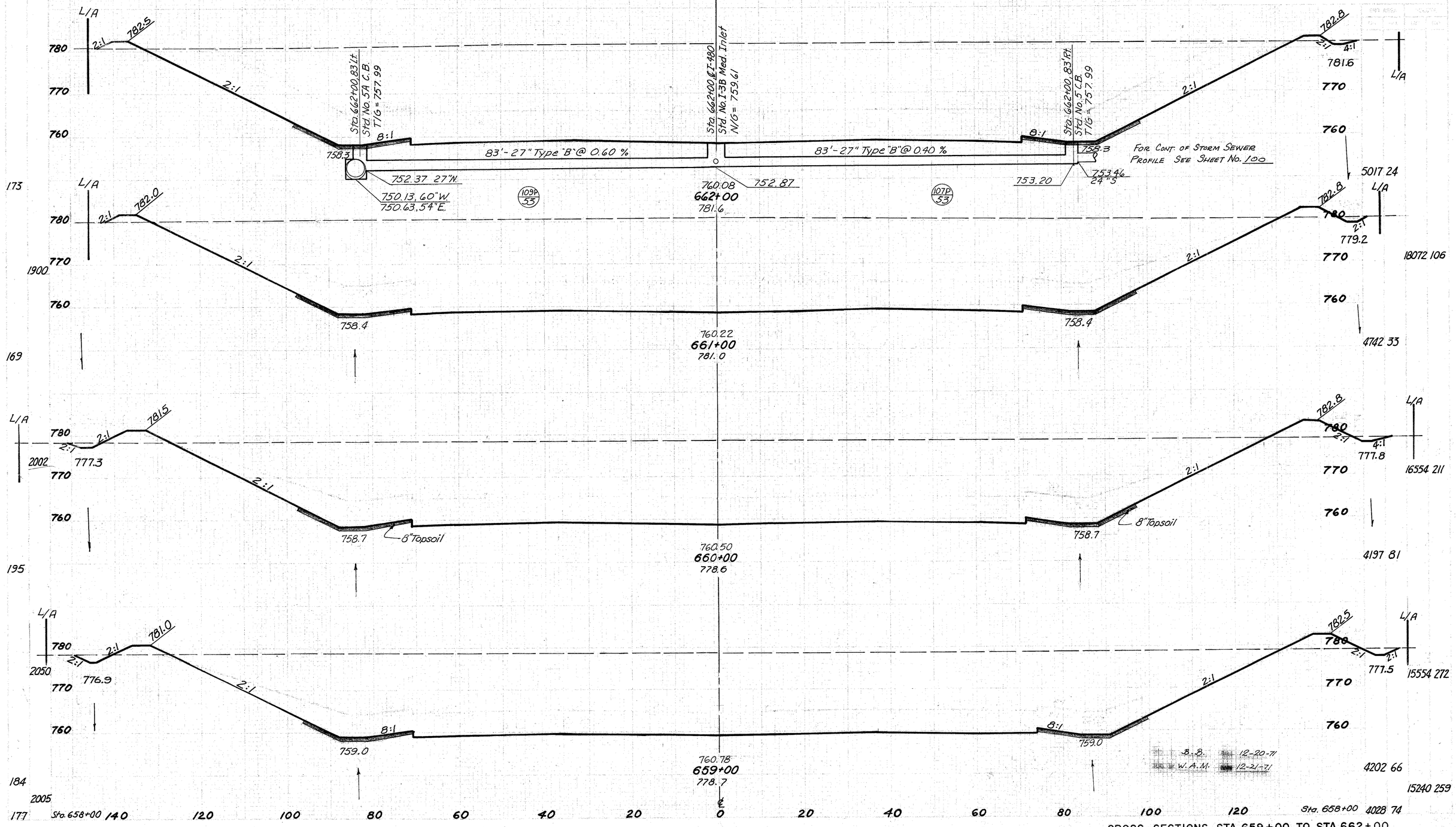


B.B. 12-20-71
W.A.M. 12-21-71

CROSS-SECTIONS STA. 659+00 TO STA. 662+00

141
500

CUYAHOGA COUNTY
CUY-480-10.39

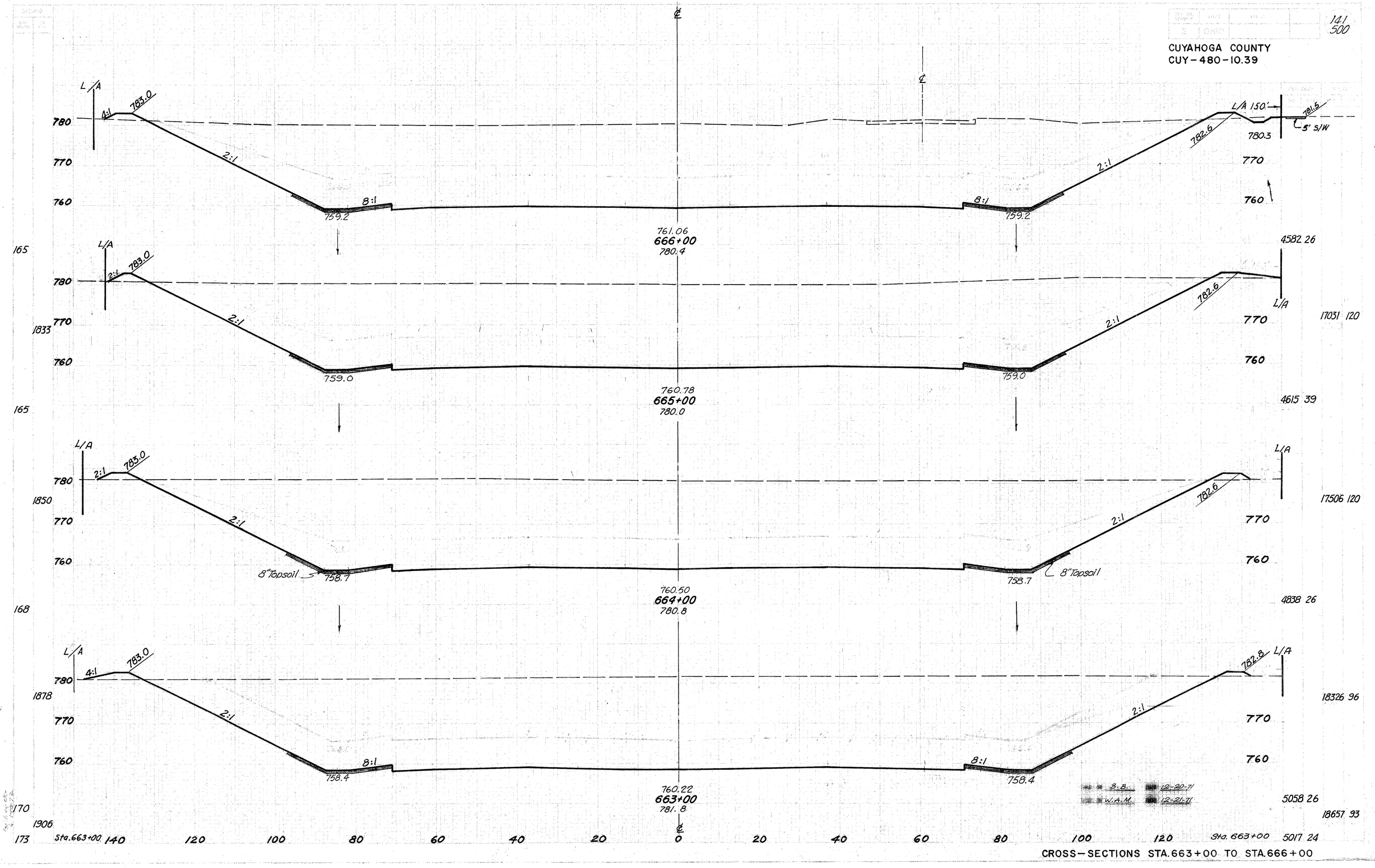


CROSS-SECTIONS STA. 663+00 TO STA. 666+00

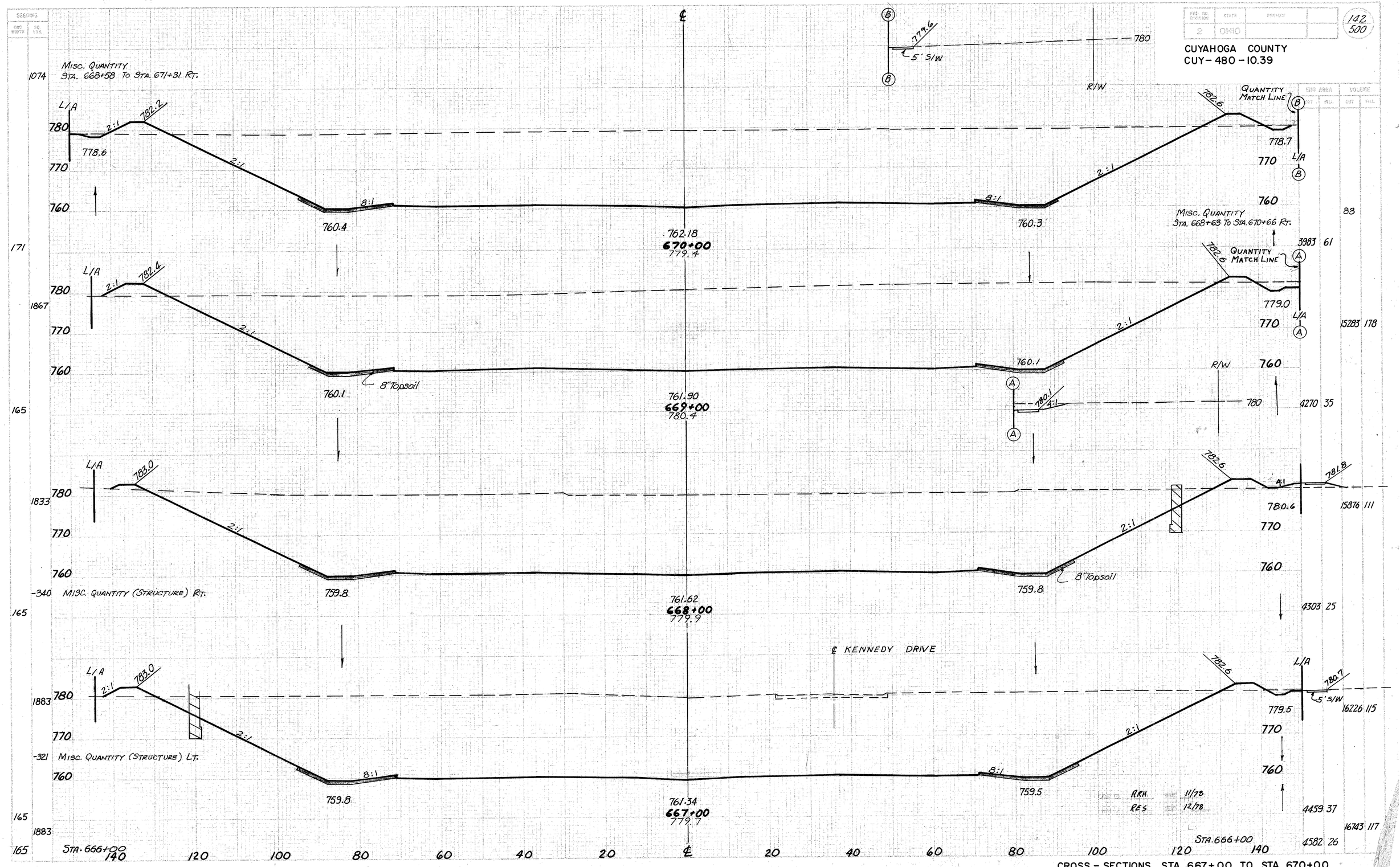


CROSS - SECTIONS STA. 667+00 TO STA. 670+00

GRADING

| END WIDTH | FILL |
|---|---|

CALC. BY A.R.H. DATE 11/78
CHKD. BY R.E.S. DATE 12/78

| FED. ROAD SYSTEM | STATE | PROJECT | |
|---|---|---|---|
| 2 | OHIO | | |

143
500

CUYAHOGA COUNTY
CUY- 480 - 10.39

| ROAD AREA | | VOLUME | |
|---|---|---|---|
| CUT | FILL | CUT | FILL |

℄

L/A 780 770 760

2:1 2.2:1 781.4 775.8 2:1 761.5 8:1 763.30 **674+00** 778.3 8:1 761.5 2:1 782.6 778.1 L/A

171 1894

L/A 780 770 760

2:1 2:1 781.6 776.5 2:1

Sta. 673+00.83 Lt. Std. No. 5-A C.B. T/G = 760.94

761.2

Sta. 673+00 Q1-480 Std. No. F-3B Med. Inlet N/G = 763.55

83'-21" Type "B" @ 0.70 %

83'-21" Type "B" @ 0.40 %

Sta. 673+00.83 Rt. Std. No. 5 C.B. T/G = 760.94

Sta. 673+00 144 Rt. Std. No. 2-2B C.B. T/G = 777.30

782.6 777.8 770 773.55

2:1 @ 52.30 %

24'-15" Type "F" @ 0.50 %

773.43

36'-15" Type "F" @ 52.30 %

118P 54

756.69

755.83 763.02 **673+00** 778.5

756.16 761.2

5'-15" Type "F" @ 0.50 %

756.66

755.25 21" N.

753.71 54" E. & W.

3429 87

12972 298

3576 74

L/A 780 770 760

1889 2:1 2:4:1 781.8 777.2 2:1 760.9 762.74 **672+00** 779.5 760.9 782.6 780 778.1 770 760

13602 235

3769 53

L/A 780 770 760

1894 2:1 2:1 782.0 777.9 2:1 8:1 760.6 762.46 **671+00** 779.2 760.6 8:1 2:1 782.6 780 778.4 770 760

14167 206

3881 58

14563 220

STA. 670+00

3983 61

171 1900

140 120 100 80 60 40 20 ℄ 20 40 60 80 100 120 140

CROSS - SECTIONS STA. 671 +00 TO STA. 674 +00

CALC. BY ARH DATE 11/78
CHKD. BY RES DATE 12/78

| FED. RD. DIVISION | STATE | PROJECT |
|---|---|---|
| 2 | OHIO | |

144
500

CUYAHOGA COUNTY
CUY- 480 - 10.39

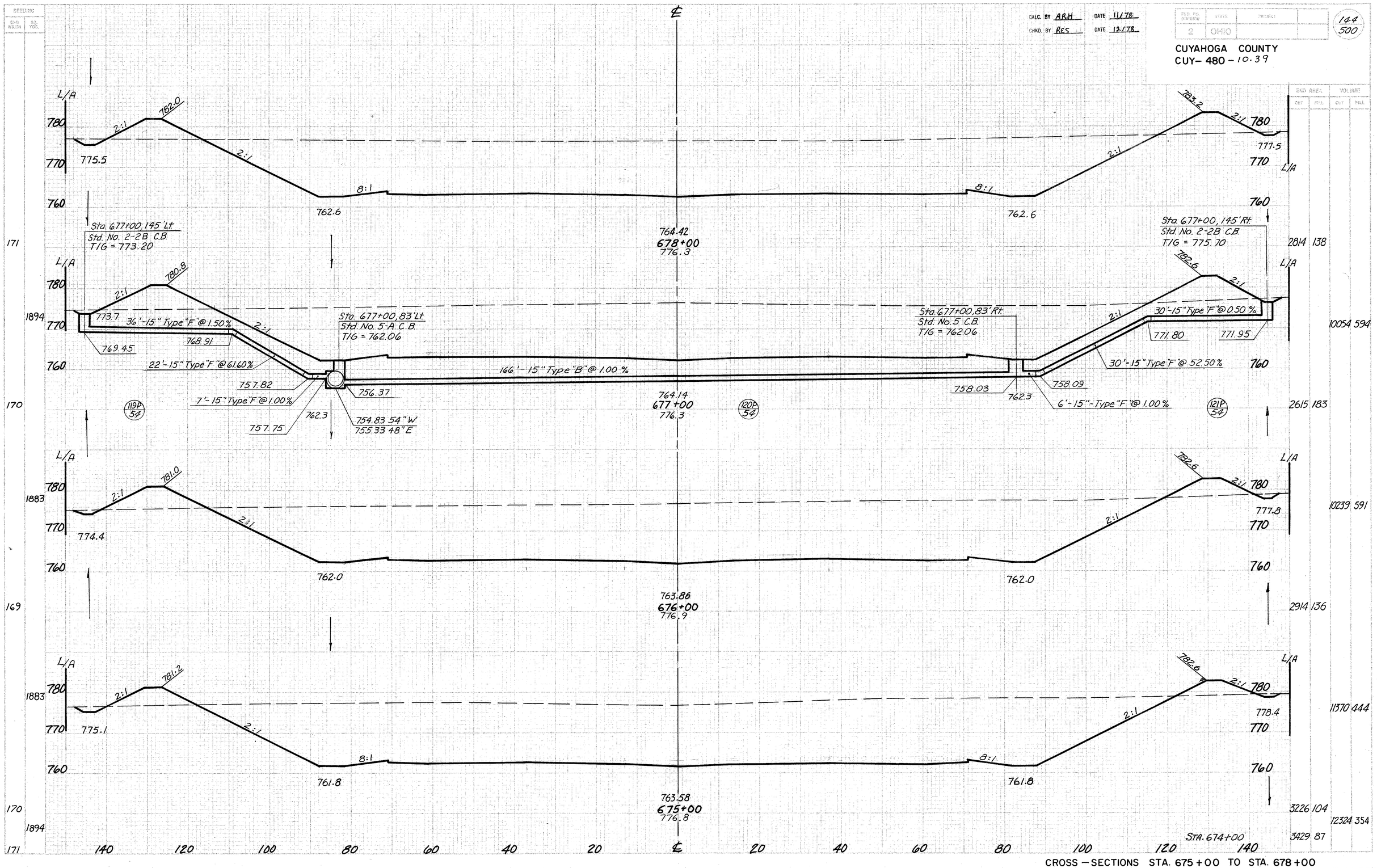


CROSS - SECTIONS STA. 675+00 TO STA. 678+00

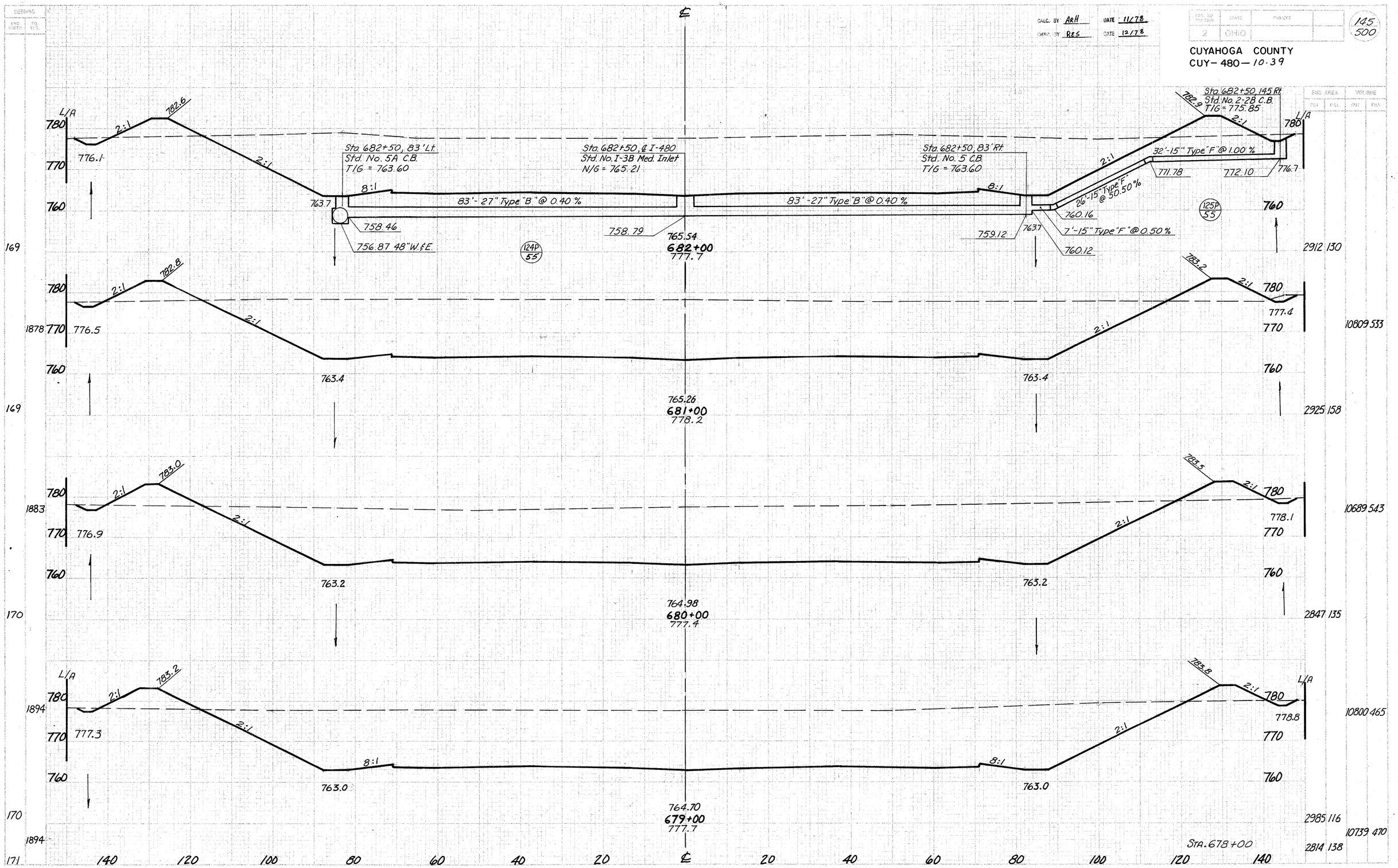


CROSS - SECTIONS STA. 679+00 TO STA. 682+00

CALC. BY ARH DATE 11/78
CHKD. BY RES DATE 12/78

| FED. RD. DIVISION | STATE | PROJECT | |
|---|---|---|---|
| 2 | OHIO | | |

146
500

CUYAHOGA COUNTY
CUY-480-10.39

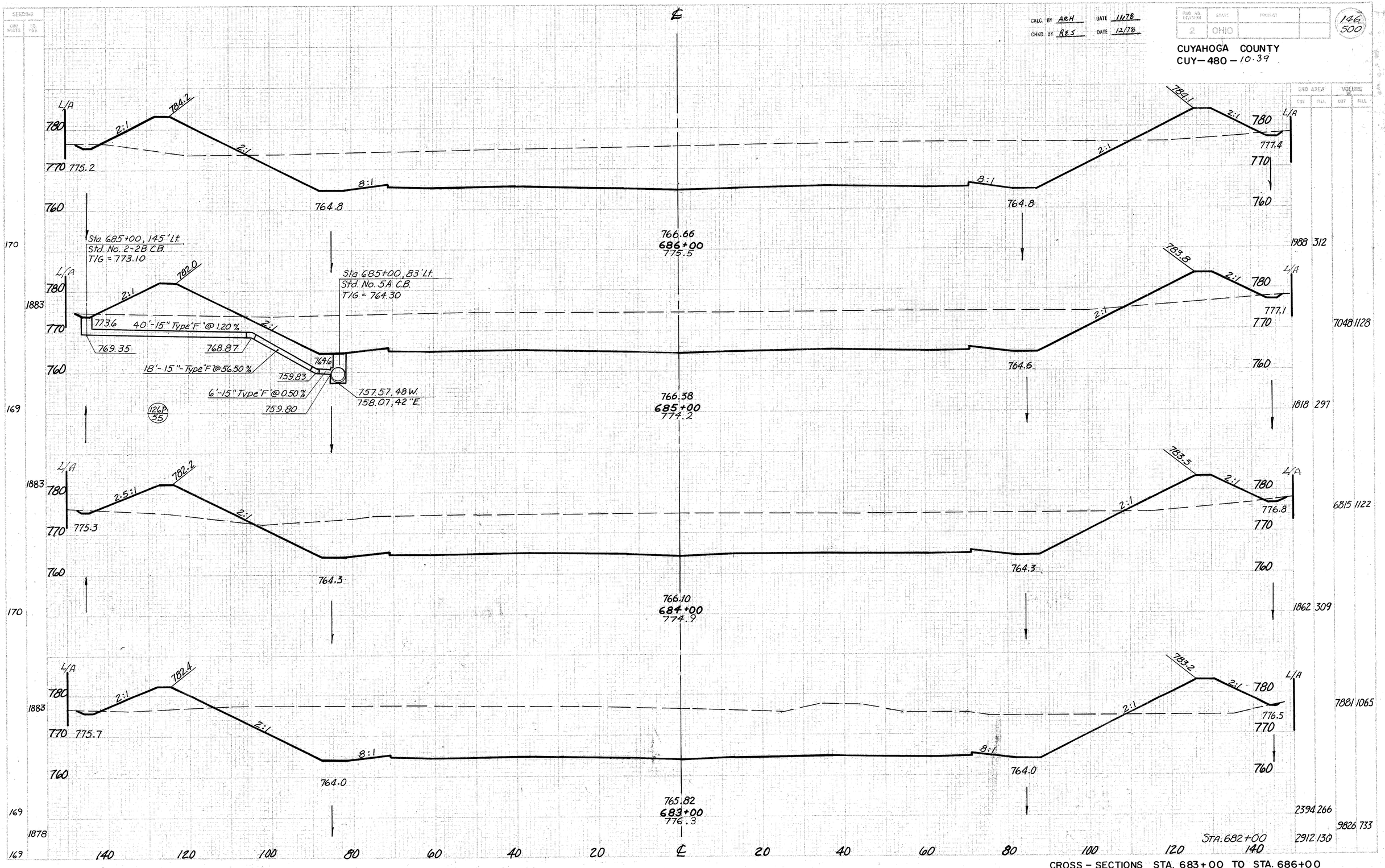


CROSS - SECTIONS STA. 683+00 TO STA. 686+00

SEEDING

| R&D WIDTH | RT. WIDTH |
|---|---|

CALC. BY ARH DATE 11/78

CHKD. BY RES DATE 12/78

| FED. ROAD DIVISION | STATE | PROJECT | |
|---|---|---|---|
| 2 | OHIO | | |

127
500

CUYAHOGA COUNTY
CUY– 480 – 10.39

| STA. | R&D AREA CUT | R&D AREA FILL | VOLUME CUT | VOLUME FILL |
|---|---|---|---|---|
| 690+00 | | | | |
| 689+00 | 1883 | 170 | 2598 | 127 |
| 688+00 | 1889 | 170 | 9131 | 613 |
| 687+00 | 1889 | 170 | 2335 | 204 |
| STA. 686+00 | 1883 | 170 | 8552 | 806 |
| | 1889 | 170 | 2285 | 231 |
| | | | 7820 | 963 |
| | | | 1938 | 289 |
| | | | 7270 | 1113 |
| | | | 1988 | 312 |

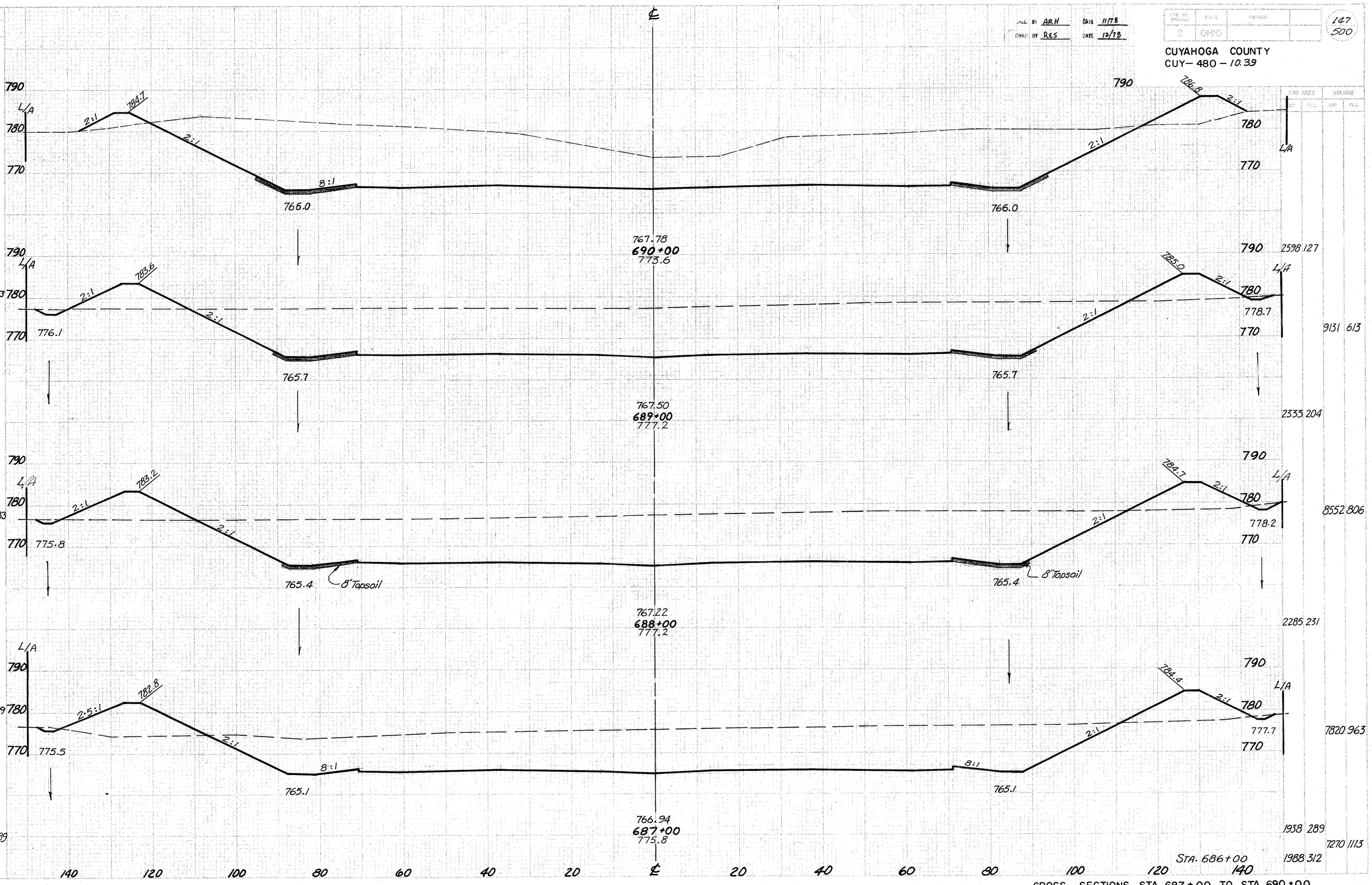


CROSS – SECTIONS STA. 687 + 00 TO STA. 690 + 00

CALC. BY ARH DATE 11/78
CHKD. BY RES DATE 12/78

| FED. PROJECT NUMBER | STATE | PROJECT | | 14.8 |
|---|---|---|---|---|
| 2 | OHIO | | | 500 |

CUYAHOGA COUNTY
CUY—480 — 10.39

SECTIONS

| END AREA | | VOLUME | |
|---|---|---|---|
| CUT | FILL | CUT | FILL |

## STA. 694+00

790 / 780 / L/A
2:1 — 789.1 — 2:1 — 784.6
8:1 — 768.6
770.49
694+00
787.7
8:1 — 768.7 — 2:1 — 795.4 — 2:1 — 790.2 — L/A

185

790 / L/A / 780 / 770
2050
2:1 — 788.0 — 2:1 — 782.6
767.6
2:1 — 792.5 — 2:1 — 788.1 — L/A — 3865.151
13830.557

184

## STA. 693+00

790 / L/A / 780 / 770
2017
2:1 — 786.9 — 2:1 — 780.6
8" Topsoil
766.8
769.43
693+00
785.2
766.8 — 8" Topsoil — 2:1 — 790.6 — 2:1 — 785.0 — L/A — 3603.150
12815.528

179

## STA. 692+00

1983
790 / L/A / 780 / 770
2:1 — 785.8 — 2:1 — 778.6
8:1 — 766.3
768.63
692+00
783.5
766.8 — 8:1 — 2:1 — 788.7 — 2:1 — 782.9 — L/A — 11037.661
3317.135

178

## STA. 691+00

1933
766.3
768.09
691+00
779.1
766.3 — 2643.222
9706.646
2598.127

170 140 120 100 80 60 40 20 ℄ 20 40 60 80 100 120 140

CROSS—SECTIONS STA. 691+00 TO STA. 694+00

SEEDING
LIME | FERT.

CALC. BY APH DATE 11/78
CHKD. BY RES DATE 12/78

| FED. RD. DIVISION | STATE | PROJECT | | |
|---|---|---|---|---|
| 2 | OHIO | | | |

129
500

CUYAHOGA COUNTY
CUY-480-10.39

| CUT AREA | | FILL AREA | |
|---|---|---|---|
| CUT | FILL | CUT | FILL |
| | | | |

L/A
800
790
780
179
1972
176
1989
182
2061
189
2078
185

2:1
8:1
1.5:1
1.6:1
1.8:1

Sta. 698+21.95' Lt.
Std. No. 5 C.B.
T/G = 712.53
772.4
95'-18" Type "B" @ 1.80 %
766.30, 27" W.
767.30, 15" E
767.05
132P 56

Sta. 698+21 @ I-480
Std. I-3B Med. Inlet
N/G = 775.55
768.76
775.74
698+00
800.1
774.42
697+00
795.8
773.10
696+00
793.7
771.78
695+00
790.0

Sta. 698+21.93' Rt.
Std. No. 5 C.B.
T/G = 775.44
775.4
93'-18" Type "B" @ 1.50 %
770.16
18" S.
132P 56

6723 0
23489 0
5961 0
19948 81
4811 44
16683 302
14931 500
4198 119
3865 151

8" Topsoil
772.0
773.2
789.8
792.8
771.0
771.5
786.6
790.9
769.9
770.0
803.5
799.2
795.0

STA. 694+00

140 120 100 80 60 40 20 ℄ 20 40 60 80 100 120 140

CROSS-SECTIONS STA. 695+00 TO STA. 698+00

6-1

DES. BY ARH DATE 11/78
CHKD. BY RES DATE 12/78

| FED. RD. PROJECT | STATE | PROJECT | | |
|---|---|---|---|---|
| 2 | OHIO | | | |

150
500

CUYAHOGA COUNTY
CUY-480-10.39

| END AREA | | VOLUME | |
|---|---|---|---|
| CUT | FILL | CUT | FILL |

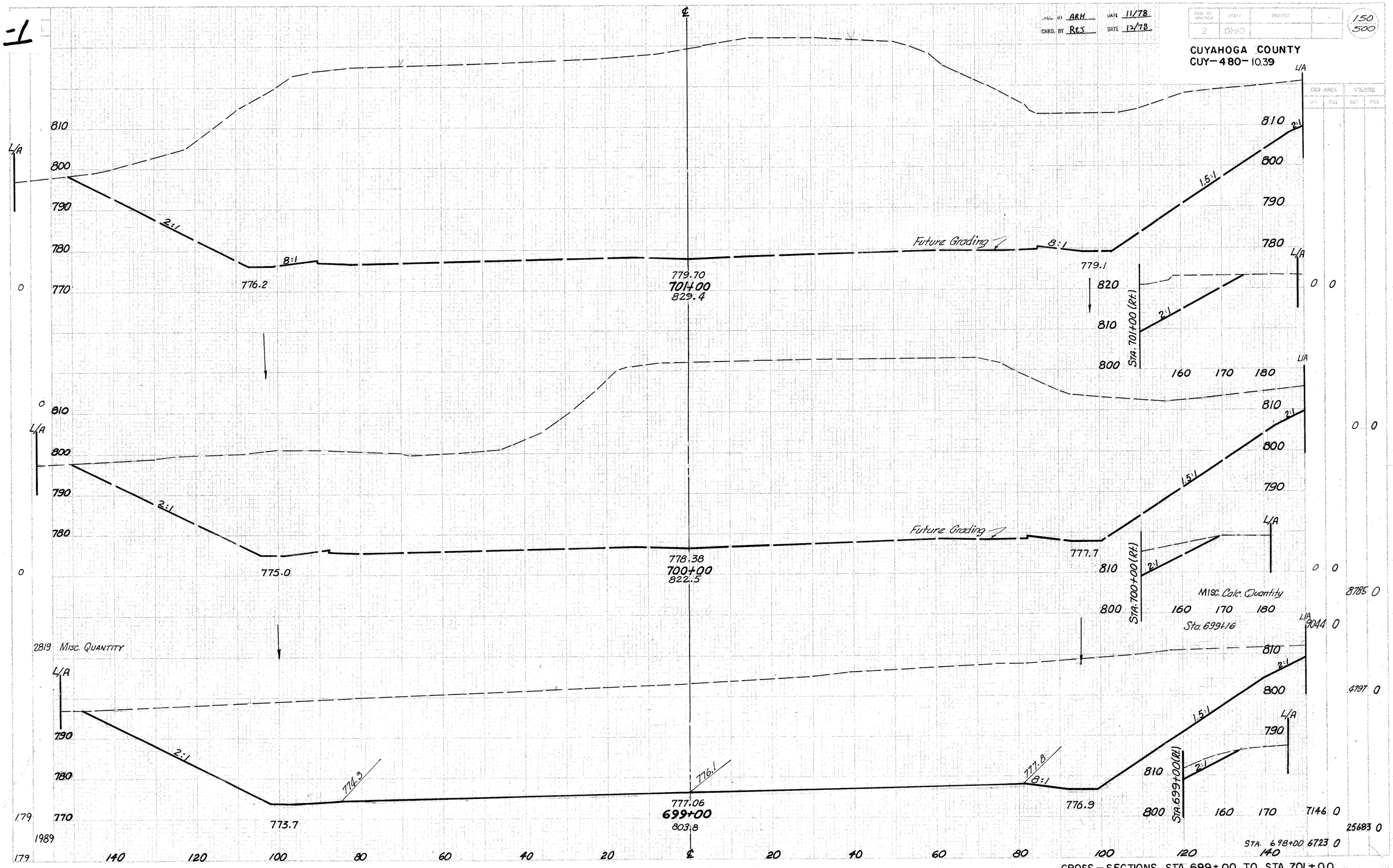
℄
L/A
810
800
790
780
770
2:1
8:1
776.2
779.70
701+00
829.4
Future Grading
779.1
1.5:1
820
STA. 701+00 (Rt.)
160
170
180
0 0
0 0
0 0

CUYAHOGA COUNTY
CUY-480-10.39

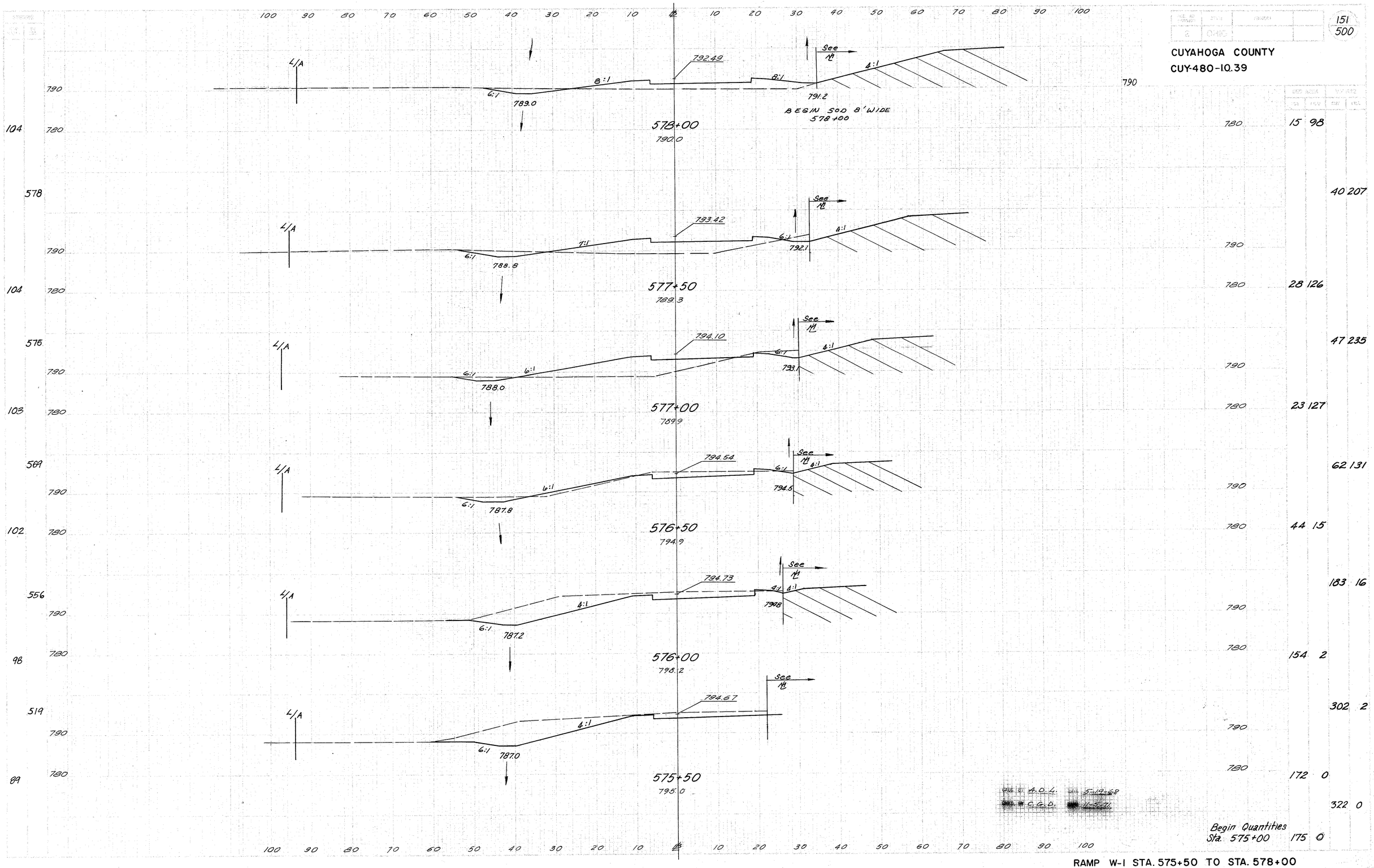


RAMP W-1 STA. 575+50 TO STA. 578+00

CUYAHOGA COUNTY
CUY-480-10.39

120 110 100 90 80 70 60 50 40 30 20 10 ℄ 10 20 30 40 50 60 70 80 90 100

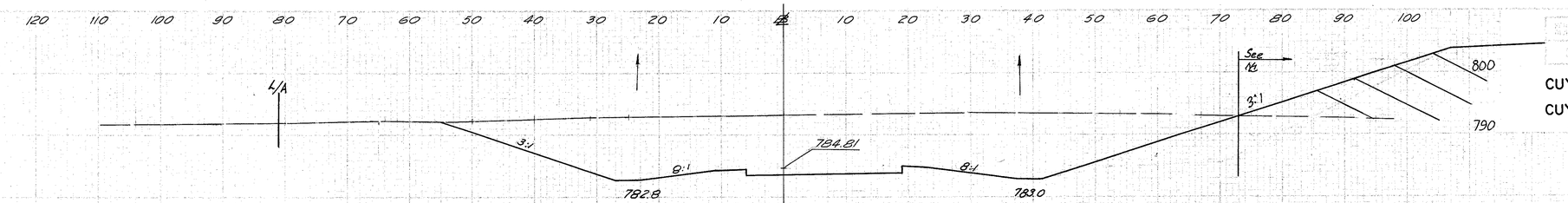


138 780 — 581+00 — 793.2 — 962

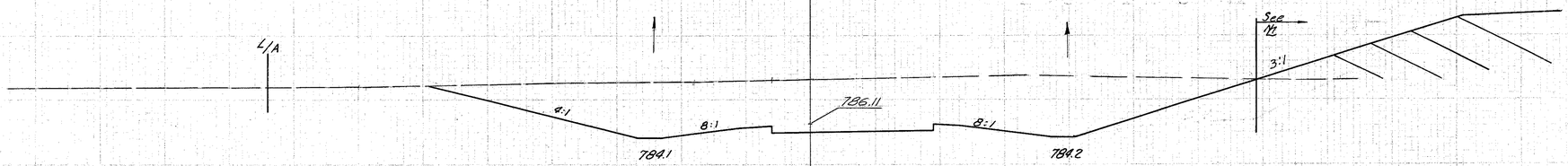


736 790 780 — 580+50 — 793.1 — 1664 835

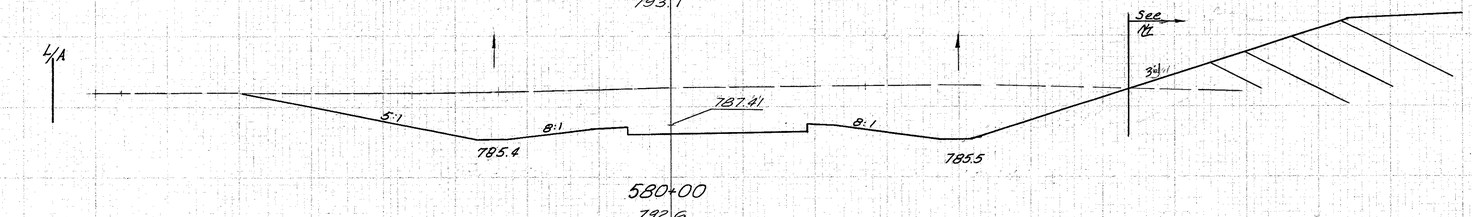


719 790 780 — 580+00 — 792.6 — 1367 641 0

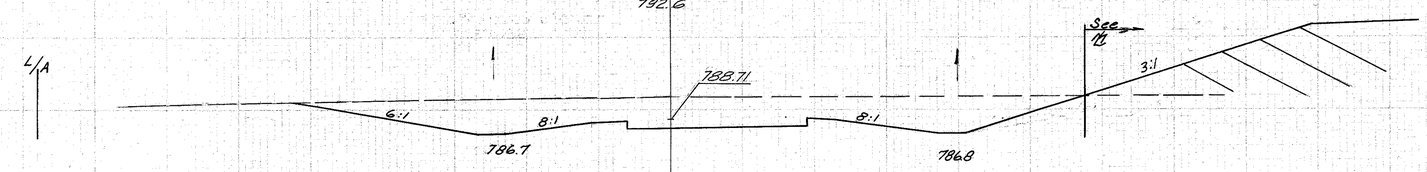


127 780 694 790 780 — 579+50 — 791.9 — 349 384 0

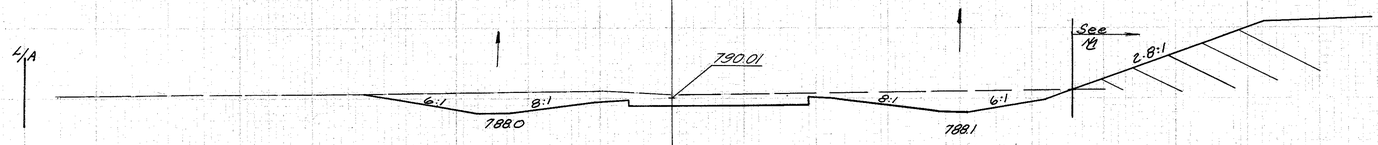


123 780 681 790 780 — 579+00 — 791.3 — 523 181 0

Note: See N2 Cross Section For Median Outlet Detail

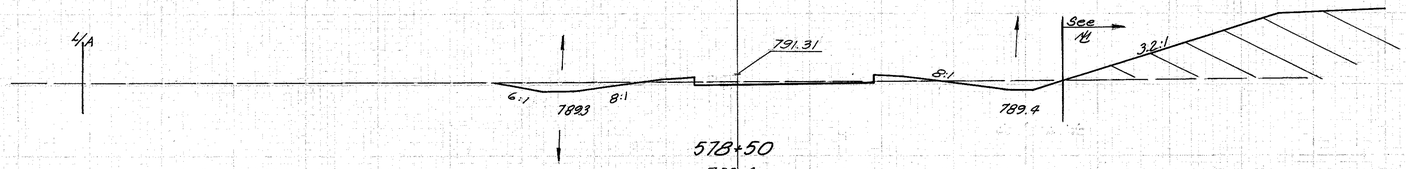


122 780 650 790 780 — 578+50 — 790.4 — 196 9 31 10

CALC. BY A.D.L. DATE 5-19-68
CHKD. BY C.G.D. DATE 11-5-71

42 100

120 110 100 90 80 70 60 50 40 30 20 10 ℄ 10 20 30 40 50 60 70 80 90 100

Sta. 578+00 15 98

RAMP W-1 STA. 578+50 TO STA. 581+00

CUYAHOGA COUNTY
CUY-480-10.39

End Quantities 582+50

582+50
792.7
(Sta. 582+37) Use same area as 582+00

582+00
793.2

581+50
793.7

W. 130 TH St

L/A

3:1
8:1
782.54
782.80
780.8
783.58
781.6
781.8
8:1
6:1
48:1
2:1

See Sht

790
780
782

86
650
117 Misc. Quantity
148
822
148
781
133

1979
116 0
Misc. Quantity
1355
2425
1264
962
2061

Sta. 581+00

Dwn. by A.D.L. Date 5-19-68
Chkd. by C.E.D. Date 11-5-71

RAMP W-1 STA. 581+50 TO STA. 582+50

154
500

CUYAHOGA COUNTY
CUY-480-10.39

140 120 100 80 60 40 20 ℄ 20 40 60 80 100

810 / 800 / 790

See N1

3:1 5:1 8:1 3:1 4:1

796.95 791.4 787.3

L/A

800 / 790

178

**584+50**
789.2

780 26 679

810 / 800 / 790

1002

See N1

3:1 6:1 7:1 12:1 3.5:1 4:1

794.87 790.2 787.1

L/A

61 1015

**584+00**
789.6

780 40 417

810 / 800 / 790

1041

See N1

2.5:1 24:1 6:1 6.5:1 4:1 4:1

793.02 789.5 787.0

L/A

113 507

**583+50**
790.2

780 82 131

810 / 800 / 790

1089

See N1

2:1 24:1 6:1 8:1 5:1 4:1

791.62 789.0 786.8

L/A

202 161

**583+00**
790.6

780 136 43

W 130th St at C.B.

925

5:1 5:1 5:1 4:1

½"/Ft. ½"/Ft.

790.68 788.5 786.6

L/A

243 51

133

**582+50**
790.4

780 126 12

W 130th St

544

Var. Var.

790.20

L/A

148 15

63

**582+00**

780 34 4

215 Misc. Quantity

Begin Quantities 582+00

Misc. Quantity From W. 130th

32 4

140 120 100 80 60 40 20 ℄ 20 40 60 80 100 120

RAMP W-2 STA. 582+00 TO STA. 584+50

CUYAHOGA COUNTY
CUY480-10.39

140 120 100 80 60 40 20 ℄ 20 40 60 80 100

810 800 790 780

See M

3:1 4:1 8:1 3:1 4:1

803.1 807.35 788.0

4/A

153 861

## 587+00
789.7

805.27 798.8 787.8

157 866

## 586+50
789.2

80319 797.0 787.7

162 914

## 586+00
789.6

80111. 795.1 787.5

167 955

## 585+50
790.0

793.03 793.2 787.4

177 986 178

## 585+00
789.6

A.D.L. 5-19-68
C.G.D. 1-15-71

Sta 584+50

9 1667
32 2881
26 1444
57 2465
36 1218
68 2039
38 984
60 1648
27 796
49 1366
26 679

RAMP W-2 STA. 585+00 TO STA. 587+00

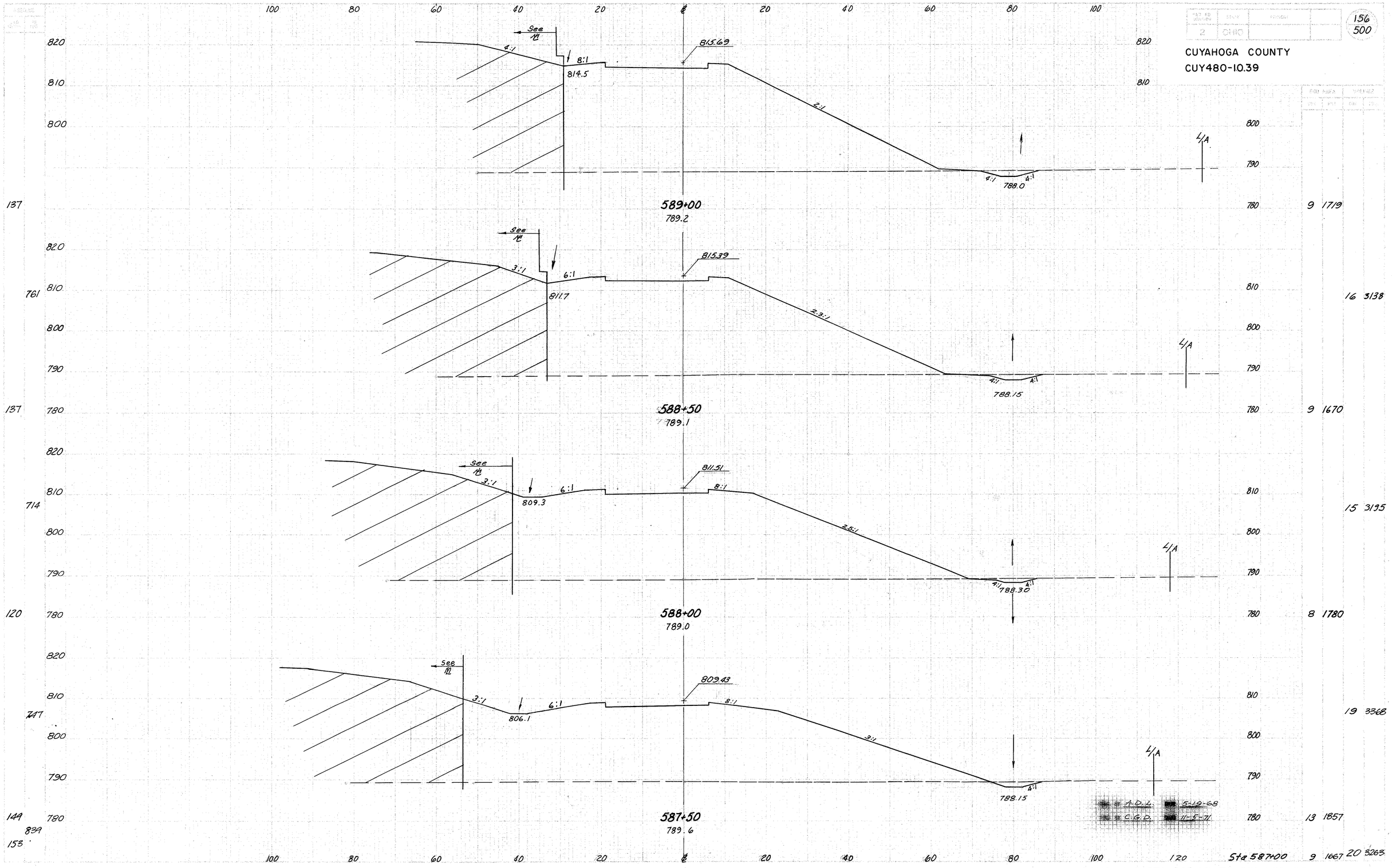


RAMP W-2 STA. 587+50 TO STA. 589+00

| FED. AID PROJECT | STATE | PROJECT | | SHEET NO. | TOTAL SHEETS |
|---|---|---|---|---|---|
| 2 | OHIO | | | 157 | 500 |

CUYAHOGA COUNTY
CUY480-10.39

| END AREA | | VOLUME | |
|---|---|---|---|
| CUT | FILL | CUT | FILL |

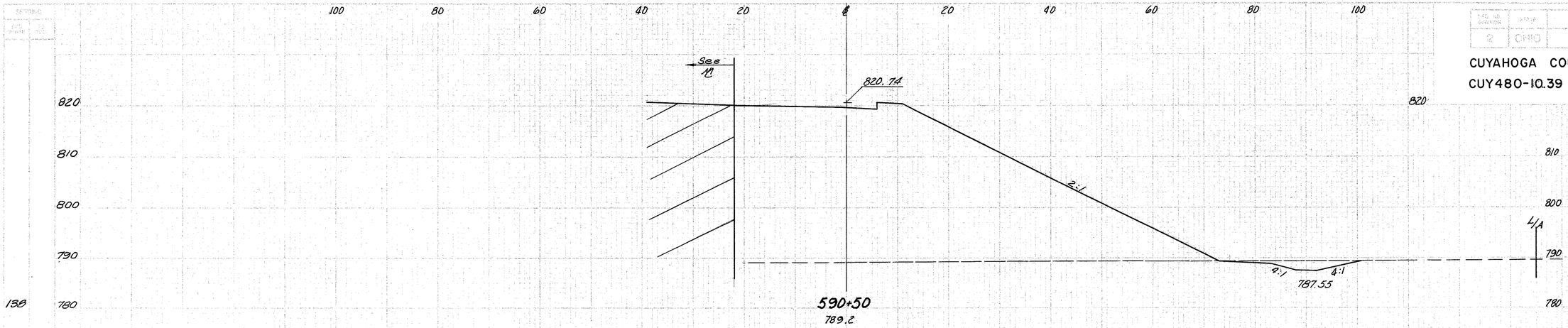


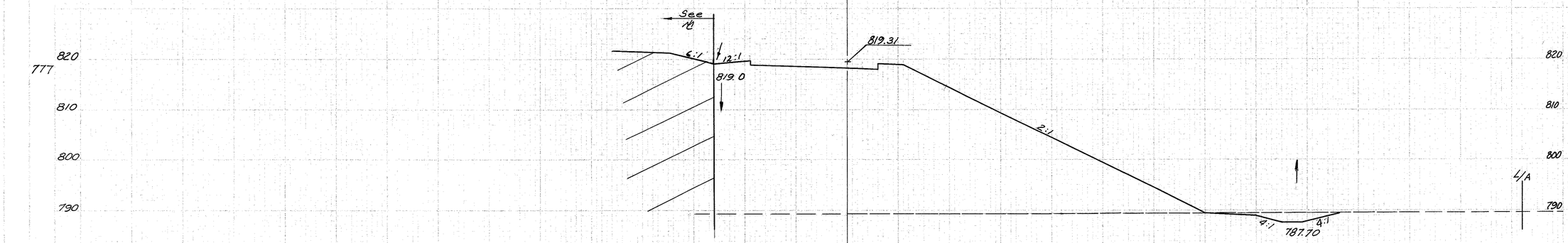


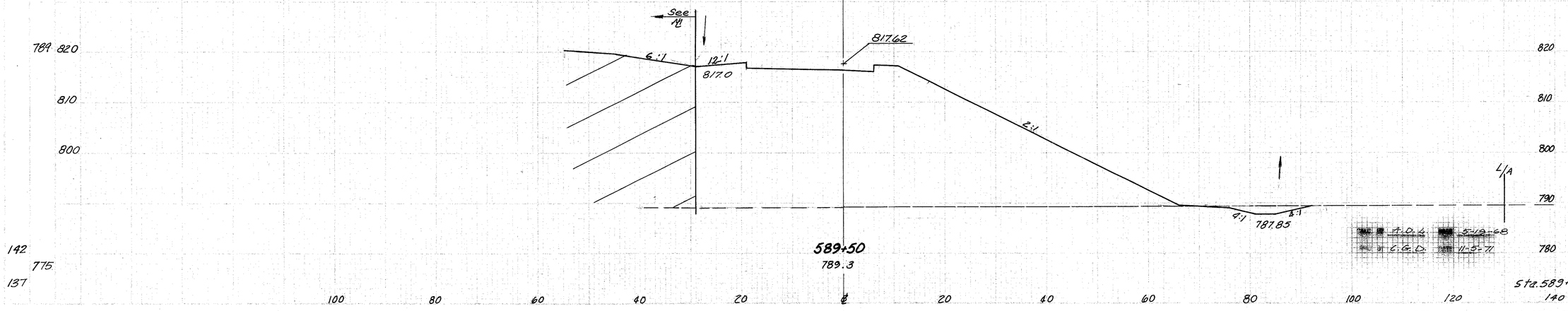


RAMP W-2 STA. 589+50 TO STA. 590+50

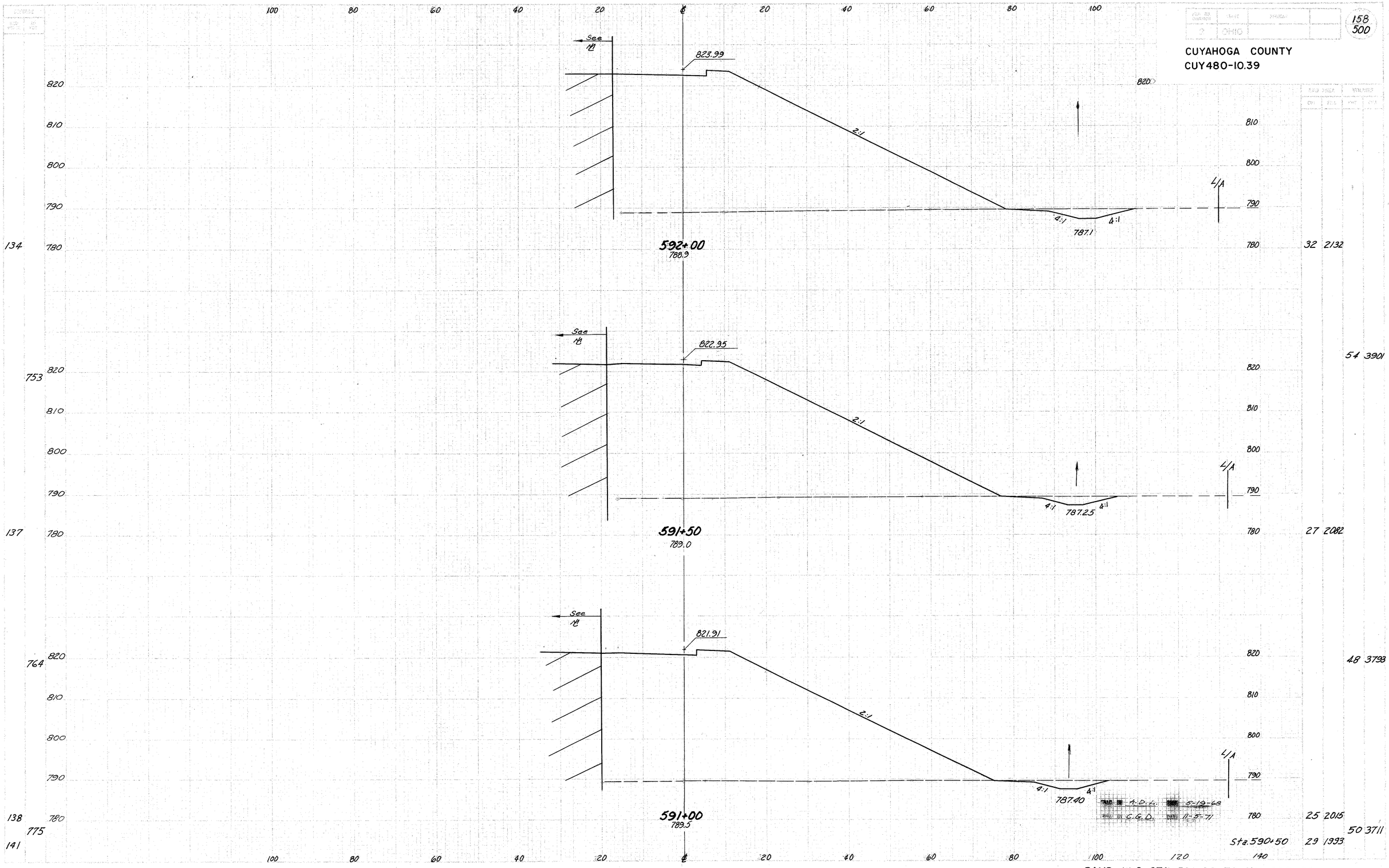


RAMP W-2 STA. 591+00 TO STA. 592+00

CUYAHOGA COUNTY
CUY 480-10.39

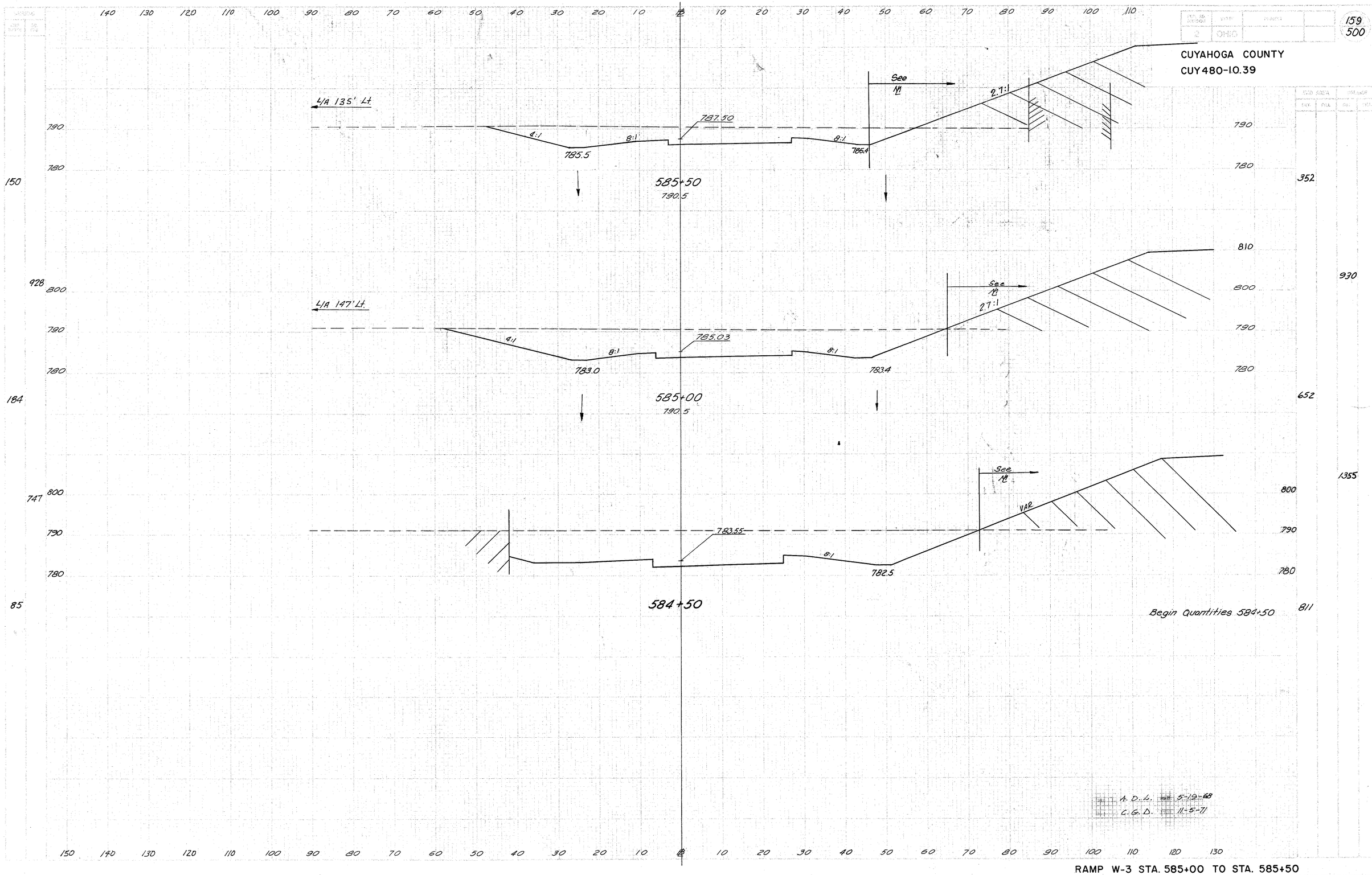


Begin Quantities 584+50

A. D. L. 5-19-68
C. G. D. 11-5-71

RAMP W-3 STA. 585+00 TO STA. 585+50

CUYAHOGA COUNTY
CUY480-10.39

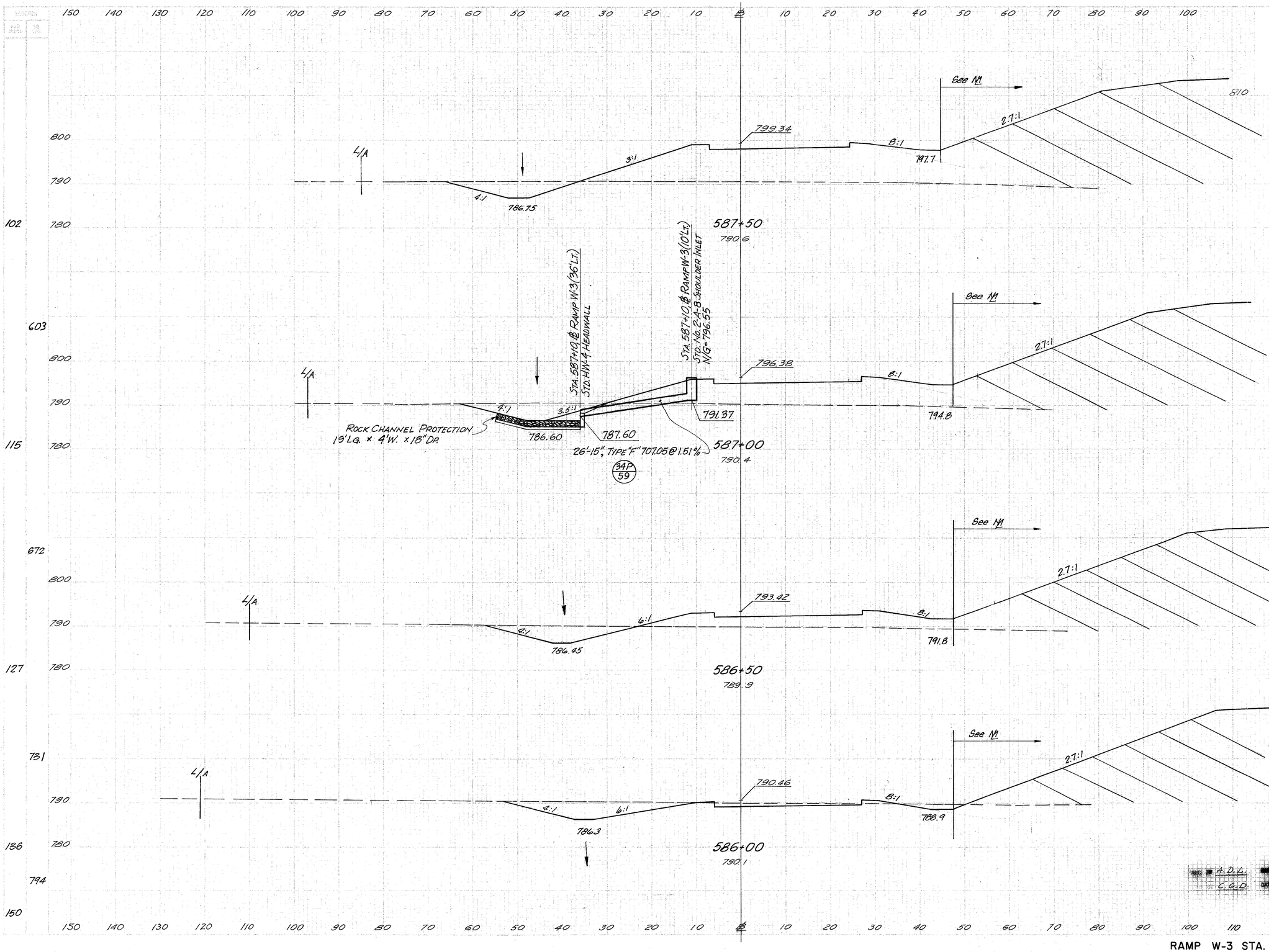


RAMP W-3 STA. 586+00 TO STA. 587+50

CUYAHOGA COUNTY

CUY 480-10.39

140 130 120 110 100 90 80 70 60 50 40 30 20 10 ℄ 10 20 30 40 50 60 70 80 90 100

810 800 790 780

℄ N.Y.C. R.R.

4:1 7814 4:1 1½"/Ft L/A 2:1 810.87 8:1 809.2 3.8:1 See N1

104 589+50 789.6 21 1465

810 800 790 780

567

℄ N.Y.C. R.R.

4:1 7812 4:1 1½"/Ft L/A 2:1 808.19 8:1 806.5 3.5:1 See N1

100 589+00 789.9 49 2453

810 800 790

550

℄ N.Y.C. R.R.

4:1 7871 4:1 1½"/Ft L/A 2:1 805.26 8:1 803.5 3.4:1 See N1

98 588+50 790.0 32 1184

810 800 790

536

4:1 786.9 4:1 1½"/Ft L/A 2:1 802.30 8:1 800.2 2.6:1 2:1 See N1

95 547 102 588+00 790.7 74 1969

810 800 790

48 942

810 800 790

108 1506

69 684

123 1163

Sta. 587+50 64 572

140 130 120 110 100 90 80 70 60 50 40 30 20 10 ℄ 10 20 30 40 50 60 70 80 90 100

DRAWN A.D.L. 5-18-68

CHKD C.G.D. 11-5-71

RAMP W-3 STA. 588+00 TO STA. 589+00

162
500

CUYAHOGA COUNTY
CUY-480-10.39

50 Misc - Quantity

Misc. Quantity
Sta. 590 to Ramp W-3

0 394

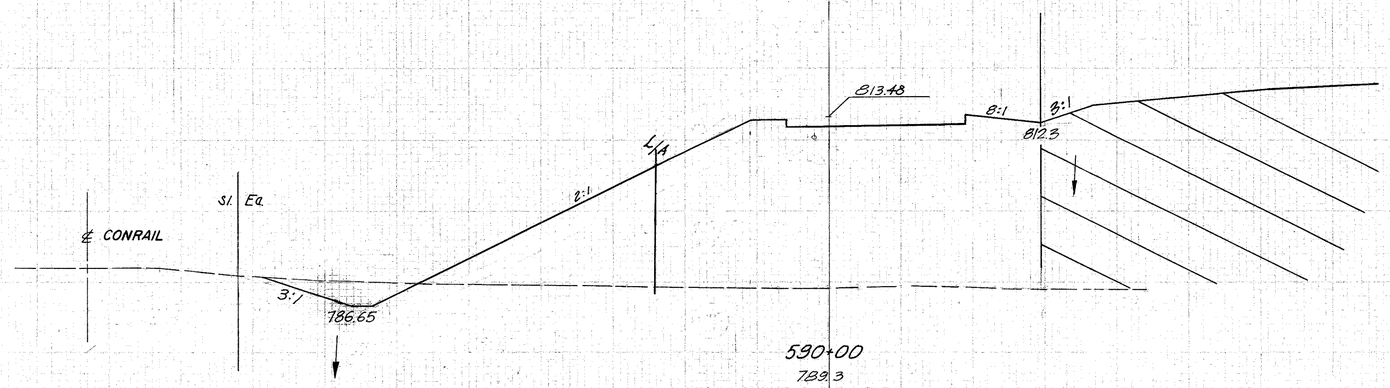


A.D.L. 5-19-68
C.G.D. 11-5-71

97 558 104

30 1473

47 2720

Sta. 589+50 21 1465

RAMP W-3 STA. 590+00 TO STA.

163
500

CUYAHOGA COUNTY
CUY-480-10.39

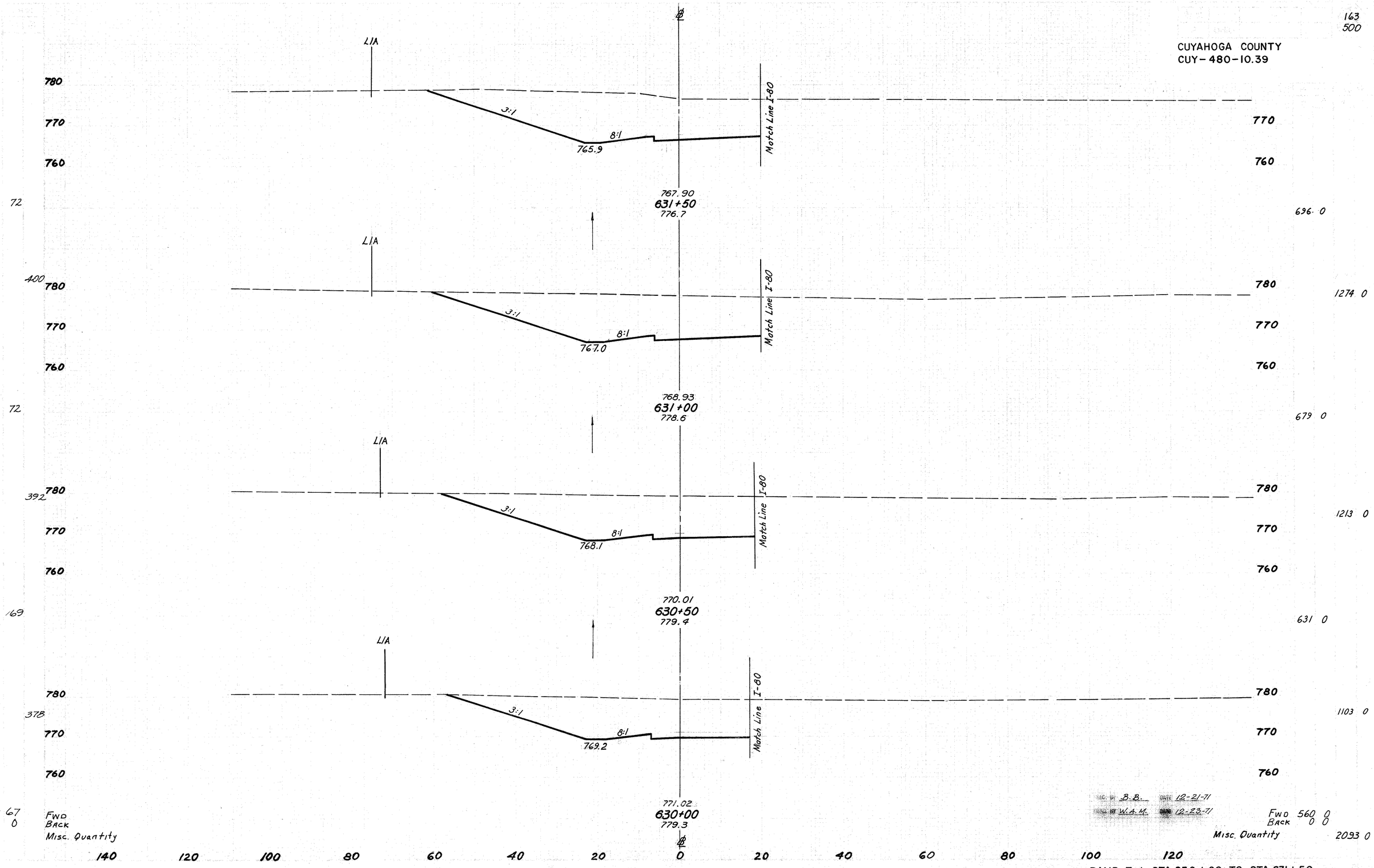


DES. BY B.B. DATE 12-21-71
CHK. BY W.A.M. DATE 12-23-71

RAMP T-1 STA. 630+00 TO STA. 631+50

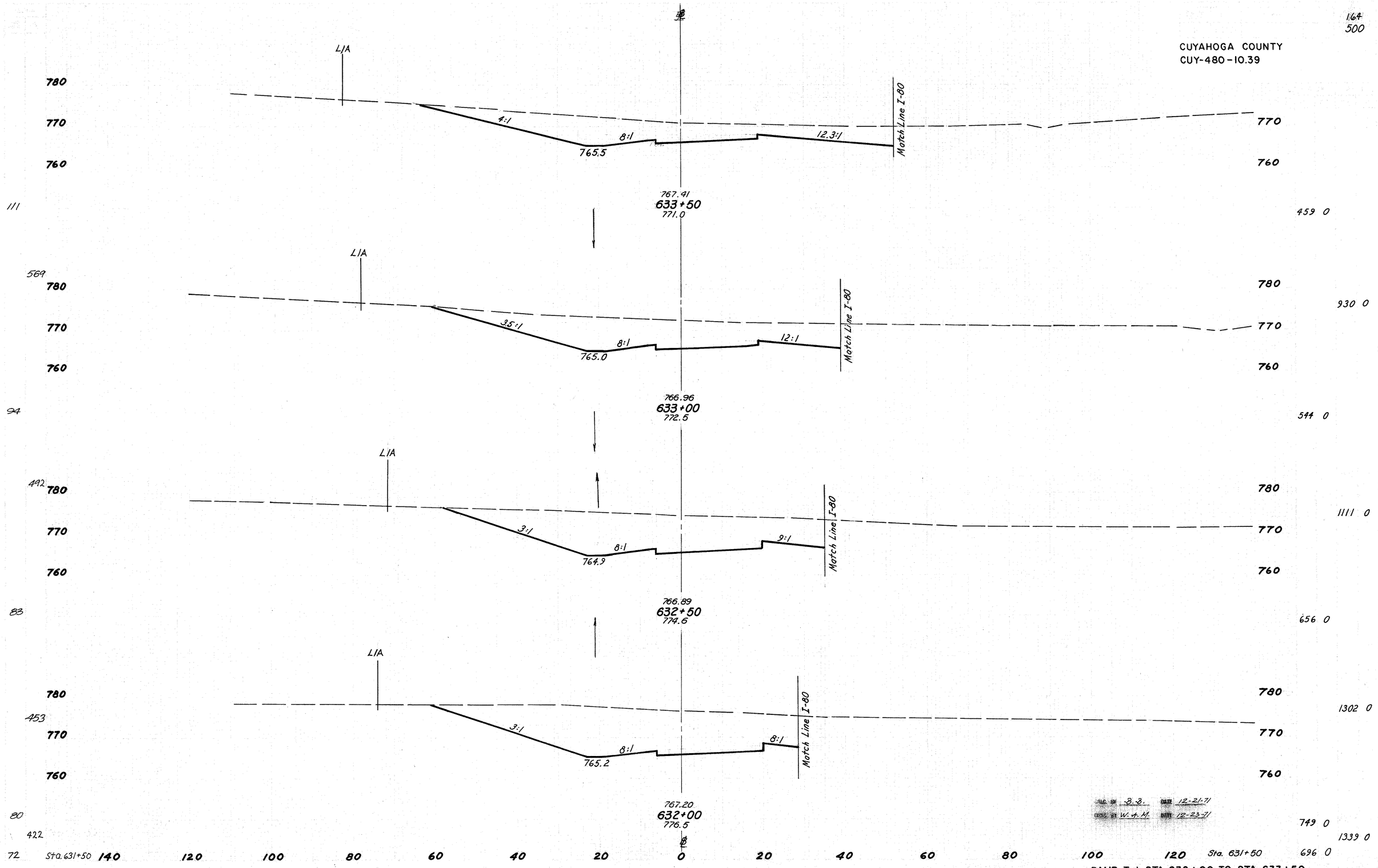


RAMP T-1 STA. 632+00 TO STA. 633+50

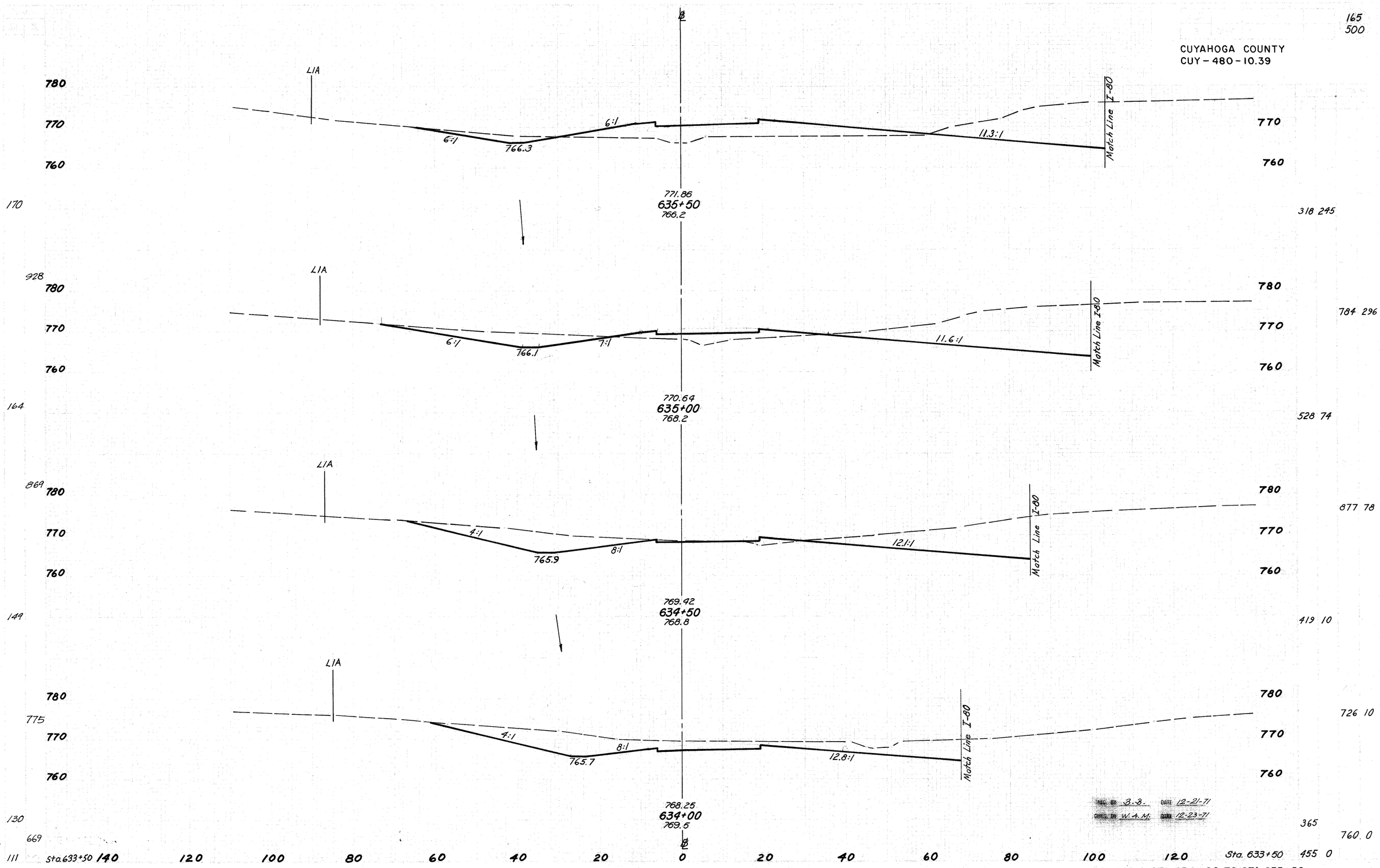


RAMP T-1 STA. 634+00 TO STA. 635+50

166
500

CUYAHOGA COUNTY
CUY-480-10.39

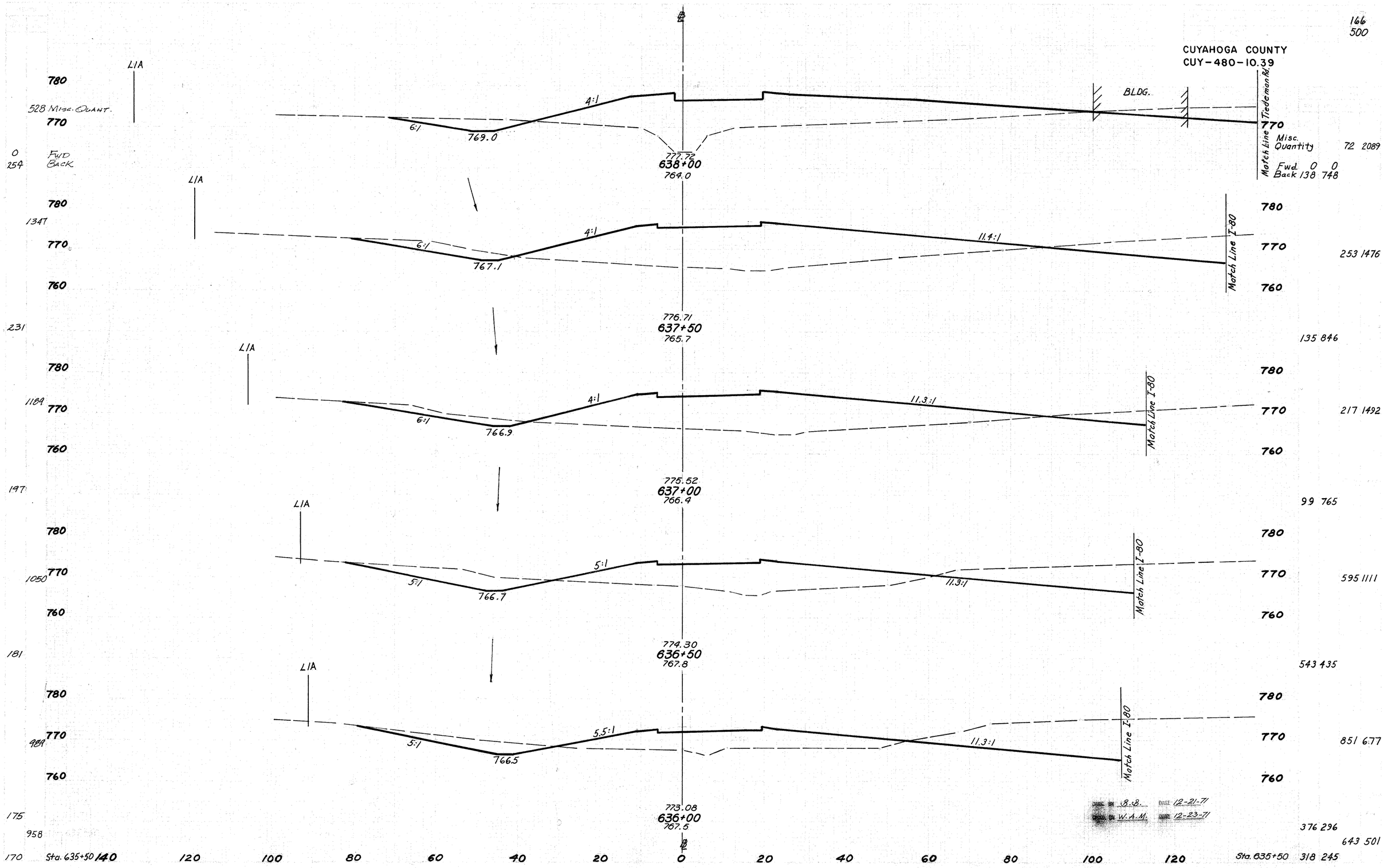


DRWN. BY S.S. DATE 12-21-71
CHKD. BY W.A.M. DATE 12-23-71

RAMP T-1 STA. 636+00 TO STA. 638+00

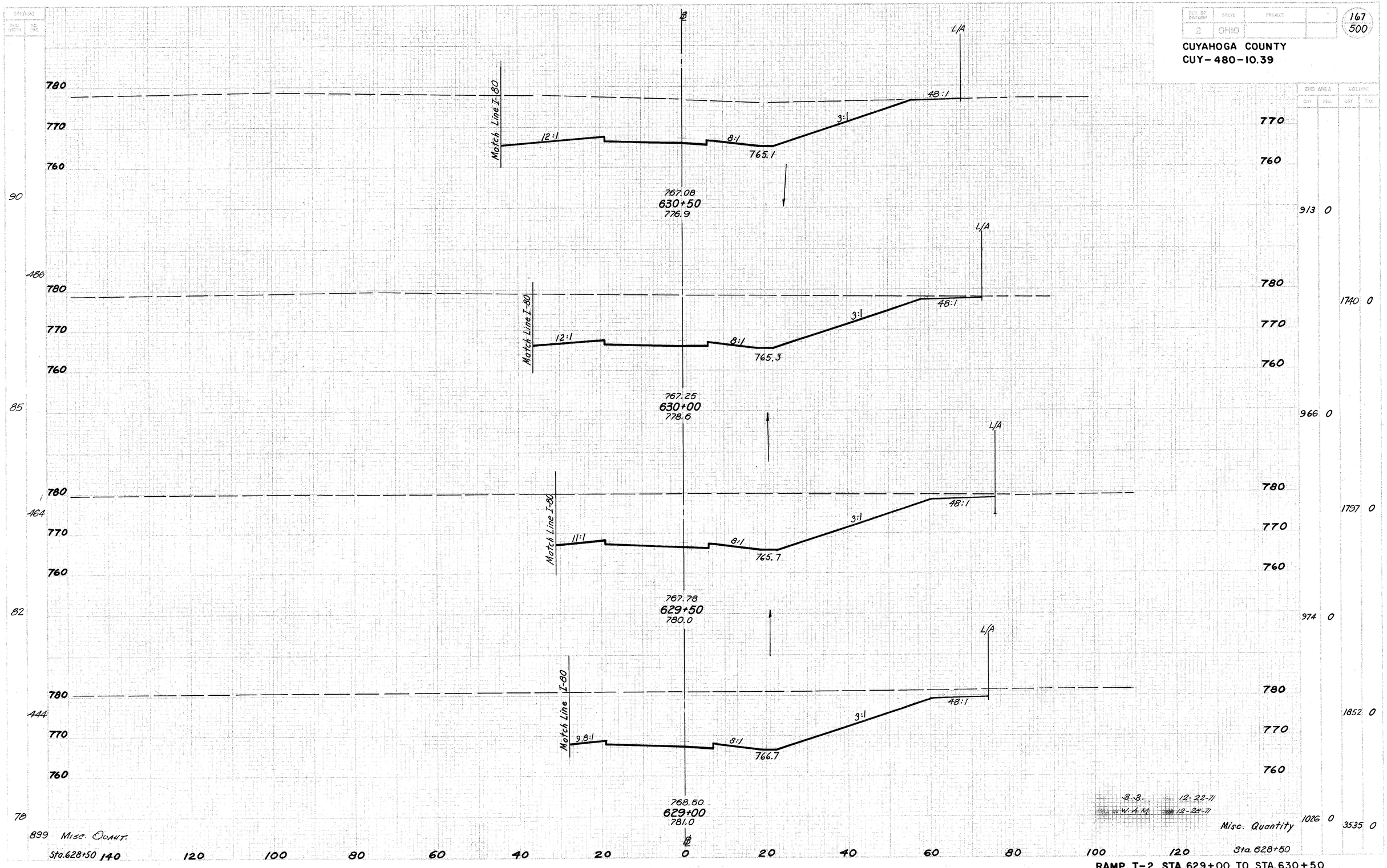


RAMP T-2 STA. 629+00 TO STA. 630+50

| FED. RD. DESIGN | STATE | PROJECT | |
|---|---|---|---|
| 2 | OHIO | | |

168
500

CUYAHOGA COUNTY
CUY-480-10.39

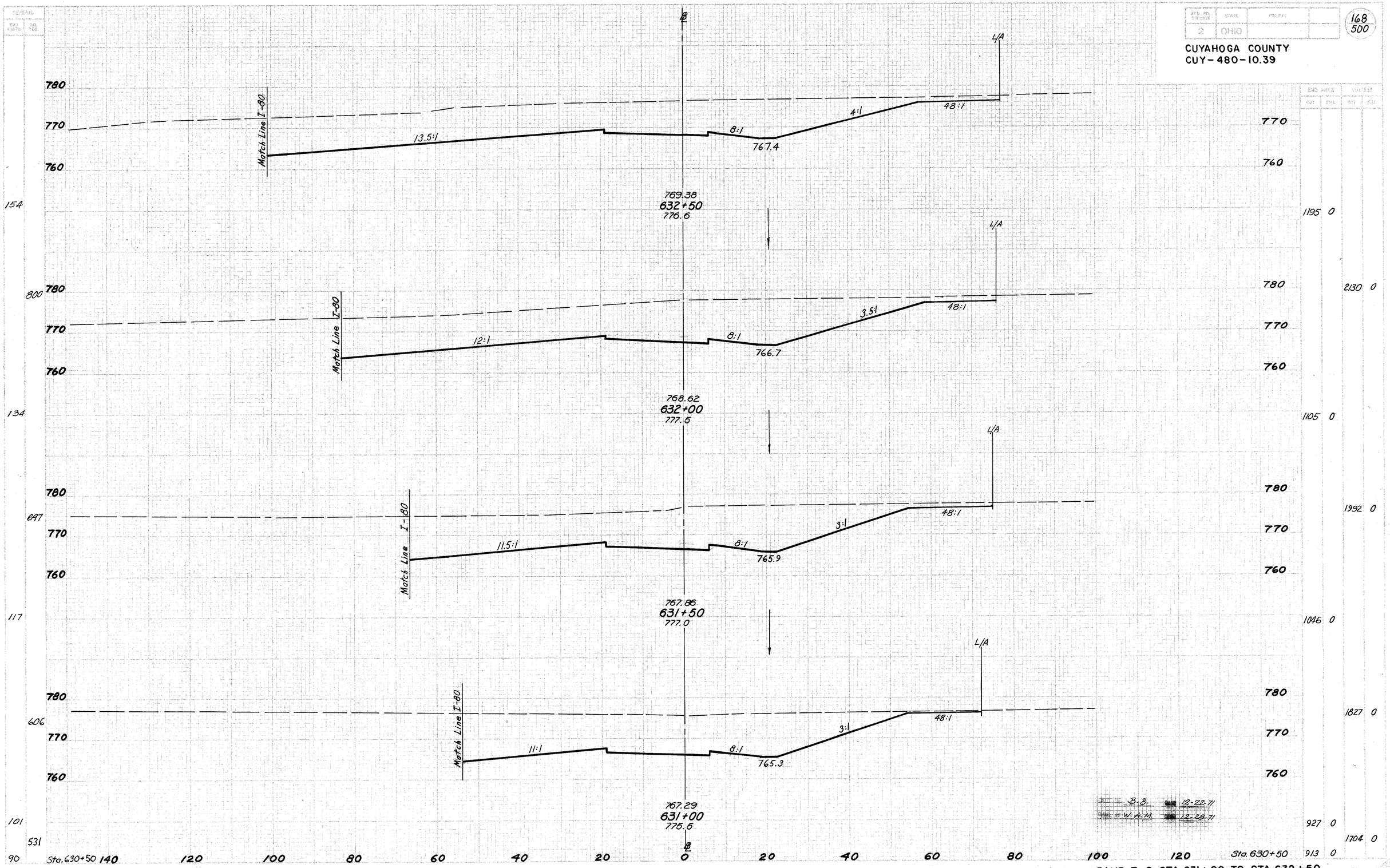


B.B. 12-22-71
CHKD. BY W.A.M. 12-28-71

RAMP T-2 STA. 631+00 TO STA. 632+50

| FED. RD. DIVISION | STATE | PROJECT | |
|---|---|---|---|
| 2 | OHIO | | |

CUYAHOGA COUNTY
CUY-480-10.39

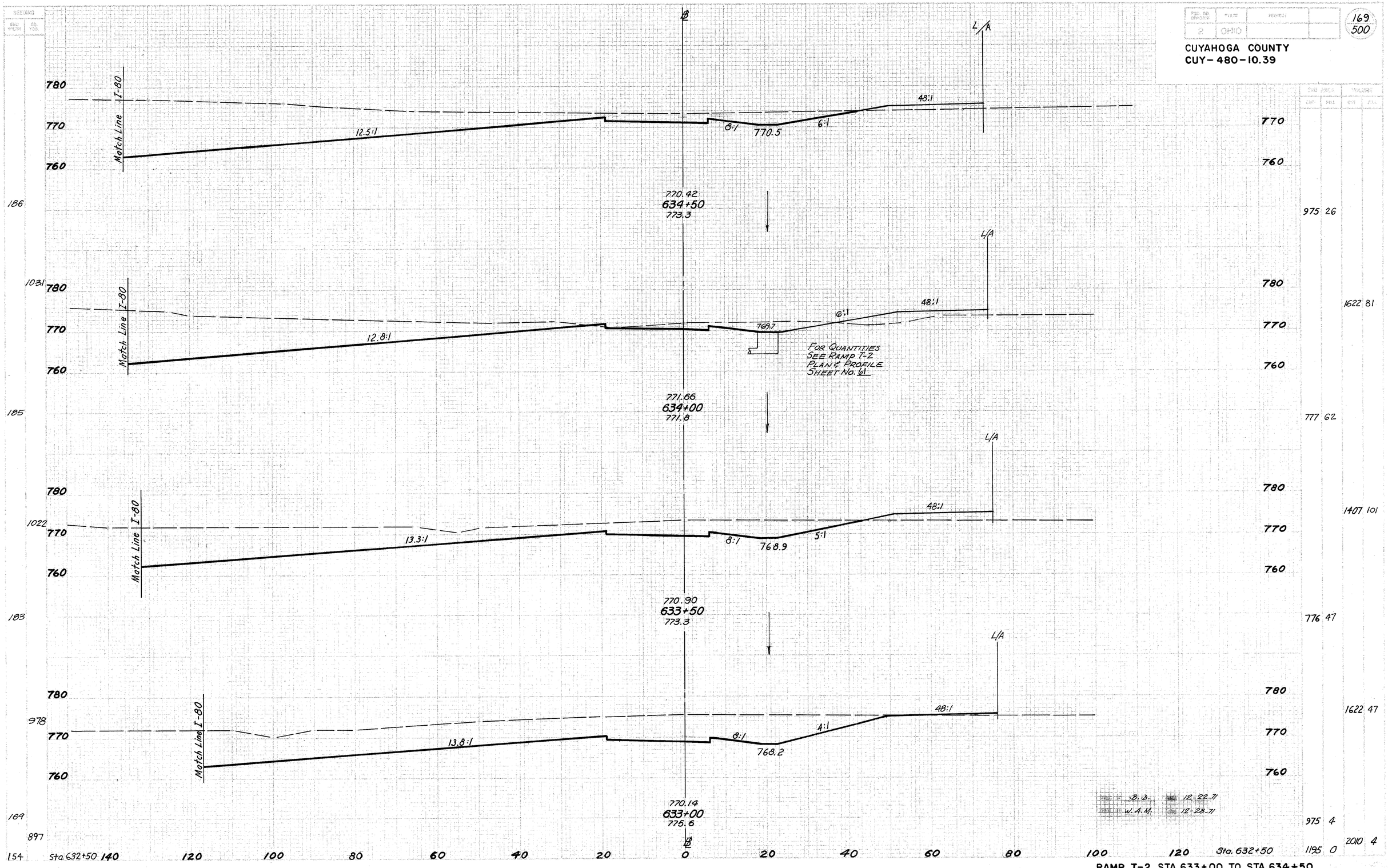


RAMP T-2 STA. 633+00 TO STA. 634+50

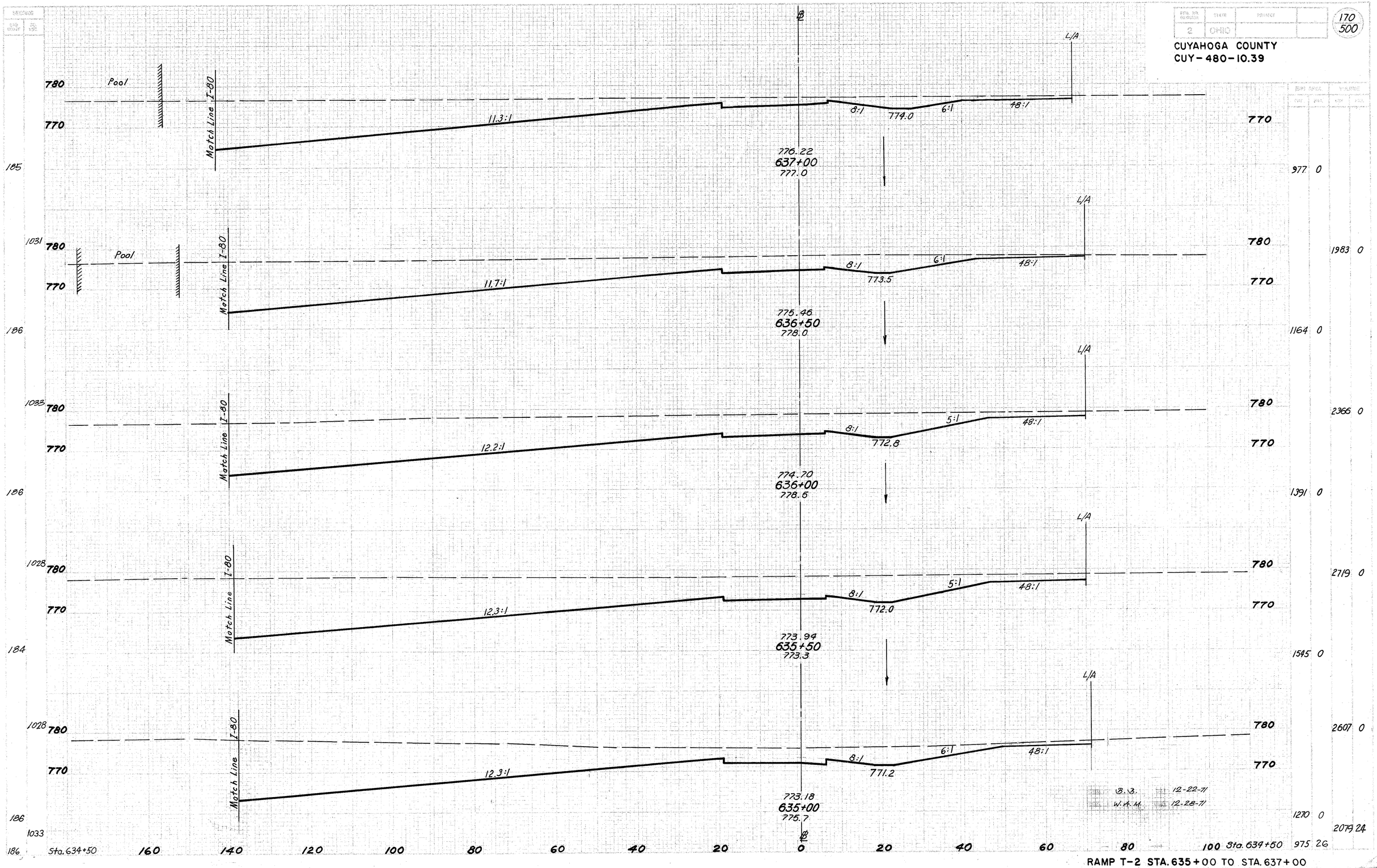


RAMP T-2 STA. 635+00 TO STA. 637+00

| FED. RD. DIVISION | STATE | PROJECT | |
|---|---|---|---|
| 2 | OHIO | | |

171
500

CUYAHOGA COUNTY
CUY-480-10.39

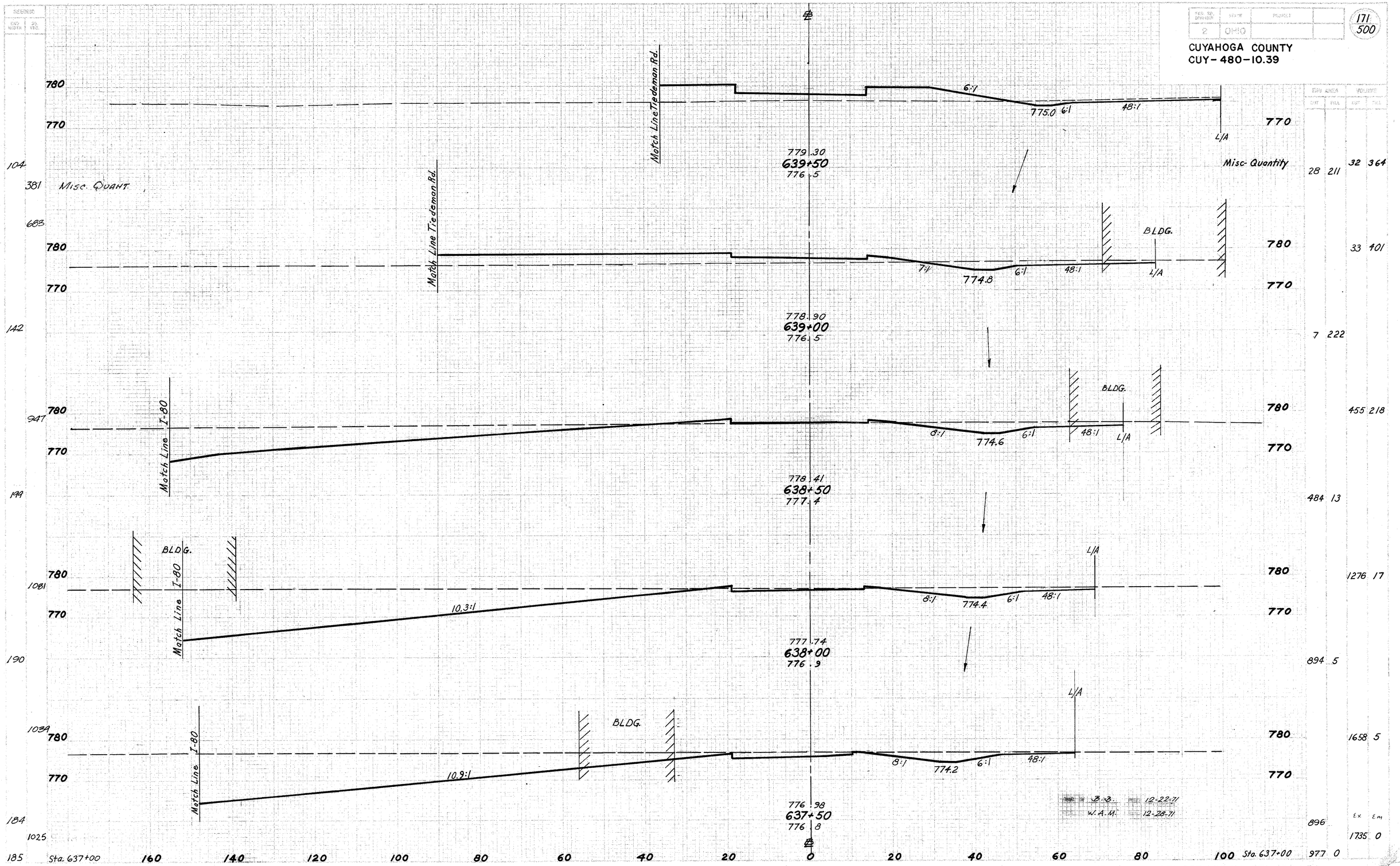


| Station | Cut | Fill | Cut | Fill |
|---|---|---|---|---|
| Misc. Quantity | 28 | 211 | 32 | 364 |
| | | | 33 | 401 |
| | 7 | 222 | | |
| | | | 455 | 218 |
| | 484 | 13 | | |
| | | | 1276 | 17 |
| | 894 | 5 | | |
| | | | 1658 | 5 |
| | 896 | | 1735 | 0 |
| Sta. 637+00 | 977 | 0 | | |

RAMP T-2 STA. 637+50 TO STA. 639+50

| FED. RD. DIVISION | STATE | PROJECT | |
|---|---|---|---|
| 2 | OHIO | | |

172
500

CUYAHOGA COUNTY
CUY-480-10.39

| SECTIONS | | END AREAS | | MID-LINE | |
|---|---|---|---|---|---|
| CUM. VOLUMES | SQ. FOS. | CUT | FILL | CUT | FILL |

780
770
760
L/A
3:1
6:1
756.0
14.7:1
BLDG.
Match Line I-80
770
760
774.83
640+50
762.7
232
272 1003

780
1294
770
760
L/A
6:1
761.3
13.6:1
BLDG.
Match Line I-80
780
770
760
776.05
640+00
766.2
234
540 1637
311 765

1311
780
770
760
L/A
4:1
6:1
766.5
12.7:1
BLDG.
BLDG.
Match Line I-80
780
770
760
777.74
639+50
768.6
238
701 1331
446 673

1350
780
770
760
L/A
BLDG.
4:1
6:1
767.0
BLDG.
780
770
760
Match Line Tiedeman Rd.
777.96
639+00
769.6
248
458 1662
48 1122

1061
780
770
760
L/A
4:1
6:1
767.5
Match Line Tiedeman Rd.
780
770
778.51
638+50
769.4
134
61 1844

B.B. 12-27-71
W.M.M. 12-28-71

719 Misc. Quantity
Sta. 638+00 100 80 60 40 20 0 20 40 60 80 100 120 140 160 Sta. 638+00

Fwd- 18 870
Back- 0 0
Misc. Quantity 2 2115

RAMP T-3 STA. 638+50 TO STA. 640+50

173
500

CUYAHOGA COUNTY
CUY-480-10.39

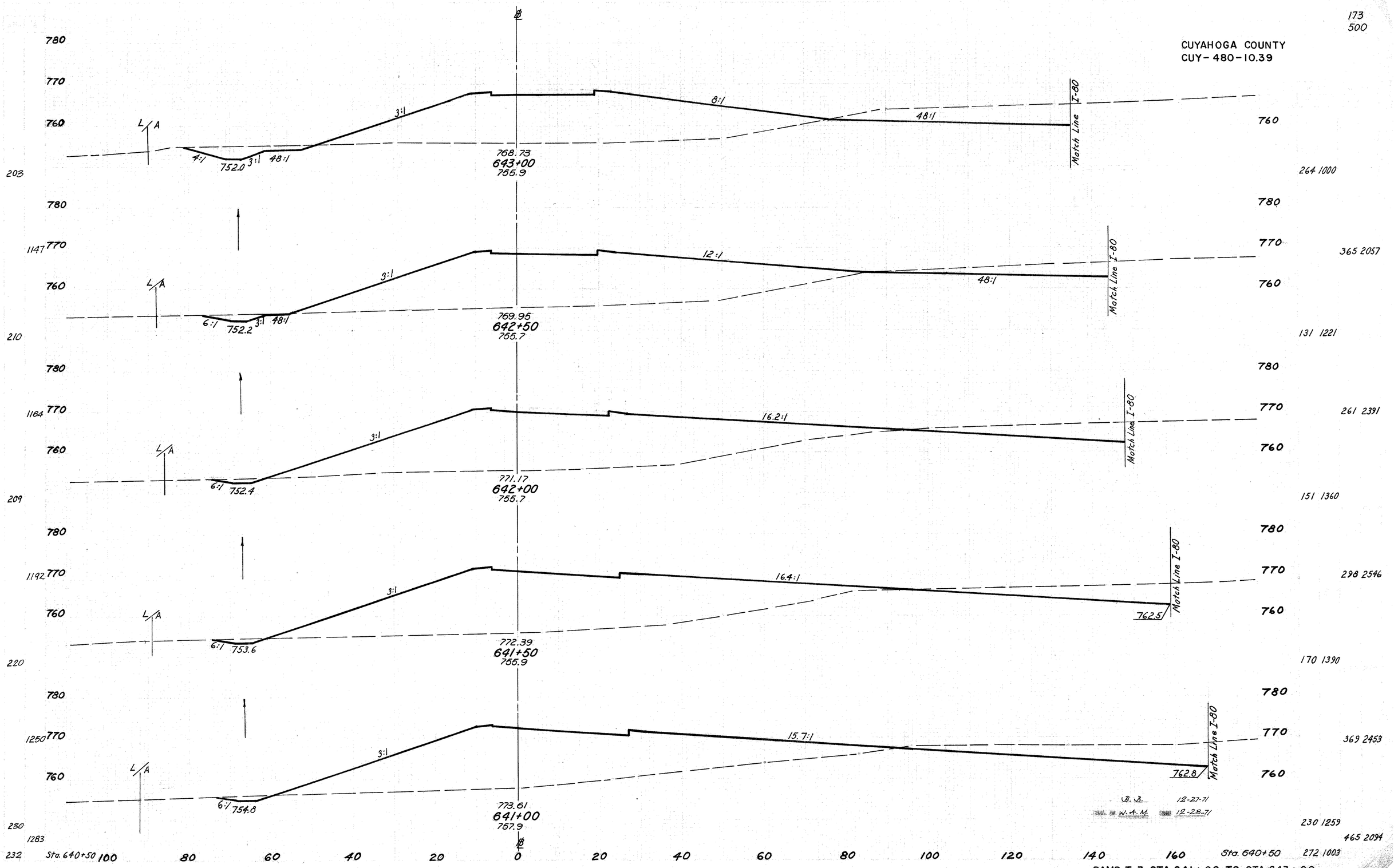


B. S. 12-27-71
W. A. M. 12-28-71

RAMP T-3 STA. 641+00 TO STA. 643+00

CUYAHOGA COUNTY
CUY-480-10.39

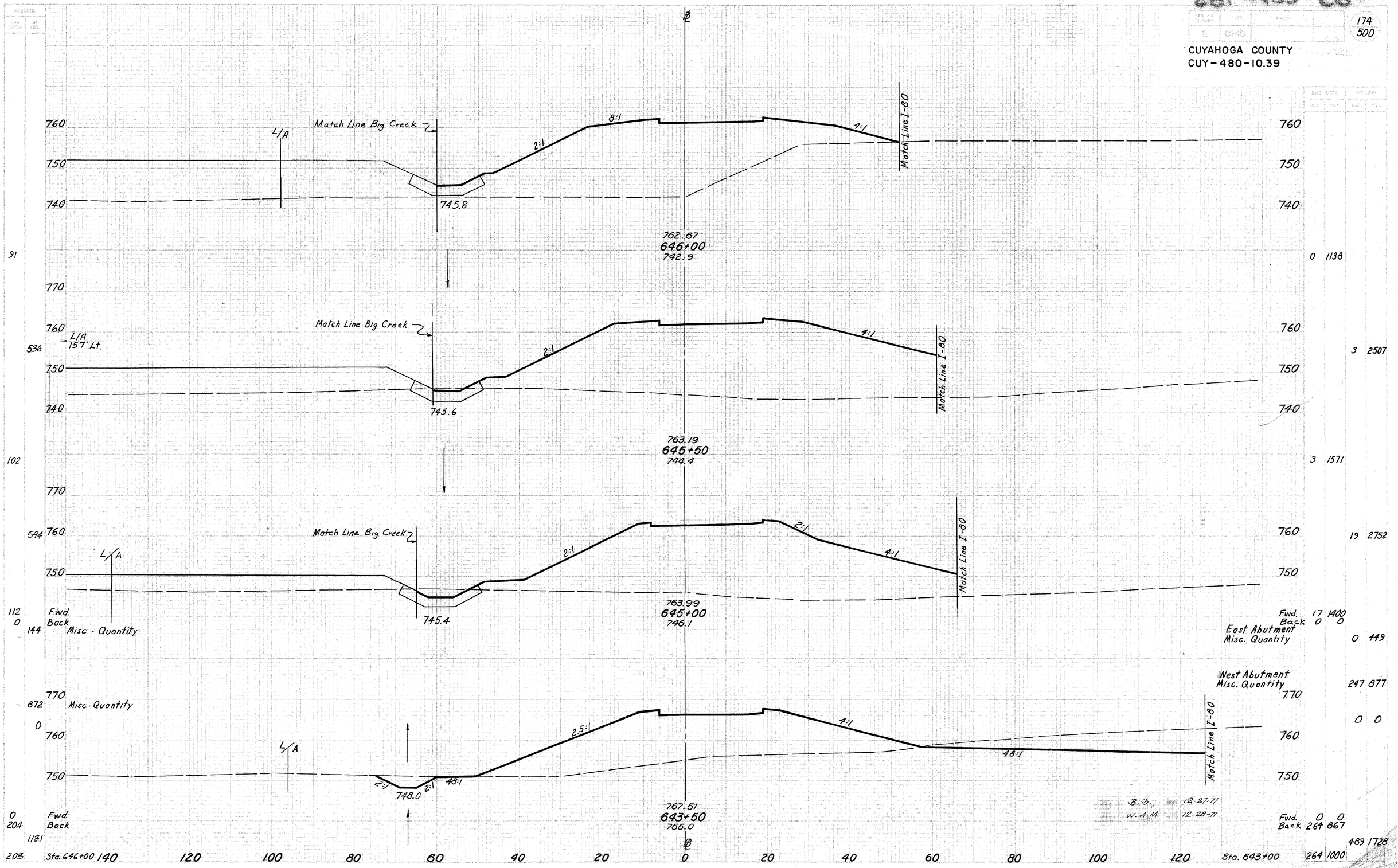


91

102

594

112
0
144
Fwd.
Back
Misc - Quantity

872
0
Misc - Quantity

0
204
1131
Fwd.
Back

203

0 1138

3 2507

3 1571

19 2752

Fwd. 17 1400
Back 0 0
East Abutment
Misc. Quantity 0 449

West Abutment
Misc. Quantity 247 877

0 0

Fwd. 0 0
Back 264 867

489 1728

264 1000

B.B. 12-27-71
W.A.M. 12-28-71

RAMP T-3 STA. 643+50 TO STA. 646+00

| FED. RD. DIVISION | STATE | PROJECT | |
|---|---|---|---|
| 2 | OHIO | | |

CUYAHOGA COUNTY
CUY-480-10.39

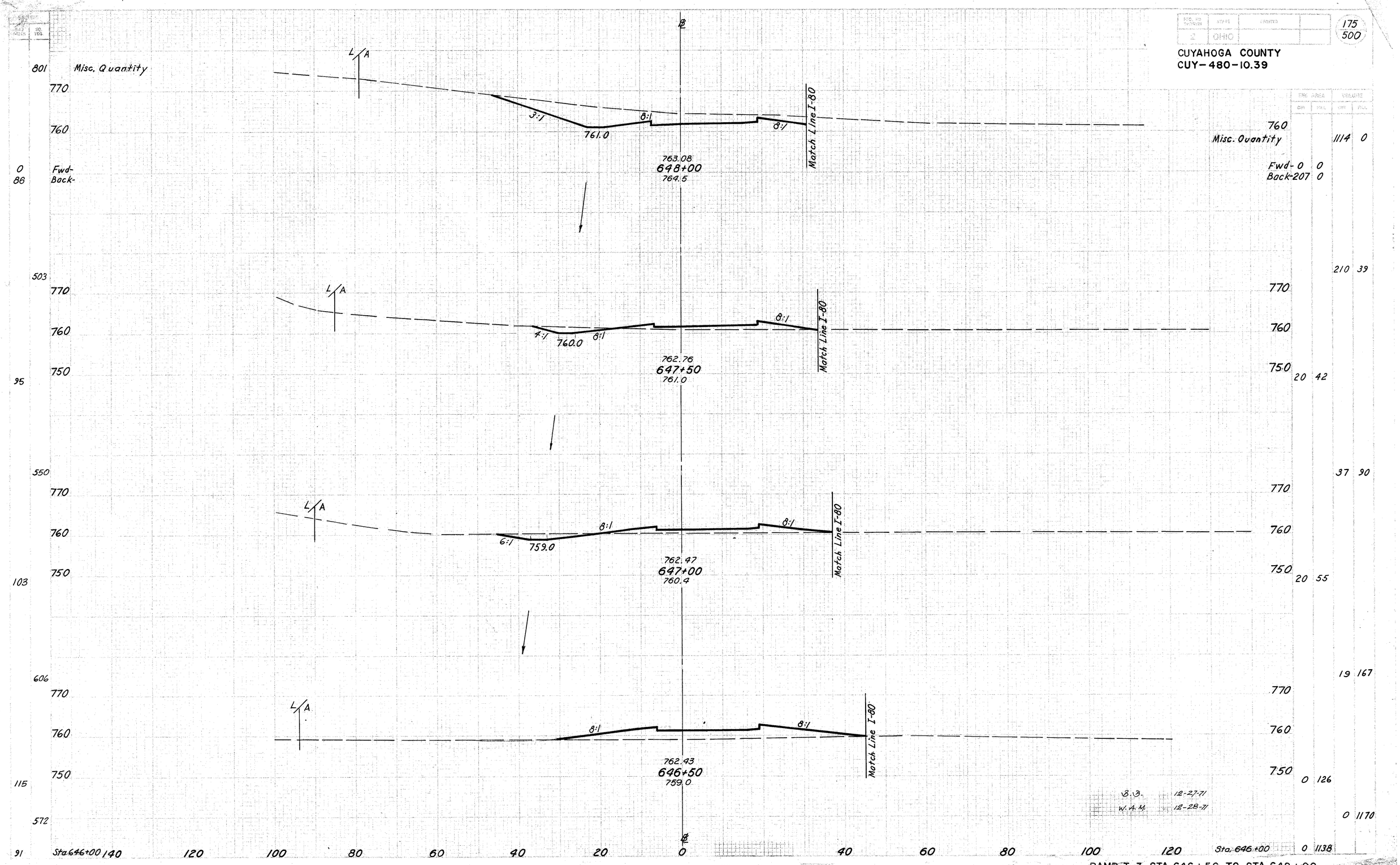


| Station | Elev. | Fwd | Back | Volume Cut | Volume Fill |
|---|---|---|---|---|---|
| Misc. Quantity | 760 | | | 1114 | 0 |
| Fwd- | | 0 | 0 | | |
| Back- | | 207 | 0 | | |
| | | | | 210 | 39 |
| | 770 | | | | |
| | 760 | | | | |
| | 750 | 20 | 42 | | |
| | | | | 37 | 90 |
| | 770 | | | | |
| | 760 | | | | |
| | 750 | 20 | 55 | | |
| | | | | 19 | 167 |
| | 770 | | | | |
| | 760 | | | | |
| | 750 | 0 | 126 | | |
| | | | | 0 | 1170 |
| Sta. 646+00 | | 0 | 1138 | | |

RAMP T-3 STA. 646+50 TO STA. 648+00

| FED. RD. DIVISION | STATE | PROJECT | |
|---|---|---|---|
| 2 | OHIO | | |

176
500

CUYAHOGA COUNTY
CUY-480-10.39

| SEEDING | | END AREA | | VOLUME | |
|---|---|---|---|---|---|
| ENG WORK | CO. YDS. | CUT | FILL | CUT | FILL |
| 155 | | 26 | 1248 | | |
| 686 | | | | 51 | 1657 |
| 92 | Fwd. - | | | | |
| 0 | Back- | | | | |
| 0 | | | | 0 | 0 |
| 0 | Fwd - | | | | |
| 208 | Back - | | | | |
| 1164 | | | | 1249 | 220 |
| 213 | Fwd- | | | | |
| 0 | Back- | | | | |
| 4 | Misc. Quantity | | | 30 | 312 |

Fwd- 29 542
Back- 0 0

Fwd- 0 0
Back - 875 157

Fwd- 470 80
Back- 0 0

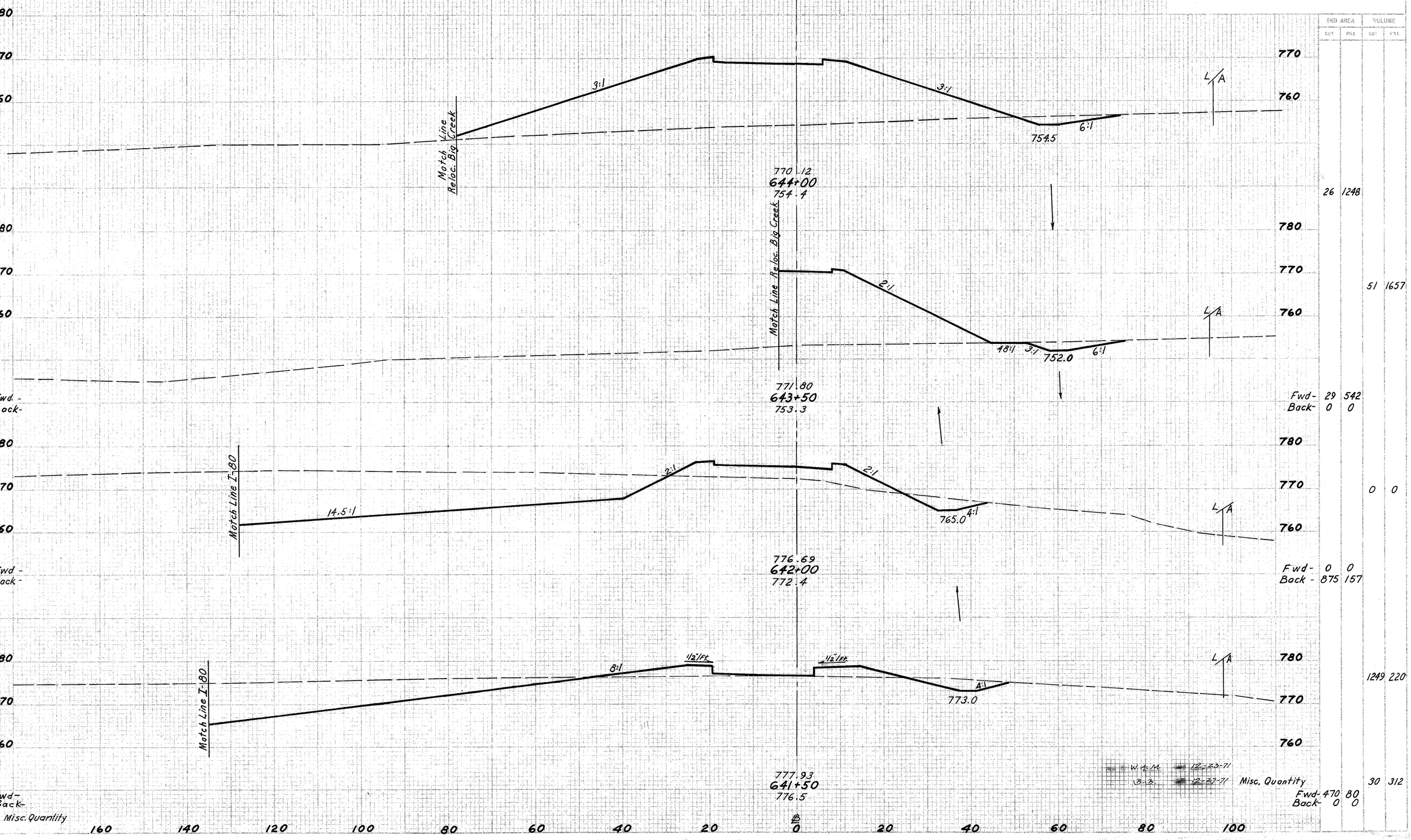


RAMP T-4 STA 641+50 TO STA 644+00

| FED. RD. DIVISION | STATE | PROJECT | |
|---|---|---|---|
| 2 | OHIO | | |

177
500

CUYAHOGA COUNTY
CUY-480-10.39

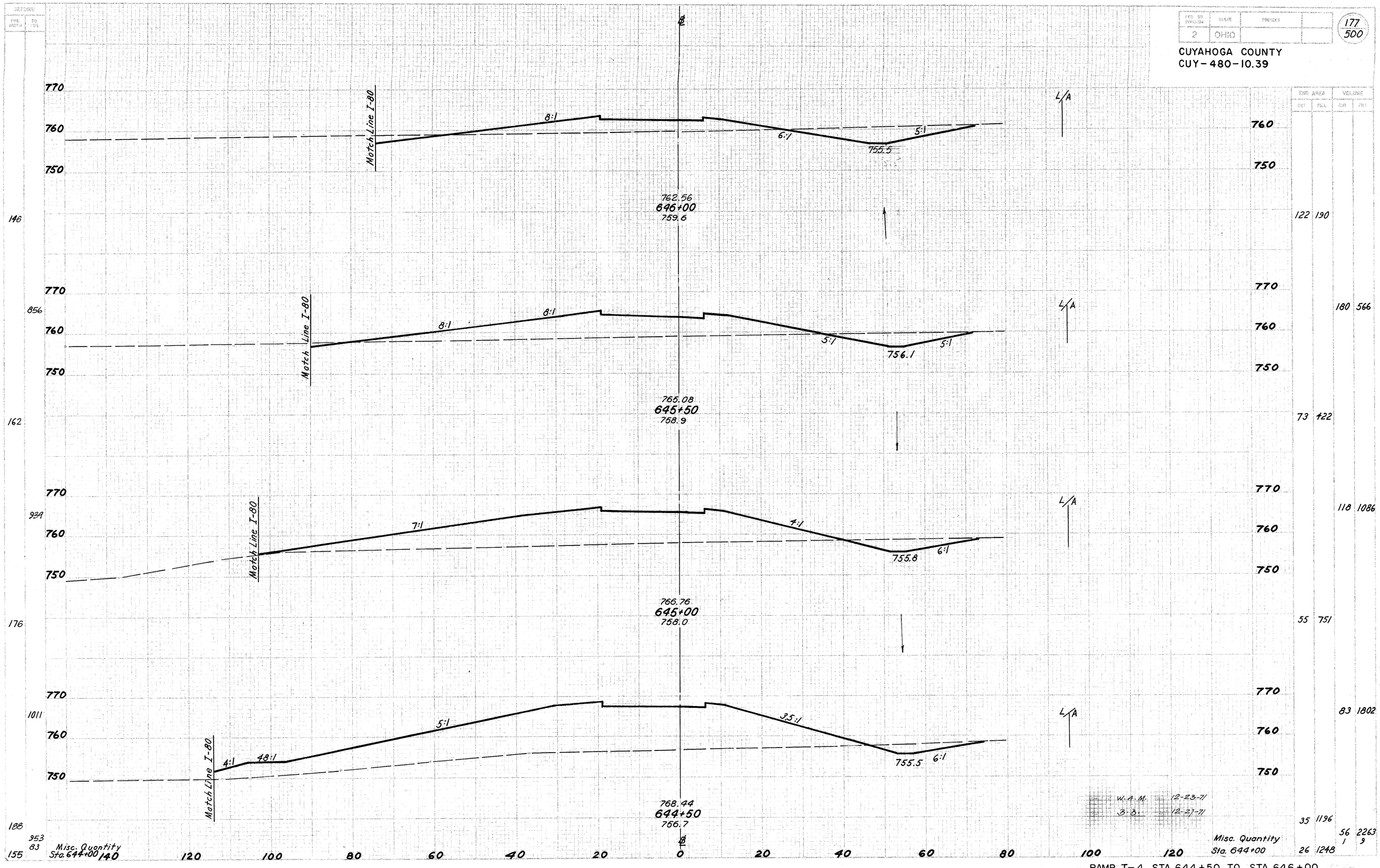


RAMP T-4 STA. 644+50 TO STA. 646+00

| FED. HWY. DIVISION | STATE | PROJECT | |
|---|---|---|---|
| 2 | OHIO | | |

178
500

CUYAHOGA COUNTY
CUY-480-10.39

| SECTIONS | | END AREA | | VOLUME | |
|---|---|---|---|---|---|
| END HAUL | BALANCE POINTS | CUT | FILL | CUT | FILL |
| 90 | | 317 | 0 | | |
| 531 | | 513 | 0 | | |
| 101 | | 237 | 0 | | |
| 597 | | 472 | 0 | | |
| 114 | | 272 | 0 | | |
| 675 | | 468 | 9 | | |
| 129 | | 234 | 9 | 329 | 185 |
| 764 | | | | 122 | 195 |
| 146 | Sta. 646+00 | | | | |

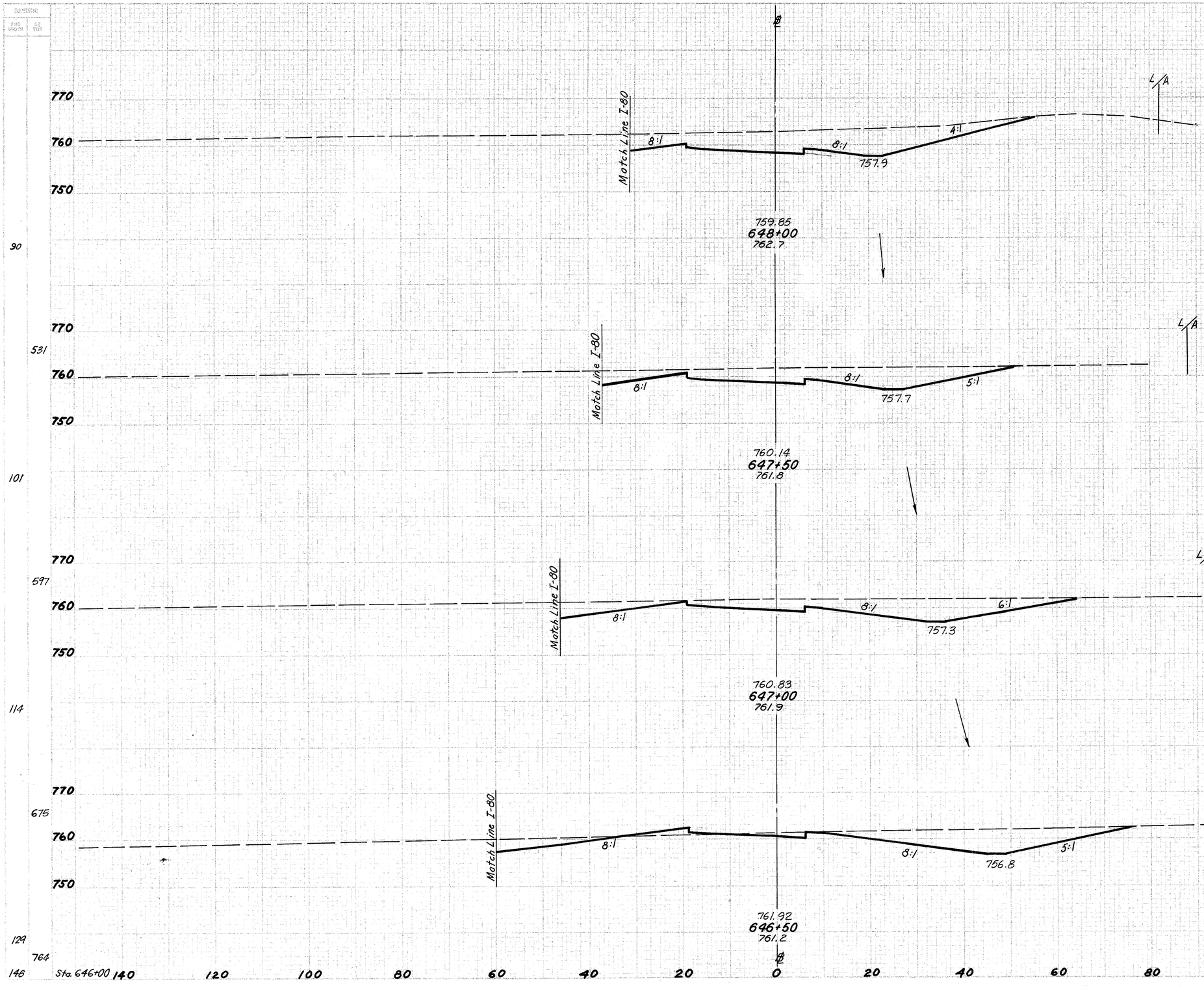


W.A.M. 12-23-71
J.B. 12-27-71

RAMP T-4 STA. 646+50 TO STA. 648+00

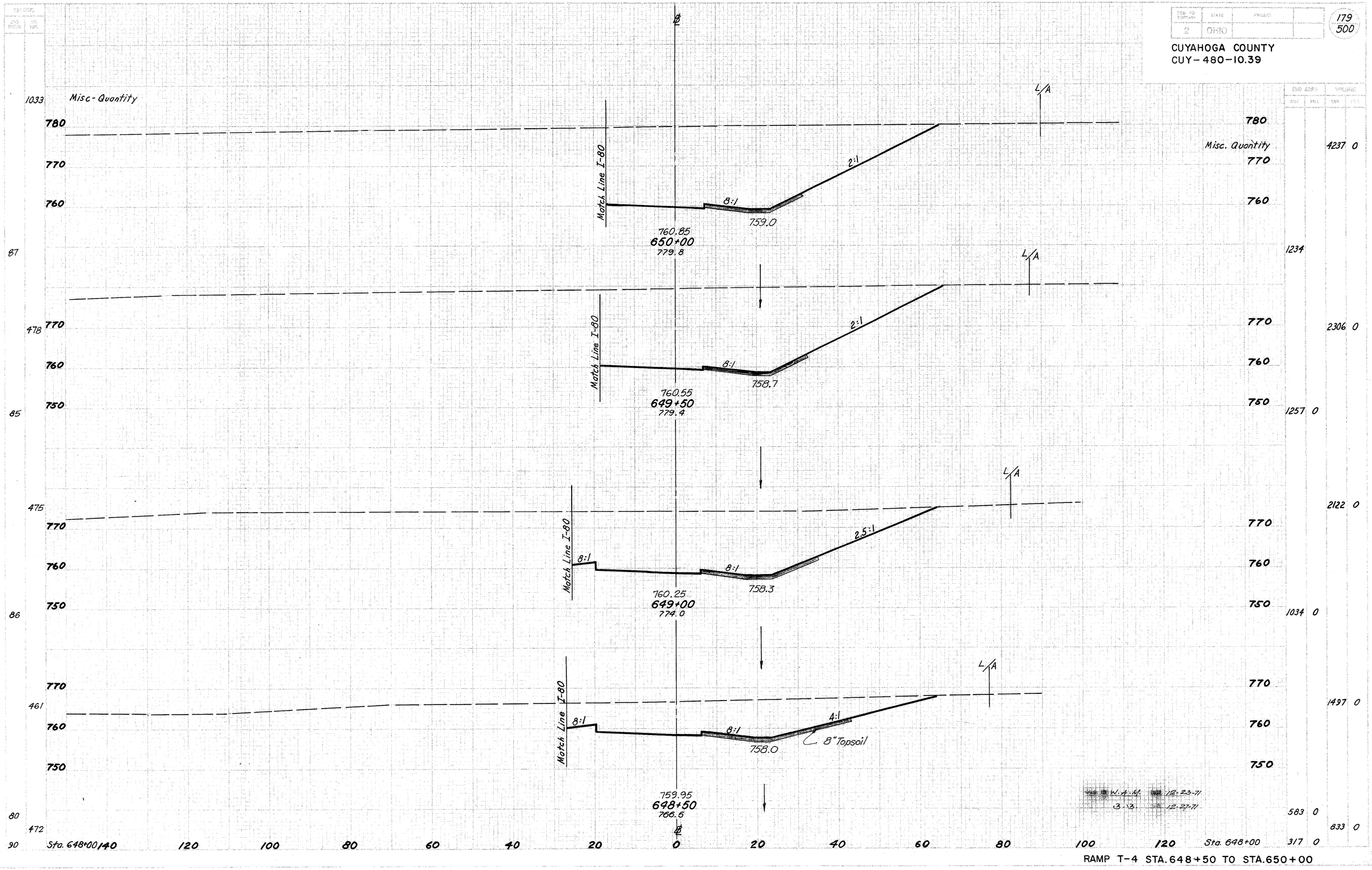


RAMP T-4 STA.648+50 TO STA.650+00

| SHEET NO. | STATE | PROJECT | |
|---|---|---|---|
| 2 | OHIO | | |

180
500

CUYAHOGA COUNTY
CUY.-80-10.39

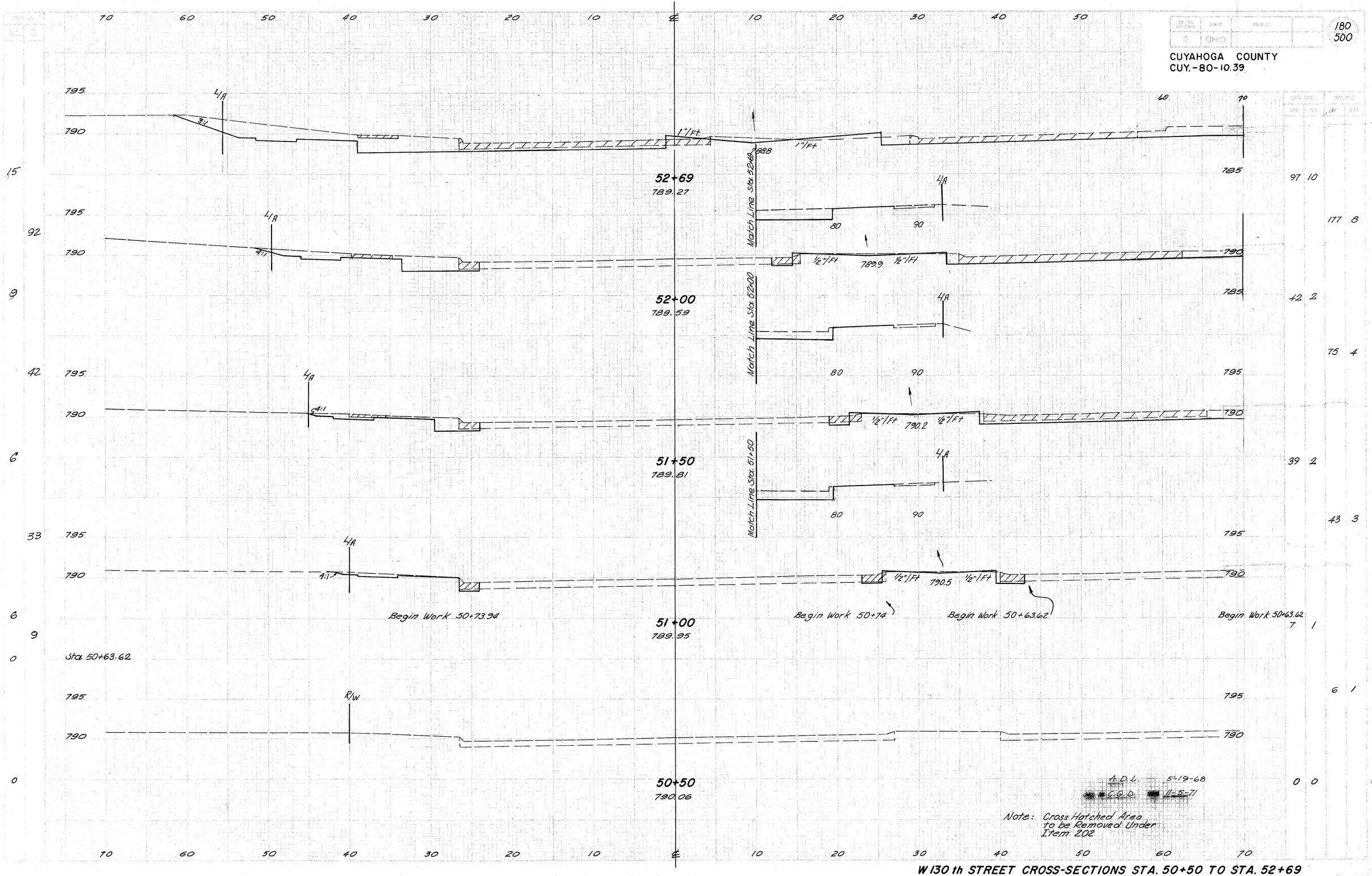

CUYAHOGA COUNTY
CUY.-80-10.39

181
500

70 60 50 40 30 20 10 ℄ 10 20 30 40 50 70 60 50 40 30 20 10 ℄ 10 20 30 40 50

Match Line I-80

795 Abutment
790

55+00
790.33

Sta. 54+92

795
790 4:1 1"/Ft 1"/Ft
789.7

54+50
790.05

Misc. Quantity (Left)

795
790 4:1 1"/Ft 1"/Ft
789.1

54+00
789.78

Match Line Ramp W-2

795
790 4:1 1"/Ft 1"/Ft
788.5

53+50
789.42

795
790 3:1 1"/Ft 1"/Ft
788.5

53+00
789.26

Ramp W-2
Match Line
53+50 Rt
53+00 Rt

Fwd.
Back

Note: Cross Hatched Area to be Removed Under Item 202

Sta. 52+69

A.D.I. 5-19-68
C.E.D. 11-5-71

W 130th STREET CROSS-SECTIONS STA. 53+00 TO STA. 55+00

| | | |

| DIV. NO. OF HIGHWAYS | STATE | PROJECT | |
|---|---|---|---|
| 2 | OHIO | | |

182
500

CUYAHOGA COUNTY
CUY.-80-10.39

| SHO. AREA | | VOLUME | |
|---|---|---|---|
| CUT | FILL | CUT | FILL |

70 60 50 40 30 20 10 ℄ 10 20 30 40 50

790
57+50 P.I.
785
70 80 90

## 57+50
788.05

795 RAMP W-1 790 785 MATCH 57+50 P.I.

0 27 Fwd Bk. 795 RAMP W-1 790 785 ABUT. 627 0

92 949

## 57+00
789.26

6 17 795 4 0 Fwd. Back Sta. 56+70 ABUT. 790 0 ABUT. 795 790 398 0

## 56+50
789.75

0 795 ABUT. 790 0 0 ABUT. 795 790 291 0 480 0

## 56+00
790.13

0 795 ABUT. 790 0 0 ABUT. 795 790 227 0 362 0

## 55+50
790.31

0 0 0 4 4 11 Fwd. Sta. 55+25 Back Sta. 55+00 164 0 253 7 109 8

Note: Cross Hatched Area to be Removed Under Item 202

| | | | |
|---|---|---|---|
| DES. BY | A.D.L. | DATE | 5-19-68 |
| CHK. BY | C.G.D. | DATE | 11-5-71 |

70 60 50 40 30 20 10 ℄ 10 20 30 40 50 60 70

# W 130th STREET CROSS-SECTIONS STA.55+50 TO STA.57+50

CUYAHOGA COUNTY
CUY.-80-10.39

End Quantities 60+25

70 60 50 40 30 20 10 ℄ 10 20 30 40 50

790 785 780 795

0 Sta. 60+25

0 L/A 87' Lt

0

244 111 Misc. Quantity (Right side)

88 L/A 93' Lt

494

90 L/A 99' Lt

464

77 0 Fwd Bk

Ramp W-1

450 Misc. Quant

0

0 Fwd Sta. 57+50

2.5:1 3:1 3:1 Match Line

95 90 85 80

60+00 778.40

59+50 780.11 779.74

59+00 781.98 781.32

58+50 784.25 782.90

58+00 786.36

Sta. 60+25 0 0

1 1

1 2

394 2

425 0

991 0

645 0

1208 0

654 0

1491 0

955 0

1465 0

627 0

Ramp W-3

2.5:1 3:1

A.D.L. 5-19-68
C.G.D. 11-5-71

Note: Cross Hatched Area to be Removed Under Item 202

W 130th STREET CROSS-SECTIONS STA. 58+00 TO STA. 60+00

| FED. RD. DIVISION | STATE | PROJECT | |
|---|---|---|---|
| 2 | OHIO | | |

184
500

CUYAHOGA COUNTY
CUY - 480 - 10.39

SEEDING

| END AREA | | VOLUME | |
|---|---|---|---|
| CUT | FILL | CUT | FILL |

70 60 50 40 30 20 10 ℄ 10 20 30 40 50

770
765

**50+50**
769.86

36" W.M.
10" SA.

770
765

**50+00**
769.57

36" W.M.
10" SA.

770
765

E.P.

**49+50**
769.35

36" W.M.
10" SA.

770
765

E.P. E.P.

**49+00**
769.45

36" W.M.
10" SA.

770
765

E.P. E.P.

**48+50**
769.69

36" W.M.
10" SA.

70 60 50 40 30 20 10 ℄ 0 10 20 30 40 50 60 70

TIEDEMAN RD. STA. 48+50 TO STA. 50+50

| FED. NO. DIVISION | STATE | PROJECT | |
|---|---|---|---|
| 2 | OHIO | | |

185
500

CUYAHOGA COUNTY
CUY-480-10.39

| SIDEWALK WIDTH | SIDEWALK SQ. YDS. | END AREA CUT | END AREA FILL | VOLUME CUT | VOLUME FILL |
|---|---|---|---|---|---|
| 0 | | | | | |
| 0 | | 8 | 59 | | |
| 0 | | | | 1 | -2 |
| | | | | -7 | 1 |
| | | | | 49 | 68 |
| 0 | | 45 | 14 | | |
| | | | | 7 | 0 |
| | | | | 1 | -2 |
| 0 | | | | 92 | 32 |
| 0 | | 54 | 21 | | |
| | | | | 7 | 0 |
| 0 | | | | 88 | 33 |
| 0 | | | | | |
| 0 | | 32 | 11 | | |
| 0 | | Back 0 | 0 | | |
| | | | | 0 | 0 |
| 0 | | 0 | 0 | | |

775 / 770 / 765

R/W — 4:1 — 770.0 — -10% — 772.95 — 772.80 — 771.88 N16 — MEET EXIST. GR. — DR. STA. 52+42

772.95
52+50
770.71

10" SA. — 36" W.M. — 771.44 N16 — 772.19 — 772.24 — -2.5% — MEET EXIST. GR. — DRIVEWAY STA. 52+47.5 — 4:1 — 771.5 — 4:1 — R/W

Rt. Dr. 52+47.5
Lt. Dr. 52+42

R/W — 12:1 — 4:1 — 769.7 — -10% — 771.00 — 770.90 — 770.07 N16 — MEET EXIST. GR. — DRIVEWAY STA. 51+47

770.93
52+00
770.66

10" SA. — 36" W.M. — 770.40 N16 — 771.20 — 771.29 — +6.2% — MEET EXIST. GR. — DR. STA. 52+00.4 — 4:1 — R/W

Rt. Dr. 52+00.4
Lt. Dr. 51+54.7

R/W — 4:1 — 770.44
51+50
770.47

10" SA. — 36" W.M. — 769.91 N16 — 770.72 — 770.81 — +10% — MEET EXIST. GR. — DRIVEWAY STA. 51+40 — 4:1 — R/W

770.09
50+94.8
770.19

10" SA. — 36" W.M. — 4:1

4-4 12-21-71
BY W.A.M. 12-23-71

50+50 70 60 50 40 30 20 10 0 10 20 30 40 50 60 STA 50+50

TIEDEMAN RD. STA. 50+94.8 TO STA. 52+50

| FED. ROAD DIVISION | STATE | PROJECT | |
|---|---|---|---|
| 2 | OHIO | | |

186
500

CUYAHOGA COUNTY
CUY - 480 - 10.39

| SHEETING | | END AREA | | VOLUME | |
|---|---|---|---|---|---|
| END WIDTH | SHT. FOR. | CUT | FILL | CUT | FILL |
| 0 | FWD. | | | | |
| 126 | BK. | | | | |
| 653 | | 0 | 545 | | |
| | | 13 | 1100 | | |
| | | | | | 305 |
| | | | | 18 | 1768 |
| 109 | FWD. | | | | |
| 0 | BK. | | | | |
| | | 6 | 810 | | |
| 0 | | | | | |
| | | | | -5 | 9 |
| | | 17 | 1188 | | |
| 0 | | | | | |
| | | | | -9 | 0 |
| | | | | 16 | 703 |
| 0 | | | | | |
| 0 | | | | 5 | 286 |
| | | | | 23 | 320 |
| 0 | | | | 0 | -5 |
| | | 8 | 59 | | |

Ramp T-3 FWD

Ramp T-1 FWD

Match Line 54+50

Match Line 54+00

Match Line 53+50

Match Line 53+00

Misc. Quantity
Channel Embankment

778.67
54+50
769.88

776.71
54+00
770.02

775.21
53+50
770.32

773.69
53+00
770.58

Exist. Channel

48:1

4:1

12" Stm

10" SA.

36" W.M.

R/W 100'LT.

R/W 90'LT.

R/W 80'LT.

R/W 85.3 RT.

767.0

768.4

768.5

775.60 N/C

776.34

776.38

-10%

Meet Exist. Gr.

Dr. Sta. 53+92.5

773.87 N/C

774.61

774.65

-5.8%

Dr. 53+33.5 (Rt.)

771.79 N/C

772.53

772.60

-6.5%

Dr. Sta. 52+60

771.6

771.1

10:1

Sta. 52+50 60 50 40 30 20 10 0 10 20 30 40 50 60 Sta. 52+50

A. M. 12-21-71
W. A. M. 12-23-71

TIEDEMAN RD. STA. 53+00 TO STA. 54+50

| FED. RD. DIVISION | STATE | PROJECT | |
|---|---|---|---|
| 2 | OHIO | | |

187
500

CUYAHOGA COUNTY
CUY-480-10.39

| SEWERS | | END AREA | | VOLUME | |
|---|---|---|---|---|---|
| END WORK | SQ. YDS. | CUT | FILL | CUT | FILL |
| 79 | | 24 | | 1002 | |
| 436 | | 22 | | 2042 | |
| 78 48 | FWD BACK | FWD | | 0 | 1203 |
| | | Back | | 0 | 981 |
| 275 | | | | 0 | 1990 |
| 51 0 | FWD BACK | FWD | | 0 | 1168 |
| | | Back | | 0 | 606 |
| 0 | | | | 0 | 1084 |
| 0 | | | | 0 | 565 |
| | | | | 0 | 1028 |
| | | FWD | | 0 | 545 |

Match Line Ramp T-3 — Varies — 4:1 — Match Line 56+50
Match Line Ramp T-1
12" Stm. — FWD / Back — 781.90 — 56+50 — 772.16
36" W.M.
775 / 770 / 75 / 85 / 770
Match Line Ramp T-3 — Varies — Match Line 56+00
12" Stm. — 781.19 — 56+00 — 771.26
36" W.M.
M.L. 56+00 — 775 / 770 / 80 / 90 — Match Line Ramp T-1
FWD / Back
Match Line Ramp T-3 — Varies — Match Line 55+50
12" Stm. — 780.13 — 55+50 — 770.53
36" W.M.
Varies — 775 / 770 / 80 / 90 — Match Line Ramp T-1
Match Line Ramp T-3 — Match Line Ramp T-3
12" Stm. — 779.27 — 55+00 — 770.03
36" W.M.

780 / 775 / 770

Sta. 54+50 FWD 60 50 40 30 20 10 0 10 20 30 40 50 60 Sta. 54+50

DES. by A.M. DATE 12-21-71
REC. by W.A.M. DATE 12-23-71

TIEDEMAN RD. STA. 55+00 TO STA. 56+50

| FED. RD. DIVISION | STATE | PROJECT | |
|---|---|---|---|
| 2 | OHIO | | |

188
500

CUYAHOGA COUNTY
CUY-480-10.39

| SIDLING | | END AREA | | VOLUME | |
|---|---|---|---|---|---|
| END WIDTH | SO YDS. | CUT | FILL | CUT | FILL |
| 54 | 0 | 11 | 0 | 504 | 0 |
| 1019 | Misc. Quantity | | | 0 | 0 |
| 0 | | | | 7 | 309 |
| 0 | | 0 | 0 | | |
| 0 | | | | 0 | 0 |
| 0 | | | | 0 | 0 |
| 145 | Misc. Quantity | | | 0 | 245 |
| 0 | | | | 0 | 0 |
| 0 | FWD | 0 | 0 | | |
| 36 | BACK | 0 | 606 | | |
| 319 | | | | 22 | 1489 |
| 79 | | 24 | 1002 | | |

70 60 50 40 30 20 10 ℄ 10 20 30 40 50

780
775
770 FWD. B.K.

Match Line I-80

12" Stm

782.59
60+00
776.04

36" W.M.

Match Line Sta. 60+00

Varies

Sta. 60+00 Match Line Ramp T-2

FWD Back

Misc. Quantity

783.23
59+00
776.53

783.23
58+00
774.66

36" W.M.

Match Line Ramp T-3

Match Line I-80

782.59
57+00
773.16

W.A.M. 12-23-71

Sta. 56+50 Sta. 56+00

TIEDEMAN RD. STA. 57+00 TO STA. 60+00

| FED. RD. DIVISION | STATE | PROJECT | |
|---|---|---|---|
| 2 | OHIO | | |

189/500

CUYAHOGA COUNTY
CUY-480-10.39

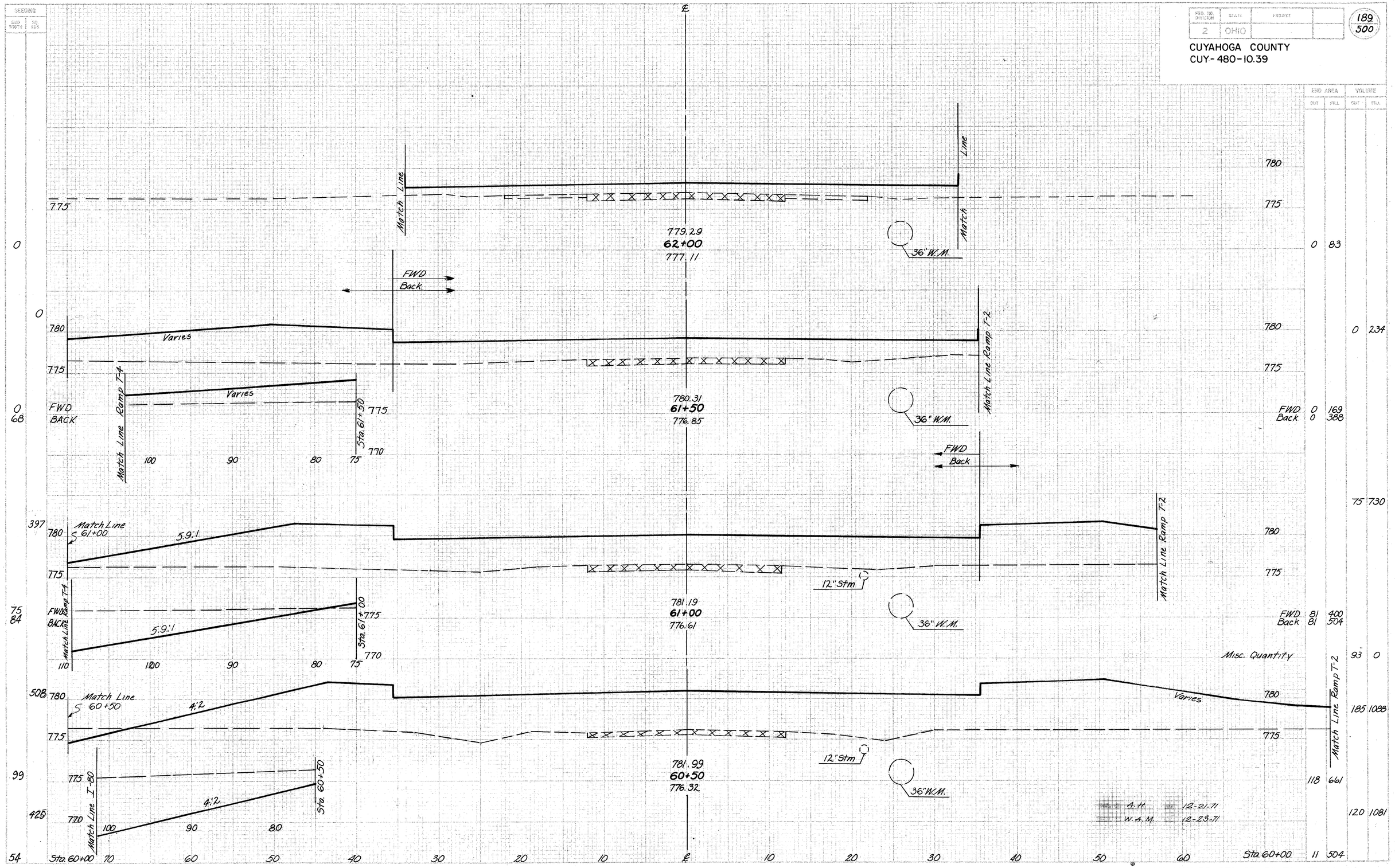


TIEDEMAN RD. STA. 60+50 TO STA. 62+00

| FED. RD. DIVISION | STATE | PROJECT | |
|---|---|---|---|
| 2 | OHIO | | |

190
500

CUYAHOGA COUNTY
CUY-480-10.39

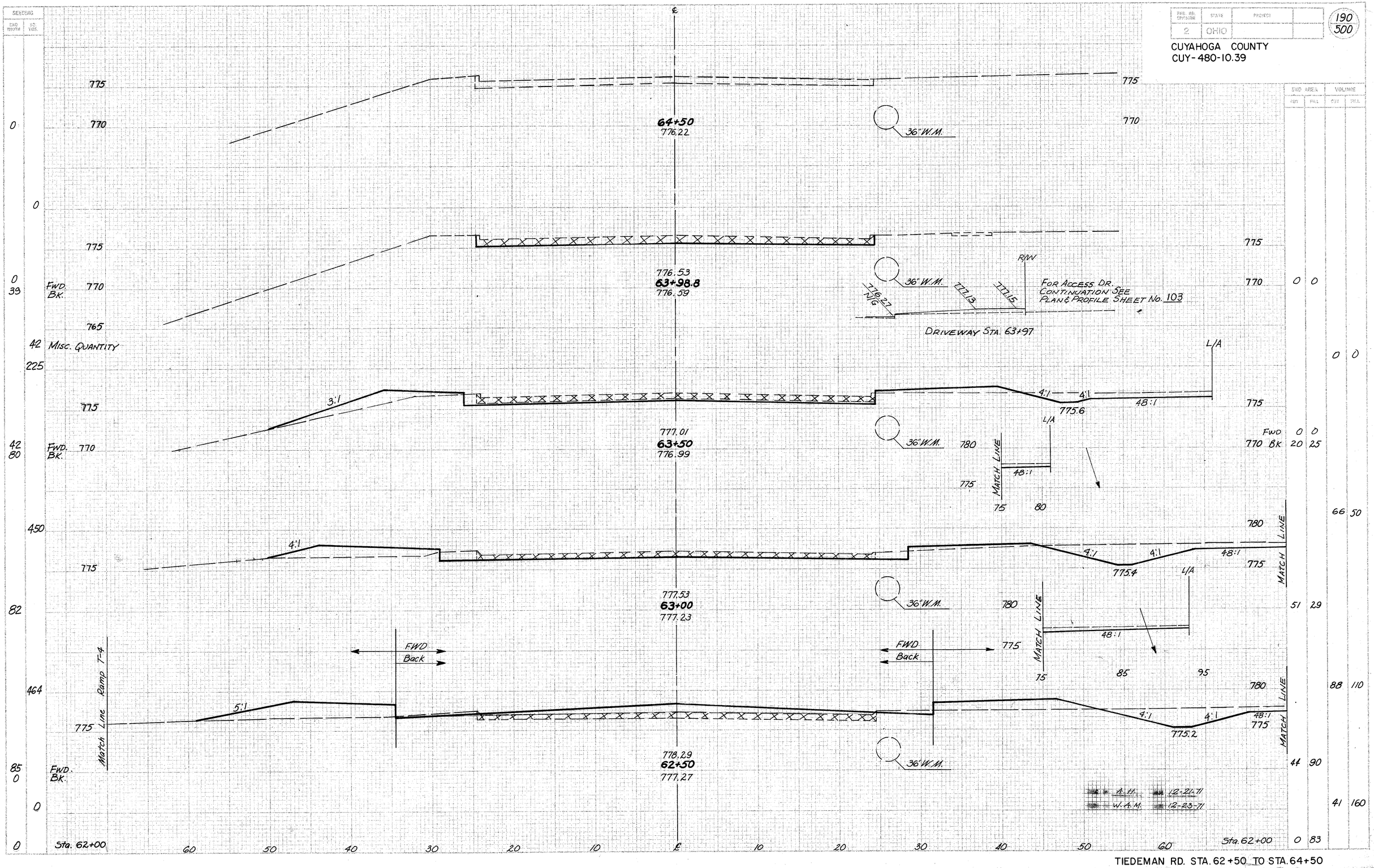


TIEDEMAN RD. STA. 62+50 TO STA. 64+50

| SEEDING | |
|---|---|
| END WIDTH | SQ. YDS. |

| FED. RD. DIVISION | STATE | PROJECT | |
|---|---|---|---|
| 2 | OHIO | | |

191/500

CUYAHOGA COUNTY
CUY-480-10.39

| END AREA | | VOLUME | |
|---|---|---|---|
| CUT | FILL | CUT | FILL |

℄

775
770
765

36" W.M.

65+50
775.03

775
770

36" W.M.

65+00
775.33

775
770

60 50 40 30 20 10 ℄ 10 20 30 40 50 60

TIEDEMAN RD. STA. 65+00 TO STA. 65+50

| FED. RD. DIVISION | STATE | PROJECT | |
|---|---|---|---|
| 2 | OHIO | | |

192
500

CUYAHOGA COUNTY
CUY-480-10.39

CALC. BY WAM DATE 2/85
CHKD. BY TRB DATE 2/85

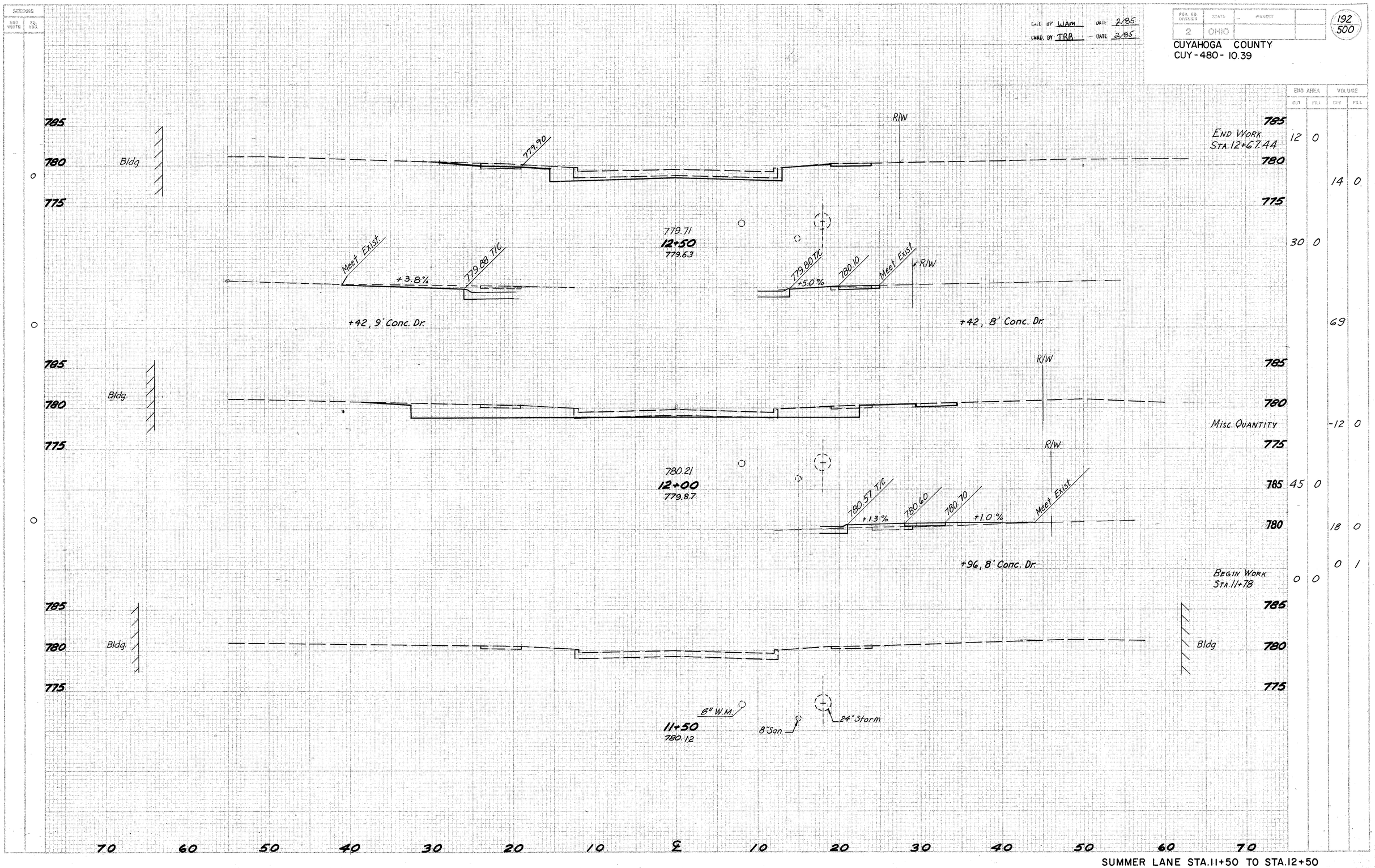


| | END AREA CUT | END AREA FILL | VOLUME CUT | VOLUME FILL |
|---|---|---|---|---|
| END WORK STA. 12+67.44 | 12 | 0 | | |
| | | | 14 | 0 |
| | 30 | 0 | | |
| | | | 69 | |
| Misc. QUANTITY | | | -12 | 0 |
| | 45 | 0 | | |
| | | | 18 | 0 |
| | | | 0 | 1 |
| BEGIN WORK STA. 11+78 | 0 | 0 | | |

SUMMER LANE STA. 11+50 TO STA. 12+50

| SEEDING | |
|---|---|
| END WIDTH | SQ YDS. |

| FED. RD. DIVISION | STATE | PROJECT | |
|---|---|---|---|
| 2 | OHIO | | |

193/500

CUYAHOGA COUNTY
CUY.-480-10.39

| END AREA | | VOLUME | |
|---|---|---|---|
| CUT | FILL | CUT | FILL |
| | | 0 | 0 |
| | | 0 | 0 |

785
780
775

14+00
780.14

785
780
775

13+50
779.82

785
780
775

8" W.M.
13+00
779.60
8" San
24" Storm

70 60 50 40 30 20 10 ℄ 10 20 30 40 50 60 70

SUMMER LANE STA.13+00 TO STA.14+00

SEEDING

| ERO WIDTH | SQ. YDS. |
|---|---|
| 14 | 109 |
| 25 | |

DRAWN BY WAM DATE 5/81
CHKD. BY TRB DATE 5/81

| FHWA REGION | STATE | PROJECT | |
|---|---|---|---|
| 5 | OHIO | | |

194
500

CUYAHOGA COUNTY
CUY-480-10.39

| END AREA | | VOLUME | |
|---|---|---|---|
| CUT | FILL | CUT | FILL |
| | | 75 | |
| | | 120 | |
| | | 55 | |
| | | 46 | 35 |
| | | 62 | |
| | | 16 | |

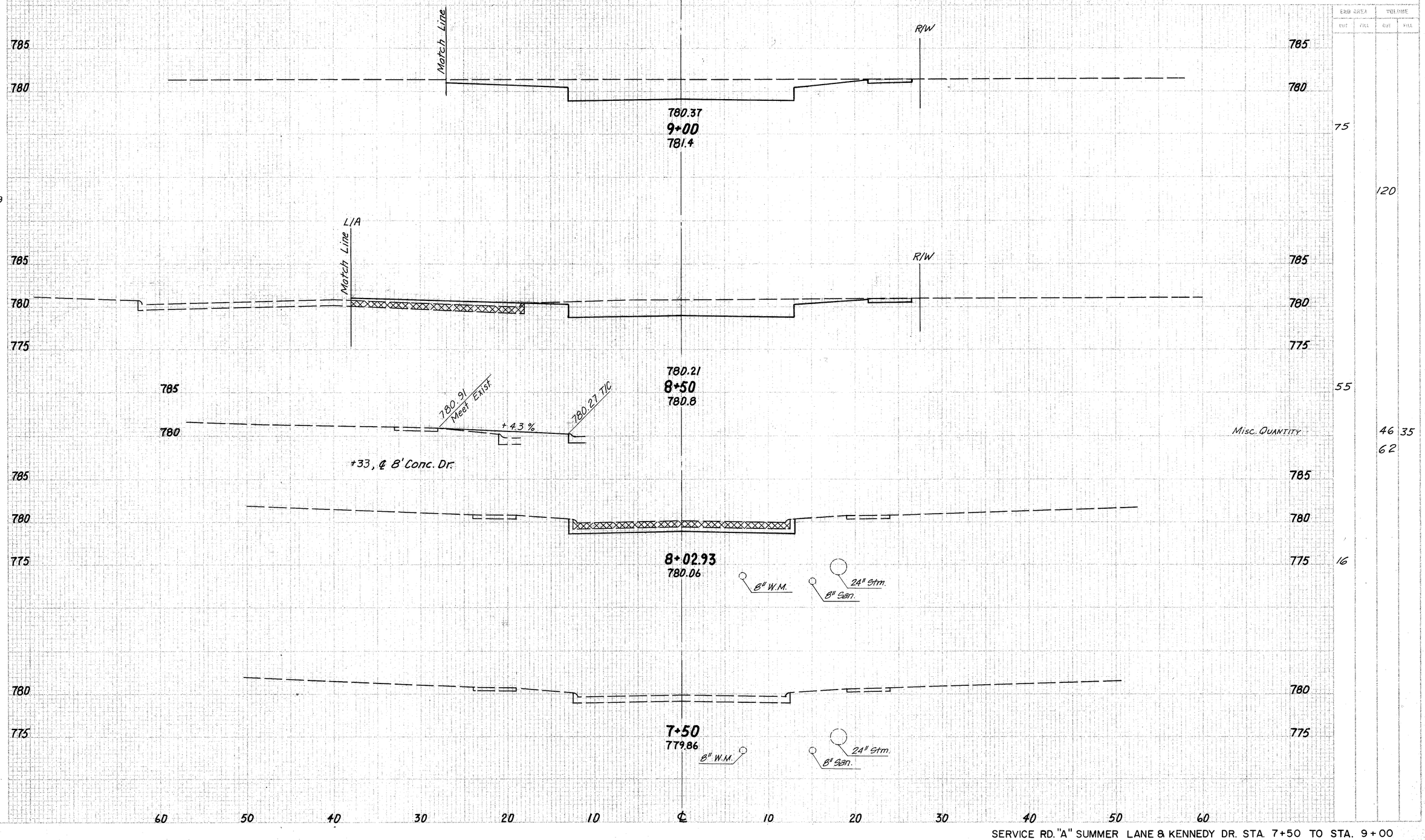


Misc. Quantity

SERVICE RD. "A" SUMMER LANE & KENNEDY DR. STA. 7+50 TO STA. 9+00

CALC. BY WAM DATE 5/81
CHKD. BY TRB DATE 5/81

| PROJECT VERSION | STATE | PROJECT | |
|---|---|---|---|
| 5 | OHIO | | |

195
500

CUYAHOGA COUNTY
CUY-480-10.39

| SEEDING | | | END AREA | | VOLUME | |
|---|---|---|---|---|---|---|
| SEED WIDTH | SEED YDS. | | CUT | FILL | CUT | FILL |
| | | 780 / 775 | | | | |
| | 144 | MISC. QUANTITY | | | | |
| 0 | | FWD. | | | | |
| 10 | | BACK | | | | |
| | | 780.97 | | | | |
| | | 11+00 | | | | |
| | | 781.2 | | | | |
| | | 785 / 780 / 775 | | | | |
| | 42 | | | | | |
| | | 780.85 | | | | |
| | | 10+50 | | | | |
| 5 | | 781.0 | | | | |
| | 25 | 785 / 780 / 775 | | | | |
| | | 780.69 | | | | |
| | | 10+00 | | | | |
| 4 | | 780.6 | | | | |
| | 28 | 785 / 780 / 775 | | | | |
| | | 780.53 | | | | |
| | | 9+50 | | | | |
| 6 | | 780.9 | | | | |
| 14 | 56 | STA. 9+50 | | | | |

Match Line L/A — R/W
Match Line — R/W
Match Line — R/W
Match Line — R/W

| STA. 9+00 | | | | | | | | | | | | | | | | | | | STA. 9+50 |
|---|---|---|---|---|---|---|---|---|---|---|---|---|---|---|---|---|---|---|---|
| 70 | 60 | 50 | 40 | 30 | 20 | 10 | ℄ | 10 | 20 | 30 | 40 | 50 | 60 | 70 | | | | | |

| END AREA | | VOLUME | |
|---|---|---|---|
| CUT | FILL | CUT | FILL |
| | | | |
| | | | |
| | | | |
| | | | |
| 43 | 1 | | |
| | | | |
| | | | |
| | | | |
| 81 | 2 | | |
| | | | |
| | | | |
| | | | |
| – | | – | |
| 76 | 1 | | |
| | | | |
| | | | |
| 38 | 0 | | |
| | | | |
| | | | |
| | | 86 | 0 |
| | | | |
| | | | |
| 48 | 0 | | |
| 75 | 0 | 114 | 0 |

SERVICE RD "A" SUMMER LANE & KENNEDY DR. STA. 9+50 TO STA. 11+00

| SEEDING | |
|---|---|
| END WIDTH | SQ. YDS. |
| 0 | |
| 0 | |

| FHWA REGION | STATE | PROJECT | |
|---|---|---|---|
| 5 | OHIO | | |

196
500

CALC. BY WAM DATE 5/81
CHKD. BY TRB DATE 5/81

CUYAHOGA COUNTY
CUY-480-10.39

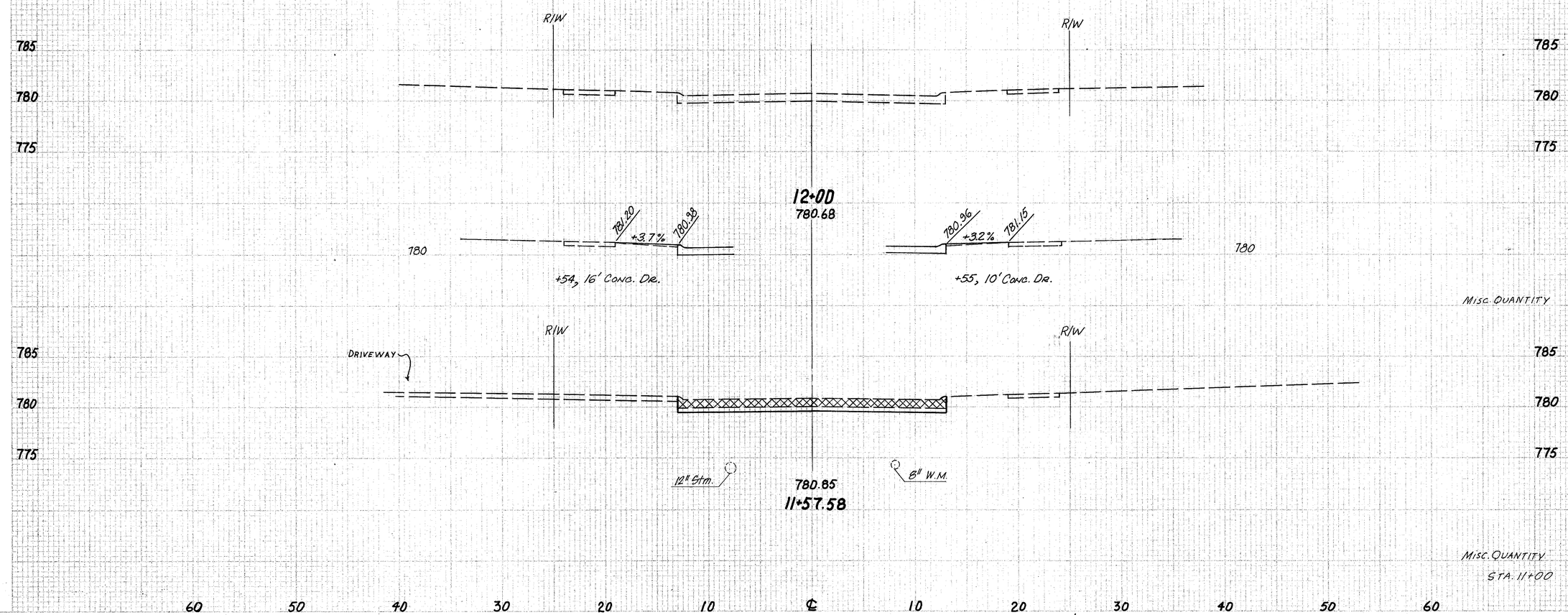


| | END AREA CUT | END AREA FILL | VOLUME CUT | VOLUME FILL |
|---|---|---|---|---|
| Misc. Quantity | | | 6 | 24 |
| | 12 | 0 | | |
| | | | 59 | 1 |
| Misc. Quantity | | | 65 | 26 |
| Sta. 11+00 | 43 | 1 | | |

SERVICE RD "A" SUMMER LANE & KENNEDY DR. STA. 11+57.58 TO STA 12+00

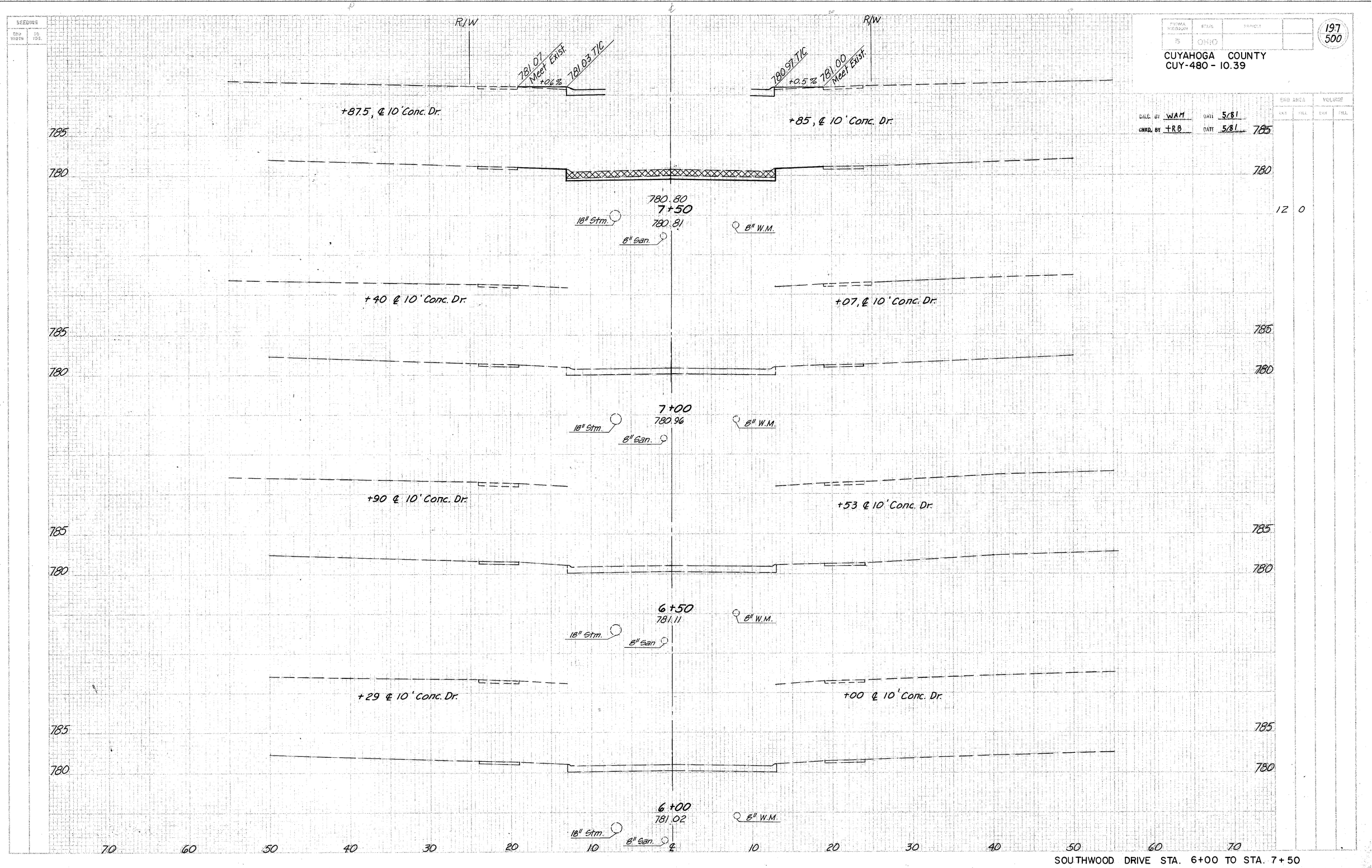


| FHWA REGION | STATE | PROJECT | |
|---|---|---|---|
| 5 | OHIO | | |

197
500

CUYAHOGA COUNTY
CUY-480 - 10.39

CALC. BY WAM DATE 5/81
CHKD. BY TRB DATE 5/81

| END AREA | | VOLUME | |
|---|---|---|---|
| CUT | FILL | CUT | FILL |
| 12 | 0 | | |

SOUTHWOOD DRIVE STA. 6+00 TO STA. 7+50

| FHWA REGION | STATE | PROJECT | |
|---|---|---|---|
| 5 | OHIO | | |

198
500

CUYAHOGA COUNTY
CUY 480 - 10.39

CALC. BY WAM DATE 5/81
CHKD BY TRB DATE 5/81

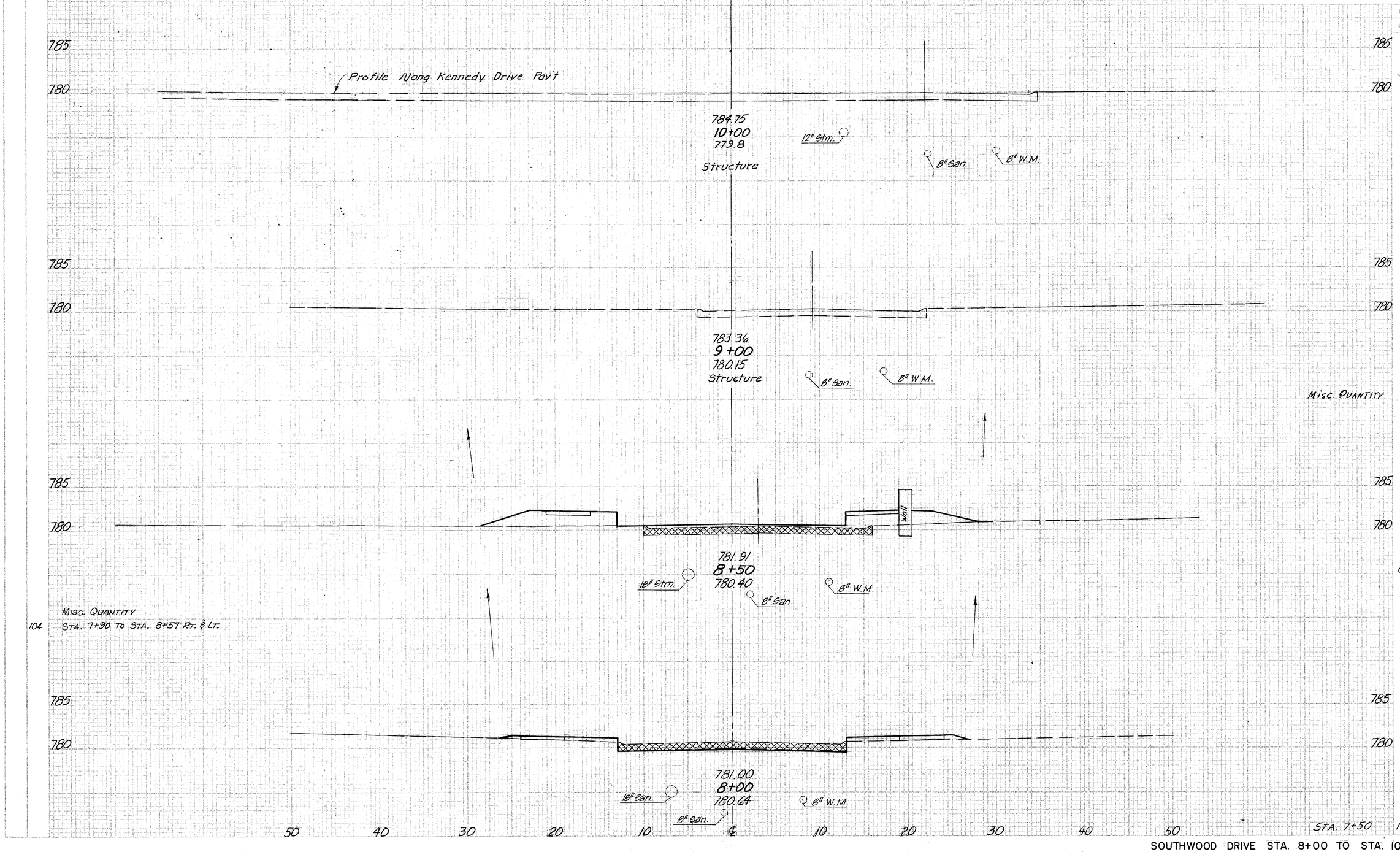


| | END AREA CUT | END AREA FILL | VOLUME CUT | VOLUME FILL |
|---|---|---|---|---|
| Misc. Quantity | | | 30 | 4 |
| | 0 | 61 | | |
| | | | 0 | 67 |
| | 0 | 12 | | |
| | | | 11 | 11 |
| Sta. 7+50 | 12 | 0 | | |

SOUTHWOOD DRIVE STA. 8+00 TO STA. 10+00

| FHWA REGION | STATE | PROJECT | |
|---|---|---|---|
| 5 | OHIO | | |

199
500

CUYAHOGA COUNTY
CUY 480 - 10.39

CALC. BY WAM DATE 5/81
CHKD. BY TRB DATE 5/81

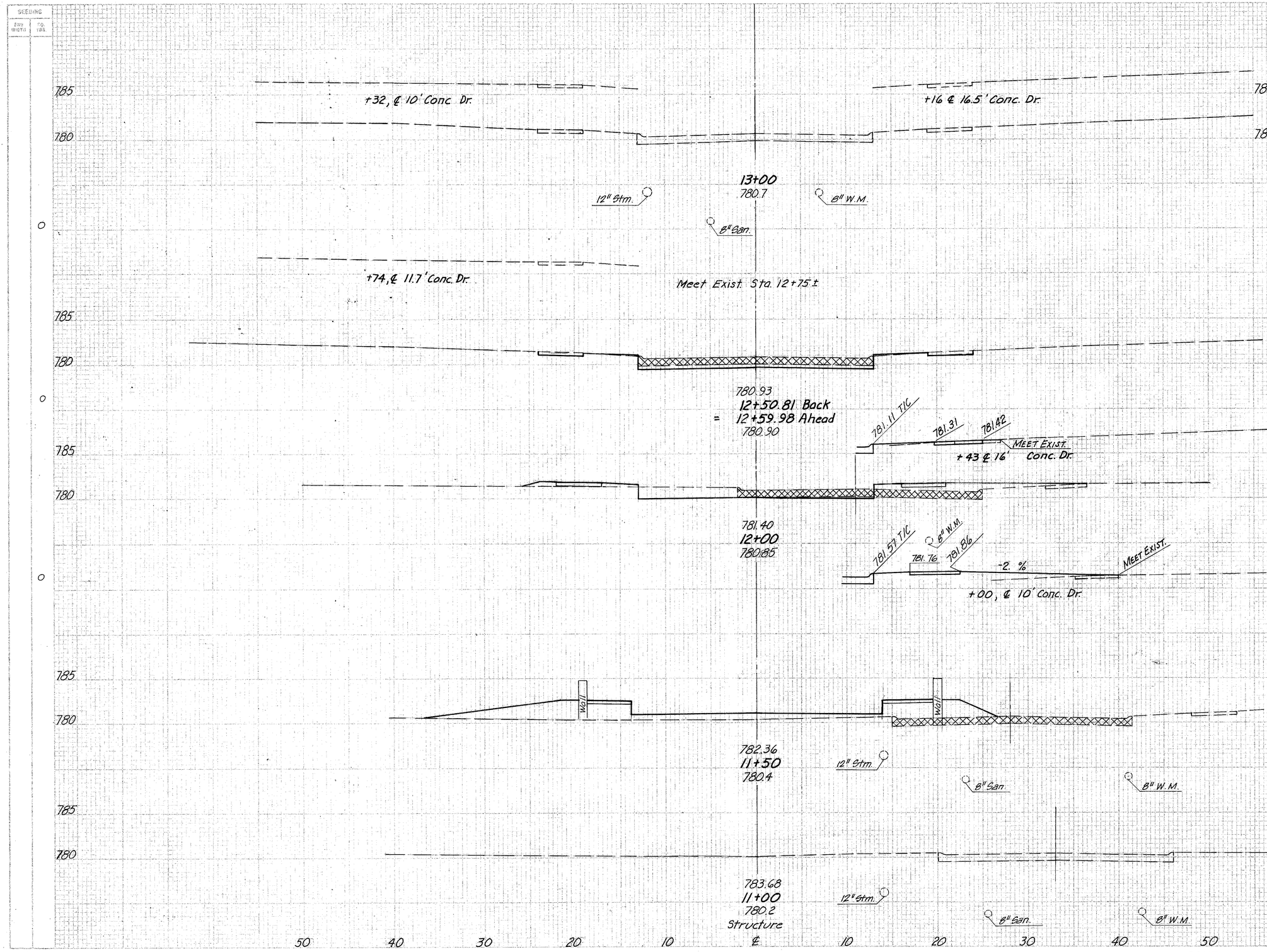


| | END AREA CUT | END AREA FILL | VOLUME CUT | VOLUME FILL |
|---|---|---|---|---|
| AHEAD | 0 | 0 | | |
| BACK | 11 | 0 | | |
| | | | 6 | 0 |
| | 11 | 0 | | |
| | | | 23 | 28 |
| | 13 | 31 | | |
| | | | 12 | 113 |
| AHEAD | 0 | 92 | | |
| BACK | 0 | 0 | | |
| Misc. QUANTITY | | | 22 | -22 |
| | | | 0 | 0 |
| | 0 | 0 | | |

SOUTHWOOD DRIVE STA. 11+00 TO STA. 13+00

01-1

CALC. BY WAM DATE 5/81
CHKD. BY TRB DATE 5/81

| FHWA REGION | STATE | PROJECT | |
|---|---|---|---|
| 5 | OHIO | | |

200
500

CUYAHOGA COUNTY
CUY-480 - 10.39

| END AREA | | VOLUME | |
|---|---|---|---|
| CUT | FILL | CUT | FILL |

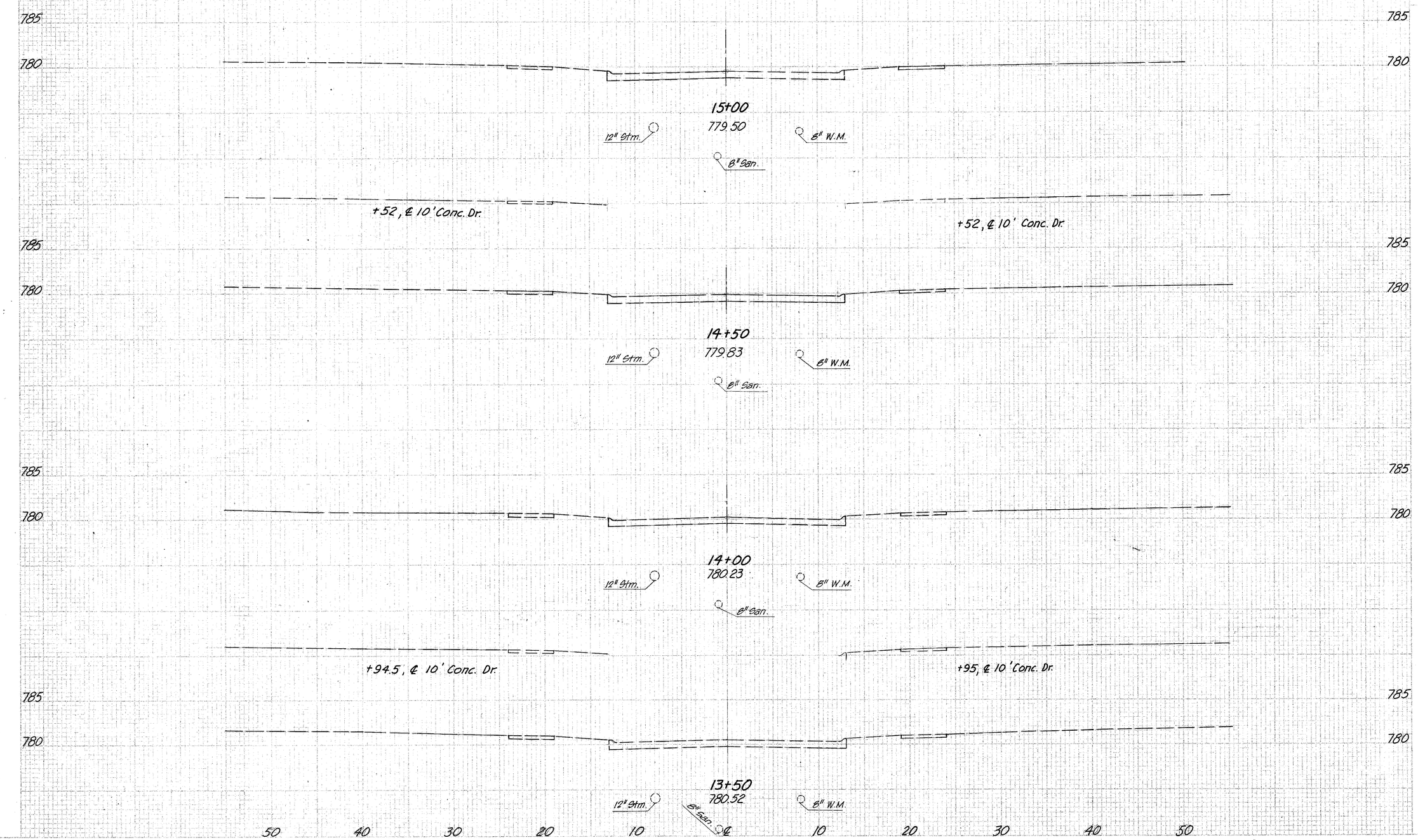


SOUTHWOOD DRIVE STA. 13+50 TO STA. 15+00

DES'D. A.T.F. 10/81
CHKD. BY T.R.B. DATE 5/81

| FED. AID PROJECT | STATE | PROJECT | |
|---|---|---|---|
| 2 | OHIO | | |

201
500

CUYAHOGA COUNTY
CUY - 480 - 10.39

R/W R/W

780
775

13+00
780.32

8" W.M.

12" STM.

8" SAN.

R/W R/W

BLDG.

780
775

779.66
12+45.60
779.66
MEET EXIST

8" W.M.

R/W R/W

MISC. QUANTITY
SEEDING 307 S.Y.

785
780
775

CUT FILL
MISC. QUANTITY 266 C.Y. 9 C.Y.

779.91
11+90
780.0

NORTH CUL-DE-SAC

R/W R/W

780
775

780
775

779.11
8+25
779.5

CUT FILL
MISC. QUANTITY 91 C.Y. 76 C.Y.

R/W R/W

Meet Exist.
+7.9 %
779.03 TIE

778.97 TIE
+6.3 %
779.35
779.45
Meet Exist.

BLDG.
780

CONC. DR. 7+91

CONC. DR. 8+05

R/W R/W

BLDG.

BLDG.
780
775

7+87.78
MEET EXIST

8" W.M.

R/W R/W

785
780
775

BLDG.

BLDG.

785
780
775

12" Storm

7+50
779.03

8" W.M.

SOUTH CUL-DE-SAC

70 60 50 40 30 20 10 ℄ 10 20 30 40 50 60 70 80

AUTUMN LANE (NORTH CUL-DE-SAC
SOUTH CUL-DE-SAC)

| FHWA REGION | STATE | PROJECT | |
|---|---|---|---|
| 5 | OHIO | | |

202
500

CUYAHOGA COUNTY
CUY-480-10.39

CALC. BY WAM DATE 5/81
CHKD. BY TRB DATE 10/81

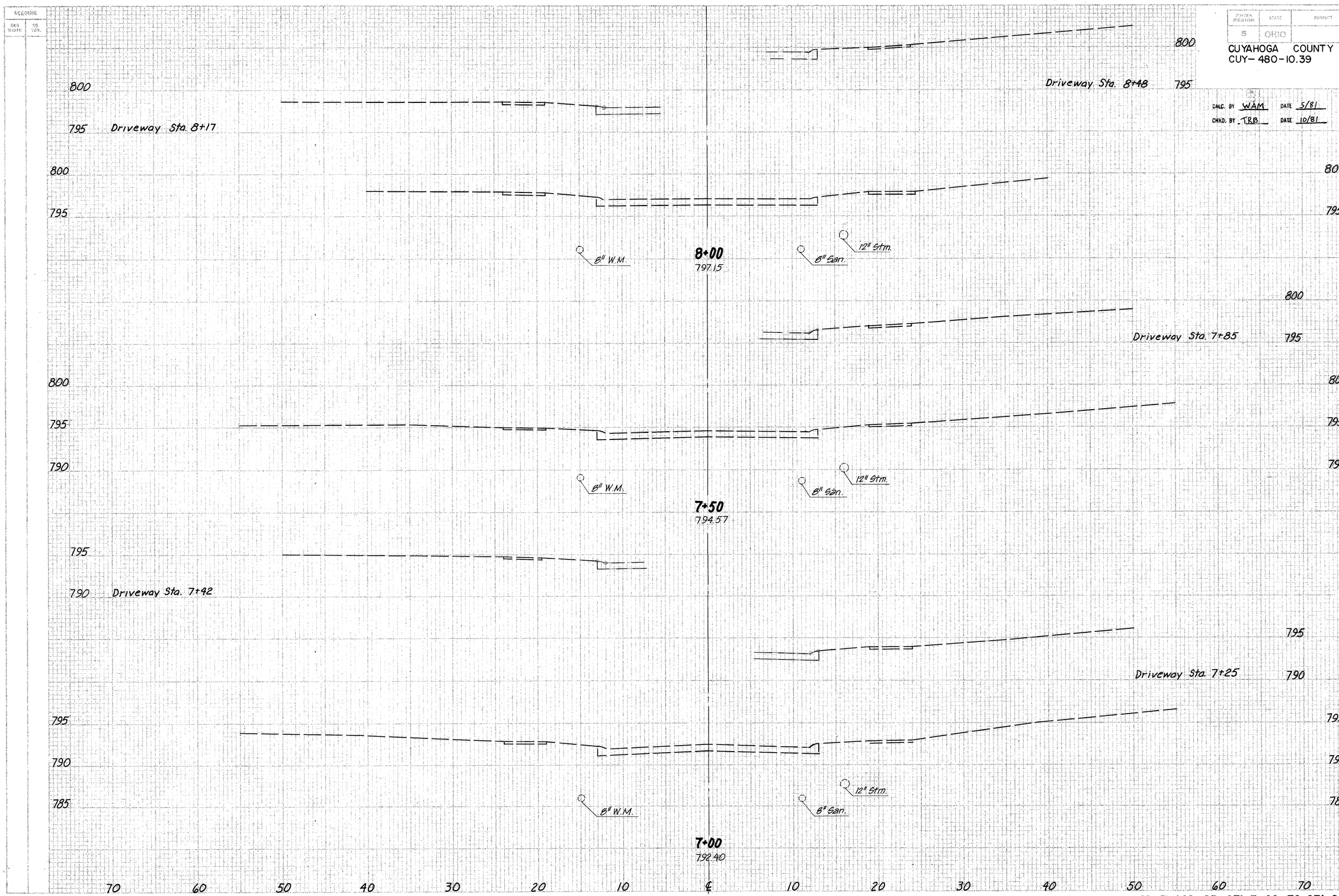


IDLEWOOD DR. STA. 7+00 TO STA. 8+00

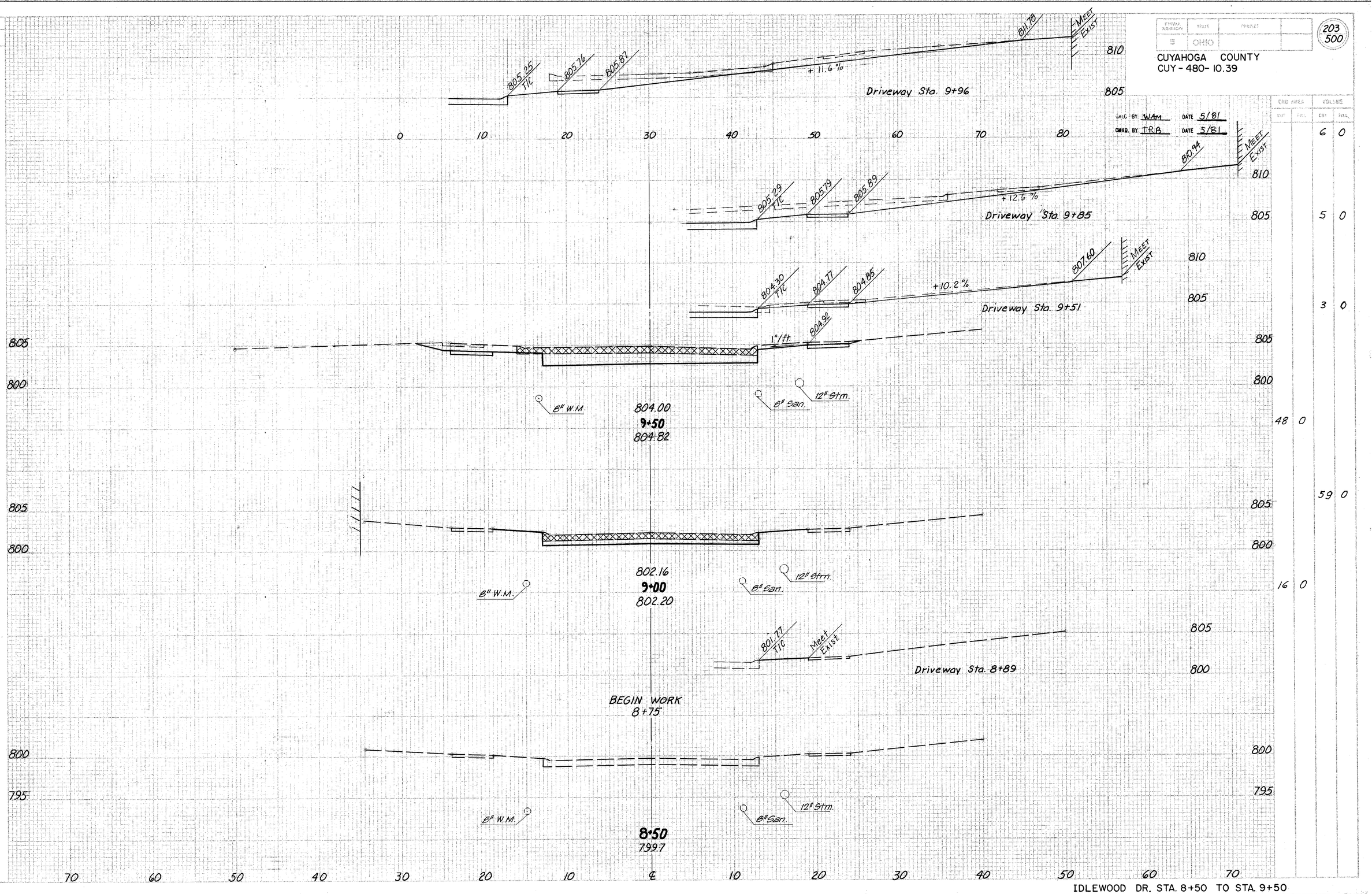


IDLEWOOD DR. STA. 8+50 TO STA. 9+50

SEEDING

| END WIDTH | SQ. YDS. |
|---|---|
| | |

| FHWA REGION | STATE | PROJECT | |
|---|---|---|---|
| 5 | OHIO | | |

204
500

CALC. BY WAM DATE 5/81
CHKD. BY TRB DATE 5/81

CUYAHOGA COUNTY
CUY-480 - 10.39

| END AREA | | VOLUME | |
|---|---|---|---|
| CUT | FILL | CUT | FILL |

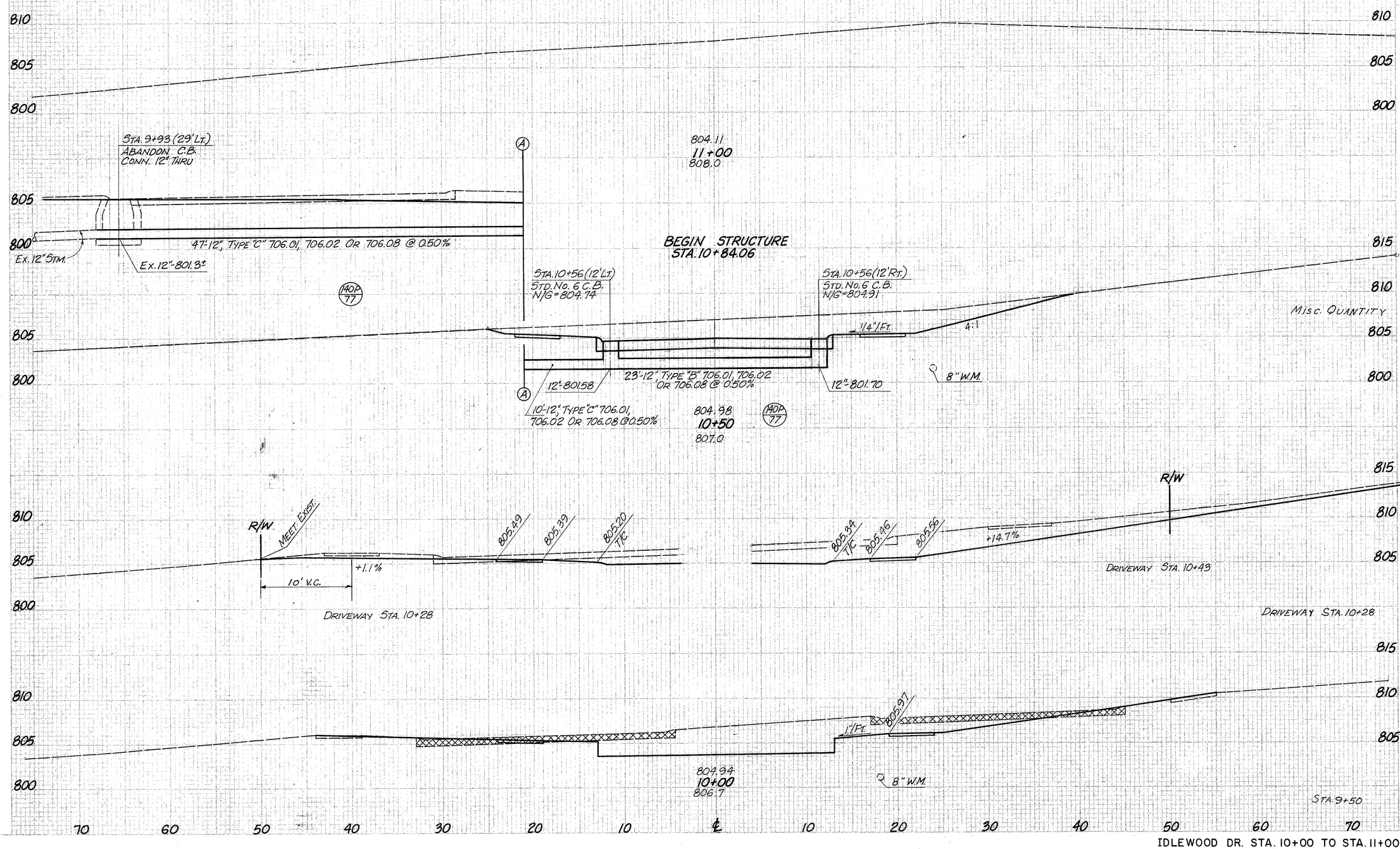


Misc. Quantity 118 0

135 0

11 0

2 0

212 12

95 13

48 0

132 12

IDLEWOOD DR. STA. 10+00 TO STA. 11+00

SEEDING

| SEED WIDTH | SQ. YDS. |
|---|---|
| 50 | 263 |
| 45 | 247 |
| 44 | 242 |
| 43 | |

CALD. BY J.D DATE 12/82
CHKD. BY K.H DATE 1/83

| FHWA REGION | STATE | PROJECT | |
|---|---|---|---|
| 5 | OHIO | | |

205
500

CUYAHOGA COUNTY
CUY - 480 - 10.39

790.32
15+50
792.3

790.58
15+00
791.5

791.26
14+50
792.2

792.53
14+00
793.3

13+50
794.7

STA. 13+00

| END AREA | | VOLUME | |
|---|---|---|---|
| CUT | FILL | CUT | FILL |
| | | | |
| 133 | 8 | | |
| | | 208 | 9 |
| 92 | 2 | | |
| | | 165 | 4 |
| 86 | 3 | | |
| | | 156 | 6 |
| 83 | 4 | | |
| | | | |
| 0 | 0 | | |

IDLEWOOD DR. STA. 13+50 TO STA. 15+50

| FHWA REGION | STATE | PROJECT | |
|---|---|---|---|
| 5 | OHIO | | |

206
500

CALC. BY J.D. DATE 12.82
CHKD. BY K.H. DATE 1/83

CUYAHOGA COUNTY
CUY - 480-10.39

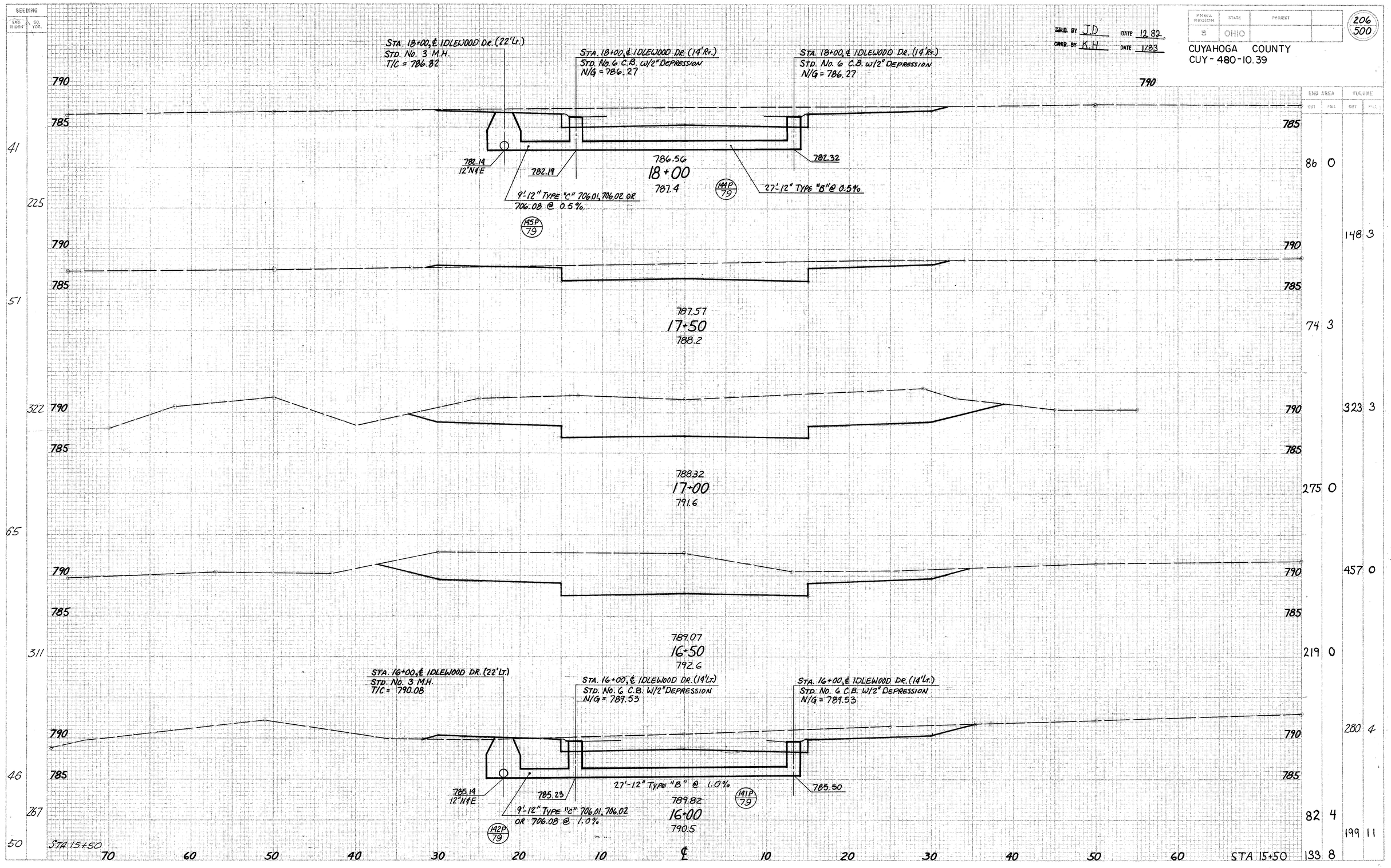


IDLEWOOD DR. STA. 16+00 TO STA. 18+00

| FHWA REGION | STATE | PROJECT | |
|---|---|---|---|
| 5 | OHIO | | |

207
500

CUYAHOGA COUNTY
CUY - 480 - 10.39

CALC. BY J.D. DATE 12.82
CHKD. BY K.H. DATE 1/83

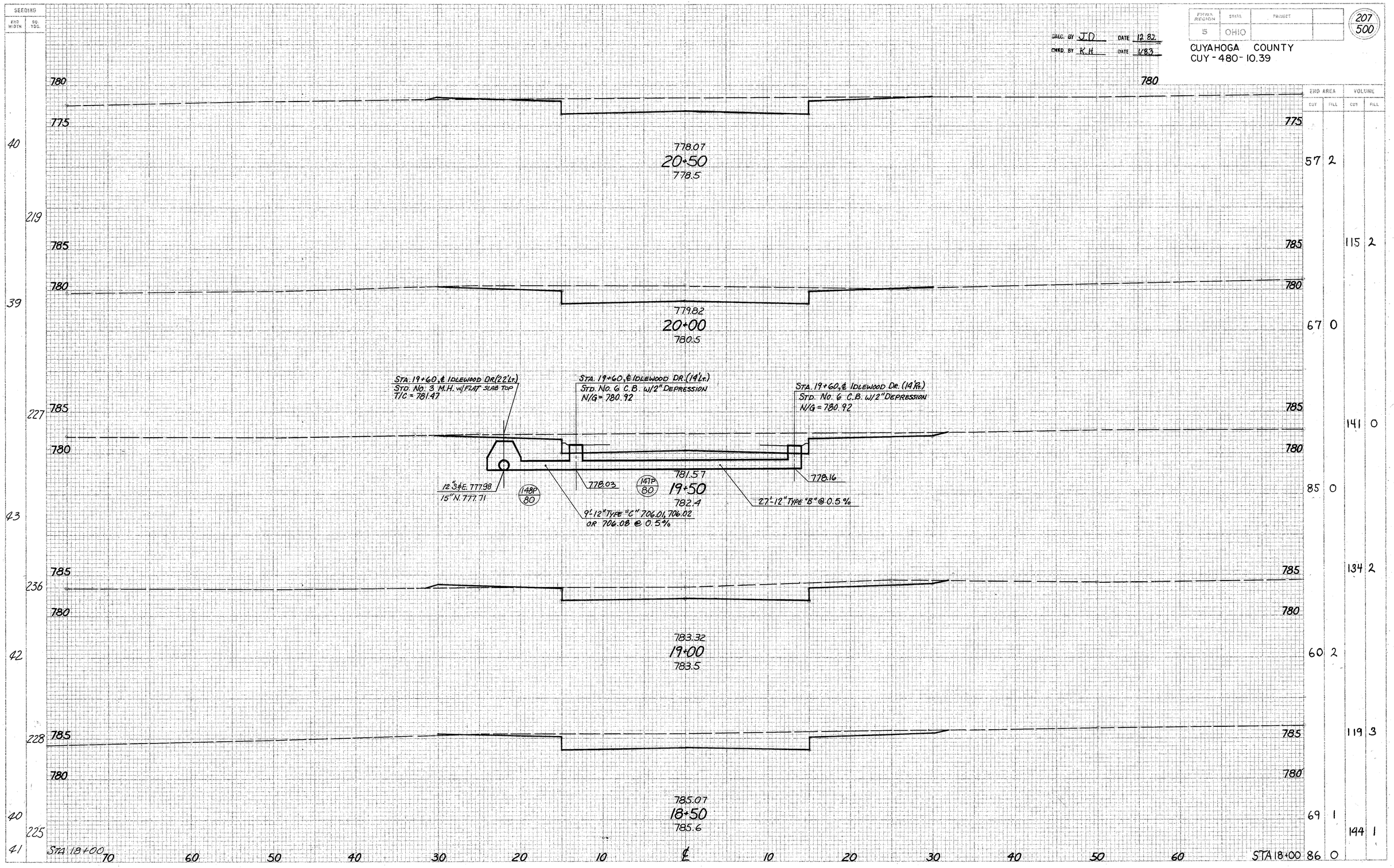


IDLEWOOD DR. STA. 18+50 TO STA. 20+50

| FHWA REGION | STATE | PROJECT | |
|---|---|---|---|
| 5 | OHIO | | |

208
500

CALC. BY J.D DATE 12/82
CHKD. BY K.H DATE 1/83

CUYAHOGA COUNTY
CUY-480-10.39

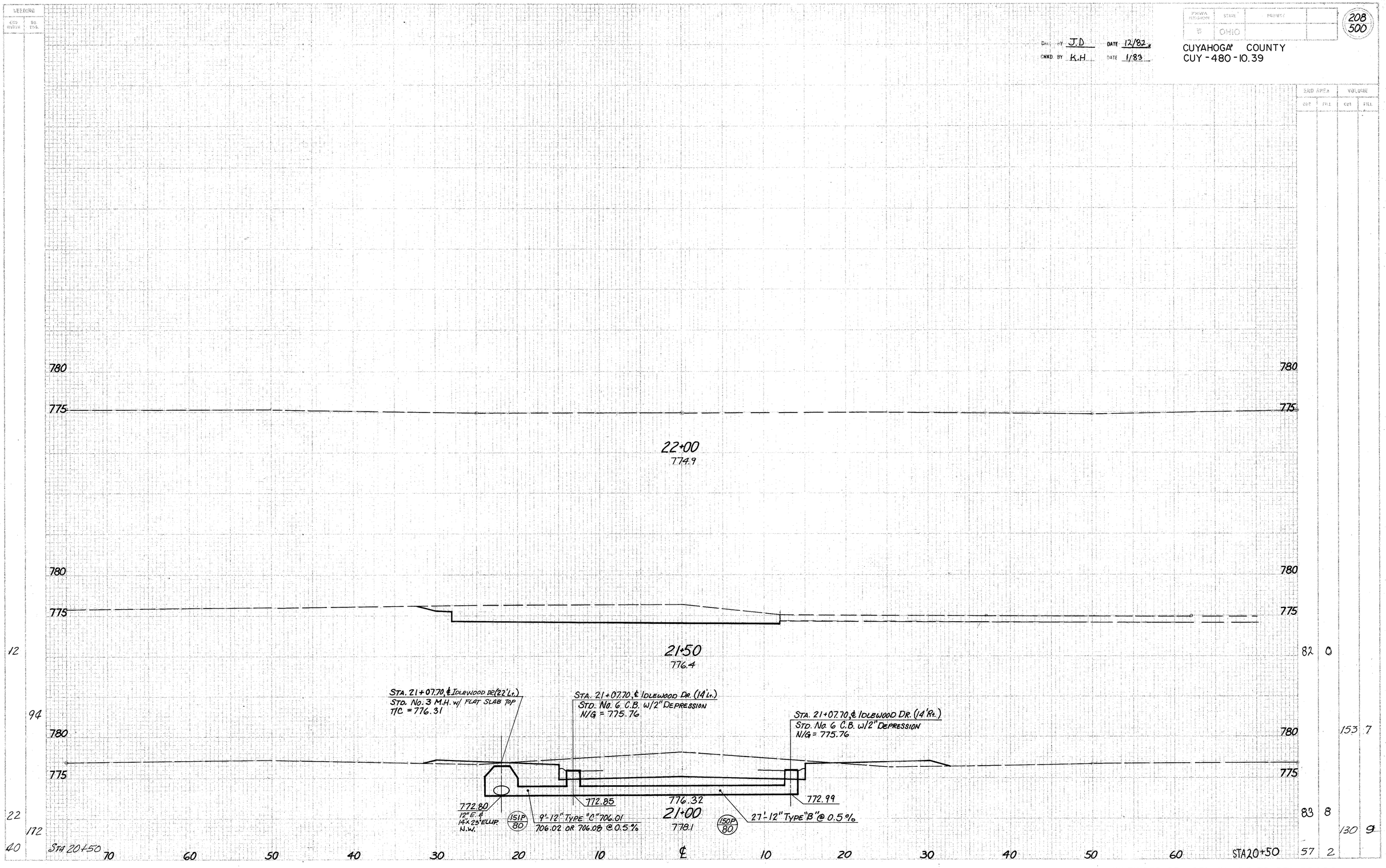


IDLEWOOD DR. STA. 21+00 TO STA. 22+00

| FED. RD. DIVISION | STATE | PROJECT | |
|---|---|---|---|
| 2 | OHIO | | |

209/500

CUYAHOGA COUNTY
CUY-480-10.39

CALC. BY JL DATE 1/72
CHKD. BY WAM DATE 1/72

| SEEDING | | END AREA | | VOLUME | |
|---|---|---|---|---|---|
| END WIDTH | SQ YDS. | CUT | FILL | CUT | FILL |
| | | | | 1399 | 46 |
| | 29 | | | | |
| | | 108 | 243 | | |
| | 81 | | | | |
| | | 130 | 225 | | |
| | 0 | | | | |
| | | 32 | 0 | | |
| | 0 | | | | |
| | | 39 | 0 | | |
| | 0 | | | | |
| | | 10 | 0 | | |
| | 0 | | | | |
| | | 0 | 0 | | |
| | 0 | | | | |
| | | | | | |
| | 0 | | | | |

Misc. Quantity
Sta. 6+60 to 9+20 (Lt)

Match Line Ramp T-4

760
750
740

2:1

747.82
7+00
749.9

748.29
6+50
750.0

749.23
6+00
749.4

Begin Work Sta. 5+84.56

5+50

40 20 0 20 40 60

| SEEDING | | END AREA | | VOLUME | |
|---|---|---|---|---|---|
| END WIDTH | SQ YDS. | CUT | FILL | CUT | FILL |
| | 27 | | | | |
| | | | | | |
| | 136 | | | | |
| | | | | | |
| | 22 | | | | |
| | | | | | |
| | | 161 | | | |
| | 36 | | | | |
| | | 167 | | | |
| | 24 | | | | |
| | 147 | | | | |
| | 29 | | | | |

Match Line I-480

760
750
740

2:1

745.94
9+00
747.0

54" Storm Sewer Outlet
749.80
54

740 For Quantities
See Plan & Profile
Sheet No. 51

746.41
8+50
746.6

High Water Elevation
Q 50 = 751.9

48:1

746.88
8+00
747.4

2.5:1

747.35
7+50
749.2

From Sta. 7+00

Varies

| END AREA | | VOLUME | |
|---|---|---|---|
| CUT | FILL | CUT | FILL |
| 94 | 56 | | |
| | | 202 | 92 |
| 124 | 43 | | |
| | | 312 | 183 |
| 213 | 155 | | |
| | | 298 | 364 |
| 109 | 238 | | |
| 108 | 243 | 201 | 445 |

From Sta. 7+00

20 40 60 40 20 0

CROSS SECTION ~ RELOCATED BIG CREEK

| FED. RD. DIVISION | STATE | PROJECT | |
|---|---|---|---|
| 2 | OHIO | | |

210/500

CUYAHOGA COUNTY
CUY-480-10.39

CALC. BY JL DATE 1/72
CHKD. BY WAM DATE 2/72

SEEDING

| END WIDTH | AREA SQ. YDS. |
|---|---|
| 33 | 147 |
| 20 | 111 |
| 20 | 83 |
| 10 | 103 |
| 27 | |

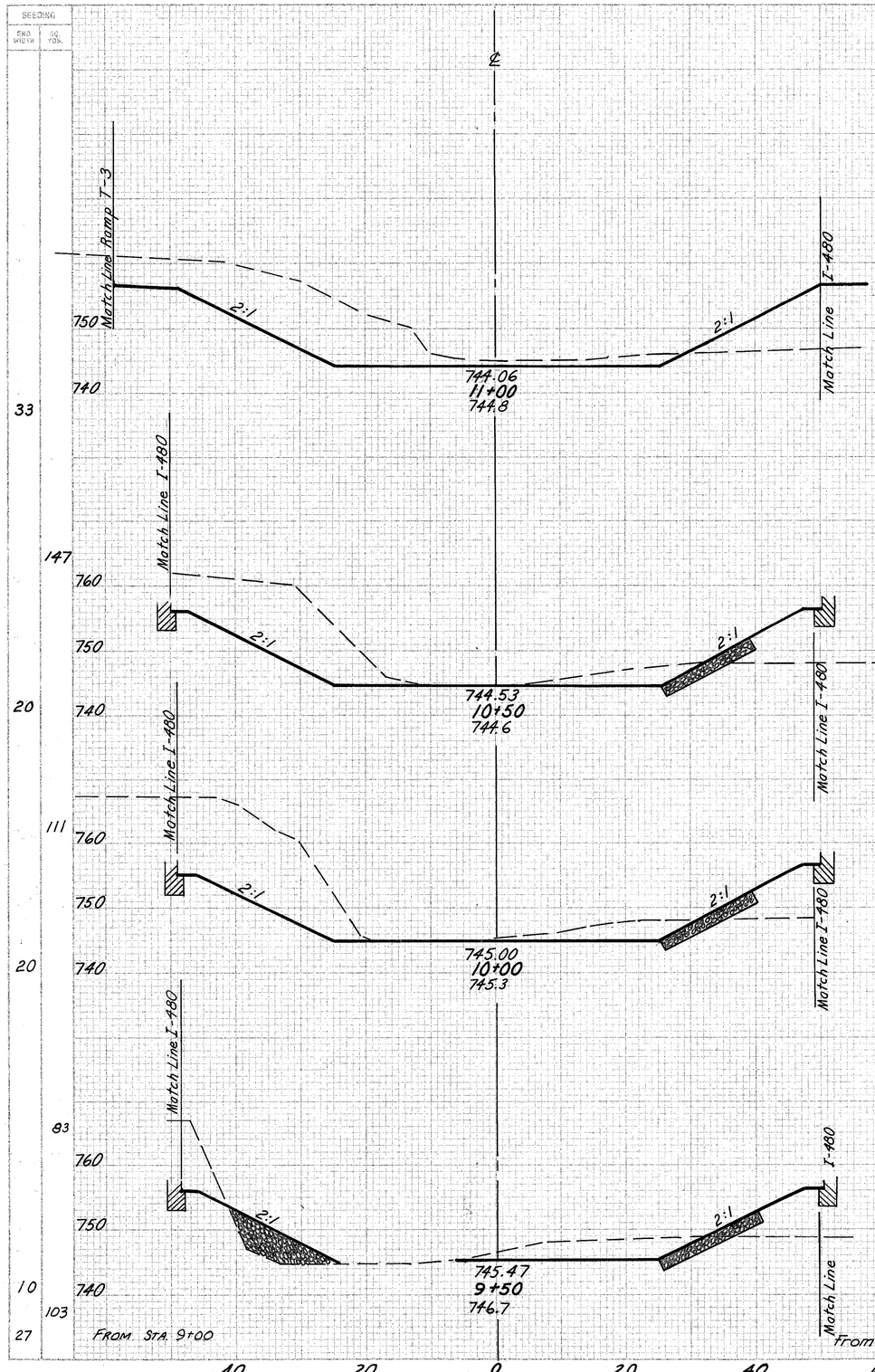


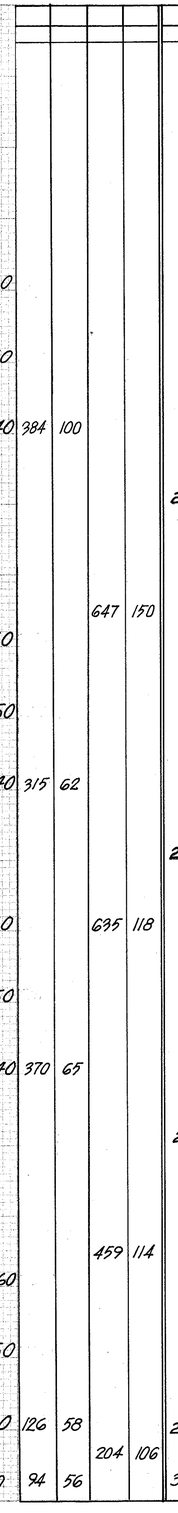


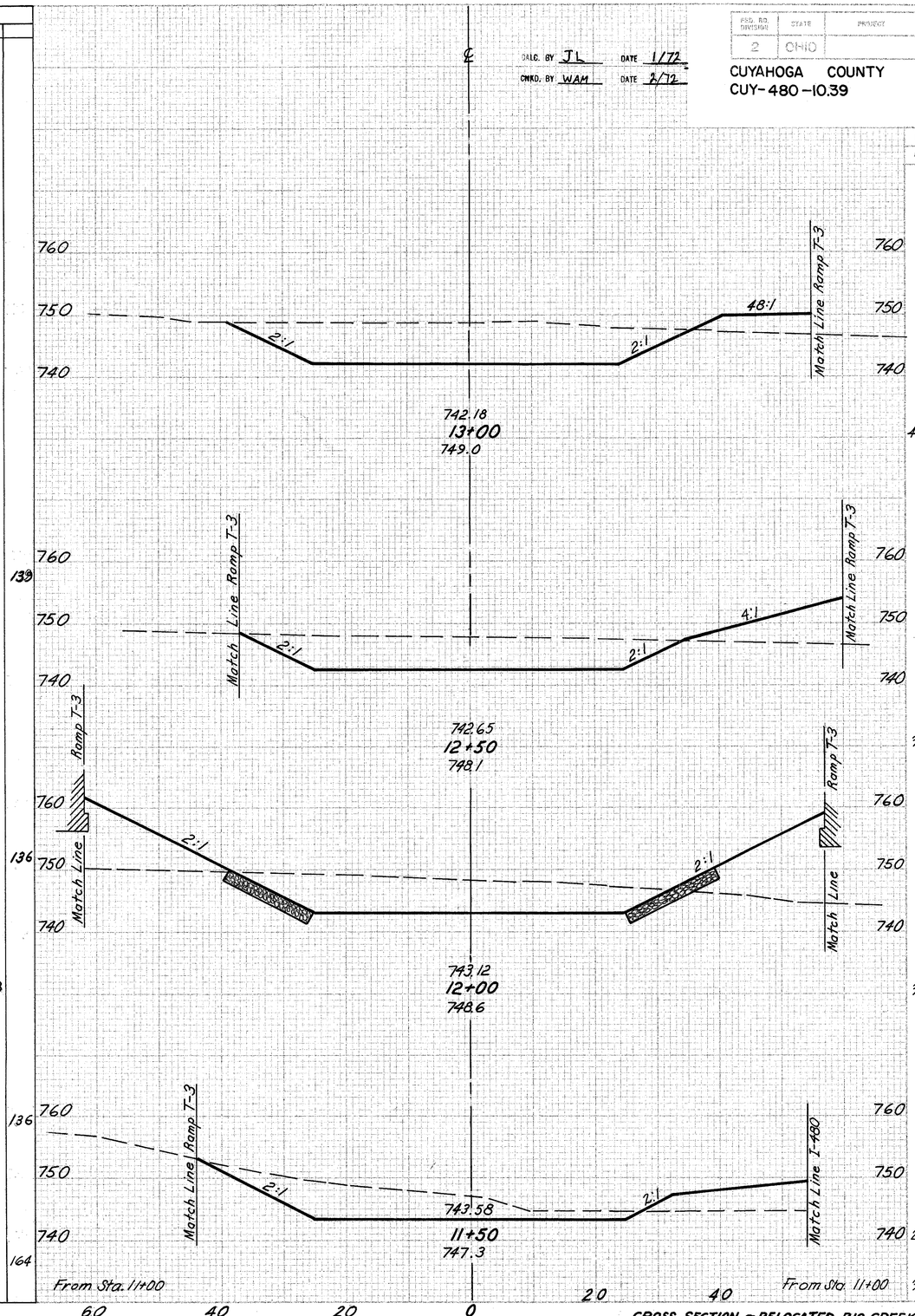


| | END AREA CUT | END AREA FILL | VOLUME CUT | VOLUME FILL |
|---|---|---|---|---|
| | | | 668 | 143 |
| 24 | 404 | 55 | | |
| 26 | 317 | 99 | | |
| 136 | | | 596 | 316 |
| 23 | 327 | 242 | | |
| 136 | | | 515 | 295 |
| 26 | 230 | 77 | | |
| 164 | | | 569 | 164 |
| 33 | 384 | 100 | | |

40 20 0 20 40 60 60 40 20 0 20 40

CROSS SECTION - RELOCATED BIG CREEK

| FED. RD. DIVISION | STATE | PROJECT | |
|---|---|---|---|
| 2 | OHIO | | |

211/500

CUYAHOGA COUNTY
CUY-480-10.39

CALC. BY JL DATE 1/72
CHKD. BY WAM DATE 2/72

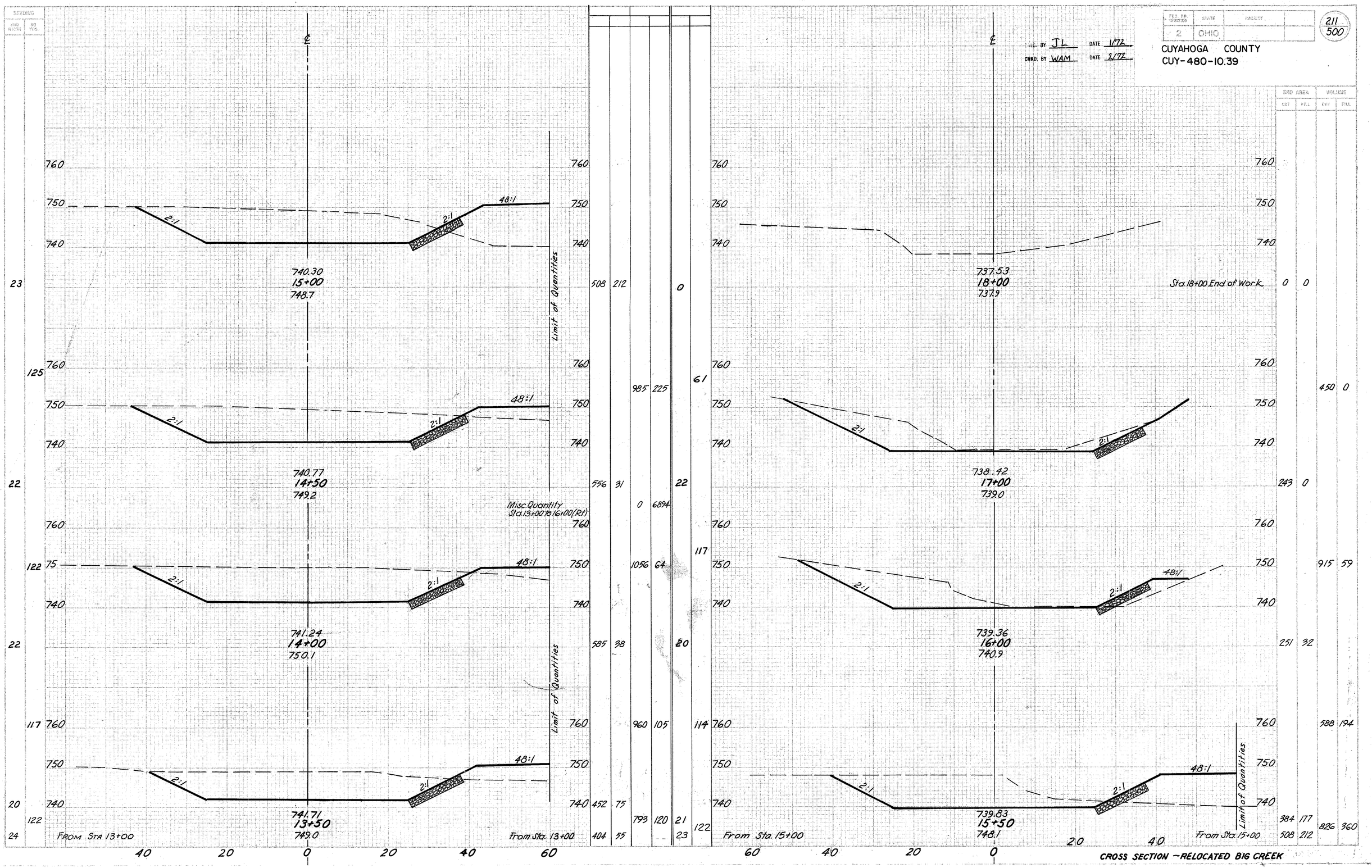


CROSS SECTION – RELOCATED BIG CREEK

CALC BY _____ DATE _____
CHKD BY _____ DATE _____

| FHWA REGION | STATE | PROJECT | |
|---|---|---|---|
| 5 | OHIO | ---- | |

212/500

CUYAHOGA COUNTY
CUY-480-10.39

# GENERAL NOTES

## CHANNEL GRADING AND LANDSCAPING

CLEARING AND GRUBBING AND EARTHWORK OPERATIONS PERFORMED WITHIN THE LIMITS OF THE TEMPORARY RIGHT-OF-WAY PROVIDED FOR THE RELOCATION OF BIG CREEK SHALL BE HELD TO A MINIMUM TO AVOID DISTURBANCE OF EXISTING BIOTA WHEREVER POSSIBLE. THE EXISTING STREAM BED, FROM THE NORTHERLY LA LINE OF I-480 TO APPROXIMATELY STA. 15+00 RT. OF THE CENTERLINE OF RELOCATED BIG CREEK, SHALL BE FILLED, GRADED AND LANDSCAPED AS DIRECTED BY THE ENGINEER TO PRESERVE AS MUCH OF THE EXISTING NATURAL VEGETATION AS POSSIBLE BOTH ADJACENT TO THE STREAM BED AND IN THE ISLAND CREATED BETWEEN IT AND THE RELOCATED CHANNEL. IF EXISTING TREES AND SHRUBS THUS MAINTAINED CONFLICT WITH THE PROPOSED LOCATIONS OF NEW PLANTS, THESE ITEMS SHALL BE NON-PERFORMED.

## SPECIFICATIONS

THE PROVISIONS OF ITEMS 661, 662 AND 663 OF THE 1983 CONSTRUCTION AND MATERIAL SPECIFICATIONS SHALL APPLY EXCEPT AS MODIFIED BELOW.

## COOPERATION

THE CONTRACTOR IS HEREBY ADVISED THAT THERE MAY BE ANOTHER CONTRACTOR OPERATING IN CERTAIN AREAS OF THIS PROJECT AT THE SAME TIME WORK IS BEING CARRIED ON UNDER THIS CONTRACT. THE CONTRACTOR SHALL COOPERATE WITH THE OTHER SO THAT INTERFERENCE AND INCONVENIENCE TO EACH BE HELD TO A MINIMUM.

## LOCATION OF TREES AND PLANTS

TREES AND SHRUBS SHALL BE LOCATED BY SCALING FROM THE PLAN DRAWINGS. WHEN TREE LOCATIONS SHOWN ON THE PLANS ARE SUCH THAT THEY ARE ON TOP OF DRAINAGE OR UTILITY LINES, THEY SHALL BE SHIFTED RIGHT OR LEFT IN A LINE PARALLEL TO THE CENTER LINE OF THE NEAREST FREEWAY PAVEMENT, AS APPROVED BY THE ENGINEER.

NO TREES SHALL BE PLANTED CLOSER THAN 30 FEET FROM FREEWAY PAVEMENT OR 25 FEET FROM RAMP PAVEMENT. IMPERVIOUS TO WATER PLANT POCKET HOLES SHALL BE ALTERED TO ALLOW FOR DRAINAGE AS DIRECTED BY THE PROJECT ENGINEER. FIELD CHANGES OF PLANT LOCATIONS SHALL BE APPROVED BY THE ENGINEER.

## PLANTING HOLE AND BED PREPARATION

AFTER THE LAYOUT IS APPROVED BY THE ENGINEER, SHRUB BEDS SHALL BE CULTIVATED TO A MINIMUM DEPTH OF SIX (6) INCHES BY A PLOW, HARROW OR DISC, OR OTHER METHOD APPROVED BY THE ENGINEER. THE CULTIVATION SHALL TAKE PLACE AS FAR IN ADVANCE OF THE PLANTING OPERATION AS POSSIBLE. WHERE SHRUBS ARE SHOWN, INDIVIDUAL HOLES SHALL BE DUG ON CENTERS AS SHOWN ON THE PLANS. THESE HOLES SHALL ALLOW FOR A MINIMUM OF NINE (9) INCHES OF BACKFILL MIXTURE AROUND THE SIDES OF THE BALLS. THE BOTTOM OF THE HOLE SHALL BE NO DEEPER THAN THE BALL TO BE PLANTED. THE MATERIAL REMOVED FROM THE HOLES SHALL BE TAKEN FROM THE PROJECT IF IT IS FOUND TO BE UNACCEPTABLE FOR USE AS BACKFILL AS DETERMINED BY THE ENGINEER. THE PLANT SHALL THEN BE SET AND THE HOLE FILLED WITH BACKFILL MIXTURE, AND THE PLANTING OPERATION PERFORMED AS SPECIFIED IN ITEMS 662.17 AND 662.18. ALL EXCESS DIRT SHALL BE REMOVED FROM THE SITE.

EXISTING TREES AND SHRUBS SHALL TAKE PRIORITY OVER PROPOSED PLANTINGS. THE LOCATIONS OF THE PROPOSED TREES AND SHRUBS ARE APPROXIMATE AND MAY BE REARRANGED AT THE DIRECTION OF THE ENGINEER WHEN OBSTRUCTIONS ARE ENCOUNTERED.

IF AN AUGER IS USED IN DIGGING POCKET HOLES AND POLISHED (SHINY) SIDES OCCUR IN CLAY OR HEAVY SOILS, THE USE OF SUCH AN AUGER SHALL BE DISCONTINUED AND THE HOLES SHALL BE DUG WITH A BACKHOE OR ANOTHER APPROVED METHOD.

BACKFILL NO. 1 - THE BACKFILL MIXTURE USED TO FILL POCKET HOLES IN LIGHT AND MEDIUM SOILS (SAND & AVERAGE) SHALL CONSIST BY VOLUME OF: 2 PARTS *SOIL CONDITIONER, 2 PARTS COMPRESSED SPHAGNUM PEAT OR 3 PARTS SEDGE PEAT, AND 2 PARTS APPROVED TOPSOIL.

BACKFILL NO. 2 - THE BACKFILL MIXTURE USED TO FILL POCKET HOLES IN HEAVY SOILS (CLAY & SHALE) SHALL CONSIST BY VOLUME OF : 1 PART *SOIL CONDITIONER, 1 PART COMPRESSED SPHAGNUM PEAT OR 2 PARTS SEDGE PEAT, AND 2 PARTS APPROVED TOPSOIL.

INCORPORATE THOROUGHLY INTO THE BACKFILL MIXTURES 5 LBS. OF COMMERCIAL FERTILIZER (0-20-20) PER CUBIC YARD. THE ENGINEER, AFTER CONSULTATION WITH THE LANDSCAPE ARCHITECT, SHALL DETERMINE THE LOCATIONS WHERE THE BACKFILL MIXTURES SHALL BE USED.

## SCHEDULING

ALL DIGGING AND PLANTING OF DECIDUOUS PLANTS SHALL BE DONE AFTER OCTOBER 1, AND BEFORE JUNE 1. EVERGREENS SHALL BE DUG AND PLANTED AFTER MARCH 15, AND BEFORE JUNE 1.

## ITEMS 662 & 663

ALL TREES AND SHRUBS SHALL BE SPECIMEN (NO. 1 GRADE) PLANTS WITH GROWTH AND BRANCHING HABIT TYPICAL OF THE SPECIES SPECIFIED. NO PARK GRADE (NO. 2 OR 3 GRADE) PLANTS WILL BE ACCEPTED.

## FERTILIZER

FOUR OUNCE (8 YEAR) COMMERCIAL FERTILIZER PACKETS USED IN PLANTING OPERATION SHALL BE DELIVERED DRY IN ORIGINAL, UNOPENED CONTAINERS. FERTILIZER ANALYSIS SHALL BE 16% NITROGEN, 8% PHOSPHORIC ACID AND 16% POTASH. FERTILIZER SHALL BE OF A SLOW RELEASE TYPE IN A POLYETHYLENE PERFORATED PACKET WITH MICROPORE HOLES.

THE PACKETS SHALL BE PLACED 6 TO 8 INCHES DEEP AND EVENLY SPACED AROUND THE PERIMETER OF THE PLANTING HOLE, ADJACENT TO THE BALL OR ROOT MASS BUT NOT IN DIRECT CONTACT WITH THE ROOTS. THE PACKETS SHALL NOT BE CUT, RIPPED OR DAMAGED.

EACH SHRUB OR TREE SHALL BE FERTILIZED ACCORDING TO THE FOLLOWING SCHEDULE:

| | | |
|---|---|---|
| SHRUBS | 1'-2' | 2 PACKETS |
| SHRUBS | 2'-3' | 2 PACKETS |
| SHRUBS | 3'-4' | 3 PACKETS |
| TREES | 5'-6' | 3 PACKETS |
| TREES | 6'-8' | 4 PACKETS |
| TREES | 1½"-2" CAL. | 2 PACKETS |
| TREES | 2"-2½" CAL. | 3 PACKETS |
| TREES | 2½-3" CAL. | 4 PACKETS |
| TREES | 3"-3½" CAL. | 5 PACKETS |

IF IT BECOMES NECESSARY TO REMOVE AND REPLACE MISSING, DEAD OR UNHEALTHY PLANTS, ALL OLD PACKETS SHALL BE REPLACED WITH NEW PACKETS.

THE FOUR OUNCE 16-8-16 FERTILIZER PACKETS SHALL BE DESIGNATED BY THE MANUFACTURER TO BE EFFECTIVE FOR EIGHT YEARS. PACKETS SUCH AS "EEESY GROW", "THE UNIQUE FEEDER" OR AN APPROVED EQUAL SHALL BE USED.

## ITEM 661.21 WATERING

WATER SHALL BE FURNISHED BY THE CONTRACTOR AND ALL PLANT MATERIAL SHALL BE WATERED THOROUGHLY AT THE TIME OF PLANTING REGARDLESS OF AMPLE MOISTURE CONTENT OF THE SURROUNDING SOIL. SUSPENSION OF WATERING OPERATIONS BECAUSE OF RAINFALL WILL BE DETERMINED BY THE ENGINEER IN CONSULTATION WITH THE LANDSCAPE ARCHITECT. AN AVERAGE OF ONE INCH OF RAINFALL PER WEEK SHALL BE CONSIDERED ADEQUATE. DETERMINATION OF RAINFALL SHALL BE BASED UPON THE USE OF A RAIN GAUGE APPROVED BY THE PROJECT ENGINEER.

## MULCH

MULCH SHALL BE AS PER ITEM 661.04 WITH THE FOLLOWING EXCEPTIONS: WOOD SHAVINGS OR PEAT MOSS OR CORN COBS SHALL NOT BE USED AS A TOP MULCH. WOOD CHIPS SHALL BE AGED (STOCKPILED) AT LEAST 6 MONTHS PRIOR TO PLACEMENT AROUND PLANTS. MULCH SHALL BE SIX INCHES LOOSE MEASUREMENT. AFTER MULCHING, COMMERCIAL FERTILIZER (12-12-12) SHALL BE APPLIED AS SPECIFIED IN ITEM 662.18.

## PRUNING

ALL PLANTS SHALL BE PRUNED WITHIN SEVEN DAYS AFTER PLANTING. THE PRUNING SHALL BE DONE ACCORDING TO SELECTED TYPICAL PLANTS OF EACH SPECIES PRUNED AND USED AS A SAMPLE AS DIRECTED BY THE ENGINEER.

ANY LEADER GROWTH ON NEEDLE EVERGREENS WHICH EXCEED 3 INCHES AT PLANTING TIME SHALL BE CUT BACK TO THAT LENGTH IMMEDIATELY.

## STORAGE AREAS

THE CONTRACTOR MAY STORE MATERIALS AND EQUIPMENT 30 FEET FROM PAVEMENT, BEHIND GUARDRAIL AND WITHIN OR ADJACENT TO THE PROJECT LIMITS BY OBTAINING OFFICAL PERMISSION OF THE ENGINEER. NO PEDESTRIAN OR VEHICULAR TRAFFIC MAY BE IMPEDED NOR HAZARDOUS CONDITION CREATED AS A RESULT OF SUCH STORAGE.

THE STORAGE OF ALL DUG PLANTS SHALL CONFORM TO 661.14 WHETHER WITHIN THE PROJECT LIMITS, ADJACENT THERETO, OR AT SOME OTHER LOCATION. THESE AREAS SHALL BE DESIGNATED PRIOR TO ACTUAL PLANT STORAGE AND SHALL BE OPEN TO INSPECTION UPON REQUEST OF THE ENGINEER.

## STAKING MATERIALS

ALL TREES SHALL BE STAKED AS SHOWN IN THE STANDARD DRAWING LA-2. STAKING OF SMALL ORNAMENTAL TREES SHALL BE SIMILAR TO THAT OF EVERGREENS. ALL DECIDUOUS TREE TRUNKS ARE TO BE TREATED WITH LINDANE SPRAY BEFORE WRAPPING.

## PLANTING PERIOD OF ESTABLISHMENT

BEFORE FINAL INSPECTION, ALL PLANTINGS SHALL BE IN PLACE AND UNDER THE CARE OF THE CONTRACTOR FOR A PERIOD OF ESTABLISHMENT. THIS PERIOD SHALL BEGIN IMMEDIATELY UPON COMPLETION OF THE PLANTING OPERATION FOR ANY PLANT OR SPECIES GROUP AND CONTINUE UNTIL OCTOBER 1. IN NO CASE SHALL IT BE LESS THAN ONE GROWING SEASON, JUNE 1 TO OCTOBER 1.

DURING THIS PERIOD OF ESTABLISHMENT, IT SHALL BE THE CONTRACTOR'S RESPONSIBILITY TO FOLLOW SUCH HORTICULTURAL PRACTICES AS REQUIRED TO ASSURE THE VIGOR AND GROWTH OF THE TRANSPLANTED MATERIAL. THIS CARE SHALL INCLUDE WATERING, REMULCHING, RESTAKING, GUYING AND CULTIVATING. THERE SHALL BE A MINIMUM OF TWO WEEDING AND MOWING (BED EDGES, AROUND TREES AND GUY STAKES) PROGRAMS OF SUCH INTENSITY AS TO COMPLETELY RID THE PLANTED AND MULCHED AREAS OF WEEDS AND GRASSES. THE FIRST PROGRAM SHALL BEGIN ON OR ABOUT JUNE 15 AND THE OTHER APPROXIMATELY 8 WEEKS LATER.

EACH PLANT SHALL HAVE SUFFICIENT WATER TO KEEP IT IN A HEALTHY, GROWING CONDITION. IF LOCAL WEATHER CONDITIONS WARRANT, THE ENGINEER MAY REQUIRE WEEKLY WATERING. WHEN WATERING IS REQUIRED, A SCHEDULE FOR WATERING EACH PLANT SHALL BE SUPPLIED TO AND APPROVED BY THE ENGINEER. THE WATER SHALL BE APPLIED IN SUCH A MANNER AS TO SATURATE THE ROOT AND MULCHED AREA OF EACH PLANT WITHOUT CAUSING RUNOFF (SEE WATERING TABLE). IN CASE OF FALL PLANTINGS, THESE WATERINGS SHALL CONTINUE UNTIL SOIL FREEZE-UP AND RECOMMENCE AFTER THE SPRING THAW UNLESS OTHERWISE DIRECTED.

ON OR ABOUT SEPTEMBER 15, THE ENGINEER SHALL INSPECT THE PLANTING AND SUPPLY THE CONTRACTOR WITH A LISTING OF THOSE PLANTS HAVING DIED, DIED BACK BEYOND NORMAL PRUNING LINES OR ARE MISSING FROM THE PLANTING. THE CONTRACTOR SHALL MAKE THE REPLANTING AS REQUIRED AND IN ACCORDANCE WITH THE SPECIFICATIONS FOR THE ORIGINAL MATERIAL. THESE REPLACEMENTS ARE NOT SUBJECT TO THE PERIOD OF ESTABLISHMENT, HOWEVER, PLANTS PLANTED INITIALLY IN THE FALL WHICH HAVE DIED BEFORE THE SPRING PLANTING SEASON SHALL BE REPLACED IMMEDIATELY AND ARE SUBJECT TO THE ESTABLISHMENT PERIOD.

AFTER REPLACEMENTS HAVE BEEN PLANTED, THE FINAL INSPECTION SHALL BE MADE AND THE ACTUAL COUNT OF LIVE PLANTS OF EACH VARIETY AND SPECIES LISTED FOR PAYMENT.

### WATERING TABLE

| | |
|---|---|
| SHRUBS 1'-2' SIZE | 2 GALLON PER PLANT |
| SHRUBS 2'-3' SIZE | 4 GALLONS PER PLANT |
| SHRUBS 4'-5' SIZE | 7 GALLONS PER PLANT |
| TREES 5'-6' SIZE | 10 GALLONS PER PLANT |
| TREES 1-1/4" - 1-1/2" CAL. | 15 GALLONS PER PLANT |
| TREES 1-1/2" - 2" CAL. | 20 GALLONS PER PLANT |
| TREES 2"-3" CAL. | 25 GALLONS PER PLANT |
| TREES 3"-4" CAL. | 30 GALLONS PER PLANT |

THE METHOD OF MEASUREMENT FOR SUMMER WATERING SHALL BE BY APPROVED METERING FROM TANKS OR BY INDIVIDUALLY MEASURED CONTAINERS TO EACH PLANT TO BE WATERED. PAYMENT FOR PLANTING PERIOD OF ESTABLISHMENT SHALL BE INCLUDED IN THE UNIT PRICE BID FOR ITEMS 661, 662 AND 663.

## *SOIL CONDITIONER

A SOIL CONDITIONER SUCH AS "TURFACE," "LUSOIL," "TERRAGREEN," OR AN APPROVED EQUAL SHALL BE USED. THE PARTICLE SIZE GRADATION OF THE SOIL CONDITIONER SHALL BE AT LEAST 80% PASSING A NO. 6 SIEVE AND NOT MORE THAN 5% PASSING A NO. 50 SIEVE. ALTERNATE SHALL BE HORTICULTURAL PERLITE.

## HERBICIDES

AFTER PLANTING AND FERTILIZING HAVE BEEN COMPLETED AND APPROVED, THE AREA OF THE BED SHALL BE TREATED WITH SIMAZINE, DYMID OR AN APPROVED EQUAL HERBICIDE. RATE AND METHOD OF APPLICATION SHALL BE IN STRICT CONFORMANCE WITH MANUFACTURER'S INSTRUCTIONS AND UNDER THE DIRECT SUPERVISION OF A PESTICIDE APPLICATOR LICENSED BY THE STATE OF OHIO.

## TOPSOIL TESTING

TOPSOIL FAILING CURRENT TEST STANDARDS MAY BE ALTERED, UPON APPROVAL OF THE ENGINEER, BY ADDING APPROVED CONDITIONERS TO CORRECT THE DEFICIENCIES. TOPSOIL SHALL BE FREE OF JOHNSON GRASS AND CONFORM TO ITEM 653 AS DETERMINED BY THE ENGINEER.

AHH 12/04/87

| FHWA REGION | STATE | PROJECT | |
|---|---|---|---|
| 5 | OHIO | | |

213/500

CUYAHOGA COUNTY
CUY-480-10.39

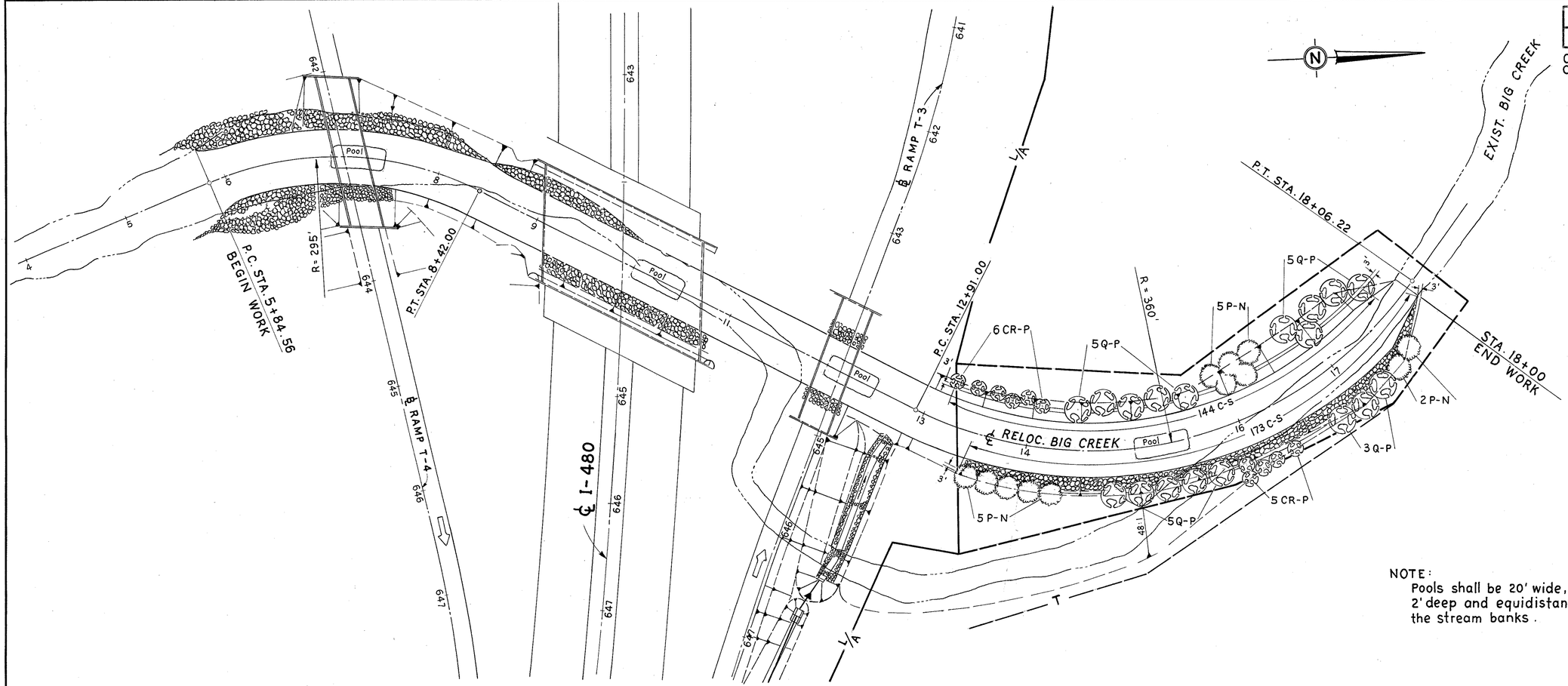


NOTE:
Pools shall be 20' wide, 50' long, 2' deep and equidistant between the stream banks.

## LANDSCAPING SUMMARY

| ITEM | QUANT. | UNIT | KEY | BOTANICAL NAME | COMMON NAME | SIZE | B+B |
|---|---|---|---|---|---|---|---|
| | | | | | | | |
| 662 | 317 | EA. | C-S | Cornus Stolonifera | Redosier Dogwood | 2' - 3' | 10" |
| | | | | | | | |
| 663 | 11 | EA. | CR-P | Crataegus Phaenoprum | Washington Hawthorn | 5' - 6' | 16" |
| 663 | 12 | EA. | P-N | Pinus Nigra | Austrian Pine | 5' - 6' | 20" |
| 663 | 18 | EA. | Q-P | Quercus Palustris | Pin Oak | 1¾"-2" Cal. | 22" |
| | | | | | | | |
| Special | 36 | M.GAL. | | Watering Plants | | | |
| | | | | | | | |
| | | | | | | | |
| | | | | | | | |

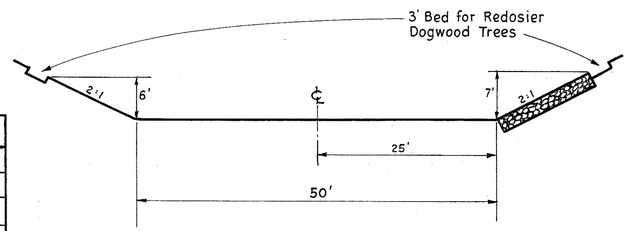


TYPICAL LOCATION OF REDOSIER TREES

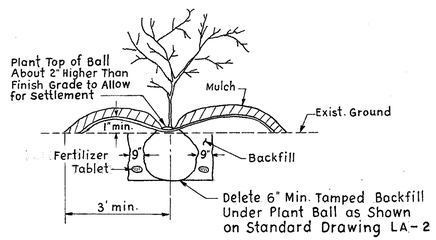


TYPICAL PLANT POCKET HOLE

LANDSCAPING PLAN

# WATER LINE WORK

| CALC. BY | | CUYAHOGA COUNTY | OHIO |
|---|---|---|---|
| DATE | | CUY-480-10.39 | FHWA REGION 5 |
| CHKD. BY | | | |
| DATE | | | |

214/500

1/39

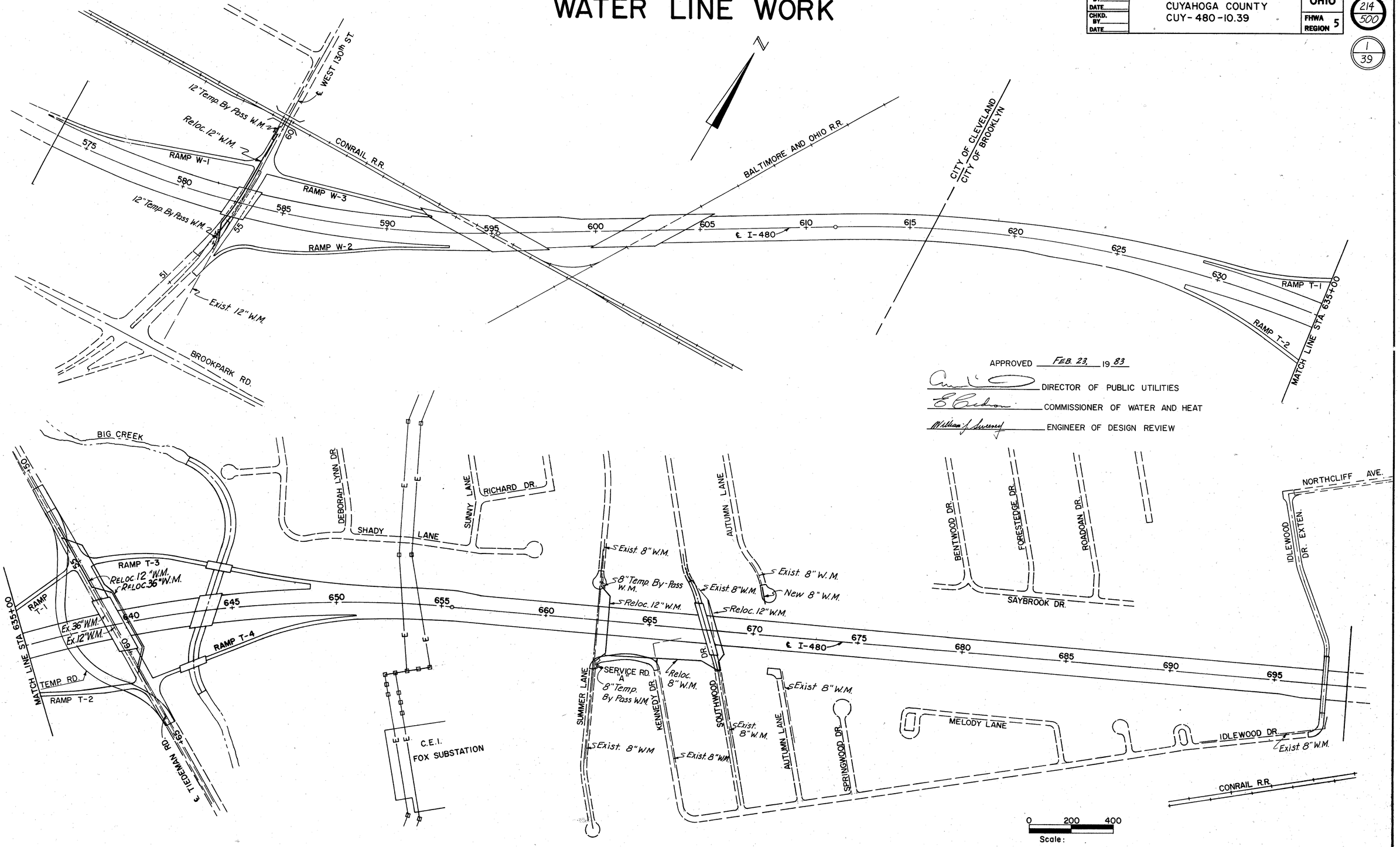


APPROVED FEB. 23, 1983

DIRECTOR OF PUBLIC UTILITIES

COMMISSIONER OF WATER AND HEAT

ENGINEER OF DESIGN REVIEW

WATER MAIN WORK - SCHEMATIC PLAN

# WATERWORK SUMMARY

CALL BY W.A.M. DATE 2/83
CHKD. BY A.C. DATE 2/83

| FWHA REGION | STATE | PROJECT | |
|---|---|---|---|
| 5 | OHIO | | |

CUYAHOGA COUNTY
CUY-480-10.39

215/500

2/39

| ITEM | SHEET NUMBERS: CITY OF CLEVELAND 218 | 241 | 242 | CITY OF BROOKLYN 243 | 244 | 245 | 246 | 247 | 248 | 249 | 250 | 251 | 252 | PARTICIPATION: CITY OF CLEVELAND | CITY OF BROOKLYN | GRAND TOTAL | UNIT | ITEM | DESCRIPTION |
|---|---|---|---|---|---|---|---|---|---|---|---|---|---|---|---|---|---|---|---|
| | | | | | | | | | | | | | | | | | | | WATERWORK – TYPE CODE Y060 |
| SPECIAL | | | | 238 | 507 | 100 | | | | | | | | | 845 | 845 | LIN FT | SPECIAL | 36" PRESTRESSED CONCRETE CYLINDER PIPE AND FITTINGS AWWA 301 |
| SPECIAL | | | | 292 | 509 | 235 | 170 | 239 | | | 94 | | | | 1539 | 1539 | LIN.FT | SPECIAL | 12" WATER MAIN DUCTILE IRON BOLTLESS RESTRAINED PUSH-ON PIPE CEMENT LINED A.S.A CLASS 56 AND DUCTILE IRON CLASS "D" CEMENT LINED BOLTLESS RESTRAINED PUSH-ON JOINT FITTINGS AND POLYETHYLENE WRAPPED |
| SPECIAL | | 115 | 463 | | | | | | | 248 | | | | 578 | 248 | 826 | LIN.FT | SPECIAL | 12" WATER MAIN DUCTILE IRON CEMENT LINED PIPE A.S.A CLASS 56 AND DUCTILE IRON CLASS "D" CEMENT LINED BOLTLESS RESTRAINED PUSH ON JOINT FITTINGS AND POLYETHYLENE WRAPPED |
| SPECIAL | | | | | | | 50 | | 526 | | | 28 | | | 604 | 604 | LIN.FT | SPECIAL | 8" WATER MAIN DUCTILE IRON CEMENT LINED PIPE A.S.A CLASS 56 AND DUCTILE IRON CLASS "D" CEMENT LINED BOLTLESS RESTRAINED PUSH ON JOINT FITTINGS AND POLYETHYLENE WRAPPED |
| SPECIAL | | 106 | 93 | 24 | | 18 | | | | | | | | 199 | 42 | 241 | LIN.FT | SPECIAL | 12" TEMPORARY WATER MAIN BY-PASS CONNECTION A.S.A CLASS 25 CAST IRON PIPE WITH CAST IRON FITTINGS CLASS "D" CEMENT LINED |
| SPECIAL | | | | | | | 68 | 64 | | | | | | | 132 | 132 | LIN.FT | SPECIAL | 8" TEMPORARY WATER MAIN BY-PASS CONNECTION A.S.A CLASS 25 CAST IRON PIPE WITH CAST IRON FITTINGS CLASS "D" CEMENT LINED |
| SPECIAL | | 8 | 7 | | | | 17 | 7 | 12 | | | 13 | | 15 | 49 | 64 | LIN.FT | SPECIAL | 6" WATER MAIN CLASS 25 CAST IRON PIPE WITH CAST IRON FITTINGS CLASS "D" CEMENT LINED |
| SPECIAL | | | | 1 | | 1 | | | | | | | | | 2 | 2 | E A. | SPECIAL | 36" VICTAULIC END GATE VALVE AND CHAMBER |
| SPECIAL | | | | 2 | | 2 | | | | | | | | | 4 | 4 | E A. | SPECIAL | ACCESS MANHOLE AND ANCHORAGE TYPE "A" WITH 4" DRAIN |
| SPECIAL | | | | 2 | | 2 | | | | | | | | | 4 | 4 | E A. | SPECIAL | "DEADMAN" REINFORCED CONCRETE ANCHOR |
| SPECIAL | | | | 1 | 1 | 1 | | | | | | | | | 3 | 3 | E A. | SPECIAL | 6" DRAIN AND VAULT, COMPLETE |
| SPECIAL | | 1 | 1 | | 2 | | 2 | 1 | | | | | | 2 | 5 | 7 | E A. | SPECIAL | 12" HUB VALVE AND VALVE BOX |
| SPECIAL | | | | | | | 2 | 1 | 3 | | | | | | 6 | 6 | E A. | SPECIAL | 8" HUB VALVE AND VALVE BOX |
| SPECIAL | | | | 1 | | | | | 1 | | | 1 | | | 3 | 3 | E A. | SPECIAL | 6" HUB VALVE AND VALVE BOX |
| SPECIAL | | 1 | 1 | 1 | | 1 | | | | | | | | 2 | 2 | 4 | E A. | SPECIAL | 12" CUTTING-IN-VALVE AND VALVE BOX, COMPLETE |
| SPECIAL | | | | | | | 1 | 1 | 1 | 1 | 1 | | | | 5 | 5 | E A. | SPECIAL | 8" CUTTING-IN-VALVE AND VALVE BOX, COMPLETE |
| SPECIAL | | 1 | 2 | | | | | | | | | | | 3 | | 3 | E A. | SPECIAL | 12"x12" TAPPING SLEEVE AND 12" TAPPING VALVE AND VALVE BOX, COMPLETE |
| SPECIAL | | | | | | | 1 | 1 | 1 | | | | | | 3 | 3 | E A. | SPECIAL | 8"x8" TAPPING SLEEVE AND 8" TAPPING VALVE AND VALVE BOX, COMPLETE |
| SPECIAL | | | 1 | 1 | | | 1 | 1 | 1 | | | 1 | | 1 | 5 | 6 | E A. | SPECIAL | FURNISHING AND SETTING 6" FIRE HYDRANT |
| SPECIAL | | 1 | | | | | | | | | | | | 1 | | 1 | E A. | SPECIAL | FIRE HYDRANT RELOCATED |
| SPECIAL | | | | | | | | | | | 1 | | 1 | | 2 | 2 | E A. | SPECIAL | ADJUST FIRE HYDRANT AND VALVE BOX TO GRADE |
| SPECIAL | | | | | 2 | | 1 | 1 | | 1 | 1 | | | | 6 | 6 | E A. | SPECIAL | 2" AIR RELIEF VALVE AND VALVE BOX COMPLETE |
| SPECIAL | | | | 1 | | | | | | | 1 | 2 | 1 | | 5 | 5 | E A. | SPECIAL | ADJUST VALVE BOX TO GRADE |
| SPECIAL | | | | | | | | 2 | | 2 | 3 | 1 | 5 | | 13 | 13 | E A. | SPECIAL | ADJUST CURB SHUT-OFF VALVE BOX TO GRADE |
| SPECIAL | | | | 1 | | | 1 | | | | | | | | 2 | 2 | E A. | SPECIAL | RELOCATE, RETAP, AND RECONNECT SERVICE CONNECTION |
| SPECIAL | | | | 2 | | | | 1 | | | | | | | 3 | 3 | E A. | SPECIAL | EXTEND SERVICE CONNECTION |
| SPECIAL | | | | 1 | | | 1 | 1 | | | | | | | 3 | 3 | E.A | SPECIAL | TEMPORARY SERVICE CONNECTION |
| SPECIAL | | | | 1 | | | | | | | | | | | 1 | 1 | E A. | SPECIAL | ADJUST WATERWORK STRUCTURES TO GRADE |
| SPECIAL | | 1 | | | | | | | | | | | | 1 | | 1 | E A. | SPECIAL | PLUGGING EXISTING WATER MAIN AND BRANCHES |
| SPECIAL | | | | | | | | 1 | 2 | 2 | 1 | | | | 6 | 6 | E A. | SPECIAL | PLUGGING SERVICE CONNECTIONS |
| SPECIAL | | | | | | | | 1 | 1 | | | | | | 2 | 2 | E A. | SPECIAL | REMOVE ABANDON CURB SHUT-OFF AND VALVE BOX |
| SPECIAL | 1 | | | | | | | | | | | | | 1 | | 1 | MBF/M | SPECIAL | SHEETING LEFT IN PLACE |
| 202 | | | | 148 | | 173 | 75 | 43 | | 50 | 20 | | | | 509 | 509 | LIN.FT. | 202 | PIPE REMOVED 24" AND UNDER |
| 202 | | | | 211 | 150 | 132 | | | | | | | | | 493 | 493 | LIN.FT. | 202 | PIPE REMOVED OVER 24" |

# WATERWORK NOTES

| FED. RD DIVISION | STATE | PROJECT | |
|---|---|---|---|
| 5 | OHIO | | |

CUYAHOGA COUNTY
CUY- 480-10.39

216 / 500

3 / 39

SCOPE OF WORK

The work contemplated under this contract comprises the furnishing and installing complete with valves, fire hydrants and other appurtenances, the following water main relocations and performing other incidental work necessary to abandon existing water facilities.

1. West 130TH Street - 12" Ductile Iron Pipe - Permanent relocation on West side.
2. Tiedeman Road - 12" Ductile Iron Pipe - Permanent relocation on East side.
   - 36" Prest. Conc. Pipe - Permanent relocation on East side.
3. Summer Lane - 12" Ductile Iron Pipe - Permanent relocation on East side.
4. Service Road "A" - 8" Ductile Iron Pipe - Permanent relocation from Summer Lane to Southwood Drive.
5. Southwood Drive - 12" Ductile Iron Pipe - Permanent relocation on East side.
6. Autumn Lane - 8" Ductile Iron Pipe - Existing 8" Water Main Extended - North of I-480.

The Contractor shall do all the work and furnish all the labor and material necessary for the final completion of this contract in the manner and under the conditions herein specified and provided and in accordance with the contract drawings.

DEFINITIONS

Whenever in these specifications or in any documents or instructions in construction where these specifications govern, the following terms are used, (or pronouns in place of them). The intent and meaning shall be interpreted as follows:

THE STATE

The State is the State of Ohio acting through its authorized representative.

ENGINEER

The Engineer is the District Deputy Director or District Engineer, The District Construction Engineer or the District Maintenance Engineer, or the Project Engineer assigned to administer the contract.

THE CITY, OR THE CITY OF CLEVELAND

The City, or the City of Cleveland, is the Director, Department of Public Utilities, of the City of Cleveland.

STATUS OF CITY INSPECTOR

Inspectors as designated by the Director of Public Utilities shall be authorized to inspect all work done and materials furnished. Such inspection may extend to all or any part of the waterworks, and to the preparation or manufacture of the materials to be used in the waterworks. The city inspector as designated by the Director of Public Utilities shall make work instructions through the Project Engineer.

ACCESS TO WORK AND PLACE OF MANUFACTURE

The Contractor shall notify the Engineer and Director of Public Utilities, at least seven (7) days previous to the commencement of the manufacture of any materials, of the time and place where the manufacture is to commence, in order that a representative of the Engineer and Director may be present to inspect the manufacture. The Contractor shall provide, without charge or expense to the State and City, all necessary assistance to the Engineer and Director when required for inspection or verification of work done.

DIMENSIONS, DETAILED DRAWINGS AND ELEVATIONS

Figured dimensions on drawings shall take precedence over measurements by scale, and detailed drawings are to take precedence over general drawings and shall be considered as explanatory of them and not as indicating extra work. If, however, any of the detailed drawings show more elaborate or expensive work than is specified and indicated by the contract drawings, notice thereof must be given to the Engineer by the Contractor within ten (10) days after the receipt of such detailed drawings in order that the drawings may be amended or the additional expense on account of such work may be adjusted and authorized. If the Engineer does not receive such notice from the Contractor within ten (10) days after detailed drawings have been received by him, it is hereby agreed that the Contractor accepts the drawings and will execute them without claim for extra compensation.

FLOODS AND FREEZING WEATHER

Proper facilities shall be provided for protecting the work from damage by flood, rain or frost, and work done in freezing weather shall be done in such manner as the Engineer may approve. Valves shall be protected from freezing until backfilled in the completed work.

ADDITIONAL WORK

(A) - Attention is called to the fact that the work of this contract includes certain performances as incidental to the itemized requirements hereof, though not exclusive as follows: To perform all excavation, backfilling, sheeting, shoring, temporary and final repaving and to test the installation. Sand backfill shall be placed under existing and proposed pavement. For the performances herein described and for other incidental performances of like nature, the State will make no specific or separate payment or allowance, but the cost thereof shall be included in the prices stipulated to be paid for the various items of the work to be done under this contract.

(B) - Preliminary flushing: Before being placed in service all dirt and foreign matter shall be removed from the new water main or extensions to existing mains by a thorough flushing through the hydrants or by other approved means. Each valved section of newly laid pipe shall be flushed independently. This shall be done after the pressure test and may be done before or after the trench shall have been backfilled.

(C) - Chlorination: Following the preliminary flushing, the newly laid water pipe shall be chlorinated. The process of chlorinating, the method of procedure, the chlorinating agent and the rate of application shall be determined by the Engineer. The City of Cleveland will furnish the necessary labor and material required for such chlorination and install the necessary taps at the ends of the water main sections to be chlorinated. No charge will be assessed the Contractor for any material, labor, tools, equipment and incidentals furnished by the City of Cleveland, Division of Water. The Contractor shall furnish the necessary labor for excavating and backfilling which will be required for the installation of taps for injecting the chlorine solution, operating pumps and flushing mains.

(D) - Final flushing and test: Following chlorination, all treated water shall be thoroughly flushed from the newly laid pipe at its extremities until the replacement water throughout its length shall, upon test, both chemically and bacteriologically, be proven equal to the water quality served the public from the existing water supply system.

(E) - For the performances described in paragraphs B, C and D, the State will make no specific or separate payment or allowances, but the cost thereof shall be included in the prices stipulated to be paid for each linear foot of pipe furnished and installed.

MAINTENANCE OF SERVICE AND CONNECTING RELOCATED MAINS

The Contractor shall follow strictly the sequence of construction shown on the plans. All existing fire hydrant leads and house services shall be hand tunneled using special care to avoid any damage which might require shutting down the existing main until the new main is ready to be placed in service.

When the new mains have been tested and chlorinated and are ready to be connected to the old main, the Contractor shall make such connections at a time designated by the City. Prior to shutting down the existing mains, the Contractor shall take suitable precautions to assure a minimum interruption to service, including the following:

1. Perform all necessary excavation, including bell holes exposing the existing main sufficiently for the operation of the pipe saw by the City.
2. Remove the cap or plug from the end of the new main.
3. Swab the inside of all pipes, bends and sleeves to be used in connection thoroughly with a chlorine solution of at least 100 p.p.m.
4. Make-up as much of the connection as possible outside the ditch to eliminate the need for caulking most of the necessary joints during the shutdown. By careful measurement all pipe cuts can be made by the Contractor prior to shutting down.
5. Have sufficient manpower and equipment on the site to perform the operation in a minimum of time.
6. In the time period from May to October shutdowns may not be permitted due to system demands.

PAINTING

(A) - It is the intention of these specifications to provide that all metal work subject to corrosion shall be satisfactorily protected by a durable coating of paint or other approved material and that all metal surfaces not buried in earth, or in concrete, shall be left clean and well painted at the completion of the contract. Unless otherwise specified, the protection shall be at least that given by three (3) coats of approved paint. The first coat is to be applied at the shop before the metal has rusted and after all grease, dirt and scale has been removed. Bolts and nuts shall not be shop coated, but shall receive three (3) coats of approved paint after installation.

APPROVED FEB. 23, 19 83

William J. Sweeney ENGINEER OF DESIGN REVIEW

1st HIGH SERVICE DISTRICT

DEPARTMENT OF PUBLIC UTILITIES
DIVISION OF WATER AND HEAT
CLEVELAND, OHIO

SUBJECT WATER WORK NOTES FOR INTERSTATE ROUTE 480

# WATERWORK NOTES

(B) - All metal work which has not been coated before the arrival on the job shall be given a temporary protective coating of such a nature as to permit the ready adherence of future coatings. The temporary coating shall be a good grade asphaltic paint or other approved material. This temporary protection shall apply particularly to the valve boxes and covers, manhole rings and covers, ladders and ladder rungs and elsewhere when in the opinion of the Engineer, such protection is necessary.

(C) - All surfaces of metal which will be in contact after assembling shall be painted, at least one coat, before assembling. The final coat of paint on all exposed work shall be given shortly before the completion of the contract.

(D) - Where painting clauses appear hereinafter, they shall take precedence over this section, except that temporary protection herein described may be required.

(E) - All of this work shall be included in the price bid for the particular item requiring the painting.

TESTS, INSPECTION AND REPORTS

Notwithstanding the requirements of any other provisions of these specifications, the Contractor shall arrange for and pay all costs involved for shop inspection of all materials furnished, manufacture of all pipe, valves, fittings, etc., field and shop welds and welding, and furnish to the State and the City of Cleveland copies of all shop, fabrication, manufacture and other related inspection reports of materials furnished. This inspection shall be done by a recognized inspection laboratory approved by the City of Cleveland. In the case of any item not specifically mentioned in the "Waterwork Notes", the State of Ohio Department of Transportation "Construction and Material Specifications - Jan. 1, 1983" shall govern.

HANDLING PIPE AND ACCESSORIES

(A) - Unloading: Pipe, fittings, valves, hydrants, and other accessories shall, unless otherwise directed, be unloaded at the point of delivery, hauled to and distributed at the site of the project by the Contractor. They shall at all times be handled with care to avoid damage. In loading and unloading they shall be lifted by hoists or slid, or rolled on skidways in such manner as to avoid shock. Under no circumstances shall they be dropped. Pipe handled on skidways must not be skidded or rolled against pipe already on the ground.

(B) - At site of work: In distributing the material at the site of the work, each piece shall be unloaded opposite or near the place where it is to be laid in the trench.

(C) - Protection of pipe coating: Pipe shall be handled in such manner that a minimum amount of damage to the coating will result. Any cast iron pipe or fitting, the coat of which has been damaged in shipping or handling, shall have the damaged portion well cleaned and covered with an asphalt paint, approved by the Engineer, before being placed in the work. The Contractor shall thoroughly coat all exposed parts of bolts and nuts with an approved asphalt paint, after all pipe has been laid and before backfilling has been placed. All field coating shall be furnished by the Contractor.

(D) - Pipe kept clean: The interior of the pipe, fittings, and other accessories shall be kept free from dirt and foreign matter at all times.

(E) - Frost protection: Valves and hydrants before installation shall be drained and stored in a manner that will protect them from damage by freezing.

CHANGES IN WATER PIPES

(A) - In such locations as may be indicated on the contract drawings or as ordered by the Engineer to change the location of house connections, such changes will be made as work to be done by the City. The Contractor shall notify the City in ample time to permit the City to make such changes and avoid unnecessary delay in the completion of the work. The Contractor shall also cooperate with the City in making these changes and shall supply all materials, do all excavating, backfilling, seeding and sodding and repaving as may be required. The City will make all changes required, including tapping, in the location of existing house service connections and meters.

(B) - Wherever it becomes necessary, in the opinion of the Engineer, to change the location or elevation of water mains and hydrants, and where connections are to be made between existing distribution mains and water mains under this contract, the Contractor shall remove and dispose of all existing water line materials required to make the connection, and shall furnish and install complete, all the cast iron or ductile iron pipe, fittings and valves to make the connections indicated, except branch sleeves and valves which will be installed by the contractor with pressure tap made by the City. The Contractor shall also furnish all necessary labor, materials, tools and equipment and make the excavation, backfill and repaving for such connections. Payment for this will be included in price bid under appropriate item for size of water main or connection to be installed. All pipes, valves, hydrants and appurtenances removed shall become the property of the Contractor.

WORK TO BE DONE BY THE CITY OF CLEVELAND, DIVISION OF WATER

(A) The Contractor will furnish the piping material for and the Cleveland Water Dept. will make all changes required, including tapping in the location of existing house service connections and meters.

The Contractor shall do all the necessary excavation, backfilling and repaving required therefore. No charge will be assessed the Contractor for any of the labor furnished by the City.

(B) The Contractor will install all tapping sleeves and valves, and the City will make the tap. The Contractor shall supply the tapping sleeves and valves, lead, and do all the necessary excavation, backfilling and repaving required therefore. In addition to the above requirements, the Contractor shall furnish all air compressors required for the work under the specified Item.

(C) In locations shown on the plans the Contractor will be required to sleeve-in to the existing mains. To speed up this operation, it is called to the Contractor's attention that the water department has on hand at Harvard Yards motor operated pipe cutters which are available for cutting pipe by city forces. The Charges include cost of labor, use of pipe cutting machine, and truck. The Contractor shall do all necessary excavation, backfilling and repaving and all air compressor equipment shall be furnished by the Contractor. Charges may be obtained from the Permit-Sales Section of the Division of Water and Heat.

EXCAVATION

(A) - The Contractor shall remove all existing structures, roadways, driveways and other similar materials and make to the lines and grades given, all excavation necessary for the proper construction of the water main, pipe connections and appurtenant structures, including tunnel and shaft excavation. The excavation shall include the removal, handling, rehandling and disposal of materials encountered in the work and shall include all pumping, bailing, draining, sheeting and bracing. Moreover, the Contractor must assume all responsibility for any added expense or other liability which may arise by means of quicksand, obstacles or conditions foreseen or unforeseen and encountered in the work of this contract.

(B) - Trenches shall in every case be of sufficient width to permit solid packing of backfill under and around pipes, and satisfactory construction of all appurtenances and for such sheeting and shoring, pumping and draining as may be necessary.

(C) - The trench shall be dug to the alignment and depth required and only so far in advance of pipe laying as the Engineer shall permit. The trench shall be so braced and drained that workmen may work therein safely and efficiently. It is essential that the discharge from pumps be led to natural drainage channels, to drains, or to sewers.

(D) - The trench width may vary with and depend upon the depth of trench and the nature of the excavated material encountered; but in any case shall be of ample width to permit the pipe to be laid and jointed properly and the backfill to be placed and compacted properly. The minimum width of unsheeted trench shall be eighteen (18) inches and for pipe ten (10) inches or larger, at least twelve (12) inches larger than the outside diameter of the pipe for concrete pipe and eighteen (18) inches larger than the outside diameter of the pipe for cast iron and steel pipe, except by consent of the Engineer; the maximum clear width of trench shall be not more than two (2) feet greater than the outside pipe diameter. When sheeting and bracing is used, the trench width shall be increased accordingly.

(E) - The trench, unless otherwise specified, shall have a flat bottom conforming to the grade to which the pipe is to be laid. The pipe shall be laid upon sound soil cut true and even, so that the barrel of the pipe will have a bearing for its full length.

(F) - Any part of the trench excavated below grade shall be corrected with approved material, thoroughly compacted.

(G) - When the uncovered trench bottom at subgrade is soft and in the opinion of the Engineer cannot support the pipe, a further depth and/or width shall be excavated and refilled to pipe foundation grade as required under (F), or other approved means shall be adopted to assure a firm foundation for the pipe.

(H) - Ledge rock, boulders, large stones, and shale shall be removed to provide a clearance of at least six (6) inches below all parts of the pipe, valves, or fittings and to a clear width of six (6) inches on each side of all concrete pipe and nine (9) inches on each side of all cast iron and steel pipe shall be provided.

(I) - Excavation below subgrade in rock, shale or in boulders shall be refilled to subgrade with approved material, thoroughly compacted.

(J) - Bell holes of ample dimensions shall be dug in earth trenches at each joint to permit the jointing to be made properly. Adequate clearance for properly jointing pipe laid in rock shall be provided at bell holes.

APPROVED FEB 23 19 83

William J. Sweeney ENGINEER OF DESIGN REVIEW

1st HIGH SERVICE DISTRICT

DEPARTMENT OF PUBLIC UTILITIES
DIVISION OF WATER AND HEAT
CLEVELAND, OHIO

SUBJECT WATER WORK NOTES FOR INTERSTATE ROUTE 480

# WATERWORK NOTES

| FED. RD. DIVISION | STATE | PROJECT | |
|---|---|---|---|
| 5 | OHIO | | |

CUYAHOGA COUNTY
CUY-480-10.39

218/500

5/39

(K) - The use of excavating machinery will be permitted except in places where operation of same will cause damage to trees, buildings, or existing structures above or below ground; in which case hand methods shall be employed.

(L) - Trees, fences, poles and all other property shall be protected unless their removal is authorized; Any property damaged shall be satisfactorily restored by the Contractor.

(M) - Hydrants under pressure, valve pit covers, valve boxes, curb shut-off boxes, fire or police call boxes, or other utility controls shall be left unobstructed and accessible during the construction period.

(N) - The Contractor shall maintain all excavations in good order during the construction, so as not to hinder or injure the pipe laying, masonry or other work. He shall take all reasonable precautions to prevent movement of the sides of such excavation, and shall remove at his own expense any material sliding into the excavation.

SHEETING AND BRACING

(A) - The Contractor shall furnish and put in place such sheeting and bracing as may be required to support the sides of trenches or other excavation and shall remove such sheetings and bracings, as the trench or excavation is filled up, unless the Engineer shall order it left in place, in which case the Contractor shall cut the plank off at a height as ordered by the Engineer, or as called for on the contract drawings. A quantity of 1 M.B.M. has been provided in the General Summary for "Item Special - Sheeting Left In Place."

(B) - Whenever the excavations for the work herein to be done are immediately adjacent to other subsurface structures, the Contractor shall furnish and place sheeting and bracing where noted on contract drawings and as may be necessary so as to reduce to a minimum the possibility of injuring or damaging the same.

(C) - If the Engineer is of the opinion that at any point sufficient or proper supports, sheeting, or bracings have not been provided, he may order additional supports, sheeting or bracing, at the expense of the Contractor, and the compliance with such orders by the Contractor shall not relieve or release him from his responsibility for sufficiency of such supports.

REMOVAL OF EXCAVATED MATERIAL

(A) - All surplus material and such other material as the Engineer may deem unfit for use as backfill shall be disposed of by the Contractor so as to give a minimum of inconvenience to the public. In case of settlement after backfill, the Contractor shall supply sufficient material satisfactory to the Engineer to make up for the deficiency.

(B) - In the storing of excavated material, which is to be used as a backfill, the Contractor shall exercise care so as to avoid inconveniencing the public. If, in the opinion of the Engineer, it is necessary to remove this excavated material from the streets or lots, the Contractor shall be required to do so.

(C) - Any material which may spill or drip from vehicles by hauling in the streets, shall be removed and the streets cleaned by the Contractor, to the satisfaction of the Director of Public Service of the City of Cleveland or the proper officials of the municipality or township in which the work is being done.

(D) - When so directed by the Engineer, the Contractor shall immediately remove all excavated materials from the site and dispose of the same.

LAYING PIPE

(A) - Proper implements, tools, and facilities, satisfactory to the Engineer shall be provided and used by the Contractor for the safe and convenient prosecution of the work. All pipe, fittings, and valves shall be carefully lowered into the trench piece by piece by means of derrick, proper slings, and other suitable tools or equipment, in such manner as to prevent damage to pipe or coating, under no circumstances shall pipe or accessories be dropped or dumped into the trench. If any defective piece be discovered while pipe is suspended or after being laid, a new piece shall be furnished and installed by the Contractor at the site of the work.

(B) - All foreign matter or dirt shall be removed from the inside of the pipe before it is lowered into its position in the trench, and it shall be kept clean by approved means during and after laying.

(C) - At times when pipe laying is not in progress, the open ends of pipe shall be closed by approved means, and no trench water shall be permitted to enter the pipe. No pipe shall be laid in water, or when the trench conditions or the weather is unsuitable for such work, except by permission of the Engineer.

(D) - Wherever necessary to deflect pipe from a straight line, either in the vertical or horizontal plane to avoid obstructions, to plumb stems, or for other reasons, the degree of deflection shall be approved by the Engineer.

(E) - Before laying cast iron or ductile iron pipe, all lumps, blisters and excess coal tar coating shall be removed from the bell and spigot ends of each pipe, the pipe ends shall then be kept clean until joints are made.

FLOATING

The Contractor shall take every precaution against the floating of the pipe due to water coming into the trench, or through caving in, flushing or puddling. In case of such floating the Contractor shall replace the pipe at his own expense, and make wholly good any injury or damage which may have resulted.

TESTING MAINS

(A) - All pipes, valves, fittings, etc., shall be laid in such a manner as to leave all joints watertight. After the pipe is laid, and before backfilling is placed around the joints, such lengths of the water main as the Engineer may determine, shall be tested under a hydrostatic pressure of seventy-five (75) pounds per square inch above the static pressure, but nowhere less than 100 pounds per square inch.

(B) - The test shall be under the direction of the Engineer and Director of Public Utilities or his designate. The Contractor may obtain water for testing by observing the rules and regulations enforced in the municipalities or Townships in which the work is being done. The City will furnish a pressure gage for measuring the pressure on the water main, but the Contractor shall furnish a suitable pump, pipes, test heads and all appliances, labor, fuel and other appurtenances necessary to make these tests.

(C) - The test pressure shall be maintained for a sufficient length of time to allow for a thorough examination of joints and elimination of leakage where necessary. The pipe lines shall be made absolutely tight under the test pressure.

(D) - After a section of the water main has been tested, the Contractor shall drain same. In case the drains are connected to valve or drain vaults, then the Contractor shall within reasonable time after the test has been completed pump all water out of the vaults.

(E) - In cold weather immediately after testing a section of the water main, the Contractor is to open all valves, air relief valves, by-passes and drains and properly drain bonnets of all valves in the section of the water main, and take all other precautions necessary to prevent injury to water main and appurtenances due to freezing.

(F) - As an alternate for testing concrete and steel mains other than by the preceding method, the Contractor may choose the following procedure.

The water main shall be tested under the same hydrostatic pressure as previously noted. The test pressure shall be maintained for a period of two (2) hours by pumping additional water into the main, if necessary. The quantity of water thus pumped into the main multiplied by twelve (12) shall be taken as the leakage per twenty-four (24) hours.

(G) - The permitted leakage shall not exceed a rate of seventy-five (75) gallons per twenty-four (24) hours per mile of pipe per inch of nominal diameter.

(H) - In calculating leakage, the Engineer will make allowance for any leakage at the valves, the removeable bulkheads, etc.

(I) - In using this method of testing, the Contractor may backfill the pipe except at lead joints, flanged joints, victaulic couplings, and drain connections immediately following the laying and before the actual test has been made. In case the leakage exceeds the permissible amount mentioned above, the Contractor shall find the leak and make the joints tight. The Contractor shall furnish suitable means for determining the quantity of water lost by leakage during the test.

(J) - In order to be able to make proper allowances for leakage at valves, etc., previously noted, only such sections of water main may be selected for test as will have such valves, removable bulkheads, etc., accessible.

(K) - The evaluation of actual leakage to standard pressure (150 lbs.) leakage is calculated by the application of the ratio determined from the square root of respective pressures, other factors being equal.

CLOSING VALVES

The closing of all gate valves on water mains for making connections, tests, or for any other cause, shall be done by the City of Cleveland. The Contractor shall notify the Cleveland Water Department three (3) weeks in advance of the shutdown and they will specify the time and/or special conditions, hours, etc. System demands may control the time of day, week, month or year when valves may be closed. No consideration for delays caused by such controlling demands will be allowed. The Contractor shall thuroughly investigate possible conditions where closing of valves may be restricted to a certain time.

PLUGGING DEAD ENDS

Standard plugs with clamps shall be inserted into the bells of all dead ends of pipes, tees, or crosses, and spigot ends capped and clamped by the Contractor , on all mains constructed by him and on existing water mains where indicated in the contract drawings. Concrete piers shall be

APPROVED FEB. 23, 1953

William J. Lawrence — ENGINEER OF DESIGN REVIEW

1st HIGH SERVICE DISTRICT

DEPARTMENT OF PUBLIC UTILITIES
DIVISION OF WATER AND HEAT
CLEVELAND, OHIO

SUBJECT WATER WORK NOTES FOR INTERSTATE ROUTE 480

placed when called for on the contract drawings, or ordered by the Engineer. The cost of furnishing and installing the plugs shall be included in the per linear foot price bid for the various sizes of new water mains.

ITEM SPECIAL - PLUGGING EXISTING WATER MAINS AND BRANCHES AND PLUGGING SERVICE CONNECTIONS

WORK INCLUDED

The work included under these items shall consist of the plugging of existing water mains and branches, and the plugging of service connections at the locations shown on the drawings or as ordered, including cast iron plugs or caps with clamps and concrete piers, all excavation, sheeting and bracing, concrete, sand backfill, backfill, temporary repaving and permanent repaving, all as required for the proper completion of the work included under this contract.

(A) - Plugging Mains and Branches:
When indicated on the plans or as ordered, the Contractor shall make pipe cuts, remove pipe and fittings and shall plug or cap mains, tees or crosses, plug connections at main or branches, shall do all the excavating, backfilling and repaving, all as required.

(B) - Plugging Service Connections:
The Contractor shall do all necessary excavation, sheeting and bracing, sand backfilling, backfilling and repaving required for this item, but the Cleveland Water Department will plug the service connection.

The Contractor shall arrange with the Cleveland Water Department for the necessary work under this item.

MEASUREMENT

The existing water mains and branches plugged or service connections plugged to be paid for shall be the actual number of each listed and estimated separately, completed and accepted.

BASIS OF PAYMENT

The unit price stipulated for (A) "Item Special-Plugging Existing Water Mains and Branches" shall constitute full compensation for performing all the requirements of this item including furnishing all necessary materials, labor, tools, equipment and incidentals to make this a complete item of work. The item shall be paid for on per "Each" basis.

The unit price stipulated for (B) "Item Special- Plugging Service Connections" shall constitute full compensation for performing all the requirements of this item including furnishing all necessary materials,labor, tools, equipment and incidentals to make this a complete item of work. The item shall be paid for on per "Each" basis.

The labor, tools, equipment and incidentals furnished by the City of Cleveland, Division of Water, will be at no expense to the Contractor. The work performed by the City of Cleveland applies to (B) Plugging Service Connections.

BACKFILLING

(A) - This work includes all backfilling, together with ramming, puddling, and rolling, as required; the grading of grounds; the replacing of surface and subsurface structures; the placing and maintaining of temporary sidewalks, and driveways; the furnishing of suitable material for backfill, reseeding lawns and replacing trees and shrubbery damaged by the Contractor; and all appurtenant work incidental thereto. Pavements, curbs, sidewalk and driveways within the limits of the work shall be temporarily surfaced, maintained and finally replaced or repaved as set forth under roads, surfaces, sidewalks, driveways and curbing.

# WATERWORK NOTES

(B) - Backfill, unless otherwise specified, may be made with material excavated from the trenches, providing same is satisfactory to the Engineer. If, in the opinion of the Engineer, the material excavated is unsatisfactory, then the Contractor shall furnish at his own expense other material suitable for backfill. All backfill shall be free from slag, cinders, rubbish and other objectionable material.

(C) - Before laying the pipe, the bottom of the trench shall be brought to the grade of the bottom of the pipe, except at field joints. Wherever the bottom of the trench has been excavated below the bottom of the pipe, the Contractor shall place sand, or other material satisfactory to the Engineer to bring the bottom of the trench to the grade of the bottom of the pipe. This bed shall be thoroughly tamped before the pipe is laid.

(D) - Unless otherwise specified, the backfill under, around and to a depth of one (1) foot above the top of all pipe, shall be made with material satisfactory to the Engineer, which material shall be free from stone and other objectionable material noted above. The Contractor must use special care in placing this portion of the backfill, so as to avoid injuring, distorting or moving the pipe when compacting same. Above this level the backfill shall be made with material satisfactory to the Engineer.However, where ordered by the Engineer, sand shall be used for the entire portion of the backfill. See below.

(E) - Backfilling as noted in paragraph (D) shall be tamped in thin layers, simultaneously on each side of the pipe, and thoroughly compacted so as to provide a solid backing against the external surface of the pipe.

(F) - Only after the backfill previously mentioned has been satisfactorily compacted, may work proceed in placing the remaining backfill which must be carefully placed and compacted by tamping, puddling, or rolling. All precautions must be taken to eliminate future settlement. The number of men tamping shall be not less than the number backfilling and additional men shall be kept in the trench to spread the material.

(G) - Backfilling shall not be done in freezing weather, except by permission of the Engineer, and it shall not be made with frozen material, nor shall any fill be made where the material already in the ditch is frozen.

(H) - The entire backfill shall be made with sand where permanent pavements, curbs, driveways, or sidewalks, have been opened for or undercut by the excavation.

(I) - All sand to be used for backfill shall be as specified in Section 703.02 of The State of Ohio Department of Transportation Construction and Material Specifications.

(J) - Special treatment of the trench will be required where cinder excavation exceeding one foot measured from the top surface is encountered. Before laying the pipe, the bottom of the trench shall be dug below grade and then brought to the grade of the pipe in the following manner, a four (4) inch layer of crushed limestone shall be placed on the entire width of the bottom of the trench followed by a filler of hydrated lime and a layer of three (3) inches of sand. The crushed limestone shall be well graded from fine to coarse and free from slag, cinders, ashes, rubbish or other objectionable material. All limestone must be capable of being passed through a 3/4 inch sieve. On top of this layer of crushed stone, hydrated lime shall be supplied in the amount of 3/8 of a pound per square foot of trench. This bed of crushed limestone shall be thoroughly tamped before the 3 inch layer of sand is placed. The backfill around and to the depth of three (3) inches above the top of the pipe shall be made with sand. The Contractor must use special care in placing this portion of the backfill so as to avoid injuring or moving the pipe when compacting same. On top of the sand the Contractor shall place another layer of crushed limestone five (5) inches thick on the entire width of the trench. On top of the compacted layer of limestone hydrated lime shall be then applied in the amount of 3/4 of a pound per square foot of trench. The remaining backfill shall be made with sand, carefully placed and compacted by tamping, puddling, or rolling. All precautions shall be taken to eliminate future settlement. The treatment of the trench bottom, previously described, may be omitted where the cinder depth, measured from the top surface does not exceed 2'-6".

ROAD SURFACES, SIDEWALKS, DRIVEWAYS AND CURBING

(A) - The Contractor shall remove all pavements and road surfaces within the lines of excavation. After the pipe has been laid, all appurtenant work constructed and backfill completed, he shall furnish, place and maintain, wherever the pavement of road surface has been removed or damaged by him, a temporary pavement in the paved portion of streets, or a temporary road surface in the unpaved portion of streets so as to provide a safe and passable roadway until such time as the final pavement or road surface is completed.

(B) - When only a portion of the street is paved and the lines of excavation are in the unpaved portion of same, the Contractor shall use the utmost care in preventing injury to the pavement. If, in making the excavation or for any other cause the pavement is removed or injured by the Contractor, he shall furnish, place and maintain a temporary pavement wherever the pavement has been removed or damaged, so as to provide a safe and passable roadway until such time as the final pavement is completed.

(C) - All final paving of road surfaces, if so noted on the contract drawings, shall be done by the Contractor to the satisfaction of the Engineer and in conformity to the City of Cleveland "Standards and Specifications for Construction of Pavements, Sidewalks and Sewers" of the most recent issues.
The Contractor shall bear the entire cost of the work. The base of concrete pavement, Item 305, shall be installed on a carefully prepared bed level with the bottom of the abutting base over disturbed areas and shall be of the thickness specified, but in no case less than 7 inches thick. Where pavement or base of pavement has been damaged by cave-in, or by trench cut leaving a portion or portions of pavement 18 inches or less in width between such cut or damage to curb or other substructure, that remaining portion of pavement shall be removed and restored monolithic with the type and kind of pavement specified for the adjacent trench area. The wearing course over trench or other disturbed areas shall be restored to match existing pavement unless otherwise specified. Asphaltic concrete wearing course over such areas shall be neatly and squarely cut,
before the installation of a carefully toothed-in-to

| FED RD DIVISION | STATE | PROJECT | |
|---|---|---|---|
| 5 | OHIO | | |

CUYAHOGA COUNTY
CUY-480-10.39

219/500

6/39

APPROVED FEB.23, 19 83

William J. Sweeney ENGINEER OF DESIGN REVIEW

1st HIGH SERVICE DISTRICT
DEPARTMENT OF PUBLIC UTILITIES
DIVISION OF WATER AND HEAT
CLEVELAND, OHIO

SUBJECT WATER WORK NOTES FOR INTERSTATE ROUTE 480

WATER WORK NOTES

adjacent pavement, unless otherwise specified. Expansion joints shall be installed between brick wearing course (if grouted ) and curb or other substructure, where such restoration is required by these specifications.

(D) - All damaged or displaced curb shall be renewed or reset to the satisfaction of the Engineer. No faulty curb or curb less than 30 inches long will be permitted for re-use.

(E) - At locations not specifically mentioned, the Contractor shall restore the same type of pavement as encountered.

(F) - If prior to the expiration of this contract, any of the pavements or road surfaces within the lines of excavation or adjacent thereto, shall have been damaged or injured, due to undermining, or for any other cause which may be attributed to the work which is being done by the Contractor, then the Contractor shall remove such damaged or injured pavements or road surfaces, foundations of same and all loose final pavement or road surface, he shall then backfill with sand properly rammed and replace the final pavement or road surface.

(G) - If any sidewalks, driveways or curbs, are removed or injured by the Contractor in the course of making excavation or handling materials, or for any other reason which may be attributed to work which has been done by the Contractor, then he shall relay same after all work, including backfilling, has been completed. If any stone sidewalks, driveways, or curbs which have been removed or injured, are unfit to be relaid, then the Contractor shall furnish new material and relay same. All concrete or cement sidewalks, driveways or curbs, which are removed or injured by the Contractor shall be broken up by him and he shall furnish all labor and materials and construct new sidewalks, driveways or curbs, to replace those removed or injured. At intersecting walks, drives, etc., additional concrete slabs beyond the excavation limits shall be removed and replaced with new material, in order to avoid having more joints than in the original work. All slabs replaced shall be of full width. The Contractor shall furnish, place and maintain, wherever the sidewalk has been removed or damaged by him, a temporary sidewalk so as to provide a safe and passable sidewalk until such time as the final sidewalk is completed.

(H) - All pavements, road surfaces, sidewalks, driveways, or curbs, which the Contractor is required to replace or to have replaced, shall, at the expiration of this contract, be in at least as good condition as at the time of awarding the contract.

(I) - All work which the Contractor may do in connection with the opening up or replacing of pavements, road surfaces, sidewalks, driveways, or curbs, as well as the final repaving, shall be done at his expense, in accordance with the rules and requirements of the Street or Sidewalk Departments of the City of Cleveland, and in accordance with the additional requirements of these specifications. And the Contractor shall furnish evidence to the Engineer that the work has been completed to their satisfaction.

(J) - Tunneling will not be permitted without permission of the Engineer. In backfilling tunnels, sand shall be used as far as possible and balance of backfilling made with Class C concrete, rammed in place.

(K) - The Contractor shall make all pavement cuts by channeling machine, hand-operated pneumatic tools or by such other methods as will furnish a clean cut in the pavement and pavement base without undue shattering. The use of ball or weight to break the pavement will not be permitted.

# WATERWORK NOTES

(L) - No specific or separate payment will be made for all of this work, but the cost thereof shall be included in the prices bid for the various items of the work to be done under this contract. Restoration as noted above will only be required in areas where the plans do not otherwise propose new construction of pavement sidewalks and curbs, except that temporary restoration in such areas may be required by the Engineer in order to maintain traffic or local access per Sec. 104.04 and 107.10 of the State of Ohio Department of Highways "Construction and Material Specifications."

LIST AND INVOICES

(A) - The Contractor shall furnish the Engineer and City with the list in duplicate of pieces in each shipment of pipe and specials, giving the serial number and designation of each pipe and special sent at that time.

(B) - The material shall be shipped in such sections as the Engineer may order.

ITEM SPECIAL-WATER MAINS
CAST IRON AND DUCTILE IRON PIPE AND FITTINGS

WORK INCLUDED

The Contractor shall furnish all the materials for and shall properly construct and connect in place, at the locations shown on the drawings or as directed, all cast iron or ductile iron pipe and fittings, including all excavation work, the cutting into and removal of existing pipe, backfilling, sand backfill, and repaving, all as required for the proper completion of the work included under this contract.

CAST IRON AND DUCTILE IRON PIPE AND FITTINGS

(A) - All pit cast pipe shall be manufactured in all respects in accordance with, and shall meet the requirements of the latest "Standard Specifications for Cast Iron Pipe and Special Fittings" as adopted by the American Water Works Association which specifications except as herein modified are made a part of these specifications.

(B) - All pit cast pipe and fittings shall be cement lined and of the size and classes noted on the respective contract drawings.

(C) - In lieu of pit cast pipe above the Contractor will be permitted to furnish either centrifugal or high strength cement lined pipe. The metal shall have a modulus of rupture of not less than 40,000 pounds and a tensile strength of not less than 18,000 pounds and shall be for class noted on the contract drawings. Pipe may be furnished in 12, 16, or 18 foot lengths. The centrifugally cast pipe shall conform to the American Standard Specification A21.6-1962 and all subsequent amendments thereto.

When noted on the contract drawings ductile iron pipe shall be supplied. All ductile iron pipe shall be manufactured in accordance with A.S.A. A21.51-1965

All ductile iron fittings shall be manufactured in accordance with A.S.A. A21.10 or AWWA C 110-55. Ductile iron shall have a minimum of 60,000 psi ultimate tensile strength; 42,000 psi yield point and 10% elongation. The chemical analysis shall be as follows: Carbon 3% minimum, Phosphorus .08% maximum and Silicon 2.75% maximum.

| FED. RD DIVISION | STATE | PROJECT | |
|---|---|---|---|
| 5 | OHIO | | |

220
500

CUYAHOGA COUNTY
CUY-480-10.39

7
39

(1) - The thickness of the centrifugally cast iron and ductile iron pipe shall conform to the following table:

STANDARD THICKNESS OF CENTRIFUGALLY CAST IRON PIPE AND DUCTILE IRON PIPE

DUCTILE IRON PIPE

| Size | Working Pressure | Thickness | Class |
|---|---|---|---|
| 6" | 350 p.s.i. | 0.43 in. | 56 |
| 8" | 350 p.s.i. | 0.45 in. | 56 |
| 12" | 350 p.s.i. | 0.49 in. | 56 |

CAST IRON PIPE

| Size | Working Pressure | Standard Thickness | Class |
|---|---|---|---|
| 6" | 250 p.s.i. | 0.48 in. | 25 |
| 8" | 250 p.s.i. | 0.52 in. | 25 |
| 12" | 250 p.s.i. | 0.60 in. | 25 |

(2) - All fittings, such as bends, tees, crosses, offsets, hydrant branches, etc., shall have bell and bell or bell and spigot ends with cast lead joints, pipe between offsets or bends and on hydrant branches, shall also be of bell and spigot type with lead joints. Joints for fittings may be of the boltless-restrained push-on type if approved by the Engineer. Drawings and assembly instructions along with pipe and fittings layout and schedule must be furnished. A minimum length of 18 feet of boltless restrained push on pipe shall be used on both sides of boltless restrained push on fittings.

(D) - All pipe shall have bell and spigot ends for cast lead joints or a slip-on type joint with compressed rubber ring inserts. All pipe and fittings shall be cement lined.

(E) - Gaskets shall be of rubber or other equally effective protection against uneven distortion of the gasket.

(F) - Where fittings are shown which are not covered by the above specifications, they in such particulars as are lacking thereon, shall conform to the dimensions and otherwise meet the specifications for the respective type which are carried in the latest revisions to the current edition of the "Handbook of Cast Iron Pipe" by the Cast Iron Pipe Research Association or which are otherwise shown on the contract drawings.

(G) - Wherever changes in line and grades of the main as shown on the drawings are not standard fitting deflections, the Contractor will be permitted to submit details using combinations of standard fittings and small deflections (not to exceed a maximum of one half ($\frac{1}{2}$) inch joint opening) in the adjoining lengths of pipe. Pipe to be installed with air relief valves or drains shall be cast with bosses thereon, and drilled and tapped for two (2) inch connections, and plugged in the shop with cast iron threaded plugs, before shipment.

(H) - Plugs for bell and spigot pipe and caps for lugged pipe shall be furnished with two (2) plugged two (2") inch taps for drain and air relief valve connections.

(I) - Closure pieces shall be accurately measured and cut in the field and installed using solid type pattern sleeves as shown or as required, with minimal space at ends to permit closure piece insertion only.

APPROVED FEB. 23, 19 83

William J. Sweeney ENGINEER OF DESIGN REVIEW

1st HIGH SERVICE DISTRICT

DEPARTMENT OF PUBLIC UTILITIES
DIVISION OF WATER AND HEAT
CLEVELAND, OHIO

SUBJECT WATER WORK NOTES FOR INTERSTATE ROUTE 480

| FED. RD DIVISION | STATE | PROJECT | |
|---|---|---|---|
| 5 | OHIO | | |

CUYAHOGA COUNTY
CUY-480-10.39

221
500

8
39

# WATERWORK NOTES

(J) - Tests, inspection, reports and analyses of tests of samples for all materials shall be furnished as set forth elsewhere in these notes.

(K)-Bitumastic coating shall be applied on the exterior of all cast iron pipe and fittings in accordance with AWWA specifications. All ductile water main pipe and fittings shall be given, in addition to that specified, a coating of four (4) mils additional thickness; or protection with polyethelene encasement in accordance with ANSI A21.5-1972 (AWWA C105-72), Class "C" installation method "B". All fittings shall have ANSI A21.5-1972 protection.

CEMENT LINING

All cast iron or ductile iron pipe and fittings shall be given a cement mortar lining at the point of manufacture. The lining shall conform to the American Standard Specification A 21.4-1964 and all subsequent amendements thereto.

MARKING

All cast iron or ductile iron pipe and fittings shall be suitably marked to denote the manufacturer, class, date, weight and other elements of identification.

LAYING

(A) - Proper and suitable tools and appliances for the safe and convenient handling and laying of the pipes and fittings shall be used. Great care shall be taken to prevent the pipe coating from being damaged, particularly on the inside of pipes and fittings and any such damage shall be remedied as directed. All pipes and fittings shall be carefully examined by the Contractor for defects just before laying and no pipe or fitting shall be laid which is known to be defective.

(B) - If any defective pipe is discovered after having been laid, it shall be removed and replaced with a sound pipe or fitting in a satisfactory manner by the Contractor at his own expense. All pipes and fittings shall be thoroughly cleaned before they are laid, shall be kept clean until they are used in the completed work, and when laid, shall conform to the lines and grades given by the Engineer. Open ends of pipes shall be kept plugged with a bulkhead during construction. In no event shall any portion of the damaged pipe be permitted to remain in the line. Any approval stamps found on the pipe shall be removed or the pipe broken up for scrap.

(C) - Pipe laid in trench shall be laid to a firm and even bearing for its full length. Precautions shall be taken against floating.

(D) - It is the intention of these specifications to secure first class workmanship in the placing of pipe and accessories. In such details as are not specifically mentioned herein or called for on the drawings, the Contractor will be required to conform with the applicable sections of the latest "Standard Specifications for Laying Cast Iron Pipe" as adopted by the American Water Works Association.

CUTTING PIPE

Whenever the pipes require cutting to fit into the lines, the work shall be done in a satisfactory manner so as to leave a smooth end at right angles to the axis of the pipe. In no event shall flame cutting be used. When a piece of pipe is cut to fit into the line, no payment will be made for the portion cut off and not used in the line.

JOINTS

(A) - Lead joints: In jointing all bell and spigot pipe and fittings having lead joints, the spigot of each pipe shall be properly seated in the bell of the next adjacent piece and adjusted so as to give a uniform annular space. The joint shall be made with twisted hard jute and soft pig lead. Before placing the jute, it shall be sterilized either by boiling or by dipping in a concentrated solution of "HTH". The jute shall be twisted and thoroughly driven into the bell, so that the lead, after having been caulked, shall have a depth of $2\frac{1}{2}$ inches.

The furnace and melting pot shall be kept near the joint to be poured and each joint shall be made with one pouring. Dross shall not be allowed to accumulate in the melting pot. The joints shall be thoroughly caulked by competent pipe joiners and in such manner as will secure a tight joint without overstraining the iron of the bell.

PAINTING

After erection, all exposed or damaged coatings and all bolts for lugged joints shall be cleaned and painted with three (3) field coats of Inertol 50 or Bitumastic 50 or approved equal.

DRAWINGS

(A) - The Contractor shall submit to the Engineer for approval duplicate prints of all shop drawings for pit cast iron pipe and fittings and miscellaneous details which are not standard construction, and are not mentioned in the regular catalogue of the company furnishing the pipe. No work shall be done in the shop until after the drawings have been approved.

(B) - The approval of the drawings by the Engineer shall not relieve the Contractor of any of his obligations in connection with this contract.

MEASUREMENT

The number of linear feet of cast iron pipe and ductile iron pipe line and connections to be paid for shall be the actual number of linear feet furnished and placed in accordance with these specifications as measured along the axis of the piping including fittings and valves connected up in place. For connections between new and existing mains, measurement shall be the distance from centerline to centerline of mains and the actual length of existing main ordered to be removed to make the connection.

BASIS OF PAYMENT

The footage measured as provided above shall be paid for at the contract price bid per linear foot for "Item Special Water Main" classified as to size and type, which price and payment shall constitute full compensation for excavating and for furnishing, hauling, placing, cutting into and connecting the pipe, pipe bends, C.I. plug and clamps at dead ends, concrete piers, sheeting and bracing, sand backfill, water used for compaction, incidental concrete, the removal of all surplus excavation and discarded material, repaving, and for the furnishing of all labor, materials, equipment, tools and incidentals necessary to complete this item, except for the items specifically listed as separate pay items.

The chlorination of the newly laid water mains by the City of Cleveland, Division of Water, will be at no expense to the Contractor.

PUSH-ON & BOLTLESS RESTRAINED JOINTS

(A) - Where restrained joints are used in place of bell & bell or bell and spigot joints for cast lead joints as indicated or shown on the drawings. The Contractor shall supply pipe and fittings having positive restrained compression locked joint in push-on or slip-on joint. Joints shall in all respects, comply to the Standard A.W.W.A. Specifications and dimensions for the class of pipe and fittings specified. Positive restrained compression locked joint push-on or slip-on joint shall have ends with positive compression locked joint in push-on or slip-on joint providing a restrained flexible joint using corrosion resistant locking so as to provide a minimum of stress in the joint, but providing a minimum of 400 lbs. per inch of pipe circumference resistance to separation of joint.

Locking grooves or slots will be allowed in plain end of pipe or fitting, thickness under grooves or slots shall not be reduced to less than that for:

(1) U.S.A.S. A21.6 (A.W.W.A. C106) Class 22 for Cast Iron Pipe.
(2) U.S.A.S. A21.51 (A.W.W.A. C151) Class 4 for Ductile Iron Pipe.

} With no minus casting tolerance

Features shall strictly comply with those which have been established under the American Water Works Association Standards. Drawings shall be furnished in accordance with drawings , sheet N°225 drawings, fully and distinctly illustrating and describing and giving complete layout and assembly direction for the joint to be furnished. Approval of The City of Cleveland, Division of Water will be required. Coating and protection shall be required in accordance with Section K, Cast Iron Pipe and Fittings.

ITEM SPECIAL-TEMPORARY WATER MAIN BY-PASS CONNECTIONS DUCTILE, CONCRETE OR CAST IRON PIPE

WORK INCLUDED

The Contractor shall furnish and install the Temporary By-Pass Connections of the size indicated using ductile, conc. and cast iron pipe and fittings as specified in the plans. The work shall be done in accordance with the requirements specified in the Water Work Notes for "Water Main" installations. Only new ductile, conc. or cast iron pipe and fittings shall be used in the Temporary Water Main By-Pass connections. When the Temporary Water Main By-Pass connections are no longer required, the contractor has the option of either removing, abandoning or disposing of the ductile, conc. or cast iron pipe, appurtenances, and fittings or abandoning the ductile, conc. or cast iron pipe and fittings in place.

PAYMENT

The work included in this item shall be paid for at the contract unit price bid per linear foot for "Item Special-Temporary Water Main By-Pass Connections," classified as to size, which price and payment shall constitute full compensation for the furnishing, installing and removing or abandoning the ductile, conc. or the cast iron pipe and fittings, excavation, backfilling, replacing existing pavement and curb, replacing sidewalks, cutting and removing existing pipe for making connections, testing, chlorinating and for the furnishing of all labor, materials, tools and equipment necessary to complete the work as shown in the plans.

No separate payment will be allowed the Contractor for the removal of the ductile, conc. or cast iron pipe and fittings or abandoning in place of the "Temporary Water Main By-Pass Connections.

ITEM SPECIAL-TEMPORARY SERVICE CONNECTION

WORK INCLUDED

The Contractor shall furnish the piping material and make all changes necessary to connect Temporary Service , and shall do all necessary excavation, backfilling, seeding, sodding and repaving required in making these Temporary Service Connections. Work shall be done in accordance with the requirements specified in the Waterwork Notes for "Relocate, Retap and Reconnect Service Connection."

PAYMENT

The work included in this item shall be paid for at the contract unit price per each for "Item Special-Temporary Service Connection." This price and payment shall constitute full compensation for the furnishing of all labor, materials, small tools and equipment required to complete work as specified or as shown in the plans. The materials, labor, tools, equipment and incidentals furnished by the City of Cleveland, Division of Water, will be at no expense to the Contractor.

APPROVED FEB. 23, 19 83

William J. Sweeney ENGINEER OF DESIGN REVIEW

1st HIGH SERVICE DISTRICT
DEPARTMENT OF PUBLIC UTILITIES
DIVISION OF WATER AND HEAT
CLEVELAND, OHIO

SUBJECT WATER WORK NOTES FOR INTERSTATE ROUTE 480

# WATERWORK NOTES

| FED. RD DIVISION | STATE | PROJECT | |
|---|---|---|---|
| 5 | OHIO | | |

222/500

CUYAHOGA COUNTY
CUY-480-10.39

9/39

## PRESTRESSED CONCRETE CYLINDER PIPE

**WORK INCLUDED**

The Contractor shall furnish all the materials, labor, tools and equipment for and shall properly construct and connect in place the water main at locations shown on the drawings, or as directed, using prestressed concrete cylinder pipe and fittings and including all excavation work, backfilling, sand backfill, repaving, concrete cylinder fittings, cast iron pipe and fittings, victaulic and dresser couplings, etc., all as required for the proper completion of the work included under this contract.

**DEFINITIONS**

Whenever the words "concrete pipe" or "prestressed concrete cylinder pipe" are used, they shall refer to and mean "prestressed steel cylinder reinforced concrete pressure pipe".

**PRESTRESSED CONCRETE CYLINDER PIPE**

All prestressed concrete pipe to be furnished shall conform to these specifications and shall conform to the latest AWWA C 301-74 "Standard Specifications for Reinforced Concrete Water Pipe-Steel Cylinder Type, Prestressed" and to specific requirements called for in Plan and Profile General Notes.

The prestressed concrete cylinder pipe shall be furnished in uniform length of not less than sixteen feet for the pipe except that shorter lengths may be used to meet special conditions. The nominal thickness of the core and the nominal thickness of the mortar coating shall not be less than that given in the following table:

| NOMINAL INSIDE DIAMETER | CORE THICKNESS | MINIMUM MORTAR COATING |
|---|---|---|
| 36" | 2-1/4" | 1-1/4" DOUBLE COATING |

THE PRESTRESSED CONCRETE CYLINDER PIPE SHALL CONSIST OF A CORE FORMED BY A CONTINUOUS ARC-WELDED STEEL CYLINDER WITH STEEL JOINT RIMS WELDED TO ITS ENDS, LINED WITH CONCRETE, WRAPPED UNDER TENSION WITH A WIRE OF HIGH TENSILE STRENGTH AND COATED WITH A DENSE COVERING OF CEMENT MORTAR. THE CEMENT MORTAR COATING SHALL HAVE, IN ADDITION, TWO COATS OF SURFACE SEALER APPLIED TO THE CONCRETE PIPE AND FITTINGS TO THE TOTAL MEASURABLE THICKNESS OF 8 MILS. THE SURFACE COATING SHALL BE "FLINTKOTE 410-50" AS PRODUCED BY MONSEY PRODUCTS COMPANY UNDER DESIGNATIONS OF "265-1 PIPE COATING" OR KOPPERS "BITUMASTIC SUPER SERVICE BLACK" OR EQUIVALENT, MEETING THE REQUIREMENTS OF AWWA C-301 AND AWWA C-104 (ANSI 21.4). EACH PIPE SHALL BE CONSTRUCTED WITH SELF-CENTERING EXPANSION JOINT, SEALED WITH A RUBBER GASKET, AND CAPABLE OF CARING FOR EARTH SETTLEMENT AND EXTREMES OF TEMPERATURE. THE PIPE LINE SHALL BE COMPLETE INCLUDING ALL STRAIGHT PIPE, BEVEL END PIPE, BENDS, TEES, SPECIAL END PIPE AND ANY AND ALL OTHER FITTINGS WHICH ARE REQUIRED FOR THE PROPER COMPLETION OF THE WORK AS SHOWN ON THE DRAWINGS OR AS DIRECTED. PIPE SHALL BE THE PRODUCT OF A WELL-KNOWN AND REPUTABLE MANUFACTURER AND OF THE TYPE WHICH HAS BEEN SUCCESSFULLY USED IN SIMILAR OR EQUIVALENT INSTALLATIONS, ELSEWHERE. THE ENDS OF PIPE SHALL BE AT RIGHT ANGLES TO THE PIPE AXIS. PIPES MAY BE BEVELED TO FORM CURVES. MAXIMUM ALLOWABLE BEVEL ANGLE SHALL BE SUCH AS MANUFACTURED AS STANDARD BEVELS. THE CONCRETE LINING OF THE STEEL CYLINDER SHALL CONSIST OF APPROXIMATELY ONE (1) PART OF CEMENT, ONE AND THREE-QUARTER (1 3/4) PARTS OF FINE AGGREGATE, AND TWO AND ONE-QUARTER (2-1/4) PARTS OF COARSE AGGREGATE, MEASURED BY VOLUME. FOR THE PURPOSE OF SECURING GREATER DENSITY, THE PROPORTIONS MAY BE VARIED, BUT IN NO CASE SHALL THE CEMENT CONTENT BE LESS THAN ONE (1) PART CEMENT TO FOUR (4) PARTS OF FINE AND COARSE AGGREGATE MEASURED SEPARATELY BY VOLUME. THE MAXIMUM RATIO OF WATER TO CEMENT SHALL BE FIVE AND ONE-HALF (5-½) U.S. GALLONS OF WATER TO ONE (1) BAG OF CEMENT. A MINIMUM OF 7.0 BAGS OF CEMENT SHALL BE USED PER CUBIC YARD OF CONCRETE. THE INTENT OF THIS SPECIFICATION IS TO PRODUCE A CONCRETE HAVING A SEVEN (7) DAY STRENGTH OF 3,000 PSI. AND A TWENTY-EIGHT (28) DAY STRENGTH OF FORTY-FIVE HUNDRED (4500) PSI. FOR 6"X12" TEST CYLINDERS MADE AND TESTED IN ACCORDANCE WITH ASTM SPECIFICATIONS: C 31-69. CONCRETE FOR WHICH SEVEN (7) DAY STRENGTH TEST SHALL SHOW STRENGTHS OF LESS THAN THREE THOUSAND (3,000) PSI. MAY BE USED, PROVIDING THAT THE MAXIMUM DESIGN COMPRESSIVE STRESSES IN THE CONCRETE SHALL NOT EXCEED FIFTY PERCENT (50%) OF THE SEVEN (7) DAY STRENGTH AS MEASURED.

The pipe shall be reinforced with a continuous welded steel cylinder of hot rolled steel sheets not lighter than #16 U.S. gage and shall conform to the requirements of ASTM Designation A-570-72 Grade B "Specifications for Hot-Rolled Carbon Steel Sheets & Strip - Structural Quality" or any subsequent amendments thereto, and ASTM designation: A242-52T, specifications for "Low-Alloy Structural Steel" or any subsequent amendments thereto, either open hearth or bessemer sheets having physical and chemical qualities equivalent to those mentioned may be used. Where the pipes are designed for special conditions or for high operating pressures, the cylinders may be made from hot-rolled sheets of special alloy steel having higher elastic limit and ultimate strength than those specified. In such case, the sheets shall be of good welding quality and shall conform to the steel manufacturer's published specifications for the special grade of steel being supplied. Each completed cylinder with joint rings welded to it shall be subjected to a hydrostatic test by closing the ends at the joint rings, filling with water in contact at all points with welds, and raising the water pressure to stress the cylinder to a fibre stress of 25,000 pounds per square inch. While under pressure test, all welds shall be thoroughly inspected. If any leaks are found, they shall be repaired and the cylinder shall be retested. The finished cylinder with joint rings attached shall be water tight under the required test pressure. Arc welding shall be an approved process and test welds shall be furnished from the work as required.

THE HIGH TENSILE WIRE USED FOR CIRCUMFERENTIAL REINFORCEMENT SHALL BE OF HIGH TENSILE PROPERTIES EITHER COLD DRAWN OR HIGH CARBON MB BASIS, UNTEMPERED ACCORDING TO THE DIAMETER OF THE PIPE AND THE PRESSURE FOR WHICH IT IS DESIGNED. THE TYPE OF WIRE TO BE USED SHALL BE DETERMINED BY THE MANUFACTURER AND SHALL CONFORM TO THE APPROPRIATE ASTM SPECIFICATION AS FOLLOWS:

| ASTM DESIGNATION | A- 82-72 | A 227-74 | A-648-73 |
|---|---|---|---|
| TITLE | COLD-DRAWN STEEL WIRE FOR CONCRETE REINFORCEMENT | HARD-DRAWN STEEL SPRING WIRE CLASS II | STEEL WIRE HARD DRAWN FOR PRESTRESSING CONCRETE PIPE CLASS III |
| MIN. ULTIMATE STRENGTH #6 GA. U.S.S. | 80,000 PSI | 222,000 PSI | 252,000 PSI |
| MIN. ELASTIC LIMIT: #6 GA. U.S.S. | 70,000 PSI | | |

THE CIRCUMFERENTIAL REINFORCEMENT PROPERTIES MAY BE INCREASED BY THE MANUFACTURER UPON APPROVAL BY THE DIRECTOR. TEST REPORTS WILL BE REQUIRED BEFORE APPROVAL. THE AVERAGE GROSS WRAPPING STRESS OF THE HIGH TENSILE WIRE SHALL NOT EXCEED SEVENTY-FIVE PERCENT OF THE MINIMUM ULTIMATE TENSILE STRENGTH OF THE WIRE, AND CENTERLINE SPACING OF THE WIRE SHALL NOT EXCEED 1-1/2 INCHES FOR LINED CYLINDER PIPE WITH WIRE OF NO. 6 GAUGE U.S.S.; THE MAXIMUM CENTERLINE SPACING OF WIRE LARGER THAN NO. 6 GAUGE SHALL BE 1 INCH. NO CIRCUMFERENTIAL WIRE SHALL BE LESS THAN NO. 6 GAUGE. THE WIRE SHALL BE PLACED DIRECTLY AGAINST THE STEEL CYLINDER OF THE CORE AND SHALL BE WRAPPED SPIRALLY, EVENLY AND UNDER CONSTANT TENSION. THE WIRE SHALL BE ANCHORED AT THE ENDS OF THE PIPE BY MECHANICAL DEVICES OF SUFFICIENT STRENGTH TO MAINTAIN THE STRESS IN THE WIRE.

The thickness of sheets for the steel cylinder and the diameter of wire used, as well as the centerline spacing at which it is placed and the tension under which it is wound around the lined cylinder shall be such that the zero compression pressure be at least 50 pounds plus 1½ times the static pressure. The maximum centerline spacing of the wire shall not exceed one inch and the wire shall not be lighter than #6 gauge U.S.S. The lined cylinder shall not be wrapped with wire until at least 6 days after placing of the concrete.

APPROVED FEB. 23 1983

William J. Sweeney ENGINEER OF DESIGN REVIEW

1st HIGH SERVICE DISTRICT

DEPARTMENT OF PUBLIC UTILITIES
DIVISION OF WATER AND HEAT
CLEVELAND, OHIO

SUBJECT WATER WORK NOTES FOR INTERSTATE ROUTE 480

# WATERWORK NOTES

| FED. RD DIVISION | STATE | PROJECT | |
|---|---|---|---|
| 5 | OHIO | | |

223/500

CUYAHOGA COUNTY
CUY-480-10.39

10/39

Steel of special section of spigot joint rings shall conform to ASTM designation: A 31-52T, Grade A, specifications for "Boiler Rivet Steel and Rivets".

Steel of flat section for bell rings shall conform to ASTM designation: A 245-44T, Grade B, specification for "Light Gage Structural Quality Flat Hot-Rolled Carbon Steel" or A 283-74 , Grade C , specification for "Structural Quality Low and Intermediate Tensile Strength Carbon Steel Plates", or any subsequent amendments thereto.

Fittings or specials shall be furnished and installed as shown on the drawings for concrete cylinder pipe or as required and all include specials with bell end, spigot end, flanged end, and victaulic end outlets, with access manholes, air relief valves, pitometer, and drain connections, anchor rings, bends, test heads, closure pieces, bevel and pipe, joint harness, etc. The Contractor shall submit to the Engineer detailed designs and shall receive his approval before the construction of any such specials.

Special pieces, such as tees, wyes, or branch openings, shall also be of cylinder construction. In all cases, the reinforcement shall adequately compensate for the openings in the pipe wall. If the special piece is prestressed, then the area of the steel in the cylinder and cage, in addition to the compensating reinforcement previously mentioned, shall be not less than that for the adjoining prestressed straight pipe. If the special piece is not prestressed, then the additional area of the steel in such cylinder and cage shall be not less than that for the adjoining straight pipe if such straight pipe were designed as concrete cylinder pipe. Steel thickness shall be a minimum of 3/8" for fittings or specials.

The openings in the special may be formed by steel rings or castings of suitable design securely welded to the cylinder and reinforcing cage. All bends and special pieces shall be provided with joint rings corresponding to those in the straight pipe.

ON VERTICAL AND HORIZONTAL BENDS AND STRAIGHT PIPE WITHIN TIED JOINTS, THE THICKNESS OF THE CYLINDER SHALL BE SUCH THAT THE RESULTANT OF THE LONGITUDINAL AND CIRCUMFERENTIAL STRESS SHALL BE NOT MORE THAN SIXTEEN THOUSAND (16,000) PSI. AT THE TEST PRESSURE, OR TWELVE THOUSAND (12,500) PSI. AT THE WORKING PRESSURE.

CAST STEEL SADDLES AND FORGINGS OR THE EQUIVALENT IN FABRICATED STEEL PLATES SHALL BE WELDED TO THE STEEL CYLINDER FOR MANHOLE AND PIPE CONNECTIONS AND FOR DRAIN, PITOMETER, AND AIR RELIEF VALVE CONNECTIONS, AND SHALL BE DRILLED AND TAPPED AND PROVIDED WITH TWO (2) INCH MALLEABLE IRON PLUGS.

EACH LENGTH OF PIPE SHALL BE PROVIDED WITH BELL AND SPIGOT ENDS FORMED BY STEEL JOINT RINGS SECURELY WELDED TO THE STEEL CYLINDER. THE SPIGOT RING SHALL BE LINED BY THE CONCRETE OF THE CORE AND THE BELL RING SHALL BE PROTECTED ON ITS EXTERIOR SURFACE BY THE CEMENT MORTAR COATING. PORTIONS OF THE JOINT RINGS WHICH WILL BE EXPOSED AFTER THE PIPE IS MANUFACTURED SHALL BE PROTECTED FROM CORROSION BY METALIZING A MINIMUM OF 0.003" THICK FOR 20" AND SMALLER PIPE, AND 0.002" THICK FOR 24" AND LARGER PIPE.

The spigot ring shall have a substantial groove on its outer surface for the purpose of receiving, holding and protecting the gasket. The joints shall be self-centering and the rings forming the joints shall be of such shape and dimensions that the pipe shall center themselves without the aid of the rubber gasket. The welding of the joint rings to the cylinder pipe shall consist of at least one full continuous weld for pipe sections that are properly tested hydraulically for strength and water tightness. For pipe sections that have to be cut to be fitted up to make bends, such construction shall have double continuous welds. Likewise, any special construction, such as for outlets or for pipes having special ends, shall have double continuous welds.

The gasket sealing the joint shall be of special composition rubber having a texture to secure a permanently watertight seal. The type of gasket shall have been in satisfactory use in comparable installations for not less than five (5) years.

Access construction manholes in addition to those shown on the drawings shall be located as required to provide easy access for field welding and placing of mortar as required for field joints.

Testing bulkheads shall be furnished and installed for testing any completed sections of the prestressed concrete cylinder pipe mains as may be required.

All steel for castings shall conform to the specifications for grade 70-36 steel castings, as given in the "Standard Specifications for Mild-to-Medium Strength Carbon-Steel Castings for General Industrial Use, ASTM designation: A 27-73 ".

All steel forgings shall conform to "Standard Specifications for Carbon-Steel Forgings, ASTM designation: A 235-52T".

All forged or rolled steel pipe flanges shall conform to the "Standard Specifications for Forged or Rolled Steel Pipe Flanges for General Service, ASTM designation: A 181-68, Grade I .

All structural steel including angles for anchor rings shall conform to "Tentative Specifications for Steel for Bridges and Buildings, ASTM designation: A 36-74 ".

All cast iron pipe and fittings shall conform to these specifications.

Iron castings must be smooth and free from blowholes and other defects and the material shall conform to "Standard Specifications for Gray Iron Castings, ASTM Designation: A 48-74, Class No.30B". and all subsequent amendments thereto.

CLOSURE PIECES OF FOLLOWER RING TYPE WHICH CAN BE CUT IN THE FIELD TO FIT REQUIRED MEASUREMENTS SHALL BE PROVIDED AS ARE NECESSARY FOR THE PROPER CONSTRUCTION OF THE WATER MAIN. CLOSURE PIECES ARE TO BE AVOIDED WHERE POSSIBLE WITHIN "TIED DISTANCES" BUT WHEN SO REQUIRED THEY SHALL BE FITTED WITH LOCKING DEVICES EQUIVALENT TO THOSE PROVIDED FOR REGULAR PIPE AND FITTINGS WITHIN "TIED DISTANCES". Measurements for length of closure pieces will be made in the field by the Contractor after adjacent pipe sections are in place in the trench.

Tests, inspection, reports and analyses of tests of samples for all materials shall be furnished in accordance with previous instructions in these notes.

MARKING

Each pipe and special shall have conspicuously painted in black on the inside, a serial number for the purpose of identification. Serial numbers shall agree with lists to be furnished to the Engineer. The top center line of all special fittings and each pipe that has a beveled end shall have a white ring painted in the shop around the mark both on the inside and outside of the pipe.

TYPICAL FIELD JOINTS FOR CONCRETE PIPE

The Contractor shall make all typical field joints and welded tied joints marked "X", "Y", as shown on the contract drawings or as required and as specified in the section of these notes titled laying pipe and shall properly make all field welds for the above tied joints. The annular recesses at the joint, both inside and outside of the pipe, shall be filled with cement mortar mixed in a proportion of not less than one part of cement and two parts of sand.

APPROVED FEB. 23, 19 83

William J. Sweeney ENGINEER OF DESIGN REVIEW

1st HIGH SERVICE DISTRICT

DEPARTMENT OF PUBLIC UTILITIES
DIVISION OF WATER AND HEAT
CLEVELAND, OHIO

SUBJECT WATER WORK NOTES FOR INTERSTATE ROUTE 480

# WATERWORK NOTES

| F.H.W.A. REGION | STATE | PROJECT | |
|---|---|---|---|
| 5 | OHIO | | |

224
500

CUYAHOGA COUNTY
CUY- 480 - 10.39

11
39

FLANGED JOINTS.

A. FLANGED JOINTS SHALL BE INSTALLED AS SHOWN ON THE DRAWINGS. FLANGES SHALL BE EITHER CAST STEEL, FORGED OR ROLLED STEEL, OR PROPERLY WELDED MACHINED FABRICATED STEEL PLATES WELDED TO PIPE CYCLINDER WITH TWO (2) CONTINUOUS WELDS. THEY SHALL HAVE PLAIN FACES AND SHALL BE FACED TRUE AND SMOOTH AT RIGHT ANGLES TO THE AXIS OF THE PIPE AND SHALL BE SPOT FACED ON THE BACK. DRILLING SHALL CONFORM TO ASA ONE HUNDRED TWENTY-FIVE (125) POUND STANDARD. EACH BLIND FLANGE SHALL BE CAST IRON AND SHALL HAVE BOSSES TAPPED AT TOP AND BOTTOM FOR TWO (2) INCH STANDARD PIPE AND FURNISHED WITH PLUGS. ALL BOLTS FOR FLANGES AND FOR OTHER TYPES OF BOLTING SHALL BE MADE OF SILICON BRONZE (ASTM B 98-74A, ALLOY A) OR STAINLESS STEEL (ASTM A 276-55, TYPE 302).

B. GASKETS FOR FLANGED PIPE SHALL BE FULL FACED RUBBER ONE-SIXTEENTH (1/16) INCH THICK EQUAL TO RAINBOW STYLE 9 AS MANUFACTURED BY U.S. RUBBER COMPANY OR 5X MANILA ROPE PATTERN.

C. IN PLACE OF FLANGED JOINTS ON CONCRETE PIPE BETWEEN VERTICAL BENDS ON TIED DISTANCES, AND ELSEWHERE AS SHOWN ON THE DRAWINGS, THE USE OF BUTT WELDED JOINTS WILL BE PERMITTED, UNLESS SPECIFICALLY PROHIBITED ON THE DRAWINGS. THE ENDS OF THE STEEL CYCLINDER SHALL BE BEVELED. THE WELD MATERIAL AND THE WELDING PROCEDURE SHALL CONFORM TO THE AWWA C 206-75 "STANDARD SPECIFICATIONS FOR FIELD WELDING OF STEEL WATER PIPE JOINTS" AND ANY SUBSEQUENT AMENDMENTS THERETO. THE ANNULAR RECESSES AT THE JOINT, BOTH INSIDE AND OUTSIDE OF THE PIPE SHALL BE PROTECTED AGAINST CORROSION BY AN APPROVED METHOD. ALL EXPOSED STEEL SURFACES BOTH INSIDE AND OUTSIDE OF THE PIPE SHALL BE COATED IN ACCORDANCE WITH THE COATING REQUIREMENTS OF THESE SPECIFICATIONS.

VICTAULIC PIPE COUPLINGS.

A. WHERE SHOWN ON THE DRAWINGS OR WHERE REQUIRED, THE CONTRACTOR SHALL FURNISH AND INSTALL VICTAULIC TYPE COUPLINGS FOR CONNECTION OF LINE VALVES TO PRESTRESSED CONCRETE CYCLINDER OR STEEL PIPE REDUCERS. STEEL PIPE ENDS SHALL BE FABRICATED AND GROOVED AS INDICATED ON THE DRAWINGS. THE COUPLINGS SHALL BE ADAPTED FOR INSTALLATION ON SHOULDERED END CAST IRON PIPE AND FITTINGS AND DESIGNED FOR NOT LESS THAN THE WORKING PRESSURE NOTED ON THE CONTRACT DRAWINGS. COUPLINGS SHALL BE COMPOSED OF MALLEABLE IRON HOUSINGS HELD TOGETHER WITH STEEL BOLTS HEAT TREATED AND "HOT DIPPED" GALVANIZED AND WITH A CONTINUOUS, HOLLOW, MOLDED RUBBER SEALING RING OF SUCH TYPE THAT THE SEAL BECOMES TIGHT AS THE PRESSURE WITHIN THE PIPE INCREASES. THE JOINTS SHALL BE CONSTRUCTED AND INSTALLED AND BE EQUAL IN ALL RESPECTS TO THOSE MANUFACTURED BY THE "VICTAULIC COMPANY OF AMERICA". MALLEABLE HOUSINGS SHALL CONFORM TO THE "STANDARD SPECIFICATIONS FOR MALLEABLE IRON CASTINGS", ASTM DESIGNATION A 47-74. BOLTS SHALL BE MANUFACTURED BY THE COUPLING MANUFACTURER AND SHALL BE HEAT TREATED STEEL BOLTS HAVING 100000 PSI TENSILE STRENGTH. ALL BOLTS AND NUTS SHALL BE ZINC COATED BY THE "HOT DIP" METHOD ACCORDING TO ASTM DESIGNATION A 123.

B. ALL METAL PARTS OF THE COUPLINGS SHALL BE COATED AT THE SHOP WITH ONE COAT OF BITUMINOUS PRIMER FURNISHED BY THE SAME MANUFACTURER WHO FURNISHES THE COATINGS AS SPECIFIED UNDER "COATING".

SHOP COATING AND PAINTING

A. THE EXPOSED SURFACES OF THE STEEL ENDS OF SPIGOT, BELL, VICTAULIC OR FLANGED STEEL OUTLET CONNECTIONS AND THE FLANGED ENDS OF CONCRETE PIPE, ETC., SHALL BE CLEANED, PRIMED AND ENAMELED INSIDE AND OUTSIDE IN ACCORDANCE WITH AWWA SPECIFICATION C 203-73. THE COATING MAY BE APPLIED BY BRUSH OR SPRAY. ALL COATINGS SHALL BE APPLIED IN THE SHOP BEFORE SHIPMENT. THE OUTSIDE COATING SHALL STOP AGAINST THE FLANGES AT ENDS OF PIPE SECTIONS.

B. GALVANIZED PIPE ENDS FOR RUBBER GASKET JOINTS ARE NOT TO BE COATED.

C. THE GROOVED STEEL BANDS AT THE ENDS OF THE PRESTRESSED CONCRETE CYLINDER PIPE TO RECEIVE VICTAULIC TYPE COUPLINGS SHALL BE COATED WITH WHITE LEAD AND TALLOW. THE COATING MUST BE REMOVED JUST PRIOR TO INSTALLATION OF THE COUPLING.

D. ALL FINISHED SURFACES SHALL BE COATED WITH WHITE LEAD AND TALLOW AND NOT PRIMED.

E. AFTER ERECTION, ALL EXPOSED OR DAMAGED COATINGS ON SURFACES BURIED UNDERGROUND AND ALL BOLTS ON FLANGES AND VICTAULIC COUPLINGS SHALL BE CLEANED AND PAINTED WITH THREE (3) FIELD COATS OF COAL TAR PITCH PAINT EQUAL TO INERTOL 66 OR KOPPERS BITUMASTIC 50.

WORK PERMITS

THE CONTRACTOR SHALL OBTAIN ALL PERMITS AND PAY ALL APPLICABLE FEES TO THE CITY OF CLEVELAND. THE COST OF SAID FEES SHALL BE INCLUDED IN THE APPLICABLE UNIT PRICES BID BY THE CONTRACTOR.

SEEDING AND SODDING

A. IN PREPARATION FOR SEEDING OR SODDING, THE SURFACE SHALL BE HARROWED TO A DEPTH OF THREE (3) INCHES. ALL GRASS, WEEDS, ROOTS, STICKS, STONES, ECT. ARE TO BE REMOVED AND THE SOIL CAREFULLY BROUGHT TO THE EXACT FINISHED GRADE OR SUBBASE BY RAKING. AN APPLICATION OF NOT LESS THAN ONE POUND PER ONE HUNDRED (100) SQUARE FEET OF A HIGH NITROGEN CONTENT COMMERCIAL FERTILIZER HAVING AN ANALYSIS OF 10:6:4 SHALL THEN BE UNIFORMLY DISTRIBUTED AND CAREFULLY RAKED IN.

B. IMMEDIATELY AFTER THE PREPARATION AND FERTILIZING OF THE SEED BED. THE PREPARED SURFACE SHALL BE SEEDED WITH NOT LESS THAN THREE HUNDRED (300) POUNDS OF GRASS SEED PER ACRE. THE SEED SHALL BE CARFULLY AND UNIFORMILY SOWN BY EXPERIENCED AND SKILLED WORKMAN. FOLLOWING THE SEEDING, THE SURFACE SHALL BE LIGHTLY RAKED AND ROLLED WITH A LIGHT ROLLER. THE GRASS SEED TO BE USED SHALL BE APPROVED BY THE DIRECTOR.

C. IMMEDIATELY AFTER THE PREPARATION OF THE SURFACE FOR SOD, THE FRESHLY CUT SOD SHALL BE CARFULLY PLACED IN FINAL POSITION. STAKED WITH SUFFICIENT WOODEN STAKES TO PREVENT MOVEMENT, CAREFULLY TAMPED TO FINAL POSITIONS AND ALL JOINTS CARFULLY FILLED WITH SCREENED TOPSOIL TO BRING ALL TO UNIFORM SURFACE

ALL SEEDED AND SODDED SURFACE SHALL BE CAREFULLY LOOKED AFTER AND TENDED BY THE CONTRACTOR; SHALL BE WATERED AND GRASS CUT WHEN NECESSARY. SETTLED AREAS SHALL BE REFILLED LEVELED, AND TAMPED TO THE PROPER GRADE. ALL SEEDED AND SODDED SURFACES SHALL BE LEFT IN GOOD CONDITION ON THE COMPLETION OF THE WORK

E AS SEEDING AND SODDING CAN ONLY BE SUCCESSFULLY DONE AT CERTAIN SEASONS OF THE YEAR, THE PREPARATION OF THE SOD OR SEED BED. AND WORK OF SODDING AND SEEDING SHALL ONLY BE DONE AT SUCH TIMES AS MAY BE APPROVED BY THE DIRECTOR

F NO SEPERATE PAYMENT IS PROVIDED

APPROVED FEB. 23, 1983

William J. Sweeney ENGINEER OF DESIGN REVIEW

1st HIGH SERVICE DISTRICT

DEPARTMENT OF PUBLIC UTILITIES
DIVISION OF WATER AND HEAT
CLEVELAND, OHIO

SUBJECT WATER WORK NOTES FOR INTERSTATE ROUTE 480

WATER WORK NOTES

# WATERWORK NOTES

| FED. RD DIVISION | STATE | PROJECT | |
|---|---|---|---|
| 5 | OHIO | | |

225/500

CUYAHOGA COUNTY
CUY-480-10.39

12/39

TRANSPORTATION AND DELIVERY

(A) - The Contractor shall transport, deliver and distribute along the line of the work, the pipe, specials and appurtenances.

(B) - Pipe shall be loaded for shipment upon suitable cars or trucks which shall be provided with wooden skids. In loading and unloading the pipe, more than ordinary care must be taken to prevent any injury to the concrete cylinder pipe, steel and pipe ends and protuberant steel connections. Such work must be done slowly with the pipe at all times under perfect control, and under no condition shall the pipe be dropped.

(C) - In distributing the pipe in the field, each pipe must be placed as nearly as possible to the point where it is to be laid, and facing in the proper direction. Suitable skids or blocks must also be left under each pipe, and the pipe securely wedged in place to prevent its being moved until required. A steel cable sling shall be used for rolling or lifting pipe. No iron chains shall be used. Pipe which has been improperly distributed and which must be moved longitudinally along the trench shall be reloaded on a wagon, or lifted and swung by a derrick or moved by such means as may be satisfactory to the Director.

(D) - If, in the process of manufacture, transportation, or handling, any concrete pipe or special receives any indentation or deformation to the concrete, steel ends or connections, the removal of which will in any degree injure it, such pipe or special shall be rejected and replaced at the Contractor's expense.

(E) - Pipe which is placed in storage, near streets or drives must be so arranged so as not to cause undue inconvenience to traffic and must be protected sufficiently to prevent injury to the concrete cylinder pipe, and the coating of the steel ends and connections.

DRAWINGS

(A) - The Contractor shall submit to the Director for approval, duplicate prints of all shop drawings as developed by the fabricator, for concrete pipe, fittings and specials, and miscellaneous details, such as air cock and drain forgings, castings, etc. Drawings shall include details, layouts and laying schedule for all pieces furnished requiring drawing submittal.

(B) - One print of each of the drawings submitted will be returned with the criticisms or approval of the Director. In case the drawings are not approved, the Contractor shall again send for approval duplicate revised prints of the drawings to take care of the criticisms noted, and after the drawings have been finally approved, the Contractor shall furnish to the Director three (3) reproduceable tracings on cloth or mylar, of each drawing. No work shall be done in the shop until after the drawings have been finally approved. Drawings shall be on a composite sheets 24"x 36". No smaller sheets will be accepted. Mylar film thickness shall be 5 mils.

(C) - The approval of the drawings by the Director shall not relieve the Contractor of any of his obligations in connection with this contract.

(D) - The Contractor shall submit to the Director a copy of the manufacturer's design calculations.

EXPERIENCE QUALIFICATIONS

All bidders will be required to show to the satisfaction of the Director that the type and size of pipe and fittings he proposes to furnish, will be made by a manufacturer whose pipe has been successfully used for like work outside of the builder's works for a period of not less than three (3) years.

ITEM SPECIAL- FURNISHING AND SETTING 6" FIRE HYDRANTS

WORK INCLUDED

The Contractor shall furnish all hydrants, caulking material, labor, tools and equipment for and shall properly connect at the location shown on the contract drawings, 6" hydrants, complete, as required for the proper completion of the work included under this contract.

HYDRANTS

The 6" hydrant details shown in the plans is a City of Cleveland standard and shall conform to the City's specifications on file at 1201 Lakeside Avenue, Cleveland, Ohio 44114. In addition to the 6" hydrant details in the plans, the City of Cleveland has approved three (3) additional 6" hydrant details on file at 1201 Lakeside Avenue, Cleveland, Ohio 44114. The drawing nos. are D525, D526 and D530.

SETTING

(A) - General Location: Hydrant shall be located in a manner to provide complete accessibility, and in such manner that the possibility of damage from vehicles or injury to pedestrians will be minimized. Unless otherwise directed, the setting of any hydrant shall conform to the following:

(B) - Location Regarding Curb Lines: When placed behind curb the hydrant barrel shall be set so that center of barrel will be no less than 3 feet from the gutter face of the curb, or deviate from location indicated on contract drawings, except by consent of the Engineer.

(C) - Location Regarding Sidewalk: When set in the lawn space between the curb and the sidewalk, or between the sidewalk and the property line, no portion of the hydrant or nozzle cap shall be within 6 inches of the sidewalk.

(D) - Position of Nozzles: The hydrant shall stand plumb, with the nozzles pointing toward the road and at an angle of forty-five degrees therefrom. Where hydrant branch piping is parallel with, or not at right-angles to the curb, the Contractor shall release swivel head bolts and adjust the hydrant nozzles to face the road at the proper angle. A hydrant without swivel heads will be adjusted by the City where necessary to correct the angle on nozzles. The elevation shall conform to the established grade with tops of frost casing at least four (4) inches above grade.

(E) - Connection to Main: The hydrant shall be connected to the main pipe with a cast iron branch controlled by the independent gate valve of the same size as hydrant, except as otherwise directed.

(F) - Drainage at Hydrant: Drainage shall be provided at the base of the hydrant by filling around the elbow with coarse gravel or crushed stone to at least six (6) inches above the waste opening. Wherever a hydrant is set in rock, clay or other impervious soil, the trench shall be widened and deepened on each side of the hydrant base, which space shall be filled compactly with coarse gravel or broken stone mixed with coarse sand of sufficient quantity to absorb all water to be drained from the hydrant when the valve is closed.

(G) - Anchorage for Hydrant: The hydrant shall be set on a stone slab or similar foundation and base of hydrant and hydrant tee well braced against unexcavated earth at the end of the trench with concrete backing, or it shall be tied to the pipe with suitable rods or clamps as directed by the Engineer.

(H) - Cleaning: The hydrant shall be thoroughly cleaned of dirt or foreign matter before setting.

BASIS OF PAYMENT

(A) - The unit price for each, "Item Special, Furnishing and Setting 6" Fire Hydrant" shall include furnishing the 6" fire hydrant, in accordance with respective specification set forth elsewhere in these notes, setting, testing, painting, the excavation, sheeting and shoring, backfilling, and the furnishing of all labor, materials, equipment, tools and appliances necessary to complete the work as specified or as shown.

(B) - The cast iron pipe and ductile iron pipe will be paid for under Item Special- "Water Mains", cast iron pipe and fittings.

(C) - The valves will be paid for under Item Special "Valves."

(D) - The valve boxes will be paid for under Item Special "Miscelaneous Metal or Plastic Work"

ITEM SPECIAL- FIRE HYDRANTS RELOCATED

WORK INCLUDED

The Contractor shall remove the hydrants and properly set in place and connect at the locations shown on the drawings or as directed by the Engineer. This shall include all excavation, backfilling, seeding and sodding, and repaving required for the proper completion of the work included under this contract.

MATERIALS

All hydrants to be relocated must be in good condition. All other materials and appurtenances necessary for the proper completion of this item shall be of the kind and grade called for in these notes for the particular kind of construction in which the materials are to be used.

CONSTRUCTION METHODS

The construction methods shall conform to the requirements of Item Special "Furnishing and Setting 6" Fire Hydrants" as set forth elsewhere in these notes.

APPROVED FEB. 23, 19 83

William J. Sweeney ENGINEER OF DESIGN REVIEW

1st HIGH SERVICE DISTRICT

DEPARTMENT OF PUBLIC UTILITIES
DIVISION OF WATER AND HEAT
CLEVELAND, OHIO

SUBJECT WATER WORK NOTES FOR INTERSTATE ROUTE 480

# WATERWORK NOTES

| FED. RD. DIVISION | STATE | PROJECT | | 226/500 |
|---|---|---|---|---|
| 5 | OHIO | | | |

CUYAHOGA COUNTY
CUY-480-10.39

13/39

BASIS OF PAYMENT

The work included in this item shall be paid for at the contract unit price bid for each "Item Special- Fire Hydrants Relocated", which price and payment shall constitute removing and reconnection according to the provisions of these specifications for the particular type of construction called for on the plans, and for all excavation, backfilling, seeding and sodding and repaving, and the furnishing of all material, labor, equipment, tools and appliances necessary to complete the work as specified or as shown.

FIRE HYDRANTS ABANDONED

Where fire hydrants are indicated to be abandoned (not indicated for removal), no work is required, the hydrant becomes the property of the Contractor and shall be disposed of as he sees fit. The cost of such disposal shall be included in the price for Item 203 Excavation including Embankment Construction.

2-INCH GALVANIZED BLACK IRON AND BRASS PIPE FOR FLUSHING CONNECTIONS, AIR RELIEF VALVES AND DRAINS

PAYMENT

No separate payment shall be made for 2-inch pipe. Payment shall be made at the contract unit price bid for the item with which the pipe is used.

WORK INCLUDED

The Contractor shall furnish all the materials for and shall properly connect in place at the locations shown on the drawings or as ordered, all 2-inch extra strong brass pipe and fittings, and all 2-inch extra strong galvanized black iron pipe and fittings respectively, which are necessary for the proper completion of the work included under this contract.

BRASS PIPE AND FITTINGS

All brass pipe and fittings shall be extra strong, 2-inch pipe size and the pipe shall conform to A.S.T.M. Specifications B 43-42. Fittings shall be extra strong weight and shall have sound, well fitting threads.

GALVANIZED BLACK IRON PIPE AND FITTINGS

All galvanized black iron pipe, nipples and couplings shall be extra strong black iron pipe A.S.T.M. Designation A-120. The fittings shall be beaded, of malleable iron, extra heavy weight. All pipe and fittings shall be hot dipped zinc coated inside and outside, and shall have sound, well-fitting threads.

ERECTION

All pipe shall be carefully placed to the proper lines and grades, and shall be connected up, unless otherwise shown, with screw fittings. Screw joints shall be made tight with a graphite paste and screwed home. A liberal number of unions shall be used to permit the ready removal of any section.

ITEM SPECIAL - VALVES

WORK INCLUDED

The Contractor shall furnish all the materials for, and shall properly set in place and connect, at the locations shown on the drawings or as directed, all air relief valves, drain valves, gate valves and valve boxes and covers, of the various sizes and types specified or ordered as required for the proper completion of the work included under this contract.

AIR RELIEF VALVES

All air relief valves or air vent valves shall be 2-inch bronze angle meter valves with a bronze water meter 2-inch iron pipe thread companion flange and a 2-inch extra heavy brass "close" (2-inch long) nipple. 2-inch air relief valves shall be equal in all respects to the 2-inch angle meter valve manufactured by J. JONES Co. No J-1527-F, FORD METER BOX Co. No. FV-7, or MUELLER Co. No. 14286.

GATE VALVES

(A) - Type of Valves: The gate valves shall be manufactured in full compliance with the Standard Specifications for Gate Valves for Ordinary Water Works Service of the American Water Works Association AWWA C-500-80 or latest revision thereof and in addition shall comply with the following supplementary requirements. Or be equal to values presently furnished to the City under requirement contracts. All gate valves shall be of the double disc parallel seat bottom wedge or side wedge type. All gate valves 20 inches and over in size shall include by-pass valves attached thereto. In opening or closing the valve, the gates shall be forced to ascend or descend by reason of the thrust exerted upon them by the valve stem nut; this thrust being generated by the rotation of the valve stem. In closing the valve, the discs when opposite the ports, shall be pressed firmly against the body seats by wedges or some other device equally suitable to the Engineer. The design of the mechanical wedging action shall be such that seating force is applied equaly to two or more contact points near the outer edge of each disc at or above and below the horizontal centerline of disc. The mechanism shall be designed so that all wedging members are activated at one time. It should be of the type which will eliminate unbalanced seating pressure and minimize distortion of the discs.

(B) - Valves with stationary stems: All gate valves, unless otherwise ordered, shall be made with single, nonrising stems.

(C) - Hub ends: The dimensions of the bells on valves up to and including 24 in. in diameter shall conform to those for Class D pressure fittings, as required by AWWA C110. On valves 30 in. and larger in size, the bell dimensions shall be for the classes ordered.

(E) - Flange Ends: The end flanges of flanged end gate valves shall conform in dimensions and drilling to the "American 125 pound Cast Iron Flanges Standard", unless otherwise ordered.

(F) - Screw Ends: All 2-inch gate valves and under shall be made with screw ends, unless otherwise specified.

(G) - Vertical and Horizontal Valves: All gate valves 16 inches and under, shall be constructed to work vertically. Valves over 16 inch waterway shall be constructed to work horizontally.

(H) - By-Passes: By passes with gate valves shall be provided on valves 20 inches and larger. The by-passes shall be located on or below the horizontal centerline of the valves. By-pass valves shall be of the same size as the by-pass and shall conform to the requirement of these specifications for the specific valve used. The size requirements of by-passes shall be as follows: 20-inch valves shall be provided with 3-in. by-passes; valves 24-in. to 30 in., inclusive, shall be provided with 4-in. by-passes; valves 36-in. to 42-in., inclusive, shall be provided with 6-in. by-passes; 48 in. valves shall be provided with 8-in. by-passes.

(I) - Flanges: When flanged valves are required, the flanges shall be faced and drilled. Bolt holes shall be spot faced on the back when necessary to secure an even bearing. All bolt holes shall be of the size shown on the drawings to be submitted and approved, shall be accurately drilled from templates, spaced equal distances apart and shall straddle horizontal and vertical axis, all as shown on the drawings. The dimensions and drilling of all end flanges shall conform to the spacing indicated on the drawings which shall be the American 125 pounds Cast Iron Flange Standard. Flanges shall be plain face with a smooth finish.

(J) - Marking: All gate valves 3 inches and over shall have the identity of maker, size and the year when made and also the letters "C.W.D." cast upon its body or dome in raised letters.

(K) - Stuffing Boxes: The stuffing box on each gate valve 3 inches or over, must be seperate from the dome and fastened to it by bolts. For 2 inch valves and under, the stuffing boxes may be formed in the dome of the valve. When required by the Director, valves 16 inches and smaller shall be furnished with "O" ring type seal plate. The seal plate shall be fitted with at least two "O" rings, the lower "O" ring serving as the pressure seal and the upper "O" ring as a combined dirt and moisture seal. The "O" rings shall be Precision Rubber Corporation Quality Compound No. I22-70, Garlock No. 8990, or National No. 622731. "The dimensions of the stuffing box flanges shall be of a thickness and uniformity proportioned to fit the various externally applied torque and internal thrust pressure. Bolt holes shall be fitted and of a number such that they will leave a sufficient cross sectional area of metal, thereby providing satisfactory strength to the upper and lower stuffing box flange."

(L) - Seat and Gate Rings: Dimensions of the bronze seat and gate rings shall be proportioned to fit the test pressure required, and shall meet the approval of the Engineer. The rings shall be firmly secured in place by an approved device, which will prevent them from working loose, particularly when the valve is left partly open. Dimensions of the bronze seat and gate rings for gate valves shall be + or - 1/8" of that specified in the following tables unless otherwise approved by the Commissioner of Water. Body seat rings shall be made of Grade One Bronze.

Gate seat rings shall be made of Grade One Bronze.

| VALVE SIZE | BODY RINGS FACE | BODY RINGS DEPTH | BODY AND GATE RINGS BOTTOM WEDGE THICKNESS AT BASE OF THREADS | BODY AND GATE RINGS BOTTOM WEDGE FACE THICKNESS | GATE RINGS FACE | GATE RINGS FACE THICKNESS | GATE RINGS DEPTH |
|---|---|---|---|---|---|---|---|
| 3" | 7/16 | 9/16 | 3/16 | 3/16 | 1/2 | 5/32 | 1/4 |
| 4" | 1/2 | 9/16 | 3/16 | 3/16 | 9/16 | 1/8 | 5/16 |
| 6" | 1/2 | 9/16 | 3/16 | 5/32 | 9/16 | 1/8 | 5/16 |
| 8" | 5/8 | 5/8 | 3/16 | 7/32 | 11/16 | 5/32 | 5/16 |
| 10" | 3/4 | 5/8 | 3/16 | 7/32 | 11/16 | 5/32 | 11/32 |
| 12" | 3/4 | 5/8 | 7/32 | 7/32 | 13/16 | 5/32 | 11/32 |
| 16" | 1 | 3/4 | 1/4 | 9/32 | 1 | 3/16 | 1/2 |
| 20" | 1-3/8 | 1-1/8 | 5/16 | 3/8 | 1-3/8 | 3/8 | 5/8 |
| 24" | 1-3/8 | 1-1/8 | 5/16 | 3/8 | 1-3/8 | 3/8 | 5/8 |
| 30" | 1-1/2 | 1-1/4 | 3/8 | 7/16 | 1-1/2 | 7/16 | 3/4 |

SIDE WEDGE

| | | | | | ALL BRONZE DISC | | |
|---|---|---|---|---|---|---|---|
| 3" | 13/32 | 1/2 | 3/16 | 3/16 | 1/2 | 5/32 | 21/64 |
| 4" | 7/16 | 9/16 | 3/16 | 3/16 | 5/8 | 5/32 | 21/64 |
| 6" | 1/2 | 11/16 | 9/32 | 1/4 | 11/16 | 5/32 | 21/64 |
| 8" | 17/32 | 11/16 | 9/32 | 1/4 | 13/16 | 5/32 | 21/64 |
| 10" | 5/8 | 13/16 | 3/8 | 5/16 | 13/16 | 5/32 | 21/64 |
| 12" | 5/8 | 13/16 | 3/8 | 5/16 | 7/8 | 3/16 | 13/32 |
| 16" | 3/4 | 1 | 15/32 | 3/8 | 1 | 1/4 | 17/32 |
| 20" | 7/8 | 1-5/16 | 17/32 | 7/16 | 1-3/16 | 5/16 | 19/32 |
| 24" | 1-1/16 | 1-3/8 | 21/32 | 1/2 | 1-7/16 | 5/16 | 19/32 |
| 30" | 1-5/16 | 1-1/2 | 25/32 | 1/2 | | | |

DIMENSIONS IN INCHES

(M) - Valve Stem: All gate valves shall be of the single screw type. The stems shall be of Grade Three Bronze. The threads of stems and stem nuts shall be of Acme, modified Acme or one-half V type. If requested, a manufacturer's certificate of test shall be furnished with all bronze stems. All stem collars shall be cast integral with stems. The diameters of

APPROVED FEB. 23, 1983

William J. Sweeney ENGINEER OF DESIGN REVIEW

1st HIGH SERVICE DISTRICT

DEPARTMENT OF PUBLIC UTILITIES
DIVISION OF WATER AND HEAT
CLEVELAND, OHIO

SUBJECT WATER WORK NOTES FOR INTERSTATE ROUTE 480

| FED. RD DIVISION | STATE | PROJECT | | 227 |
|---|---|---|---|---|
| 5 | OHIO | | | 500 |

CUYAHOGA COUNTY
CUY-480-10.39

14
39

# WATERWORK NOTES

stems at the base of the thread shall not be less than those shown below. The stem opening and thrust-bearing recess shall be Grade One, bronze bushed. The number of threads per inch shall be as given below.

| SIZE OF VALVE INCHES | DIAMETER OF STEM AT BASE OF THREAD - INCHES | NO.OF THREADS PER INCH |
|---|---|---|
| 2 | 0.469 | 4 |
| 3 | 0.859 | 4 |
| 4 | 0.859 | 3 |
| 6 | 1.000 | 3 |
| 8 | 1.000 | 3 |
| 10 | 1.125 | 3 |
| 12 | 1.188 | 3 |
| 16 | 1.438 | 3 |
| 20 | 1.772 | 3 |
| 24 | 1.980 | 2 |
| 30 | 2.480 | 2 |

(N) - Wrench Caps: The wrench caps and retaining nuts on heads of valve stems and pinion shafts shall be of Grade Three Bronze. On valves 24 inches and over, wrench caps shall be 2 inches square and 2 inches deep. On valves 4 inches to 20 inches, inclusive, they shall be 1-3/4 inches square on top, 1-7/8 inches square at base and 1-3/4 inches deep. On 3 inch valves and under, they shall be 1-1/4 inches square on top, 1-3/8 inches square at base and 1-1/2 inches deep. Machined wrench caps for valves 3 inches to 48 inches inclusive shall be fitted to a machined square stem or pinion shaft and held in place by a retaining nut. Wrench caps shall have a cut-away skirt to permit easy access to gland bolts.

(O) - Valves to open clockwise except 2 inches and under. All gate valves 3 inches and over including by-pass valves, shall be made to open by turning in a clockwise direction. All valves to be so made that they can be easily operated.

(P) - Facing of Gates: All discs or gates and threads for seat rings in the body shall be machined true and a groove or grooves shall be machined in each disc or gate for the reception of the face ring. The disc and seat rings shall be securely and rigidly attached to the discs or body seats in a manner approved by the Engineer, and the rings are to be finished to a true surface.

(Q) - Rollers and Scrapers: In all valves 20 inches in diameter and larger designed to lie horizontally, each gate or disc shall be provided with two bronze rollers travelling on bronze-faced tracks and provided with suitable bronze scrapers or two stainless steel rollers travelling on stainless steel-faced tracks and provided with suitable stainless steel scrapers. The thickness of the facing of the tracks shall be not less than 1/4 inch. The bronze shall be Class 1 and the stainless steel shall be ASTM A 276-55, Type 302.

(R) - Valve Guides: All valves 20 inches in diameter and larger shall be provided with guides or tracks which shall be made straight and true, and all irregularities must be machined off. The guides or tracks of horizontal valves shall be substantially faced with a minimum of 1/4 inches of Grade One Bronze, or stainless steel ASTM A 276-55, Type 302, satisfactory to the Engineer, securely fastened and planed off smooth and true.

(S) - Gearing: All valves 20 inches in diameter and larger shall be equipped with enclosed cut tooth steel gears. Gears, shafts and bearings shall be such as to provide easy operation without bending or twisting.

(T) - Dowel Pins: All gear valves shall have two dowel pins set in the flanges connecting the dome and body. Size of the pins to be shown in plans.

(V) - Grease Cases: All valves 20 inches in diameter and larger shall have water tight grease cases installed. The grease cases shall be of the extended type and shall be made of cast iron conforming to ASTM specifications, serial designation A 126, Class B, or any subsequent amendment thereto. Bearing surfaces for valve stem and pinion shaft shall be bronze bushed with Grade One Bronze. The grease cases shall be securely bolted to the valve bonnet through a heavy cast iron yoke. The yoke shall be of sufficient length to provide space for repacking valve and grease case stuffing boxes. All grease cases shall be provided with a removable cover securely bolted in place to allow easy access to the gears. There shall also be provided convenient filling and draining plugs and sufficient oil to fully submerge the pinion gear. The valves shall be delivered with the grease cases filled with the proper oil as recommended by the manufacturer.

(W) - Indicators: All valves 20 inches in diameter and over, shall be equipped with indicators denoting the positions of the gate. The moving part and bearings to be of bronze or bronze-lined.

(AA) - Bronze Parts: The stems, stem nuts, operating nuts, retaining nuts, disc and seat rings, shall be of solid bronze. Other parts such as wedges, glands, thrust bearings, gear spindles, rollers, scrapers and tracks, and all other parts coming together in operation, shall be of bronze, or substantially lined with bronze or stainless steel of a thickness not less than 1/4 of an inch and as shown on drawings submitted and approved. All 2 inch valves and under shall be made entirely of bronze, except handwheels which shall be of malleable iron.

(BB) - Cast Iron Parts: The bodies, covers, discs, frames, etc., of all gate valves 3 inches and over, shall be of cast iron.

(CC) - Waterway Opening: With the valve open, an unobstructed waterway shall be afforded, the diameter of which is not to be less than the full nominal diameter of the valve.

MATERIAL SPECIFICATIONS

(A) - Strength of Valves: The gate valve shall be designed for 150 lb. working pressure and shall withstand an internally applied hydrostatic pressure at all points of at least 300 lbs. per square inch. A factor of safety of not less than 10 shall be used on the design. Should tests develop any weakness, the valves from that design shall be rejected and a new design made.

(B) - Reinforcement at Flanges: All valve flanges shall be reinforced by fillets in accordance with the manufacturer's practice proven satisfactory in actual service.

(C) - Joints: All joints of the valves shall be faced true in a lathe or planer, and put together with a gasket of some material acceptable to the Engineer.

(D) - Bolt Holes: All bolt holes shall be accurately drilled from templates and spaced equal distances apart.

(E) - Bolts and Nuts: All bolts and nuts shall be made of silicone bronze (ASTM B 98-55, Alloy A) or stainless steel (ASTM A 276-55, Type 302), Ductile Iron (ASTM A-536 Square Grade 65-45-12).

(F) - Parts to be Interchangeable: All parts of valves of the same size and make must be perfectly interchangeable and all work done in a thorough and workmanlike manner.

(G) - Castings: All castings, whether of bronze, iron or steel, shall be sound and smooth without cold shuts, swells, lumps, scabs, blisters, sand holes or otner imperfections, and shall be made in accordance with the best modern foundry practice to obtain castings of the best quality and of uniform thickness. No welding, plugging, or filling of holes or other defects will be permitted. For parts whose thickness is less than one (1) inch, casting being thinner than the specified thickness by .06 of an inch or more shall be rejected, and for parts whose thickness is one (1) inch or more, castings being thinner than specified by .08 of an inch or more shall be rejected.

(H) - Bronze Parts: (1) Bronze for parts, other than those listed below, shall be Grade One. (2) Valve stems, pinion shafts, stem nuts, wrench caps and retaining nuts shall be made of Grade Three Bronze. (3) Disc rings shall be made of Grade Five Bronze.

(I) - Tests of Bronze: (1) If demanded, a manufacturer's certificate of test shall be furnished with all bronze stems. (2) The certificate shall describe the method of test.

(J) - Cast Iron: (1) Quality: Cast iron shall conform to ASTM Specifications A 126, Class B, or latest revision thereof. All iron castings shall be tough and without brittleness, such as may be cut drilled and chipped by hand with due ease. A blow from a hammer shall produce an indentation on the edge of the casting without flaking the metal.

(2) - Tests: Bars from the molten metal from which the valves are being made shall be tested at such time and in such manner as the Engineer may require. The requirements of ASTM Specifications A 126 shall govern testing procedures to determine the physical and chemical characteristics of the iron castings. Should the result obtained from the bar tested fail to show that the cast iron meets the requirements herein specified, the entire melt will be rejected. Test bars, however, whose failure is due to inherent defects shall not be considered. All valves made from iron showing less strength than called for in the ASTM Specifications shall be rejected.

APPROVED FEB. 23, 1983

William J. Sweeney ENGINEER OF DESIGN REVIEW

1st HIGH SERVICE DISTRICT
DEPARTMENT OF PUBLIC UTILITIES
DIVISION OF WATER AND HEAT
CLEVELAND, OHIO

SUBJECT WATER WORK NOTES FOR INTERSTATE ROUTE 480

WATER WORK NOTES

# WATERWORK NOTES

(K) - Quality of Materials: Grade One cast bronze shall conform to the properties of ASTM B 62.

Grade Two cast bronze shall conform to the properties of ASTM B 132, Alloy A.

Grade Three cast bronze shall conform to the properties of ASTM B 132, Alloy B.

Grade Four rolled bronze shall conform to the properties of ASTM B 21, Alloy A (one-half hard).

Grade Five bronze shall be sufficiently malleable to conform to dovetailed grooves when peened or rolled, and shall have a minimum compressive strength, without deformation, of 4,000 PSI, and shall have the following chemical composition:

| | |
|---|---|
| Copper, per cent | 91.0 |
| Tin, per cent | 0.0 |
| Zinc, per cent | 5.0 |
| Lead, per cent | 4.0 |

Silicon Bronze - This bronze shall conform to ASTM Specification B 98, Alloy A.

Stainless Steel - The stainless steel shall conform to ASTM Specifications A 276, Type 302.

Cast Iron - The cast iron shall conform to ASTM Specification A 126, Class B.

(L) - Other Materials: All other materials used in the manufacture of these valves and not specified in the specifications shall be of the best quality of their respective kinds, and subject to inspection, tests, and approval by the Engineer.

(M) - Chemical Analysis: Chemical analysis of the material used shall be furnished by the Contractor whenever required by the Engineer.

(N) - Cleaning of Castings: All iron castings shall be thoroughly cleaned on the outside and inside surfaces, and protected from rain or moisture until they are painted.

(O) - Hydrostatic Tests at Shop: All gate valves shall be tested in the shop by hydrostatic pressure, by closing the valve and applying the required test pressure in the body and dome of the valve as specified below.

| | | |
|---|---|---|
| 3" and under | 300 PSI - | No time requirement |
| 4" through 12" | 400 PSI - | No time requirement |
| 14" through 20" | 300 PSI - | for 15 minutes, drop pressure to 150 PSI, then elevate again to 300 PSI for 15 minutes - a total of 1/2 hour |
| 24" through 48" | 300 PSI - | for 1/2 hour, drop pressure to 150 PSI, then elevate again to 300 PSI for 30 minutes - a total of 1 hour |

This is a modification of Section 29 of the "Standard Specifications AWWA Designation C 500-61". All leaks, flaws or other defects developed in making these tests shall be corrected to the satisfaction of the Engineer or the entire piece shall be rejected. After testing, all valves shall be thoroughly drained. All equipment for testing and all tests shall be made at the Contractor's expense.

(P) - Performance Tests: Each valve shall be operated in the position that it will assume in service and for the full length of gate travel in both directions, to demonstrate the free and perfect functioning of all parts in the intended manner. Any defects of workmanship shall be corrected and the test repeated until satisfactory performance is demonstrated.

PLACING AND TESTING

(A) - All valves shall be set accurately and carefully to the lines and grades given. All connections to pipe shall have the necessary flanged, lead, victalic or screwed ends as required under various sections of these specifications and as shown on the valve schedule.

(B) - After the valves are set in place and ready to operate, the Contractor shall test them under working pressure and conditions herein specified under the Specification "Testing Mains", and any valve found to leak shall be made water-tight and, if found to be of faulty design, shall be satisfactorily repaired or replaced by the Contractor.

PAINTING

(A) - Iron body valves shall either be dipped in asphalt paint and all bronze parts cleaned, or all iron castings shall be painted inside before assembling with two (2) coats of an approved paint and, after passing the hydraulic test, shall be given at least two (2) coats of approved paint outside.

(B) - After erection, all exposed metal surfaces of valves except brass or bronze shall be painted with two (2) field coats of coal tar pitch paint equal to Inertol 66 or Koppers Bitumastic 50 or approved equal.

INSPECTION

The Engineer or his authorized designate will inspect the material and work done, as the interests of the City or State may require. Such officer shall have unrestricted access to the Contractor's plant, and to all parts of the work, and other places at which the preparation of the material and the construction of the different parts of the work to be done under these specifications are carried on, and he shall receive all facilities and assistance to carry out his work of inspection and testing in a manner satisfactory to the Engineer. Such inspection shall not relieve the Contractor from any obligation to perform said work strictly in accordance with the specifications, or any modifications thereof as herein provided, and work not so constructed shall be removed and made good by the Contractor at his own expense.

DRAWINGS

(A) - Prior to the manufacture of any valves, the Contractor shall submit for the approval of the Engineer and Director of Public Utilities of the City of Cleveland, complete working, detail, and dimension drawings showing thicknesses and kinds of material, and similar information.

(B) - TWO (2) Prints of each of the drawings submitted will be returned with the criticisms or approval of the Engineer. In case the drawings are not approved, the Contractor shall again send for approval duplicate revised prints of the drawings to take care of the criticisms noted, and after the drawings have been finally approved, the Contractor shall again furnish to the Engineer three (3) sets of mylar or reproducible cloth, one of which shall be furnished to the Director of Public Utilities of the City of Cleveland, and one (1) set returned to the contractor. No work shall be done in the shop until after the drawings have been finally approved. *

BASIS OF PAYMENT

The unit price stipulated for each "Item Special-Valves," classified as to size and type shall include the furnishing, placing, testing and painting of the air relief valve, drain valves, check and gate valves, including by-pass valves, operating nuts, valve boxes and other accessories and appurtenances and the furnishing of all labor, tools, materials and appliances necessary to complete the work as specified or as shown.

| FED. AID DIVISION | STATE | PROJECT | |
|---|---|---|---|
| 5 | OHIO | | |

CUYAHOGA COUNTY
CUY-480-10.39

228 / 500

15 / 39

Note: (a) - Air Relief Valve is included for payment in item Special-2" Air Relief Valve Complete

(b) - Drain Valve is included for payment in Item Special-2" Drain Complete and 4" Drain Complete.

ITEM SPECIAL TAPPING SLEEVE / PRESSURE TAPPING ASSEMBLY & VALVE & VALVE BOX

1. TAPPING SLEEVES, / PRESSURE TAPPING ASSEMBLY

THE TAPPING SLEEVES / PRESSURE TAPPING ASSEMBLY SHALL BE PROPERLY SIZED TO FIT THE EXISTING CAST IRON/CONCRETE PIPE TO BE TAPPED. THE OUTSIDE DIAMETER OF THE EXISTING PIPE SHALL BE DETERMINED BY FIELD MEASUREMENTS MADE BY THE CONTRACTOR. THE SLEEVES SHALL BE OF BOLTED TYPE, WITH OUTLET FLANGED OR WITH RECESSED LUGGED BELL TO RECEIVE THE TAPPING VALVE, SHALL BE OF CAST IRON OR SEMI-STEEL, AND SHALL BE DESIGNED TO SAFELY WITHSTAND A WORKING PRESSURE OF 150 PSI. TAPPING SLEEVES FOR SIZE ON SIZE CAST IRON PIPE TAPS SHALL BE EQUAL TO THOSE MANUFACTURED BY A.P. SMITH VALVE & HYDRANT DIVISION OF U.S. CAST IRON PIPE & FOUNDRY COMPANY, AND OF TYPE IN WHICH THE ANNULAR SPACE BETWEEN PIPE AND SLEEVE IS FILLED WITH LEAD AND CAULKED. FOR LESSER NOMINAL SIZE, COMPRESSION SEAL TYPE MAY BE USED.

2. TAPPING VALVES:

THE TAPPING VALVES SHALL MEET THE SPECIFICATIONS FOR GATE VALVES EXCEPT THAT OVERSIZED SEAT RINGS SHALL BE PROVIDED TO PERMIT THE USE OF FULL SIZED CUTTERS THROUGH THE VALVE. ONE END OF THE TAPPING VALVE SHALL BE FLANGED OR HAVE LUGGED SPIGOT TO MATE WITH THE TAPPING SLEEVE. THE OUTLET END OF THE TAPPING VALVE SHALL BE A STANDARD AWWA HUB WITH SPECIAL PROVISIONS FOR BOLTING ON THE TAPPING MACHINE. TAPPING VALVES FOR USE IN BURIED LOCATIONS SHALL BE NUT OPERATED WITH NUTS, AND SHALL OPEN BY CLOCKWISE ROTATION OF THE OPERATING NUT. BOLTS FOR FLANGED JOINTS SHALL CONFORM TO THE REQUIREMENTS OF MATERIAL SPECIFICATIONS. TAPPING VALVES SHALL BE EQUAL TO THOSE MANUFACTURED BY A.P. SMITH VALVE & HYDRANT DIVISION OF U. S. PIPE & FOUNDRY COMPANY.

3. INSTALLATION.

A. THE EXISTING CAST IRON/CONCRETE PIPE TO BE TAPPED SHALL BE THOROUGHLY CLEANED IN THE AREA TO BE COVERED BY THE TAPPING SLEEVE. THE SLEEVE SHALL BE PROPERLY INSTALLED IN POSITION AND THE ANNULAR SPACE BETWEEN PIPE AND SLEEVE SHALL BE FILLED WITH LEAD, OR SEALED AS APPROVED. THE TAPPING WORK IS TO BE DONE BY THE CITY.

B. ALL EXPOSED FERROUS METAL SURFACES OF BURIED TAPPING SLEEVES AND VALVES, SHALL AFTER ERECTION, BE CLEANED AND PAINTED WITH TWO (2) FIELD COATS OF COAL TAR PITCH PAINT EQUAL TO INTERTOL 66 OR KOPPERS BITUMASTIC 50. ON CAST IRON PIPE AND WITH MORTAR ON CONCRETE PIPE.

BASIS OF PAYMENT

The unit price stipulated for each "Item Special-Tapping Sleeve / Pressure Tapping Assembly & valve & valve box furnished under this item shall include the furnishing and delivery to the proper location and shall include all excavation, sheeting and shoring, backfilling, sand backfilling, seeding and sodding and repaving, if so noted on the contract drawings and the furnishing of all labor, equipment, materials, tools and appliances necessary to complete the work as specified or as shown.

ITEM -SPECIAL CUTTING IN VALVE AND VALVE BOX COMPLETE

WORK INCLUDED

Due to operating pressures, class of cast iron pipe and use demand, it is necessary that a hub valve be cut-in by the Contractor.

The time of installation will be set by the Division of Water and Heat.

The Contractor will do all pipe cutting and installing.

The Contractor shall furnish the hub valve, and valve box complete, Standard 38 Dresser or Smith-Blair Couplings, or approved equal, cast iron pipe and lead for the instal-

APPROVED FEB. 23 19 83

* (c) If the valve furnished is one previously approved for which drawings are presently on file with the Department of Public Utilities, The drawing requirement will be waived.

William J. Sweeney ENGINEER OF DESIGN REVIEW

1st HIGH SERVICE DISTRICT

DEPARTMENT OF PUBLIC UTILITIES
DIVISION OF WATER AND HEAT
CLEVELAND, OHIO

SUBJECT WATER WORK NOTES FOR INTERSTATE ROUTE 480

| | STATE | PROJECT | |
|---|---|---|---|
| 5 | OHIO | | |

229/500

CUYAHOGA COUNTY
CUY-480-10.39

16/39

# WATERWORK NOTES

lation. The Contractor shall excavate, tight sheet and shore as necessary the work, pit, backfill and repave as necessary. The work shall be performed under the supervision of the Division of Water and Heat.

BASIS OF PAYMENT

The work included in this item shall be paid for at the unit price bid for each "Item Special-Cutting-In-Valves and Valve Box, Complete and classified as to size. The price and payment shall constitute full compensation for performing all excavation, sheeting, shoring, backfilling and repaving as necessary and the furnishing of all materials, labor, tools, equipment and incidentals necessary to complete this item.

ITEM SPECIAL-VAULTS, MANHOLES OR CHAMBERS
BRICK AND PLAIN CONCRETE MASONRY

WORK INCLUDED

Under these items the Contractor shall furnish all necessary labor, materials, tools and equipment for the construction, complete, of all miscellaneous masonry structures and including all water main drain and pitometer vaults, access and anchorage manholes, valve chambers, anchors, piers at pipe bends and under line valves, floors for drain and valve vaults, and other appurtenant work together with the hauling, mixing, placing, forms, scaffolding, sheeting and bracing, grouting, plastering, curing, etc., all as specified, required or shown on the contract drawings.

BRICK AND MASONRY MATERIAL

The material furnished by the Contractor for the various kinds of masonry construction to be constructed shall conform to the following Ohio Department of Transportation (O.D.O.T.) Specifications:

(A) All brick furnished and used shall be No. 2 shale brick and shall comply with the requirements for "Grade SA" ASTM C32, or ODOT 704.02 concrete brick.

(B)
Portland cement shall conform to the requirements of 701.04 (ASTM C 150 Type I) ODOT.

(C) Sand shall be as specified in Section 703.03 of The State of Ohio Standard Construction and Material Specifications.

(D) Course aggregate shall be as specified in Section 703.02 of The State of Ohio Standard Construction and Material Specifications.

(E) All water shall be clean and accurately measured for each batch of concrete.

(F) All plain concrete shall be the ODOT 499 Class "C".

(G) All reinforcing steel shall be ODOT Item 509.

(H) All cement mortar shall be mixed in the proportion of one (1) part of cement to three (3) parts of sand, except the mortar for brick catch basins and sewer manholes which shall be 1:2 mix.
(I) see below

PACKAGING AND MARKING

When the cement is delivered in packages, the name and brand of the manufacturer shall be plainly indicated thereon. Similar information shall be provided in the shipping invoices accompanying the shipment of packaged or bulk cement. A bag shall contain 94 pounds net. A barrel shall consist of 376 pounds net. All packages shall be in good condition at the time of inspection.

(I) Precast masonry vault sections may be furnished if they meet the requirements of the drawings and specifications on file with the Cleveland Division of Water or approved by the Engineer.

MANHOLE CONSTRUCTION

(A) All brick manholes, brick necks and extensions shall be built in accordance with the contract drawings.

(B) The walls of manholes shall be built of No. 2 shale brick laid in 1:3 portland cement mortar, with brick arranged radially as headers, forming a wall nine (9) inches thick. In deep manholes, the wall shall be 13 inches thick below a point 12 feet from the surface. All of the brick composing said manholes shall be laid in full mortar beds and joints, with no mortar joints appearing on the inner surface of the manhole exceeding three-eights inches (3/8") thick.

(C) The top of the walls of manholes shall be properly leveled off with mortar so as to form a flat surface upon which the cast iron manhole ring is to rest, and said manhole shall be carried to a proper height as indicated by the contract drawings.

(D) The entire outer surface of all brick manholes shall be plastered with a smooth coating of 1:3 portland cement mortar, at least one-half (½) inch thick.

(E) Precast or cast in place concrete masonry construction shall follow the applicable section of Item 604 ODOT Specification.

PAYMENT

Payment shall be made at the contract unit price bid per each "Item Special-Vaults, Manholes or Chambers" classified as to size and type, complete and accepted in place, Payment for brick or concrete masonry is to be included in the unit price bid for the item in which it is used, and shall constitute full compensation for performing all the requirements of this item including all necessary material, labor, tools, equipment and incidentals to make this a complete item of work.

Payment for concrete anchors and piers is to be included in the unit price bid for "Item Special-Water Mains" (New Lines), "Item Special-Prestressed Concrete Cylinder Pipe" or "Item Special-Plugging Existing Water Mains and Branches." Payment for frames, covers, and steps shall be included in the unit price bid for "Item Special-Miscellaneous Metal or Plastic Work,"

VALVE BOXES AND COVERS

Materials and specifications shall conform to "Miscellaneous Metal or Plastic Work," "Specifications and details as shown in the plans. Cast iron shall be ASTM Designation A-48 with no specific requirements as to class.

Payment for valve boxes and covers shall be the unit price stipulated per pound for Item Special-Miscellaneous Metal or Plastic Work," as described elsewhere in these notes.

APPROVED FEB. 23, 1983

William J. Sweeney ENGINEER OF DESIGN REVIEW

1st HIGH SERVICE DISTRICT
DEPARTMENT OF PUBLIC UTILITIES
DIVISION OF WATER AND HEAT
CLEVELAND, OHIO

SUBJECT WATER WORK NOTES FOR INTERSTATE ROUTE 480

WATER WORK NOTES

# WATERWORK NOTES

| CALC. BY | | CUYAHOGA COUNTY | OHIO |
|---|---|---|---|
| DATE | | CUY-480-10.39 | FHWA REGION 5 |
| CHKD. BY | | | |
| DATE | | | |

230
500

17
39

## ITEM SPECIAL - MISCELLANEOUS METAL OR PLASTIC WORK

WORK INCLUDED

(A) THE CONTRACTOR SHALL FURNISH AND INSTALL ALL MISCELLANEOUS METAL OR PLASTIC WORK WHICH IS REQUIRED FOR THE PROPER COMPLETION OF THE WORK INCLUDED UNDER THIS CONTRACT AND IS NOT SPECIFICALLY INCLUDED UNDER THE OTHER ITEMS OR THESE SPECIFICATIONS.

(B) IN GENERAL, THE WORK SHALL INCLUDE THE FURNISHING AND INSTALLING OF MANHOLE FRAMES AND COVERS, MANHOLE STEPS, VALVE BOXES, EXTENSION STEMS AND BRACE, STRUCTURAL MEMBERS, BRONZE BOLTS, AND OTHER SIMILAR ITEMS REQUIRED FOR THE PROPER COMPLETION OF THE WORK.

MATERIALS

ALL CASTINGS SHALL CONFORM TO THE REQUIREMENTS OF ITEM 604 OF THE OHIO DEPARTMENT OF TRANSPORTATION CONSTRUCTION AND MATERIALS SPECIFICATIONS, EXCEPT THAT THE CAST IRON SHALL CONFORM TO ASTM DESIGNATION A48, CLASS 30-B FOR MANHOLE FRAME AND COVER. ALL STRUCTURAL STEEL SHALL MEET THE REQUIREMENTS OF THE ASTM SPECIFICATIONS A36. ALL BRONZE BOLTS AND NUTS SHALL CONFORM TO THE U.S. STANDARD SIZES, AND SHALL BE CLEAN CUT AND HAVE WELL FITTED THREADS. ALL BRONZE BOLTS AND NUTS SHALL BE TOBIN OR MANGANEZE BRONZE, OR OF SIMILAR APPROVED MATERIALS.

CAST IRON VALVE BOXES AND COVERS SHALL BE GRAY IRON CASTINGS, IN WHICH APPEARANCE AND DIMENSION TOLERANCES ARE PRIMARY CONSIDERATIONS AND STRENGTH IS NOT A PRIMARY OR MAJOR CONSIDERATION. VALVE BOXES AND COVERS SHALL BE ASTE DESIGNATION A-48 WITH NO SPECIFIC REQUIREMENT AS TO CLASS. CHEMICAL COMPOSITION SHALL NOT BE CONSIDERED, BUT THE MATERIAL SHALL BE OF GOOD QUALITY AND OF SUCH CHARACTER AS SHALL MAKE THE METAL OF THE CASTINGS STRONG, TOUGH AND OF EVEN GRAIN. THE METAL SHALL BE MADE WITHOUT ANY ADMIXTURE OF CINDER IRON OR OTHER INFERIOR METAL.

PLASTIC VALVE BOX SHALL BE INJECTION MOLDED AND COMMERCIALLY MANUFACTURED UTILIZING A COMPOUND PER ASTM D-2853-70, CLASS 1212. MATERIAL SHALL BE A RIGID COMBINATION OF POLYOLEFIN WITH FIBROUS INORGANIC COMPONENT REINFORCING, AND U.V. STABILIZER ADDITIVES TO ASSURE RESISTANCE TO MATERIAL DEGRADATION FROM ULTRA-VIOLET LIGHT. THE ENTIRE UPPER SECTION OF THE BOX SHALL BE MADE OF A MAGNETICALLY LOCATEABLE MATERIAL. THE USE OF MAGNETS WILL NOT BE PERMITTED. APPEARANCE AND DIMENSIONAL TOLERANCES ARE PRIMARY CONSIDERATION AND STRENGTH A MAJOR CONSIDERATION.

PLASTIC VALVE BOX SHALL HAVE A COST IRON RING AND A CAST IRON 4-PRONGED TRAFFIC LID. CAST IRON SHALL HAVE A MINIMUM WEIGHT OF 18 LBS. AND MUST CONFORM TO ASTM A-148, CLASS 20 SPECIFICATIONS. BOX TO BE BUFFALO TYPE (SLIP) OR (SCREW) AND HAVE A SHAFT DIAMETER OF 5-¼". THE BOTTOM PART OF THE BOX SHALL HAVE A BELL MEASURING 7-5/8" HIGH BY 10-1/16" WIDE AND HAVE A KNOCK OUT AS STANDARD EQUIPMENT. A NO. 6 ROUND BASE AND A 23" EXTENSION SECTION MUST BE AVAILABLE.

PHYSICAL PROPERTIES OF MOLDED PLASTIC

| PROPERTIES | TEST METHOD ASTM | MINIMUM TEST VALUES |
|---|---|---|
| TENSILE STRENGTH (2.0"/MIN.) | D-638-72 | 3400 PSI |
| FLEXURAL MODULUS | D-790-71 | 191,000 PSI |
| COMPRESSIVE STRENGTH (.05"/MIN.) | D-695-69 | 3350 PSI |
| IMPACT STRENGTH, IZOD | D-256-72 | .6 FT.LB/IN. |
| DUROMETER HARDNESS, TYPE D | D-2240-68 | 60 |
| DEFLECTION TEMPERATURE @ 66 PSI STRESS | D-648-72 | 230 F |
| SPECIFIC GRAVITY | D-792-66 | 1.15 |

VALVE BOXES AND COVERS

THE CONTRACTOR SHALL FURNISH AND INSTALL, OVER EACH VERTICALLY SET VALVE AT THE LOCATIONS SHOWN ON THE DRAWINGS, OR AS REQUIRED, VALVE BOXES WITH COVERS OF THE ASSEMBLED TYPES AND SIZES HEREINAFTER SPECIFIC OR INDICATED ON THE CONTRACT PLANS.

A. FOR WATER SERVICE CONNECTIONS AND VALVES TO EIGHT-INCH (8") SIZE:

ROUND COVER WITH BOTTOM/BASE NO. 2 AND 3, PLASTIC BOTTOM OR ALTERNATE NO. 1.

B. FOR VALVES OF TEN-INCH (10") SIZE:

ROUND OR SQUARE COVER WITH BOTTOM/BASE NO. 4, ALTERNATE BOTTOM NO. 2 WITH NO. 6 BASE, OR PLASTIC BOTTOM WITH PLASTIC NO. 6 BASE.

C. FOR VALVES OF TWELVE-INCH (12") SIZE:

ROUND OR SQUARE COVER WITH BOTTOM/BASE NO. 4, ALTERNATE BOTTOM NO. 2 WITH NO 6 OR 3 BASE, OR PLASTIC BOTTOM WITH PLASTIC NO. 6 BASE.

D. FOR VALVES OF SIXTEEN-INCH (16") SIZE:

ROUND OR SQUARE COVER WITH BOTTOM/BASE NO. 4, ALTERNATE BOTTOM NO. 2 WITH NO. 8 OR 160 BASE.

E. FOR AIR RELIEF AND FLUSHING ASSEMBLIES:

OVAL COVER VALVE BOX OR ALTERNATE DOUBLE ROUND COVER, ASSEMBLED TYPE A.

NOTE:

VALVE BOXES FOR USE IN FLEXIBLE TYPE PAVEMENTS SHALL HAVE TOPS WITH FLANGE SUPPORT RING NO LESS THAN FIVE AND ONE-QUARTER INCHES (5¼") FROM COVER SURFACE. WHERE THE CONTRACTOR FURNISHES AN ALTERNATE SHORT TOP, 6-INCH SIZE SDR-21 PLASTIC PIPE CUT TO PROPER LENGTH SHALL BE USED AS EXTENSION PIECE WITH ANY ADJUSTABLE CAST IRON VALVE BOX BOTTOM.

ALL COVERS SHALL BE INTERCHANGEABLE IN TOPS OF THEIR RESPECTIVE BOXES: SLIP TYPE TOPS SHALL BE INTERCHANGEABLE WITH SLIP TYPE BOTTOMS OR EXTENSIONS. THESE ASSEMBLED TYPE BOXES SHALL EXTEND FROM VALVE BONNET TO FINISHED GRADE OR ELEVATION REQUIRED, BEING CAREFULLY LOCATED OVER THE VALVE OPERATING NUT (S) AND SHALL BE SET PLUMB AND TRUE AS REQUIRED.

VALVE BOXES AND COVER ASSEMBLIES SHALL BE COMPLETED AND THEIR PARTS SHALL COMPLY WITH THOSE PARTS SHOWN ON DRAWINGS WHICH ARE MADE A PART OF THESE SPECIFICATIONS AND ENCLOSED HEREIN AND ALSO ON FILE IN THE WATER ENGINEERING SECTION OF THE DIVISION OF WATER AND HEAT, ROOM 553 PUBLIC UTILITIES BUILDING, 1201 LAKESIDE AVENUE, CLEVELAND, OHIO 44114.

DETAILED DRAWINGS

COMPLETE DETAILED DRAWINGS OF MISCELLANEOUS METAL WORK SHALL BE SUBMITTED TO THE ENGINEER FOR APPROVAL, PRIOR TO THE MANUFACTURE OF ANY WORK TO BE FURNISHED UNDER THIS ITEM IN ACCORDANCE WITH THESE SPECIFICATIONS.

PAINTING

ALL MISCELLANEOUS METAL WORK NOT GALVANIZED SHALL BE THOROUGHLY CLEANED AND GIVEN THREE (3) COSTS OR COAL TAR PITCH, USING INERTOL 50 OR BITUMASTIC 50, OR APPROVED EQUAL.

WORKMANSHIP AND FINISH SHALL CONFORM SUBSTANTIALLY TO THE DIMENSIONS ON THE CONTRACT DRAWINGS OR FURNISHED DRAWINGS. THE CASTINGS OR MOLDINGS SHALL BE FREE FROM INJURIOUS DEFECTS, CRACKS, GAS HOLES, FLAWS, AND EXCESSIVE SHRINKAGE. ADDITIONAL INSPECTION MAY BE MADE AT THE PROJECT OR WORK SITE. INSPECTION SHALL BE VISUAL INSPECTION FOR APPEARANCE AND SURFACE SMOOTHNESS IN COMPARISON WITH SAMPLES ACCEPTED AS STANDARD.

SAMPLE CASTINGS OR MOLDINGS FROM EACH PATTERN, WHEN REQUIRED BY THE ENGINEER, SHALL BE SUBMITTED BY THE MANUFACTURER FOR THE PURPOSE OF ESTABLISHING STANDARDS OF APPEARANCE AND DIMENSIONAL TOLERANCES. THE MANUFACTURER SHALL CERTIFY THAT HIS PRODUCT CONFORMS TO THESE SPECIFICATIONS. EACH CERTIFICATION SO FURNISHED SHALL BE SIGNED BY AN AUTHORIZED AGENT OF THE MANUFACTURER.

CLEANING AND TESTING

ALL CASTINGS SHALL BE THOROUGHLY CLEANED AND SUBJECTED TO A CAREFUL HAMMER TEST.

NO CASTINGS SHALL BE COATED UNLESS CLEAN AND FREE FROM RUST, AND APPROVED IN THESE RESPECTS BY THE ENGINEER OR HIS AUTHORIZED INSPECTOR IMMEDIATELY BEFORE BEING DIPPED.

COATING

EACH CASTING SHALL BE SPRAYED OR BRUSHED INSIDE AND OUT WITH ONE COAT OF ASPHALTIC COMPOUND VARNISH. THE VARNISH SHALL BE MADE OF HIGH GRADE ASPHALT FLUXED AND BLENDED WITH PROPERLY TREATED DRYING OILS AND THINNED TO A PROPER CONSISTENCY WITH A VOLATILE SOLVENT. THE VARNISH SHALL BE MADE WITH FEDERAL SPECIFICATION 77-V-51A OR JOINT ARMY-NAVY SPECIFICATION JAN-P-450. OTHER METHODS OF COATING AND TYPES OF COATING MATERIAL SHALL BE SUBJECT TO THE APPROVAL OF THE ENGINEER; IN ADDITION TO THE SHOP COAT, THE CASTINGS SHALL RECEIVE TWO (2) COATS OF APPROVED PAINT.

INSPECTION

THE ENGINEER OR HIS AUTHORIZED REPRESENTATIVE SHALL HAVE THE RIGHT TO INSPECT THE MATERIAL AND WORK DONE, AS THE INTERESTS OF THE CITY OR STATE MAY REQUIRE. SUCH INSPECTION SHALL NOT RELIEVE THE CONTRACTOR FROM ANY OBLIGATION TO PERFORM SAID WORK STRICTLY IN ACCORDANCE WITH THE SPECIFICATIONS, AND ANY MODIFICATION THEREOF, AS HEREIN PROVIDED, AND WORK NOT SO CONSTRUCTED SHALL BE REMOVED AND MADE GOOD BY THE CONTRACTOR AT HIS OWN EXPENSE. ALL MANHOLE RINGS AND COVERS MUST BE SOUND AND SHALL CONFORM TO THESE SPECIFICATIONS, AND ANY DEFECTIVE CASTINGS WHICH MAY HAVE PASSED THE INSPECTOR AT THE WORKS, OR ELSEWHERE, SHALL BE AT ALL TIMES LIABLE TO REJECTION WHEN DISCOVERED, UNTIL THE DATE OF FINAL PAYMENT UNDER THIS CONTRACT.

STEPS AND LADDERS

DUCTILE IRON STEPS AND LADDERS OF THE SIZE AND SHAPE SHOWN ON THE CONTRACT DRAWINGS SHALL BE BUILT INTO THE BRICK AND CONCRETE MASONRY OF THE MANHOLES AS INDICATED ON THE DRAWINGS.

RIMS AND COVERS

(A) ALL CAST IRON MANHOLE RIMS AND COVERS OF THE FORMS, DIMENSIONS AND DETAILS SHOWN ON THE CONTRACT SHALL BE FURNISHED AND INSTALLED AS DIRECTED.

(B) THE RIMS SHALL BE PROPERLY SET IN PLACE IN A FULLBED OF MORTAR OF POURED MONOLITHIC IN THE MASONRY, AT SUCH ELEVATION AS TO MAKE THE TOP OF THE RIM CONFORM TO THE FINISHED SURFACES OF THE STRUCTURES OR THE FINISHED GRADE AS ESTABLISHED BY THE ENGINEER.

MEASUREMENT

THE MISCELLANEOUS METAL OR PLASTIC WORK SHALL BE METAL WORK ACTUALLY FURNISHED AND PLACED IN ACCORDANCE WITH THESE SPECIFICATIONS AND THE DETAILED DRAWINGS APPROVED BY THE DIRECTOR. IN THE COMPUTING OF WEIGHTS, IF NOT DETERMINED BY WEIGHING, THE ONE (1) CUBIC FOOT OF CAST IRON SHALL BE ASSUMED TO WEIGH FOUR HUNDRED AND FIFTY (450) POUNDS, AND ONE (1) CUBIC FOOT OF STEEL SHALL BE ASSUMED TO WEIGH FOUR HUNDRED AND NINETY (490) POUNDS. THE WEIGHT OF CAST IRON SHALL BE USED FOR CAST IRON VALVE BOXES AND COVERS AND ANY CAST IRON SECTIONS OF VALVE BOXES AND COVERS. WHERE PLASTIC PIPE IS USED AS THE EXTENSION, THE PIPE SHALL BE INCLUDED IN THE CAST IRON WEIGHT WITH NO SEPARATE ALLOWANCE FOR LENGTH OR WEIGHT. THE WEIGHT OF PLASTIC VALVE BOXES SHALL BE THE ACTUAL WEIGHT FURNISHED WITH ANY CAST IRON PARTS CONSIDERED SEPARATELY AS CAST IRON.

PAYMENT

THE UNIT PRICE STIPULATED PER POUND FOR MISCELLANEOUS METAL OR PLASTIC WORK SHALL INCLUDE THE FURNISHING, ERECTING, AND MACHINING, FITTING, ADJUSTING, BOLTING, CLEANING, AND PAINTING OF ALL MISCELLANEOUS METAL OR PLASTIC WORK, AND THE FURNISHING OF ALL LABOR, MATERIALS, TOOLS AND APPLIANCES NECESSARY TO COMPLETE THE WORK AS SPECIFIED OR AS SHOWN.

APPROVED FEB. 23, 1983

William J. Sweeney ENGINEER OF DESIGN REVIEW

1st HIGH SERVICE DISTRICT

DEPARTMENT OF PUBLIC UTILITIES
DIVISION OF WATER AND HEAT
CLEVELAND, OHIO

SUBJECT WATER WORK NOTES FOR INTERSTATE ROUTE 480

# WATERWORK NOTES

| FED. RD DIVISION | STATE | PROJECT | |
|---|---|---|---|
| 5 | OHIO | | |

CUYAHOGA COUNTY
CUY-480-10.39

231
500

18
39

DETAILED DRAWINGS

Complete detailed drawings of miscellaneous metal work shall be submitted to the Engineer for approval, prior to the manufacture of any work to be furnished under this item, in accordance with these specifications unless shown in details on the contract drawings.

PAINTING

All miscellaneous metal work not galvanized shall be thoroughly cleaned and given three (3) field coats of coal tar pitch equal to Inertol 50 or Bitumastic 50 or approved equal.

STEPS AND LADDERS

Ductile iron steps and ladders of the size and shape shown on the contract drawings shall be built into the brick and concrete masonry of the manholes as indicated on the drawings and be in accordance with the requirements of Section 711.13 of The State of Ohio Standard Construction and Materials Specifications.

RIMS AND COVERS

(A) All cast iron manhole rims and covers of the forms, dimensions and details shown on the contract drawings shall be furnished and installed as directed.

(B) The rims shall be properly set in place in a full bed of mortar or poured monolithic in the masonry, at such elevation as to make the top of the rim conform to the finished surfaces of the structures or the finished grade as estimated by the Engineer.

BASIS OF PAYMENT

No separate payment will be made for Miscellaneous Metal Work. The furnishing, erecting, machining, fitting, adjusting, bolting, cleaning and painting of all Miscellaneous Metal Work and the furnishing of all labor, materials, tools and equipment shall be included in the contract unit prices bid for the pertinent "Item Special - Masonry Structures" and "Item Special - Valves."

ITEM SPECIAL-ADJUST FIRE HYDRANT AND VALVE BOX TO GRADE

WORK INCLUDED

The Contractor shall perform all operations necessary to the adjusting of the existing Hydrant and Valve Box to the new grade at the locations shown on Sheet Nos. 250 through 252. The work shall include excavating, tamping earth under the valve box, backfilling, inserting extension sections on the hydrants, seeding and sodding required for the proper completion of the work under this contract.

The adjusted height of the hydrant hose connection above the ground or pavement grade shall be in accordance with the requirements of the City of Cleveland Fire Department.

BASIS OF PAYMENT

The work included in this item shall be paid for at the contract unit price bid for each "Item Special - Adjust 6" Hydrant and Valve Box to Grade". This price and payment shall constitute full compensation for performing all of the requirements of this item, furnishing all necessary materials, labor, tools, equipment, supplies and incidentals.

ITEM - SPECIAL - ADJUST WATERWORKS STRUCTURES TO GRADE

WORK INCLUDED

The Contractor shall raise or lower the existing waterworks structures to fit the revised grade. The entire casting or Valve Box shall be adjusted, no inserts.

BASIS OF PAYMENT

The work included in this item shall be paid for at the contract unit price bid for each "Item Special - Adjust Existing Waterworks Structures to Grade", which price and payment shall constitute full compensation for adjusting valve boxes, vaults, access manholes and any required excavation, backfilling, tamping, seeding and sodding, pavement restoration and for the furnishing of all labor, equipment, materials, tools and incidentals necessary to complete this item.

ITEM SPECIAL-REMOVE ABANDONED CURB SHUT-OFF AND VALVE BOX

WORK INCLUDED

The Contractor shall either remove or leave in place the abandoned curb shut-off. The valve box shall either be removed or broken off at least 1' below the ground surface and backfilled. If the valve box is in a paved area, the area shall be restored to match the existing pavement.

BASIS OF PAYMENT

The work included in this item shall be paid for at the contract unit price bid for each "Item Special - Remove Abandoned Curb Shut-Off and Valve Box", which price and payment shall constitute full compensation for abandoning the valve and removing the valve box, backfilling, seeding, repaving, and for the furnishing of all materials, labor, equipment, tools and incidentals necessary to complete this item. All removed materials shall become the property of the Contractor.

ITEM SPECIAL-"SERVICE CONNECTION EXTENDED" AND "WATER METER RELOCATED"

The Contractor will furnish the piping material for and the City shall make all changes required in the relocation of existing house connections from the corporation shut-off to the curb shut-off. The Contractor shall do all the necessary excavation, backfilling and repaving required. Materials to be furnished by the Contractor are listed on Sheet No. 232
The Contractor shall do all work from Curb Shut-off Box to the dwelling where necessary.

BASIS OF PAYMENT

The actual number of "Item Special - Service Connection Extended and "Item Special - Water Meter Relocated" shall be paid for at the contract unit price. The price and payment shall constitute full compensation for performing all of the requirements of the item including the furnishing of all materials, labor, tools, equipment and incidentals.

The labor, tools, equipment and incidentals furnished by the City of Cleveland, Division of Water, will be at no expense to the Contractor.

ITEM SPECIAL - RELOCATED, RETAP AND RECONNECT SERVICE CONNECTION

A tap is to be made on the new water main and the existing service connection shall be connected to the new water main. Materials to be furnished by the Contractor are listed on Sheet No. 232.

The Contractor shall furnish the piping materials and the City shall make all changes necessary to reconnect. The Contractor shall do all excavation, backfilling and repaving. The Contractor shall do all work from Curb Shut-off Box to the dwelling where necessary.

BASIS OF PAYMENT

The actual number of "Item Special - Relocate, Retap and Reconnect Service Connections", shall be paid for at the contract unit price. This price and payment shall constitute full compensation for performing all of the requirements of this item, including furnishing all necessary materials, labor, tools, equipment, supplies and incidentals.

The labor, tools, equipment and incidentals furnished by the City of Cleveland, Division of Water, will be at no expense to the Contractor.

GENERAL NOTES

The exact location of existing underground structures, utilities, etc. is not known and the information shown on the plans is to be used at the contractors risk.

The water line stationing is along horizontal centerlines of the pipe. The elevations are based on sea level datum.

The static head used for both design and testing shall be measured from elevation 927.00. The field testing head shall be 75 p.s.i. plus that due to the static head, but in no case less than 100 p.s.i..

The Contractor shall notify INSP. & ENFORC'T. Three (3) working days prior to starting any water works construction. Call 664-3065

ITEM SPECIAL - ADJUST VALVE BOX TO GRADE

WORK INCLUDED

The Contractor shall raise or lower the existing valve box to fix the new grade by using appropriate extension stem sections, if needed, or by excavating under or tamping backfill under the valve box to insure that the box has a firm footing.

PAYMENT

The work included in this item will be paid for at the contract unit price bid for each "Item Special - Adjust Valve Box to Grade"* which price and payment shall constitute full compensation for adjusting the valve box, excavation, tamping earth under valve box, backfilling, seeding and sodding and repaving and for the furnishing of all labor, materials, small tools, equipments and incidentals necessary to complete this item.

* "or Item Special - Adjust Curb Shut-off Valve Box to Grade."

ITEM SPECIAL - 2" AIR RELIEF VALVE AND VALVE BOX COMPLETE

WORK INCLUDED

The Contractor shall furnish pipe with 2" air relief valve connection and furnish and install the 2" Air Relief Valve and Valve Box as shown in the "Water Work Details" at the locations shown in the plans.

PAYMENT

The work include in this item shall be paid for at the contract unit price bid for each "Item Special - 2" Air Relief Valve and Valve Box Complete" which price and payment shall constitute full payment for the furnishing and installing of all materials, labor, equipment, tools and appliances necessary to complete this item of work in place.

APPROVED FEB. 23, 19 83

William J. Sweeney ENGINEER OF DESIGN REVIEW

1st HIGH SERVICE DISTRICT
DEPARTMENT OF PUBLIC UTILITIES
DIVISION OF WATER AND HEAT
CLEVELAND, OHIO

SUBJECT WATER WORK NOTES FOR INTERSTATE ROUTE 480

WATER WORK NOTES

| FHWA REGION | STATE | PROJECT | |
|---|---|---|---|
| 5 | OHIO | | |

CUYAHOGA COUNTY
CUY- 480 - 10.39

232
500

19
39

## MATERIALS REQUIRED FOR ITEM SPECIAL SERVICE CONNECTION EXTENDED

| 3/4" or 1" GENERAL SUPPLY WATER CONNECTION | | | 1-1/2" GENERAL SUPPLY WATER CONNECTION | | |
|---|---|---|---|---|---|
| 1 | 3/4" or 1" | Curb Shut-Off Valve - Copper to Iron | 2 | 1-1/2" | Strm. Unions - Copper to Iron, Male |
| 1 | | Curb Shut-Off Valve Box Bottom | ft. | 1-1/2" | Copper Tubing |
| 1 | | Curb Shut-Off Valve Box Top | 1 | #2 | Adj. Valve Box Tops |
| ft. | 3/4" or 1" | Copper Tubing | 1 | #2 | Adj. Valve Box Covers |
| | | or | 1 | #2 | Adj. Valve Box Bottoms |
| 1 | 3/4" or 1" | Compression Corporation Stop | | | or |
| 1 | 3/4" or 1" | Oraseal Compression Valve | 2 | 1-1/2" | Strm. Unions Copper to Iron Male |
| 1 | | Oraseal Box | ft. | 1-1/2" | Copper Tubing |
| 1 | | Oraseal Box Footpiece | 1 | #2 | Adj. Valve Box Tops |
| ft. | 3/4" or 1" | Copper Tubing | 1 | #2 | Adj. Valve Box Covers |
| 2 | 3/4" or 1" | Flare Couplings Copper to Iron Fem. | 1 | #2 | Adj. Valve Box Bottoms |
| 2 | 3/4" or 1" | Flare Couplings Copper to Iron Male | 1 | | Stationary Rods |
| 2 | 3/4" or 1" | Flare Couplings Copper to Copper | | | |

## MATERIALS REQUIRED FOR ITEM SPECIAL RELOCATE RETAP AND RECONNECT SERVICE CONNECTION

| 3/4" or 1" GENERAL SUPPLY WATER CONNECTION | | | 1-1/2" GENERAL SUPPLY WATER CONNECTION | | |
|---|---|---|---|---|---|
| 1 | 3/4" or 1" | Corporation Shut-Off Valve - Copper to Iron | 1 | x 1-1/2" | Strap Saddle |
| 1 | 3/4" or 1" | Curb Shut-Off Valve - Copper to Iron | 1 | 1-1/2" | Corporation Shut-Off Valve - Copper to Iron |
| 1 | | Curb Shut-Off Valve Box Bottom | 1 | 1-1/2" x 12" | Brass Nipple |
| 1 | | Curb Shut-Off Valve Box Top | 1 | 1-1/2" | Square Head Gate Valve |
| ft. | 3/4" or 1" | Copper Tubing | 2 | 1-1/2" | Strm. Unions, Copper to Iron, Male |
| | | or | ft. | 1-1/2" | Copper Tubing |
| 1 | 3/4" or 1" | Compression Corporation Stop | 1 | #2 | Valve Box Tops |
| 1 | 3/4" or 1" | Oraseal Compression Valve | 1 | #2 | Valve Box Covers |
| 1 | | Oraseal Box | 1 | #2 | Valve Box Bottom |
| 1 | | Oraseal Box Footpiece | 1 | 1-1/2" | Strm. Coupling, Copper to Iron, Fem. |
| ft. | 3/4" or 1" | Copper Tubing | 1 | 1-1/2" | Strm. Coupling, Copper to Iron, Male |
| | | | | | or |
| | | | 1 | x 1-1/2" | Strap Saddle |
| | | | 1 | 1-1/2" | Oraseal Valves, Iron to Iron |
| | | | 1 | 1-1/2" x 6" | Brass Nipple |
| | | | 2 | 1-1/2" | Strm. Unions, Copper to Iron, Male |
| | | | ft. | 1-1/2" | Copper Tubing |
| | | | 1 | #2 | Valve Box Tops |
| | | | 1 | #2 | Valve Box Covers |
| | | | 1 | #2 | Valve Box Bottoms |
| | | | 1 | | Stationary Rods |

NOTE: If connection is to be longer than twenty feet, One additional 1-1/2" Streamline Coupling (Copper to Copper) is to be added for each additional twenty foot length or each portion (20) over the initial twenty feet.

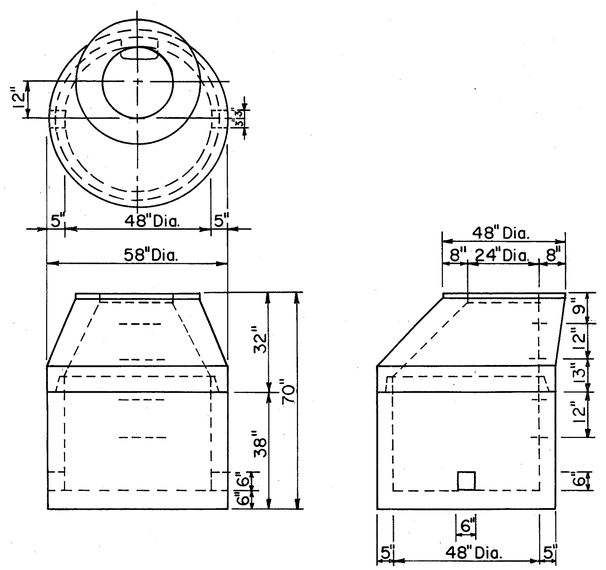


METER VAULT
SCALE: 1/2" = 1'-0"

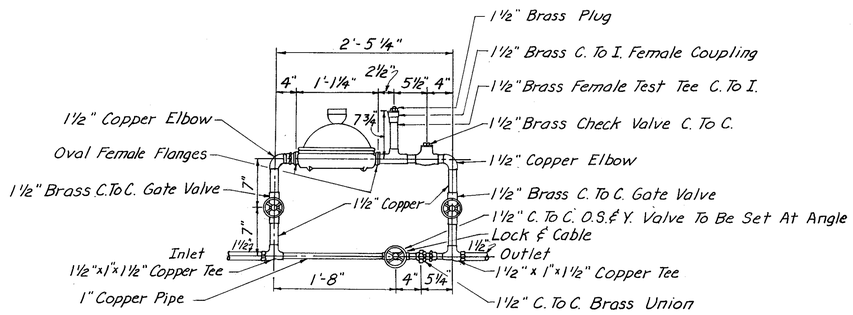


1½" METER SETTING
SIDE ELEVATION
SCALE: 1½" = 1'-0"

APPROVED FEB. 23, 1983

William J. Sweeney ENGINEER OF DESIGN REVIEW

1st HIGH SERVICE DISTRICT
DEPARTMENT OF PUBLIC UTILITIES
DIVISION OF WATER AND HEAT
CLEVELAND, OHIO

SUBJECT WATER WORK NOTES FOR INTERSTATE ROUTE 480

SCALE AS SHOWN | NO.

WATER WORK DETAILS

| FED. RD. DIVISION | STATE | PROJECT | |
|---|---|---|---|
| 5 | OHIO | | |

233
500

20
39

**CUYAHOGA COUNTY**
**CUY-480-10.39**

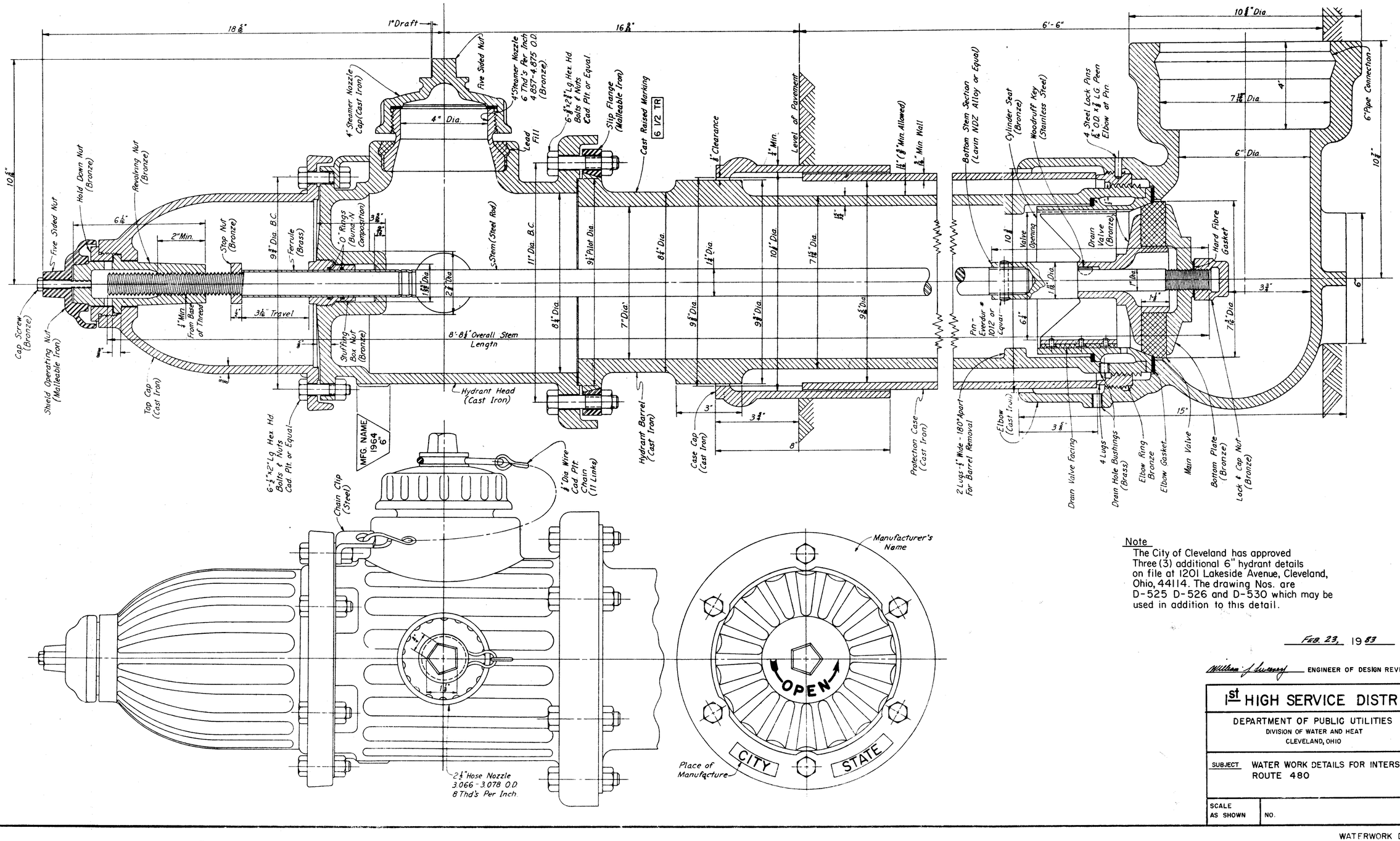


Note
The City of Cleveland has approved Three (3) additional 6" hydrant details on file at 1201 Lakeside Avenue, Cleveland, Ohio, 44114. The drawing Nos. are D-525 D-526 and D-530 which may be used in addition to this detail.

FEB. 23, 1963

William J. Sweeney ENGINEER OF DESIGN REVIEW

**1st HIGH SERVICE DISTRICT**

DEPARTMENT OF PUBLIC UTILITIES
DIVISION OF WATER AND HEAT
CLEVELAND, OHIO

SUBJECT WATER WORK DETAILS FOR INTERSTATE ROUTE 480

SCALE AS SHOWN | NO.

| FED. RD. DIVISION | STATE | PROJECT | |
|---|---|---|---|
| 5 | OHIO | | |

234
500

21
39

CUYAHOGA COUNTY
CUY-480-10.39

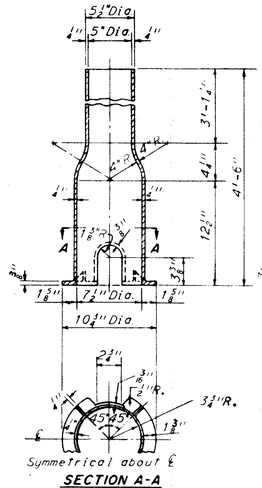


**SECTION A-A**
Base No. 1 for 1½" and 2" Valves
Est. Wt. 69#

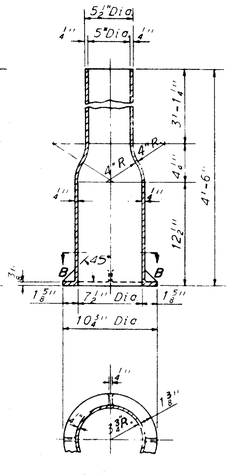


**SECTION B-B**
Base No. 2 and 3 for 3", 4", 6" and 8" Valves
Est. Wt. 71#

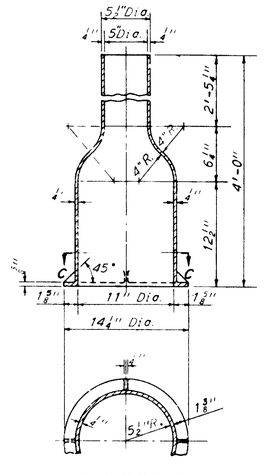


**SECTION C-C**
Base No. 4 for 10", 12" and 16" Valves
Est. Wt. 79#

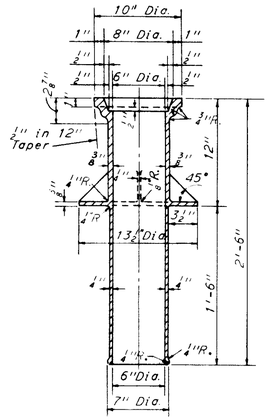


**SECTION OF TOP WITH ROUND HEAD NO. 1 AND 2**
Est. Wt. 73#

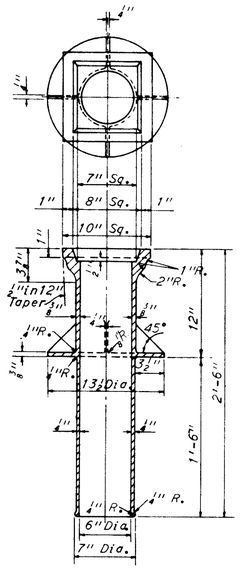


**SECTION OF TOP WITH SQUARE HEAD NO. 3 AND 4**
Est. Wt. 85#

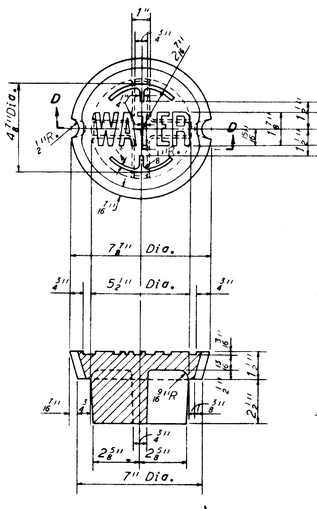


**SECTION D-D**
Detail of round cover for No. 1 and 2 top
Est. Wt. 20#

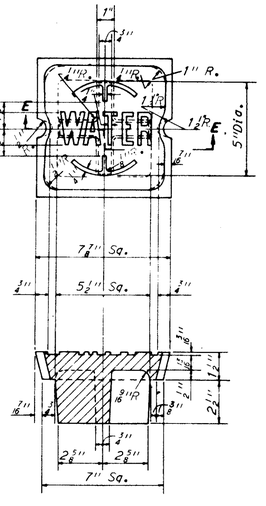


**SECTION E-E**
Detail of square cover for No. 3 and 4 top
Est. Wt. 23#

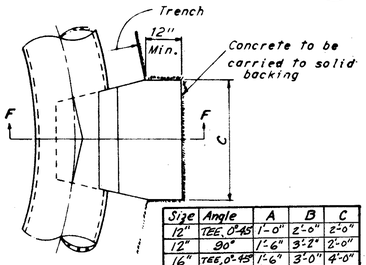


| Size | Angle | A | B | C |
|---|---|---|---|---|
| 12" | TEE, 0°-45° | 1'-0" | 2'-0" | 2'-0" |
| 12" | 90° | 1'-6" | 3'-2" | 2'-0" |
| 16" | TEE, 0°-45° | 1'-6" | 3'-0" | 4'-0" |
| 36" | TEE, 45° | 2'-6" | 4'-0" | 6'-0" |
| 36" | 0° TO 22½° | 2'-0" | 3'-6" | 5'-6" |
| 6 & 8 | ALL | 0'-9" | 1'-2" | 2'-0" |

**PLAN**

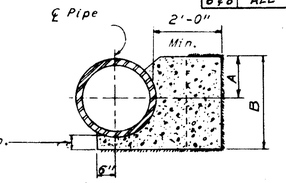


**SECTION FF**
**CONCRETE PIER FOR BENDS**

Scale ½" = 1'-0"

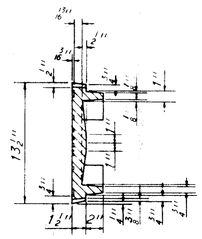


**SECTION K-K**
Est. Wt. 3#

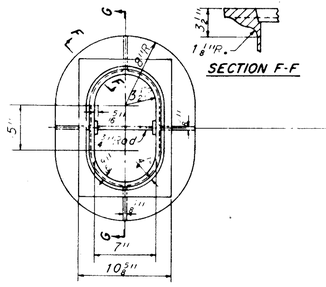


**PLAN**

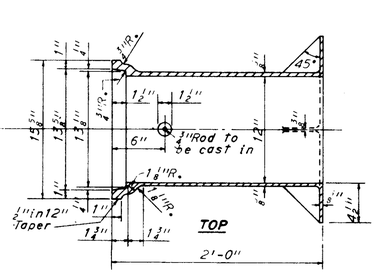


**SECTION G-G**
Air Relief Valve Box No.5 is Top and Cover
Air Relief Valve Box No.6 is Top, Base 2'-6" Long and Cover
Flushing Box No.7 is Top, Base 5'-0" Long and Cover
Est. Wt. 128#

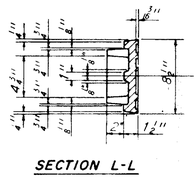


**SECTION L-L**

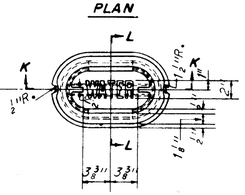


**COVER**

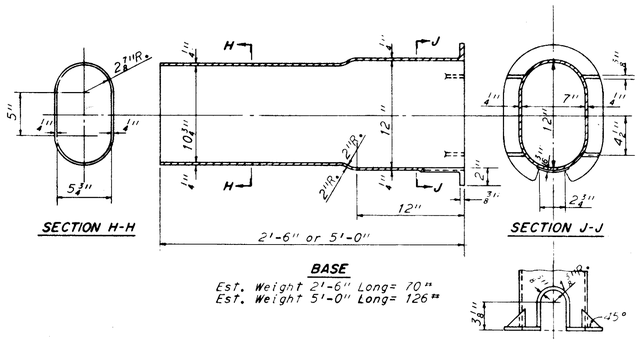


**SECTION H-H** **SECTION J-J**

**BASE**
Est. Weight 2'-6" Long= 70#
Est. Weight 5'-0" Long= 126#

This opening to be in 5'-0" base only.

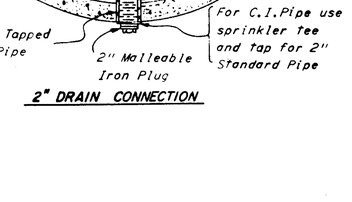


**2" DRAIN CONNECTION**

## STANDARD DETAILS - VALVE AND AIR RELIEF VALVE BOXES

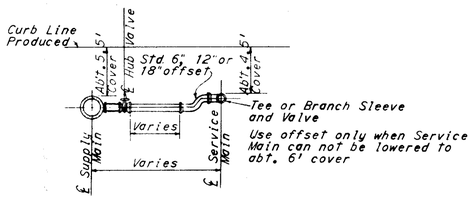


Typical Offset Connection Where Supply Main Is Lower Than Service Main

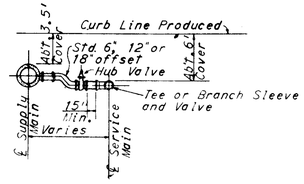


Typical Offset Connection Where Supply Main Is Higher Than Service Main

**TYPICAL OFFSET CONNECTIONS**

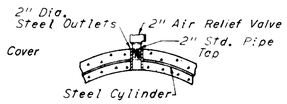


**ENLARGED DETAIL SHOWING CONNECTION FOR AIR RELIEF VALVE OR PITOMETER**

For C.I. Pipe, boss will be cast on pipe and tapped at foundry for 2" Standard pipe.

For Steel Pipe, Steel forgings shall be welded to pipe and tapped for 2" Standard Pipe.

## STANDARD DETAILS CONNECTIONS FOR VARIOUS PIPE

APPROVED FEB. 23, 1983

William J. Sweeney ENGINEER OF DESIGN REVIEW

**1st HIGH SERVICE DISTRICT**
DEPARTMENT OF PUBLIC UTILITIES
DIVISION OF WATER AND HEAT
CLEVELAND, OHIO

SUBJECT WATER WORK DETAILS FOR INTERSTATE ROUTE 480

SCALE AS SHOWN | NO.

WATER WORK DETAILS

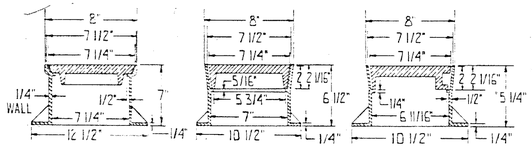

ALTERNATE SHORT TOP NO. 1 | ALTERNATE SHORT TOP NO. 2 | ALTERNATE SHORT TOP NO. 3

## SHORT STYLE VALVE BOX- ROUND TOP AND COVER

NOT TO SCALE

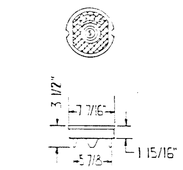


CAST IRON COVER
WT. 19 1/4 LBS.

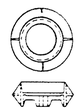

C.I. FULL FLANGED RING
WT. 14 LBS.

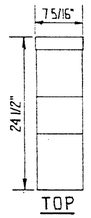


TOP

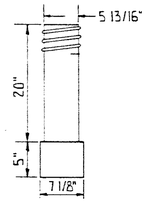


EXTENSION

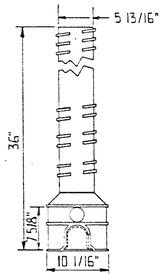


BOTTOM

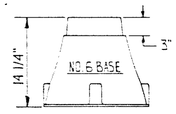


PLASTIC VALVE BOX

WITH POLYIRON TOP SECTION, CAST IRON FULL FLANGED RING, AND CAST IRON COVER.

NOT TO SCALE

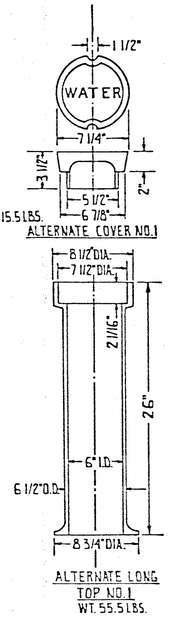


ALTERNATE COVER NO. 1

ALTERNATE LONG TOP NO. 1 WT. 55.5 LBS.

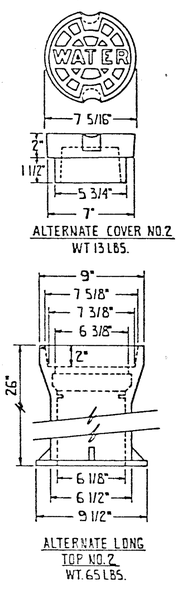


ALTERNATE COVER NO. 2
WT 13 LBS.

ALTERNATE LONG TOP NO. 2 WT. 65 LBS.

## LONG STYLE VALVE BOX- ROUND TOP AND COVER

NOT TO SCALE

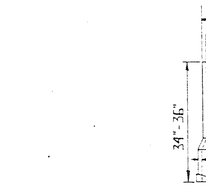


ALTERNATE BOTTOM NO. 2
(FOR BASE)
WT. 40-40.5 LBS.

WT. 33-35 LBS. #6 | WT. 55-56 LBS. #8 | WT. 55-60 LBS. #160

## VALVE BOX BOTTOMS AND EXTENSIONS

NOT TO SCALE

VALVE BOX DRAWINGS REPRODUCED FROM CITY OF CLEVELAND WATER DEPARTMENT STANDARD SKETCHES NO. SK-1236-A, SK-1236-B, SK-1236-C, AND SK-1236-D.

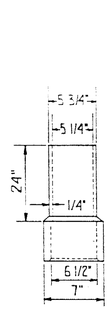


EXTENSION
WT. 35-38 LBS.

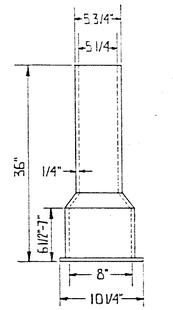


ALTERNATE BOTTOM NO. 1
WT. 44-45 LBS.

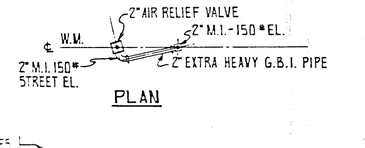


PLAN

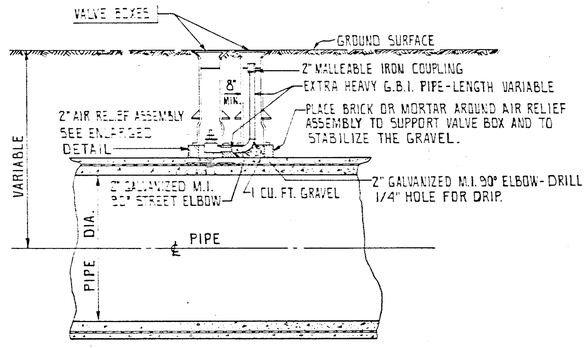


DOUBLE VALVE BOX ASSEMBLY

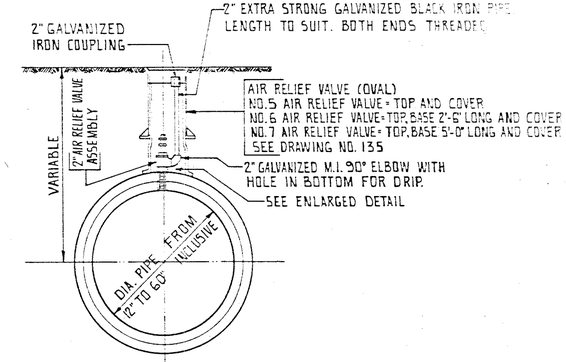


OVAL VALVE BOX ASSEMBLY

## DETAIL OF 2" AIR RELIEF VALVE INSTALLATION

NOT TO SCALE

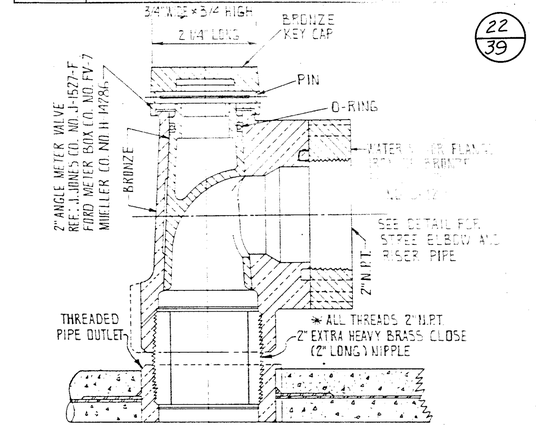


## 2" AIR RELIEF ASSEMBLY

ENLARGED DETAIL
NOT TO SCALE

APPROVED FEB. 23, 1983

ENGINEER OF DESIGN REVIEW

1st HIGH SERVICE DISTRICT

DEPARTMENT OF PUBLIC UTILITIES
DIVISION OF WATER AND HEAT
CLEVELAND, OHIO

SUBJECT WATER WORK NOTES FOR INTERSTATE ROUTE 480

CALC. BY
DATE
CHKD. BY
DATE

CUYAHOGA COUNTY
CUY-480-10.39

OHIO

FHWA

235/500

22/39

WATER WORK DETAILS

| FED. RD. DIVISION | STATE | PROJECT | |
|---|---|---|---|
| | OHIO | | |

236/500

23/39

CUYAHOGA COUNTY
CUY-480-10.39

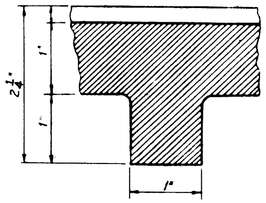


FULL SIZE SECTION B-B

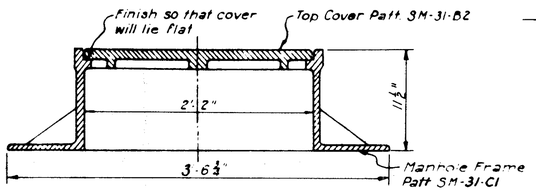


## MANHOLE FRAME AND COVER MARK NO. 3

Consisting of { C.I. Manhole Frame Patt SM-31-C1
C.I. Top Cover Patt SM-31-B2
(Dimensions not given are the same as those shown for Manhole Frame Patt Mark SM-31-B1)
Approximate Weight = 602#
Scale : 1½"=1'-0"

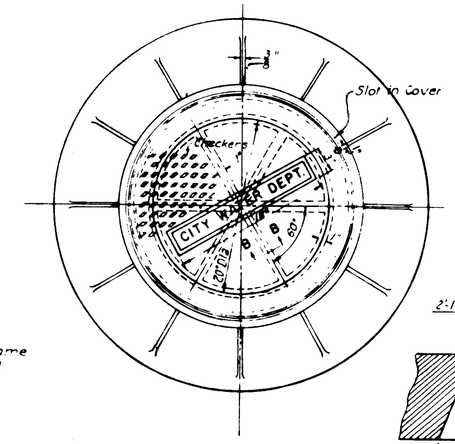


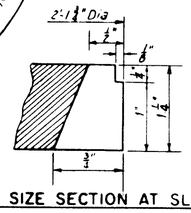


FULL SIZE SECTION AT SLOT

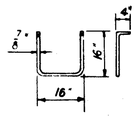


DETAIL OF MANHOLE STEP (W1)
Number required depends on the depth of vault

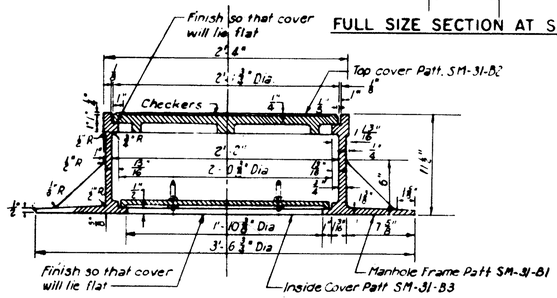


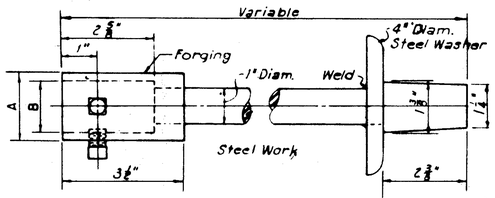


DETAIL OF VALVE EXTENSION STEM

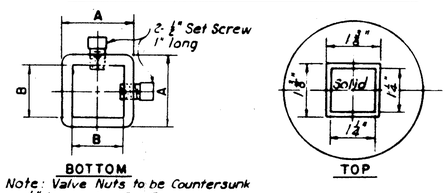


Note: Valve Nuts to be Countersunk ⅛" to receive Set Screws.
Scale : 6"=1'-0"

| VALVE SIZE | A | B |
|---|---|---|
| 2" and smaller | 2" | 1½" |
| 4" to 20" | 2½" | 2" |

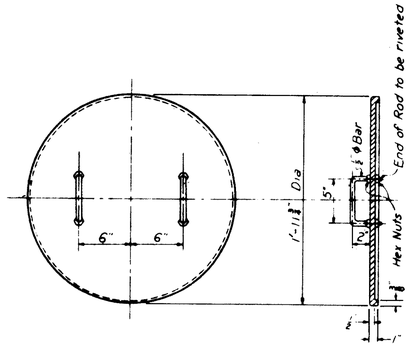


INSIDE COVER (C.I.) PATT. SM-31-B3

## MANHOLE FRAME AND COVERS MARK SM-31B

Consisting of { C.I Manhole Frame Patt SM-31-B1
C.I Top Cover Patt SM-31-B2
C.I Inside Cover Patt SM-1-B3
Approximate Weight = 766#
Scale : 1½"=1'-0"

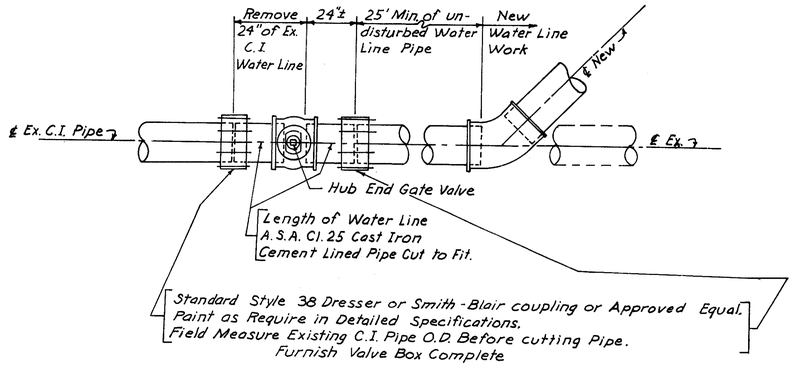


## CUTTING-IN VALVE & BOX DETAIL

Scale : ½"=1'-0"

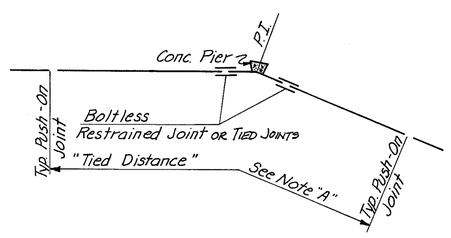


## TYPICAL HORIZONTAL BEND

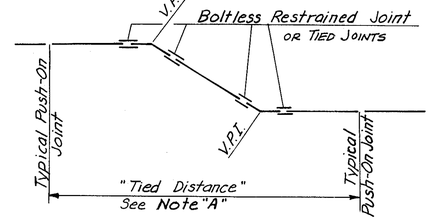


## TYPICAL VERTICAL BENDS

Note "A"
All Pipe May Have Push-On Joints With Compressed Rubber Ring Inserts Except For A Minimum Of One (1) 18 Foot Length Of Pipe From Each End Of Fittings Which Pipe Shall Be Restrained To Fittings As Specified For Boltless Restrained Pipe And Fittings. All Pipe And Fittings Shall Be Boltless Restrained Where Shown On The Detailed Plans Within "Tied Distance."

ALIGNMENT DRAWINGS GIVE "TIED DISTANCE" AT REQUIRED POINTS FOR CONCRETE WATER PIPE. SEE TIED JOINT DETAIL "Y", SHT. No. 238.

APPROVED FEB. 23, 1983

William J. Sweeney ENGINEER OF DESIGN REVIEW

**1st HIGH SERVICE DISTRICT**

DEPARTMENT OF PUBLIC UTILITIES
DIVISION OF WATER AND HEAT
CLEVELAND, OHIO

SUBJECT WATER WORK DETAILS FOR INTERSTATE ROUTE 480

SCALE AS SHOWN | NO.

| FED. RD. DIVISION | STATE | PROJECT | |
|---|---|---|---|
| | OHIO | | |

237/500

CUYAHOGA COUNTY
CUY - 480 - 10.39

24/39

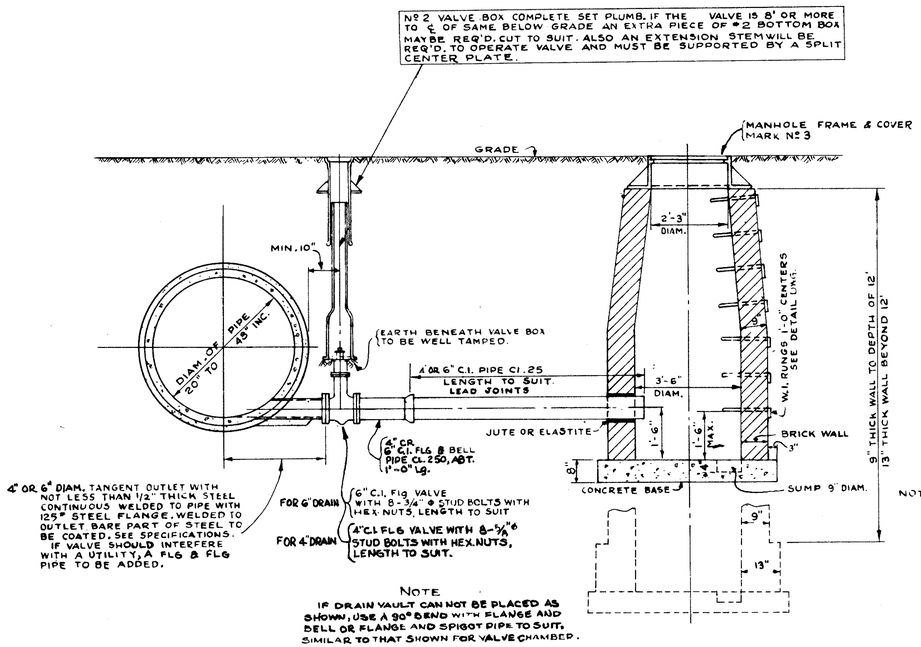


NOTE
IF DRAIN VAULT CAN NOT BE PLACED AS SHOWN, USE A 90° BEND WITH FLANGE AND BELL OR FLANGE AND SPIGOT PIPE TO SUIT, SIMILAR TO THAT SHOWN FOR VALVE CHAMBER.

## TYPICAL DETAIL OF 4" OR 6" DRAIN AND VAULT

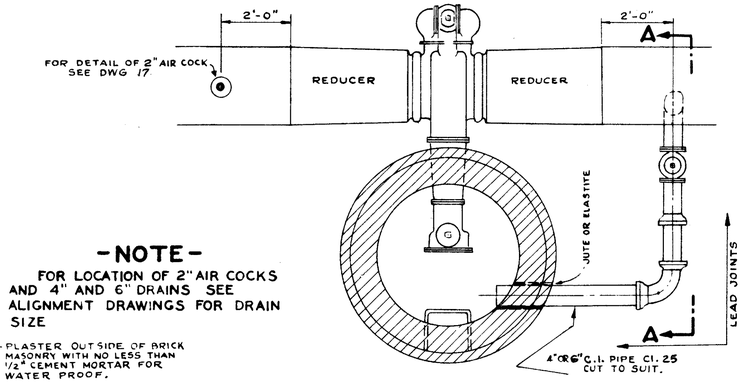


PLAN:

-NOTE-
FOR LOCATION OF 2" AIR COCKS AND 4" AND 6" DRAINS SEE ALIGNMENT DRAWINGS FOR DRAIN SIZE

NOTE:- PLASTER OUTSIDE OF BRICK MASONRY WITH NO LESS THAN 1/2" CEMENT MORTAR FOR WATER PROOF.

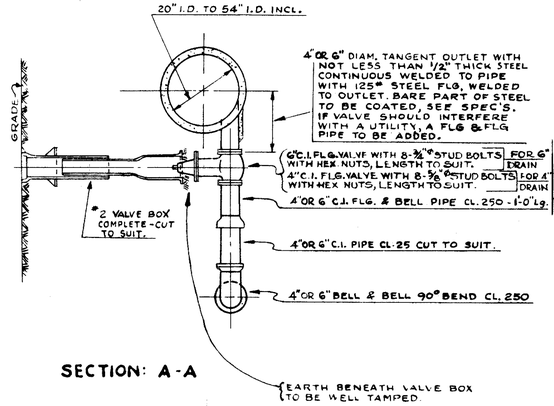


SECTION: A-A

## TYPICAL DETAIL SHOWING 4" OR 6" DRAIN FROM WATER MAIN TO VALVE CHAMBER

DETAIL SHOWN FOR 24" PIPE & 20" VALVE.
SCALE 1/2" = 1 FT.

DETAIL SHOWN FOR 48" PIPE
SCALE: 1/2" = 1FT.

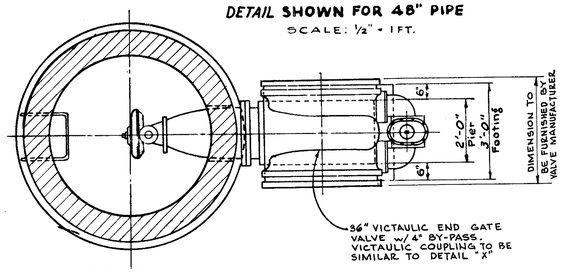


SECTION C-C

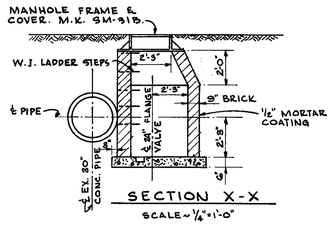


SECTION X-X
SCALE ~ 1/4" = 1'-0"

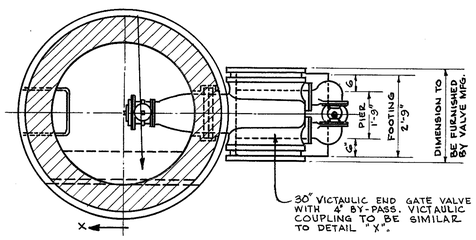


SECTION A-A

NOTE-1
THE LOCATION OF THE VALVE STEM TO THE CENTER OF THE CHAMBER WILL REMAIN THE SAME AS SHOWN.

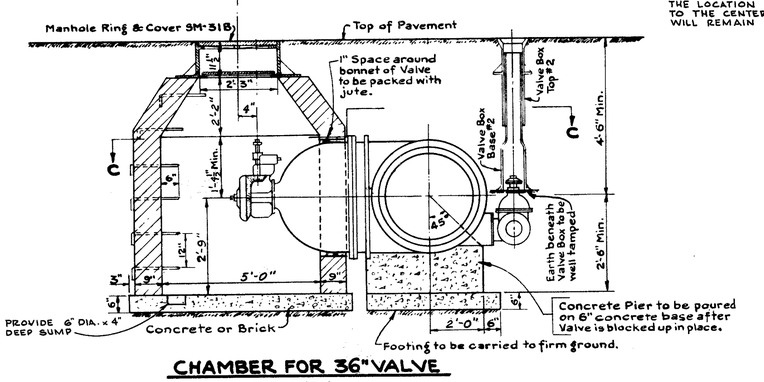


CHAMBER FOR 36" VALVE
SCALE: NONE

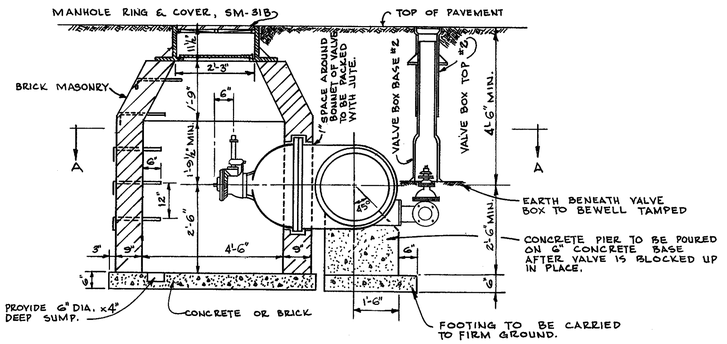


CHAMBER FOR 30" VALVE
SCALE: NONE

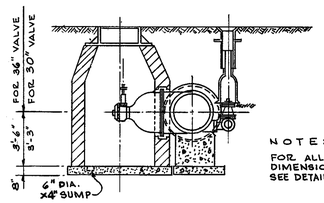


NOTE:
FOR ALL OTHER DETAIL DIMENSIONS OF CHAMBERS SEE DETAILS ON THIS SHEET.

TYPICAL DETAIL OF VALVE CHAMBER WHEN USED AS DRAIN VAULT (4" OR 6")
SCALE ~ 1/4" = 1'-0"

APPROVED FEB. 23, 1983

William J. Lawrence ENGINEER OF DESIGN REVIEW

1st HIGH SERVICE DISTRICT
DEPARTMENT OF PUBLIC UTILITIES
DIVISION OF WATER AND HEAT
CLEVELAND, OHIO

SUBJECT WATER WORK DETAILS FOR INTERSTATE ROUTE - 480

SCALE AS SHOWN | NO.

WATER WORK DETAILS

| FED. RD. DIVISION | STATE | PROJECT | TYPE FUNDS |
|---|---|---|---|
| 5 | OHIO | | |

238/500

25/39

CUYAHOGA COUNTY
CUY - 480 - 10.39

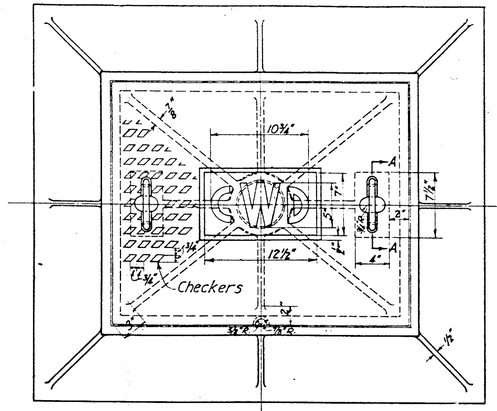


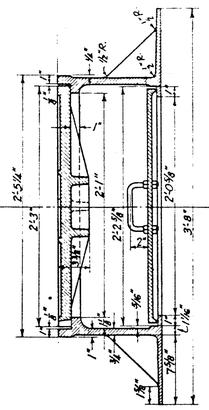


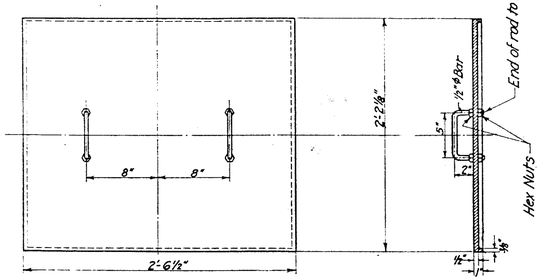


INSIDE COVER (C.I.) PATT. SM-31-A3

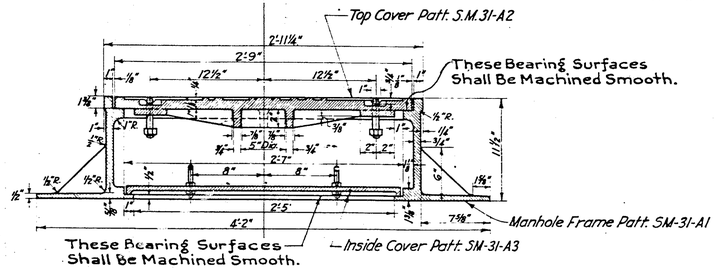


MANHOLE FRAME AND COVERS MARK SM-31A

Consisting of { C.I. Manhole Frame Patt. SM-31-A1
C.I. Top Cover Patt. SM-31-A2
C.I. Inside Cover Patt. SM-31-A3 }

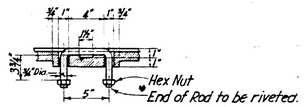


SECTION A-A

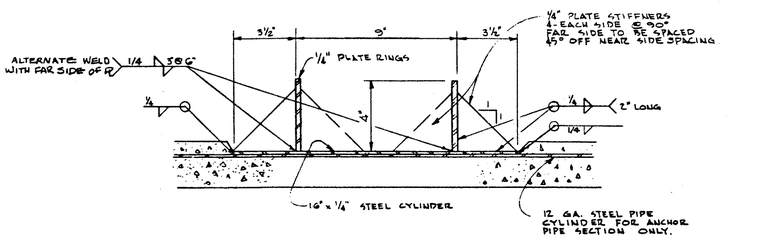


CONCRETE PIPE ANCHORAGE DETAIL
SCALE ~ ¼" = 1"

NOTE: "HARNESSED" TIED JOINTS CONSISTING OF A MECHANICAL CLAMP TYPE DEVICE MAY BE USED WHERE TIED OR WELDED TIED JOINTS ARE INTENDED.

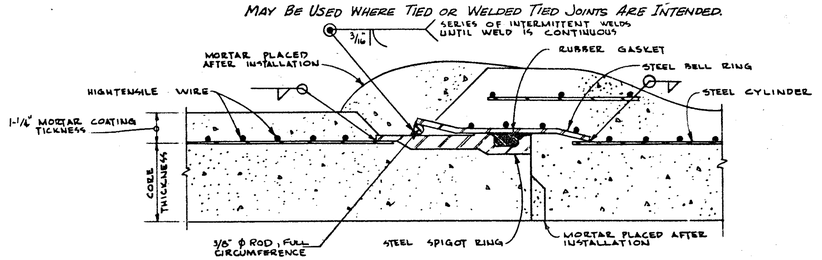


DETAIL - Y
NO SCALE

PRESTRESSED CONCRETE CYLINDER PIPE WITH RUBBER AND STEEL JOINT SHOWING WELDED TYPE TIED JOINT

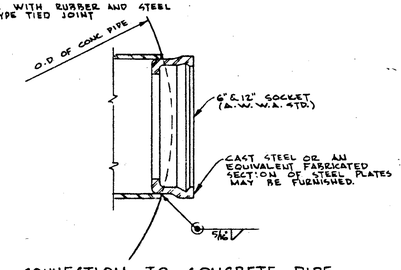


CONNECTION TO CONCRETE PIPE
NO SCALE

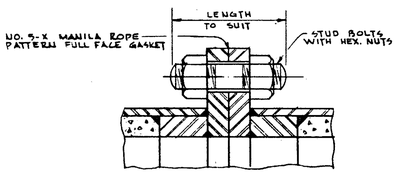


SECTION THROUGH ℄ SHOWING
TYPICAL DETAILS OF FLANGE CONNECTIONS
NO SCALE

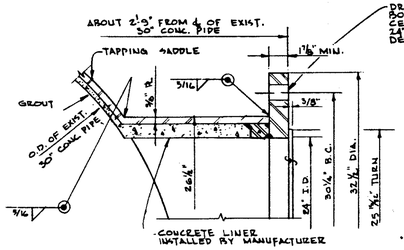


24" TAPPING SADDLE OUTLET FOR 30" CONCRETE PIPE
NO SCALE

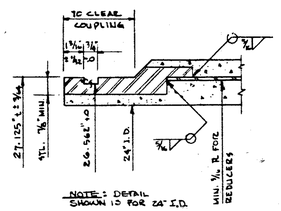


NOTE: DETAIL SHOWN IS FOR 24" I.D.

DETAIL "X"
FOR STYLE NO. 44
VICTAULIC COUPLING
NO SCALE

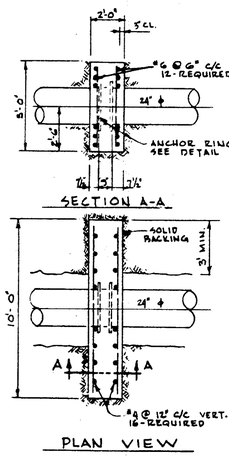


NOTE:
CARE MUST BE TAKEN TO PRESERVE SIDES OF TRENCH AT ANCHOR. TRENCH WIDTH SHOULD NOT EXCEED WIDTH GIVEN. BOTTOM OF TRENCH SHOULD NOT EXCEED 6" BELOW BOTTOM OF PIPE.

PLAIN ANCHOR - 24" WATER LINE
SCALE ~ 1/4" = 1'-0"

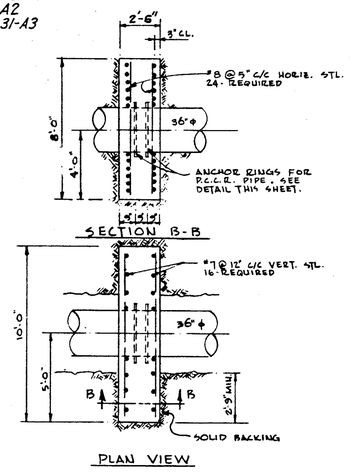


PLAIN ANCHOR - 36" WATER LINE
SCALE ~ ¼" = 1'-0"

William J. Sweeney ENGINEER OF DESIGN REVIEW

APPROVED FEB. 23, 1983

**1st HIGH SERVICE DISTRICT**

DEPARTMENT OF PUBLIC UTILITIES
DIVISION OF WATER AND HEAT
CLEVELAND, OHIO

SUBJECT: WATER WORK DETAILS FOR INTERSTATE ROUTE 480

SCALE AS SHOWN | NO.

WATER WORK DETAILS

| FED. RD. | STATE | PROJECT | |
|---|---|---|---|
| 5 | OHIO | | |

239/500

CUY-480-10.39

26/39

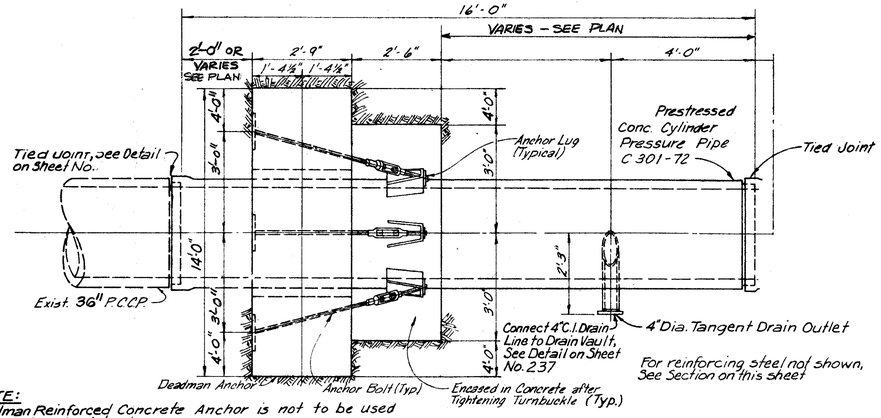


NOTE:
Deadman Reinforced Concrete Anchor is not to be used to draw the pipe into place.

**PLAN - SPECIAL "DEADMAN" REINFORCED CONCRETE ANCHOR**

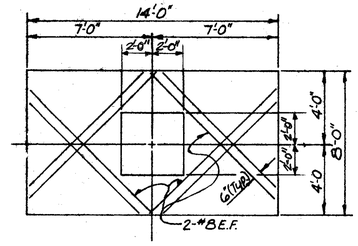


**TYPICAL SECTION FOR LOCATION OF REINFORCING STEEL**

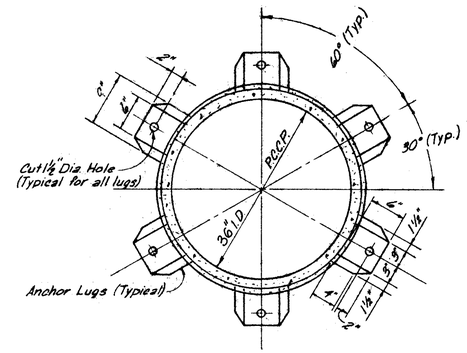


**TYPICAL SECTION FOR ANCHOR LUGS LOCATION**

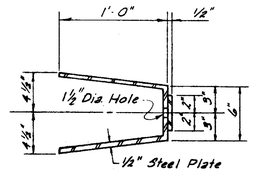


**PLAN - TYPICAL ANCHOR LUG**

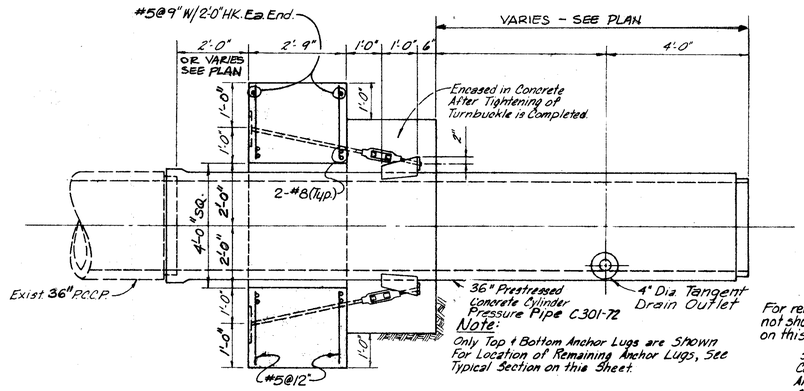


**SECTION - SPECIAL "DEADMAN" REINFORCED CONCRETE ANCHOR**

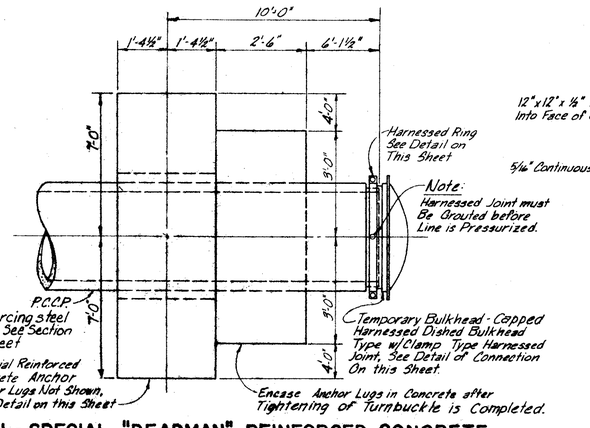


**PLAN - SPECIAL "DEADMAN" REINFORCED CONCRETE ANCHOR AT TEMPORARY BULKHEAD**

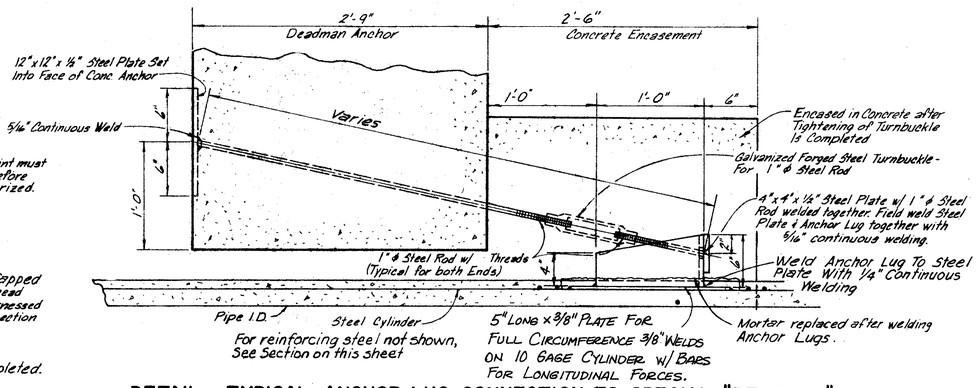


For reinforcing steel not shown, See Section on this sheet

**DETAIL - TYPICAL ANCHOR LUG CONNECTION TO SPECIAL "DEADMAN" REINFORCED CONCRETE ANCHOR**

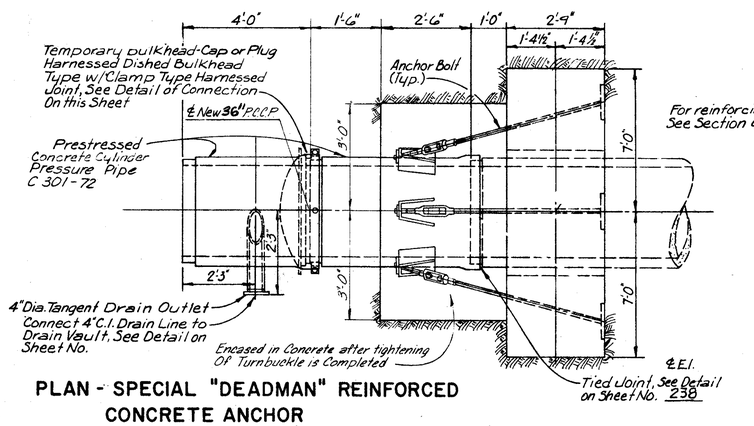


For reinforcing steel not shown See Section on this sheet

**PLAN - SPECIAL "DEADMAN" REINFORCED CONCRETE ANCHOR**

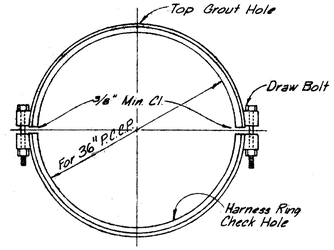


**DETAIL - HARNESS RING FOR CLAMP TYPE HARNESSED JOINT**

APPROVED FEB. 23, 1983

William J. Sweeney — ENGINEER OF REVIEW - CLEVELAND

| REVISIONS | 1st HIGH SERVICE DISTRICT |
|---|---|
| | DEPARTMENT OF PUBLIC UTILITIES |
| | DIVISION OF WATER AND HEAT |
| | CLEVELAND, OHIO |
| | SUBJECT WATER WORK NOTES FOR INTERSTATE ROUTE 480 |
| | DRAWN ____ SCALE NO SCALE |
| | CHECKED ____ DATE ____ No. ____ |

WATER WORK DETAILS

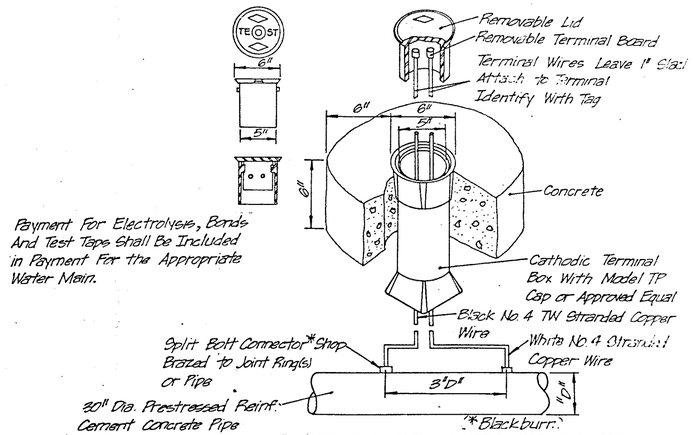


Payment For Electrolysis, Bonds And Test Tape Shall Be Included in Payment For the Appropriate Water Main.

DETAIL OF ASSEMBLY FOR ELECTROLYSIS TAP FOR TEST STATION

Not to Scale

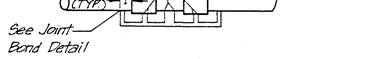


Payment For Electrolysis, Bonds and Test Taps Shall Be Included in Payment For the Appropriate Water Main.

ELECTROLYSIS BOND DETAIL FOR VICTAULIC OR MECHANICAL COUPLING, FLANGE JOINT AND VALVE BODY

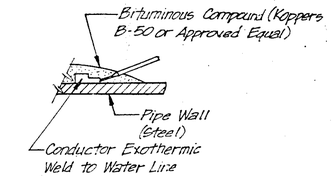


BOND TO IRON OR STEEL

Not to Scale

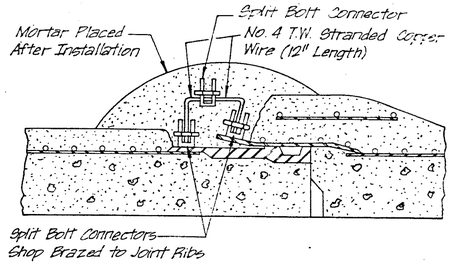


ELECTROLYSIS JOINT BOND DETAIL—CONCRETE PIPE

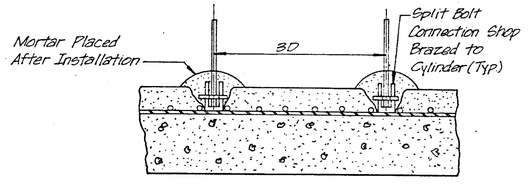


TEST STATION BONDING DETAIL—CONCRETE PIPE

(See Detail of Assembly)

Flush-to-Grade Test Stations to be Installed at the Beginning of the Project and Approximately Every 1000+Ft. Thereafter and Terminating at the End of the Project. (Valve Pits-Pitometer Vaults, Etc. Can be Used For Making Connections for Test Stations if Available at the Approximate Distance.)

The Flush-to-Grade Testing Stations Shall Consist of 2-#4 TW Wires Which Shall be Connected in a Flush-to-Grade Type Assembly Consisting of a Back Outlet Junction Box or Terminal Box With a Cast Iron Cover for Waterproof and Weather Resistant Service: A Five (5) Pole Connection Block with Five Threaded Posts with Two (2) Binding Nuts or Equivalent Per Post All Mounted in a Junction Box or Terminal Box with a Minimum of Two Mounting Screws. The Junction Box Shall be Flush-to-Grade Installed as Shown in a Poured Concrete Base with the Base Surface Sloped Away From the Junction Box a Minimum of ¼" Per Foot. A Non-corrosive Preformed Terminal Box of ABS Plastic Having A Shaft Length of 24" Provided with a Heavy Cast Iron Lid of a Locking Type Surface Water Protected and Marked "Corrosion Control."

All Joints are to be Bonded to Make the Entire Structure Electrically Continuous.

All Valves are to be Bonded to Pipes to Make Entire Structure Electrically Continuous.

Test Stations are to be Installed to Pipe at Locations Shown on the Contract Drawings.

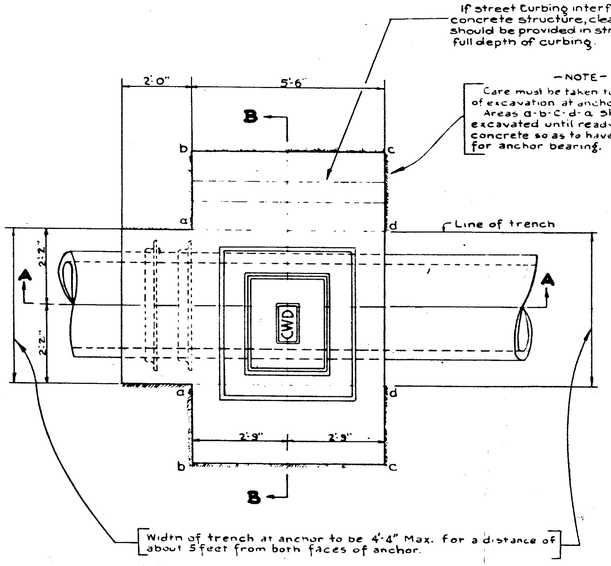


PLAN

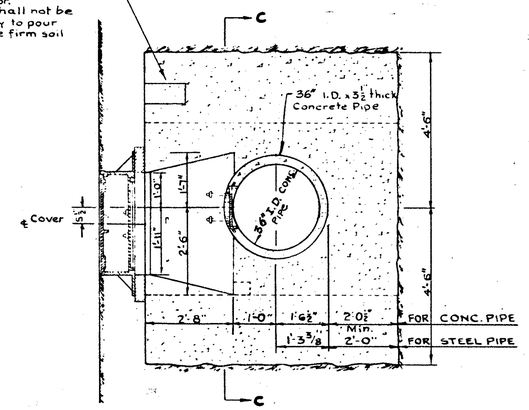


SECTION B-B

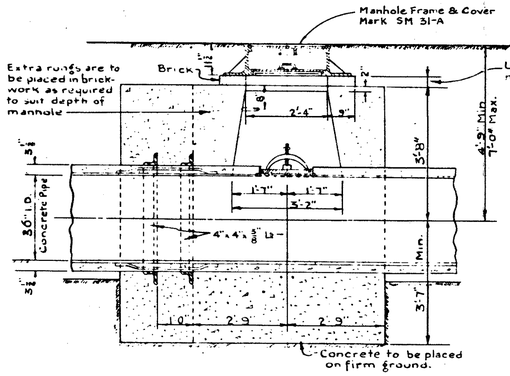


SECTION A-A

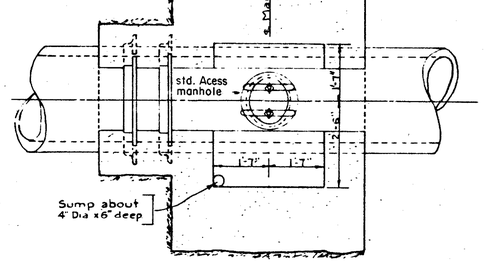


SECTION C-C

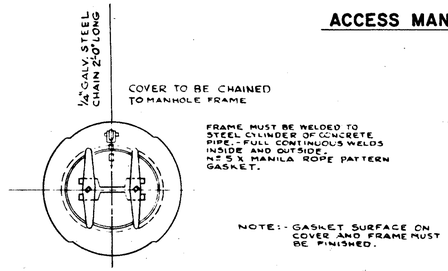


STD. ACCESS MANHOLE FRAME AND COVER

(FRAME, COVER & YOKES TO BE CAST STEEL)

ACCESS MANHOLE AND ANCHORAGE TYPE "A"

NO SCALE

APPROVED FEB. 23, 1983

William J. Sweeney ENGINEER OF DESIGN REVIEW

| | STATE | PROJECT | |
|---|---|---|---|
| | OHIO | | |

240/500

27/39

CUYAHOGA COUNTY

CUY-480-10.39

1st HIGH SERVICE DISTRICT

DEPARTMENT OF PUBLIC UTILITIES

DIVISION OF WATER AND HEAT

CLEVELAND, OHIO

SUBJECT WATER WORK DETAILS FOR INTERSTATE ROUTE 480

SCALE AS SHOWN

NO.

| CALC. BY WAM DATE 2/83 | CUYAHOGA COUNTY CUY-480-10.39 | OHIO FHWA REGION 5 | 241/500 |
|---|---|---|---|
| CHKD. BY B.B. DATE 2/83 | | | 28/39 |

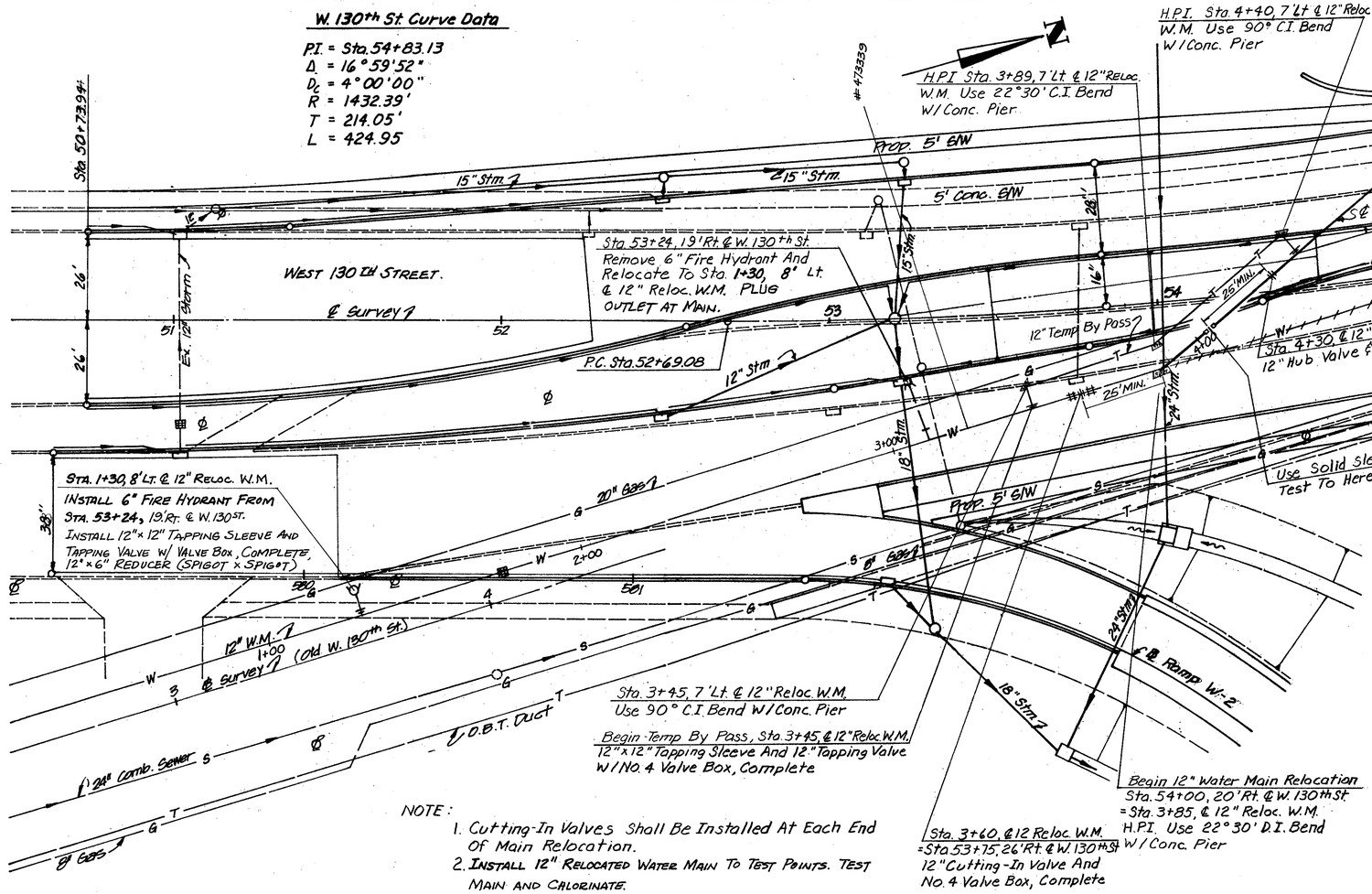


NOTE:

1. Cutting-In Valves Shall Be Installed At Each End Of Main Relocation.
2. Install 12" Relocated Water Main To Test Points. Test Main And Chlorinate.
3. Install Temporary By-Passes To Maintain Service.
4. Complete The Relocated 12" Water Main And Connect Ends. As Shown.
5. Remove By-Passes And Plug Outlets on New W.M.

## ESTIMATED QUANTITIES

| ITEM | DESCRIPTION | QUANTITY | UNIT |
|---|---|---|---|
| Special | 12" Water Main Ductile Iron Cement Lined Pipe | | |
| | ASA Class 56 And Ductile Iron Class "D" Cement | | |
| | Lined Boltless Restrained Push-On Joint Fittings | | |
| | And Polyethylene Wrapped | 115 | L.F. |
| Special | 12" Temporary Water Main By-Pass Connection ASA | | |
| | Class 25 Cast Iron Pipe With Cast Iron Fittings | | |
| | Class "D" Cement Lined | 106 | L.F. |
| Special | 12" Hub Valve And Valve Box | 1 | EA. |
| Special | 12" Cutting-In-Valve And Valve Box, Complete | 1 | EA. |
| Special | 12"x12" Tapping Sleeve And 12" Tapping Valve And | | |
| | Valve Box, Complete | 1 | EA. |
| Special | Fire Hydrant Relocated | 1 | EA. |
| Special | 6" Water Main Class 25 Cast Iron Pipe With Cast | | |
| | Iron Fittings Class "D" Cement Lined | 8 | L.F. |
| | | | |
| Special | Plugging Existing Water Mains And Branches | 1 | EA. |
| | | | |
| | | | |
| | | | |

NOTE:

A Minimum 18' Length Of Boltless Restrained Push-On Joint Pipe Will Be Required On Each Side Of Boltless Restrained Joint Fittings. See Waterwork Notes.

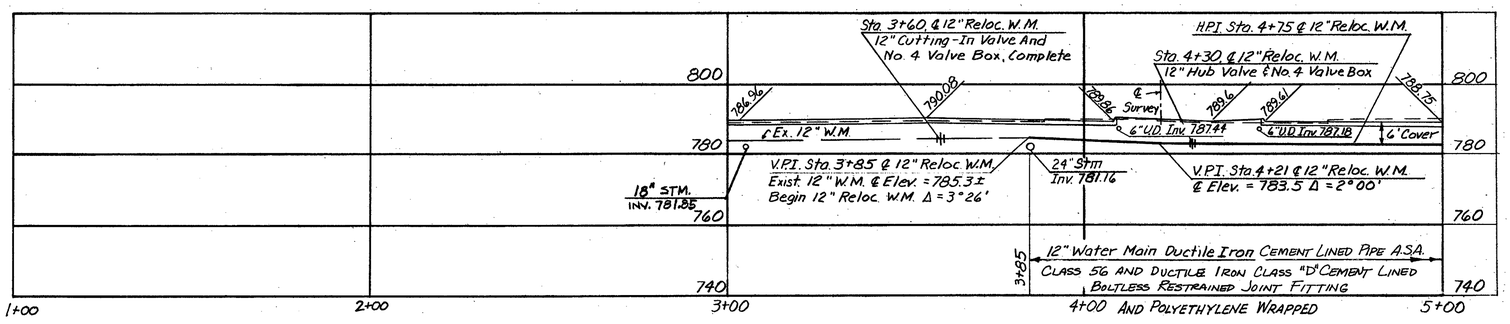


12" RELOCATED WATER MAIN

APPROVED FEB. 23, 1983

William J. Sweeney ENGINEER OF DESIGN REVIEW

**1st HIGH SERVICE DISTRICT**

DEPARTMENT OF PUBLIC UTILITIES
DIVISION OF WATER AND HEAT
CLEVELAND, OHIO

SUBJECT 12" DUCTILE IRON WATER MAIN ACROSS I-480 ALONG WEST 130TH STREET

SCALE 1"=20' NO. B-2501

12" RELOCATED WATER MAIN — W. 130th STREET

| CALC. BY W.A.M. DATE 2/83 | CUYAHOGA COUNTY CUY-480-10.39 | OHIO FHWA REGION 5 | 242/500 |
|---|---|---|---|
| CHKD. BY A.C. DATE 2/83 | | | 29/39 |

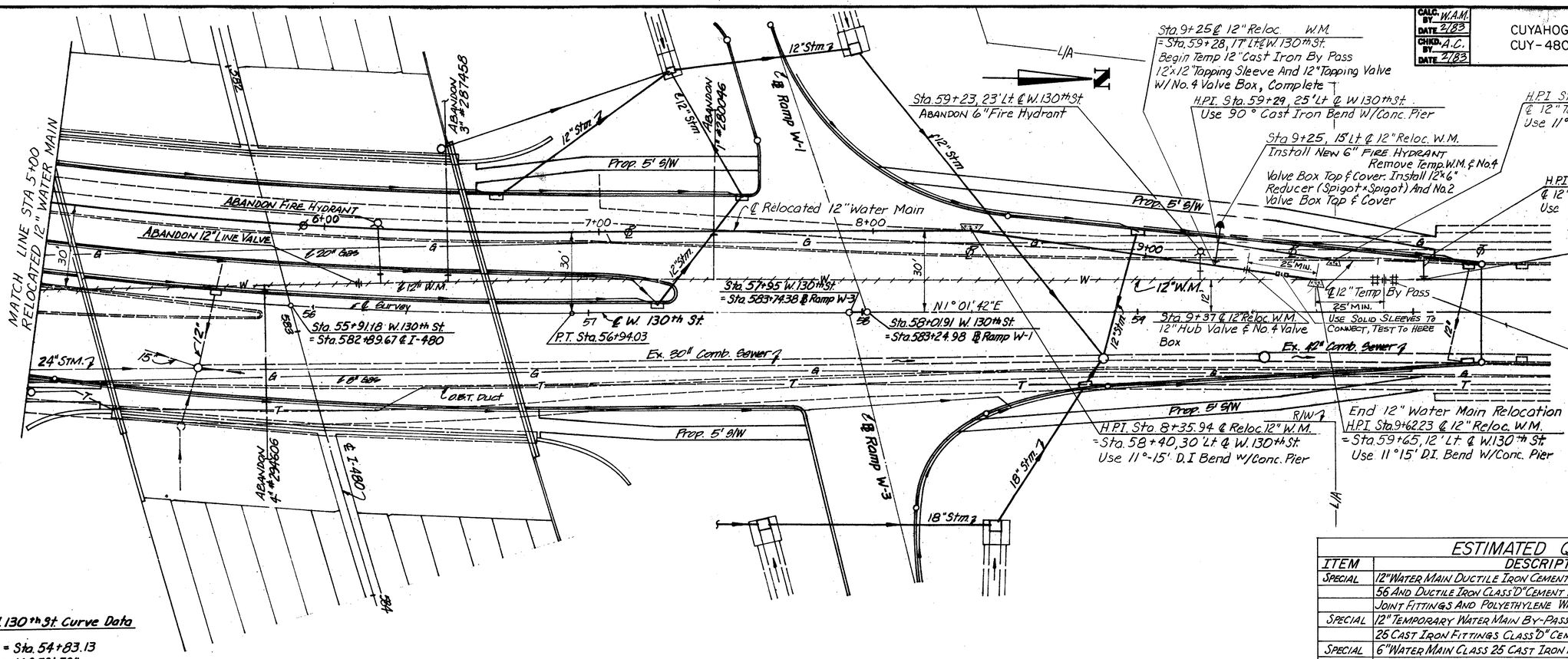


**W. 130th St. Curve Data**

P.I. = Sta. 54+83.13
Δ = 16°59'52"
$D_c$ = 4°00'00"
R = 1432.39'
T = 214.05'
L = 424.95

## ESTIMATED QUANTITIES

| ITEM | DESCRIPTION | QUANTITY | UNIT |
|---|---|---|---|
| SPECIAL | 12" WATER MAIN DUCTILE IRON CEMENT LINED PIPE A.S.A. CLASS | | |
| | 56 AND DUCTILE IRON CLASS "D" CEMENT LINED BOLTLESS RESTRAINED | | |
| | JOINT FITTINGS AND POLYETHYLENE WRAPPED | 463 | L.F. |
| SPECIAL | 12" TEMPORARY WATER MAIN BY-PASS CONNECTION A.S.A. CLASS | | |
| | 25 CAST IRON FITTINGS CLASS "D" CEMENT LINED | 93 | L.F. |
| SPECIAL | 6" WATER MAIN CLASS 25 CAST IRON PIPE WITH CAST IRON | | |
| | FITTINGS CLASS "D" CEMENT LINED | 7 | L.F. |
| SPECIAL | 12" HUB VALVE | 1 | EA. |
| SPECIAL | 12" CUTTING-IN-VALVE AND VALVE BOX, COMPLETE | 1 | EA. |
| SPECIAL | 12"x12" TAPPING SLEEVE AND 12" TAPPING VALVE AND VALVE BOX, | 2 | EA. |
| | COMPLETE | | |
| SPECIAL | FURISHING AND SETTING 6" FIRE HYDRANT | 1 | EA. |

NOTE: A MINIMUM LENGTH OF 18' OF BOLTLESS RESTRAINED PUSH-ON PIPE WILL BE REQUIRED ON EACH SIDE OF BOLTLESS RESTRAINED JOINT FITTINGS.

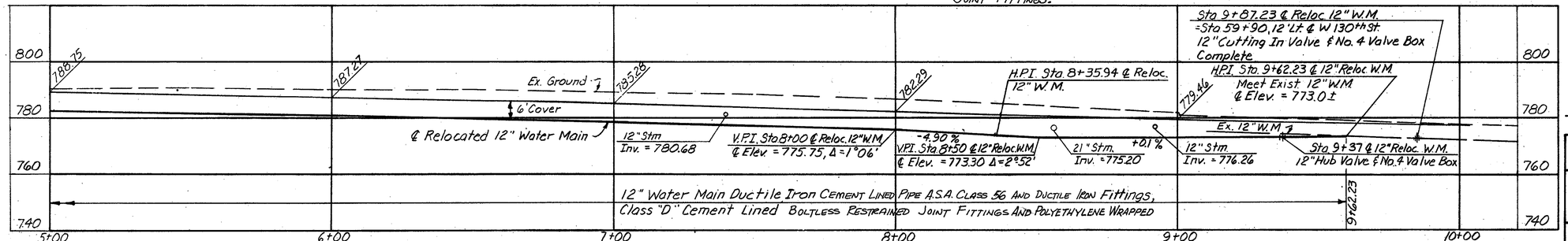


12" RELOCATED WATER MAIN

APPROVED FEB. 23, 19 83

William J. Sweeney ENGINEER OF DESIGN REVIEW

**1st HIGH SERVICE DISTRICT**

DEPARTMENT OF PUBLIC UTILITIES
DIVISION OF WATER AND HEAT
CLEVELAND, OHIO

SUBJECT 12" DUCTILE IRON WATER MAIN ACROSS I-480 ALONG WEST 130TH STREET

SCALE 1"=20' NO. B-2502

12" RELOCATED WATER MAIN — W. 130th STREET

| FHWA REGION | STATE | PROJECT | | |
|---|---|---|---|---|
| 5 | OHIO | | | |

CUYAHOGA COUNTY
CUY- 480 -10.39

243/500

30/39

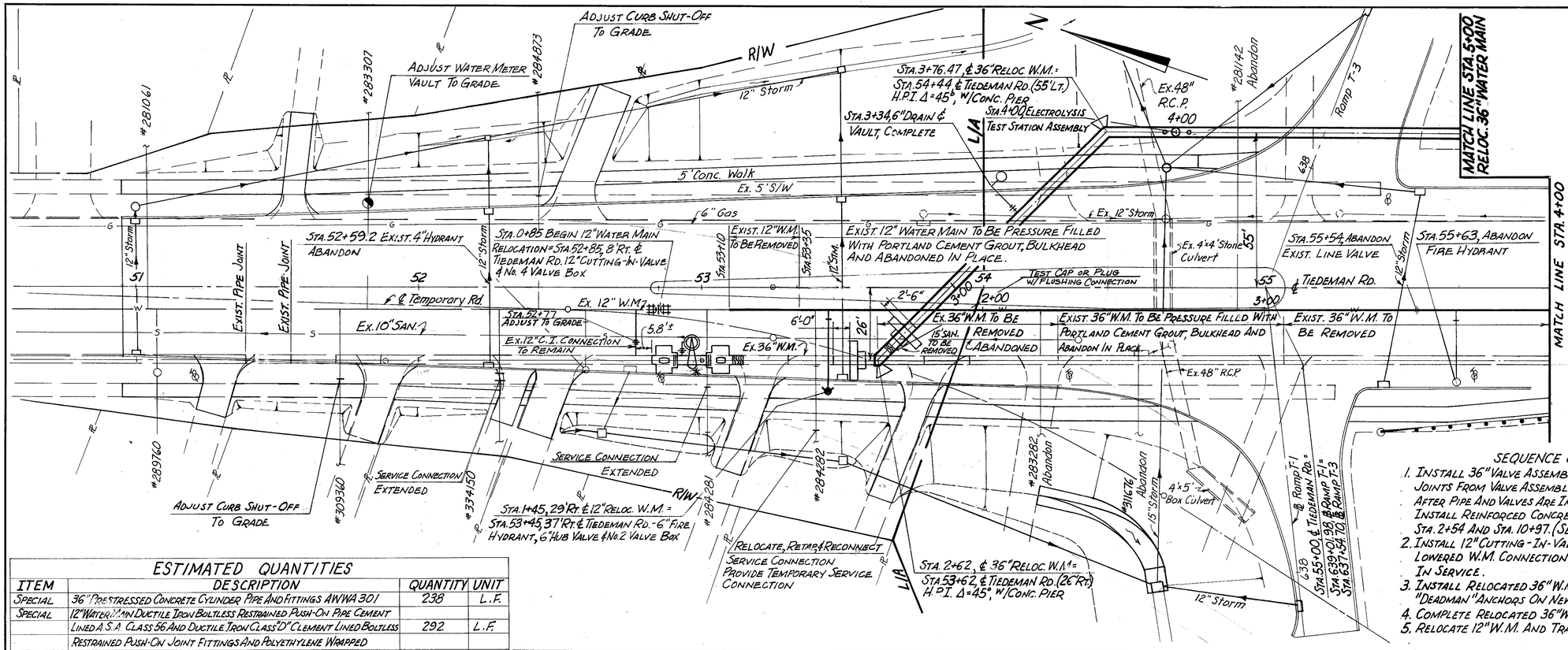


* Remove Two (2) Lengths @ 16.03' Each = 32.06 L.F. To Install UP-STATION The Following Valve Assemblies:

| | |
|---|---|
| SP-3 × SP-5 Adapter | 0.55 L.F. |
| 1 Special Short With: Access Manhole, 2 Ring Anchors 4" Tangent Flange Outlet, For Anchor Access Manhole Type "A" And 4" Drain. | 10.00 L.F. |
| SP-5 × Victaulic Adapter | 0.71 L.F. |
| 36" Victaulic End Gate Valve | 3.25 L.F. |
| Victaulic × SP-5 Adapter | 0.47 L.F. |
| 1 Special Short With: 2" Iron Pipe Outlet Top, 2 Ring Anchors, Access Manhole For 4" Drain And Anchor Access Manhole Type "A". | 10.00 L.F. |
| CLOSURE CUT TO LENGTH. | 6.53 L.F. |
| SP-5 × SP-3 Adapter | 0.55 L.F. |
| Valve Assembly - Total Length | 32.06 L.F. |

SP-3 = Reinforced Concrete Cylinder Pipe.
SP-5 = Prestressed Concrete Cylinder Pipe.

## SEQUENCE OF WATER MAIN INSTALLATION

1. Install 36" Valve Assembly At Sta.1+83 And Sta.11+79. Weld Tie Existing 36" Pipe Joints From Valve Assemblies To Proposed Tie-In Points. Place Back In Service After Pipe And Valves Are Installed, But Before Access Manholes Are Constructed. Install Reinforced Concrete "Deadman" Anchors Around Existing Pipe At Sta. 2+54 And Sta. 10+97. (See Detail Sht. No. 239).
2. Install 12" Cutting-In-Valves At Sta. 0+85 And Sta. 11+60. Install 12" Temporary Lowered W.M. Connections At Sta. 1+68 And Sta. 9+40. Place Existing 12" Back In Service.
3. Install Relocated 36" W.M. From Sta. 2+81 To Sta. 10+47 And Reinforced Concrete "Deadman" Anchors On New Pipe. Install Temporary Bulkhead - Cap Or Plug & Test.
4. Complete Relocated 36" W.M. At Each End And Place Back In Service.
5. Relocate 12" W.M. And Transfer And Connections Involved.

## ESTIMATED QUANTITIES

| ITEM | DESCRIPTION | QUANTITY | UNIT |
|---|---|---|---|
| Special | 36" Prestressed Concrete Cylinder Pipe And Fittings AWWA 301 | 238 | L.F. |
| Special | 12" Water Main Ductile Iron Boltless Restrained Push-On Pipe Cement Lined A.S.A. Class 56 And Ductile Iron Class "D" Clement Lined Boltless Restrained Push-On Joint Fittings And Polyethylene Wrapped | 292 | L.F. |
| Special | 12" Temporary Water Main By-Pass Connection A.S.A. Class 25 Cast Iron Pipe With Cast Iron Fittings Class "D" Cement Lined | 24 | L.F. |
| Special | 36" Victaulic End Gate Valve And Chamber | 1 | EA. |
| Special | Access Manhole And Anchorage Type "A" With 4" Drain | 2 | EA. |
| Special | "Deadman" Reinforced Concrete Anchor | 2 | EA. |
| Special | 6" Drain And Vault, Complete | 1 | EA. |
| Special | 6" Hub Valve And Valve Box | 1 | EA. |
| Special | 12" Cutting-In-Valve And Valve Box, Complete | 1 | EA. |
| Special | Furnishing And Setting 6" Fire Hydrant | 1 | EA. |
| Special | Adjust Valve Box To Grade | 1 | EA. |
| Special | Relocate, Retap And Reconnect Service Connection | 1 | EA. |
| Special | Extend Service Connection | 2 | EA. |
| Special | Temporary Service Connection | 1 | EA. |
| Special | Adjust Waterwork Structures To Grade | 1 | EA. |
| 202 | Pipe Removed 24" And Under | 148 | L.F. |
| 202 | Pipe Removed Over 24" | 211 | L.F. |

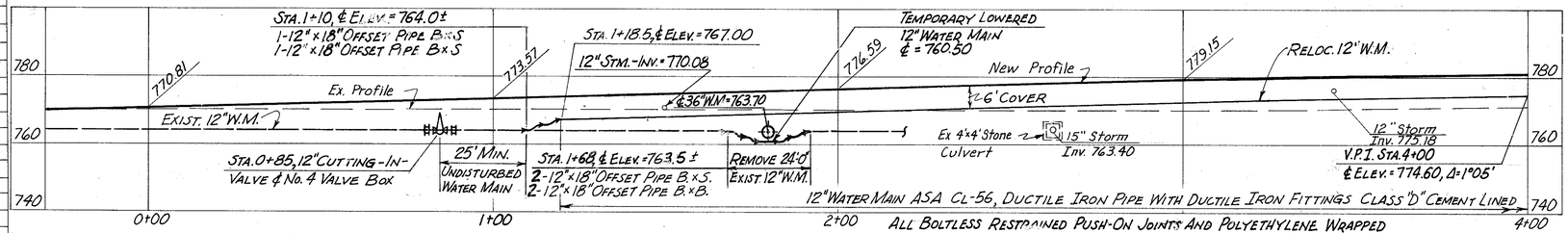


## 12" RELOCATED WATER MAIN

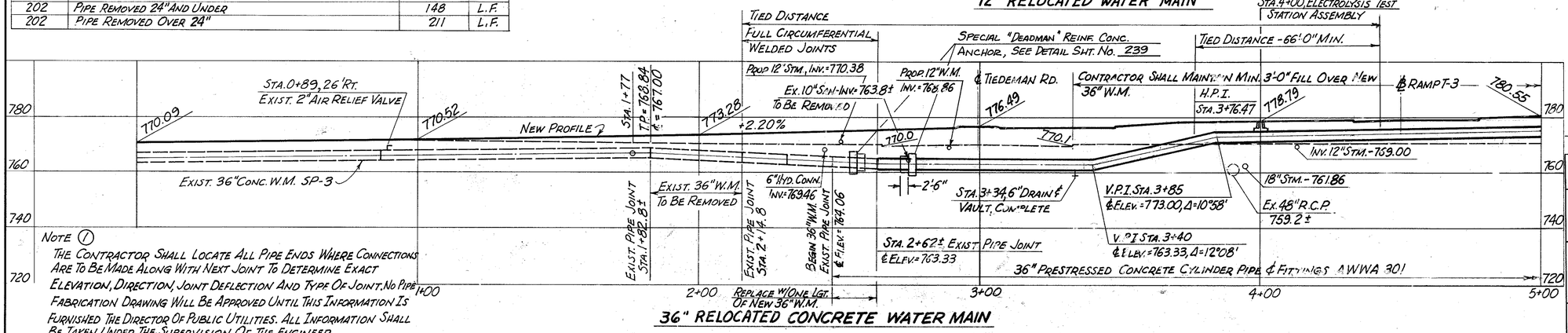


## 36" RELOCATED CONCRETE WATER MAIN

Note (1)
The Contractor Shall Locate All Pipe Ends Where Connections Are To Be Made Along With Next Joint To Determine Exact Elevation, Direction, Joint Deflection And Type Of Joint. No Pipe Fabrication Drawing Will Be Approved Until This Information Is Furnished The Director Of Public Utilities. All Information Shall Be Taken Under The Supervision Of The Engineer.

CALC. BY W.A.M. DATE 2/83
CHKD. BY A.C. DATE 2/83

APPROVED FEB. 23, 1983

Milton J. Sweeney ENGINEER OF DESIGN REVIEW

1st HIGH SERVICE DISTRICT
DEPARTMENT OF PUBLIC UTILITIES
DIVISION OF WATER AND HEAT
CLEVELAND, OHIO

SUBJECT RELOCATED 12" DUCTILE IRON WATER MAIN AND RELOCATED 36" CONCRETE WATER MAIN ACROSS I-480 ALONG TIEDEMAN ROAD.

SCALE 1" = 20

NO. SM-120-A

12" & 36" WATER MAIN RELOCATION - TIEDEMAN ROAD

CALC. BY W.A.M. DATE 2/83
CHKD. BY A.C. DATE 2/83

CUYAHOGA COUNTY
CUY - 480 - 10.39

OHIO
FHWA REGION 5

244
600

31
39

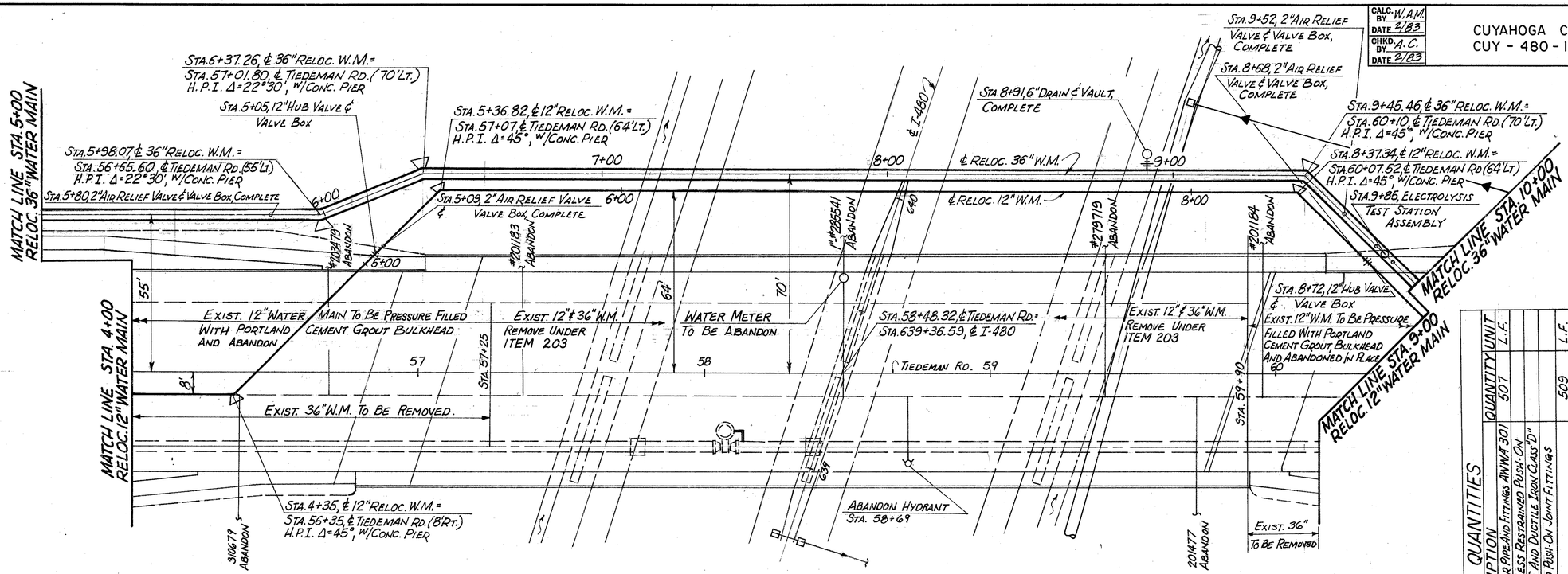


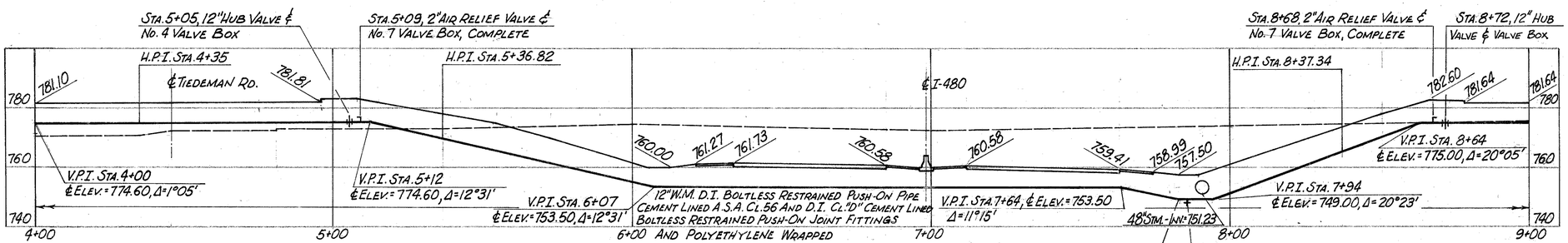


## 12" Relocated Water Main

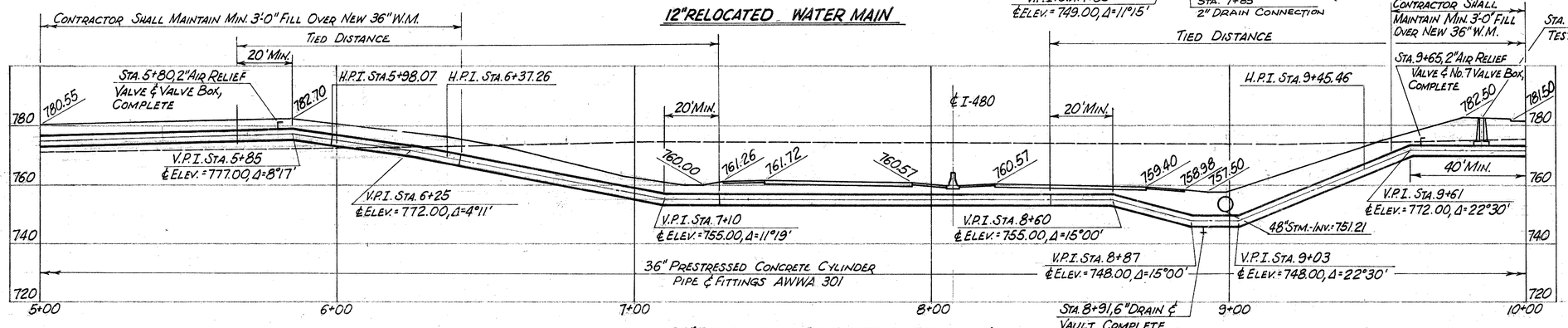


## 36" Relocated Concrete Water Main

## Estimated Quantities

| ITEM | DESCRIPTION | QUANTITY | UNIT |
|---|---|---|---|
| Special | 36" Prestressed Concrete Cylinder Pipe And Fittings AWWA 301 | 507 | L.F. |
| Special | 12" Water Main Ductile Iron Boltless Restrained Push-On Pipe Cement Lined A.S.A. Class 56 And Ductile Iron Class "D" Cement Lined Boltless Restrained Push-On Joint Fittings And Polyethylene Wrapped | 509 | L.F. |
| Special | 12" Hub Valve And Valve Box | 2 | EA. |
| Special | 6" Drain And Vault, Complete | 1 | EA. |
| Special | 2" Air Relief Valve And Valve Box, Complete | 2 | EA. |
| 202 | Pipe, Removed Over 24" | 150 | L.F. |

APPROVED FEB. 23, 19 83

William J. Sweeney — ENGINEER OF DESIGN REVIEW

**1st HIGH SERVICE DISTRICT**

DEPARTMENT OF PUBLIC UTILITIES
DIVISION OF WATER AND HEAT
CLEVELAND, OHIO

SUBJECT RELOCATED 12" DUCTILE IRON WATER MAIN AND RELOCATED 36" CONCRETE WATER MAIN ACROSS I-480 ALONG TIEDEMAN ROAD.

SCALE 1"=20'

NO. SM-121-A

12" & 36" WATER MAIN RELOCATION - TIEDEMAN ROAD

CALC. BY W.AM. DATE 2/83
CHKD. BY A.C. DATE 2/83

CUYAHOGA COUNTY
CUY - 480 - 10.39

OHIO
FHWA REGION 5

245/500

32/39

## ESTIMATED QUANTITIES

| ITEM | DESCRIPTION | QUANTITY | UNIT |
|---|---|---|---|
| Special | 36" Prestressed Concrete Cylinder Pipe And Fittings AWWA 301 | 100 | L.F. |
| Special | 12" Water Main Ductile Iron Boltless Restrained Push-On Pipe Cement Lined A.S.A. Class 56 And Ductile Iron Class "D" Cement Lined Boltless Restrained Push-On Joint Fittings And Polyethylene Wrapped | 235 | L.F. |
| Special | 12" Temporary Water Main By-Pass Connection A.S.A. Class 25 Cast Iron Pipe With Cement Lined Fittings Class "D" | 18 | L.F. |
| Special | 36" Metallic End Gate Valve And Chamber | 1 | EA. |
| Special | Access Manhole And Anchorage Type "A" With 4" Drain | 2 | EA. |
| Special | "Deadman" Reinforced Concrete Anchor | 2 | EA. |
| Special | 6" Drain And Vault, Complete | 1 | EA. |
| Special | 12" Cutting-In-Valve And Valve Box, Complete | 1 | EA. |
| 202 | Pipe Removed 24" And Under | 173 | L.F. |
| 202 | Pipe Removed Over 24" | 132 | L.F. |

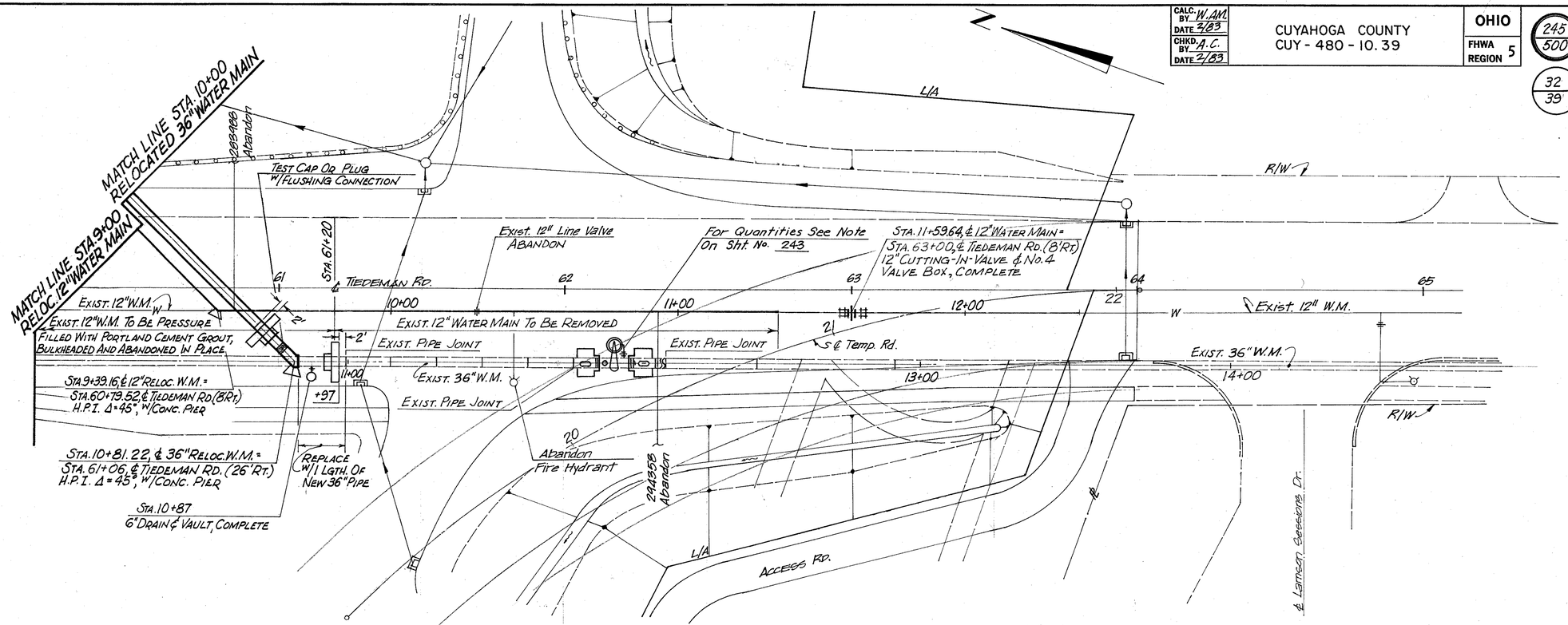


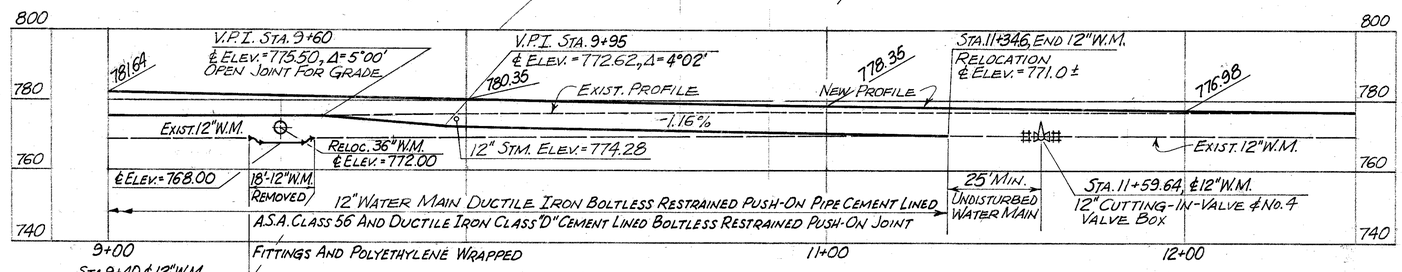


## 12" RELOCATED WATER MAIN

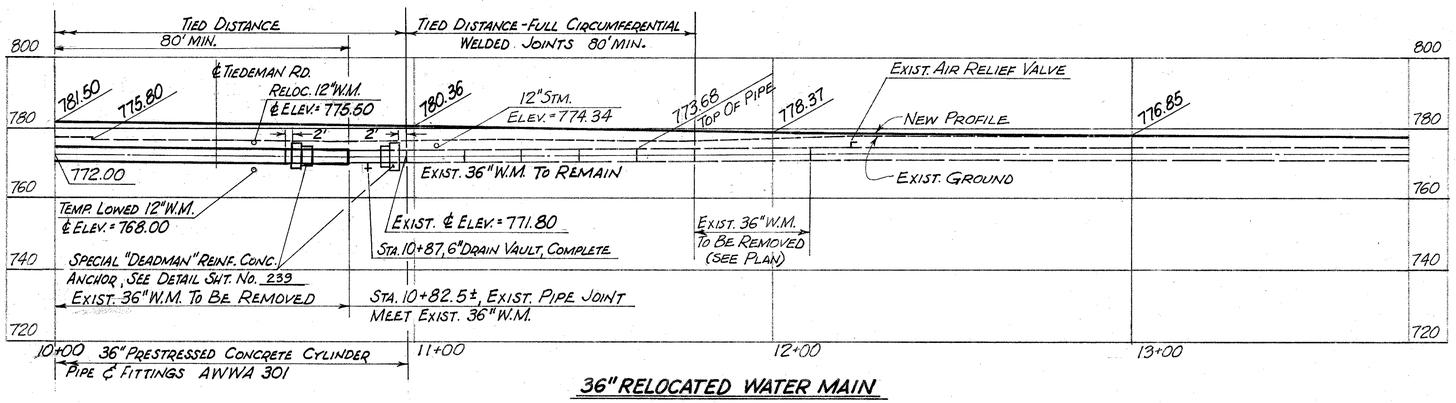


## 36" RELOCATED WATER MAIN

Note:
See Note ① Sheet No. 243

APPROVED Feb. 23, 19 83

William J. Sweeney ENGINEER OF DESIGN REVIEW

1st HIGH SERVICE DISTRICT

DEPARTMENT OF PUBLIC UTILITIES
DIVISION OF WATER AND HEAT
CLEVELAND, OHIO

SUBJECT RELOCATED 12" DUCTILE IRON WATER MAIN AND RELOCATED 36" CONCRETE WATER MAIN ACROSS I-480 ALONG TIEDEMAN ROAD.

SCALE 1"=20'

NO. SM-121-B

| CALC. BY W.A.M. DATE 2/83 | CUYAHOGA COUNTY | OHIO |
|---|---|---|
| CHKD. BY A.C. DATE 2/83 | CUY-480-10.39 | FHWA REGION 5 |

246/500

33/39

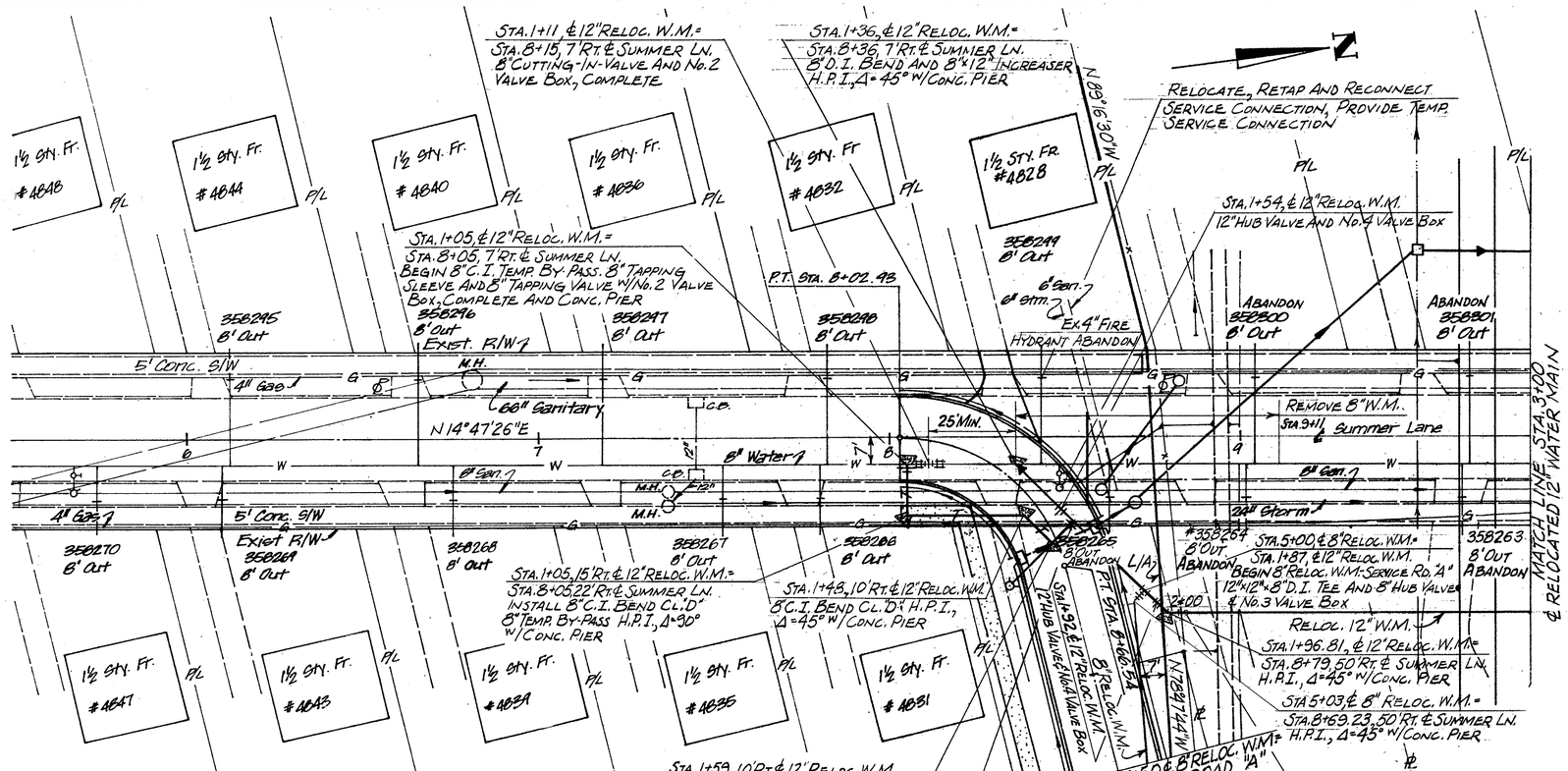


## Sequence of Water Main Installation

To Maintain Realitively Full System Capacity A Sequence Of Construction Is Given

1. Install Cutting-In-Valves Sta. 8+15 And Sta. 12+21, Summer Lane, Sta. 9+32, Kennedy Drive, Sta. 8+08 Southwood Drive At Such Time As Authorized By The Director Of Public Utilities.
2. Install 12" Relocated Water Main Sta. 1+54 To Sta. 5+25, Summer Lane, 8" Relocated Water Main Sta. 5+00 To Sta. 10+66.95 And Kennedy Drive Connection, And 12" Relocated Water Main Southwood Drive.
3. Install Temporary By-Pass Sta. 8+05 And Sta. 5+70, Summer Lane. Test, Chlorinate And Place In Service Summer Lane Relocation And Service Road "A" Relocation To Southwood Drive.
4. Complete Relocations And Connect Ends.
5. Remove Temporary By-Passes And Plug Outlets.

## ESTIMATED QUANTITIES

| ITEM | DESCRIPTION | QUANTITY | UNIT |
|---|---|---|---|
| Special | 12" Water Main Ductile Iron Boltless Restrained Push-On Pipe Cement Lined A.S.A. Class 56 And Ductile Iron Class "D" Cement Lined Boltless Restrained Push-On Joint Fittings And Polyethylene Wrapped | 170 | L.F. |
| Special | 8" Water Main Ductile Iron Cement Lined Pipe A.S.A. Class 56 And Ductile Iron Class "D" Cement Lined Boltless Restrained Joint Fittings | 50 | L.F. |
| Special | 8" Temporary Water Main By-Pass Connection A.S.A. Class 25 Cast Iron Pipe With Cast Iron Fittings Class "D" Cement Lined | 68 | L.F. |
| Special | 6" Water Main Class 25 Cast Iron Pipe With Cast Iron Fittings Class "D" Cement Lined | 17 | L.F. |
| Special | 12" Hub Valve And Valve Box | 2 | EA. |
| Special | 8" Hub Valve And Valve Box | 2 | EA. |
| Special | 8" Cutting-In-Valve And Valve Box, Complete | 1 | EA. |
| Special | 8"x8" Tapping Sleeve And Tapping Valve And Valve Box, Complete | 1 | EA. |
| Special | Furnishing And Setting 6" Fire Hydrant | 1 | EA. |
| Special | 2" Air Relief Valve And Valve Box, Complete | 1 | EA. |
| Special | Relocate, Retap And Reconnect Service Connection | 1 | EA. |
| Special | Temporary Service Connection | 1 | EA. |
| 202 | Pipe Removed 24" And Under | 75 | L.F. |

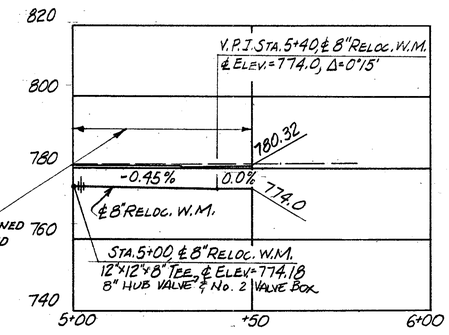


8" Water Main Ductile Iron Cement Lined Pipe A.S.A. Class 56 And Ductile Iron Class "D" Cement Lined Boltless Restrained Push-On Joint Fittings As Specified And Polyethylene Wrapped

Note:

A Minimum Length Of 18' Of Boltless Restrained Push-On Joint Pipe Will Be Required On Each Side Of Boltless Restrained Joint Fittings.

8" Relocated Water Main - Service Road "A"

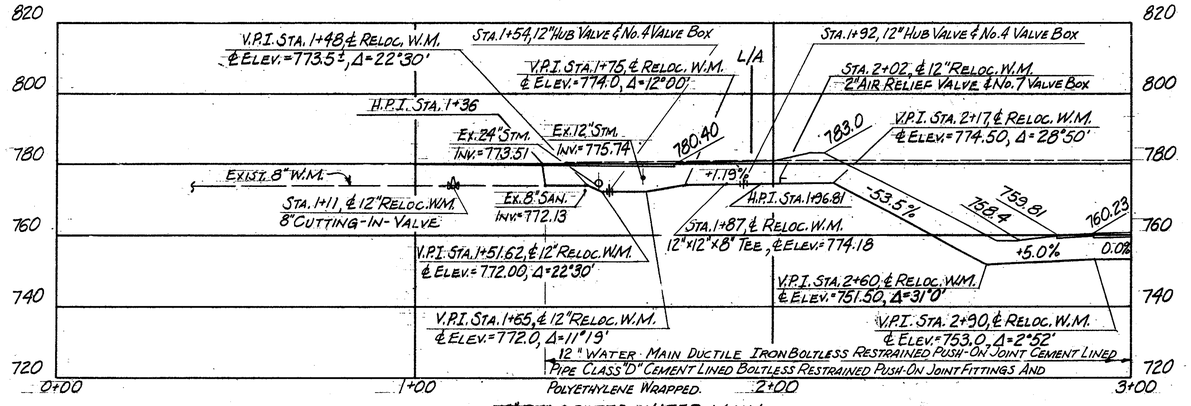


12" Relocated Water Main

APPROVED FEB. 23, 19 83

William J. Sweeney ENGINEER OF DESIGN REVIEW

**1st HIGH SERVICE DISTRICT**

DEPARTMENT OF PUBLIC UTILITIES
DIVISION OF WATER AND HEAT
CLEVELAND, OHIO

SUBJECT 8" DUCTILE IRON WATER MAIN ALONG SERVICE ROAD "A" AND 12" DUCTILE IRON WATER MAIN ALONG SUMMER LANE ACROSS I-480

SCALE 1"=20' NO.

8" & 12" RELOCATED WATER MAIN — SUMMER LANE

| | |
|---|---|
| CALC. BY W.A.M. | CUYAHOGA COUNTY |
| DATE 2/83 | CUY-480-10.39 |
| CHKD. BY A.C. | OHIO |
| DATE 2/83 | FHWA REGION 5 |

247 / 500

34 / 39

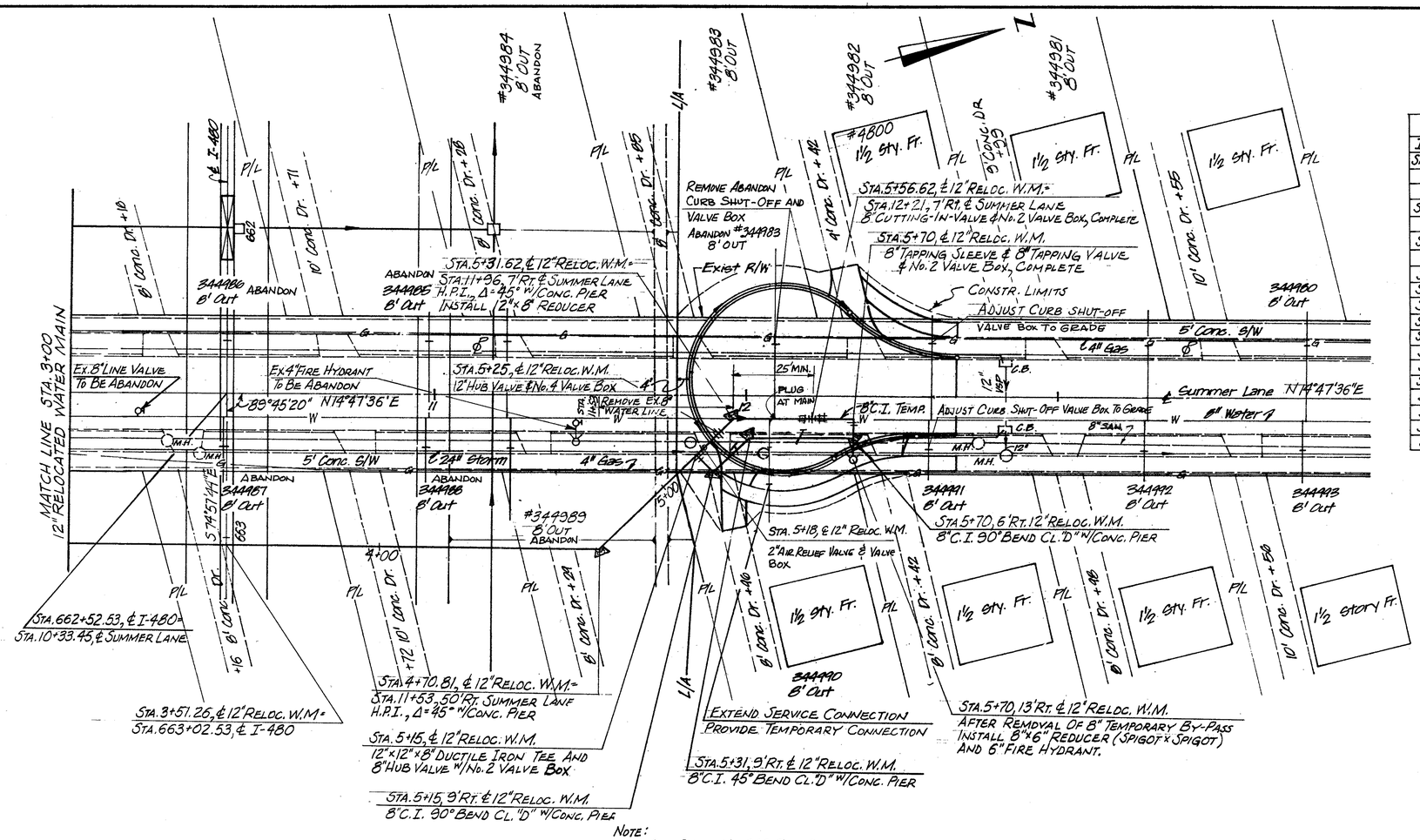


Note:
See Sheet No. 246 For Sequence Of Water Main Installation.

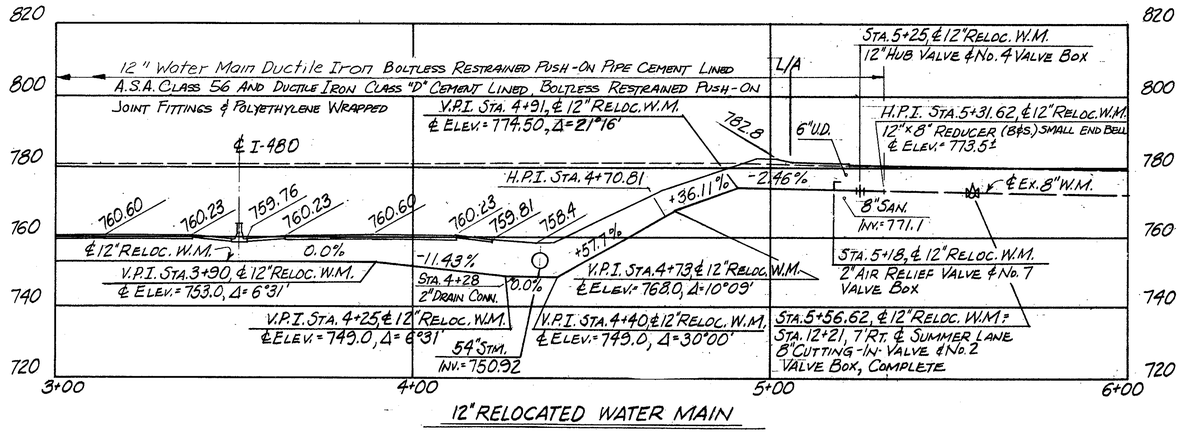


12" RELOCATED WATER MAIN

## ESTIMATED QUANTITIES

| ITEM | DESCRIPTION | QUANTITY | UNIT |
|---|---|---|---|
| Special | 12" Water Main Ductile Iron Boltless Restrained Push-On | | |
| | Cement Lined ASA Class 56 And Ductile Iron Class "D" Cement | | |
| | Lined Boltless Restrained Joint Fittings And Polyethylene Wrapped | 239 | L.F. |
| Special | 8" Temporary Water Main By-Pass Connection A.S.A. Class 25 | | |
| | Cast Iron Pipe With Cast Iron Fittings Class "D" Cement Lined | 64 | L.F. |
| Special | 6" Water Main Class 25 Cast Iron Pipe With Cast Iron Fittings | | |
| | Class "D" Cement Lined | 7 | L.F. |
| Special | 8" Hub Valve And Valve Box | 1 | EA. |
| Special | 12" Hub Valve And Valve Box | 1 | EA. |
| Special | 8" Cutting-In-Valve And Valve Box, Complete | 1 | EA. |
| Special | 8"x8" Tapping Sleeve And 8" Tapping Valve And Valve Box, Complete | 1 | EA. |
| Special | Furnishing And Setting 6" Fire Hydrant | 1 | EA. |
| Special | 2" Air Relief Valve And Valve Box, Complete | 1 | EA. |
| Special | Adjust Curb Shut-Off Valve Box To Grade | 2 | EA. |
| Special | Remove Abandoned Curb Shut-Off And Valve Box | 1 | EA. |
| Special | Extend Service Connection | 1 | EA. |
| Special | Temporary Service Connection | 1 | EA. |
| Special | Plugging Service Connections | 1 | EA. |
| Special | Pipe Removed 24" And Under | 43 | L.F. |

APPROVED FEB. 23, 1983

William J. Sweeney ENGINEER OF DESIGN REVIEW

**1st HIGH SERVICE DISTRICT**

DEPARTMENT OF PUBLIC UTILITIES
DIVISION OF WATER AND HEAT
CLEVELAND, OHIO

SUBJECT 12" DUCTILE IRON WATER MAIN ALONG SUMMER LANE ACROSS I-480

SCALE 1" = 20' | NO.

12" RELOCATED WATER MAIN — SUMMER LANE

| CALC. BY B.B. | CUYAHOGA COUNTY | OHIO |
|---|---|---|
| DATE 2-83 | CUY-480-10.39 | FHWA REGION 5 |
| CHKD. BY WAM | | |
| DATE 2-83 | | |

248/500

35/39

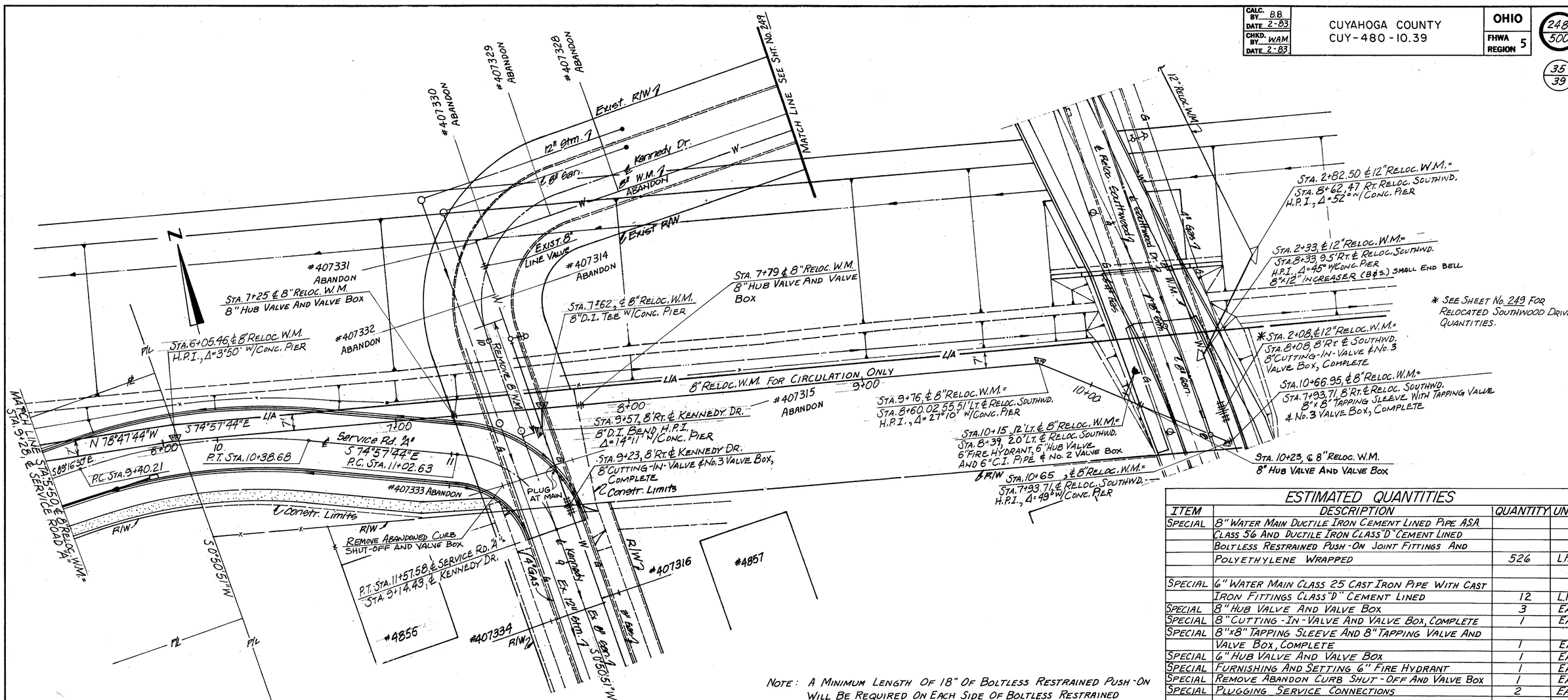


Note: A Minimum Length Of 18" Of Boltless Restrained Push-On Will Be Required On Each Side Of Boltless Restrained Joint Fittings.

See Sheet No. 246 For Sequence Of Water Main Installation.

## ESTIMATED QUANTITIES

| ITEM | DESCRIPTION | QUANTITY | UNIT |
|---|---|---|---|
| Special | 8" Water Main Ductile Iron Cement Lined Pipe A.S.A. Class 56 And Ductile Iron Class "D" Cement Lined Boltless Restrained Push-On Joint Fittings And Polyethylene Wrapped | 526 | L.F. |
| Special | 6" Water Main Class 25 Cast Iron Pipe With Cast Iron Fittings Class "D" Cement Lined | 12 | L.F. |
| Special | 8" Hub Valve And Valve Box | 3 | EA. |
| Special | 8" Cutting-In-Valve And Valve Box, Complete | 1 | EA. |
| Special | 8"x8" Tapping Sleeve And 8" Tapping Valve And Valve Box, Complete | 1 | EA |
| Special | 6" Hub Valve And Valve Box | 1 | EA. |
| Special | Furnishing And Setting 6" Fire Hydrant | 1 | EA. |
| Special | Remove Abandon Curb Shut-Off And Valve Box | 1 | EA. |
| Special | Plugging Service Connections | 2 | EA. |

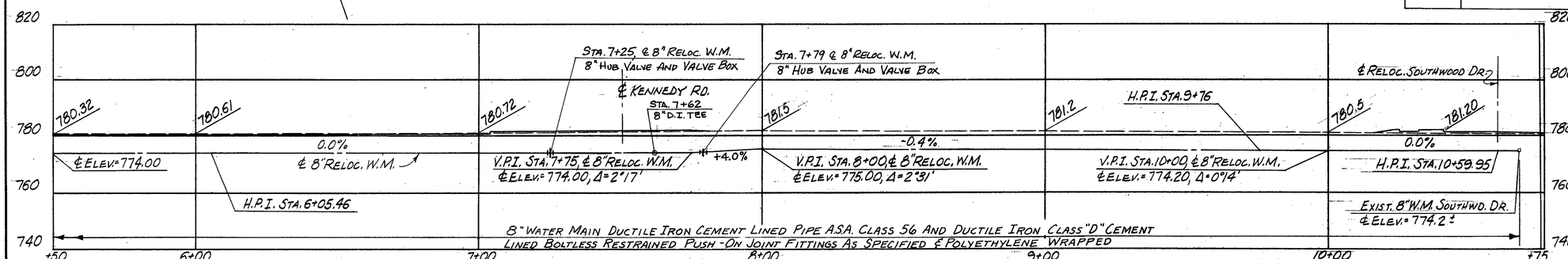


8" Relocated Water Main - Service Road "A"

APPROVED Feb. 23, 1983

William J. Sweeny ENGINEER OF DESIGN REVIEW

**1st HIGH SERVICE DISTRICT**

DEPARTMENT OF PUBLIC UTILITIES
DIVISION OF WATER AND HEAT
CLEVELAND, OHIO

SUBJECT 8" DUCTILE IRON WATER MAIN ALONG SERVICE ROAD "A" TO RELOCATED SOUTHWOOD DRIVE

SCALE 1"=20' | NO.

8" RELOCATED WATER MAIN - SOUTHWOOD DRIVE TO SUMMER LANE

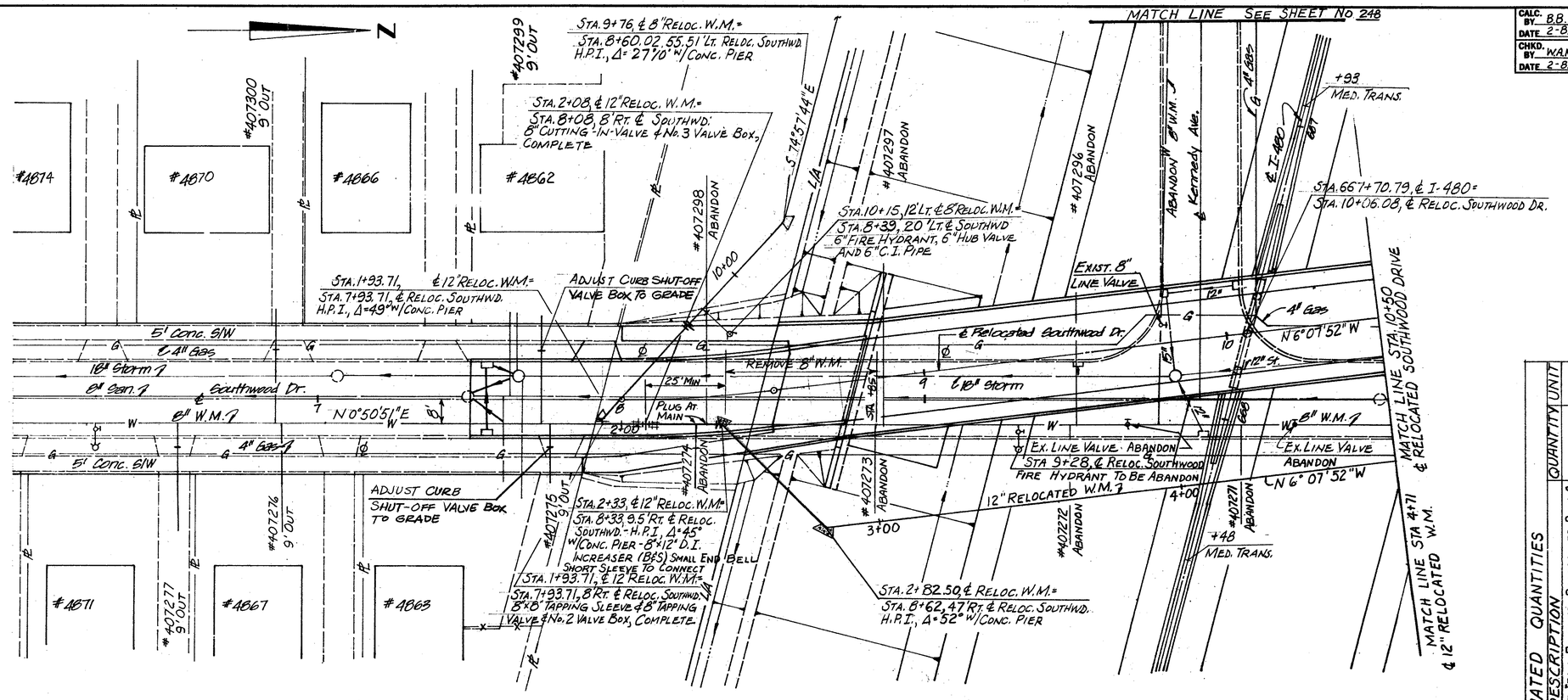


ESTIMATED QUANTITIES

| ITEM | DESCRIPTION | QUANTITY | UNIT |
|---|---|---|---|
| Special | 12" Water Main Ductile Iron Boltless Restrained Push-On Pipe Cement Lined A.S.A. Class 56 And Ductile Iron Class D Cement Lined Boltless Restrained Push-On Joint Fittings And Polyethylene Wrapped | 248 | L.F. |
| Special | 8" Cutting-In-Valve & No. 3 Valve Box Complete | 1 | EA. |
| Special | 2" Air Relief Valve And Valve Box Complete | 1 | EA. |
| Special | Adjust Curb Shut-Off Valve Box To Grade | 2 | EA. |
| Special | Plugging Service Connections | 2 | EA. |
| 202 | Pipe Removed 24" And Under | 50 | L.F. |

Note:
See Sheet No. 246 For Sequence Of Water Main Installation.

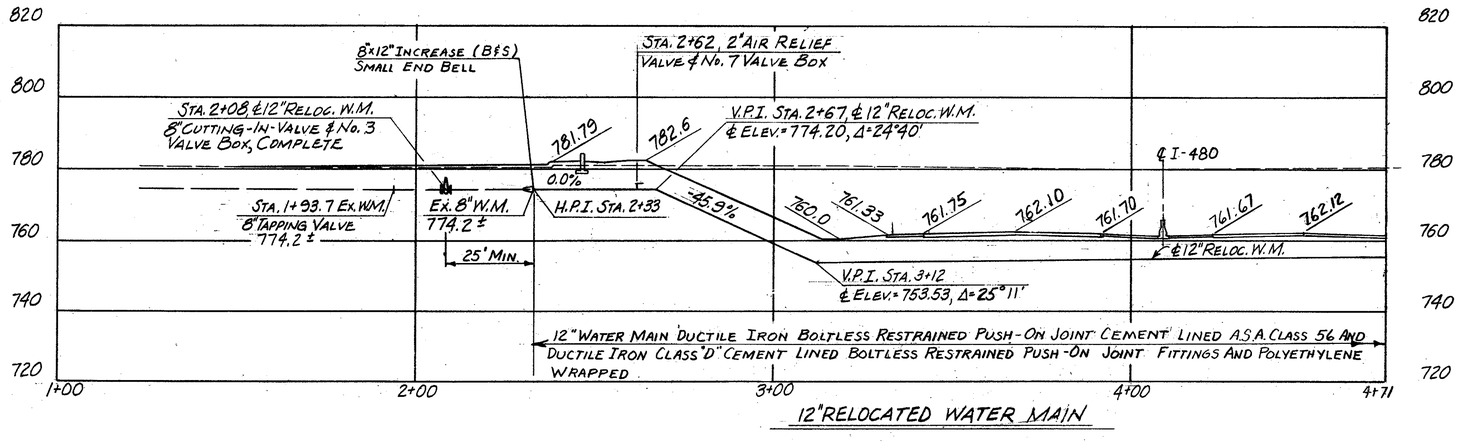


12" Relocated Water Main

APPROVED Feb. 23, 1983

William J. Sweeney ENGINEER OF DESIGN REVIEW

**1st HIGH SERVICE DISTRICT**

DEPARTMENT OF PUBLIC UTILITIES
DIVISION OF WATER AND HEAT
CLEVELAND, OHIO

SUBJECT
12" DUCTILE IRON WATER MAIN ALONG RELOCATED SOUTHWOOD DRIVE ACROSS I-480

SCALE 1"=20' | NO.

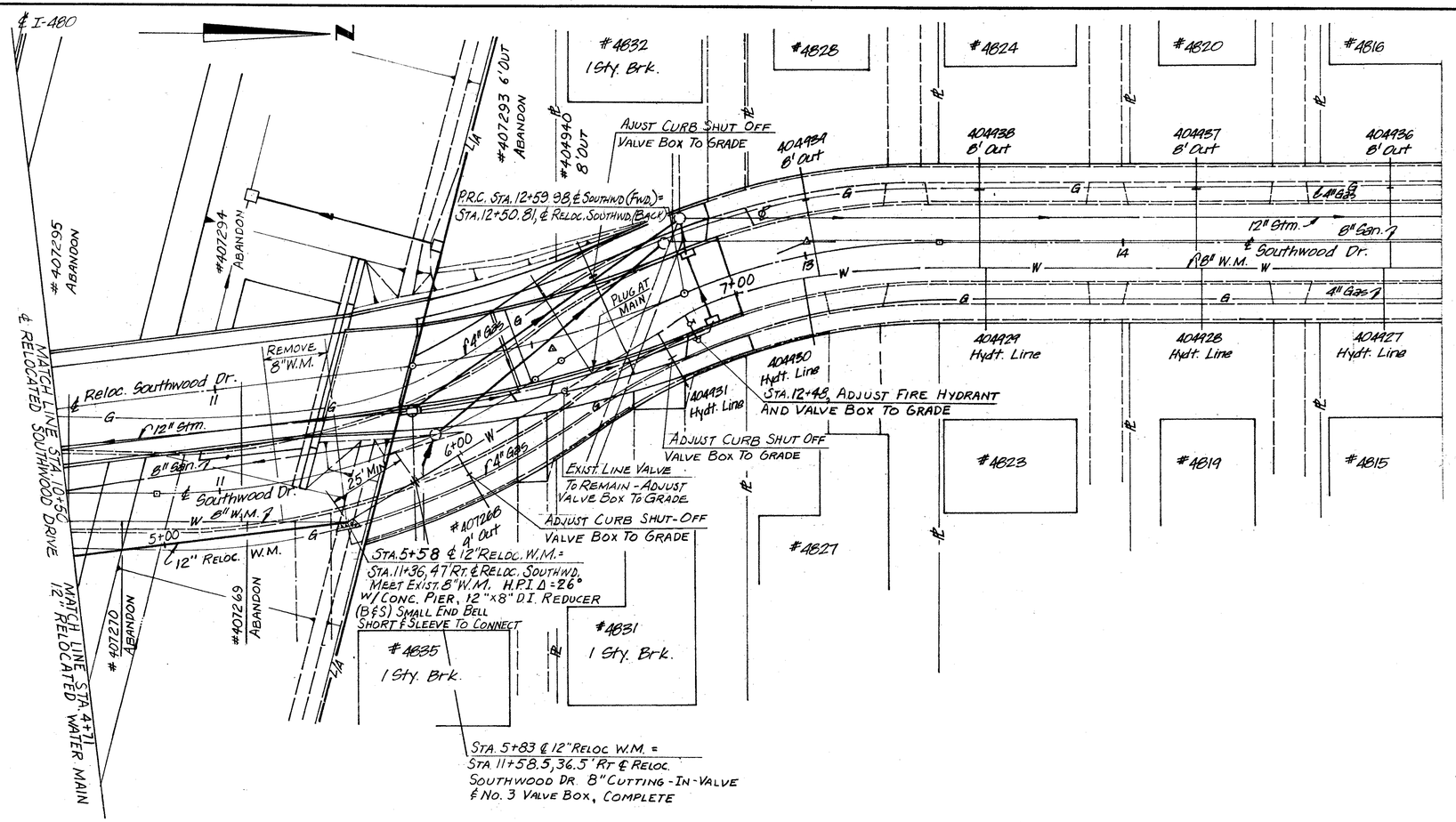


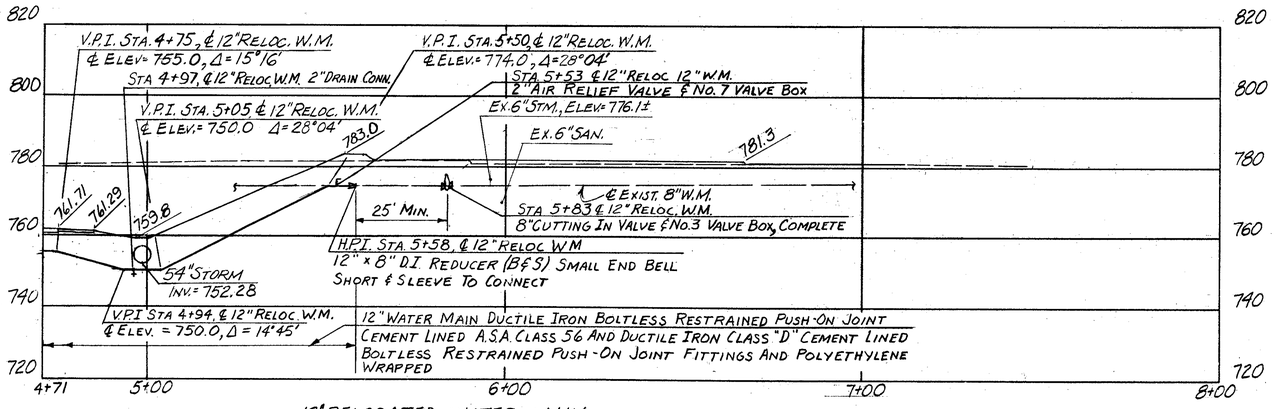


12" RELOCATED WATER MAIN

| CALC. BY WAM | DATE 2/83 |
|---|---|
| CHKD. BY B.B. | DATE 2/83 |

CUYAHOGA COUNTY
CUY-480-10.39

OHIO
FHWA REGION 5

250/500

37/39

## ESTIMATED QUANTITIES

| ITEM | DESCRIPTION | QUANTITY | UNIT |
|---|---|---|---|
| Special | 12" Water Main Ductile Iron Boltless Restrained | | |
| | Push-On Pipe Cement Lined A.S.A. Class 56 And | | |
| | Ductile Iron Class "D" Cement Lined Boltless | | |
| | Restrained Push-On Joint Fittings And | | |
| | Polyethylene Wrapped | 94 | L.F. |
| Special | 8" Cutting-In-Valve And Valve Box, Complete | 1 | EA. |
| Special | 2" Air Relief Valve And Valve Box, Complete | 1 | EA. |
| Special | Adjust Valve Box To Grade | 1 | EA. |
| Special | Adjust Curb Shut-Off Valve Box To Grade | 3 | EA. |
| Special | Plugging Service Connections | 1 | EA. |
| Special | Adjust Fire Hydrant And Valve Box To Grade | 1 | EA. |
| 202 | Pipe Removed 24" And Under | 20 | L.F. |

APPROVED FEB. 23, 19 83

William J. Sweeney ENGINEER OF DESIGN REVIEW

**1st HIGH SERVICE DISTRICT**

DEPARTMENT OF PUBLIC UTILITIES
DIVISION OF WATER AND HEAT
CLEVELAND, OHIO

SUBJECT
12" DUCTILE IRON WATER MAIN ALONG RELOCATED SOUTHWOOD DRIVE ACROSS I-480

SCALE 1"=20'

NO.

| CALC. BY W.A.M. | CUYAHOGA COUNTY | OHIO |
|---|---|---|
| DATE 2/83 | CUY-480-10.39 | FHWA REGION 5 |
| CHKD. BY B.B. | | |
| DATE 2/83 | | |

251/500

38/39

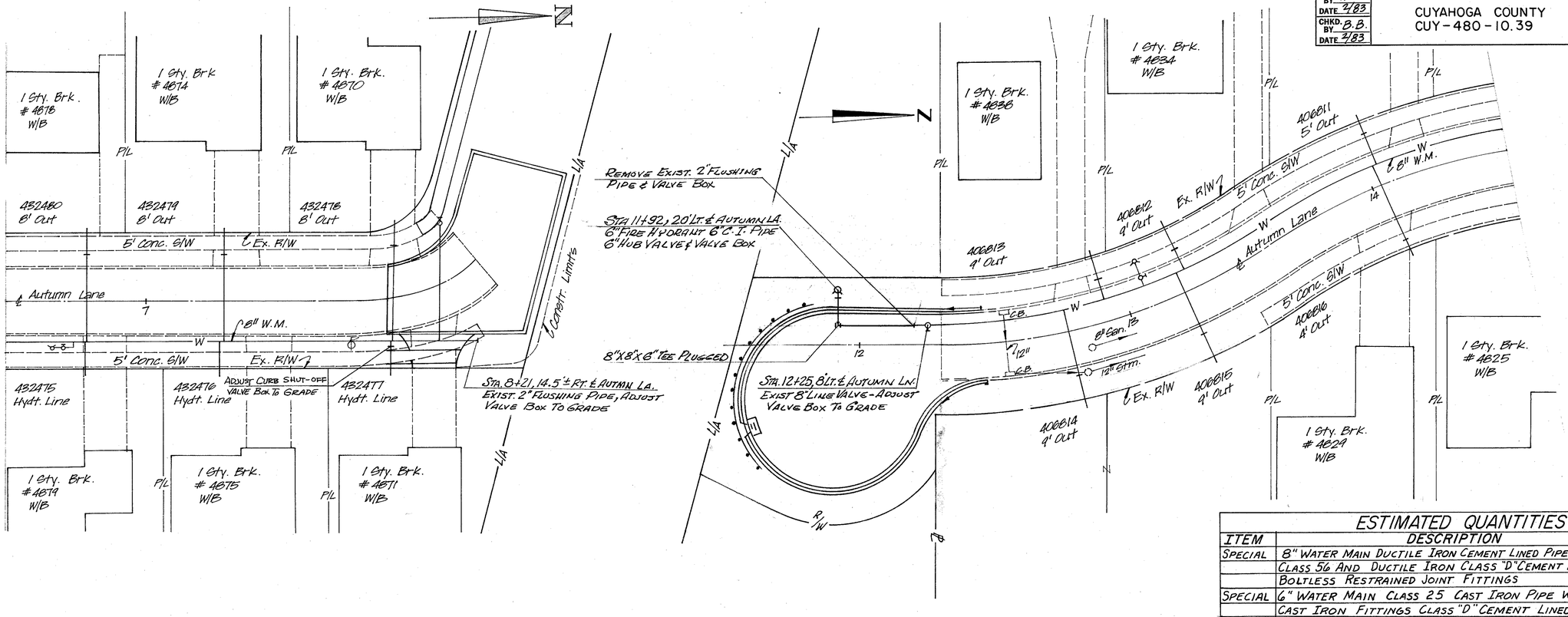


## ESTIMATED QUANTITIES

| ITEM | DESCRIPTION | QUANTITY | UNIT |
|---|---|---|---|
| SPECIAL | 8" WATER MAIN DUCTILE IRON CEMENT LINED PIPE A.S.A. | | |
| | CLASS 56 AND DUCTILE IRON CLASS "D" CEMENT LINED | | |
| | BOLTLESS RESTRAINED JOINT FITTINGS | 28 | L.F. |
| SPECIAL | 6" WATER MAIN CLASS 25 CAST IRON PIPE WITH | | |
| | CAST IRON FITTINGS CLASS "D" CEMENT LINED | 13 | L.F. |
| SPECIAL | 6" HUB VALVE AND VALVE BOX | 1 | EA. |
| SPECIAL | ADJUST VALVE BOX TO GRADE | 2 | EA. |
| SPECIAL | ADJUST CURB SHUT-OFF VALVE BOX TO GRADE | 1 | EA. |
| SPECIAL | FURNISHING AND SETTING 6" FIRE HYDRANT | 1 | EA. |

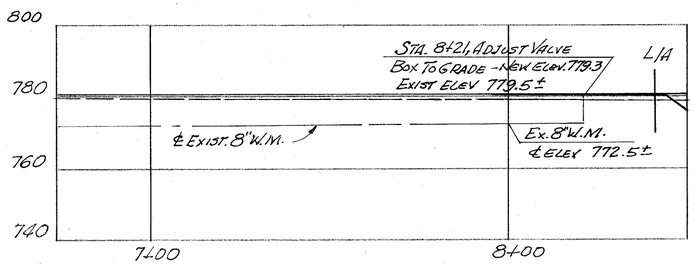


8" WATER MAIN

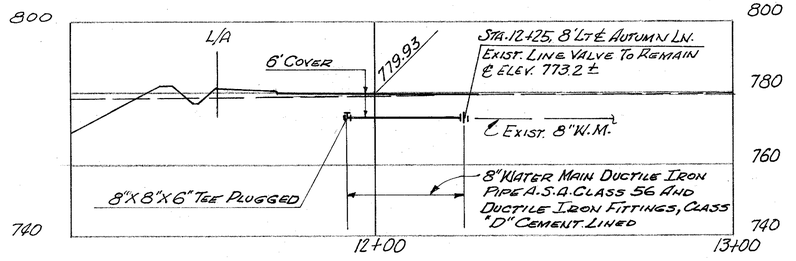


8" WATER MAIN

APPROVED FEB. 23, 1983

William J. Sweeney ENGINEER OF DESIGN REVIEW

**1st HIGH SERVICE DISTRICT**

DEPARTMENT OF PUBLIC UTILITIES
DIVISION OF WATER AND HEAT
CLEVELAND, OHIO

SUBJECT: 8" DUCTILE IRON WATER MAIN EXTENSION ALONG AUTUMN LANE

SCALE 1"=20' | NO.

8" WATER MAIN — AUTUMN LANE

| CALC. BY W.A.M. DATE 3/83 | CUYAHOGA COUNTY<br>CUY - 480 - 10.39 | OHIO<br>FHWA REGION 5 | 252/500 |
|---|---|---|---|
| CHKD. BY A.C. DATE 3/83 | | | 39/39 |

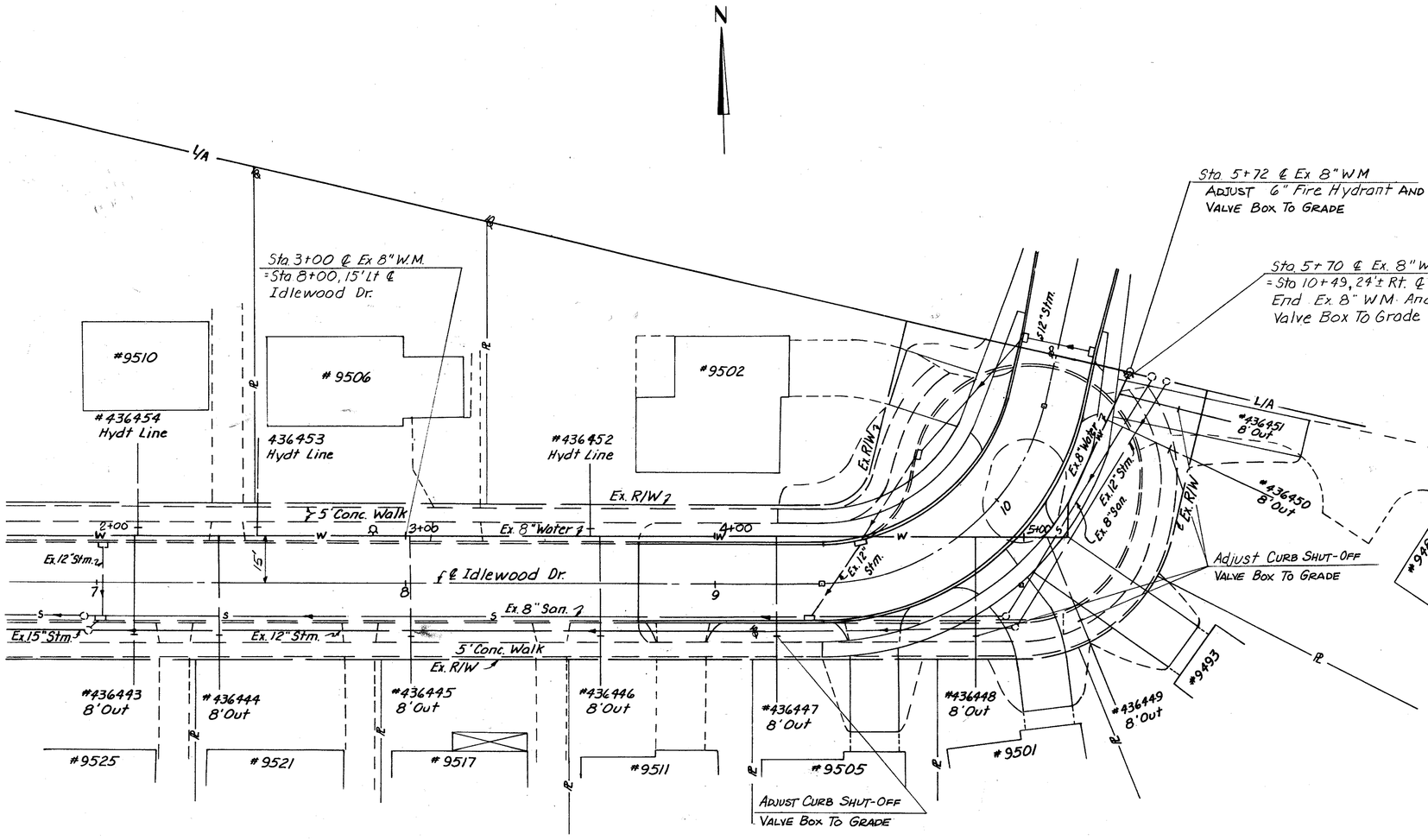


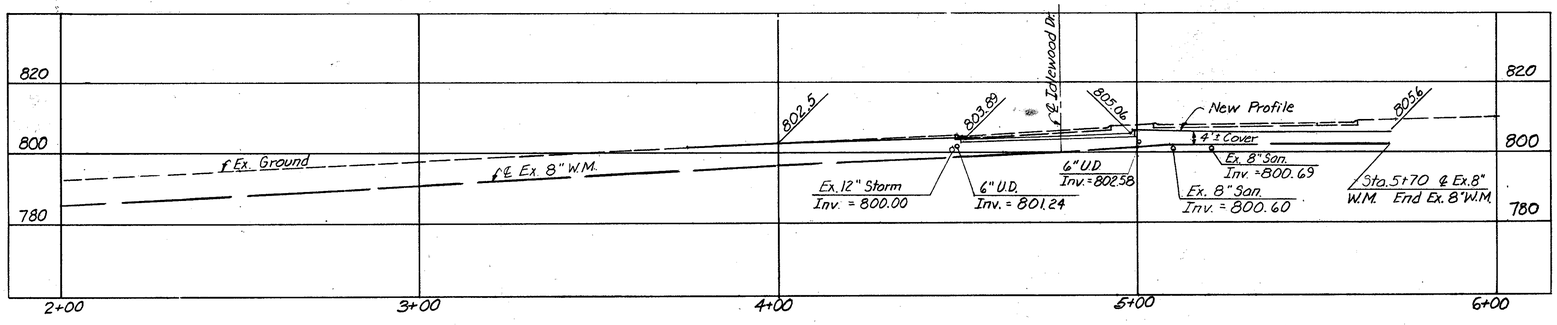


## ESTIMATED QUANTITIES

| ITEM | DESCRIPTION | QUANTITY | UNIT |
|---|---|---|---|
| Special | Adjust Fire Hydrant And Valve Box To Grade | 1 | EA. |
| Special | Adjust Curb Shut-Off Valve Box To Grade | 5 | EA. |
| Special | Adjust Valve Box To Grade | 1 | EA. |

APPROVED Feb. 23, 1983

William J. Sweeney ENGINEER OF DESIGN REVIEW

**1st HIGH SERVICE DISTRICT**

DEPARTMENT OF PUBLIC UTILITIES
DIVISION OF WATER AND HEAT
CLEVELAND, OHIO

SUBJECT: WATERWORK ALONG IDLEWOOD DRIVE

SCALE 1"= 20' | NO.

8" WATER MAIN - IDLEWOOD DRIVE

| CALC. BY | | CUYAHOGA COUNTY<br>CUY-480-10.39 | OHIO<br>FHWA REGION 5 | 253<br>500 |
|---|---|---|---|---|
| DATE | | | | |
| CHKD. BY | | | | |
| DATE | | | | |

01-L

KEY PLAN LEGEND

- LIGHTING CONTROL CENTER
- TOWER LIGHT POLE-1000 WATT TYPE I
- TOWER LIGHT POLE-1000 WATT ASYMMETRIC
- TWIN 400 WATT LIGHTS & POLE
- 250 WATT LIGHT & POLE
- 200 WATT LIGHT & POLE
- 150 WATT LIGHT & POLE
- 100 WATT UNDERPASS LUMINAIRE
- PULL BOX (UP INDICATES UNDERPASS LIGHTING CONNECTION)
- ILLUMINATED OVERHEAD SIGN
- Nº 4 AWG CIRCUIT CABLE
- SERVICE POLE

BEGIN PROJECT STA. 573+50 S.L.M. 10.39

WEST 130th ST.

CONRAIL R.R.

BALTIMORE AND OHIO R.R.

CITY OF CLEVELAND / CITY OF BROOKLYN

STRUCTURE No. CUY-480-1054

TOWER NO. 1 (T-1) · TOWER NO. 2 · TOWER NO. 3 (R-2) · TOWER NO. 4 (R-1) · TOWER NO. 5 (T-2) · TOWER NO. 6 (T-3) · TOWER NO. 7 (T-4) · TOWER NO. 8 (T-5) · TOWER NO. 9 (T-6)

RAMP W-1 · RAMP W-2 · RAMP W-3

CONTROL CENTERS WOT & WUP

575 · 580 S-1 · 585 · 590 · 595 · 600 · 605 · 610 · 615

STRUCTURE No. CUY-480-1078

STRUCTURE No. CUY-480-1088

℄ I-480

J-1 · 620 · K-1 · J-2 · 625 · K-2 · J-3 · 630 · J-7 · J-8 · J-9 · K-3 · RAMP T-1 · J-12 · J-13 · J-14 · J-15 · RAMP T-2

MATCH LINE STA. 635+00

BROOKPARK RD.

BIG CREEK

DEBORAH LYNN DR. · SHADY LANE · SUNNY LANE · RICHARD DR.

BENTWOOD DR. · FORESTEDGE DR. · ROADOAN DR. · SAYBROOK DR.

STRUCTURE No. CUY-480-1171 · STRUCTURE No. CUY-480-1169 · STRUCTURE No. CUY-480-1162 · STRUCTURE No. CUY-480-1168 · STRUCTURE No. CUY-480-1216 · STRUCTURE No. CUY-480-1272

CONTROL CENTER · TIE J-10 · J-11 · RAMP T-1 · RAMP T-3 · RAMP T-4 · RAMP T-2

L-1 · L-2 · L-3 · L-4 · L-5 · L-6 · L-7 · L-8 · K-4 · K-5 · K-6 · K-7 · K-8 · K-9 · K-10 · K-11 · K-12 · K-13 · K-14 · K-15 · K-16 · J-4 · J-5 · J-6 · J-16 · J-17

635+00 · 640 · 645 · 650 · M-1 · N-1 · 655 · M-2 · N-2 · 660 · M-3 · N-3 · 665 · M-4 · N-4 · 670 · M-5 · N-5 · 675 · M-6 · N-6 · 680 · M-7 · N-7 · 685 · M-8 · N-8 · 690 · 695

C.E.I. FOX SUBSTATION

SUMMER LANE · SERVICE RD. "A" · CONTROL CENTER SUM · KENNEDY DR. · SOUTHWOOD DR. · AUTUMN LANE · SPRINGWOOD DR. · MELODY LANE · IDLEWOOD DR.

END PROJECT STA. 598+50 S.L.M. 12.75

CONRAIL R.R.

0 200 400
Scale: 1"=200'

LIGHTING KEY PLAN

CALC. BY JRB DATE 5/81
CHKD. BY ARH DATE 5/81

| FHWA REGION | STATE | PROJECT | |
|---|---|---|---|
| 5 | OHIO | | |

254
500

CUYAHOGA COUNTY
CUY-480-10.39

SPECIFICATIONS
THESE NOTES ARE SUPPLEMENTAL TO ITEMS 625 AND 713 OF THE STATE OF OHIO DEPARTMENT OF TRANSPORTATION CONSTRUCTION AND MATERIAL SPECIFICATIONS
REFER TO STANDARD CONSTRUCTION DRAWINGS LISTED ON THE TITLE SHEET.

UTILITIES
SEE SHEET NO. 11

625.03 - GENERAL
THE POWER SUPPLYING AGENCY FOR THIS PROJECT IS
THE CLEVELAND ELECTRIC ILLUMINATING CO.
ILLUMINATING BUILDING
CLEVELAND, OHIO 44113

THE PROJECT HAS BEEN DESIGNED ON THE BASIS OF 5% VOLTAGE DROP PERMISSIBLE ON BRANCH CIRCUITS. THE PROJECT WILL RECEIVE 480 VOLT CONTROLLED TWO WIRE SECONDARY SERVICE ONE SIDE GROUNDED FROM THE CLEVELAND ELECTRIC ILLUMINATING COMPANY.

THE PROJECT HAS BEEN DESIGNED ON THE BASIS OF FULL LIGHTING WITH 1.2 FOOT CANDLE AVERAGE INITIAL ILLUMINATION WITH A MAXIMUM UNIFORMITY RATIO OF 4.0 TO 1.0. FOR CONVENTIONAL UNITS AND 3.0 TO 1.0 FOR TOWER UNITS.

625.07 - 713.11 LUMINAIRES

STYLE B LUMINAIRES SHALL HAVE SINGLE RATED 480 VOLT, 200 WATT; 120 VOLT, 250 WATT OR 120 VOLT 150 WATT INTEGRAL REGULATOR BALLASTS FOR USE WITH HIGH PRESSURE SODIUM LAMPS AND SHALL BE GENERAL ELECTRIC M400, WESTINGHOUSE OV-25-TUDOR, ITT AMERICAN 400, OR EQUAL APPROVED BY THE ENGINEER, A PHOTO ELECTRIC CELL IS REQUIRED ON ALL 120 VOLT UNITS.

STYLE C LUMINAIRES SHALL HAVE SINGLE RATED 480 VOLT, 400 WATT, INTEGRAL REGULATOR BALLASTS AND SHALL BE GENERAL ELECTRIC M-1000, WESTINGHOUSE OV-50, ITT AMERICAN 1000, OR EQUAL APPROVED BY THE ENGINEER.

713.14 LAMPS

HIGH PRESSURE SODIUM LAMPS SHALL BE GENERAL ELECTRIC "LUCALOX", WESTINGHOUSE CERAMALUX, SYLVANIA "LUMALUX", OR EQUAL APPROVED BY THE ENGINEER. 150 WATT HPS LAMPS SHALL BE OF THE 100 VOLT DESIGN, ANSI S56.

UNDERDRAINS FOR PULL BOXES

REFERENCE IS MADE TO STANDARD DRAWING HL-10 FOR DETAILS OF DRAINING PULL BOXES. UNDERDRAINS FOR PULL BOXES SHALL BE USED AS DIRECTED BY THE ENGINEER AND SHALL BE PROVIDED WHERE THE LENGTH REQUIRED FOR SATISFACTORY OUTLET DOES NOT EXCEED APPROXIMATELY 20 FEET. AN ESTIMATED QUANTITY OF 750 LINEAR FEET OF ITEM 605, 4" SHALLOW PIPE UNDERDRAINS IS INCLUDED IN THE LIGHTING GENERAL SUMMARY FOR THIS PURPOSE.

ELECTRICAL SERVICE FOR ILLUMINATED SIGNS
THE PAY ITEMS IN THE LIGHTING GENERAL SUMMARY INCLUDE THE PULL BOX OR JUNCTION BOX ADJACENT TO EACH LIGHTED SIGN AND THE ELECTRICAL SERVICE CONNECTIONS LEADING INTO THE BOX. INCLUDING SPLICING KITS IN THE PULL BOX OR JUNCTION BOX. QUANTITIES FOR ELECTRICAL SERVICE FROM THE CONNECTION IN THE PULL BOX OR JUNCTION BOX TO THE SIGN ARE INCLUDED IN THE TRAFFIC CONTROL GENERAL SUMMARY.

HIGH VOLTAGE DIRECT CURRENT TESTS
A HIGH VOLTAGE TEST, AS DESCRIBED IN SUPPLEMENTAL SPECIFICATION 839 SHALL BE PERFORMED ON ALL DISTRIBUTION CABLE, AND DUCT-CABLE SYSTEMS TO BE INSTALLED ON THIS PROJECT. THE TEST SHALL NOT BE PERFORMED UNTIL AFTER ALL NEW CONSTRUCTION, SUCH AS GUARD RAIL, FENCES, DELINEATOR POSTS, SIGNS ET CETERA, IN THE IMMEDIATE VICINITY OF THE LOCATION OF THE CABLE RUN BEING TESTED HAS BEEN COMLETED.

713.07 POLYVINYL CHLORIDE PLASTIC CONDUIT CONDUIT FURNISHED UNDER THIS SPECIFICATION SHALL CONFORM TO NEMA STANDARDS PUBLICATION NO. TC6 WITH THE EXCEPTION THAT CONDUIT AND CONDUIT FITTINGS COMPOSED OF ACRYLONITRILE-BUTADIENE-STYRENE (ABS) SHALL NOT BE ACCEPTABLE. AS AN ALTERNATE TO POLYVINYL CHLORIDE, CORRUGATED COILABLE POLYPROPYLENE CONFORMING TO NEMA STANDARDS PUBLICATION NO. TC-5 MAY BE USED.

PULLBOX COVERS
SUPPLEMENTING 713.09(3). COVERS FOR CIRCULAR PULLBOXES SHALL BE PRECAST, STEEL REINFORCED CONCRETE OF THE SIZE AND DIMENSIONS DETAILED IN THE PLANS, WITH TWO (2) NO. 4 GA. GALVANIZED STEEL LIFTING EYES RECESSED FLUSH WITH THE TOP OF THE COVER. THE COVER SHALL BE CONSTRUCTED WITH 4X4LB REINFORCING MESH AND CLASS C CONCRETE WITH NO. 4 AGGREGATE CONFORMING TO ITEM 499 OF THE SPECIFICATIONS.
PAYMENT FOR PULLBOX COVERS FOR CIRCULAR PULLBOXES SHALL BE INCLUDED IN THE UNIT PRICE BID FOR ITEM 625- 'PULLBOX, BY SIZE, 713.09, WITH CONCRETE COVER, AS PER PLAN.'

CONTROL CENTER
A 20 AMP BY-PASS SWITCH RATED 240 VOLTS.
COMPLETE WITH WIRE AND CONDUIT SHALL BE FURNISHED AND INSTALLED BY THE CONTRACTOR.

THE CLEVELAND ELECTRIC ILLUMINATING CO. WILL MAKE FINAL CONNECTION TO THE SWITCH FOR MANUAL BY-PASS CONTROL OF THEIR LIGHTING CONTROLLER.

COST OF SWITCH TO BE INCLUDED IN THE UNIT PRICE BID FOR CONTROL CENTER, AS PER PLAN. FOR DETAILS, SEE SHEET NO. 275

625.07 - 713.13 UNDERPASS LUMINAIRES

UNDERPASS LUMINAIRES SHALL BE HOLOPHANE "UNDERPASS WALLPACK", WESTINGHOUSE, OR GENERAL ELECTRIC WL-250 UNDERPASS UNIT OR EQUAL APPROVED BY THE ENGINEER, AND SHALL BE FURNISHED WITH AN INTEGRAL FUSE HOLDER AND 10-AMPERE FUSE. THE INTEGRAL HIGH PRESSURE SODIUM BALLAST SHALL BE OF A REGULATOR TYPE RATED FOR 480 VOLTS, 100 WATTS.

ITEM SPECIAL - SERVICE TO UNDERPASS LIGHTING

THIS ITEM SHALL CONSIST OF PROVIDING COMPLETE ELECTRICAL SERVICE, EXCEPT FOR LUMINAIRES AND STRUCTURE GROUNDING, FOR AN UNDERPASS LIGHTING SYSTEM ON BRIDGES NO. CUY-480-10.54 AND CUY-480-11.62. THE INSTALLATION WORK SHALL INCLUDE CONDUITS, CONDUIT GROUNDING, MOUNTINGS, FITTINGS, JUNCTION BOXES, CABLES, AND ALL INCIDENTALS NECESSARY TO COMPLETE, READY FOR USE, THE SERVICE AS DETAILED ON SHEETS 273 & 274. THE LUMP SUM PRICE BID FOR "ITEM SPECIAL SERVICE TO UNDERPASS LIGHTING" SHALL INCLUDE PAYMENT FOR ALL EQUIPMENT, LABOR, AND MATERIALS NECESSARY TO COMPLETE THE WORK AS SPECIFIED. COMPONENT PARTS NOT SPECIFICALLY MENTIONED BUT REQUIRED FOR SATISFACTORY OPERATION OF THIS ITEM SHALL BE FURNISHED AND CONSIDERED PAID FOR AS PART OF THE ITEM.

PADLOCKS AND KEYS

PADLOCKS FURNISHED SHALL BE EITHER BRASS OR BRONZE, EQUAL TO MASTER NO. 4BKA OR WILSON BOHANNAN 660A, AND SHALL BE KEYED IN ACCORDANCE WITH SPECIFICATION 631.08 PARAGRAPH 3. PAYMENT SHALL BE INCLUDED IN THE BID FOR THE ITEM(S) BEING LOCKED.

TRANSITION JUNCTION BOX

THE UNIT PRICE BID FOR EACH "ITEM 625 TRANSITION JUNCTION BOX" SHALL BE FULL COMPENSATION FOR FURNISHING AND PLACING THE JUNCTION BOX AS SHOWN IN THE DETAIL ON SHEET 276, AND ALL LABOR, MATERIAL, EQUIPMENT AND INCIDENTALS NECESSARY TO COMPLETE THE WORK SPECIFIED.

ITEM SPECIAL - LIGHT POLE ANCHOR BOLTS FOR BRIDGES AND RETAINING WALLS

ANCHOR BOLTS FOR MOUNTING LIGHT POLES ON BRIDGES AND RETAINING WALLS SHALL CONFORM TO THE REQUIREMENTS OF 713.01 AND DETAILS SHOWN ON THE PLANS AND STANDARD DRAWINGS, OR THE APPROVED SHOP DRAWINGS, FOR THE RESPECTIVE POLES TO BE PLACED THEREON. PAYMENT SHALL BE MADE AT THE UNIT PRICE BID FOR EACH SET OF THE SIZE REQUIRED AND NECESSARY TO INSTALL ONE POLE, AND THIS PAYMENT SHALL CONSTITUTE FULL COMPENSATION FOR FURNISHING AND PLACING THE BOLTS.

CONDUIT ON STRUCTURE

EXPANSION FITTINGS FOR CONDUIT ON STRUCTURES SHALL BE OZ TYPE AX, CROUSE-HINDS TYPE XJ-4, APPLETON TYPE XJ-4, OR EQUAL APPROVED BY THE ENGINEER.

EACH EXPANSION FITTING SHALL HAVE A COPPER EXTERNAL BONDING JUMPER.

ITEM SPECIAL -, TEMPORARY LIGHTING

THIS ITEM SHALL CONSIST OF MAINTAINING EXISTING LIGHTING OR PROVIDING LIGHTING FOR TEMPORARY ROADWAYS AS FURTHER DESCRIBED BELOW:

EXISTING LIGHTING ON ALL EXISTING ROADWAYS REMAINING OPEN TO TRAFFIC THROUGH THE PROJECT AREA SHALL BE MAINTAINED. SHOULD THE CONTRACTOR REQUIRE THE REMOVAL OF LIGHTING FROM AN EXISTING ROADWAY, THE CONTRACTOR SHALL THEN BE RESPONSIBLE FOR ADEQUATE TEMPORARY LIGHTING OF THE PORTION OF THE EXISTING ROADWAY AFFECTED BY THE REMOVAL OF THE EXISTING LIGHTING.

ON THE TEMPORARY ROADWAY AROUND BRIDGE NO. CUY-480-11.62, TEMPORARY LIGHTING PROVIDING AN AVERAGE INITIAL INTENSITY OF 1.2 FOOTCANDLES SHALL BE INSTALLED BEFORE OPENING OF THE TEMPORARY PAVEMENTS TO TRAFFIC.

ON PERMANENT NEW ROADWAYS OPENED TO TRAFFIC, EITHER THE PERMANENT NEW LIGHTING SHALL BE INSTALLED BEFORE OPENING, OR TEMPORARY LIGHTING PROVIDING AN AVERAGE INITIAL INTENSITY OF 1.2 FOOTCANDLES SHALL BE INSTALLED BEFORE OPENING.

WHERE TEMPORARY LIGHTING IS TO BE INSTALLED, AND A DETAILED LAYOUT IS NOT SHOWN IN THE PLANS, THE CONTRACTOR SHALL SUBMIT FOUR (4) SETS OF THE PROPOSED DETAILED PLANS TO THE ENGINEER FOR REVIEW AND APPROVAL. THESE PLANS SHALL SHOW LOCATION OF POLES, LENGTH OF BRACKET ARMS, STYLE OF LUMINAIRES, MOUNTING HEIGHT, AND OTHER PERTINENT INFORMATION.

WOOD POLES WITH OVERHEAD WIRING MAY BE USED. ALL MATERIALS NECESSARY TO COMPLETE THE TEMPORARY LIGHTING SHALL BE FURNISHED BY THE CONTRACTOR AND THE TEMPORARY LIGHTING INSTALLATIONS SHALL BE REMOVED AND DISPOSED OF BY THE CONTRACTOR WHEN NO LONGER NEEDED.

RECONDITIONED OR APPROVED USED MATERIALS MAY BE FURNISHED FOR TEMPORARY LIGHTING. TEMPORARY OVERHEAD CONSTRUCTION SHALL NOT BE LESS THAN GRADE A FOR STRENGTH REQUIREMENT AS DEFINED BY THE NATIONAL ELECTRIC SAFETY CODE. MOUNTING HEIGHT FOR TEMPORARY LUMINAIRES SHALL NOT BE LESS THAN 27 FEET AND MINIMUM OVERHEAD CONDUCTOR CLEARANCE SHALL BE 20 FEET.

THE CITIES OF CLEVELAND AND BROOKLYN WILL PAY FOR ELECTRICAL ENGERY AND MAINTENANCE FOR **UNDISTURBED** LIGHTING ON EXISTING ROADWAYS AND FOR PERMANENT LIGHTING PLACED IN OPERATION IN THEIR RESPECTIVE CITIES. THE CONTRACTOR WILL PAY FOR ELECTRICAL ENERGY, INSTALLATION, REMOVAL, AND MAINTENANCE OF ANY TEMPORARY LIGHTING REQUIRED.

THE LUMP SUM BID PRICE FOR **ITEM SPEC.** - TEMPORARY LIGHTING" SHALL INCLUDE PAYMENT FOR ALL LABOR, EQUIPMENT, MATERIALS, AND INCIDENTALS NECESSARY TO PROVIDE THE TEMPORARY LIGHTING AS SPECIFIED.

625.02 HAZARDOUS MATERIALS

NO MATERIAL FURNISHED UNDER THIS SPECIFICATION SHALL CONTAIN POLYCHLORINATED BIPHENYLS (PCBs). TRANSFORMERS, BALLASTS AND CAPACITORS SHALL BE MARKED "NO PCBs" IN ACCORDANCE WITH FEDERAL ENVIRONMENTAL PROTECTION AGENCY REGULATION 40 CFR 761.

ITEM 625 - CABLE SPLICING KIT

THIS ITEM SHALL CONSIST OF PROVIDING AND INSTALLING AN APPROVED CABLE SPLICING KIT AS DESCRIBED IN PARAGRAPH 5 OF SECTION 713.15 OF THE ODOT CONSTRUCTION AND MATERIAL SPECIFICATIONS. THE COST OF ALL MATERIALS, LABOR, AND EQUIPMENT NECESSARY FOR THIS ITEM SHALL BE INCLUDED IN THE UNIT PRICE BID FOR EACH "ITEM 625 - CABLE SPLICING KIT."

LIGHT TOWER LUMINAIRE MOUNTING ARRANGEMENT

LUMINAIRE MOUNTING ARMS FOR TOWER LIGHTING UNITS SHALL BE INSTALLED BY THE POLE MANUFACTURER SO THAT THE REQUIRED NUMBER OF LUMINAIRES CAN BE INSTALLED ON THE LUMINAIRE MOUNTING RING IN SYMMETRICAL ARRANGEMENT. WHEN ONLY TWO ARMS ARE REQUIRED THEY SHALL BE POSITIONED SO THE ARMS ARE PARALLEL TO THE CENTERLINE OR BASELINE OF THE PAVEMENT FROM WHICH THE TOWER IS STATIONED.

UNLESS OTHERWISE SPECIFIED IN THE PLANS, ALL LUMINAIRES WITH ASYMMETRIC DISTRIBUTIONS SHALL BE INSTALLED SO THE "ARROW" OR "STREET SIDE" DESIGNATION ON THE OPTICAL ASSEMBLY IS POSITIONED PERPENDICULAR TO THE CENTERLINE OR BASELINE OF THE PAVEMENT FROM WHICH THE TOWER IS STATIONED. ANY OPTICAL ROTATION CALLED FOR WILL BE EXPRESSED AS A CLOCKWISE (CW) OR COUNTERCLOCKWISE (CCW) ANGULAR MEASUREMENT FROM THE NORMAL "ARROW" ORIENTATION.

LIGHT TOWER HANDHOLE LOCATION

FOR LIGHT TOWERS WITH MAINTENANCE PLATFORMS, THE POLE HANDHOLE SHALL BE LOCATED ON THE DOWN SLOPE OR OPEN SIDE OF THE PLATFORM. FOR LIGHT TOWERS WITHOUT MAINTENANCE PLATFORMS, THE POLE HANDHOLE SHALL BE LOCATED ON THE SIDE OPPOSITE TRAFFIC FLOW ON THE ROADWAY FROM WHICH THE TOWER IS STATIONED.

ITEM SPECIAL-TOWER LIGHTNING PROTECTION SYSTEM

THIS ITEM SHALL CONSIST OF PROVIDING AND INSTALLING AN APPROVED TOWER LIGHTNING PROTECTION SYSTEM AS DETAILED BELOW. , THE COST OF ALL MATERIALS, LABOR, AND EQUIPMENT NECESSARY FOR THIS ITEM SHALL BE INCLUDED IN THE UNIT PRICE BID FOR EACH "ITEM SPEC.- TOWER LIGHTNING PROTECTION SYSTEM".

TOWER LIGHTNING PROTECTION SYSTEM

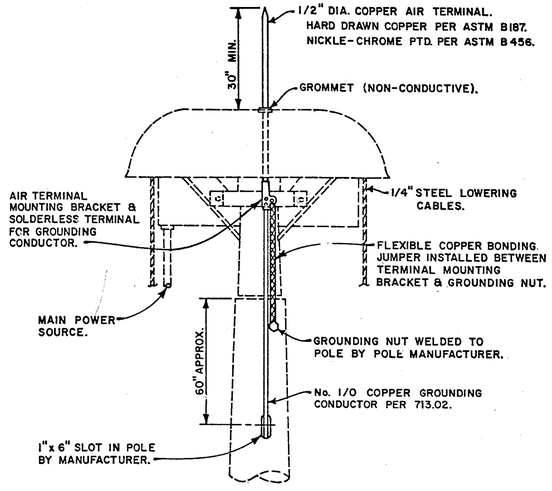


GROUNDING CONDUCTOR TO BE INSTALLED INSIDE THE POLE THROUGH SLOT AND TERMINATED BY EXOTHERMIC WELD TO GROUND ROD INSTALLED AT FOUNDATION. SLOT SHALL BE SEALED FLUSH INSIDE AND OUTSIDE, AFTER GROUNDING CONDUCTOR IS INSTALLED, WITH AN APPROVED PLIABLE CAULKING COMPOUND.

STANDARD CONSTRUCTION DRAWING HL-3

POLE BASE DETAILS SHOWN ON THIS DRAWING ARE ESSENTIALLY FOR GALVANIZED STEEL POLES. FOR ALUMINUM DESIGNS, OR OTHER PERMITTED STEEL MATERIAL DESIGNS, VARIATIONS FROM THESE DETAILS WILL BE ACCEPTABLE, AS APPROVED BY THE ENGINEER.

# GENERAL SUMMARY

CALC. BY RT DATE 6-81
CHKD BY T.R.B. DATE 6-81

| | STATE | PROJECT | |
|---|---|---|---|
| | OHIO | | |

256/500

CUYAHOGA COUNTY
CUY-480-10.39

| ITEM | SHEET NUMBERS 262 | 263 | 264 | 265 | 265 | 266 | 267 | 268 | 269 | 270 | PARTICIPATION CITY OF CLEVELAND | CITY OF BROOKLYN | GRAND TOTAL | UNIT | ITEM | DESCRIPTION | |
|---|---|---|---|---|---|---|---|---|---|---|---|---|---|---|---|---|---|
| 625 | 2 | 2 | | | | | | | | | 4 | | 4 | EACH | 625 | LIGHT TOWER, DESIGN BB 100, 713.21 | 1 |
| 625 | 2 | 1 | | | | | | | | | 3 | | 3 | EACH | 625 | LIGHT TOWER, DESIGN BB 80, 713.21 (MEDIAN MOUNTED) | 2 |
| | | | | | | | | | | | | | | | | | 3 |
| 625 | | 1 | 4 | 1 | 4 | 5 | 4 | 5 | 4 | 5 | 6 | 27 | 33 | EACH | 625 | LIGHT POLE, DESIGN A12BB47.5D (MEDIAN MOUNTED) | 4 |
| 625 | | | | | | 6 | | | | | | 6 | 6 | EACH | 625 | LIGHT POLE, DESIGN AT15B41.7 | 5 |
| 625 | | | | | | 15 | 7 | | | | | 22 | 22 | EACH | 625 | LIGHT POLE, DESIGN AT12B34.2 | 6 |
| 625 | | | | | | 2 | | | | | | 2 | 2 | EACH | 625 | LIGHT POLE, DESIGN ST8B41.7 (STRUCTURE MOUNTED) | 7 |
| 625 | | | | | | | | 2 | | | | 2 | 2 | EACH | 625 | LIGHT POLE, DESIGN ST8B34.2 (STRUCTURE MOUNTED) | 8 |
| | | | | | | | | | | | | | | | | | 9 |
| | | | | | | | | | | | | | | | | | 10 |
| 625 | | 2 | 8 | 2 | 8 | 10 | 8 | 10 | 8 | 10 | 12 | 54 | 66 | EACH | 625 | LUMINAIRE, STYLE C, TYPE II, 400 WATT HIGH PRESSURE | 11 |
| | | | | | | | | | | | | | | | | SODIUM 713.11 | 12 |
| 625 | | | | | | 8 | | | | | | 8 | 8 | EACH | 625 | LUMINAIRE, STYLE B, TYPE III, 250 WATT HIGH PRESSURE | 13 |
| | | | | | | | | | | | | | | | | SODIUM WITH 120 VOLT BALLAST AND PE 713.11 | 14 |
| 625 | | | | | | 15 | 7 | | | | | 22 | 22 | EACH | 625 | LUMINAIRE, STYLE B, TYPE II, 200 WATT HIGH PRESSURE | 15 |
| | | | | | | | | | | | | | | | | SODIUM 713.11 | 16 |
| 625 | | | | | | | | 2 | | | | 2 | 2 | EACH | 625 | LUMINAIRE, STYLE B, TYPE II, 150 WATT HIGH PRESSURE | 17 |
| | | | | | | | | | | | | | | | | SODIUM WITH 120 VOLT BALLAST AND PE 713.11 | 18 |
| 625 | | | | | | 4 | | | | | | 4 | 4 | EACH | 625 | LUMINAIRE, UNDERPASS 713.13 100 WATT HIGH PRESSURE | 19 |
| | | | | | | | | | | | | | | | | SODIUM | 20 |
| 625 | 4 | 4 | | | | | | | | | 8 | | 8 | EACH | 625 | LUMINAIRE FOR LIGHT TOWER, ASYMMETRIC TYPE III, 1000 WATT HIGH | 21 |
| | | | | | | | | | | | | | | | | PRESSURE SODIUM, 713.21 | 22 |
| 625 | 4 | 2 | | | | | | | | | 6 | | 6 | EACH | 625 | LUMINAIRE FOR LIGHT TOWER, TYPE I, 1000 WATT HIGH PRESSURE | 23 |
| | | | | | | | | | | | | | | | | SODIUM, 713.21 | 24 |
| | 6 | | | | | | | | | | 6 | | 6 | EACH | 625 | LUMINAIRE, UNDERPASS, 713.13 100 WATT HIGH PRESSURE | 25 |
| 625 | | | | | | | | | | | | | | | | SODIUM WITH 120 VOLT BALLAST | 26 |
| 625 | | | | | | | | | | | | | | | | | 27 |
| 625 | | | | | | | | | | | | | | | | | 28 |
| 625 | | | | | | | | | | | | | | | | | 29 |
| 625 | | | | | | | | | | | | | | | | | 30 |
| 625 | | | | | | | | | | | | | | | | | 31 |
| | 1 | 2 | | | | | | | | | 3 | | 3 | EACH | 625 | LIGHT TOWER FOUNDATION PAD, TYPE B | 32 |
| 625 | | 1 | 4 | 1 | 4 | 5 | 4 | 5 | 4 | 5 | 6 | 27 | 33 | EACH | 625 | MEDIAN LIGHT POLE FOUNDATION (TYPE B-50 CONCRETE BARRIER) | 33 |
| 625 | | | | | | 6 | | | | | | 6 | 6 | EACH | 625 | LIGHT POLE FOUNDATION 24" DIA. X 8' DEEP | 34 |
| 625 | | | | | | 15 | 7 | | | | | 22 | 22 | EACH | 625 | LIGHT POLE FOUNDATION 24" DIA. X 6' DEEP | 35 |
| | | | | | | | | | | | | | | | | | 36 |
| | | | | | | | | | | | | | | | | | 37 |
| 625 | 2 | 2 | | | | | | | | | 4 | | 4 | EACH | 625 | LIGHT TOWER FOUNDATION 36" DIA. X 20'-0" | 38 |
| 625 | 2 | 1 | | | | | | | | | 3 | | 3 | EACH | 625 | LIGHT TOWER FOUNDATION, MEDIAN BARRIER, 36" X 20'-0" DEPTH, AS | 39 |
| | | | | | | | | | | | | | | | | PER PLAN | 40 |
| | | | | | | | | | | | | | | | | | 41 |
| 625 | | | | | | 2 | | 2 | | | | 4 | 4 | SETS | SPEC. | LIGHT POLE ANCHOR BOLTS FOR STRUCTURE, 713.01 | 42 |
| | | | | | | | | | | | | | | | | | 43 |
| 625 | 8 | 7 | 4 | 1 | 4 | 26 | 16 | 6 | 4 | 5 | 20 | 61 | 81 | EACH | 625 | GROUND ROD, 713.16 | 44 |
| 625 | | | | | | | | | | | | | | | | | 45 |
| 625 | 11 | | 2 | | | 14 | 3 | 3 | | 1 | 13 | 21 | 34 | EACH | 625 | PULLBOX, 18" DIA., 713.09 WITH CONCRETE COVER, AS PER PLAN | 46 |
| | | | | | | | | | | | | | | | | | 47 |
| 625 | 2 | 2 | 2 | | 1 | 2 | | 2 | | 1 | 6 | 6 | 12 | EACH | 625 | MEDIAN PULLBOX (TYPE B-50 CONCRETE BARRIER) | 48 |
| 625 | 2 | 2 | 2 | | | | 2 | | | | 6 | 2 | 8 | EACH | 625 | TRANSITION JUNCTION BOX | 49 |
| 625 | | | | | | | | | | | | | | | | | 50 |
| | | | | | | | | | | | | | | | | | 51 |
| 625 | 508 | 312 | 307 | | | 937 | 257 | 510 | | | 1,127 | 1,704 | 2,831 | LIN.FT. | 625 | CONDUIT, 2" 713.04 | 52 |
| 625 | 473 | 152 | 152 | | | 780 | 195 | 76 | | 76 | 777 | 1,127 | 1,904 | LIN.FT. | 625 | CONDUIT, 3" 713.04 | 53 |
| 625 | 45 | 75 | | | | 85 | | 85 | | | 120 | 170 | 290 | LIN.FT. | 625 | CONDUIT, 3" 713.07 ENCASED | 54 |
| 625 | 1172 | 227 | 152 | | | 1731 | 511 | 226 | | 76 | 1,551 | 6,544 | 8,095 | LIN.FT. | 625 | TRENCH, 24" DEEP | 55 |
| | | | | | | | | | | | | | | | | | 56 |
| | | | | | | | | | | | | | | | | | 57 |
| 625 | 1 | | | | | | | | | | 1 | | 1 | EACH | 625 | PORTABLE POWER UNIT, 713.21 | 58 |
| SPEC | 4 | 3 | | | | | | | | | 7 | | 7 | EACH | SPEC | TOWER LIGHTNING PROTECTION | 59 |
| | | | | | | | | | | | | | | | | | 60 |
| 625 | 4754 | 6194 | 5684 | 50 | 3970 | 8980 | 3983 | 7224 | 6080 | 4972 | 16,682 | 35,215 | 51,897 | LIN.FT. | 625 | NO. 4 AWG, 5000 VOLT DISTRIBUTION CABLE | 61 |
| 625 | 366 | | | | | 4406 | 1396 | | | | 366 | 5,802 | 6,168 | LIN.FT. | 625 | 1½" DUCT CABLE WITH TWO NO. 4 AWG CABLE, 5000 VOLT | 62 |
| 625 | 68 | 223 | 892 | 223 | 892 | 3575 | 1536 | 1413 | 892 | 1115 | 1,406 | 9,423 | 10,829 | LIN.FT. | 625 | NO. 10 AWG POLE AND BRACKET CABLE | 63 |
| | | | | | | | | | | | | | | | | | 64 |
| 625 | | | | | | 23 | 7 | 2 | | | | 32 | 32 | EACH | 625 | CONNECTOR KIT, TYPE II | 65 |
| 625 | | | | | | 23 | 7 | 2 | | | | 32 | 32 | EACH | 625 | CONNECTOR KIT, TYPE III | 66 |
| 625 | | 2 | 8 | 2 | 8 | 10 | 8 | 10 | 8 | 10 | 12 | 54 | 66 | EACH | 625 | CONNECTOR KIT, TYPE VI | 67 |
| | | | | | | | | | | | | | | | | | 68 |
| 625 | 6 | 6 | 4 | | 2 | 2 | | 6 | | 2 | 16 | 12 | 28 | EACH | 625 | CONNECTOR KIT, TYPE VII-B | 69 |
| 625 | | 2 | 8 | 2 | 8 | 12 | 8 | 10 | 8 | 10 | 12 | 56 | 68 | EACH | 625 | CONNECTOR KIT, TYPE VII-C | 70 |
| | 22 | | 4 | | | 28 | 6 | 6 | | 2 | 26 | 42 | 68 | EACH | 625 | CABLE SPLICING KIT | 71 |
| | | | | | | | | | | | | | | | | | 72 |

# GENERAL SUMMARY

CALC. BY R.T. DATE 6-81
CHK'D. BY T.R.B. DATE 6-81

| | STATE | PROJECT | |
|---|---|---|---|
| | OHIO | | |

257/500

CUYAHOGA COUNTY
CUY-480-10.39

| ITEM | SHEET NUMBERS | | | | | | | | | | PARTICIPATION | | GRAND TOTAL | UNIT | ITEM | DESCRIPTION | |
|---|---|---|---|---|---|---|---|---|---|---|---|---|---|---|---|---|---|
| | 254 | 254 | 255 | 262 | 263 | 264 | 266 | 267 | 268 | | CITY OF CLEVELAND | CITY OF BROOKLYN | | | | | |
| 625 | | | | 2 | | | 1 | | 1 | | 2 | 2 | 4 | EACH | 625 | CONTROL CENTER (WOT, TIE, SUM, WUP) | 1 |
| 625 | | | | | | | | | | | | | | | | | 2 |
| 625 | | | | | | | | | | | | | | | | | 3 |
| | | | | | | | | | | | | | | | | | 4 |
| 625 | | | | | | | | | 1 | | | 1 | 1 | EACH | 625 | POWER SERVICE NO. 4 | 5 |
| | | | | | | | | | | | | | | | | | 6 |
| | | | | | | | | | | | | | | | | | 7 |
| | | | | | | | | | | | | | | | | | 8 |
| SPEC | | | | L.S. | | | | | | | LUMP | | LUMP | | SPEC | SERVICE TO UNDERPASS LIGHTING FOR BRIDGE NO. CUY 480-10.54 | 9 |
| SPEC | | | | | | | L.S. | | | | | LUMP | LUMP | | SPEC | SERVICE TO UNDERPASS LIGHTING FOR BRIDGE NO. CUY 480-11.62 | 10 |
| | | | | | | | | | | | | | | | | | 11 |
| 625 | | | | 1 | | | | | | | 1 | | 1 | EACH | 625 | STRUCTURE GROUNDING SYSTEM FOR BRIDGE NO. CUY 480-10.54 | 12 |
| 625 | | | | | 1 | | | | | | 1 | | 1 | EACH | 625 | STRUCTURE GROUNDING SYSTEM FOR BRIDGE NO. CUY 480-10.78 | 13 |
| 625 | | | | | | 1 | | | | | 1 | | 1 | EACH | 625 | STRUCTURE GROUNDING SYSTEM FOR BRIDGE NO. CUY 480-10.88 | 14 |
| 625 | | | | | | | 1 | | | | | 1 | 1 | EACH | 625 | STRUCTURE GROUNDING SYSTEM FOR BRIDGE NO. CUY 480-11.62 | 15 |
| 625 | | | | | | | 1 | | | | | 1 | 1 | EACH | 625 | STRUCTURE GROUNDING SYSTEM FOR BRIDGE NO. CUY 480-11.68 | 16 |
| 625 | | | | | | | | 1 | | | | 1 | 1 | EACH | 625 | STRUCTURE GROUNDING SYSTEM FOR BRIDGE NO. CUY 480-11.69 | 17 |
| 625 | | | | | | | | 1 | | | | 1 | 1 | EACH | 625 | STRUCTURE GROUNDING SYSTEM FOR BRIDGE NO. CUY 480-11.71 | 18 |
| 625 | | | | | | | | | 1 | | | 1 | 1 | EACH | 625 | STRUCTURE GROUNDING SYSTEM FOR BRIDGE NO. CUY 480-12.16 | 19 |
| | | | | | | | | | | | | | | | | | 20 |
| | | | | | | | | | | | | | | | | | 21 |
| SPEC | | | L.S. | | | | | | | | | LUMP | LUMP | | SPEC | TEMPORARY LIGHTING | 22 |
| 839 | | L.S. | | | | | | | | | | LUMP | LUMP | | 839 | HIGH VOLTAGE TEST | 23 |
| 605 | 250 | 500 | | | | | | | | | 250 | 500 | 750 | LIN.FT. | 605 | 4" SHALLOW PIPE UNDERDRAINS | 24 |
| | | | | 2 | | | 1 | | 1 | | 2 | 2 | 4 | EACH | 625 | POWER SERVICE (WOT, TIE, SUM, WUP) | |

CALC. BY T.R.B. DATE 4-20-81
CHK'D. BY A.R.H. DATE 4-23-81

| | STATE | PROJECT | |
|---|---|---|---|
| | OHIO | | |

CUYAHOGA COUNTY
CUY - 480 - 10.39

258/500

# LIGHTING SUB SUMMARY

| REFERENCE No. | SIDE | STATION | STATION | Light Tower Design BB 100, 713.21 | Light Tower, Design BB 80, 713.21 (Med. Mounted) | Luminaire, Light Tower Assy. Type III 1000W H.P.S. | Luminaire, Light Tower Assy. Type I 1000W H.P.S. | Luminaire, Underpass 715.13, 100W, H.P.S. (120V) | Light Tower Foundation Pad Type B | Light Tower Foundation 36" Dia. X 20' Deep | Light Tower Foundation Med. Base As Per Plan | Ground Rod 713.16 | Pull Box, 18" Dia. 713.09 W/Conc. Cover, As Per Plan | Median Pull Box | Tower Lighting Protection | No. 4 AWG 3000 Volt Distribution Cable | 1 1/2" Duct Cable with 2 No. 4 AWG Cable 3000V No. 10 AWG Cable and Bracket Cable | | | Connector Kit Type VIII - B | Cable Splicing Kit | Service To U.R Lighting Bridge No. Cuy 480.1854 | Sys. Grounding System Bridge No. Cuy-480.1854 | Control Center Not | Control Center W/UP | Portable Power Unit |
|---|---|---|---|---|---|---|---|---|---|---|---|---|---|---|---|---|---|---|---|---|---|---|---|---|---|---|
| | | | | EA | EA | EA | | EA | EA | | EA | EA | EA | | EA | | LF | LF | LF | LF | LF | | EA | EA | Loop | EA | EA | EA | EA |
| 1 | Rt | 52+90 | W 130 TH. ST. | | | | | | | | | | | 1 | | | | | | | | | 2 | | | | | |
| 2 | Rt | 52+90 | 53+35 | | | | | | | | | | | | | | 55 | | 55 | | 60 | | | | | | | |
| 3 | Rt | 53+35 | 55+10 | | | | | | | | | | | | | | | | 180 | | 185 | | | | | | | |
| 4 | Rt | 54+75 | W 130 TH. ST. | 1 | | 2 | | | | 1 | | 2 | | | | 1 | | | | | | | | | | | | |
| 5 | Rt | 54+75 | 55+10 | | | | | | | | | | | | | | 50 | | 50 | | 120 | | | | | | | |
| 6 | Rt | 55+10 | | | | | | | | | | | | 1 | | | | | | | | | 2 | | | | | |
| 7 | Rt/Lt | 55+10 | 55+10 | | | | | | | | | | | | | | 55 | | 55 | | 130 | | | | | | | |
| 8 | Lt | 55+10 | | | | | | | | | | | | 1 | | | | | | | | | 2 | | | | | |
| 9 | Lt/Rt | 55+10 | 54+95 | | | | | | | | | | | | | | 40 | | 40 | | 100 | | | | | | | |
| 10 | Lt | 54+95 | | | | | | | | | | | | 1 | | | | | | | | | 2 | | | | | |
| 11 | Lt | 54+95 | 54+45 | | | | | | | | | | | | | | 50 | | 50 | | 120 | | | | | | | |
| 12 | Lt | 54+45 (15Lt) | W 130 TH. ST. | | | | | | | | | | | | | | | | | | | | | | | 1 | | |
| 13 | Lt | 54+45 | 54+54 | | | | | | | | | | | | | | 8 | | 8 | | 36 | 36 | | | | | | |
| 14 | Lt | 54+54 | 54+48 | | | | | | | | | | | | | | 6 | | 6 | | 32 | 32 | | | | | | |
| 15 | Lt | 54+48 | | | | | | | | | | | | | | | | | | | | | | | | | 1 | |
| 16 | Lt | 54+48 | 55+18 | | | | | | | | | | | | | | 70 | | 70 | | 160 | | | | | | | |
| 17 | Lt | 55+18 (UP) | | | | | 6 | | | | | | | 1 | | | | | | | | | 2 | LS | | | | |
| 18 | Lt | 54+95 | 56+55 | | | | | | | | | | | | | | 160 | | 160 | | 340 | | | | | | | |
| 19 | Lt/Rt | 56+65 | W 130 TH. ST. | | | | | | | | | | | 1 | | | | | | | | | 2 | | | | | |
| 20 | Lt/Rt | 56+65 | 56+55 | | | | | | | | | | | | | | 40 | | 40 | | 100 | | | | | | | |
| 21 | Lt | 56+55 | | | | | | | | | | | | 1 | | | | | | | | | 2 | | | | | |
| 22 | Lt | 56+55 | 57+55 | | | | | | | | | | | | | | 100 | | 100 | | 210 | | | | | | | |
| 23 | Lt | 57+55 | | | | | | | | | | | | 1 | | | | | | | | | | | | | | |
| 24 | Lt | 57+55 | 58+10 | | | | | | | | | | | | | | 55 | | 55 | | 120 | | | | | | | |
| 25 | Lt | 58+10 | W 130 TH. ST. | | | | | | | | | | | 1 | | | | | | | | | 2 | | | | | |
| 26 | Rt/Lt | 58+10 (W 130) | 582+10 (W-1) | | | | | | | | | | | | | | | | 75 | | | 85 | | | | | | |
| 27 | Lt/Rt | 582+00 | 582+00 | | | | | | | | | | | | | | 26 | | 26 | | | 36 | | | | | | |
| 28 | Lt | 582+00 | (RAMP W-1) | 1 | | 2 | | | | 1 | 1 | | 2 | | | 1 | | | | | | | | | | | | |
| 29 | Lt/Rt | 54+45 (W 130TH) | 54+45 (20Lt) | | | | | | | | | | | | | | 5 | | 5 | | 60 | | | | | | | |
| 30 | Lt | 54+45 | (W 130TH) | | | | | | | | | | | 1 | | | | | | | | | 4 | | | | | |
| 31 | Lt/Rt | 54+45 (W 130TH) | 581+60 (I-480) | | | | | | | | | | | | | | | 45 | 45 | | 200 | | | | | | | |
| 32 | Rt/℄ | 581+60 | 581+60 | | | | | | | | | | | | | | 76 | | 76 | | 324 | | | | | | | |
| 33 | ℄ | 576+50 | | | 1 | | 2 | | | | 1 | 2 | | | | 1 | | | | | | | | | | | | |
| 34 | ℄ | 576+50 | 581+25 | | | | | | | | | | | | | | | | | | 960 | | | | | | | |
| 35 | ℄ | 581+25 | | | 1 | | 2 | | | | 1 | 2 | | | | 1 | | | | | | | | | | | | |
| 36 | ℄ | 581+25 | 581+60 | | | | | | | | | | | | | | | | | | 170 | | | | | | | |
| 37 | ℄ | 581+60 | | | | | | | | | | | | | | | | | | | | | 4 | | | | | |
| 38 | ℄ | 581+60 | 582+30.1 | | | | | | | | | | | | | | | | | | 300 | | | | | | | |
| 39 | ℄ | 582+30.1 | | | | | | | | | | | | | | | 1 | | | | | | | | | | | |
| 40 | ℄ | 582+30.1 | 583+38.6 | | | | | | | | | | | | | | | 109 | | | 434 | | | | | | 1 | |
| 41 | ℄ | 583+38.6 | | | | | | | | | | | | | | | 1 | | | | | | | | | | | |
| 42 | ℄ | 583+38.6 | 583+75 | | | | | | | | | | | | | | | | | | 156 | | | | | | | |
| 43 | Rt | 583+81 | | | | | | | | | | | | 1 | | | | | | | | | 2 | | | | | |
| 44 | Rt/℄ | 583+81 | 583+75 | | | | | | | | | | | | | | 76 | | 76 | | 172 | | | | | | | |
| 45 | ℄ | 583+75 | | | | | | | | | | | | | | | | | | | | | 2 | | | | | |
| 46 | ℄ | 583+75 | 585+00 | | | | | | | | | | | | | | | | | | 510 | | | | | | | |
| 47 | | | | | | | | | | | | | | | | | | | | | | | | | | | | |
| 48 | | | | | | | | | | | | | | | | | | | | | | | | | | | | |
| 49 | | | | | | | | | | | | | | | | | | | | | | | | | | | | |
| Sheet No. 262 Total | | | | 2 | 2 | 4 | | 4 | 6 | | 1 | 2 | 2 | 8 | | 11 | 2 | 508 | 473 | 45 | 1172 | | 2 | 4 | 4754 | 366 | 68 | | | 6 | 22 | LS. | 1 | 1 | 1 | 1 |

| REFERENCE No. | SIDE | STATION | STATION | Light Tower Design BB 100, 713.21 | Light Tower Design BB 80, 713.21 (Med. Mounted) | Light Pole Design A12 B34.1.5 (1) (Med. Mounted) | Luminaire, Light Tower Assy. Type III 1000W H.P.S. | Luminaire, Light Tower Assy. Type I 1000 W. H.P.S. | Luminaire, Style C Type II 400W H.P.S. | | Light Tower Foundation Pad Type B | Light Tower Foundation 36" Dia. X 20' Deep | Light Tower Foundation Med. Base As Per Plan | Med. Light Pole Foundation | | Ground Rod 713.16 | Pull Box, 18" Dia. 713.09 W/Conc. Cover, As Per Plan | Median Pull Box | Transition Junction Box | Conduit 2" 713.04 | Conduit 3" 713.04 | Conduit 3" 713.07 Encased | Trench 24" Deep | Tower Lighting Protection | No. 4 AWG, 3000 Volt Distribution Cable | No. 10 AWG Pole Taid Bracket Cable | Connector Kit Type III | Connector Kit Type VIII - C | | Connector Kit Type VIII - B | Sys. Grounding System Bridge No. Cuy-480.11.78 | Sys. Grounding System Bridge No. Cuy-480.11.88 | Cable Splice Kit |
|---|---|---|---|---|---|---|---|---|---|---|---|---|---|---|---|---|---|---|---|---|---|---|---|---|---|---|---|---|---|---|---|
| | | | | EA | EA | EA | EA | EA | EA | | EA | EA | EA | EA | | EA | EA | EA | EA | LF | LF | LF | LF | EA | LF | LF | EA | EA | | EA | EA | EA | EA |
| 50 | Rt | 587+50 | | 1 | | | 2 | | | | 1 | 1 | | | | 2 | | | | | | | 1 | | | | | | | | | |
| 51 | Rt/℄ | 587+50 | 587+50 | | | | | | | | | | | | | | | | | | | 32 | 32 | | 74 | | | | | | | |
| 52 | | | | | | | | | | | | | | | | | | | | | | | | | | | | | | | | |
| 53 | Rt/℄ | 587+50 | 587+50 | | | | | | | | | | | | | | | | | | 76 | | 76 | | 162 | | | | | | | |
| 54 | | | | | | | | | | | | | | | | | | | | | | | | | | | | | | | | |
| 55 | Lt | 587+50 | | 1 | | | 2 | | | | 1 | 1 | | | | 2 | | | | | | | 1 | | | | | | | | | |
| 56 | Lt/℄ | 587+50 | 587+50 | | | | | | | | | | | | | | | | | | | 43 | 43 | | 96 | | | | | | | |
| 57 | | | | | | | | | | | | | | | | | | | | | | | | | | | | | | | | |
| 58 | Lt/℄ | 587+50 | 587+50 | | | | | | | | | | | | | | | | | | 76 | | 76 | | 162 | | | | | | | |
| 59 | ℄ | 585+00 | 587+50 | | | | | | | | | | | | | | | | | | | | | | 1020 | | | | | | | |
| 60 | ℄ | 587+50 | | | | | | | | | | | | | | | | | | 1 | | | | | | | | | 4 | | | |
| 61 | ℄ | 587+50 | 592+75 | | | | | | | | | | | | | | | | | | | | | | 2130 | | | | | | | |
| 62 | ℄ | 592+75 | | | 1 | | | 2 | | | | | 1 | | | 2 | | | | | | | | 1 | | | | | | | | |
| 63 | ℄ | 592+75 | 593+38.7 | | | | | | | | | | | | | | | | | | | | | | 265 | | | | | | | |
| 64 | ℄ | 593+38.7 | | | | | | | | | | | | | | | | | | 1 | | | | | | | | | | | | |
| 65 | ℄ | 593+38.7 | 596+51.0 | | | | | | | | | | | | | | | | | | 312 | | | | 1249 | | | | | 1 | | |
| 66 | ℄ | 596+51.0 | | | | | | | | | | | | | | | | | | 1 | | | | | | | | | | | | |
| 67 | ℄ | 596+51.0 | 597+15 | | | | | | | | | | | | | | | | | | | | | | 266 | | | | | | | |
| 68 | ℄ | 597+15 | | | | | | | | | | | | | | | | | | 1 | | | | | | | | | 2 | | | |
| 69 | ℄ | 597+15 | 597+75 | | | | | | | | | | | | | | | | | | | | | | 260 | | | | | | | |
| 70 | ℄ | 597+75 | | | | 1 | | | 2 | | | | 1 | 1 | | | | | | | | | | | | 223 | 2 | 2 | | | | |
| 71 | ℄ | 597+75 | 599+00 | | | | | | | | | | | | | | | | | | | | | | 510 | | | | | | | |
| Sheet No. 263 Total | | | | 2 | 1 | 1 | 4 | 2 | 2 | | 2 | 2 | 1 | 1 | | 7 | | 2 | 2 | 312 | 152 | 75 | 227 | 3 | 6194 | 223 | 2 | 2 | | 6 | 1 | | |
| 72 | ℄ | 599+00 | 600+90 | | | | | | | | | | | | | | | | | | | | | | 770 | | | | | | | |
| 73 | ℄ | 600+90 | | | | 1 | | | 2 | | | | 1 | 1 | | | | | | | | | | | | 223 | 2 | 2 | | | | |
| 74 | ℄ | 600+90 | 601+22.2 | | | | | | | | | | | | | | | | | | | | | | 139 | | | | | | | |
| 75 | ℄ | 601+22.2 | | | | | | | | | | | | | | | | | | 1 | | | | | | | | | | | | |
| 76 | ℄ | 601+22.2 | 604+29.3 | | | | | | | | | | | | | | | | | | 307 | | | | 1228 | | | | | | 1 | |
| 77 | ℄ | 604+29.3 | | | | | | | | | | | | | | | | | | 1 | | | | | | | | | | | | |
| 78 | ℄ | 604+29.3 | 604+60 | | | | | | | | | | | | | | | | | | | | | | 133 | | | | | | | |
| 79 | ℄ | 604+60 | | | | 1 | | | 2 | | | | 1 | 1 | | | | | | | | | | | | 223 | 2 | 2 | | | | |
| 80 | ℄ | 604+60 | 606+90 | | | | | | | | | | | | | | | | | | | | | | 940 | | | | | | | |
| 81 | Lt | 606+90 | | | | | | | | | | | | | | | | | | 1 | | | | | | | | | | | | 2 |
| 82 | Lt/℄ | 606+90 | 606+90 | | | | | | | | | | | | | | | | | | | 76 | | 76 | 172 | | | | | | | |
| 83 | ℄ | 606+90 | | | | | | | | | | | | | | | | | | 1 | | | | | | | | | 2 | | | |
| 84 | ℄ | 606+90 | 607+60 | | | | | | | | | | | | | | | | | | | | | | 300 | | | | | | | |
| 85 | ℄ | 607+60 | | | | 1 | | | 2 | | | | 1 | 1 | | | | | | | | | | | | 223 | 2 | 2 | | | | |
| 86 | ℄ | 607+60 | 610+65 | | | | | | | | | | | | | | | | | | | | | | 1240 | | | | | | | |
| 87 | ℄ | 610+65 | | | | 1 | | | 2 | | | | 1 | 1 | | | | | | | | | | | | 223 | 2 | 2 | | | | |
| 88 | ℄ | 610+65 | 612+85 | | | | | | | | | | | | | | | | | | | | | | 450 | | | | | | | |
| 89 | Rt | 612+85 | | | | | | | | | | | | | | | | | | 1 | | | | | | | | | | | | 2 |
| 90 | Rt/℄ | 612+85 | 612+85 | | | | | | | | | | | | | | | | | | | 76 | | 76 | 172 | | | | | | | |
| 91 | ℄ | 612+85 | | | | | | | | | | | | | | | | | | 1 | | | | | | | | | 2 | | | |
| 92 | ℄ | 612+85 | 613+50 | | | | | | | | | | | | | | | | | | | | | | 140 | | | | | | | |
| Sheet No. 264 Total | | | | | 4 | | 8 | | | | 4 | 4 | 2 | 2 | 2 | 307 | 152 | | 152 | | | | | | 5684 | 892 | 8 | 8 | | 4 | | 1 | 4 |
| 93 | ℄ | 613+50 | 613+70 | | | | | | | | | | | | | | | | | | | | | | 50 | | | | | | | |
| 94 | ℄ | 613+70 | | | | 1 | | | 2 | | | | 1 | 1 | | | | | | | | | | | | 223 | 2 | 2 | | | | |
| Sheet No. 265 Total | | | | | | 1 | | | 2 | | | | 1 | 1 | | | | | | | | | | | | 50 | 223 | 2 | 2 | | | | |

City of Cleveland

CALC. BY TDB DATE 5/81
CHK'D. BY ARH DATE 5/81

| FED. RD. DIVISION | STATE | PROJECT | |
|---|---|---|---|
| 2 | OHIO | | |

259/500

CUYAHOGA COUNTY
CUY-480-10.39

# LIGHTING SUB SUMMARY

| REFERENCE No. | SIDE | STATION | STATION | Light Pole Design 48'25' (Mtd. Mtd.) | Light Pole Design AT 12 B 34.2 | Luminaire Style C Type II, 400 W.H.P.S. | Luminaire Style B Type II, 200W.H.P.S. | | | | Median Light Pole Foundation | Light Pole Foundation 24" Dia. X 6' Deep | Ground Rod, 713.16 | Pull Box, 18" 713.09 W/Conc. Cov. As Per Plan | Median Pull Box | Conduit 3" 713.04 | Trench | No. 4 AWG, 5000 Volt Distribution Cable | 1 1/2" Duct Cable W/Two No. 4 AWG Cables, 5000 No. 10 AWG Pole And Bracket Cable | | Connector Kit Type II | Connector Kit Type III | Connector Kit Type VI | Connector Kit Type VII-C | Connector Kit Type VII-B | Cable Splice Kit | | | |

CALC. BY TRB DATE 5/81
CHK'D. BY ARH DATE 5/81

| | STATE | PROJECT | |
|---|---|---|---|
| | OHIO | | |

260
500

CUYAHOGA COUNTY
CUY-480-10.39

# LIGHTING SUB SUMMARY

| REFERENCE NO. | SIDE | STATION | STATION | Light Pole Design A12 B8417.5 D(Mod.Mtd) | Light Pole Design AT12 B 34.2 | Light Pole Design AT15 B 41.7 | Light Pole Design ST 8841.11 Str. Mtd. | | Luminaire, Style C Type II, 400 W. H.P.S. | Luminaire, Style B Type III, 250 W. H.P.S. (100V) | Luminaire, Style B Type II, 200 W. H.P.S. | Luminaire Underpass 713.13, 100 W. H.P.S. | | | | | Median Light Pole Foundation | Light Pole Foundation 24" Dia. X 6' Deep | Light Pole Foundation 24" Dia. X 8' Deep | Light Pole Anchor Bolts for Str. 713.01 | | Ground Rod 713.16 | Pull Box, 18" 713.09 W/Conc. Cover 45 Pat. Rad. | Median Pull Box | Transition Junction Box | | Conduit, 2" 713.04 | Conduit, 3" 713.04 | Conduit 3" 713.07 Encased Trench | Trench | | No. 4 AWG, 5000 V 6Ct Distribution Cable | 1 1/2" Duct Cable W/Two No. 4 AWG Cable 5000 V. | No. 10 AWG Pole And Bracket Cable | | Connector Kit Type II | Connector Kit Type III | Connector Kit Type IV | Connector Kit Type VII C | | Connector Kit Type VII - B | Cable Splice Kit | | Control Center Tie | Service To Underpass Lighting, Cuy. 480/1140 | Str. Grounding System Bridge No. Cuy. 480 11.62 | Str. Grounding System Bridge No. Cuy. 480 11.58 | Str. Grounding System Bridge No. Cuy. 480 11.69 |
|---|---|---|---|---|---|---|---|---|---|---|---|---|---|---|---|---|---|---|---|---|---|---|---|---|---|---|---|---|---|---|---|---|---|---|---|---|---|---|---|---|---|---|---|---|
| | | | | EA | EA | EA | EA | | EA | EA | EA | EA | | | | | EA | EA | EA | SET | | EA | EA | EA | EA | | LF | LF | LF | LF | | LF | LF | LF | | EA | EA | EA | EA | | EA | EA | | EA | EA | EA | EA |
| 1 | Lt | 57+55 | (Tiedeman) | | | | 1 | | | 1 | | | | | | | | | 1 | | | | | | | | | | | | | | 99 | | 1 | 1 | | | | | | | | | | | |
| 2 | Lt | 57+55 | 60+25 | | | | | | | | | | | | | | | | | | | | | | | 270 | | | 10 | | 560 | | | | | | | | | | | | 1 | | | |
| 3 | Lt | 60+25 | | | | | | | | | | | | | | | | | | | | 1 | | | | | | | | | | | | | | | | | | 2 | | | | | |
| 4 | Lt | 60+25 | 60+85 | | | | | | | | | | | | | | | | | | | | | | | | | | 60 | | | 70 | | | | | | | | | | | | |
| 5 | Lt | 60+85 | (Tiedeman) | | | 1 | | | | 1 | | | | | | | | 1 | | | | 1 | | | | | | | | | | 113 | | 1 | 1 | | | | | | | | | | |
| | | | | | | | | | | | | | | | | | | | | | | | | | | | | | | | | | | | | | | | | | | | | | | |
| 6 | Rt | 52+60 | (Tiedeman) | | | 1 | | | | 1 | | | | | | | | 1 | | | | 1 | | | | | | | | | | 113 | | 1 | 1 | | | | | | | | | | |
| 7 | Rt | 52+60 | 53+85 | | | | | | | | | | | | | | | | | | | | | | | | | | 125 | | | 135 | | | | | | | | | | | | |
| 8 | Rt | 53+85 | | | | | | | | | | | | | | | | | | | | 1 | | | | | | | | | | | | | | | | | | 2 | | | | | |
| 9 | Rt | 53+85 | 53+90 | | | | | | | | | | | | | | | | | | | | | | | 5 | | | 5 | | 30 | | | | | | | | | | | | | |
| 10 | Rt Lt | 53+85 | 53+85 | | | | | | | | | | | | | | | | | | | | | | | | 94 | | 94 | | 208 | | | | | | | | | | | | | |
| 11 | | | | | | | | | | | | | | | | | | | | | | | | | | | | | | | | | | | | | | | | | | | | | | |
| 12 | | | | | | | | | | | | | | | | | | | | | | | | | | | | | | | | | | | | | | | | | | | | | | |
| 13 | Rt | 54+75 | 55+40 | | | | | | | | | | | | | | | | | | | | | | | | 65 | | 65 | | | 65 | | | | | | | | | | | | | |
| 14 | | | | | | | | | | | | | | | | | | | | | | | | | | | | | | | | | | | | | | | | | | | | | | |
| 15 | Rt | 55+40 | 55+90 | | | | | | | | | | | | | | | | | | | | | | | | | | 50 | | | 55 | | | | | | | | | | | | | |
| 16 | Rt | 55+90 | | | | 1 | | | | 1 | | | | | | | | 1 | | | | 1 | | | | | | | | | | 113 | | 1 | 1 | | | | | | | | | | |
| 17 | Rt | 55+90 | 56+70 | | | | | | | | | | | | | | | | | | | | | | | | | | 80 | | | 90 | | | | | | | | | | | | | |
| 18 | Rt | 56+70 | | | | | | | | | | | | | | | | | | | | 1 | | | | | | | | | | | | | | | | | | 2 | | | | | |
| 19 | Rt | 56+70 | 59+20 | | | | | | | | | | | | | | | | | | | | | | | 250 | | | 10 | | 520 | | | | | | | | | | | | | |
| 20 | Rt | 59+20 | | | | 1 | | | | 1 | | | | | | | | | 1 | | | | | | | | | | | | | 99 | | 1 | 1 | | | | | | | | | | |
| 21 | Rt | 59+20 | 60+00 | | | | | | | | | | | | | | | | | | | | | | | 80 | | | 10 | | 180 | | | | | | | | | | | | | |
| 22 | Rt | 60+00 | | | | | | | | | | | | | | | | | | | | 1 | | | | | | | | | | | | | | | | | | 2 | | | | | |
| 23 | Rt | 60+00 | 61+30 | | | | | | | | | | | | | | | | | | | | | | | | | | 130 | | | 135 | | | | | | | | | | | | | |
| 24 | | | | | | | | | | | | | | | | | | | | | | | | | | | | | | | | | | | | | | | | | | | | | | |
| 25 | Rt | 61+30 | 61+90 | | | | | | | | | | | | | | | | | | | | | | | | 60 | | 60 | | | 60 | | | | | | | | | | | | | |
| 26 | Rt | 61+90 | | | | | | | | | | | | | | | | | | | | | | | | | | | | | | | | | | | | | | | | | | | | |
| 27 | Rt | 61+90 | 62+50 | | | | | | | | | | | | | | | | | | | | | | | | | | 60 | | | 65 | | | | | | | | | | | | | |
| 28 | Rt | 62+50 | | | | 1 | | | | 1 | | | | | | | | 1 | | | | 1 | | | | | | | | | | 113 | | 1 | 1 | | | | | | | | | | |
| | | | | | | | | | | | | | | | | | | | | | | | | | | | | | | | | | | | | | | | | | | | | | | |
| | | | | | | | | | | | | | | | | | | | | | | | | | | | | | | | | | | | | | | | | | | | | | | |
| | | | | | | | | | | | | | | | | | | | | | | | | | | | | | | | | | | | | | | | | | | | | | | |
| | | | | | | | | | | | | | | | | | | | | | | | | | | | | | | | | | | | | | | | | | | | | | | |
| | | | | | | | | | | | | | | | | | | | | | | | | | | | | | | | | | | | | | | | | | | | | | | |
| | | | | | | | | | | | | | | | | | | | | | | | | | | | | | | | | | | | | | | | | | | | | | | |
| SHEET NO. 266 TOTAL | | | | 5 | 15 | 6 | 2 | | 10 | 8 | 15 | 4 | | | | | 5 | 15 | 6 | 2 | | 26 | 14 | 2 | | 937 | 780 | 85 | 4731 | | 8980 | 4406 | 3515 | | 23 | 23 | 10 | 12 | | 2 | 28 | | 1 | LS. | 1 | 1 |
| | | | | | | | | | | | | | | | | | | | | | | | | | | | | | | | | | | | | | | | | | | | | | |
| | | | | | | | | | | | | | | | | | | | | | | | | | | | | | | | | | | | | | | | | | | | | | |
| | | | | | | | | | | | | | | | | | | | | | | | | | | | | | | | | | | | | | | | | | | | | | |
| 32 | ℄ | 642+50 | 643+18.4 | | | | | | | | | | | | | | | | | | | | | | | | | | | | | 274 | | | | | | | | | | | | | |
| 33 | ℄ | 643+18.4 | | | | | | | | | | | | | | | | | | | | | | | 1 | | | | | | | | | | | | | | | | | | | |
| 34 | ℄ | 643+18.4 | 644+31.6 | | | | | | | | | | | | | | | | | | | | | | | 113 | | | | | | 453 | | | | | | | | | | | | 1 | |
| 35 | ℄ | 644+31.6 | | | | | | | | | | | | | | | | | | | | | | | 1 | | | | | | | | | | | | | | | | | | | |
| 36 | ℄ | 644+31.6 | 644+80 | | | | | | | | | | | | | | | | | | | | | | | | | | | | | 204 | | | | | | | | | | | | | |
| 37 | ℄ | 644+80 | | 1 | | | | | 2 | | | | | | | | 1 | | | | | 1 | | | | | | | | | | | | 223 | | | 2 | 2 | | | | | | | |
| 38 | ℄ | 644+80 | 648+05 | | | | | | | | | | | | | | | | | | | | | | | | | | | | | 660 | | | | | | | | | | | | | |
| 39 | ℄ | 648+05 | | 1 | | | | | 2 | | | | | | | | 1 | | | | | 1 | | | | | | | | | | | | 223 | | | 2 | 2 | | | | | | | |
| 40 | ℄ | 651+30 | | 1 | | | | | 2 | | | | | | | | 1 | | | | | 1 | | | | | | | | | | | | 223 | | | 2 | 2 | | | | | | | |
| 41 | ℄ | 651+30 | 654+40 | | | | | | | | | | | | | | | | | | | | | | | | | | | | | 630 | | | | | | | | | | | | | |
| 42 | ℄ | 654+40 | | 1 | | | | | 2 | | | | | | | | 1 | | | | | 1 | | | | | | | | | | | | 223 | | | 2 | 2 | | | | | | | |
| 43 | ℄ | 654+40 | 657+00 | | | | | | | | | | | | | | | | | | | | | | | | | | | | | 1050 | | | | | | | | | | | | | |
| | | | | | | | | | | | | | | | | | | | | | | | | | | | | | | | | | | | | | | | | | | | | | | |
| | | | | | | | | | | | | | | | | | | | | | | | | | | | | | | | | | | | | | | | | | | | | | | |

CALC. BY TRB DATE 5/81
CHK'D. BY ARH DATE 5/81

| | STATE | PROJECT | |
|---|---|---|---|
| | OHIO | | |

261
500

CUYAHOGA COUNTY
CUY-480-10.39

# LIGHTING SUB SUMMARY

| REFERENCE NO. | SIDE | STATION | STATION | Light Pole Design A12.8B 475.0(Med.Mtd.) | Light Pole Design AT12.8-5&.2 | Luminaire, Style C, Type II 400 Wt. H.P.S. | Luminaire, Style B, Type II 200W. H.P.S. | | | | Median Light Pole Foundation | Light Pole Foundation 24" Dia. x 6' Deep | Ground Rod 713.16 | Pull Box 18" 713.09 W/Conc. Cover, As Per Plan | Median Pull Box | Transition Junction Box | Conduit 2" 713.04 | Conduit 3" 713.04 | Conduit 3" 713.07 Encased | Trench | No. 4 AWG 5000 Volt Distribution Cable | No. 4 AWG 5000 Volt Duct Cable W/One 1/0 AWG Cable 5000V | No. 10 AWG Pole And Bracket Cable | Connector Kit Type II | Connector Kit Type III | Connector Kit Type VI | Connector Kit Type VIII-C | | Connector Kit Type VIII-B | Cable Splice Kit | Control Center Sum | Structure Grounding System, Cur. 480 11.69 | Structure Grounding System, Cur. 480 11.71 | |
|---|---|---|---|---|---|---|---|---|---|---|---|---|---|---|---|---|---|---|---|---|---|---|---|---|---|---|---|---|---|---|---|---|
| | | | | EA | EA | EA | EA | | | | EA | EA | EA | EA | EA | EA | L.F. | L.F. | L.F. | L.F. | L.F. | L.F. | L.F. | L.F. | EA | EA | EA | EA | | EA | EA | EA | EA | |
| 1 | LT | 642+00 | 643+20(T-3) | | | | | | | | | 1 | 1 | | | | | | | | 120 | | | 125 | | | | | | | | | | |
| 2 | LT | 643+20 | (RAMP T-3) | | 1 | | 1 | | | | | 1 | 1 | | | | | | | | | | | 92 | 1 | 1 | | | | | | | | |
| 3 | LT | 643+20 | 643+63 | | | | | | | | | | | | | | | | | | 43 | | | 53 | | | | | | | | | | |
| 4 | LT | 643+63 | | | | | | | | | | | | 1 | | | | | | | | | | | | | | | | 2 | | | | |
| 5 | LT | 643+63 | 645+07 | | | | | | | | | | | | | | | 144 | | | | 308 | | | | | | | | | | | | 1 |
| 6 | LT | 645+07 | | | | | | | | | | | | 1 | | | | | | | | | | | | | | | | 2 | | | | |
| 7 | LT | 645+07 | 645+30 | | | | | | | | | | | | | | | | | | 23 | | | 33 | | | | | | | | | | |
| 8 | LT | 645+30 | | | 1 | | 1 | | | | | 1 | 1 | | | | | | | | | | | 92 | 1 | 1 | | | | | | | | |
| 9 | LT | 645+30 | 647+30 | | | | | | | | | | | | | | | | | | 200 | | | 210 | | | | | | | | | | |
| 10 | LT | 647+30 | | | 1 | | 1 | | | | | 1 | 1 | | | | | | | | | | | 92 | 1 | 1 | | | | | | | | |
| 11 | LT | 647+30 | 649+20 | | | | | | | | | | | | | | | | | | 190 | | | 200 | | | | | | | | | | |
| 12 | LT | 649+20 | | | 1 | | 1 | | | | | 1 | 1 | | | | | | | | | | | 92 | 1 | 1 | | | | | | | | |
| 13 | LT | 649+20 | 650+30 | | | | | | | | | | | | | | | | | | 110 | | | 120 | | | | | | | | | | |
| 14 | LT | 650+30 | (RAMP T-3) | | | | | | | | | | | 1 | | | | | | | | | | | | | | | | 2 | | | | |
| 15 | CL/RT | 650+30(T-3) | 650+30(T-4) | | | | | | | | | | | | | | | 195 | | | 195 | 410 | | | | | | | | | | | | |
| 16 | RT | 650+30 | (RAMP T-4) | | 1 | | 1 | | | | | 1 | 1 | | | | | | | | | | | 92 | 1 | 1 | | | | | | | | |
| 17 | RT | 650+30 | 648+15 | | | | | | | | | | | | | | | | | | 215 | | | 225 | | | | | | | | | | |
| 18 | RT | 648+15 | | | 1 | | 1 | | | | | 1 | 1 | | | | | | | | | | | 92 | 1 | 1 | | | | | | | | |
| 19 | RT | 648+15 | 646+00 | | | | | | | | | | | | | | | | | | 215 | | | 225 | | | | | | | | | | |
| 20 | RT | 646+00 | (RAMP T-4) | | 1 | | 1 | | | | | 1 | 1 | | | | | | | | | | | 92 | 1 | 1 | | | | | | | | |
| 21 | RT | 646+00 | 644+00 | | | | | | | | | | | | | | | | | | 200 | | | 205 | | | | | | | | | | |
| 22 | | | | | | | | | | | | | | | | | | | | | | | | | | | | | | | | | | |
| 23 | RT | 651+40 | 656+70 | | | | | | | | | | | | 3 | | | | | | | | | | | | | | | | | | | |
| 24 | | | | | | | | | | | | | | | | | | | | | | | | | | | | | | | | | | |
| 25 | LT | 652+40 | 653+80 | | | | | | | | | | | | 2 | | | | | | | | | | | | | | | | | | | |
| 26 | | | | | | | | | | | | | | | | | | | | | | | | | | | | | | | | | | |
| SHEET No. 267 TOTAL | | | | 4 | 7 | 8 | 7 | | | | 4 | 7 | 16 | 3 | 2 | 257 | 195 | 1511 | 3989 | 1396 | 1536 | | 7 | 7 | 8 | 8 | | 6 | | 1 | 1 | | |
| 27 | ℄ | 657+00 | 657+45 | | | | | | | | | | | | | | | | | | | 190 | | | | | | | | | | | | |
| 28 | ℄ | 657+45 | | 1 | | 2 | | | | | 1 | | 1 | | | | | | | | | | | 223 | | | | 2 | 2 | | | | | |
| 29 | ℄ | 657+45 | 660+50 | | | | | | | | | | | | | | | | | | | 1240 | | | | | | | | | | | | |
| 30 | ℄ | 660+50 | | 1 | | 2 | | | | | 1 | | 1 | | | | | | | | | | | 223 | | | | 2 | 2 | | | | | |
| 31 | ℄ | 660+50 | 663+50 | | | | | | | | | | | | | | | | | | | 1230 | | | | | | | | | | | | |
| 32 | ℄ | 663+50 | | | | | | | | | | | | | | 1 | | | | | | | | | | | | | | 4 | | | | |
| 33 | ℄ | 663+50 | 663+55 | | | | | | | | | | | | | | | | | | | 50 | | | | | | | | | | | | |
| 34 | ℄ | 663+55 | | 1 | | 2 | | | | | 1 | | 1 | | | | | | | | | | | 223 | | | | 2 | 2 | | | | | |
| 35 | ℄ | 663+55 | 666+60 | | | | | | | | | | | | | | | | | | | 1240 | | | | | | | | | | | | |
| 36 | ℄ | 666+60 | | 1 | | 2 | | | | | 1 | | 1 | | | | | | | | | | | 223 | | | | 2 | 2 | | | | | |
| 37 | ℄ | 666+60 | 667+78 | | | | | | | | | | | | | | | | | | | 492 | | | | | | | | | | | | |
| 38 | ℄ | 667+78 | | | | | | | | | | | | | | 1 | | | | | | | | | | | | | | 2 | | | | |
| 39 | ℄ | 667+78 | 669+70 | | | | | | | | | | | | | | | | | | | 788 | | | | | | | | | | | | |
| 40 | ℄ | 669+70 | | 1 | | 2 | | | | | 1 | | 1 | | | | | | | | | | | 223 | | | | 2 | 2 | | | | | |
| 41 | ℄ | 669+70 | 670+00 | | | | | | | | | | | | | | | | | | | 130 | | | | | | | | | | | | |
| 42 | | | | | | | | | | | | | | | | | | | | | | | | | | | | | | | | | | |
| 43 | ℄/RT | 663+50 | 663+50 | | | | | | | | | | | | | | | | | | | 324 | | | | | | | | | | | | |
| 44 | RT | 663+50 | | | | | | | | | | | | | | | | | | | | | | | | | | | | | | | | |
| 45 | RT/LT | 663+50 | 9+35 (SERVICE 200 A) | | | | | | | | | | | | | | | | | | | 360 | | | | | | | | | | | | |
| 46 | LT | 9+35 | | | | | | | | | | | | | | 1 | | | | | | | | | | | | | | 4 | | | | |
| 47 | CL/LT | 9+35 | 9+45 | | | | | | | | | | | | | | | 10 | | | | 80 | | | | | | | | | | | | |
| 48 | LT | 9+45 | | | | | | | | | | | | | | | | | | | | | | | | | | | | | | | 1 | |
| 49 | CL/LT | 9+45 | 9+69 | | | | | | | | | | | | | | | 55 | | | | 130 | | 130 | | | | | | | | | | |
| 50 | | | | | | | | | | | | | | | | | | | | | | | | | | | | | | | | | | |
| 51 | RT | 659+34 | | | | | | | | | | | 1 | | | | | | | | | | | | | | | | | | | | | |

| REFERENCE NO. | SIDE | STATION | STATION | Light Pole Design A12.8B 475.0(Med.Mtd.) | Light Pole Design ST8.8B 34.2(Str.Mtd.) | Luminaire, Style C, Type III 400 Wt. H.P.S. | Luminaire, Style B Type II 150 W. H.P.S. (120V) | | | | Median Light Pole Foundation | Light Pole Anchor Bolts For Str. (713.01) | Ground Rod 713.16 | Pull Box, 18" 713.09 W/Conc. Cover, As Per Plan | Median Pull Box | | Conduit 2" 713.04 | Conduit 3" 713.04 | Conduit 3" 713.07 Encased | Trench | No. 4 AWG, 5000 Volt Distribution Cable | | No. 10 AWG Pole And Bracket Cable | Connector Kit Type II | Connector Kit Type III | Connector Kit Type VI | Connector Kit Type VIII-C | Connector Kit Type VIII - C | | Connector Kit Type VII-B | Cable Splice Kit | Control Center Sum | Power Service No. 4 | Structure Grounding System, Cur. 480 12.16 | |
|---|---|---|---|---|---|---|---|---|---|---|---|---|---|---|---|---|---|---|---|---|---|---|---|---|---|---|---|---|---|---|---|---|---|
| | | | | EA | EA | EA | EA | | | | EA | SET | EA | EA | EA | | L.F. | L.F. | L.F. | L.F. | L.F. | | L.F. | EA | EA | EA | EA | EA | | EA | EA | EA | EA | |
| 52 | LT | 8+45 | (SOUTHWOOD) | | | | | | | | | | | | 1 | | | | | | | | | | | | | | | | | | |
| 53 | LT | 8+45 | 9+00 | | | | | | | | | | | | | | 55 | | | | 130 | | | | | | | | | | | | |
| 54 | LT | 9+00 | | | 1 | | 1 | | | | | 1 | | | | | | | | | | | 84 | 1 | 1 | | | | | | | | |
| 55 | LT | 9+00 | 10+85 | | | | | | | | | | | | | | 185 | | | | 390 | | | | | | | | | | | | 1 |
| 56 | LT | 10+85 | | | 1 | | 1 | | | | | 1 | | | | | | | | | | | 84 | 1 | 1 | | | | | | | | |
| 57 | LT | 10+85 | 11+85 | | | | | | | | | | | | | | 100 | | | | 220 | | | | | | | | | | | | |
| 58 | LT | 11+85 | | | | | | | | | | | | | 1 | | | | | | | | | | | | | | | | 2 | | | |
| 59 | LT | 11+85 | 12+90 | | | | | | | | | | | | | | 105 | | | | 230 | | | | | | | | | | | | |
| 60 | LT | 12+90 | (SOUTHWOOD) | | | | | | | | | | | | | | | | | | | | | | | | | | | | | | 1 | |
| 61 | | | | | | | | | | | | | | | | | | | | | | | | | | | | | | | | | | |
| SHEET No. 268 TOTAL | | | | 5 | 2 | 10 | 2 | | | | 5 | 2 | 6 | 3 | 2 | | 510 | 76 | 85 | 226 | 7224 | | 1413 | 2 | 2 | 10 | 10 | | 6 | 6 | 1 | 1 | 1 | |
| 62 | | | | | | | | | | | | | | | | | | | | | | | | | | | | | | | | | | |
| 63 | | | | | | | | | | | | | | | | | | | | | | | | | | | | | | | | | | |
| 64 | ℄ | 670+00 | 672+85 | | | | | | | | | | | | | | | | | | 1150 | | | | | | | | | | | | |
| 65 | ℄ | 672+85 | | | 1 | | 2 | | | | | 1 | | 1 | | | | | | | | | 223 | | | | 2 | 2 | | | | | |
| 66 | | | | | | | | | | | | | | | | | | | | | | | | | | | | | | | | | | |
| 67 | | | | | | | | | | | | | | | | | | | | | | | | | | | | | | | | | | |
| 68 | ℄ | 672+85 | 676+00 | | | | | | | | | | | | | | | | | | 1280 | | | | | | | | | | | | |
| 69 | ℄ | 676+00 | | | 1 | | 2 | | | | | 1 | | 1 | | | | | | | | | 223 | | | | 2 | 2 | | | | | |
| 70 | | | | | | | | | | | | | | | | | | | | | | | | | | | | | | | | | | |
| 71 | | | | | | | | | | | | | | | | | | | | | | | | | | | | | | | | | | |
| 72 | ℄ | 676+00 | 679+15 | | | | | | | | | | | | | | | | | | 1280 | | | | | | | | | | | | |
| 73 | ℄ | 679+15 | | | 1 | | 2 | | | | | 1 | | 1 | | | | | | | | | 223 | | | | 2 | 2 | | | | | |
| 74 | ℄ | 679+15 | 682+35 | | | | | | | | | | | | | | | | | | 1300 | | | | | | | | | | | | |
| 75 | ℄ | 682+35 | | | 1 | | 2 | | | | | 1 | | 1 | | | | | | | | | 223 | | | | 2 | 2 | | | | | |
| 76 | ℄ | 682+35 | 685+00 | | | | | | | | | | | | | | | | | | 1070 | | | | | | | | | | | | |
| 77 | | | | | | | | | | | | | | | | | | | | | | | | | | | | | | | | | | |
| 78 | | | | | | | | | | | | | | | | | | | | | | | | | | | | | | | | | | |
| 79 | | | | | | | | | | | | | | | | | | | | | | | | | | | | | | | | | | |
| 80 | | | | | | | | | | | | | | | | | | | | | | | | | | | | | | | | | | |
| 81 | | | | | | | | | | | | | | | | | | | | | | | | | | | | | | | | | | |
| 82 | | | | | | | | | | | | | | | | | | | | | | | | | | | | | | | | | | |
| SHEET No. 269 TOTAL | | | | 4 | 8 | | | | | | 4 | 4 | | | | | | | | | 6080 | | 892 | | | 8 | 8 | | | | | | |
| 83 | ℄ | 685+00 | 685+55 | | | | | | | | | | | | | | | | | | 230 | | | | | | | | | | | | |
| 84 | ℄ | 685+55 | | | 1 | | 2 | | | | | 1 | | 1 | | | | | | | | | 223 | | | | 2 | 2 | | | | | |
| 85 | ℄ | 685+55 | 688+75 | | | | | | | | | | | | | | | | | | 1300 | | | | | | | | | | | | |
| 86 | ℄ | 688+75 | | | 1 | | 2 | | | | | 1 | | 1 | | | | | | | | | 223 | | | | 2 | 2 | | | | | |
| 87 | ℄ | 688+75 | 690+10 | | | | | | | | | | | | | | | | | | 560 | | | | | | | | | | | | |
| 88 | ℄ | 690+10 | | | | | | | | | | | | | 1 | | | | | | | | | | | | | | | 2 | | | |
| 89 | ℄ | 690+10 | 691+95 | | | | | | | | | | | | | | | | | | 760 | | | | | | | | | | | | |
| 90 | ℄ | 691+95 | | | 1 | | 2 | | | | | 1 | | 1 | | | | | | | | | 223 | | | | 2 | 2 | | | | | |
| 91 | ℄ | 691+95 | 695+15 | | | | | | | | | | | | | | | | | | 1300 | | | | | | | | | | | | |
| 92 | ℄ | 695+15 | | | 1 | | 2 | | | | | 1 | | 1 | | | | | | | | | 223 | | | | 2 | 2 | | | | | |
| 93 | ℄ | 695+15 | 698+35 | | | | | | | | | | | | | | | | | | 650 | | | | | | | | | | | | |
| 94 | ℄ | 698+35 | | | 1 | | 2 | | | | | 1 | | 1 | | | | | | | | | 223 | | | | 2 | 2 | | | | | |
| 95 | | | | | | | | | | | | | | | | | | | | | | | | | | | | | | | | | | |
| 96 | ℄/RT | 690+10 | 690+10 | | | | | | | | | | | | | | | 76 | | 76 | 172 | | | | | | | | | | | | |
| 97 | RT | 690+10 | | | | | | | | | | | | | 1 | | | | | | | | | | | | | | | 2 | | | |
| | | | | | | | | | | | | | | | | | | | | | | | | | | | | | | | | | | |
| SHEET No. 270 TOTAL | | | | 5 | | 10 | | | | | 5 | 5 | 1 | 1 | | | 76 | | 76 | 4972 | | | 1115 | | | 10 | 10 | | 2 | 2 | | | |

| FED. RD. DIVISION | STATE | PROJECT | |
|---|---|---|---|
| 2 | OHIO | | |

262
500

CUYAHOGA COUNTY
CUY. 480 - 10.39

N

Begin Project
Sta. 573+50
Cuy. 480-10.39

Sta. 61+80 ℄ W.130TH. St. (24'Lt.)
O.H. Sign No. 50 (350W)

Sta. 61+58 ± ℄ W130TH. St. (24'Lt.)
C.E.I. Pole No.
(Sign Service - Overhead) See
Traffic Control Sheet No. 283
For Quantity

Sta 58+38 (15'Lt.) Prop.
CEI Pole No. 695133
Sta. 58+20 ℄ W130TH. St. (47'Lt.)
O.H. Sign No. 51 (350

Sta. 58+10 W 130TH. St. (8'Lt.)
Pull Box, Circ. R,2 Cable Splice
(Sign Service.) Kits

Sta. 57+50 W130TH. St. (4'Lt.)
Pull Box (24") See Traffic Control Sheet 284
For Quantity

Sta. 57+55 W130TH. St. (14'Lt.)
Pull Box, Circ. R,

Sta. 582+00 Ramp W-1 (37'Lt.)
Wot-R-2, B.B 100, 1000 Asym. III
Tower No. 3

Sta. 582+00 Ramp W-1 (11'Lt.)
Circ. R
1-#4 AWG 2/C
1-3"1-#4 AWG 2/C

Sta 56+98 (15'Lt.) Prop
CEI Pole No. 695134

Sta. 582+30.1 ℄ I-480
Transition Junction Box
Circs, S℄T;

Sta. 581+60 ℄ I-480
Median Pull Box, Circs. S℄T
4 Type VIII-B

Sta. 581+60 ℄ I-480 (15'Rt.)
Circs. S℄T,

Sta. 581+25 ℄ I-480(±)
Wot S-1 BB 80D-1000 I, Tower No. 2

Circ. S - 2-#4 AWG

1-3" 4-#4 AWG. Circ. S℄T

Sta. 54+45 W130TH. St. (20'Lt.)
Pull Box, Circs. S ℄T
4 Cable Splice Kits

Sta. 576+50 ℄ I-480(±)
Wot-T-1 BB 80D-1,000 I
Tower No. 1

44,248 WESTBOUND I-480
Circ. T, 2-#4 AWG

45,050 EASTBOUND I-480

1-3" ENCASED
4-#4 AWG, Circs. S℄T
1-2", 2-#4 AWG, ℄ 2-#10 AWG
1-2" 2-#4 AWG ℄ 2-#10 AWG (120V)
1-2", 4-#4 AWG, Circs. S℄T

Sta. 54+45 W130TH. St. (15'Lt.)
Control Center No. WOT.
Circs. R,S℄T
Sta. 54+48 W130TH. St. (15'Lt.)
Control Center No. WUP
Circ. U (120V)

Sta. 54+54 W130TH. St. (12' Lt.)
Proposed C.E.I. Pole No. 695135
Power Service

Sta. 56+55 W130TH. St. (5'Lt.)
Pull Box, Circ. R, 2 Cable Splice Kits
Sta. 582+73.5 ℄ I-480 (71'Lt.)
O.H. Sign No. 52 (200W)
(Structure Mounted)
Sta. 56+65 W130TH. St. (6'Lt.) Sign Service
Pull Box Circ. R, 2 Cable Splice Kits
Sta. 55+18 W130TH. St. (6'Lt.) Pull Box U/P Circ U
(120V) 2 Cable Splice Kits

RAMP W-3 585

Sta. 55+10 W130TH. St. (6'Lt.)(Sign Service)
Pull Box, Circ. R-2 Cable Splice Kits
Sta. 583+38.6 ℄ I-480 ℄
Transition Junction Box, Circs. S℄T
Sta. 583+75 ℄ I-480(℄)
Median Pull Box, Circ. S-2 Type VII-B

MATCH LINE STA. 585+00

Circ. T, 2-#4 AWG
Circ. S, 2-#4 AWG
1'-3", 2 #4 AWG

Sta. 583+81 ℄ I-480 (15'Rt.)
Pull Box, Circ. S, 2 Cable
Splice Kits
Sta. 583+75 ℄ I-480
(78'Rt.) O.H. Sign No. 46 (350W)
Sta. 55+10 W130TH. St. (10'Rt.)
Pull Box Circ. R, 2 Cable
Splice Kits

RAMP W-2 584

Sta. 54+75 W130TH. St. (40'Rt.)
Wot-R-1 BB100, 1000 Asym. III
Tower No. 4
Sta. 582+65 ℄ I-480 (71'Rt.)
O.H. Sign No. 49 (200W)
(Structure Mounted)

Sta. 53+35 W130TH. St. (14'Rt.)
Circ. R

Sta. 52+90 W130TH. St. (5'Rt.) Signs Service
Pull Box Circ. R, 2 Cable Splice Kits
Sta. 52+80 W 130TH. St. ( Rt.)
O.H. Sign No. 48 (350W)

Sta 54+57 (15'Rt.)
Prop. CEI Pole No. 695136

## LEGEND

- △ CONTROL CENTER
- ● PULLBOX (18" OR 24" 713.09)
- OVERHEAD SIGN
- AVERAGE DAILY TRAFFIC
- UNDERPASS LUMINAIRE
- FERROUS METAL CONDUIT
- STRUCTURE GROUND*
- DUCT OR DISTRIBUTION CABLE (SIZE AND NUMBER INDICATED)
- LIGHT POLE & LUMINAIRE (ARM PERPENDICULAR TO STATIONING ℄)
  100+82 I480 (15'Lt.) (STATION, LOCATION & OFFSET FROM PAV'T EDGE)
- LIGHT TOWER ASYMETRICAL
- EXISTING LIGHT POLE
- LIGHT TOWER
- BARRIER MEDIAN INLET
- BARRIER MEDIAN TRANSITION SECTION
- BARRIER MEDIAN PULL BOX
- SERVICE POLE

TIE-J-10 A12BB 47.5, 400 III POLE & LUMINAIRE DESCRIPTION
- IES DISTRIBUTION TYPE
- LAMP WATTS
- LUMINAIRE MOUNTING HEIGHT
- BRACKET (B-SINGLE, BB-DOUBLE)
- BRACKET ARM LENGTH
- BASE (A-ANCHOR, AT-ALUMINUM TRANSFORMER)
- ST (STEEL TRANSFORMER)
- POLE NUMBER
- CIRCUIT NUMBER

* GROUNDS ARE NOT CONSIDERED COMPLETE IN NUMBER OR MORE THAN APPROXIMATE IN LOCATION.

LIGHTING PLAN STA. 573+50 to STA. 585+00

| FED. RD. DIVISION | STATE | PROJECT | |
|---|---|---|---|
| 2 | OHIO | | |

263
500

CUYAHOGA COUNTY
CUY. 480 - 10.39

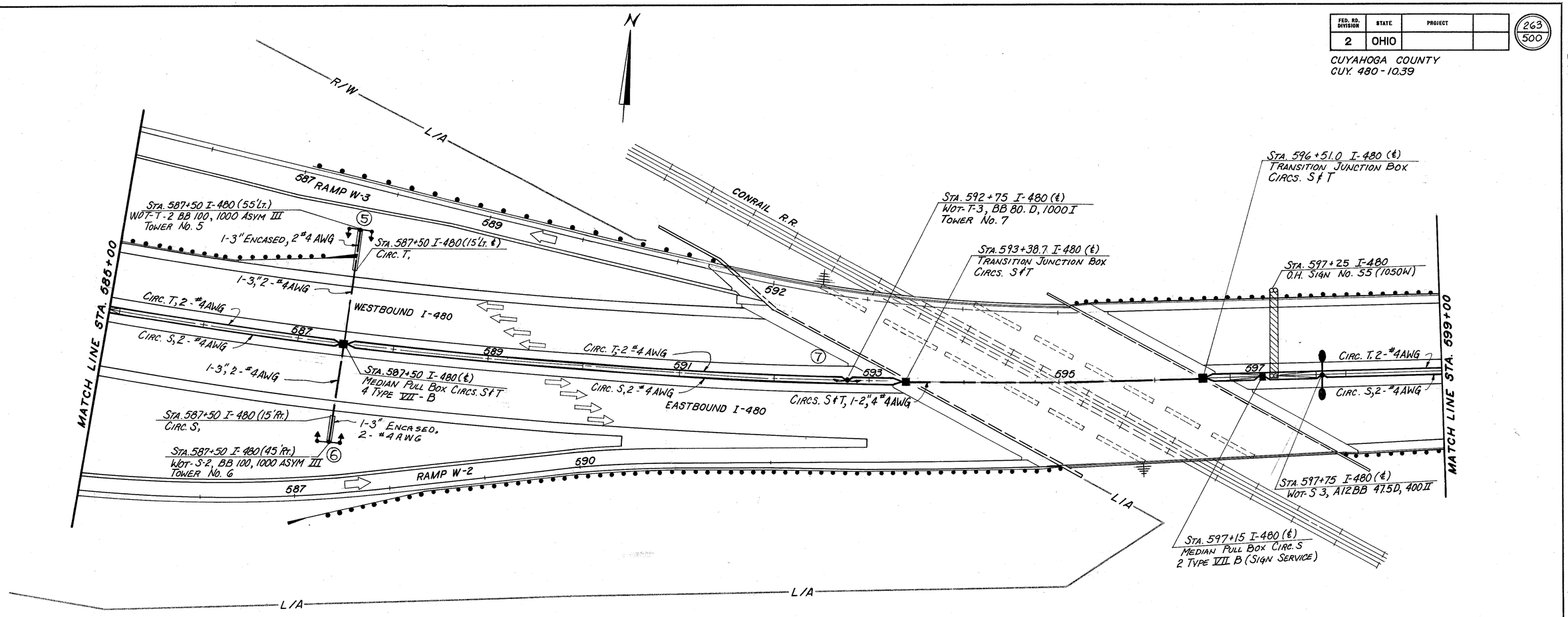


LIGHTING PLAN STA. 585+00 to STA 599+00

| FED. RD. DIVISION | STATE | PROJECT | |
|---|---|---|---|
| 2 | OHIO | | |

264
500

CUYAHOGA COUNTY
CUY. 480 - 10.39

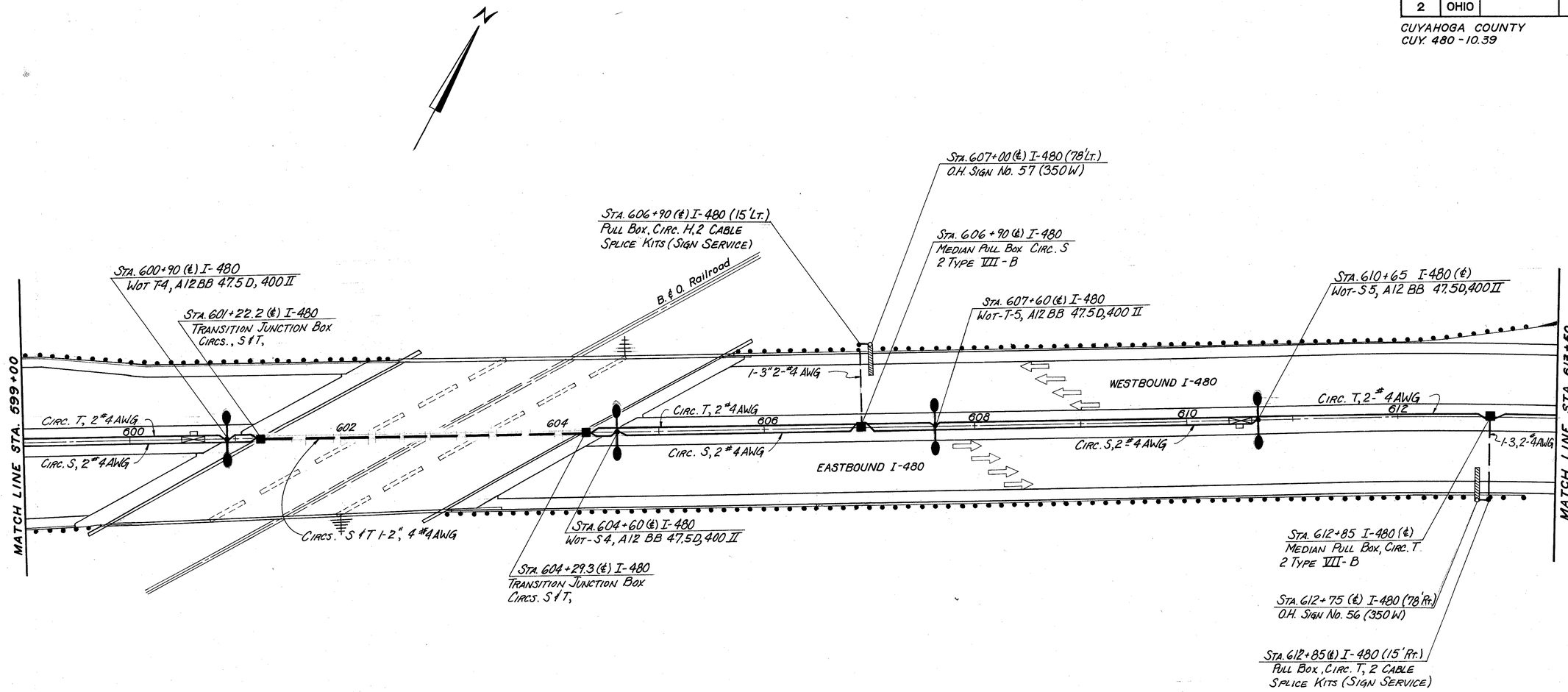


LIGHTING PLAN STA. 599+00 to STA. 613+50

| FED. RD. DIVISION | STATE | PROJECT | |
|---|---|---|---|
| 2 | OHIO | | |

265/500

CUYAHOGA COUNTY
CUY. 480-10.39

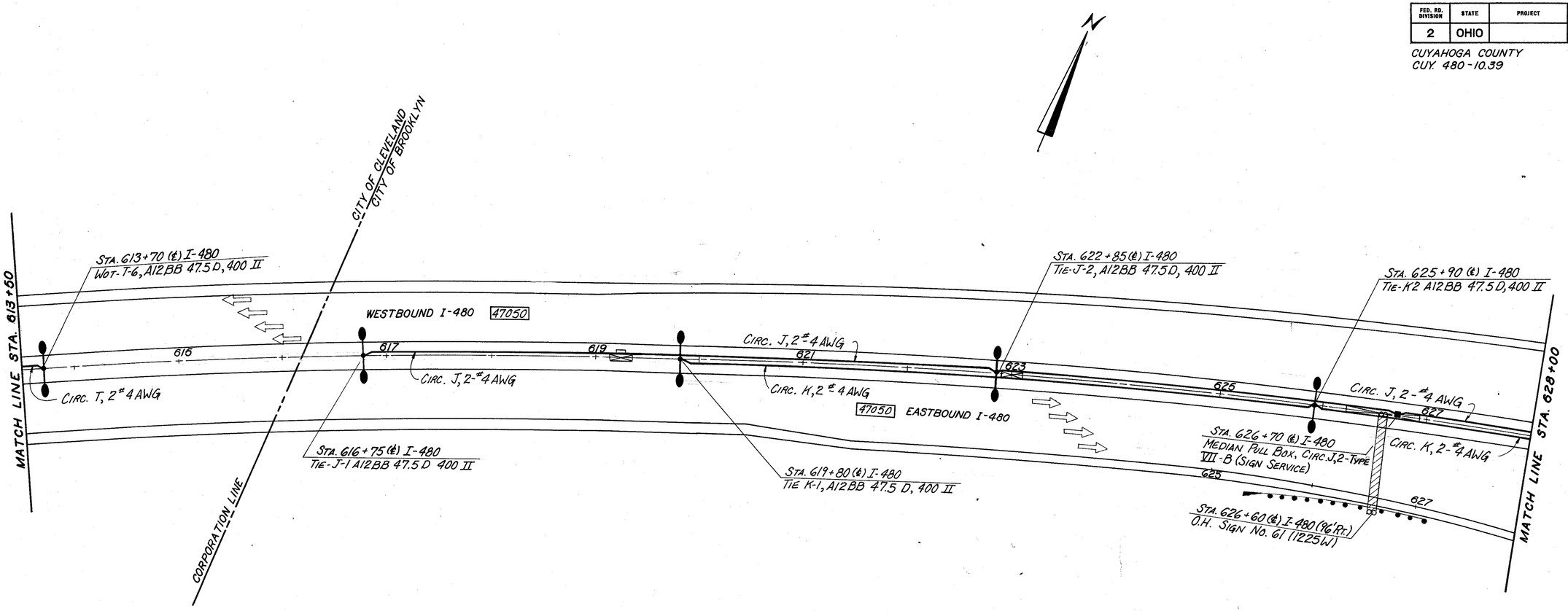


LIGHTING PLAN STA. 613+50 to STA. 628+00

| FED. RD. DIVISION | STATE | PROJECT | |
|---|---|---|---|
| 2 | OHIO | | |

266
500

CUYAHOGA COUNTY
CUY. 480 - 10.39

STA. 50+95 TIEDEMAN (14'Lt.)
L-1, AT 15B 41.7, 250 II (120V)

1-#4AWG 2/c

R/W

MATCH LINE STA. 53+50

48 50 52

STA. 52+60 TIEDEMAN (14'Rt.)
L-2, AT 15B 41.7 250 III (120V)

1-#4AWG 2/c

STA. 48+40 TIEDEMAN ( Rt.)
O.H. SIGN No. 65 (100W)

STA. 48+49 TIEDEMAN (6'Rt.)
C.E.I. POLE No. 814349
SIGN SERVICE (OVERHEAD) SEE TRAFFIC CONTROL SHEET No. 283 FOR QUANTITIES

STA. 52+22 TIEDEMAN (14'Rt.)
PROPOSED C.E.I. POLE #694933

STA. 53+07 TIEDEMAN (14.4'Rt.)
PROPOSED C.E.I. POLE #814352

R/W

L/A

STA. 629+00 & I-480
TIE-J-3, A12 BB 47.5 D 400 II

STA. 635+80 RAMP T-1 (11'Lt.)
TIE-J-10, AT 12B 34.2, 200 II

STA. 633+60 RAMP T-1 (11'Lt.)
TIE-J-9 AT 12B 34.2, 200 II

1-#4AWG 2/c

636

637

STA. 629+20 RAMP T-1 (11'Lt.)
TIE-J-7, AT12B 34.2, 200 II

STA. 631+40 RAMP T-1 (11'Lt.)
TIE-J-8 AT 12B 34.2, 200 II

RAMP T-1

CIRC. J, 1-#4AWG 2/c

632

633

1-3", 2 #4AWG

WESTBOUND I-480

631

CIRC. J, 2 #4AWG

CIRC. K, 2 #4AWG

STA. 629+20 & I-480
MEDIAN PULL BOX, CIRC. J
2 TYPE VIII - C

STA. 635+20 & I-480
TIE-J-4 A12BB 47.5D, 400 II

STA. 632+10 & I-480
TIE-K-3, A12BB 47.5D, 400 II

635

637

MATCH LINE STA. 628+00

1-3", 2 #4AWG CIRC. J

629

633

638

CIRC. J, 1-#4AWG 2/c

EASTBOUND I-480

STA. 628+00 RAMP T-2 (11'Rt.)
TIE-J-12, AT12B 34.2, 200 II

L/A

STA. 627+20 RAMP T-2 (11'Rt.)
PULL BOX, CIRC. J, 2 CABLE SPLICE KITS

STA. 630+00 RAMP T-2 (11'Rt.)
TIE-J-13, AT12B 34.2, 200 II

STA. 632+20 RAMP T-2 (11'Rt.)
TIE-J-14, AT12B 34.2, 200 II

RAMP T-2

STA. 634+40 RAMP T-2 (11'Rt.)
TIE-J-15, AT12B 34.2, 200 II

636

638

L/A

CIRC. J, 1-#4AWG 2/c

1-3", 1 #4AWG 2/c

STA. 636+60 RAMP T-2 (11'Rt.)
TIE-J-16, AT12B 34.2, 200 II

STA. 638+80 RAMP T-2 (11'Rt.)
TIE-J-17, AT12B 34.2, 200 II

STA. 61+90 TIEDEMAN (14'Rt.)
CIRC. L (120V)

STA. 62+50 TIEDEMAN (14'Rt.)
L-8, AT 15B 41.7, 250 III

STA. 53+85 TIEDEMAN (13'Rt.)
PULL BOX, CIRC. L (120V), 2 CABLE SPLICE KITS

STA. 53+90 TIEDEMAN (14'Rt.)
POWER SERVICE
PROPOSED C.E.I. POLE No. 814353

1-2", 2 #4AWG

STA. 54+75 TIEDEMAN (5'Rt.)
CIRC. L (120V).

1-2", 2 #4AWG
2 #10AWG

STA. 638+35 RAMP T-1 (15'Lt.)
CONTROL CENTER TIE-CIRCS. J & K

STA. 638+35 RAMP T-1 (5'Lt.)
PULL BOX, CIRCS. J & K.
4 CABLE SPLICE KITS

1-2", 4 #4AWG

STA. 638+00 RAMP T-1 (11'Lt.)
TIE-J-11 AT 12B 34.2, 200 II

1-#4AWG 2/c

1-3", 2 #4AWG
1-3", 1-#4AWG 2/c

STA. 638+35 RAMP T-1 (7'Rt.) PULL BOX, CIRC. K, 2 CABLE SPLICE KITS (SIGN SERVICE)

STA. 55+40 TIEDEMAN (18'Rt.)
CIRC. L (120V)

STA. 55+35 TIEDEMAN (50'Rt.)
O.H. SIGN No. 66 (350W)

STA. 55+90 TIEDEMAN (14'Rt.)
L-4 AT 15B 41.7, 250 III

STA. 56+75 TIEDEMAN (9'Rt.)
CIRC. K,

STA. 56+70 TIEDEMAN (8'Rt.)
PULL BOX, CIRC. L (120V) 2 CABLE SPLICE KITS

1-3" ENCASED, 1 #4AWG 2/c

CIRC. K, 1-3", 2 #4AWG

STA. 638+65 & I-480 (15'Lt.) PULL BOX - U.P. CIRC. K, 2 CABLE SPLICE KITS

1-2", 2 #4AWG

STA. 638+30 & I-480
TIE-K-4, A12 BB 47.5 D, 400 II

STA. 638+65 & I-480
MEDIAN PULL BOX, CIRC. K.
2 TYPE VIII - B

STA. 59+20 TIEDEMAN ( Rt.)
L-6, ST 8 B 41.7, 250 III

STA. 60+00 TIEDEMAN (8'Rt.)
PULL BOX, CIRC. L (120V) 2 CABLE SPLICE KITS.

1-#4AWG 2/c

STA. 61+30 TIEDEMAN (14'Rt.)
CIRC. L (120V)

1-#4AWG 2/c

1-2", 2 #4AWG

1-#4AWG 2/c

1-#4AWG 2/c

1-2", 2 #4AWG

1-#4AWG 2/c

MATCH LINE STA. 53+50

CIRC. L

54

1-#4AWG 2/c
1-3", 2 #4AWG

STA. 53+85 TIEDEMAN (14'Lt.) PULL BOX
CIRC. L (120V) 2 CABLE SPLICE KITS

STA. 54+25 TIEDEMAN (14'Lt.)
L-3, AT 15B 41.7, 250 III (120V)

STA. 54+85 TIEDEMAN (7'Lt.)
CIRC. L

STA. 638+05 RAMP T-3
(11'Lt.) CIRC. K.
CIRC. K 1 #4AWG 2/c

STA. 638+80 RAMP T-3 (11'Lt.)
TIE-K-6, AT 12B 34.2, 200 II

L/A

635

CIRC. L 1-3", 2 #4AWG 2/c

STA. 641+00 RAMP T-3 (11'Lt.)
TIE-K-7, AT 12B 34.2, 200 II

640

RAMP T-3

CIRC. K, 1-3", 2 #4AWG 2/c

STA. 55+50 TIEDEMAN (14'Lt.)
CIRC. L (120V)

CIRC. K, 1 #4AWG 2/c

STA. 642+00

CIRC. L, 1-#4AWG 2/c

CIRC. K

1-#4AWG 2/c

CIRC. L

56

CIRC. K, 1-3", 2 #4AWG

1-2", 2 #4AWG

STA. 56+90 TIEDEMAN (8'Lt.)
PULL BOX CIRC. L (120V)
2 CABLE SPLICE KITS

STA. 57+55 TIEDEMAN ( Lt.)
L-5 ST 8 B 41.7, 250 III

1-2", 2 #4AWG

1-2", 2 #4AWG

58

641

STA. 641+55 & I-480
TIE-J-5, A12 BB 47.5 D, 400 II

CIRC. J, 2-#4AWG

CIRC. K, 2-#4AWG

STA. 642+00

MATCH LINE STA. 642+50

STA. 60+25 TIEDEMAN (8'Lt.)
PULL BOX CIRC. L (120V) 2 CABLE SPLICE KITS

STA. 60+85 TIEDEMAN (14'Lt.)
L-7, AT 15B 41.7, 250 III

STA. 61+44 TIEDEMAN (41'Lt.)
O.H. SIGN No. 63, (700W)

STA. 61+40 TIEDEMAN (14'Lt.)
PULL BOX CIRC. K, 2 CABLE SPLICE KITS (SIGN SERVICE)

STA. 641+60 RAMP T-4 (7'Lt.)
PULL BOX, CIRC. K,

1-#4AWG 2/c

640

RAMP T-4

643

1-3", 1 #4AWG 2/c

1-#4AWG 2/c

1-#4AWG 2/c

℄ TIEDEMAN ROAD

1-2", 2 #4AWG

1-#4AWG 2/c

℄ Reloc. Big 7 Creek

1-2", 2 #4AWG

STA. 644+00

CIRC. K, 1-#4AWG 2/c

STA. 641+60 RAMP T-4 (11'Rt.)
TIE-K-12, AT 12 B 34.2, 200 II

STA. 641+90 RAMP T-4 (11'Rt.)
PULL BOX, CIRC. K, 2 CABLE SPLICE KITS

STA. 643+55 RAMP T-4 (11'Rt.)
PULL BOX, CIRC. K, 2 CABLE SPLICE KITS

STA. 643+80 RAMP T-4 (11'Rt.)
TIE-K-13, AT 12 B 34.2 200 II

CIRC. K, 1-#4AWG 2/c

MATCH LINE STA. 63+00

L/A

STA. 70+50 TIEDEMAN ( Lt.)
O.H. SIGN No. 64 (100W)

65 70

STA. 70+35 ± TIEDEMAN (6'Rt.)
C.E.I. POLE No.
SIGN SERVICE (OVERHEAD) SEE TRAFFIC CONTROL SHEET 283 FOR QUANTITIES

LIGHTING PLAN STA. 628+00 to STA. 642+50

| FED. RD. DIVISION | STATE | PROJECT | |
|---|---|---|---|
| 2 | OHIO | | |

267
500

CUYAHOGA COUNTY
CUY. 480 - 10.39

N

STA. 642+00

STA. 643+63 RAMP T-3 (11'LT.)
PULL BOX CIRC. K, 2 CABLE SPLICE KITS
CIRC. K, 1-#4 AWG 2/C

STA. 643+20 RAMP T-3 (11'LT.)
TIE K-8, AT12B 34.2, 200 II

643

1-2"2-#4 AWG

STA. 645+07 RAMP T-3 (11'LT.)
PULL BOX CIRC. K, 2 CABLE SPLICE KITS

STA. 645+30 RAMP T-3 (11'LT.)
TIE K-9, AT12B 34.2, 200 II

L/A

CIRC. K, 1-#4 AWG 2/C

646

RAMP T-3

648

STA. 647+30 RAMP T-3 (11'LT.)
TIE -K-10, AT12B 34.2, 200 II

STA. 649+20 RAMP T-3 (11'LT.)
TIE K-11, AT12B 34.2, 200 II

STA. 650+30 RAMP T-3 (11'LT.)
PULL BOX, CIRC. K, 2 CABLE SPLICE KITS (SIGN SERVICE)

STA. 652+40 (LT.)
FENCE GROUND

SHADY LANE

ELECTRIC TOWER BASES

STA. 653+80 (LT.)
FENCE GROUND

L/A

STA. 643+18.4(℄) I-480
TRANSITION JUNCTION BOX
CIRC. J & K.

CIRCS. J & K, 1-2", 4-#4 AWG

CIRC. K, 1-#4 AWG 2/C

STA. 650+40(℄) I-480 (96'LT.)
O.H. SIGN No. 68 (1225W)

MATCH LINE STA. 642+50

2-#4 AWG.
CIRC. J.

643

CIRC. K.
2-#4 AWG.

& Relocated Big Creek

WESTBOUND I-480

CIRC. J, 2-#4 AWG

646

CIRC. K, 1-3", 2-#4 AWG

650

652

CIRC. K, 2 #4 AWG

STA. 648+05(℄) I-480
TIE J-6, A12BB 47.5D, 400 II

STA. 654+40 (℄) I-480
SUM.-N-1, A12BB47.5D, 400 II

654

CIRC. M, 2-#4 AWG

656

EASTBOUND I-480

STA. 644+80 (℄) I-480
TIE K-S, A12BB 47.5D, 400 II

643

CIRC. N, 2-#4 AWG

MATCH LINE STA. 667+00

STA. 644+31.6 (℄) I-480
TRANSITION JUNCTION BOX CIRCS. J & K

647

649

645 RAMP T-4

CIRC. K, 1-#4 AWG 2/C

STA. 650+30 RAMP T-4 (11'RT.)
TIE K-16, AT12B 34.2, 200 II

STA. 651+30 (℄) I-480
SUM. M-1, A12BB47.5D, 400 II

STA. 646+00 RAMP T-4 (11'RT.)
TIE-K-14, AT 12 B 34.2, 200 II

STA. 648+15 RAMP T-4 (11'RT.)
TIE K-15, AT 12B 34.2, 200 II

STA. 644+00

L/A

STA. 651+40 (RT.)
FENCE GROUND

STA. 656+70 (RT.)
FENCE GROUND

L/A

STA. 654+05 (RT.)
FENCE GROUND

LIGHTING PLAN STA. 642+50 to STA. 657+00

| FED. RD. DIVISION | STATE | PROJECT | |
|---|---|---|---|
| 2 | OHIO | | |

268
500

CUYAHOGA COUNTY
CUY. 480 - 10.39

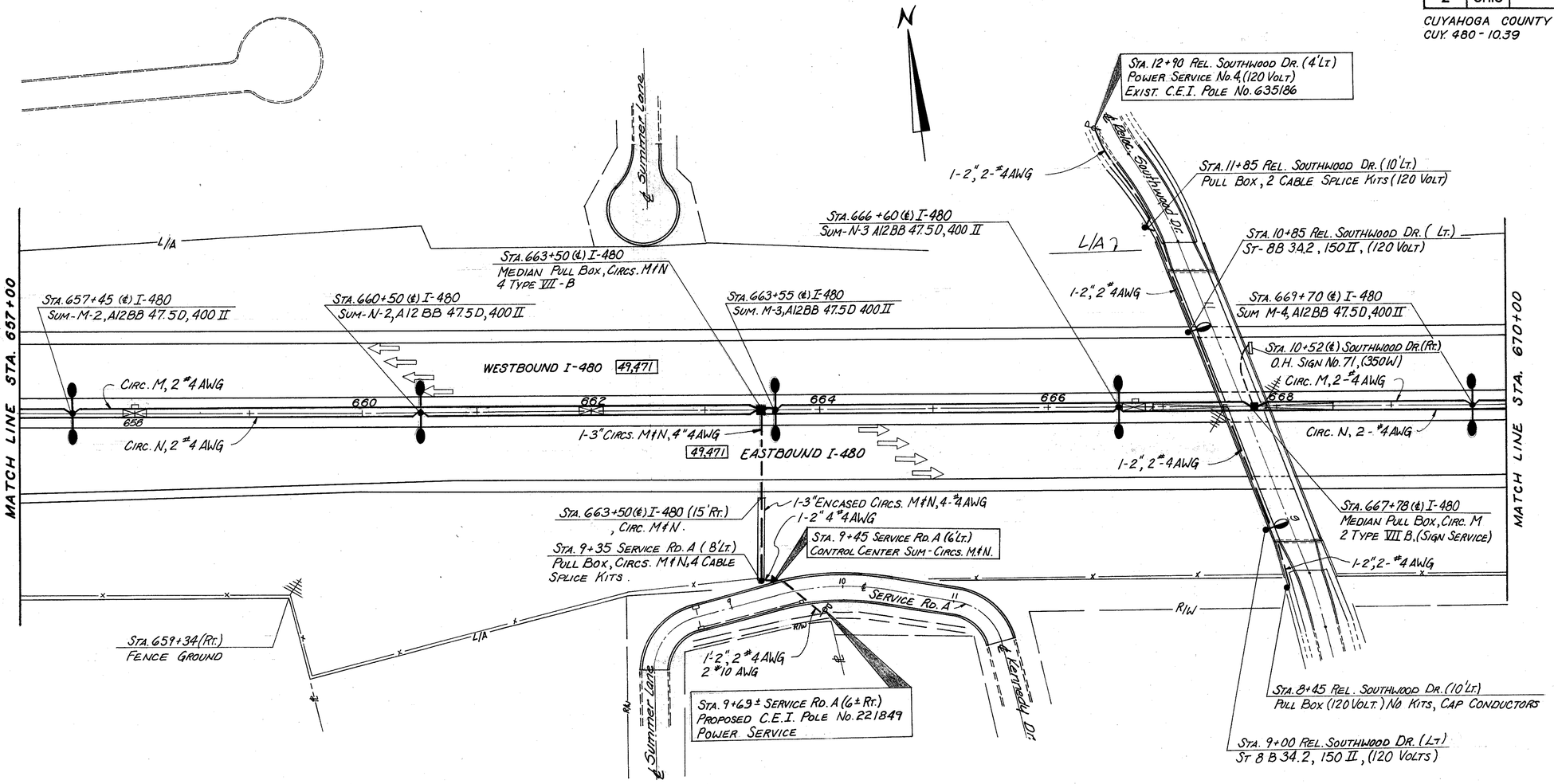


LIGHTING PLAN STA. 657+00 to STA. 670+00

| FHWA REGION | STATE | PROJECT | |
|---|---|---|---|
| 5 | OHIO | | |

269/500

CUYAHOGA COUNTY
CUY. 480-10.39

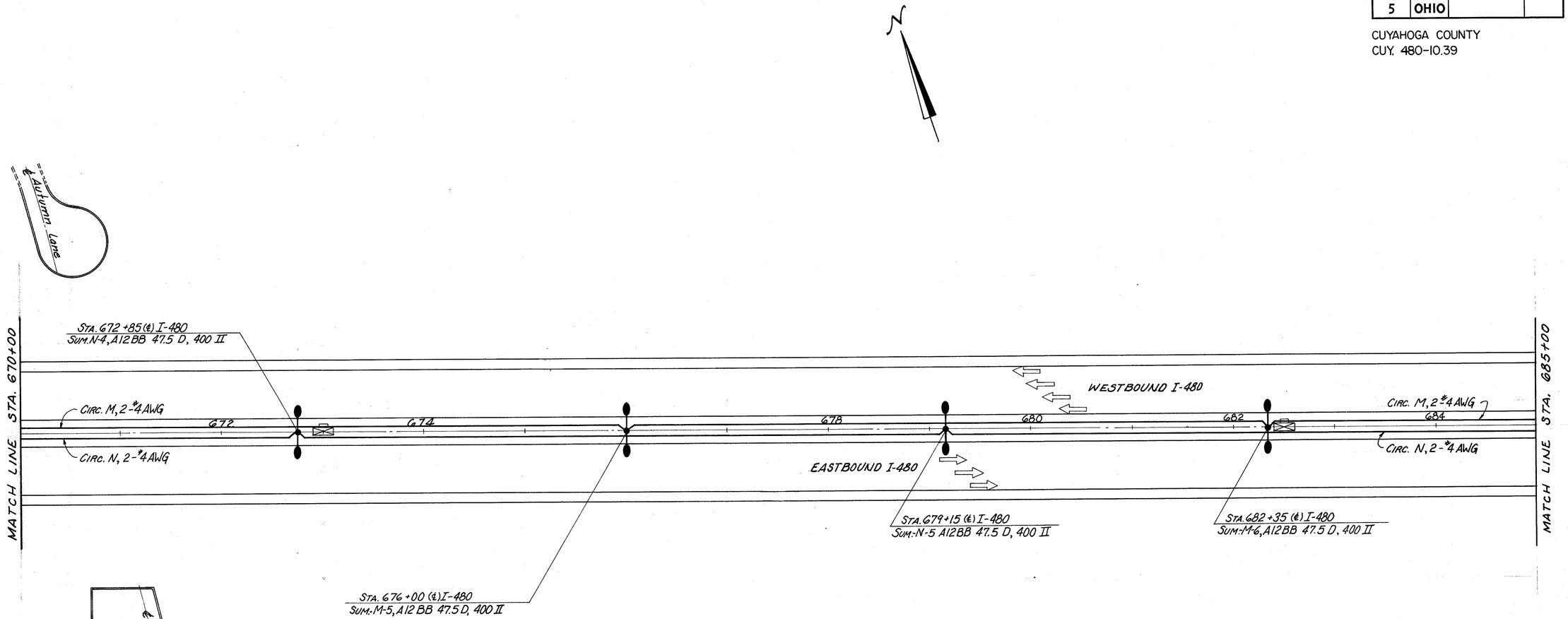


LIGHTING PLAN STA. 670+00 to STA. 685+00

| FHWA REGION | STATE | PROJECT | |
|---|---|---|---|
| 5 | OHIO | | |

270
500

CUYAHOGA COUNTY
CUY. 480-10.39

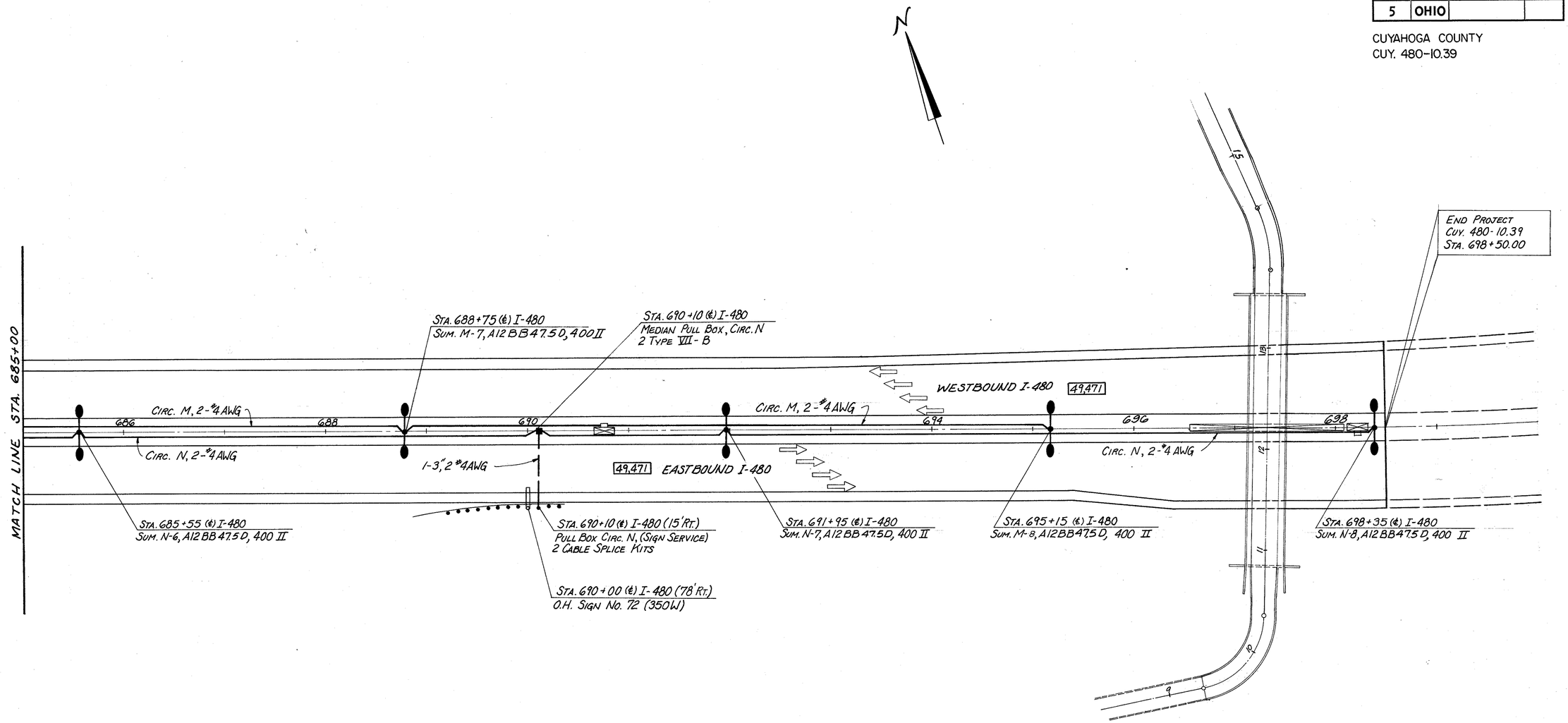


LIGHTING PLAN STA. 685+00 to STA. 698+50

CALC. BY
DATE
CHKD. BY
DATE

CUYAHOGA COUNTY
CUY-480-10.39

OHIO
FHWA REGION 5

271/500

## CIRCUIT S

4-1000W
6-400W
1-1050W SIGN
2-350W SIGNS
20 A

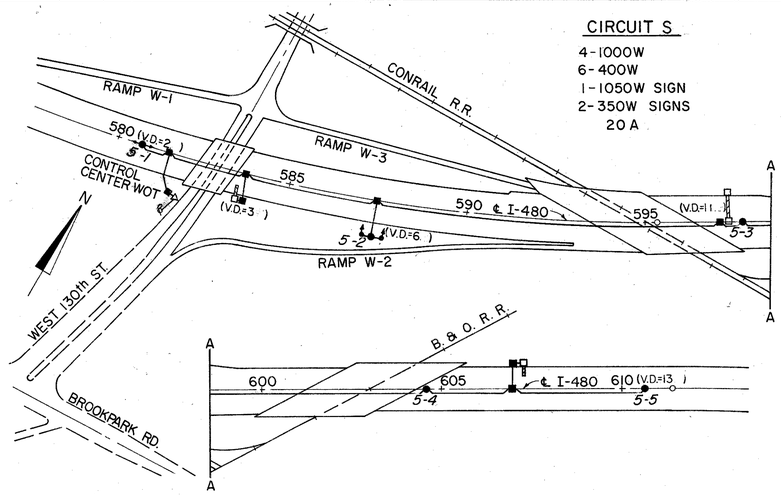


## CIRCUIT T

6-1000W
6-400W
1-350 W SIGN
22 A

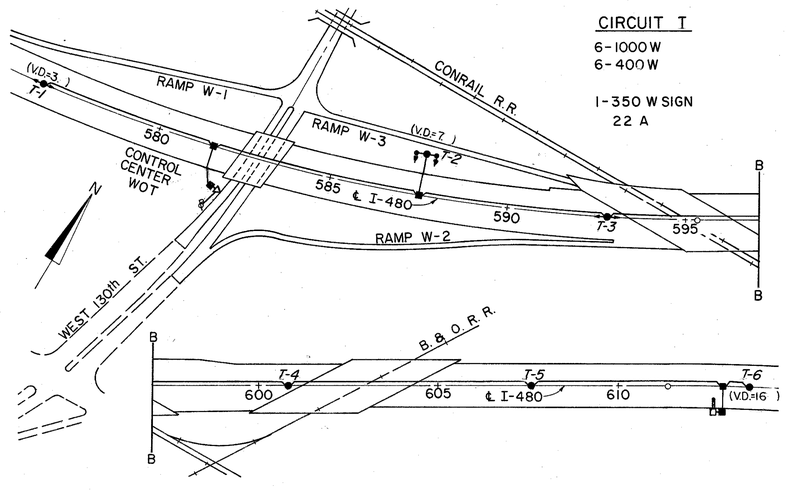


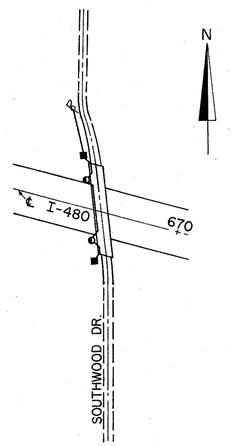


## KEY PLAN LEGEND

- LIGHTING CONTROL CENTER
- TOWER LIGHT POLE-1000 WATT TYPE I
- TOWER LIGHT POLE-1000 WATT ASYMMETRIC
- TWIN 400 WATT LIGHTS & POLE
- 250 WATT LIGHT & POLE
- 200 WATT LIGHT & POLE
- 150 WATT LIGHT & POLE
- 100 WATT UNDERPASS LUMINAIRE
- PULL BOX (UP INDICATES UNDERPASS LIGHTING CONNECTION)
- ILLUMINATED OVERHEAD SIGN
- No 4 AWG CIRCUIT CABLE
- SERVICE POLE

## CIRCUIT J

12-400W
11-200W
1-1225W SIGN
20 A

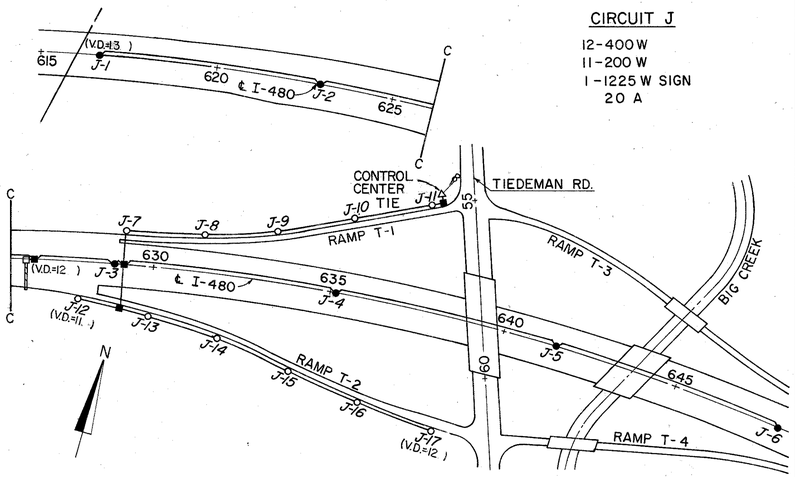


## CIRCUIT K

10-400W
11-200W
4-100W
1-1225W SIGN
1-700W SIGN
1-350W SIGN
22 A

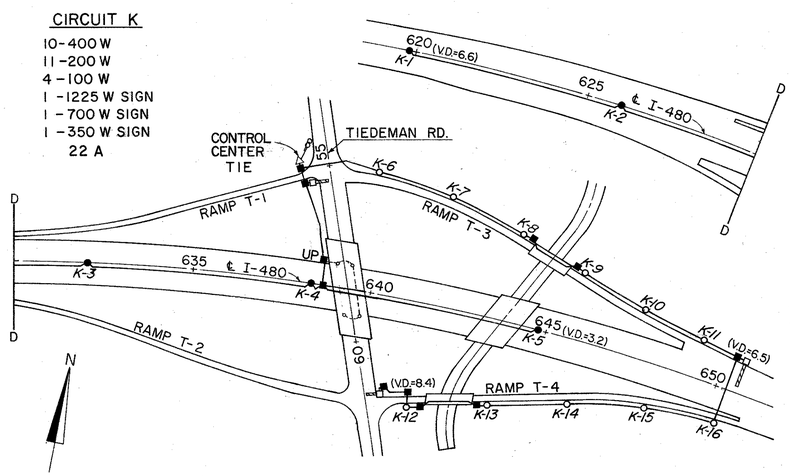


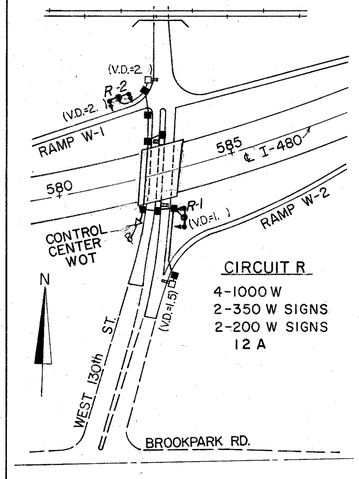


## CIRCUIT R

4-1000W
2-350W SIGNS
2-200W SIGNS
12 A

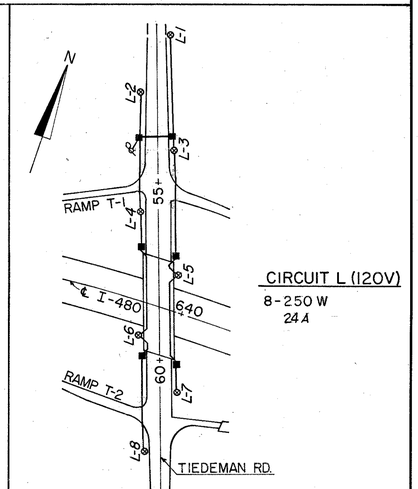


## CIRCUIT L (120V)

8-250W
24 A

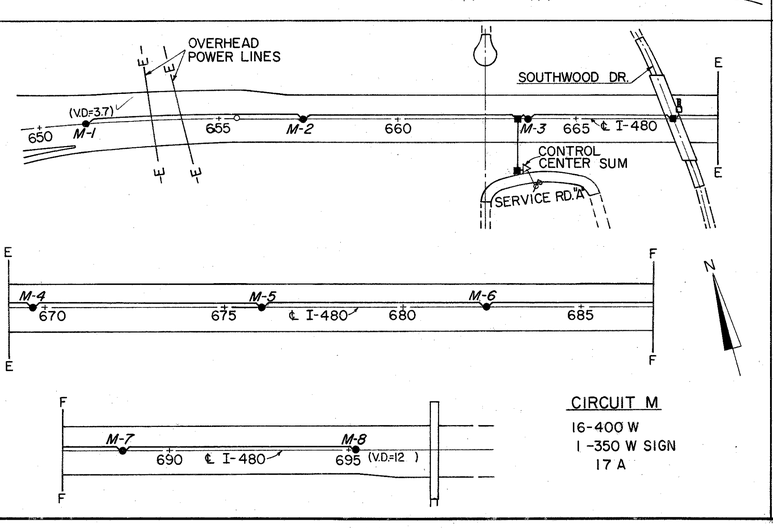


## CIRCUIT M

16-400W
1-350W SIGN
17 A

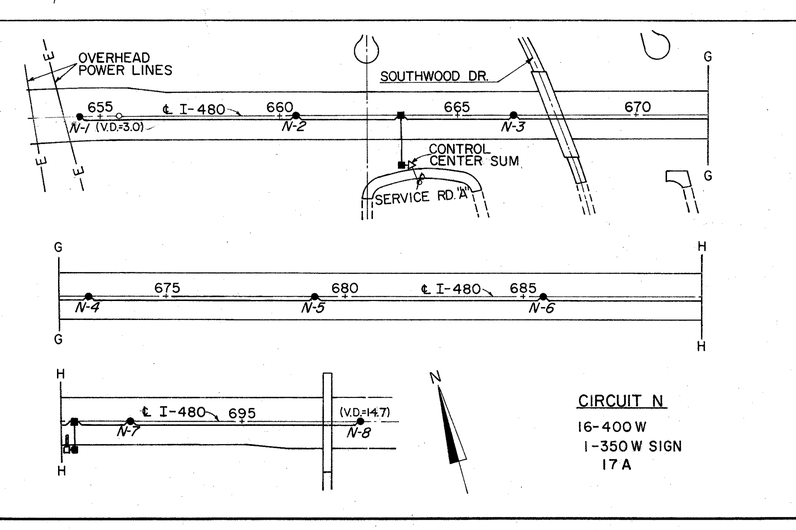


## CIRCUIT N

16-400W
1-350W SIGN
17 A

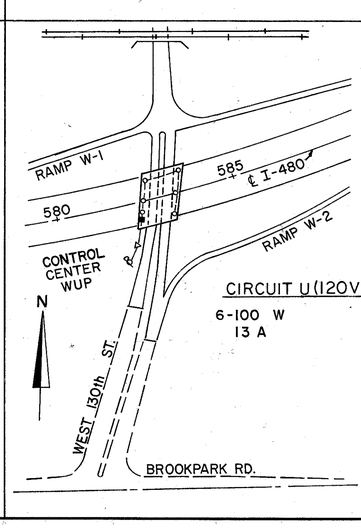


## CIRCUIT U (120V)

6-100 W
13 A

### CONTROL CENTER DATA

| CONTROL CENTER | LOAD KVA | CIRCUIT NUMBER | CIRCUIT LOAD AMPS | CIRCUIT FUSE AMPS |
|---|---|---|---|---|
| WOT | 25.7 | R | 12 | 20 |
| | | S | 20 | 30 |
| | | T | 22 | 30 |
| WUP | 1.5 | U | 13 | 20 |
| TIE | 20.3 | J | 20 | 30 |
| | | K | 22 | 30 |
| SUM | 16.0 | M | 17 | 25 |
| | | N | 17 | 25 |

LIGHTING CIRCUIT DIAGRAMS

| CALC. BY | | CUYAHOGA COUNTY | OHIO |
|---|---|---|---|
| DATE | | CUY-480-10.39 | FHWA REGION 5 |
| CHKD. BY | | | |
| DATE | | | |

272
500

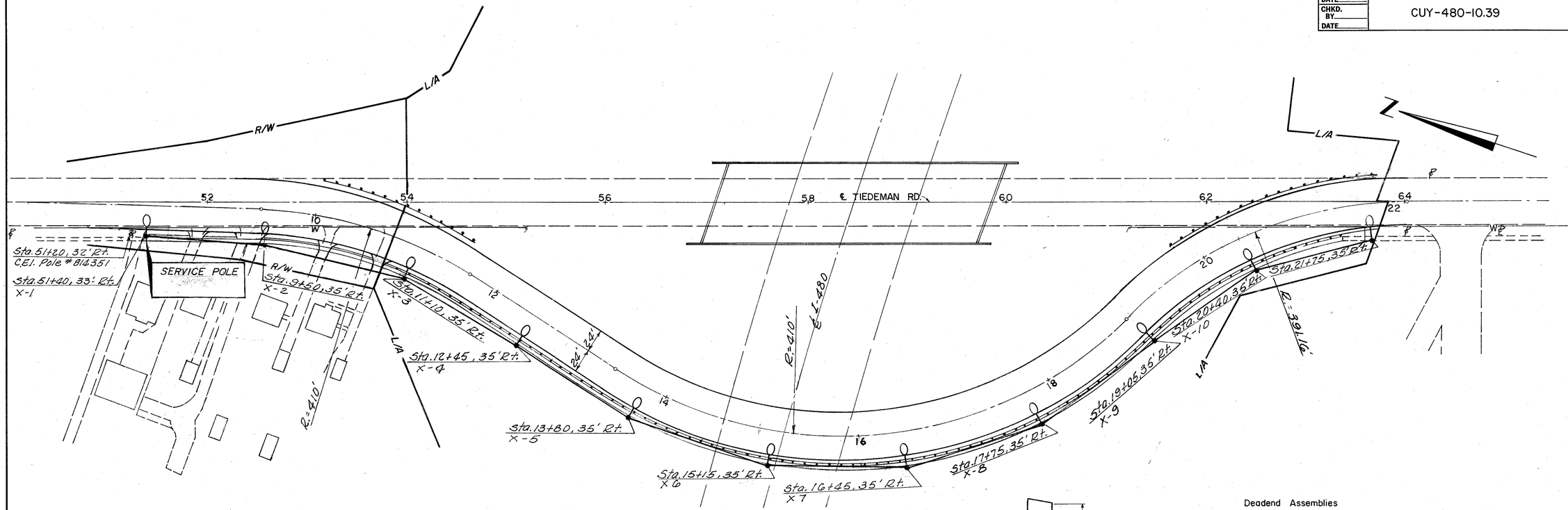


## LEGEND-TEMPORARY LIGHTING

150 Watt Luminaire With P.E. at
32.5' Mounting Height
Station Number (OFFSET FROM ℄)
Light Number & Circuit

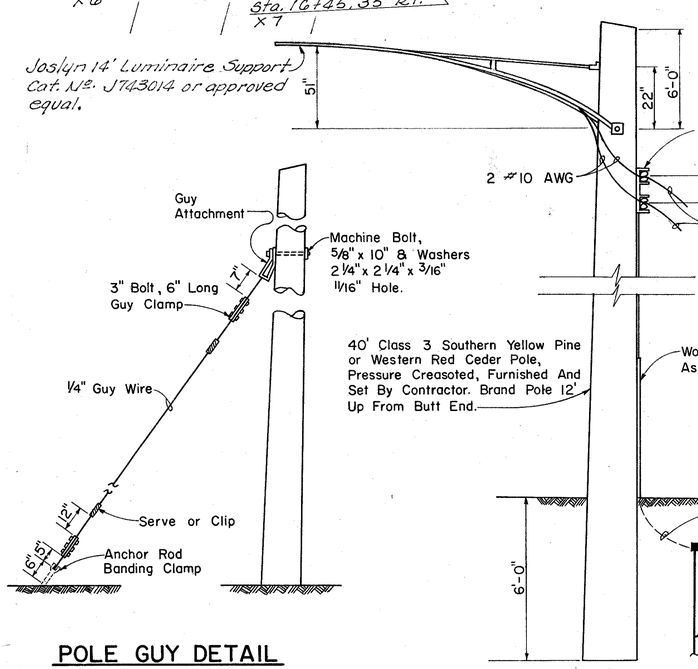


POLE AND BRACKET DETAIL




POLE GUY DETAIL

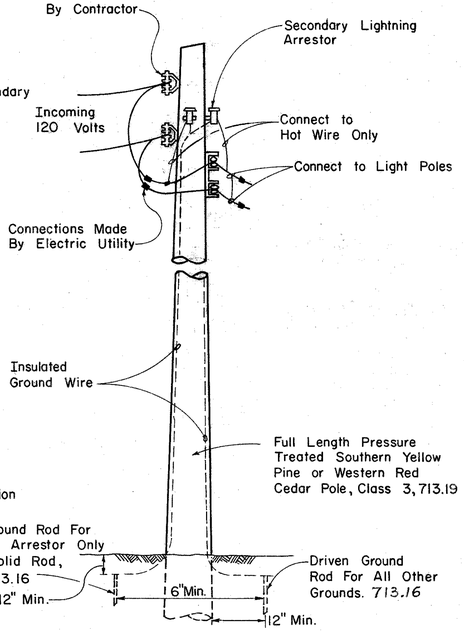


SERVICE POLE DETAIL

TEMPORARY LIGHTING PLAN & DETAILS

| | | | |
|---|---|---|---|
| CALC. BY | CUYAHOGA COUNTY | OHIO | 273 |
| DATE | CUY-480-10.39 | FHWA REGION 5 | 500 |
| CHKD. BY | | | |
| DATE | | | |

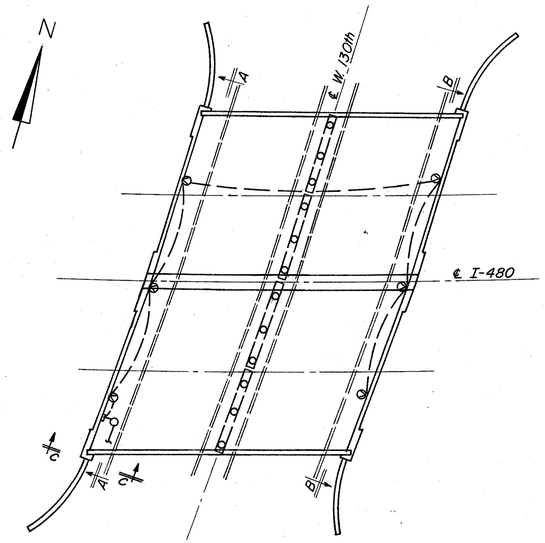


SCHEMATIC PLAN

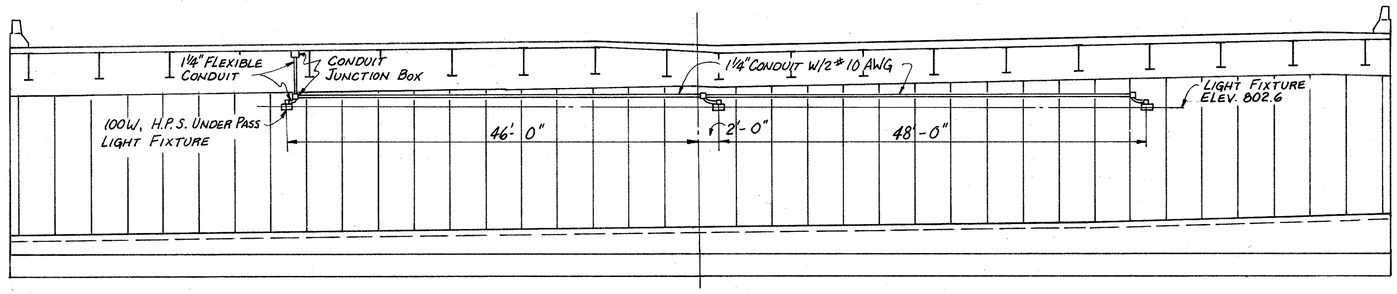


SECTION B-B
EAST ABUTMENT

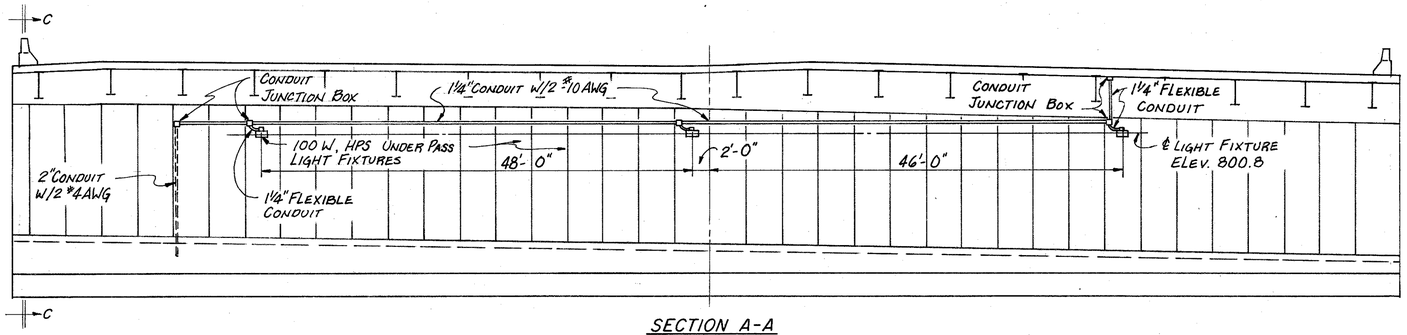


SECTION A-A
WEST ABUTMENT

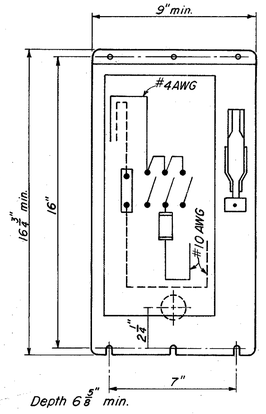


SERVICE SWITCH

*Enclosure NEMA 4 watertight AISI 302 or 303 stainless steel with flange mounted switch handle.*

*Space provided for knockout for wiring direct into structure.*

*480 Volt*
*30 Amp Switch*
*20 Amp Fuse*

*Switch shall be:*
*Square "D" H36INDS*
*Cutler Hammer 9589X601-2F30*
*Westinghouse WHF-461-N*
*or approved equal.*

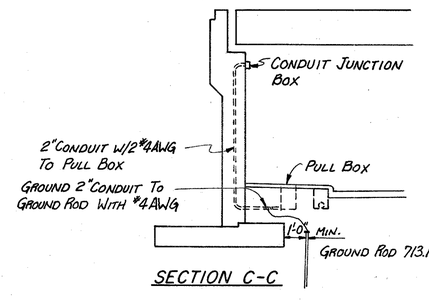


SECTION C-C

## UNDERPASS LIGHTING NOTES

*Underpass Lighting - Item 625 Including Installation Of All Electrical Equipment On The Bridge To The Adjacent Roadway Pull Box (See Lighting General Notes For Pay Item Description.)*

*Quantities - For Detail Listing Of Quantities See General Lighting Summary, Sheet No. 256 & 257.*

*Anchorage - The Junction Boxes Shall Be Attached To The Concrete With ¼" Flat Head Drive Pins.*

*For Additional Details And Notes, See Highway Lighting, Std. Dwg. HL-6.*

**UNDERPASS LIGHTING DETAILS BRIDGE No CUY-480-1054**

| CALC. BY | | CUYAHOGA COUNTY | OHIO |
|---|---|---|---|
| DATE | | CUY-480-10.39 | FHWA REGION 5 |
| CHKD. BY | | | |
| DATE | | | |

274
500

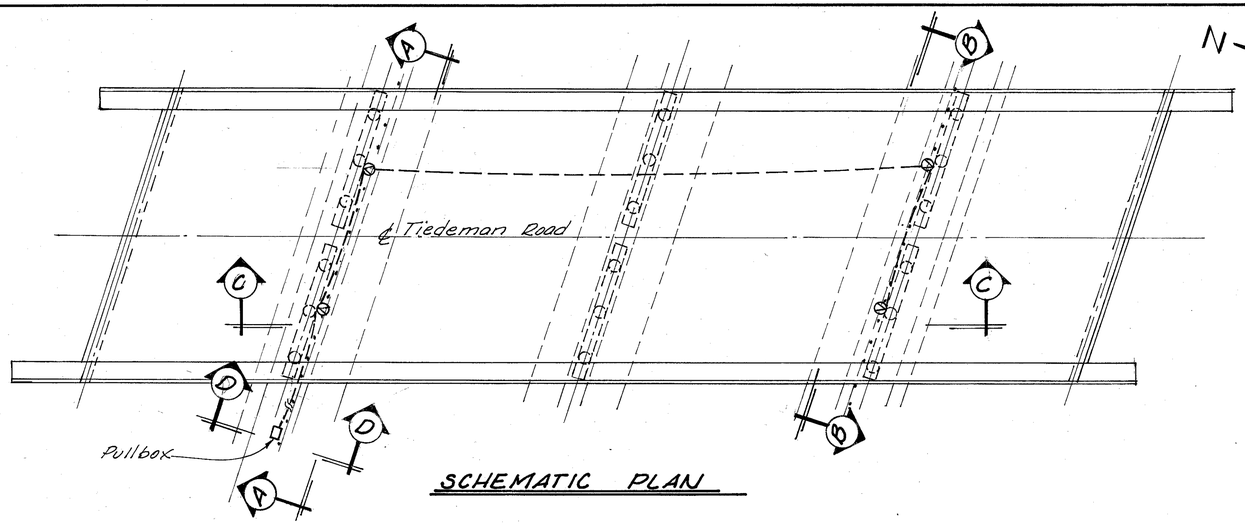


SCHEMATIC PLAN

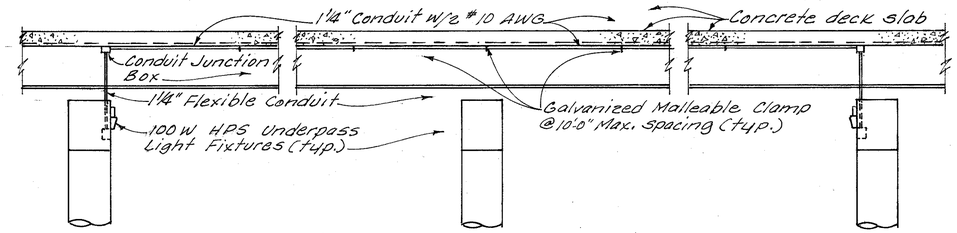


SECTION C-C

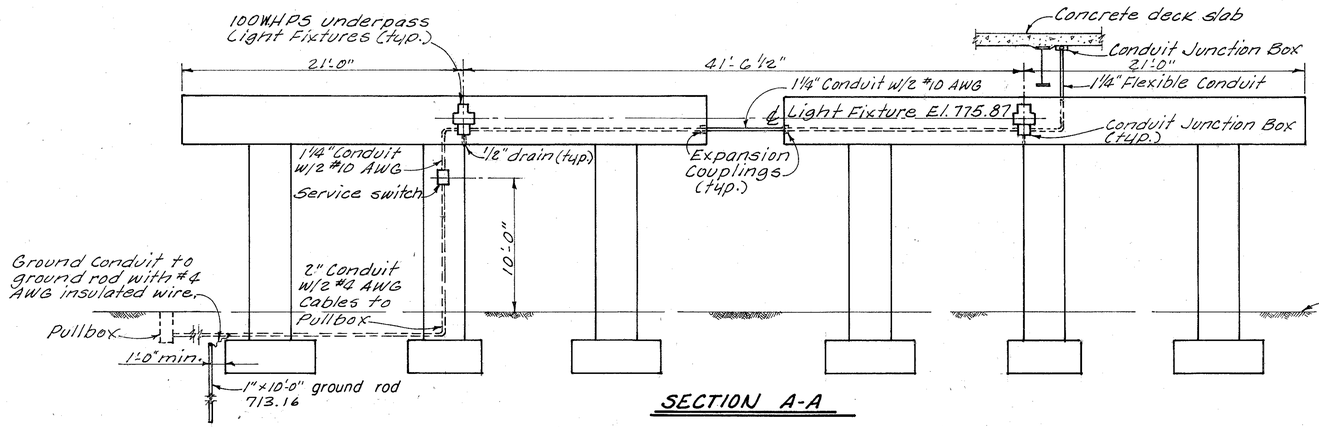


SECTION A-A

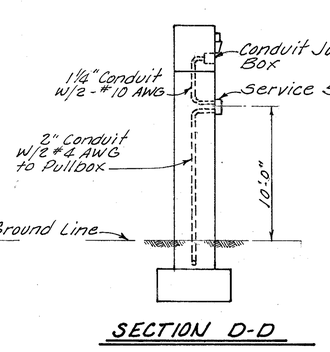


SECTION D-D

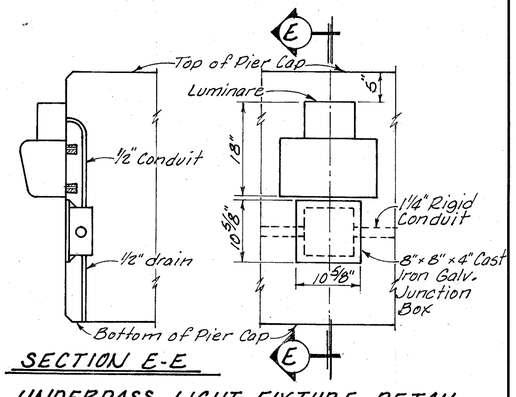


SECTION E-E

UNDERPASS LIGHT FIXTURE DETAIL

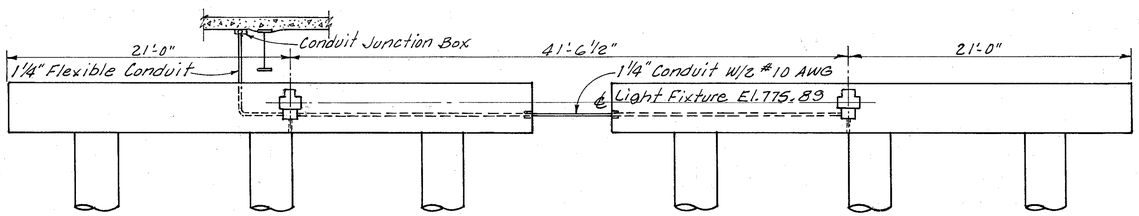


SECTION B-B

NOTE:
For additional notes and details see Sheet No. 273

| CALC. BY | | CUYAHOGA COUNTY | OHIO |
|---|---|---|---|
| DATE | | CUY-480-10.39 | FHWA REGION 5 |
| CHKD. BY | | | |
| DATE | | | |

275/500

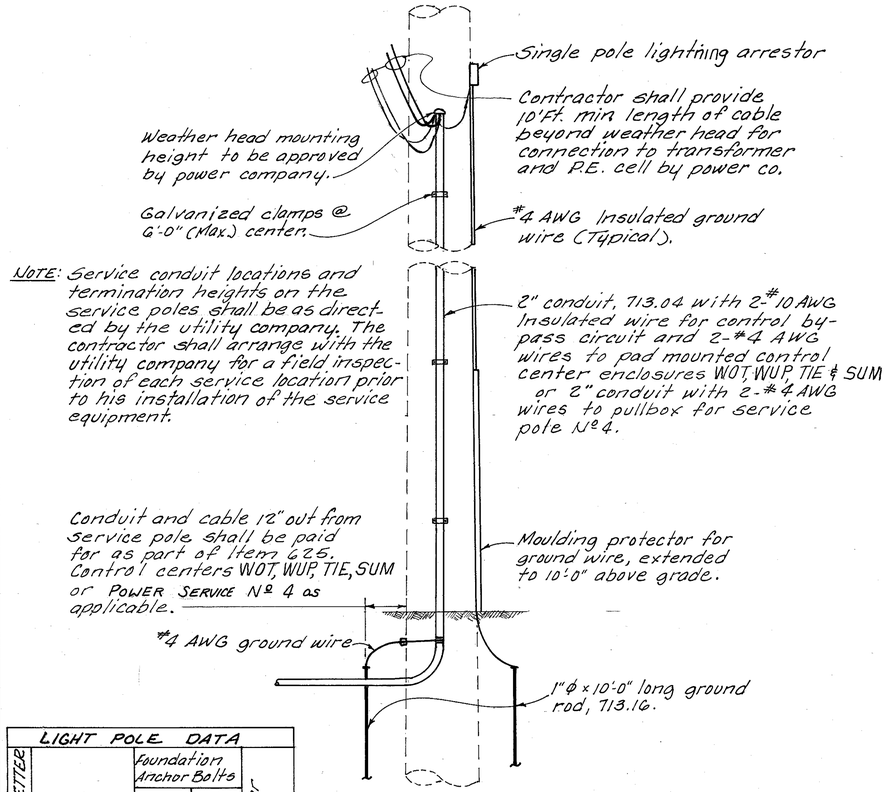


SERVICE POLE DETAIL

| REFERENCE LETTER | Design Number | Foundation Anchor Bolts: SIZE: Diameter x Length | Foundation Anchor Bolts: Bolt Circle Diameter | Transformer Base Style |
|---|---|---|---|---|
| A | A12 B8 47.5D* | 1¼" x 70" | 18" x 18" | None |
| B | AT 15 B 41.1 | 1" x 40" | 15" | ATA |
| C | AT 12B 34.2 | 1" x 40" | 15" | ATA |
| D | ST 8 B 41.7 | 1" x 40" | 15" | steel |
| E | ST 8B 34.2 | 1" x 40" | 15" | steel |
| | | | | |

* D With special steel base plate, 12"x22"x1¼" thick with 1½ϕ holes spaced to match anchor bolts as shown in HL-22.

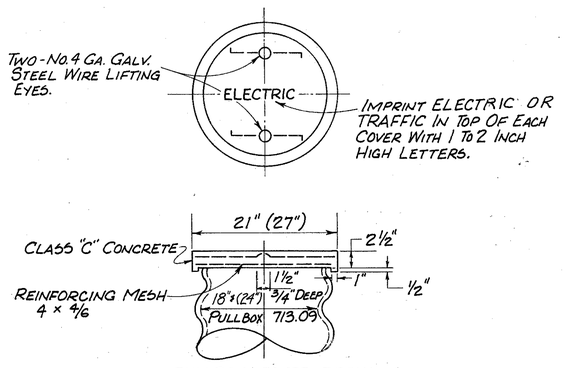


PULLBOX COVER DETAIL

18"x(24") DIA. PULLBOX WITH CONC. COVER

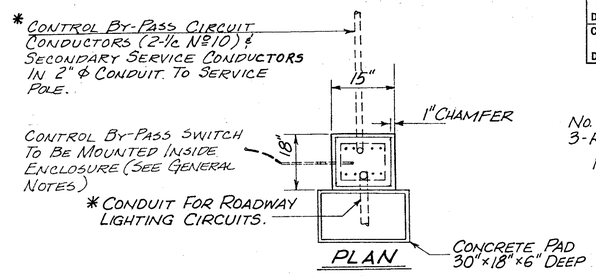


PLAN

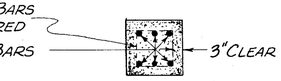


SECTION THRU FOUNDATION

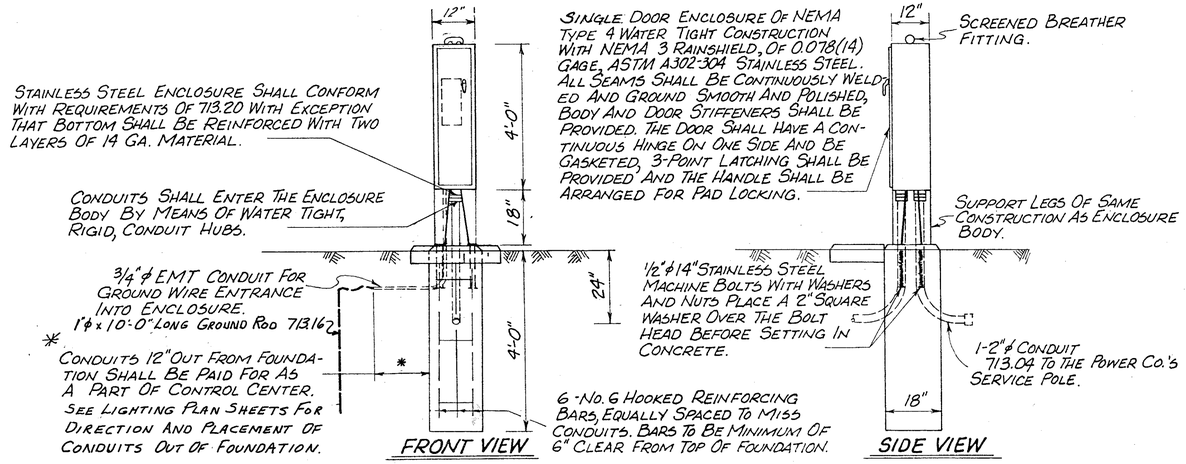


CONTROL CENTER DETAILS

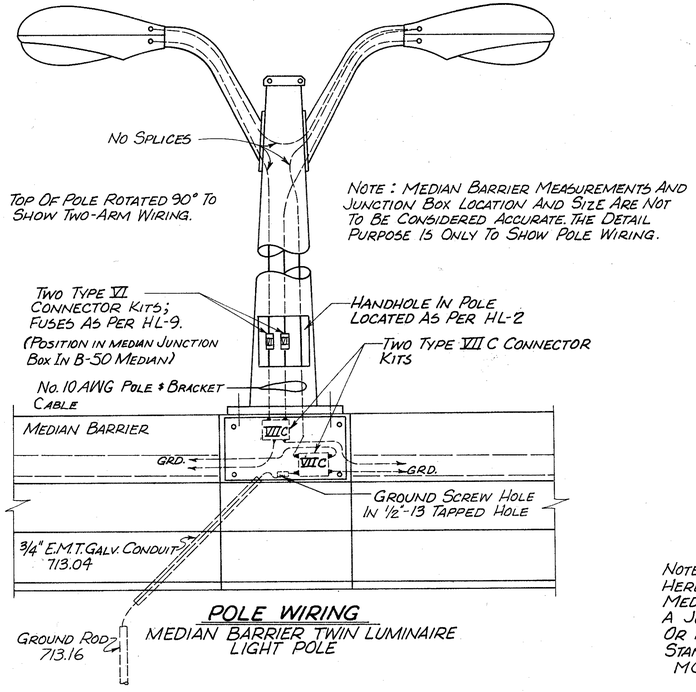


POLE WIRING
MEDIAN BARRIER TWIN LUMINAIRE LIGHT POLE

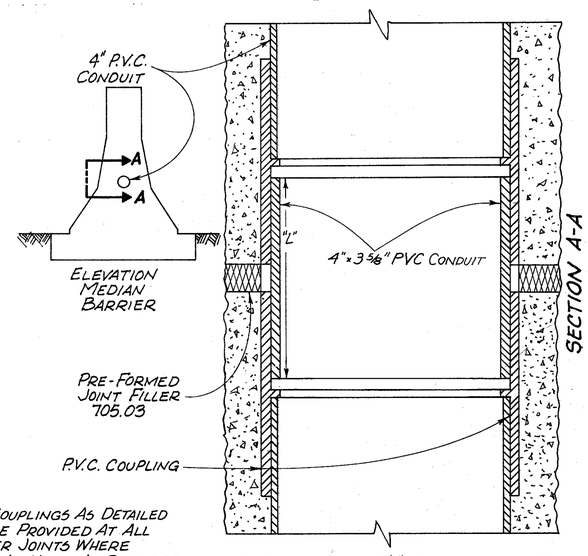


NOTE: CONDUIT COUPLINGS AS DETAILED HEREIN SHALL BE PROVIDED AT ALL MEDIAN BARRIER JOINTS WHERE A JOINT FILLER IS USED, AS REQUIRED OR PERMITTED BY ITEM 622 OR STANDARD CONSTRUCTION DRAWING MC-9.

"L" IS APPROX. 3¾" WHEN JOINT IS ½"

DETAILS OF CONSTRUCTION JOINT 4" P.V.C. COUPLING IN MEDIAN CONCRETE BARRIER

| FHWA REGION | STATE | PROJECT | |
|---|---|---|---|
| 5 | OHIO | | |

276
500

CUYAHOGA COUNTY
CUY-480-10.39

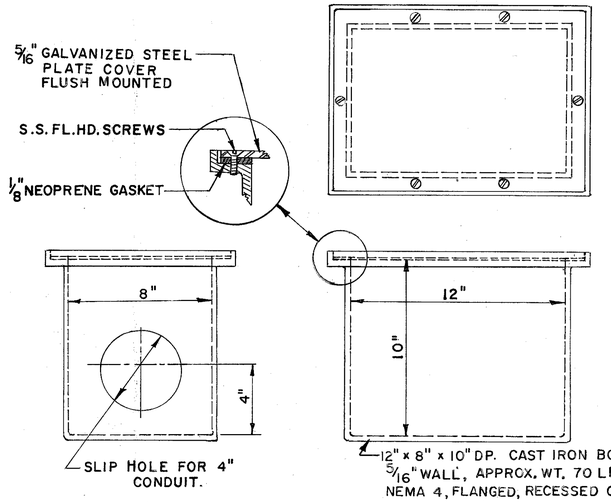


JUNCTION BOX SHALL CONFORM TO 713.10, EXCEPT THAT THE GALVANIZED STEEL PLATE COVER SHALL CONFORM TO ASTM A-242 OR A-36.

## TRANSITION JUNCTION BOX DETAILS

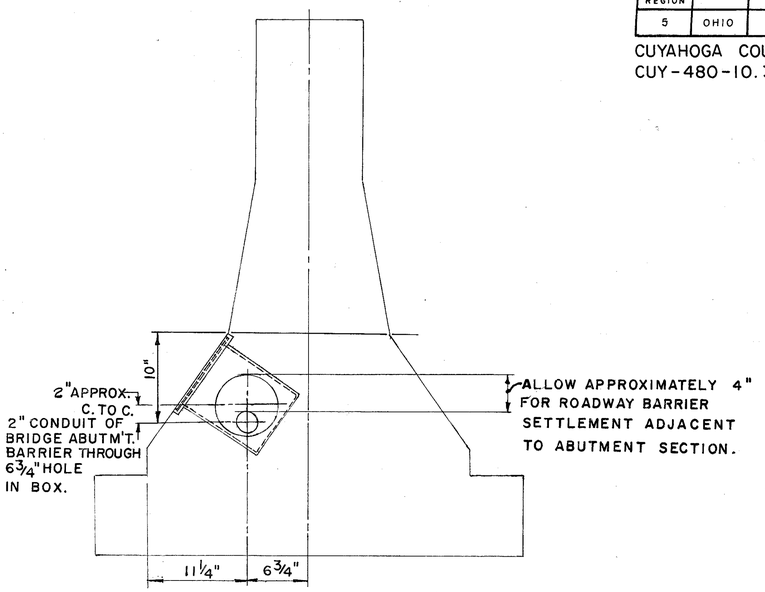


END ELEV. B-B

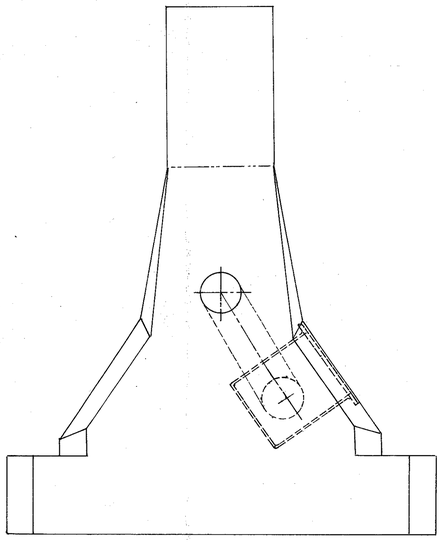

END ELEV. A-A

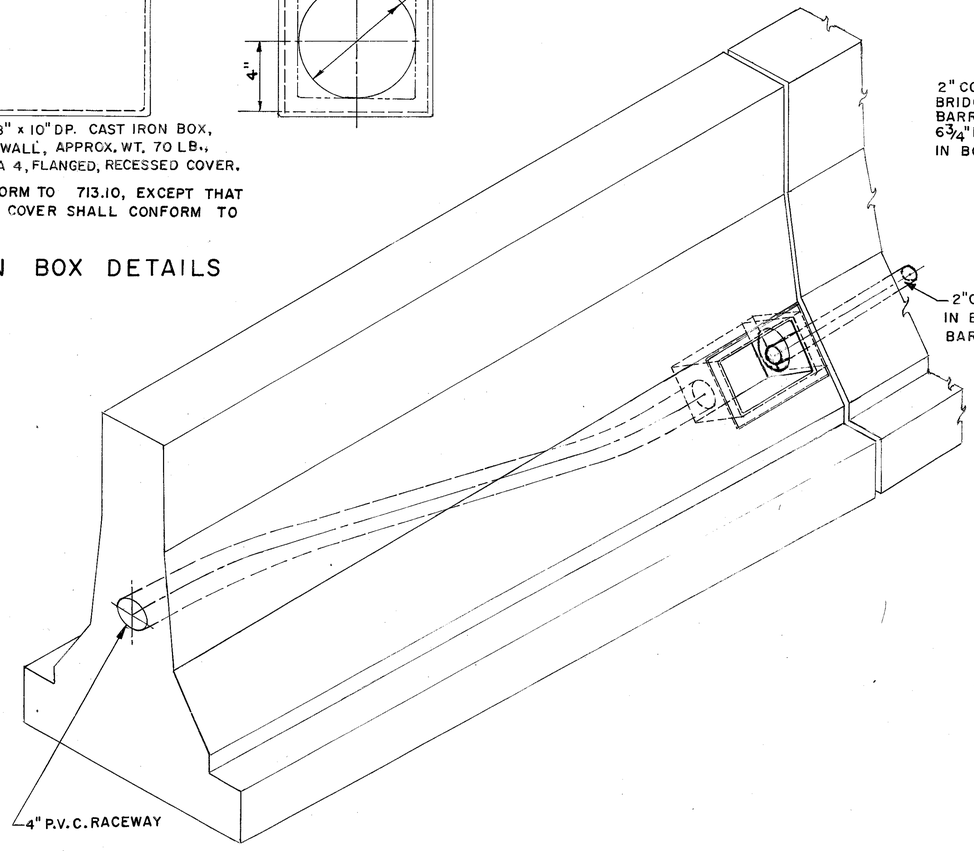


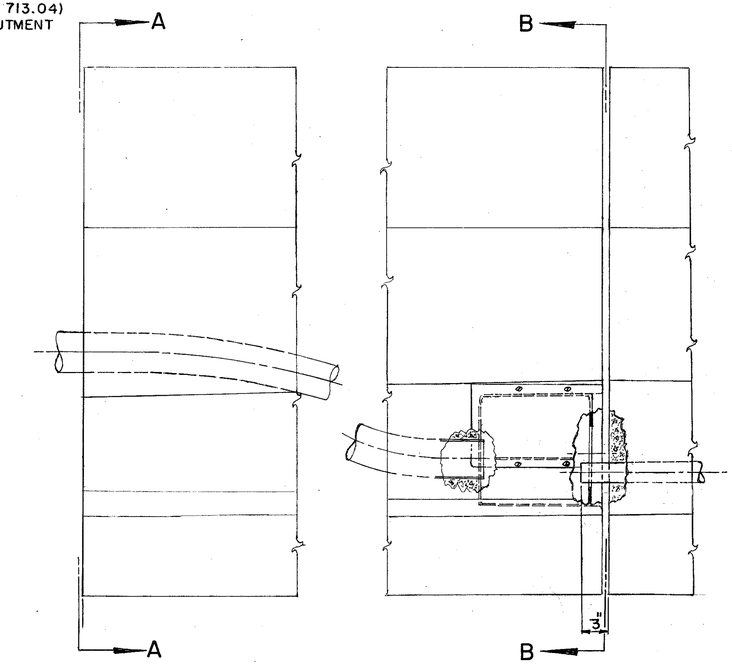


SIDE ELEVATION, TRANSITION BARRIER FROM ROADWAY TO BRIDGE CONFIGURATIONS

| F.H.W.A. REGION | STATE | PROJECT | |
|---|---|---|---|
| 5 | OHIO | | |

277/500

CUYAHOGA COUNTY
CUY.-480- 10.39

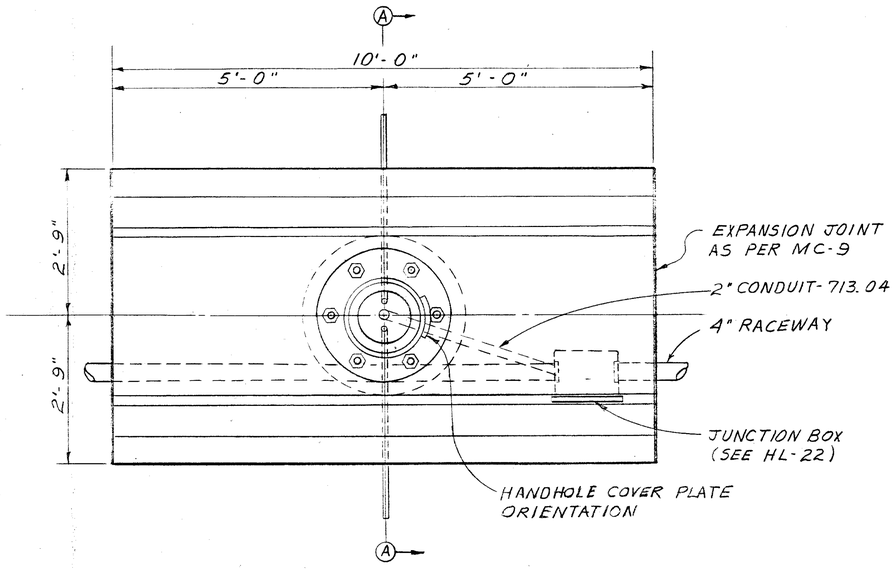


PLAN

| LIGHT TOWER DATA | | | | | | | | |
|---|---|---|---|---|---|---|---|---|
| TOWER NUMBER | 1 | 2 | 3 | 4 | 5 | 6 | 7 | |
| DESIGN NUMBER | BB 80 (MED. MTD.) | BB 80 (MED. MTD.) | BB100 | BB100 | BB100 | BB100 | BB 80 (MED. MTD.) | |
| TOWER HEIGHT | 80' | 80' | 100' | 100' | 100' | 100' | 80' | |
| FOUNDATION TYPE | II | II | II | II | II | II | II | |
| FOUNDATION DEPTH | 20'-0" | 20'-0" | 20'-0" | 20'-0" | 20'-0" | 20'-0" | 20'-0" | |
| BOLT CIRCLE | 23 1/2" | 23 1/2" | 23 1/2" | 23 1/2" | 23 1/2" | 23 1/2" | 23 1/2" | |
| NUMBER OF BOLTS | 6 | 6 | 6 | 6 | 6 | 6 | 6 | |
| BOLTS DIMENSIONS | 1 3/4"x96" | 1 3/4"x96" | 1 3/4"x96" | 1 3/4"x96" | 1 3/4"x96" | 1 3/4"x96" | 1 3/4"x96" | |
| FOUNDATION ELEVATION | 802.61 | 809.74 | 784.00 | 792.54 | 780.71 | 807.71 | 827.64 | |
| MAINTENANCE PLATFORM TYPE | NONE | NONE | B | NONE | B | B | NONE | |
| | | | | | | | | |

*SEE DETAILS

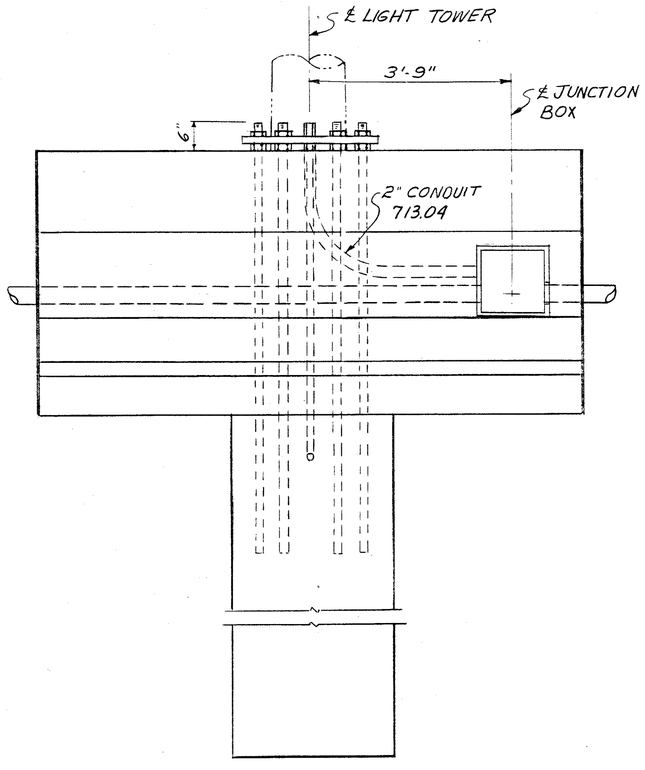


ELEVATION

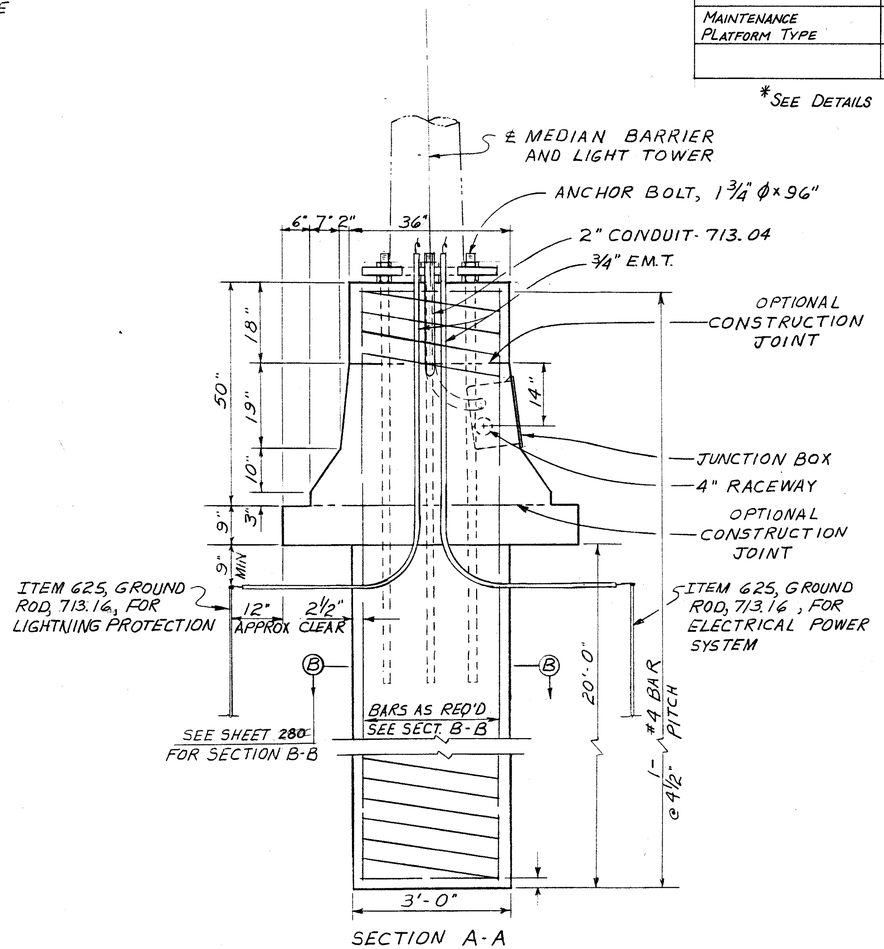


SECTION A-A

BENDING DIAGRAM

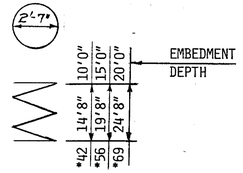


* NUMBER OF TURNS @ 4½" PITCH INCLUDES 1½ TURNS AT EACH END.

SPIRAL REINFORCEMENT NOTE:

THE LENGTH SHOWN ON THE NO. 4 SPIRAL BAR BENDING DIAGRAM IS THE FOUNDATION EMBEDMENT DEPTH WITH A 3" CLEARANCE.

FOUR STEEL CHANNELS, TEE OR ANGLE SPACERS, WEIGHING APPROXIMATELY 0.80 LBS. PER FOOT OF SPACER SHALL BE PROVIDED FOR EACH SPIRAL UNIT.

THEY SHALL BE EQUALLY SPACED ALONG THE PERIPHERY OF THE COIL.

NOTES

FOR ADDITIONAL NOTES, SEE GENERAL NOTES.
FOUNDATION TO BE CAST-IN-PLACE, CLASS "C" CONCRETE.
REINFORCEMENT TO COMPLY WITH AND BE PLACED IN ACCORD_ ANCE WITH 509.
CASSIONS AND SLABS SHALL BE PLACED IN WELL-COMPACTED, UNDISTURBED SOIL.
ANCHOR BOLTS, PULLBOX AND COVER, CODUITS, 4" Ø PVC RACEWAY AND EXPANSION JOINT FILLER INCLUDED IN PRICE BID FOR FOUNDATION.
FOR LIGHT TOWER FOUNDATION DATA, SEE SHEET 277

LIGHT TOWER FOUNDATION DETAILS

# LIGHT TOWER MAINTENANCE PLATFORM

| FHWA REGION | STATE | PROJECT | |
|---|---|---|---|
| 5 | OHIO | | |

278
500

CUYAHOGA COUNTY
CUY-480-10.39

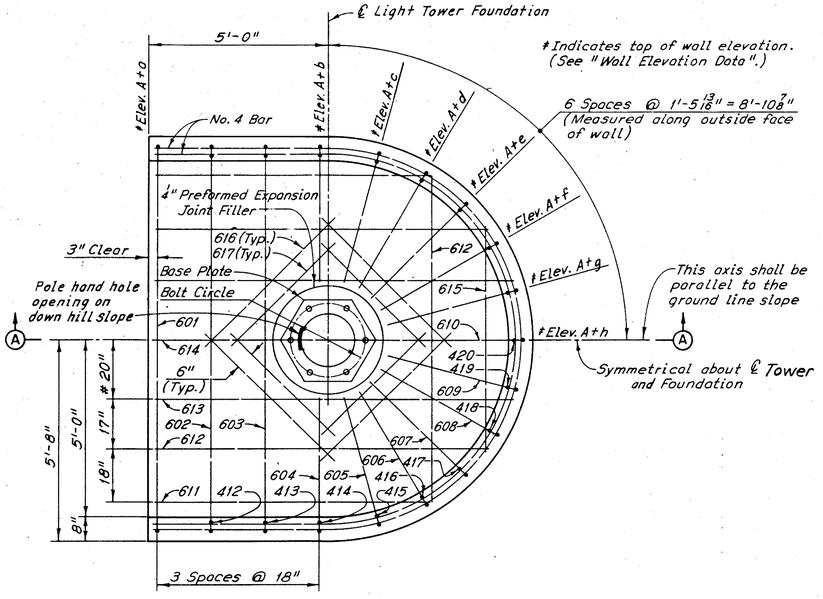


PLAN

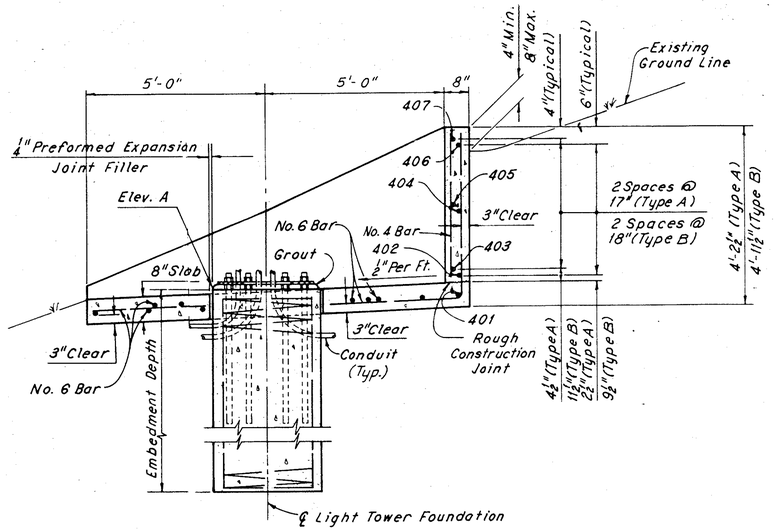


SECTION A-A

(TYPE A AND TYPE B)

*(Type A platform will be used in special cases on Slopes 3.01:1 to 3.75:1)*

| WALL ELEVATION DATA | | | | | | | | |
|---|---|---|---|---|---|---|---|---|
| TYPE | a | b | c | d | e | f | g | h |
| A | .08 | 1.78 | 2.28 | 2.74 | 3.14 | 3.45 | 3.64 | 3.71 |
| B | .09 | 2.14 | 2.74 | 3.30 | 3.78 | 4.15 | 4.39 | 4.46 |
| C | .10 | 2.70 | 3.46 | 4.17 | 4.79 | 5.25 | 5.55 | 5.65 |
| D | .11 | 3.06 | 3.92 | 4.73 | 5.43 | 5.96 | 6.29 | 6.41 |

*Note: The values shown are in feet*

| PLATFORM GROUPING | |
|---|---|
| TYPE | SLOPE |
| A | 3.01:1 to 3.75 :1 |
| B | 2.5:1 to 3.0 :1 |
| C | 2.0:1 to 2.49:1 |
| D | 1.75:1 to 1.99:1 |

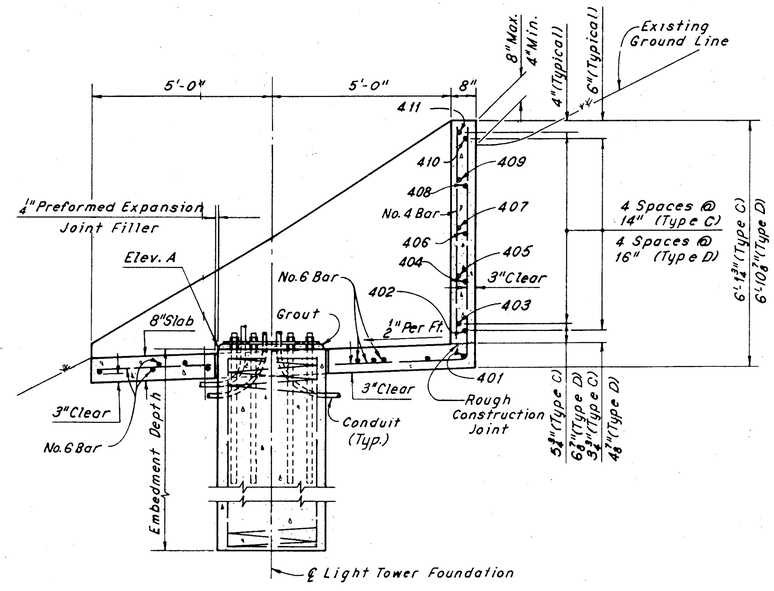


SECTION A-A

(TYPE C AND TYPE D)

TOWER LIGHTNING PROTECTION SYSTEM
SEE SHEET NO. 255

Notes:

Clearance for reinforcing bars is 2" typical, except as noted.

For Elevation A and embedment depth, see Light Tower Foundation Data Sheet 277.

The following abbreviations are used:

No. = Number
Min. = Minimum
Max. = Maximum
Typ. = Typical
Elev. = Elevation

# LIGHT TOWER MAINTENANCE PLATFORM
# REINFORCEMENT SCHEDULE

| FHWA REGION | STATE | PROJECT | |
|---|---|---|---|
| 5 | OHIO | | |

279
500

CUYAHOGA COUNTY
CUY-480-10.39

### WALL TYPE A

| MARK | NO. | LENGTH | TYPE | A | B | R |
|---|---|---|---|---|---|---|
| 401 | 1 | 26'-3" | 144 | 16'-10" | 4'-9" | 5'-3¾" |
| 402 | 1 | 23'-11½" | 144 | 16'-10" | 3'-7" | 5'-3¾" |
| 403 | 1 | 22'-7" | 144 | 16'-6" | 3'-1" | 5'-2½" |
| 404 | 1 | 15'-9" | 121 | 15'-9" | ---- | 5'-3¾" |
| 405 | 1 | 14'-6" | 121 | 14'-6" | ---- | 5'-2½" |
| 406 | 1 | 6'-2" | 121 | 6'-2" | ---- | 5'-3¾" |
| 407 | 1 | 4'-3" | 121 | 4'-3" | ---- | 5'-2½" |
| 413 | 2 | 1'-0" | Str. | | | |
| 414 | 2 | 1'-6" | Str. | | | |
| 415 | 2 | 2'-0" | Str. | | | |
| 416 | 2 | 2'-6" | Str. | | | |
| 417 | 2 | 2'-9" | Str. | | | |
| 418 | 2 | 3'-0" | Str. | | | |
| 419 | 2 | 3'-3" | Str. | | | |
| 420 | 1 | 3'-3" | Str. | | | |
| | | | | | | |
| 601 | 1 | 11'-10" | 105 | 8" | 10'-10" | ---- |
| 602 | 1 | 12'-10" | 105 | 1'-2" | 10'-10" | ---- |
| 603 | 1 | 13'-8" | 105 | 1'-7" | 10'-10" | ---- |
| 604 | 2 | 5'-7" | 104 | 2'-0" | 3'-9" | ---- |
| 605 | 2 | 6'-1" | 108 | 2'-6" | ⅛" | ---- |
| 606 | 2 | 6'-6" | 108 | 2'-11" | ¼" | ---- |
| 607 | 2 | 6'-10" | 108 | 3'-3" | ⅜" | ---- |
| 608 | 2 | 7'-2" | 108 | 3'-7" | ⅜" | ---- |
| 609 | 2 | 7'-4" | 108 | 3'-9" | ½" | ---- |
| 610 | 1 | 7'-4" | 108 | 3'-9" | ½" | ---- |
| 611 | 2 | 7'-6" | Str. | | | |
| 612 | 3 | 9'-3" | Str. | | | |
| 613 | 2 | 10'-0" | Str. | | | |
| 614 | 1 | 3'-0" | Str. | | | |
| 615 | 1 | 6'-6" | Str. | | | |
| 616 | 4 | 5'-6" | Str. | | | |
| 617 | 4 | 4'-6" | Str. | | | |
| | | | | | | |
| | | | | | | |

### WALL TYPE B

| MARK | NO. | LENGTH | TYPE | A | B | R |
|---|---|---|---|---|---|---|
| 401 | 1 | 26'-3" | 144 | 16'-10" | 4'-9" | 5'-3¾" |
| 402 | 1 | 21'-9" | 144 | 16'-10" | 2'-6" | 5'-3¾" |
| 403 | 1 | 20'-7" | 144 | 16'-6" | 2'-1" | 5'-2½" |
| 404 | 1 | 14'-7" | 121 | 14'-7" | ---- | 5'-3¾" |
| 405 | 1 | 13'-6" | 121 | 13'-6" | ---- | 5'-2½" |
| 406 | 1 | 5'-10" | 121 | 5'-10" | ---- | 5'-3¾" |
| 407 | 1 | 4'-0" | 121 | 4'-0" | ---- | 5'-2½" |
| 412 | 2 | 9" | Str. | | | |
| 413 | 2 | 1'-3" | Str. | | | |
| 414 | 2 | 1'-9" | Str. | | | |
| 415 | 2 | 2'-6" | Str. | | | |
| 416 | 2 | 3'-0" | Str. | | | |
| 417 | 2 | 3'-6" | Str. | | | |
| 418 | 2 | 3'-9" | Str. | | | |
| 419 | 2 | 4'-0" | Str. | | | |
| 420 | 1 | 4'-0" | Str. | | | |
| | | | | | | |
| 601 | 1 | 12'-0" | 105 | 9" | 10'-10" | ---- |
| 602 | 1 | 13'-0" | 105 | 1'-3" | 10'-10" | ---- |
| 603 | 1 | 14'-2" | 105 | 1'-10" | 10'-10" | ---- |
| 604 | 2 | 5'-11" | 104 | 2'-4" | 3'-9" | ---- |
| 605 | 2 | 6'-7" | 108 | 3'-0" | ⅛" | ---- |
| 606 | 2 | 7'-1" | 108 | 3'-6" | ¼" | ---- |
| 607 | 2 | 7'-6" | 108 | 3'-11" | ⅜" | ---- |
| 608 | 2 | 7'-10" | 108 | 4'-3" | ⅜" | ---- |
| 609 | 2 | 8'-1" | 108 | 4'-6" | ½" | ---- |
| 610 | 1 | 8'-1" | 108 | 4'-6" | ½" | ---- |
| 611 | 2 | 7'-6" | Str. | | | |
| 612 | 3 | 9'-3" | Str. | | | |
| 613 | 2 | 10'-0" | Str. | | | |
| 614 | 1 | 3'-0" | Str. | | | |
| 615 | 1 | 6'-6" | Str. | | | |
| 616 | 4 | 5'-6" | Str. | | | |
| 617 | 4 | 4'-6" | Str. | | | |

### WALL TYPE C

| MARK | NO. | LENGTH | TYPE | A | B | R |
|---|---|---|---|---|---|---|
| 401 | 1 | 26'-3" | 144 | 16'-10" | 4'-9" | 5'-3¾" |
| 402 | 1 | 24'-7" | 144 | 16'-10" | 3'-11" | 5'-3¾" |
| 403 | 1 | 23'-7" | 144 | 16'-6" | 3'-7" | 5'-2½" |
| 404 | 1 | 20'-1" | 144 | 16'-10" | 1'-8" | 5'-3¾" |
| 405 | 1 | 19'-3" | 144 | 16'-6" | 1'-5" | 5'-2½" |
| 406 | 1 | 15'-9" | 121 | 15'-10" | ---- | 5'-3¾" |
| 407 | 1 | 14'-11" | 121 | 14'-11" | ---- | 5'-2½" |
| 408 | 1 | 11'-4" | 121 | 11'-4" | ---- | 5'-3¾" |
| 409 | 1 | 10'-4" | 121 | 10'-4" | ---- | 5'-2½" |
| 410 | 1 | 5'-0" | 121 | 5'-0" | ---- | 5'-3¾" |
| 411 | 1 | 3'-4" | 121 | 3'-4" | ---- | 5'-2½" |
| 412 | 2 | 1'-0" | Str. | | | |
| 413 | 2 | 1'-9" | Str. | | | |
| 414 | 2 | 2'-6" | Str. | | | |
| 415 | 2 | 3'-3" | Str. | | | |
| 416 | 2 | 3'-9" | Str. | | | |
| 417 | 2 | 4'-6" | Str. | | | |
| 418 | 2 | 4'-9" | Str. | | | |
| 419 | 2 | 5'-0" | Str. | | | |
| 420 | 1 | 5'-3" | Str. | | | |
| | | | | | | |
| 601 | 1 | 12'-0" | 105 | 9" | 10'-10" | ---- |
| 602 | 1 | 13'-6" | 105 | 1'-6" | 10'-10" | ---- |
| 603 | 1 | 14'-10" | 105 | 2'-2" | 10'-10" | ---- |
| 604 | 2 | 6'-6" | 104 | 2'-11" | 3'-9" | ---- |
| 605 | 2 | 7'-3" | 108 | 3'-8" | ⅛" | ---- |
| 606 | 2 | 7'-11" | 108 | 4'-4" | ¼" | ---- |
| 607 | 2 | 8'-6" | 108 | 4'-11" | ⅜" | ---- |
| 608 | 2 | 8'-11" | 108 | 5'-4" | ⅜" | ---- |
| 609 | 2 | 9'-2" | 108 | 5'-7" | ½" | ---- |
| 610 | 1 | 9'-4" | 108 | 5'-9" | ½" | ---- |
| 611 | 2 | 7'-6" | Str. | | | |
| 612 | 3 | 9'-3" | Str. | | | |
| 613 | 2 | 10'-0" | Str. | | | |
| 614 | 1 | 3'-0" | Str. | | | |
| 615 | 1 | 6'-6" | Str. | | | |
| 616 | 4 | 5'-6" | Str. | | | |
| 617 | 4 | 4'-6" | Str. | | | |

### WALL TYPE D

| MARK | NO. | LENGTH | TYPE | A | B | R |
|---|---|---|---|---|---|---|
| 401 | 1 | 26'-3" | 144 | 16'-10" | 4'-9" | 5'-3¾" |
| 402 | 1 | 25'-3" | 144 | 16'-10" | 4'-3" | 5'-3¾" |
| 403 | 1 | 24'-5" | 144 | 16'-6" | 4'-0" | 5'-2½" |
| 404 | 1 | 20'-7" | 144 | 16'-10" | 1'-11" | 5'-3¾" |
| 405 | 1 | 19'-9" | 144 | 16'-6" | 1'-8" | 5'-2½" |
| 406 | 1 | 16'-1" | 121 | 16'-1" | ---- | 5'-3¾" |
| 407 | 1 | 15'-3" | 121 | 15'-3" | ---- | 5'-2½" |
| 408 | 1 | 11'-1" | 121 | 11'-1" | ---- | 5'-3¾" |
| 409 | 1 | 10'-2" | 121 | 10'-2" | ---- | 5'-2½" |
| 410 | 1 | 4'-8" | 121 | 4'-8" | ---- | 5'-3¾" |
| 411 | 1 | 3'-2" | 121 | 3'-2" | ---- | 5'-2½" |
| 412 | 2 | 1'-0" | Str. | | | |
| 413 | 2 | 2'-0" | Str. | | | |
| 414 | 2 | 2'-9" | Str. | | | |
| 415 | 2 | 3'-9" | Str. | | | |
| 416 | 2 | 4'-6" | Str. | | | |
| 417 | 2 | 5'-0" | Str. | | | |
| 418 | 2 | 5'-6" | Str. | | | |
| 419 | 2 | 5'-9" | Str. | | | |
| 420 | 1 | 6'-0" | Str. | | | |
| | | | | | | |
| 601 | 1 | 12'-0" | 105 | 9" | 10'-10" | ---- |
| 602 | 1 | 13'-3" | 105 | 1'-7" | 10'-10" | ---- |
| 603 | 1 | 15'-4" | 105 | 2'-5" | 10'-10" | ---- |
| 604 | 2 | 6'-10" | 104 | 3'-3" | 3'-9" | ---- |
| 605 | 2 | 7'-9" | 108 | 4'-2" | ⅛" | ---- |
| 606 | 2 | 8'-6" | 108 | 4'-11" | ¼" | ---- |
| 607 | 2 | 9'-2" | 108 | 5'-7" | ⅜" | ---- |
| 608 | 2 | 9'-8" | 108 | 6'-1" | ⅜" | ---- |
| 609 | 2 | 9'-11" | 108 | 6'-4" | ½" | ---- |
| 610 | 1 | 10'-1" | 108 | 6'-6" | ½" | ---- |
| 611 | 2 | 7'-6" | Str. | | | |
| 612 | 3 | 9'-3" | Str. | | | |
| 613 | 2 | 10'-0" | Str. | | | |
| 614 | 1 | 3'-0" | Str. | | | |
| 615 | 1 | 6'-6" | Str. | | | |
| 616 | 4 | 5'-6" | Str. | | | |
| 617 | 4 | 4'-6" | Str. | | | |

## BENDING DIAGRAMS

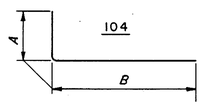


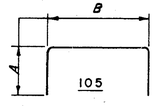


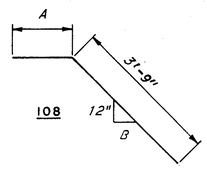


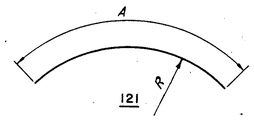


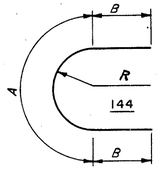


REINFORCEMENT SCHEDULE
LIGHT TOWER MAINTENANCE PLATFORM

# LIGHT TOWER FOUNDATION DETAILS

| FHWA REGION | STATE | PROJECT | |
|---|---|---|---|
| 5 | OHIO | | |

280/500

CUYAHOGA COUNTY
CUY-480-10.39

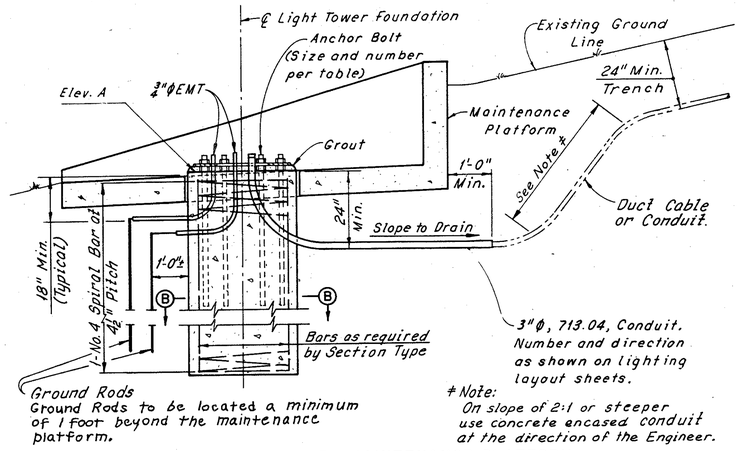


FOUNDATION WITH MAINTENANCE PLATFORM
(Slope 3.75:1 or steeper)
(Maintenance Platform reinforcement, See Sheet 279)

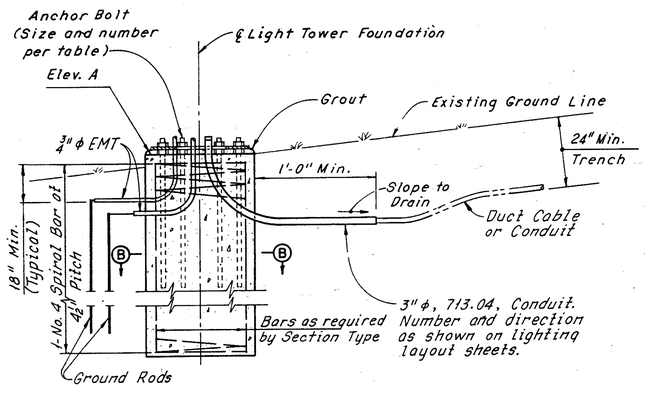


FOUNDATION WITHOUT MAINTENANCE PLATFORM
(Slope 2.0:1 or flatter)
For grading on slopes 3.75:1 to 11.99:1 see Sheet 281

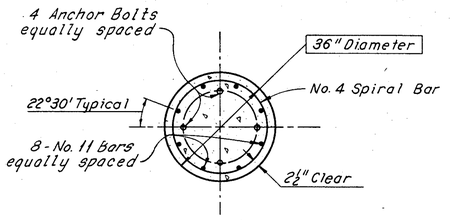


SECTION B-B

TYPE I

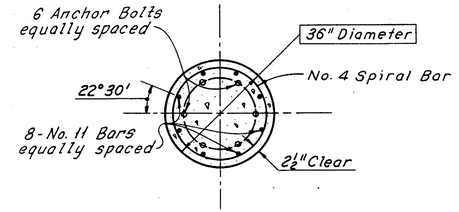


SECTION B-B

TYPE II

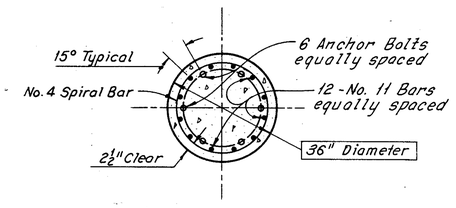


SECTION B-B

TYPE III

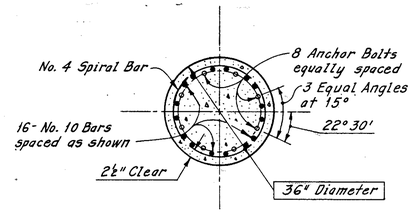


SECTION B-B

TYPE IV

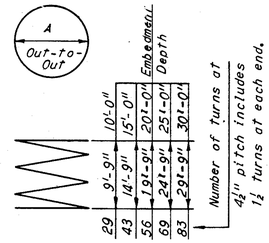


A = 2'-7" for a 36" foundation

NO. 4 SPIRAL BAR

**SPIRAL REINFORCEMENT NOTE:**

The Length shown on the No. 4 Spiral Bar Bending Diagram is the Foundation embedment depth with a 3" clearance.

Four steel channels, tee or angle spacers, weighing approximately 0.80 lbs. per foot of spacer shall be provided for each spiral unit. They shall be equally spaced along the periphery of the coil.

Notes:

Placement of reinforcement and anchor bolts is based on the anchor bolt data shown on Light Tower Foundation Data, Sheet 277. If a pole with a different anchorage pattern is proposed, the Contractor shall obtain approval from the Engineer prior to ordering reinforcing steel. The Contractor shall take special care in placing the anchor bolts to assure that the hand holes of the poles are placed in the proper location. The Contractor's plan for reinforcement and anchor bolt placement shall be approved by the Engineer.

All concrete shall be Class C - basic unit stress 1,333 psi.

All reinforcing steel shall be ASTM A615, A616 or A617 - basic unit stress 20,000 psi. Spiral reinforcement may be plain bars, ASTM A82 or A615.

Comments shown are supplemental to O.D.O.T. Standard Construction Drawing HL-1.

For "Elevation A" and foundation embedment depth, see Light Tower Foundation Data Sheet

Maintenance platforms and ground rods are itemized individually and are not included in the bid price of the tower foundation. All other items: anchor rods and bolts, conduit, etc., are included in the bid price of the tower foundation.

# LIGHT TOWER FOUNDATION DETAILS

| FHWA REGION | STATE | PROJECT | |
|---|---|---|---|
| 5 | OHIO | | |

281/500

CUYAHOGA COUNTY
CUY-480-10.39

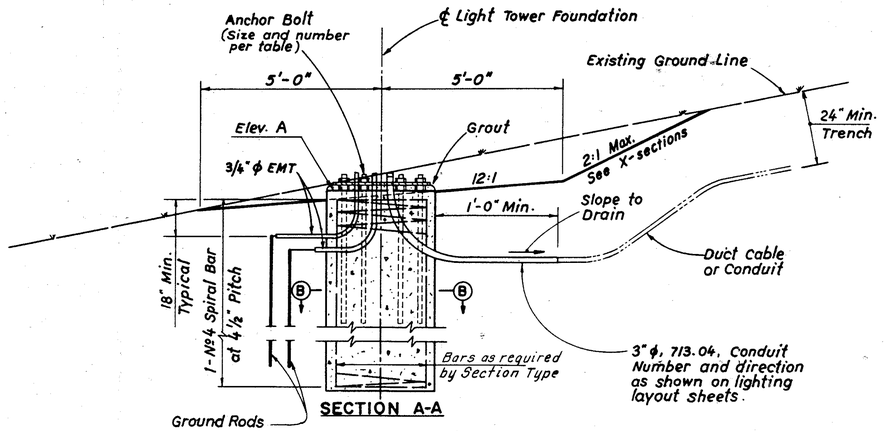


**FOUNDATION WITHOUT MAINTENANCE PLATFORM**
*( Slope 11.99:1 to 3.75:1 )*

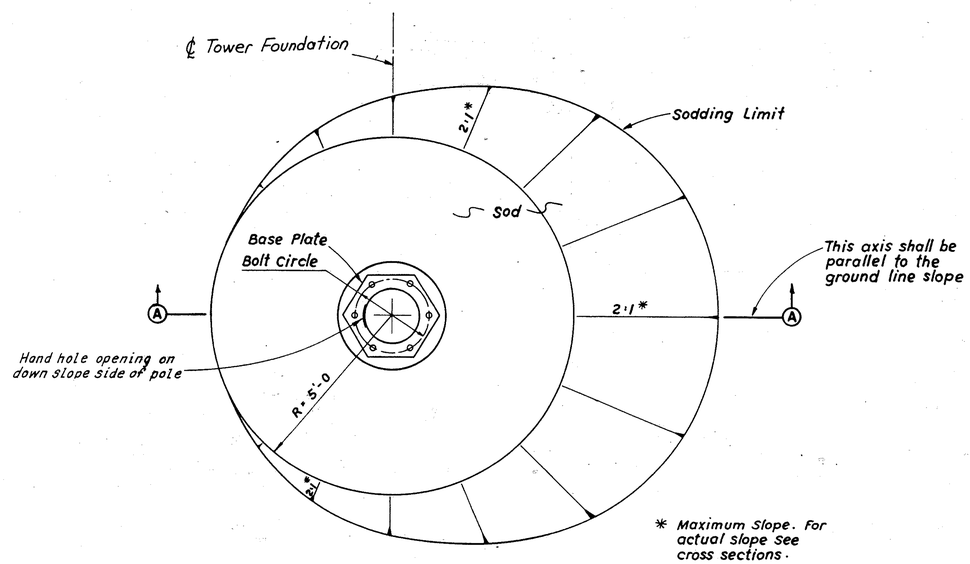


* Maximum Slope. For actual slope see cross sections.

**GRADING PLAN**
*( Slope 11.99:1 to 3.75:1 )*

Note:
For Notes and Section B-B, see Sheet 280.

CUYAHOGA COUNTY
CUY-480-10.39

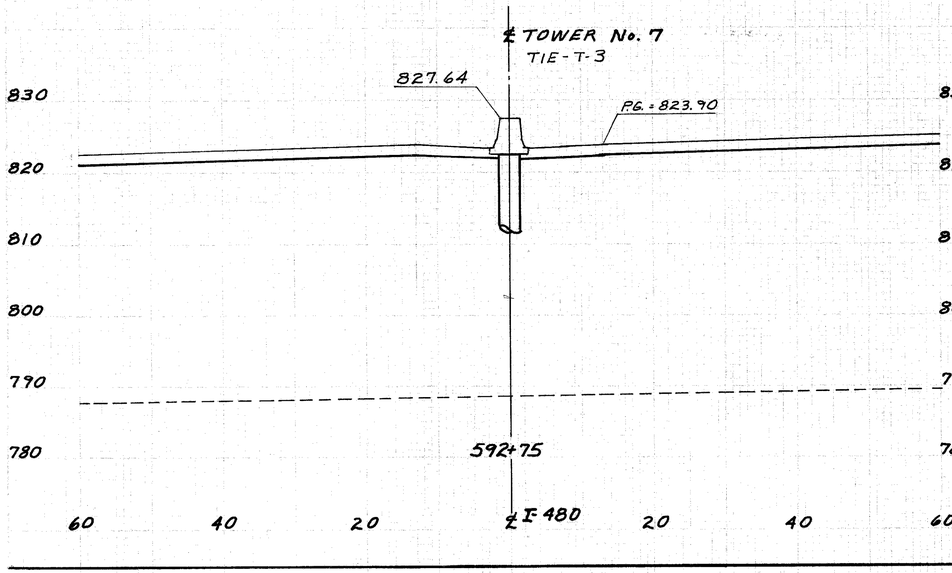


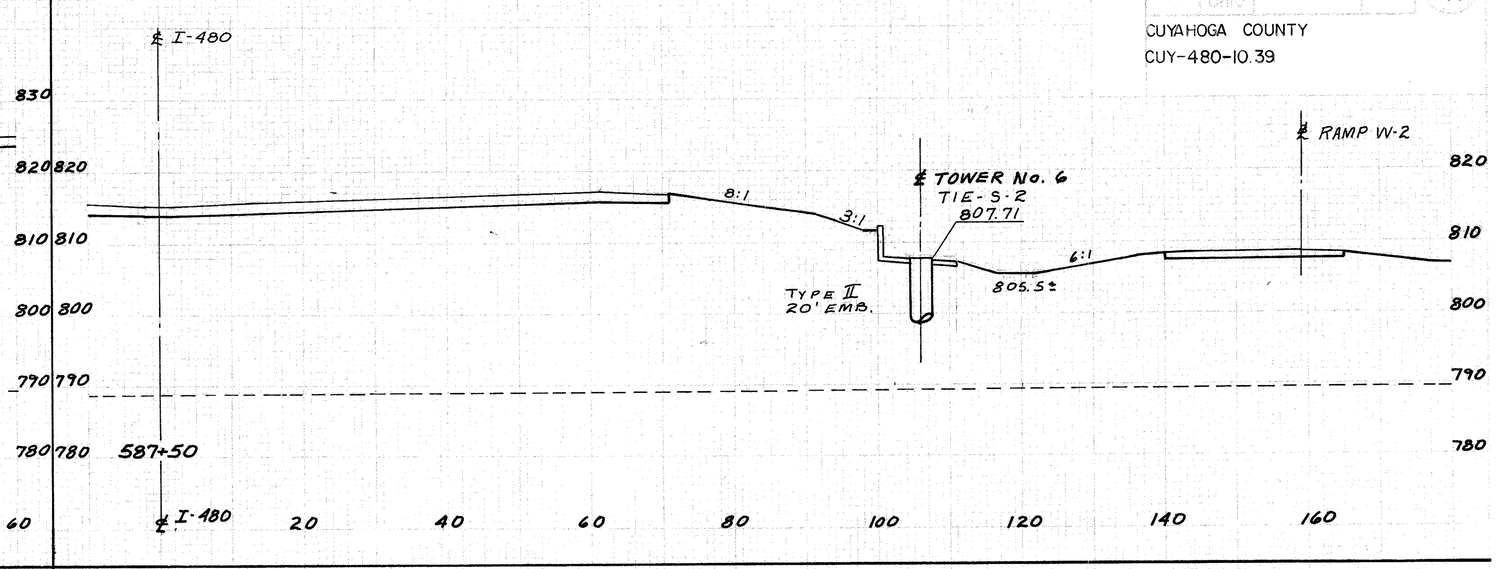


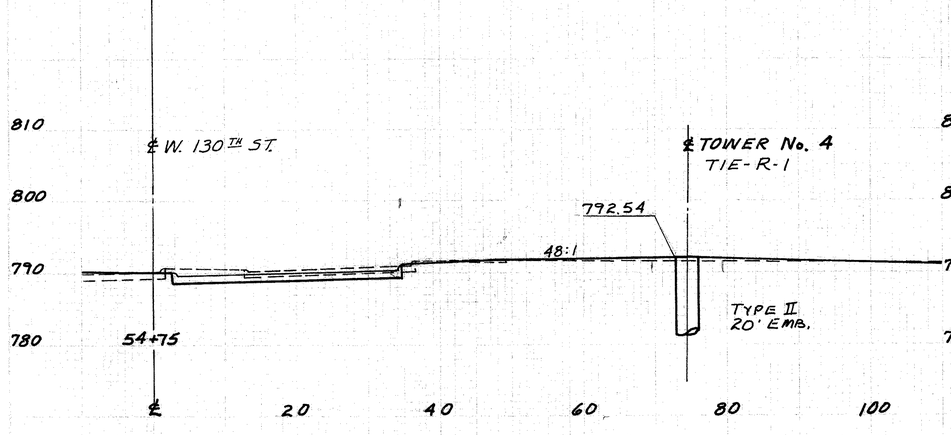


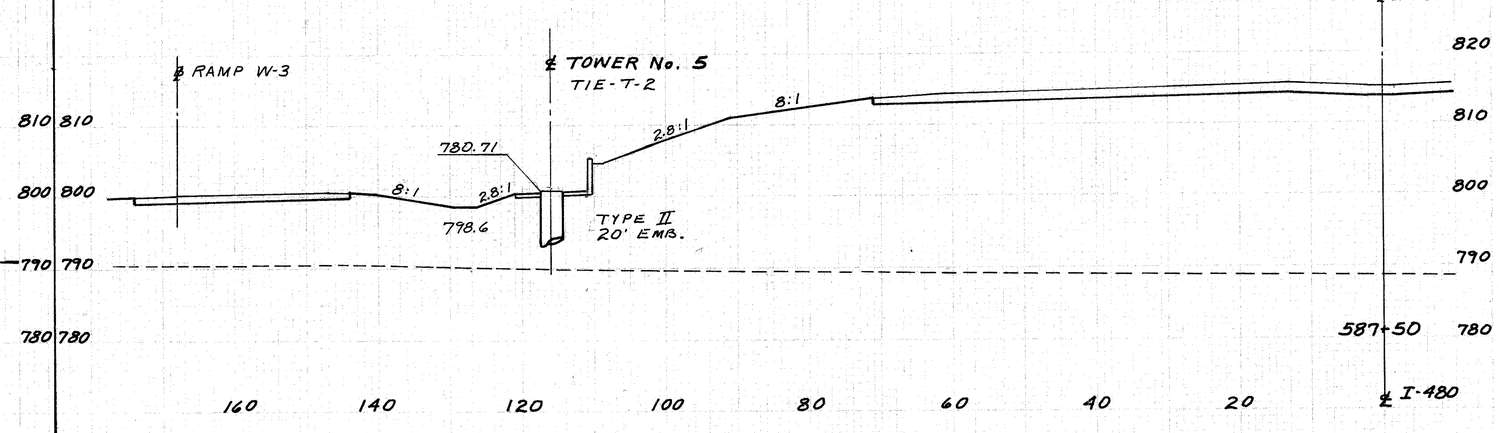


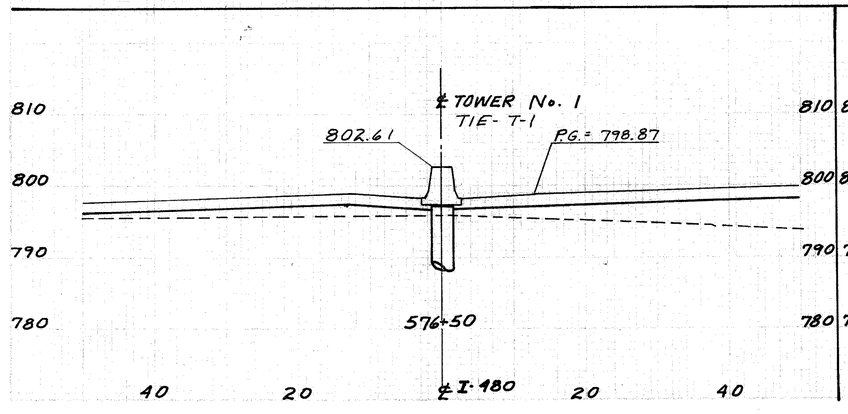


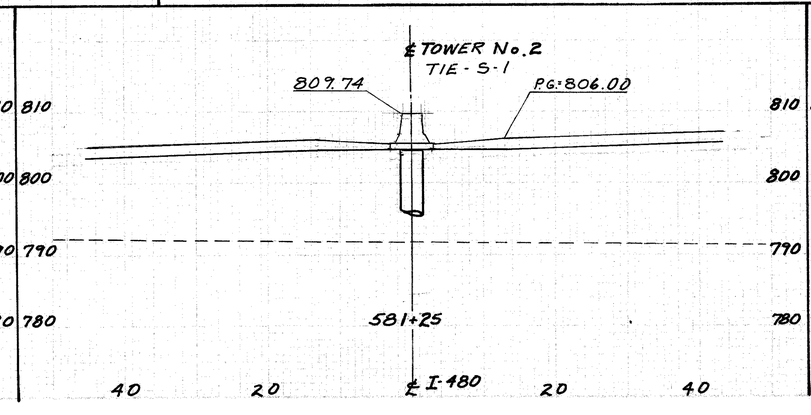


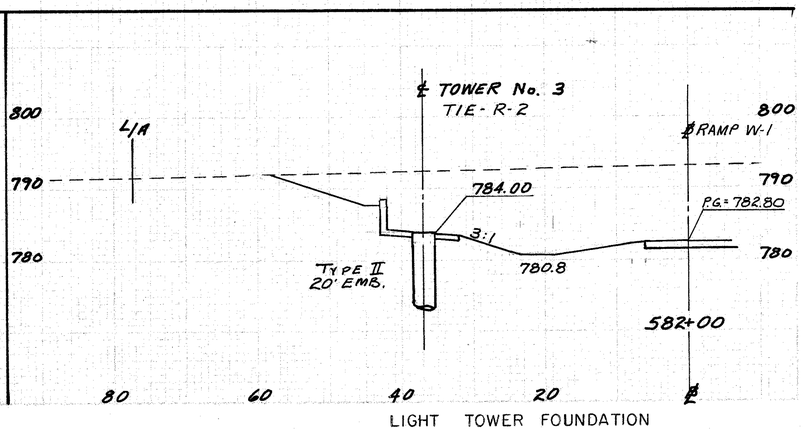


LIGHT TOWER FOUNDATION

CALC. BY UGF DATE 6/8/78
CHKD. BY HJH DATE 2-83

| FHWA REGION | STATE | PROJECT | |
|---|---|---|---|
| 5 | OHIO | | |

283
500

CUYAHOGA COUNTY
CUY-480-10.39

# GENERAL SUMMARY
## TRAFFIC CONTROL

| ITEM | SHEET NUMBERS | | | | | | | | | | | COST PARTICIPATION CITY OF CLEVELAND | COST PARTICIPATION CITY OF BROOKLYN | GRAND TOTAL | UNIT | ITEM | DESCRIPTION | |
|---|---|---|---|---|---|---|---|---|---|---|---|---|---|---|---|---|---|---|
| | 285 | 286 | 287 | 290 | 292 | 293 | 294 | 307 | 308 | | | | | | | | | |
| | | | | | | 187.5 | | | | | | | 187.5 | 187.5 | L.F. | 606 | Temporary Beam Rail | |
| | | | 111 | | | | | | | | | 41 | 70 | 111 | Each | 620 | Delineator, Type "C", Flexible, Post Mounted, As Per Plan | |
| | | | 13 | | | | | | | | | 10 | 3 | 13 | Each | 620 | Delineator, Type "C", Bracket Mounted | |
| | | | 37 | | | | | | | | | 8 | 29 | 37 | Each | 620 | Delineator, Type "D", Flexible, Post Mounted, As Per Plan | |
| | | | 2.49 | | | | | | | | | 0.93 | 1.56 | 2.49 | Miles | 621 | Edge Lines | |
| | | | 0.68 | | | | | | | | | 0.25 | 0.43 | 0.68 | Miles | 621 | Lane Lines, 4 In. | |
| | | | 0.55 | | | | | | | | | 0.07 | 0.48 | 0.55 | Miles | 621 | Center Lines | |
| | | | 9.43 | | | | | | | | | 3.38 | 6.05 | 9.43 | Miles | 847 | Edge Lines 847.09 | |
| | | | 16.03 | | | | | | | | | 6.49 | 9.54 | 16.03 | Miles | 847 | Lane Lines, 4 In. 847.09 | |
| | | | | | | | | | | | | | | | | | | |
| | | | 650 | | | | | | | | | 200 | 450 | 650 | Lin.Ft. | 847 | 6" Crosswalk Line, 847.09 | |
| | | | 3786 | | | | | | | | | 1710 | 2076 | 3786 | Lin.Ft. | 847 | Channelizing Line, 847.09 | |
| | | | 352 | | | | | | | | | 119 | 233 | 352 | Lin.Ft. | 847 | Stop Lines, 847.09 | |
| | | | 420 | | | | | | | | | 420 | — | 420 | Lin.Ft. | 621 | Curb Marking | |
| | | | 987 | | | | | | | | | 567 | 420 | 987 | Sq.Ft. | 621 | Island Marking | |
| | | | 814 | | | | | | | | | 511 | 303 | 814 | Lin.Ft. | 847 | Transverse Lines 847.09 | |
| | | | 9 | | | | | | | | | 3 | 6 | 9 | Each | 847 | Word "Only" on Pavement, 72", 847.09 | |
| | | | 18 | | | | | | | | | 6 | 12 | 18 | Each | 847 | Lane Arrows, 847.09 | |
| | 15 | | | | | | | | | | | 8 | 7 | 15 | Each | 625 | Ground Rods | |
| | | | | 771 | | | | | | | | 771 | — | 771 | Sq.Ft. | 630 | Refurbishing Signs | |
| | 441 | 10.5 | | 192 | | | | | | | | 322.5 | 321.0 | 643.5 | Sq.Ft. | 630 | Signs, Overlay | |
| | | 882.6 | | 49 | | | | | | | | 519.3 | 412.3 | 931.6 | Sq.Ft. | 630 | Signs, Flat Sheet | |
| | 3020 | 339 | | 30 | | | | | | | | 1685 | 1704 | 3389 | Sq.Ft. | 630 | Signs, Extrusheet | |
| | | 4295 | | | | | | | | | | 131.5 | 298 | 429.5 | Lin.Ft. | 630 | Ground Mounted Support, No. 3 Post | |
| | | 424 | | 93 | | | | | | | | 399 | 118 | 517 | Lin.Ft. | 630 | Ground Mounted Support, No. 4 Post | |
| | | 107 | | | | | | | | | | 26 | 81 | 107 | Lin.Ft. | 630 | One Way Support, No. 4 Post | |
| | | 70 | | | | | | | | | | 40 | 30 | 70 | Lin.Ft. | 630 | Ground Mounted Support, W10 x 12 Beam | |
| | | 4085 | | 41 | | | | | | | | 213 | 236.5 | 449.5 | Lin.Ft. | 630 | Ground Mounted Support, S4 x 7.7 Beam | |
| | | 28 | | 2 | | | | | | | | 14 | 16 | 30 | Each | 630 | Breakaway Beam Connection | |
| | | 10.56 | | 0.54 | | | | | | | | 5.28 | 5.82 | 11.10 | Cu.Yd. | 630 | Concrete For Embedded Foundations | |
| | 77.47 | | | | | | | | | | | 40.94 | 36.53 | 77.47 | Cu.Yd. | 630 | Concrete For Anchor Base Foundations | |
| | | | | | | | | | | | | | | | | | | |
| | 6 | | | | | | | | | | | 4 | 2 | 6 | Each | 631 | Ballast Type CMRI-100-480 Volt | |
| | 41 | | | | | | | | | | | 19 | 22 | 41 | Each | 631 | Ballast Type CMRI-175-480 Volt | |
| | 6 | | | | | | | | | | | 4 | 2 | 6 | Each | 631 | Mercury Vapor Luminaire, TC-31.21, with 100 Watt Lamp | |
| | 41 | | | | | | | | | | | 19 | 22 | 41 | Each | 631 | Mercury Vapor Luminaire, TC-31.21, with 175 Watt Lamp | |
| | 18 | | | | | | | | | | | 10 | 8 | 18 | Each | 631 | Disconnect Switch with Enclosure, Type "X" | |
| | 18 | | | | | | | | | | | 10 | 8 | 18 | Each | 631 | Switch Enclosure Mounting Brackets Assembly | |
| | 25 | | | | | | | | | | | 11 | 14 | 25 | Each | 631 | Signs Wired | |
| | 3 | | | | | | | | | | | 2 | 1 | 3 | Each | 631 | Signs Wired, Overpass Structure Mounted | |
| | 18 | | | | | | | | | | | 10 | 8 | 18 | Each | 631 | Sign Service | |
| | | | | | | | | | | | | | | | | | | |
| | 1 | | | | | | | | | | | 1 | | 1 | Each | 630 | Overhead Sign Support No. 7.65, Design No. 8, | 86'-0" Span |
| | 2 | | | | | | | | | | | | 2 | 2 | Each | 630 | Overhead Sign Support No. 7.65, Design No. 8, | 96'-0" Span |
| | 1 | | | | | | | | | | | 1 | | 1 | Each | 630 | Overhead Sign Support No. 9.30, Design No. 2 | |
| | 2 | | | | | | | | | | | | 2 | 2 | Each | 630 | Overhead Sign Support No. 12.30, Design No. 1, | 23' Pole |
| | 1 | | | | | | | | | | | 1 | | 1 | Each | 630 | Overhead Sign Support No. 12.30, Design No. 3 | 25' Pole |
| | 1 | | | | | | | | | | | 1 | | 1 | Each | 630 | Overhead Sign Support No. 12.30, Design No. 4, | 25' Pole |
| | 2 | | | | | | | | | | | 2 | | 2 | Each | 630 | Overhead Sign Support No. 12.30, Design No. 7 | 28' Pole |
| | 3 | | | | | | | | | | | 2 | 1 | 3 | Each | 630 | Overhead Sign Support No. 12.30, Design No. 8 | 28' Pole |
| | | | | | | | | | | | | | | | | | | |
| | 1 | | | | | | | | | | | 1 | | 1 | Each | 630 | Overhead Sign Support No. 16.20, Design No. 4, | 21' Pole |
| | 2 | | | | | | | | | | | 2 | | 2 | Each | 630 | Overhead Sign Support No. 18.26, Design No. 2 | |
| | 1 | | | | | | | | | | | | 1 | 1 | Each | 630 | Overhead Sign Support No. 18.26, Design No. 7 | |
| | | | | | | | | | | | | | | | | | | |
| | 6 | | | | | | | | | | | 4 | 2 | 6 | Each | 631 | Ballast Wiring Enclosure Mounting Bracket, | |
| | 3 | | | | | | | | | | | 1 | 2 | 3 | Each | 631 | Ballast Wiring Enclosure, Type A | |
| | 14 | | | | | | | | | | | 9 | 5 | 14 | Each | 631 | Ballast Wiring Enclosure, Type B | |
| | | | | | | | | | | | | | | | | | | |
| | | | | | | | 0.98 | | | | | | 0.98 | 0.98 | Miles | 614 | Temporary Lane Line Class I (Paint) | |
| | | | 0.42 | | 0.59 | | 0.49 | | | | | 0.78 | 0.72 | 1.50 | Miles | 614 | Temporary Edge Line Class I (Paint) | |
| | | | | 0.09 | 1.36 | | 0.46 | | | | | 1.36 | 0.55 | 1.91 | Miles | 614 | Temporary Center Line Class I (Paint) | |
| | | | 2250 | | | | | | | | | 1018 | 1232 | 2250 | Lin.Ft. | 622 | Temporary Concrete Barrier | |

CALC. BY DJF DATE 2/21/83
CHKD. BY HJH DATE 2-83

| | STATE | PROJECT | |
|---|---|---|---|
| | OHIO | | |

CUYAHOGA COUNTY
CUY-480-10.39

284
500

# GENERAL SUMMARY
## TRAFFIC CONTROL

| ITEM | SHEET NUMBERS 301 | 302 | 303 | COST PARTICIPATION CITY OF CLEVELAND | CITY OF BROOKLYN | GRAND TOTAL | UNIT | ITEM | DESCRIPTION |
|---|---|---|---|---|---|---|---|---|---|
| | | | | | | | | | TRAFFIC SIGNALS |
| | 180 | 310 | 393 | 180 | 703 | 883 | Lin.Ft. | 625 | Conduit, 3" 713.04 |
| | 2 | 1 | 4 | 2 | 5 | 7 | Each | 625 | Pullbox, 24" Dia. 713.09 with Concrete Cover, As Per Plan |
| | 3 | 2 | 3 | 3 | 5 | 8 | Each | 625 | Ground Rods |
| | 141 | 50 | 292 | 134 | 342 | 486 | Lin.Ft. | 625 | Trench |
| | 1 | 1 | 1 | 1 | 2 | 3 | Each | 632 | Power Service |
| | 100 | 135 | 280 | 100 | 415 | 515 | L.F. | 632 | Service Cable, 3 Conductor No.8 A.W.G. |
| | 5 | 5 | 5 | 5 | 10 | 15 | Each | 632 | Vehicular Signal Head, 3 Section, 12" Lenses, One Way |
| | 1 | 1 | 1 | 1 | 2 | 3 | Each | 632 | Vehicular Signal Head, 4 Section, 12" Lenses, One Way |
| | 2 | 2 | 2 | 2 | 4 | 6 | Each | 632 | Cable Support Assembly |
| | 84 | 45 | 46 | 84 | 91 | 175 | Lin.Ft. | 632 | Signal Cable, 5 Conductor No.14 A.W.G. |
| | 560 | 343 | 368 | 560 | 711 | 1271 | Lin.Ft. | 632 | Signal Cable, 7 Conductor No.14 A.W.G. |
| | | | 720 | | 720 | 720 | Lin.Ft. | 632 | Interconnect Cable, 8 Conductor No.14 A.W.G. |
| | | | 1 | | 1 | 1 | Each | 632 | Combination Mast Arm Signals & Overhead Signs Support - .3125" x 12.00" dia. x 24'-0" lg. Pole; .250" x 9.00" dia. x 36'-0" lg. Arm, .250" x 9.00" dia. x 30'-0" lg. Arm. |
| | | | 1 | | 1 | 1 | Each | 632 | Mast Arm Signal Support - .3125" x 13.00" dia. x 22'-0" lg. Pole; .250" x 10.00" dia. x 44'-0" lg. Arm. |
| | | 1 | | | 1 | 1 | Each | 632 | Combination Mast Arm Signals & Overhead Signs Support - .3125" x 12.00" dia. x 24'-0" lg. Pole; .250" x 9.00" dia. x 36'-0" lg. Arm; & .250" x 9.00" dia. x 34'-0" lg. Arm. |
| | | 1 | | | 1 | 1 | Each | 632 | Mast Arm Signal Support - .3125" x 13.00" dia. x 22'-0" lg. Pole with .250" x 10.00" dia. x 45'-0" lg. Arm. |
| | 1 | | | 1 | | 1 | Each | 632 | Dual Mast Arm Signal Support Pole .3125" x 15.00" dia. x 23'-0" lg. Pole; .250" x 9.00" dia. x 34'-0" lg. Arm; & .250" x 8.00" dia. x 22'-0" lg. Arm. |
| | 1 | | | 1 | | 1 | Each | 632 | Mast Arm Signal Support - .3125" x 13.00" dia. x 22'-0" lg. Pole; .250" x 10.00" dia. x 42'-0" lg. Arm. |
| | 6.80 | 6.55 | 7.06 | 6.80 | 13.61 | 20.41 | Cu.Yd. | 632 | Concrete for Anchor Base Foundations |
| | 1 | | | 1 | | 1 | Each | 843 | Controller, Pretimed, 3 Dial, Electromechanical, with Cabinet, As Per Plan |
| | | 1 | | | 1 | 1 | Each | 843 | Controller, Pretimed, 3 Dial, Electromechanical, Secondary with Cabinet, As Per Plan |
| | | | 1 | | 1 | 1 | Each | 843 | Controller, Pretimed, 3 Dial, Electromechanical, Master/Secondary with Cabinet, As Per Plan. |

CALC. BY AGF 2/21/83
CHKD. BY HJH DATE 2-83

| FHWA REGION | STATE | PROJECT | |
|---|---|---|---|
| 5 | OHIO | | |

CUYAHOGA COUNTY
CUY-480-10.39

285/500

# OVERHEAD SIGNS SUB-SUMMARY

| Support No. | Station | Participation: City of Cleveland | Participation: City of Brooklyn | 630 No. 7.65, Des. #8 36'-0" Span (55) Ea. | 630 No. 7.65, Des. #8 36'-0" Span (61, 68) Ea. | 630 No. 9.30 Des. #2 (51) Ea. | 630 No. 12.30, Des. #1 23' Pole (64, 65) Ea. | 630 No. 12.30, Des. #3 25' Pole (50) Ea. | 630 No. 12.30, Des. #4 25' Pole (43) Ea. | 630 No. 12.30 Des. #7 (40A) # (46) 28' Pole Ea. | 630 No. 12.30 Des. #8 (56, 57, 72) 28' Pole Ea. | 631 Ballast Wiring Enclosure Mounting Bracket Ea. | 630 No. 16.20 Des. #4 21' Pole (47) Ea. | 630 No. 18.26 Des. #2 (49)(52) Ea. | 630 No. 1826 Des. #7 (71) Ea. | 630 Combination B.H. Signs & Signal Supports (63) # (66) Ea. | 630 Signs, Overlay Sq.Ft. | 630 Signs, Flat Sheet Sq.Ft. | 630 Signs, Extrusheet Sq.Ft. | 631 Mercury Vapor Luminaire with 100 Watt Lamp Ea. | 631 Mercury Vapor Luminaire with 175 Watt Lamp Ea. | 631 Ballasts: Type CMRI-100-480 Volt Ea. | 631 Ballasts: Type CMRI-175-480 Volt Ea. | 631 Ballast Wiring Enclosure: Type A Ea. | 631 Ballast Wiring Enclosure: Type B Ea. | 631 Disconnect Switch Type "X" Enclosure Ea. | 631 Switch Enclosure Mounting Bracket Assembly Ea. | 630 Concrete for Anchor Base Foundation Cu.Yd. | 625 Ground Rod Ea. | 631 Signs Wired Ea. | 631 Sign Service Ea. | 631 Signs Wired Overpass Structure Mounted Ea. | Support No. | Remarks |
|---|---|---|---|---|---|---|---|---|---|---|---|---|---|---|---|---|---|---|---|---|---|---|---|---|---|---|---|---|---|---|---|---|---|---|
| 40A | 555+40 I-480 W.B. | ✓ | | | | | | | | 1 | | | | | | | | | 168.0 | | 2 | | 2 | | 1 | 1 | 1 | 3.93 | 1 | 1 | 1 | | 40A | |
| 46 | 583+75 I-480 E.B. | ✓ | | | | | | | | 1 | | | | | | | 120.0 | | 175.5 | | 2 | | 2 | | 1 | 1 | 1 | 3.93 | 1 | 1 | 1 | | 46 | |
| 47 | 49+85 W.130th N.B. | ✓ | | | | | | | | | | | 1 | | | | | √22.5 | — | | | | | | | | | 2.62 | | | | | 47 | No Sign Lighting |
| 48 | 52+80 W.130th N.B. | ✓ | | | | | | 1 | | | | | | | | | | | 90.0 | | 2 | | 2 | | 1 | 1 | 1 | 2.89 | 1 | 1 | 1 | | 48 | |
| 49 | 582+65 I-480 (W.130 N.B.) | ✓ | | | | | | | | | | 2 | | 1 | | | | | 60.5 | 2 | | 2 | | | 1 | 1 | 1 | — | — | | 1 | 1 | 49 | Structure Mounted |
| 50 | 61+80 W.130th S.B. | ✓ | | | | | 1 | | | | | | | | | | | √9.0 | 90.0 | | 1 | | 1 | | 1 | 1 | 1 | 2.89 | 1 | 1 | 1 | | 50 | |
| 51 | 58+20 W.130th N.B. & S.B. | ✓ | | | | 1 | | | | | | | | | | | | | 120.0 | | 2 | | 2 | | 1 | 1 | 1 | 2.36 | 1 | 2 | 1 | | 51 | Back to Back Signs |
| 52 | 582+73.5 I-480 (W.130 S.B.) | ✓ | | | | | | | | | | 2 | | 1 | | | | | 66.0 | 2 | | 2 | | | 1 | 1 | 1 | — | — | | 1 | 1 | 52 | Structure Mounted |
| 55 | 597+25 I-480 W.B. | | | 1 | | | | | | | | | | | | | | | 439.5 | | 6 | | 6 | 1 | | 1 | 1 | 14.46 | 1 | 3 | 1 | | 55 | |
| 56 | 612+75 I-480 E.B. | ✓ | | | | | | | | | 1 | | | | | | | | 175.5 | | 2 | | 2 | | 1 | 1 | 1 | 3.93 | 1 | 1 | 1 | | 56 | |
| 57 | 607+00 I-480 W.B. | ✓ | | | | | | | | | 1 | | | | | | | | 128.0 | | 2 | | 2 | | 1 | 1 | 1 | 3.93 | 1 | 1 | 1 | | 57 | |
| SUB-TOTAL : CITY OF CLEVELAND | | ✗ | | 1 | | 1 | | 1 | 1 | 2 | 2 | 4 | 1 | 2 | | | 120.0 | Ⓐ 31.5 | 1513.0 | 4 | 19 | 4 | 19 | 1 | 9 | 10 | 10 | 40.94 | 8 | 11 | 10 | 2 | | |
| 61 | 626+60 I-480 E.B. | | ✓ | | 1 | | | | | | | | | | | | 201 | | 432.5 | | 7 | | 7 | 1 | | 1 | 1 | 14.09 | 1 | 3 | 1 | | 61 | |
| 63 | 61+44 Tiedeman N.B./S.B. | | ✓ | | | | | | | | | | | | | * | 99 | | 150.0 | | 2 | | 2 | | 1 | 1 | 1 | * | 1 | 2 | 1 | | 63 | Comb. O.H. Signs & Signals |
| 64 | 70+00 Tiedeman N.B. | | ✓ | | | | 1 | | | | | | | | | | 10.5 | | 50.0 | 1 | | 1 | | | 1 | 1 | 1 | 2.36 | 1 | 1 | 1 | | 64 | |
| 65 | 48+40 Tiedeman S.B. | | ✓ | | | | 1 | | | | | | | | | | 10.5 | | 50.0 | 1 | | 1 | | | 1 | 1 | 1 | 2.36 | 1 | 1 | 1 | | 65 | |
| 66 | 55+35 Tiedeman N.B./S.B. | | ✓ | | | | | | | | | | | | | * | | | 120.0 | | 2 | | 2 | | 1 | 1 | 1 | * | 1 | 2 | 1 | | 66 | Comb. O.H. Signs & Signals |
| 68 | 650+40 I-480 W.B. | | ✓ | | 1 | | | | | | | | | | | | | | 378.0 | | 7 | | 7 | 1 | | 1 | 1 | 13.73 | 1 | 3 | 1 | | 68 | |
| 71 | 10+57 Southwood Dr. (OVER I-480 W.B.) | | ✓ | | | | | | | | | 2 | | | 1 | | | | 175.5 | | 2 | | 2 | | 1 | 1 | 1 | — | — | 1 | 1 | 1 | 71 | Structure Mounted |
| 72 | 690+00 I-480 E.B. | | ✓ | | | | | | | 1 | | | | | | | | | 150.5 | | 2 | | 2 | | | 1 | 1 | 3.99 | 1 | 1 | 1 | | 72 | |
| SUB-TOTAL : CITY OF BROOKLYN | | | ✗ | — | 2 | — | 2 | — | — | — | 1 | 2 | — | — | 1 | * | 321.0 | | 1506.5 | 2 | 22 | 2 | 22 | 2 | 5 | 8 | 8 | 36.53 | 7 | 14 | 8 | 1 | | |
| PROJECT TOTALS | | | | 1 | 2 | 1 | 2 | 1 | 1 | 2 | 3 | 6 | 1 | 2 | 1 | * | 441 | Ⓐ | 3019.5 | 6 | 41 | 6 | 41 | 3 | 14 | 18 | 18 | 77.47 | 15 | 25 | 18 | 3 | | |

Ⓐ INFORMATION ONLY - FOR SIGN TYPES & PAY QUANTITIES SEE GROUND MOUNTED SIGNS SUB-SUMMARY, SHT. Nº 287

* = QUANTITIES ARE CARRIED ON TRAFFIC SIGNAL SUMMARY, SEE SHEET Nº 284

## GROUND MOUNTED SIGNS SUB-SUMMARY

| Station | Distance Rt. or Lt. of ℄ or ℄ of Survey to ℄ Post or ℄ Nearest Post of the Sign | Type of Sign(s) | Participation: City of Cleveland | Participation: City of Brooklyn | Number of Supports Ea. | 630 Signs Flat Sheet Sq.Ft. | 630 Signs Extrusheet Sq.Ft. | 630 Signs Overlay Sq.Ft. | 630 Ground Mounted Support, #3 Post Lin.Ft. | 630 Ground Mounted Support, #4 Post Lin.Ft. | 630 Ground Mounted Support 34x77 Beam Lin.Ft. | 630 One Way Supports (#4 Post) Lin.Ft. | 630 Ground Mounted Supports W10x12 Beam Lin.Ft. | | 630 Concrete for Embedded Foundations Cu.Yd. | 630 Breakaway Beam Connection Ea. | | Remarks |
|---|---|---|---|---|---|---|---|---|---|---|---|---|---|---|---|---|---|---|
| I-480 W.B. 629+10 | 79.32' Rt. | GF-72 (6'x5') | | ✓ | 2 | | 30.0 | | | | 34.0 | | | | 0.54 | 2 | | |
| I-480 E.B. 620+45 | 78.50' Rt. | R-33-30 | | ✓ | 1 | 7.50 | | | | | | | | | | | | |
| I-480 W.B. 648+15 | 79.32' Lt | GF-72 (6'x5') | | ✓ | 2 | | 30.0 | | | | 34.0 | | | | 0.54 | 2 | | |
| I-480 E.B./W.B. 642+50.76 | 77.5' Lt/Rt. | N-41-12, N-41-12 | | ✓ | 1/1 | 2.0/2.0 | | | 12.0/12.0 | | | | | | | | | |
| I-480 E.B. 661+40 | 77.75' Rt. | 1M-39-36, M-5-36-3 | | ✓ | 2 | 16.5 | | | | 28.0 | | | | | | | | |
| I-480 W.B. 679+00 | 77.75' Lt | R-78-48 | | ✓ | 2 | 32.0 | | | | | 36.0 | | | | 0.54 | 2 | | |
| I-480 W.B. 689+00 | 77.75' Lt. | M-5-36-3, 1M-40-36 | | ✓ | 2 | 16.5 | | | | 28.0 | | | | | | | | |
| I-480 E.B./W.B. 695+30.76 | 77.75' Rt/Lt. | N-41-12, N-41-12 | | ✓ | | 2.0/2.0 | | | 12.0/12.0 | | | | | | | | | |
| SUB-TOTALS City of Brooklyn (Quantities carried to Ground Mount Sumy.-Sht Nº286) | | | | ✗ | — | 80.5 | 60.0 | | 48.0 | 56.0 | 104.0 | | | | 1.62 | 6 | | |

# GROUND MOUNTED SIGNS SUB-SUMMARY

OQF 2/21/83
HJH 2/83

| FHWA REGION | STATE | PROJECT | |
|---|---|---|---|
| 5 | OHIO | | |

286/500

CUYAHOGA COUNTY
CUY-480-10.39

| Station | Distance Rt. or Lt. of ℄ or ℄ of Survey to ℄ Post or ℄ Nearest Post of the Sign | Type of Sign(s) | Participation: City of Cleveland | Participation: City of Brooklyn | Number Of Supports | G30: Signs Flat Sheet Sq.Ft. | Signs Ext-rusheet Sq.Ft. | Signs Overlay Sq.Ft. | Ground Mounted Support, #3 Post Lin.Ft. | Ground Mounted Support, #4 Post Lin.Ft. | Ground Mounted Support 34"x7" Beam Lin.Ft. | One Way Supports (#4 Post) Lin.Ft. | Ground Mounted Supports W10"x12 Beam Lin.Ft. | | Concrete for Embedded Foundations Cu.Yd. | Breakaway Beam Connection Ea. | Remarks |
|---|---|---|---|---|---|---|---|---|---|---|---|---|---|---|---|---|---|
| | | | | | Ea. | | | | | | | | | | | | |
| I-480 W.B. 591+30 | 78.75' Rt. | GF-96(8'x5') | ✓ | | 2 | | 40.0 | | | | 32.0 | | | | 0.54 | 2 | |
| I-480 E.B. 605+20 | 77.75' Rt. | W-54A-144 (12'x4') | ✓ | | 2 | | 48.0 | | | | | | 40.0 | | 2.20 | 2 | |
| | | | | | | | | | | | | | | | | | |
| Ramp W-3 W.B. 584+35 | 20.0' Rt. | R-31F-36 | ✓ | | 1 | 7.5 | | | 11.5 | | | | | | | | |
| | | | | | | | | | | | | | | | | | |
| Brookpark Rd. 138+50 (W.B.) | 32.0' Rt. | M-45-42 (3'-6"x4'-0") | ✓ | | 2 | 14.0 | | | | 29.0 | | | | | | | |
| I-480 E.B. 573+50 | 77.75' Rt. | R-7B-48 | ✓ | | 2 | 32.0 | | | | | 36.0 | | | | 0.5 | 2 | |
| I-480 W.B. 578+50 | 78.50' Lt. | W-49-48 | ✓ | | 2 | 16.0 | | | | 31.0 | | | | | | | |
| I-480 E.B. 588+00 | 78.50' Rt. | W-49-48 | ✓ | | 2 | 16.0 | | | | 31.0 | | | | | | | |
| I-480 W.B. 589+25 | 77.75' Lt. | M-5-36-3 | ✓ | | 2 | 12.0 | | | | 27.0 | | | | | | | |
| Brookpark Rd. 151+50 (E.B.) | 31.5' Lt. | M-45-42 (3'-6"x4'-0") | ✓ | | 2 | 14.0 | | | | | | | | | | | |
| " " " 146+36 (E.B.) | 44.0' Lt. | M-45-42 (3'-6"x4'-0"), M-2-2.4, M-25-21 | ✓ | | 2 | 20.19 | | | | 29.0 | | | | | | | |
| " " " " 144+00 (W.B) | 54.0' Rt. | M-45-42, M-45-42 (Ea.3'-6"x4'-0") | ✓ | | 2 | ~~14.0~~ 14.0 | | | | 29.0 | | | | | | | Back to Back Signs |
| | | | | | 1 | | | | | | | | | | | | |
| W.130th St. S.B. 48+10 | 30.75' Lt. | M-45-42 (3'-6"x6'-0") | ✓ | | 2 | 21.0 | | 5.25 | | 29.0 | | | | | | | Overlay on Sign |
| " " " N.B. 48+06 | See Remarks | R-38R-24 | ✓ | | — | 5.0 | | | | | | | | | | | Affix to Exist. Pole |
| " " " N.B. 48+70 | 93.0' Rt. | M-45-42 (3'-6"x3'-6") | ✓ | | 2 | 12.25 | | | | 29.0 | | | | | | | |
| " " " N.B. 49+85 | See Remarks | R-30A-30, R-30A-30, R-27A-30 | ✓ | | — | 22.5 | | | | | | | | | | | Install on O.H. Sign № 47 (Arm) |
| " " " S.B. 52+00 | 36.0' Lt. | M-45-42 (3'-6"x6'-0") | ✓ | | 2 | 21.0 | | 5.25 | | 29.0 | | | | | | | Overlay on Sign |
| " " " N.B. 54+50 | 60.0' Lt./40.0' Rt. | W-47-36, W-47-36 | ✓ | | 1/1 | 9.0 ~~9.0~~ | | | 13.5 ~~13.5~~ | | | | | | | | |
| " " " S.B. 57+15 | 8.0' Lt. | R-38R-24 | ✓ | | .1 | 5.0 | | | 11.5 | | | | | | | | |
| " " " S.B. 57+56 | See Remarks | M-8-24, M-2-24-2, M-24-21, R-121-24 | ✓ | | — | 15.69 | | | | | | | | | | | Install on Signal Pole & Arm |
| " " " N.B. 58+90 | 31.0' Rt. | W-42-36, WP-42-18 | ✓ | | 1 | 12.0 | | | | 14.0 | | | | | | | |
| W.130th St. N.B. 58+48 | See Remarks | R-43L-36, R-43R-36, R-41B-36, R-26A-30 | ✓ | | — | 22.5 | | | | | | | | | | | Install on Signal Pole & Arm |
| " " " N.B. 57+30 | 29.0' Rt. | W-51-36 | ✓ | | 1 | 9.0 | | | 11.5 | | | | | | | | |
| " " " S.B. 61+80 | See Remarks | W-47-36 | ✓ | | — | 9.0 | | | | | | | | | | | Install on O.H. Sign № 50 (Pole) |
| " " " S.B. 64+90± | " " " | M-45-42 (3'-6"x3'-6") | ✓ | | 2 | 21.0 | | | | 29.0 | | | | | | | Field Locate |
| | | | | | | | | | | | | | | | | | |
| Ramp W-1 W.B. 582+00 | 10.25' Lt. | R-15B | ✓ | | 1 | 3.75 | | | 11.0 | | | | | | | | |
| " W-2 E.B. 583+20 | 10.25' Rt. | R-15B | ✓ | | 1 | 3.75 | | | 11.0 | | | | | | | | |
| " W-3 W.B. 584+23 | 29.0' Rt. | R-43L-36, R-43R-36, R-41B-36, R-31F-36 | ✓ | | 2 | 22.5 | | | | | | 26.0 | | | | | One Way Support |
| " W-3 W.B. 586+50 | 10.5' Lt./34.5' Rt. | R-41A-36, R-41A-36, R-31F-36 | ✓ | | 1/1 | ~~13.5~~ 13.5 | | | ~~12.0~~ 12.0 | | | | | | | | Back/Back |
| " W-3 W.B. 589+50 | 13.98' Lt. | D-4B (9'x3') M-8-24, M-2-24-2, M-24-21, W-42-36, WP-42-18, M-24-21 | ✓ | | 2 | 23.69 | 27.0 | | | | 35.0 | | | | 0.5 | 2 | |
| I-480 W.B. 616+20 | 78.98' Lt. | GN (9'x3') | ✓ | | 2 | | 27.0 | | | | 33.0 | | | | 0.5 | 2 | |
| " W.B. 610+00 | 77.75' Lt. | R-7B-48 | ✓ | | 2 | 32.0 | | | | | 36.0 | | | | 0.5 | 2 | |
| " E.B.&W.B. 589+70.76 | 77.5' Rt./77.5' Lt. | N-41-12, N-41-12 | ✓ | | 1/1 | ~~2.0~~ 2.0 | | | ~~12.0~~ 12.0 | | | | | | | | |
| TOTALS City of Cleveland | | | | | — | 470.32 | 142.0 | 10.5 | 131.5 | 306.0 | 172.0 | 26.0 | 40.0 | | 4.74 | 12 | |
| I-480 E.B. 616+20 | 78.98' Rt. | GN (9'x3') | | ✓ | 2 | | 27.0 | | | | 33.0 | | | | 0.5 | 2 | |
| " W.B. 633+50 | 78.6' Lt. | W-49-48 | | ✓ | 2 | 16.0 | | | | 31.0 | | | | | | | |
| " E.B. 647+00 | 78.6' Rt. | W-49-48 | | ✓ | 2 | 16.0 | | | | 31.0 | | | | | | | |
| Tiedeman Rd S.B. 42+80 | 30.0' Rt. | IM-17-21, M-5-24-3 | | ✓ | 1 | 7.19 | | | 13.0 | | | | | | | | |
| " " " S.B. 45+50 | 30.0' Rt. | W-85-36 | | ✓ | 1 | 9.0 | | | 13.5 | | | | | | | | |
| " " " S.B. 53+25 | ℄ | R-38R-24 | | ✓ | 1 | 5.0 | | | 11.5 | | | | | | | | |
| " " " N.B. 54+80 | See Remarks | R-26A-30, R-121-MOD. | | ✓ | — | 11.5 | | | | | | | | | | | Mount on Signal Arm BACK/BACK |
| " " " N.B. 54+95/60+70 | ℄ | R-37R-24, R-37R-24 | | ✓ | 1 | ~~5.0~~ 5.0 | | | ~~11.5~~ 11.5 | | | | | | | | |
| " " " N.B. 55+05 | 60.0' Lt. | R-41B-36, R-43L-36, R-43R-36, R-31F-36 | | ✓ | 2 | 22.5 | | | | | | 27.0 | | | | | One Way Support |
| " " " N.B. 55+52 | 49.0' Lt. | R-41B-36, R-43L-36, R-43R-36, R-31F-36 | | ✓ | 2 | 22.5 | | | | | | 27.0 | | | | | One Way Support |
| " " " S.B. 61+32 | 52.0' Rt. | R-41B-36, R-43L-36, R-43R-36, R-31F-36 | | ✓ | 2 | 22.5 | | | | | | 27.0 | | | | | One Way Support |
| " " " S.B. 61+80/56+00 | ℄ | R-37R-24, R-37R-24 | | ✓ | 1 | 5.0 | | | 11.5 | | | | | | | | |
| " " " S.B. 61+94 | See Remarks | R-41B-36, R-43L-36, R-43R-36, R-26A-30, R-31F-36 | | ✓ | — | 30.0 | | | | | | | | | | | Mount on Signal Pole & Arm |
| " " " N.B. 62+50 | ℄ | R-38R-24 | | ✓ | 1 | 5.0 | | | 11.5 | | | | | | | | |
| " " " N.B. 68+00± | 29.0' Lt. | W-85-36 | | ✓ | 1 | 9.0 | | | 13.5 | | | | | | | | |
| " " " N.B. 82+00± | 29.0' Lt. | IM-17-21, M-5-24-3 | | ✓ | 1 | 7.19 | | | 13.0 | | | | | | | | |
| Ramp T-2 E.B. 639+20 | 16.0' Rt. | 8'x7' | | ✓ | 2 | | 56.0 | | | | | | 30.0 | | 2.20 | 2 | |
| Ramp T-1 W.B. 637+30 | 8.25' Lt. | R-15B | | ✓ | 1 | 3.75 | | | 11.5 | | | | | | | | |
| " T-2 E.B. 634+75 | 13.98' Rt. | D-4-B (9'x3'), M-8-24, M-2-24-2, M-24-21 | | ✓ | 2 | 8.19 | 27.0 | | | | 32.0 | | | | 0.5 | 2 | |
| " T-2 E.B. 637+25 | 31.5' Lt./14.0' Rt. | R-41A-36, R-41A-36, R-31F-36, R-31F-36 | | ✓ | 1/1 | ~~13.5~~ 13.5 | | | ~~13.5~~ 13.0 | | | | | | | | |
| " T-3 W.B. 640+50 | 13.5' Lt./34.5' Rt. | R-41A-36, R-41A-36, R-31F-36, R-31F-36 | | ✓ | 1/1 | ~~13.5~~ 13.5 | | | ~~13.0~~ 13.0 | | | | | | | | |
| " T-3 W.B. 643+00 | 13.98' Lt. | D-4-B (9'x3'), M-8-24, M-2-24-2, M-24-21 | | ✓ | 2 | 8.19 | 27.0 | | | | 31.5 | | | | 0.5 | 2 | |
| " T-4 E.B. 641+65 | 8.25' Rt. | R-15B | | ✓ | 1 | 3.75 | | | 11.0 | | | | | | | | |
| I-480 E.B.&W.B. 642+50.76 | 77.5' Lt./77.5' Rt. | N-41-12, N-41-12 | | ✓ | 1/1 | ~~2.0~~ 2.0 | | | ~~12.0~~ 12.0 | | | | | | | | |
| " " E.B. 671+40 | 77.75' Rt. | R-7B-48 | | ✓ | 2 | 32.0 | | | | | 36.0 | | | | 0.5 | 2 | |
| Idlewood Dr. W.B. | See Remarks | W-48-30 | | ✓ | 1 | 6.25 | | | 13.5 | | | | | | | | Field locate @ N.W.Cor. Southwood Dr. |
| " " " E.B. 7+25± | " " " | W-14-24, W-143-18 | | ✓ | 1 | 7.0 | | | 13.5 | | | | | | | | " " |
| " " " N.B. 21+10 | 19.0' Rt. | R-1-30 | | ✓ | 1 | 6.25 | | | 13.5 | | | | | | | | |
| SUB-TOTALS City of Brooklyn | From Sht. № 285 | | | | — | 80.5 | 60.0 | | 48.0 | 56.0 | 104.0 | — | — | | 1.62 | 6 | |
| TOTALS City of Brooklyn | | | | | — | 412.26 | 197.0 | | 298.0 | 118.0 | 236.5 | 81.0 | 30.0 | | 5.82 | 16 | |
| PROJECT TOTALS | | | | | | 882.58 | 339.0 | 10.5 | 429.5 | 424.0 | 408.5 | 107.0 | 70.0 | | 10.56 | 28 | |

# TRAFFIC CONTROL SUB-SUMMARY

DESIGNED BY CBF DATE 2/20/83
CHKD BY HJH DATE 2-83

| FHWA REGION | STATE | PROJECT | |
|---|---|---|---|
| 5 | OHIO | | |

287/500

CUYAHOGA COUNTY
CUY-480-10.39

* Note: Edge Lines & Lane Lines on I-480 E.B. & W.B. (Mainline Pav't.) are included with Item 847.
All other Edge Lines & Lane Lines are included in Item 621

## PAVEMENT MARKING

| | Roadway | Station to Station | | Participation: City of Cleveland | Participation: City of Brooklyn | ★ Side | * Yellow Edge Line L.F. | * White Edge Line L.F. | * 4" Lane Line L.F. | & Double Yellow Solid L.F. | 12" Crossw'k Line L.F. | Chan'g Line L.F. | Stop Line L.F. | Curb Mark'g L.F. | Island Mark'g Yellow Sq.Ft. | Transverse Lines L.F. | Word on Pavemt. Ea. | Lane Arrows Ea. |
|---|---|---|---|---|---|---|---|---|---|---|---|---|---|---|---|---|---|---|
| See * Note | I-480 EB/WB. | 550+85 | 555+35 | ✓ | | Rt/Lt. | 380 | 126 | 8415 | | | 360 | | | | 202 | | |
| | I-480 E.B. | 573+50 | 593+00 | ✓ | | Rt. | 1950 | 1950 | 5850 | | | | | | | | | |
| | " " " | 593+00 | 595+50 | ✓ | | " | 250 | 500 | 750 | | | 250 | | | | | | |
| | " " " | 595+50 | 616+18 | ✓ | | " | 2068 | 2068 | 6204 | | | | | | | | | |
| | I-480 W.B. | 573+50 | 591+60 | ✓ | | Lt. | 1810 | 1810 | 5430 | | | | | | | | | |
| | " " " | 591+60 | 594+00 | ✓ | | " | 240 | 240 | 720 | | | 480 | | | 250 | 156 | | |
| | " " " | 594+00 | 596+50 | ✓ | | " | 250 | 250 | 1000 | | | | | | | | | |
| | " " " | 596+50 | 616+18 | ✓ | | " | 1968 | 1968 | 5904 | | | | | | | | | |
| | W. 130th N.B. | 51+50 | 53+06 | ✓ | | Rt. | | | 156 | | | | | | 144 | | | |
| | " " " " | 53+06 | 57+52 | ✓ | | " | | | 606 | 48 | | 100 | 46 | | 72 | 20 | 1 | 2 |
| | W. 130th S.B. | 52+00 | 57+50 | ✓ | | Lt. | | | 550 | | | | | | | | | |
| | " " " " | 58+25 | 60+00 | ✓ | | " | | | | 330 | | | 32 | | 101 | 133 | | |
| | Ramp W-1 | 573+50 | 575+50 | ✓ | | Rt. | | 200 | | | | 200 | | | | | | |
| | " " | 575+50 | 582+04 | ✓ | | Lt. Rt. | 654 | 654 | | | | | | | | | | |
| | " " | 582+66 | 582+72 | ✓ | | Lt. Rt. | | | | | 90 | | | | | | | |
| | Ramp W-2 | 581+50 | 583+60 | ✓ | | Lt. Rt. | | | | | | | | 420 | | | | |
| | " " | 583+60 | 593+00 | ✓ | | Lt. Rt. | 940 | 940 | | | | | | | | | | |
| | " " | 593+00 | 595+00 | ✓ | | Lt. | | 200 | | | | 200 | | | | | | |
| | Ramp W-3 | 584+15 | 584+21 | ✓ | | Lt. Rt. | | | | | 110 | | | | | | | |
| | " " | 584+28 | 585+50 | ✓ | | Rt. | | | | | | 120 | 41 | | | | 2 | 4 |
| | " " | 585+04 | 591+65 | ✓ | | Lt. Rt. | 661 | 661 | | | | | | | | | | |
| SUB-TOTALS CITY OF CLEVELAND | | | | ✗ | | — | 11,171 | 11,567 | 35,585 | 378 | 200 | 1,710 | 119 | 420 | 567 | 511 | 3 | 6 |
| See * Note | I-480 E.B. | 616+18 | 628+50 | | ✓ | Rt. | 1232 | 1232 | 3696 | | | | | | | | | |
| | " " " | 623+65 | 625+80 | | ✓ | " | | | 215 | | | | | | | | | |
| | " " " | 625+80 | 628+50 | | ✓ | " | | | | | | 540 | | | | 153 | | |
| | " " " | 628+50 | 651+00 | | ✓ | " | 2250 | 2250 | 6750 | | | | | | | | | |
| | " " " | 651+00 | 652+70 | | ✓ | " | | 170 | | | | 170 | | | | | | |
| | " " " | 652+70 | 655+40 | | ✓ | " | | | 270 | | | | | | | | | |
| | " " " | 651+00 | 698+50 | | ✓ | " | 4750 | 4750 | 14,250 | | | | | | | | | |
| | I-480 W.B. | 616+18 | 629+00 | | ✓ | Lt. | 1282 | 1282 | 3846 | | | | | | | | | |
| | " " " | 622+20 | 624+60 | | ✓ | " | | | 240 | | | | | | | | | |
| | " " " | 624+60 | 629+00 | | ✓ | " | | 440 | | | | 440 | | | | | | |
| | " " " | 629+00 | 648+77 | | ✓ | " | 1977 | 1977 | 5931 | | | | | | | | | |
| | " " " | 648+77 | 651+00 | | ✓ | " | | | | | | 446 | | | | 150 | | |
| | " " " | 651+00 | 653+38 | | ✓ | " | | | 238 | | | | | | | | | |
| | " " " | 648+77 | 698+50 | | ✓ | " | 4973 | 4973 | 14,919 | | | | | | | | | |
| | Tiedeman Rd. SB | 50+95 | 52+80 | | ✓ | ℄ | | | | 370 | | | | | 68/85 | | | |
| | " " " | 52+33 | 55+06 | | ✓ | ℄ | | | | | | | | | | | | |
| | " " " | 50+95 | 54+60 | | ✓ | Rt. | | | 365 | | | | 38 | | | | | |
| | " " " | 55+45 | 61+15 | | ✓ | " | | | 570 | 30 | | 120 | 38 | | 42 | | 1 | 2 |
| | " " " | 61+69 | 62+72 | | ✓ | " | | | | | | | | | 104/65 | | | |
| | " " " | 62+00 | 64+00 | | ✓ | " | | | 200 | | | | | | | | | |
| | Tiedeman Rd. N.B. | 50+95 | 55+00 | | ✓ | Lt. | | | 405 | | | | | | | | | |
| | " " " | 55+66 | 61+30 | | ✓ | " | | | 564 | 20 | | 120 | 38 | | 56 | | 1 | 2 |
| | " " " | 62+30 | 64+00 | | ✓ | " | | | 175 | | | | 33 | | | | | |
| | Ramp T-1 | 629+00 | 637+77 | | ✓ | ℄ Rt. | 877 | 877 | | | | | | | | | | |
| | " " | 638+53 | 638+59 | | ✓ | Lt. Rt. | | | | | 115 | | | | | | | |
| | Ramp T-2 | 628+43 | 639+05 | | ✓ | Lt. ℄ | 1062 | 1062 | | | | | | | | | | |
| | " " | 638+37 | 639+57 | | ✓ | Lt. Rt. | | | | | | 120 | 39 | | | | 2 | 4 |
| | " " | 639+65 | 639+71 | | ✓ | Lt. Rt. | | | | | 105 | | | | | | | |
| | Ramp T-3 | 638+20 | 639+42 | | ✓ | Lt. Rt. | | | | | 106 | 120 | 33 | | | | 2 | 4 |
| | " " | 638+70 | 648+77 | | ✓ | ℄ Rt. | 1077 | 1077 | | | | | | | | | | |
| | Ramp T-4 | 641+81 | 651+00 | | ✓ | Lt. ℄ | 1081 | 1081 | | | 124 | | | | | | | |
| | Service Rd. "A" | 8+03 | 11+58 | | ✓ | ℄ | | | | 355 | | | | | | | | |
| | Southwood Dr. | 7+50 | 12+75 | | ✓ | ℄ | | | | 525 | | | | | | | | |
| | Idlewood Dr. | 8+75 | 21+10 | | ✓ | ℄, Rt. | | | | 1235 | | | 14 | | | | | |
| SUB-TOTALS CITY OF BROOKLYN | | | | | ✗ | — | 20,561 | 21,171 | 52,634 | 1655 | 450 | 2,076 | 233 | — | 420 | 303 | 6 | 12 |
| PROJECT TOTALS | | | | | | | 31,732 | 32,738 | 88,219 | 2033 | 650 | 3,786 | 352 | 420 | 987 | 814 | 9 | 18 |

Ⓐ Quant. Carried from Sht. No 290

## 620 DELINEATORS

| Location | Station to Station | | ★ Side | Interval | C Post | C Bracket | D Post | D Bracket |
|---|---|---|---|---|---|---|---|---|
| Ramp W-1 | 573+50 | 576+70 | Lt. | 80' | 5 | | | |
| " " | 577+70 | 581+70 | Lt. | 100' | 5 | | | |
| " " | 576+10 | 577+70 | Rt. | 80' | | | 3 | |
| Ramp W-2 | 582+30 | 583+50 | Lt. | 30' | | | 5 | |
| " " | 583+50 | 584+50 | Rt. | 100' | 2 | | | |
| " " | 585+20 | 588+00 | Rt. | 70' | 5 | | | |
| " " | 588+70 | 589+70 | Rt. | 100' | 2 | | | |
| " " | 590+40 | 591+10 | Rt. | 70' | 2 | | | |
| " " | 591+80 | 603+80 | Rt. | 100' | 7 | 6 | | |
| Ramp W-3 | 585+20 | 591+20 | Lt. | 100' | 7 | | | |
| " " | 592+20 | 595+40 | Lt. | 80' | 1 | 4 | | |
| " " | 596+20 | 600+20 | Lt. | 100' | 5 | | | |
| SUB-TOTAL : City of Cleveland | | | | | 41 | 10 | 8 | |
| Ramp T-1 | 619+00 | 637+00 | Lt. | 100' | 19 | | | |
| " " | 631+80 | 635+00 | Rt. | 80' | | | 5 | |
| Ramp T-2 | 620+50 | 629+50 | Rt. | 100' | 10 | | | |
| " " | 629+50 | 633+50 | Lt. | 80' | | | 6 | |
| " " | 633+50 | 638+50 | Rt. | 100' | 6 | | | |
| Ramp T-3 | 639+00 | 642+60 | Lt. | 60' | 7 | | | |
| " " | 643+60 | 656+60 | Lt. | 100' | 13 | 1 | | |
| " " | 645+70 | 648+50 | Rt. | 70' | | | 5 | |
| Ramp T-4 | 642+30 | 646+30 | Rt. | 100' | 3 | 2 | | |
| " " | 646+30 | 649+10 | Lt. | 70' | | | 5 | |
| " " | 649+10 | 660+10 | Rt. | 100' | 12 | | | |
| Ramp R-1 | 695+50 | 697+50 | Rt. | 100' | | | 3 | |
| Ramp R-2 | 694+10 | 698+10 | Lt. | 100' | | | 5 | |
| SUB-TOTALS: City of Brooklyn | | | | | 70 | 3 | 29 | |
| PROJECT TOTAL | | | | | 111 | 13 | 37 | |

★ = All upstation regardless of traffic flow

## PAVEMENT MARKING

| | | | |
|---|---|---|---|
| 621 | CITY OF CLEVELAND | Edge Line Yellow | 2,255 L.F. ÷ 5,280 = 0.43 Mi. |
| | | Edge Line White | 2,655 L.F. ÷ 5,280 = 0.50 Mi. |
| | | 4" Lane Line | 1,312 L.F. ÷ 5,280 = 0.25 Mi. |
| | | Center Line | 378 L.F. ÷ 5,280 = 0.07 Mi. |
| | CITY OF BROOKLYN | Edge Line Yellow | 4,097 L.F. ÷ 5,280 = 0.78 Mi. |
| | | Edge Line White | 4,097 L.F. ÷ 5,280 = 0.78 Mi. |
| | | 4" Lane Line | 2,279 L.F. ÷ 5,280 = 0.43 Mi. |
| | | Center Line | 2,535 L.F. ÷ 5,280 = 0.48 Mi. |
| 847 See Note * | CITY OF CLEVELAND | Edge Line Yellow | 8,916 L.F. ÷ 5,280 = 1.69 Mi. |
| | | Edge Line White | 8,912 L.F. ÷ 5,280 = 1.69 Mi. |
| | | 4" Lane Line | 34,273 L.F. ÷ 5,280 = 6.49 Mi |
| | CITY OF BROOKLYN | Edge Line Yellow | 16,464 L.F ÷ 5,280 = 3.12 Mi. |
| | | Edge Line White | 17,074 L.F. ÷ 5,280 = 2.93 Mi. |
| | | 4" Lane Line | 50,355 L.F. ÷ 5,280 = 9.54 Mi. |

01-T

| CALC. BY | | CUY-480-10.39 | OHIO | 288 |
|---|---|---|---|---|
| DATE | | | FHWA REGION 5 | 570 |
| CHKD. BY | | | | |
| DATE | | | | |

# TRAFFIC CONTROL NOTES

620 Delineators, By Type, Flexible Post Mounted, As Per Plan

This item shall consist of furnishing and installing delineators as specified. The reflectors shall be either Type C or D and shall be approximately 3 inches by 6 inches with a minimum area of 18 square inches. The reflector shall be reflective sheeting bonded directly to the delineator post (not screwed or bolted).

The Seal Test as described in 620.03 shall not apply.

The flexible posts shall be white non-metallic, ultraviolet resistant, and designed to withstand repeated automobile impacts at 55 MPH and return to a vertical position with little or no damage to the vehicle. The posts shall be capable of being hand driven. Where adverse soil conditions cause the delineator post to exceed 1/4 inch per foot out of plumb in any direction, the Contractor may drive a pilot shaft before driving the post.

Flexible delineator posts shall be one of the following designs or approved equal;

1. Design 1 flexible post shall be manufactured from either fiberglass reinforced plastic or lexan with a 24 inch length of No. 1 steel drive post bolted to the bottom of the flexible portion. The total length of the composite post shall be 78 inches. The width of the post shall be 3.25 inches.

2. Design 2 flexible post shall be manufactured from fiberglass reinforced plastic with a T cross-section. The post shall be 72 inches long and 3.60 inches wide.

3. Design 3 flexible post shall be manufactured from fiberglass reinforced plastic with a curved cross-section. The post shall be 72 inches long and 3.60 inches wide.

4. Design 4 flexible post shall be manufactured from fiberglass reinforced plastic with a curved cross-section. The post shall be 27 inches long and 3.25 inches in width. These posts may be installed by the Contractor in lieu of Designs 1, 2 or 3 when delineators would be placed behind guardrail. These posts shall be installed on the front of the wooden guardrail blockouts facing approaching traffic by installing either two 5/16 inch diameter by 1 1/2 inch long, zinc coated lag screws with zinc coated 5/16 inch flat washers or two 5/16 inch diameter by 1 1/2 inch long, zinc coated indented hex washer-head lag screws.

Payment will be at the contract unit price for each delineator which shall include furnishing and installing the post and all necessary hardware, labor and equipment.

620 EACH DELINEATORS, TYPE (C OR D), FLEXIBLE POST MOUNTED, AS PER PLAN

631, BALLAST WIRING ENCLOSURE, TYPE B

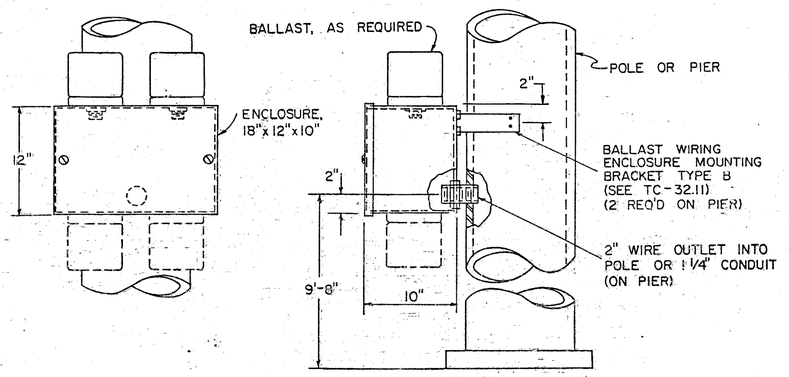


631 SIGN SERVICE

IN LIEU OF THE REQUIREMENTS OF 531.06, CABLE FOR SIGN SERVICE SHALL BE RATED THE SAME AS THE HIGHWAY LIGHTING DISTRIBUTION AND CIRCUIT CABLE USED ON THIS PROJECT.

625 POWER SUPPLY FOR TRAFFIC SIGNALS

ELECTRIC POWER SHALL BE OBTAINED FROM THE CLEVELAND ELECTRIC ILLUMINATING COMPANY, CLEVELAND, OHIO AT THE LOCATION SHOWN ON THE PLANS. THE VOLTAGE SUPPLIED SHALL BE 480 VOLTS AND BE APPROPRIATELY REDUCED TO 120 VOLTS TO EACH CONTROLLER. DISTRIBUTION CABLE SHALL BE TAGGED 480 VOLTS AS PER 625.14. ALL NECESSARY WORK TO INSTALL A COMPLETE OPERATIVE SYSTEM WILL BE INCLUDED IN THE VARIOUS ELECTRICAL BID ITEMS IN THIS CONTRACT.

625 PULL BOX, WITH CONCRETE COVER, AS PER PLAN

24 INCH DIAMETER PULL BOX 713.09 WITH CONCRETE COVER, SHALL BE PROVIDED WHERE SHOWN ON THE PLANS. FOR DETAILS, SEE SHEET NO. 275

630 GUIDE SIGNS

OHIO AND U.S. SHIELDS MOUNTED ON GUIDE SIGNS SHALL BE COVERED WITH TYPE G SILVER WHITE REFLECTIVE SHEETING AS PER 730.19

630 MILE MARKER LOCATION

THE LOCATION OF MILE MARKERS ON THE PLANS ARE APPROXIMATE AND A MORE PRECISE LOCATION WILL BE PROVIDED BY THE DEPARTMENT. THE CONTRACTOR SHALL NOTIFY THE ENGINEER AT LEAST 30 DAYS IN ADVANCE OF THE PLANNED DATE OF MARKER INSTALLATION. THE ENGINEER WILL CONTACT THE BUREAU OF TECHNICAL SERVICES WHICH WILL LOCATE THE LONGITUDINAL POSITION OF MILE MARKERS BY MEANS OF A PAINT MARK ON THE PAVEMENT EDGE. ALTERNATE MARKS WILL NOT BE PROVIDED ON DIVIDED HIGHWAYS AND THE CONTRACTOR SHALL SET MARKER FOR THE OPPOSITE ROADWAY ACROSS FROM THE PROVIDED MARK. DELINEATORS WHOSE NORMAL POSITION FALLS WITHIN 50 FEET OF A MILE MARKER SHALL BE OMITTED.

843 CONTROLLER, AS PER PLAN

PRETIMED, ELECTROMECHANICAL CONTROLLERS FOR USE WITHIN THE CITY OF CLEVELAND SHALL MEET THE REQUIREMENTS OF SUPPLEMENTAL SPECIFICATION 843 AND BE ONE OF THE FOLLOWING TYPES:

CROUSE-HINDS CO. TYPE PCE-3
EAGLE SIGNAL CORP. TYPE EF-20
OR EQUAL

TRAFFIC CONTROL STANDARD CONSTRUCTION DRAWINGS

REFERENCES TO SUPPLEMENTAL SPECIFICATIONS 857, 858, 859, 957, 958, AND 959 ON THE TRAFFIC CONTROL STANDARD CONSTRUCTION DRAWINGS IN THESE PLANS SHALL BE CONSIDERED TO READ AS RESPECTIVE REFERENCES TO ITEMS 630, 631, 632, 730, 731 AND 732.

# 614 TEMPORARY PAVEMENT MARKINGS
## NOTE B

GENERAL

THE CONTRACTOR SHALL FURNISH, INSTALL, MAINTAIN, AND WHEN NECESSARY, REMOVE TEMPORARY RETROREFLECTIVE PAVEMENT MARKINGS ON EXISTING, RECONSTRUCTED, RESURFACED OR TEMPORARY ROADS WITHIN THE WORK LIMITS, IN ACCORDANCE WITH THE FOLLOWING REQUIREMENTS.

THE MARKINGS SHALL BE MAINTAINED IN GOOD CONDITION DURING THE REQUIRED SERVICE PERIOD TO PROVIDE DAY AND NIGHT VISIBILITY. THE MARKINGS SHALL BE REPAIRED OR REPLACED AS DIRECTED BY THE ENGINEER TO MAINTAIN REQUIRED VISIBILITY AND/OR REFLECTIVITY AT NO ADDITIONAL COST TO THE STATE.

MATERIALS

UNLESS OTHERWISE INDICATED ON THE PLANS, TEMPORARY PAVEMENT MARKINGS MAY BE OF PAINT, PAVEMENT MARKING TAPE OR REMOVABLE PAVEMENT MARKING TAPE (TYPE R TAPE).

A. PAINT

PAINT SHALL COMPLY WITH 708.14 AND SHALL BE APPLIED IN ACCORDANCE WITH 621 EXCEPT AS MODIFIED HEREIN.

B. PAVEMENT MARKING TAPE

FLEXIBLE RETROREFLECTIVE PREFORMED PRESSURE SENSITIVE TAPE SHALL HAVE STRAIGHT EDGES AND BE FREE OF CRACKS. THE TAPE SHALL CONSIST OF PIGMENT AND FILLERS WITH SUFFICIENT BINDER AND PLASTICIZER TO RETAIN GLASS BEADS HAVING A REFRACTIVE INDEX MEETING THE MINIMUM REFLECTIVE INTENSITY STANDARD STATED IN THE MANUFACTURERS INFORMATION. THE TAPE SHALL BE FLEXOLITE "WET REFLECTIVE", 3M "SCOTCHLANE", OR AN APPROVED EQUAL.

THE GLASS BEADS SHALL BE DISTRIBUTED UNIFORMLY THROUGHOUT THE TAPE WITH SUFFICIENT SURFACE BEADS TO PROVIDE OPTIMUM REFLECTORIZATION AT ALL TIMES.

PAVEMENT MARKING TAPE SHALL COMPLY WITH THE COLOR REQUIREMENTS OF 708.14.

THE TAPE SHALL HAVE A PRECOATED ADHESIVE LAYER FOR PAVEMENT APPLICATION WITHOUT THE USE OF HEAT, SOLVENTS OR ADDITIONAL ADHESIVES. THE ADHESIVE SHALL BE SUFFICIENT TO RETAIN COMPLETE MARKINGS ON THE PAVEMENT SURFACE THROUGHOUT THE USEFUL LIFE OF THE MARKINGS.

IN ADDITION TO THE FOREGOING, ALL TEMPERATURE APPLICATION REQUIREMENTS AND OTHER APPLICABLE MANUFACTURERS MATERIAL AND APPLICATION INSTRUCTIONS SHALL BE FOLLOWED.

WHEN APPROVED BY THE ENGINEER THE CONTRACTOR MAY USE REMOVABLE PAVEMENT MARKING TAPE (TYPE R TAPE), IN LIEU OF THAT DESCRIBED ABOVE, TO FACILITATE REMOVAL OF MARKINGS.

C. REMOVABLE PAVEMENT MARKING TAPE (TYPE R TAPE)

THE MARKING MATERIAL SHALL BE A MIXTURE OF POLYMERIC MATERIALS, PIGMENTS, REINFORCING MEDIUM TO FACILITATE REMOVAL, GLASS BEADS THROUGHOUT THE PIGMENTED PORTION, AND A RETROREFLECTIVE LAYER OF GLASS BEADS BONDED TO THE TOP SURFACE.

THE TAPE SHALL BE PRECOATED WITH A PRESSURE SENSITVE ADHESIVE CAPABLE OF TEMPORARILY BONDING TO ASPHALT CONCRETE OR PORTLAND CEMENT CONCRETE PAVEMENT AT AN AMBIENT TEMPERATURE OF NOT LESS THAN 50° F AND RISING, AT A PAVEMENT TEMPERATURE OF NOT LESS THAN 50° F NOR MORE THAN 150° F, WITHOUT THE USE OF HEAT, SOLVENTS, AND ADDITIONAL ADHESIVES OR ACTIVATORS.

MATERIALS SHALL CONFORM TO THE COLOR REQUIREMENTS OF 708.14.

THE TAPE SHALL BE REMOVABLE FROM APSHALT AND PORTLAND CEMENT CONCRETE INTACT OR IN LARGE PIECES AT TEMPERATURES ABOVE 40° F WITHOUT USE OF HEAT, SOLVENTS, GRINDING, OR SANDBLASTING. REMOVAL SHALL NOT RESULT IN DAMAGE TO OR OBJECTIONABLE STAINING OF THE PAVEMENT.

GLASS BEADS SHALL BE PROVIDED IN A PROPER SIZE, QUANTITY AND DISTRIBUTION TO ASSURE OPTIMUM RETROREFLECTIVITY AS THE FILM WEARS. THE FOLLOWING INITIAL AVERAGE REFLECTANCE VALUES AT 86.0° ENTRANCE ANGLE AS MEASURED IN ACCORDANCE WITH THE TESTING PROCEDURES OF FEDERAL TEST METHOD 370 SHALL BE CERTIFIED:

| | WHITE | | YELLOW | |
|---|---|---|---|---|
| OBSERVATION ANGLE | 0.2 | 0.5 | 0.2 | 0.5 |
| SPECIFIC LUMINANCE (MCD/FT²)/FC | 1770 | 1270 | 1310 | 810 |

THE TAPE SHALL BE 3-M COMPANY'S "STAMARK, DETOUR GRADE (SERIES 5710, 5711, 6210, 6211)" OR AN APPROVED EQUAL.

THE CONTRACTOR SHALL FURNISH TO THE ENGINEER CERTIFICATION THAT THE MATERIAL SUPPLIED MEETS THE PROPERTIES SPECIFIED HEREIN.

LAYOUT

THE TEMPORARY MARKINGS SHALL BE ACCURATELY LAID OUT IN CONFORMANCE WITH 621.051 AND SHALL BE LOCATED IN A TRUE LINE ON THE CENTER LINE, LANE LINE, EDGE LINE, OR CHANNELIZING LINE WHERE PERMANENT MARKINGS WOULD LIE UNLESS OTHERWISE SPECIFIED IN THE PLANS.

PLACEMENT

TEMPORARY MARKINGS SHALL BE PLACED IN ACCORDANCE WITH LAYOUTS ON SHEETS 622-624 AND THE FOLLOWING REQUIREMENTS, UNLESS OTHERWISE SPECIFIED IN THE PLANS.

TEMPORARY MARKINGS SHALL BE COMPLETE AND IN PLACE ON ALL PAVEMENT PRIOR TO EXPOSING IT TO TRAFFIC. WHEN TEMPORARY MARKINGS ARE NO LONGER NEEDED, THEY SHALL BE REMOVED BY THE CONTRACTOR IN ACCORDANCE WITH 621.134 AND NECESSARY PAVEMENT MARKINGS INSTALLED BEFORE THE FLOW OF TRAFFIC IS CHANGED TO THE NEXT PHASE OR RETURNED TO ITS NORMAL CHANNEL.

WHERE PERMANENT PAVEMENT MARKINGS ARE CALLED FOR IN THE PLANS, THE CONTRACTOR SHALL FURNISH AND PLACE THE PERMANENT MARKINGS WITHIN 30 CALENDAR DAYS FOLLOWING COMPLETION OF ALL SURFACE COURSES IN A SINGLE ROADWAY OR PRIOR TO THE END OF THE CONSTRUCTION SEASON, WHICHEVER COMES FIRST. PERMANENT MARKINGS SHALL NOT BE PLACED OVER ANY TAPE MARKINGS.

A. CLASS I MARKINGS

CLASS I MARKINGS SHALL BE AS DEFINED IN 621, EXCEPT AS FOLLOWS:
1) LANE LINES SHALL BE 4-INCHES IN WIDTH.
2) TRANSVERSE LINES SHALL BE 8-INCHES IN WIDTH.
3) STOP LINES SHALL BE 12-INCHES IN WIDTH.
4) CROSS WALK LINES SHALL BE 8 INCHES IN WIDTH.

GORE MARKINGS SHALL CONSIST OF TWO CHANNELIZING LINES PLACED AT THE THEORETICAL OR TEMPORARY GORE OF RAMPS AND DIVERGING OR CONVERGING ROADWAYS.

THE PAINT APPLICATION RATE SHALL BE NOT LESS THAN GALLONS PER MILE FOR SOLID 4-INCH LINES, 24 GALLONS PER MILE FOR SOLID 6-INCH LINES, 48 GALLONS PER MILE FOR SOLID 12-INCH LINES, AND 4 GALLONS PER MILE FOR 4-INCH DASHED LINES.

B. CLASS II MARKINGS

CENTER LINES SHALL CONSIST OF SINGLE, YELLOW 12-INCH BY 4-INCH DASHES SPACED AT A MAXIMUM OF 40-FOOT INTERVALS.

LANE LINES SHALL CONSIST OF WHITE 12-INCH BY 4-INCH DASHES SPACED AT A MAXIMUM OF 40-FOOT INTERVALS.

CHANNELIZING LINES SHALL CONSIST OF WHITE 12-INCH BY 4-INCH DASHES SPACED AT A MAXIMUM OF 20-FOOT INTERVALS.

GORE MARKINGS SHALL BE TWO CONTINUOUS, WHITE 50-FOOT BY 4-INCH LINES PLACED AT THE THEORETICAL GORE OF AN EXIT RAMP OR DIVERGING ROADWAYS.

THE PAINT APPLICATION RATE SHALL BE NOT LESS THAN 16 GALLONS PER MILE FOR GORE MARKINGS, 0.8 GALLONS PER MILE FOR CHANNELIZING LINE, AND 0.4 GALLONS PER MILE FOR LANE LINE AND CENTER LINE.

CONFLICTING MARKINGS

THE CONTRACTOR SHALL, PRIOR TO PLACING TEMPORARY MARKINGS, REMOVE ALL EXISTING CONFLICTING MARKINGS VISIBLE TO THE TRAVELING PUBLIC DURING DAYLIGHT OR NIGHTTIME HOURS IN ACCORDANCE WITH 621.134. THE COST FOR REMOVAL OF CONFLICTING MARKINGS SHALL BE INCIDENTAL TO THE VARIOUS PAY ITEMS.

METHOD OF MEASUREMENT

TEMPORARY PAVEMENT MARKINGS WILL BE MEASURED COMPLETE IN PLACE, BY CLASS AND TYPE, IN THE UNITS LISTED. DASHED LINE QUANTITIES WILL BE THE LENGTH OF THE COMPLETED STRIPE, INCLUDING GAPS, INTERSECTIONS, AND OTHER SECTIONS OF PAVEMENT NOT NORMALLY MARKED IN ACCORDANCE WITH 707.15.

TEMPORARY PAVEMENT MARKINGS WILL INCLUDE THE LAYOUT, APPLICATION AND REMOVAL OF THE MARKINGS, WHERE REQUIRED.

BASIS OF PAYMENT

PAYMENT FOR ACCEPTED QUANTITIES, COMPLETE IN PLACE WILL BE MADE AT THE CONTRACT UNIT PRICE. PAYMENT SHALL BE FULL COMPENSATION FOR ALL MATERIALS, LABOR, INCIDENTALS AND EQUIPMENT FOR PLACEMENT, MAINTENANCE AND NECESSARY REMOVAL OF THE MARKINGS.

| ITEM | UNIT | DESCRIPTION |
|---|---|---|
| 614 | MILES | TEMPORARY LANE LINES, CLASS ___, (PAINT, TAPE OR TYPE R TAPE) |
| 614 | MILES | TEMPORARY CENTER LINES, CLASS ___, (PAINT, TAPE OR TYPE R TAPE) |
| 614 | MILES/LIN. FT. | TEMPORARY CHANNELIZING LINES, CLASS ___, (PAINT, TAPE OR TYPE R TAPE) |
| 614 | MILES | TEMPORARY EDGE LINES, CLASS I, (PAINT, TAPE OR TYPE R TAPE) |
| 614 | LIN. FT. | TEMPORARY GORE MARKING, CLASS II, (PAINT, TAPE OR TYPE R TAPE) |
| 614 | LIN. FT. | TEMPORARY STOP LINES, CLASS I, (PAINT, TAPE OR TYPE R TAPE) |
| 614 | LIN. FT. | TEMPORARY CROSSWALK LINES, CLASS I, (PAINT, TAPE OR TYPE R TAPE) |
| 614 | EACH | TEMPORARY LANE ARROWS, CLASS I, (PAINT, TAPE OR TYPE R TAPE) |
| 614 | EACH | TEMPORARY WORD "ONLY" ON PAVEMENT, 72-INCH, CLASS I, (PAINT, TAPE OR TYPE R TAPE) |
| 614 | LIN. FT. | TEMPORARY TRANSVERSE LINES, CLASS I, (PAINT, TAPE OR TYPE R TAPE) |

5/13/82

| CALC. BY AJF DATE 2-21-83 | CHKD. BY MJH DATE 2-83 | CUY. – 480 – 10.39 | OHIO | FHWA REGION 5 | 290 / 500 |
|---|---|---|---|---|---|

## 847 PAVEMENT MARKING – I-480 NB

| | | | |
|---|---|---|---|
| Sta. 531+35 | to Sta. 555+35 (E.B.) | 4" Lane Line | = 7470 L.F. |
| Sta. 550+85 | to Sta. 554+00 (W.B.) | 4" Lane Line | = 945 L.F. |
| Sta. 552+30 | to Sta. 554+20 (E/W.B.) | 4" Yellow E. Line | = 380 L.F. |
| Sta. 554+44 | to Sta. 555+70 (E.B.) | 4" White E. Line | = 126 L.F. |
| Sta. 551+95 | to Sta. 553+70 (E.B.) | Chann. Line | = 360 L.F. |
| Sta. 551+95 | to Sta. 553+70 (E.B.) | 24" Broad Transv. Stripe | = 202 L.F. |

Quantities Carried to T/C Sub-Summary, Sht. No. 287

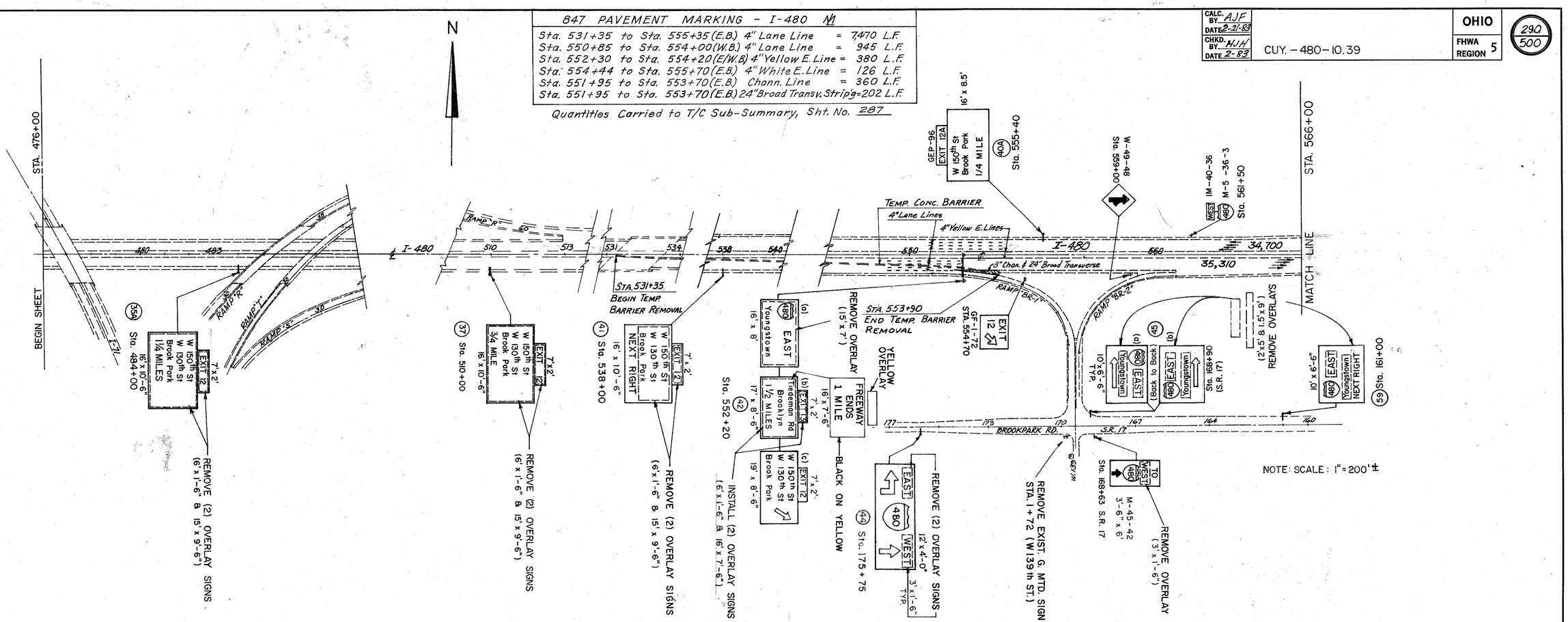


| Sign No. | Station | Participation: City of Cleveland | 630: Refurbishing Signs | 630: Signs Overlay | 202: Concrete Barrier Removed For Re-Use | | Remarks |
|---|---|---|---|---|---|---|---|
| | | | Sq. Ft. | Sq. Ft. | L.F. | | |
| 35A | 484+00 I-480 E.B. | ✓ | 151.0 | | | | |
| 37 | 510+00 " " " " | ✓ | 151.0 | | | | |
| 41 | 538+00 " " " " | ✓ | 151.0 | | | | |
| 42 | 552+20 " " " " | ✓ | 234.0 | 192.0 | | | |
| | 168+63 S.R. 17 E.B. | ✓ | 4.5 | | | | |
| 59 | 161+00 S.R. 17 W.B. | ✓ | 23.5 | | | | |
| 45 | 168+90 S.R. 17 E.B. & W.B. | ✓ | 47.0 | | | | BACK/BACK SIGNS |
| 44 | 175+75 S.R. 17 E.B. | ✓ | 9.0 | | | | |
| | | | | | | | |
| | 531+35 To 553+90 I-480 EB | ✓ | | | 2,255 | | |
| | | | | | | | |
| TOTALS | | | 771.0 | 192.0 | *2,255 | | |

*Note: Quantity Carried to SUB Summary, Sht. 20

GROUND MOUNTED SIGNS

| Station | Distance Rt. or Lt. of ℄ or ℄ of Survey to ℄ Post or ℄ Nearest Post of the Sign | Type of Sign(s) | Participation: City of Cleveland | Number of Supports | 630: Signs Flat Sheet | 630: Signs Extru-Sheet | 630: Ground Mounted Support #3 Post | 630: Ground Mounted Support #4 Post | 630: Ground Mounted Support 34×17.7 Beam | 630: Concrete for Embedded Foundations | 630: Breakaway Beam Connection | Remarks |
|---|---|---|---|---|---|---|---|---|---|---|---|---|
| | | | | Ea. | Sq. Ft. | Sq. Ft. | Lin. Ft. | Lin. Ft. | Lin. Ft. | Cu. Yd. | Each | N.P. = Near Post F.P. = Far Post |
| 554+70, I-480 E.B. | 92.32' Rt. | GF-1-72 (6'×5') | ✓ | 2 | | 30.0 | | | NP 20.0' FP 21.0' | 0.54 | 2 | |
| 559+00, I-480 E.B. | 78.58' Rt. | W-49-48 | ✓ | 2 | 16.0 | | | 31.0 | | | | |
| 561+50, I-480 W.B. | 77.75' Lt. | IM-40-36, M-5-36-3 | ✓ | 2 | 16.5 | | | 31.0 | | | | |
| 570+50, I-480 E.B. | 77.75' Rt. | IM-39-36, M-5-36-3 | ✓ | 2 | 16.5 | | | 31.0 | | | | |
| | | | | | | | | | | | | |
| | | | | | | | | | | | | |
| TOTALS | | | | | 49.0 | 30.0 | X | 93.0 | 41.0 | 0.54 | 2 | |

SIGNING PLAN

| FED. RD. DIVISION | STATE | PROJECT | |
|---|---|---|---|
| 2 | OHIO | | |

291/500

CUYAHOGA COUNTY
CUY- 480-10.39

CONTRACT No. CUY- 480-8.54 | CONTRACT No. CUY- 480- 10.39

STA. 573+50 CONTRACT CUY. 480 - 10.39

STA. 566+00

MATCH LINE

P.C. Sta. 571+52.74

ENTERPRISE AVE.

CONRAIL

W. 130th. ST.

MATCH LINE

W-49-48

Sta. 578+50

RAMP W-1

1,870

575

580

32,830 ℄ I-480

570

35,310

Sta. 570+50 EAST 480 IM-39-36 M-5-36-3

SPEED LIMIT 55 MINIMUM 40 R-7B-48

Sta. 573+50

M-45-42 3'-6" x 3'-6" JCT 480 Sta. 64+90± (Field Locate)

Existing Signals

W-42-36 WP-42 Sta. 58+90 12'-6" LOW CLEARANCE

50

480 Toledo Youngstown KEEP RIGHT Sta. 61+80 10'x 8'

W-47-36 (Affix to Pole) O.H. SIGN No. 50

R-41B-36 ENTER

R-43R-36 ONE WAY

R-43L-36 ONE WAY

Sta. 584+30 (W-3) Rt. Sta. 58+48 (Rt.) – Mount Signs on Signal Pole

W-42-36 WP-42-21 W

12'-6" LOW CLEARANCE

W 130th ST SOUTH (W-3) 589+55 Sta. 9 x 3

MATCH LINE

Sta. 591+30 EXIT 12B 96 FT

W-8-24 W-2-24-2 W-24-21

TO 17

480 WEST Toledo (b) 8'x 6'-6" BACK to BACK 480 WEST Toledo (a) 8'x 9'-6"

15 Sta. 58 + 20

Sta. 582+73.5± (On Structure) 52 480 Youngstown EAST (12'x 4'-6")

M-8-24 M-2-24-2 M-24-21 TO 17 Mount on Signal Pole Sta. 57+56 (Lt.)

R-26A-30 ON ARM

9500 9500

Sta. 586+50 R-41A-36 WRONG WAY BACK/BACK R-31F-36 ONLY

584+35 ONLY

585

RAMP W-3

590

SIGNALS

R-15B PEDESTRIANS AND BICYCLES PROHIBITED Sta. 582+00 (W-1)

R-12I-24

ROAD NARROWS Sta. 57+30 W-51-36

R-38R-24 Sta. 57+15

MILE 3

N-41-12 Sta. 589 +70.76

STA. 592+00

W-49-48 Sta. 588+00

RAMP W-2

1,500

Sta. 54+50 W-47-36

Sta. 583+20 PEDESTRIANS AND BICYCLES PROHIBITED R-15B

Overlay 16'x 7'-6" LEFT LANES END 1/2 MILE

GEP-84 EXIT 13 Fiedeman Rd Brookyn 3/4 MILE

17'x 8'-6"

Black-On-Yellow

Sta. 583 +75

Sta. 582+65 (W) ONLY Toledo (On Structure) 11'x 4'-6" 480 WEST

TO 480 EAST Sta. 52+00 M-45-42 3'-6" x 6"

49

480 EAST Youngstown ONLY 12'x 6'-6"

48 Sta. 52 + 80 Black on Yellow

R-38R-24 Sta. 48+06± (Affix to Pole)

ONLY R-30A-30 ONLY R-30A-30 ONLY R-27A-30

47 Sta. 49+85±

TO 480 EAST Sta. 48+10 M-45-42 3'-6" x 6"

WEST 130th 50

Sta. 144+00 (BACK to BACK) 3'-6" x 4' M-45-42 480 480 3'-6" x 4' M-45-42

3'-6" x 4' 480 M-45-42 Sta. 138+50

CITY OF CLEVELAND

150 Existing Signals 145 BROOKPARK ROAD 140 S. R. 17

CITY OF BROOK PARK | CITY OF PARMA

3'-6" x 4' 480 M-45-42 Sta. 151+50

3'-6" x 4' M-45-42 Sta. 146+36 480 M-25-21 17 M-2-24

JCT 480 3'-6" x 3'-6" M-45-42 Sta. 48+70

INFORMATIONAL & REGULATORY
I-480 STA. 566+00 TO STA. 592+00

SIGNING PLA...

| FED. RD. DIVISION | STATE | PROJECT | |
|---|---|---|---|
| 2 | OHIO | | |

292/500

CUYAHOGA COUNTY
CUY-480-10.39

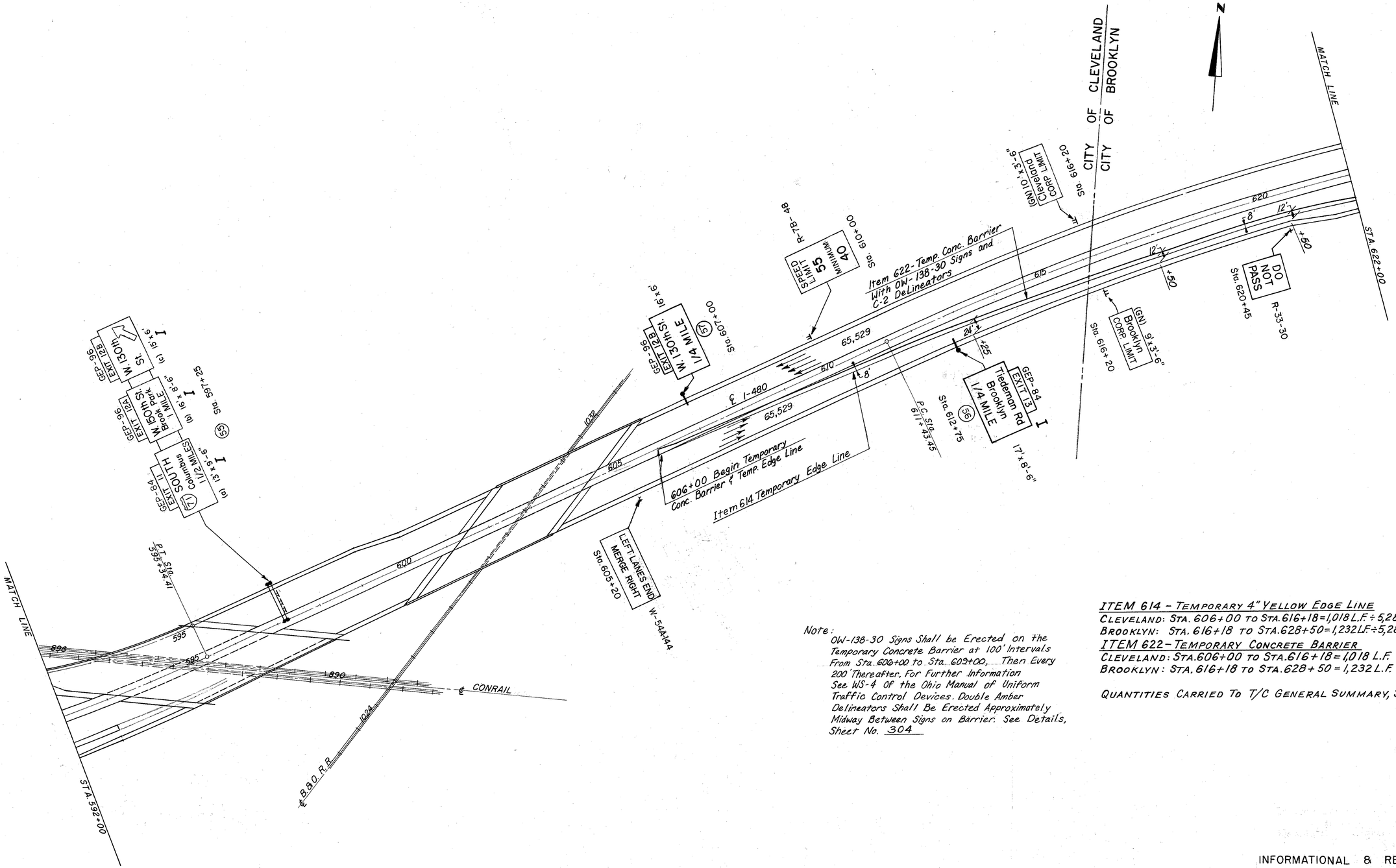


Note:
OW-138-30 Signs Shall be Erected on the Temporary Concrete Barrier at 100' Intervals From Sta. 606+00 to Sta. 609+00, Then Every 200' Thereafter. For Further Information See WS-4 Of the Ohio Manual of Uniform Traffic Control Devices. Double Amber Delineators Shall Be Erected Approximately Midway Between Signs on Barrier. See Details, Sheet No. 304

ITEM 614 - TEMPORARY 4" YELLOW EDGE LINE
CLEVELAND: STA. 606+00 TO STA. 616+18 = 1,018 L.F. ÷ 5,280 = 0.19 MI.
BROOKLYN: STA. 616+18 TO STA. 628+50 = 1,232 L.F. ÷ 5,280 = 0.23 MI.
ITEM 622 - TEMPORARY CONCRETE BARRIER
CLEVELAND: STA. 606+00 TO STA. 616+18 = 1,018 L.F.
BROOKLYN: STA. 616+18 TO STA. 628+50 = 1,232 L.F.

QUANTITIES CARRIED TO T/C GENERAL SUMMARY, SHT. No. 283

INFORMATIONAL & REGULATORY
I-480 STA. 592+00 to STA. 622+00

SIGNING PLAN

| FED. RD. DIVISION | STATE | PROJECT | |
|---|---|---|---|
| 2 | OHIO | | |

293
500

CUYAHOGA COUNTY
CUY - 480 - 10.39

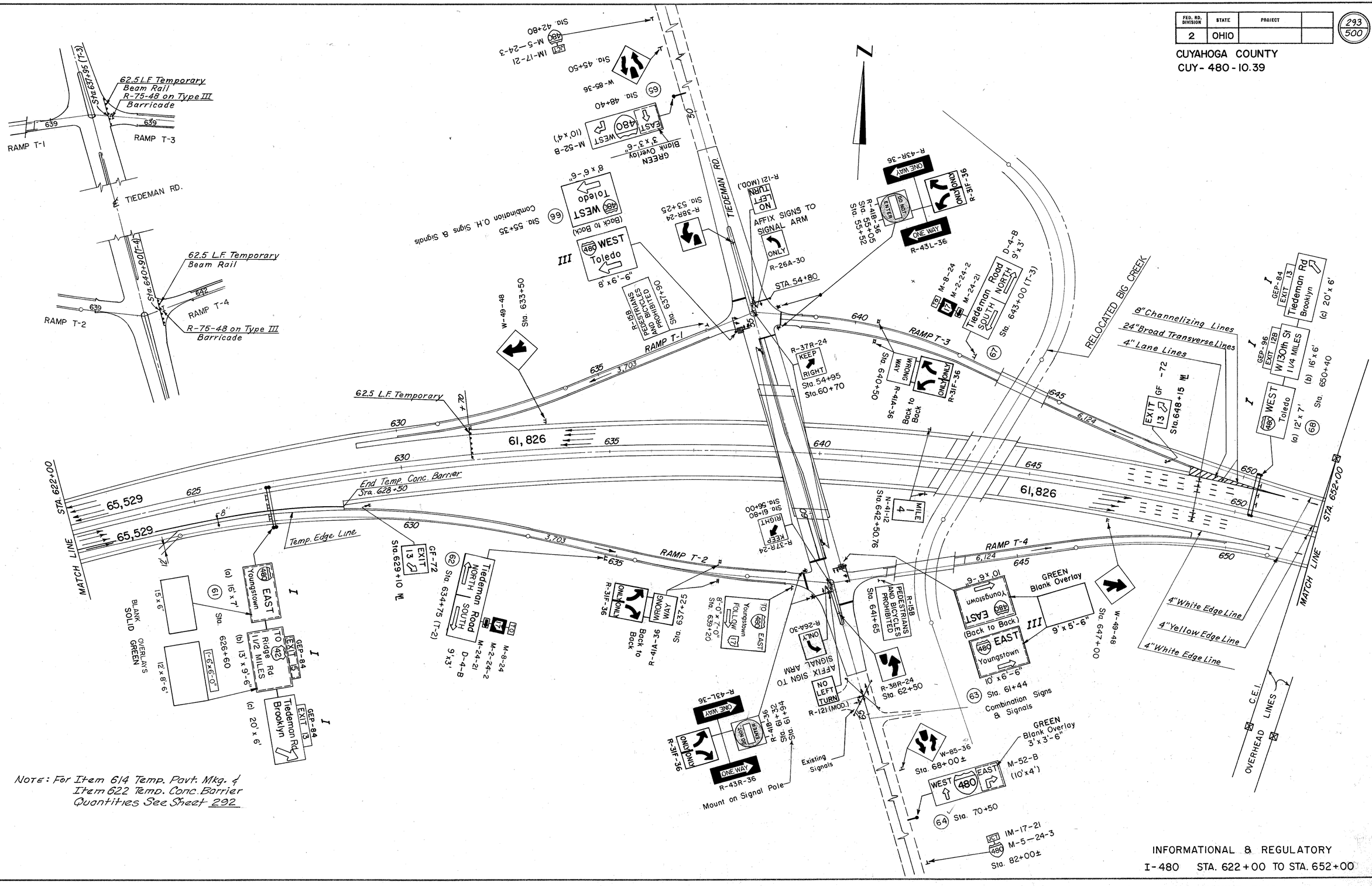


NOTE: For Item 614 Temp. Pavt. Mkg. & Item 622 Temp. Conc. Barrier Quantities See Sheet 292

INFORMATIONAL & REGULATORY
I-480 STA. 622+00 TO STA. 652+00

SIGNING PLAN

| FED. RD. DIVISION | STATE | PROJECT | |
|---|---|---|---|
| 2 | OHIO | | |

294
500

CUYAHOGA COUNTY
CUY-480-10.39

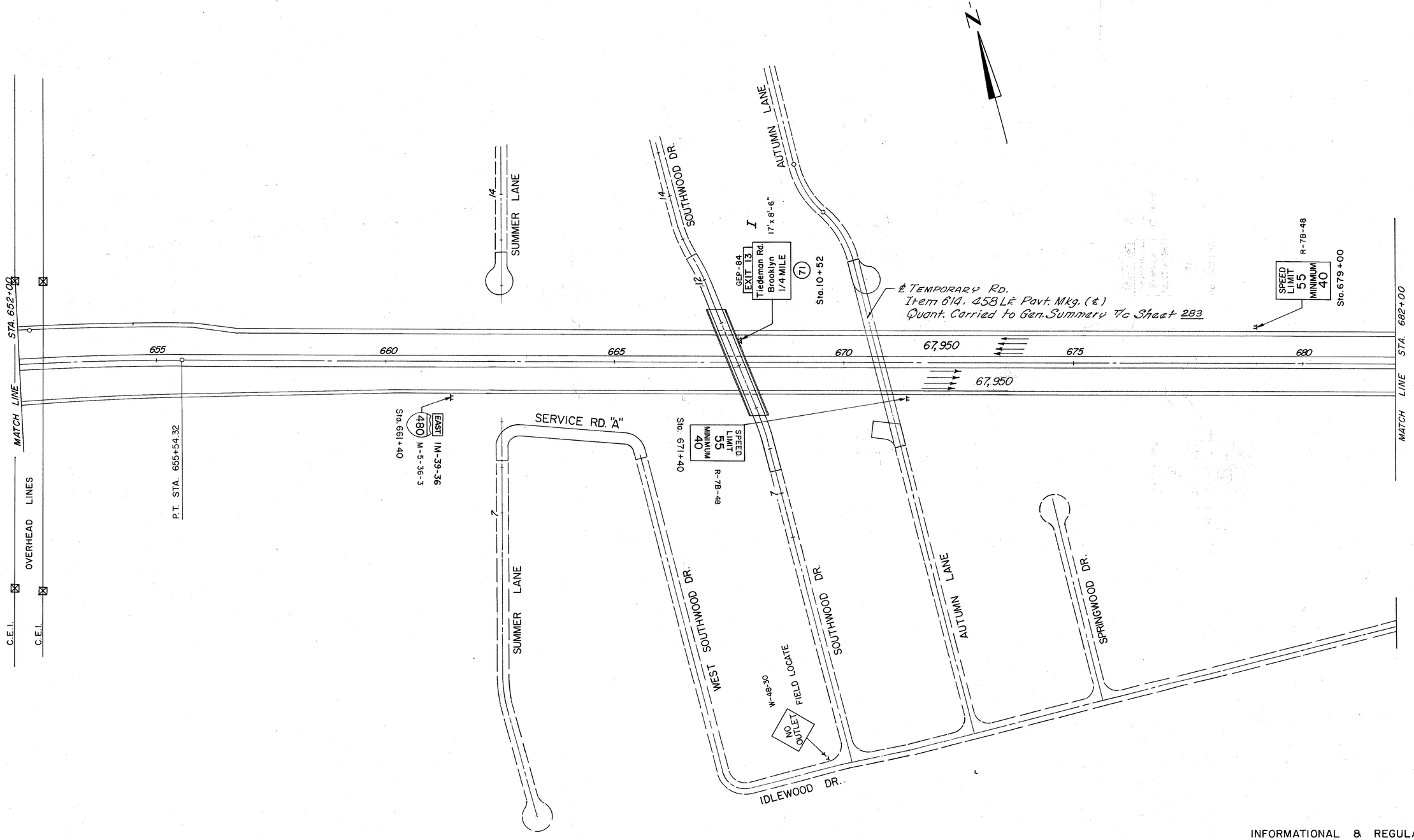


INFORMATIONAL & REGULATORY
I-480 STA. 652+00 TO STA. 682+00

SIGNING PLAN

| FHWA REGION | STATE | PROJECT | |
|---|---|---|---|
| 5 | OHIO | | |

295/500

CUYAHOGA COUNTY
CUY-480-10.39

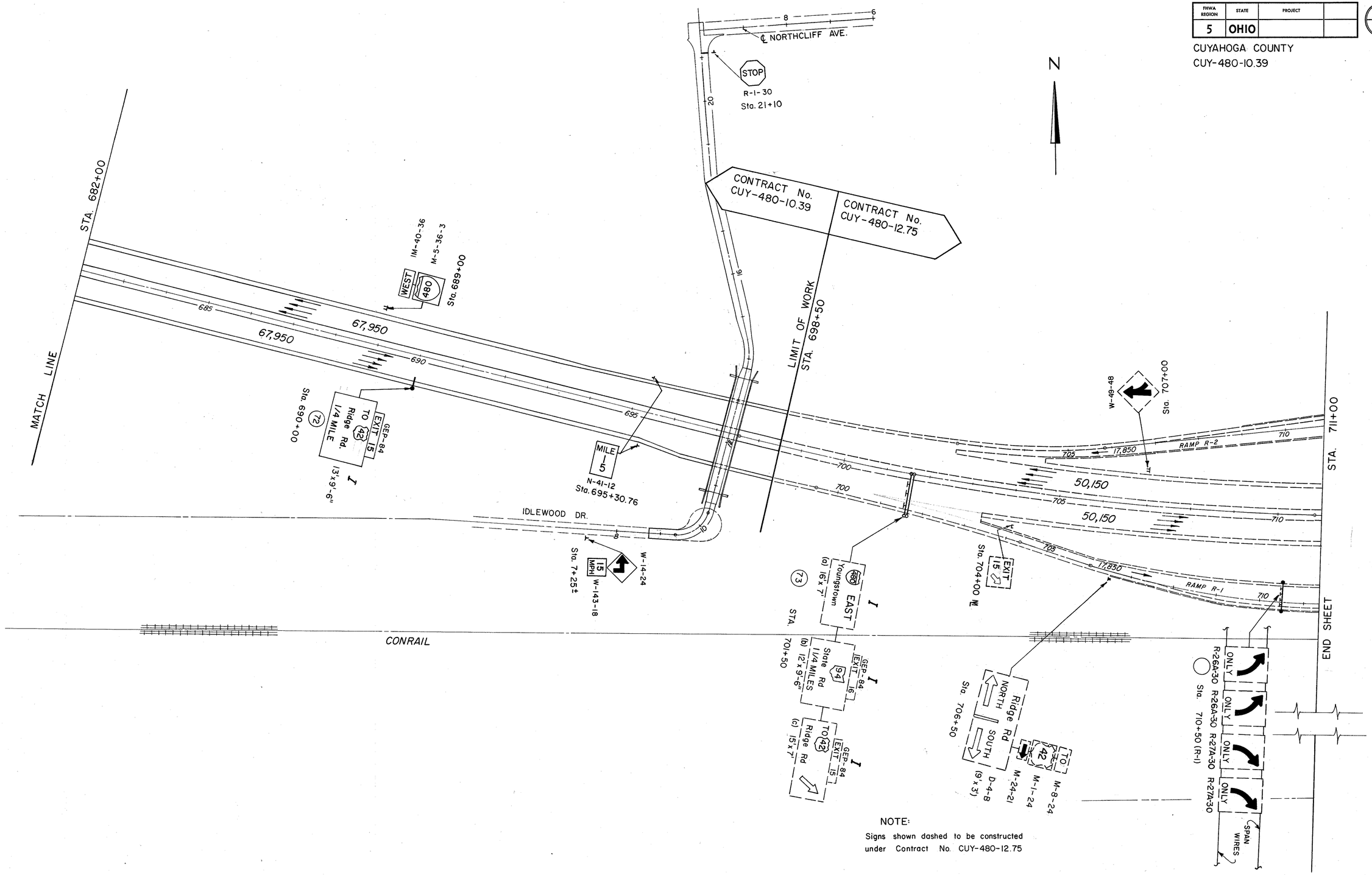


NOTE:
Signs shown dashed to be constructed under Contract No. CUY-480-12.75

INFORMATIONAL & REGULATORY
I-480 STA. 682+00 TO STA. 711+00

SIGNING PLAN

| FHWA REGION | STATE | PROJECT | |
|---|---|---|---|
| 5 | OHIO | | |

296
500

CUYAHOGA COUNTY
CUY-480-10.39

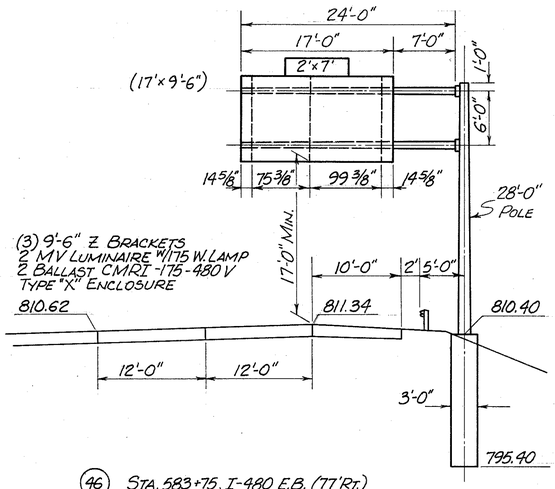


(46) STA. 583+75, I-480 E.B. (77' Rt.)
T.C. 12.30, DES. No. 7

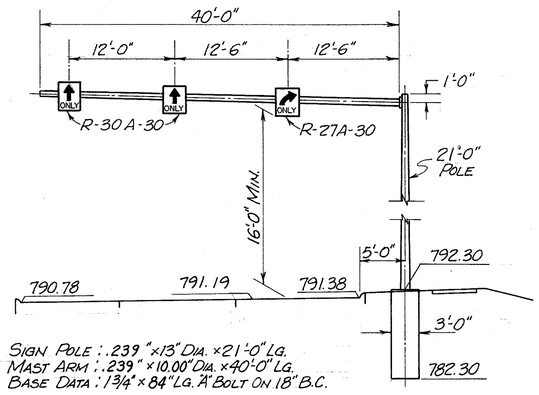


(47) STA. 49+85± W. 130TH ST. (N.B.)
T.C. 16.20, DES. No. -4

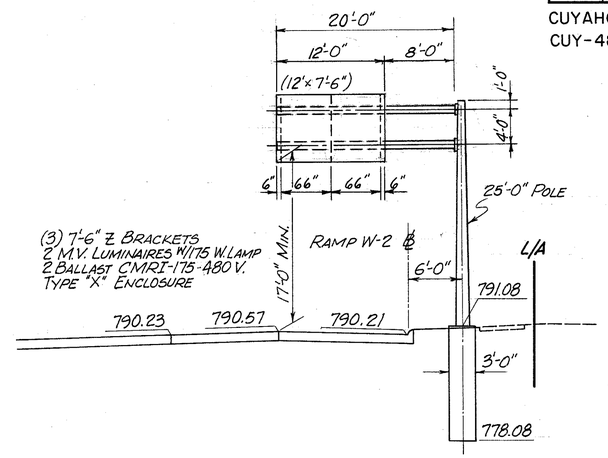


(48) STA. 52+80 W. 130TH N.B. (85' Rt.)
T.C. 12.30, DES. No. 4
25'-0" POLE

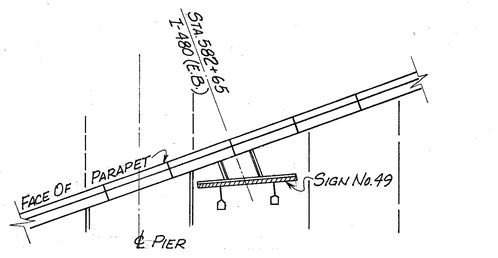


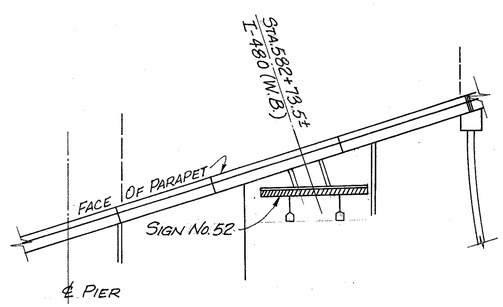


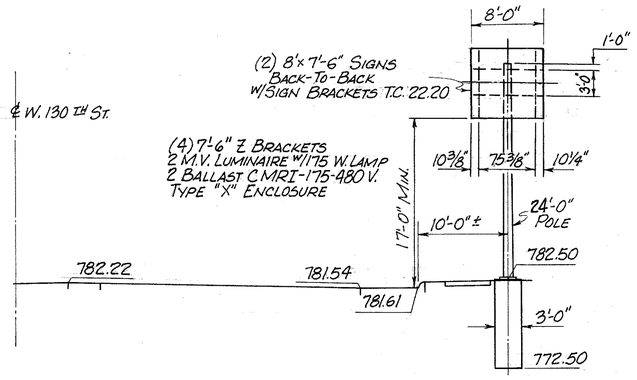


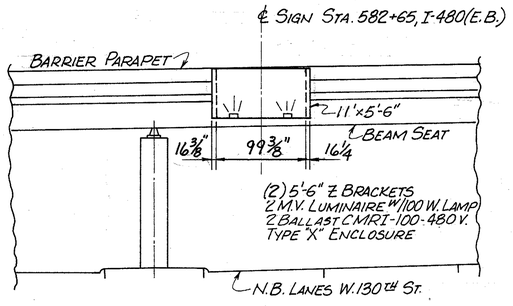


(49) ℄ STA. 582+65, I-480 (E.B.)
(OVER W. 130TH N.B.)
OVERPASS STRUCTURE MOUNTED SIGN
T.C. 18.26, DES. No. 2

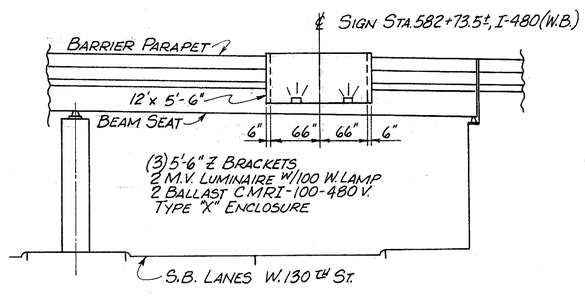


(52) ℄ STA. 582+73.5±, I-480 (W.B.)
(OVER W. 130TH S.B.)
OVERPASS STRUCTURE MOUNTED SIGN
T.C. 18.26, DES. No. 2

(51) STA. 58+20, W. 130TH (55' Lt.)
(VIEW LOOKING SOUTHBOUND)
T.C. 9.30, DES. No. 2

SIGNING ELEVATION

| FHWA REGION | STATE | PROJECT | |
|---|---|---|---|
| 5 | OHIO | | |

297
500

CUYAHOGA COUNTY
CUY-480-10.39

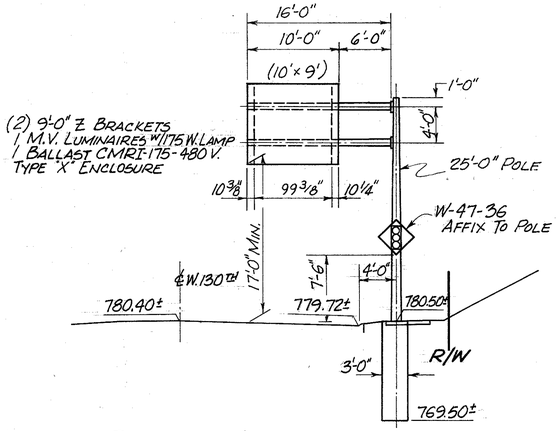


(50) STA. 61+80, W.130TH S.B. (24'Lt.)
T.C. 12.30, DES. No. 3

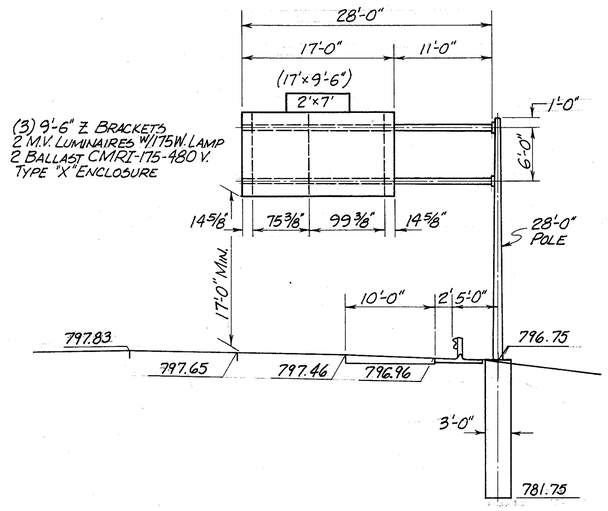


(56) STA. 612+75, I-480 E.B. (78'Rt.)
T.C. 12.30, DES. No. 8

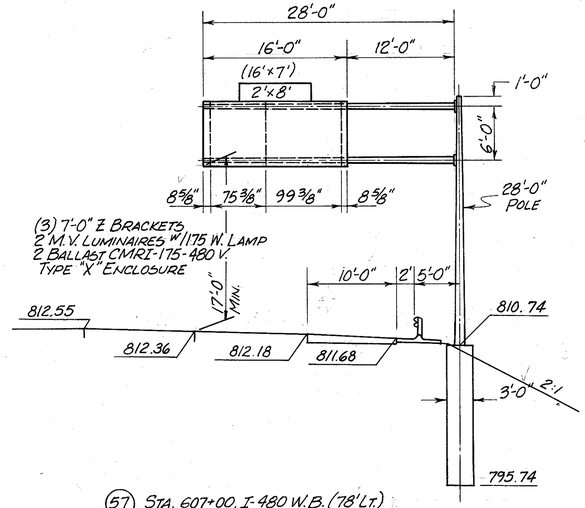


(57) STA. 607+00, I-480 W.B. (78'Lt.)
T.C. 12.30, DES. No. 8

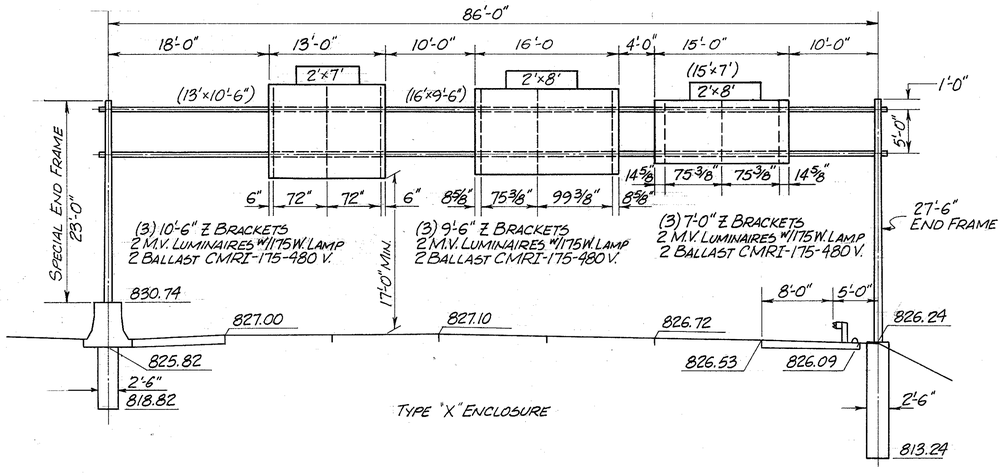


(55) STA. 597+25, I-480 (W.B.)
(CONC. BARRIER MEDIAN FOUNDATION)
T.C. 7.65, DES. No. 8, 86'-0" SPAN
23'-0" Lt. END FRAME-(SPEC.)
27'-6" Rt. END FRAME - STD.

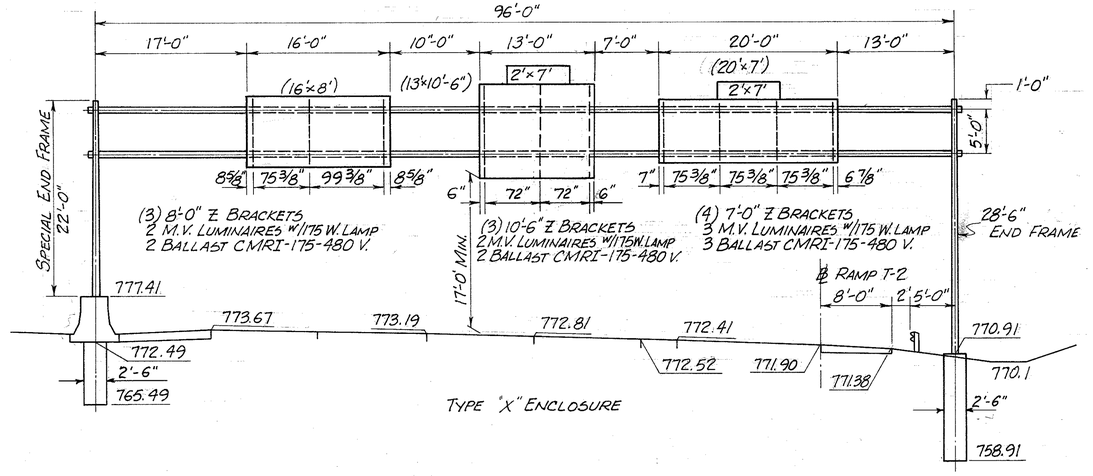


(61) STA. 626+60, I-480 (E.B.)
T.C. 7.65, DES. No. 8-96'-0" SPAN
22'-0" Lt. END FRAME (C.B.M.F.)
28'-6" Rt. END FRAME-

SIGNING ELEVATION

| FHWA REGION | STATE | PROJECT | |
|---|---|---|---|
| 5 | OHIO | | |

298
500

CUYAHOGA COUNTY
CUY-480-10.39

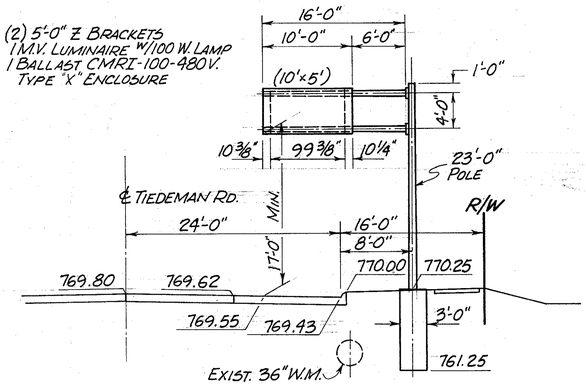


(65) STA. 48+40, TIEDEMAN RD. S.B. (32' RT.)
T.C. 12.30, DES. No. 1

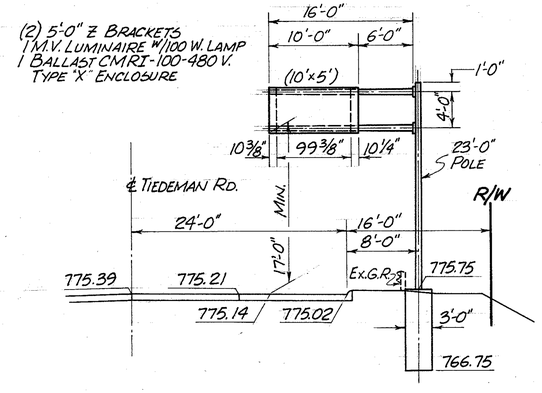


(64) STA. 70+00, TIEDEMAN RD. N.B. (32' LT.)
T.C. 12.30, DES. No. 1

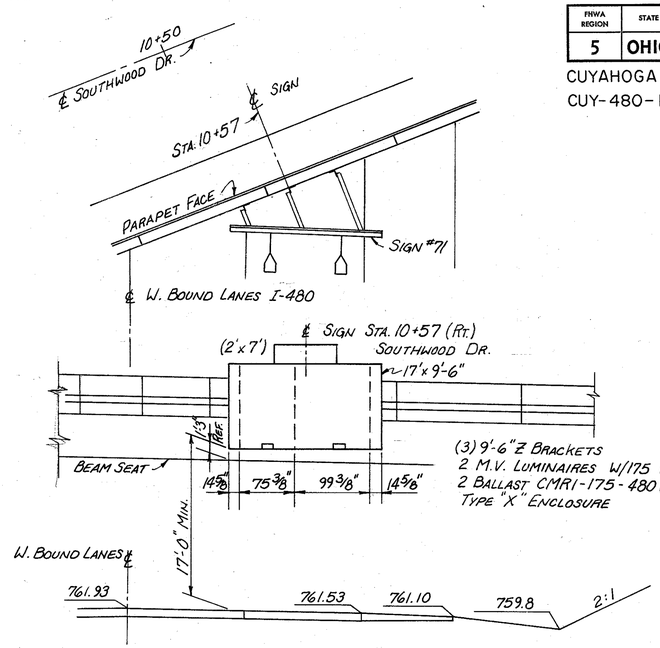


(71) STA. 10+57 SOUTHWOOD DR. OVER I-480
SKEWED STRUCTURE MOUNTED SUPPORT
T.C. - 18.26; DES. No. 7

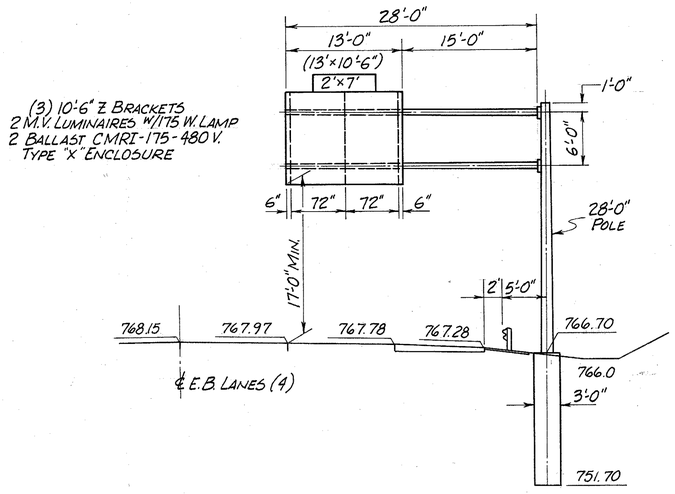


(72) STA. 690+00, I-480 E.B. (78' RT.)
T.C. 12.30, DES. No. 8

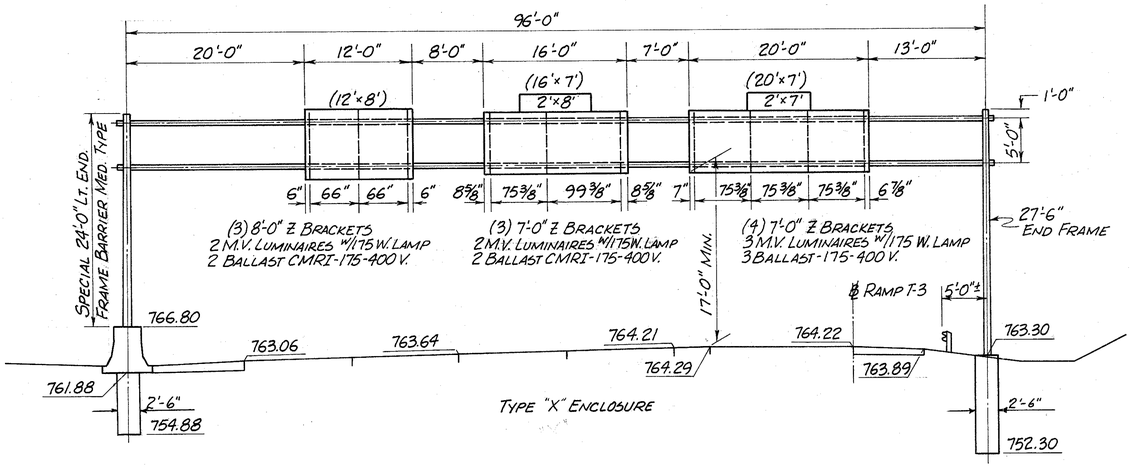


(68) STA. 650+40, I-480 W.B.
T.C. 7.65, DES. No. 8, 96'-0" SPAN
24'-0" LT. END FRAME (C.B.M.E.)
27'-6" RT. END FRAME (STANDARD)

SIGNING ELEVATION

| FHWA REGION | STATE | PROJECT | |
|---|---|---|---|
| 5 | OHIO | | |

299
500

CUYAHOGA COUNTY
CUY-480-10.39

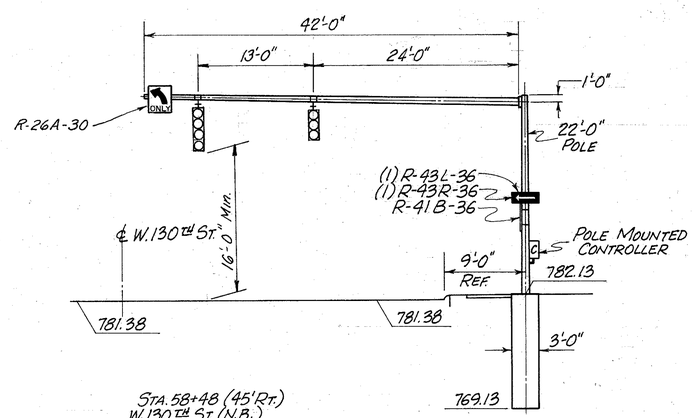


STA. 58+48 (45'RT.)
W.130TH ST. (N.B.)
SIGNAL POLE : .3125" x 13" DIA. x 22'-0" LG.
MAST ARM : .250" x 10" DIA. x 42'-0" LG.
BASE DATA : 2" x 90" LG. "A" BOLTS ON 18" B.C.
NOTE: MOUNT REGULATORY SIGNS AS SHOWN

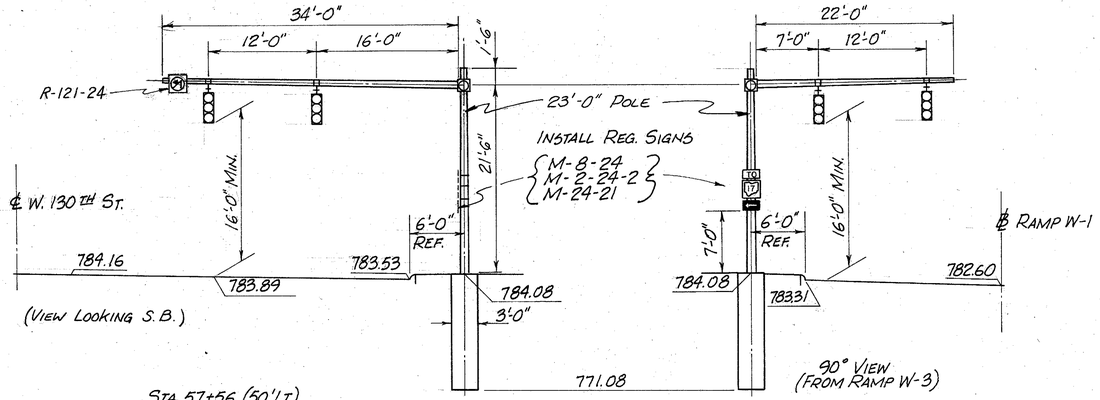


STA. 57+56 (50'LT.)
W.130TH ST.
SIGNAL POLE : .3125" x 15" DIA. x 23'-0" LG.
MAST ARM : .250" x 9" DIA. x 34'-0" LG.
MAST ARM : .250" x 8" DIA. x 22'-0" LG.
BASE DATA : (4) 2" x 90" LG. "A" BOLTS ON 22" B.C.
NOTE: MOUNT REGULATORY SIGNS AS SHOWN

DUAL MAST ARM SIGNALS SUPPORT

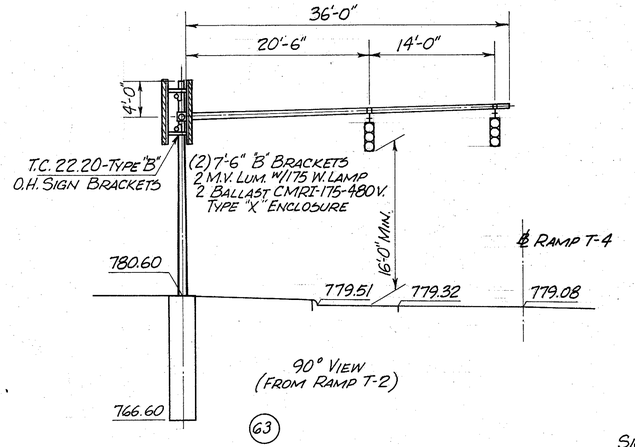


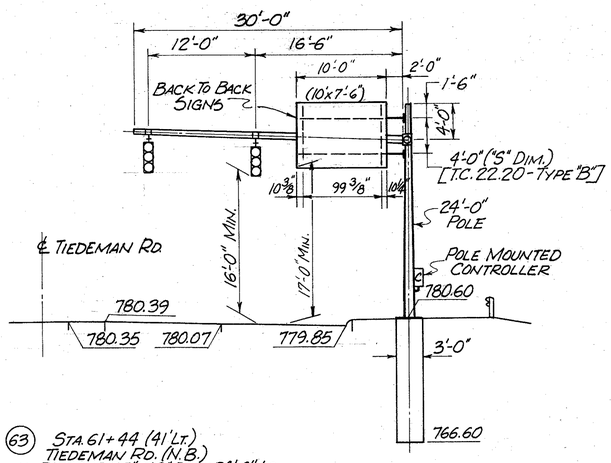


(63) STA. 61+44 (41'LT.)
TIEDEMAN RD. (N.B.)
SIGNAL POLE : .3125" x 12" DIA x 24'-0" LG.
MAST ARM : .250" x 9" DIA. x 36'-0" LG.
MAST ARM : .250" x 9" DIA. x 30'-0" LG.
BASE DATA : 2" x 90" LG. "A" BOLTS ON 18" B.C.

COMBINATION O.H. SIGNS & SIGNAL SUPPORTS

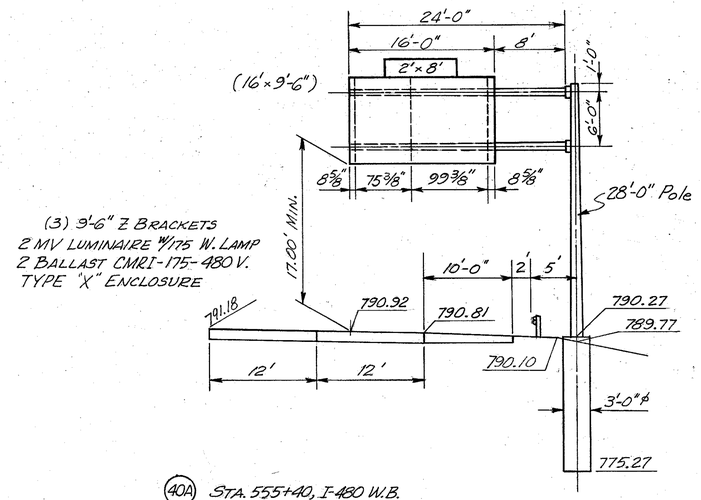


(40A) STA. 555+40, I-480 W.B.
T.C. 12.30, DES. No. 7

| FED. RD. DIVISION | STATE | PROJECT | |
|---|---|---|---|
| 2 | OHIO | | |

300
500

CUYAHOGA COUNTY
CUY-480-10.39

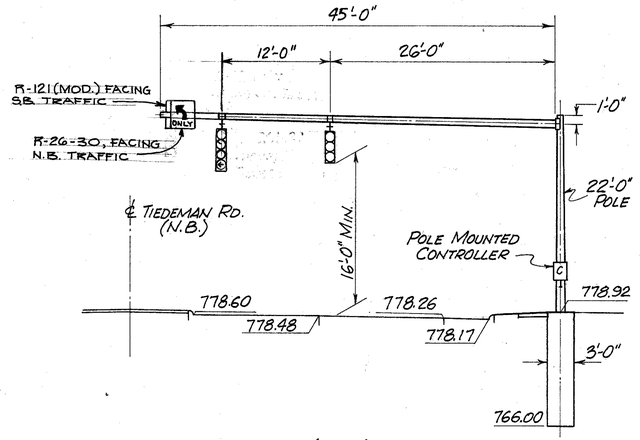


STA. 54+80 (49' LT.)
TIEDEMAN RD. (N.B.)
SIGNAL POLE : .3125" x 13" DIA. x 22'-0" LG.
MAST ARM : .250" x 10" DIA. x 45'-0" LG.
BASE DATA : 2" x 90" LG. "A" BOLTS ON 18" B.C.
NOTE : MOUNT REGULATORY SIGNS ON MAST ARM

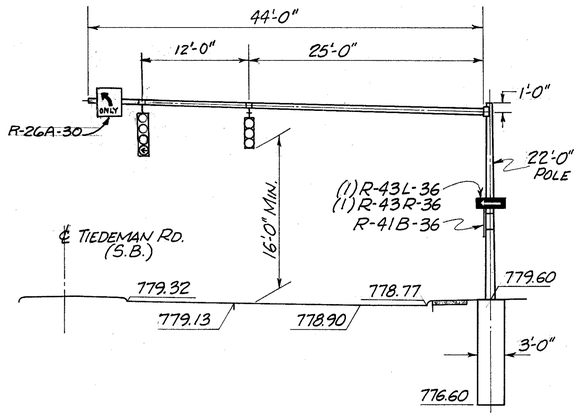


STA. 61+94 (47.5' RT.)
TIEDEMAN RD. (S.B.)
SIGNAL POLE : .3125" x 13" DIA. x 22'-0" LG.
MAST POLE : .250" x 10" DIA. x 44'-0" LG.
BASE DATA : 2" x 90" LG. "A" BOLTS ON 18" B.C.
NOTE : MOUNT REGULATORY SIGNS AS SHOWN

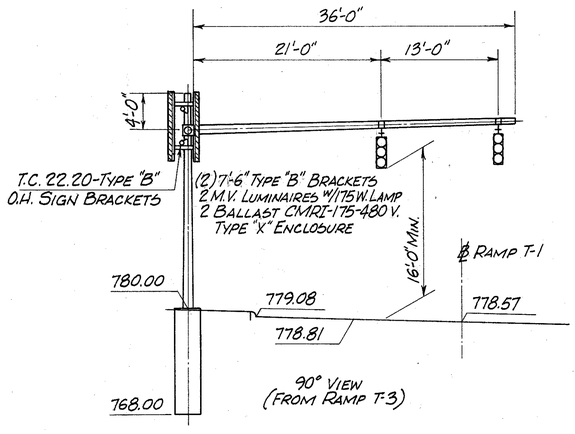


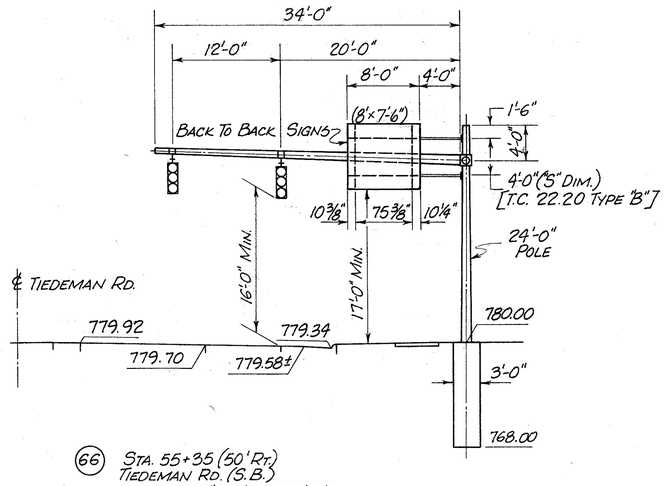


(66) STA. 55+35 (50' RT.)
TIEDEMAN RD. (S.B.)
SIGNAL POLE : .3125" x 12" DIA. x 24'-0" LG.
MAST ARM : .250" x 9" DIA. x 36'-0" LG.
MAST ARM : .250" x 9" DIA. x 34'-0" LG.
BASE DATA : 2" x 90" LG. "A" BOLTS ON 18" B.C.

COMBINATION O.H. SIGNS & SIGNAL SUPPORTS

SIGNAL POLE ELEVATIONS

| | | | |
|---|---|---|---|
| DJF | 2/21/83 | | |
| HJH | 2-83 | | |

| FHWA REGION | STATE | PROJECT | |
|---|---|---|---|
| 5 | OHIO | | |

301/500

CUYAHOGA COUNTY
CUY-480-10.39

## LEGEND

- ⊠ = Controller, By Type As Shown
- ●→ = Signal Head, Std. 1-Way
- —D— = Conduit (Size As Shown)
- —●— = Pullbox, 24" ϕ Traffic Control (See Sht. No. 275)

| SIGNAL PHASES | | TIMING |
|---|---|---|
| ϕA | | 45 Sec. |
| ϕB | | 12 Sec. |
| ϕC | | 18 Sec. |

9 Sec. Amber (3 Sec/Phase)
6 Sec. All Red (2 Sec/Phase)

SIGNAL DISPLAY SCHEDULE

| PHASE | | A | | B | | C | | FLASH |
|---|---|---|---|---|---|---|---|---|
| MOVEMENT | | R/W | C | R/W | C | R/W | C | |
| SIGNAL | 1 | G | Y | R | R | R | Y | |
| | 2 | ↑ | Y | R | R | R | Y | |
| | 3 | G | G | G/G | Y | R | Y | |
| | 4 | ↑ | ↑ | ↑ | Y | R | Y | |
| | 5 | R | R | R | R | ←/Y | R | |
| | 6 | R | R | R | R | →/Y | R | |

SIGNAL FACES

| Ⓐ ◇1 | Ⓑ ◇2 ◇4 | Ⓒ ◇3 | Ⓓ ◇5 | Ⓔ ◇6 |
|---|---|---|---|---|
| R A G | R A ↑ | R A G ← | R A ← | R A → |
| 12" Lens | 12" Lens | 12" Lens | 12" Lens | 12" Lens |

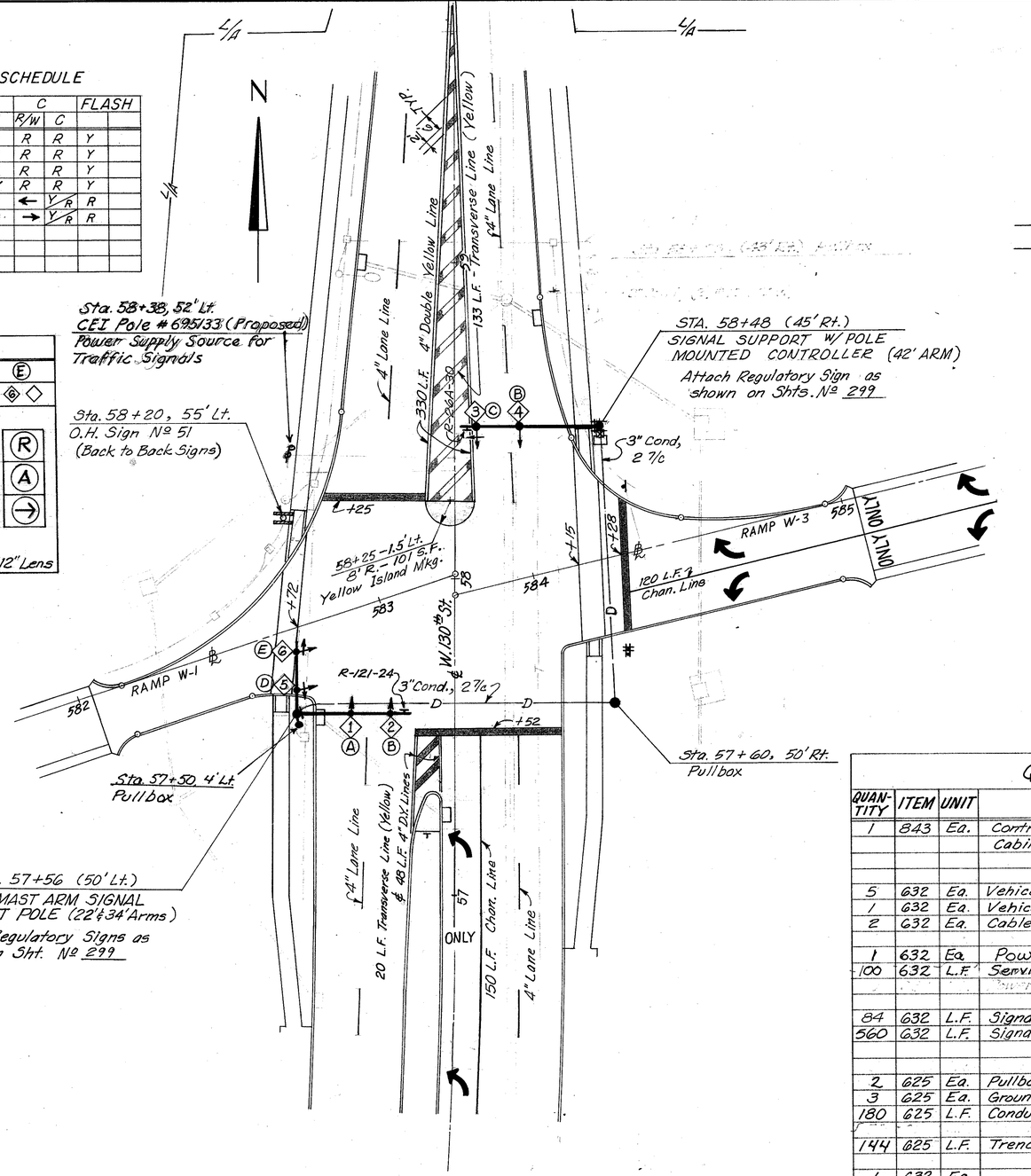


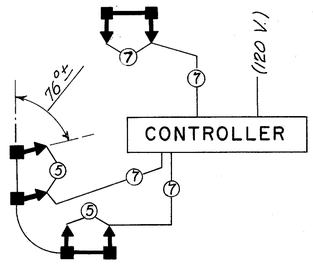


WIRING DIAGRAM

## QUANTITIES

| QUANTITY | ITEM | UNIT | DESCRIPTION |
|---|---|---|---|
| 1 | 843 | Ea. | Controller, Pretimed, 3 Dial, Electromechanical with Cabinet, As Per Plan |
| 5 | 632 | Ea. | Vehicular Signal Head, 3 Section, 12" Lenses, One Way |
| 1 | 632 | Ea. | Vehicular Signal Head, 4 Section, 12" Lenses, One Way |
| 2 | 632 | Ea. | Cable Support Assembly |
| 1 | 632 | Ea. | Power Service |
| 100 | 632 | L.F. | Service Cable, 3 Conductor No 8 A.W.G. |
| 84 | 632 | L.F. | Signal Cable, 5 Conductor No. 14 A.W.G. |
| 560 | 632 | L.F. | Signal Cable, 7 Conductor No. 14 A.W.G. |
| 2 | 625 | Ea. | Pullbox, 24" ϕ 713.09 with Conc. Cover, As Per Plan |
| 3 | 625 | Ea. | Ground Rods, |
| 180 | 625 | L.F. | Conduit, 3" 713.04 |
| 144 | 625 | L.F. | Trench |
| 1 | 632 | Ea. | Dual Mast Arm Signal Support Pole .3125" × 15.00" dia. × 23'-0" Lg; Arm .250" × 9.00" dia. × 34'-0" Lg; Arm .250" × 8.00" dia. × 22'-0" Lg. |
| 1 | 632 | Ea. | Mast Arm Signal Support - .3125" × 13.00" dia. × 22'-0" Lg Pole; .250" × 10.00" dia. × 42'-0" Lg. Arm. |
| 6.80 | 632 | C.Y. | Conc. for Anchor Base Foundations |

WEST 130th ST.; RAMP W-1 & RAMP W-3 INTERSECTION

AJF 2/21/83
HJH 2-83

| FHWA REGION | STATE | PROJECT | |
|---|---|---|---|
| 5 | OHIO | | |

302/500

CUYAHOGA COUNTY
CUY-480-10.39

NOTE: FOR TRAFFIC CONTROL LEGEND SEE SHEET NO. 301 .

## SIGNAL PHASES / TIMING

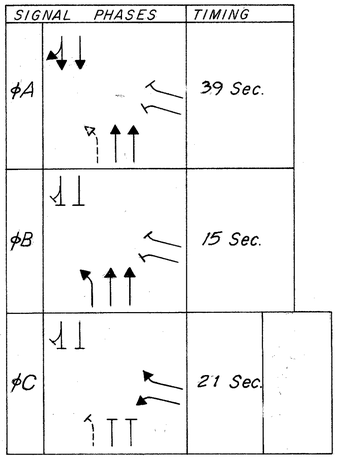


9 Sec. Amber (3.5sec/Phase)
6 Sec. All Red (2.5sec./Phase)

## SIGNAL DISPLAY SCHEDULE

| PHASE | | A | | B | | C | | FLASH | |
|---|---|---|---|---|---|---|---|---|---|
| MOVEMENT | | R/W | C | R/W | C | R/W | C | | |
| SIGNAL | 1 | G | Y | R | R | R | R | Y | |
| | 2 | G | Y | R | R | R | R | Y | |
| | 3 | G | G | G | Y | R | R | Y | |
| | 4 | G | G | G | Y | R | R | Y | |
| | 5 | R | R | R | R | → | Y R | R | |
| | 6 | R | R | R | R | ← | Y R | R | |

## SIGNAL FACES

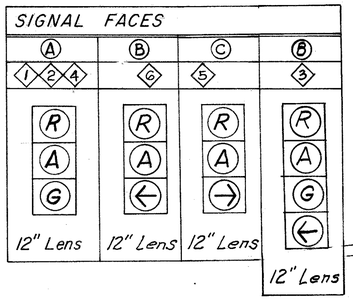


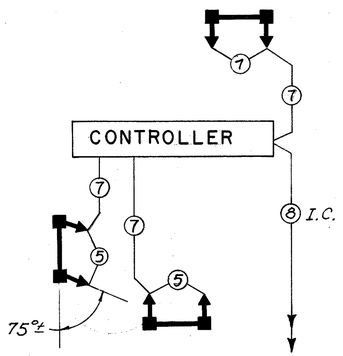


WIRING DIAGRAM

Sta. 53+90, 48' Rt. → CEI Pole # 81435-3 (Prop) Power Supply Source for Traffic Signals

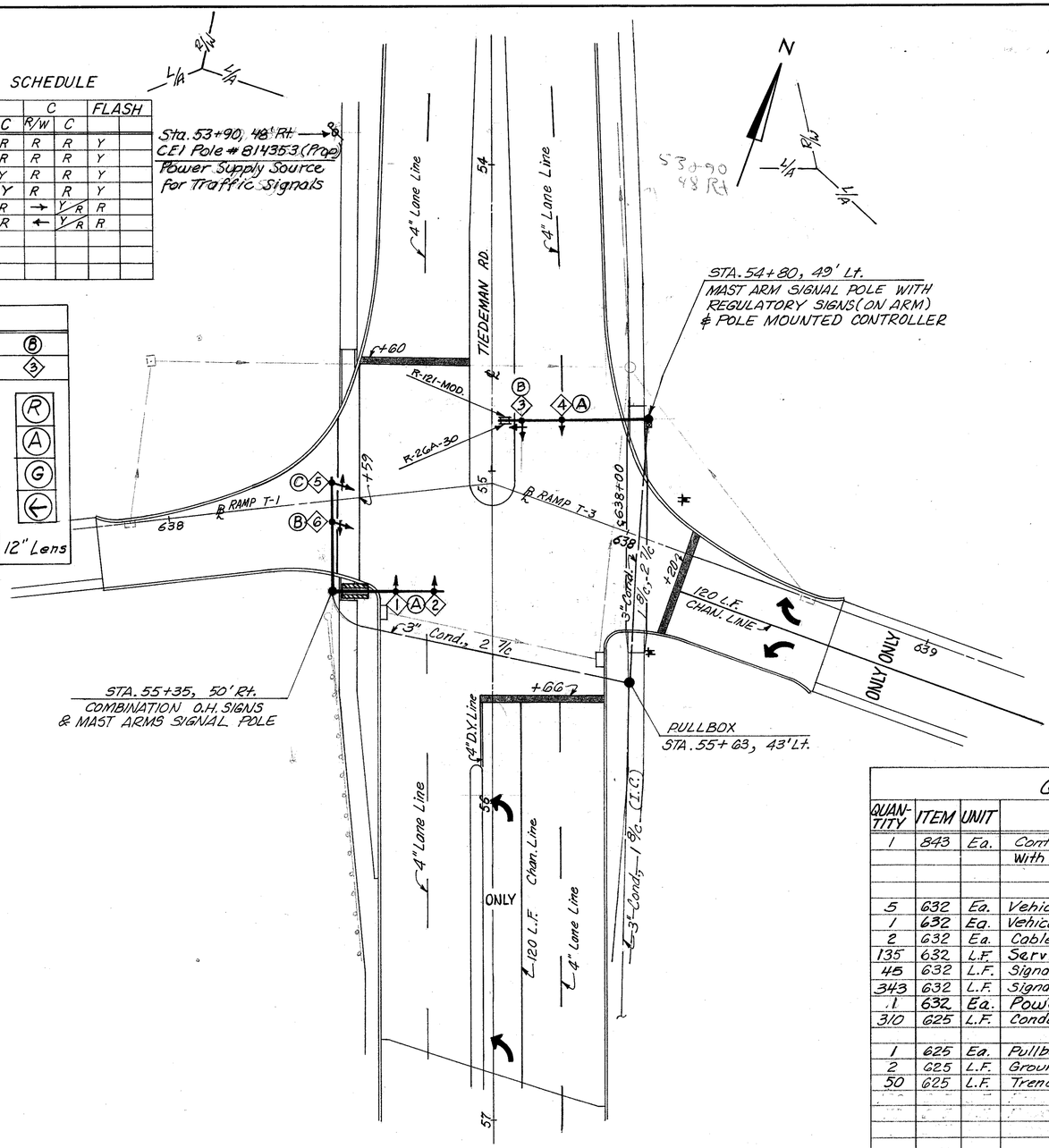


## QUANTITIES

| QUANTITY | ITEM | UNIT | DESCRIPTION |
|---|---|---|---|
| 1 | 843 | Ea. | Controller, Pretimed, 3 Dial, Electromechanical, Secondary, With Cabinet, As Per Plan. |
| 5 | 632 | Ea. | Vehicular Signal Head, 3 Section, 12" Lenses |
| 1 | 632 | Ea. | Vehicular Signal Head, 4 Section, 12" Lenses |
| 2 | 632 | Ea. | Cable Support Assembly |
| 135 | 632 | L.F. | Service Cable, 3 Conductor No. 8 A.W.G. |
| 45 | 632 | L.F. | Signal Cable, 5 Conductor, No. 14 A.W.G. |
| 343 | 632 | L.F. | Signal Cable, 7 Conductor, No. 14 A.W.G. |
| 1 | 632 | Ea. | Power Service |
| 310 | 625 | L.F. | Conduit, 3" 713.04 |
| 1 | 625 | Ea. | Pullbox, 24" ϕ 713.09 with Conc. Cover, As Per Plan |
| 2 | 625 | L.F. | Ground Rod |
| 50 | 625 | L.F. | Trench |
| 1 | 632 | Ea. | Combination Mast Arm Signals & O.H. Signs Support-Pole .3125" × 12.00" Dia. × 24'-0" Lg. — Arm .250" × 9.00" Dia. × 36'-0" Lg. — Arm .250" × 9.00" Dia. × 34'-0" Lg. |
| 1 | 632 | Ea. | Mast Arm Signal Support — .3125" × 13.00" Dia. × 22'-0" Lg. Pole with .250" × 10.00" Dia. × 45'-0" Lg. Arm |
| 0.55 | 632 | C.Y. | Conc. for Anchor Base Foundations |

TIEDEMAN RD.; RAMP T-1 & RAMP T-3 INTERSECTION

| DWN BY | DATE | CHKD BY | DATE |
|---|---|---|---|
| agf | 3/21/83 | HJH | 2-83 |

| FHWA REGION | STATE | PROJECT | |
|---|---|---|---|
| 5 | OHIO | | |

303
500

CUYAHOGA COUNTY
CUY-480-10.39

NOTE : FOR TRAFFIC CONTROL LEGEND SEE SHEET NO. 301.

## SIGNAL PHASES / TIMING

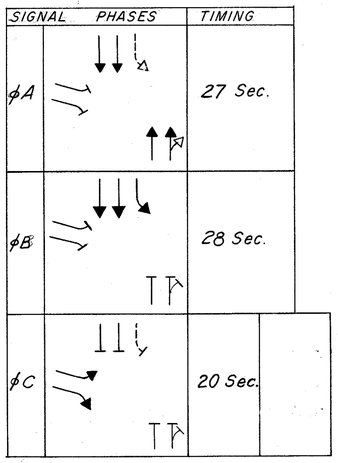


9 Sec. Amber (3 Sec./Phase)
6 Sec. All Red (2 Sec./Phase)

## SIGNAL DISPLAY SCHEDULE

| PHASE | | A | | B | | C | | FLASH | |
|---|---|---|---|---|---|---|---|---|---|
| MOVEMENT | | R/W | C | R/W | C | R/W | C | | |
| SIGNAL | 1 | G | Y | R | R | R | R | Y | |
| | 2 | G | Y | R | R | R | R | Y | |
| | 3 | G | G | G | Y | R | R | Y | |
| | 4 | G | G | G | Y | R | R | Y | |
| | 5 | R | R | R | R | ← | Y/R | R | |
| | 6 | R | R | R | R | → | Y/R | R | |

## SIGNAL FACES

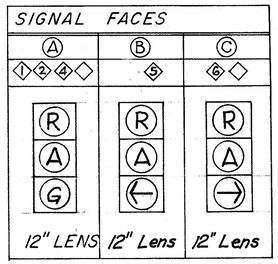


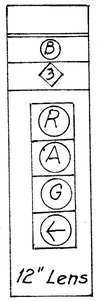


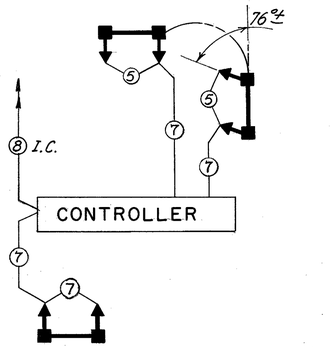


WIRING DIAGRAM

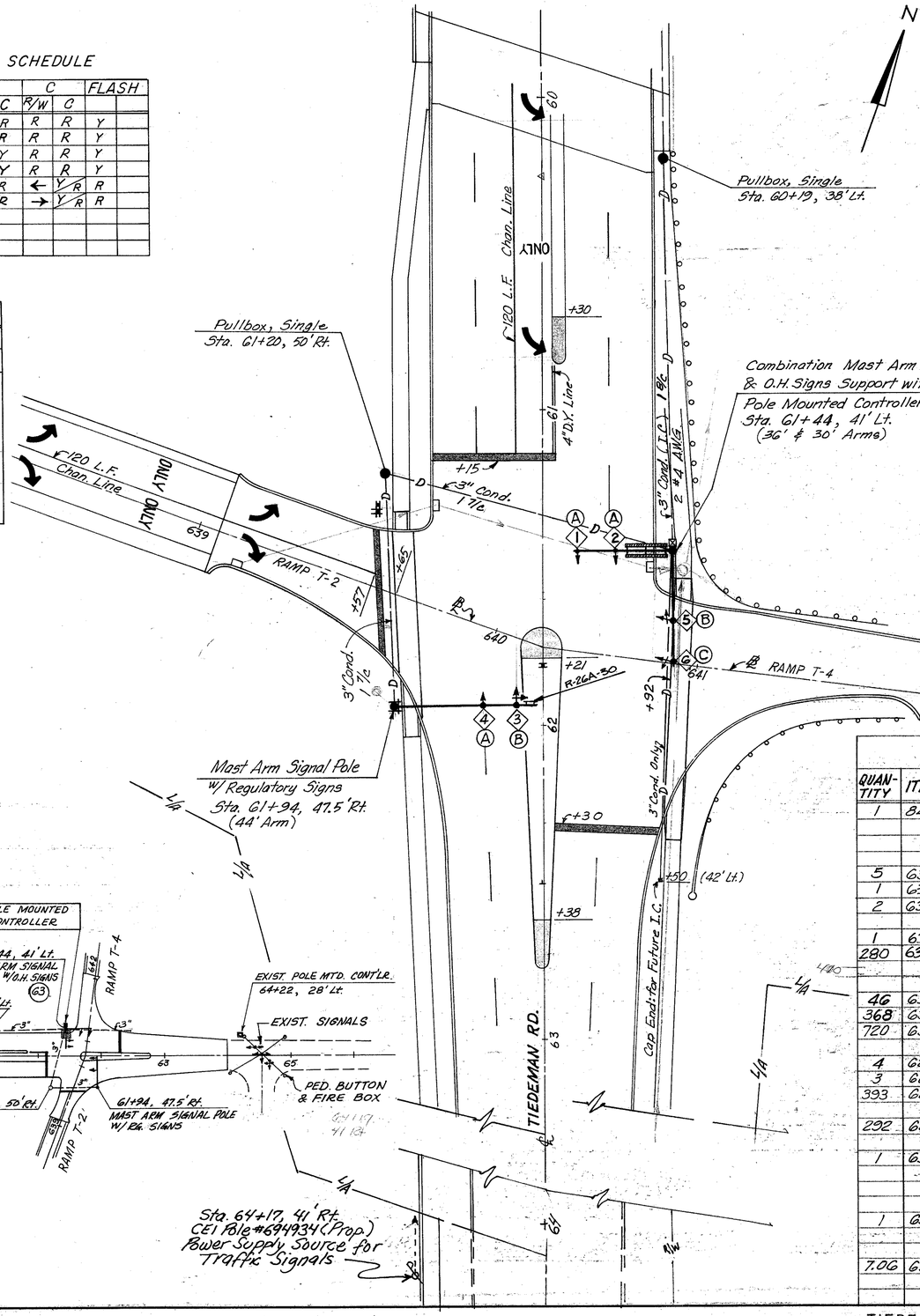


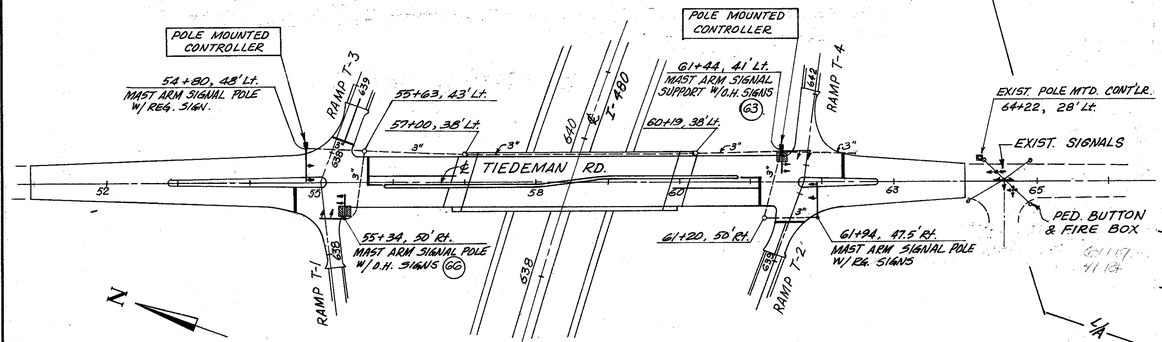


INTERCONNECT PLAN

SCALE : 1" = 100'

Note:
The contractor shall provide an added set of cams (to be installed at the discretion of the engineer) which will eliminate Phase B and modify the Phase A clearance displays to obtain 2 phase operation. These will be installed during the period when only Ramps T-1 and T-2 are open, but Ramps T-3 and T-4 are not used. Interim timing will be:

| Phase | R/W | Yellow | All Red |
|---|---|---|---|
| A | 50 | 3 | 2 |
| C | 30 | 3 | 2 |

## QUANTITIES

| QUANTITY | ITEM | UNIT | DESCRIPTION |
|---|---|---|---|
| 1 | 843 | Ea. | Controller, Pretimed, 3 Dial, Electromechanical, Master/Secondary with Cabinet, As Per Plan |
| 5 | 632 | Ea. | Vehicular Signal Head, 3 Section, 12" Lenses, One Way |
| 1 | 632 | Ea. | Vehicular Signal Head 4 Section, 12" Lenses, One Way |
| 2 | 632 | Ea. | Cable Support Assembly |
| 1 | 632 | Ea. | Power Service |
| 280 | 632 | L.F. | Service Cable 3 Conductor No. 8 A.W.G. |
| 46 | 632 | L.F. | Signal Cable, 5 Conductor No. 14 A.W.G. |
| 368 | 632 | L.F. | Signal Cable, 7 Conductor No. 14 A.W.G. |
| 720 | 632 | L.F. | Interconnect Cable, 8 Conductor No. 14 A.W.G. |
| 4 | 625 | Ea. | Pullbox, 24"ϕ 713.09 with Conc. Cover, As Per Plan |
| 3 | 625 | Ea. | Ground Rods, |
| 393 | 625 | L.F. | Conduit, 3" 713.04 |
| 292 | 625 | L.F. | Trench |
| 1 | 632 | Ea. | Combination Mast Arm Signals & O.H. Signs Support .3125" x 12.00" dia. x 24'-0" Lg. Pole; .250" x 9.00" dia. x 36'-0" Lg. Arm & .250" x 9.00" dia. x 30'-0" Lg. Arm. |
| 1 | 632 | Ea. | Mast Arm Signal Support - .3125" x 13.00" dia. x 22'-0" Lg. Pole; .250" x 10.00" dia. x 44'-0" Lg. Arm. |
| 7.06 | 632 | C.Y. | Conc. for Anchor Base Foundations |

TIEDEMAN RD., RAMP T-2 & RAMP T-4 INTERSECTION

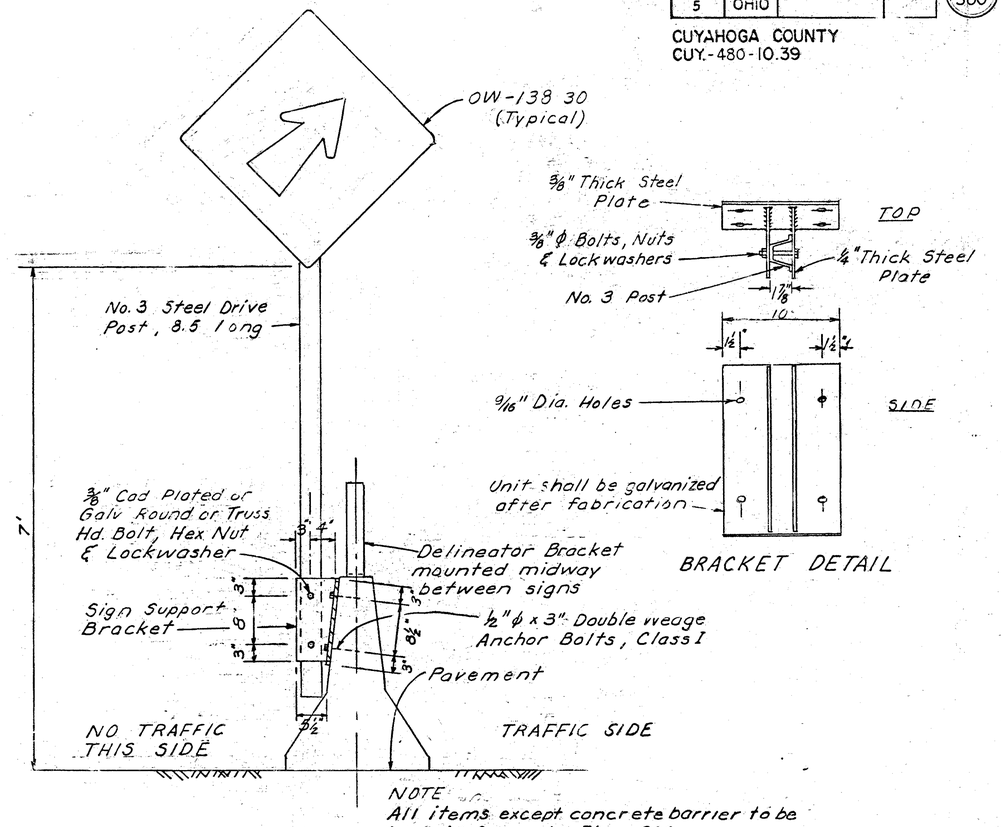


SIGN ATTACHMENT TO CONCRETE BARRIER

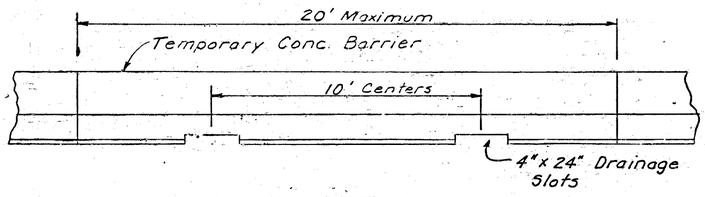


ELEVATION
(No Scale)

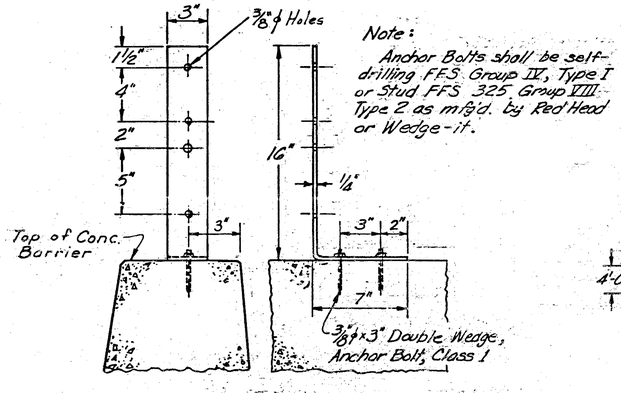


DELINEATOR ATTACHMENT BRACKET

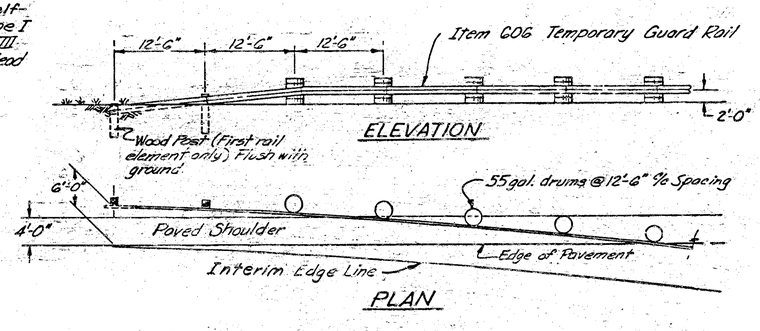


ANCHOR DETAIL FOR SPECIAL GUARD RAIL

CALC. BY ARH DATE 2-17-83
CHKD. BY JJA DATE 2-17-83

| FHWA REGION | STATE | PROJECT | |
|---|---|---|---|
| 5 | OHIO | | |

305/500

CUYAHOGA COUNTY
CUY-480-10.39

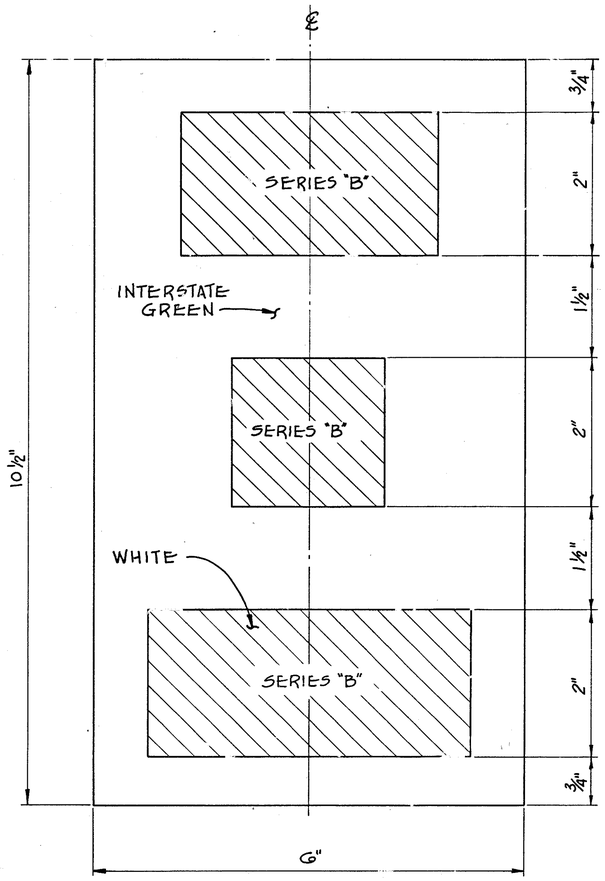


LEGEND VARIES, SEE TABLE

CUY
480
13.01

EXAMPLE

| SUPPORT NO. | STATION | LOCATION | DIRECTION | DECAL LEGENDS | | |
|---|---|---|---|---|---|---|
| | | | | COUNTY | RT | MILEAGE |
| 40A | 555+40 | I-480 | W.B | Cuy. | 480 | 10.05 |
| 47 | 49+85 | W-130 TH. | N.B | Cuy. | 480 | 10.53 |
| 48 | 52+80 | W-130 TH. | N.B | Cuy. | 480 | 10.54 |
| 49 | 582+65 | I-480 | E.B | Cuy. | 480 | 10.55 |
| 52 | 582+73 | I-480 | W.B | Cuy. | 480 | 10.56 |
| 51 | 58+20 | W-130 TH. | S.B | Cuy. | 480 | 10.57 |
| 46 | 583+75 | I-480 | E.B | Cuy. | 480 | 10.58 |
| 50 | 61+80 | W-130 TH. | S.B | Cuy. | 480 | 10.59 |
| 55 | 597+25 | I-480 | W.B | Cuy. | 480 | 10.84 |
| 57 | 607+00 | I-480 | W.B | Cuy. | 480 | 11.02 |
| 56 | 612+75 | I-480 | E.B | Cuy. | 480 | 11.13 |
| 61 | 626+60 | I-480 | E.B | Cuy. | 480 | 11.40 |
| 65 | 48+40 | TIEDEMAN RD. | S.B | Cuy. | 480 | 11.58 |
| 66 | 55+35 | TIEDEMAN RD. | S.B | Cuy. | 480 | 11.61 |
| 63 | 61+44 | TIEDEMAN RD. | N.B | Cuy. | 480 | 11.66 |
| 64 | 70+50 | TIEDEMAN RD. | N.B | Cuy. | 480 | 11.73 |
| 68 | 650+40 | I-480 | W.B | Cuy. | 480 | 11.85 |
| 71 | 10+52 | SOUTHWOOD DR. | N.B | Cuy. | 480 | 12.17 |
| 72 | 690+00 | I-480 | E.B | Cuy. | 480 | 12.60 |

SIGN SUPPORT INDENTIFICATION DECALS

| CALC. BY | | OHIO | 306 |
|---|---|---|---|
| DATE | CUY-480-10.39 | FHWA REGION 5 | 500 |
| CHKD. BY | | | |
| DATE | | | |

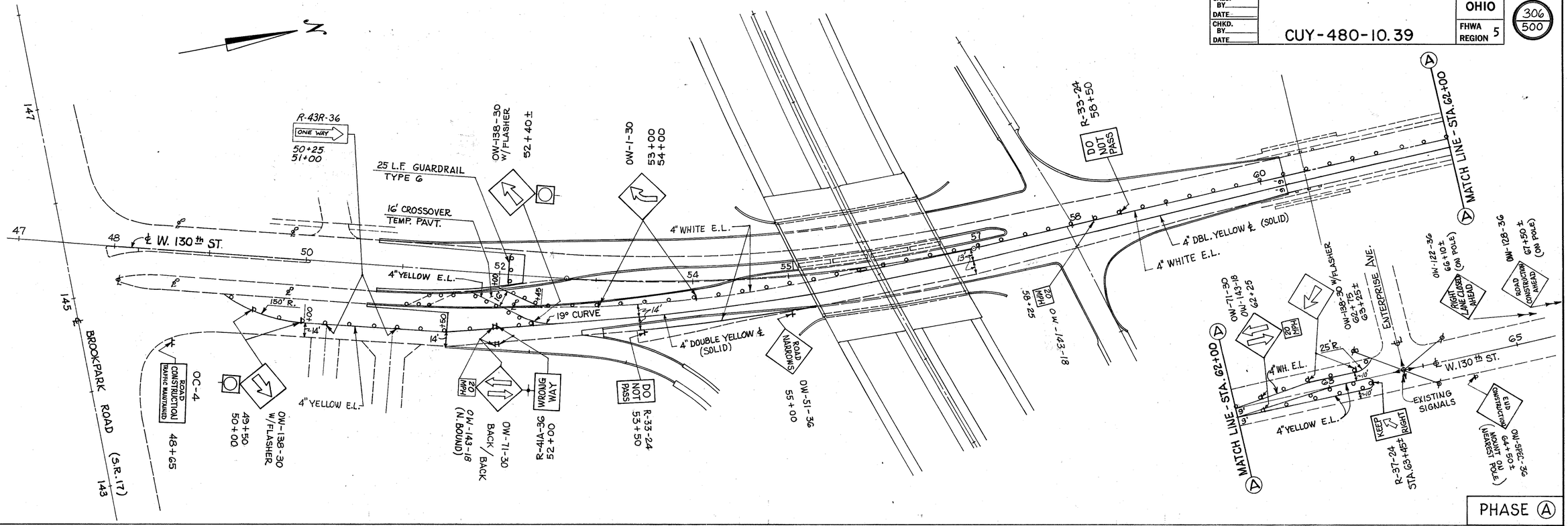


W. 130th St. TEMPORARY TRAFFIC CONTROL

CALC. BY AJF DATE 2/19/83
CHKD. BY HJH DATE 2-83

CUY-480-10.39

OHIO
FHWA REGION 5

307/500

## TEMPORARY TRAFFIC CONTROL SIGN SUMMARY

| LOCATION (W. 130th St. Unless otherwise noted) | TRAFFIC DIRECTION | SIGNS: OC-4 EA. | OW-138-30 W/FLASHER EA. | R-43R-36 EA. | OW-1-30 EA. | OW-143-18 EA. | OW-71-30 EA. | OW-2-30 EA. | R-4A-36 EA. | R-33-24 EA. | OW-51-36 EA. | R-37-24 EA. | OW-SPEC-36 EA. | OW-128-36 EA. | OW-122-36 EA. | OW-123-36 EA. | TYPE-6 GUARDRAIL L.F. | SIGN AREA SQ.FT. | PHASE | REMARKS |
|---|---|---|---|---|---|---|---|---|---|---|---|---|---|---|---|---|---|---|---|---|
| 48 + 65 | N.B. | 1 | | | | | | | | | | | | | | | | 10.0 | A B | |
| 49 + 50 | N.B. | | 1/1 | | | | | | | | | | | | | | | 6.25/6.25 | A B | |
| 50 + 00 | N.B. | | 1/1 | | | | | | | | | | | | | | | 6.25/6.25 | A B | |
| 50 + 25 | N.B. | | | 1/1 | | | | | | | | | | | | | | 3.00/3.00 | A B | |
| 50 + 75 | N.B. | | | | | | | 1 | | | | | | | | | | 6.25 | B | |
| 51 + 00 | N.B. | | | 1/1 | | | | | | | | | | | | | | 6.00 | A B | |
| 51 + 37± | N.B. | | | | | | | 1 | | | | | | | | | | 6.25 | B | |
| 52 + 00 | N.B. | | | | | 2 | 2 | | | | | | | | | | | 17.00 | A | BACK TO BACK |
| 52 + 00 | N.B. | | | | | | | | 2 | | | | | | | | | 12.00 | A | |
| 52 + 40 | S.B. | | 1 | | | | | | | | | | | | | | | 6.25 | A. | |
| 52 + 50 | N.B. | | | | | 1 | 1 | | | | | | | | | | | 8.50 | B | BACK TO BACK |
| 52 + 50 | N.B. | | | | | | | | 1 | | | | | | | | | 6.00 | B | |
| 53 + 00 | S.B. | | 1 | | 1 | | | | | | | | | | | | | 6.25/6.25 | A B | |
| 53 + 50 | N.B. | | | | | | | | | 1 | | | | | | | | 5.00 | A | |
| 53 + 75 | N.B. | | | | | | | | | 1 | | | | | | | | 5.00 | B | |
| 54 + 00 | S.B. | | | | 1 | | | | | | | | | | | | | 6.25 | A | |
| 55 + 00 | N.B. | | | | | | | | | | 1/1 | | | | | | | 9.0/9.0 | A B | |
| 58 + 25 | N.B. | | | | | 1 | | | | | | | | | | | | 2.25 | A | |
| 58 + 25 | NB SB | | | | | 1/1 | 1/1 | | | | | | | | | | | 8.50/8.50 | B | |
| 58 + 50 | S.B. | | | | | | | | | 1 | | | | | | | | 5.00 | A | |
| 59 + 00 | S.B. | | | | | | | | | 1 | | | | | | | | 5.00 | B | |
| 62 + 35 | N.B. | | | | | | | | | | | 1 | | | | | | 5.00 | B | |
| 62 + 25 | S.B. | | | | | 2 | 2 | | | | | | | | | | | 17.00 | A | |
| 62 + 50 | S.B. | | | | | 2 | 2 | | | | | | | | | | | 17.00 | B | |
| 62 + 75 | S.B. | | 1 | | | | | | | | | | | | | | | 6.25 | A | |
| 63 + 25 | S.B. | | 1 | | | | | | | | | | | | | | | 6.25 | A | |
| 63 + 45± | S.B. | | | | | | | | | | | 1/1 | | | | | | 5.0/5.0 | A B | |
| 64 + 50± | N.B. | | | | | | | | | | | | 1 | | | | | 9.00 | A B | |
| 66 + 10± | S.B. | | | | | | | | | | | | | 1 | 1 | | | 18.00 | A B | |
| 67 + 50± | S.B. | | | | | | | | | | | | | 1 | | | | 9.00 | A B | |
| 52 + 10 Exist. W. 130th | Ex. SB | | | | | | | | | | | | | | | | 25 | | A | |
| 51 + 30± | N.B. | | | | | | | | | | | | | | | | 25 | | B | |
| 57 + 57± to 58 + 20 | S.B. | | | | | | | | | | | | | | | | 625 | | B | |
| ◐ TOTALS | | 1 | 8 | 4 | 2 | 10 | 9 | 2 | 3 | 4 | 2 | 3 | 1 | 1 | 1 | 1 | 1125 | | | |

◐ = INFORMATION ONLY

## ITEM 614 - PAVEMENT MARKINGS (TEMPORARY TRAFFIC CONTROL)

| LOCATION (W. 130th St. Unless otherwise noted) | TRAFFIC DIRECTION | 4" YELLOW EDGE LINE L.F. | 4" WHITE EDGE LINE L.F. | 4" & SOLID DOUBLE YELLOW L.F. | PHASE | REMARKS |
|---|---|---|---|---|---|---|
| 49+20 TO 52+60 | N.B. | 340 | | | A | |
| 51+75 TO 52+60 | S.B. | 85 | | | A | |
| 52+60 TO 62+00 | N.B./S.B. | | | 1,880 | A | |
| 55+80 TO 63+50 | S.B. | | 770 | | A | |
| 62+00 TO 63+45 | S.B./N.B. | 290 | | | A | |
| 49+20 TO 51+50 | N.B. | | 230 | | B | |
| 50+50 TO 53+50 | S.B. | 300 | | | B | |
| 51+15 TO 53+50 | N.B. | 235 | | | B | |
| 53+50 TO 62+00 | N.B./S.B. | | | 1,700 | B | |
| 57+00 TO 63+00 | N.B. | | 600 | | B | |
| 62+00 TO 63+45 | N.B./S.B. | 290 | | | B | |
| TOTALS (See Note *) | | 1,540 | 1,600 | 3,580 | | |

### ITEM 614 - PAVEMENT MARKING

4" Edge Lines - Yellow 1,540 ÷ 5,280 = 0.29 Miles
4" Edge Lines - White 1,600 ÷ 5,280 = 0.30 Miles
4" & Solid - Dbl. Yellow 2×3,580 ÷ 5,280 = 1.36 Miles

} NOTE: QUANTITIES CARRIED TO TRAFFIC CONTROL GENERAL SUMMARY SHEET No. 283

*NOTE

TOTAL QUANTITIES FOR TEMPORARY PAVEMENT MARKINGS HAVE BEEN ADJUSTED TO PROVIDE FOR REAPPLICATION AS DETERMINED BY THE ENGINEER.
PAYMENT SHALL BE MADE ON FINAL MEASUREMENTS.

| CALC. BY QAF DATE 6/6/00 | CUYAHOGA COUNTY CUY-480-10.39 | OHIO | 308 / 500 |
|---|---|---|---|
| CHKD. BY MJH DATE 2-83 | | FHWA REGION 5 | |

## LEGEND

- = Temporary Beam Rail
- = Interim Sign (OW-138-30)
- = Interim Delineator (Type D - double)
- = Standard Barricade
- = Wing Barricade (Std. unless otherwise noted)

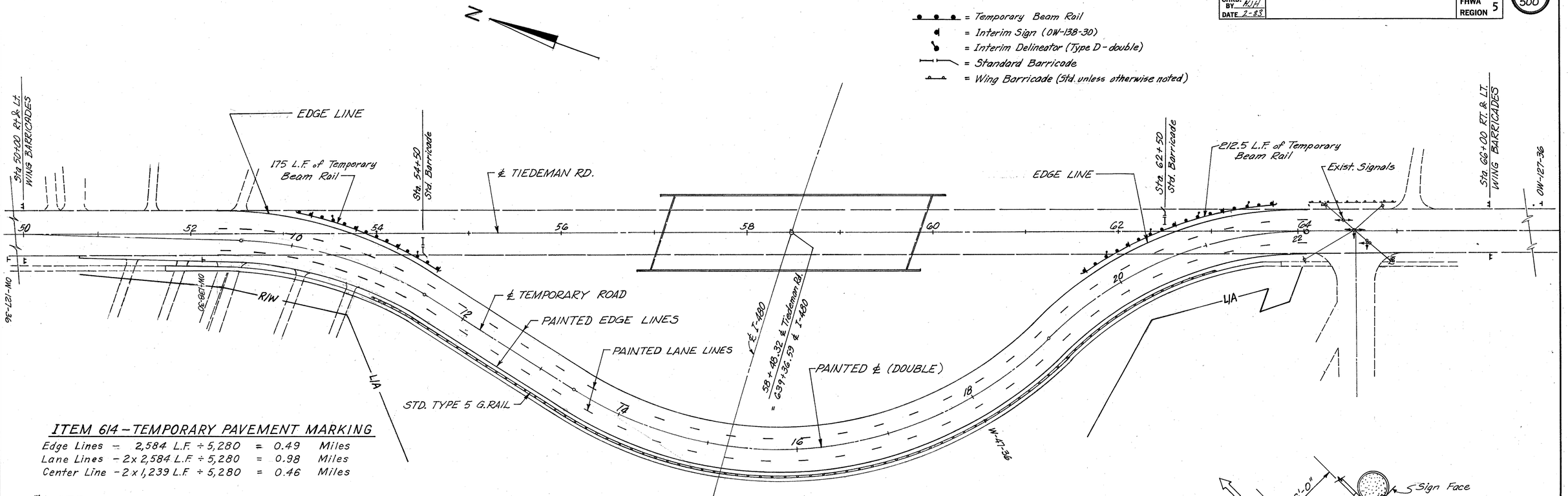


## ITEM 614 – TEMPORARY PAVEMENT MARKING

| | | | |
|---|---|---|---|
| Edge Lines | 2,584 L.F. ÷ 5,280 | = | 0.49 Miles |
| Lane Lines | – 2 x 2,584 L.F. ÷ 5,280 | = | 0.98 Miles |
| Center Line | – 2 x 1,239 L.F. ÷ 5,280 | = | 0.46 Miles |

*NOTE:
TOTAL QUANTITIES FOR TEMPORARY PAVEMENT MARKINGS HAVE BEEN ADJUSTED TO PROVIDE FOR REAPPLICATION AS DETERMINED BY THE ENGINEER. PAYMENT SHALL BE MADE ON FINAL MEASUREMENTS.

For Plan & Profile of Temporary Tiedeman Rd., see Sht. № 82

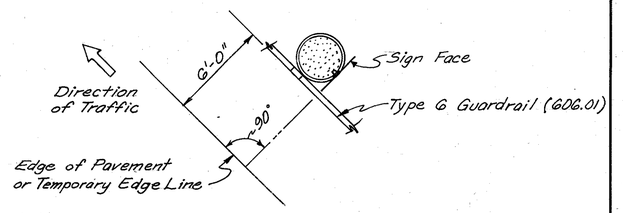


PLAN

*Carried to Gen. Summary Sht # 283 See Calculation Above

ITEM 614 – TEMP'Y PAV'T. MARKING

| STATION | SIDE | INTERVAL | PAINTED EDGE LINE L.F. | PAINTED LANE LINE L.F. | PAINTED ℄ (DOUBLE) L.F. | INTERIM SIGN (OW-138-30) EACH. | SIGN AREA SQ. FT. | INTERIM DELINEATOR AS PER PLAN EACH | INTERIM STEEL DRIVE POST 2#/FT. L.F. | INTERIM STEEL DRIVE POST 3#/FT. L.F. | TEMPORARY BEAM RAIL L.F. | WING BARRICADE EACH | ROAD CLOSED STD. BARRICADE EACH |
|---|---|---|---|---|---|---|---|---|---|---|---|---|---|
| TEMP. TIEDEMAN RD. 9+16 – 10+60 | ℄ | | | | 144 | | | | | | | | |
| " " " " 9+16 – 10+86 | LT. | | 170 | 170 | | | | | | | | | |
| " " " " 9+16 – 10+18 | RT. | | 102 | 102 | | | | | | | | | |
| " " " " 11+13 – 20+70 | ℄ | | | | 957 | | | | | | | | |
| " " " " 10+18 – 21+14 | Rt. | | 1096 | 1096 | | | | | | | | | |
| " " " " 10+86 – 20+44 | Lt. | | 958 | 958 | | | | | | | | | |
| " " " " 20+70 – 22+08 | ℄ | | | | 138 | | | | | | | | |
| " " " " 20+44 – 22+08 | Lt. | | 164 | 164 | | | | | | | | | |
| " " " " 21+14 – 22+08 | Rt. | | 94 | 94 | | | | | | | | | |
| TEMP. TIEDEMAN RD. 9+75 – 11+50 | Lt. | 12.5 | | | | 4 | 25.0 | 4 | 16 | 44 | 175 | | |
| " " " " 19+75 – 21+87.5 | Lt. | 12.5 | | | | 5 | 31.25 | 5 | 20 | 55 | 212.5 | | |
| TIEDEMAN RD. 50+00 | Rt/Lt. | | | | | | | | | | | 2 | |
| " " " 54+50 | Rt. | | | | | | | | | | | | 1 |
| " " " 62+50 | Lt. | | | | | | | | | | | | 1 |
| " " " 66+00 | Rt/Lt. | | | | | | | | | | | 2 | |
| TOTALS | | | 2584 | 2584 | 1239 | 9 | 56.25 | 9 | 36 | 99 | 387.5 | 4 | 2 |

NOTE: except Temporary Pavement Markings
Quantities shown on this sheet are for information only and the cost to furnish, erect, maintain and subsequently remove same shall be included under Item 614 and may be revised as required by the Engineer.

| SIGN AND SUPPORT SUMMARY STATION | SIDE | OC-4-48 EA. | OC-6-48 EA. | OW-127-36 EA. | OW-138-30 EA. | R-75-48 EA. | W-47-36 EA. | SIGN AREA S.F. | №3 POST L.F. | №4 POST L.F. |
|---|---|---|---|---|---|---|---|---|---|---|
| TIEDEMAN RD. 47+70 | RT. | | | 1 | | | | 9.0 | | 14.5 |
| " " " 50+00 | RT/LT. | 1 | 1 | | | | | 10.0 10.0 | 56.0 | |
| " " " 52+12 | RT. | | | | 1 | | | 6.25 | 14.0 | |
| " " " 54+50 | RT. | | | | | 1 | | 10.0 | | |
| TIEDEMAN RD. 62+50 | LT. | | | | | 1 | | 10.0 | | |
| " " " 66+00 | RT/LT. | 1 | 1 | | | | | 10.0 10.0 | 56.0 | |
| " " " 70+00 | LT. | | | 1 | | | | 9.0 | | 14.5 |
| TEMP. TIED. RD. 18+00 | RT. | | | | | | 1 | 9.0 | | 14.5 |
| TOTALS | | 2 | 2 | 2 | 1 | 2 | 1 | 93.25 | 126.0 | 43.5 |

▲ = MOUNT ON TYPE III BARRICADE

NOTE: Erect OW-138-30 signs on first barrel, then as shown on plans above.

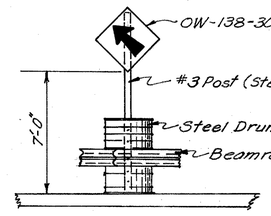


ELEVATION

SIGN ATTACHMENT TO TEMPORARY BEAMRAIL

| FED. RD. DIVISION | STATE | PROJECT | TYPE FUNDS |
|---|---|---|---|
| 2 | OHIO | | |

309
500

CUYAHOGA COUNTY
CUY-480-10.39

CONNECTOR TRACK CURVE DATA
Δ = 46° 40' 36"
$D_c$ = 10°
R = 573.69'
L = 466.77'
T = 247.53'

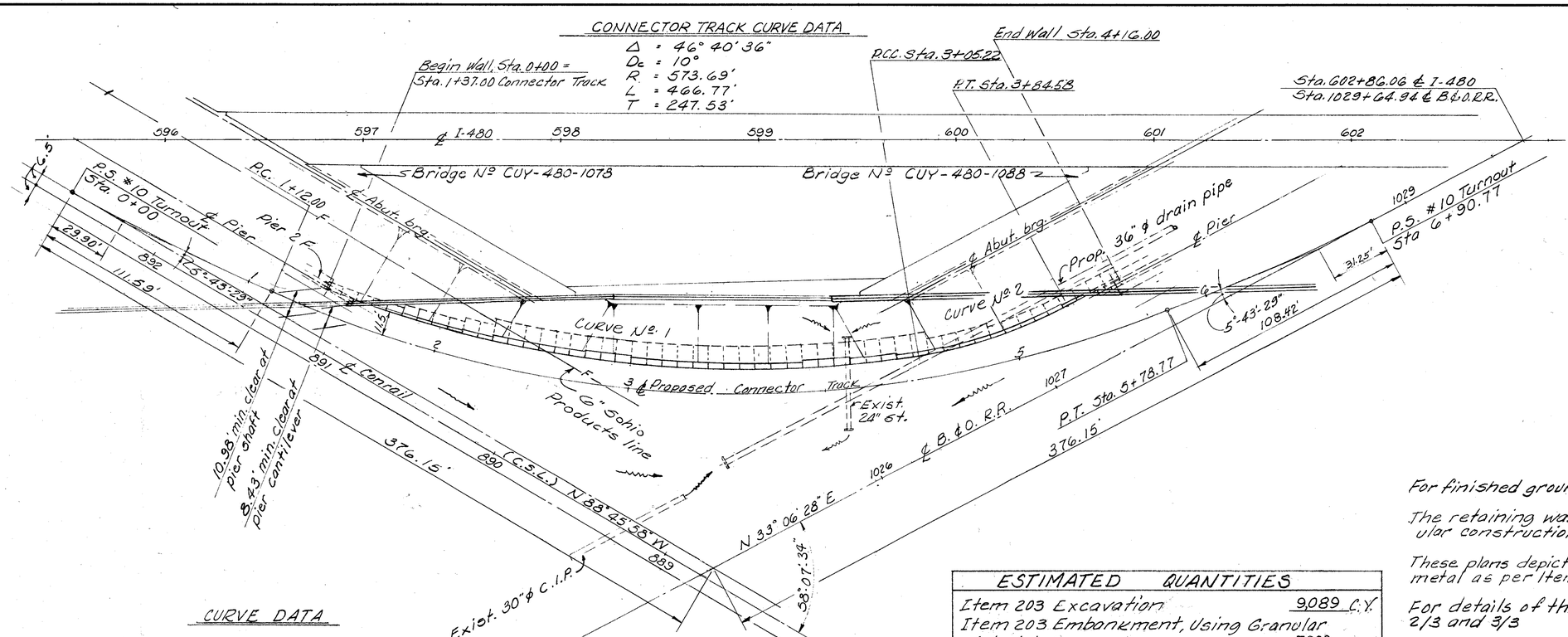


PLAN
Scale: 1" = 30'

CURVE DATA

CELLULAR RETAINING WALL

| Curve Nº. 1 | Curve Nº. 2 |
|---|---|
| Δ = 31°-06'-24" | Δ = 18°-38'-40" |
| R = 562.19' | R = 243.88' |
| L = 305.22' | L = 79.36' |
| T = 156.47' | T = 40.03 |

ESTIMATED QUANTITIES

| | |
|---|---|
| Item 203 Excavation | 9,089 C.Y. |
| Item 203 Embankment, Using Granular Material, As per plan. | 7,999 C.Y. |
| Item 203 Proof Rolling | 0.4 HR. |
| Item 610 Cellular Retaining Wall | 7275 S.F. |

Quantities carried forward to Sheet 20

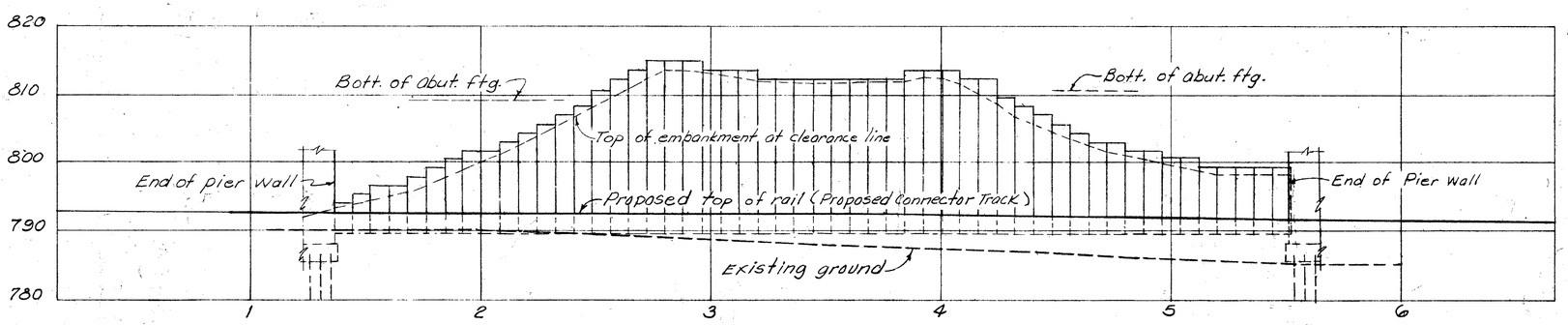


PROFILE ALONG ℄ CONNECTOR TRACK
Scale: Horiz. 1" = 30'
Vert. 1" = 10'

Note:

For finished ground see plan cross sections Shts.

The retaining wall here shown shall be of closed face cellular construction

These plans depict a concrete cellular wall, however galvanized metal as per Item 610.03 may be substituted.

For details of the cellular retaining wall see Sheets 2/3 and 3/3

CONSTRUCTION SEQUENCE:

1. Prior to construction of the cellular retaining wall, remove existing unsuitable material as shown on cross section Shts. Nº 120 & 121. Proof roll the excavated area as described in Item 203.14 using a roller with a gross load of 50 tons. Replace the excavated area with Item 203, Embankment, Using Granular Material, As per plan (See General Note Sht. Nº 13).
2. Place embankment to 1½ : 1. Slope limits shown on cross sections.
3. Excavate behind wall location to 1:1 slopes as shown on cross sections.
4. Construct the two pier segments adjacent to the wall sufficiently to allow construction of the wall. Construct the wall.
5. Backfill behind the wall to the 1½ : 1 slope limit with Item 203, Embankment, Using Granular Material, As per plan. When Granular Material is placed within the finished slope, the surface shall be backfilled with one foot of soil, placed in accordance with Item 203.
6. Place remaining embankment to the finish slope as shown.

Proof rolling shall be paid for as Item 203 Proof Rolling. All excavation shall be paid for as Item 203, Excavation Not Including Embankment Construction.

1 / 3

ALDEN E. STILSON & ASSOCIATES
CONSULTING ENGINEERS
CLEVELAND, OHIO COLUMBUS, OHIO WHEELING, W. VA.

SITE PLAN
CLOSED FACE CELLULAR RETAINING WALL
PROPOSED CONRAIL AND B. & O. R.R. CONNECTOR TRACK
CUYAHOGA COUNTY

| DESIGNED | DRAWN | TRACED | CHECKED | REVIEWED | DATE | REVISED |
|---|---|---|---|---|---|---|
| G.W.M. | R.T. | | B.T.G. | G.W.M. | 12/28/82 | |

| F.H.W.A. REGION | STATE | PROJECT | |
|---|---|---|---|
| 5 | OHIO | | |

310
500

CUYAHOGA COUNTY
CUY.-480-10.39

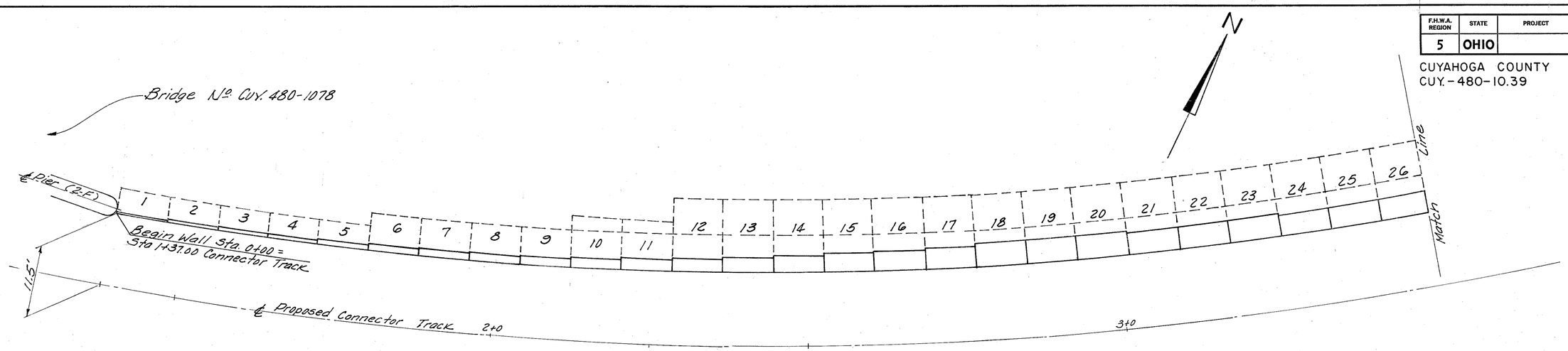


## PART PLAN

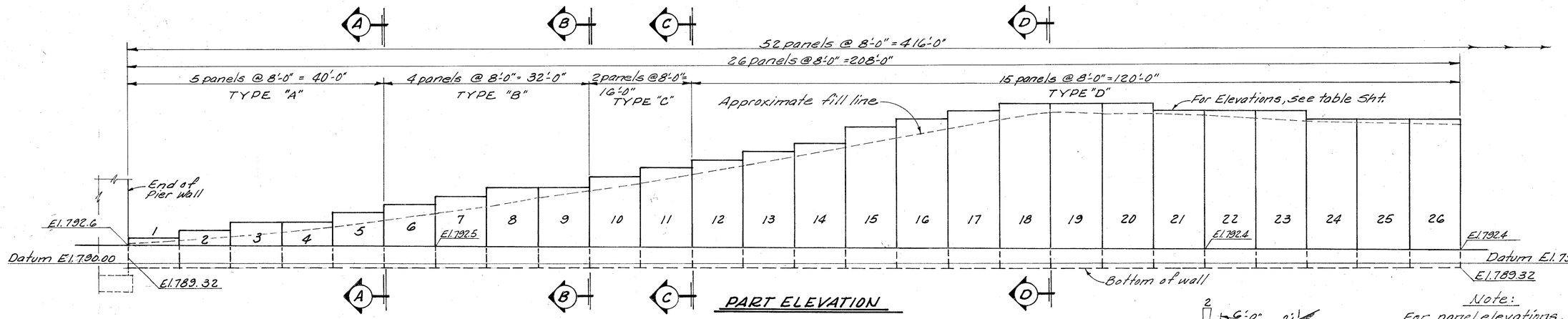


## PART ELEVATION

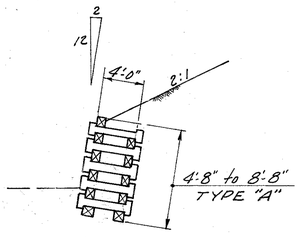


## SECTION A-A

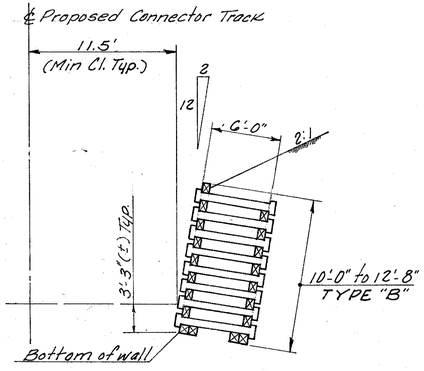


## SECTION B-B

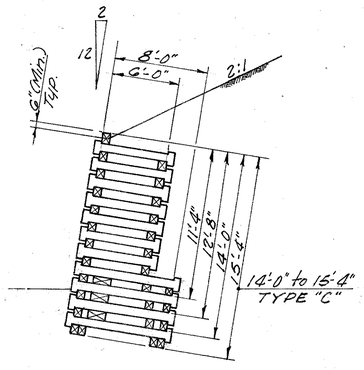


## SECTION C-C

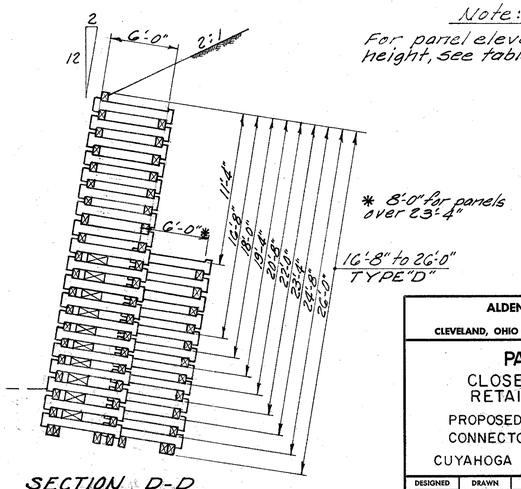


## SECTION D-D
## SECTION E-E (Similar)

**Note:**
For panel elevations, type and height, see table Sht. 3/3.

2/3

ALDEN E. STILSON & ASSOCIATES
CONSULTING ENGINEERS
CLEVELAND, OHIO COLUMBUS, OHIO WHEELING, W. VA.

# PANEL DETAILS
CLOSED FACE CELLULAR RETAINING WALL
PROPOSED CONRAIL AND B. & O. R.R. CONNECTOR TRACK
CUYAHOGA COUNTY

| DESIGNED | DRAWN | TRACED | CHECKED | REVIEWED | DATE | REVISED |
|---|---|---|---|---|---|---|
| G.W.M. | R.T. | | B.T.G. | G.W.M. | 12/28/82 | |

| F.H.W.A. REGION | STATE | PROJECT | |
|---|---|---|---|
| 5 | OHIO | | |

311/500

CUYAHOGA COUNTY
CUY.-480-10.39

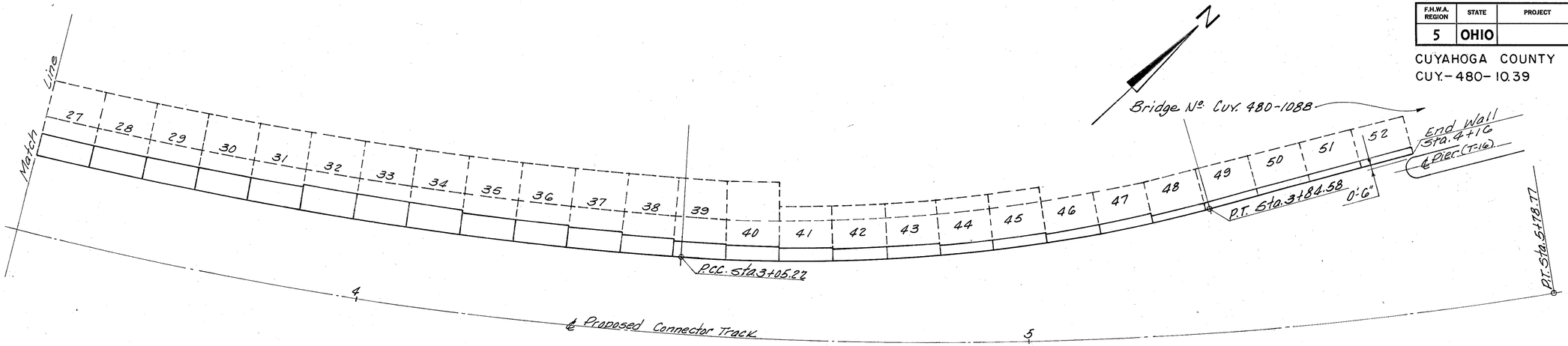


PART PLAN

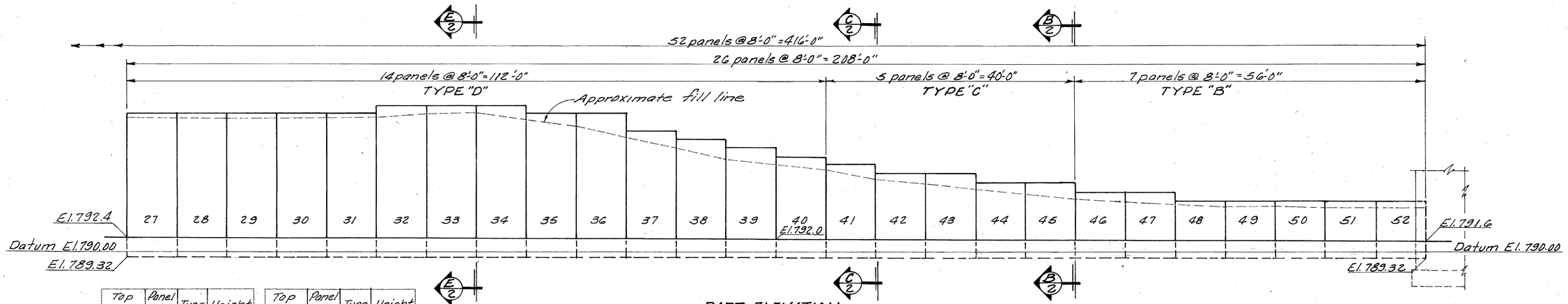


PART ELEVATION

| Top Elev. | Panel No. | Type | Height |
|---|---|---|---|
| 793.92 | 1 | A | 4'-8" |
| 795.23 | 2 | A | 6'-0" |
| 796.55 | 3 | A | 7'-4" |
| 796.55 | 4 | A | 7'-4" |
| 797.86 | 5 | A | 8'-8" |
| 799.18 | 6 | B | 10'-0" |
| 800.49 | 7 | B | 11'-4" |
| 801.80 | 8 | B | 12'-8" |
| 801.80 | 9 | B | 12'-8" |
| 803.12 | 10 | C | 14'-0" |
| 804.44 | 11 | C | 15'-4" |
| 805.75 | 12 | D | 16'-8" |
| 807.07 | 13 | D | 18'-0" |
| 808.38 | 14 | D | 19'-4" |
| 811.01 | 15 | D | 22'-0" |
| 812.32 | 16 | D | 23'-4" |
| 813.64 | 17 | D | 24'-8" |
| 814.96 | 18 | D | 26'-0" |
| 814.96 | 19 | D | 26'-0" |
| 814.96 | 20 | D | 26'-0" |
| 813.64 | 21 | D | 24'-8" |
| 813.64 | 22 | D | 24'-8" |
| 813.64 | 23 | D | 24'-8" |
| 812.32 | 24 | D | 23'-4" |
| 812.32 | 25 | D | 23'-4" |
| 812.32 | 26 | D | 23'-4" |

| Top Elev. | Panel No. | Type | Height |
|---|---|---|---|
| 812.32 | 27 | D | 23'-4" |
| 812.32 | 28 | D | 23'-4" |
| 812.32 | 29 | D | 23'-4" |
| 812.32 | 30 | D | 23'-4" |
| 812.32 | 31 | D | 23'-4" |
| 813.64 | 32 | D | 24'-8" |
| 813.64 | 33 | D | 24'-8" |
| 813.64 | 34 | D | 24'-8" |
| 812.32 | 35 | D | 23'-4" |
| 812.32 | 36 | D | 23'-4" |
| 809.70 | 37 | D | 20'-8" |
| 808.38 | 38 | D | 19'-4" |
| 807.07 | 39 | D | 18'-0" |
| 805.75 | 40 | D | 16'-8" |
| 804.44 | 41 | C | 15'-4" |
| 803.12 | 42 | C | 14'-0" |
| 803.12 | 43 | C | 14'-0" |
| 801.80 | 44 | C | 12'-8" |
| 801.80 | 45 | C | 12'-8" |
| 800.49 | 46 | B | 11'-4" |
| 800.49 | 47 | B | 11'-4" |
| 799.18 | 48 | B | 10'-0" |
| 799.18 | 49 | B | 10'-0" |
| 799.18 | 50 | B | 10'-0" |
| 799.18 | 51 | B | 10'-0" |
| 799.18 | 52 | B | 10'-0" |

3/3

ALDEN E. STILSON & ASSOCIATES
CONSULTING ENGINEERS
CLEVELAND, OHIO COLUMBUS, OHIO WHEELING, W. VA.

# PANEL DETAILS
## CLOSED FACE CELLULAR RETAINING WALL

PROPOSED CONRAIL AND B.& O. R.R. CONNECTOR TRACK
CUYAHOGA COUNTY

| DESIGNED | DRAWN | TRACED | CHECKED | REVIEWED | DATE | REVISED |
|---|---|---|---|---|---|---|
| G.W.M. | R.T. | | B.T.G. | G.W.M. | 12/10/80 | |

MICROFILMED
JAN 17 1991

| FED. RD. DIVISION | STATE | PROJECT | TYPE FUNDS |
|---|---|---|---|
| 2 | OHIO | | |

312/500

CUYAHOGA COUNTY
CUY.-480-10.39

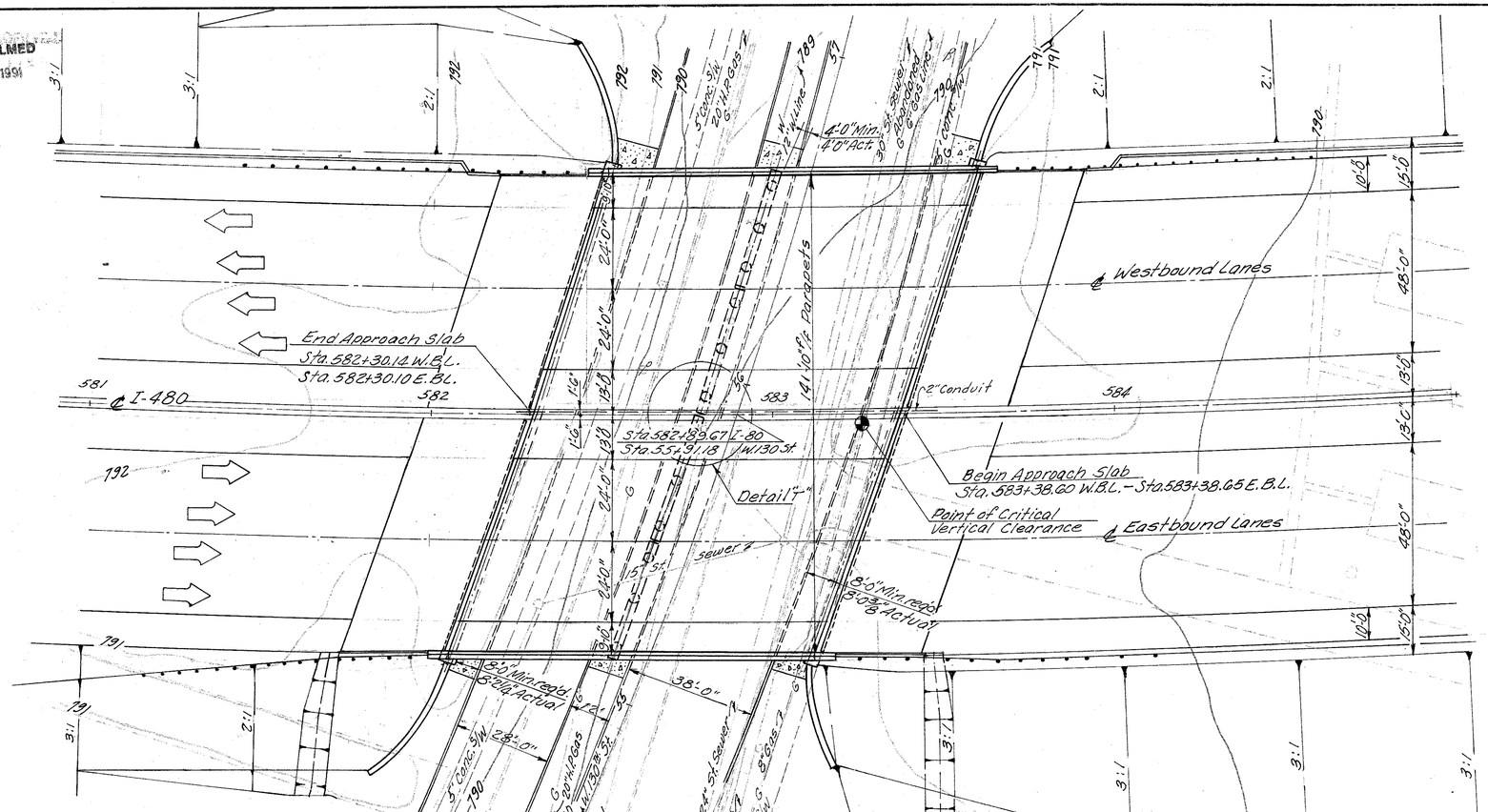


## NOTES

W.B.L. indicates West Bound Lanes.
E.B.L. indicates East Bound Lanes.

Reference Chord is a line between ℄ of abutment bearings. Sta. 582+32.49 to Sta. 583+36.24.

## TRAFFIC ESTIMATE

Design Year 1990
Total A.D.T. 93,396

## PROPOSED STUCTURE

Type: Continuous steel beam with reinforced concrete deck and substructure.
Spans: 47.141' & 56.611' & Brg. E.B.L. abnt. ℄ I-80
Roadway: 141'-8" F/F Parapets of BR-1 (Mod.) Railings with Conc. Barrier Median

Loading: CF-2000 (1957), adequate for AASHO alternate loading.
Wearing Surface: 1½" Latex Modified Concrete
Skew: 17°13'-17" and 20°12'-55" left forward with respect to Reference Chord.
Alignment: 1°15'-00" Curve left.
Superelevation: 0.03 ft/ft.
Approach Slabs: AS-1-81 (30'-0" long).

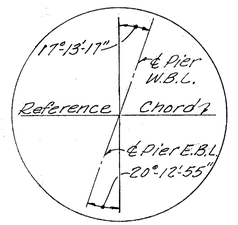


DETAIL "T"

## CURVE DATA
### ℄ Survey W. 130th St.

P.I. Sta. 54+83.13
Δ = 16°59'-52"
D = 4°00'-00"
R = 1432.39'
T = 214.05'
L = 424.95'

## CURVE DATA
### ℄ I-480

P.I. Sta. 583+71.11
Δ = 29°46'-15"
D = 1°15'-00"
R = 4583.66'
T = 1218.37'
L = 2381.67'

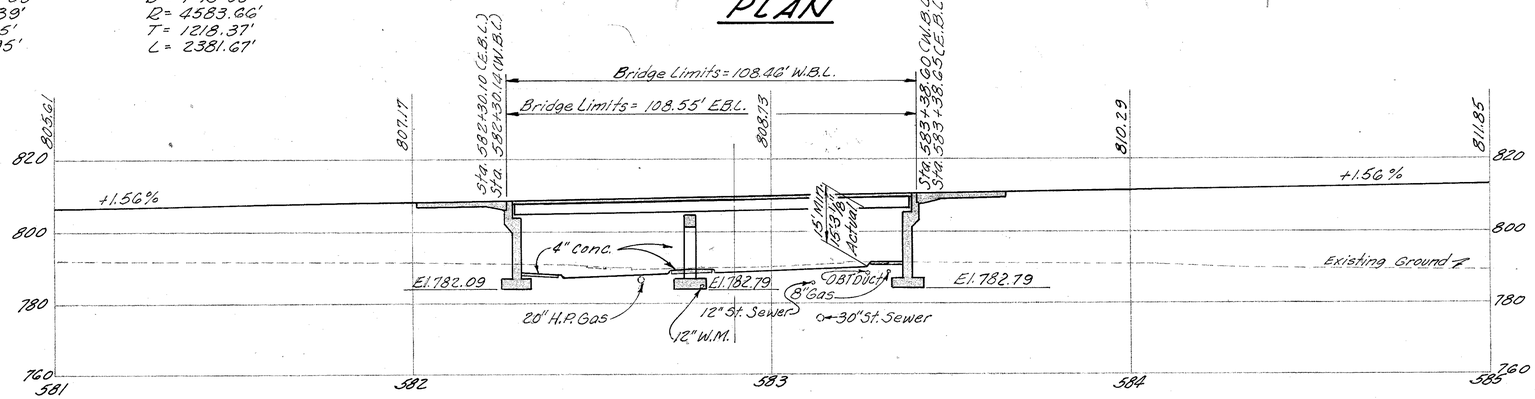


## PLAN

## PROFILE ALONG ℄ I-480

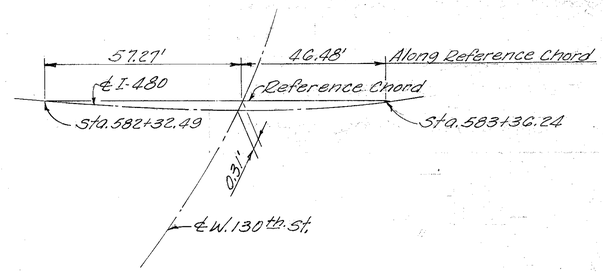


## LAYOUT DIAGRAM

Note: Earthwork limits shown are schematic. The actual slopes shall conform to plan cross-sections.

ALDEN E. STILSON & ASSOCIATES, LIMITED
CONSULTING ENGINEERS
COLUMBUS, OHIO

1/20

# SITE PLAN
## BRIDGE No. CUY-480 1054
## I-480 OVER WEST 130TH STREET

CUYAHOGA COUNTY STA. 582+30.10
STA. 583+38.65
Scale: 1" = 20'

| DESIGNED | DRAWN | TRACED | CHECKED | REVIEWED | DATE | REVISED |
|---|---|---|---|---|---|---|
| PHB | R.J.P. | R.T. | SBP | G.W.M. | 11/10/71 | |

MICROFILMED
JAN 17 2002

| FHWA REGION | STATE | PROJECT | |
|---|---|---|---|
| 5 | OHIO | | |

313
500

CUYAHOGA COUNTY
CUY-480-10.39

STANDARD DRAWING REFERENCES

| DESCRIPTION | DWG. NO. | SHT. | DATE |
|---|---|---|---|
| COMP. SEAL EXP. JTS. | TS-EXJ-2-81 | 1-2 | 9-01-81 |
| END CROSSFRAME | SD-1-69 | 1-2 | 6-12-69 |
| BOLTED SPLICES | SD-1-69 | 4 | 6-12-69 |
| BRIDGE RAILING | BR-1 | | 5-29-79 |
| ROCKERS AND BOLSTERS | RB-1-55 | | 2- 2-59 R |
| APPROACH SLABS | AS-1-81 | 1-3 | 11-27-81 |
| HIGHWAY LIGHTING | HL-6 | | 3-22-77 R |
| HIGHWAY LIGHTING | HL-7 | | 1-21-76 R |

(R INDICATES REVISED DATE)

SUPPLEMENTAL SPECIFICATION REFERENCES

| DESCRIPTION | NO. | DATE |
|---|---|---|
| EPOXY COATED REINFORCING STEEL | 824 | 10-08-82 |
| CONCRETE CURING AND PROTECTIVE MEMBRANE | 836 | 3-12-75 |
| BRIDGE DECK REPAIR AND OVERLAY | 845 | 3-2-81 |
| ELASTOMERIC COMPRESSION SEALS FOR STRUCTURAL STEEL JOINTS | 849 | 10-19-81 |
| LATEX FOR CONCRETE MODIFICATION | 953 | 8-21-80 |

COMMON DETAIL REFERENCES

| | | |
|---|---|---|
| CONTRACTION JOINTS | SHEET | 476 |
| EXPANSION JOINTS | SHEET | 477 |
| PVC WATERSTOP | SHEET | 476 |

DESIGN SPECIFICATIONS
THIS STRUCTURE CONFORMS TO THE REQUIREMENTS OF DESIGN SPECIFICATIONS FOR HIGHWAY STRUCTURES OF THE STATE OF OHIO, DEPARTMENT OF HIGHWAYS, DATED 9-01-57, TOGETHER WITH CURRENT REVISIONS THEREOF.

DESIGN DATA
DESIGN LOADING - CF-2000 (57)
CONCRETE CLASS S - UNIT STRESS 1500 PSI, SUPERSTRUCTURE. THE DESIGN IS BASED ON CLASS C CONCRETE UNIT STRESS 1333 PSI.
CONCRETE CLASS C - UNIT STRESS 1333 P.S.I. (SUB-STRUCTURE).
STRUCTURAL STEEL ASTM A36 - UNIT STRESS 20,000 P.S.I.
REINFORCING STEEL ASTM A615, A616 OR A617.
GRADE 40 - UNIT STRESS 20,000 P.S.I.
SPIRAL REINFORCEMENT MAY BE PLAIN BARS, ASTM A82 OR A615.

REINFORCING BAR LAPPED SPLICES
ALL SPLICES SHALL BE LAPPED 30 BAR DIAMETERS.

DECK PROTECTION METHOD
EPOXY COATED REINFORCING STEEL, TOP MAT ONLY.

LATEX MODIFIED CONCRETE OVERLAY.

EMBANKMENT CONSTRUCTION
BEFORE THE BACKWALL IS CONSTRUCTED, THE EMBANKMENT SHALL BE CONSTRUCTED UP TO THE LEVEL OF THE SUBGRADE WITH A 1 TO 1 SLOPE FROM THE BRIDGE SEAT TO THE SUBGRADE, FOR A MINIMUM DISTANCE OF 200 FEET BACK OF THE ABUTMENT.

FOUNDATION BEARING PRESSURE
ABUTMENT AND WINGWALL FOOTINGS, AS DESIGNED, PRODUCE A MAXIMUM BEARING PRESSURE OF 2.5 TONS PER SQ. FT.

PIER FOOTINGS, AS DESIGNED, PRODUCE A MAXIMUM BEARING PRESSURE OF 2.5 TONS PER SQ. FT.

UTILITY LINES
ALL EXPENSE INVOLVED IN RELOCATING THE AFFECTED UTILITY LINES SHALL BE BORNE BY THE OWNERS. THE CONTRACTOR AND OWNERS ARE REQUESTED TO COOPERATE BY ARRANGING THEIR WORK IN SUCH A MANNER THAT INCONVENIENCE TO EITHER WOULD BE HELD TO A MINIMUM.

MAINTENANCE OF TRAFFIC
SEE ROADWAY GENERAL NOTES.

* ELASTOMERIC COMPRESSION SEALS
ITEM 516 ELASTOMERIC COMPRESSION SEALS FOR STRUCTURAL STEEL JOINTS INCLUDES ALL LABOR, MATERIALS, AND EQUIPMENT NECESSARY TO COMPLETE THE JOINT IN PLACE INCLUDING THE JOINT ARMOR, 1/2 INCH STEEL PLATES, ANCHORING DEVICES, AND END CROSSFRAME GUSSET PLATES.

INSTALLATION OF SEAL
DURING INSTALLATION OF THE ARMOR FOR THE SUPERSTRUCTURE SIDE OF THE EXPANSION JOINT SEAL, THE SEATING OF BEAMS ON BEARINGS SHALL BE CAREFULLY OBSERVED TO ASSURE POSITIVE BEARING IS MAINTAINED. PROPER VERTICAL FIT OF THE ARMOR ON THE BEAMS SHALL BE ACHIEVED BY THE POSITIONING OF THE BEVEL FILL PLATES RATHER THAN BY CLAMPING FORCE.

* THE FIRST SENTENCE OF THE MATERIALS NOTE ON SHEET 2 OF STANDARD DRAWING TS-EXJ-2-81 SHALL BE REVISED TO READ: "A588 or A36, WITH SYSTEM B FIELD PAINT ON EXPOSED STEEL SURFACES."

| ITEM | TOTAL | UNIT | DESCRIPTION | ABUTS | WINGS | PIER | SUPER | GENERAL |
|---|---|---|---|---|---|---|---|---|
| 503 | LUMP | | COFFERDAMS, CRIBS AND SHEETING | | | | | LUMP |
| 503 | 2214 | C.Y. | UNCLASSIFIED EXCAVATION | 1462 | 485 | 267 | | |
| 509 | 163,552 | LB | REINFORCING STEEL | 81090 | 13946 | 28,348 | 40168 | |
| 511 | 469 | C.Y. | CLASS S CONCRETE, SUPERSTRUCTURE (SEE PROPOSAL NOTE) | | | | 469 | |
| 511 | 685 | C.Y. | CLASS C CONCRETE, ABUTMENTS ABOVE FOOTINGS | 685 | | | | |
| 511 | 106 | C.Y. | CLASS C CONCRETE, PIER CAPS AND COLUMNS | | | 106 | | |
| 511 | 643 | C.Y. | CLASS C CONCRETE, FOOTINGS | 397 | 163 | 83 | | |
| 511 | 184 | C.Y. | CLASS C CONCRETE, WINGWALLS ABOVE FOOTINGS | | 184 | | | |
| 512 | 31 | S.Y. | TYPE B WATERPROOFING | 31 | | | | |
| 513 | 384900 | LB | STRUCTURAL STEEL, ASTM A-36 (AISC CATEGORY I)(SEE PROPOSAL NOTE) | | | | 384900 | |
| 514 | 384900 | LB | FIELD PAINTING OF NEW STRUCTURAL STEEL, SYSTEM A | | | | 384900 | |
| 516 | 304.20 | L.F. | ELASTOMERIC COMPRESSION SEALS FOR STRUCTURAL STEEL JOINTS | 304.20 | | | | |
| 516 | 287 | L.F. | PVC WATERSTOP, AS PER PLAN | 223 | 64 | | | |
| 516 | 306 | S.F. | 1 INCH PREFORMED EXPANSION JOINT FILLER | 306 | | | | |
| 518 | 522 | C.Y. | POROUS BACKFILL | 420 | 102 | | | |
| 625 | | | SEE SHEET (236 247) FOR LIGHTING SUMMARY | | | | | |
| 824 | 55499 | LB. | EPOXY COATED REINFORCING STEEL | 655 | | | 54844 | |
| 845 | 1600 | S.Y. | LATEX MODIFIED CONCRETE OVERLAY, 1 1/4 IN. THICK ( SEE PROPOSAL NOTE ). | | | | 1600 | |

B203001A

2/20

ALDEN E. STILSON & ASSOCIATES
CONSULTING ENGINEERING AND ARCHITECTURE
COLUMBUS, CLEVELAND, WHEELING

# GENERAL NOTES AND ESTIMATED QUANTITIES

BRIDGE NO. CUY-480-1054
I-480 OVER WEST 130TH STREET
CUYAHOGA COUNTY
STA. 582+30.10 TO STA. 583+38.65

| DESIGNED | DRAWN | TRACED | CHECKED | REVIEWED | DATE | REVISED |
|---|---|---|---|---|---|---|
| PHB | | | SBP 5/10/68 | G.W.H. | 2/15/83 | 1-3-84 |

| FED. RD. DIVISION | STATE | PROJECT | TYPE FUNDS |
|---|---|---|---|
| 2 | OHIO | | |

314
500

CUYAHOGA COUNTY
CUY-480-10.39

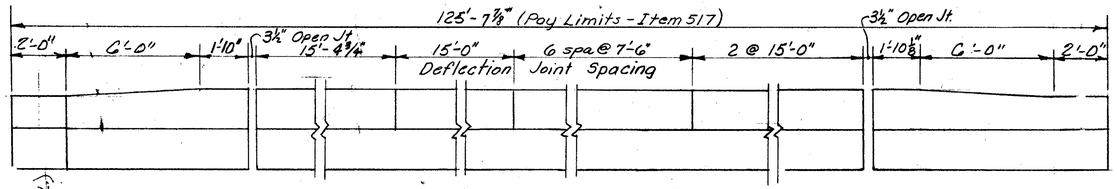


NORTH RAILING ELEVATION

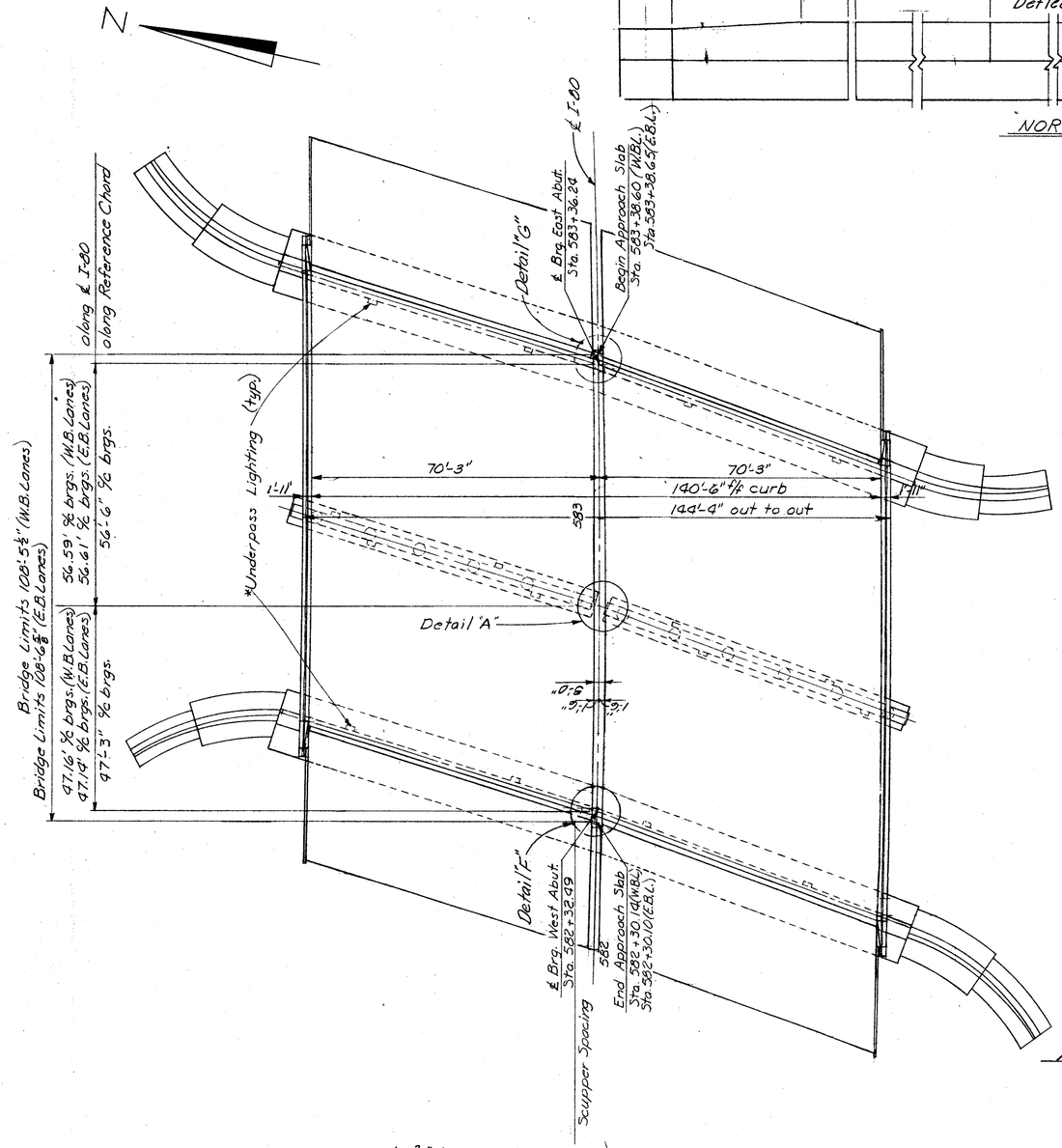


GENERAL PLAN

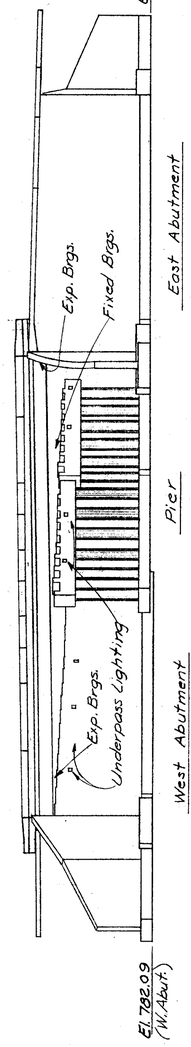


GENERAL ELEVATION

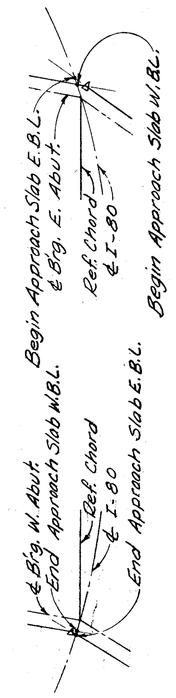


DETAIL "G"

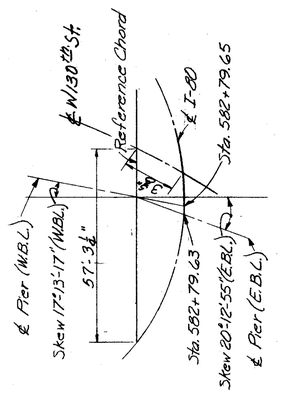


DETAIL "A"

DETAIL "F"

Note: Deflection Jt. filler material for the Barrier Median shall be the same as that for the railing parapet as listed on Std. Dwg. BR-1.1. For limits of same see Sht 16/20. Include with Item 511 Class "S" Concrete, Superstructure, for payment.

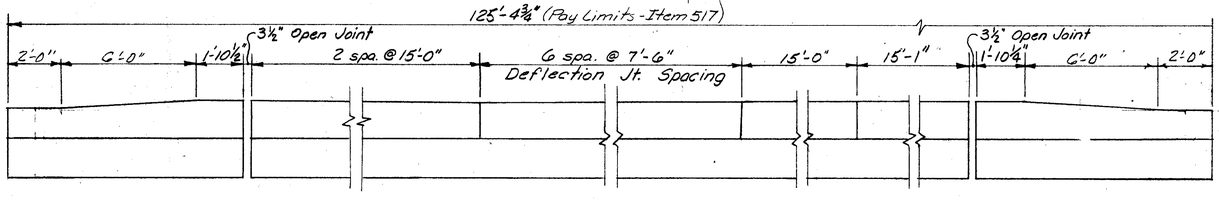


SOUTH RAILING ELEVATION

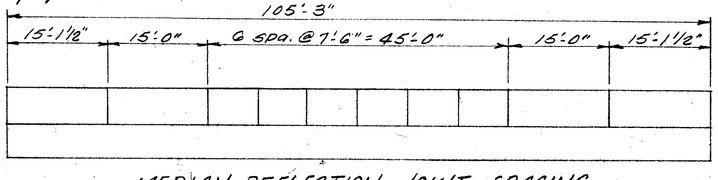


MEDIAN DEFLECTION JOINT SPACING

ALDEN E. STILSON & ASSOCIATES, LIMITED
CONSULTING ENGINEERS
COLUMBUS, OHIO

3/20

GENERAL PLAN and ELEVATION

BRIDGE No. CUY-480-1054
I-480 over WEST 130TH STREET
STA. 582+30.10
CUYAHOGA COUNTY STA. 583+38.65

| DESIGNED | DRAWN | TRACED | CHECKED | REVIEWED | DATE | REVISED |
|---|---|---|---|---|---|---|
| PHB | DW | | SBP | G.W.M. | 11/11/11 | |

RECEIVED
JAN 27 1995

| FED. RD. DIVISION | STATE | PROJECT | TYPE FUNDS |
|---|---|---|---|
| 2 | OHIO | | |

315/500

CUYAHOGA COUNTY
CUY-480-10.39

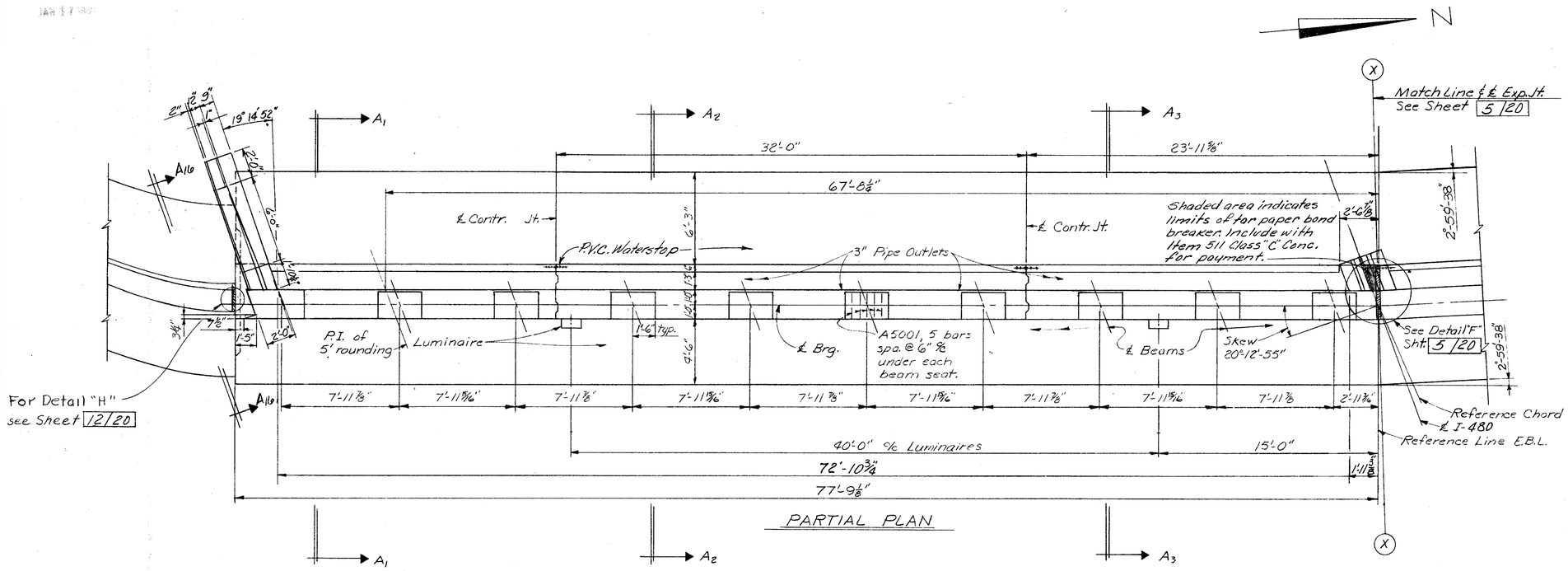


PARTIAL PLAN

For Sections $A_1$-$A_1$ thru $A_3$-$A_3$ see Sheet 8/20
For Elevation $A_{16}$-$A_{16}$ see sheet 9/20

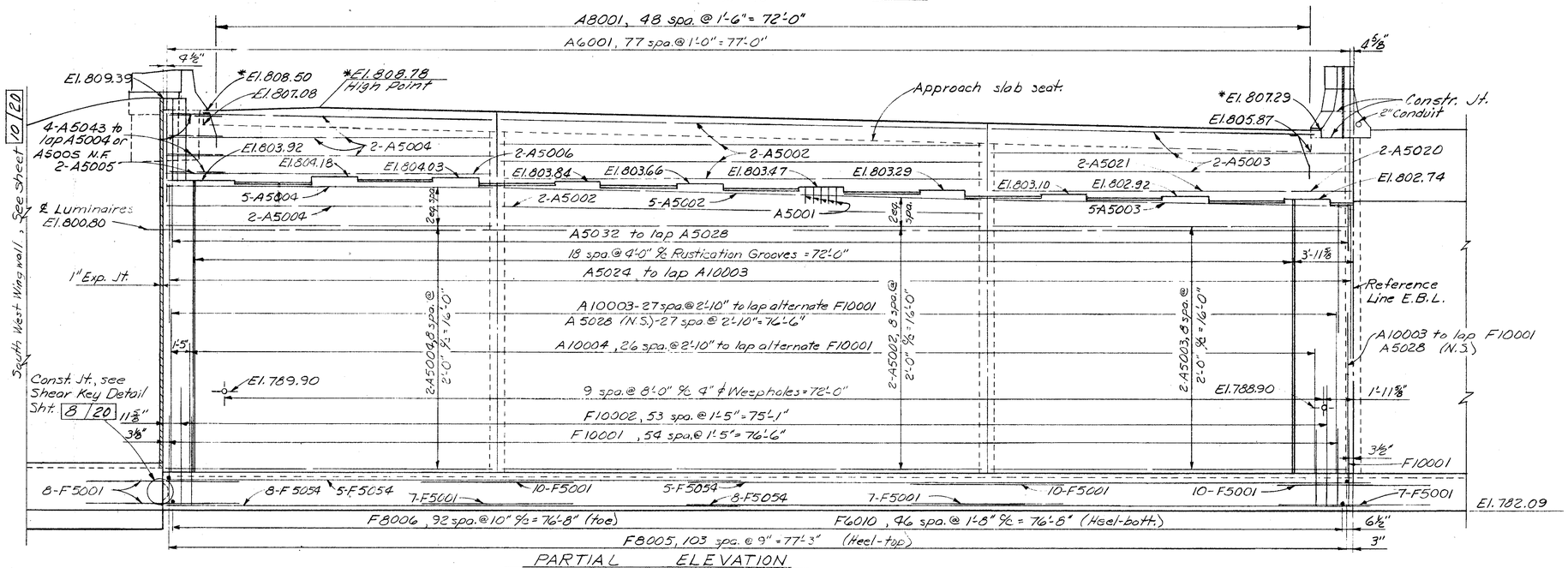


PARTIAL ELEVATION

## Notes:

Porous backfill 2 feet thick shall extend up to the plane of subgrade for the full width of the abutment.

Joints shall be provided in the abutment portion of the end dam armor at contraction and expansion joints.

*Elevations shown thus are at the top surface of the abutment portion of the end dam armor.

Place weepholes in a straight line between indicated elevations.

For rustication grooves, expansion, and contraction joint details see Common Details Sheet 476

Reinforcing Steel location:
N.S. indicates near side.
F.S. indicates far side.

The spacing of vertical reinforcing steel shall be field adjusted so as to clear the contraction joints by 3" minimum.

All the vertical stem reinforcing steel is in the back of the wall unless otherwise noted.

For detail of lighting and communication conduits through abutment backwall see Std. Dwg. HL-4.

For additional notes and details see Shts. 5/20 and 8/20

ALDEN E. STILSON & ASSOCIATES, LIMITED
CONSULTING ENGINEERS
COLUMBUS, OHIO

4/20

# WEST ABUTMENT DETAILS

BRIDGE No. CUY-480-1054
I-480 over WEST 130th STREET
STA. 582+30.10
CUYAHOGA COUNTY STA. 583+38.65

| DESIGNED | DRAWN | TRACED | CHECKED | REVIEWED | DATE | REVISED |
|---|---|---|---|---|---|---|
| PHB | DW | | SBP | G.W.M. | 11/21/171 | |

JAN 17 1996

| FED. RD. DIVISION | STATE | PROJECT | TYPE FUNDS |
|---|---|---|---|
| 2 | OHIO | | |

316
500

CUYAHOGA COUNTY
CUY-480-10.39

Match Line ℄ Exp. Jt. see Sheet 4/20

23'-11⅝" | 32'-0"

1'-3¼"

9"

P.V.C. Waterstop

Skew 17°-13'-17"

℄ Contr. Jt.

6'-3"

2°-59'-38"

See Detail "F" this sheet.

℄ I-480

Reference Chord

Reference Line W.B.L.

Luminaire P.I. of 5' rounding

1'-6" typ.

A5001, 5 bars spa. @ 6" ℄ under each beam seat.

℄ Brg.

4'-6"

℄ Beams

2'-0"

10¼"

For Detail "H" see Sheet 12/20

A11

16°49'27"

A6

9"

12"

1'-0"

10'-0"

10'-1"

2'-10¾" | 7'-10⅝" | 7'-10⅜" | 7'-10⅝" | 7'-10⅜" | 7'-10⅝" | 7'-10⅜" | 7'-10⅝" | 7'-10⅜" | 7'-10⅝"

25'-0" | 40'-0" c/c Luminaires

4'-0¾" | 10'-7⅞" | 67'-3" | 73'-0½" | 76'-6⅞"

A4 A5 A6

PARTIAL PLAN

N

NOTES:

Reinforcing Steel Location:
N.S. indicates near side.
F.S. indicates far side.

For additional notes see Sheet 4/20

For Sections A4-A4 thru A6-A6 see Sheet 8/20

For Elevation A11-A11 see Sheet 9/20

*El. 807.75 / High Point

A8001, 49 spa. @ 1'-6" (±) = 73'-0"

A6001, 76 spa. @ 1'-0" = 76'-0"

5"

2" Conduit

*El. 807.39

El. 805.97

Approach slab seat

*El. 806.26

El. 804.84

El. 807.15

El. 805.88

2-A-5022

El. 802.83

2-A5003

El. 803.13

2-A5023

El. 803.00

El. 802.81

El. 802.61

El. 802.43

El. 802.23

El. 802.05

2-A5009

El. 801.85

2-A5008

El. 801.67

1'-3"x 1'-3" Box out

5-A5003

5-A5002

A5001

2-A5002

2-A5007

5-A5007

North West Wingwall See sheet 12/21

Reference Line W.B.L.

A5032 to lap A5029

A5025 to lap A10003

A10003, 26 spa. @ 2'-10" = 73'-8" to lap alternate F10001

A5029 (N.S.), 26 spa. @ 2'-10" = 73'-8"

A10004, 26 spa. @ 2'-10" = 73'-8" to lap alternate F10001

17 spa. @ 4'-0" % Rustication Grooves = 68'-0"

8 spa. @ 8'-0" % 4"ϕ Weepholes = 64'-0"

F10002, 52 spa. @ 1'-5" = 73'-8"

F10001.1, 53 spa. @ 1'-5" = 75'-1"

2-A5003, 8 spa. @ 2'-0" % = 16'-0"

2-A5002, 8 spa. @ 2'-0" % = 16'-0"

2-A5007, 8 spa. @ 2'-0" % = 16'-0"

℄ Luminaires El. 800.80

1" Exp. Jt.

A10003 to lap F10001
A5029 (N.S.)

F10001

3"

3'-11⅝"

5'-11⅝"

1'-0⅛"

9"

El. 788.70

El. 787.70

10-F5001

7-F5001

5-F5055

8-F5055

10-F5001

7-F5001

5-F5055

8-F5055

10-F5001

7-F5001

7-F5001

El. 782.09

5"

5"

F8005, 101 spa. @ 9" = 75'-9" (Heel-top)

F8006, 90 spa. @ 10" = 75'-0" (Toe)

F6010, 95 spa. @ 1'-8" = 75'-0" (Heel-bott.)

F8006 (Toe)

4"

Const. Jt., see Shear Key Detail, Sheet 8/20

PARTIAL ELEVATION

Reference Line W.B.L. (Normal to ℄ Brg.-W.B.L.)

Match Line ℄ Exp. Jt.

P.V.C. Waterstop

Reference Line E.B.L. (Normal to ℄ Brg.-E.B.L.)

1" Exp. Jt.

℄ Brg.-E.B.L.

℄ Brg.-W.B.L.

Skew 20°-12'-55"

Skew 17°-13'-17"

Sta. 582+32.49

℄ I-480

Reference Chord

DETAIL "F"

(For details of Exp. Jt. see Common Details, Sheet 476)

ALDEN E. STILSON & ASSOCIATES, LIMITED
CONSULTING ENGINEERS
COLUMBUS, OHIO

5/20

# WEST ABUTMENT DETAILS

BRIDGE No. CUY-480-1054
I-480 over WEST 130th STREET
STA. 582+30.10
CUYAHOGA COUNTY STA. 583+38.65

| DESIGNED | DRAWN | TRACED | CHECKED | REVIEWED | DATE | REVISED |
|---|---|---|---|---|---|---|
| PHB | DW | | SBP | G.W.M. | 11/12/71 | |

| FED. RD. DIVISION | STATE | PROJECT | TYPE FUNDS |
|---|---|---|---|
| 2 | OHIO | | |

317
500

CUYAHOGA COUNTY
CUY-480-10.39

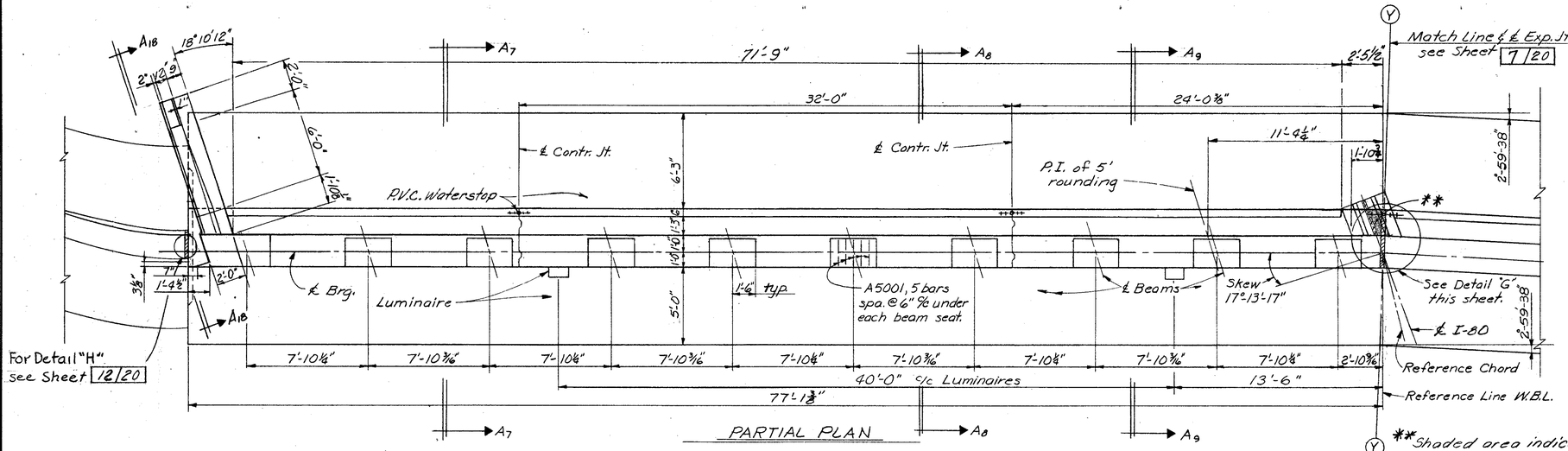


**Shaded area indicates limits of tar paper bond breaker. Include with Item 511 Class "C" Concrete for payment.

NOTES:

Reinforcing Steel location:
N.S. indicates near side.
F.S. indicates far side.

For additional notes see Sheet 4/20
For additional details see Sheet 7&8/20

For Elevation A18-A18 see sheet 9/20
For Sections A7-A7 thru A9-A9 see Sheet 8/20

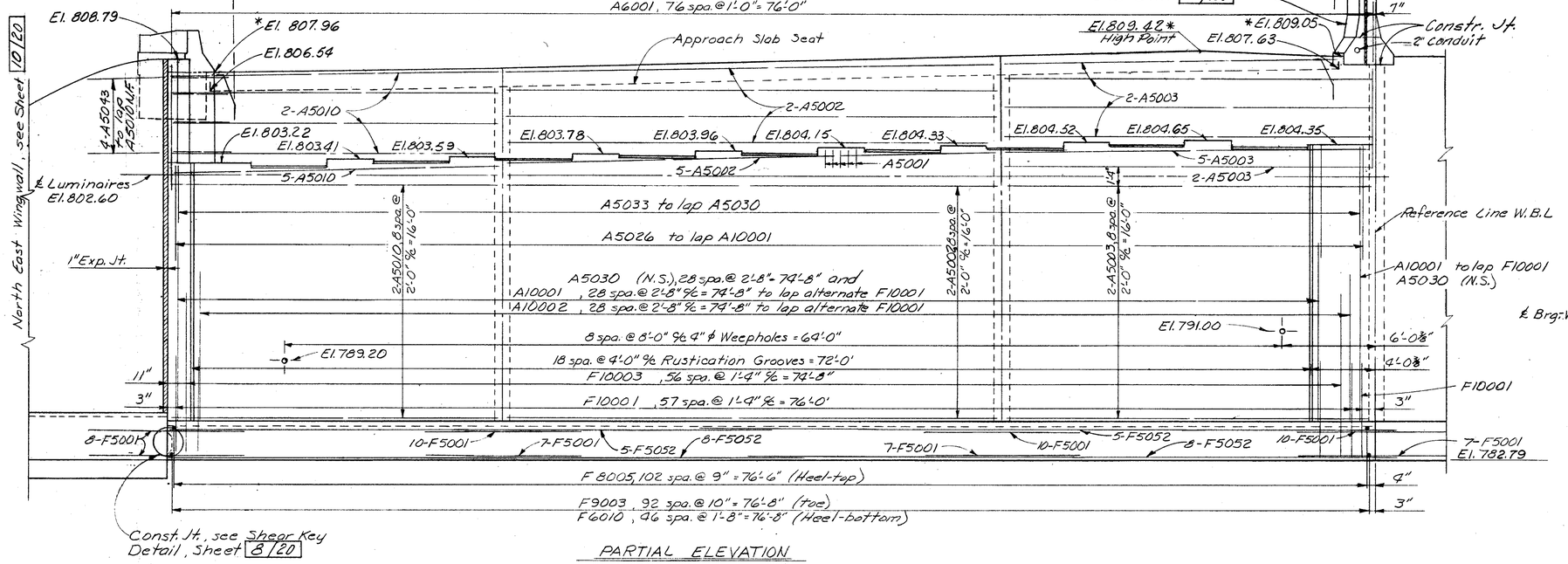


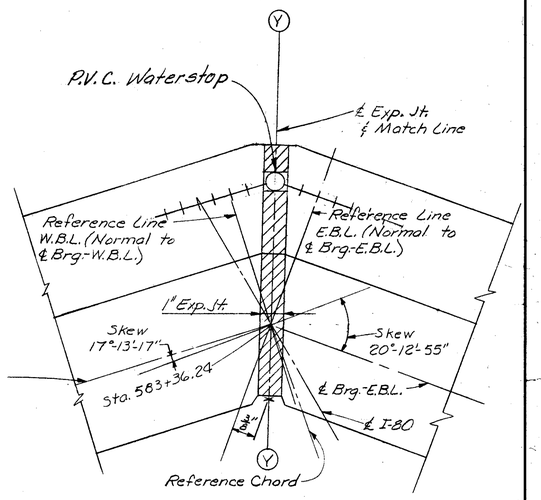


DETAIL "G"
(For details of Exp. Jt., see Common Details, Sheet 476)

ALDEN E. STILSON & ASSOCIATES, LIMITED
CONSULTING ENGINEERS
COLUMBUS, OHIO
6/20

# EAST ABUTMENT DETAILS

BRIDGE No. CUY-480-1054
I-480 over WEST 130th STREET
STA. 582+30.10
CUYAHOGA COUNTY : STA. 583+38.65

| DESIGNED | DRAWN | TRACED | CHECKED | REVIEWED | DATE | REVISED |
|---|---|---|---|---|---|---|
| PHB | DW | | SBP | G.W.M. | 11/12/71 | |

| FED. RD. DIVISION | STATE | PROJECT | TYPE FUNDS |
|---|---|---|---|
| 2 | OHIO | | |

318
500

CUYAHOGA COUNTY
CUY-480-10.39

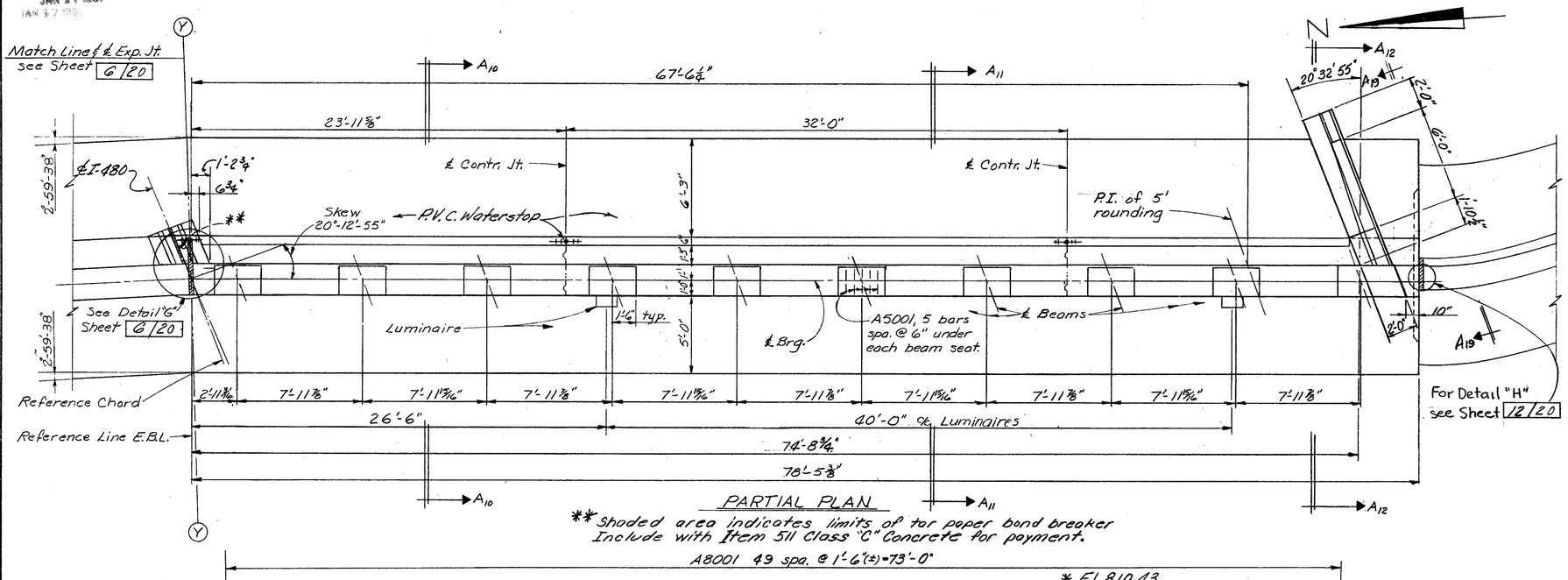


PARTIAL PLAN

** Shaded area indicates limits of tar paper bond breaker Include with Item 511 Class "C" Concrete for payment.

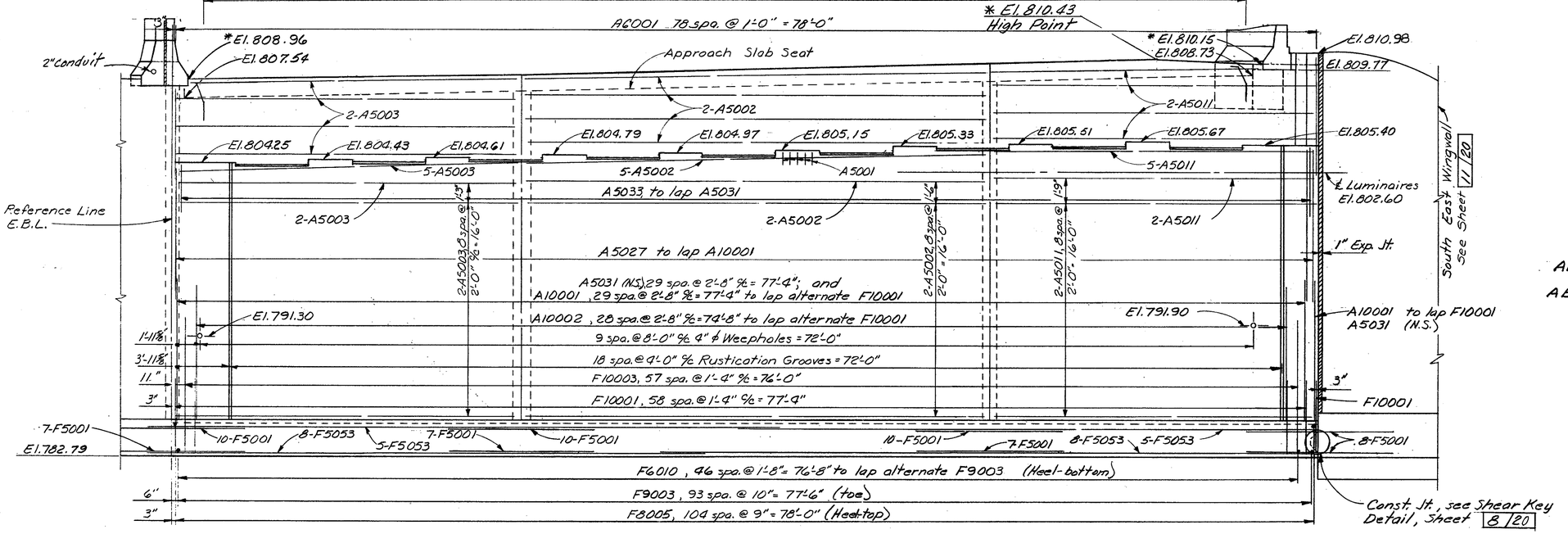


PARTIAL ELEVATION

NOTES:

Reinforcing Steel location:
N.S. indicates near side.
F.S. indicates far side.

For additional notes see Sheet 4/20

For Sections A10-A10 thru A12-A12 see Sht. 8/20
For Elevation A19-A19 see sheet 9/20

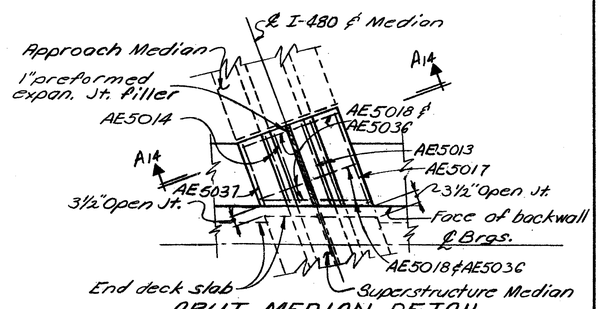


ABUT. MEDIAN DETAIL

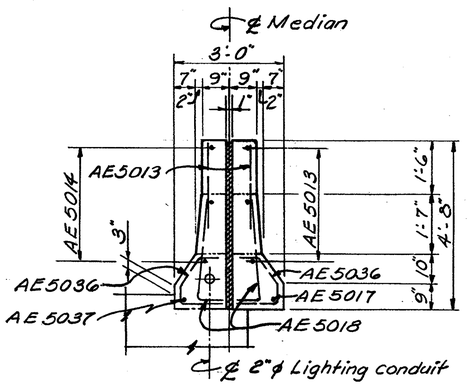


SECTION A14-A14

ALDEN E. STILSON & ASSOCIATES, LIMITED
CONSULTING ENGINEERS
COLUMBUS, OHIO

7/20

# EAST ABUTMENT DETAILS

BRIDGE No. CUY-480-1054
I-480 over WEST 130th STREET
CUYAHOGA COUNTY
STA. 582+30.10
STA. 583+38.65

| DESIGNED | DRAWN | TRACED | CHECKED | REVIEWED | DATE | REVISED |
|---|---|---|---|---|---|---|
| PHB | DW | | SBP | G.W.M. | 11/12/11 | |

RECEIVED
JAN 17 1971

| FED. RD. DIVISION | STATE | PROJECT | TYPE FUNDS |
|---|---|---|---|
| 2 | OHIO | | |

319
500

CUYAHOGA COUNTY
CUY-480-10.39

Note:

BACKWALL CONCRETE: In addition to the provisions of 511.08, no backwall concrete shall be placed above the level of the optional construction joint at the approach slab seat until after the deck in the span adjacent to the abutment has been placed.

Footing reinforcement shall be a minimum of 3" clear from all surfaces.

For additional notes and details see Sheets 4/20 thru 7/20

Sections below are located as shown:

| SECTION | SHEET |
|---|---|
| $A_1$-$A_1$ thru $A_3$-$A_3$ | 4/20 |
| $A_4$-$A_4$ thru $A_6$-$A_6$ | 5/20 |
| $A_7$-$A_7$ thru $A_9$-$A_9$ | 6/20 |
| $A_{10}$-$A_{10}$ thru $A_{12}$-$A_{12}$ | 7/20 |

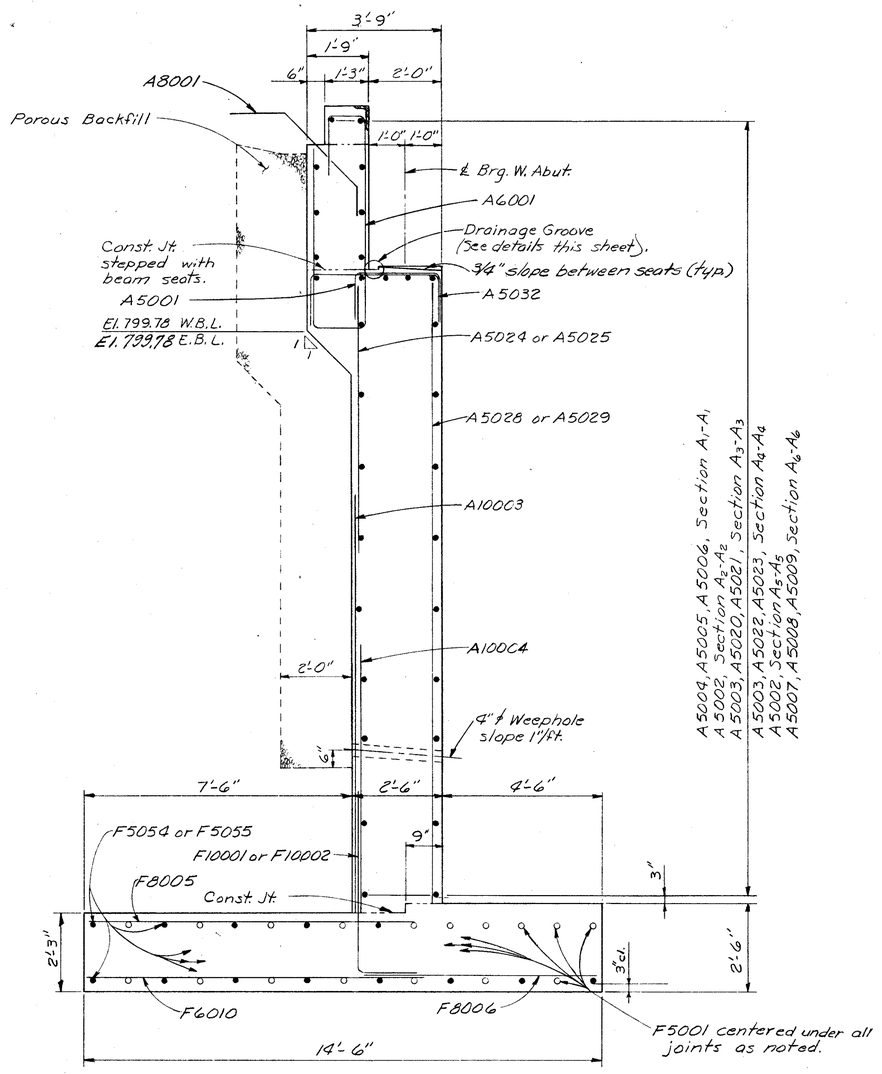


SECTION~$A_1$-$A_1$ THRU $A_6$-$A_6$

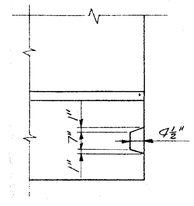


SECTION~$A_{13}$-$A_{13}$

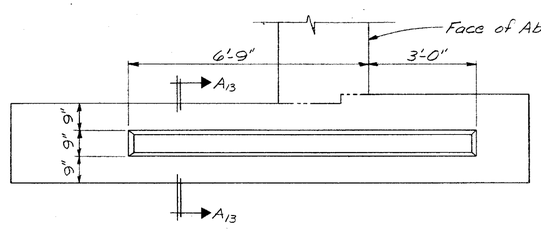


SHEAR KEY DETAIL

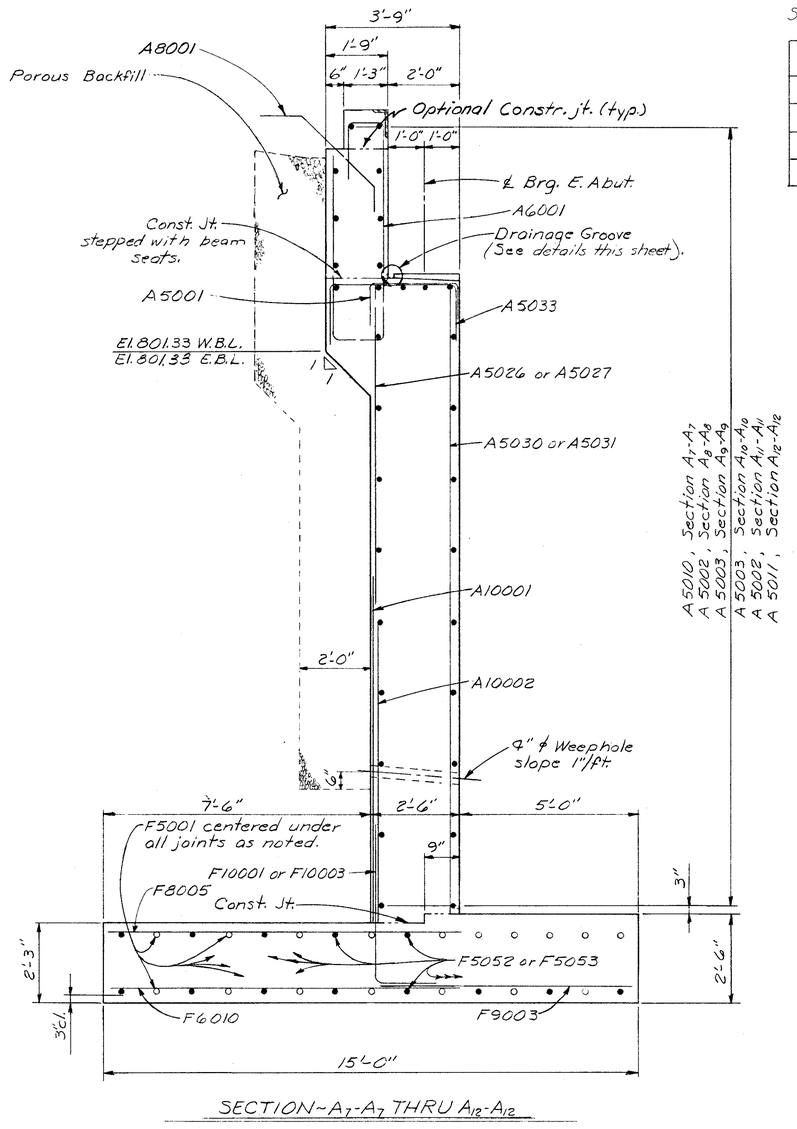


SECTION~$A_7$-$A_7$ THRU $A_{12}$-$A_{12}$

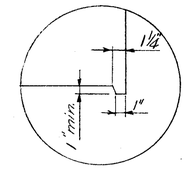


At Beam Seats.

ALDEN E. STILSON & ASSOCIATES, LIMITED
CONSULTING ENGINEERS
COLUMBUS, OHIO

8/20

# ABUTMENT DETAILS

BRIDGE No. CUY-480-1054
I-480 over WEST 130th STREET
STA. 582+30.10
CUYAHOGA COUNTY STA. 583+38.65

| DESIGNED | DRAWN | TRACED | CHECKED | REVIEWED | DATE | REVISED |
|---|---|---|---|---|---|---|
| PHB | DW | | SBP | G.W.M. | 11/12/71 | |

| FED. RD. DIVISION | STATE | PROJECT | TYPE FUNDS |
|---|---|---|---|
| 2 | OHIO | | |

320
500

CUYAHOGA COUNTY
CUY-480-10.39

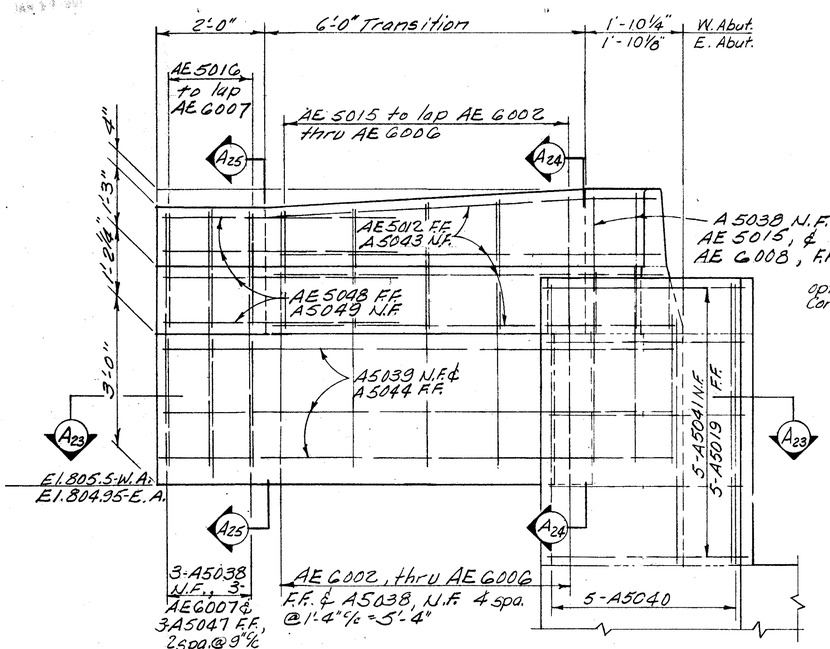


ELEVATION $A_{16}$ - $A_{16}$ 4/20

ELEVATION $A_{18}$ - $A_{18}$ 6/20

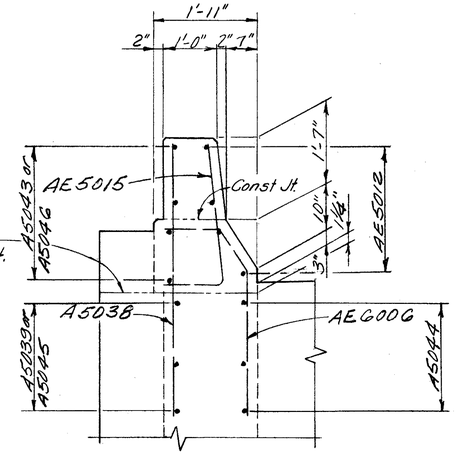


SECTION $A_{26}$-$A_{24}$

SECTION $A_{21}$-$A_{21}$ (Opp. Hand)

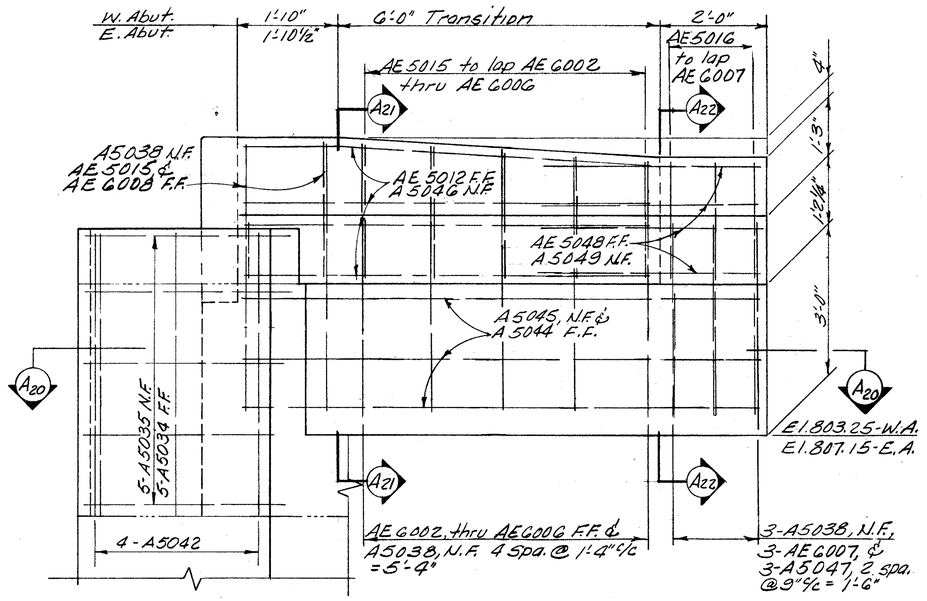


ELEVATION $A_{17}$ - $A_{17}$ 5/20

ELEVATION $A_{19}$ - $A_{19}$ 7/20

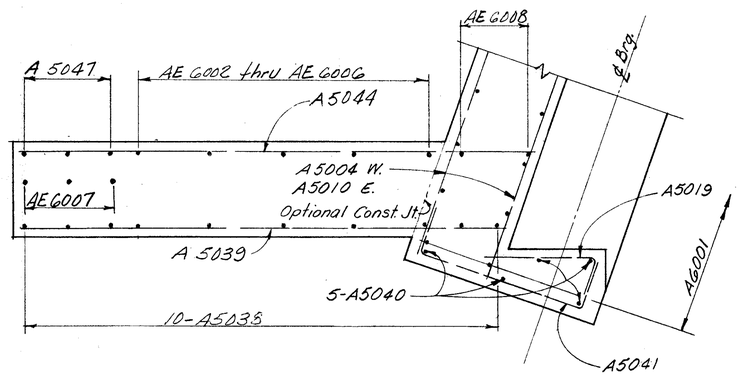


SECTION $A_{23}$-$A_{23}$

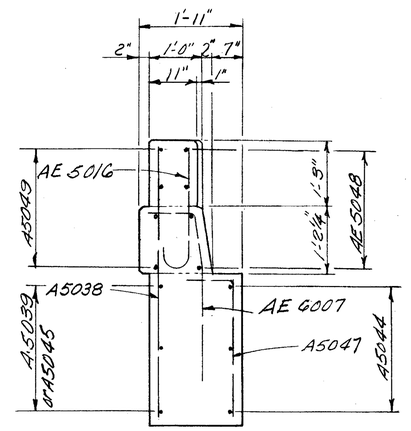


SECTION $A_{25}$-$A_{25}$

SECTION $A_{22}$-$A_{22}$ (Opp. Hand)

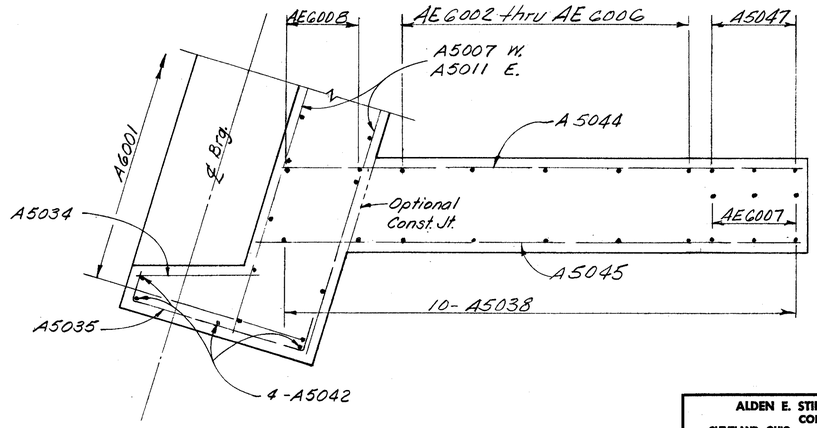


SECTION $A_{20}$-$A_{20}$

9/20

ALDEN E. STILSON & ASSOCIATES, LIMITED
CONSULTING ENGINEERS
CLEVELAND, OHIO COLUMBUS, OHIO WHEELING, W. VA.

# ABUTMENT DETAILS

BRIDGE No. CUY-480-1054
I-480 over WEST 130th STREET
STA. 582+30.10
CUYAHOGA COUNTY STA. 583+38.65

| DESIGNED | DRAWN | TRACED | CHECKED | REVIEWED | DATE | REVISED |
|---|---|---|---|---|---|---|
| | | | | | | |

| FED. RD. DIVISION | STATE | PROJECT | TYPE FUNDS |
|---|---|---|---|
| 2 | OHIO | | |

321
500

CUYAHOGA COUNTY
CUY-480-10.39

N.E. Wingwall - N

N - S.W. Wingwall

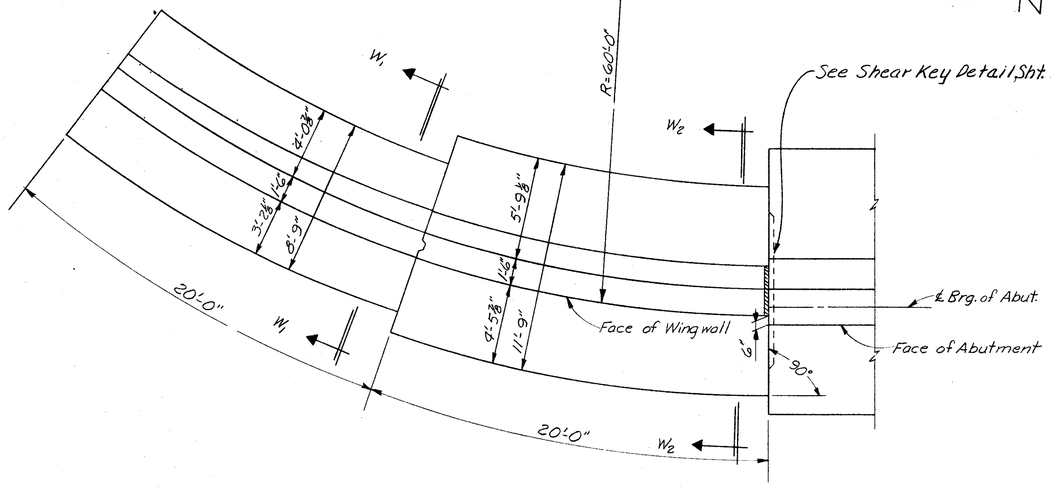


PLAN

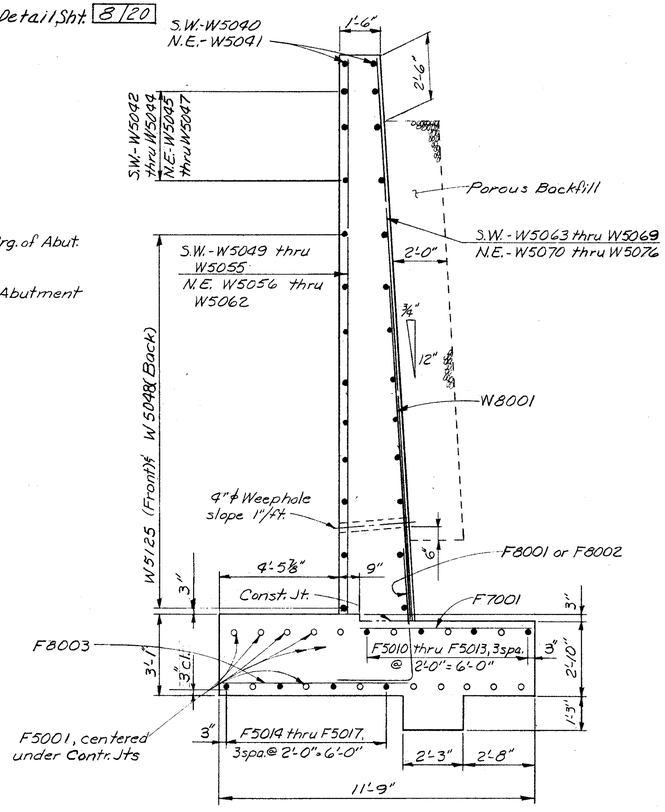


SECTION ~ $W_2$ - $W_2$

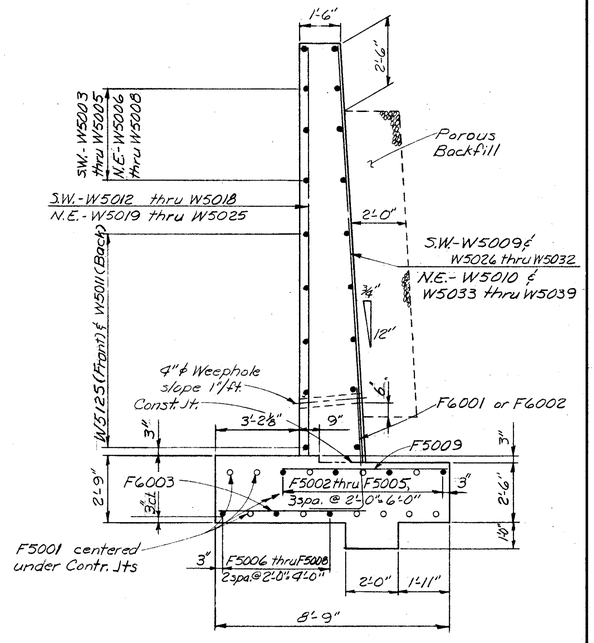


SECTION - $W_1$ - $W_1$

**Note:**

Footing reinforcement shall be a minimum of 3" clear from all surfaces.

Key on bottom of footing shall be placed in a carefully made trench against undisturbed earth.

For Wingwall Contraction Joint Detail see Sheet 12/20

Vertical Steel: All vertical stem reinforcing is in back of wall unless otherwise noted.

Field bending of longitudinal steel shall be included in Item 509 for payment.

Place weepholes in a straight line between indicated elevations.

For Rustication Groove Detail see Common Details Sheet 476
All horizontal dimensions and spacings are along or radial to face of wall

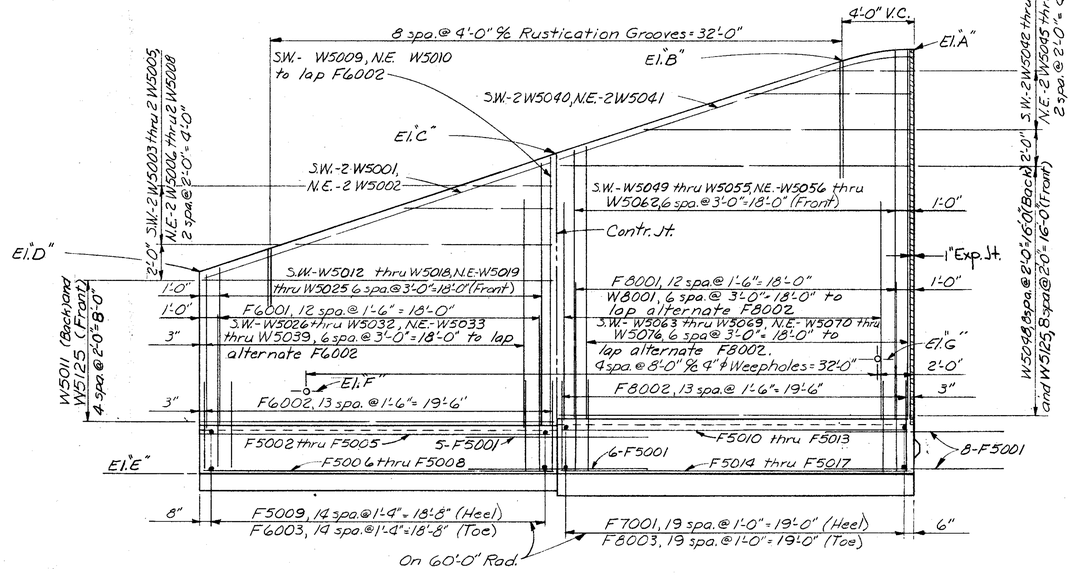


DEVELOPED ELEVATION OF SOUTHWEST AND NORTHEAST WINGWALLS

| LOCATION | ELEVATION | | | | | | |
|---|---|---|---|---|---|---|---|
| | "A" | "B" | "C" | "D" | "E" | "F" | "G" |
| South west Wing wall | 809.39 | 808.62 | 802.41 | 794.70 | 782.09 | 790.30 | 789.80 |
| Northeast Wing wall | 808.80 | 808.07 | 802.22 | 794.90 | 782.79 | 788.30 | 789.00 |

ALDEN E. STILSON & ASSOCIATES, LIMITED
CONSULTING ENGINEERS
COLUMBUS, OHIO

10/20

SOUTHWEST and NORTHEAST WINGWALLS
BRIDGE No. CUY-480-1054
I-480 over WEST 130th STREET
STA. 582+30.10
CUYAHOGA COUNTY STA. 583+38.65

| DESIGNED | DRAWN | TRACED | CHECKED | REVIEWED | DATE | REVISED |
|---|---|---|---|---|---|---|
| PHB | DW | | SBP | C.W.M. | 11/15/71 | |

JAN 27 1971

| FED. RD. DIVISION | STATE | PROJECT | TYPE FUNDS |
|---|---|---|---|
| 2 | OHIO | | |

322/500

CUYAHOGA COUNTY
CUY-480 10.39

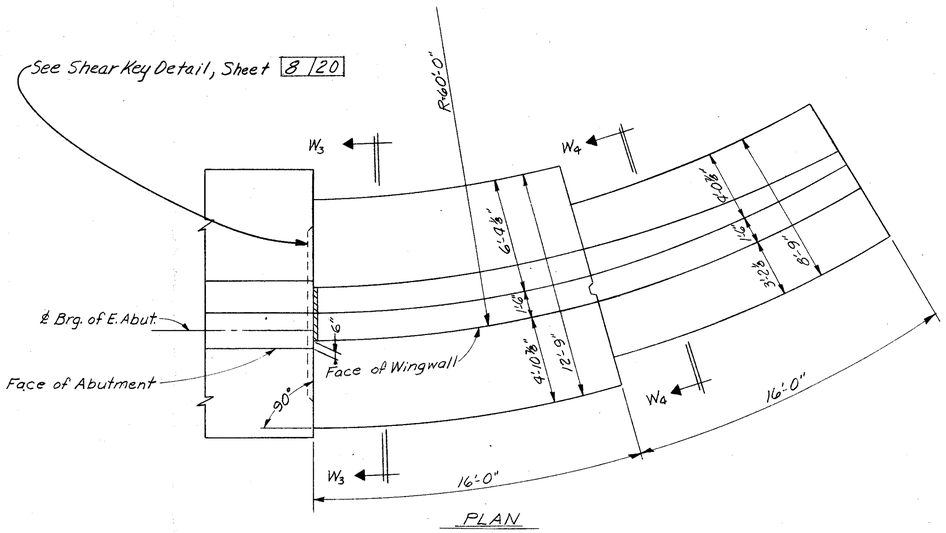


PLAN

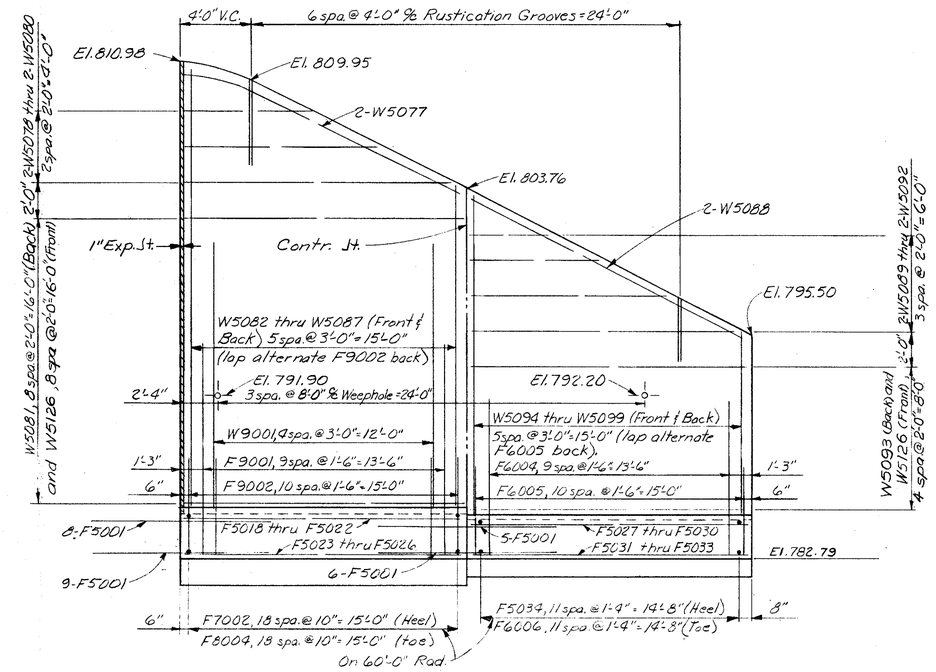


DEVELOPED ELEVATION

N

NOTES:

Vertical Steel: All vertical stem reinforcing is in back of wall unless otherwise noted.

For additional notes see Sheet 10/20

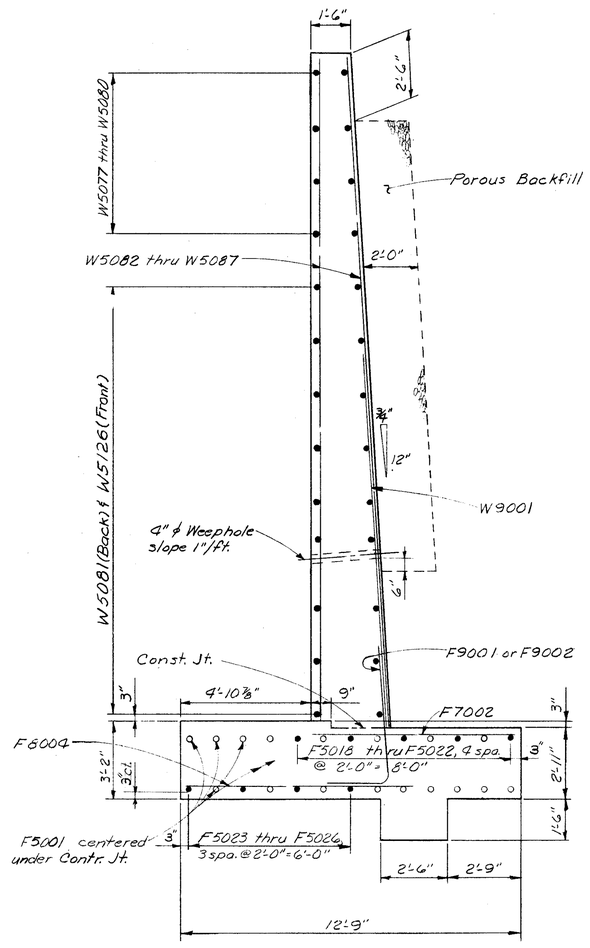


SECTION ~ $W_3$-$W_3$

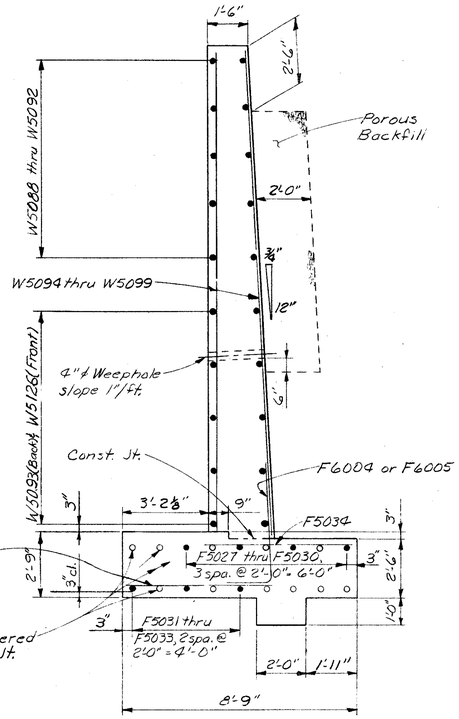


SECTION ~ $W_4$-$W_4$


ALDEN E. STILSON & ASSOCIATES, LIMITED
CONSULTING ENGINEERS
COLUMBUS, OHIO


11/20

# SOUTHEAST WINGWALL

BRIDGE No. CUY-480-1054
I-480 over WEST 130th STREET
STA. 582+30.10
CUYAHOGA COUNTY STA. 583+38.65

| DESIGNED | DRAWN | TRACED | CHECKED | REVIEWED | DATE | REVISED |
|---|---|---|---|---|---|---|
| PHB | DW | | SBP | G.W.M. | 11/15/71 | |

JAN 17 1991

| FED. RD. DIVISION | STATE | PROJECT | TYPE FUNDS |
|---|---|---|---|
| 2 | OHIO | | |

323/500

CUYAHOGA COUNTY
CUY-480-10.39

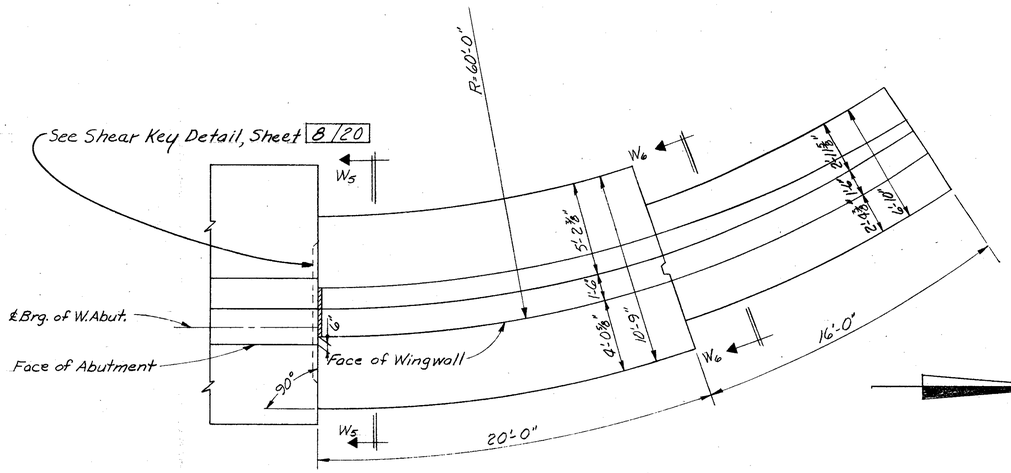


PLAN

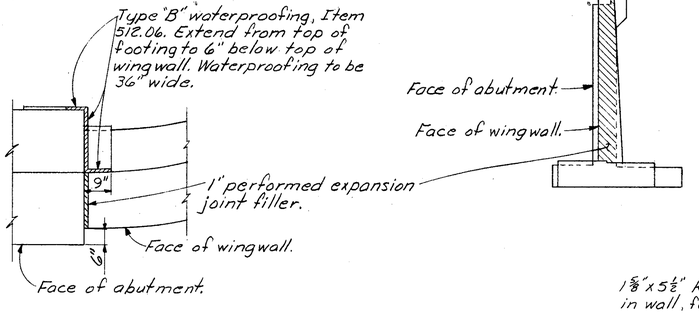


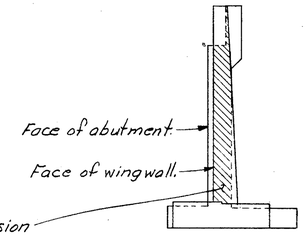


NOTES:

Vertical Steel: All vertical stem reinforcing is in back of wall unless otherwise noted.

For additional notes see Sheet 10/20

DETAIL "H"

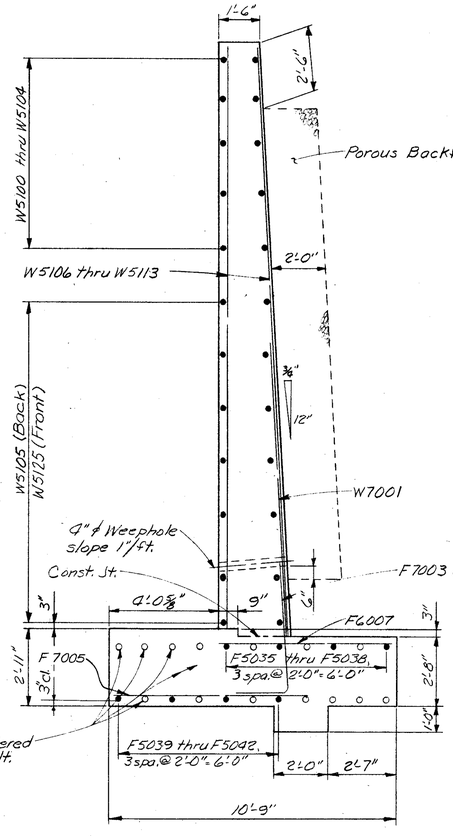


SECTION ~ $W_5$-$W_5$

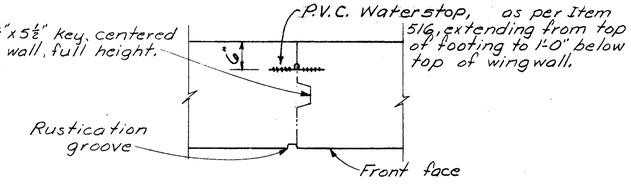


WING WALL CONTRACTION JOINT DETAIL

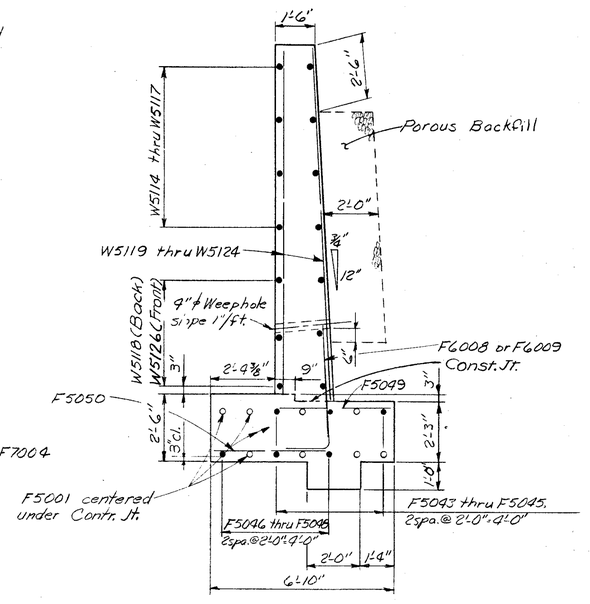


SECTION ~ $W_6$-$W_6$

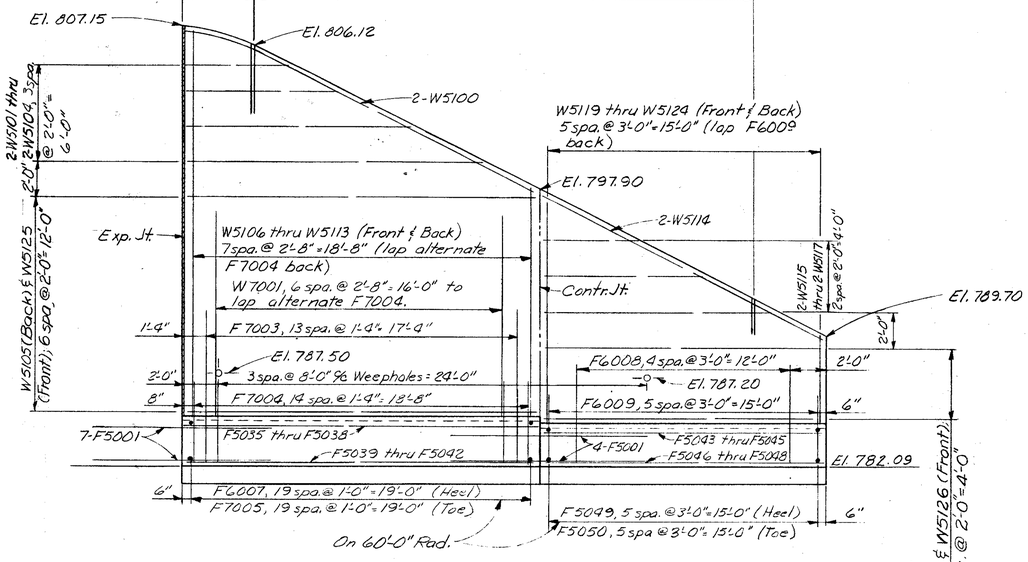


DEVELOPED ELEVATION

ALDEN E. STILSON & ASSOCIATES, LIMITED
CONSULTING ENGINEERS
COLUMBUS, OHIO

12/20

NORTHWEST WINGWALL

BRIDGE No. CUY-480-1054
I-480 over WEST 130th STREET
STA. 582+30.10
CUYAHOGA COUNTY STA. 583+38.65

| DESIGNED | DRAWN | TRACED | CHECKED | REVIEWED | DATE | REVISED |
|---|---|---|---|---|---|---|
| PHB | DW | | SBP | G.W.M. | 11/15/91 | |

RECEIVED
JAN 17 1972

| FED. RD. DIVISION | STATE | PROJECT | TYPE FUNDS |
|---|---|---|---|
| 2 | OHIO | | |

324/500

CUYAHOGA COUNTY
CUY-480-10.39

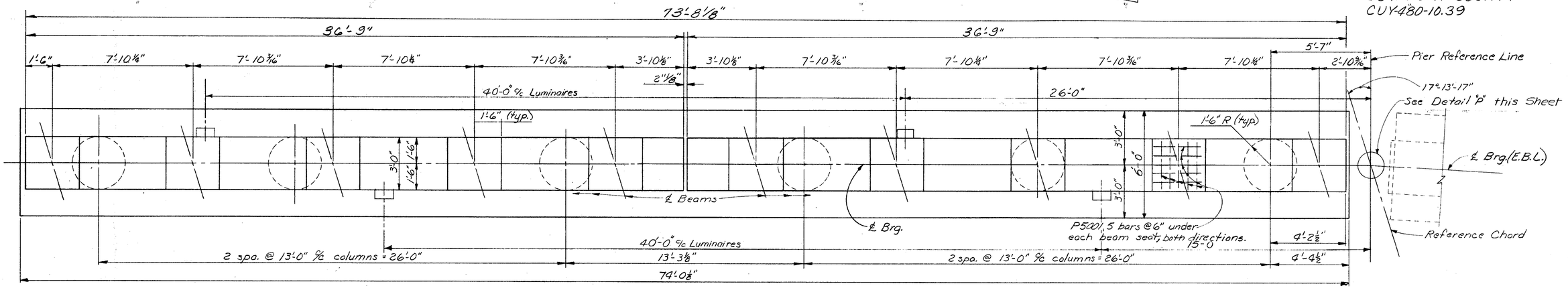


PLAN

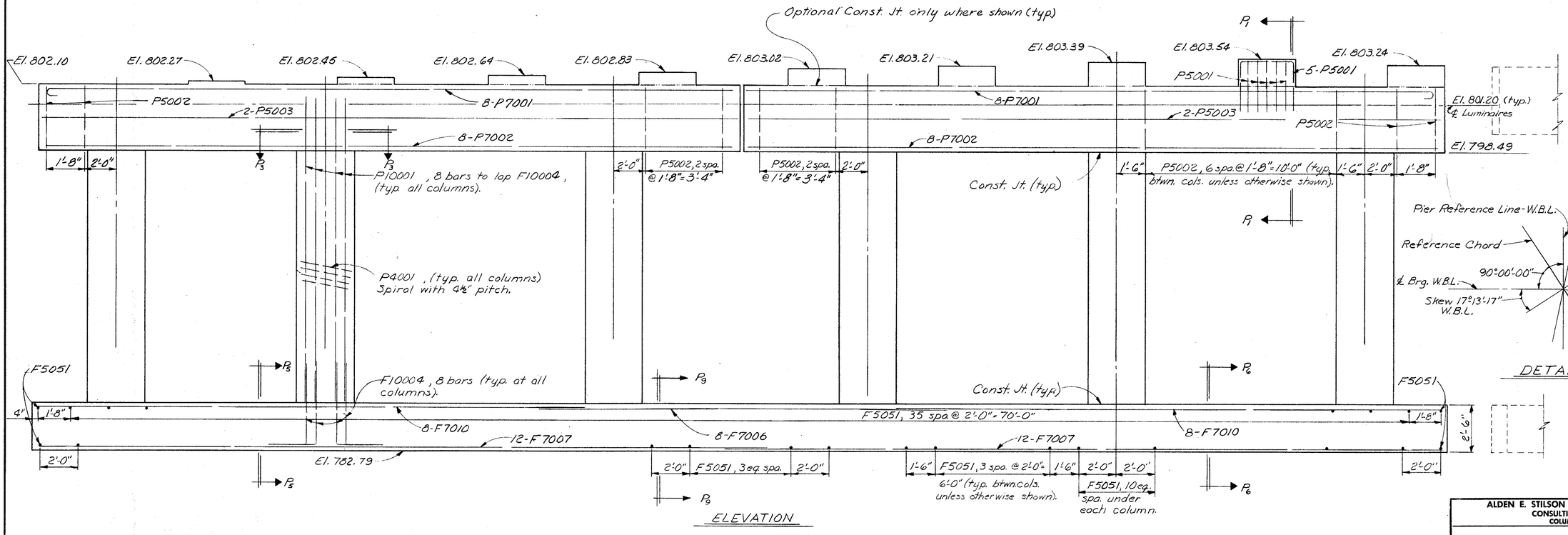


ELEVATION

DETAIL "P"

NOTES:

For sections P-P1, P3-P3, P5-P5, P6-P6, & P9-P9 see Sheet 15/20
For additional notes and details see sheets 14 & 15/20
For Superstructure grounding Details see Std. Dwg. HL-4

Stirrup bars, P5002 shall have hooked corner placed in compression area of the pier cap.

ALDEN E. STILSON & ASSOCIATES, LIMITED
CONSULTING ENGINEERS
COLUMBUS, OHIO

13/20

# PIER DETAILS
(WEST BOUND LANES)
BRIDGE No. CUY-480-1054
I-480 over WEST 130th STREET
CUYAHOGA COUNTY STA. 582+30.10 STA. 583+38.65

| DESIGNED | DRAWN | TRACED | CHECKED | REVIEWED | DATE | REVISED |
|---|---|---|---|---|---|---|
| PHB | DW | | SBP | G.W.M. | 11/3/71 | |

MICROFILMED
JAN 17 1991

| FED. RD. DIVISION | STATE | PROJECT | TYPE FUNDS |
|---|---|---|---|
| 2 | OHIO | | |

325/500

CUYAHOGA COUNTY
CUY-480-10.39

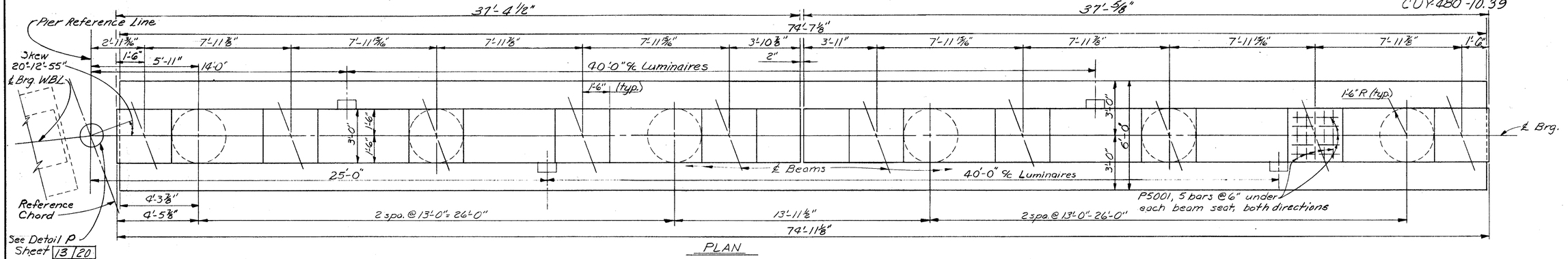


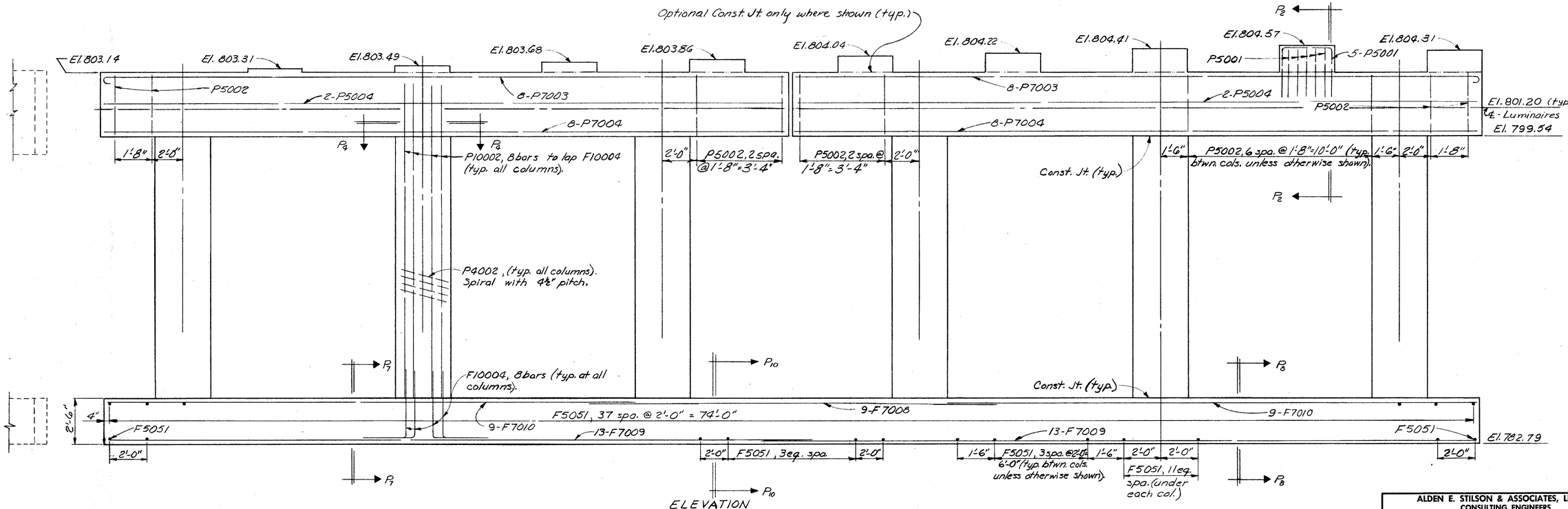


For sections P2-P2, P4-P4, P7-P7, P8-P8, & P10-P10 see Sheet 15/20
For additional notes and details see Sheets 13 & 15/20

ALDEN E. STILSON & ASSOCIATES, LIMITED
CONSULTING ENGINEERS
COLUMBUS, OHIO

14/20

# PIER DETAILS
(EAST BOUND LANES)
BRIDGE No. CUY-480-1054
I-480 over WEST 130TH STREET
STA. 582+30.10
CUYAHOGA COUNTY STA. 583+38.65

| DESIGNED | DRAWN | TRACED | CHECKED | REVIEWED | DATE | REVISED |
|---|---|---|---|---|---|---|
| PHB | DW | | SBP | G.W.M. | 11/15/71 | |

JAN 17 1975

| FED. RD. DIVISION | STATE | PROJECT | TYPE FUNDS |
|---|---|---|---|
| 2 | OHIO | | |

326
500

CUYAHOGA COUNTY
CUY-480-10.39

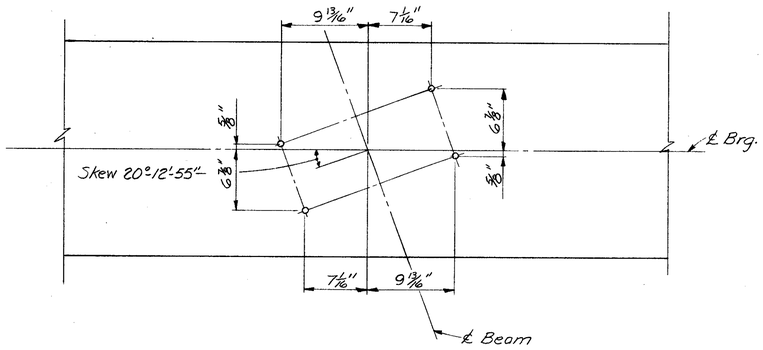


ANCHOR BOLT SETTING DETAIL
(East Bound Lanes)

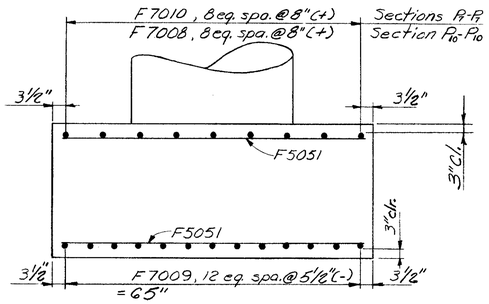


SECTIONS ~ P7-P7, P8-P8 and P10-P10

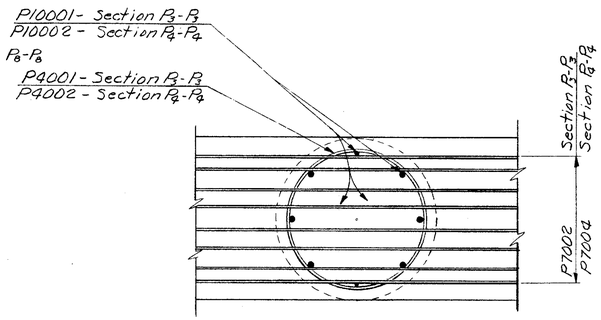


SECTIONS ~ P3-P3 and P4-P4

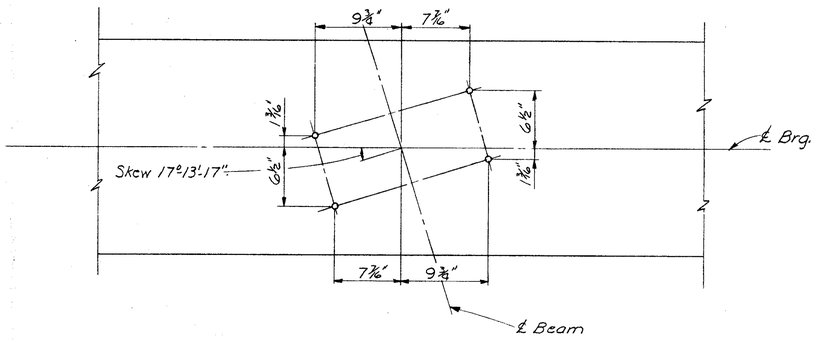


ANCHOR BOLT SETTING DETAIL
(West Bound Lanes)

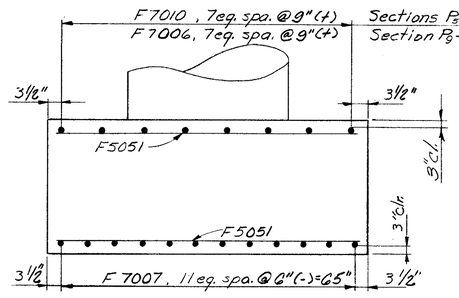


SECTIONS ~ P3-P3, P6-P6 and P9-P9

Note:
Stirrups, P5002, shall be oriented so that the hooked corner is located in the compression area as indicated in Sec. P1-P1 & P2-P2

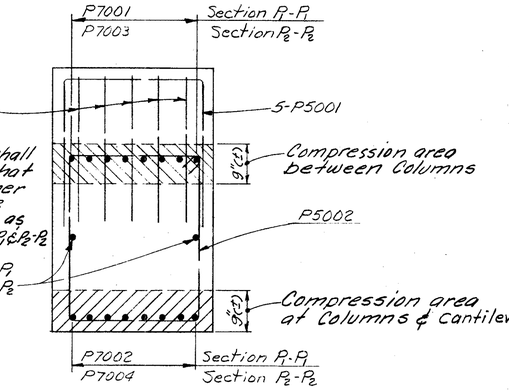


SECTIONS ~ P1-P1 and P2-P2

NOTES:

Bridge Seat Reinforcing: Special care shall be taken in placing reinforcing steel in the vicinity of the bridge seat so as to avoid interference with the drilling of anchor bar holes or the pre-setting of bearing anchors.
For additional details see Sheets 13 & 14 / 20

For locations of sections P1-P1, P3-P3, P5, P5, P6-P6 & P9-P9 see Sheet 13 / 20
For locations of sections P2-P2, P4-P4, P7-P7, P8-P8 & P10-P10 see Sheet 14 / 20

BEARING ANCHORS: At the option of the Contractor, bearing anchors (or formed holes), located and supported by templates, may be cast in place.

ALDEN E. STILSON & ASSOCIATES, LIMITED
CONSULTING ENGINEERS
COLUMBUS, OHIO
15 / 20

# PIER DETAILS

BRIDGE No. CUY-480-1054
I-480 over WEST 130TH STREET
STA. 582+30.10
CUYAHOGA COUNTY STA. 583+38.65

| DESIGNED | DRAWN | TRACED | CHECKED | REVIEWED | DATE | REVISED |
|---|---|---|---|---|---|---|
| PHB | DW | | SBP | G.W.M. | 11/19/71 | |

JAN 17 1991

Note: All longitudinal steel shall be S5157 or S5158 except as otherwise noted.

| FED. RD. DIVISION | STATE | PROJECT | TYPE FUNDS |
|---|---|---|---|
| 2 | OHIO | | |

327/500

CUYAHOGA COUNTY
CUY-480-10.39

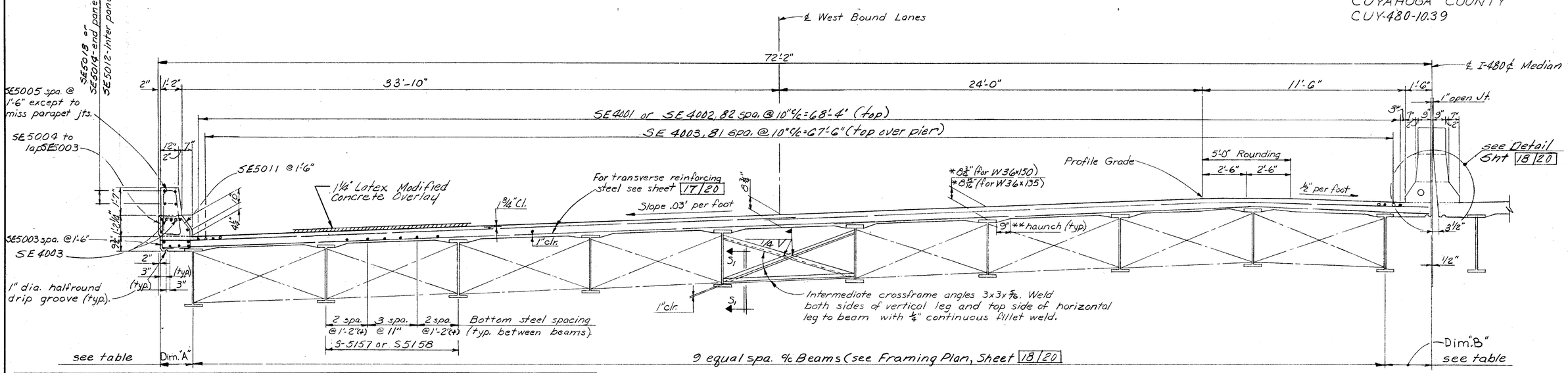


| TABLE OF SLAB CANTILEVERS | | | | | | | | | |
|---|---|---|---|---|---|---|---|---|---|
| Location | ℄ Brg. W. Abut | .25 pt. | .50 pt. | ℄ Splice | ℄ Brg. Pier | .25 pt. | .50 pt. | .75 pt | ℄ Brg. E. Abut |
| Dim. "A" | 1'-6 3/4" | 1'-5 5/8" | 1'-5 1/2" | 1'-5 1/2" | 1'-5 5/8" | 1'-6 1/8" | 1'-8 5/8" | 1'-10 1/4" | 2'-0 3/4" |
| Dim. "B" | 2'-8 5/8" | 2'-10 1/8" | 2'-11" | 2'-11 1/16" | 3'-0" | 2'-11 7/8" | 2'-11 1/4" | 2'-10" | 2'-8 3/8" |
| Dim. "C" | 2'-5 5/8" | 2'-4 1/8" | 2'-3 1/8" | 2'-2 1/16" | 2'-2" | 2'-2" | 2'-2 5/8" | 2'-3 3/4" | 2'-5 3/8" |
| Dim. "D" | 1'-4 5/8" | 1'-7" | 1'-8 3/4" | 1'-9 5/8" | 1'-11 1/4" | 2'-0 1/4" | 2'-0 1/2" | 2'-0 3/8" | 1'-11 3/8" |

TRANSVERSE SECTION ~ WEST BOUND LANES

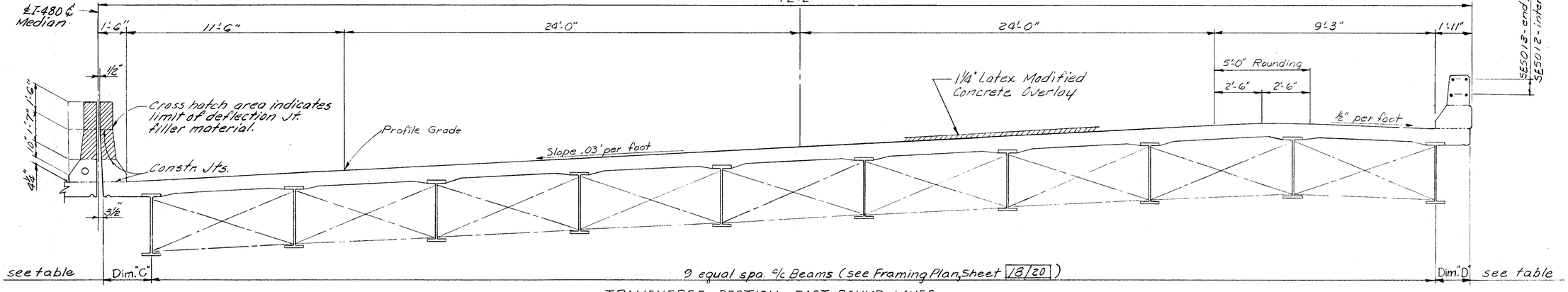


TRANSVERSE SECTION ~ EAST BOUND LANES

Details, dimensions, and reinforcing not shown oppsite hand to W.B. Lanes.

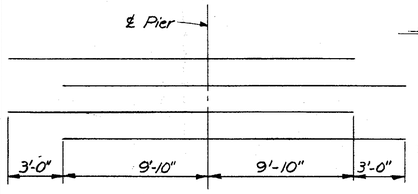


DIAGRAM SHOWING STAGGER of SE4003 BARS OVER PIERS

NOTES:

*This is the nominal dimension. The quanity of deck concrete to be paid for shall be based upon this dimension, even though deviation from it may be necessary because the top flange of the beam may not have the exact camber or conformation required to place it parallel to the finished grade.

**A typical haunch width of 9" shall be used for computing quantity of concrete. However the haunch width may vary between 6" and 12"

Field bending of transverse slab steel to be included in item 509 for payment.

Longitudinal reinforcing steel shall be field cut as necessary to avoid interference with scuppers.

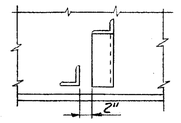


SECTION ~ S1 - S1

For additional notes and details see sheets 17 & 18/20

ALDEN E. STILSON & ASSOCIATES, LIMITED
CONSULTING ENGINEERS
COLUMBUS, OHIO
16/20

SUPERSTRUCTURE DETAILS

BRIDGE No. CUY-480-1054
I-480 over WEST 130TH STREET
STA. 582+30.10
CUYAHOGA COUNTY STA. 583+38.65

| DESIGNED | DRAWN | TRACED | CHECKED | REVIEWED | DATE | REVISED |
|---|---|---|---|---|---|---|
| PHB | DW | | SBP | G.W.M. | 11/15/71 | |

MICROFILMED
JAN 17 1991
MICROFILMED
JAN 17 1991

| FED. RD. DIVISION | STATE | PROJECT | TYPE FUNDS |
|---|---|---|---|
| 2 | OHIO | | |

328/500

CUYAHOGA COUNTY
CUY-480-10.39

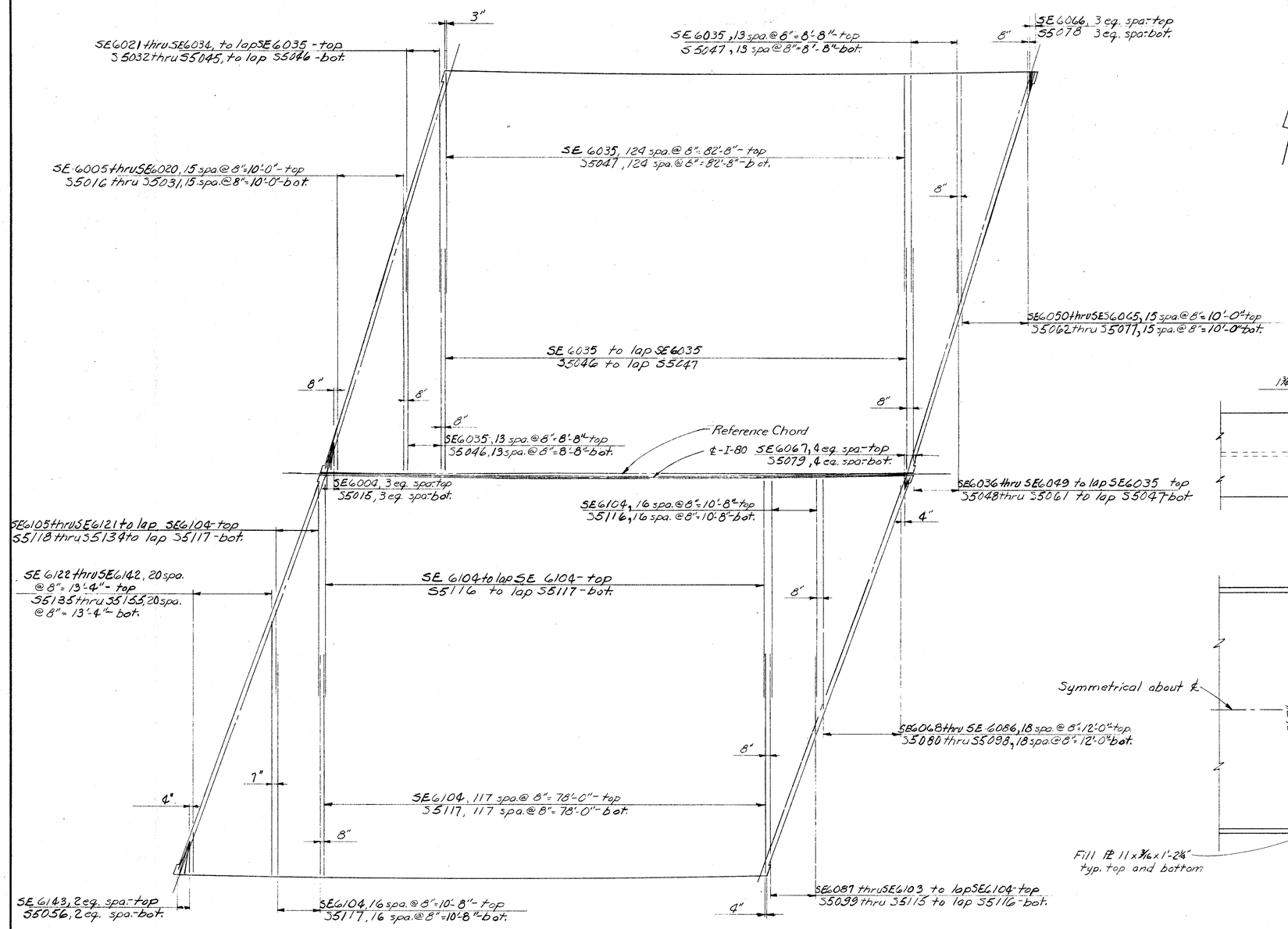


TRANSVERSE SLAB REINFORCING

Note: Transverse reinforcing bars shall be placed normal to beams except at acute corners of slab.

N

Notes

Where "(CVN)" follows a shape or plate size designation, the material shall meet specified minimum notch toughness requirements as specified in 711.01 of C.M.S.

Unless otherwise noted, high strength bolts shall be 1" ϕ A325.

For additional notes & details see sheets 16, 18/20

WELDING ATTACHMENTS: See sheet 366/500

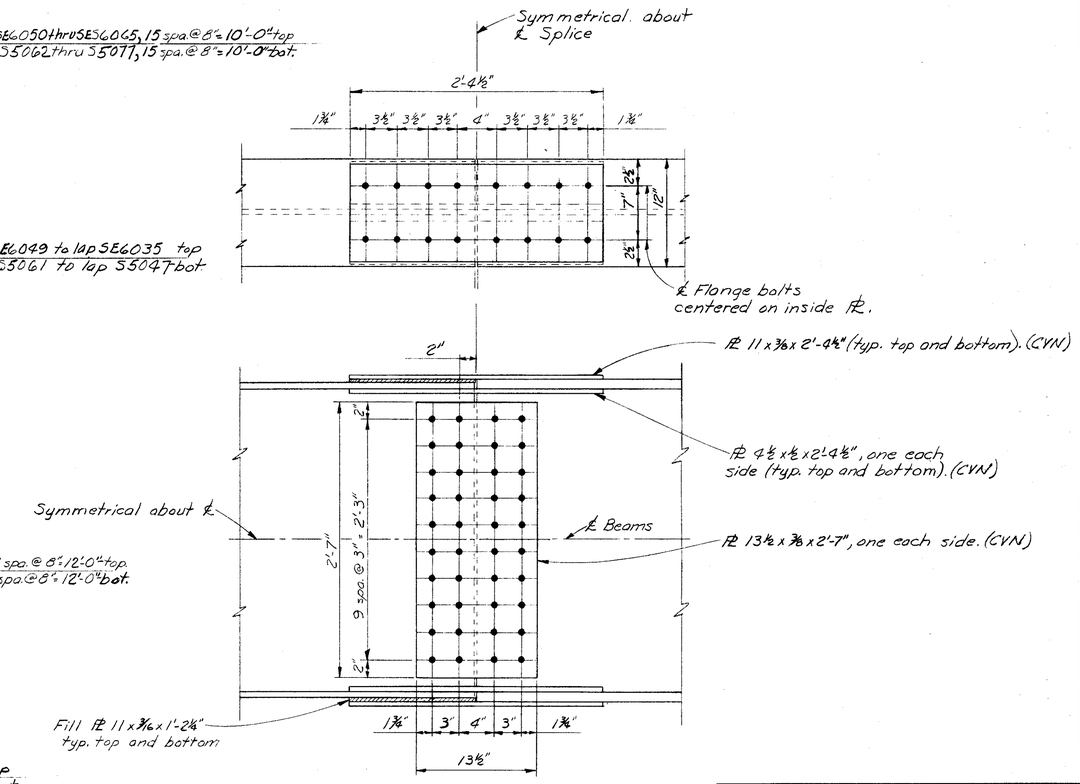


BEAM SPLICE DETAIL

Note: Bolt heads shall be placed on fascia side of exterior beams and on bottom of bottom flanges.

ALDEN E. STILSON & ASSOCIATES, LIMITED
CONSULTING ENGINEERS
COLUMBUS, OHIO

17/20

SUPERSTRUCTURE DETAILS

BRIDGE No. CUY-480-1054
I-480 over WEST 130th STREET
STA. 582+30.10
CUYAHOGA COUNTY STA. 583+38.65

| DESIGNED | DRAWN | TRACED | CHECKED | REVIEWED | DATE | REVISED |
|---|---|---|---|---|---|---|
| PHB | DW | | SBP | G.W.M. | 11/15/71 | |

| FED. RD. DIVISION | STATE | PROJECT | TYPE FUNDS |
|---|---|---|---|
| 2 | OHIO | | |

329/500

CUYAHOGA COUNTY
CUY-480-10.39

MICROFILMED
JAN 17 1991

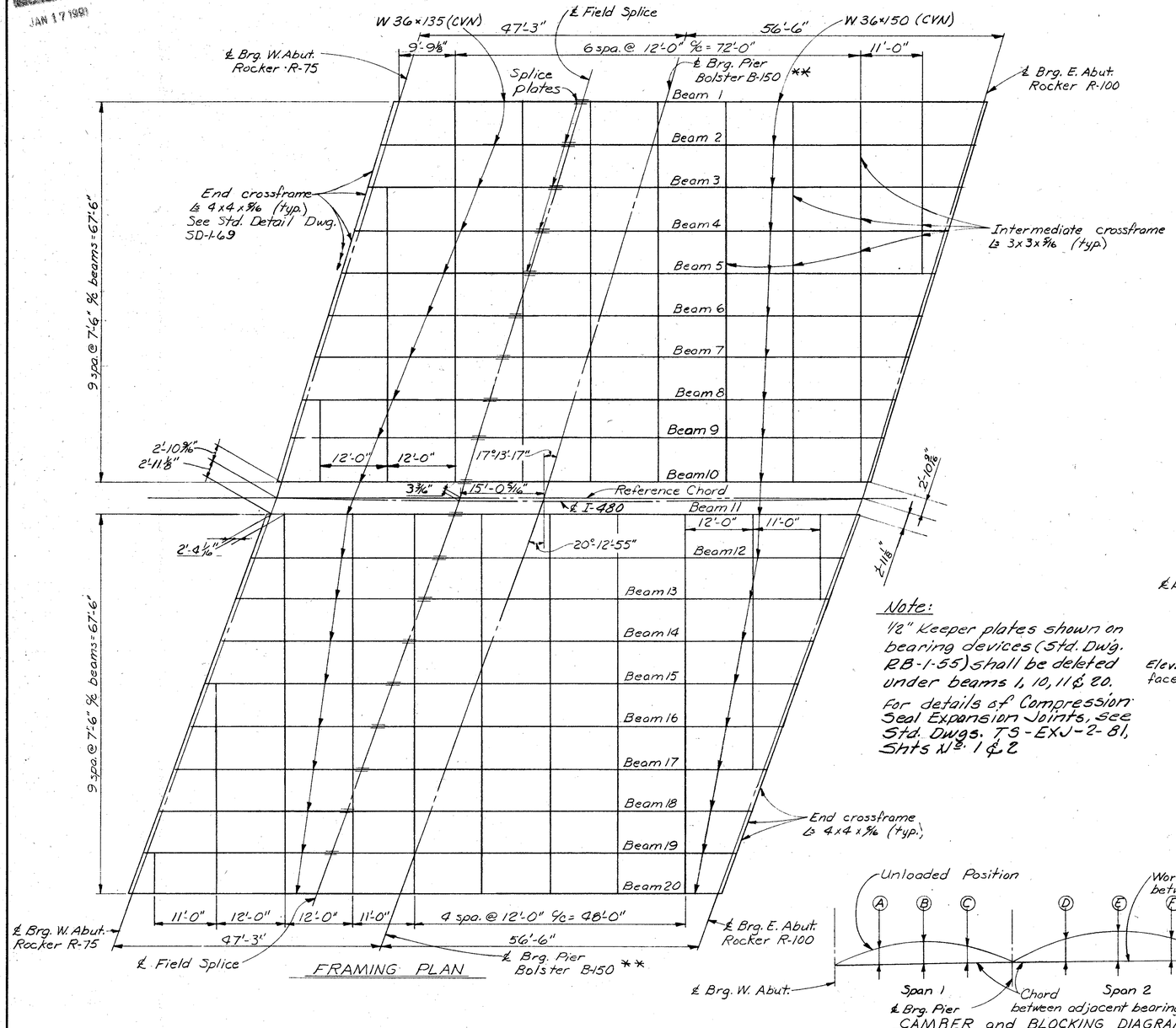


FRAMING PLAN

Note:

1/2" Keeper plates shown on bearing devices (Std. Dwg. RB-1-55) shall be deleted under beams 1, 10, 11 & 20.

For details of Compression Seal Expansion Joints, see Std. Dwgs. TS-EXJ-2-81, Shts Nos. 1 & 2

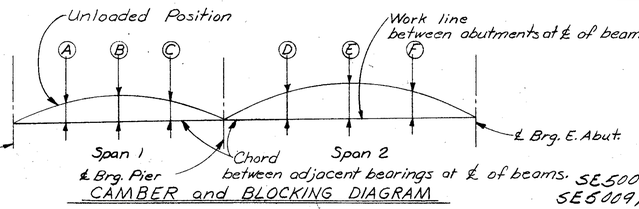


CAMBER and BLOCKING DIAGRAM

| DEFLECTION and CAMBER | Span 1 | | | Span 2 | | |
|---|---|---|---|---|---|---|
| | ⅛ Pt. | ½ Pt. | Splice | ⅛ Pt. | ½ Pt. | ¾ Pt. |
| All beams | A | B | C | D | E | F |
| Defl. due to wt. of steel | 0 | 0 | 0 | 1/16 | 1/16 | 1/16 |
| Defl. due to remaining D.L. | ⅛ | ⅛ | 1/16 | 3/16 | ⅛ | ¼ |
| Adj. req'd. for curvature | 0 | 0 | 0 | 0 | 0 | 0 |
| Req'd. shop camber | ⅛ | ⅛ | 1/16 | ¼ | 7/16 | 5/16 |

N

Screed lines 1 thru 4 and 6 thru 9 shall be deflected at ℄ I-480 to run parallel to the corresponding ℄ of Brgs. For deflection of screed line 5, see detail "S" this sheet.

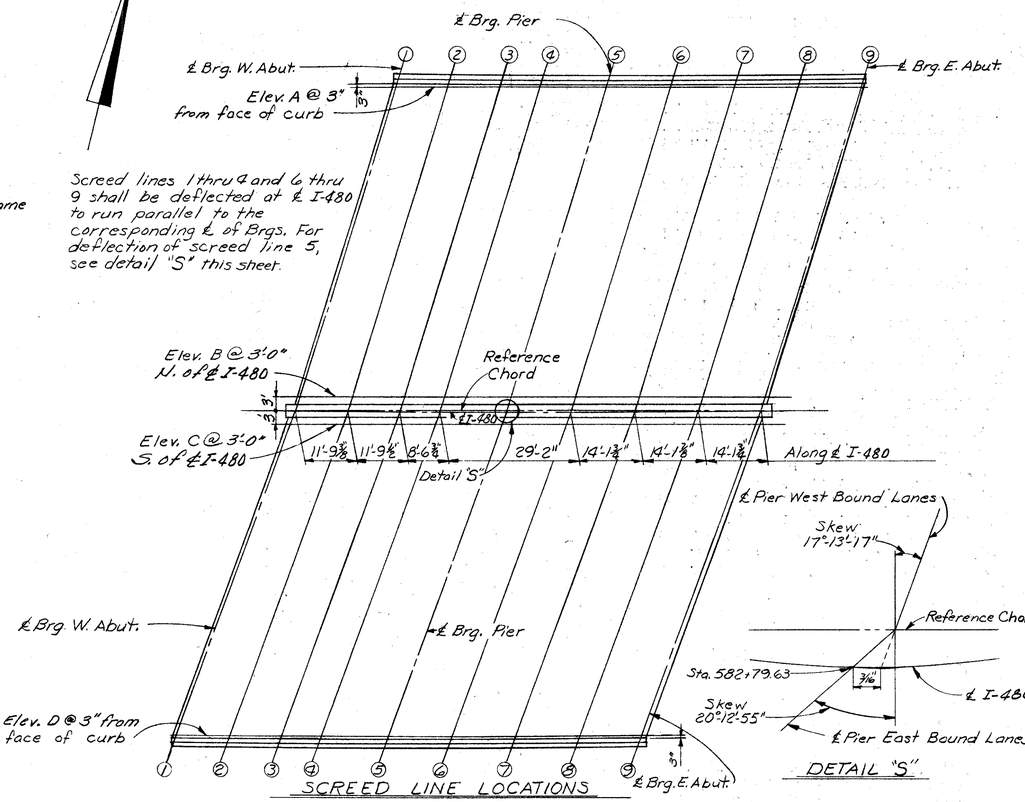


SCREED LINE LOCATIONS




DETAIL "S"

TABLE of SCREED ELEVATIONS

| | 1 | 2 | 3 | 4 | 5 | 6 | 7 | 8 | 9 |
|---|---|---|---|---|---|---|---|---|---|
| A | 806.19 | 806.38 | 806.57 | 806.70 | 806.94 | 807.17 | 807.41 | 807.63 | 807.83 |
| B | 807.34 | 807.53 | 807.72 | 807.85 | 808.08 | 808.31 | 808.55 | 808.76 | 808.96 |
| C | 807.25 | 807.44 | 807.62 | 807.76 | 807.99 | 808.22 | 808.46 | 808.67 | 808.87 |
| D | 808.43 | 808.62 | 808.80 | 808.93 | 809.15 | 809.38 | 809.61 | 809.82 | 810.02 |

The elevations shown in the table above, are those which are required before concrete is placed. Proper allowance has been made for the Dead Load deflections caused by the weight of the concrete.

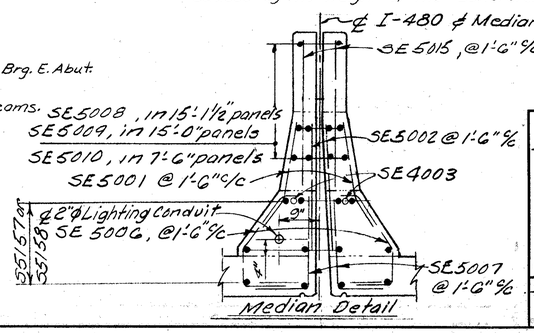


Median Detail

NOTES:

All intermediate crossframes shall be normal to beams.

For field splice details see Sheet 17/20

For additional notes and details see sheets 16 & 17/20

** Refer to Std. Dwg. RB-1-55 for detail dimensions of Bolster B-150 except that the "k" dimension shall be 13" instead of 11½".

ALDEN E. STILSON & ASSOCIATES, LIMITED
CONSULTING ENGINEERS
COLUMBUS, OHIO

18/20

SUPERSTRUCTURE DETAILS

BRIDGE No. CUY-480-1054
I-480 over WEST 130th STREET
STA. 582+30.10
CUYAHOGA COUNTY STA. 583+38.65

| DESIGNED | DRAWN | TRACED | CHECKED | REVIEWED | DATE | REVISED |
|---|---|---|---|---|---|---|
| PHB | DW | | SBP | G.W.M. | 11/5/91 | |

MICROFILMED
JAN 17 1991

| MARK | NUM. | LENGTH | WEIGHT | TYPE | A | B | C | D | E | NOTE |
|---|---|---|---|---|---|---|---|---|---|---|
| | | | ABUTMENTS | | | | | | | |
| A 5001 | 200 | 4-11 | 1026 | 1 | | 1- 6 | 2- 2 | 1- 6 | | |
| A 5002 | 128 | 31- 8 | 4228 | ST | | | | | | |
| A 5003 | 124 | 23- 7 | 3050 | ST | | | | | | |
| A 5004 | 31 | 21- 5 | 692 | ST | | | | | | |
| A 5005 | 2 | 3- 9 | 8 | ST | | | | | | |
| A 5006 | 2 | 16- 0 | 33 | ST | | | | | | |
| A 5007 | 29 | 20- 3 | 613 | ST | | | | | | |
| A 5008 | 2 | 4- 3 | 9 | ST | | | | | | |
| A 5009 | 2 | 13- 4 | 28 | ST | | | | | | |
| A 5010 | 31 | 20- 9 | 671 | ST | | | | | | |
| A 5011 | 33 | 22- 1 | 760 | ST | | | | | | |
| A 5020 | 2 | 3- 1 | 6 | ST | | | | | | |
| A 5021 | 2 | 18-10 | 39 | ST | | | | | | |
| A 5022 | 2 | 3- 3 | 7 | ST | | | | | | |
| A 5023 | 2 | 18- 8 | 39 | ST | | | | | | |
| A 5024 | 29 | 18- 6 | 560 | ST | | | | | | |
| A 5025 | 28 | 7- 5 | 217 | ST | | | | | | |
| A 5026 | 30 | 9- 0 | 282 | ST | | | | | | |
| A 5027 | 31 | 10- 1 | 326 | ST | | | | | | |
| A 5028 | 29 | 17-10 | 539 | ST | | | | | | |
| A 5029 | 28 | 16-10 | 492 | ST | | | | | | |
| A 5030 | 30 | 17- 8 | 553 | ST | | | | | | |
| A 5031 | 31 | 18- 8 | 604 | ST | | | | | | |
| A 5032 | 57 | 7-11 | 471 | 1 | | 1- 8 | 3- 5 | 3- 1 | | |
| A 5033 | 61 | 7-11 | 504 | 1 | | 1- 8 | 3- 5 | 3- 1 | | |
| A 5034 | 10 | 2- 4 | 24 | ST | | | | | | |
| A 5035 | 10 | 4- 4 | 45 | 1 | | 0- 7 | 3- 5 | 0- 7 | | |
| A 5038 | 40 | 5- 2 | 216 | ST | | | | | | |
| A 5039 | 6 | 9- 0 | 56 | ST | | | | | | |
| A 5040 | 10 | 5- 3 | 55 | ST | | | | | | |
| A 5041 | 10 | 5- 0 | 52 | 1 | | 0-11 | 3- 5 | 0-11 | | |
| A 5042 | 8 | 5- 3 | 44 | ST | | | | | | |
| A 5043 | 8 | 7- 0 | 58 | ST | | | | | | |
| A 5044 | 12 | 9- 6 | 119 | ST | | | | | | |
| A 5045 | 6 | 10- 0 | 63 | ST | | | | | | |
| A 5046 | 8 | 8- 0 | 67 | ST | | | | | | |
| A 5047 | 12 | 3- 1 | 39 | 1 | 0- 9 | 2- 6 | | | | |
| A 5049 | 16 | 4- 4 | 72 | ST | | | | | | |
| | | | | | | | | | | |
| A 6001 | 311 | 15- 2 | 7085 | 2 | 4- 8 | 1- 5 | 6- 0 | 0-11 | 2-10 | |
| | | | | | | | | | | |
| A 8001 | 198 | 5- 7 | 2952 | 15 | | 0- 9 | 2- 5 | 1- 6 | 2- 5 | |
| | | | | | | | | | | |
| A10001 | 61 | 11-11 | 3128 | ST | | | | | | |
| A10002 | 58 | 9- 2 | 2288 | ST | | | | | | |
| A10003 | 57 | 12- 8 | 3107 | ST | | | | | | |
| A10004 | 54 | 8- 9 | 2033 | ST | | | | | | |
| | | | | | | | | | | |
| F 5001 | 232 | 10- 0 | 2420 | ST | | | | | | |
| F 5052 | 26 | 39-10 | 1080 | ST | | | | | | |
| F 5053 | 26 | 40- 6 | 1098 | ST | | | | | | |
| F 5054 | 26 | 40- 2 | 1089 | ST | | | | | | |
| F 5055 | 26 | 39- 7 | 1073 | ST | | | | | | |
| | | | | | | | | | | |
| F 6010 | 187 | 9- 4 | 2621 | ST | | | | | | |
| | | | | | | | | | | |
| F 8005 | 414 | 9- 6 | 10501 | ST | | | | | | |
| F 8006 | 185 | 7- 4 | 3622 | ST | | | | | | |
| | | | | | | | | | | |
| F 9003 | 187 | 8- 1 | 5139 | ST | | | | | | |
| | | | | | | | | | | |
| F10001 | 230 | 6- 6 | 6433 | 1 | | 5- 1 | 1- 9 | | | |
| F10002 | 107 | 9- 3 | 4259 | 1 | | 7-10 | 1- 9 | | | |
| F10003 | 115 | 9- 1 | 4495 | 1 | | 7- 8 | 1- 9 | | | |

| MARK | NUM. | LENGTH | WEIGHT | TYPE | A | B | C | D | E | NOTE |
|---|---|---|---|---|---|---|---|---|---|---|
| | | | WINGWALLS | | | | | | | |
| W 5001 | 2 | 20- 9 | 43 | ST | | | | | | |
| W 5002 | 2 | 20- 8 | 43 | ST | | | | | | |
| W 5003 | 2 | 17- 9 | | ST | | | | | | 1 |
| THRU | | | 80 | | VARY | LENGTH | BY | 5- 0 | 1/ 2 | |
| W 5005 | 2 | 7- 8 | | ST | | | | | | 1 |
| W 5006 | 2 | 16- 5 | | ST | | | | | | 1 |
| THRU | | | 69 | | VARY | LENGTH | BY | 5- 4 | | |
| W 5008 | 2 | 5- 9 | | ST | | | | | | 1 |
| W 5009 | 1 | 17- 1 | 18 | ST | | | | | | |
| W 5010 | 1 | 16- 2 | 17 | ST | | | | | | |
| W 5011 | 10 | 19- 0 | 198 | ST | | | | | | |
| W 5012 | 1 | 9- 9 | | ST | | | | | | 1 |
| THRU | | | 97 | | VARY | LENGTH | BY | 1- 2 | | |
| W 5018 | 1 | 16- 9 | | ST | | | | | | 1 |
| W 5019 | 1 | 9- 3 | | ST | | | | | | 1 |
| THRU | | | 92 | | VARY | LENGTH | BY | 1- 1 | 1/ 8 | |
| W 5025 | 1 | 15-10 | | ST | | | | | | 1 |
| W 5026 | 1 | 9- 9 | | ST | | | | | | 1 |
| THRU | | | 96 | | VARY | LENGTH | BY | 1- 1 | 7/ 8 | |
| W 5032 | 1 | 16- 8 | | ST | | | | | | 1 |
| W 5033 | 1 | 9- 3 | | ST | | | | | | 1 |
| THRU | | | 92 | | VARY | LENGTH | BY | 1- 1 | 1/ 8 | |
| W 5039 | 1 | 15-10 | | ST | | | | | | 1 |
| W 5040 | 2 | 20- 7 | 43 | ST | | | | | | |
| W 5041 | 2 | 20- 5 | 43 | ST | | | | | | |
| W 5042 | 2 | 16- 2 | | ST | | | | | | 1 |
| THRU | | | 70 | | VARY | LENGTH | BY | 5- 0 | | |
| W 5044 | 2 | 6- 2 | | ST | | | | | | 1 |
| W 5045 | 2 | 13- 8 | | ST | | | | | | 1 |
| THRU | | | 52 | | VARY | LENGTH | BY | 5- 4 | | |
| W 5047 | 2 | 3- 0 | | ST | | | | | | 1 |
| W 5048 | 18 | 18-11 | 355 | ST | | | | | | |
| W 5049 | 1 | 17- 2 | | ST | | | | | | 1 |
| THRU | | | 150 | | VARY | LENGTH | BY | 1- 1 | 3/ 8 | |
| W 5055 | 1 | 23-10 | | ST | | | | | | 1 |
| W 5056 | 1 | 16- 3 | | ST | | | | | | 1 |
| THRU | | | 141 | | VARY | LENGTH | BY | 1- 0 | 1/ 2 | |
| W 5062 | 1 | 22- 6 | | ST | | | | | | 1 |
| W 5063 | 1 | 17- 9 | | ST | | | | | | 1 |
| THRU | | | 152 | | VARY | LENGTH | BY | 1- 0 | 1/ 2 | |
| W 5069 | 1 | 24- 0 | | ST | | | | | | 1 |
| W 5070 | 1 | 16- 9 | | ST | | | | | | 1 |
| THRU | | | 144 | | VARY | LENGTH | BY | 1- 0 | | |
| W 5076 | 1 | 22- 9 | | ST | | | | | | 1 |
| W 5077 | 2 | 17- 1 | 36 | ST | | | | | | |
| W 5078 | 2 | 14- 0 | | ST | | | | | | 1 |
| THRU | | | 64 | | VARY | LENGTH | BY | 3- 9 | 1/ 2 | |
| W 5080 | 2 | 6- 5 | | ST | | | | | | 1 |
| W 5081 | 9 | 15- 0 | 141 | ST | | | | | | |
| W 5082 | 2 | 24- 8 | | ST | | | | | | 1 |
| THRU | | | 264 | | VARY | LENGTH | BY | 1- 5 | | |
| W 5087 | 2 | 17- 7 | | ST | | | | | | 1 |
| W 5088 | 2 | 17- 4 | 36 | ST | | | | | | |
| W 5089 | 2 | 14- 5 | | ST | | | | | | 1 |
| THRU | | | 73 | | VARY | LENGTH | BY | 3- 9 | 5/ 8 | |
| W 5092 | 2 | 3- 0 | | ST | | | | | | 1 |
| W 5093 | 5 | 15- 2 | 79 | ST | | | | | | |
| W 5094 | 2 | 17- 3 | | ST | | | | | | 1 |
| THRU | | | 167 | | VARY | LENGTH | BY | 1- 6 | 5/ 8 | |
| W 5099 | 2 | 9- 6 | | ST | | | | | | 1 |
| W 5100 | 2 | 21- 6 | 45 | ST | | | | | | |

| MARK | NUM. | LENGTH | WEIGHT | TYPE | A | B | C | D | E | NOTE |
|---|---|---|---|---|---|---|---|---|---|---|
| | | | WINGWALLS | | | | | ( CONTINUED ) | | |
| W 5101 | 2 | 16- 2 | | ST | | | | | | 1 |
| THRU | | | 88 | | VARY | LENGTH | BY | 3- 9 | | |
| W 5104 | 2 | 4-11 | | ST | | | | | | 1 |
| W 5105 | 7 | 19- 0 | 139 | ST | | | | | | |
| W 5106 | 2 | 21- 9 | | ST | | | | | | 1 |
| THRU | | | 288 | | VARY | LENGTH | BY | 1- 3 | 3/ 8 | |
| W 5113 | 2 | 12- 9 | | ST | | | | | | 1 |
| W 5114 | 2 | 17- 4 | 36 | ST | | | | | | |
| W 5115 | 2 | 12- 8 | | ST | | | | | | 1 |
| THRU | | | 56 | | VARY | LENGTH | BY | 3- 9 | 1/ 2 | |
| W 5117 | 2 | 5- 1 | | ST | | | | | | 1 |
| W 5118 | 3 | 15- 3 | 48 | ST | | | | | | |
| W 5119 | 2 | 12- 8 | | ST | | | | | | 1 |
| THRU | | | 110 | | VARY | LENGTH | BY | 1- 6 | 5/ 8 | |
| W 5124 | 2 | 4-11 | | ST | | | | | | 1 |
| W 5125 | 35 | 19- 6 | 712 | ST | | | | | | |
| W 5126 | 17 | 15- 6 | 275 | ST | | | | | | |
| | | | | | | | | | | |
| W 7001 | 7 | 10- 7 | 151 | ST | | | | | | |
| | | | | | | | | | | |
| W 8001 | 14 | 12- 6 | 467 | ST | | | | | | |
| | | | | | | | | | | |
| W 9001 | 5 | 14- 8 | 249 | ST | | | | | | |
| | | | | | | | | | | |
| F 5001 | 41 | 10- 0 | 428 | ST | | | | | | |
| F 5002 | 2 | 19-10 | | ST | | | | | | 1 |
| THRU | | | 157 | | VARY | LENGTH | BY | 0- 8 | | |
| F 5005 | 2 | 17-10 | | ST | | | | | | 1 |
| F 5006 | 2 | 20- 8 | | ST | | | | | | 1 |
| THRU | | | 125 | | VARY | LENGTH | BY | 0- 8 | | |
| F 5008 | 2 | 19- 4 | | ST | | | | | | 1 |
| F 5009 | 30 | 5- 1 | 159 | ST | | | | | | |
| F 5010 | 2 | 19- 4 | | ST | | | | | | 1 |
| THRU | | | 153 | | VARY | LENGTH | BY | 0- 8 | | |
| F 5013 | 2 | 17- 4 | | ST | | | | | | 1 |
| F 5014 | 2 | 21- 1 | | ST | | | | | | 1 |
| THRU | | | 168 | | VARY | LENGTH | BY | 0- 8 | | |
| F 5017 | 2 | 19- 1 | | ST | | | | | | 1 |
| F 5018 | 1 | 15- 9 | | ST | | | | | | 1 |
| THRU | | | 77 | | VARY | LENGTH | BY | 0- 6 | 1/ 4 | |
| F 5022 | 1 | 13- 8 | | ST | | | | | | 1 |
| F 5023 | 1 | 16-10 | | ST | | | | | | 1 |
| THRU | | | 67 | | VARY | LENGTH | BY | 0- 6 | 3/ 8 | |
| F 5026 | 1 | 15- 3 | | ST | | | | | | 1 |
| F 5027 | 1 | 15-10 | | ST | | | | | | 1 |
| THRU | | | 63 | | VARY | LENGTH | BY | 0- 6 | 3/ 8 | |
| F 5030 | 1 | 14- 3 | | ST | | | | | | 1 |
| F 5031 | 1 | 16- 5 | | ST | | | | | | 1 |
| THRU | | | 50 | | VARY | LENGTH | BY | 0- 6 | 1/ 2 | |
| F 5033 | 1 | 15- 4 | | ST | | | | | | 1 |
| F 5034 | 12 | 5- 0 | 63 | ST | | | | | | |
| F 5035 | 1 | 19- 7 | | ST | | | | | | 1 |
| THRU | | | 78 | | VARY | LENGTH | BY | 0- 8 | | |
| F 5038 | 1 | 17- 7 | | ST | | | | | | 1 |
| F 5039 | 1 | 20-11 | | ST | | | | | | 1 |
| THRU | | | 83 | | VARY | LENGTH | BY | 0- 8 | | |
| F 5042 | 1 | 18-11 | | ST | | | | | | 1 |
| F 5043 | 1 | 15- 7 | | ST | | | | | | 1 |
| THRU | | | 47 | | VARY | LENGTH | BY | 0- 6 | 1/ 2 | |
| F 5045 | 1 | 14- 6 | | ST | | | | | | 1 |
| F 5046 | 1 | 16- 2 | | ST | | | | | | 1 |
| THRU | | | 49 | | VARY | LENGTH | BY | 0- 6 | | |
| F 5048 | 1 | 15- 2 | | ST | | | | | | 1 |
| F 5049 | 6 | 4- 2 | 26 | ST | | | | | | |
| F 5050 | 6 | 4- 3 | 27 | ST | | | | | | |

## BAR BENDING DIAGRAM TYPES

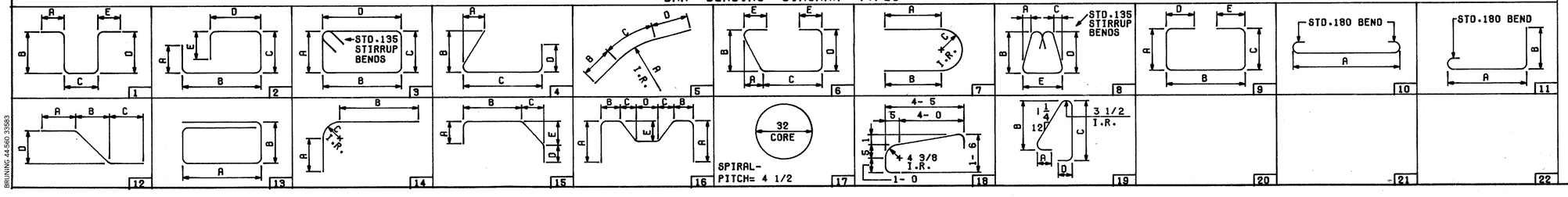


BRUNING 44-560 33983

| FED. RD. DIVISION | STATE | PROJECT | TYPE FUNDS |
|---|---|---|---|
| 5 | OHIO | | |

330
500

CUYAHOGA COUNTY

CUY-480-10.39

NOTES

1. INDICATES SERIES BAR. EACH BAR VARIES FROM ADJACENT BAR(S) BY TABULATED AMOUNT(S), CALCULATED TO NEAREST 1/8 INCH. WEIGHT SHOWN IS FOR ENTIRE SERIES UTILIZING AVERAGE LENGTH.

3. COST OF FIELD BENDING SHALL BE INCLUDED WITH ITEM 509.

6. 'LENGTH' SHOWN FOR SPIRAL BARS IS DISTANCE FROM TOP OF FOOTING TO BOTTOM OF PIER CAP.
'NO. TURNS' SHOWN IS 'LENGTH' DIVIDED BY PITCH, PLUS 3 TURNS (NUMBER OF CLOSED COILS), EXPRESSED AS NEAREST WHOLE NUMBER.
1 1/2 CLOSED COILS SHALL BE PROVIDED AT ENDS OF EACH SPIRAL UNIT. FOUR STEEL CHANNEL, TEE OR ANGLE SPACERS, WEIGHING APPROXIMATELY 0.80 LB. PER LIN. FT. OF SPACER SHALL BE PROVIDED FOR EACH SPIRAL UNIT. THEY SHALL BE EQUALLY SPACED ALONG PERIPHERY OF COIL. WEIGHT OF SPACERS, AT 0.80 LB. PER LIN. FT. WILL BE PAID FOR AS REINFORCING STEEL AND IS INCLUDED IN TABULATED WEIGHT.

REFER TO CMS SECTIONS 106.03, 700, 709.01 THROUGH 709.05 AND 709.08. SUFFICIENT ADDITIONAL REINFORCING STEEL SHALL BE PROVIDED FOR SAMPLING. RANDOM SAMPLES SHALL BE REPLACED IN THE STRUCTURES BY THE ADDITIONAL STEEL, SPLICED IN ACCORDANCE WITH 509.08.

BAR DIMENSIONS ARE OUT TO OUT.

A BAR MARK THAT INCLUDES THE LETTER 'E' IN ITS PREFIX INDICATES THAT THE BAR SHALL BE EPOXY COATED.

19120

ALDEN E. STILSON & ASSOCIATES, LIMITED
CONSULTING ENGINEERS
CLEVELAND, OHIO COLUMBUS, OHIO WHEELING, W. VA.

# REINFORCING STEEL LIST

BRIDGE NO. CUY-480-1054
I-480 OVER WEST 130TH STREET
STA. 582+30.10 TO
CUYAHOGA COUNTY STA. 583+38.65

| DESIGNED | DRAWN | TRACED | CHECKED | REVIEWED | DATE | REVISED |
|---|---|---|---|---|---|---|
| | | | | | | |

MICROFILMED
JAN 17 1985

| MARK | NUM. | LENGTH | WEIGHT | TYPE | A | B | C | D | E | NOTE |
|---|---|---|---|---|---|---|---|---|---|---|
| | | | WINGWALLS | | | | | | ( CONTINUED ) | |
| F 6001 | 26 | 10- 6 | 410 | 4 | 0- 7 | 8- 8 | 1-11 | | | |
| F 6002 | 28 | 6- 9 | 284 | 4 | 0- 4 | 5- 0 | 1-11 | | | |
| F 6003 | 30 | 5- 4 | 240 | ST | | | | | | |
| F 6004 | 10 | 10- 6 | 158 | 4 | 0- 7 | 8- 8 | 1-11 | | | |
| F 6005 | 11 | 6- 9 | 112 | 4 | 0- 4 | 5- 0 | 1-11 | | | |
| F 6006 | 12 | 5- 4 | 96 | ST | | | | | | |
| F 6007 | 20 | 6- 4 | 190 | ST | | | | | | |
| F 6008 | 5 | 6- 5 | 48 | 4 | 0- 4 | 4- 8 | 1-11 | | | |
| F 6009 | 6 | 5- 8 | 51 | 4 | 0- 3 | 3-11 | 1-11 | | | |
| F 7001 | 40 | 7- 0 | 572 | ST | | | | | | |
| F 7002 | 19 | 7- 6 | 291 | ST | | | | | | |
| F 7003 | 14 | 10-10 | 310 | 4 | 0- 7 | 8- 9 | 2- 3 | | | |
| F 7004 | 15 | 6- 9 | 207 | 4 | 0- 4 | 4- 8 | 2- 3 | | | |
| F 7005 | 20 | 6- 5 | 262 | ST | | | | | | |
| F 8001 | 26 | 13- 0 | 902 | 4 | 0- 8 | 10- 8 | 2- 6 | | | |
| F 8002 | 28 | 7- 5 | 554 | 4 | 0- 4 | 5- 1 | 2- 6 | | | |
| F 8003 | 40 | 7- 0 | 748 | ST | | | | | | |
| F 8004 | 19 | 7- 6 | 380 | ST | | | | | | |
| F 9001 | 10 | 14- 5 | 490 | 4 | 0- 9 | 11-10 | 2-10 | | | |
| F 9002 | 11 | 8- 1 | 302 | 4 | 0- 5 | 5- 6 | 2-10 | | | |
| | | | PIERS | | | | | | | |
| P 4001 | 6 | 13- 3 | 1531 | 17 | NO. TURNS = 38 | | NO. SPACERS = 24 | | | 6 |
| P 4002 | 6 | 14- 3 | 1651 | 17 | NO. TURNS = 41 | | NO. SPACERS = 24 | | | 6 |
| P 5001 | 100 | 8- 1 | 843 | 1 | | 2-10 | 2- 8 | 2-10 | | |
| P 5002 | 156 | 8- 9 | 1424 | 1 | | 3- 2 | 2- 8 | 3- 2 | | |
| P 5003 | 4 | 36- 5 | 152 | ST | | | | | | |
| P 5004 | 4 | 37- 0 | 154 | ST | | | | | | |
| P 7001 | 16 | 37- 3 | 1218 | 11 | 36- 5 | | | | | |
| P 7002 | 16 | 36- 5 | 1191 | ST | | | | | | |
| P 7003 | 16 | 37-10 | 1237 | 11 | 37- 0 | | | | | |
| P 7004 | 16 | 37- 0 | 1210 | ST | | | | | | |
| P10001 | 48 | 16- 2 | 3339 | ST | | | | | | |
| P10002 | 48 | 17- 3 | 3563 | ST | | | | | | |
| F 5051 | 258 | 5- 8 | 1525 | ST | | | | | | |
| F 7006 | 8 | 20- 7 | 337 | ST | | | | | | |
| F 7007 | 24 | 37-11 | 1860 | ST | | | | | | |
| F 7008 | 9 | 21- 3 | 391 | ST | | | | | | |
| F 7009 | 26 | 38- 3 | 2033 | ST | | | | | | |
| F 7010 | 34 | 28-10 | 2004 | ST | | | | | | |
| F10004 | 96 | 6- 6 | 2685 | 1 | | 5- 4 | 1- 6 | | | |
| | | | SUPERSTRUCTURE | | | | | | | |
| S 5015 | 4 | 4-11 | 21 | ST | | | | | | 1 |
| S 5016 | 1 | 7- 1 | | ST | | | | | | |
| THRU | | | 387 | | VARY | LENGTH | BY | 2- 1 | 3/ 4 | |
| S 5031 | 1 | 39- 4 | | ST | | | | | | 1 |

| MARK | NUM. | LENGTH | WEIGHT | TYPE | A | B | C | D | E | NOTE |
|---|---|---|---|---|---|---|---|---|---|---|
| | | | SUPERSTRUCTURE | | | | | | ( CONTINUED ) | |
| S 5032 | 1 | 9- 6 | | ST | | | | | | 1 |
| THRU | | | 344 | | VARY | LENGTH | BY | 2- 2 | | |
| S 5045 | 1 | 37- 8 | | ST | | | | | | 1 |
| S 5046 | 139 | 34- 2 | 4953 | ST | | | | | | |
| S 5047 | 139 | 39- 8 | 5751 | ST | | | | | | |
| S 5048 | 1 | 30- 6 | | ST | | | | | | 1 |
| THRU | | | 243 | | VARY | LENGTH | BY | 2- 1 | 5/ 8 | |
| S 5061 | 1 | 2- 9 | | ST | | | | | | 1 |
| S 5062 | 1 | 38- 6 | | ST | | | | | | 1 |
| THRU | | | 373 | | VARY | LENGTH | BY | 2- 1 | 3/ 4 | |
| S 5077 | 1 | 6- 3 | | ST | | | | | | 1 |
| S 5078 | 4 | 4- 1 | 17 | ST | | | | | | |
| S 5079 | 5 | 5- 5 | 28 | ST | | | | | | |
| S 5080 | 1 | 6- 4 | | ST | | | | | | 1 |
| THRU | | | 448 | | VARY | LENGTH | BY | 1- 9 | 3/ 4 | |
| S 5098 | 1 | 38-11 | | ST | | | | | | 1 |
| S 5099 | 1 | 9- 3 | | ST | | | | | | 1 |
| THRU | | | 420 | | VARY | LENGTH | BY | 1- 9 | 5/ 8 | |
| S 5115 | 1 | 38- 2 | | ST | | | | | | 1 |
| S 5116 | 135 | 33- 4 | 4693 | ST | | | | | | |
| S 5117 | 135 | 39- 9 | 5597 | ST | | | | | | |
| S 5118 | 1 | 32- 4 | | ST | | | | | | 1 |
| THRU | | | 316 | | VARY | LENGTH | BY | 1- 9 | 3/ 4 | |
| S 5134 | 1 | 3- 4 | | ST | | | | | | 1 |
| S 5135 | 1 | 39- 8 | | ST | | | | | | 1 |
| THRU | | | 470 | | VARY | LENGTH | BY | 1- 9 | 7/ 8 | |
| S 5155 | 1 | 3- 3 | | ST | | | | | | 1 |
| S 5156 | 3 | 2- 7 | 8 | ST | | | | | | |
| S 5157 | 420 | 30- 0 | 13142 | ST | | | | | | |
| S 5158 | 140 | 20- 3 | 2957 | ST | | | | | | |
| | | | EPOXY COATED BARS | | | | | | | |
| | | | ABUTMENT | | | | | | | |
| AE5012 | 16 | 7- 6 | 125 | ST | | | | | | |
| AE5013 | 4 | 2- 5 | 10 | ST | | | | | | |
| AE5014 | 4 | 2- 0 | 8 | ST | | | | | | |
| AE5015 | 28 | 3- 8 | 107 | 4 | 0- 4 | 2- 7 | 1- 2 | | | |
| AE5016 | 12 | 2- 9 | 34 | 11 | 2- 2 | | | | | |
| AE5017 | 2 | 2- 9 | 6 | ST | | | | | | |
| AE5018 | 12 | 3- 3 | 41 | 4 | 0- 6 | 2-10 | 0- 6 | | | |
| AE5019 | 10 | 2- 9 | 29 | 4 | 0- 6 | 2- 0 | 0- 9 | | | |
| AE5036 | 12 | 3- 1 | 39 | 15 | 1- 1 | 0- 9 | 0- 8 | 0- 7 | 0- 7 | |
| AE5037 | 2 | 1- 9 | 4 | ST | | | | | | |
| AE5048 | 16 | 4- 4 | 72 | ST | | | | | | |
| AE6002 | 4 | 4- 1 | 25 | 15 | | 0- 9 | 0- 2 | 2- 8 | 0- 9 | |
| AE6006 | 4 | 4- 6 | 27 | 15 | | 1- 0 | 0- 6 | 2- 8 | 0- 9 | |
| AE6007 | 12 | 4- 1 | 74 | 15 | | 0- 9 | 0- 2 | 2- 8 | 0- 9 | |
| AE6008 | 8 | 4- 6 | 54 | 15 | | 1- 0 | 0- 6 | 2- 8 | 0- 9 | |
| | | | SUPERSTRUCTURE | | | | | | | |
| SE4001 | 498 | 30- 0 | 9980 | ST | | | | | | |
| SE4002 | 166 | 20- 0 | 2218 | ST | | | | | | |
| SE4003 | 170 | 22- 8 | 2574 | ST | | | | | | |
| SE5001 | 142 | 2- 6 | 370 | 12 | 1- 6 | 0-11 | | 0- 5 | | |
| SE5002 | 142 | 2- 7 | 383 | ST | | | | | | |
| SE5003 | 142 | 2- 1 | 309 | 1 | | 1- 6 | 0- 9 | | | |

| MARK | NUM. | LENGTH | WEIGHT | TYPE | A | B | C | D | E | NOTE |
|---|---|---|---|---|---|---|---|---|---|---|
| | | | SUPERSTRUCTURE | | | | | | ( CONTINUED ) | |
| SE5004 | 142 | 1-11 | 284 | 1 | | 0- 8 | 0-10 | 0- 8 | | |
| SE5005 | 142 | 5- 6 | 815 | 19 | 0- 8 | 2- 6 | 2- 3 | | | |
| SE5006 | 142 | 3- 0 | 444 | 15 | 0- 9 | 0-11 | 0-10 | 0- 6 | 0- 7 | |
| SE5007 | 142 | 2- 4 | 346 | 1 | | 1- 9 | 0- 9 | | | |
| SE5008 | 8 | 14- 9 | 123 | ST | | | | | | |
| SE5009 | 8 | 14- 8 | 122 | ST | | | | | | |
| SE5010 | 24 | 7- 2 | 179 | ST | | | | | | |
| SE5011 | 142 | 3- 2 | 469 | 15 | 0- 9 | 0-11 | 0- 9 | 0- 9 | 0- 7 | |
| SE5012 | 48 | 7- 2 | 359 | ST | | | | | | |
| SE5013 | 28 | 14- 8 | 428 | ST | | | | | | |
| SE5014 | 4 | 15- 0 | 63 | ST | | | | | | |
| SE5015 | 142 | 2- 9 | 407 | ST | | | | | | |
| SE6004 | 4 | 4-11 | 30 | ST | | | | | | |
| SE6005 | 1 | 7- 0 | | ST | | | | | | 1 |
| THRU | | | 562 | | VARY | LENGTH | BY | 2- 2 | 1/ 4 | |
| SE6020 | 1 | 39- 9 | | ST | | | | | | 1 |
| SE6021 | 1 | 6- 3 | | ST | | | | | | 1 |
| THRU | | | 426 | | VARY | LENGTH | BY | 2- 1 | 7/ 8 | |
| SE6034 | 1 | 34- 3 | | ST | | | | | | 1 |
| SE6035 | 278 | 37- 3 | 15554 | ST | | | | | | |
| SE6036 | 1 | 34- 3 | | ST | | | | | | 1 |
| THRU | | | 426 | | VARY | LENGTH | BY | 2- 1 | 7/ 8 | |
| SE6049 | 1 | 6- 3 | | ST | | | | | | 1 |
| SE6050 | 1 | 38- 6 | | ST | | | | | | 1 |
| THRU | | | 538 | | VARY | LENGTH | BY | 2- 1 | 3/ 4 | |
| SE6065 | 1 | 6- 3 | | ST | | | | | | 1 |
| SE6066 | 4 | 4- 1 | 25 | ST | | | | | | |
| SE6067 | 5 | 5- 5 | 41 | ST | | | | | | |
| SE6068 | 1 | 6- 4 | | ST | | | | | | 1 |
| THRU | | | 646 | | VARY | LENGTH | BY | 1- 9 | 3/ 4 | |
| SE6086 | 1 | 38-11 | | ST | | | | | | 1 |
| SE6087 | 1 | 6- 6 | | ST | | | | | | 1 |
| THRU | | | 535 | | VARY | LENGTH | BY | 1- 9 | 5/ 8 | |
| SE6103 | 1 | 35- 5 | | ST | | | | | | 1 |
| SE6104 | 270 | 36- 4 | 14735 | ST | | | | | | |
| SE6105 | 1 | 35- 3 | | ST | | | | | | 1 |
| THRU | | | 530 | | VARY | LENGTH | BY | 1- 9 | 3/ 4 | |
| SE6121 | 1 | 6- 3 | | ST | | | | | | 1 |
| SE6122 | 1 | 39- 8 | | ST | | | | | | 1 |
| THRU | | | 677 | | VARY | LENGTH | BY | 1- 9 | 7/ 8 | |
| SE6142 | 1 | 3- 3 | | ST | | | | | | 1 |
| SE6143 | 3 | 2- 7 | 12 | ST | | | | | | |
| SE6144 | 8 | 19- 6 | 234 | ST | | | | | | |

| FED. RD. DIVISION | STATE | PROJECT | TYPE FUNDS |
|---|---|---|---|
| 5 | OHIO | | |

331
500

CUYAHOGA COUNTY

CUY-480-10.39

## NOTES

1. INDICATES SERIES BAR. EACH BAR VARIES FROM ADJACENT BAR(S) BY TABULATED AMOUNT(S). CALCULATED TO NEAREST 1/8 INCH. WEIGHT SHOWN IS FOR ENTIRE SERIES UTILIZING AVERAGE LENGTH.

3. COST OF FIELD BENDING SHALL BE INCLUDED WITH ITEM 509.

6. 'LENGTH' SHOWN FOR SPIRAL BARS IS DISTANCE FROM TOP OF FOOTING TO BOTTOM OF PIER CAP.
'NO. TURNS' SHOWN IS 'LENGTH' DIVIDED BY PITCH, PLUS 3 TURNS (NUMBER OF CLOSED COILS). EXPRESSED AS NEAREST WHOLE NUMBER.
1 1/2 CLOSED COILS SHALL BE PROVIDED AT ENDS OF EACH SPIRAL UNIT. FOUR STEEL CHANNEL, TEE OR ANGLE SPACERS, WEIGHING APPROXIMATELY 0.80 LB. PER LIN. FT. OF SPACER SHALL BE PROVIDED FOR EACH SPIRAL UNIT. THEY SHALL BE EQUALLY SPACED ALONG PERIPHERY OF COIL. WEIGHT OF SPACERS, AT 0.80 LB. PER LIN. FT. WILL BE PAID FOR AS REINFORCING STEEL AND IS INCLUDED IN TABULATED WEIGHT.

REFER TO CMS SECTIONS 106.03, 700, 709.01 THROUGH 709.05 AND 709.08. SUFFICIENT ADDITIONAL REINFORCING STEEL SHALL BE PROVIDED FOR SAMPLING. RANDOM SAMPLES SHALL BE REPLACED IN THE STRUCTURES BY THE ADDITIONAL STEEL, SPLICED IN ACCORDANCE WITH 509.08.

BAR DIMENSIONS ARE OUT TO OUT.

A BAR MARK THAT INCLUDES THE LETTER 'E' IN ITS PREFIX INDICATES THAT THE BAR SHALL BE EPOXY COATED.

## BAR BENDING DIAGRAM TYPES

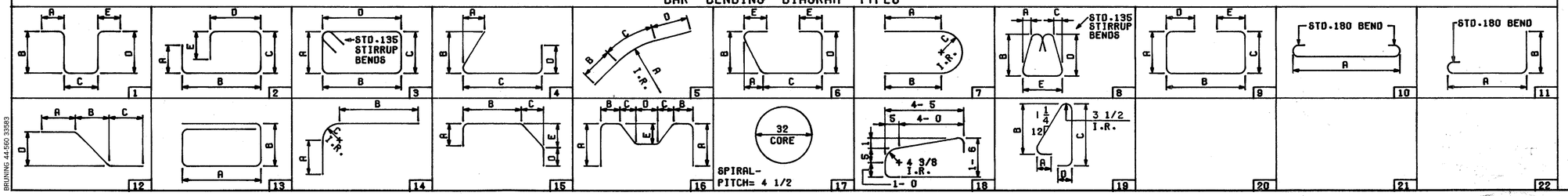


BRUNING 44-560 33583

20/20

ALDEN E. STILSON & ASSOCIATES, LIMITED
CONSULTING ENGINEERS
CLEVELAND, OHIO COLUMBUS, OHIO WHEELING, W. VA.

# REINFORCING STEEL LIST

BRIDGE NO. CUY-480-1054
I-480 OVER WEST 130TH STREET
STA. 582+30.10 TO
CUYAHOGA COUNTY STA. 583+38.65

| DESIGNED | DRAWN | TRACED | CHECKED | REVIEWED | DATE | REVISED |
|---|---|---|---|---|---|---|
| | | | | | | |

MICROFILMED
JAN 17 1991

01-1

| FED. RD. DIVISION | STATE | PROJECT | TYPE FUNDS |
|---|---|---|---|
| 2 | OHIO | | |

332
300

CUYAHOGA COUNTY
CUY. 480-10.39

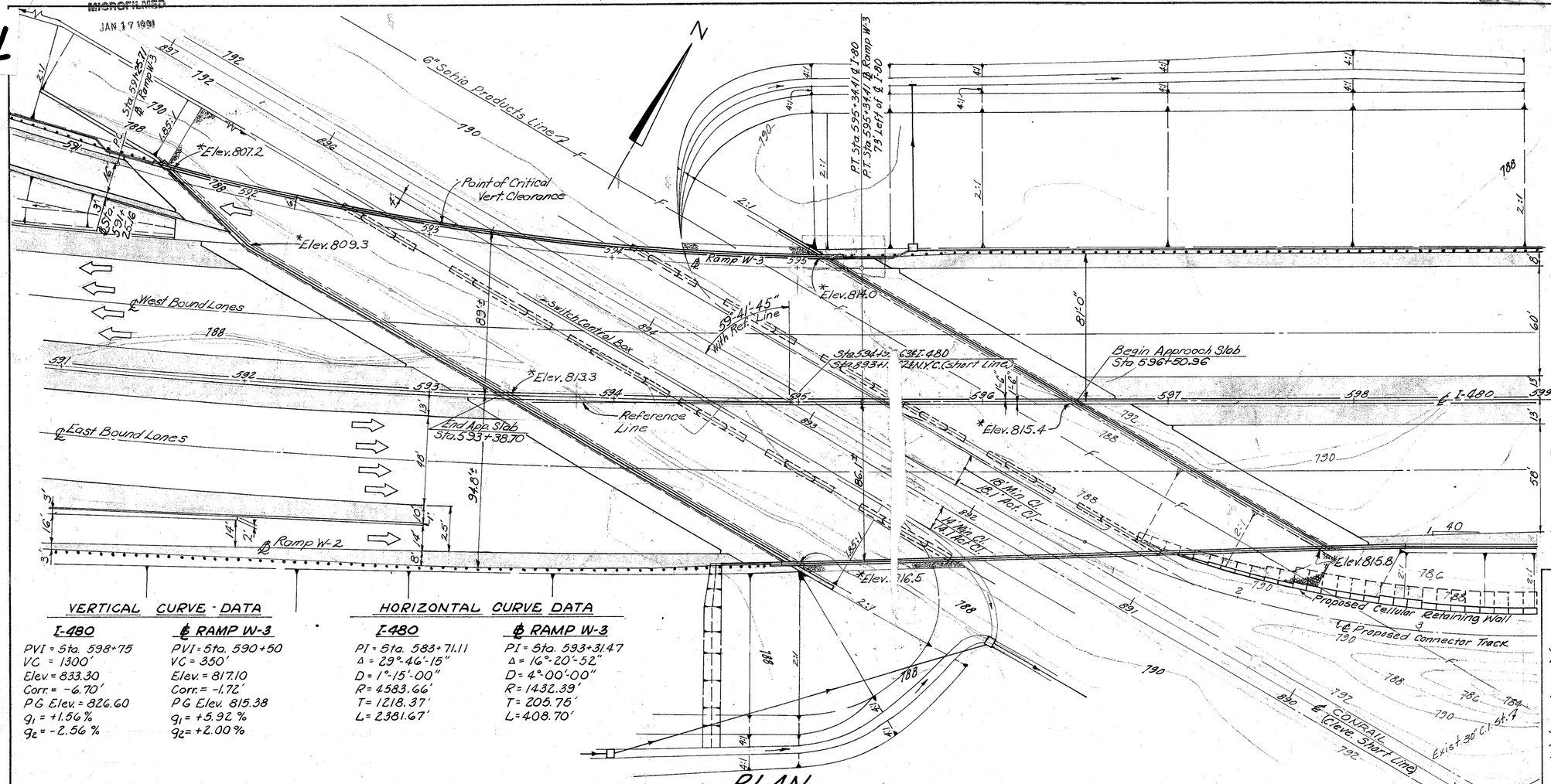


Earthwork limits shown are schematic. Actual slopes shall conform to plan cross-sections.

* Elevations marked with an asterisk are the top of the embankment slope at the face of the abutment.

Reference line is an extension of the tangent from PT Sta. 595+34.41 on ℄ I-480

## VERTICAL CURVE - DATA

| I-480 | ℄ RAMP W-3 |
|---|---|
| PVI = Sta. 598+75 | PVI = Sta. 590+50 |
| VC = 1300' | VC = 350' |
| Elev. = 833.30 | Elev. = 817.10 |
| Corr. = -6.70' | Corr. = -1.72' |
| P.G. Elev. = 826.60 | P.G. Elev. 815.38 |
| $g_1$ = +1.56 % | $g_1$ = +5.92 % |
| $g_2$ = -2.56 % | $g_2$ = +2.00 % |

## HORIZONTAL CURVE DATA

| I-480 | ℄ RAMP W-3 |
|---|---|
| PI = Sta. 583+71.11 | PI = Sta. 593+31.47 |
| Δ = 29°-46'-15" | Δ = 16°-20'-52" |
| D = 1°-15'-00" | D = 4°-00'-00" |
| R = 4583.66' | R = 1432.39' |
| T = 1218.37' | T = 205.75' |
| L = 2381.67' | L = 408.70' |

## PLAN

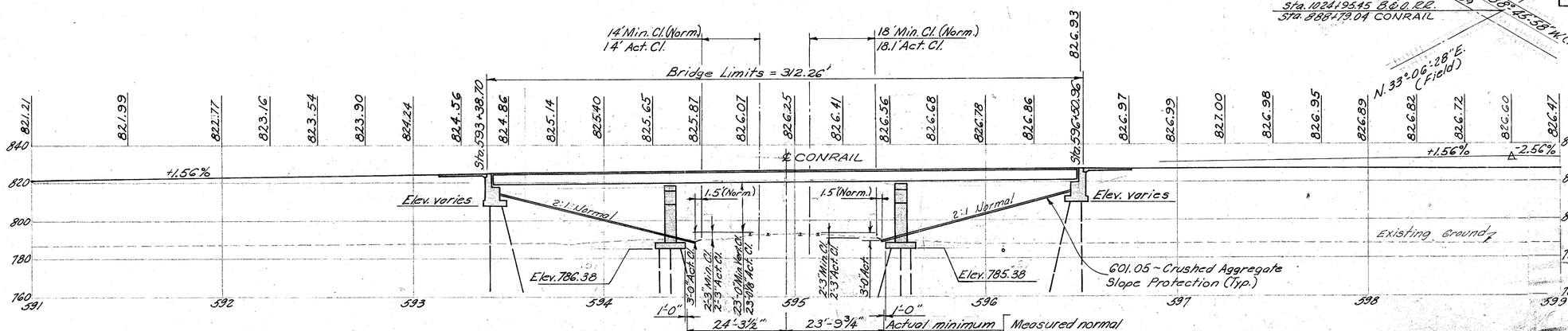


## PROFILE ALONG ℄ I-480

## PROPOSED STRUCTURE

TYPE: Continuous steel girder with reinforced concrete deck and reinforced concrete substructure.
SPANS: 91'-0"-121'-0"-91'-0" Brgs. on ℄ I-480
ROADWAY: Width varies b/n concrete parapets. Avg. width = 169'-0". Bridge Roadway BR-1 Railing, and concrete barrier median.
LOADING: HS 20-44 Case I and the alternate Military Loading.
WEARING SURFACE: 1½" Latex Modified Concrete
SKEW: 59°41'-45" Right Fwd. with respect to Ref. Line
ALIGNMENT: 1°-15'-00" Curve and Tangent
APPROACH SLABS: AS-1-81 (25' long). (Mod.)
SUPERELEVATION: Varies (0.03 ft. per ft. max.)

## TRAFFIC ESTIMATE

Design Year 2000
Total A.D.T. 98,198

All piles shall be H.P. 10x42 steel bearing piles. Estimated average pay lengths are:

| | |
|---|---|
| S. Abut. | 45'± |
| Pier #1 | 20'± |
| Pier #2 | 20'± |
| N. Abut. | 45'± |

1 | 46

ALDEN E. STILSON & ASSOCIATES, LIMITED
CONSULTING ENGINEERS
CLEVELAND, OHIO COLUMBUS, OHIO WHEELING W. VA.

# SITE PLAN
# BRIDGE No. CUY-480-1078
I-480 OVER CONRAIL (CLEVE. SHT. LN.)
CUYAHOGA COUNTY STA. 593+38.70
STA. 596+50.96

Scale - 1" = 30'

| DESIGNED | DRAWN | TRACED | CHECKED | REVIEWED | DATE | REVISED |
|---|---|---|---|---|---|---|
| TJ | TJ | | HT | G.W.M. | 11/90 | |

MICROFILMED
JAN 27 1984

| ITEM | TOTAL | UNIT | DESCRIPTION | ABUTS | WINGS | PIERS | SUPER | GENERAL |
|---|---|---|---|---|---|---|---|---|
| 503 | LUMP | SUM | COFFERDAMS, CRIBS AND SHEETING | | | | | LUMP |
| 503 | 3324 | C.Y. | UNCLASSIFIED EXCAVATION | 2138 | 315 | 871 | | |
| 505 | LUMP | SUM | PILE DRIVING EQUIPMENT MOBILIZATION | | | | | LUMP |
| | | | | | | | | LUMP |
| | | | | | | | | 1 |
| 507 | 14,715 | L.F. | STEEL PILES, HP10X42 (SEE PROPOSAL NOTE) | 8910 | 1125 | 4680 | | |
| 509 | 452,725 | LB | REINFORCING STEEL | 96,867 | 7876 | 148828 | 199154 | |
| 511 | 1657 | C.Y. | CLASS S CONCRETE, SUPERSTRUCTURE (SEE PROPOSAL NOTE) | | | | 1657 | |
| 511 | 1076 | C.Y. | CLASS C CONCRETE, PIERS ABOVE FOOTINGS | | | 1076 | | |
| 511 | 1225 | C.Y. | CLASS C CONCRETE, ABUTMENTS ABOVE FOOTINGS | 1225 | | | | |
| 511 | 989 | C.Y. | CLASS C CONCRETE, FOOTINGS | 676 | 78 | 235 | | |
| 511 | 88 | C.Y. | CLASS C CONCRETE, WINGWALLS ABOVE FOOTINGS | | 88 | | | |
| 512 | 15 | S.Y. | TYPE B WATERPROOFING | 15 | | | | |
| 513 | 1,437,400 | LB. | STRUCTURAL STEEL (AISC CATEGORY III) (SEE PROPOSAL NOTE) ASTM A-588 | | | | 1,437,400 | |
| 513 | 15272 | EA | WELDED STUD SHEAR CONNECTORS (SEE PROPOSAL NOTE) | | | | 15272 | |
| 516 | 698.98 | L.F. | STRUCTURAL STEEL EXPANSION JOINTS, AS PER PLAN | | | | 698.98 | |
| 516 | 242 | L.F. | PVC WATERSTOP, AS PER PLAN | 242 | | | | |
| 516 | 1 | EA | LAMINATED ELASTOMERIC BEARINGS (12" X 15" X 2.398" ELASTOMERIC PAD WITH 14" X 18" X 1.5" X 1" STEEL LOAD PLATE) | 1 | | | | |
| 516 | 1 | EA | LAMINATED ELASTOMERIC BEARINGS (6" X 12" X 2.222" ELASTOMERIC PAD WITH 8" X 14" X 1" STEEL LOAD PLATE) | 1 | | | | |
| 516 | 1 | EA | LAMINATED ELASTOMERIC BEARINGS (10" X 12" X 1.648" ELASTOMERIC PAD WITH 12" X 14" X 1" STEEL LOAD PLATE) | 1 | | | | |
| 516 | 20 | EA | LAMINATED ELASTOMERIC BEARINGS (12" X 15" X 2.398" ELASTOMERIC PAD WITH 14" X 17" X 1" STEEL LOAD PLATE) | 20 | | | | |
| 516 | 1 | EA | LAMINATED ELASTOMERIC BEARINGS (15" X 12" X 5.694" ELASTOMERIC PAD WITH 17" X 18" X 1" X 1" STEEL LOAD PLATE) | 1 | | | | |
| 516 | 18 | EA | LAMINATED ELASTOMERIC BEARINGS (15" X 12" X 5.694" ELASTOMERIC PAD WITH 17" X 14" X 1" STEEL LOAD PLATE) | 18 | | | | |
| 516 | 1 | EA | LAMINATED ELASTOMERIC BEARINGS (30" X 20" X 1.574" ELASTOMERIC PAD WITH 32" X 22" X 2" STEEL LOAD PLATE) | | | 1 | | |
| 516 | 20 | EA | LAMINATED ELASTOMERIC BEARINGS (18" X 24" X 1.574" ELASTOMERIC PAD WITH 20" X 26" X 2" STEEL LOAD PLATE) | | | 20 | | |
| 516 | 1 | EA | LAMINATED ELASTOMERIC BEARINGS (27.5"X20"X6.518" ELASTOMERIC PAD WITH 29.5" X 22" X 2" STEEL LOAD PLATE) | | | 1 | | |
| 516 | 18 | EA | LAMINATED ELASTOMERIC BEARINGS (18" X 24" X 4.870" ELASTOMERIC PAD WITH 20" X 26" X 2" STEEL LOAD PLATE) | | | 18 | | |
| 516 | 428 | S.F. | 1 INCH PREFORMED EXPANSION JOINT FILLER | 428 | | | | |
| 518 | 616 | C.Y. | POROUS BACKFILL | 583 | 33 | | | |
| 518 | 19 | EA | SCUPPERS INCLUDING SUPPORTS | | | | 19 | |
| 518 | 736 | L.F. | 6 INCH PERFORATED, HELICAL CSP, 707.01 | 736 | | | | |
| 518 | 485 | L.F. | 6 INCH NON-PERFORATED, HELICAL CSP, INCLUDING SPECIALS, 707.01 | 485 | | | | |
| 601 | 4823 | S.Y. | CRUSHED AGGREGATE SLOPE PROTECTION | | | | | 4823 |
| 625 | | | SEE SHEET FOR LIGHTING SUMMARY | | | | | |
| 824 | 226,507 | LB | EPOXY COATED REINFORCING STEEL | 1614 | | | 224,893 | |
| 845 | 5786 | S.Y. | LATEX MODIFIED CONCRETE OVERLAY, 1 1/4 INCHES THICK (SEE PROPOSAL NOTE) | | | | 5786 | |
| SPEC | 21,000 | S.F. | PROTECTION OF CONCRETE SURFACES (SEE PROPOSAL NOTE) | | | 21,000 | | |
| SPEC | 1043 | S.Y. | SEALING OF CONCRETE SURFACES (SEE PROPOSAL NOTE) | 1043 | | | | |

B20201OA

| FHWA REGION | STATE | PROJECT | |
|---|---|---|---|
| 5 | OHIO | | |

333
500

CUYAHOGA COUNTY
CUY-480-10.39

STANDARD DRAWING REFERENCES

| DESCRIPTION | DWG. NO. | SHT. | DATE |
|---|---|---|---|
| END DAM AND END CROSSFRAME | SD-1-69 | 1-2 | 6-12-69 |
| CURB PLATES | SD-1-69 | 2 | 6-12-69 |
| SCUPPERS | SD-1-69 | 3 | 6-12-69 |
| BRIDGE ROADWAY RAILING | BR-1 | | 5-29-79 |
| APPROACH SLABS | AS-1-81 | 1-3 | 11-27-81 |
| HIGHWAY LIGHTING | HL-7 | | 1-21-76 R |

(R INDICATES REVISED DATE)

SUPPLEMENTAL SPECIFICATION REFERENCES

| DESCRIPTION | NO. | DATE |
|---|---|---|
| EPOXY COATED REINFORCING STEEL | 824 | 10-08-82 |
| CONCRETE CURING AND PROTECTIVE MEMBRANE | 836 | 3-12-75 |
| BRIDGE DECK REPAIR AND OVERLAY WITH LATEX MODIFIED CONCRETE | 845 | 3-2-81 |
| LATEX FOR CONCRETE MODIFICATION | 953 | 8-21-80 |

COMMON DETAIL REFERENCES

| | |
|---|---|
| CONTRACTION JOINTS | SHEET 476 |
| EXPANSION JOINTS | SHEET 476 |
| RUSTICATION GROOVES | SHEET 476 |
| PVC WATERSTOP | SHEET 476 |

DESIGN SPECIFICATIONS

THIS STRUCTURE CONFORMS TO "STANDARD SPECIFICATIONS FOR HIGHWAY BRIDGES" ADOPTED BY THE AMERICAN ASSOCIATION OF STATE HIGHWAY AND TRANSPORTATION OFFICIALS, 1977, INCLUDING THE 1978, 1979, 1980, AND 1981, INTERIM SPECIFICATIONS AND THE OHIO "SUPPLEMENT" TO THESE SPECIFICATIONS.

DESIGN DATA

DESIGN LOADING-HS20-44 CASE I AND THE ALTERNATE MILITARY LOADING.
CONCRETE CLASS S - UNIT STRESS 1500 P.S.I. (SUPER-STRUCTURE).
CONCRETE CLASS C - UNIT STRESS 1333 P.S.I. (SUB-STRUCTURE).
STRUCTURAL STEEL ASTM A588 - UNIT STRESS 27,000 P.S.I.
REINFORCING STEEL ASTM A615, A616 OR A617.
GRADE 40 - UNIT STRESS 20,000 P.S.I.

REINFORCING BAR LAPPED SPLICES

ALL SPLICES SHALL BE LAPPED 30 BAR DIAMETERS.

DECK PROTECTION METHOD

EPOXY COATED REINFORCING STEEL, TOP MAT ONLY.

LATEX MODIFIED CONCRETE OVERLAY.

EMBANKMENT CONSTRUCTION

THE EMBANKMENTS SHALL BE CONSTRUCTED TO THE LEVEL OF THE SUBGRADE FOR A MINIMUM DISTANCE OF 200 FEET BACK OF THE ABUTMENTS. EXCAVATION SHALL THEN BE MADE FOR THE ABUTMENTS AND PIERS AND PILES DRIVEN.

PILES

PILES SHALL BE DRIVEN TO REFUSAL ON BEDROCK. REFUSAL SHALL BE CONSIDERED AS OBTAINED BY PENETRATING SOFT BEDROCK FOR SEVERAL INCHES WITH A MINIMUM RESISTANCE OF 20 BLOWS PER INCH OR REFUSAL SHALL BE CONSIDERED AS OBTAINED AFTER THE PILE HAS CONTACTED HARD BEDROCK AND THE PILE HAS THEN RECEIVED AT LEAST 20 BLOWS.

DESIGN LOAD

45 TONS PER PILE FOR THE ABUTMENTS AND WINGWALLS
45 TONS PER PILE FOR THE PIERS

UTILITY LINES

ALL EXPENSE INVOLVED IN RELOCATING THE AFFECTED UTILITY LINES SHALL BE BORNE BY THE OWNERS. THE CONTRACTOR AND OWNERS ARE REQUESTED TO COOPERATE BY ARRANGING THEIR WORK IN SUCH A MANNER THAT INCONVENIENCE TO EITHER WOULD BE HELD TO A MINIMUM.

CONSTRUCTION CLEARANCE

CONSTRUCTION CLEARANCE OF 8 FEET HORIZONTALLY FROM THE CENTER OF TRACKS AND 20 FEET VERTICALLY FROM A POINT LEVEL WITH THE TOP OF THE HIGHER RAIL, AND 4 FEET FROM THE CENTER OF TRACKS, SHALL BE MAINTAINED AT ALL TIMES.

RAILROAD AERIAL LINES

RAILROAD AERIAL LINES WILL BE RELOCATED BY THE RAILROAD. THE CONTRACTOR SHALL USE ALL PRECAUTIONS NECESSARY TO SEE THAT THE LINES ARE NOT DISTURBED DURING THE CONSTRUCTION STAGE AND SHALL COOPERATE WITH THE RAILROAD IN THE RELOCATION OF THESE LINES. THE COST OF THE RELOCATION SHALL BE INCLUDED IN THE RAILROAD FORCE ACCOUNT WORK.

2146

ALDEN E. STILSON & ASSOCIATES
CONSULTING ENGINEERING AND ARCHITECTURE
COLUMBUS, CLEVELAND, WHEELING

# GENERAL NOTES AND ESTIMATED QUANTITIES

BRIDGE NO. CUY-480-1078

I-480 OVER CONRAIL

CUYAHOGA COUNTY STA. 593+38.70 TO STA. 596+50.96

| DESIGNED | DRAWN | TRACED | CHECKED | REVIEWED | DATE | REVISED |
|---|---|---|---|---|---|---|
| WM | | | BTG 3-14-83 | G.W.M. | 3/15/83 | |

MICROFILMED
JAN 17 1991

| FED. RD. DIVISION | STATE | PROJECT | TYPE FUNDS |
|---|---|---|---|
| 2 | OHIO | | |

334
500

CUYAHOGA COUNTY
CUY-480-10.39




MEDIAN DEFLECTION JOINT SPACING

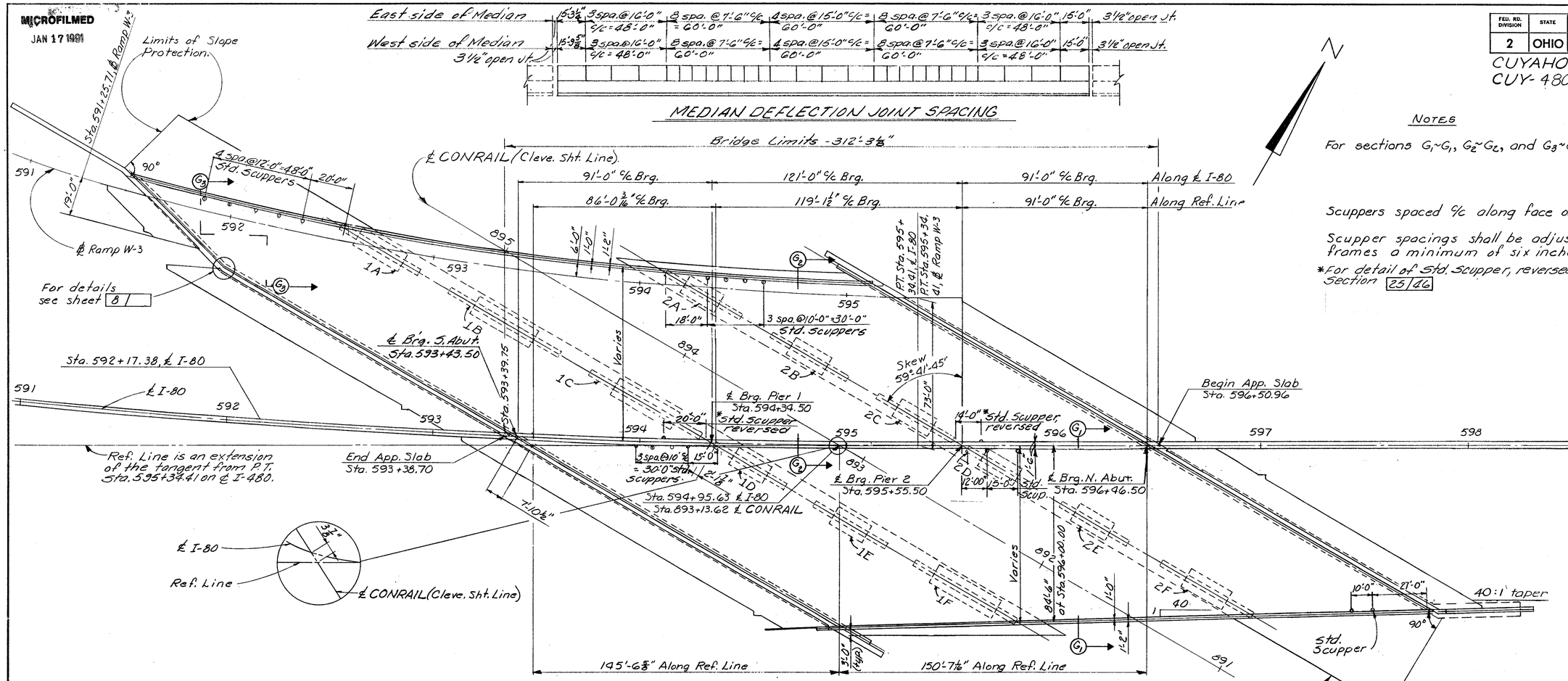


GENERAL PLAN

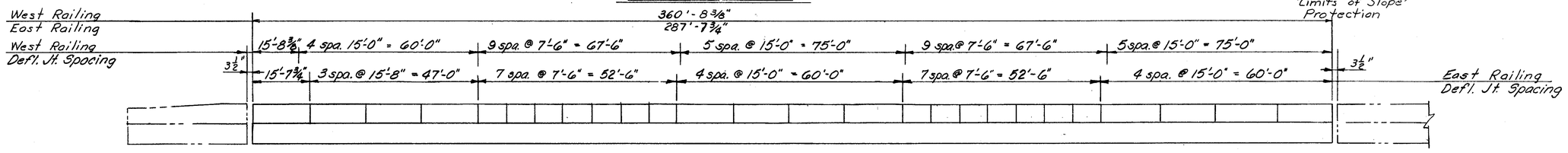


RAILING ELEVATION

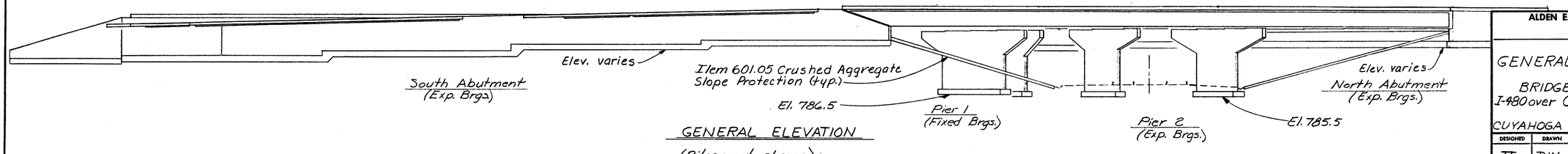


GENERAL ELEVATION
(Piles not shown.)

NOTES

For sections $G_1$~$G_1$, $G_2$~$G_2$, and $G_3$~$G_3$, see sheets 25 26 46

Scuppers spaced % along face of curb.

Scupper spacings shall be adjusted to clear cross frames a minimum of six inches.

*For detail of Std. Scupper, reversed see Transverse Section 25/46

ALDEN E. STILSON & ASSOCIATES, LIMITED
CONSULTING ENGINEERS
COLUMBUS, OHIO

3 / 46

GENERAL PLAN and ELEVATION

BRIDGE No. CUY-80-1078
I-480 over CONRAIL (CLEVE. SHT. LN.)
STA. 593+38.70
CUYAHOGA COUNTY STA. 596+50.96

| DESIGNED | DRAWN | TRACED | CHECKED | REVIEWED | DATE | REVISED |
|---|---|---|---|---|---|---|
| TJ | DW | | SBP PHB | G.W.M. | 11/16/71 | |

MICROFILMED
JAN 17 1991

| FED. RD. DIVISION | STATE | PROJECT | TYPE FUNDS |
|---|---|---|---|
| 2 | OHIO | | |

335/500

CUYAHOGA COUNTY
CUY-480-10.39

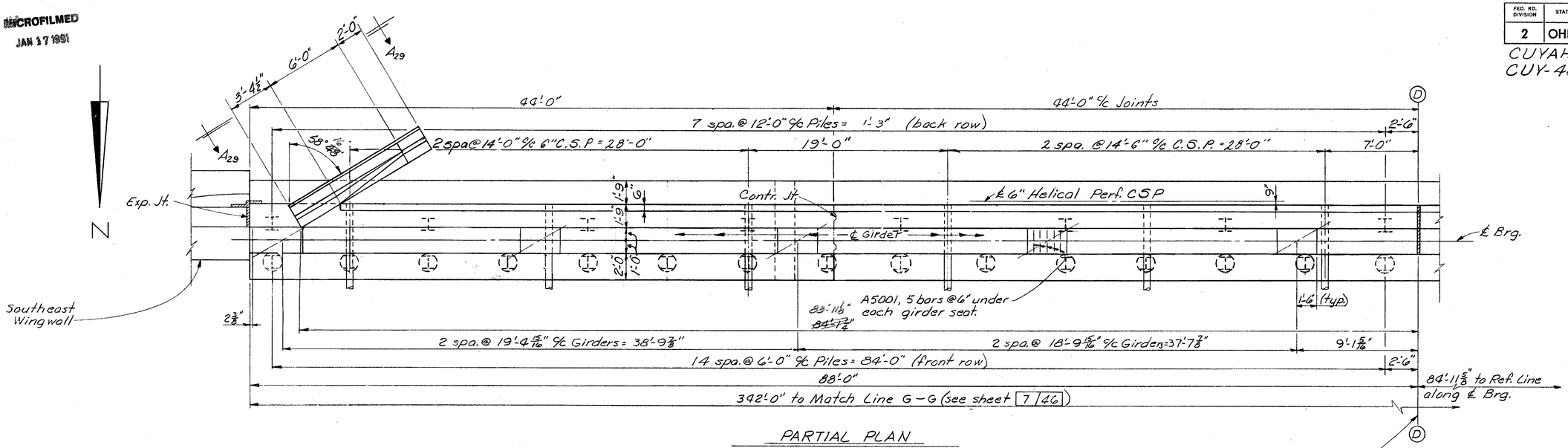


PARTIAL PLAN

Match Line ℄ ℄ Exp Jt.
See sheet 5/46

NOTES

Reinforcing Steel location:
N.S. indicates near side.
F.S. indicates far side.

For additional notes see Sheet 9/46

For Sections $A_7$-$A_7$ & $A_8$-$A_8$ see Sheet 13/46

For Section $A_{29}$-$A_{29}$ see sht. 14/46

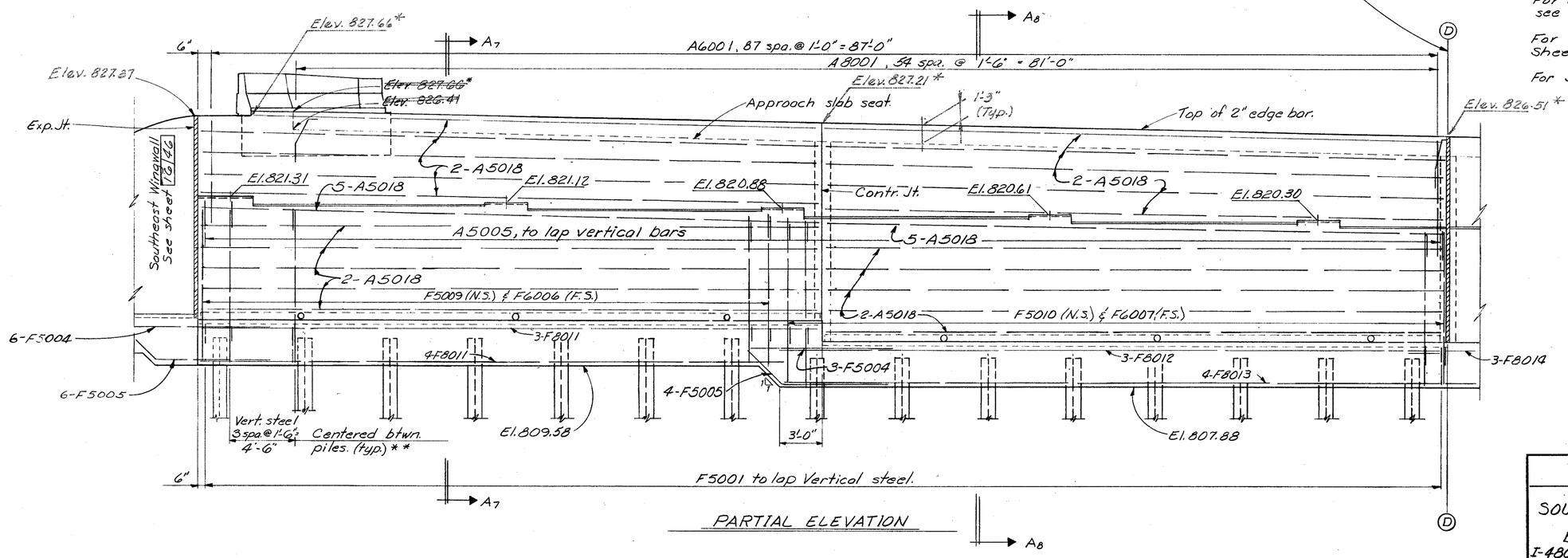


PARTIAL ELEVATION

Revised As-Built

ALDEN E. STILSON & ASSOCIATES, LIMITED
CONSULTING ENGINEERS
COLUMBUS, OHIO

4/46

# SOUTH ABUTMENT DETAILS

BRIDGE No. CUY-480-10.78
I-480 over CONRAIL (CLEVE. SHT. LN.)
STA. 593+38.70
CUYAHOGA COUNTY STA. 596+50.96

| DESIGNED | DRAWN | TRACED | CHECKED | REVIEWED | DATE | REVISED |
|---|---|---|---|---|---|---|
| PHB | DW | | BSS ANA | G.W.W. | 11/17/71 | |

MICROFILMED
JAN 17 1991

| FED. RD. DIVISION | STATE | PROJECT | TYPE FUNDS |
|---|---|---|---|
| 2 | OHIO | | |

336
500

CUYAHOGA COUNTY
CUY-480-10.39

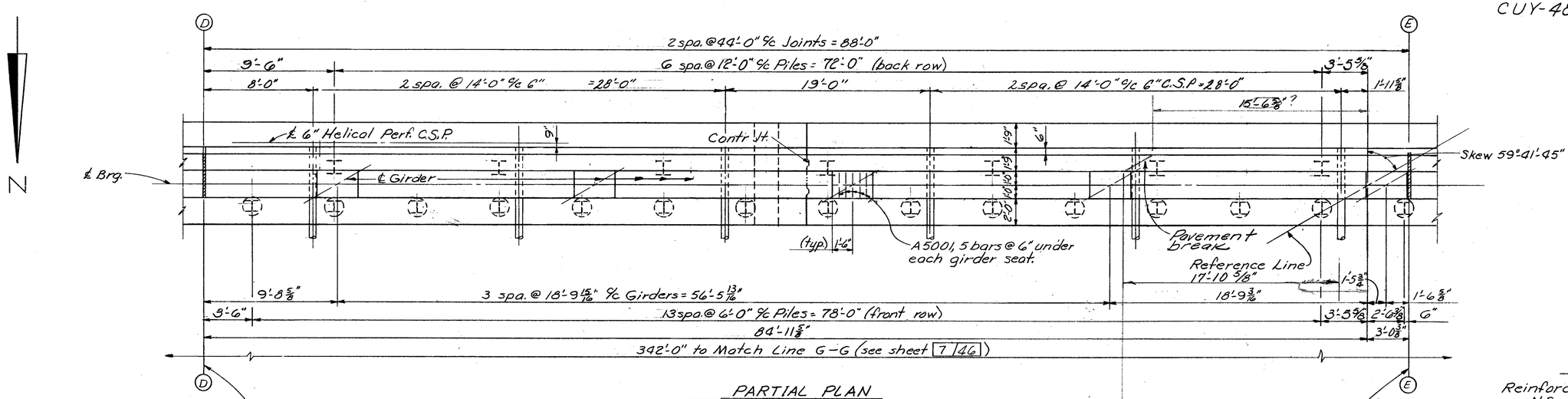


PARTIAL PLAN

Match Line ℄ & Exp. Jt. See sheet 4 46

Match Line ℄ & Exp. Jt. See sheet 6 46

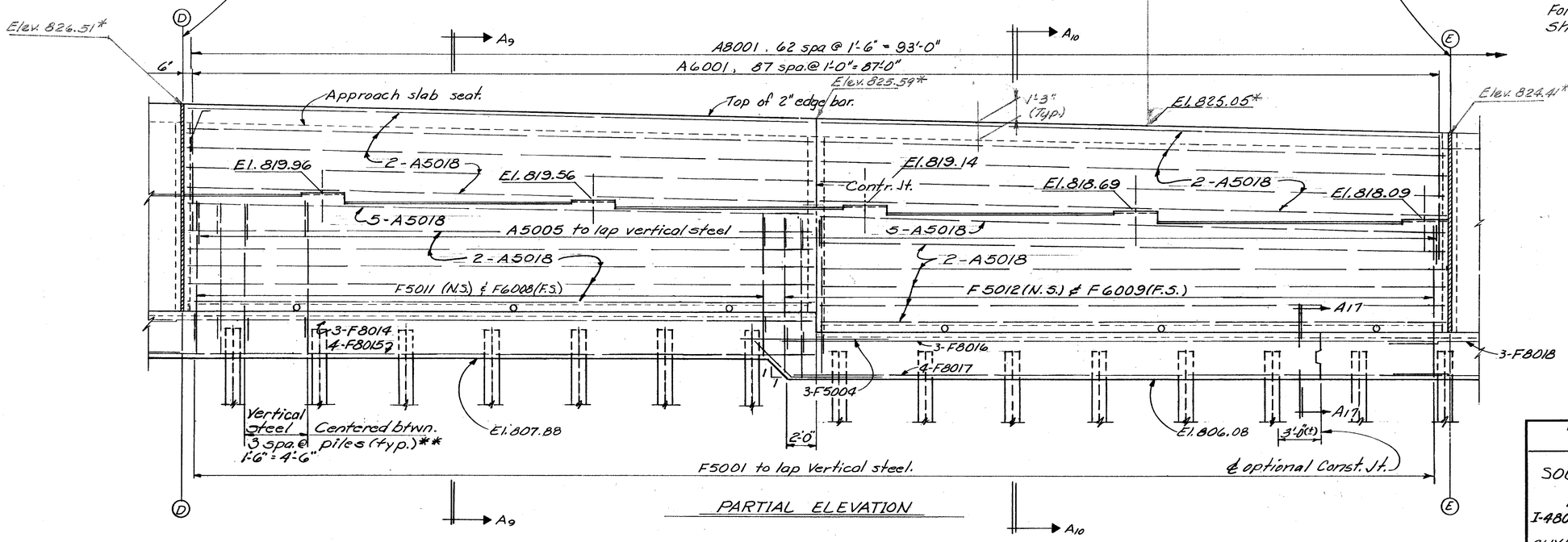


PARTIAL ELEVATION

NOTES

Reinforcing Steel location:
N.S. indicates near side.
F.S. indicates far side.

For additional notes see Sheet 9 46

For Section A9-A9 & A10-A10 see Sheet 13 46

For Section A17-A17 see Sheet 7 46

ALDEN E. STILSON & ASSOCIATES, LIMITED
CONSULTING ENGINEERS
COLUMBUS, OHIO
5 46

SOUTH ABUTMENT DETAILS

BRIDGE No. CUY-480-1078
I-480 over CONRAIL (CLEVE. SHT. LN.)
STA. 593+38.70
CUYAHOGA COUNTY STA. 596+50.96

| DESIGNED | DRAWN | TRACED | CHECKED | REVIEWED | DATE | REVISED |
|---|---|---|---|---|---|---|
| PHB | DW | | BSS ANA | G.W.M. | 11/19/91 | |

MICROFILMED
JAN 17 1991

| FED. RD. DIVISION | STATE | PROJECT | TYPE FUNDS |
|---|---|---|---|
| 2 | OHIO | | |

337/500

CUYAHOGA COUNTY
CUY-480-10.39

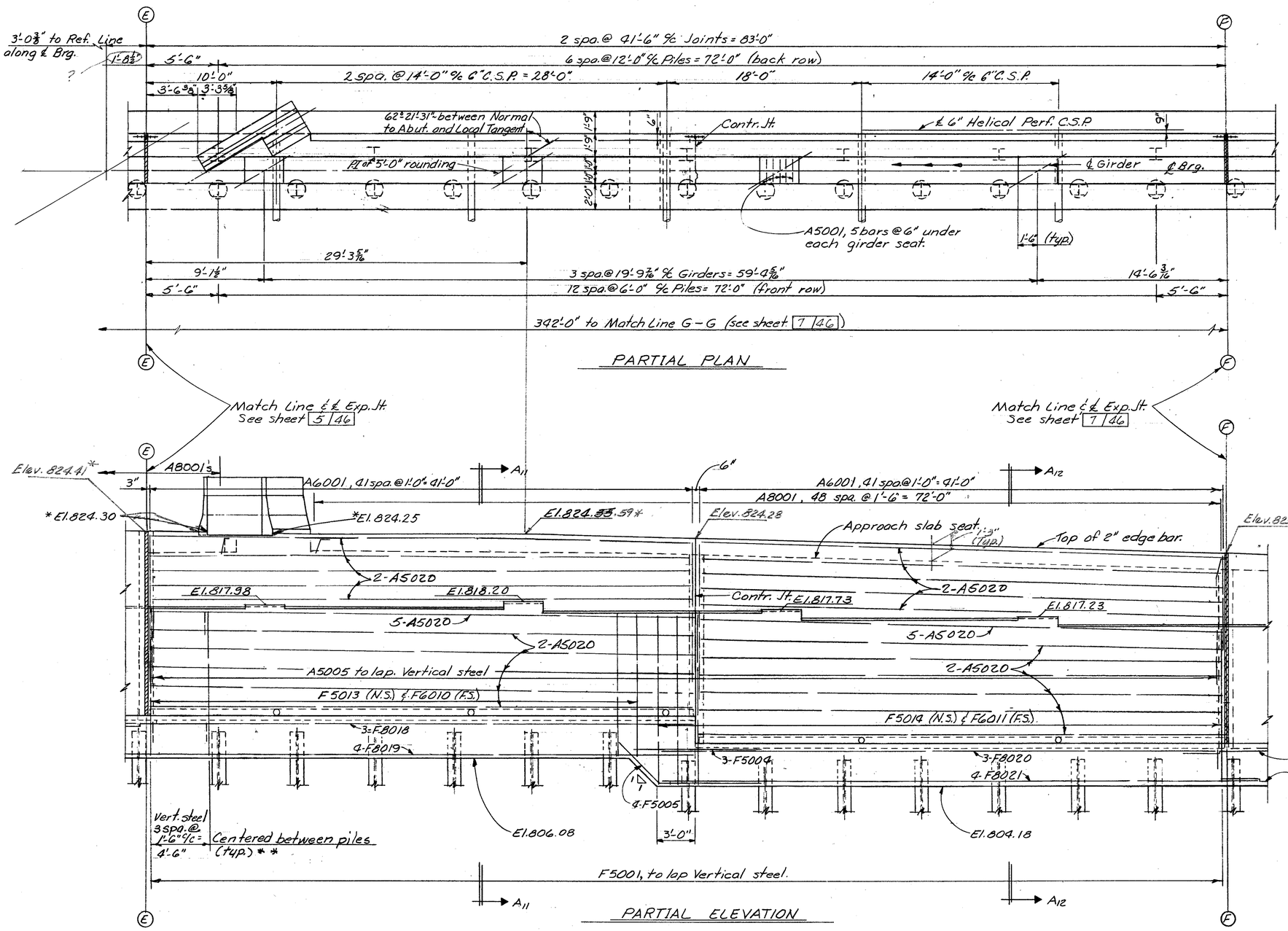


PARTIAL PLAN

PARTIAL ELEVATION

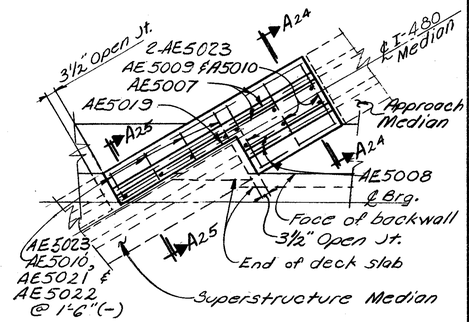


SOUTH ABUT. MEDIAN DETAIL

Median curb plates not shown.
For details see STD. DWG. SD-1-69 Sht. 2

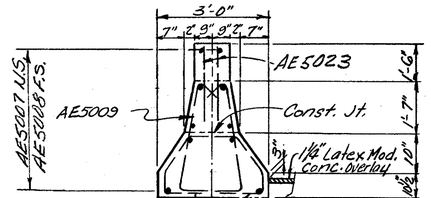


SECTION A24 - A24

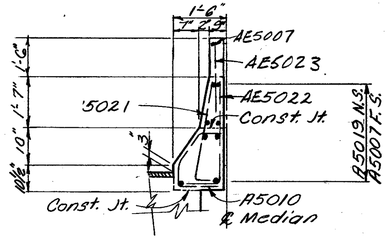


SECTION A25 - A25

NOTE:
Reinforcing steel location N.S. indicates near side F.S. indicates far side

For additional notes see sht. 9 46

For Sections A11-A11 & A12-A12 see sht. 13 46

Field bending of A5020 bars in top of backwall shall be included with Item 509 for payment.

Reviewed As-Built

ALDEN E. STILSON & ASSOCIATES, LIMITED
CONSULTING ENGINEERS
COLUMBUS, OHIO

6 46

SOUTH ABUTMENT DETAILS

BRIDGE No. CUY-480-1078
I-480 over CONRAIL (CLEVE. SHT. LN.)
STA. 593+38.70
CUYAHOGA COUNTY STA. 596+50.96

| DESIGNED | DRAWN | TRACED | CHECKED | REVIEWED | DATE | REVISED |
|---|---|---|---|---|---|---|
| PHB | DW | | BSS ANA | G.W.M. | 11/17/11 | |

MICROFILMED
JAN 17 1991

| FED. RD. DIVISION | STATE | PROJECT | TYPE FUNDS |
|---|---|---|---|
| 2 | OHIO | | |

338
500

CUYAHOGA COUNTY
CUY-480-10.39

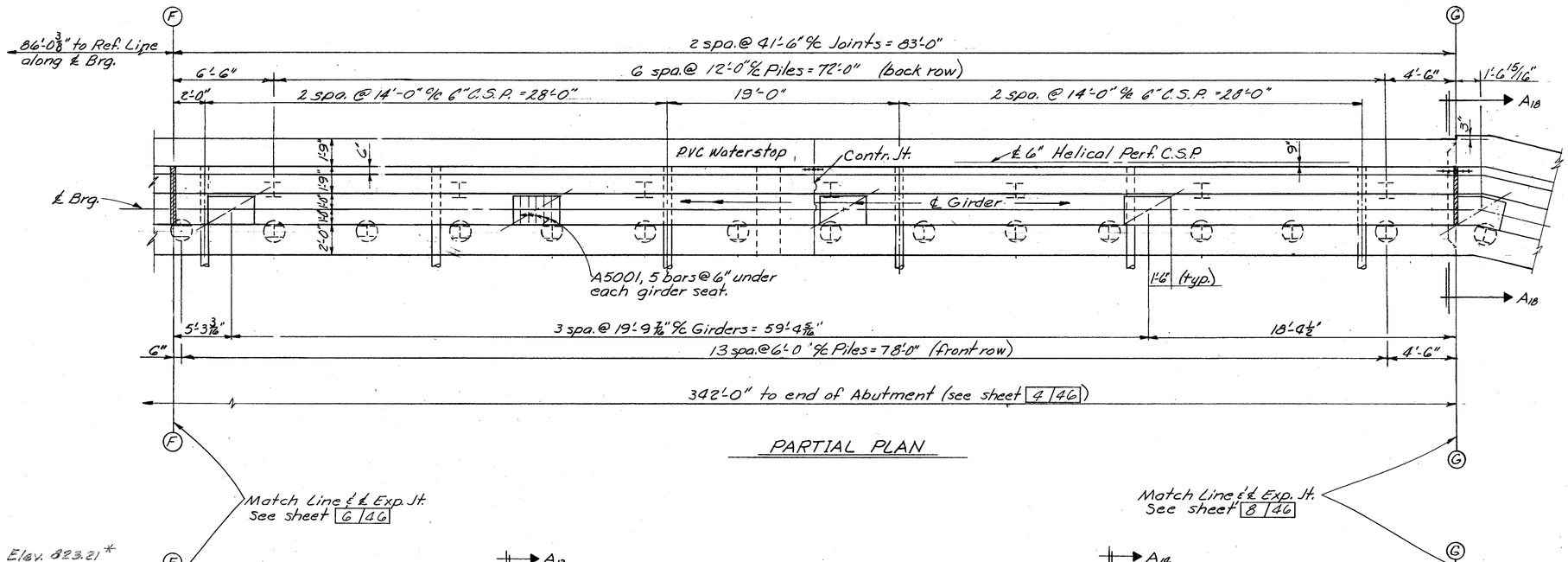


PARTIAL PLAN

Match Line ℄ ℄ Exp. Jt. See sheet 6 46

Match Line ℄ ℄ Exp. Jt. See sheet 8 46

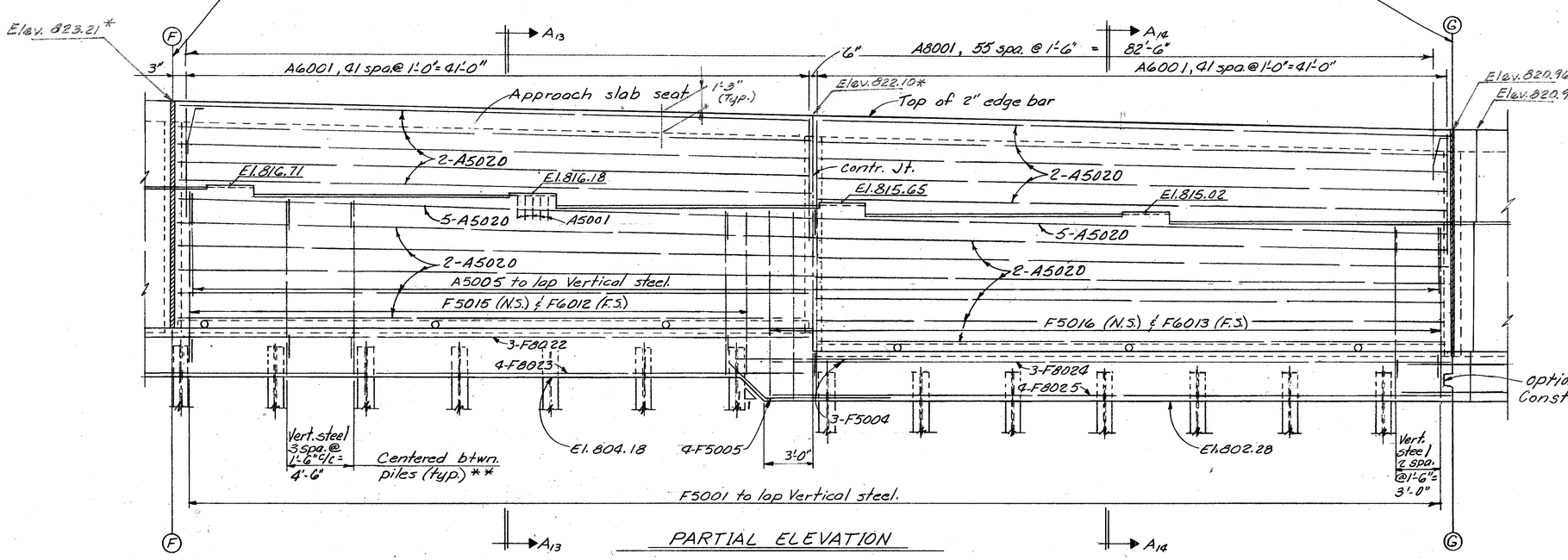


PARTIAL ELEVATION

## NOTES

Reinforcing Steel location:
N.S. indicates near side.
F.S. indicates far side.

For additional notes see Sheet 9 46

For Sections $A_{13}$-$A_{13}$ & $A_{14}$-$A_{14}$ see sheet 13 46

For Section $A_{18}$-$A_{18}$ see this sheet.

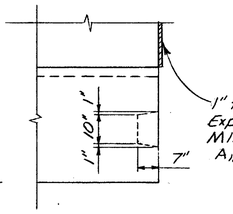


SECTION ~ $A_{19}$-$A_{19}$

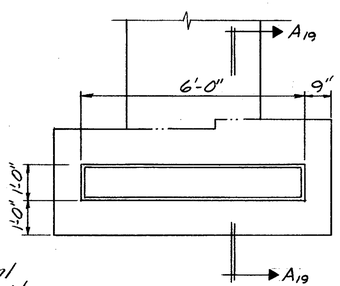


SECTIONS ~ $A_{17}$-$A_{17}$ & $A_{18}$-$A_{18}$

(For location of $A_{17}$-$A_{17}$ see Sheet 5 46)

ALDEN E. STILSON & ASSOCIATES, LIMITED
CONSULTING ENGINEERS
COLUMBUS, OHIO

7 46

SOUTH ABUTMENT DETAILS

BRIDGE No. CUY-480-1078
I-480 over CONRAIL (CLEVE. SHT. LN.)
STA. 593+38.70
CUYAHOGA COUNTY STA. 596+50.96

| DESIGNED | DRAWN | TRACED | CHECKED | REVIEWED | DATE | REVISED |
|---|---|---|---|---|---|---|
| PHS | DW | | BSS ANA | G.K.M. | 11/7/71 | |

MICROFILMED
JAN 17 1991

| FED. RD. DIVISION | STATE | PROJECT | TYPE FUNDS |
|---|---|---|---|
| 2 | OHIO | | |

339
500

CUYAHOGA COUNTY
CUY-480-10.39

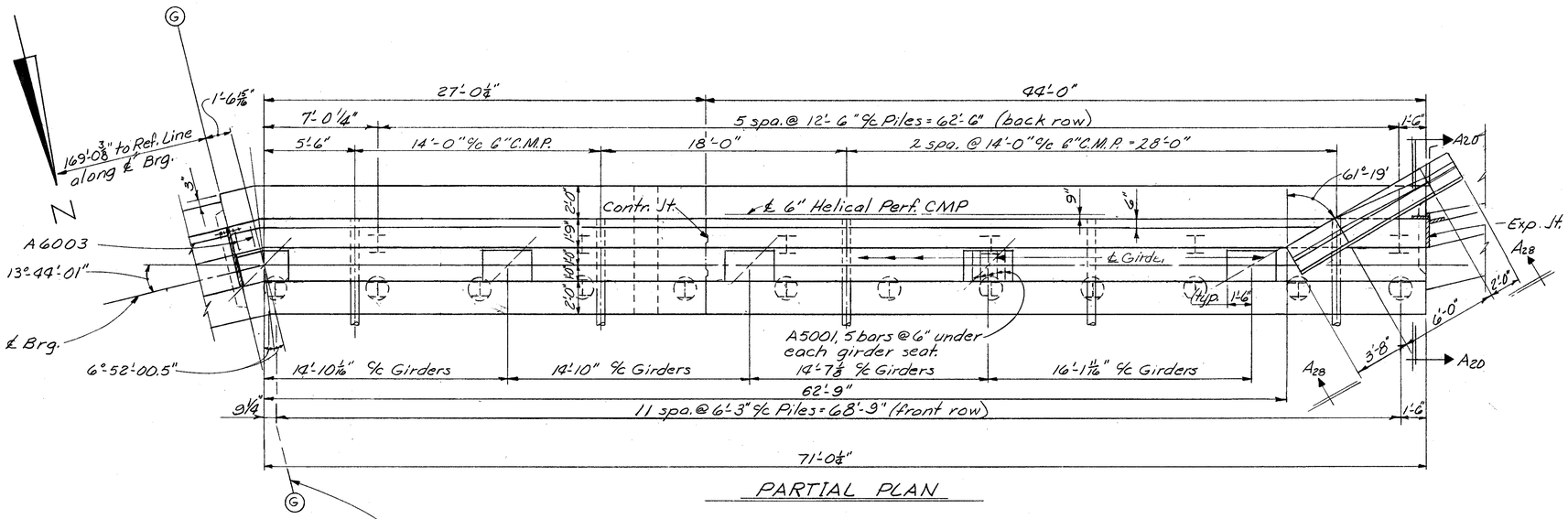


PARTIAL PLAN

Match Line ℄ ℄ Exp. Jt.
See sheet 7 | 46

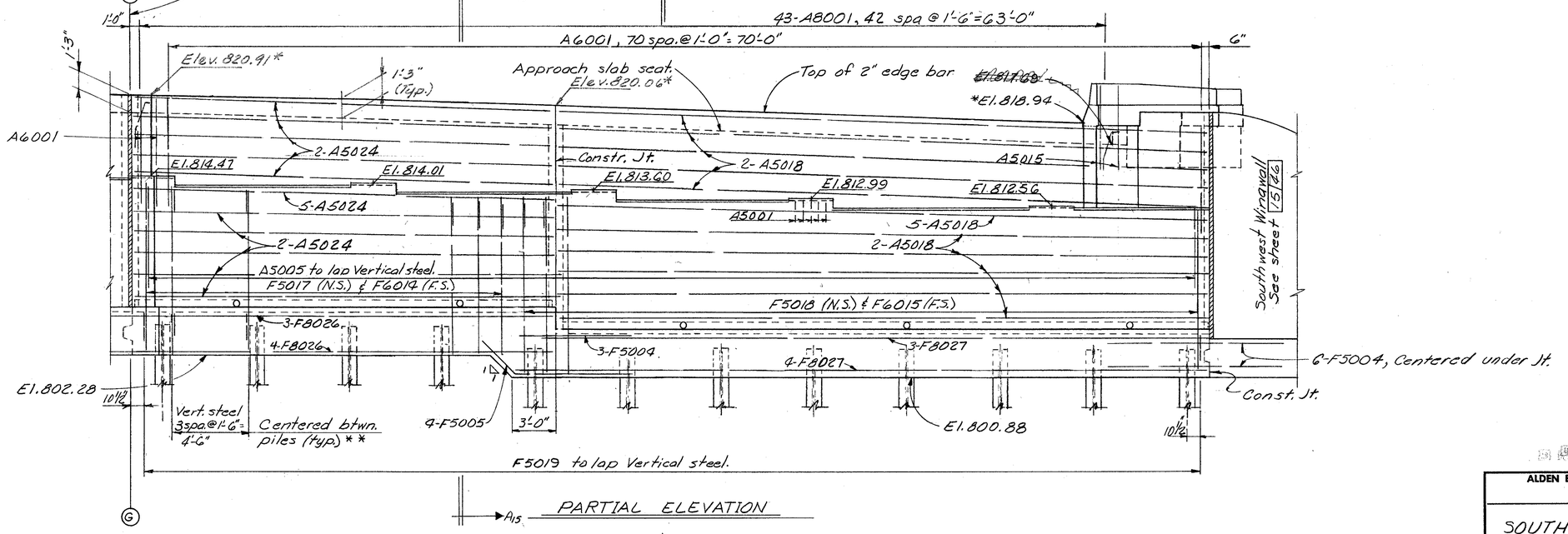


PARTIAL ELEVATION

## NOTES

Reinforcing Steel location:
N.S. indicates near side.
F.S. indicates far side.

For additional notes see Sheet 9 | 46

For Sections $A_{15}$-$A_{15}$ & $A_{16}$-$A_{16}$ see sheet 13 | 46

For Section $A_{20}$-$A_{20}$ see sheet 14 | 46

For Section $A_{28}$-$A_{28}$ see sheet 14 | 46

Revised As-Built

ALDEN E. STILSON & ASSOCIATES, LIMITED
CONSULTING ENGINEERS
COLUMBUS, OHIO

8 | 46

# SOUTH ABUTMENT DETAILS

BRIDGE No. CUY-480-1078
I-480 over CONRAIL (CLEVE. SHT. LN.)
STA. 593+38.70
CUYAHOGA COUNTY STA. 596+50.96

| DESIGNED | DRAWN | TRACED | CHECKED | REVIEWED | DATE | REVISED |
|---|---|---|---|---|---|---|
| PHB | DW | | BSS ANA | G.W.M. | 11/18/71 | |

MICROFILMED
JAN 18 1991

| FED. RD. DIVISION | STATE | PROJECT | TYPE FUNDS |
|---|---|---|---|
| 2 | OHIO | | |

340
500

CUYAHOGA COUNTY
CUY-480-10.39

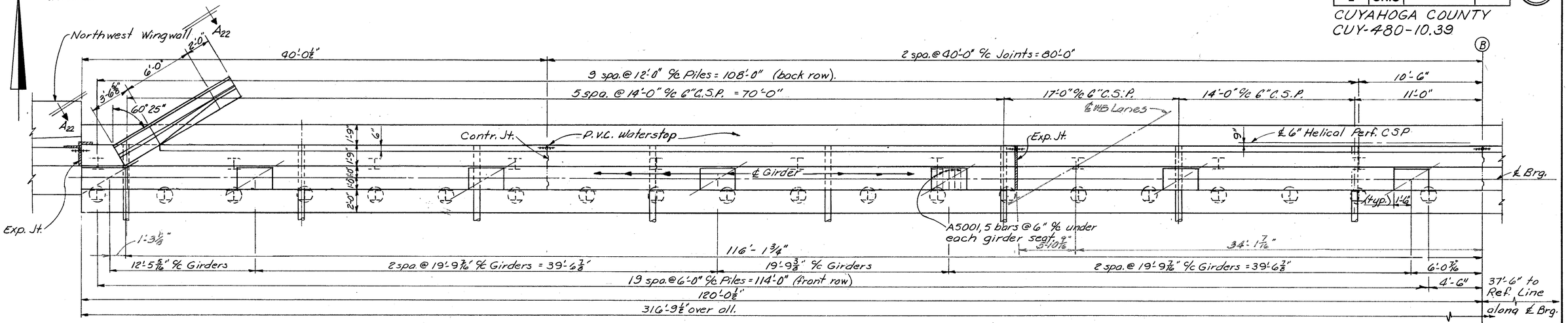


PARTIAL PLAN

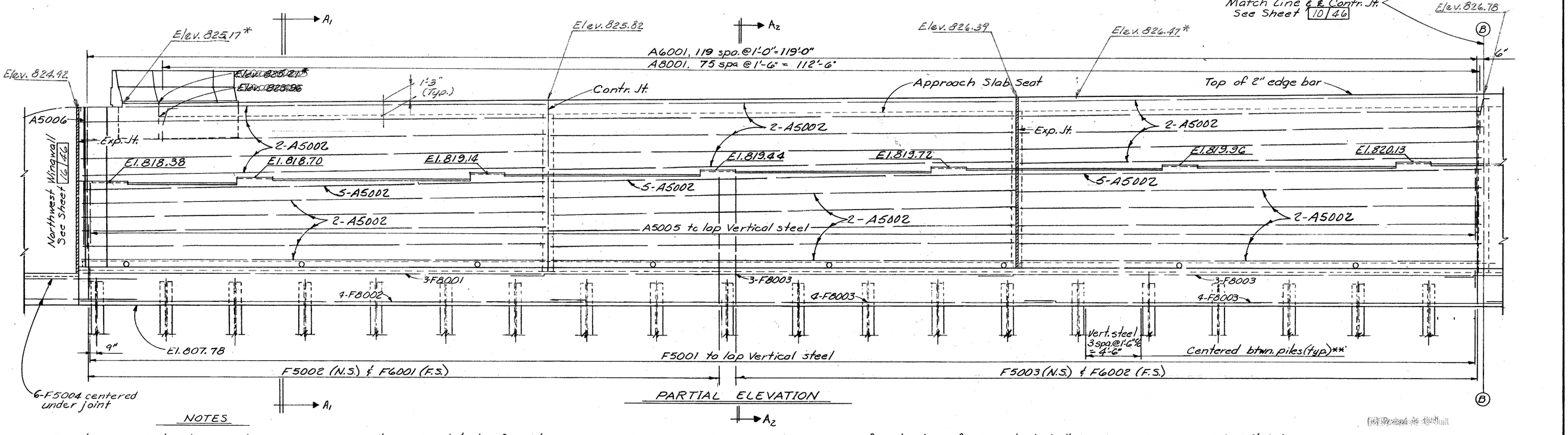


PARTIAL ELEVATION

NOTES

* Elevations marked with an asterisk are pavement elevations at the face of abutment-backwall and points indicated.
Reinforcing Steel location:
N.S. - indicates near side.
F.S. - indicates far side.

For expansion or contraction joint details, see Common Details sheet

All piles shall be HP10x42 steel piles.
Vertical piles.
Battered piles 1:3.

For details of lighting and communications conduit in backwall see Standard Construction Drawing HL-4.

6" Helical Perforated C.S.P. shall be capped at Abutment ends and Expansion Joints. It shall be continuous at contraction joints unless a step is provided in the footing, in which case the 6" C.S.P. shall not be continuous.

End Dam Joints: Joints shall be provided in the abutment portion of the end dam at contraction and expansion joints.

** The spacing of vertical reinforcing steel shall be field adjusted to clear contraction and expansion joints and 6" non-perforated C.S.P.s by 3" minimum.

Field bending of No. 5 bars in abutment backwall shall be included with Item 509 for payment.

For Sections $A_1$-$A_1$ and $A_2$-$A_2$ see sheet 13/46
For Section $A_{22}$-$A_{22}$ see sheet 14/46

Porous Backfill, 1.5' thick, shall extend up to the plane of the subgrade and laterally to the end of the wingwalls.

ALDEN E. STILSON & ASSOCIATES, LIMITED
CONSULTING ENGINEERS
COLUMBUS, OHIO
9/46

# NORTH ABUTMENT DETAILS

BRIDGE No. CUY-480-1078
I-480 over CONRAIL (CLEVE. SHT. LN.)
STA. 593+38.70
CUYAHOGA COUNTY STA. 596+50.96

| DESIGNED | DRAWN | TRACED | CHECKED | REVIEWED | DATE | REVISED |
|---|---|---|---|---|---|---|
| PHB | DW | | BSS ANA | G.W.M. | 11/18/71 | |

MICROFILMED
JAN 18 1991

| FED. RD. DIVISION | STATE | PROJECT | TYPE FUNDS |
|---|---|---|---|
| 2 | OHIO | | |

341/500

CUYAHOGA COUNTY
CUY-480-10.39

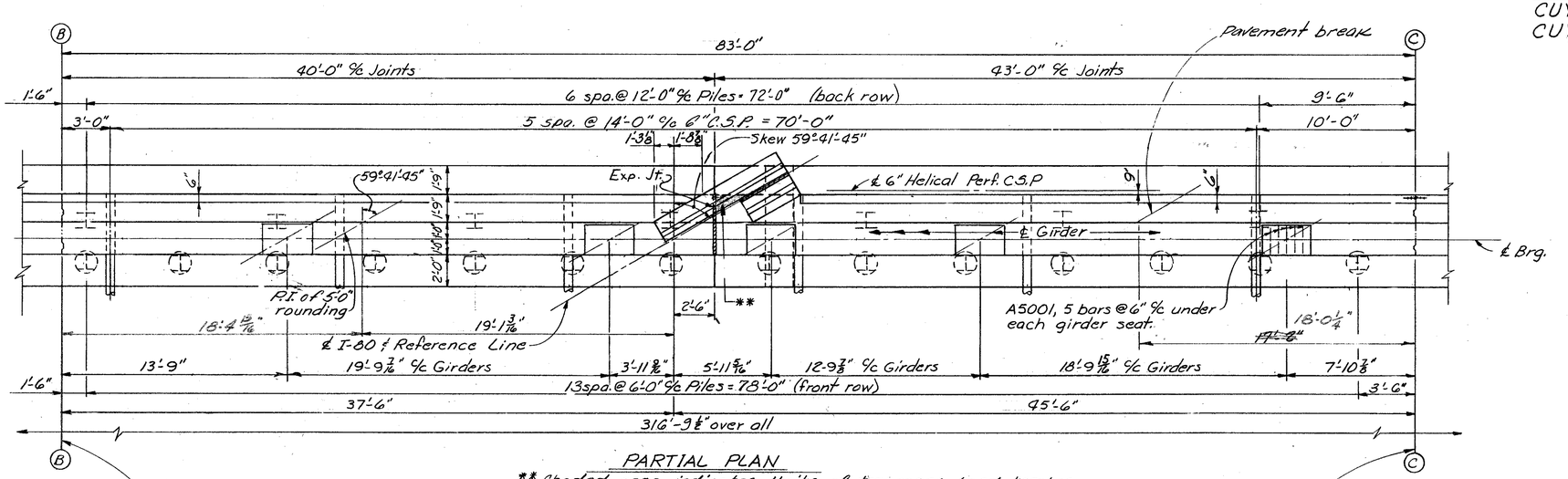


PARTIAL PLAN

** Shaded area indicates limits of tar paper bond breaker. Include with Item 511 Class "C" Concrete for payment.

Match Line ℄ ℄ Contr. Jt. See sheet 9/46

Match Line ℄ ℄ Contr. Jt. See sheet 11/46

Elev. 827.12

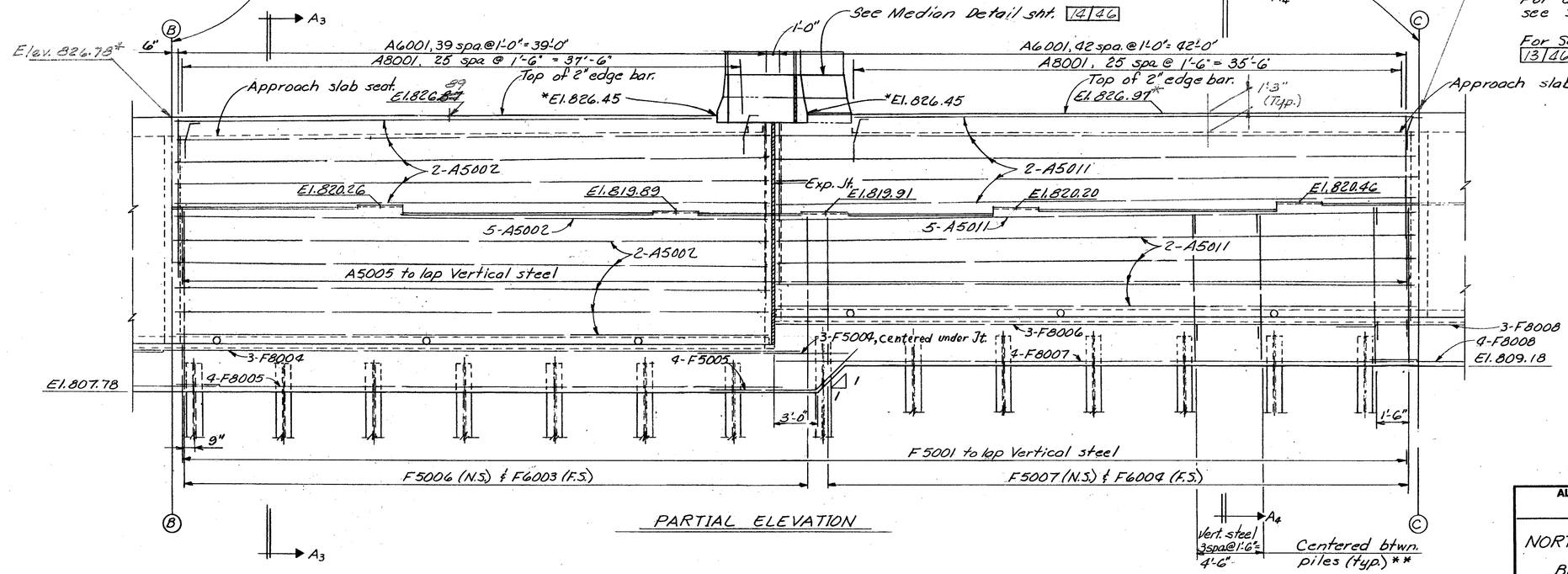


PARTIAL ELEVATION

NOTES

Reinforcing Steel location:
N.S. indicates near side.
F.S. indicates far side.

For additional notes see Sheets 9/46

For Sections A3-A3 & A4-A4 see sheet 13/46

ALDEN E. STILSON & ASSOCIATES, LIMITED
CONSULTING ENGINEERS
COLUMBUS, OHIO
10/46

NORTH ABUTMENT DETAILS

BRIDGE No. CUY-480-1078
I-480 over CONRAIL (CLEVE. SHT. LN.)
STA. 593+38.70
CUYAHOGA COUNTY STA. 596+50.96

| DESIGNED | DRAWN | TRACED | CHECKED | REVIEWED | DATE | REVISED |
|---|---|---|---|---|---|---|
| PHB | DW | | BSS ANA | G.W.M. | 11/19/71 | |

MICROFILMED
JAN 18 1991

| FED. RD. DIVISION | STATE | PROJECT | TYPE FUNDS |
|---|---|---|---|
| 2 | OHIO | | |

CUYAHOGA COUNTY
CUY-480-10.39

342/500

N

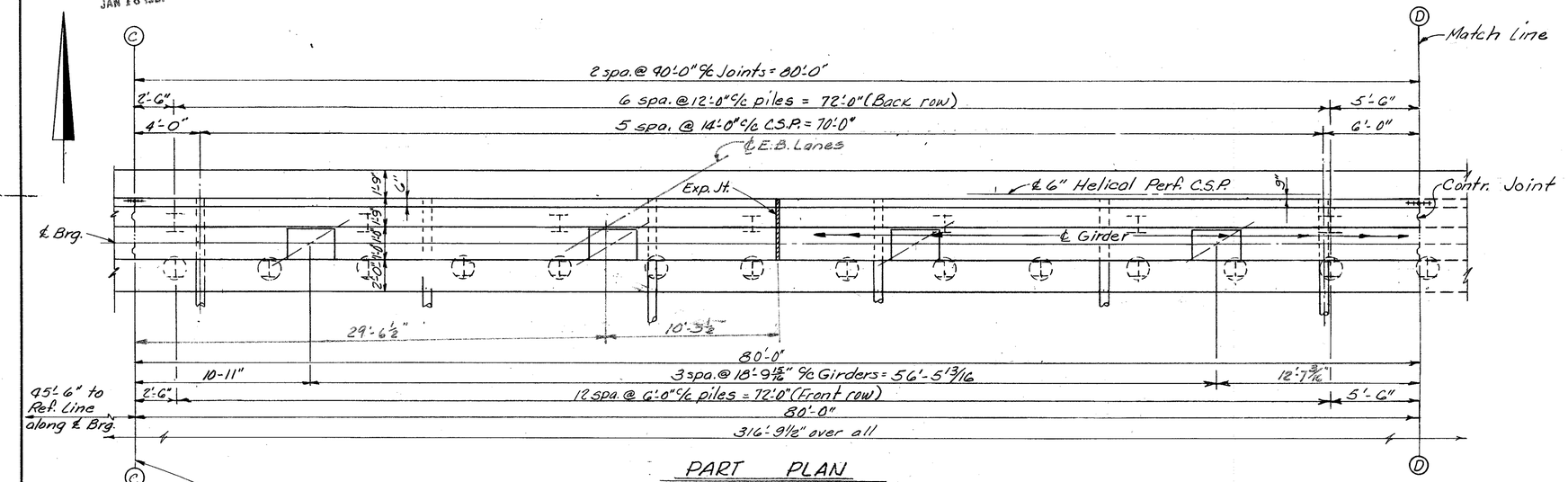


PART PLAN

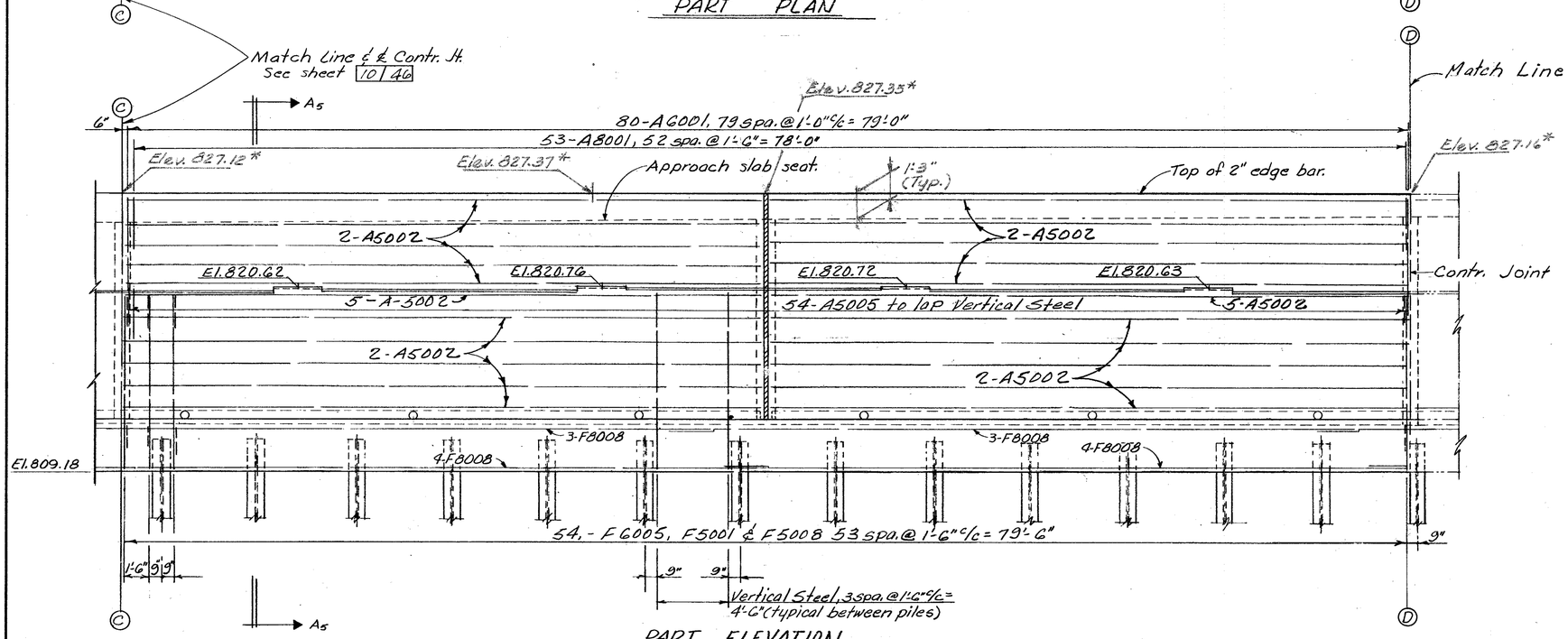


PART ELEVATION

NOTES

Reinforcing Steel location:
N.S. indicates near side.
F.S. indicates far side.

For additional notes see Sheet 9/46.

For Sections $A_5$-$A_5$ & $A_6$-$A_6$ see sheet 13/46.
For Section $A_{23}$-$A_{23}$ see sheet 14/46.

ALDEN E. STILSON & ASSOCIATES, LIMITED
CONSULTING ENGINEERS
COLUMBUS, OHIO
11/46

# NORTH ABUTMENT DETAILS

BRIDGE No. CUY-480-1078
I-480 over CONRAIL (CLEVE. SHT. LN.)
STA. 593+38.70
CUYAHOGA COUNTY STA. 596+50.96

| DESIGNED | DRAWN | TRACED | CHECKED | REVIEWED | DATE | REVISED |
|---|---|---|---|---|---|---|
| PHB | DW | | BSS ANA | G.W.M. | 11/19/71 | |

MICROFILMED
JAN 18 1991

| F.H.W.A. REGION | STATE | PROJECT | |
|---|---|---|---|
| 5 | OHIO | | |

343/500

CUYAHOGA COUNTY
CUY-480-10.39

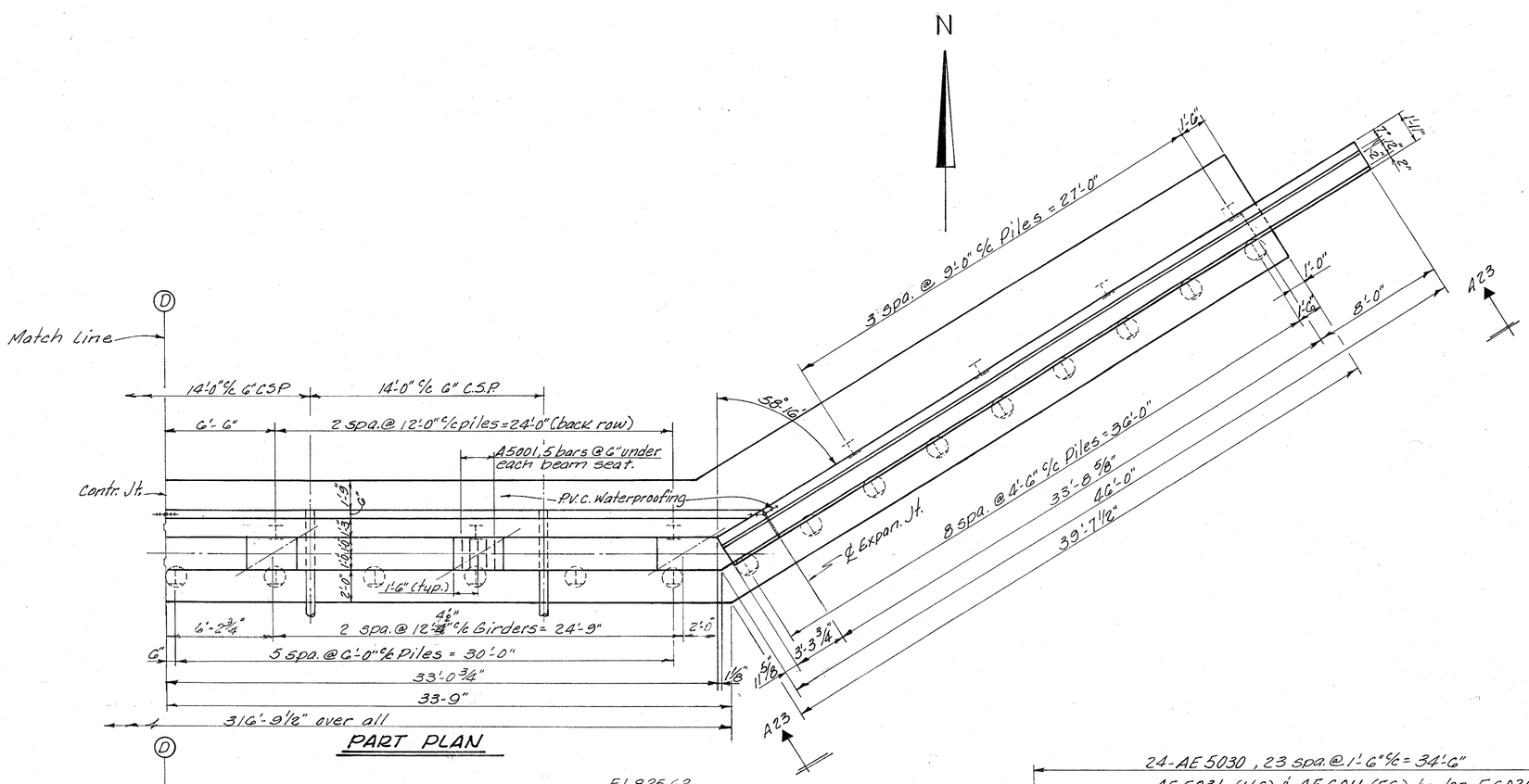


PART PLAN

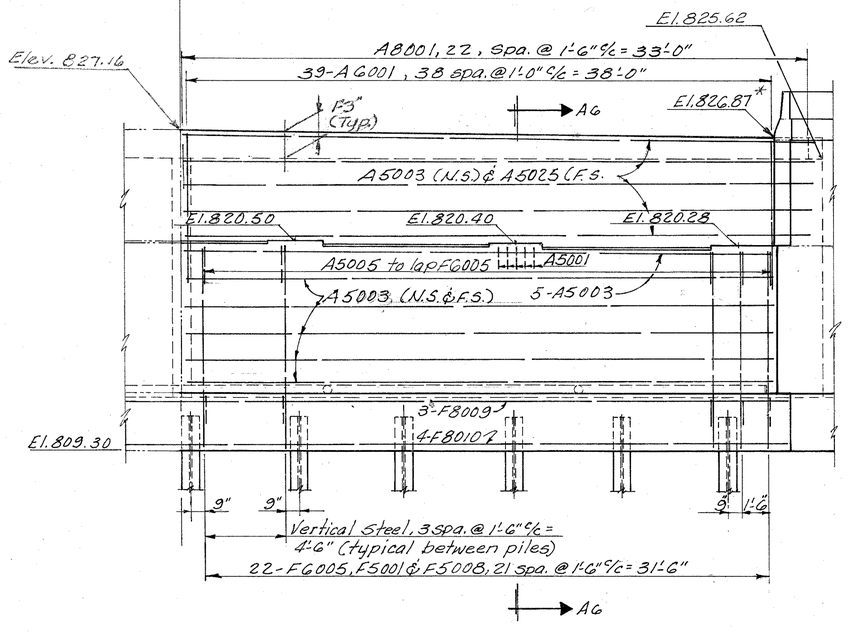


PART ELEVATION

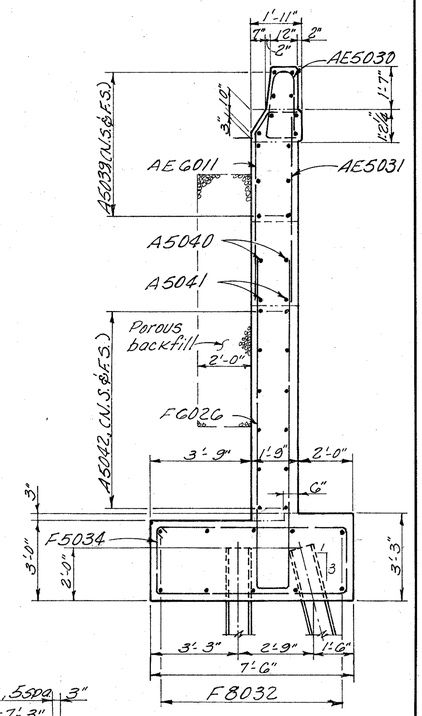


SECTION A37-A37

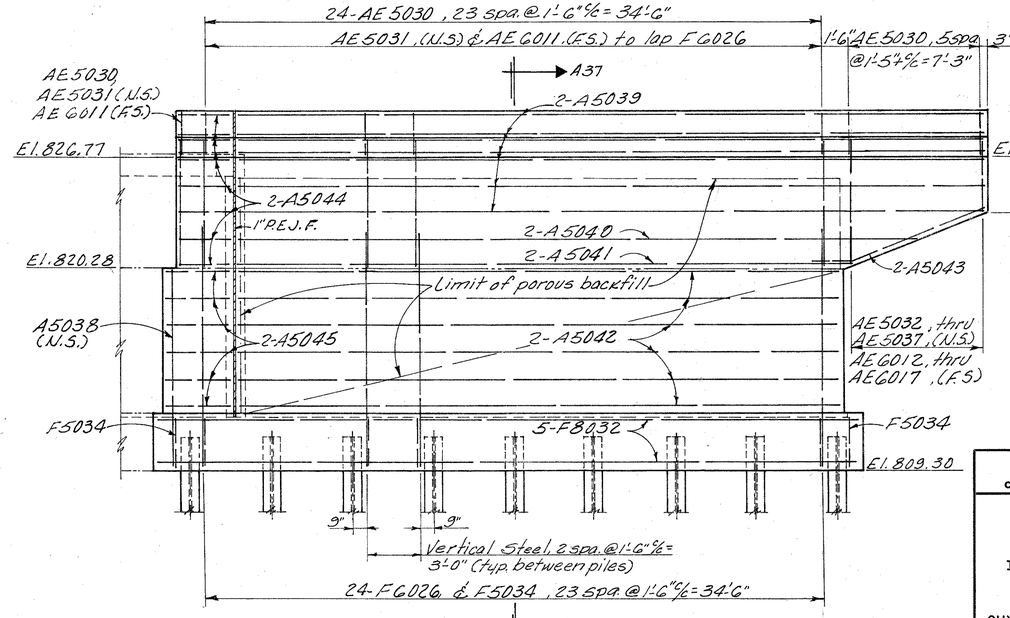


VIEW A23-A23

Notes:

Reinforcing steel locations:
N.S. indicates near side.
F.S. indicates far side

For Section AG-AG see sheet 13/46

Revised As-Built

12/46

ALDEN E. STILSON & ASSOCIATES
CONSULTING ENGINEERS
CLEVELAND, OHIO COLUMBUS, OHIO WHEELING, W. VA.

# NORTH ABUTMENT DETAILS

BRIDGE No. CUY-480-1078
I-480 over CONRAIL (CLEVE. SHT. LN.)

CUYAHOGA COUNTY
STA. 593+38.70
STA. 596+50.96

| DESIGNED | DRAWN | TRACED | CHECKED | REVIEWED | DATE | REVISED |
|---|---|---|---|---|---|---|
| WM | R.T. | | BTG | G.W.M. | 3/14/93 | |

MICROFILMED
JAN 18 1991

| FED. RD. DIVISION | STATE | PROJECT | TYPE FUNDS |
|---|---|---|---|
| 2 | OHIO | | |

344
500

CUYAHOGA COUNTY
CUY-480-10.39


For location of Sections $A_1$-$A_1$ and $A_2$-$A_2$ see Sheet 9|46
" " " " $A_3$-$A_3$ and $A_4$-$A_4$ " " 10|46
" " " " $A_5$-$A_5$ " " 11|46
" " " " $A_7$-$A_7$ and $A_8$-$A_8$ " " 4|46
" " " " $A_9$-$A_9$ and $A_{10}$-$A_{10}$ " " 5|46
" " " " $A_{11}$-$A_{11}$ and $A_{12}$-$A_{12}$ " " 6|46
" " " " $A_{13}$-$A_{13}$ and $A_{14}$-$A_{14}$ " " 7|46
" " " " $A_{15}$-$A_{15}$ and $A_{16}$-$A_{16}$ " " 8|46
" " " " A G-AG 12|46


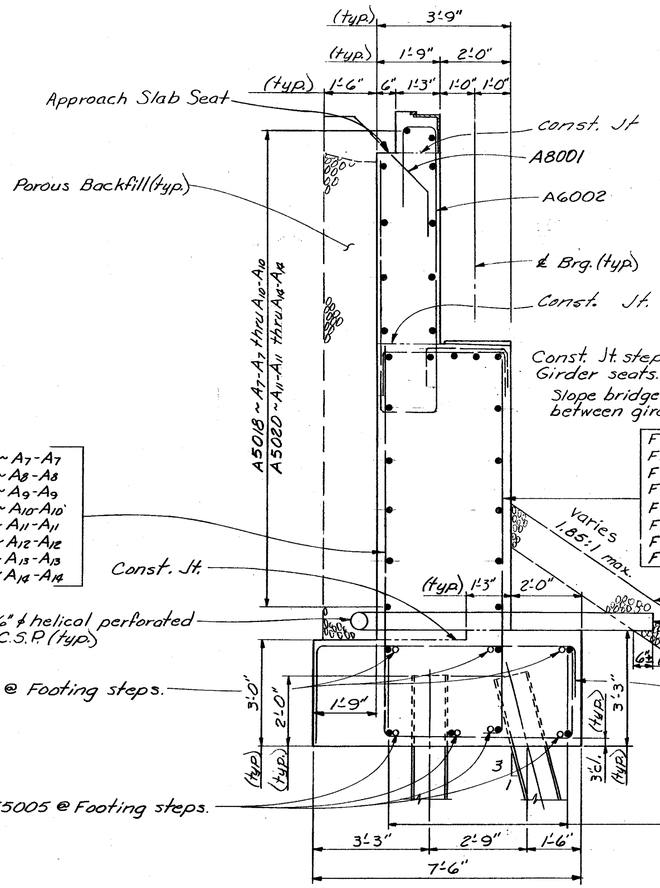


| Section | Top | Bottom |
|---|---|---|
| $A_7$-$A_7$ | ~F8011 | ~F8011 |
| $A_8$-$A_8$ | ~F8012 | ~F8013 |
| $A_9$-$A_9$ | ~F8014 | ~F8015 |
| $A_{10}$-$A_{10}$ | ~F8016 | ~F8017 |
| $A_{11}$-$A_{11}$ | ~F8018 | ~F8019 |
| $A_{12}$-$A_{12}$ | ~F8020 | ~F8021 |
| $A_{13}$-$A_{13}$ | ~F8022 | ~F8023 |
| $A_{14}$-$A_{14}$ | ~F8024 | ~F8025 |

SECTIONS~$A_7$-$A_7$ thru $A_{14}$-$A_{14}$
SOUTH ABUTMENT

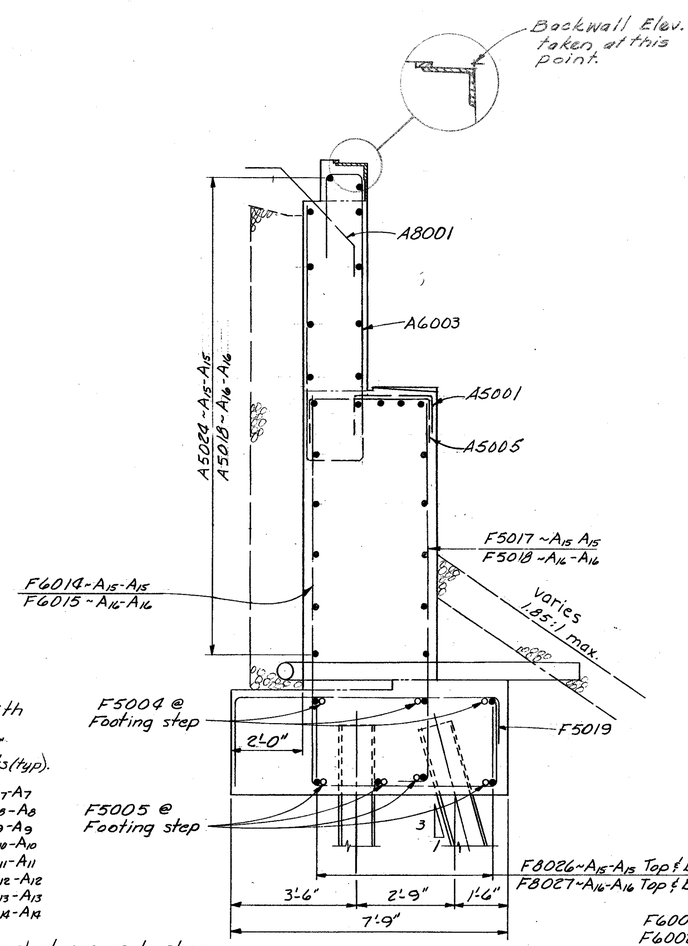


SECTIONS~$A_{15}$-$A_{15}$ and $A_{16}$-$A_{16}$
SOUTH ABUTMENT

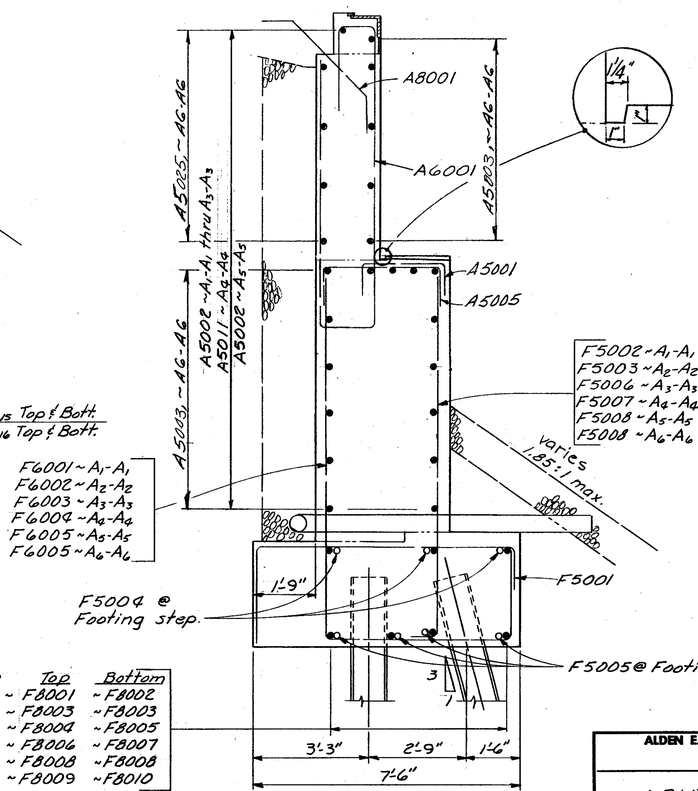


| Section | Top | Bottom |
|---|---|---|
| $A_1$-$A_1$ | ~F8001 | ~F8002 |
| $A_2$-$A_2$ | ~F8003 | ~F8003 |
| $A_3$-$A_3$ | ~F8004 | ~F8005 |
| $A_4$-$A_4$ | ~F8006 | ~F8007 |
| $A_5$-$A_5$ | ~F8008 | ~F8008 |
| $A_6$-$A_6$ | ~F8009 | ~F8010 |

SECTIONS~$A_1$-$A_1$ thru $A_6$-$A_6$
NORTH ABUTMENT

Revised As-Built

ALDEN E. STILSON & ASSOCIATES, LIMITED
CONSULTING ENGINEERS
COLUMBUS, OHIO
13|46

# ABUTMENT DETAILS

BRIDGE No. CUY-480-1078
I-480 over CONRAIL (CLEVE. SHT. LN.)
STA. 593+38.70
CUYAHOGA COUNTY STA. 596+50.96

| DESIGNED | DRAWN | TRACED | CHECKED | REVIEWED | DATE | REVISED |
|---|---|---|---|---|---|---|
| PHB | DW | | BSS ANA | G.W.M. | 11/9/71 | |

MICROFILMED
JAN 18 1991

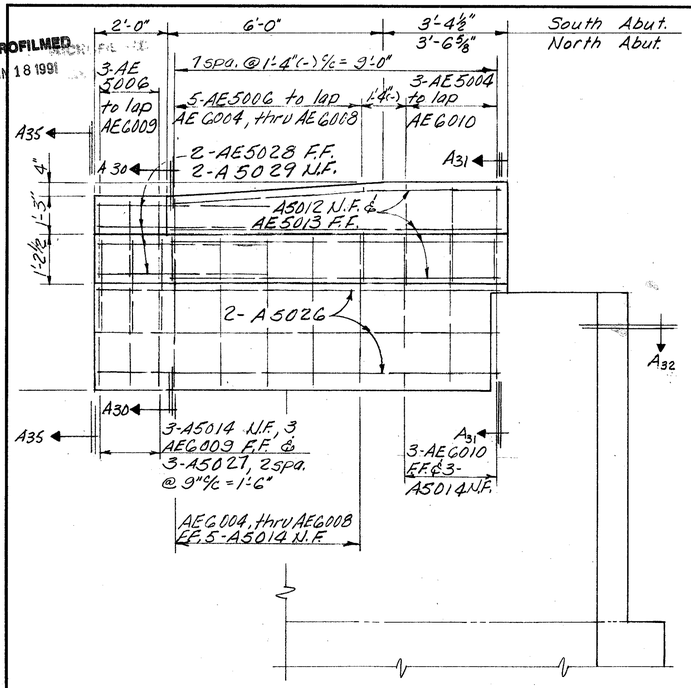


ELEVATION $A_{29}$-$A_{29}$ see sht. 4/46

ELEVATION $A_{22}$-$A_{22}$ see sht. 9/46

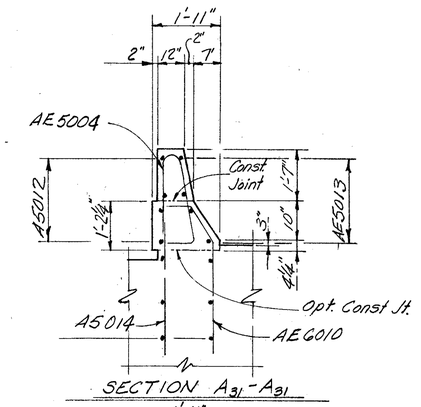


SECTION $A_{31}$-$A_{31}$

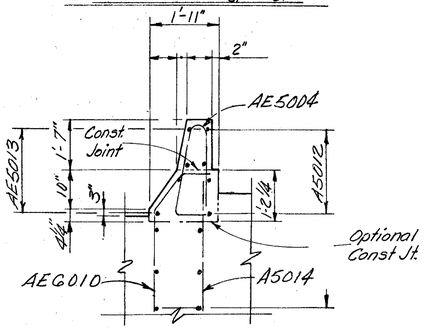


SECTION $A_{34}$-$A_{34}$

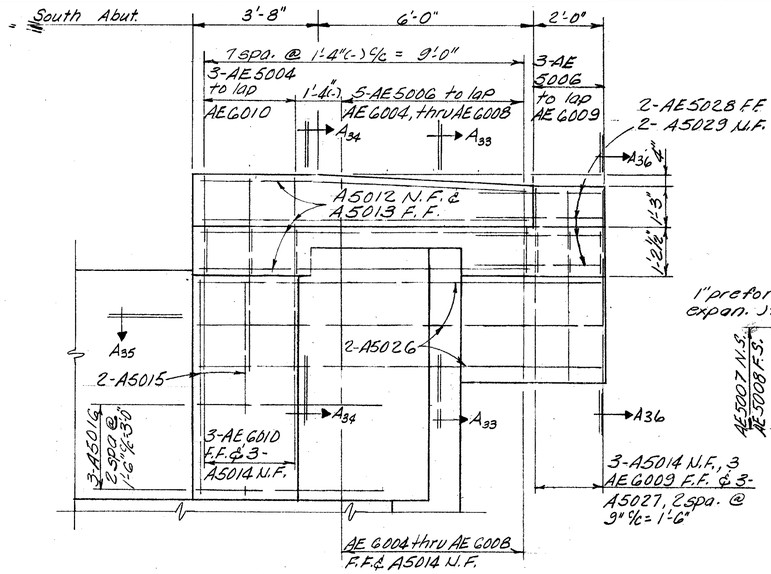


ELEVATION $A_{28}$-$A_{28}$ see sht 8/46

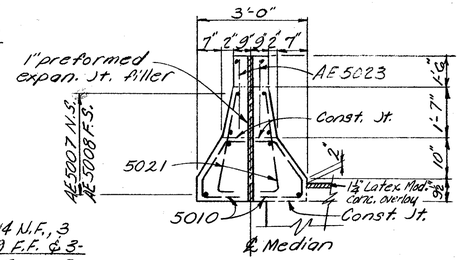


SECTION $A_{26}$-$A_{26}$

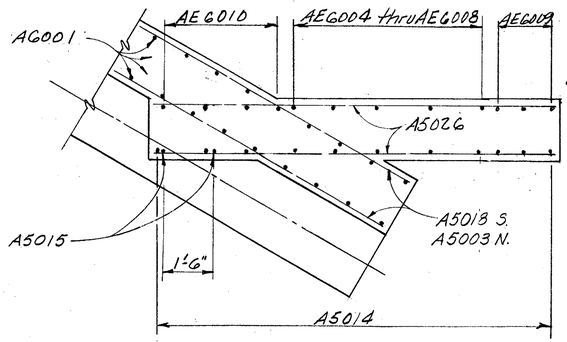


SECTION $A_{35}$-$A_{35}$

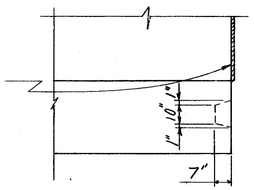


SECTION $A_{21}$-$A_{21}$

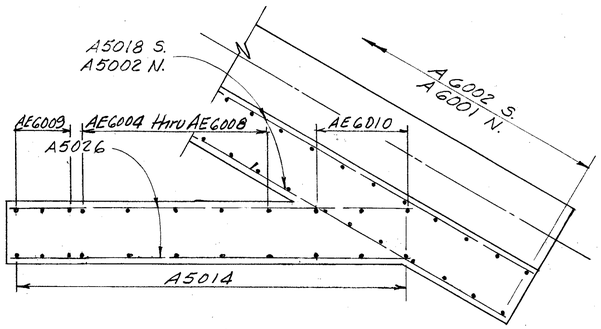


SECTION $A_{32}$-$A_{32}$

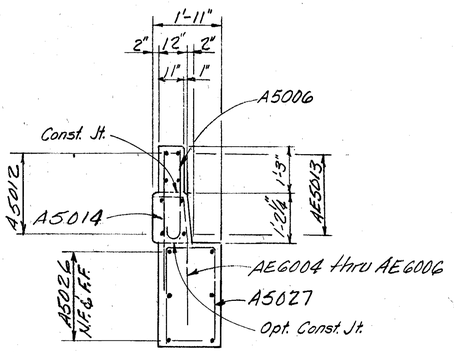


SECTION $A_{30}$-$A_{30}$

SECTION $A_{33}$-$A_{33}$ (Opp Hand)

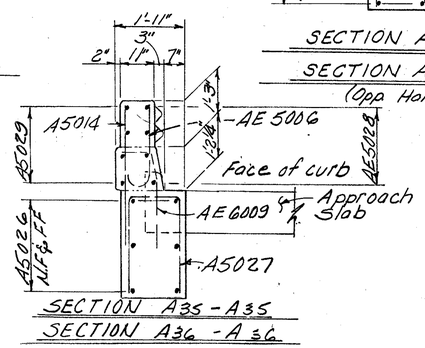


SECTION $A_{35}$-$A_{35}$

SECTION $A_{36}$-$A_{36}$

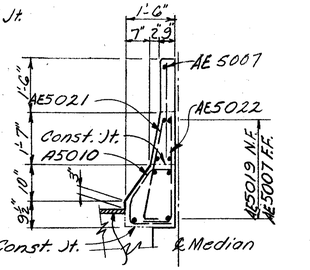


SECTION $A_{27}$-$A_{27}$

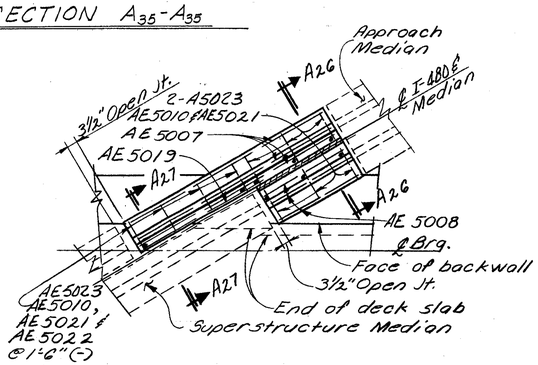


NORTH ABUT. MEDIAN DETAIL

Median curb plates not shown.
For details see Std. DWG. SD-1-69 Sht. 2.

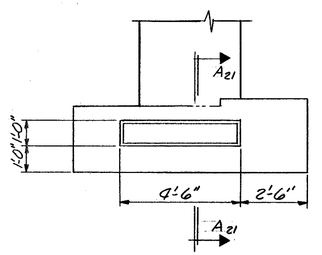


SECTION ~ $A_{20}$-$A_{20}$ (see Sht. 8/46)

| FED. RD. DIVISION | STATE | PROJECT | TYPE FUNDS |
|---|---|---|---|
| 2 | OHIO | | |

345/500

CUYAHOGA COUNTY
CUY-480-10.39

ALDEN E. STILSON & ASSOCIATES, LIMITED
CONSULTING ENGINEERS
COLUMBUS, OHIO

14/46

# ABUTMENT DETAILS

BRIDGE No. CUY-480-1078
I-480 over CONRAIL (CLEVE. SHT. LN.)
STA. 593+38.70
CUYAHOGA COUNTY STA. 596+50.96

| DESIGNED | DRAWN | TRACED | CHECKED | REVIEWED | DATE | REVISED |
|---|---|---|---|---|---|---|
| PHB | DW | | ANA | G.W.M. | 11/9/71 | |

MICROFILMED
JAN 18 1991

| FED. RD. DIVISION | STATE | PROJECT | TYPE FUNDS |
|---|---|---|---|
| 2 | OHIO | | |

346
500

CUYAHOGA COUNTY
CUY-480-10.39

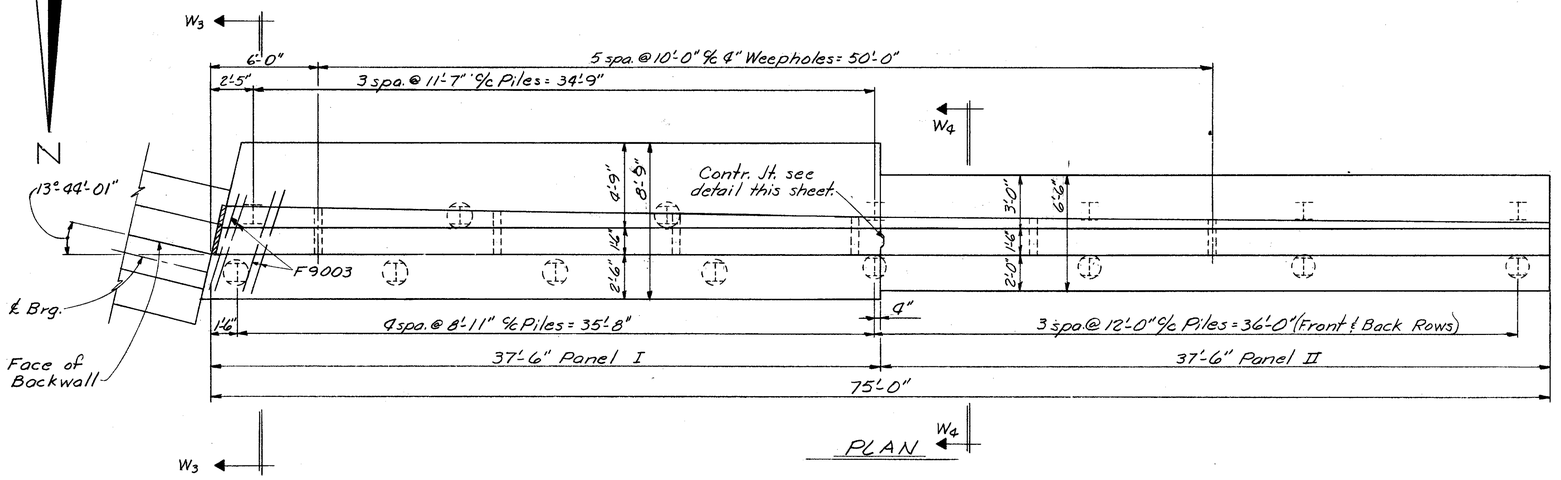


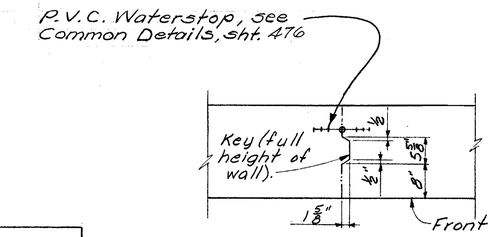


CONTRACTION JOINT DETAIL

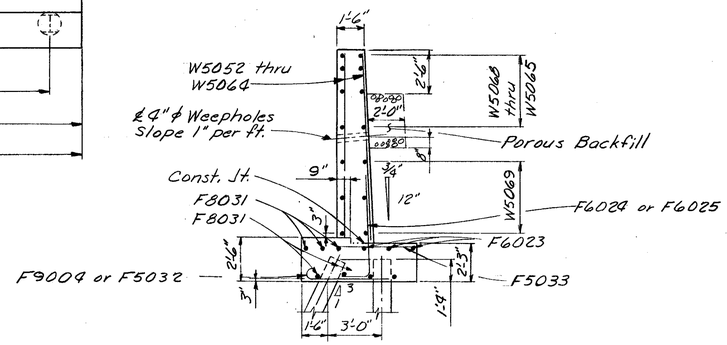


SECTION ~ $W_4$-$W_4$

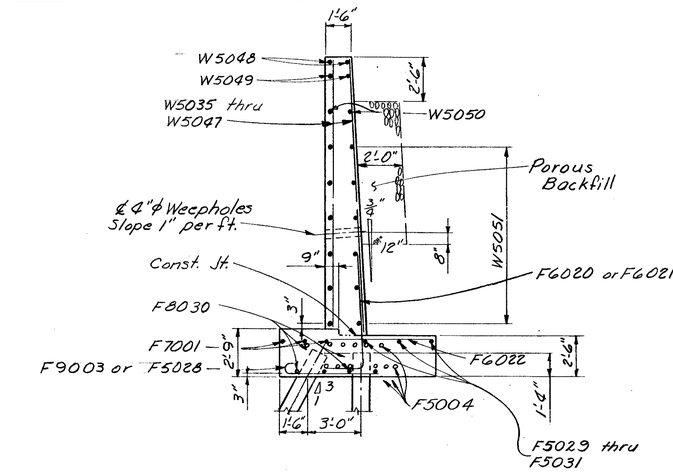


SECTION ~ $W_3$-$W_3$

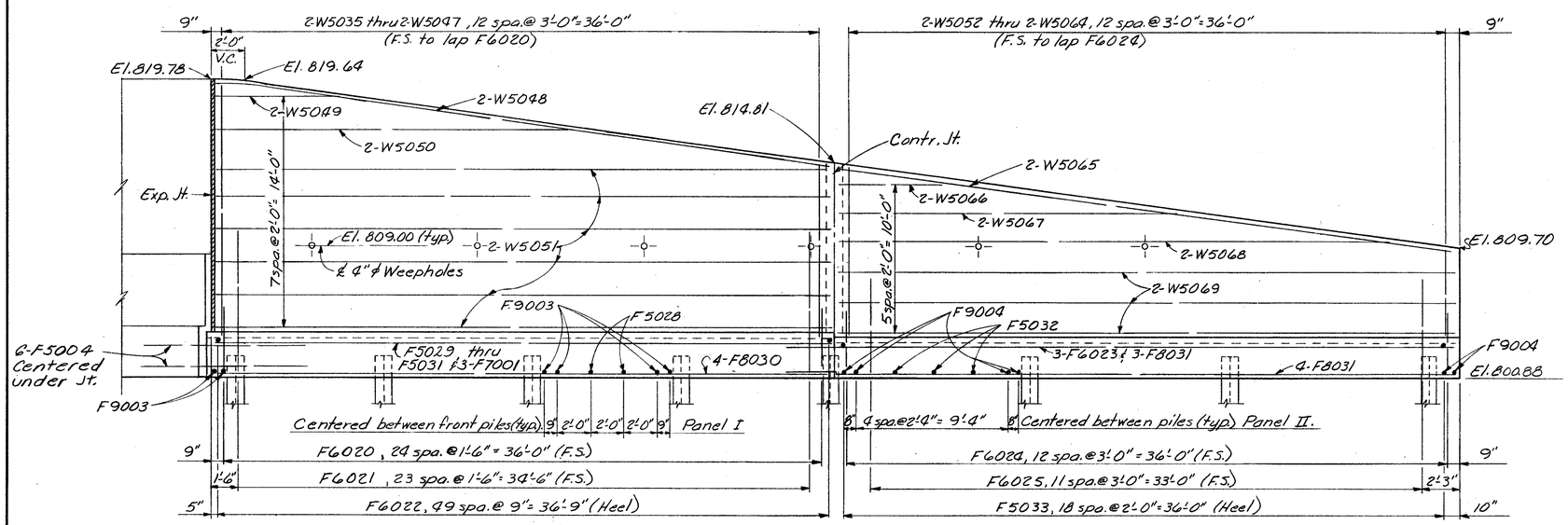


ELEVATION
(Rear Piles not shown)

NOTE

For notes see sheet 16/46

ALDEN E. STILSON & ASSOCIATES, LIMITED
CONSULTING ENGINEERS
COLUMBUS, OHIO
15/46

SOUTHWEST WINGWALL

BRIDGE No. CUY-480-1078
I-480 over CONRAIL (CLEVE. SHT. LN.)
STA. 593+38.70
CUYAHOGA COUNTY STA. 596+50.96

| DESIGNED | DRAWN | TRACED | CHECKED | REVIEWED | DATE | REVISED |
|---|---|---|---|---|---|---|
| PHB | DW | | BSS ANA | G.W.M. | 11/19/71 | |

MICROFILMED
JAN 18 1991

| FED. RD. DIVISION | STATE | PROJECT | TYPE FUNDS |
|---|---|---|---|
| 2 | OHIO | | |

347
500

CUYAHOGA COUNTY
CUY-480-10.39

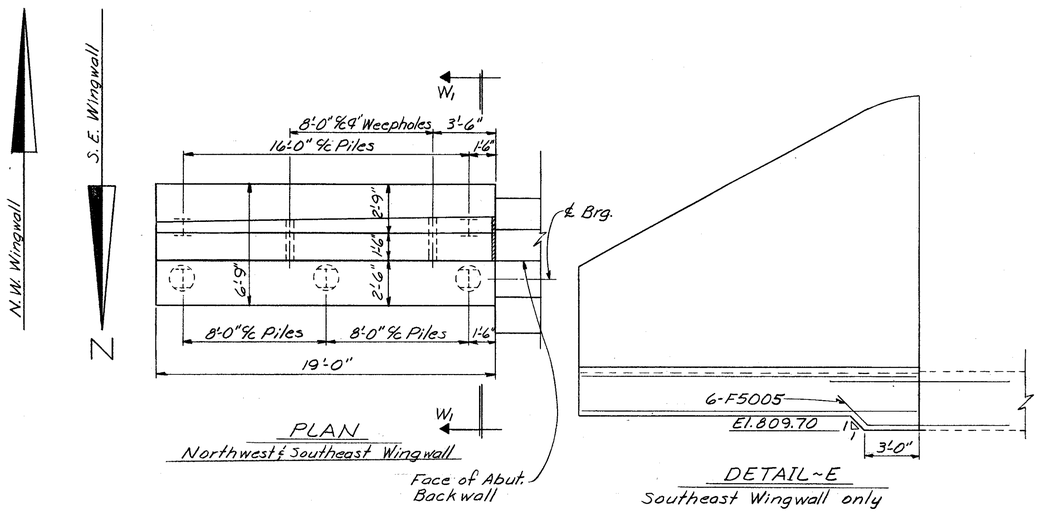


PLAN
Northwest & Southeast Wingwall




DETAIL-E
Southeast Wingwall only

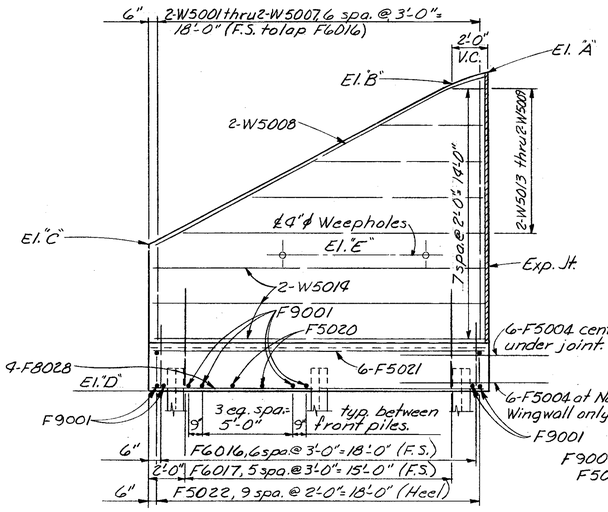


ELEVATION
Northwest & Southeast Wingwalls.
For Step in footing of Southeast wingwall, see Detail-E.

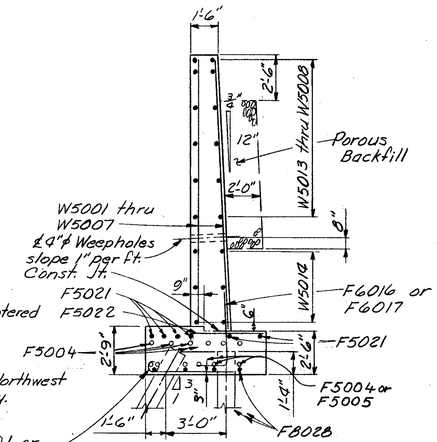


SECTION ~ W1 - W1

TABLE OF ELEVATIONS

| Wingwall Location | Elevations | | | | |
|---|---|---|---|---|---|
| | "A" | "B" | "C" | "D" | "E" |
| North west | 824.92 | 824.37 | 815.06 | 807.78 | 814.56 |
| South east | 827.37 | 826.82 | 817.76 | 810.48 | 817.16 |

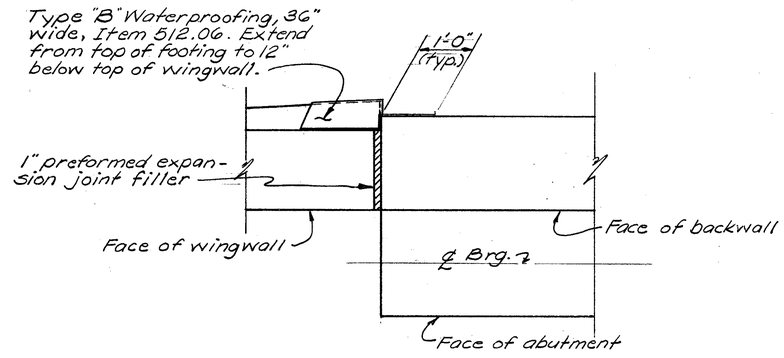


EXPANSION JOINT DETAIL
Between Wingwall and Abutment. Typical 3 locations

NOTES

Adjust footing reinforcing steel location to clear piles where necessary.

Reinforcing Steel locations:
N.S. indicates near side.
F.S. indicates far side.

indicates Vertical Piles.
indicates Battered Piles 1:3.

All piles shall be HP 10×42 steel piles.

Field bending of longitudinal steel shall be included in Item 509 for payment.

Wall vertical reinforcing steel location shall be field adjusted to clear piles.

ALDEN E. STILSON & ASSOCIATES, LIMITED
CONSULTING ENGINEERS
COLUMBUS, OHIO
16 46

NORTHWEST AND SOUTHEAST WINGWALLS.
BRIDGE No. CUY-480-1078
I-480 over CONRAIL (Cleve. Sht. Ln.)
STA. 593+38.70
CUYAHOGA COUNTY STA. 596+50.96

| DESIGNED | DRAWN | TRACED | CHECKED | REVIEWED | DATE | REVISED |
|---|---|---|---|---|---|---|
| PHB | DW | | BSS ANA | G.W.M. | 11/19/71 | |

MICROFILMED
JAN 18 1991

| FED. RD. DIVISION | STATE | PROJECT | TYPE FUNDS |
|---|---|---|---|
| 2 | OHIO | | |

348/500

CUYAHOGA COUNTY
CUY-480-10.39

N

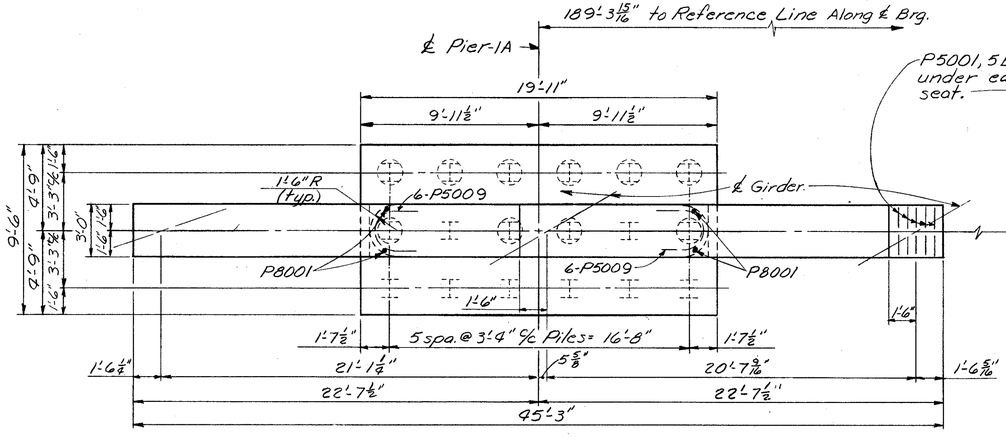


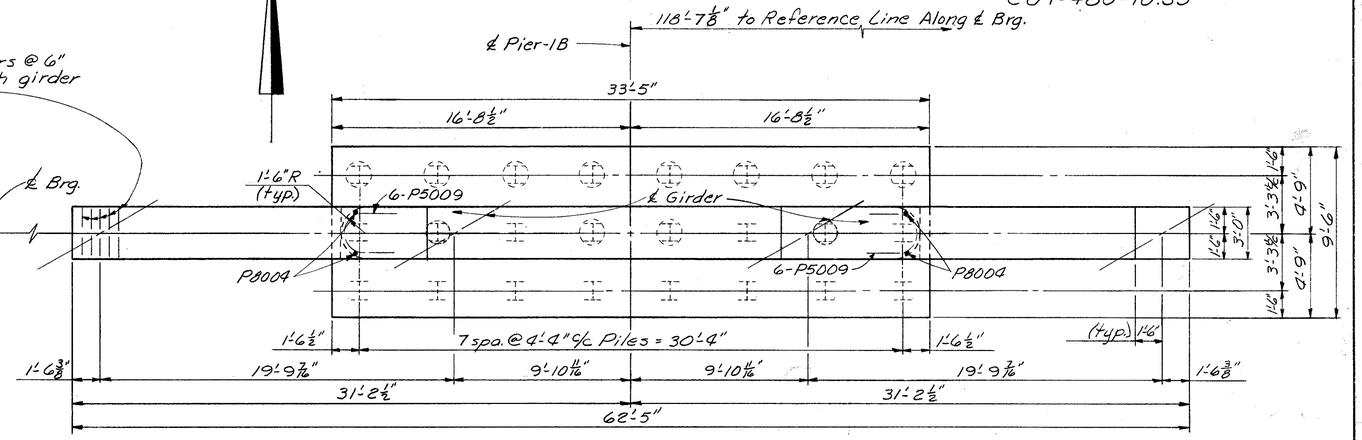


## PLAN - PIER-1A

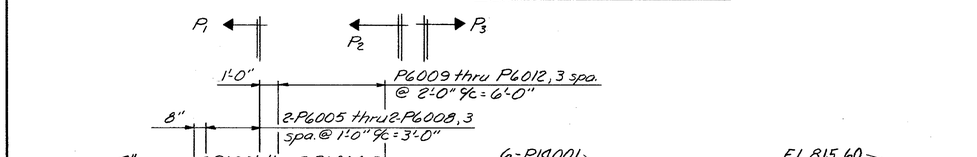


ELEVATION
PIER-1A

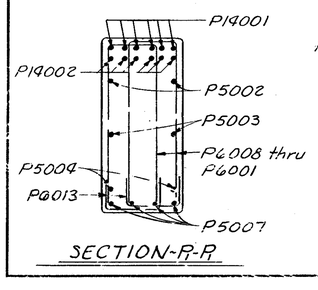


SECTION-P-P

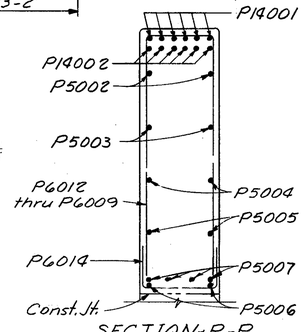


SECTION-P2-P2

## PLAN - PIER-1B

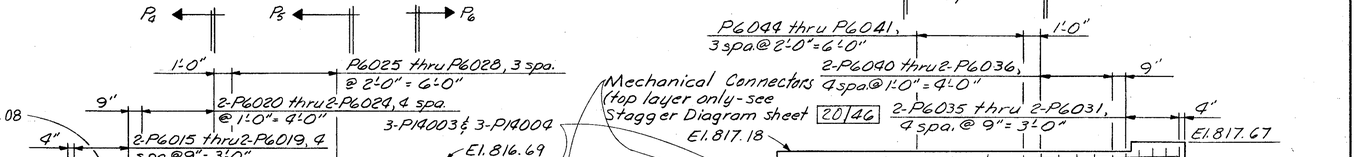


ELEVATION
PIER-1B

## NOTES

All piles shall be HP 10×42 Steel piles.

Vertical
Batter 1:4

For Sections P3-P3 thru P8-P8 see sheet 20/46

For additional notes and details see sheets 18, 20/46

For Superstructure Ground details see Std. Dwg. HL-7.

ALDEN E. STILSON & ASSOCIATES, LIMITED
CONSULTING ENGINEERS
COLUMBUS, OHIO

17/46

# PIER 1 DETAILS

BRIDGE No. CUY-80-1078
I-480 over CONRAIL (CLEVE. SHT. LN.)
STA. 593+38.70
CUYAHOGA COUNTY STA. 596+50.96

| DESIGNED | DRAWN | TRACED | CHECKED | REVIEWED | DATE | REVISED |
|---|---|---|---|---|---|---|
| PHB | DW | | BSS | G.W.M. | 11/19/71 | |

MICROFILMED
JAN 18 1991

| FED. RD. DIVISION | STATE | PROJECT | TYPE FUNDS |
|---|---|---|---|
| 2 | OHIO | | |

349/500

CUYAHOGA COUNTY
CUY-480-10.39

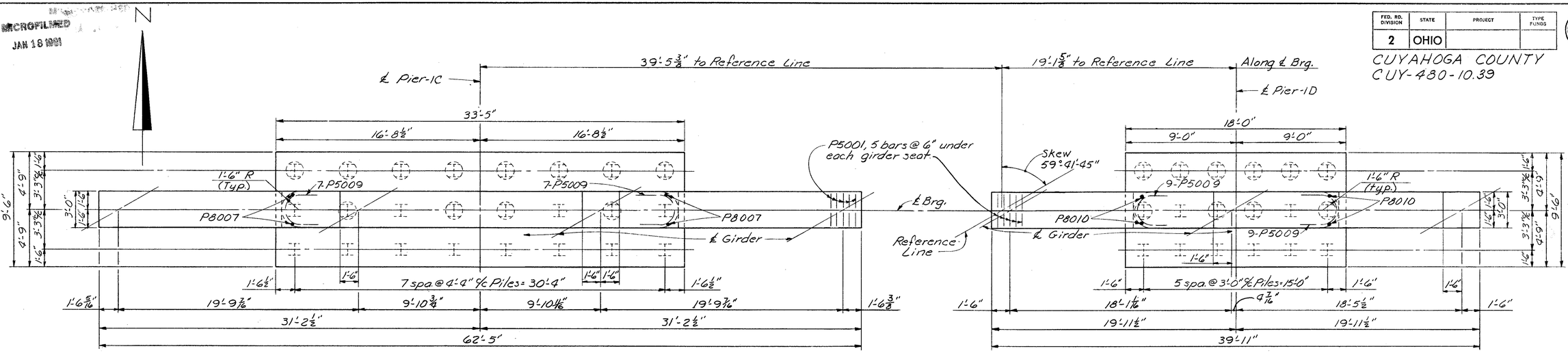


## PLAN ~ PIER-1C

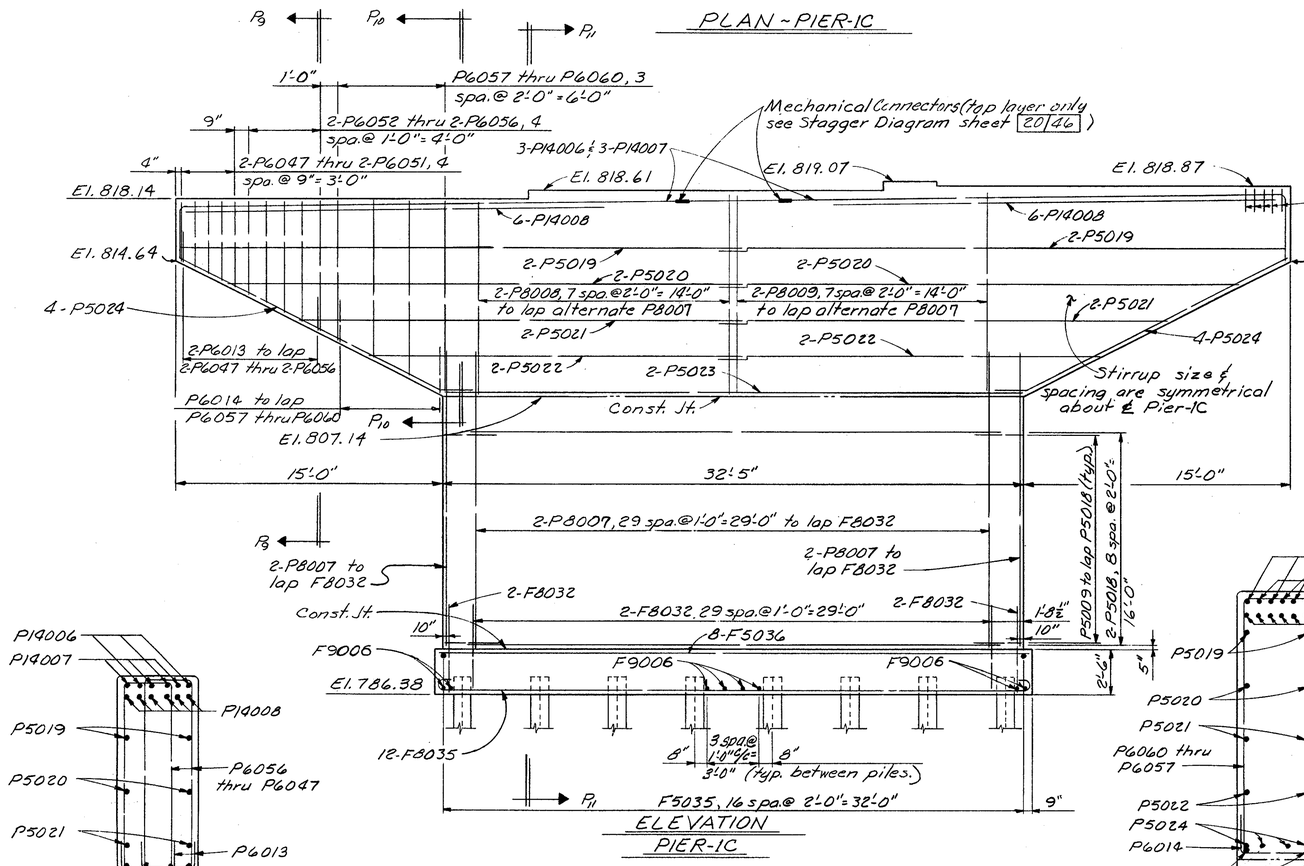


## ELEVATION PIER-1C

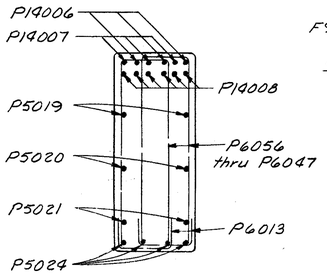


## SECTION-P8-P8

## NOTE

For Sections P11-P11 & P14-P14, see sheet 20|46

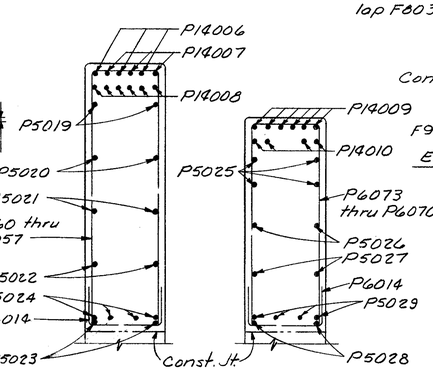


## SECTION-P10-P10

## SECTION-P13-P13

## PLAN ~ PIER-1D

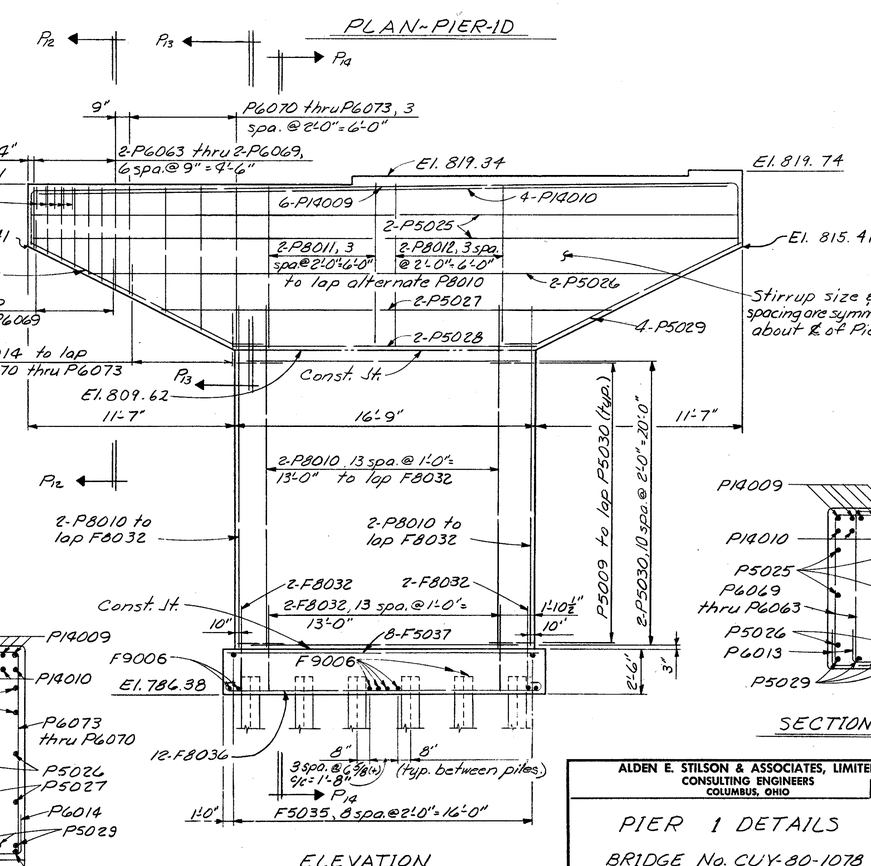


## SECTION-P12-P12

## ELEVATION PIER-1D

ALDEN E. STILSON & ASSOCIATES, LIMITED
CONSULTING ENGINEERS
COLUMBUS, OHIO

18|46

# PIER 1 DETAILS

BRIDGE No. CUY-80-1078
I-480 over CONRAIL (CLEVE. SHT. LN.) STA. 593+38.70
CUYAHOGA COUNTY STA. 596+50.96

| DESIGNED | DRAWN | TRACED | CHECKED | REVIEWED | DATE | REVISED |
|---|---|---|---|---|---|---|
| PHB | DW | | BSS | G.W.M. | 11/19/91 | |

MICROFILMED
JAN 18 1991

| FED. RD. DIVISION | STATE | PROJECT | TYPE FUNDS |
|---|---|---|---|
| 2 | OHIO | | |

350
600

CUYAHOGA COUNTY
CUY-480-10.39

N

75'-2 15/16" to Reference Line — Along ℄ Brg. — ℄ Pier-1E

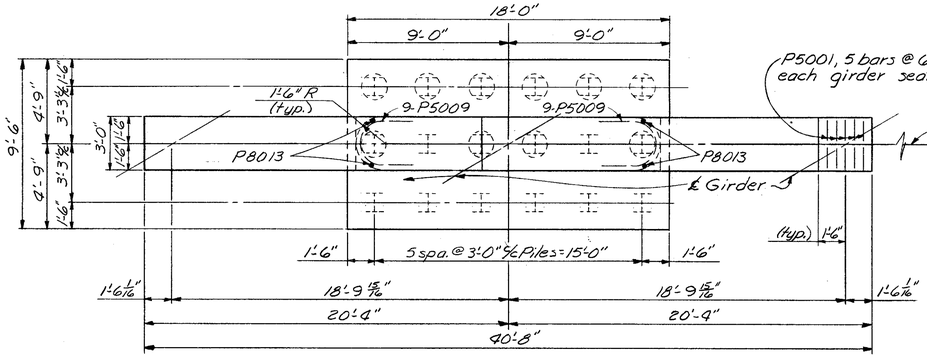


PLAN ~ PIER-1E

139'-8 3/16" to Reference Line — Along ℄ Brg. — ℄ Pier-1F

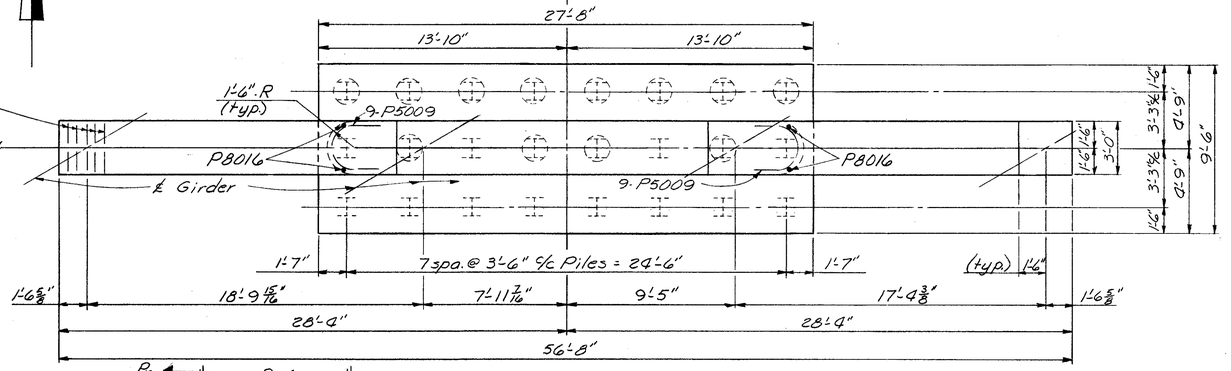


PLAN ~ PIER-1F

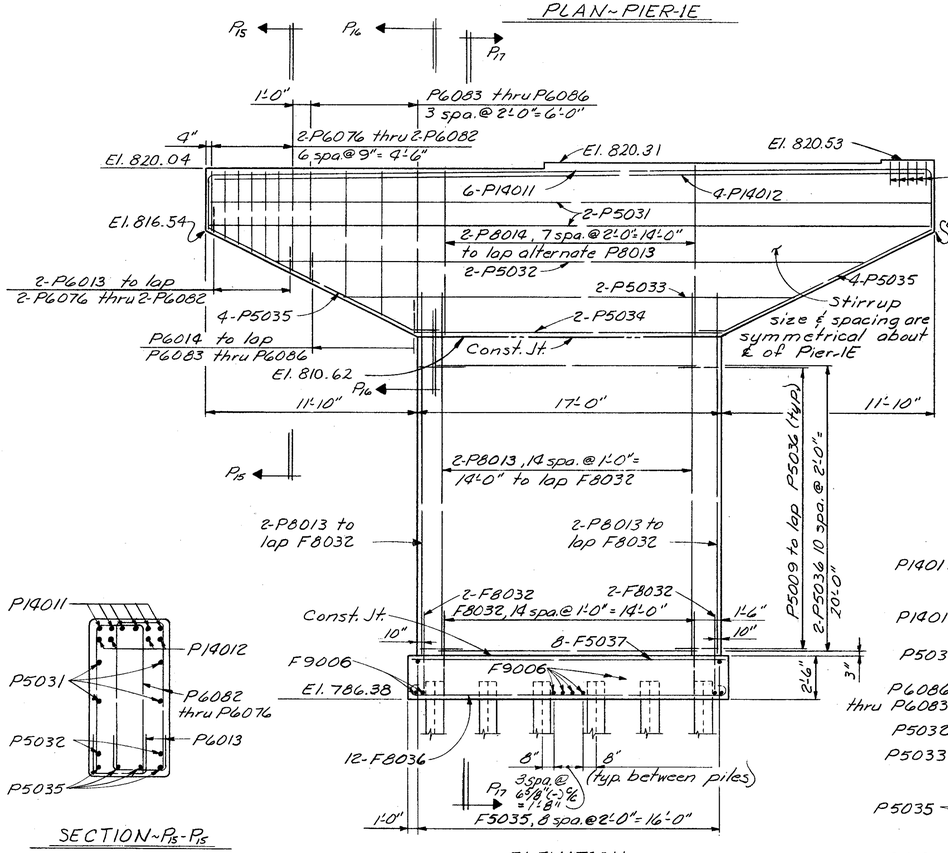


ELEVATION
PIER-1E




SECTION ~ P15 - P15

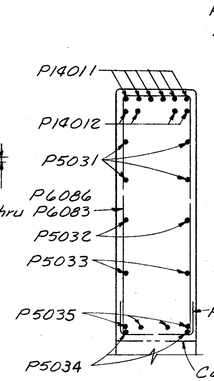


SECTION ~ P16 - P16

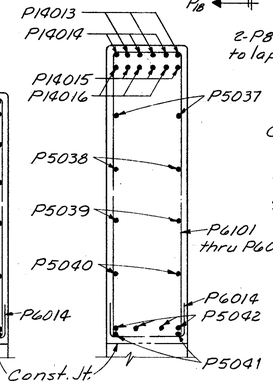


SECTION ~ P19 - P19

P18
P19
P20
1'-0"
P6098 thru P6101
3 spa. @ 2'-0" = 6'-0"
2-P6094 thru 2-P6097
3 spa. @ 1'-0" = 3'-0"
4'
2-P6089 thru 2-P6093
4 spa. @ 11" = 3'-8"
El. 820.73
El. 820.91
Mechanical Connectors see Stagger Diagram sheet 20 | 46
3-P14013 & 3-P14014
El. 821.05
El. 821.15
3-P14015 & 3-P14016
El. 817.23
2-P5037
2-P5038
2-P8017, 6 spa. @ 2'-0" = 12'-0" to lap alternate P8016
2-P5038
2-P8017, 5 spa. @ 2'-0" = 10'-0" to lap alternate P8016
2-P5039
2-P5039
2-P5040
2-P5040
2-P6013 to lap 2-P6089 thru 2-P6097
4-P5042
4-P5042
Stirrup size & spacing are symmetrical about ℄ of Pier-1F.
P14013 to lap P6098 thru P6101
El. 809.73
2-P5041
Const. Jt.
15'-0"
26'-8"
15'-0"
2-P8016, 23 spa. @ 1'-0" = 23'-0" to lap F8032
P5009 to lap P5043 (typ.)
2-P5043, 10 spa. @ 2'-0" = 20'-0"
2-P8016 to lap F8032
2-P8016 to lap F8032
2-F8032
2-F8032
2-F8032, 23 spa. @ 1'-0" = 23'-0"
Const. Jt.
10"
10"
1'-10"
8-F5038
F10001
F10001
El. 786.38
2'-6"
3"
12-F8037
8"
8"
3 spa. @ 8 5/8" (±) % = 2'-2"
(typ. between piles)
10"
P20
F5035, 13 spa. @ 2'-0" = 26'-0"

ELEVATION
PIER-1F

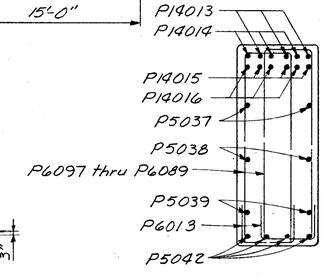


SECTION ~ P18 - P18

NOTE
For Sections P17-P17 & P20-P20 see sheet 20 | 46

ALDEN E. STILSON & ASSOCIATES, LIMITED
CONSULTING ENGINEERS
COLUMBUS, OHIO
19 | 46

# PIER 1 DETAILS

BRIDGE No. CUY-80-1078
I-480 over CONRAIL (CLEVE. SHT. LN)
STA. 593+38.70
CUYAHOGA COUNTY STA. 596+50.96

| DESIGNED | DRAWN | TRACED | CHECKED | REVIEWED | DATE | REVISED |
|---|---|---|---|---|---|---|
| PHB | DW | | BSS | G.W.M. | 11/9/71 | |

MICROFILMED
JAN 18 1991

| FED. RD. DIVISION | STATE | PROJECT | TYPE FUNDS |
|---|---|---|---|
| 2 | OHIO | | |

CUYAHOGA COUNTY
CUY-480-10.39

(351)
(500)

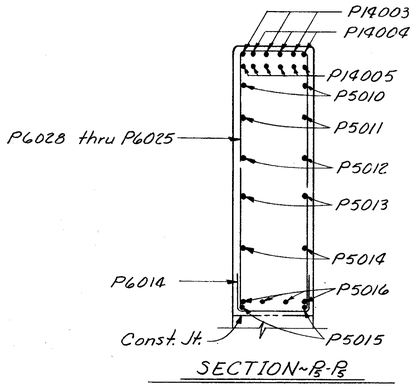


SECTION~$P_3$-$P_3$

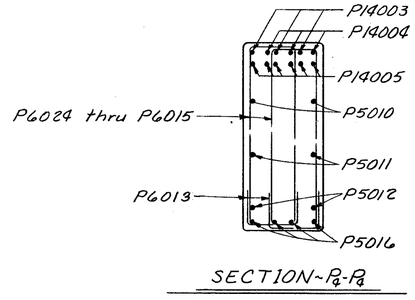


SECTION~$P_4$-$P_4$

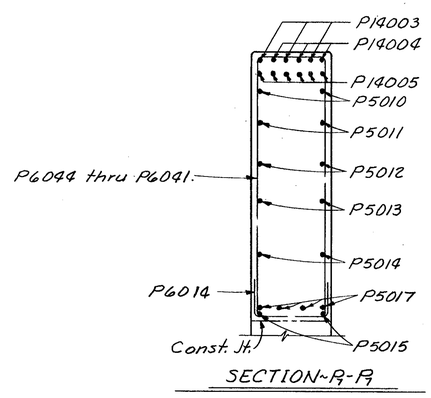


SECTION~$P_7$-$P_7$

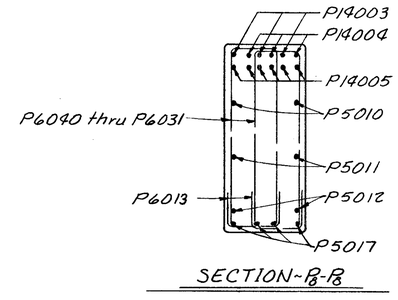


SECTION~$P_8$-$P_8$

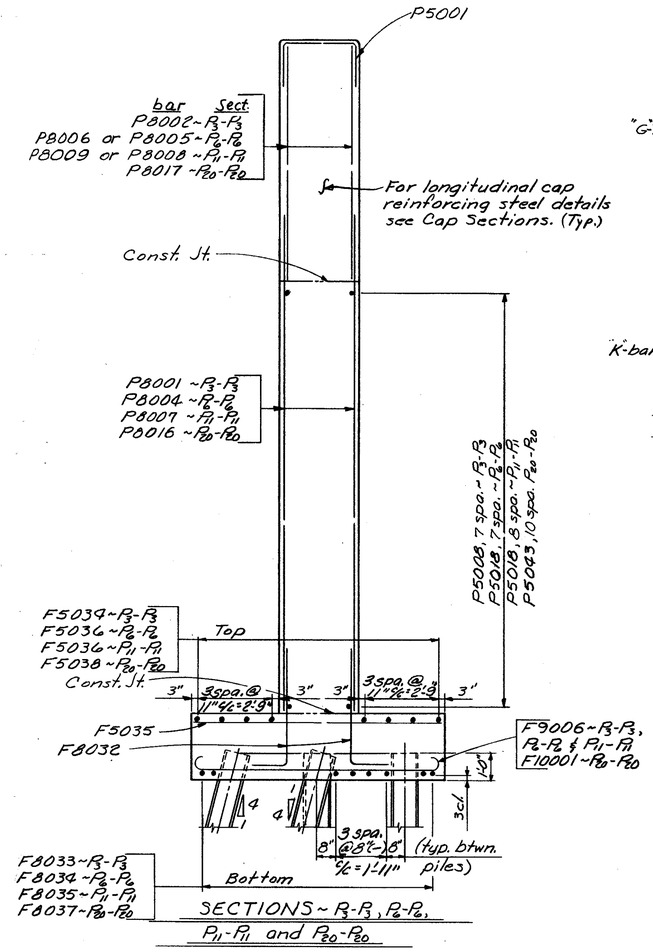


SECTIONS~$P_3$-$P_3$, $P_4$-$P_4$, $P_{11}$-$P_{11}$ and $P_{20}$-$P_{20}$

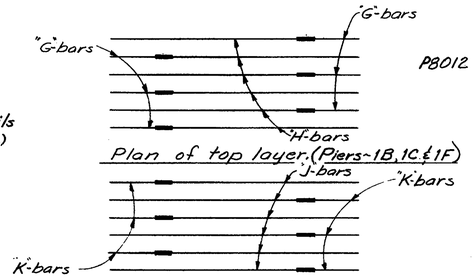


Plan of top layer. (Piers~1B, 1C & 1F)

Plan of bottom layer. (Pier~1F only)

STAGGER DIAGRAM FOR MECHANICAL CONNECTORS

(See Tables below for bar designations.)

| PIER | Top Layer | | Sheet |
|---|---|---|---|
| | "G" bars | "H" bars | |
| 1B | P14003 | P14004 | 17/46 |
| 1C | P14006 | P14007 | 18/46 |
| 1F | P14013 | P14014 | 19/46 |

| PIER | Bottom Layer | | Sheet |
|---|---|---|---|
| | "K" bars | "J" bars | |
| 1F | P14015 | P14016 | 19/46 |

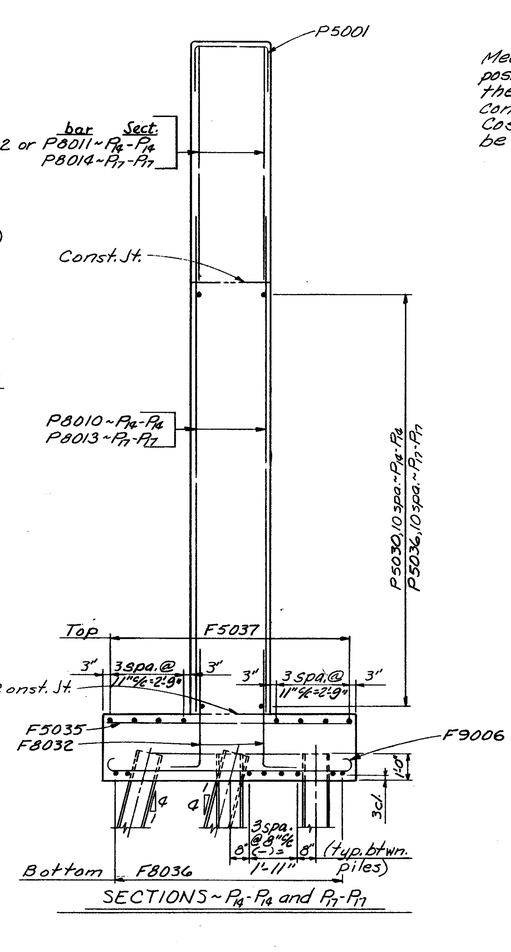


SECTIONS~$P_{14}$-$P_{14}$ and $P_{17}$-$P_{17}$

NOTES

Mechanical Connectors shall be of an approved positive type, designed to develop 125% of the specified yield strength of the bars connected.
Cost of the mechanical connectors shall be included with Item 509 for payment.

SECTION CROSS REFERENCE TABLE

| Pier | Section | Sheet |
|---|---|---|
| 1-A | $P_3$-$P_3$ | 17/46 |
| 1-B | $P_4$-$P_4$ thru $P_8$-$P_8$ | 17/46 |
| 1-C | $P_{11}$-$P_{11}$ | 18/46 |
| 1-D | $P_{14}$-$P_{14}$ | 18/46 |
| 1-E | $P_{17}$-$P_{17}$ | 19/46 |
| 1-F | $P_{20}$-$P_{20}$ | 19/46 |

ALDEN E. STILSON & ASSOCIATES, LIMITED
CONSULTING ENGINEERS
COLUMBUS, OHIO

20/46

# PIER 1 DETAILS

BRIDGE No. CUY-80-1078
I-480 over CONRAIL (CLEVE. SHT. LN.)
STA. 593+38.70
CUYAHOGA COUNTY STA. 596+50.96

| DESIGNED | DRAWN | TRACED | CHECKED | REVIEWED | DATE | REVISED |
|---|---|---|---|---|---|---|
| PHB | DW | | BSS | G.W.M. | 11/19/71 | |

MICROFILMED
JAN 18 1991

| FED. RD. DIVISION | STATE | PROJECT | TYPE FUNDS |
|---|---|---|---|
| 2 | OHIO | | |

CUYAHOGA COUNTY
CUY-480-10.39

352
500

N

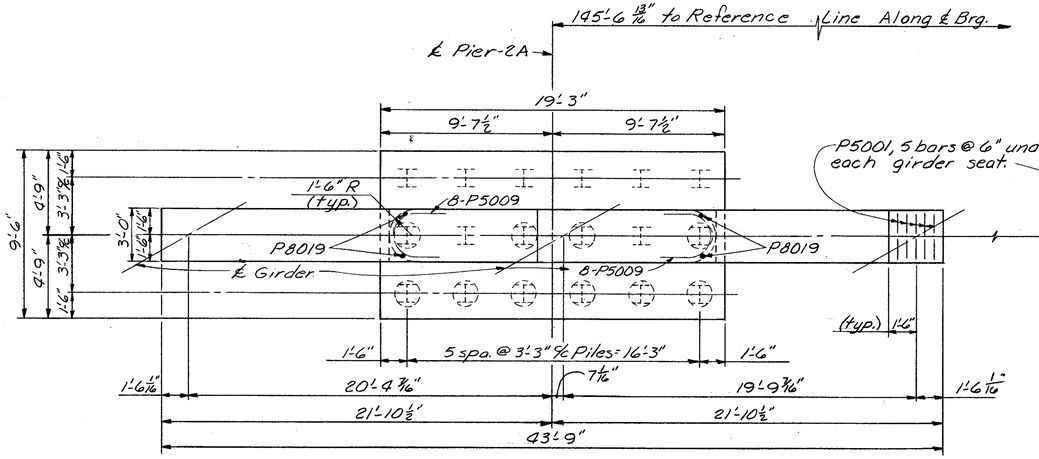


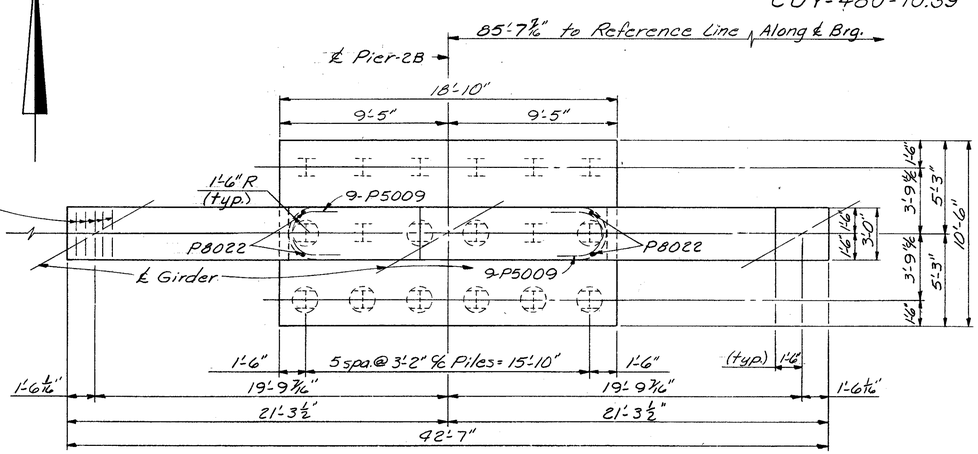


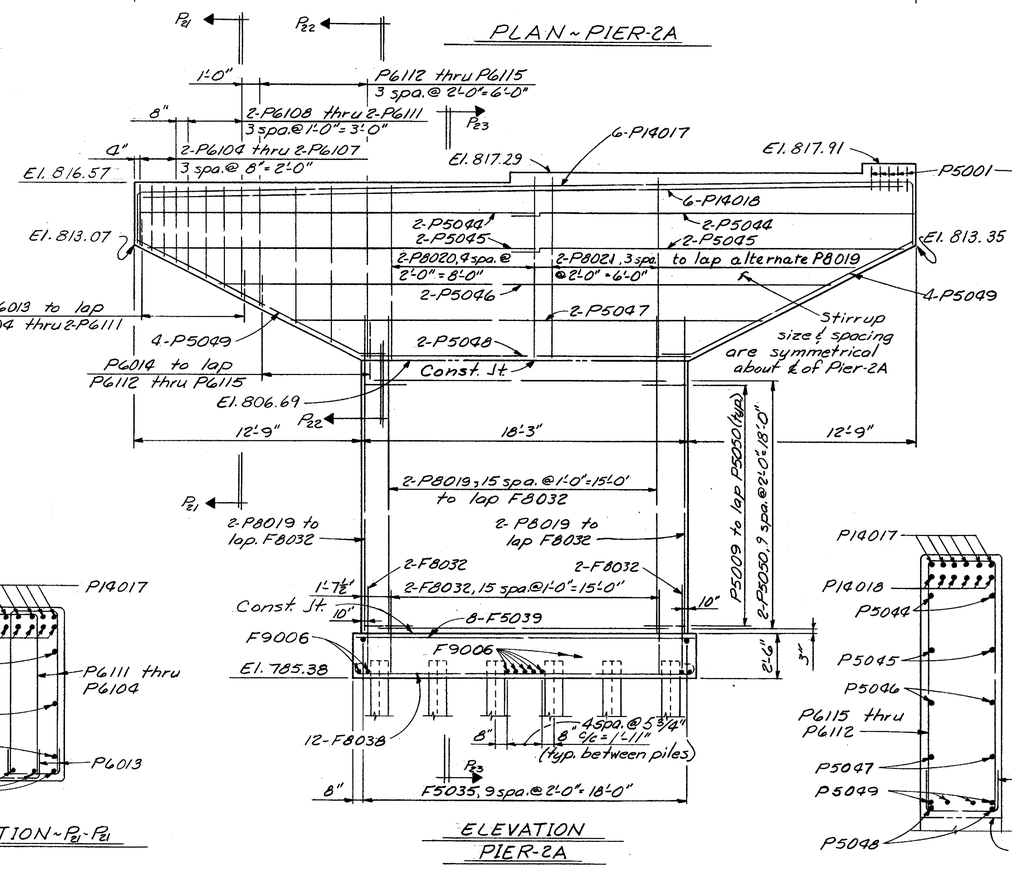


PLAN ~ PIER-2A

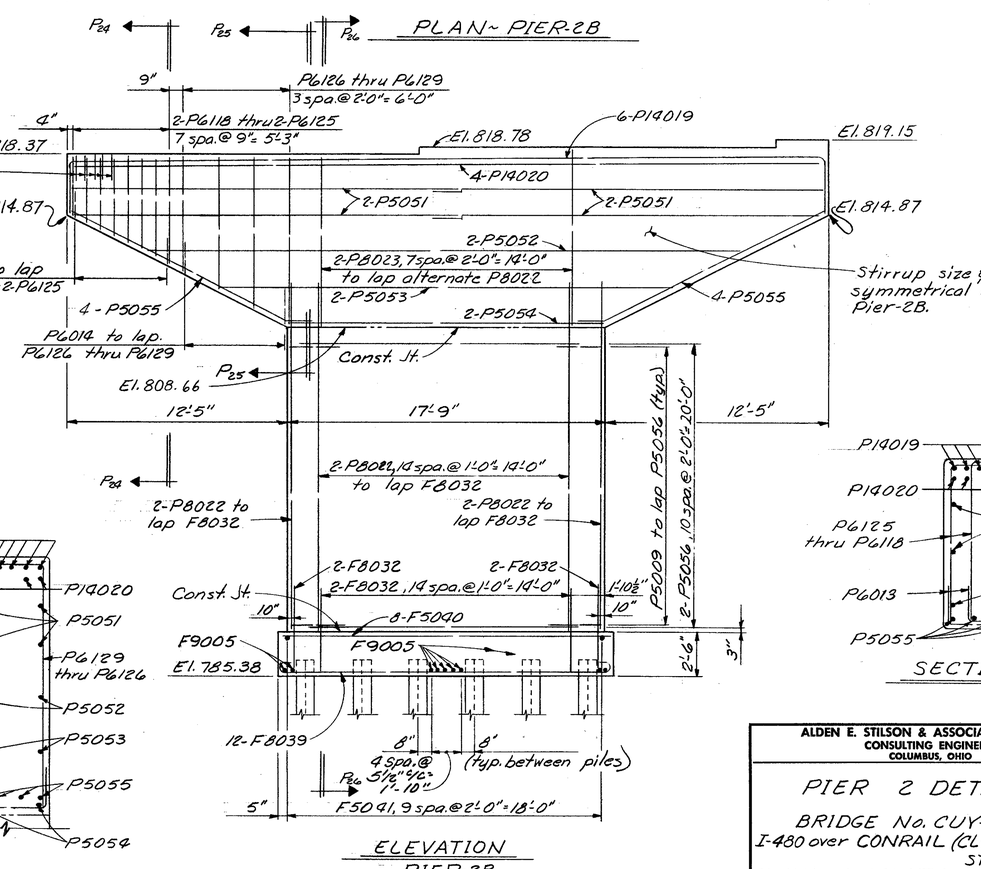


PLAN ~ PIER-2B

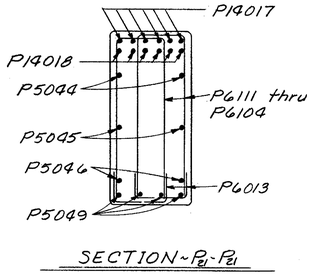


SECTION ~ P21 - P21



ELEVATION
PIER-2A

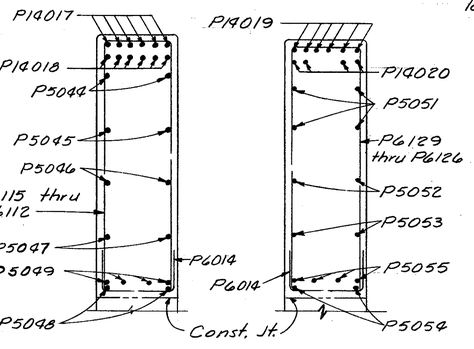


SECTION ~ P22 - P22




SECTION ~ P25 - P25



ELEVATION
PIER-2B

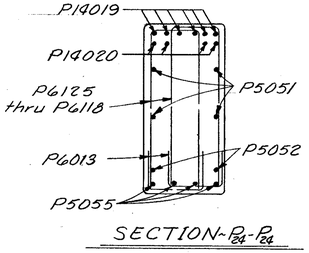


SECTION ~ P24 - P24

NOTE

For Sections P23 - P23 & P26 - P26 see sheet 24/46

ALDEN E. STILSON & ASSOCIATES, LIMITED
CONSULTING ENGINEERS
COLUMBUS, OHIO

21/46

# PIER 2 DETAILS

BRIDGE No. CUY-80-1078
I-480 over CONRAIL (CLEVE. SHT. LN)
STA. 593+38.70
CUYAHOGA COUNTY STA. 590+50.96

| DESIGNED | DRAWN | TRACED | CHECKED | REVIEWED | DATE | REVISED |
|---|---|---|---|---|---|---|
| PHB | DW | | BSS | G.W.M. | 11/19/71 | |

MICROFILMED
JAN 18 1991

| FED. RD. DIVISION | STATE | PROJECT | TYPE FUNDS |
|---|---|---|---|
| 2 | OHIO | | |

353/500

CUYAHOGA COUNTY
CUY-480-10.39

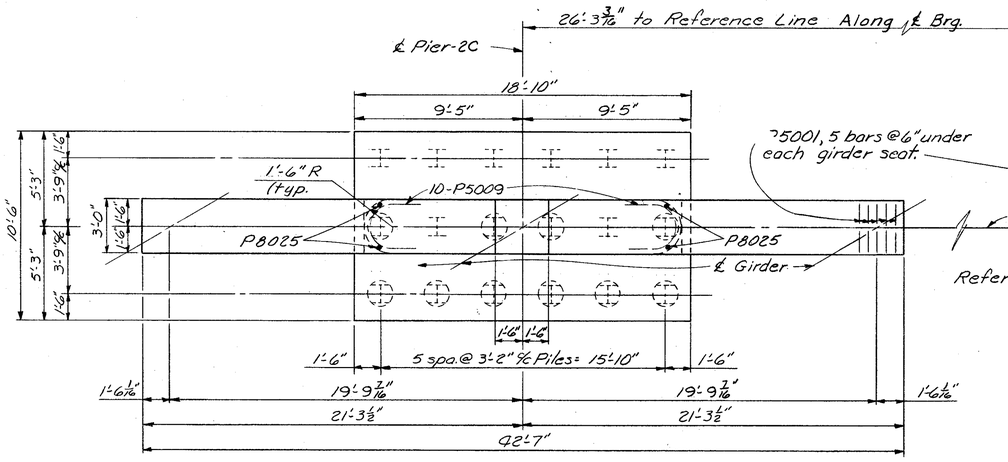


PLAN-PIER-2C

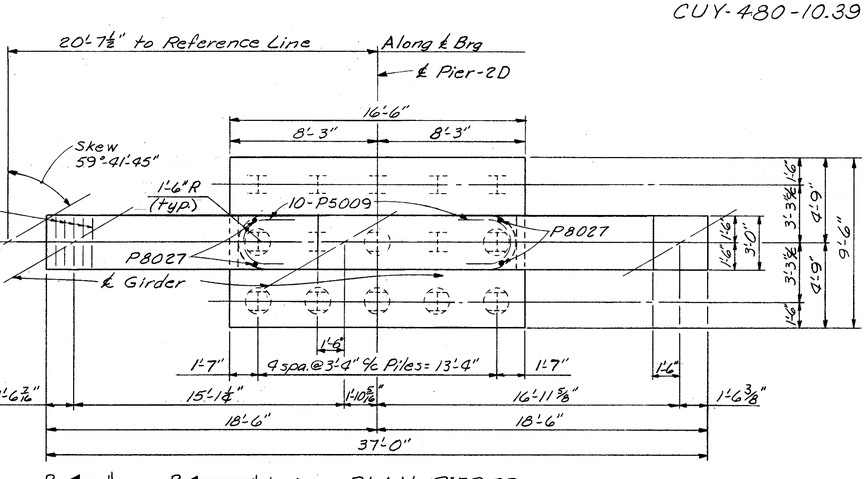


PLAN-PIER-2D

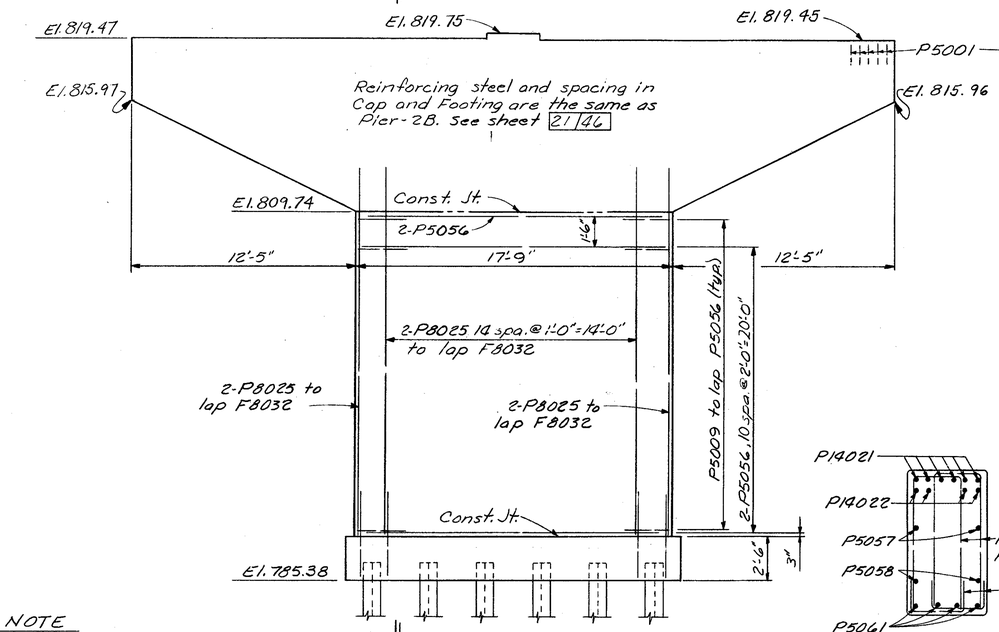


ELEVATION
PIER-2C

NOTE

For Sections P27-P27 & P30-P30 see sheet 24/46

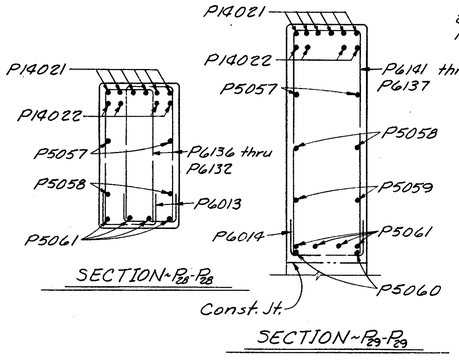


SECTION-P28-P28




SECTION-P29-P29

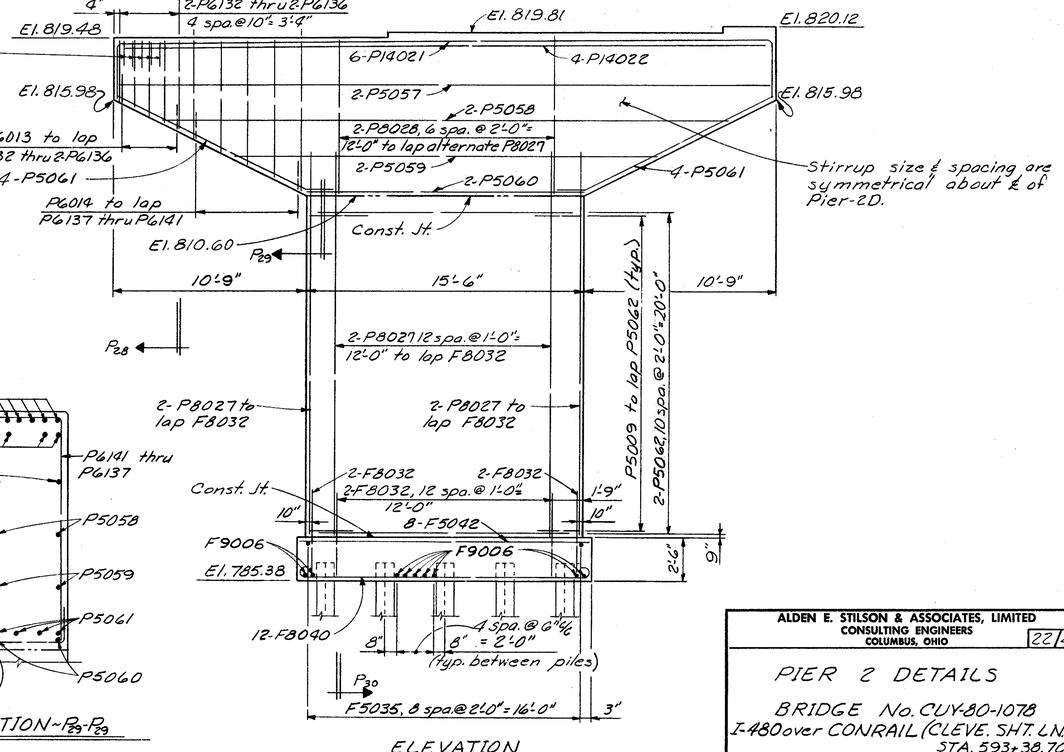


ELEVATION
PIER-2D

ALDEN E. STILSON & ASSOCIATES, LIMITED
CONSULTING ENGINEERS
COLUMBUS, OHIO

22/46

# PIER 2 DETAILS

BRIDGE No. CUY-80-1078
I-480 over CONRAIL (CLEVE. SHT. LN.)
STA. 593+38.70
CUYAHOGA COUNTY STA. 596+50.96

| DESIGNED | DRAWN | TRACED | CHECKED | REVIEWED | DATE | REVISED |
|---|---|---|---|---|---|---|
| PHB | DW | | BSS | G.W.M. | 11/19/71 | |

MICROFILMED
JAN 18 1991

| FED. RD. DIVISION | STATE | PROJECT | TYPE FUNDS |
|---|---|---|---|
| 2 | OHIO | | |

354
500

CUYAHOGA COUNTY
CUY-480-10.39

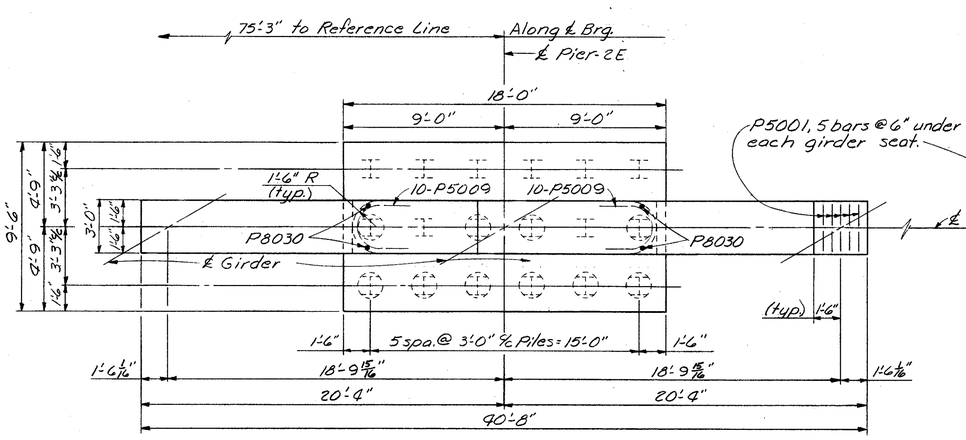


PLAN ~ PIER-2E

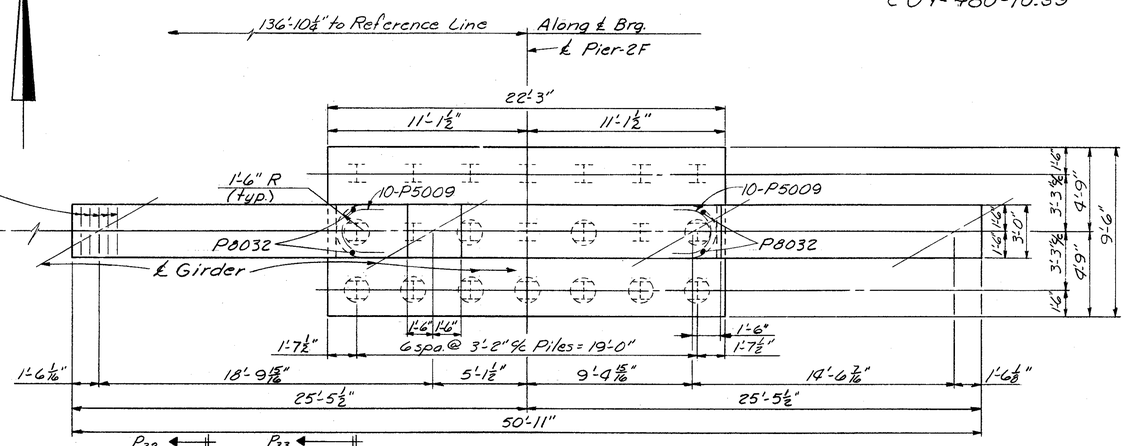


PLAN ~ PIER-2F

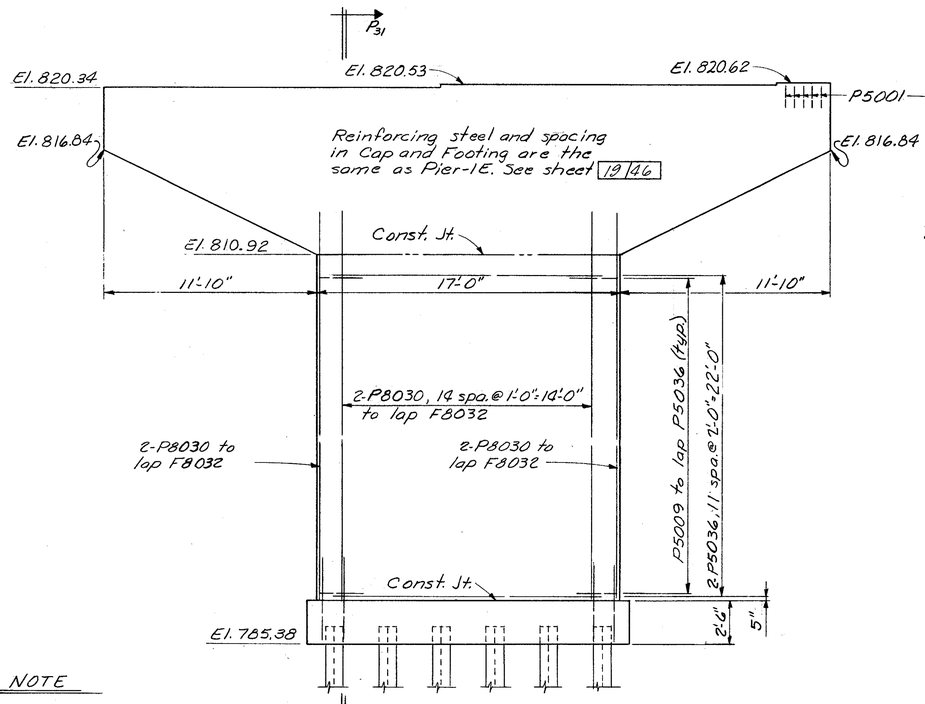


NOTE

For Sections P31-P31 thru P34-P34 see sheet 24/46

P31

ELEVATION
PIER-2E

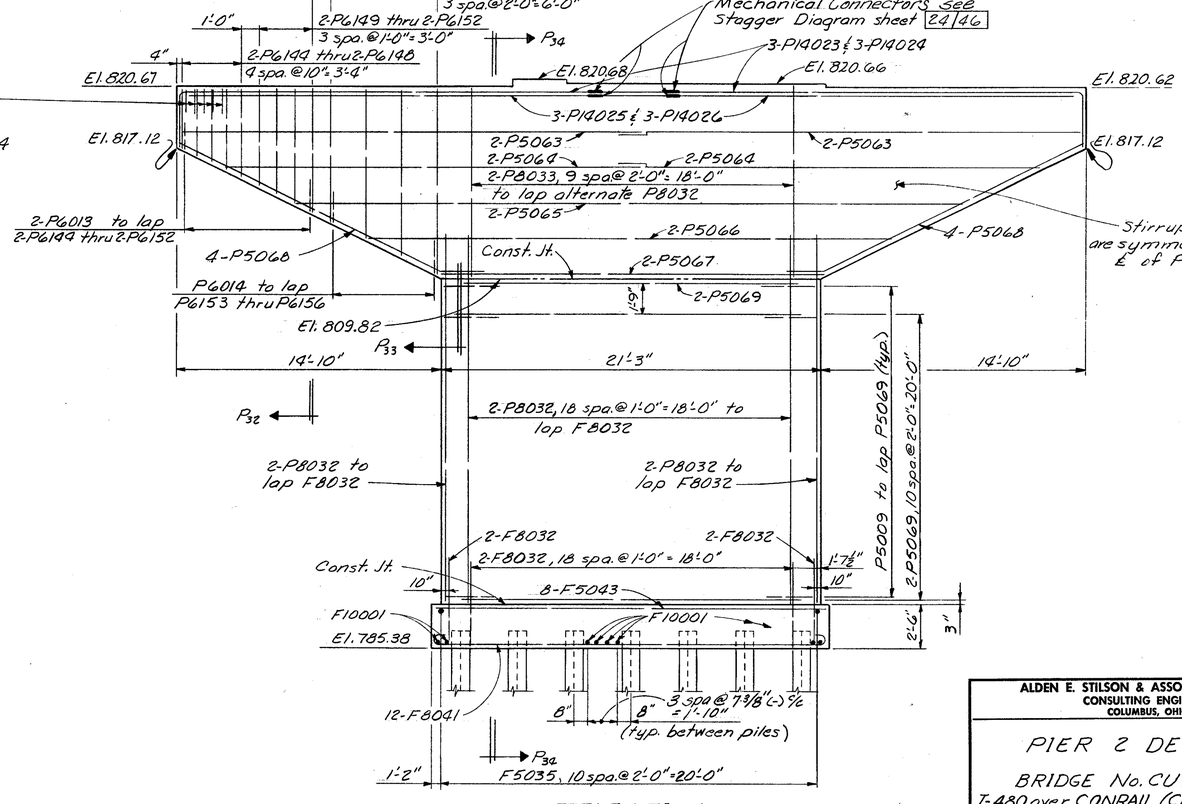


ELEVATION
PIER-2F

ALDEN E. STILSON & ASSOCIATES, LIMITED
CONSULTING ENGINEERS
COLUMBUS, OHIO
23/46

# PIER 2 DETAILS

BRIDGE No. CUY-80-1078
I-480 over CONRAIL (CLEVE. SHT. LN)
STA. 593+38.70
CUYAHOGA COUNTY STA. 596+50.96

| DESIGNED | DRAWN | TRACED | CHECKED | REVIEWED | DATE | REVISED |
|---|---|---|---|---|---|---|
| PHB | DW | | BSS | G.W.M. | 11/19/71 | |

MICROFILMED
JAN 18 1991

| FED. RD. DIVISION | STATE | PROJECT | TYPE FUNDS |
|---|---|---|---|
| 2 | OHIO | | |

355/500

CUYAHOGA COUNTY
CUY-480-10.39

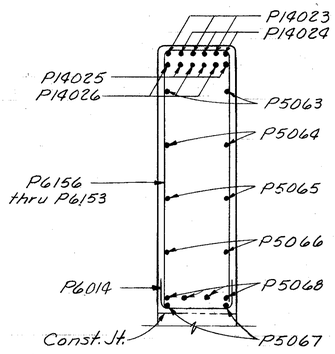


SECTION~$P_{33}$-$P_{33}$

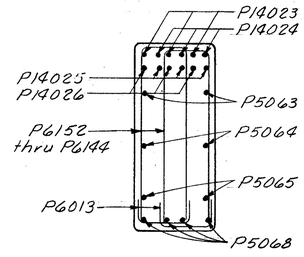


SECTION~$P_{32}$-$P_{32}$

NOTES

Mechanical connectors shall be of an approved positive type designed to develop 125% of the specified yield strength of the bars connected.
Cost of the mechanical connectors shall be included with Item 509 for payment.

For longitudinal cap reinforcing steel details see Cap Sections.

SECTION CROSS REFERENCE TABLE

| Pier | Sections | Sheet |
|---|---|---|
| 2-A | $P_{23}$-$P_{23}$ | 21/46 |
| 2-B | $P_{26}$-$P_{26}$ | 21/46 |
| 2-C | $P_{27}$-$P_{27}$ | 22/46 |
| 2-D | $P_{30}$-$P_{30}$ | 22/46 |
| 2-E | $P_{31}$-$P_{31}$ | 23/46 |
| 2-F | $P_{32}$-$P_{32}$ thru $P_{34}$-$P_{34}$ | 23/46 |

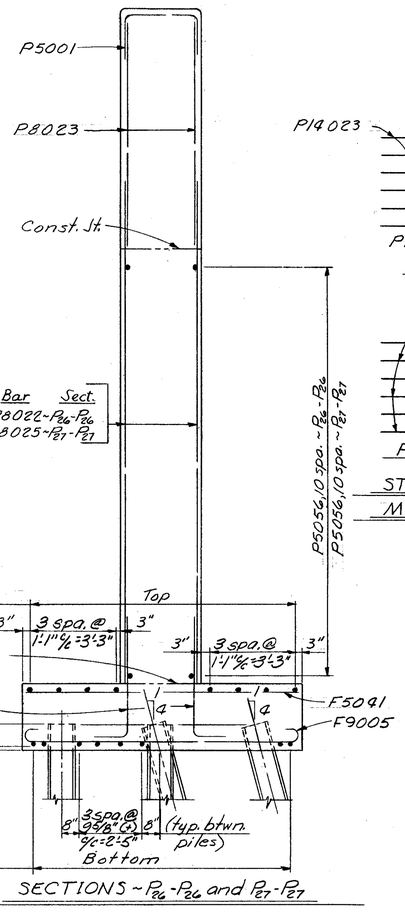


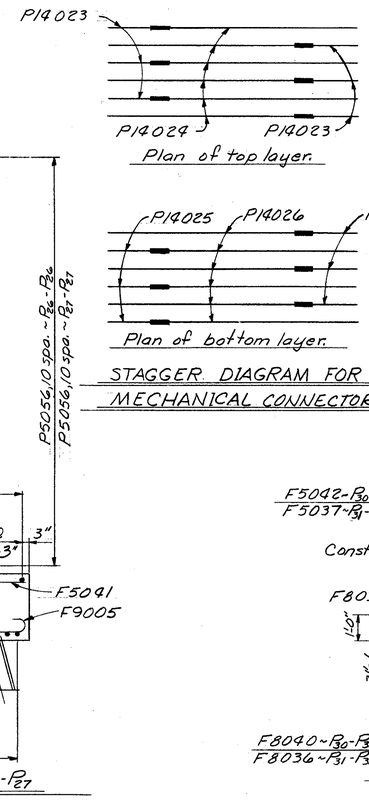


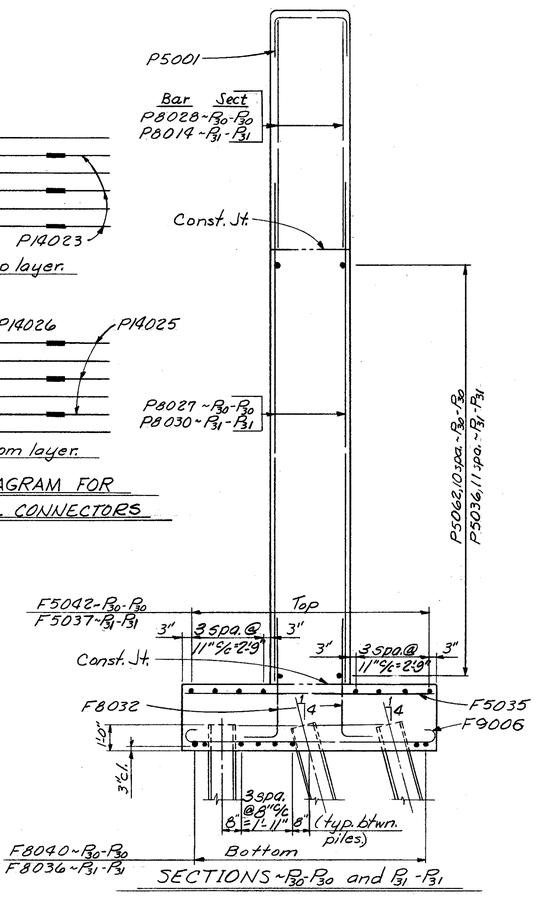


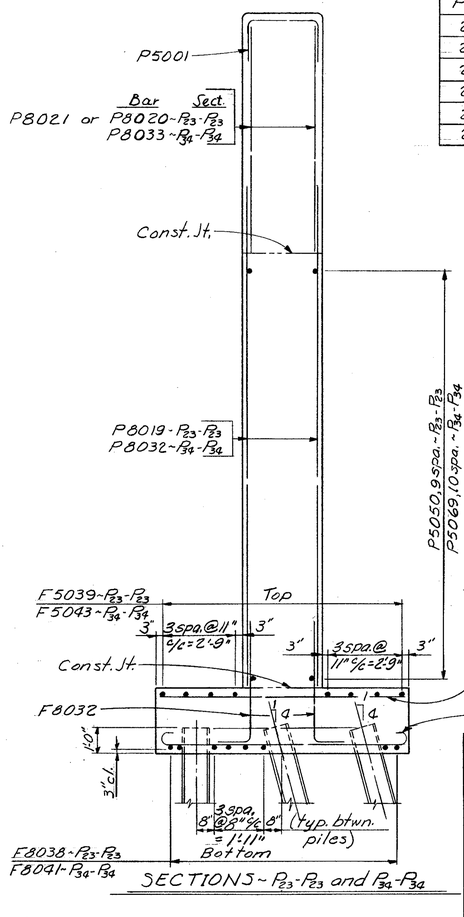


ALDEN E. STILSON & ASSOCIATES, LIMITED
CONSULTING ENGINEERS
COLUMBUS, OHIO

24/46

PIER 2 DETAILS

BRIDGE No. CUY-80-1078
I-480 over CONRAIL (CLEVE. SHT. LN.)
STA. 593+38.70
CUYAHOGA COUNTY STA. 596+50.96

| DESIGNED | DRAWN | TRACED | CHECKED | REVIEWED | DATE | REVISED |
|---|---|---|---|---|---|---|
| PHB | DW | | BSS | G.W.M. | 11/19/91 | |

MICROFILMED
JAN 18 1991
MICROFILMED

| FED. RD. DIVISION | STATE | PROJECT | TYPE FUNDS |
|---|---|---|---|
| 2 | OHIO | | |

356/500

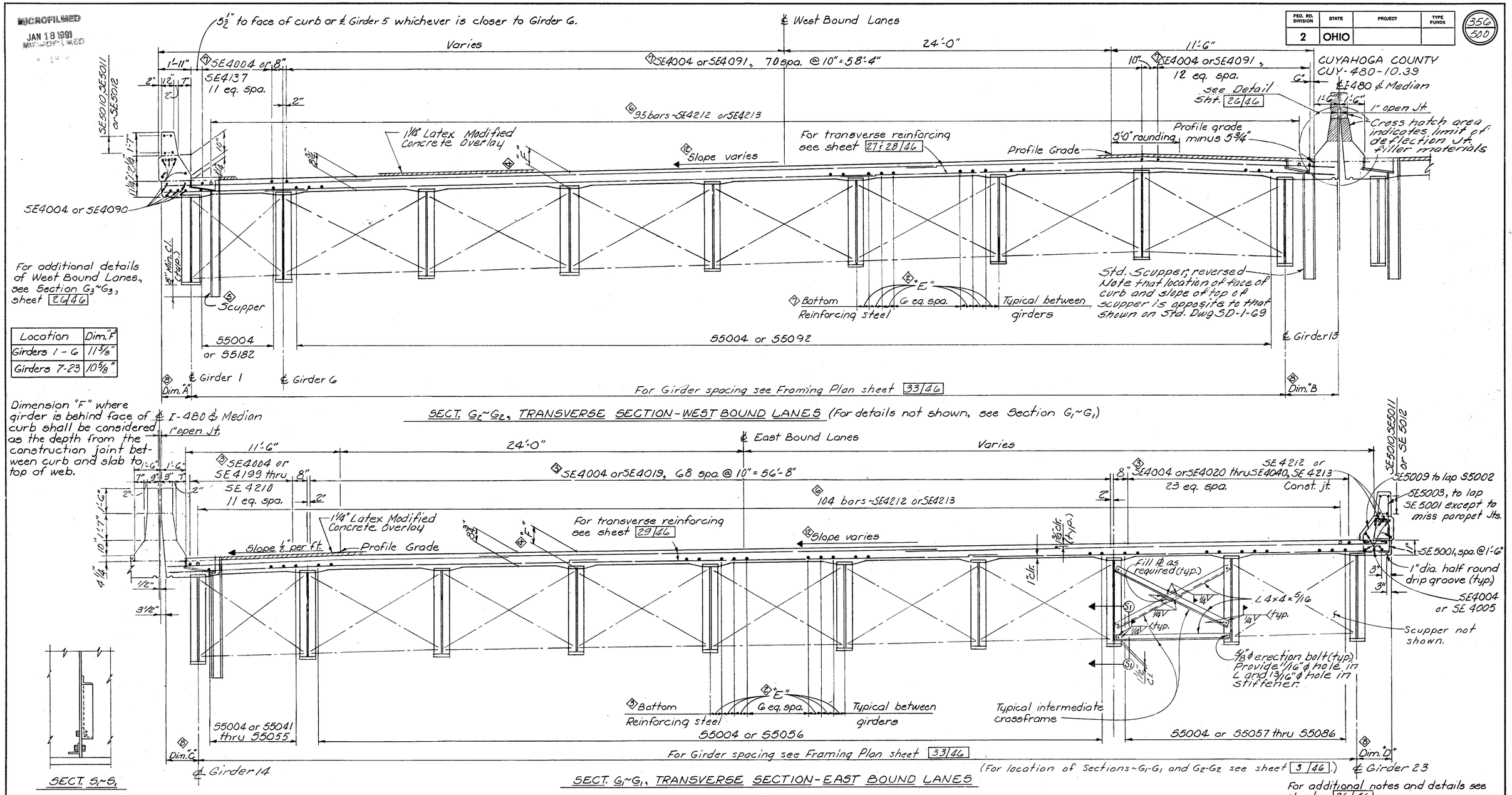


SECT. G2~G2, TRANSVERSE SECTION-WEST BOUND LANES (For details not shown, see Section G1~G1)

SECT. G1~G1, TRANSVERSE SECTION-EAST BOUND LANES

SECT. S1~S1

For additional notes and details see sheet 26/46

## NOTES

1. A typical haunch width of 9" shall be used for computing quantity of concrete. However, the haunch width may vary between 6" and 12" provided that the slope shall not be more than 1:4 for a haunch less than 9" in width.
2. Dimension "E" is one-twelth of c/c distance between girders.
3. Measured normal to reference line.

For details of median curb plates see Std. Dwg. SD-1-69, Sht. 2.

4. This is the design dimension. The quantity of deck concrete to be paid for shall be based upon this dimension, even though deviation from it may be necessary because the top flange of the girder may not have the exact camber or conformation required to place it parallel to the finished grade. Deduction shall be made for volume of encased steel plates as per Sec. 511.18 of the Construction and Material Specifications.
5. Std. scupper. For details see Std. Dwg. SD-1-69. For location see General Plan Sht. 3/46
6. Stagger bars to be spaced alternate between top longitudinal reinforcing steel. See bar stagger diagram, sheet 26/46
7. Measured normal to West Bound interior girders.
8. For dimensions A, B, C, & D, see Table of Slab Cantilevers sheet 26/46
10. Longitudinal reinforcing shall be field cut as necessary to clear scuppers.
11. Concrete parapet shall be included with Item 511, Class S concrete, for payment.
12. For slab profile see sheet 26/46

ALDEN E. STILSON & ASSOCIATES, LIMITED
CONSULTING ENGINEERS
COLUMBUS, OHIO

25/46

SUPERSTRUCTURE DETAILS
TRANSVERSE SECTION
BRIDGE Nº CUY-80-1078
I-480 over CONRAIL (CLEVE. SHT. LN.)
CUYAHOGA COUNTY STA. 593+38.70 STA. 596+50.96

| DESIGNED | DRAWN | TRACED | CHECKED | REVIEWED | DATE | REVISED |
|---|---|---|---|---|---|---|
| TJ | GTR | | SBP | G.W.M. | 11/22/71 | |

MICROFILMED
JAN 18 1991

| FED. RD. DIVISION | STATE | PROJECT | TYPE FUNDS |
|---|---|---|---|
| 2 | OHIO | | |

357/500

CUYAHOGA COUNTY
CUY-480-10.39

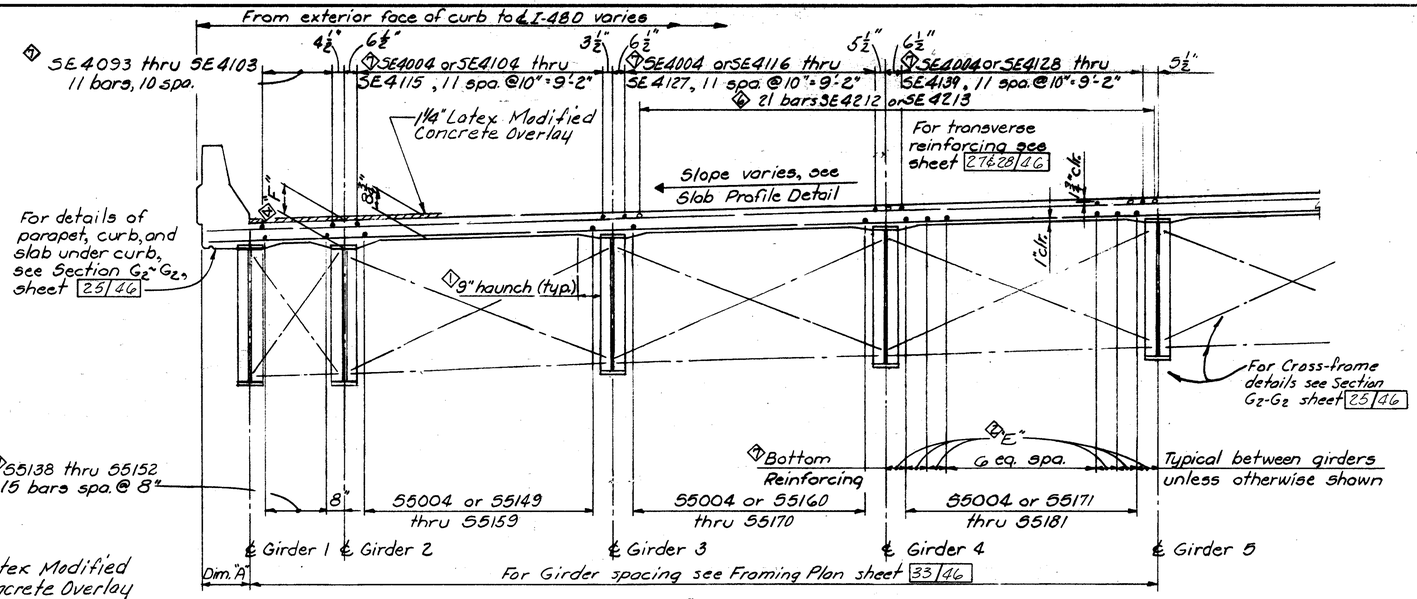


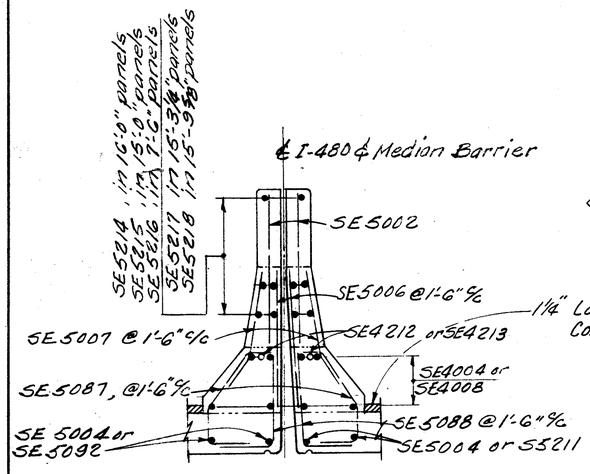


MEDIAN DETAIL

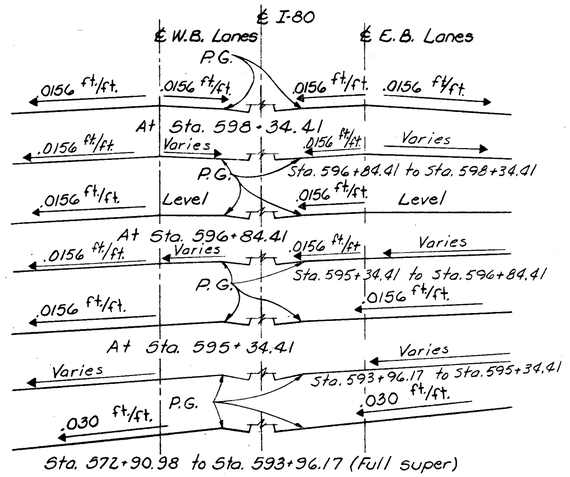


SLAB PROFILE DETAIL

(Profile grade is at top of 1¼" Latex Modified Concrete Overlay.

SECT. G3-G3, PARTIAL TRANSVERSE SECTION WEST BOUND LANES

(For location of Section-G3-G3 see sheet 3/46.)

Indicates 90° angle

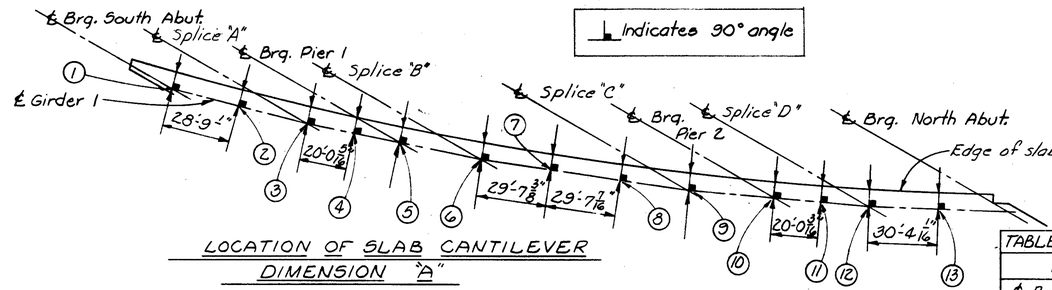


LOCATION OF SLAB CANTILEVER DIMENSION "A"

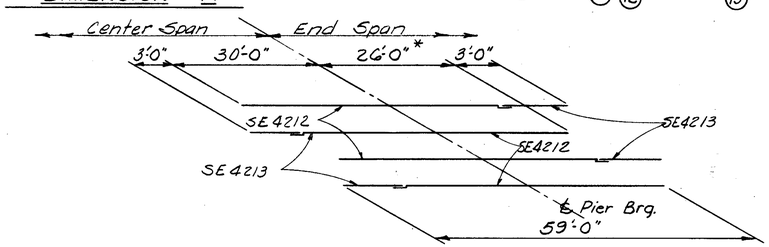


BAR STAGGER DIAGRAM

Showing Stagger of SE4212 or SE4213 over Piers

* This dimension to be field adjusted between Girders 3 and 4 over Pier 1 and between Girders 1 and 6 over Pier 2 such that the bars fit properly in the slab.

Notes:

For screed elevations see sheets 31, 32/46

See sheet 25/46 for notes ①, ②, ④, ⑤, ⑦, ⑩, and ⑪.

For additional details of longitudinal reinforcing see sheet 30/46

Lap longitudinal reinforcing 1'-7" min.

TABLE OF SLAB CANTILEVER DIM. "A"

| Point | Dim. "A" | Point | Dim. "A" |
|---|---|---|---|
| ① | 2'-0" | ⑧ | 1'-4 5/8" |
| ② | 1'-8 1/2" | ⑨ | 2'-0" |
| ③ | 2'-0" | ⑩ | 1'-6 1/2" |
| ④ | 1'-7 3/8" | ⑪ | 1'-7 3/8" |
| ⑤ | 1'-6" | ⑫ | 2'-0" |
| ⑥ | 2'-0" | ⑬ | 1'-8 1/2" |
| ⑦ | 1'-4 5/8" | | |

TABLE OF SLAB CANTILEVER DIM. "B", "C", & "D"

| LOCATION | Dim. "B" | Dim. "C" | Dim. "D" |
|---|---|---|---|
| ℄ Brg. South Abut. | 1'-11 1/2" | 2'-8 1/2" | 1'-10 1/8" |
| 1/4 Point-Span 1 | 2'-6 1/2" | 2'-1 3/4" | 1'-11 3/8" |
| Mid-Point-Span 1 | 3'-0 1/8" | 1'-8 1/4" | 2'-0" |
| Splice 1 | 3'-3 7/8" | 1'-4 3/4" | 2'-0" |
| ℄ Brg. Pier 1 | 3'-7 3/4" | 1'-1 1/2" | 2'-0" |
| Splice 2 | 3'-10 1/4" | 11" | 2'-0" |
| Mid-Point-Span 2 | 3'-10 1/8" | 11 3/8" | 2'-0" |
| Splice 3 | 3'-7 1/2" | 1'-2 1/8" | 2'-0" |
| ℄ Brg. Pier 2 | 3'-2 3/4" | 1'-6 3/4" | 2'-0" |
| Splice 4 | 2'-10 1/4" | 1'-10 3/4" | 2'-0" |
| Mid-Point-Span 3 | 2'-7 1/8" | 2'-1 1/2" | 2'-0" |
| 3/4 Point-Span 3 | 2'-3 7/8" | 2'-5" | 2'-0" |
| ℄ Brg. North Abut. | 1'-11 1/2" | 2'-8 1/2" | 2'-0" |

ALDEN E. STILSON & ASSOCIATES, LIMITED
CONSULTING ENGINEERS
COLUMBUS, OHIO

26/46

# SUPERSTRUCTURE DETAILS
## TRANSVERSE SECTION
BRIDGE Nº CUY-80-1078
I-480 over CONRAIL (CLEVE. SHT. LN.)
CUYAHOGA COUNTY STA. 593+38.70
STA. 596+50.96

| DESIGNED | DRAWN | TRACED | CHECKED | REVIEWED | DATE | REVISED |
|---|---|---|---|---|---|---|
| TJ | GTR | | ANA SBP | G.W.M. | 11/22/71 | |

MICROFILMED
JAN 1 8 1971

| FED. RD. DIVISION | STATE | PROJECT | TYPE FUNDS |
|---|---|---|---|
| 2 | OHIO | | |

358
500

CUYAHOGA COUNTY
CUY-480-10.39

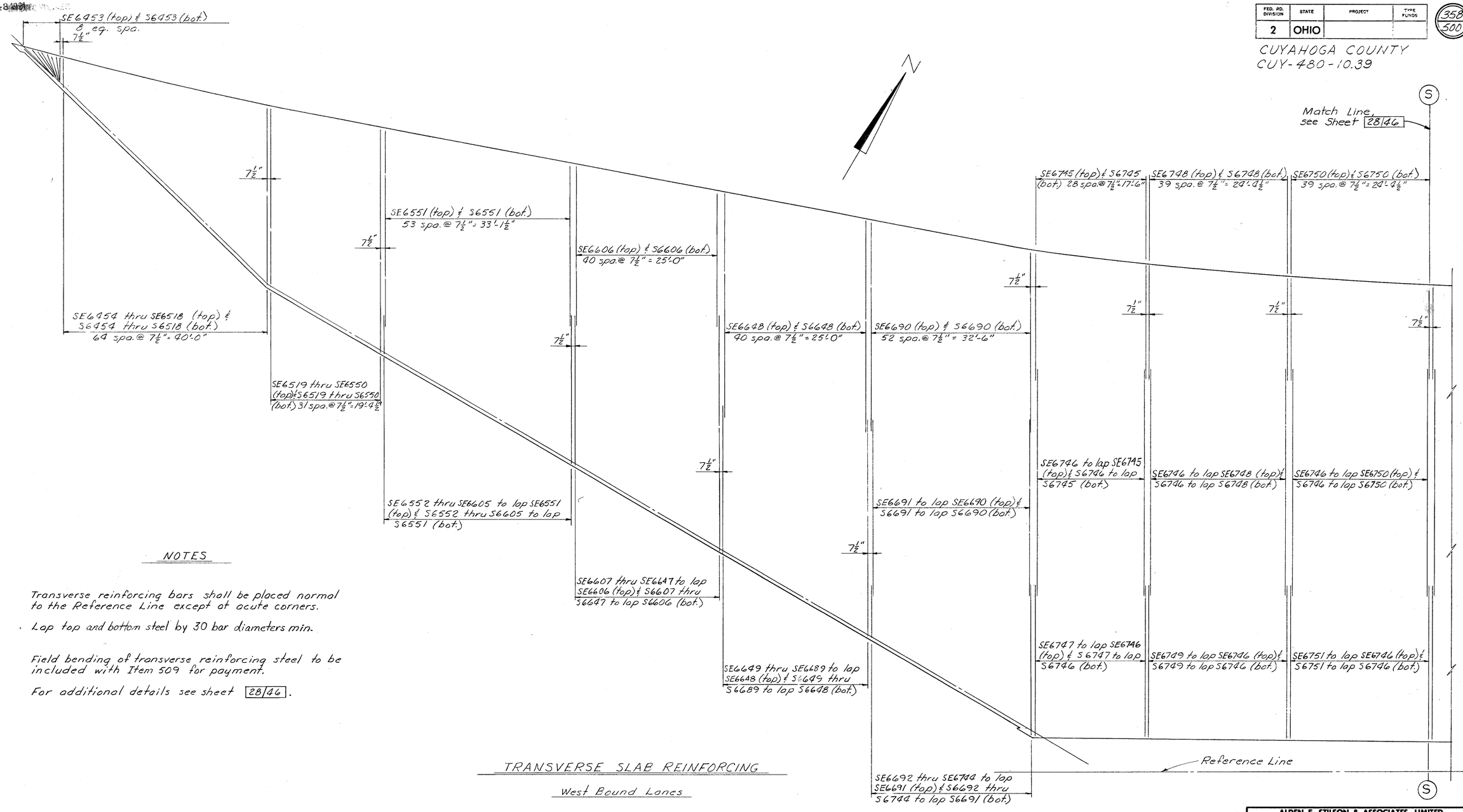


## NOTES

Transverse reinforcing bars shall be placed normal to the Reference Line except at acute corners.

Lap top and bottom steel by 30 bar diameters min.

Field bending of transverse reinforcing steel to be included with Item 509 for payment.

For additional details see sheet 28/46.

## TRANSVERSE SLAB REINFORCING

West Bound Lanes

ALDEN E. STILSON & ASSOCIATES, LIMITED
CONSULTING ENGINEERS
COLUMBUS, OHIO

27/46

# SUPERSTRUCTURE DETAILS

BRIDGE No. CUY-80-1078
I-480 over CONRAIL (CLEVE. SHT. LN.)
STA. 593+38.70
CUYAHOGA COUNTY STA. 596+50.96

| DESIGNED | DRAWN | TRACED | CHECKED | REVIEWED | DATE | REVISED |
|---|---|---|---|---|---|---|
| SBP | DW | | PHB | G.W.M. | 11/22/71 | |

MICROFILMED
JAN 18 1991

| FED. RD. DIVISION | STATE | PROJECT | TYPE FUNDS |
|---|---|---|---|
| 2 | OHIO | | |

359
500

CUYAHOGA COUNTY
CUY-480-10.39

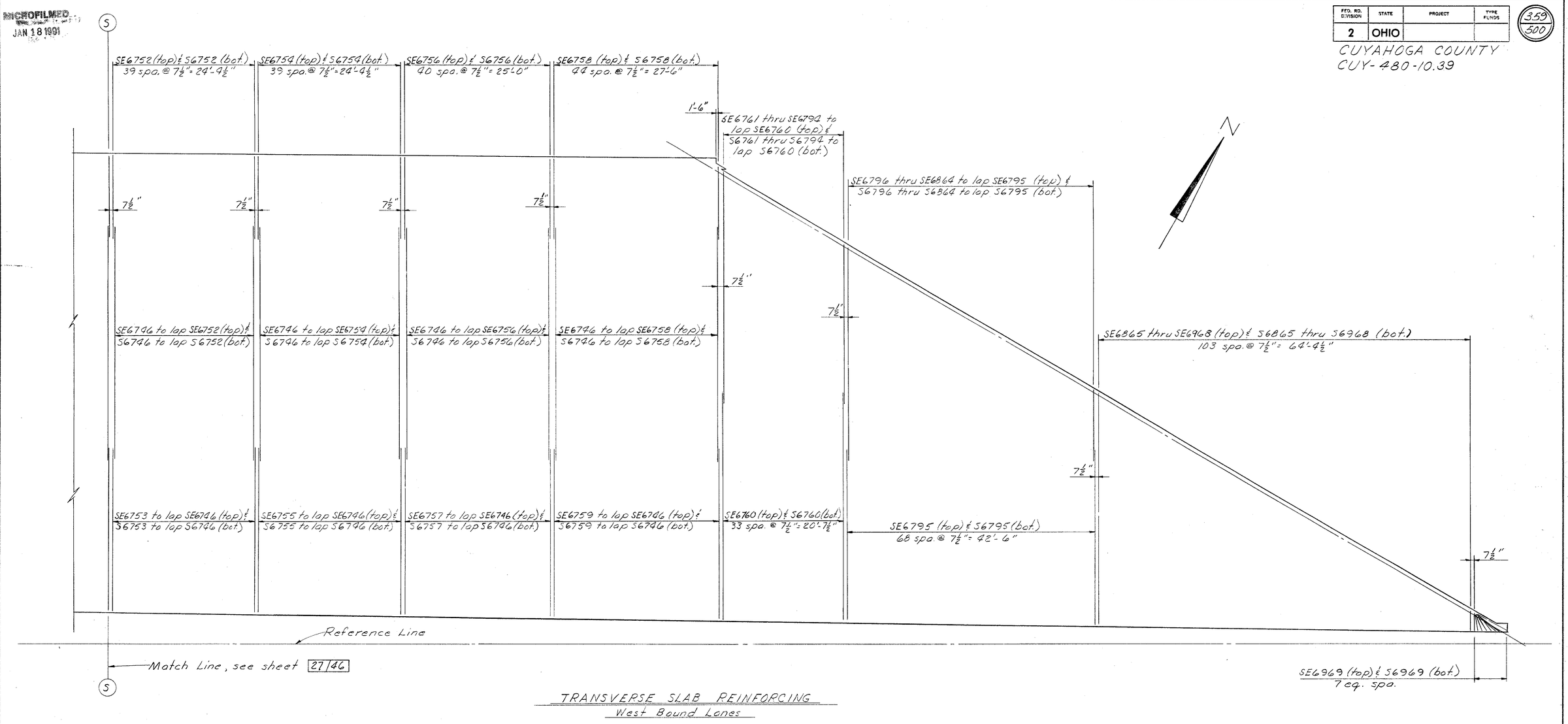


## TRANSVERSE SLAB REINFORCING
West Bound Lanes

### NOTE

For additional notes and details see sheet 27/46

ALDEN E. STILSON & ASSOCIATES, LIMITED
CONSULTING ENGINEERS
COLUMBUS, OHIO

28/46

# SUPERSTRUCTURE DETAILS

BRIDGE No. CUY-80-1078
I-480 over CONRAIL (CLEVE. SHT. LN.)
STA. 593+38.70
CUYAHOGA COUNTY STA. 596+50.96

| DESIGNED | DRAWN | TRACED | CHECKED | REVIEWED | DATE | REVISED |
|---|---|---|---|---|---|---|
| SBP | DW | | PHB | G.W.M. | 11/22/71 | |

RECEIVED
JAN 18 1991

| FED. RD. DIVISION | STATE | PROJECT | TYPE FUNDS |
|---|---|---|---|
| 2 | OHIO | | |

360
500

CUYAHOGA COUNTY
CUY-480-10.39

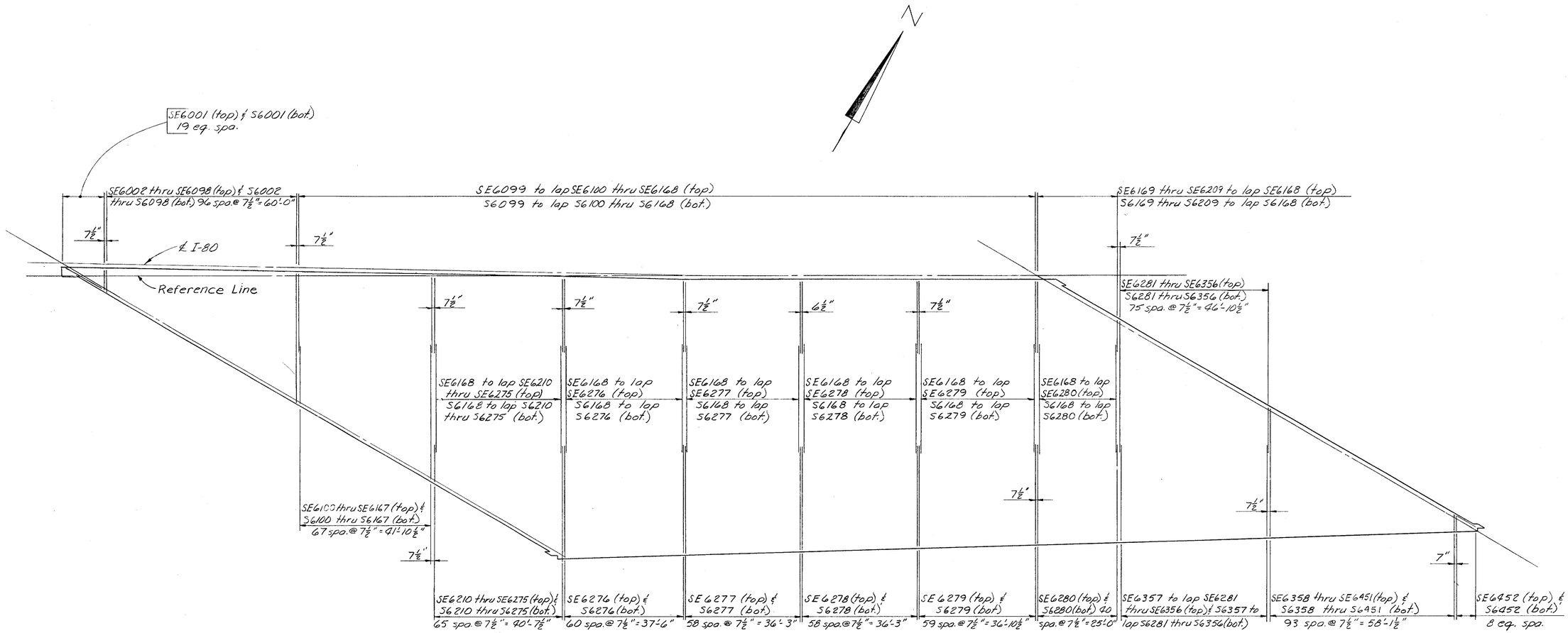


## TRANSVERSE SLAB REINFORCING

East Bound Lanes

### NOTES

Transverse reinforcing bars shall be placed normal to Girders 15 thru 21 except at acute corners.

Lap top and bottom steel by 30 bar diameters min.

Field bending of transverse reinforcing steel to be included with Item 509 for payment.

ALDEN E. STILSON & ASSOCIATES, LIMITED
CONSULTING ENGINEERS
COLUMBUS, OHIO

29/46

# SUPERSTRUCTURE DETAILS

BRIDGE No. CUY-80-1078
I-480 over CONRAIL (Cleve. Sht. Ln.)
STA. 593 + 38.70
CUYAHOGA COUNTY STA. 596 + 50.96

| DESIGNED | DRAWN | TRACED | CHECKED | REVIEWED | DATE | REVISED |
|---|---|---|---|---|---|---|
| SBP | DW | | PHB | G.W.M. | 11/22/71 | |

MICROFILMED

| FED. RD. DIVISION | STATE | PROJECT | TYPE FUNDS |
|---|---|---|---|
| 2 | OHIO | | |

361/500

CUYAHOGA COUNTY
CUY-480-10.39

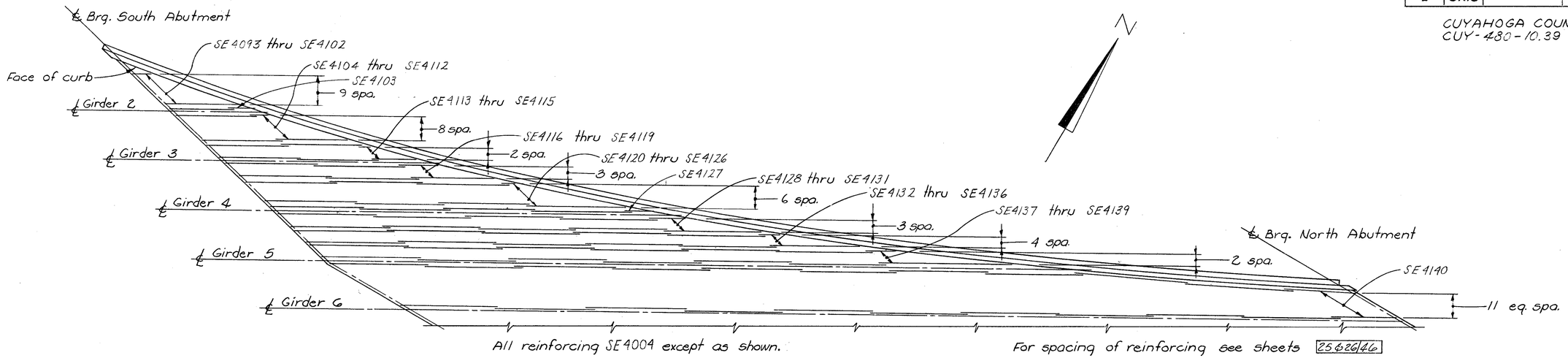


All reinforcing SE4004 except as shown.

For spacing of reinforcing see sheets 25&26/46

TOP LONGITUDINAL SLAB REINFORCING BETWEEN GIRDERS 1 AND 6

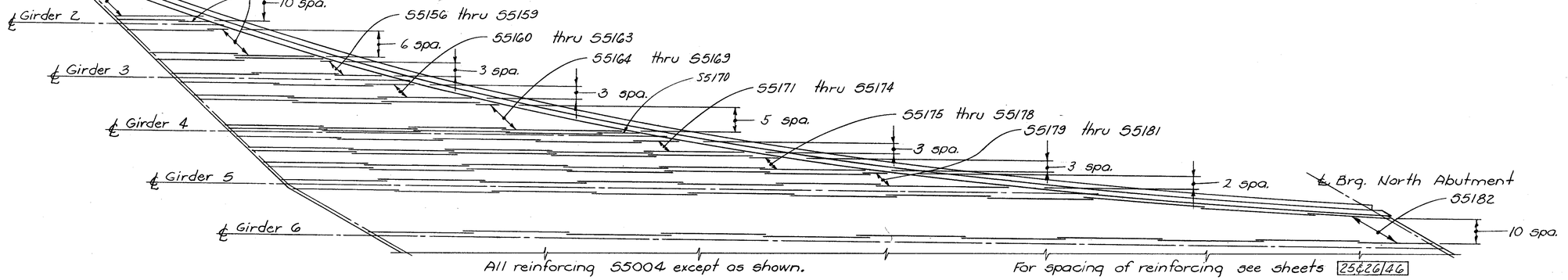


All reinforcing 55004 except as shown.

For spacing of reinforcing see sheets 25&26/46

BOTTOM LONGITUDINAL SLAB REINFORCING BETWEEN GIRDERS 1 AND 6

ALDEN E. STILSON & ASSOCIATES, LIMITED
CONSULTING ENGINEERS
COLUMBUS, OHIO

30/46

# SUPERSTRUCTURE DETAILS
## DECK REINFORCING
BRIDGE Nº CUY-80-1078
I-480 OVER CONRAIL (CLEVE. SHT. LN.)
CUYAHOGA COUNTY STA. 593+38.70 STA. 596+50.96

| DESIGNED | DRAWN | TRACED | CHECKED | REVIEWED | DATE | REVISED |
|---|---|---|---|---|---|---|
| TJ | GTR | | ANA | G.W.M. | 11/22/71 | |

MICROFILMED
JAN 18 1991

| FED. RD. DIVISION | STATE | PROJECT | TYPE FUNDS |
|---|---|---|---|
| 2 | OHIO | | |

362
500

CUYAHOGA COUNTY
CUY-480-10.39

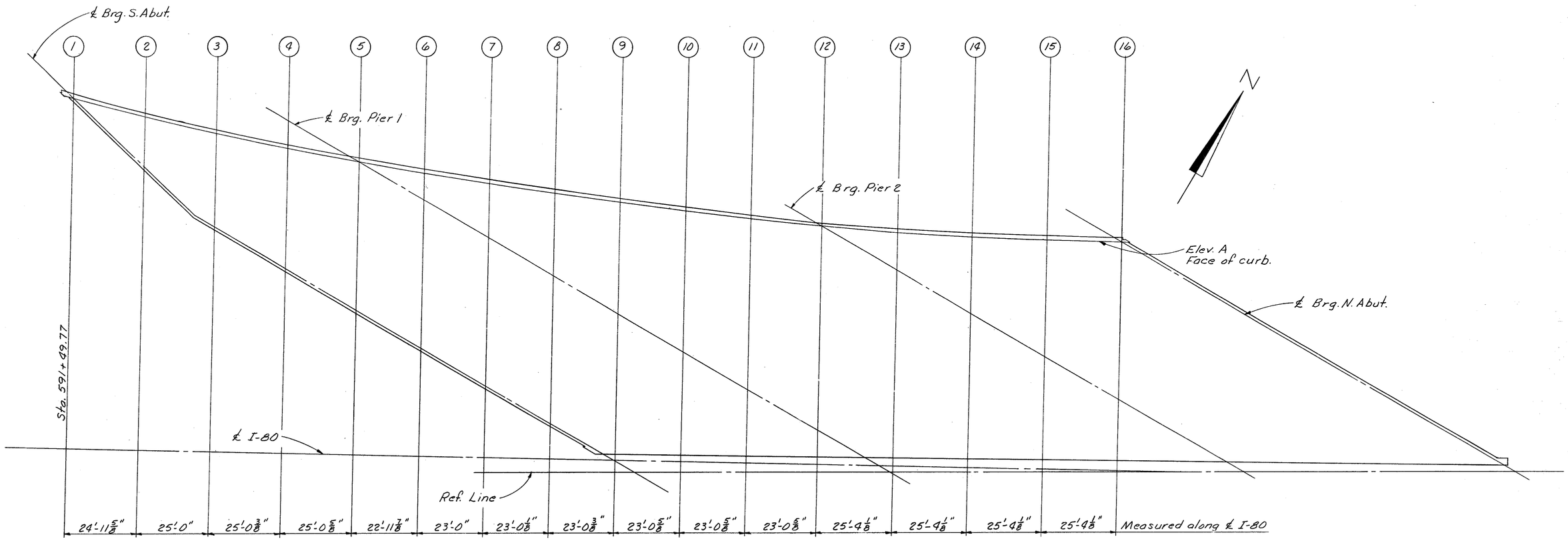


## PARTIAL PLAN OF SCREEDS

(West Bound Lanes)

| Screed Elevations | |
|---|---|
| Locations | A |
| 1 | 819.01 |
| 2 | 819.54 |
| 3 | 820.04 |
| 4 | 820.52 |
| 5 | 821.02 |
| 6 | 821.51 |
| 7 | 821.97 |
| 8 | 822.43 |
| 9 | 822.77 |
| 10 | 823.08 |
| 11 | 823.30 |
| 12 | 823.58 |
| 13 | 823.99 |
| 14 | 824.44 |
| 15 | 824.84 |
| 16 | 825.17 |

Screed elevations are at top of Portland Cement Concrete slab before the concrete deck is placed. Proper allowance has been made for the dead load deflection due to weight of the concrete.

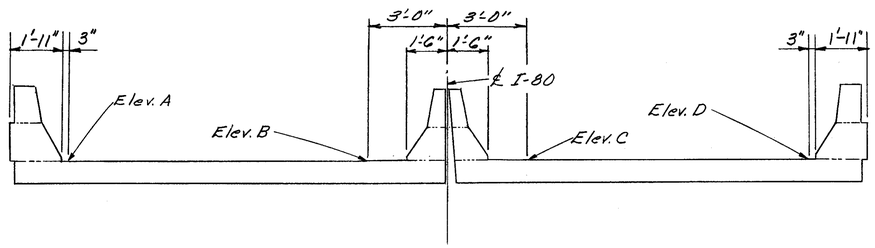


## CROSS SECTION FOR SCREED ELEVATIONS

ALDEN E. STILSON & ASSOCIATES, LIMITED
CONSULTING ENGINEERS
COLUMBUS, OHIO

31/46

# SUPERSTRUCTURE DETAILS

BRIDGE No. CUY-80-1078
I-480 over CONRAIL (CLEVE. SHT. LN.)
STA. 593+38.70
CUYAHOGA COUNTY STA. 596+50.96

| DESIGNED | DRAWN | TRACED | CHECKED | REVIEWED | DATE | REVISED |
|---|---|---|---|---|---|---|
| TJ | DW | | ANA | G.W.M. | 11/23/71 | |

MICROFILMED
JAN 18 1991

| FED. RD. DIVISION | STATE | PROJECT | TYPE FUNDS |
|---|---|---|---|
| 2 | OHIO | | |

363
500

CUYAHOGA COUNTY
CUY-480-10.39

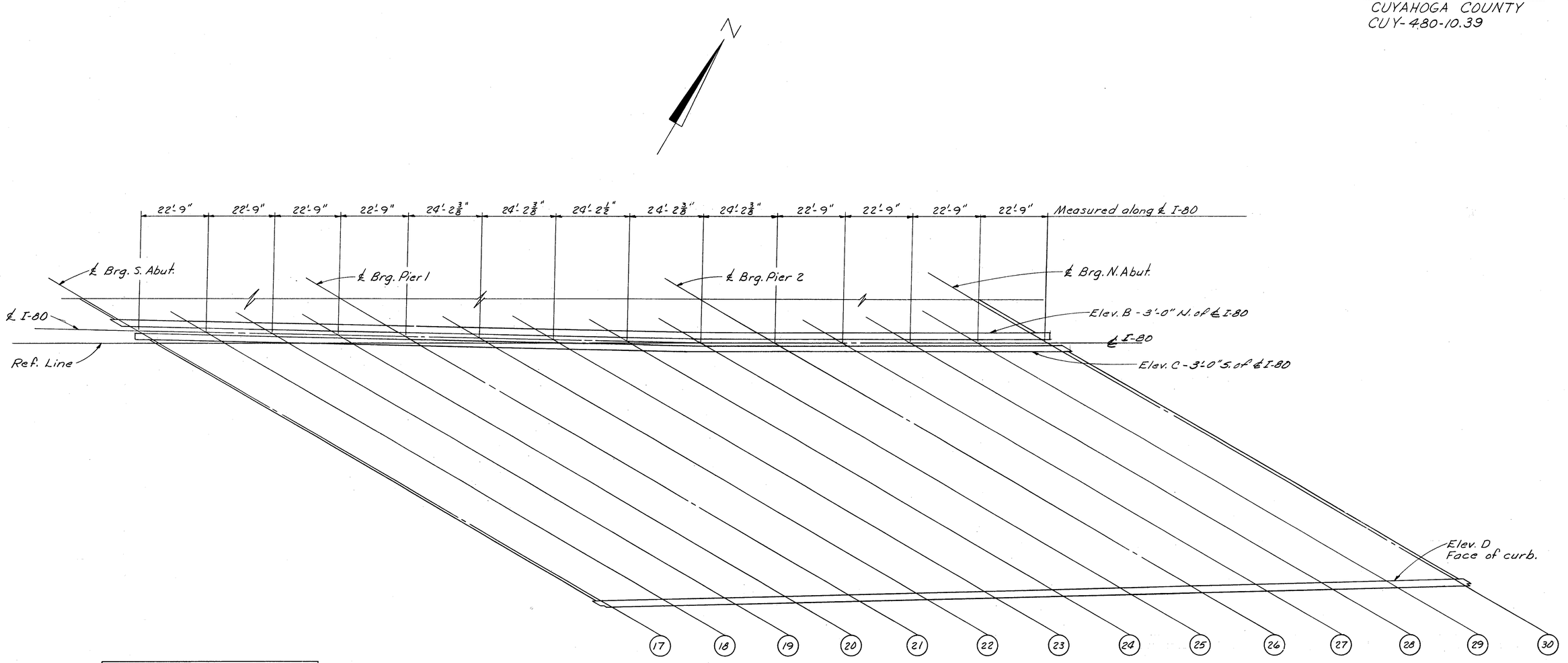


PARTIAL PLAN OF SCREEDS
(East Bound Lanes)

| Screed Elevations | | | |
|---|---|---|---|
| Locations | B | C | D |
| 17 | 829.30 | 829.44 | 827.66 |
| 18 | 829.61 | 829.74 | 827.66 |
| 19 | 829.87 | 829.98 | 827.64 |
| 20 | 825.07 | 825.17 | 827.61 |
| 21 | 825.27 | 825.36 | 827.58 |
| 22 | 825.54 | 825.62 | 827.60 |
| 23 | 825.79 | 825.69 | 827.62 |
| 24 | 825.97 | 826.04 | 827.57 |
| 25 | 826.07 | 826.13 | 827.45 |
| 26 | 826.16 | 826.21 | 827.34 |
| 27 | 826.29 | 826.34 | 827.26 |
| 28 | 826.43 | 826.47 | 827.19 |
| 29 | 826.50 | 826.53 | 827.07 |
| 30 | 826.50 | 826.53 | 826.90 |

NOTE

For additional notes and details see sheet 31/46

ALDEN E. STILSON & ASSOCIATES, LIMITED
CONSULTING ENGINEERS
COLUMBUS, OHIO
32/46

# SUPERSTRUCTURE DETAILS

BRIDGE No. CUY-80-1078
I-480 over CONRAIL (CLEVE. SHT. LN.)
STA. 593+38.70
CUYAHOGA COUNTY STA. 596+50.96

| DESIGNED | DRAWN | TRACED | CHECKED | REVIEWED | DATE | REVISED |
|---|---|---|---|---|---|---|
| TJ | DW | | SBP | G.W.M. | 11/23/11 | |

MICROFILMED
JAN 1 [illegible] MICROFILMED

| FED. RD. DIVISION | STATE | PROJECT | TYPE FUNDS |
|---|---|---|---|
| 2 | OHIO | | |

364/600

CUYAHOGA COUNTY
CUY-480-10.39

Table of Angle Values ~ W.B.

| Horizontal Deflection Angle | | | | Horizontal Intersection Angle | | | |
|---|---|---|---|---|---|---|---|
| $\Delta_1$ | $\Delta_2$ | $\Delta_3$ | $\Delta_4$ | $\alpha_1$ | $\alpha_2$ | $\alpha_3$ | $\alpha_4$ |
| 2°-40'-11" | 3°-17'-56" | 3°-17'-20" | 2°-43'-23" | 13°-17'-12" | 10°-37'-01" | 7°-19'-05" | 4°-01'-45" |

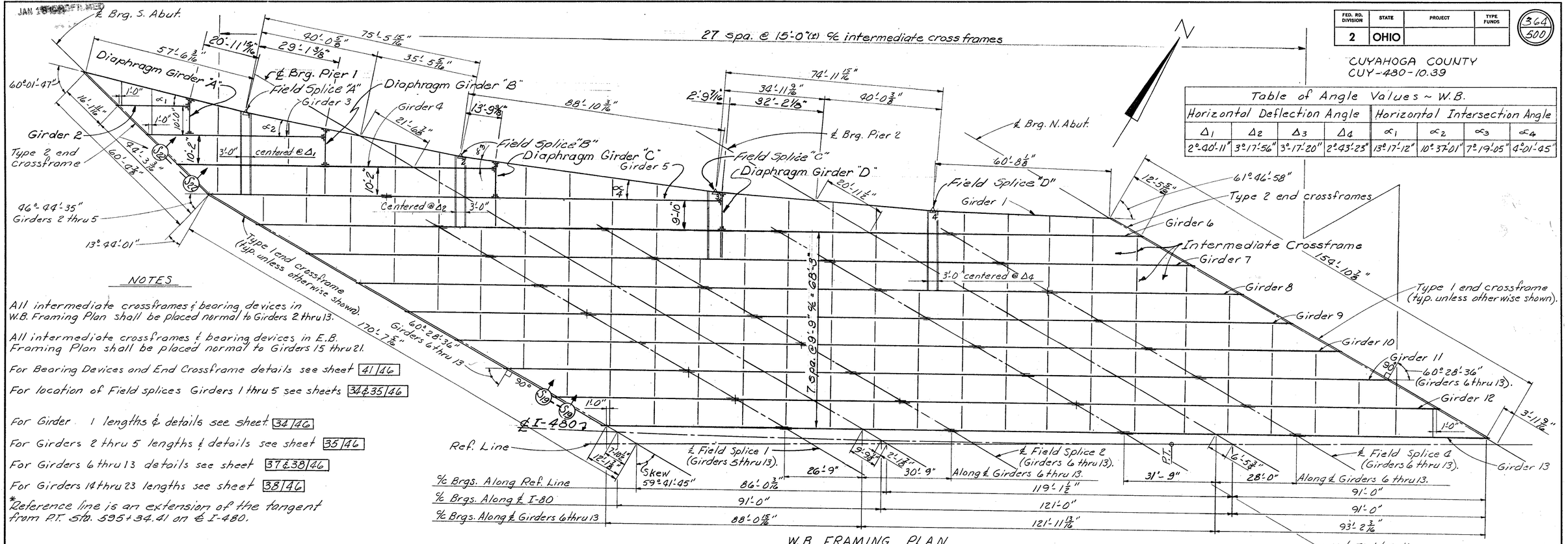


| | | | | |
|---|---|---|---|---|
| ℄ Brgs. Along Ref. Line | 86'-0 3/16" | 26'-9" | 30'-9" | 119'-1 1/2" |
| ℄ Brgs. Along ℄ I-80 | 91'-0" | | | 121'-0" |
| ℄ Brgs. Along ℄ Girders 6 thru 13 | 88'-0 15/16" | | | 121'-11 13/16" |

W.B. FRAMING PLAN

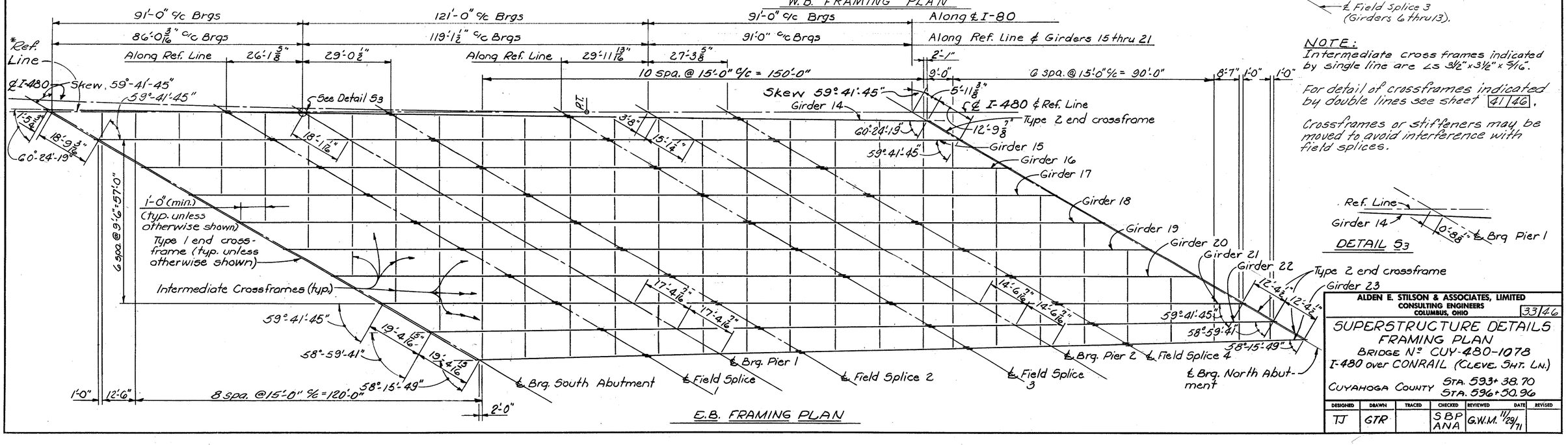


E.B. FRAMING PLAN

NOTES

All intermediate crossframes & bearing devices in W.B. Framing Plan shall be placed normal to Girders 2 thru 13.

All intermediate crossframes & bearing devices in E.B. Framing Plan shall be placed normal to Girders 15 thru 21.

For Bearing Devices and End Crossframe details see sheet 41/46

For location of Field splices Girders 1 thru 5 see sheets 34 & 35/46

For Girder 1 lengths & details see sheet 34/46

For Girders 2 thru 5 lengths & details see sheet 35/46

For Girders 6 thru 13 details see sheet 37 & 38/46

For Girders 14 thru 23 lengths see sheet 38/46

*Reference line is an extension of the tangent from P.T. Sta. 595+34.41 on ℄ I-480.

NOTE:
Intermediate cross frames indicated by single line are Ls 3½" x 3½" x 5/16".

For detail of crossframes indicated by double lines see sheet 41/46.

Crossframes or stiffeners may be moved to avoid interference with field splices.




DETAIL S3

ALDEN E. STILSON & ASSOCIATES, LIMITED
CONSULTING ENGINEERS
COLUMBUS, OHIO

33/46

# SUPERSTRUCTURE DETAILS FRAMING PLAN

BRIDGE Nº CUY-480-1078
I-480 over CONRAIL (CLEVE. SHT. LN.)
CUYAHOGA COUNTY STA. 593+38.70 STA. 596+50.96

| DESIGNED | DRAWN | TRACED | CHECKED | REVIEWED | DATE | REVISED |
|---|---|---|---|---|---|---|
| TJ | GTR | | SBP ANA | G.W.M. | 11/29/71 | |

MICROFILMED
JAN 16 1991

| FHWA REGION | STATE | PROJECT | |
|---|---|---|---|
| 5 | OHIO | | |

365
500

CUYAHOGA COUNTY
CUY-480-10.39

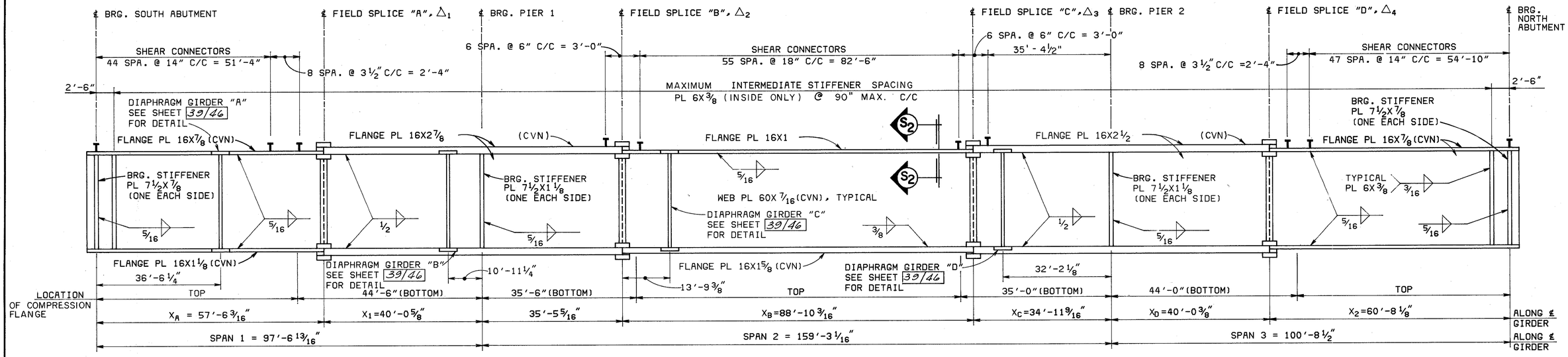


## GIRDER 1

NOTES:

FOR TYPICAL GIRDER SECTION, SEE SHEET 38/46
FOR BEARING STIFFENER DETAIL, SEE DETAIL SHEET 38/46
FOR CAMBER AND BLOCKING DIAGRAM AND DETAILS, SEE SHEET 39/46
FOR GIRDER PLAN SEE FRAMING PLAN, SHEET 33/46
FOR TYPICAL GIRDER NOTES, SEE SHEET 35/46

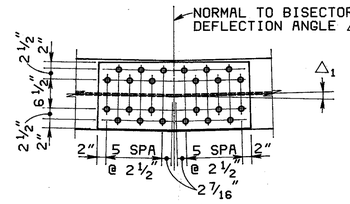


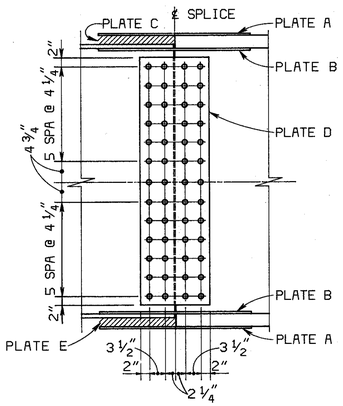


FIELD SPLICE "A"

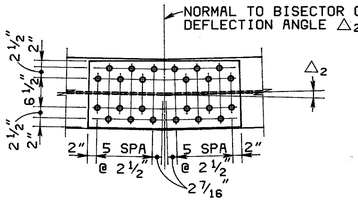


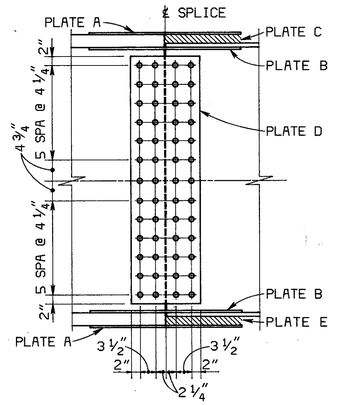


FIELD SPLICE "B"

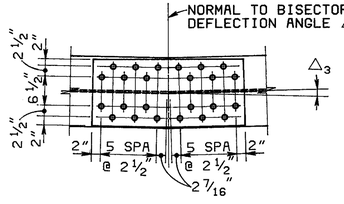


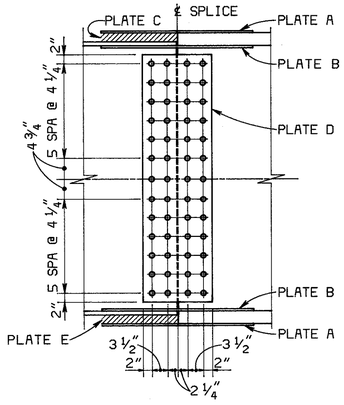


FIELD SPLICE "C"

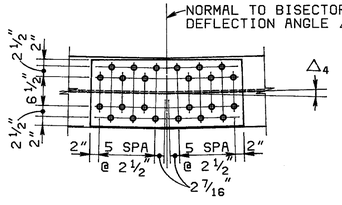


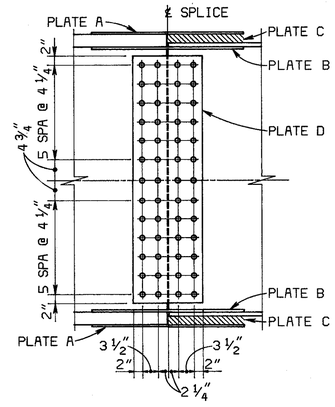


FIELD SPLICE "D"

| BOLTED FIELD SPLICE PLATE DIMENSIONS, GIRDER 1 | | | | |
|---|---|---|---|---|
| | FIELD SPLICE "A" | FIELD SPLICE "B" | FIELD SPLICE "C" | FIELD SPLICE "D" |
| PLATE A | VARIES X 7/16" X VARIES (CVN), 2 REQUIRED | VARIES X½" X VARIES (CVN), 2 REQUIRED | VARIES X½" X VARIES (CVN), 2 REQUIRED | VARIES X 7/16" X VARIES (CVN), 2 REQUIRED |
| PLATE B | VARIES X½" X VARIES (CVN), 4 REQUIRED | VARIES X 9/16" X VARIES (CVN), 4 REQUIRED | VARIES X⅝" X VARIES (CVN), 4 REQUIRED | VARIES X 9/16" X VARIES (CVN), 4 REQUIRED |
| PLATE C | VARIES X2" X VARIES 1 REQUIRED | VARIES X1⅛" X VARIES 1 REQUIRED | VARIES X1½" X VARIES 1 REQUIRED | VARIES X1⅝" X VARIES 2 REQUIRED |
| PLATE D | 15½"X⅜"X4'-8", BENT (CVN), 2 REQUIRED | 15½"X⅜"X4'-8", BENT (CVN), 2 REQUIRED | 15½"X⅜"X4'-8", BENT (CVN), 2 REQUIRED | 15½"X⅜"X4'-8", BENT (CVN), 2 REQUIRED |
| PLATE E | VARIES X1¾" X VARIES 1 REQUIRED | VARIES X1¼" X VARIES 1 REQUIRED | VARIES X⅞" X VARIES 1 REQUIRED | |
| △ | △1 = 2°-40'-11" | △2 = 3°-17'-56" | △3 = 3°-17'-20" | △4 = 2°-43'-23" |

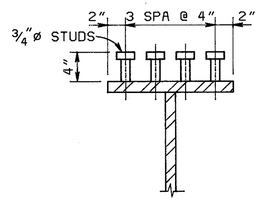


SECTION $S_2$-$S_2$

34/46

ALDEN E. STILSON & ASSOCIATES
CONSULTING ENGINEERING AND ARCHITECTURE
COLUMBUS, CLEVELAND, WHEELING

# SUPERSTRUCTURE DETAILS GIRDER 1

BRIDGE NO. CUY-480-1078
I-480 OVER CONRAIL
CUYAHOGA COUNTY
STA. 593+38.70 TO STA. 596+50.96

| DESIGNED | DRAWN | TRACED | CHECKED | REVIEWED | DATE | REVISED |
|---|---|---|---|---|---|---|
| BTG | | | KHW TEU | G.W.M. | 3/15/83 | |

B202004A

MICROFILMED
JAN 18 1991
MICROFILMED

| FHWA REGION | STATE | PROJECT | |
|---|---|---|---|
| 5 | OHIO | | |

360
500

CUYAHOGA COUNTY
CUY-480-10.39

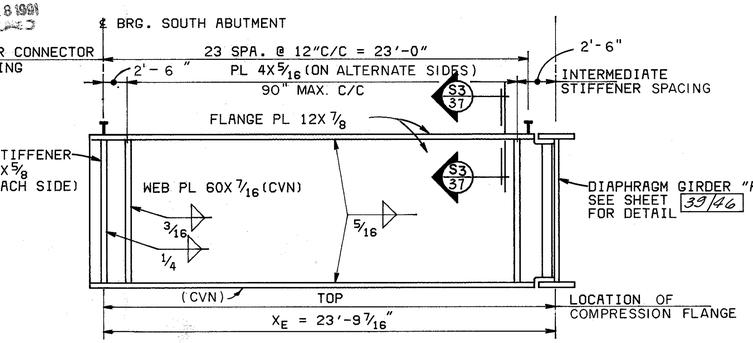


GIRDER 2

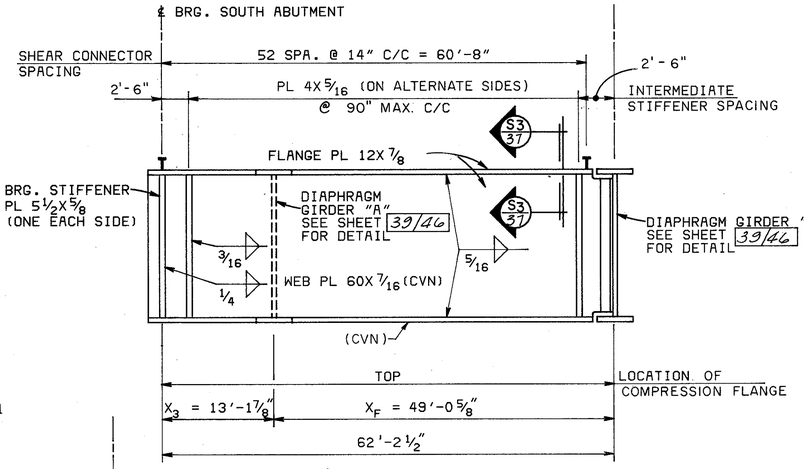


GIRDER 3

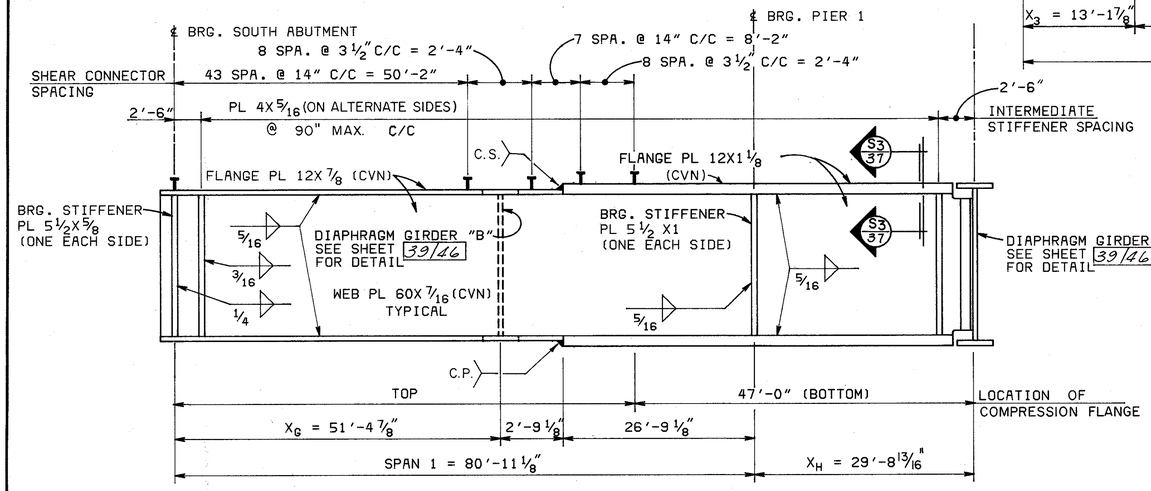


| BOLTED FIELD SPLICE PLATE DIMENSIONS GIRDER 5 | |
|---|---|
| | FIELD SPLICE #1 |
| PLATE A | 11 1/2" X 3/8" X2'-5 1/2" (CVN), 2 REQUIRED |
| PLATE B | 4 1/2" X 9/16" X2'-5 1/2" (CVN), 4 REQUIRED |
| PLATE C | 11 1/2" X 3/4" X1'-2 3/4" 2 REQUIRED |
| PLATE D | 15 1/2" X 3/8" X4'-8" (CVN), 2 REQUIRED |

GIRDER 4

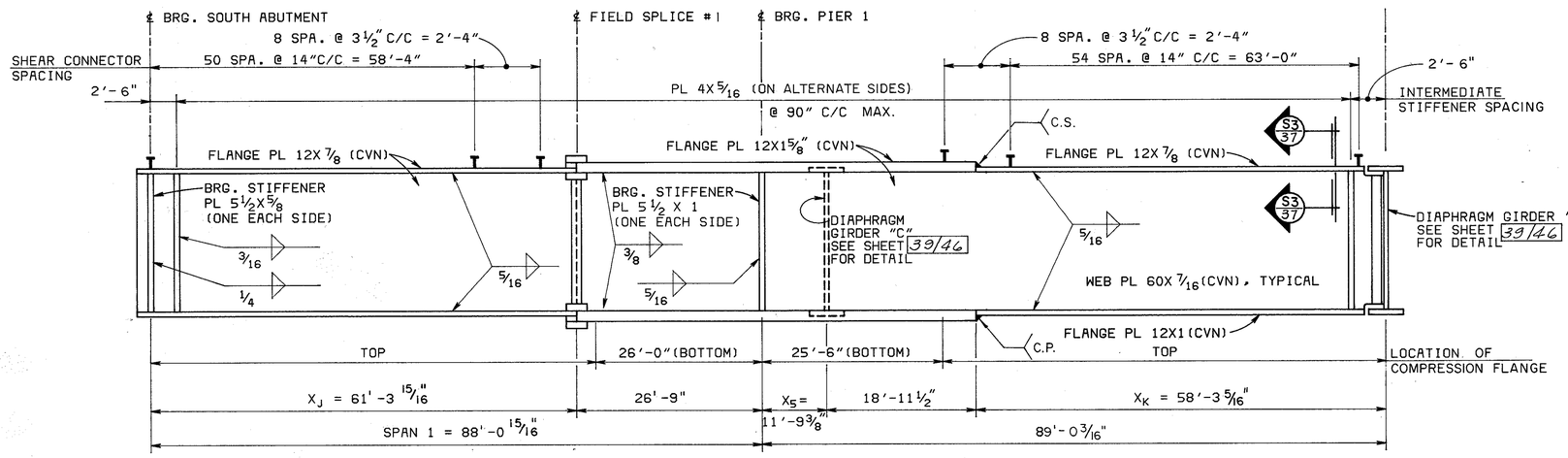


GIRDER 5

NOTES:

FOR BEARING STIFFENER DETAIL, SEE DETAIL, SHEET 38/46
FOR CAMBER AND BLOCKING DIAGRAM AND DETAILS, SEE SHEET 39/46
FOR TYPICAL GIRDER SECTION, SEE SHEET 38/46

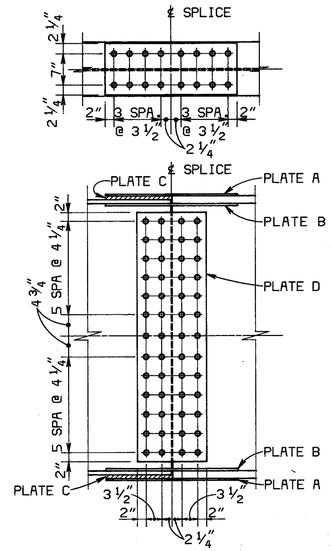


FIELD SPLICE #1

TYPICAL GIRDER NOTES

INTERMEDIATE STIFFENERS SHALL BE LOCATED ON ALTERNATE SIDES OF THE GIRDER WEB AT THE MAXIMUM SPACINGS SHOWN, EXCEPT FOR EXTERIOR GIRDERS WHERE ALL INTERMEDIATE STIFFENERS ARE LOCATED ON INSIDE OF WEB.

LOCATE INTERMEDIATE STIFFENERS TO SERVE AS ATTACHMENTS FOR INTERMEDIATE CROSSFRAMES.

ALL FULL PENETRATION WELDS SHALL BE BACKGOUGED AND WELDED AFTER WELDING FAR SIDE.

GRINDING OF SHOP WELDS: FLANGE BUTT WELDS SHALL BE GROUND FLUSH IN TENSION AREAS ONLY. EXCEPT FOR WEBS OF FASCIA GIRDERS, WEB WELDS SHALL BE GROUND FLUSH FROM THE NEUTRAL AXIS OF THE WEB TO THE FLANGE WHICH IS IN TENSION. WEBS OF FASCIA GIRDERS SHALL BE GROUND FLUSH FOR THEIR FULL DEPTH. GRINDING SHALL BE DONE IN THE DIRECTION OF STRESS.

ALL WEB SPLICE WELDS SHALL BE COMPLETE PENETRATION.

C.P. INDICATES COMPLETE PENETRATION BUTT WELD.

C.S. INDICATES BUTT WELD SUBJECT TO COMPRESSIVE STRESSES ONLY.

WHERE A PLATE IS DESIGNATED (CVN) THE MATERIAL SHALL MEET SPECIFIED MINIMUM NOTCH TOUGHNESS REQUIREMENTS AS SPECIFIED IN 711.02 OF CMS.

HIGH STRENGTH BOLTS SHALL BE 1" DIAMETER, A325, TYPE 3, UNLESS OTHERWISE NOTED.

SHEAR CONNECTOR LOCATION MAY BE ADJUSTED BY A MAXIMUM OF 1 1/2" TO AVOID CONFLICT WITH HIGH STRENGTH BOLTS AND EDGES OF PLATES.

SHEAR CONNECTOR SPACING IN THE VICINITY OF FIELD SPLICES SHALL BE ADJUSTED TO ALLOW CONNECTORS TO BE PLACED BETWEEN THE SPLICE BOLTS.

WELDING ATTACHMENTS FOR SUPPORTING THE CONCRETE DECK FINISHING MACHINE MAY BE MADE TO THE COMPRESSION FLANGE ONLY. WELDS SHALL BE NO LONGER THAN 2", SHALL CLEAR THE EDGE OF THE FLANGE BY AT LEAST 1" AND BE AT LEAST AS LARGE AS THE MINIMUM SIZE REQUIRED FOR THE MATERIAL THICKNESS INVOLVED.

35/46

ALDEN E. STILSON & ASSOCIATES
CONSULTING ENGINEERING AND ARCHITECTURE
COLUMBUS, CLEVELAND, WHEELING

# SUPERSTRUCTURE DETAILS GIRDERS 2 THRU 5

BRIDGE NO. CUY-480-1078

I-480 OVER CONRAIL

CUYAHOGA COUNTY STA. 593+38.70 TO STA. 596+50.96

| DESIGNED | DRAWN | TRACED | CHECKED | REVIEWED | DATE | REVISED |
|---|---|---|---|---|---|---|
| BTG | | | KHW TEW | G.W.M. | 3/15/83 | |

B202003B

MICROFILMED
JAN 18 1991

| FHWA REGION | STATE | PROJECT | |
|---|---|---|---|
| 5 | OHIO | | |

367
500

CUYAHOGA COUNTY
CUY-480-10.39

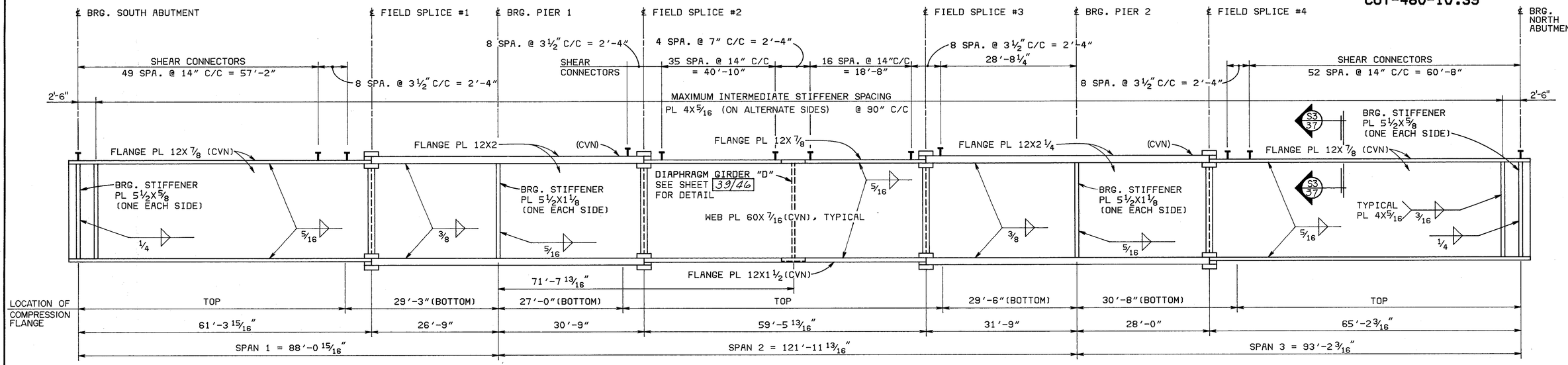


## GIRDER 6

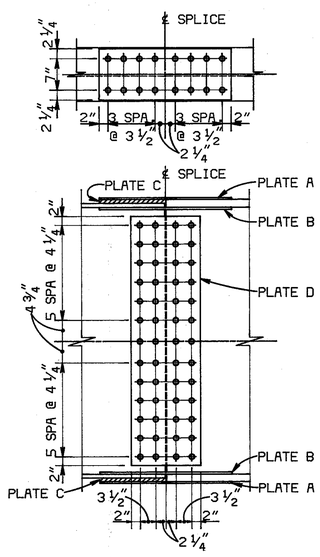


FIELD SPLICE #1

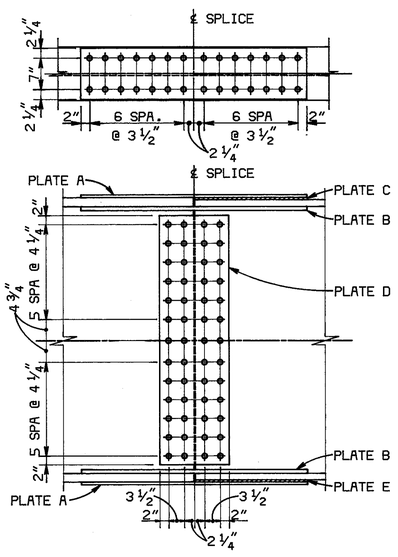


FIELD SPLICE #2

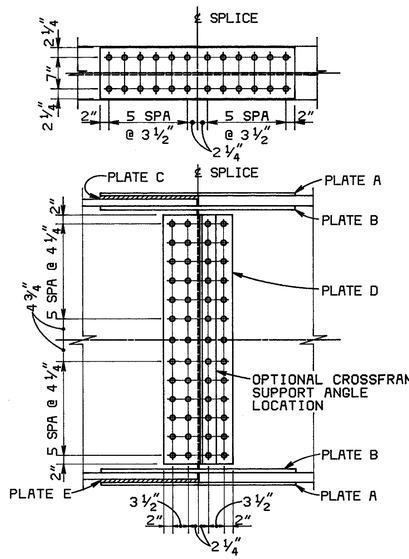


FIELD SPLICE #3

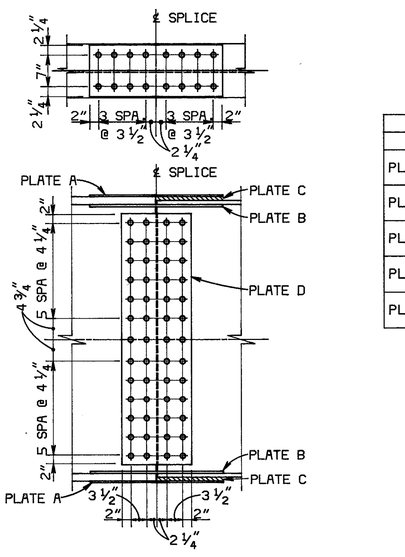


FIELD SPLICE #4

NOTES:

FOR TYPICAL GIRDER NOTES, SEE SHEET 35/46
FOR TYPICAL GIRDER SECTION, SEE SHEET 38/46
FOR BEARING STIFFENER DETAIL, SEE DETAIL SHEET 38/46
FOR CAMBER AND BLOCKING DIAGRAM AND DETAILS, SEE SHEET 40/46

BOLTED FIELD SPLICE PLATE DIMENSIONS, GIRDER 6

| | FIELD SPLICE #1 | FIELD SPLICE #2 | FIELD SPLICE #3 | FIELD SPLICE #4 |
|---|---|---|---|---|
| PLATE A | 11 1/2" X 3/8" X 2'-5 1/2" (CVN), 2 REQUIRED | 11 1/2" X 5/8" X 4'-2 1/2" (CVN), 2 REQUIRED | 11 1/2" X 5/8" X 3'-7 1/2" (CVN), 2 REQUIRED | 11 1/2" X 3/8" X 2'-5 1/2" (CVN), 2 REQUIRED |
| PLATE B | 4 1/2" X 1/2" X 2'-5 1/2" (CVN), 4 REQUIRED | 4 1/2" X 7/8" X 4'-2 1/2" (CVN), 4 REQUIRED | 4 1/2" X 7/8" X 3'-7 1/2" (CVN), 4 REQUIRED | 4 1/2" X 1/2" X 2'-5 1/2" (CVN), 4 REQUIRED |
| PLATE C | 11 1/2" X 1 1/8" X 1'-2 3/4" 2 REQUIRED | 11 1/2" X 1 1/8" X 2'-1 1/4" 1 REQUIRED | 11 1/2" X 1 3/8" X 1'-9 3/4" 1 REQUIRED | 11 1/2" X 1 3/8" X 1'-2 3/4" 2 REQUIRED |
| PLATE D | 15 1/2" X 3/8" X 4'-8" (CVN), 2 REQUIRED | 15 1/2" X 3/8" X 4'-8" (CVN), 2 REQUIRED | 15 1/2" X 3/8" X 4'-8" (CVN), 2 REQUIRED | 15 1/2" X 3/8" X 4'-8" (CVN), 2 REQUIRED |
| PLATE E | | 11 1/2" X 1/2" X 2'-1 1/4" 1 REQUIRED | 11 1/2" X 3/4" X 1'-9 3/4" 1 REQUIRED | |

36/46

ALDEN E. STILSON & ASSOCIATES
CONSULTING ENGINEERING AND ARCHITECTURE
COLUMBUS, CLEVELAND, WHEELING

## SUPERSTRUCTURE DETAILS GIRDER 6

BRIDGE NO. CUY-480-1078
I-480 OVER CONRAIL
CUYAHOGA COUNTY
STA. 593+38.70 TO STA. 596+50.96

| DESIGNED | DRAWN | TRACED | CHECKED | REVIEWED | DATE | REVISED |
|---|---|---|---|---|---|---|
| BTG | | | KHW TEU | G.W.M. | 3/15/83 | |

B202008

MICROFILMED
JAN 18 1991

| FHWA REGION | STATE | PROJECT | |
|---|---|---|---|
| 5 | OHIO | | |

368
500

CUYAHOGA COUNTY
CUY-480-10.39

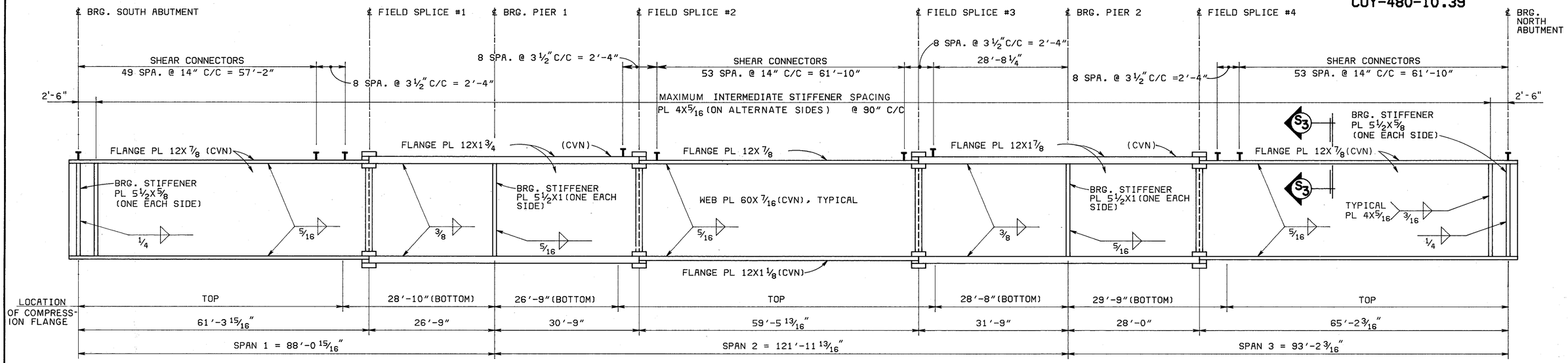


## GIRDER 7 THRU GIRDER 13

NOTES:

FOR BEARING STIFFENER DETAIL, SEE DETAIL SHEET 38/46

FOR TYPICAL GIRDER SECTION, SEE SHEET 38/46

FOR CAMBER AND BLOCKING DIAGRAM AND DETAILS, SEE SHEET 40/46

FOR TYPICAL GIRDER NOTES, SEE SHEET 35/46

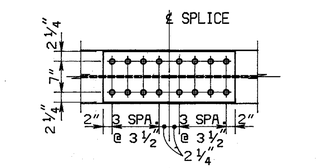


FIELD SPLICE #1

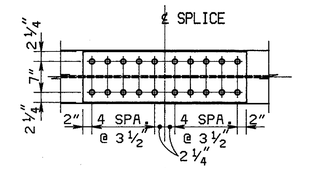


FIELD SPLICE #2

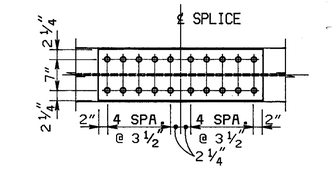


FIELD SPLICE #3

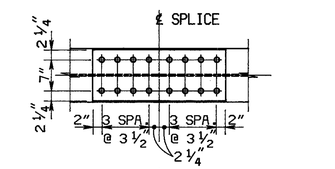


FIELD SPLICE #4

| BOLTED FIELD SPLICE PLATE DIMENSIONS, GIRDERS 7 THRU 23 | | | | |
|---|---|---|---|---|
| | FIELD SPLICE #1 | FIELD SPLICE #2 | FIELD SPLICE #3 | FIELD SPLICE #4 |
| PLATE A | 11 1/2" X 3/8" X2'-5 1/2" (CVN), 2 REQUIRED | 11 1/2" X 1/2" X3'-0 1/2" (CVN), 2 REQUIRED | 11 1/2" X 1/2" X3'-0 1/2" (CVN), 2 REQUIRED | 11 1/2" X 3/8" X2'-5 1/2" (CVN), 2 REQUIRED |
| PLATE B | 4 1/2" X 1/2" X2'-5 1/2" (CVN), 4 REQUIRED | 4 1/2" X 11/16" X3'-0 1/2" (CVN), 4 REQUIRED | 4 1/2" X 11/16" X3'-0 1/2" (CVN), 4 REQUIRED | 4 1/2" X 1/2" X2'-5 1/2" (CVN), 4 REQUIRED |
| PLATE C | 11 1/2" X 7/8" X1'-2 3/4" 2 REQUIRED | 11 1/2" X 7/8" X1'-6 1/4" 1 REQUIRED | 11 1/2" X1"X1'-6 1/4" 1 REQUIRED | 11 1/2" X1"X1'-2 3/4" 2 REQUIRED |
| PLATE D | 15 1/2" X 3/8" X4'-8" (CVN), 2 REQUIRED | 15 1/2" X 3/8" X4'-8" (CVN), 2 REQUIRED | 15 1/2" X 3/8" X4'-8" (CVN), 2 REQUIRED | 15 1/2" X 3/8" X4'-8" (CVN), 2 REQUIRED |
| PLATE E | | 11 1/2" X 5/8" X1'-6 1/4" 1 REQUIRED | 11 1/2" X 3/4" X1'-6 1/4" 1 REQUIRED | |

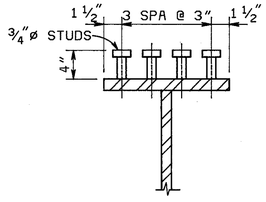


SECTION $S_3$-$S_3$

37/46

ALDEN E. STILSON & ASSOCIATES
CONSULTING ENGINEERING AND ARCHITECTURE
COLUMBUS, CLEVELAND, WHEELING

## SUPERSTRUCTURE DETAILS GIRDERS 7 THRU 13

BRIDGE NO. CUY-480-1078

I-480 OVER CONRAIL

CUYAHOGA COUNTY STA. 593+38.70 TO STA. 596+50.96

| DESIGNED | DRAWN | TRACED | CHECKED | REVIEWED | DATE | REVISED |
|---|---|---|---|---|---|---|
| BTG | | | KHW TEU | G.W.M. | 3/15/83 | |

B202001R

MICROFILMED
JAN 18 1991

| FHWA REGION | STATE | PROJECT | |
|---|---|---|---|
| 5 | OHIO | | |

369
500

CUYAHOGA COUNTY
CUY-480-10.39

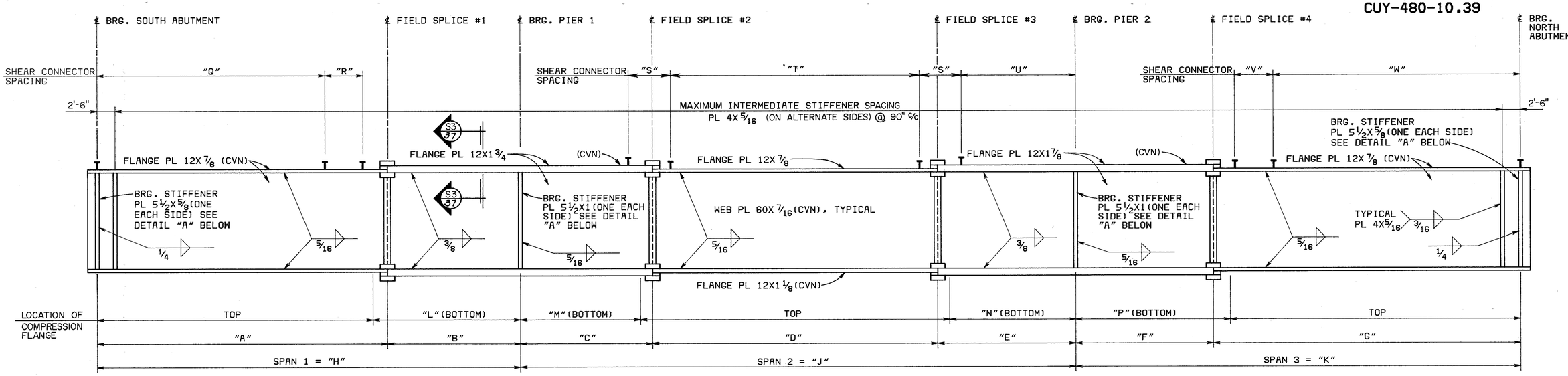


## GIRDER 14 THRU GIRDER 23

NOTES:

FOR TYPICAL GIRDER NOTES, SEE SHEET 35/46
FOR BOLTED SPLICE DETAILS, SEE SHEET 37/46

FOR CAMBER AND BLOCKING DIAGRAM AND DETAILS, SEE SHEET 40/46

| GIRDER NUMBER | TABLE OF DIMENSIONS (MEASURED HORIZONTALLY) | | | | | | | | | |
|---|---|---|---|---|---|---|---|---|---|---|
| | "A" | "B" | "C" | "D" | "E" | "F" | "G" | "H" | "J" | "K" |
| 14 | 61'-2 3/16" | 26'-8 7/16" | 29'-8 1/8" | 61'-4 7/8" | 30'-7 5/8" | 27'-10 11/16" | 65'-1" | 87'-10 5/8" | 121'-8 5/8" | 92'-11 11/16" |
| 15-21 | 59'-10 9/16" | 26'-1 5/8" | 29'-0 1/2" | 60'-1 3/16" | 29'-11 13/16" | 27'-3 5/8" | 63'-8 3/8" | 86'-0 3/16" | 119'-1 1/2" | 91'-0" |
| 22 | 58'-8 7/8" | 25'-7 3/16" | 28'-5 7/16" | 58'-10 7/16" | 29'-4 1/2" | 26'-8 15/16" | 62'-4 13/16" | 84'-4 1/16" | 116'-8 3/8" | 89'-1 3/4" |
| 23 | 57'-5 5/16" | 25'-0 7/8" | 27'-10 5/16" | 57'-7 13/16" | 28'-9 3/16" | 26'-2 1/4" | 61'-1 1/4" | 82'-6 3/16" | 114'-3 5/16" | 87'-3 1/2" |

| GIRDER NUMBER | SHEAR CONNECTOR DATA | | | | | | |
|---|---|---|---|---|---|---|---|
| | "Q" | "R" | "S" | "T" | "U" | "V" | "W" |
| 14 | 50 SPA @ 14"C/C | 8 SPA @ 3 1/2" C/C | 8 SPA @ 3 1/2" C/C | 52 SPA @ 14"C/C | 28'-9 5/8" | 8 SPA @ 3 1/2" C/C | 52 SPA @ 14"C/C |
| 15-21 | 48 SPA @ 14"C/C | 8 SPA @ 3 1/2" C/C | 8 SPA @ 3 1/2" C/C | 52 SPA @ 14"C/C | 27'-9 1/2" | 8 SPA @ 3 1/2" C/C | 51 SPA @ 14"C/C |
| 22 | 47 SPA @ 14"C/C | 8 SPA @ 3 1/2" C/C | 8 SPA @ 3 1/2" C/C | 51 SPA @ 14"C/C | 26'-10 1/8" | 8 SPA @ 3 1/2" C/C | 50 SPA @ 14"C/C |
| 23 | 46 SPA @ 14"C/C | 8 SPA @ 3 1/2" C/C | 8 SPA @ 3 1/2" C/C | 50 SPA @ 14"C/C | 26'-2 5/8" | 8 SPA @ 3 1/2" C/C | 49 SPA @ 14"C/C |

| GIRDER NUMBER | COMPRESSION FLANGE LOCATION | | | |
|---|---|---|---|---|
| | "L" | "M" | "N" | "P" |
| 14 | 28'-0" | 27'-6" | 29'-0" | 30'-0" |
| 15-21 | 28'-0" | 26'-0" | 28'-0" | 29'-0" |
| 22 | 27'-6" | 26'-0" | 27'-0" | 28'-6" |
| 23 | 27'-0" | 25'-6" | 26'-6" | 28'-0" |

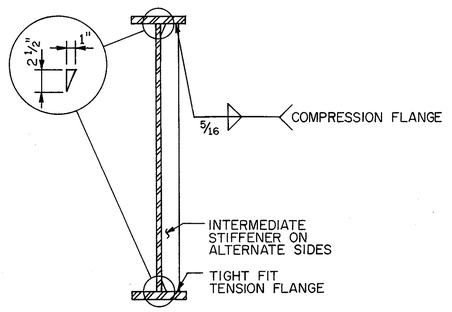


TYPICAL GIRDER SECTION

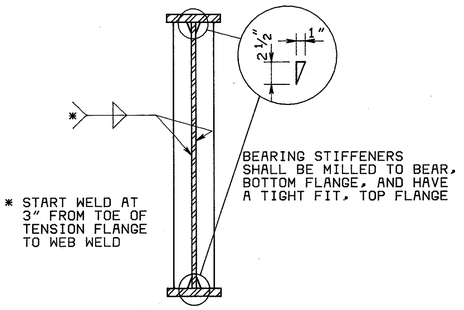


TYPICAL SECTION THRU GIRDER AT BEARING

B202002B

38/46

ALDEN E. STILSON & ASSOCIATES
CONSULTING ENGINEERING AND ARCHITECTURE
COLUMBUS, CLEVELAND, WHEELING

SUPERSTRUCTURE DETAILS
GIRDERS 14 THRU 23
BRIDGE NO. CUY-480-1078
I-480 OVER CONRAIL
CUYAHOGA COUNTY
STA. 593+38.70 TO
STA. 596+50.96

| DESIGNED | DRAWN | TRACED | CHECKED | REVIEWED | DATE | REVISED |
|---|---|---|---|---|---|---|
| BTG | | | KHW TEU | G.W.M. | 3/15/83 | |

MICROFILMED
JAN 18 1991

| FHWA REGION | STATE | PROJECT | |
|---|---|---|---|
| 5 | OHIO | | |

370
500

CUYAHOGA COUNTY
CUY-480-10.39

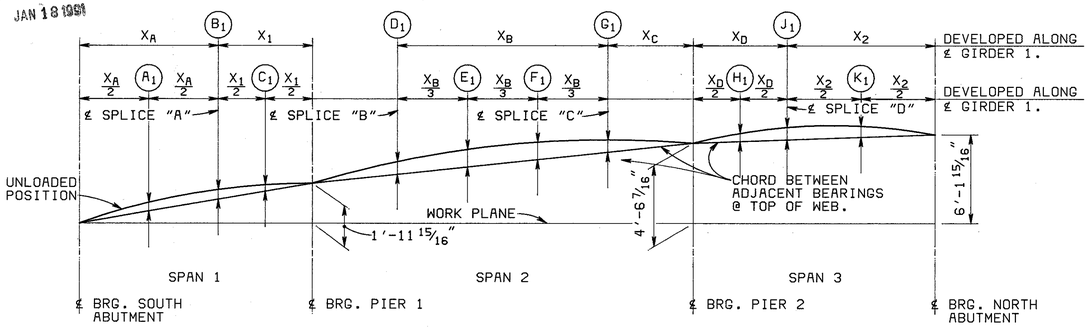


## BLOCKING AND CAMBER - GIRDER 1

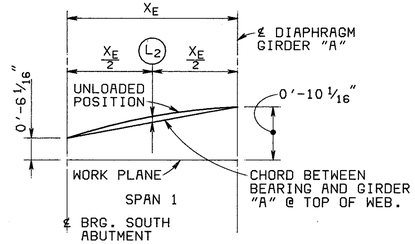


## BLOCKING AND CAMBER - GIRDER 2

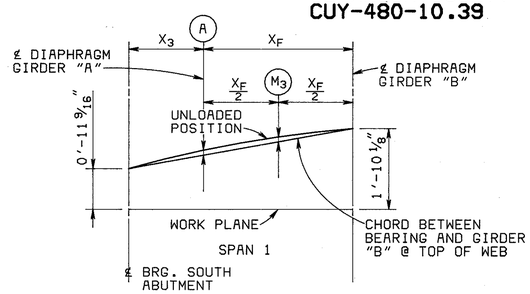


## BLOCKING AND CAMBER - GIRDER 3

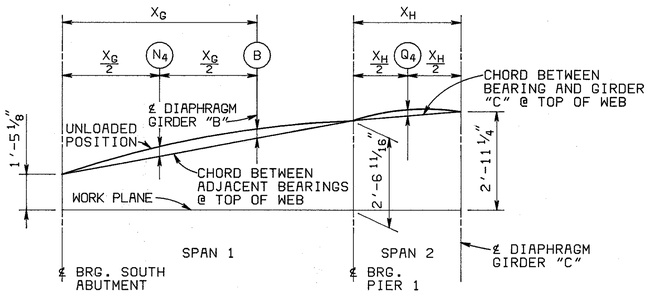


## BLOCKING AND CAMBER - GIRDER 4

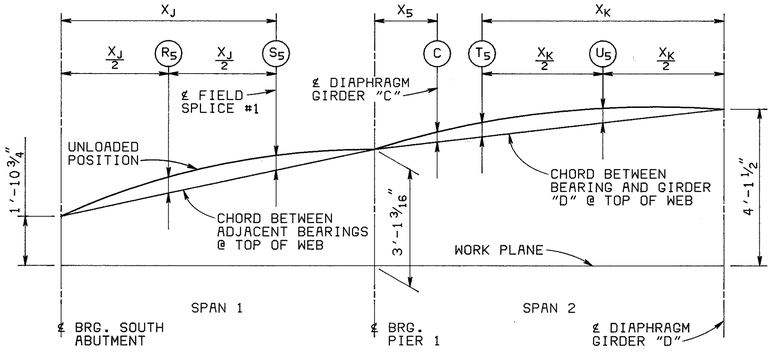


## BLOCKING AND CAMBER - GIRDER 5

| DEFLECTION AND CAMBER | GIRDER 1 | | | | | | | | | | GDR. 2 | GIRDER 3 | | GIRDER 4 | | | | GIRDER 5 | | | | |
|---|---|---|---|---|---|---|---|---|---|---|---|---|---|---|---|---|---|---|---|---|---|---|
| LOCATION | SPAN 1 | | | SPAN 2 | | | | SPAN 3 | | | SPAN 1 | | | SPAN 1 | | | SPAN 2 | SPAN 1 | | SPAN 2 | | |
| | $A_1$ | $B_1$ | $C_1$ | $D_1$ | $E_1$ | $F_1$ | $G_1$ | $H_1$ | $J_1$ | $K_1$ | $L_2$ | A | $M_3$ | $N_4$ | B | | $Q_4$ | $R_5$ | $S_5$ | C | $T_5$ | $U_5$ |
| DEFL. DUE TO WEIGHT OF STEEL | 1/16 | 0 | -1/16 | 3/8 | 5/8 | 5/8 | 3/8 | -1/16 | 0 | 1/16 | 0 | 0 | 1/16 | 1/8 | 1/16 | | 0 | 1/8 | 1/16 | 0 | 1/16 | 1/8 |
| DEFL. DUE TO REMAINING DEAD LOAD | 3/16 | -1/16 | -3/16 | 1 1/8 | 2 1/4 | 2 3/8 | 1 7/8 | -3/8 | -1/8 | 5/16 | 0 | 1/4 | 1/2 | 13/16 | 5/8 | | 0 | 13/16 | 1/2 | 3/16 | 5/8 | 13/16 |
| ADJUSTMENT REQ'D. FOR CURVATURE | 3/16 | 1/4 | 3/16 | 15/16 | 1 3/16 | 15/16 | 3/16 | 7/16 | 11/16 | 5/8 | 0 | 0 | 0 | 1/16 | 1/8 | | 0 | 3/16 | 3/16 | 1/8 | 1/4 | 1/4 |
| REQUIRED SHOP CAMBER | 7/16 | 3/16 | -1/16 | 2 7/16 | 4 1/16 | 3 15/16 | 2 7/16 | 0 | 9/16 | 1 | 0 | 1/4 | 9/16 | 1 | 13/16 | | 0 | 1 1/8 | 3/4 | 5/16 | 15/16 | 1 3/16 |

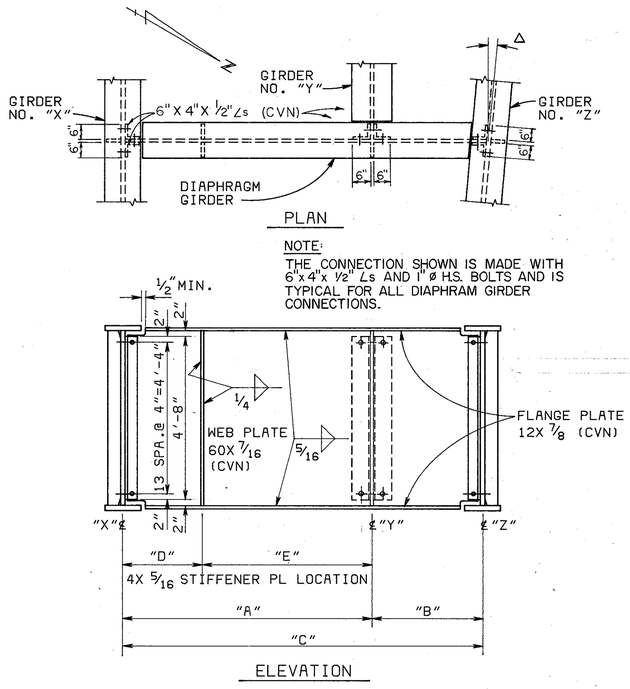


## DIAPHRAGM GIRDER DETAILS

FOR LOCATION OF DIAPHRAM GIRDERS SEE FRAMING PLAN SHEET 33/46

NOTES:

WORK PLANE IS A HORIZONTAL PLANE PASSING THROUGH THE TOP OF WEB GIRDER 1 AT ℄ SOUTH ABUTMENT.
HIGH STRENGTH BOLTS SHALL BE 1" DIAMETER A325 UNLESS OTHERWISE NOTED.

FOR THE DIMENSIONS NOT SHOWN SEE SHEETS 34/46 AND 35/46

## DIAPHRAGM GIRDER DATA

| GIRDER \ DIMENSIONS | "A" | "B" | "C" | TRANS. STIFF. "D" | TRANS. STIFF. "E" | "X" | "Y" | "Z" | Δ |
|---|---|---|---|---|---|---|---|---|---|
| DIAPHRAGM GIRDER "A" | 10'-0" | 2'-8" | 12'-8" | | | GIRDER 3 | GIRDER 2 | GIRDER 1 | 13°17'12" |
| DIAPHRAGM GIRDER "B" | 10'-2" | 2'-5 3/4" | 12'-7 3/4" | 2'-8" | 7'-6" | GIRDER 4 | GIRDER 3 | GIRDER 1 | 10°37'01" |
| DIAPHRAGM GIRDER "C" | 10'-2" | 2'-4 1/8" | 12'-6 1/8" | | | GIRDER 5 | GIRDER 4 | GIRDER 1 | 7°19'05" |
| DIAPHRAGM GIRDER "D" | 9'-10" | 2'-9 1/16" | 12'-7 1/16" | 2'-10" | 7'-0" | GIRDER 6 | GIRDER 5 | GIRDER 1 | 4°01'45" |

39/46

ALDEN E. STILSON & ASSOCIATES
CONSULTING ENGINEERING AND ARCHITECTURE
COLUMBUS, CLEVELAND, WHEELING

# DIAPHRAGM GIRDER DETAILS BLOCKING & CAMBER, GIRDERS 1-5

BRIDGE NO. CUY-480-1078

I-480 OVER CONRAIL

CUYAHOGA COUNTY STA. 593+38.70 TO STA. 596+50.96

| DESIGNED | DRAWN | TRACED | CHECKED | REVIEWED | DATE | REVISED |
|---|---|---|---|---|---|---|
| BTG | | | KHW TEW | G.W.M. | 3/13/93 | |

B202005B

MICROFILMED
JAN 18 1991

| FHWA REGION | STATE | PROJECT | |
|---|---|---|---|
| 5 | OHIO | | |

371
500

CUYAHOGA COUNTY
CUY-480-10.39

## GIRDER 6

| LOCATION | SPAN 1 | | | SPAN 2 | | | | | SPAN 3 | | |
|---|---|---|---|---|---|---|---|---|---|---|---|
| | $A_6$ .25 | $B_6$ .50 | $C_6$ SPLICE | $E_6$ SPLICE | $F_6$ .375 | $G_6$ .50 | $H_6$ .625 | $J_6$ SPLICE | $L_6$ SPLICE | $M_6$ .50 | $N_6$ .75 |
| DEFL. DUE TO WEIGHT OF STEEL | 1/16 | 1/16 | 1/16 | 1/8 | 3/16 | 3/16 | 3/16 | 1/8 | 1/16 | 1/8 | 1/8 |
| DEFL. DUE TO REMAINING DEAD LOAD | 9/16 | 9/16 | 1/4 | 7/8 | 1 3/16 | 1 1/2 | 1 3/8 | 15/16 | 7/16 | 13/16 | 3/4 |
| ADJUSTMENT REQ'D. FOR CURVATURE | 3/16 | 1/4 | 1/4 | -3/16 | -3/8 | -5/8 | -3/4 | -15/16 | 5/16 | 7/16 | 3/8 |
| REQUIRED SHOP CAMBER | 13/16 | 7/8 | 9/16 | 13/16 | 1 3/16 | 1 1/16 | 13/16 | 1/8 | 13/16 | 1 3/8 | 1 1/4 |

## GIRDER 7

| LOCATION | SPAN 1 | | | SPAN 2 | | | | | SPAN 3 | | |
|---|---|---|---|---|---|---|---|---|---|---|---|
| | $A_6$ .25 | $B_6$ .50 | $C_6$ SPLICE | $E_6$ SPLICE | $F_6$ .375 | $G_6$ .50 | $H_6$ .625 | $J_6$ SPLICE | $L_6$ SPLICE | $M_6$ .50 | $N_6$ .75 |
| DEFL. DUE TO WEIGHT OF STEEL | 1/16 | 1/16 | 1/16 | 1/8 | 3/16 | 3/16 | 3/16 | 1/8 | 1/16 | 1/8 | 1/8 |
| DEFL. DUE TO REMAINING DEAD LOAD | 9/16 | 9/16 | 5/16 | 7/8 | 1 5/16 | 1 1/2 | 1 5/16 | 7/8 | 7/16 | 13/16 | 3/4 |
| ADJUSTMENT REQ'D. FOR CURVATURE | 3/16 | 1/4 | 1/4 | -3/8 | -9/16 | -7/8 | -13/16 | -11/16 | 7/16 | 9/16 | 1/2 |
| REQUIRED SHOP CAMBER | 13/16 | 7/8 | 5/8 | 5/8 | 15/16 | 13/16 | 11/16 | 5/16 | 15/16 | 1 1/2 | 1 3/8 |

## GIRDER 8

| LOCATION | SPAN 1 | | | SPAN 2 | | | | | SPAN 3 | | |
|---|---|---|---|---|---|---|---|---|---|---|---|
| | $A_6$ .25 | $B_6$ .50 | $C_6$ SPLICE | $E_6$ SPLICE | $F_6$ .375 | $G_6$ .50 | $H_6$ .625 | $J_6$ SPLICE | $L_6$ SPLICE | $M_6$ .50 | $N_6$ .75 |
| DEFL. DUE TO WEIGHT OF STEEL | 1/16 | 1/16 | 1/16 | 1/8 | 3/16 | 3/16 | 3/16 | 1/8 | 1/16 | 1/8 | 1/8 |
| DEFL. DUE TO REMAINING DEAD LOAD | 9/16 | 9/16 | 5/16 | 7/8 | 1 5/16 | 1 1/2 | 1 5/16 | 7/8 | 7/16 | 13/16 | 3/4 |
| ADJUSTMENT REQ'D. FOR CURVATURE | 3/16 | 1/4 | 1/4 | -7/16 | -1/2 | -11/16 | -1/2 | -5/16 | 7/16 | 5/8 | 1/2 |
| REQUIRED SHOP CAMBER | 13/16 | 7/8 | 5/8 | 9/16 | 1 | 1 | 1 | 11/16 | 15/16 | 1 9/16 | 1 3/8 |

## GIRDER 9

| LOCATION | SPAN 1 | | | SPAN 2 | | | | | SPAN 3 | | |
|---|---|---|---|---|---|---|---|---|---|---|---|
| | $A_6$ .25 | $B_6$ .50 | $C_6$ SPLICE | $E_6$ SPLICE | $F_6$ .375 | $G_6$ .50 | $H_6$ .625 | $J_6$ SPLICE | $L_6$ SPLICE | $M_6$ .50 | $N_6$ .75 |
| DEFL. DUE TO WEIGHT OF STEEL | 1/16 | 1/16 | 1/16 | 1/8 | 3/16 | 3/16 | 3/16 | 1/8 | 1/16 | 1/8 | 1/8 |
| DEFL. DUE TO REMAINING DEAD LOAD | 9/16 | 9/16 | 5/16 | 7/8 | 1 5/16 | 1 1/2 | 1 5/16 | 7/8 | 7/16 | 13/16 | 3/4 |
| ADJUSTMENT REQ'D. FOR CURVATURE | 3/16 | 1/4 | 3/16 | -5/16 | -1/4 | -3/16 | -1/16 | 1/16 | 7/16 | 1/2 | 7/16 |
| REQUIRED SHOP CAMBER | 13/16 | 7/8 | 9/16 | 11/16 | 1 1/4 | 1 1/2 | 1 7/16 | 1 1/16 | 15/16 | 1 7/16 | 1 5/16 |

## GIRDER 10

| LOCATION | SPAN 1 | | | SPAN 2 | | | | | SPAN 3 | | |
|---|---|---|---|---|---|---|---|---|---|---|---|
| | $A_6$ .25 | $B_6$ .50 | $C_6$ SPLICE | $E_6$ SPLICE | $F_6$ .375 | $G_6$ .50 | $H_6$ .625 | $J_6$ SPLICE | $L_6$ SPLICE | $M_6$ .50 | $N_6$ .75 |
| DEFL. DUE TO WEIGHT OF STEEL | 1/16 | 1/16 | 1/16 | 1/8 | 3/16 | 3/16 | 3/16 | 1/8 | 1/16 | 1/8 | 1/8 |
| DEFL. DUE TO REMAINING DEAD LOAD | 9/16 | 9/16 | 5/16 | 7/8 | 1 5/16 | 1 1/2 | 1 5/16 | 7/8 | 7/16 | 13/16 | 3/4 |
| ADJUSTMENT REQ'D. FOR CURVATURE | 3/16 | 1/4 | 3/16 | 1/16 | 3/16 | 5/16 | 5/16 | 5/16 | 3/8 | 7/16 | 5/16 |
| REQUIRED SHOP CAMBER | 13/16 | 7/8 | 9/16 | 1 1/16 | 1 11/16 | 2 | 1 13/16 | 1 5/16 | 7/8 | 1 3/8 | 1 3/16 |

## GIRDER 11

| LOCATION | SPAN 1 | | | SPAN 2 | | | | | SPAN 3 | | |
|---|---|---|---|---|---|---|---|---|---|---|---|
| | $A_6$ .25 | $B_6$ .50 | $C_6$ SPLICE | $E_6$ SPLICE | $F_6$ .375 | $G_6$ .50 | $H_6$ .625 | $J_6$ SPLICE | $L_6$ SPLICE | $M_6$ .50 | $N_6$ .75 |
| DEFL. DUE TO WEIGHT OF STEEL | 1/16 | 1/16 | 1/16 | 1/8 | 3/16 | 3/16 | 3/16 | 1/8 | 1/16 | 1/8 | 1/8 |
| DEFL. DUE TO REMAINING DEAD LOAD | 9/16 | 9/16 | 5/16 | 7/8 | 1 5/16 | 1 1/2 | 1 5/16 | 7/8 | 7/16 | 13/16 | 3/4 |
| ADJUSTMENT REQ'D. FOR CURVATURE | 3/16 | 1/4 | 3/16 | 3/8 | 1/2 | 9/16 | 1/2 | 7/16 | 3/8 | 7/16 | 3/8 |
| REQUIRED SHOP CAMBER | 13/16 | 7/8 | 9/16 | 1 3/8 | 2 | 2 1/4 | 2 | 1 7/16 | 7/8 | 1 3/8 | 1 1/4 |

## GIRDER 12

| LOCATION | SPAN 1 | | | SPAN 2 | | | | | SPAN 3 | | |
|---|---|---|---|---|---|---|---|---|---|---|---|
| | $A_6$ .25 | $B_6$ .50 | $C_6$ SPLICE | $E_6$ SPLICE | $F_6$ .375 | $G_6$ .50 | $H_6$ .625 | $J_6$ SPLICE | $L_6$ SPLICE | $M_6$ .50 | $N_6$ .75 |
| DEFL. DUE TO WEIGHT OF STEEL | 1/16 | 1/16 | 1/16 | 1/8 | 3/16 | 3/16 | 3/16 | 1/8 | 1/16 | 1/8 | 1/8 |
| DEFL. DUE TO REMAINING DEAD LOAD | 9/16 | 9/16 | 5/16 | 7/8 | 1 5/16 | 1 1/2 | 1 5/16 | 7/8 | 7/16 | 13/16 | 3/4 |
| ADJUSTMENT REQ'D. FOR CURVATURE | 5/16 | 7/16 | 5/16 | 7/16 | 1/2 | 5/8 | 9/16 | 7/16 | 7/16 | 1/2 | 3/8 |
| REQUIRED SHOP CAMBER | 15/16 | 1 1/16 | 11/16 | 1 7/16 | 2 | 2 5/16 | 2 1/16 | 1 7/16 | 15/16 | 1 7/16 | 1 1/4 |

## GIRDER 13

| LOCATION | SPAN 1 | | | SPAN 2 | | | | | SPAN 3 | | |
|---|---|---|---|---|---|---|---|---|---|---|---|
| | $A_6$ .25 | $B_6$ .50 | $C_6$ SPLICE | $E_6$ SPLICE | $F_6$ .375 | $G_6$ .50 | $H_6$ .625 | $J_6$ SPLICE | $L_6$ SPLICE | $M_6$ .50 | $N_6$ .75 |
| DEFL. DUE TO WEIGHT OF STEEL | 1/16 | 1/16 | 1/16 | 1/8 | 3/16 | 3/16 | 3/16 | 1/8 | 1/16 | 1/8 | 1/8 |
| DEFL. DUE TO REMAINING DEAD LOAD | 9/16 | 9/16 | 1/4 | 7/8 | 1 5/16 | 1 7/16 | 1 1/4 | 13/16 | 7/16 | 13/16 | 3/4 |
| ADJUSTMENT REQ'D. FOR CURVATURE | 3/16 | 1/4 | 1/4 | 3/4 | 15/16 | 1 | 7/8 | 3/4 | 3/16 | 5/16 | 1/4 |
| REQUIRED SHOP CAMBER | 3/4 | 3/4 | 9/16 | 1 3/4 | 2 7/16 | 2 5/8 | 2 5/16 | 1 11/16 | 11/16 | 1 1/4 | 1 1/8 |

## GIRDER 14

| LOCATION | SPAN 1 | | | SPAN 2 | | | | | SPAN 3 | | |
|---|---|---|---|---|---|---|---|---|---|---|---|
| | $A_6$ .25 | $B_6$ .50 | $C_6$ SPLICE | $E_6$ SPLICE | $F_6$ .375 | $G_6$ .50 | $H_6$ .625 | $J_6$ SPLICE | $L_6$ SPLICE | $M_6$ .50 | $N_6$ .75 |
| DEFL. DUE TO WEIGHT OF STEEL | 1/16 | 1/16 | 1/16 | 1/8 | 3/16 | 3/16 | 3/16 | 1/8 | 1/16 | 1/8 | 1/8 |
| DEFL. DUE TO REMAINING DEAD LOAD | 9/16 | 5/8 | 5/16 | 15/16 | 1 3/8 | 1 1/2 | 1 3/8 | 7/8 | 7/16 | 3/4 | 3/4 |
| ADJUSTMENT REQ'D. FOR CURVATURE | 1/4 | 5/16 | 1/4 | 1/2 | 5/8 | 11/16 | 5/8 | 1/2 | 3/8 | 7/16 | 5/16 |
| REQUIRED SHOP CAMBER | 7/8 | 1 | 5/8 | 1 9/16 | 2 3/16 | 2 3/8 | 2 3/16 | 1 1/2 | 7/8 | 1 5/16 | 1 3/16 |

## GIRDER 15

| LOCATION | SPAN 1 | | | SPAN 2 | | | | | SPAN 3 | | |
|---|---|---|---|---|---|---|---|---|---|---|---|
| | $A_6$ .25 | $B_6$ .50 | $C_6$ SPLICE | $E_6$ SPLICE | $F_6$ .375 | $G_6$ .50 | $H_6$ .625 | $J_6$ SPLICE | $L_6$ SPLICE | $M_6$ .50 | $N_6$ .75 |
| DEFL. DUE TO WEIGHT OF STEEL | 1/16 | 1/16 | 1/16 | 1/8 | 3/16 | 3/16 | 3/16 | 1/8 | 1/16 | 1/8 | 1/8 |
| DEFL. DUE TO REMAINING DEAD LOAD | 9/16 | 9/16 | 1/4 | 3/4 | 1 1/8 | 1 5/16 | 1 1/8 | 3/4 | 3/8 | 3/4 | 5/8 |
| ADJUSTMENT REQ'D. FOR CURVATURE | 3/16 | 1/4 | 3/16 | 3/8 | 7/16 | 7/16 | 7/16 | 7/16 | 5/16 | 3/8 | 5/16 |
| REQUIRED SHOP CAMBER | 13/16 | 7/8 | 1/2 | 1 1/4 | 1 3/4 | 1 15/16 | 1 3/4 | 1 5/16 | 3/4 | 1 1/4 | 1 1/16 |

## GIRDER 16

| LOCATION | SPAN 1 | | | SPAN 2 | | | | | SPAN 3 | | |
|---|---|---|---|---|---|---|---|---|---|---|---|
| | $A_6$ .25 | $B_6$ .50 | $C_6$ SPLICE | $E_6$ SPLICE | $F_6$ .375 | $G_6$ .50 | $H_6$ .625 | $J_6$ SPLICE | $L_6$ SPLICE | $M_6$ .50 | $N_6$ .75 |
| DEFL. DUE TO WEIGHT OF STEEL | 1/16 | 1/16 | 1/16 | 1/8 | 3/16 | 3/16 | 3/16 | 1/8 | 1/16 | 1/8 | 1/8 |
| DEFL. DUE TO REMAINING DEAD LOAD | 9/16 | 9/16 | 1/4 | 3/4 | 1 1/8 | 1 5/16 | 1 1/8 | 3/4 | 3/8 | 3/4 | 5/8 |
| ADJUSTMENT REQ'D. FOR CURVATURE | 1/4 | 1/4 | 1/4 | 5/16 | 3/8 | 3/8 | 3/8 | 3/8 | 5/16 | 3/8 | 5/16 |
| REQUIRED SHOP CAMBER | 13/16 | 7/8 | 9/16 | 1 3/16 | 1 11/16 | 1 7/8 | 1 11/16 | 1 1/4 | 3/4 | 1 1/4 | 1 1/16 |

## GIRDER 17

| LOCATION | SPAN 1 | | | SPAN 2 | | | | | SPAN 3 | | |
|---|---|---|---|---|---|---|---|---|---|---|---|
| | $A_6$ .25 | $B_6$ .50 | $C_6$ SPLICE | $E_6$ SPLICE | $F_6$ .375 | $G_6$ .50 | $H_6$ .625 | $J_6$ SPLICE | $L_6$ SPLICE | $M_6$ .50 | $N_6$ .75 |
| DEFL. DUE TO WEIGHT OF STEEL | 1/16 | 1/16 | 1/16 | 1/8 | 3/16 | 3/16 | 3/16 | 1/8 | 1/16 | 1/8 | 1/8 |
| DEFL. DUE TO REMAINING DEAD LOAD | 9/16 | 9/16 | 1/4 | 3/4 | 1 1/8 | 1 5/16 | 1 1/8 | 3/4 | 3/8 | 3/4 | 5/8 |
| ADJUSTMENT REQ'D. FOR CURVATURE | 1/4 | 1/4 | 3/16 | 1/8 | 1/8 | 1/8 | 3/16 | 1/4 | 5/16 | 3/8 | 5/16 |
| REQUIRED SHOP CAMBER | 13/16 | 7/8 | 1/2 | 1 | 1 7/16 | 1 5/8 | 1 1/2 | 1 1/8 | 3/4 | 1 1/4 | 1 1/16 |

## GIRDER 18

| LOCATION | SPAN 1 | | | SPAN 2 | | | | | SPAN 3 | | |
|---|---|---|---|---|---|---|---|---|---|---|---|
| | $A_6$ .25 | $B_6$ .50 | $C_6$ SPLICE | $E_6$ SPLICE | $F_6$ .375 | $G_6$ .50 | $H_6$ .625 | $J_6$ SPLICE | $L_6$ SPLICE | $M_6$ .50 | $N_6$ .75 |
| DEFL. DUE TO WEIGHT OF STEEL | 1/16 | 1/16 | 1/16 | 1/8 | 3/16 | 3/16 | 3/16 | 1/8 | 1/16 | 1/8 | 1/8 |
| DEFL. DUE TO REMAINING DEAD LOAD | 9/16 | 9/16 | 1/4 | 3/4 | 1 1/8 | 1 5/16 | 1 1/8 | 3/4 | 3/8 | 3/4 | 5/8 |
| ADJUSTMENT REQ'D. FOR CURVATURE | 3/16 | 1/4 | 3/16 | -1/8 | 1/16 | 1/8 | 3/16 | 1/4 | 5/16 | 3/8 | 5/16 |
| REQUIRED SHOP CAMBER | 3/4 | 7/8 | 1/2 | 3/4 | 1 3/8 | 1 5/8 | 1 1/2 | 1 1/8 | 3/4 | 1 1/4 | 1 1/16 |

## GIRDER 19

| LOCATION | SPAN 1 | | | SPAN 2 | | | | | SPAN 3 | | |
|---|---|---|---|---|---|---|---|---|---|---|---|
| | $A_6$ .25 | $B_6$ .50 | $C_6$ SPLICE | $E_6$ SPLICE | $F_6$ .375 | $G_6$ .50 | $H_6$ .625 | $J_6$ SPLICE | $L_6$ SPLICE | $M_6$ .50 | $N_6$ .75 |
| DEFL. DUE TO WEIGHT OF STEEL | 1/16 | 1/16 | 1/16 | 1/8 | 3/16 | 3/16 | 3/16 | 1/8 | 1/16 | 1/8 | 1/8 |
| DEFL. DUE TO REMAINING DEAD LOAD | 1/2 | 9/16 | 1/4 | 3/4 | 1 1/8 | 1 5/16 | 1 1/8 | 3/4 | 3/8 | 3/4 | 5/8 |
| ADJUSTMENT REQ'D. FOR CURVATURE | 3/16 | 1/4 | 3/16 | 1/8 | 5/16 | 3/8 | 3/8 | 3/8 | 5/16 | 3/8 | 5/16 |
| REQUIRED SHOP CAMBER | 3/4 | 7/8 | 1/2 | 1 | 1 5/8 | 1 7/8 | 1 11/16 | 1 1/4 | 1 | 1 1/4 | 1 1/16 |

## GIRDER 20

| LOCATION | SPAN 1 | | | SPAN 2 | | | | | SPAN 3 | | |
|---|---|---|---|---|---|---|---|---|---|---|---|
| | $A_6$ .25 | $B_6$ .50 | $C_6$ SPLICE | $E_6$ SPLICE | $F_6$ .375 | $G_6$ .50 | $H_6$ .625 | $J_6$ SPLICE | $L_6$ SPLICE | $M_6$ .50 | $N_6$ .75 |
| DEFL. DUE TO WEIGHT OF STEEL | 1/16 | 1/16 | 1/16 | 1/8 | 3/16 | 3/16 | 3/16 | 1/8 | 1/16 | 1/8 | 1/8 |
| DEFL. DUE TO REMAINING DEAD LOAD | 1/2 | 9/16 | 1/4 | 3/4 | 1 1/8 | 1 5/16 | 1 1/8 | 3/4 | 3/8 | 3/4 | 5/8 |
| ADJUSTMENT REQ'D. FOR CURVATURE | 3/16 | 3/16 | 1/8 | 3/8 | 1/2 | 9/16 | 11/16 | 1/2 | 5/16 | 3/8 | 5/16 |
| REQUIRED SHOP CAMBER | 3/4 | 13/16 | 7/16 | 1 1/4 | 1 13/16 | 2 1/16 | 2 | 1 3/8 | 3/4 | 1 1/4 | 1 1/16 |

## GIRDER 21

| LOCATION | SPAN 1 | | | SPAN 2 | | | | | SPAN 3 | | |
|---|---|---|---|---|---|---|---|---|---|---|---|
| | $A_6$ .25 | $B_6$ .50 | $C_6$ SPLICE | $E_6$ SPLICE | $F_6$ .375 | $G_6$ .50 | $H_6$ .625 | $J_6$ SPLICE | $L_6$ SPLICE | $M_6$ .50 | $N_6$ .75 |
| DEFL. DUE TO WEIGHT OF STEEL | 1/16 | 1/16 | 1/16 | 1/8 | 3/16 | 3/16 | 3/16 | 1/8 | 1/16 | 1/8 | 1/8 |
| DEFL. DUE TO REMAINING DEAD LOAD | 1/2 | 9/16 | 1/4 | 3/4 | 1 1/8 | 1 5/16 | 1 1/8 | 3/4 | 3/8 | 3/4 | 5/8 |
| ADJUSTMENT REQ'D. FOR CURVATURE | 1/16 | 0 | -1/16 | 9/16 | 11/16 | 11/16 | 5/8 | 1/2 | 5/16 | 3/8 | 5/16 |
| REQUIRED SHOP CAMBER | 5/8 | 5/8 | 1/4 | 1 7/16 | 2 | 2 3/16 | 1 15/16 | 1 3/8 | 3/4 | 1 1/4 | 1 1/16 |

## GIRDER 22

| LOCATION | SPAN 1 | | | SPAN 2 | | | | | SPAN 3 | | |
|---|---|---|---|---|---|---|---|---|---|---|---|
| | $A_6$ .25 | $B_6$ .50 | $C_6$ SPLICE | $E_6$ SPLICE | $F_6$ .375 | $G_6$ .50 | $H_6$ .625 | $J_6$ SPLICE | $L_6$ SPLICE | $M_6$ .50 | $N_6$ .75 |
| DEFL. DUE TO WEIGHT OF STEEL | 1/16 | 1/16 | 1/16 | 1/8 | 1/8 | 3/16 | 1/8 | 1/16 | 1/16 | 1/16 | 1/16 |
| DEFL. DUE TO REMAINING DEAD LOAD | 1/2 | 1/2 | 1/4 | 11/16 | 1 1/16 | 1 1/4 | 1 1/16 | 11/16 | 5/16 | 5/8 | 5/8 |
| ADJUSTMENT REQ'D. FOR CURVATURE | -1/16 | -1/8 | -3/16 | 7/16 | 9/16 | 5/8 | 9/16 | 7/16 | 5/16 | 5/16 | 1/4 |
| REQUIRED SHOP CAMBER | 1/2 | 7/16 | 1/8 | 1 1/4 | 1 3/4 | 2 1/16 | 1 3/4 | 1 3/16 | 11/16 | 1 | 15/16 |

## GIRDER 23

| LOCATION | SPAN 1 | | | SPAN 2 | | | | | SPAN 3 | | |
|---|---|---|---|---|---|---|---|---|---|---|---|
| | $A_6$ .25 | $B_6$ .50 | $C_6$ SPLICE | $E_6$ SPLICE | $F_6$ .375 | $G_6$ .50 | $H_6$ .625 | $J_6$ SPLICE | $L_6$ SPLICE | $M_6$ .50 | $N_6$ .75 |
| DEFL. DUE TO WEIGHT OF STEEL | 1/16 | 1/16 | 1/16 | 1/16 | 1/8 | 1/8 | 1/8 | 1/16 | 1/16 | 1/16 | 1/16 |
| DEFL. DUE TO REMAINING DEAD LOAD | 7/16 | 1/2 | 1/4 | 5/8 | 1 | 1 1/8 | 1 | 5/8 | 5/16 | 5/8 | 9/16 |
| ADJUSTMENT REQ'D. FOR CURVATURE | -1/8 | -1/4 | -1/8 | 7/16 | 1/2 | 1/2 | 1/2 | 7/16 | 1/4 | 5/16 | 3/16 |
| REQUIRED SHOP CAMBER | 3/8 | 5/16 | 3/16 | 1 1/8 | 1 5/8 | 1 3/4 | 1 5/8 | 1 1/8 | 5/8 | 1 | 13/16 |

| BLOCKING TABLE | | |
|---|---|---|
| GIRDER | DIMENSIONS | |
| | $D_6$ | $K_6$ |
| 6 | 1/4 | -15/16 |
| 7 | 7/16 | 1/4 |
| 8 | 3/4 | 1 1/4 |
| 9 | 1 1/8 | 1 15/16 |
| 10 | 1 9/16 | 2 7/16 |
| 11 | 2 1/4 | 3 |
| 12 | 3 3/8 | 3 5/8 |
| 13 | 4 1/8 | 3 15/16 |
| 14 | 3 9/16 | 3 11/16 |
| 15 | 2 11/16 | 3 1/16 |
| 16 | 2 5/8 | 2 15/16 |
| 17 | 2 3/16 | 2 9/16 |
| 18 | 1 1/2 | 2 1/4 |
| 19 | 1 7/16 | 2 1/2 |
| 20 | 1 1/2 | 2 11/16 |
| 21 | 1 13/16 | 2 7/8 |
| 22 | 1 13/16 | 2 9/16 |
| 23 | 1 13/16 | 2 3/8 |

NOTE:

VERTICAL OFFSET SHOWN (-) INDICATES THAT OFFSET IS BELOW WORK LINE AT BEARING.

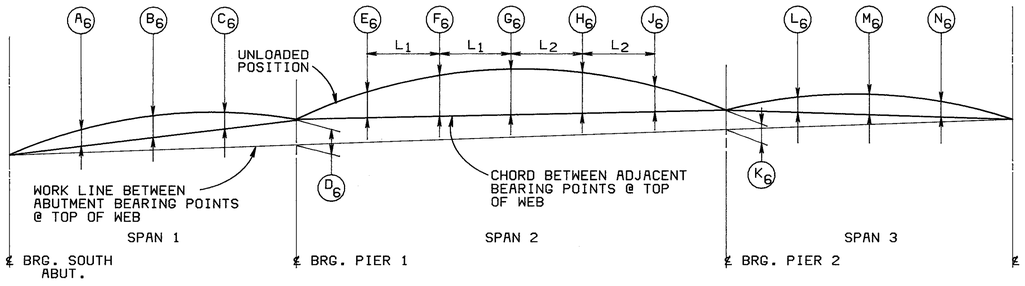


## BLOCKING AND CAMBER - GIRDERS 6 THRU 23

40146

ALDEN E. STILSON & ASSOCIATES
CONSULTING ENGINEERING AND ARCHITECTURE
COLUMBUS, CLEVELAND, WHEELING

# BLOCKING & CAMBER DETAILS GIRDERS 6 THRU 23

BRIDGE NO. CUY-480-1078

I-480 OVER CONRAIL

CUYAHOGA COUNTY STA. 593+38.70 TO STA. 596+50.96

| DESIGNED | DRAWN | TRACED | CHECKED | REVIEWED | DATE | REVISED |
|---|---|---|---|---|---|---|
| BTG | | | KHW TEW | G.W.M. | 3/15/83 | |

B2020068

MICROFILMED
JAN 18 1991

| FHWA REGION | STATE | PROJECT | |
|---|---|---|---|
| 5 | OHIO | | |

372
500

CUYAHOGA COUNTY
CUY-480-10.39

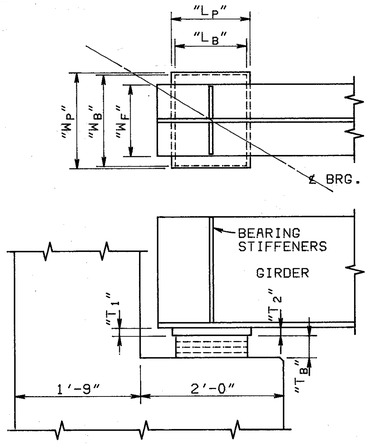


ABUTMENT BEARING DETAILS

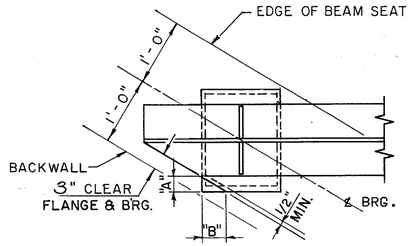


| TABLE OF CLIP DIMENSIONS | | | | |
|---|---|---|---|---|
| GIRDER Nº | SOUTH ABUTMENT | | NORTH ABUTMENT | |
| | "A" | "B" | "A" | "B" |
| 1 | 2 5/8" | 4 5/8" | 3 3/8" | 6 1/4" |
| 4 | 2 3/4" | 2 7/8" | | |
| 5 | 2 3/4" | 3 3/4" | | |
| 6-21 | 2 1/8" | 3 3/4" | 1 1/2" | 2 5/8" |
| 22 & 23 | 2 1/4" | 3 5/8" | 1 5/8" | 2 5/8" |

BEARING PAD CLIP DETAILS

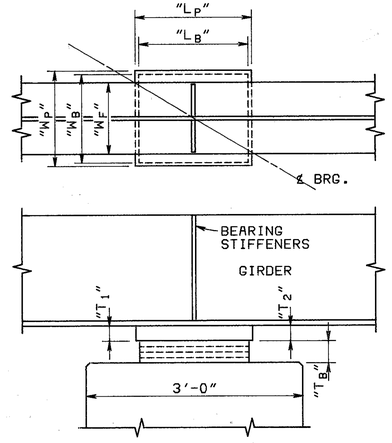


PIER BEARING DETAILS

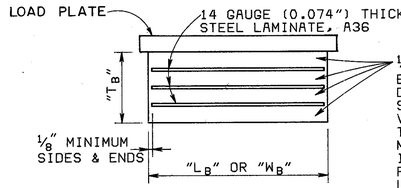


1/2" OR 3/4" THICK ELASTOMERIC BEARING PAD LAYERS, 50 DUROMETER HARDNESS. STEEL LAMINATE AND LOAD PLATE SHALL BE VULCANIZED BONDED TO THE NEOPRENE DURING THE MOLDING PROCESS AS PER ITEM 711.23. SEE TABLE FOR NUMBER & SIZE OF LAYERS.

WELDING SHALL BE CONTROLLED SO THAT THE PLATE TEMPERATURE AT THE ELASTOMER BONDED SURFACE DOES NOT EXCEED 300°F AS DETERMINED BY USE OF PYROMETRIC STICKS OR OTHER TEMPERATURE MONITORING DEVICES.

LAMINATED ELASTOMERIC BEARING PAD DETAILS

## LAMINATED ELASTOMERIC BEARINGS TABLE (ALL DIMENSIONS IN INCHES)

| | | GIRDER 1 | | | | GIRDER 2 | GIRDER 3 | GIRDER 4 | | GIRDER 5 | | GIRDERS 6-23 | | | |
|---|---|---|---|---|---|---|---|---|---|---|---|---|---|---|---|
| | | SOUTH ABUTMENT | PIER 1 | PIER 2 | NORTH ABUTMENT | SOUTH ABUTMENT | SOUTH ABUTMENT | SOUTH ABUTMENT | PIER 1 | SOUTH ABUTMENT | PIER 1 | SOUTH ABUTMENT | PIER 1 | PIER 2 | NORTH ABUTMENT |
| FLANGE WIDTH, "WF" | | 16 | 16 | 16 | 16 | 12 | 12 | 12 | 12 | 12 | 12 | 12 | 12 | 12 | 12 |
| A588 STEEL LOAD PLATE "LP" X "WP" X "T1" X "T2" | | 14X18X1 X1 | 32X22X2X2 | 29 1/2X22X2X2 | 17X18X1X1 | 8X14X1 X 1 | 12X14X1 X 1 | 14X17X1 X 1 | 20X26X2X2 | 14X17X1 X 1 | 20X26X2X2 | 14X17X1X1 | 20X26X2X2 | 20X26X2X2 | 17X14X1X1 |
| BEARINGS GRADE 50 | PAD SIZE NO. LAYERS | 12X15X 3/4 3 | 30X20X 3/4 2 | 27 1/2X20X 3/4 8 | 15X12 X3/4 7 | 6 X12 X 1/2 4 | 10X12X 1/2 3 | 12X15X 3/4 3 | 18X24X 3/4 2 | 12X15X 3/4 3 | 18X24X 3/4 2 | 12X15X 3/4 3 | 18X24X 3/4 2 | 18X24X 3/4 6 | 15X12X 3/4 7 |
| | LAMINATE SIZE NO. REQ'D. | 11 3/4X14 3/4X0.074 2 | 29 3/4X19 3/4X0.074 1 | 27 1/4X19 3/4X0.074 7 | 14 3/4X11 3/4X0.074 6 | 5 3/4X11 3/4X0.074 3 | 9 3/4X11 3/4X0.074 2 | 11 3/4X14 3/4X0.074 2 | 17 3/4X23 3/4X0.074 1 | 11 3/4X14 3/4X0.074 2 | 17 3/4X23 3/4X0.074 1 | 11 3/4X14 3/4X0.074 2 | 17 3/4X23 3/4X0.074 1 | 17 3/4X23 3/4X0.074 5 | 14 3/4X11 3/4X0.074 6 |
| | "TB" | 2.398 | 1.574 | 6.518 | 5.694 | 2.222 | 1.648 | 2.398 | 1.574 | 2.398 | 1.574 | 2.398 | 1.574 | 4.870 | 5.694 |

NOTES:

** CROSSFRAMES INDICATED BY DOUBLE LINE ON FRAMING PLAN SHEET 33/46. THESE CROSSFRAMES SHALL BE PLACED IMMEDIATELY UPON COMPLETION OF ALL BOLTING OF FIELD SPLICES OF GIRDER 1 BEFORE STRESS IS INDUCED INTO THESE SPLICES.

FOR ADDITIONAL DETAILS SEE STD. DWG. SD-1-69, SHEET 1.

TYPE-2 END CROSSFRAME DETAILS SHALL BE AS SHOWN IN STD. DWG. SD-1-69 EXCEPT CONNECTION BETWEEN GIRDER WEB AND LS4X4X5/16 SHALL BE AS SHOWN IN SECTION $S_{22}$-$S_{22}$.

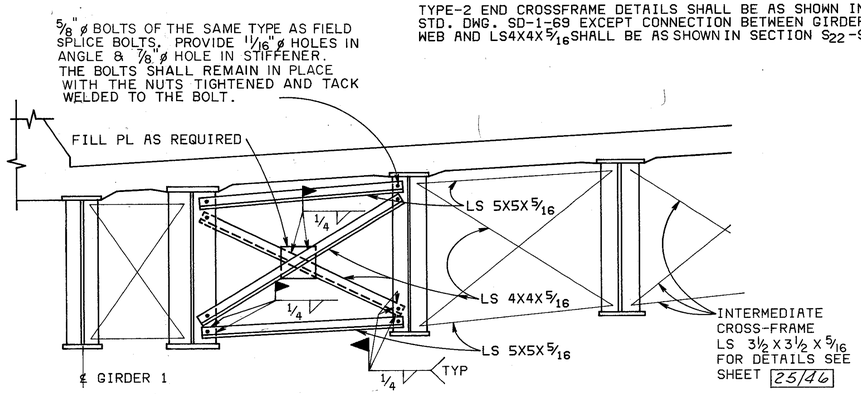


SPECIAL CROSSFRAMES ** AT GIRDER 1 HORIZONTAL DEFLECTION POINTS

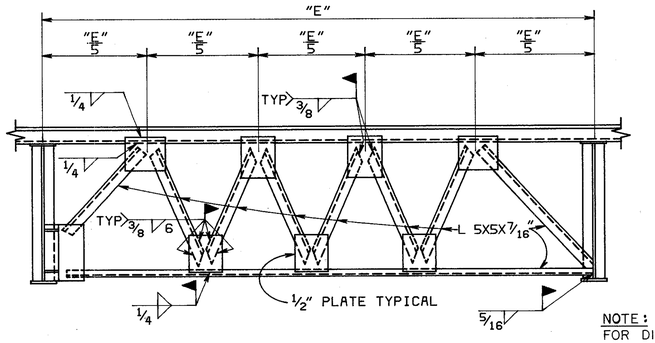


TYPE 1 END CROSSFRAME

NOTE:
FOR DIMENSION "E" SEE FRAMING PLAN, SHEET 33/46

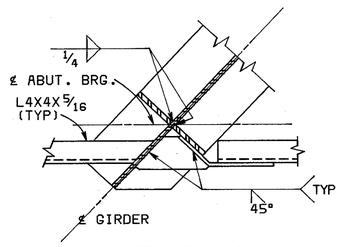


VIEW $S_{23}$ -$S_{23}$

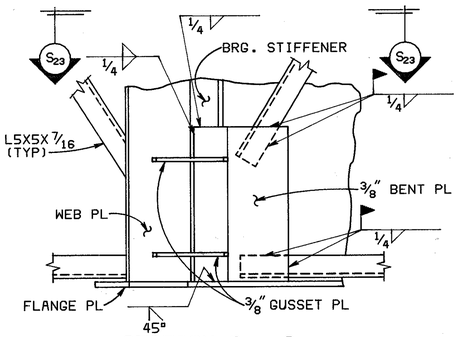


SECTION $S_{19}$ -$S_{19}$

SECTION $S_{22}$ -$S_{22}$

41/46

ALDEN E. STILSON & ASSOCIATES
CONSULTING ENGINEERING AND ARCHITECTURE
COLUMBUS, CLEVELAND, WHEELING

BEARING DETAILS
END CROSSFRAME DETAILS
BRIDGE NO. CUY-480-1078
I-480 OVER CONRAIL
CUYAHOGA COUNTY
STA. 593+38.70 TO STA. 596+50.96

| DESIGNED | DRAWN | TRACED | CHECKED | REVIEWED | DATE | REVISED |
|---|---|---|---|---|---|---|
| BTG | | | KHW TEU | G.W.M. | 3/15/83 | |

B2020078

MICROFILMED
JAN 16 1991

| F.H.W.A. REGION | STATE | PROJECT | |
|---|---|---|---|
| 5 | OHIO | | |

373/500

CUYAHOGA COUNTY
CUY-480-10.39

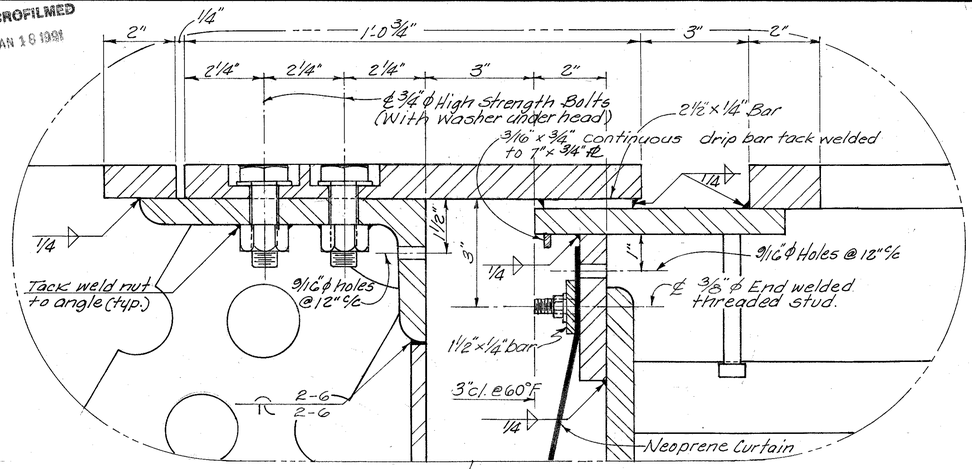


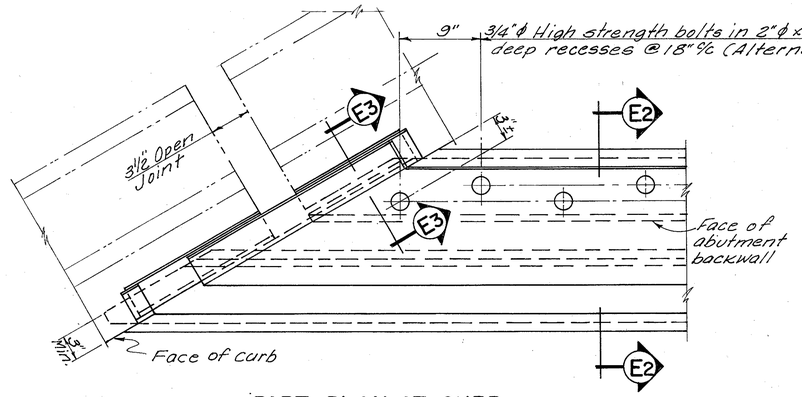


## PART PLAN AT CURB

(Parapet shown, Median Similar.)

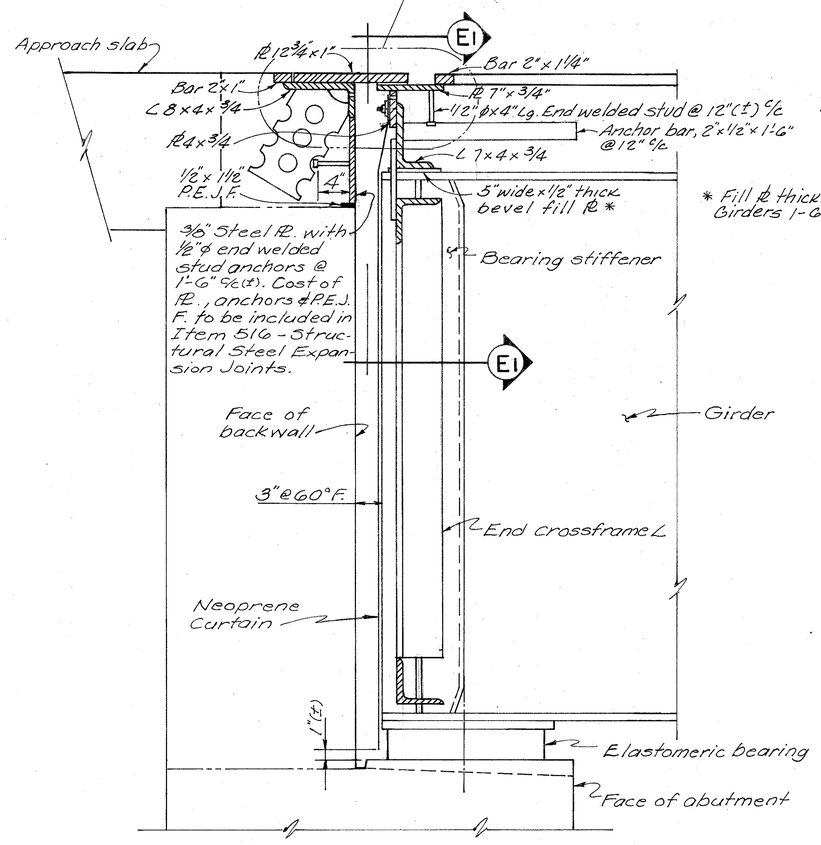


* Fill ℄ thickness at Girders 1-6 is 1 1/2"

## SECTION E2-E2

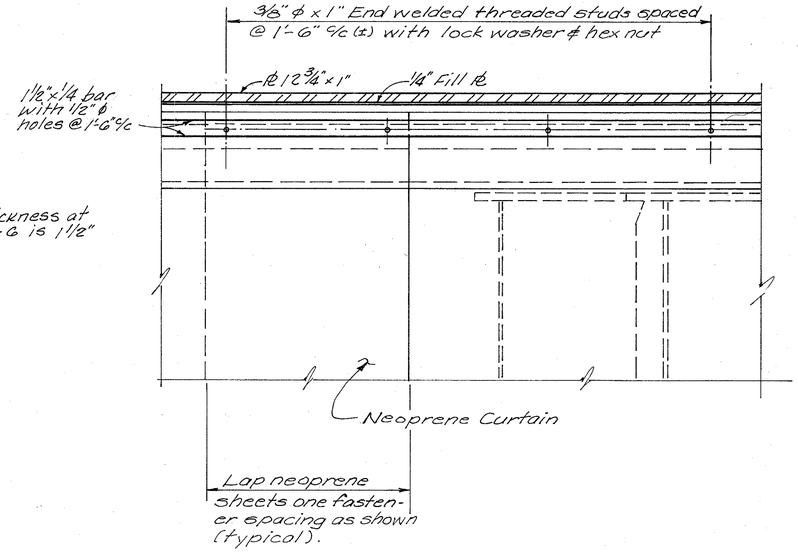


## VIEW E1-E1

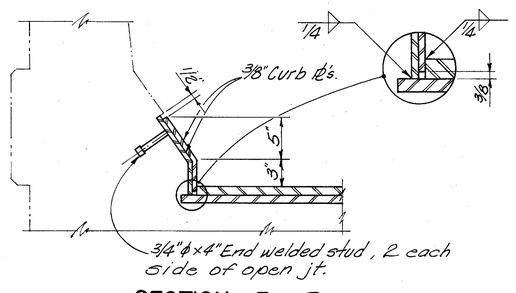


## SECTION E3-E3

Notes:

This drawing in addition to details of the structural steel expansion joints, provides details for a sheet neoprene fabric curtain to be attached to and hung from the end finish, as shown, to protect the superstructure steel from contamination by deck drainage water.

The curtain shall be provided for the full width of the superstructure and shall be fabricated in panels of such length as to facilitate handling and installation. Lap panels as shown on view E-E.

Holes shall be provided in the neoprene sheets to match threaded stud spacing. The holes shall be approximately ½ inch diameter, preferably die cut and reinforced with metalic grommets.

Neoprene sheet shall be Du Pont's Fairprene NN-0003, a 3/32 inch thick sheet of Nylon-Reinforced Neoprene or a suitable alternate. The 1 ply material shall conform to ASTM D 751 and the following:

| | |
|---|---|
| Thickness | 0.094 ± 0.01 inch |
| Breaking Strength Grab, W×F, minimum | 700 × 700 lbs. |
| Adhesion, 1 inch strip, 2 inch min., minimum | 9 lbs. |
| Bursting Strength (Mullen), minimum | 1,400 psi |
| Heat aging, 180° bend without cracking after 70 hours at | 212 °F |
| Lowering temperature brittleness, ASTM D 2136, pass flex test after 5 hours | -40°F |

* Payment for all material, labor, and equipment necessary to provide the neoprene curtain shall be included with the unit price bid for Item 516 Structural Steel Expansion Joints.

End Finish: Details not shown are the same or similar to details on Std. Dwg. SD-1-69. Work this drawing with Std. Dwg. SD-1-69.

SUGGESTED CONSTRUCTION PROCEDURE

1. Construct abutment to girder seat elevation.
2. Erect superstructure steel.
3. Install superstructure portion of end finish.
4. Place superstructure slabs in end span.
5. Construct abutment backwall to level of construction joint at approach slab seat.
6. Seal concrete in accordance with Item Special, Sealing of conc. surfaces.
7. Install neoprene curtain, as per plan.
8. Install abutment portion of the end finish, with bolts in place, and place remainder of backwall concrete.
9. Install end finish cover plates.

* This item includes the angles, bars, plates, studs, etc., that make up the Structural Steel Expansion Joint, and the end crossframe gusset plates.

42/46

ALDEN E. STILSON & ASSOCIATES
CONSULTING ENGINEERS
CLEVELAND, OHIO COLUMBUS, OHIO WHEELING, W. VA.

# SUPERSTRUCTURE DETAILS

BRIDGE No. CUY-480-1078
I-480 over CONRAIL (CLEVE. SHT. LN.)

CUYAHOGA COUNTY
STA. 593+38.70
STA. 596+50.96

| DESIGNED | DRAWN | TRACED | CHECKED | REVIEWED | DATE | REVISED |
|---|---|---|---|---|---|---|
| WM | | | BG | G.W.M. | 3/10/83 | 1-5-84 |

MICROFILMED
JAN 18 1990

| MARK | NUM. | LENGTH | WEIGHT | TYPE | A | B | C | D | E | NOTE |
|---|---|---|---|---|---|---|---|---|---|---|
| | | | | ABUTMENTS | | | | | | |
| A 5001 | 210 | 4-11 | 1077 | 9 | 1- 6 | 2- 2 | 1- 6 | | | |
| A 5002 | 150 | 39- 8 | 6206 | ST | | | | | | |
| A 5003 | 20 | 32- 8 | 681 | ST | | | | | | |
| A 5005 | 484 | 9- 2 | 4627 | 9 | 3- 0 | 3- 5 | 3- 0 | | | |
| A 5011 | 23 | 42- 8 | 1024 | ST | | | | | | |
| A 5012 | 12 | 9- 0 | 113 | ST | | | | | | |
| A 5014 | 33 | 3- 6 | 120 | ST | | | | | | |
| A 5015 | 2 | 6- 2 | 13 | ST | | | | | | |
| A 5016 | 3 | 3- 6 | 11 | ST | | | | | | |
| A 5018 | 125 | 43- 8 | 5693 | ST | | | | | | |
| A 5020 | 104 | 41- 2 | 4465 | ST | | | | | | |
| A 5024 | 23 | 28- 2 | 676 | ST | | | | | | |
| A 5025 | 5 | 34- 9 | 181 | ST | | | | | | |
| A 5026 | 12 | 11- 3 | 141 | ST | | | | | | |
| A 5027 | 9 | 6- 8 | 63 | 1 | 2- 8 | 1- 7 | 2- 8 | | | |
| A 5029 | 12 | 4- 4 | 54 | ST | | | | | | |
| A 5038 | 1 | 10- 6 | 11 | ST | | | | | | |
| A 5039 | 14 | 41- 4 | 604 | ST | | | | | | |
| A 5040 | 2 | 37- 9 | 79 | ST | | | | | | |
| A 5041 | 2 | 34- 3 | 71 | ST | | | | | | |
| A 5042 | 12 | 33- 4 | 417 | ST | | | | | | |
| A 5043 | 2 | 10- 6 | 22 | 12 | 8- 3 | 2- 0 | | 1- 0 | | |
| A 5044 | 18 | 2-11 | 55 | ST | | | | | | |
| A 5045 | 12 | 3- 9 | 47 | ST | | | | | | |
| A 6001 | 739 | 19-10 | 22015 | 2 | 7- 0 | 1- 5 | 8- 4 | 0-11 | 2-10 | |
| A 8001 | 480 | 4- 0 | 5126 | 15 | | 1- 0 | 1- 6 | 1- 0 | 1- 6 | |
| F 5001 | 484 | 11- 1 | 5595 | 9 | 1- 7 | 7- 2 | 2- 7 | | | |
| F 5002 | 37 | 10- 8 | 412 | 1 | 0- 8 | 10- 2 | | | | |
| F 5003 | 43 | 11- 9 | 527 | 1 | 0- 8 | 11- 3 | | | | |
| F 5004 | 36 | 10- 0 | 375 | ST | | | | | | |
| F 5005 | 30 | 12- 3 | 383 | 12 | | 3- 0 | 8- 0 | 3- 0 | | |
| F 5006 | 29 | 12- 2 | 368 | 1 | 0- 8 | 11- 8 | | | | |
| F 5007 | 26 | 10- 9 | 292 | 1 | 0- 8 | 10- 3 | | | | |
| F 5008 | 76 | 11- 2 | 885 | 1 | 0- 8 | 10- 8 | | | | |
| F 5009 | 27 | 11- 5 | 322 | 1 | 0- 8 | 10-11 | | | | |
| F 5010 | 32 | 12- 1 | 403 | 1 | 0- 8 | 11- 7 | | | | |
| F 5011 | 27 | 11- 4 | 319 | 1 | 0- 8 | 10-10 | | | | |
| F 5012 | 31 | 12- 1 | 391 | 1 | 0- 8 | 11- 7 | | | | |
| F 5013 | 25 | 12- 0 | 313 | 1 | 0- 8 | 11- 6 | | | | |
| F 5014 | 30 | 12- 6 | 391 | 1 | 0- 8 | 12- 0 | | | | |
| F 5015 | 25 | 12- 1 | 315 | 1 | 0- 8 | 11- 7 | | | | |
| F 5016 | 30 | 12- 3 | 383 | 1 | 0- 8 | 11- 9 | | | | |
| F 5017 | 16 | 11- 9 | 196 | 1 | 0- 8 | 11- 3 | | | | |
| F 5018 | 30 | 11- 8 | 365 | 1 | 0- 8 | 11- 2 | | | | |
| F 5019 | 46 | 11- 4 | 544 | 9 | 1- 7 | 7- 5 | 2- 7 | | | |
| F 5034 | 26 | 17- 3 | 468 | 3 | 2- 7 | 5- 9 | 2- 7 | 5- 9 | | |
| F 6001 | 37 | 17-10 | 991 | 1 | | 10- 2 | 5- 5 | 2- 7 | | |
| F 6002 | 43 | 18-11 | 1222 | 1 | | 11- 3 | 5- 5 | 2- 7 | | |
| F 6003 | 29 | 19- 4 | 842 | 1 | | 11- 8 | 5- 5 | 2- 7 | | |
| F 6004 | 26 | 17-11 | 700 | 1 | | 10- 3 | 5- 5 | 2- 7 | | |
| F 6005 | 76 | 18- 4 | 2093 | 1 | | 10- 8 | 5- 5 | 2- 7 | | |
| F 6006 | 27 | 18- 7 | 754 | 1 | | 10-11 | 5- 5 | 2- 7 | | |
| F 6007 | 32 | 19- 3 | 925 | 1 | | 11- 7 | 5- 5 | 2- 7 | | |
| F 6008 | 27 | 18- 6 | 750 | 1 | | 10-10 | 5- 5 | 2- 7 | | |
| F 6009 | 31 | 19- 3 | 896 | 1 | | 11- 7 | 5- 5 | 2- 7 | | |
| F 6010 | 25 | 19- 2 | 720 | 1 | | 11- 6 | 5- 5 | 2- 7 | | |

| MARK | NUM. | LENGTH | WEIGHT | TYPE | A | B | C | D | E | NOTE |
|---|---|---|---|---|---|---|---|---|---|---|
| | | | | ABUTMENTS | | | | ( CONTINUED ) | | |
| F 6011 | 30 | 19- 8 | 886 | 1 | | 12- 0 | 5- 5 | 2- 7 | | |
| F 6012 | 25 | 19- 3 | 723 | 1 | | 11- 7 | 5- 5 | 2- 7 | | |
| F 6013 | 30 | 19- 5 | 875 | 1 | | 11- 9 | 5- 5 | 2- 7 | | |
| F 6014 | 16 | 18-11 | 455 | 1 | | 11- 3 | 5- 5 | 2- 7 | | |
| F 6015 | 30 | 18-10 | 849 | 1 | | 11- 2 | 5- 5 | 2- 7 | | |
| F 6026 | 24 | 26- 7 | 958 | 1 | | 12- 9 | 1- 5 | 12- 9 | | |
| F 8001 | 3 | 39- 6 | 316 | ST | | | | | | |
| F 8002 | 4 | 42-10 | 457 | ST | | | | | | |
| F 8003 | 14 | 42- 6 | 1589 | ST | | | | | | |
| F 8004 | 3 | 45- 6 | 364 | ST | | | | | | |
| F 8005 | 4 | 42- 2 | 450 | ST | | | | | | |
| F 8006 | 3 | 39- 6 | 316 | ST | | | | | | |
| F 8007 | 4 | 42-10 | 457 | ST | | | | | | |
| F 8008 | 14 | 42- 6 | 1589 | ST | | | | | | |
| F 8009 | 3 | 40- 0 | 320 | ST | | | | | | |
| F 8010 | 4 | 36- 6 | 390 | ST | | | | | | |
| F 8011 | 7 | 43- 8 | 816 | ST | | | | | | |
| F 8012 | 3 | 46- 0 | 368 | ST | | | | | | |
| F 8013 | 4 | 47- 0 | 502 | ST | | | | | | |
| F 8014 | 3 | 47- 0 | 376 | ST | | | | | | |
| F 8015 | 4 | 46- 0 | 491 | ST | | | | | | |
| F 8016 | 3 | 46- 0 | 368 | ST | | | | | | |
| F 8017 | 4 | 44- 6 | 475 | ST | | | | | | |
| F 8018 | 3 | 44- 6 | 356 | ST | | | | | | |
| F 8019 | 4 | 46- 0 | 491 | ST | | | | | | |
| F 8020 | 3 | 42- 0 | 336 | ST | | | | | | |
| F 8021 | 4 | 45- 6 | 486 | ST | | | | | | |
| F 8022 | 3 | 46- 0 | 368 | ST | | | | | | |
| F 8023 | 4 | 42- 6 | 454 | ST | | | | | | |
| F 8024 | 3 | 44- 0 | 352 | ST | | | | | | |
| F 8025 | 4 | 44- 0 | 470 | ST | | | | | | |
| F 8026 | 7 | 27- 9 | 519 | ST | | | | | | |
| F 8027 | 7 | 46- 6 | 869 | ST | | | | | | |
| F 8032 | 10 | 39- 1 | 1044 | ST | | | | | | |
| | | | | EPOXY COATED ABUTMENT BARS | | | | | | |
| AE5004 | 9 | 5- 7 | 52 | 19 | | 2- 2 | 2- 5 | 0-11 | | |
| AE5006 | 24 | 2- 9 | 69 | 11 | 2- 2 | | | | | |
| AE5007 | 9 | 8- 3 | 77 | ST | | | | | | |
| AE5008 | 9 | 3- 2 | 30 | ST | | | | | | |
| AE5009 | 3 | 7-11 | 25 | 8 | 0- 5 | 2-10 | 0- 5 | 2-10 | 1- 7 | |
| AE5010 | 14 | 2-11 | 43 | 15 | 1- 1 | 0- 6 | 0- 9 | 0- 7 | 0- 7 | |
| AE5013 | 12 | 9- 0 | 113 | ST | | | | | | |
| AE5019 | 8 | 5- 2 | 43 | ST | | | | | | |
| AE5021 | 14 | 3- 2 | 46 | 4 | 0- 5 | 2-10 | 0- 5 | | | |
| AE5022 | 8 | 3- 5 | 29 | 1 | 0- 9 | 2-10 | | | | |
| AE5023 | 20 | 2- 8 | 56 | ST | | | | | | |
| AE5028 | 12 | 4- 4 | 54 | ST | | | | | | |
| AE5030 | 31 | 5- 7 | 181 | 19 | | 2- 2 | 2- 5 | 0-11 | | |
| AE5031 | 25 | 7- 0 | 183 | ST | | | | | | |
| AE5032 | 1 | 3-10 | | ST | | | | | | 1 |
| THRU | | | 33 | | VARY | LENGTH | BY | 0- 7 | 1/ 4 | |
| AE5037 | 1 | 6-10 | | ST | | | | | | 1 |
| AE6004 | 3 | 4- 1 | | 15 | | 0- 9 | 0- 2 | 2- 8 | 0- 9 | 1 |
| THRU | | | 96 | | VARY | LENGTH | BY | 0- 1 | | |
| | | | | | VARY | DIM. B | BY | 0- 0 | 3/ 4 | |
| | | | | | VARY | DIM. C | BY | 0- 1 | | |
| AE6008 | 3 | 4- 5 | | 15 | | 1- 0 | 0- 6 | 2- 8 | 0- 9 | 1 |
| AE6009 | 9 | 4- 1 | 55 | 15 | | 0- 9 | 0- 2 | 2- 8 | 0- 9 | |
| AE6010 | 9 | 4- 6 | 61 | 15 | | 1- 0 | 0- 6 | 2- 8 | 0- 9 | |
| AE6011 | 25 | 8- 3 | 310 | 15 | | 1- 0 | 0- 6 | 6- 5 | 0- 9 | |

| MARK | NUM. | LENGTH | WEIGHT | TYPE | A | B | C | D | E | NOTE |
|---|---|---|---|---|---|---|---|---|---|---|
| | | | | EPOXY COATED ABUTMENT BARS ( CONTINUED ) | | | | | | |
| AE6012 | 1 | 4-11 | | 15 | | 1- 0 | 0- 6 | 3- 1 | 0- 9 | 1 |
| THRU | | | 58 | | VARY | LENGTH | BY | 0- 7 | 3/ 8 | |
| | | | | | VARY | DIM. D | BY | 0- 7 | 3/ 8 | |
| AE6017 | 1 | 8- 0 | | 15 | | 1- 0 | 0- 6 | 6- 2 | 0- 9 | 1 |
| | | | | WING WALLS | | | | | | |
| W 5001 | 4 | 5- 8 | | ST | | | | | | 1 |
| THRU | | | 298 | | VARY | LENGTH | BY | 1- 6 | 1/ 8 | |
| W 5007 | 4 | 14- 9 | | ST | | | | | | 1 |
| W 5008 | 4 | 21- 0 | 88 | ST | | | | | | 3 |
| W 5009 | 4 | 2- 0 | | ST | | | | | | 1 |
| THRU | | | 198 | | VARY | LENGTH | BY | 3- 9 | | |
| W 5013 | 4 | 17- 0 | | ST | | | | | | 1 |
| W 5014 | 12 | 18- 7 | 233 | ST | | | | | | |
| W 5035 | 2 | 15- 9 | | ST | | | | | | 1 |
| THRU | | | 362 | | VARY | LENGTH | BY | 0- 4 | 7/ 8 | |
| W 5047 | 2 | 10-11 | | ST | | | | | | 1 |
| W 5048 | 2 | 37- 3 | 78 | ST | | | | | | 3 |
| W 5049 | 2 | 13- 2 | 27 | ST | | | | | | |
| W 5050 | 2 | 27- 8 | 58 | ST | | | | | | |
| W 5051 | 12 | 36- 6 | 457 | ST | | | | | | |
| W 5052 | 2 | 11- 0 | | ST | | | | | | 1 |
| THRU | | | 231 | | VARY | LENGTH | BY | 0- 5 | | |
| W 5064 | 2 | 6- 0 | | ST | | | | | | 1 |
| W 5065 | 2 | 37- 6 | 78 | ST | | | | | | |
| W 5066 | 2 | 7- 3 | 15 | ST | | | | | | |
| W 5067 | 2 | 21-11 | 46 | ST | | | | | | |
| W 5068 | 2 | 36- 7 | 76 | ST | | | | | | |
| W 5069 | 6 | 37- 2 | 233 | ST | | | | | | |
| F 5020 | 8 | 5- 4 | 45 | 11 | 4- 9 | | | | | |
| F 5021 | 12 | 18- 8 | 234 | ST | | | | | | |
| F 5022 | 20 | 4- 0 | 83 | ST | | | | | | |
| F 5027 | 20 | 4- 7 | 96 | ST | | | | | | |
| F 5028 | 8 | 6- 7 | 55 | 11 | 6- 0 | | | | | |
| F 5029 | 1 | 37- 0 | | ST | | | | | | 1 |
| THRU | | | 115 | | VARY | LENGTH | BY | 0- 4 | 1/ 2 | |
| F 5031 | 1 | 36- 3 | | ST | | | | | | 1 |
| F 5032 | 9 | 4-10 | 45 | 11 | 4- 3 | | | | | |
| F 5033 | 19 | 4- 4 | 86 | ST | | | | | | |
| F 6016 | 14 | 5- 8 | 119 | 4 | 0- 3 | 3-11 | 1-11 | | | |
| F 6017 | 12 | 6- 5 | 116 | 4 | 0- 3 | 4- 8 | 1-11 | | | |
| F 6020 | 25 | 6- 9 | 253 | 4 | 0- 3 | 5- 0 | 1-11 | | | |
| F 6021 | 24 | 10- 5 | 375 | 4 | 0- 6 | 8- 8 | 1-11 | | | |
| F 6022 | 50 | 6- 1 | 457 | ST | | | | | | |
| F 6023 | 3 | 37- 2 | 167 | ST | | | | | | |
| F 6024 | 13 | 5- 6 | 107 | 4 | 0- 3 | 3- 9 | 1-11 | | | |
| F 6025 | 12 | 7- 6 | 135 | 4 | 0- 4 | 5- 9 | 1-11 | | | |
| F 7001 | 3 | 37- 0 | 227 | ST | | | | | | |
| F 8028 | 8 | 18- 8 | 399 | ST | | | | | | |
| F 8030 | 4 | 36-10 | 393 | ST | | | | | | |
| F 8031 | 7 | 37- 2 | 695 | ST | | | | | | |
| F 9001 | 24 | 6- 0 | 490 | 11 | 4- 9 | | | | | |
| F 9003 | 18 | 7- 3 | 444 | 11 | 6- 0 | | | | | |
| F 9004 | 14 | 5- 6 | 262 | 11 | 4- 3 | | | | | |

| FED. RD. DIVISION | STATE | PROJECT | TYPE FUNDS |
|---|---|---|---|
| 5 | OHIO | | |

374
500

CUYAHOGA COUNTY
CUY-480-10.39

NOTES

1. INDICATES SERIES BAR. EACH BAR VARIES FROM ADJACENT BAR(S) BY TABULATED AMOUNT(S), CALCULATED TO NEAREST 1/8 INCH. WEIGHT SHOWN IS FOR ENTIRE SERIES UTILIZING AVERAGE LENGTH.

3. COST OF FIELD BENDING SHALL BE INCLUDED WITH ITEM 509.

   REFER TO CMS SECTIONS 106.03, 700, 709.01 THROUGH 709.05 AND 709.08. SUFFICIENT ADDITIONAL REINFORCING STEEL SHALL BE PROVIDED FOR SAMPLING. RANDOM SAMPLES SHALL BE REPLACED IN THE STRUCTURES BY THE ADDITIONAL STEEL, SPLICED IN ACCORDANCE WITH 509.08.

BAR DIMENSIONS ARE OUT TO OUT.

A BAR MARK THAT INCLUDES THE LETTER E IN THE PREFIX INDICATES THAT THE BAR SHALL BE EPOXY COATED.

BAR BENDING DIAGRAM TYPES

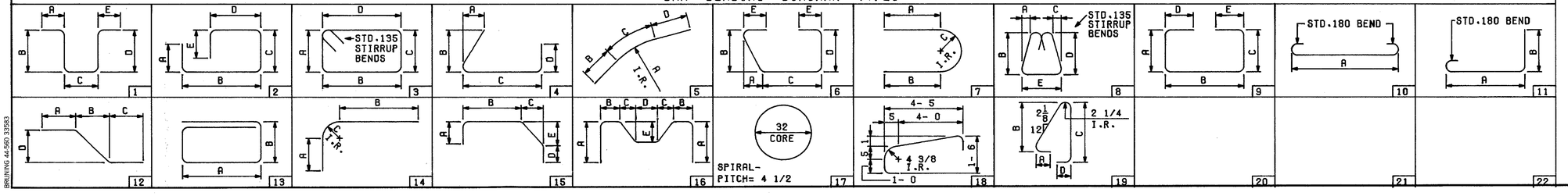


BRUNING 44-560 33583

43146

ALDEN E. STILSON & ASSOCIATES, LIMITED
CONSULTING ENGINEERS
CLEVELAND, OHIO COLUMBUS, OHIO WHEELING, W. VA.

# REINFORCING STEEL LIST

BRIDGE NO. CUY-480-1078
I-480 OVER CONRAIL
STA. 593+38.70 TO
STA. 596+50.96

| DESIGNED | DRAWN | TRACED | CHECKED | REVIEWED | DATE | REVISED |
|---|---|---|---|---|---|---|
| R.T. | | | BTG | G.W.M. | 3/15/83 | |

MICROFILMED
JAN 18 1991

| MARK | NUM. | LENGTH | WEIGHT | TYPE PIER | A | B | C | D | E | NOTE |
|---|---|---|---|---|---|---|---|---|---|---|
| P 5001 | 200 | 5- 7 | 1165 | 9 | 1- 7 | 2- 8 | 1- 7 | | | |
| P 5002 | 4 | 23- 5 | 98 | ST | | | | | | |
| P 5003 | 4 | 22- 4 | 93 | ST | | | | | | |
| P 5004 | 2 | 35- 1 | 73 | ST | | | | | | |
| P 5005 | 2 | 27- 0 | 56 | ST | | | | | | |
| P 5006 | 2 | 19- 0 | 40 | ST | | | | | | |
| P 5007 | 8 | 16- 2 | 135 | 6 | 13- 2 | 6- 7 | 1- 6 | | | |
| P 5008 | 16 | 16- 0 | 267 | ST | | | | | | |
| P 5009 | 206 | 7- 5 | 1594 | 7 | 1- 7 | 1- 7 | 1- 4 | | | |
| P 5010 | 4 | 32- 0 | 134 | ST | | | | | | |
| P 5011 | 4 | 30-11 | 129 | ST | | | | | | |
| P 5012 | 4 | 27- 6 | 115 | ST | | | | | | |
| P 5013 | 4 | 24- 1 | 100 | ST | | | | | | |
| P 5014 | 4 | 20- 8 | 86 | ST | | | | | | |
| P 5015 | 2 | 32- 6 | 68 | ST | | | | | | |
| P 5016 | 4 | 18- 3 | 76 | 6 | 15- 0 | 7- 6 | 1- 6 | | | |
| P 5017 | 4 | 18- 9 | 78 | 6 | 15- 0 | 8- 6 | 1- 6 | | | |
| P 5018 | 34 | 29- 6 | 1046 | ST | | | | | | |
| P 5019 | 4 | 32- 0 | 134 | ST | | | | | | |
| P 5020 | 4 | 29- 3 | 122 | ST | | | | | | |
| P 5021 | 4 | 25- 3 | 105 | ST | | | | | | |
| P 5022 | 4 | 21- 3 | 89 | ST | | | | | | |
| P 5023 | 2 | 32- 6 | 68 | ST | | | | | | |
| P 5024 | 8 | 18- 3 | 152 | 6 | 15- 0 | 7- 6 | 1- 6 | | | |
| P 5025 | 4 | 39- 7 | 165 | ST | | | | | | |
| P 5026 | 2 | 33- 0 | 69 | ST | | | | | | |
| P 5027 | 2 | 25- 0 | 52 | ST | | | | | | |
| P 5028 | 2 | 16- 9 | 35 | ST | | | | | | |
| P 5029 | 8 | 14- 5 | 120 | 6 | 11- 7 | 5-10 | 1- 6 | | | |
| P 5030 | 22 | 13- 9 | 316 | ST | | | | | | |
| P 5031 | 8 | 40- 0 | 334 | ST | | | | | | |
| P 5032 | 4 | 33- 0 | 138 | ST | | | | | | |
| P 5033 | 4 | 25- 0 | 104 | ST | | | | | | |
| P 5034 | 4 | 17- 0 | 71 | ST | | | | | | |
| P 5035 | 16 | 14- 9 | 246 | 6 | 11-10 | 5-11 | 1- 6 | | | |
| P 5036 | 44 | 14- 0 | 642 | ST | | | | | | |
| P 5037 | 4 | 29- 0 | 121 | ST | | | | | | |
| P 5038 | 4 | 27- 0 | 113 | ST | | | | | | |
| P 5039 | 4 | 23- 0 | 96 | ST | | | | | | |
| P 5040 | 4 | 19- 0 | 79 | ST | | | | | | |
| P 5041 | 2 | 28- 2 | 59 | ST | | | | | | |
| P 5042 | 8 | 18- 3 | 152 | 6 | 15- 0 | 7- 6 | 1- 6 | | | |
| P 5043 | 22 | 23- 8 | 543 | ST | | | | | | |
| P 5044 | 4 | 22- 8 | 95 | ST | | | | | | |
| P 5045 | 4 | 22- 0 | 92 | ST | | | | | | |
| P 5046 | 2 | 34- 3 | 71 | ST | | | | | | |
| P 5047 | 2 | 26- 3 | 55 | ST | | | | | | |
| P 5048 | 2 | 18- 3 | 38 | ST | | | | | | |
| P 5049 | 8 | 15- 9 | 131 | 6 | 12- 9 | 6- 5 | 1- 6 | | | |
| P 5050 | 20 | 15- 3 | 318 | ST | | | | | | |
| P 5051 | 16 | 22- 0 | 367 | ST | | | | | | |
| P 5052 | 4 | 34- 0 | 142 | ST | | | | | | |
| P 5053 | 4 | 26- 0 | 108 | ST | | | | | | |
| P 5054 | 4 | 18- 0 | 75 | ST | | | | | | |
| P 5055 | 16 | 15- 5 | 257 | 6 | 12- 5 | 6- 3 | 1- 6 | | | |
| P 5056 | 46 | 14- 9 | 708 | ST | | | | | | |
| P 5057 | 2 | 36- 8 | 76 | ST | | | | | | |
| P 5058 | 2 | 32- 6 | 68 | ST | | | | | | |
| P 5059 | 2 | 24- 6 | 51 | ST | | | | | | |
| P 5060 | 2 | 16- 6 | 34 | ST | | | | | | |
| P 5061 | 8 | 13- 6 | 113 | 6 | 10- 9 | 5- 5 | 1- 6 | | | |
| P 5062 | 22 | 12- 6 | 287 | ST | | | | | | |
| P 5063 | 4 | 26- 3 | 110 | ST | | | | | | |
| P 5064 | 4 | 24- 3 | 101 | ST | | | | | | |

| MARK | NUM. | LENGTH | WEIGHT | TYPE PIER | A | B | C | D | E (CONTINUED) | NOTE |
|---|---|---|---|---|---|---|---|---|---|---|
| P 5065 | 2 | 38- 5 | 80 | ST | | | | | | |
| P 5066 | 2 | 30- 5 | 63 | ST | | | | | | |
| P 5067 | 2 | 22- 5 | 47 | ST | | | | | | |
| P 5068 | 8 | 18- 1 | 151 | 6 | 14-10 | 7- 5 | 1- 6 | | | |
| P 5069 | 24 | 18- 3 | 457 | ST | | | | | | |
| P 6001 | 4 | 8- 2 | | 9 | 3- 4 | 1-10 | 3- 4 | | | 1 |
| THRU | | | 220 | | VARY | LENGTH | BY | 0- 8 | | |
| | | | | | VARY | DIM. A | BY | 0- 4 | | |
| | | | | | VARY | DIM. C | BY | 0- 4 | | |
| P 6004 | 4 | 10- 2 | | 9 | 4- 4 | 1-10 | 4- 4 | | | 1 |
| P 6005 | 4 | 10-10 | | 9 | 4- 8 | 1-10 | 4- 8 | | | 1 |
| THRU | | | 296 | | VARY | LENGTH | BY | 1- 0 | | |
| | | | | | VARY | DIM. A | BY | 0- 6 | | |
| | | | | | VARY | DIM. C | BY | 0- 6 | | |
| P 6008 | 4 | 13-10 | | 9 | 6- 2 | 1-10 | 6- 2 | | | 1 |
| P 6009 | 2 | 15- 8 | | 9 | 6- 8 | 2- 8 | 6- 8 | | | 1 |
| THRU | | | 224 | | VARY | LENGTH | BY | 2- 0 | | |
| | | | | | VARY | DIM. A | BY | 1- 0 | | |
| | | | | | VARY | DIM. C | BY | 1- 0 | | |
| P 6012 | 2 | 21- 8 | | 9 | 9- 8 | 2- 8 | 9- 8 | | | 1 |
| P 6013 | 384 | 6-10 | 3941 | 9 | 2- 8 | 1-10 | 2- 8 | | | |
| P 6014 | 98 | 7- 8 | 1129 | 9 | 2- 8 | 2- 8 | 2- 8 | | | |
| P 6015 | 2 | 8- 2 | | 9 | 3- 4 | 1-10 | 3- 4 | | | 1 |
| THRU | | | 145 | | VARY | LENGTH | BY | 0- 9 | | |
| | | | | | VARY | DIM. A | BY | 0- 4 | 1/ 2 | |
| | | | | | VARY | DIM. C | BY | 0- 4 | 1/ 2 | |
| P 6019 | 2 | 11- 2 | | 9 | 4-10 | 1-10 | 4-10 | | | 1 |
| P 6020 | 2 | 11-10 | | 9 | 5- 2 | 1-10 | 5- 2 | | | 1 |
| THRU | | | 208 | | VARY | LENGTH | BY | 1- 0 | | |
| | | | | | VARY | DIM. A | BY | 0- 6 | | |
| | | | | | VARY | DIM. C | BY | 0- 6 | | |
| P 6024 | 2 | 15-10 | | 9 | 7- 2 | 1-10 | 7- 2 | | | 1 |
| P 6025 | 1 | 17- 8 | | 9 | 7- 8 | 2- 8 | 7- 8 | | | 1 |
| THRU | | | 124 | | VARY | LENGTH | BY | 2- 0 | | |
| | | | | | VARY | DIM. A | BY | 1- 0 | | |
| | | | | | VARY | DIM. C | BY | 1- 0 | | |
| P 6028 | 1 | 23- 8 | | 9 | 10- 8 | 2- 8 | 10- 8 | | | 1 |
| P 6031 | 2 | 8- 2 | | 9 | 3- 4 | 1-10 | 3- 4 | | | 1 |
| THRU | | | 140 | | VARY | LENGTH | BY | 0- 7 | | |
| | | | | | VARY | DIM. A | BY | 0- 3 | 1/ 2 | |
| | | | | | VARY | DIM. C | BY | 0- 3 | 1/ 2 | |
| P 6035 | 2 | 10- 6 | | 9 | 4- 6 | 1-10 | 4- 6 | | | 1 |
| P 6036 | 2 | 12- 4 | | 9 | 5- 5 | 1-10 | 5- 5 | | | 1 |
| THRU | | | 219 | | VARY | LENGTH | BY | 1- 1 | 1/ 2 | |
| | | | | | VARY | DIM. A | BY | 0- 6 | 3/ 4 | |
| | | | | | VARY | DIM. C | BY | 0- 6 | 3/ 4 | |
| P 6040 | 2 | 16-10 | | 9 | 7- 8 | 1-10 | 7- 8 | | | 1 |
| P 6041 | 1 | 18-10 | | 9 | 8- 3 | 2- 8 | 8- 3 | | | 1 |
| THRU | | | 134 | | VARY | LENGTH | BY | 2- 3 | 3/ 8 | |
| | | | | | VARY | DIM. A | BY | 1- 1 | 5/ 8 | |
| | | | | | VARY | DIM. C | BY | 1- 1 | 5/ 8 | |
| P 6044 | 1 | 25- 8 | | 9 | 11- 8 | 2- 8 | 11- 8 | | | 1 |
| P 6047 | 4 | 8- 2 | | 9 | 3- 4 | 1-10 | 3- 4 | | | 1 |
| THRU | | | 290 | | VARY | LENGTH | BY | 0- 9 | | |
| | | | | | VARY | DIM. A | BY | 0- 4 | 1/ 2 | |
| | | | | | VARY | DIM. C | BY | 0- 4 | 1/ 2 | |
| P 6051 | 4 | 11- 2 | | 9 | 4-10 | 1-10 | 4-10 | | | 1 |
| P 6052 | 4 | 11-10 | | 9 | 5- 2 | 1-10 | 5- 2 | | | 1 |
| THRU | | | 416 | | VARY | LENGTH | BY | 1- 0 | | |
| | | | | | VARY | DIM. A | BY | 0- 6 | | |
| | | | | | VARY | DIM. C | BY | 0- 6 | | |
| P 6056 | 4 | 15-10 | | 9 | 7- 2 | 1-10 | 7- 2 | | | 1 |

| MARK | NUM. | LENGTH | WEIGHT | TYPE PIER | A | B | C | D | E (CONTINUED) | NOTE |
|---|---|---|---|---|---|---|---|---|---|---|
| P 6057 | 2 | 17- 8 | | 9 | 7- 8 | 2- 8 | 7- 8 | | | 1 |
| THRU | | | 248 | | VARY | LENGTH | BY | 2- 0 | | |
| | | | | | VARY | DIM. A | BY | 1- 0 | | |
| | | | | | VARY | DIM. C | BY | 1- 0 | | |
| P 6060 | 2 | 23- 8 | | 9 | 10- 8 | 2- 8 | 10- 8 | | | 1 |
| P 6063 | 4 | 8- 2 | | 9 | 3- 4 | 1-10 | 3- 4 | | | 1 |
| THRU | | | 438 | | VARY | LENGTH | BY | 0- 9 | | |
| | | | | | VARY | DIM. A | BY | 0- 4 | 1/ 2 | |
| | | | | | VARY | DIM. C | BY | 0- 4 | 1/ 2 | |
| P 6069 | 4 | 12- 8 | | 9 | 5- 7 | 1-10 | 5- 7 | | | 1 |
| P 6070 | 2 | 14- 2 | | 9 | 5-11 | 2- 8 | 5-11 | | | 1 |
| THRU | | | 206 | | VARY | LENGTH | BY | 2- 0 | | |
| | | | | | VARY | DIM. A | BY | 1- 0 | | |
| | | | | | VARY | DIM. C | BY | 1- 0 | | |
| P 6073 | 2 | 20- 2 | | 9 | 8-11 | 2- 8 | 8-11 | | | 1 |
| P 6076 | 8 | 8- 2 | | 9 | 3- 4 | 1-10 | 3- 4 | | | 1 |
| THRU | | | 876 | | VARY | LENGTH | BY | 0- 9 | | |
| | | | | | VARY | DIM. A | BY | 0- 4 | 1/ 2 | |
| | | | | | VARY | DIM. C | BY | 0- 4 | 1/ 2 | |
| P 6082 | 8 | 12- 8 | | 9 | 5- 7 | 1-10 | 5- 7 | | | 1 |
| P 6083 | 4 | 14- 6 | | 9 | 6- 1 | 2- 8 | 6- 1 | | | 1 |
| THRU | | | 421 | | VARY | LENGTH | BY | 2- 0 | | |
| | | | | | VARY | DIM. A | BY | 1- 0 | | |
| | | | | | VARY | DIM. C | BY | 1- 0 | | |
| P 6086 | 4 | 20- 6 | | 9 | 9- 1 | 2- 8 | 9- 1 | | | 1 |
| P 6089 | 4 | 8- 2 | | 9 | 3- 4 | 1-10 | 3- 4 | | | 1 |
| THRU | | | 300 | | VARY | LENGTH | BY | 0-11 | | |
| | | | | | VARY | DIM. A | BY | 0- 5 | 1/ 2 | |
| | | | | | VARY | DIM. C | BY | 0- 5 | 1/ 2 | |
| P 6093 | 4 | 11-10 | | 9 | 5- 2 | 1-10 | 5- 2 | | | 1 |
| P 6094 | 4 | 12-10 | | 9 | 5- 8 | 1-10 | 5- 8 | | | 1 |
| THRU | | | 344 | | VARY | LENGTH | BY | 1- 0 | | |
| | | | | | VARY | DIM. A | BY | 0- 6 | | |
| | | | | | VARY | DIM. C | BY | 0- 6 | | |
| P 6097 | 4 | 15-10 | | 9 | 7- 2 | 1-10 | 7- 2 | | | 1 |
| P 6098 | 2 | 17- 8 | | 9 | 7- 8 | 2- 8 | 7- 8 | | | 1 |
| THRU | | | 248 | | VARY | LENGTH | BY | 2- 0 | | |
| | | | | | VARY | DIM. A | BY | 1- 0 | | |
| | | | | | VARY | DIM. C | BY | 1- 0 | | |
| P 6101 | 2 | 23- 8 | | 9 | 10- 8 | 2- 8 | 10- 8 | | | 1 |
| P 6104 | 4 | 8- 2 | | 9 | 3- 4 | 1-10 | 3- 4 | | | 1 |
| THRU | | | 220 | | VARY | LENGTH | BY | 0- 8 | | |
| | | | | | VARY | DIM. A | BY | 0- 4 | | |
| | | | | | VARY | DIM. C | BY | 0- 4 | | |
| P 6107 | 4 | 10- 2 | | 9 | 4- 4 | 1-10 | 4- 4 | | | 1 |
| P 6108 | 4 | 10-10 | | 9 | 4- 8 | 1-10 | 4- 8 | | | 1 |
| THRU | | | 296 | | VARY | LENGTH | BY | 1- 0 | | |
| | | | | | VARY | DIM. A | BY | 0- 6 | | |
| | | | | | VARY | DIM. C | BY | 0- 6 | | |
| P 6111 | 4 | 13-10 | | 9 | 6- 2 | 1-10 | 6- 2 | | | 1 |
| P 6112 | 2 | 15- 8 | | 9 | 6- 8 | 2- 8 | 6- 8 | | | 1 |
| THRU | | | 224 | | VARY | LENGTH | BY | 2- 0 | | |
| | | | | | VARY | DIM. A | BY | 1- 0 | | |
| | | | | | VARY | DIM. C | BY | 1- 0 | | |
| P 6115 | 2 | 21- 8 | | 9 | 9- 8 | 2- 8 | 9- 8 | | | 1 |
| P 6118 | 8 | 8- 2 | | 9 | 3- 4 | 1-10 | 3- 4 | | | 1 |
| THRU | | | 1033 | | VARY | LENGTH | BY | 0- 8 | 7/ 8 | |
| | | | | | VARY | DIM. A | BY | 0- 4 | 3/ 8 | |
| | | | | | VARY | DIM. C | BY | 0- 4 | 3/ 8 | |
| P 6125 | 8 | 13- 4 | | 9 | 5-11 | 1-10 | 5-11 | | | 1 |

## BAR BENDING DIAGRAM TYPES

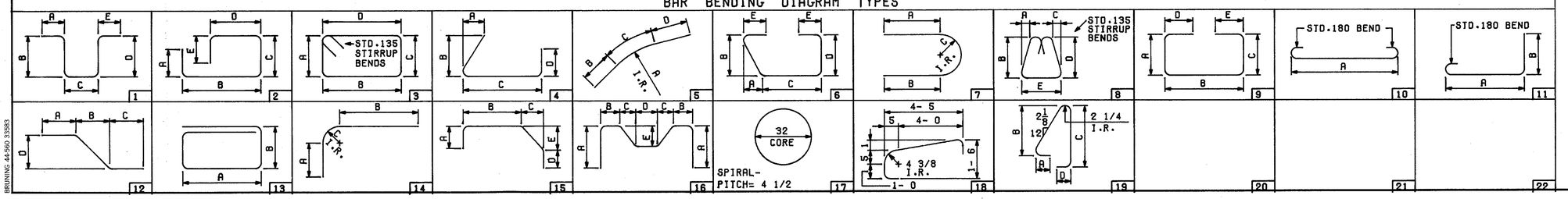


| FED. RD. DIVISION | STATE | PROJECT | TYPE FUNDS |
|---|---|---|---|
| 5 | OHIO | | |

CUYAHOGA COUNTY
CUY-480-10.39

NOTES

1. INDICATES SERIES BAR. EACH BAR VARIES FROM ADJACENT BAR(S) BY TABULATED AMOUNT(S), CALCULATED TO NEAREST 1/8 INCH. WEIGHT SHOWN IS FOR ENTIRE SERIES UTILIZING AVERAGE LENGTH.

3. COST OF FIELD BENDING SHALL BE INCLUDED WITH ITEM 509.

REFER TO CMS SECTIONS 106.03, 700, 709.01 THROUGH 709.05 AND 709.08. SUFFICIENT ADDITIONAL REINFORCING STEEL SHALL BE PROVIDED FOR SAMPLING. RANDOM SAMPLES SHALL BE REPLACED IN THE STRUCTURES BY THE ADDITIONAL STEEL, SPLICED IN ACCORDANCE WITH 509.08.

BAR DIMENSIONS ARE OUT TO OUT.

A BAR MARK THAT INCLUDES THE LETTER E IN THE PREFIX INDICATES THAT THE BAR SHALL BE EPOXY COATED.

44146

ALDEN E. STILSON & ASSOCIATES, LIMITED
CONSULTING ENGINEERS
CLEVELAND, OHIO COLUMBUS, OHIO WHEELING, W. VA.

# REINFORCING STEEL LIST

BRIDGE NO. CUY-480-1078
I-480 OVER CONRAIL
STA. 593+38.70 TO
STA. 596+50.96

| DESIGNED | DRAWN | TRACED | CHECKED | REVIEWED | DATE | REVISED |
|---|---|---|---|---|---|---|
| R.T. | | | BTG | G.W.M. | 3/15/83 | |

BRUNING 44-560 33983

MICROFILMED
JAN 18 1994

| MARK | NUM. | LENGTH | WEIGHT | TYPE PIER | A | B | C | D | E (CONTINUED) | NOTE |
|---|---|---|---|---|---|---|---|---|---|---|
| P 6126 | 4 | 15- 0 | | 9 | 6- 4 | 2- 8 | 6- 4 | | | 1 |
| THRU | | | 433 | | VARY | LENGTH | BY | 2- 0 | | |
| | | | | | VARY | DIM. A | BY | 1- 0 | | |
| | | | | | VARY | DIM. C | BY | 1- 0 | | |
| P 6129 | 4 | 21- 0 | | 9 | 9- 4 | 2- 8 | 9- 4 | | | 1 |
| P 6132 | 4 | 8- 2 | | 9 | 3- 4 | 1-10 | 3- 4 | | | 1 |
| THRU | | | 295 | | VARY | LENGTH | BY | 0-10 | | |
| | | | | | VARY | DIM. A | BY | 0- 5 | | |
| | | | | | VARY | DIM. C | BY | 0- 5 | | |
| P 6136 | 4 | 11- 6 | | 9 | 5- 0 | 1-10 | 5- 0 | | | 1 |
| P 6137 | 2 | 13- 2 | | 9 | 5- 5 | 2- 8 | 5- 5 | | | 1 |
| THRU | | | 243 | | VARY | LENGTH | BY | 1- 6 | | |
| | | | | | VARY | DIM. A | BY | 0- 9 | | |
| | | | | | VARY | DIM. C | BY | 0- 9 | | |
| P 6141 | 2 | 19- 2 | | 9 | 8- 5 | 2- 8 | 8- 5 | | | 1 |
| P 6144 | 4 | 8- 2 | | 9 | 3- 4 | 1-10 | 3- 4 | | | 1 |
| THRU | | | 295 | | VARY | LENGTH | BY | 0-10 | | |
| | | | | | VARY | DIM. A | BY | 0- 5 | | |
| | | | | | VARY | DIM. C | BY | 0- 5 | | |
| P 6148 | 4 | 11- 6 | | 9 | 5- 0 | 1-10 | 5- 0 | | | 1 |
| P 6149 | 4 | 12- 6 | | 9 | 5- 6 | 1-10 | 5- 6 | | | 1 |
| THRU | | | 336 | | VARY | LENGTH | BY | 1- 0 | | |
| | | | | | VARY | DIM. A | BY | 0- 6 | | |
| | | | | | VARY | DIM. C | BY | 0- 6 | | |
| P 6152 | 4 | 15- 6 | | 9 | 7- 0 | 1-10 | 7- 0 | | | 1 |
| P 6153 | 2 | 17- 4 | | 9 | 7- 6 | 2- 8 | 7- 6 | | | 1 |
| THRU | | | 244 | | VARY | LENGTH | BY | 2- 0 | | |
| | | | | | VARY | DIM. A | BY | 1- 0 | | |
| | | | | | VARY | DIM. C | BY | 1- 0 | | |
| P 6156 | 2 | 23- 4 | | 9 | 10- 6 | 2- 8 | 10- 6 | | | 1 |
| P 8001 | 38 | 18- 0 | 1826 | ST | | | | | | |
| P 8002 | 18 | 9-11 | 477 | ST | | | | | | |
| P 8004 | 64 | 18- 9 | 3204 | ST | | | | | | |
| P 8005 | 32 | 10-10 | 926 | ST | | | | | | |
| P 8006 | 16 | 11- 4 | 484 | ST | | | | | | |
| P 8007 | 64 | 20- 9 | 3546 | ST | | | | | | |
| P 8008 | 16 | 10-10 | 463 | ST | | | | | | |
| P 8009 | 16 | 11- 3 | 481 | ST | | | | | | |
| P 8010 | 32 | 23- 3 | 1986 | ST | | | | | | |
| P 8011 | 8 | 9- 1 | 194 | ST | | | | | | |
| P 8012 | 8 | 9- 6 | 203 | ST | | | | | | |
| P 8013 | 34 | 24- 5 | 2217 | ST | | | | | | |
| P 8014 | 32 | 9- 3 | 790 | ST | | | | | | |
| P 8016 | 52 | 23- 5 | 3251 | ST | | | | | | |
| P 8017 | 26 | 10-10 | 752 | ST | | | | | | |
| P 8019 | 36 | 21- 5 | 2059 | ST | | | | | | |
| P 8020 | 10 | 9- 8 | 258 | ST | | | | | | |
| P 8021 | 8 | 10- 3 | 219 | ST | | | | | | |
| P 8022 | 34 | 23- 4 | 2118 | ST | | | | | | |
| P 8023 | 32 | 9- 6 | 812 | ST | | | | | | |
| P 8025 | 34 | 24- 5 | 2217 | ST | | | | | | |
| P 8027 | 30 | 23-11 | 1916 | ST | | | | | | |
| P 8028 | 14 | 8- 8 | 324 | ST | | | | | | |
| P 8030 | 34 | 24-10 | 2254 | ST | | | | | | |
| P 8032 | 42 | 24- 4 | 2729 | ST | | | | | | |
| P 8033 | 20 | 10- 9 | 574 | ST | | | | | | |
| P14001 | 6 | 49-10 | 2287 | 1 | | 3- 0 | 44- 9 | 3- 0 | | |
| P14002 | 6 | 44- 7 | 2046 | ST | | | | | | |
| P14003 | 6 | 31- 0 | 1423 | 1 | 28- 6 | 3- 0 | | | | |
| P14004 | 6 | 36- 0 | 1652 | 1 | 33- 6 | 3- 0 | | | | |
| P14005 | 12 | 30- 6 | 2800 | ST | | | | | | |
| P14006 | 6 | 31- 0 | 1423 | 1 | 28- 6 | 3- 0 | | | | |

| MARK | NUM. | LENGTH | WEIGHT | TYPE PIER | A | B | C | D | E (CONTINUED) | NOTE |
|---|---|---|---|---|---|---|---|---|---|---|
| P14007 | 6 | 36- 0 | 1652 | 1 | 33- 6 | 3- 0 | | | | |
| P14008 | 12 | 30- 3 | 2777 | ST | | | | | | |
| P14009 | 6 | 44- 6 | 2043 | 1 | | 3- 0 | 39- 5 | 3- 0 | | |
| P14010 | 4 | 39- 3 | 1201 | ST | | | | | | |
| P14011 | 12 | 45- 4 | 4162 | 1 | | 3- 0 | 40- 3 | 3- 0 | | |
| P14012 | 8 | 40- 0 | 2448 | ST | | | | | | |
| P14013 | 6 | 31- 1 | 1427 | 1 | | 3- 0 | 26- 0 | 3- 0 | | |
| P14014 | 6 | 35- 4 | 1622 | 1 | | 3- 0 | 30- 3 | 3- 0 | | |
| P14015 | 6 | 25- 6 | 1170 | ST | | | | | | |
| P14016 | 6 | 30- 6 | 1400 | ST | | | | | | |
| P14017 | 6 | 48- 4 | 2218 | 1 | | 3- 0 | 43- 3 | 3- 0 | | |
| P14018 | 6 | 43- 0 | 1974 | ST | | | | | | |
| P14019 | 12 | 47- 4 | 4345 | 1 | | 3- 0 | 42- 3 | 3- 0 | | |
| P14020 | 8 | 42- 0 | 2570 | ST | | | | | | |
| P14021 | 6 | 41- 9 | 1916 | 1 | | 3- 0 | 36- 8 | 3- 0 | | |
| P14022 | 4 | 36- 5 | 1114 | ST | | | | | | |
| P14023 | 6 | 27-10 | 1278 | 1 | | 3- 0 | 22- 9 | 3- 0 | | |
| P14024 | 6 | 32-10 | 1507 | 1 | | 3- 0 | 27- 9 | 3- 0 | | |
| P14025 | 6 | 22- 3 | 1021 | ST | | | | | | |
| P14026 | 6 | 28- 0 | 1285 | ST | | | | | | |
| F 5034 | 8 | 19- 7 | 163 | ST | | | | | | |
| F 5035 | 115 | 9- 2 | 1099 | ST | | | | | | |
| F 5036 | 16 | 33- 0 | 551 | ST | | | | | | |
| F 5037 | 24 | 17- 8 | 442 | ST | | | | | | |
| F 5038 | 8 | 27- 4 | 228 | ST | | | | | | |
| F 5039 | 8 | 18-11 | 158 | ST | | | | | | |
| F 5040 | 16 | 18- 6 | 309 | ST | | | | | | |
| F 5041 | 20 | 10- 2 | 212 | ST | | | | | | |
| F 5042 | 8 | 16- 2 | 135 | ST | | | | | | |
| F 5043 | 8 | 21-11 | 183 | ST | | | | | | |
| F 8032 | 494 | 5- 5 | 7144 | 1 | 0-11 | 4- 9 | | | | |
| F 8033 | 12 | 21- 9 | 697 | 10 | 19- 7 | | | | | |
| F 8034 | 12 | 35- 2 | 1127 | 10 | 33- 0 | | | | | |
| F 8035 | 12 | 35- 2 | 1127 | 10 | 33- 0 | | | | | |
| F 8036 | 36 | 19-10 | 1906 | 10 | 17- 8 | | | | | |
| F 8037 | 12 | 29- 6 | 945 | 10 | 27- 4 | | | | | |
| F 8038 | 12 | 21- 1 | 676 | 10 | 18-11 | | | | | |
| F 8039 | 24 | 20- 8 | 1324 | 10 | 18- 6 | | | | | |
| F 8040 | 12 | 18- 4 | 587 | 10 | 16- 2 | | | | | |
| F 8041 | 12 | 24- 1 | 772 | 10 | 21-11 | | | | | |
| F 9005 | 58 | 12- 8 | 2498 | 10 | 10- 2 | | | | | |
| F 9006 | 218 | 11- 8 | 8647 | 10 | 9- 2 | | | | | |
| F10001 | 60 | 12- 0 | 3098 | 10 | 9- 2 | | | | | |
| | | | | SUPERSTRUCTURE | | | | | | |
| S 5004 | 1970 | 30- 0 | 61641 | ST | | | | | | |
| S 5041 | 1 | 21- 0 | | ST | | | | | | 1 |
| THRU | | | 301 | | VARY | LENGTH | BY | 0- 3 | | |
| S 5055 | 1 | 17- 6 | | ST | | | | | | 1 |
| S 5056 | 66 | 19- 0 | 1308 | ST | | | | | | |
| S 5057 | 1 | 14- 0 | | ST | | | | | | 1 |
| THRU | | | 282 | | VARY | LENGTH | BY | 0- 4 | 1/ 8 | |
| S 5086 | 1 | 4- 0 | | ST | | | | | | 1 |
| S 5092 | 77 | 21- 1 | 1693 | ST | | | | | | |
| S 5138 | 1 | 4-10 | | ST | | | | | | 1 |
| THRU | | | 182 | | VARY | LENGTH | BY | 2- 9 | 1/ 2 | |
| S 5147 | 1 | 30- 0 | | ST | | | | | | 1 |
| S 5148 | 1 | 3- 9 | 4 | ST | | | | | | |

| MARK | NUM. | LENGTH | WEIGHT | TYPE SUPERSTRUCTURE | A | B | C | D | E (CONTINUED) | NOTE |
|---|---|---|---|---|---|---|---|---|---|---|
| S 5149 | 1 | 9- 5 | | ST | | | | | | 1 |
| THRU | | | 144 | | VARY | LENGTH | BY | 3- 5 | 1/ 8 | |
| S 5155 | 1 | 30- 0 | | ST | | | | | | 1 |
| S 5156 | 1 | 4- 0 | | ST | | | | | | 1 |
| THRU | | | 34 | | VARY | LENGTH | BY | 2- 9 | 3/ 8 | |
| S 5159 | 1 | 12- 4 | | ST | | | | | | 1 |
| S 5160 | 1 | 19- 0 | | ST | | | | | | 1 |
| THRU | | | 102 | | VARY | LENGTH | BY | 3- 8 | | |
| S 5163 | 1 | 30- 0 | | ST | | | | | | 1 |
| S 5164 | 1 | 3- 7 | | ST | | | | | | 1 |
| THRU | | | 102 | | VARY | LENGTH | BY | 5- 0 | 3/ 4 | |
| S 5169 | 1 | 28-11 | | ST | | | | | | 1 |
| S 5170 | 1 | 6- 2 | 6 | ST | | | | | | |
| S 5171 | 1 | 15- 6 | | ST | | | | | | 1 |
| THRU | | | 92 | | VARY | LENGTH | BY | 4- 5 | 3/ 8 | |
| S 5174 | 1 | 28-10 | | ST | | | | | | 1 |
| S 5175 | 1 | 3- 0 | | ST | | | | | | 1 |
| THRU | | | 69 | | VARY | LENGTH | BY | 9- 0 | | |
| S 5178 | 1 | 30- 0 | | ST | | | | | | 1 |
| S 5179 | 1 | 3- 4 | | ST | | | | | | 1 |
| THRU | | | 52 | | VARY | LENGTH | BY | 13- 4 | | |
| S 5181 | 1 | 30- 0 | | ST | | | | | | 1 |
| S 5182 | 11 | 27- 8 | 317 | ST | | | | | | |
| S 6001 | 20 | 5-10 | 175 | ST | | | | | | |
| S 6002 | 1 | 6- 3 | | ST | | | | | | 1 |
| THRU | | | 3296 | | VARY | LENGTH | BY | 0- 4 | 1/ 8 | |
| S 6098 | 1 | 39- 0 | | ST | | | | | | 1 |
| S 6099 | 373 | 29- 6 | 16527 | ST | | | | | | |
| S 6100 | 1 | 12- 3 | | ST | | | | | | 1 |
| THRU | | | 2443 | | VARY | LENGTH | BY | 0- 4 | 1/ 8 | |
| S 6167 | 1 | 35- 7 | | ST | | | | | | 1 |
| S 6168 | 346 | 30- 4 | 15764 | ST | | | | | | |
| S 6169 | 1 | 30- 2 | | ST | | | | | | 1 |
| THRU | | | 1391 | | VARY | LENGTH | BY | 0- 4 | 1/ 2 | |
| S 6209 | 1 | 15- 0 | | ST | | | | | | 1 |
| S 6210 | 1 | 6- 6 | | ST | | | | | | 1 |
| THRU | | | 1834 | | VARY | LENGTH | BY | 0- 4 | 3/ 8 | |
| S 6275 | 1 | 30- 6 | | ST | | | | | | 1 |
| S 6276 | 61 | 31- 9 | 2909 | ST | | | | | | |
| S 6277 | 59 | 30- 9 | 2725 | ST | | | | | | |
| S 6278 | 59 | 29-10 | 2644 | ST | | | | | | |
| S 6279 | 60 | 28-11 | 2606 | ST | | | | | | |
| S 6280 | 41 | 27-11 | 1719 | ST | | | | | | |
| S 6281 | 1 | 33- 5 | | ST | | | | | | 1 |
| THRU | | | 2250 | | VARY | LENGTH | BY | 0- 4 | 3/ 8 | |
| S 6356 | 1 | 6- 0 | | ST | | | | | | 1 |
| S 6357 | 76 | 37- 4 | 4262 | ST | | | | | | |
| S 6358 | 1 | 39- 8 | 60 | ST | | | | | | |
| S 6451 | 1 | 4- 0 | | ST | | | | | | 1 |
| THRU | | | 12 | | VARY | LENGTH | BY | 0- 4 | | |
| S 6452 | 1 | 3- 8 | | ST | | | | | | 1 |
| S 6453 | 9 | 4- 0 | 54 | ST | | | | | | |
| S 6454 | 1 | 4- 2 | | ST | | | | | | 1 |
| THRU | | | 1798 | | VARY | LENGTH | BY | 0- 5 | 3/ 8 | |
| S 6518 | 1 | 32- 8 | | ST | | | | | | 1 |
| S 6519 | 1 | 33- 2 | | ST | | | | | | 1 |
| THRU | | | 1758 | | VARY | LENGTH | BY | 0- 2 | 5/ 8 | |
| S 6550 | 1 | 40- 0 | | ST | | | | | | 1 |
| S 6551 | 54 | 30- 8 | 2487 | ST | | | | | | |
| S 6552 | 1 | 13- 8 | | ST | | | | | | 1 |
| THRU | | | 1865 | | VARY | LENGTH | BY | 0- 4 | 1/ 4 | |
| S 6605 | 1 | 32- 4 | | ST | | | | | | 1 |
| S 6606 | 41 | 32- 0 | 1971 | ST | | | | | | |

| FED. RD. DIVISION | STATE | PROJECT | TYPE FUNDS |
|---|---|---|---|
| 5 | OHIO | | |

376
500

CUYAHOGA COUNTY
CUY-480-10.39

NOTES

1. INDICATES SERIES BAR. EACH BAR VARIES FROM ADJACENT BAR(S) BY TABULATED AMOUNT(S), CALCULATED TO NEAREST 1/8 INCH. WEIGHT SHOWN IS FOR ENTIRE SERIES UTILIZING AVERAGE LENGTH.

3. COST OF FIELD BENDING SHALL BE INCLUDED WITH ITEM 509.

   REFER TO CMS SECTIONS 106.03, 700, 709.01 THROUGH 709.05 AND 709.08. SUFFICIENT ADDITIONAL REINFORCING STEEL SHALL BE PROVIDED FOR SAMPLING. RANDOM SAMPLES SHALL BE REPLACED IN THE STRUCTURES BY THE ADDITIONAL STEEL, SPLICED IN ACCORDANCE WITH 509.08.

BAR DIMENSIONS ARE OUT TO OUT.

A BAR MARK THAT INCLUDES THE LETTER E IN THE PREFIX INDICATES THAT THE BAR SHALL BE EPOXY COATED.

BAR BENDING DIAGRAM TYPES

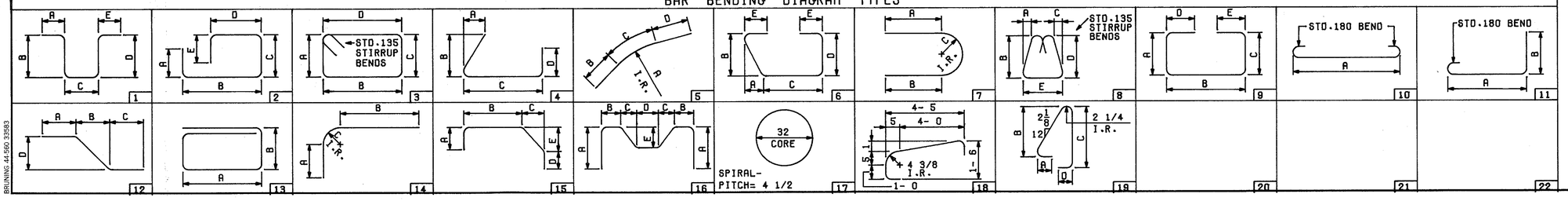


45/16

ALDEN E. STILSON & ASSOCIATES, LIMITED
CONSULTING ENGINEERS
CLEVELAND, OHIO COLUMBUS, OHIO WHEELING, W. VA.

REINFORCING STEEL LIST

BRIDGE NO. CUY-480-1078
I-480 OVER CONRAIL
STA. 593+38.70 TO
STA. 596+50.96

| DESIGNED | DRAWN | TRACED | CHECKED | REVIEWED | DATE | REVISED |
|---|---|---|---|---|---|---|
| R.T. | | | BTG | G.W.M. | 3/10/93 | |

BRUNING 44-560 33583

MICROFILMED
JAN 18 1994

| MARK | NUM. | LENGTH | WEIGHT | TYPE | A | B | C | D | E | NOTE |
|---|---|---|---|---|---|---|---|---|---|---|
| | | | | SUPERSTRUCTURE | | | | ( CONTINUED ) | | |
| S 6607 | 1 | 22- 9 | | ST | | | | | | 1 |
| THRU | | | 1847 | | VARY | LENGTH | BY | 0- 4 | 3/ 8 | |
| S 6647 | 1 | 37- 3 | | ST | | | | | | 1 |
| S 6648 | 41 | 38-11 | 2397 | ST | | | | | | |
| S 6649 | 1 | 27- 2 | | ST | | | | | | 1 |
| THRU | | | 2068 | | VARY | LENGTH | BY | 0- 3 | 7/ 8 | |
| S 6689 | 1 | 40- 0 | | ST | | | | | | 1 |
| S 6690 | 53 | 33- 9 | 2687 | ST | | | | | | |
| S 6691 | 53 | 31- 6 | 2508 | ST | | | | | | |
| S 6692 | 1 | 12-10 | | ST | | | | | | 1 |
| THRU | | | 1811 | | VARY | LENGTH | BY | 0- 4 | 5/ 8 | |
| S 6744 | 1 | 32- 8 | | ST | | | | | | |
| S 6745 | 29 | 19- 9 | 860 | ST | | | | | | |
| S 6746 | 275 | 40- 0 | 16522 | ST | | | | | | |
| S 6747 | 29 | 32- 5 | 1412 | ST | | | | | | |
| S 6748 | 40 | 17- 9 | 1066 | ST | | | | | | |
| S 6749 | 40 | 32- 9 | 1968 | ST | | | | | | |
| S 6750 | 40 | 14- 9 | 886 | ST | | | | | | |
| S 6751 | 40 | 33- 9 | 2028 | ST | | | | | | |
| S 6752 | 40 | 12- 9 | 766 | ST | | | | | | |
| S 6753 | 40 | 34- 1 | 2048 | ST | | | | | | |
| S 6754 | 40 | 10- 9 | 646 | ST | | | | | | |
| S 6755 | 40 | 34- 8 | 2083 | ST | | | | | | |
| S 6756 | 41 | 9- 9 | 600 | ST | | | | | | |
| S 6757 | 41 | 34- 8 | 2135 | ST | | | | | | |
| S 6758 | 45 | 8- 9 | 591 | ST | | | | | | |
| S 6759 | 45 | 34-11 | 2360 | ST | | | | | | |
| S 6760 | 34 | 39- 3 | 2004 | ST | | | | | | |
| S 6761 | 1 | 40- 0 | | ST | | | | | | 1 |
| THRU | | | 1941 | | VARY | LENGTH | BY | 0- 1 | 1/ 2 | |
| S 6794 | 1 | 36- 0 | | ST | | | | | | 1 |
| S 6795 | 69 | 33- 3 | 3446 | ST | | | | | | |
| S 6796 | 1 | 34- 2 | | ST | | | | | | 1 |
| THRU | | | 2241 | | VARY | LENGTH | BY | 0- 4 | 3/ 8 | |
| S 6864 | 1 | 9- 1 | | ST | | | | | | 1 |
| S 6865 | 1 | 39-11 | | ST | | | | | | 1 |
| THRU | | | 3326 | | VARY | LENGTH | BY | 0- 4 | 3/ 8 | |
| S 6968 | 1 | 2- 8 | | ST | | | | | | 1 |
| S 6969 | 8 | 2- 4 | 28 | ST | | | | | | |
| | | | | | | | | | | |
| | | | EPOXY COATED | | SUPERSTRUCTURE BARS | | | | | |
| | | | | | | | | | | |
| SE4004 | 2460 | 30- 0 | 49298 | ST | | | | | | |
| SE4005 | 10 | 29- 4 | 196 | ST | | | | | | |
| SE4008 | 8 | 22- 7 | 121 | ST | | | | | | |
| SE4019 | 69 | 13- 9 | 634 | ST | | | | | | |
| SE4020 | 1 | 13- 9 | | ST | | | | | | 1 |
| THRU | | | 132 | | VARY | LENGTH | BY | 0- 5 | 3/ 4 | |
| SE4043 | 1 | 2- 9 | | ST | | | | | | 1 |
| SE4090 | 10 | 19- 1 | 127 | ST | | | | | | |
| SE4091 | 84 | 20-10 | 1169 | ST | | | | | | |
| SE4093 | 1 | 4- 4 | | ST | | | | | | 1 |
| THRU | | | 112 | | VARY | LENGTH | BY | 2- 9 | | |
| SE4102 | 1 | 29- 1 | | ST | | | | | | 1 |
| SE4103 | 1 | 3- 5 | 2 | ST | | | | | | |
| | | | | | | | | | | |
| SE4104 | 1 | 6- 5 | | ST | | | | | | 1 |
| THRU | | | 109 | | VARY | LENGTH | BY | 2-11 | 1/ 4 | |
| SE4112 | 1 | 29-11 | | ST | | | | | | 1 |
| SE4113 | 1 | 5- 6 | | ST | | | | | | 1 |
| THRU | | | 18 | | VARY | LENGTH | BY | 3- 6 | | |
| SE4115 | 1 | 12- 6 | | ST | | | | | | 1 |

| MARK | NUM. | LENGTH | WEIGHT | TYPE | A | B | C | D | E | NOTE |
|---|---|---|---|---|---|---|---|---|---|---|
| | | | EPOXY COATED | | SUPERSTRUCTURE BARS | | | ( CONTINUED ) | | |
| SE4116 | 1 | 17- 0 | | ST | | | | | | 1 |
| THRU | | | 63 | | VARY | LENGTH | BY | 4- 4 | | |
| SE4119 | 1 | 30- 0 | | ST | | | | | | 1 |
| SE4120 | 1 | 5- 7 | | ST | | | | | | 1 |
| THRU | | | 78 | | VARY | LENGTH | BY | 3- 8 | | |
| SE4126 | 1 | 27- 7 | | ST | | | | | | 1 |
| SE4127 | 1 | 5- 2 | 3 | ST | | | | | | |
| SE4128 | 1 | 13- 2 | | ST | | | | | | 1 |
| THRU | | | 57 | | VARY | LENGTH | BY | 5- 4 | | |
| SE4131 | 1 | 29- 2 | | ST | | | | | | 1 |
| SE4132 | 1 | 8- 1 | | ST | | | | | | 1 |
| THRU | | | 57 | | VARY | LENGTH | BY | 4- 6 | 1/ 2 | |
| SE4136 | 1 | 26- 3 | | ST | | | | | | 1 |
| SE4137 | 1 | 9- 4 | | ST | | | | | | 1 |
| THRU | | | 39 | | VARY | LENGTH | BY | 10- 0 | | |
| SE4139 | 1 | 29- 4 | | ST | | | | | | 1 |
| SE4140 | 12 | 28- 0 | 224 | ST | | | | | | |
| SE4199 | 1 | 20- 9 | | ST | | | | | | 1 |
| THRU | | | 149 | | VARY | LENGTH | BY | 0- 4 | 5/ 8 | |
| SE4210 | 1 | 16- 6 | | ST | | | | | | 1 |
| SE4212 | 431 | 40- 0 | 11516 | ST | | | | | | |
| SE4213 | 431 | 20- 3 | 5830 | ST | | | | | | |
| | | | | | | | | | | |
| SE5001 | 432 | 5- 0 | 2253 | 9 | 1- 4 | 1- 6 | 1- 4 | 0- 8 | 0- 8 | |
| SE5002 | 412 | 2- 6 | 1074 | ST | | | | | | |
| SE5003 | 432 | 5- 9 | 2591 | 8 | | 2- 2 | | 2- 2 | 0- 8 | |
| SE5004 | 40 | 30- 0 | 1252 | ST | | | | | | |
| SE5006 | 412 | 2- 6 | 1074 | ST | | | | | | |
| SE5007 | 412 | 2- 5 | 1038 | ST | | | | | | |
| SE5008 | 8 | 22- 7 | 188 | ST | | | | | | |
| SE5009 | 432 | 3- 2 | 1427 | 15 | 0- 9 | 0-11 | 0- 9 | 0- 9 | 0- 7 | |
| SE5011 | 4 | 15- 3 | 64 | ST | | | | | | |
| SE5012 | 16 | 15- 4 | 256 | ST | | | | | | |
| SE5087 | 412 | 3- 0 | 1289 | 15 | 0- 9 | 0- 8 | 1- 0 | 0- 6 | 0- 9 | |
| SE5088 | 412 | 2- 2 | 931 | 1 | 1- 7 | 0- 9 | | | | |
| SE5092 | 2 | 21- 1 | 44 | ST | | | | | | |
| SE5211 | 2 | 17- 3 | 36 | ST | | | | | | |
| SE5214 | 60 | 15- 8 | 980 | ST | | | | | | |
| SE5215 | 138 | 14- 8 | 2111 | ST | | | | | | |
| SE5216 | 288 | 7- 2 | 2153 | ST | | | | | | |
| SE5217 | 5 | 14-11 | 78 | ST | | | | | | |
| SE5218 | 5 | 15- 5 | 80 | ST | | | | | | |
| | | | | | | | | | | |
| SE6001 | 20 | 5-10 | 175 | ST | | | | | | |
| SE6002 | 1 | 6- 3 | | ST | | | | | | 1 |
| THRU | | | 3296 | | VARY | LENGTH | BY | 0- 4 | 1/ 8 | |
| SE6098 | 1 | 39- 0 | | ST | | | | | | 1 |
| SE6099 | 373 | 25- 6 | 14286 | ST | | | | | | |
| SE6100 | 1 | 16- 6 | | ST | | | | | | 1 |
| THRU | | | 2877 | | VARY | LENGTH | BY | 0- 4 | 1/ 8 | |
| SE6167 | 1 | 39-10 | | ST | | | | | | 1 |
| SE6168 | 346 | 30- 0 | 15591 | ST | | | | | | |
| SE6169 | 1 | 25- 3 | | ST | | | | | | 1 |
| THRU | | | 1088 | | VARY | LENGTH | BY | 0- 4 | 1/ 2 | |
| SE6209 | 1 | 10- 1 | | ST | | | | | | 1 |
| SE6210 | 1 | 11- 4 | | ST | | | | | | 1 |
| THRU | | | 2313 | | VARY | LENGTH | BY | 0- 4 | 3/ 8 | |
| SE6275 | 1 | 35- 4 | | ST | | | | | | 1 |
| SE6276 | 61 | 36- 6 | 3344 | ST | | | | | | |
| SE6277 | 59 | 35- 7 | 3153 | ST | | | | | | |
| SE6278 | 59 | 34- 8 | 3072 | ST | | | | | | |
| SE6279 | 60 | 33- 9 | 3042 | ST | | | | | | |
| SE6280 | 41 | 32- 9 | 2017 | ST | | | | | | |

| MARK | NUM. | LENGTH | WEIGHT | TYPE | A | B | C | D | E | NOTE |
|---|---|---|---|---|---|---|---|---|---|---|
| | | | EPOXY COATED | | SUPERSTRUCTURE BARS | | | ( CONTINUED ) | | |
| SE6281 | 1 | 38- 3 | | ST | | | | | | 1 |
| THRU | | | 2801 | | VARY | LENGTH | BY | 0- 4 | 3/ 8 | |
| SE6356 | 1 | 10-10 | | ST | | | | | | 1 |
| SE6357 | 76 | 32- 1 | 3662 | ST | | | | | | |
| SE6358 | 1 | 39- 8 | | ST | | | | | | 1 |
| THRU | | | 3083 | | VARY | LENGTH | BY | 0- 4 | 5/ 8 | |
| SE6451 | 1 | 4- 0 | | ST | | | | | | 1 |
| SE6452 | 9 | 3- 8 | 50 | ST | | | | | | |
| SE6453 | 9 | 4- 0 | 54 | ST | | | | | | |
| SE6454 | 1 | 4- 2 | | ST | | | | | | 1 |
| THRU | | | 1798 | | VARY | LENGTH | BY | 0- 5 | 3/ 8 | |
| SE6518 | 1 | 32- 8 | | ST | | | | | | 1 |
| SE6519 | 1 | 33- 2 | | ST | | | | | | 1 |
| THRU | | | 1758 | | VARY | LENGTH | BY | 0- 2 | 5/ 8 | |
| SE6550 | 1 | 40- 0 | | ST | | | | | | 1 |
| SE6551 | 54 | 35- 6 | 2879 | ST | | | | | | |
| SE6552 | 1 | 6-10 | | ST | | | | | | 1 |
| THRU | | | 1311 | | VARY | LENGTH | BY | 0- 4 | 1/ 4 | |
| SE6605 | 1 | 25- 6 | | ST | | | | | | 1 |
| SE6606 | 41 | 28-10 | 1776 | ST | | | | | | |
| SE6607 | 1 | 25-10 | | ST | | | | | | 1 |
| THRU | | | 2027 | | VARY | LENGTH | BY | 0- 4 | 1/ 4 | |
| SE6647 | 1 | 40- 0 | | ST | | | | | | 1 |
| SE6648 | 41 | 40- 0 | 2463 | ST | | | | | | |
| SE6649 | 1 | 25- 0 | | ST | | | | | | 1 |
| THRU | | | 1965 | | VARY | LENGTH | BY | 0- 4 | 1/ 8 | |
| SE6689 | 1 | 38-10 | | ST | | | | | | 1 |
| SE6690 | 50 | 38-10 | 2916 | ST | | | | | | |
| SE6691 | 53 | 31- 3 | 2488 | ST | | | | | | |
| SE6692 | 1 | 7-10 | | ST | | | | | | 1 |
| THRU | | | 1413 | | VARY | LENGTH | BY | 0- 4 | 5/ 8 | |
| SE6744 | 1 | 27- 8 | | ST | | | | | | 1 |
| SE6745 | 29 | 24- 0 | 1045 | ST | | | | | | |
| SE6746 | 275 | 40- 0 | 16522 | ST | | | | | | |
| SE6747 | 29 | 28-11 | 1260 | ST | | | | | | |
| SE6748 | 40 | 24- 3 | 1457 | ST | | | | | | |
| SE6749 | 40 | 27- 0 | 1622 | ST | | | | | | |
| SE6750 | 40 | 21- 5 | 1287 | ST | | | | | | |
| SE6751 | 40 | 27-10 | 1672 | ST | | | | | | |
| SE6752 | 40 | 19- 0 | 1142 | ST | | | | | | |
| SE6753 | 40 | 28- 7 | 1717 | ST | | | | | | |
| SE6754 | 40 | 17- 0 | 1021 | ST | | | | | | |
| SE6755 | 40 | 29- 2 | 1752 | ST | | | | | | |
| SE6756 | 41 | 15- 6 | 955 | ST | | | | | | |
| SE6757 | 41 | 29- 8 | 1827 | ST | | | | | | |
| SE6758 | 45 | 14- 5 | 974 | ST | | | | | | |
| SE6759 | 45 | 30- 0 | 2028 | ST | | | | | | |
| SE6760 | 34 | 40- 0 | 2043 | ST | | | | | | |
| SE6761 | 1 | 40- 0 | | ST | | | | | | 1 |
| THRU | | | 1736 | | VARY | LENGTH | BY | 0- 4 | 3/ 8 | |
| SE6794 | 1 | 28- 0 | | ST | | | | | | 1 |
| SE6795 | 69 | 28- 3 | 2928 | ST | | | | | | |
| SE6796 | 1 | 40- 0 | | ST | | | | | | 1 |
| THRU | | | 2846 | | VARY | LENGTH | BY | 0- 4 | 3/ 8 | |
| SE6864 | 1 | 14-11 | | ST | | | | | | 1 |
| SE6865 | 1 | 40-10 | | ST | | | | | | 1 |
| THRU | | | 3469 | | VARY | LENGTH | BY | 0- 4 | 3/ 8 | |
| SE6968 | 1 | 3- 7 | | ST | | | | | | 1 |
| SE6969 | 8 | 3- 3 | 39 | ST | | | | | | |

| FED. RD. DIVISION | STATE | PROJECT | TYPE FUNDS |
|---|---|---|---|
| 5 | OHIO | | |

377
500

CUYAHOGA COUNTY
CUY-480-10.39

NOTES

1. INDICATES SERIES BAR. EACH BAR VARIES FROM ADJACENT BAR(S) BY TABULATED AMOUNT(S), CALCULATED TO NEAREST 1/8 INCH. WEIGHT SHOWN IS FOR ENTIRE SERIES UTILIZING AVERAGE LENGTH.

3. COST OF FIELD BENDING SHALL BE INCLUDED WITH ITEM 509.

   REFER TO CMS SECTIONS 106.03, 700, 709.01 THROUGH 709.05 AND 709.08. SUFFICIENT ADDITIONAL REINFORCING STEEL SHALL BE PROVIDED FOR SAMPLING. RANDOM SAMPLES SHALL BE REPLACED IN THE STRUCTURES BY THE ADDITIONAL STEEL, SPLICED IN ACCORDANCE WITH 509.08.

BAR DIMENSIONS ARE OUT TO OUT.

A BAR MARK THAT INCLUDES THE LETTER E IN THE PREFIX INDICATES THAT THE BAR SHALL BE EPOXY COATED.

BAR BENDING DIAGRAM TYPES

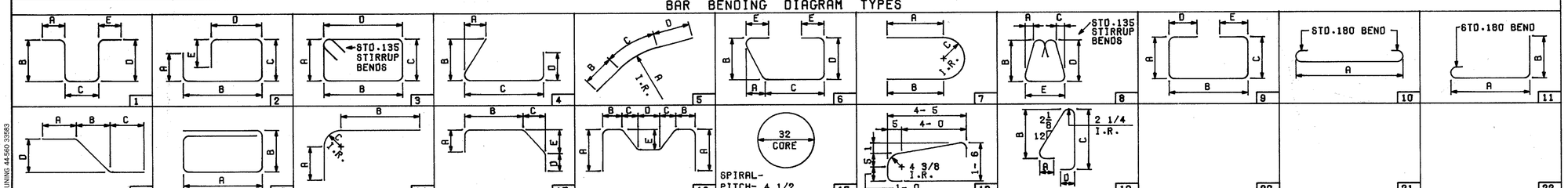


BRUNING 44-560 33883

46146

ALDEN E. STILSON & ASSOCIATES, LIMITED
CONSULTING ENGINEERS
CLEVELAND, OHIO COLUMBUS, OHIO WHEELING, W. VA.

# REINFORCING STEEL LIST

BRIDGE NO. CUY-480-1078
I-480 OVER CONRAIL
STA. 593+38.70 TO
STA. 596+50.96

| DESIGNED | DRAWN | TRACED | CHECKED | REVIEWED | DATE | REVISED |
|---|---|---|---|---|---|---|
| R.T. | | | BTG | G.W.M. | 3/16/93 | |

MICROFILMED
JAN 18 1991

| FED. RD. DIVISION | STATE | PROJECT | TYPE FUNDS |
|---|---|---|---|
| 2 | OHIO | | |

378
500

CUYAHOGA COUNTY
CUY.-480-10.39

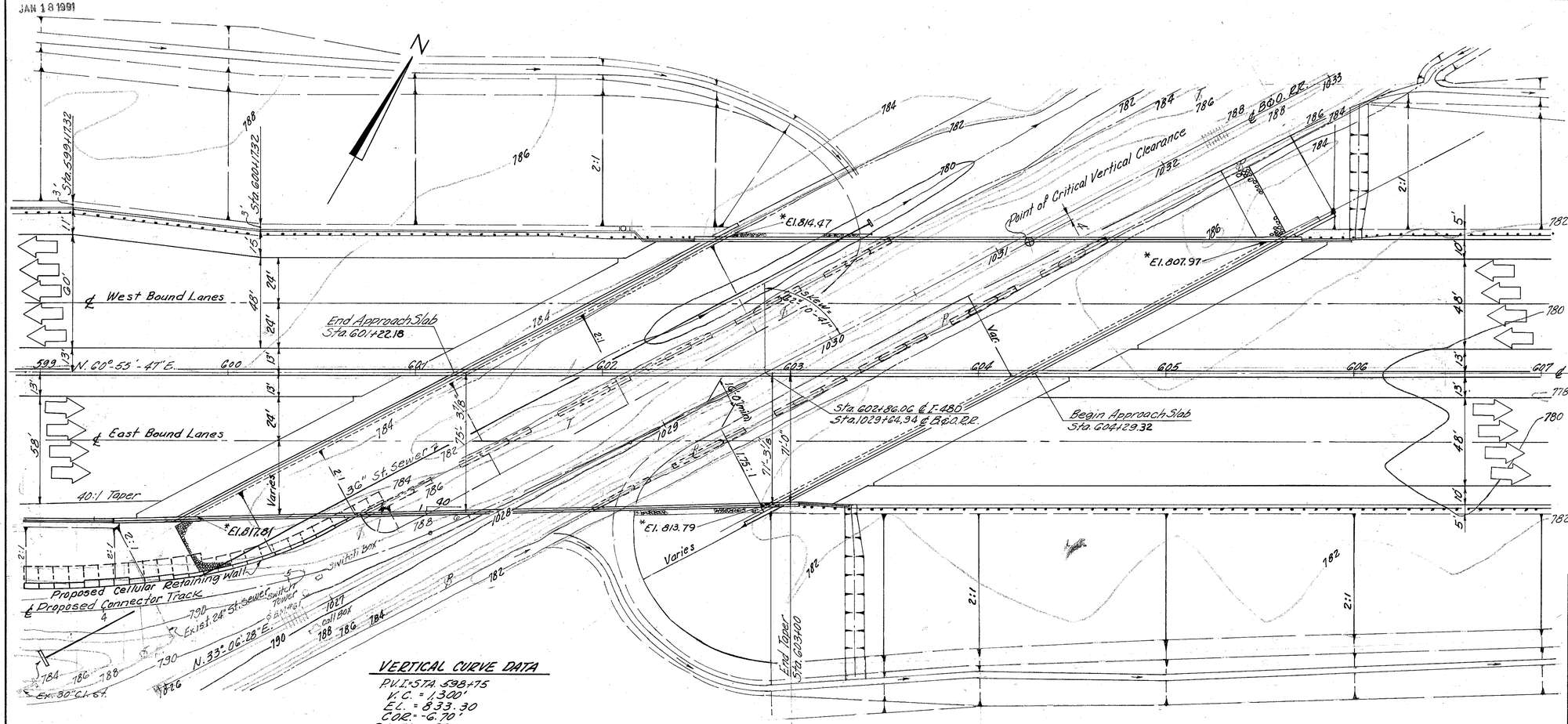


## PLAN

### VERTICAL CURVE DATA

P.V.I.=STA. 598+75
V.C. = 1,300'
E.L. = 833.30
C.O.E. = -6.70'
P.G. EL. = 826.60
$G_1$ = +1.56% $G_2$ = -2.56%

Earthwork limits shown are schematic. Actual slopes shall conform to plan cross-sections.

Note:
* The vertical curve data does not apply to bridge or graphic grade elevations. The bridge elevations were obtained by adding 0.10 feet to the elevations obtained from vertical curve data and worked out within the graphic grade limits.

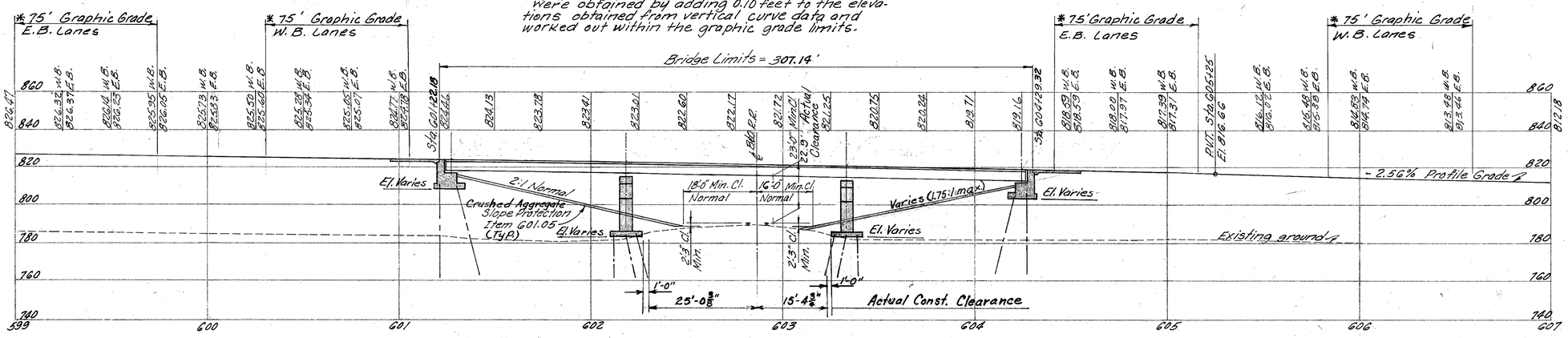


## PROFILE ALONG ℄ I-480

### PROPOSED STRUCTURE

TYPE: Continuous steel girder with reinforced concrete deck and reinforced concrete substructure.
SPANS: 91'-6", 114'-0", 91'-6" S.C. Brgs. along ℄ I-480
ROADWAY: W.B. - 71'-0" ℄ to face of parapet
E.B. - Average 73'-3 1/2" ℄ to face of parapet
BR-1 railing, Conc. Barrier Median
LOADING: C.F.-2000 (1957) Adequate for A.A.S.H.O. alternate loading.
WEARING SURFACE: 1 1/4" Latex Modified Concrete
SKEW: 62°-10'-41" Left forward
ALIGNMENT: Tangent
APPROACH SLABS: A.S.-1-81, 25'-0" long.

* Elevations marked with an asterisk are at top of slope at face of abutment.

All piles shall be HP10x42 steel piles.

Estimated average pay lengths are:
Abutments 40'±
Piers 22'±

### TRAFFIC ESTIMATE

Design Year 2000
Total A.D.T. 98,198

ALDEN E. STILSON & ASSOCIATES, LIMITED 1/25
CONSULTING ENGINEERS
CLEVELAND, OHIO COLUMBUS, OHIO WHEELING W. VA.

# SITE PLAN

BRIDGE No. CUY-480-1088
I-480 OVER B.&O. R.R.
CUYAHOGA COUNTY STA. 601+22.18 STA. 604+29.32

| DESIGNED | DRAWN | TRACED | CHECKED | REVIEWED | DATE | REVISED |
|---|---|---|---|---|---|---|
| R.C. | R.J.P. | | DLM | JEV | 9/13/68 | |

MICROFILMED
JAN 18 1991

| FHWA REGION | STATE | PROJECT | |
|---|---|---|---|
| 5 | OHIO | | |

379
500

CUYAHOGA COUNTY
CUY-480-10.39

STANDARD DRAWING REFERENCES

| DESCRIPTION | DWG. NO. | SHT. | DATE |
|---|---|---|---|
| END DAM AND END CROSSFRAME | SD-1-69 | 1-2 | 6-12-69 |
| CURB PLATES | SD-1-69 | 2 | 6-12-69 |
| SCUPPERS | SD-1-69 | 3 | 6-12-69 |
| BRIDGE ROADWAY RAILING | BR-1 | | 5-29-79 |
| ROCKERS AND BOLSTERS | RB-1-55 | | 2- 2-59 R |
| APPROACH SLABS | AS-1-81 | 1-3 | 11-27-81 |
| HIGHWAY LIGHTING | HL-7 | | 1-21-76 R |

(R INDICATES REVISED DATE)

MICROFILMED

SUPPLEMENTAL SPECIFICATION REFERENCES

| DESCRIPTION | NO. | DATE |
|---|---|---|
| EPOXY COATED REINFORCING STEEL | 824 | 10-08-82 |
| CONCRETE CURING AND PROTECTIVE MEMBRANE | 836 | 3-12-75 |
| BRIDGE DECK REPAIR AND OVERLAY WITH LATEX MODIFIED CONCRETE | 845 | 3-2-81 |
| LATEX FOR CONCRETE MODIFICATION | 953 | 8-21-80 |

COMMON DETAIL REFERENCES

| | |
|---|---|
| CONTRACTION JOINTS | SHEET 476 |
| EXPANSION JOINTS | SHEET 476 |
| PVC WATERSTOP | SHEET 476 |

DESIGN SPECIFICATIONS
THIS STRUCTURE CONFORMS TO THE REQUIREMENTS OF "DESIGN SPECIFICATIONS FOR HIGHWAY STRUCTURES" OF THE STATE OF OHIO, DEPARTMENT OF HIGHWAYS, DATED 9-01-57, TOGETHER WITH CURRENT REVISIONS THEREOF.

DESIGN DATA
DESIGN LOADING - CF-2000 (57)
CONCRETE CLASS S - UNIT STRESS 1500 P.S.I. (SUPERSTRUCTURE)
THE DESIGN IS BASED ON CLASS C CONCRETE
UNIT STRESS 1333 P.S.I.
CONCRETE CLASS C - UNIT STRESS 1333 P.S.I. (SUBSTRUCTURE).
STRUCTURAL STEEL ASTM A36 - UNIT STRESS 20,000 P.S.I.
REINFORCING STEEL ASTM A615, A616 OR A617.
GRADE 40 - UNIT STRESS 20,000 P.S.I.

REINFORCING BAR LAPPED SPLICES
ALL SPLICES SHALL BE LAPPED 30 BAR DIAMETERS.

DECK PROTECTION METHOD
EPOXY COATED REINFORCING STEEL, TOP MAT ONLY.

LATEX MODIFIED CONCRETE OVERLAY.

EMBANKMENT CONSTRUCTION
THE EMBANKMENTS SHALL BE CONSTRUCTED TO THE LEVEL OF THE SUBGRADE FOR A MINIMUM DISTANCE OF 200 FEET BACK OF THE ABUTMENTS. EXCAVATION SHALL THEN BE MADE FOR THE ABUTMENTS AND PIERS, *AND PILES DRIVEN.*

PILES
PILES SHALL BE DRIVEN TO REFUSAL ON BEDROCK. REFUSAL SHALL BE CONSIDERED AS OBTAINED BY PENETRATING SOFT BEDROCK FOR SEVERAL INCHES WITH A MINIMUM RESISTANCE OF 20 BLOWS PER INCH OR REFUSAL SHALL BE CONSIDERED AS OBTAINED AFTER THE PILE HAS CONTACTED HARD BEDROCK AND THE PILE HAS THEN RECEIVED AT LEAST 20 BLOWS.

DESIGN LOAD
40 TONS PER PILE FOR THE ABUTMENT PILES
40 TONS PER PILE FOR THE PIER PILES

UTILITY LINES
ALL EXPENSE INVOLVED IN RELOCATING THE AFFECTED UTILITY LINES SHALL BE BORNE BY THE OWNERS. THE CONTRACTOR AND OWNERS ARE REQUESTED TO COOPERATE BY ARRANGING THEIR WORK IN SUCH A MANNER THAT INCONVENIENCE TO EITHER WOULD BE HELD TO A MINIMUM.

CONSTRUCTION CLEARANCE
CONSTRUCTION CLEARANCE OF 8 FEET HORIZONTALLY FROM THE CENTER OF TRACKS AND 20 FEET VERTICALLY FROM A POINT LEVEL WITH THE TOP OF THE HIGHER RAIL, AND 4 FEET FROM THE CENTER OF TRACKS, SHALL BE MAINTAINED AT ALL TIMES.

RAILROAD AERIAL LINES
RAILROAD AERIAL LINES WILL BE RELOCATED BY THE RAILROAD. THE CONTRACTOR SHALL USE ALL PRECAUTIONS NECESSARY TO SEE THAT THE LINES ARE NOT DISTURBED DURING THE CONSTRUCTION STAGE AND SHALL COOPERATE WITH THE RAILROAD IN THE RELOCATION OF THESE LINES. THE COST OF THE RELOCATION SHALL BE INCLUDED IN THE RAILROAD FORCE ACCOUNT WORK.

| ITEM | TOTAL | UNIT | DESCRIPTION | ABUTS | PIERS | SUPER | GENERAL | |
|---|---|---|---|---|---|---|---|---|
| 503 | LUMP | | COFFERDAMS, CRIBS AND SHEETING | | | | LUMP | |
| 503 | 2821 | C.Y. | UNCLASSIFIED EXCAVATION | 1676 | 1145 | | | |
| 505 | LUMP | | PILE DRIVING EQUIPMENT MOBILIZATION | | | | LUMP | |
| 507 | 10,460 | L.F. | STEEL PILES, HP *10×42* | 5680 | 4780 | | | |
| 509 | *348,104* | LB | REINFORCING STEEL | 79,754 | *113,612* | 154,738 | | |
| 511 | 1436 | C.Y. | CLASS S CONCRETE, SUPERSTRUCTURE *(SEE PROPOSAL NOTE)* | | | 1436 | | |
| 511 | 834 | C.Y. | CLASS C CONCRETE, PIERS ABOVE FOOTINGS | | 834 | | | |
| 511 | 778 | C.Y. | CLASS C CONCRETE, ABUTMENTS ABOVE FOOTINGS | 778 | | | | |
| 511 | 751 | C.Y. | CLASS C CONCRETE, FOOTINGS | 518 | 233 | | | |
| 513 | 1,455,000 | LB | STRUCTURAL STEEL, ASTM A-36 *(AISC CATEGORY III)* | | | 1,455,000 | | |
| 514 | 1,455,000 | LB | FIELD PAINTING OF NEW STRUCTURAL STEEL, SYSTEM A | | | 1,455,000 | | |
| 516 | 606.42 | L.F. | STRUCTURAL STEEL EXPANSION JOINTS | | | 606.42 | | |
| 516 | 158 | L.F. | PVC WATERSTOP, AS PER PLAN | 158 | | | | |
| 516 | 202 | S.F. | 1 INCH PREFORMED EXPANSION JOINT FILLER | 202 | | | | |
| 518 | 421 | C.Y. | POROUS BACKFILL | 421 | | | | |
| 518 | *28* | EA | SCUPPERS INCLUDING SUPPORTS | | | *28* | | |
| 518 | 665 | L.F. | 6 INCH PERFORATED, HELICAL CSP, 707.01 | 665 | | | | |
| 518 | 502 | L.F. | 6 INCH NON-PERFORATED, HELICAL CSP, INCLUDING SPECIALS, 707.01 | 502 | | | | |
| 601 | 4600 | S.Y. | CRUSHED AGGREGATE SLOPE PROTECTION | | | | 4600 | |
| 625 | | | SEE SHEET 256 & 257 FOR LIGHTING SUMMARY | | | | | |
| 824 | 181,175 | LB | EPOXY COATED REINFORCING STEEL | 1,651 | | 179,524 | | |
| 845 | 4734 | S.Y. | LATEX MODIFIED CONCRETE OVERLAY, 1 1/4 IN. THICK (SEE PROPOSAL NOTE) | | | 4,734 | | |

B2150018

2/25

ALDEN E. STILSON & ASSOCIATES
CONSULTING ENGINEERING AND ARCHITECTURE
COLUMBUS, CLEVELAND, WHEELING

# GENERAL NOTES AND ESTIMATED QUANTITIES

BRIDGE NO. CUY-480-1088
I-480 OVER B.&O. R.R.
CUYAHOGA COUNTY STA. 601+22.18 TO STA. 604+29.32

| DESIGNED | DRAWN | TRACED | CHECKED | REVIEWED | DATE | REVISED |
|---|---|---|---|---|---|---|
| WM | | | BTG 3/14/83 | G.W.M. | 3/14/83 | |

MICROFILMED
JAN 18 1991

| FED. RD. DIVISION | STATE | PROJECT | TYPE FUNDS |
|---|---|---|---|
| 2 | OHIO | | |

380
500

CUYAHOGA COUNTY
CUY-480-10.39

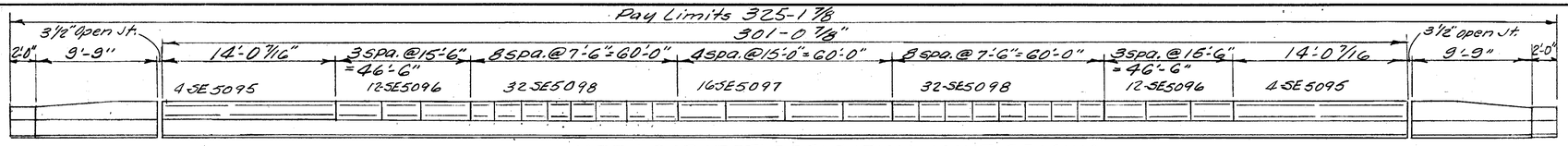


## NORTH PARAPET DEFLECTION JOINT SPACING

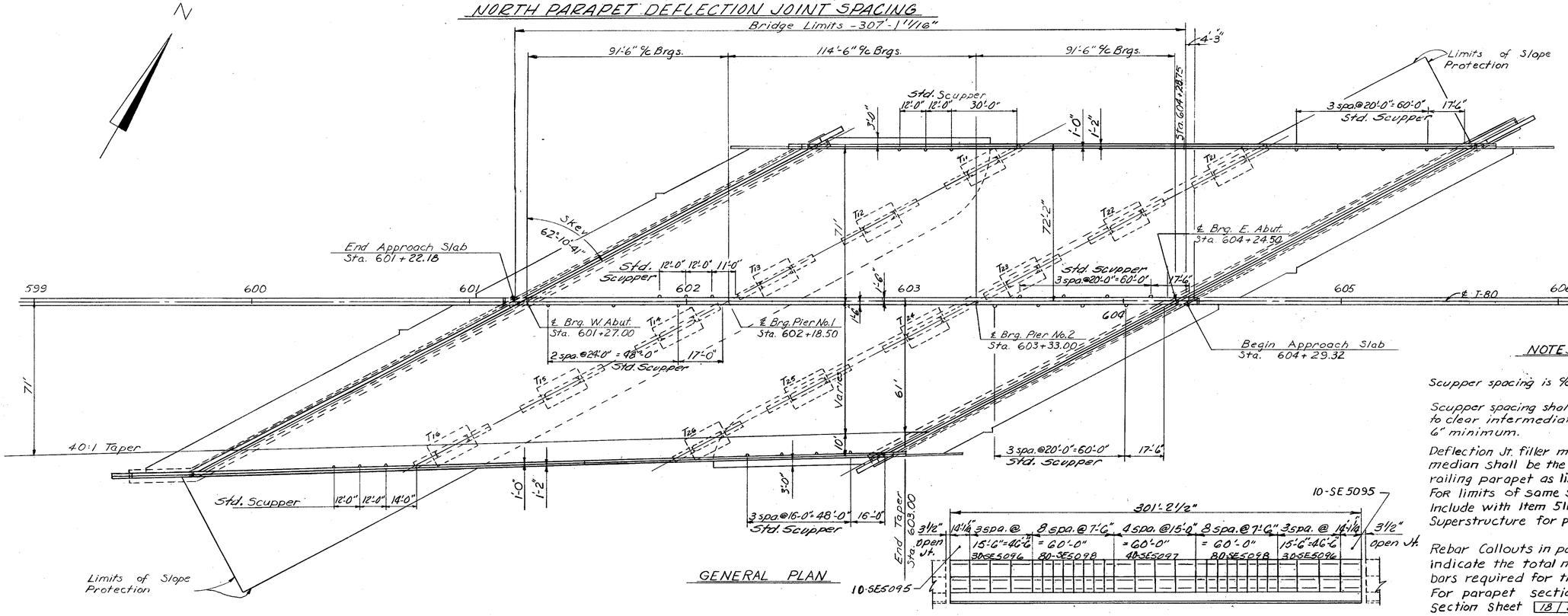


GENERAL PLAN




MEDIAN DEFLECTION JOINT SPACING

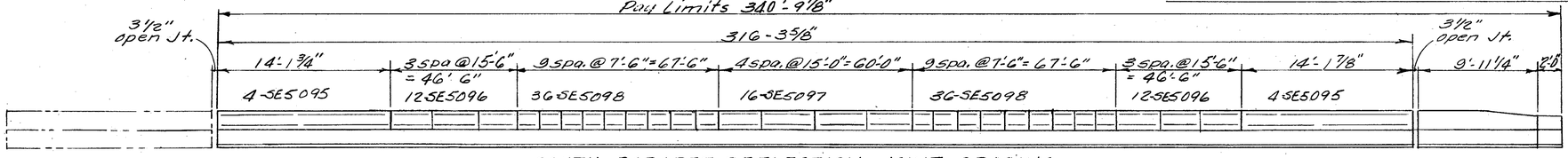


SOUTH PARAPET DEFLECTION JOINT SPACING

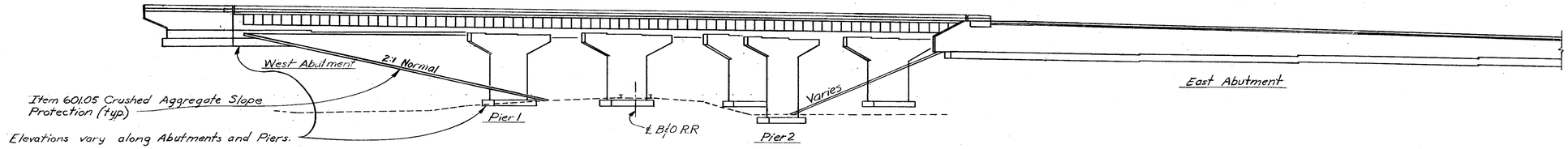


GENERAL ELEVATION
(Piles not shown)

## NOTES

Scupper spacing is ℄ along face of curb.

Scupper spacing shall be field adjusted to clear intermediate crossframes by 6" minimum.

Deflection Jt. filler material for the barrier median shall be the same as that for the railing parapet as listed on Std. Dwg. BR-1. For limits of same see Sht. 18/25. Include with Item 511 Class "C" Conc. Superstructure for payment.

Rebar Callouts in parapets and median indicate the total number of longitudinal bars required for the spaces shown. For parapet section see Transverse Section Sheet 18/25.

For median section see Median Detail Sheet 19/25.

ALDEN E. STILSON & ASSOCIATES, LIMITED
CONSULTING ENGINEERS
COLUMBUS, OHIO

3/25

# GENERAL PLAN and ELEVATION

BRIDGE No. CUY-80-1088
I-480 over B/O R.R.
CUYAHOGA COUNTY
STA. 601+22.18
STA. 604+29.32

| DESIGNED | DRAWN | TRACED | CHECKED | REVIEWED | DATE | REVISED |
|---|---|---|---|---|---|---|
| DLM | DW | | SBP | JEV | 9/13/68 | |

MICROFILMED
JAN 18 1991

| F.H.W.A. REGION | STATE | PROJECT | |
|---|---|---|---|
| 5 | OHIO | | |

381/500

CUYAHOGA COUNTY
CUY-480-10.39

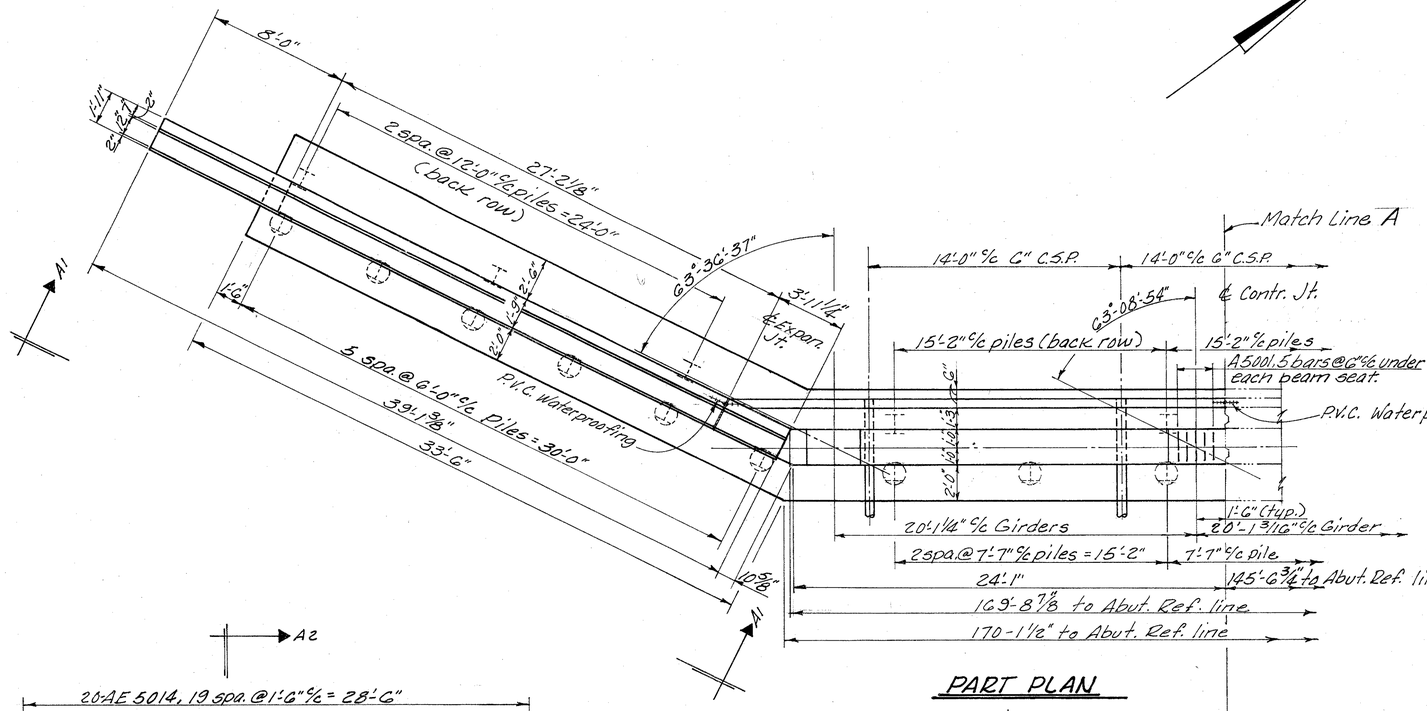


PART PLAN

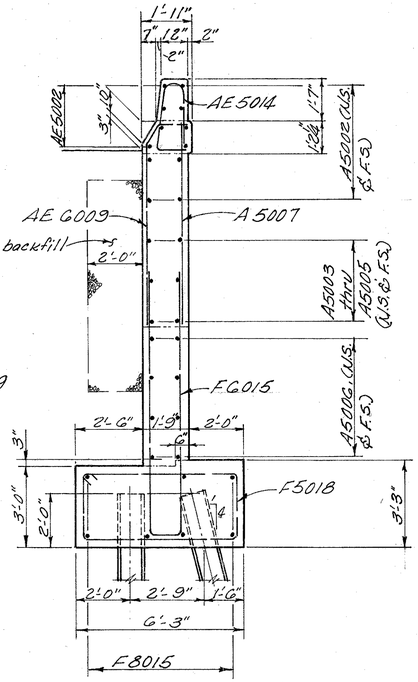


SECTION A2-A2.

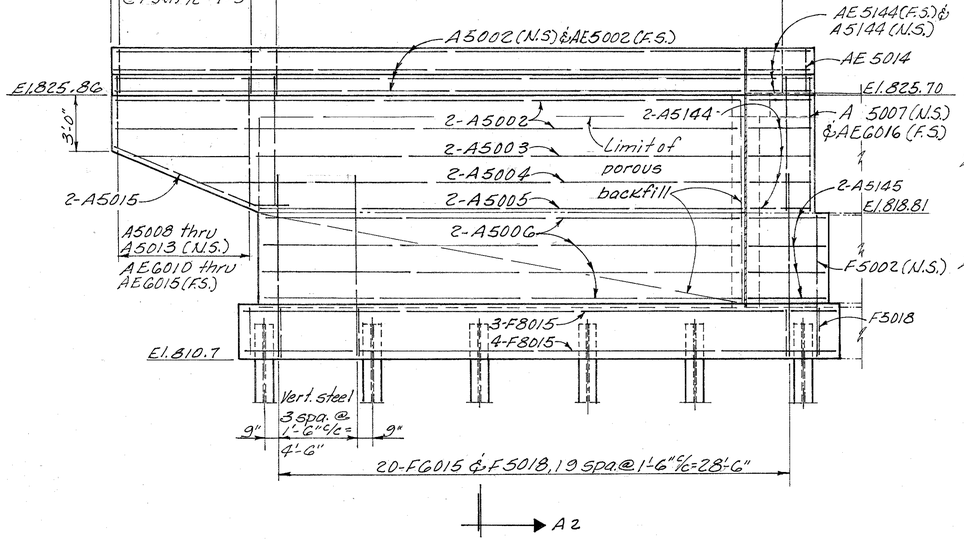


VIEW A1-A1

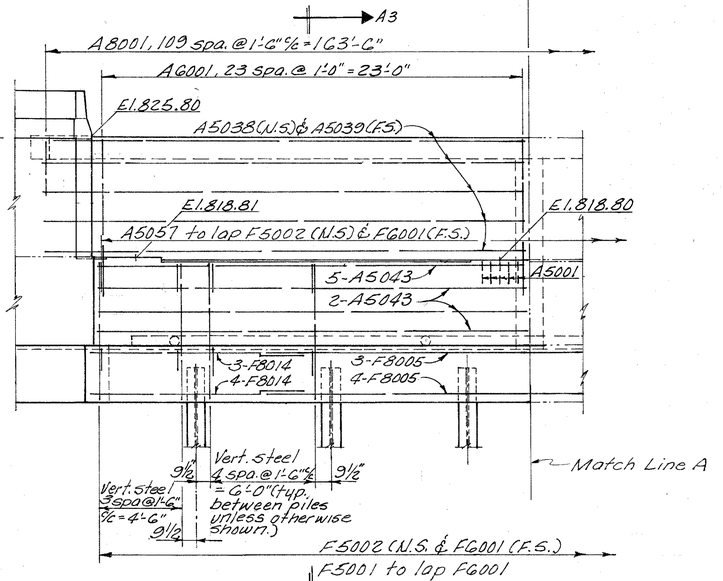


PART ELEVATION

Notes:
Reinforcing stee location: N.S. indicates near side.
F.S. indicates far side.

For Section A3-A3 see sheet 11/25

4/25

ALDEN E. STILSON & ASSOCIATES
CONSULTING ENGINEERS
CLEVELAND, OHIO COLUMBUS, OHIO WHEELING, W. VA.

# WEST ABUTMENT DETAILS

BRIDGE No. CUY-480-1088
I-480 over B & O R.R.

CUYAHOGA COUNTY

STA. 601+22.18
STA. 604+29.32

| DESIGNED | DRAWN | TRACED | CHECKED | REVIEWED | DATE | REVISED |
|---|---|---|---|---|---|---|
| WM | R.T. | | BTG | G.W.M. | 3/14/83 | |

MICROFILMED
JAN 18 1991

| FED. RD. DIVISION | STATE | PROJECT | TYPE FUNDS |
|---|---|---|---|
| 2 | OHIO | | |

382
500

CUYAHOGA COUNTY
CUY-480-10.39

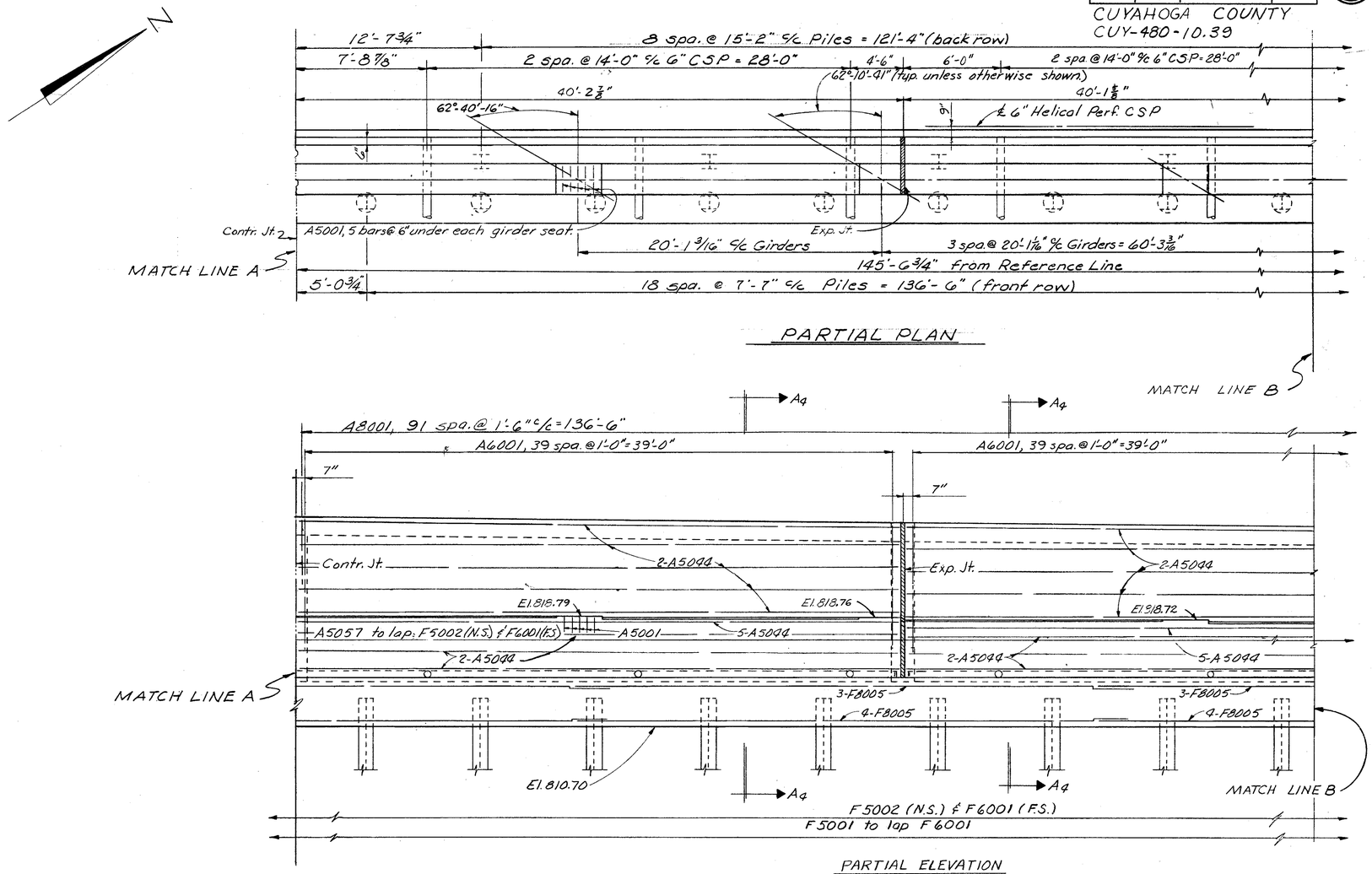


## NOTES

*Elevations marked with an asterisk are to top of 2" edge bar at face of curb.

Reinforcing steel location: N.S. indicates near side. F.S. indicates far side.

For expansion or contraction joint details, see Common Details sheet 476.

All piles shall be HP 10×42 steel piles.
Vertical piles
Battered piles 1:4

6" Helical Perforated CSP shall have all ends capped and shall not be continuous across the expansion joints.

End Dam Joints: Joints shall be provided in the abutment portion of the end dam at contraction and expansion joints.

**The spacing of vertical reinforcing steel shall be field adjusted to clear the expansion and contraction joints, and drainage pipes by 3" minimum.

For additional notes and details see sheets 6, 7, & 11 / 25

For Sections A4, see sheet 11 / 25.

Backwall Concrete: In addition to the provisions of 511.08, backwall concrete above the optional construction joint at the approach slab seat shall not be placed until after the deck concrete in the span adjacent to the backwall has been placed.

ALDEN E. STILSON & ASSOCIATES, LIMITED
CONSULTING ENGINEERS
COLUMBUS, OHIO
5/25

# WEST ABUTMENT DETAILS

BRIDGE No. CUY-80-1088
I-480 over B&O R.R.
STA. 601+22.16
CUYAHOGA COUNTY STA. 604+29.32

| DESIGNED | DRAWN | TRACED | CHECKED | REVIEWED | DATE | REVISED |
|---|---|---|---|---|---|---|
| DLM | DW | | SBP | JEV | 9/13/90 | |

MICROFILMED
JAN 18 1991

| FED. RD. DIVISION | STATE | PROJECT | TYPE FUNDS |
|---|---|---|---|
| 2 | OHIO | | |

383
500

CUYAHOGA COUNTY
CUY-480-10.39

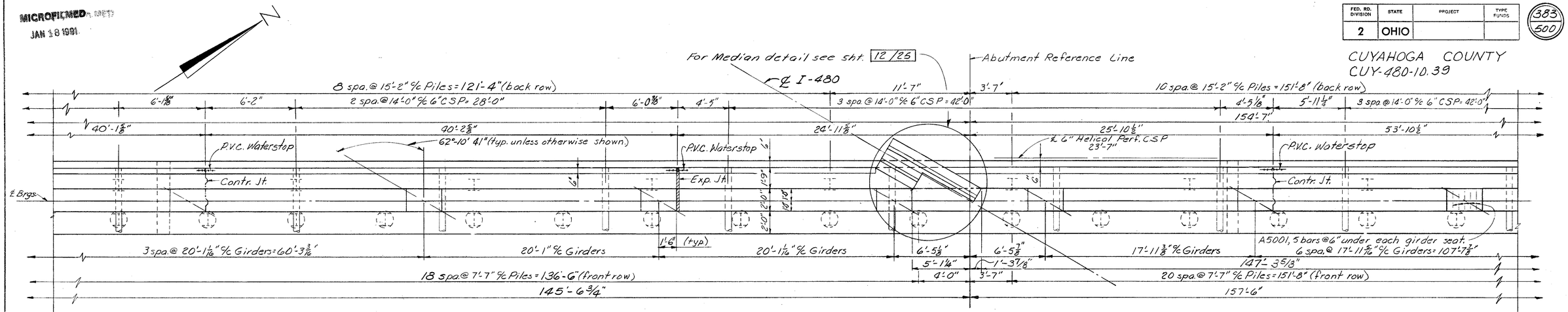


## PARTIAL PLAN

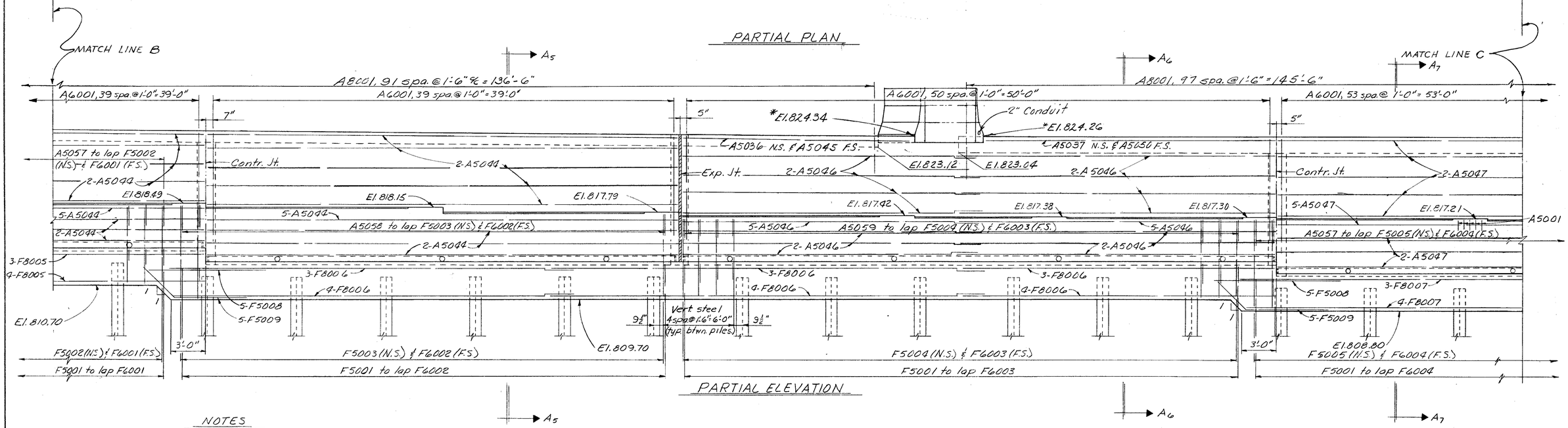


## PARTIAL ELEVATION

### NOTES

Reinforcing steel location: N.S. indicates near side.
F.S. indicates far side.

For additional notes and details see sheets 5, 7, 11/25.

For Sections A5, A6, & A7 see Sheet 11/25.

ALDEN E. STILSON & ASSOCIATES, LIMITED
CONSULTING ENGINEERS
COLUMBUS, OHIO

6/25

# WEST ABUTMENT DETAILS

BRIDGE No. CUY-480-1088
I-480 over B&O R.R.
CUYAHOGA COUNTY
STA. 601 + 22.18
STA. 604 + 29.32

| DESIGNED | DRAWN | TRACED | CHECKED | REVIEWED | DATE | REVISED |
|---|---|---|---|---|---|---|
| DLM | DW | | SBP | JEV | 9/13/68 | |

MICROFILMED
JAN 18 1991

| FED. RD. DIVISION | STATE | PROJECT | TYPE FUNDS |
|---|---|---|---|
| 2 | OHIO | | |

384
500

CUYAHOGA COUNTY
CUY-480-10.39

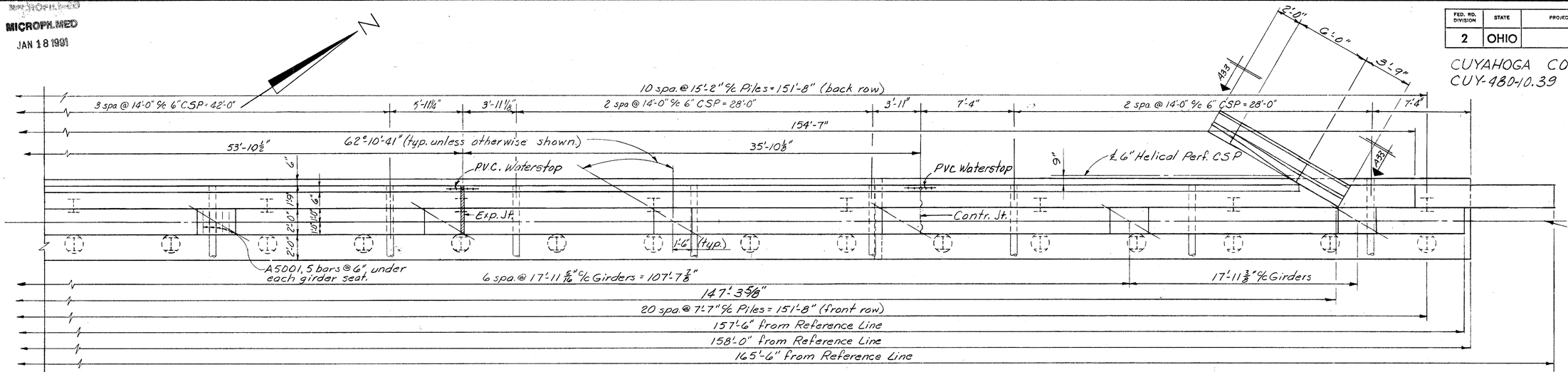


## PARTIAL PLAN

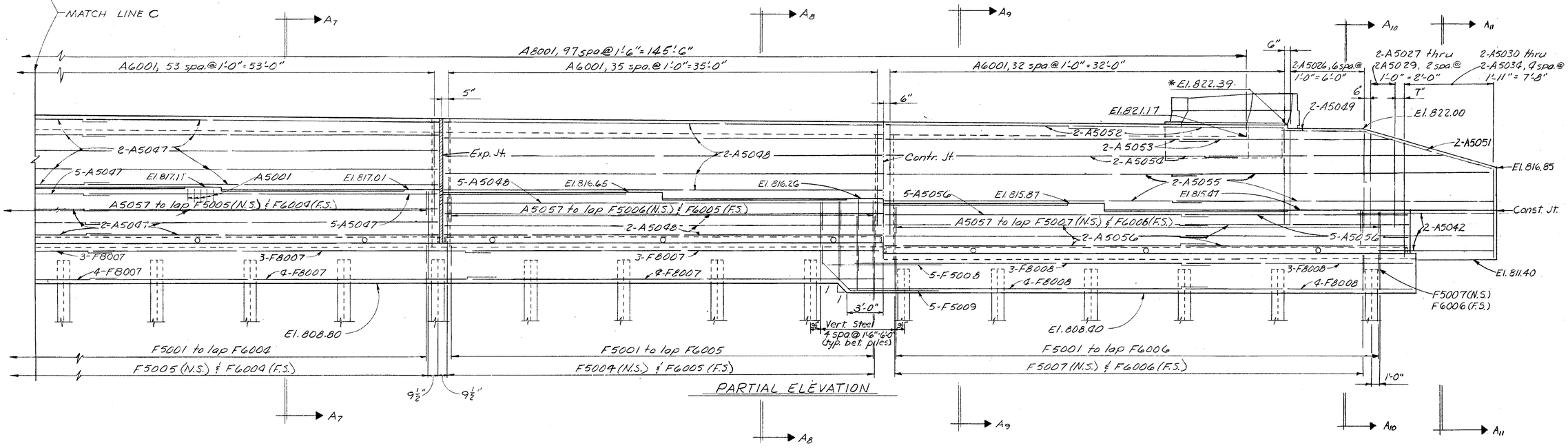


## PARTIAL ELEVATION

## NOTES

Reinforcing steel location: N.S. indicates near side.
F.S. indicates far side.

For additional notes and details see sheets 5.6.11 25.

For Sections A7, A8, A9, A10, & A11 see Sheet 11 25

For Elevation A33 - A33 see Sheet 12 25

ALDEN E. STILSON & ASSOCIATES, LIMITED
CONSULTING ENGINEERS
COLUMBUS, OHIO

7 25

# WEST ABUTMENT DETAILS

BRIDGE No. CUY-4804088
I-480 over B&O R.R.
STA. 601 + 22.18
CUYAHOGA COUNTY STA. 604 + 29.32

| DESIGNED | DRAWN | TRACED | CHECKED | REVIEWED | DATE | REVISED |
|---|---|---|---|---|---|---|
| DLM | DW | | SBP | JEV | 9/13/68 | |

MICROFILMED
JAN 18 1991

| FED. RD. DIVISION | STATE | PROJECT | TYPE FUNDS |
|---|---|---|---|
| 2 | OHIO | | |

385
500

CUYAHOGA COUNTY
CUY-480-10.39

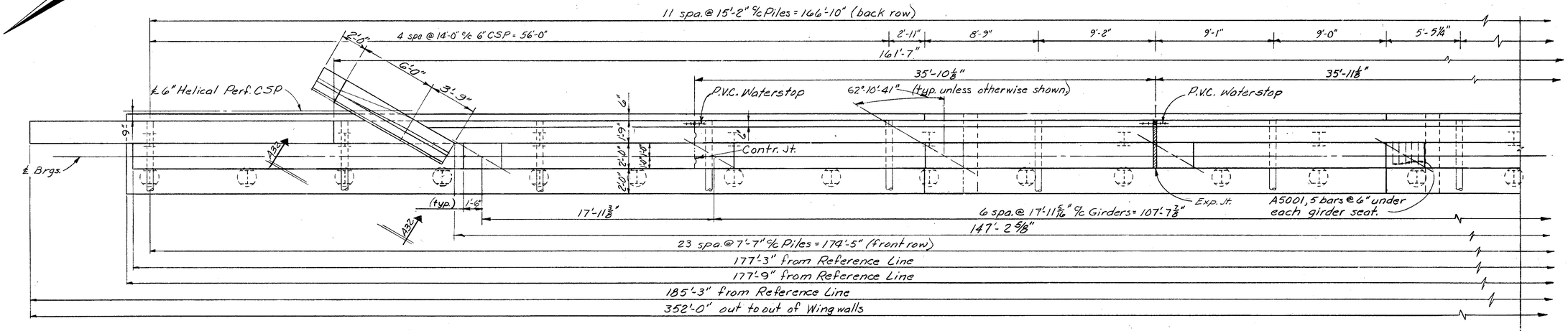


PARTIAL PLAN

MATCH LINE A

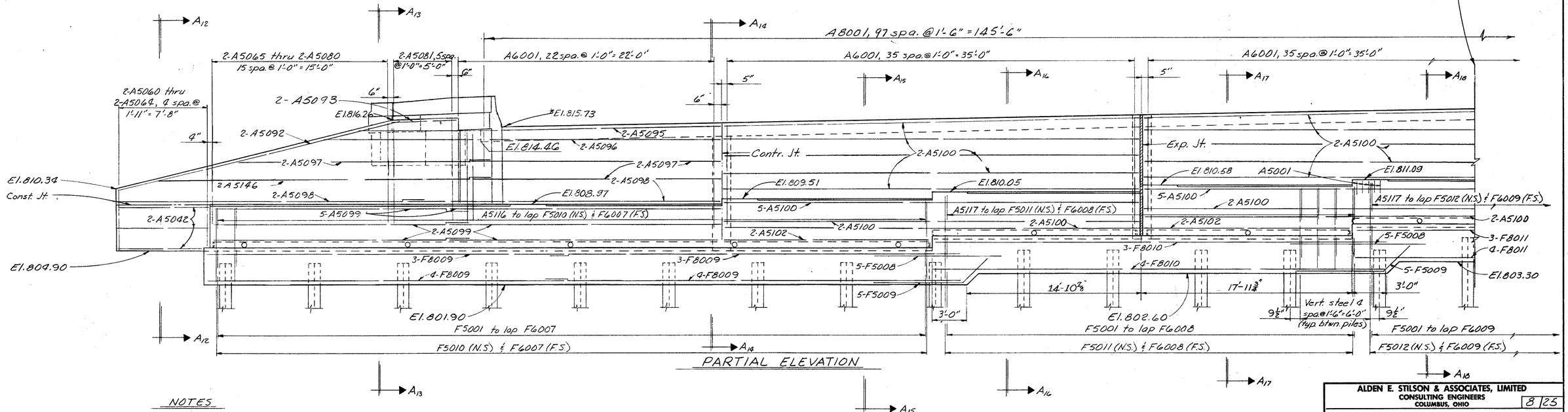


PARTIAL ELEVATION

NOTES

Reinforcing steel location: N.S. indicates near side, F.S. indicates far side.

For additional notes and details see sheets 5,9,10,11|25.

For Sections A12, A13, A14, A15, A16, A17, & A18 see sheet 11|25.

For Elevation A32-A32 see Sht. 12|25

ALDEN E. STILSON & ASSOCIATES, LIMITED
CONSULTING ENGINEERS
COLUMBUS, OHIO

8|25

# EAST ABUTMENT DETAILS

BRIDGE No. CUY-480-1088
I-480 over B&O R.R.
STA. 601+22.18
CUYAHOGA COUNTY STA. 604+29.32

| DESIGNED | DRAWN | TRACED | CHECKED | REVIEWED | DATE | REVISED |
|---|---|---|---|---|---|---|
| DLM | DW | | SBP | JEV | 9/13/68 | |

MICROFILMED
JAN 18 1991

| FED. RD. DIVISION | STATE | PROJECT | TYPE FUNDS |
|---|---|---|---|
| 2 | OHIO | | |

380
500

CUYAHOGA COUNTY
CUY-480-10.39

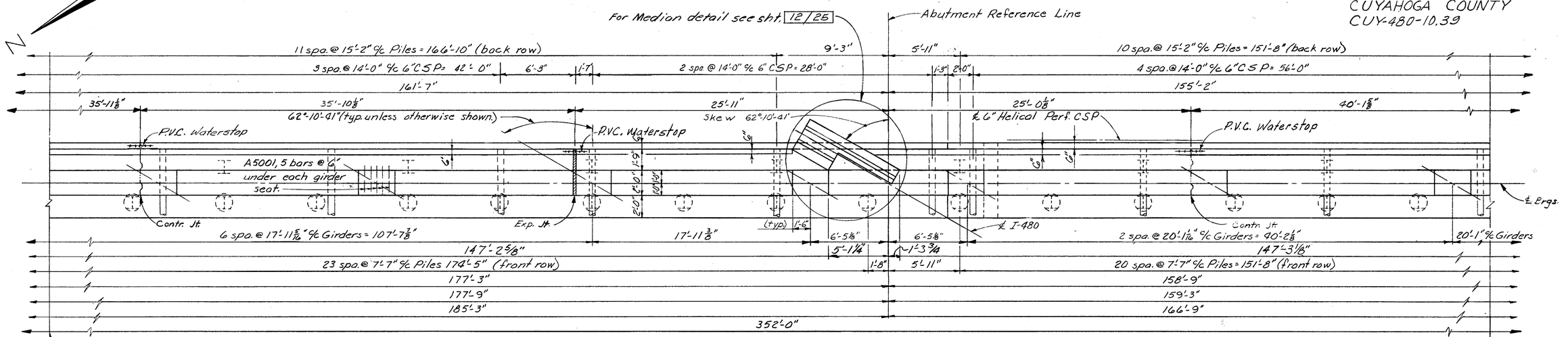


## PARTIAL PLAN

MATCH LINE A

MATCH LINE B

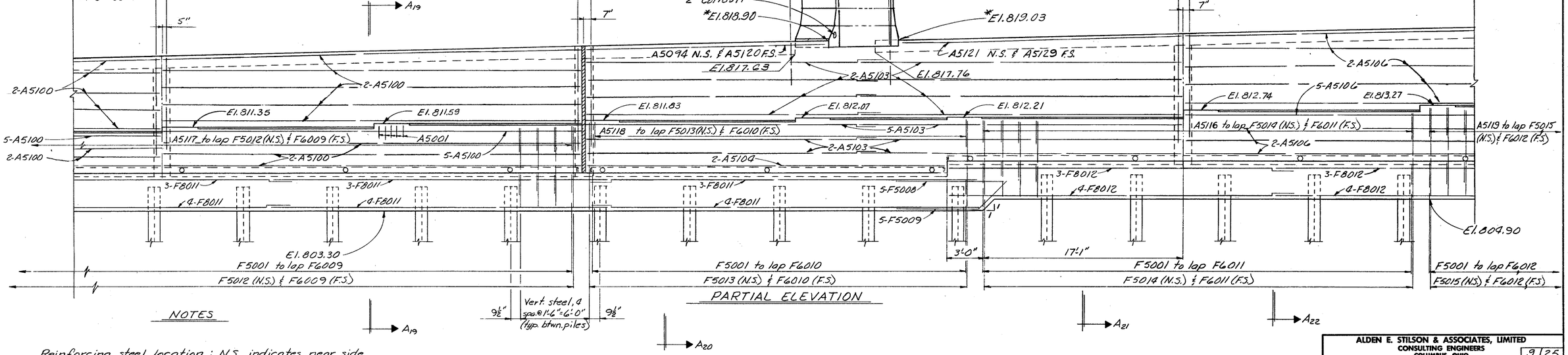


## PARTIAL ELEVATION

### NOTES

Reinforcing steel location : N.S. indicates near side.
F.S. indicates far side.

For additional notes and details see sheets 5,8,10,11/25.

For Sections $A_{19}$, $A_{20}$, $A_{21}$, & $A_{22}$ see Sheet 11/25.

ALDEN E. STILSON & ASSOCIATES, LIMITED
CONSULTING ENGINEERS
COLUMBUS, OHIO
9/25

# EAST ABUTMENT DETAILS

BRIDGE No. CUY-480-1088
E480 over B&O R.R.
STA. 601+22.18
CUYAHOGA COUNTY STA. 604+29.32

| DESIGNED | DRAWN | TRACED | CHECKED | REVIEWED | DATE | REVISED |
|---|---|---|---|---|---|---|
| DLM | DW | | SBP | JEV | 9/13/68 | |

MICROFILMED
JAN 18 1991

| FED. RD. DIVISION | STATE | PROJECT | TYPE FUNDS |
|---|---|---|---|
| 2 | OHIO | | |

387
500

CUYAHOGA COUNTY
CUY-480-10.39

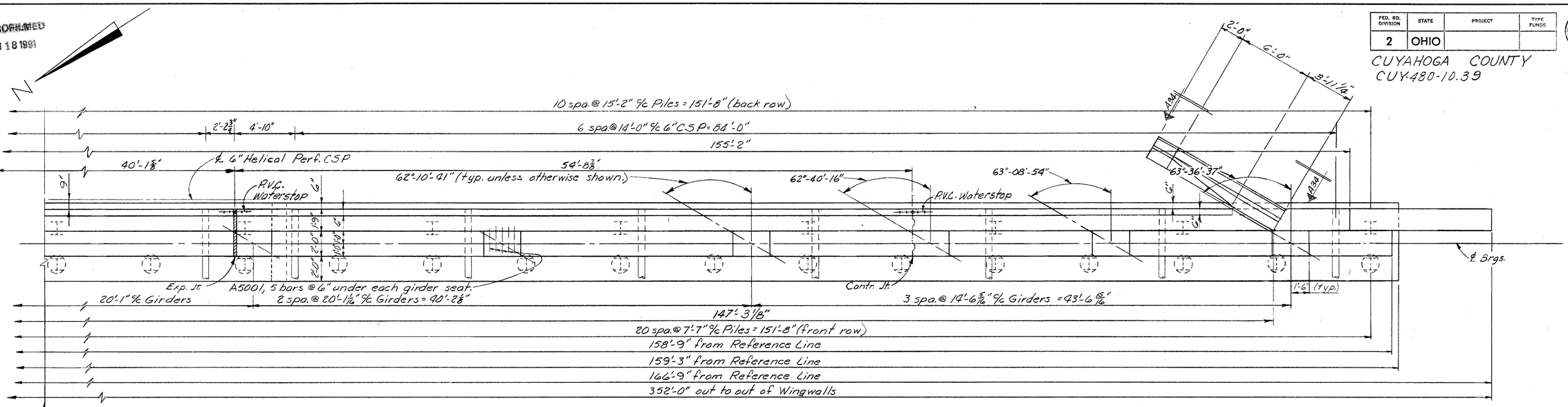


## PARTIAL PLAN

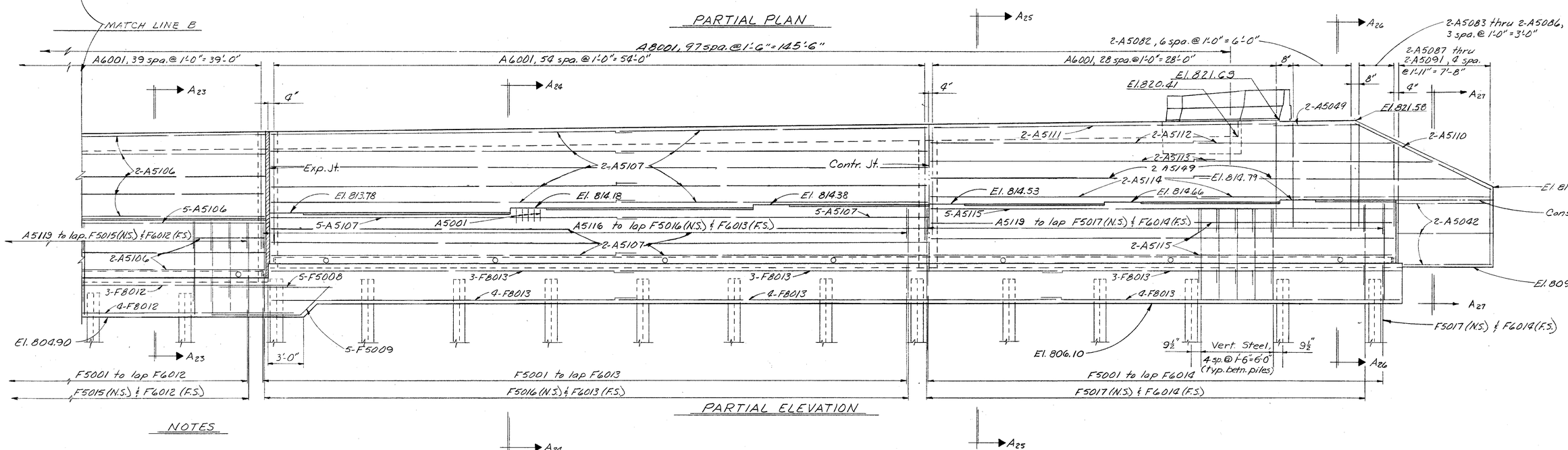


## PARTIAL ELEVATION

### NOTES

Reinforcing steel location: N.S. indicates near side.
F.S. indicates far side.

For additional notes and details see sheets 5,8,9,11|25

For Sections A23, A24, A25, A26, & A27 see Sheet 11|25

ALDEN E. STILSON & ASSOCIATES, LIMITED
CONSULTING ENGINEERS
COLUMBUS, OHIO
10|25

# EAST ABUTMENT DETAILS

BRIDGE No. CUY-480-1088
I-480 over B&O R.R.
STA. 601+22.18
CUYAHOGA COUNTY STA. 604+29.32

| DESIGNED | DRAWN | TRACED | CHECKED | REVIEWED | DATE | REVISED |
|---|---|---|---|---|---|---|
| DLM | DW | | SBP | JEV | 9/13/68 | |

MICROFILMED
JAN 18 1999

| FED. RD. DIVISION | STATE | PROJECT | TYPE FUNDS |
|---|---|---|---|
| 2 | OHIO | | |

388/500

CUYAHOGA COUNTY
CUY-480-10.39

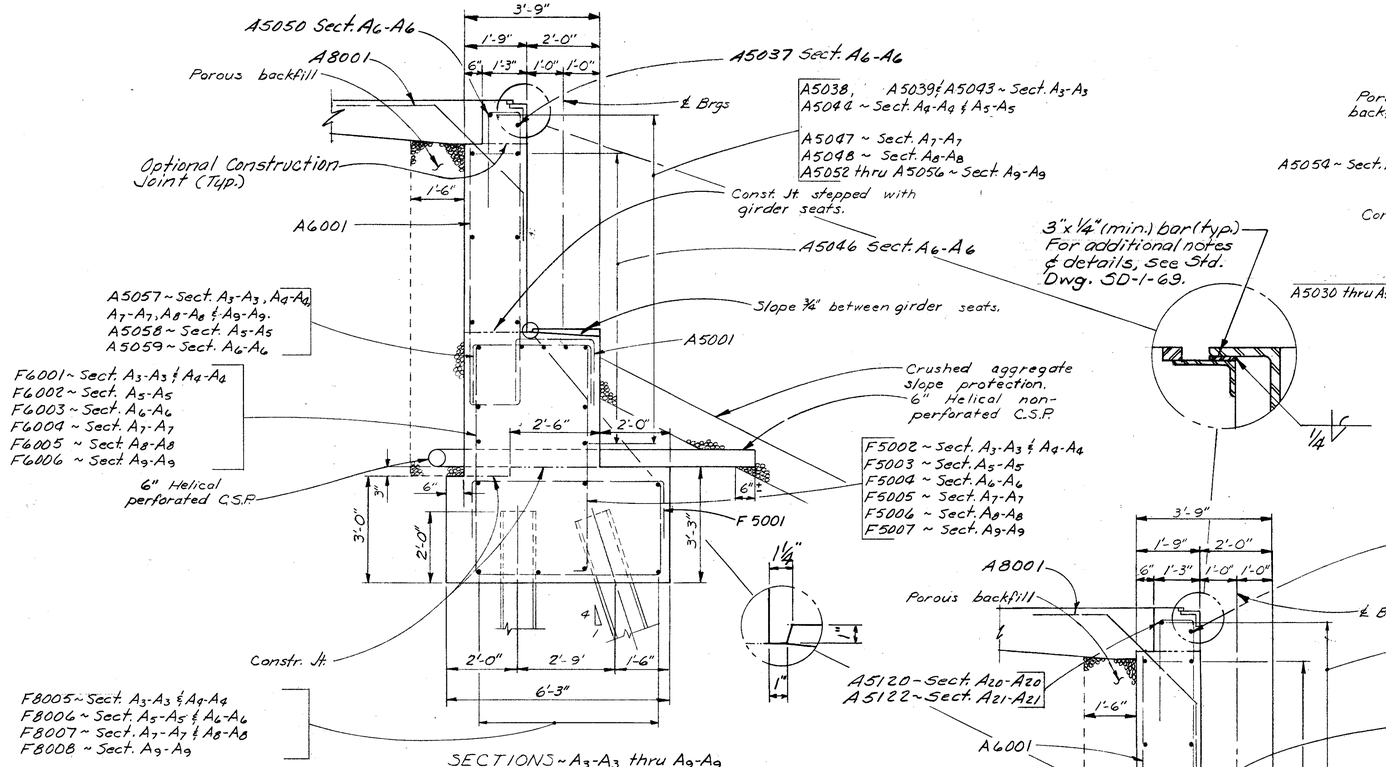


SECTIONS ~ $A_3$-$A_3$ thru $A_9$-$A_9$

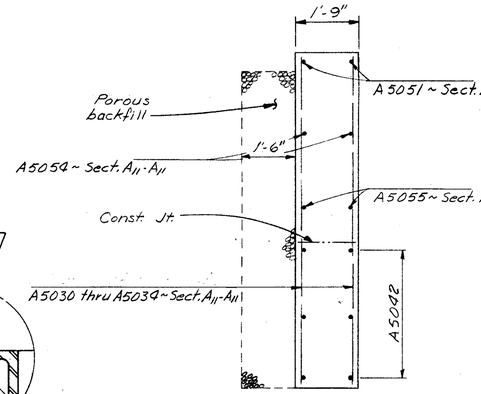


SECTION ~ $A_{11}$-$A_{11}$

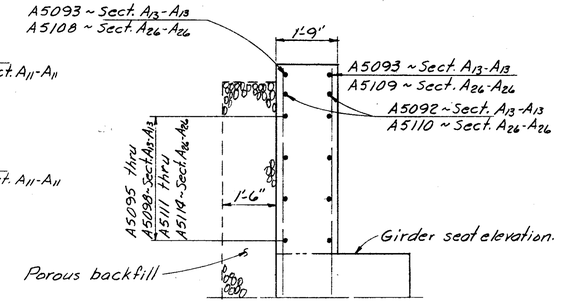


PARTIAL SECTIONS ~ $A_{13}$-$A_{13}$ & $A_{26}$-$A_{26}$**

Note: ** The details not shown below the girder seat elevation same as Sections $A_{14}$-$A_{14}$ and $A_{25}$-$A_{25}$ for Sections $A_{13}$-$A_{13}$ and $A_{26}$-$A_{26}$ respectively.

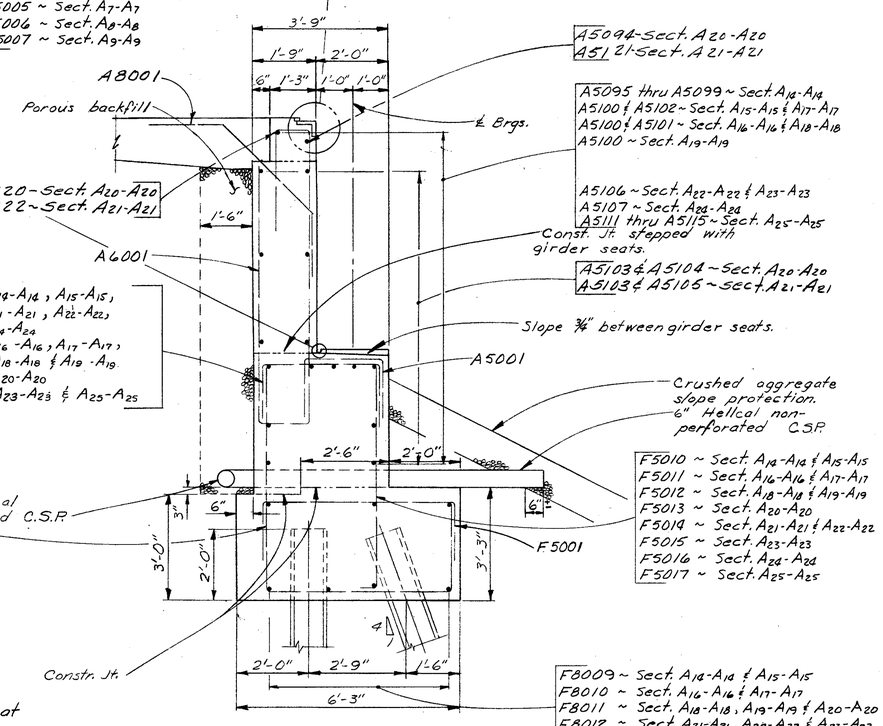


SECTIONS ~ $A_{14}$-$A_{14}$ thru $A_{25}$-$A_{25}$




SECTIONS ~ $A_{12}$-$A_{12}$ & $A_{27}$-$A_{27}$

| | | | | | | | | |
|---|---|---|---|---|---|---|---|---|
| For location of Sections | A4 | & | A4 | see Sht. | 5 | 25 |
| " " " " | $A_5$ | " | $A_7$ | " | " | 6 | 25 |
| " " " " | $A_7$ | " | $A_{11}$ | " | " | 7 | 25 |
| " " " " | $A_{12}$ | " | $A_{18}$ | " | " | 8 | 25 |
| " " " " | $A_{19}$ | " | $A_{22}$ | " | " | 9 | 25 |
| " " " " | $A_{23}$ | " | $A_{27}$ | " | " | 10 | 25 |
| " " " " | $A_2$ | " | $A_3$ | " | " | 4 | 25 |

NOTES:

The reinforcing steel in the footing shall clear all footing faces by 3" min.
Porous backfill shall extend from the top of the footing upward to the underside of the approach slab and to the earth shoulders and outward to the embankment slopes. Excavation therefore in excess of that required for construction of the abutment shall be considered as paid for in the bid price per cubic yard paid for porous backfill.

For additional notes and details see sheets 5 thru 10 | 25

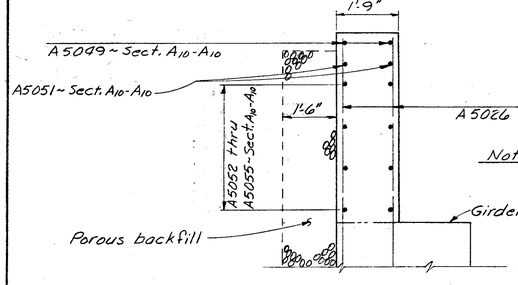


PARTIAL SECTION ~ $A_{10}$-$A_{10}$*

Note: * The details not shown below the girder seat elevation same as Sections $A_3$-$A_3$ and $A_9$-$A_9$ and $A_{10}$-$A_{10}$ respectively.

ALDEN E. STILSON & ASSOCIATES, LIMITED
CONSULTING ENGINEERS
COLUMBUS, OHIO
11 | 25

# ABUTMENT DETAILS

BRIDGE No. CUY-480-1088
I-480 over B&O R.R.
STA. 601+22.18
CUYAHOGA COUNTY STA. 604+29.32

| DESIGNED | DRAWN | TRACED | CHECKED | REVIEWED | DATE | REVISED |
|---|---|---|---|---|---|---|
| DLM | DW | | SBP | JEV | 9/18/68 | |

MICROFILMED
JAN 18 1991

| FED. RD. DIVISION | STATE | PROJECT | TYPE FUNDS |
|---|---|---|---|
| 2 | OHIO | | |

389
500

CUYAHOGA COUNTY
CUY-480-10.39

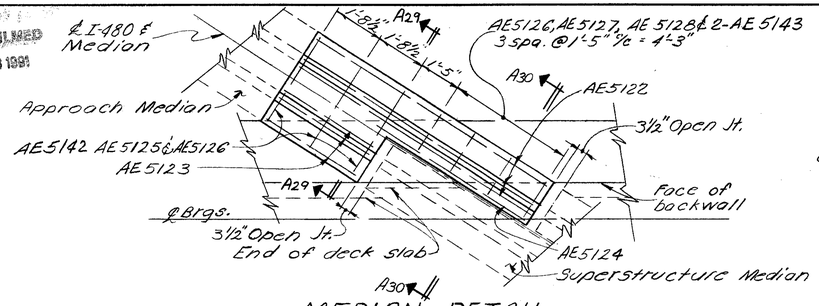


MEDIAN DETAIL

Median curb plates not shown. For details see Std. Dwg. SD-1-69 Sht. 2.

Shts 6/25 & 7/25

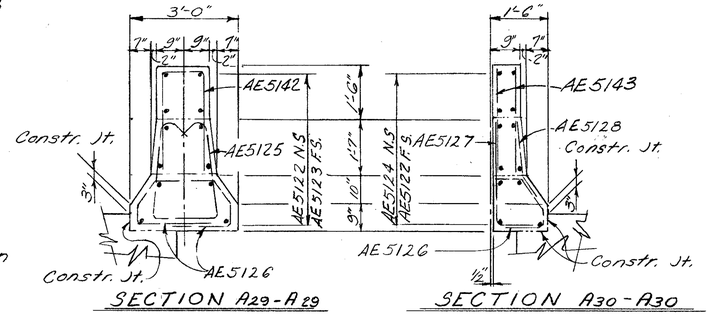


SECTION A29-A29




SECTION A30-A30

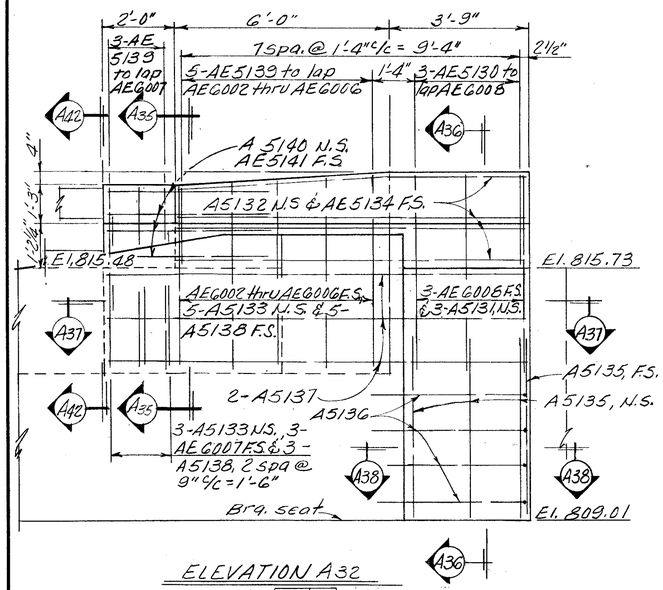


ELEVATION A32

Sht. 8/25

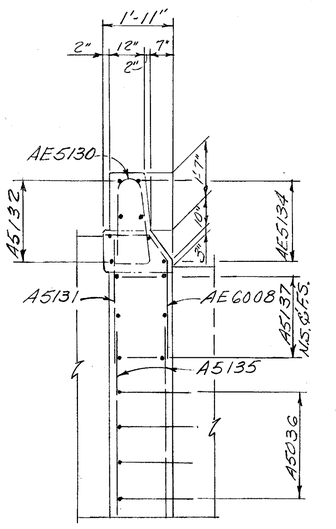


SECTION A36-A36

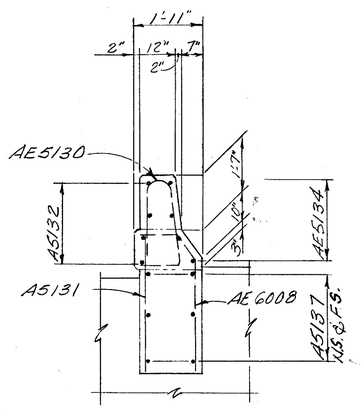


SECTION A39-A39

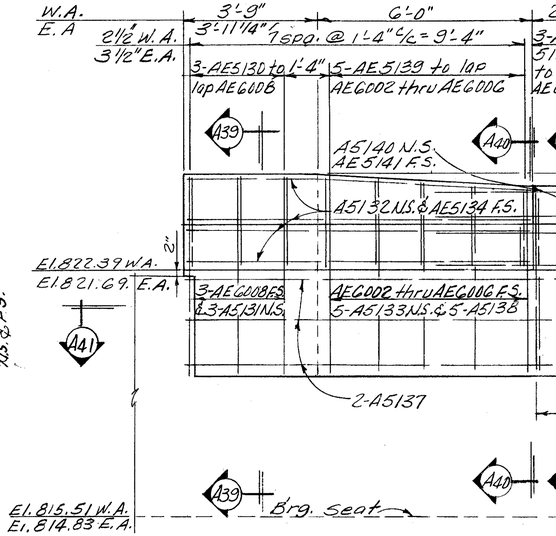


ELEVATION A33 & A34

Shts. 7/25 & 10/25

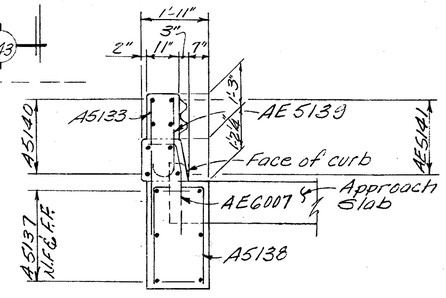


SECTION A42-A42

SECTION A43-A43

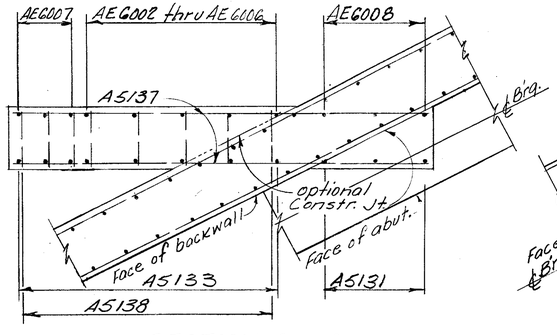


SECTION A37-A37

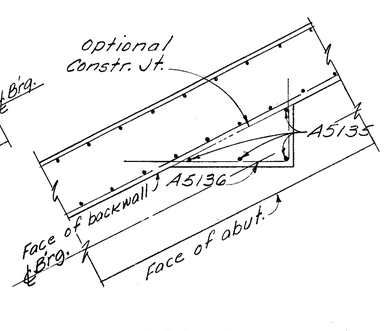


SECTION A38-A38

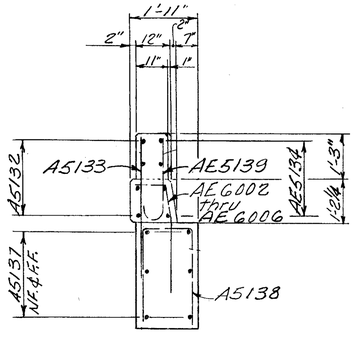


SECTION A35-A35

SECTION A40-A40

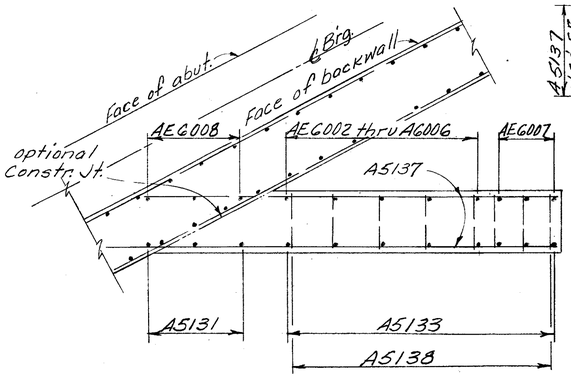


SECTION A41-A41

12/25

ALDEN E. STILSON & ASSOCIATES, LIMITED
CONSULTING ENGINEERS
CLEVELAND, OHIO COLUMBUS, OHIO WHEELING, W. VA.

# ABUTMENT DETAILS

BRIDGE No. CUY-480-1088
I-480 over B & O R.R.
STA. 601+22.18
CUYAHOGA COUNTY STA 604+29.32

| DESIGNED | DRAWN | TRACED | CHECKED | REVIEWED | DATE | REVISED |
|---|---|---|---|---|---|---|
| WM | R.T. | | BTG | G.W.M. | 3/14/88 | |

MICROFILMED
MAR 18 1991

| FED. RD. DIVISION | STATE | PROJECT | TYPE FUNDS |
|---|---|---|---|
| 2 | OHIO | | |

390/500

CUYAHOGA COUNTY
CUY-480-10.39

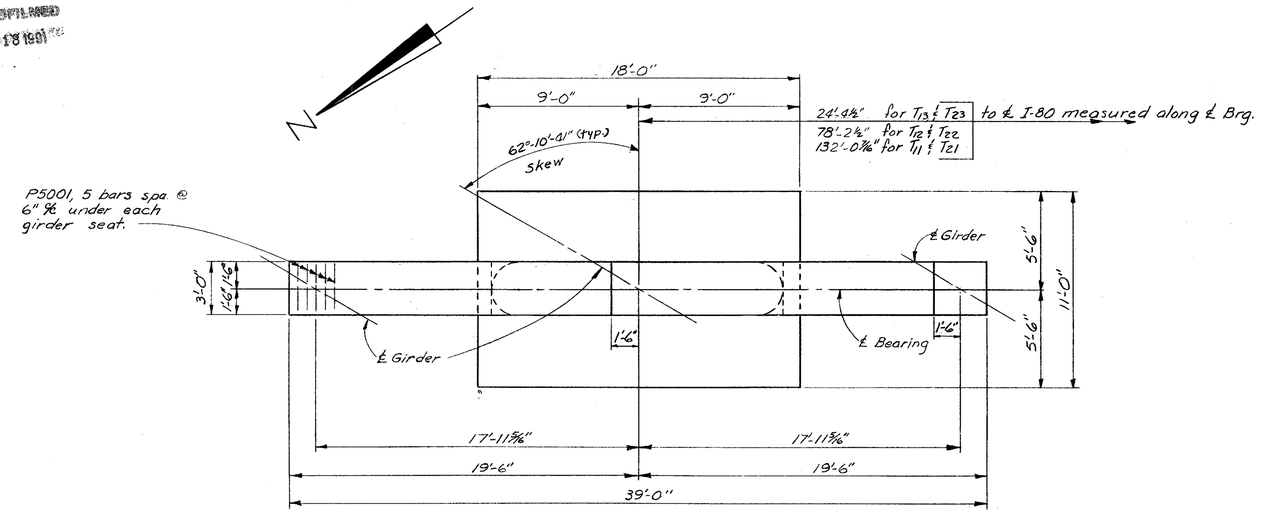


PLAN

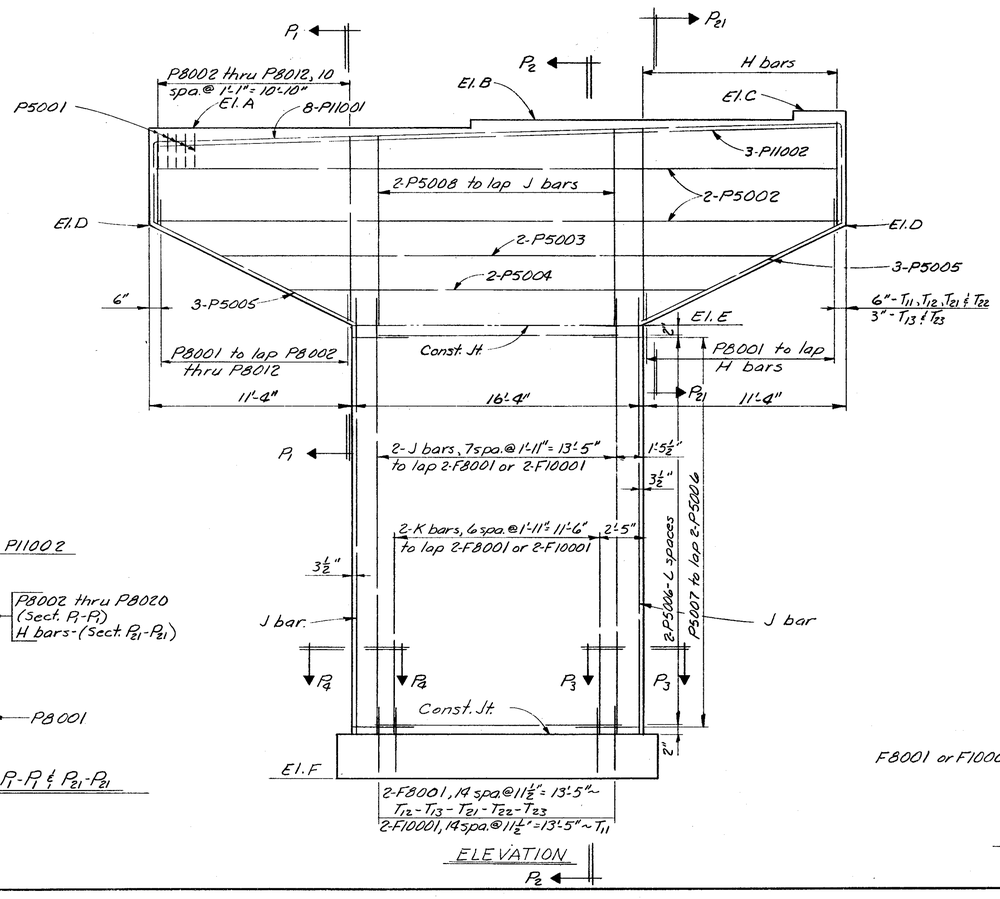


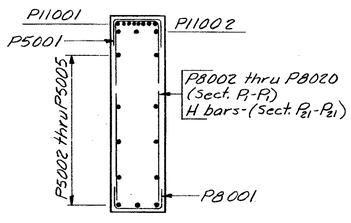


SECTION ~ P1-P1 & P21-P21

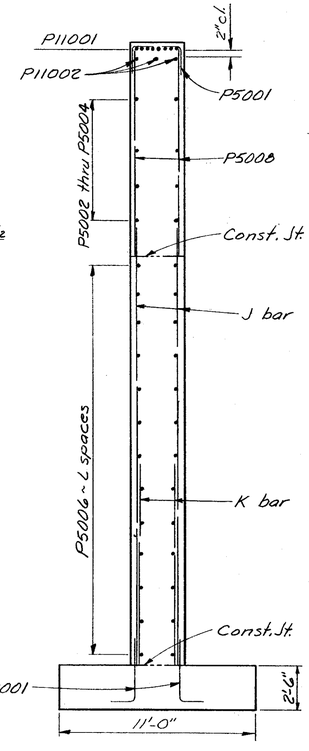


SECTION ~ P2-P2

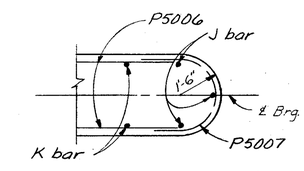


SECTION ~ P3-P3 (As shown)
SECTION ~ P4-P4 (Opp. hand)

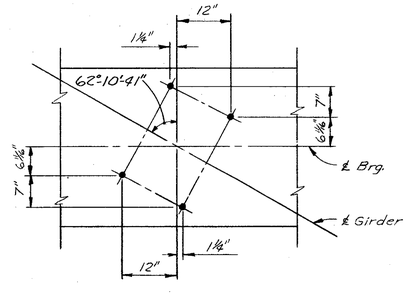


ANCHOR BOLT SETTING DETAILS
(T21, T22 & T23)

REINFORCING STEEL TABLE

| Bars | Pier 1 | | | Pier 2 | | |
|---|---|---|---|---|---|---|
| | T11 | T12 | T13 | T21 | T22 | T23 |
| H | P8002 thru P8012 10 spa. @ 1'-1" = 10'-10" | P8002 thru P8012 10 spa. @ 1'-1" = 10'-10" | P8013 thru P8020 7 spa. @ 1'-7" = 11'-1" | P8002 thru P8012 10 spa. @ 1'-1" = 10'-10" | P8002 thru P8012 10 spa. @ 1'-1" = 10-10" | P8013 thru P8020 7 spa @ 1'-7" = 11'-1" |
| J | P10001 | P8021 | P8022 | P8023 | P8024 | P8025 |
| K | P10002 | P8026 | P8027 | P8028 | P8029 | P8030 |
| L | 12 equal spaces | 9 spa. @ 2'-0" = 18'-0" | 10 equal spaces | 8 equal spaces | 8 equal spaces | 9 equal spaces |

TABLE of ELEVATIONS

| Location | Pier 1 | | | Pier 2 | | |
|---|---|---|---|---|---|---|
| | T11 | T12 | T13 | T21 | T22 | T23 |
| A | 813.18 | 814.49 | 815.19 | 810.67 | 812.16 | 813.03 |
| B | 813.62 | 814.90 | 815.33 | 811.17 | 812.62 | 813.23 |
| C | 814.06 | 815.05 | 815.46 | 811.67 | 812.83 | 813.41 |
| D | 809.68 | 810.99 | 811.69 | 807.17 | 808.66 | 809.53 |
| E | 804.01 | 805.32 | 806.02 | 801.50 | 802.99 | 803.86 |
| F | 776.50 | 784.50 | 784.70 | 784.00 | 784.20 | 784.30 |

NOTES:

Special care shall be taken in placing reinforcing steel in the vicinity of the bridge seat so as to avoid interference with the drilling of anchor bar holes or the presetting of bearing anchors in Pier No. 2.

Piles and reinforcing steel in Footing are not shown, see sheet 16|25

For Superstructure Ground requirements see Std. Dwg. HL-1.

Bearing Anchors: At the option of the Contractor, bearing anchors (or formed holes), located and supported by templates, may be cast in place.

ALDEN E. STILSON & ASSOCIATES, LIMITED
CONSULTING ENGINEERS
COLUMBUS, OHIO

13|25

PIERS 1 & 2 ~ T11, T12, T13, T21, T22 & T23
DETAILS

BRIDGE No. CUY-80-1088
I-480 over B&O R.R.
STA. 601+22.18
CUYAHOGA COUNTY STA. 604+29.32

| DESIGNED | DRAWN | TRACED | CHECKED | REVIEWED | DATE | REVISED |
|---|---|---|---|---|---|---|
| SBP | DW | | DLM | JEV | 9/13/88 | |

MICROFILMED
JAN 18 1989

| FED. RD. DIVISION | STATE | PROJECT | TYPE FUNDS |
|---|---|---|---|
| 2 | OHIO | | |

391/500

CUYAHOGA COUNTY
CUY-480-10.39

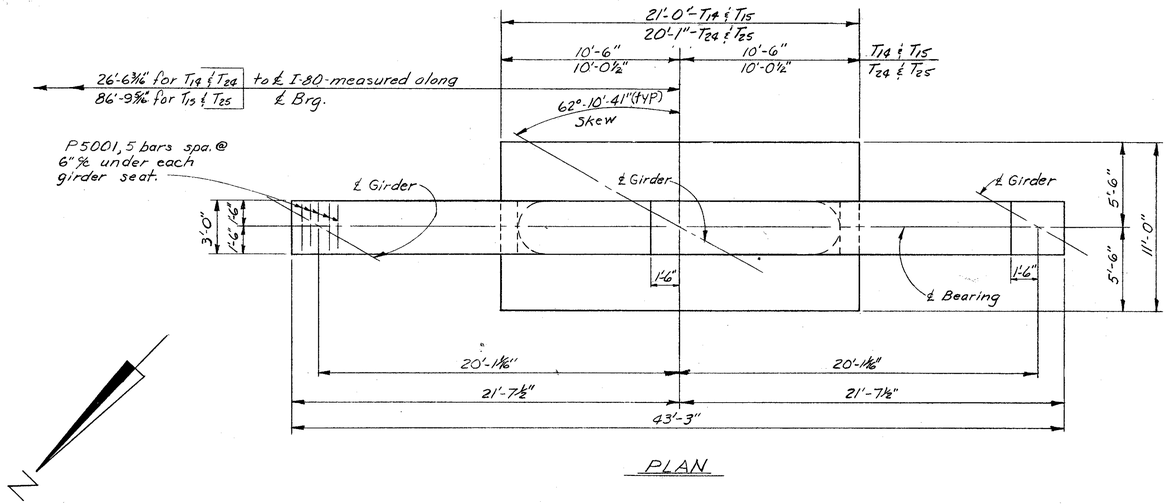


PLAN

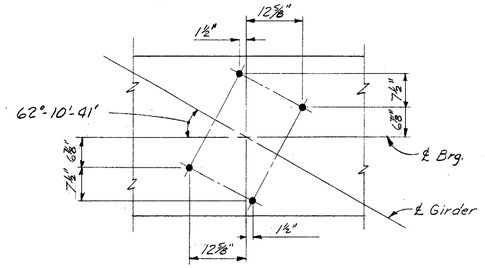


ANCHOR BOLT SETTING DETAILS
(T24 & T25)

TABLE of ELEVATION

| Location | Pier 1 | | Pier 2 | |
|---|---|---|---|---|
| | T14 | T15 | T24 | T25 |
| A | 815.58 | 816.81 | 813.57 | 815.00 |
| B | 816.00 | 817.09 | 814.06 | 815.34 |
| C | 816.41 | 817.18 | 814.53 | 815.49 |
| D | 812.08 | 813.31 | 810.07 | 811.50 |
| E | 805.79 | 807.02 | 803.78 | 805.21 |
| F | 784.90 | 785.20 | 784.50 | 784.80 |

REINFORCING STEEL TABLE

| Bars | Pier 1 | | Pier 2 | |
|---|---|---|---|---|
| | T14 | T15 | T24 | T25 |
| H | P5014 thru P5030 16 spa. @ 9" = 12'-0" | P8032 thru P8045 13 spa. @ 11" = 11'-11" | P5014 thru P5030 16 spa. @ 9" = 12'-0" | P8032 thru P8045 13 spa. @ 11" = 11'-11" |
| J | P8046 | P8047 | P8048 | P8049 |
| K | P8050 | P8051 | P8052 | P8053 |

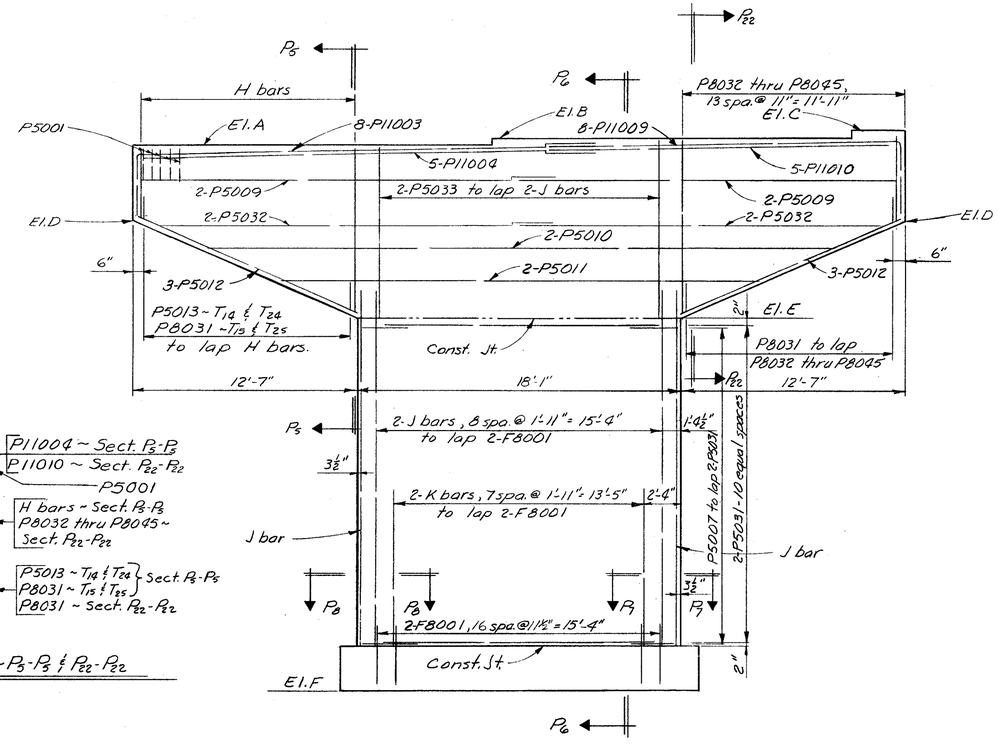


ELEVATION

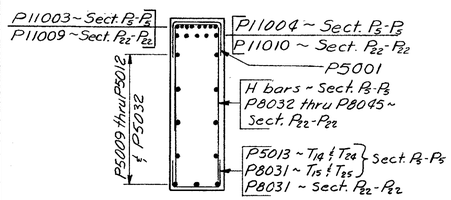


SECTION ~ P3-P3 & P22-P22

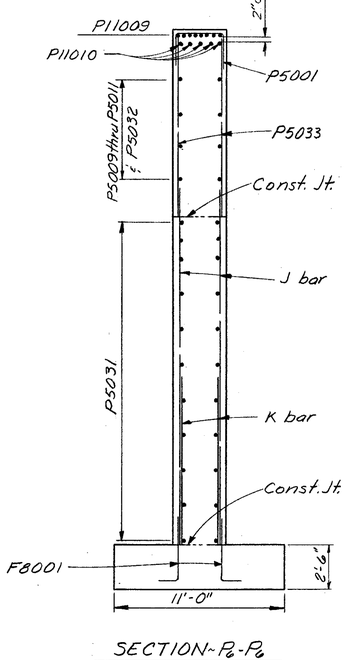


SECTION ~ P2-P6

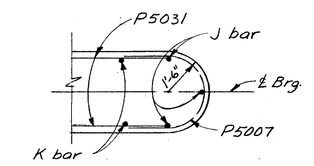


SECTION ~ P7-P7 (As shown)
SECTION ~ P8-P8 (Opp. hand)

NOTES:

Special care shall be taken in placing reinforcing steel in the vicinity of the bridge seat so as to avoid interference with the drilling of anchor bar holes or the presetting of Brg. anchors in Pier No. 2

Piles and reinforcing steel in Footing are not shown, see sheets 16&17 of 25.

For superstructure Ground requirements see Std. Dwg. HL-7.

Bearing Anchors: At the option of the Contractor, bearing anchors (or formed holes) located and supported by templates, may be cast in place.

ALDEN E. STILSON & ASSOCIATES, LIMITED
CONSULTING ENGINEERS
COLUMBUS, OHIO

14 of 25

PIERS 1 & 2 ~ T14, T15, T24 & T25
DETAILS

BRIDGE No. CUY-80-1088
I-480 over B&O R.R.
STA. 601+22.18
CUYAHOGA COUNTY STA. 604+29.32

| DESIGNED | DRAWN | TRACED | CHECKED | REVIEWED | DATE | REVISED |
|---|---|---|---|---|---|---|
| SBP | DW | | DLM | JEV | 9/13/68 | |

MICROFILMED
JAN 18 1968

| FED. RD. DIVISION | STATE | PROJECT | TYPE FUNDS |
|---|---|---|---|
| 2 | OHIO | | |

392
500

CUYAHOGA COUNTY
CUY-480-10,39

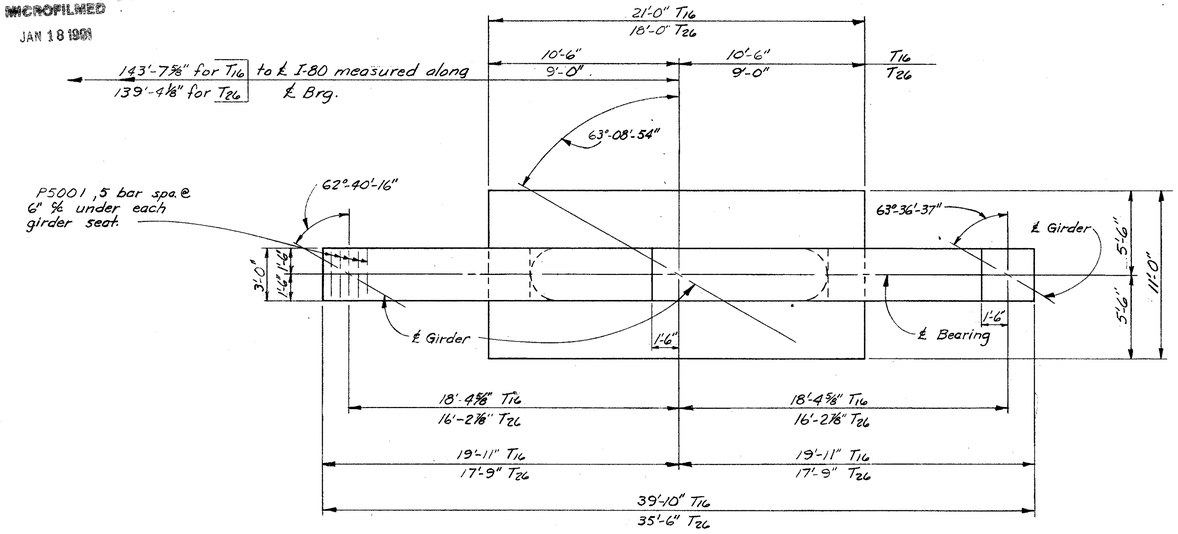


PLAN

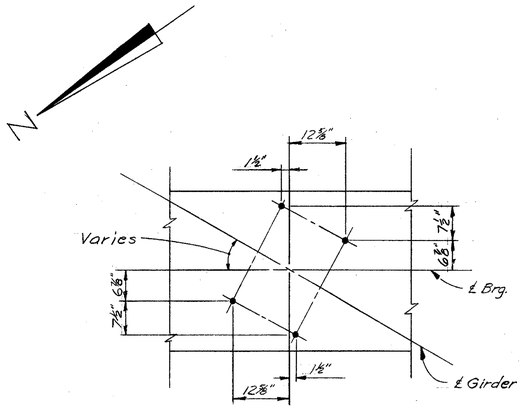


ANCHOR BOLT SETTING DETAILS (T26)

REINFORCING STEEL TABLE

| | Pier 1 | Pier 2 |
|---|---|---|
| | T16 | T26 |
| A | P8055 thru P8066<br>11 spa @ 1'-0" = 11'-0" | P8067 thru P8076<br>9 spa. @ 1'-1" = 9'-9" |

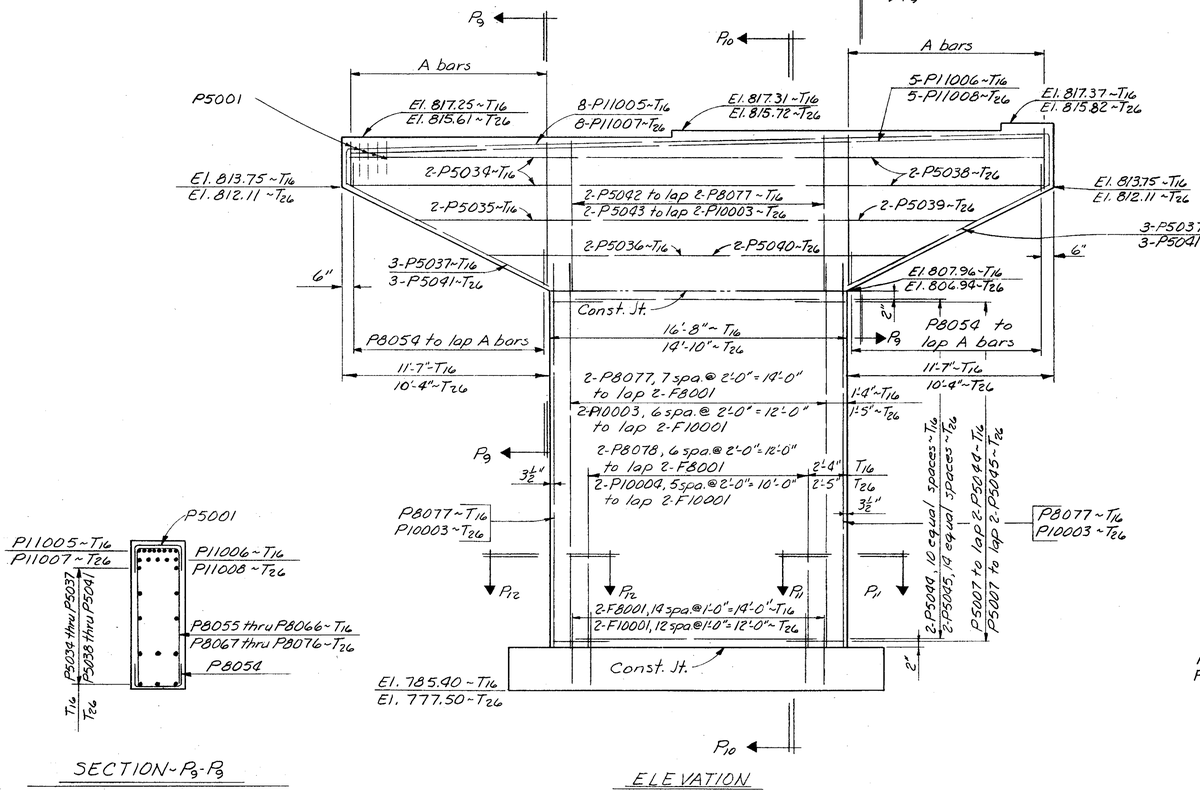


ELEVATION




SECTION ~ P9 - P9

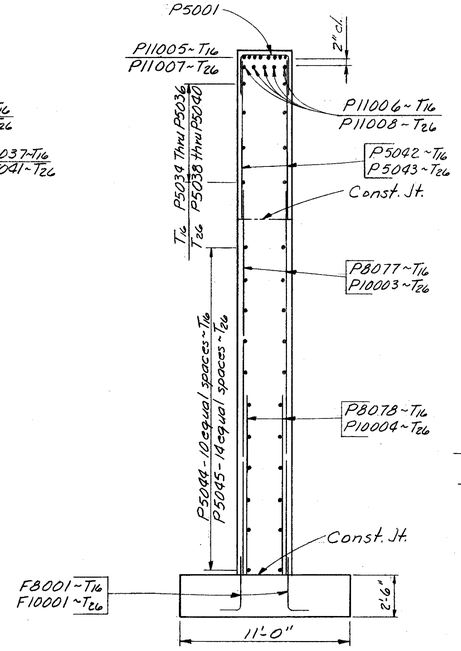


SECTION ~ P10 - P10

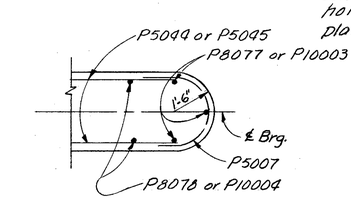


SECTION ~ P11 - P11 (As shown)
SECTION ~ P12 - P12 (Opp. hand)

NOTES:

Special care shall be taken in placing reinforcing steel in the vicinity of the bridge seats so as to avoid interference with the drilling of anchor bar holes or the presetting of bearing anchors in Pier No. 2.

Piles and reinforcing steel in Footing are not shown, see sheet 17 | 25.

For superstructure Ground requirements see Std. Dwg. HL-1.

Bearing Anchors: At the option of the Contractor, bearing anchors (or formed holes), located and supported by templates, may be cast in place.

ALDEN E. STILSON & ASSOCIATES, LIMITED
CONSULTING ENGINEERS
COLUMBUS, OHIO

15 | 25

# PIERS 1 & 2 ~ T16 & T26 DETAILS

BRIDGE No. CUY-80-1088
I-480 over B&O R.R.
STA. 601+22.18
CUYAHOGA COUNTY STA. 604+29.32

| DESIGNED | DRAWN | TRACED | CHECKED | REVIEWED | DATE | REVISED |
|---|---|---|---|---|---|---|
| SBP | DW | | DLM | JEV | 9/13/68 | |

MICROFILMED
JAN 18 1991

| FED. RD. DIVISION | STATE | PROJECT | TYPE FUNDS |
|---|---|---|---|
| 2 | OHIO | | |

393
500

CUYAHOGA COUNTY
CUY-480-10.39

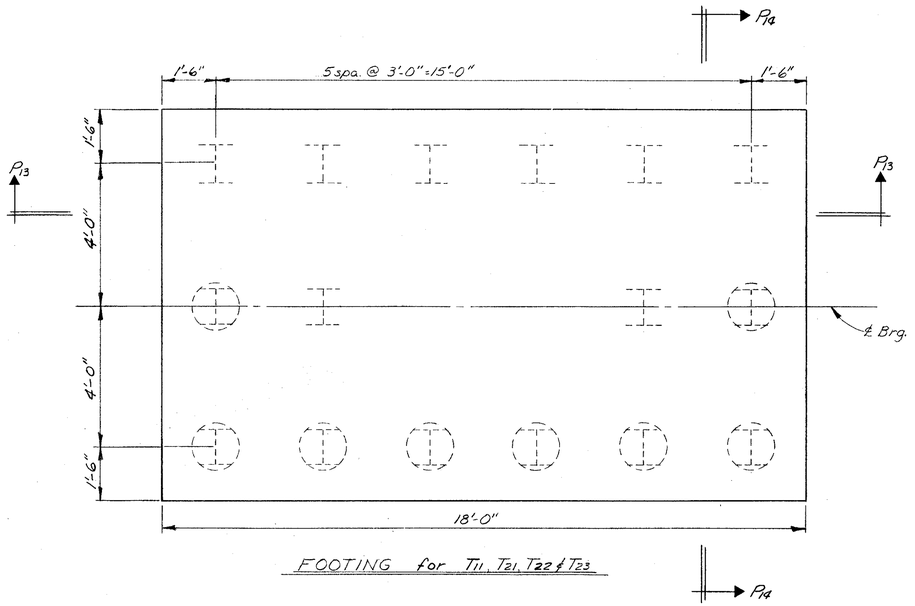


FOOTING for T11, T21, T22 & T23

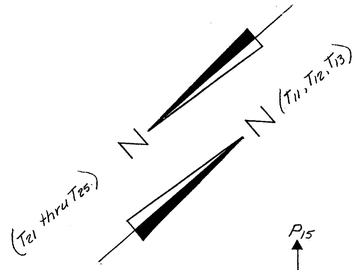


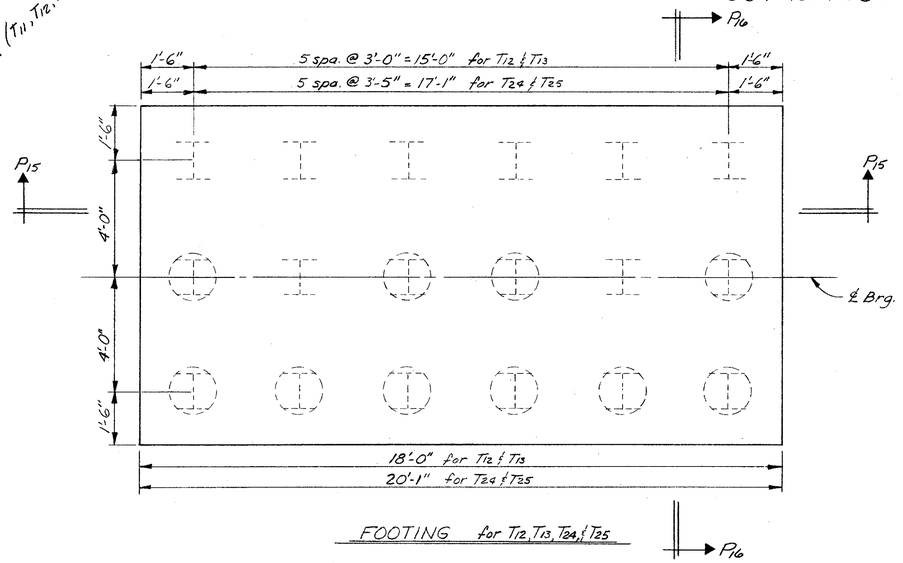


FOOTING for T12, T13, T24, & T25

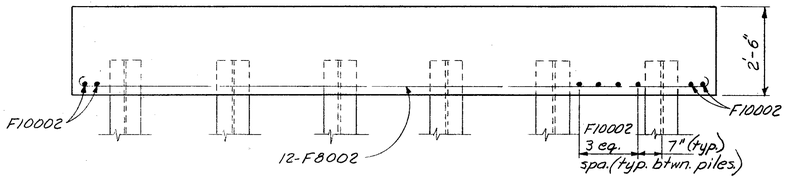


SECTION ~ P3 - P13

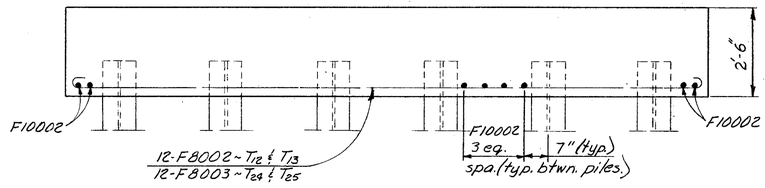


SECTION ~ P15 - P15

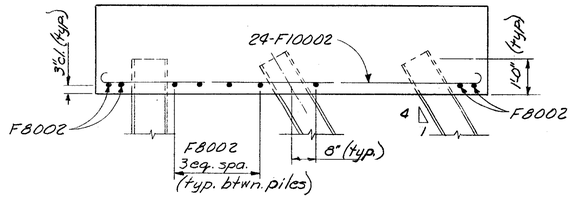


SECTION ~ P14 - P14

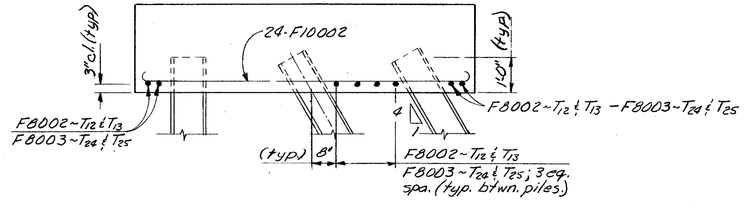


SECTION ~ P16 - P16

NOTES

I Vertical piles.

Battered piles all are on 4 to 1 taper.

All piles shall be HP10×42 steel piles.

Dowel bars in the footings not shown see sheets 13 & 14.

ALDEN E. STILSON & ASSOCIATES, LIMITED
CONSULTING ENGINEERS
COLUMBUS, OHIO
16 | 25

# PIER FOOTING DETAILS FOR ~ T11, T12, T13, T21 thru T25

BRIDGE No. CUY-80-1088
I-480 over B & O R.R.
CUYAHOGA COUNTY
STA. 601+22.18
STA. 604+29.32

| DESIGNED | DRAWN | TRACED | CHECKED | REVIEWED | DATE | REVISED |
|---|---|---|---|---|---|---|
| SBP | DW | | DLM | JEV | 9/13/68 | |

MICROFILMED
JAN 18 1991

| FED. RD. DIVISION | STATE | PROJECT | TYPE FUNDS |
|---|---|---|---|
| 2 | OHIO | | |

394
500

CUYAHOGA COUNTY
CUY-480-10.39

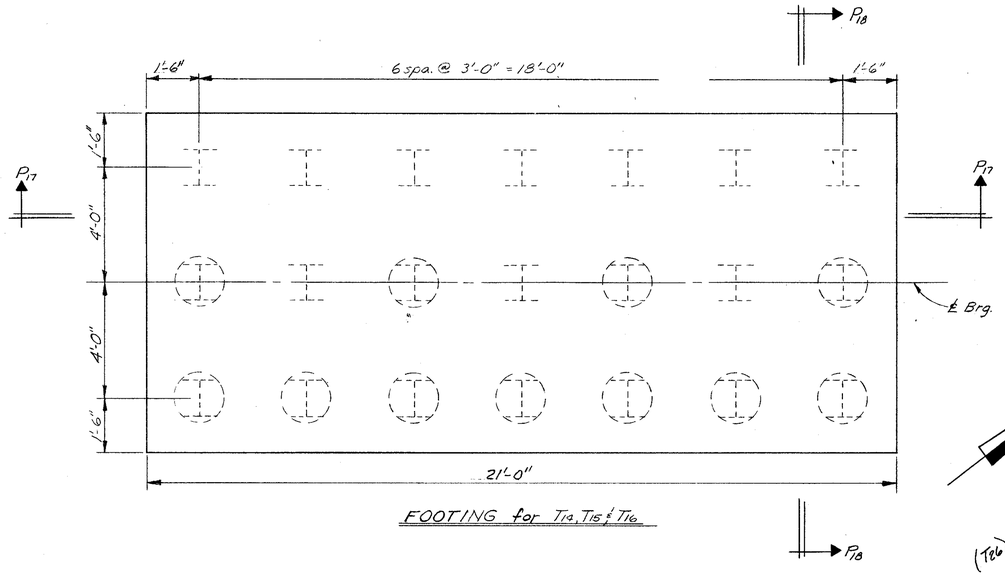


FOOTING for T14, T15 & T16

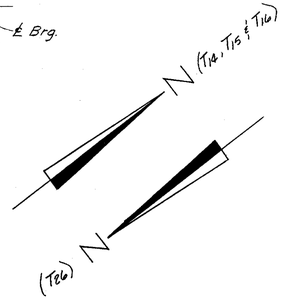


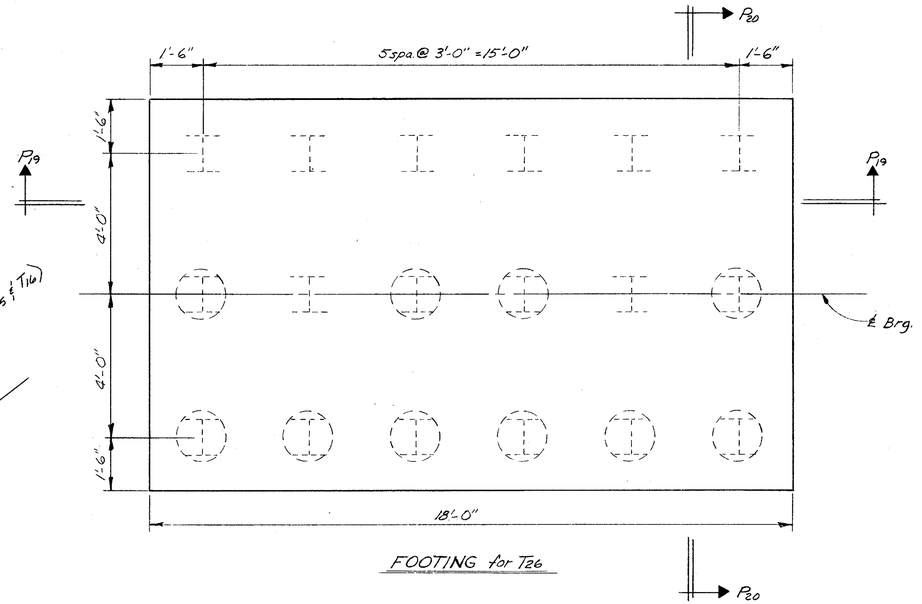


FOOTING for T26

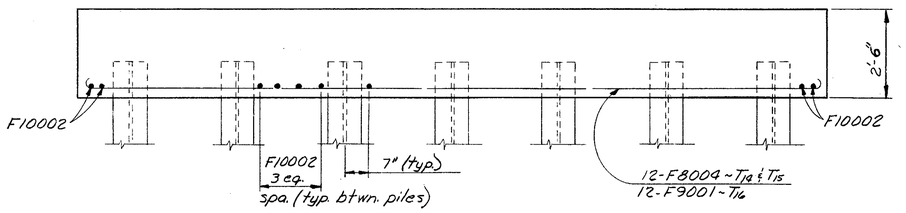


SECTION ~ P17 - P17

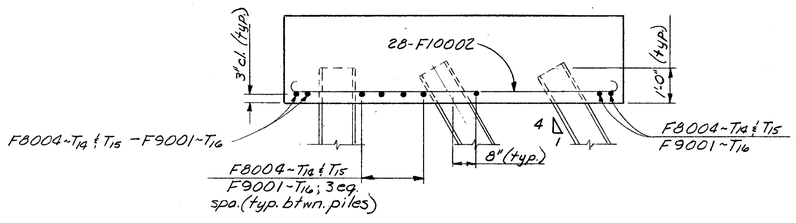


SECTION ~ P18 - P18

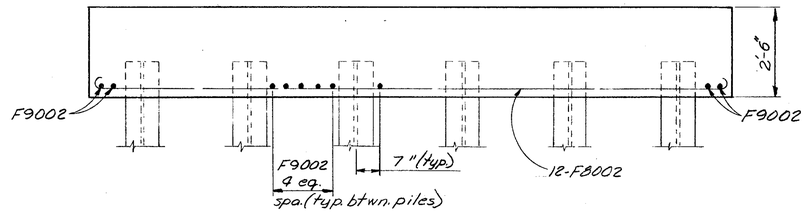


SECTION ~ P19 - P19

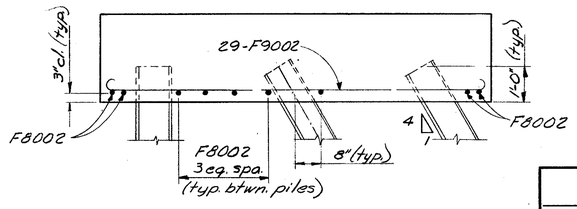


SECTION ~ P20 - P20

NOTES

I Vertical piles.

Battered piles all are on 4 to 1 taper.

All piles shall be HP10x42 steel piles.

Dowel bars in the footings not shown see sheets 14 & 15 & 25.

ALDEN E. STILSON & ASSOCIATES, LIMITED
CONSULTING ENGINEERS
COLUMBUS, OHIO
17 | 25

# PIER FOOTING DETAILS FOR ~ T14, T15, T16 & T26

BRIDGE No. CUY-80-1088
I-480 over B&O R.R.
STA. 601+22.18
CUYAHOGA COUNTY STA. 604+29.32

| DESIGNED | DRAWN | TRACED | CHECKED | REVIEWED | DATE | REVISED |
|---|---|---|---|---|---|---|
| SBP | DW | | DLM | JEV | 9/13/68 | |

MICROFILMED
JAN 18 1991

| FED. RD. DIVISION | STATE | PROJECT | TYPE FUNDS |
|---|---|---|---|
| 2 | OHIO | | |

395/500

CUYAHOGA COUNTY
CUY-480-10.39

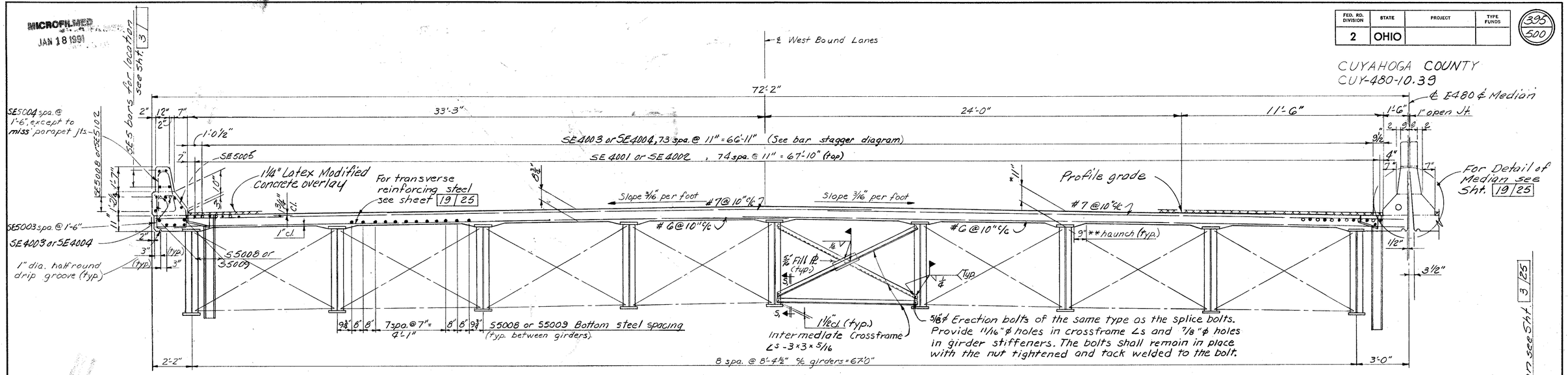


WEST BOUND LANES

For transverse slab reinforcing see sht. 19/25

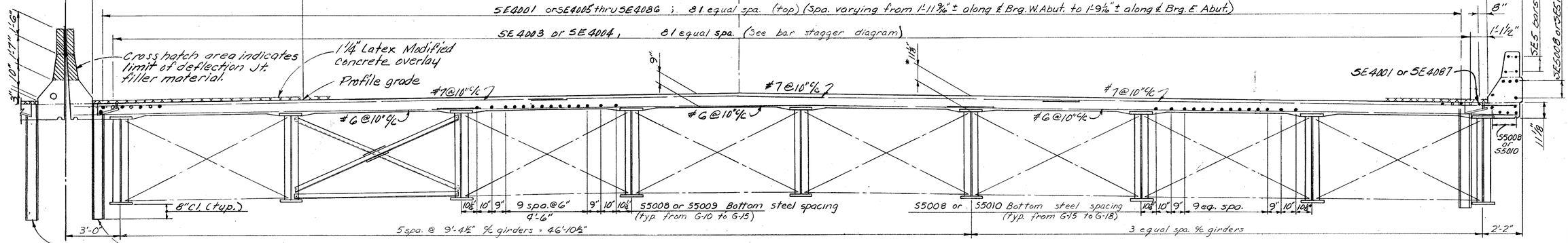


EAST BOUND LANES

(Details, dimensions and reinforcing not shown are opp. hand to West bound Lanes.

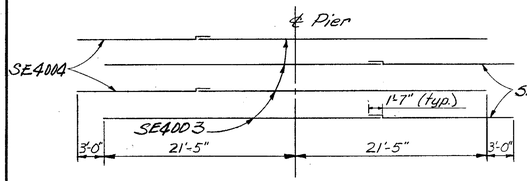


DIAGRAM SHOWING STAGGER of SE4003 & SE4004 BARS over PIERS

NOTES

* This is the nominal dimension. The quantity of deck concrete to be paid for shall be based upon this dimension, even though deviation from it may be necessary because the top flange of the girder may not have the exact camber or conformation required to place it parallel to the finished grade. Deduction shall be made for volume of encased steel plates as per Section 511.19 of the Construction and Material Specifications.

** A typical haunch width of 9" shall be used for computing quantity of concrete. However, the haunch may vary between 6" and 12" provided that the slope shall be not more than 1:4 for a haunch less than 9" in width.

Lap longitudinal bars 1'-7" min.

Std. Scupper For details see Std. Dwg. SD-1-69

Field bending of transverse slab steel is included in Item 509 for payment.

Longitudinal reinforcing steel shall be field cut as necessary to avoid interference with scuppers.

For details of median curb plates, see Std. Dwg. SD-1-69

For additional notes and details see sheets 19 thru 22 25

WELDING ATTACHMENTS: See sheet (366/500)

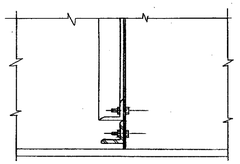

SECTION 5-5

ALDEN E. STILSON & ASSOCIATES, LIMITED
CONSULTING ENGINEERS
COLUMBUS, OHIO

18/25

TRANSVERSE SECTION

BRIDGE No. CUY-480-1088
I-480 over B&O R.R.

CUYAHOGA COUNTY

STA. 601+22.18
STA. 604+29.32

| DESIGNED | DRAWN | TRACED | CHECKED | REVIEWED | DATE | REVISED |
|---|---|---|---|---|---|---|
| DLM | DW | | SBP | JEV | 9/13/68 | |

MICROFILMED
JAN 18 1991

| FED. RD. DIVISION | STATE | PROJECT | TYPE FUNDS |
|---|---|---|---|
| 2 | OHIO | | |

396
500

CUYAHOGA COUNTY
CUY-480-10.39

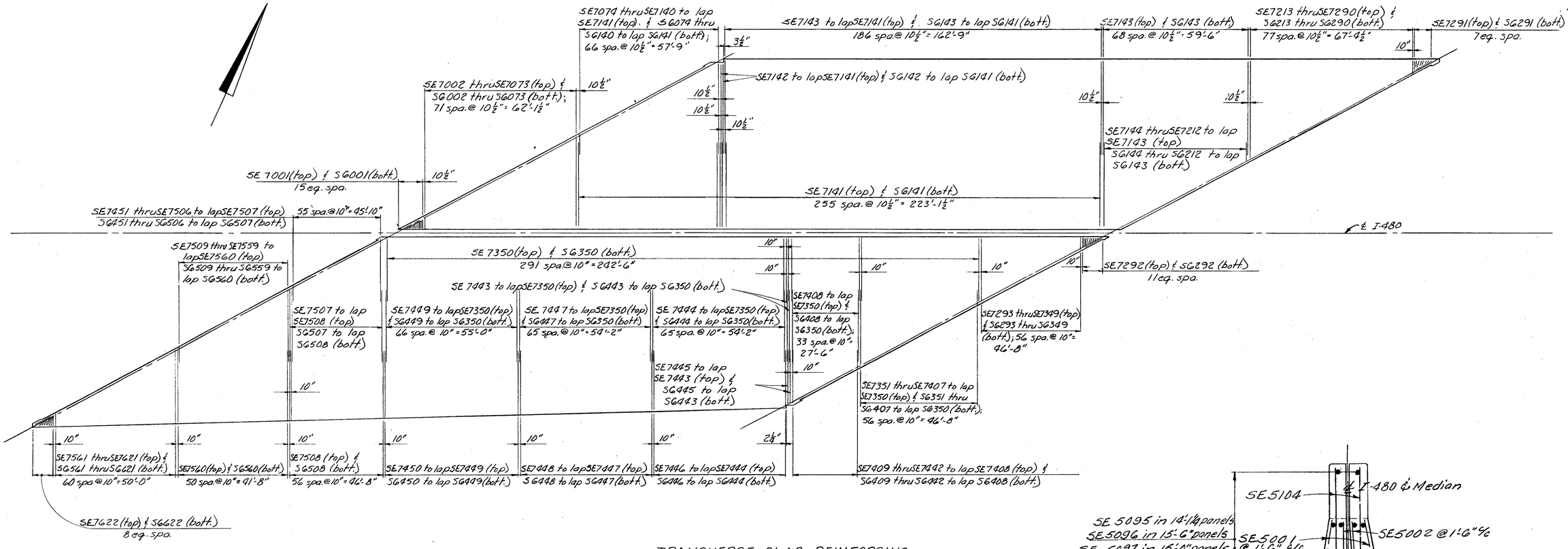


## TRANSVERSE SLAB REINFORCING

### NOTE

Transverse reinforcing steel shall be placed normal to ℄ I-480 except at acute corners of slab where the bars shall be fanned. The spacing shown for the fanned bars is along edge of slab.

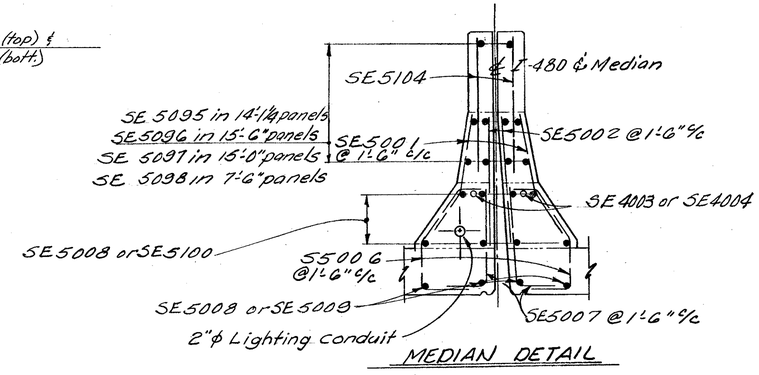


## MEDIAN DETAIL

Note: For dimensions see Sht. 18/25

ALDEN E. STILSON & ASSOCIATES, LIMITED
CONSULTING ENGINEERS
COLUMBUS, OHIO

19 | 25

# SUPERSTRUCTURE DETAILS

BRIDGE No. CUY-480-10.88
I-480 over B&O R.R.
STA. 601 + 22.18
CUYAHOGA COUNTY STA. 604 + 29.32

| DESIGNED | DRAWN | TRACED | CHECKED | REVIEWED | DATE | REVISED |
|---|---|---|---|---|---|---|
| DLM | DW | | SBP | JEV | 9/13/68 | |

MICROFILMED
JAN 28 1991

| FED. RD. DIVISION | STATE | PROJECT | TYPE FUNDS |
|---|---|---|---|
| 2 | OHIO | | |

397
500

CUYAHOGA COUNTY
CUY-480-10.39

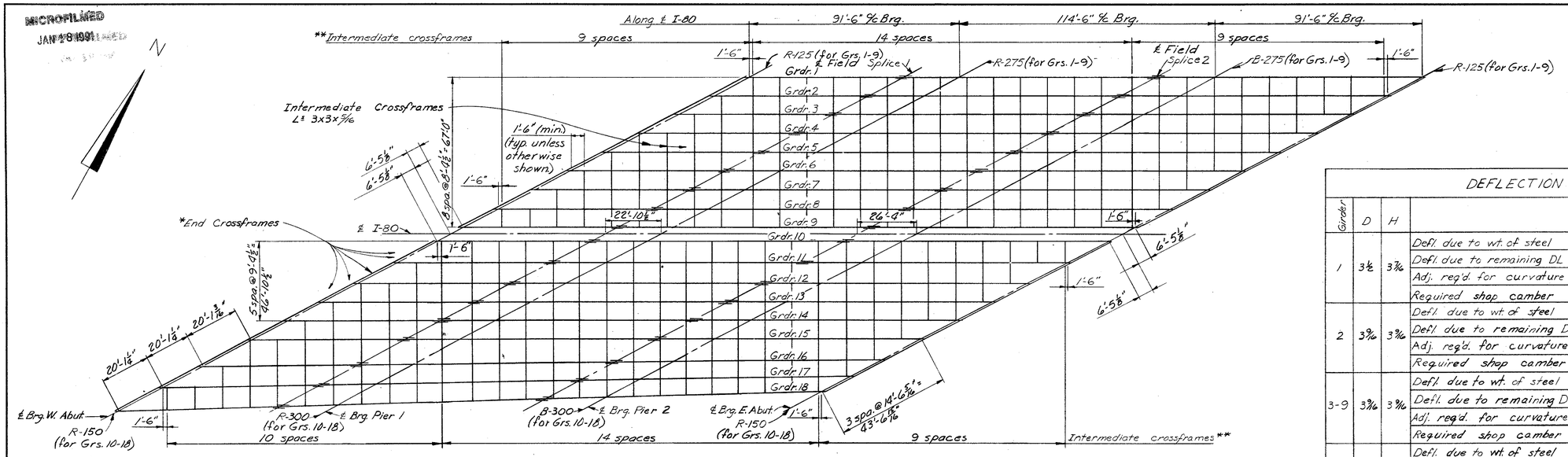


FRAMING PLAN

## NOTES

All intermediate crossframes shall be normal to girders 1 thru 15. Place transverse ℄ of all brg. devices normal to girders 1 thru 15.

*End Crossframes: For the details of end crossframes on East Abut. between girders 15 thru 16 see Std. Dwg. SD-1-69. For the details of the remaining end crossframes see sheet 22|25.

** The intermediate crossframe spacing shall not exceed 13'-0".

1/2" keeper plates shown on bearing devices (Std. Dwg. RB-1-55) shall be deleted under girders 1, 9 10 and 18.

| GIRDER LENGTHS BETWEEN ℄ BEARINGS | | | | |
|---|---|---|---|---|
| Girders | 1-15 | 16 | 17 | 18 |
| Span 1 | 91'-6" | 93'-0 1/2" | 94'-6 3/16" | 96'-1" |
| Span 2 | 114'-6" | 116'-9 1/16" | 118'-3 3/16" | 120'-2 3/16" |
| Span 3 | 91'-6" | 93'-0 1/2" | 94'-6 3/16" | 96'-1" |

| SCREED ELEVATIONS | | | | |
|---|---|---|---|---|
| Line | A | B | C | D |
| 1 | 822.20 | 824.11 | 824.26 | 825.65 |
| 2 | 821.83 | 823.84 | 823.99 | 825.49 |
| 3 | 821.42 | 823.52 | 823.68 | 825.27 |
| 4 | 820.96 | 823.15 | 823.32 | 825.02 |
| 5 | 820.49 | 822.77 | 822.95 | 824.74 |
| 6 | 820.04 | 822.42 | 822.60 | 824.48 |
| 7 | 819.58 | 822.05 | 822.25 | 824.22 |
| 8 | 819.08 | 821.64 | 821.84 | 823.91 |
| 9 | 818.54 | 821.19 | 821.40 | 823.56 |
| 10 | 817.98 | 820.72 | 820.95 | 823.20 |
| 11 | 817.45 | 820.29 | 820.52 | 822.85 |
| 12 | 816.91 | 819.84 | 820.07 | 822.49 |
| 13 | 816.32 | 819.33 | 819.58 | 822.08 |
| 14 | 815.70 | 818.79 | 819.04 | 821.63 |

Screed elevations shown are at face of curbs and are those elevations which are required before the concrete is placed. Proper allowance has been made for the dead load deflection due to the weight of the concrete.

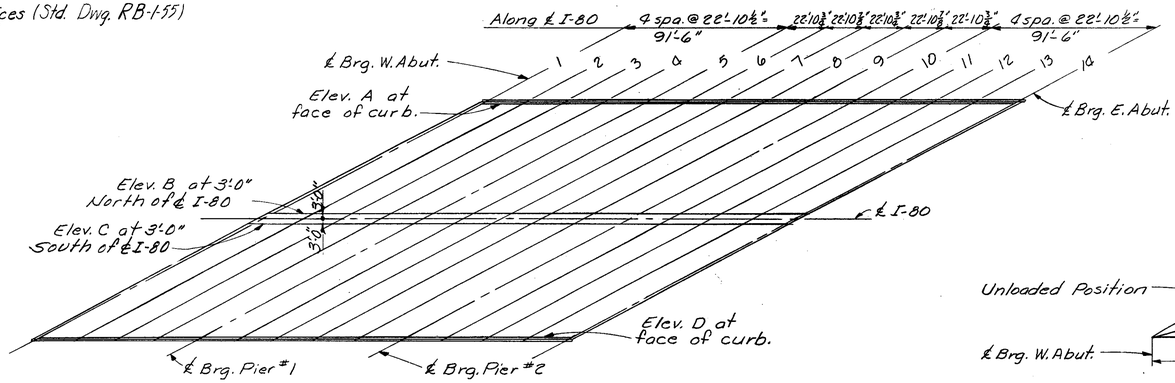


SCREED LINE LOCATIONS

## DEFLECTION and CAMBER

| Girder | D | H | | Span 1 A | Span 1 B | Span 1 C | Span 2 E | Span 2 F | Span 2 G | Span 3 J | Span 3 K | Span 3 L |
|---|---|---|---|---|---|---|---|---|---|---|---|---|
| 1 | 3 1/2 | 3 7/16 | Defl. due to wt. of steel | 1/8 | 1/8 | 1/16 | 1/16 | 1/8 | 1/16 | 1/16 | 1/8 | 1/8 |
| | | | Defl. due to remaining DL | 7/16 | 1/2 | 5/16 | 5/16 | 3/16 | 1/4 | 3/16 | 1/2 | 11/16 |
| | | | Adj. req'd. for curvature | 5/16 | 3/8 | 5/16 | 7/16 | 5/8 | 7/16 | 1/4 | 5/16 | 3/16 |
| | | | Required shop camber | 7/8 | 1 | 3/4 | 15/16 | 1 3/16 | 3/4 | 1/2 | 1 5/16 | 3/4 |
| 2 | 3 9/16 | 3 7/16 | Defl. due to wt. of steel | 1/8 | 1/8 | 1/16 | 1/16 | 1/8 | 1/16 | 1/16 | 1/8 | 1/8 |
| | | | Defl. due to remaining DL | 7/16 | 9/16 | 1/4 | 5/16 | 5/8 | 1/4 | 1/4 | 3/16 | 7/16 |
| | | | Adj. req'd. for curvature | 5/16 | 3/8 | 5/16 | 7/16 | 1/2 | 7/16 | 5/16 | 3/8 | 1/4 |
| | | | Required shop camber | 7/8 | 1 1/16 | 5/8 | 1 5/16 | 1 1/8 | 3/4 | 5/8 | 1 1/16 | 1 5/16 |
| 3-9 | 3 3/16 | 3 7/16 | Defl. due to wt. of steel | 1/8 | 1/8 | 1/16 | 1/16 | 1/8 | 1/16 | 1/16 | 1/8 | 1/8 |
| | | | Defl. due to remaining DL | 7/16 | 9/16 | 1/4 | 5/16 | 5/16 | 1/4 | 1/4 | 9/16 | 7/16 |
| | | | Adj. req'd. for curvature | 5/16 | 3/8 | 5/16 | 7/16 | 5/8 | 7/16 | 5/16 | 3/8 | 5/16 |
| | | | Required shop camber | 7/8 | 1 1/16 | 5/8 | 1 5/16 | 1 1/8 | 3/4 | 5/8 | 1 1/16 | 7/8 |
| 10 | 3 3/16 | 3 7/16 | Defl. due to wt. of steel | 1/8 | 1/8 | 1/16 | 1/16 | 1/8 | 1/16 | 1/16 | 1/8 | 1/8 |
| | | | Defl. due to remaining DL | 7/16 | 1/2 | 1/4 | 5/16 | 1/2 | 1/4 | 1/4 | 1/2 | 7/16 |
| | | | Adj. req'd. for curvature | 5/16 | 3/8 | 5/16 | 7/16 | 7/8 | 7/16 | 5/16 | 3/8 | 5/16 |
| | | | Required shop camber | 7/8 | 1 | 5/8 | 1 5/16 | 1 1/2 | 3/4 | 5/8 | 1 | 7/8 |
| 11-15 | 3 3/16 | 3 7/16 | Defl. due to wt. of steel | 1/8 | 1/8 | 1/16 | 1/16 | 1/8 | 1/16 | 1/16 | 7/8 | 1/8 |
| | | | Defl. due to remaining DL | 9/16 | 5/8 | 1/4 | 3/8 | 3/8 | 5/16 | 1/4 | 5/8 | 9/16 |
| | | | Adj. req'd. for curvature | 5/16 | 3/8 | 5/16 | 7/16 | 5/8 | 7/16 | 5/16 | 3/8 | 5/16 |
| | | | Required shop camber | 1 | 1 1/16 | 5/8 | 7/8 | 1 3/16 | 1 1/16 | 5/8 | 1 1/8 | 1 |
| 16 | 3 1/16 | 3 11/16 | Defl. due to wt. of steel | 1/8 | 1/8 | 1/16 | 1/16 | 1/8 | 1/16 | 1/16 | 1/8 | 1/8 |
| | | | Defl. due to remaining DL | 1/2 | 9/16 | 1/4 | 5/16 | 9/16 | 1/4 | 3/16 | 7/16 | 3/8 |
| | | | Adj. req'd. for curvature | 5/16 | 3/8 | 5/16 | 1/2 | 7/8 | 7/16 | 5/16 | 3/8 | 5/16 |
| | | | Required shop camber | 1 1/16 | 1 1/16 | 5/8 | 7/8 | 1 3/16 | 3/4 | 3/16 | 1 5/16 | 3/16 |
| 17 | 3 1/32 | 3 13/16 | Defl. due to wt. of steel | 1/8 | 1/8 | 1/16 | 1/16 | 1/8 | 1/16 | 1/16 | 1/8 | 1/8 |
| | | | Defl. due to remaining DL | 5/16 | 3/16 | 1/4 | 5/16 | 3/16 | 1/4 | 3/16 | 7/16 | 3/8 |
| | | | Adj. req'd. for curvature | 5/16 | 11/16 | 5/16 | 1/2 | 1 1/16 | 1/2 | 5/16 | 7/16 | 5/16 |
| | | | Required shop camber | 1 5/16 | 1 1/8 | 5/8 | 7/8 | 1 3/8 | 3/16 | 9/16 | 1 | 1 3/16 |
| 18 | 4 | 4 | Defl. due to wt. of steel | 1/8 | 1/8 | 1/16 | 1/16 | 1/8 | 1/16 | 1/16 | 1/8 | 1/8 |
| | | | Defl. due to remaining DL | 3/16 | 1/2 | 1/4 | 5/16 | 1/2 | 1/4 | 3/16 | 3/16 | 3/8 |
| | | | Adj. req'd. for curvature | 9/16 | 7/16 | 5/16 | 1/2 | 1 1/16 | 1/2 | 5/16 | 7/16 | 5/16 |
| | | | Required shop camber | 7/8 | 1 1/16 | 5/8 | 7/8 | 1 5/16 | 1/16 | 9/16 | 1 | 1 3/16 |

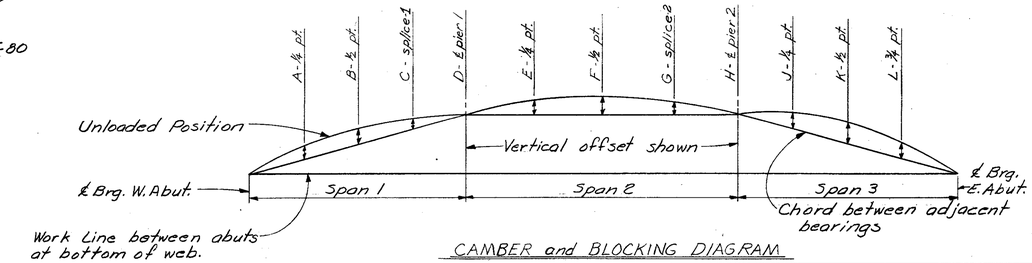


CAMBER and BLOCKING DIAGRAM

ALDEN E. STILSON & ASSOCIATES, LIMITED
CONSULTING ENGINEERS
COLUMBUS, OHIO
20|25

# SUPERSTRUCTURE DETAILS

BRIDGE No. CUY-80-1088
I-480 over B&O R.R.
STA. 601+22.18
CUYAHOGA COUNTY STA. 604+29.32

| DESIGNED | DRAWN | TRACED | CHECKED | REVIEWED | DATE | REVISED |
|---|---|---|---|---|---|---|
| D.L.M | D.W | | S.B.P | J.E.V | 9/13/68 | |

MICROFILMED
JAN 18 1971

| FED. RD. DIVISION | STATE | PROJECT | TYPE FUNDS |
|---|---|---|---|
| 2 | OHIO | | |

398
500

CUYAHOGA COUNTY
CUY-480- 10,39

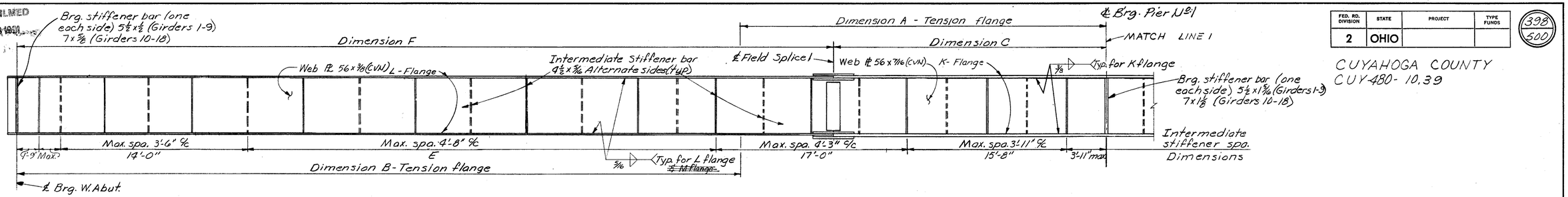


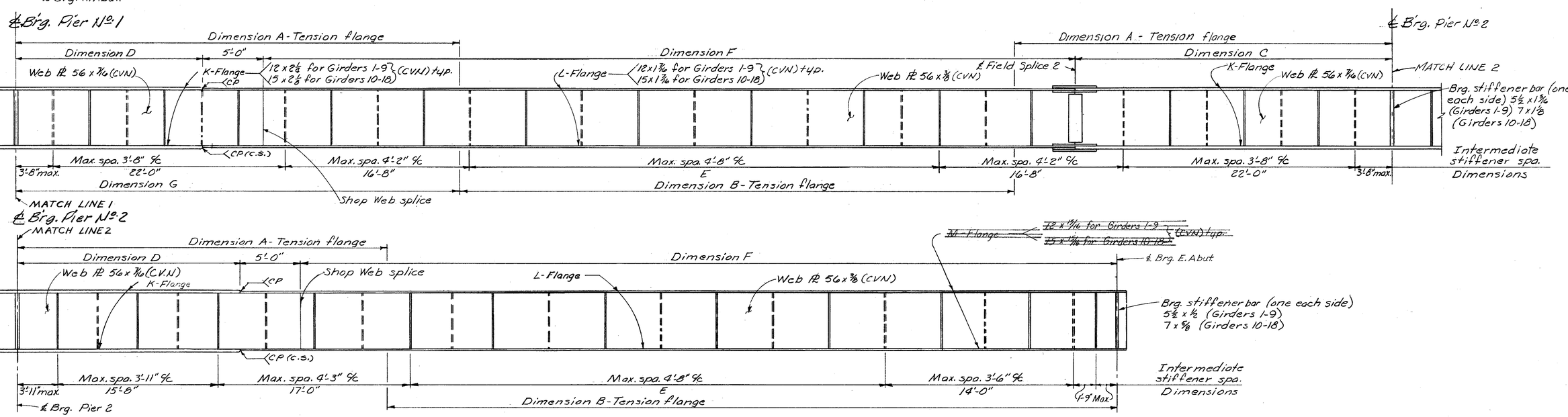


| Girder | Spans | A | B | C | D | E | F | G |
|---|---|---|---|---|---|---|---|---|
| 1 thru 9 | 1 | 30'-3" | 61'-3" | 22'-10½" | | 37'-5" | 68'-7½" | |
| | 2 | 34'-4" | 45'-10" | 26'-4" | 15'-6" | 29'-10" | 67'-8" | 34'-4" |
| | 3 | 30'-3" | 61'-3" | | 18'-6" | 37'-5" | 68'-0" | |
| 10 thru 15 | 1 | 30'-3" | 61'-3" | 22'-10½" | | 37'-5" | 68'-7½" | |
| | 2 | 35'-9" | 42'-11" | 26'-4" | 16'-0" | 29'-10" | 67'-2" | 35'-9" |
| | 3 | 30'-3" | 61'-3" | | 16'-0" | 37'-5" | 70'-6" | |
| 16 | 1 | 30'-9" | 62'-3" | 23'-3 1/16" | | 38'-11¼" | 69'-9 3/16" | |
| | 2 | 36'-4" | 43'-8" | 26' 9¼" | 16'-6" | 31'-8 13/16" | 68'-1 9/16" | 36'-4" |
| | 3 | 30'-9" | 62'-3" | | 16'-6" | 38'-11¼" | 71'-6¼" | |
| 17 | 1 | 31'-2" | 63'-3" | 23'-7 5/16" | | 40'-5 9/16" | 70'-10 15/16" | |
| | 2 | 37'-0" | 44'-3" | 27'-2 9/16" | 16'-9" | 33'-7¾" | 69'-4 3/16" | 37'-0" |
| | 3 | 31'-2" | 63'-3" | | 16'-9" | 40'-5 9/16" | 72'-9 5/16" | |
| 18 | 1 | 31'-9" | 64'-3" | 24'-0½" | | 42'-0" | 72'-0⅜" | |
| | 2 | 37'-7" | 45'-0" | 27'-7 7/8" | 17'-0" | 35'-6 13/16" | 70'-6 15/16" | 37'-7" |
| | 3 | 31'-9" | 64'-3" | | 17'-0" | 42'-0" | 74'-1" | |

## NOTES

Optional Shop Web splices shall be located a minimum of 3'-0" from shop flange splice location and a minimum of 6" from stiffener locations

C S - indicates butt weld subject to compressive stresses only.

Locate intermediate stiffeners to serve as attachments for intermediate Crossframes.

All full penetration welds shall be back-gouged and welded after welding for side.

C.P. indicates complete penetration butt weld.
All web splice welds shall be complete penetration.

Intermediate transverse stiffeners for fascia girders shall be placed on the inside at the spacing shown.

Where a shape or plate designated (CVN) the material shall meet specified minimum notch toughness requirements as specified in 711.02 of the CMS.

For additional notes and details see Shts. 18, 19, 20 & 22 | 25

Grinding of shop welds: Flange butt welds shall be ground flush in tension areas only. Except for webs of fascia girders web weld shall be ground flush from the neutral axis of the web to the flange which is in tension. Webs of fascia girders shall be ground flush for thier full depth. Grinding shall be done in the direction of stress.

ALDEN E. STILSON & ASSOCIATES, LIMITED
CONSULTING ENGINEERS
COLUMBUS, OHIO

21 | 25

# GIRDER DETAILS

BRIDGE No. CUY-480-1088
I-480 over B&O R.R.
STA. 601+22.18
CUYAHOGA COUNTY STA. 604+29.32

| DESIGNED | DRAWN | TRACED | CHECKED | REVIEWED | DATE | REVISED |
|---|---|---|---|---|---|---|
| DLM | DW | | SBP | JEV | 9/13/68 | 1-5-84 |

MICROFILMED
JAN 18 1991

| FED. RD. DIVISION | STATE | PROJECT | TYPE FUNDS |
|---|---|---|---|
| 2 | OHIO | | |

399
500

CUYAHOGA COUNTY
CUY-480-10.39

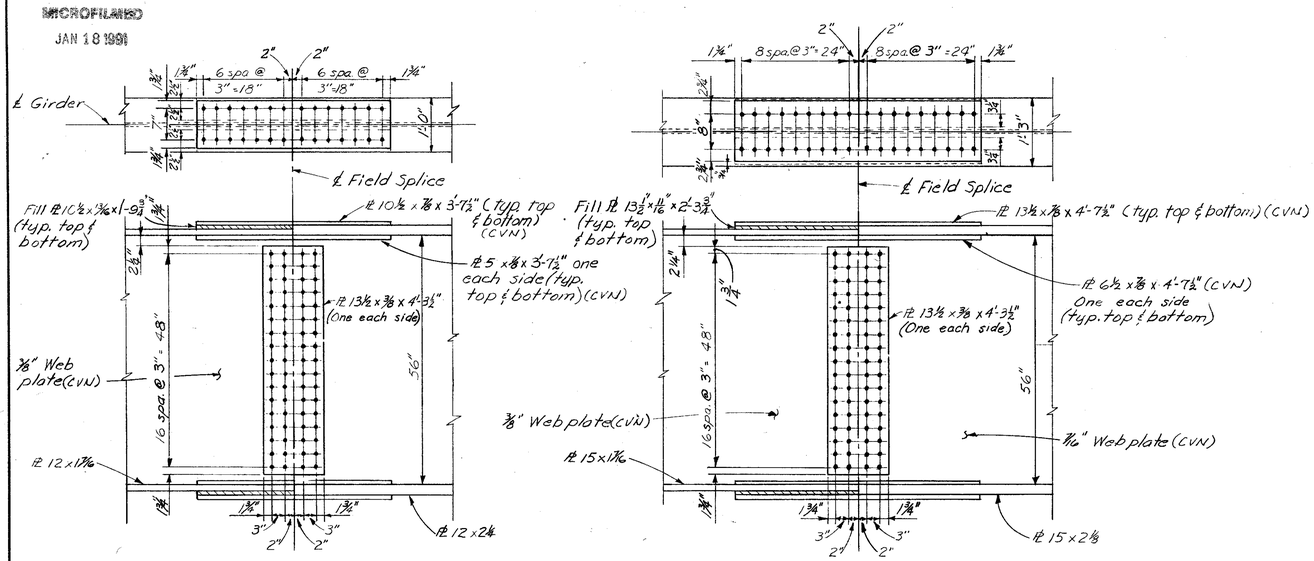


SPLICE 1 & 2 DETAILS (For Girders 1-9)

SPLICE 1 & 2 DETAILS (For Girders 10-18)

GIRDER FIELD SPLICE DETAILS

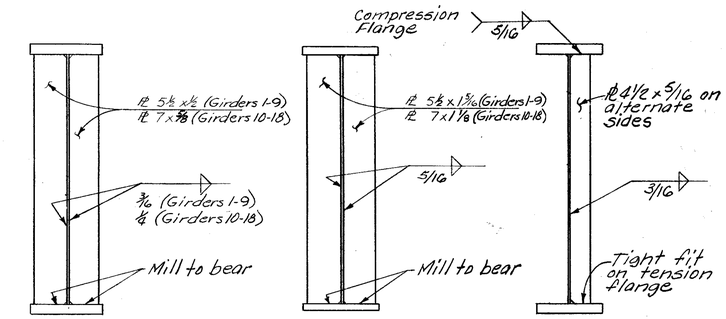


ABUTMENTS ~ SECTION S4-S4 PIERS BEARING STIFFENERS

INTERMEDIATE STIFFENERS

Clip stiffeners 1" horiz. & 2½" vert. (top & bottom)

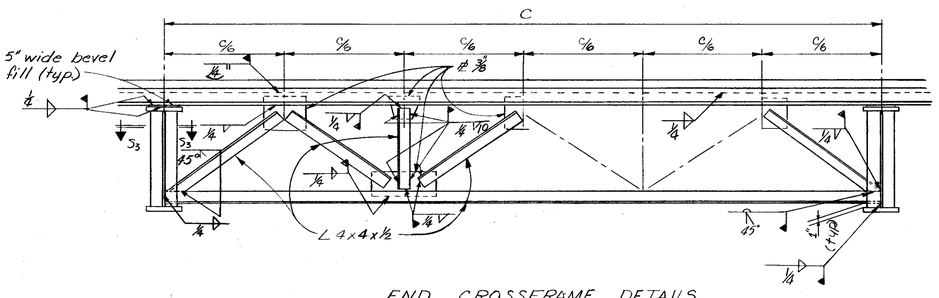


END CROSSFRAME DETAILS

The standard end crossframe as shown on SD-1-69 shall also be modified as shown in these details.

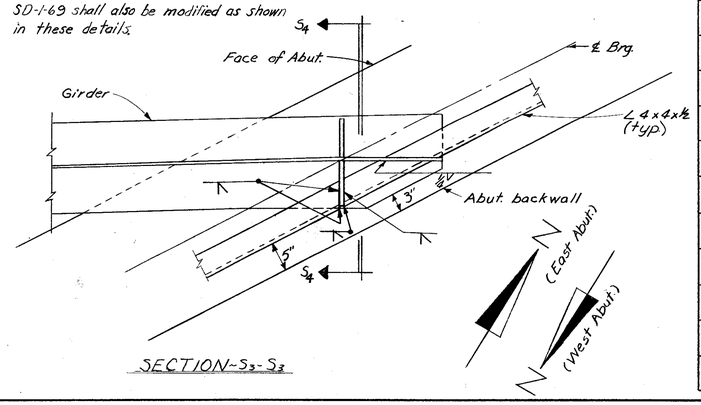


SECTION-S3-S3

| Dimension C for End Crossframes | | |
|---|---|---|
| Distance between | Measured along ℄ West Abut. | Measured along ℄ East Abut. |
| Girders 1 & 2 | 17'-11⅜" ℄ | 17'-11⅜" ℄ |
| Girders 2 & 6 | 4 spa. @ 17'-11 5/16" ℄ = 71'-9⅛" | 4 spa. @ 17'-11⅝" ℄ = 71'-9⅜" |
| Girders 6 & 7 | 17'-11⅜" ℄ | 17'-11⅜" ℄ |
| Girders 7 & 9 | 2 spa. @ 17'-11 5/16" ℄ = 35'-10⅝" | 2 spa. @ 17'-11⅝" ℄ = 35'-10⅞" |
| Girders 10 & 12 | 2 spa. @ 20'-1 1/16" ℄ = 40'-2⅛" | 2 spa. @ 20'-1⅛" ℄ = 40'-2⅜" |
| Girders 12 & 13 | 20'-1" ℄ | 20'-1" ℄ |
| Girders 13 & 15 | 2 spa. @ 20'-1 1/16" ℄ = 40'-2⅛" | 2 spa. @ 20'-1⅛" ℄ = 40'-2⅜" |
| Girders 15 & 16 | 20'-1 3/16" ℄ | 14'-6 5/16" ℄ * |
| Girders 16 & 18 | 2 spa. @ 20'-1⅛" ℄ = 40'-2¼" | 2 spa. @ 14'-6 5/16" ℄ = 29'-0⅝" * |

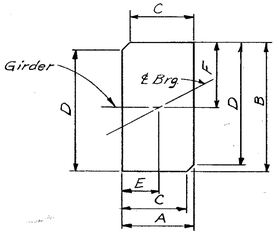


MASONRY PLATE MODIFICATIONS AT BOTH ABUTMENTS

| Girders | A | B | C | D | E | F |
|---|---|---|---|---|---|---|
| 1 thur 9 | 11" | 20" | 10 11/16" | 19 13/16" | 5½" | 10" |
| 10 thur 18 | 12" | 22" | 9⅞" | 20⅜" | 6" | 11" |

NOTES

*For details of end crossframes see Std. Dwg. SD-1-69 and end crossframe detail shown on this sheet.

1" ϕ high strength bolts shall be used at field splices. Bolt heads shall be placed on fascia side of exterior girders.

Bolts shall conform to ASTM A-325 steel.

Place nut on top surface of lower flange plate.

For end dam details see Std. Dwg. SD-1-69.

For additional notes and details see sheets 18-21-25

ALDEN E. STILSON & ASSOCIATES, LIMITED
CONSULTING ENGINEERS
COLUMBUS, OHIO

22 | 25

SUPERSTRUCTURE DETAILS

BRIDGE No. CUY-480-1088
I-480 over B & O R.R.
CUYAHOGA COUNTY
STA. 601 + 22.18
STA. 604 + 29.32

| DESIGNED | DRAWN | TRACED | CHECKED | REVIEWED | DATE | REVISED |
|---|---|---|---|---|---|---|
| DLM | DW | | SBP | JEV | 9/13/68 | |

MICROFILMED
JAN 18 1991

| MARK | NUM. | LENGTH | WEIGHT | TYPE | A | B | C | D | E | NOTE |
|---|---|---|---|---|---|---|---|---|---|---|
| | | | | WEST | ABUTMENT | | | | | |
| A 5001 | 90 | 4-11 | 462 | 1 | | 1- 6 | 2- 2 | 1- 6 | | |
| A 5002 | 8 | 34-10 | 291 | ST | | | | | | |
| A 5003 | 2 | 33-11 | 71 | ST | | | | | | |
| A 5004 | 2 | 30- 9 | 64 | ST | | | | | | |
| A 5005 | 2 | 27- 2 | 57 | ST | | | | | | |
| A 5006 | 8 | 26-10 | 224 | ST | | | | | | |
| A 5007 | 21 | 7-11 | 173 | ST | | | | | | |
| A 5008 | 1 | 4- 0 | | ST | | | | | | 1 |
| THRU | | | 37 | | VARY LENGTH BY | | | 0- 9 | 3/ 8 | |
| A 5013 | 1 | 7-11 | | ST | | | | | | 1 |
| A 5015 | 2 | 12- 5 | 26 | 12 | 8- 5 | 2- 0 | | 3- 6 | | |
| A 5026 | 14 | 9- 1 | 133 | ST | | | | | | |
| A 5027 | 2 | 8- 6 | | ST | | | | | | 1 |
| THRU | | | 50 | | VARY LENGTH BY | | | 0- 6 | | |
| A 5029 | 2 | 7- 6 | | ST | | | | | | 1 |
| A 5030 | 2 | 8- 8 | | ST | | | | | | 1 |
| THRU | | | 71 | | VARY LENGTH BY | | | 0-11 | | |
| A 5034 | 2 | 5- 0 | | ST | | | | | | 1 |
| A 5036 | 1 | 19- 3 | 20 | ST | | | | | | |
| A 5037 | 1 | 24- 8 | 26 | ST | | | | | | |
| A 5038 | 5 | 24- 1 | 126 | ST | | | | | | |
| A 5039 | 5 | 26- 1 | 136 | ST | | | | | | |
| A 5042 | 6 | 9- 5 | 59 | ST | | | | | | |
| A 5043 | 11 | 23- 9 | 272 | ST | | | | | | |
| A 5044 | 63 | 39- 9 | 2612 | ST | | | | | | |
| A 5045 | 1 | 17- 3 | 18 | ST | | | | | | |
| A 5046 | 38 | 26- 0 | 1030 | ST | | | | | | |
| A 5047 | 42 | 27- 8 | 1212 | ST | | | | | | |
| A 5048 | 21 | 35- 5 | 776 | ST | | | | | | |
| A 5049 | 2 | 6- 6 | 14 | ST | | | | | | |
| A 5050 | 1 | 26- 8 | 28 | ST | | | | | | |
| A 5051 | 2 | 11-10 | 25 | ST | | | | | | |
| A 5052 | 4 | 17- 0 | 71 | ST | | | | | | |
| A 5053 | 4 | 21- 2 | 88 | ST | | | | | | |
| A 5054 | 4 | 23- 9 | 99 | ST | | | | | | |
| A 5055 | 8 | 25- 7 | 213 | ST | | | | | | |
| A 5056 | 22 | 21- 7 | 495 | ST | | | | | | |
| A 5057 | 155 | 7- 2 | 1159 | 1 | | 2- 0 | 3- 5 | 2- 0 | | |
| A 5058 | 28 | 7-10 | 229 | 1 | | 2- 4 | 3- 5 | 2- 4 | | |
| A 5059 | 32 | 6- 8 | 223 | 1 | | 1- 9 | 3- 5 | 1- 9 | | |
| A 5131 | 3 | 3- 0 | 9 | ST | | | | | | |
| A 5132 | 4 | 9- 5 | 39 | ST | | | | | | |
| A 5133 | 8 | 3-11 | 33 | ST | | | | | | |
| A 5135 | 4 | 6- 3 | 26 | ST | | | | | | |
| A 5136 | 4 | 6- 7 | 27 | 1 | 2- 3 | 4- 6 | | | | |
| A 5138 | 8 | 6- 6 | 54 | 1 | | 2- 8 | 1- 5 | 2- 8 | | |
| A 5140 | 4 | 4- 7 | 19 | ST | | | | | | |
| A 5144 | 14 | 3- 7 | 52 | ST | | | | | | |
| A 5145 | 8 | 4- 6 | 38 | ST | | | | | | |
| | | | | | | | | | | |
| A 6001 | 318 | 20-11 | 9991 | 2 | 7- 3 | 1- 5 | 8-10 | 0-11 | 3- 2 | |
| A 6009 | 18 | 10- 0 | 270 | 15 | | 7-11 | 0-10 | 1- 2 | 0- 7 | |
| | | | | | | | | | | |
| A 8001 | 208 | 3-11 | 2175 | 15 | | 1- 0 | 1- 5 | 1- 0 | 1- 5 | |
| | | | | | | | | | | |
| F 5001 | 215 | 8- 3 | 1850 | 1 | | 1- 7 | 5- 4 | 1- 7 | | |
| F 5002 | 67 | 7- 9 | 542 | 1 | | 7- 3 | 0- 8 | | | |
| F 5003 | 28 | 8- 1 | 236 | 1 | | 7- 7 | 0- 8 | | | |
| F 5004 | 56 | 7- 7 | 443 | 1 | | 7- 1 | 0- 8 | | | |
| F 5005 | 37 | 8- 3 | 318 | 1 | | 7- 9 | 0- 8 | | | |
| F 5007 | 27 | 7- 1 | 199 | 1 | | 6- 7 | 0- 8 | | | |
| F 5008 | 15 | 10- 0 | 156 | ST | | | | | | |
| F 5009 | 15 | 11- 4 | 177 | 6 | 2- 6 | 2- 6 | 7-10 | | | |
| F 5018 | 21 | 17- 1 | 374 | 3 | 2- 6 | 5- 9 | 2- 6 | 5- 9 | | |

| MARK | NUM. | LENGTH | WEIGHT | TYPE | A | B | C | D | E | NOTE |
|---|---|---|---|---|---|---|---|---|---|---|
| | | | | WEST | ABUTMENT | | | ( CONTINUED ) | | |
| F 6001 | 67 | 14-11 | 1501 | 1 | | 7- 3 | 5- 5 | 2- 7 | | |
| F 6002 | 28 | 15- 3 | 641 | 1 | | 7- 7 | 5- 5 | 2- 7 | | |
| F 6003 | 32 | 14- 9 | 709 | 1 | | 7- 1 | 5- 5 | 2- 7 | | |
| F 6004 | 37 | 15- 5 | 857 | 1 | | 7- 9 | 5- 5 | 2- 7 | | |
| F 6005 | 24 | 14- 8 | 529 | 1 | | 7- 0 | 5- 5 | 2- 7 | | |
| F 6006 | 27 | 14- 3 | 578 | 1 | | 6- 7 | 5- 5 | 2- 7 | | |
| F 6015 | 20 | 21- 2 | 636 | 1 | | 10- 2 | 1- 2 | 10- 2 | | |
| | | | | | | | | | | |
| F 8005 | 21 | 34- 7 | 1939 | ST | | | | | | |
| F 8006 | 21 | 32-11 | 1846 | ST | | | | | | |
| F 8007 | 21 | 32- 5 | 1818 | ST | | | | | | |
| F 8008 | 14 | 23- 9 | 888 | ST | | | | | | |
| F 8014 | 7 | 12- 0 | 224 | ST | | | | | | |
| F 8015 | 7 | 33- 2 | 620 | ST | | | | | | |
| | | | | EAST | ABUTMENT | | | | | |
| A 5001 | 90 | 4-11 | 462 | 1 | | 1- 6 | 2- 2 | 1- 6 | | |
| A 5042 | 12 | 9- 5 | 118 | ST | | | | | | |
| A 5049 | 2 | 7- 4 | 15 | ST | | | | | | |
| A 5060 | 2 | 5- 0 | | ST | | | | | | 1 |
| THRU | | | 63 | | VARY LENGTH BY | | | 0- 6 | | |
| A 5064 | 2 | 7- 0 | | ST | | | | | | 1 |
| A 5065 | 2 | 4-10 | | ST | | | | | | 1 |
| THRU | | | 223 | | VARY LENGTH BY | | | 0- 2 | 7/ 8 | |
| A 5080 | 2 | 8- 6 | | ST | | | | | | 1 |
| A 5081 | 12 | 8- 8 | 108 | ST | | | | | | |
| A 5082 | 14 | 9- 2 | 134 | ST | | | | | | |
| A 5083 | 2 | 9- 1 | | ST | | | | | | 1 |
| THRU | | | 69 | | VARY LENGTH BY | | | 0- 6 | 5/ 8 | |
| A 5086 | 2 | 7- 5 | | ST | | | | | | 1 |
| A 5087 | 2 | 10-11 | | ST | | | | | | 1 |
| THRU | | | 92 | | VARY LENGTH BY | | | 1- 0 | 1/ 2 | |
| A 5091 | 2 | 6- 9 | | ST | | | | | | 1 |
| A 5092 | 2 | 24- 1 | 50 | ST | | | | | | |
| A 5093 | 2 | 5- 6 | 11 | ST | | | | | | |
| A 5094 | 1 | 20- 3 | 21 | ST | | | | | | |
| A 5095 | 2 | 31- 3 | 65 | ST | | | | | | |
| A 5096 | 2 | 34- 0 | 71 | ST | | | | | | |
| A 5097 | 6 | 21- 7 | 135 | ST | | | | | | |
| A 5098 | 4 | 26- 6 | 111 | ST | | | | | | |
| A 5099 | 18 | 22- 6 | 422 | ST | | | | | | |
| A 5100 | 59 | 35- 6 | 2185 | ST | | | | | | |
| A 5102 | 4 | 17- 7 | 73 | ST | | | | | | |
| A 5103 | 34 | 26- 1 | 925 | ST | | | | | | |
| A 5104 | 2 | 30- 6 | 64 | ST | | | | | | |
| A 5106 | 21 | 39- 9 | 871 | ST | | | | | | |
| A 5107 | 42 | 28- 0 | 1227 | ST | | | | | | |
| A 5110 | 2 | 12- 8 | 26 | ST | | | | | | |
| A 5111 | 2 | 28- 6 | 59 | ST | | | | | | |
| A 5112 | 4 | 20- 1 | 84 | ST | | | | | | |
| A 5113 | 4 | 20- 6 | 86 | ST | | | | | | |
| A 5114 | 4 | 24- 5 | 102 | ST | | | | | | |
| A 5115 | 11 | 38- 6 | 442 | ST | | | | | | |
| A 5116 | 102 | 7- 8 | 816 | 1 | | 2- 3 | 3- 5 | 2- 3 | | |
| A 5117 | 59 | 8- 0 | 492 | 1 | | 2- 5 | 3- 5 | 2- 5 | | |
| A 5118 | 22 | 7- 4 | 168 | 1 | | 2- 1 | 3- 5 | 2- 1 | | |
| A 5119 | 39 | 6-10 | 278 | 1 | | 1-10 | 3- 5 | 1-10 | | |
| A 5120 | 1 | 18- 3 | 19 | ST | | | | | | |
| A 5121 | 1 | 23- 9 | 25 | ST | | | | | | |
| A 5129 | 1 | 21- 9 | 23 | ST | | | | | | |
| A 5131 | 6 | 3- 0 | 19 | ST | | | | | | |
| A 5132 | 8 | 9- 5 | 79 | ST | | | | | | |
| A 5133 | 16 | 3-11 | 65 | ST | | | | | | |
| A 5137 | 12 | 11- 5 | 143 | ST | | | | | | |
| A 5138 | 24 | 6- 6 | 163 | 1 | | 2- 8 | 1- 5 | 2- 8 | | |

| MARK | NUM. | LENGTH | WEIGHT | TYPE | A | B | C | D | E | NOTE |
|---|---|---|---|---|---|---|---|---|---|---|
| | | | | EAST | ABUTMENT | | | ( CONTINUED ) | | |
| A 5140 | 8 | 4- 7 | 38 | ST | | | | | | |
| A 5146 | 2 | 27- 8 | 58 | ST | | | | | | |
| A 5149 | 4 | 23- 6 | 98 | ST | | | | | | |
| | | | | | | | | | | |
| A 6001 | 306 | 20-11 | 9614 | 2 | 7- 3 | 1- 5 | 8-10 | 0-11 | 3- 2 | |
| | | | | | | | | | | |
| A 8001 | 196 | 5- 4 | 2791 | 15 | | 1- 0 | 2- 5 | 1- 0 | 2- 5 | |
| | | | | | | | | | | |
| F 5001 | 222 | 8- 3 | 1910 | 1 | | 1- 7 | 5- 4 | 1- 7 | | |
| F 5008 | 20 | 10- 0 | 209 | ST | | | | | | |
| F 5009 | 20 | 11- 4 | 236 | 6 | 2- 6 | 2- 6 | 7-10 | | | |
| F 5010 | 41 | 14- 4 | 613 | 1 | | 6- 7 | 5- 5 | 2- 7 | | |
| F 5011 | 24 | 7- 5 | 186 | 1 | | 6-11 | 0- 8 | | | |
| F 5012 | 35 | 7- 9 | 283 | 1 | | 7- 3 | 0- 8 | | | |
| F 5013 | 22 | 8- 6 | 195 | 1 | | 8- 0 | 0- 8 | | | |
| F 5014 | 25 | 7- 4 | 191 | 1 | | 6-10 | 0- 8 | | | |
| F 5015 | 13 | 8- 4 | 113 | 1 | | 7-10 | 0- 8 | | | |
| F 5016 | 36 | 7- 8 | 288 | 1 | | 7- 2 | 0- 8 | | | |
| F 5017 | 25 | 8- 5 | 219 | 1 | | 7-11 | 0- 8 | | | |
| | | | | | | | | | | |
| F 6007 | 41 | 14- 3 | 878 | 1 | | 6- 7 | 5- 5 | 2- 7 | | |
| F 6008 | 24 | 14- 7 | 526 | 1 | | 6-11 | 5- 5 | 2- 7 | | |
| F 6009 | 35 | 14-11 | 784 | 1 | | 7- 3 | 5- 5 | 2- 7 | | |
| F 6010 | 22 | 15- 8 | 518 | 1 | | 8- 0 | 5- 5 | 2- 7 | | |
| F 6011 | 25 | 14- 6 | 544 | 1 | | 6-10 | 5- 5 | 2- 7 | | |
| F 6012 | 13 | 15- 6 | 303 | 1 | | 7-10 | 5- 5 | 2- 7 | | |
| F 6013 | 36 | 14-10 | 802 | 1 | | 7- 2 | 5- 5 | 2- 7 | | |
| F 6014 | 25 | 15- 7 | 585 | 1 | | 7-11 | 5- 5 | 2- 7 | | |
| | | | | | | | | | | |
| F 8009 | 14 | 33- 7 | 1255 | ST | | | | | | |
| F 8010 | 7 | 38- 5 | 718 | ST | | | | | | |
| F 8011 | 21 | 30- 9 | 1724 | ST | | | | | | |
| F 8012 | 14 | 32- 8 | 1221 | ST | | | | | | |
| F 8013 | 21 | 32-11 | 1846 | ST | | | | | | |
| | | | | | | | | | | |
| | | | | PIERS | | | | | | |
| | | | | | | | | | | |
| P 5001 | 180 | 5- 5 | 1017 | 1 | | 1- 6 | 2- 8 | 1- 6 | | |
| P 5002 | 24 | 38- 8 | 968 | ST | | | | | | |
| P 5003 | 12 | 31- 4 | 392 | ST | | | | | | |
| P 5004 | 12 | 23- 4 | 292 | ST | | | | | | |
| P 5005 | 36 | 12- 8 | 476 | ST | | | | | | |
| P 5006 | 124 | 13- 4 | 1724 | ST | | | | | | |
| P 5007 | 264 | 7- 2 | 1973 | 7 | 1- 7 | 1- 7 | 1- 3 | | | |
| P 5008 | 96 | 9- 0 | 901 | ST | | | | | | |
| P 5009 | 16 | 22- 3 | 371 | ST | | | | | | |
| P 5010 | 8 | 33- 1 | 276 | ST | | | | | | |
| P 5011 | 8 | 25- 1 | 209 | ST | | | | | | |
| P 5012 | 24 | 14- 0 | 350 | ST | | | | | | |
| P 5013 | 34 | 5- 7 | 198 | 1 | | 1- 7 | 2- 8 | 1- 7 | | |
| P 5014 | 2 | 9- 3 | | 1 | | 3- 5 | 2- 8 | 3- 5 | | 1 |
| THRU | | | 541 | | VARY LENGTH BY | | | 0- 9 | | |
| | | | | | VARY DIM. B BY | | | 0- 4 | 1/ 2 | |
| | | | | | VARY DIM. D BY | | | 0- 4 | 1/ 2 | |
| P 5030 | 2 | 21- 3 | | 1 | | 9- 5 | 2- 8 | 9- 5 | | 1 |
| P 5031 | 88 | 15- 1 | 1384 | ST | | | | | | |
| P 5032 | 16 | 21- 4 | 356 | ST | | | | | | |
| P 5033 | 72 | 9- 7 | 720 | ST | | | | | | |
| P 5034 | 4 | 39- 6 | 165 | ST | | | | | | |
| P 5035 | 2 | 31- 8 | 66 | ST | | | | | | |
| P 5036 | 2 | 23- 8 | 49 | ST | | | | | | |
| P 5037 | 6 | 12-10 | 80 | ST | | | | | | |
| P 5038 | 4 | 35- 2 | 147 | ST | | | | | | |
| P 5039 | 2 | 28- 3 | 59 | ST | | | | | | |
| P 5040 | 2 | 21- 4 | 45 | ST | | | | | | |

## BAR BENDING DIAGRAM TYPES

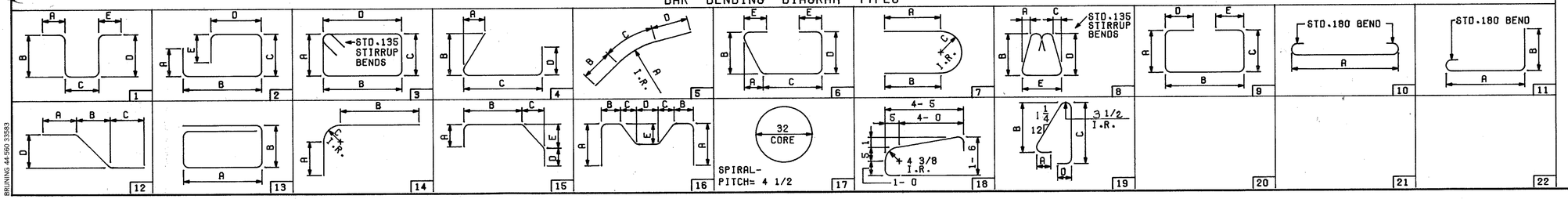


BRUNING 44-960 33583

| FED. RD. DIVISION | STATE | PROJECT | TYPE FUNDS |
|---|---|---|---|
| 5 | OHIO | | |

400
500

CUYAHOGA COUNTY

CUY-480-10.39

NOTES

1. INDICATES SERIES BAR. EACH BAR VARIES FROM ADJACENT BAR(S) BY TABULATED AMOUNT(S), CALCULATED TO NEAREST 1/8 INCH. WEIGHT SHOWN IS FOR ENTIRE SERIES UTILIZING AVERAGE LENGTH.

3. COST OF FIELD BENDING SHALL BE INCLUDED WITH ITEM 509.

REFER TO CMS SECTIONS 106.03, 700, 709.01 THROUGH 709.05 AND 709.08. SUFFICIENT ADDITIONAL REINFORCING STEEL SHALL BE PROVIDED FOR SAMPLING. RANDOM SAMPLES SHALL BE REPLACED IN THE STRUCTURES BY THE ADDITIONAL STEEL, SPLICED IN ACCORDANCE WITH 509.08.

BAR DIMENSIONS ARE OUT TO OUT

A BAR MARK THAT INCLUDES THE LETTER E IN THE PREFIX INDICATES THAT THE BAR SHALL BE EPOXY COATED.

23125

ALDEN E. STILSON & ASSOCIATES, LIMITED
CONSULTING ENGINEERS
CLEVELAND, OHIO COLUMBUS, OHIO WHEELING, W. VA.

# REINFORCING STEEL LIST

BRIDGE NO. CUY-480-1088
I-480 OVER B. + O. R.R.
STA. 601 + 22.18
CUYAHOGA COUNTY STA. 604 + 29.32

| DESIGNED | DRAWN | TRACED | CHECKED | REVIEWED | DATE | REVISED |
|---|---|---|---|---|---|---|
| RT | | | BTG | G.W.M. | 3/14/83 | |

MICROFILMED
JAN 18 1990

| MARK | NUM. | LENGTH | WEIGHT | TYPE | A | B | C | D | E | NOTE |
|---|---|---|---|---|---|---|---|---|---|---|
| | | | | PIERS | | | | ( CONTINUED ) | | |
| P 5041 | 4 | 11- 6 | 48 | ST | | | | | | |
| P 5042 | 16 | 9- 1 | 152 | ST | | | | | | |
| P 5043 | 14 | 8- 6 | 124 | ST | | | | | | |
| P 5044 | 22 | 13- 8 | 314 | ST | | | | | | |
| P 5045 | 30 | 11-10 | 370 | ST | | | | | | |
| | | | | | | | | | | |
| P 8001 | 126 | 8- 7 | 2888 | 1 | | 3- 2 | 2- 8 | 3- 2 | | |
| P 8002 | 10 | 9- 1 | | 1 | | 3- 5 | 2- 8 | 3- 5 | | 1 |
| THRU | | | 4259 | | VARY | LENGTH | BY | 1- 1 | | |
| | | | | | VARY | DIM. B | BY | 0- 6 | 1/ 2 | |
| | | | | | VARY | DIM. D | BY | 0- 6 | 1/ 2 | |
| P 8012 | 10 | 19-11 | | 1 | | 8-10 | 2- 8 | 8-10 | | 1 |
| P 8013 | 2 | 9- 1 | | 1 | | 3- 5 | 2- 8 | 3- 5 | | 1 |
| THRU | | | 619 | | VARY | LENGTH | BY | 1- 6 | 5/ 8 | |
| | | | | | VARY | DIM. B | BY | 0- 9 | 1/ 4 | |
| | | | | | VARY | DIM. D | BY | 0- 9 | 1/ 4 | |
| P 8020 | 2 | 19-11 | | 1 | | 8-10 | 2- 8 | 8-10 | | 1 |
| P 8021 | 18 | 19-11 | 957 | ST | | | | | | |
| P 8022 | 18 | 20- 5 | 981 | ST | | | | | | |
| P 8023 | 18 | 16- 7 | 797 | ST | | | | | | |
| P 8024 | 18 | 17-11 | 861 | ST | | | | | | |
| P 8025 | 18 | 18- 8 | 897 | ST | | | | | | |
| P 8026 | 14 | 9- 2 | 343 | ST | | | | | | |
| P 8027 | 14 | 9- 5 | 352 | ST | | | | | | |
| P 8028 | 14 | 7- 6 | 280 | ST | | | | | | |
| P 8029 | 14 | 8- 2 | 305 | ST | | | | | | |
| P 8030 | 14 | 8- 6 | 318 | ST | | | | | | |
| P 8031 | 84 | 8- 7 | 1925 | 1 | | 3- 2 | 2- 8 | 3- 2 | | |
| P 8032 | 6 | 9- 1 | | 1 | | 3- 5 | 2- 8 | 3- 5 | | 1 |
| THRU | | | 3364 | | VARY | LENGTH | BY | 0-10 | 7/ 8 | |
| | | | | | VARY | DIM. B | BY | 0- 5 | 1/ 2 | |
| | | | | | VARY | DIM. D | BY | 0- 5 | 1/ 2 | |
| P 8045 | 6 | 20-11 | | 1 | | 9- 4 | 2- 8 | 9- 4 | | 1 |
| P 8046 | 20 | 20- 0 | 1068 | ST | | | | | | |
| P 8047 | 20 | 20-11 | 1117 | ST | | | | | | |
| P 8048 | 20 | 18- 5 | 983 | ST | | | | | | |
| P 8049 | 20 | 19- 6 | 1041 | ST | | | | | | |
| P 8050 | 16 | 9- 2 | 392 | ST | | | | | | |
| P 8051 | 16 | 9- 7 | 409 | ST | | | | | | |
| P 8052 | 16 | 8- 4 | 356 | ST | | | | | | |
| P 8053 | 16 | 8-11 | 381 | ST | | | | | | |
| P 8054 | 44 | 7- 9 | 910 | 1 | | 2- 9 | 2- 8 | 2- 9 | | |
| P 8055 | 2 | 9- 1 | | 1 | | 3- 5 | 2- 8 | 3- 5 | | 1 |
| THRU | | | 934 | | VARY | LENGTH | BY | 1- 0 | | |
| | | | | | VARY | DIM. B | BY | 0- 6 | | |
| | | | | | VARY | DIM. D | BY | 0- 6 | | |
| P 8066 | 2 | 20- 1 | | 1 | | 8-11 | 2- 8 | 8-11 | | 1 |
| P 8067 | 2 | 9- 1 | | 1 | | 3- 5 | 2- 8 | 3- 5 | | 1 |
| THRU | | | 743 | | VARY | LENGTH | BY | 1- 0 | 7/ 8 | |
| | | | | | VARY | DIM. B | BY | 0- 6 | 1/ 2 | |
| | | | | | VARY | DIM. D | BY | 0- 6 | 1/ 2 | |
| P 8076 | 2 | 18- 9 | | 1 | | 8- 3 | 2- 8 | 8- 3 | | 1 |
| P 8077 | 18 | 21- 8 | 1041 | ST | | | | | | |
| P 8078 | 14 | 10- 1 | 377 | ST | | | | | | |
| | | | | | | | | | | |
| P10001 | 18 | 26- 7 | 2059 | ST | | | | | | |
| P10002 | 14 | 12- 6 | 753 | ST | | | | | | |
| P10003 | 16 | 28- 7 | 1968 | ST | | | | | | |
| P10004 | 12 | 13- 6 | 697 | ST | | | | | | |
| | | | | | | | | | | |
| P11001 | 48 | 44- 4 | 11306 | 1 | | 3- 2 | 38- 8 | 3- 2 | | |
| P11002 | 18 | 38- 8 | 3698 | ST | | | | | | |
| P11003 | 32 | 29- 5 | 5001 | 1 | 26- 7 | 3- 2 | | | | |
| P11004 | 20 | 26- 7 | 2825 | ST | | | | | | |
| P11005 | 8 | 45- 2 | 1920 | 1 | | 3- 2 | 39- 6 | 3- 2 | | |

| MARK | NUM. | LENGTH | WEIGHT | TYPE | A | B | C | D | E | NOTE |
|---|---|---|---|---|---|---|---|---|---|---|
| | | | | PIERS | | | | | ( CONTINUED ) | |
| P11006 | 5 | 39- 6 | 1049 | ST | | | | | | |
| P11007 | 8 | 40-10 | 1736 | 1 | | 3- 2 | 35- 2 | 3- 2 | | |
| P11008 | 5 | 35- 2 | 934 | ST | | | | | | |
| P11009 | 32 | 22- 9 | 3868 | 1 | 19-11 | 3- 2 | | | | |
| P11010 | 20 | 10-10 | 1151 | 19 | 11- 0 | | | | | |
| | | | | | | | | | | |
| F 8001 | 316 | 5- 8 | 4781 | 1 | 1- 2 | 4- 9 | | | | |
| F 8002 | 84 | 19-10 | 4448 | 10 | 17- 8 | | | | | |
| F 8003 | 24 | 21-11 | 1404 | 10 | 19- 9 | | | | | |
| F 8004 | 24 | 22-10 | 1463 | 10 | 20- 8 | | | | | |
| | | | | | | | | | | |
| F 9001 | 12 | 23- 2 | 945 | 10 | 20- 8 | | | | | |
| F 9002 | 29 | 13- 2 | 1298 | 10 | 10- 8 | | | | | |
| | | | | | | | | | | |
| F10001 | 56 | 6- 7 | 1586 | 1 | 1- 5 | 5- 6 | | | | |
| F10002 | 276 | 13- 6 | 16033 | 10 | 10- 8 | | | | | |
| | | | | | | | | | | |
| | | | | SUPERSTRUCTURE | | | | | | |
| | | | | | | | | | | |
| S 5008 | 2200 | 30- 0 | 68838 | ST | | | | | | |
| S 5009 | 175 | 15- 7 | 2844 | ST | | | | | | |
| S 5010 | 47 | 31- 3 | 1532 | ST | | | | | | |
| | | | | | | | | | | |
| S 6001 | 16 | 6- 1 | 146 | ST | | | | | | |
| S 6002 | 1 | 6- 6 | | ST | | | | | | 1 |
| THRU | | | 2478 | | VARY | LENGTH | BY | 0- 5 | 1/ 2 | |
| S 6073 | 1 | 39- 4 | | ST | | | | | | 1 |
| S 6074 | 1 | 4- 6 | | ST | | | | | | 1 |
| THRU | | | 1988 | | VARY | LENGTH | BY | 0- 5 | 1/ 2 | |
| S 6140 | 1 | 35- 0 | | ST | | | | | | 1 |
| S 6141 | 256 | 37- 3 | 14323 | ST | | | | | | |
| S 6142 | 2 | 35- 1 | 105 | ST | | | | | | |
| S 6143 | 256 | 36- 3 | 13939 | ST | | | | | | |
| S 6144 | 1 | 37- 4 | | ST | | | | | | 1 |
| THRU | | | 2237 | | VARY | LENGTH | BY | 0- 5 | 1/ 2 | |
| S 6212 | 1 | 5-10 | | ST | | | | | | 1 |
| S 6213 | 1 | 39- 7 | | ST | | | | | | 1 |
| THRU | | | 2563 | | VARY | LENGTH | BY | 0- 5 | 1/ 2 | |
| S 6290 | 1 | 4- 2 | | ST | | | | | | 1 |
| S 6291 | 8 | 3- 8 | 44 | ST | | | | | | |
| S 6292 | 12 | 5- 2 | 93 | ST | | | | | | |
| S 6293 | 1 | 5- 7 | | ST | | | | | | 1 |
| THRU | | | 1530 | | VARY | LENGTH | BY | 0- 5 | 1/ 4 | |
| S 6349 | 1 | 30- 2 | | ST | | | | | | 1 |
| S 6350 | 292 | 22-11 | 10051 | ST | | | | | | |
| S 6351 | 1 | 10- 0 | | ST | | | | | | 1 |
| THRU | | | 1912 | | VARY | LENGTH | BY | 0- 5 | 1/ 4 | |
| S 6407 | 1 | 34- 8 | | ST | | | | | | 1 |
| S 6408 | 34 | 28-10 | 1472 | ST | | | | | | |
| S 6409 | 1 | 8- 5 | | ST | | | | | | 1 |
| THRU | | | 806 | | VARY | LENGTH | BY | 0- 5 | 3/ 8 | |
| S 6442 | 1 | 23- 2 | | ST | | | | | | 1 |
| S 6443 | 2 | 29- 0 | 87 | ST | | | | | | |
| S 6444 | 66 | 29- 4 | 2908 | ST | | | | | | |
| S 6445 | 2 | 23- 1 | 69 | ST | | | | | | |
| S 6446 | 66 | 25- 0 | 2478 | ST | | | | | | |
| S 6447 | 66 | 29- 7 | 2933 | ST | | | | | | |
| S 6448 | 66 | 26- 6 | 2627 | ST | | | | | | |
| S 6449 | 67 | 29-10 | 3002 | ST | | | | | | |
| S 6450 | 67 | 27- 8 | 2784 | ST | | | | | | |
| S 6451 | 1 | 3- 1 | | ST | | | | | | 1 |
| THRU | | | 1048 | | VARY | LENGTH | BY | 0- 4 | 1/ 8 | |
| S 6506 | 1 | 21-10 | | ST | | | | | | 1 |
| S 6507 | 57 | 29- 8 | 2540 | ST | | | | | | |
| S 6508 | 57 | 28- 5 | 2433 | ST | | | | | | |

| FED. RD. DIVISION | STATE | PROJECT | TYPE FUNDS |
|---|---|---|---|
| 5 | OHIO | | |

401
500

CUYAHOGA COUNTY

CUY-480-10.39

NOTES

1. INDICATES SERIES BAR. EACH BAR VARIES FROM ADJACENT BAR(S) BY TABULATED AMOUNT(S), CALCULATED TO NEAREST 1/8 INCH. WEIGHT SHOWN IS FOR ENTIRE SERIES UTILIZING AVERAGE LENGTH.

3. COST OF FIELD BENDING SHALL BE INCLUDED WITH ITEM 509.

   REFER TO CMS SECTIONS 106.03, 700, 709.01 THROUGH 709.05 AND 709.08. SUFFICIENT ADDITIONAL REINFORCING STEEL SHALL BE PROVIDED FOR SAMPLING. RANDOM SAMPLES SHALL BE REPLACED IN THE STRUCTURES BY THE ADDITIONAL STEEL, SPLICED IN ACCORDANCE WITH 509.08.

BAR DIMENSIONS ARE OUT TO OUT

A BAR MARK THAT INCLUDES THE LETTER E IN THE PREFIX INDICATES THAT THE BAR SHALL BE EPOXY COATED.

BAR BENDING DIAGRAM TYPES

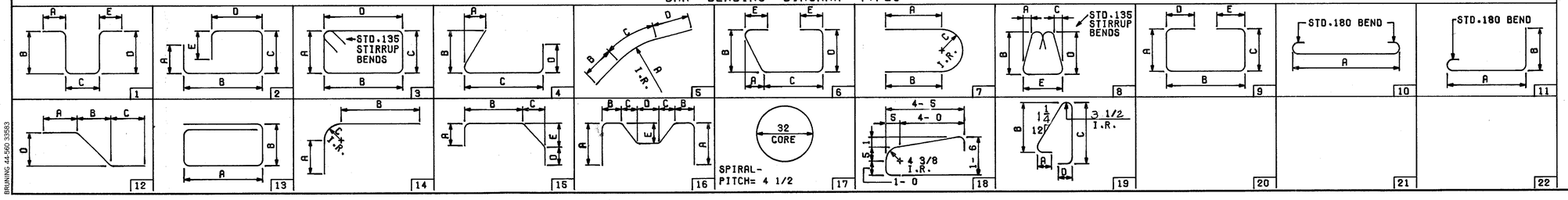


24125

ALDEN E. STILSON & ASSOCIATES, LIMITED
CONSULTING ENGINEERS
CLEVELAND, OHIO COLUMBUS, OHIO WHEELING, W. VA.

# REINFORCING STEEL LIST

BRIDGE NO. CUY-480-1088
I-480 OVER B. + O. R.R.
STA. 601 + 22.18
CUYAHOGA COUNTY STA. 604 + 29.32

| DESIGNED | DRAWN | TRACED | CHECKED | REVIEWED | DATE | REVISED |
|---|---|---|---|---|---|---|
| RT | | | BTG | G.W.M. | 3/14/83 | |

BRUNING 44-560 33583

MICROFILMED
JAN 18 1991

| MARK | NUM. | LENGTH | WEIGHT | TYPE | A | B | C | D | E | NOTE |
|---|---|---|---|---|---|---|---|---|---|---|
| | | | | SUPERSTRUCTURE | | | | ( CONTINUED ) | | |
| S 6509 | 1 | 2- 9 | | ST | | | | | | 1 |
| THRU | | | 1056 | | VARY | LENGTH | BY | 0- 5 | 1/ 4 | |
| S 6559 | 1 | 24-10 | | ST | | | | | | 1 |
| S 6560 | 51 | 29- 6 | 2260 | ST | | | | | | |
| S 6561 | 1 | 4- 5 | | ST | | | | | | 1 |
| THRU | | | 1558 | | VARY | LENGTH | BY | 0- 5 | | |
| S 6621 | 1 | 29- 7 | | ST | | | | | | 1 |
| S 6622 | 9 | 4- 0 | 54 | ST | | | | | | |
| | | | | EPOXY | COATED BARS | | | | | |
| | | | | ABUTMENTS | | | | | | |
| AE5002 | 4 | 34-10 | 145 | ST | | | | | | |
| AE5014 | 27 | 5-11 | 167 | 19 | 1- 2 | 2- 6 | 2- 2 | | | |
| AE5122 | 12 | 9- 1 | 114 | ST | | | | | | |
| AE5123 | 12 | 3- 4 | 42 | ST | | | | | | |
| AE5124 | 12 | 5- 6 | 69 | ST | | | | | | |
| AE5125 | 6 | 8- 1 | 51 | 8 | 0- 3 | 2-10 | 0- 3 | 2-10 | 1- 9 | |
| AE5126 | 20 | 3- 2 | 66 | 15 | 1- 2 | 0- 7 | 0- 8 | 0- 9 | 0- 7 | |
| AE5127 | 8 | 3- 5 | 29 | 1 | 0- 9 | 2-10 | | | | |
| AE5128 | 8 | 2- 2 | 18 | 12 | 1- 5 | 0-11 | | | | |
| AE5130 | 9 | 5- 7 | 52 | 19 | | 2- 2 | 2- 5 | 0-11 | | |
| AE5134 | 12 | 9- 5 | 118 | ST | | | | | | |
| AE5139 | 24 | 2- 9 | 69 | 11 | 2- 2 | | | | | |
| AE5141 | 12 | 4- 4 | 54 | ST | | | | | | |
| AE5142 | 9 | 6- 3 | 59 | 1 | | 2- 8 | 1- 2 | 2- 8 | | |
| AE5143 | 16 | 2- 8 | 45 | ST | | | | | | |
| AE5144 | 4 | 3- 7 | 15 | ST | | | | | | |
| AE6002 | 3 | 4- 1 | | 15 | | 0- 9 | 0- 2 | 2- 8 | 0- 9 | 1 |
| THRU | | | 96 | | VARY | LENGTH | BY | 0- 1 | | |
| | | | | | VARY | DIM. B | BY | 0- 0 | 3/ 4 | |
| | | | | | VARY | DIM. C | BY | 0- 1 | | |
| AE6006 | 3 | 4- 5 | | 15 | | 1- 0 | 0- 6 | 2- 8 | 0- 9 | 1 |
| AE6007 | 9 | 4- 1 | 55 | 15 | | 0- 9 | 0- 2 | 2- 8 | 0- 9 | |
| AE6008 | 9 | 4- 6 | 61 | 15 | | 1- 0 | 0- 6 | 2- 8 | 0- 9 | |
| AE6009 | 20 | 8- 3 | 248 | 15 | | 1- 0 | 0- 6 | 6- 5 | 0- 9 | |
| AE6010 | 1 | 6- 1 | | 15 | | 4- 0 | 0-10 | 1- 2 | 0- 7 | 1 |
| THRU | | | 72 | | VARY | LENGTH | BY | 0- 9 | 3/ 8 | |
| | | | | | VARY | DIM. B | BY | 0- 9 | 3/ 8 | |
| AE6015 | 1 | 10- 0 | | 15 | | 7-11 | 0-10 | 1- 2 | 0- 7 | 1 |
| AE6016 | 1 | 4- 1 | 6 | 15 | | 2- 0 | 0-10 | 1- 2 | 0- 7 | |
| | | | | EPOXY | COATED BARS | | | | | |
| | | | | SUPERSTRUCTURE | | | | | | |
| SE4001 | 1580 | 30- 0 | 31663 | ST | | | | | | |
| SE4002 | 75 | 19- 2 | 960 | ST | | | | | | |
| SE4003 | 322 | 30- 0 | 6453 | ST | | | | | | |
| SE4004 | 322 | 16- 8 | 3585 | ST | | | | | | |
| SE4005 | 1 | 15- 7 | | ST | | | | | | 1 |
| THRU | | | 1283 | | VARY | LENGTH | BY | 0- 2 | 3/ 8 | |
| SE4086 | 1 | 31- 3 | | ST | | | | | | 1 |
| SE4087 | 1 | 31- 6 | 21 | ST | | | | | | |
| SE5001 | 402 | 2- 6 | 1048 | 12 | 1- 6 | 0-11 | | 0- 5 | | |
| SE5002 | 402 | 2- 7 | 1083 | ST | | | | | | |
| SE5003 | 408 | 2- 5 | 1028 | 1 | 0-11 | 1- 8 | | | | |
| SE5004 | 408 | 5- 6 | 2340 | 19 | 0- 8 | 2- 6 | 2- 3 | | | |
| SE5005 | 408 | 3- 2 | 1348 | 15 | 0- 9 | 0-11 | 0- 9 | 0- 9 | 0- 7 | |
| SE5006 | 402 | 3- 0 | 1258 | 15 | 0- 9 | 0-11 | 0-10 | 0- 6 | 0- 7 | |
| SE5007 | 402 | 2- 4 | 978 | 1 | | 1- 9 | 0- 9 | | | |
| SE5008 | 270 | 30- 0 | 8448 | ST | | | | | | |
| SE5009 | 4 | 16- 2 | 67 | ST | | | | | | |
| SE5095 | 36 | 13- 9 | 516 | ST | | | | | | |

| MARK | NUM. | LENGTH | WEIGHT | TYPE | A | B | C | D | E | NOTE |
|---|---|---|---|---|---|---|---|---|---|---|
| | | | | SUPERSTRUCTURE | | | | ( CONTINUED ) | | |
| SE5096 | 108 | 15- 2 | 1708 | ST | | | | | | |
| SE5097 | 72 | 14- 8 | 1101 | ST | | | | | | |
| SE5098 | 288 | 7- 2 | 2153 | ST | | | | | | |
| SE5100 | 8 | 16- 2 | 135 | ST | | | | | | |
| SE5102 | 5 | 16- 0 | 83 | ST | | | | | | |
| SE5103 | 5 | 31- 9 | 166 | ST | | | | | | |
| SE5104 | 402 | 2- 6 | 1048 | ST | | | | | | |
| SE7001 | 16 | 6- 1 | 199 | ST | | | | | | |
| SE7002 | 1 | 6- 6 | | ST | | | | | | 1 |
| THRU | | | 3373 | | VARY | LENGTH | BY | 0- 5 | 1/ 2 | |
| SE7073 | 1 | 39- 4 | | ST | | | | | | 1 |
| SE7074 | 1 | 8- 2 | | ST | | | | | | 1 |
| THRU | | | 3218 | | VARY | LENGTH | BY | 0- 5 | 5/ 8 | |
| SE7140 | 1 | 38-10 | | ST | | | | | | 1 |
| SE7141 | 256 | 33-10 | 17704 | ST | | | | | | |
| SE7142 | 2 | 38-11 | 159 | ST | | | | | | |
| SE7143 | 256 | 40- 0 | 20931 | ST | | | | | | |
| SE7144 | 1 | 34- 0 | | ST | | | | | | 1 |
| THRU | | | 2574 | | VARY | LENGTH | BY | 0- 5 | 1/ 2 | |
| SE7212 | 1 | 2- 6 | | ST | | | | | | 1 |
| SE7213 | 1 | 39- 7 | | ST | | | | | | 1 |
| THRU | | | 3488 | | VARY | LENGTH | BY | 0- 5 | 1/ 2 | |
| SE7290 | 1 | 4- 2 | | ST | | | | | | 1 |
| SE7291 | 8 | 3- 8 | 60 | ST | | | | | | |
| SE7292 | 12 | 5- 2 | 127 | ST | | | | | | |
| SE7293 | 1 | 5- 7 | | ST | | | | | | 1 |
| THRU | | | 2083 | | VARY | LENGTH | BY | 0- 5 | 1/ 4 | |
| SE7349 | 1 | 30- 2 | | ST | | | | | | 1 |
| SE7350 | 292 | 27- 5 | 16364 | ST | | | | | | |
| SE7351 | 1 | 5- 9 | | ST | | | | | | 1 |
| THRU | | | 2107 | | VARY | LENGTH | BY | 0- 5 | 1/ 4 | |
| SE7407 | 1 | 30- 5 | | ST | | | | | | 1 |
| SE7408 | 34 | 29- 2 | 2027 | ST | | | | | | |
| SE7409 | 1 | 3-11 | | ST | | | | | | 1 |
| THRU | | | 785 | | VARY | LENGTH | BY | 0- 5 | 3/ 8 | |
| SE7442 | 1 | 18- 8 | | ST | | | | | | 1 |
| SE7443 | 2 | 29- 3 | 120 | ST | | | | | | |
| SE7444 | 66 | 29- 5 | 3968 | ST | | | | | | |
| SE7445 | 2 | 18- 7 | 76 | ST | | | | | | |
| SE7446 | 66 | 20- 6 | 2766 | ST | | | | | | |
| SE7447 | 66 | 29- 8 | 4002 | ST | | | | | | |
| SE7448 | 66 | 22- 0 | 2968 | ST | | | | | | |
| SE7449 | 67 | 29-11 | 4097 | ST | | | | | | |
| SE7450 | 67 | 23- 2 | 3173 | ST | | | | | | |
| SE7451 | 1 | 3- 5 | | ST | | | | | | 1 |
| THRU | | | 1703 | | VARY | LENGTH | BY | 0- 5 | | |
| SE7506 | 1 | 26- 4 | | ST | | | | | | 1 |
| SE7507 | 57 | 30- 1 | 3505 | ST | | | | | | |
| SE7508 | 57 | 23- 9 | 2767 | ST | | | | | | |
| SE7509 | 1 | 7- 7 | | ST | | | | | | 1 |
| THRU | | | 1942 | | VARY | LENGTH | BY | 0- 5 | 1/ 4 | |
| SE7559 | 1 | 29- 8 | | ST | | | | | | 1 |
| SE7560 | 51 | 24- 8 | 2571 | ST | | | | | | |
| SE7561 | 1 | 4- 5 | | ST | | | | | | 1 |
| THRU | | | 2120 | | VARY | LENGTH | BY | 0- 5 | | |
| SE7621 | 1 | 29- 7 | | ST | | | | | | 1 |
| SE7622 | 9 | 4- 0 | 74 | ST | | | | | | |

## BAR BENDING DIAGRAM TYPES

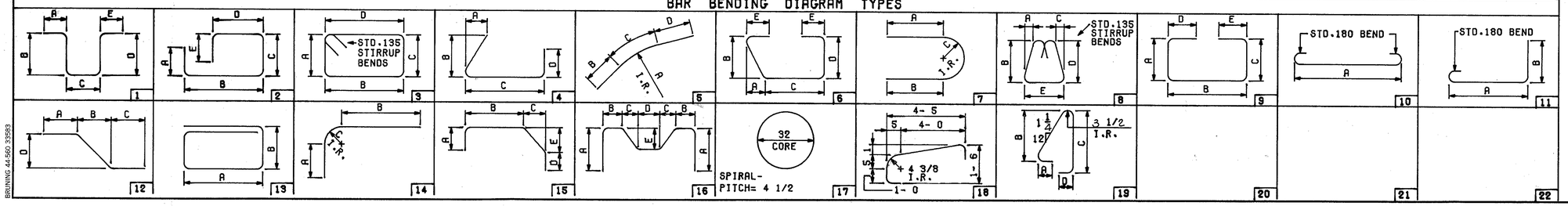


BRUNING 44-560 33583

| FED. RD. DIVISION | STATE | PROJECT | TYPE FUNDS |
|---|---|---|---|
| 5 | OHIO | | |

402 / 500

CUYAHOGA COUNTY

CUY-480-10.39

NOTES

1. INDICATES SERIES BAR. EACH BAR VARIES FROM ADJACENT BAR(S) BY TABULATED AMOUNT(S), CALCULATED TO NEAREST 1/8 INCH. WEIGHT SHOWN IS FOR ENTIRE SERIES UTILIZING AVERAGE LENGTH.

3. COST OF FIELD BENDING SHALL BE INCLUDED WITH ITEM 509.

   REFER TO CMS SECTIONS 106.03, 700, 709.01 THROUGH 709.05 AND 709.08. SUFFICIENT ADDITIONAL REINFORCING STEEL SHALL BE PROVIDED FOR SAMPLING. RANDOM SAMPLES SHALL BE REPLACED IN THE STRUCTURES BY THE ADDITIONAL STEEL, SPLICED IN ACCORDANCE WITH 509.08.

BAR DIMENSIONS ARE OUT TO OUT

A BAR MARK THAT INCLUDES THE LETTER E IN THE PREFIX INDICATES THAT THE BAR SHALL BE EPOXY COATED.

25/25

ALDEN E. STILSON & ASSOCIATES, LIMITED
CONSULTING ENGINEERS
CLEVELAND, OHIO COLUMBUS, OHIO WHEELING, W. VA.

# REINFORCING STEEL LIST

BRIDGE NO. CUY-480-1088
I-480 OVER B. + O. R.R.
STA. 601 + 22.18
CUYAHOGA COUNTY STA. 604 + 29.32

| DESIGNED | DRAWN | TRACED | CHECKED | REVIEWED | DATE | REVISED |
|---|---|---|---|---|---|---|
| RT | | | BTG | G.W.M. | 3/4/83 | |

MICROFILMED
JAN 18 1991

01-1

| FED. RD. DIVISION | STATE | PROJECT | TYPE FUNDS |
|---|---|---|---|
| 2 | OHIO | | |

403
500

CUYAHOGA COUNTY
CUY-480-10.39

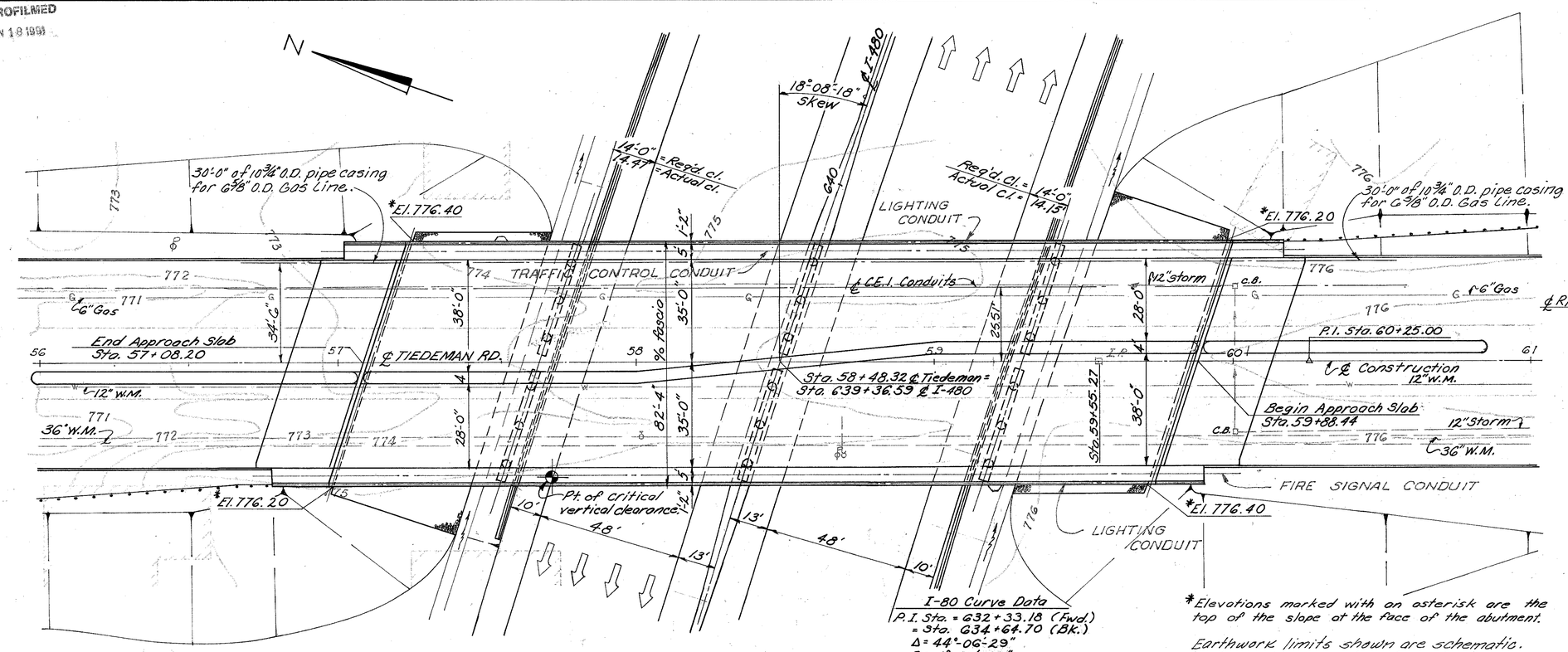


PLAN

I-80 Curve Data
P.I. Sta. = 632+33.18 (Fwd.)
= Sta. 634+64.70 (Bk.)
Δ = 44°-06'-29"
D = 1°-00'-00"
R = 5,729.58'
T = 2,321.19'
L = 4,410.86'
C = 4,302.69'

*Elevations marked with an asterisk are the top of the slope at the face of the abutment.

Earthwork limits shown are schematic. Actual slopes shall conform to plan cross-sections.

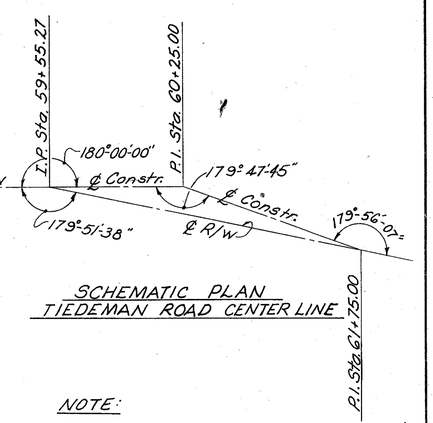


SCHEMATIC PLAN
TIEDEMAN ROAD CENTER LINE

NOTE:
Vertical curve data does not apply to bridge or graphic grade elevations. The bridge elevations were obtained by adding 0.12 feet to the elevations obtained from vertical curve data.

## PROPOSED STRUCTURE

TYPE: Continuous steel beam with reinforced concrete deck and substructure.
SPANS: 56'-9", 81'-0", 81'-0", 56'-9" % brgs.
ROADWAY: 70'-0" f/f curbs, 5'-0" sidewalk, 6'-0" Chain Link Fence mounted on 2'7" Concrete parapet and 4'-0" raised median.
LOADING: HS 20-44
WEARING SURFACE: 1½" Latex Modified Concrete.
SKEW: 18°-08'-18" Lt. forward
ALIGNMENT: Tangent
APPROACH SLABS: AS-1-81 (25' long)

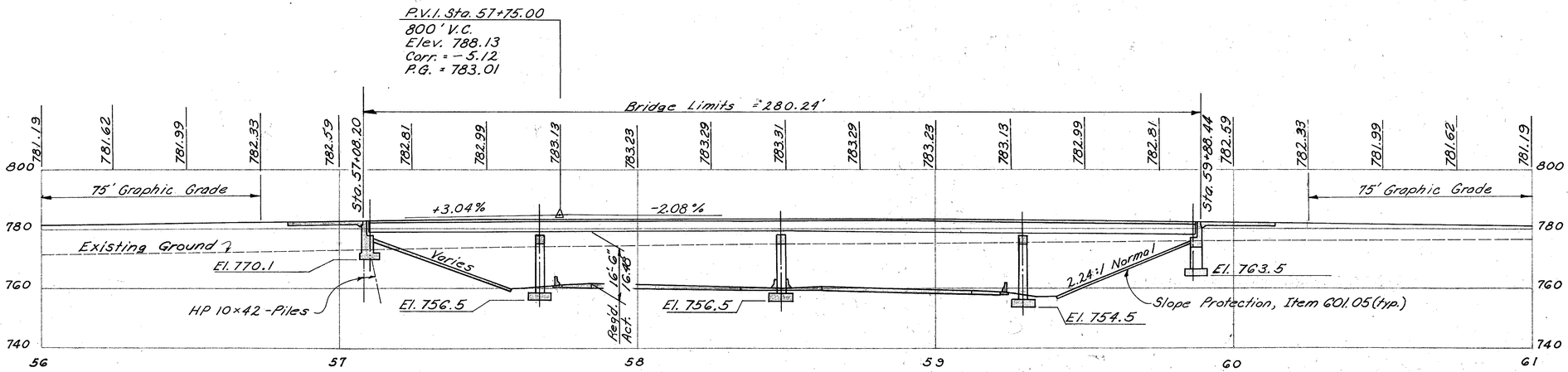


PROFILE ON ℄ OF TIEDEMAN ROAD

Piling estimated average pay length:
Rear Abutment - 16'

TRAFFIC ESTIMATE

Design Year - 2000
Total A.D.T. - 26667
A.D.T.T. - 1330

1/13

ALDEN E. STILSON & ASSOCIATES, LIMITED
CONSULTING ENGINEERS
COLUMBUS, OHIO

# SITE PLAN

BRIDGE NO. CUY-480-1162
TIEDEMAN ROAD OVER I-480

CUYAHOGA COUNTY
STA. 57+08.20
STA. 59+88.44

SCALE: 1"-20'

| DESIGNED | DRAWN | TRACED | CHECKED | REVIEWED | DATE | REVISED |
|---|---|---|---|---|---|---|
| G.W.M. | G.W.M. | D.L. | B.I.P. | G.W.M. | 11/30/71 | 1-5-84 |

MICROFILMED
JAN 18 1991

| FHWA REGION | STATE | PROJECT | |
|---|---|---|---|
| 5 | OHIO | | |

404
500

CUYAHOGA COUNTY
CUY-480-10.39

STANDARD DRAWING REFERENCES

| DESCRIPTION | DWG. NO. | SHT. | DATE |
|---|---|---|---|
| END DAM AND END CROSSFRAME | SD-1-69 | 1-2 | 6-12-69 |
| CURB PLATES | SD-1-69 | 2 | 6-12-69 |
| SCUPPERS | SD-1-69 | 3 | 6-12-69 |
| MOMENT PLATES | SD-1-69 | 3 | 6-12-69 |
| BOLTED SPLICES | SD-1-69 | 4 | 6-12-69 |
| ROCKERS AND BOLSTERS | RB-1-55 | | 2- 2-59 R |
| APPROACH SLABS | AS-1-81 | 1-3 | 11-27-81 |
| HIGHWAY LIGHTING | HL-3 | | 7-27-73 R |
| HIGHWAY LIGHTING | HL-4 | | 1-21-76 R |
| HIGHWAY LIGHTING | HL-5 | | 4-06-73 R |
| HIGHWAY LIGHTING | HL-6 | | 3-22-77 R |
| HIGHWAY LIGHTING | HL-7 | | 1-21-76 R |

(R INDICATES REVISED DATE)

SUPPLEMENTAL SPECIFICATION REFERENCES

| DESCRIPTION | NO. | DATE |
|---|---|---|
| EPOXY COATED REINFORCING STEEL | 824 | 10-08-82 |
| CONCRETE CURING AND PROTECTIVE MEMBRANE | 836 | 3-12-75 |
| BRIDGE DECK REPAIR AND OVERLAY WITH LATEX MODIFIED CONCRETE | 845 | 3-2-81 |
| LATEX FOR CONCRETE MODIFICATION | 953 | 8-21-80 |

COMMON DETAIL REFERENCES

| | |
|---|---|
| CONTRACTION JOINTS | SHEET 476 |
| CHAIN LINK FENCE | SHEET 477 |
| PVC WATERSTOP | SHEET 476 |

DESIGN SPECIFICATIONS
THIS STRUCTURE CONFORMS TO THE "STANDARD SPECIFICATIONS FOR HIGHWAY BRIDGES" ADOPTED BY THE AMERICAN ASSOCIATION OF STATE HIGHWAY OFFICIALS, 1969, INCLUDING THE OHIO SUPPLEMENT TO THESE SPECIFICATIONS.

DESIGN DATA
DESIGN LOADING - HS20-44
CONCRETE CLASS S - UNIT STRESS 1500 P.S.I. (SUPERSTRUCTURE).*
CONCRETE CLASS C - UNIT STRESS 1333 P.S.I. (SUBSTRUCTURE).
STRUCTURAL STEEL ASTM A36 - UNIT STRESS 20,000 P.S.I.
REINFORCING STEEL ASTM A615, A616 OR A617.
GRADE 40 - UNIT STRESS 20,000 P.S.I.
SPIRAL REINFORCEMENT MAY BE PLAIN BARS, ASTM A82 OR A615.
DECK PROTECTION METHOD
EPOXY COATED REINFORCING STEEL, TOP MAT ONLY.
LATEX MODIFIED CONCRETE OVERLAY.

LATEX MODIFIED CONCRETE (LMC) OVERLAY OF NEW CONCRETE BRIDGE DECKS
THE CLASS S CONCRETE BRIDGE DECK SURFACE SHALL BE FINISHED BY BROOMING OR BY ROUGH BURLAP DRAG TO PRODUCE A SURFACE CONDUCIVE TO DEVELOPMENT OF SHEAR BOND STRENGTH WITH THE LMC OVERLAY.
THE CLASS S CONCRETE BRIDGE DECK SHALL BE WATER CURED IN ACCORDANCE WITH 511.14, METHOD (A). SIDEWALKS, CURBS AND PAPAPETS MAY BE CURED BY METHOD (B) UNLESS OTHERWISE NOTED.
SANDBLASTING OF THE SURFACE OF THE CLASS S CONCRETE DECK, AS SPECIFIED IN 845.04, SHALL BE OF SUFFICIENT DURATION AND INTENSITY AS TO EXPOSE FINE AGGREGATE.
LMC OVERLAY SHALL BE 1 1/2 INCH THICK AND SHALL BE IN ACCORDANCE WITH SS 845 EXCEPT ITEM 845, LMC OVERLAY, VARIABLE THICKNESS, AND ITEM 845, FULL DEPTH REPAIR ARE NOT REQUIRED; THE FIRST THREE (3) PARAGRAPHS UNDER 845.04, PREPARATION OF EXISTING DECK, ARE NOT APPLICABLE; AND THE PROVISIONS OF THIS NOTE SHALL APPLY.

PILES
PILES SHALL BE DRIVEN TO REFUSAL ON BEDROCK. REFUSAL SHALL BE CONSIDERED AS OBTAINED BY PENETRATING SOFT BEDROCK FOR SEVERAL INCHES WITH A MINIMUM RESISTANCE OF 20 BLOWS PER INCH OR REFUSAL SHALL BE CONSIDERED AS OBTAINED AFTER THE PILE HAS CONTACTED HARD BEDROCK AND THE PILE HAS THEN RECEIVED AT LEAST 20 BLOWS. THE DESIGN LOAD IS 35 TONS PER PILE FOR THE ABUTMENT PILES.

FOUNDATION BEARING PRESSURE
SOUTH ABUTMENT FOOTINGS AS DESIGNED, PRODUCE A MAXIMUM BEARING PRESSURE OF 7 TONS PER SQ. FT.
PIER FOOTINGS, AS DESIGNED, PRODUCE A MAXIMUM BEARING PRESSURE OF 7 TONS PER SQ. FT.

FOOTINGS
PIER FOOTINGS SHALL EXTEND A MINIMUM OF 3 INCHES INTO BEDROCK OR TO THE ELEVATION SHOWN, WHICHEVER IS LOWER.
SOUTH ABUTMENT FOOTINGS SHALL EXTEND A MINIMUM OF 12 INCHES INTO BEDROCK OR TO THE ELEVATION SHOWN, WHICHEVER IS LOWER.

UTILITY LINES
ALL EXPENSE INVOLVED IN RELOCATING THE AFFECTED UTILITY LINES SHALL BE BORNE BY THE OWNERS. THE CONTRACTOR AND OWNERS ARE REQUESTED TO COOPERATE BY ARRANGING THEIR WORK IN SUCH A MANNER THAT INCONVENIENCE TO EITHER WOULD BE HELD TO A MINIMUM.

REINFORCING BAR LAPPED SPLICES
ALL SPLICES SHALL BE LAPPED 30 BAR DIAMETERS.

* THE DESIGN IS BASED ON CLASS C CONCRETE UNIT STRESS 1333 PSI

| ITEM | TOTAL | UNIT | DESCRIPTION | ABUTS | PIERS | SUPER | GENERAL | |
|---|---|---|---|---|---|---|---|---|
| 503 | 612 | C.Y. | UNCLASSIFIED EXCAVATION | 612 | | | | |
| 503 | 134 | C.Y. | ROCK EXCAVATION | 20 | 114 | | | |
| 503 | LUMP | | COFFERDAMS, CRIBS, AND SHEETING | | | | LUMP | |
| 505 | LUMP | | PILE DRIVING EQUIPMENT MOBILIZATION | | | | LUMP | |
| 507 | 350 | L.F. | STEEL PILES, HP10X42 | 350 | | | | |
| 509 | 159829 | LB | REINFORCING STEEL | 43433 | 44968 | 71428 | | |
| 511 | 784 | C.Y. | CLASS S CONCRETE, SUPERSTRUCTURE (SEE PROPOSAL NOTE) | | | 784 | | |
| 511 | 211 | C.Y. | CLASS C CONCRETE, ABUTMENTS ABOVE FOOTINGS | 211 | | | | |
| 511 | 171 | C.Y. | CLASS C CONCRETE, PIER CAPS AND COLUMNS | | 171 | | | |
| 511 | 189 | C.Y. | CLASS C CONCRETE, FOOTINGS | 122 | 67 | | | |
| 512 | 4 | S.Y. | TYPE B WATERPROOFING | 4 | | | | |
| 513 | 600500 | LB | STRUCTURAL STEEL, ASTM A-36* (AISC CATEGORY I) | | | 600500 | | |
| 514 | 600500 | LB | FIELD PAINTING OF NEW STRUCTURAL STEEL, SYSTEM A * | | | 600500 | | |
| 516 | 16 | L.F. | PVC WATERSTOP, AS PER PLAN | 16 | | | | |
| 516 | 168.33 | L.F. | STRUCTURAL STEEL EXPANSION JOINTS | 168.33 | | | | |
| 518 | 105 | C.Y. | POROUS BACKFILL | 105 | | | | |
| 518 | 16 | EA | SCUPPERS INCLUDING SUPPORTS | | | 16 | | |
| 518 | 217 | L.F. | 6 INCH PERFORATED, HELICAL CSP, 707.01 | 217 | | | | |
| 518 | 62 | L.F. | 6 INCH NON-PERFORATED, HELICAL CSP, INCLUDING SPECIALS, 707.01 | 62 | | | | |
| 601 | 1018 | S.Y. | CRUSHED AGGREGATE SLOPE PROTECTION | | | | 1018 | |
| ~~517~~ | ~~628~~ | L.F. | RAILING (CONCRETE PARAPET WITH CHAIN LINK FENCE), AS PER PLAN | | | | ~~628~~ | |
| ~~607~~ | ~~628~~ | L.F. | FENCE TYPE CL, AS PER PLAN | | | | ~~628~~ | |
| 625 | | | SEE SHEET 256 & 257 FOR LIGHTING SUMMARY | | | | | |
| 824 | 96785 | LB | EPOXY COATED REINFORCING STEEL | 499 | | 96286 | | |
| 845 | 2030 | S.Y. | LATEX MODIFIED CONCRETE OVERLAY, 1 1/2 INCH THICK, AS PER PLAN | | | 2030 | | |
| SPEC. | 60 | L.F. | 10-3/4" O.D. PIPE CASING, 0.279" WALL THICKNESS ** | | | | 60 | |

* 143 LBS. TO BE PAID FOR BY THE EAST OHIO GAS COMPANY; 190 LBS TO BE PAID FOR BY THE CLEVELAND ELECTRIC ILLUMINATING CO.
** To BE PAID FOR BY THE EAST OHIO GAS COMPANY

B201001A

2 / 13

ALDEN E. STILSON & ASSOCIATES
CONSULTING ENGINEERING AND ARCHITECTURE
COLUMBUS, CLEVELAND, WHEELING

# GENERAL NOTES AND ESTIMATED QUANTITIES

BRIDGE NO. CUY-480-1162
TIEDEMAN ROAD OVER I-480
CUYAHOGA COUNTY STA. 57+08.20 TO STA. 59+88.44

| DESIGNED | DRAWN | TRACED | CHECKED | REVIEWED | DATE | REVISED |
|---|---|---|---|---|---|---|
| RSS | | | DL 11-4-71 | G.W.M. | 2/15/83 | 1-3-84 |

MICROFILMED
JAN 18 1991

| FED. RD. DIVISION | STATE | PROJECT | TYPE FUNDS |
|---|---|---|---|
| 2 | OHIO | | |

405/500

CUYAHOGA COUNTY
CUY.-480-10.39

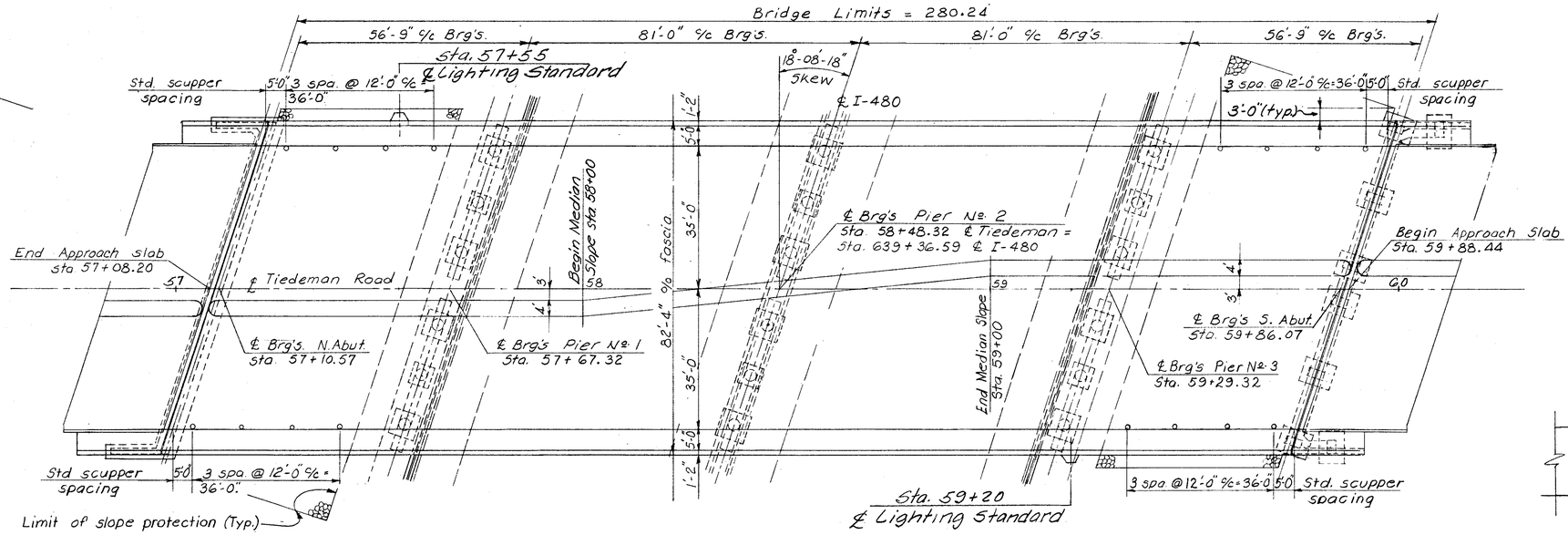


GENERAL PLAN

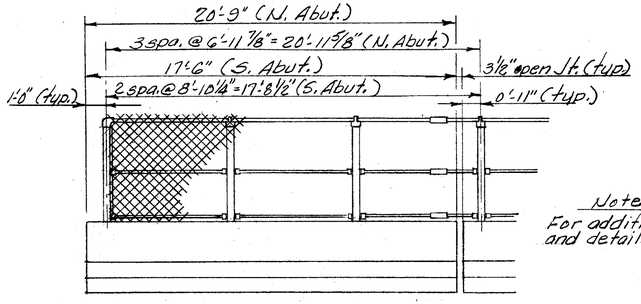


Note:
For additional notes and details see Sht. 477

FENCE RAILING POST DETAIL AT WING WALLS

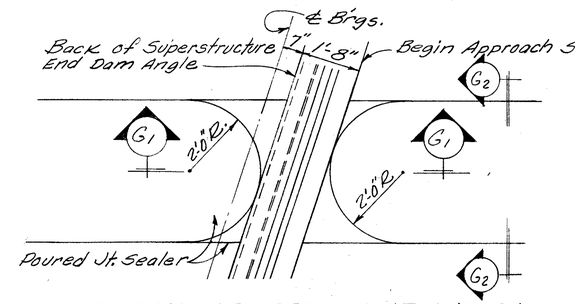


DETAIL OF MEDIAN AT END DAM
(south end dam shown, North similar).

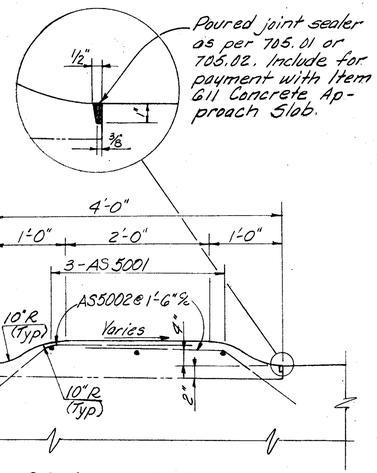


SECTION $G_2$-$G_2$

Notes:
Scupper spacing is along face of curb.

Scupper spacing shall be adjusted to clear intermediate crossframes by a minimum of 6 inches.

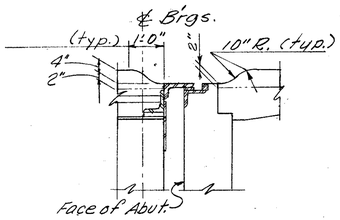


SECTION - $G_1$-$G_1$

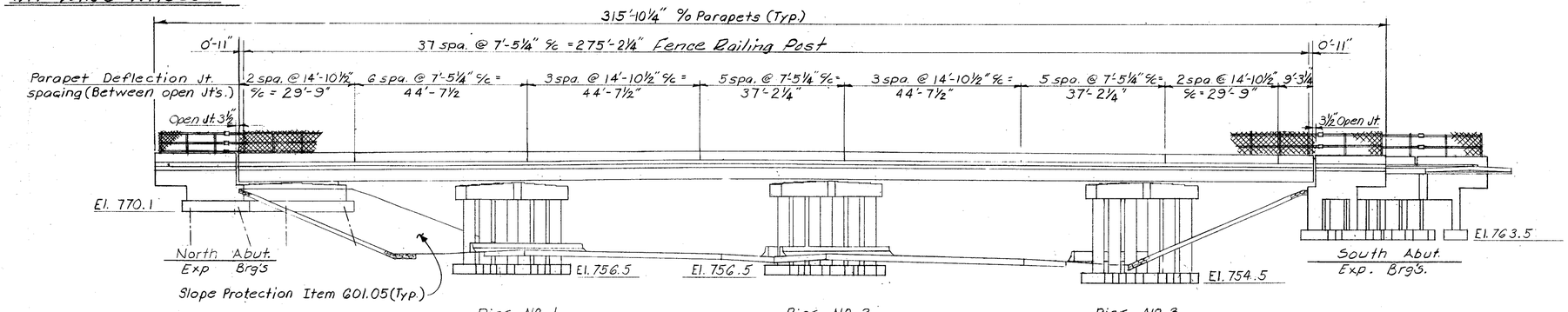


ELEVATION

3/13

ALDEN E. STILSON & ASSOCIATES, LIMITED
CONSULTING ENGINEERS
CLEVELAND, OHIO COLUMBUS, OHIO WHEELING, W. VA.

# GENERAL PLAN

BRIDGE No. CUY-480-1162
TIEDEMAN ROAD OVER I-480
CUYAHOGA COUNTY
STA. 57+08.20
STA. 59+88.44

| DESIGNED | DRAWN | TRACED | CHECKED | REVIEWED | DATE | REVISED |
|---|---|---|---|---|---|---|
| B.I.P. | B.I.P. | | R.S.S. | G.W.M. | 11/30/71 | |

MICROFILMED
JAN 18 1985

| FED. RD. DIVISION | STATE | PROJECT | TYPE FUNDS |
|---|---|---|---|
| 2 | OHIO | | |

406/500

CUYAHOGA COUNTY
CUY.-480-10.39

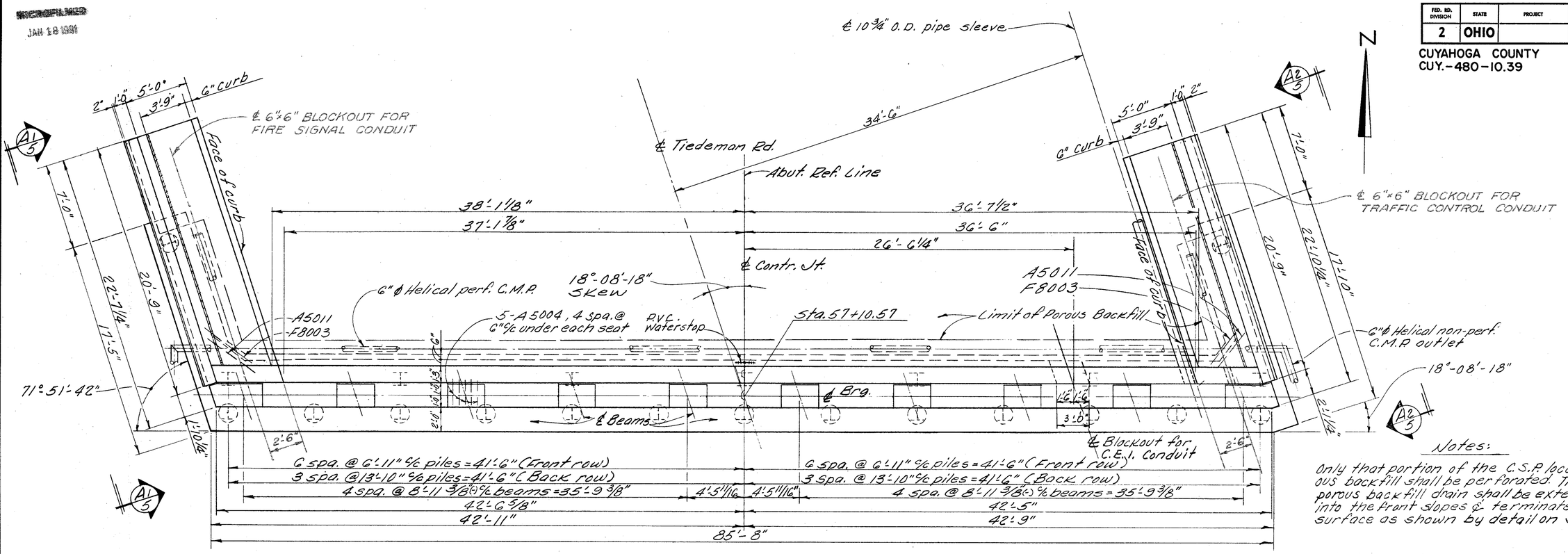


## PLAN

Note: For Fillet Details See Sheet 5|13

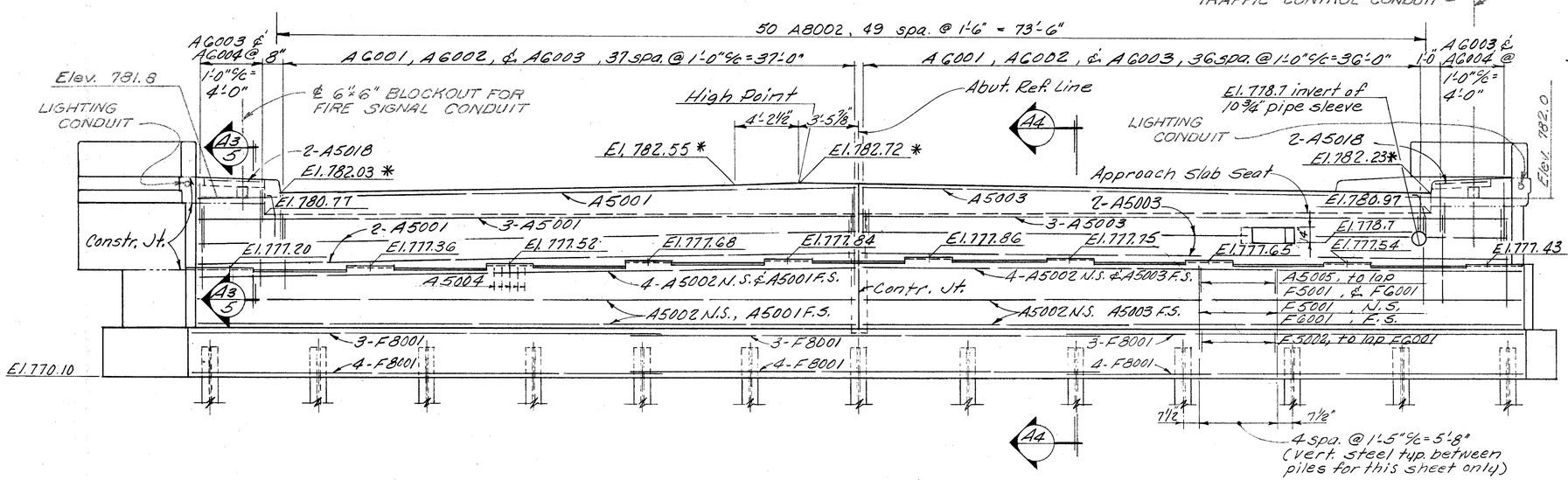


## ELEVATION

Notes:

Only that portion of the C.S.P located in porous backfill shall be perforated. The 6"ϕ C.S.P porous backfill drain shall be extended out into the front slopes & terminated near the surface as shown by detail on Sht.

All piles are H.P. 10×42
I indicates Vertical piles
(F) indicates piles battered 1:4

In reinforcing bar callouts
N.S. indicates near side.
F.S. indicates far side.

* Elevations shown thus are at the top surface of the end main angle at the face of backwall and the point indicated.

For detail of contraction joint, see Common Details Sht.

Porous Backfill 1'-6" thick, full length of abutment and 2'-0" thick, full length of wings as shown, shall extend up to the subgrade or underside of approach slab.

Backwall Concrete: In addition to the provisions of 511.08, backwall concrete above the optional construction joint at the approach slab seat shall not be placed until after the deck concrete in the span adjacent to the abutment has been placed.

4|13

ALDEN E. STILSON & ASSOCIATES, LIMITED
CONSULTING ENGINEERS
CLEVELAND, OHIO COLUMBUS, OHIO WHEELING, W. VA.

# NORTH ABUTMENT DETAILS

BRIDGE NO. CUY-480-1162
TIEDEMAN ROAD OVER I-480
CUYAHOGA COUNTY
STA. 57+08.20
STA. 59+88.44

| DESIGNED | DRAWN | TRACED | CHECKED | REVIEWED | DATE | REVISED |
|---|---|---|---|---|---|---|
| R.S.S. | R.T. | | B.I.P. | G.W.M. | 11/30/71 | 1-5-84 |

MICROFILMED
JAN 18 1971

| FED. RD. DIVISION | STATE | PROJECT | TYPE FUNDS |
|---|---|---|---|
| 2 | OHIO | | |

407/500

CUYAHOGA COUNTY
CUY.-480-10.39

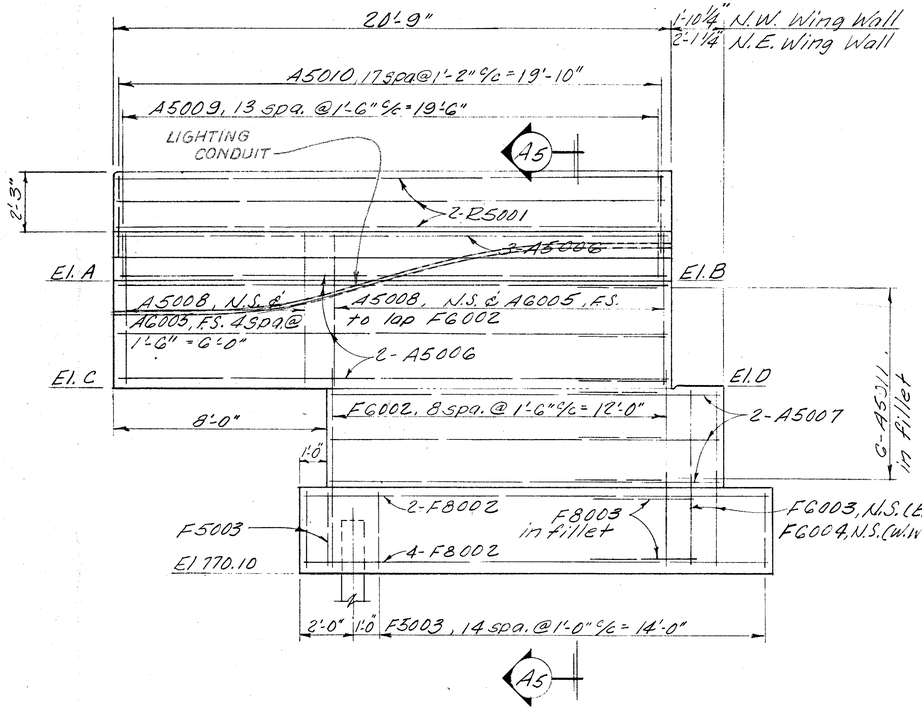


ELEVATION $A_1$ - $A_1$ 4/13 (As shown)

ELEVATION $A_2$ - $A_2$ 4/13 (opp. hand)

Note: For end post details and reinforcing not shown, see Std. Dwg. BR-2-67

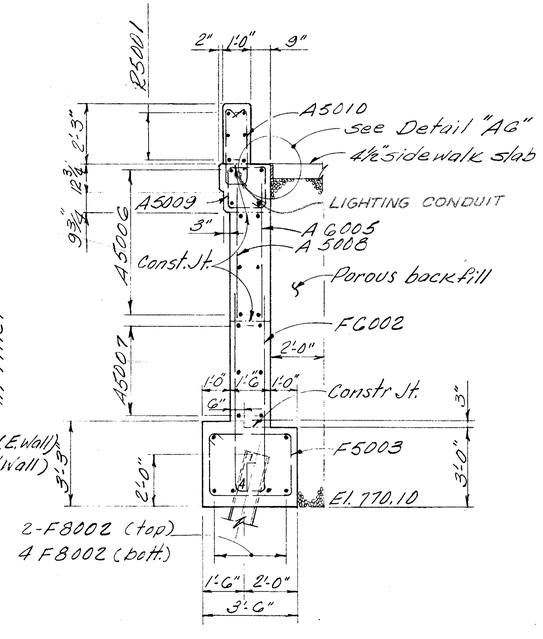


SECTION A5 - A5

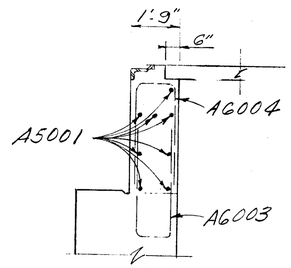


SECTION A3 - A3

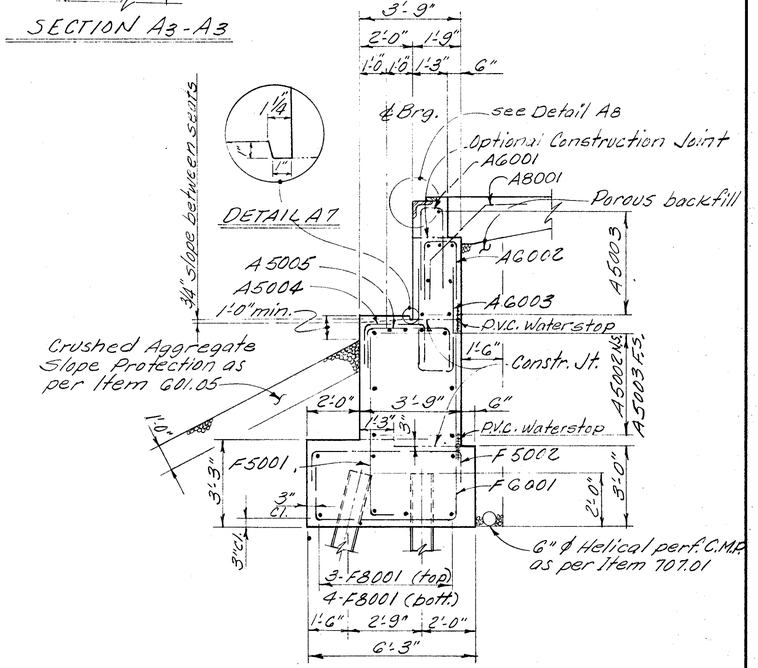


SECTION A4 - A4

Note: Footing reinforcement shall have min. cover of 3" at all surfaces.

| TABLE OF ELEVATIONS | | | | |
|---|---|---|---|---|
| Locations | A | B | C | D |
| N.W. W. WALL | 780.89 | 781.08 | 777.12 | 777.20 |
| N.E. W. WALL | 781.16 | 781.31 | 777.35 | 777.43 |

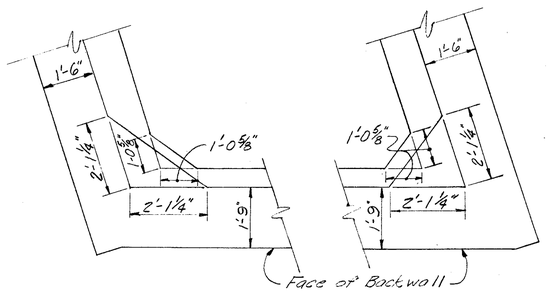


FILLET DETAILS

4/13 & 6/13

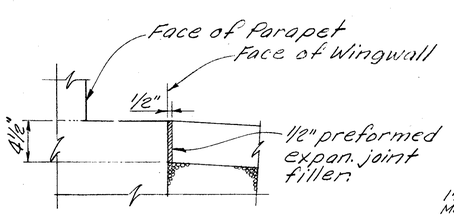


DETAIL "AG"

½" preformed expan. joint filler and base course material included with Item 608 Concrete sidewalk for payment.

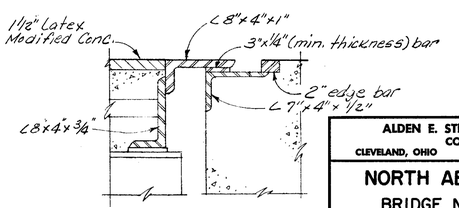


DETAIL A8

For additional notes and details see Std. Dwg. SD-1-69 Sht. No. 1

5/13

ALDEN E. STILSON & ASSOCIATES, LIMITED
CONSULTING ENGINEERS
CLEVELAND, OHIO COLUMBUS, OHIO WHEELING, W. VA.

# NORTH ABUTMENT DETAILS

BRIDGE No. CUY-480-1162
TIEDEMAN ROAD OVER I-480
CUYAHOGA COUNTY
STA. 57+08.20
STA. 59+88.44

| DESIGNED | DRAWN | TRACED | CHECKED | REVIEWED | DATE | REVISED |
|---|---|---|---|---|---|---|
| R.S.S. | R.T. | | B.I.P. | G.W.M. | 11/23/71 | 1-5-84 |

MICROFILMED
JAN 18 1991

| FED. RD. DIVISION | STATE | PROJECT | TYPE FUNDS |
|---|---|---|---|
| 2 | OHIO | | |

408/500

CUYAHOGA COUNTY
CUY.-480-10.39

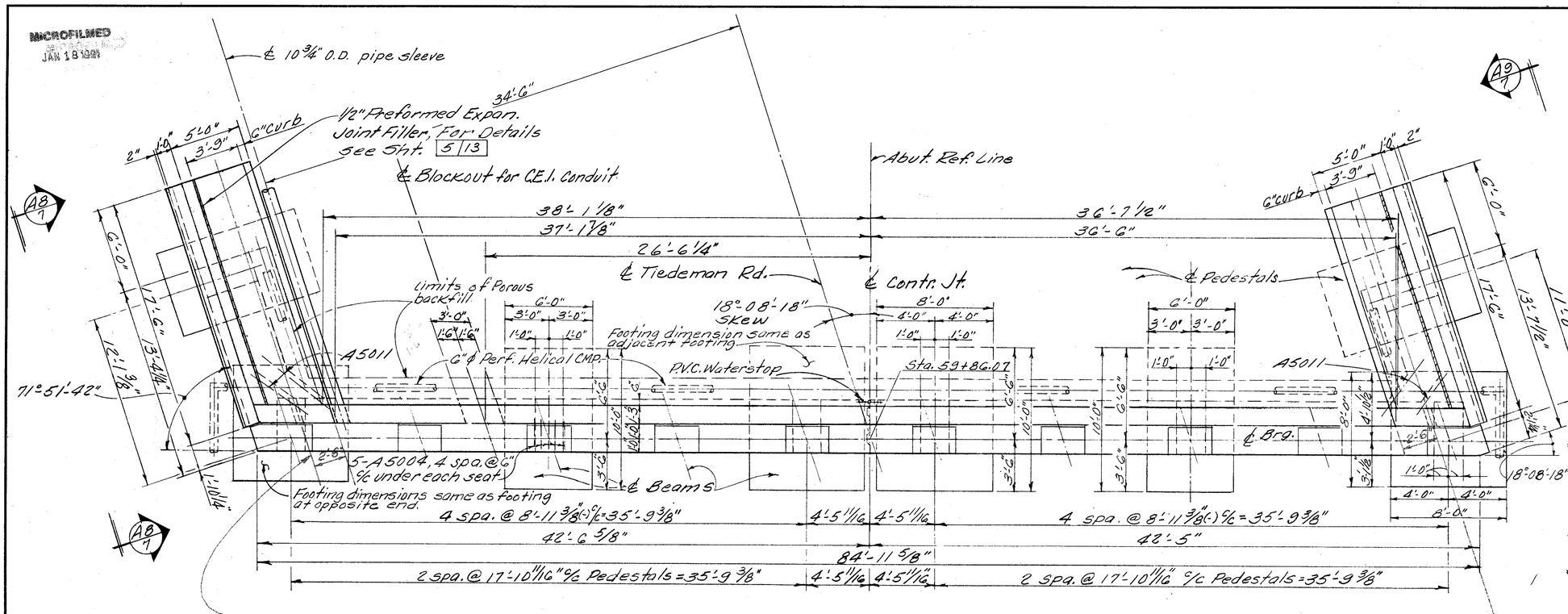


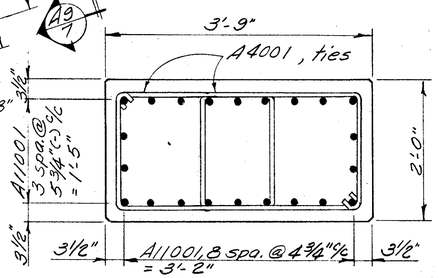


SECTION A11-A11

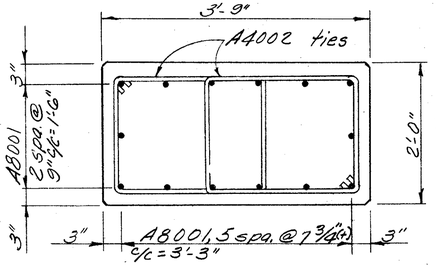


SECTION A12-A12

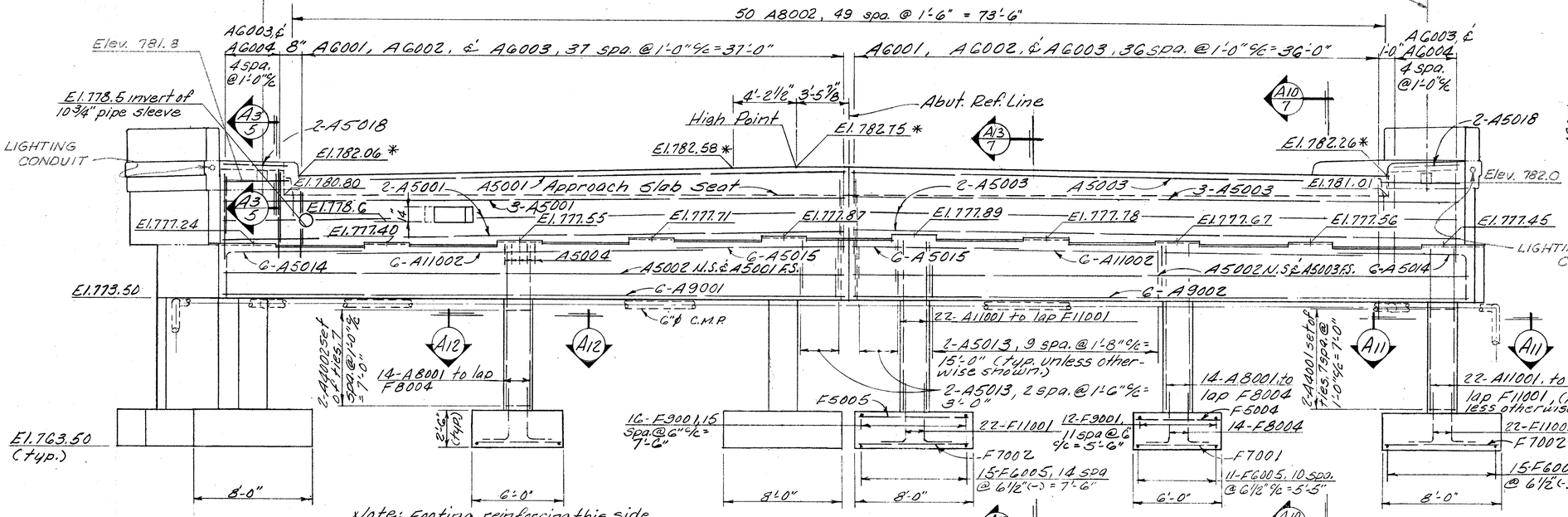


Note: For notes see Sht. 4/13

6/13

ALDEN E. STILSON & ASSOCIATES, LIMITED
CONSULTING ENGINEERS
CLEVELAND, OHIO COLUMBUS, OHIO WHEELING, W. VA.

# SOUTH ABUTMENT DETAILS

BRIDGE NO. CUY-480-1162
TIEDEMAN ROAD OVER I-480
CUYAHOGA COUNTY
STA. 57+08.20
STA. 59+88.44

| DESIGNED | DRAWN | TRACED | CHECKED | REVIEWED | DATE | REVISED |
|---|---|---|---|---|---|---|
| R.S.S. | R.T. | | B.I.P. | G.W.M. | 11/30/71 | 1-5-84 |

MICROFILMED
JAN 18 1991

| FED. RD. DIVISION | STATE | PROJECT | TYPE FUNDS |
|---|---|---|---|
| 2 | OHIO | | |

409/500

CUYAHOGA COUNTY
CUY.-480-10.39

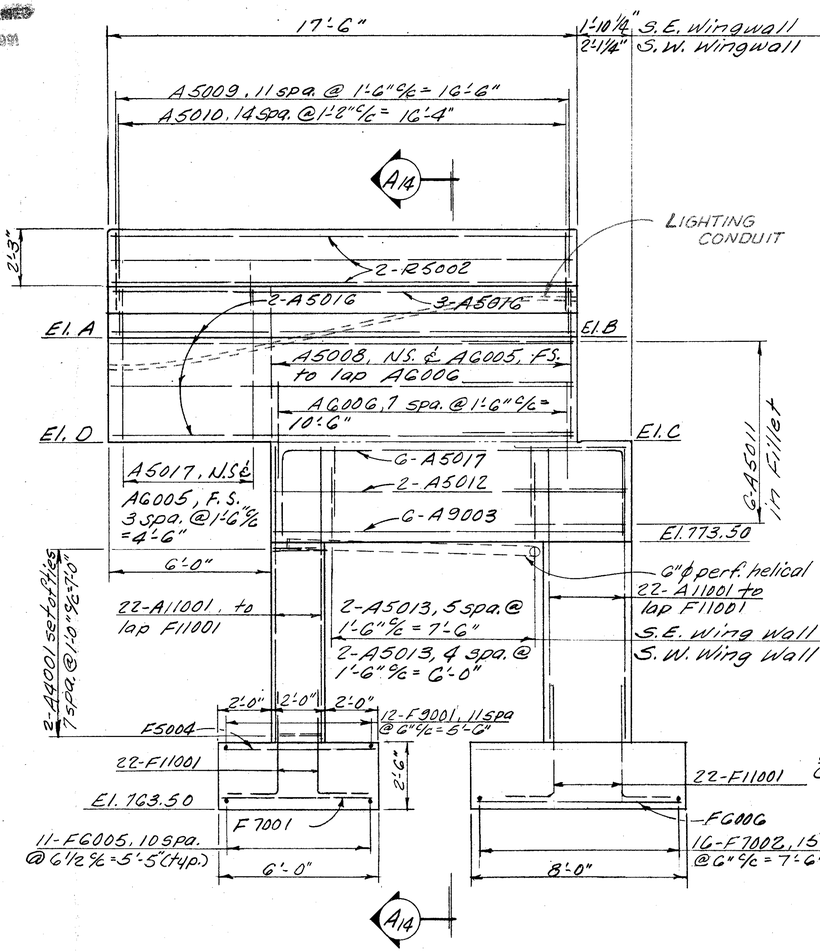


ELEVATION A8-A8 (As shown)
ELEVATION A9-A9 (opp. hand)

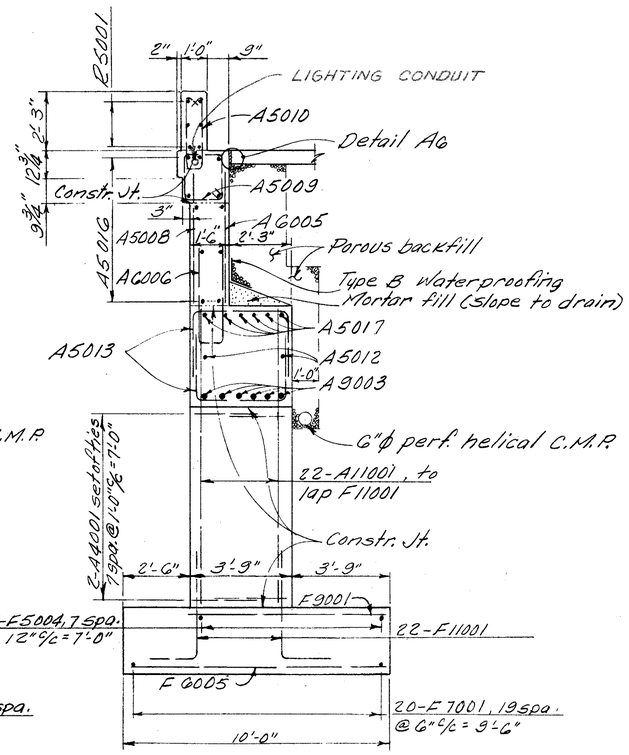


SECTION A14-A14

Note: Mortar fill to be included with Item 511 Class "C" concrete for payment.

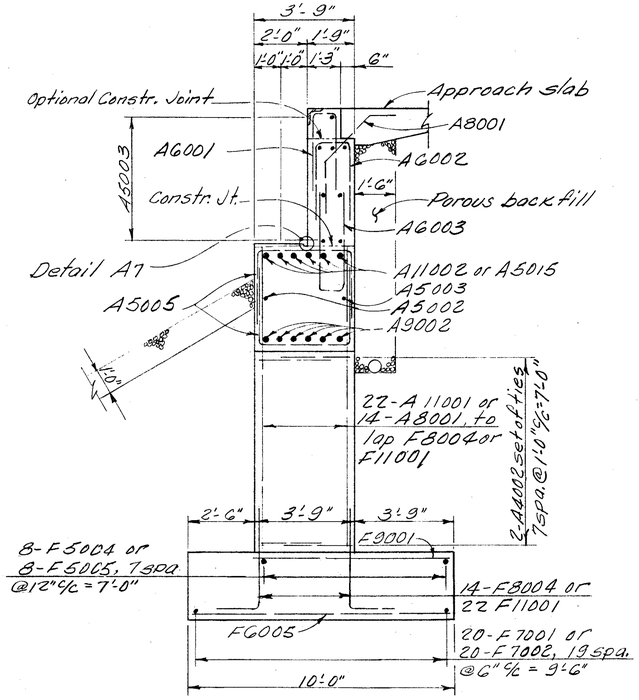


SECTION A10-A10 Sht. 6/13
SECTION A13-A13 Sht 6/13

Note: For detail A6 & A7 see Sht. 5/13
Minimum cover for footing reinforcing bars shall be 3", at all surfaces.

| TABLE OF ELEVATIONS | | | | |
|---|---|---|---|---|
| Locations | A | B | C | D |
| S.E. W. Wall | 780.95 | 781.11 | 777.24 | 777.16 |
| S.W. W. Wall | 781.21 | 781.34 | 777.45 | 777.37 |

7/13

ALDEN E. STILSON & ASSOCIATES, LIMITED
CONSULTING ENGINEERS
CLEVELAND, OHIO COLUMBUS, OHIO WHEELING, W. VA.

# SOUTH ABUTMENT DETAILS

BRIDGE No. CUY-480-1162
TIEDEMAN ROAD OVER I-480
CUYAHOGA COUNTY
STA. 57+08.20
STA. 59+88 44

| DESIGNED | DRAWN | TRACED | CHECKED | REVIEWED | DATE | REVISED |
|---|---|---|---|---|---|---|
| R.S.S. | R.T. | | B.I.P | G.W.M. | 11/30/71 | 1-5-84 |

MICROFILMED
JAN 18 1991

| FED. RD. DIVISION | STATE | PROJECT | TYPE FUNDS |
|---|---|---|---|
| 2 | OHIO | | |

410
500

CUYAHOGA COUNTY
CUY.-480-10.39

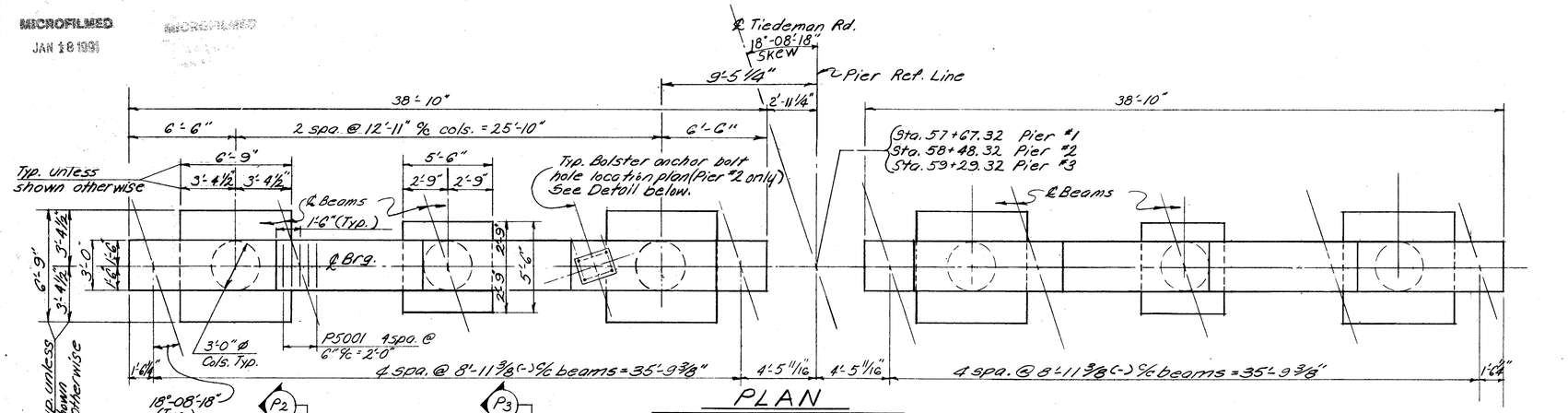


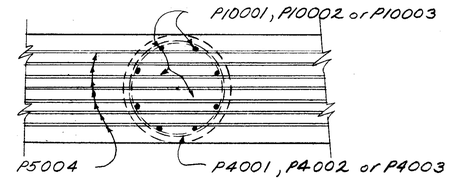


SECTION P1-P1

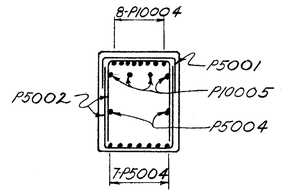


SECTION P2-P2

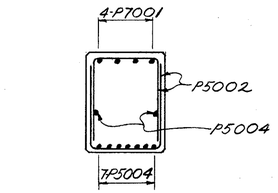


SECTION P3-P3

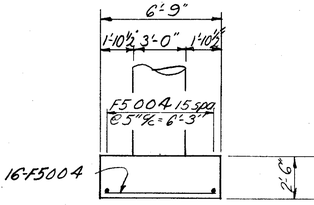


SECTION P4-P4

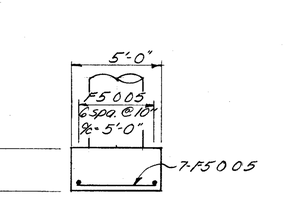


SECTION P5-P5

NOTES:
Special core shall be taken at Pier No. 2 in placing reinforcing steel in the top of the cap so as to avoid interference with the drilling of anchor bolt holes or the pre-setting of bearing anchors. See Anchor Bolt Location Detail.

Bearing Anchors: At the option of the Contractor, bearing anchors (or formed holes), located and supported by templates, may be cast in place.

All footing reinforcement shall have 3" min. cover.

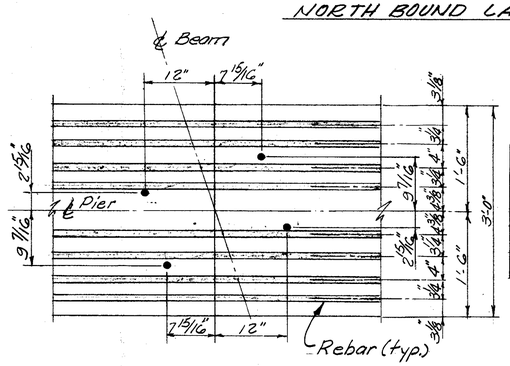


ANCHOR BOLT LOCATION DETAIL
(Pier No. 2 only)

TABLE OF ELEVATIONS

| Location | A | B | C | D | E | F | G | H | J | K | L | M |
|---|---|---|---|---|---|---|---|---|---|---|---|---|
| Pier No. 1 | 777.26 | 777.38 | 777.50 | 777.62 | 777.73 | 777.72 | 777.57 | 777.42 | 777.27 | 777.12 | 773.62 | 756.5 |
| Pier No. 2 | 777.33 | 777.46 | 777.60 | 777.73 | 777.86 | 777.86 | 777.73 | 777.60 | 777.46 | 777.33 | 773.83 | 756.5 |
| Pier No. 3 | 777.14 | 777.29 | 777.44 | 777.59 | 777.74 | 777.75 | 777.63 | 777.51 | 777.39 | 777.27 | 773.64 | 754.5 |

8/13

ALDEN E. STILSON & ASSOCIATES, LIMITED
CONSULTING ENGINEERS
CLEVELAND, OHIO COLUMBUS, OHIO WHEELING, W. VA.

# PIER DETAILS

BRIDGE Nº CUY-480-1162
TIEDEMAN ROAD OVER I-480
CUYAHOGA COUNTY
STA. 57+08.20
STA. 59+88.44

| DESIGNED | DRAWN | TRACED | CHECKED | REVIEWED | DATE | REVISED |
|---|---|---|---|---|---|---|
| B.I.P. | OL | | R.S.S. | G.W.M. | 12/1/71 | |

MICROFILMED
JAN 18 1991

| FED. RD. DIVISION | STATE | PROJECT | TYPE FUNDS |
|---|---|---|---|
| 2 | OHIO | | |

411/500

CUYAHOGA COUNTY
CUY.-480-10.39




## SECTION S4-S4

Gas line furnished and installed by others.

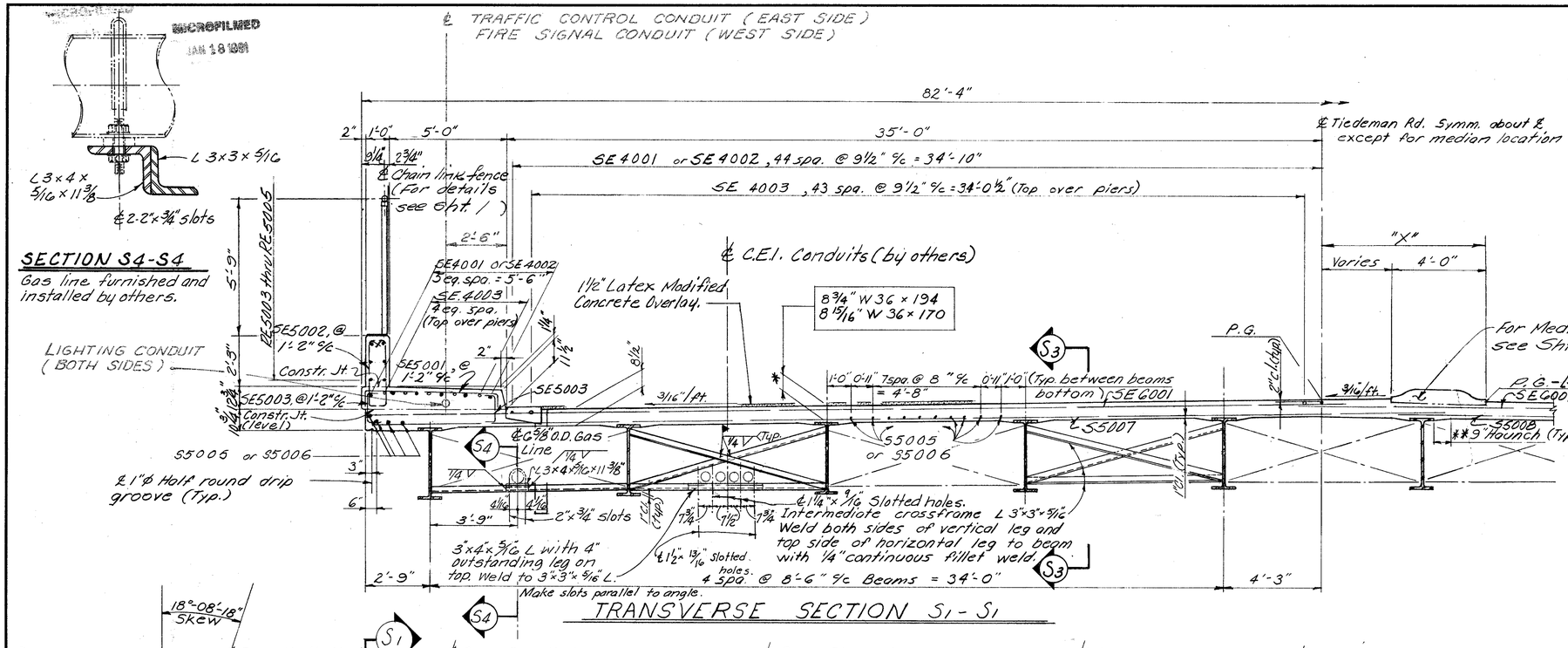


## TRANSVERSE SECTION S1-S1

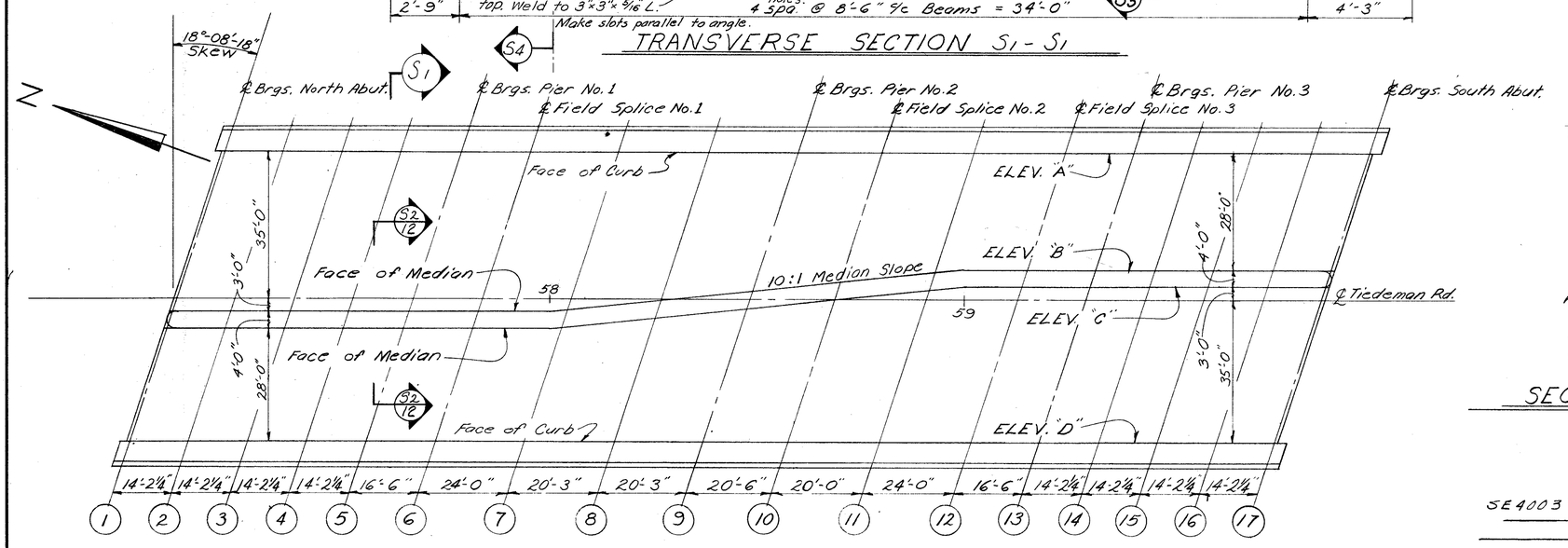


## SCREED ELEVATIONS

TABLE OF SCREED ELEVATIONS ***

| LINE | 1 | 2 | 3 | 4 | 5 | 6 | 7 | 8 | 9 | 10 | 11 | 12 | 13 | 14 | 15 | 16 | 17 |
|---|---|---|---|---|---|---|---|---|---|---|---|---|---|---|---|---|---|
| ELEV. "A" | 782.12 | 782.25 | 782.35 | 782.43 | 782.49 | 782.57 | 782.66 | 782.66 | 782.64 | 782.64 | 782.61 | 782.49 | 782.38 | 782.30 | 782.21 | 782.10 | 781.95 |
| ELEV. "B" | 782.60 | 782.76 | 782.87 | 782.95 | 783.03 | 783.12 | 783.21 | 783.19 | 783.16 | 783.13 | 783.09 | 782.96 | 782.86 | 782.79 | 782.71 | 782.60 | 781.47 |
| ELEV. "C" | 782.45 | 782.59 | 782.69 | 782.78 | 782.85 | 782.96 | 783.07 | 783.13 | 783.16 | 783.20 | 783.22 | 783.14 | 783.04 | 782.97 | 782.89 | 782.79 | 782.66 |
| ELEV. "D" | 781.91 | 782.05 | 782.17 | 782.27 | 782.35 | 782.47 | 782.59 | 782.63 | 782.64 | 782.66 | 782.67 | 782.58 | 782.49 | 782.43 | 782.36 | 782.27 | 782.16 |

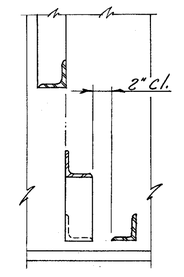


SECTION S3-S3

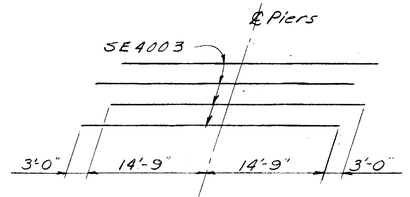


DIAGRAM SHOWING STAGGER OF S4003, BARS OVER PIERS

NOTES:

Each run of longitudinal reinforcing, unless otherwise shown, shall be as follows: Top of slab, Median and top of sidewalk; S.S-4001 & I-S4002 lapped a minimum of 1'-3" Bottom of slab, S-S5005 & I-S5006, lapped a min. of 1'-7"

* Deck slab depth: The distance shown from top of deck slab to top of steel beam is the design dimension. The quantity of deck concrete to be paid for shall be based on this dimension, even though deviation from it may be necessary because the top flange of the beam may not have the exact camber or conformation required to place it parallel to the finished grade.

** A haunch width of 9" shall be used for computing quantity of concrete. However, the haunch width may vary between 8" and 12" provided that the slope shall be not more than 1:4 for a haunch less than 9" in width.

For transverse slab reinforcing see sht. 10

Concrete parapets are included for payment with Item 517, railing.

Longitudinal reinforcing steel shall be field cut as necessary to avoid interference with scuppers.

*** The screed elevations shown are those which are required prior to placing of the concrete deck. Proper allowance has been made for the dead load deflection caused by the weight of the concrete.

Scuppers shall be in accordance with Std. Dwg. SD-1-69 except that the scupper pipes shall extend 8" below the bottom of the beams instead of 2".

WELDING ATTACHMENTS: See sheet 366/500

9/13

ALDEN E. STILSON & ASSOCIATES, LIMITED
CONSULTING ENGINEERS
CLEVELAND, OHIO COLUMBUS, OHIO WHEELING, W. VA.

**SUPERSTRUCTURE DETAILS**
BRIDGE Nº CUY-480-1162
TIEDEMAN ROAD OVER I-480
CUYAHOGA COUNTY STA. 57+08.20 STA. 59+88.44

| DESIGNED | DRAWN | TRACED | CHECKED | REVIEWED | DATE | REVISED |
|---|---|---|---|---|---|---|
| B.I.P. | DL | | R.S.S. | G.W.M. | 12/1/11 | 1-5-84 |

MICROFILMED
JAN 18 1971

| FED. RD. DIVISION | STATE | PROJECT | TYPE FUNDS |
|---|---|---|---|
| 2 | OHIO | | |

412/500

CUYAHOGA COUNTY
CUY.-480-10.39

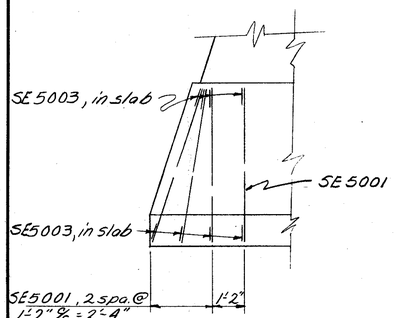


DETAIL S3

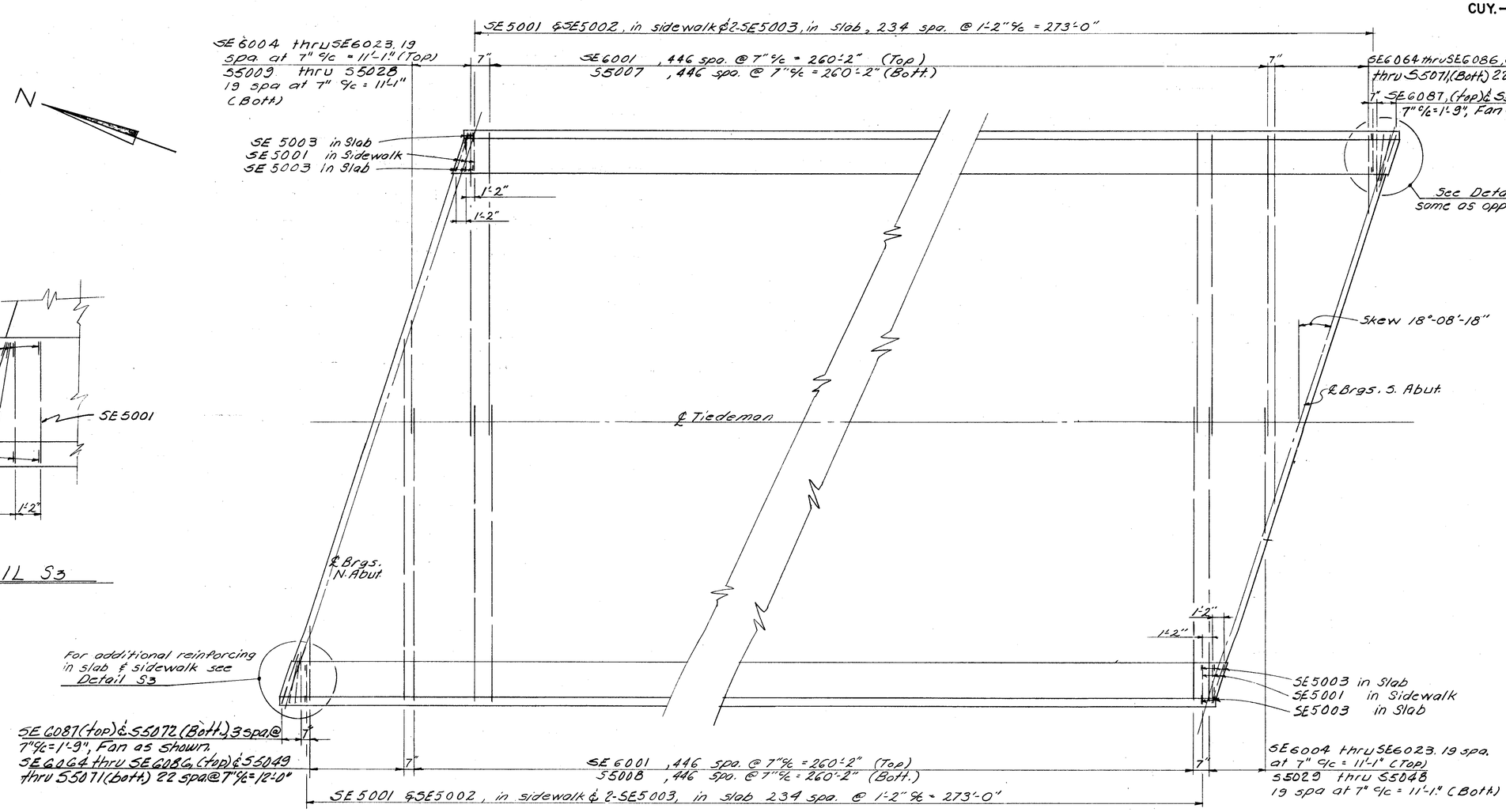


## TRANSVERSE SLAB REINFORCING

Transverse reinforcing steel shall be placed normal to the ℄ of Tiedeman Rd. except at acute corners of slab.

10/13

ALDEN E. STILSON & ASSOCIATES, LIMITED
CONSULTING ENGINEERS
CLEVELAND, OHIO COLUMBUS, OHIO WHEELING, W. VA.

# SUPERSTRUCTURE DETAILS

BRIDGE Nº CUY-480-1162
TIEDEMAN ROAD OVER I-480
CUYAHOGA COUNTY
STA. 57+08.20
STA. 59+88.44

| DESIGNED | DRAWN | TRACED | CHECKED | REVIEWED | DATE | REVISED |
|---|---|---|---|---|---|---|
| B.I.P. | DL | | R.S.S. | G.W.M. | 12/2/71 | |

MICROFILMED
JAN 19 1981

| FED. RD. DIVISION | STATE | PROJECT | TYPE FUNDS |
|---|---|---|---|
| 2 | OHIO | | |

413/500

CUYAHOGA COUNTY
CUY.-480-10.39

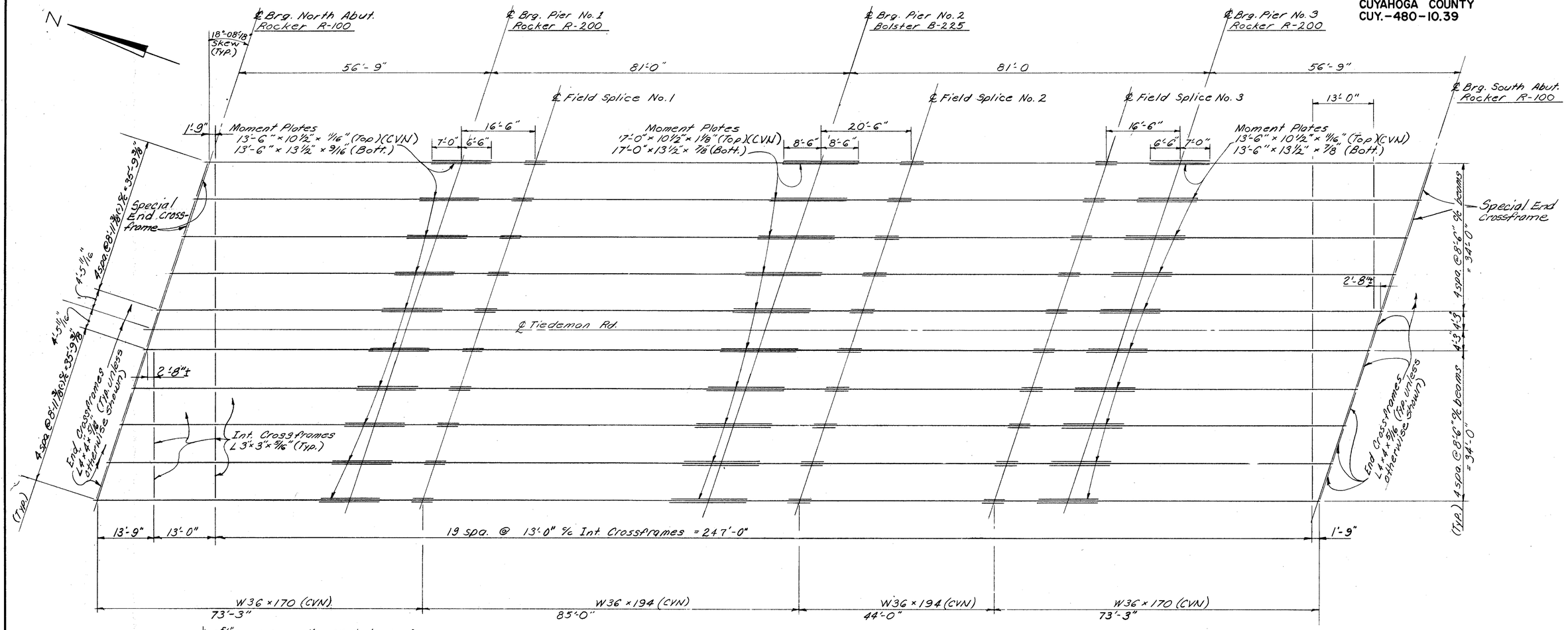


℄ G 5/8" O.D. E.O. Gas line (Exterior bay)
℄ C.E.I. Conduits (First interior bay)

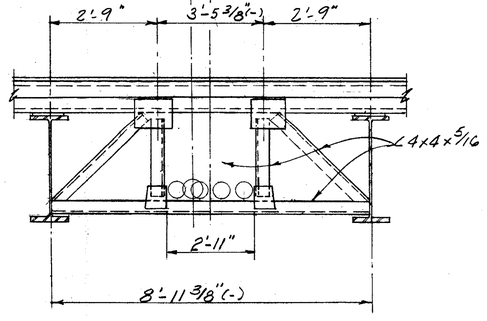


SPECIAL END CROSSFRAME DETAIL

For details not shown see Std. Dwg. SD-1-69 Sht. #1

## FRAMING PLAN

NOTES:
Crossframes may be shifted if necessary to avoid field splice.
Place intermediate crossframes normal to beam.
For field splice details see sht. 12/13
For intermediate crossframe details see transverse section Sht. 9/13
For end crossframe details see Std. Dwg. SD-1-69

NOTES
Where "(CVN)" follows a shape or plate size designation, the material shall meet specified minimum notch toughness requirements as specified in 711.02 of C.M.S.

11/13

ALDEN E. STILSON & ASSOCIATES, LIMITED
CONSULTING ENGINEERS
CLEVELAND, OHIO COLUMBUS, OHIO WHEELING, W. VA.

# SUPERSTRUCTURE DETAILS

BRIDGE Nº CUY-480-1162
TIEDEMAN ROAD OVER I-480
CUYAHOGA COUNTY
STA. 57+08.20
STA. 59+88.44

| DESIGNED | DRAWN | TRACED | CHECKED | REVIEWED | DATE | REVISED |
|---|---|---|---|---|---|---|
| B.I.P. | DL | | R.S.S. | G.W.M. | 12/1/71 | |

MICROFILMED
JAN 16 1991

| FED. RD. DIVISION | STATE | PROJECT | TYPE FUNDS |
|---|---|---|---|
| 2 | OHIO | | |

414/500

CUYAHOGA COUNTY
CUY.-480-10.39

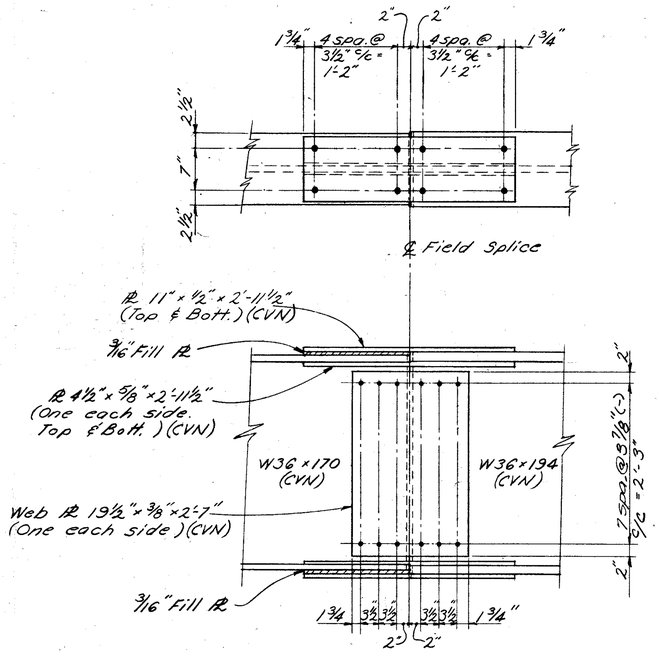


## FIELD SPLICE No. 1 & No. 3 DETAILS

High strength bolts shall be 1" ϕ A325. Bolt heads shall be placed on fascia side of exterior beam web and bottom side of bottom flange.

For details of Field Splice No. 2 see Std. Dwg. SD-1-69 Sht. No. 4

For additional notes see sht. 11/13

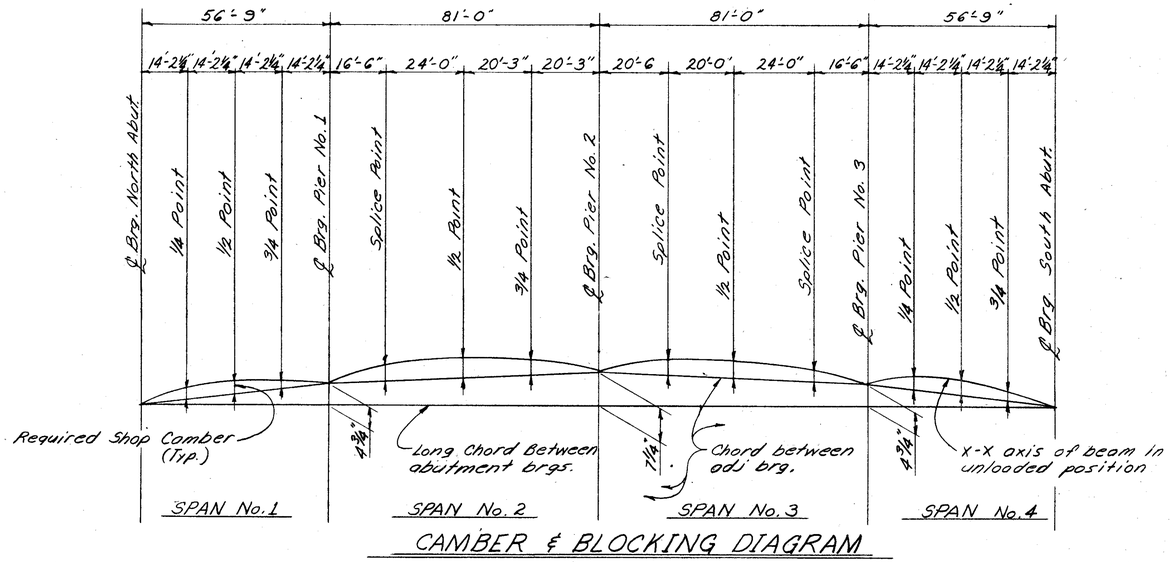


## CAMBER & BLOCKING DIAGRAM

### DEFLECTION AND CAMBER

| LOCATION | SPAN No. 1 | | | SPAN No. 2 | | | SPAN No. 3 | | | SPAN No. 4 | | |
|---|---|---|---|---|---|---|---|---|---|---|---|---|
| | ¼ Pt. | ½ Pt. | ¾ Pt. | S.Pt. | ½ Pt. | ¾ Pt. | S.Pt. | ½ Pt. | S.Pt. | ¼ Pt. | ½ Pt. | ¾ Pt. |
| Deflection due to weight of steel | 1/16 | 1/16 | 0 | 1/16 | 1/8 | 1/16 | 1/16 | 1/8 | 1/16 | 0 | 1/16 | 1/16 |
| Deflection due to remaining dead load | 3/16 | 3/16 | 1/16 | 1/4 | 1/2 | 1/4 | 1/4 | 1/2 | 1/4 | 1/16 | 3/16 | 3/16 |
| Adjust. req'd. for vertical curve | 3/16 | 5/16 | 3/16 | 3/8 | 3/8 | 7/16 | 7/16 | 5/8 | 3/8 | 5/16 | 5/16 | 3/16 |
| Required shop camber | 7/16 | 9/16 | 1/2 | 11/16 | 1 1/4 | 3/4 | 3/4 | 1 1/4 | 11/16 | 1/4 | 9/16 | 7/16 |

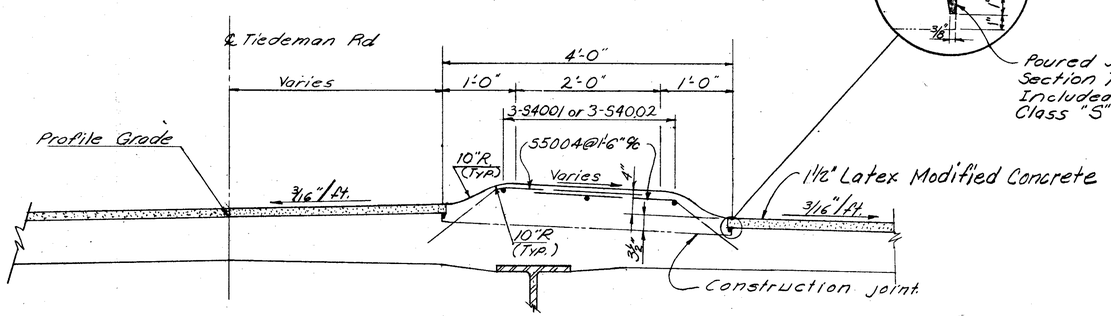


SECTION S2-S2 9/13

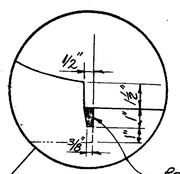


Poured joint sealer as per Section 705.01 or 705.02 Included for payment with Item 511 Class "S" Concrete, Superstructure.

12/13

ALDEN E. STILSON & ASSOCIATES, LIMITED
CONSULTING ENGINEERS
CLEVELAND, OHIO · COLUMBUS, OHIO · WHEELING, W. VA.

**SUPERSTRUCTURE DETAILS**
BRIDGE NO. CUY-480-1162
TIEDEMAN ROAD OVER I-480
CUYAHOGA COUNTY
STA. 57+08.20
STA. 59+88.44

| DESIGNED | DRAWN | TRACED | CHECKED | REVIEWED | DATE | REVISED |
|---|---|---|---|---|---|---|
| B.I.P. | DL | | R.S.S. | G.W.M. | 12/6/71 | |

MICROFILMED
JAN 18 1989

| MARK | NUM. | LENGTH | WEIGHT | TYPE | A | B | C | D | E | NOTE |
|---|---|---|---|---|---|---|---|---|---|---|
| | | | NORTH ABUTMENT | | | | | | | |
| A 5001 | 11 | 42- 8 | 490 | ST | | | | | | |
| A 5002 | 12 | 42- 2 | 528 | ST | | | | | | |
| A 5003 | 11 | 41- 8 | 478 | ST | | | | | | |
| A 5004 | 50 | 4- 5 | 230 | 2 | 1- 6 | 1- 8 | 1- 6 | | | |
| A 5005 | 60 | 7- 4 | 459 | 2 | 2- 1 | 3- 5 | 2- 1 | | | |
| A 5006 | 22 | 20- 5 | 468 | ST | | | | | | |
| A 5007 | 12 | 14- 4 | 179 | ST | | | | | | |
| A 5008 | 28 | 5- 4 | 156 | ST | | | | | | |
| A 5009 | 28 | 6- 3 | 183 | 3 | 1- 5 | 1- 5 | 1- 5 | 1- 5 | | |
| A 5011 | 12 | 5- 0 | 63 | ST | | | | | | |
| A 5018 | 4 | 3- 7 | 15 | ST | | | | | | |
| | | | | | | | | | | |
| A 6001 | 75 | 7- 1 | 798 | 2 | 3- 3 | 0-11 | 3- 3 | | | |
| A 6002 | 75 | 7- 5 | 835 | 2 | 3- 2 | 1- 5 | 3- 2 | | | |
| A 6003 | 85 | 8- 3 | 1053 | 2 | 3- 7 | 1- 5 | 3- 7 | | | |
| A 6004 | 10 | 11-11 | 179 | 2 | 5- 5 | 1- 5 | 5- 5 | | | |
| A 6005 | 28 | 5- 3 | 221 | ST | | | | | | |
| F 5001 | 60 | 7- 1 | 443 | 2 | 6- 7 | 0- 8 | | | | |
| F 5002 | 60 | 8- 3 | 516 | 2 | 1- 7 | 5- 4 | 1- 7 | | | |
| F 5003 | 34 | 11- 1 | 393 | 3 | 2- 3 | 3- 0 | 2- 3 | 3- 0 | | |
| F 5004 | 32 | 5- 6 | 184 | ST | | | | | | |
| F 5005 | 16 | 7- 6 | 125 | ST | | | | | | |
| F 6001 | 60 | 14- 1 | 1269 | 2 | 6- 7 | 5- 4 | 2- 6 | | | |
| F 6002 | 18 | 17- 6 | 473 | 2 | 8- 2 | 1- 2 | 8- 6 | | | |
| F 6003 | 2 | 6- 8 | 20 | ST | | | | | | |
| F 6004 | 2 | 6-11 | 21 | ST | | | | | | |
| | | | | | | | | | | |
| F 8001 | 21 | 30-11 | 1733 | ST | | | | | | |
| F 8002 | 12 | 17-11 | 574 | ST | | | | | | |
| F 8003 | 4 | 4- 0 | 43 | ST | | | | | | |
| | | | EPOXY COATED BARS | | | | | | | |
| AE5010 | 36 | 7- 3 | 272 | 8 | | 2-11 | | 2-11 | 0- 8 | |
| | | | SOUTH ABUTMENT | | | | | | | |
| A 4001 | 96 | 8- 0 | 513 | 3 | 2- 2 | 1- 7 | 2- 2 | 1- 7 | | |
| A 4002 | 32 | 7- 4 | 157 | 3 | 1-11 | 1- 6 | 1-11 | 1- 6 | | |
| | | | | | | | | | | |
| A 5001 | 9 | 42- 8 | 401 | ST | | | | | | |
| A 5002 | 2 | 42- 2 | 88 | ST | | | | | | |
| A 5003 | 9 | 41- 8 | 391 | ST | | | | | | |
| A 5004 | 50 | 4- 5 | 230 | 2 | 1- 6 | 1- 8 | 1- 6 | | | |
| A 5008 | 24 | 5- 4 | 134 | ST | | | | | | |
| A 5009 | 24 | 6- 3 | 156 | 3 | 1- 5 | 1- 5 | 1- 5 | 1- 5 | | |
| A 5011 | 12 | 5- 0 | 63 | ST | | | | | | |
| A 5012 | 4 | 13- 1 | 55 | ST | | | | | | |
| A 5013 | 114 | 9-10 | 1169 | 2 | 3- 4 | 3- 5 | 3- 4 | | | |
| A 5014 | 12 | 13- 7 | 170 | 2 | 3- 5 | 10- 4 | | | | |
| A 5015 | 12 | 11-10 | 148 | ST | | | | | | |
| A 5016 | 22 | 17- 2 | 394 | ST | | | | | | |
| A 5017 | 12 | 19- 6 | 244 | 2 | 3- 4 | 13- 1 | 3- 4 | | | |
| A 5018 | 4 | 3- 7 | 15 | ST | | | | | | |
| | | | | | | | | | | |
| A 6001 | 75 | 7- 1 | 798 | 2 | 3- 3 | 0-11 | 3- 3 | | | |
| A 6002 | 75 | 7- 5 | 835 | 2 | 3- 2 | 1- 5 | 3- 2 | | | |
| A 6003 | 85 | 8- 3 | 1053 | 2 | 3- 7 | 1- 5 | 3- 7 | | | |
| A 6004 | 10 | 11-11 | 179 | 2 | 5- 5 | 1- 5 | 5- 5 | | | |
| A 6005 | 24 | 5- 3 | 189 | ST | | | | | | |
| A 6006 | 14 | 7-10 | 165 | 2 | 3- 6 | 1- 2 | 3- 6 | | | |
| | | | | | | | | | | |
| A 8001 | 28 | 10- 5 | 779 | ST | | | | | | |
| A 8002 | 100 | 5- 4 | 1424 | 15 | | 0- 9 | 2- 3 | 1- 6 | 2- 3 | |
| | | | | | | | | | | |
| A 9001 | 6 | 42- 1 | 858 | ST | | | | | | |
| A 9002 | 6 | 41- 8 | 850 | ST | | | | | | |
| A 9003 | 12 | 13- 1 | 534 | ST | | | | | | |

| MARK | NUM. | LENGTH | WEIGHT | TYPE | A | B | C | D | E | NOTE |
|---|---|---|---|---|---|---|---|---|---|---|
| | | | SOUTH ABUTMENT | | | | | | ( CONTINUED ) | |
| A11001 | 132 | 10- 5 | 7305 | ST | | | | | | |
| A11002 | 12 | 24- 1 | 1535 | ST | | | | | | |
| | | | | | | | | | | |
| F 6005 | 74 | 9- 6 | 1056 | ST | | | | | | |
| F 6006 | 30 | 7- 6 | 338 | ST | | | | | | |
| | | | | | | | | | | |
| F 7001 | 80 | 5- 6 | 899 | ST | | | | | | |
| F 7002 | 72 | 7- 6 | 1104 | ST | | | | | | |
| | | | | | | | | | | |
| F 8004 | 28 | 5- 8 | 424 | 2 | 4- 9 | 1- 2 | | | | |
| | | | | | | | | | | |
| F 9001 | 80 | 7- 5 | 2017 | ST | | | | | | |
| | | | | | | | | | | |
| F11001 | 132 | 7- 2 | 5026 | 2 | 5-10 | 1- 8 | | | | |
| | | | EPOXY COATED BARS | | | | | | | |
| AE5010 | 30 | 7- 3 | 227 | 8 | | 2-11 | | 2-11 | 0- 8 | |
| | | | PIER NO 1 | | | | | | | |
| P 4001 | 6 | 14- 7 | 1670 | 17 | NO.TURNS= 42 | | | NO.SPACERS= 24 | | 6 |
| | | | | | | | | | | |
| P 5001 | 50 | 5- 5 | 282 | 2 | 1- 6 | 2- 8 | 1- 6 | | | |
| P 5002 | 280 | 8- 9 | 2555 | 2 | 3- 2 | 2- 8 | 3- 2 | | | |
| P 5003 | 4 | 2- 8 | 11 | ST | | | | | | |
| P 5004 | 18 | 38- 6 | 723 | ST | | | | | | |
| | | | | | | | | | | |
| P 7001 | 8 | 14- 8 | 240 | ST | | | | | | |
| | | | | | | | | | | |
| P10001 | 48 | 17- 7 | 3632 | ST | | | | | | |
| P10004 | 32 | 16-11 | 2329 | 2 | 3- 2 | 14- 1 | | | | |
| P10005 | 16 | 14- 1 | 970 | ST | | | | | | |
| | | | | | | | | | | |
| F 5004 | 128 | 6- 3 | 834 | ST | | | | | | |
| F 5005 | 28 | 5- 0 | 146 | ST | | | | | | |
| | | | | | | | | | | |
| F10001 | 48 | 6- 7 | 1360 | 2 | 5- 6 | 1- 5 | | | | |
| | | | PIER NO 2 | | | | | | | |
| P 4002 | 6 | 14-10 | 1708 | 17 | NO.TURNS= 43 | | | NO.SPACERS= 24 | | 6 |
| | | | | | | | | | | |
| P 5001 | 50 | 5- 5 | 282 | 2 | 1- 6 | 2- 8 | 1- 6 | | | |
| P 5002 | 280 | 8- 9 | 2555 | 2 | 3- 2 | 2- 8 | 3- 2 | | | |
| P 5003 | 4 | 2- 8 | 11 | ST | | | | | | |
| P 5004 | 18 | 38- 6 | 723 | ST | | | | | | |
| | | | | | | | | | | |
| P 7001 | 8 | 14-10 | 243 | ST | | | | | | |
| | | | | | | | | | | |
| P10002 | 48 | 17-10 | 3683 | ST | | | | | | |
| P10004 | 32 | 16-11 | 2329 | 2 | 3- 2 | 14- 1 | | | | |
| P10005 | 16 | 14- 1 | 970 | ST | | | | | | |
| | | | | | | | | | | |
| F 5004 | 128 | 6- 3 | 834 | ST | | | | | | |
| F 5005 | 28 | 5- 0 | 146 | ST | | | | | | |
| | | | | | | | | | | |
| F10001 | 48 | 6- 7 | 1360 | 2 | 5- 6 | 1- 5 | | | | |
| | | | PIER NO 3 | | | | | | | |
| P 4003 | 6 | 16- 7 | 1874 | 17 | NO.TURNS= 47 | | | NO.SPACERS= 24 | | 6 |
| | | | | | | | | | | |
| P 5001 | 50 | 5- 5 | 282 | 2 | 1- 6 | 2- 8 | 1- 6 | | | |
| P 5002 | 280 | 8- 9 | 2555 | 2 | 3- 2 | 2- 8 | 3- 2 | | | |
| P 5003 | 4 | 2- 8 | 11 | ST | | | | | | |
| P 5004 | 18 | 38- 6 | 723 | ST | | | | | | |
| | | | | | | | | | | |
| P 7001 | 8 | 14-10 | 243 | ST | | | | | | |
| | | | | | | | | | | |
| P10003 | 48 | 19- 7 | 4045 | ST | | | | | | |
| P10004 | 32 | 16-11 | 2329 | 2 | 3- 2 | 14- 1 | | | | |
| P10005 | 16 | 14- 1 | 970 | ST | | | | | | |

| MARK | NUM. | LENGTH | WEIGHT | TYPE | A | B | C | D | E | NOTE |
|---|---|---|---|---|---|---|---|---|---|---|
| | | | PIER NO 3 | | | | | | ( CONTINUED ) | |
| | | | | | | | | | | |
| F 5004 | 128 | 6- 3 | 834 | ST | | | | | | |
| F 5005 | 28 | 5- 0 | 146 | ST | | | | | | |
| | | | | | | | | | | |
| F10001 | 48 | 6- 7 | 1360 | 2 | 5- 6 | 1- 5 | | | | |
| | | | SUPERSTRUCTURE | | | | | | | |
| S 5005 | 882 | 30- 0 | 27598 | ST | | | | | | |
| S 5006 | 98 | 21- 0 | 2146 | ST | | | | | | |
| S 5007 | 447 | 46- 4 | 21602 | ST | | | | | | 3 |
| S 5008 | 447 | 38- 0 | 17716 | ST | | | | | | 3 |
| S 5009 | 1 | 12- 6 | | ST | | | | | | 1 |
| THRU | | | 614 | | VARY LENGTH BY | | | 1- 9 | 3/ 8 | |
| S 5028 | 1 | 46- 4 | | ST | | | | | | 1 |
| S 5029 | 1 | 37-10 | | ST | | | | | | 1 |
| THRU | | | 436 | | VARY LENGTH BY | | | 1- 9 | 3/ 8 | |
| S 5048 | 1 | 4- 0 | | ST | | | | | | 1 |
| S 5049 | 2 | 46- 1 | | ST | | | | | | 1 |
| THRU | | | 1273 | | VARY LENGTH BY | | | 1- 9 | 3/ 8 | |
| S 5071 | 2 | 7- 0 | | ST | | | | | | 1 |
| S 5072 | 8 | 5- 2 | 43 | ST | | | | | | |
| | | | EPOXY COATED BARS | | | | | | | |
| SE4001 | 936 | 30- 0 | 18757 | ST | | | | | | |
| SE4002 | 104 | 18- 0 | 1250 | ST | | | | | | |
| SE4003 | 294 | 32- 6 | 6383 | ST | | | | | | |
| | | | | | | | | | | |
| SE5001 | 480 | 6- 9 | 3379 | 2 | 0- 8 | 5- 8 | 0- 8 | | | |
| SE5002 | 476 | 7- 3 | 3599 | 8 | | 2-11 | | 2-11 | 0- 8 | |
| SE5003 | 960 | 2- 3 | 2253 | 2 | 0- 8 | 1- 2 | 0- 8 | | | |
| SE5004 | 372 | 2-10 | 1099 | 6 | 0-10 | 0-10 | 1- 8 | | | |
| | | | | | | | | | | |
| SE6001 | 894 | 41-10 | 56173 | ST | | | | | | 3 |
| SE6004 | 2 | 8- 0 | | ST | | | | | | 1 |
| THRU | | | 1497 | | VARY LENGTH BY | | | 1- 9 | 3/ 8 | |
| SE6023 | 2 | 41-10 | | ST | | | | | | 1 |
| SE6064 | 2 | 46- 1 | | ST | | | | | | 1 |
| THRU | | | 1834 | | VARY LENGTH BY | | | 1- 9 | 3/ 8 | |
| SE6086 | 2 | 7- 0 | | ST | | | | | | 1 |
| SE6087 | 8 | 5- 2 | 62 | ST | | | | | | |
| | | | PARAPETS | | | | | | | |
| RE5001 | 12 | 20- 5 | | ST | | | | | | 2 |
| RE5002 | 12 | 17- 2 | | ST | | | | | | 2 |
| RE5003 | 120 | 14- 6 | | ST | | | | | | 2 |
| RE5004 | 192 | 7- 1 | | ST | | | | | | 2 |
| RE5005 | 12 | 8-11 | | ST | | | | | | 2 |
| | | | LIGHT POLE SUPPORT | | | | | | | |
| L 5001 | 16 | 4- 0 | 67 | 6 | 0- 8 | 0- 9 | 3- 0 | | | 4 |
| L 5002 | 4 | 3- 5 | 14 | 1 | 2- 3 | 1- 4 | | | | 4 |
| L 5003 | 6 | 5- 8 | 35 | 1 | 3- 0 | 2-10 | | | | 4 |
| L 5004 | 6 | 3- 6 | 22 | 1 | 3- 0 | 0- 8 | | | | 4 |
| | | | APPROACH SLABS * | | | | | | | |
| AS5001 | 6 | 23- 0 | 144 | ST | | | | | | |
| AS5002 | 32 | 2-10 | 95 | 6 | 0-10 | 0-10 | 1- 8 | | | |

* COST OF APPROACH SLAB REINFORCING STEEL SHALL BE INCLUDED WITH BID FOR ITEM 611, APPROACH SLABS.

BAR BENDING DIAGRAM TYPES

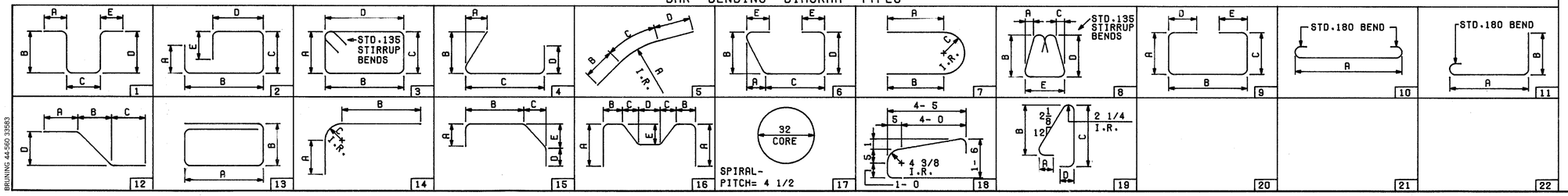


BRUNING 44-560 33583

| FED. RD. DIVISION | STATE | PROJECT | TYPE FUNDS |
|---|---|---|---|
| 5 | OHIO | | |

415
500

CUYAHOGA COUNTY

CUY-480-10.39

NOTES

1. INDICATES SERIES BAR. EACH BAR VARIES FROM ADJACENT BAR(S) BY TABULATED AMOUNT(S), CALCULATED TO NEAREST 1/8 INCH. WEIGHT SHOWN IS FOR ENTIRE SERIES UTILIZING AVERAGE LENGTH.

2. BARS INCLUDED WITH ITEM 517, RAILING, FOR PAYMENT.

3. COST OF FIELD BENDING SHALL BE INCLUDED WITH ITEM 509.

4. LIGHT POLE SUPPORT BARS INCLUDED WITH ITEM 509 FOR PAYMENT.

6. 'LENGTH' SHOWN FOR SPIRAL BARS IS DISTANCE FROM TOP OF FOOTING TO BOTTOM OF PIER CAP.
'NO. TURNS' SHOWN IS 'LENGTH' DIVIDED BY PITCH, PLUS 3 TURNS (NUMBER OF CLOSED COILS), EXPRESSED AS NEAREST WHOLE NUMBER.
1 1/2 CLOSED COILS SHALL BE PROVIDED AT ENDS OF EACH SPIRAL UNIT. FOUR STEEL CHANNEL, TEE OR ANGLE SPACERS, WEIGHING APPROXIMATELY 0.80 LB. PER LIN. FT. OF SPACER SHALL BE PROVIDED FOR EACH SPIRAL UNIT. THEY SHALL BE EQUALLY SPACED ALONG PERIPHERY OF COIL. WEIGHT OF SPACERS, AT 0.80 LB. PER LIN. FT. WILL BE PAID FOR AS REINFORCING STEEL AND IS INCLUDED IN TABULATED WEIGHT.

REFER TO CMS SECTIONS 106.03, 700, 709.01 THROUGH 709.05 AND 709.08. SUFFICIENT ADDITIONAL REINFORCING STEEL SHALL BE PROVIDED FOR SAMPLING. RANDOM SAMPLES SHALL BE REPLACED IN THE STRUCTURES BY THE ADDITIONAL STEEL, SPLICED IN ACCORDANCE WITH 509.08.

BAR DIMENSIONS ARE OUT TO OUT.

A BAR MARK THAT INCLUDES THE LETTER 'E' IN ITS PREFIX INDICATES THAT THE BAR SHALL BE EPOXY COATED.

13/13

ALDEN E. STILSON & ASSOCIATES, LIMITED
CONSULTING ENGINEERS
CLEVELAND, OHIO COLUMBUS, OHIO WHEELING, W. VA.

# REINFORCING STEEL LIST

BRIDGE NO. CUY-480-1162
TIEDEMAN ROAD OVER I-480
STA. 57+08.20 TO
CUYAHOGA COUNTY STA. 59+88.44

| DESIGNED | DRAWN | TRACED | CHECKED | REVIEWED | DATE | REVISED |
|---|---|---|---|---|---|---|
| | | | | | | |

MICROFILMED
JAN 18 1991

| FED. RD. DIVISION | STATE | PROJECT | TYPE FUNDS |
|---|---|---|---|
| 2 | OHIO | | |

1161
500

CUYAHOGA COUNTY
CUY-480-10.39

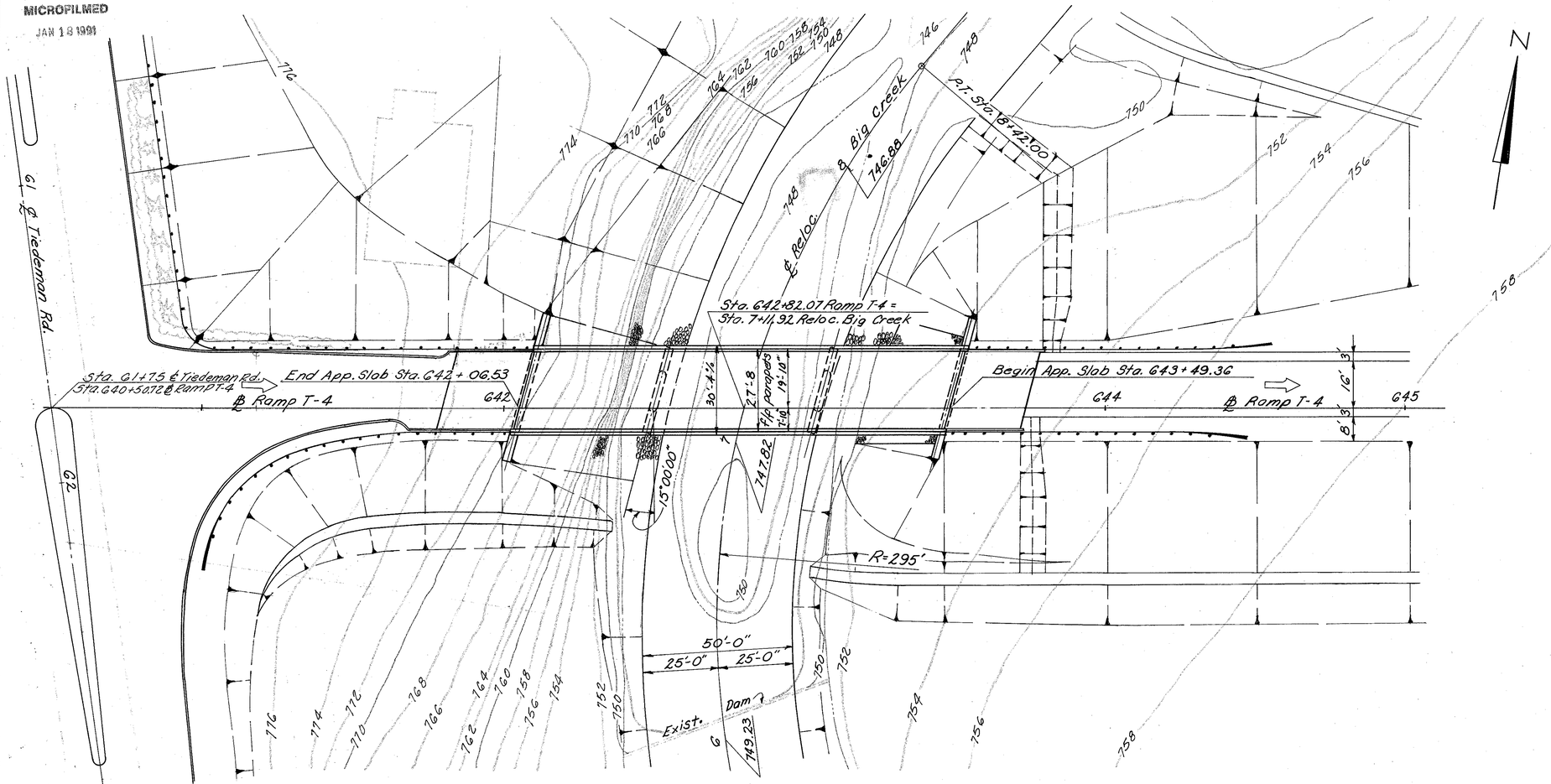


PLAN

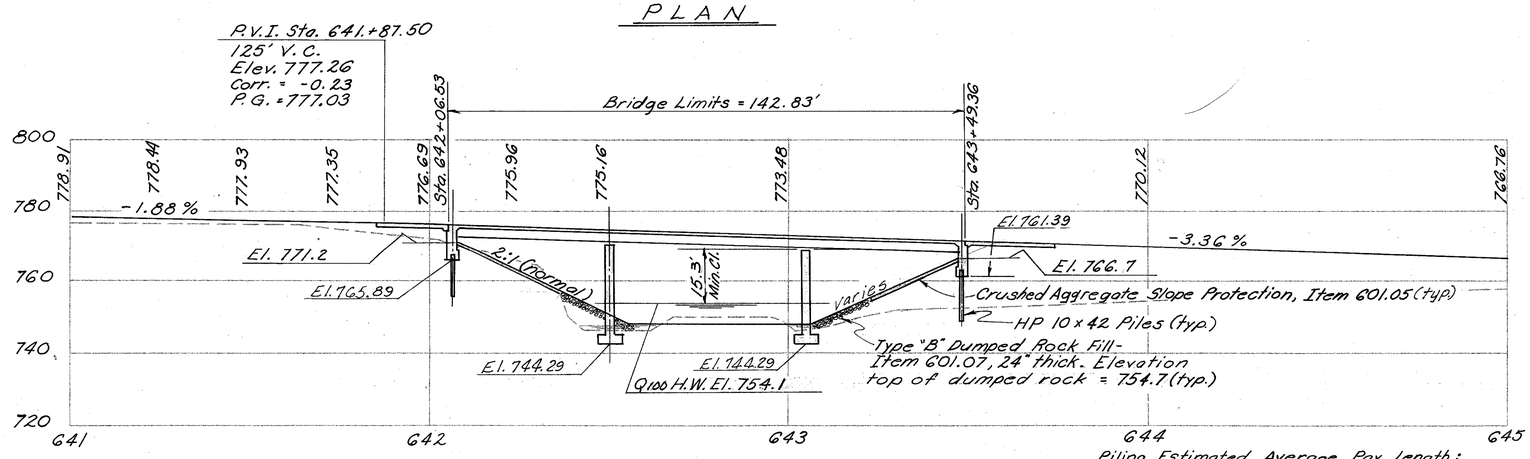


PROFILE ON ℄ RAMP T-4

Piling Estimated Average Pay Length:
Rear Abutment -12'
Forward Abutment -15'

Notes:
Earthwork limits shown are schematic. Actual slopes shall conform to plan cross-sections.

For limits of dumped rock fill, see channel relocation plan and sections.

## PROPOSED STRUCTURE

TYPE: Continuous steel beam with reinforced concrete deck and substructure.
SPANS: 43'-3", 54'-6", 43'-3" ℄ brgs.
ROADWAY: 27'-8" f/f parapets, BR-1 railing
LOADING: HS 20-44
WEARING SURFACE: 2½" Asphalt concrete.
SKEW: 15°00' Lt. forward
ALIGNMENT: Tangent
APPROACH SLABS: AS-1-81 25'-0" lg.

## HYDROLOGICAL DATA

Drainage Area = 14.1 Sq. Mi.
$Q_{100}$ = 3496 c.f.s.
$V_{100}$ = 13.7 f.s.

## TRAFFIC ESTIMATE

Design Year ~ 2000
Total A.D.T. ~ 6124

119

ALDEN E. STILSON & ASSOCIATES, LIMITED
CONSULTING ENGINEERS
CLEVELAND, OHIO COLUMBUS, OHIO WHEELING, W. VA.

# SITE PLAN

BRIDGE No. CUY.-480-1168
RAMP T-4 OVER RELOC. BIG CREEK
CUYAHOGA COUNTY
STA. 642 + 06.53
STA. 643 + 49.36

SCALE: 1"=20'

| DESIGNED | DRAWN | TRACED | CHECKED | REVIEWED | DATE | REVISED |
|---|---|---|---|---|---|---|
| G.W.M. | G.W.M. | D.L. | R T | G.W.M. | 12/9/71 | |

MICROFILMED
JAN 22 1991

| FHWA REGION | STATE | PROJECT | |
|---|---|---|---|
| 5 | OHIO | | |

417/500

CUYAHOGA COUNTY
CUY-480-10.39

STANDARD DRAWING REFERENCES

| DESCRIPTION | DWG. NO. | SHT. | DATE |
|---|---|---|---|
| BOLTED SPLICES | SD-1-69 | 4 | 6-12-69 |
| BRIDGE ROADWAY RAILING | BR-1 | | 5-29-79 |
| APPROACH SLABS | AS-1-81 | 1-3 | 11-27-81 |

SUPPLEMENTAL SPECIFICATION REFERENCES

| DESCRIPTION | NO. | DATE |
|---|---|---|
| CONCRETE CURING AND PROTECTIVE MEMBRANE | 836 | 3-12-75 |
| EPOXY COATED REINFORCING STEEL | 824 | 10- 8-82 |

DESIGN SPECIFICATIONS

THIS STRUCTURE CONFORMS TO THE "STANDARD SPECIFICATIONS FOR HIGHWAY BRIDGES" ADOPTED BY THE AMERICAN ASSOCIATION OF STATE HIGHWAY OFFICIALS, 1969 INCLUDING THE OHIO 'SUPPLEMENT' TO THESE SPECIFICATIONS.

DESIGN DATA

DESIGN LOADING - HS20-44
CONCRETE CLASS S - UNIT STRESS 1500 P.S.I. (SUPERSTRUCTURE).
CONCRETE CLASS C - UNIT STRESS 1333 P.S.I. (SUBSTRUCTURE).
STRUCTURAL STEEL ASTM A36 - UNIT STRESS 20,000 P.S.I.
REINFORCING STEEL ASTM A615, A616 OR A617.
GRADE 40 - UNIT STRESS 20,000 P.S.I.
DECK PROTECTION METHOD
MEMBRANE WATERPROOFING AND ASPHALT CONCRETE OVERLAY.

EMBANKMENT CONSTRUCTION

THE CHANNEL OPENING IN THE VICINITY OF THE STRUCTURE, THE EMBANKMENT AT THE WEST ABUTMENT TO THE LEVEL OF THE SUBGRADE BACK TO THE LIMITS OF EMBANKMENT WORK SHOWN ON ROADWAY PLANS, AND THE EMBANKMENT AT THE EAST ABUTMENT TO THE LEVEL OF THE SUBGRADE FOR A MINIMUM DISTANCE OF 200 FEET BACK OF THE ABUTMENT SHALL BE CONSTRUCTED PRIOR TO EXCAVATING FOR ABUTMENTS AND PIERS.

REINFORCING BAR LAPPED SPLICES

ALL SPLICES SHALL BE LAPPED 30 BAR DIAMETERS.

ATTACHMENT OF GUARDRAIL TO CONCRETE PARAPETS

CONCRETE INSERT ANCHOR ASSEMBLIES PER STANDARD CONSTRUCTION DRAWINGS GR-1 AND GR-3 SHALL BE PLACED DURING PARAPET CONSTRUCTION.

FOUNDATION BEARING PRESSURE

PIER FOOTINGS, AS DESIGNED, PRODUCE A MAXIMUM BEARING PRESSURE OF 6 TONS PER SQ. FT.

FOOTINGS

FOOTINGS SHALL EXTEND A MINIMUM OF 3 INCHES INTO BEDROCK OR TO THE ELEVATION SHOWN, WHICHEVER IS LOWER.

PILES

PILES SHALL BE DRIVEN TO REFUSAL ON BEDROCK. REFUSAL SHALL BE CONSIDERED AS OBTAINED BY PENETRATING SOFT BEDROCK FOR SEVERAL INCHES WITH A MINIMUM RESISTANCE OF 20 BLOWS PER INCH OR REFUSAL SHALL BE CONSIDERED AS OBTAINED AFTER THE PILE HAS CONTACTED HARD BEDROCK AND THE PILE HAS THEN RECEIVED AT LEAST 20 BLOWS. THE DESIGN LOAD IS 35 TONS PER PILE FOR THE ABUTMENT PILES.

| ITEM | TOTAL | UNIT | DESCRIPTION | ABUTS | PIERS | SUPER | GENERAL | | | |
|---|---|---|---|---|---|---|---|---|---|---|
| 404 | 29 | C.Y. | ASPHALT CONCRETE, AC-20 | | | 29 | | | | |
| 503 | LUMP | | COFFERDAMS, CRIBS AND SHEETING | | | | LUMP | | | |
| 503 | 138 | C.Y. | UNCLASSIFIED EXCAVATION | 115 | 23 | | | | | |
| 503 | 10 | C.Y. | SHALE EXCAVATION | | 10 | | | | | |
| 505 | LUMP | | PILE DRIVING EQUIPMENT MOBILIZATION | | | | LUMP | | | |
| 507 | 190 | L.F. | STEEL PILES, HP10X42 | 190 | | | | | | |
| 509 | 36317 | LB | REINFORCING STEEL | 7333 | 11064 | 17920 | | | | |
| 511 | 174 | C.Y. | CLASS S CONCRETE, SUPERSTRUCTURE | | | 174 | | | | |
| 511 | 53 | C.Y. | CLASS C CONCRETE, PIERS ABOVE FOOTINGS | | 53 | | | | | |
| 511 | 46 | C.Y. | CLASS C CONCRETE, ABUTMENTS ABOVE FOOTINGS | 46 | | | | | | |
| 511 | 49 | C.Y. | CLASS C CONCRETE, FOOTINGS | 35 | 14 | | | | | |
| 513 | 75300 | LB | STRUCTURAL STEEL, ASTM A-36 *(AISC CATEGORY I)* | | | 75300 | | | | |
| 514 | 75300 | LB | FIELD PAINTING OF NEW STRUCTURAL STEEL, SYSTEM A | | | 75300 | | | | |
| 516 | 62 | S.F. | 1/4 INCH PREFORMED EXPANSION JOINT FILLER | 62 | | | | | | |
| 516 | 80 | S.F. | 1 INCH PREFORMED EXPANSION JOINT FILLER | 80 | | | | | | |
| 516 | 10 | S.F. | 5/8 INCH THICK ELASTOMERIC BEARING PADS | | 10 | | | | | |
| 516 | 86 | L.F. | PVC WATERSTOP, AS PER PLAN | 86 | | | | | | |
| 518 | 50 | C.Y. | POROUS BACKFILL | 50 | | | | | | |
| 518 | 104 | L.F. | 6 INCH PERFORATED, HELICAL CSP, 707.01 | 104 | | | | | | |
| 518 | 50 | L.F. | 6 INCH NON-PERFORATED, HELICAL CSP, INCLUDING SPECIALS, 707.01 | 50 | | | | | | |
| 518 | 143 | L.F. | SUBDRAINAGE FOR WEARING SURFACE COURSE, AS PER PLAN | | | 143 | | | | |
| 601 | 295 | S.Y. | CRUSHED AGGREGATE SLOPE PROTECTION | | | | 295 | | | |
| 824 | 21183 | LB | EPOXY COATED REINFORCING STEEL | | | 21183 | | | | |
| SPEC | 421 | S.Y. | MEMBRANE WATERPROOFING (SEE PROPOSAL NOTE) | | | 421 | | | | |
| *516* | *8* | *EA.* | *LAMINATED ELASTOMERIC BEARINGS (8"x 19"x 5/8" ELASTOMERIC PAD WITH 9"x20"x BEVELED STEEL LOAD PLATE)* | | *8* | | | | | |

B190001A

2/9

ALDEN E. STILSON & ASSOCIATES
CONSULTING ENGINEERING AND ARCHITECTURE
COLUMBUS, CLEVELAND, WHEELING

# GENERAL NOTES AND ESTIMATED QUANTITIES

BRIDGE NO. CUY-480-1168
RAMP T-4 OVER RELOCATED BIG CREEK
CUYAHOGA COUNTY
STA. 642+06.53 TO STA. 643+49.36

| DESIGNED | DRAWN | TRACED | CHECKED | REVIEWED | DATE | REVISED |
|---|---|---|---|---|---|---|
| RT | | | VB 11-16-90 | [illegible] 1/23 | | |

MICROFILMED

| FED. RD. DIVISION | STATE | PROJECT | TYPE FUNDS |
|---|---|---|---|
| 2 | OHIO | | |

418/500

CUYAHOGA COUNTY
CUY-480-10.39

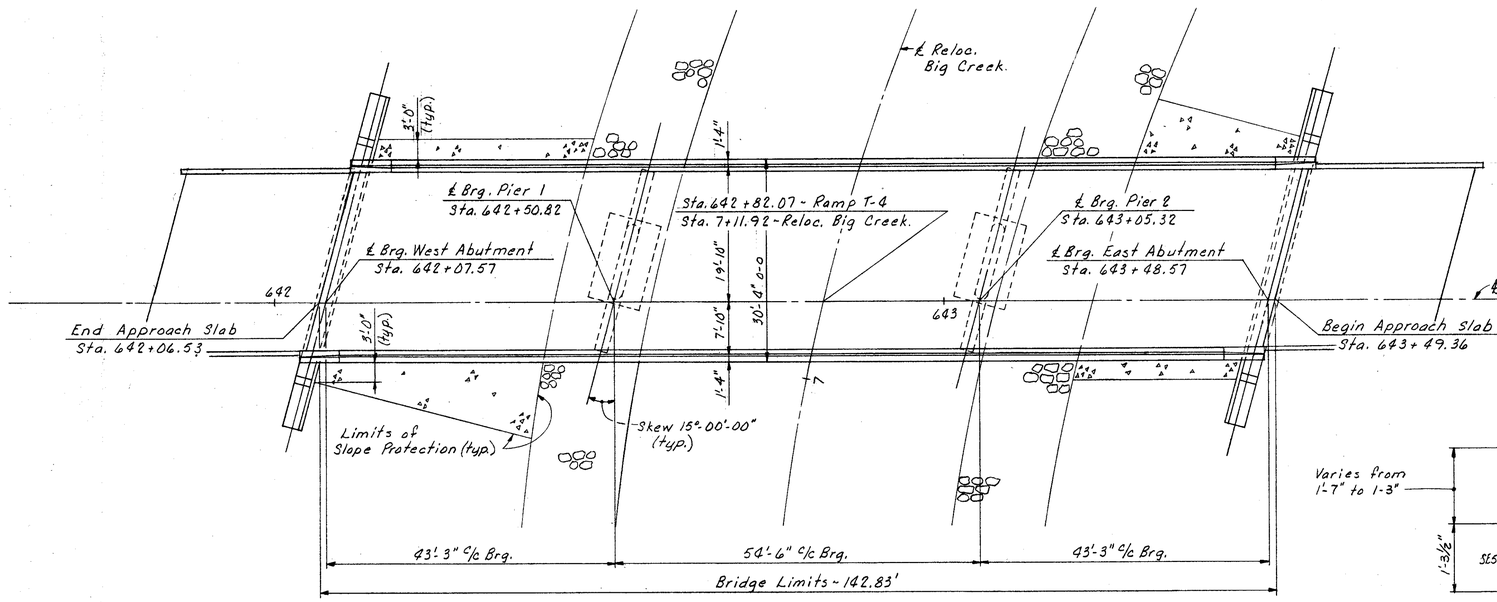


GENERAL PLAN

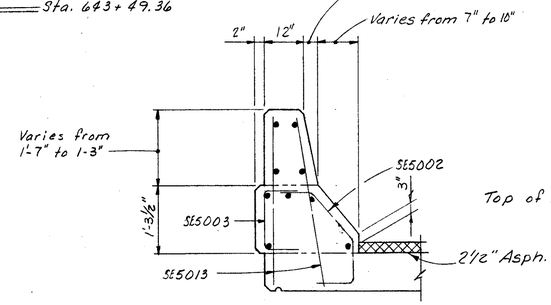


SECTION - $G_1$-$G_1$

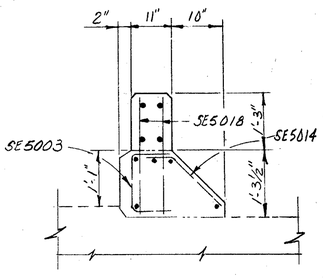


VIEW - $G_2$-$G_2$

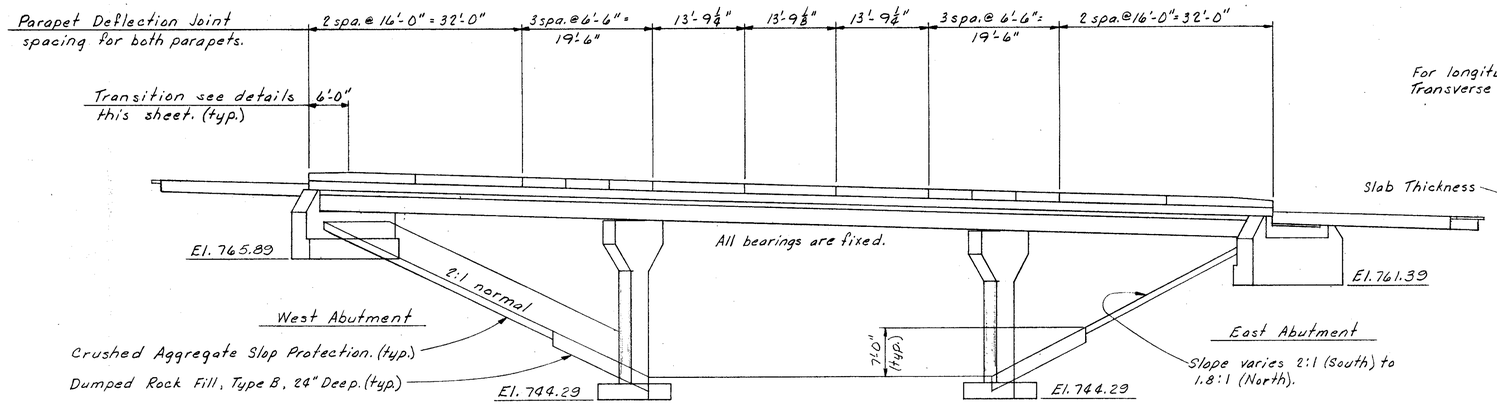


GENERAL ELEVATION
(Abut. Piles not shown.)

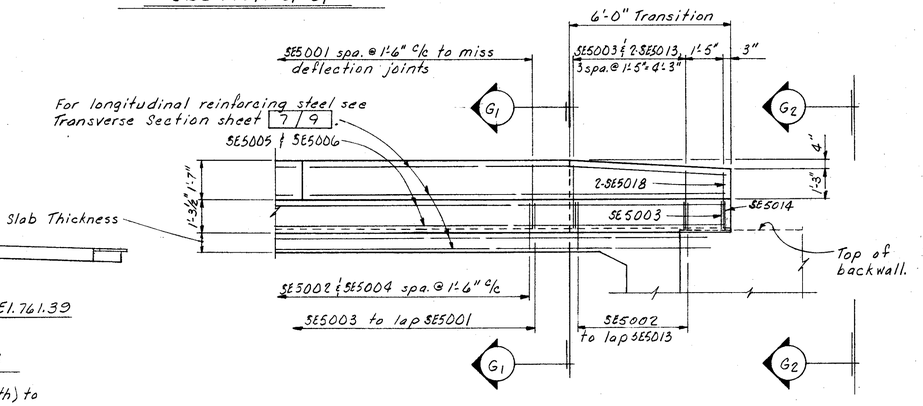


PARAPET TRANSITION DETAILS

3/9

**ALDEN E. STILSON & ASSOCIATES, LIMITED**
CONSULTING ENGINEERS
CLEVELAND, OHIO COLUMBUS, OHIO WHEELING, W. VA.

# GENERAL PLAN AND ELEVATION

BRIDGE NO. CUY-480-1168
RAMP T-4 OVER RELOCATED BIG CREEK
CUYAHOGA COUNTY
STA. 642+06.53 TO STA. 643+49.36

| DESIGNED | DRAWN | TRACED | CHECKED | REVIEWED | DATE | REVISED |
|---|---|---|---|---|---|---|
| RT | DW | | VB | G.W.M. | 12/10/71 | |

NOTES

For Parapet Deflection Joint details see Std. Dwg. BR-1.

For additional details see Transverse Section sheet 7/9.

MICROFILMED
JAN 22 1991

| FED. RD. DIVISION | STATE | PROJECT | TYPE FUNDS |
|---|---|---|---|
| 2 | OHIO | | |

419
500

CUYAHOGA COUNTY
CUY-480-10.39

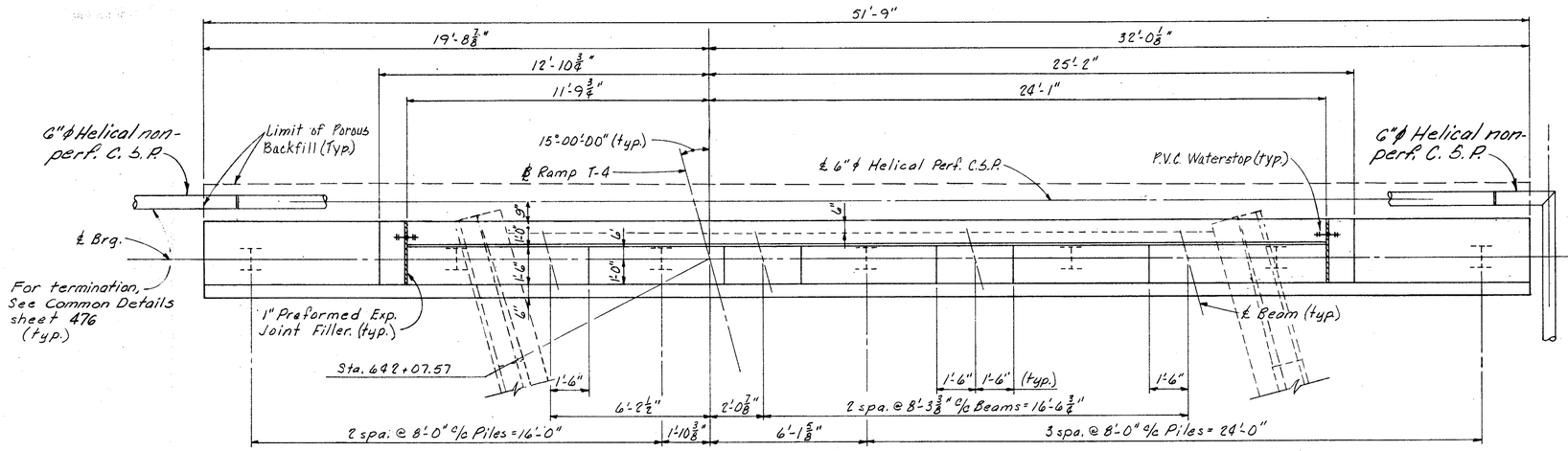


PLAN

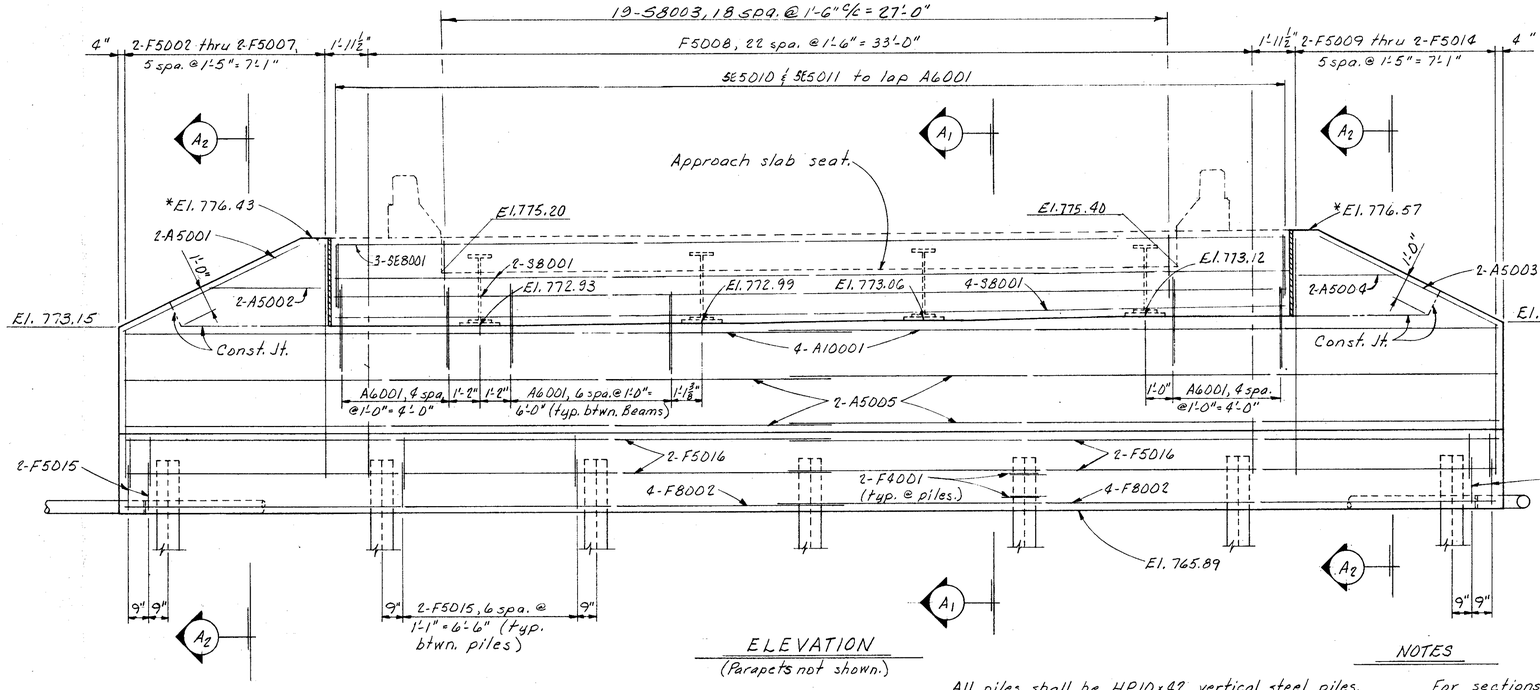


ELEVATION
(Parapets not shown.)

Porous backfill shall extend upward to the plane of the subgrade or bottom of Approach Slab and laterally to the end of wingwalls.

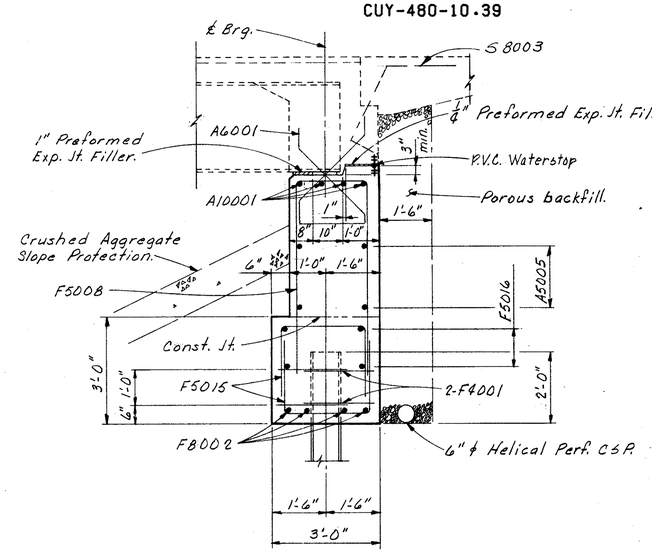


SECTION~A1-A1
(Superstructure reinforcing not shown.)

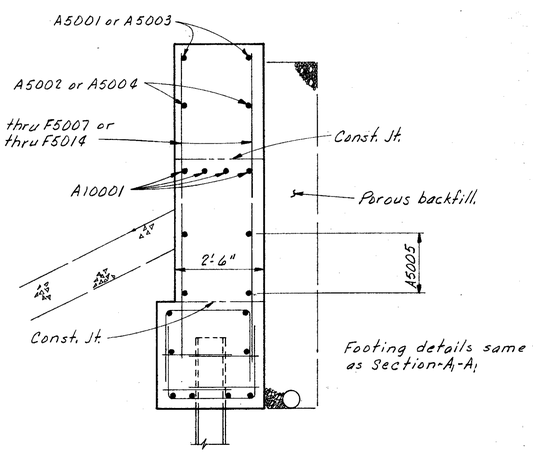


SECTION~A2-A2

NOTES

All piles shall be HP10x42 vertical steel piles.

Only that portion of the CSP located in the porous backfill shall be perforated.

Concrete in wingwalls above beam seats shall not be placed until the structural steel has been erected and the bars which are to be threaded thru the beam webs have been placed.

For sections thru superstructure backwall see sheet 8 9.

*Elevations marked with an asterisk are at the front face of wall.

All reinforcing in footing shall have 3" minimum cover.

For additional details see sheet 5 9.

4 9

ALDEN E. STILSON & ASSOCIATES, LIMITED
CONSULTING ENGINEERS
CLEVELAND, OHIO COLUMBUS, OHIO WHEELING, W. VA.

# WEST ABUTMENT DETAILS

BRIDGE NO. CUY-480-1168
RAMP T-4 OVER RELOCATED BIG CREEK
STA. 642+06.53 TO
CUYAHOGA COUNTY STA. 643+49.36

| DESIGNED | DRAWN | TRACED | CHECKED | REVIEWED | DATE | REVISED |
|---|---|---|---|---|---|---|
| RT | DW | | VB | G.W.M. | 12/10/71 | |

MICROFILMED
JAN 22 1981

| FED. RD. DIVISION | STATE | PROJECT | TYPE FUNDS |
|---|---|---|---|
| 2 | OHIO | | |

420
500

CUYAHOGA COUNTY
CUY-480-10.39

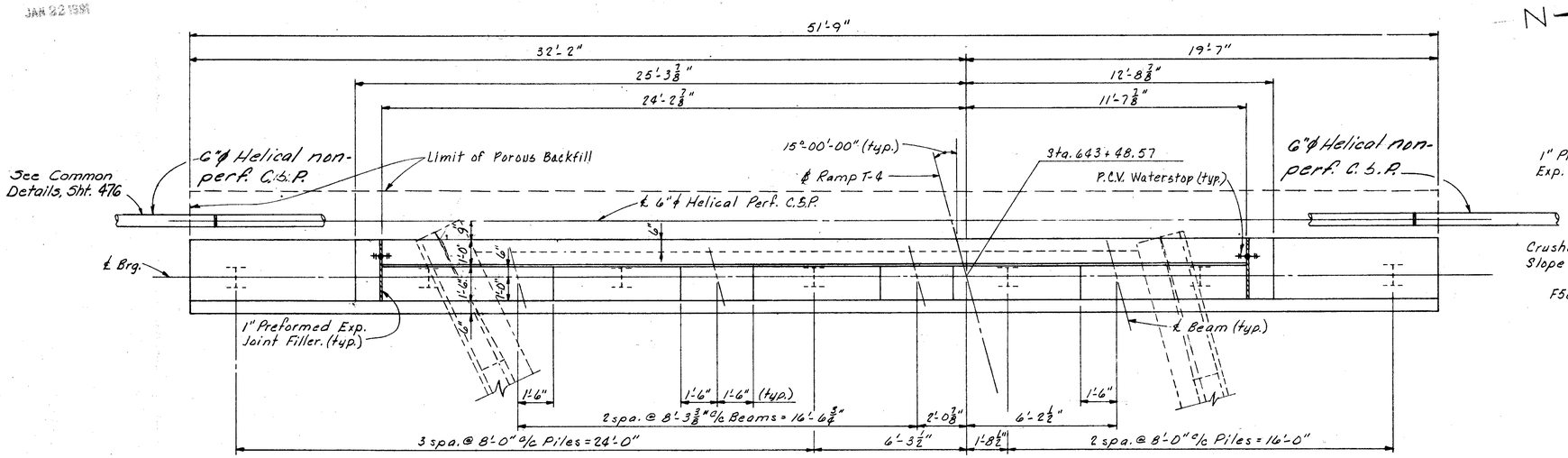


PLAN

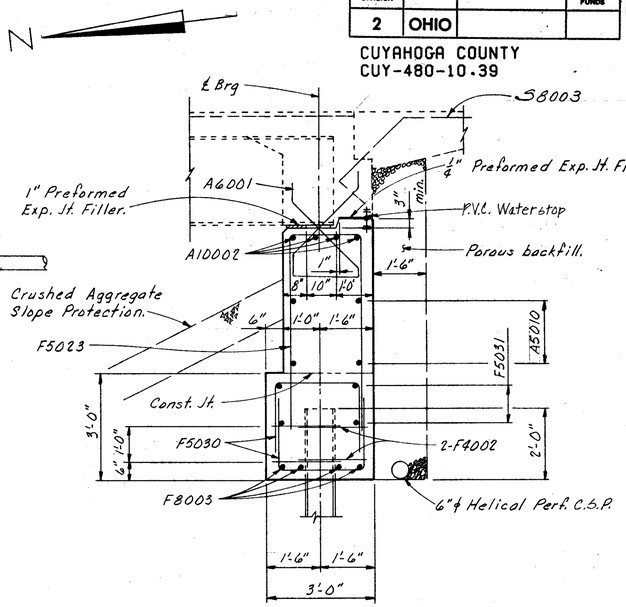


SECTION-A3-A3

(Superstructure reinforcing not shown.)

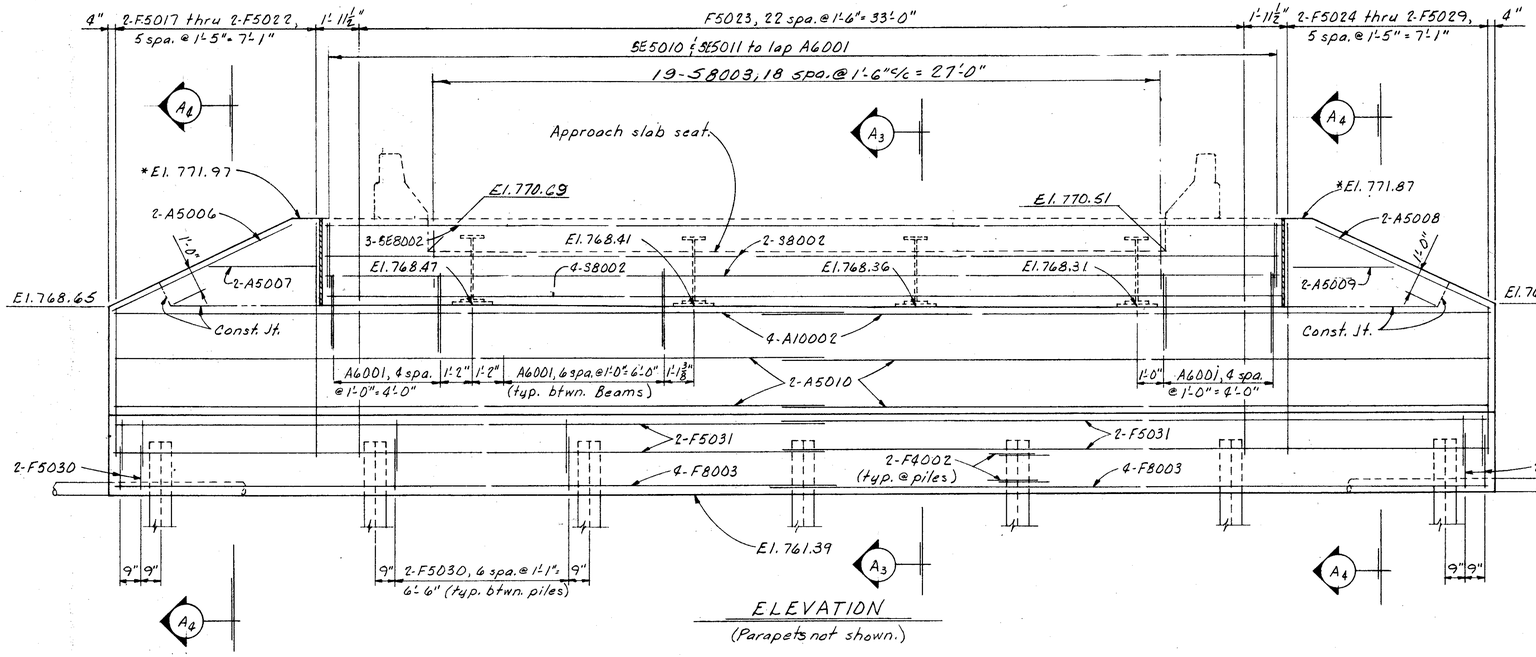


ELEVATION

(Parapets not shown.)

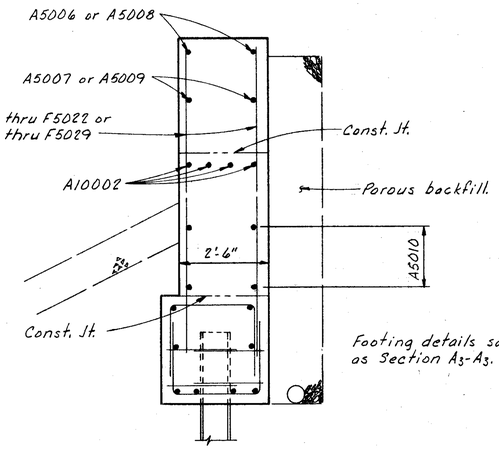


SECTION-A4-A4

NOTE

For additional notes and details see sheet 4/9
For P.V.C. waterstop detail see Common Detail sheet 476

5/9

ALDEN E. STILSON & ASSOCIATES, LIMITED
CONSULTING ENGINEERS
CLEVELAND, OHIO COLUMBUS, OHIO WHEELING, W. VA.

# EAST ABUTMENT DETAILS

BRIDGE NO. CUY-480-1168
RAMP T-4 OVER RELOCATED BIG CREEK
STA. 642+06.53 TO
CUYAHOGA COUNTY STA. 643+49.36

| DESIGNED | DRAWN | TRACED | CHECKED | REVIEWED | DATE | REVISED |
|---|---|---|---|---|---|---|
| RT | DW | | VB | G.W.M. | 12/10/71 | |

MICROFILMED
JAN 22 1991

| FED. RD. DIVISION | STATE | PROJECT | TYPE FUNDS |
|---|---|---|---|
| 2 | OHIO | | |

421/500

CUYAHOGA COUNTY
CUY-480-10.39

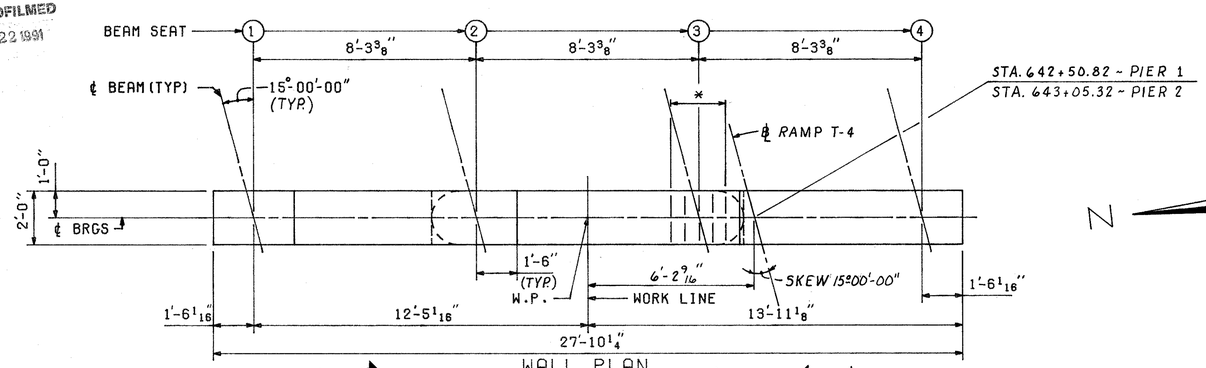


## WALL PLAN

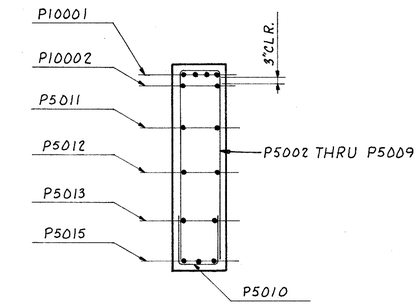


## SECTION P2 -P2

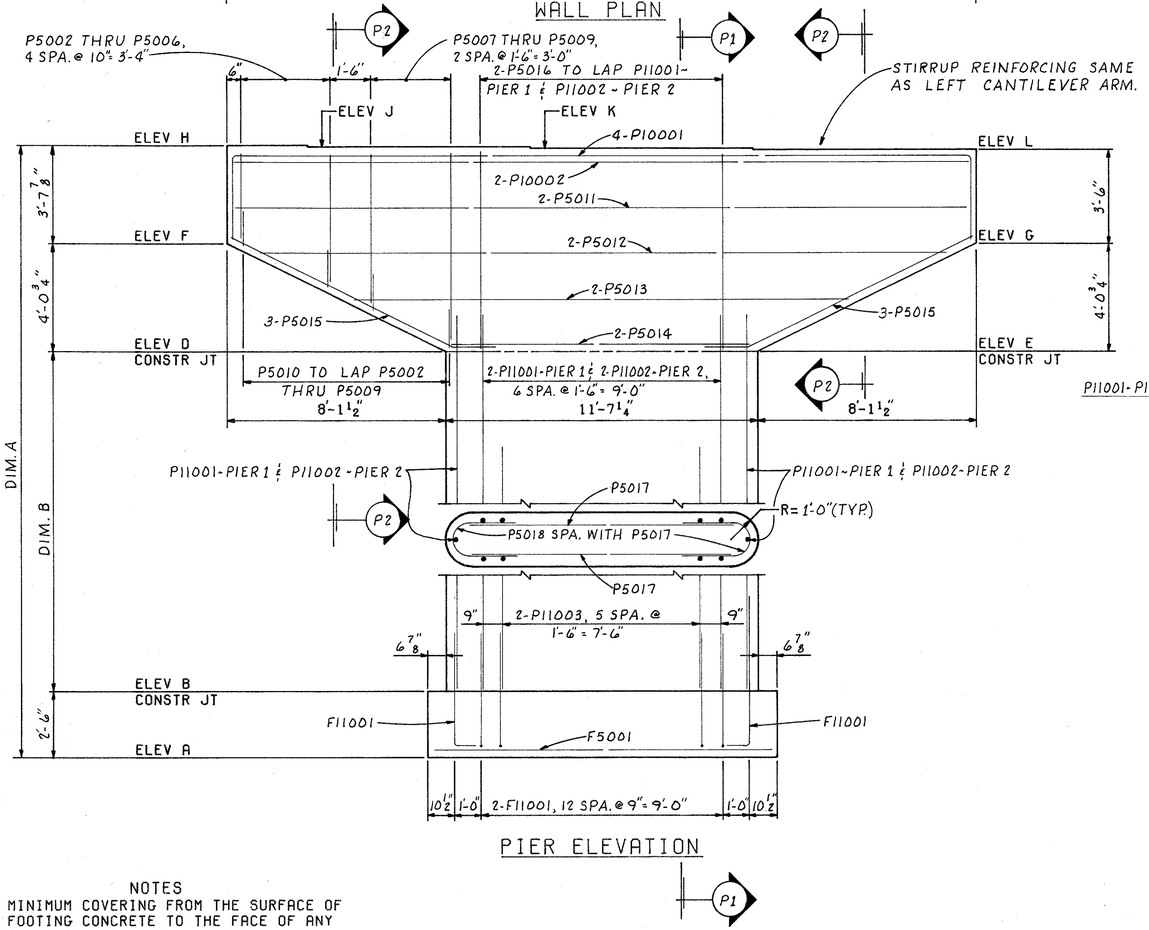


## PIER ELEVATION

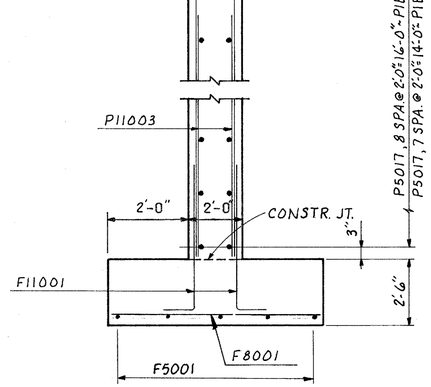


## SECTION P1 -P1

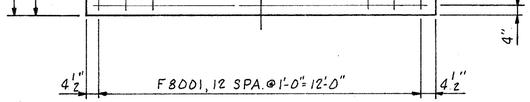


## FOOTING PLAN

NOTES
THE MINIMUM COVERING FROM THE SURFACE OF THE FOOTING CONCRETE TO THE FACE OF ANY FOOTING REINFORCING SHALL BE 3 INCHES.

* PLACE 5-P5001 BARS SPACED AT 6 INCHES CENTER-TO-CENTER UNDER EACH BEAM SEAT.

TABLE OF ELEVATIONS AND DIMENSIONS

| PIER | ELEV A | ELEV B | ELEV D | ELEV E | ELEV F | ELEV G | ELEV H | ELEV J | ELEV K | ELEV L | DIM. A | DIM. B |
|---|---|---|---|---|---|---|---|---|---|---|---|---|
| 1 | 744.29 | 746.79 | 763.94 | 763.94 | 768.00 | 768.00 | 771.66 | 771.61 | 771.56 | 771.50 | 27'-4 3/8" | 17'-1 3/4" |
| 2 | 744.29 | 746.79 | 762.11 | 762.11 | 766.17 | 766.17 | 769.83 | 769.78 | 769.72 | 769.67 | 25'-6 1/2" | 15'-3 7/8" |

6/9

ALDEN E. STILSON & ASSOCIATES, LIMITED
CONSULTING ENGINEERS
CLEVELAND, OHIO COLUMBUS, OHIO WHEELING, W. VA.

# PIER DETAILS

BRIDGE NO. CUY-480-1168
RAMP T-4 OVER RELOCATED BIG CREEK
STA. 642+06.53 TO
CUYAHOGA COUNTY STA. 643+49.36

| DESIGNED | DRAWN | TRACED | CHECKED | REVIEWED | DATE | REVISED |
|---|---|---|---|---|---|---|
| RT | DW | | VB | G.W.M. | 12/13/91 | |

MICROFILMED
JAN 23 1996

All longitudinal reinforcing shall be S5015 or S5016 unless otherwise noted. Longitudinal reinforcing in the parapets shall be SE5005 & SE5006.

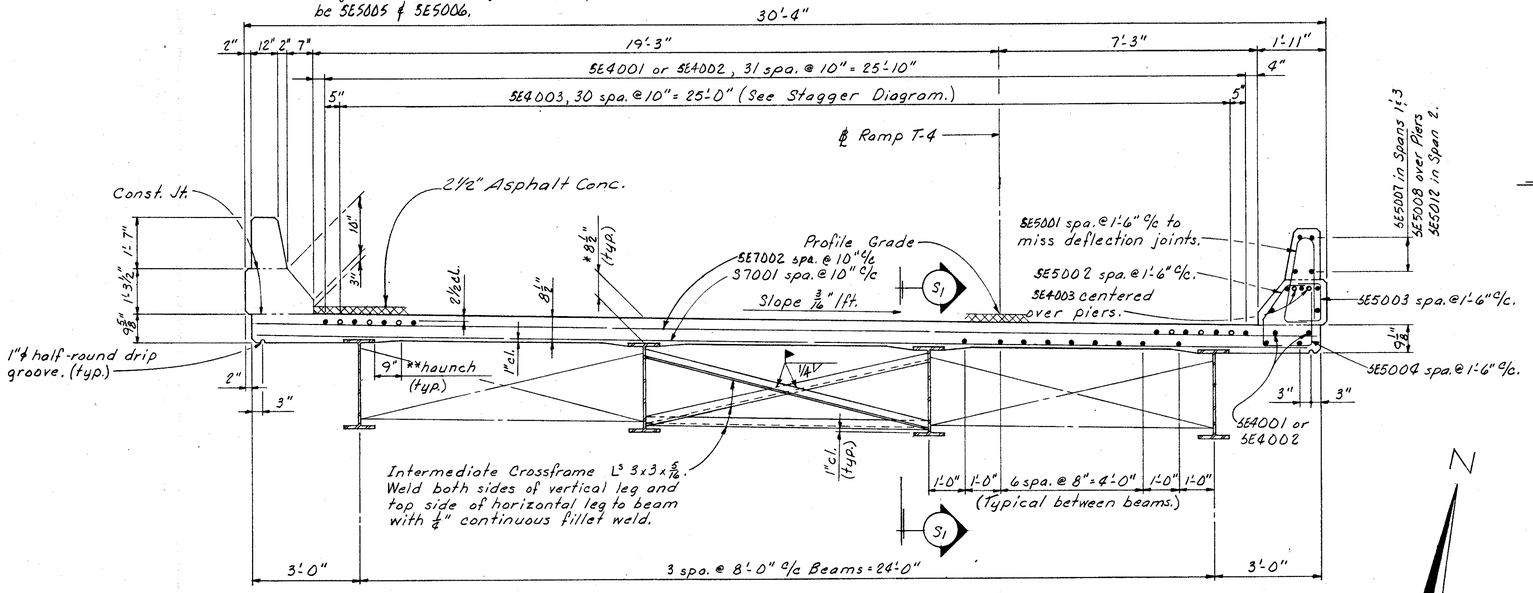


TRANSVERSE SECTION

For details and reinforcing in parapet transition see sheet 3 / 9.

Note: For details of Asphalt Concrete Surface Course and Subdrainage see Sht. No.

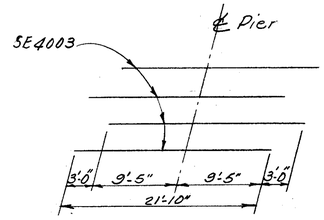


STAGGER DIAGRAM

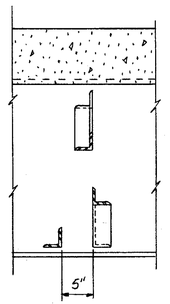


SECTION-S1-S1

| FED. RD. DIVISION | STATE | PROJECT | TYPE FUNDS |
|---|---|---|---|
| 2 | OHIO | | |

422 / 500

CUYAHOGA COUNTY
CUY-480-10.39

NOTES

*The distance shown from top of deck slab to top of steel beam is the design dimension. The quantity of deck concrete to be paid for shall be based on this dimension, even though deviation from it may be necessary because the top flange of the beam may not have the exact camber or conformation required to place it parallel to the finished grade.

**A haunch width of 9" shall be used for computing quantity of concrete. However, the haunch width may vary between 6" and 12" provided that the slope shall be not more than 1:4 for a haunch less than 9" in width.

Lap SE4001 and SE4002 bars 1'-3".
Lap SE5005 and SE5006 bars 1'-7".
Lap S5015 and S5016 bars 1'-7".
Quantities of concrete and reinforcing steel for railing shall be included with their appropriate Item for payment.

S7001 and SE7002 bars shall be placed parallel to ℄ bearing. Spacing is measured along ℄ Ramp T-4.

For additional notes and details see sheet 8 / 9

Welding Attachments: See sheet 366 / 500

Where "(CVN)" follows a shape or plate size designation, the material shall meet specified minimum notch toughness requirements.

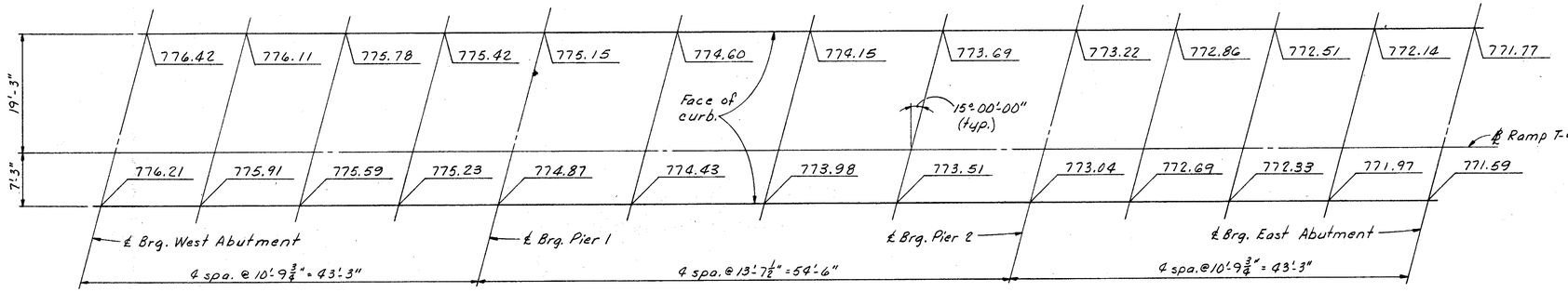


SCREED ELEVATIONS

Screed elevations are at top of slab before the concrete is placed. Proper allowance has been made for the dead load deflection due to the weight of the concrete.

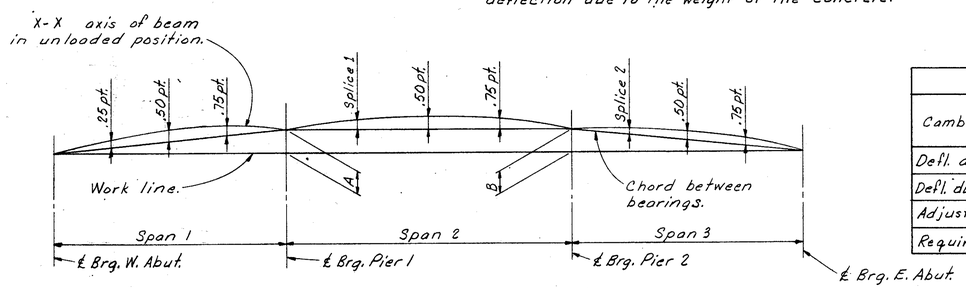


CAMBER AND BLOCKING DIAGRAM

| DEFLECTION AND CAMBER | | | | | | | | | |
|---|---|---|---|---|---|---|---|---|---|
| Camber Description | Span 1 | | | Span 2 | | | Span 3 | | |
| | .25 | .50 | .75 | Splice | .50 | .75 | Splice | .50 | .75 |
| Defl. due to weight of steel. | 0 | 0 | 0 | 0 | 1/16 | 0 | 0 | 0 | 0 |
| Defl. due to rem. dead load. | 3/16 | 3/16 | 1/16 | 1/16 | 1/4 | 1/8 | 1/16 | 3/16 | 3/16 |
| Adjustment due to curvature. | 1/4 | 5/16 | 1/4 | 0 | 0 | 0 | 0 | 0 | 0 |
| Required shop camber. | 7/16 | 1/2 | 5/16 | 1/16 | 5/16 | 1/8 | 1/16 | 3/16 | 3/16 |

| BLOCKING DIMENSIONS | | |
|---|---|---|
| Beam | A | B |
| 1 | 11/16 | 5/16 |
| 2 | 3/4 | 5/16 |
| 3 | 7/8 | 3/8 |
| 4 | 15/16 | 3/8 |

7 / 9

ALDEN E. STILSON & ASSOCIATES, LIMITED
CONSULTING ENGINEERS
CLEVELAND, OHIO COLUMBUS, OHIO WHEELING, W. VA.

# SUPERSTRUCTURE DETAILS

BRIDGE NO. CUY-480-1168
RAMP T-4 OVER RELOCATED BIG CREEK
STA. 642+06.53 TO
CUYAHOGA COUNTY STA. 643+49.36

| DESIGNED | DRAWN | TRACED | CHECKED | REVIEWED | DATE | REVISED |
|---|---|---|---|---|---|---|
| RT | DW | | VB | G.W.M. | 12/13/71 | |

MICROFILMED
JAN 22 1991

| FED. RD. DIVISION | STATE | PROJECT | TYPE FUNDS |
|---|---|---|---|
| 2 | OHIO | | |

423/500

CUYAHOGA COUNTY
CUY-480-10.39

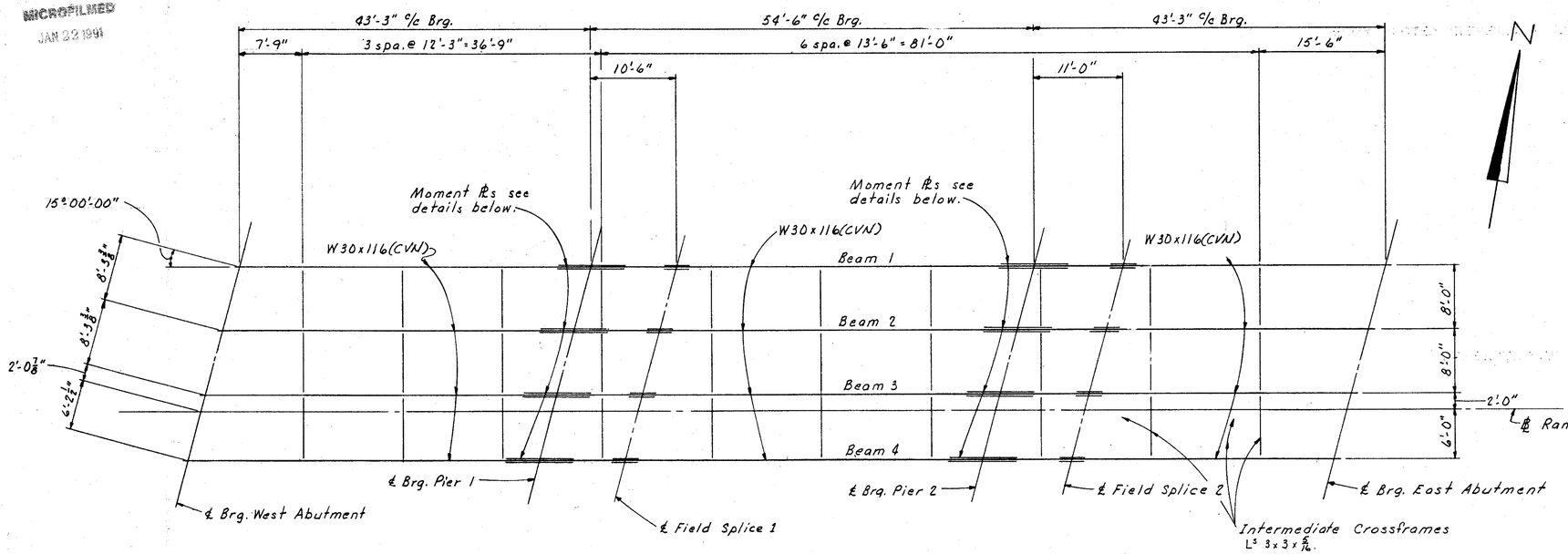


FRAMING PLAN

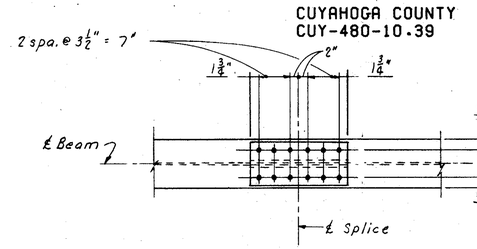


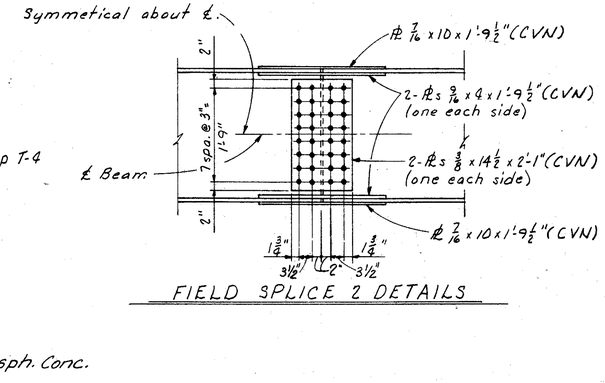


FIELD SPLICE 2 DETAILS

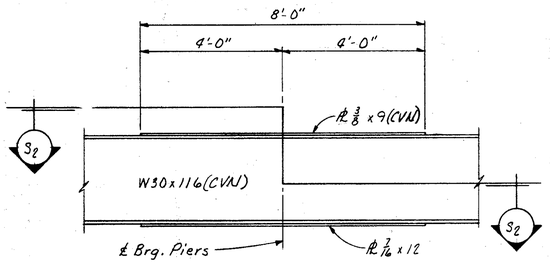


MOMENT PLATE DETAILS ~ PIERS 1 & 2

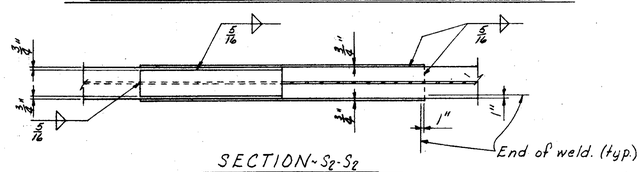


SECTION ~ S2 - S2

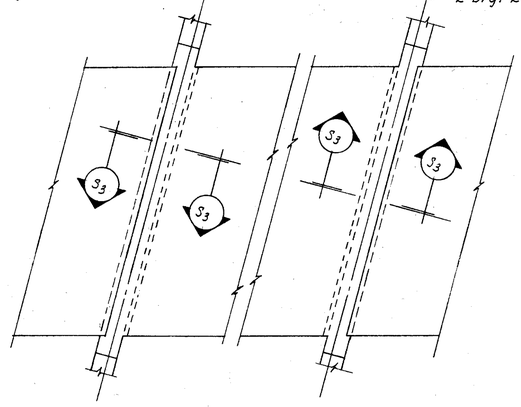


DECK PLAN

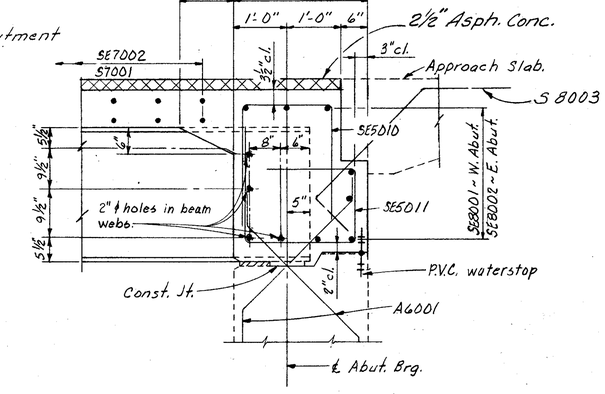


SECTION ~ S3 - S3

(For placement of bars and Approach Slab Seat Elev. see sheets 4 & 5 / 9).

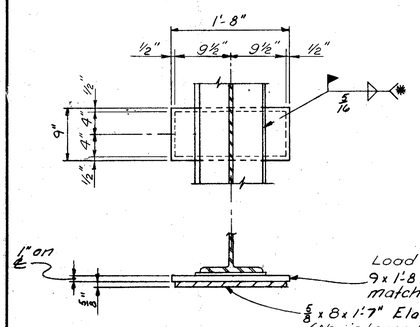


PIER BEARING DETAIL

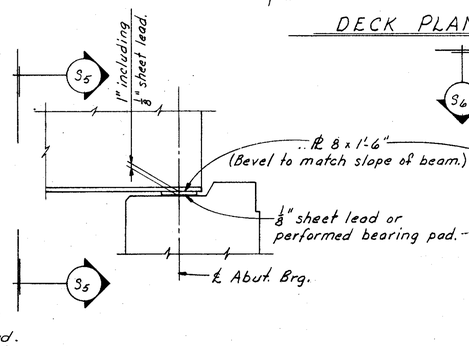


ABUTMENT BEARING DETAIL

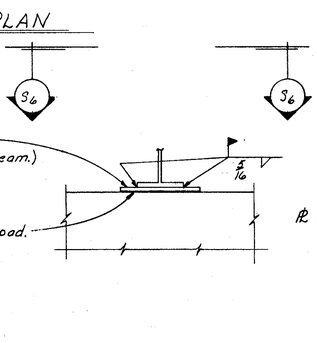


SECTION ~ S5 - S5

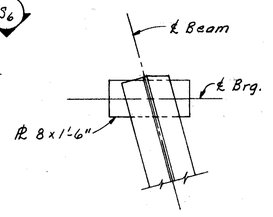


VIEW ~ S6 - S6

## NOTES

Place intermediate crossframes normal to beams.

For details of Field Splice 1 see Std. Dwg. SD-1-69.

Bolts for Field Splices shall be 1" diameter A325. Bolt heads shall be placed on the fascia side of the exterior beams and the bottom side of all botton flanges.

For additional notes and details see sheet 7 / 9.

The elastomeric bearing pad shall be vulcanized bonded to the steel load plate.

✱ Welding shall be controlled so that the plate temperature at the Elastomer bonded surface does not exceed 300°F. as determined by use of pyrometric sticks or other temperature monitoring devices.

8 / 9

ALDEN E. STILSON & ASSOCIATES, LIMITED
CONSULTING ENGINEERS
CLEVELAND, OHIO COLUMBUS, OHIO WHEELING, W. VA.

# SUPERSTRUCTURE DETAILS

BRIDGE NO. CUY-480-1168
RAMP T-4 OVER RELOCATED BIG CREEK
STA. 642+06.53 TO
CUYAHOGA COUNTY STA. 643+49.36

| DESIGNED | DRAWN | TRACED | CHECKED | REVIEWED | DATE | REVISED |
|---|---|---|---|---|---|---|
| RT | DW | | VB | G.W.M. | 12/13/71 | |

MICROFILMED
JAN 22 1991

| MARK | NUM. | LENGTH | WEIGHT | TYPE | A | B | C | D | E | NOTE |
|---|---|---|---|---|---|---|---|---|---|---|
| | | | | WEST ABUTMENT | | | | | | |
| A 5001 | 2 | 7- 6 | 16 | ST | | | | | | |
| A 5002 | 2 | 4- 5 | 9 | ST | | | | | | |
| A 5003 | 2 | 7- 6 | 16 | ST | | | | | | |
| A 5004 | 2 | 3-11 | 8 | ST | | | | | | |
| A 5005 | 8 | 26- 6 | 221 | ST | | | | | | |
| A 6001 | 31 | 10- 0 | 466 | 20 | 2- 2 | 1- 0 | 2- 2 | 0- 6 | 2- 2 | |
| A10001 | 8 | 27- 3 | 938 | ST | | | | | | |
| F 4001 | 28 | 5- 4 | 100 | 1 | | 1-11 | 1- 9 | 1-11 | | |
| F 5002 | 2 | 5- 7 | | ST | | | | | | 1 |
| THRU | | | 90 | | VARY | LENGTH | BY | 0- 7 | 5/ 8 | |
| F 5007 | 2 | 8- 9 | | ST | | | | | | 1 |
| F 5008 | 23 | 12- 8 | 304 | 1 | | 5- 5 | 2- 1 | 5- 5 | | |
| F 5009 | 2 | 8-11 | | ST | | | | | | 1 |
| THRU | | | 91 | | VARY | LENGTH | BY | 0- 8 | | |
| F 5014 | 2 | 5- 7 | | ST | | | | | | 1 |
| F 5015 | 92 | 6- 5 | 616 | 1 | | 2- 1 | 2- 6 | 2- 1 | | |
| F 5016 | 8 | 26- 5 | 220 | ST | | | | | | |
| F 8002 | 8 | 26-10 | 573 | ST | | | | | | |
| | | | | EAST ABUTMENT | | | | | | |
| A 5006 | 2 | 7- 6 | 16 | ST | | | | | | |
| A 5007 | 2 | 4- 5 | 9 | ST | | | | | | |
| A 5008 | 2 | 7- 4 | 15 | ST | | | | | | |
| A 5009 | 2 | 4- 0 | 8 | ST | | | | | | |
| A 5010 | 8 | 26- 6 | 221 | ST | | | | | | |
| A 6001 | 31 | 10- 0 | 466 | 20 | 2- 2 | 1- 0 | 2- 2 | 0- 6 | 2- 2 | |
| A10002 | 8 | 27- 3 | 938 | ST | | | | | | |
| F 4002 | 28 | 5- 4 | 100 | 1 | | 1-11 | 1- 9 | 1-11 | | |
| F 5017 | 2 | 5- 7 | | ST | | | | | | 1 |
| THRU | | | 90 | | VARY | LENGTH | BY | 0- 7 | 3/ 4 | |
| F 5022 | 2 | 8-10 | | ST | | | | | | 1 |
| F 5023 | 23 | 12- 8 | 304 | 1 | | 5- 5 | 2- 1 | 5- 5 | | |
| F 5024 | 2 | 8- 8 | | ST | | | | | | 1 |
| THRU | | | 89 | | VARY | LENGTH | BY | 0- 7 | 3/ 8 | |
| F 5029 | 2 | 5- 7 | | ST | | | | | | 1 |
| F 5030 | 92 | 6- 5 | 616 | 1 | | 2- 1 | 2- 6 | 2- 1 | | |
| F 5031 | 8 | 26- 5 | 220 | ST | | | | | | |
| F 8003 | 8 | 26-10 | 573 | ST | | | | | | |

| MARK | NUM. | LENGTH | WEIGHT | TYPE | A | B | C | D | E | NOTE |
|---|---|---|---|---|---|---|---|---|---|---|
| | | | | PIER 1 | | | | | | |
| P 5001 | 20 | 4- 5 | 92 | 1 | | 1- 6 | 1- 8 | 1- 6 | | |
| P 5002 | 2 | 7-11 | | 1 | | 3- 3 | 1- 8 | 3- 3 | | 1 |
| THRU | | | 100 | | VARY | LENGTH | BY | 0-10 | | |
| | | | | | VARY | DIM. B | BY | 0- 5 | | |
| | | | | | VARY | DIM. D | BY | 0- 5 | | |
| P 5006 | 2 | 11- 3 | | 1 | | 4-11 | 1- 8 | 4-11 | | 1 |
| P 5007 | 2 | 12- 9 | 27 | 1 | | 5- 8 | 1- 8 | 5- 8 | | |
| P 5008 | 2 | 14- 3 | 30 | 1 | | 6- 5 | 1- 8 | 6- 5 | | |
| P 5009 | 2 | 15- 9 | 33 | 1 | | 7- 2 | 1- 8 | 7- 2 | | |
| P 5010 | 16 | 4- 7 | 76 | 1 | | 1- 7 | 1- 8 | 1- 7 | | |
| P 5011 | 2 | 27- 6 | 57 | ST | | | | | | |
| P 5012 | 2 | 25- 7 | 53 | ST | | | | | | |
| P 5013 | 2 | 18- 7 | 39 | ST | | | | | | |
| P 5014 | 2 | 11- 7 | 24 | ST | | | | | | |
| P 5015 | 6 | 10- 7 | 66 | 12 | 1- 7 | 8- 1 | | 4- 0 | | |
| P 5016 | 14 | 7- 2 | 105 | ST | | | | | | |
| P 5017 | 18 | 9- 7 | 180 | ST | | | | | | |
| P 5018 | 18 | 5- 7 | 105 | 7 | 1- 7 | 1- 7 | 0- 9 | | | |
| P10001 | 4 | 33- 3 | 572 | 1 | | 3- 2 | 27- 6 | 3- 2 | | |
| P10002 | 2 | 27- 6 | 237 | ST | | | | | | |
| P11001 | 16 | 18- 9 | 1594 | ST | | | | | | |
| P11003 | 12 | 15- 0 | 956 | ST | | | | | | |
| F 5001 | 2 | 12- 3 | 26 | ST | | | | | | |
| F 8001 | 13 | 5- 6 | 191 | ST | | | | | | |
| F11001 | 28 | 7- 2 | 1066 | 1 | 1- 8 | 5-10 | | | | |
| | | | | PIER 2 | | | | | | |
| P 5001 | 20 | 4- 5 | 92 | 1 | | 1- 6 | 1- 8 | 1- 6 | | |
| P 5002 | 2 | 7-11 | | 1 | | 3- 3 | 1- 8 | 3- 3 | | 1 |
| THRU | | | 100 | | VARY | LENGTH | BY | 0-10 | | |
| | | | | | VARY | DIM. B | BY | 0- 5 | | |
| | | | | | VARY | DIM. D | BY | 0- 5 | | |
| P 5006 | 2 | 11- 3 | | 1 | | 4-11 | 1- 8 | 4-11 | | 1 |
| P 5007 | 2 | 12- 9 | 27 | 1 | | 5- 8 | 1- 8 | 5- 8 | | |
| P 5008 | 2 | 14- 3 | 30 | 1 | | 6- 5 | 1- 8 | 6- 5 | | |
| P 5009 | 2 | 15- 9 | 33 | 1 | | 7- 2 | 1- 8 | 7- 2 | | |
| P 5010 | 16 | 4- 7 | 76 | 1 | | 1- 7 | 1- 8 | 1- 7 | | |
| P 5011 | 2 | 27- 6 | 57 | ST | | | | | | |
| P 5012 | 2 | 25- 7 | 53 | ST | | | | | | |
| P 5013 | 2 | 18- 7 | 39 | ST | | | | | | |
| P 5014 | 2 | 11- 7 | 24 | ST | | | | | | |
| P 5015 | 4 | 10- 7 | 44 | 12 | 1- 7 | 8- 1 | | 4- 0 | | |
| P 5016 | 14 | 7- 2 | 105 | ST | | | | | | |
| P 5017 | 16 | 9- 7 | 160 | ST | | | | | | |
| P 5018 | 16 | 5- 7 | 93 | 7 | 1- 7 | 1- 7 | 0- 9 | | | |
| P10001 | 4 | 33- 3 | 572 | 1 | | 3- 2 | 27- 6 | 3- 2 | | |
| P10002 | 2 | 27- 6 | 237 | ST | | | | | | |
| P11002 | 16 | 16-11 | 1438 | ST | | | | | | |
| P11003 | 12 | 15- 0 | 956 | ST | | | | | | |
| F 5001 | 5 | 12- 3 | 64 | ST | | | | | | |
| F 8001 | 13 | 5- 6 | 191 | ST | | | | | | |
| F11001 | 28 | 7- 2 | 1066 | 1 | 1- 8 | 5-10 | | | | |

| MARK | NUM. | LENGTH | WEIGHT | TYPE | A | B | C | D | E | NOTE |
|---|---|---|---|---|---|---|---|---|---|---|
| | | | | SUPERSTRUCTURE | | | | | | |
| | | EPOXY | COATED | REINFORCING STEEL | | | | | | |
| SE4001 | 144 | 30- 0 | 2886 | ST | | | | | | |
| SE4002 | 36 | 28-11 | 695 | ST | | | | | | |
| SE4003 | 70 | 21-10 | 1021 | ST | | | | | | |
| SE5001 | 174 | 5- 4 | 968 | 19 | 0- 8 | 2- 5 | 2- 2 | | | |
| SE5002 | 190 | 3- 6 | 694 | 15 | 0-10 | 1- 0 | 0- 9 | 1- 0 | 0- 6 | |
| SE5003 | 194 | 2- 1 | 422 | 1 | | 0- 8 | 1- 0 | 0- 8 | | |
| SE5004 | 174 | 2- 0 | 363 | 1 | 0- 8 | 1- 6 | | | | |
| SE5005 | 40 | 30- 0 | 1252 | ST | | | | | | |
| SE5006 | 10 | 30- 3 | 316 | ST | | | | | | |
| SE5007 | 32 | 15- 8 | 523 | ST | | | | | | 3 |
| SE5008 | 48 | 6- 2 | 309 | ST | | | | | | |
| SE5010 | 62 | 5-11 | 383 | 1 | | 2- 4 | 1- 6 | 2- 4 | | |
| SE5011 | 62 | 6-10 | 442 | 2 | | 2- 4 | 2- 0 | 1- 5 | 1- 6 | |
| SE5012 | 24 | 13- 5 | 336 | ST | | | | | | |
| SE5013 | 32 | 2-11 | 97 | ST | | | | | | |
| SE5014 | 4 | 1-10 | 8 | 15 | | | 0- 9 | 1- 0 | 0- 6 | |
| SE7002 | 167 | 30- 8 | 10468 | ST | | | | | | |
| | | | | SUPERSTRUCTURE | | | | | | |
| S 5015 | 124 | 30- 0 | 3880 | ST | | | | | | |
| S 5016 | 31 | 30- 3 | 978 | ST | | | | | | |
| S 5018 | 8 | 2- 2 | 18 | ST | | | | | | |
| S 7001 | 167 | 30- 8 | 10468 | ST | | | | | | |
| S 8001 | 11 | 35- 6 | 1043 | ST | | | | | | |
| S 8002 | 11 | 35- 6 | 1043 | ST | | | | | | |
| S 8003 | 38 | 4-10 | 490 | 15 | 1- 1 | 2- 6 | 1- 1 | | 1- 1 | |

| FED. RD. DIVISION | STATE | PROJECT | TYPE FUNDS |
|---|---|---|---|
| 5 | OHIO | | |

424
500

CUYAHOGA COUNTY

CUY-480-10.39

NOTES

1. INDICATES SERIES BAR. EACH BAR VARIES FROM ADJACENT BAR(S) BY TABULATED AMOUNT(S), CALCULATED TO NEAREST 1/8 INCH. WEIGHT SHOWN IS FOR ENTIRE SERIES UTILIZING AVERAGE LENGTH.

3. COST OF FIELD BENDING SHALL BE INCLUDED WITH ITEM 509.

REFER TO CMS SECTIONS 106.03, 700, 709.01 THROUGH 709.05 AND 709.08. SUFFICIENT ADDITIONAL REINFORCING STEEL SHALL BE PROVIDED FOR SAMPLING. RANDOM SAMPLES SHALL BE REPLACED IN THE STRUCTURES BY THE ADDITIONAL STEEL, SPLICED IN ACCORDANCE WITH 509.08.

BAR DIMENSIONS ARE OUT TO OUT.

A BAR MARK WITH THE PREFIX 'SE' INDICATES THAT REINFORCING STEEL SHALL BE EPOXY COATED.

BAR BENDING DIAGRAM TYPES

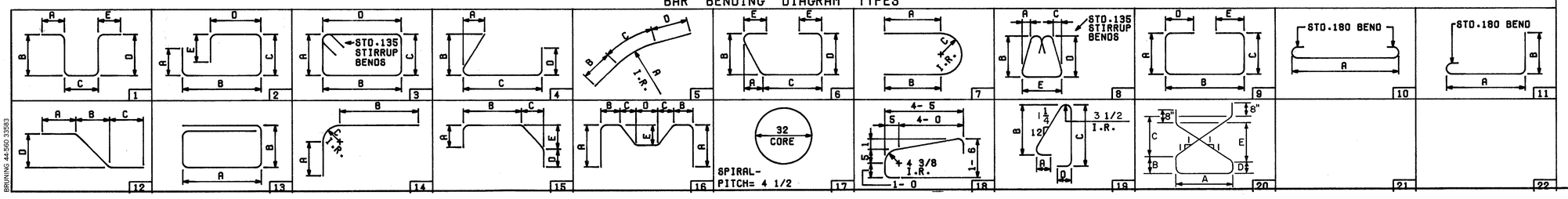


BRUNING 44-560 33583

9/9

ALDEN E. STILSON & ASSOCIATES, LIMITED
CONSULTING ENGINEERS
CLEVELAND, OHIO COLUMBUS, OHIO WHEELING, W. VA.

# REINFORCING STEEL LIST

BRIDGE NO. CUY-480-1168
RAMP T-4 OVER RELOCATED BIG CREEK
STA 642+06.53 TO
CUYAHOGA COUNTY STA 643+49.36

| DESIGNED | DRAWN | TRACED | CHECKED | REVIEWED | DATE | REVISED |
|---|---|---|---|---|---|---|
| | | | | G.W.M. | 1/27/83 | |

MICROFILMED
JAN 22 1991

| FED. RD. DIVISION. | STATE | PROJECT | TYPE FUNDS |
|---|---|---|---|
| 2 | OHIO | | |

425/500

CUYAHOGA COUNTY
CUY-480-10.39

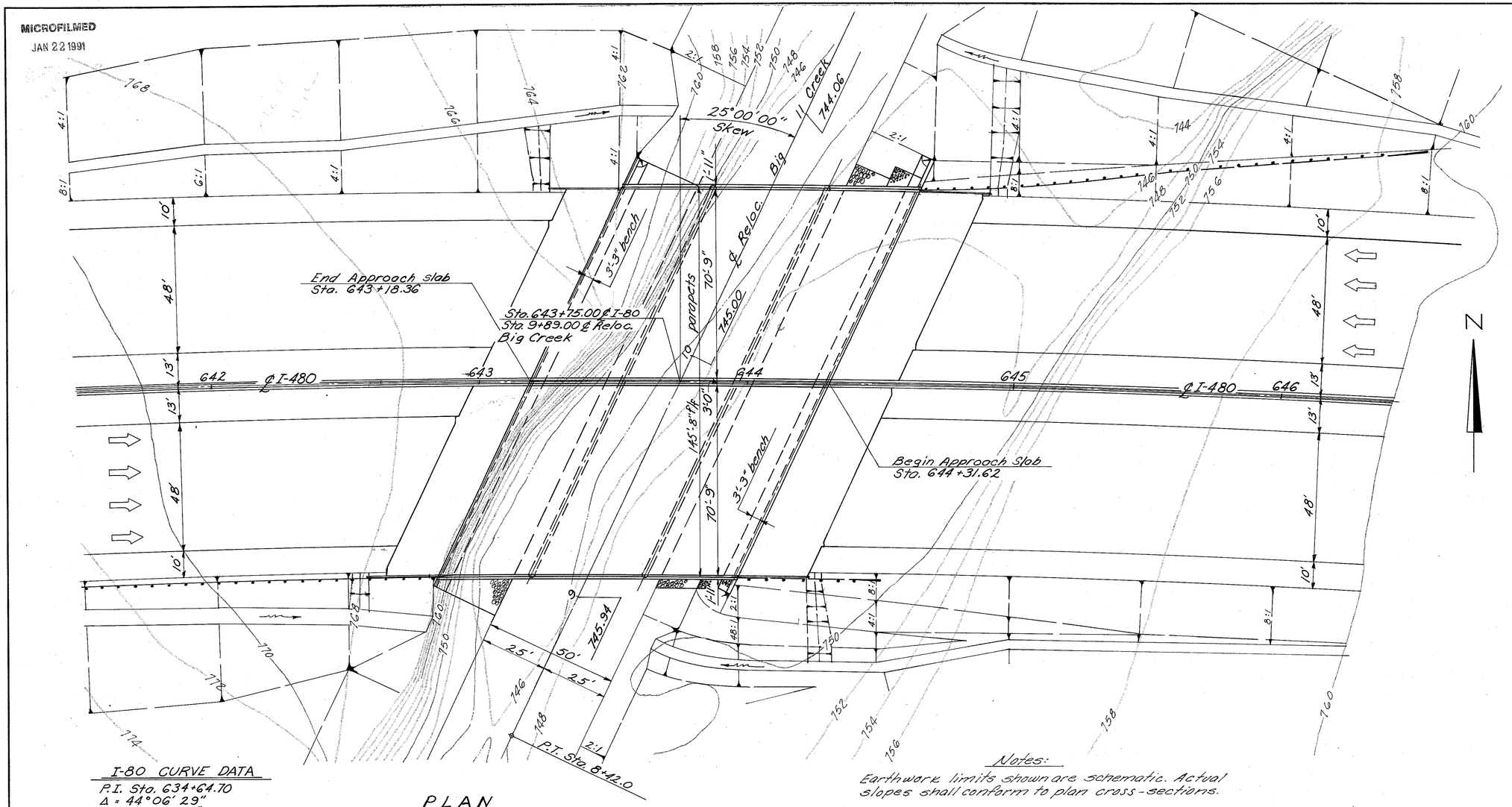


PLAN

I-80 CURVE DATA
P.I. Sta. 634+64.70
Δ = 44°06' 29"
$D_c$ = 1° 00' 00"
R = 5,729.58'
T = 2,321.19'
L = 4,410.86'
C = 4,302.69'

Notes:
Earthwork limits shown are schematic. Actual slopes shall conform to plan cross-sections.

For limits of Type "B" Dumped Rock Fill see Channel Relocation plan and sections.

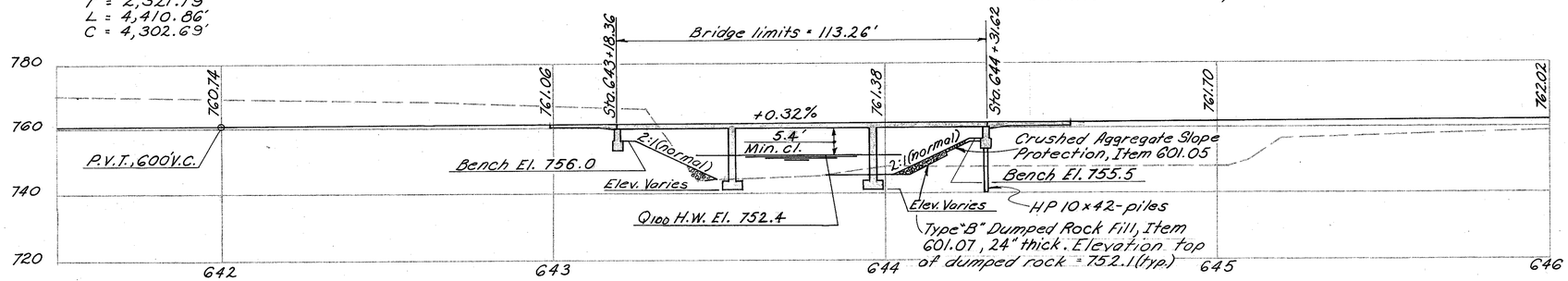


PROFILE ALONG ℄ I-480

Note: Piling Estimated Average Pay Length East Abutment - 12'-0"

EXISTING STRUCTURE DATA

LOCATION: Approx. 1500' downstream - Biddulph Road over Big Creek
TYPE: Concrete arch - earth fill
SPAN: 50'-0"
RISE: 20'-0"
ROADWAY: 26'-0"
SKEW: 0° 00'
CONDITION:
DATE BUILT: 1945

LOCATION: Approx. 600' upstream - Golf course drive over Big Creek
TYPE: Steel truss
SPAN: 45'-0" (±)
ROADWAY: 17' (±)
SKEW: 0° 00'

PROPOSED STRUCTURE

TYPE: Continuous reinforced concrete slab with reinforced concrete substructure.
SPANS: 34'-0", 42'-6", 34'-0" on ℄
ROADWAY: 145'-8" o/o parapets, BR-1 railing, conc. barrier median.
LOADING: HS 20-44 and the Interstate Alternate Loading.
WEARING SURFACE: 1¼" Latex mod. conc.
SKEW: 25°-00'-00" Lt. Forward with reference chord.
ALIGNMENT: 1°-00'-00" curve rt.
APPROACH SLABS: AS-1-81 20' lg. rear, 25' lg. forward.
SUPERELEVATION: 0.024 ft/ft.

TRAFFIC ESTIMATE

Design Year - 2000
Total A.D.T. - 90,792

HYDROLOGICAL DATA

Drainage Area = 14.1 sq. Mi.
$Q_{100}$ = 5496 c.f.s.
$V_{100}$ = 13.7 ft./sec.

1/15

ALDEN E. STILSON & ASSOCIATES, LIMITED
CONSULTING ENGINEERS
COLUMBUS, OHIO

# SITE PLAN

BRIDGE No. CUY-480-1169
I-480 OVER RELOCATED BIG CREEK
CUYAHOGA COUNTY
STA. 643+18.36
STA. 644+31.62
SCALE: 1"=20'

| DESIGNED | DRAWN | TRACED | CHECKED | REVIEWED | DATE | REVISED |
|---|---|---|---|---|---|---|
| G.W.M. | G.W.M. | D.L. | B.I.P. | G.W.M. | 12/21/71 | |

MICROFILMED
JAN 22 1991

| FHWA REGION | STATE | PROJECT | |
|---|---|---|---|
| 5 | OHIO | | |

426
500

CUYAHOGA COUNTY
CUY-480-10.39

STANDARD DRAWING REFERENCES

| DESCRIPTION | DWG. NO. | SHT. | DATE |
|---|---|---|---|
| BRIDGE ROADWAY RAILING | BR-1 | | 5-29-79 |
| APPROACH SLABS | AS-1-81 | 1-3 | 11-27-81 |

SUPPLEMENTAL SPECIFICATION REFERENCES

| DESCRIPTION | NO. | DATE |
|---|---|---|
| CONCRETE CURING AND PROTECTIVE MEMBRANE | 836 | 3-12-75 |
| BRIDGE DECK REPAIR AND OVERLAY WITH LATEX MODIFIED CONCRETE | 845 | 3-2-81 |
| EPOXY COATED REINFORCING STEEL | 824 | 10-8-82 |

DESIGN SPECIFICATIONS

THIS STRUCTURE CONFORMS TO THE "STANDARD SPECIFICATIONS FOR HIGHWAY BRIDGES" ADOPTED BY THE AMERICAN ASSOCIATION OF STATE HIGHWAY OFFICIALS, 1969, INCLUDING THE OHIO 'SUPPLEMENT' TO THESE SPECIFICATIONS.

DESIGN DATA

DESIGN LOADING - HS20-44
CONCRETE CLASS S - UNIT STRESS 1500 P.S.I. (SUPERSTRUCTURE).
CONCRETE CLASS C - UNIT STRESS 1333 P.S.I. (SUBSTRUCTURE).
STRUCTURAL STEEL ASTM A36 - UNIT STRESS 20,000 P.S.I.
REINFORCING STEEL ASTM A615, A616 OR A617.
GRADE 40 - UNIT STRESS 20,000 P.S.I.
DECK PROTECTION METHOD
EPOXY COATED REINFORCING STEEL, TOP MAT ONLY.
LATEX MODIFIED CONCRETE OVERLAY.

EMBANKMENT CONSTRUCTION

THE CHANNEL OPENING IN THE VICINITY OF THE STRUCTURE AND THE EMBANKMENT AT THE EAST ABUTMENT TO THE LEVEL OF THE SUBGRADE FOR A MINIMUM DISTANCE OF 200 FEET BACK OF THE ABUTMENT SHALL BE CONSTRUCTED PRIOR TO EXCAVATING FOR ABUTMENTS AND PIERS.

EAST ABUTMENT EXCAVATION QUANTITY

ABUTMENT EXCAVATION QUANTITY, IN ADDITION TO 503.11, INCLUDES THE REMOVAL OF EMBANKMENT ABOVE THE BENCH.

WEST ABUTMENT EXCAVATION QUANTITY

ABUTMENT EXCAVATION QUANTITY, IN ADDITION TO 503.11, INCLUDES THE REMOVAL OF MATERIAL BOUNDED BY THE PROPOSED BENCH, BY THE FRONT VERTICAL PLANE DESCRIBED IN 503.11 AND BY THE FINISHED SLOPE OF THE CUT.

REINFORCING BAR LAPPED SPLICES

ALL SPLICES SHALL BE LAPPED 30 BAR DIAMETERS.

ATTACHMENT OF GUARDRAIL TO CONCRETE PARAPETS

CONCRETE INSERT ANCHOR ASSEMBLIES PER STANDARD CONSTRUCTION DRAWINGS GR-1 AND GR-3 SHALL BE PLACED DURING PARAPET CONSTRUCTION.

FOUNDATION BEARING PRESSURE

WEST ABUTMENT AND PIER FOOTINGS ARE DESIGNED FOR A MAXIMUM BEARING PRESSURE OF 6 TONS PER SQ. FT.

FOOTINGS

WEST ABUTMENT FOOTINGS SHALL BE PLACED IN BEDROCK AT THE ELEVATION SHOWN.

PIER FOOTINGS SHALL EXTEND A MINIMUM OF 3 INCHES INTO BEDROCK OR TO THE ELEVATION SHOWN, WHICHEVER IS LOWER.

OPEN EXCAVATIONS FOR WEST ABUTMENT AND PIER FOOTINGS SHALL BE WELL DRAINED AT ALL TIMES AND THEY SHALL NOT BE SUBJECTED TO PROLONGED ATMOSPHERIC EXPOSURE.

PILES

PILES SHALL BE DRIVEN TO REFUSAL ON BEDROCK. REFUSAL SHALL BE CONSIDERED AS OBTAINED BY PENETRATING SOFT BEDROCK FOR SEVERAL INCHES WITH A MINIMUM RESISTANCE OF 20 BLOWS PER INCH OR REFUSAL SHALL BE CONSIDERED AS OBTAINED AFTER THE PILE HAS CONTACTED HARD BEDROCK AND THE PILE HAS THEN RECEIVED AT LEAST 20 BLOWS. THE DESIGN LOAD IS 35 TONS PER PILE FOR THE ABUTMENT PILES.

| ITEM | TOTAL | UNIT | DESCRIPTION | ABUTS | PIERS | SUPER | GENERAL | | | |
|---|---|---|---|---|---|---|---|---|---|---|
| 503 | 249 | C.Y. | UNCLASSIFIED EXCAVATION | 187 | 62 | | | | | |
| 503 | 220 | C.Y. | ROCK EXCAVATION | 109 | 111 | | | | | |
| 505 | LUMP | | PILE DRIVING EQUIPMENT MOBILIZATION | | | | LUMP | | | |
| 503 | LUMP | | COFFERDAMS, CRIBS, AND SHEETING | | | | LUMP | | | |
| 507 | 290 | L.F. | STEEL PILES, HP10X42 | 290 | | | | | | |
| 509 | 179795 | LB | REINFORCING STEEL | 20301 | 28136 | 131358 | | | | |
| 511 | 1069 | C.Y. | CLASS S CONCRETE, SUPERSTRUCTURE (SEE PROPOSAL NOTE) | | | 1069 | | | | |
| 511 | 91 | C.Y. | CLASS C CONCRETE, ABUTMENTS ABOVE FOOTINGS | 91 | | | | | | |
| 511 | 249 | C.Y. | CLASS C CONCRETE, FOOTINGS | 128 | 121 | | | | | |
| 511 | 267 | C.Y. | CLASS C CONCRETE, PIER WALLS | | 267 | | | | | |
| 516 | 10 | L.F. | PREFORMED ELASTOMERIC JOINT SEALER, 705.11 | | | 10 | | | | |
| 516 | 8 | S.F. | 1/2 INCH PREFORMED EXPANSION JOINT FILLER | 8 | | | | | | |
| 516 | 60 | S.F. | 1 INCH PREFORMED EXPANSION JOINT FILLER | 14 | 46 | | | | | |
| 516 | 22 | L.F. | PVC WATERSTOP, AS PER PLAN | 22 | | | | | | |
| 518 | 80 | C.Y. | POROUS BACKFILL | 80 | | | | | | |
| 518 | 178 | L.F. | 6 INCH PERFORATED, HELICAL CSP, 707.01 | 178 | | | | | | |
| 518 | 17 | L.F. | 6 INCH NON-PERFORATED, HELICAL CSP, INCLUDING SPECIALS, 707.01 | 17 | | | | | | |
| 601 | 199 | S.Y. | CRUSHED AGGREGATE SLOPE PROTECTION | | | | 199 | | | |
| 845 | 1779 | S.Y. | LATEX MODIFIED CONCRETE OVERLAY OF NEW CONCRETE BRIDGE DECKS (SEE PROPOSAL NOTE) | | | 1779 | | | | |
| 824 | 106913 | LB | EPOXY COATED REINFORCING STEEL | | | 106913 | | | | |



ALDEN E. STILSON & ASSOCIATES
CONSULTING ENGINEERING AND ARCHITECTURE
COLUMBUS, CLEVELAND, WHEELING

# GENERAL NOTES AND ESTIMATED QUANTITIES

BRIDGE NO. CUY-480-1169
I-480 OVER RELOCATED BIG CREEK
CUYAHOGA COUNTY STA. 643+18.36 TO STA. 644+31.62

| DESIGNED | DRAWN | TRACED | CHECKED | REVIEWED | DATE | REVISED |
|---|---|---|---|---|---|---|
| R.S.S. | | | R. TSTH 11/16/71 | G.W.M. | 1/27/83 | |

810018

MICROFILMED
JAN 22 1971

| FED. RD. DIVISION | STATE | PROJECT | TYPE FUNDS |
|---|---|---|---|
| 2 | OHIO | | |

427/500

CUYAHOGA COUNTY
CUY-480-10.39

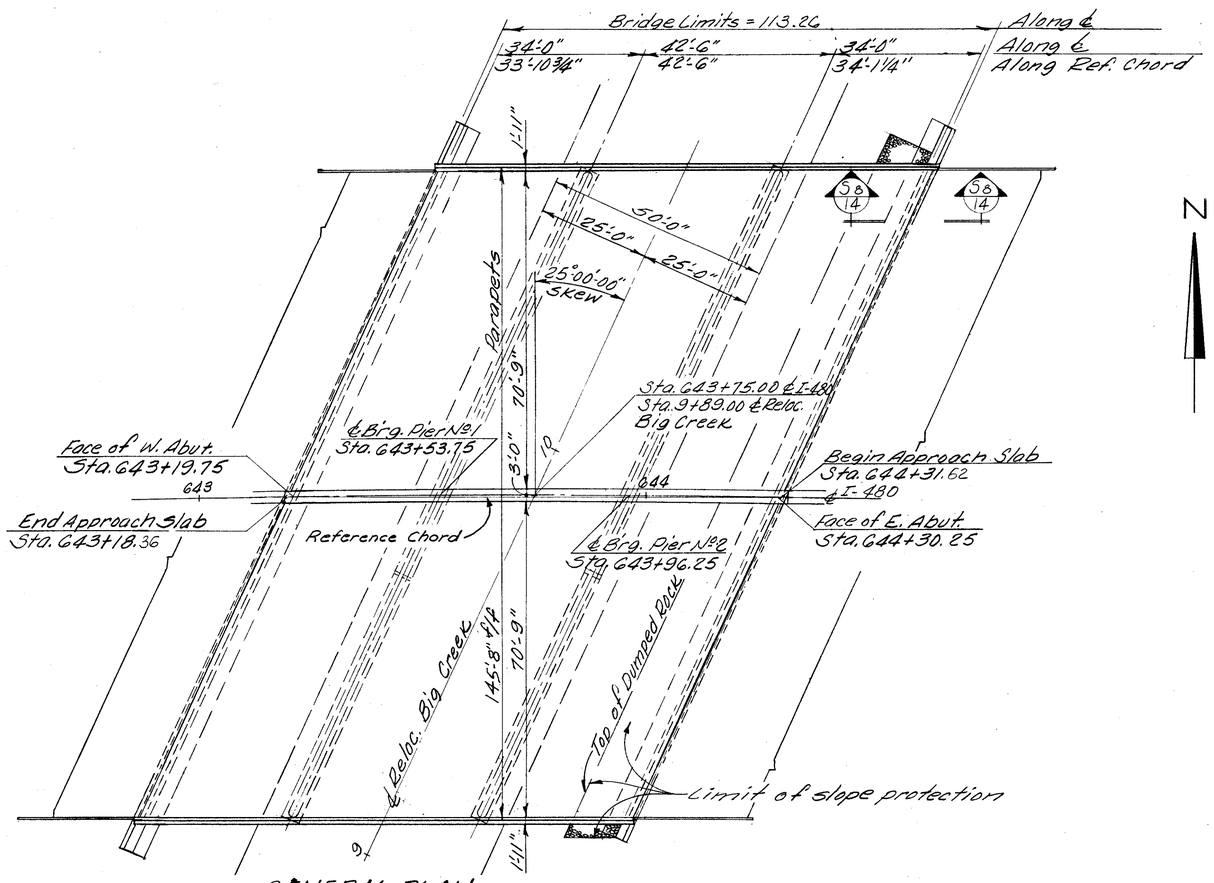


GENERAL PLAN

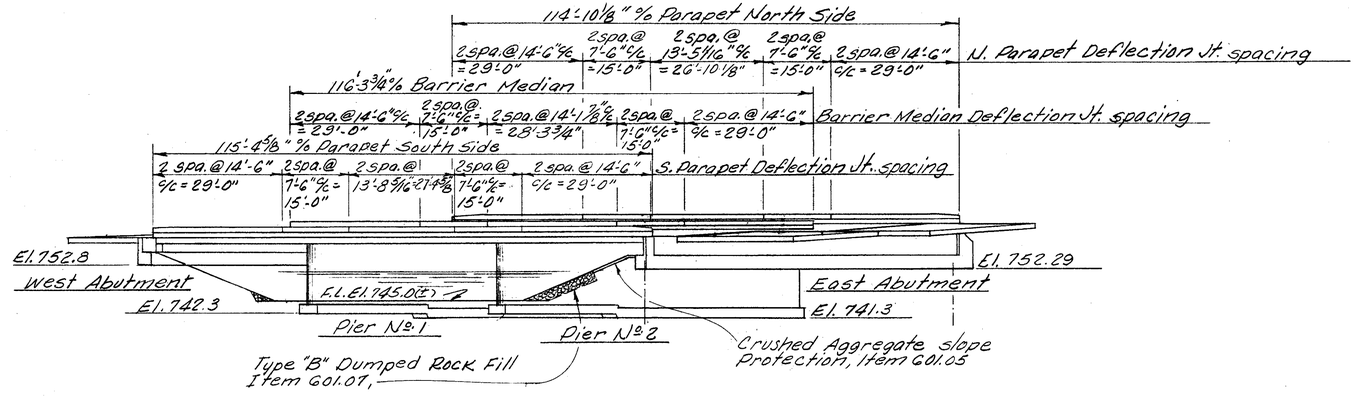


ELEVATION

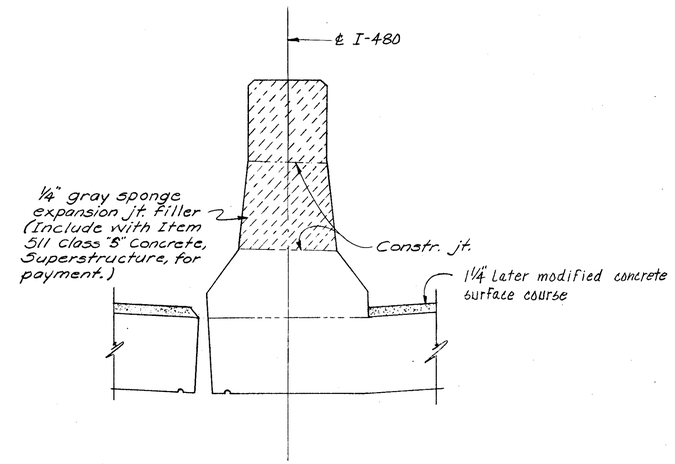


SECTION THRU MEDIAN DEFLECTION JOINT

Note :
Material for median deflection joint filler shall be the same as that for the parapet deflection joints. For details of parapet deflection joints see Std. Dwg. BR-1.

The Reference Chord is a straight line connecting stations of intersection of ℄ I-480 and face of abutment.

3/15

ALDEN E. STILSON & ASSOCIATES, LIMITED
CONSULTING ENGINEERS
CLEVELAND, OHIO COLUMBUS, OHIO WHEELING, W. VA.

# GENERAL PLAN

BRIDGE No. CUY-480-1169
I-480 OVER RELOCATED BIG CREEK
CUYAHOGA COUNTY STA. 643+18.36 STA. 644+31.62

| DESIGNED | DRAWN | TRACED | CHECKED | REVIEWED | DATE | REVISED |
|---|---|---|---|---|---|---|
| R.S.S. | R.T. | | B.I.P. | G.W.M. | 12/6/71 | |

MICROFILMED
JAN 22 1991

| FED. RD. DIVISION | STATE | PROJECT | TYPE FUNDS |
|---|---|---|---|
| 2 | OHIO | | |

428/500

CUYAHOGA COUNTY
CUY-480-10.39

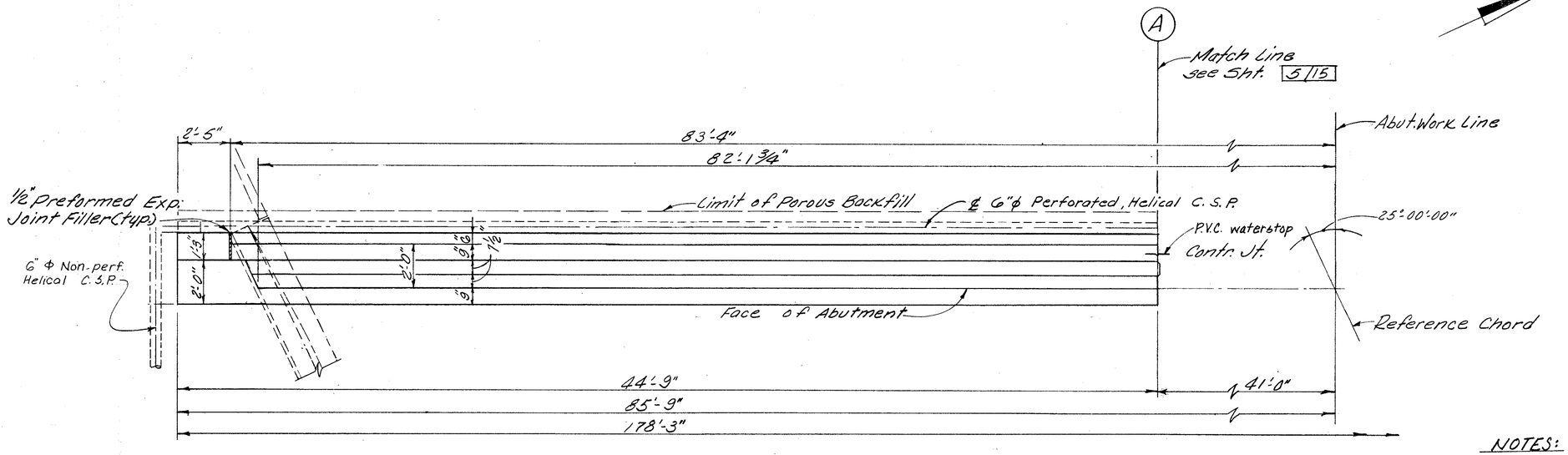


PLAN

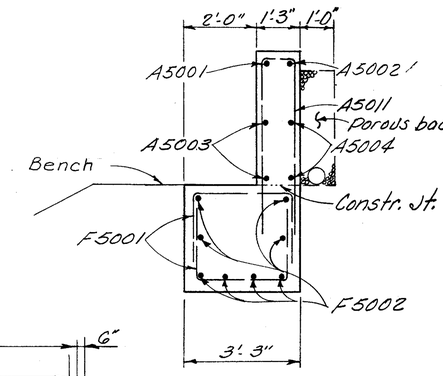


SECTION A4-A4

NOTES:
only that portion of C.S.P. located in porous backfill shall be perforated. The 6"ϕ Non-perforated C.S.P. shall be extended out into the slopes, as shown and terminated near the surface as shown by detail on Sht. 4/16

Porous backfill 1'-6" thick full length of abutment, 1'-0" thick full length of wingwall, shall extend upward to the plane of the subgrade and laterally to the ends of the wingwalls. (west abutment only)

For contraction joint & expansion joint details see Sht. 5/15

In reinforcing bar callouts:
N.S. indicates near side.
F.S. indicates far side.

Footing reinforcement shall have a minimum of 3" cover.

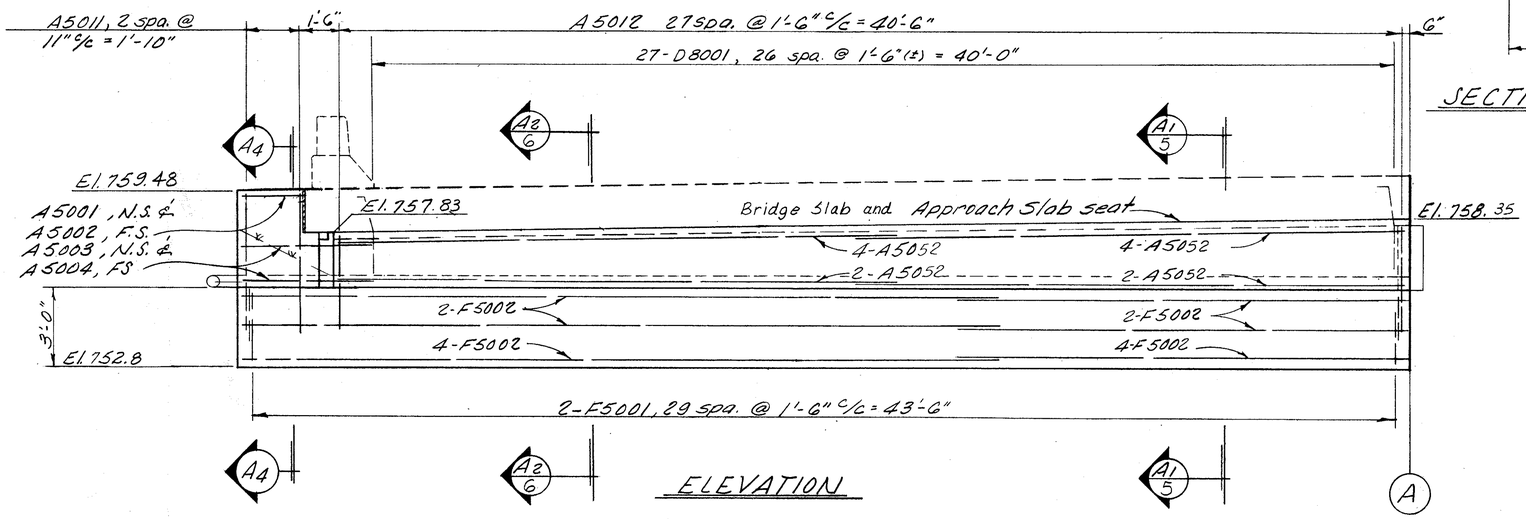


ELEVATION

4/15

ALDEN E. STILSON & ASSOCIATES, LIMITED
CONSULTING ENGINEERS
CLEVELAND, OHIO COLUMBUS, OHIO WHEELING, W. VA.

# WEST ABUTMENT DETAILS

BRIDGE Nº CUY-480-1169
I-480 OVER RELOCATED BIG CREEK
CUYAHOGA COUNTY
STA. 643+18.36
STA. 644+31.62

| DESIGNED | DRAWN | TRACED | CHECKED | REVIEWED | DATE | REVISED |
|---|---|---|---|---|---|---|
| R.S.S. | R.T. | | B.I.P. | G.W.M. | 12/8/11 | |

MICROFILMED
JAN 22 1931

| FED. RD. DIVISION | STATE | PROJECT | TYPE FUNDS |
|---|---|---|---|
| 2 | OHIO | | |

429
500

CUYAHOGA COUNTY
CUY-480-10.39

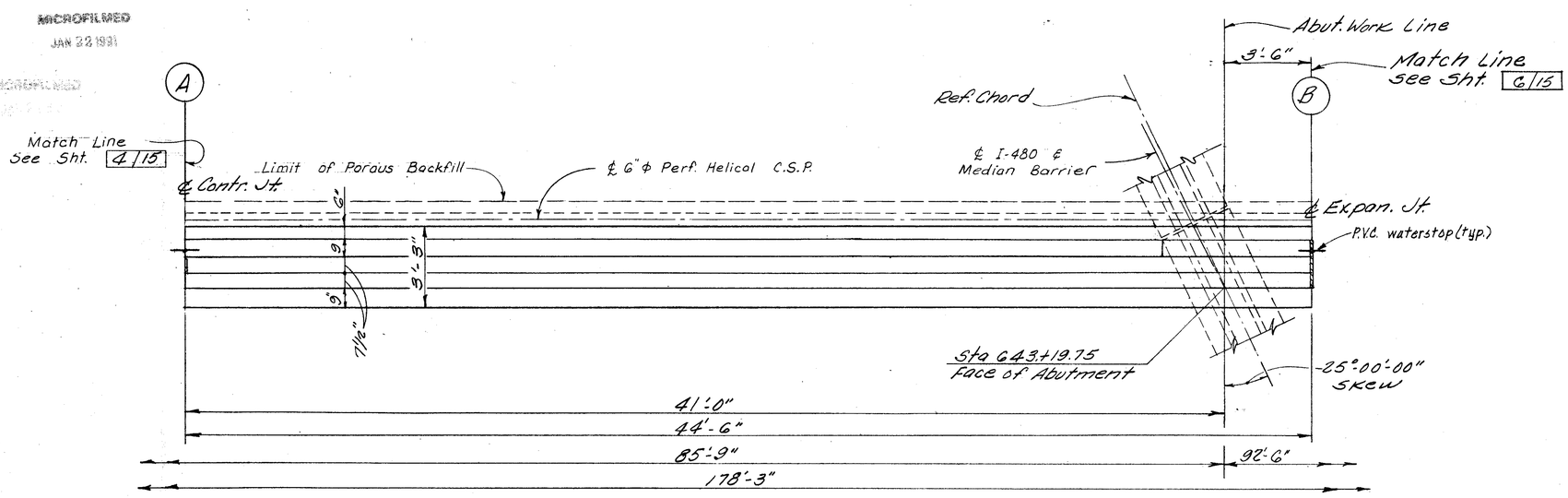


PLAN

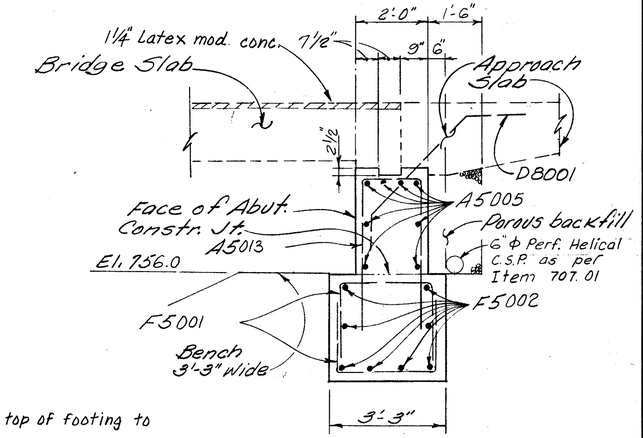


SECTION A1-A1

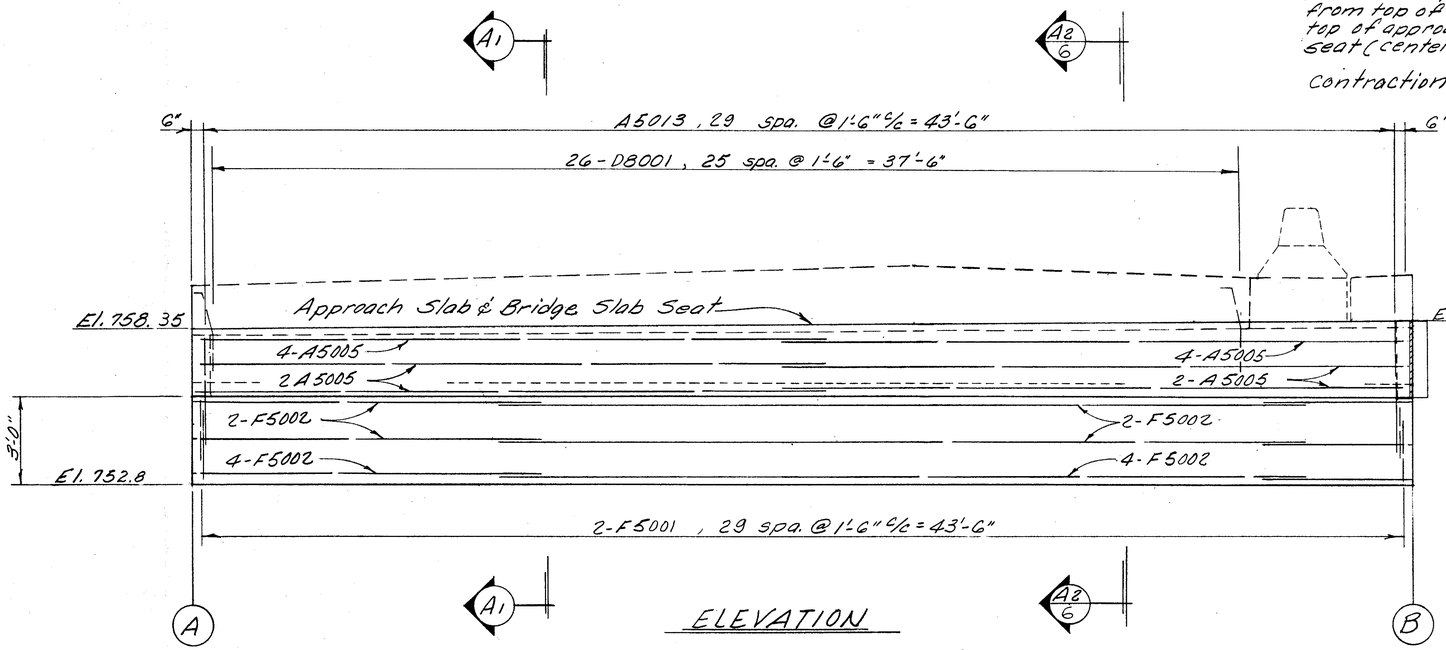


ELEVATION

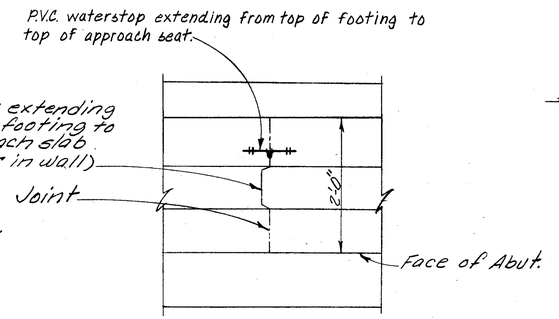


ABUTMENT CONTRACTION JOINT DETAIL

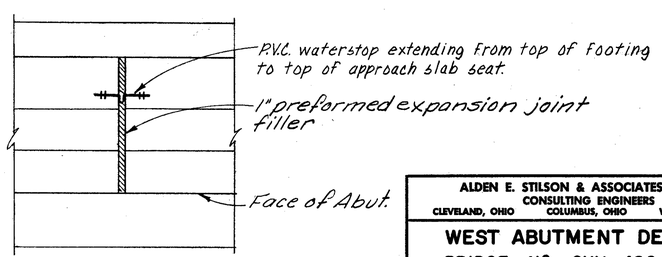


ABUTMENT EXPANSION JOINT DETAIL

Note: For details of P.V.C. Waterstop see Common Detail Sheet 476

5/15

ALDEN E. STILSON & ASSOCIATES, LIMITED
CONSULTING ENGINEERS
CLEVELAND, OHIO COLUMBUS, OHIO WHEELING, W. VA.

# WEST ABUTMENT DETAILS

BRIDGE No. CUY-480-1169
I-480 OVER RELOCATED BIG CREEK
CUYAHOGA COUNTY STA. 643+18.36
STA. 644+31.62

| DESIGNED | DRAWN | TRACED | CHECKED | REVIEWED | DATE | REVISED |
|---|---|---|---|---|---|---|
| R.S.S. | R.T. | | B.I.P. | G.W.M. | 12/3/71 | |

RECEIVED
MICROFILMED
JAN 22 1971

| FED. RD. DIVISION | STATE | PROJECT | TYPE FUNDS |
|---|---|---|---|
| 2 | OHIO | | |

430/500

CUYAHOGA COUNTY
CUY-480-10.39

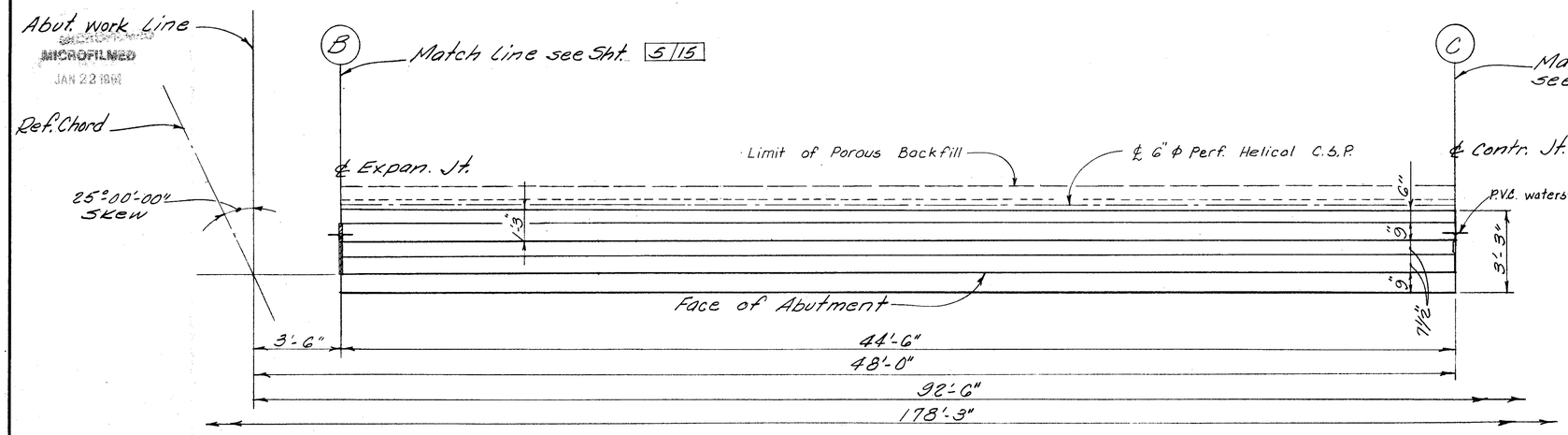


PLAN

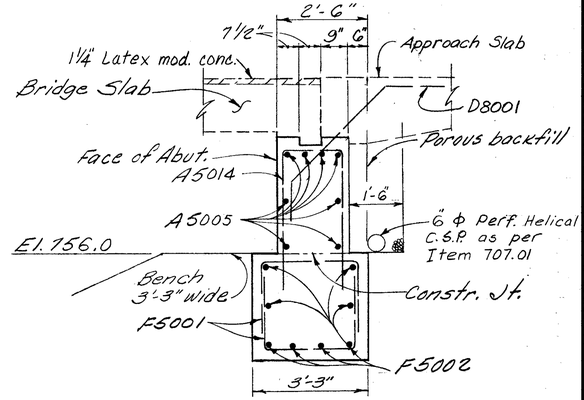


SECTION A2-A2

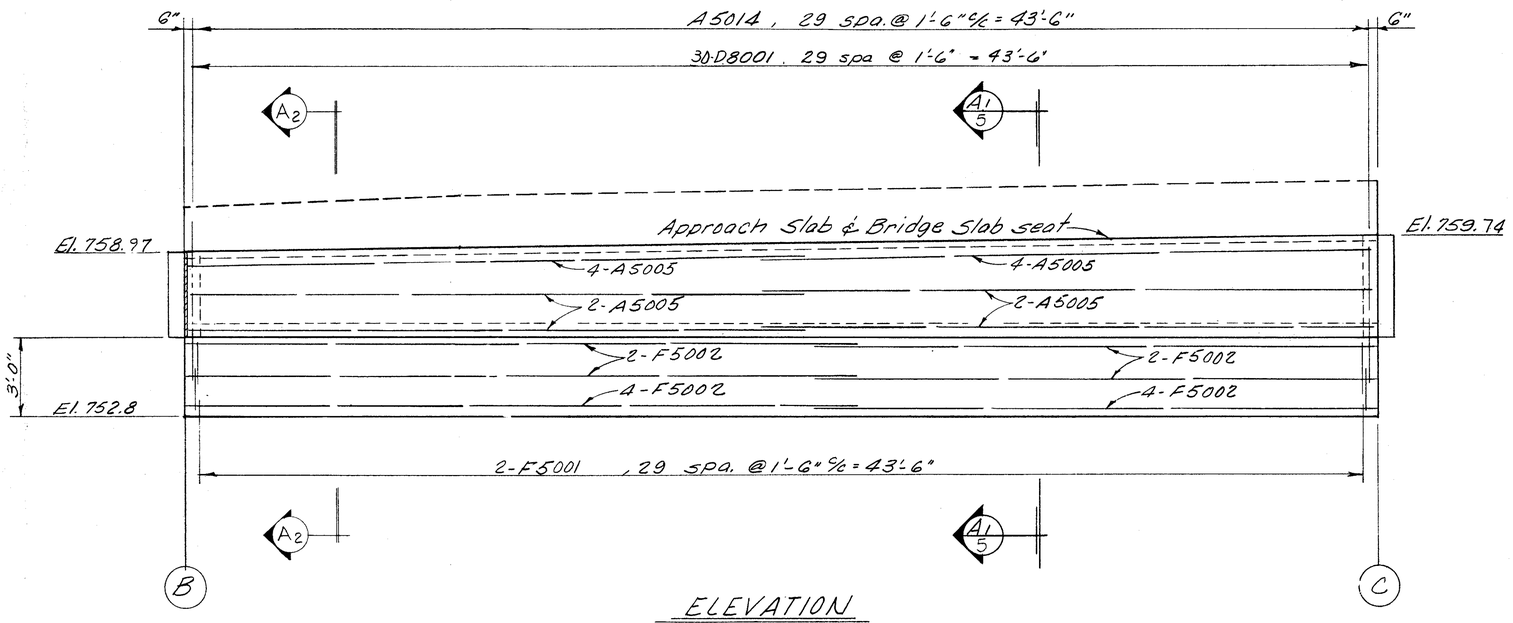


ELEVATION

6/15

ALDEN E. STILSON & ASSOCIATES, LIMITED
CONSULTING ENGINEERS
CLEVELAND, OHIO COLUMBUS, OHIO WHEELING, W. VA.

# WEST ABUTMENT DETAILS

BRIDGE No. CUY-480-1169
I-480 OVER RELOCATED BIG CREEK
CUYAHOGA COUNTY STA. 643+18.36
STA. 644+31.62

| DESIGNED | DRAWN | TRACED | CHECKED | REVIEWED | DATE | REVISED |
|---|---|---|---|---|---|---|
| R.S.S. | R.T. | | B.I.P. | G.W.M. | 12/6/71 | |

MICROFILMED

| FED. RD. DIVISION | STATE | PROJECT | TYPE FUNDS |
|---|---|---|---|
| 2 | OHIO | | |

431/500

CUYAHOGA COUNTY
CUY-480-10.39

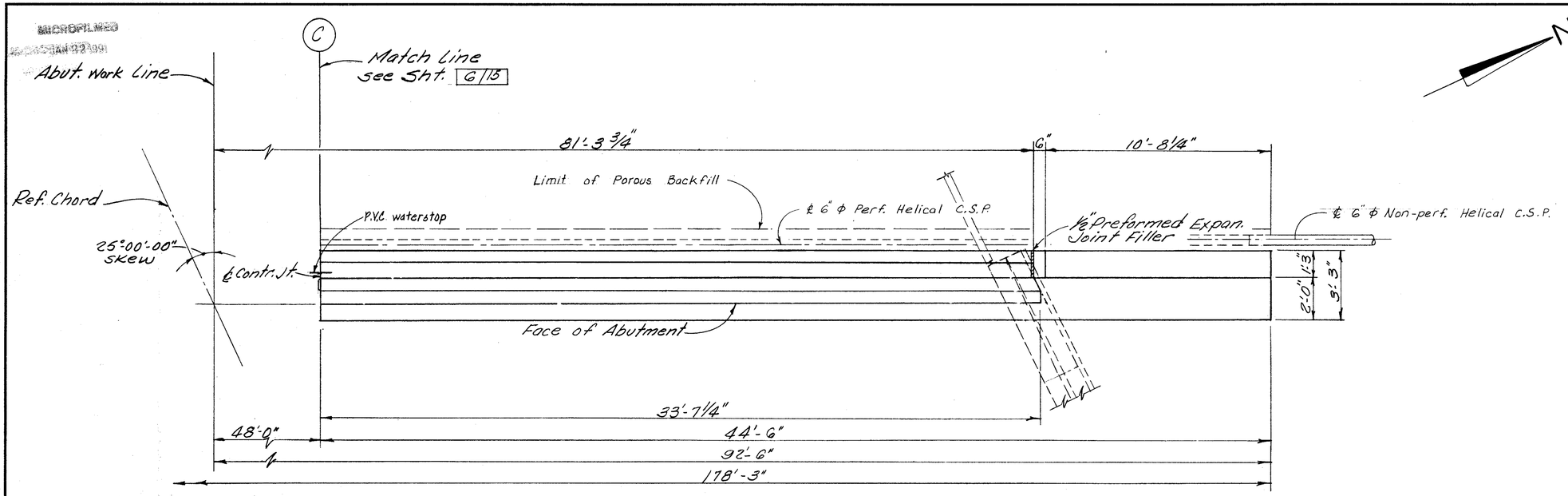


PLAN

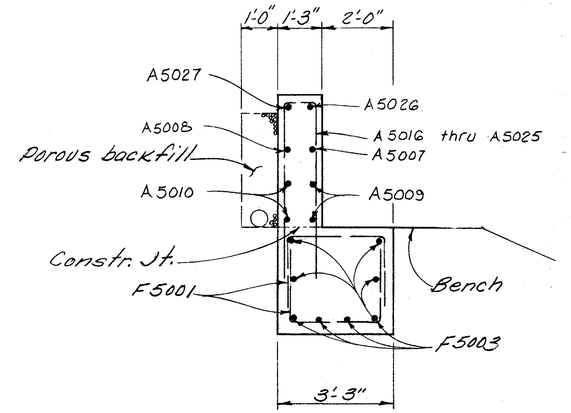


SECTION A3-A3

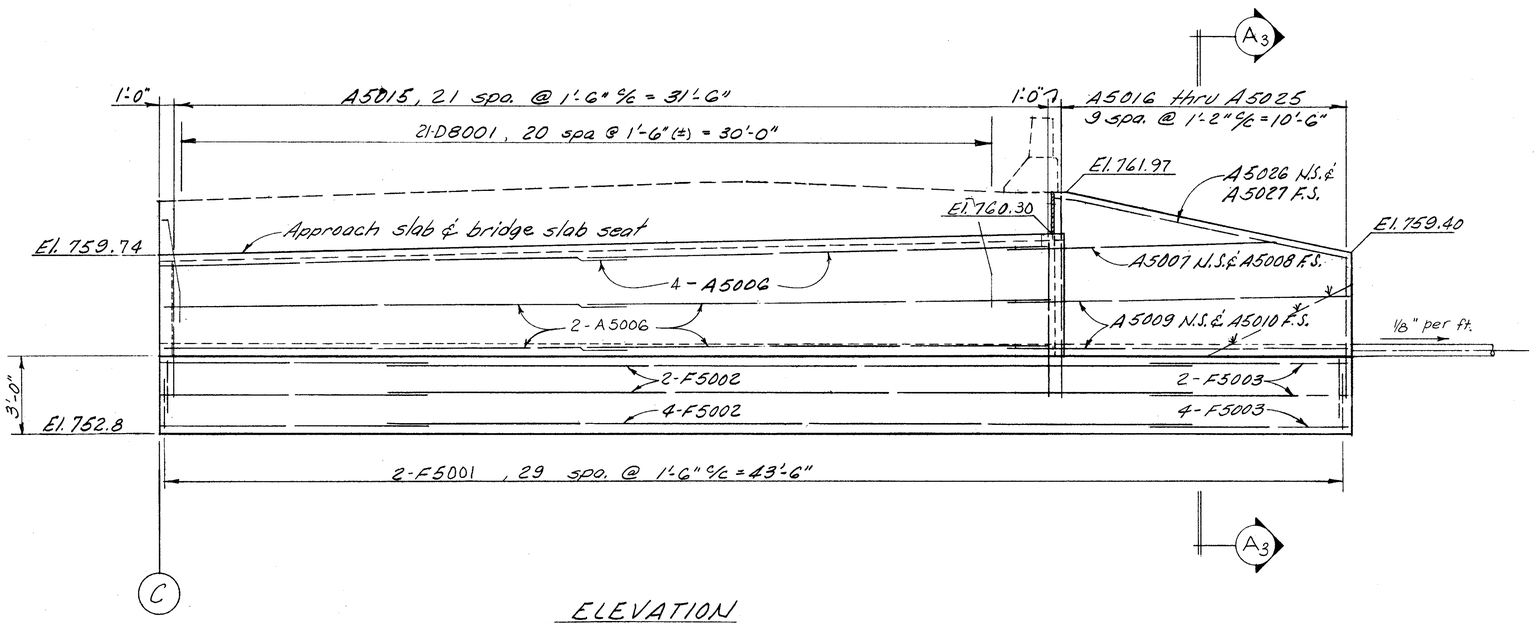


ELEVATION

In reinforcing bar callouts:
N.S. indicates near side.
F.S. indicates far side.

7/15

ALDEN E. STILSON & ASSOCIATES, LIMITED
CONSULTING ENGINEERS
CLEVELAND, OHIO · COLUMBUS, OHIO · WHEELING, W. VA.

# WEST ABUTMENT DETAILS

BRIDGE NO. CUY-480-1169
I-480 OVER RELOCATED BIG CREEK
CUYAHOGA COUNTY
STA. 643+18.36
STA. 644+31.62

| DESIGNED | DRAWN | TRACED | CHECKED | REVIEWED | DATE | REVISED |
|---|---|---|---|---|---|---|
| R.S.S. | R.T. | | B.I.P. | G.W.M. | 12/6/71 | |

MICROFILMED
JAN 22 1991

| FED. RD. DIVISION | STATE | PROJECT | TYPE FUNDS |
|---|---|---|---|
| 2 | OHIO | | |

432/500

CUYAHOGA COUNTY
CUY-480-10.39

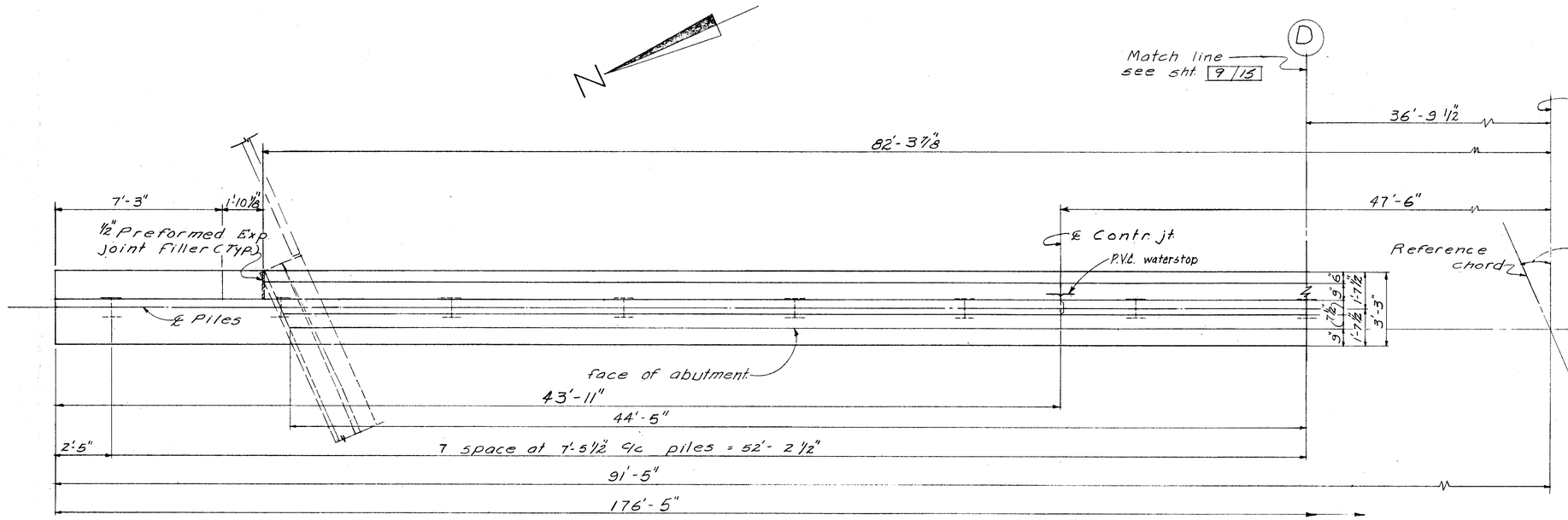


PLAN

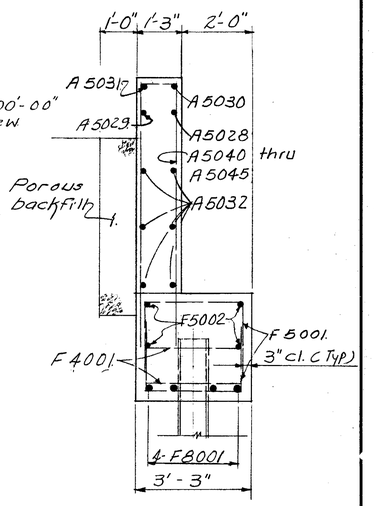


SECTION - A5 A5

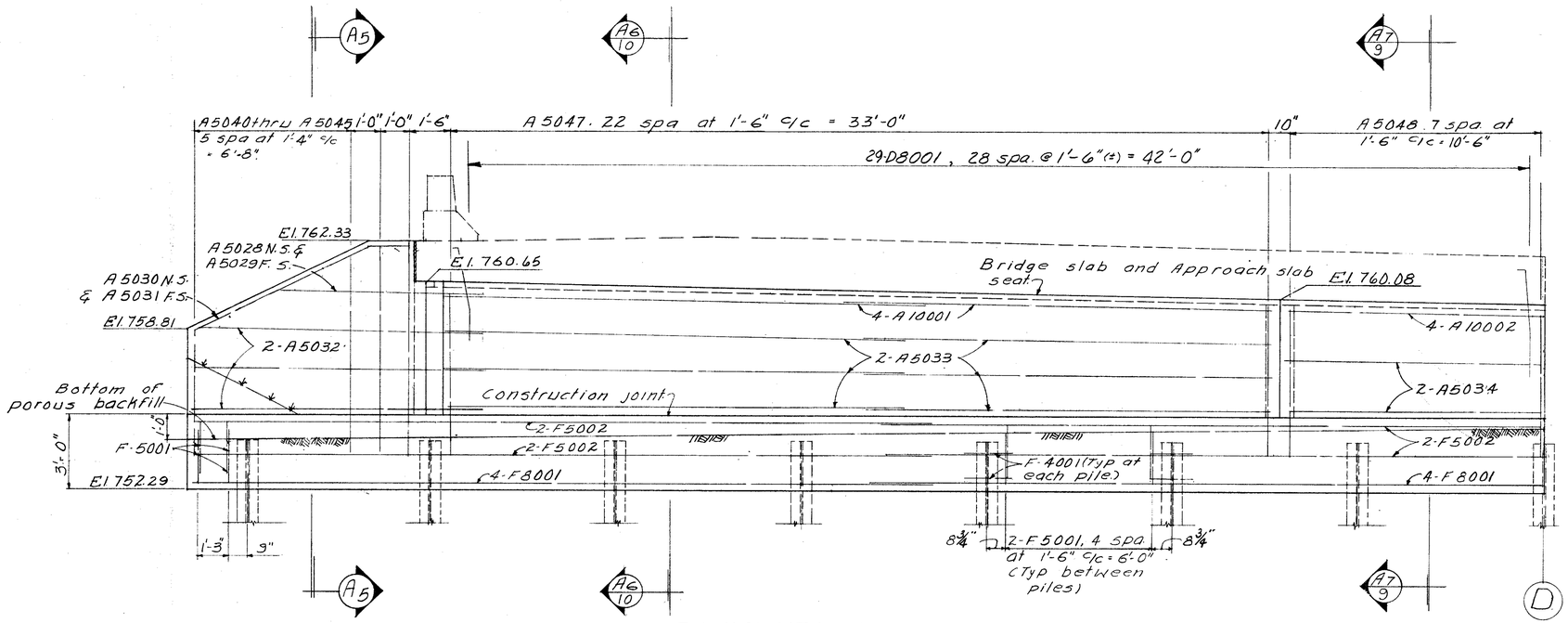


ELEVATION

Notes
Porous backfill shall extend upward to the plane of the subgrade and laterally to the surface of the embankment slopes.
All piles are HP 10x42 piles.
In reinforcing bar callouts
N.S. indicates near side.
F.S. indicates far side.
For additional notes see sht 4/15

For details of expansion and contraction joints see sht. 5/15

8/15

ALDEN E. STILSON & ASSOCIATES, LIMITED
CONSULTING ENGINEERS
CLEVELAND, OHIO COLUMBUS, OHIO WHEELING, W. VA.

# EAST ABUTMENT DETAILS
## BRIDGE NO. CUY-480-1169
## I-480 OVER RELOCATED BIG CREEK
CUYAHOGA COUNTY STA. 643+18.36
STA. 644+31.62

| DESIGNED | DRAWN | TRACED | CHECKED | REVIEWED | DATE | REVISED |
|---|---|---|---|---|---|---|
| R.S.S. | R.S.S. | | B.I.P. | G.W.M. | 12/6/71 | |

MICROFILMED
JAN 22 1971

| FED. RD. DIVISION | STATE | PROJECT | TYPE FUNDS |
|---|---|---|---|
| 2 | OHIO | | |

433
500

CUYAHOGA COUNTY
CUY-480-10.39

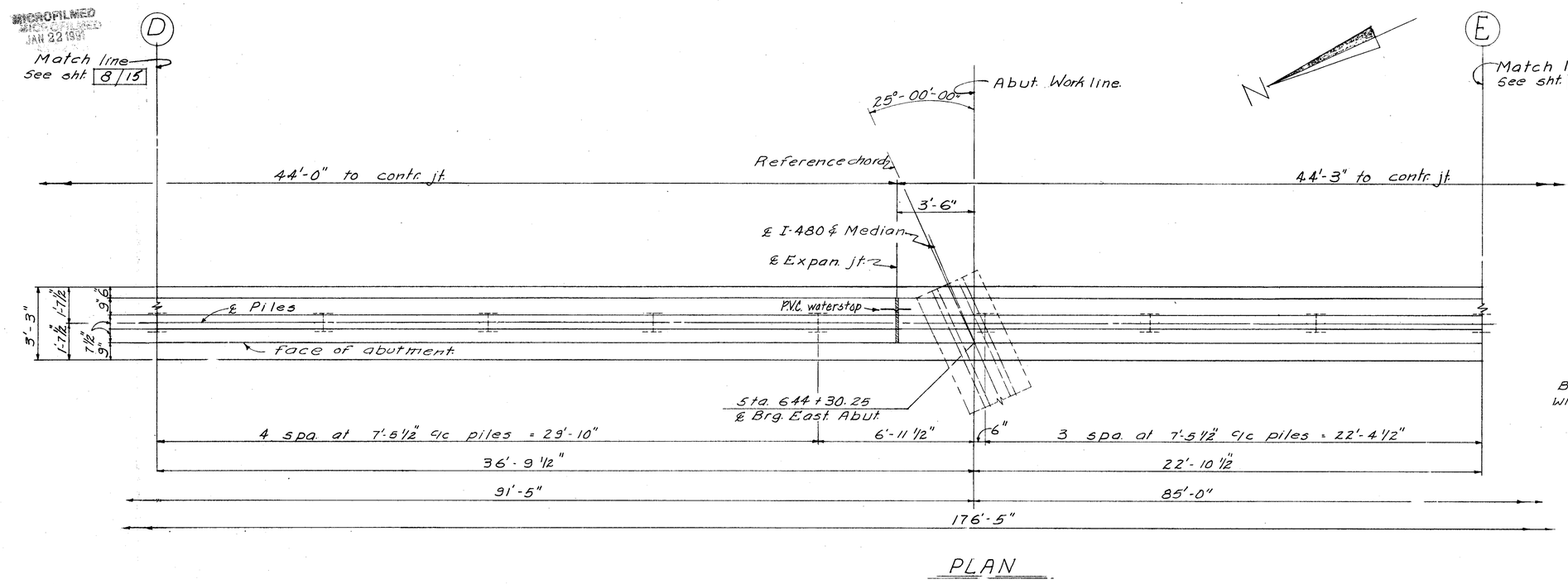


PLAN

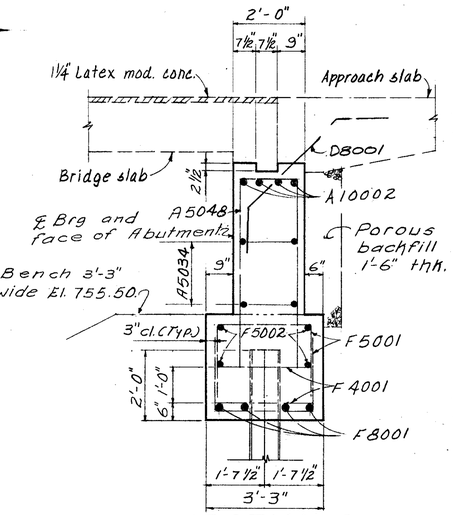


SECTION A8-A8

(Sec A8-A8 as shown, Sec A7-A7 and sec A10-A10 similar)

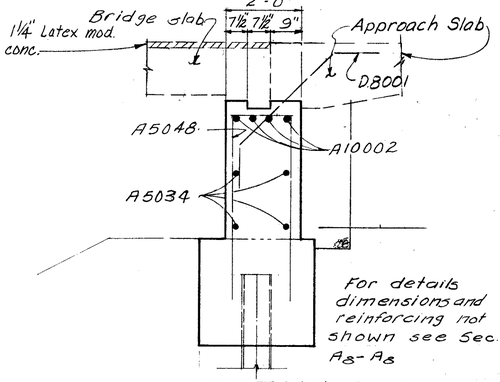


SECTION A9-A9

(Sec A9-A9 as shown, Sec A6-A6 and Sec. A11-A11 similar)

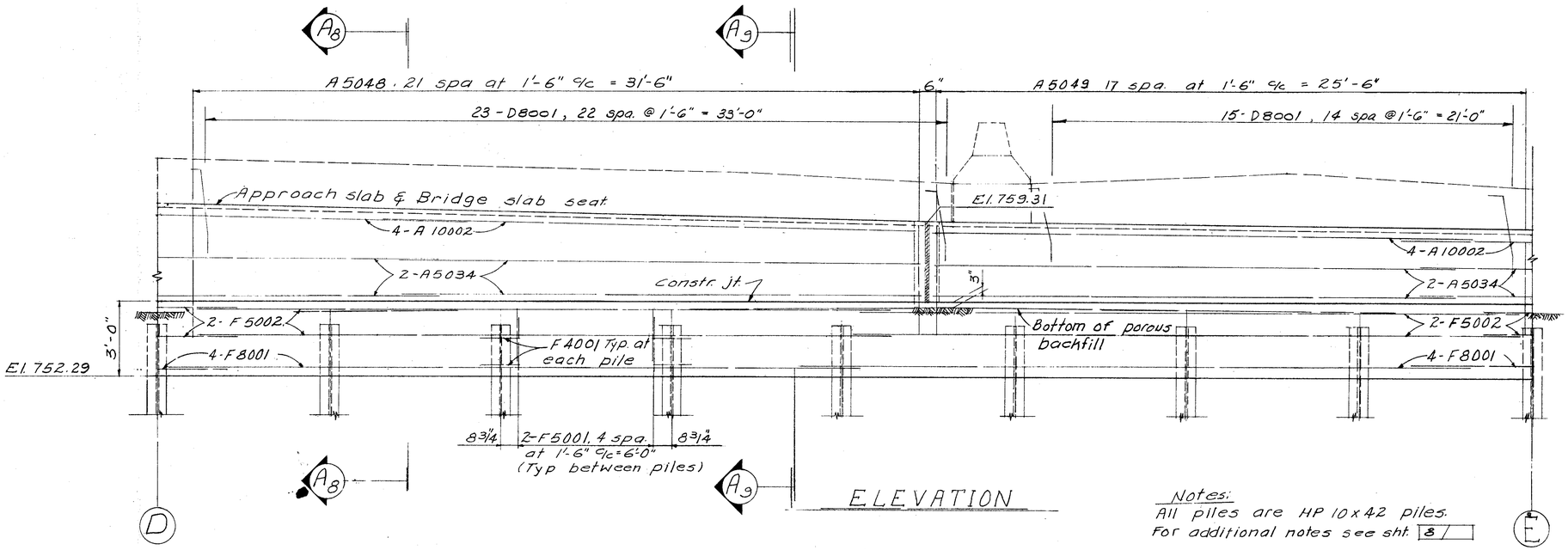


ELEVATION

Notes:
All piles are HP 10x42 piles.
For additional notes see sht. 8/

9/15

ALDEN E. STILSON & ASSOCIATES, LIMITED
CONSULTING ENGINEERS
CLEVELAND, OHIO COLUMBUS, OHIO WHEELING, W. VA.

# EAST ABUTMENT DETAILS

BRIDGE No. CUY-480-1169
I-480 OVER RELOCATED BIG CREEK
CUYAHOGA COUNTY
STA. 643+18.36
STA. 644+31.62

| DESIGNED | DRAWN | TRACED | CHECKED | REVIEWED | DATE | REVISED |
|---|---|---|---|---|---|---|
| R.S.S. | R.S.S. | | B.I.P. | G.W.M. | 12/6/71 | |

MICROFILMED
JAN 22 1991

| FED. RD. DIVISION | STATE | PROJECT | TYPE FUNDS |
|---|---|---|---|
| 2 | OHIO | | |

434/500

CUYAHOGA COUNTY
CUY-480-10.39

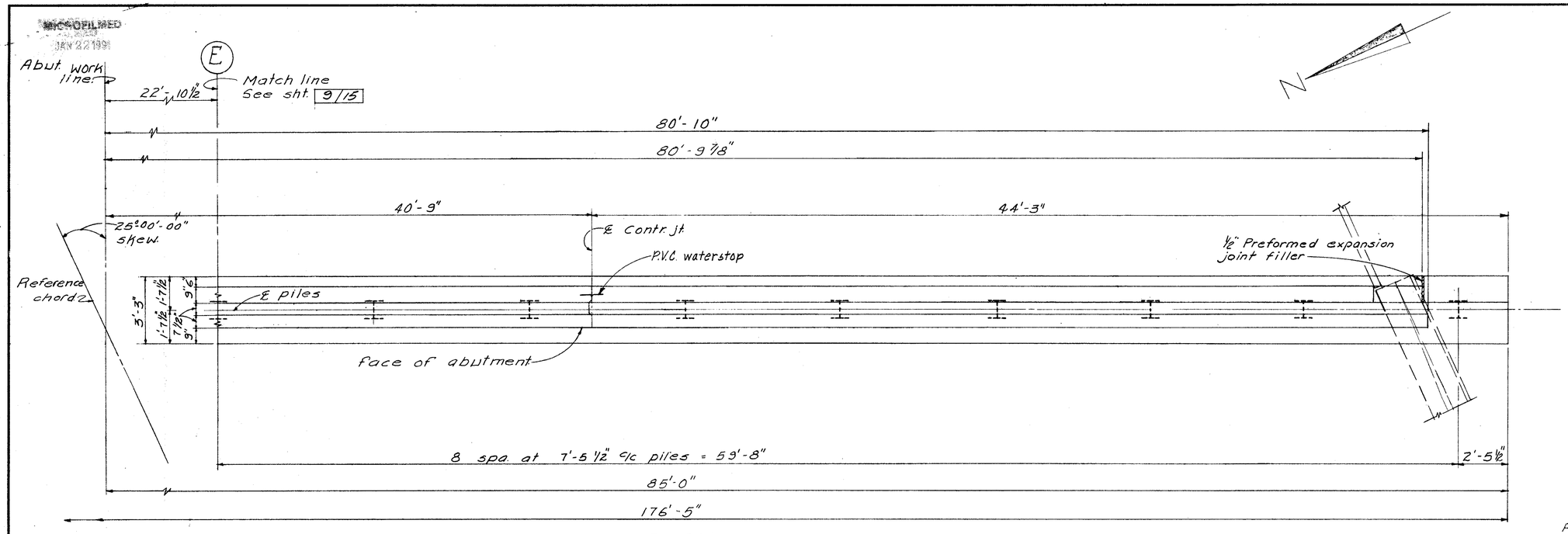


PLAN

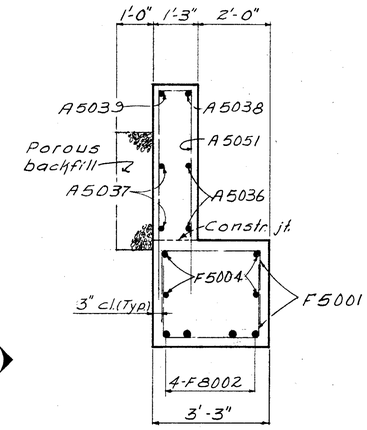


SECTION A12-A12

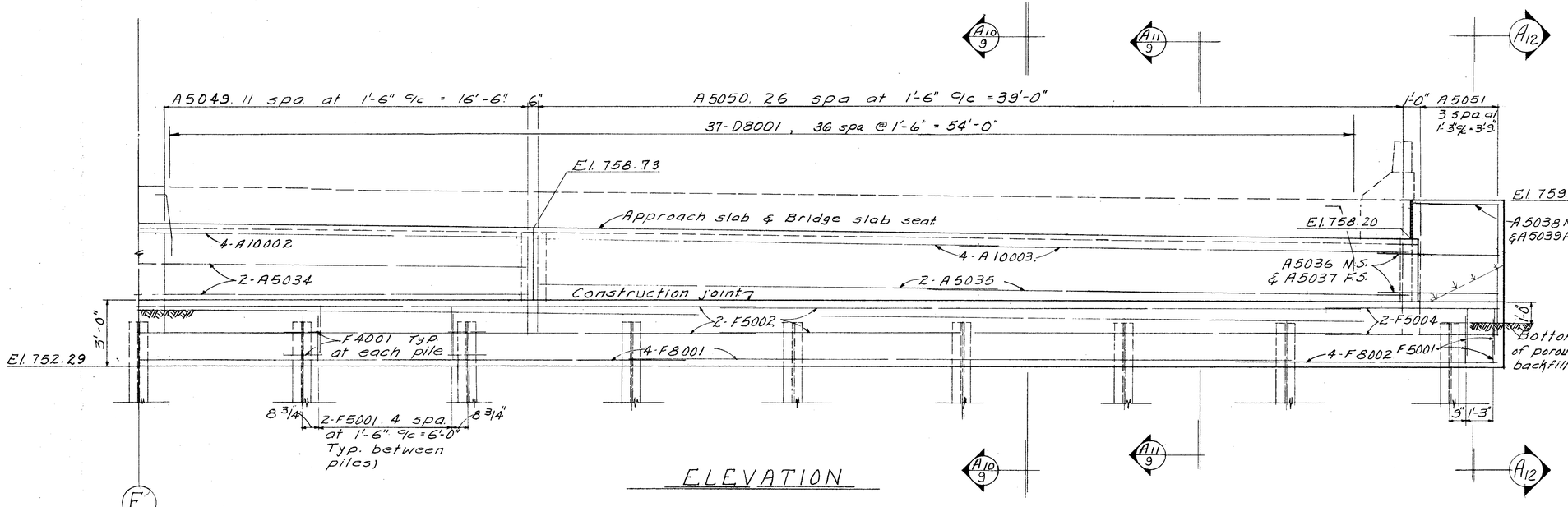


ELEVATION

## Notes

All piles are HP 10x42 piles.
In Reinforcing bar call outs:
N.S. indicates Near side.
F.S. indicates Far side.
For additional notes see sht 8/15

10/15

ALDEN E. STILSON & ASSOCIATES, LIMITED
CONSULTING ENGINEERS
CLEVELAND, OHIO COLUMBUS, OHIO WHEELING, W. VA.

# EAST ABUTMENT DETAILS

BRIDGE NO. CUY-480-1169
I-480 OVER RELOCATED BIG CREEK
CUYAHOGA COUNTY STA. 643+18.36 STA. 644+31.62

| DESIGNED | DRAWN | TRACED | CHECKED | REVIEWED | DATE | REVISED |
|---|---|---|---|---|---|---|
| R.S.S. | R.S.S. | | B.I.P. | G.W.M. | 12/6/71 | |

MICROFILMED
JAN 22 19

| FED. RD. DIVISION | STATE | PROJECT | TYPE FUNDS |
|---|---|---|---|
| 2 | OHIO | | |

435
500

CUYAHOGA COUNTY
CUY-480-10.39

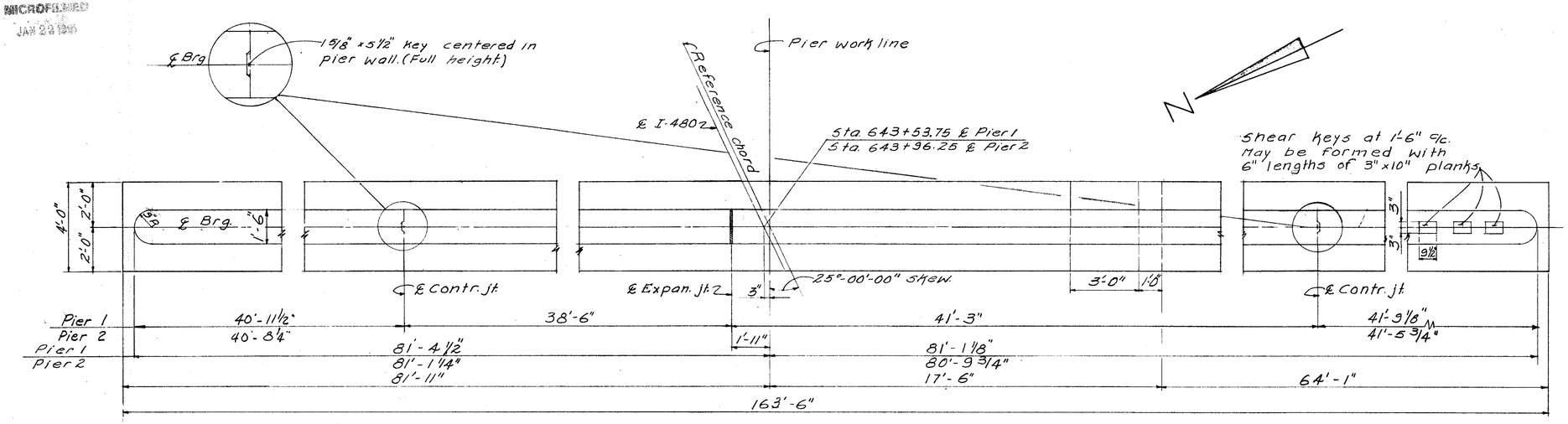


PLAN

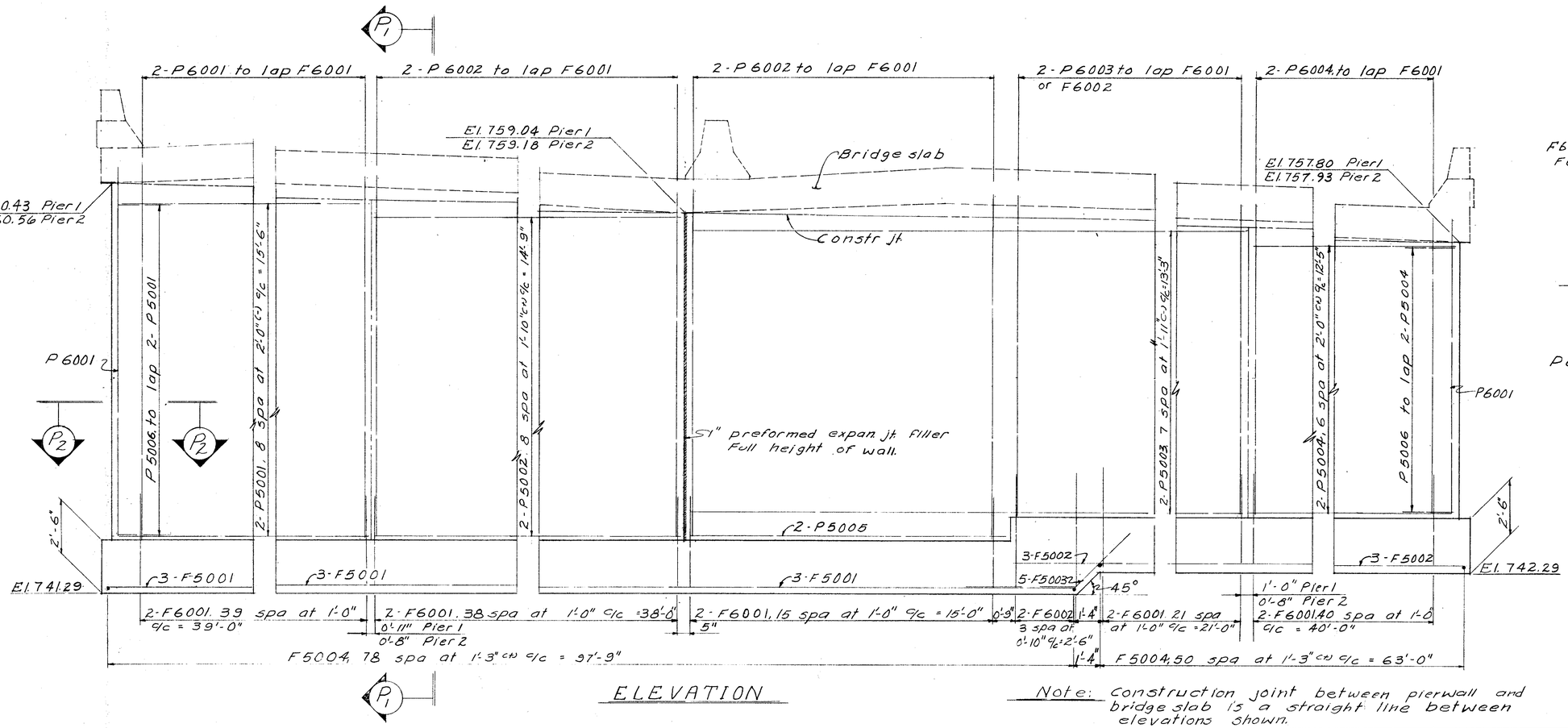


ELEVATION

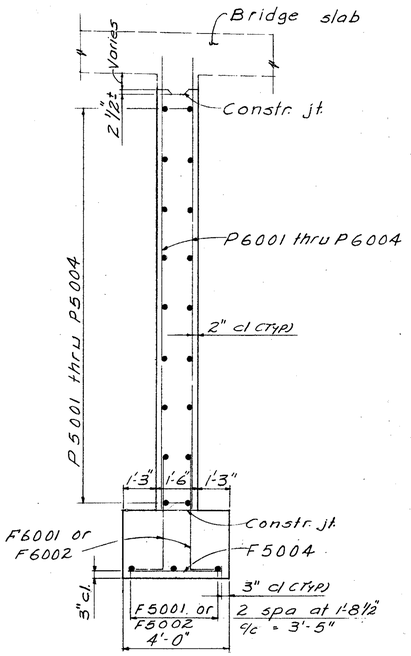


SECTION P1-P1

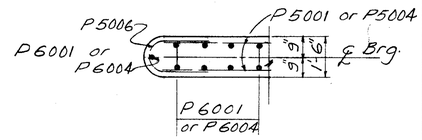


SECTION P2-P2

Note: Construction joint between pierwall and bridge slab is a straight line between elevations shown.

11/15

ALDEN E. STILSON & ASSOCIATES, LIMITED
CONSULTING ENGINEERS
CLEVELAND, OHIO COLUMBUS, OHIO WHEELING, W. VA.

# PIER DETAILS

BRIDGE NO. CUY-480-1169
I-480 OVER RELOCATED BIG CREEK
CUYAHOGA COUNTY STA. 643+18.36
STA. 644+31.62

| DESIGNED | DRAWN | TRACED | CHECKED | REVIEWED | DATE | REVISED |
|---|---|---|---|---|---|---|
| R.S.S. | R.S.S. | | B.I.P. | G.W.M. | 12/1/11 | |

MICROFILMED
JAN 22 1991
MICROFILMED

| FED. RD. DIVISION | STATE | PROJECT | TYPE FUNDS |
|---|---|---|---|
| 2 | OHIO | | |

436
500

CUYAHOGA COUNTY
CUY-480-10.39

NOTE :
Field bend transverse bars to fit crown. Field bending to be included in Item 509 for payment.

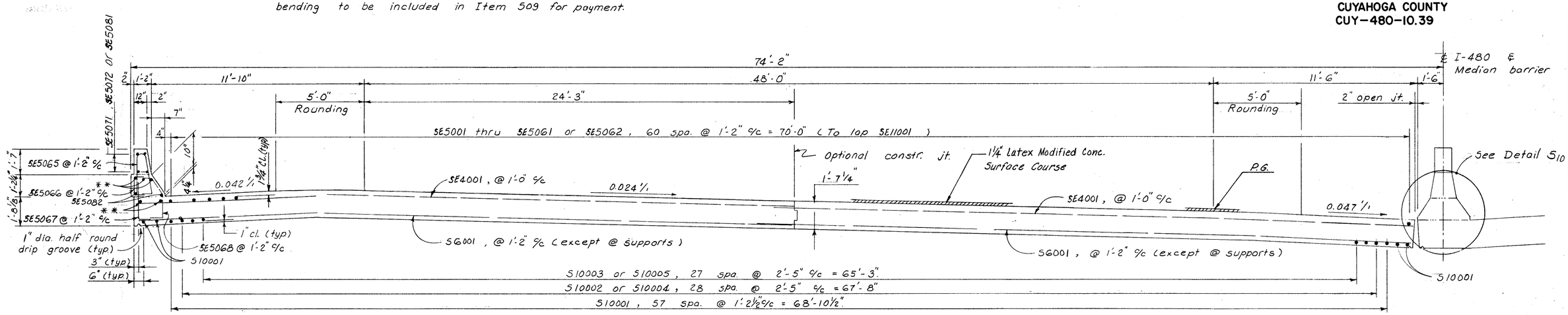


## SECTION S1-S1 & S3-S3 13/15

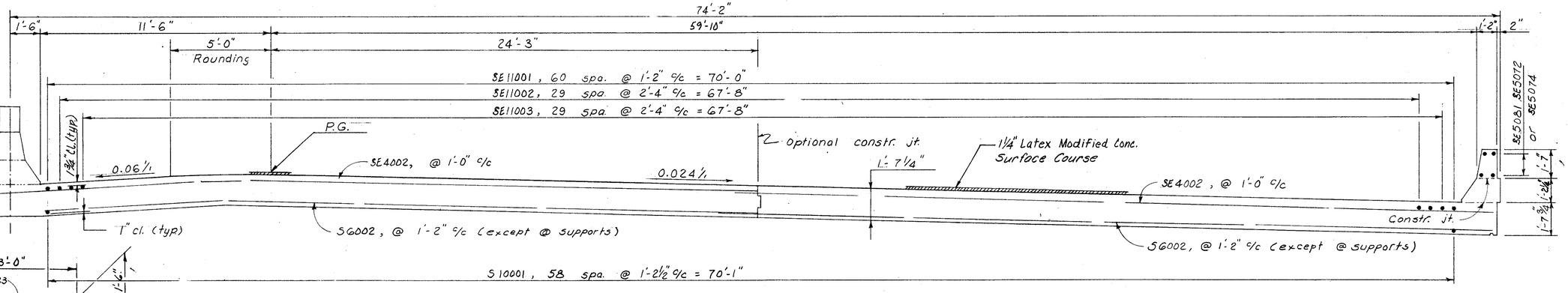


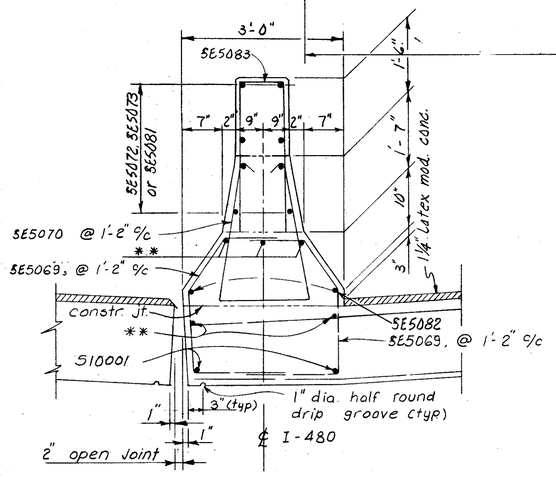


DETAIL S10

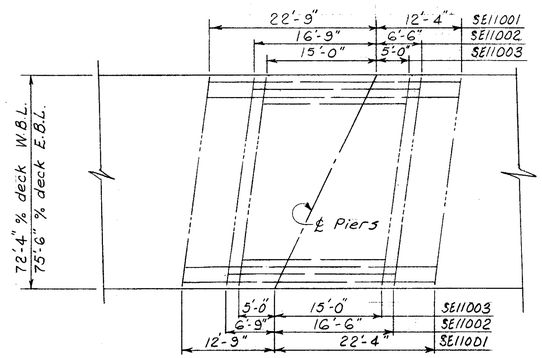


PLACEMENT DIAGRAM FOR SE11001, SE11002 & SE11003 BARS.

## SECTION S2-S2 13/15

NOTES :

Parapets shall be placed after the shoring under the slab has been released sufficiently to permit full dead load deflection.

Concrete and reinforcing steel for parapets shall be included for payment with their respective items; Item 511 Superstructure concrete and Item 509 Reinforcing Steel.

For optional construction joint detail see sht. 13/15

** Each longitudinal run of reinforcing steel thus indicated shall consist of the following sequence of bars: 1-SE5063, 1-SE11001, 1-SE5062, 1-SE11001 & 1-SE5064

SE11001 in lower part of median and parapet shall be placed as shown in placement diagram.

Details, dimensions and reinforcing not shown are same as for opposite parapet.

12/15

ALDEN E. STILSON & ASSOCIATES, LIMITED
CONSULTING ENGINEERS
CLEVELAND, OHIO COLUMBUS, OHIO WHEELING, W. VA.

# SUPERSTRUCTURE DETAILS
## BRIDGE No. CUY-480-1169
## I-480 OVER RELOCATED BIG CREEK

CUYAHOGA COUNTY STA. 643+18 36
STA. 644+31.62

| DESIGNED | DRAWN | TRACED | CHECKED | REVIEWED | DATE | REVISED |
|---|---|---|---|---|---|---|
| B.I.P. | B.I.P. | | R.S.S. | G.W.M. | 12/1/71 | |

MICROFILMED
JAN 22 1991

| FED. RD. DIVISION | STATE | PROJECT | TYPE FUNDS |
|---|---|---|---|
| 2 | OHIO | | |

437/500

CUYAHOGA COUNTY
CUY-480-10.39

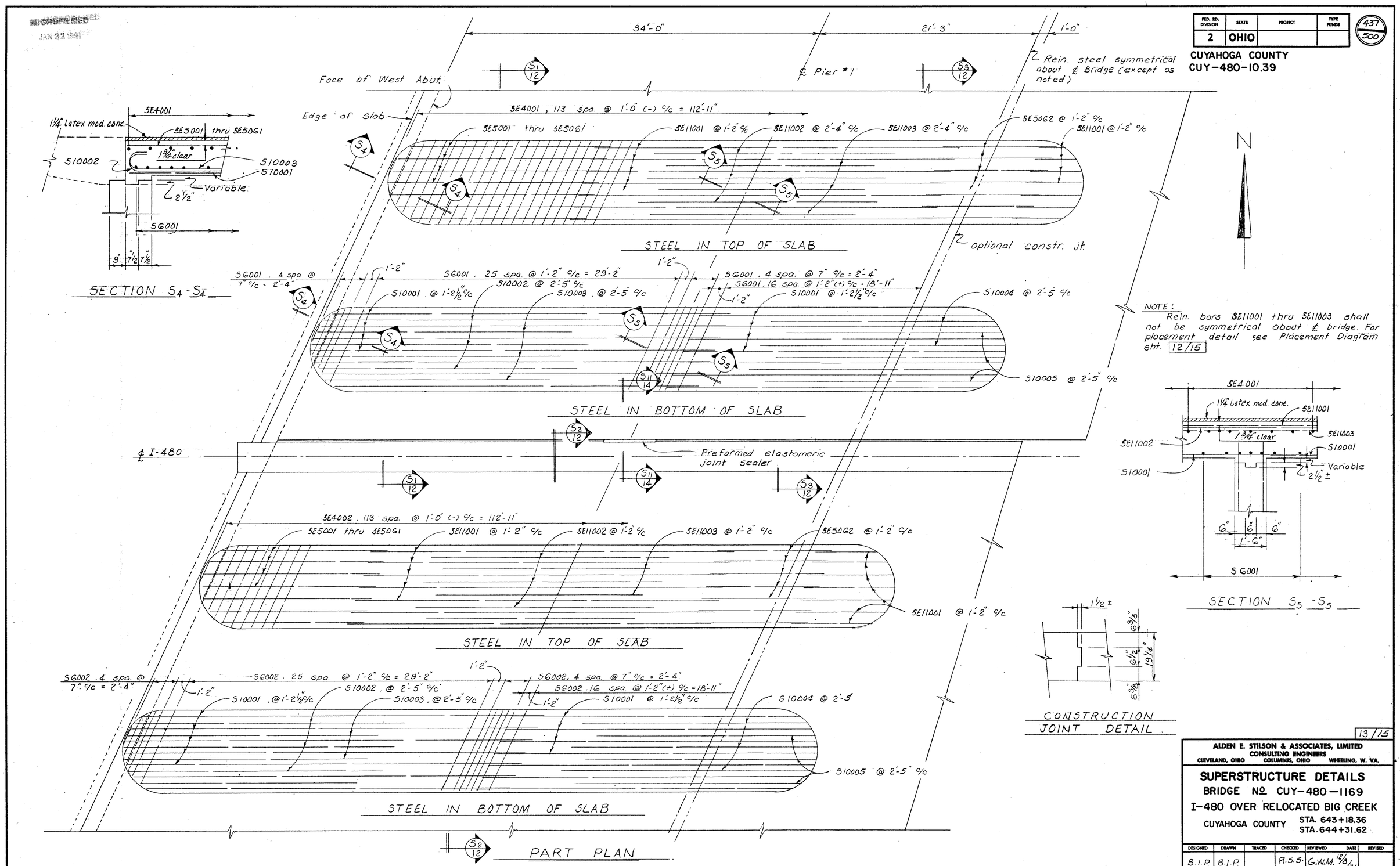


13/15

ALDEN E. STILSON & ASSOCIATES, LIMITED
CONSULTING ENGINEERS
CLEVELAND, OHIO COLUMBUS, OHIO WHEELING, W. VA.

**SUPERSTRUCTURE DETAILS**
**BRIDGE No. CUY-480-1169**
**I-480 OVER RELOCATED BIG CREEK**
CUYAHOGA COUNTY STA. 643+18.36 STA. 644+31.62

| DESIGNED | DRAWN | TRACED | CHECKED | REVIEWED | DATE | REVISED |
|---|---|---|---|---|---|---|
| B.I.P. | B.I.P. | | R.S.S. | G.W.M. | 12/8/71 | |

MICROFILMED
JAN 22 1981

| FED. RD. DIVISION | STATE | PROJECT | TYPE FUNDS |
|---|---|---|---|
| 2 | OHIO | | |

438
500

CUYAHOGA COUNTY
CUY-480-10.39

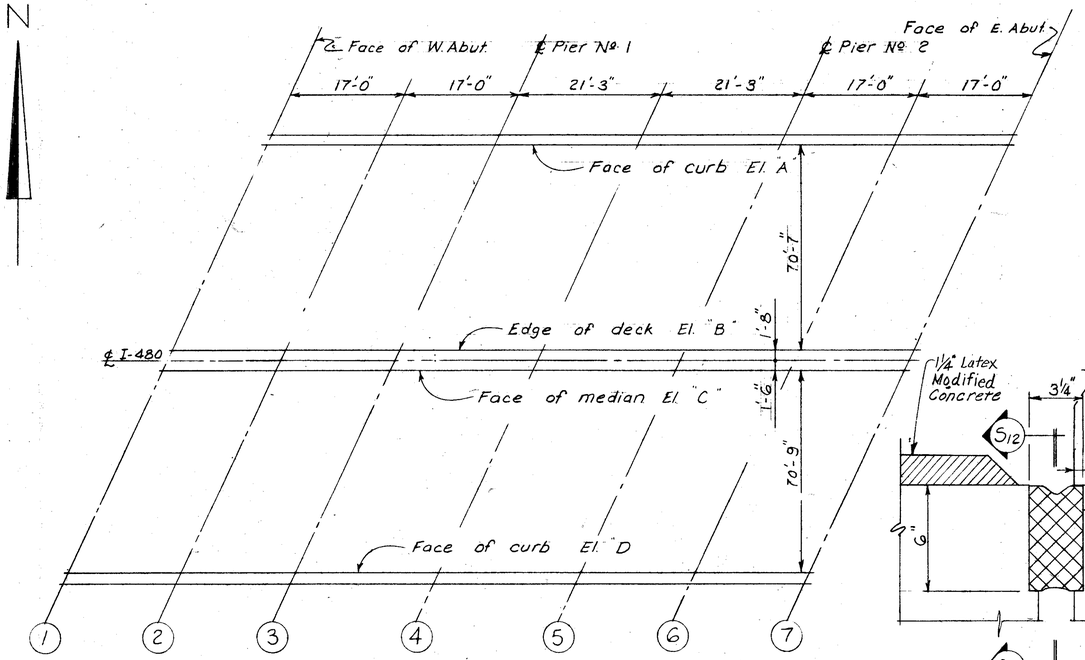


DECK ELEVATIONS

| TABLE OF SCREED ELEVATIONS | | | | | | | |
|---|---|---|---|---|---|---|---|
| LINE | 1 | 2 | 3 | 4 | 5 | 6 | 7 |
| El. "A" | 761.97 | 762.07 | 762.08 | 762.20 | 762.21 | 762.31 | 762.32 |
| El. "B" | 760.54 | 760.63 | 760.64 | 760.77 | 760.78 | 760.88 | 760.89 |
| El. "C" | 760.53 | 760.63 | 760.64 | 760.76 | 760.78 | 760.87 | 760.89 |
| El. "D" | 759.47 | 759.57 | 759.59 | 759.71 | 759.72 | 759.82 | 759.83 |

NOTE:
The screed elevations shown are to the top of the Class "S" Concrete placement and are those elevations which are required prior to release of the falsework. Proper allowance has been made for the dead load deflection caused by the weight of the concrete. To obtain these elevations, proper allowance shall be made for the deflection of falsework members.

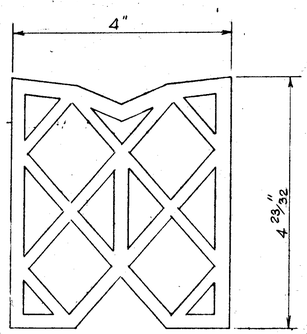


DETAIL
PREFORMED ELASTOMERIC JOINT SEALER

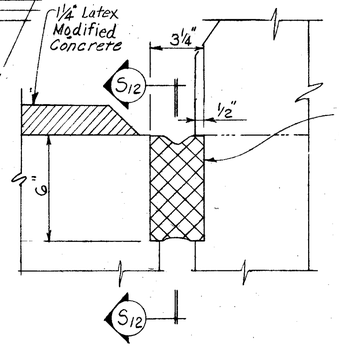


Preformed elastomeric joint sealer as per section 705.11

SECTION S11-S11

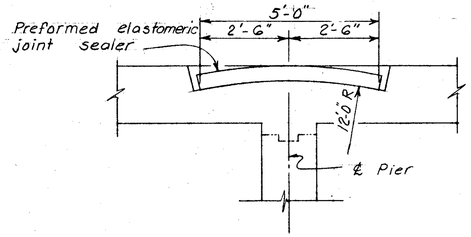


SECTION S12-S12

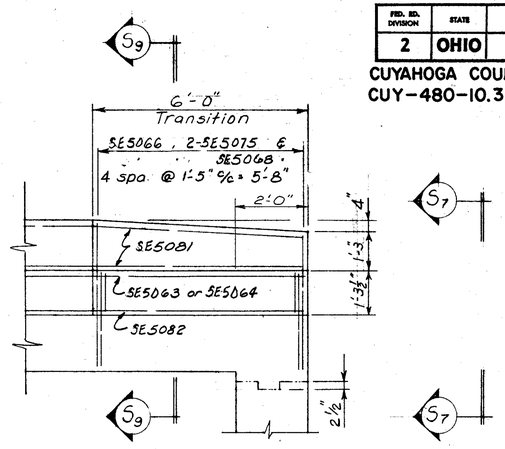


SECTION S8-S8 3/15
(Typical Parapet Transition Detail)

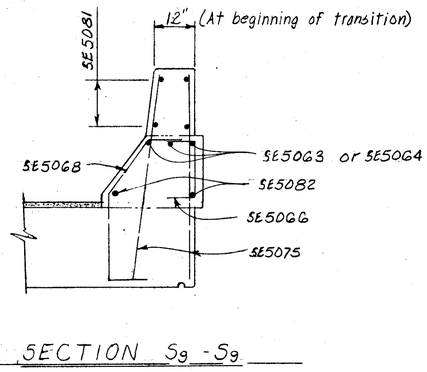


SECTION S9-S9

Steel in slab not shown.

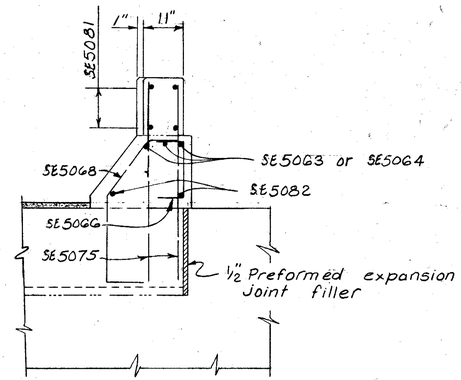


SECTION S7-S7

14/15

ALDEN E. STILSON & ASSOCIATES, LIMITED
CONSULTING ENGINEERS
CLEVELAND, OHIO COLUMBUS, OHIO WHEELING, W. VA.

# SUPERSTRUCTURE DETAILS
BRIDGE № CUY-480-1169
I-480 OVER RELOCATED BIG CREEK
CUYAHOGA COUNTY STA. 643+18.36
STA. 644+31.62

| DESIGNED | DRAWN | TRACED | CHECKED | REVIEWED | DATE | REVISED |
|---|---|---|---|---|---|---|
| B.I.P. | B.I.P. | | P.S.S. | G.W.M. | 12/8/71 | |

MICROFILMED
JAN 22 1991

| MARK | NUM. | LENGTH | WEIGHT | TYPE | A | B | C | D | E | NOTE |
|---|---|---|---|---|---|---|---|---|---|---|
| | | | | WEST ABUTMENT | | | | | | |
| A 5001 | 1 | 2- 7 | 3 | ST | | | | | | |
| A 5002 | 1 | 2- 0 | 2 | ST | | | | | | |
| A 5003 | 2 | 4- 2 | 9 | ST | | | | | | |
| A 5004 | 2 | 3- 7 | 7 | ST | | | | | | |
| A 5005 | 32 | 23- 1 | 770 | ST | | | | | | |
| A 5006 | 16 | 17- 6 | 292 | ST | | | | | | |
| A 5007 | 1 | 9- 0 | 9 | ST | | | | | | |
| A 5008 | 1 | 9- 7 | 10 | ST | | | | | | |
| A 5009 | 2 | 12- 7 | 26 | ST | | | | | | |
| A 5010 | 2 | 13- 2 | 27 | ST | | | | | | |
| A 5011 | 3 | 10- 4 | 32 | 2 | 4-10 | 0-11 | 4-10 | | | |
| A 5012 | 28 | 9- 1 | 265 | 2 | 3-10 | 1- 8 | 3-10 | | | |
| A 5013 | 30 | 10- 3 | 321 | 2 | 4- 5 | 1- 8 | 4- 5 | | | |
| A 5014 | 30 | 11- 9 | 368 | 2 | 5- 2 | 1- 8 | 5- 2 | | | |
| A 5015 | 22 | 13- 1 | 300 | 2 | 5-10 | 1- 8 | 5-10 | | | |
| A 5016 | 1 | 15- 4 | | 2 | 7- 4 | 0-11 | 7- 4 | | | 1 |
| THRU | | | 135 | | VARY LENGTH BY | | | 0- 6 | 1/ 2 | |
| | | | | | VARY DIM. A BY | | | 0- 3 | 1/ 4 | |
| | | | | | VARY DIM. C BY | | | 0- 3 | 1/ 4 | |
| A 5025 | 1 | 10- 6 | | 2 | 4-11 | 0-11 | 4-11 | | | 1 |
| A 5026 | 1 | 10- 8 | 11 | ST | | | | | | |
| A 5027 | 1 | 11- 3 | 12 | ST | | | | | | |
| A 5052 | 12 | 21- 9 | 272 | ST | | | | | | |
| D 8001 | 104 | 7- 2 | 1990 | 16 | | | 1- 1 | 4- 2 | 1- 1 | |
| F 5001 | 240 | 6- 8 | 1669 | 2 | 2- 1 | 2- 9 | 2- 1 | | | |
| F 5002 | 48 | 30- 0 | 1502 | ST | | | | | | |
| F 5003 | 8 | 7- 3 | 60 | ST | | | | | | |
| | | | | EAST ABUTMENT | | | | | | |
| A 5028 | 1 | 8- 3 | 9 | ST | | | | | | |
| A 5029 | 1 | 7- 6 | 8 | ST | | | | | | |
| A 5030 | 1 | 9- 9 | 10 | 12 | 7- 9 | 1-10 | | 0-11 | | |
| A 5031 | 1 | 9- 1 | 9 | 12 | 7- 9 | 1- 3 | | 0- 7 | | |
| A 5032 | 6 | 11- 4 | 71 | ST | | | | | | |
| A 5033 | 12 | 18- 0 | 225 | ST | | | | | | |
| A 5034 | 16 | 22- 9 | 380 | ST | | | | | | |
| A 5035 | 4 | 20-11 | 87 | ST | | | | | | |
| A 5036 | 2 | 5- 8 | 12 | ST | | | | | | |
| A 5037 | 2 | 6- 3 | 13 | ST | | | | | | |
| A 5038 | 1 | 4- 1 | 4 | ST | | | | | | |
| A 5039 | 1 | 4- 8 | 5 | ST | | | | | | |
| A 5040 | 1 | 10- 0 | | 2 | 4- 8 | 0-11 | 4- 8 | | | 1 |
| THRU | | | 83 | | VARY LENGTH BY | | | 1- 4 | | |
| | | | | | VARY DIM. A BY | | | 0- 8 | | |
| | | | | | VARY DIM. C BY | | | 0- 8 | | |
| A 5045 | 1 | 16- 8 | | 2 | 8- 0 | 0-11 | 8- 0 | | | 1 |
| A 5046 | 2 | 17- 2 | 36 | 2 | 8- 3 | 0-11 | 8- 3 | | | |
| A 5047 | 23 | 14- 7 | 350 | 2 | 6- 7 | 1- 8 | 6- 7 | | | |
| A 5048 | 30 | 13- 1 | 409 | 2 | 5-10 | 1- 8 | 5-10 | | | |
| A 5049 | 30 | 11-11 | 373 | 2 | 5- 3 | 1- 8 | 5- 3 | | | |
| A 5050 | 27 | 10- 9 | 303 | 2 | 4- 8 | 1- 8 | 4- 8 | | | |
| A 5051 | 4 | 12- 2 | 51 | 2 | 5- 9 | 0-11 | 5- 9 | | | |
| D 8001 | 104 | 7- 2 | 1990 | 16 | | | 1- 1 | 4- 2 | 1- 1 | |
| A10001 | 8 | 18-10 | 648 | ST | | | | | | |
| A10002 | 16 | 23- 5 | 1612 | ST | | | | | | |
| A10003 | 8 | 21- 9 | 749 | ST | | | | | | |

| MARK | NUM. | LENGTH | WEIGHT | TYPE | A | B | C | D | E | NOTE |
|---|---|---|---|---|---|---|---|---|---|---|
| | | | | EAST ABUTMENT | | | | ( CONTINUED ) | | |
| F 4001 | 48 | 9- 4 | 299 | 3 | 2- 8 | 1- 9 | 2- 8 | 1- 9 | | |
| F 5001 | 238 | 6- 8 | 1655 | 2 | 2- 1 | 2- 9 | 2- 1 | | | |
| F 5002 | 24 | 30- 0 | 751 | ST | | | | | | |
| F 5004 | 4 | 5- 5 | 23 | ST | | | | | | |
| F 8001 | 24 | 30- 0 | 1922 | ST | | | | | | |
| F 8002 | 4 | 11- 5 | 122 | ST | | | | | | |
| | | | | PIER 1 | | | | | | |
| P 5001 | 18 | 40- 4 | 757 | ST | | | | | | |
| P 5002 | 18 | 40- 1 | 753 | ST | | | | | | |
| P 5003 | 16 | 40-11 | 683 | ST | | | | | | |
| P 5004 | 14 | 41- 1 | 600 | ST | | | | | | |
| P 5005 | 2 | 15- 1 | 31 | ST | | | | | | |
| P 5006 | 16 | 4-10 | 81 | 7 | 1- 7 | 1- 7 | 0- 6 | | | |
| P 6001 | 80 | 17- 0 | 2043 | ST | | | | | | |
| P 6002 | 110 | 16- 5 | 2712 | ST | | | | | | |
| P 6003 | 52 | 15- 0 | 1172 | ST | | | | | | |
| P 6004 | 82 | 14- 5 | 1776 | ST | | | | | | |
| F 5001 | 9 | 33-10 | 318 | ST | | | | | | |
| F 5002 | 6 | 34- 9 | 217 | ST | | | | | | |
| F 5003 | 5 | 7-11 | 41 | 12 | 5- 0 | 2- 2 | | 2- 0 | | |
| F 5004 | 130 | 3- 6 | 475 | ST | | | | | | |
| F 6001 | 316 | 5- 0 | 2373 | 2 | 4- 2 | 1- 0 | | | | |
| F 6002 | 4 | 6- 0 | 36 | 2 | 5- 2 | 1- 0 | | | | |
| | | | | PIER 2 | | | | | | |
| P 5001 | 18 | 40- 4 | 757 | ST | | | | | | |
| P 5002 | 18 | 40- 1 | 753 | ST | | | | | | |
| P 5003 | 16 | 40-11 | 683 | ST | | | | | | |
| P 5004 | 14 | 41- 1 | 600 | ST | | | | | | |
| P 5005 | 2 | 15- 1 | 31 | ST | | | | | | |
| P 5006 | 16 | 4-10 | 81 | 7 | 1- 7 | 1- 7 | 0- 6 | | | |
| P 6001 | 80 | 17- 0 | 2043 | ST | | | | | | |
| P 6002 | 110 | 16- 5 | 2712 | ST | | | | | | |
| P 6003 | 52 | 15- 0 | 1172 | ST | | | | | | |
| P 6004 | 82 | 14- 5 | 1776 | ST | | | | | | |
| F 5001 | 9 | 33-10 | 318 | ST | | | | | | |
| F 5002 | 6 | 34- 9 | 217 | ST | | | | | | |
| F 5003 | 5 | 7-11 | 41 | 12 | 5- 0 | 2- 2 | | 2- 0 | | |
| F 5004 | 130 | 3- 6 | 475 | ST | | | | | | |
| F 6001 | 316 | 5- 0 | 2373 | 2 | 4- 2 | 1- 0 | | | | |
| F 6002 | 4 | 6- 0 | 36 | 2 | 5- 2 | 1- 0 | | | | |

| MARK | NUM. | LENGTH | WEIGHT | TYPE | A | B | C | D | E | NOTE |
|---|---|---|---|---|---|---|---|---|---|---|
| | | | | SUPERSTRUCTURE | | | | | | |
| SE4001 | 228 | 40- 8 | 6194 | ST | | | | | | |
| SE4002 | 228 | 42- 5 | 6460 | ST | | | | | | |
| SE5001 | 4 | 15- 3 | | ST | | | | | | 1 |
| THRU | | | 5153 | | VARY LENGTH BY | | | 0- 2 | | |
| SE5061 | 4 | 25- 3 | | ST | | | | | | 1 |
| SE5062 | 137 | 10- 7 | 1512 | ST | | | | | | |
| SE5063 | 15 | 15- 3 | 239 | ST | | | | | | |
| SE5064 | 15 | 25- 3 | 395 | ST | | | | | | |
| SE5065 | 176 | 5- 4 | 979 | 19 | 0- 8 | 2- 5 | 2- 2 | | | |
| SE5066 | 196 | 2- 1 | 426 | 2 | 0- 9 | 0-10 | 0- 9 | | | |
| SE5067 | 176 | 2-11 | 535 | 2 | 2- 5 | 0- 8 | | | | |
| SE5068 | 196 | 4- 3 | 869 | 15 | 0-10 | 1- 9 | 0- 9 | 1- 0 | 0- 6 | |
| SE5069 | 202 | 5- 6 | 1159 | 15 | 1-10 | 1- 9 | 0- 9 | 1- 3 | 0- 6 | |
| SE5070 | 101 | 7- 8 | 808 | 8 | 0- 5 | 2- 6 | 0- 5 | 2- 6 | 2- 0 | |
| SE5071 | 8 | 13- 1 | 109 | ST | | | | | | |
| SE5072 | 64 | 7- 2 | 478 | ST | | | | | | |
| SE5073 | 16 | 13- 9 | 229 | ST | | | | | | |
| SE5074 | 8 | 13- 4 | 111 | ST | | | | | | |
| SE5075 | 40 | 4- 1 | 170 | ST | | | | | | |
| SE5081 | 64 | 14- 2 | 946 | ST | | | | | | |
| SE5082 | 18 | 39- 3 | 737 | ST | | | | | | |
| SE5083 | 101 | 6- 9 | 711 | 1 | | 2-11 | 1- 2 | 2-11 | | |
| S 6001 | 212 | 41- 0 | 13055 | ST | | | | | | |
| S 6002 | 212 | 42- 9 | 13613 | ST | | | | | | |
| S10001 | 375 | 40- 8 | 65621 | ST | | | | | | |
| S10002 | 116 | 28- 7 | 14267 | 11 | 27- 2 | | | | | |
| S10003 | 114 | 26- 5 | 12958 | 11 | 25- 0 | | | | | |
| S10004 | 58 | 25-11 | 6468 | ST | | | | | | |
| S10005 | 57 | 21-11 | 5376 | ST | | | | | | |
| SE11001 | 274 | 35- 1 | 51068 | ST | | | | | | |
| SE11002 | 120 | 23- 4 | 14874 | ST | | | | | | |
| SE11003 | 120 | 20- 0 | 12751 | ST | | | | | | |

| FED. RD. DIVISION | STATE | PROJECT | TYPE FUNDS |
|---|---|---|---|
| 5 | OHIO | | |

439
500

CUYAHOGA COUNTY

CUY-480-10.39

NOTES

1. INDICATES SERIES BAR. EACH BAR VARIES FROM ADJACENT BAR(S) BY TABULATED AMOUNT(S), CALCULATED TO NEAREST 1/8 INCH. WEIGHT SHOWN IS FOR ENTIRE SERIES UTILIZING AVERAGE LENGTH.

3. COST OF FIELD BENDING SHALL BE INCLUDED WITH ITEM 509.

REFER TO CMS SECTIONS 106.03, 700, 709.01 THROUGH 709.05 AND 709.08. SUFFICIENT ADDITIONAL REINFORCING STEEL SHALL BE PROVIDED FOR SAMPLING. RANDOM SAMPLES SHALL BE REPLACED IN THE STRUCTURES BY THE ADDITIONAL STEEL, SPLICED IN ACCORDANCE WITH 509.08.

BAR DIMENSIONS ARE OUT TO OUT.

A BAR MARK WITH THE PREFIX 'SE' INDICATES THAT REINFORCING STEEL SHALL BE EPOXY COATED.

BAR BENDING DIAGRAM TYPES

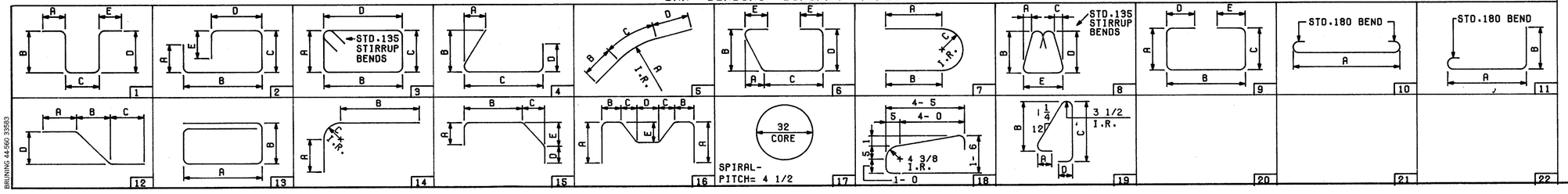


BRUNING 44-560 33583

15/15

ALDEN E. STILSON & ASSOCIATES, LIMITED
CONSULTING ENGINEERS
CLEVELAND, OHIO COLUMBUS, OHIO WHEELING, W. VA.

# REINFORCING STEEL LIST

BRIDGE NO. CUY-480-1169
I-480 OVER RELOCATED BIG CREEK
STA 643+18.36 TO
CUYAHOGA COUNTY STA 644+31.62

| DESIGNED | DRAWN | TRACED | CHECKED | REVIEWED | DATE | REVISED |
|---|---|---|---|---|---|---|
| | | | | G.W.M. | 1/27/83 | |

01-1
MICROFILMED
JAN 22 1991

| FED. RD. DIVISION | STATE | PROJECT | TYPE FUNDS |
|---|---|---|---|
| 2 | OHIO | | |

440/500

CUYAHOGA COUNTY
CUY-480-10.39

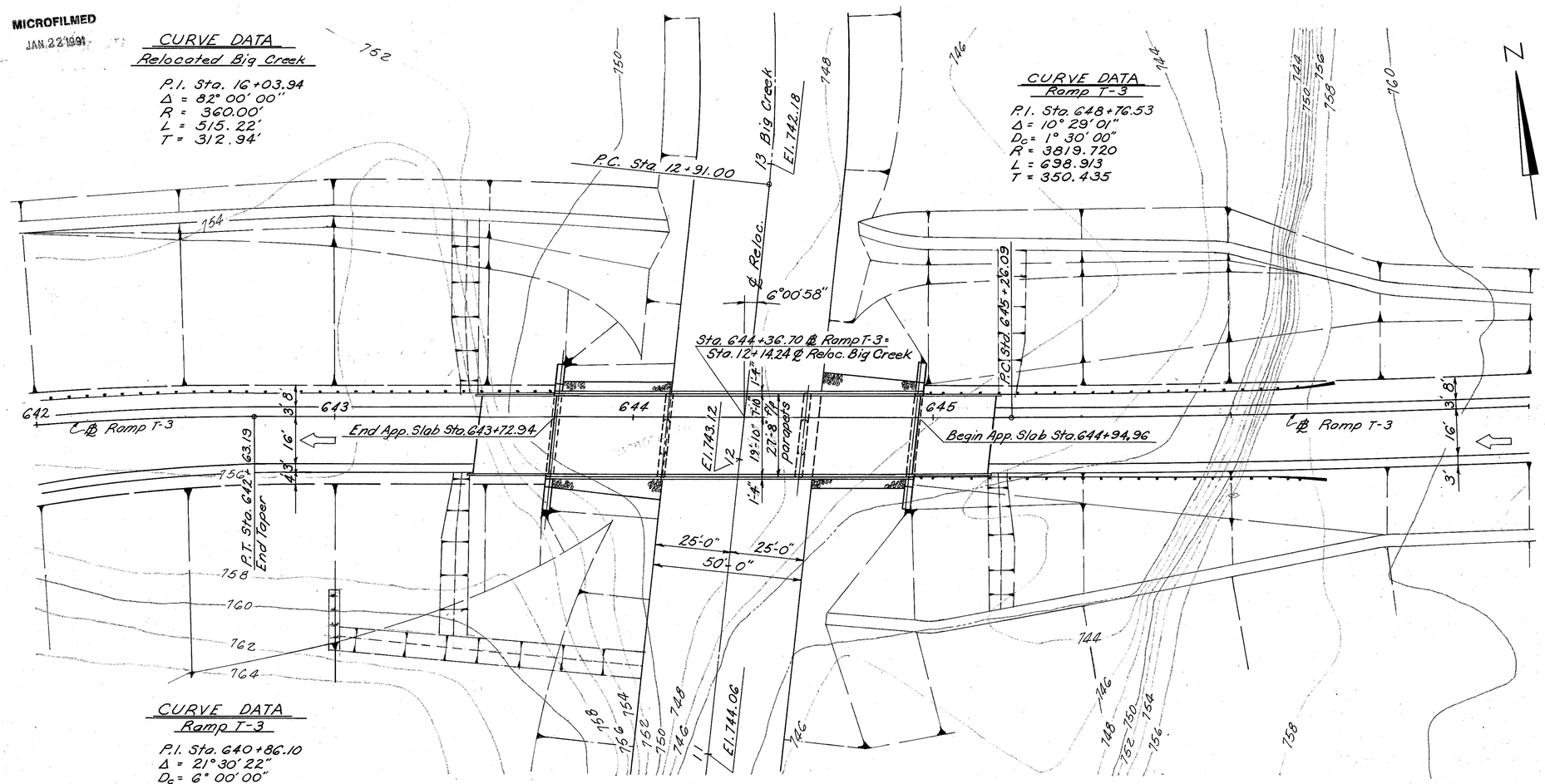


PLAN

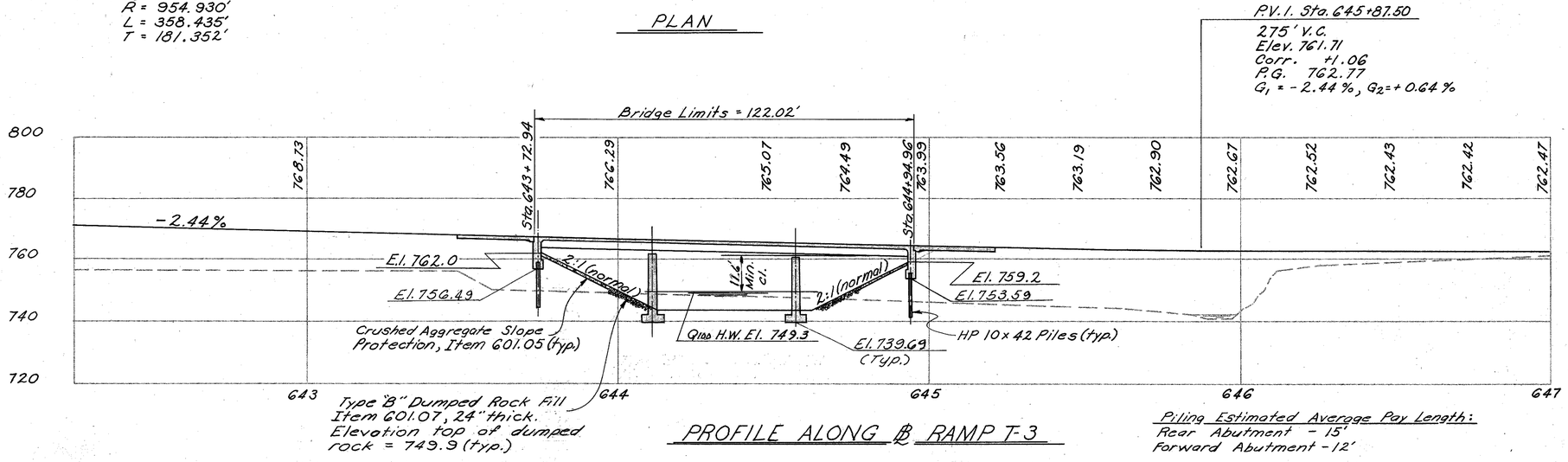


PROFILE ALONG ℄ RAMP T-3

Piling Estimated Average Pay Length:
Rear Abutment - 15'
Forward Abutment - 12'

Notes:
Earthwork limits shown are schematic. Actual slopes shall conform to plan cross-sections.

For limits of dumped rock fill, see channel relocation plan and sections.

## PROPOSED STRUCTURE

TYPE: continuous steel beam with reinforced concrete deck and substructure.
SPANS: 37'-0", 46'-0", 37'-0" ℄ brgs.
ROADWAY: 27'-8" ℄ parapets of BR-1 railing.
LOADING: HS 20-44
WEARING SURFACE: 2½" Asphalt Concrete.
SKEW: 6°-00'-58" Lt. fwd.
ALIGNMENT: Tangent
APPROACH SLABS: AS-1-81 (Mod.) 25' long

## HYDROLOGICAL DATA

Drainage Area = 14.1 Sq. Mi.
$Q_{100}$ = 5496 c.f.s.
$V_{100}$ = 13.7 f.s.

## TRAFFIC ESTIMATE

Design Year ~ 2000
Total A.D.T. ~ 6124

1/9

ALDEN E. STILSON & ASSOCIATES, LIMITED
CONSULTING ENGINEERS
CLEVELAND, OHIO COLUMBUS, OHIO WHEELING, W. VA.

# SITE PLAN

BRIDGE NO. CUY.-480-1171
RAMP T-3 OVER RELOC. BIG CREEK
CUYAHOGA COUNTY
STA. 643+72.94
STA. 644+94.96

SCALE: 1" = 20'

| DESIGNED | DRAWN | TRACED | CHECKED | REVIEWED | DATE | REVISED |
|---|---|---|---|---|---|---|
| G.W.M. | G.W.M. | D.L. | RT | G.W.M. | 12/19/91 | |

MICROFILMED
JAN 22 1991

| FHWA REGION | STATE | PROJECT | |
|---|---|---|---|
| 5 | OHIO | | |

441
500

CUYAHOGA COUNTY
CUY-480-10.39

STANDARD DRAWING REFERENCES

| DESCRIPTION | DWG. NO. | SHT. | DATE |
|---|---|---|---|
| BOLTED SPLICES | SD-1-69 | 4 | 6-12-69 |
| BRIDGE ROADWAY RAILING | BR-1 | | 5-29-79 |
| APPROACH SLABS | AS-1-81 | 1-3 | 11-27-81 |

SUPPLEMENTAL SPECIFICATION REFERENCES

| DESCRIPTION | NO. | DATE |
|---|---|---|
| CONCRETE CURING AND PROTECTIVE MEMBRANE | 836 | 3-12-75 |
| EPOXY COATED REINFORCING STEEL | 824 | 10-8 -82 |

DESIGN SPECIFICATIONS

THIS STRUCTURE CONFORMS TO THE "STANDARD SPECIFICATIONS FOR HIGHWAY BRIDGES" ADOPTED BY THE AMERICAN ASSOCIATION OF STATE HIGHWAY OFFICIALS 1969, INCLUDING THE OHIO'SUPPLACEMENT' TO THESE SPECIFICATIONS.

DESIGN DATA

DESIGN LOADING - HS20-44
CONCRETE CLASS S - UNIT STRESS 1500 P.S.I. (SUPERSTRUCTURE).
CONCRETE CLASS C - UNIT STRESS 1333 P.S.I. (SUBSTRUCTURE).
STRUCTURAL STEEL ASTM A36 - UNIT STRESS 20,000 P.S.I.
REINFORCING STEEL ASTM A615, A616 OR A617.
GRADE 40 - UNIT STRESS 20,000 P.S.I.
DECK PROTECTION METHOD
MEMBRANE WATERPROOFING AND ASPHALT CONCRETE OVERLAY.

EMBANKMENT CONSTRUCTION

THE CHANNEL OPENING IN THE VICINITY OF THE STRUCTURE AND THE EMBANKMENTS TO THE LEVEL OF THE SUBGRADE FOR A MINIMUM DISTANCE OF 200 FEET BACK OF THE ABUTMENTS SHALL BE CONSTRUCTED PRIOR TO EXCAVATING FOR ABUTMENTS AND PIERS.

REINFORCING BAR LAPPED SPLICES

ALL SPLICES SHALL BE LAPPED 30 BAR DIAMETERS.

ATTACHMENT OF GUARDRAIL TO CONCRETE PARAPETS

CONCRETE INSERT ANCHOR ASSEMBLIES PER STANDARD CONSTRUCTION DRAWING GR-1 AND GR-3 SHALL BE PLACED DURING PARAPET CONSTRUCTION.

FOUNDATION BEARING PRESSURE

PIER FOOTINGS, AS DESIGNED, PRODUCE A MAXIMUM BEARING PRESSURE OF 6.5 TONS PER SQ. FT.

FOOTINGS

FOOTINGS SHALL BE PLACED IN BEDROCK AT THE ELEVATION SHOWN.

PILES

PILES SHALL BE DRIVEN TO REFUSAL ON BEDROCK. REFUSAL SHALL BE CONSIDERED AS OBTAINED BY PENETRATING SOFT BEDROCK FOR SEVERAL INCHES WITH A MINIMUM RESISTANCE OF 20 BLOWS PER INCH OR REFUSAL SHALL BE CONSIDERED AS OBTAINED AFTER THE PILE HAS CONTACTED HARD BEDROCK AND THE PILE HAS THEN RECEIVED AT LEAST 20 BLOWS. THE DESIGN LOAD IS 35 TONS PER PILE FOR THE ABUTMENT PILES.

| ITEM | TOTAL | UNIT | DESCRIPTION | ABUTS | PIERS | SUPER | GENERAL | | | |
|---|---|---|---|---|---|---|---|---|---|---|
| 404 | 25 | C.Y. | ASPHALT CONCRETE, AC-20 | | | 25 | | | | |
| 503 | LUMP | | COFFERDAMS, CRIBS AND SHEETING | | | | LUMP | | | |
| 503 | 105 | C.Y. | UNCLASSIFIED EXCAVATION | 105 | | | | | | |
| 503 | 14 | C.Y. | SHALE EXCAVATION | | 14 | | | | | |
| 505 | LUMP | | PILE DRIVING EQUIPMENT MOBILIZATION | | | | LUMP | | | |
| 507 | 190 | L.F. | STEEL PILES, HP10X42 | 190 | | | | | | |
| 509 | 32384 | LB | REINFORCING STEEL | 7234 | 9877 | 15273 | | | | |
| 511 | 150 | C.Y. | CLASS S CONCRETE, SUPERSTRUCTURE *(SEE PROPOSAL NOTE)* | | | 150 | | | | |
| 511 | 46 | C.Y. | CLASS C CONCRETE, PIERS ABOVE FOOTINGS | | 46 | | | | | |
| 511 | 45 | C.Y. | CLASS C CONCRETE, ABUTMENTS ABOVE FOOTINGS | 45 | | | | | | |
| 511 | 45 | C.Y. | CLASS C CONCRETE, FOOTINGS | 33 | 12 | | | | | |
| 513 | 56000 | LB | STRUCTURAL STEEL, ASTM A-36 *(AISC CATEGORY I)* | | | 56000 | | | | |
| 514 | 56000 | LB | FIELD PAINTING OF NEW STRUCTURAL STEEL, SYSTEM A | | | 56000 | | | | |
| 516 | 59 | S.F. | 1/4 INCH PREFORMED EXPANSION JOINT FILLER | 59 | | | | | | |
| 516 | 78 | S.F. | 1 INCH PREFORMED EXPANSION JOINT FILLER | 78 | | | | | | |
| 516 | 83 | L.F. | PVC WATERSTOP, AS PER PLAN | 83 | | | | | | |
| 518 | 42 | C.Y. | POROUS BACKFILL | 42 | | | | | | |
| 518 | 122 | L.F. | SUBDRAINAGE FOR WEARING SURFACE COURSE,AS PER PLAN | | | 122 | | | | |
| 518 | 100 | L.F. | 6 INCH PERFORATED, HELICAL CSP, 707.01 | 100 | | | | | | |
| 518 | 63 | L.F. | 6 INCH NON-PERFORATED, HELICAL CSP, INCLUDING SPECIALS, 707.01 | 63 | | | | | | |
| 601 | 192 | S.Y. | CRUSHED AGGREGATE SLOPE PROTECTION | | | | 192 | | | |
| 824 | 17938 | LB | EPOXY COATED REINFORCING STEEL | | | 17938 | | | | |
| SPEC | 359 | S.Y. | MEMBRANE WATERPROOFING (SEE PROPOSAL NOTE) | | | 359 | | | | |

B18200IA

2 / 9

ALDEN E. STILSON & ASSOCIATES
CONSULTING ENGINEERING AND ARCHITECTURE
COLUMBUS, CLEVELAND, WHEELING

# GENERAL NOTES AND ESTIMATED QUANTITIES

BRIDGE NO. CUY-480-1171
RAMP T-3 OVER RELOCATED BIG CREEK
CUYAHOGA COUNTY
STA. 643+72.94 TO STA. 644+94.96

| DESIGNED | DRAWN | TRACED | CHECKED | REVIEWED | DATE | REVISED |
|---|---|---|---|---|---|---|
| RT | | | HT 11-29-76 | G.W.M. | 1/27/83 | |

MICROFILMED
JAN 22 1991

| FED. RD. DIVISION | STATE | PROJECT | TYPE FUNDS |
|---|---|---|---|
| 2 | OHIO | | |

442
500

CUYAHOGA COUNTY
CUY-480-10.39

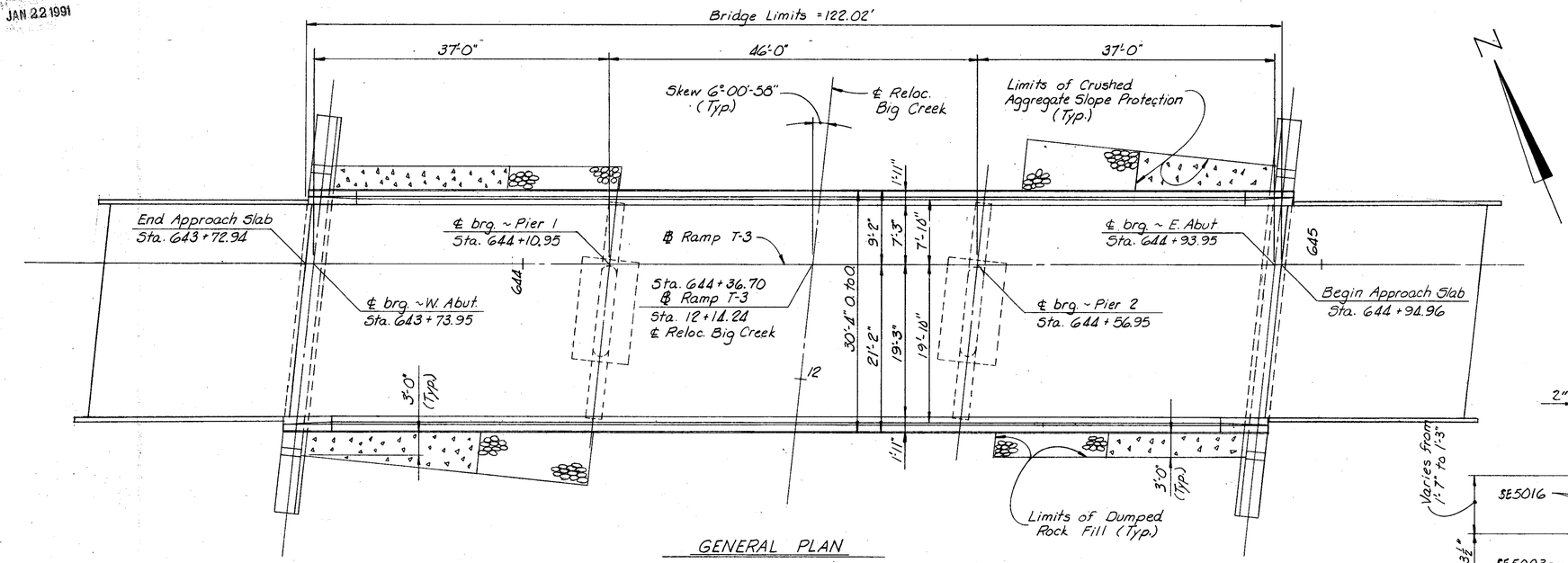


GENERAL PLAN

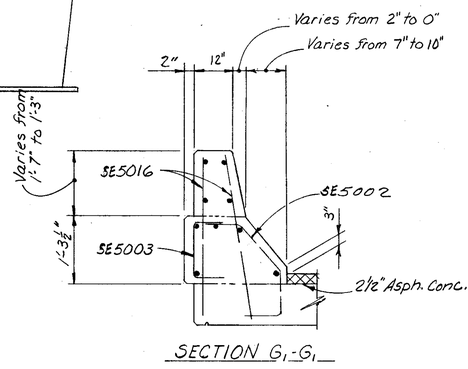


SECTION $G_1$-$G_1$

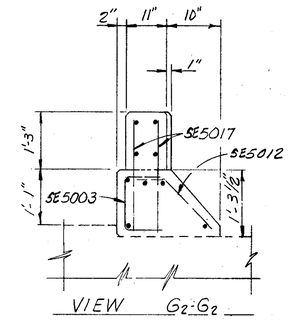


VIEW $G_2$-$G_2$

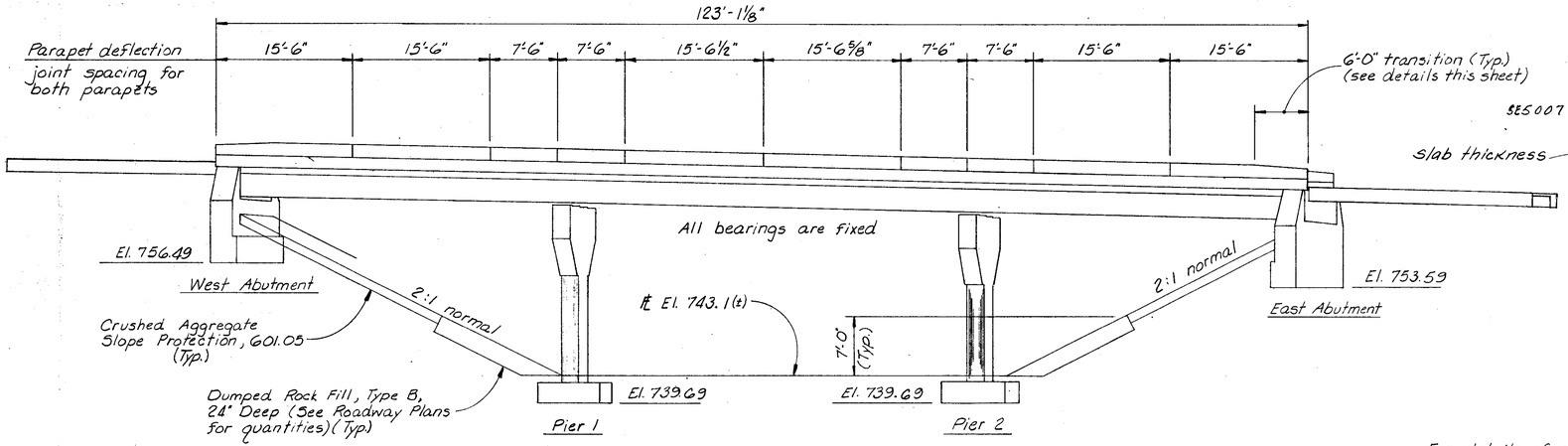


GENERAL ELEVATION
(Abutment piles not shown)

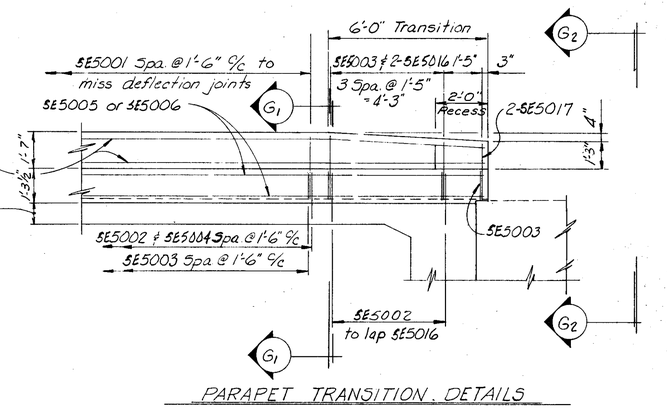


PARAPET TRANSITION DETAILS

NOTES

For details of parapet deflection joints see Std. Dwg. BR-1.

For additional details of parapets see TRANSVERSE SECTION, sheet 7 / 9.

3 / 9

ALDEN E. STILSON & ASSOCIATES, LIMITED
CONSULTING ENGINEERS
CLEVELAND, OHIO COLUMBUS, OHIO WHEELING, W. VA.

# GENERAL PLAN AND ELEVATION

BRIDGE NO. CUY-480-1171
RAMP T-3 OVER RELOCATED BIG CREEK
CUYAHOGA COUNTY
STA. 643+72.94 TO
STA. 644+94.96

| DESIGNED | DRAWN | TRACED | CHECKED | REVIEWED | DATE | REVISED |
|---|---|---|---|---|---|---|
| RT | RT | | HT | G.W.M. | 12/9/71 | |

MICROFILMED
JAN 22 1991

| FED. RD. DIVISION | STATE | PROJECT | TYPE FUNDS |
|---|---|---|---|
| 2 | OHIO | | |

443
500

CUYAHOGA COUNTY
CUY-480-10.39

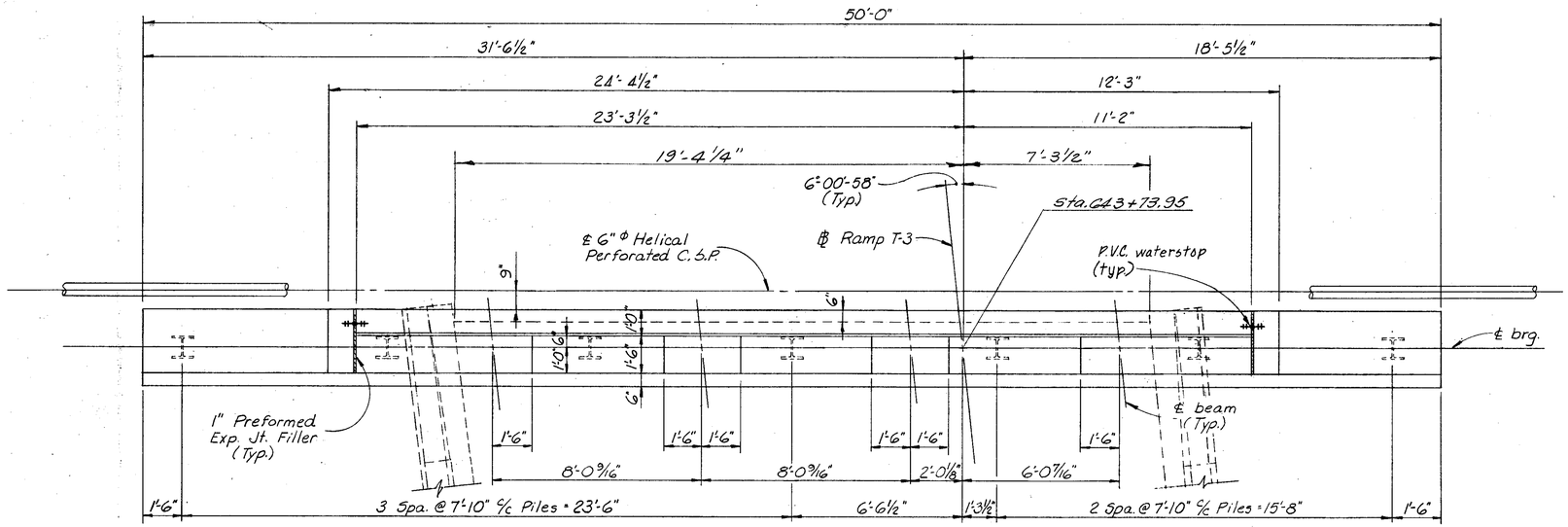


PLAN

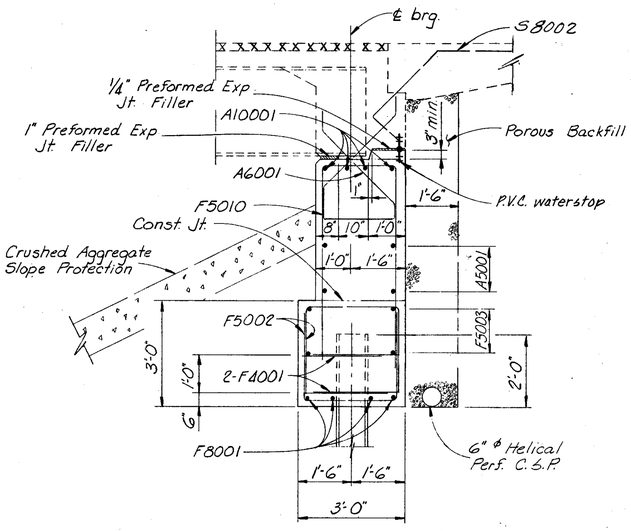


SECTION $A_1$-$A_1$ & $A_3$-$A_3$ /5
Superstructure reinforcing not shown

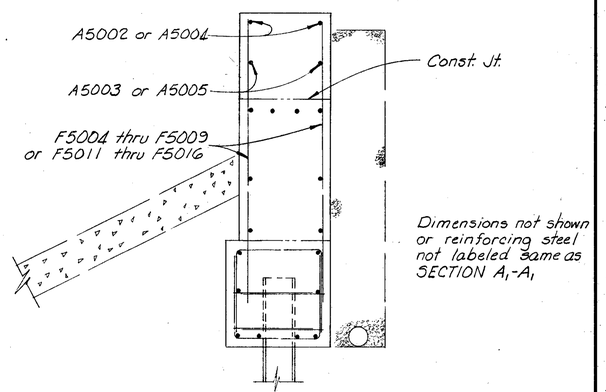


SECTION $A_2$-$A_2$ & $A_4$-$A_4$ /5

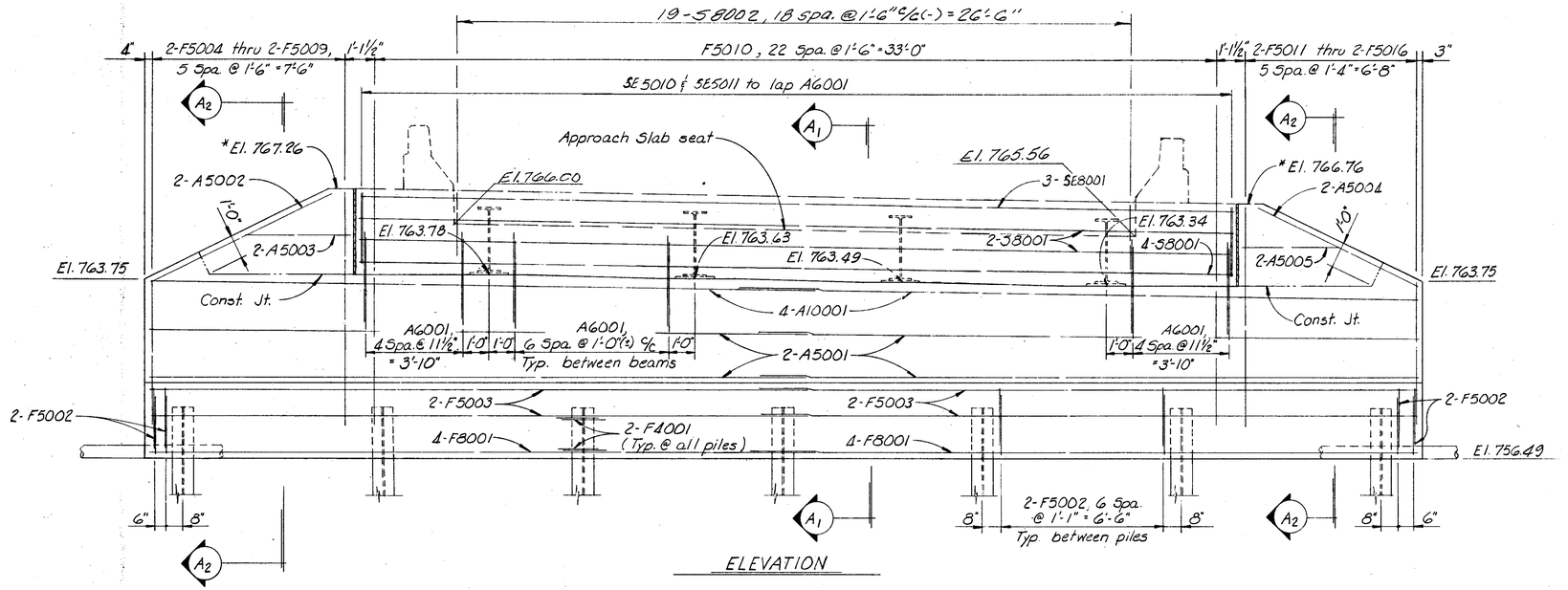


ELEVATION

For notes see sheet 5/9.

4/9

ALDEN E. STILSON & ASSOCIATES, LIMITED
CONSULTING ENGINEERS
CLEVELAND, OHIO COLUMBUS, OHIO WHEELING, W. VA.

# WEST ABUTMENT DETAILS

BRIDGE NO. CUY-480-1171
RAMP T-3 OVER RELOCATED BIG CREEK
STA. 643+72.94 TO
CUYAHOGA COUNTY STA. 644+94.96

| DESIGNED | DRAWN | TRACED | CHECKED | REVIEWED | DATE | REVISED |
|---|---|---|---|---|---|---|
| RT | RT | | HT | G.W.M. | 12/9/71 | |

MICROFILMED
JAN 22 1991

| FED. RD. DIVISION | STATE | PROJECT | TYPE FUNDS |
|---|---|---|---|
| 2 | OHIO | | |

444
500

CUYAHOGA COUNTY
CUY-480-10.39

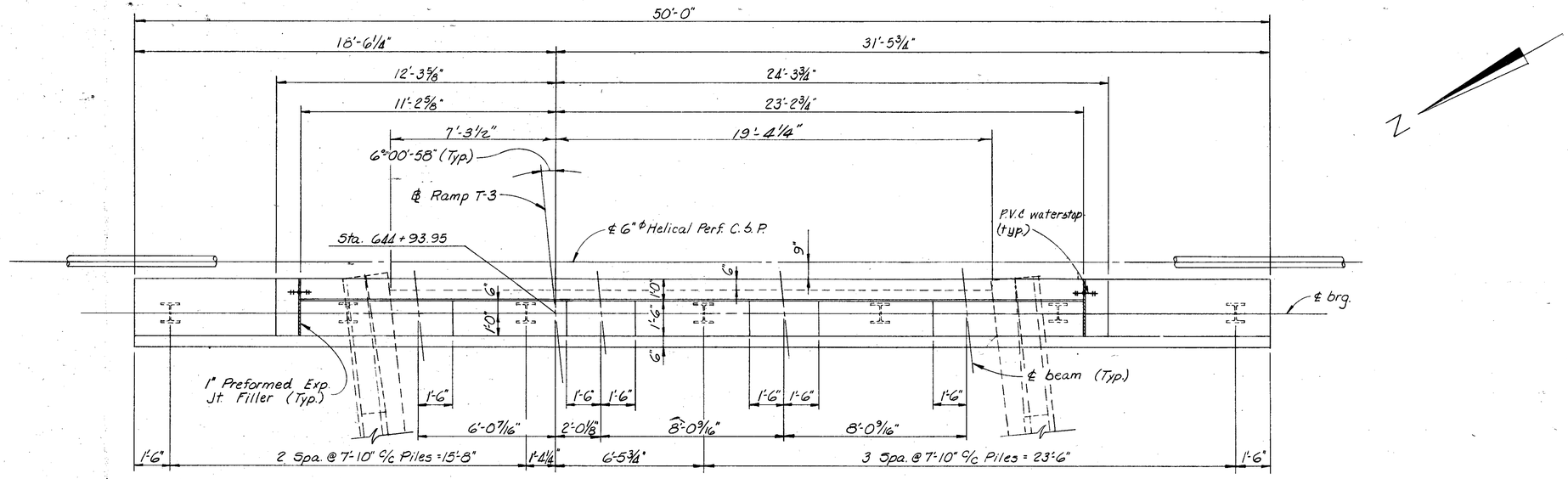


PLAN

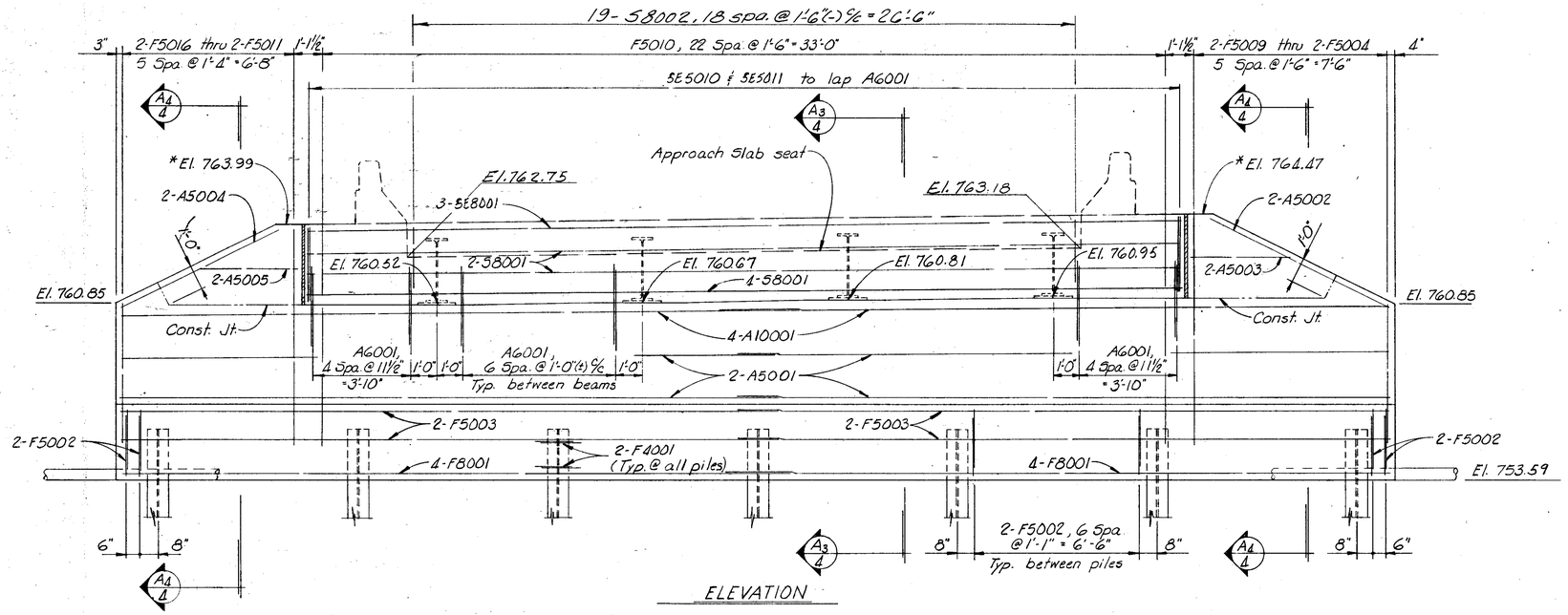


ELEVATION

NOTES

All piles shall be HP10x42 vertical steel piles.

Porous backfill, 1'-6" thick, shall extend up to the plane of the subgrade and laterally to the ends of wingwalls.

Concrete in wingwalls above beam seats shall not be placed until the structural steel has been erected and the bars which are to be threaded thru the beam webs have been placed.

*Elevations marked with an asterisk are at the front face of wall.

All reinforcing steel in footings shall have 3" minimum cover.

Only that portion of the 6" C.S.P. located in the porous backfill shall be perforated.

For sections thru Superstructure backwall see sheet 8 / 9.

For termination of 6" ϕ C.S.P., see common details, Sht. 476

For details of P.V.C. Waterstop see Common Detail Sheet 476

5 / 9

ALDEN E. STILSON & ASSOCIATES, LIMITED
CONSULTING ENGINEERS
CLEVELAND, OHIO COLUMBUS, OHIO WHEELING, W. VA.

# EAST ABUTMENT DETAILS

BRIDGE NO. CUY-480-1171
RAMP T-3 OVER RELOCATED BIG CREEK
STA. 643+72.94 TO
CUYAHOGA COUNTY STA. 644+94.96

| DESIGNED | DRAWN | TRACED | CHECKED | REVIEWED | DATE | REVISED |
|---|---|---|---|---|---|---|
| RT | RT | | HT | G.W.M. | 12/3/71 | |

MICROFILMED
JAN 22 1991

| FED. RD. DIVISION | STATE | PROJECT | TYPE FUNDS |
|---|---|---|---|
| 2 | OHIO | | |

445/500

CUYAHOGA COUNTY
CUY-480-10.39

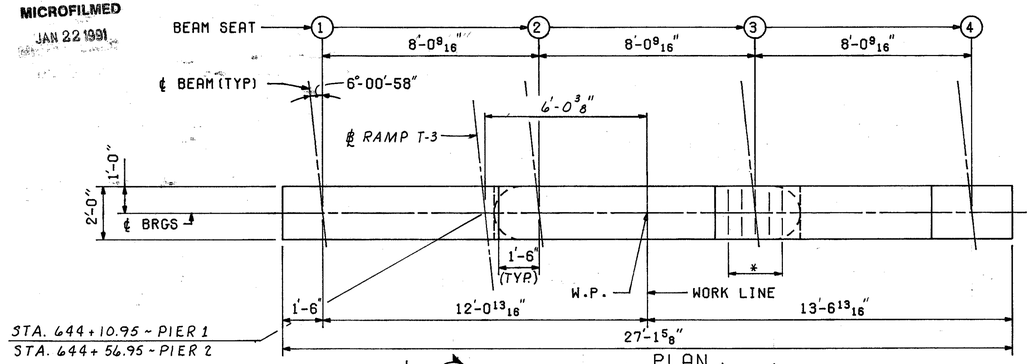


PLAN

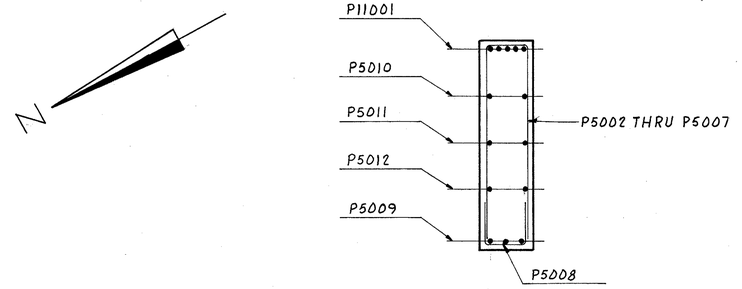


SECTION P2 -P2

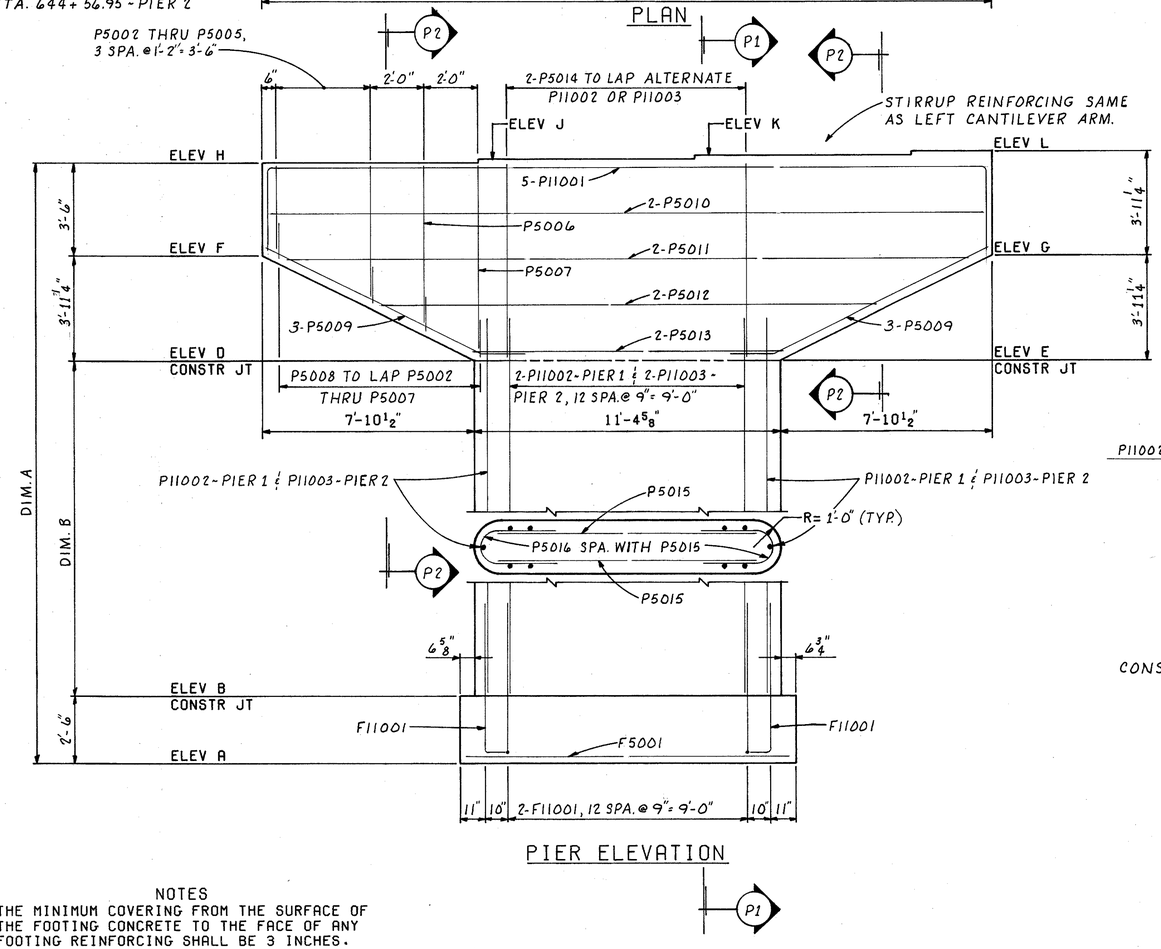


PIER ELEVATION

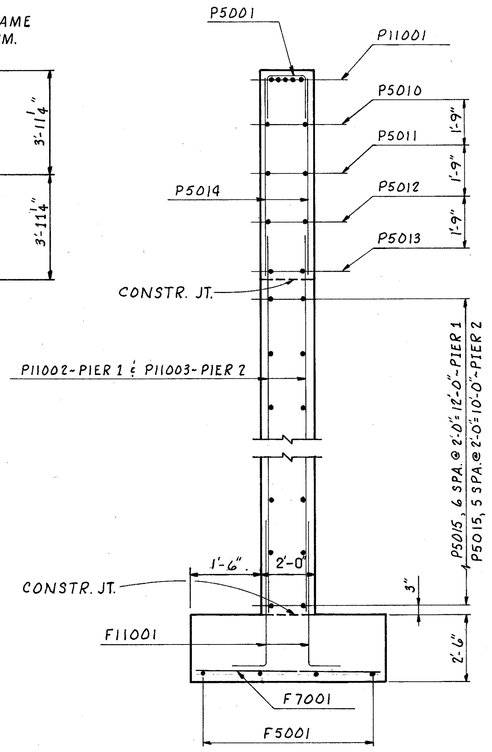


SECTION P1 -P1

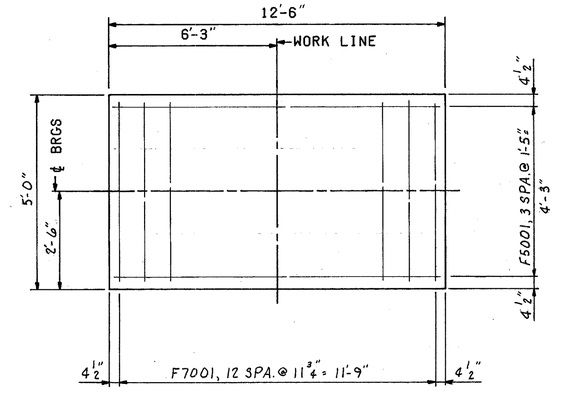


FOOTING PLAN

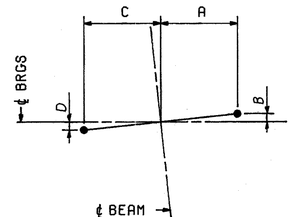


ANCHOR BOLT SETTING

| ANCHOR BOLT LOCATIONS | | | | |
|---|---|---|---|---|
| BM | A | B | C | D |
| 1 | 0'-7 7/16" | 0'-0 13/16" | 0'-7 7/16" | 0'-0 13/16" |
| 2 | 0'-7 7/16" | 0'-0 13/16" | 0'-7 7/16" | 0'-0 13/16" |
| 3 | 0'-7 7/16" | 0'-0 13/16" | 0'-7 7/16" | 0'-0 13/16" |
| 4 | 0'-7 7/16" | 0'-0 13/16" | 0'-7 7/16" | 0'-0 13/16" |

NOTES

THE MINIMUM COVERING FROM THE SURFACE OF THE FOOTING CONCRETE TO THE FACE OF ANY FOOTING REINFORCING SHALL BE 3 INCHES.

* PLACE 5-P5001 BARS SPACED AT 6 INCHES CENTER-TO-CENTER UNDER EACH BEAM SEAT.

SPECIAL CARE SHALL BE TAKEN IN PLACING REINFORCING STEEL IN THE VICINITY OF THE BEAM SEATS SO AS TO AVOID INTERFERENCE WITH THE DRILLING OF ANCHOR BOLT HOLES or the presetting of bearing anchors.

*Bearing Anchors: At the option of the Contractor, bearing anchors (or formed holes), located and supported by templates, may be cast in place*

| TABLE OF ELEVATIONS AND DIMENSIONS | | | | | | | | | | | | |
|---|---|---|---|---|---|---|---|---|---|---|---|---|
| PIER | ELEV A | ELEV B | ELEV D | ELEV E | ELEV F | ELEV G | ELEV H | ELEV J | ELEV K | ELEV L | DIM. A | DIM. B |
| 1 | 739.69 | 742.19 | 754.87 | 754.87 | 758.81 | 758.81 | 762.31 | 762.46 | 762.60 | 762.75 | 22'-7 1/2" | 12'-8 1/4" |
| 2 | 739.69 | 742.19 | 753.75 | 753.75 | 757.69 | 757.69 | 761.19 | 761.33 | 761.48 | 761.62 | 21'-6" | 11'-6 3/4" |

6/9

ALDEN E. STILSON & ASSOCIATES, LIMITED
CONSULTING ENGINEERS
CLEVELAND, OHIO COLUMBUS, OHIO WHEELING, W. VA.

# PIER DETAILS

BRIDGE NO. CUY-480-1171
RAMP T-3 OVER RELOCATED BIG CREEK
STA. 643+72.94 TO
CUYAHOGA COUNTY STA. 644+94.96

| DESIGNED | DRAWN | TRACED | CHECKED | REVIEWED | DATE | REVISED |
|---|---|---|---|---|---|---|
| RT | DW | | HT | G.W.M. | 10/9/11 | |

MICROFILMED
JAN 22 1971

All longitudinal reinforcing shall be 55018 or 55019 unless otherwise noted. Longitudinal reinforcing in the parapets shall be SE5005 and SE5006.

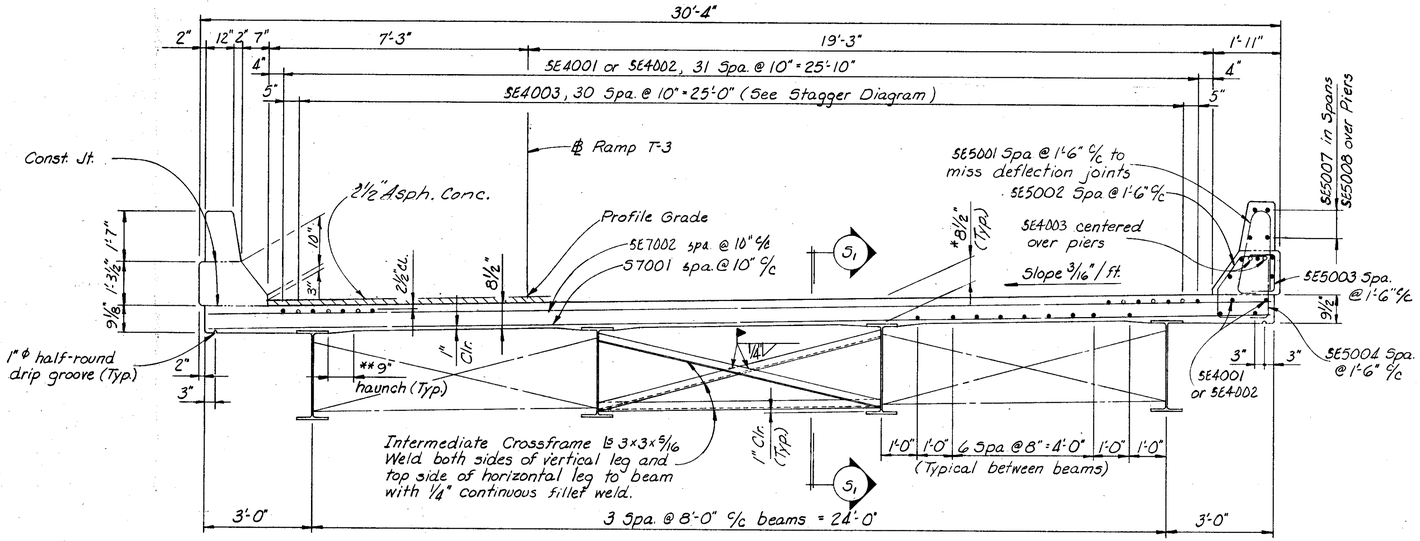


Note: For details of Asphalt Concrete Surface Course and Subdrainage See Sht. No. 476

TRANSVERSE SECTION

For details and reinforcing in parapet transition see sheet 3 / 9

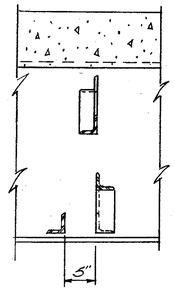


SECTION ~ 5, - 5,

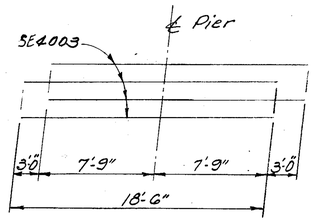


STAGGER DIAGRAM

Where "(CVN)" follows a shape or plate size designation, the material shall meet specified minimum notch toughness requirements.

* The distance shown from top of deck slab to top of steel beam is the design dimension. The quantity of deck concrete to be paid for shall be based on this dimension, even though deviation from it may be necessary because the top flange of the beam may not have the exact camber or conformation required to place it parallel to the finished grade.

** A haunch width of 9" shall be used for computing quantity of concrete. However, the haunch width may vary between 6" and 12" provided that the slope shall be not more than 1:4 for a haunch less than 9" in width.

Lap SE4001 and SE4002 bars 1'-3".
Lap SE5005 and SE5006 bars 1'-7".
Lap S5018 and S5019 bars 1'-7".
Quantities of concrete and reinforcing steel for railing shall be included with their appropriate Item for payment.

S7001 ℄ SE7002 bars shall be placed parallel to ℄ bearings. Spacing is measured along ℄ Ramp T-3.

For additional notes and details see sheet 8 / 9

WELDING ATTACHMENTS: See sheet 366 / 500

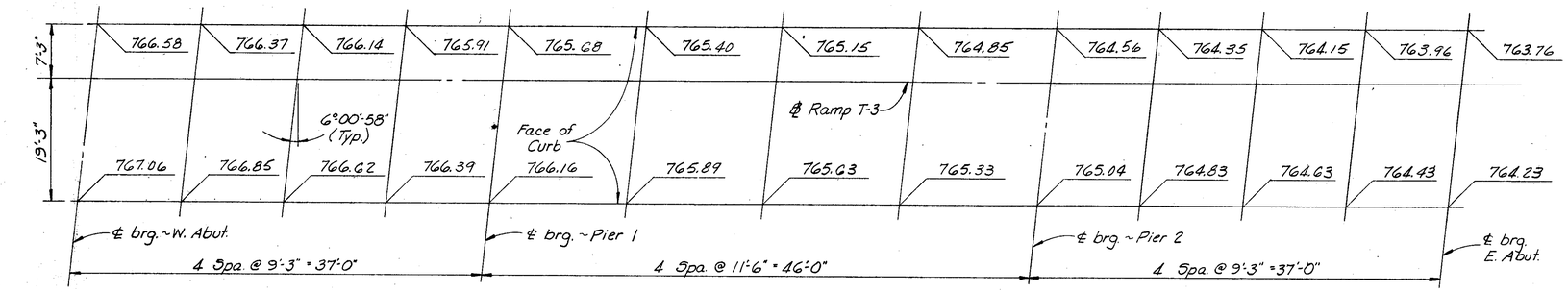


SCREED ELEVATIONS

Screed elevations are at top of slab before the concrete is placed. Proper allowance has been made for the dead load deflection due to the weight of the concrete.

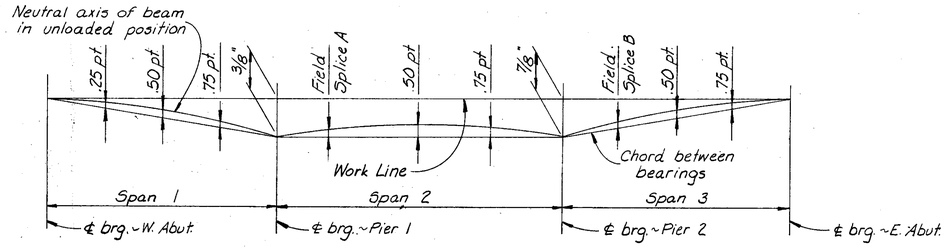


CAMBER AND BLOCKING DIAGRAM

DEFLECTION AND CAMBER

| Camber Description | Span 1 | | | Span 2 | | | Span 3 | | |
|---|---|---|---|---|---|---|---|---|---|
| | .25 pt. | .50 pt. | .75 pt. | Splice | .50 pt. | .75 pt. | Splice | .50 pt. | .75 pt. |
| Defl. due to weight of steel | 0 | 0 | 0 | 0 | 1/16 | 0 | 0 | 0 | 0 |
| Defl. due to remaining dead load | 1/8 | 1/8 | 1/16 | 1/16 | 3/8 | 1/8 | 1/16 | 1/8 | 1/8 |
| Adjustment due to curvature | 0 | 0 | 0 | 0 | 0 | 0 | -3/16 | -1/4 | -3/16 |
| Required shop camber | 1/8 | 1/8 | 1/16 | 1/16 | 7/16 | 1/8 | -1/8 | -1/8 | -1/16 |

minus (-) values indicates that the neutral axis of the beam in unloaded position is below the chord between bearings.

| FED. RD. DIVISION | STATE | PROJECT | TYPE FUNDS |
|---|---|---|---|
| 2 | OHIO | | |

446 / 500

CUYAHOGA COUNTY
CUY-480-10.39

Notes:

7 / 9

ALDEN E. STILSON & ASSOCIATES, LIMITED
CONSULTING ENGINEERS
CLEVELAND, OHIO COLUMBUS, OHIO WHEELING, W. VA.

# SUPERSTRUCTURE DETAILS

BRIDGE NO. CUY-480-1171
RAMP T-3 OVER RELOCATED BIG CREEK
STA. 643+72.94 TO
CUYAHOGA COUNTY STA. 644+94.96

| DESIGNED | DRAWN | TRACED | CHECKED | REVIEWED | DATE | REVISED |
|---|---|---|---|---|---|---|
| RT | RT | | HT | G.W.M. | 12/9/71 | |

MICROFILMED
JAN 22 1991

| FED. RD. DIVISION | STATE | PROJECT | TYPE FUNDS |
|---|---|---|---|
| 2 | OHIO | | |

447
500

CUYAHOGA COUNTY
CUY-480-10.39

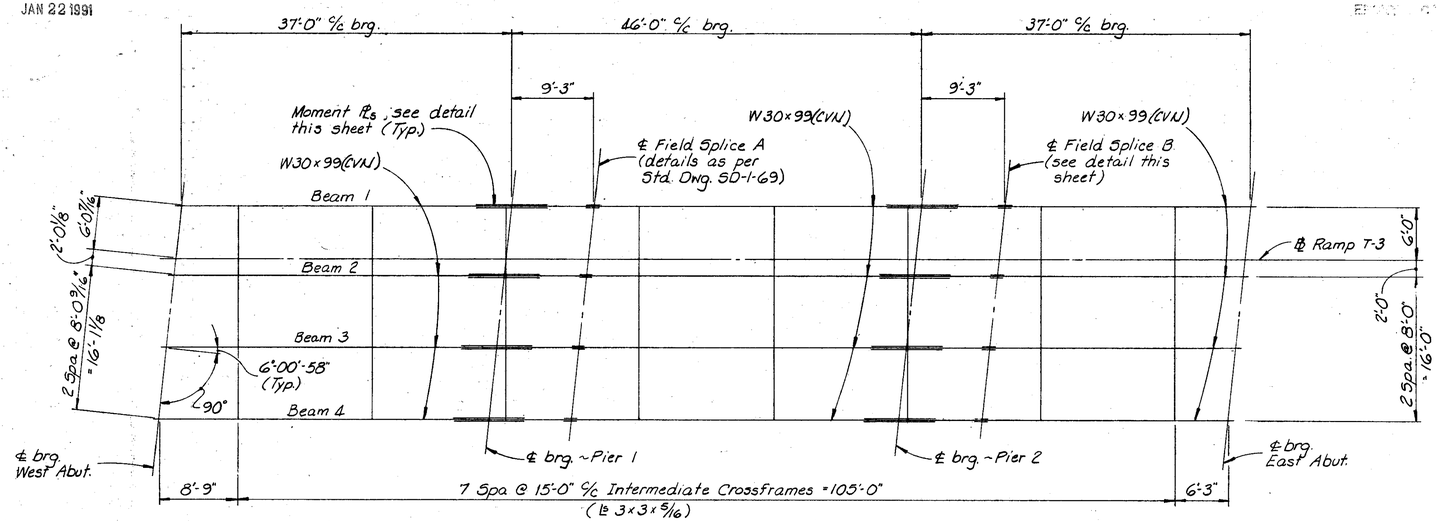


FRAMING PLAN

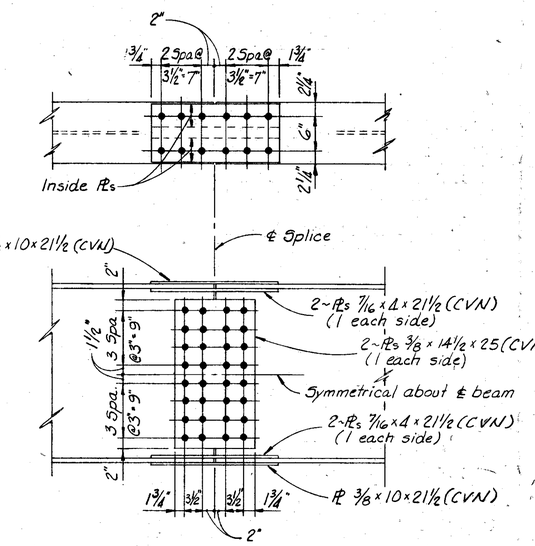


FIELD SPLICE B DETAILS

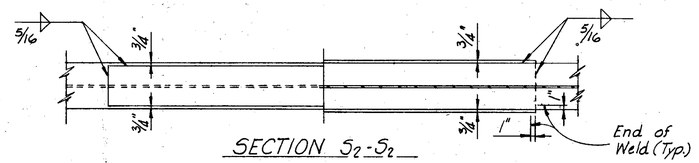


SECTION $S_2$-$S_2$

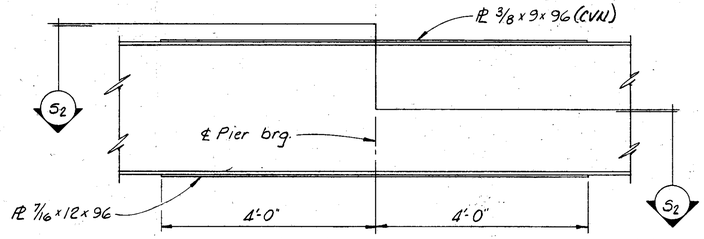


MOMENT Pl DETAILS

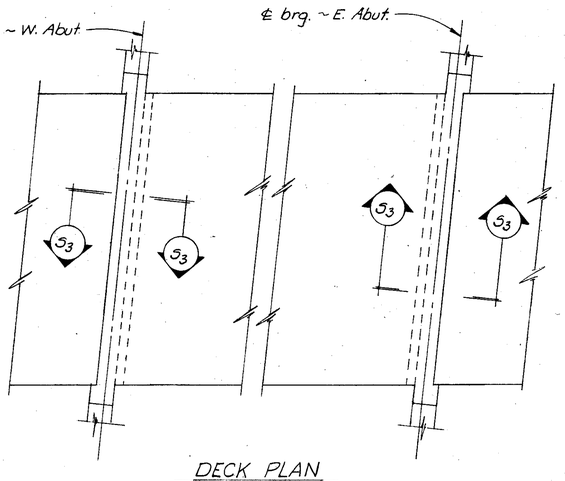


DECK PLAN

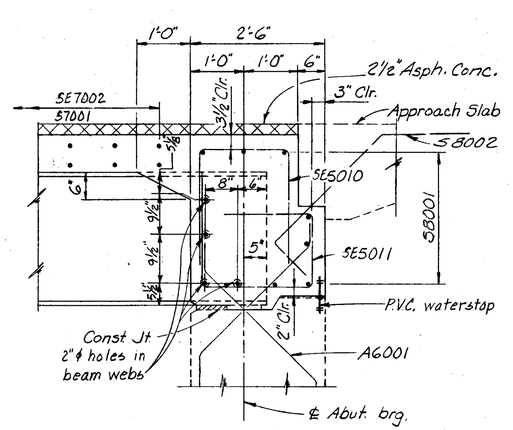


SECTION $S_3$-$S_3$

For placement of reinforcing steel and Approach Slab seat elevations see sheet 4/9 and 5/9.

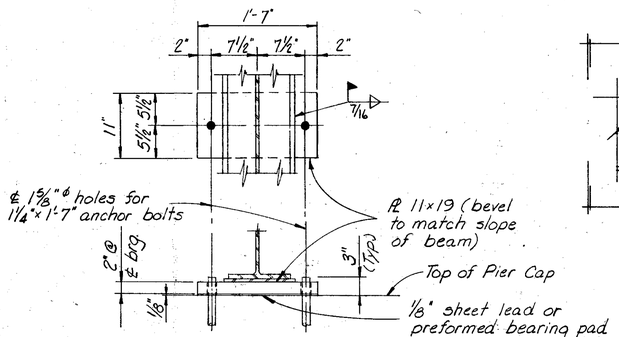


PIER BEARING DETAILS

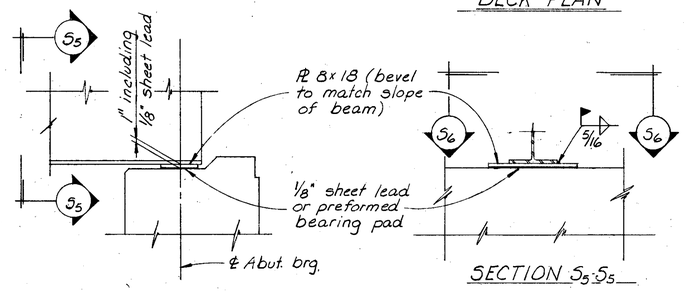


SECTION $S_5$-$S_5$

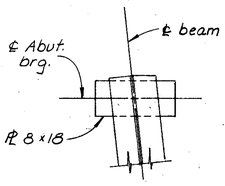


SECTION $S_6$-$S_6$

ABUTMENT BEARING DETAILS

NOTES

Place intermediate crossframes normal to beams.

Bolts for field splices shall be 1" diameter A325. Bolt heads shall be placed on the fascia side of the exterior beams and the bottom side of all bottom flanges.

For additional notes and details see sheet 7/9.

8/9

ALDEN E. STILSON & ASSOCIATES, LIMITED
CONSULTING ENGINEERS
CLEVELAND, OHIO COLUMBUS, OHIO WHEELING, W. VA.

# SUPERSTRUCTURE DETAILS

BRIDGE NO. CUY-480-1171
RAMP T-3 OVER RELOCATED BIG CREEK
STA. 643+72.94 TO STA. 644+94.96
CUYAHOGA COUNTY

| DESIGNED | DRAWN | TRACED | CHECKED | REVIEWED | DATE | REVISED |
|---|---|---|---|---|---|---|
| RT | RT | | HT | G.W.M. | 12/9/71 | |

MICROFILMED
JAN 22 1991

| MARK | NUM. | LENGTH | WEIGHT | TYPE | A | B | C | D | E | NOTE |
|---|---|---|---|---|---|---|---|---|---|---|
| | | | | WEST | ABUTMENT | | | | | |
| F 4001 | 28 | 5- 4 | 100 | 1 | | 1-11 | 1- 9 | 1-11 | | |
| F 5002 | 92 | 6- 5 | 616 | 1 | | 2- 1 | 2- 6 | 2- 1 | | |
| F 5003 | 8 | 25- 7 | 213 | ST | | | | | | |
| F 5004 | 2 | 5- 8 | | ST | | | | | | 1 |
| THRU | | | 93 | | VARY | LENGTH | BY | | 0- 8 | 5/ 8 |
| F 5009 | 2 | 9- 3 | | ST | | | | | | 1 |
| F 5010 | 23 | 13- 2 | 316 | 1 | | 5- 8 | 2- 1 | 5- 8 | | |
| F 5011 | 2 | 8- 7 | | ST | | | | | | 1 |
| THRU | | | 89 | | VARY | LENGTH | BY | | 0- 7 | |
| F 5016 | 2 | 5- 8 | | ST | | | | | | 1 |
| F 8001 | 8 | 26- 0 | 555 | ST | | | | | | |
| A 5001 | 8 | 25- 8 | 214 | ST | | | | | | |
| A 5002 | 2 | 7-10 | 16 | ST | | | | | | |
| A 5003 | 2 | 4- 0 | 8 | ST | | | | | | |
| A 5004 | 2 | 6-10 | 14 | ST | | | | | | |
| A 5005 | 2 | 3-10 | 8 | ST | | | | | | |
| A 6001 | 31 | 10- 0 | 466 | 20 | 2- 2 | 1- 0 | 2- 2 | 0- 6 | 2- 2 | |
| A10001 | 8 | 26- 5 | 909 | ST | | | | | | |
| | | | | EAST | ABUTMENT | | | | | |
| F 4001 | 28 | 5- 4 | 100 | 1 | | 1-11 | 1- 9 | 1-11 | | |
| F 5002 | 92 | 6- 5 | 616 | 1 | | 2- 1 | 2- 6 | 2- 1 | | |
| F 5003 | 8 | 25- 7 | 213 | ST | | | | | | |
| F 5004 | 2 | 5- 8 | | ST | | | | | | 1 |
| THRU | | | 93 | | VARY | LENGTH | BY | | 0- 8 | 5/ 8 |
| F 5009 | 2 | 9- 3 | | ST | | | | | | 1 |
| F 5010 | 23 | 13- 2 | 316 | 1 | | 5- 8 | 2- 1 | 5- 8 | | |
| F 5011 | 2 | 8- 7 | | ST | | | | | | 1 |
| THRU | | | 89 | | VARY | LENGTH | BY | | 0- 7 | |
| F 5016 | 2 | 5- 8 | | ST | | | | | | 1 |
| F 8001 | 8 | 26- 0 | 555 | ST | | | | | | |
| A 5001 | 8 | 25- 8 | 214 | ST | | | | | | |
| A 5002 | 2 | 7-10 | 16 | ST | | | | | | |
| A 5003 | 2 | 4- 0 | 8 | ST | | | | | | |
| A 5004 | 2 | 6-10 | 14 | ST | | | | | | |
| A 5005 | 2 | 3-10 | 8 | ST | | | | | | |
| A 6001 | 31 | 10- 0 | 466 | 20 | 2- 2 | 1- 0 | 2- 2 | 0- 6 | 2- 2 | |
| A10001 | 8 | 26- 5 | 909 | ST | | | | | | |

| MARK | NUM. | LENGTH | WEIGHT | TYPE | A | B | C | D | E | NOTE |
|---|---|---|---|---|---|---|---|---|---|---|
| | | | | PIER 1 | | | | | | |
| F 5001 | 4 | 12- 0 | 50 | ST | | | | | | |
| F 7001 | 13 | 4- 6 | 120 | ST | | | | | | |
| F11001 | 28 | 7- 2 | 1066 | 1 | 1- 8 | 5-10 | | | | |
| P 5001 | 20 | 4- 5 | 92 | 1 | | 1- 6 | 1- 8 | 1- 6 | | |
| P 5002 | 2 | 7- 9 | | 1 | | 3- 2 | 1- 8 | 3- 2 | | 1 |
| THRU | | | 79 | | VARY | LENGTH | BY | 1- 2 | | |
| | | | | | VARY | DIM. B | BY | 0- 7 | | |
| | | | | | VARY | DIM. D | BY | 0- 7 | | |
| P 5005 | 2 | 11- 3 | | 1 | | 4-11 | 1- 8 | 4-11 | | 1 |
| P 5006 | 2 | 13- 3 | 28 | 1 | | 5-11 | 1- 8 | 5-11 | | |
| P 5007 | 2 | 15- 3 | 32 | 1 | | 6-11 | 1- 8 | 6-11 | | |
| P 5008 | 12 | 4-11 | 62 | 1 | | 1-10 | 1- 8 | 1- 8 | | |
| P 5009 | 6 | 10- 4 | 65 | 12 | 1- 7 | 7-10 | | 4- 0 | | |
| P 5010 | 2 | 26- 9 | 56 | ST | | | | | | |
| P 5011 | 2 | 25- 4 | 53 | ST | | | | | | |
| P 5012 | 2 | 18- 4 | 38 | ST | | | | | | |
| P 5013 | 2 | 11- 4 | 24 | ST | | | | | | |
| P 5014 | 14 | 7- 4 | 107 | ST | | | | | | |
| P 5015 | 12 | 9- 4 | 117 | ST | | | | | | |
| P 5016 | 12 | 5- 7 | 70 | 7 | 1- 7 | 1- 7 | 0- 9 | | | |
| P11001 | 5 | 32- 5 | 861 | 1 | | 3- 2 | 26- 9 | 3- 2 | | |
| P11002 | 28 | 14- 3 | 2120 | ST | | | | | | |
| | | | | PIER 2 | | | | | | |
| F 5001 | 4 | 12- 0 | 50 | ST | | | | | | |
| F 7001 | 13 | 4- 6 | 120 | ST | | | | | | |
| F11001 | 28 | 7- 2 | 1066 | 1 | 1- 8 | 5-10 | | | | |
| P 5001 | 20 | 4- 5 | 92 | 1 | | 1- 6 | 1- 8 | 1- 6 | | |
| P 5002 | 2 | 7- 9 | | 1 | | 3- 2 | 1- 8 | 3- 2 | | 1 |
| THRU | | | 79 | | VARY | LENGTH | BY | 1- 2 | | |
| | | | | | VARY | DIM. B | BY | 0- 7 | | |
| | | | | | VARY | DIM. D | BY | 0- 7 | | |
| P 5005 | 2 | 11- 3 | | 1 | | 4-11 | 1- 8 | 4-11 | | 1 |
| P 5006 | 2 | 13- 3 | 28 | 1 | | 5-11 | 1- 8 | 5-11 | | |
| P 5007 | 2 | 15- 3 | 32 | 1 | | 6-11 | 1- 8 | 6-11 | | |
| P 5008 | 12 | 5- 1 | 64 | 1 | | 1-10 | 1- 8 | 1-10 | | |
| P 5009 | 4 | 10- 4 | 43 | 12 | 1- 7 | 7-10 | | 4- 0 | | |
| P 5010 | 2 | 26- 9 | 56 | ST | | | | | | |
| P 5011 | 2 | 25- 4 | 53 | ST | | | | | | |
| P 5012 | 2 | 18- 4 | 38 | ST | | | | | | |
| P 5013 | 2 | 11- 4 | 24 | ST | | | | | | |
| P 5014 | 14 | 7- 4 | 107 | ST | | | | | | |
| P 5015 | 12 | 9- 4 | 117 | ST | | | | | | |
| P 5016 | 12 | 5- 7 | 70 | 7 | 1- 7 | 1- 7 | 0- 9 | | | |
| P11001 | 5 | 32- 5 | 861 | 1 | | 3- 2 | 26- 9 | 3- 2 | | |
| P11003 | 28 | 13- 2 | 1959 | ST | | | | | | |

| MARK | NUM. | LENGTH | WEIGHT | TYPE | A | B | C | D | E | NOTE |
|---|---|---|---|---|---|---|---|---|---|---|
| | | | | SUPERSTRUCTURE | | | | | | |
| | | EPOXY | COATED | D | REINFORCING | | STEEL | | | |
| SE4001 | 108 | 30- 0 | 2164 | ST | | | | | | |
| SE4002 | 36 | 36- 6 | 878 | ST | | | | | | |
| SE4003 | 70 | 18- 6 | 865 | ST | | | | | | |
| SE5001 | 148 | 5- 4 | 823 | 19 | 0- 8 | 2- 5 | 2- 2 | | | |
| SE5002 | 164 | 3- 6 | 599 | 15 | 0-10 | 1- 0 | 0- 9 | 1- 0 | 0- 6 | |
| SE5003 | 168 | 2- 1 | 365 | 1 | | 0- 8 | 1- 0 | 0- 8 | | |
| SE5004 | 148 | 2- 0 | 309 | 1 | 0- 8 | 1- 6 | | | | |
| SE5005 | 30 | 30- 0 | 939 | ST | | | | | | |
| SE5006 | 10 | 37- 6 | 391 | ST | | | | | | |
| SE5007 | 48 | 15- 2 | 759 | ST | | | | | | 3 |
| SE5008 | 32 | 7- 2 | 239 | ST | | | | | | |
| SE5010 | 62 | 5-11 | 383 | 1 | | 2- 4 | 1- 6 | 2- 4 | | |
| SE5011 | 62 | 6-10 | 442 | 2 | | 2- 4 | 2- 0 | 1- 5 | 1- 6 | |
| SE5012 | 4 | 1-10 | 8 | 15 | | | 0- 9 | 1- 0 | 0- 6 | |
| SE5016 | 32 | 2-11 | 97 | ST | | | | | | |
| SE5017 | 8 | 2- 2 | 18 | ST | | | | | | |
| SE7002 | 142 | 29-10 | 8659 | ST | | | | | | |
| | | | | SUPERSTRUCTURE | | | | | | |
| S 5018 | 93 | 30- 0 | 2910 | ST | | | | | | |
| S 5019 | 31 | 37- 6 | 1212 | ST | | | | | | |
| S 7001 | 142 | 29-10 | 8659 | ST | | | | | | |
| S 8001 | 22 | 34- 1 | 2002 | ST | | | | | | |
| S 8002 | 38 | 4-10 | 490 | 15 | 1- 1 | 2- 6 | 1- 1 | | 1- 1 | |

| FED. RD. DIVISION | STATE | PROJECT | TYPE FUNDS |
|---|---|---|---|
| 5 | OHIO | | |

448
500

CUYAHOGA COUNTY

CUY-480-10.39

NOTES

1. INDICATES SERIES BAR. EACH BAR VARIES FROM ADJACENT BAR(S) BY TABULATED AMOUNT(S), CALCULATED TO NEAREST 1/8 INCH. WEIGHT SHOWN IS FOR ENTIRE SERIES UTILIZING AVERAGE LENGTH.

3. COST OF FIELD BENDING SHALL BE INCLUDED WITH ITEM 509.

REFER TO CMS SECTIONS 106.03, 700, 709.01 THROUGH 709.05 AND 709.08. SUFFICIENT ADDITIONAL REINFORCING STEEL SHALL BE PROVIDED FOR SAMPLING. RANDOM SAMPLES SHALL BE REPLACED IN THE STRUCTURES BY THE ADDITIONAL STEEL, SPLICED IN ACCORDANCE WITH 509.08.

BAR DIMENSIONS ARE OUT TO OUT.

A BAR MARK WITH THE PREFIX 'SE' INDICATES THAT REINFORCING STEEL SHALL BE EPOXY COATED.

BAR BENDING DIAGRAM TYPES

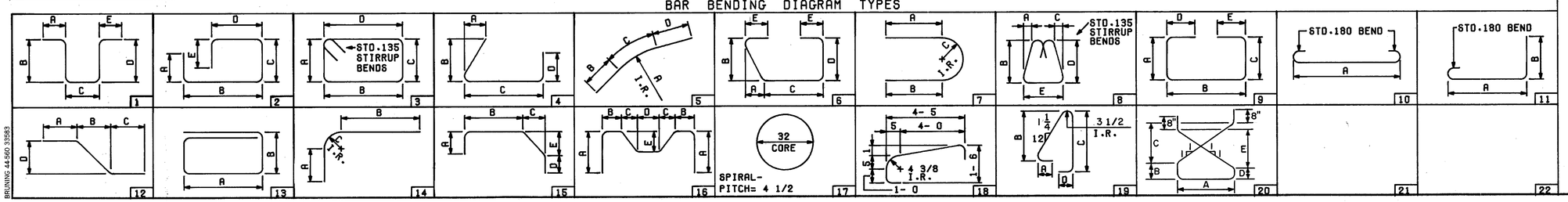


9/9

ALDEN E. STILSON & ASSOCIATES, LIMITED
CONSULTING ENGINEERS
CLEVELAND, OHIO COLUMBUS, OHIO WHEELING, W. VA.

# REINFORCING STEEL LIST

BRIDGE NO. CUY-480-1171
RAMP T-3 OVER RELOCATED BIG CREEK
STA 643+72.94 TO
CUYAHOGA COUNTY STA 644+94.96

| DESIGNED | DRAWN | TRACED | CHECKED | REVIEWED | DATE | REVISED |
|---|---|---|---|---|---|---|
| | | | | G.W.M. | 1/27/93 | |

BRUNING 44-560 33583

MICROFILMED
JAN 22 1991

| FED. RD. DIVISION | STATE | PROJECT | TYPE FUNDS |
|---|---|---|---|
| 2 | OHIO | | |

449/500

CUYAHOGA COUNTY
CUY. 480-10.39

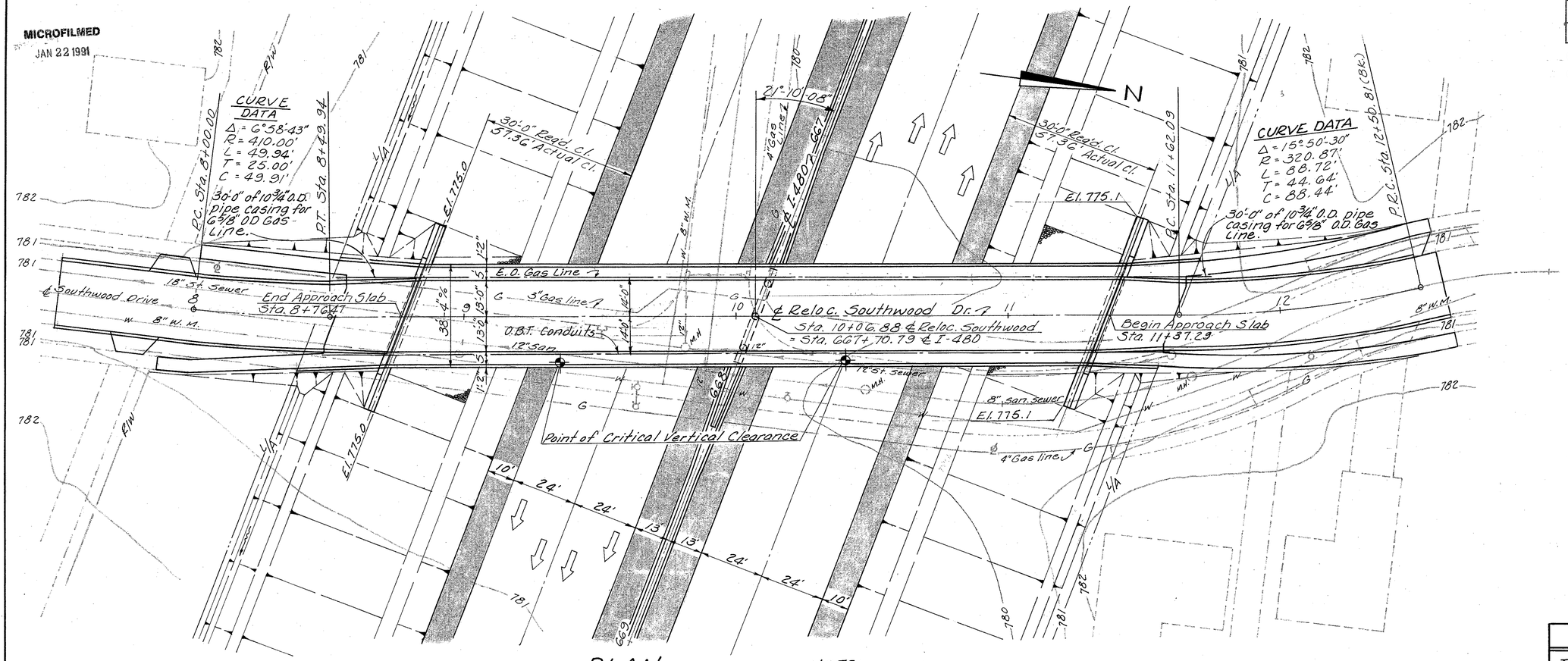


PLAN

NOTE:
Earthwork limits shown are approximate. Actual slopes shall conform to plan cross-sections.

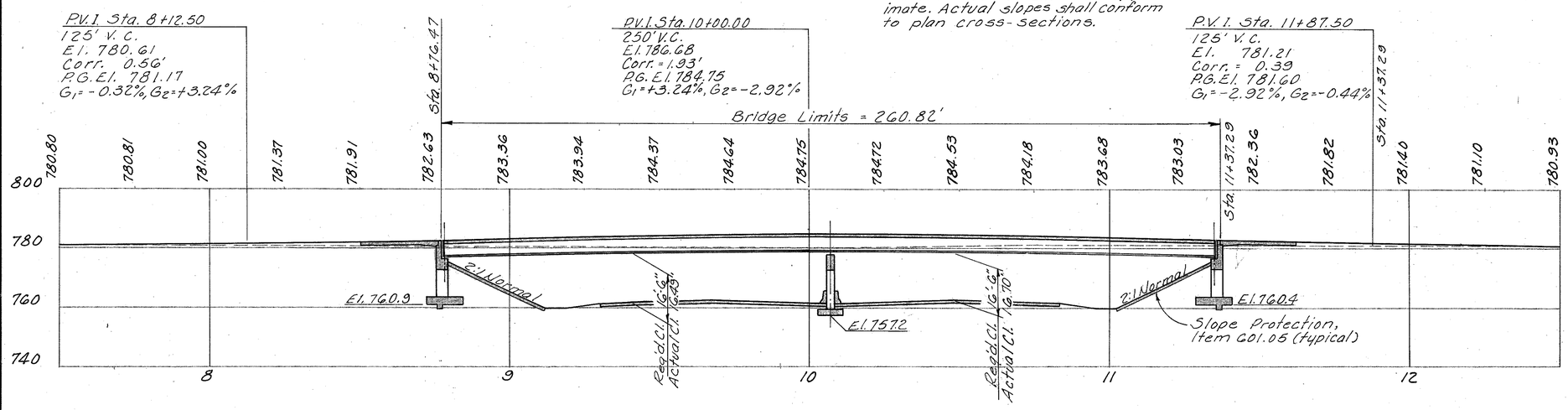


PROFILE ALONG ℄ RELOCATED SOUTHWOOD DRIVE

## PROPOSED STRUCTURE

TYPE: Continuous steel girder with reinforced concrete deck and substructure.
SPANS: 128'-0" & 128'-0" ℄ Brg's.
ROADWAY: 26'-0" f/f curbs. 5'-0" sidewalks & 6'-0" chain link fence mounted on 27" conc. parapet.
LOADING: H S 20-44 & the alternate military loadings. Fatigue Case II
WEARING SURFACE: Monolithic Conc.
SKEW: 21° 10'-08" L.F.
ALIGNMENT: Tangent
APPROACH SLABS: AS-1-72 (Mod.) 25'-0" long.

## TRAFFIC ESTIMATE

Design Year - 1990
Total A.D.T. - 740
A.D.T.T. - 0

1/13

ALDEN E. STILSON & ASSOCIATES, LIMITED
CONSULTING ENGINEERS
CLEVELAND, OHIO COLUMBUS, OHIO WHEELING, W. VA.

# SITE PLAN
## BRIDGE Nº. CUY-480-1216

I-480 UNDER RELOCATED SOUTHWOOD DRIVE
CUYAHOGA COUNTY
STA. 8+76.47
STA. 11+37.29

| DESIGNED | DRAWN | TRACED | CHECKED | REVIEWED | DATE | REVISED |
|---|---|---|---|---|---|---|
| G.W.M. | G.W.M. | R.T. | DEM | G.W.M. | 2/25/80 | |

MICROFILMED
JAN 22 1991

| FED. RD. DIVISION | STATE | PROJECT | TYPE FUNDS |
|---|---|---|---|
| 5 | OHIO | | |

450/500

CUYAHOGA COUNTY

CUY-480-10.39

STANDARD DRAWING REFERENCES

| DESCRIPTION | DWG. NO. SHT. | DATE |
|---|---|---|
| APPROACH SLABS | AS-1-81 | 11-27-81 |

SUPPLEMENTAL SPECIFICATION REFERENCES

| DESCRIPTION | NO. | DATE |
|---|---|---|
| CONCRETE CURING AND PROTECTIVE MEMBRANE | 836 | 3-12-75 |
| ELASTOMERIC COMPRESSION SEALS FOR STRUCTURAL STEEL JOINTS | 849 | 10-19-81 |
| EPOXY COATED REINFORCING STEEL | 824 | 10-08-82 |

COMMON DETAIL REFERENCES

| | | |
|---|---|---|
| CHAIN LINK FENCE | SHEET | 477 |

DESIGN SPECIFICATIONS

THIS STRUCTURE CONFORMS TO THE 'STANDARD SPECIFICATIONS FOR HIGHWAY BRIDGES' ADOPTED BY THE AMERICAN ASSOCIATION OF STATE HIGHWAY AND TRANSPORTATION OFFICIALS, 1977, INCLUDING 1978 INTERIM SPECIFICATIONS AND THE OHIO SUPPLEMENT TO THESE SPECIFICATIONS.

DESIGN DATA

DESIGN LOADING - HS20-44 AND THE INTERSTATE ALTERNATE LOADING, FATIGUE CASE II
CONCRETE CLASS S - COMPRESSIVE STRENGTH 4500 PSI FOR SUPERSTRUCTURE
CONCRETE CLASS C - COMPRESSIVE STRENGTH 4000 PSI FOR SUBSTRUCTURE
STRUCTURAL STEEL - ASTM A588 -UNIT STRESS 27000 PSI
REINFORCING STEEL - ASTM A615, A616 OR A617-GRADE 60 MINIMUM YIELD STRENGTH 60000 PSI

SPIRAL REINFORCEMENT MAY BE PLAIN BARS ASTM A82 OR A615

DECK PROTECTION METHOD - EPOXY COATED REINFORCING STEEL, TOP MAT ONLY

MONOLITHIC WEARING SURFACE -THICKNESS IS ASSUMED TO BE 1 INCH (FOR DESIGN PURPOSES)

FOUNDATION BEARING PRESSURE

ABUTMENT FOOTINGS ARE DESIGNED FOR A MAXIMUM BEARING PRESSURE OF 6.0 TONS PER SQ. FT.

PIER FOOTINGS ARE DESIGNED FOR A MAXIMUM BEARING PRESSURE OF 6.0 TONS PER SQ. FT.

FOOTINGS

PIER FOOTINGS SHALL BE PLACED IN BEDROCK AT THE ELEVATION SHOWN.

ABUTMENT FOOTINGS SHALL EXTEND A MINIMUM OF 3 INCHES INTO BEDROCK OR TO THE ELEVATION SHOWN, WHICHEVER IS LOWER.

UTILITY LINES

ALL EXPENSE INVOLVED IN RELOCATING AND INSTALLING THE AFFECTED UTILITY LINES SHALL BE BORNE BY THE OWNERS. THE CONTRACTOR AND OWNERS ARE REQUESTED TO COOPERATE BY ARRANGING THEIR WORK IN SUCH A MANNER THAT INCONVENIENCE TO EITHER WOULD BE HELD TO A MINIMUM.

BACKWALL CONCRETE

IN ADDITION TO THE PROVISIONS OF 511.08, BACKWALL CONCRETE ABOVE THE BRIDGE SEAT OR BACKWALL CONCRETE ABOVE THE OPTIONAL CONSTRUCTION JOINT AT THE APPROACH SLAB SEAT SHALL NOT BE PLACED UNTIL AFTER THE DECK CONCRETE IN THE SPAN ADJACENT TO THE ABUTMENT HAS BEEN PLACED.

| ITEM | TOTAL | UNIT | DESCRIPTION | ABUTS | PIER | SUPER | GENERAL | | | |
|---|---|---|---|---|---|---|---|---|---|---|
| 503 | LUMP | | COFFERDAMS, CRIBS AND SHEETING | | | | LUMP | | | |
| 503 | 704 | C.Y. | UNCLASSIFIED EXCAVATION | 661 | | | 43 | | | |
| 503 | 32 | C.Y. | SHALE EXCAVATION | 12 | 20 | | | | | |
| 509 | 62956 | LB | REINFORCING STEEL, GRADE 60 | 23121 | 7588 | 30244 | 2003 | | | |
| 511 | 382 | C.Y. | CLASS S CONCRETE, SUPERSTRUCTURE (SEE PROPOSAL NOTE) | | | 382 | | | | |
| 511 | 32 | C.Y. | CLASS C CONCRETE, PIER CAPS AND COLUMNS | | 32 | | | | | |
| 511 | 160 | C.Y. | CLASS C CONCRETE, ABUTMENTS ABOVE FOOTINGS | 160 | | | | | | |
| 511 | 90 | C.Y. | CLASS C CONCRETE, FOOTINGS | 70 | 20 | | | | | |
| 511 | 21 | C.Y. | CLASS C CONCRETE, APPROACH PARAPET WALLS | | | | 21 | | | |
| 512 | 6 | S.Y. | TYPE B WATERPROOFING | 6 | | | | | | |
| 513 | 367700 | LB | STRUCTURAL STEEL, AISC CATEGORY III (SEE PROPOSAL NOTE) * | | | 367700 | | | | |
| 516 | 77.21 | L.F. | ELASTOMERIC COMPRESSION SEALS FOR STRUCTURAL STEEL JOINTS | 77.21 | | | | | | |
| 516 | 5 | EACH | LAMINATED ELASTOMERIC BEARINGS (30" X21" X1" ELASTOMERIC PAD WITH 32"X23"X2" STEEL LOAD PLATE) | | 5 | | | | | |
| 516 | 10 | EACH | LAMINATED ELASTOMERIC BEARINGS (18"X12"X4-5/16" LAMINATED ELASTOMERIC PAD WITH 20"X14"X1" STEEL LOAD PLATE) | 10 | | | | | | |
| 516 | 25 | S.Y. | 1" PREFORMED EXPANSION JOINT FILLER | | | | 25 | | | |
| 517 | 515 | L.F. | RAILING (CONCRETE PARAPET WITH 60 INCH CHAIN LINK FENCE) AS PER PLAN | | | 515 | | | | |
| 518 | 65 | C.Y. | POROUS BACKFILL | 65 | | | | | | |
| 518 | 143 | L.F. | 6 INCH PERFORATED, HELICAL CORRUGATED STEEL PIPE, 707.01 | 143 | | | | | | |
| 518 | 56 | L.F. | 6 INCH NON-PERFORATED, HELICAL CORRUGATED STEEL PIPE, INCLUDING SPECIALS, 707.01 | 56 | | | | | | |
| 601 | 407 | S.Y. | CRUSHED AGGREGATE SLOPE PROTECTION | | | | 407 | | | |
| 607 | 113 | L.F. | FENCE, TYPE CL (AS PER PLAN) | | | | 113 | | | |
| 824 | 47190 | LB | EPOXY COATED REINFORCING STEEL, GRADE 60 | | | 47190 | | | | |
| SPEC | 1335 | S.F. | PROTECTION OF CONCRETE SURFACES (SEE PROPOSAL NOTE) | 475 | 860 | | | | | |
| SPEC | 60 | L.F. | 10-3/4" O.D. PIPE CASING, 0.279" WALL THICKNESS ** | | | | 60 | | | |

* 125 LBS. TO BE PAID FOR BY THE EAST OHIO GAS COMPANY; 1266 LBS. TO BE PAID FOR BY OHIO BELL TELEPHONE COMPANY

** TO BE PAID FOR BY THE EAST OHIO GAS COMPANY

□ ASTM A-588

2 1/3

ALDEN E. STILSON & ASSOCIATES, LIMITED
CONSULTING ENGINEERS
CLEVELAND, OHIO COLUMBUS, OHIO WHEELING, W. VA.

# GENERAL NOTES AND ESTIMATED QUANTITIES

BRIDGE NO. CUY-480-1216
I-480 UNDER RELOCATED SOUTHWOOD DRIVE
STA. 8+76.47
CUYAHOGA COUNTY STA. 11+37.29

| DESIGNED | DRAWN | TRACED | CHECKED | REVIEWED | DATE | REVISED |
|---|---|---|---|---|---|---|
| DEM | | | R.T 2-13-80 | G.W.M. 2/29/80 | | |

BRUNING 44-560 33583

MICROFILMED
JAN 22 1981

| FHWA REGION | STATE | PROJECT | |
|---|---|---|---|
| 5 | OHIO | | |

451/500

CUYAHOGA COUNTY
CUY-480-10.39

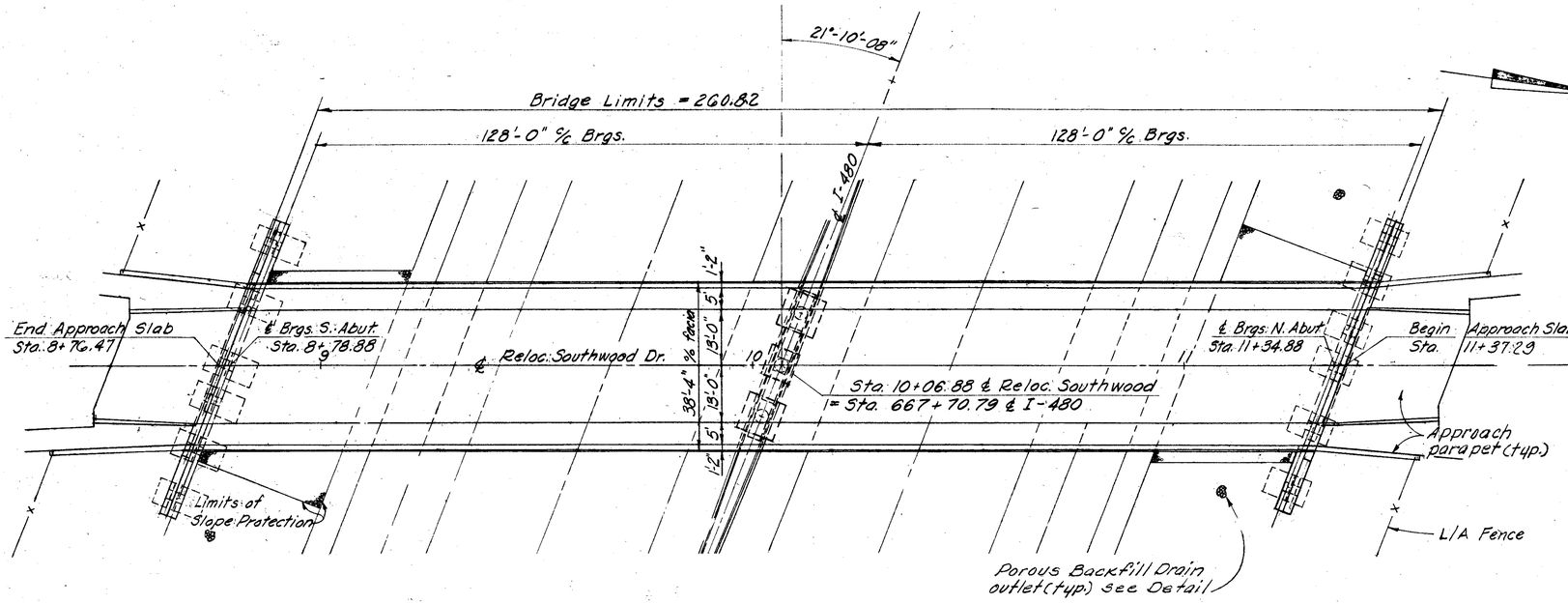


GENERAL PLAN

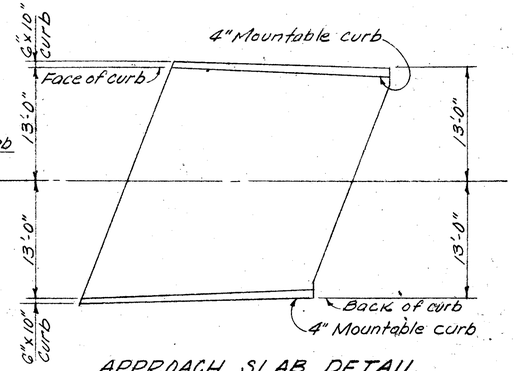


APPROACH SLAB DETAIL

Showing transition from bridge curb to approach roadway curb.

Note:

Limit of Item 517 Railing (Concrete parapet with 60 inch Chain Link Fence) As per plan, is from open joint to open joint at the abutments. Remainder of Fence is listed as Item 607 for payment.

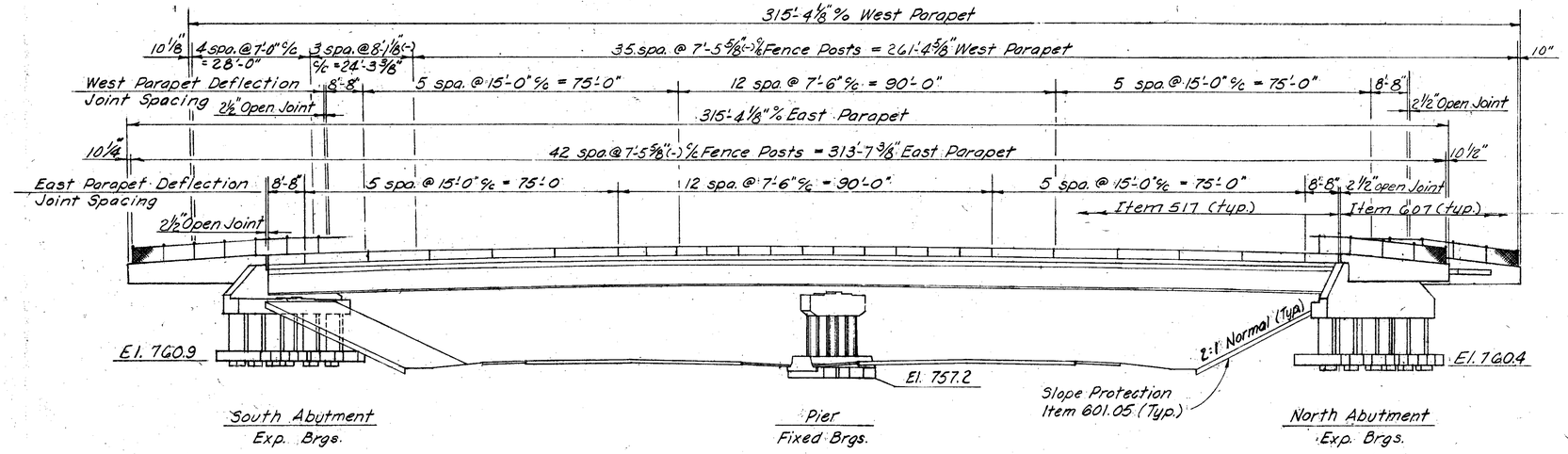


EAST ELEVATION

For Fence Details see Common Details, Sht. 477

For Approach Parapet Details see Sht. 12/13

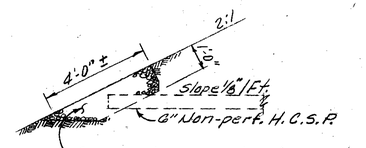


Crushed aggregate slope protection material at end of pipe. Include with Crushed Aggregate Slope Protection for payment.

DETAIL OF DRAINAGE OUTLET

3/13

ALDEN E. STILSON & ASSOCIATES
CONSULTING ENGINEERS
CLEVELAND, OHIO COLUMBUS, OHIO WHEELING, W. VA.

# GENERAL PLAN & ELEVATION

BRIDGE Nº CUY-480-1216

I-480 UNDER RELOCATED SOUTHWOOD DRIVE

CUYAHOGA COUNTY STA. 8+76.47 STA. 11+37.29

| DESIGNED | DRAWN | TRACED | CHECKED | REVIEWED | DATE | REVISED |
|---|---|---|---|---|---|---|
| DEM | R.T. | | W.M. | G.W.M. | 2/25/80 | |

MICROFILMED
JAN 22 1991

| FED. RD. DIVISION | STATE | PROJECT | TYPE FUNDS |
|---|---|---|---|
| 2 | OHIO | | |

452/500

CUYAHOGA COUNTY
CUY. 480-10.39

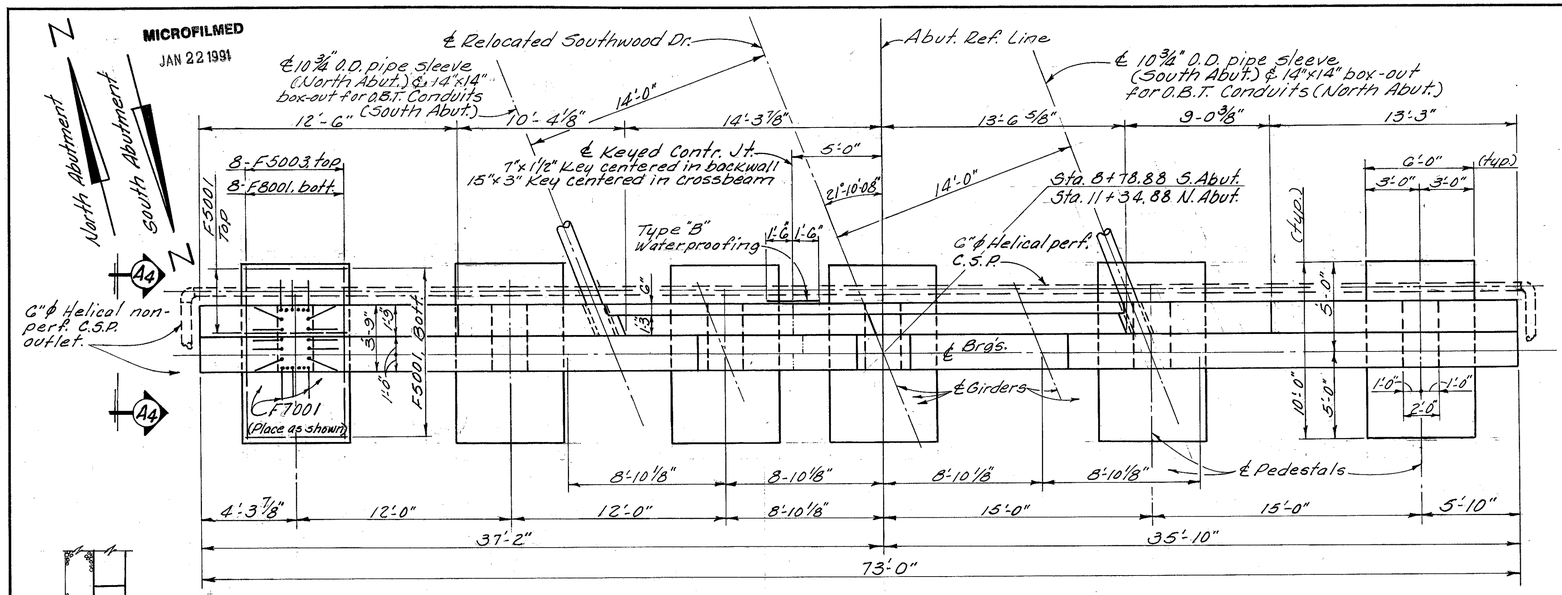


PLAN

Note:
* Elevations shown thus are pavement elevations at the face of backwall and the point indicated.

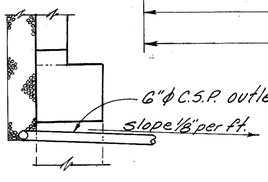


VIEW A4-A4

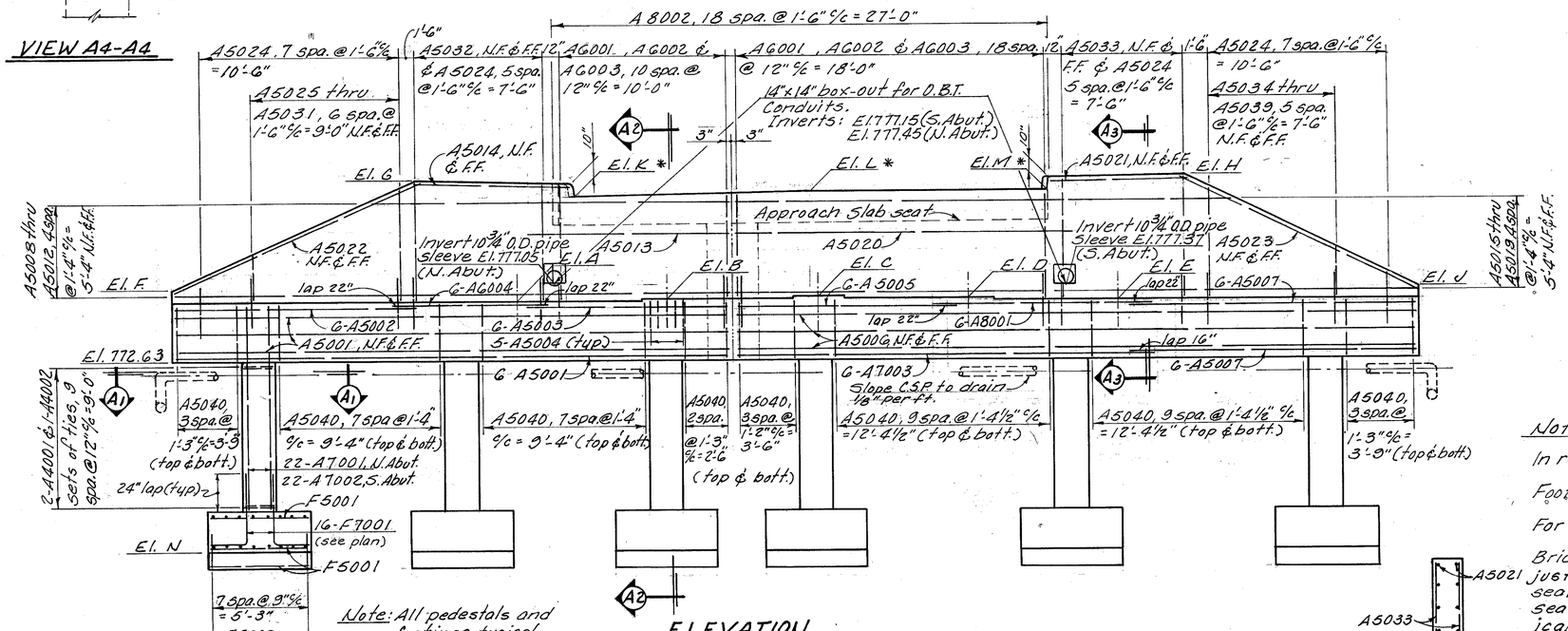


Note: All pedestals and footings typical.

ELEVATION

TABLE OF ELEVATIONS

| LOCATION | El. A | El. B | El. C | El. D | El. E | El. F | El. G | El. H | El. J | El. K | El. L | El. M | El. N |
|---|---|---|---|---|---|---|---|---|---|---|---|---|---|
| N. Abut. | 776.17 | 776.38 | 776.60 | 776.55 | 776.51 | 777.48 | 783.32 | 783.72 | 777.48 | 782.33* | 782.70* | 782.65* | 760.4 |
| S. Abut. | 776.13 | 776.37 | 776.60 | 776.57 | 776.53 | 777.38 | 783.21 | 783.74 | 777.68 | 782.35* | 782.69* | 782.67* | 760.9 |

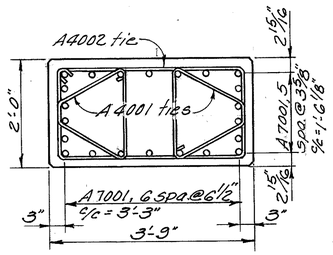


SECTION A1-A1

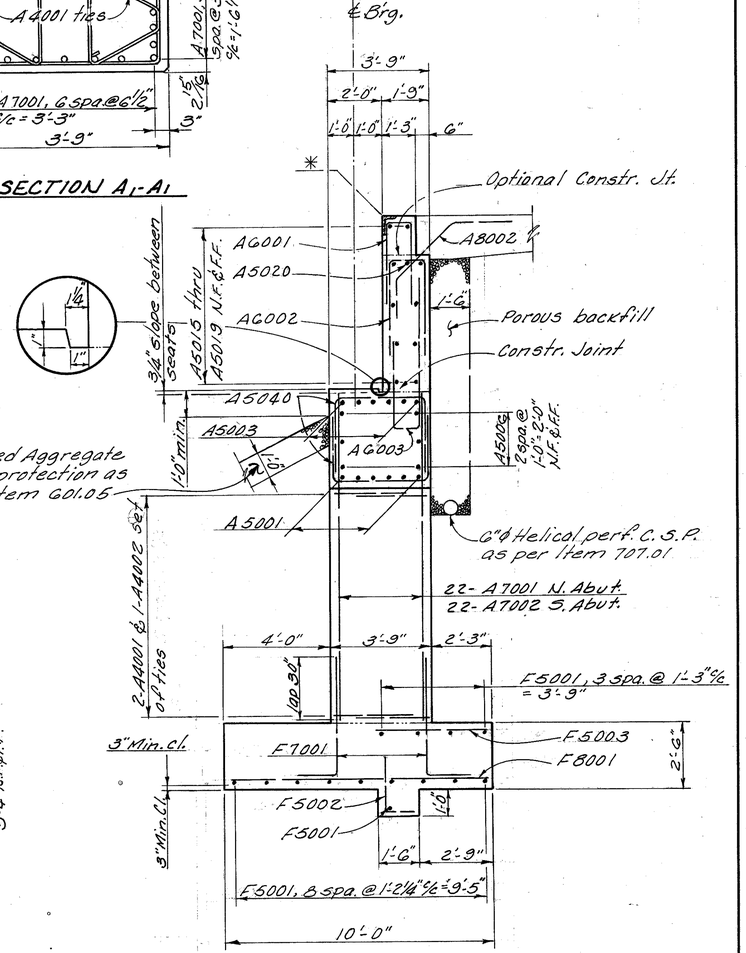


SECTION A2-A2

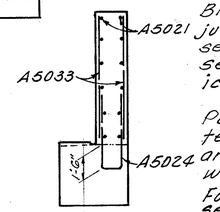


SECTION A3-A3

Notes:

In reinforcing bar callouts: N.F. indicates Near Face, F.F. indicates Far Face.

Footing reinforcement shall have a min. cover of 3" at all surfaces.

For Expansion Joint Details see sheet 10/13

Bridge seat elevations have been adjusted upward 0.21" at exterior seats and 0.23" at interior girder seats to compensate for the vertical deformation of the bearings.

Porous Backfill, 1'-6" thick, shall extend up to the plane of the subgrade and laterally to the ends of the wingwalls.

For porous backfill drain outlet detail see General Plan Sht. 3/13.

4/13

ALDEN E. STILSON & ASSOCIATES, LIMITED
CONSULTING ENGINEERS
COLUMBUS, OHIO

# ABUTMENT DETAILS

BRIDGE № CUY.-480-1216

I-480 UNDER RELOCATED SOUTHWOOD DRIVE

CUYAHOGA COUNTY — STA. 8+76.47 — STA. 11+37.29

| DESIGNED | DRAWN | TRACED | CHECKED | REVIEWED | DATE | REVISED |
|---|---|---|---|---|---|---|
| DEM | R.T. | | WM | G.W.M. | 8/25/80 | |

MICROFILMED
JAN 22 1991

| FED. RD. DIVISION | STATE | PROJECT | TYPE FUNDS |
|---|---|---|---|
| 2 | OHIO | | |

453/500

CUYAHOGA COUNTY
CUY. 480-10.39

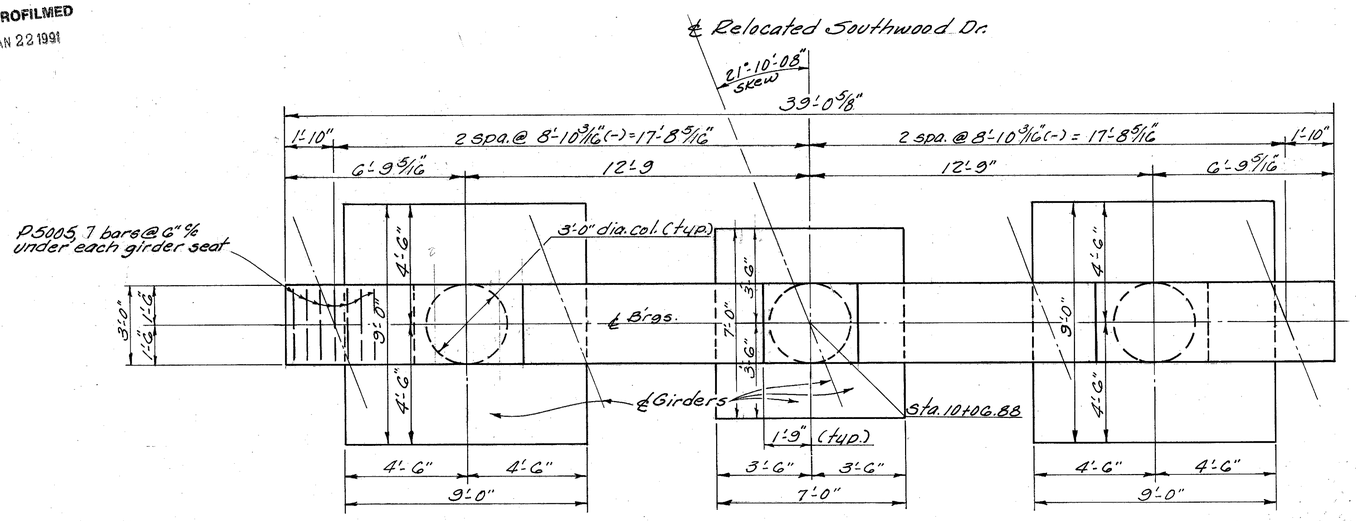


PLAN

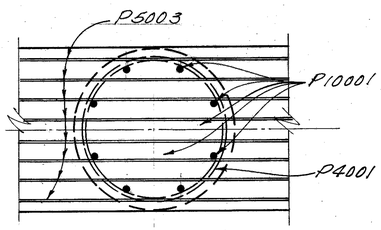


SECTION P2-P2

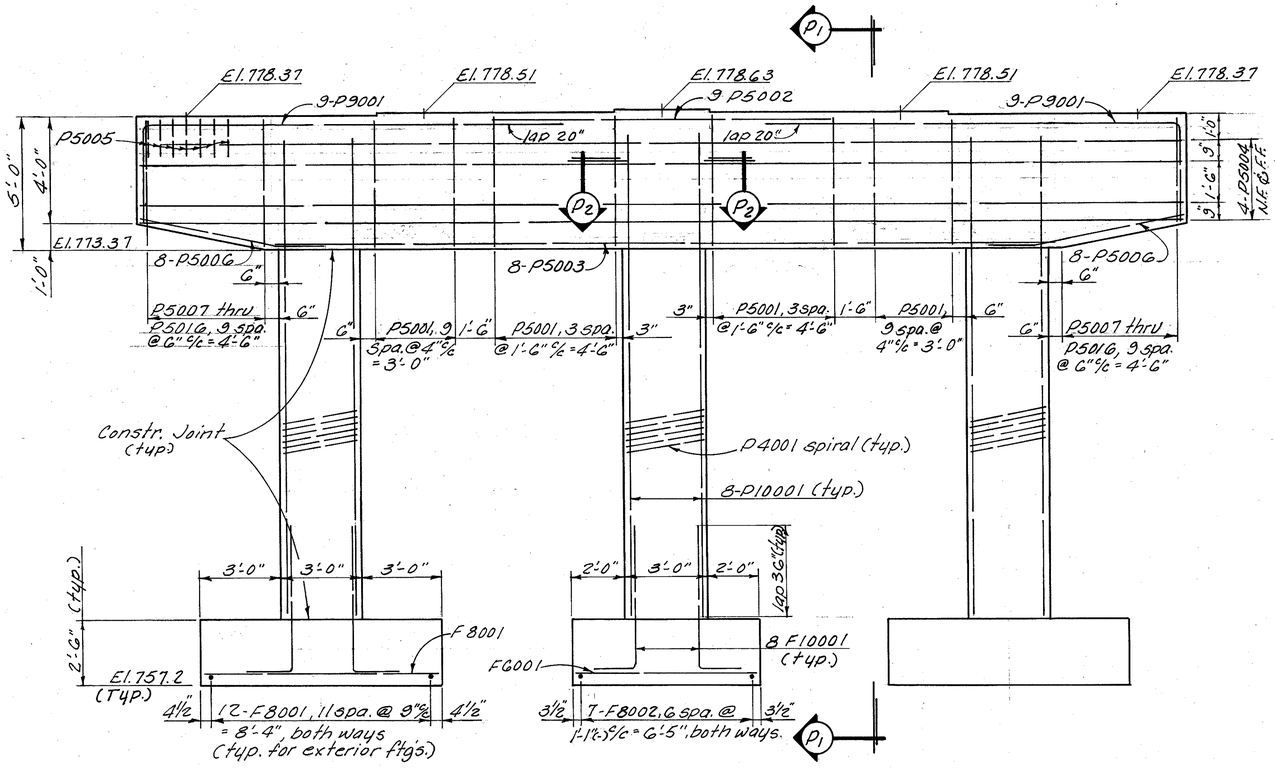


ELEVATION

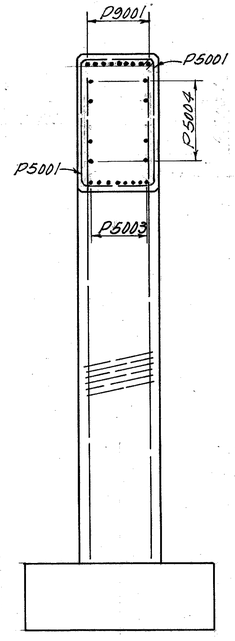


SECTION P1-P1

NOTES:

In reinforcing steel callouts:
N.F. indicates near face.
F.F. indicates far face.

5/13

ALDEN E. STILSON & ASSOCIATES, LIMITED
CONSULTING ENGINEERS
CLEVELAND, OHIO COLUMBUS, OHIO WHEELING, W. VA.

# PIER DETAILS
## BRIDGE Nº CUY.-480-1216

I-480 UNDER RELOCATED SOUTHWOOD DRIVE

CUYAHOGA COUNTY

STA. 8+76.47
STA. 11+37.29

| DESIGNED | DRAWN | TRACED | CHECKED | REVIEWED | DATE | REVISED |
|---|---|---|---|---|---|---|
| DEM | R.T. | | WM | G.W.M. | 2/26/80 | |

MICROFILMED
JAN 22 1981

| FED. RD. DIVISION | STATE | PROJECT | TYPE FUNDS |
|---|---|---|---|
| 2 | OHIO | | |

CUYAHOGA COUNTY
CUY. 480-10.39

454/500

NOTE: Each run of longitudinal deck reinforcing, excluding top over Pier bars, shall be comprised of the following:
Top bars: 8-SE 4001 & 1-SE 4002, Min. lap 1'-5"
Bottom bars: 8-S5004 & 1-S5005, Min. lap 1'-10"

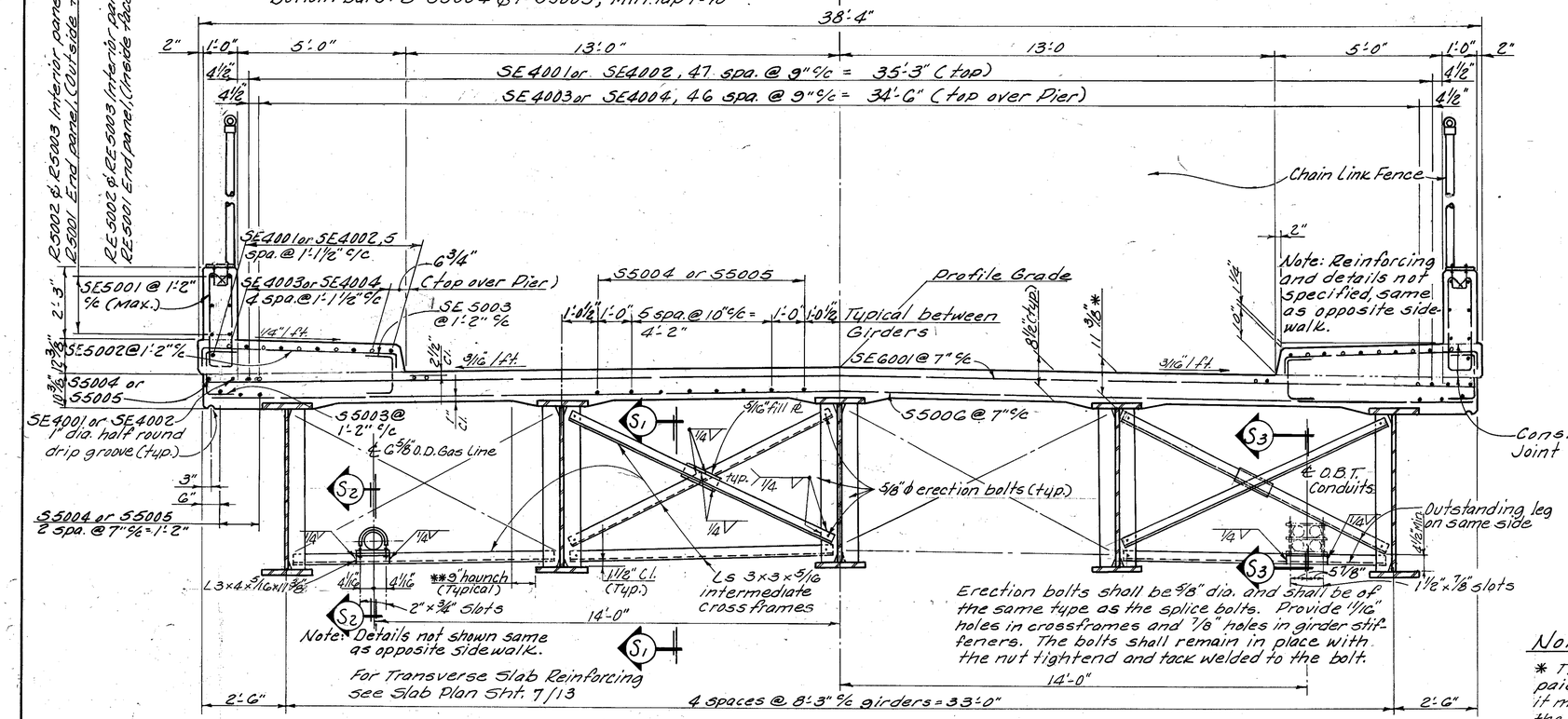


## TRANSVERSE SECTION

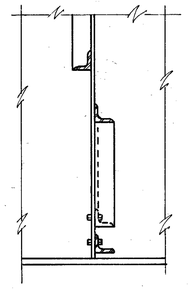

SECTION S1-S1

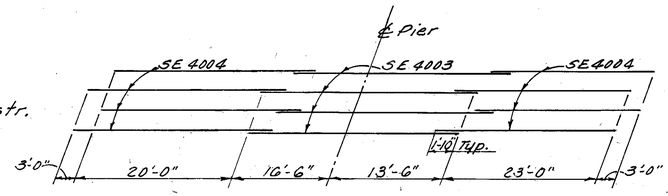


DIAGRAM SHOWING STAGGER OF BARS OVER PIER

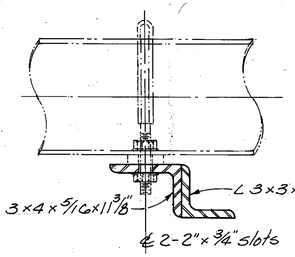


SECTION S2-S2

Gas Line furnished and installed by others.

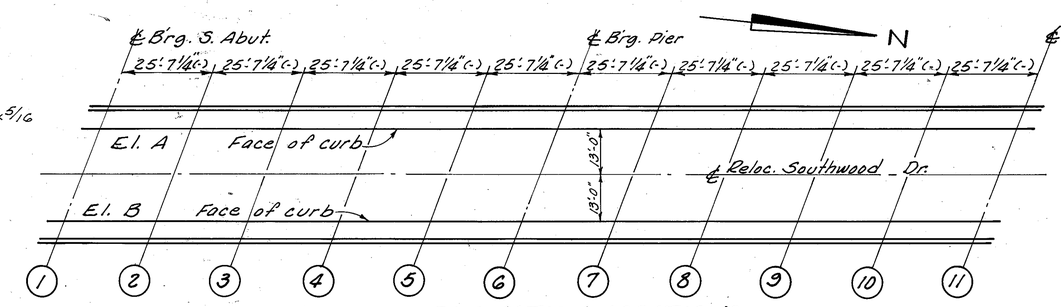


## SCREED ELEVATION LOCATIONS

Note: The screed elevations listed are those which are required prior to placing of the concrete deck. Proper allowance has been made for the dead load deflection caused by the weight of the concrete.

TABLE OF SCREED ELEVATIONS

| Line | 1 | 2 | 3 | 4 | 5 | 6 | 7 | 8 | 9 | 10 | 11 |
|---|---|---|---|---|---|---|---|---|---|---|---|
| Elev. A | 782.72 | 783.52 | 784.03 | 784.42 | 784.55 | 784.55 | 784.48 | 784.28 | 783.89 | 783.25 | 782.43 |
| Elev. B | 782.40 | 783.27 | 783.90 | 784.29 | 784.49 | 784.56 | 784.55 | 784.41 | 784.08 | 783.50 | 782.70 |

## Notes:

* This is the design dimension. The quantity of deck concrete to be paid for shall be based upon this dimension, even though deviation from it may be necessary because the top flange of the girder may not have the exact camber or conformation required to place it parallel to the finished grade. Deduction shall be made for volume of encased steel plates as per 511.18.

** A typical haunch width of 9" shall be used for all girders for computing quantity of concrete. However, the haunch width may vary between 6" and 12" provided that the slope shall be not more than 1:4 for a haunch less than 9" in width.

For Chain Link Fence Details, see Common Details, Sht. 477

WELDING ATTACHMENTS: See sheet 366/500

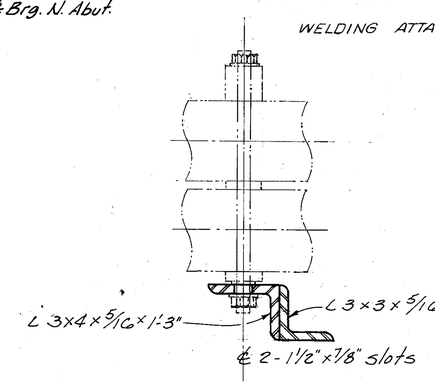


SECTION S3-S3

O.B.T. Line furnished and installed by others.

G/13

ALDEN E. STILSON & ASSOCIATES, LIMITED
CONSULTING ENGINEERS
CLEVELAND, OHIO COLUMBUS, OHIO WHEELING, W. VA.

SUPERSTRUCTURE DETAILS
BRIDGE No. CUY.-480-1216
I-480 UNDER RELOCATED SOUTHWOOD DRIVE
CUYAHOGA COUNTY STA. 8+76.47 STA. 11+37.29

| DESIGNED | DRAWN | TRACED | CHECKED | REVIEWED | DATE | REVISED |
|---|---|---|---|---|---|---|
| DEM | R.T. | | W.M. | G.W.M. | 2/26/80 | |

K&E CLEVELAND No. 17-5153

MICROFILMED
JAN 22 1991

| FED. RD. DIVISION | STATE | PROJECT | TYPE FUNDS |
|---|---|---|---|
| 2 | OHIO | | |

455/500

CUYAHOGA COUNTY
CUY. 480 – 10.39

N

℄ Brg. S. Abutment

℄ Brg. N. Abutment

SE 5001 top, S5006 bott., 416 spa. @ 7" ℄ = 242'-8"

7" SEG002 thru SEG022 top, S5007 thru S5027 bott., 20 spa. @ 7" ℄ = 11'-8"

7" SEG023 top, S5028 bott., 3 spa. @ 7" ℄ = 1'-9" (Fan as shown)

SE 5001, SE 5002, SE 5003 & S5003 (Fan as shown)

21'-10'-08"

Face of curb

SE 5001, SE 5002, SE 5003 & S5003, 218 spa. @ 1'-2"(+) ℄ = 254'-10"

℄ Relocated Southwood Drive

SE 5001, SE 5002, SE 5003 & S5003 (Fan as shown)

SE 5001, SE 5002, SE 5003 & S5003 (Fan as shown)

SE 5001, SE 5002, SE 5003 & S5003, 218 spa. @ 1'-2"(+) ℄ = 254'-10"

Face of curb

SE 5001, SE 5002, SE 5003 & S5003 (Fan as shown)

SEG023 top, S5028 bott. 3 spa. @ 7" ℄ = 1'-9" (Fan as shown)

7"

SEG002 thru SEG022 top, S5007 thru S5027 bott., 20 spa. @ 7" ℄ 11'-8"

7"

## TRANSVERSE SLAB REINFORCING

Note: Transverse reinforcing shall be placed normal to ℄ Reloc. Southwood Dr. except at acute corners.

For longitudinal slab reinforcing see Transverse Section, Sheet 6/13

7/13

ALDEN E. STILSON & ASSOCIATES, LIMITED
CONSULTING ENGINEERS
COLUMBUS, OHIO

# SUPERSTRUCTURE DETAILS

BRIDGE No. CUY.-480-1216

I-480 UNDER RELOCATED SOUTHWOOD DRIVE

CUYAHOGA COUNTY

STA. 8+76.47
STA. 11+37.29

| DESIGNED | DRAWN | TRACED | CHECKED | REVIEWED | DATE | REVISED |
|---|---|---|---|---|---|---|
| WM | R.T. | | DEM | G.W.M. | 2/26/80 | |

MICROFILMED
JAN 22 1991

| FED. RD. DIVISION | STATE | PROJECT | TYPE FUNDS |
|---|---|---|---|
| 2 | OHIO | | |

456/500

CUYAHOGA COUNTY
CUY. 480-10.39

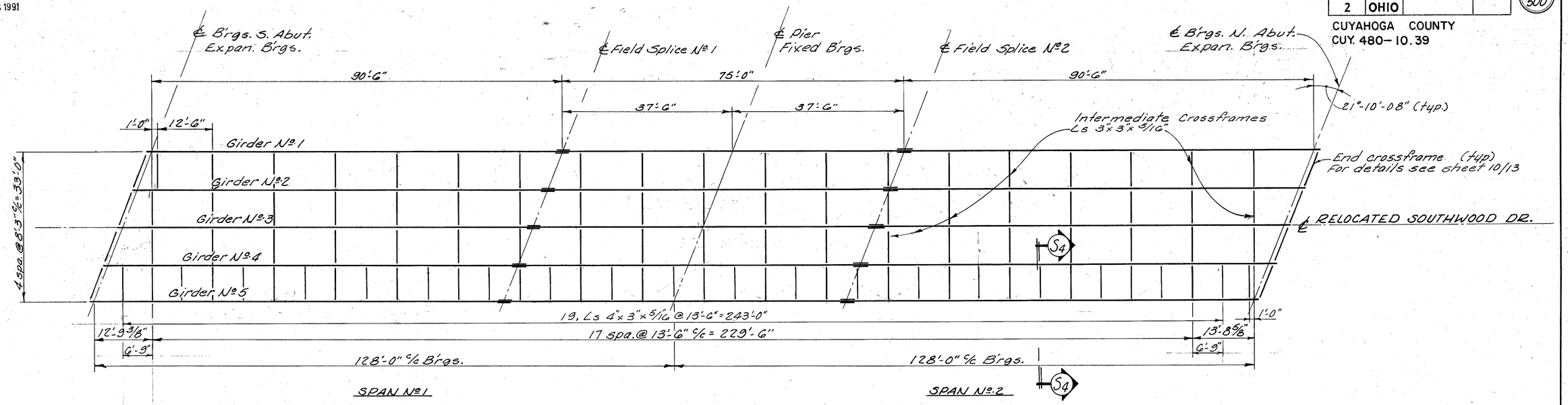


## FRAMING PLAN

Note: Place intermediate crossframes normal to girders.
For details of Elastomeric Bearing Devices see Sht. 11/13
For Girder Details see Sht. 9/13

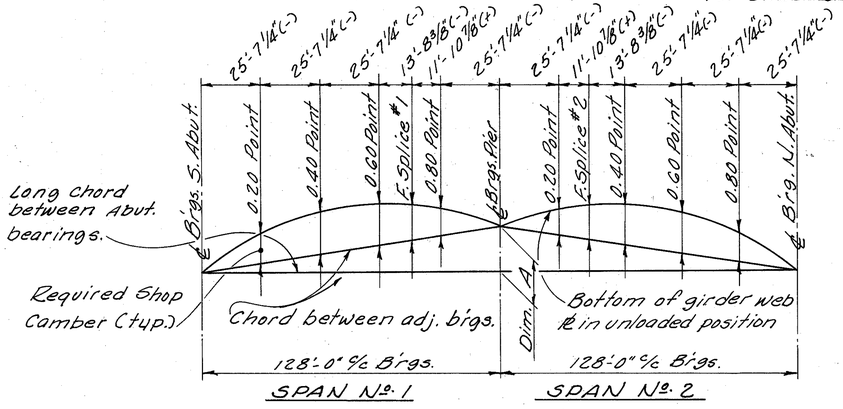


## CAMBER & BLOCKING DIAGRAM

| TABLE OF BLOCKING DIMENSIONS | |
|---|---|
| GIRDER No. | DIM. A |
| 1 | 2'-0" |
| 2 | 2'-0" |
| 3 | 2'-0 1/16" |
| 4 | 2'-0 1/8" |
| 5 | 2'-0 3/16" |

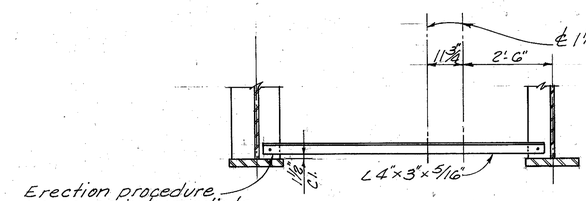


SECTION S4-S4

Typical support L for O.B.T. Conduits

## DEFLECTION AND CAMBER

| Location | SPAN No. 1 | | | | | SPAN No. 2 | | | | | SPAN No. 1 | | | | | SPAN No. 2 | | | | | SPAN No. 1 | | | | | SPAN No. 2 | | | | |
|---|---|---|---|---|---|---|---|---|---|---|---|---|---|---|---|---|---|---|---|---|---|---|---|---|---|---|---|---|---|
| Girder No. | 1 | | | | | 1 | | | | | 2-3 & 4 | | | | | 2-3 & 4 | | | | | 5 | | | | | 5 | | | | |
| Point along Girder | 0.20 | 0.40 | 0.60 | F.S. | 0.80 | 0.20 | F.S. | 0.40 | 0.60 | 0.80 | 0.20 | 0.40 | 0.60 | F.S. | 0.80 | 0.20 | F.S. | 0.40 | 0.60 | 0.80 | 0.20 | 0.40 | 0.60 | F.S. | 0.80 | 0.20 | F.S. | 0.40 | 0.60 | 0.80 |
| Deflection due to weight of steel | 11/32 | 1/2 | 3/8 | 1/4 | 1/8 | 1/8 | 1/4 | 3/8 | 1/2 | 11/32 | 11/32 | 1/2 | 3/8 | 1/4 | 1/8 | 1/8 | 1/4 | 3/8 | 1/2 | 11/32 | 11/32 | 1/2 | 3/8 | 1/4 | 1/8 | 1/8 | 1/4 | 3/8 | 1/2 | 11/32 |
| Deflection due to remaining dead load | 9/16 | 1 1/16 | 1 1/4 | 3/4 | 7/16 | 7/16 | 13/16 | 1 9/32 | 1 1/16 | 13/16 | 13/32 | 2 | 1 1/2 | 1 | 1/2 | 1/2 | 1 | 1 1/2 | 2 | 13/32 | 3/16 | 1 1/16 | 1 1/4 | 3/4 | 7/16 | 7/16 | 3/4 | 1 5/16 | 1 1/16 | 3/16 |
| Adjust. req'd. for vertical curve | 3 3/8 | 5 13/16 | 5 13/16 | 5 1/8 | 3 3/8 | 3 3/4 | 4 13/16 | 5 17/32 | 5 3/8 | 3 5/16 | 3 3/8 | 5 13/16 | 5 13/16 | 5 | 3 3/8 | 3 13/16 | 4 7/8 | 5 11/16 | 5 5/8 | 3 11/16 | 3 27/32 | 5 13/16 | 5 1/8 | 5 1/16 | 3 3/8 | 3 3/8 | 5 1/16 | 5 1/8 | 5 13/16 | 3 27/32 |
| Required Shop Camber | 5 1/16 | 8 | 7 7/16 | 6 1/8 | 4 7/16 | 4 9/16 | 5 1/8 | 7 9/16 | 7 9/16 | 4 7/8 | 5 5/8 | 8 5/16 | 7 1/16 | 6 1/4 | 4 1/2 | 4 7/16 | 6 1/8 | 7 9/16 | 8 1/8 | 5 1/16 | 5 3/8 | 8 | 7 1/2 | 6 1/16 | 4 1/16 | 4 1/16 | 6 1/16 | 7 1/2 | 8 | 5 1/8 |

8/13

ALDEN E. STILSON & ASSOCIATES, LIMITED
CONSULTING ENGINEERS
CLEVELAND, OHIO COLUMBUS, OHIO WHEELING, W. VA.

# SUPERSTRUCTURE DETAILS

BRIDGE No. CUY.-480-1216

I-480 UNDER RELOCATED SOUTHWOOD DRIVE

CUYAHOGA COUNTY STA. 8+76.47
STA. 11+37.29

| DESIGNED | DRAWN | TRACED | CHECKED | REVIEWED | DATE | REVISED |
|---|---|---|---|---|---|---|
| DEM | R.T. | | WM | G.W.M. | 8/20/80 | |

MICROFILMED
JAN 22 1991

| FED. RD. DIVISION | STATE | PROJECT | TYPE FUNDS |
|---|---|---|---|
| 2 | OHIO | | |

457/500

CUYAHOGA COUNTY
CUY. 480-10.39

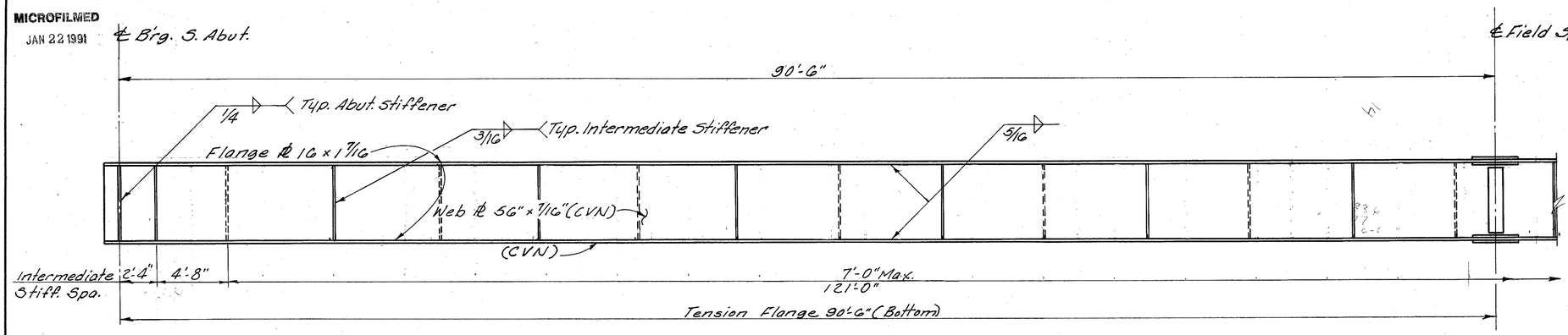


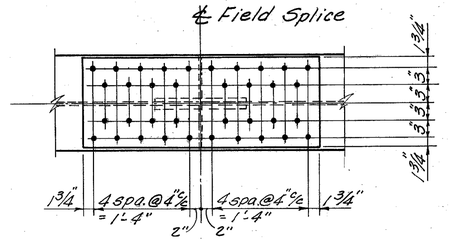


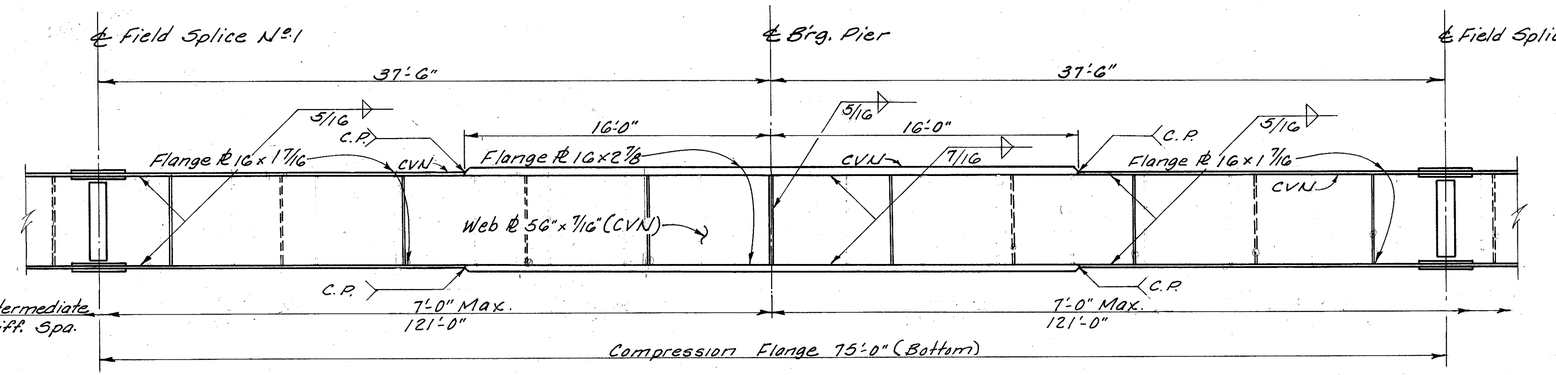


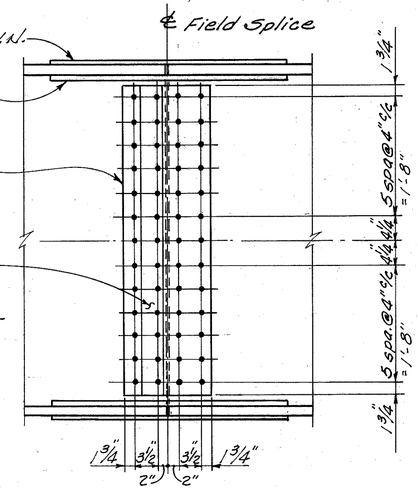


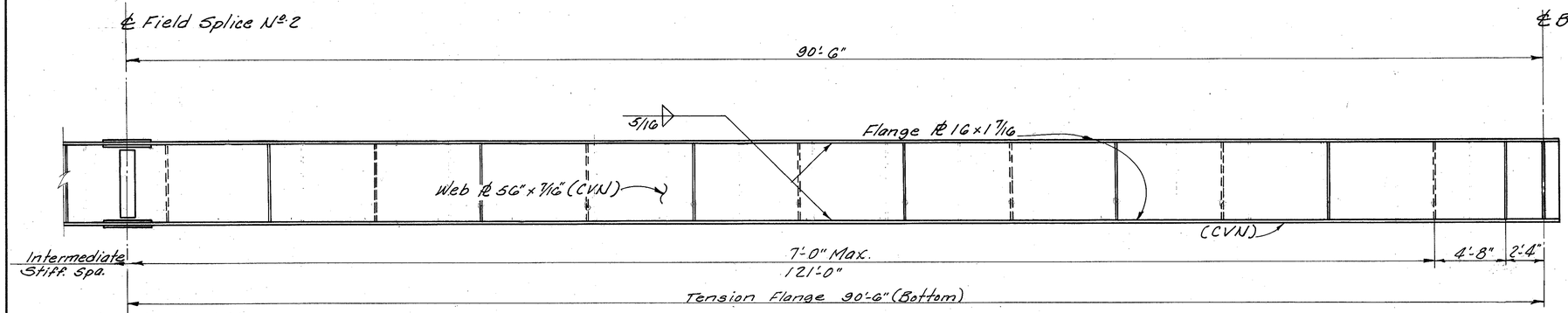


## TYPICAL GIRDER ELEVATION

## GIRDER FIELD SPLICE DETAIL

Note:

1" ϕ High strength bolts shall be used at field splices. Bolt heads on exterior girder web splices shall be on fascia side. Bolts shall be ASTM-A325 Type 3.

Locate intermediate stiffeners to serve as attachments for intermediate crossframes.

All full penetration welds shall be back-gouged and welded after welding far side.

Grinding of shop welds: Flange butt welds shall be ground flush in tension areas only. Except for webs of fascia girders web welds shall be ground flush from the neutral axis of the web to the flange which is in tension. Webs of fascia girders shall be ground flush for thier full depth. Grinding shall be done in the direction of stress.

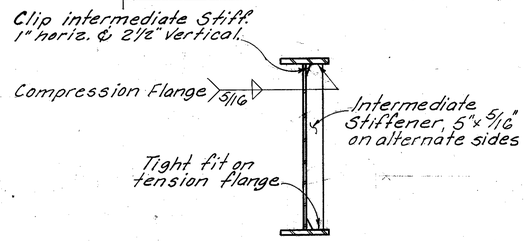


TYPICAL SECTION THRU GIRDER

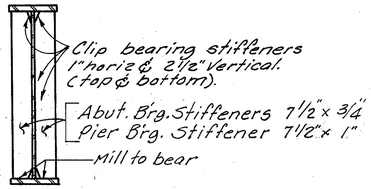


TYPICAL SECTION THRU GIRDER AT BEARING

Optional shop web splices shall be located a minimum of 3'-0" from shop flange splice locations and a minimum of 6" from stiffener locations.

Intermediate transverse stiffeners for fascia girders shall all be placed on the inside at the spacing shown.

Where a shape or plate is designated (CVN) the material shall meet specified minimum notch toughness requirements as specified in 711.01 of the CMS.

C.P. indicates complete penetration butt weld. All web splice welds shall be complete penetration.

9/13

ALDEN E. STILSON & ASSOCIATES, LIMITED
CONSULTING ENGINEERS
CLEVELAND, OHIO COLUMBUS, OHIO WHEELING, W. VA.

SUPERSTRUCTURE DETAILS

BRIDGE No. CUY.-480-1216

I-480 UNDER RELOCATED SOUTHWOOD DRIVE

CUYAHOGA COUNTY STA. 8+76.47
STA. 11+37.29

| DESIGNED | DRAWN | TRACED | CHECKED | REVIEWED | DATE | REVISED |
|---|---|---|---|---|---|---|
| DEM | R.T. | | WM | G.W.M. | 6/7/80 | |

MICROFILMED
JAN 22 1991

| F.H.W.A. REGION | STATE | PROJECT | |
|---|---|---|---|
| 5 | OHIO | | |

458/500

CUYAHOGA COUNTY
CUY-480-10.39

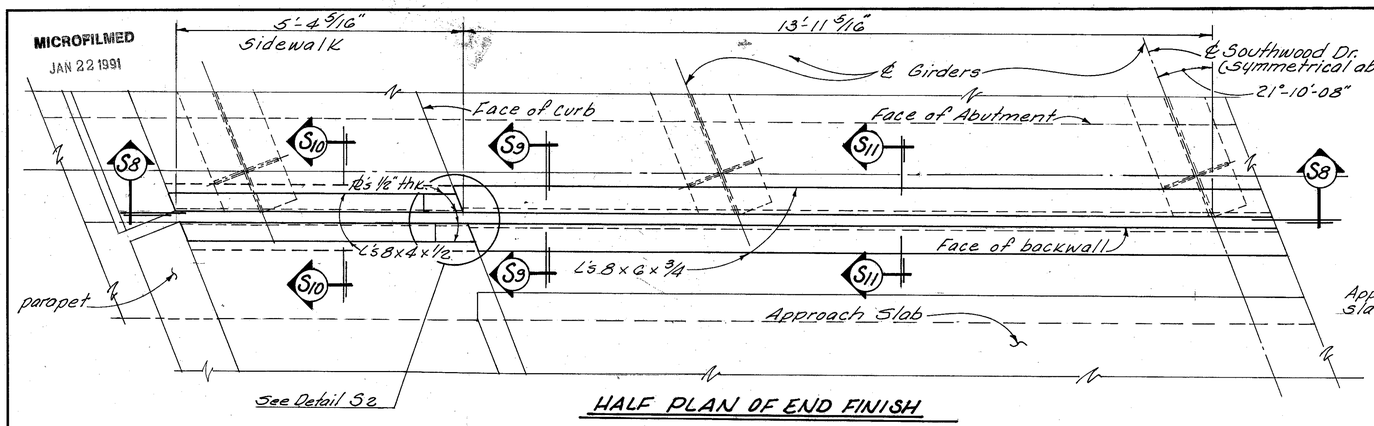


HALF PLAN OF END FINISH

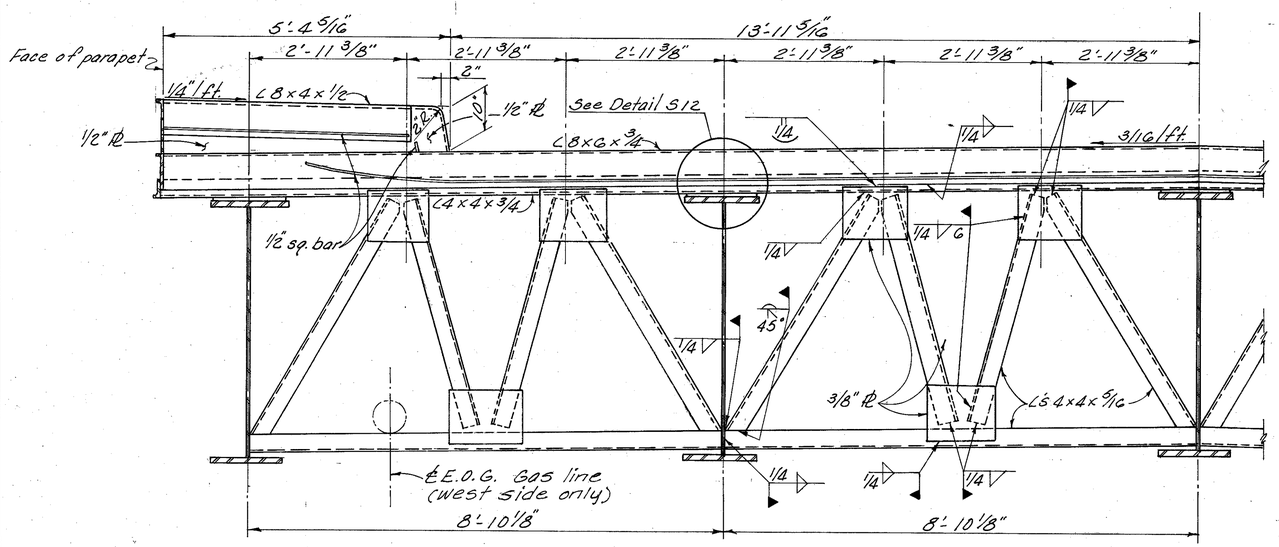


SECTION S8-S8

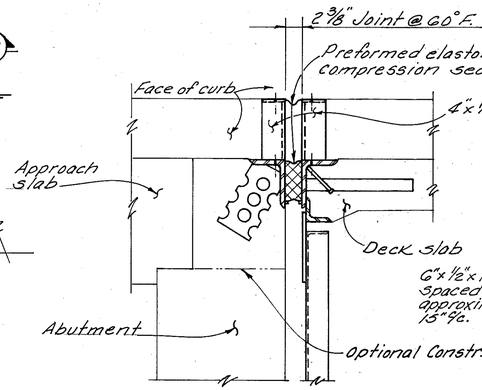


SECTION S9-S9

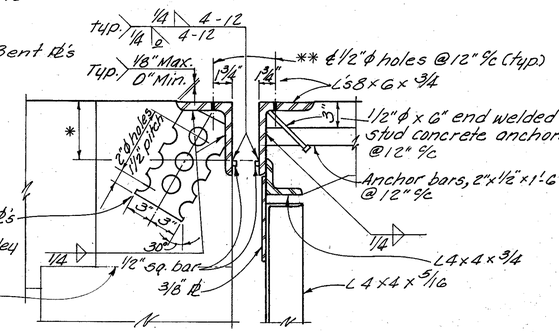


SECTION S11-S11

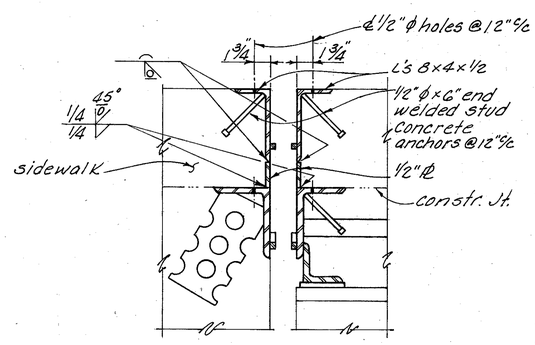


SECTION S10-S10

* * Holes shall be filled with bituminous material after concrete is placed.

* Set to provide 3/4" min. clear to top of seal when fully compressed.

NOTES:

At the time of installation, the joint shall be adjusted to provide a joint width of 2 3/8" at 60° F.

The end finish shall be filled with an elastomeric compression seal meeting the requirements of Supplemental Specification 849 and having a nominal width of 4".

Joints in the Elastomeric Compression seal will be permitted only where shown on the plans.

The end finish assembly shall be furnished in one piece.

~~Surfaces of the end finish to be in contact with the seal shall be thoroughly cleaned by sand blasting or other approved method prior to installation of the seal.~~

~~Installation of the seal shall be in accordance with written instructions furnished by the manufacturer of the seal to insure a durable water tight joint.~~

Fabrication of the seal shall be based upon approved shop drawings.

~~In addition to the Elastomeric Compression Seal, all material, labor and equipment necessary to complete the end finish in place shall be included for payment with Item 516 Elastomeric Compression Seals for Structural Steel Joints.~~

Payment per linear foot for Item 516, Elastomeric compression seals for structural steel joints, includes all labor, materials and equipment necessary to complete the joint in place, including the joint armor, 1/2" steel plates, anchoring devices and end crossframe gusset plates. Joint armor materials: A588 or A36, with System B field paint on exposed steel surfaces. Field paint shall consist of two prime coats and one finish coat.

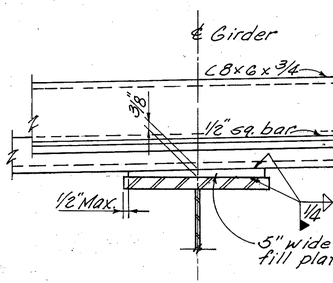


DETAIL S12

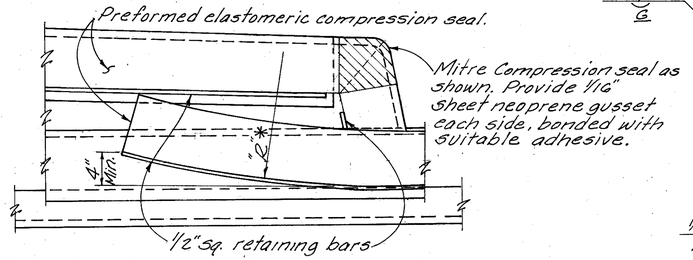


DETAIL OF ELASTOMERIC COMPRESSION SEAL

* Set "R" so that the minimum distance between the 1/2" retainer bars is the minimum joint depth required for the seal provided.

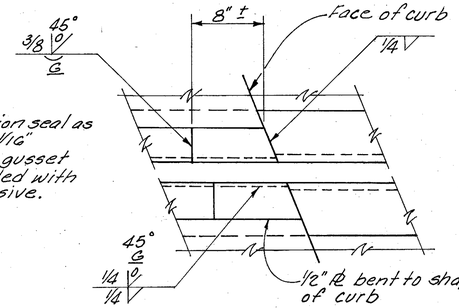


DETAIL S2

10/13

ALDEN E. STILSON & ASSOCIATES
CONSULTING ENGINEERS
CLEVELAND, OHIO COLUMBUS, OHIO WHEELING, W. VA.

# SUPERSTRUCTURE DETAILS

BRIDGE No. CUY.-480-1216

I-480 UNDER RELOCATED SOUTHWOOD DRIVE

CUYAHOGA COUNTY

STA. 8+76.47
STA. 11+37.29

| DESIGNED | DRAWN | TRACED | CHECKED | REVIEWED | DATE | REVISED |
|---|---|---|---|---|---|---|
| WM | R.T. | | DEM | G.W.M. | 12/80 | 1-5-84 |

MICROFILMED
JAN 22 1991

| FED. RD. DIVISION | STATE | PROJECT | TYPE FUNDS |
|---|---|---|---|
| 2 | OHIO | | |

459
500

CUYAHOGA COUNTY
CUY. 480-10.39

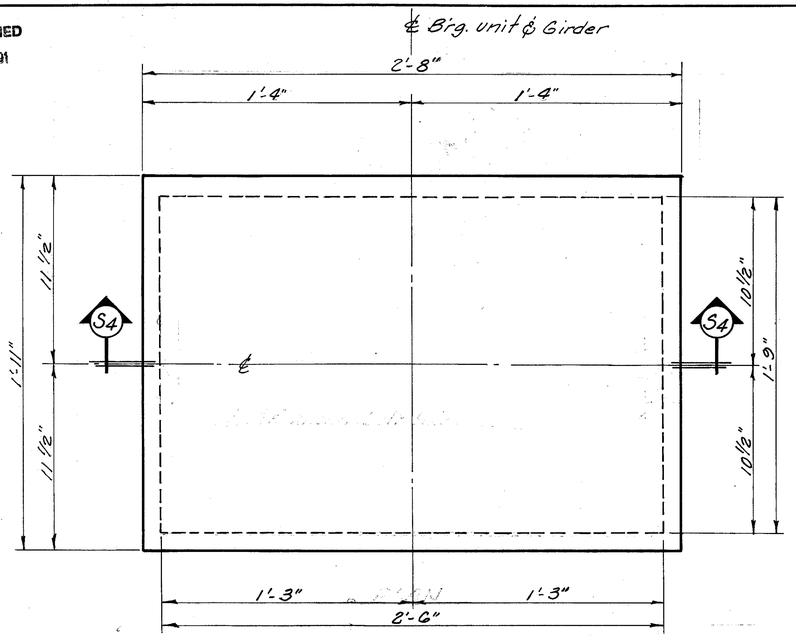


PLAN

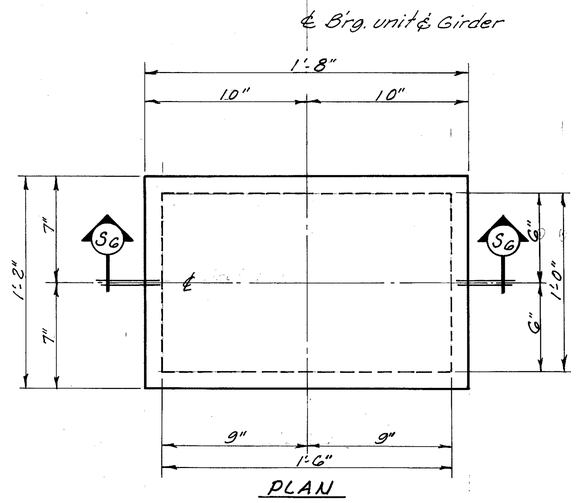


PLAN

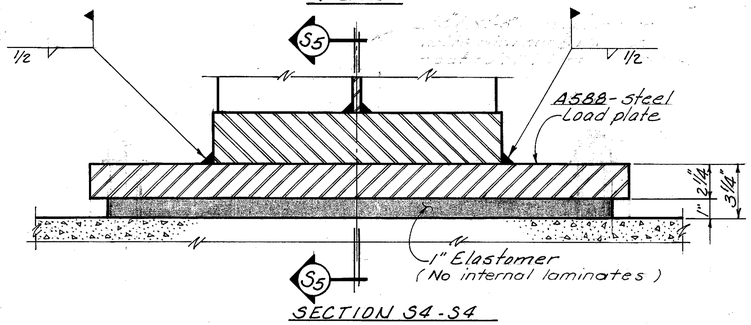


SECTION S4-S4

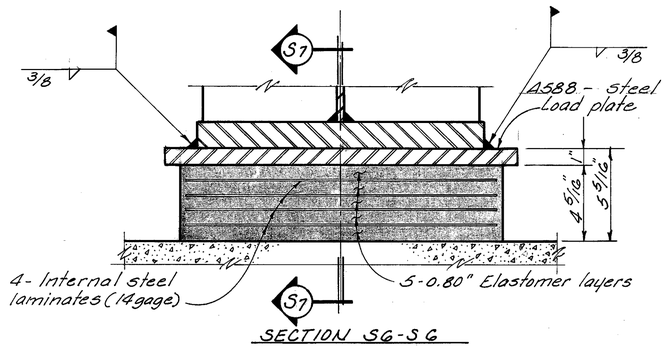


SECTION S6-S6

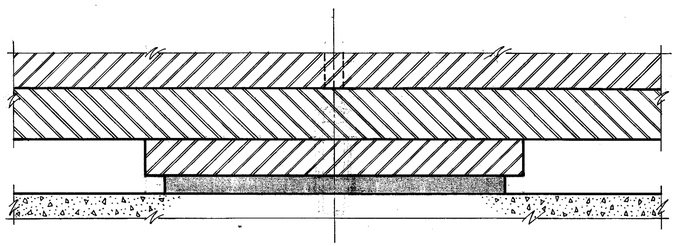

SECTION S5-S5

FIXED BEARING
(to be used at pier locations)

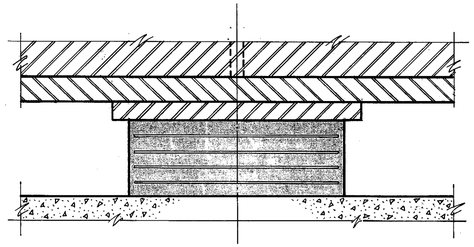

SECTION S7-S7

EXPANSION BEARING
(to be used at abutment locations)

# ELASTOMERIC BEARING DETAIL

Notes:

Elastomer for fixed and expansion bearings shall be Grade 50.

The load plate shall be vulcanized bonded to the elastomer during the molding process.

Welding shall be controlled so that the plate temperature at the elastomer bonded surface does not exceed 300°F. as determined by use of pyrometric sticks or other temperature monitoring devices. Cooling by quenching shall not be permitted.

11/13

ALDEN E. STILSON & ASSOCIATES, LIMITED
CONSULTING ENGINEERS
COLUMBUS, OHIO

SUPERSTRUCTURE DETAILS

BRIDGE Nº CUY.-480-1216

I-480 UNDER RELOCATED SOUTHWOOD DRIVE

CUYAHOGA COUNTY

STA. 8+76.47
STA. 11+37.29

| DESIGNED | DRAWN | TRACED | CHECKED | REVIEWED | DATE | REVISED |
|---|---|---|---|---|---|---|
| DEM | R.T. | | WM | G.W.M. | 2/27/80 | |

MICROFILMED
JAN 22 1991

| FED. RD. DIVISION | STATE | PROJECT | TYPE FUNDS |
|---|---|---|---|
| 2 | OHIO | | |

460/500

CUYAHOGA COUNTY
CUY. 480-10.39

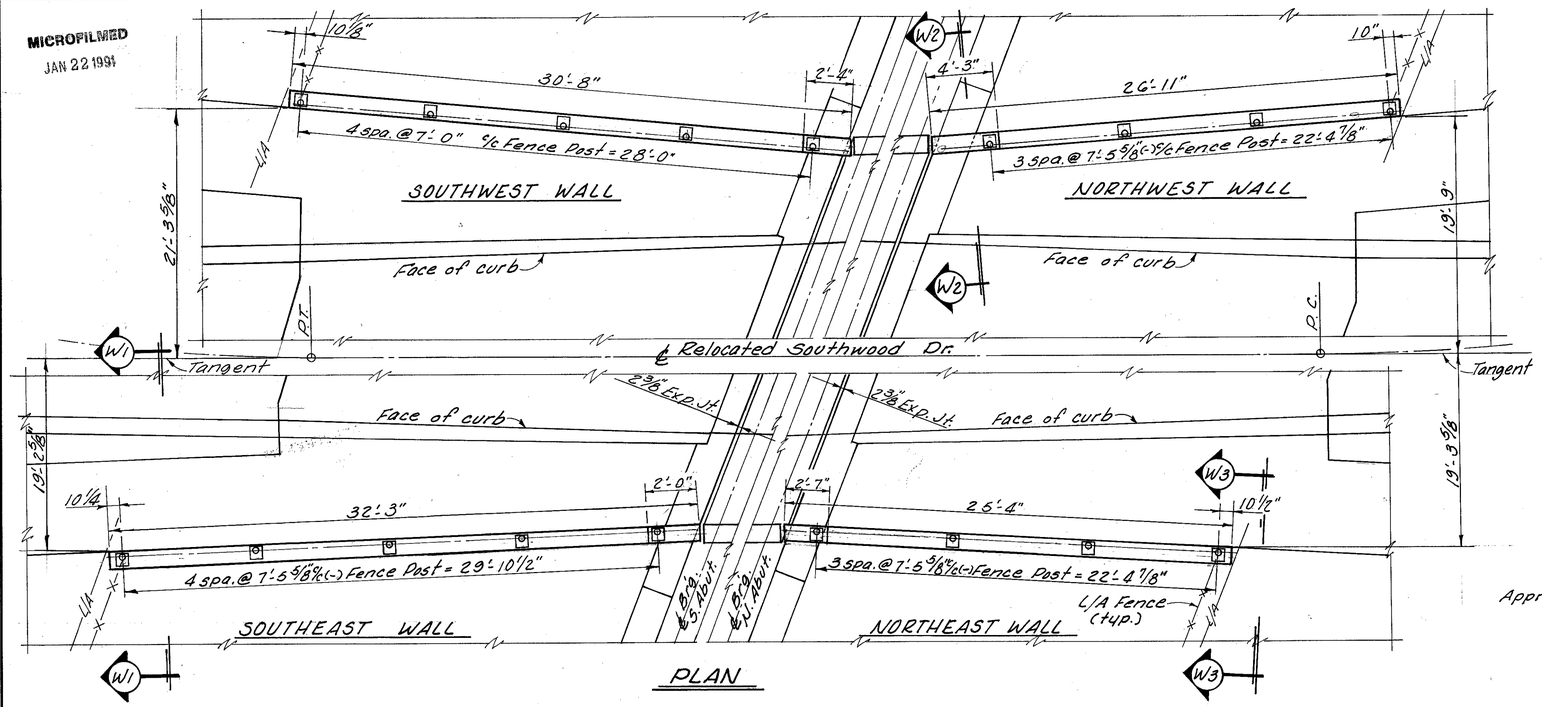


PLAN

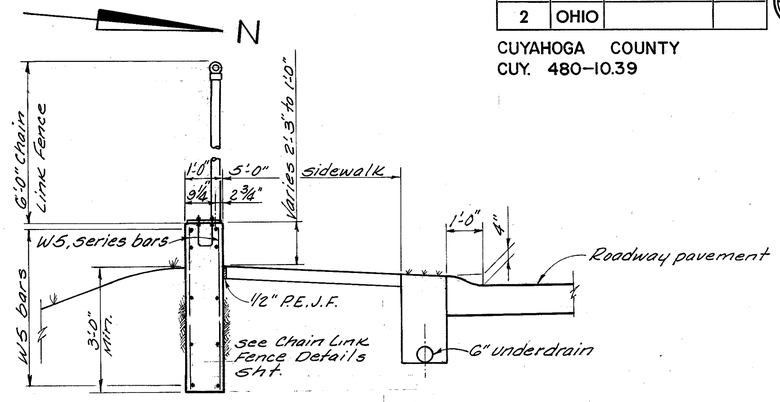


SECTION W1 - W1

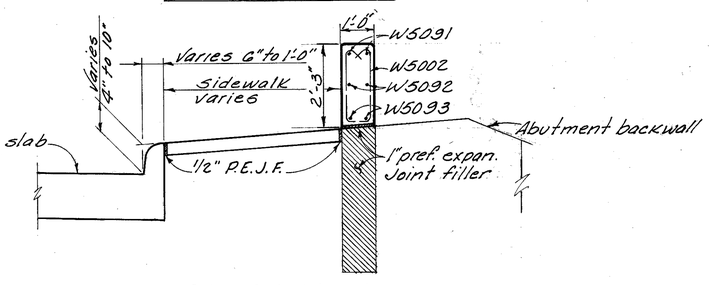


SECTION W2-W2

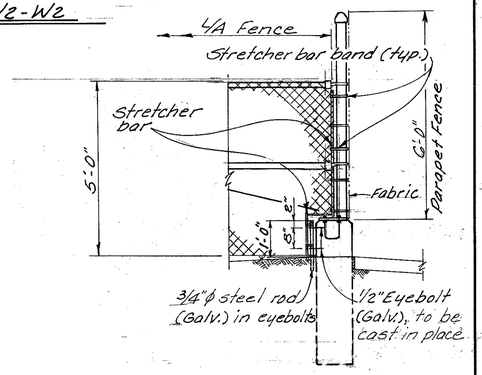


SECTION W3-W3

Showing suggested method of attaching L/A fence at end of wall.

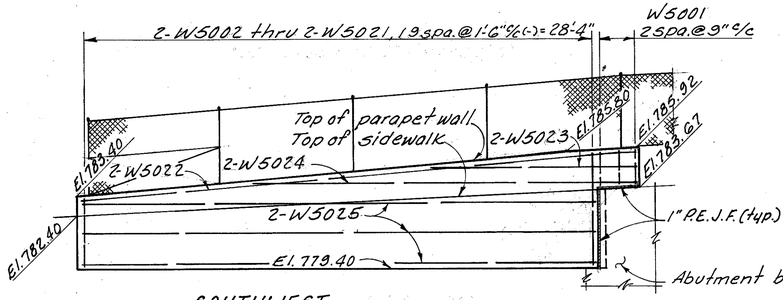


SOUTHWEST

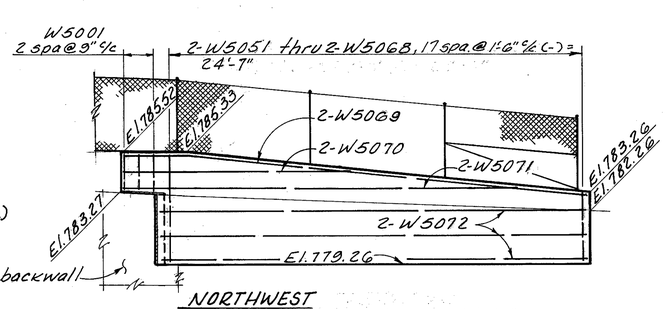


NORTHWEST

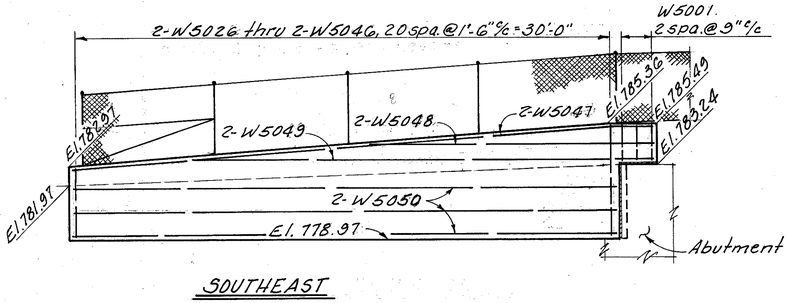


SOUTHEAST

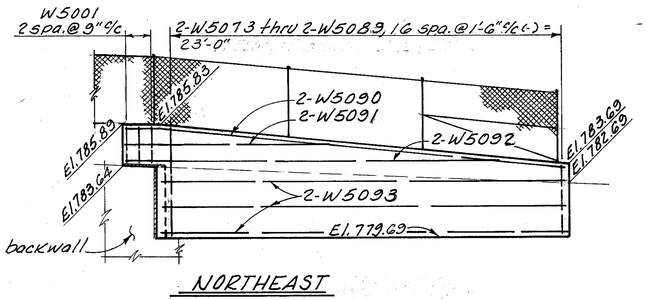


NORTHEAST

## WALL ELEVATIONS

NOTE: ALL ELEVATIONS TAKEN LOOKING WEST
For details of chain link fence, see Common Details, Sht.

Note:

Excavation for approach parapet walls is included with Item 503, Unclassified Excavation, for payment.

12/13

ALDEN E. STILSON & ASSOCIATES, LIMITED
CONSULTING ENGINEERS
COLUMBUS, OHIO

# APPROACH PARAPET DETAILS

BRIDGE No. CUY.-480-1216
I-480 UNDER RELOCATED SOUTHWOOD DRIVE
STA. 8+76.47
CUYAHOGA COUNTY
STA 11+37.29

| DESIGNED | DRAWN | TRACED | CHECKED | REVIEWED | DATE | REVISED |
|---|---|---|---|---|---|---|
| DEM | R.T. | | WM | G.W.M. | 8/27/80 | |

MICROFILMED
JAN 22 1991

| MARK | NUM. | LENGTH | WEIGHT | TYPE | A | B | C | D | E | NOTE |
|---|---|---|---|---|---|---|---|---|---|---|
| | | | NORTH | AND SOUTH ABUTMENTS | | | | | | |
| A 4001 | 240 | 5- 0 | 802 | 3 | 1- 9 | 1- 2 | 0- 5 | 1- 2 | | |
| A 4002 | 120 | 11- 0 | 882 | 3 | 1- 9 | 3- 6 | 1- 9 | 3- 6 | | |
| A 5001 | 24 | 31-10 | 797 | ST | | | | | | |
| A 5002 | 12 | 14- 6 | 181 | ST | | | | | | |
| A 5003 | 12 | 12- 0 | 150 | ST | | | | | | |
| A 5004 | 50 | 6- 2 | 322 | 2 | 1- 6 | 3- 5 | 1- 6 | | | |
| A 5005 | 12 | 13- 0 | 163 | ST | | | | | | |
| A 5006 | 12 | 40- 6 | 507 | ST | | | | | | |
| A 5007 | 24 | 17- 2 | 430 | ST | | | | | | |
| A 5008 | 4 | 22- 6 | | ST | | | | | | 1 |
| THRU | | | 568 | | VARY | LENGTH | BY | 2- 4 | 1/ 2 | |
| A 5012 | 4 | 32- 0 | | ST | | | | | | 1 |
| A 5013 | 2 | 12- 6 | 26 | ST | | | | | | |
| A 5014 | 4 | 10- 0 | 42 | ST | | | | | | |
| A 5015 | 4 | 30- 3 | | ST | | | | | | 1 |
| THRU | | | 738 | | VARY | LENGTH | BY | 2- 6 | 3/ 4 | |
| A 5019 | 4 | 40- 6 | | ST | | | | | | 1 |
| A 5020 | 2 | 21- 0 | 44 | ST | | | | | | |
| A 5021 | 4 | 8- 8 | 36 | ST | | | | | | |
| A 5022 | 4 | 14- 9 | 62 | ST | | | | | | |
| A 5023 | 4 | 14- 6 | 60 | ST | | | | | | |
| A 5024 | 56 | 7- 6 | 438 | 2 | 3- 2 | 1- 5 | 3- 2 | | | |
| A 5025 | 4 | 1- 6 | | ST | | | | | | 1 |
| THRU | | | 117 | | VARY | LENGTH | BY | 0-10 | | |
| A 5031 | 4 | 6- 6 | | ST | | | | | | 1 |
| A 5032 | 24 | 6- 8 | 167 | ST | | | | | | |
| A 5033 | 24 | 6-10 | 171 | ST | | | | | | |
| A 5034 | 4 | 2- 9 | | ST | | | | | | 1 |
| THRU | | | 119 | | VARY | LENGTH | BY | 0- 9 | 5/ 8 | |
| A 5039 | 4 | 6- 9 | | ST | | | | | | 1 |
| A 5040 | 102 | 9- 6 | 1011 | 2 | 3- 2 | 3- 5 | 3- 2 | | | |
| A 6001 | 6 | 7- 1 | 64 | 2 | 3- 3 | 0-11 | 3- 3 | | | |
| A 6002 | 6 | 7-11 | 71 | 2 | 3- 5 | 1- 5 | 3- 5 | | | |
| A 6003 | 6 | 10- 1 | 91 | 2 | 3- 7 | 1- 5 | 5- 5 | | | |
| A 6004 | 6 | 9- 0 | 81 | ST | | | | | | |
| A 7001 | 132 | 13- 1 | 3530 | ST | | | | | | |
| A 7002 | 132 | 12- 7 | 3395 | ST | | | | | | |
| A 7003 | 12 | 24- 9 | 607 | ST | | | | | | |
| A 8001 | 12 | 14- 0 | 449 | ST | | | | | | |
| A 8002 | 38 | 6- 9 | 685 | 15 | | 2- 3 | 2- 2 | 1- 6 | 2- 2 | |
| F 5001 | 168 | 5- 8 | 993 | ST | | | | | | |
| F 5002 | 84 | 2- 9 | 241 | 2 | 1- 9 | 1- 2 | | | | |
| F 5003 | 96 | 4- 0 | 400 | ST | | | | | | |
| F 7001 | 192 | 6- 7 | 2584 | 2 | 4- 9 | 2- 0 | | | | |
| F 8001 | 96 | 9- 6 | 2435 | ST | | | | | | |
| | | | PIER | | | | | | | |
| P 4001 | 3 | 13- 8 | 776 | 17 | NO.TURNS= 39 | | NO.SPACERS= 12 | | | 6 |
| P 5001 | 28 | 15- 3 | 445 | 3 | 4- 8 | 2- 8 | 4- 8 | 2- 8 | | |
| P 5002 | 9 | 12- 0 | 113 | ST | | | | | | |

| MARK | NUM. | LENGTH | WEIGHT | TYPE | A | B | C | D | E | NOTE |
|---|---|---|---|---|---|---|---|---|---|---|
| | | | | PIER | | | | ( CONTINUED ) | | |
| P 5003 | 8 | 29- 0 | 242 | ST | | | | | | |
| P 5004 | 8 | 38- 8 | 323 | ST | | | | | | |
| P 5005 | 35 | 5- 5 | 198 | 1 | | 1- 6 | 2- 8 | 1- 6 | | |
| P 5006 | 16 | 7- 1 | 118 | 6 | 5- 0 | 1- 0 | 2- 0 | | | |
| P 5007 | 2 | 13- 3 | | 3 | 3- 8 | 2- 8 | 3- 8 | 2- 8 | | 1 |
| THRU | | | 297 | | VARY | LENGTH | BY | 0- 2 | 5/ 8 | |
| | | | | | VARY | DIM. A | BY | 0- 1 | 3/ 8 | |
| | | | | | VARY | DIM. C | BY | 0- 1 | 3/ 8 | |
| P 5016 | 2 | 15- 3 | | 3 | 4- 8 | 2- 8 | 4- 8 | 2- 8 | | 1 |
| P 9001 | 18 | 19- 0 | 1163 | 1 | 3- 8 | 15- 7 | | | | |
| P10001 | 24 | 17- 8 | 1824 | ST | | | | | | |
| F 8002 | 14 | 6- 6 | 243 | ST | | | | | | |
| F 8001 | 48 | 8- 6 | 1089 | ST | | | | | | |
| F10001 | 24 | 7- 4 | 757 | 1 | 1- 6 | 6- 2 | | | | |
| | | | | SUPERSTRUCTURE | | | | | | |
| SE4001 | 496 | 30- 0 | 9940 | ST | | | | | | |
| SE4002 | 62 | 29- 3 | 1211 | ST | | | | | | |
| SE4003 | 57 | 30- 0 | 1143 | ST | | | | | | |
| SE4004 | 114 | 24-10 | 1891 | ST | | | | | | |
| SE5001 | 442 | 7- 5 | 3419 | 8 | | 3- 0 | | 3- 0 | 0- 8 | |
| SE5002 | 442 | 6- 9 | 3112 | 1 | | 0- 8 | 5- 8 | 0- 8 | | |
| SE5003 | 442 | 3- 3 | 1498 | 1 | | 1- 0 | 1- 6 | 1- 0 | | |
| S 5003 | 442 | 3- 3 | 1498 | 1 | | 1- 0 | 1- 6 | 1- 0 | | |
| S 5004 | 320 | 30- 0 | 10013 | ST | | | | | | |
| S 5005 | 40 | 33- 8 | 1405 | ST | | | | | | |
| S 5006 | 417 | 37- 8 | 16382 | ST | | | | | | |
| S 5007 | 2 | 6- 0 | | ST | | | | | | 1 |
| THRU | | | 924 | | VARY | LENGTH | BY | 1- 6 | 1/ 8 | |
| S 5027 | 2 | 36- 2 | | ST | | | | | | 1 |
| S 5028 | 8 | 4- 6 | 38 | ST | | | | | | |
| SE6001 | 417 | 37- 8 | 23592 | ST | | | | | | |
| SE6002 | 2 | 6- 0 | | ST | | | | | | 1 |
| THRU | | | 1330 | | VARY | LENGTH | BY | 1- 6 | 1/ 8 | |
| SE6022 | 2 | 36- 2 | | ST | | | | | | 1 |
| SE6023 | 8 | 4- 6 | 54 | ST | | | | | | |
| RE5001 | 12 | 8- 4 | 104 | ST | | | | | | 2 |
| R 5001 | 12 | 8- 4 | 104 | ST | | | | | | 2 |
| RE5002 | 60 | 14- 8 | 918 | ST | | | | | | 2 |
| R 5002 | 60 | 14- 8 | 918 | ST | | | | | | 2 |
| RE5003 | 72 | 7- 2 | 538 | ST | | | | | | 2 |
| R 5003 | 72 | 7- 2 | 538 | ST | | | | | | 2 |
| | | | | APPROACH PARAPET WALLS | | | | | | |
| W 5001 | 12 | 5- 1 | 64 | 8 | | 1-10 | | 1-10 | 0- 8 | |
| W 5002 | 2 | 3- 7 | | ST | | | | | | 1 |
| THRU | | | 200 | | VARY | LENGTH | BY | 0- 1 | 1/ 2 | |
| W 5021 | 2 | 6- 0 | | ST | | | | | | 1 |
| W 5022 | 2 | 30- 3 | 63 | ST | | | | | | |
| W 5023 | 2 | 11- 3 | 23 | ST | | | | | | |

| MARK | NUM. | LENGTH | WEIGHT | TYPE | A | B | C | D | E | NOTE |
|---|---|---|---|---|---|---|---|---|---|---|
| | | | | APPROACH PARAPET WALLS | | | | ( CONTINUED ) | | |
| W 5024 | 2 | 21- 6 | 45 | ST | | | | | | |
| W 5025 | 6 | 28- 3 | 177 | ST | | | | | | |
| W 5026 | 2 | 3- 7 | | ST | | | | | | 1 |
| THRU | | | 208 | | VARY | LENGTH | BY | 0- 1 | 3/ 8 | |
| W 5046 | 2 | 5-11 | | ST | | | | | | 1 |
| W 5047 | 2 | 31-11 | 67 | ST | | | | | | |
| W 5048 | 2 | 15- 9 | 33 | ST | | | | | | |
| W 5049 | 2 | 25- 3 | 53 | ST | | | | | | |
| W 5050 | 6 | 30- 0 | 188 | ST | | | | | | |
| W 5051 | 2 | 3- 7 | | ST | | | | | | 1 |
| THRU | | | 174 | | VARY | LENGTH | BY | 0- 1 | 1/ 2 | |
| W 5068 | 2 | 5- 8 | | ST | | | | | | 1 |
| W 5069 | 2 | 26- 6 | 55 | ST | | | | | | |
| W 5070 | 2 | 12- 3 | 26 | ST | | | | | | |
| W 5071 | 2 | 22- 0 | 46 | ST | | | | | | |
| W 5072 | 6 | 24- 8 | 154 | ST | | | | | | |
| W 5073 | 2 | 3- 7 | | ST | | | | | | 1 |
| THRU | | | 165 | | VARY | LENGTH | BY | 0- 1 | 5/ 8 | |
| W 5089 | 2 | 5- 9 | | ST | | | | | | 1 |
| W 5090 | 2 | 25- 0 | 52 | ST | | | | | | |
| W 5091 | 2 | 11- 3 | 23 | ST | | | | | | |
| W 5092 | 2 | 20- 9 | 43 | ST | | | | | | |
| W 5093 | 6 | 23- 0 | 144 | ST | | | | | | |

| FED. RD. DIVISION | STATE | PROJECT | TYPE FUNDS |
|---|---|---|---|
| 5 | OHIO | | |

461/500

CUYAHOGA COUNTY

CUY-480-10.39

NOTES

1. INDICATES SERIES BAR. EACH BAR VARIES FROM ADJACENT BAR(S) BY TABULATED AMOUNT(S), CALCULATED TO NEAREST 1/8 INCH. WEIGHT SHOWN IS FOR ENTIRE SERIES UTILIZING AVERAGE LENGTH.

2. BARS INCLUDED WITH ITEM 517, RAILING, FOR PAYMENT.

3. COST OF FIELD BENDING SHALL BE INCLUDED WITH ITEM 509.

6. 'LENGTH' SHOWN FOR SPIRAL BARS IS DISTANCE FROM TOP OF FOOTING TO BOTTOM OF PIER CAP.
'NO. TURNS' SHOWN IS 'LENGTH' DIVIDED BY PITCH, PLUS 3 TURNS (NUMBER OF CLOSED COILS), EXPRESSED AS NEAREST WHOLE NUMBER.
1 1/2 CLOSED COILS SHALL BE PROVIDED AT ENDS OF EACH SPIRAL UNIT. FOUR STEEL CHANNEL, TEE OR ANGLE SPACERS, WEIGHING APPROXIMATELY 0.80 LB. PER LIN. FT. OF SPACER SHALL BE PROVIDED FOR EACH SPIRAL UNIT. THEY SHALL BE EQUALLY SPACED ALONG PERIPHERY OF COIL. WEIGHT OF SPACERS, AT 0.80 LB. PER LIN. FT. WILL BE PAID FOR AS REINFORCING STEEL AND IS INCLUDED IN TABULATED WEIGHT.

A BAR MARK THAT INCLUDES THE LETTER "E" IN THE PREFIX INDICATES THAT THE BAR SHALL BE EPOXY COATED.

REFER TO CMS SECTIONS 106.03, 700, 709.01 THROUGH 709.05 AND 709.08. SUFFICIENT ADDITIONAL REINFORCING STEEL SHALL BE PROVIDED FOR SAMPLING. RANDOM SAMPLES SHALL BE REPLACED IN THE STRUCTURES BY THE ADDITIONAL STEEL, SPLICED IN ACCORDANCE WITH 509.08.

BAR BENDING DIAGRAM TYPES

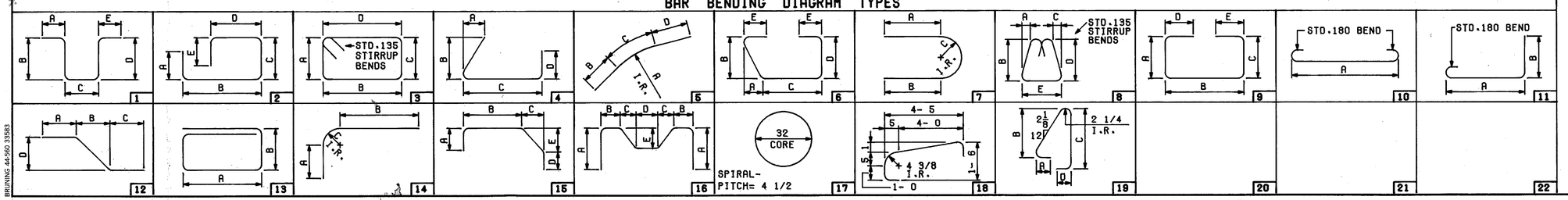


BRUNING 44-560 33583

13113

ALDEN E. STILSON & ASSOCIATES, LIMITED
CONSULTING ENGINEERS
CLEVELAND, OHIO COLUMBUS, OHIO WHEELING, W. VA.

# REINFORCING STEEL LIST

BRIDGE NO. CUY-480-1216
I-480 UNDER RELOCATED SOUTHWOOD DRIVE
STA. 8+76.47
CUYAHOGA COUNTY STA. 11+37.29

| DESIGNED | DRAWN | TRACED | CHECKED | REVIEWED | DATE | REVISED |
|---|---|---|---|---|---|---|
| DEM | | | R.T. | G.W.M. | 9/6/90 | |

MICROFILMED
JAN 22 1991

| FED. RD. DIVISION | STATE | PROJECT | TYPE FUNDS |
|---|---|---|---|
| 2 | OHIO | | |

462/500

CUYAHOGA COUNTY
CUY-480-10.39

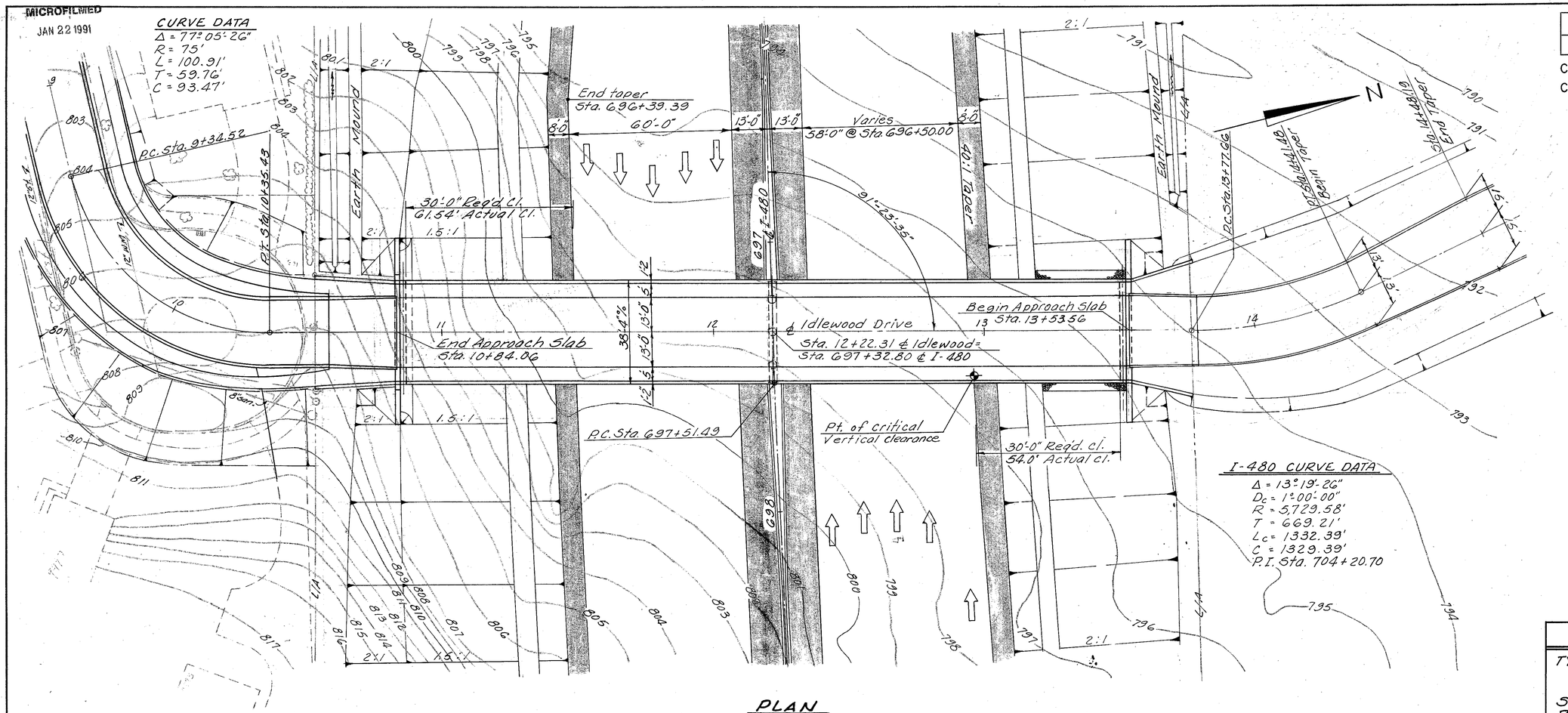


PLAN

NOTE: Earthwork limits shown are approximate. Actual slopes shall conform to plan cross sections.

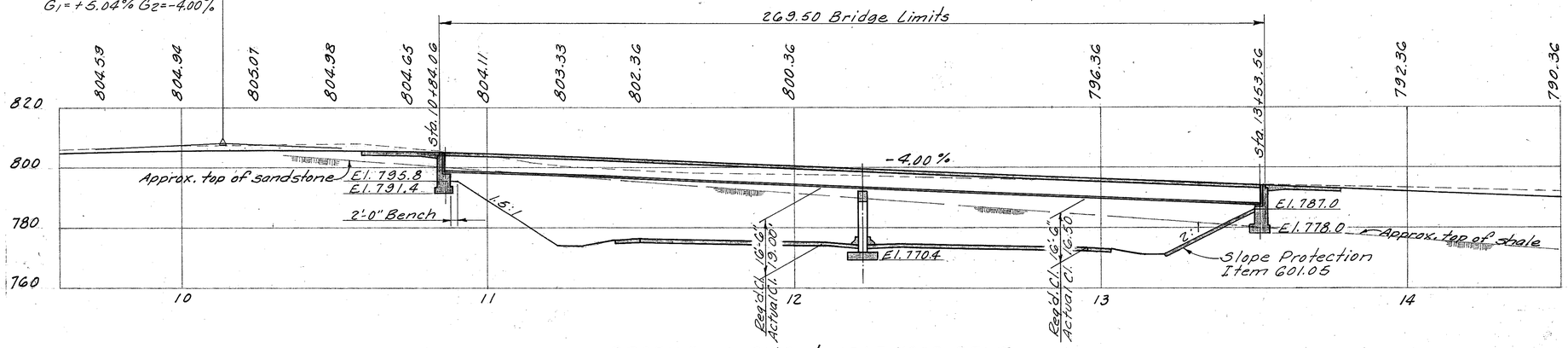


PROFILE ALONG ℄ IDLEWOOD DRIVE

## PROPOSED STRUCTURE

TYPE: Continuous steel girders with reinforced concrete deck and substructure.
SPANS: 136'-0" & 129'-0" c/c Brg's.
ROADWAY: 26'-0" c/c curbs, 5'-0" side walks & 6'-0" chain link fence mounted on 2'-7" Conc. parapet
LOADING: HS 20-44 & the alternate military loading, Fatigue Case II
WEARING SURFACE Monolithic concrete.
SKEW: 0°00'-00"
ALIGNMENT: Tangent
APPROACH SLABS: AS-1-72(Mod.) 25'-0" long.

## TRAFFIC ESTIMATE

Design Year - 1990
Total A.D.T. - 490
A.D.T.T. - 0

1/14

ALDEN E. STILSON & ASSOCIATES, LIMITED
CONSULTING ENGINEERS
CLEVELAND, OHIO COLUMBUS, OHIO WHEELING, W. VA.

## SITE PLAN
BRIDGE No. CUY-480-1272

I-480 UNDER IDLEWOOD DRIVE

CUYAHOGA COUNTY STA. 10+84.06
STA. 13+53.56

| DESIGNED | DRAWN | TRACED | CHECKED | REVIEWED | DATE | REVISED |
|---|---|---|---|---|---|---|
| G.W.M. | G.W.M. | R.T. | DEM | G.W.M. | 6/29/90 | |

MICROFILMED
JAN 22 1991

| FED. RD. DIVISION | STATE | PROJECT | TYPE FUNDS |
|---|---|---|---|
| 5 | OHIO | | |

463/500

CUYAHOGA COUNTY

CUY-480-10.39

STANDARD DRAWING REFERENCES

| DESCRIPTION | DWG. NO. SHT. | DATE |
|---|---|---|
| APPROACH SLABS | AS-1-81 | 11-27-81 |

SUPPLEMENTAL SPECIFICATION REFERENCES

| DESCRIPTION | NO. | DATE |
|---|---|---|
| CONCRETE CURING AND PROTECTIVE MEMBRANE | 836 | 3-12-75 |
| ELASTOMERIC COMPRESSION SEALS FOR STRUCTURAL STEEL JOINTS | 849 | 10-19-81 |
| EPOXY COATED REINFORCING STEEL | 824 | 10-08-82 |

COMMON DETAIL REFERENCES

| | | |
|---|---|---|
| CHAIN LINK FENCE | SHEET | 477 |

DESIGN SPECIFICATIONS

THIS STRUCTURE CONFORMS TO THE 'STANDARD SPECIFICATIONS FOR HIGHWAY BRIDGES' ADOPTED BY THE AMERICAN ASSOCIATION OF STATE HIGHWAY AND TRANSPORTATION OFFICIALS, 1977, INCLUDING 1978 INTERIM SPECIFICATIONS AND THE OHIO SUPPLEMENT TO THESE SPECIFICATIONS.

DESIGN DATA

DESIGN LOADING - HS20-44 AND THE INTERSTATE ALTERNATE LOADING, FATIGUE CASE II
CONCRETE CLASS S - COMPRESSIVE STRENGTH 4500 PSI FOR SUPERSTRUCTURE
CONCRETE CLASS C - COMPRESSIVE STRENGTH 4000 PSI FOR SUBSTRUCTURE
STRUCTURAL STEEL - ASTM A588 -UNIT STRESS 27000 PSI
REINFORCING STEEL - ASTM A615, A616 OR A617-GRADE 60 MINIMUM YIELD STRENGTH 60000 PSI

SPIRAL REINFORCEMENT MAY BE PLAIN BARS ASTM A82 OR A615

DECK PROTECTION METHOD - EPOXY COATED REINFORCING STEEL, TOP MAT ONLY

MONOLITHIC WEARING SURFACE - THICKNESS IS ASSUMED TO BE 1 INCH. (FOR DESIGN PURPOSES)

FOUNDATION BEARING PRESSURE

NORTH ABUTMENT FOOTING IS DESIGNED FOR A MAXIMUM BEARING PRESSURE OF 5.0 TONS PER SQ. FT.
SOUTH ABUTMENT FOOTING IS DESIGNED FOR A MAXIMUM BEARING PRESSURE OF 10.0 TONS PER SQ. FT.
PIER FOOTINGS ARE DESIGNED FOR A MAXIMUM BEARING PRESSURE OF 10.0 TONS PER SQ. FT.

FOOTINGS

FOOTINGS SHALL BE PLACED IN BEDROCK AT THE ELEVATION SHOWN.

UTILITY LINES

ALL EXPENSE INVOLVED IN RELOCATING AND INSTALLING THE AFFECTED UTILITY LINES SHALL BE BORNE BY THE OWNERS. THE CONTRACTOR AND OWNERS ARE REQUESTED TO COOPERATE BY ARRANGING THEIR WORK IN SUCH A MANNER THAT INCONVENIENCE TO EITHER WOULD BE HELD TO A MINIMUM.

| ITEM | TOTAL | UNIT | DESCRIPTION | ABUTS | PIER | SUPER | GENERAL |
|---|---|---|---|---|---|---|---|
| 503 | LUMP | | COFFERDAMS, CRIBS AND SHEETING | | | | LUMP |
| 503 | 181 | C.Y. | UNCLASSIFIED EXCAVATION | 138 | | | 43 |
| 503 | 81 | C.Y. | ROCK EXCAVATION | 69 | 12 | | |
| 503 | 22 | C.Y. | SHALE EXCAVATION | 22 | | | |
| 509 | 51853 | LB | REINFORCING STEEL, GRADE 60 | 11113 | 7350 | 31355 | 2035 |
| 511 | 399 | C.Y. | CLASS S CONCRETE, SUPERSTRUCTURE (SEE PROPOSAL NOTE) | | | 399 | |
| 511 | 32 | C.Y. | CLASS C CONCRETE, PIER CAPS AND COLUMNS | | 32 | | |
| 511 | 133 | C.Y. | CLASS C CONCRETE, ABUTMENTS ABOVE FOOTINGS | 133 | | | |
| 511 | 55 | C.Y. | CLASS C CONCRETE, FOOTINGS | 42 | 13 | | |
| 511 | 21 | C.Y. | CLASS C CONCRETE, APPROACH PARAPET WALLS | | | | 21 |
| 513 | 422300 | LB | STRUCTURAL STEEL☐ AISC CATEGORY III (SEE PROPOSAL NOTE) | | | 422300 | |
| 516 | 82 | L.F. | ELASTOMERIC COMPRESSION SEAL FOR STRUCTURAL STEEL JOINTS | 82 | | | |
| 516 | 22 | S.F. | 1 INCH PREFORMED EXPANSION JOINT FILLER | | | | 22 |
| 516 | 5 | EACH | LAMINATED ELASTOMERIC BEARING (13"X18"X4-9/16" | 5 | | | |
| | | | LAMINATED ELASTOMERIC PAD WITH 15"X20"X 1" STEEL | | | | |
| | | | LOAD PLATE) | | | | |
| 516 | 5 | EACH | LAMINATED ELASTOMERIC BEARINGS (13"X18"X4-9/16" | 5 | | | |
| | | | LAMINATED ELASTOMERIC PAD WITH 15"X20"X1-1/4" | | | | |
| | | | BEVELED STEEL LOAD PLATE) | | | | |
| 516 | 5 | EACH | LAMINATED ELASTOMERIC BEARINGS (26"X26"X1" | | 5 | | |
| | | | ELASTOMERIC PAD WITH 28"X28"X2-1/8" BEVELED | | | | |
| | | | STEEL LOAD PLATE) | | | | |
| 517 | 533 | L.F. | RAILING (CONCRETE PARAPET WITH | | | 533 | |
| | | | 60 INCH CHAIN LINK FENCE) AS PER PLAN | | | | |
| 518 | 77 | C.Y. | POROUS BACKFILL | 77 | | | |
| 518 | 99 | L.F. | 6 INCH PERFORATED, HELICAL CORRUGATED STEEL | 99 | | | |
| | | | PIPE, 707.01 | | | | |
| 518 | 73 | L.F. | 6 INCH NON-PERFORATED, HELICAL CORRUGATED STEEL | 73 | | | |
| | | | PIPE, INCLUDING SPECIALS, 707.01 | | | | |
| 601 | 165 | S.Y. | CRUSHED AGGREGATE SLOPE PROTECTION | | | | 165 |
| 607 | 115 | L.F. | FENCE, TYPE CL, MODIFIED AS PER PLAN | | | | 115 |
| 824 | 48771 | LB | EPOXY COATED REINFORCING STEEL, GRADE 60 | | | 48771 | |
| SPEC | 1156 | S.F. | PROTECTION OF CONCRETE SURFACES (SEE PROPOSAL NOTE) | 295 | 861 | | |

☐ ASTM A-588

2 114

ALDEN E. STILSON & ASSOCIATES, LIMITED
CONSULTING ENGINEERS
CLEVELAND, OHIO COLUMBUS, OHIO WHEELING, W. VA.

# GENERAL NOTES AND ESTIMATED QUANTITIES

BRIDGE NO. CUY-480-1272
I-480 UNDER IDLEWOOD DRIVE
STA. 10+84.06
CUYAHOGA COUNTY STA. 13+53.56

| DESIGNED | DRAWN | TRACED | CHECKED | REVIEWED | DATE | REVISED |
|---|---|---|---|---|---|---|
| MEM | | | DEM 2-16-80 | G.W.M. 2/20/80 | | |

BRUNING 44-560 33583

MICROFILMED
JAN 22 1991

| FED. RD. DIVISION | STATE | PROJECT | TYPE FUNDS |
|---|---|---|---|
| 2 | OHIO | | |

464/500

CUYAHOGA COUNTY
CUY-480-10.39

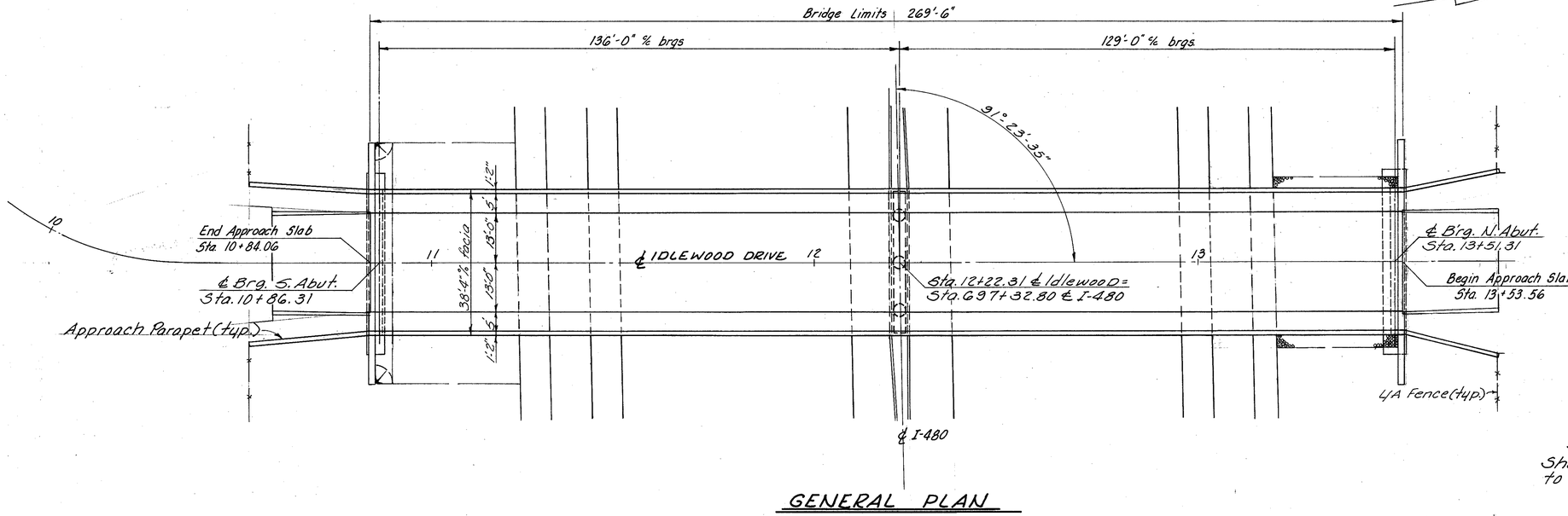


GENERAL PLAN

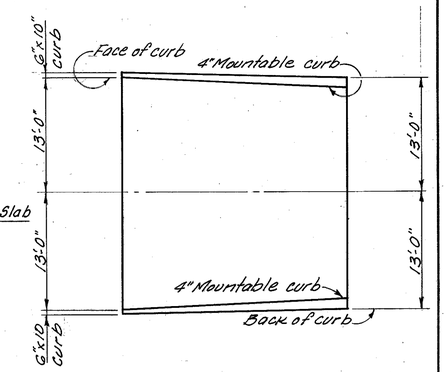


APPROACH SLAB DETAIL

Showing transition from bridge curb to approach roadway curb.

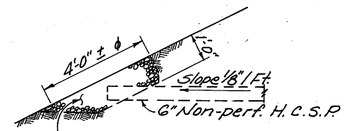


DETAIL OF DRAINAGE OUTLET

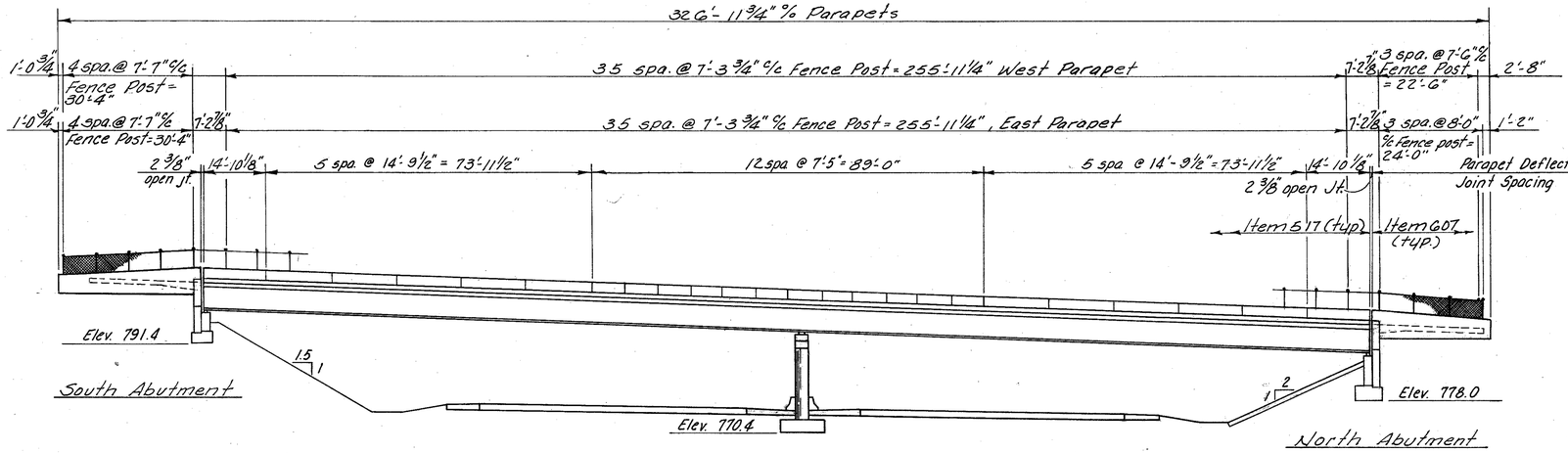


EAST ELEVATION

Note:

For fence details, see Common Details Sht. 477

For Approach Parapet Details see Sht. 13/14

Limit of Item 517 Railing (concrete parapet with 60 inch Chain Link Fence) as per plan, is from open joint to open joint at the abutments. Remainder of fence is listed as Item 607 for payment.

3/14

ALDEN E. STILSON & ASSOCIATES, LIMITED
CONSULTING ENGINEERS
CLEVELAND, OHIO COLUMBUS, OHIO WHEELING, W. VA.

GENERAL PLAN & ELEVATION
BRIDGE No. CUY-480-1272
I-480 UNDER IDLEWOOD DRIVE
CUYAHOGA COUNTY
STA. 10+84.06
STA. 13+53.56

| DESIGNED | DRAWN | TRACED | CHECKED | REVIEWED | DATE | REVISED |
|---|---|---|---|---|---|---|
| W.M. | R.T. | | D.E.M. | G.W.N. | 2/28/80 | |

MICROFILMED
JAN 22 1991

| FED. RD. DIVISION | STATE | PROJECT | TYPE FUNDS |
|---|---|---|---|
| 5 | OHIO | | |

465/500

CUYAHOGA COUNTY
CUY-480-10.39

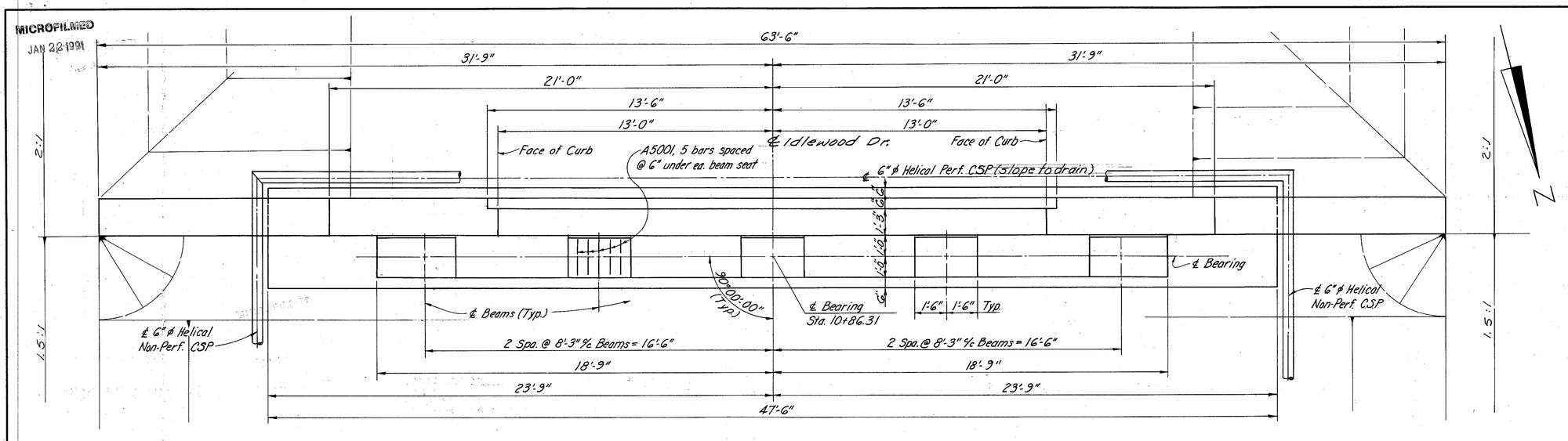


## PLAN

* Elevations shown thus are pavement elevations at the face of backwall and the point indicated.

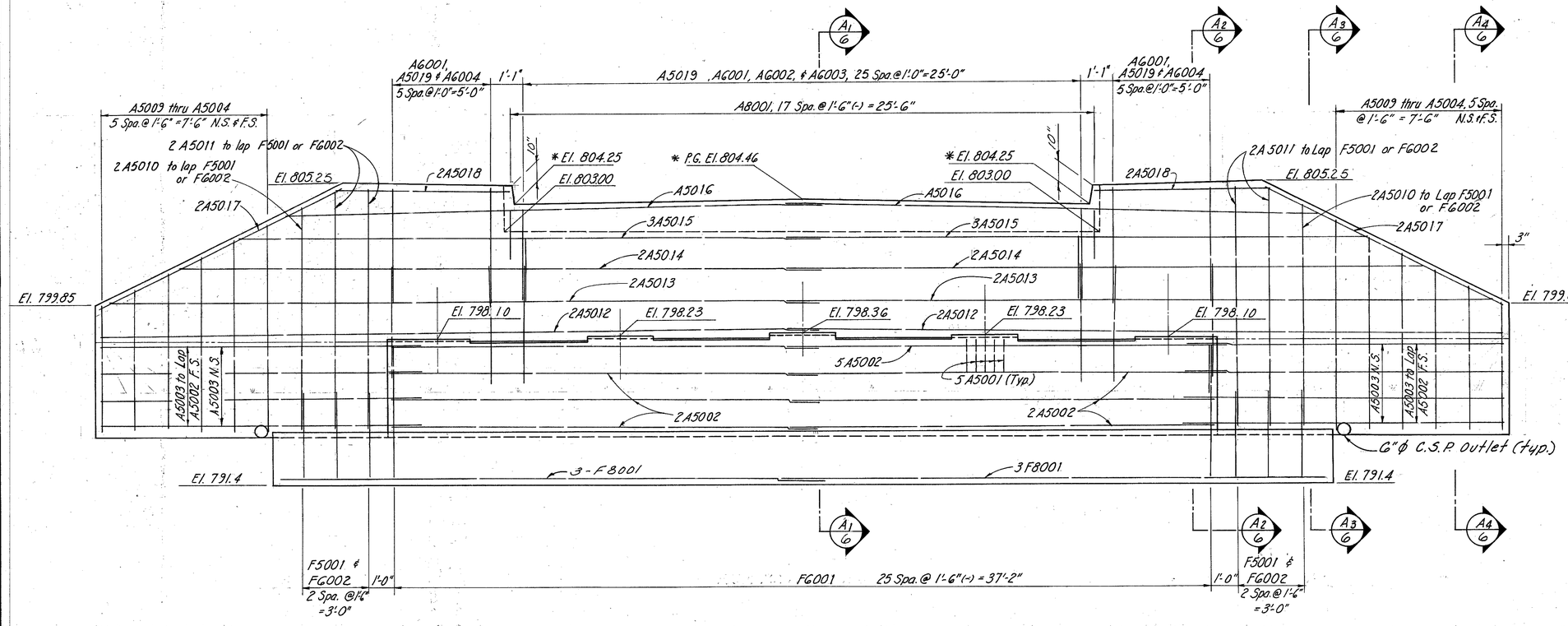


## ELEVATION

Notes:

In reinforcing bar callouts
N.S. indicates near side.
F.S. indicates far side.

For additional notes see Sht. 5/14

Bridge seat elevations have been adjusted upward 0.23" at exterior girder seats and 0.26" at interior girder seats to compensate for the vertical deformation of the bearings.

Typical reinforcing bar lap lengths:
No. 5 bars = 19" lap
No. 6 bars = 23" lap
No. 8 bars = 30" lap

For C.S.P. outlet detail see Sht. 3/14

4.114

ALDEN E. STILSON & ASSOCIATES, LIMITED
CONSULTING ENGINEERS
CLEVELAND, OHIO COLUMBUS, OHIO WHEELING, W. VA.

# SOUTH ABUTMENT DETAILS

BRIDGE No. CUY-480-1272
I-480 UNDER IDLEWOOD DRIVE
CUYAHOGA COUNTY
STA. 10+84.06
STA. 13+53.56

| DESIGNED | DRAWN | TRACED | CHECKED | REVIEWED | DATE | REVISED |
|---|---|---|---|---|---|---|
| MEM | | E.O.C. | DEM | G.W.M. | 2/28/80 | |

BRUNING 44-560 33583

MICROFILMED
JAN 22 1991

| FED. RD. DIVISION | STATE | PROJECT | TYPE FUNDS |
|---|---|---|---|
| 5 | OHIO | | |

466/500

CUYAHOGA COUNTY
CUY-480-10.39

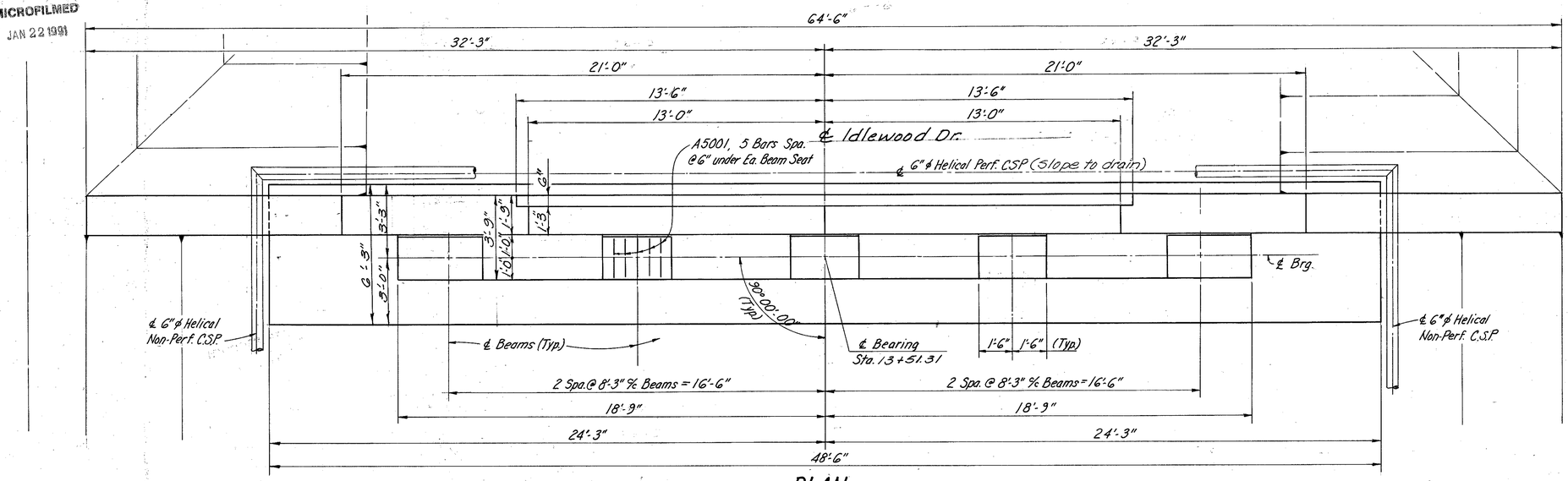


## PLAN

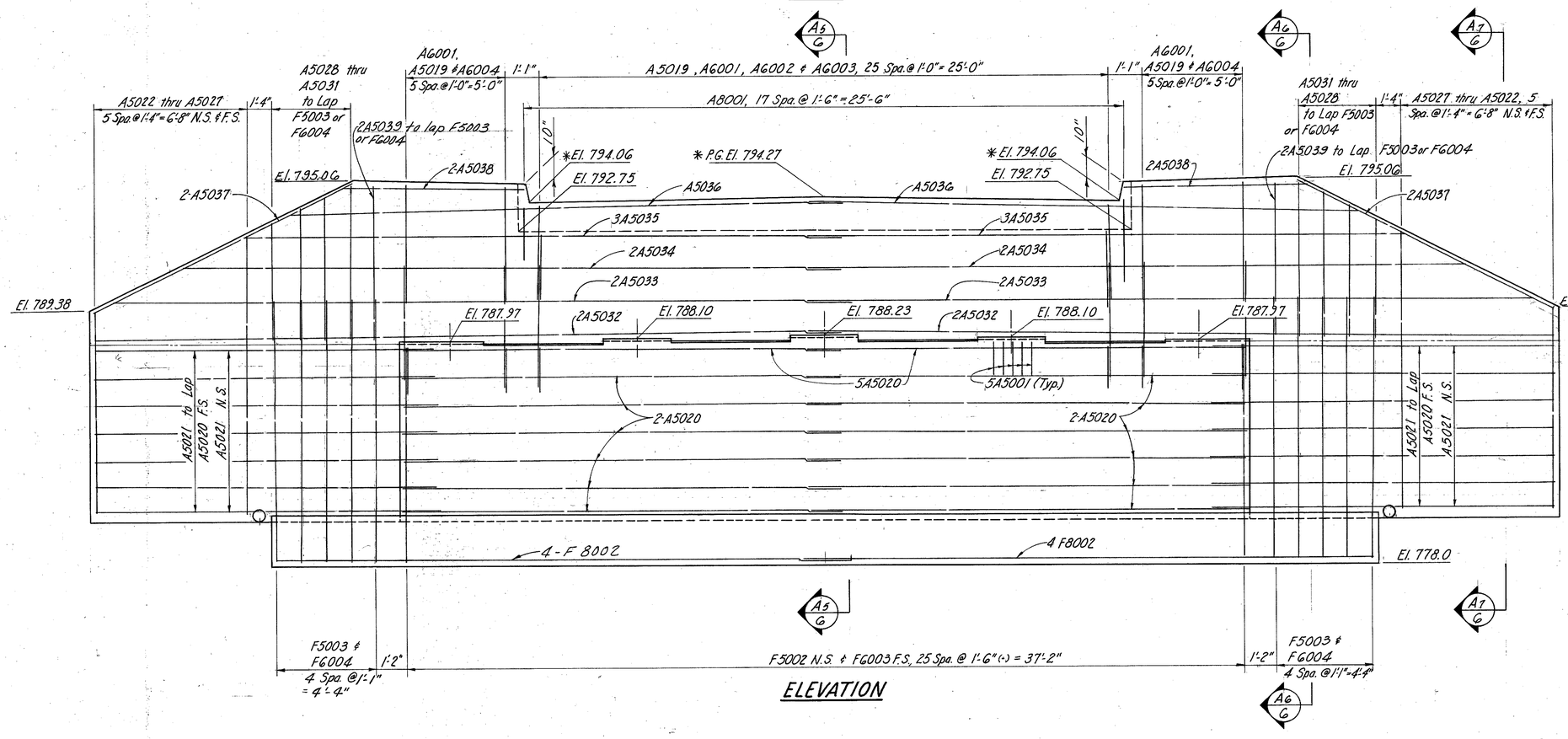


## ELEVATION

### Notes:

Typical reinforcing bar lap lengths:
No.5 bars = 19" lap
No.6 bars = 23" lap
No.8 bars = 30" lap

In reinforcing bar callouts:
N.S. indicates near side
F.S. indicates far side

Footing reinforcement shall have a minimum cover of 3" at all surfaces.

For expansion joint details see Sht.11/14

Bridge seat elevations have been adjusted upward 0.21" at exterior girder seats and 0.24" at interior girder seats to compensate for the vertical deformation of the bearings.

Porous Backfill, 1'-6" thick, shall extend up to the plane of the subgrade and laterally to the ends of the wingwalls.

* Elevations shown thus are pavement elevations at the face of backwall and the point indicated.

Backwall Concrete: In addition to the provisions of 511.08, backwall concrete above the bridge seat or backwall concrete above the optional construction joint at the approach slab seat shall not be placed until after the deck concrete in the span adjacent to the abutment has been placed.

For C.S.P. outlet detail see Sht. 3/14

5 1/4

ALDEN E. STILSON & ASSOCIATES, LIMITED
CONSULTING ENGINEERS
CLEVELAND, OHIO COLUMBUS, OHIO WHEELING, W. VA.

# NORTH ABUTMENT DETAILS

BRIDGE No. CUY-480-1272
I-480 UNDER IDLEWOOD DRIVE
CUYAHOGA COUNTY STA. 10+84.06
STA. 13+53.56

| DESIGNED | DRAWN | TRACED | CHECKED | REVIEWED | DATE | REVISED |
|---|---|---|---|---|---|---|
| MEM | M.E.M. | E.O.C. | DEM | G.W.M. | 6/28/80 | |

BRUNING 44-560 33583

MICROFILMED
JAN 22 1991

| FED. RD. DIVISION | STATE | PROJECT | TYPE FUNDS |
|---|---|---|---|
| 5 | OHIO | | |

467/500

CUYAHOGA COUNTY
CUY-480-10.39

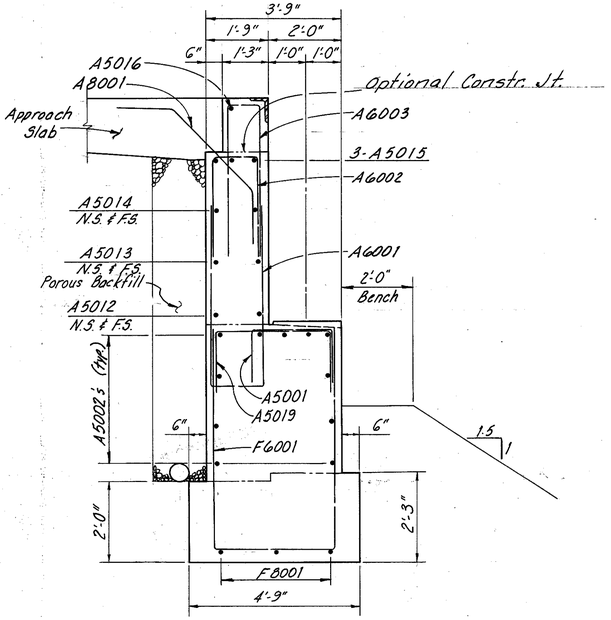


SECTION $A_1$-$A_1$

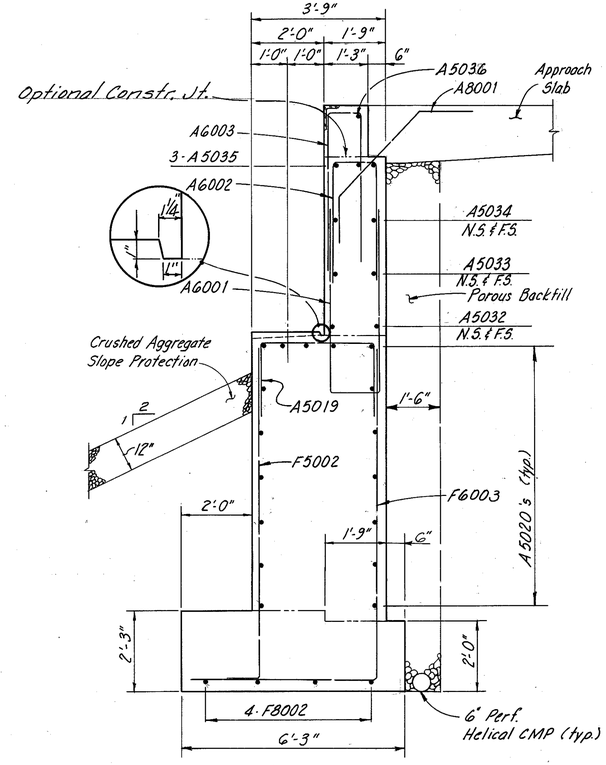


SECTION $A_5$-$A_5$

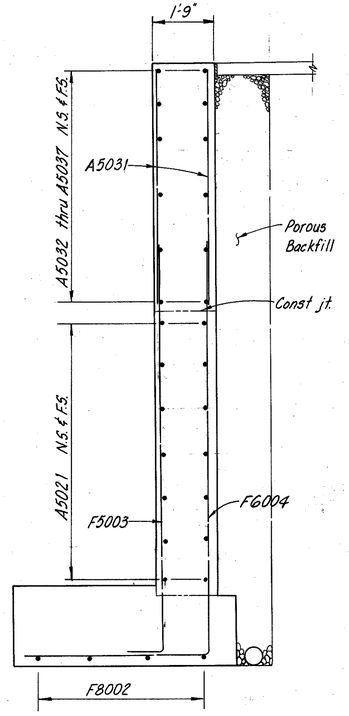


SECTION $A_6$-$A_6$

Notes:

In reinforcing bar callouts
N.S. indicates near side.
F.S. indicates far side.

For additional notes see Sht. 5/14

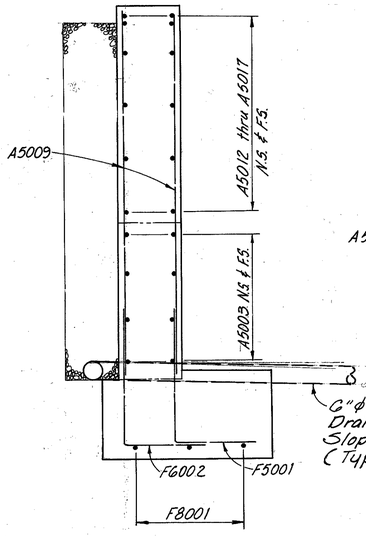


SECTION $A_3$-$A_3$

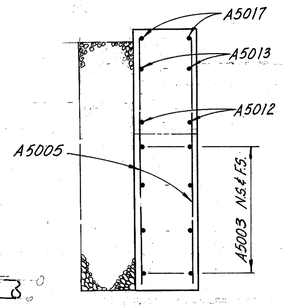


SECTION $A_4$-$A_4$

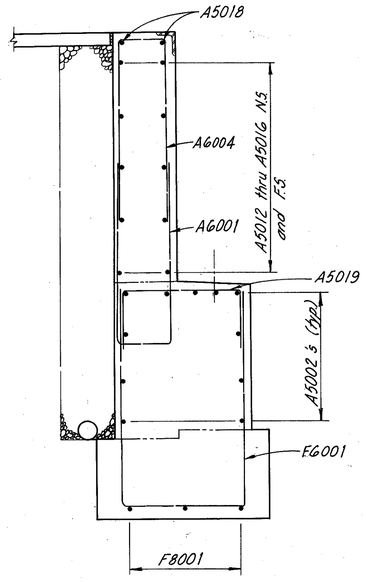


SECTION $A_2$-$A_2$

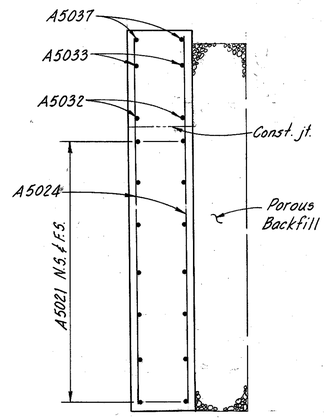


SECTION $A_7$-$A_7$

G 1/4

ALDEN E. STILSON & ASSOCIATES, LIMITED
CONSULTING ENGINEERS
CLEVELAND, OHIO COLUMBUS, OHIO WHEELING, W. VA.

# ABUTMENT DETAILS

BRIDGE No. CUY-480-1272
I-480 UNDER IDLEWOOD DRIVE
CUYAHOGA COUNTY
STA. 10+84.06
STA. 13+53.56

| DESIGNED | DRAWN | TRACED | CHECKED | REVIEWED | DATE | REVISED |
|---|---|---|---|---|---|---|
| MEM | | E.O.C. | DEM | G.W.M. | 6/20/80 | |

BRUNING 44-560 33563

MICROFILMED
JAN 22 1991

| FED. RD. DIVISION | STATE | PROJECT | TYPE FUNDS |
|---|---|---|---|
| 2 | OHIO | | |

468/500

CUYAHOGA COUNTY
CUY-480-10.39

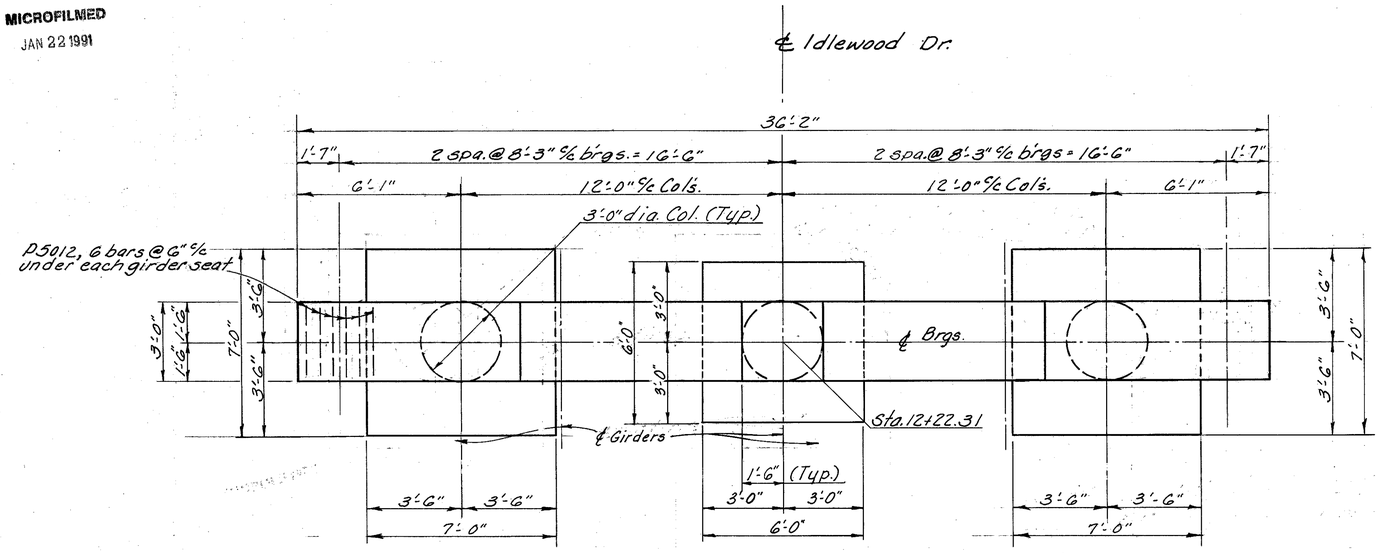


PLAN

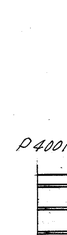


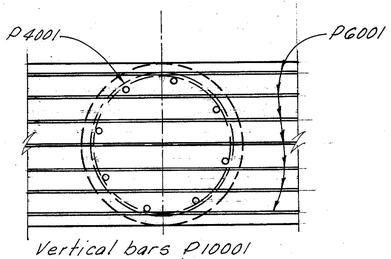


Vertical bars P10001
(Typical all columns)

SECTION P3-P3

Notes:

In reinforcing steel callouts:
N.F. indicates near face.
F.F indicates far face

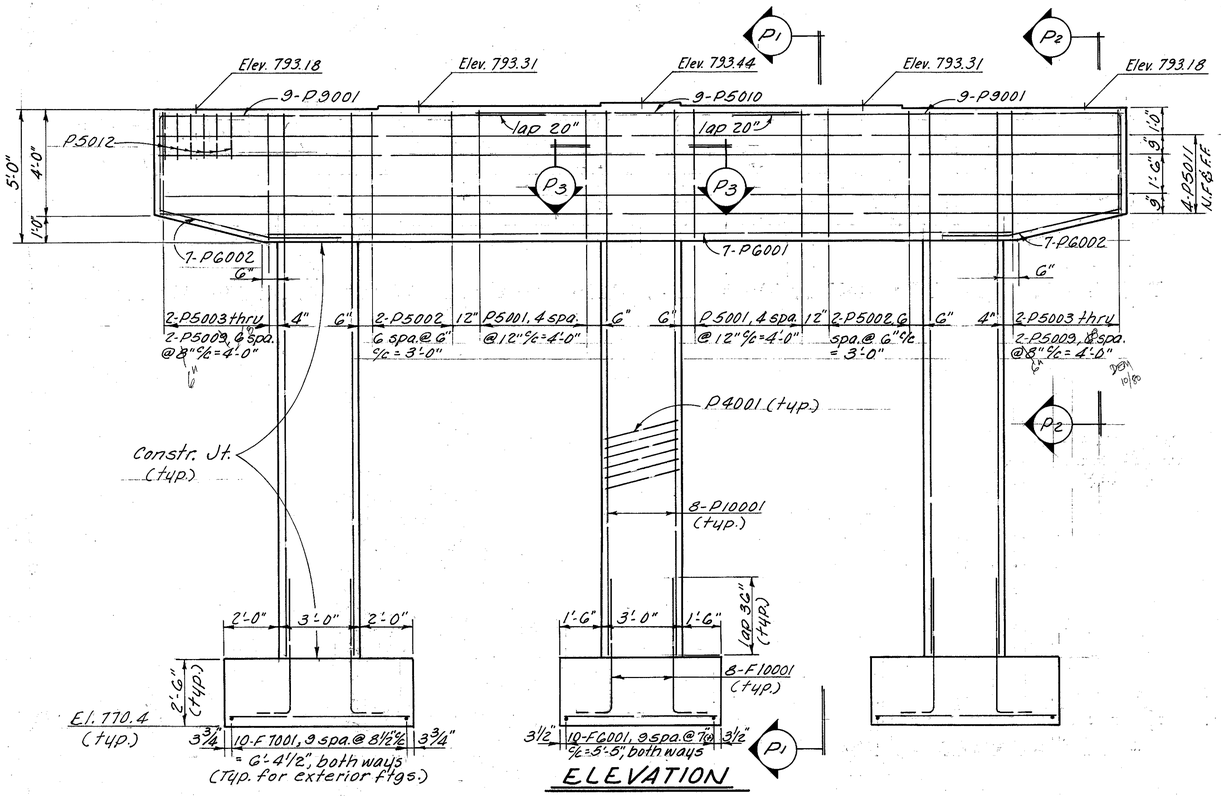


ELEVATION

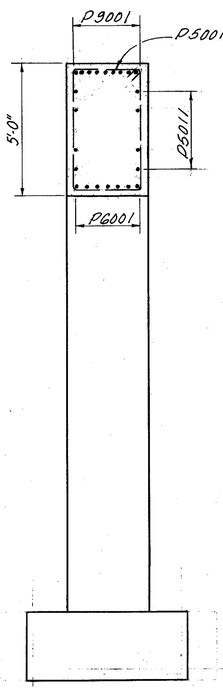


SECTION P1-P1

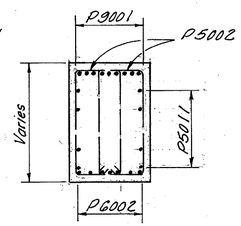


SECTION P2-P2

7/14

ALDEN E. STILSON & ASSOCIATES, LIMITED
CONSULTING ENGINEERS
CLEVELAND, OHIO COLUMBUS, OHIO WHEELING, W. VA.

# PIER DETAILS

BRIDGE No. CUY-480-1272
I-480 UNDER IDLEWOOD DRIVE
CUYAHOGA COUNTY
STA. 10+84.06
STA. 13+53.56

| DESIGNED | DRAWN | TRACED | CHECKED | REVIEWED | DATE | REVISED |
|---|---|---|---|---|---|---|
| DEM | R.T. | | MEM | G.W.M. | 2/20/80 | |

MICROFILMED
JAN 22 1991

| FED. RD. DIVISION | STATE | PROJECT | TYPE FUNDS |
|---|---|---|---|
| 2 | OHIO | | |

469/500

CUYAHOGA COUNTY
CUY-480-10.39

NOTE: Each run of longitudinal deck reinforcing, excluding top over Pier bars, shall be comprised of the following:
Top bars: 9-SE4001 & 1-SE4002, Min. lap 1'-5"
Bottom bars: 9-S5004 & 1-S5005, Min. lap 1'-10"

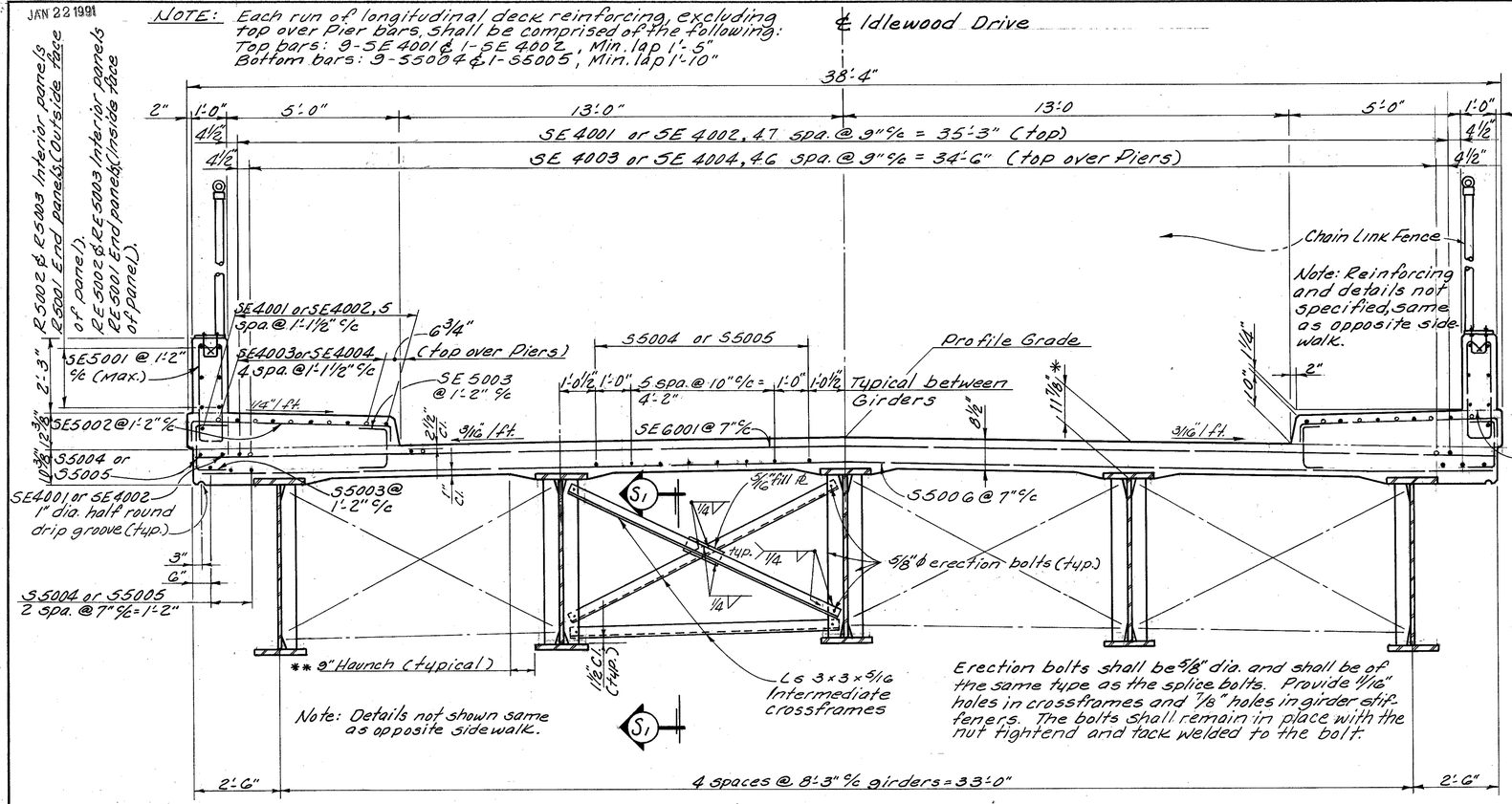


TRANSVERSE SECTION

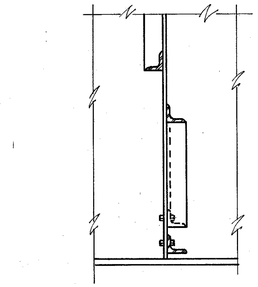

SECTION S1-S1

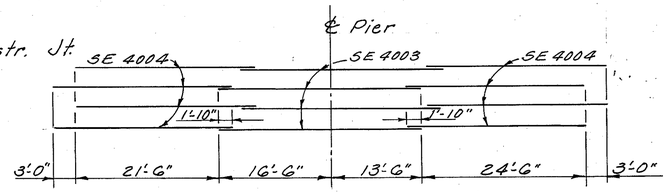


DIAGRAM SHOWING STAGGER OF BARS OVER PIER

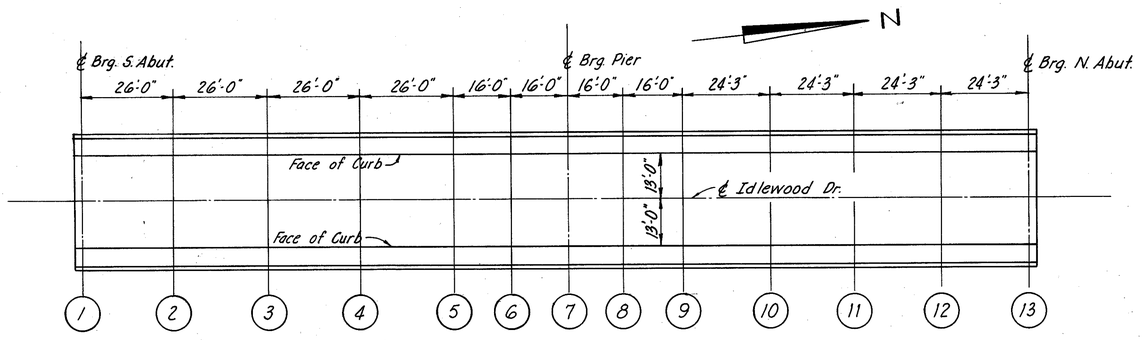


SCREED ELEVATION LOCATIONS

NOTE: Elevations shown at the face of curb are those which are required before the concrete deck is placed. Proper allowance has been made for the dead load deflections caused by the weight of the concrete.

TABLE OF SCREED ELEVATIONS

| Line | 1 | 2 | 3 | 4 | 5 | 6 | 7 | 8 | 9 | 10 | 11 | 12 | 13 |
|---|---|---|---|---|---|---|---|---|---|---|---|---|---|
| Elev. | 804.25 | 803.68 | 802.81 | 801.74 | 800.62 | 799.93 | 799.27 | 798.64 | 798.04 | 797.13 | 796.19 | 795.18 | 794.12 |

Notes:

* This is the design dimension. The quantity of deck concrete to be paid for shall be based upon this dimension, even though deviation from it may be necessary because the top flange of the girder may not have the exact camber or conformation required to place it parallel to the finished grade. Deduction shall be made for volume of encased steel plates as per 511.18.

** A typical haunch width of 9" shall be used for all girders for computing quantity of concrete. However, the haunch width may vary between 6" and 12" provided that the slope shall be not more than 1:4 for a haunch less than 9" in width.

For Chain Link Fence Details, see Common Details, Sht. 477

WELDING ATTACHMENTS: See sheet 366/500

814

ALDEN E. STILSON & ASSOCIATES, LIMITED
CONSULTING ENGINEERS
CLEVELAND, OHIO COLUMBUS, OHIO WHEELING, W. VA.

SUPERSTRUCTURE DETAILS
BRIDGE No. CUY-480-1272
I-480 UNDER IDLEWOOD DRIVE
CUYAHOGA COUNTY STA. 10+84.06 STA. 13+53.56

| DESIGNED | DRAWN | TRACED | CHECKED | REVIEWED | DATE | REVISED |
|---|---|---|---|---|---|---|
| MEM | R.T. | | DEM | G.W.M. | 2/28/80 | |

MICROFILMED
JAN 22 1981

| FED. RD. DIVISION | STATE | PROJECT | TYPE FUNDS |
|---|---|---|---|
| 5 | OHIO | | |

470/500

CUYAHOGA COUNTY
CUY-480-10.39

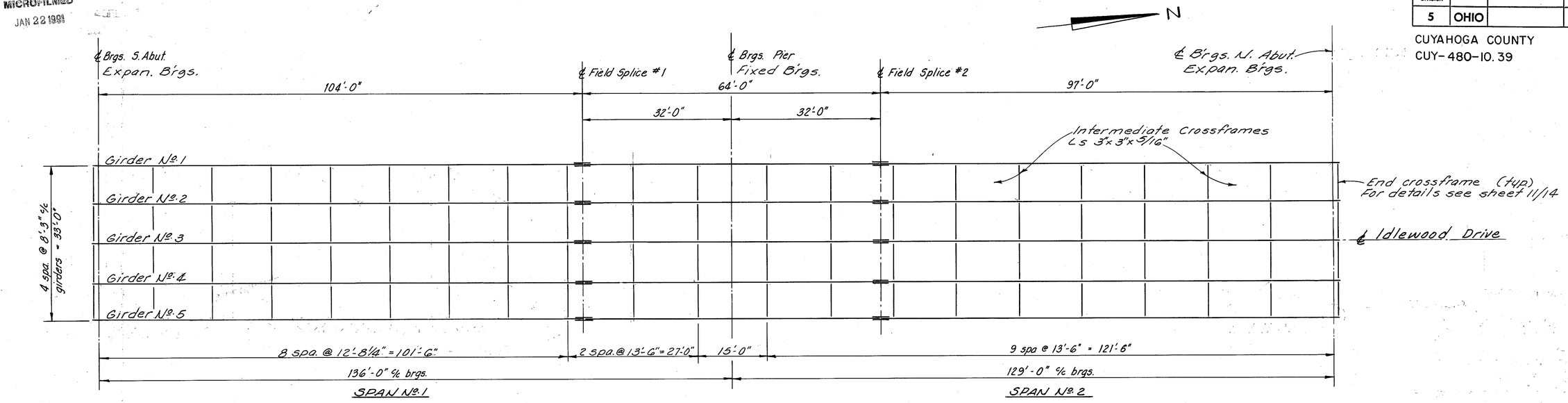


## FRAMING PLAN

Note: For details of Elastomeric Bearing devices see Sht. 12/14
For Girder Details see Sht. 10/14

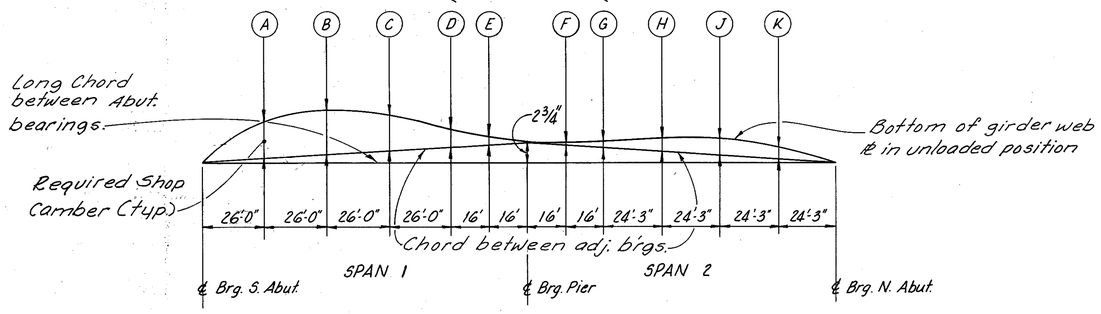


## BLOCKING & CAMBER DIAGRAM

### DEFLECTION AND CAMBER

| Girder | Nº. 2, 3 & 4 | | | | | | | | | | Nº. 1 & 5 | | | | | | | | | |
|---|---|---|---|---|---|---|---|---|---|---|---|---|---|---|---|---|---|---|---|---|
| Camber Locations | SPAN 1 | | | | | SPAN 2 | | | | | SPAN 1 | | | | | SPAN 2 | | | | |
| | A | B | C | D | E | F | G | H | J | K | A | B | C | D | E | F | G | H | J | K |
| Defl. due to weight of steel | 3/8 | 9/16 | 1/2 | 3/16 | 1/16 | 1/16 | 3/16 | 3/8 | 7/16 | 5/16 | 3/8 | 9/16 | 1/2 | 3/16 | 1/16 | 1/16 | 3/16 | 3/8 | 7/16 | 5/16 |
| Defl. due to Rem. Dead Load | 1 5/8 | 2 3/8 | 2 | 1 5/16 | 5/16 | 1/8 | 5/8 | 1 7/16 | 1 13/16 | 1 1/4 | 1 1/4 | 1 7/8 | 1 5/8 | 1 3/16 | 1/4 | 1/8 | 1/2 | 1 1/8 | 1 7/16 | 1 |
| Correction due to Vertical Curve | 3 1/4 | 3 1/2 | 2 3/8 | 1 5/16 | 11/16 | 0 | 0 | 0 | 0 | 0 | 3 1/4 | 3 1/2 | 2 3/8 | 1 5/16 | 11/16 | 0 | 0 | 0 | 0 | 0 |
| Required Shop Camber | 5 1/4 | 6 7/16 | 4 7/8 | 2 7/16 | 1 1/16 | 3/16 | 1 3/16 | 1 13/16 | 2 1/4 | 1 9/16 | 4 7/8 | 5 15/16 | 4 1/2 | 2 5/16 | 1 | 3/16 | 11/16 | 1 1/2 | 1 7/8 | 1 5/16 |

9 114

ALDEN E. STILSON & ASSOCIATES, LIMITED
CONSULTING ENGINEERS
CLEVELAND, OHIO COLUMBUS, OHIO WHEELING, W. VA.

# SUPERSTRUCTURE DETAILS

BRIDGE No. CUY-480-1272

I-480 UNDER IDLEWOOD DRIVE

CUYAHOGA COUNTY STA. 10+84.06
STA. 13+53.56

| DESIGNED | DRAWN | TRACED | CHECKED | REVIEWED | DATE | REVISED |
|---|---|---|---|---|---|---|
| MEM | R.T. | | DEM | G.W.M. | 8/29/80 | |

BRUNING 44-560 33583

MICROFILMED
JAN 22 1991

| FED. RD. DIVISION | STATE | PROJECT | TYPE FUNDS |
|---|---|---|---|
| 5 | OHIO | | |

471
500

CUYAHOGA COUNTY
CUY-480-10.39

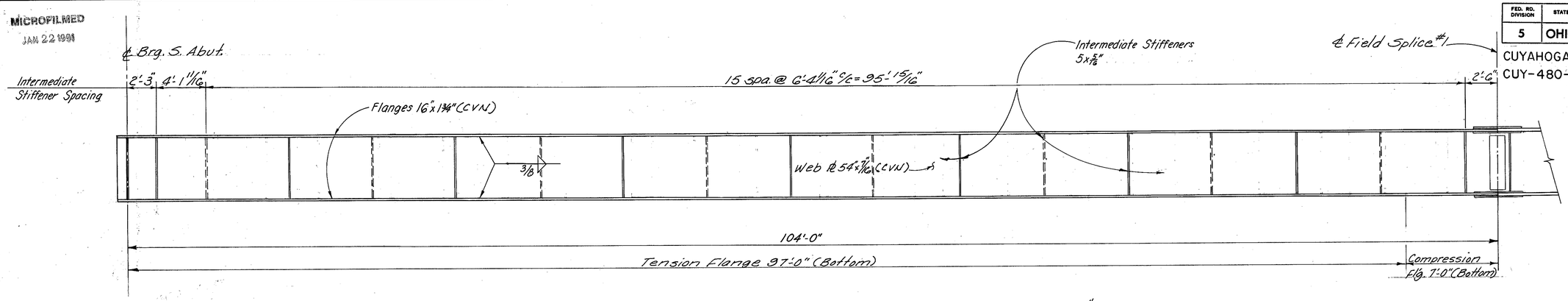


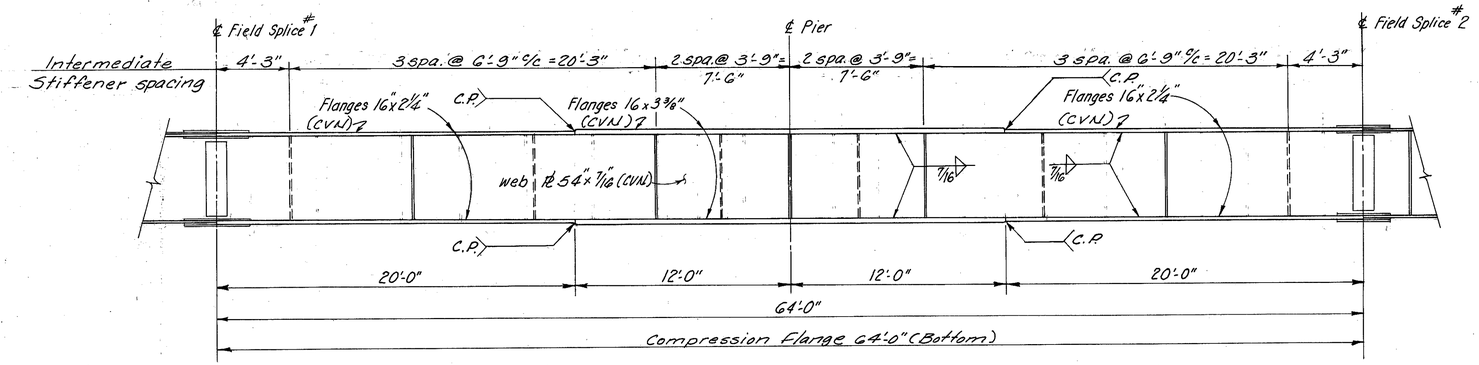


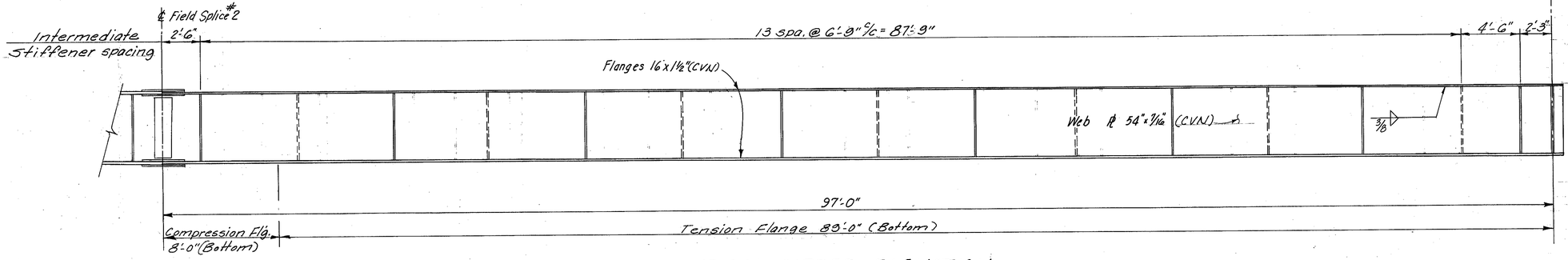


## TYPICAL GIRDER ELEVATION

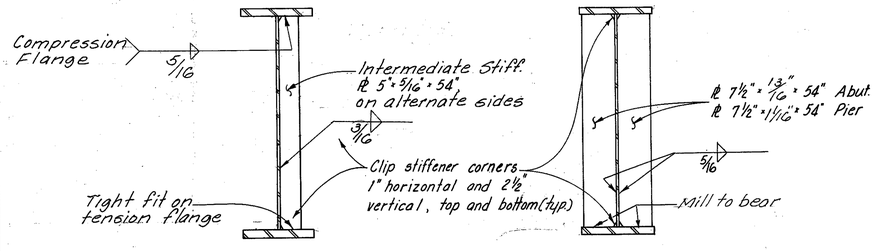


## TYPICAL SECTION THRU GIRDER




## TYPICAL SECTION THRU GIRDER AT BEARING

℄ Brg. N. Abut.

### Notes:

Optional shop web splices shall be located a minimum of 3'-0" from shop flange splice locations and a minimum of 6" from stiffener locations.

Locate intermediate stiffeners to serve as attachments for intermediate crossframes.

Intermediate transverse stiffeners for fascia girders shall all be placed on the inside at the spacing shown.

Where shape or plate is designated (CVN) the material shall meet specified minimum notch toughness requirements as specified in 711.01 of the C.M.S.

C.P. indicates complete penetration butt weld.

All web splice welds shall be complete penetration.

All full penetration welds shall be back-gouged and welded after welding far side.

For Field Splice Details see Sht. 12/14

Grinding of shop welds: Flange butt welds shall be ground flush in tension areas only. Except for webs of fascia girders web welds shall be ground flush from the neutral axis of the web to the flange which is in tension. Webs of fascia girders shall be ground flush for thier full depth. Grinding shall be done in the direction of stress.

10/14

ALDEN E. STILSON & ASSOCIATES, LIMITED
CONSULTING ENGINEERS
CLEVELAND, OHIO COLUMBUS, OHIO WHEELING, W. VA.

# SUPERSTRUCTURE DETAILS

BRIDGE No. CUY-480-1272
I-480 UNDER IDLEWOOD DRIVE
CUYAHOGA COUNTY
STA. 10+84.06
STA. 13+53.56

| DESIGNED | DRAWN | TRACED | CHECKED | REVIEWED | DATE | REVISED |
|---|---|---|---|---|---|---|
| MEM | | E.O.C. | DEM | G.W.M. | 2/29/80 | |

BRUNING 44560 33583

MICROFILMED
JAN 22 1991

| F.H.W.A. REGION | STATE | PROJECT | |
|---|---|---|---|
| 5 | OHIO | | |

472/500

CUYAHOGA COUNTY
CUY-480-10.39

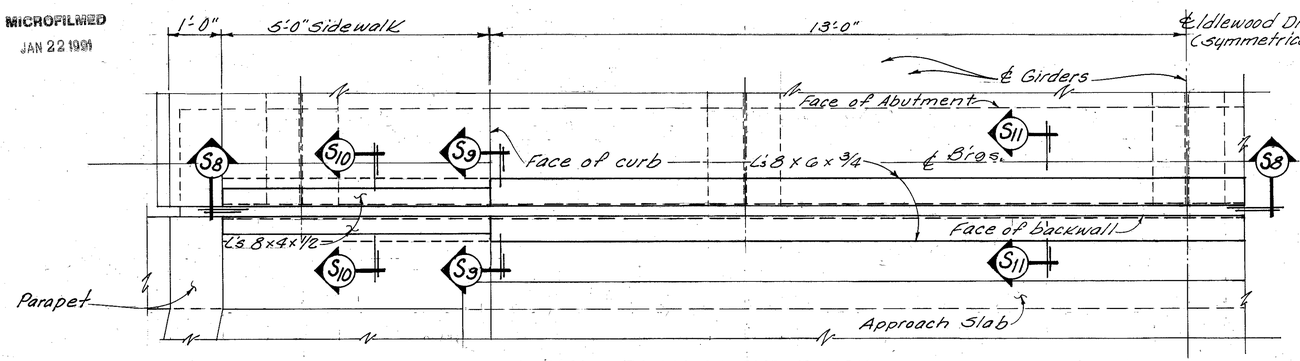


HALF PLAN OF END FINISH

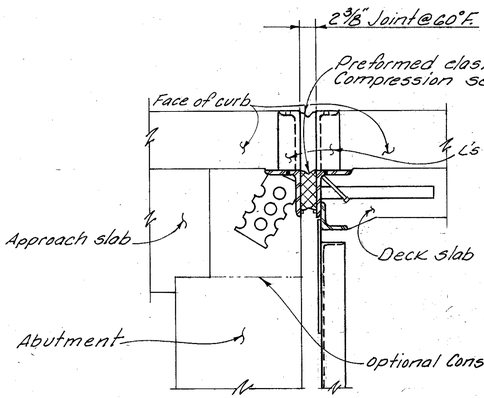


SECTION S9-S9

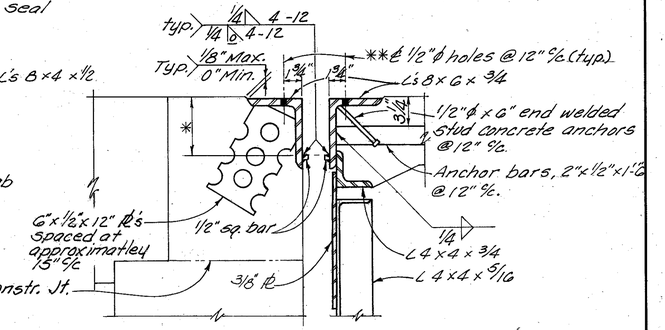


SECTION S11-S11

** Holes shall be filled with bituminous material after concrete is placed

* Set to provide 3/4" min. clear to top of seal when fully compressed.

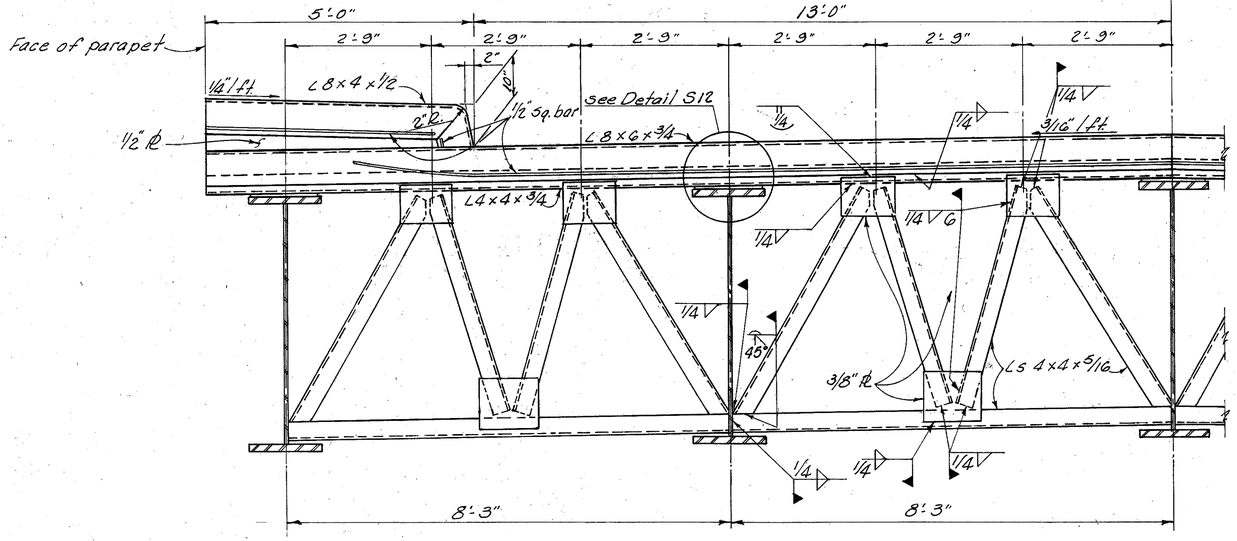


SECTION S8-S8

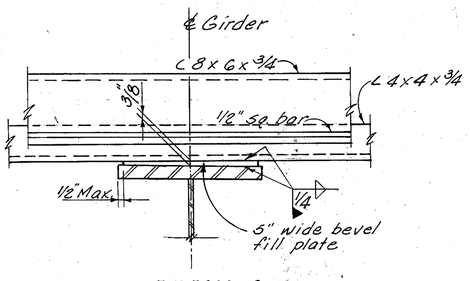


DETAIL S12

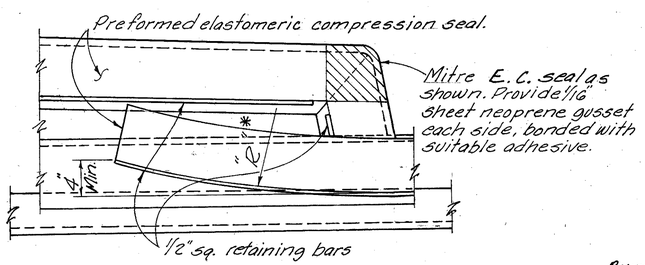


DETAIL OF ELASTOMERIC COMPRESSION SEAL

* Set "R" so that the minimum distance between the 1/2" retainer bars, is the minimum joint depth required for the seal provided.

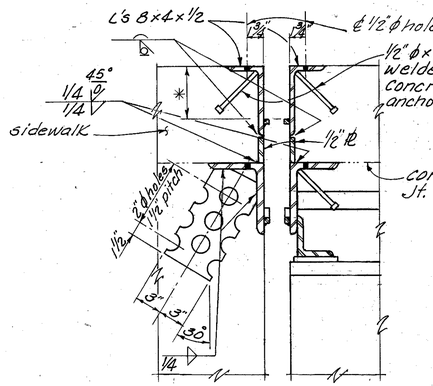


SECTION S10-S10

* Set to provide 3/4" min. clear to top of seal when fully compressed.

NOTES:

At the time of installation, the joint shall be adjusted to provide a joint width of 2 3/8" at 60° F.

The end finish shall be filled with an elastomeric compression seal meeting the requirements of Supplemental Specification 849 and having a nominal width of 4".

Joints in the Elastomeric Compression seal will be permitted only where shown on the plans.

The end finish assembly shall be furnished in one piece.

~~Surfaces of the end finish to be in contact with the seal shall be thoroughly cleaned by sand blasting or other approved method prior to installation of the seal.~~

~~Installation of the seal shall be in accordance with the written instructions furnished by the manufacturer of the seal to insure a durable water tight joint.~~

Fabrication of the seal shall be based upon approved shop drawings.

~~In addition to the Elastomeric Compression Seal, all material, labor and equipment necessary to complete the end finish in place shall be included for payment with Item 516, Elastomeric Compression Seals for Structural Steel Joints.~~

~~End Dams: In lieu of A588 steel, A36 steel, galvanized, shall be furnished for end dams. This A36 steel shall be included with A588 steel quantity for payment.~~

Payment per linear foot for Item 516, Elastomeric compression seals for structural steel joints, includes all labor, materials and equipment necessary to complete the joint in place, including the joint armor, 1/2" steel plates, anchoring devices and end crossframe gusset plates.

Joint armor materials: A588 or A36, with System B field paint on exposed steel surfaces. Field paint shall consist of two prime coats and one finish coat.

11/14

ALDEN E. STILSON & ASSOCIATES
CONSULTING ENGINEERS
CLEVELAND, OHIO COLUMBUS, OHIO WHEELING, W. VA.

# SUPERSTRUCTURE DETAILS

BRIDGE No. CUY-480-1272

I-480 UNDER IDLEWOOD DRIVE

CUYAHOGA COUNTY STA. 10+84.06 13+53.56

| DESIGNED | DRAWN | TRACED | CHECKED | REVIEWED | DATE | REVISED |
|---|---|---|---|---|---|---|
| WM | R.T. | | DEM | G.W.M. Feb 80 | | 1-5-84 |

MICROFILMED
JAN 22 1991

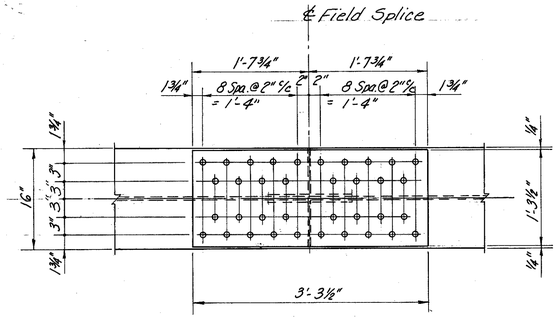


PLAN

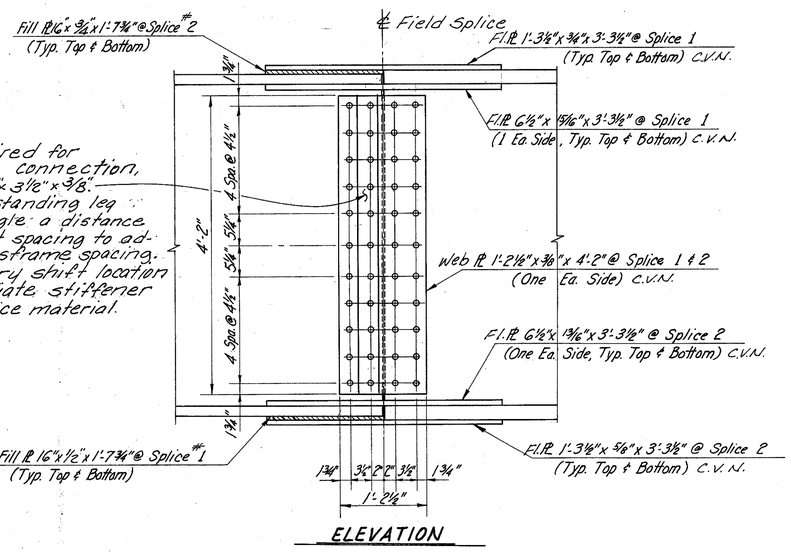


ELEVATION

## FIELD SPLICE DETAILS

Note:

1" ϕ High strength bolts shall be used at field splice. Bolt heads on exterior girder web splices shall be on fascia side. Bolts shall be ASTM-A325 Type 3.

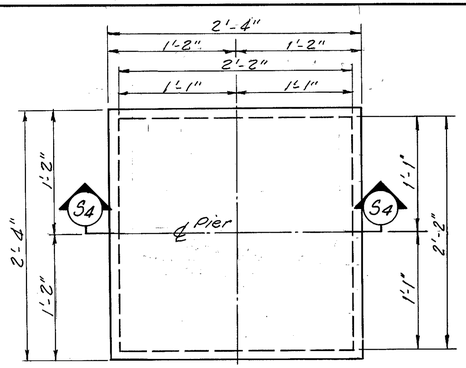


PLAN

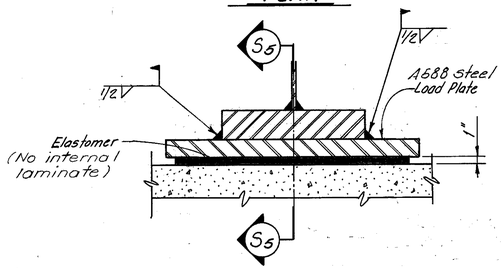


SECTION S4-S4

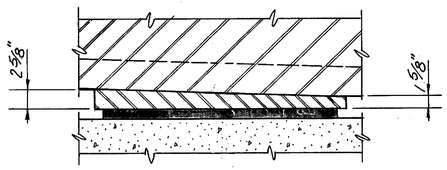


SECTION S5-S5

FIXED BEARING

(to be used at pier locations)

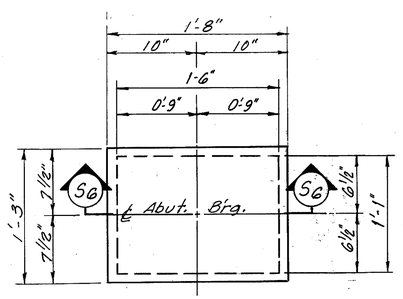


PLAN

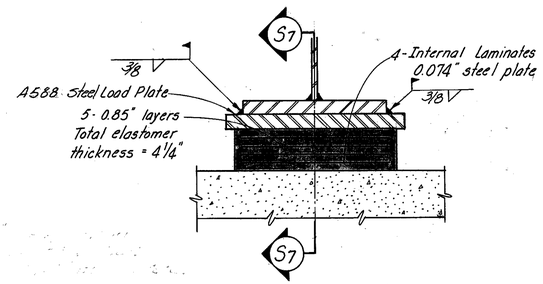


SECTION S6-S6

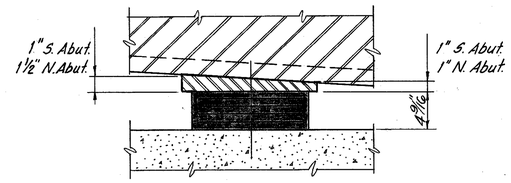


SECTION S7-S7

EXPANSION BEARING

(to be used at abutment locations)

## BEARING DEVICES

NOTES:

Elastomer for fixed and expansion bearings shall be grade 50.

The load plate shall be vulcanized bonded to the elastomer during the molding process.

Welding shall be controlled so that the plate temperature at the elastomer bonded surface does not exceed 300° F as determined by the use of pyrometric sticks or other temperature monitoring devices. Cooling by quenching shall not be permitted.

| FED. RD. DIVISION | STATE | PROJECT | TYPE FUNDS |
|---|---|---|---|
| 5 | OHIO | | |

473/500

CUYAHOGA COUNTY
CUY-480-10.39

12/14

ALDEN E. STILSON & ASSOCIATES, LIMITED
CONSULTING ENGINEERS
CLEVELAND, OHIO COLUMBUS, OHIO WHEELING, W. VA.

# SUPERSTRUCTURE DETAILS

BRIDGE No. CUY-480-1272
I-480 UNDER IDLEWOOD DRIVE
CUYAHOGA COUNTY
STA. 10+84.06
STA. 13+53.56

| DESIGNED | DRAWN | TRACED | CHECKED | REVIEWED | DATE | REVISED |
|---|---|---|---|---|---|---|
| MEM | | L.E.O.C. | DEM | G.W.M. | 6/29/80 | |

BRUNING 44-560 33583

MICROFILMED
JAN 22 1991

| F.H.W.A. REGION | STATE | PROJECT | |
|---|---|---|---|
| 5 | OHIO | | |

474/500

CUYAHOGA COUNTY
CUY-480-10.39

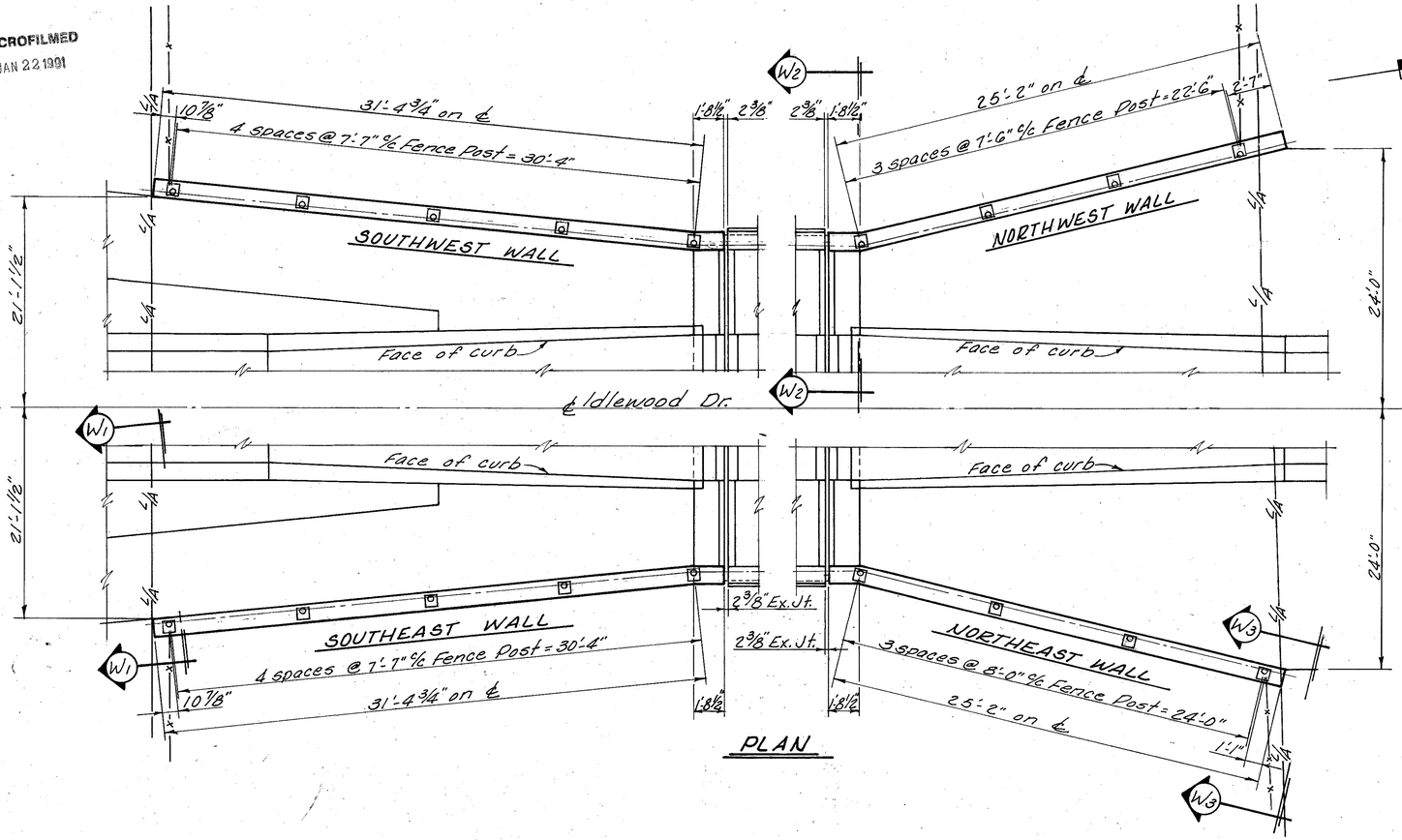


PLAN

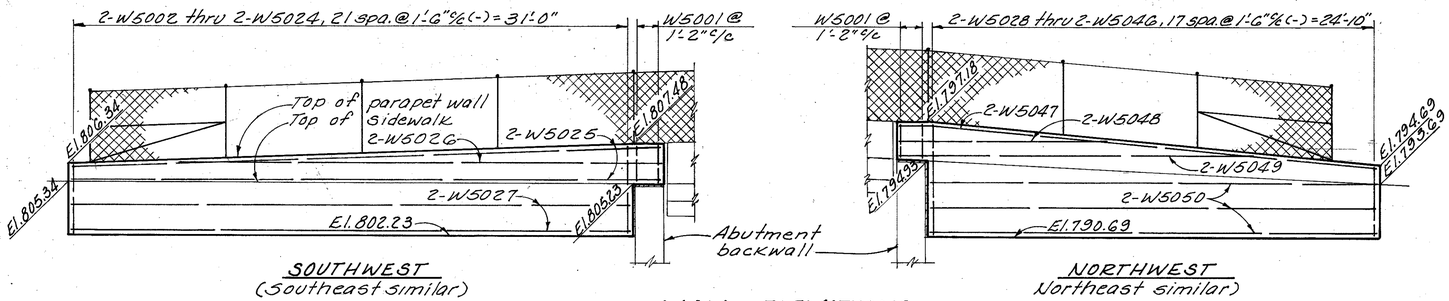


## WALL ELEVATIONS

NOTE: For details of chain link fence, see Common Details Sht. 477

Excavation for approach parapet walls is included with Item 503, unclassified excavation, for payment.

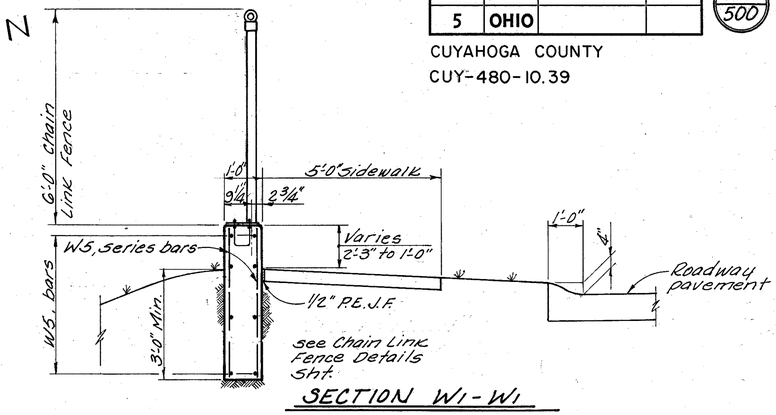


SECTION W1 - W1

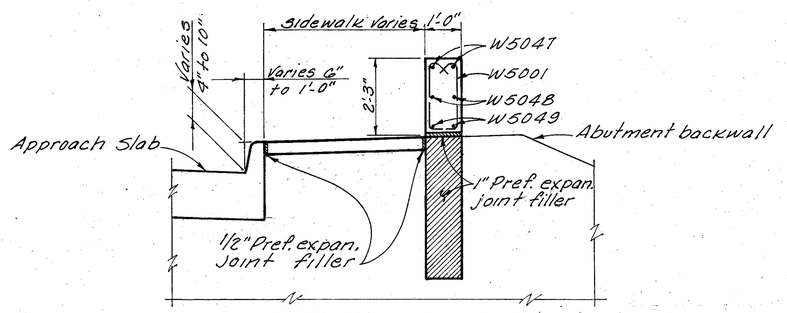


SECTION W2 - W2

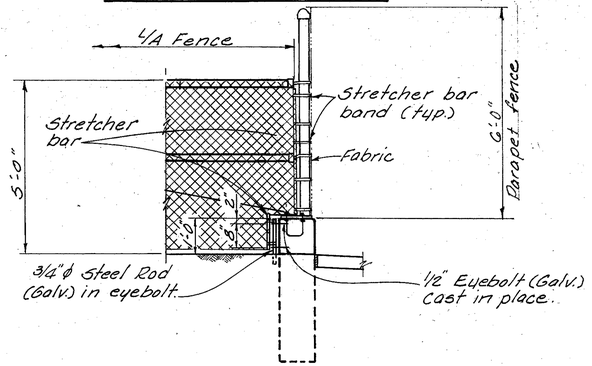


SECTION W3 - W3

Showing suggested method of attaching ℄ Fence at end of wall.

13/14

ALDEN E. STILSON & ASSOCIATES
CONSULTING ENGINEERS
CLEVELAND, OHIO COLUMBUS, OHIO WHEELING, W. VA.

# APPROACH PARAPET DETAILS
## BRIDGE No. CUY-480-1272

I-480 UNDER IDLEWOOD DRIVE

CUYAHOGA COUNTY STA. 10+84.06
STA. 13+53.56

| DESIGNED | DRAWN | TRACED | CHECKED | REVIEWED | DATE | REVISED |
|---|---|---|---|---|---|---|
| WM | R.T. | | DEM | G.W.M. | 2/89/90 | |

MICROFILMED
JAN 22 1991

| MARK | NUM. | LENGTH | WEIGHT | TYPE | A | B | C | D | E | NOTE |
|---|---|---|---|---|---|---|---|---|---|---|
| | | | | SOUTH | ABUTMENT | | | | | |
| A 5001 | 25 | 4-11 | 128 | 1 | | 1- 6 | 2- 2 | 1- 6 | | |
| A 5002 | 22 | 19- 4 | 444 | ST | | | | | | |
| A 5003 | 16 | 14- 6 | 242 | ST | | | | | | |
| A 5004 | 4 | 16- 2 | | ST | | | | | | 1 |
| THRU | | | 325 | | VARY | LENGTH | BY | 1- 3 | 1/ 4 | |
| A 5009 | 4 | 9-10 | | ST | | | | | | 1 |
| A 5010 | 4 | 10- 8 | 45 | ST | | | | | | |
| A 5011 | 8 | 11- 5 | 95 | ST | | | | | | |
| A 5012 | 4 | 32- 5 | 135 | ST | | | | | | |
| A 5013 | 4 | 32- 0 | 134 | ST | | | | | | |
| A 5014 | 4 | 29- 0 | 121 | ST | | | | | | |
| A 5015 | 6 | 26- 4 | 165 | ST | | | | | | |
| A 5016 | 2 | 24- 3 | 51 | ST | | | | | | |
| A 5017 | 4 | 11-10 | 49 | ST | | | | | | |
| A 5018 | 4 | 7- 3 | 30 | ST | | | | | | |
| A 5019 | 38 | 6- 2 | 244 | 1 | | 1- 6 | 3- 5 | 1- 6 | | |
| | | | | | | | | | | |
| A 6001 | 38 | 11- 1 | 633 | 1 | | 5- 0 | 1- 5 | 5- 0 | | |
| A 6002 | 26 | 7- 9 | 303 | 1 | | 3- 4 | 1- 5 | 3- 4 | | |
| A 6003 | 26 | 9- 1 | 355 | 1 | | 4- 3 | 0-11 | 4- 3 | | |
| A 6004 | 12 | 12- 1 | 218 | 1 | | 5- 6 | 1- 5 | 5- 6 | | |
| | | | | | | | | | | |
| A 8001 | 18 | 6- 5 | 308 | 15 | | 1- 6 | 2- 6 | 1- 6 | 2- 6 | |
| | | | | | | | | | | |
| F 5001 | 6 | 6- 4 | 40 | 1 | | 4- 0 | 2- 6 | | | |
| | | | | | | | | | | |
| F 6001 | 26 | 15- 7 | 609 | 1 | | 6- 3 | 3- 5 | 6- 3 | | |
| F 6002 | 6 | 6- 4 | 57 | 1 | | 4- 0 | 2- 6 | | | |
| | | | | | | | | | | |
| F 8001 | 6 | 24- 9 | 396 | ST | | | | | | |
| | | | | | | | | | | |
| | | | | | | | | | | |
| | | | | NORTH | ABUTMENT | | | | | |
| | | | | | | | | | | |
| A 5001 | 25 | 4-11 | 128 | 1 | | 1- 6 | 2- 2 | 1- 6 | | |
| A 5019 | 38 | 6- 2 | 244 | 1 | | 1- 6 | 3- 5 | 1- 6 | | |
| A 5020 | 34 | 19- 4 | 686 | ST | | | | | | |
| A 5021 | 28 | 15- 0 | 438 | ST | | | | | | |
| A 5022 | 1 | 9- 0 | | ST | | | | | | 1 |
| THRU | | | 67 | | VARY | LENGTH | BY | 0- 8 | 3/ 8 | |
| A 5027 | 1 | 12- 6 | | ST | | | | | | 1 |
| A 5028 | 4 | 5- 2 | | ST | | | | | | 1 |
| THRU | | | 99 | | VARY | LENGTH | BY | 0- 6 | | |
| A 5031 | 4 | 6- 8 | | ST | | | | | | 1 |
| A 5032 | 4 | 33- 0 | 138 | ST | | | | | | |
| A 5033 | 4 | 32- 3 | 135 | ST | | | | | | |
| A 5034 | 4 | 29- 2 | 122 | ST | | | | | | |
| A 5035 | 6 | 26- 5 | 165 | ST | | | | | | |
| A 5036 | 2 | 24- 4 | 51 | ST | | | | | | |
| A 5037 | 4 | 12- 6 | 52 | ST | | | | | | |
| A 5038 | 4 | 7- 3 | 30 | ST | | | | | | |
| A 5039 | 4 | 6- 8 | 28 | ST | | | | | | |
| | | | | | | | | | | |
| | | | | | | | | | | |
| A 6001 | 38 | 11- 1 | 633 | 1 | | 5- 0 | 1- 5 | 5- 0 | | |
| A 6002 | 26 | 7- 9 | 303 | 1 | | 3- 4 | 1- 5 | 3- 4 | | |
| A 6003 | 26 | 9- 1 | 355 | 1 | | 4- 3 | 0-11 | 4- 3 | | |
| A 6004 | 12 | 12- 1 | 218 | 1 | | 5- 6 | 1- 5 | 5- 6 | | |
| | | | | | | | | | | |
| A 8001 | 18 | 6- 5 | 308 | 15 | | 1- 6 | 2- 6 | 1- 6 | 2- 6 | |
| | | | | | | | | | | |
| | | | | | | | | | | |
| F 5002 | 26 | 10- 6 | 285 | 1 | | 9- 8 | 1- 0 | | | |

| MARK | NUM. | LENGTH | WEIGHT | TYPE | A | B | C | D | E | NOTE |
|---|---|---|---|---|---|---|---|---|---|---|
| | | | | NORTH | ABUTMENT | | | ( CONTINUED ) | | |
| F 5003 | 10 | 12- 4 | 129 | 1 | | 11- 6 | 1- 0 | | | |
| F 6003 | 26 | 14- 9 | 576 | 1 | | 9- 8 | 5- 3 | | | |
| F 6004 | 10 | 17- 1 | 257 | 1 | | 12- 0 | 5- 3 | | | |
| | | | | | | | | | | |
| F 8002 | 8 | 25- 3 | 539 | ST | | | | | | |
| | | | | | | | | | | |
| | | | | | | | | | | |
| | | | | PIER | | | | | | |
| | | | | | | | | | | |
| P 4001 | 3 | 15- 4 | 887 | 17 | NO. TURNS = 44 | | | NO. SPACERS = 12 | | 6 |
| | | | | | | | | | | |
| P 5001 | 10 | 15- 3 | 159 | 3 | 2- 8 | 4- 8 | 2- 8 | 4- 8 | | |
| P 5002 | 28 | 13- 7 | 397 | 3 | 1-10 | 4- 8 | 1-10 | 4- 8 | | |
| P 5003 | 4 | 11- 7 | | 3 | 1-10 | 3- 8 | 1-10 | 3- 8 | | 1 |
| THRU | | | 367 | | VARY | LENGTH | BY | 0- 4 | | |
| | | | | | VARY | DIM. B | BY | 0- 2 | | |
| | | | | | VARY | DIM. D | BY | 0- 2 | | |
| P 5009 | 4 | 13- 7 | | 3 | 1-10 | 4- 8 | 1-10 | 4- 8 | | 1 |
| P 5010 | 9 | 12- 0 | 113 | ST | | | | | | |
| P 5011 | 8 | 35-10 | 299 | ST | | | | | | |
| P 5012 | 30 | 5- 9 | 180 | 1 | | 1- 8 | 2- 8 | 1- 8 | | |
| | | | | | | | | | | |
| | | | | | | | | | | |
| P 6001 | 7 | 27- 6 | 289 | ST | | | | | | |
| P 6002 | 14 | 6- 6 | 137 | 6 | 3-11 | 1- 0 | 2- 6 | | | |
| | | | | | | | | | | |
| P 9001 | 18 | 17-11 | 1096 | 1 | 3- 8 | 14- 6 | | | | |
| | | | | | | | | | | |
| P10001 | 24 | 19- 4 | 1997 | ST | | | | | | |
| | | | | | | | | | | |
| | 20 | | 170 | | | | | | | |
| F 6001 | 20 | 5- 8 | 170 | ST | | | | | | |
| | | | | | | | | | | |
| F 7001 | 40 | 6- 8 | 545 | ST | | | | | | |
| | | | | | | | | | | |
| F10001 | 24 | 6-11 | 714 | 1 | 2- 0 | 5- 3 | | | | |
| | | | | | | | | | | |
| | | | | | | | | | | |
| | | | | | | | | | | |
| | | | | SUPERSTRUCTURE | | | | | | |
| | | | | | | | | | | |
| SE4001 | 558 | 30- 0 | 11182 | ST | | | | | | |
| SE4002 | 62 | 10- 3 | 425 | ST | | | | | | |
| SE4003 | 57 | 30- 0 | 1143 | ST | | | | | | |
| SE4004 | 114 | 26- 4 | 2005 | ST | | | | | | |
| | | | | | | | | | | |
| | | | | | | | | | | |
| SE5001 | 458 | 7- 1 | 3384 | 8 | | 2-10 | | 2-10 | 0- 8 | |
| SE5002 | 458 | 6- 9 | 3224 | 1 | | 0- 8 | 5- 8 | 0- 8 | | |
| SE5003 | 458 | 3- 3 | 1553 | 1 | | 1- 0 | 1- 6 | 1- 0 | | |
| S 5003 | 458 | 3- 3 | 1553 | 1 | | 1- 0 | 1- 6 | 1- 0 | | |
| S 5004 | 360 | 30- 0 | 11264 | ST | | | | | | |
| S 5005 | 40 | 14- 0 | 584 | ST | | | | | | |
| S 5006 | 457 | 37- 8 | 17954 | ST | | | | | | |
| | | | | | | | | | | |
| SE6001 | 457 | 37- 8 | 25855 | ST | | | | | | |
| | | | | | | | | | | |
| | | | | | | | | | | |
| RE5001 | 12 | 14- 6 | | ST | | | | | | 2 |
| R 5001 | 12 | 14- 6 | | ST | | | | | | 2 |
| RE5002 | 60 | 14- 5 | | ST | | | | | | 2 |
| R 5002 | 60 | 14- 5 | | ST | | | | | | 2 |
| RE5003 | 72 | 7- 1 | | ST | | | | | | 2 |
| R 5003 | 72 | 7- 1 | | ST | | | | | | 2 |

| MARK | NUM. | LENGTH | WEIGHT | TYPE | A | B | C | D | E | NOTE |
|---|---|---|---|---|---|---|---|---|---|---|
| | | | | APPROACH | PARAPET | WALLS | | | | |
| W 5001 | 8 | 5- 1 | 42 | 8 | | 1-10 | | 1-10 | 0- 8 | |
| W 5002 | 4 | 3- 8 | | ST | | | | | | 1 |
| THRU | | | 412 | | VARY | LENGTH | BY | 0- 0 | 5/ 8 | |
| W 5024 | 4 | 4-11 | | ST | | | | | | 1 |
| W 5025 | 8 | 32- 9 | 273 | ST | | | | | | |
| W 5026 | 4 | 27- 0 | 113 | ST | | | | | | |
| W 5027 | 8 | 31- 0 | 259 | ST | | | | | | |
| | | | | | | | | | | |
| W 5028 | 4 | 3- 7 | | ST | | | | | | 1 |
| THRU | | | 383 | | VARY | LENGTH | BY | 0- 1 | 5/ 8 | |
| W 5046 | 4 | 6- 1 | | ST | | | | | | 1 |
| W 5047 | 4 | 26- 6 | 111 | ST | | | | | | |
| W 5048 | 4 | 11- 9 | 49 | ST | | | | | | |
| W 5049 | 4 | 20- 0 | 83 | ST | | | | | | |
| W 5050 | 12 | 24- 9 | 310 | ST | | | | | | |

BAR BENDING DIAGRAM TYPES

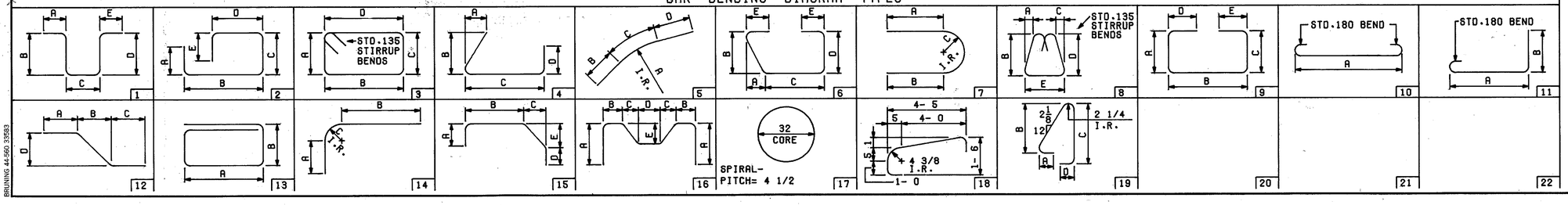


BRUNING 44-560 33583

| FED. RD. DIVISION | STATE | PROJECT | TYPE FUNDS |
|---|---|---|---|
| 5 | OHIO | | |

475
500

CUYAHOGA COUNTY

CUY-480-10.39

NOTES

1. INDICATES SERIES BAR. EACH BAR VARIES FROM ADJACENT BAR(S) BY TABULATED AMOUNT(S), CALCULATED TO NEAREST 1/8 INCH. WEIGHT SHOWN IS FOR ENTIRE SERIES UTILIZING AVERAGE LENGTH.

2. BARS INCLUDED WITH ITEM 517, RAILING, FOR PAYMENT.

3. COST OF FIELD BENDING SHALL BE INCLUDED WITH ITEM 509.

6. 'LENGTH' SHOWN FOR SPIRAL BARS IS DISTANCE FROM TOP OF FOOTING TO BOTTOM OF PIER CAP.
'NO. TURNS' SHOWN IS 'LENGTH' DIVIDED BY PITCH, PLUS 3 TURNS (NUMBER OF CLOSED COILS), EXPRESSED AS NEAREST WHOLE NUMBER.
1 1/2 CLOSED COILS SHALL BE PROVIDED AT ENDS OF EACH SPIRAL UNIT. FOUR STEEL CHANNEL, TEE OR ANGLE SPACERS, WEIGHING APPROXIMATELY 0.80 LB. PER LIN. FT. OF SPACER SHALL BE PROVIDED FOR EACH SPIRAL UNIT. THEY SHALL BE EQUALLY SPACED ALONG PERIPHERY OF COIL. WEIGHT OF SPACERS, AT 0.80 LB. PER LIN. FT. WILL BE PAID FOR AS REINFORCING STEEL AND IS INCLUDED IN TABULATED WEIGHT.

A BAR MARK THAT INCLUDES THE LETTER "E" IN THE PREFIX INDICATES THAT THE BAR SHALL BE EPOXY COATED.

REFER TO CMS SECTIONS 106.03, 700, 709.01 THROUGH 709.05 AND 709.08. SUFFICIENT ADDITIONAL REINFORCING STEEL SHALL BE PROVIDED FOR SAMPLING. RANDOM SAMPLES SHALL BE REPLACED IN THE STRUCTURES BY THE ADDITIONAL STEEL, SPLICED IN ACCORDANCE WITH 509.08.

14114

ALDEN E. STILSON & ASSOCIATES, LIMITED
CONSULTING ENGINEERS
CLEVELAND, OHIO COLUMBUS, OHIO WHEELING, W. VA.

# REINFORCING STEEL LIST

BRIDGE NO. CUY-480-1272
I-480 UNDER IDLEWOOD DRIVE
STA. 10+84.06
CUYAHOGA COUNTY STA. 13+53.56

| DESIGNED | DRAWN | TRACED | CHECKED | REVIEWED | DATE | REVISED |
|---|---|---|---|---|---|---|
| DEM | | | R.T. | G.W.M. | 9/20/80 | |

| FHWA REGION | STATE | PROJECT | |
|---|---|---|---|
| 5 | OHIO | | |

476
500

CUYAHOGA COUNTY
CUY-480-10.39

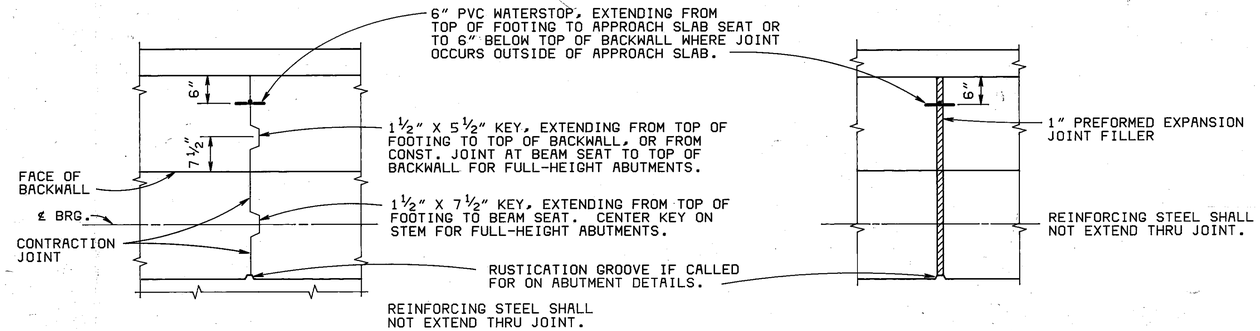


## ABUTMENT CONTRACTION JOINT DETAIL
## BEAM AND GIRDER BRIDGES




## ABUTMENT EXPANSION JOINT DETAIL
## BEAM AND GIRDER BRIDGES

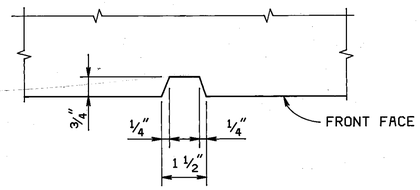


## RUSTICATION GROOVE DETAIL

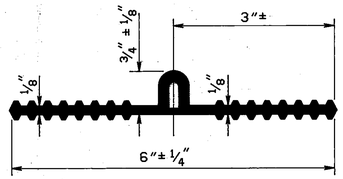


## PVC WATERSTOP DETAIL

PVC WATERSTOP SHALL BE CAPABLE OF ACCOMODATING 1 1/2" OF JOINT MOVEMENT.

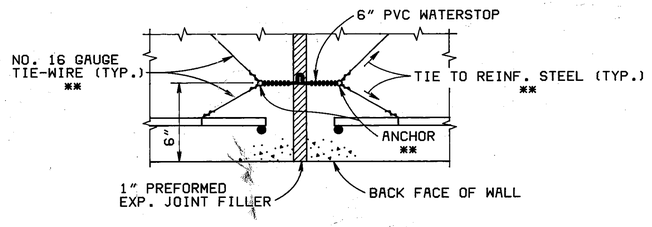


## WATERSTOP INSTALLATION DETAIL

** FOR THE FIRST POUR, THE WATERSTOP SHOULD BE HELD SECURELY IN PLACE BY THE USE OF SPLIT FORMS AND TIE-WIRES. FOR THE SECOND POUR, SECURE THE FREE END OF WATERSTOP IN PROPER POSITION WITH TIE-WIRES. ALTERNATE METHODS, AS APPROVED BY THE ENGINEER, MAY BE USED TO INSURE THE CORRECT POSITIONING OF THE WATERSTOP.
INSTALLATION AT CONTRACTION JOINTS IS SIMILAR.

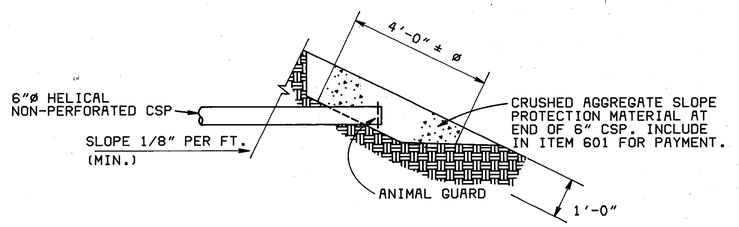


## TERMINATION OF 6"ø CSP DETAIL

B202009R

ALDEN E. STILSON & ASSOCIATES
CONSULTING ENGINEERING AND ARCHITECTURE
COLUMBUS, CLEVELAND, WHEELING

# COMMON DETAILS (BRIDGE)

CUYAHOGA COUNTY

| DESIGNED | DRAWN | TRACED | CHECKED | REVIEWED | DATE | REVISED |
|---|---|---|---|---|---|---|
| | | | | G.W.M. | 3/14/03 | |

| FHWA REGION | STATE | PROJECT | |
|---|---|---|---|
| 5 | OHIO | | |

477
500

CUYAHOGA COUNTY
CUY-480-10.39

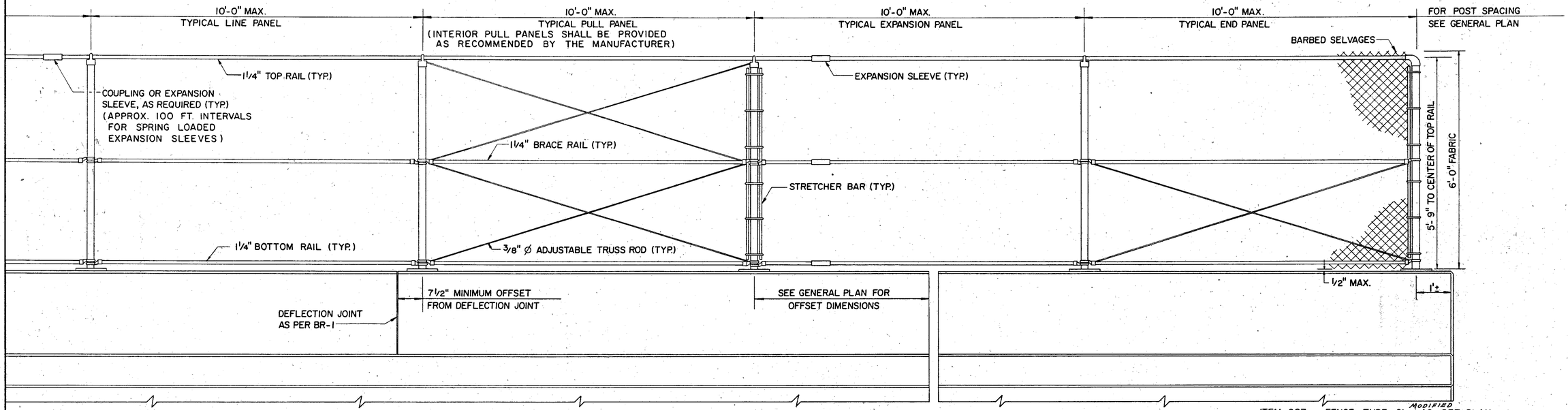


OUTSIDE ELEVATION

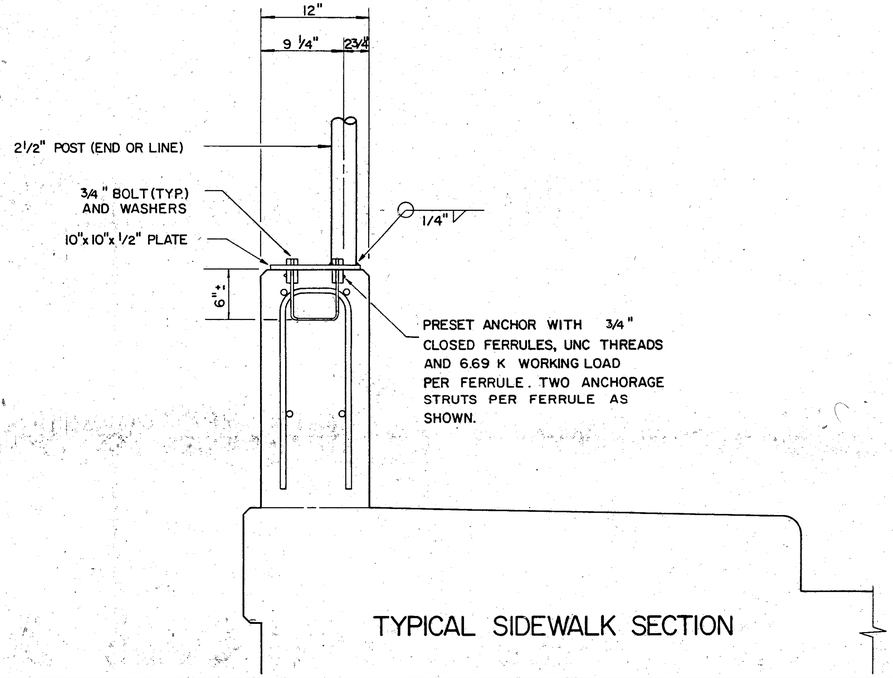


TYPICAL SIDEWALK SECTION

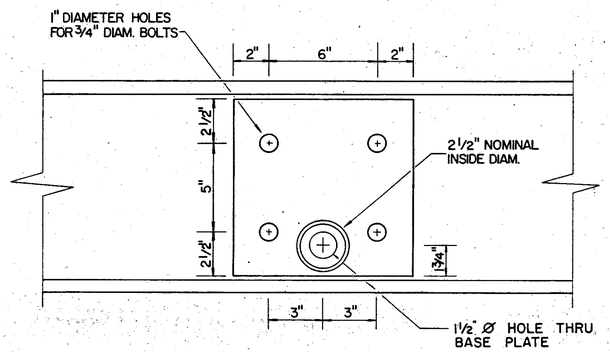


PLAN VIEW

ITEM 607 – FENCE, TYPE CL, AS PER PLAN MODIFIED

THIS ITEM INCLUDES THE FURNISHING OF ALL MATERIALS, LABOR, EQUIPMENT AND INCIDENTALS NECESSARY TO COMPLETE THE FENCING. TENSION BANDS SHALL BE A MINIMUM OF 12 GAUGE STEEL BY 7/8 INCHES WIDE ASSEMBLED WITH 5/16 INCH DIAMETER BY 1 1/4 INCH GALVANIZED OR CADMIUM PLATED BOLTS. ONE TENSION BAND SHALL BE REQUIRED FOR EACH FOOT OF FABRIC HEIGHT. FENCE POSTS AND ANCHOR BOLTS SHALL BE PERPENDICULAR TO GRADE. RAILS SHALL BE PARALLEL TO GRADE. THE FABRIC AND RAILS SHALL BE FREE TO EXPAND OR CONTRACT ACROSS BRIDGE EXPANSION JOINTS. MATERIALS AND WORKMANSHIP SHALL MEET THE REQUIREMENTS OF ITEM 607 EXCEPT THAT ALUMINUM ALLOY POSTS AND BASE PLATES SHALL NOT BE USED. FABRIC TIES SHALL BE SPACED 14 INCH C/C MAXIMUM ON LINE OR END POSTS AND 24 INCH C/C MAXIMUM ON ALL RAILS. ALL POSTS AND PIPE SIZES ARE NOTED IN TERMS OF THE NOMINAL INSIDE DIAMETER OF STANDARD WEIGHT PIPE, SCHEDULE 40. STRETCHER BARS AND MISCELLANEOUS HARDWALL SHALL BE THAT OF THE CHAIN LINK FENCE INDUSTRY STANDARD. BASE PLATES AND MISCELLANEOUS BRACKETS FOR STEEL POSTS MAY BE OF ANY COMMERCIALLY WELDABLE STEEL HAVING A YIELD STRENGTH OF NOT LESS THAN 33,000 P.S.I. ALUMINUM ALLOY FABRIC (AASHTO M-181, TYPE III) SHALL BE USED.

STATE OF OHIO
DEPARTMENT OF TRANSPORTATION
DISTRICT 12 LOCATION & DESIGN

# COMMON FENCE DETAILS

BRIDGE

CUYAHOGA COUNTY

| DESIGNED | DRAWN | TRACED | CHECKED | REVIEWED | DATE | REVISED |
|---|---|---|---|---|---|---|
| | | | | | | |

| FHWA REGION | STATE | PROJECT | |
|---|---|---|---|
| 5 | OHIO | | |

477A
500

CUYAHOGA COUNTY
CUY-480-10.39

Drain pipes shall be located adjacent to and in contact with bottom horizontal crossframe or supplementary support members so that ties may be installed without deflecting the pipe.

≠ Ties shall be nylon self-clinching cable ties of the required size, Ty-Rap by The Thomas & Betts Co., Pan-Ty by the Panduit Corp. or approved equal.

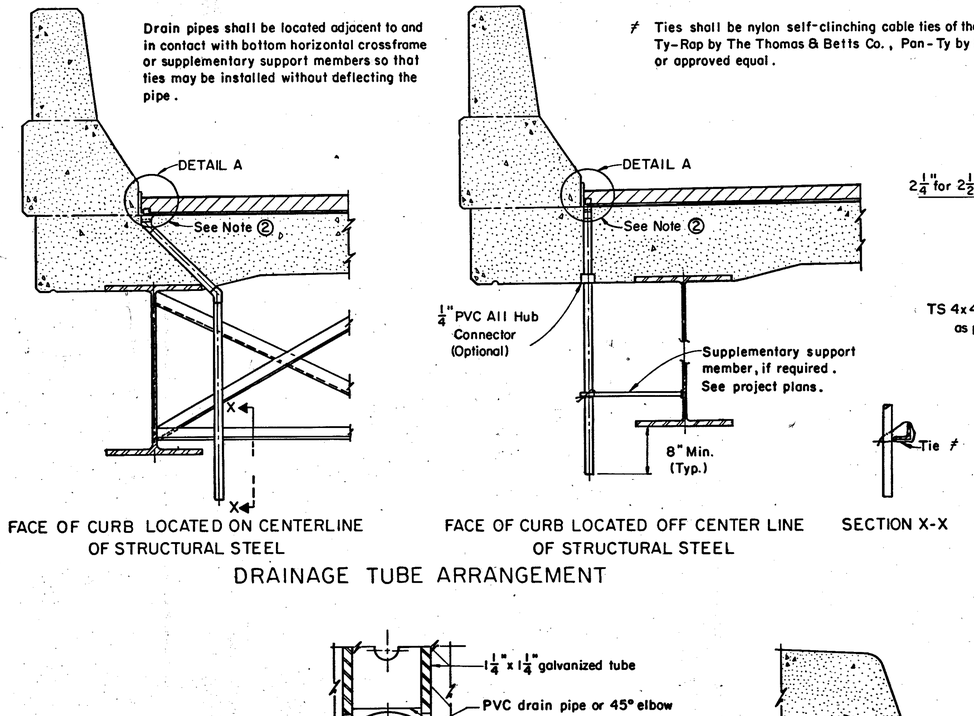


FACE OF CURB LOCATED ON CENTERLINE OF STRUCTURAL STEEL

FACE OF CURB LOCATED OFF CENTER LINE OF STRUCTURAL STEEL

SECTION X-X

## DRAINAGE TUBE ARRANGEMENT

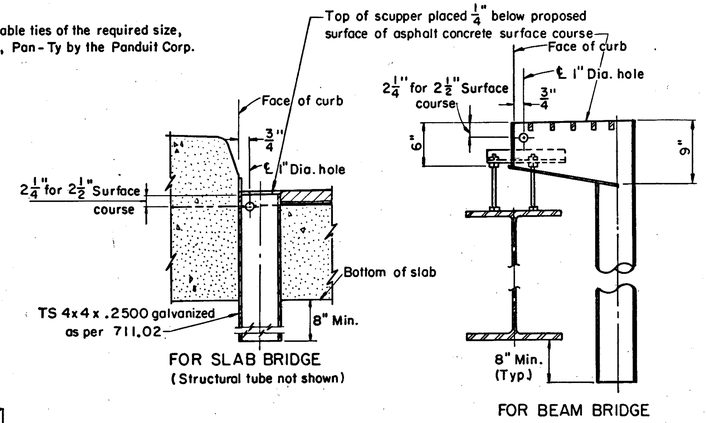


## SCUPPER DETAILS

(Scupper details conform to SD-1-69 except as noted)

SUBDRAINAGE FOR ASPHALT CONCRETE SURFACE COURSE:
The subdrainage system shall consist of plastic pipes and fittings, structural tubes and fasteners. The pipe location requirements of 518.07 shall apply: the pipes shall be placed within one foot of each expansion joint; the pipe shall be extended or located in such a manner as to cause the discharge to fall clear of bridge seats and structural members; no pipes shall be placed within 4 feet of a pavement or a sidewalk, or over or within 10 feet of the centerline of a railroad track. In addition, the pipes shall be spaced approximately at six foot intervals but may be shifted 2 feet maximum longitudinally to permit tying to crossframes or other support members, as required. Pipes shall not be placed along curb lines where the deck configuration does not permit water to accumulate.

The structural tube may be placed in any convenient length using butt joints. The price bid per linear foot for this drainage system shall include all PVC pipe and fittings, structural tubes and all incidentals and all labor necessary to complete the item. The quantity will be the actual length of structural tube required. Payment will be made at the contract price for Item 518, Lin. Ft. Subdrainage for wearing course, as per plan.

The 404 shall be 2 1/2" placed in two 1 1/4" courses.

① - 1 1/4" x 1 1/4" galvanized, perforated structural tube with 11/32" ± dia. holes 1" on centers on all four sides as shown. Cut 1 1/2" ± x 1 1/4" opening in bottom, centered over each PVC drain pipe. The steel for the structural tube shall conform to the following:
PREGALVANIZED, ASTM A446, Grade A Steel, Galvanizing as per ASTM A525.
POSTGALVANIZED, ASTM A569 or A366, Galvanizing as per 711.02.
The minimum steel thickness shall be 0.105".
Any damaged galvanizing shall be repaired as per AASHO M36.
Install tubes with 1/8" expansion opening between pieces.

② - 45° ELBOW AND/OR 1 1/4" PVC DRAIN PIPE. Position accurately to match 1 1/2" x 1 1/4" openings in perforated tube. Place membrane carefully at the pipe openings, making sure to completely seal around the lip of the pipe but taking care not to plug or constrict the opening. The drain pipe and elbow shall conform to the dimensional and marking requirements of, ASTM D2661 or ASTM D2665.
The elbow shall be used only as required when the face of curb is located on or near the centerline of structural steel. Where the elbow is not adequate to provide clearance between the PVC pipe and the structural steel, the elbow shall be canted as required and cut on a line 1/4" below and parallel with the deck surface. The solvent cement for the pipe and fittings shall be a type suitable for the plastic used.

③ - 1 1/4" x 5/32" x 1" flat head drive pin and washer. (Length x Shank Dia x Head Dia.)
Fastening of the structural tube by methods other than shown shall be subject to approval by the Engineer. (Driving pins into bridge deck is prohibited, except for fastening drip strips.)

④ - L 1 1/4" x 1 1/4" x 1/8", 3" long, clipped and galvanized, or bent galvanized steel plate 2"x3"x 0.105" thick. Attach to curb at approximately 5'-0" ℄ except near joints, where the angle shall be placed within 6" of the end of each tube section.

⑤ - 1/2" x 1/8" x 1/4" flat head drive pin and washer driven thru angle and tube.

Note: Wherever "PVC" appears it shall be considered to read "PVC" or "ABS".

DRIP STRIP: Prior to applying deck membrane waterproofing, a bent drip strip shall be installed along the edges of the deck as shown. The strips shall be fastened at 1'-6" ℄ maximum with 1 1/4" x 5/32" x 1/4" flat head drive pin and washer. (Length x Shank Dia. x Head Dia.) or #10 galvanized screws and expansion anchors, subject to the approval of the Engineer. The strips shall be placed the full length of the deck, ending at the face of the abutment wingwall or steel end dam angle. Where splices are required a 3" (Min.) lap shall be used with a fastener through the lap. Steel for galvanized strips shall be 8"x0.105" and shall meet the requirements of ASTM A568. Galvanizing shall be in accordance with 711.02. Stainless steel shall be 20 gauge ASTM A167, Type 304, mill finish. Payment shall be at the contract price bid for item Special, Sq. Ft., Steel Drip Strip, which shall include all materials, labor, tools and incidentals necessary to complete the item.

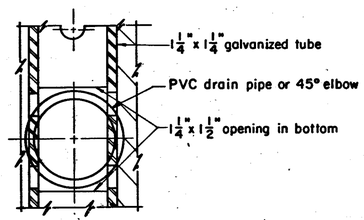


SECTION A-A

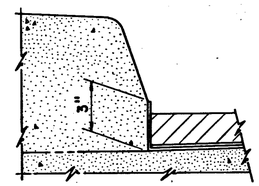

SHAPE OF SIDEWALK CURB

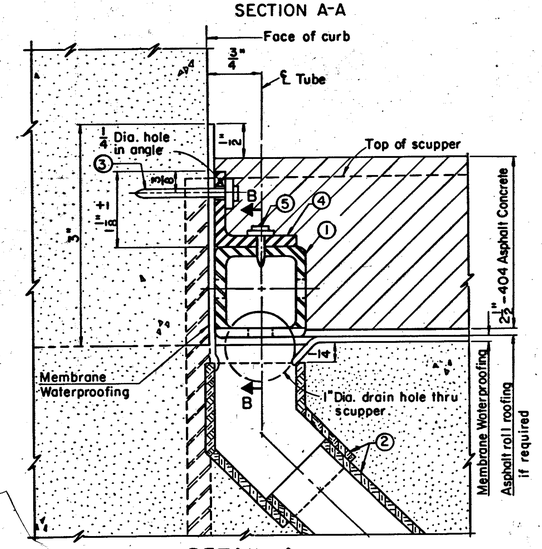


DETAIL A

SUBDRAINAGE FOR 2 1/2" SURFACE COURSE

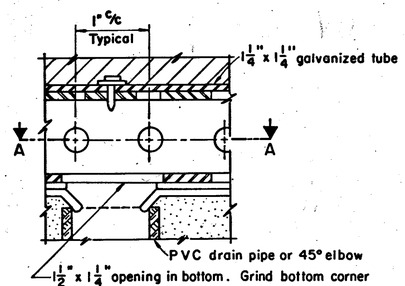


1 1/2" x 1 1/4" opening in bottom. Grind bottom corner of transverse cuts to smooth radius, to prevent cutting of membrane when asphalt concrete is compacted over the structural tube.

SECTION B-B

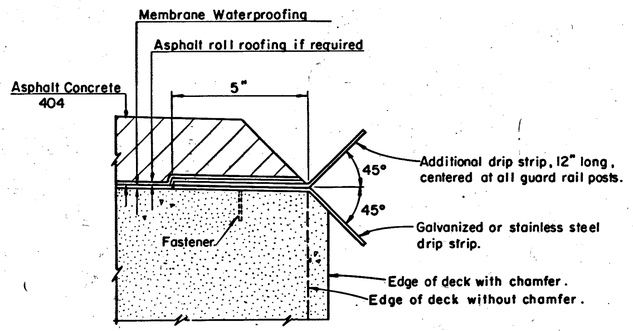


DRIP STRIP
BRIDGES WITHOUT CURBS

STATE OF OHIO
DEPARTMENT OF TRANSPORTATION
BUREAU OF BRIDGES AND STRUCTURAL DESIGN

DECK DRAINAGE DETAILS FOR BRIDGES WITH ASPHALT CONCRETE SURFACE COURSE

CUYAHOGA COUNTY

| DESIGNED | DRAWN | TRACED | CHECKED | REVIEWED | DATE | REVISED |
|---|---|---|---|---|---|---|
| DLM | GFJ | —— | DWI | WJJ | 2-27-79 | 2-27-79 |

H0077