FOR: Pier 11 RFI	JOB NO: 49633	SHEET NO:
MADE BY: LER	CHECKED BY: KDG	BACKCHECKED BY:
DATE: 6/18/12	DATE: 6-13-12	DATE:

HNTB

Pier 11 Misalignment

Pier 11 has been constructed 2'-9" NW along the cap length from plan location. The pier design will be re-evaluated to account for this misalignment.

See attached sketch depicting revised geometry.

Cap Beam Design

Refer to moment envelope for cap beam showing original & revised design moments. Provided capacity exceeds revised moment demand at all locations. See critical point design conc. calc sheets as well.

Refer to comparison of req. shear rein. spacing with that provided. At all locations the provided spacing is less than that required.

Column Design

The critical column design ratio increased from 1.76 to 1.80.

Footing Design

Pile design P-M interaction decreased from 0.98 to 0.97.

All moment and shear checks on footing were satisfactory.

See pile bending comps and footing design comps.

FOR: Pier 11 - RFI	JOB NO: 49633	SHEET NO:
MADE BY: LER	CHECKED BY: KDG	BACKCHECKED BY:
DATE: 10/7/12	DATE: 6-13-12	DATE:

HNTB

Geometry

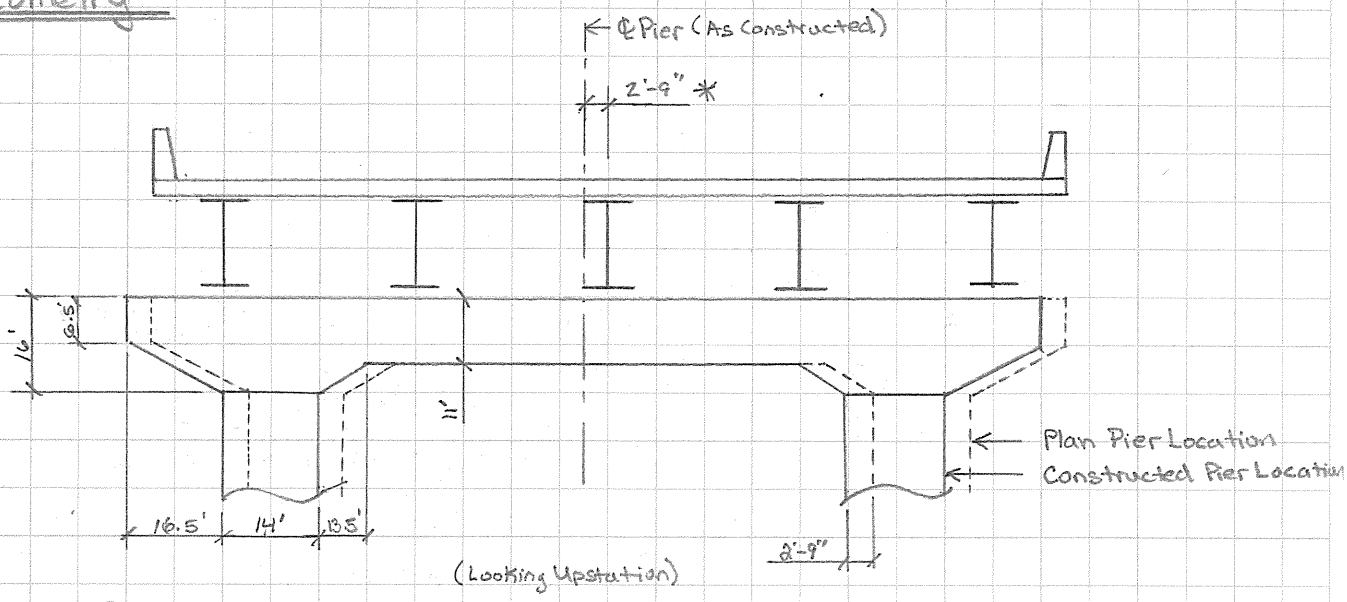

* Shift slab and girders 2'-9" to right along ℄ Pier in model

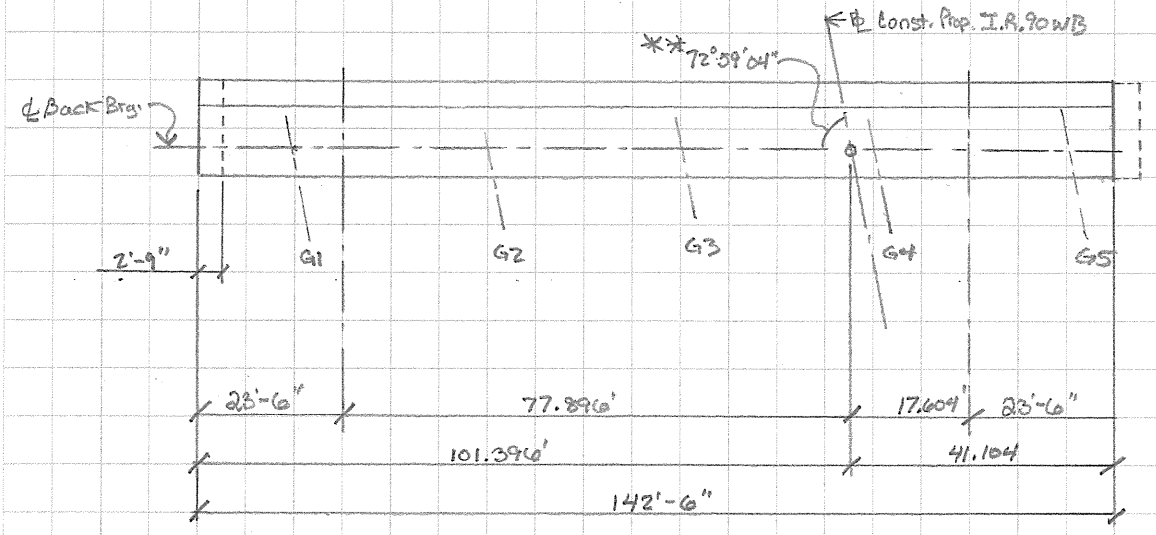

** Model uses 72.0°

ME-101-1204

MOMENT DIAGRAM

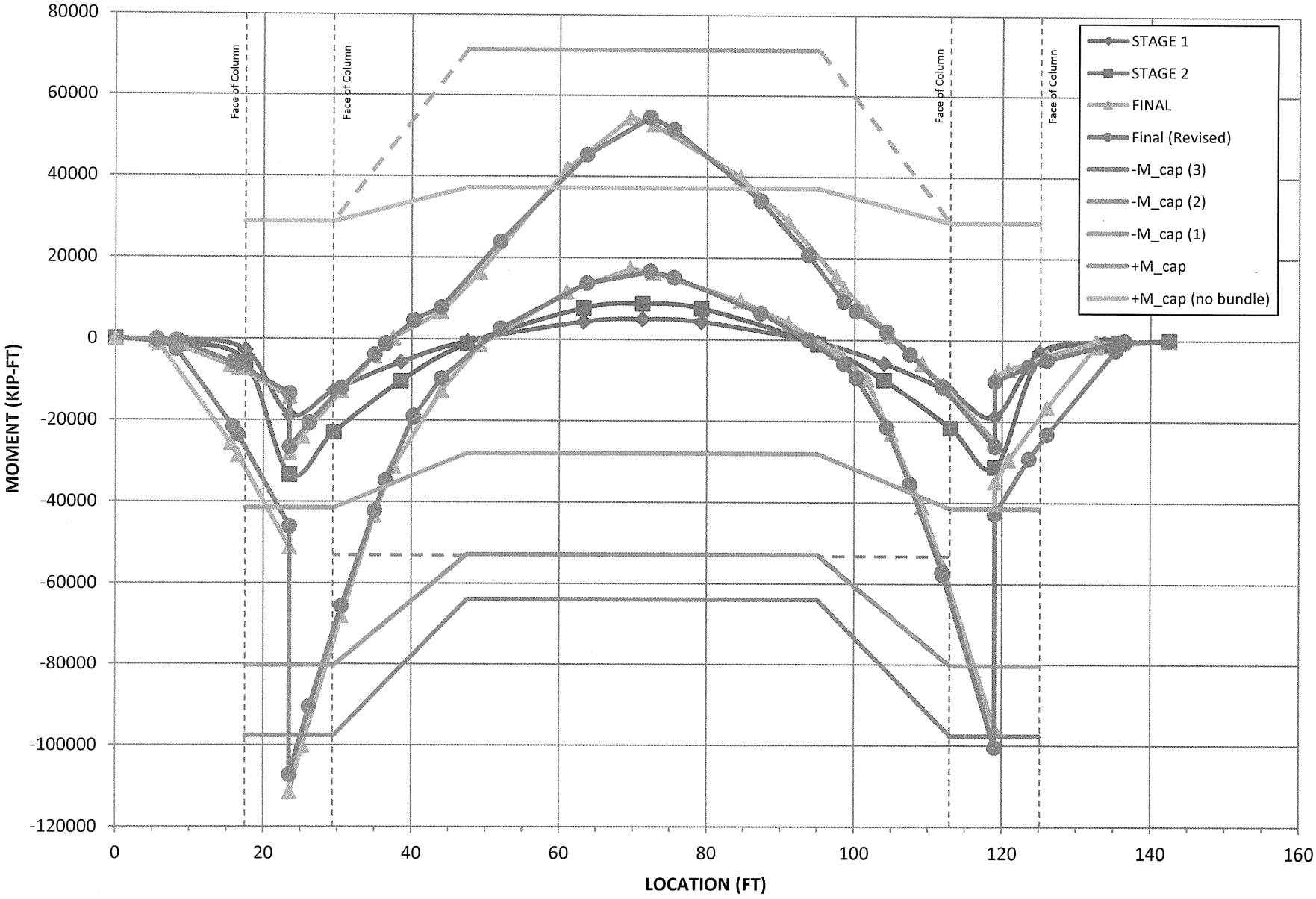

For	Pier 11 - RFI	Job No.	49633	Sheet No.
Made by	LER	Checked by	RDG	Backchecked by
Date	6/7/12	Date	6/13/12	Date

HNTB

PIER 11 CAP: +M SECTION

Section Geometry

Width:	b =	144.000	in	I_g =	27599616	in^4	
Total Depth (inc. red. for wear):	D =	132.000	in	f_{cr} =	0.740	ksi	(AASHTO 5.4.2.6)
Cover Prim. Bar:	c_p =	2.000	in	1.2*M_{cr} =	371340	kip-in	
Cover on Sec. Bar:	c_s =	2.000	in	x =	36.50	in	
Side Cover:	c_{side} =	3.000	in	β =	0.85		
Stirrups/Outer Bar:		#6	bar				

Primary Bars:

	No. Bars	Size	Layer Spac.	No./Bundle	Bundled Vert/Hor.
Layer 1	44	#11	-----	2	V
Layer 2	44	#11	8.0 in	2	V
Layer 3		NA			

Stirrups:

$d_{stirrup}$ =	0.750	in
D_{bend} =	4.5	in
$A_{stirrup}$ =	0.440	in^2
No. Legs for Shear =	8	
No. Legs for Torsion =	2	
d_v =	115.43	in

	No. Bars	Size
Secondary Bars:	32	#11
Face Bars:	21	#10

Eff. Depth for Primary Bars:	d =	123.84	in	A_s =	**137.280**	in^2	d_s =	1.410	in
Eff. Depth for Secondary Bars:	d' =	3.455	in	A_s' =	49.920	in^2	d_s' =	1.410	in

Materials

Concrete Compression Strength:	f_c' =	4.0	ksi
Concrete Modulas of Elasticity:	E_c =	3600	ksi
Modular Ratio:	n =	8	
Reinforcing Yield Strength:	f_y =	60	ksi
Reinforcing Modulas of Elasticity:	E_s =	29000	ksi
Crack Width Parameter:	Exposure =	Class 2	
	γ =	0.75	k/in

Resistance Factors

Flexure and Tension:	ϕ =	0.90	*
Shear and Torsion:	ϕ =	0.90	

Loads

Limit State	Load Case	M (kip-ft)	V (kip)	T (kip-ft)	N (kip)
STR I	Max M	54600.00			
SERV I	Max M	42390.00			
STR I	Max V				

Flexure - Strength

Analyze as Doubly Reinforced (Y/N): n

Flexural Strength:

R_n =	0.330	ksi			
m =	17.65		A_sF_y =	8236.8	kip
ρ =	0.0058		a =	16.82	in
A_{s_req} =	**103.43**	in^2	ϕM_n =	**71308**	kip-ft
	OK			**OK**	

Minimum Steel:

R_n =	0.187	ksi	4/3R_n =	0.440	ksi
m =	17.65		m =	17.65	
$ρ_{min\_1}$ =	0.0032		$ρ_{min\_2}$ =	0.0079	
A_{s_min1} =	57.07	in^2	A_{s_min2} =	140.88	in^2
				OK	

Maximum Steel:

*The maximum steel requirment has been removed. This provision is compensated for by adjusting the reistance factor based on whether the section is tension controlled, compression controlled, or in transistion. A section is tension controlled if c/d <= 0.375 and ϕ = 0.90)

c = a/β =	19.79	in
c/d =	0.16	**<=0.375, Tension Controlled**
		(Use this for single and double reinforcement)

Flexure - Crack Control [AASHTO 5.7.3.4]

f_s =	33.18	ksi	
f_c =	1.73	ksi	
d_c =	4.16	in	
$β_s$ =	1.046		
s_{max} =	**6.80**	in	
s_{prov} =	6.22	in	**OK**

Flexure - Face Bars [AASHTO 5.7.3.4]

d_l =	127.84	in	
A_{sk} =	1.17	in^2/ft	
s_{max} =	12.00	in	
A_{rqd} =	6.25	in^2	[over d_l/2]
s_{req} =	**11.18**	in	
s_{prov} =	5.29	in	**OK**
$ρ_{sk}$ =	0.0033		

Fatigue [AASHTO 5.5.3.2]

Stresses calculated using cracked section properties.

M_{DL} =	0	kip-ft	f_{min} =	0.000	ksi
M_{LL_min} =	0	kip-ft	f_{LL_min} =	0.000	ksi
M_{LL_max} =	0	kip-ft	f_{LL_max} =	0.000	ksi
			Actual Range =	0.000	ksi
			Allowable Range =	24.000	ksi **OK**

(Assumes no cross weld at high stress region)

For	Pier 11 - RFI	Job No.	49633	Sheet No.
Made by	LER	Checked by	KPG	Backchecked by
Date	6/7/12	Date	6/12/12	Date

HNTB

PIER 11 CAP: -M SECTION @ INSIDE OF LEFT COLUMN

Section Geometry

Width:	b =	144.000	in	I_g =	127776000	in^4	
Total Depth (inc. red. for wear):	D =	220.000	in	f_{cr} =	0.740	ksi	(AASHTO 5.4.2.6)
Cover Prim. Bar:	c_p =	2.000	in	1.2*M_{cr} =	1031501	kip-in	
Cover on Sec. Bar:	c_s =	2.000	in	x =	47.40	in	
Side Cover:	c_{side} =	3.000	in	β =	0.85		
Stirrups/Outer Bar:		#6	bar				

Primary Bars:

	No. Bars	Size	Layer Spac.	No./Bundle	Bundled Vert/Hor.
Layer 1	32	#11	-----	2	V
Layer 2	32	#11	8.0 in	2	V
Layer 3	16	#11	8.0 in	1	V

Stirrups:

$d_{stirrup}$ =	0.750	in
D_{bend} =	4.5	in
$A_{stirrup}$ =	0.440	in^2
No. Legs for Shear =	8	
No. Legs for Torsion =	2	
d_v =	201.80	in

	No. Bars	Size
Secondary Bars:	44	#11
Face Bars:	32	#10

Eff. Depth for Primary Bars:	d =	209.44	in	A_s =	**124.800**	in^2	d_s =	1.410	in
Eff. Depth for Secondary Bars:	d' =	3.455	in	A_s' =	68.640	in^2	d_s' =	1.410	in

Materials

Concrete Compression Strength:	f_c' =	4.0	ksi
Concrete Modulas of Elasticity:	E_c =	3600	ksi
Modular Ratio:	n =	8	
Reinforcing Yield Strength:	f_y =	60	ksi
Reinforcing Modulas of Elasticity:	E_s =	29000	ksi
Crack Width Parameter:	Exposure =	Class 2	
	γ =	0.75	k/in

Resistance Factors

Flexure and Tension:	ϕ =	0.90
Shear and Torsion:	ϕ =	0.90

Loads

Limit State	Load Case	M (kip-ft)	V (kip)	T (kip-ft)	N (kip)
STR I	Max M	65753.00			
SERV I	Max M	49593.00			
STR I	Max V				

Flexure - Strength

Analyze as Doubly Reinforced (Y/N): n

Flexural Strength:

R_n =	0.139	ksi			
m =	17.65		A_sF_y =	7488	kip
ρ =	0.0024		a =	15.29	in
A_{s_req} =	**72.38**	in^2	ϕM_n =	**113328**	kip-ft
	OK				**OK**

Minimum Steel:

R_n =	0.181	ksi	4/3R_n =	0.185	ksi
m =	17.65		m =	17.65	
$ρ_{min\_1}$ =	0.0031		$ρ_{min\_2}$ =	0.0032	
A_{s_min1} =	93.49	in^2	A_{s_min2} =	96.51	in^2
					OK

Maximum Steel:

*The maximum steel requirment has been removed. This provision is compensated for by adjusting the reistance factor based on whether the section is tension controlled, compression controlled, or in transistion. A section is tension controlled if c/d <= 0.375 and ϕ = 0.90)

c = a/β =	17.99	in	
c/d =	0.09	**<=0.375, Tension Controlled**	
	(Use this for single and double reinforcement)		

Flexure - Crack Control [AASHTO 5.7.3.4]

f_s =	24.63	ksi	
f_c =	0.90	ksi	
d_c =	4.16	in	
$β_s$ =	1.028		
s_{max} =	**12.43**	in	
s_{prov} =	~ 6.5	in	**OK**

Flexure - Face Bars [AASHTO 5.7.3.4]

d_f =	215.84	in		
A_{sk} =	2.23	in^2/ft		
s_{max} =	12.00	in		
A_{rqd} =	20.06	in^2	[over d_f/2]	
s_{req} =	**5.75**	in		
s_{prov} =	5.95	in	**NG**	**SAY OK**
$ρ_{sk}$ =	0.0030			

Fatigue [AASHTO 5.5.3.2]

Stresses calculated using cracked section properties.

M_{DL} =	0	kip-ft	f_{min} =	0.000	ksi
M_{LL_min} =	0	kip-ft	f_{LL_min} =	0.000	ksi
M_{LL_max} =	0	kip-ft	f_{LL_max} =	0.000	ksi
		Actual Range =	0.000	ksi	
		Allowable Range =	24.000	ksi	**OK**

(Assumes no cross weld at high stress region)

For	Pier 11 - RFI	Job No.	49633	Sheet No.
Made by	LER	Checked by	KPG	Backchecked by
Date	6/7/12	Date	6/12/12	Date

HNTB

PIER 11 CAP: -M SECTION @ INSIDE OF RIGHT COLUMN

Section Geometry

Width:	b =	144.000	in	I_g =	84934656	in^4	
Total Depth (inc. red. for wear):	D =	192.000	in	f_{cr} =	0.740	ksi	(AASHTO 5.4.2.6)
Cover Prim. Bar:	c_p =	2.000	in	1.2*M_{cr} =	785646	kip-in	
Cover on Sec. Bar:	c_s =	2.000	in	x =	43.70	in	
Side Cover:	c_{side} =	3.000	in	β =	0.85		
Stirrups/Outer Bar:		#6	bar				

Primary Bars:

	No. Bars	Size	Layer Spac.	No./Bundle	Bundled Vert/Hor.
Layer 1	32	#11	-----	2	V
Layer 2	32	#11	8.0 in	2	V
Layer 3	16	#11	8.0 in	1	V

Stirrups:

$d_{stirrup}$ =	0.750	in
D_{bend} =	4.5	in
$A_{stirrup}$ =	0.440	in^2
No. Legs for Shear =	8	
No. Legs for Torsion =	2	
d_v =	173.80	in

	No. Bars	Size
Secondary Bars:	18	#11
Face Bars:	26	#10

Eff. Depth for Primary Bars:	d =	181.44	in	A_s =	**124.800**	in^2	d_s =	1.410	in
Eff. Depth for Secondary Bars:	d' =	3.455	in	A_s' =	28.080	in^2	d_s' =	1.410	in

Materials

Concrete Compression Strength:	f_c' =	4.0	ksi
Concrete Modulas of Elasticity:	E_c =	3600	ksi
Modular Ratio:	n =	8	
Reinforcing Yield Strength:	f_y =	60	ksi
Reinforcing Modulas of Elasticity:	E_s =	29000	ksi
Crack Width Parameter:	Exposure =	Class 2	
	γ =	0.75	k/in

Resistance Factors

Flexure and Tension:	ϕ =	0.90	*
Shear and Torsion:	ϕ =	0.90	

Loads

Limit State	Load Case	M (kip-ft)	V (kip)	T (kip-ft)	N (kip)
STR I	Max M	57121.00			
SERV I	Max M	43958.00			
STR I	Max V				

Flexure - Strength

Analyze as Doubly Reinforced (Y/N): n

Flexural Strength:

R_n =	0.161	ksi			
m =	17.65		A_sF_y =	7488	kip
ρ =	0.0027		a =	15.29	in
A_{s_req} =	**70.54**	in^2	ϕM_n =	**97603**	kip-ft
	OK				**OK**

Minimum Steel:

R_n =	0.184	ksi	4/3R_n =	0.214	ksi
m =	17.65		m =	17.65	
$ρ_{min\_1}$ =	0.0032		$ρ_{min\_2}$ =	0.0037	
A_{s_min1} =	83.61	in^2	A_{s_min2} =	96.67	in^2
					OK

Maximum Steel:

The maximum steel requirment has been removed. This provision is compensated for by adjusting the reistance factor based on whether the section is tension controlled, compression controlled, or in transistion. A section is tension controlled if c/d <= 0.375 and ϕ = 0.90)

c = a/β =	17.99	in
c/d =	0.10	**<=0.375, Tension Controlled**
		(Use this for single and double reinforcement)

Flexure - Crack Control [AASHTO 5.7.3.4]

f_s =	25.33	ksi	
f_c =	1.00	ksi	
d_c =	4.16	in	
$β_s$ =	1.032		
s_{max} =	**11.77**	in	
s_{prov} =	~ 6.5	in	**OK**

Flexure - Face Bars [AASHTO 5.7.3.4]

d_l =	187.84	in	
A_{sk} =	1.89	in^2/ft	
s_{max} =	12.00	in	
A_{rqd} =	14.82	in^2	[over d_l/2]
s_{req} =	**6.49**	in	
s_{prov} =	6.24	in	**OK**
$ρ_{sk}$ =	0.0028		

Fatigue [AASHTO 5.5.3.2]

Stresses calculated using cracked section properties.

M_{DL} =	0	kip-ft	f_{min} =	0.000	ksi
M_{LL_min} =	0	kip-ft	f_{LL_min} =	0.000	ksi
M_{LL_max} =	0	kip-ft	f_{LL_max} =	0.000	ksi
			Actual Range =	0.000	ksi
			Allowable Range =	24.000	ksi **OK**

(Assumes no cross weld at high stress region)

FOR: Pier 11	JOB NO: 49633	SHEET NO:
MADE BY: LEE	CHECKED BY: KDG	BACKCHECKED BY:
DATE: 6/7/12	DATE: 6-13-12	DATE:

HNTB

Shear Reinforcement Requirements

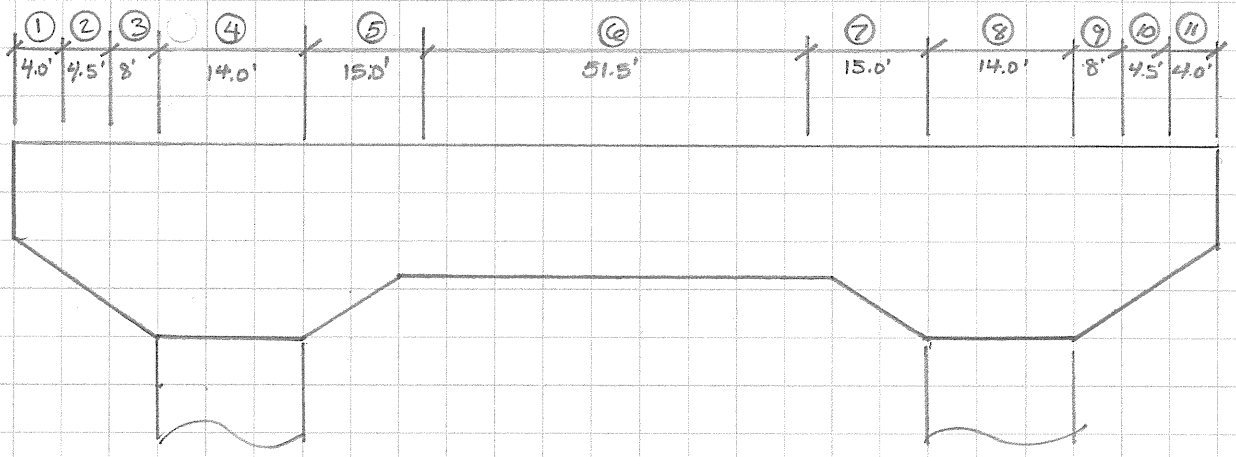

Zone	#legs	Spa. Prov. (in)	Spa. Requ. (in)	
1	6	15"	17"	OK
2	6	8"	8.5"	OK
3	6	16"	17"	OK
4			---	OK
5	8	6½"	7"	OK
6	6	6"	6"	OK
7	8	6½"	7"	OK
8			---	OK
9	6	16"	17"	OK
10	6	8"	9"	OK
11	6	15"	17"	OK

Shear reinforcement is adequate.

ME-101-1204

FOR: Pier 11 - RFI	JOB NO: 496033	SHEET NO:
MADE BY: LER	CHECKED BY: KDG	BACKCHECKED BY:
DATE: 6/11/12.	DATE: 6-13-12	DATE:

HNTB

Relocation of Anchor Rods

The anchor rods for bearing devices will be relocated to coordinate with the revised bearing locations along the cap beam per this RFI. The new anchor rods will be installed in drilled holes per CMS 516.07. When drilling the holes for the relocated anchor rods it may not be possible to avoid cutting or damaging tranverse reinforcing bars. Damage of the transverse bars at the shelf on which Unit 3 and Ramp A5 bear is inconsequential as these bars are not essential to the structural capacity of the cap beam. Installation of the anchor rods for Unit 2 bearing devices may require cutting or damaging transverse reinforcing bars that are contributing to the shear and torsional capacity of the cap beam. The impacts to each will be subsequently discussed.

Shear

Per RFI 198, the closed stirrups in the cap beam were replaced with two-piece stirrups as shown below:

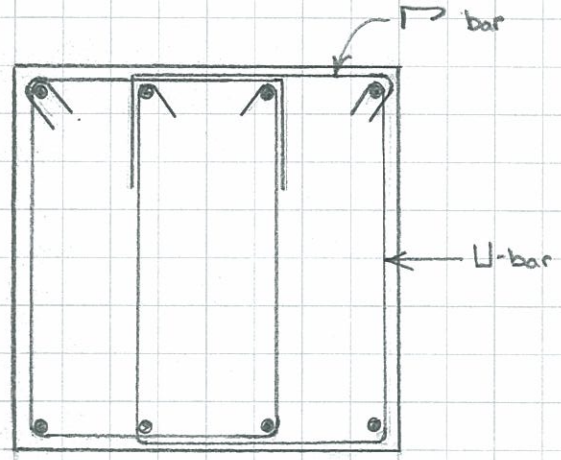

The vertical legs of the U-bars are achored at the top by 135-hooks that engage the long. rebar. Cutting of the top ⌐ bar will therefore have no impact on the shear capacity of the cap beam.

ME-101:1204

FOR: Pier 11	JOB NO: 49633	SHEET NO:
MADE BY: LER	CHECKED BY: KDG	BACKCHECKED BY:
DATE: 6/11/12	DATE: 6-13-12	DATE:

HNTB

Torsion

Cutting of one or both of the top ⌐→ bars will impact the torsional capacity of the cap beam at this location. Loss of one leg of a effective "closed stirrup" would cause additional stress on the remaining legs of adjacent stirrups in that face of the cap beam. Check that loss of two stirrup legs at the top face of the cap will not cause an overstress in adjacent legs due to application of the maximum torsion. Assume 2 legs lost over distance d_v. Calculate T_n for 11' deep section using max. spacing of stirrups over length of cap bt. columns.

T_u = 7304 k-ft
[Cap Design 042, pt. 2.97 L]

s = 6½"

d_v = 115" (see conc. calc. for cap, +M section)

bars over d_v = $\frac{115"}{6.5}$ ≈ 18

Calc. new effective spacing for 2 less bars:

$s_{eff} = \frac{115"}{(16-1)} = 7.7"$

Calculate shear capacity per AASHTO 5.8.3.6.

$$T_n = \frac{2 A_o A_t f_y \cot\theta}{s}$$

$A_o = 0.85 A_n$ [AASHTO C.5.8.2.1]

A_n = area enclose by centerline of exterior closed stirrup

= (144 − 2×3 − 0.75) * (132 − 2×2 − 0.75)

= 137.25 * 127.25

= 17465 in²

$A_o = 0.85\ (17465) = 14845$ in²

A_t = area of one leg of closed st.

= 0.44 in² (#6)

$\theta = 45°$ (AASHTO 5.8.3.4.1)

$$T_n = \frac{2(14845)(0.44)(60)(1)}{7.7}\left(\frac{1}{12}\right)$$

= 8483 k-ft

$\phi T_n = 0.9(8483)$

= 7635 k-ft > T_u ok

No stirrups are required within the overhang portions of the cap beam for torsional effects ($T_u < \frac{1}{4}\phi T_{cr}$).

∴ Loss or damage to top leg of a closed stirrup will not cause the torsional capacity of the cap to be decreased below that required.

FOR: Pier 11	JOB NO: 49633	SHEET NO:
MADE BY: LER	CHECKED BY: FDG	BACKCHECKED BY:
DATE: 6/11/12	DATE: 6-13-12	DATE:

HNTB

Conclusion

The holes for bearing devices may be safely drilled as required to correctly relocated the bearings on the cap beam. Transverse bars may be cut or damaged if unavoidable. Long. bars may not be cut or damaged.

HNTB	The HNTB Companies Engineers Architects Planners	Made	LER	Date	6/8/2012	Job Number	49633
		Checked	KDG	Date	6/12/12		
For	Cleveland Innerbelt	Backchk'd		Date		Sheet No.	1

49633\Techprod\Bridges\Main Span (Unit 2)\Pier 11\RFI - Misalignment\Footing Design\[Footing Loads Summary UPDATE 06082012.xlsx]Pier 11 (060812)

Top of Footing Loads
Main Viaduct (Pier 11)

Footing	Column	AASHTO Limit State	Load Case	Axial P (k)	Trans HT (k)	Long HL (k)	Trans MT (k-ft)	Long ML (k-ft)	Torsion (k-ft)
1	1	STR I	2	-8864	-440	-11	-3993	-5247	-14
1	1	STR I	13	-9154	-490	-101	-3777	6067	88
1	1	STR I	445	-9197	-706	102	-15790	-10332	-76
1	1	STR I	880	-10764	-635	-92	-6575	2934	24
1	1	STR I	985	-10399	-645	-129	-7990	7346	113
1	1	STR I	988	-10821	-686	-108	-9097	4283	7
1	1	STR I	1309	-10391	-817	114	-17803	-12333	-94
1	1	STR I	1312	-10805	-848	91	-18410	-12012	-94
1	1	STR I	1420	-10861	-898	77	-20932	-10769	-137
1	1	STR I	1444	-10816	-909	77	-21203	-10770	-130
1	1	STR I	1453	-10635	-932	80	-20913	-10737	-130
1	1	STR I	1747	-5755	-148	-37	2093	283	148
1	1	STR I	2255	-5416	-420	35	-9717	-5121	32
1	1	STIII	3481	-8061	-405	106	-4118	-12024	-225
1	1	STIII	3505	-9231	-326	1	4596	-4685	31
1	1	STIII	3514	-9443	-596	-22	-8180	-2042	220
1	1	STIII	3516	-9521	-686	-92	-12630	2942	251
1	1	STIII	3520	-9518	-677	-173	-12269	8187	194
1	1	STIII	3521	-9491	-642	-175	-10616	8199	166
1	1	STIII	3533	-9295	-572	176	-8704	-17548	-161
1	1	STIII	3539	-9519	-845	56	-21855	-8494	-2
1	1	STIII	3541	-9555	-887	-1	-23916	-4602	-1
1	1	STIII	3542	-9360	-884	-31	-25202	-2061	-83
1	1	STIII	3554	-4394	23	69	11867	-6975	-149
1	1	STRIV	3649	-9831	-511	-56	-4393	73	114
1	1	STRIV	3650	-9854	-699	55	-15046	-8775	-125
1	1	STRIV	3651	-11020	-615	-67	-6084	3	156
1	1	STRIV	3652	-11047	-810	68	-17060	-10775	-143
1	1	STRIV	3654	-9854	-699	55	-15046	-8775	-125
1	1	STRIV	3656	-11047	-810	68	-17060	-10775	-143
1	1	STR V	3658	-8648	-363	4	-272	-5902	-32
1	1	STR V	3672	-9198	-434	-49	-959	463	-35
1	1	STR V	15876	-9289	-693	99	-15115	-11194	-139
1	1	STR V	24840	-10378	-530	-52	-2254	-263	6
1	1	STR V	25056	-10378	-530	-52	-2254	-263	6
1	1	STR V	30993	-10223	-677	-152	-10228	8503	146
1	1	STR V	30996	-10549	-708	-136	-11082	6140	64
1	1	STR V	36069	-10108	-728	141	-14086	-14497	-135
1	1	STR V	36504	-10439	-765	122	-15183	-14153	-123
1	1	STR V	39204	-10575	-907	67	-22180	-9797	-88
1	1	STR V	40500	-10598	-930	39	-23381	-7891	-82
1	1	STR V	40524	-10564	-939	39	-23590	-7891	-76
1	1	STR V	40533	-10424	-956	41	-23367	-7866	-76
1	1	STR V	40716	-10598	-930	39	-23381	-7891	-82
1	1	STR V	45579	-5592	-89	-2	5528	-2297	85
1	1	STR V	59479	-5429	-447	41	-11105	-5410	40
1	1	SER I	87051	-6407	-83	-14	9071	-1768	85
1	1	SER I	101383	-6322	-557	32	-15287	-5206	10
1	1	SER I	107784	-7694	-260	-36	5888	-344	3
1	1	SER I	113937	-7596	-373	-111	-223	6150	109
1	1	SER I	113940	-7825	-395	-99	-825	4483	50
1	1	SER I	114156	-7825	-395	-99	-825	4483	50
1	1	SER I	119013	-7506	-591	103	-13545	-10644	-104
1	1	SER I	119016	-7731	-607	90	-13875	-10469	-104
1	1	SER I	119232	-7731	-607	90	-13875	-10469	-104
1	1	SER I	122580	-7852	-733	40	-20107	-6545	-59
1	1	SER I	123444	-7862	-743	27	-20588	-5669	-58
1	1	SER I	123477	-7739	-761	29	-20578	-5652	-53

HNTB	The HNTB Companies Engineers Architects Planners	Made	LER	Date	6/8/2012	Job Number	49633
		Checked	KDG	Date	6/12/12		
For	Cleveland Innerbelt	Backchk'd		Date		Sheet No.	2

49633\Techprod\Bridges\Main Span (Unit 2)\Pier 11\RFI - Misalignment\Footing Design\[Footing Loads Summary UPDATE 06082012.xlsx]Pier 11 (060812)

Top of Footing Loads
Main Viaduct (Pier 11)

Footing	Column	AASHTO Limit State	Load Case	Axial P (k)	Trans HT (k)	Long HL (k)	Trans MT (k-ft)	Long ML (k-ft)	Torsion (k-ft)
2	2	STR I	3	-8642	498	14	2970	-7635	185
2	2	STR I	43	-8834	546	-88	5320	5390	69
2	2	STR I	904	-10198	701	-73	6607	1765	152
2	2	STR I	910	-10584	698	-72	7923	1296	177
2	2	STR I	1009	-9890	617	-106	4157	5819	260
2	2	STR I	1018	-10528	648	-89	5407	2696	180
2	2	STR I	1261	-10528	648	-89	5407	2696	180
2	2	STR I	1339	-10076	749	97	13205	-11404	-120
2	2	STR I	1342	-10546	804	71	14564	-11034	-118
2	2	STR I	1344	-10524	810	19	14991	-9221	-122
2	2	STR I	1347	-10089	838	37	14608	-9483	-75
2	2	STR I	1585	-10546	804	71	14564	-11034	-118
2	2	STR I	1857	-5762	159	-9	-2117	-2830	291
2	2	STR I	2265	-5086	377	23	7164	-4404	-151
2	2	STIII	3483	-7935	754	114	19190	-12737	-292
2	2	STIII	3505	-9244	738	-1	13354	-4676	-40
2	2	STIII	3517	-8945	351	-81	-4676	2486	280
2	2	STIII	3521	-8985	408	-144	-2073	6295	290
2	2	STIII	3529	-9221	863	80	20950	-11882	-271
2	2	STIII	3530	-8994	836	109	21960	-13327	-239
2	2	STIII	3532	-9208	841	137	20021	-15481	-301
2	2	STIII	3533	-9180	805	143	18346	-15699	-280
2	2	STIII	3566	-4105	10	-79	-11741	4816	313
2	2	STIII	3578	-5009	553	89	17775	-9220	-198
2	2	STRIV	3649	-9366	542	-39	4198	-850	104
2	2	STRIV	3651	-10655	653	-47	6094	-1237	137
2	2	STRIV	3652	-10628	773	47	13441	-9631	-124
2	2	STRIV	3654	-9344	669	39	11869	-7771	-115
2	2	STRIV	3655	-10655	653	-47	6094	-1237	137
2	2	STR V	3659	-8513	556	19	6313	-7480	98
2	2	STR V	8994	-8849	440	-85	-197	3644	198
2	2	STR V	24408	-9905	730	-53	9521	151	41
2	2	STR V	24870	-10313	745	-41	10972	-1275	86
2	2	STR V	30162	-10130	543	-102	1294	3854	244
2	2	STR V	30405	-10130	543	-102	1294	3854	244
2	2	STR V	31449	-9663	548	-124	1700	6654	291
2	2	STR V	31458	-10154	572	-111	2664	4245	229
2	2	STR V	31701	-10154	572	-111	2664	4245	229
2	2	STR V	35238	-10279	855	88	17831	-12420	-196
2	2	STR V	35240	-10262	860	48	18161	-11022	-199
2	2	STR V	35243	-9926	881	62	17866	-11224	-163
2	2	STR V	35483	-10262	860	48	18161	-11022	-199
2	2	STR V	36102	-10266	839	95	17101	-12828	-190
2	2	STR V	36345	-10266	839	95	17101	-12828	-190
2	2	STR V	36531	-9892	783	117	15413	-13104	-182
2	2	STR V	50873	-5540	97	-36	-5640	-264	315
2	2	STR V	56033	-5156	461	46	11166	-6368	-212
2	2	SER I	92345	-6253	96	-36	-9206	-272	254
2	2	SER I	97505	-5988	545	44	13814	-6567	-185
2	2	SER I	113106	-7490	270	-75	-6596	2834	180
2	2	SER I	113349	-7490	270	-75	-6596	2834	180
2	2	SER I	114609	-7162	275	-90	-6216	4775	212
2	2	SER I	114645	-7509	292	-80	-5536	3075	168
2	2	SER I	118182	-7606	689	64	16562	-9121	-149
2	2	SER I	118184	-7594	692	36	16795	-8135	-151
2	2	SER I	118187	-7357	707	46	16586	-8277	-126
2	2	SER I	119046	-7596	677	70	15997	-9393	-144
2	2	SER I	119289	-7596	677	70	15997	-9393	-144
2	2	SER I	119475	-7331	636	85	14763	-9571	-137

HNTB	The HNTB Companies Engineers Architects Planners	Made	LER	Date	6/8/2012	Job Number	49633
		Checked	KDG	Date	6/12/12		
For	Cleveland Innerbelt	Backchk'd		Date		Sheet No.	3

49633\Techprod\Bridges\Main Span (Unit 2)\Pier 11\RFI - Misalignment\Footing Design\[Footing Loads Summary UPDATE 06082012.xlsx]Pier 11 (060812)

Top of Footing Loads
Main Viaduct (Pier 11-Slabs loaded simultaneously)

Footing	Column	AASHTO Limit State	Load Case	Axial P (k)	Trans HT (k)	Long HL (k)	Trans MT (k-ft)	Long ML (k-ft)	Torsion (k-ft)
1	1	STR I	1	-9022	-489	0	-4900	-7270	161
1	1	STR I	6	-9568	-532	-33	-5448	-2977	-136
1	1	STR I	150	-9584	-713	29	-15697	-8262	-86
1	1	STR I	294	-10756	-636	-45	-7140	-3047	-93
1	1	STR I	330	-10853	-721	-77	-11473	-504	-71
1	1	STR I	333	-9789	-537	-83	-5887	1238	584
1	1	STR I	366	-10756	-636	-45	-7140	-3047	-93
1	1	STR I	437	-9931	-763	88	-16506	-10924	-107
1	1	STR I	438	-10777	-823	41	-17711	-10262	-103
1	1	STR I	474	-10874	-907	10	-22044	-7748	-84
1	1	STR I	481	-10833	-925	9	-22798	-7679	-106
1	1	STR I	485	-10546	-964	25	-22241	-8190	-207
1	1	STR I	583	-5782	-150	-20	1899	-2117	168
1	1	STR I	789	-5390	-420	20	-10046	-4257	-103
1	1	STIII	1177	-8061	-405	106	-4118	-12024	-225
1	1	STIII	1201	-9231	-326	1	4596	-4685	31
1	1	STIII	1210	-9443	-596	-22	-8180	-2042	220
1	1	STIII	1212	-9521	-686	-92	-12630	2942	251
1	1	STIII	1216	-9518	-677	-173	-12269	8187	194
1	1	STIII	1217	-9491	-642	-175	-10616	8199	166
1	1	STIII	1229	-9295	-572	176	-8704	-17548	-161
1	1	STIII	1235	-9519	-845	56	-21855	-8494	-2
1	1	STIII	1237	-9555	-887	-1	-23916	-4602	-1
1	1	STIII	1238	-9360	-884	-31	-25202	-2061	-83
1	1	STIII	1250	-4394	23	69	11867	-6975	-149
1	1	STRIV	1345	-9831	-511	-56	-4393	73	114
1	1	STRIV	1346	-9854	-699	55	-15046	-8775	-125
1	1	STRIV	1347	-11020	-615	-67	-6084	3	156
1	1	STRIV	1348	-11047	-810	68	-17060	-10775	-143
1	1	STRIV	1350	-9854	-699	55	-15046	-8775	-125
1	1	STRIV	1352	-11047	-810	68	-17060	-10775	-143
1	1	STR V	1353	-8770	-401	13	-972	-7462	104
1	1	STR V	2690	-9353	-599	-53	-9584	-696	-38
1	1	STR V	4850	-9282	-680	33	-15022	-7992	-125
1	1	STR V	8414	-10372	-531	-15	-2690	-4877	-84
1	1	STR V	8486	-10372	-531	-15	-2690	-4877	-84
1	1	STR V	10466	-10573	-735	-111	-12915	2446	4
1	1	STR V	10469	-9753	-593	-116	-8606	3790	509
1	1	STR V	12157	-9753	-687	121	-13085	-13410	-145
1	1	STR V	12302	-10418	-746	84	-14644	-12804	-130
1	1	STR V	13209	-10553	-927	14	-23620	-7413	-64
1	1	STR V	13634	-10608	-937	-12	-24239	-5560	-40
1	1	STR V	13641	-10576	-951	-13	-24821	-5507	-57
1	1	STR V	13645	-10355	-981	-1	-24391	-5901	-135
1	1	STR V	13713	-10576	-951	-13	-24821	-5507	-57
1	1	STR V	15327	-5613	-91	10	5378	-4148	100
1	1	STR V	19997	-5408	-446	30	-11359	-4743	-64
1	1	SER I	29151	-6422	-84	-5	8965	-3074	95
1	1	SER I	33965	-6308	-556	24	-15466	-4736	-63
1	1	SER I	36062	-7690	-261	-10	5580	-3599	-61
1	1	SER I	38117	-7264	-314	-85	922	2825	364
1	1	SER I	38186	-7843	-414	-82	-2118	1877	8
1	1	SER I	39805	-7255	-561	89	-12839	-9877	-111
1	1	SER I	39806	-7716	-594	63	-13495	-9517	-109
1	1	SER I	41001	-7837	-748	3	-21123	-4864	-42
1	1	SER I	41289	-7846	-757	-10	-21604	-3988	-40
1	1	SER I	41293	-7690	-779	-1	-21301	-4266	-95
1	1	SER I	41361	-7846	-757	-10	-21604	-3988	-40

HNTB	The HNTB Companies Engineers Architects Planners	Made	LER	Date	6/8/2012	Job Number	49633
		Checked	KDG	Date	6/12/12		
For	Cleveland Innerbelt	Backchk'd		Date		Sheet No.	4

49633\Techprod\Bridges\Main Span (Unit 2)\Pier 11\RFI - Misalignment\Footing Design\[Footing Loads Summary UPDATE 06082012.xlsx]Pier 11 (060812)

Top of Footing Loads
Main Viaduct (Pier 11-Slabs loaded simultaneously)

Footing	Column	AASHTO Limit State	Load Case	Axial P (k)	Trans HT (k)	Long HL (k)	Trans MT (k-ft)	Long ML (k-ft)	Torsion (k-ft)
2	2	STR I	1	-8628	484	16	2334	-8203	50
2	2	STR I	293	-9537	606	-66	5475	1807	199
2	2	STR I	304	-10558	687	-21	7296	-5239	252
2	2	STR I	339	-9587	554	-88	3357	3558	114
2	2	STR I	343	-10389	606	-57	2830	-1769	345
2	2	STR I	348	-10388	542	-53	514	-2787	177
2	2	STR I	415	-10389	606	-57	2830	-1769	345
2	2	STR I	420	-10388	542	-53	514	-2787	177
2	2	STR I	447	-9607	712	71	12612	-9972	-113
2	2	STR I	448	-10541	821	18	15340	-9239	-106
2	2	STR I	449	-10106	849	36	14957	-9501	-60
2	2	STR I	457	-10537	818	18	15214	-9305	-88
2	2	STR I	520	-10541	821	18	15340	-9239	-106
2	2	STR I	529	-10537	818	18	15214	-9305	-88
2	2	STR I	619	-5719	116	-13	-4114	-2617	245
2	2	STR I	752	-5067	369	21	7020	-4261	-108
2	2	STIII	1179	-7935	754	114	19190	-12737	-292
2	2	STIII	1201	-9244	738	-1	13354	-4676	-40
2	2	STIII	1213	-8945	351	-81	-4676	2486	280
2	2	STIII	1217	-8985	408	-144	-2073	6295	290
2	2	STIII	1225	-9221	863	80	20950	-11882	-271
2	2	STIII	1226	-8994	836	109	21960	-13327	-239
2	2	STIII	1228	-9208	841	137	20021	-15481	-301
2	2	STIII	1229	-9180	805	143	18346	-15699	-280
2	2	STIII	1262	-4105	10	-79	-11741	4816	313
2	2	STIII	1274	-5009	553	89	17775	-9220	-198
2	2	STRIV	1345	-9366	542	-39	4198	-850	104
2	2	STRIV	1347	-10655	653	-47	6094	-1237	137
2	2	STRIV	1348	-10628	773	47	13441	-9631	-124
2	2	STRIV	1350	-9344	669	39	11869	-7771	-115
2	2	STRIV	1351	-10655	653	-47	6094	-1237	137
2	2	STR V	1353	-8502	546	21	5823	-7918	-6
2	2	STR V	8269	-9498	665	-44	8679	-284	117
2	2	STR V	8280	-10285	728	-10	10084	-5720	157
2	2	STR V	8424	-10293	736	-1	10489	-6316	144
2	2	STR V	10196	-10023	461	-74	-2480	-376	241
2	2	STR V	10619	-9429	500	-110	1083	4909	178
2	2	STR V	10623	-10047	539	-86	676	800	356
2	2	STR V	10695	-10047	539	-86	676	800	356
2	2	STR V	11880	-10275	868	47	18430	-11036	-187
2	2	STR V	11881	-9939	889	61	18135	-11238	-152
2	2	STR V	12177	-10259	850	54	17603	-11495	-167
2	2	STR V	12311	-9530	754	96	14956	-12000	-176
2	2	STR V	17091	-5507	64	-39	-7180	-100	279
2	2	STR V	18808	-5141	455	45	11055	-6257	-179
2	2	SER I	30915	-6230	72	-39	-10293	-157	229
2	2	SER I	32632	-5978	540	43	13736	-6490	-162
2	2	SER I	37844	-7414	212	-55	-9259	-151	178
2	2	SER I	37916	-7414	212	-55	-9259	-151	178
2	2	SER I	38123	-6989	230	-79	-7147	3571	139
2	2	SER I	38343	-7434	269	-63	-6938	645	258
2	2	SER I	39528	-7603	698	36	16985	-8145	-143
2	2	SER I	39529	-7366	713	46	16776	-8287	-118
2	2	SER I	39600	-7603	698	36	16985	-8145	-143
2	2	SER I	39825	-7591	685	41	16351	-8453	-128
2	2	SER I	39959	-7076	616	70	14440	-8792	-133

Maximum Shear and Torsion

Trans HT (k)	Long HL (k)	Torsion (k-ft)
-981	176	584

Maximum Shear and Torsion
(excluding Fatigue and Service)

Trans HT (k)	Long HL (k)	Torsion (k-ft)
-981	176	584

HNTB	The HNTB Companies Engineers Architects Planners	Made	LER	Date	6/8/2012	Job Number	49633
		Checked	KDG	Date	6/12/12		
For	Cleveland Innerbelt	Backchk'd		Date		Sheet No.	1

echprod\Bridges\Main Span (Unit 2)\Pier 11\RFI - Misalignment\Footing Design\[Footing Loads Summary UPDATE 06082012.xlsx]Pier 11 (060812)(Column Load)

Top of Footing Loads With Filled Column
Main Viaduct (Pier 11)

Filled column height = 25 ft
Paddditional = 240 kips

Footing	Column	AASHTO Limit State	Load Case	Axial P (k)	Trans HT (k)	Long HL (k)	Trans MT (k-ft)	Long ML (k-ft)	Torsion (k-ft)
1	1	STR I	2	-9164	-440	-11	-3993	-5247	-14
1	1	STR I	13	-9454	-490	-101	-3777	6067	88
1	1	STR I	445	-9497	-706	102	-15790	-10332	-76
1	1	STR I	880	-11064	-635	-92	-6575	2934	24
1	1	STR I	985	-10699	-645	-129	-7990	7346	113
1	1	STR I	988	-11121	-686	-108	-9097	4283	7
1	1	STR I	1309	-10691	-817	114	-17803	-12333	-94
1	1	STR I	1312	-11105	-848	91	-18410	-12012	-94
1	1	STR I	1420	-11161	-898	77	-20932	-10769	-137
1	1	STR I	1444	-11116	-909	77	-21203	-10770	-130
1	1	STR I	1453	-10935	-932	80	-20913	-10737	-130
1	1	STR I	1747	-6055	-148	-37	2093	283	148
1	1	STR I	2255	-5716	-420	35	-9717	-5121	32
1	1	STIII	3481	-8361	-405	106	-4118	-12024	-225
1	1	STIII	3505	-9531	-326	1	4596	-4685	31
1	1	STIII	3514	-9743	-596	-22	-8180	-2042	220
1	1	STIII	3516	-9821	-686	-92	-12630	2942	251
1	1	STIII	3520	-9818	-677	-173	-12269	8187	194
1	1	STIII	3521	-9791	-642	-175	-10616	8199	166
1	1	STIII	3533	-9595	-572	176	-8704	-17548	-161
1	1	STIII	3539	-9819	-845	56	-21855	-8494	-2
1	1	STIII	3541	-9855	-887	-1	-23916	-4602	-1
1	1	STIII	3542	-9660	-884	-31	-25202	-2061	-83
1	1	STIII	3554	-4694	23	69	11867	-6975	-149
1	1	STRIV	3649	-10191	-511	-56	-4393	73	114
1	1	STRIV	3650	-10214	-699	55	-15046	-8775	-125
1	1	STRIV	3651	-11380	-615	-67	-6084	3	156
1	1	STRIV	3652	-11407	-810	68	-17060	-10775	-143
1	1	STRIV	3654	-10214	-699	55	-15046	-8775	-125
1	1	STRIV	3656	-11407	-810	68	-17060	-10775	-143
1	1	STR V	3658	-8948	-363	4	-272	-5902	-32
1	1	STR V	3672	-9498	-434	-49	-959	463	-35
1	1	STR V	15876	-9589	-693	99	-15115	-11194	-139
1	1	STR V	24840	-10678	-530	-52	-2254	-263	6
1	1	STR V	25056	-10678	-530	-52	-2254	-263	6
1	1	STR V	30993	-10523	-677	-152	-10228	8503	146
1	1	STR V	30996	-10849	-708	-136	-11082	6140	64
1	1	STR V	36069	-10408	-728	141	-14086	-14497	-135
1	1	STR V	36504	-10739	-765	122	-15183	-14153	-123
1	1	STR V	39204	-10875	-907	67	-22180	-9797	-88
1	1	STR V	40500	-10898	-930	39	-23381	-7891	-82
1	1	STR V	40524	-10864	-939	39	-23590	-7891	-76
1	1	STR V	40533	-10724	-956	41	-23367	-7866	-76
1	1	STR V	40716	-10898	-930	39	-23381	-7891	-82
1	1	STR V	45579	-5892	-89	-2	5528	-2297	85
1	1	STR V	59479	-5729	-447	41	-11105	-5410	40
1	1	SER I	87051	-6647	-83	-14	9071	-1768	85
1	1	SER I	101383	-6562	-557	32	-15287	-5206	10
1	1	SER I	107784	-7934	-260	-36	5888	-344	3
1	1	SER I	113937	-7836	-373	-111	-223	6150	109
1	1	SER I	113940	-8065	-395	-99	-825	4483	50
1	1	SER I	114156	-8065	-395	-99	-825	4483	50
1	1	SER I	119013	-7746	-591	103	-13545	-10644	-104
1	1	SER I	119016	-7971	-607	90	-13875	-10469	-104
1	1	SER I	119232	-7971	-607	90	-13875	-10469	-104
1	1	SER I	122580	-8092	-733	40	-20107	-6545	-59
1	1	SER I	123444	-8102	-743	27	-20588	-5669	-58
1	1	SER I	123477	-7979	-761	29	-20578	-5652	-53

Top of Footing Loads With Filled Column
Main Viaduct (Pier 11)

Footing	Column	AASHTO Limit State	Load Case	Axial P (k)	Trans HT (k)	Long HL (k)	Trans MT (k-ft)	Long ML (k-ft)	Torsion (k-ft)
2	2	STR I	3	-8942	498	14	2970	-7635	185
2	2	STR I	43	-9134	546	-88	5320	5390	69
2	2	STR I	904	-10498	701	-73	6607	1765	152
2	2	STR I	910	-10884	698	-72	7923	1296	177
2	2	STR I	1009	-10190	617	-106	4157	5819	260
2	2	STR I	1018	-10828	648	-89	5407	2696	180
2	2	STR I	1261	-10828	648	-89	5407	2696	180
2	2	STR I	1339	-10376	749	97	13205	-11404	-120
2	2	STR I	1342	-10846	804	71	14564	-11034	-118
2	2	STR I	1344	-10824	810	19	14991	-9221	-122
2	2	STR I	1347	-10389	838	37	14608	-9483	-75
2	2	STR I	1585	-10846	804	71	14564	-11034	-118
2	2	STR I	1857	-6062	159	-9	-2117	-2830	291
2	2	STR I	2265	-5386	377	23	7164	-4404	-151
2	2	STIII	3483	-8235	754	114	19190	-12737	-292
2	2	STIII	3505	-9544	738	-1	13354	-4676	-40
2	2	STIII	3517	-9245	351	-81	-4676	2486	280
2	2	STIII	3521	-9285	408	-144	-2073	6295	290
2	2	STIII	3529	-9521	863	80	20950	-11882	-271
2	2	STIII	3530	-9294	836	109	21960	-13327	-239
2	2	STIII	3532	-9508	841	137	20021	-15481	-301
2	2	STIII	3533	-9480	805	143	18346	-15699	-280
2	2	STIII	3566	-4405	10	-79	-11741	4816	313
2	2	STIII	3578	-5309	553	89	17775	-9220	-198
2	2	STRIV	3649	-9726	542	-39	4198	-850	104
2	2	STRIV	3651	-11015	653	-47	6094	-1237	137
2	2	STRIV	3652	-10988	773	47	13441	-9631	-124
2	2	STRIV	3654	-9704	669	39	11869	-7771	-115
2	2	STRIV	3655	-11015	653	-47	6094	-1237	137
2	2	STR V	3659	-8813	556	19	6313	-7480	98
2	2	STR V	8994	-9149	440	-85	-197	3644	198
2	2	STR V	24408	-10205	730	-53	9521	151	41
2	2	STR V	24870	-10613	745	-41	10972	-1275	86
2	2	STR V	30162	-10430	543	-102	1294	3854	244
2	2	STR V	30405	-10430	543	-102	1294	3854	244
2	2	STR V	31449	-9963	548	-124	1700	6654	291
2	2	STR V	31458	-10454	572	-111	2664	4245	229
2	2	STR V	31701	-10454	572	-111	2664	4245	229
2	2	STR V	35238	-10579	855	88	17831	-12420	-196
2	2	STR V	35240	-10562	860	48	18161	-11022	-199
2	2	STR V	35243	-10226	881	62	17866	-11224	-163
2	2	STR V	35483	-10562	860	48	18161	-11022	-199
2	2	STR V	36102	-10566	839	95	17101	-12828	-190
2	2	STR V	36345	-10566	839	95	17101	-12828	-190
2	2	STR V	36531	-10192	783	117	15413	-13104	-182
2	2	STR V	50873	-5840	97	-36	-5640	-264	315
2	2	STR V	56033	-5456	461	46	11166	-6368	-212
2	2	SER I	92345	-6493	96	-36	-9206	-272	254
2	2	SER I	97505	-6228	545	44	13814	-6567	-185
2	2	SER I	113106	-7730	270	-75	-6596	2834	180
2	2	SER I	113349	-7730	270	-75	-6596	2834	180
2	2	SER I	114609	-7402	275	-90	-6216	4775	212
2	2	SER I	114645	-7749	292	-80	-5536	3075	168
2	2	SER I	118182	-7846	689	64	16562	-9121	-149
2	2	SER I	118184	-7834	692	36	16795	-8135	-151
2	2	SER I	118187	-7597	707	46	16586	-8277	-126
2	2	SER I	119046	-7836	677	70	15997	-9393	-144
2	2	SER I	119289	-7836	677	70	15997	-9393	-144
2	2	SER I	119475	-7571	636	85	14763	-9571	-137

HNTB	The HNTB Companies Engineers Architects Planners	Made	LER	Date	6/8/2012	Job Number	49633
		Checked	KDG	Date	6/12/12		
For	Cleveland Innerbelt	Backchk'd		Date		Sheet No.	3

echprod\Bridges\Main Span (Unit 2)\Pier 11\RFI - Misalignment\Footing Design\[Footing Loads Summary UPDATE 06082012.xlsx]Pier 11 (060812)(Column Load)

Top of Footing Loads With Filled Column
Main Viaduct (Pier 11 - Slabs loaded simultaneously)

Footing	Column	AASHTO Limit State	Load Case	Axial P (k)	Trans HT (k)	Long HL (k)	Trans MT (k-ft)	Long ML (k-ft)	Torsion (k-ft)
1	1	STR I	1	-9322	-489	0	-4900	-7270	161
1	1	STR I	6	-9868	-532	-33	-5448	-2977	-136
1	1	STR I	150	-9884	-713	29	-15697	-8262	-86
1	1	STR I	294	-11056	-636	-45	-7140	-3047	-93
1	1	STR I	330	-11153	-721	-77	-11473	-504	-71
1	1	STR I	333	-10089	-537	-83	-5887	1238	584
1	1	STR I	366	-11056	-636	-45	-7140	-3047	-93
1	1	STR I	437	-10231	-763	88	-16506	-10924	-107
1	1	STR I	438	-11077	-823	41	-17711	-10262	-103
1	1	STR I	474	-11174	-907	10	-22044	-7748	-84
1	1	STR I	481	-11133	-925	9	-22798	-7679	-106
1	1	STR I	485	-10846	-964	25	-22241	-8190	-207
1	1	STR I	583	-6082	-150	-20	1899	-2117	168
1	1	STR I	789	-5690	-420	20	-10046	-4257	-103
1	1	STIII	1177	-8361	-405	106	-4118	-12024	-225
1	1	STIII	1201	-9531	-326	1	4596	-4685	31
1	1	STIII	1210	-9743	-596	-22	-8180	-2042	220
1	1	STIII	1212	-9821	-686	-92	-12630	2942	251
1	1	STIII	1216	-9818	-677	-173	-12269	8187	194
1	1	STIII	1217	-9791	-642	-175	-10616	8199	166
1	1	STIII	1229	-9595	-572	176	-8704	-17548	-161
1	1	STIII	1235	-9819	-845	56	-21855	-8494	-2
1	1	STIII	1237	-9855	-887	-1	-23916	-4602	-1
1	1	STIII	1238	-9660	-884	-31	-25202	-2061	-83
1	1	STIII	1250	-4694	23	69	11867	-6975	-149
1	1	STRIV	1345	-10191	-511	-56	-4393	73	114
1	1	STRIV	1346	-10214	-699	55	-15046	-8775	-125
1	1	STRIV	1347	-11380	-615	-67	-6084	3	156
1	1	STRIV	1348	-11407	-810	68	-17060	-10775	-143
1	1	STRIV	1350	-10214	-699	55	-15046	-8775	-125
1	1	STRIV	1352	-11407	-810	68	-17060	-10775	-143
1	1	STR V	1353	-9070	-401	13	-972	-7462	104
1	1	STR V	2690	-9653	-599	-53	-9584	-696	-38
1	1	STR V	4850	-9582	-680	33	-15022	-7992	-125
1	1	STR V	8414	-10672	-531	-15	-2690	-4877	-84
1	1	STR V	8486	-10672	-531	-15	-2690	-4877	-84
1	1	STR V	10466	-10873	-735	-111	-12915	2446	4
1	1	STR V	10469	-10053	-593	-116	-8606	3790	509
1	1	STR V	12157	-10053	-687	121	-13085	-13410	-145
1	1	STR V	12302	-10718	-746	84	-14644	-12804	-130
1	1	STR V	13209	-10853	-927	14	-23620	-7413	-64
1	1	STR V	13634	-10908	-937	-12	-24239	-5560	-40
1	1	STR V	13641	-10876	-951	-13	-24821	-5507	-57
1	1	STR V	13645	-10655	-981	-1	-24391	-5901	-135
1	1	STR V	13713	-10876	-951	-13	-24821	-5507	-57
1	1	STR V	15327	-5913	-91	10	5378	-4148	100
1	1	STR V	19997	-5708	-446	30	-11359	-4743	-64
1	1	SER I	29151	-6662	-84	-5	8965	-3074	95
1	1	SER I	33965	-6548	-556	24	-15466	-4736	-63
1	1	SER I	36062	-7930	-261	-10	5580	-3599	-61
1	1	SER I	38117	-7504	-314	-85	922	2825	364
1	1	SER I	38186	-8083	-414	-82	-2118	1877	8
1	1	SER I	39805	-7495	-561	89	-12839	-9877	-111
1	1	SER I	39806	-7956	-594	63	-13495	-9517	-109
1	1	SER I	41001	-8077	-748	3	-21123	-4864	-42
1	1	SER I	41289	-8086	-757	-10	-21604	-3988	-40
1	1	SER I	41293	-7930	-779	-1	-21301	-4266	-95
1	1	SER I	41361	-8086	-757	-10	-21604	-3988	-40

HNTB	The HNTB Companies Engineers Architects Planners	Made	LER	Date	6/8/2012	Job Number	49633
		Checked	KDG	Date	6/12/12		
For	Cleveland Innerbelt	Backchk'd		Date		Sheet No.	4

echprod\Bridges\Main Span (Unit 2)\Pier 11\RFI - Misalignment\Footing Design\[Footing Loads Summary UPDATE 06082012.xlsx]Pier 11 (060812)(Column Load)

Top of Footing Loads With Filled Column
Main Viaduct (Pier 11 - Slabs loaded simultaneously)

Footing	Column	AASHTO Limit State	Load Case	Axial P (k)	Trans HT (k)	Long HL (k)	Trans MT (k-ft)	Long ML (k-ft)	Torsion (k-ft)
2	2	STR I	1	-8928	484	16	2334	-8203	50
2	2	STR I	293	-9837	606	-66	5475	1807	199
2	2	STR I	304	-10858	687	-21	7296	-5239	252
2	2	STR I	339	-9887	554	-88	3357	3558	114
2	2	STR I	343	-10689	606	-57	2830	-1769	345
2	2	STR I	348	-10688	542	-53	514	-2787	177
2	2	STR I	415	-10689	606	-57	2830	-1769	345
2	2	STR I	420	-10688	542	-53	514	-2787	177
2	2	STR I	447	-9907	712	71	12612	-9972	-113
2	2	STR I	448	-10841	821	18	15340	-9239	-106
2	2	STR I	449	-10406	849	36	14957	-9501	-60
2	2	STR I	457	-10837	818	18	15214	-9305	-88
2	2	STR I	520	-10841	821	18	15340	-9239	-106
2	2	STR I	529	-10837	818	18	15214	-9305	-88
2	2	STR I	619	-6019	116	-13	-4114	-2617	245
2	2	STR I	752	-5367	369	21	7020	-4261	-108
2	2	STIII	1179	-8235	754	114	19190	-12737	-292
2	2	STIII	1201	-9544	738	-1	13354	-4676	-40
2	2	STIII	1213	-9245	351	-81	-4676	2486	280
2	2	STIII	1217	-9285	408	-144	-2073	6295	290
2	2	STIII	1225	-9521	863	80	20950	-11882	-271
2	2	STIII	1226	-9294	836	109	21960	-13327	-239
2	2	STIII	1228	-9508	841	137	20021	-15481	-301
2	2	STIII	1229	-9480	805	143	18346	-15699	-280
2	2	STIII	1262	-4405	10	-79	-11741	4816	313
2	2	STIII	1274	-5309	553	89	17775	-9220	-198
2	2	STRIV	1345	-9726	542	-39	4198	-850	104
2	2	STRIV	1347	-11015	653	-47	6094	-1237	137
2	2	STRIV	1348	-10988	773	47	13441	-9631	-124
2	2	STRIV	1350	-9704	669	39	11869	-7771	-115
2	2	STRIV	1351	-11015	653	-47	6094	-1237	137
2	2	STR V	1353	-8802	546	21	5823	-7918	-6
2	2	STR V	8269	-9798	665	-44	8679	-284	117
2	2	STR V	8280	-10585	728	-10	10084	-5720	157
2	2	STR V	8424	-10593	736	-1	10489	-6316	144
2	2	STR V	10196	-10323	461	-74	-2480	-376	241
2	2	STR V	10619	-9729	500	-110	1083	4909	178
2	2	STR V	10623	-10347	539	-86	676	800	356
2	2	STR V	10695	-10347	539	-86	676	800	356
2	2	STR V	11880	-10575	868	47	18430	-11036	-187
2	2	STR V	11881	-10239	889	61	18135	-11238	-152
2	2	STR V	12177	-10559	850	54	17603	-11495	-167
2	2	STR V	12311	-9830	754	96	14956	-12000	-176
2	2	STR V	17091	-5807	64	-39	-7180	-100	279
2	2	STR V	18808	-5441	455	45	11055	-6257	-179
2	2	SER I	30915	-6470	72	-39	-10293	-157	229
2	2	SER I	32632	-6218	540	43	13736	-6490	-162
2	2	SER I	37844	-7654	212	-55	-9259	-151	178
2	2	SER I	37916	-7654	212	-55	-9259	-151	178
2	2	SER I	38123	-7229	230	-79	-7147	3571	139
2	2	SER I	38343	-7674	269	-63	-6938	645	258
2	2	SER I	39528	-7843	698	36	16985	-8145	-143
2	2	SER I	39529	-7606	713	46	16776	-8287	-118
2	2	SER I	39600	-7843	698	36	16985	-8145	-143
2	2	SER I	39825	-7831	685	41	16351	-8453	-128
2	2	SER I	39959	-7316	616	70	14440	-8792	-133

Maximum Shear and Torsion

Trans HT (k)	Long HL (k)	Torsion (k-ft)
-981	176	584

Maximum Shear and Torsion
(excluding Fatigue and Service)

Trans HT (k)	Long HL (k)	Torsion (k-ft)
-981	176	584

HNTB The HNTB Companies Engineers Architects Planners	Made LER	Date 6/8/2012	Job No. 49633
	Checked KDG	Date 6/12/12	
For **Cleveland Innerbelt**	Backchk'd	Date	Sheet No. 3

NOTE : For piles on negative side of footing, SM is negative.
(i.e. piles placed on downstation side of footing have a negative longitudinal SM for batter equations)

M:\jobs\49633\Techprod\Bridges\Main Span (Unit 2)\Pier 11\RFI - Misalignment\Footing Design\[PileBending_modified_Pier11_Add 6 HP18 Piles.xls]Pile Bending_max_load

Pier Design - Pile Group Combined Pile Stresses

Main Viaduct (Pier 11)

HP18s and HP16s are used in this pile group

Pile Size = **HP18x204**

			Equivalents for Lateral stiffness Trans	Long
No. of Trans. Strong Axis Piles =	**18.00**	(N_{TS})	**18.00**	**18.00**
No. of Trans. Weak Axis Piles =	**0**	(N_{TW})	**0**	**0**
No. of Long. Strong Axis Piles =	0	(N_{LS})		
No. of Long. Weak Axis Piles =	18.00	(N_{LW})		

Total No.of Piles = 18.00 ea.

Note: Pile number is equivalent HP18's

Trans. Pile Batter = horiz. in vertical

Long. Pile Batter = horiz. in vertical

Notes:

* Use the actual number of battered piles which may be mobilized in the indicated direction.

**Torsion not accounted for in this spreadsheet. Must examine torsional effects separately if significant loads exist.

Transverse Battered Piles

Pile Row	No. of Piles *	SM_T (ft)
1		
2		
3		
4		

Longitudinal Battered Piles

Pile Row	No. of Piles *	SM_L (ft)
1		
2		
3		
4		

Note: Batter equations have been modified for this case

F_y =	**60**	ksi	
E =	**29,000**	ksi	
k =	**1.2**		
L_b =	**12.40**	ft	
Ag =	60		
Φ_f =	**1.00**	LRFD §6.5.4.2	
ST Φ_c =	**0.70**	LRFD §6.5.4.2	
EX Φ_c =	**1.00**	LRFD §6.5.5	
r_y =	4.32	in	
kL/r =	41.3	Nonslender: Q = 1.0	
P_e =	10052	kips	
P_0 =	3600	kips	
λ =	**0.0**	Set equal to 0 per AASHTO 10.7.3.13.1	
Q =	**1.0**	LRFD §6.9.4	
Redundacy Reduct. =	0%	LRFD §10.5.5.2.3	
Footing_Long_	**0.0000**	ft	
Footing_Trans_	**0.0000**	ft	
Column_Long_	**0.0000**	ft	
Column_Trans_	**0.0000**	ft	

Footing Properties

Width =	**38.00**	ft
Length =	**38.00**	ft
Depth =	**10.00**	ft
Overburden =	**3.00**	ft
Column Area =	**164.00**	ft^2
Unit Weight of Concrete =	**0.150**	kcf
Unit Weight of Backfill =	**0.125**	kcf
k_p =	**0.00**	(per S&W)
fraction of full mobilization =	**0.00**	
Φ_{ep} =	**0.00**	10.5.5.2.2-1
effective soil wt =	**0.000**	kcf (per S&W)
Equivalent Fluid Wt =	0.000	kcf (per S&W)
Pp =	0.0	k/ft
Passive Resistance =	0	kips
direction to apply passive resistance =	**TRANS**	LONG or TRANS

SIGN STRUCTURES LOADS (Top of Footing)

Load Group	F_V (kips)	F_T[1] (kips)	F_L[1] (Kips*ft)	M_T[1] (Kips*ft)	M_L[1] (Kips*ft)	TORSION[1] (Kips*ft)
STR I	13.00	1.00	0.00	24.00	0.00	0.00
STIII	13.00	-2.00	30.00	89.00	2685.00	78.00
STRIV	15.00	1.00	0.00	24.00	0.00	0.00
STR V	13.00	-1.00	9.00	43.00	767.00	22.00
SER I	10.00	-1.00	6.00	33.00	575.00	17.00
FATGE	0.00	0.00	0.00	0.00	0.00	0.00

1 F_L, M_L and M_T can act in either direction.

Induced Wall Loads (Top of Footing)

	F_V (kips)	F_T (Kips)	F_L (Kips)	M_T (Kips*ft)	M_L (Kips*ft)	TORSION (Kips*ft)
STR I	-3076.28	191.51	-588.89	-6100.68	-19373.43	0.00
STIII	-3076.28	191.51	-552.49	-6100.68	-19828.43	0.00
STRIV	-3186.40	191.51	-588.89	-6518.21	-19154.43	0.00
STR V	-3076.28	191.51	-578.49	-6100.68	-19503.43	0.00
SER I	-2383.31	212.78	-646.52	-4211.46	-13288.69	0.00
FATGE	0.00	0.00	0.00	0.00	0.00	0.00

Pile / Group Properties

SM_T = 152.0 ft

SM_L = 136.0 ft

Strong Axis Properties

I_x = 3450 $in.^4$

M_{rx} = 2029 kip-ft

Weak Axis Properties

I_Y = 1119 $in.^4$

M_{ry} = 926 kip-ft

P_{rST}= ΦP_n = 2520.0 kips LRFD §6.9.4.1

P_{rEX} = ΦP_n = 3600.0 kips (2008 eqns)

Max D/C ratio= **0.92**

Min D/C ratio= **0.30**

-11407 -301 584 1429.7 Trans. 404.2 Trans. Long. 42.1 Long. 260.9

Footing No.	Load Group	Load Case	F_V (kips)	F_T (kips)	F_L (kips)	M_T (kip-ft)	M_L (kip-ft)	T** (kip-ft)	$F_{add.}$ (kips)	Lateral Resistance from Batter F_{TB} (kips)	F_{LB} (kips)	Lateral Resistance from Pile Bending F_{TP} (kips)	F_{LP} (kips)	Axial Force $P_{u/Pile}$ (kips)	$F_{TS/Pile}$ (kips)	Strong Bending $M_{TS/Pile}$ (kip-ft)	$F_{TW/Pile}$ (kips)	Weak Bending $M_{TW/Pile}$ (kip-ft)	$F_{LS/Pile}$ (kips)	Strong Bending $M_{LS/Pile}$ (kip-ft)	$F_{LW/Pile}$ (kips)	Weak Bending $M_{LW/Pile}$ (kip-ft)	P_u/P_r	Trans. Strong M_{ux}/M_{rx}	Tran. Weak M_{uy}/M_{ry}	Long. Strong M_{ux}/M_{rx}	Long. Weak M_{uy}/M_{ry}	Trans. Strong Interaxn. (6.9.2.2)	Long. Strong Interaxn. (6.9.2.2)		
1	STR I	2	-9164	-440	-11	-3993	-5247	-14	-3332	0	0	633	600	1110.9	35.1	217.9	0.0	0.0	0.0	0.0	33.3	206.6	0.44	0.11	0.00	0.00	0.22	0.73	0.00	≤ 1.0	O.K.
1	STR I	13	-9454	-490	-101	-3777	6067	88	-3332	0	0	683	690	1039.1	37.9	235.1	0.0	0.0	0.0	0.0	38.3	237.6	0.41	0.12	0.00	0.00	0.26	0.74	0.00	≤ 1.0	O.K.
1	STR I	445	-9497	-706	102	-15790	-10332	-76	-3332	0	0	899	487	1270.2	49.9	309.5	0.0	0.0	0.0	0.0	27.0	167.7	0.50	0.15	0.00	0.00	0.18	0.80	0.00	≤ 1.0	O.K.
1	STR I	880	-11064	-635	-92	-6575	2934	24	-3332	0	0	828	681	1180.2	46.0	285.0	0.0	0.0	0.0	0.0	37.8	234.5	0.47	0.14	0.00	0.00	0.25	0.82	0.00	≤ 1.0	O.K.
1	STR I	985	-10699	-645	-129	-7990	7346	113	-3332	0	0	838	718	1134.7	46.5	288.5	0.0	0.0	0.0	0.0	39.9	247.3	0.45	0.14	0.00	0.00	0.27	0.81	0.00	≤ 1.0	O.K.
1	STR I	988	-11121	-686	-108	-9097	4283	7	-3332	0	0	879	697	1192.2	48.8	302.6	0.0	0.0	0.0	0.0	38.7	240.0	0.47	0.15	0.00	0.00	0.26	0.84	0.00	≤ 1.0	O.K.
1	STR I	1309	-10691	-817	114	-17803	-12333	-94	-3332	0	0	1010	475	1372.7	56.1	347.7	0.0	0.0	0.0	0.0	26.4	163.6	0.54	0.17	0.00	0.00	0.18	0.85	0.00	≤ 1.0	O.K.
1	STR I	1312	-11105	-848	91	-18410	-12012	-94	-3332	0	0	1041	498	1397.7	57.8	358.4	0.0	0.0	0.0	0.0	27.7	171.5	0.55	0.18	0.00	0.00	0.19	0.88	0.00	≤ 1.0	O.K.
1	STR I	1420	-11161	-898	77	-20932	-10769	-137	-3332	0	0	1091	512	1410.5	60.6	375.6	0.0	0.0	0.0	0.0	28.4	176.3	0.56	0.19	0.00	0.00	0.19	0.89	0.00	≤ 1.0	O.K.
1	STR I	1444	-11116	-909	77	-21203	-10770	-130	-3332	0	0	1102	512	1410.5	61.2	379.4	0.0	0.0	0.0	0.0	28.4	176.3	0.56	0.19	0.00	0.00	0.19	0.90	0.00	≤ 1.0	O.K.
1	STR I	1453	-10935	-932	80	-20913	-10737	-130	-3332	0	0	1125	509	1400.1	62.5	387.3	0.0	0.0	0.0	0.0	28.3	175.3	0.56	0.19	0.00	0.00	0.19	0.89	0.00	≤ 1.0	O.K.
1	STR I	1747	-6055	-148	-37	2093	283	148	-3332	0	0	341	626	819.1	18.9	117.3	0.0	0.0	0.0	0.0	34.8	215.6	0.33	0.06	0.00	0.00	0.23	0.58	0.00	≤ 1.0	O.K.
1	STR I	2255	-5716	-420	35	-9717	-5121	32	-3332	0	0	613	554	958.2	34.0	211.0	0.0	0.0	0.0	0.0	30.8	190.8	0.38	0.10	0.00	0.00	0.21	0.66	0.00	≤ 1.0	O.K.
1	STIII	3481	-8361	-405	106	-4118	-12024	-225	-3332	0	0	599	416	1151.7	33.3	206.2	0.0	0.0	0.0	0.0	23.1	143.5	0.46	0.10	0.00	0.00	0.15	0.69	0.00	≤ 1.0	O.K.
1	STIII	3505	-9531	-326	1	4596	-4685	31	-3332	0	0	520	521	1084.6	28.9	178.9	0.0	0.0	0.0	0.0	29.0	179.6	0.43	0.09	0.00	0.00	0.19	0.68	0.00	≤ 1.0	O.K.
1	STIII	3514	-9743	-596	-22	-8180	-2042	220	-3332	0	0	790	604	1180.6	43.9	271.9	0.0	0.0	0.0	0.0	33.6	208.2	0.47	0.13	0.00	0.00	0.22	0.79	0.00	≤ 1.0	O.K.
1	STIII	3516	-9821	-686	-92	-12630	2942	251	-3332	0	0	880	674	1138.8	48.9	302.9	0.0	0.0	0.0	0.0	37.5	232.3	0.45	0.15	0.00	0.00	0.25	0.81	0.00	≤ 1.0	O.K.
1	STIII	3520	-9818	-677	-173	-12269	8187	194	-3332	0	0	871	755	1091.2	48.4	299.8	0.0	0.0	0.0	0.0	42.0	260.2	0.43	0.15	0.00	0.00	0.28	0.81	0.00	≤ 1.0	O.K.
1	STIII	3521	-9791	-642	-175	-10616	8199	166	-3332	0	0	836	757	1076.3	46.4	287.8	0.0	0.0	0.0	0.0	42.1	260.9	0.43	0.14	0.00	0.00	0.28	0.80	0.00	≤ 1.0	O.K.
1	STIII	3533	-9595	-572	176	-8704	-17548	-161	-3332	0	0	766	346	1307.2	42.5	263.7	0.0	0.0	0.0	0.0	19.2	119.3	0.52	0.13	0.00	0.00	0.13	0.75	0.00	≤ 1.0	O.K.
1	STIII	3539	-9819	-845	56	-21855	-8494	-2	-3332	0	0	1039	466	1348.7	57.7	357.7	0.0	0.0	0.0	0.0	25.9	160.7	0.54	0.18	0.00	0.00	0.17	0.85	0.00	≤ 1.0	O.K.
1	STIII	3541	-9855	-887	-1	-23916	-4602	-1	-3332	0	0	1081	583	1329.8	60.0	372.2	0.0	0.0	0.0	0.0	32.4	201.0	0.53	0.18	0.00	0.00	0.22	0.88	0.00	≤ 1.0	O.K.
1	STIII	3542	-9660	-884	-31	-25202	-2061	-83	-3332	0	0	1078	613	1306.4	59.9	371.1	0.0	0.0	0.0	0.0	34.1	211.3	0.52	0.18	0.00	0.00	0.23	0.88	0.00	≤ 1.0	O.K.
1	STIII	3554	-4694	23	69	11867	-6975	-149	-3332	0	0	217	453	934.0	12.0	74.6	0.0	0.0	0.0	0.0	25.2	156.2	0.37	0.04	0.00	0.00	0.17	0.55	0.00	≤ 1.0	O.K.

HNTB	The HNTB Companies Engineers Architects Planners	Made	LER	Date	6/8/2012	Job Number	49633
		Checked	KDG	Date	6/12/12		
For	Cleveland Innerbelt	Backchk'd		Date		Sheet No.	4

M:\jobs\49633\Techprod\Bridges\Main Span (Unit 2)\Pier 11\RFI - Misalignment\Footing Design\[PileBending_modified_Pier11_Add 6 HP18 Piles.xls]Pile Bending_max_load

Pier Design - Pile Group Combined Pile Stresses
Main Viaduct (Pier 11)

			Top of Footing Loads							Lateral Resistance from Batter		Lateral Resistance from Pile Bending		Trans. Axial Force		Trans. Strong Bending		Trans. Weak Bending		Long. Strong Bending		Long. Weak Bending			Trans. Strong	Tran. Weak	Long. Strong	Long. Weak	Trans. Strong	Long. Strong		
Footing No.	Load Group	Load Case	F_V (kips)	F_T (kips)	F_L (kips)	M_T (kip-ft)	M_L (kip-ft)	T** (kip-ft)	$F_{add.}$ (kips)	F_{TB} (kips)	F_{LB} (kips)	F_{TP} (kips)	F_{LP} (kips)	$P_{uT/Pile}$ (kips)	$F_{TS/Pile}$ (kips)	$M_{TS/Pile}$ (kip-ft)	$F_{TW/Pile}$ (kips)	$M_{TW/Pile}$ (kip-ft)	$F_{LS/Pile}$ (kips)	$M_{LS/Pile}$ (kip-ft)	$F_{LW/Pile}$ (kips)	$M_{LW/Pile}$ (kip-ft)	P_u/P_r	M_{ux}/M_{rx}	M_{uy}/M_{ry}	M_{ux}/M_{rx}	M_{uy}/M_{ry}	Interaxn. (6.9.2.2)	Interaxn. (6.9.2.2)		
1	STRIV	3649	-10191	-511	-56	-4393	73	114	-3873	0	0	704	645	1170.3	39.1	242.3	0.0	0.0	0.0	0.0	35.8	222.1	0.46	0.12	0.00	0.00	0.24	0.78	0.00	≤ 1.0	O.K.
1	STRIV	3650	-10214	-699	55	-15046	-8775	-125	-3873	0	0	892	534	1327.3	49.5	307.1	0.0	0.0	0.0	0.0	29.7	183.9	0.53	0.15	0.00	0.00	0.20	0.84	0.00	≤ 1.0	O.K.
1	STRIV	3651	-11380	-615	-67	-6084	3	156	-3873	0	0	808	656	1254.0	44.9	278.1	0.0	0.0	0.0	0.0	36.4	225.9	0.50	0.14	0.00	0.00	0.24	0.84	0.00	≤ 1.0	O.K.
1	STRIV	3652	-11407	-810	68	-17060	-10775	-143	-3873	0	0	1003	521	1429.7	55.7	345.3	0.0	0.0	0.0	0.0	28.9	179.4	0.57	0.17	0.00	0.00	0.19	0.89	0.00	≤ 1.0	O.K.
1	STRIV	3654	-10214	-699	55	-15046	-8775	-125	-3873	0	0	892	534	1327.3	49.5	307.1	0.0	0.0	0.0	0.0	29.7	183.9	0.53	0.15	0.00	0.00	0.20	0.84	0.00	≤ 1.0	O.K.
1	STRIV	3656	-11407	-810	68	-17060	-10775	-143	-3873	0	0	1003	521	1429.7	55.7	345.3	0.0	0.0	0.0	0.0	28.9	179.4	0.57	0.17	0.00	0.00	0.19	0.89	0.00	≤ 1.0	O.K.
1	STR V	3658	-8948	-363	4	-272	-5902	-32	-3332	0	0	556	565	1083.4	30.9	191.3	0.0	0.0	0.0	0.0	31.4	194.8	0.43	0.09	0.00	0.00	0.21	0.70	0.00	≤ 1.0	O.K.
1	STR V	3672	-9498	-434	-49	-959	463	-35	-3332	0	0	627	636	1059.9	34.8	215.8	0.0	0.0	0.0	0.0	35.4	219.2	0.42	0.11	0.00	0.00	0.24	0.73	0.00	≤ 1.0	O.K.
1	STR V	15876	-9589	-693	99	-15115	-11194	-139	-3332	0	0	886	470	1284.3	49.2	305.0	0.0	0.0	0.0	0.0	26.1	162.1	0.51	0.15	0.00	0.00	0.17	0.80	0.00	≤ 1.0	O.K.
1	STR V	24840	-10678	-530	-52	-2254	-263	6	-3332	0	0	723	639	1156.7	40.1	248.9	0.0	0.0	0.0	0.0	35.5	220.3	0.46	0.12	0.00	0.00	0.24	0.78	0.00	≤ 1.0	O.K.
1	STR V	25056	-10678	-530	-52	-2254	-263	6	-3332	0	0	723	639	1156.7	40.1	248.9	0.0	0.0	0.0	0.0	35.5	220.3	0.46	0.12	0.00	0.00	0.24	0.78	0.00	≤ 1.0	O.K.
1	STR V	30993	-10523	-677	-152	-10228	8503	146	-3332	0	0	870	739	1127.1	48.3	299.5	0.0	0.0	0.0	0.0	41.1	254.7	0.45	0.15	0.00	0.00	0.28	0.82	0.00	≤ 1.0	O.K.
1	STR V	30996	-10849	-708	-136	-11082	6140	64	-3332	0	0	901	723	1171.4	50.0	310.2	0.0	0.0	0.0	0.0	40.2	249.2	0.46	0.15	0.00	0.00	0.27	0.84	0.00	≤ 1.0	O.K.
1	STR V	36069	-10408	-728	141	-14086	-14497	-135	-3332	0	0	921	428	1352.7	51.1	317.1	0.0	0.0	0.0	0.0	23.8	147.6	0.54	0.16	0.00	0.00	0.16	0.82	0.00	≤ 1.0	O.K.
1	STR V	36504	-10739	-765	122	-15183	-14153	-123	-3332	0	0	958	447	1376.8	53.2	329.8	0.0	0.0	0.0	0.0	24.9	154.1	0.55	0.16	0.00	0.00	0.17	0.84	0.00	≤ 1.0	O.K.
1	STR V	39204	-10875	-907	67	-22180	-9797	-88	-3332	0	0	1100	502	1403.7	61.1	378.7	0.0	0.0	0.0	0.0	27.9	173.1	0.56	0.19	0.00	0.00	0.19	0.89	0.00	≤ 1.0	O.K.
1	STR V	40500	-10898	-930	39	-23381	-7891	-82	-3332	0	0	1123	530	1398.3	62.4	386.6	0.0	0.0	0.0	0.0	29.5	182.7	0.55	0.19	0.00	0.00	0.20	0.90	0.00	≤ 1.0	O.K.
1	STR V	40524	-10864	-939	39	-23590	-7891	-76	-3332	0	0	1132	530	1398.4	62.9	389.7	0.0	0.0	0.0	0.0	29.5	182.7	0.55	0.19	0.00	0.00	0.20	0.90	0.00	≤ 1.0	O.K.
1	STR V	40533	-10724	-956	41	-23367	-7866	-76	-3332	0	0	1149	528	1390.2	63.8	395.6	0.0	0.0	0.0	0.0	29.4	182.0	0.55	0.19	0.00	0.00	0.20	0.90	0.00	≤ 1.0	O.K.
1	STR V	40716	-10898	-930	39	-23381	-7891	-82	-3332	0	0	1123	530	1398.3	62.4	386.6	0.0	0.0	0.0	0.0	29.5	182.7	0.55	0.19	0.00	0.00	0.20	0.90	0.00	≤ 1.0	O.K.
1	STR V	45579	-5892	-89	-2	5528	-2297	85	-3332	0	0	282	589	864.9	15.6	97.0	0.0	0.0	0.0	0.0	32.7	203.0	0.34	0.05	0.00	0.00	0.22	0.58	0.00	≤ 1.0	O.K.
1	STR V	59479	-5729	-447	41	-11105	-5410	40	-3332	0	0	640	528	980.5	35.5	220.3	0.0	0.0	0.0	0.0	29.4	182.0	0.39	0.11	0.00	0.00	0.20	0.66	0.00	≤ 1.0	O.K.
2	STR I	3	-8942	498	14	2970	-7635	185	-3332	0	0	691	575	1115.1	38.4	237.8	0.0	0.0	0.0	0.0	31.9	198.0	0.44	0.12	0.00	0.00	0.21	0.74	0.00	≤ 1.0	O.K.
2	STR I	43	-9134	546	-88	5320	5390	69	-3332	0	0	739	677	1041.1	41.0	254.4	0.0	0.0	0.0	0.0	37.6	233.2	0.41	0.13	0.00	0.00	0.25	0.75	0.00	≤ 1.0	O.K.
2	STR I	904	-10498	701	-73	6607	1765	152	-3332	0	0	894	662	1163.3	49.6	307.8	0.0	0.0	0.0	0.0	36.8	228.0	0.46	0.15	0.00	0.00	0.25	0.82	0.00	≤ 1.0	O.K.
2	STR I	910	-10884	698	-72	7923	1296	177	-3332	0	0	891	661	1196.7	49.5	306.7	0.0	0.0	0.0	0.0	36.7	227.6	0.47	0.15	0.00	0.00	0.25	0.83	0.00	≤ 1.0	O.K.
2	STR I	1009	-10190	617	-106	4157	5819	260	-3332	0	0	810	695	1092.3	45.0	278.8	0.0	0.0	0.0	0.0	38.6	239.4	0.43	0.14	0.00	0.00	0.26	0.79	0.00	≤ 1.0	O.K.
2	STR I	1018	-10828	648	-89	5407	2696	180	-3332	0	0	841	678	1162.2	46.7	289.5	0.0	0.0	0.0	0.0	37.7	233.5	0.46	0.14	0.00	0.00	0.25	0.81	0.00	≤ 1.0	O.K.
2	STR I	1261	-10828	648	-89	5407	2696	180	-3332	0	0	841	678	1162.2	46.7	289.5	0.0	0.0	0.0	0.0	37.7	233.5	0.46	0.14	0.00	0.00	0.25	0.81	0.00	≤ 1.0	O.K.
2	STR I	1339	-10376	749	97	13205	-11404	-120	-3332	0	0	942	492	1312.4	52.3	324.3	0.0	0.0	0.0	0.0	27.3	169.4	0.52	0.16	0.00	0.00	0.18	0.83	0.00	≤ 1.0	O.K.
2	STR I	1342	-10846	804	71	14564	-11034	-118	-3332	0	0	997	518	1346.4	55.4	343.2	0.0	0.0	0.0	0.0	28.8	178.4	0.53	0.17	0.00	0.00	0.19	0.86	0.00	≤ 1.0	O.K.
2	STR I	1344	-10824	810	19	14991	-9221	-122	-3332	0	0	1003	570	1331.3	55.7	345.3	0.0	0.0	0.0	0.0	31.7	196.3	0.53	0.17	0.00	0.00	0.21	0.87	0.00	≤ 1.0	O.K.
2	STR I	1347	-10389	838	37	14608	-9483	-75	-3332	0	0	1031	552	1309.7	57.3	355.0	0.0	0.0	0.0	0.0	30.7	190.1	0.52	0.17	0.00	0.00	0.21	0.86	0.00	≤ 1.0	O.K.
2	STR I	1585	-10846	804	71	14564	-11034	-118	-3332	0	0	997	518	1346.4	55.4	343.2	0.0	0.0	0.0	0.0	28.8	178.4	0.53	0.17	0.00	0.00	0.19	0.86	0.00	≤ 1.0	O.K.
2	STR I	1857	-6062	159	-9	-2117	-2830	291	-3332	0	0	352	598	843.9	19.5	121.1	0.0	0.0	0.0	0.0	33.2	205.9	0.33	0.06	0.00	0.00	0.22	0.59	0.00	≤ 1.0	O.K.
2	STR I	2265	-5386	377	23	7164	-4404	-151	-3332	0	0	570	566	914.0	31.6	196.2	0.0	0.0	0.0	0.0	31.4	194.9	0.36	0.10	0.00	0.00	0.21	0.64	0.00	≤ 1.0	O.K.
2	STIII	3483	-8235	754	114	19190	-12737	-292	-3332	0	0	948	408	1272.7	52.6	326.4	0.0	0.0	0.0	0.0	22.7	140.7	0.51	0.16	0.00	0.00	0.15	0.78	0.00	≤ 1.0	O.K.
2	STIII	3505	-9544	738	-1	13354	-4676	-40	-3332	0	0	932	583	1233.8	51.8	320.9	0.0	0.0	0.0	0.0	32.4	201.0	0.49	0.16	0.00	0.00	0.22	0.82	0.00	≤ 1.0	O.K.
2	STIII	3517	-9245	351	-81	-4676	2486	280	-3332	0	0	545	663	965.0	30.3	187.6	0.0	0.0	0.0	0.0	36.9	228.5	0.38	0.09	0.00	0.00	0.25	0.68	0.00	≤ 1.0	O.K.
2	STIII	3521	-9285	408	-144	-2073	6295	290	-3332	0	0	602	726	913.7	33.4	207.2	0.0	0.0	0.0	0.0	40.4	250.2	0.36	0.10	0.00	0.00	0.27	0.69	0.00	≤ 1.0	O.K.
2	STIII	3529	-9521	863	80	20950	-11882	-271	-3332	0	0	1057	442	1354.1	58.7	363.9	0.0	0.0	0.0	0.0	24.6	152.4	0.54	0.18	0.00	0.00	0.16	0.84	0.00	≤ 1.0	O.K.
2	STIII	3530	-9294	836	109	21960	-13327	-239	-3332	0	0	1030	413	1359.1	57.2	354.6	0.0	0.0	0.0	0.0	23.0	142.4	0.54	0.17	0.00	0.00	0.15	0.83	0.00	≤ 1.0	O.K.
2	STIII	3532	-9508	841	137	20021	-15481	-301	-3332	0	0	1035	385	1376.5	57.5	356.3	0.0	0.0	0.0	0.0	21.4	132.8	0.55	0.18	0.00	0.00	0.14	0.83	0.00	≤ 1.0	O.K.
2	STIII	3533	-9480	805	143	18346	-15699	-280	-3332	0	0	999	379	1363.6	55.5	343.9	0.0	0.0	0.0	0.0	21.1	130.7	0.54	0.17	0.00	0.00	0.14	0.82	0.00	≤ 1.0	O.K.
2	STIII	3566	-4405	10	-79	-11741	4816	313	-3332	0	0	204	661	748.0	11.3	70.1	0.0	0.0	0.0	0.0	36.7	227.8	0.30	0.03	0.00	0.00	0.25	0.55	0.00	≤ 1.0	O.K.
2	STIII	3578	-5309	553	89	17775	-9220	-198	-3332	0	0	747	433	1059.9	41.5	257.1	0.0	0.0	0.0	0.0	24.1	149.3	0.42	0.13	0.00	0.00	0.16	0.68	0.00	≤ 1.0	O.K.
2	STRIV	3649	-9726	542	-39	4198	-850	104	-3873	0	0	735	628	1153.3	40.8	253.0	0.0	0.0	0.0	0.0	34.9	216.3	0.46	0.12	0.00	0.00	0.23	0.78	0.00	≤ 1.0	O.K.
2	STRIV	3651	-11015	653	-47	6094	-1237	137	-3873	0	0	846	636	1246.9	47.0	291.2	0.0	0.0	0.0	0.0	35.3	219.0	0.49	0.14	0.00	0.00	0.24	0.83	0.00	≤ 1.0	O.K.
2	STRIV	3652	-10988	773	47	13441	-9631	-124	-3873	0	0	966	542	1370.3	53.6	332.6	0.0	0.0	0.0	0.0	30.1	186.7	0.54	0.16	0.00	0.00	0.20	0.87	0.00	≤ 1.0	O.K.
2	STRIV	3654	-9704	669	39	11869	-7771	-115	-3873	0	0	862	550	1267.5	47.9	296.7	0.0	0.0	0.0	0.0	30.5	189.4	0.50	0.15	0.00	0.00	0.20	0.81	0.00	≤ 1.0	O.K.
2	STRIV	3655	-11015	653	-47	6094	-1237	137	-3873	0	0	846	636	1246.9	47.0	291.2	0.0	0.0	0.0	0.0	35.3	219.0	0.49	0.14	0.00	0.00	0.24	0.83	0.00	≤ 1.0	O.K.

HNTB	The HNTB Companies Engineers Architects Planners	Made	LER	Date	6/8/2012	Job Number	49633
		Checked	KDG	Date	6/12/12		
For	Cleveland Innerbelt	Backchk'd		Date		Sheet No.	5

M:\jobs\49633\Techprod\Bridges\Main Span (Unit 2)\Pier 11\RFI - Misalignment\Footing Design\[PileBending_modified_Pier11_Add 6 HP18 Piles.xls]Pile Bending_max_load

Pier Design - Pile Group Combined Pile Stresses
Main Viaduct (Pier 11)

			Top of Footing Loads							Lateral Resistance from Batter		Lateral Resistance from Pile Bending		Trans. Axial Force		Trans. Strong Bending		Trans. Weak Bending		Long. Strong Bending		Long. Weak Bending			Trans. Strong	Tran. Weak	Long. Strong	Long. Weak	Trans. Strong	Long. Strong		
Footing No.	Load Group	Load Case	F_V (kips)	F_T (kips)	F_L (kips)	M_T (kip-ft)	M_L (kip-ft)	T** (kip-ft)	$F_{add.}$ (kips)	F_{TB} (kips)	F_{LB} (kips)	F_{TP} (kips)	F_{LP} (kips)	$P_{uT/Pile}$ (kips)	$F_{TS/Pile}$ (kips)	$M_{TS/Pile}$ (kip-ft)	$F_{TW/Pile}$ (kips)	$M_{TW/Pile}$ (kip-ft)	$F_{LS/Pile}$ (kips)	$M_{LS/Pile}$ (kip-ft)	$F_{LW/Pile}$ (kips)	$M_{LW/Pile}$ (kip-ft)	P_u/P_r	M_{ux}/M_{rx}	M_{uy}/M_{ry}	M_{ux}/M_{rx}	M_{uy}/M_{ry}	Interaxn. (6.9.2.2)	Interaxn. (6.9.2.2)		
2	STR V	3659	-8813	556	19	6313	-7480	98	-3332	0	0	749	550	1141.1	41.6	257.8	0.0	0.0	0.0	0.0	30.6	189.6	0.45	0.13	0.00	0.00	0.20	0.75	0.00	≤ 1.0	O.K.
2	STR V	8994	-9149	440	-85	-197	3644	198	-3332	0	0	633	672	926.6	35.1	217.9	0.0	0.0	0.0	0.0	37.4	231.6	0.37	0.11	0.00	0.00	0.25	0.69	0.00	≤ 1.0	O.K.
2	STR V	24408	-10205	730	-53	9521	151	41	-3332	0	0	923	640	1177.0	51.3	317.8	0.0	0.0	0.0	0.0	35.6	220.6	0.47	0.16	0.00	0.00	0.24	0.82	0.00	≤ 1.0	O.K.
2	STR V	24870	-10613	745	-41	10972	-1275	86	-3332	0	0	938	628	1232.8	52.1	322.9	0.0	0.0	0.0	0.0	34.9	216.5	0.49	0.16	0.00	0.00	0.23	0.84	0.00	≤ 1.0	O.K.
2	STR V	30162	-10430	543	-102	1294	3854	244	-3332	0	0	736	689	1092.2	40.9	253.3	0.0	0.0	0.0	0.0	38.3	237.5	0.43	0.12	0.00	0.00	0.26	0.77	0.00	≤ 1.0	O.K.
2	STR V	30405	-10430	543	-102	1294	3854	244	-3332	0	0	736	689	1092.2	40.9	253.3	0.0	0.0	0.0	0.0	38.3	237.5	0.43	0.12	0.00	0.00	0.26	0.77	0.00	≤ 1.0	O.K.
2	STR V	31449	-9963	548	-124	1700	6654	291	-3332	0	0	741	711	1047.1	41.1	255.1	0.0	0.0	0.0	0.0	39.5	245.1	0.42	0.13	0.00	0.00	0.26	0.76	0.00	≤ 1.0	O.K.
2	STR V	31458	-10454	572	-111	2664	4245	229	-3332	0	0	765	698	1100.9	42.5	263.3	0.0	0.0	0.0	0.0	38.8	240.6	0.44	0.13	0.00	0.00	0.26	0.78	0.00	≤ 1.0	O.K.
2	STR V	31701	-10454	572	-111	2664	4245	229	-3332	0	0	765	698	1100.9	42.5	263.3	0.0	0.0	0.0	0.0	38.8	240.6	0.44	0.13	0.00	0.00	0.26	0.78	0.00	≤ 1.0	O.K.
2	STR V	35238	-10579	855	88	17831	-12420	-196	-3332	0	0	1048	481	1376.0	58.2	360.8	0.0	0.0	0.0	0.0	26.7	165.8	0.55	0.18	0.00	0.00	0.18	0.86	0.00	≤ 1.0	O.K.
2	STR V	35240	-10562	860	48	18161	-11022	-199	-3332	0	0	1053	521	1364.4	58.5	362.5	0.0	0.0	0.0	0.0	29.0	179.6	0.54	0.18	0.00	0.00	0.19	0.87	0.00	≤ 1.0	O.K.
2	STR V	35243	-10226	881	62	17866	-11224	-163	-3332	0	0	1074	507	1347.7	59.6	369.8	0.0	0.0	0.0	0.0	28.2	174.8	0.53	0.18	0.00	0.00	0.19	0.86	0.00	≤ 1.0	O.K.
2	STR V	35483	-10562	860	48	18161	-11022	-199	-3332	0	0	1053	521	1364.4	58.5	362.5	0.0	0.0	0.0	0.0	29.0	179.6	0.54	0.18	0.00	0.00	0.19	0.87	0.00	≤ 1.0	O.K.
2	STR V	36102	-10566	839	95	17101	-12828	-190	-3332	0	0	1032	474	1373.0	57.3	355.3	0.0	0.0	0.0	0.0	26.4	163.4	0.54	0.18	0.00	0.00	0.18	0.86	0.00	≤ 1.0	O.K.
2	STR V	36345	-10566	839	95	17101	-12828	-190	-3332	0	0	1032	474	1373.0	57.3	355.3	0.0	0.0	0.0	0.0	26.4	163.4	0.54	0.18	0.00	0.00	0.18	0.86	0.00	≤ 1.0	O.K.
2	STR V	36531	-10192	783	117	15413	-13104	-182	-3332	0	0	976	452	1341.1	54.2	336.0	0.0	0.0	0.0	0.0	25.1	155.9	0.53	0.17	0.00	0.00	0.17	0.83	0.00	≤ 1.0	O.K.
2	STR V	50873	-5840	97	-36	-5640	-264	315	-3332	0	0	290	623	844.8	16.1	99.7	0.0	0.0	0.0	0.0	34.6	214.8	0.34	0.05	0.00	0.00	0.23	0.59	0.00	≤ 1.0	O.K.
2	STR V	56033	-5456	461	46	11166	-6368	-212	-3332	0	0	654	523	974.1	36.3	225.1	0.0	0.0	0.0	0.0	29.1	180.3	0.39	0.11	0.00	0.00	0.19	0.66	0.00	≤ 1.0	O.K.
1	STR I	1	-9322	-489	0	-4900	-7270	161	-3332	0	0	682	589	1144.6	37.9	234.7	0.0	0.0	0.0	0.0	32.7	202.8	0.45	0.12	0.00	0.00	0.22	0.75	0.00	≤ 1.0	O.K.
1	STR I	6	-9868	-532	-33	-5448	-2977	-136	-3332	0	0	725	622	1147.3	40.3	249.6	0.0	0.0	0.0	0.0	34.5	214.2	0.46	0.12	0.00	0.00	0.23	0.77	0.00	≤ 1.0	O.K.
1	STR I	150	-9884	-713	29	-15697	-8262	-86	-3332	0	0	906	560	1271.0	50.3	311.9	0.0	0.0	0.0	0.0	31.1	192.9	0.50	0.15	0.00	0.00	0.21	0.83	0.00	≤ 1.0	O.K.
1	STR I	294	-11056	-636	-45	-7140	-3047	-93	-3332	0	0	829	634	1231.0	46.0	285.4	0.0	0.0	0.0	0.0	35.2	218.3	0.49	0.14	0.00	0.00	0.24	0.82	0.00	≤ 1.0	O.K.
1	STR I	330	-11153	-721	-77	-11473	-504	-71	-3332	0	0	914	666	1249.4	50.8	314.7	0.0	0.0	0.0	0.0	37.0	229.4	0.50	0.16	0.00	0.00	0.25	0.85	0.00	≤ 1.0	O.K.
1	STR I	333	-10089	-537	-83	-5887	1238	584	-3332	0	0	730	672	1128.2	40.5	251.3	0.0	0.0	0.0	0.0	37.3	231.4	0.45	0.12	0.00	0.00	0.25	0.78	0.00	≤ 1.0	O.K.
1	STR I	366	-11056	-636	-45	-7140	-3047	-93	-3332	0	0	829	634	1231.0	46.0	285.4	0.0	0.0	0.0	0.0	35.2	218.3	0.49	0.14	0.00	0.00	0.24	0.82	0.00	≤ 1.0	O.K.
1	STR I	437	-10231	-763	88	-16506	-10924	-107	-3332	0	0	956	501	1322.8	53.1	329.1	0.0	0.0	0.0	0.0	27.8	172.5	0.52	0.16	0.00	0.00	0.19	0.83	0.00	≤ 1.0	O.K.
1	STR I	438	-11077	-823	41	-17711	-10262	-103	-3332	0	0	1016	548	1373.3	56.4	349.8	0.0	0.0	0.0	0.0	30.4	188.7	0.54	0.17	0.00	0.00	0.20	0.88	0.00	≤ 1.0	O.K.
1	STR I	474	-11174	-907	10	-22044	-7748	-84	-3332	0	0	1100	579	1392.0	61.1	378.7	0.0	0.0	0.0	0.0	32.2	199.4	0.55	0.19	0.00	0.00	0.22	0.91	0.00	≤ 1.0	O.K.
1	STR I	481	-11133	-925	9	-22798	-7679	-106	-3332	0	0	1118	580	1395.3	62.1	384.9	0.0	0.0	0.0	0.0	32.2	199.7	0.55	0.19	0.00	0.00	0.22	0.91	0.00	≤ 1.0	O.K.
1	STR I	485	-10846	-964	25	-22241	-8190	-207	-3332	0	0	1157	564	1383.2	64.3	398.4	0.0	0.0	0.0	0.0	31.3	194.2	0.55	0.20	0.00	0.00	0.21	0.91	0.00	≤ 1.0	O.K.
1	STR I	583	-6082	-150	-20	1899	-2117	168	-3332	0	0	343	609	838.1	19.0	118.0	0.0	0.0	0.0	0.0	33.8	209.7	0.33	0.06	0.00	0.00	0.23	0.59	0.00	≤ 1.0	O.K.
1	STR I	789	-5690	-420	20	-10046	-4257	-103	-3332	0	0	613	569	951.4	34.0	211.0	0.0	0.0	0.0	0.0	31.6	196.0	0.38	0.10	0.00	0.00	0.21	0.66	0.00	≤ 1.0	O.K.
1	STIII	1177	-8361	-405	106	-4118	-12024	-225	-3332	0	0	599	416	1151.7	33.3	206.2	0.0	0.0	0.0	0.0	23.1	143.5	0.46	0.10	0.00	0.00	0.15	0.69	0.00	≤ 1.0	O.K.
1	STIII	1201	-9531	-326	1	4596	-4685	31	-3332	0	0	520	521	1084.6	28.9	178.9	0.0	0.0	0.0	0.0	29.0	179.6	0.43	0.09	0.00	0.00	0.19	0.68	0.00	≤ 1.0	O.K.
1	STIII	1210	-9743	-596	-22	-8180	-2042	220	-3332	0	0	790	604	1180.6	43.9	271.9	0.0	0.0	0.0	0.0	33.6	208.2	0.47	0.13	0.00	0.00	0.22	0.79	0.00	≤ 1.0	O.K.
1	STIII	1212	-9821	-686	-92	-12630	2942	251	-3332	0	0	880	674	1138.8	48.9	302.9	0.0	0.0	0.0	0.0	37.5	232.3	0.45	0.15	0.00	0.00	0.25	0.81	0.00	≤ 1.0	O.K.
1	STIII	1216	-9818	-677	-173	-12269	8187	194	-3332	0	0	871	755	1091.2	48.4	299.8	0.0	0.0	0.0	0.0	42.0	260.2	0.43	0.15	0.00	0.00	0.28	0.81	0.00	≤ 1.0	O.K.
1	STIII	1217	-9791	-642	-175	-10616	8199	166	-3332	0	0	836	757	1076.3	46.4	287.8	0.0	0.0	0.0	0.0	42.1	260.9	0.43	0.14	0.00	0.00	0.28	0.80	0.00	≤ 1.0	O.K.
1	STIII	1229	-9595	-572	176	-8704	-17548	-161	-3332	0	0	766	346	1307.2	42.5	263.7	0.0	0.0	0.0	0.0	19.2	119.3	0.52	0.13	0.00	0.00	0.13	0.75	0.00	≤ 1.0	O.K.
1	STIII	1235	-9819	-845	56	-21855	-8494	-2	-3332	0	0	1039	466	1348.7	57.7	357.7	0.0	0.0	0.0	0.0	25.9	160.7	0.54	0.18	0.00	0.00	0.17	0.85	0.00	≤ 1.0	O.K.
1	STIII	1237	-9855	-887	-1	-23916	-4602	-1	-3332	0	0	1081	583	1329.8	60.0	372.2	0.0	0.0	0.0	0.0	32.4	201.0	0.53	0.18	0.00	0.00	0.22	0.88	0.00	≤ 1.0	O.K.
1	STIII	1238	-9660	-884	-31	-25202	-2061	-83	-3332	0	0	1078	613	1306.4	59.9	371.1	0.0	0.0	0.0	0.0	34.1	211.3	0.52	0.18	0.00	0.00	0.23	0.88	0.00	≤ 1.0	O.K.
1	STIII	1250	-4694	23	69	11867	-6975	-149	-3332	0	0	217	453	934.0	12.0	74.6	0.0	0.0	0.0	0.0	25.2	156.2	0.37	0.04	0.00	0.00	0.17	0.55	0.00	≤ 1.0	O.K.
1	STRIV	1345	-10191	-511	-56	-4393	73	114	-3873	0	0	704	645	1170.3	39.1	242.3	0.0	0.0	0.0	0.0	35.8	222.1	0.46	0.12	0.00	0.00	0.24	0.78	0.00	≤ 1.0	O.K.
1	STRIV	1346	-10214	-699	55	-15046	-8775	-125	-3873	0	0	892	534	1327.3	49.5	307.1	0.0	0.0	0.0	0.0	29.7	183.9	0.53	0.15	0.00	0.00	0.20	0.84	0.00	≤ 1.0	O.K.
1	STRIV	1347	-11380	-615	-67	-6084	3	156	-3873	0	0	808	656	1254.0	44.9	278.1	0.0	0.0	0.0	0.0	36.4	225.9	0.50	0.14	0.00	0.00	0.24	0.84	0.00	≤ 1.0	O.K.
1	STRIV	1348	-11407	-810	68	-17060	-10775	-143	-3873	0	0	1003	521	1429.7	55.7	345.3	0.0	0.0	0.0	0.0	28.9	179.4	0.57	0.17	0.00	0.00	0.19	0.89	0.00	≤ 1.0	O.K.
1	STRIV	1350	-10214	-699	55	-15046	-8775	-125	-3873	0	0	892	534	1327.3	49.5	307.1	0.0	0.0	0.0	0.0	29.7	73.7	0.53	0.15	0.00	0.00	0.08	0.73	0.00	≤ 1.0	O.K.
1	STRIV	1352	-11407	-810	68	-17060	-10775	-143	-3873	0	0	1003	521	1429.7	55.7	345.3	0.0	0.0	0.0	0.0	28.9	179.4	0.57	0.17	0.00	0.00	0.19	0.89	0.00	≤ 1.0	O.K.

HNTB	The HNTB Companies Engineers Architects Planners	Made	LER	Date	6/8/2012	Job Number	49633
		Checked	KDG	Date	6/12/12		
For	Cleveland Innerbelt	Backchk'd		Date		Sheet No.	6

Pier Design - Pile Group Combined Pile Stresses
Main Viaduct (Pier 11)

Footing No.	Load Group	Load Case	Top of Footing Loads F_V (kips)	F_T (kips)	F_L (kips)	M_T (kip-ft)	M_L (kip-ft)	T** (kip-ft)	$F_{add.}$ (kips)	Lateral Resistance from Batter F_{TB} (kips)	F_{LB} (kips)	Lateral Resistance from Pile Bending F_{TP} (kips)	F_{LP} (kips)	Trans. Axial Force $P_{uT/Pile}$ (kips)	$F_{TS/Pile}$ (kips)	Trans. Strong Bending $M_{TS/Pile}$ (kip-ft)	$F_{TW/Pile}$ (kips)	Trans. Weak Bending $M_{TW/Pile}$ (kip-ft)	$F_{LS/Pile}$ (kips)	Long. Strong Bending $M_{LS/Pile}$ (kip-ft)	$F_{LW/Pile}$ (kips)	Long. Weak Bending $M_{LW/Pile}$ (kip-ft)	P_u/P_r	Trans. Strong M_{ux}/M_{rx}	Tran. Weak M_{uy}/M_{ry}	Long. Strong M_{ux}/M_{rx}	Long. Weak M_{uy}/M_{ry}	Trans. Strong Interaxn. (6.9.2.2)	Long. Strong Interaxn. (6.9.2.2)		
1	STR V	1353	-9070	-401	13	-972	-7462	104	-3332	0	0	594	556	1109.5	33.0	204.4	0.0	0.0	0.0	0.0	30.9	191.7	0.44	0.10	0.00	0.00	0.21	0.71	0.00	≤ 1.0	O.K.
1	STR V	2690	-9653	-599	-53	-9584	-696	-38	-3332	0	0	792	640	1155.6	44.0	272.6	0.0	0.0	0.0	0.0	35.6	220.6	0.46	0.13	0.00	0.00	0.24	0.79	0.00	≤ 1.0	O.K.
1	STR V	4850	-9582	-680	33	-15022	-7992	-125	-3332	0	0	873	536	1254.1	48.5	300.5	0.0	0.0	0.0	0.0	29.8	184.8	0.50	0.15	0.00	0.00	0.20	0.81	0.00	≤ 1.0	O.K.
1	STR V	8414	-10672	-531	-15	-2690	-4877	-84	-3332	0	0	724	602	1195.9	40.2	249.2	0.0	0.0	0.0	0.0	33.5	207.5	0.47	0.12	0.00	0.00	0.22	0.78	0.00	≤ 1.0	O.K.
1	STR V	8486	-10672	-531	-15	-2690	-4877	-84	-3332	0	0	724	602	1195.9	40.2	249.2	0.0	0.0	0.0	0.0	33.5	207.5	0.47	0.12	0.00	0.00	0.22	0.78	0.00	≤ 1.0	O.K.
1	STR V	10466	-10873	-735	-111	-12915	2446	4	-3332	0	0	928	698	1215.6	51.5	319.5	0.0	0.0	0.0	0.0	38.8	240.6	0.48	0.16	0.00	0.00	0.26	0.85	0.00	≤ 1.0	O.K.
1	STR V	10469	-10053	-593	-116	-8606	3790	509	-3332	0	0	786	703	1122.1	43.6	270.6	0.0	0.0	0.0	0.0	39.1	242.3	0.45	0.13	0.00	0.00	0.26	0.80	0.00	≤ 1.0	O.K.
1	STR V	12157	-10053	-687	121	-13085	-13410	-145	-3332	0	0	880	448	1314.2	48.9	302.9	0.0	0.0	0.0	0.0	24.9	154.5	0.52	0.15	0.00	0.00	0.17	0.80	0.00	≤ 1.0	O.K.
1	STR V	12302	-10718	-746	84	-14644	-12804	-130	-3332	0	0	939	485	1358.2	52.1	323.3	0.0	0.0	0.0	0.0	27.0	167.2	0.54	0.16	0.00	0.00	0.18	0.84	0.00	≤ 1.0	O.K.
1	STR V	13209	-10853	-927	14	-23620	-7413	-64	-3332	0	0	1120	555	1391.8	62.2	385.6	0.0	0.0	0.0	0.0	30.9	191.3	0.55	0.19	0.00	0.00	0.21	0.90	0.00	≤ 1.0	O.K.
1	STR V	13634	-10908	-937	-12	-24239	-5560	-40	-3332	0	0	1130	599	1382.8	62.8	389.1	0.0	0.0	0.0	0.0	33.3	206.5	0.55	0.19	0.00	0.00	0.22	0.92	0.00	≤ 1.0	O.K.
1	STR V	13641	-10876	-951	-13	-24821	-5507	-57	-3332	0	0	1144	600	1385.3	63.5	393.9	0.0	0.0	0.0	0.0	33.4	206.8	0.55	0.19	0.00	0.00	0.22	0.92	0.00	≤ 1.0	O.K.
1	STR V	13645	-10655	-981	-1	-24391	-5901	-135	-3332	0	0	1174	588	1375.9	65.2	404.2	0.0	0.0	0.0	0.0	32.7	202.7	0.55	0.20	0.00	0.00	0.22	0.92	0.00	≤ 1.0	O.K.
1	STR V	13713	-10876	-951	-13	-24821	-5507	-57	-3332	0	0	1144	600	1385.3	63.5	393.9	0.0	0.0	0.0	0.0	33.4	206.8	0.55	0.19	0.00	0.00	0.22	0.92	0.00	≤ 1.0	O.K.
1	STR V	15327	-5913	-91	10	5378	-4148	100	-3332	0	0	284	559	880.8	15.8	97.7	0.0	0.0	0.0	0.0	31.1	192.7	0.35	0.05	0.00	0.00	0.21	0.58	0.00	≤ 1.0	O.K.
1	STR V	19997	-5708	-446	30	-11359	-4743	-64	-3332	0	0	639	539	975.2	35.5	219.9	0.0	0.0	0.0	0.0	30.0	185.8	0.39	0.11	0.00	0.00	0.20	0.66	0.00	≤ 1.0	O.K.
2	STR I	1	-8928	484	16	2334	-8203	50	-3332	0	0	677	573	1113.5	37.6	233.0	0.0	0.0	0.0	0.0	31.8	197.3	0.44	0.11	0.00	0.00	0.21	0.73	0.00	≤ 1.0	O.K.
2	STR I	293	-9837	606	-66	5475	1807	199	-3332	0	0	799	655	1113.1	44.4	275.0	0.0	0.0	0.0	0.0	36.4	225.6	0.44	0.14	0.00	0.00	0.24	0.78	0.00	≤ 1.0	O.K.
2	STR I	304	-10858	687	-21	7296	-5239	252	-3332	0	0	880	610	1242.2	48.9	302.9	0.0	0.0	0.0	0.0	33.9	210.1	0.49	0.15	0.00	0.00	0.23	0.83	0.00	≤ 1.0	O.K.
2	STR I	339	-9887	554	-88	3357	3558	114	-3332	0	0	747	677	1084.0	41.5	257.1	0.0	0.0	0.0	0.0	37.6	233.2	0.43	0.13	0.00	0.00	0.25	0.77	0.00	≤ 1.0	O.K.
2	STR I	343	-10689	606	-57	2830	-1769	345	-3332	0	0	799	646	1170.0	44.4	275.0	0.0	0.0	0.0	0.0	35.9	222.5	0.46	0.14	0.00	0.00	0.24	0.80	0.00	≤ 1.0	O.K.
2	STR I	348	-10688	542	-53	514	-2787	177	-3332	0	0	735	642	1158.2	40.8	253.0	0.0	0.0	0.0	0.0	35.7	221.1	0.46	0.12	0.00	0.00	0.24	0.78	0.00	≤ 1.0	O.K.
2	STR I	415	-10689	606	-57	2830	-1769	345	-3332	0	0	799	646	1170.0	44.4	275.0	0.0	0.0	0.0	0.0	35.9	222.5	0.46	0.14	0.00	0.00	0.24	0.80	0.00	≤ 1.0	O.K.
2	STR I	420	-10688	542	-53	514	-2787	177	-3332	0	0	735	642	1158.2	40.8	253.0	0.0	0.0	0.0	0.0	35.7	221.1	0.46	0.12	0.00	0.00	0.24	0.78	0.00	≤ 1.0	O.K.
2	STR I	447	-9907	712	71	12612	-9972	-113	-3332	0	0	905	518	1267.6	50.3	311.6	0.0	0.0	0.0	0.0	28.8	178.4	0.50	0.15	0.00	0.00	0.19	0.81	0.00	≤ 1.0	O.K.
2	STR I	448	-10841	821	18	15340	-9239	-106	-3332	0	0	1014	571	1335.3	56.3	349.1	0.0	0.0	0.0	0.0	31.7	196.6	0.53	0.17	0.00	0.00	0.21	0.87	0.00	≤ 1.0	O.K.
2	STR I	449	-10406	849	36	14957	-9501	-60	-3332	0	0	1042	553	1313.7	57.9	358.7	0.0	0.0	0.0	0.0	30.7	190.4	0.52	0.18	0.00	0.00	0.21	0.86	0.00	≤ 1.0	O.K.
2	STR I	457	-10837	818	18	15214	-9305	-88	-3332	0	0	1011	571	1334.5	56.1	348.1	0.0	0.0	0.0	0.0	31.7	196.6	0.53	0.17	0.00	0.00	0.21	0.87	0.00	≤ 1.0	O.K.
2	STR I	520	-10841	821	18	15340	-9239	-106	-3332	0	0	1014	571	1335.3	56.3	349.1	0.0	0.0	0.0	0.0	31.7	196.6	0.53	0.17	0.00	0.00	0.21	0.87	0.00	≤ 1.0	O.K.
2	STR I	529	-10837	818	18	15214	-9305	-88	-3332	0	0	1011	571	1334.5	56.1	348.1	0.0	0.0	0.0	0.0	31.7	196.6	0.53	0.17	0.00	0.00	0.21	0.87	0.00	≤ 1.0	O.K.
2	STR I	619	-6019	116	-13	-4114	-2617	245	-3332	0	0	309	602	855.6	17.1	106.3	0.0	0.0	0.0	0.0	33.4	207.3	0.34	0.05	0.00	0.00	0.22	0.59	0.00	≤ 1.0	O.K.
2	STR I	752	-5367	369	21	7020	-4261	-108	-3332	0	0	562	568	910.3	31.2	193.4	0.0	0.0	0.0	0.0	31.5	195.6	0.36	0.10	0.00	0.00	0.21	0.63	0.00	≤ 1.0	O.K.
2	STIII	1179	-8235	754	114	19190	-12737	-292	-3332	0	0	948	408	1272.7	52.6	326.4	0.0	0.0	0.0	0.0	22.7	140.7	0.51	0.16	0.00	0.00	0.15	0.78	0.00	≤ 1.0	O.K.
2	STIII	1201	-9544	738	-1	13354	-4676	-40	-3332	0	0	932	583	1233.8	51.8	320.9	0.0	0.0	0.0	0.0	32.4	201.0	0.49	0.16	0.00	0.00	0.22	0.82	0.00	≤ 1.0	O.K.
2	STIII	1213	-9245	351	-81	-4676	2486	280	-3332	0	0	545	663	965.0	30.3	187.6	0.0	0.0	0.0	0.0	36.9	228.5	0.38	0.09	0.00	0.00	0.25	0.68	0.00	≤ 1.0	O.K.
2	STIII	1217	-9285	408	-144	-2073	6295	290	-3332	0	0	602	726	913.7	33.4	207.2	0.0	0.0	0.0	0.0	40.4	250.2	0.36	0.10	0.00	0.00	0.27	0.69	0.00	≤ 1.0	O.K.
2	STIII	1225	-9521	863	80	20950	-11882	-271	-3332	0	0	1057	442	1354.1	58.7	363.9	0.0	0.0	0.0	0.0	24.6	152.4	0.54	0.18	0.00	0.00	0.16	0.84	0.00	≤ 1.0	O.K.
2	STIII	1226	-9294	836	109	21960	-13327	-239	-3332	0	0	1030	413	1359.1	57.2	354.6	0.0	0.0	0.0	0.0	23.0	142.4	0.54	0.17	0.00	0.00	0.15	0.83	0.00	≤ 1.0	O.K.
2	STIII	1228	-9508	841	137	20021	-15481	-301	-3332	0	0	1035	385	1376.5	57.5	356.3	0.0	0.0	0.0	0.0	21.4	132.8	0.55	0.18	0.00	0.00	0.14	0.83	0.00	≤ 1.0	O.K.
2	STIII	1229	-9480	805	143	18346	-15699	-280	-3332	0	0	999	379	1363.6	55.5	343.9	0.0	0.0	0.0	0.0	21.1	130.7	0.54	0.17	0.00	0.00	0.14	0.82	0.00	≤ 1.0	O.K.
2	STIII	1262	-4405	10	-79	-11741	4816	313	-3332	0	0	204	661	748.0	11.3	70.1	0.0	0.0	0.0	0.0	36.7	227.8	0.30	0.03	0.00	0.00	0.25	0.55	0.00	≤ 1.0	O.K.
2	STIII	1274	-5309	553	89	17775	-9220	-198	-3332	0	0	747	433	1059.9	41.5	257.1	0.0	0.0	0.0	0.0	24.1	149.3	0.42	0.13	0.00	0.00	0.16	0.68	0.00	≤ 1.0	O.K.

HNTB	The HNTB Companies	Made	LER	Date	6/8/2012	Job Number	
		Checked	KDG	Date	6/12/12		
For		Backchk'd		Date		Sheet No.	7

M:\jobs\49633\Techprod\Bridges\Main Span (Unit 2)\Pier 11\RFI - Misalignment\Footing Design\[PileBending_modified_Pier11_Add 6 HP18 Piles.xls]Pile Bending_max_load

Pier Design - Pile Group Combined Pile Stresses
Main Viaduct (Pier 11)

			Top of Footing Loads							Lateral Resistance from Batter		Lateral Resistance from Pile Bending		Trans. Axial Force		Trans. Strong Bending		Trans. Weak Bending		Long. Strong Bending		Long. Weak Bending								
Footing No.	Load Group	Load Case	F_V (kips)	F_T (kips)	F_L (kips)	M_T (kip-ft)	M_L (kip-ft)	T** (kip-ft)	$F_{add.}$ (kips)	F_{TB} (kips)	F_{LB} (kips)	F_{TP} (kips)	F_{LP} (kips)	$P_{uT/Pile}$ (kips)	$F_{TS/Pile}$ (kips)	$M_{TS/Pile}$ (kip-ft)	$F_{TW/Pile}$ (kips)	$M_{TW/Pile}$ (kip-ft)	$F_{LS/Pile}$ (kips)	$M_{LS/Pile}$ (kip-ft)	$F_{LW/Pile}$ (kips)	$M_{LW/Pile}$ (kip-ft)	P_u/P_r	Trans. Strong M_{ux}/M_{rx}	Tran. Weak M_{uy}/M_{ry}	Long. Strong M_{ux}/M_{rx}	Long. Weak M_{uy}/M_{ry}	Trans. Strong Interaxn. (6.9.2.2)	Long. Strong Interaxn. (6.9.2.2)		
2	STRIV	1345	-9726	542	-39	4198	-850	104	-3873	0	0	735	628	1153.3	40.8	253.0	0.0	0.0	0.0	0.0	34.9	216.3	0.46	0.12	0.00	0.00	0.23	0.78	0.00	≤ 1.0	O.K.
2	STRIV	1347	-11015	653	-47	6094	-1237	137	-3873	0	0	846	636	1246.9	47.0	291.2	0.0	0.0	0.0	0.0	35.3	219.0	0.49	0.14	0.00	0.00	0.24	0.83	0.00	≤ 1.0	O.K.
2	STRIV	1348	-10988	773	47	13441	-9631	-124	-3873	0	0	966	542	1370.3	53.6	332.6	0.0	0.0	0.0	0.0	30.1	186.7	0.54	0.16	0.00	0.00	0.20	0.87	0.00	≤ 1.0	O.K.
2	STRIV	1350	-9704	669	39	11869	-7771	-115	-3873	0	0	862	550	1267.5	47.9	296.7	0.0	0.0	0.0	0.0	30.5	189.4	0.50	0.15	0.00	0.00	0.20	0.81	0.00	≤ 1.0	O.K.
2	STRIV	1351	-11015	653	-47	6094	-1237	137	-3873	0	0	846	636	1246.9	47.0	291.2	0.0	0.0	0.0	0.0	35.3	219.0	0.49	0.14	0.00	0.00	0.24	0.83	0.00	≤ 1.0	O.K.
2	STR V	1353	-8802	546	21	5823	-7918	-6	-3332	0	0	739	548	1140.0	41.0	254.4	0.0	0.0	0.0	0.0	30.5	188.9	0.45	0.13	0.00	0.00	0.20	0.75	0.00	≤ 1.0	O.K.
2	STR V	8269	-9798	665	-44	8679	-284	117	-3332	0	0	858	631	1159.7	47.6	295.4	0.0	0.0	0.0	0.0	35.1	217.5	0.46	0.15	0.00	0.00	0.23	0.80	0.00	≤ 1.0	O.K.
2	STR V	8280	-10585	728	-10	10084	-5720	157	-3332	0	0	921	597	1259.3	51.1	317.1	0.0	0.0	0.0	0.0	33.2	205.8	0.50	0.16	0.00	0.00	0.22	0.84	0.00	≤ 1.0	O.K.
2	STR V	8424	-10593	736	-1	10489	-6316	144	-3332	0	0	929	588	1267.9	51.6	319.8	0.0	0.0	0.0	0.0	32.7	202.7	0.50	0.16	0.00	0.00	0.22	0.84	0.00	≤ 1.0	O.K.
2	STR V	10196	-10323	461	-74	-2480	-376	241	-3332	0	0	654	661	1047.1	36.3	225.1	0.0	0.0	0.0	0.0	36.7	227.8	0.42	0.11	0.00	0.00	0.25	0.73	0.00	≤ 1.0	O.K.
2	STR V	10619	-9729	500	-110	1083	4909	178	-3332	0	0	693	697	1040.7	38.5	238.5	0.0	0.0	0.0	0.0	38.7	240.2	0.41	0.12	0.00	0.00	0.26	0.75	0.00	≤ 1.0	O.K.
2	STR V	10623	-10347	539	-86	676	800	356	-3332	0	0	732	673	1106.9	40.6	252.0	0.0	0.0	0.0	0.0	37.4	232.0	0.44	0.12	0.00	0.00	0.25	0.77	0.00	≤ 1.0	O.K.
2	STR V	10695	-10347	539	-86	676	800	356	-3332	0	0	732	673	1106.9	40.6	252.0	0.0	0.0	0.0	0.0	37.4	232.0	0.44	0.12	0.00	0.00	0.25	0.77	0.00	≤ 1.0	O.K.
2	STR V	11880	-10575	868	47	18430	-11036	-187	-3332	0	0	1061	522	1367.4	58.9	365.3	0.0	0.0	0.0	0.0	29.0	180.0	0.54	0.18	0.00	0.00	0.19	0.88	0.00	≤ 1.0	O.K.
2	STR V	11881	-10239	889	61	18135	-11238	-152	-3332	0	0	1082	508	1350.7	60.1	372.5	0.0	0.0	0.0	0.0	28.2	175.1	0.54	0.18	0.00	0.00	0.19	0.87	0.00	≤ 1.0	O.K.
2	STR V	12177	-10559	850	54	17603	-11495	-167	-3332	0	0	1043	515	1363.8	57.9	359.1	0.0	0.0	0.0	0.0	28.6	177.6	0.54	0.18	0.00	0.00	0.19	0.87	0.00	≤ 1.0	O.K.
2	STR V	12311	-9830	754	96	14956	-12000	-176	-3332	0	0	947	473	1306.4	52.6	326.0	0.0	0.0	0.0	0.0	26.3	163.1	0.52	0.16	0.00	0.00	0.18	0.82	0.00	≤ 1.0	O.K.
2	STR V	17091	-5807	64	-39	-7180	-100	279	-3332	0	0	257	626	853.8	14.3	88.4	0.0	0.0	0.0	0.0	34.8	215.8	0.34	0.04	0.00	0.00	0.23	0.58	0.00	≤ 1.0	O.K.
2	STR V	18808	-5441	455	45	11055	-6257	-179	-3332	0	0	648	524	971.2	36.0	223.0	0.0	0.0	0.0	0.0	29.1	180.7	0.39	0.11	0.00	0.00	0.20	0.66	0.00	≤ 1.0	O.K.

HNTB The HNTB Companies	Made LER	Date 6/8/2012	Job Number
For	Checked KDG	Date 6/12/12	
	Backchk'd	Date	Sheet No. 8

Pier Design - Pile Group Combined Pile Stresses
Main Viaduct (Pier 11)

Footing No.	Load Group	Load Case	Top of Footing Loads F_V (kips)	F_T (kips)	F_L (kips)	M_T (kip-ft)	M_L (kip-ft)	T** (kip-ft)	$F_{add.}$ (kips)	Lateral Resistance from Batter F_{TB} (kips)	F_{LB} (kips)	Lateral Resistance from Pile Bending F_{TP} (kips)	F_{LP} (kips)	Trans. Axial Force $P_{uT/Pile}$ (kips)	$F_{TS/Pile}$ (kips)	Trans. Strong Bending $M_{TS/Pile}$ (kip-ft)	$F_{TW/Pile}$ (kips)	Trans. Weak Bending $M_{TW/Pile}$ (kip-ft)	$F_{LS/Pile}$ (kips)	Long. Strong Bending $M_{LS/Pile}$ (kip-ft)	$F_{LW/Pile}$ (kips)	Long. Weak Bending $M_{LW/Pile}$ (kip-ft)	P_u/P_r	Trans. Strong M_{ux}/M_{rx}	Tran. Weak M_{uy}/M_{ry}	Long. Strong M_{ux}/M_{rx}	Long. Weak M_{uy}/M_{ry}	Trans. Strong Interaxn. (6.9.2.2)	Long. Strong Interaxn. (6.9.2.2)		
1	SER I	87051	-6647	-83	-14	9071	-1768	85	-2646	0	0	297	667	783.2	16.5	102.2	0.0	0.0	0.0	0.0	37.0	229.6		0.05	0.00	0.00	0.25	0.30	0.00	≤ 1.0	O.K.
1	SER I	101383	-6562	-557	32	-15287	-5206	10	-2646	0	0	771	609	919.2	42.8	265.5	0.0	0.0	0.0	0.0	33.8	209.6		0.13	0.00	0.00	0.23	0.36	0.00	≤ 1.0	O.K.
1	SER I	107784	-7934	-260	-36	5888	-344	3	-2646	0	0	474	689	810.1	26.3	163.2	0.0	0.0	0.0	0.0	38.3	237.2		0.08	0.00	0.00	0.26	0.34	0.00	≤ 1.0	O.K.
1	SER I	113937	-7836	-373	-111	-223	6150	109	-2646	0	0	587	764	791.2	32.6	202.1	0.0	0.0	0.0	0.0	42.4	263.0		0.10	0.00	0.00	0.28	0.38	0.00	≤ 1.0	O.K.
1	SER I	113940	-8065	-395	-99	-825	4483	50	-2646	0	0	609	752	806.7	33.8	209.7	0.0	0.0	0.0	0.0	41.8	258.9		0.10	0.00	0.00	0.28	0.38	0.00	≤ 1.0	O.K.
1	SER I	114156	-8065	-395	-99	-825	4483	50	-2646	0	0	609	752	806.7	33.8	209.7	0.0	0.0	0.0	0.0	41.8	258.9		0.10	0.00	0.00	0.28	0.38	0.00	≤ 1.0	O.K.
1	SER I	119013	-7746	-591	103	-13545	-10644	-104	-2646	0	0	805	538	1021.0	44.7	277.2	0.0	0.0	0.0	0.0	29.9	185.1		0.14	0.00	0.00	0.20	0.34	0.00	≤ 1.0	O.K.
1	SER I	119016	-7971	-607	90	-13875	-10469	-104	-2646	0	0	821	551	1034.4	45.6	282.7	0.0	0.0	0.0	0.0	30.6	189.6		0.14	0.00	0.00	0.20	0.34	0.00	≤ 1.0	O.K.
1	SER I	119232	-7971	-607	90	-13875	-10469	-104	-2646	0	0	821	551	1034.4	45.6	282.7	0.0	0.0	0.0	0.0	30.6	189.6		0.14	0.00	0.00	0.20	0.34	0.00	≤ 1.0	O.K.
1	SER I	122580	-8092	-733	40	-20107	-6545	-59	-2646	0	0	947	601	1057.9	52.6	326.1	0.0	0.0	0.0	0.0	33.4	206.8		0.16	0.00	0.00	0.22	0.38	0.00	≤ 1.0	O.K.
1	SER I	123444	-8102	-743	27	-20588	-5669	-58	-2646	0	0	957	614	1054.9	53.2	329.6	0.0	0.0	0.0	0.0	34.1	211.3		0.16	0.00	0.00	0.23	0.39	0.00	≤ 1.0	O.K.
1	SER I	123477	-7979	-761	29	-20578	-5652	-53	-2646	0	0	975	612	1049.2	54.2	335.8	0.0	0.0	0.0	0.0	34.0	210.6		0.17	0.00	0.00	0.23	0.39	0.00	≤ 1.0	O.K.
2	SER I	92345	-6493	96	-36	-9206	-272	254	-2646	0	0	310	689	762.1	17.2	106.7	0.0	0.0	0.0	0.0	38.3	237.2		0.05	0.00	0.00	0.26	0.31	0.00	≤ 1.0	O.K.
2	SER I	97505	-6228	545	44	13814	-6567	-185	-2646	0	0	759	597	901.1	42.2	261.4	0.0	0.0	0.0	0.0	33.1	205.5		0.13	0.00	0.00	0.22	0.35	0.00	≤ 1.0	O.K.
2	SER I	113106	-7730	270	-75	-6596	2834	180	-2646	0	0	484	728	768.0	26.9	166.6	0.0	0.0	0.0	0.0	40.4	250.6		0.08	0.00	0.00	0.27	0.35	0.00	≤ 1.0	O.K.
2	SER I	113349	-7730	270	-75	-6596	2834	180	-2646	0	0	484	728	768.0	26.9	166.6	0.0	0.0	0.0	0.0	40.4	250.6		0.08	0.00	0.00	0.27	0.35	0.00	≤ 1.0	O.K.
2	SER I	114609	-7402	275	-90	-6216	4775	212	-2646	0	0	489	743	731.6	27.2	168.4	0.0	0.0	0.0	0.0	41.3	255.8		0.08	0.00	0.00	0.28	0.36	0.00	≤ 1.0	O.K.
2	SER I	114645	-7749	292	-80	-5536	3075	168	-2646	0	0	506	733	758.5	28.1	174.2	0.0	0.0	0.0	0.0	40.7	252.3		0.09	0.00	0.00	0.27	0.36	0.00	≤ 1.0	O.K.
2	SER I	118182	-7846	689	64	16562	-9121	-149	-2646	0	0	903	577	1038.7	50.2	311.0	0.0	0.0	0.0	0.0	32.0	198.6		0.15	0.00	0.00	0.21	0.37	0.00	≤ 1.0	O.K.
2	SER I	118184	-7834	692	36	16795	-8135	-151	-2646	0	0	906	605	1030.5	50.3	312.0	0.0	0.0	0.0	0.0	33.6	208.2		0.15	0.00	0.00	0.22	0.38	0.00	≤ 1.0	O.K.
2	SER I	118187	-7597	707	46	16586	-8277	-126	-2646	0	0	921	595	1018.7	51.2	317.2	0.0	0.0	0.0	0.0	33.0	204.8		0.16	0.00	0.00	0.22	0.38	0.00	≤ 1.0	O.K.
2	SER I	119046	-7836	677	70	15997	-9393	-144	-2646	0	0	891	571	1036.1	49.5	306.8	0.0	0.0	0.0	0.0	31.7	196.5		0.15	0.00	0.00	0.21	0.36	0.00	≤ 1.0	O.K.
2	SER I	119289	-7836	677	70	15997	-9393	-144	-2646	0	0	891	571	1036.1	49.5	306.8	0.0	0.0	0.0	0.0	31.7	196.5		0.15	0.00	0.00	0.21	0.36	0.00	≤ 1.0	O.K.
2	SER I	119475	-7571	636	85	14763	-9571	-137	-2646	0	0	850	556	1013.0	47.2	292.7	0.0	0.0	0.0	0.0	30.9	191.3		0.14	0.00	0.00	0.21	0.35	0.00	≤ 1.0	O.K.
1	SER I	29151	-6662	-84	-5	8965	-3074	95	-2646	0	0	298	658	793.6	16.5	102.6	0.0	0.0	0.0	0.0	36.5	226.5		0.05	0.00	0.00	0.24	0.30	0.00	≤ 1.0	O.K.
1	SER I	33965	-6548	-556	24	-15466	-4736	-63	-2646	0	0	770	617	915.5	42.8	265.1	0.0	0.0	0.0	0.0	34.3	212.4		0.13	0.00	0.00	0.23	0.36	0.00	≤ 1.0	O.K.
1	SER I	36062	-7930	-261	-10	5580	-3599	-61	-2646	0	0	475	663	833.6	26.4	163.5	0.0	0.0	0.0	0.0	36.8	228.2		0.08	0.00	0.00	0.25	0.33	0.00	≤ 1.0	O.K.
1	SER I	38117	-7504	-314	-85	922	2825	364	-2646	0	0	528	738	716.1	29.3	181.8	0.0	0.0	0.0	0.0	41.0	254.0		0.09	0.00	0.00	0.27	0.36	0.00	≤ 1.0	O.K.
1	SER I	38186	-8083	-414	-82	-2118	1877	8	-2646	0	0	628	735	837.8	34.9	216.2	0.0	0.0	0.0	0.0	40.8	253.0		0.11	0.00	0.00	0.27	0.38	0.00	≤ 1.0	O.K.
1	SER I	39805	-7495	-561	89	-12839	-9877	-111	-2646	0	0	775	552	993.7	43.0	266.9	0.0	0.0	0.0	0.0	30.6	190.0		0.13	0.00	0.00	0.21	0.34	0.00	≤ 1.0	O.K.
1	SER I	39806	-7956	-594	63	-13495	-9517	-109	-2646	0	0	808	578	1021.3	44.9	278.2	0.0	0.0	0.0	0.0	32.1	198.9		0.14	0.00	0.00	0.21	0.35	0.00	≤ 1.0	O.K.
1	SER I	41001	-8077	-748	3	-21123	-4864	-42	-2646	0	0	962	638	1049.7	53.4	331.3	0.0	0.0	0.0	0.0	35.4	219.6		0.16	0.00	0.00	0.24	0.40	0.00	≤ 1.0	O.K.
1	SER I	41289	-8086	-757	-10	-21604	-3988	-40	-2646	0	0	971	663	1045.7	53.9	334.4	0.0	0.0	0.0	0.0	36.8	228.2		0.16	0.00	0.00	0.25	0.41	0.00	≤ 1.0	O.K.
1	SER I	41293	-7930	-779	-1	-21301	-4266	-95	-2646	0	0	993	654	1039.1	55.2	342.0	0.0	0.0	0.0	0.0	36.3	225.1		0.17	0.00	0.00	0.24	0.41	0.00	≤ 1.0	O.K.
1	SER I	41361	-8086	-757	-10	-21604	-3988	-40	-2646	0	0	971	663	1045.7	53.9	334.4	0.0	0.0	0.0	0.0	36.8	228.2		0.16	0.00	0.00	0.25	0.41	0.00	≤ 1.0	O.K.
2	SER I	30915	-6470	72	-39	-10293	-157	229	-2646	0	0	286	692	768.5	15.9	98.4	0.0	0.0	0.0	0.0	38.4	238.2		0.05	0.00	0.00	0.26	0.31	0.00	≤ 1.0	O.K.
2	SER I	32632	-6218	540	43	13736	-6490	-162	-2646	0	0	754	598	899.0	41.9	259.6	0.0	0.0	0.0	0.0	33.2	205.8		0.13	0.00	0.00	0.22	0.35	0.00	≤ 1.0	O.K.
2	SER I	37844	-7654	212	-55	-9259	-151	178	-2646	0	0	426	708	817.0	23.7	146.7	0.0	0.0	0.0	0.0	39.3	243.7		0.07	0.00	0.00	0.26	0.34	0.00	≤ 1.0	O.K.
2	SER I	37916	-7654	212	-55	-9259	-151	178	-2646	0	0	426	708	817.0	23.7	146.7	0.0	0.0	0.0	0.0	39.3	243.7		0.07	0.00	0.00	0.26	0.34	0.00	≤ 1.0	O.K.
2	SER I	38123	-7229	230	-79	-7147	3571	139	-2646	0	0	444	732	740.8	24.7	152.9	0.0	0.0	0.0	0.0	40.6	252.0		0.08	0.00	0.00	0.27	0.35	0.00	≤ 1.0	O.K.
2	SER I	38343	-7674	269	-63	-6938	645	258	-2646	0	0	483	716	784.2	26.8	166.3	0.0	0.0	0.0	0.0	39.8	246.5		0.08	0.00	0.00	0.27	0.35	0.00	≤ 1.0	O.K.
2	SER I	39528	-7843	698	36	16985	-8145	-143	-2646	0	0	912	605	1032.7	50.7	314.1	0.0	0.0	0.0	0.0	33.6	208.2		0.15	0.00	0.00	0.22	0.38	0.00	≤ 1.0	O.K.
2	SER I	39529	-7606	713	46	16776	-8287	-118	-2646	0	0	927	595	1020.9	51.5	319.2	0.0	0.0	0.0	0.0	33.0	204.8		0.16	0.00	0.00	0.22	0.38	0.00	≤ 1.0	O.K.
2	SER I	39600	-7843	698	36	16985	-8145	-143	-2646	0	0	912	605	1032.7	50.7	314.1	0.0	0.0	0.0	0.0	33.6	208.2		0.15	0.00	0.00	0.22	0.38	0.00	≤ 1.0	O.K.
2	SER I	39825	-7831	685	41	16351	-8453	-128	-2646	0	0	899	600	1029.7	49.9	309.6	0.0	0.0	0.0	0.0	33.3	206.5		0.15	0.00	0.00	0.22	0.38	0.00	≤ 1.0	O.K.
2	SER I	39959	-7316	616	70	14440	-8792	-133	-2646	0	0	830	571	988.6	46.1	285.8	0.0	0.0	0.0	0.0	31.7	196.5		0.14	0.00	0.00	0.21	0.35	0.00	≤ 1.0	O.K.

HNTB	The HNTB Companies Engineers Architects Planners	Made LER	Date 6/8/2012	Job Number 49633
		Checked KDG	Date 6/12/12	
For Cleveland Innerbelt		Backchk'd	Date	Sheet No. 1a

Footing Pile Loads
Main Viaduct (Pier 11)

Purpose

Calculates the maximum load on an extreme transverse pile row. Input the top of footing load combination with the critical combination of axial load (P) and transverse moment (MT).

Pile Layout

Transverse Group SM = **152.0** ft
Longitudinal Group SM = **136.0** ft

Total Number of Piles, N_{tot} = **18.00** ea.

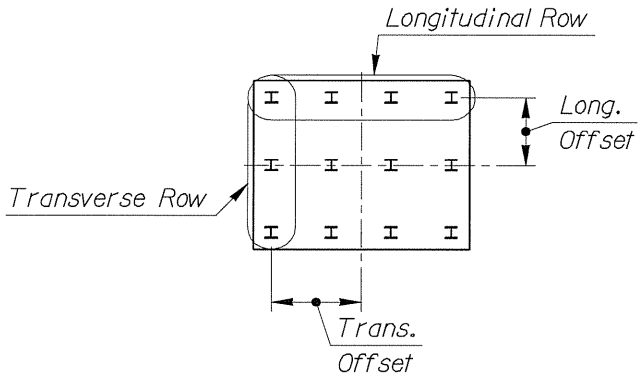

Convention identical to PIER program input.

Top of Footing Loads*

Enter as Shown in PIER

Limit State Type	SERVICE	STR/*EXT	
Footing Number	1	1	--
Controlling Limit State	SER I	STRIV	--
Load Case	41289	3652	--
P =	-10479.31	-14608.4	kips
H_T =	-970.7841	-1002.506	kips
H_L =	-662.523	-520.8907	kips
M_T =	-25848.46	-23602.21	kip-ft
M_L =	-17851.69	-29929.43	kip-ft

* Loads above account for Retaining wall and Sign structures

Depth of Footing =	10.0	10.0	ft
Fact. Foot. DL (DC) =	2166.0	3249.0	kips
Fact. Soil DL (EV) =	480.0	624.0	kips

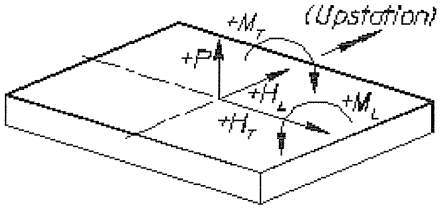

*Use Extreme Event (EXT) loads if the resulting critical pile force is 111% or more of the maximum Strength (STR) pile force.

Loads at Bottom of Footing

	SER I	STRIV	
P =	13125	18481	kips
H_T =	-971	-1003	kips
H_L =	-663	-521	kips
M_T =	-35556	-33627	kip-ft
M_L =	-11226	-24721	kip-ft

Corner Pile Loads

	SER I	STRIV	
Upstation Right =	578	987	kips
Upstation Left =	1046	1430	kips
Downstation Right =	413	624	kips
Downstation Left =	881	1066	kips

The remaining pile loads may be found using linear interpolation.

Footing Design Pile Loads

	SER I	STRIV	
Trans. Flexure (Avg.) =	963	1248	kips
Long. Flexure (Avg.) =	812	1209	kips
Col. Punching (Avg.) =	--	1027	kips
Pile Punching (Max.) =	--	1430	kips

	Row 2
SM_T (ft) =	**304.0**
SM_L (ft) =	**272.0**

	SER I	STRIV
Trans. Flexure (Avg.) =	846	1137
Long. Flexure (Avg.) =	770	1118

Footing Pile Loads
Main Viaduct (Pier 11)

Purpose

Calculates the maximum load on an extreme longitudinal pile row. Input the top of footing load combination with the critical combination of axial load (P) and longitudinal moment (ML).

Pile Layout

Transverse Group SM = **152.0** ft
Longitudinal Group SM = **136.0** ft

Total Number of Piles, N_{tot} = **18.00** ea.

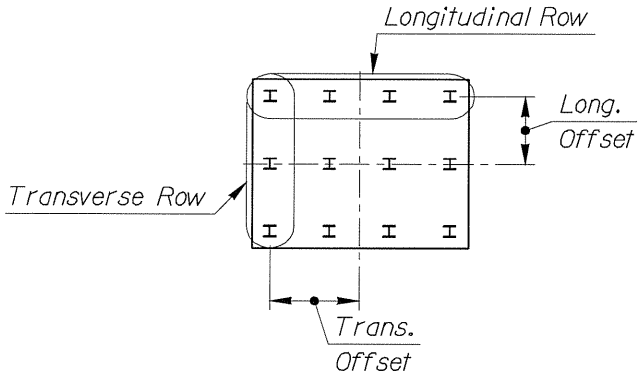

Convention identical to PIER program input.

Top of Footing Loads*

Enter as Shown in PIER

Limit State Type	SERVICE	STR/*EXT	
Footing Number	1	1	--
Controlling Limit State	SER I	STRIV	--
Load Case	119016	3652	--
P =	-10364.31	-14608.4	kips
H_T =	-820.7841	-1002.506	kips
H_L =	-550.523	-520.8907	kips
M_T =	-18119.46	-23602.21	kip-ft
M_L =	-24332.69	-29929.43	kip-ft

* The above loads account for the Retaining wall and Sign structures loads

Depth of Footing =	10.0	10.0	ft
Fact. Foot. DL (DC) =	2166.0	3249.0	kips
Fact. Soil DL (EV) =	480.0	624.0	kips

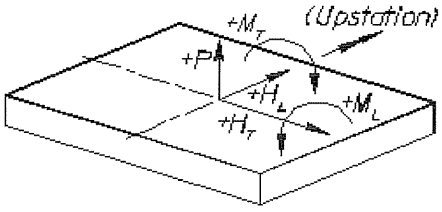

*Use Extreme Event (EXT) loads if the resulting critical pile force is 111% or more of the maximum Strength (STR) pile force.

Loads at Bottom of Footing

	SER I	STRIV	
P =	13010	18481	kips
H_T =	-821	-1003	kips
H_L =	-551	-521	kips
M_T =	-26327	-33627	kip-ft
M_L =	-18827	-24721	kip-ft

Corner Pile Loads

	SER I	STRIV	
Upstation Right =	688	987	kips
Upstation Left =	1034	1430	kips
Downstation Right =	411	624	kips
Downstation Left =	758	1066	kips

The remaining pile loads may be found using linear interpolation.

Footing Design Pile Loads

	SER I	STRIV	
Trans. Flexure (Avg.) =	896	1248	kips
Long. Flexure (Avg.) =	861	1209	kips
Col. Punching (Avg.) =	--	1027	kips
Pile Punching (Max.) =	--	1430	kips

	Row 2
SM_T (ft) =	**304.0**
SM_L (ft) =	**272.0**

	SER I	STRIV
Trans. Flexure (Avg.) =	809	1137
Long. Flexure (Avg.) =	792	1118

HNTB	The HNTB Companies Engineers Architects Planners	Made LER	Date 6/8/2012	Job Number 49633
		Checked KDG	Date 6/12/12	
For Cleveland Innerbelt		Backchk'd	Date	Sheet No. 1c

Footing Pile Loads
Main Viaduct (Pier 11)

Purpose

Calculates the highest average pile load. Input the top of footing load combination with the highest axial force (P).

Pile Layout

Transverse Group SM =	152.0	ft
Longitudinal Group SM =	136.0	ft
Total Number of Piles, N_{tot} =	18.00	ea.

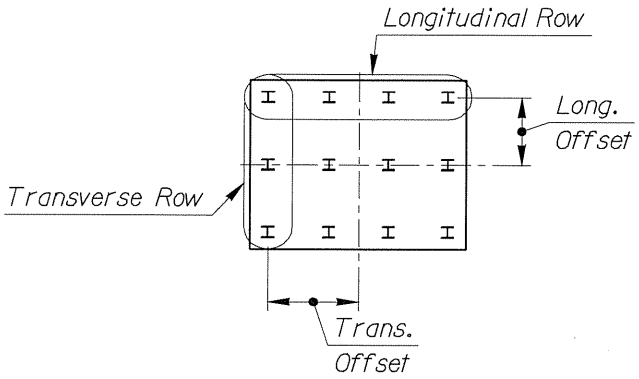

Convention identical to PIER program input.

Top of Footing Loads*

Enter as Shown in PIER

Limit State Type	STR/*EXT	
Footing Number	1	--
Controlling Limit State	STRIV	--
Load Case	3652	--
P =	-14608.4	kips
H_T =	-1002.506	kips
H_L =	-520.8907	kips
M_T =	-23602.21	kip-ft
M_L =	-29929.43	kip-ft

* The above loads account for the Retaining wall and Sign structures loads

Depth of Footing =	10.0	ft
Factored Footing DL (DC) =	3249.0	kips
Factored Soil Vertical Load (EV) =	624.0	kips

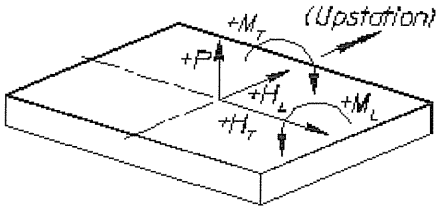

*Use Extreme Event (EXT) loads if the resulting critical pile force is 111% or more of the maximum Strength (STR) pile force.

Loads at Bottom of Footing

	STRIV	
P =	18481	kips
H_T =	-1003	kips
H_L =	-521	kips
M_T =	-33627	kip-ft
M_L =	-24721	kip-ft

Corner Pile Loads

	STRIV	
Upstation Right =	987	kips
Upstation Left =	1430	kips
Downstation Right =	624	kips
Downstation Left =	1066	kips

The remaining pile loads may be found using linear interpolation.

Footing Design Pile Loads

	STRIV	
Trans. Flexure (Avg.) =	1248	kips
Long. Flexure (Avg.) =	1209	kips
Col. Punching (Avg.) =	1027	kips
Pile Punching (Max.) =	1430	kips

HNTB	The HNTB Companies Engineers Architects Planners	Made LER	Date 6/8/2012	Job Number 49633
		Checked KDG	Date 6/12/12	
For Cleveland Innerbelt		Backchk'd	Date	Sheet No. 1d

Footing Pile Loads
Main Viaduct (Pier 11)

Purpose

Calculates the maximum load on a single (corner) pile. Input the top of footing load combination that results in the max. single pile load.

Pile Layout

Transverse Group SM =	152.0	ft
Longitudinal Group SM =	136.0	ft
Total Number of Piles, N_{tot} =	18.00	ea.

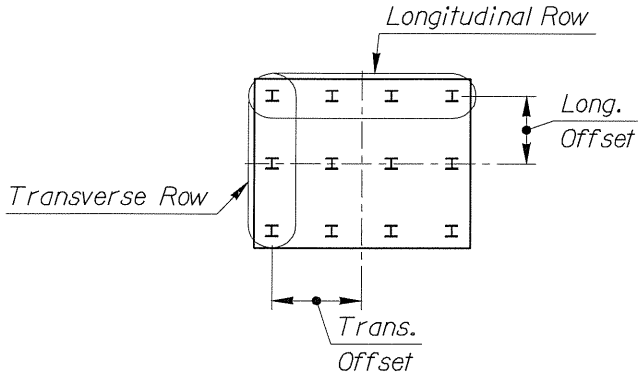

Convention identical to PIER program input.

Top of Footing Loads*

Enter as Shown in PIER

Limit State Type	SERVICE	STR/*EXT	
Footing Number	1	1	--
Controlling Limit State	SER I	STRIV	--
Load Case	122580	3652	--
P =	-10485.31	-14608.4	kips
H_T =	-946.7841	-1002.506	kips
H_L =	-600.523	-520.8907	kips
M_T =	-24351.46	-23602.21	kip-ft
M_L =	-20408.69	-29929.43	kip-ft

* The above loads account for the Retaining wall and Sign structures loads

Depth of Footing =	10.0	10.0	ft
Fact. Foot. DL (DC) =	2166.0	3249.0	kips
Fact. Soil DL (EV) =	480.0	624.0	kips

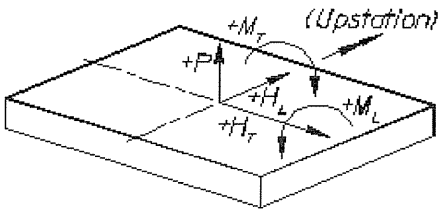

*Use Extreme Event (EXT) loads if the resulting critical pile force is 111% or more of the maximum Strength (STR) pile force.

Loads at Bottom of Footing

	SER I	STRIV	
P =	13131	18481	kips
H_T =	-947	-1003	kips
H_L =	-601	-521	kips
M_T =	-33819	-33627	kip-ft
M_L =	-14403	-24721	kip-ft

Corner Pile Loads

	SER I	STRIV	
Upstation Right =	613	987	kips
Upstation Left =	1058	1430	kips
Downstation Right =	401	624	kips
Downstation Left =	846	1066	kips

The remaining pile loads may be found using linear interpolation.

Footing Design Pile Loads

	SER I	STRIV	
Trans. Flexure (Avg.) =	952	1248	kips
Long. Flexure (Avg.) =	835	1209	kips
Col. Punching (Avg.) =	--	1027	kips
Pile Punching (Max.) =	1058	1430	kips

Footing Pile Loads
Main Viaduct (Pier 11)

Purpose

Calculates the minimum axial load on an extreme pile.
Input the top of footing load combination with the critical combination of axial load (P), transverse (MT) and longitudinal moment (ML).

Pile Layout

Transverse Group SM = **152.0** ft
Longitudinal Group SM = **136.0** ft

Total Number of Piles, N_{tot} = **18.00** ea.

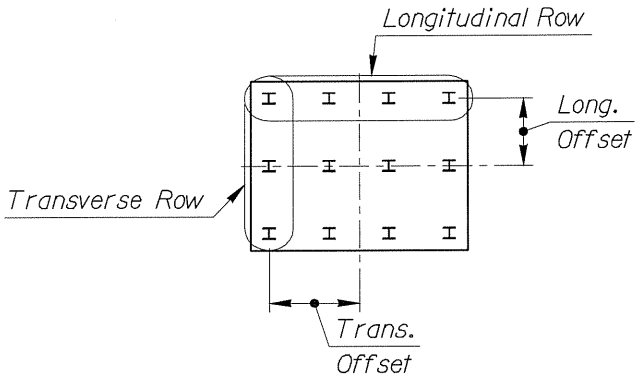

Use Factors: **Min.**

Convention identical to PIER program input.

Top of Footing Loads*

Enter as Shown in PIER

Limit State Type	STR/*EXT	STR/*EXT	
Footing Number	2	2	--
Controlling Limit State	SER I	STIII	--
Load Case	97505	3578	--
P =	-8621.309	-8398.276	kips
H_T =	758.78413	746.50572	kips
H_L =	-596.523	-433.4907	kips
M_T =	18058.464	23964.678	kip-ft
M_L =	-20430.69	-31733.43	kip-ft

* The above loads account for the Retaining wall and Sign structures loads

Depth of Footing =	10.0	10.0	ft
Fact. Foot. DL (DC) =	2166.0	1949.4	kips
Fact. Soil DL (EV) =	0.0	0.0	kips <----------

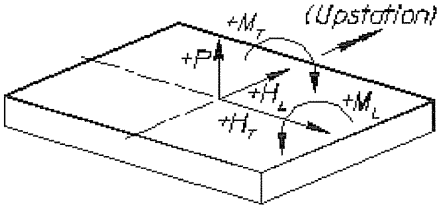

*Use Extreme Event (EXT) loads if the resulting critical pile force is 111% or more of the maximum Strength (STR) pile force.

Loads at Bottom of Footing

	SER I	STIII	
P =	10787	10348	kips
H_T =	759	747	kips
H_L =	-597	-433	kips
M_T =	25646	31430	kip-ft
M_L =	-14465	-27399	kip-ft

Corner Pile Loads

	SER I	STIII	
Upstation Right =	874	983	kips
Upstation Left =	537	570	kips
Downstation Right =	662	580	kips
Downstation Left =	324	167	kips

The remaining pile loads may be found using linear interpolation.

Footing Design Pile Loads

	SER I	STIII	
Trans. Flexure (Avg.) =	768	782	kips
Long. Flexure (Avg.) =	706	776	kips
Col. Punching (Avg.) =	599	575	kips
Pile Punching (Max.) =	874	983	kips
Uplift (Min.) =	324	167	kips

Min. Value - for Uplift Check
Soil Backfill Depth (Surcharge) = **0** ft

HNTB The HNTB Companies Engineers Architects Planners	Made LER	Date 6/8/2012	Job Number 49633
	Checked KDG	Date 6/12/12	
For Cleveland Innerbelt	Backchk'd	Date	Sheet No. 2

Pile-Supported Footing Design
Main Viaduct (Pier 11)

Purpose
To design and check flexural bending, flexural shear (one-way), and punching shear (two-way) within a pilecap footing.

Specifications
AASHTO LRFD Bridge Design Specifications, 5th Ed. (2010)

Data Sources

Pile Loads:

Methodology
Critical pile loads are based on the average pile load per pile row calculated in the Footing Pile Loads spreadsheet.

Flexural reinforcement is designed at the face of the column in both directions, longitudinal and transverse.

Flexural shear is checked within the footing at d_v from the column face in the direction of the largest pile loads.

Two-way punching shear is checked using a critical section $d_v/2$ from the column face and from the effective diameter of the pile with the greatest single pile load, assuming an effective diameter of ~~$\sqrt{(d^2+b_f^2)}$~~ MAX(d,b_f) for H-Piles. The designer must verify that 50% of the effective circumference of the critical shear section is available for the corner pile that is up to MIN(6",d_{eff}/4) out-of-position.

Per AASHTO 5.13.3.2, assume an additional 3" average pile group offset from the column face for flexural and shear design checks.

Critical Pile Loads

	Limit State	Row 1	Row 2		Row 3		Row 4	
Transverse Bending	STRIV	1248.0	1137.4	kips	0.0	kips	0.0	kips
(about long. axis)	SER I	963.1	846.1	kips	0.0	kips	0.0	kips
Longitudinal Bending	STRIV	1208.5	1117.6	kips	0.0	kips	0.0	kips
(about tran. axis)	SER I	861.2	792.0	kips	0.0	kips	0.0	kips
Column Punching	STRIV	1026.7	kips	(average)				
Pile Punching	STRIV	1429.7	kips	(max. single pile)				

Column/Wall Properties

	Longitudinal		Transverse	
Equiv. Column =	12.00	ft by	14.00	ft

Footing Properties

STR	$\varnothing_{Flexure}$ =	0.90	$\varnothing_{Shear}$ =	0.90	AASHTO 5.5.4.2
EXT	$\varnothing_{Flexure}$ =	1.00	$\varnothing_{Shear}$ =	1.00	AASHTO 1.3.2.1

f'_c =	4.0	ksi
E_c =	3605	ksi
f_y =	60	ksi
E_s =	29000	ksi

	Depth	Length	Width	
Dimensions =	10.0	38.0	38.0	ft

Earth Backfill Depth =	3.0	ft
Concrete Unit Weight =	0.150	kcf
Soil Unit Weight =	0.125	kcf

	Longitudinal	Transverse		
Pile Edge Distance =	3.00	3.00	ft	(from CL pile)
Row 2 Edge Dist. =	11.00	11.00	ft	
Row 3 Edge Dist. =			ft	
Row 4 Edge Dist. =			ft	
Top Reinforcing Clear Cover =		3.0	in.	
Bot. Reinforcing Clear Cover =		3.0	in.	
Bot. Reinforcing 2nd Layer =		8.0	in.	(above 1st layer ctr-to-ctr)

f_r =	0.74	ksi	AASHTO 5.4.2.6
y_t =	60.0	in.	

HNTB	The HNTB Companies Engineers Architects Planners	Made	LER	Date	6/8/2012	Job Number	49633
		Checked	KDG	Date	6/12/12		
For	**Cleveland Innerbelt**	Backchk'd		Date		Sheet No.	3

Pilecap Footing Design
Main Viaduct (Pier 11)

Transverse Flexural Reinforcing (Bottom)

AASHTO 5.13.3.4

Geometry Bar Layer Position = **Upper**

	No. Piles	Mom. Arm (Col_{face} to CL_{pile} + 3")		
Row 1	**4**	**9.25**	ft	Symm. about
Row 2	**3**	**1.25**	ft	CL Footing
Row 3	**0**		ft	
Row 4	**0**		ft	

Ultimate Capacity (Strength/Extreme Event)

M_{Piles} =	50,440	kip-ft
$M_{Earth+DL}$ =	-7,490	kip-ft
M_u =	42,950	kip-ft

Try:

48 - #11 s		Bottom Layer
48 - #11 s		Top Layer
d1 =	114.89	in.
d2 =	106.89	
Effective Depth, d =	110.89	
$A_{s,prov'd.}$ =	149.76	$in.^2$
Equiv. Stress Block Depth, a =	5.80	in.
Moment Resistance, $M_r = ØM_n$ =	72,775	kip-ft

42,950 < 72,775 Capacity O.K.

Gross Moment of Interia, I_g =	65,664,000	$in.^4$	
Cracking Moment, M_{cr} =	67,488	kip-ft	AASTHO 5.7.3.3
1.2 M_{cr} =	80,986	kip-ft	
$^4/_3$ M_u =	57,267	kip-ft	

57,267 < 72,775 Capacity O.K.

Flexural Distribution (Service) AASHTO 5.7.3.4

Reinforcement Ratio, ρ =	**0.00296**	--	
Modular Ratio, n =	**8**	--	
Neutral Axis Depth Scalar, k =	**0.19528**	--	k=c/d
Moment Arm Scalar, j =	**0.9349**	--	j=(1-k/3)

M_{Piles} =	38,808	kip-ft	
$M_{Earth+DL}$ =	-5,130	kip-ft	
$M_{service}$ =	33,678	kip-ft	
$f_{s,SRVC}$ =	**26.0**	ksi	
Peak Concrete Stress, f_c =	**0.79**	ksi	vs. 3.40 ksi

$s \le 700*\gamma_e/(ß*f_{ss}) - 2d_c$

CL Cover to 1st Steel Layer, d_c =	**5.115**	in.	AASHTO 5.7.3.4
ß =	**1.064**	--	5.7.3.4-1
Exposure Factor, γ_e =	**1.00**	--	Class 1
$s_{max-allowed}$ =	**15.05**	in.	
$s_{max-prov'd.}$ =	**9.32**	in.	

9.3 < 15.1 - O.K.

Evaluated vs. nominal bar spacing.

Longitudinal Flexural Reinforcing (Bottom)

Geometry Bar Layer Position = **Lower**

	No. Piles	Mom. Arm (Col_{face} to CL_{pile} + 3")		
Row 1	**3**	**10.25**	ft	Symm. about
Row 2	**5**	**2.25**	ft	CL Footing
Row 3	**0**		ft	
Row 4	**0**		ft	

Ultimate Capacity (Strength/Extreme Event)

M_{Piles} =	49,735	kip-ft
$M_{Earth+DL}$ =	-8,790	kip-ft
M_u =	40,945	kip-ft

Try:

48 - #11 s		Bottom Layer
48 - #11 s		Top Layer
d1 =	116.30	in.
d2 =	108.30	
Effective Depth, d =	112.30	
$A_{s,prov'd.}$ =	149.76	$in.^2$
Equiv. Stress Block Depth, a =	5.80	in.
Moment Resistance, $M_r = ØM_n$ =	73,725	kip-ft

40,945 < 73,725 Capacity O.K.

Gross Moment of Interia, I_g =	65,664,000	$in.^4$	
Cracking Moment, M_{cr} =	67,488	kip-ft	AASTHO 5.7.3.3
1.2 M_{cr} =	80,986	kip-ft	
$^4/_3$ M_u =	54,593	kip-ft	

54,593 < 73,725 Capacity O.K.

Flexural Distribution (Service) AASHTO 5.7.3.4

Reinforcement Ratio, ρ =	**0.00292**	--	
Modular Ratio, n =	**8**	--	
Neutral Axis Depth Scalar, k =	**0.19418**	--	k=c/d
Moment Arm Scalar, j =	**0.9353**	--	j=(1-k/3)

M_{Piles} =	35,393	kip-ft	
$M_{Earth+DL}$ =	-6,021	kip-ft	
$M_{service}$ =	29,372	kip-ft	
$f_{s,SRVC}$ =	**22.4**	ksi	
Peak Concrete Stress, f_c =	**0.68**	ksi	vs. 3.40 ksi

CL Cover to 1st Steel Layer, d_c =	**3.705**	in.	
ß =	**1.046**	--	5.7.3.4-1
Exposure Factor, γ_e =	**1.00**	--	Class 1
$s_{max-allowed}$ =	**22.47**	in.	
$s_{max-prov'd.}$ =	**9.32**	in.	

9.3 < 22.5 - O.K.

Evaluated vs. nominal bar spacing.

HNTB	The HNTB Companies Engineers Architects Planners	Made LER	Date 6/8/2012	Job Number 49633
		Checked KDG	Date 6/12/12	
For Cleveland Innerbelt		Backchk'd	Date	Sheet No. 4

Pilecap Footing Design
Main Viaduct (Pier 11)

Distribution of Moment Reinforcement

AASHTO 5.13.3.5

Transverse Flexural Reinforcing (Bottom)

β =	1.00		Long Dim./Short Dim.
$A_{s,req'd.(total\ in\ short\ length)}$ =	87.41	$in.^2$	
$A_{s,req'd.(in\ band\ width)}$ =	87.41	$in.^2$	(5.13.3.5-1)
$A_{s,prov'd.(in\ band\ width)}$ =	149.76	$in.^2$	Approx.

87.41 < 149.76 - O.K.

Transverse Flexural Reinforcing (Top)

Place thru column? **Yes**

$A_{s,prov'd.}$ = **38 - #11 s** = 1.56 $in.^2$ / ft

$A_{s,req'd.}$ = 0.60 $in.^2$ / ft (5.10.8-1,2)

1.56 > 0.60 Reinforcement O.K.

Bar Spacing = **12** in.

Edge Distance = 6 in.

Longitudinal Flexural Reinforcing (Top)

Place thru column? **Yes**

$A_{s,prov'd.}$ = **38 - #11 s** = 1.56 $in.^2$ / ft

$A_{s,req'd.}$ = 0.60 $in.^2$ / ft (5.10.8-1,2)

1.56 > 0.60 Reinforcement O.K.

Bar Spacing = **12** in.

Edge Distance = 6 in.

Footing Shear

AASHTO 5.13.3.6

One-Way Beam Action - Transverse (at d_v from column face)

Effective Depth for Shear, d_v =	107.99	in.	AASHTO 5.8.2.9
Distance to Critical Section =	9.00	ft	(from col. face)
Piles Outside Crit. Sxn. =	4	ea.	
V_{Piles} =	4,992	kips	
V_{Earth} =	-38	kips	
$V_{Concrete}$ =	-154	kips	
V_u =	4,799	kips	
$V_r = ØV_n$ =	5,602	kips	

4,799 < 5,602 - O.K.

One-Way Beam Action - Longitudinal (at d_v from column face)

Effective Depth for Shear, d_v =	109.40	in.	AASHTO 5.8.2.9
Distance to Critical Section =	9.12	ft	(from col. face)
Piles Outside Crit. Sxn. =	3		
V_{Piles} =	3,626	kips	
V_{Earth} =	-50	kips	
$V_{Concrete}$ =	-199	kips	
V_u =	3,377	kips	
$V_r = ØV_n$ =	5,675	kips	AASHTO 5.8.3.3
	β=2.0		

3,377 < 5,675 - O.K.

ADD STIRRUPS:

Transverse Shear reinforcement

$ØV_{C\_trans}$ =	**5602**	**kips**
Stirrup_size =	**#0 s**	
Stirrup_spacing =	**5**	**in**
Vs_trans_required =	**-891**	**kips**
Vs_trans_provided =	**0**	

OK Transverse shear reinforcement is adequate

Longitudinal Shear reinforcement

$ØV_{C\_long}$ =	**5675**	**kips**
Stirrup_size =	**#0 s**	
Stirrup_spacing =	**5**	**in**
Vs_long_required =	**-2554**	**kips**
Vs_long_provided =	**0**	

OK Longitudinal shear reinforcement is adequate

Footing Shear (cont'd.)

Two-way Action (Column Punching)

AASHTO 5.13.3.6.3

Determine perimeter shear acting on critical section at "d_v/2" from column face.

$d_v/2$ =	54.70	in.				Longitudinal
$d_v/2$ =	53.99	in.				Transverse
Col. Dim. + d_v =	21.12	ft	by	23.00	ft	
Perimeter, b_o =	88.23	ft				= 1,058.77 in.
Area Outside Crit. Sxn. =	958.34	ft^2				
Piles Outside Crit. Sxn. =	**10**					
V_{piles} =	10,267	kips				
$V_{Earth+Concrete}$ =	-2,623	kips				
V_u =	7,644	kips				
$β_c$ =	1.167					
$(.063+.126/β_c)*\sqrt{f'_c}*b_o d_v$ =	39,357	kips				Eqn. 5.13.3.6.3-1
$.126*\sqrt{f'_c}*b_o d_v$ =	29,000	kips				
$V_r = ØV_n$ =	26,100	kips				

7,644 < 26,100 - O.K.

Two-way Action (Pile Punching)

Check punching at d_v/2 from the perimeter of a corner pile

Pile Type = **HP18x204**

d_{pile} = 18.25 in. = 1.521 ft

b_o =	144.00	in.	Verify
max pile load V_u =	1,430	kips	
$β_c$ =	1.01		
$(.063+.126/β_c)*\sqrt{f'_c}*b_o d_v$ =	4,822	kips	
$.126*\sqrt{f'_c}*b_o d_v$ =	3,230	kips	
$V_r = ØV_n$ =	2,907	kips	

1,430 < 2,907 - O.K.

pile embedment = 31 inches

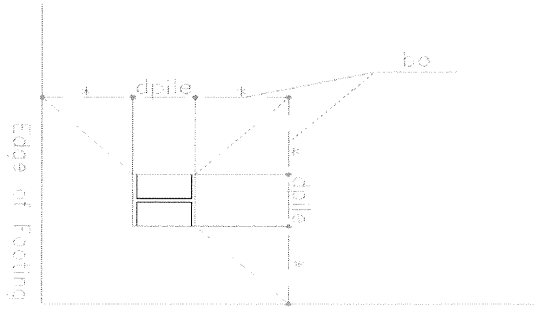

* Minimum of (pile edge distance, (footing depth - pile embedment)/2)

HNTB The HNTB Companies Engineers Architects Planners	Made LER	Date 6/8/2012	Job No. 49633
	Checked KDG	Date 6/12/12	
For **Cleveland Innerbelt**	Backchk'd	Date	Sheet No. 3

NOTE : For piles on negative side of footing, SM is negative.
(i.e. piles placed on downstation side of footing have a negative longitudinal SM for batter equations)

M:\jobs\49633\Techprod\Bridges\Main Span (Unit 2)\Pier 11\RFI - Misalignment\Footing Design\[PileBending_modified_Pier11_Add 6 HP18 Piles.xls]Pile Bending_min_load

Pier Design - Pile Group Combined Pile Stresses

Main Viaduct (Pier 11)

HP18s and HP16s are used in this pile group

Pile Size = **HP18x204**

			Equivalents for Lateral stiffness Trans	Long
No. of Trans. Strong Axis Piles =	**18**	(N_{TS})	**18**	**18**
No. of Trans. Weak Axis Piles =	**0**	(N_{TW})	**0**	**0**
No. of Long. Strong Axis Piles =	0	(N_{LS})		
No. of Long. Weak Axis Piles =	18.00	(N_{LW})		
Total No.of Piles =	18.00	ea.		

Note: Pile number is equivalent HP18's

Trans. Pile Batter = **4** horiz. in **12** vertical

Long. Pile Batter = **4** horiz. in **12** vertical

Notes:
* Use the actual number of battered piles which may be mobilized in the indicated direction.
**Torsion not accounted for in this spreadsheet. Must examine torsional effects separately if significant loads exist.

Transverse Battered Piles

Pile Row	No. of Piles *	SM_T (ft)
1		
2		
3		
4		

Longitudinal Battered Piles

Pile Row	No. of Piles *	SM_L (ft)
1		
2		
3		
4		

Note: Batter equations have been modified for this case

F_y =	**60**	ksi	
E =	**29,000**	ksi	
k =	**1.2**		
L_b =	**12.40**	ft	
Ag =	60		
Φ_f =	**1.00**	LRFD §6.5.4.2	
ST Φ_c =	**0.70**	LRFD §6.5.4.2	
EX Φ_c =	**1.00**	LRFD §6.5.5	
r_y =	4.32	in	
kL/r =	41.3	Nonslender: Q = 1.0	
P_e =	10052	kips	
P_0 =	3600	kips	
λ =	**0.0**	Set equal to 0 per AASHTO 10.7.3.13.1	
Q =	**1.0**	LRFD §6.9.4	
Redundacy Reduct. =	0%	LRFD §10.5.5.2.3	
Footing_Long_	**0.0000**	ft	
Footing_Trans_	**0.0000**	ft	
Column_Long_	**0.0000**	ft	
Column_Trans_	**0.0000**	ft	

Footing Properties

Width =	**38.00**	ft
Length =	**38.00**	ft
Depth =	**10.00**	ft
Overburden =	**3.00**	ft
Column Area =	**164.00**	ft^2
Unit Weight of Concrete =	**0.150**	kcf
Unit Weight of Backfill =	**0.125**	kcf
k_p =	**0.00**	(per S&W)
fraction of full mobilization =	**0.00**	
Φ_{ep} =	**0.00**	10.5.5.2.2-1
effective soil wt =	**0.000**	kcf (per S&W)
Equivalent Fluid Wt =	0.000	kcf (per S&W)
Pp =	0.0	k/ft
Passive Resistance =	0	kips
direction to apply passive resistance =	**TRANS**	LONG or TRANS

SIGN STRUCTURES LOADS (Top of Footing)

Load Group	F_V (kips)	F_T[1] (kips)	F_L[1] (Kips*ft)	M_T[1] (Kips*ft)	M_L[1] (Kips*ft)	TORSION[1] (Kips*ft)
STR I	13.00	1.00	0.00	24.00	0.00	0.00
STIII	13.00	-2.00	30.00	89.00	2685.00	78.00
STRIV	15.00	1.00	0.00	24.00	0.00	0.00
STR V	13.00	-1.00	9.00	43.00	767.00	22.00
SER I	10.00	-1.00	6.00	33.00	575.00	17.00
FATGE	0.00	0.00	0.00	0.00	0.00	0.00

1 F_L, M_L and M_T can act in either direction.

Induced Wall Loads (Top of Footing)

	F_V (kips)	F_T (Kips)	F_L (Kips)	M_T (Kips*ft)	M_L (Kips*ft)	TORSION (Kips*ft)
STR I	-2144.98	287.26	-883.34	-2992.38	-9418.36	0.00
STIII	-2144.98	287.26	-846.94	-2992.38	-9873.36	0.00
STRIV	-2144.98	287.26	-883.34	-2992.38	-9418.36	0.00
STR V	-2144.98	287.26	-872.94	-2992.38	-9548.36	0.00
SER I	-2383.31	212.78	-646.52	-4211.46	-13288.69	0.00
FATGE	0.00	0.00	0.00	0.00	0.00	0.00

Pile / Group Properties

SM_T = 152.0 ft
SM_L = 136.0 ft

Strong Axis Properties

I_X = 3450 $in.^4$
M_{rx} = 2029 kip-ft

Weak Axis Properties

I_Y = 1119 $in.^4$
M_{ry} = 926 kip-ft

$P_{rST} = \Phi P_n$ = 2520.0 kips LRFD §6.9.4.1
$P_{rEX} = \Phi P_n$ = 3600.0 kips (2008 eqns)

Max D/C ratio= 0.97
Min D/C ratio= 0.30

Footing No.	Load Group	Load Case	F_V (kips)	F_T (kips)	F_L (kips)	M_T (kip-ft)	M_L (kip-ft)	T** (kip-ft)	$F_{add.}$ (kips)	F_{TB} (kips)	F_{LB} (kips)	F_{TP} (kips)	F_{LP} (kips)	$P_{u/Pile}$ (kips)	$F_{TS/Pile}$ (kips)	$M_{TS/Pile}$ (kip-ft)	$F_{TW/Pile}$ (kips)	$M_{TW/Pile}$ (kip-ft)	$F_{LS/Pile}$ (kips)	$M_{LS/Pile}$ (kip-ft)	$F_{LW/Pile}$ (kips)	$M_{LW/Pile}$ (kip-ft)	P_u/P_r	Trans. Strong M_{ux}/M_{rx}	Tran. Weak M_{uy}/M_{ry}	Long. Strong M_{ux}/M_{rx}	Long. Weak M_{uy}/M_{ry}	Trans. Strong Interaxn. (6.9.2.2)	Long. Strong Interaxn. (6.9.2.2)		
					Top of Footing Loads					Lateral Resistance from Batter		Lateral Resistance from Pile Bending		Axial Force		Strong Bending		Weak Bending		Strong Bending		Weak Bending									
																Trans.		Trans.		Long.		Long.									
			-11407					-301 584						**1261.8**		**437.2**					**58.4**	**362.3**									
1	STR I	2	-9164	-440	-11	-3993	-5247	-14	-3332	0	0	728	894	950.2	40.5	250.8	0.0	0.0	0.0	0.0	49.7	308.0	0.38	0.12	0.00	0.00	0.33	0.78	0.00	≤ 1.0	O.K.
1	STR I	13	-9454	-490	-101	-3777	6067	88	-3332	0	0	778	984	973.8	43.2	268.1	0.0	0.0	0.0	0.0	54.7	339.0	0.39	0.13	0.00	0.00	0.37	0.83	0.00	≤ 1.0	O.K.
1	STR I	445	-9497	-706	102	-15790	-10332	-76	-3332	0	0	994	781	1109.5	55.2	342.5	0.0	0.0	0.0	0.0	43.4	269.1	0.44	0.17	0.00	0.00	0.29	0.85	0.00	≤ 1.0	O.K.
1	STR I	880	-11064	-635	-92	-6575	2934	24	-3332	0	0	923	975	1067.5	51.3	318.0	0.0	0.0	0.0	0.0	54.2	335.9	0.42	0.16	0.00	0.00	0.36	0.89	0.00	≤ 1.0	O.K.
1	STR I	985	-10699	-645	-129	-7990	7346	113	-3332	0	0	933	1012	1092.4	51.8	321.5	0.0	0.0	0.0	0.0	56.2	348.7	0.43	0.16	0.00	0.00	0.38	0.91	0.00	≤ 1.0	O.K.
1	STR I	988	-11121	-686	-108	-9097	4283	7	-3332	0	0	974	991	1101.7	54.1	335.6	0.0	0.0	0.0	0.0	55.1	341.5	0.44	0.17	0.00	0.00	0.37	0.91	0.00	≤ 1.0	O.K.
1	STR I	1309	-10691	-817	114	-17803	-12333	-94	-3332	0	0	1105	769	1212.0	61.4	380.7	0.0	0.0	0.0	0.0	42.7	265.0	0.48	0.19	0.00	0.00	0.29	0.90	0.00	≤ 1.0	O.K.
1	STR I	1312	-11105	-848	91	-18410	-12012	-94	-3332	0	0	1136	792	1236.9	63.1	391.4	0.0	0.0	0.0	0.0	44.0	272.9	0.49	0.19	0.00	0.00	0.29	0.92	0.00	≤ 1.0	O.K.
1	STR I	1420	-11161	-898	77	-20932	-10769	-137	-3332	0	0	1186	806	1249.8	65.9	408.6	0.0	0.0	0.0	0.0	44.8	277.7	0.50	0.20	0.00	0.00	0.30	0.94	0.00	≤ 1.0	O.K.
1	STR I	1444	-11116	-909	77	-21203	-10770	-130	-3332	0	0	1197	806	1249.8	66.5	412.4	0.0	0.0	0.0	0.0	44.8	277.7	0.50	0.20	0.00	0.00	0.30	0.94	0.00	≤ 1.0	O.K.
1	STR I	1453	-10935	-932	80	-20913	-10737	-130	-3332	0	0	1220	803	1239.3	67.8	420.3	0.0	0.0	0.0	0.0	44.6	276.7	0.49	0.21	0.00	0.00	0.30	0.94	0.00	≤ 1.0	O.K.
1	STR I	1747	-6055	-148	-37	2093	283	148	-3332	0	0	436	920	646.8	24.2	150.3	0.0	0.0	0.0	0.0	51.1	317.0	0.26	0.07	0.00	0.00	0.34	0.63	0.00	≤ 1.0	O.K.
1	STR I	2255	-5716	-420	35	-9717	-5121	32	-3332	0	0	708	848	797.4	39.3	244.0	0.0	0.0	0.0	0.0	47.1	292.2	0.32	0.12	0.00	0.00	0.32	0.70	0.00	≤ 1.0	O.K.
1	STIII	3481	-8361	-405	106	-4118	-12024	-225	-3332	0	0	694	711	991.0	38.6	239.1	0.0	0.0	0.0	0.0	39.5	244.9	0.39	0.12	0.00	0.00	0.26	0.73	0.00	≤ 1.0	O.K.
1	STIII	3505	-9531	-326	1	4596	-4685	31	-3332	0	0	615	816	911.3	34.2	211.9	0.0	0.0	0.0	0.0	45.3	281.0	0.36	0.10	0.00	0.00	0.30	0.72	0.00	≤ 1.0	O.K.
1	STIII	3514	-9743	-596	-22	-8180	-2042	220	-3332	0	0	885	899	1019.8	49.2	304.9	0.0	0.0	0.0	0.0	49.9	309.6	0.40	0.15	0.00	0.00	0.33	0.84	0.00	≤ 1.0	O.K.
1	STIII	3516	-9821	-686	-92	-12630	2942	251	-3332	0	0	975	969	1058.1	54.2	335.9	0.0	0.0	0.0	0.0	53.8	333.7	0.42	0.17	0.00	0.00	0.36	0.89	0.00	≤ 1.0	O.K.
1	STIII	3520	-9818	-677	-173	-12269	8187	194	-3332	0	0	966	1050	1099.5	53.7	332.8	0.0	0.0	0.0	0.0	58.3	361.6	0.44	0.16	0.00	0.00	0.39	0.93	0.00	≤ 1.0	O.K.
1	STIII	3521	-9791	-642	-175	-10616	8199	166	-3332	0	0	931	1052	1085.1	51.7	320.8	0.0	0.0	0.0	0.0	58.4	362.3	0.43	0.16	0.00	0.00	0.39	0.92	0.00	≤ 1.0	O.K.
1	STIII	3533	-9595	-572	176	-8704	-17548	-161	-3332	0	0	861	641	1146.5	47.8	296.7	0.0	0.0	0.0	0.0	35.6	220.8	0.45	0.15	0.00	0.00	0.24	0.80	0.00	≤ 1.0	O.K.
1	STIII	3539	-9819	-845	56	-21855	-8494	-2	-3332	0	0	1134	761	1188.0	63.0	390.7	0.0	0.0	0.0	0.0	42.3	262.1	0.47	0.19	0.00	0.00	0.28	0.89	0.00	≤ 1.0	O.K.
1	STIII	3541	-9855	-887	-1	-23916	-4602	-1	-3332	0	0	1176	878	1169.1	65.3	405.2	0.0	0.0	0.0	0.0	48.8	302.4	0.46	0.20	0.00	0.00	0.33	0.93	0.00	≤ 1.0	O.K.
1	STIII	3542	-9660	-884	-31	-25202	-2061	-83	-3332	0	0	1173	908	1145.6	65.2	404.1	0.0	0.0	0.0	0.0	50.4	312.7	0.45	0.20	0.00	0.00	0.34	0.93	0.00	≤ 1.0	O.K.
1	STIII	3554	-4694	23	69	11867	-6975	-149	-3332	0	0	312	748	773.3	17.3	107.6	0.0	0.0	0.0	0.0	41.6	257.6	0.31	0.05	0.00	0.00	0.28	0.60	0.00	≤ 1.0	O.K.

HNTB	The HNTB Companies Engineers Architects Planners	Made	LER	Date	6/8/2012	Job Number	49633
		Checked	KDG	Date	6/12/12		
For	Cleveland Innerbelt	Backchk'd		Date		Sheet No.	4

M:\jobs\49633\Techprod\Bridges\Main Span (Unit 2)\Pier 11\RFI - Misalignment\Footing Design\[PileBending_modified_Pier11_Add 6 HP18 Piles.xls]Pile Bending_min_load

Pier Design - Pile Group Combined Pile Stresses
Main Viaduct (Pier 11)

			Top of Footing Loads							Lateral Resistance from Batter		Lateral Resistance from Pile Bending		Trans. Axial Force		Trans. Strong Bending		Trans. Weak Bending		Long. Strong Bending		Long. Weak Bending			Trans. Strong	Tran. Weak	Long. Strong	Long. Weak	Trans. Strong Interaxn.	Long. Strong Interaxn.		
Footing No.	Load Group	Load Case	F_V (kips)	F_T (kips)	F_L (kips)	M_T (kip-ft)	M_L (kip-ft)	T** (kip-ft)	$F_{add.}$ (kips)	F_{TB} (kips)	F_{LB} (kips)	F_{TP} (kips)	F_{LP} (kips)	$P_{uT/Pile}$ (kips)	$F_{TS/Pile}$ (kips)	$M_{TS/Pile}$ (kip-ft)	$F_{TW/Pile}$ (kips)	$M_{TW/Pile}$ (kip-ft)	$F_{LS/Pile}$ (kips)	$M_{LS/Pile}$ (kip-ft)	$F_{LW/Pile}$ (kips)	$M_{LW/Pile}$ (kip-ft)	P_u/P_r	M_{ux}/M_{rx}	M_{uy}/M_{ry}	M_{ux}/M_{rx}	M_{uy}/M_{ry}	(6.9.2.2)	(6.9.2.2)		
1	STRIV	3649	-10191	-511	-56	-4393	73	114	-3873	0	0	799	939	1003.0	44.4	275.3	0.0	0.0	0.0	0.0	52.2	323.5	0.40	0.14	0.00	0.00	0.35	0.83	0.00	≤ 1.0	O.K.
1	STRIV	3650	-10214	-699	55	-15046	-8775	-125	-3873	0	0	987	828	1159.3	54.8	340.1	0.0	0.0	0.0	0.0	46.0	285.3	0.46	0.17	0.00	0.00	0.31	0.88	0.00	≤ 1.0	O.K.
1	STRIV	3651	-11380	-615	-67	-6084	3	156	-3873	0	0	903	950	1087.3	50.2	311.1	0.0	0.0	0.0	0.0	52.8	327.3	0.43	0.15	0.00	0.00	0.35	0.88	0.00	≤ 1.0	O.K.
1	STRIV	3652	-11407	-810	68	-17060	-10775	-143	-3873	0	0	1098	815	1261.8	61.0	378.3	0.0	0.0	0.0	0.0	45.3	280.8	0.50	0.19	0.00	0.00	0.30	0.94	0.00	≤ 1.0	O.K.
1	STRIV	3654	-10214	-699	55	-15046	-8775	-125	-3873	0	0	987	828	1159.3	54.8	340.1	0.0	0.0	0.0	0.0	46.0	285.3	0.46	0.17	0.00	0.00	0.31	0.88	0.00	≤ 1.0	O.K.
1	STRIV	3656	-11407	-810	68	-17060	-10775	-143	-3873	0	0	1098	815	1261.8	61.0	378.3	0.0	0.0	0.0	0.0	45.3	280.8	0.50	0.19	0.00	0.00	0.30	0.94	0.00	≤ 1.0	O.K.
1	STR V	3658	-8948	-363	4	-272	-5902	-32	-3332	0	0	651	860	922.7	36.2	224.3	0.0	0.0	0.0	0.0	47.8	296.2	0.37	0.11	0.00	0.00	0.32	0.75	0.00	≤ 1.0	O.K.
1	STR V	3672	-9498	-434	-49	-959	463	-35	-3332	0	0	722	931	913.7	40.1	248.8	0.0	0.0	0.0	0.0	51.7	320.7	0.36	0.12	0.00	0.00	0.35	0.78	0.00	≤ 1.0	O.K.
1	STR V	15876	-9589	-693	99	-15115	-11194	-139	-3332	0	0	981	765	1123.6	54.5	338.0	0.0	0.0	0.0	0.0	42.5	263.5	0.45	0.17	0.00	0.00	0.28	0.85	0.00	≤ 1.0	O.K.
1	STR V	24840	-10678	-530	-52	-2254	-263	6	-3332	0	0	818	934	995.9	45.5	281.8	0.0	0.0	0.0	0.0	51.9	321.7	0.40	0.14	0.00	0.00	0.35	0.83	0.00	≤ 1.0	O.K.
1	STR V	25056	-10678	-530	-52	-2254	-263	6	-3332	0	0	818	934	995.9	45.5	281.8	0.0	0.0	0.0	0.0	51.9	321.7	0.40	0.14	0.00	0.00	0.35	0.83	0.00	≤ 1.0	O.K.
1	STR V	30993	-10523	-677	-152	-10228	8503	146	-3332	0	0	965	1034	1114.3	53.6	332.5	0.0	0.0	0.0	0.0	57.4	356.1	0.44	0.16	0.00	0.00	0.38	0.93	0.00	≤ 1.0	O.K.
1	STR V	30996	-10849	-708	-136	-11082	6140	64	-3332	0	0	996	1018	1121.5	55.3	343.2	0.0	0.0	0.0	0.0	56.6	350.6	0.45	0.17	0.00	0.00	0.38	0.93	0.00	≤ 1.0	O.K.
1	STR V	36069	-10408	-728	141	-14086	-14497	-135	-3332	0	0	1016	723	1192.0	56.5	350.0	0.0	0.0	0.0	0.0	40.2	249.0	0.47	0.17	0.00	0.00	0.27	0.87	0.00	≤ 1.0	O.K.
1	STR V	36504	-10739	-765	122	-15183	-14153	-123	-3332	0	0	1053	742	1216.1	58.5	362.8	0.0	0.0	0.0	0.0	41.2	255.6	0.48	0.18	0.00	0.00	0.28	0.89	0.00	≤ 1.0	O.K.
1	STR V	39204	-10875	-907	67	-22180	-9797	-88	-3332	0	0	1195	797	1243.0	66.4	411.7	0.0	0.0	0.0	0.0	44.3	274.5	0.49	0.20	0.00	0.00	0.30	0.94	0.00	≤ 1.0	O.K.
1	STR V	40500	-10898	-930	39	-23381	-7891	-82	-3332	0	0	1218	825	1237.6	67.7	419.6	0.0	0.0	0.0	0.0	45.8	284.1	0.49	0.21	0.00	0.00	0.31	0.95	0.00	≤ 1.0	O.K.
1	STR V	40524	-10864	-939	39	-23590	-7891	-76	-3332	0	0	1227	825	1237.6	68.2	422.7	0.0	0.0	0.0	0.0	45.8	284.1	0.49	0.21	0.00	0.00	0.31	0.95	0.00	≤ 1.0	O.K.
1	STR V	40533	-10724	-956	41	-23367	-7866	-76	-3332	0	0	1244	823	1229.5	69.1	428.6	0.0	0.0	0.0	0.0	45.7	283.5	0.49	0.21	0.00	0.00	0.31	0.95	0.00	≤ 1.0	O.K.
1	STR V	40716	-10898	-930	39	-23381	-7891	-82	-3332	0	0	1218	825	1237.6	67.7	419.6	0.0	0.0	0.0	0.0	45.8	284.1	0.49	0.21	0.00	0.00	0.31	0.95	0.00	≤ 1.0	O.K.
1	STR V	45579	-5892	-89	-2	5528	-2297	85	-3332	0	0	377	884	691.6	21.0	129.9	0.0	0.0	0.0	0.0	49.1	304.5	0.27	0.06	0.00	0.00	0.33	0.62	0.00	≤ 1.0	O.K.
1	STR V	59479	-5729	-447	41	-11105	-5410	40	-3332	0	0	735	823	819.8	40.8	253.3	0.0	0.0	0.0	0.0	45.7	283.5	0.33	0.12	0.00	0.00	0.31	0.71	0.00	≤ 1.0	O.K.
2	STR I	3	-8942	498	14	2970	-7635	185	-3332	0	0	786	869	954.3	43.7	270.8	0.0	0.0	0.0	0.0	48.3	299.4	0.38	0.13	0.00	0.00	0.32	0.78	0.00	≤ 1.0	O.K.
2	STR I	43	-9134	546	-88	5320	5390	69	-3332	0	0	834	971	963.9	46.3	287.4	0.0	0.0	0.0	0.0	54.0	334.6	0.38	0.14	0.00	0.00	0.36	0.83	0.00	≤ 1.0	O.K.
2	STR I	904	-10498	701	-73	6607	1765	152	-3332	0	0	989	956	1030.6	55.0	340.7	0.0	0.0	0.0	0.0	53.1	329.4	0.41	0.17	0.00	0.00	0.36	0.87	0.00	≤ 1.0	O.K.
2	STR I	910	-10884	698	-72	7923	1296	177	-3332	0	0	986	955	1057.0	54.8	339.7	0.0	0.0	0.0	0.0	53.1	329.1	0.42	0.17	0.00	0.00	0.36	0.88	0.00	≤ 1.0	O.K.
2	STR I	1009	-10190	617	-106	4157	5819	260	-3332	0	0	905	989	1024.1	50.3	311.8	0.0	0.0	0.0	0.0	55.0	340.8	0.41	0.15	0.00	0.00	0.37	0.87	0.00	≤ 1.0	O.K.
2	STR I	1018	-10828	648	-89	5407	2696	180	-3332	0	0	936	972	1045.6	52.0	322.5	0.0	0.0	0.0	0.0	54.0	334.9	0.41	0.16	0.00	0.00	0.36	0.88	0.00	≤ 1.0	O.K.
2	STR I	1261	-10828	648	-89	5407	2696	180	-3332	0	0	936	972	1045.6	52.0	322.5	0.0	0.0	0.0	0.0	54.0	334.9	0.41	0.16	0.00	0.00	0.36	0.88	0.00	≤ 1.0	O.K.
2	STR I	1339	-10376	749	97	13205	-11404	-120	-3332	0	0	1037	786	1151.7	57.6	357.3	0.0	0.0	0.0	0.0	43.7	270.8	0.46	0.18	0.00	0.00	0.29	0.87	0.00	≤ 1.0	O.K.
2	STR I	1342	-10846	804	71	14564	-11034	-118	-3332	0	0	1092	812	1185.7	60.7	376.2	0.0	0.0	0.0	0.0	45.1	279.8	0.47	0.19	0.00	0.00	0.30	0.90	0.00	≤ 1.0	O.K.
2	STR I	1344	-10824	810	19	14991	-9221	-122	-3332	0	0	1098	864	1170.5	61.0	378.3	0.0	0.0	0.0	0.0	48.0	297.7	0.46	0.19	0.00	0.00	0.32	0.92	0.00	≤ 1.0	O.K.
2	STR I	1347	-10389	838	37	14608	-9483	-75	-3332	0	0	1126	846	1148.9	62.6	387.9	0.0	0.0	0.0	0.0	47.0	291.5	0.46	0.19	0.00	0.00	0.31	0.91	0.00	≤ 1.0	O.K.
2	STR I	1585	-10846	804	71	14564	-11034	-118	-3332	0	0	1092	812	1185.7	60.7	376.2	0.0	0.0	0.0	0.0	45.1	279.8	0.47	0.19	0.00	0.00	0.30	0.90	0.00	≤ 1.0	O.K.
2	STR I	1857	-6062	159	-9	-2117	-2830	291	-3332	0	0	447	892	670.5	24.8	154.1	0.0	0.0	0.0	0.0	49.6	307.4	0.27	0.08	0.00	0.00	0.33	0.63	0.00	≤ 1.0	O.K.
2	STR I	2265	-5386	377	23	7164	-4404	-151	-3332	0	0	665	860	753.3	37.0	229.1	0.0	0.0	0.0	0.0	47.8	296.3	0.30	0.11	0.00	0.00	0.32	0.68	0.00	≤ 1.0	O.K.
2	STIII	3483	-8235	754	114	19190	-12737	-292	-3332	0	0	1043	703	1111.9	58.0	359.3	0.0	0.0	0.0	0.0	39.1	242.1	0.44	0.18	0.00	0.00	0.26	0.83	0.00	≤ 1.0	O.K.
2	STIII	3505	-9544	738	-1	13354	-4676	-40	-3332	0	0	1027	878	1073.1	57.1	353.8	0.0	0.0	0.0	0.0	48.8	302.4	0.43	0.17	0.00	0.00	0.33	0.87	0.00	≤ 1.0	O.K.
2	STIII	3517	-9245	351	-81	-4676	2486	280	-3332	0	0	640	958	863.4	35.6	220.5	0.0	0.0	0.0	0.0	53.2	330.0	0.34	0.11	0.00	0.00	0.36	0.76	0.00	≤ 1.0	O.K.
2	STIII	3521	-9285	408	-144	-2073	6295	290	-3332	0	0	697	1021	901.3	38.7	240.2	0.0	0.0	0.0	0.0	56.7	351.7	0.36	0.12	0.00	0.00	0.38	0.80	0.00	≤ 1.0	O.K.
2	STIII	3529	-9521	863	80	20950	-11882	-271	-3332	0	0	1152	737	1193.3	64.0	396.9	0.0	0.0	0.0	0.0	40.9	253.8	0.47	0.20	0.00	0.00	0.27	0.89	0.00	≤ 1.0	O.K.
2	STIII	3530	-9294	836	109	21960	-13327	-239	-3332	0	0	1125	708	1198.4	62.5	387.6	0.0	0.0	0.0	0.0	39.3	243.8	0.48	0.19	0.00	0.00	0.26	0.88	0.00	≤ 1.0	O.K.
2	STIII	3532	-9508	841	137	20021	-15481	-301	-3332	0	0	1130	680	1215.7	62.8	389.3	0.0	0.0	0.0	0.0	37.8	234.2	0.48	0.19	0.00	0.00	0.25	0.88	0.00	≤ 1.0	O.K.
2	STIII	3533	-9480	805	143	18346	-15699	-280	-3332	0	0	1094	674	1202.8	60.8	376.9	0.0	0.0	0.0	0.0	37.4	232.1	0.48	0.19	0.00	0.00	0.25	0.87	0.00	≤ 1.0	O.K.
2	STIII	3566	-4405	10	-79	-11741	4816	313	-3332	0	0	299	956	680.4	16.6	103.1	0.0	0.0	0.0	0.0	53.1	329.3	0.27	0.05	0.00	0.00	0.36	0.63	0.00	≤ 1.0	O.K.
2	STIII	3578	-5309	553	89	17775	-9220	-198	-3332	0	0	842	728	899.2	46.8	290.1	0.0	0.0	0.0	0.0	40.4	250.7	0.36	0.14	0.00	0.00	0.27	0.72	0.00	≤ 1.0	O.K.
2	STRIV	3649	-9726	542	-39	4198	-850	104	-3873	0	0	830	922	985.3	46.1	286.0	0.0	0.0	0.0	0.0	51.2	317.7	0.39	0.14	0.00	0.00	0.34	0.82	0.00	≤ 1.0	O.K.
2	STRIV	3651	-11015	653	-47	6094	-1237	137	-3873	0	0	941	930	1078.9	52.3	324.2	0.0	0.0	0.0	0.0	51.7	320.4	0.43	0.16	0.00	0.00	0.35	0.88	0.00	≤ 1.0	O.K.
2	STRIV	3652	-10988	773	47	13441	-9631	-124	-3873	0	0	1061	836	1202.3	59.0	365.5	0.0	0.0	0.0	0.0	46.5	288.1	0.48	0.18	0.00	0.00	0.31	0.91	0.00	≤ 1.0	O.K.
2	STRIV	3654	-9704	669	39	11869	-7771	-115	-3873	0	0	957	844	1099.5	53.2	329.7	0.0	0.0	0.0	0.0	46.9	290.8	0.44	0.16	0.00	0.00	0.31	0.86	0.00	≤ 1.0	O.K.
2	STRIV	3655	-11015	653	-47	6094	-1237	137	-3873	0	0	941	930	1078.9	52.3	324.2	0.0	0.0	0.0	0.0	51.7	320.4	0.43	0.16	0.00	0.00	0.35	0.88	0.00	≤ 1.0	O.K.

HNTB	The HNTB Companies Engineers Architects Planners	Made	LER	Date	6/8/2012	Job Number	49633
		Checked	KDG	Date	6/12/12		
For	Cleveland Innerbelt	Backchk'd		Date		Sheet No.	5

Pier Design - Pile Group Combined Pile Stresses
Main Viaduct (Pier 11)

			Top of Footing Loads							Lateral Resistance from Batter		Lateral Resistance from Pile Bending		Trans. Axial Force		Trans. Strong Bending		Trans. Weak Bending		Long. Strong Bending		Long. Weak Bending			Trans. Strong	Tran. Weak	Long. Strong	Long. Weak	Trans. Strong Interaxn.	Long. Strong Interaxn.		
Footing No.	Load Group	Load Case	F_V (kips)	F_T (kips)	F_L (kips)	M_T (kip-ft)	M_L (kip-ft)	T** (kip-ft)	$F_{add.}$ (kips)	F_{TB} (kips)	F_{LB} (kips)	F_{TP} (kips)	F_{LP} (kips)	$P_{uT/Pile}$ (kips)	$F_{TS/Pile}$ (kips)	$M_{TS/Pile}$ (kip-ft)	$F_{TW/Pile}$ (kips)	$M_{TW/Pile}$ (kip-ft)	$F_{LS/Pile}$ (kips)	$M_{LS/Pile}$ (kip-ft)	$F_{LW/Pile}$ (kips)	$M_{LW/Pile}$ (kip-ft)	P_u/P_r	M_{ux}/M_{rx}	M_{uy}/M_{ry}	M_{ux}/M_{rx}	M_{uy}/M_{ry}	(6.9.2.2)	(6.9.2.2)		
2	STR V	3659	-8813	556	19	6313	-7480	98	-3332	0	0	844	845	980.3	46.9	290.8	0.0	0.0	0.0	0.0	46.9	291.0	0.39	0.14	0.00	0.00	0.31	0.80	0.00	≤ 1.0	O.K.
2	STR V	8994	-9149	440	-85	-197	3644	198	-3332	0	0	728	967	873.2	40.5	250.8	0.0	0.0	0.0	0.0	53.7	333.1	0.35	0.12	0.00	0.00	0.36	0.78	0.00	≤ 1.0	O.K.
2	STR V	24408	-10205	730	-53	9521	151	41	-3332	0	0	1018	935	1026.8	56.6	350.7	0.0	0.0	0.0	0.0	51.9	322.0	0.41	0.17	0.00	0.00	0.35	0.87	0.00	≤ 1.0	O.K.
2	STR V	24870	-10613	745	-41	10972	-1275	86	-3332	0	0	1033	923	1072.1	57.4	355.9	0.0	0.0	0.0	0.0	51.3	317.9	0.43	0.18	0.00	0.00	0.34	0.89	0.00	≤ 1.0	O.K.
2	STR V	30162	-10430	543	-102	1294	3854	244	-3332	0	0	831	984	1003.7	46.2	286.3	0.0	0.0	0.0	0.0	54.7	338.9	0.40	0.14	0.00	0.00	0.37	0.85	0.00	≤ 1.0	O.K.
2	STR V	30405	-10430	543	-102	1294	3854	244	-3332	0	0	831	984	1003.7	46.2	286.3	0.0	0.0	0.0	0.0	54.7	338.9	0.40	0.14	0.00	0.00	0.37	0.85	0.00	≤ 1.0	O.K.
2	STR V	31449	-9963	548	-124	1700	6654	291	-3332	0	0	836	1006	1003.0	46.5	288.0	0.0	0.0	0.0	0.0	55.9	346.5	0.40	0.14	0.00	0.00	0.37	0.86	0.00	≤ 1.0	O.K.
2	STR V	31458	-10454	572	-111	2664	4245	229	-3332	0	0	860	993	1019.5	47.8	296.3	0.0	0.0	0.0	0.0	55.2	342.0	0.40	0.15	0.00	0.00	0.37	0.86	0.00	≤ 1.0	O.K.
2	STR V	31701	-10454	572	-111	2664	4245	229	-3332	0	0	860	993	1019.5	47.8	296.3	0.0	0.0	0.0	0.0	55.2	342.0	0.40	0.15	0.00	0.00	0.37	0.86	0.00	≤ 1.0	O.K.
2	STR V	35238	-10579	855	88	17831	-12420	-196	-3332	0	0	1143	776	1215.3	63.5	393.8	0.0	0.0	0.0	0.0	43.1	267.3	0.48	0.19	0.00	0.00	0.29	0.91	0.00	≤ 1.0	O.K.
2	STR V	35240	-10562	860	48	18161	-11022	-199	-3332	0	0	1148	816	1203.6	63.8	395.5	0.0	0.0	0.0	0.0	45.3	281.0	0.48	0.19	0.00	0.00	0.30	0.92	0.00	≤ 1.0	O.K.
2	STR V	35243	-10226	881	62	17866	-11224	-163	-3332	0	0	1169	802	1186.9	65.0	402.7	0.0	0.0	0.0	0.0	44.6	276.2	0.47	0.20	0.00	0.00	0.30	0.91	0.00	≤ 1.0	O.K.
2	STR V	35483	-10562	860	48	18161	-11022	-199	-3332	0	0	1148	816	1203.6	63.8	395.5	0.0	0.0	0.0	0.0	45.3	281.0	0.48	0.19	0.00	0.00	0.30	0.92	0.00	≤ 1.0	O.K.
2	STR V	36102	-10566	839	95	17101	-12828	-190	-3332	0	0	1127	769	1212.2	62.6	388.3	0.0	0.0	0.0	0.0	42.7	264.9	0.48	0.19	0.00	0.00	0.29	0.91	0.00	≤ 1.0	O.K.
2	STR V	36345	-10566	839	95	17101	-12828	-190	-3332	0	0	1127	769	1212.2	62.6	388.3	0.0	0.0	0.0	0.0	42.7	264.9	0.48	0.19	0.00	0.00	0.29	0.91	0.00	≤ 1.0	O.K.
2	STR V	36531	-10192	783	117	15413	-13104	-182	-3332	0	0	1071	747	1180.3	59.5	369.0	0.0	0.0	0.0	0.0	41.5	257.3	0.47	0.18	0.00	0.00	0.28	0.88	0.00	≤ 1.0	O.K.
2	STR V	50873	-5840	97	-36	-5640	-264	315	-3332	0	0	385	918	671.4	21.4	132.7	0.0	0.0	0.0	0.0	51.0	316.2	0.27	0.07	0.00	0.00	0.34	0.63	0.00	≤ 1.0	O.K.
2	STR V	56033	-5456	461	46	11166	-6368	-212	-3332	0	0	749	818	813.3	41.6	258.1	0.0	0.0	0.0	0.0	45.4	281.7	0.32	0.13	0.00	0.00	0.30	0.71	0.00	≤ 1.0	O.K.
1	STR I	1	-9322	-489	0	-4900	-7270	161	-3332	0	0	777	883	983.8	43.2	267.7	0.0	0.0	0.0	0.0	49.1	304.3	0.39	0.13	0.00	0.00	0.33	0.80	0.00	≤ 1.0	O.K.
1	STR I	6	-9868	-532	-33	-5448	-2977	-136	-3332	0	0	820	916	986.6	45.6	282.5	0.0	0.0	0.0	0.0	50.9	315.6	0.39	0.14	0.00	0.00	0.34	0.82	0.00	≤ 1.0	O.K.
1	STR I	150	-9884	-713	29	-15697	-8262	-86	-3332	0	0	1001	854	1110.3	55.6	344.9	0.0	0.0	0.0	0.0	47.5	294.3	0.44	0.17	0.00	0.00	0.32	0.87	0.00	≤ 1.0	O.K.
1	STR I	294	-11056	-636	-45	-7140	-3047	-93	-3332	0	0	924	928	1070.2	51.3	318.4	0.0	0.0	0.0	0.0	51.6	319.8	0.42	0.16	0.00	0.00	0.35	0.87	0.00	≤ 1.0	O.K.
1	STR I	330	-11153	-721	-77	-11473	-504	-71	-3332	0	0	1009	960	1088.7	56.1	347.6	0.0	0.0	0.0	0.0	53.4	330.8	0.43	0.17	0.00	0.00	0.36	0.90	0.00	≤ 1.0	O.K.
1	STR I	333	-10089	-537	-83	-5887	1238	584	-3332	0	0	825	966	989.2	45.8	284.3	0.0	0.0	0.0	0.0	53.7	332.8	0.39	0.14	0.00	0.00	0.36	0.84	0.00	≤ 1.0	O.K.
1	STR I	366	-11056	-636	-45	-7140	-3047	-93	-3332	0	0	924	928	1070.2	51.3	318.4	0.0	0.0	0.0	0.0	51.6	319.8	0.42	0.16	0.00	0.00	0.35	0.87	0.00	≤ 1.0	O.K.
1	STR I	437	-10231	-763	88	-16506	-10924	-107	-3332	0	0	1051	795	1162.1	58.4	362.1	0.0	0.0	0.0	0.0	44.2	273.9	0.46	0.18	0.00	0.00	0.30	0.88	0.00	≤ 1.0	O.K.
1	STR I	438	-11077	-823	41	-17711	-10262	-103	-3332	0	0	1111	842	1212.6	61.7	382.8	0.0	0.0	0.0	0.0	46.8	290.1	0.48	0.19	0.00	0.00	0.31	0.93	0.00	≤ 1.0	O.K.
1	STR I	474	-11174	-907	10	-22044	-7748	-84	-3332	0	0	1195	873	1231.3	66.4	411.7	0.0	0.0	0.0	0.0	48.5	300.8	0.49	0.20	0.00	0.00	0.32	0.96	0.00	≤ 1.0	O.K.
1	STR I	481	-11133	-925	9	-22798	-7679	-106	-3332	0	0	1213	874	1234.5	67.4	417.9	0.0	0.0	0.0	0.0	48.6	301.2	0.49	0.21	0.00	0.00	0.33	0.96	0.00	≤ 1.0	O.K.
1	STR I	485	-10846	-964	25	-22241	-8190	-207	-3332	0	0	1252	858	1222.4	69.6	431.3	0.0	0.0	0.0	0.0	47.7	295.6	0.49	0.21	0.00	0.00	0.32	0.96	0.00	≤ 1.0	O.K.
1	STR I	583	-6082	-150	-20	1899	-2117	168	-3332	0	0	438	903	664.8	24.3	151.0	0.0	0.0	0.0	0.0	50.2	311.1	0.26	0.07	0.00	0.00	0.34	0.63	0.00	≤ 1.0	O.K.
1	STR I	789	-5690	-420	20	-10046	-4257	-103	-3332	0	0	708	863	790.7	39.3	244.0	0.0	0.0	0.0	0.0	48.0	297.4	0.31	0.12	0.00	0.00	0.32	0.71	0.00	≤ 1.0	O.K.
1	STIII	1177	-8361	-405	106	-4118	-12024	-225	-3332	0	0	694	711	991.0	38.6	239.1	0.0	0.0	0.0	0.0	39.5	244.9	0.39	0.12	0.00	0.00	0.26	0.73	0.00	≤ 1.0	O.K.
1	STIII	1201	-9531	-326	1	4596	-4685	31	-3332	0	0	615	816	911.3	34.2	211.9	0.0	0.0	0.0	0.0	45.3	281.0	0.36	0.10	0.00	0.00	0.30	0.72	0.00	≤ 1.0	O.K.
1	STIII	1210	-9743	-596	-22	-8180	-2042	220	-3332	0	0	885	899	1019.8	49.2	304.9	0.0	0.0	0.0	0.0	49.9	309.6	0.40	0.15	0.00	0.00	0.33	0.84	0.00	≤ 1.0	O.K.
1	STIII	1212	-9821	-686	-92	-12630	2942	251	-3332	0	0	975	969	1058.1	54.2	335.9	0.0	0.0	0.0	0.0	53.8	333.7	0.42	0.17	0.00	0.00	0.36	0.89	0.00	≤ 1.0	O.K.
1	STIII	1216	-9818	-677	-173	-12269	8187	194	-3332	0	0	966	1050	1099.5	53.7	332.8	0.0	0.0	0.0	0.0	58.3	361.6	0.44	0.16	0.00	0.00	0.39	0.93	0.00	≤ 1.0	O.K.
1	STIII	1217	-9791	-642	-175	-10616	8199	166	-3332	0	0	931	1052	1085.1	51.7	320.8	0.0	0.0	0.0	0.0	58.4	362.3	0.43	0.16	0.00	0.00	0.39	0.92	0.00	≤ 1.0	O.K.
1	STIII	1229	-9595	-572	176	-8704	-17548	-161	-3332	0	0	861	641	1146.5	47.8	296.7	0.0	0.0	0.0	0.0	35.6	220.8	0.45	0.15	0.00	0.00	0.24	0.80	0.00	≤ 1.0	O.K.
1	STIII	1235	-9819	-845	56	-21855	-8494	-2	-3332	0	0	1134	761	1188.0	63.0	390.7	0.0	0.0	0.0	0.0	42.3	262.1	0.47	0.19	0.00	0.00	0.28	0.89	0.00	≤ 1.0	O.K.
1	STIII	1237	-9855	-887	-1	-23916	-4602	-1	-3332	0	0	1176	878	1169.1	65.3	405.2	0.0	0.0	0.0	0.0	48.8	302.4	0.46	0.20	0.00	0.00	0.33	0.93	0.00	≤ 1.0	O.K.
1	STIII	1238	-9660	-884	-31	-25202	-2061	-83	-3332	0	0	1173	908	1145.6	65.2	404.1	0.0	0.0	0.0	0.0	50.4	312.7	0.45	0.20	0.00	0.00	0.34	0.93	0.00	≤ 1.0	O.K.
1	STIII	1250	-4694	23	69	11867	-6975	-149	-3332	0	0	312	748	773.3	17.3	107.6	0.0	0.0	0.0	0.0	41.6	257.6	0.31	0.05	0.00	0.00	0.28	0.60	0.00	≤ 1.0	O.K.
1	STRIV	1345	-10191	-511	-56	-4393	73	114	-3873	0	0	799	939	1003.0	44.4	275.3	0.0	0.0	0.0	0.0	52.2	323.5	0.40	0.14	0.00	0.00	0.35	0.83	0.00	≤ 1.0	O.K.
1	STRIV	1346	-10214	-699	55	-15046	-8775	-125	-3873	0	0	987	828	1159.3	54.8	340.1	0.0	0.0	0.0	0.0	46.0	285.3	0.46	0.17	0.00	0.00	0.31	0.88	0.00	≤ 1.0	O.K.
1	STRIV	1347	-11380	-615	-67	-6084	3	156	-3873	0	0	903	950	1087.3	50.2	311.1	0.0	0.0	0.0	0.0	52.8	327.3	0.43	0.15	0.00	0.00	0.35	0.88	0.00	≤ 1.0	O.K.
1	STRIV	1348	-11407	-810	68	-17060	-10775	-143	-3873	0	0	1098	815	1261.8	61.0	378.3	0.0	0.0	0.0	0.0	45.3	280.8	0.50	0.19	0.00	0.00	0.30	0.94	0.00	≤ 1.0	O.K.
1	STRIV	1350	-10214	-699	55	-15046	-8775	-125	-3873	0	0	987	828	1159.3	54.8	340.1	0.0	0.0	0.0	0.0	46.0	64.4	0.46	0.17	0.00	0.00	0.07	0.67	0.00	≤ 1.0	O.K.
1	STRIV	1352	-11407	-810	68	-17060	-10775	-143	-3873	0	0	1098	815	1261.8	61.0	378.3	0.0	0.0	0.0	0.0	45.3	280.8	0.50	0.19	0.00	0.00	0.30	0.94	0.00	≤ 1.0	O.K.

HNTB	The HNTB Companies Engineers Architects Planners	Made	LER	Date	6/8/2012	Job Number	49633
		Checked	KDG	Date	6/12/12		
For	Cleveland Innerbelt	Backchk'd		Date		Sheet No.	6

M:\jobs\49633\Techprod\Bridges\Main Span (Unit 2)\Pier 11\RFI - Misalignment\Footing Design\[PileBending_modified_Pier11_Add 6 HP18 Piles.xls]Pile Bending_min_load

Pier Design - Pile Group Combined Pile Stresses
Main Viaduct (Pier 11)

			Top of Footing Loads							Lateral Resistance from Batter		Lateral Resistance from Pile Bending																	
Footing No.	Load Group	Load Case	F_V (kips)	F_T (kips)	F_L (kips)	M_T (kip-ft)	M_L (kip-ft)	T** (kip-ft)	$F_{add.}$ (kips)	F_{TB} (kips)	F_{LB} (kips)	F_{TP} (kips)	F_{LP} (kips)	Trans. Axial Force $P_{uT/Pile}$ (kips)	$F_{TS/Pile}$ (kips)	Trans. Strong Bending $M_{TS/Pile}$ (kip-ft)	$F_{TW/Pile}$ (kips)	Trans. Weak Bending $M_{TW/Pile}$ (kip-ft)	$F_{LS/Pile}$ (kips)	Long. Strong Bending $M_{LS/Pile}$ (kip-ft)	$F_{LW/Pile}$ (kips)	Long. Weak Bending $M_{LW/Pile}$ (kip-ft)	P_u/P_r	Trans. Strong M_{ux}/M_{rx}	Tran. Weak M_{uy}/M_{ry}	Long. Strong M_{ux}/M_{rx}	Long. Weak M_{uy}/M_{ry}	Trans. Strong Interaxn. (6.9.2.2)	Long. Strong Interaxn. (6.9.2.2)		
1	STR V	1353	-9070	-401	13	-972	-7462	104	-3332	0	0	689	851	948.7	38.3	237.4	0.0	0.0	0.0	0.0	47.3	293.1	0.38	0.12	0.00	0.00	0.32	0.76	0.00	≤ 1.0	O.K.
1	STR V	2690	-9653	-599	-53	-9584	-696	-38	-3332	0	0	887	935	994.9	49.3	305.6	0.0	0.0	0.0	0.0	51.9	322.0	0.39	0.15	0.00	0.00	0.35	0.84	0.00	≤ 1.0	O.K.
1	STR V	4850	-9582	-680	33	-15022	-7992	-125	-3332	0	0	968	831	1093.3	53.8	333.5	0.0	0.0	0.0	0.0	46.2	286.2	0.43	0.16	0.00	0.00	0.31	0.85	0.00	≤ 1.0	O.K.
1	STR V	8414	-10672	-531	-15	-2690	-4877	-84	-3332	0	0	819	897	1035.2	45.5	282.2	0.0	0.0	0.0	0.0	49.8	308.9	0.41	0.14	0.00	0.00	0.33	0.83	0.00	≤ 1.0	O.K.
1	STR V	8486	-10672	-531	-15	-2690	-4877	-84	-3332	0	0	819	897	1035.2	45.5	282.2	0.0	0.0	0.0	0.0	49.8	308.9	0.41	0.14	0.00	0.00	0.33	0.83	0.00	≤ 1.0	O.K.
1	STR V	10466	-10873	-735	-111	-12915	2446	4	-3332	0	0	1023	993	1107.7	56.8	352.5	0.0	0.0	0.0	0.0	55.2	342.0	0.44	0.17	0.00	0.00	0.37	0.92	0.00	≤ 1.0	O.K.
1	STR V	10469	-10053	-593	-116	-8606	3790	509	-3332	0	0	881	998	1034.7	49.0	303.5	0.0	0.0	0.0	0.0	55.4	343.7	0.41	0.15	0.00	0.00	0.37	0.87	0.00	≤ 1.0	O.K.
1	STR V	12157	-10053	-687	121	-13085	-13410	-145	-3332	0	0	975	743	1153.5	54.2	335.9	0.0	0.0	0.0	0.0	41.3	255.9	0.46	0.17	0.00	0.00	0.28	0.85	0.00	≤ 1.0	O.K.
1	STR V	12302	-10718	-746	84	-14644	-12804	-130	-3332	0	0	1034	780	1197.4	57.5	356.2	0.0	0.0	0.0	0.0	43.3	268.6	0.48	0.18	0.00	0.00	0.29	0.89	0.00	≤ 1.0	O.K.
1	STR V	13209	-10853	-927	14	-23620	-7413	-64	-3332	0	0	1215	850	1231.1	67.5	418.6	0.0	0.0	0.0	0.0	47.2	292.8	0.49	0.21	0.00	0.00	0.32	0.95	0.00	≤ 1.0	O.K.
1	STR V	13634	-10908	-937	-12	-24239	-5560	-40	-3332	0	0	1225	894	1222.0	68.1	422.0	0.0	0.0	0.0	0.0	49.7	307.9	0.48	0.21	0.00	0.00	0.33	0.97	0.00	≤ 1.0	O.K.
1	STR V	13641	-10876	-951	-13	-24821	-5507	-57	-3332	0	0	1239	895	1224.5	68.8	426.9	0.0	0.0	0.0	0.0	49.7	308.3	0.49	0.21	0.00	0.00	0.33	0.97	0.00	≤ 1.0	O.K.
1	STR V	13645	-10655	-981	-1	-24391	-5901	-135	-3332	0	0	1269	883	1215.2	70.5	437.2	0.0	0.0	0.0	0.0	49.1	304.1	0.48	0.22	0.00	0.00	0.33	0.97	0.00	≤ 1.0	O.K.
1	STR V	13713	-10876	-951	-13	-24821	-5507	-57	-3332	0	0	1239	895	1224.5	68.8	426.9	0.0	0.0	0.0	0.0	49.7	308.3	0.49	0.21	0.00	0.00	0.33	0.97	0.00	≤ 1.0	O.K.
1	STR V	15327	-5913	-91	10	5378	-4148	100	-3332	0	0	379	854	707.4	21.1	130.6	0.0	0.0	0.0	0.0	47.4	294.1	0.28	0.06	0.00	0.00	0.32	0.62	0.00	≤ 1.0	O.K.
1	STR V	19997	-5708	-446	30	-11359	-4743	-64	-3332	0	0	734	834	814.5	40.8	252.9	0.0	0.0	0.0	0.0	46.3	287.2	0.32	0.12	0.00	0.00	0.31	0.71	0.00	≤ 1.0	O.K.
2	STR I	1	-8928	484	16	2334	-8203	50	-3332	0	0	772	867	952.8	42.9	266.0	0.0	0.0	0.0	0.0	48.2	298.7	0.38	0.13	0.00	0.00	0.32	0.78	0.00	≤ 1.0	O.K.
2	STR I	293	-9837	606	-66	5475	1807	199	-3332	0	0	894	949	980.0	49.7	308.0	0.0	0.0	0.0	0.0	52.7	327.0	0.39	0.15	0.00	0.00	0.35	0.84	0.00	≤ 1.0	O.K.
2	STR I	304	-10858	687	-21	7296	-5239	252	-3332	0	0	975	904	1081.5	54.2	335.9	0.0	0.0	0.0	0.0	50.2	311.5	0.43	0.17	0.00	0.00	0.34	0.88	0.00	≤ 1.0	O.K.
2	STR I	339	-9887	554	-88	3357	3558	114	-3332	0	0	842	971	979.9	46.8	290.1	0.0	0.0	0.0	0.0	54.0	334.6	0.39	0.14	0.00	0.00	0.36	0.84	0.00	≤ 1.0	O.K.
2	STR I	343	-10689	606	-57	2830	-1769	345	-3332	0	0	894	940	1009.2	49.7	308.0	0.0	0.0	0.0	0.0	52.2	323.9	0.40	0.15	0.00	0.00	0.35	0.85	0.00	≤ 1.0	O.K.
2	STR I	348	-10688	542	-53	514	-2787	177	-3332	0	0	830	936	997.5	46.1	286.0	0.0	0.0	0.0	0.0	52.0	322.5	0.40	0.14	0.00	0.00	0.35	0.83	0.00	≤ 1.0	O.K.
2	STR I	415	-10689	606	-57	2830	-1769	345	-3332	0	0	894	940	1009.2	49.7	308.0	0.0	0.0	0.0	0.0	52.2	323.9	0.40	0.15	0.00	0.00	0.35	0.85	0.00	≤ 1.0	O.K.
2	STR I	420	-10688	542	-53	514	-2787	177	-3332	0	0	830	936	997.5	46.1	286.0	0.0	0.0	0.0	0.0	52.0	322.5	0.40	0.14	0.00	0.00	0.35	0.83	0.00	≤ 1.0	O.K.
2	STR I	447	-9907	712	71	12612	-9972	-113	-3332	0	0	1000	812	1106.8	55.6	344.5	0.0	0.0	0.0	0.0	45.1	279.8	0.44	0.17	0.00	0.00	0.30	0.86	0.00	≤ 1.0	O.K.
2	STR I	448	-10841	821	18	15340	-9239	-106	-3332	0	0	1109	865	1174.6	61.6	382.1	0.0	0.0	0.0	0.0	48.1	298.1	0.47	0.19	0.00	0.00	0.32	0.92	0.00	≤ 1.0	O.K.
2	STR I	449	-10406	849	36	14957	-9501	-60	-3332	0	0	1137	847	1153.0	63.2	391.7	0.0	0.0	0.0	0.0	47.1	291.9	0.46	0.19	0.00	0.00	0.32	0.91	0.00	≤ 1.0	O.K.
2	STR I	457	-10837	818	18	15214	-9305	-88	-3332	0	0	1106	865	1173.8	61.5	381.0	0.0	0.0	0.0	0.0	48.1	298.1	0.47	0.19	0.00	0.00	0.32	0.92	0.00	≤ 1.0	O.K.
2	STR I	520	-10841	821	18	15340	-9239	-106	-3332	0	0	1109	865	1174.6	61.6	382.1	0.0	0.0	0.0	0.0	48.1	298.1	0.47	0.19	0.00	0.00	0.32	0.92	0.00	≤ 1.0	O.K.
2	STR I	529	-10837	818	18	15214	-9305	-88	-3332	0	0	1106	865	1173.8	61.5	381.0	0.0	0.0	0.0	0.0	48.1	298.1	0.47	0.19	0.00	0.00	0.32	0.92	0.00	≤ 1.0	O.K.
2	STR I	619	-6019	116	-13	-4114	-2617	245	-3332	0	0	404	896	682.3	22.5	139.2	0.0	0.0	0.0	0.0	49.8	308.7	0.27	0.07	0.00	0.00	0.33	0.63	0.00	≤ 1.0	O.K.
2	STR I	752	-5367	369	21	7020	-4261	-108	-3332	0	0	657	862	749.6	36.5	226.4	0.0	0.0	0.0	0.0	47.9	297.0	0.30	0.11	0.00	0.00	0.32	0.68	0.00	≤ 1.0	O.K.
2	STIII	1179	-8235	754	114	19190	-12737	-292	-3332	0	0	1043	703	1111.9	58.0	359.3	0.0	0.0	0.0	0.0	39.1	242.1	0.44	0.18	0.00	0.00	0.26	0.83	0.00	≤ 1.0	O.K.
2	STIII	1201	-9544	738	-1	13354	-4676	-40	-3332	0	0	1027	878	1073.1	57.1	353.8	0.0	0.0	0.0	0.0	48.8	302.4	0.43	0.17	0.00	0.00	0.33	0.87	0.00	≤ 1.0	O.K.
2	STIII	1213	-9245	351	-81	-4676	2486	280	-3332	0	0	640	958	863.4	35.6	220.5	0.0	0.0	0.0	0.0	53.2	330.0	0.34	0.11	0.00	0.00	0.36	0.76	0.00	≤ 1.0	O.K.
2	STIII	1217	-9285	408	-144	-2073	6295	290	-3332	0	0	697	1021	901.3	38.7	240.2	0.0	0.0	0.0	0.0	56.7	351.7	0.36	0.12	0.00	0.00	0.38	0.80	0.00	≤ 1.0	O.K.
2	STIII	1225	-9521	863	80	20950	-11882	-271	-3332	0	0	1152	737	1193.3	64.0	396.9	0.0	0.0	0.0	0.0	40.9	253.8	0.47	0.20	0.00	0.00	0.27	0.89	0.00	≤ 1.0	O.K.
2	STIII	1226	-9294	836	109	21960	-13327	-239	-3332	0	0	1125	708	1198.4	62.5	387.6	0.0	0.0	0.0	0.0	39.3	243.8	0.48	0.19	0.00	0.00	0.26	0.88	0.00	≤ 1.0	O.K.
2	STIII	1228	-9508	841	137	20021	-15481	-301	-3332	0	0	1130	680	1215.7	62.8	389.3	0.0	0.0	0.0	0.0	37.8	234.2	0.48	0.19	0.00	0.00	0.25	0.88	0.00	≤ 1.0	O.K.
2	STIII	1229	-9480	805	143	18346	-15699	-280	-3332	0	0	1094	674	1202.8	60.8	376.9	0.0	0.0	0.0	0.0	37.4	232.1	0.48	0.19	0.00	0.00	0.25	0.87	0.00	≤ 1.0	O.K.
2	STIII	1262	-4405	10	-79	-11741	4816	313	-3332	0	0	299	956	680.4	16.6	103.1	0.0	0.0	0.0	0.0	53.1	329.3	0.27	0.05	0.00	0.00	0.36	0.63	0.00	≤ 1.0	O.K.
2	STIII	1274	-5309	553	89	17775	-9220	-198	-3332	0	0	842	728	899.2	46.8	290.1	0.0	0.0	0.0	0.0	40.4	250.7	0.36	0.14	0.00	0.00	0.27	0.72	0.00	≤ 1.0	O.K.

HNTB	The HNTB Companies	Made	LER	Date	6/8/2012	Job Number	
		Checked	KDG	Date	6/12/12		
For		Backchk'd		Date		Sheet No.	7

Pier Design - Pile Group Combined Pile Stresses
Main Viaduct (Pier 11)

			Top of Footing Loads							Lateral Resistance from Batter		Lateral Resistance from Pile Bending		Trans. Axial Force		Trans. Strong Bending		Trans. Weak Bending		Long. Strong Bending		Long. Weak Bending			Trans. Strong	Tran. Weak	Long. Strong	Long. Weak	Trans. Strong	Long. Strong		
Footing No.	Load Group	Load Case	F_V (kips)	F_T (kips)	F_L (kips)	M_T (kip-ft)	M_L (kip-ft)	T** (kip-ft)	$F_{add.}$ (kips)	F_{TB} (kips)	F_{LB} (kips)	F_{TP} (kips)	F_{LP} (kips)	$P_{uT/Pile}$ (kips)	$F_{TS/Pile}$ (kips)	$M_{TS/Pile}$ (kip-ft)	$F_{TW/Pile}$ (kips)	$M_{TW/Pile}$ (kip-ft)	$F_{LS/Pile}$ (kips)	$M_{LS/Pile}$ (kip-ft)	$F_{LW/Pile}$ (kips)	$M_{LW/Pile}$ (kip-ft)	P_u/P_r	M_{ux}/M_{rx}	M_{uy}/M_{ry}	M_{ux}/M_{rx}	M_{uy}/M_{ry}	Interaxn. (6.9.2.2)	Interaxn. (6.9.2.2)		
2	STRIV	1345	-9726	542	-39	4198	-850	104	-3873	0	0	830	922	985.3	46.1	286.0	0.0	0.0	0.0	0.0	51.2	317.7	0.39	0.14	0.00	0.00	0.34	0.82	0.00	≤ 1.0	O.K.
2	STRIV	1347	-11015	653	-47	6094	-1237	137	-3873	0	0	941	930	1078.9	52.3	324.2	0.0	0.0	0.0	0.0	51.7	320.4	0.43	0.16	0.00	0.00	0.35	0.88	0.00	≤ 1.0	O.K.
2	STRIV	1348	-10988	773	47	13441	-9631	-124	-3873	0	0	1061	836	1202.3	59.0	365.5	0.0	0.0	0.0	0.0	46.5	288.1	0.48	0.18	0.00	0.00	0.31	0.91	0.00	≤ 1.0	O.K.
2	STRIV	1350	-9704	669	39	11869	-7771	-115	-3873	0	0	957	844	1099.5	53.2	329.7	0.0	0.0	0.0	0.0	46.9	290.8	0.44	0.16	0.00	0.00	0.31	0.86	0.00	≤ 1.0	O.K.
2	STRIV	1351	-11015	653	-47	6094	-1237	137	-3873	0	0	941	930	1078.9	52.3	324.2	0.0	0.0	0.0	0.0	51.7	320.4	0.43	0.16	0.00	0.00	0.35	0.88	0.00	≤ 1.0	O.K.
2	STR V	1353	-8802	546	21	5823	-7918	-6	-3332	0	0	834	843	979.2	46.3	287.4	0.0	0.0	0.0	0.0	46.8	290.3	0.39	0.14	0.00	0.00	0.31	0.79	0.00	≤ 1.0	O.K.
2	STR V	8269	-9798	665	-44	8679	-284	117	-3332	0	0	953	926	998.9	53.0	328.3	0.0	0.0	0.0	0.0	51.4	318.9	0.40	0.16	0.00	0.00	0.34	0.85	0.00	≤ 1.0	O.K.
2	STR V	8280	-10585	728	-10	10084	-5720	157	-3332	0	0	1016	892	1098.5	56.5	350.0	0.0	0.0	0.0	0.0	49.6	307.2	0.44	0.17	0.00	0.00	0.33	0.88	0.00	≤ 1.0	O.K.
2	STR V	8424	-10593	736	-1	10489	-6316	144	-3332	0	0	1024	883	1107.2	56.9	352.8	0.0	0.0	0.0	0.0	49.1	304.1	0.44	0.17	0.00	0.00	0.33	0.89	0.00	≤ 1.0	O.K.
2	STR V	10196	-10323	461	-74	-2480	-376	241	-3332	0	0	749	956	899.8	41.6	258.1	0.0	0.0	0.0	0.0	53.1	329.3	0.36	0.13	0.00	0.00	0.36	0.79	0.00	≤ 1.0	O.K.
2	STR V	10619	-9729	500	-110	1083	4909	178	-3332	0	0	788	992	968.9	43.8	271.5	0.0	0.0	0.0	0.0	55.1	341.7	0.38	0.13	0.00	0.00	0.37	0.83	0.00	≤ 1.0	O.K.
2	STR V	10623	-10347	539	-86	676	800	356	-3332	0	0	827	968	971.1	46.0	284.9	0.0	0.0	0.0	0.0	53.8	333.4	0.39	0.14	0.00	0.00	0.36	0.83	0.00	≤ 1.0	O.K.
2	STR V	10695	-10347	539	-86	676	800	356	-3332	0	0	827	968	971.1	46.0	284.9	0.0	0.0	0.0	0.0	53.8	333.4	0.39	0.14	0.00	0.00	0.36	0.83	0.00	≤ 1.0	O.K.
2	STR V	11880	-10575	868	47	18430	-11036	-187	-3332	0	0	1156	817	1206.7	64.2	398.3	0.0	0.0	0.0	0.0	45.4	281.4	0.48	0.20	0.00	0.00	0.30	0.92	0.00	≤ 1.0	O.K.
2	STR V	11881	-10239	889	61	18135	-11238	-152	-3332	0	0	1177	803	1190.0	65.4	405.5	0.0	0.0	0.0	0.0	44.6	276.6	0.47	0.20	0.00	0.00	0.30	0.92	0.00	≤ 1.0	O.K.
2	STR V	12177	-10559	850	54	17603	-11495	-167	-3332	0	0	1138	810	1203.1	63.2	392.1	0.0	0.0	0.0	0.0	45.0	279.0	0.48	0.19	0.00	0.00	0.30	0.92	0.00	≤ 1.0	O.K.
2	STR V	12311	-9830	754	96	14956	-12000	-176	-3332	0	0	1042	768	1145.6	57.9	359.0	0.0	0.0	0.0	0.0	42.7	264.5	0.45	0.18	0.00	0.00	0.29	0.87	0.00	≤ 1.0	O.K.
2	STR V	17091	-5807	64	-39	-7180	-100	279	-3332	0	0	352	921	680.5	19.6	121.3	0.0	0.0	0.0	0.0	51.2	317.2	0.27	0.06	0.00	0.00	0.34	0.63	0.00	≤ 1.0	O.K.
2	STR V	18808	-5441	455	45	11055	-6257	-179	-3332	0	0	743	819	810.5	41.3	256.0	0.0	0.0	0.0	0.0	45.5	282.1	0.32	0.13	0.00	0.00	0.30	0.70	0.00	≤ 1.0	O.K.

HNTB The HNTB Companies	Made LER	Date 6/8/2012	Job Number
	Checked KDS	Date 6/12/12	
For	Backchk'd	Date	Sheet No. 8

Pier Design - Pile Group Combined Pile Stresses
Main Viaduct (Pier 11)

Footing No.	Load Group	Load Case	Top of Footing Loads F_V (kips)	F_T (kips)	F_L (kips)	M_T (kip-ft)	M_L (kip-ft)	T** (kip-ft)	$F_{add.}$ (kips)	Lateral Resistance from Batter F_{TB} (kips)	F_{LB} (kips)	Lateral Resistance from Pile Bending F_{TP} (kips)	F_{LP} (kips)	Trans. Axial Force $P_{uT/Pile}$ (kips)	$F_{TS/Pile}$ (kips)	Trans. Strong Bending $M_{TS/Pile}$ (kip-ft)	$F_{TW/Pile}$ (kips)	Trans. Weak Bending $M_{TW/Pile}$ (kip-ft)	$F_{LS/Pile}$ (kips)	Long. Strong Bending $M_{LS/Pile}$ (kip-ft)	$F_{LW/Pile}$ (kips)	Long. Weak Bending $M_{LW/Pile}$ (kip-ft)	P_u/P_r	Trans. Strong M_{ux}/M_{rx}	Tran. Weak M_{uy}/M_{ry}	Long. Strong M_{ux}/M_{rx}	Long. Weak M_{uy}/M_{ry}	Trans. Strong Interaxn. (6.9.2.2)	Long. Strong Interaxn. (6.9.2.2)		
1	SER I	87051	-6647	-83	-14	9071	-1768	85	-2646	0	0	297	667	783.2	16.5	102.2	0.0	0.0	0.0	0.0	37.0	229.6		0.05	0.00	0.00	0.25	0.30	0.00	≤ 1.0	O.K.
1	SER I	101383	-6562	-557	32	-15287	-5206	10	-2646	0	0	771	609	919.2	42.8	265.5	0.0	0.0	0.0	0.0	33.8	209.6		0.13	0.00	0.00	0.23	0.36	0.00	≤ 1.0	O.K.
1	SER I	107784	-7934	-260	-36	5888	-344	3	-2646	0	0	474	689	810.1	26.3	163.2	0.0	0.0	0.0	0.0	38.3	237.2		0.08	0.00	0.00	0.26	0.34	0.00	≤ 1.0	O.K.
1	SER I	113937	-7836	-373	-111	-223	6150	109	-2646	0	0	587	764	791.2	32.6	202.1	0.0	0.0	0.0	0.0	42.4	263.0		0.10	0.00	0.00	0.28	0.38	0.00	≤ 1.0	O.K.
1	SER I	113940	-8065	-395	-99	-825	4483	50	-2646	0	0	609	752	806.7	33.8	209.7	0.0	0.0	0.0	0.0	41.8	258.9		0.10	0.00	0.00	0.28	0.38	0.00	≤ 1.0	O.K.
1	SER I	114156	-8065	-395	-99	-825	4483	50	-2646	0	0	609	752	806.7	33.8	209.7	0.0	0.0	0.0	0.0	41.8	258.9		0.10	0.00	0.00	0.28	0.38	0.00	≤ 1.0	O.K.
1	SER I	119013	-7746	-591	103	-13545	-10644	-104	-2646	0	0	805	538	1021.0	44.7	277.2	0.0	0.0	0.0	0.0	29.9	185.1		0.14	0.00	0.00	0.20	0.34	0.00	≤ 1.0	O.K.
1	SER I	119016	-7971	-607	90	-13875	-10469	-104	-2646	0	0	821	551	1034.4	45.6	282.7	0.0	0.0	0.0	0.0	30.6	189.6		0.14	0.00	0.00	0.20	0.34	0.00	≤ 1.0	O.K.
1	SER I	119232	-7971	-607	90	-13875	-10469	-104	-2646	0	0	821	551	1034.4	45.6	282.7	0.0	0.0	0.0	0.0	30.6	189.6		0.14	0.00	0.00	0.20	0.34	0.00	≤ 1.0	O.K.
1	SER I	122580	-8092	-733	40	-20107	-6545	-59	-2646	0	0	947	601	1057.9	52.6	326.1	0.0	0.0	0.0	0.0	33.4	206.8		0.16	0.00	0.00	0.22	0.38	0.00	≤ 1.0	O.K.
1	SER I	123444	-8102	-743	27	-20588	-5669	-58	-2646	0	0	957	614	1054.9	53.2	329.6	0.0	0.0	0.0	0.0	34.1	211.3		0.16	0.00	0.00	0.23	0.39	0.00	≤ 1.0	O.K.
1	SER I	123477	-7979	-761	29	-20578	-5652	-53	-2646	0	0	975	612	1049.2	54.2	335.8	0.0	0.0	0.0	0.0	34.0	210.6		0.17	0.00	0.00	0.23	0.39	0.00	≤ 1.0	O.K.
2	SER I	92345	-6493	96	-36	-9206	-272	254	-2646	0	0	310	689	762.1	17.2	106.7	0.0	0.0	0.0	0.0	38.3	237.2		0.05	0.00	0.00	0.26	0.31	0.00	≤ 1.0	O.K.
2	SER I	97505	-6228	545	44	13814	-6567	-185	-2646	0	0	759	597	901.1	42.2	261.4	0.0	0.0	0.0	0.0	33.1	205.5		0.13	0.00	0.00	0.22	0.35	0.00	≤ 1.0	O.K.
2	SER I	113106	-7730	270	-75	-6596	2834	180	-2646	0	0	484	728	768.0	26.9	166.6	0.0	0.0	0.0	0.0	40.4	250.6		0.08	0.00	0.00	0.27	0.35	0.00	≤ 1.0	O.K.
2	SER I	113349	-7730	270	-75	-6596	2834	180	-2646	0	0	484	728	768.0	26.9	166.6	0.0	0.0	0.0	0.0	40.4	250.6		0.08	0.00	0.00	0.27	0.35	0.00	≤ 1.0	O.K.
2	SER I	114609	-7402	275	-90	-6216	4775	212	-2646	0	0	489	743	731.6	27.2	168.4	0.0	0.0	0.0	0.0	41.3	255.8		0.08	0.00	0.00	0.28	0.36	0.00	≤ 1.0	O.K.
2	SER I	114645	-7749	292	-80	-5536	3075	168	-2646	0	0	506	733	758.5	28.1	174.2	0.0	0.0	0.0	0.0	40.7	252.3		0.09	0.00	0.00	0.27	0.36	0.00	≤ 1.0	O.K.
2	SER I	118182	-7846	689	64	16562	-9121	-149	-2646	0	0	903	577	1038.7	50.2	311.0	0.0	0.0	0.0	0.0	32.0	198.6		0.15	0.00	0.00	0.21	0.37	0.00	≤ 1.0	O.K.
2	SER I	118184	-7834	692	36	16795	-8135	-151	-2646	0	0	906	605	1030.5	50.3	312.0	0.0	0.0	0.0	0.0	33.6	208.2		0.15	0.00	0.00	0.22	0.38	0.00	≤ 1.0	O.K.
2	SER I	118187	-7597	707	46	16586	-8277	-126	-2646	0	0	921	595	1018.7	51.2	317.2	0.0	0.0	0.0	0.0	33.0	204.8		0.16	0.00	0.00	0.22	0.38	0.00	≤ 1.0	O.K.
2	SER I	119046	-7836	677	70	15997	-9393	-144	-2646	0	0	891	571	1036.1	49.5	306.8	0.0	0.0	0.0	0.0	31.7	196.5		0.15	0.00	0.00	0.21	0.36	0.00	≤ 1.0	O.K.
2	SER I	119289	-7836	677	70	15997	-9393	-144	-2646	0	0	891	571	1036.1	49.5	306.8	0.0	0.0	0.0	0.0	31.7	196.5		0.15	0.00	0.00	0.21	0.36	0.00	≤ 1.0	O.K.
2	SER I	119475	-7571	636	85	14763	-9571	-137	-2646	0	0	850	556	1013.0	47.2	292.7	0.0	0.0	0.0	0.0	30.9	191.3		0.14	0.00	0.00	0.21	0.35	0.00	≤ 1.0	O.K.
1	SER I	29151	-6662	-84	-5	8965	-3074	95	-2646	0	0	298	658	793.6	16.5	102.6	0.0	0.0	0.0	0.0	36.5	226.5		0.05	0.00	0.00	0.24	0.30	0.00	≤ 1.0	O.K.
1	SER I	33965	-6548	-556	24	-15466	-4736	-63	-2646	0	0	770	617	915.5	42.8	265.1	0.0	0.0	0.0	0.0	34.3	212.4		0.13	0.00	0.00	0.23	0.36	0.00	≤ 1.0	O.K.
1	SER I	36062	-7930	-261	-10	5580	-3599	-61	-2646	0	0	475	663	833.6	26.4	163.5	0.0	0.0	0.0	0.0	36.8	228.2		0.08	0.00	0.00	0.25	0.33	0.00	≤ 1.0	O.K.
1	SER I	38117	-7504	-314	-85	922	2825	364	-2646	0	0	528	738	716.1	29.3	181.8	0.0	0.0	0.0	0.0	41.0	254.0		0.09	0.00	0.00	0.27	0.36	0.00	≤ 1.0	O.K.
1	SER I	38186	-8083	-414	-82	-2118	1877	8	-2646	0	0	628	735	837.8	34.9	216.2	0.0	0.0	0.0	0.0	40.8	253.0		0.11	0.00	0.00	0.27	0.38	0.00	≤ 1.0	O.K.
1	SER I	39805	-7495	-561	89	-12839	-9877	-111	-2646	0	0	775	552	993.7	43.0	266.9	0.0	0.0	0.0	0.0	30.6	190.0		0.13	0.00	0.00	0.21	0.34	0.00	≤ 1.0	O.K.
1	SER I	39806	-7956	-594	63	-13495	-9517	-109	-2646	0	0	808	578	1021.3	44.9	278.2	0.0	0.0	0.0	0.0	32.1	198.9		0.14	0.00	0.00	0.21	0.35	0.00	≤ 1.0	O.K.
1	SER I	41001	-8077	-748	3	-21123	-4864	-42	-2646	0	0	962	638	1049.7	53.4	331.3	0.0	0.0	0.0	0.0	35.4	219.6		0.16	0.00	0.00	0.24	0.40	0.00	≤ 1.0	O.K.
1	SER I	41289	-8086	-757	-10	-21604	-3988	-40	-2646	0	0	971	663	1045.7	53.9	334.4	0.0	0.0	0.0	0.0	36.8	228.2		0.16	0.00	0.00	0.25	0.41	0.00	≤ 1.0	O.K.
1	SER I	41293	-7930	-779	-1	-21301	-4266	-95	-2646	0	0	993	654	1039.1	55.2	342.0	0.0	0.0	0.0	0.0	36.3	225.1		0.17	0.00	0.00	0.24	0.41	0.00	≤ 1.0	O.K.
1	SER I	41361	-8086	-757	-10	-21604	-3988	-40	-2646	0	0	971	663	1045.7	53.9	334.4	0.0	0.0	0.0	0.0	36.8	228.2		0.16	0.00	0.00	0.25	0.41	0.00	≤ 1.0	O.K.
2	SER I	30915	-6470	72	-39	-10293	-157	229	-2646	0	0	286	692	768.5	15.9	98.4	0.0	0.0	0.0	0.0	38.4	238.2		0.05	0.00	0.00	0.26	0.31	0.00	≤ 1.0	O.K.
2	SER I	32632	-6218	540	43	13736	-6490	-162	-2646	0	0	754	598	899.0	41.9	259.6	0.0	0.0	0.0	0.0	33.2	205.8		0.13	0.00	0.00	0.22	0.35	0.00	≤ 1.0	O.K.
2	SER I	37844	-7654	212	-55	-9259	-151	178	-2646	0	0	426	708	817.0	23.7	146.7	0.0	0.0	0.0	0.0	39.3	243.7		0.07	0.00	0.00	0.26	0.34	0.00	≤ 1.0	O.K.
2	SER I	37916	-7654	212	-55	-9259	-151	178	-2646	0	0	426	708	817.0	23.7	146.7	0.0	0.0	0.0	0.0	39.3	243.7		0.07	0.00	0.00	0.26	0.34	0.00	≤ 1.0	O.K.
2	SER I	38123	-7229	230	-79	-7147	3571	139	-2646	0	0	444	732	740.8	24.7	152.9	0.0	0.0	0.0	0.0	40.6	252.0		0.08	0.00	0.00	0.27	0.35	0.00	≤ 1.0	O.K.
2	SER I	38343	-7674	269	-63	-6938	645	258	-2646	0	0	483	716	784.2	26.8	166.3	0.0	0.0	0.0	0.0	39.8	246.5		0.08	0.00	0.00	0.27	0.35	0.00	≤ 1.0	O.K.
2	SER I	39528	-7843	698	36	16985	-8145	-143	-2646	0	0	912	605	1032.7	50.7	314.1	0.0	0.0	0.0	0.0	33.6	208.2		0.15	0.00	0.00	0.22	0.38	0.00	≤ 1.0	O.K.
2	SER I	39529	-7606	713	46	16776	-8287	-118	-2646	0	0	927	595	1020.9	51.5	319.2	0.0	0.0	0.0	0.0	33.0	204.8		0.16	0.00	0.00	0.22	0.38	0.00	≤ 1.0	O.K.
2	SER I	39600	-7843	698	36	16985	-8145	-143	-2646	0	0	912	605	1032.7	50.7	314.1	0.0	0.0	0.0	0.0	33.6	208.2		0.15	0.00	0.00	0.22	0.38	0.00	≤ 1.0	O.K.
2	SER I	39825	-7831	685	41	16351	-8453	-128	-2646	0	0	899	600	1029.7	49.9	309.6	0.0	0.0	0.0	0.0	33.3	206.5		0.15	0.00	0.00	0.22	0.38	0.00	≤ 1.0	O.K.
2	SER I	39959	-7316	616	70	14440	-8792	-133	-2646	0	0	830	571	988.6	46.1	285.8	0.0	0.0	0.0	0.0	31.7	196.5		0.14	0.00	0.00	0.21	0.35	0.00	≤ 1.0	O.K.

Pile-Supported Footing Design
Main Viaduct (Pier 11)

Combined Axial and Bending for Torsional Loads

Incorporates torsional loads on a pile-supported footing into the interaction check for combined pile bending and axial load. Ignores the coincidence of load direction at specific extreme piles and conservatively combines the absolute value of horizontal load with torsional load.

Conservatively assume no residual capacity for horizontal load exists due to batter, thus all resistance of torsional loads is due to pile bending.

Identify the controlling load case for combined torsional, horiz., and axial forces (the load case with the highest load/capacity ratios per the combined bending spreadsheet with a "max." torsion value).

Load Case =	13641		--	
Limit State =	**STR V**		--	
Design Pile Axial Load =	**1,224.5**		kips	(in design pile)
Design Torsion =	**57.0**		kip-ft	
Unbraced Length, L_b =	**12.4**		ft	
Pile Size =	**HP18x204**		--	
	Trans.	Long.		
Polar S.M. =	**288.0**	**288.0**	ft	
Axis Orientation =	**Strong**	**Weak**	--	
Residual Batter Cap. =	**0.0**	**0.0**	kips/pile	(in extreme pile)
Lat. Bend. Force, F_P =	**68.8**	**49.7**	kips/pile	
Torsional Force, F_{TP} =	**0.2**	**0.2**	kips	" "
Total Force, V_u =	**69.0**	**49.9**	kips	" "
Applied Moment, M_u =	**428.1**	**309.5**	kip-ft	(fixed - "fixed")
Capacity, $M_r = \Phi M_n$ =	**2029.3**	**926.1**	kip-ft	
M_u/M_r =	**0.21**	**0.33**	--	
Capacity, $P_r = \Phi P_n$ =	**2520.0**		kips	
P_u/P_r =	**0.49**		--	
Interaction =	**0.97**	**< 1.0**		6.9.2.2-1
		OK		& 6.9.2.2-2

HNTB	The HNTB Companies Engineers Architects Planners	Made LER	Date 6/8/2012	Job Number 49633
		Checked KDG	Date 6/12/12	
For Cleveland Innerbelt		Backchk'd	Date	Sheet No. 1a

Footing Pile Loads
Main Viaduct (Pier 11)

Purpose

Calculates the maximum load on an extreme transverse pile row. Input the top of footing load combination with the critical combination of axial load (P) and transverse moment (MT).

Pile Layout

Transverse Group SM =	152.0	ft
Longitudinal Group SM =	136.0	ft
Total Number of Piles, N_{tot} =	18.00	ea.

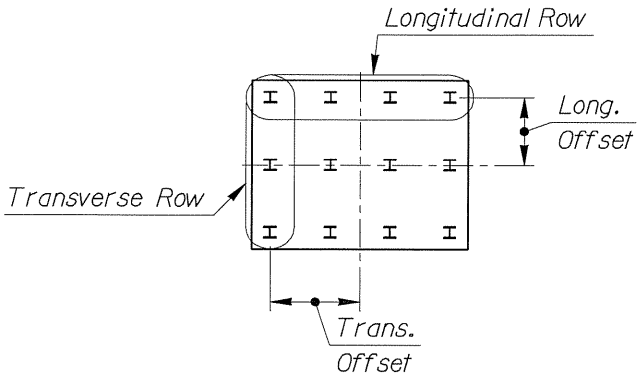

Convention identical to PIER program input.

Top of Footing Loads*

Enter as Shown in PIER

Limit State Type	SERVICE	STR/*EXT	
Footing Number	1	1	--
Controlling Limit State	SER I	STR V	--
Load Case	41289	13641	--
P =	-10479.31	-13033.98	kips
H_T =	-970.7841	-1239.259	kips
H_L =	-662.523	-894.9361	kips
M_T =	-25848.46	-27856.38	kip-ft
M_L =	-17851.69	-15822.36	kip-ft

* Loads above account for Retaining wall and Sign structures

Depth of Footing =	10.0	10.0	ft
Fact. Foot. DL (DC) =	2166.0	2707.5	kips
Fact. Soil DL (EV) =	480.0	624.0	kips

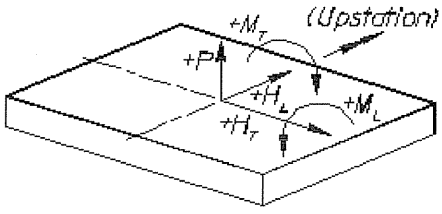

*Use Extreme Event (EXT) loads if the resulting critical pile force is 111% or more of the maximum Strength (STR) pile force.

Loads at Bottom of Footing

	SER I	STR V	
P =	13125	16365	kips
H_T =	-971	-1239	kips
H_L =	-663	-895	kips
M_T =	-35556	-40249	kip-ft
M_L =	-11226	-6873	kip-ft

Corner Pile Loads

	SER I	STR V	
Upstation Right =	578	695	kips
Upstation Left =	1046	1225	kips
Downstation Right =	413	594	kips
Downstation Left =	881	1123	kips

The remaining pile loads may be found using linear interpolation.

Footing Design Pile Loads

	SER I	STR V	
Trans. Flexure (Avg.) =	963	1174	kips
Long. Flexure (Avg.) =	812	960	kips
Col. Punching (Avg.) =	--	909	kips
Pile Punching (Max.) =	--	1225	kips

	Row 2
SM_T (ft) =	304.0
SM_L (ft) =	272.0

	SER I	STR V
Trans. Flexure (Avg.) =	846	1042
Long. Flexure (Avg.) =	770	934

HNTB	The HNTB Companies Engineers Architects Planners	Made LER	Date 6/8/2012	Job Number 49633
		Checked KDG	Date 6/12/12	
For Cleveland Innerbelt		Backchk'd	Date	Sheet No. 1b

Footing Pile Loads
Main Viaduct (Pier 11)

Purpose

Calculates the maximum load on an extreme longitudinal pile row. Input the top of footing load combination with the critical combination of axial load (P) and longitudinal moment (ML).

Pile Layout

Transverse Group SM = **152.0** ft
Longitudinal Group SM = **136.0** ft

Total Number of Piles, N_{tot} = **18.00** ea.

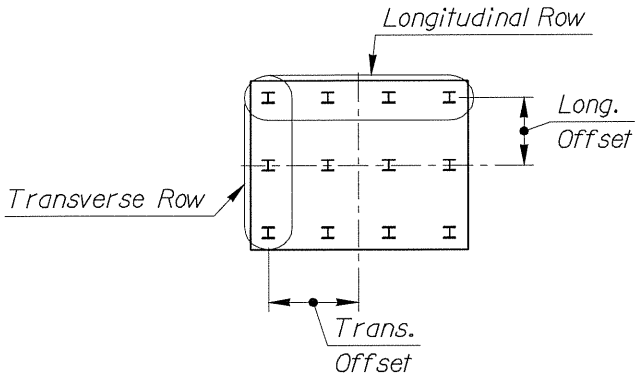

Convention identical to PIER program input.

Top of Footing Loads*

Enter as Shown in PIER

Limit State Type	SERVICE	STR/*EXT	
Footing Number	1	1	--
Controlling Limit State	SER I	STRIV	--
Load Case	119016	3652	--
P =	-10364.31	-13566.98	kips
H_T =	-820.7841	-1098.259	kips
H_L =	-550.523	-815.3361	kips
M_T =	-18119.46	-20076.38	kip-ft
M_L =	-24332.69	-20193.36	kip-ft

* The above loads account for the Retaining wall and Sign structures loads

Depth of Footing =	10.0	10.0	ft
Fact. Foot. DL (DC) =	2166.0	3249.0	kips
Fact. Soil DL (EV) =	480.0	624.0	kips

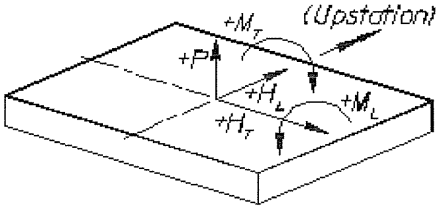

*Use Extreme Event (EXT) loads if the resulting critical pile force is 111% or more of the maximum Strength (STR) pile force.

Loads at Bottom of Footing

	SER I	STRIV	
P =	13010	17440	kips
H_T =	-821	-1098	kips
H_L =	-551	-815	kips
M_T =	-26327	-31059	kip-ft
M_L =	-18827	-12040	kip-ft

Corner Pile Loads

	SER I	STRIV	
Upstation Right =	688	853	kips
Upstation Left =	1034	1262	kips
Downstation Right =	411	676	kips
Downstation Left =	758	1085	kips

The remaining pile loads may be found using linear interpolation.

Footing Design Pile Loads

	SER I	STRIV	
Trans. Flexure (Avg.) =	896	1173	kips
Long. Flexure (Avg.) =	861	1057	kips
Col. Punching (Avg.) =	--	969	kips
Pile Punching (Max.) =	--	1262	kips

	Row 2
SM_T (ft) =	**304.0**
SM_L (ft) =	**272.0**

	SER I	STRIV
Trans. Flexure (Avg.) =	809	1071
Long. Flexure (Avg.) =	792	1013

HNTB	The HNTB Companies Engineers Architects Planners	Made LER	Date 6/8/2012	Job Number 49633
		Checked KDG	Date 6/12/12	
For Cleveland Innerbelt		Backchk'd	Date	Sheet No. 1c

Footing Pile Loads
Main Viaduct (Pier 11)

Purpose

Calculates the highest average pile load. Input the top of footing load combination with the highest axial force (P).

Pile Layout

Transverse Group SM =	152.0	ft
Longitudinal Group SM =	136.0	ft
Total Number of Piles, N_{tot} =	18.00	ea.

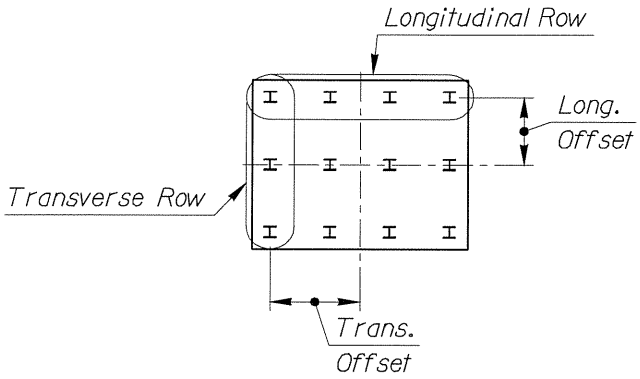

Convention identical to PIER program input.

Top of Footing Loads*

Enter as Shown in PIER

Limit State Type	STR/*EXT	
Footing Number	1	--
Controlling Limit State	STRIV	--
Load Case	3652	--
P =	-13566.98	kips
H_T =	-1098.259	kips
H_L =	-815.3361	kips
M_T =	-20076.38	kip-ft
M_L =	-20193.36	kip-ft

* The above loads account for the Retaining wall and Sign structures loads

Depth of Footing =	10.0	ft
Factored Footing DL (DC) =	3249.0	kips
Factored Soil Vertical Load (EV) =	624.0	kips

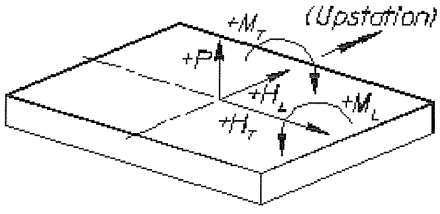

*Use Extreme Event (EXT) loads if the resulting critical pile force is 111% or more of the maximum Strength (STR) pile force.

Loads at Bottom of Footing

	STRIV	
P =	17440	kips
H_T =	-1098	kips
H_L =	-815	kips
M_T =	-31059	kip-ft
M_L =	-12040	kip-ft

Corner Pile Loads

	STRIV	
Upstation Right =	853	kips
Upstation Left =	1262	kips
Downstation Right =	676	kips
Downstation Left =	1085	kips

The remaining pile loads may be found using linear interpolation.

Footing Design Pile Loads

	STRIV	
Trans. Flexure (Avg.) =	1173	kips
Long. Flexure (Avg.) =	1057	kips
Col. Punching (Avg.) =	969	kips
Pile Punching (Max.) =	1262	kips

HNTB	The HNTB Companies Engineers Architects Planners	Made LER	Date 6/8/2012	Job Number 49633
		Checked KDG	Date 6/12/12	
For Cleveland Innerbelt		Backchk'd	Date	Sheet No. 1d

Footing Pile Loads
Main Viaduct (Pier 11)

Purpose

Calculates the maximum load on a single (corner) pile. Input the top of footing load combination that results in the max. single pile load.

Pile Layout

Transverse Group SM =	152.0	ft
Longitudinal Group SM =	136.0	ft
Total Number of Piles, N_{tot} =	18.00	ea.

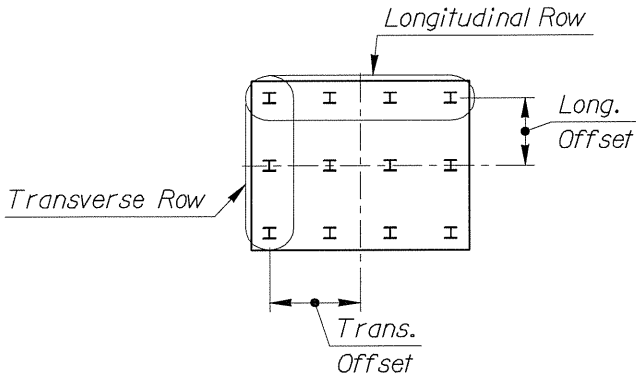

Convention identical to PIER program input.

Top of Footing Loads*

Enter as Shown in PIER

Limit State Type	SERVICE	STR/*EXT	
Footing Number	1	1	--
Controlling Limit State	SER I	STRIV	--
Load Case	122580	3652	--
P =	-10485.31	-13566.98	kips
H_T =	-946.7841	-1098.259	kips
H_L =	-600.523	-815.3361	kips
M_T =	-24351.46	-20076.38	kip-ft
M_L =	-20408.69	-20193.36	kip-ft

* The above loads account for the Retaining wall and Sign structures loads

Depth of Footing =	10.0	10.0	ft
Fact. Foot. DL (DC) =	2166.0	3249.0	kips
Fact. Soil DL (EV) =	480.0	624.0	kips

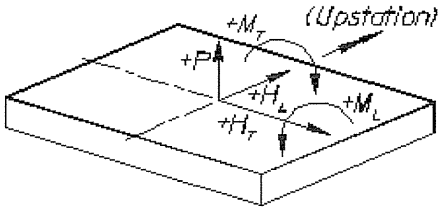

*Use Extreme Event (EXT) loads if the resulting critical pile force is 111% or more of the maximum Strength (STR) pile force.

Loads at Bottom of Footing

	SER I	STRIV	
P =	13131	17440	kips
H_T =	-947	-1098	kips
H_L =	-601	-815	kips
M_T =	-33819	-31059	kip-ft
M_L =	-14403	-12040	kip-ft

Corner Pile Loads

	SER I	STRIV	
Upstation Right =	613	853	kips
Upstation Left =	1058	1262	kips
Downstation Right =	401	676	kips
Downstation Left =	846	1085	kips

The remaining pile loads may be found using linear interpolation.

Footing Design Pile Loads

	SER I	STRIV	
Trans. Flexure (Avg.) =	952	1173	kips
Long. Flexure (Avg.) =	835	1057	kips
Col. Punching (Avg.) =	--	969	kips
Pile Punching (Max.) =	1058	1262	kips

HNTB	The HNTB Companies Engineers Architects Planners	Made LER	Date 6/8/2012	Job Number 49633
		Checked KDG	Date 6/12/12	
For Cleveland Innerbelt		Backchk'd	Date	Sheet No. 1e

Footing Pile Loads
Main Viaduct (Pier 11)

Purpose

Calculates the minimum axial load on an extreme pile.
Input the top of footing load combination with the critical combination of axial load (P), transverse (MT) and longitudinal moment (ML).

Pile Layout

Transverse Group SM = **152.0** ft
Longitudinal Group SM = **136.0** ft

Total Number of Piles, N_{tot} = **18.00** ea.

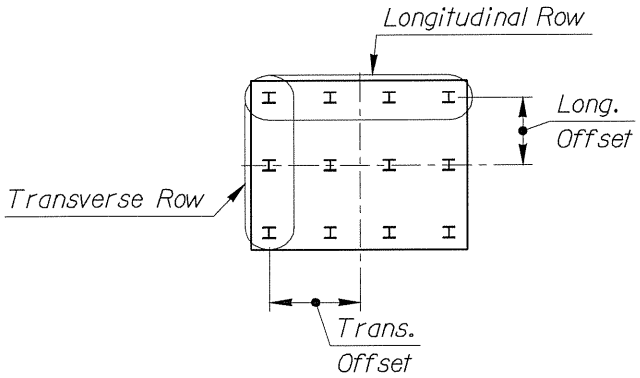

Use Factors: **Min.**

Convention identical to PIER program input.

Top of Footing Loads*

Enter as Shown in PIER

Limit State Type	STR/*EXT	STR/*EXT	
Footing Number	2	2	--
Controlling Limit State	SER I	STIII	--
Load Case	97505	3578	--
P =	-8621.309	-7466.978	kips
H_T =	758.78413	842.25857	kips
H_L =	-596.523	-727.9361	kips
M_T =	18058.464	20856.377	kip-ft
M_L =	-20430.69	-21778.36	kip-ft

* The above loads account for the Retaining wall and Sign structures loads

Depth of Footing =	10.0	10.0	ft	
Fact. Foot. DL (DC) =	2166.0	1949.4	kips	
Fact. Soil DL (EV) =	0.0	0.0	kips	<----------

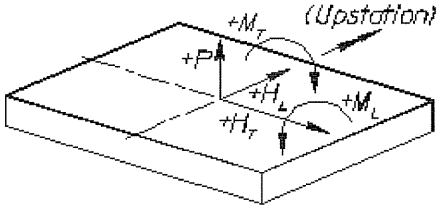

*Use Extreme Event (EXT) loads if the resulting critical pile force is 111% or more of the maximum Strength (STR) pile force.

Loads at Bottom of Footing

	SER I	STIII	
P =	10787	9416	kips
H_T =	759	842	kips
H_L =	-597	-728	kips
M_T =	25646	29279	kip-ft
M_L =	-14465	-14499	kip-ft

Corner Pile Loads

	SER I	STIII	
Upstation Right =	874	822	kips
Upstation Left =	537	437	kips
Downstation Right =	662	609	kips
Downstation Left =	324	224	kips

The remaining pile loads may be found using linear interpolation.

Footing Design Pile Loads

	SER I	STIII	
Trans. Flexure (Avg.) =	768	716	kips
Long. Flexure (Avg.) =	706	630	kips
Col. Punching (Avg.) =	599	523	kips
Pile Punching (Max.) =	874	822	kips
Uplift (Min.) =	324	224	kips

Min. Value - for Uplift Check
Soil Backfill Depth (Surcharge) = **0** ft

HNTB	The HNTB Companies Engineers Architects Planners	Made	LER	Date	6/8/2012	Job Number	49633
		Checked	KDG	Date	6/12/12		
For	**Cleveland Innerbelt**	Backchk'd		Date		Sheet No.	2

Pile-Supported Footing Design
Main Viaduct (Pier 11)

Purpose

To design and check flexural bending, flexural shear (one-way), and punching shear (two-way) within a pilecap footing.

Specifications

AASHTO LRFD Bridge Design Specifications, 5th Ed. (2010)

Data Sources

Pile Loads:

Methodology

Critical pile loads are based on the average pile load per pile row calculated in the Footing Pile Loads spreadsheet.

Flexural reinforcement is designed at the face of the column in both directions, longitudinal and transverse.

Flexural shear is checked within the footing at d_v from the column face in the direction of the largest pile loads.

Two-way punching shear is checked using a critical section $d_v/2$ from the column face and from the effective diameter of the pile with the greatest single pile load, assuming an effective diameter of ~~$\sqrt{(d^2+b_f^2)}$~~ MAX(d,b_f) for H-Piles. The designer must verify that 50% of the effective circumference of the critical shear section is available for the corner pile that is up to MIN(6",d_{eff}/4) out-of-position.

Per AASHTO 5.13.3.2, assume an additional 3" average pile group offset from the column face for flexural and shear design checks.

Critical Pile Loads

	Limit State	Row 1	Row 2		
Transverse Bending	STR V	1174.0	1041.6	kips	
(about long. axis)	SER I	963.1	846.1	kips	
Longitudinal Bending	STR V	1057.4	1013.2	kips	
(about tran. axis)	SER I	861.2	792.0	kips	
Column Punching	STR V	968.9		kips	(average)
Pile Punching	STR V	1261.8		kips	(max. single pile)

Column/Wall Properties

	Longitudinal		Transverse	
Equiv. Column =	12.00	ft by	14.00	ft

Footing Properties

STR	$\varnothing_{Flexure}$ =	0.90	$\varnothing_{Shear}$ =	0.90	AASHTO 5.5.4.2
EXT	$\varnothing_{Flexure}$ =	1.00	$\varnothing_{Shear}$ =	1.00	AASHTO 1.3.2.1

f'_c =	4.0	ksi
E_c =	3605	ksi
f_y =	60	ksi
E_s =	29000	ksi

	Depth	Length	Width	
Dimensions =	10.0	38.0	38.0	ft

Earth Backfill Depth =	3.0	ft
Concrete Unit Weight =	0.150	kcf
Soil Unit Weight =	0.125	kcf

	Longitudinal	Transverse		
Pile Edge Distance =	3.00	3.00	ft	(from CL pile)
Row 2 Edge Dist. =	11.00	11.00	ft	
Row 3 Edge Dist. =			ft	
Row 4 Edge Dist. =			ft	
Top Reinforcing Clear Cover =		3.0	in.	
Bot. Reinforcing Clear Cover =		3.0	in.	
Bot. Reinforcing 2nd Layer =		8.0	in.	(above 1st layer ctr-to-ctr)

f_r =	0.74	ksi	AASHTO 5.4.2.6
y_t =	60.0	in.	

	Row 3		Row 4	
	0.0	kips	0.0	kips
	0.0	kips	0.0	kips
	0.0	kips	0.0	kips
	0.0	kips	0.0	kips

HNTB The HNTB Companies Engineers Architects Planners	Made LER	Date 6/9/12	Job Number 49633
	Checked KDG	Date 6/12/12	
For Cleveland Innerbelt	Backchk'd	Date	Sheet No. 3

Pilecap Footing Design
Main Viaduct (Pier 11)

Transverse Flexural Reinforcing (Bottom)

AASHTO 5.13.3.4

Geometry — Bar Layer Position = **Upper**

	No. Piles	Mom. Arm (Col_{face} to CL_{pile} + 3")		
Row 1	**4**	**9.25**	ft	Symm. about
Row 2	**3**	**1.25**	ft	CL Footing
Row 3	**0**		ft	
Row 4	**0**		ft	

Ultimate Capacity (Strength/Extreme Event)

M_{Piles} =	47,344	kip-ft
$M_{Earth+DL}$ =	-6,464	kip-ft
M_u =	40,880	kip-ft

Try:

	48 - #11 s	Bottom Layer
	48 - #11 s	Top Layer
d1 =	114.89	in.
d2 =	106.89	
Effective Depth, d =	110.89	
$A_{s,prov'd.}$ =	149.76	$in.^2$
Equiv. Stress Block Depth, a =	5.80	in.
Moment Resistance, $M_r = ØM_n$ =	72,775	kip-ft

40,880 < 72,775 Capacity O.K.

Gross Moment of Interia, I_g =	65,664,000	$in.^4$	
Cracking Moment, M_{cr} =	67,488	kip-ft	AASTHO 5.7.3.3
1.2 M_{cr} =	80,986	kip-ft	
$^4/_3$ M_u =	54,506	kip-ft	

54,506 < 72,775 Capacity O.K.

Flexural Distribution (Service) — AASHTO 5.7.3.4

Reinforcement Ratio, ρ =	**0.00296**	--	
Modular Ratio, n =	**8**	--	
Neutral Axis Depth Scalar, k =	**0.19528**	--	k=c/d
Moment Arm Scalar, j =	**0.9349**	--	j=(1-k/3)

M_{Piles} =	38,808	kip-ft
$M_{Earth+DL}$ =	-5,130	kip-ft
$M_{service}$ =	33,678	kip-ft

$f_{s,SRVC}$ =	**26.0**	ksi	
Peak Concrete Stress, f_c =	**0.79**	ksi	vs. 3.40 ksi

$s \le 700*\gamma_e/(ß*f_{ss}) - 2d_c$

CL Cover to 1st Steel Layer, d_c =	**5.115**	in.	AASHTO 5.7.3.4
ß =	**1.064**	--	5.7.3.4-1
Exposure Factor, γ_e =	**1.00**	--	Class 1
$s_{max-allowed}$ =	**15.05**	in.	
$s_{max-prov'd.}$ =	**9.32**	in.	

9.3 < 15.1 - O.K.

Evaluated vs. nominal bar spacing.

Longitudinal Flexural Reinforcing (Bottom)

Geometry — Bar Layer Position = **Lower**

	No. Piles	Mom. Arm (Col_{face} to CL_{pile} + 3")		
Row 1	**3**	**10.25**	ft	Symm. about
Row 2	**5**	**2.25**	ft	CL Footing
Row 3	**0**		ft	
Row 4	**0**		ft	

Ultimate Capacity (Strength/Extreme Event)

M_{Piles} =	43,914	kip-ft
$M_{Earth+DL}$ =	-8,790	kip-ft
M_u =	35,123	kip-ft

Try:

	48 - #11 s	Bottom Layer
	48 - #11 s	Top Layer
d1 =	116.30	in.
d2 =	108.30	
Effective Depth, d =	112.30	
$A_{s,prov'd.}$ =	149.76	$in.^2$
Equiv. Stress Block Depth, a =	5.80	in.
Moment Resistance, $M_r = ØM_n$ =	73,725	kip-ft

35,123 < 73,725 Capacity O.K.

Gross Moment of Interia, I_g =	65,664,000	$in.^4$	
Cracking Moment, M_{cr} =	67,488	kip-ft	AASTHO 5.7.3.3
1.2 M_{cr} =	80,986	kip-ft	
$^4/_3$ M_u =	46,831	kip-ft	

46,831 < 73,725 Capacity O.K.

Flexural Distribution (Service) — AASHTO 5.7.3.4

Reinforcement Ratio, ρ =	**0.00292**	--	
Modular Ratio, n =	**8**	--	
Neutral Axis Depth Scalar, k =	**0.19418**	--	k=c/d
Moment Arm Scalar, j =	**0.9353**	--	j=(1-k/3)

M_{Piles} =	35,393	kip-ft
$M_{Earth+DL}$ =	-6,021	kip-ft
$M_{service}$ =	29,372	kip-ft

$f_{s,SRVC}$ =	**22.4**	ksi	
Peak Concrete Stress, f_c =	**0.68**	ksi	vs. 3.40 ksi

CL Cover to 1st Steel Layer, d_c =	**3.705**	in.	
ß =	**1.046**	--	5.7.3.4-1
Exposure Factor, γ_e =	**1.00**	--	Class 1
$s_{max-allowed}$ =	**22.47**	in.	
$s_{max-prov'd.}$ =	**9.32**	in.	

9.3 < 22.5 - O.K.

Evaluated vs. nominal bar spacing.

HNTB The HNTB Companies Engineers Architects Planners	Made LER	Date 6/9/12	Job Number 49633
	Checked KDG	Date 6/12/12	
For Cleveland Innerbelt	Backchk'd	Date	Sheet No. 4

Pilecap Footing Design
Main Viaduct (Pier 11)

Distribution of Moment Reinforcement

AASHTO 5.13.3.5

Transverse Flexural Reinforcing (Bottom)

β =	1.00		Long Dim./Short Dim.
$A_{s,req'd.(total\ in\ short\ length)}$ =	83.13	$in.^2$	
$A_{s,req'd.(in\ band\ width)}$ =	83.13	$in.^2$	(5.13.3.5-1)
$A_{s,prov'd.(in\ band\ width)}$ =	149.76	$in.^2$	Approx.

83.13 < 149.76 - O.K.

Transverse Flexural Reinforcing (Top)

Place thru column? **Yes**

$A_{s,prov'd.}$ = **38 - #11 s** = 1.56 $in.^2$ / ft

$A_{s,req'd.}$ = 0.60 $in.^2$ / ft (5.10.8-1,2)

1.56 > 0.60 Reinforcement O.K.

Bar Spacing = **12** in.

Edge Distance = 6 in.

Longitudinal Flexural Reinforcing (Top)

Place thru column? **Yes**

$A_{s,prov'd.}$ = **38 - #11 s** = 1.56 $in.^2$ / ft

$A_{s,req'd.}$ = 0.60 $in.^2$ / ft (5.10.8-1,2)

1.56 > 0.60 Reinforcement O.K.

Bar Spacing = **12** in.

Edge Distance = 6 in.

Footing Shear

AASHTO 5.13.3.6

One-Way Beam Action - Transverse (at d_v from column face)

Effective Depth for Shear, d_v =	107.99	in.	AASHTO 5.8.2.9
Distance to Critical Section =	9.00	ft	(from col. face)
Piles Outside Crit. Sxn. =	4	ea.	
V_{Piles} =	4,696	kips	
V_{Earth} =	-38	kips	
$V_{Concrete}$ =	-154	kips	
V_u =	4,504	kips	
$V_r = ØV_n$ =	5,602	kips	

4,504 < 5,602 - O.K.

One-Way Beam Action - Longitudinal (at d_v from column face)

Effective Depth for Shear, d_v =	109.40	in.	AASHTO 5.8.2.9
Distance to Critical Section =	9.12	ft	(from col. face)
Piles Outside Crit. Sxn. =	3		
V_{Piles} =	3,172	kips	
V_{Earth} =	-50	kips	
$V_{Concrete}$ =	-199	kips	
V_u =	2,923	kips	
$V_r = ØV_n$ =	5,675	kips	AASHTO 5.8.3.3
	β=2.0		

2,923 < 5,675 - O.K.

ADD STIRRUPS:

Transverse Shear reinforcement

$ØV_{C\_trans}$ =	**5602**	**kips**
Stirrup_size =	**#0 s**	
Stirrup_spacing =	**5**	**in**
Vs_trans_required =	**-1220**	**kips**
Vs_trans_provided =	**0**	

OK Transverse shear reinforcement is adequate

Longitudinal Shear reinforcement

$ØV_{C\_long}$ =	**5675**	**kips**
Stirrup_size =	**#0 s**	
Stirrup_spacing =	**5**	**in**
Vs_long_required =	**-3057**	**kips**
Vs_long_provided =	**0**	

OK Longitudinal shear reinforcement is adequate

Footing Shear (cont'd.)

Two-way Action (Column Punching)

AASHTO 5.13.3.6.3

Determine perimeter shear acting on critical section at "d_v/2" from column face.

$d_v/2$ =	54.70	in.			Longitudinal
$d_v/2$ =	53.99	in.			Transverse
Col. Dim. + d_v =	21.12	ft	by	23.00	ft
Perimeter, b_o =	88.23	ft			= 1,058.77 in.
Area Outside Crit. Sxn. =	958.34	ft^2			
Piles Outside Crit. Sxn. =	**12**				
V_{piles} =	11,627	kips			
$V_{Earth+Concrete}$ =	-2,623	kips			
V_u =	9,003	kips			
β_c =	1.167				
$(.063+.126/\beta_c)*\sqrt{f'_c}*b_o d_v$ =	39,357	kips			Eqn. 5.13.3.6.3-1
$.126*\sqrt{f'_c}*b_o d_v$ =	29,000	kips			
$V_r = ØV_n$ =	26,100	kips			

9,003 < 26,100 - O.K.

Two-way Action (Pile Punching)

Check punching at d_v/2 from the perimeter of a corner pile

Pile Type = **HP18x204**

d_{pile} = 18.25 in. = 1.521 ft

b_o =	144.00	in.	Verify
max pile load V_u =	1,262	kips	
β_c =	1.01		
$(.063+.126/\beta_c)*\sqrt{f'_c}*b_o d_v$ =	4,822	kips	
$.126*\sqrt{f'_c}*b_o d_v$ =	3,230	kips	
$V_r = ØV_n$ =	2,907	kips	

1,262 < 2,907 - O.K.

pile embedment = 31 inches

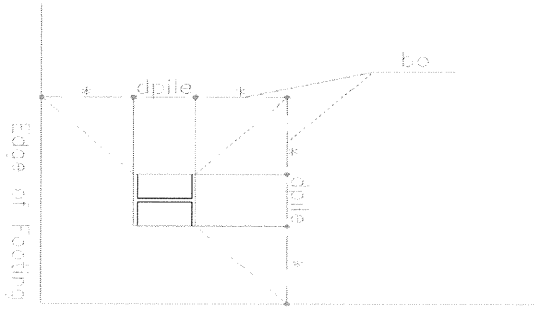

* Minimum of (pile edge distance, (footing depth - pile embedment)/2)

RUN TIME: 06/07/2012 15:08:02.042 PROGRAM'S INTERPRETATION OF INPUT DATA MADE BY:__LER__ DATE_6/08/12
Filename: M:\jobs\49633\Techprod\Bridges\Main Span (Unit 2)\Pier 11\RFI - Misa CHECKED BY:__KDG__ DATE_6/12/12
BACKCHECKED BY:_____ DATE_____
INPUT FILE: m:\jobs\49633\techprod\bridges\main span (unit 2)\pier 11\rfi - misalignment\pier\cap\pier 11 cap.bdf
INPUT FILE DATE: 06/07/2012 15:07:53
DLL VERSION: 1.2.2.7 DATE: 1/10/2012

ELEMENT SUMMARY:

ELEMENT TYPE	NUMBER OF ELEMENTS
FOOTINGS	2
DRILLED SHAFT	0
PILES	24
COLUMNS	2
CAP BEAMS	1

----- JOB DESCRIPTION AND INITIAL GEOMETRY -----

JOB NUMBER: 49633
JOB NAME: Pier 11 Updated 3-11-11
USER NAME: ajohn
DESIGN CODE: AASHTO 2010
NUMBER OF COLUMNS: 2
NUMBER OF CAPBEAMS: 1
NUMBER OF FOOTINGS: 2
UNITS: (English)

----- DESIGN OPTIONS -----

DESIGN OPTIONS:
CAP:
DESIGN CAPS: Yes
DESIGN METHOD: LRFD Design
FACE + D: No
DESIGN POINTS: All Points
STIFFEN CAPS OVER COLUMNS: No
COLUMN:
DESIGN COLS: No
DESIGN METHOD: LRFD Design
MOMENT MAG.: Apply Moment Magnification
LOCATION: Quarter Points
FOOTING:
DESIGN FOOTS: No
DESIGN METHOD: LRFD Design

LOAD MODIFIER FACTORS:
DUCTILITY: 1.000
REDUNDANCY: 1.000
IMPORTANCE: 1.050

----- ENVIRONMENTAL PARAMETERS -----

STREAM AND ICE FLOW DATA:
HIGH WATER ELEVATION: 0.000 (ft)
LOW WATER ELEVATION : 0.000 (ft)
STREAM VELOCITY: 0.0 (ft/sec)
FLOW DIRECTION: 0.000 (degrees)
LONGITUDINAL DRAG COEFF: 0.000
LATERAL DRAG COEFF: 0.000
EFFECTIVE NOSE WIDTH: 0.000 (ft)
NOSE INCLINATION: VERT: 0.000 (degrees) HORZ: 0.000 (degrees)
ICE FRICTION ANGLE: 0.000 (degrees)
ICE STRENGTH: 0.000 (psi)
ICE THICKNESS: 0.000 (in)

WIND PRESSURE INTENSITY DATA:
SUBSTRUCTURE:
DESIGN VELOCITY: 100.0 (mph)
WIND PRESSURE: 40.000 (psf)

SUPERSTRUCTURE:
DESIGN VELOCITY: 100.0 (mph)
OVERTURNING WIND PRESSURE: 20.000 (psf)
AASHTO STANDARD WIND PRESSURES HAVE BEEN USED, 3.8.1.2.2-1 AND 3.8.1.3-1.

Note: All wind pressures are applied using a base wind velocity of 100 mph. These values are increased or decreased in accordance with AASHTO 3.8.1.2.1 for Strength Limit State III only.

TEMPERATURE DATA:
TEMP RISE: 35.0 Fahr.
TEMP FALL: 45.0 Fahr.

----- CAP BEAM 1 DATA -----

SHEAR DESIGN USING SIMPLIFIED PROCEDURE, AASHTO 5.8.3.4.1

TOP OF CAP BEAM 1 REFERENCE LINE DATA:
NUMBER OF POINTS: 22
POINT 1: OFFSET: -101.396 (ft) ELEV: 686.500 (ft)
POINT 2: OFFSET: -95.560 (ft) ELEV: 686.500 (ft)
POINT 3: OFFSET: -85.870 (ft) ELEV: 686.500 (ft)
POINT 4: OFFSET: -84.896 (ft) ELEV: 686.500 (ft)
POINT 5: OFFSET: -77.896 (ft) ELEV: 686.500 (ft)
POINT 6: OFFSET: -76.180 (ft) ELEV: 686.500 (ft)
POINT 7: OFFSET: -66.490 (ft) ELEV: 686.500 (ft)
POINT 8: OFFSET: -63.500 (ft) ELEV: 686.500 (ft)

```
    POINT  9:  OFFSET:  -50.788 (ft)     ELEV:  686.500 (ft)
    POINT 10:  OFFSET:  -39.088 (ft)     ELEV:  686.500 (ft)
    POINT 11:  OFFSET:  -31.440 (ft)     ELEV:  686.500 (ft)
    POINT 12:  OFFSET:  -27.388 (ft)     ELEV:  686.500 (ft)
    POINT 13:  OFFSET:  -15.688 (ft)     ELEV:  686.500 (ft)
    POINT 14:  OFFSET:   -3.988 (ft)     ELEV:  686.500 (ft)
    POINT 15:  OFFSET:    0.620 (ft)     ELEV:  686.500 (ft)
    POINT 16:  OFFSET:    7.712 (ft)     ELEV:  686.500 (ft)
    POINT 17:  OFFSET:   17.604 (ft)     ELEV:  686.500 (ft)
    POINT 18:  OFFSET:   19.412 (ft)     ELEV:  686.500 (ft)
    POINT 19:  OFFSET:   24.604 (ft)     ELEV:  686.500 (ft)
    POINT 20:  OFFSET:   31.112 (ft)     ELEV:  686.500 (ft)
    POINT 21:  OFFSET:   32.680 (ft)     ELEV:  686.500 (ft)
    POINT 22:  OFFSET:   41.104 (ft)     ELEV:  686.500 (ft)

NUMBER OF SEGMENTS:  7
SEGMENT  1 DIMENSIONS:
  SHAPE:   Rectangular
  PROFILE: Linear
  BEGIN SECTION:
    DISTANCE:   -101.40 (ft)      DEPTH:  6.50 (ft)      TOP ELEV:   686.500 (ft)
    BOT SLOPE:   0.0000           WIDTH: 12.00 (ft)      BOT ELEV:   680.000 (ft)
  END SECTION:
    DISTANCE:    -84.90 (ft)      DEPTH: 16.00 (ft)      TOP ELEV:   686.500 (ft)
    BOT SLOPE:   0.0000           WIDTH: 12.00 (ft)      BOT ELEV:   670.500 (ft)

SEGMENT  2 DIMENSIONS:
  SHAPE:   Rectangular
  PROFILE: Linear
  BEGIN SECTION:
    DISTANCE:    -84.90 (ft)      DEPTH: 16.00 (ft)      TOP ELEV:   686.500 (ft)
    BOT SLOPE:   0.0000           WIDTH: 12.00 (ft)      BOT ELEV:   670.500 (ft)
  END SECTION:
    DISTANCE:    -70.90 (ft)      DEPTH: 16.00 (ft)      TOP ELEV:   686.500 (ft)
    BOT SLOPE:   0.0000           WIDTH: 12.00 (ft)      BOT ELEV:   670.500 (ft)

SEGMENT  3 DIMENSIONS:
  SHAPE:   Rectangular
  PROFILE: Linear
  BEGIN SECTION:
    DISTANCE:    -70.90 (ft)      DEPTH: 16.00 (ft)      TOP ELEV:   686.500 (ft)
    BOT SLOPE:   0.0000           WIDTH: 12.00 (ft)      BOT ELEV:   670.500 (ft)
  END SECTION:
    DISTANCE:    -57.40 (ft)      DEPTH: 11.00 (ft)      TOP ELEV:   686.500 (ft)
    BOT SLOPE:   0.0000           WIDTH: 12.00 (ft)      BOT ELEV:   675.500 (ft)

SEGMENT  4 DIMENSIONS:
  SHAPE:   Rectangular
  PROFILE: Linear
  BEGIN SECTION:
    DISTANCE:    -57.40 (ft)      DEPTH: 11.00 (ft)      TOP ELEV:   686.500 (ft)
    BOT SLOPE:   0.0000           WIDTH: 12.00 (ft)      BOT ELEV:   675.500 (ft)
  END SECTION:
    DISTANCE:     -2.90 (ft)      DEPTH: 11.00 (ft)      TOP ELEV:   686.500 (ft)
    BOT SLOPE:   0.0000           WIDTH: 12.00 (ft)      BOT ELEV:   675.500 (ft)

SEGMENT  5 DIMENSIONS:
  SHAPE:   Rectangular
  PROFILE: Linear
  BEGIN SECTION:
    DISTANCE:     -2.90 (ft)      DEPTH: 11.00 (ft)      TOP ELEV:   686.500 (ft)
    BOT SLOPE:   0.0000           WIDTH: 12.00 (ft)      BOT ELEV:   675.500 (ft)
  END SECTION:
    DISTANCE:     10.60 (ft)      DEPTH: 16.00 (ft)      TOP ELEV:   686.500 (ft)
    BOT SLOPE:   0.0000           WIDTH: 12.00 (ft)      BOT ELEV:   670.500 (ft)

SEGMENT  6 DIMENSIONS:
  SHAPE:   Rectangular
  PROFILE: Linear
  BEGIN SECTION:
    DISTANCE:     10.60 (ft)      DEPTH: 16.00 (ft)      TOP ELEV:   686.500 (ft)
    BOT SLOPE:   0.0000           WIDTH: 12.00 (ft)      BOT ELEV:   670.500 (ft)
  END SECTION:
    DISTANCE:     24.60 (ft)      DEPTH: 16.00 (ft)      TOP ELEV:   686.500 (ft)
    BOT SLOPE:   0.0000           WIDTH: 12.00 (ft)      BOT ELEV:   670.500 (ft)

SEGMENT  7 DIMENSIONS:
  SHAPE:   Rectangular
  PROFILE: Linear
  BEGIN SECTION:
    DISTANCE:     24.60 (ft)      DEPTH: 16.00 (ft)      TOP ELEV:   686.500 (ft)
    BOT SLOPE:   0.0000           WIDTH: 12.00 (ft)      BOT ELEV:   670.500 (ft)
  END SECTION:
    DISTANCE:     41.10 (ft)      DEPTH:  6.50 (ft)      TOP ELEV:   686.500 (ft)
    BOT SLOPE:   0.0000           WIDTH: 12.00 (ft)      BOT ELEV:   680.000 (ft)

NUMBER OF USER DEFINED DESIGN POINTS:  2
  USER DEFINED DESIGN POINT OFFSET DISTANCES:
     -66.396 (ft)       6.104 (ft)

REINFORCEMENT PARAMETERS:             CONCRETE PARAMETERS:
  YIELD  STRENGTH:    60.0 (ksi)        FPC:      4.0 (ksi)
  MIN COVER:    TOP:   2.0 (in)         WEIGHT: 150.0 (pcf)
             BOTTOM:   2.0 (in)         CTE:      0.0000060
               SIDE:   2.0 (in)
```

```
   STIRRUPS:    SIZE:   6
     NO.LEGS TORSION:   1
     NO.LEGS   TOTAL:   6
   EXPOSURE FACTOR:     0.750

 REINFORCEMENT LAYER DATA:
   Layer   0: Layer located by distance to CL bar, parallel with top of beam
              Layer is designed for tension only.
              MIN SIZE: 11    MIN NUMBER OF BARS:  16    BEGIN DIST: ******* (ft)    BEGIN OFFSET:    3.455 (in)
              MAX SIZE: 11    MAX NUMBER OF BARS:  16    END DIST:    41.104 (ft)    END OFFSET:      3.455 (in)

   Layer   1: Layer located by distance to CL bar, parallel with top of beam
              Layer is designed for tension only.
              MIN SIZE: 11    MIN NUMBER OF BARS:  16    BEGIN DIST: ******* (ft)    BEGIN OFFSET:   11.455 (in)
              MAX SIZE: 11    MAX NUMBER OF BARS:  16    END DIST:    41.104 (ft)    END OFFSET:     11.455 (in)

   Layer   2: Layer located by distance to CL bar, parallel with bottom of beam
              Layer is designed for tension only.
              MIN SIZE: 11    MIN NUMBER OF BARS:  22    BEGIN DIST: ******* (ft)    BEGIN OFFSET:    3.455 (in)
              MAX SIZE: 11    MAX NUMBER OF BARS:  22    END DIST:    41.104 (ft)    END OFFSET:      3.455 (in)

   Layer   3: Layer located by distance to CL bar, parallel with bottom of beam
              Layer is designed for tension only.
              MIN SIZE: 11    MIN NUMBER OF BARS:  22    BEGIN DIST: -57.396 (ft)    BEGIN OFFSET:   11.455 (in)
              MAX SIZE: 11    MAX NUMBER OF BARS:  22    END DIST:    -2.896 (ft)    END OFFSET:     11.455 (in)

   Layer   4: Layer located by distance to CL bar, parallel with top of beam
              Layer is designed for tension only.
              MIN SIZE: 11    MIN NUMBER OF BARS:  16    BEGIN DIST: ******* (ft)    BEGIN OFFSET:   20.160 (in)
              MAX SIZE: 11    MAX NUMBER OF BARS:  16    END DIST:   -66.496 (ft)    END OFFSET:     20.160 (in)

   Layer   5: Layer located by distance to CL bar, parallel with top of beam
              Layer is designed for tension only.
              MIN SIZE: 11    MIN NUMBER OF BARS:  16    BEGIN DIST:   6.204 (ft)    BEGIN OFFSET:   20.160 (in)
              MAX SIZE: 11    MAX NUMBER OF BARS:  16    END DIST:    41.104 (ft)    END OFFSET:     20.160 (in)

   Layer   6: Layer located by distance to CL bar, parallel with bottom of beam
              Layer is designed for tension only.
              MIN SIZE: 11    MIN NUMBER OF BARS:  22    BEGIN DIST: ******* (ft)    BEGIN OFFSET:    4.865 (in)
              MAX SIZE: 11    MAX NUMBER OF BARS:  22    END DIST:    41.104 (ft)    END OFFSET:      4.865 (in)

   Layer   7: Layer located by distance to CL bar, parallel with bottom of beam
              Layer is designed for tension only.
              MIN SIZE: 11    MIN NUMBER OF BARS:  22    BEGIN DIST: -57.396 (ft)    BEGIN OFFSET:   12.865 (in)
              MAX SIZE: 11    MAX NUMBER OF BARS:  22    END DIST:    -2.896 (ft)    END OFFSET:     12.865 (in)

   Layer   8: Layer located by distance to CL bar, parallel with top of beam
              Layer is designed for tension only.
              MIN SIZE: 11    MIN NUMBER OF BARS:  16    BEGIN DIST: ******* (ft)    BEGIN OFFSET:    4.865 (in)
              MAX SIZE: 11    MAX NUMBER OF BARS:  16    END DIST:    41.104 (ft)    END OFFSET:      4.865 (in)

   Layer   9: Layer located by distance to CL bar, parallel with top of beam
              Layer is designed for tension only.
              MIN SIZE: 11    MIN NUMBER OF BARS:  16    BEGIN DIST: ******* (ft)    BEGIN OFFSET:   12.865 (in)
              MAX SIZE: 11    MAX NUMBER OF BARS:  16    END DIST:    41.104 (ft)    END OFFSET:     12.865 (in)

 NUMBER OF SLABS:  3
   Slab No:  1   Label: Slab 1-1
   Slab No:  2   Label: Slab 1-2
   Slab No:  3   Label: Slab 1-3

----- SLAB 1 DATA ------------------------------------------------------------------------------------------

 SLAB:  1     SLAB LABEL: Slab 1-1
 CONNECTED TO: CAPBEAM  1
   SLAB LENGTH:    306.14 (ft)
   SLAB WIDTH:     131.94 (ft)
   SLAB THICK:      10.00 (in)
   DESIGN SPEED:     70.0 (mph)
   SLAB RADIUS:    3522.0 (ft)
   HAUNCH THICK:     2.00 (in)
   PIER SKEW:      18.000 (degrees)
   NUMBER OF ROADWAYS:  1

   SLAB  1 DIMENSIONS:
     LEFT FASCIA:              LEFT BARRIER:             LEFT SIDEWALK:
       WIDTH:    0.000 (in)      WIDTH:   18.000 (in)      WIDTH:    0.000 (ft)
                                 HEIGHT:  32.000 (in)      THICK:    0.000 (in)

     ROADWAY 1 WIDTH = 128.940 (ft)

     RIGHT SIDEWALK:           RIGHT BARRIER:            RIGHT FASCIA:
       WIDTH:    0.000 (ft)      WIDTH:   18.000 (in)      WIDTH:    0.000 (in)
       THICK:    0.000 (in)      HEIGHT:  32.000 (in)

   SLAB  1 CROSS SLOPE DATA:
     NUMBER OF CROSS SLOPE VALUES:  2
       SLOPE: -0.0400          SLOPE: -0.0400
       DIST:   98.455 (ft)     DIST:   38.216 (ft)

   SLAB  1 GIRDER DATA:
     NUMBER OF GIRDERS:  5           GIRDER DEPTH AND PROFILE DISTANCES:
     SPAN LENGTH:                      BACK STATION:              PIER:                  FORWARD STATION:
       BACK STATION:  306.140 (ft)       DEPTH:     10.00 (ft)      DEPTH: 10.00 (ft)      DEPTH:      0.00 (ft)
       FWD STATION:     0.000 (ft)       DISTANCE: 306.14 (ft)                             DISTANCE:   0.00 (ft)
```

GIRDER LOCATION DATA:

NO.	NAME	DISTANCE (ft)	GIRDER TYPE	BOT FL WIDTH (in)	TOP FL WIDTH (in)	TOP FL ECCENT (in)	SKEW ANGLE (degrees)	BEARING OFFSET (in)	FIXITY
1	Girder 1	-93.225	I	0.00	0.00	0.00	18.000	-19.50	T
2	Girder 2	-61.162	I	0.00	0.00	0.00	18.000	-19.50	T
3	Girder 3	-29.098	I	0.00	0.00	0.00	18.000	-19.50	T
4	Girder 4	2.965	I	0.00	0.00	0.00	18.000	-19.50	T
5	Girder 5	35.029	I	0.00	0.00	0.00	18.000	-19.50	T

SLAB 1 BEARING DATA:
BEARING HEIGHT: 12.000 (in)
BEARING FRICTION COEFFICIENT: 0.060

----- SLAB 2 DATA -----

SLAB: 2 SLAB LABEL: Slab 1-2
CONNECTED TO: CAPBEAM 1
SLAB LENGTH: 240.00 (ft)
SLAB WIDTH: 37.00 (ft)
SLAB THICK: 9.25 (in)
DESIGN SPEED: 70.0 (mph)
SLAB RADIUS: 3274.0 (ft)
HAUNCH THICK: 3.50 (in)
PIER SKEW: 18.000 (degrees)
NUMBER OF ROADWAYS: 1

SLAB 2 DIMENSIONS:

LEFT FASCIA:	LEFT BARRIER:	LEFT SIDEWALK:
WIDTH: 0.000 (in)	WIDTH: 18.000 (in)	WIDTH: 0.000 (ft)
	HEIGHT: 32.000 (in)	THICK: 0.000 (in)

ROADWAY 1 WIDTH = 34.000 (ft)

RIGHT SIDEWALK:	RIGHT BARRIER:	RIGHT FASCIA:
WIDTH: 0.000 (ft)	WIDTH: 18.000 (in)	WIDTH: 0.000 (in)
THICK: 0.000 (in)	HEIGHT: 32.000 (in)	

SLAB 2 CROSS SLOPE DATA:
NUMBER OF CROSS SLOPE VALUES: 2

SLOPE: -0.0400	SLOPE: -0.0400
DIST: 37.234 (ft)	DIST: 61.221 (ft)

SLAB 2 GIRDER DATA:
NUMBER OF GIRDERS: 4 GIRDER DEPTH AND PROFILE DISTANCES:

SPAN LENGTH:	BACK STATION:	PIER:	FORWARD STATION:
BACK STATION: 0.000 (ft)	DEPTH: 0.00 (ft)	DEPTH: 8.17 (ft)	DEPTH: 8.17 (ft)
FWD STATION: 240.000 (ft)	DISTANCE: 0.00 (ft)		DISTANCE: 240.00 (ft)

GIRDER LOCATION DATA:

NO.	NAME	DISTANCE (ft)	GIRDER TYPE	BOT FL WIDTH (in)	TOP FL WIDTH (in)	TOP FL ECCENT (in)	SKEW ANGLE (degrees)	BEARING OFFSET (in)	FIXITY
1	Girder 1	-95.847	I	0.00	0.00	0.00	18.000	50.50	T
2	Girder 2	-85.540	I	0.00	0.00	0.00	18.000	50.50	T
3	Girder 3	-75.230	I	0.00	0.00	0.00	18.000	50.50	T
4	Girder 4	-64.917	I	0.00	0.00	0.00	18.000	50.50	T

SLAB 2 BEARING DATA:
BEARING HEIGHT: 40.000 (in)
BEARING FRICTION COEFFICIENT: 0.060

----- SLAB 3 DATA -----

SLAB: 3 SLAB LABEL: Slab 1-3
CONNECTED TO: CAPBEAM 1
SLAB LENGTH: 240.00 (ft)
SLAB WIDTH: 87.93 (ft)
SLAB THICK: 9.50 (in)
DESIGN SPEED: 70.0 (mph)
SLAB RADIUS: 3522.0 (ft)
HAUNCH THICK: 2.00 (in)
PIER SKEW: 18.000 (degrees)
NUMBER OF ROADWAYS: 1

SLAB 3 DIMENSIONS:

LEFT FASCIA:	LEFT BARRIER:	LEFT SIDEWALK:
WIDTH: 0.000 (in)	WIDTH: 18.000 (in)	WIDTH: 0.000 (ft)
	HEIGHT: 32.000 (in)	THICK: 0.000 (in)

ROADWAY 1 WIDTH = 84.929 (ft)

RIGHT SIDEWALK:	RIGHT BARRIER:	RIGHT FASCIA:
WIDTH: 0.000 (ft)	WIDTH: 18.000 (in)	WIDTH: 0.000 (in)
THICK: 0.000 (in)	HEIGHT: 32.000 (in)	

SLAB 3 CROSS SLOPE DATA:
NUMBER OF CROSS SLOPE VALUES: 2

SLOPE: -0.0400	SLOPE: -0.0400
DIST: 52.181 (ft)	DIST: 38.000 (ft)

SLAB 3 GIRDER DATA:
NUMBER OF GIRDERS: 9 GIRDER DEPTH AND PROFILE DISTANCES:

SPAN LENGTH:	BACK STATION:	PIER:	FORWARD STATION:

```
      BACK STATION:    0.000 (ft)        DEPTH:      0.00 (ft)      DEPTH:  8.27 (ft)      DEPTH:      8.27 (ft)
      FWD STATION:   240.000 (ft)        DISTANCE:   0.00 (ft)                             DISTANCE: 240.00 (ft)

    GIRDER LOCATION DATA:
      NO.    NAME           DISTANCE   GIRDER   BOT FL   TOP FL   TOP FL    SKEW     BEARING   FIXITY
                                        TYPE     WIDTH    WIDTH    ECCENT    ANGLE     OFFSET
                              (ft)               (in)     (in)     (in)   (degrees)    (in)
       1  Girder 1          -49.440       I       0.00     0.00     0.00    18.000     50.50      T
       2  Girder 2          -37.671       I       0.00     0.00     0.00    18.000     50.50      T
       3  Girder 3          -25.897       I       0.00     0.00     0.00    18.000     50.50      T
       4  Girder 4          -14.118       I       0.00     0.00     0.00    18.000     50.50      T
       5  Girder 5           -7.655       I       0.00     0.00     0.00    18.000     50.50      T
       6  Girder 6           -1.192       I       0.00     0.00     0.00    18.000     50.50      T
       7  Girder 7           10.483       I       0.00     0.00     0.00    18.000     50.50      T
       8  Girder 8           22.162       I       0.00     0.00     0.00    18.000     50.50      T
       9  Girder 9           33.844       I       0.00     0.00     0.00    18.000     50.50      T

  SLAB  3 BEARING DATA:
    BEARING HEIGHT:  40.000 (in)
    BEARING FRICTION COEFFICIENT:    0.060

----- COLUMN  1 DATA ------------------------------------------------------------------------------------------

  COLUMN LINE OFFSET:  -77.896 (ft)
  NUMBER OF LEVELS:  1
  COLUMN FACE LOCATIONS:
    CAPBEAM: -TRAN:    84.00 (in)     +TRAN:    84.00 (in)
    FOOTING: -TRAN:    84.00 (in)     +TRAN:    84.00 (in)     -LONG:    72.00 (in)     +LONG:    72.00 (in)
  COLUMN:  1  LEVEL: 1
    NUMBER OF SEGMENTS:  1
    MAGNIFICATION FACTORS:    K-TRAN:  1.20         K-LONG:  2.10
    ECCENTRICITIES:             TRAN:  0.000 (ft)     LONG:  0.000 (ft)
    ROTATION ANGLE:      0.000 (degrees)
    SEGMENT  1 DIMENSIONS:
      SHAPE:   User Defined
      BEGIN SECTION:
        TOP ELEV:    670.500 (ft)
        TORSIONAL CONSTANT J:       0.437E+08 (in**4)
          NUMBER OF FACES: 18
            FACE  1: BEG  X:    -84.000 (in)     Y:    -60.000 (in)     Rad:      0.000 (in)
                     END  X:    -72.000 (in)     Y:    -60.000 (in)
            FACE  2: BEG  X:    -72.000 (in)     Y:    -60.000 (in)     Rad:      0.000 (in)
                     END  X:    -72.000 (in)     Y:    -72.000 (in)
            FACE  3: BEG  X:    -72.000 (in)     Y:    -72.000 (in)     Rad:      0.000 (in)
                     END  X:     72.000 (in)     Y:    -72.000 (in)
            FACE  4: BEG  X:     72.000 (in)     Y:    -72.000 (in)     Rad:      0.000 (in)
                     END  X:     72.000 (in)     Y:    -60.000 (in)
            FACE  5: BEG  X:     72.000 (in)     Y:    -60.000 (in)     Rad:      0.000 (in)
                     END  X:     84.000 (in)     Y:    -60.000 (in)
            FACE  6: BEG  X:     84.000 (in)     Y:    -60.000 (in)     Rad:      0.000 (in)
                     END  X:     84.000 (in)     Y:     60.000 (in)
            FACE  7: BEG  X:     84.000 (in)     Y:     60.000 (in)     Rad:      0.000 (in)
                     END  X:     72.000 (in)     Y:     60.000 (in)
            FACE  8: BEG  X:     72.000 (in)     Y:     60.000 (in)     Rad:      0.000 (in)
                     END  X:     72.000 (in)     Y:     72.000 (in)
            FACE  9: BEG  X:     72.000 (in)     Y:     72.000 (in)     Rad:      0.000 (in)
                     END  X:    -72.000 (in)     Y:     72.000 (in)
            FACE 10: BEG  X:    -72.000 (in)     Y:     72.000 (in)     Rad:      0.000 (in)
                     END  X:    -72.000 (in)     Y:     60.000 (in)
            FACE 11: BEG  X:    -72.000 (in)     Y:     60.000 (in)     Rad:      0.000 (in)
                     END  X:    -84.000 (in)     Y:     60.000 (in)
            FACE 12: BEG  X:    -84.000 (in)     Y:     60.000 (in)     Rad:      0.000 (in)
                     END  X:    -84.000 (in)     Y:    -60.000 (in)
            FACE 13: BEG  X:    -84.000 (in)     Y:    -60.000 (in)     Rad:      0.000 (in)
                     END  X:    -48.000 (in)     Y:    -48.000 (in)
            FACE 14: BEG  X:    -48.000 (in)     Y:    -48.000 (in)     Rad:      0.000 (in)
                     END  X:    -48.000 (in)     Y:     48.000 (in)
            FACE 15: BEG  X:    -48.000 (in)     Y:     48.000 (in)     Rad:      0.000 (in)
                     END  X:     48.000 (in)     Y:     48.000 (in)
            FACE 16: BEG  X:     48.000 (in)     Y:     48.000 (in)     Rad:      0.000 (in)
                     END  X:     48.000 (in)     Y:    -48.000 (in)
            FACE 17: BEG  X:     48.000 (in)     Y:    -48.000 (in)     Rad:      0.000 (in)
                     END  X:    -48.000 (in)     Y:    -48.000 (in)
            FACE 18: BEG  X:    -48.000 (in)     Y:    -48.000 (in)     Rad:      0.000 (in)
                     END  X:    -84.000 (in)     Y:    -60.000 (in)
      END SECTION:
        BOT ELEV:    603.000 (ft)
        TORSIONAL CONSTANT J:       0.437E+08 (in**4)
          NUMBER OF FACES: 18
            FACE  1: BEG  X:    -84.000 (in)     Y:    -60.000 (in)     Rad:      0.000 (in)
                     END  X:    -72.000 (in)     Y:    -60.000 (in)
            FACE  2: BEG  X:    -72.000 (in)     Y:    -60.000 (in)     Rad:      0.000 (in)
                     END  X:    -72.000 (in)     Y:    -72.000 (in)
            FACE  3: BEG  X:    -72.000 (in)     Y:    -72.000 (in)     Rad:      0.000 (in)
                     END  X:     72.000 (in)     Y:    -72.000 (in)
            FACE  4: BEG  X:     72.000 (in)     Y:    -72.000 (in)     Rad:      0.000 (in)
                     END  X:     72.000 (in)     Y:    -60.000 (in)
            FACE  5: BEG  X:     72.000 (in)     Y:    -60.000 (in)     Rad:      0.000 (in)
                     END  X:     84.000 (in)     Y:    -60.000 (in)
            FACE  6: BEG  X:     84.000 (in)     Y:    -60.000 (in)     Rad:      0.000 (in)
                     END  X:     84.000 (in)     Y:     60.000 (in)
            FACE  7: BEG  X:     84.000 (in)     Y:     60.000 (in)     Rad:      0.000 (in)
                     END  X:     72.000 (in)     Y:     60.000 (in)
            FACE  8: BEG  X:     72.000 (in)     Y:     60.000 (in)     Rad:      0.000 (in)
                     END  X:     72.000 (in)     Y:     72.000 (in)
```

```
        FACE  9: BEG  X:     72.000 (in)     Y:     72.000 (in)     Rad:      0.000 (in)
                  END  X:    -72.000 (in)     Y:     72.000 (in)
        FACE 10: BEG  X:    -72.000 (in)     Y:     72.000 (in)     Rad:      0.000 (in)
                  END  X:    -72.000 (in)     Y:     60.000 (in)
        FACE 11: BEG  X:    -72.000 (in)     Y:     60.000 (in)     Rad:      0.000 (in)
                  END  X:    -84.000 (in)     Y:     60.000 (in)
        FACE 12: BEG  X:    -84.000 (in)     Y:     60.000 (in)     Rad:      0.000 (in)
                  END  X:    -84.000 (in)     Y:    -60.000 (in)
        FACE 13: BEG  X:    -84.000 (in)     Y:    -60.000 (in)     Rad:      0.000 (in)
                  END  X:    -48.000 (in)     Y:    -48.000 (in)
        FACE 14: BEG  X:    -48.000 (in)     Y:    -48.000 (in)     Rad:      0.000 (in)
                  END  X:    -48.000 (in)     Y:     48.000 (in)
        FACE 15: BEG  X:    -48.000 (in)     Y:     48.000 (in)     Rad:      0.000 (in)
                  END  X:     48.000 (in)     Y:     48.000 (in)
        FACE 16: BEG  X:     48.000 (in)     Y:     48.000 (in)     Rad:      0.000 (in)
                  END  X:     48.000 (in)     Y:    -48.000 (in)
        FACE 17: BEG  X:     48.000 (in)     Y:    -48.000 (in)     Rad:      0.000 (in)
                  END  X:    -48.000 (in)     Y:    -48.000 (in)
        FACE 18: BEG  X:    -48.000 (in)     Y:    -48.000 (in)     Rad:      0.000 (in)
                  END  X:    -84.000 (in)     Y:    -60.000 (in)
REINFORCEMENT PARAMETERS:                   CONCRETE PARAMETERS:
  YIELD  STRENGTH:   60.0 (ksi)               FPC:      4.0 (ksi)
  CONTAINMENT BARS:   TYPE:   Tied            WEIGHT: 150.0 (pcf)
                      SIZE:   6               CTE:      0.0000060
  DISTANCE TO CL VERT BARS:   0.000 (in)
  PERCENT STEEL:       MIN:    1.00
                       MAX:    8.00

COLUMN REINFORCEMENT DATA:
  NUMBER OF REINFORCEMENT SECTIONS:  3
    SECTION  1 DATA:
      SHAPE: Rectangular           TRAN OFFSET:    0.00 (in)       TOP ELEV:   675.50 (ft)
      NUMBER OF FACES:  4          LONG OFFSET:    0.00 (in)       BOT ELEV:   603.00 (ft)
        FACE DATA:
          FACE NUMBER:           1            2            3            4
          TOP BEG X COORD:   -66.92 (in)    66.92 (in)    66.92 (in)   -66.92 (in)
          TOP BEG Y COORD:   -66.92 (in)   -66.92 (in)    66.92 (in)    66.92 (in)
          TOP END X COORD:    66.92 (in)    66.92 (in)   -66.92 (in)   -66.92 (in)
          TOP END Y COORD:   -66.92 (in)    66.92 (in)    66.92 (in)   -66.92 (in)
          TOP RADIUS:          0.00 (in)     0.00 (in)     0.00 (in)     0.00 (in)

          BOT BEG X COORD:   -66.92 (in)    66.92 (in)    66.92 (in)   -66.92 (in)
          BOT BEG Y COORD:   -66.92 (in)   -66.92 (in)    66.92 (in)    66.92 (in)
          BOT END X COORD:    66.92 (in)    66.92 (in)   -66.92 (in)   -66.92 (in)
          BOT END Y COORD:   -66.92 (in)    66.92 (in)    66.92 (in)   -66.92 (in)
          BOT RADIUS:          0.00 (in)     0.00 (in)     0.00 (in)     0.00 (in)

          BARSIZE:               11            11            11            11
          BARS/BUNDLE:            1             1             1             1
          MIN NUM BARS:          13            13            13            13
          MAX NUM BARS:          13            13            13            13
          BAR AT BEG:           Yes            No           Yes            No
          BAR AT END:           Yes            No           Yes            No

    SECTION  2 DATA:
      SHAPE: Square                TRAN OFFSET:    0.00 (in)       TOP ELEV:   675.50 (ft)
      NUMBER OF FACES:  4          LONG OFFSET:    0.00 (in)       BOT ELEV:   603.00 (ft)
        FACE DATA:
          FACE NUMBER:           1            2            3            4
          TOP BEG X COORD:   -53.08 (in)    53.08 (in)    53.08 (in)   -53.08 (in)
          TOP BEG Y COORD:   -53.08 (in)   -53.08 (in)    53.08 (in)    53.08 (in)
          TOP END X COORD:    53.08 (in)    53.08 (in)   -53.08 (in)   -53.08 (in)
          TOP END Y COORD:   -53.08 (in)    53.08 (in)    53.08 (in)   -53.08 (in)
          TOP RADIUS:          0.00 (in)     0.00 (in)     0.00 (in)     0.00 (in)

          BOT BEG X COORD:   -53.08 (in)    53.08 (in)    53.08 (in)   -53.08 (in)
          BOT BEG Y COORD:   -53.08 (in)   -53.08 (in)    53.08 (in)    53.08 (in)
          BOT END X COORD:    53.08 (in)    53.08 (in)   -53.08 (in)   -53.08 (in)
          BOT END Y COORD:   -53.08 (in)    53.08 (in)    53.08 (in)   -53.08 (in)
          BOT RADIUS:          0.00 (in)     0.00 (in)     0.00 (in)     0.00 (in)

          BARSIZE:               11            11            11            11
          BARS/BUNDLE:            1             1             1             1
          MIN NUM BARS:          11             9            11             9
          MAX NUM BARS:          11             9            11             9
          BAR AT BEG:           Yes            No           Yes            No
          BAR AT END:           Yes            No           Yes            No

    SECTION  3 DATA:
      SHAPE: Rectangular           TRAN OFFSET:    0.00 (in)       TOP ELEV:   675.50 (ft)
      NUMBER OF FACES:  4          LONG OFFSET:    0.00 (in)       BOT ELEV:   603.00 (ft)
        FACE DATA:
          FACE NUMBER:           1            2            3            4
          TOP BEG X COORD:   -79.05 (in)    79.05 (in)    79.05 (in)   -79.05 (in)
          TOP BEG Y COORD:   -55.05 (in)   -55.05 (in)    55.05 (in)    55.05 (in)
          TOP END X COORD:    79.05 (in)    79.05 (in)   -79.05 (in)   -79.05 (in)
          TOP END Y COORD:   -55.05 (in)    55.05 (in)    55.05 (in)   -55.05 (in)
          TOP RADIUS:          0.00 (in)     0.00 (in)     0.00 (in)     0.00 (in)

          BOT BEG X COORD:   -79.05 (in)    79.05 (in)    79.05 (in)   -79.05 (in)
          BOT BEG Y COORD:   -55.05 (in)   -55.05 (in)    55.05 (in)    55.05 (in)
          BOT END X COORD:    79.05 (in)    79.05 (in)   -79.05 (in)   -79.05 (in)
          BOT END Y COORD:   -55.05 (in)    55.05 (in)    55.05 (in)   -55.05 (in)
          BOT RADIUS:          0.00 (in)     0.00 (in)     0.00 (in)     0.00 (in)
```

```
            BARSIZE:               11           11           11           11
            BARS/BUNDLE:            1            1            1            1
            MIN NUM BARS:           0            6            0            6
            MAX NUM BARS:           0            6            0            6
            BAR AT BEG:            No          Yes           No          Yes
            BAR AT END:            No          Yes           No          Yes


----- COLUMN  2 DATA ------------------------------------------------------------------------------------------

  COLUMN LINE OFFSET:   17.604 (ft)
  NUMBER OF LEVELS:  1
  COLUMN FACE LOCATIONS:
    CAPBEAM: -TRAN:    84.00 (in)     +TRAN:    84.00 (in)
    FOOTING: -TRAN:    84.00 (in)     +TRAN:    84.00 (in)     -LONG:    72.00 (in)     +LONG:    72.00 (in)
  COLUMN:  2  LEVEL: 1
    NUMBER OF SEGMENTS:  1
    MAGNIFICATION FACTORS:    K-TRAN:  1.20         K-LONG:  2.10
    ECCENTRICITIES:             TRAN:  0.000 (ft)     LONG:  0.000 (ft)
    ROTATION ANGLE:      0.000 (degrees)
    SEGMENT  1 DIMENSIONS:
      SHAPE:   User Defined
      BEGIN SECTION:
        TOP ELEV:    670.500 (ft)
        TORSIONAL CONSTANT J:       0.437E+08 (in**4)
          NUMBER OF FACES: 18
            FACE  1: BEG  X:    -84.000 (in)     Y:    -60.000 (in)     Rad:      0.000 (in)
                     END  X:    -72.000 (in)     Y:    -60.000 (in)
            FACE  2: BEG  X:    -72.000 (in)     Y:    -60.000 (in)     Rad:      0.000 (in)
                     END  X:    -72.000 (in)     Y:    -72.000 (in)
            FACE  3: BEG  X:    -72.000 (in)     Y:    -72.000 (in)     Rad:      0.000 (in)
                     END  X:     72.000 (in)     Y:    -72.000 (in)
            FACE  4: BEG  X:     72.000 (in)     Y:    -72.000 (in)     Rad:      0.000 (in)
                     END  X:     72.000 (in)     Y:    -60.000 (in)
            FACE  5: BEG  X:     72.000 (in)     Y:    -60.000 (in)     Rad:      0.000 (in)
                     END  X:     84.000 (in)     Y:    -60.000 (in)
            FACE  6: BEG  X:     84.000 (in)     Y:    -60.000 (in)     Rad:      0.000 (in)
                     END  X:     84.000 (in)     Y:     60.000 (in)
            FACE  7: BEG  X:     84.000 (in)     Y:     60.000 (in)     Rad:      0.000 (in)
                     END  X:     72.000 (in)     Y:     60.000 (in)
            FACE  8: BEG  X:     72.000 (in)     Y:     60.000 (in)     Rad:      0.000 (in)
                     END  X:     72.000 (in)     Y:     72.000 (in)
            FACE  9: BEG  X:     72.000 (in)     Y:     72.000 (in)     Rad:      0.000 (in)
                     END  X:    -72.000 (in)     Y:     72.000 (in)
            FACE 10: BEG  X:    -72.000 (in)     Y:     72.000 (in)     Rad:      0.000 (in)
                     END  X:    -72.000 (in)     Y:     60.000 (in)
            FACE 11: BEG  X:    -72.000 (in)     Y:     60.000 (in)     Rad:      0.000 (in)
                     END  X:    -84.000 (in)     Y:     60.000 (in)
            FACE 12: BEG  X:    -84.000 (in)     Y:     60.000 (in)     Rad:      0.000 (in)
                     END  X:    -84.000 (in)     Y:    -60.000 (in)
            FACE 13: BEG  X:    -84.000 (in)     Y:    -60.000 (in)     Rad:      0.000 (in)
                     END  X:    -48.000 (in)     Y:    -48.000 (in)
            FACE 14: BEG  X:    -48.000 (in)     Y:    -48.000 (in)     Rad:      0.000 (in)
                     END  X:    -48.000 (in)     Y:     48.000 (in)
            FACE 15: BEG  X:    -48.000 (in)     Y:     48.000 (in)     Rad:      0.000 (in)
                     END  X:     48.000 (in)     Y:     48.000 (in)
            FACE 16: BEG  X:     48.000 (in)     Y:     48.000 (in)     Rad:      0.000 (in)
                     END  X:     48.000 (in)     Y:    -48.000 (in)
            FACE 17: BEG  X:     48.000 (in)     Y:    -48.000 (in)     Rad:      0.000 (in)
                     END  X:    -48.000 (in)     Y:    -48.000 (in)
            FACE 18: BEG  X:    -48.000 (in)     Y:    -48.000 (in)     Rad:      0.000 (in)
                     END  X:    -84.000 (in)     Y:    -60.000 (in)
      END SECTION:
        BOT ELEV:    603.000 (ft)
        TORSIONAL CONSTANT J:       0.437E+08 (in**4)
          NUMBER OF FACES: 18
            FACE  1: BEG  X:    -84.000 (in)     Y:    -60.000 (in)     Rad:      0.000 (in)
                     END  X:    -72.000 (in)     Y:    -60.000 (in)
            FACE  2: BEG  X:    -72.000 (in)     Y:    -60.000 (in)     Rad:      0.000 (in)
                     END  X:    -72.000 (in)     Y:    -72.000 (in)
            FACE  3: BEG  X:    -72.000 (in)     Y:    -72.000 (in)     Rad:      0.000 (in)
                     END  X:     72.000 (in)     Y:    -72.000 (in)
            FACE  4: BEG  X:     72.000 (in)     Y:    -72.000 (in)     Rad:      0.000 (in)
                     END  X:     72.000 (in)     Y:    -60.000 (in)
            FACE  5: BEG  X:     72.000 (in)     Y:    -60.000 (in)     Rad:      0.000 (in)
                     END  X:     84.000 (in)     Y:    -60.000 (in)
            FACE  6: BEG  X:     84.000 (in)     Y:    -60.000 (in)     Rad:      0.000 (in)
                     END  X:     84.000 (in)     Y:     60.000 (in)
            FACE  7: BEG  X:     84.000 (in)     Y:     60.000 (in)     Rad:      0.000 (in)
                     END  X:     72.000 (in)     Y:     60.000 (in)
            FACE  8: BEG  X:     72.000 (in)     Y:     60.000 (in)     Rad:      0.000 (in)
                     END  X:     72.000 (in)     Y:     72.000 (in)
            FACE  9: BEG  X:     72.000 (in)     Y:     72.000 (in)     Rad:      0.000 (in)
                     END  X:    -72.000 (in)     Y:     72.000 (in)
            FACE 10: BEG  X:    -72.000 (in)     Y:     72.000 (in)     Rad:      0.000 (in)
                     END  X:    -72.000 (in)     Y:     60.000 (in)
            FACE 11: BEG  X:    -72.000 (in)     Y:     60.000 (in)     Rad:      0.000 (in)
                     END  X:    -84.000 (in)     Y:     60.000 (in)
            FACE 12: BEG  X:    -84.000 (in)     Y:     60.000 (in)     Rad:      0.000 (in)
                     END  X:    -84.000 (in)     Y:    -60.000 (in)
            FACE 13: BEG  X:    -84.000 (in)     Y:    -60.000 (in)     Rad:      0.000 (in)
                     END  X:    -48.000 (in)     Y:    -48.000 (in)
            FACE 14: BEG  X:    -48.000 (in)     Y:    -48.000 (in)     Rad:      0.000 (in)
                     END  X:    -48.000 (in)     Y:     48.000 (in)
            FACE 15: BEG  X:    -48.000 (in)     Y:     48.000 (in)     Rad:      0.000 (in)
```

```
                END  X:     48.000 (in)     Y:     48.000 (in)
        FACE 16: BEG  X:     48.000 (in)     Y:     48.000 (in)     Rad:      0.000 (in)
                END  X:     48.000 (in)     Y:    -48.000 (in)
        FACE 17: BEG  X:     48.000 (in)     Y:    -48.000 (in)     Rad:      0.000 (in)
                END  X:    -48.000 (in)     Y:    -48.000 (in)
        FACE 18: BEG  X:    -48.000 (in)     Y:    -48.000 (in)     Rad:      0.000 (in)
                END  X:    -84.000 (in)     Y:    -60.000 (in)
  REINFORCEMENT PARAMETERS:                  CONCRETE PARAMETERS:
    YIELD  STRENGTH:   60.0 (ksi)              FPC:      4.0 (ksi)
    CONTAINMENT BARS:   TYPE:   Tied           WEIGHT: 150.0 (pcf)
                        SIZE:   6              CTE:      0.0000060
    DISTANCE TO CL VERT BARS:   0.000 (in)
    PERCENT STEEL:       MIN:    1.00
                         MAX:    8.00

  COLUMN REINFORCEMENT DATA:
    NUMBER OF REINFORCEMENT SECTIONS:  3
      SECTION  1 DATA:
        SHAPE: Rectangular           TRAN OFFSET:    0.00 (in)       TOP ELEV:   675.50 (ft)
        NUMBER OF FACES:  4          LONG OFFSET:    0.00 (in)       BOT ELEV:   603.00 (ft)
          FACE DATA:
            FACE NUMBER:            1             2             3             4
            TOP BEG X COORD:   -66.92 (in)    66.92 (in)    66.92 (in)   -66.92 (in)
            TOP BEG Y COORD:   -66.92 (in)   -66.92 (in)    66.92 (in)    66.92 (in)
            TOP END X COORD:    66.92 (in)    66.92 (in)   -66.92 (in)   -66.92 (in)
            TOP END Y COORD:   -66.92 (in)    66.92 (in)    66.92 (in)   -66.92 (in)
            TOP RADIUS:          0.00 (in)     0.00 (in)     0.00 (in)     0.00 (in)

            BOT BEG X COORD:   -66.92 (in)    66.92 (in)    66.92 (in)   -66.92 (in)
            BOT BEG Y COORD:   -66.92 (in)   -66.92 (in)    66.92 (in)    66.92 (in)
            BOT END X COORD:    66.92 (in)    66.92 (in)   -66.92 (in)   -66.92 (in)
            BOT END Y COORD:   -66.92 (in)    66.92 (in)    66.92 (in)   -66.92 (in)
            BOT RADIUS:          0.00 (in)     0.00 (in)     0.00 (in)     0.00 (in)

            BARSIZE:               11            11            11            11
            BARS/BUNDLE:            1             1             1             1
            MIN NUM BARS:          13            13            13            13
            MAX NUM BARS:          13            13            13            13
            BAR AT BEG:           Yes            No           Yes            No
            BAR AT END:           Yes            No           Yes            No

      SECTION  2 DATA:
        SHAPE: Square                TRAN OFFSET:    0.00 (in)       TOP ELEV:   675.50 (ft)
        NUMBER OF FACES:  4          LONG OFFSET:    0.00 (in)       BOT ELEV:   603.00 (ft)
          FACE DATA:
            FACE NUMBER:            1             2             3             4
            TOP BEG X COORD:   -53.08 (in)    53.08 (in)    53.08 (in)   -53.08 (in)
            TOP BEG Y COORD:   -53.08 (in)   -53.08 (in)    53.08 (in)    53.08 (in)
            TOP END X COORD:    53.08 (in)    53.08 (in)   -53.08 (in)   -53.08 (in)
            TOP END Y COORD:   -53.08 (in)    53.08 (in)    53.08 (in)   -53.08 (in)
            TOP RADIUS:          0.00 (in)     0.00 (in)     0.00 (in)     0.00 (in)

            BOT BEG X COORD:   -53.08 (in)    53.08 (in)    53.08 (in)   -53.08 (in)
            BOT BEG Y COORD:   -53.08 (in)   -53.08 (in)    53.08 (in)    53.08 (in)
            BOT END X COORD:    53.08 (in)    53.08 (in)   -53.08 (in)   -53.08 (in)
            BOT END Y COORD:   -53.08 (in)    53.08 (in)    53.08 (in)   -53.08 (in)
            BOT RADIUS:          0.00 (in)     0.00 (in)     0.00 (in)     0.00 (in)

            BARSIZE:               11            11            11            11
            BARS/BUNDLE:            1             1             1             1
            MIN NUM BARS:          11             9            11             9
            MAX NUM BARS:          11             9            11             9
            BAR AT BEG:           Yes            No           Yes            No
            BAR AT END:           Yes            No           Yes            No

      SECTION  3 DATA:
        SHAPE: Rectangular           TRAN OFFSET:    0.00 (in)       TOP ELEV:   675.50 (ft)
        NUMBER OF FACES:  4          LONG OFFSET:    0.00 (in)       BOT ELEV:   603.00 (ft)
          FACE DATA:
            FACE NUMBER:            1             2             3             4
            TOP BEG X COORD:   -79.05 (in)    79.05 (in)    79.05 (in)   -79.05 (in)
            TOP BEG Y COORD:   -55.05 (in)   -55.05 (in)    55.05 (in)    55.05 (in)
            TOP END X COORD:    79.05 (in)    79.05 (in)   -79.05 (in)   -79.05 (in)
            TOP END Y COORD:   -55.05 (in)    55.05 (in)    55.05 (in)   -55.05 (in)
            TOP RADIUS:          0.00 (in)     0.00 (in)     0.00 (in)     0.00 (in)

            BOT BEG X COORD:   -79.05 (in)    79.05 (in)    79.05 (in)   -79.05 (in)
            BOT BEG Y COORD:   -55.05 (in)   -55.05 (in)    55.05 (in)    55.05 (in)
            BOT END X COORD:    79.05 (in)    79.05 (in)   -79.05 (in)   -79.05 (in)
            BOT END Y COORD:   -55.05 (in)    55.05 (in)    55.05 (in)   -55.05 (in)
            BOT RADIUS:          0.00 (in)     0.00 (in)     0.00 (in)     0.00 (in)

            BARSIZE:               11            11            11            11
            BARS/BUNDLE:            1             1             1             1
            MIN NUM BARS:           0             6             0             6
            MAX NUM BARS:           0             6             0             6
            BAR AT BEG:            No           Yes            No           Yes
            BAR AT END:            No           Yes            No           Yes


----- FOOTING  1 DATA ---------------------------------------------------------------------------------------------

  FOOTING TYPE: Pile Footing
  TOP OF FOOTING ELEVATION:  603.000 (ft)     ROTATION ANGLE:     0.000 (degrees)
  SHEAR DESIGN USING SIMPLIFIED PROCEDURE, AASHTO 5.8.3.4.1
```

REINFORCEMENT PARAMETERS:
YIELD STRENGTH: 60.0 (ksi)
MIN COVER: TOP: 3.0 (in)
BOTTOM: 3.0 (in)
SIDE: 3.0 (in)
STIRRUPS: SIZE: 0
NO.LEGS TOTAL: 0
EXPOSURE FACTOR: 1.000

CONCRETE PARAMETERS:
FPC: 4.0 (ksi)
WEIGHT: 150.0 (pcf)
CTE: 0.0000060

SOIL PARAMETERS:
SOIL ELEVATION: 628.000 (ft)
SOIL WEIGHT: 120.0 (pcf)
SOIL CAPACITY:
UNFACTORED: 0.000 (ksf)
FACTORED: 0.000 (ksf)

FOOTING DIMENSIONS:
TRANSVERSE: 38.000 (ft)
LONGITUDINAL: 38.000 (ft)
DEPTH: 10.000 (ft)

LOCATION OF FIRST COLUMN:
TRANSVERSE: 19.000 (ft)
LONGITUDINAL: 19.000 (ft)

REINFORCEMENT LAYER DATA:
BOTTOM MAT: Transverse bars on bottom at min cover of 3.000 (in) from bottom of footing.
Longitudinal Bars:
MIN SIZE: 8 MIN NUMBER OF BARS: 2
MAX SIZE: 8 MAX NUMBER OF BARS: 10
Transverse Bars:
MIN SIZE: 8 MIN NUMBER OF BARS: 2
MAX SIZE: 8 MAX NUMBER OF BARS: 10

TOP MAT: Longitudinal bars on top at min cover of 3.000 (in) from top of footing.
Transverse Bars:
MIN SIZE: 8 MIN NUMBER OF BARS: 2
MAX SIZE: 8 MAX NUMBER OF BARS: 10
Longitudinal Bars:
MIN SIZE: 8 MIN NUMBER OF BARS: 2
MAX SIZE: 8 MAX NUMBER OF BARS: 10

FOOTING SUPPORT FIXITY:

	DISPLACEMENT	ROTATION ABOUT
TRANSVERSE	Rigid	Rigid
VERTICAL	Rigid	Rigid
LONGITUDINAL	Rigid	Rigid

PILE DATA:

PILE NO.	LABEL	SHAPE	MATL CODE	STIFF CODE	EFF. DIA. (in)	TRAN Z (ft)	LONG X (ft)	VERT Y (ft)	BATTER (1H:__V)	ROTATION (degrees)	AXIAL CAPACITY SERV (kips)	AXIAL CAPACITY STR (kips)
1	R:1 C:1	HP14x117	0	1	8.8	-16.00	-16.00	7.42	0.0	90.0	0	0
2	R:1 C:3	HP14x117	0	1	8.8	0.00	-16.00	7.42	0.0	90.0	0	0
3	R:1 C:5	HP14x117	0	1	8.8	16.00	-16.00	7.42	0.0	90.0	0	0
4	R:2 C:2	HP14x117	0	1	8.8	-8.00	-8.00	7.42	0.0	90.0	0	0
5	R:2 C:4	HP14x117	0	1	8.8	8.00	-8.00	7.42	0.0	90.0	0	0
6	R:3 C:1	HP14x117	0	1	8.8	-16.00	0.00	7.42	0.0	90.0	0	0
7	R:3 C:5	HP14x117	0	1	8.8	16.00	0.00	7.42	0.0	90.0	0	0
8	R:4 C:2	HP14x117	0	1	8.8	-8.00	8.00	7.42	0.0	90.0	0	0
9	R:4 C:4	HP14x117	0	1	8.8	8.00	8.00	7.42	0.0	90.0	0	0
10	R:5 C:1	HP14x117	0	1	8.8	-16.00	16.00	7.42	0.0	90.0	0	0
11	R:5 C:3	HP14x117	0	1	8.8	0.00	16.00	7.42	0.0	90.0	0	0
12	R:5 C:5	HP14x117	0	1	8.8	16.00	16.00	7.42	0.0	90.0	0	0

PILE STIFFNESS COEFFICIENT TABLE DATA:

TABLE NO.	C(1) k/in	C(2) k/in	C(3) in-k/in	C(4) k/in	C(5) in-k/in	C(6) in-k/rad	C(7) k/rad	C(8) in-k/rad	C(9) k/rad	C(10) in-k/rad
1	10.0	10.0	0.00	10.0	0.00	0.00	0.00	0.00	0.00	0.00

----- FOOTING 2 DATA -----

FOOTING TYPE: Pile Footing
TOP OF FOOTING ELEVATION: 603.000 (ft) ROTATION ANGLE: 0.000 (degrees)
SHEAR DESIGN USING SIMPLIFIED PROCEDURE, AASHTO 5.8.3.4.1

REINFORCEMENT PARAMETERS:
YIELD STRENGTH: 60.0 (ksi)
MIN COVER: TOP: 3.0 (in)
BOTTOM: 3.0 (in)
SIDE: 3.0 (in)
STIRRUPS: SIZE: 0
NO.LEGS TOTAL: 0
EXPOSURE FACTOR: 1.000

CONCRETE PARAMETERS:
FPC: 4.0 (ksi)
WEIGHT: 150.0 (pcf)
CTE: 0.0000060

SOIL PARAMETERS:
SOIL ELEVATION: 628.000 (ft)
SOIL WEIGHT: 120.0 (pcf)
SOIL CAPACITY:
UNFACTORED: 0.000 (ksf)
FACTORED: 0.000 (ksf)

FOOTING DIMENSIONS:
TRANSVERSE: 38.000 (ft)
LONGITUDINAL: 38.000 (ft)
DEPTH: 10.000 (ft)

LOCATION OF FIRST COLUMN:
TRANSVERSE: 19.000 (ft)
LONGITUDINAL: 19.000 (ft)

REINFORCEMENT LAYER DATA:
BOTTOM MAT: Transverse bars on bottom at min cover of 3.000 (in) from bottom of footing.
Longitudinal Bars:
MIN SIZE: 8 MIN NUMBER OF BARS: 2
MAX SIZE: 8 MAX NUMBER OF BARS: 10
Transverse Bars:
MIN SIZE: 8 MIN NUMBER OF BARS: 2
MAX SIZE: 8 MAX NUMBER OF BARS: 10

TOP MAT: Longitudinal bars on top at min cover of 3.000 (in) from top of footing.
Transverse Bars:
MIN SIZE: 8 MIN NUMBER OF BARS: 2
MAX SIZE: 8 MAX NUMBER OF BARS: 10
Longitudinal Bars:
MIN SIZE: 8 MIN NUMBER OF BARS: 2

MAX SIZE: 8 MAX NUMBER OF BARS: 10

FOOTING SUPPORT FIXITY:

	DISPLACEMENT	ROTATION ABOUT
TRANSVERSE	Rigid	Rigid
VERTICAL	Rigid	Rigid
LONGITUDINAL	Rigid	Rigid

PILE DATA:

PILE NO.	LABEL	SHAPE	MATL CODE	STIFF CODE	EFF. DIA. (in)	TRAN Z (ft)	LONG X (ft)	VERT Y (ft)	BATTER (1H:__V)	ROTATION (degrees)	AXIAL CAPACITY SERV (kips)	AXIAL CAPACITY STR (kips)
1	R:1 C:1	HP14x117	0	1	8.7	-16.00	-16.00	7.42	0.0	90.0	0	0
2	R:1 C:3	HP14x117	0	1	8.7	0.00	-16.00	7.42	0.0	90.0	0	0
3	R:1 C:5	HP14x117	0	1	8.7	16.00	-16.00	7.42	0.0	90.0	0	0
4	R:2 C:2	HP14x117	0	1	8.7	-8.00	-8.00	7.42	0.0	90.0	0	0
5	R:2 C:4	HP14x117	0	1	8.7	8.00	-8.00	7.42	0.0	90.0	0	0
6	R:3 C:1	HP14x117	0	1	8.7	-16.00	0.00	7.42	0.0	90.0	0	0
7	R:3 C:5	HP14x117	0	1	8.7	16.00	0.00	7.42	0.0	90.0	0	0
8	R:4 C:2	HP14x117	0	1	8.7	-8.00	8.00	7.42	0.0	90.0	0	0
9	R:4 C:4	HP14x117	0	1	8.7	8.00	8.00	7.42	0.0	90.0	0	0
10	R:5 C:1	HP14x117	0	1	8.7	-16.00	16.00	7.42	0.0	90.0	0	0
11	R:5 C:3	HP14x117	0	1	8.7	0.00	16.00	7.42	0.0	90.0	0	0
12	R:5 C:5	HP14x117	0	1	8.7	16.00	16.00	7.42	0.0	90.0	0	0

PILE STIFFNESS COEFFICIENT TABLE DATA:

TABLE NO.	C(1) k/in	C(2) k/in	C(3) in-k/in	C(4) k/in	C(5) in-k/in	C(6) in-k/rad	C(7) k/rad	C(8) in-k/rad	C(9) k/rad	C(10) in-k/rad
1	10.0	10.0	0.00	10.0	0.00	0.00	0.00	0.00	0.00	0.00

----- AASHTO LRFD LOAD OPTIONS -----

AASHTO LIMIT STATES:		LOAD TYPE:	INCLUDED	LOAD TYPE:	INCLUDED
STRENGTH I:	Yes	SELF WEIGHT OF PIER DC:	Yes	BUOYANCY:	No
STRENGTH II:	No	DC-DEAD LOAD SUPER:	Yes	STREAM FLOW:	No
STRENGTH III:	Yes	DW-DEAD LOAD SUPER:	Yes	ICE LOAD:	No
STRENGTH IV:	Yes	USER DEFINED LIVE LOAD:	No	WIND ON STRUCTURE:	Yes
STRENGTH V:	Yes	DESIGN TRUCK LOAD:	Yes	WIND ON LIVE LOAD:	Yes
SERVICE I:	Yes	DESIGN LANE LOAD:	Yes	SUPER TEMPERATURE RISE:	Yes
SERVICE III:	No	PERMIT TRUCK LOAD:	No	SUPER TEMPERATURE FALL:	Yes
FATIGUE:	Yes	FATIGUE TRUCK LOAD:	Yes	SHRINKAGE FROM SUPER:	No
EXTREME EVT I:	No	PEDESTRIAN LOADS:	No	SHRINKAGE OF SUBSTR:	Yes
EXTREME EVT II:	No	CENTRIFUGAL FORCE:	Yes	BRAKING FORCE:	Yes
		EARTHQUAKE:	No	COLLISION LOAD:	No

LIVE LOAD OPTIONS:
APPLY IMPACT: Yes FACTORS: 1.330 (Strength) 1.150 (Fatigue)
APPLY TRUCK LOAD ON MULTIPLE SLABS SIMULTANEOUSLY: No
BRAKING FORCE FACTOR × 3.6.4: 0.500
CENTRIFUGAL FORCE FACTOR × 3.6.3: 1.000

----- LOAD INPUT -----

SELF WEIGHT FACTORS:
CAP BEAMS: 1.000
COLUMNS: 1.320
FOOTINGS: 1.000

DC - DEAD LOAD GIRDER REACTIONS:

SLAB NO.	GIRDER LABEL	FORCES (kips) VERT	TRAN	LONG	MOMENTS (ft-k) VERT	TRAN	LONG
1	Girder 1	754.1					
1	Girder 2	880.1					
1	Girder 3	836.1					
1	Girder 4	792.0					
1	Girder 5	578.0					
2	Girder 1	276.4					
2	Girder 2	206.9					
2	Girder 3	202.5					
2	Girder 4	233.8					
3	Girder 1	236.0					
3	Girder 2	225.5					
3	Girder 3	221.6					
3	Girder 4	189.3					
3	Girder 5	183.6					
3	Girder 6	193.7					
3	Girder 7	212.1					
3	Girder 8	211.8					
3	Girder 9	196.5					

DW - DEAD LOAD GIRDER REACTIONS:

SLAB NO.	GIRDER LABEL	FORCES (kips) VERT	TRAN	LONG	MOMENTS (ft-k) VERT	TRAN	LONG
1	Girder 1	153.0					
1	Girder 2	198.0					
1	Girder 3	198.0					
1	Girder 4	198.0					
1	Girder 5	153.0					
2	Girder 1	53.3					
2	Girder 2	42.3					
2	Girder 3	40.9					

2	Girder 4	42.8
3	Girder 1	57.3
3	Girder 2	55.3
3	Girder 3	56.3
3	Girder 4	55.2
3	Girder 5	51.9
3	Girder 6	54.7
3	Girder 7	56.7
3	Girder 8	55.8
3	Girder 9	50.7

TRUCK LOAD REACTIONS (One Lane, No Impact):

SLAB NO.	GIRDER LABEL	FORCES (kips) VERT	TRAN	LONG	MOMENTS (ft-k) VERT	TRAN	LONG
1	Girder 1	70.0					
1	Girder 2	70.0					
1	Girder 3	70.0					
1	Girder 4	70.0					
1	Girder 5	70.0					
2	Girder 1	68.6					
2	Girder 2	68.6					
2	Girder 3	68.6					
2	Girder 4	68.6					
3	Girder 1	69.3					
3	Girder 2	69.3					
3	Girder 3	69.3					
3	Girder 4	69.3					
3	Girder 5	69.3					
3	Girder 6	69.3					
3	Girder 7	69.3					
3	Girder 8	69.3					
3	Girder 9	69.3					

LANE LOAD REACTIONS (One Lane, No Impact):

SLAB NO.	GIRDER LABEL	FORCES (kips) VERT	TRAN	LONG	MOMENTS (ft-k) VERT	TRAN	LONG
1	Girder 1	80.0					
1	Girder 2	80.0					
1	Girder 3	80.0					
1	Girder 4	80.0					
1	Girder 5	80.0					
2	Girder 1	62.9					
2	Girder 2	62.9					
2	Girder 3	62.9					
2	Girder 4	62.9					
3	Girder 1	70.5					
3	Girder 2	70.5					
3	Girder 3	70.5					
3	Girder 4	70.5					
3	Girder 5	70.5					
3	Girder 6	70.5					
3	Girder 7	70.5					
3	Girder 8	70.5					
3	Girder 9	70.5					

MAX FATIGUE TRUCK LOAD REACTIONS (One Lane, No Impact):

SLAB NO.	GIRDER LABEL	FORCES (kips) VERT	TRAN	LONG	MOMENTS (ft-k) VERT	TRAN	LONG
1	Girder 1	70.0					
1	Girder 2	70.0					
1	Girder 3	70.0					
1	Girder 4	70.0					
1	Girder 5	70.0					
2	Girder 1	64.9					
2	Girder 2	64.9					
2	Girder 3	64.9					
2	Girder 4	64.9					
3	Girder 1	66.0					
3	Girder 2	66.0					
3	Girder 3	66.0					
3	Girder 4	66.0					
3	Girder 5	66.0					
3	Girder 6	66.0					
3	Girder 7	66.0					
3	Girder 8	66.0					
3	Girder 9	66.0					

MIN FATIGUE TRUCK LOAD REACTIONS (One Lane, No Impact):

SLAB NO.	GIRDER LABEL	FORCES (kips) VERT	TRAN	LONG	MOMENTS (ft-k) VERT	TRAN	LONG
1	Girder 1	-10.0					
1	Girder 2	-10.0					
1	Girder 3	-10.0					
1	Girder 4	-10.0					
1	Girder 5	-10.0					
2	Girder 1	-4.4					
2	Girder 2	-4.4					

2	Girder 3	-4.4
2	Girder 4	-4.4
3	Girder 1	-4.7
3	Girder 2	-4.7
3	Girder 3	-4.7
3	Girder 4	-4.7
3	Girder 5	-4.7
3	Girder 6	-4.7
3	Girder 7	-4.7
3	Girder 8	-4.7
3	Girder 9	-4.7

REACTIONS DUE TO TEMPERATURE RISE:

SLAB NO.	GIRDER LABEL	FORCES (kips) VERT	TRAN	LONG	MOMENTS (ft-k) VERT	TRAN	LONG
1	Girder 1			1616.0			
1	Girder 2			1616.0			
1	Girder 3			1616.0			
1	Girder 4			1616.0			
1	Girder 5			1616.0			
2	Girder 1			-120.0			
2	Girder 2			-120.0			
2	Girder 3			-120.0			
2	Girder 4			-120.0			
3	Girder 1			-120.0			
3	Girder 2			-120.0			
3	Girder 3			-120.0			
3	Girder 4			-120.0			
3	Girder 5			-120.0			
3	Girder 6			-120.0			
3	Girder 7			-120.0			
3	Girder 8			-120.0			
3	Girder 9			-120.0			

REACTIONS DUE TO TEMPERATURE FALL:

SLAB NO.	GIRDER LABEL	FORCES (kips) VERT	TRAN	LONG	MOMENTS (ft-k) VERT	TRAN	LONG
1	Girder 1			-2424.0			
1	Girder 2			-2424.0			
1	Girder 3			-2424.0			
1	Girder 4			-2424.0			
1	Girder 5			-2424.0			
2	Girder 1			120.0			
2	Girder 2			120.0			
2	Girder 3			120.0			
2	Girder 4			120.0			
3	Girder 1			120.0			
3	Girder 2			120.0			
3	Girder 3			120.0			
3	Girder 4			120.0			
3	Girder 5			120.0			
3	Girder 6			120.0			
3	Girder 7			120.0			
3	Girder 8			120.0			
3	Girder 9			120.0			

SHRINKAGE STRAIN OF SUBSTRUCTURE: 0.00020

WIND LOAD DIRECTIONS: (degrees)		APPLIED	EARTHQUAKE LOAD: DIRECTION	FACTORS TRAN	LONG	APPLIED
0	(+Tran)	Yes	0	1.0	0.0	No
15		Yes				
30		Yes	1	1.0	0.3	No
45		Yes				
60		Yes	2	0.3	1.0	No
75		Yes				
90	(+Long)	Yes	3	0.0	1.0	No
105		Yes				
120		Yes	4	-0.3	1.0	No
135		Yes				
150		Yes	5	-1.0	0.3	No
165		Yes				
180	(-Tran)	Yes	6	-1.0	0.0	No
195		Yes				
210		Yes	7	-1.0	-0.3	No
225		Yes				
240		Yes	8	-0.3	-1.0	No
255		Yes				
270	(-Long)	Yes	9	0.0	-1.0	No
285		Yes				
300		Yes	10	0.3	-1.0	No
315		Yes				
330		Yes	11	1.0	-0.3	No
345		Yes				

*** WARNING: SLAB 1 TOTAL APPLIED FORCE, 6363.0(kips) EXCEEDS FRICTIONAL CAPACITY, 302.4(kips). ***
EXCESS MUST BE REDISTRIBUTED TO ANOTHER SUBSTRUCTURE UNIT. LIMIT STATE: STR I, LOAD: 1

*** WARNING: SLAB 2 TOTAL APPLIED FORCE,   -252.0(kips) EXCEEDS FRICTIONAL CAPACITY,   72.4(kips). ***
    EXCESS MUST BE REDISTRIBUTED TO ANOTHER SUBSTRUCTURE UNIT. LIMIT STATE: STR I, LOAD: 1

*** WARNING: SLAB 3 TOTAL APPLIED FORCE,   -567.0(kips) EXCEEDS FRICTIONAL CAPACITY,   156.6(kips). ***
    EXCESS MUST BE REDISTRIBUTED TO ANOTHER SUBSTRUCTURE UNIT. LIMIT STATE: STR I, LOAD: 1

*** WARNING: SLAB 1 TOTAL APPLIED FORCE,   6363.0(kips) EXCEEDS FRICTIONAL CAPACITY,   302.4(kips). ***
    EXCESS MUST BE REDISTRIBUTED TO ANOTHER SUBSTRUCTURE UNIT. LIMIT STATE: STR I, LOAD: 2

*** WARNING: SLAB 2 TOTAL APPLIED FORCE,   -252.0(kips) EXCEEDS FRICTIONAL CAPACITY,   72.4(kips). ***
    EXCESS MUST BE REDISTRIBUTED TO ANOTHER SUBSTRUCTURE UNIT. LIMIT STATE: STR I, LOAD: 2

*** WARNING: SLAB 3 TOTAL APPLIED FORCE,   -567.0(kips) EXCEEDS FRICTIONAL CAPACITY,   156.6(kips). ***
    EXCESS MUST BE REDISTRIBUTED TO ANOTHER SUBSTRUCTURE UNIT. LIMIT STATE: STR I, LOAD: 2

*** WARNING: SLAB 1 TOTAL APPLIED FORCE,   6363.0(kips) EXCEEDS FRICTIONAL CAPACITY,   302.4(kips). ***
    EXCESS MUST BE REDISTRIBUTED TO ANOTHER SUBSTRUCTURE UNIT. LIMIT STATE: STR I, LOAD: 3

*** WARNING: SLAB 2 TOTAL APPLIED FORCE,   -252.0(kips) EXCEEDS FRICTIONAL CAPACITY,   72.4(kips). ***
    EXCESS MUST BE REDISTRIBUTED TO ANOTHER SUBSTRUCTURE UNIT. LIMIT STATE: STR I, LOAD: 3

*** WARNING: SLAB 3 TOTAL APPLIED FORCE,   -586.8(kips) EXCEEDS FRICTIONAL CAPACITY,   168.8(kips). ***
    EXCESS MUST BE REDISTRIBUTED TO ANOTHER SUBSTRUCTURE UNIT. LIMIT STATE: STR I, LOAD: 3

*** WARNING MESSAGES LIMITED TO TEN! ***

*** WARNING: SLAB 1 TOTAL APPLIED FORCE,   6399.9(kips) EXCEEDS FRICTIONAL CAPACITY,   302.4(kips). ***
    EXCESS MUST BE REDISTRIBUTED TO ANOTHER SUBSTRUCTURE UNIT. LIMIT STATE: STIII, LOAD: 1

*** WARNING: SLAB 2 TOTAL APPLIED FORCE,   -226.8(kips) EXCEEDS FRICTIONAL CAPACITY,   72.4(kips). ***
    EXCESS MUST BE REDISTRIBUTED TO ANOTHER SUBSTRUCTURE UNIT. LIMIT STATE: STIII, LOAD: 1

*** WARNING: SLAB 3 TOTAL APPLIED FORCE,   -541.8(kips) EXCEEDS FRICTIONAL CAPACITY,   147.3(kips). ***
    EXCESS MUST BE REDISTRIBUTED TO ANOTHER SUBSTRUCTURE UNIT. LIMIT STATE: STIII, LOAD: 1

*** WARNING: SLAB 1 TOTAL APPLIED FORCE,   6363.0(kips) EXCEEDS FRICTIONAL CAPACITY,   266.8(kips). ***
    EXCESS MUST BE REDISTRIBUTED TO ANOTHER SUBSTRUCTURE UNIT. LIMIT STATE: STIII, LOAD: 2

*** WARNING: SLAB 2 TOTAL APPLIED FORCE,   -252.0(kips) EXCEEDS FRICTIONAL CAPACITY,   64.6(kips). ***
    EXCESS MUST BE REDISTRIBUTED TO ANOTHER SUBSTRUCTURE UNIT. LIMIT STATE: STIII, LOAD: 2

*** WARNING: SLAB 3 TOTAL APPLIED FORCE,   -567.0(kips) EXCEEDS FRICTIONAL CAPACITY,   128.7(kips). ***
    EXCESS MUST BE REDISTRIBUTED TO ANOTHER SUBSTRUCTURE UNIT. LIMIT STATE: STIII, LOAD: 2

*** WARNING: SLAB 1 TOTAL APPLIED FORCE,   6326.1(kips) EXCEEDS FRICTIONAL CAPACITY,   302.4(kips). ***
    EXCESS MUST BE REDISTRIBUTED TO ANOTHER SUBSTRUCTURE UNIT. LIMIT STATE: STIII, LOAD: 3

*** WARNING: SLAB 2 TOTAL APPLIED FORCE,   -277.2(kips) EXCEEDS FRICTIONAL CAPACITY,   72.4(kips). ***
    EXCESS MUST BE REDISTRIBUTED TO ANOTHER SUBSTRUCTURE UNIT. LIMIT STATE: STIII, LOAD: 3

*** WARNING: SLAB 3 TOTAL APPLIED FORCE,   -592.2(kips) EXCEEDS FRICTIONAL CAPACITY,   147.3(kips). ***
    EXCESS MUST BE REDISTRIBUTED TO ANOTHER SUBSTRUCTURE UNIT. LIMIT STATE: STIII, LOAD: 3

*** WARNING MESSAGES LIMITED TO TEN! ***

*** WARNING: SLAB 1 TOTAL APPLIED FORCE,   6363.0(kips) EXCEEDS FRICTIONAL CAPACITY,   362.9(kips). ***
    EXCESS MUST BE REDISTRIBUTED TO ANOTHER SUBSTRUCTURE UNIT. LIMIT STATE: STRIV, LOAD: 1

*** WARNING: SLAB 2 TOTAL APPLIED FORCE,   -252.0(kips) EXCEEDS FRICTIONAL CAPACITY,   86.9(kips). ***
    EXCESS MUST BE REDISTRIBUTED TO ANOTHER SUBSTRUCTURE UNIT. LIMIT STATE: STRIV, LOAD: 1

*** WARNING: SLAB 3 TOTAL APPLIED FORCE,   -567.0(kips) EXCEEDS FRICTIONAL CAPACITY,   176.7(kips). ***
    EXCESS MUST BE REDISTRIBUTED TO ANOTHER SUBSTRUCTURE UNIT. LIMIT STATE: STRIV, LOAD: 1

*** WARNING: SLAB 1 TOTAL APPLIED FORCE,   -4242.0(kips) EXCEEDS FRICTIONAL CAPACITY,   362.9(kips). ***
    EXCESS MUST BE REDISTRIBUTED TO ANOTHER SUBSTRUCTURE UNIT. LIMIT STATE: STRIV, LOAD: 2

*** WARNING: SLAB 2 TOTAL APPLIED FORCE,   252.0(kips) EXCEEDS FRICTIONAL CAPACITY,   86.9(kips). ***
    EXCESS MUST BE REDISTRIBUTED TO ANOTHER SUBSTRUCTURE UNIT. LIMIT STATE: STRIV, LOAD: 2

```
*** WARNING: SLAB  3 TOTAL APPLIED FORCE,      567.0(kips) EXCEEDS FRICTIONAL CAPACITY,      176.7(kips). ***
    EXCESS MUST BE REDISTRIBUTED TO ANOTHER SUBSTRUCTURE UNIT. LIMIT STATE: STRIV, LOAD:     2

*** WARNING: SLAB  1 TOTAL APPLIED FORCE,     6363.0(kips) EXCEEDS FRICTIONAL CAPACITY,      448.0(kips). ***
    EXCESS MUST BE REDISTRIBUTED TO ANOTHER SUBSTRUCTURE UNIT. LIMIT STATE: STRIV, LOAD:     3

*** WARNING: SLAB  2 TOTAL APPLIED FORCE,     -252.0(kips) EXCEEDS FRICTIONAL CAPACITY,      103.8(kips). ***
    EXCESS MUST BE REDISTRIBUTED TO ANOTHER SUBSTRUCTURE UNIT. LIMIT STATE: STRIV, LOAD:     3

*** WARNING: SLAB  3 TOTAL APPLIED FORCE,     -567.0(kips) EXCEEDS FRICTIONAL CAPACITY,      223.4(kips). ***
    EXCESS MUST BE REDISTRIBUTED TO ANOTHER SUBSTRUCTURE UNIT. LIMIT STATE: STRIV, LOAD:     3

*** WARNING MESSAGES LIMITED TO TEN! ***

*** WARNING: SLAB  1 TOTAL APPLIED FORCE,     6377.4(kips) EXCEEDS FRICTIONAL CAPACITY,      302.4(kips). ***
    EXCESS MUST BE REDISTRIBUTED TO ANOTHER SUBSTRUCTURE UNIT. LIMIT STATE: STR V, LOAD:     1

*** WARNING: SLAB  2 TOTAL APPLIED FORCE,     -241.8(kips) EXCEEDS FRICTIONAL CAPACITY,       72.4(kips). ***
    EXCESS MUST BE REDISTRIBUTED TO ANOTHER SUBSTRUCTURE UNIT. LIMIT STATE: STR V, LOAD:     1

*** WARNING: SLAB  3 TOTAL APPLIED FORCE,     -556.8(kips) EXCEEDS FRICTIONAL CAPACITY,      154.5(kips). ***
    EXCESS MUST BE REDISTRIBUTED TO ANOTHER SUBSTRUCTURE UNIT. LIMIT STATE: STR V, LOAD:     1

*** WARNING: SLAB  1 TOTAL APPLIED FORCE,     6377.4(kips) EXCEEDS FRICTIONAL CAPACITY,      302.4(kips). ***
    EXCESS MUST BE REDISTRIBUTED TO ANOTHER SUBSTRUCTURE UNIT. LIMIT STATE: STR V, LOAD:     2

*** WARNING: SLAB  2 TOTAL APPLIED FORCE,     -241.8(kips) EXCEEDS FRICTIONAL CAPACITY,       72.4(kips). ***
    EXCESS MUST BE REDISTRIBUTED TO ANOTHER SUBSTRUCTURE UNIT. LIMIT STATE: STR V, LOAD:     2

*** WARNING: SLAB  3 TOTAL APPLIED FORCE,     -556.8(kips) EXCEEDS FRICTIONAL CAPACITY,      154.5(kips). ***
    EXCESS MUST BE REDISTRIBUTED TO ANOTHER SUBSTRUCTURE UNIT. LIMIT STATE: STR V, LOAD:     2

*** WARNING: SLAB  1 TOTAL APPLIED FORCE,     6377.4(kips) EXCEEDS FRICTIONAL CAPACITY,      302.4(kips). ***
    EXCESS MUST BE REDISTRIBUTED TO ANOTHER SUBSTRUCTURE UNIT. LIMIT STATE: STR V, LOAD:     3

*** WARNING: SLAB  2 TOTAL APPLIED FORCE,     -241.8(kips) EXCEEDS FRICTIONAL CAPACITY,       72.4(kips). ***
    EXCESS MUST BE REDISTRIBUTED TO ANOTHER SUBSTRUCTURE UNIT. LIMIT STATE: STR V, LOAD:     3

*** WARNING: SLAB  3 TOTAL APPLIED FORCE,     -572.1(kips) EXCEEDS FRICTIONAL CAPACITY,      163.9(kips). ***
    EXCESS MUST BE REDISTRIBUTED TO ANOTHER SUBSTRUCTURE UNIT. LIMIT STATE: STR V, LOAD:     3

*** WARNING MESSAGES LIMITED TO TEN! ***

*** WARNING: SLAB  1 TOTAL APPLIED FORCE,    12131.2(kips) EXCEEDS FRICTIONAL CAPACITY,      230.4(kips). ***
    EXCESS MUST BE REDISTRIBUTED TO ANOTHER SUBSTRUCTURE UNIT. LIMIT STATE: SER I, LOAD:     1

*** WARNING: SLAB  2 TOTAL APPLIED FORCE,     -472.0(kips) EXCEEDS FRICTIONAL CAPACITY,       55.2(kips). ***
    EXCESS MUST BE REDISTRIBUTED TO ANOTHER SUBSTRUCTURE UNIT. LIMIT STATE: SER I, LOAD:     1

*** WARNING: SLAB  3 TOTAL APPLIED FORCE,    -1072.0(kips) EXCEEDS FRICTIONAL CAPACITY,      117.3(kips). ***
    EXCESS MUST BE REDISTRIBUTED TO ANOTHER SUBSTRUCTURE UNIT. LIMIT STATE: SER I, LOAD:     1

*** WARNING: SLAB  1 TOTAL APPLIED FORCE,    12131.2(kips) EXCEEDS FRICTIONAL CAPACITY,      230.4(kips). ***
    EXCESS MUST BE REDISTRIBUTED TO ANOTHER SUBSTRUCTURE UNIT. LIMIT STATE: SER I, LOAD:     2

*** WARNING: SLAB  2 TOTAL APPLIED FORCE,     -472.0(kips) EXCEEDS FRICTIONAL CAPACITY,       55.2(kips). ***
    EXCESS MUST BE REDISTRIBUTED TO ANOTHER SUBSTRUCTURE UNIT. LIMIT STATE: SER I, LOAD:     2

*** WARNING: SLAB  3 TOTAL APPLIED FORCE,    -1072.0(kips) EXCEEDS FRICTIONAL CAPACITY,      117.3(kips). ***
    EXCESS MUST BE REDISTRIBUTED TO ANOTHER SUBSTRUCTURE UNIT. LIMIT STATE: SER I, LOAD:     2

*** WARNING: SLAB  1 TOTAL APPLIED FORCE,    12131.2(kips) EXCEEDS FRICTIONAL CAPACITY,      230.4(kips). ***
    EXCESS MUST BE REDISTRIBUTED TO ANOTHER SUBSTRUCTURE UNIT. LIMIT STATE: SER I, LOAD:     3

*** WARNING: SLAB  2 TOTAL APPLIED FORCE,     -472.0(kips) EXCEEDS FRICTIONAL CAPACITY,       55.2(kips). ***
    EXCESS MUST BE REDISTRIBUTED TO ANOTHER SUBSTRUCTURE UNIT. LIMIT STATE: SER I, LOAD:     3

*** WARNING: SLAB  3 TOTAL APPLIED FORCE,    -1082.8(kips) EXCEEDS FRICTIONAL CAPACITY,      123.9(kips). ***
    EXCESS MUST BE REDISTRIBUTED TO ANOTHER SUBSTRUCTURE UNIT. LIMIT STATE: SER I, LOAD:     3
```

*** WARNING MESSAGES LIMITED TO TEN! ***

----- NUMBER OF LOAD COMBINATIONS -----

LRFD DESIGN OF CAP AND COL:
STRENGTH LIMIT STATE I, NUMBER OF LOAD COMBINATIONS = 35344
STRENGTH LIMIT STATE III, NUMBER OF LOAD COMBINATIONS = 192
STRENGTH LIMIT STATE IV, NUMBER OF LOAD COMBINATIONS = 8
STRENGTH LIMIT STATE V, NUMBER OF LOAD COMBINATIONS = 848256
SERVICE LIMIT STATE I, NUMBER OF LOAD COMBINATIONS = 424128
FATIGUE LIMIT STATE, NUMBER OF LOAD COMBINATIONS = 220

----- CAP BEAM 1 FLEXURAL DESIGN -----

FLEXURAL DESIGN - TRANSVERSE FLEXURE, REINFORCING STEEL REQUIREMENTS:

LRFD MOMENT, MIN STEEL CODE:
a: Design controlled by 1.2 Mcr
b: Design controlled by 4/3 Mdes
c: Design controlled 0.03f'c/fy

				POSITIVE FLEXURE						NEGATIVE FLEXURE					
CAP NO.	HORZ DIST. (ft)	LOCATION	AASHTO LIMIT STATE	LOAD CASE	LRFD MOMENT (ft-k)	d (in)	AREA REQD. (sq-in)	AREA PROV. (sq-in)	NG	LOAD CASE	LRFD MOMENT (ft-k)	d (in)	AREA REQD. (sq-in)	AREA PROV. (sq-in)	NG
1	-101.40 R	CAP	STR I	0	0	0.0	0.00	0.00		0	0	0.0	0.00	0.00	
			STIII	0	0	0.0	0.00	0.00		0	0	0.0	0.00	0.00	
			STRIV	0	0	0.0	0.00	0.00		0	0	0.0	0.00	0.00	
			STR V	0	0	0.0	0.00	0.00		0	0	0.0	0.00	0.00	
1	-95.85 L	GIRD	STR I	0	0	0.0	0.00	0.00		1	-367b	105.8	0.77	124.80	
			STIII	0	0	0.0	0.00	0.00		35351	-367b	105.8	0.77	124.80	
			STRIV	0	0	0.0	0.00	0.00		35537	-440b	105.8	0.93	124.80	
			STR V	0	0	0.0	0.00	0.00		62053	-367b	105.8	0.77	124.80	
1	-95.85 R	GIRD	STR I	0	0	0.0	0.00	0.00		9974	-497b	105.8	1.04	124.80	
			STIII	0	0	0.0	0.00	0.00		35406	-586b	105.8	1.23	124.80	
			STRIV	0	0	0.0	0.00	0.00		35539	-502b	105.8	1.06	124.80	
			STR V	0	0	0.0	0.00	0.00		306180	-547b	105.8	1.15	124.80	
1	-93.23 L	GIRD	STR I	0	0	0.0	0.00	0.00		9965	-3292b	123.9	5.92	124.80	
			STIII	0	0	0.0	0.00	0.00		35406	-2800b	123.9	5.03	124.80	
			STRIV	0	0	0.0	0.00	0.00		35539	-2905b	123.9	5.22	124.80	
			STR V	0	0	0.0	0.00	0.00		306171	-3237b	123.9	5.82	124.80	
1	-93.23 R	GIRD	STR I	0	0	0.0	0.00	0.00		14415	-3310b	123.9	5.95	124.80	
			STIII	0	0	0.0	0.00	0.00		35430	-3057b	123.9	5.50	124.80	
			STRIV	0	0	0.0	0.00	0.00		35540	-2959b	123.9	5.32	124.80	
			STR V	0	0	0.0	0.00	0.00		412235	-3343b	123.9	6.01	124.80	
1	-85.54 L	GIRD	STR I	0	0	0.0	0.00	0.00		14417	-28882b	177.0	36.73	124.80	
			STIII	0	0	0.0	0.00	0.00		35430	-23954b	177.0	30.40	124.80	
			STRIV	0	0	0.0	0.00	0.00		35540	-26486b	177.0	33.65	124.80	
			STR V	0	0	0.0	0.00	0.00		412237	-27945b	177.0	35.52	124.80	
1	-85.54 R	GIRD	STR I	0	0	0.0	0.00	0.00		14417	-28805b	177.0	36.63	124.80	
			STIII	0	0	0.0	0.00	0.00		35430	-24151b	177.0	30.65	124.80	
			STRIV	0	0	0.0	0.00	0.00		35540	-26410b	177.0	33.55	124.80	
			STR V	0	0	0.0	0.00	0.00		412237	-27975b	177.0	35.56	124.80	
1	-84.90 L	FACE	STR I	0	0	0.0	0.00	0.00		14417	-31444b	181.4	39.03	124.80	
			STIII	0	0	0.0	0.00	0.00		35430	-26311b	181.4	32.58	124.80	
			STRIV	0	0	0.0	0.00	0.00		35540	-28863b	181.4	35.78	124.80	
			STR V	0	0	0.0	0.00	0.00		412237	-30520b	181.4	37.86	124.80	
1	-77.90 L	COL	STR I	0	0	0.0	0.00	0.00		14417	-61401b	181.4	77.22	124.80	
			STIII	0	0	0.0	0.00	0.00		35430	-50895b	181.4	63.71	124.80	
			STRIV	0	0	0.0	0.00	0.00		35540	-57100b	181.4	71.67	124.80	
			STR V	0	0	0.0	0.00	0.00		412237	-59382b	181.4	74.61	124.80	
1	-77.90 R	COL	STR I	0	0	0.0	0.00	0.00		14492	-107293	181.4	137.82	124.80	NG
			STIII	0	0	0.0	0.00	0.00		35429	-92416	181.4	117.88	124.80	
			STRIV	0	0	0.0	0.00	0.00		35540	-100117	181.4	128.17	124.80	NG
			STR V	0	0	0.0	0.00	0.00		412312	-105290	181.4	135.12	124.80	NG
1	-75.23 L	GIRD	STR I	0	0	0.0	0.00	0.00		14492	-90599	181.4	115.47	124.80	
			STIII	0	0	0.0	0.00	0.00		35429	-78422	181.4	99.39	124.80	
			STRIV	0	0	0.0	0.00	0.00		35540	-84169	181.4	106.95	124.80	
			STR V	0	0	0.0	0.00	0.00		412312	-89147	181.4	113.54	124.80	
1	-75.23 R	GIRD	STR I	0	0	0.0	0.00	0.00		14492	-90548	181.4	115.40	124.80	
			STIII	0	0	0.0	0.00	0.00		35429	-78550	181.4	99.55	124.80	
			STRIV	0	0	0.0	0.00	0.00		35540	-84112	181.4	106.87	124.80	
			STR V	0	0	0.0	0.00	0.00		412312	-89178	181.4	113.58	124.80	
1	-70.90 L	FACE	STR I	0	0	0.0	0.00	0.00		14567	-65753	181.4	82.85	124.80	
			STIII	0	0	0.0	0.00	0.00		35408	-65470a	181.4	82.48	124.80	
			STRIV	0	0	0.0	0.00	0.00		35539	-65470a	181.4	82.48	124.80	
			STR V	0	0	0.0	0.00	0.00		315152	-65470a	181.4	82.48	124.80	
1	-66.40 L	SPEC	STR I	0	0	0.0	0.00	0.00		14567	-52542a	163.8	73.27	99.84	
			STIII	0	0	0.0	0.00	0.00		35430	-51146b	163.8	71.27	99.84	
			STRIV	0	0	0.0	0.00	0.00		35540	-50556b	163.8	70.43	99.84	
			STR V	0	0	0.0	0.00	0.00		412387	-52542a	163.8	73.27	99.84	

1	-66.40	R	SPEC	STR I	0	0	0.0	0.00	0.00	14438	-52542a	163.8	73.27	99.84
				STIII	0	0	0.0	0.00	0.00	35430	-51146b	163.8	71.27	99.84
				STRIV	0	0	0.0	0.00	0.00	35540	-50556b	163.8	70.43	99.84
				STR V	0	0	0.0	0.00	0.00	412258	-52542a	163.8	73.27	99.84
1	-64.92	L	GIRD	STR I	0	0	0.0	0.00	0.00	14567	-45817b	157.3	66.46	99.84
				STIII	0	0	0.0	0.00	0.00	35430	-42886b	157.3	62.10	99.84
				STRIV	0	0	0.0	0.00	0.00	35540	-40891b	157.3	59.14	99.84
				STR V	0	0	0.0	0.00	0.00	412387	-46382b	157.3	67.30	99.84
1	-64.92	R	GIRD	STR I	0	0	0.0	0.00	0.00	14567	-45754b	157.3	66.37	99.84
				STIII	0	0	0.0	0.00	0.00	35430	-43070b	157.3	62.37	99.84
				STRIV	0	0	0.0	0.00	0.00	35540	-40817b	157.3	59.03	99.84
				STR V	0	0	0.0	0.00	0.00	412387	-46414b	157.3	67.35	99.84
1	-61.16	L	GIRD	STR I	17882	3001b	144.6	4.62	68.64	14615	-24178b	140.6	38.88	99.84
				STIII	35442	5930b	144.6	9.15	68.64	35430	-23850b	140.6	38.34	99.84
				STRIV	0	0	0.0	0.00	0.00	35540	-18968b	140.6	30.39	99.84
				STR V	464300	4297b	144.6	6.62	68.64	412435	-25124b	140.6	40.43	99.84
1	-61.16	R	GIRD	STR I	17882	3186b	144.6	4.91	68.64	14615	-24491b	140.6	39.39	99.84
				STIII	35442	6258b	144.6	9.66	68.64	35430	-24308b	140.6	39.09	99.84
				STRIV	0	0	0.0	0.00	0.00	35540	-19228b	140.6	30.81	99.84
				STR V	464300	4560b	144.6	7.03	68.64	412435	-25512b	140.6	41.06	99.84
1	-57.40	L	CAP	STR I	17885	9097b	123.8	16.46	137.28	14618	-11688b	123.8	21.20	99.84
				STIII	35442	10387b	123.8	18.81	137.28	35430	-12645b	123.8	22.95	99.84
				STRIV	35537	1926b	123.8	3.46	137.28	35540	-6477b	123.8	11.69	99.84
				STR V	464303	10152b	123.8	18.38	137.28	412438	-12780b	123.8	23.20	99.84
1	-49.44	L	GIRD	STR I	9102	30945a	123.8	57.14	137.28	0	0	0.0	0.00	0.00
				STIII	35393	28516b	123.8	52.53	137.28	0	0	0.0	0.00	0.00
				STRIV	35539	28251b	123.8	52.03	137.28	0	0	0.0	0.00	0.00
				STR V	252292	30945a	123.8	57.14	137.28	0	0	0.0	0.00	0.00
1	-49.44	R	GIRD	STR I	9102	30945a	123.8	57.14	137.28	0	0	0.0	0.00	0.00
				STIII	35393	28534b	123.8	52.57	137.28	0	0	0.0	0.00	0.00
				STRIV	35539	28188b	123.8	51.91	137.28	0	0	0.0	0.00	0.00
				STR V	252292	30945a	123.8	57.14	137.28	0	0	0.0	0.00	0.00
1	-37.67	L	GIRD	STR I	10229	45389	123.8	85.03	137.28	0	0	0.0	0.00	0.00
				STIII	35393	37421	123.8	69.54	137.28	0	0	0.0	0.00	0.00
				STRIV	35539	41929	123.8	78.27	137.28	0	0	0.0	0.00	0.00
				STR V	253419	43778	123.8	81.87	137.28	0	0	0.0	0.00	0.00
1	-37.67	R	GIRD	STR I	9126	45316	123.8	84.88	137.28	0	0	0.0	0.00	0.00
				STIII	35393	37436	123.8	69.57	137.28	0	0	0.0	0.00	0.00
				STRIV	35539	41884	123.8	78.18	137.28	0	0	0.0	0.00	0.00
				STR V	252316	43737	123.8	81.79	137.28	0	0	0.0	0.00	0.00
1	-29.10	L	GIRD	STR I	10014	54604	123.8	103.26	137.28	0	0	0.0	0.00	0.00
				STIII	35405	44087	123.8	82.48	137.28	0	0	0.0	0.00	0.00
				STRIV	35539	50515	123.8	95.12	137.28	0	0	0.0	0.00	0.00
				STR V	306220	52257	123.8	98.58	137.28	0	0	0.0	0.00	0.00
1	-29.10	R	GIRD	STR I	8905	54698	123.8	103.45	137.28	0	0	0.0	0.00	0.00
				STIII	35405	44089	123.8	82.48	137.28	0	0	0.0	0.00	0.00
				STRIV	35539	50681	123.8	95.45	137.28	0	0	0.0	0.00	0.00
				STR V	305111	52300	123.8	98.67	137.28	0	0	0.0	0.00	0.00
1	-25.90	L	GIRD	STR I	10011	51649	123.8	97.37	137.28	0	0	0.0	0.00	0.00
				STIII	35405	42351	123.8	79.09	137.28	0	0	0.0	0.00	0.00
				STRIV	35539	48102	123.8	90.36	137.28	0	0	0.0	0.00	0.00
				STR V	306217	49655	123.8	93.42	137.28	0	0	0.0	0.00	0.00
1	-25.90	R	GIRD	STR I	10011	51599	123.8	97.27	137.28	0	0	0.0	0.00	0.00
				STIII	35405	42259	123.8	78.91	137.28	0	0	0.0	0.00	0.00
				STRIV	35539	48058	123.8	90.27	137.28	0	0	0.0	0.00	0.00
				STR V	306217	49583	123.8	93.28	137.28	0	0	0.0	0.00	0.00
1	-14.12	L	GIRD	STR I	10346	34083	123.8	63.13	137.28	0	0	0.0	0.00	0.00
				STIII	35393	30945a	123.8	57.14	137.28	0	0	0.0	0.00	0.00
				STRIV	35539	30945a	123.8	57.14	137.28	0	0	0.0	0.00	0.00
				STR V	306552	33428	123.8	61.88	137.28	0	0	0.0	0.00	0.00
1	-14.12	R	GIRD	STR I	10346	34001	123.8	62.98	137.28	0	0	0.0	0.00	0.00
				STIII	35409	30945a	123.8	57.14	137.28	0	0	0.0	0.00	0.00
				STRIV	35539	30945a	123.8	57.14	137.28	0	0	0.0	0.00	0.00
				STR V	306552	33332	123.8	61.70	137.28	0	0	0.0	0.00	0.00
1	-7.65	L	GIRD	STR I	10358	27827b	123.8	51.23	137.28	0	0	0.0	0.00	0.00
				STIII	35406	24521b	123.8	45.00	137.28	35466	-33b	123.8	0.06	99.84
				STRIV	35539	22337b	123.8	40.91	137.28	0	0	0.0	0.00	0.00
				STR V	306564	27871b	123.8	51.31	137.28	0	0	0.0	0.00	0.00
1	-7.65	R	GIRD	STR I	10358	27730b	123.8	51.05	137.28	0	0	0.0	0.00	0.00
				STIII	35406	24400b	123.8	44.78	137.28	0	0	0.0	0.00	0.00
				STRIV	35539	22287b	123.8	40.82	137.28	0	0	0.0	0.00	0.00
				STR V	306564	27753b	123.8	51.09	137.28	0	0	0.0	0.00	0.00
1	-2.90	L	CAP	STR I	10367	11829b	127.8	20.77	68.64	22497	-6500b	123.8	11.73	99.84
				STIII	35406	11683b	127.8	20.51	68.64	35466	-7792b	123.8	14.08	99.84
				STRIV	35539	5205b	127.8	9.09	68.64	35538	-616b	123.8	1.11	99.84
				STR V	306573	12550b	127.8	22.05	68.64	570529	-7554b	123.8	13.65	99.84

1	-1.19 L	GIRD	STR I	19203	8669b	135.4	14.32	68.64	13667	-11339b	131.4	19.35	99.84	
			STIII	35454	9165b	135.4	15.14	68.64	35418	-11886b	131.4	20.29	99.84	
			STRIV	0	0	0.0	0.00	0.00	35540	-5957b	131.4	10.12	99.84	
			STR V	518637	9524b	135.4	15.74	68.64	358471	-12357b	131.4	21.10	99.84	
1	-1.19 R	GIRD	STR I	19203	8581b	135.4	14.17	68.64	13667	-11290b	131.4	19.27	99.84	
			STIII	35454	9062b	135.4	14.97	68.64	35418	-11755b	131.4	20.07	99.84	
			STRIV	0	0	0.0	0.00	0.00	35540	-5901b	131.4	10.03	99.84	
			STR V	518637	9416b	135.4	15.56	68.64	358471	-12273b	131.4	20.96	99.84	
1	2.97 L	GIRD	STR I	0	0	0.0	0.00	0.00	13673	-27714b	149.9	41.80	99.84	
			STIII	35454	2776b	153.9	4.02	68.64	35418	-26009b	149.9	39.19	99.84	
			STRIV	0	0	0.0	0.00	0.00	35540	-22726b	149.9	34.17	99.84	
			STR V	518635	1214b	153.9	1.75	68.64	358477	-28563b	149.9	43.11	99.84	
1	2.97 R	GIRD	STR I	19201	38b	153.9	0.05	68.64	13673	-27937b	149.9	42.14	99.84	
			STIII	35454	2599b	153.9	3.76	68.64	35418	-25964b	149.9	39.12	99.84	
			STRIV	0	0	0.0	0.00	0.00	35540	-22980b	149.9	34.56	99.84	
			STR V	518635	1226b	153.9	1.77	68.64	358477	-28685b	149.9	43.29	99.84	
1	6.10 L	SPEC	STR I	0	0	0.0	0.00	0.00	13673	-46554b	163.8	64.71	99.84	
			STIII	0	0	0.0	0.00	0.00	35417	-43349b	163.8	60.15	99.84	
			STRIV	0	0	0.0	0.00	0.00	35540	-42795b	163.8	59.36	99.84	
			STR V	0	0	0.0	0.00	0.00	358477	-47185b	163.8	65.61	99.84	
1	6.10 R	SPEC	STR I	0	0	0.0	0.00	0.00	13673	-46554b	163.8	64.71	99.84	
			STIII	0	0	0.0	0.00	0.00	35417	-43349b	163.8	60.15	99.84	
			STRIV	0	0	0.0	0.00	0.00	35540	-42795b	163.8	59.36	99.84	
			STR V	0	0	0.0	0.00	0.00	358477	-47185b	163.8	65.61	99.84	
1	10.48 L	GIRD	STR I	0	0	0.0	0.00	0.00	9262	-65104a	180.9	82.27	124.80	
			STIII	0	0	0.0	0.00	0.00	35421	-65104a	180.9	82.27	124.80	
			STRIV	0	0	0.0	0.00	0.00	35539	-65104a	180.9	82.27	124.80	
			STR V	0	0	0.0	0.00	0.00	252452	-65104a	180.9	82.27	124.80	
1	10.48 R	GIRD	STR I	0	0	0.0	0.00	0.00	10386	-65104a	180.9	82.27	124.80	
			STIII	0	0	0.0	0.00	0.00	35417	-65104a	180.9	82.27	124.80	
			STRIV	0	0	0.0	0.00	0.00	35539	-65104a	180.9	82.27	124.80	
			STR V	0	0	0.0	0.00	0.00	358496	-65104a	180.9	82.27	124.80	
1	10.60 L	FACE	STR I	0	0	0.0	0.00	0.00	9265	-65470a	181.4	82.48	124.80	
			STIII	0	0	0.0	0.00	0.00	35421	-65470a	181.4	82.48	124.80	
			STRIV	0	0	0.0	0.00	0.00	35539	-65470a	181.4	82.48	124.80	
			STR V	0	0	0.0	0.00	0.00	252455	-65470a	181.4	82.48	124.80	
1	17.60 L	COL	STR I	0	0	0.0	0.00	0.00	13701	-100412	181.4	128.56	124.80	NG
			STIII	0	0	0.0	0.00	0.00	35417	-87750	181.4	111.69	124.80	
			STRIV	0	0	0.0	0.00	0.00	35540	-94584	181.4	120.77	124.80	
			STR V	0	0	0.0	0.00	0.00	358505	-98888	181.4	126.52	124.80	NG
1	17.60 R	COL	STR I	0	0	0.0	0.00	0.00	9289	-57065b	181.4	71.62	124.80	
			STIII	0	0	0.0	0.00	0.00	35394	-43695b	181.4	54.52	124.80	
			STRIV	0	0	0.0	0.00	0.00	35539	-49175b	181.4	61.51	124.80	
			STR V	0	0	0.0	0.00	0.00	252479	-54099b	181.4	67.81	124.80	
1	22.16 L	GIRD	STR I	0	0	0.0	0.00	0.00	9292	-38868b	181.4	48.40	124.80	
			STIII	0	0	0.0	0.00	0.00	35394	-29345b	181.4	36.39	124.80	
			STRIV	0	0	0.0	0.00	0.00	35539	-32752b	181.4	40.67	124.80	
			STR V	0	0	0.0	0.00	0.00	252482	-36775b	181.4	45.75	124.80	
1	22.16 R	GIRD	STR I	0	0	0.0	0.00	0.00	9292	-38942b	181.4	48.49	124.80	
			STIII	0	0	0.0	0.00	0.00	35394	-29300b	181.4	36.33	124.80	
			STRIV	0	0	0.0	0.00	0.00	35539	-32836b	181.4	40.78	124.80	
			STR V	0	0	0.0	0.00	0.00	252482	-36800b	181.4	45.78	124.80	
1	24.60 L	FACE	STR I	0	0	0.0	0.00	0.00	9292	-30949b	181.4	38.40	124.80	
			STIII	0	0	0.0	0.00	0.00	35394	-23246b	181.4	28.75	124.80	
			STRIV	0	0	0.0	0.00	0.00	35539	-25924b	181.4	32.10	124.80	
			STR V	0	0	0.0	0.00	0.00	252482	-29253b	181.4	36.27	124.80	
1	33.84 L	GIRD	STR I	0	0	0.0	0.00	0.00	9286	-3149b	117.6	5.97	124.80	
			STIII	0	0	0.0	0.00	0.00	35394	-2637b	117.6	5.00	124.80	
			STRIV	0	0	0.0	0.00	0.00	35539	-2706b	117.6	5.13	124.80	
			STR V	0	0	0.0	0.00	0.00	252476	-3080b	117.6	5.84	124.80	
1	33.84 R	GIRD	STR I	0	0	0.0	0.00	0.00	9286	-3193b	117.6	6.05	124.80	
			STIII	0	0	0.0	0.00	0.00	35394	-2606b	117.6	4.94	124.80	
			STRIV	0	0	0.0	0.00	0.00	35539	-2757b	117.6	5.22	124.80	
			STR V	0	0	0.0	0.00	0.00	252476	-3093b	117.6	5.86	124.80	
1	35.03 L	GIRD	STR I	0	0	0.0	0.00	0.00	9286	-629b	109.4	1.28	124.80	
			STIII	0	0	0.0	0.00	0.00	35394	-766b	109.4	1.56	124.80	
			STRIV	0	0	0.0	0.00	0.00	35539	-677b	109.4	1.38	124.80	
			STR V	836764	16b	115.8	0.03	68.64	252476	-692b	109.4	1.41	124.80	
1	35.03 R	GIRD	STR I	0	0	0.0	0.00	0.00	1	-446b	109.4	0.91	124.80	
			STIII	0	0	0.0	0.00	0.00	35351	-446b	109.4	0.91	124.80	
			STRIV	0	0	0.0	0.00	0.00	35537	-535b	109.4	1.09	124.80	
			STR V	0	0	0.0	0.00	0.00	62053	-446b	109.4	0.91	124.80	
1	41.10 L	CAP	STR I	0	0	0.0	0.00	0.00	0	0	0.0	0.00	0.00	
			STIII	0	0	0.0	0.00	0.00	0	0	0.0	0.00	0.00	
			STRIV	0	0	0.0	0.00	0.00	0	0	0.0	0.00	0.00	
			STR V	0	0	0.0	0.00	0.00	0	0	0.0	0.00	0.00	

----- CAP BEAM 1 FLEXURAL DESIGN ----------

FLEXURAL DESIGN - TRANSVERSE FLEXURAL DESIGN PARAMETERS (Based on As Provided):

				POSITIVE FLEXURE					NEGATIVE FLEXURE				
CAP NO.	HORZ DIST. (ft)	LOCATION	AASHTO LIMIT STATE	LOAD CASE	a (in)	STRAIN es	PHI Ø	ØMn CAP (ft-k)	LOAD CASE	a (in)	STRAIN es	PHI Ø	ØMn CAP (ft-k)
1	-101.40 R	CAP	STR I	0	0.00	0.000000	0.000	0	0	0.00	0.000000	0.000	0
			STIII	0	0.00	0.000000	0.000	0	0	0.00	0.000000	0.000	0
			STRIV	0	0.00	0.000000	0.000	0	0	0.00	0.000000	0.000	0
			STR V	0	0.00	0.000000	0.000	0	0	0.00	0.000000	0.000	0
1	-95.85 L	GIRD	STR I	0	0.00	0.000000	0.000	0	1	15.29	0.015821	0.900	-55110
			STIII	0	0.00	0.000000	0.000	0	35351	15.29	0.015821	0.900	-55110
			STRIV	0	0.00	0.000000	0.000	0	35537	15.29	0.015821	0.900	-55110
			STR V	0	0.00	0.000000	0.000	0	62053	15.29	0.015821	0.900	-55110
1	-95.85 R	GIRD	STR I	0	0.00	0.000000	0.000	0	9974	15.29	0.015821	0.900	-55110
			STIII	0	0.00	0.000000	0.000	0	35406	15.29	0.015821	0.900	-55110
			STRIV	0	0.00	0.000000	0.000	0	35539	15.29	0.015821	0.900	-55110
			STR V	0	0.00	0.000000	0.000	0	306180	15.29	0.015821	0.900	-55110
1	-93.23 L	GIRD	STR I	0	0.00	0.000000	0.000	0	9965	15.29	0.018841	0.900	-65282
			STIII	0	0.00	0.000000	0.000	0	35406	15.29	0.018841	0.900	-65282
			STRIV	0	0.00	0.000000	0.000	0	35539	15.29	0.018841	0.900	-65282
			STR V	0	0.00	0.000000	0.000	0	306171	15.29	0.018841	0.900	-65282
1	-93.23 R	GIRD	STR I	0	0.00	0.000000	0.000	0	14415	15.29	0.018841	0.900	-65282
			STIII	0	0.00	0.000000	0.000	0	35430	15.29	0.018841	0.900	-65282
			STRIV	0	0.00	0.000000	0.000	0	35540	15.29	0.018841	0.900	-65282
			STR V	0	0.00	0.000000	0.000	0	412235	15.29	0.018841	0.900	-65282
1	-85.54 L	GIRD	STR I	0	0.00	0.000000	0.000	0	14417	15.29	0.027694	0.900	-95103
			STIII	0	0.00	0.000000	0.000	0	35430	15.29	0.027694	0.900	-95103
			STRIV	0	0.00	0.000000	0.000	0	35540	15.29	0.027694	0.900	-95103
			STR V	0	0.00	0.000000	0.000	0	412237	15.29	0.027694	0.900	-95103
1	-85.54 R	GIRD	STR I	0	0.00	0.000000	0.000	0	14417	15.29	0.027694	0.900	-95103
			STIII	0	0.00	0.000000	0.000	0	35430	15.29	0.027694	0.900	-95103
			STRIV	0	0.00	0.000000	0.000	0	35540	15.29	0.027694	0.900	-95103
			STR V	0	0.00	0.000000	0.000	0	412237	15.29	0.027694	0.900	-95103
1	-84.90 L	FACE	STR I	0	0.00	0.000000	0.000	0	14417	15.29	0.028436	0.900	-97602
			STIII	0	0.00	0.000000	0.000	0	35430	15.29	0.028436	0.900	-97602
			STRIV	0	0.00	0.000000	0.000	0	35540	15.29	0.028436	0.900	-97602
			STR V	0	0.00	0.000000	0.000	0	412237	15.29	0.028436	0.900	-97602
1	-77.90 L	COL	STR I	0	0.00	0.000000	0.000	0	14417	15.29	0.028436	0.900	-97602
			STIII	0	0.00	0.000000	0.000	0	35430	15.29	0.028436	0.900	-97602
			STRIV	0	0.00	0.000000	0.000	0	35540	15.29	0.028436	0.900	-97602
			STR V	0	0.00	0.000000	0.000	0	412237	15.29	0.028436	0.900	-97602
1	-77.90 R	COL	STR I	0	0.00	0.000000	0.000	0	14492	15.29	0.028436	0.900	-97602
			STIII	0	0.00	0.000000	0.000	0	35429	15.29	0.028436	0.900	-97602
			STRIV	0	0.00	0.000000	0.000	0	35540	15.29	0.028436	0.900	-97602
			STR V	0	0.00	0.000000	0.000	0	412312	15.29	0.028436	0.900	-97602
1	-75.23 L	GIRD	STR I	0	0.00	0.000000	0.000	0	14492	15.29	0.028436	0.900	-97602
			STIII	0	0.00	0.000000	0.000	0	35429	15.29	0.028436	0.900	-97602
			STRIV	0	0.00	0.000000	0.000	0	35540	15.29	0.028436	0.900	-97602
			STR V	0	0.00	0.000000	0.000	0	412312	15.29	0.028436	0.900	-97602
1	-75.23 R	GIRD	STR I	0	0.00	0.000000	0.000	0	14492	15.29	0.028436	0.900	-97602
			STIII	0	0.00	0.000000	0.000	0	35429	15.29	0.028436	0.900	-97602
			STRIV	0	0.00	0.000000	0.000	0	35540	15.29	0.028436	0.900	-97602
			STR V	0	0.00	0.000000	0.000	0	412312	15.29	0.028436	0.900	-97602
1	-70.90 L	FACE	STR I	0	0.00	0.000000	0.000	0	14567	15.29	0.028436	0.900	-97602
			STIII	0	0.00	0.000000	0.000	0	35408	15.29	0.028436	0.900	-97602
			STRIV	0	0.00	0.000000	0.000	0	35539	15.29	0.028436	0.900	-97602
			STR V	0	0.00	0.000000	0.000	0	315152	15.29	0.028436	0.900	-97602
1	-66.40 L	SPEC	STR I	0	0.00	0.000000	0.000	0	14567	12.24	0.032127	0.900	-70862
			STIII	0	0.00	0.000000	0.000	0	35430	12.24	0.032127	0.900	-70862
			STRIV	0	0.00	0.000000	0.000	0	35540	12.24	0.032127	0.900	-70862
			STR V	0	0.00	0.000000	0.000	0	412387	12.24	0.032127	0.900	-70862
1	-66.40 R	SPEC	STR I	0	0.00	0.000000	0.000	0	14438	12.24	0.032127	0.900	-70862
			STIII	0	0.00	0.000000	0.000	0	35430	12.24	0.032127	0.900	-70862
			STRIV	0	0.00	0.000000	0.000	0	35540	12.24	0.032127	0.900	-70862
			STR V	0	0.00	0.000000	0.000	0	412258	12.24	0.032127	0.900	-70862
1	-64.92 L	GIRD	STR I	0	0.00	0.000000	0.000	0	14567	12.24	0.030757	0.900	-67909
			STIII	0	0.00	0.000000	0.000	0	35430	12.24	0.030757	0.900	-67909
			STRIV	0	0.00	0.000000	0.000	0	35540	12.24	0.030757	0.900	-67909
			STR V	0	0.00	0.000000	0.000	0	412387	12.24	0.030757	0.900	-67909
1	-64.92 R	GIRD	STR I	0	0.00	0.000000	0.000	0	14567	12.24	0.030757	0.900	-67909
			STIII	0	0.00	0.000000	0.000	0	35430	12.24	0.030757	0.900	-67909
			STRIV	0	0.00	0.000000	0.000	0	35540	12.24	0.030757	0.900	-67909
			STR V	0	0.00	0.000000	0.000	0	412387	12.24	0.030757	0.900	-67909
1	-61.16 L	GIRD	STR I	17882	8.41	0.041042	0.900	43358	14615	12.24	0.027279	0.900	-60410

			STIII	35442	8.41	0.041042	0.900	43358	35430	12.24	0.027279	0.900	-60410
			STRIV	0	0.00	0.000000	0.000	0	35540	12.24	0.027279	0.900	-60410
			STR V	464300	8.41	0.041042	0.900	43358	412435	12.24	0.027279	0.900	-60410
1	-61.16 R	GIRD	STR I	17882	8.41	0.041042	0.900	43358	14615	12.24	0.027279	0.900	-60410
			STIII	35442	8.41	0.041042	0.900	43358	35430	12.24	0.027279	0.900	-60410
			STRIV	0	0.00	0.000000	0.000	0	35540	12.24	0.027279	0.900	-60410
			STR V	464300	8.41	0.041042	0.900	43358	412435	12.24	0.027279	0.900	-60410
1	-57.40 L	CAP	STR I	17885	16.82	0.016484	0.900	71307	14618	12.24	0.023791	0.900	-52890
			STIII	35442	16.82	0.016484	0.900	71307	35430	12.24	0.023791	0.900	-52890
			STRIV	35537	16.82	0.016484	0.900	71307	35540	12.24	0.023791	0.900	-52890
			STR V	464303	16.82	0.016484	0.900	71307	412438	12.24	0.023791	0.900	-52890
1	-49.44 L	GIRD	STR I	9102	16.82	0.016484	0.900	71307	0	0.00	0.000000	0.000	0
			STIII	35393	16.82	0.016484	0.900	71307	0	0.00	0.000000	0.000	0
			STRIV	35539	16.82	0.016484	0.900	71307	0	0.00	0.000000	0.000	0
			STR V	252292	16.82	0.016484	0.900	71307	0	0.00	0.000000	0.000	0
1	-49.44 R	GIRD	STR I	9102	16.82	0.016484	0.900	71307	0	0.00	0.000000	0.000	0
			STIII	35393	16.82	0.016484	0.900	71307	0	0.00	0.000000	0.000	0
			STRIV	35539	16.82	0.016484	0.900	71307	0	0.00	0.000000	0.000	0
			STR V	252292	16.82	0.016484	0.900	71307	0	0.00	0.000000	0.000	0
1	-37.67 L	GIRD	STR I	10229	16.82	0.016484	0.900	71307	0	0.00	0.000000	0.000	0
			STIII	35393	16.82	0.016484	0.900	71307	0	0.00	0.000000	0.000	0
			STRIV	35539	16.82	0.016484	0.900	71307	0	0.00	0.000000	0.000	0
			STR V	253419	16.82	0.016484	0.900	71307	0	0.00	0.000000	0.000	0
1	-37.67 R	GIRD	STR I	9126	16.82	0.016484	0.900	71307	0	0.00	0.000000	0.000	0
			STIII	35393	16.82	0.016484	0.900	71307	0	0.00	0.000000	0.000	0
			STRIV	35539	16.82	0.016484	0.900	71307	0	0.00	0.000000	0.000	0
			STR V	252316	16.82	0.016484	0.900	71307	0	0.00	0.000000	0.000	0
1	-29.10 L	GIRD	STR I	10014	16.82	0.016484	0.900	71307	0	0.00	0.000000	0.000	0
			STIII	35405	16.82	0.016484	0.900	71307	0	0.00	0.000000	0.000	0
			STRIV	35539	16.82	0.016484	0.900	71307	0	0.00	0.000000	0.000	0
			STR V	306220	16.82	0.016484	0.900	71307	0	0.00	0.000000	0.000	0
1	-29.10 R	GIRD	STR I	8905	16.82	0.016484	0.900	71307	0	0.00	0.000000	0.000	0
			STIII	35405	16.82	0.016484	0.900	71307	0	0.00	0.000000	0.000	0
			STRIV	35539	16.82	0.016484	0.900	71307	0	0.00	0.000000	0.000	0
			STR V	305111	16.82	0.016484	0.900	71307	0	0.00	0.000000	0.000	0
1	-25.90 L	GIRD	STR I	10011	16.82	0.016484	0.900	71307	0	0.00	0.000000	0.000	0
			STIII	35405	16.82	0.016484	0.900	71307	0	0.00	0.000000	0.000	0
			STRIV	35539	16.82	0.016484	0.900	71307	0	0.00	0.000000	0.000	0
			STR V	306217	16.82	0.016484	0.900	71307	0	0.00	0.000000	0.000	0
1	-25.90 R	GIRD	STR I	10011	16.82	0.016484	0.900	71307	0	0.00	0.000000	0.000	0
			STIII	35405	16.82	0.016484	0.900	71307	0	0.00	0.000000	0.000	0
			STRIV	35539	16.82	0.016484	0.900	71307	0	0.00	0.000000	0.000	0
			STR V	306217	16.82	0.016484	0.900	71307	0	0.00	0.000000	0.000	0
1	-14.12 L	GIRD	STR I	10346	16.82	0.016484	0.900	71307	0	0.00	0.000000	0.000	0
			STIII	35393	16.82	0.016484	0.900	71307	0	0.00	0.000000	0.000	0
			STRIV	35539	16.82	0.016484	0.900	71307	0	0.00	0.000000	0.000	0
			STR V	306552	16.82	0.016484	0.900	71307	0	0.00	0.000000	0.000	0
1	-14.12 R	GIRD	STR I	10346	16.82	0.016484	0.900	71307	0	0.00	0.000000	0.000	0
			STIII	35409	16.82	0.016484	0.900	71307	0	0.00	0.000000	0.000	0
			STRIV	35539	16.82	0.016484	0.900	71307	0	0.00	0.000000	0.000	0
			STR V	306552	16.82	0.016484	0.900	71307	0	0.00	0.000000	0.000	0
1	-7.65 L	GIRD	STR I	10358	16.82	0.016484	0.900	71307	0	0.00	0.000000	0.000	0
			STIII	35406	16.82	0.016484	0.900	71307	35466	12.24	0.023791	0.900	-52890
			STRIV	35539	16.82	0.016484	0.900	71307	0	0.00	0.000000	0.000	0
			STR V	306564	16.82	0.016484	0.900	71307	0	0.00	0.000000	0.000	0
1	-7.65 R	GIRD	STR I	10358	16.82	0.016484	0.900	71307	0	0.00	0.000000	0.000	0
			STIII	35406	16.82	0.016484	0.900	71307	0	0.00	0.000000	0.000	0
			STRIV	35539	16.82	0.016484	0.900	71307	0	0.00	0.000000	0.000	0
			STR V	306564	16.82	0.016484	0.900	71307	0	0.00	0.000000	0.000	0
1	-2.90 L	CAP	STR I	10367	8.41	0.035968	0.900	38188	22497	12.24	0.023791	0.900	-52890
			STIII	35406	8.41	0.035968	0.900	38188	35466	12.24	0.023791	0.900	-52890
			STRIV	35539	8.41	0.035968	0.900	38188	35538	12.24	0.023791	0.900	-52890
			STR V	306573	8.41	0.035968	0.900	38188	570529	12.24	0.023791	0.900	-52890
1	-1.19 L	GIRD	STR I	19203	8.41	0.038264	0.900	40527	13667	12.24	0.025369	0.900	-56292
			STIII	35454	8.41	0.038264	0.900	40527	35418	12.24	0.025369	0.900	-56292
			STRIV	0	0.00	0.000000	0.000	0	35540	12.24	0.025369	0.900	-56292
			STR V	518637	8.41	0.038264	0.900	40527	358471	12.24	0.025369	0.900	-56292
1	-1.19 R	GIRD	STR I	19203	8.41	0.038264	0.900	40527	13667	12.24	0.025369	0.900	-56292
			STIII	35454	8.41	0.038264	0.900	40527	35418	12.24	0.025369	0.900	-56292
			STRIV	0	0.00	0.000000	0.000	0	35540	12.24	0.025369	0.900	-56292
			STR V	518637	8.41	0.038264	0.900	40527	358471	12.24	0.025369	0.900	-56292
1	2.97 L	GIRD	STR I	0	0.00	0.000000	0.000	0	13673	12.24	0.029219	0.900	-64594
			STIII	35454	8.41	0.043865	0.900	46234	35418	12.24	0.029219	0.900	-64594
			STRIV	0	0.00	0.000000	0.000	0	35540	12.24	0.029219	0.900	-64594
			STR V	518635	8.41	0.043865	0.900	46234	358477	12.24	0.029219	0.900	-64594
1	2.97 R	GIRD	STR I	19201	8.41	0.043865	0.900	46234	13673	12.24	0.029219	0.900	-64594

			STIII	35454	8.41	0.043865	0.900	46234	35418	12.24	0.029219	0.900	-64594
			STRIV	0	0.00	0.000000	0.000	0	35540	12.24	0.029219	0.900	-64594
			STR V	518635	8.41	0.043865	0.900	46234	358477	12.24	0.029219	0.900	-64594
1	6.10 L	SPEC	STR I	0	0.00	0.000000	0.000	0	13673	12.24	0.032127	0.900	-70861
			STIII	0	0.00	0.000000	0.000	0	35417	12.24	0.032127	0.900	-70861
			STRIV	0	0.00	0.000000	0.000	0	35540	12.24	0.032127	0.900	-70861
			STR V	0	0.00	0.000000	0.000	0	358477	12.24	0.032127	0.900	-70861
1	6.10 R	SPEC	STR I	0	0.00	0.000000	0.000	0	13673	12.24	0.032127	0.900	-70861
			STIII	0	0.00	0.000000	0.000	0	35417	12.24	0.032127	0.900	-70861
			STRIV	0	0.00	0.000000	0.000	0	35540	12.24	0.032127	0.900	-70861
			STR V	0	0.00	0.000000	0.000	0	358477	12.24	0.032127	0.900	-70861
1	10.48 L	GIRD	STR I	0	0.00	0.000000	0.000	0	9262	15.29	0.028347	0.900	-97300
			STIII	0	0.00	0.000000	0.000	0	35421	15.29	0.028347	0.900	-97300
			STRIV	0	0.00	0.000000	0.000	0	35539	15.29	0.028347	0.900	-97300
			STR V	0	0.00	0.000000	0.000	0	252452	15.29	0.028347	0.900	-97300
1	10.48 R	GIRD	STR I	0	0.00	0.000000	0.000	0	10386	15.29	0.028347	0.900	-97300
			STIII	0	0.00	0.000000	0.000	0	35417	15.29	0.028347	0.900	-97300
			STRIV	0	0.00	0.000000	0.000	0	35539	15.29	0.028347	0.900	-97300
			STR V	0	0.00	0.000000	0.000	0	358496	15.29	0.028347	0.900	-97300
1	10.60 L	FACE	STR I	0	0.00	0.000000	0.000	0	9265	15.29	0.028436	0.900	-97602
			STIII	0	0.00	0.000000	0.000	0	35421	15.29	0.028436	0.900	-97602
			STRIV	0	0.00	0.000000	0.000	0	35539	15.29	0.028436	0.900	-97602
			STR V	0	0.00	0.000000	0.000	0	252455	15.29	0.028436	0.900	-97602
1	17.60 L	COL	STR I	0	0.00	0.000000	0.000	0	13701	15.29	0.028436	0.900	-97602
			STIII	0	0.00	0.000000	0.000	0	35417	15.29	0.028436	0.900	-97602
			STRIV	0	0.00	0.000000	0.000	0	35540	15.29	0.028436	0.900	-97602
			STR V	0	0.00	0.000000	0.000	0	358505	15.29	0.028436	0.900	-97602
1	17.60 R	COL	STR I	0	0.00	0.000000	0.000	0	9289	15.29	0.028436	0.900	-97602
			STIII	0	0.00	0.000000	0.000	0	35394	15.29	0.028436	0.900	-97602
			STRIV	0	0.00	0.000000	0.000	0	35539	15.29	0.028436	0.900	-97602
			STR V	0	0.00	0.000000	0.000	0	252479	15.29	0.028436	0.900	-97602
1	22.16 L	GIRD	STR I	0	0.00	0.000000	0.000	0	9292	15.29	0.028436	0.900	-97602
			STIII	0	0.00	0.000000	0.000	0	35394	15.29	0.028436	0.900	-97602
			STRIV	0	0.00	0.000000	0.000	0	35539	15.29	0.028436	0.900	-97602
			STR V	0	0.00	0.000000	0.000	0	252482	15.29	0.028436	0.900	-97602
1	22.16 R	GIRD	STR I	0	0.00	0.000000	0.000	0	9292	15.29	0.028436	0.900	-97602
			STIII	0	0.00	0.000000	0.000	0	35394	15.29	0.028436	0.900	-97602
			STRIV	0	0.00	0.000000	0.000	0	35539	15.29	0.028436	0.900	-97602
			STR V	0	0.00	0.000000	0.000	0	252482	15.29	0.028436	0.900	-97602
1	24.60 L	FACE	STR I	0	0.00	0.000000	0.000	0	9292	15.29	0.028436	0.900	-97602
			STIII	0	0.00	0.000000	0.000	0	35394	15.29	0.028436	0.900	-97602
			STRIV	0	0.00	0.000000	0.000	0	35539	15.29	0.028436	0.900	-97602
			STR V	0	0.00	0.000000	0.000	0	252482	15.29	0.028436	0.900	-97602
1	33.84 L	GIRD	STR I	0	0.00	0.000000	0.000	0	9286	15.29	0.017793	0.900	-61751
			STIII	0	0.00	0.000000	0.000	0	35394	15.29	0.017793	0.900	-61751
			STRIV	0	0.00	0.000000	0.000	0	35539	15.29	0.017793	0.900	-61751
			STR V	0	0.00	0.000000	0.000	0	252476	15.29	0.017793	0.900	-61751
1	33.84 R	GIRD	STR I	0	0.00	0.000000	0.000	0	9286	15.29	0.017793	0.900	-61751
			STIII	0	0.00	0.000000	0.000	0	35394	15.29	0.017793	0.900	-61751
			STRIV	0	0.00	0.000000	0.000	0	35539	15.29	0.017793	0.900	-61751
			STR V	0	0.00	0.000000	0.000	0	252476	15.29	0.017793	0.900	-61751
1	35.03 L	GIRD	STR I	0	0.00	0.000000	0.000	0	9286	15.29	0.016427	0.900	-57153
			STIII	0	0.00	0.000000	0.000	0	35394	15.29	0.016427	0.900	-57153
			STRIV	0	0.00	0.000000	0.000	0	35539	15.29	0.016427	0.900	-57153
			STR V	836764	8.41	0.032323	0.900	34474	252476	15.29	0.016427	0.900	-57153
1	35.03 R	GIRD	STR I	0	0.00	0.000000	0.000	0	1	15.29	0.016427	0.900	-57153
			STIII	0	0.00	0.000000	0.000	0	35351	15.29	0.016427	0.900	-57153
			STRIV	0	0.00	0.000000	0.000	0	35537	15.29	0.016427	0.900	-57153
			STR V	0	0.00	0.000000	0.000	0	62053	15.29	0.016427	0.900	-57153
1	41.10 L	CAP	STR I	0	0.00	0.000000	0.000	0	0	0.00	0.000000	0.000	0
			STIII	0	0.00	0.000000	0.000	0	0	0.00	0.000000	0.000	0
			STRIV	0	0.00	0.000000	0.000	0	0	0.00	0.000000	0.000	0
			STR V	0	0.00	0.000000	0.000	0	0	0.00	0.000000	0.000	0

----- CAP BEAM 1 FLEXURAL DESIGN ----------

FLEXURAL DESIGN - LONGITUDINAL FLEXURE, REINFORCING STEEL REQUIREMENTS:

LRFD MOMENT, MIN STEEL CODE:
a: Design controlled by 1.2 Mcr
b: Design controlled by 4/3 Mdes
c: Design controlled 0.03f'c/fy

				POSITIVE FLEXURE				NEGATIVE FLEXURE			
CAP NO.	HORZ DIST. (ft)	LOCATION	AASHTO LIMIT STATE	LOAD CASE	LRFD MOMENT (ft-k)	d (in)	AREA REQD. (sq-in)	LOAD CASE	LRFD MOMENT (ft-k)	d (in)	AREA REQD. (sq-in)
1	-101.40 R	CAP	STR I	0	0	0.0	0.00	0	0	0.0	0.00
			STIII	0	0	0.0	0.00	0	0	0.0	0.00
			STRIV	0	0	0.0	0.00	0	0	0.0	0.00
			STR V	0	0	0.0	0.00	0	0	0.0	0.00

1	-95.85	L	GIRD	STR I	0	0	0.0	0.00	0	0	0.0	0.00
				STIII	35351	12b	140.9	0.02	0	0	0.0	0.00
				STRIV	0	0	0.0	0.00	0	0	0.0	0.00
				STR V	62053	3b	140.9	0.01	0	0	0.0	0.00
1	-95.85	R	GIRD	STR I	9974	113b	140.9	0.18	0	0	0.0	0.00
				STIII	35406	194b	140.9	0.31	0	0	0.0	0.00
				STRIV	35540	54b	140.9	0.09	0	0	0.0	0.00
				STR V	306180	157b	140.9	0.25	0	0	0.0	0.00
1	-93.23	L	GIRD	STR I	14392	117b	140.9	0.18	0	0	0.0	0.00
				STIII	35430	222b	140.9	0.35	0	0	0.0	0.00
				STRIV	35539	50b	140.9	0.08	0	0	0.0	0.00
				STR V	412212	172b	140.9	0.27	0	0	0.0	0.00
1	-93.23	R	GIRD	STR I	23228	71b	140.9	0.11	0	0	0.0	0.00
				STIII	35418	117b	140.9	0.19	0	0	0.0	0.00
				STRIV	35540	8b	140.9	0.01	0	0	0.0	0.00
				STR V	624276	101b	140.9	0.16	0	0	0.0	0.00
1	-85.54	L	GIRD	STR I	9993	775b	140.9	1.22	0	0	0.0	0.00
				STIII	35420	794b	140.9	1.25	0	0	0.0	0.00
				STRIV	35540	540b	140.9	0.85	0	0	0.0	0.00
				STR V	358109	827b	140.9	1.30	0	0	0.0	0.00
1	-85.54	R	GIRD	STR I	9993	811b	140.9	1.28	0	0	0.0	0.00
				STIII	35419	946b	140.9	1.49	0	0	0.0	0.00
				STRIV	35539	580b	140.9	0.92	0	0	0.0	0.00
				STR V	358109	918b	140.9	1.45	0	0	0.0	0.00
1	-84.90	L	FACE	STR I	9993	858b	140.9	1.35	0	0	0.0	0.00
				STIII	35419	994b	140.9	1.57	0	0	0.0	0.00
				STRIV	35539	606b	140.9	0.96	0	0	0.0	0.00
				STR V	358109	968b	140.9	1.53	0	0	0.0	0.00
1	-77.90	L	COL	STR I	9993	1372b	140.9	2.17	0	0	0.0	0.00
				STIII	35420	1549b	140.9	2.44	0	0	0.0	0.00
				STRIV	35540	881b	140.9	1.39	0	0	0.0	0.00
				STR V	358109	1517b	140.9	2.40	0	0	0.0	0.00
1	-77.90	R	COL	STR I	10444	1510b	140.9	2.38	0	0	0.0	0.00
				STIII	35420	1384b	140.9	2.19	0	0	0.0	0.00
				STRIV	35540	781b	140.9	1.23	0	0	0.0	0.00
				STR V	315486	1540b	140.9	2.43	0	0	0.0	0.00
1	-75.23	L	GIRD	STR I	10444	1253b	140.9	1.98	0	0	0.0	0.00
				STIII	35420	1069b	140.9	1.69	0	0	0.0	0.00
				STRIV	35540	653b	140.9	1.03	0	0	0.0	0.00
				STR V	315486	1241b	140.9	1.96	0	0	0.0	0.00
1	-75.23	R	GIRD	STR I	10502	1331b	140.9	2.10	0	0	0.0	0.00
				STIII	35420	1219b	140.9	1.92	0	0	0.0	0.00
				STRIV	35540	692b	140.9	1.09	0	0	0.0	0.00
				STR V	315544	1355b	140.9	2.14	0	0	0.0	0.00
1	-70.90	L	FACE	STR I	10502	1039b	140.9	1.64	0	0	0.0	0.00
				STIII	35420	647b	140.9	1.02	0	0	0.0	0.00
				STRIV	35540	357b	140.9	0.56	0	0	0.0	0.00
				STR V	306708	966b	140.9	1.53	0	0	0.0	0.00
1	-66.40	L	SPEC	STR I	10295	838b	140.9	1.32	0	0	0.0	0.00
				STIII	35382	193b	140.9	0.30	0	0	0.0	0.00
				STRIV	35539	50b	140.9	0.08	0	0	0.0	0.00
				STR V	346263	676b	140.9	1.07	0	0	0.0	0.00
1	-66.40	R	SPEC	STR I	10295	838b	140.9	1.32	0	0	0.0	0.00
				STIII	35382	193b	140.9	0.30	0	0	0.0	0.00
				STRIV	35539	50b	140.9	0.08	0	0	0.0	0.00
				STR V	346263	676b	140.9	1.07	0	0	0.0	0.00
1	-64.92	L	GIRD	STR I	10525	963b	140.9	1.52	0	0	0.0	0.00
				STIII	35410	251b	140.9	0.40	0	0	0.0	0.00
				STRIV	35539	163b	140.9	0.26	0	0	0.0	0.00
				STR V	319985	809b	140.9	1.28	0	0	0.0	0.00
1	-64.92	R	GIRD	STR I	10525	924b	140.9	1.46	0	0	0.0	0.00
				STIII	35430	309b	140.9	0.49	0	0	0.0	0.00
				STRIV	35539	118b	140.9	0.19	0	0	0.0	0.00
				STR V	350911	781b	140.9	1.23	0	0	0.0	0.00
1	-61.16	L	GIRD	STR I	11022	1401b	140.9	2.21	0	0	0.0	0.00
				STIII	35411	673b	140.9	1.06	0	0	0.0	0.00
				STRIV	35539	529b	140.9	0.83	0	0	0.0	0.00
				STR V	329318	1247b	140.9	1.97	0	0	0.0	0.00
1	-61.16	R	GIRD	STR I	11022	1336b	140.9	2.11	0	0	0.0	0.00
				STIII	35409	631b	140.9	1.00	0	0	0.0	0.00
				STRIV	35539	461b	140.9	0.73	0	0	0.0	0.00
				STR V	320482	1195b	140.9	1.89	0	0	0.0	0.00
1	-57.40	L	CAP	STR I	10284	1249b	140.9	1.97	0	0	0.0	0.00
				STIII	35409	698b	140.9	1.10	0	0	0.0	0.00
				STRIV	35539	387b	140.9	0.61	0	0	0.0	0.00
				STR V	319744	1156b	140.9	1.82	0	0	0.0	0.00

1	-49.44	L	GIRD	STR I	10504	1168b	140.9	1.84	0	0	0.0	0.00
				STIII	35409	804b	140.9	1.27	0	0	0.0	0.00
				STRIV	35539	230b	140.9	0.36	0	0	0.0	0.00
				STR V	319964	1143b	140.9	1.81	0	0	0.0	0.00
1	-49.44	R	GIRD	STR I	10504	1127b	140.9	1.78	0	0	0.0	0.00
				STIII	35409	721b	140.9	1.14	0	0	0.0	0.00
				STRIV	35539	182b	140.9	0.29	0	0	0.0	0.00
				STR V	319964	1085b	140.9	1.71	0	0	0.0	0.00
1	-37.67	L	GIRD	STR I	10504	1517b	140.9	2.40	0	0	0.0	0.00
				STIII	35409	1115b	140.9	1.76	0	0	0.0	0.00
				STRIV	35539	364b	140.9	0.57	0	0	0.0	0.00
				STR V	319964	1504b	140.9	2.37	0	0	0.0	0.00
1	-37.67	R	GIRD	STR I	10504	1477b	140.9	2.33	0	0	0.0	0.00
				STIII	35409	1034b	140.9	1.63	0	0	0.0	0.00
				STRIV	35539	318b	140.9	0.50	0	0	0.0	0.00
				STR V	319964	1447b	140.9	2.28	0	0	0.0	0.00
1	-29.10	L	GIRD	STR I	10504	2011b	140.9	3.18	0	0	0.0	0.00
				STIII	35409	1481b	140.9	2.34	0	0	0.0	0.00
				STRIV	35539	739b	140.9	1.17	0	0	0.0	0.00
				STR V	315546	1974b	140.9	3.12	0	0	0.0	0.00
1	-29.10	R	GIRD	STR I	10504	1977b	140.9	3.12	0	0	0.0	0.00
				STIII	35409	1467b	140.9	2.32	0	0	0.0	0.00
				STRIV	35539	674b	140.9	1.06	0	0	0.0	0.00
				STR V	315546	1955b	140.9	3.09	0	0	0.0	0.00
1	-25.90	L	GIRD	STR I	10900	1687b	140.9	2.66	0	0	0.0	0.00
				STIII	35409	1250b	140.9	1.97	0	0	0.0	0.00
				STRIV	35539	434b	140.9	0.69	0	0	0.0	0.00
				STR V	315942	1682b	140.9	2.66	0	0	0.0	0.00
1	-25.90	R	GIRD	STR I	10900	1648b	140.9	2.60	0	0	0.0	0.00
				STIII	35409	1169b	140.9	1.85	0	0	0.0	0.00
				STRIV	35539	389b	140.9	0.61	0	0	0.0	0.00
				STR V	315942	1621b	140.9	2.56	0	0	0.0	0.00
1	-14.12	L	GIRD	STR I	15245	1301b	140.9	2.05	0	0	0.0	0.00
				STIII	35397	799b	140.9	1.26	0	0	0.0	0.00
				STRIV	35540	108b	140.9	0.17	0	0	0.0	0.00
				STR V	421901	1256b	140.9	1.98	0	0	0.0	0.00
1	-14.12	R	GIRD	STR I	15251	1310b	140.9	2.07	0	0	0.0	0.00
				STIII	35397	793b	140.9	1.25	0	0	0.0	0.00
				STRIV	35540	148b	140.9	0.23	0	0	0.0	0.00
				STR V	426325	1253b	140.9	1.98	0	0	0.0	0.00
1	-7.65	L	GIRD	STR I	15245	1224b	140.9	1.93	0	0	0.0	0.00
				STIII	35397	723b	140.9	1.14	0	0	0.0	0.00
				STRIV	35540	221b	140.9	0.35	0	0	0.0	0.00
				STR V	426319	1157b	140.9	1.83	0	0	0.0	0.00
1	-7.65	R	GIRD	STR I	14515	1232b	140.9	1.95	0	0	0.0	0.00
				STIII	35397	715b	140.9	1.13	0	0	0.0	0.00
				STRIV	35540	259b	140.9	0.41	0	0	0.0	0.00
				STR V	425589	1154b	140.9	1.82	0	0	0.0	0.00
1	-2.90	L	CAP	STR I	9075	1081b	140.9	1.71	0	0	0.0	0.00
				STIII	35397	512b	140.9	0.81	0	0	0.0	0.00
				STRIV	35539	181b	140.9	0.29	0	0	0.0	0.00
				STR V	265519	981b	140.9	1.55	0	0	0.0	0.00
1	-1.19	L	GIRD	STR I	9075	1038b	140.9	1.64	0	0	0.0	0.00
				STIII	35397	435b	140.9	0.69	0	0	0.0	0.00
				STRIV	35539	154b	140.9	0.24	0	0	0.0	0.00
				STR V	265519	925b	140.9	1.46	0	0	0.0	0.00
1	-1.19	R	GIRD	STR I	9075	1088b	140.9	1.72	0	0	0.0	0.00
				STIII	35398	445b	140.9	0.70	0	0	0.0	0.00
				STRIV	35539	194b	140.9	0.31	0	0	0.0	0.00
				STR V	269937	958b	140.9	1.51	0	0	0.0	0.00
1	2.97	L	GIRD	STR I	26750	847b	140.9	1.34	0	0	0.0	0.00
				STIII	35363	188b	140.9	0.30	0	0	0.0	0.00
				STRIV	35537	42b	140.9	0.07	0	0	0.0	0.00
				STR V	698486	702b	140.9	1.11	0	0	0.0	0.00
1	2.97	R	GIRD	STR I	9078	889b	140.9	1.40	0	0	0.0	0.00
				STIII	35399	218b	140.9	0.34	0	0	0.0	0.00
				STRIV	35539	67b	140.9	0.11	0	0	0.0	0.00
				STR V	269940	745b	140.9	1.18	0	0	0.0	0.00
1	6.10	L	SPEC	STR I	9078	1051b	140.9	1.66	0	0	0.0	0.00
				STIII	35404	350b	140.9	0.55	0	0	0.0	0.00
				STRIV	35539	295b	140.9	0.47	0	0	0.0	0.00
				STR V	296448	904b	140.9	1.43	0	0	0.0	0.00
1	6.10	R	SPEC	STR I	9078	1051b	140.9	1.66	0	0	0.0	0.00
				STIII	35404	350b	140.9	0.55	0	0	0.0	0.00
				STRIV	35539	295b	140.9	0.47	0	0	0.0	0.00
				STR V	296448	904b	140.9	1.43	0	0	0.0	0.00

1	10.48 L	GIRD	STR I	9078	1277b	140.9	2.02	0	0	0.0	0.00
			STIII	35408	801b	140.9	1.26	0	0	0.0	0.00
			STRIV	35539	614b	140.9	0.97	0	0	0.0	0.00
			STR V	305284	1207b	140.9	1.91	0	0	0.0	0.00
1	10.48 R	GIRD	STR I	9078	1334b	140.9	2.11	0	0	0.0	0.00
			STIII	35408	890b	140.9	1.40	0	0	0.0	0.00
			STRIV	35539	658b	140.9	1.04	0	0	0.0	0.00
			STR V	305284	1285b	140.9	2.03	0	0	0.0	0.00
1	10.60 L	FACE	STR I	8922	1337b	140.9	2.11	0	0	0.0	0.00
			STIII	35408	901b	140.9	1.42	0	0	0.0	0.00
			STRIV	35539	663b	140.9	1.05	0	0	0.0	0.00
			STR V	305128	1290b	140.9	2.04	0	0	0.0	0.00
1	17.60 L	COL	STR I	10921	1773b	140.9	2.80	0	0	0.0	0.00
			STIII	35408	1576b	140.9	2.49	0	0	0.0	0.00
			STRIV	35539	948b	140.9	1.50	0	0	0.0	0.00
			STR V	315963	1822b	140.9	2.88	0	0	0.0	0.00
1	17.60 R	COL	STR I	10125	1338b	140.9	2.11	0	0	0.0	0.00
			STIII	35409	1091b	140.9	1.72	0	0	0.0	0.00
			STRIV	35539	769b	140.9	1.21	0	0	0.0	0.00
			STR V	315167	1326b	140.9	2.09	0	0	0.0	0.00
1	22.16 L	GIRD	STR I	10125	1058b	140.9	1.67	0	0	0.0	0.00
			STIII	35409	826b	140.9	1.30	0	0	0.0	0.00
			STRIV	35539	650b	140.9	1.03	0	0	0.0	0.00
			STR V	315167	1032b	140.9	1.63	0	0	0.0	0.00
1	22.16 R	GIRD	STR I	10125	1096b	140.9	1.73	0	0	0.0	0.00
			STIII	35420	912b	140.9	1.44	0	0	0.0	0.00
			STRIV	35539	694b	140.9	1.10	0	0	0.0	0.00
			STR V	315167	1090b	140.9	1.72	0	0	0.0	0.00
1	24.60 L	FACE	STR I	10125	879b	140.9	1.39	0	0	0.0	0.00
			STIII	35420	720b	140.9	1.14	0	0	0.0	0.00
			STRIV	35539	553b	140.9	0.87	0	0	0.0	0.00
			STR V	315167	871b	140.9	1.37	0	0	0.0	0.00
1	33.84 L	GIRD	STR I	10398	86b	140.9	0.14	0	0	0.0	0.00
			STIII	35409	44b	140.9	0.07	0	0	0.0	0.00
			STRIV	35539	17b	140.9	0.03	0	0	0.0	0.00
			STR V	319858	79b	140.9	0.12	0	0	0.0	0.00
1	33.84 R	GIRD	STR I	10398	121b	140.9	0.19	0	0	0.0	0.00
			STIII	35418	135b	140.9	0.21	0	0	0.0	0.00
			STRIV	35540	58b	140.9	0.09	0	0	0.0	0.00
			STR V	306604	137b	140.9	0.22	0	0	0.0	0.00
1	35.03 L	GIRD	STR I	14816	98b	140.9	0.15	0	0	0.0	0.00
			STIII	35394	108b	140.9	0.17	0	0	0.0	0.00
			STRIV	35539	46b	140.9	0.07	0	0	0.0	0.00
			STR V	412636	110b	140.9	0.17	0	0	0.0	0.00
1	35.03 R	GIRD	STR I	0	0	0.0	0.00	0	0	0.0	0.00
			STIII	35351	15b	140.9	0.02	0	0	0.0	0.00
			STRIV	0	0	0.0	0.00	0	0	0.0	0.00
			STR V	62053	4b	140.9	0.01	0	0	0.0	0.00
1	41.10 L	CAP	STR I	0	0	0.0	0.00	0	0	0.0	0.00
			STIII	0	0	0.0	0.00	0	0	0.0	0.00
			STRIV	0	0	0.0	0.00	0	0	0.0	0.00
			STR V	0	0	0.0	0.00	0	0	0.0	0.00

----- CAP BEAM 1 SHEAR/TORSION DESIGN -----

SHEAR/TORSION DESIGN, SIMPLIFIED PROCEDURE 5.8.3.4.1:

Notes: Stirrup spacing is based on 6 legs/stirrup total, and 1 leg/stirrup for torsion.

Shears have been modified for torsion as appropriate, in accordance with equation 5.8.2.1-6.

DESIGN CODE LEGEND:
0: No Shear Reinforcement Required
1: Minimum Shear Reinforcement Required
2: Reinforcement Calculated
3: Insufficient Section
4: Insufficient Stirrup Clearance

				FORCES			SHEAR/TORSION DESIGN							
CAP NO.	HORZ DIST. (ft)	LOCATION	AASHTO LIMIT STATE	LOAD CASE	LRFD SHEAR (kips)	LRFD TORSION (ft-k)	dv (in)	TORSION CRACKING øTcr (ft-k)	SHEAR CAPACITY øVn (kips)	STIRRUP AREA SHEAR Av (sq-in /ft)	STIRRUP AREA TORSION At/leg (sq-in /ft)	# 6 STIRRUP SPACING (in)	DSGN CODE	NG
1	-101.40 R	CAP	STR I	0	0	0	0.00	0	0	0.00	0.00	0.00	0	
			STIII	0	0	0	0.00	0	0	0.00	0.00	0.00	0	
			STRIV	0	0	0	0.00	0	0	0.00	0.00	0.00	0	
			STR V	0	0	0	0.00	0	0	0.00	0.00	0.00	0	
1	-95.85 L	GIRD	STR I	1	-106	0	105.73	10106	2600	1.82	0.00	17.39	1	
			STIII	35351	-106	-3	105.73	10106	2600	1.82	0.00	17.39	1	
			STRIV	35537	-127	0	105.72	10106	2600	1.82	0.00	17.39	1	
			STR V	62053	-106	-1	105.73	10106	2600	1.82	0.00	17.39	1	
1	-95.85 R	GIRD	STR I	9965	980	-2962	105.72	10106	2600	1.82	0.30	8.76	1	
			STIII	35406	-592	-2138	105.70	10106	2599	1.82	0.00	17.39	1	

			STRIV	35539	-647	-2329	105.71	10106	2599	1.82	0.00	17.39	1
			STR V	306171	932	-2797	105.71	10106	2599	1.82	0.28	9.01	1
1	-93.23 L	GIRD	STR I	9965	-833	-2989	123.53	12620	3038	1.82	0.00	17.39	1
			STIII	35406	-657	-2152	123.58	12620	3039	1.82	0.00	17.39	1
			STRIV	35539	-724	-2351	123.57	12620	3039	1.82	0.00	17.39	1
			STR V	306171	-799	-2821	123.53	12620	3038	1.82	0.00	17.39	1
1	-93.23 R	GIRD	STR I	9999	-2412	964	123.61	12620	3039	1.82	0.00	17.39	1
			STIII	35406	-1905	328	123.58	12620	3039	1.82	0.00	17.39	1
			STRIV	35539	-2153	427	123.59	12620	3039	1.82	0.00	17.39	1
			STR V	306205	-2303	805	123.59	12620	3039	1.82	0.00	17.39	1
1	-85.54 L	GIRD	STR I	9999	-2656	1119	174.77	20624	4298	1.82	0.00	17.39	1
			STIII	35406	-2148	468	175.15	20624	4307	1.82	0.00	17.39	1
			STRIV	35539	-2445	542	174.96	20624	4302	1.82	0.00	17.39	1
			STR V	306205	-2547	963	174.85	20624	4299	1.82	0.00	17.39	1
1	-85.54 R	GIRD	STR I	14420	-3071	-1501	174.78	20624	4298	1.82	0.00	17.39	1
			STIII	35430	-2478	-1388	175.11	20624	4306	1.82	0.00	17.39	1
			STRIV	35540	-2838	-1746	174.93	20624	4302	1.82	0.00	17.39	1
			STR V	412240	-2949	-1493	174.84	20624	4299	1.82	0.00	17.39	1
1	-84.90 L	FACE	STR I	14420	-3095	-1509	179.09	21328	4404	1.82	0.00	17.39	1
			STIII	35430	-2502	-1387	179.44	21328	4412	1.82	0.00	17.39	1
			STRIV	35540	-2867	-1751	179.25	21328	4408	1.82	0.00	17.39	1
			STR V	412240	-2973	-1498	179.15	21328	4405	1.82	0.00	17.39	1
1	-77.90 L	COL	STR I	14420	-3359	-1509	176.74	21328	4346	1.82	0.00	17.39	1
			STIII	35430	-2766	-1387	177.54	21328	4366	1.82	0.00	17.39	1
			STRIV	35540	-3184	-1751	177.05	21328	4354	1.82	0.00	17.39	1
			STR V	412240	-3238	-1498	176.89	21328	4350	1.82	0.00	17.39	1
1	-77.90 R	COL	STR I	8949	5822	6697	174.36	21328	5822	3.78	0.40	5.11	2
			STIII	35429	5300	3264	174.22	21328	5300	3.12	0.00	10.16	2
			STRIV	35540	6043	3912	173.59	21328	6043	4.09	0.00	7.74	2
			STR V	252139	5618	6009	174.79	21328	5618	3.50	0.36	5.59	2
1	-75.23 L	GIRD	STR I	8949	5723	6697	175.58	21328	5723	3.60	0.40	5.26	2
			STIII	35429	5199	3264	175.35	21328	5199	2.95	0.00	10.75	2
			STRIV	35540	5922	3912	174.89	21328	5922	3.88	0.00	8.16	2
			STR V	252139	5519	6009	175.96	21328	5519	3.33	0.36	5.76	2
1	-75.23 R	GIRD	STR I	14438	5896	2048	174.45	21328	5896	3.87	0.00	8.19	2
			STIII	35429	4878	2115	175.34	21328	4878	2.54	0.00	12.48	2
			STRIV	35540	5539	2473	174.89	21328	5539	3.39	0.00	9.33	2
			STR V	412258	5691	2043	174.54	21328	5691	3.60	0.00	8.79	2
1	-70.90 L	FACE	STR I	14438	5732	2048	176.39	21328	5732	3.58	0.00	8.85	2
			STIII	35429	4714	2115	176.39	21328	4714	2.30	0.00	13.80	2
			STRIV	35540	5342	2473	176.39	21328	5342	3.09	0.00	10.26	2
			STR V	412258	5528	2043	176.39	21328	5528	3.32	0.00	9.54	2
1	-66.40 L	SPEC	STR I	8946	4963	4989	160.23	18200	4963	3.24	0.34	6.03	2
			STIII	35429	4553	2097	159.54	18200	4553	2.70	0.00	11.74	2
			STRIV	35540	5149	2425	159.53	18200	5149	3.53	0.00	8.98	2
			STR V	412258	5366	2000	159.35	18200	5366	3.84	0.00	8.25	2
1	-66.40 R	SPEC	STR I	8946	4963	4989	160.23	18200	4963	3.24	0.34	6.03	2
			STIII	35429	4553	2097	159.54	18200	4553	2.70	0.00	11.74	2
			STRIV	35540	5149	2425	159.53	18200	5149	3.53	0.00	8.98	2
			STR V	412258	5366	2000	159.35	18200	5366	3.84	0.00	8.25	2
1	-64.92 L	GIRD	STR I	8946	4917	4993	154.34	17193	4917	3.44	0.35	5.72	2
			STIII	35429	4503	2091	153.55	17193	4503	2.87	0.00	11.02	2
			STRIV	35540	5090	2409	153.64	17193	5090	3.72	0.00	8.52	2
			STR V	412258	5317	1986	153.34	17193	5317	4.06	0.00	7.80	2
1	-64.92 R	GIRD	STR I	14435	5057	131	153.29	17193	5057	3.69	0.00	8.59	2
			STIII	35429	4155	813	153.54	17193	4155	2.37	0.00	13.36	2
			STRIV	35540	4654	747	153.65	17193	4654	3.09	0.00	10.26	2
			STR V	412255	4889	325	153.21	17193	4889	3.45	0.00	9.19	2
1	-61.16 L	GIRD	STR I	14435	4941	63	138.52	14691	4941	4.28	0.00	7.40	2
			STIII	35429	4039	779	138.36	14691	4039	2.84	0.00	11.14	2
			STRIV	35540	4515	690	138.72	14691	4515	3.59	0.00	8.83	2
			STR V	412255	4772	269	138.35	14691	4772	4.02	0.00	7.88	2
1	-61.16 R	GIRD	STR I	9072	2949	6075	139.44	14691	3429	1.82	0.48	6.78	1
			STIII	35429	2569	2700	138.32	14691	3401	1.82	0.00	17.39	1
			STRIV	35540	2817	2848	138.69	14691	3410	1.82	0.00	17.39	1
			STR V	305278	2903	5477	139.22	14691	3424	1.82	0.43	7.21	1
1	-57.40 L	CAP	STR I	9072	2878	6043	123.73	12273	3043	1.82	0.53	6.30	1
			STIII	35406	2516	3466	123.28	12273	3031	1.82	0.31	8.65	1
			STRIV	35539	2740	3449	123.69	12273	3042	1.82	0.31	8.67	1
			STR V	305278	2827	5456	123.70	12273	3042	1.82	0.48	6.71	1
1	-49.44 L	GIRD	STR I	9072	2690	6043	120.70	12273	2968	1.82	0.53	6.30	1
			STIII	35406	2317	3466	121.65	12273	2991	1.82	0.31	8.65	1
			STRIV	35539	2500	3449	120.65	12273	2967	1.82	0.31	8.67	1
			STR V	305278	2636	5456	120.97	12273	2975	1.82	0.48	6.71	1
1	-49.44 R	GIRD	STR I	9075	2071	3864	120.75	12273	2969	1.82	0.34	8.18	1
			STIII	35429	1852	1155	122.31	12273	3008	1.82	0.00	17.39	1

			STRIV	35540	1982	1059	121.51	12273	2988	1.82	0.00	17.39	1
			STR V	305281	2047	3352	121.02	12273	2976	1.82	0.30	8.79	1
1	-37.67 L	GIRD	STR I	9075	1788	3864	119.10	12273	2929	1.82	0.34	8.18	1
			STIII	35429	1546	1155	120.34	12273	2959	1.82	0.00	17.39	1
			STRIV	35540	1615	1059	119.65	12273	2942	1.82	0.00	17.39	1
			STR V	305281	1759	3352	119.29	12273	2933	1.82	0.30	8.79	1
1	-37.67 R	GIRD	STR I	14762	1437	-703	119.54	12273	2939	1.82	0.00	17.39	1
			STIII	35429	1158	-337	120.34	12273	2959	1.82	0.00	17.39	1
			STRIV	35540	1172	-663	119.65	12273	2942	1.82	0.00	17.39	1
			STR V	412582	1406	-568	119.77	12273	2945	1.82	0.00	17.39	1
1	-29.10 L	GIRD	STR I	14762	1214	-703	118.18	12273	2906	1.82	0.00	17.39	1
			STIII	35429	936	-337	119.36	12273	2935	1.82	0.00	17.39	1
			STRIV	35540	905	-663	118.59	12273	2916	1.82	0.00	17.39	1
			STR V	412582	1183	-568	118.45	12273	2913	1.82	0.00	17.39	1
1	-29.10 R	GIRD	STR I	9156	1040	4356	118.08	12273	2904	1.82	0.39	7.66	1
			STIII	35393	-802	1939	118.81	12273	2922	1.82	0.00	17.39	1
			STRIV	35539	-756	2518	117.99	12273	2901	1.82	0.00	17.39	1
			STR V	305362	946	3977	118.24	12273	2908	1.82	0.35	8.05	1
1	-25.90 L	GIRD	STR I	9156	1092	4356	118.34	12273	2910	1.82	0.39	7.66	1
			STIII	35393	-885	1939	119.13	12273	2929	1.82	0.00	17.39	1
			STRIV	35539	-855	2518	118.30	12273	2909	1.82	0.00	17.39	1
			STR V	305362	998	3977	118.47	12273	2913	1.82	0.35	8.05	1
1	-25.90 R	GIRD	STR I	9130	-1577	77	117.98	12273	2901	1.82	0.00	17.39	1
			STIII	35393	-1262	218	119.13	12273	2929	1.82	0.00	17.39	1
			STRIV	35539	-1293	538	118.31	12273	2909	1.82	0.00	17.39	1
			STR V	252320	-1537	53	118.26	12273	2908	1.82	0.00	17.39	1
1	-14.12 L	GIRD	STR I	9130	-1884	77	120.34	12273	2959	1.82	0.00	17.39	1
			STIII	35393	-1568	218	120.34	12273	2959	1.82	0.00	17.39	1
			STRIV	35539	-1660	538	120.34	12273	2959	1.82	0.00	17.39	1
			STR V	252320	-1843	53	120.34	12273	2959	1.82	0.00	17.39	1
1	-14.12 R	GIRD	STR I	10307	2237	-3542	120.34	12273	2959	1.82	0.31	8.56	1
			STIII	35393	-1903	-1312	120.34	12273	2959	1.82	0.00	17.39	1
			STRIV	35539	-2045	-1203	120.34	12273	2959	1.82	0.00	17.39	1
			STR V	253497	2192	-3091	120.34	12273	2959	1.82	0.27	9.15	1
1	-7.65 L	GIRD	STR I	10307	2398	-3542	121.40	12273	2985	1.82	0.31	8.56	1
			STIII	35393	-2071	-1312	122.10	12273	3002	1.82	0.00	17.39	1
			STRIV	35539	-2247	-1203	121.33	12273	2984	1.82	0.00	17.39	1
			STR V	253497	2354	-3091	121.66	12273	2992	1.82	0.27	9.15	1
1	-7.65 R	GIRD	STR I	10310	2854	-5096	121.20	12273	2980	1.82	0.45	7.00	1
			STIII	35393	-2393	-2789	122.10	12273	3002	1.82	0.00	17.39	1
			STRIV	35540	2656	-3177	121.98	12273	2999	1.82	0.28	9.03	1
			STR V	253500	2792	-4632	121.51	12273	2988	1.82	0.41	7.40	1
1	-2.90 L	CAP	STR I	10310	2971	-5096	127.19	12273	3127	1.82	0.45	7.00	1
			STIII	35393	-2517	-2789	127.83	12273	3143	1.82	0.00	17.39	1
			STRIV	35540	2801	-3177	123.82	12273	3045	1.82	0.28	9.03	1
			STR V	253500	2909	-4632	127.45	12273	3134	1.82	0.41	7.40	1
1	-1.19 L	GIRD	STR I	10310	3005	-5109	135.40	13355	3330	1.82	0.43	7.23	1
			STIII	35393	-2563	-2795	130.85	13355	3218	1.82	0.00	17.39	1
			STRIV	35539	-2821	-2884	131.34	13355	3230	1.82	0.00	17.39	1
			STR V	253500	2946	-4644	131.17	13355	3226	1.82	0.39	7.63	1
1	-1.19 R	GIRD	STR I	9192	3499	-6721	135.30	13355	3499	2.10	0.56	5.79	2
			STIII	35419	2988	-4400	130.31	13355	3204	1.82	0.37	7.87	1
			STRIV	35539	3327	-4660	131.33	13355	3327	1.99	0.39	7.33	2
			STR V	253831	3392	-6294	131.30	13355	3392	2.10	0.53	6.03	2
1	2.97 L	GIRD	STR I	10641	3553	-6819	148.45	16077	3650	1.82	0.50	6.56	1
			STIII	35395	3120	-4405	147.98	16077	3639	1.82	0.32	8.42	1
			STRIV	35539	3456	-4687	148.23	16077	3645	1.82	0.34	8.15	1
			STR V	253831	3486	-6339	148.22	16077	3645	1.82	0.47	6.86	1
1	2.97 R	GIRD	STR I	15107	4790	-4299	147.91	16077	4790	3.55	0.32	5.81	2
			STIII	35393	-4381	-1741	148.01	16077	4381	2.93	0.00	10.80	2
			STRIV	35539	-4918	-1567	148.26	16077	4918	3.73	0.00	8.50	2
			STR V	359911	4730	-4034	147.70	16077	4730	3.47	0.30	6.03	2
1	6.10 L	SPEC	STR I	9262	-5442	-666	160.39	18200	5442	3.90	0.00	8.13	2
			STIII	35393	-4483	-1726	160.60	18200	4483	2.56	0.00	12.38	2
			STRIV	35539	-5040	-1535	160.63	18200	5040	3.33	0.00	9.51	2
			STR V	252452	-5256	-995	160.32	18200	5256	3.64	0.00	8.70	2
1	6.10 R	SPEC	STR I	9262	-5442	-666	160.39	18200	5442	3.90	0.00	8.13	2
			STIII	35393	-4483	-1726	160.60	18200	4483	2.56	0.00	12.38	2
			STRIV	35539	-5040	-1535	160.63	18200	5040	3.33	0.00	9.51	2
			STR V	252452	-5256	-995	160.32	18200	5256	3.64	0.00	8.70	2
1	10.48 L	GIRD	STR I	9262	-5599	-600	175.86	21243	5599	3.43	0.00	9.23	2
			STIII	35393	-4639	-1705	175.96	21243	4639	2.22	0.00	14.29	2
			STRIV	35539	-5228	-1491	175.86	21243	5228	2.96	0.00	10.69	2
			STR V	252452	-5412	-944	175.86	21243	5412	3.20	0.00	9.91	2
1	10.48 R	GIRD	STR I	13367	5607	-6314	175.86	21243	5607	3.44	0.38	5.53	2
			STIII	35393	-5010	-3458	175.96	21243	5010	2.68	0.00	11.80	2

			STRIV	35539	-5651	-3465	175.86	21243	5651	3.50	0.00	9.06	2
			STR V	358171	5510	-5952	175.86	21243	5510	3.32	0.36	5.79	2
1	10.60 L	FACE	STR I	13367	5611	-6313	176.39	21328	5611	3.43	0.38	5.55	2
			STIII	35393	-5014	-3458	176.45	21328	5014	2.67	0.00	11.86	2
			STRIV	35539	-5657	-3465	176.39	21328	5657	3.48	0.00	9.09	2
			STR V	358171	5514	-5952	176.39	21328	5514	3.30	0.36	5.81	2
1	17.60 L	COL	STR I	13367	5872	-6313	174.24	21328	5872	3.85	0.38	5.17	2
			STIII	35393	-5279	-3458	174.86	21328	5279	3.07	0.00	10.33	2
			STRIV	35539	-5974	-3465	174.29	21328	5974	3.97	0.00	7.97	2
			STR V	358171	5775	-5952	174.21	21328	5775	3.72	0.36	5.39	2
1	17.60 R	COL	STR I	9291	3171	3263	177.17	21328	4357	1.82	0.00	17.39	1
			STIII	35418	2448	1679	178.11	21328	4380	1.82	0.00	17.39	1
			STRIV	35540	2806	1697	177.68	21328	4369	1.82	0.00	17.39	1
			STR V	358513	3007	2912	177.38	21328	4362	1.82	0.00	17.39	1
1	22.16 L	GIRD	STR I	9291	2999	3263	178.64	21328	4393	1.82	0.00	17.39	1
			STIII	35418	2275	1679	179.22	21328	4407	1.82	0.00	17.39	1
			STRIV	35540	2599	1697	178.96	21328	4401	1.82	0.00	17.39	1
			STR V	358513	2834	2912	178.76	21328	4396	1.82	0.00	17.39	1
1	22.16 R	GIRD	STR I	9292	2500	-813	178.47	21328	4389	1.82	0.00	17.39	1
			STIII	35394	1905	-341	179.21	21328	4407	1.82	0.00	17.39	1
			STRIV	35539	2178	-580	178.94	21328	4400	1.82	0.00	17.39	1
			STR V	252482	2364	-691	178.63	21328	4393	1.82	0.00	17.39	1
1	24.60 L	FACE	STR I	9292	2408	-813	179.09	21328	4404	1.82	0.00	17.39	1
			STIII	35394	1813	-341	179.68	21328	4418	1.82	0.00	17.39	1
			STRIV	35539	2067	-580	179.47	21328	4413	1.82	0.00	17.39	1
			STR V	252482	2272	-691	179.22	21328	4407	1.82	0.00	17.39	1
1	33.84 L	GIRD	STR I	9292	2117	-662	117.24	11732	2883	1.82	0.00	17.39	1
			STIII	35394	1522	-282	117.30	11732	2884	1.82	0.00	17.39	1
			STRIV	35539	1717	-465	117.29	11732	2884	1.82	0.00	17.39	1
			STR V	252482	1980	-567	117.25	11732	2883	1.82	0.00	17.39	1
1	33.84 R	GIRD	STR I	9286	1630	-2861	117.23	11732	2883	1.82	0.00	17.39	1
			STIII	35394	1165	-1912	117.30	11732	2884	1.82	0.00	17.39	1
			STRIV	35539	1328	-2222	117.28	11732	2884	1.82	0.00	17.39	1
			STR V	252476	1524	-2636	117.24	11732	2883	1.82	0.00	17.39	1
1	35.03 L	GIRD	STR I	9286	1700	-2832	109.34	10600	2689	1.82	0.28	9.10	1
			STIII	35394	1136	-1895	109.32	10600	2688	1.82	0.00	17.39	1
			STRIV	35539	1293	-2199	109.33	10600	2688	1.82	0.00	17.39	1
			STR V	252476	1495	-2610	109.33	10600	2688	1.82	0.00	17.39	1
1	35.03 R	GIRD	STR I	1	118	0	109.36	10600	2689	1.82	0.00	17.39	1
			STIII	35351	118	3	109.36	10600	2689	1.82	0.00	17.39	1
			STRIV	35537	142	0	109.35	10600	2689	1.82	0.00	17.39	1
			STR V	62053	118	1	109.36	10600	2689	1.82	0.00	17.39	1
1	41.10 L	CAP	STR I	0	0	0	0.00	0	0	0.00	0.00	0.00	0
			STIII	0	0	0	0.00	0	0	0.00	0.00	0.00	0
			STRIV	0	0	0	0.00	0	0	0.00	0.00	0.00	0
			STR V	0	0	0	0.00	0	0	0.00	0.00	0.00	0

LONGITUDINAL REINFORCEMENT FOR SHEAR: (Axial Compression Positive)

					FORCES				LONGITUDINAL STEEL			
CAP NO.	HORZ DIST. (ft)	LOCATION	AASHTO LIMIT STATE	LOAD CASE	LRFD AXIAL Nu (kips)	LRFD SHEAR Vu (kips)	LRFD TORSION Tu (ft-k)	LRFD MOMENT Mu (ft-k)	dv (in)	As LONG REQD (sq-in)	As LONG PROV (sq-in)	NG
1	-101.40 R	CAP	STR I	1	0	0	0	0	74.75	0.00	0.00	
			STIII	35345	0	0	0	0	74.75	0.00	0.00	
			STRIV	35537	0	0	0	0	74.75	0.00	0.00	
			STR V	35545	0	0	0	0	74.75	0.00	0.00	
1	-95.85 L	GIRD	STR I	1	0	-106	0	-275	105.73	1.56	124.80	
			STIII	35351	0	-106	-3	-275	105.73	1.56	124.80	
			STRIV	35537	0	-127	0	-330	105.72	1.87	124.80	
			STR V	62053	0	-106	-1	-275	105.73	1.56	124.80	
1	-95.85 R	GIRD	STR I	9965	-17	980	-2962	-359	105.72	12.49	124.80	
			STIII	35406	-34	-592	-2138	-440	105.70	6.72	124.80	
			STRIV	35539	-10	-647	-2329	-377	105.71	6.87	124.80	
			STR V	306171	-26	932	-2797	-400	105.71	11.74	124.80	
1	-93.23 L	GIRD	STR I	9965	-17	-833	-2989	-2469	123.53	12.32	124.80	
			STIII	35406	-34	-657	-2152	-2100	123.58	10.17	124.80	
			STRIV	35539	-10	-724	-2351	-2179	123.57	10.71	124.80	
			STR V	306171	-26	-799	-2821	-2428	123.53	12.01	124.80	
1	-93.23 R	GIRD	STR I	9999	16	-2412	964	-1927	123.61	38.57	124.80	
			STIII	35430	-68	-1905	-160	-2292	123.55	30.65	124.80	
			STRIV	35540	-17	-2153	-154	-2219	123.56	34.64	124.80	
			STR V	306205	-6	-2303	805	-2044	123.59	37.01	124.80	
1	-85.54 L	GIRD	STR I	14417	-28	-2656	59	-21662	174.74	63.73	124.80	
			STIII	35430	-68	-2148	-212	-17966	175.13	49.92	124.80	
			STRIV	35540	-17	-2445	-269	-19865	174.93	57.40	124.80	
			STR V	412237	-46	-2547	-5	-20959	174.81	60.97	124.80	

1	-85.54 R	GIRD	STR I	14417	-21	-3053	-1437	-21604	174.74	70.95	124.80	
			STIII	35430	-87	-2478	-1388	-18113	175.11	56.39	124.80	
			STRIV	35540	-10	-2838	-1746	-19808	174.93	64.53	124.80	
			STR V	412237	-49	-2936	-1443	-20981	174.81	68.23	124.80	
1	-84.90 L	FACE	STR I	14417	-21	-3077	-1445	-23583	179.05	72.86	124.80	
			STIII	35430	-87	-2502	-1387	-19733	179.44	57.95	124.80	
			STRIV	35540	-10	-2867	-1751	-21647	179.25	66.41	124.80	
			STR V	412237	-49	-2960	-1448	-22890	179.12	70.08	124.80	
1	-77.90 L	COL	STR I	14417	-21	-3342	-1445	-46051	176.71	106.58	124.80	
			STIII	35430	-87	-2766	-1387	-38171	177.54	86.34	124.80	
			STRIV	35540	-10	-3184	-1751	-42825	177.05	99.37	124.80	
			STR V	412237	-49	-3225	-1448	-44536	176.87	102.71	124.80	
1	-77.90 R	COL	STR I	14492	1306	6313	3249	-107293	172.99	206.99	124.80	**
			STIII	35429	1096	5300	3264	-92416	174.22	180.35	124.80	**
			STRIV	35540	1170	6043	3912	-100117	173.59	196.55	124.80	**
			STR V	412312	1275	6106	3208	-105290	173.16	202.76	124.80	**
1	-75.23 L	GIRD	STR I	14492	1306	6212	3249	-90599	174.36	183.90	124.80	**
			STIII	35429	1096	5199	3264	-78422	175.35	161.09	124.80	**
			STRIV	35540	1170	5922	3912	-84169	174.89	174.41	124.80	**
			STR V	412312	1275	6005	3208	-89147	174.48	180.45	124.80	**
1	-75.23 R	GIRD	STR I	14492	1312	5867	1956	-90548	174.37	180.57	124.80	**
			STIII	35429	1080	4878	2115	-78550	175.34	158.47	124.80	**
			STRIV	35540	1177	5539	2473	-84112	174.89	170.70	124.80	**
			STR V	412312	1271	5669	1973	-89178	174.48	177.42	124.80	**
1	-70.90 L	FACE	STR I	14567	1288	5596	1654	-65753	176.36	146.11	124.80	**
			STIII	35429	1080	4714	2115	-57765	176.39	130.34	124.80	**
			STRIV	35540	1177	5342	2473	-60532	176.39	138.49	124.80	**
			STR V	412387	1253	5423	1739	-65177	176.39	144.19	124.80	**
1	-66.40 L	SPEC	STR I	14567	1288	5435	1589	-42012	159.35	117.77	99.84	**
			STIII	35429	1080	4553	2097	-37823	159.54	106.19	99.84	**
			STRIV	35540	1177	5149	2425	-37917	159.53	110.70	99.84	**
			STR V	412387	1253	5262	1693	-42189	159.35	116.83	99.84	**
1	-66.40 R	SPEC	STR I	14567	1288	5435	1589	-42012	159.35	117.77	99.84	**
			STIII	35429	1080	4553	2097	-37823	159.54	106.19	99.84	**
			STRIV	35540	1177	5149	2425	-37917	159.53	110.70	99.84	**
			STR V	412387	1253	5262	1693	-42189	159.35	116.83	99.84	**
1	-64.92 L	GIRD	STR I	14567	1288	5386	1568	-34363	153.20	107.64	99.84	**
			STIII	35430	1052	4359	1772	-32165	153.46	97.70	99.84	
			STRIV	35540	1177	5090	2409	-30668	153.64	100.80	99.84	**
			STR V	412387	1253	5213	1678	-34786	153.14	107.08	99.84	**
1	-64.92 R	GIRD	STR I	14567	1295	5012	141	-34315	153.20	104.02	99.84	**
			STIII	35430	1032	4089	798	-32302	153.45	95.64	99.84	
			STRIV	35540	1185	4654	747	-30613	153.65	96.59	99.84	
			STR V	412387	1249	4854	332	-34810	153.14	103.83	99.84	**
1	-61.16 L	GIRD	STR I	17882	369	2417	-804	2251	144.29	32.87	68.64	
			STR I	14435	1300	4941	63	-15736	138.52	76.54	99.84	
			STIII	35346	506	2579	-637	1447	144.40	33.00	68.64	
			STIII	35430	1032	3973	776	-17887	138.23	74.23	99.84	
			STRIV	35540	1185	4515	690	-14226	138.72	71.54	99.84	
			STR V	464300	352	2263	-703	3223	144.17	31.75	68.64	
			STR V	412255	1253	4772	269	-16994	138.35	77.57	99.84	
1	-61.16 R	GIRD	STR I	17882	392	1212	1581	2390	144.28	10.51	68.64	
			STR I	14599	1230	3063	3792	-16215	138.45	58.02	99.84	
			STIII	35394	713	1967	1998	79	144.57	17.09	68.64	
			STIII	35430	977	2557	2635	-18231	138.18	54.55	99.84	
			STRIV	35540	1153	2817	2848	-14421	138.69	51.01	99.84	
			STR V	464300	384	1163	1450	3420	144.15	11.47	68.64	
			STR V	412435	1128	2802	2640	-19134	138.06	58.78	99.84	
1	-57.40 L	CAP	STR I	9072	966	2878	6043	731	123.73	35.01	137.28	
			STR I	14618	1156	2704	2502	-8766	122.54	42.91	99.84	
			STIII	35397	794	2158	2841	4286	123.21	28.89	137.28	
			STIII	35430	977	2453	2662	-9484	122.43	41.71	99.84	
			STRIV	35539	954	2740	3449	1014	123.69	32.27	137.28	
			STRIV	35540	1153	2692	2858	-4858	123.12	35.54	99.84	
			STR V	261098	926	2689	5260	2351	123.49	34.69	137.28	
			STR V	412438	1124	2686	2611	-9585	122.42	44.46	99.84	
1	-49.44 L	GIRD	STR I	9102	990	2574	4388	23884	120.34	71.62	137.28	
			STIII	35393	795	1908	2780	21387	120.62	56.11	137.28	
			STRIV	35539	954	2500	3449	21188	120.65	65.30	137.28	
			STR V	252292	945	2399	3964	23914	120.34	68.90	137.28	
1	-49.44 R	GIRD	STR I	9102	979	1837	1692	23823	120.34	57.22	137.28	
			STIII	35393	797	1514	982	21400	120.62	48.82	137.28	
			STRIV	35539	946	1950	1360	21141	120.66	54.63	137.28	
			STR V	252292	939	1729	1479	23883	120.34	55.81	137.28	
1	-37.67 L	GIRD	STR I	10229	1061	1749	1786	45389	118.63	95.77	137.28	
			STIII	35408	793	1505	1388	35531	119.80	75.25	137.28	
			STRIV	35539	946	1583	1360	41929	119.04	87.29	137.28	
			STR V	253419	1002	1591	1552	43778	118.82	90.39	137.28	

1	-37.67 R	GIRD	STR I	9126	1031	1070	-1137	45316	118.64	83.42	137.28	
			STIII	35408	776	1118	-347	35442	119.81	68.10	137.28	
			STRIV	35539	938	1141	-640	41884	119.05	79.11	137.28	
			STR V	252316	981	982	-1095	43737	118.83	79.28	137.28	
1	-29.10 L	GIRD	STR I	10014	1052	1055	-1205	54604	117.51	101.36	137.28	
			STIII	35405	777	908	-329	44087	118.79	81.63	137.28	
			STRIV	35539	938	873	-640	50515	118.01	92.05	137.28	
			STR V	306220	986	1054	-958	52257	117.80	97.42	137.28	
1	-29.10 R	GIRD	STR I	8905	1078	-959	2628	54698	117.50	99.49	137.28	
			STIII	35393	852	-802	1939	43879	118.81	79.36	137.28	
			STRIV	35539	968	-756	2518	50681	117.99	90.93	137.28	
			STR V	305111	1000	-821	2644	52300	117.79	94.36	137.28	
1	-25.90 L	GIRD	STR I	10275	1006	1196	3883	48606	118.24	94.23	137.28	
			STIII	35405	778	-584	2450	42351	118.99	75.25	137.28	
			STRIV	35539	968	-855	2518	48102	118.30	86.75	137.28	
			STR V	319735	950	1089	3572	47215	118.41	90.13	137.28	
1	-25.90 R	GIRD	STR I	9130	1048	-1577	77	50771	117.98	103.41	137.28	
			STIII	35393	855	-1262	218	41193	119.13	81.00	137.28	
			STRIV	35539	960	-1293	538	48058	118.31	93.81	137.28	
			STR V	252320	1015	-1537	53	48463	118.26	98.47	137.28	
1	-14.12 L	GIRD	STR I	10346	1031	-1569	600	34083	119.97	70.82	137.28	
			STIII	35405	761	-1273	738	29069	120.34	59.06	137.28	
			STRIV	35539	960	-1660	538	30664	120.34	66.81	137.28	
			STR V	306552	958	-1470	688	33428	120.05	68.58	137.28	
1	-14.12 R	GIRD	STR I	10346	1016	-2135	-1950	34001	119.98	81.31	137.28	
			STIII	35405	745	-1609	-765	28982	120.34	65.32	137.28	
			STRIV	35539	953	-2045	-1203	30625	120.34	73.96	137.28	
			STR V	306552	941	-1984	-1621	33332	120.06	78.12	137.28	
1	-7.65 L	GIRD	STR I	10358	961	-2057	-1634	20870	120.70	55.92	137.28	
			STIII	35409	756	-1817	-838	17173	121.27	46.91	137.28	
			STIII	35466	569	-1075	-677	-24	123.84	3.78	99.84	
			STRIV	35539	953	-2247	-1203	16753	121.33	51.75	137.28	
			STR V	306564	898	-1962	-1376	20903	120.70	54.97	137.28	
1	-7.65 R	GIRD	STR I	10358	947	2630	-3764	20797	120.71	67.11	137.28	
			STIII	35406	689	-1942	-1961	18300	121.10	52.16	137.28	
			STRIV	35539	946	-2618	-2880	16715	121.34	58.62	137.28	
			STR V	306564	882	2484	-3345	20815	120.71	65.13	137.28	
1	-2.90 L	CAP	STR I	10310	936	2971	-5096	4587	127.19	43.12	68.64	
			STR I	22497	683	-1607	-2162	-4875	123.12	21.09	99.84	
			STIII	35406	689	-2066	-1961	8762	126.58	35.84	68.64	
			STIII	35417	1078	-2490	-3059	-4121	123.23	31.35	99.84	
			STRIV	35539	946	-2766	-2880	3904	127.28	37.13	68.64	
			STRIV	35540	1162	2801	-3177	-130	123.82	29.24	99.84	
			STR V	306573	816	-2314	-2377	9413	126.49	40.07	68.64	
			STR V	570529	691	-1597	-2123	-5666	123.00	22.25	99.84	
1	-1.19 L	GIRD	STR I	10310	936	3005	-5109	62	135.40	35.18	68.64	
			STR I	13667	1136	2837	-3473	-8504	130.23	44.05	99.84	
			STIII	35454	261	-1019	-709	6874	134.48	17.69	68.64	
			STIII	35419	1077	-2533	-3058	-8011	130.30	37.86	99.84	
			STRIV	35540	1162	-2789	-3173	-4468	130.79	35.48	99.84	
			STR V	518637	387	-1266	-1128	7143	134.45	20.44	68.64	
			STR V	358471	1139	2816	-3448	-9268	130.12	44.95	99.84	
1	-1.19 R	GIRD	STR I	10641	914	3463	-6775	1213	135.25	44.98	68.64	
			STR I	13667	1143	3228	-4793	-8468	130.23	51.18	99.84	
			STIII	35380	786	-2120	-2795	11	135.41	19.63	68.64	
			STIII	35419	1093	2988	-4400	-7917	130.31	46.56	99.84	
			STRIV	35540	1169	3297	-4689	-4426	130.80	44.62	99.84	
			STR V	518637	373	-1631	-2772	7062	134.46	27.23	68.64	
			STR V	358471	1150	3208	-4778	-9205	130.13	52.16	99.84	
1	2.97 L	GIRD	STR I	13673	1150	3346	-4763	-20786	147.33	69.02	99.84	
			STIII	35454	247	-1220	-1236	2082	153.64	11.37	68.64	
			STIII	35393	866	3121	-4397	-15653	147.97	60.31	99.84	
			STRIV	35540	1169	3424	-4662	-17044	147.80	64.44	99.84	
			STR V	518635	354	-1545	-2387	910	153.78	14.04	68.64	
			STR V	358477	1155	3322	-4756	-21422	147.25	69.51	99.84	
1	2.97 R	GIRD	STR I	19201	410	-2749	-420	28	153.89	34.38	68.64	
			STR I	13673	1124	-4606	-3058	-20952	147.31	83.24	99.84	
			STIII	35454	227	-1712	-189	1950	153.66	20.17	68.64	
			STIII	35419	1094	-4351	-2757	-19270	147.52	78.69	99.84	
			STRIV	35540	1140	-4886	-2714	-17235	147.77	80.01	99.84	
			STR V	518635	356	-2567	-306	919	153.78	32.95	68.64	
			STR V	358477	1141	-4581	-3076	-21514	147.24	83.65	99.84	
1	6.10 L	SPEC	STR I	9262	1071	-5442	-666	-30510	160.39	104.25	99.84	**
			STIII	35417	1095	-4455	-2789	-32512	160.15	97.64	99.84	
			STRIV	35540	1140	-5008	-2746	-32096	160.20	101.63	99.84	**
			STR V	252452	1060	-5256	-995	-31116	160.32	103.51	99.84	**
1	6.10 R	SPEC	STR I	9262	1071	-5442	-666	-30510	160.39	104.25	99.84	**
			STIII	35417	1095	-4455	-2789	-32512	160.15	97.64	99.84	
			STRIV	35540	1140	-5008	-2746	-32096	160.20	101.63	99.84	**
			STR V	252452	1060	-5256	-995	-31116	160.32	103.51	99.84	**

1	10.48 L	GIRD	STR I	13692	1214	-5485	-2171	-57121	175.86	135.22	124.80	**
			STIII	35417	1095	-4612	-2844	-51471	175.86	121.40	124.80	
			STRIV	35540	1140	-5196	-2789	-53506	175.86	128.84	124.80	**
			STR V	358496	1210	-5319	-2423	-56977	175.86	133.53	124.80	**
1	10.48 R	GIRD	STR I	13692	1220	-5853	-3551	-57067	175.86	138.47	124.80	**
			STIII	35417	1111	-4982	-4259	-51338	175.86	124.47	124.80	
			STRIV	35540	1148	-5619	-4378	-53444	175.86	132.59	124.80	**
			STR V	358496	1221	-5688	-3821	-56886	175.86	136.70	124.80	**
1	10.60 L	FACE	STR I	13692	1220	-5858	-3552	-57749	176.39	139.24	124.80	**
			STIII	35417	1111	-4987	-4261	-51917	176.39	125.12	124.80	**
			STRIV	35540	1148	-5625	-4379	-54099	176.39	133.34	124.80	**
			STR V	358496	1221	-5692	-3822	-57548	176.39	137.44	124.80	**
1	17.60 L	COL	STR I	13701	1241	-6251	-3892	-100412	173.56	198.01	124.80	**
			STIII	35417	1111	-5251	-4261	-87750	174.60	173.58	124.80	**
			STRIV	35540	1148	-5942	-4379	-94584	174.04	188.54	124.80	**
			STR V	358505	1237	-6056	-4085	-98888	173.69	194.23	124.80	**
1	17.60 R	COL	STR I	9289	-10	3124	1291	-42799	177.05	98.22	124.80	
			STIII	35394	-57	2448	1414	-32771	178.10	73.22	124.80	
			STRIV	35539	-6	2806	1386	-36881	177.67	84.66	124.80	
			STR V	252479	-29	2970	1347	-40574	177.28	92.68	124.80	
1	22.16 L	GIRD	STR I	9291	0	2999	3263	-27566	178.64	76.26	124.80	
			STIII	35394	-57	2275	1414	-22009	179.21	56.35	124.80	
			STRIV	35539	-6	2599	1386	-24564	178.95	65.11	124.80	
			STR V	358513	-20	2834	2912	-26344	178.76	71.85	124.80	
1	22.16 R	GIRD	STR I	9292	-18	2500	-813	-29206	178.47	69.30	124.80	
			STIII	35394	-53	1905	-341	-21975	179.21	49.42	124.80	
			STRIV	35539	-14	2178	-580	-24627	178.94	57.46	124.80	
			STR V	252482	-33	2364	-691	-27600	178.63	64.86	124.80	
1	24.60 L	FACE	STR I	9292	-18	2408	-813	-23212	179.09	59.98	124.80	
			STIII	35394	-53	1813	-341	-17434	179.68	41.99	124.80	
			STRIV	35539	-14	2067	-580	-19443	179.47	48.86	124.80	
			STR V	252482	-33	2272	-691	-21940	179.22	55.97	124.80	
1	33.84 L	GIRD	STR I	9292	-18	2117	-662	-2347	117.24	34.92	124.80	
			STIII	35394	-53	1522	-282	-1978	117.30	23.51	124.80	
			STRIV	35539	-14	1717	-465	-2030	117.29	26.88	124.80	
			STR V	252482	-33	1980	-567	-2298	117.25	32.44	124.80	
1	33.84 R	GIRD	STR I	9286	-27	1630	-2861	-2395	117.23	26.08	124.80	
			STIII	35394	-48	1165	-1912	-1954	117.30	16.82	124.80	
			STRIV	35539	-21	1328	-2222	-2068	117.28	19.81	124.80	
			STR V	252476	-37	1524	-2636	-2320	117.24	24.06	124.80	
1	35.03 L	GIRD	STR I	9286	-27	1700	-2832	-472	109.34	24.98	124.80	
			STIII	35394	-48	1136	-1895	-575	109.32	14.35	124.80	
			STRIV	35539	-21	1293	-2199	-508	109.33	16.88	124.80	
			STR V	836764	47	1068	-1371	12	115.81	10.44	68.64	
			STR V	252476	-37	1495	-2610	-519	109.33	20.78	124.80	
1	35.03 R	GIRD	STR I	1	0	118	0	-334	109.36	1.78	124.80	
			STIII	35345	0	118	0	-334	109.36	1.78	124.80	
			STRIV	35537	0	142	0	-401	109.35	2.13	124.80	
			STR V	35545	0	118	0	-334	109.36	1.78	124.80	
1	41.10 L	CAP	STR I	1	0	0	0	0	74.75	0.00	0.00	
			STIII	35345	0	0	0	0	74.75	0.00	0.00	
			STRIV	35537	0	0	0	0	74.75	0.00	0.00	
			STR V	35545	0	0	0	0	74.75	0.00	0.00	

Notes:
 **: DESIGNER MUST VERIFY SHEAR LONGITUDINAL STEEL REQUIREMENT VERSUS FLEXURAL LONGITUDINAL STEEL REQUIREMENT, DEPENDING ON LOCATION IN CAPBEAM AND STRESS DISTRIBUTION. REFER TO AASHTO LRFD SPECS 5.8.3.5 AND 5.8.3.6.3. IF THE DESIGNER INTENDS TO USE THE SHEAR LONGITUDINAL STEEL VALUE AND IT IS LARGER THAN THE FLEXURAL VALUE, IT IS RECOMMENDED TO RERUN THE FILE WITH THE FLEXURAL BARS INCREASED TO MEET THE SHEAR REQUIREMENT. THIS WILL ENSURE THAT THE LARGER AMOUNT OF STEEL IS CHECKED BY THE FLEXURAL DESIGN ROUTINE TO PREVENT OVER-REINFORCEMENT.

----- CAP BEAM 1 SERVICEABILITY RESULTS -----

FATIGUE LIMIT STATE DATA:

Notes: All fatigue data is computed from Fatigue Limit State.
Axial tension is negative.
T indicates top bars control; B indicates bottom bars control.
** Dead load values may include effects due to shrinkage, refer to load case data.

			FATIGUE										
CAP NO.	HORZ DIST. (ft)	LOCATION	MAX LOAD CASE	MIN LOAD CASE	DL** AXIAL (kips)	DL** MOMENT (ft-k)	MAX LL MOM (ft-k)	CORRES AXIAL (kips)	MIN LL MOM (ft-k)	CORRES AXIAL (kips)	f MIN (ksi)	ACTUAL RANGE (ksi)	ALLOW RANGE (ksi)	NG
1	-101.40 R	CAP	0	0	0	0	0	0	0	0	0.0	0.0	0.0	
1	-95.85 L	GIRD	0	0	0	-210	0	0	0	0	0.0	0.0	0.0	
1	-95.85 R	GIRD	0	1308149	0	-210	0	0	-6	-1	0.2	0.0	23.9	T

1	-93.23	L	GIRD	1308150	1308151	0	-1349	6	0	-105	-1	1.2	0.1	23.6	T
1	-93.23	R	GIRD	1308150	1308151	0	-1349	6	0	-105	-1	1.2	0.1	23.6	T
1	-85.54	L	GIRD	1308152	1308153	0	-12529	63	0	-456	-1	7.7	0.3	21.5	T
1	-85.54	R	GIRD	1308152	1308153	0	-12529	63	0	-456	-1	7.7	0.3	21.5	T
1	-84.90	L	FACE	1308152	1308153	0	-13695	68	0	-494	-1	8.2	0.3	21.3	T
1	-77.90	L	COL	1308152	1308153	0	-27142	125	0	-903	-1	16.2	0.6	18.7	T
1	-77.90	R	COL	1308154	1308155	695	-62270	283	-7	-744	0	34.5	0.5	12.6	T
1	-75.23	L	GIRD	1308154	1308156	695	-52171	261	-7	-656	0	28.5	0.4	14.6	T
1	-75.23	R	GIRD	1308154	1308156	695	-52171	261	-7	-656	0	28.5	0.4	14.6	T
1	-70.90	L	FACE	1308154	1308156	695	-37244	227	-7	-527	0	19.6	0.3	17.5	T
1	-66.40	L	SPEC	1308157	1308151	695	-22887	224	0	-412	-8	15.3	0.4	18.9	T
1	-66.40	R	SPEC	1308157	1308151	695	-22887	224	0	-412	-8	15.3	0.4	18.9	T
1	-64.92	L	GIRD	1308157	1308151	695	-18286	286	0	-399	-8	12.3	0.4	20.0	T
1	-64.92	R	GIRD	1308157	1308151	695	-18286	286	0	-408	-9	12.3	0.5	20.0	T
1	-61.16	L	GIRD	1308158	1308151	695	-7880	346	0	-366	-9	4.4	0.5	22.6	T
1	-61.16	R	GIRD	1308158	1308151	695	-7880	346	0	-366	-9	4.4	0.5	22.6	T
1	-57.40	L	CAP	1308159	1308151	695	-1820	318	0	-325	-9	0.0	0.5	24.0	T
1	-49.44	L	GIRD	1308160	1308161	575	13838	458	0	-251	-9	9.3	0.4	20.9	B
1	-49.44	R	GIRD	1308160	1308161	575	13838	458	0	-251	-9	9.3	0.4	20.9	B
1	-37.67	L	GIRD	1308162	1308161	575	27156	589	0	-142	-9	20.1	0.5	17.4	B
1	-37.67	R	GIRD	1308163	1308161	575	27156	588	0	-142	-9	20.1	0.5	17.4	B
1	-29.10	L	GIRD	1308164	1308165	575	32723	672	0	-95	-2	24.6	0.6	15.9	B
1	-29.10	R	GIRD	1308166	1308167	575	32723	667	0	-97	-2	24.6	0.6	15.9	B
1	-25.90	L	GIRD	1308168	1308169	575	31118	619	0	-111	-7	23.3	0.5	16.3	B
1	-25.90	R	GIRD	1308168	1308169	575	31118	616	0	-111	-7	23.3	0.5	16.3	B
1	-14.12	L	GIRD	1308170	1308169	575	20194	555	0	-204	-7	14.4	0.5	19.2	B
1	-14.12	R	GIRD	1308170	1308169	575	20194	552	0	-204	-7	14.4	0.5	19.2	B
1	-7.65	L	GIRD	1308171	1308169	575	11452	487	0	-255	-7	7.4	0.5	21.6	B
1	-7.65	R	GIRD	1308171	1308169	575	11452	484	0	-255	-7	7.4	0.5	21.6	B
1	-2.90	L	CAP	1308172	1308173	475	3207	399	0	-293	-7	4.6	0.7	22.5	B
1	-1.19	L	GIRD	1308174	1308173	475	772	402	0	-309	-7	3.9	0.6	22.7	B
1	-1.19	R	GIRD	1308174	1308173	475	772	399	0	-309	-7	3.9	0.6	22.7	B
1	2.97	L	GIRD	1308175	1308154	695	-10277	372	0	-348	-7	6.0	0.4	22.0	T
1	2.97	R	GIRD	1308175	1308154	695	-10277	366	0	-348	-7	6.0	0.4	22.0	T
1	6.10	L	SPEC	1308151	1308154	695	-19762	247	-9	-385	-7	12.8	0.4	19.8	T
1	6.10	R	SPEC	1308151	1308154	695	-19762	247	-9	-385	-7	12.8	0.4	19.8	T
1	10.48	L	GIRD	1308151	1308176	695	-33423	280	-9	-448	0	17.4	0.3	18.3	T
1	10.48	R	GIRD	1308151	1308176	695	-33423	280	-9	-448	0	17.4	0.3	18.3	T
1	10.60	L	FACE	1308151	1308176	695	-33841	281	-9	-451	0	17.6	0.3	18.2	T
1	17.60	L	COL	1308151	1308177	695	-59617	345	-9	-655	0	32.9	0.4	13.1	T
1	17.60	R	COL	1308178	1308154	0	-23385	175	0	-1006	0	13.9	0.6	19.4	T
1	22.16	L	GIRD	1308178	1308154	0	-15564	131	0	-743	0	9.3	0.5	20.9	T
1	22.16	R	GIRD	1308178	1308154	0	-15564	131	0	-743	0	9.3	0.5	20.9	T
1	24.60	L	FACE	1308178	1308154	0	-12273	108	0	-602	0	7.3	0.4	21.6	T
1	33.84	L	GIRD	1308178	1308154	0	-1241	16	0	-68	0	1.2	0.1	23.6	T
1	33.84	R	GIRD	1308178	1308154	0	-1241	16	0	-68	0	1.2	0.1	23.6	T
1	35.03	L	GIRD	1308179	0	0	-255	5	0	0	0	0.3	0.0	23.9	T
1	35.03	R	GIRD	0	0	0	-255	0	0	0	0	0.0	0.0	0.0	

1	41.10	L	CAP		0	0	0	0	0	0	0	0	0.0	0.0	0.0

DISTRIBUTION OF FLEXURAL REINFORCEMENT DATA:
Note: Reinforcing steel distribution data is based on the maximum area of steel obtained from either Strength Limit State Design, or user defined limits. Moments are based on Service I Limit State.

CAP NO.	HORZ DIST. (ft)	LOCATION	LOAD CASE	FACE	SERV I AXIAL (kips)	SERV I MOMENT (ft-k)	h (in)	dc (in)	ßs	STRESS fs (ksi)	SPACING ACTUAL (in)	SPACING ALLOW. (in)	NG
1	-95.85	L	GIRD	910309	TOP	0	-210	116.34	3.46	1.044	0.23	4.4	137.1	
1	-95.85	R	GIRD	******	TOP	-21	-310	116.34	3.46	1.044	0.42	4.4	137.1	
1	-93.23	L	GIRD	******	TOP	-19	-1798	134.45	3.46	1.038	1.70	4.4	137.1	
1	-93.23	R	GIRD	******	TOP	-30	-1859	134.45	3.46	1.038	1.80	4.4	137.1	
1	-85.54	L	GIRD	******	TOP	-35	-15433	187.55	3.46	1.027	9.60	4.4	46.3	
1	-85.54	R	GIRD	******	TOP	-37	-15454	187.55	3.46	1.027	9.62	4.4	46.2	
1	-84.90	L	FACE	******	TOP	-37	-16859	192.00	3.46	1.026	10.21	4.4	43.2	
1	-77.90	L	COL	******	TOP	-37	-32824	192.00	3.46	1.026	19.75	4.4	19.0	
1	-77.90	R	COL	******	TOP	1015	-79143	192.00	3.46	1.026	43.44	4.4	4.9	
1	-75.23	L	GIRD	******	TOP	1015	-67247	192.00	3.46	1.026	36.35	4.4	7.2	
1	-75.23	R	GIRD	******	TOP	1011	-67274	192.00	3.46	1.026	36.38	4.4	7.2	
1	-70.90	L	FACE	******	TOP	998	-49593	192.00	3.46	1.026	25.88	4.4	12.9	
1	-66.40	L	SPEC	******	TOP	998	-32733	172.00	3.46	1.029	21.98	4.4	16.3	
1	-66.40	R	SPEC	******	TOP	998	-32733	172.00	3.46	1.029	21.98	4.4	16.3	
1	-64.92	L	GIRD	******	TOP	998	-27309	165.43	3.46	1.030	18.58	4.4	20.5	
1	-64.92	R	GIRD	******	TOP	995	-27330	165.43	3.46	1.030	18.61	4.4	20.5	
1	-61.16	L	GIRD	******	TOP	942	-15610	148.74	3.46	1.034	10.65	4.4	40.8	
				888428	BOT	300	3797	148.74	3.46	1.034	3.00	3.2	137.1	
1	-61.16	R	GIRD	******	TOP	908	-15826	148.74	3.46	1.034	11.00	4.4	39.2	
				888461	BOT	324	3957	148.74	3.46	1.034	3.06	3.2	137.1	
1	-57.40	L	CAP	******	TOP	905	-8818	132.00	3.46	1.038	5.57	4.4	83.9	
				888431	BOT	346	9112	132.00	3.46	1.038	6.24	3.2	74.1	
1	-49.44	L	GIRD	******	BOT	522	21612	132.00	3.46	1.038	15.77	3.2	25.1	
1	-49.44	R	GIRD	******	BOT	518	21591	132.00	3.46	1.038	15.77	3.2	25.2	
1	-37.67	L	GIRD	******	BOT	563	36173	132.00	3.46	1.038	27.43	3.2	11.5	
1	-37.67	R	GIRD	******	BOT	548	36145	132.00	3.46	1.038	27.45	3.2	11.5	
1	-29.10	L	GIRD	******	BOT	551	42356	132.00	3.46	1.038	32.48	3.2	8.7	
1	-29.10	R	GIRD	******	BOT	561	42386	132.00	3.46	1.038	32.47	3.2	8.7	
1	-25.90	L	GIRD	******	BOT	556	40465	132.00	3.46	1.038	30.93	3.2	9.4	
1	-25.90	R	GIRD	******	BOT	546	40411	132.00	3.46	1.038	30.92	3.2	9.4	
1	-14.12	L	GIRD	******	BOT	530	28561	132.00	3.46	1.038	21.37	3.2	16.7	
1	-14.12	R	GIRD	******	BOT	517	28490	132.00	3.46	1.038	21.36	3.2	16.8	
1	-7.65	L	GIRD	******	BOT	487	19335	132.00	3.46	1.038	14.04	3.2	29.1	
1	-7.65	R	GIRD	******	BOT	475	19270	132.00	3.46	1.038	14.03	3.2	29.1	
1	-2.90	L	CAP	994657	TOP	804	-5686	132.00	3.46	1.038	2.81	4.4	137.1	
				******	BOT	429	10865	132.00	3.46	1.038	13.16	3.2	31.5	
1	-1.19	L	GIRD	******	TOP	918	-8584	139.57	3.46	1.036	4.81	4.4	98.5	
				942765	BOT	328	8339	139.57	3.46	1.036	9.39	3.2	47.0	
1	-1.19	R	GIRD	******	TOP	926	-8536	139.57	3.46	1.036	4.73	4.4	100.2	
				942765	BOT	317	8271	139.57	3.46	1.036	9.37	3.2	47.1	
1	2.97	L	GIRD	******	TOP	930	-17493	158.05	3.46	1.032	11.39	4.4	37.8	
				942763	BOT	303	1064	158.05	3.46	1.032	0.07	3.2	137.1	
1	2.97	R	GIRD	******	TOP	920	-17556	158.05	3.46	1.032	11.49	4.4	37.4	
				942763	BOT	309	1103	158.05	3.46	1.032	0.07	3.2	137.1	
1	6.10	L	SPEC	******	TOP	920	-27735	172.00	3.46	1.029	18.29	4.4	21.0	
1	6.10	R	SPEC	******	TOP	920	-27735	172.00	3.46	1.029	18.29	4.4	21.0	

1	10.48	L	GIRD	******	TOP	969	-43541	191.46	3.46	1.026	22.47	4.4	15.9
1	10.48	R	GIRD	******	TOP	977	-43473	191.46	3.46	1.026	22.39	4.4	15.9
1	10.60	L	FACE	******	TOP	977	-43958	192.00	3.46	1.026	22.60	4.4	15.7
1	17.60	L	COL	******	TOP	989	-74345	192.00	3.46	1.026	40.68	4.4	5.7
1	17.60	R	COL	******	TOP	-22	-29693	192.00	3.46	1.026	17.82	4.4	21.8
1	22.16	L	GIRD	******	TOP	-23	-20161	192.00	3.46	1.026	12.13	4.4	35.3
1	22.16	R	GIRD	******	TOP	-25	-20173	192.00	3.46	1.026	12.14	4.4	35.2
1	24.60	L	FACE	******	TOP	-25	-16026	192.00	3.46	1.026	9.67	4.4	46.0
1	33.84	L	GIRD	******	TOP	-26	-1696	128.16	3.46	1.040	1.73	4.4	137.1
1	33.84	R	GIRD	******	TOP	-27	-1702	128.16	3.46	1.040	1.74	4.4	137.1
1	35.03	L	GIRD	******	TOP	-27	-391	119.97	3.46	1.042	0.52	4.4	137.1
1	35.03	R	GIRD	883801	TOP	0	-255	119.97	3.46	1.042	0.27	4.4	137.1

DEFLECTION DATA:

Notes: Vertical deflection is positive upward.
Longitudinal deflection is positive upstation.
Transverse deflection is positive to right, when looking upstation.

				DEFLECTIONS											
				TRANSVERSE				LONGITUDINAL				VERTICAL			
CAP NO.	HORZ DIST. (ft)	LOCATION	AASHTO LIMIT STATE	LOAD CASE	MIN (in)	LOAD CASE	MAX (in)	LOAD CASE	MIN (in)	LOAD CASE	MAX (in)	LOAD CASE	MIN (in)	LOAD CASE	MAX (in)
1	-101.40	R	CAP	SER I	******	-0.27	******	0.49	951380	-0.20	******	0.42	******	-0.38	995240	0.13
1	-95.85	L	GIRD	SER I	******	-0.26	******	0.46	951380	-0.20	******	0.42	******	-0.40	995240	0.12
1	-95.85	R	GIRD	SER I	******	-0.26	******	0.46	951380	-0.20	******	0.42	******	-0.40	995240	0.12
1	-93.23	L	GIRD	SER I	******	-0.25	******	0.44	951380	-0.20	******	0.42	******	-0.41	995240	0.11
1	-93.23	R	GIRD	SER I	******	-0.25	******	0.44	951380	-0.20	******	0.42	******	-0.41	995240	0.11
1	-85.54	L	GIRD	SER I	******	-0.23	******	0.40	951380	-0.20	******	0.42	******	-0.44	994793	0.09
1	-85.54	R	GIRD	SER I	******	-0.23	******	0.40	951380	-0.20	******	0.42	******	-0.44	994793	0.09
1	-84.90	L	FACE	SER I	******	-0.23	******	0.40	951380	-0.20	******	0.42	******	-0.45	994793	0.09
1	-77.90	L	COL	SER I	******	-0.20	******	0.36	951380	-0.20	******	0.41	******	-0.50	994390	0.08
1	-77.90	R	COL	SER I	******	-0.20	******	0.36	951380	-0.20	******	0.41	******	-0.50	994390	0.08
1	-75.23	L	GIRD	SER I	******	-0.19	******	0.36	951380	-0.20	******	0.41	******	-0.52	******	0.07
1	-75.23	R	GIRD	SER I	******	-0.19	******	0.36	951380	-0.20	******	0.41	******	-0.52	******	0.07
1	-70.90	L	FACE	SER I	******	-0.17	******	0.34	951380	-0.20	******	0.42	******	-0.58	******	0.06
1	-66.40	L	SPEC	SER I	******	-0.15	******	0.32	951380	-0.20	******	0.42	******	-0.64	******	0.04
1	-66.40	R	SPEC	SER I	******	-0.15	******	0.32	951380	-0.20	******	0.42	******	-0.64	******	0.04
1	-64.92	L	GIRD	SER I	******	-0.14	******	0.31	951380	-0.20	******	0.42	******	-0.66	******	0.03
1	-64.92	R	GIRD	SER I	******	-0.14	******	0.31	951380	-0.20	******	0.42	******	-0.66	******	0.03
1	-61.16	L	GIRD	SER I	******	-0.13	******	0.29	951380	-0.20	******	0.42	******	-0.72	******	0.02
1	-61.16	R	GIRD	SER I	******	-0.13	******	0.29	951380	-0.20	******	0.42	******	-0.72	******	0.02
1	-57.40	L	CAP	SER I	******	-0.12	******	0.27	951380	-0.20	******	0.42	******	-0.78	******	0.00
1	-49.44	L	GIRD	SER I	******	-0.10	******	0.21	951771	-0.19	******	0.42	******	-0.88	******	-0.05
1	-49.44	R	GIRD	SER I	******	-0.10	******	0.21	951771	-0.19	******	0.42	******	-0.88	******	-0.05
1	-37.67	L	GIRD	SER I	******	-0.08	******	0.11	951302	-0.19	******	0.42	******	-0.98	******	-0.11
1	-37.67	R	GIRD	SER I	******	-0.08	******	0.11	951302	-0.19	******	0.42	******	-0.98	******	-0.11
1	-29.10	L	GIRD	SER I	******	-0.08	888431	0.04	951239	-0.19	******	0.41	******	-1.00	994385	-0.12
1	-29.10	R	GIRD	SER I	******	-0.08	888431	0.04	951239	-0.19	******	0.41	******	-1.00	994385	-0.12
1	-25.90	L	GIRD	SER I	******	-0.10	994717	0.03	951455	-0.19	******	0.41	******	-1.00	994385	-0.12
1	-25.90	R	GIRD	SER I	******	-0.10	994717	0.03	951455	-0.19	******	0.41	******	-1.00	994385	-0.12
1	-14.12	L	GIRD	SER I	******	-0.21	994717	0.05	952131	-0.19	******	0.41	******	-0.92	994387	-0.08
1	-14.12	R	GIRD	SER I	******	-0.21	994717	0.05	952131	-0.19	******	0.41	******	-0.92	994387	-0.08
1	-7.65	L	GIRD	SER I	******	-0.26	994717	0.06	952131	-0.19	******	0.41	******	-0.85	994387	-0.04

1	-7.65	R	GIRD	SER I	******	-0.26	994717	0.06	952131	-0.19	******	0.41	******	-0.85	994387	-0.04
1	-2.90	L	CAP	SER I	******	-0.30	994717	0.07	951632	-0.18	******	0.41	******	-0.78	994390	-0.01
1	-1.19	L	GIRD	SER I	******	-0.31	994717	0.07	951632	-0.18	******	0.40	******	-0.76	994390	0.00
1	-1.19	R	GIRD	SER I	******	-0.31	994717	0.07	951632	-0.18	******	0.40	******	-0.76	994390	0.00
1	2.97	L	GIRD	SER I	******	-0.33	994717	0.09	951632	-0.18	******	0.40	******	-0.69	994390	0.02
1	2.97	R	GIRD	SER I	******	-0.33	994717	0.09	951632	-0.18	******	0.40	******	-0.69	994390	0.02
1	6.10	L	SPEC	SER I	******	-0.35	994717	0.10	951632	-0.18	******	0.40	******	-0.65	994390	0.04
1	6.10	R	SPEC	SER I	******	-0.35	994717	0.10	951632	-0.18	******	0.40	******	-0.65	994390	0.04
1	10.48	L	GIRD	SER I	******	-0.37	994717	0.12	951632	-0.18	******	0.40	******	-0.58	994347	0.06
1	10.48	R	GIRD	SER I	******	-0.37	994717	0.12	951632	-0.18	******	0.40	******	-0.58	994347	0.06
1	10.60	L	FACE	SER I	******	-0.37	994717	0.12	951632	-0.18	******	0.40	******	-0.58	994347	0.06
1	17.60	L	COL	SER I	******	-0.39	994717	0.15	951632	-0.18	******	0.39	******	-0.49	******	0.09
1	17.60	R	COL	SER I	******	-0.39	994717	0.15	951632	-0.18	******	0.39	******	-0.49	******	0.09
1	22.16	L	GIRD	SER I	******	-0.42	994717	0.16	951632	-0.18	******	0.39	******	-0.46	******	0.10
1	22.16	R	GIRD	SER I	******	-0.42	994717	0.16	951632	-0.18	******	0.39	******	-0.46	******	0.10
1	24.60	L	FACE	SER I	******	-0.43	994717	0.17	951632	-0.18	******	0.39	******	-0.44	******	0.10
1	33.84	L	GIRD	SER I	******	-0.48	994717	0.20	951632	-0.18	******	0.39	******	-0.40	******	0.14
1	33.84	R	GIRD	SER I	******	-0.48	994717	0.20	951632	-0.18	******	0.39	******	-0.40	******	0.14
1	35.03	L	GIRD	SER I	******	-0.48	994717	0.20	951632	-0.18	******	0.39	******	-0.39	******	0.14
1	35.03	R	GIRD	SER I	******	-0.48	994717	0.20	951632	-0.18	******	0.39	******	-0.39	******	0.14
1	41.10	L	CAP	SER I	******	-0.52	994717	0.22	951632	-0.18	******	0.39	******	-0.36	******	0.16

----- CAP BEAM 1 MOMENT-SHEAR INTERACTION ENVELOPES -----

Note: The moments printed in this table are not modified for minimum reinforcement criteria and thus may differ from those shown in the flexural reinforcement output.

				MOMENT ENVELOPE				SHEAR ENVELOPE			
CAP NO.	HORZ DIST. (ft)	LOCATION	AASHTO LIMIT STATE	MAX LRFD MOMENT (ft-k)	CORRES. SHEAR (kips)	MIN LRFD MOMENT (ft-k)	CORRES. SHEAR (kips)	MAX LRFD SHEAR (kips)	CORRES. MOMENT (ft-k)	MIN LRFD SHEAR (kips)	CORRES. MOMENT (ft-k)
1	-101.40	R CAP	STR I	0	0	0	0	0	0	0	0
			STIII	0	0	0	0	0	0	0	0
			STRIV	0	0	0	0	0	0	0	0
			STR V	0	0	0	0	0	0	0	0
1	-95.85	L GIRD	STR I	-180	-69	-275	-106	-69	-180	-106	-275
			STIII	-169	-69	-275	-106	-69	-180	-106	-275
			STRIV	-330	-127	-330	-127	-127	-330	-127	-330
			STR V	-177	-69	-275	-106	-69	-180	-106	-275
1	-95.85	R GIRD	STR I	-133	-585	-373	-739	-306	-201	-768	-359
			STIII	-28	-296	-440	-592	-212	-61	-592	-440
			STRIV	-283	-647	-377	-647	-563	-369	-647	-377
			STR V	-87	-525	-410	-712	-291	-147	-735	-400
1	-93.23	L GIRD	STR I	-1012	-349	-2469	-833	-349	-1061	-833	-2469
			STIII	-618	-254	-2100	-657	-254	-648	-657	-2100
			STRIV	-1860	-640	-2179	-724	-640	-1950	-724	-2179
			STR V	-911	-333	-2428	-799	-333	-957	-799	-2428
1	-93.23	R GIRD	STR I	-945	-1471	-2482	-2284	-995	-994	-2412	-1927
			STIII	-443	-645	-2292	-1905	-645	-495	-1905	-2134
			STRIV	-1827	-1828	-2219	-2153	-1828	-1827	-2153	-2030
			STR V	-788	-1342	-2507	-2204	-975	-826	-2303	-2044
1	-85.54	L GIRD	STR I	-9201	-1154	-21662	-2656	-1154	-9201	-2656	-21317
			STIII	-5824	-804	-17966	-2148	-804	-5896	-2148	-17745
			STRIV	-16907	-2120	-19865	-2445	-2120	-16907	-2445	-19601
			STR V	-8826	-1134	-20959	-2547	-1134	-8826	-2547	-20644
1	-85.54	R GIRD	STR I	-9227	-1331	-21604	-3053	-1331	-9294	-3071	-21222
			STIII	-5647	-928	-18113	-2478	-928	-5683	-2478	-18113
			STRIV	-16954	-2446	-19808	-2838	-2446	-17077	-2838	-19808
			STR V	-8772	-1306	-20981	-2936	-1306	-8844	-2949	-20687
1	-84.90	L FACE	STR I	-10088	-1347	-23583	-3077	-1347	-10157	-3095	-23212
			STIII	-6233	-944	-19733	-2502	-944	-6270	-2502	-19733
			STRIV	-18538	-2475	-21647	-2867	-2475	-18664	-2867	-21647
			STR V	-9611	-1322	-22890	-2960	-1322	-9685	-2973	-22603
1	-77.90	L COL	STR I	-20122	-1520	-46051	-3342	-1520	-20191	-3359	-45801
			STIII	-13445	-1117	-38171	-2766	-1117	-13482	-2766	-38171
			STRIV	-36975	-2793	-42825	-3184	-2793	-37101	-3184	-42825

			STR V	-19470	-1495	-44536	-3225	-1495	-19544	-3238	-44343
1	-77.90 R	COL	STR I	-39906	2764	-107293	6313	6401	-106421	2764	-39906
			STIII	-26663	2253	-92416	5300	5300	-92416	2253	-26663
			STRIV	-80724	5211	-100117	6043	6043	-100117	5211	-80724
			STR V	-37624	2725	-105290	6106	6174	-104618	2725	-37624
1	-75.23 L	GIRD	STR I	-32627	2698	-90599	6212	6300	-89492	2698	-32627
			STIII	-20744	2188	-78422	5199	5199	-78422	2188	-20744
			STRIV	-66993	5090	-84169	5922	5922	-84169	5090	-66993
			STR V	-30446	2660	-89147	6005	6073	-88293	2660	-30446
1	-75.23 R	GIRD	STR I	-32652	2524	-90548	5867	5896	-89614	2524	-32652
			STIII	-20568	2026	-78550	4878	4878	-78550	2026	-20568
			STRIV	-67040	4771	-84112	5539	5539	-84112	4771	-67040
			STR V	-30392	2481	-89178	5669	5691	-88458	2481	-30392
1	-70.90 L	FACE	STR I	-21897	2454	-65753	5596	5732	-64415	2417	-21944
			STIII	-12019	1919	-57765	4714	4714	-57765	1919	-12019
			STRIV	-46786	4575	-60532	5342	5342	-60532	4575	-46786
			STR V	-19835	2403	-65177	5423	5528	-64145	2374	-19871
1	-66.40 L	SPEC	STR I	-10676	2674	-42012	5435	5571	-40088	2312	-11544
			STIII	-3809	1814	-38360	4408	4553	-37823	1814	-3809
			STRIV	-27291	4381	-37917	5149	5149	-37917	4381	-27291
			STR V	-8990	2548	-42189	5262	5366	-40704	2269	-9660
1	-66.40 R	SPEC	STR I	-10676	2674	-42012	5435	5571	-40088	2312	-11544
			STIII	-3809	1814	-38360	4408	4553	-37823	1814	-3809
			STRIV	-27291	4381	-37917	5149	5149	-37917	4381	-27291
			STR V	-8990	2548	-42189	5262	5366	-40704	2269	-9660
1	-64.92 L	GIRD	STR I	-6666	2814	-34363	5386	5522	-32246	2280	-8225
			STIII	-1211	1782	-32165	4359	4503	-31422	1782	-1211
			STRIV	-21067	4322	-30668	5090	5090	-30668	4322	-21067
			STR V	-5201	2649	-34786	5213	5317	-33153	2237	-6404
1	-64.92 R	GIRD	STR I	-6707	2493	-34315	5012	5057	-33599	2066	-7640
			STIII	-1068	1552	-32302	4089	4155	-31529	1552	-1068
			STRIV	-21114	3954	-30613	4654	4654	-30613	3954	-21114
			STR V	-5171	2339	-34810	4854	4889	-34258	2010	-5891
1	-61.16 L	GIRD	STR I	2251	2417	-18133	4323	4941	-15736	1990	-231
			STIII	4447	1476	-17887	3973	4039	-16887	1476	4447
			STRIV	-7067	3815	-14226	4515	4515	-14226	3815	-7067
			STR V	3223	2263	-18843	4296	4772	-16994	1934	1308
1	-61.16 R	GIRD	STR I	2390	1212	-18368	2823	2986	-16215	1198	2345
			STIII	4694	909	-18231	2557	2569	-17216	909	4694
			STRIV	-6908	2429	-14421	2817	2817	-14421	2429	-6908
			STR V	3420	1163	-19134	2802	2928	-17473	1153	3386
1	-57.40 L	CAP	STR I	6823	1236	-8766	2704	2882	-6026	1130	6462
			STIII	7790	841	-9484	2453	2465	-8447	841	7790
			STRIV	1444	2304	-4858	2692	2692	-4858	2304	1444
			STR V	7614	1166	-9585	2686	2824	-7471	1085	7336
1	-49.44 L	GIRD	STR I	23884	2433	4243	1321	2676	16083	995	14916
			STIII	21387	1908	2642	1282	2258	10340	706	13943
			STRIV	21188	2412	13291	2082	2444	15571	2056	18784
			STR V	23914	2277	3535	1352	2617	14169	950	15430
1	-49.44 R	GIRD	STR I	23823	1837	4264	1119	2175	14962	793	14895
			STIII	21400	1514	2604	1054	1852	10328	592	13993
			STRIV	21141	1950	13329	1710	1982	15618	1684	18746
			STR V	23883	1729	3531	1146	2136	13290	751	15435
1	-37.67 L	GIRD	STR I	45389	1749	15187	777	1870	38766	593	23052
			STIII	37421	1208	13835	854	1546	30322	392	19784
			STRIV	41929	1583	31296	1343	1615	36783	1317	36404
			STR V	43778	1591	15013	836	1830	36626	552	23103
1	-37.67 R	GIRD	STR I	45316	1070	15207	584	1437	37743	322	25192
			STIII	37436	830	13795	652	1158	30308	272	19832
			STRIV	41884	1141	31332	988	1172	36828	962	36368
			STR V	43737	982	15009	640	1406	35821	301	24774
1	-29.10 L	GIRD	STR I	54604	1055	19236	383	1214	49104	177	27331
			STIII	44087	908	16663	138	936	39283	127	21540
			STRIV	50515	873	38655	721	905	45733	694	43465
			STR V	52257	1054	19376	318	1183	46916	156	26733
1	-29.10 R	GIRD	STR I	54698	-959	19162	-318	-55	25133	-1063	52645
			STIII	44089	-501	16763	-459	-91	18543	-802	43879
			STRIV	50681	-756	38521	-596	-596	38521	-756	50681
			STR V	52300	-821	19364	-386	-49	24072	-1036	50615
1	-25.90 L	GIRD	STR I	51649	-989	18009	-388	-109	24870	-1146	49109
			STIII	42351	-584	15205	-514	-145	18165	-885	41177
			STRIV	48102	-855	36452	-696	-696	36452	-855	48102
			STR V	49655	-864	18003	-453	-104	23826	-1119	47165
1	-25.90 R	GIRD	STR I	51599	-1481	18028	-578	-388	21697	-1577	50771
			STIII	42259	-967	15280	-646	-327	18122	-1262	41193
			STRIV	48058	-1293	36487	-1045	-1045	36487	-1293	48058

			STR V	49583	-1332	18047	-641	-364	21358	-1537	48463
1	-14.12 L	GIRD	STR I	34083	-1569	9373	-856	-588	15951	-1884	30387
			STIII	29069	-1273	6496	-846	-527	13095	-1568	24522
			STRIV	30664	-1660	22014	-1412	-1412	22014	-1660	30664
			STR V	33428	-1470	8799	-901	-564	15895	-1843	28555
1	-14.12 R	GIRD	STR I	34001	-2135	9389	-1018	-785	14940	-2303	31770
			STIII	28982	-1609	6569	-965	-664	13048	-1903	24542
			STRIV	30625	-2045	22044	-1711	-1711	22044	-2045	30625
			STR V	33332	-1984	8841	-1063	-753	15095	-2243	29640
1	-7.65 L	GIRD	STR I	20870	-2057	2189	-1240	-894	9515	-2471	16341
			STIII	18391	-1654	-24	-1075	-773	8403	-2071	11700
			STRIV	16753	-2247	10337	-1912	-1912	10337	-2247	16753
			STR V	20903	-1962	1411	-1259	-863	9872	-2411	14600
1	-7.65 R	GIRD	STR I	20797	-2530	2205	-1397	-1072	8572	-2854	17702
			STIII	18300	-1942	49	-1198	-896	8354	-2393	11721
			STRIV	16715	-2618	10366	-2201	-2201	10366	-2618	16715
			STR V	20815	-2400	1452	-1416	-1036	9124	-2780	15667
1	-2.90 L	CAP	STR I	8872	-2381	-4875	-1607	-1153	3277	-2978	3827
			STIII	8762	-2066	-5844	-1279	-977	3897	-2517	37
			STRIV	3904	-2766	-462	-2350	-2350	-462	-2766	3904
			STR V	9413	-2314	-5666	-1597	-1117	4001	-2904	2144
1	-1.19 L	GIRD	STR I	6502	-1333	-8504	-2763	-1183	1475	-3023	-959
			STIII	6874	-1019	-8914	-2388	-1007	2356	-2563	-4018
			STRIV	-109	-2431	-4468	-2789	-2404	-4195	-2821	-557
			STR V	7143	-1266	-9268	-2742	-1147	2249	-2949	-2523
1	-1.19 R	GIRD	STR I	6436	-1758	-8468	-3103	-1364	841	-3440	-454
			STIII	6796	-1141	-8816	-2703	-1129	2304	-2904	-3998
			STRIV	-142	-2736	-4426	-3180	-2709	-4162	-3212	-600
			STR V	7062	-1631	-9205	-3083	-1324	1738	-3349	-2116
1	2.97 L	GIRD	STR I	-57	-1623	-20786	-3241	-1444	-4543	-3561	-14214
			STIII	2082	-1220	-19507	-2824	-1209	-2195	-3026	-15653
			STRIV	-11211	-2882	-17044	-3326	-2856	-14947	-3358	-13528
			STR V	910	-1545	-21422	-3217	-1404	-3505	-3471	-15512
1	2.97 R	GIRD	STR I	28	-2749	-20952	-4606	-2160	-7094	-5340	-14213
			STIII	1950	-1712	-19473	-4125	-1701	-2447	-4381	-15318
			STRIV	-11058	-4129	-17235	-4886	-4103	-15099	-4918	-13338
			STR V	919	-2567	-21514	-4581	-2109	-5567	-5154	-15398
1	6.10 L	SPEC	STR I	-8312	-2733	-34915	-4708	-2226	-13682	-5442	-30510
			STIII	-3397	-1779	-32512	-4455	-1767	-7642	-4483	-28693
			STRIV	-23741	-4252	-32096	-5008	-4225	-27594	-5040	-28401
			STR V	-6915	-2570	-35389	-4683	-2175	-12014	-5256	-31116
1	6.10 R	SPEC	STR I	-8312	-2733	-34915	-4708	-2226	-13682	-5442	-30510
			STIII	-3397	-1779	-32512	-4455	-1767	-7642	-4483	-28693
			STRIV	-23741	-4252	-32096	-5008	-4225	-27594	-5040	-28401
			STR V	-6915	-2570	-35389	-4683	-2175	-12014	-5256	-31116
1	10.48 L	GIRD	STR I	-19066	-2367	-57121	-5485	-2328	-23241	-5599	-53809
			STIII	-11223	-1881	-51471	-4612	-1870	-15256	-4639	-47917
			STRIV	-42110	-4440	-53506	-5196	-4413	-45703	-5228	-50091
			STR V	-17251	-2311	-56977	-5319	-2278	-21376	-5412	-53609
1	10.48 R	GIRD	STR I	-19110	-2666	-57067	-5853	-2513	-23312	-6045	-53793
			STIII	-11329	-2002	-51338	-4982	-1991	-15327	-5010	-47894
			STRIV	-42160	-4774	-53444	-5619	-4747	-45653	-5651	-50154
			STR V	-17326	-2581	-56886	-5688	-2460	-21461	-5843	-53573
1	10.60 L	FACE	STR I	-19427	-2669	-57749	-5858	-2516	-23605	-6050	-54501
			STIII	-11567	-2005	-51917	-4987	-1994	-15559	-5014	-48480
			STRIV	-42720	-4779	-54099	-5625	-4753	-46206	-5657	-50817
			STR V	-17633	-2584	-57548	-5692	-2463	-21748	-5847	-54257
1	17.60 L	COL	STR I	-38028	-2703	-100412	-6251	-2689	-41821	-6315	-97778
			STIII	-26210	-2178	-87750	-5251	-2166	-30119	-5279	-84507
			STRIV	-77286	-5097	-94584	-5942	-5070	-80588	-5974	-91526
			STR V	-35799	-2650	-98888	-6056	-2636	-39594	-6112	-96114
1	17.60 R	COL	STR I	-16632	1297	-42799	3124	3171	-41625	1297	-16632
			STIII	-10047	878	-32771	2448	2448	-32685	878	-10047
			STRIV	-30895	2397	-36881	2806	2806	-36780	2397	-30895
			STR V	-16352	1288	-40574	2970	3007	-39655	1288	-16352
1	22.16 L	GIRD	STR I	-10979	1184	-29151	2872	2999	-27566	1184	-10979
			STIII	-6301	765	-22009	2275	2275	-21923	765	-6301
			STRIV	-20440	2190	-24564	2599	2599	-24463	2190	-20440
			STR V	-10739	1175	-27581	2737	2834	-26344	1175	-10739
1	22.16 R	GIRD	STR I	-10965	1007	-29206	2500	2500	-29206	1006	-11096
			STIII	-6375	661	-21975	1905	1905	-21975	661	-6424
			STRIV	-20391	1857	-24627	2178	2178	-24627	1857	-20569
			STR V	-10759	1000	-27600	2364	2364	-27600	999	-10881
1	24.60 L	FACE	STR I	-8581	946	-23212	2408	2408	-23212	946	-8712
			STIII	-4833	601	-17434	1813	1813	-17434	601	-4882
			STRIV	-15991	1746	-19443	2067	2067	-19443	1746	-16169

			STR V	-8391	939	-21940	2272	2272	-21940	939	-8515
1	33.84 L	GIRD	STR I	-817	756	-2362	1968	2117	-2347	755	-911
			STIII	-360	411	-1978	1522	1522	-1978	411	-393
			STRIV	-1609	1397	-2030	1717	1717	-2030	1397	-1728
			STR V	-737	749	-2310	1865	1980	-2298	749	-824
1	33.84 R	GIRD	STR I	-801	588	-2395	1630	1630	-2395	588	-898
			STIII	-412	337	-1954	1165	1165	-1954	337	-459
			STRIV	-1578	1087	-2068	1328	1328	-2068	1087	-1759
			STR V	-744	584	-2320	1524	1524	-2320	584	-841
1	35.03 L	GIRD	STR I	-18	1148	-472	1601	1601	-472	569	-213
			STIII	-10	807	-575	1136	1136	-575	318	-82
			STRIV	-294	1293	-508	1293	1293	-508	1052	-485
			STR V	12	1068	-519	1495	1495	-519	566	-164
1	35.03 R	GIRD	STR I	-218	77	-334	118	118	-334	77	-218
			STIII	-206	77	-334	118	118	-334	77	-218
			STRIV	-401	142	-401	142	142	-401	142	-401
			STR V	-215	77	-334	118	118	-334	77	-218
1	41.10 L	CAP	STR I	0	0	0	0	0	0	0	0
			STIII	0	0	0	0	0	0	0	0
			STRIV	0	0	0	0	0	0	0	0
			STR V	0	0	0	0	0	0	0	0

----- CAP BEAM 1 SHEAR-TORSION INTERACTION ENVELOPES -----

				SHEAR ENVELOPE				TORSION ENVELOPE			
CAP NO.	HORZ DIST. (ft)	LOCATION	AASHTO LIMIT STATE	MAX LRFD SHEAR (kips)	CORRES. TORSION (ft-k)	MIN LRFD SHEAR (kips)	CORRES. TORSION (ft-k)	MAX LRFD TORSION (ft-k)	CORRES. SHEAR (kips)	MIN LRFD TORSION (ft-k)	CORRES. SHEAR (kips)
1	-101.40 R	CAP	STR I	0	0	0	0	0	0	0	0
			STIII	0	0	0	0	0	0	0	0
			STRIV	0	0	0	0	0	0	0	0
			STR V	0	0	0	0	0	0	0	0
1	-95.85 L	GIRD	STR I	-69	0	-106	0	0	-106	0	-106
			STIII	-69	3	-106	3	3	-106	-3	-106
			STRIV	-127	0	-127	0	0	-127	0	-127
			STR V	-69	1	-106	1	1	-106	-1	-106
1	-95.85 R	GIRD	STR I	-306	1063	-768	2962	2962	-768	931	-306
			STIII	-212	679	-592	2138	2138	-592	600	-212
			STRIV	-563	1952	-647	2329	2329	-647	1712	-563
			STR V	-291	1008	-735	2797	2797	-735	886	-291
1	-93.23 L	GIRD	STR I	-349	1073	-833	2989	2989	-833	921	-349
			STIII	-254	692	-657	2152	2152	-657	601	-254
			STRIV	-640	1971	-724	2351	2351	-724	1693	-640
			STR V	-333	1021	-799	2821	2821	-799	879	-333
1	-93.23 R	GIRD	STR I	-995	-184	-2412	-964	959	-2064	-1324	-2333
			STIII	-645	144	-1905	-328	197	-1498	-389	-1817
			STRIV	-1828	-339	-2153	-427	154	-2153	-427	-2153
			STR V	-975	-207	-2303	-805	786	-2034	-1130	-2202
1	-85.54 L	GIRD	STR I	-1154	-236	-2656	-1119	1028	-2307	-1489	-2577
			STIII	-804	219	-2148	-468	319	-1742	-501	-2117
			STRIV	-2120	-434	-2445	-542	269	-2445	-542	-2445
			STR V	-1134	-244	-2547	-963	852	-2258	-1266	-2453
1	-85.54 R	GIRD	STR I	-1331	796	-3071	1501	3002	-2840	-430	-1816
			STIII	-928	749	-2478	1388	1570	-2391	487	-1379
			STRIV	-2446	1464	-2838	1746	1746	-2838	1083	-2446
			STR V	-1306	805	-2949	1493	2670	-2730	-206	-1689
1	-84.90 L	FACE	STR I	-1347	799	-3095	1509	3002	-2864	-438	-1832
			STIII	-944	756	-2502	1387	1580	-2415	479	-1395
			STRIV	-2475	1468	-2867	1751	1751	-2867	1079	-2475
			STR V	-1322	810	-2973	1498	2673	-2750	-212	-1704
1	-77.90 L	COL	STR I	-1520	799	-3359	1509	3002	-3129	-438	-2004
			STIII	-1117	756	-2766	1387	1580	-2680	479	-1567
			STRIV	-2793	1468	-3184	1751	1751	-3184	1079	-2793
			STR V	-1495	810	-3238	1498	2673	-3015	-212	-1877
1	-77.90 R	COL	STR I	6401	-3523	2764	-1223	494	3652	-6697	5724
			STIII	5300	-3264	2253	-1331	-1061	2788	-3549	5052
			STRIV	6043	-3912	5211	-3020	-3020	5211	-3912	6043
			STR V	6174	-3419	2725	-1415	101	3520	-6009	5536
1	-75.23 L	GIRD	STR I	6300	-3523	2698	-1223	494	3586	-6697	5623
			STIII	5199	-3264	2188	-1331	-1061	2722	-3549	4951
			STRIV	5922	-3912	5090	-3020	-3020	5090	-3912	5922
			STR V	6073	-3419	2660	-1415	101	3454	-6009	5436
1	-75.23 R	GIRD	STR I	5896	-2048	2524	-413	1449	3411	-4976	5217
			STIII	4878	-2115	2026	-513	-513	2026	-2230	4639
			STRIV	5539	-2473	4771	-1532	-1532	4771	-2473	5539
			STR V	5691	-2043	2481	-554	973	3274	-4279	5053
1	-70.90 L	FACE	STR I	5732	-2048	2417	-413	1449	3304	-4976	5054

			STIII	4714	-2115	1919	-513	-513	1919	-2230	4475
			STRIV	5342	-2473	4575	-1532	-1532	4575	-2473	5342
			STR V	5528	-2043	2374	-554	973	3167	-4279	4889
1	-66.40	L SPEC	STR I	5571	-1987	2312	-437	1380	3199	-4989	4892
			STIII	4553	-2097	1814	-497	-497	1814	-2151	4362
			STRIV	5149	-2425	4381	-1572	-1572	4381	-2425	5149
			STR V	5366	-2000	2269	-564	900	3061	-4285	4728
1	-66.40	R SPEC	STR I	5571	-1987	2312	-437	1380	3199	-4989	4892
			STIII	4553	-2097	1814	-497	-497	1814	-2151	4362
			STRIV	5149	-2425	4381	-1572	-1572	4381	-2425	5149
			STR V	5366	-2000	2269	-564	900	3061	-4285	4728
1	-64.92	L GIRD	STR I	5522	-1968	2280	-445	1357	3167	-4993	4843
			STIII	4503	-2091	1782	-491	-491	1782	-2128	4365
			STRIV	5090	-2409	4322	-1585	-1585	4322	-2409	5090
			STR V	5317	-1986	2237	-568	877	3040	-4287	4668
1	-64.92	R GIRD	STR I	5057	-131	2066	442	2311	4110	-2969	3218
			STIII	4155	-813	1552	621	653	2695	-813	4155
			STRIV	4654	-747	3954	110	110	3954	-747	4654
			STR V	4889	-325	2010	422	1871	3848	-2379	3203
1	-61.16	L GIRD	STR I	4941	-63	1990	414	2231	3993	-2984	3143
			STIII	4039	-779	1476	619	637	2579	-779	4039
			STRIV	4515	-690	3815	62	62	3815	-690	4515
			STR V	4772	-269	1934	403	1809	3732	-2406	3127
1	-61.16	R GIRD	STR I	2986	-3792	1198	-1657	-133	1416	-6075	2741
			STIII	2569	-2700	909	-445	-445	909	-3464	2532
			STRIV	2817	-2848	2429	-2680	-2199	2455	-3459	2785
			STR V	2928	-3598	1153	-1509	-333	1321	-5477	2732
1	-57.40	L CAP	STR I	2882	-3815	1130	-1650	-142	1348	-6043	2636
			STIII	2465	-2719	841	-432	-432	841	-3466	2427
			STRIV	2692	-2858	2304	-2673	-2207	2330	-3449	2660
			STR V	2824	-3624	1085	-1497	-334	1253	-5456	2627
1	-49.44	L GIRD	STR I	2676	-3815	995	-1650	-142	1213	-6043	2430
			STIII	2258	-2719	706	-432	-432	706	-3466	2221
			STRIV	2444	-2858	2056	-2673	-2207	2082	-3449	2412
			STR V	2617	-3624	950	-1497	-334	1118	-5456	2421
1	-49.44	R GIRD	STR I	2175	-1899	793	-735	922	1057	-3864	1935
			STIII	1852	-1155	592	104	104	592	-1561	1795
			STRIV	1982	-1059	1684	-992	-759	1710	-1360	1950
			STR V	2136	-1783	751	-591	687	955	-3352	1944
1	-37.67	L GIRD	STR I	1870	-1899	593	-735	922	858	-3864	1629
			STIII	1546	-1155	392	104	104	392	-1561	1489
			STRIV	1615	-1059	1317	-992	-759	1343	-1360	1583
			STR V	1830	-1783	552	-591	687	756	-3352	1638
1	-37.67	R GIRD	STR I	1437	703	322	584	2241	1068	-1776	679
			STIII	1158	337	272	667	871	729	-13	641
			STRIV	1172	663	962	614	663	1172	614	962
			STR V	1406	568	301	622	1947	981	-1388	710
1	-29.10	L GIRD	STR I	1214	703	177	584	2241	845	-1776	533
			STIII	936	337	127	667	871	506	-13	495
			STRIV	905	663	694	614	663	905	614	694
			STR V	1183	568	156	622	1947	758	-1388	565
1	-29.10	R GIRD	STR I	-55	-1359	-1063	-2306	526	-425	-4356	-624
			STIII	-91	-575	-802	-1939	-332	-475	-2450	-501
			STRIV	-596	-1102	-756	-2518	-1102	-596	-2518	-756
			STR V	-49	-1308	-1036	-2166	280	-472	-3977	-563
1	-25.90	L GIRD	STR I	-109	-1359	-1146	-2306	526	-479	-4356	-707
			STIII	-145	-575	-885	-1939	-332	-529	-2450	-584
			STRIV	-696	-1102	-855	-2518	-1102	-696	-2518	-855
			STR V	-104	-1308	-1119	-2166	280	-527	-3977	-647
1	-25.90	R GIRD	STR I	-388	-322	-1577	-77	1868	-849	-2416	-1123
			STIII	-327	113	-1262	-218	489	-1019	-738	-967
			STRIV	-1045	257	-1293	-538	257	-1045	-538	-1293
			STR V	-364	-341	-1537	-53	1512	-854	-2089	-1056
1	-14.12	L GIRD	STR I	-588	-322	-1884	-77	1868	-1049	-2416	-1429
			STIII	-527	113	-1568	-218	489	-1325	-738	-1273
			STRIV	-1412	257	-1660	-538	257	-1412	-538	-1660
			STR V	-564	-341	-1843	-53	1512	-1054	-2089	-1362
1	-14.12	R GIRD	STR I	-785	421	-2303	2803	3542	-2132	-1178	-1019
			STIII	-664	627	-1903	1312	1784	-1875	177	-676
			STRIV	-1711	1418	-2045	1203	1732	-2013	987	-1737
			STR V	-753	371	-2243	2521	3091	-2111	-907	-937
1	-7.65	L GIRD	STR I	-894	421	-2471	2803	3542	-2300	-1178	-1128
			STIII	-773	627	-2071	1312	1784	-2043	177	-785
			STRIV	-1912	1418	-2247	1203	1732	-2215	987	-1938
			STR V	-863	371	-2411	2521	3091	-2279	-907	-1047
1	-7.65	R GIRD	STR I	-1072	1333	-2854	4366	5096	-2683	-467	-1286

			STIII	-896	1085	-2393	2789	3059	-2366	713	-908
			STRIV	-2201	2544	-2618	2880	3177	-2586	2295	-2228
			STR V	-1036	1206	-2780	4068	4632	-2648	-204	-1204
1	-2.90 L	CAP	STR I	-1153	1333	-2978	4366	5096	-2806	-467	-1367
			STIII	-977	1085	-2517	2789	3059	-2490	713	-989
			STRIV	-2350	2544	-2766	2880	3177	-2734	2295	-2376
			STR V	-1117	1206	-2904	4068	4632	-2772	-204	-1285
1	-1.19 L	GIRD	STR I	-1183	1330	-3023	4375	5109	-2852	-470	-1396
			STIII	-1007	1079	-2563	2795	3058	-2533	709	-1019
			STRIV	-2404	2541	-2821	2884	3173	-2789	2298	-2431
			STR V	-1147	1201	-2949	4078	4644	-2817	-208	-1315
1	-1.19 R	GIRD	STR I	-1364	2052	-3440	5391	6775	-3227	544	-1620
			STIII	-1129	1531	-2904	4364	4400	-2875	1243	-1141
			STRIV	-2709	3724	-3212	4660	4689	-3180	3683	-2736
			STR V	-1324	1895	-3349	5226	6294	-3185	735	-1524
1	2.97 L	GIRD	STR I	-1444	2037	-3561	5426	6819	-3349	541	-1709
			STIII	-1209	1507	-3026	4397	4405	-3024	1236	-1220
			STRIV	-2856	3704	-3358	4687	4687	-3358	3704	-2882
			STR V	-1404	1875	-3471	5264	6339	-3307	730	-1612
1	2.97 R	GIRD	STR I	-2160	1266	-5340	713	4299	-4731	-1589	-3034
			STIII	-1701	830	-4381	1741	2757	-4351	189	-1712
			STRIV	-4103	2145	-4918	1567	2714	-4886	1208	-4129
			STR V	-2109	1065	-5154	1031	4034	-4678	-1244	-2787
1	6.10 L	SPEC	STR I	-2226	1279	-5442	666	4308	-4833	-1639	-3101
			STIII	-1767	822	-4483	1726	2804	-4453	161	-1779
			STRIV	-4225	2172	-5040	1535	2746	-5008	1182	-4252
			STR V	-2175	1072	-5256	995	4054	-4780	-1292	-2853
1	6.10 R	SPEC	STR I	-2226	1279	-5442	666	4308	-4833	-1639	-3101
			STIII	-1767	822	-4483	1726	2804	-4453	161	-1779
			STRIV	-4225	2172	-5040	1535	2746	-5008	1182	-4252
			STR V	-2175	1072	-5256	995	4054	-4780	-1292	-2853
1	10.48 L	GIRD	STR I	-2328	1297	-5599	600	4321	-4990	-1708	-3203
			STIII	-1870	810	-4639	1705	2870	-4610	122	-1881
			STRIV	-4413	2208	-5228	1491	2789	-5196	1146	-4440
			STR V	-2278	1081	-5412	944	4082	-4936	-1360	-2956
1	10.48 R	GIRD	STR I	-2513	2087	-6045	2678	6314	-5516	-695	-3393
			STIII	-1991	1236	-5010	3458	4285	-4980	658	-2002
			STRIV	-4747	3462	-5651	3465	4378	-5619	2704	-4774
			STR V	-2460	1828	-5843	2958	5952	-5428	-404	-3142
1	10.60 L	FACE	STR I	-2516	2088	-6050	2676	6313	-5521	-697	-3396
			STIII	-1994	1236	-5014	3458	4287	-4985	657	-2005
			STRIV	-4753	3462	-5657	3465	4379	-5625	2703	-4779
			STR V	-2463	1828	-5847	2958	5952	-5432	-405	-3145
1	17.60 L	COL	STR I	-2689	2088	-6315	2676	6313	-5785	-697	-3569
			STIII	-2166	1236	-5279	3458	4287	-5250	657	-2178
			STRIV	-5070	3462	-5974	3465	4379	-5942	2703	-5097
			STR V	-2636	1828	-6112	2958	5952	-5697	-405	-3318
1	17.60 R	COL	STR I	3171	-3263	1297	-675	404	1787	-3727	2948
			STIII	2448	-1679	878	-246	-189	878	-1679	2448
			STRIV	2806	-1697	2397	-1349	-1105	2397	-1697	2806
			STR V	3007	-2912	1288	-614	251	1667	-3226	2835
1	22.16 L	GIRD	STR I	2999	-3263	1184	-675	404	1675	-3727	2775
			STIII	2275	-1679	765	-246	-189	765	-1679	2275
			STRIV	2599	-1697	2190	-1349	-1105	2190	-1697	2599
			STR V	2834	-2912	1175	-614	251	1554	-3226	2662
1	22.16 R	GIRD	STR I	2500	813	1006	282	1510	2351	-1392	2213
			STIII	1905	341	661	267	626	1855	-262	1905
			STRIV	2178	580	1857	451	580	2178	-115	2178
			STR V	2364	691	999	326	1333	2233	-1149	2142
1	24.60 L	FACE	STR I	2408	813	946	282	1510	2259	-1392	2121
			STIII	1813	341	601	267	626	1763	-262	1813
			STRIV	2067	580	1746	451	580	2067	-115	2067
			STR V	2272	691	939	326	1333	2141	-1149	2050
1	33.84 L	GIRD	STR I	2117	662	755	227	1336	1968	-1359	1105
			STIII	1522	282	411	201	483	1472	-127	1201
			STRIV	1717	465	1397	360	465	1717	-6	1397
			STR V	1980	567	749	256	1160	1849	-1080	1438
1	33.84 R	GIRD	STR I	1630	2861	588	966	2861	1630	654	592
			STIII	1165	1912	337	516	1963	1140	370	337
			STRIV	1328	2222	1087	1757	2222	1328	1202	1087
			STR V	1524	2636	584	976	2660	1515	639	596
1	35.03 L	GIRD	STR I	1601	2832	569	955	2832	1601	664	573
			STIII	1136	1895	318	508	1940	1111	371	318
			STRIV	1293	2199	1052	1739	2199	1293	1220	1052
			STR V	1495	2610	566	964	2632	1486	651	577
1	35.03 R	GIRD	STR I	118	0	77	0	0	118	0	118

	STIII	118	-3	77	-3	3	118	-3	118
	STRIV	142	0	142	0	0	142	0	142
	STR V	118	-1	77	-1	1	118	-1	118
1 41.10 L CAP	STR I	0	0	0	0	0	0	0	0
	STIII	0	0	0	0	0	0	0	0
	STRIV	0	0	0	0	0	0	0	0
	STR V	0	0	0	0	0	0	0	0

----- CAP BEAM 1 REINFORCEMENT SUMMARY ----------

SUMMARY OF REQUIRED REINFORCEMENT:

			SHEAR			FLEXURE											
				TOP	BOTTOM		LONG										
CAP NO.	HORZ DIST. (ft)	LOCATION	# 6 STR SPACING (in)	LONG AREA (sq-in)	LONG AREA (sq-in)	NG	FLEX AREA (sq-in)	LAYER 0 SIZE	QUAN	LAYER 1 SIZE	QUAN	LAYER 2 SIZE	QUAN	LAYER 3 SIZE	QUAN	LAYER 4 SIZE	QUAN
1	-101.40	R CAP	0.00	0.00	0.00		0.00	11	16	11	16	11	22			11	16
11	22		11	16	11	16											
1	-95.85	L GIRD	17.39	1.87	0.00		0.02	11	16	11	16	11	22			11	16
11	22		11	16	11	16											
1	-95.85	R GIRD	8.76	12.49	0.00		0.31	11	16	11	16	11	22			11	16
11	22		11	16	11	16											
1	-93.23	L GIRD	17.39	12.32	0.00		0.35	11	16	11	16	11	22			11	16
11	22		11	16	11	16											
1	-93.23	R GIRD	17.39	38.57	0.00		0.19	11	16	11	16	11	22			11	16
11	22		11	16	11	16											
1	-85.54	L GIRD	17.39	63.73	0.00		1.30	11	16	11	16	11	22			11	16
11	22		11	16	11	16											
1	-85.54	R GIRD	17.39	70.95	0.00		1.49	11	16	11	16	11	22			11	16
11	22		11	16	11	16											
1	-84.90	L FACE	17.39	72.86	0.00		1.57	11	16	11	16	11	22			11	16
11	22		11	16	11	16											
1	-70.90	L FACE	8.85	146.11	0.00	**	1.64	11	16	11	16	11	22			11	16
11	22		11	16	11	16											
1	-66.40	L SPEC	6.03	117.77	0.00	**	1.32	11	16	11	16	11	22				
11	22		11	16	11	16											
1	-66.40	R SPEC	6.03	117.77	0.00	**	1.32	11	16	11	16	11	22				
11	22		11	16	11	16											
1	-64.92	L GIRD	5.72	107.64	0.00	**	1.52	11	16	11	16	11	22				
11	22		11	16	11	16											
1	-64.92	R GIRD	8.59	104.02	0.00	**	1.46	11	16	11	16	11	22				
11	22		11	16	11	16											
1	-61.16	L GIRD	7.40	77.57	33.00		2.21	11	16	11	16	11	22				
11	22		11	16	11	16											
1	-61.16	R GIRD	6.78	58.78	17.09		2.11	11	16	11	16	11	22				
11	22		11	16	11	16											
1	-57.40	L CAP	6.30	44.46	35.01		1.97	11	16	11	16	11	22	11	22		
11	22	11 22	11	16	11	16											
1	-49.44	L GIRD	6.30	0.00	71.62		1.84	11	16	11	16	11	22	11	22		
11	22	11 22	11	16	11	16											
1	-49.44	R GIRD	8.18	0.00	57.22		1.78	11	16	11	16	11	22	11	22		
11	22	11 22	11	16	11	16											
1	-37.67	L GIRD	8.18	0.00	95.77		2.40	11	16	11	16	11	22	11	22		
11	22	11 22	11	16	11	16											
1	-37.67	R GIRD	17.39	0.00	83.42		2.33	11	16	11	16	11	22	11	22		
11	22	11 22	11	16	11	16											
1	-29.10	L GIRD	17.39	0.00	101.36		3.18	11	16	11	16	11	22	11	22		
11	22	11 22	11	16	11	16											
1	-29.10	R GIRD	7.66	0.00	99.49		3.12	11	16	11	16	11	22	11	22		
11	22	11 22	11	16	11	16											
1	-25.90	L GIRD	7.66	0.00	94.23		2.66	11	16	11	16	11	22	11	22		
11	22	11 22	11	16	11	16											
1	-25.90	R GIRD	17.39	0.00	103.41		2.60	11	16	11	16	11	22	11	22		
11	22	11 22	11	16	11	16											

1	-14.12	L	GIRD	17.39	0.00	70.82		2.05	11	16	11	16	11	22	11	22	11	22	11	16	11	16
1	-14.12	R	GIRD	8.56	0.00	81.31		2.07	11	16	11	16	11	22	11	22	11	22	11	16	11	16
1	-7.65	L	GIRD	8.56	3.78	55.92		1.93	11	16	11	16	11	22	11	22	11	22	11	16	11	16
1	-7.65	R	GIRD	7.00	0.00	67.11		1.95	11	16	11	16	11	22	11	22	11	22	11	16	11	16
1	-2.90	L	CAP	7.00	31.35	43.12		1.71	11	16	11	16	11	22	11	22	11	16	11	16		
1	-1.19	L	GIRD	7.23	44.95	35.18		1.64	11	16	11	16	11	22	11	22	11	16	11	16		
1	-1.19	R	GIRD	5.79	52.16	44.98		1.72	11	16	11	16	11	22	11	22	11	16	11	16		
1	2.97	L	GIRD	6.56	69.51	14.04		1.34	11	16	11	16	11	22	11	22	11	16	11	16		
1	2.97	R	GIRD	5.81	83.65	34.38		1.40	11	16	11	16	11	22	11	22	11	16	11	16		
1	6.10	L	SPEC	8.13	104.25	0.00	**	1.66	11	16	11	16	11	22	11	22	11	16	11	16		
1	6.10	R	SPEC	8.13	104.25	0.00	**	1.66	11	16	11	16	11	22	11	22	11	16	11	16		
1	10.48	L	GIRD	9.23	135.22	0.00	**	2.02	11	16	11	16	11	22	11	16	11	22	11	16	11	16
1	10.48	R	GIRD	5.53	138.47	0.00	**	2.11	11	16	11	16	11	22	11	16	11	22	11	16	11	16
1	10.60	L	FACE	5.55	139.24	0.00	**	2.11	11	16	11	16	11	22	11	16	11	22	11	16	11	16
1	24.60	L	FACE	17.39	59.98	0.00		1.39	11	16	11	16	11	22	11	16	11	22	11	16	11	16
1	33.84	L	GIRD	17.39	34.92	0.00		0.14	11	16	11	16	11	22	11	16	11	22	11	16	11	16
1	33.84	R	GIRD	17.39	26.08	0.00		0.22	11	16	11	16	11	22	11	16	11	22	11	16	11	16
1	35.03	L	GIRD	9.10	24.98	10.44		0.17	11	16	11	16	11	22	11	16	11	22	11	16	11	16
1	35.03	R	GIRD	17.39	2.13	0.00		0.02	11	16	11	16	11	22	11	16	11	22	11	16	11	16
1	41.10	L	CAP	0.00	0.00	0.00		0.00	11	16	11	16	11	22	11	16	11	22	11	16	11	16

**: DESIGNER MUST VERIFY SHEAR LONGITUDINAL STEEL REQUIREMENT VERSUS FLEXURAL LONGITUDINAL STEEL REQUIREMENT, DEPENDING ON LOCATION IN CAPBEAM AND STRESS DISTRIBUTION. REFER TO AASHTO LRFD SPECS 5.8.3.5 AND 5.8.3.6.3. IF THE DESIGNER INTENDS TO USE THE SHEAR LONGITUDINAL STEEL VALUE AND IT IS LARGER THAN THE FLEXURAL VALUE, IT IS RECOMMENDED TO RERUN THE FILE WITH THE FLEXURAL BARS INCREASED TO MEET THE SHEAR REQUIREMENT. THIS WILL ENSURE THAT THE LARGER AMOUNT OF STEEL IS CHECKED BY THE FLEXURAL DESIGN ROUTINE TO PREVENT OVER-REINFORCEMENT.

BEGIN TIME: 06/07/2012 15:08:02
END TIME: 06/07/2012 15:24:41
ELAPSED TIME: 00:16:39

RUN TIME: 06/08/2012 08:27:33.131 PROGRAM'S INTERPRETATION OF INPUT DATA MADE BY:__LER__ DATE_6/08/12
Filename: M:\jobs\49633\Techprod\Bridges\Main Span (Unit 2)\Pier 11\RFI - Misa CHECKED BY:__KDG__ DATE_6/12/12
BACKCHECKED BY:_____ DATE_____
INPUT FILE: m:\jobs\49633\techprod\bridges\main span (unit 2)\pier 11\rfi - misalignment\pier\cap\pier 11 cap 0u2.bdf
INPUT FILE DATE: 06/08/2012 08:26:30
DLL VERSION: 1.2.2.7 DATE: 1/10/2012

ELEMENT SUMMARY:

ELEMENT TYPE	NUMBER OF ELEMENTS
FOOTINGS	2
DRILLED SHAFT	0
PILES	24
COLUMNS	2
CAP BEAMS	1

----- JOB DESCRIPTION AND INITIAL GEOMETRY -----

JOB NUMBER: 49633
JOB NAME: Pier 11 Updated 3-11-11
USER NAME: ajohn
DESIGN CODE: AASHTO 2010
NUMBER OF COLUMNS: 2
NUMBER OF CAPBEAMS: 1
NUMBER OF FOOTINGS: 2
UNITS: (English)

----- DESIGN OPTIONS -----

DESIGN OPTIONS:
CAP:
DESIGN CAPS: Yes
DESIGN METHOD: LRFD Design
FACE + D: No
DESIGN POINTS: All Points
STIFFEN CAPS OVER COLUMNS: No
COLUMN:
DESIGN COLS: No
DESIGN METHOD: LRFD Design
MOMENT MAG.: Apply Moment Magnification
LOCATION: Quarter Points
FOOTING:
DESIGN FOOTS: No
DESIGN METHOD: LRFD Design

LOAD MODIFIER FACTORS:
DUCTILITY: 1.000
REDUNDANCY: 1.000
IMPORTANCE: 1.050

----- ENVIRONMENTAL PARAMETERS -----

STREAM AND ICE FLOW DATA:
HIGH WATER ELEVATION: 0.000 (ft)
LOW WATER ELEVATION : 0.000 (ft)
STREAM VELOCITY: 0.0 (ft/sec)
FLOW DIRECTION: 0.000 (degrees)
LONGITUDINAL DRAG COEFF: 0.000
LATERAL DRAG COEFF: 0.000
EFFECTIVE NOSE WIDTH: 0.000 (ft)
NOSE INCLINATION: VERT: 0.000 (degrees) HORZ: 0.000 (degrees)
ICE FRICTION ANGLE: 0.000 (degrees)
ICE STRENGTH: 0.000 (psi)
ICE THICKNESS: 0.000 (in)

WIND PRESSURE INTENSITY DATA:
SUBSTRUCTURE:
DESIGN VELOCITY: 100.0 (mph)
WIND PRESSURE: 40.000 (psf)

SUPERSTRUCTURE:
DESIGN VELOCITY: 100.0 (mph)
OVERTURNING WIND PRESSURE: 20.000 (psf)
AASHTO STANDARD WIND PRESSURES HAVE BEEN USED, 3.8.1.2.2-1 AND 3.8.1.3-1.

Note: All wind pressures are applied using a base wind velocity of 100 mph. These values are increased or decreased in accordance with AASHTO 3.8.1.2.1 for Strength Limit State III only.

TEMPERATURE DATA:
TEMP RISE: 35.0 Fahr.
TEMP FALL: 45.0 Fahr.

----- CAP BEAM 1 DATA -----

SHEAR DESIGN USING SIMPLIFIED PROCEDURE, AASHTO 5.8.3.4.1

TOP OF CAP BEAM 1 REFERENCE LINE DATA:
NUMBER OF POINTS: 22
POINT 1: OFFSET: -101.396 (ft) ELEV: 686.500 (ft)
POINT 2: OFFSET: -95.560 (ft) ELEV: 686.500 (ft)
POINT 3: OFFSET: -85.870 (ft) ELEV: 686.500 (ft)
POINT 4: OFFSET: -84.896 (ft) ELEV: 686.500 (ft)
POINT 5: OFFSET: -77.896 (ft) ELEV: 686.500 (ft)
POINT 6: OFFSET: -76.180 (ft) ELEV: 686.500 (ft)
POINT 7: OFFSET: -66.490 (ft) ELEV: 686.500 (ft)
POINT 8: OFFSET: -63.500 (ft) ELEV: 686.500 (ft)

```
    POINT  9:  OFFSET:  -50.788 (ft)     ELEV:  686.500 (ft)
    POINT 10:  OFFSET:  -39.088 (ft)     ELEV:  686.500 (ft)
    POINT 11:  OFFSET:  -31.440 (ft)     ELEV:  686.500 (ft)
    POINT 12:  OFFSET:  -27.388 (ft)     ELEV:  686.500 (ft)
    POINT 13:  OFFSET:  -15.688 (ft)     ELEV:  686.500 (ft)
    POINT 14:  OFFSET:   -3.988 (ft)     ELEV:  686.500 (ft)
    POINT 15:  OFFSET:    0.620 (ft)     ELEV:  686.500 (ft)
    POINT 16:  OFFSET:    7.712 (ft)     ELEV:  686.500 (ft)
    POINT 17:  OFFSET:   17.604 (ft)     ELEV:  686.500 (ft)
    POINT 18:  OFFSET:   19.412 (ft)     ELEV:  686.500 (ft)
    POINT 19:  OFFSET:   24.604 (ft)     ELEV:  686.500 (ft)
    POINT 20:  OFFSET:   31.112 (ft)     ELEV:  686.500 (ft)
    POINT 21:  OFFSET:   32.680 (ft)     ELEV:  686.500 (ft)
    POINT 22:  OFFSET:   41.104 (ft)     ELEV:  686.500 (ft)

NUMBER OF SEGMENTS:  7
SEGMENT  1 DIMENSIONS:
  SHAPE:   Rectangular
  PROFILE: Linear
  BEGIN SECTION:
    DISTANCE:   -101.40 (ft)      DEPTH:  6.50 (ft)      TOP ELEV:   686.500 (ft)
    BOT SLOPE:   0.0000           WIDTH: 12.00 (ft)      BOT ELEV:   680.000 (ft)
  END SECTION:
    DISTANCE:    -84.90 (ft)      DEPTH: 16.00 (ft)      TOP ELEV:   686.500 (ft)
    BOT SLOPE:   0.0000           WIDTH: 12.00 (ft)      BOT ELEV:   670.500 (ft)

SEGMENT  2 DIMENSIONS:
  SHAPE:   Rectangular
  PROFILE: Linear
  BEGIN SECTION:
    DISTANCE:    -84.90 (ft)      DEPTH: 16.00 (ft)      TOP ELEV:   686.500 (ft)
    BOT SLOPE:   0.0000           WIDTH: 12.00 (ft)      BOT ELEV:   670.500 (ft)
  END SECTION:
    DISTANCE:    -70.90 (ft)      DEPTH: 16.00 (ft)      TOP ELEV:   686.500 (ft)
    BOT SLOPE:   0.0000           WIDTH: 12.00 (ft)      BOT ELEV:   670.500 (ft)

SEGMENT  3 DIMENSIONS:
  SHAPE:   Rectangular
  PROFILE: Linear
  BEGIN SECTION:
    DISTANCE:    -70.90 (ft)      DEPTH: 16.00 (ft)      TOP ELEV:   686.500 (ft)
    BOT SLOPE:   0.0000           WIDTH: 12.00 (ft)      BOT ELEV:   670.500 (ft)
  END SECTION:
    DISTANCE:    -57.40 (ft)      DEPTH: 11.00 (ft)      TOP ELEV:   686.500 (ft)
    BOT SLOPE:   0.0000           WIDTH: 12.00 (ft)      BOT ELEV:   675.500 (ft)

SEGMENT  4 DIMENSIONS:
  SHAPE:   Rectangular
  PROFILE: Linear
  BEGIN SECTION:
    DISTANCE:    -57.40 (ft)      DEPTH: 11.00 (ft)      TOP ELEV:   686.500 (ft)
    BOT SLOPE:   0.0000           WIDTH: 12.00 (ft)      BOT ELEV:   675.500 (ft)
  END SECTION:
    DISTANCE:     -2.90 (ft)      DEPTH: 11.00 (ft)      TOP ELEV:   686.500 (ft)
    BOT SLOPE:   0.0000           WIDTH: 12.00 (ft)      BOT ELEV:   675.500 (ft)

SEGMENT  5 DIMENSIONS:
  SHAPE:   Rectangular
  PROFILE: Linear
  BEGIN SECTION:
    DISTANCE:     -2.90 (ft)      DEPTH: 11.00 (ft)      TOP ELEV:   686.500 (ft)
    BOT SLOPE:   0.0000           WIDTH: 12.00 (ft)      BOT ELEV:   675.500 (ft)
  END SECTION:
    DISTANCE:     10.60 (ft)      DEPTH: 16.00 (ft)      TOP ELEV:   686.500 (ft)
    BOT SLOPE:   0.0000           WIDTH: 12.00 (ft)      BOT ELEV:   670.500 (ft)

SEGMENT  6 DIMENSIONS:
  SHAPE:   Rectangular
  PROFILE: Linear
  BEGIN SECTION:
    DISTANCE:     10.60 (ft)      DEPTH: 16.00 (ft)      TOP ELEV:   686.500 (ft)
    BOT SLOPE:   0.0000           WIDTH: 12.00 (ft)      BOT ELEV:   670.500 (ft)
  END SECTION:
    DISTANCE:     24.60 (ft)      DEPTH: 16.00 (ft)      TOP ELEV:   686.500 (ft)
    BOT SLOPE:   0.0000           WIDTH: 12.00 (ft)      BOT ELEV:   670.500 (ft)

SEGMENT  7 DIMENSIONS:
  SHAPE:   Rectangular
  PROFILE: Linear
  BEGIN SECTION:
    DISTANCE:     24.60 (ft)      DEPTH: 16.00 (ft)      TOP ELEV:   686.500 (ft)
    BOT SLOPE:   0.0000           WIDTH: 12.00 (ft)      BOT ELEV:   670.500 (ft)
  END SECTION:
    DISTANCE:     41.10 (ft)      DEPTH:  6.50 (ft)      TOP ELEV:   686.500 (ft)
    BOT SLOPE:   0.0000           WIDTH: 12.00 (ft)      BOT ELEV:   680.000 (ft)

NUMBER OF USER DEFINED DESIGN POINTS:  2
  USER DEFINED DESIGN POINT OFFSET DISTANCES:
     -66.396 (ft)       6.104 (ft)

REINFORCEMENT PARAMETERS:              CONCRETE PARAMETERS:
  YIELD  STRENGTH:    60.0 (ksi)         FPC:      4.0 (ksi)
  MIN COVER:    TOP:   2.0 (in)          WEIGHT: 150.0 (pcf)
             BOTTOM:   2.0 (in)          CTE:      0.0000060
               SIDE:   2.0 (in)
```

```
  STIRRUPS:    SIZE:   6
    NO.LEGS TORSION:   1
    NO.LEGS   TOTAL:   6
  EXPOSURE FACTOR:     0.750

REINFORCEMENT LAYER DATA:
  Layer   0: Layer located by distance to CL bar, parallel with top of beam
             Layer is designed for tension only.
             MIN SIZE: 11    MIN NUMBER OF BARS:  16    BEGIN DIST: ******* (ft)    BEGIN OFFSET:    3.455 (in)
             MAX SIZE: 11    MAX NUMBER OF BARS:  16    END DIST:    41.104 (ft)    END OFFSET:      3.455 (in)

  Layer   1: Layer located by distance to CL bar, parallel with top of beam
             Layer is designed for tension only.
             MIN SIZE: 11    MIN NUMBER OF BARS:  16    BEGIN DIST: ******* (ft)    BEGIN OFFSET:   11.455 (in)
             MAX SIZE: 11    MAX NUMBER OF BARS:  16    END DIST:    41.104 (ft)    END OFFSET:     11.455 (in)

  Layer   2: Layer located by distance to CL bar, parallel with bottom of beam
             Layer is designed for tension only.
             MIN SIZE: 11    MIN NUMBER OF BARS:  22    BEGIN DIST: ******* (ft)    BEGIN OFFSET:    3.455 (in)
             MAX SIZE: 11    MAX NUMBER OF BARS:  22    END DIST:    41.104 (ft)    END OFFSET:      3.455 (in)

  Layer   3: Layer located by distance to CL bar, parallel with bottom of beam
             Layer is designed for tension only.
             MIN SIZE: 11    MIN NUMBER OF BARS:  22    BEGIN DIST: -57.396 (ft)    BEGIN OFFSET:   11.455 (in)
             MAX SIZE: 11    MAX NUMBER OF BARS:  22    END DIST:    -2.896 (ft)    END OFFSET:     11.455 (in)

  Layer   4: Layer located by distance to CL bar, parallel with top of beam
             Layer is designed for tension only.
             MIN SIZE: 11    MIN NUMBER OF BARS:  16    BEGIN DIST: ******* (ft)    BEGIN OFFSET:   20.160 (in)
             MAX SIZE: 11    MAX NUMBER OF BARS:  16    END DIST:   -66.496 (ft)    END OFFSET:     20.160 (in)

  Layer   5: Layer located by distance to CL bar, parallel with top of beam
             Layer is designed for tension only.
             MIN SIZE: 11    MIN NUMBER OF BARS:  16    BEGIN DIST:   6.204 (ft)    BEGIN OFFSET:   20.160 (in)
             MAX SIZE: 11    MAX NUMBER OF BARS:  16    END DIST:    41.104 (ft)    END OFFSET:     20.160 (in)

  Layer   6: Layer located by distance to CL bar, parallel with top of beam
             Layer is designed for tension only.
             MIN SIZE: 11    MIN NUMBER OF BARS:  16    BEGIN DIST: ******* (ft)    BEGIN OFFSET:    4.865 (in)
             MAX SIZE: 11    MAX NUMBER OF BARS:  16    END DIST:    41.104 (ft)    END OFFSET:      4.865 (in)

  Layer   7: Layer located by distance to CL bar, parallel with top of beam
             Layer is designed for tension only.
             MIN SIZE: 11    MIN NUMBER OF BARS:  16    BEGIN DIST: ******* (ft)    BEGIN OFFSET:   12.865 (in)
             MAX SIZE: 11    MAX NUMBER OF BARS:  16    END DIST:    41.104 (ft)    END OFFSET:     12.865 (in)

  Layer   8: Layer located by distance to CL bar, parallel with bottom of beam
             Layer is designed for tension only.
             MIN SIZE: 11    MIN NUMBER OF BARS:  22    BEGIN DIST: ******* (ft)    BEGIN OFFSET:    4.865 (in)
             MAX SIZE: 11    MAX NUMBER OF BARS:  22    END DIST:    41.104 (ft)    END OFFSET:      4.865 (in)

  Layer   9: Layer located by distance to CL bar, parallel with bottom of beam
             Layer is designed for tension only.
             MIN SIZE: 11    MIN NUMBER OF BARS:  22    BEGIN DIST: -57.396 (ft)    BEGIN OFFSET:   12.865 (in)
             MAX SIZE: 11    MAX NUMBER OF BARS:  22    END DIST:    -2.896 (ft)    END OFFSET:     12.865 (in)

NUMBER OF SLABS:  3
  Slab No:  1   Label: Slab 1-1
  Slab No:  2   Label: Slab 1-2
  Slab No:  3   Label: Slab 1-3

----- SLAB 1 DATA ------------------------------------------------------------------------------------------

SLAB:  1     SLAB LABEL: Slab 1-1
CONNECTED TO: CAPBEAM  1
  SLAB LENGTH:    306.14 (ft)
  SLAB WIDTH:     131.94 (ft)
  SLAB THICK:      10.00 (in)
  DESIGN SPEED:     70.0 (mph)
  SLAB RADIUS:    3522.0 (ft)
  HAUNCH THICK:     2.00 (in)
  PIER SKEW:      18.000 (degrees)
  NUMBER OF ROADWAYS:  1

  SLAB  1 DIMENSIONS:
    LEFT FASCIA:              LEFT BARRIER:             LEFT SIDEWALK:
      WIDTH:    0.000 (in)      WIDTH:   18.000 (in)      WIDTH:    0.000 (ft)
                                HEIGHT:  32.000 (in)      THICK:    0.000 (in)

    ROADWAY 1 WIDTH = 128.940 (ft)

    RIGHT SIDEWALK:           RIGHT BARRIER:            RIGHT FASCIA:
      WIDTH:    0.000 (ft)      WIDTH:   18.000 (in)      WIDTH:    0.000 (in)
      THICK:    0.000 (in)      HEIGHT:  32.000 (in)

  SLAB  1 CROSS SLOPE DATA:
    NUMBER OF CROSS SLOPE VALUES:  2
      SLOPE: -0.0400          SLOPE: -0.0400
      DIST:   98.455 (ft)     DIST:   38.216 (ft)

  SLAB  1 GIRDER DATA:
    NUMBER OF GIRDERS:  5           GIRDER DEPTH AND PROFILE DISTANCES:
    SPAN LENGTH:                      BACK STATION:              PIER:                  FORWARD STATION:
      BACK STATION:  306.140 (ft)       DEPTH:     10.00 (ft)      DEPTH: 10.00 (ft)      DEPTH:      0.00 (ft)
      FWD STATION:     0.000 (ft)       DISTANCE: 306.14 (ft)                             DISTANCE:   0.00 (ft)
```

GIRDER LOCATION DATA:

NO.	NAME	DISTANCE (ft)	GIRDER TYPE	BOT FL WIDTH (in)	TOP FL WIDTH (in)	TOP FL ECCENT (in)	SKEW ANGLE (degrees)	BEARING OFFSET (in)	FIXITY
1	Girder 1	-93.225	I	0.00	0.00	0.00	18.000	-19.50	T
2	Girder 2	-61.162	I	0.00	0.00	0.00	18.000	-19.50	T
3	Girder 3	-29.098	I	0.00	0.00	0.00	18.000	-19.50	T
4	Girder 4	2.965	I	0.00	0.00	0.00	18.000	-19.50	T
5	Girder 5	35.029	I	0.00	0.00	0.00	18.000	-19.50	T

SLAB 1 BEARING DATA:
BEARING HEIGHT: 12.000 (in)
BEARING FRICTION COEFFICIENT: 0.060

----- SLAB 2 DATA -----

SLAB: 2 SLAB LABEL: Slab 1-2
CONNECTED TO: CAPBEAM 1
SLAB LENGTH: 240.00 (ft)
SLAB WIDTH: 37.00 (ft)
SLAB THICK: 9.25 (in)
DESIGN SPEED: 70.0 (mph)
SLAB RADIUS: 3274.0 (ft)
HAUNCH THICK: 3.50 (in)
PIER SKEW: 18.000 (degrees)
NUMBER OF ROADWAYS: 1

SLAB 2 DIMENSIONS:

LEFT FASCIA:	LEFT BARRIER:	LEFT SIDEWALK:
WIDTH: 0.000 (in)	WIDTH: 18.000 (in)	WIDTH: 0.000 (ft)
	HEIGHT: 32.000 (in)	THICK: 0.000 (in)

ROADWAY 1 WIDTH = 34.000 (ft)

RIGHT SIDEWALK:	RIGHT BARRIER:	RIGHT FASCIA:
WIDTH: 0.000 (ft)	WIDTH: 18.000 (in)	WIDTH: 0.000 (in)
THICK: 0.000 (in)	HEIGHT: 32.000 (in)	

SLAB 2 CROSS SLOPE DATA:
NUMBER OF CROSS SLOPE VALUES: 2

SLOPE: -0.0400	SLOPE: -0.0400
DIST: 37.234 (ft)	DIST: 61.221 (ft)

SLAB 2 GIRDER DATA:
NUMBER OF GIRDERS: 4 GIRDER DEPTH AND PROFILE DISTANCES:

SPAN LENGTH:	BACK STATION:	PIER:	FORWARD STATION:
BACK STATION: 0.000 (ft)	DEPTH: 0.00 (ft)	DEPTH: 8.17 (ft)	DEPTH: 8.17 (ft)
FWD STATION: 240.000 (ft)	DISTANCE: 0.00 (ft)		DISTANCE: 240.00 (ft)

GIRDER LOCATION DATA:

NO.	NAME	DISTANCE (ft)	GIRDER TYPE	BOT FL WIDTH (in)	TOP FL WIDTH (in)	TOP FL ECCENT (in)	SKEW ANGLE (degrees)	BEARING OFFSET (in)	FIXITY
1	Girder 1	-95.847	I	0.00	0.00	0.00	18.000	50.50	T
2	Girder 2	-85.540	I	0.00	0.00	0.00	18.000	50.50	T
3	Girder 3	-75.230	I	0.00	0.00	0.00	18.000	50.50	T
4	Girder 4	-64.917	I	0.00	0.00	0.00	18.000	50.50	T

SLAB 2 BEARING DATA:
BEARING HEIGHT: 40.000 (in)
BEARING FRICTION COEFFICIENT: 0.060

----- SLAB 3 DATA -----

SLAB: 3 SLAB LABEL: Slab 1-3
CONNECTED TO: CAPBEAM 1
SLAB LENGTH: 240.00 (ft)
SLAB WIDTH: 87.93 (ft)
SLAB THICK: 9.50 (in)
DESIGN SPEED: 70.0 (mph)
SLAB RADIUS: 3522.0 (ft)
HAUNCH THICK: 2.00 (in)
PIER SKEW: 18.000 (degrees)
NUMBER OF ROADWAYS: 1

SLAB 3 DIMENSIONS:

LEFT FASCIA:	LEFT BARRIER:	LEFT SIDEWALK:
WIDTH: 0.000 (in)	WIDTH: 18.000 (in)	WIDTH: 0.000 (ft)
	HEIGHT: 32.000 (in)	THICK: 0.000 (in)

ROADWAY 1 WIDTH = 84.929 (ft)

RIGHT SIDEWALK:	RIGHT BARRIER:	RIGHT FASCIA:
WIDTH: 0.000 (ft)	WIDTH: 18.000 (in)	WIDTH: 0.000 (in)
THICK: 0.000 (in)	HEIGHT: 32.000 (in)	

SLAB 3 CROSS SLOPE DATA:
NUMBER OF CROSS SLOPE VALUES: 2

SLOPE: -0.0400	SLOPE: -0.0400
DIST: 52.181 (ft)	DIST: 38.000 (ft)

SLAB 3 GIRDER DATA:
NUMBER OF GIRDERS: 9 GIRDER DEPTH AND PROFILE DISTANCES:
SPAN LENGTH: BACK STATION: PIER: FORWARD STATION:

```
      BACK STATION:    0.000 (ft)        DEPTH:      0.00 (ft)      DEPTH:  8.27 (ft)      DEPTH:      8.27 (ft)
      FWD STATION:   240.000 (ft)        DISTANCE:   0.00 (ft)                             DISTANCE: 240.00 (ft)

    GIRDER LOCATION DATA:
      NO.    NAME           DISTANCE   GIRDER   BOT FL   TOP FL   TOP FL    SKEW     BEARING   FIXITY
                                        TYPE     WIDTH    WIDTH    ECCENT    ANGLE     OFFSET
                              (ft)               (in)     (in)     (in)   (degrees)    (in)
       1  Girder 1          -49.440       I       0.00     0.00     0.00    18.000     50.50      T
       2  Girder 2          -37.671       I       0.00     0.00     0.00    18.000     50.50      T
       3  Girder 3          -25.897       I       0.00     0.00     0.00    18.000     50.50      T
       4  Girder 4          -14.118       I       0.00     0.00     0.00    18.000     50.50      T
       5  Girder 5           -7.655       I       0.00     0.00     0.00    18.000     50.50      T
       6  Girder 6           -1.192       I       0.00     0.00     0.00    18.000     50.50      T
       7  Girder 7           10.483       I       0.00     0.00     0.00    18.000     50.50      T
       8  Girder 8           22.162       I       0.00     0.00     0.00    18.000     50.50      T
       9  Girder 9           33.844       I       0.00     0.00     0.00    18.000     50.50      T

  SLAB  3 BEARING DATA:
    BEARING HEIGHT:  40.000 (in)
    BEARING FRICTION COEFFICIENT:    0.060

----- COLUMN  1 DATA ------------------------------------------------------------------------------------------

  COLUMN LINE OFFSET:  -77.896 (ft)
  NUMBER OF LEVELS:  1
  COLUMN FACE LOCATIONS:
    CAPBEAM: -TRAN:    84.00 (in)     +TRAN:    84.00 (in)
    FOOTING: -TRAN:    84.00 (in)     +TRAN:    84.00 (in)     -LONG:    72.00 (in)     +LONG:    72.00 (in)
  COLUMN:  1  LEVEL: 1
    NUMBER OF SEGMENTS:  1
    MAGNIFICATION FACTORS:    K-TRAN:  1.20         K-LONG:  2.10
    ECCENTRICITIES:             TRAN:  0.000 (ft)     LONG:  0.000 (ft)
    ROTATION ANGLE:      0.000 (degrees)
    SEGMENT  1 DIMENSIONS:
      SHAPE:   User Defined
      BEGIN SECTION:
        TOP ELEV:    670.500 (ft)
        TORSIONAL CONSTANT J:       0.437E+08 (in**4)
          NUMBER OF FACES: 18
            FACE  1: BEG  X:    -84.000 (in)     Y:    -60.000 (in)     Rad:      0.000 (in)
                     END  X:    -72.000 (in)     Y:    -60.000 (in)
            FACE  2: BEG  X:    -72.000 (in)     Y:    -60.000 (in)     Rad:      0.000 (in)
                     END  X:    -72.000 (in)     Y:    -72.000 (in)
            FACE  3: BEG  X:    -72.000 (in)     Y:    -72.000 (in)     Rad:      0.000 (in)
                     END  X:     72.000 (in)     Y:    -72.000 (in)
            FACE  4: BEG  X:     72.000 (in)     Y:    -72.000 (in)     Rad:      0.000 (in)
                     END  X:     72.000 (in)     Y:    -60.000 (in)
            FACE  5: BEG  X:     72.000 (in)     Y:    -60.000 (in)     Rad:      0.000 (in)
                     END  X:     84.000 (in)     Y:    -60.000 (in)
            FACE  6: BEG  X:     84.000 (in)     Y:    -60.000 (in)     Rad:      0.000 (in)
                     END  X:     84.000 (in)     Y:     60.000 (in)
            FACE  7: BEG  X:     84.000 (in)     Y:     60.000 (in)     Rad:      0.000 (in)
                     END  X:     72.000 (in)     Y:     60.000 (in)
            FACE  8: BEG  X:     72.000 (in)     Y:     60.000 (in)     Rad:      0.000 (in)
                     END  X:     72.000 (in)     Y:     72.000 (in)
            FACE  9: BEG  X:     72.000 (in)     Y:     72.000 (in)     Rad:      0.000 (in)
                     END  X:    -72.000 (in)     Y:     72.000 (in)
            FACE 10: BEG  X:    -72.000 (in)     Y:     72.000 (in)     Rad:      0.000 (in)
                     END  X:    -72.000 (in)     Y:     60.000 (in)
            FACE 11: BEG  X:    -72.000 (in)     Y:     60.000 (in)     Rad:      0.000 (in)
                     END  X:    -84.000 (in)     Y:     60.000 (in)
            FACE 12: BEG  X:    -84.000 (in)     Y:     60.000 (in)     Rad:      0.000 (in)
                     END  X:    -84.000 (in)     Y:    -60.000 (in)
            FACE 13: BEG  X:    -84.000 (in)     Y:    -60.000 (in)     Rad:      0.000 (in)
                     END  X:    -48.000 (in)     Y:    -48.000 (in)
            FACE 14: BEG  X:    -48.000 (in)     Y:    -48.000 (in)     Rad:      0.000 (in)
                     END  X:    -48.000 (in)     Y:     48.000 (in)
            FACE 15: BEG  X:    -48.000 (in)     Y:     48.000 (in)     Rad:      0.000 (in)
                     END  X:     48.000 (in)     Y:     48.000 (in)
            FACE 16: BEG  X:     48.000 (in)     Y:     48.000 (in)     Rad:      0.000 (in)
                     END  X:     48.000 (in)     Y:    -48.000 (in)
            FACE 17: BEG  X:     48.000 (in)     Y:    -48.000 (in)     Rad:      0.000 (in)
                     END  X:    -48.000 (in)     Y:    -48.000 (in)
            FACE 18: BEG  X:    -48.000 (in)     Y:    -48.000 (in)     Rad:      0.000 (in)
                     END  X:    -84.000 (in)     Y:    -60.000 (in)
      END SECTION:
        BOT ELEV:    603.000 (ft)
        TORSIONAL CONSTANT J:       0.437E+08 (in**4)
          NUMBER OF FACES: 18
            FACE  1: BEG  X:    -84.000 (in)     Y:    -60.000 (in)     Rad:      0.000 (in)
                     END  X:    -72.000 (in)     Y:    -60.000 (in)
            FACE  2: BEG  X:    -72.000 (in)     Y:    -60.000 (in)     Rad:      0.000 (in)
                     END  X:    -72.000 (in)     Y:    -72.000 (in)
            FACE  3: BEG  X:    -72.000 (in)     Y:    -72.000 (in)     Rad:      0.000 (in)
                     END  X:     72.000 (in)     Y:    -72.000 (in)
            FACE  4: BEG  X:     72.000 (in)     Y:    -72.000 (in)     Rad:      0.000 (in)
                     END  X:     72.000 (in)     Y:    -60.000 (in)
            FACE  5: BEG  X:     72.000 (in)     Y:    -60.000 (in)     Rad:      0.000 (in)
                     END  X:     84.000 (in)     Y:    -60.000 (in)
            FACE  6: BEG  X:     84.000 (in)     Y:    -60.000 (in)     Rad:      0.000 (in)
                     END  X:     84.000 (in)     Y:     60.000 (in)
            FACE  7: BEG  X:     84.000 (in)     Y:     60.000 (in)     Rad:      0.000 (in)
                     END  X:     72.000 (in)     Y:     60.000 (in)
            FACE  8: BEG  X:     72.000 (in)     Y:     60.000 (in)     Rad:      0.000 (in)
                     END  X:     72.000 (in)     Y:     72.000 (in)
```

```
        FACE  9: BEG  X:     72.000 (in)     Y:     72.000 (in)     Rad:      0.000 (in)
                  END  X:    -72.000 (in)     Y:     72.000 (in)
        FACE 10: BEG  X:    -72.000 (in)     Y:     72.000 (in)     Rad:      0.000 (in)
                  END  X:    -72.000 (in)     Y:     60.000 (in)
        FACE 11: BEG  X:    -72.000 (in)     Y:     60.000 (in)     Rad:      0.000 (in)
                  END  X:    -84.000 (in)     Y:     60.000 (in)
        FACE 12: BEG  X:    -84.000 (in)     Y:     60.000 (in)     Rad:      0.000 (in)
                  END  X:    -84.000 (in)     Y:    -60.000 (in)
        FACE 13: BEG  X:    -84.000 (in)     Y:    -60.000 (in)     Rad:      0.000 (in)
                  END  X:    -48.000 (in)     Y:    -48.000 (in)
        FACE 14: BEG  X:    -48.000 (in)     Y:    -48.000 (in)     Rad:      0.000 (in)
                  END  X:    -48.000 (in)     Y:     48.000 (in)
        FACE 15: BEG  X:    -48.000 (in)     Y:     48.000 (in)     Rad:      0.000 (in)
                  END  X:     48.000 (in)     Y:     48.000 (in)
        FACE 16: BEG  X:     48.000 (in)     Y:     48.000 (in)     Rad:      0.000 (in)
                  END  X:     48.000 (in)     Y:    -48.000 (in)
        FACE 17: BEG  X:     48.000 (in)     Y:    -48.000 (in)     Rad:      0.000 (in)
                  END  X:    -48.000 (in)     Y:    -48.000 (in)
        FACE 18: BEG  X:    -48.000 (in)     Y:    -48.000 (in)     Rad:      0.000 (in)
                  END  X:    -84.000 (in)     Y:    -60.000 (in)
REINFORCEMENT PARAMETERS:                   CONCRETE PARAMETERS:
  YIELD  STRENGTH:   60.0 (ksi)               FPC:      4.0 (ksi)
  CONTAINMENT BARS:   TYPE:   Tied            WEIGHT: 150.0 (pcf)
                      SIZE:   6               CTE:      0.0000060
  DISTANCE TO CL VERT BARS:   0.000 (in)
  PERCENT STEEL:       MIN:    1.00
                       MAX:    8.00

COLUMN REINFORCEMENT DATA:
  NUMBER OF REINFORCEMENT SECTIONS:  3
    SECTION  1 DATA:
      SHAPE: Rectangular           TRAN OFFSET:    0.00 (in)       TOP ELEV:   675.50 (ft)
      NUMBER OF FACES:  4          LONG OFFSET:    0.00 (in)       BOT ELEV:   603.00 (ft)
        FACE DATA:
          FACE NUMBER:           1            2            3            4
          TOP BEG X COORD:   -66.92 (in)    66.92 (in)    66.92 (in)   -66.92 (in)
          TOP BEG Y COORD:   -66.92 (in)   -66.92 (in)    66.92 (in)    66.92 (in)
          TOP END X COORD:    66.92 (in)    66.92 (in)   -66.92 (in)   -66.92 (in)
          TOP END Y COORD:   -66.92 (in)    66.92 (in)    66.92 (in)   -66.92 (in)
          TOP RADIUS:          0.00 (in)     0.00 (in)     0.00 (in)     0.00 (in)

          BOT BEG X COORD:   -66.92 (in)    66.92 (in)    66.92 (in)   -66.92 (in)
          BOT BEG Y COORD:   -66.92 (in)   -66.92 (in)    66.92 (in)    66.92 (in)
          BOT END X COORD:    66.92 (in)    66.92 (in)   -66.92 (in)   -66.92 (in)
          BOT END Y COORD:   -66.92 (in)    66.92 (in)    66.92 (in)   -66.92 (in)
          BOT RADIUS:          0.00 (in)     0.00 (in)     0.00 (in)     0.00 (in)

          BARSIZE:               11            11            11            11
          BARS/BUNDLE:            1             1             1             1
          MIN NUM BARS:          13            13            13            13
          MAX NUM BARS:          13            13            13            13
          BAR AT BEG:           Yes            No           Yes            No
          BAR AT END:           Yes            No           Yes            No

    SECTION  2 DATA:
      SHAPE: Square                TRAN OFFSET:    0.00 (in)       TOP ELEV:   675.50 (ft)
      NUMBER OF FACES:  4          LONG OFFSET:    0.00 (in)       BOT ELEV:   603.00 (ft)
        FACE DATA:
          FACE NUMBER:           1            2            3            4
          TOP BEG X COORD:   -53.08 (in)    53.08 (in)    53.08 (in)   -53.08 (in)
          TOP BEG Y COORD:   -53.08 (in)   -53.08 (in)    53.08 (in)    53.08 (in)
          TOP END X COORD:    53.08 (in)    53.08 (in)   -53.08 (in)   -53.08 (in)
          TOP END Y COORD:   -53.08 (in)    53.08 (in)    53.08 (in)   -53.08 (in)
          TOP RADIUS:          0.00 (in)     0.00 (in)     0.00 (in)     0.00 (in)

          BOT BEG X COORD:   -53.08 (in)    53.08 (in)    53.08 (in)   -53.08 (in)
          BOT BEG Y COORD:   -53.08 (in)   -53.08 (in)    53.08 (in)    53.08 (in)
          BOT END X COORD:    53.08 (in)    53.08 (in)   -53.08 (in)   -53.08 (in)
          BOT END Y COORD:   -53.08 (in)    53.08 (in)    53.08 (in)   -53.08 (in)
          BOT RADIUS:          0.00 (in)     0.00 (in)     0.00 (in)     0.00 (in)

          BARSIZE:               11            11            11            11
          BARS/BUNDLE:            1             1             1             1
          MIN NUM BARS:          11             9            11             9
          MAX NUM BARS:          11             9            11             9
          BAR AT BEG:           Yes            No           Yes            No
          BAR AT END:           Yes            No           Yes            No

    SECTION  3 DATA:
      SHAPE: Rectangular           TRAN OFFSET:    0.00 (in)       TOP ELEV:   675.50 (ft)
      NUMBER OF FACES:  4          LONG OFFSET:    0.00 (in)       BOT ELEV:   603.00 (ft)
        FACE DATA:
          FACE NUMBER:           1            2            3            4
          TOP BEG X COORD:   -79.05 (in)    79.05 (in)    79.05 (in)   -79.05 (in)
          TOP BEG Y COORD:   -55.05 (in)   -55.05 (in)    55.05 (in)    55.05 (in)
          TOP END X COORD:    79.05 (in)    79.05 (in)   -79.05 (in)   -79.05 (in)
          TOP END Y COORD:   -55.05 (in)    55.05 (in)    55.05 (in)   -55.05 (in)
          TOP RADIUS:          0.00 (in)     0.00 (in)     0.00 (in)     0.00 (in)

          BOT BEG X COORD:   -79.05 (in)    79.05 (in)    79.05 (in)   -79.05 (in)
          BOT BEG Y COORD:   -55.05 (in)   -55.05 (in)    55.05 (in)    55.05 (in)
          BOT END X COORD:    79.05 (in)    79.05 (in)   -79.05 (in)   -79.05 (in)
          BOT END Y COORD:   -55.05 (in)    55.05 (in)    55.05 (in)   -55.05 (in)
          BOT RADIUS:          0.00 (in)     0.00 (in)     0.00 (in)     0.00 (in)
```

```
            BARSIZE:               11           11           11           11
            BARS/BUNDLE:            1            1            1            1
            MIN NUM BARS:           0            6            0            6
            MAX NUM BARS:           0            6            0            6
            BAR AT BEG:            No          Yes           No          Yes
            BAR AT END:            No          Yes           No          Yes


----- COLUMN  2 DATA ------------------------------------------------------------------------------------------

  COLUMN LINE OFFSET:   17.604 (ft)
  NUMBER OF LEVELS:  1
  COLUMN FACE LOCATIONS:
    CAPBEAM: -TRAN:    84.00 (in)     +TRAN:    84.00 (in)
    FOOTING: -TRAN:    84.00 (in)     +TRAN:    84.00 (in)     -LONG:    72.00 (in)     +LONG:    72.00 (in)
  COLUMN:  2  LEVEL: 1
    NUMBER OF SEGMENTS:  1
    MAGNIFICATION FACTORS:    K-TRAN:  1.20         K-LONG:  2.10
    ECCENTRICITIES:             TRAN:  0.000 (ft)     LONG:  0.000 (ft)
    ROTATION ANGLE:      0.000 (degrees)
    SEGMENT  1 DIMENSIONS:
      SHAPE:   User Defined
      BEGIN SECTION:
        TOP ELEV:    670.500 (ft)
        TORSIONAL CONSTANT J:       0.437E+08 (in**4)
          NUMBER OF FACES: 18
            FACE  1: BEG  X:    -84.000 (in)     Y:    -60.000 (in)     Rad:      0.000 (in)
                     END  X:    -72.000 (in)     Y:    -60.000 (in)
            FACE  2: BEG  X:    -72.000 (in)     Y:    -60.000 (in)     Rad:      0.000 (in)
                     END  X:    -72.000 (in)     Y:    -72.000 (in)
            FACE  3: BEG  X:    -72.000 (in)     Y:    -72.000 (in)     Rad:      0.000 (in)
                     END  X:     72.000 (in)     Y:    -72.000 (in)
            FACE  4: BEG  X:     72.000 (in)     Y:    -72.000 (in)     Rad:      0.000 (in)
                     END  X:     72.000 (in)     Y:    -60.000 (in)
            FACE  5: BEG  X:     72.000 (in)     Y:    -60.000 (in)     Rad:      0.000 (in)
                     END  X:     84.000 (in)     Y:    -60.000 (in)
            FACE  6: BEG  X:     84.000 (in)     Y:    -60.000 (in)     Rad:      0.000 (in)
                     END  X:     84.000 (in)     Y:     60.000 (in)
            FACE  7: BEG  X:     84.000 (in)     Y:     60.000 (in)     Rad:      0.000 (in)
                     END  X:     72.000 (in)     Y:     60.000 (in)
            FACE  8: BEG  X:     72.000 (in)     Y:     60.000 (in)     Rad:      0.000 (in)
                     END  X:     72.000 (in)     Y:     72.000 (in)
            FACE  9: BEG  X:     72.000 (in)     Y:     72.000 (in)     Rad:      0.000 (in)
                     END  X:    -72.000 (in)     Y:     72.000 (in)
            FACE 10: BEG  X:    -72.000 (in)     Y:     72.000 (in)     Rad:      0.000 (in)
                     END  X:    -72.000 (in)     Y:     60.000 (in)
            FACE 11: BEG  X:    -72.000 (in)     Y:     60.000 (in)     Rad:      0.000 (in)
                     END  X:    -84.000 (in)     Y:     60.000 (in)
            FACE 12: BEG  X:    -84.000 (in)     Y:     60.000 (in)     Rad:      0.000 (in)
                     END  X:    -84.000 (in)     Y:    -60.000 (in)
            FACE 13: BEG  X:    -84.000 (in)     Y:    -60.000 (in)     Rad:      0.000 (in)
                     END  X:    -48.000 (in)     Y:    -48.000 (in)
            FACE 14: BEG  X:    -48.000 (in)     Y:    -48.000 (in)     Rad:      0.000 (in)
                     END  X:    -48.000 (in)     Y:     48.000 (in)
            FACE 15: BEG  X:    -48.000 (in)     Y:     48.000 (in)     Rad:      0.000 (in)
                     END  X:     48.000 (in)     Y:     48.000 (in)
            FACE 16: BEG  X:     48.000 (in)     Y:     48.000 (in)     Rad:      0.000 (in)
                     END  X:     48.000 (in)     Y:    -48.000 (in)
            FACE 17: BEG  X:     48.000 (in)     Y:    -48.000 (in)     Rad:      0.000 (in)
                     END  X:    -48.000 (in)     Y:    -48.000 (in)
            FACE 18: BEG  X:    -48.000 (in)     Y:    -48.000 (in)     Rad:      0.000 (in)
                     END  X:    -84.000 (in)     Y:    -60.000 (in)
      END SECTION:
        BOT ELEV:    603.000 (ft)
        TORSIONAL CONSTANT J:       0.437E+08 (in**4)
          NUMBER OF FACES: 18
            FACE  1: BEG  X:    -84.000 (in)     Y:    -60.000 (in)     Rad:      0.000 (in)
                     END  X:    -72.000 (in)     Y:    -60.000 (in)
            FACE  2: BEG  X:    -72.000 (in)     Y:    -60.000 (in)     Rad:      0.000 (in)
                     END  X:    -72.000 (in)     Y:    -72.000 (in)
            FACE  3: BEG  X:    -72.000 (in)     Y:    -72.000 (in)     Rad:      0.000 (in)
                     END  X:     72.000 (in)     Y:    -72.000 (in)
            FACE  4: BEG  X:     72.000 (in)     Y:    -72.000 (in)     Rad:      0.000 (in)
                     END  X:     72.000 (in)     Y:    -60.000 (in)
            FACE  5: BEG  X:     72.000 (in)     Y:    -60.000 (in)     Rad:      0.000 (in)
                     END  X:     84.000 (in)     Y:    -60.000 (in)
            FACE  6: BEG  X:     84.000 (in)     Y:    -60.000 (in)     Rad:      0.000 (in)
                     END  X:     84.000 (in)     Y:     60.000 (in)
            FACE  7: BEG  X:     84.000 (in)     Y:     60.000 (in)     Rad:      0.000 (in)
                     END  X:     72.000 (in)     Y:     60.000 (in)
            FACE  8: BEG  X:     72.000 (in)     Y:     60.000 (in)     Rad:      0.000 (in)
                     END  X:     72.000 (in)     Y:     72.000 (in)
            FACE  9: BEG  X:     72.000 (in)     Y:     72.000 (in)     Rad:      0.000 (in)
                     END  X:    -72.000 (in)     Y:     72.000 (in)
            FACE 10: BEG  X:    -72.000 (in)     Y:     72.000 (in)     Rad:      0.000 (in)
                     END  X:    -72.000 (in)     Y:     60.000 (in)
            FACE 11: BEG  X:    -72.000 (in)     Y:     60.000 (in)     Rad:      0.000 (in)
                     END  X:    -84.000 (in)     Y:     60.000 (in)
            FACE 12: BEG  X:    -84.000 (in)     Y:     60.000 (in)     Rad:      0.000 (in)
                     END  X:    -84.000 (in)     Y:    -60.000 (in)
            FACE 13: BEG  X:    -84.000 (in)     Y:    -60.000 (in)     Rad:      0.000 (in)
                     END  X:    -48.000 (in)     Y:    -48.000 (in)
            FACE 14: BEG  X:    -48.000 (in)     Y:    -48.000 (in)     Rad:      0.000 (in)
                     END  X:    -48.000 (in)     Y:     48.000 (in)
            FACE 15: BEG  X:    -48.000 (in)     Y:     48.000 (in)     Rad:      0.000 (in)
```

```
                END  X:     48.000 (in)     Y:     48.000 (in)
        FACE 16: BEG  X:     48.000 (in)     Y:     48.000 (in)     Rad:      0.000 (in)
                END  X:     48.000 (in)     Y:    -48.000 (in)
        FACE 17: BEG  X:     48.000 (in)     Y:    -48.000 (in)     Rad:      0.000 (in)
                END  X:    -48.000 (in)     Y:    -48.000 (in)
        FACE 18: BEG  X:    -48.000 (in)     Y:    -48.000 (in)     Rad:      0.000 (in)
                END  X:    -84.000 (in)     Y:    -60.000 (in)
  REINFORCEMENT PARAMETERS:                  CONCRETE PARAMETERS:
    YIELD  STRENGTH:   60.0 (ksi)              FPC:      4.0 (ksi)
    CONTAINMENT BARS:   TYPE:   Tied           WEIGHT: 150.0 (pcf)
                        SIZE:   6              CTE:      0.0000060
    DISTANCE TO CL VERT BARS:   0.000 (in)
    PERCENT STEEL:       MIN:    1.00
                         MAX:    8.00

  COLUMN REINFORCEMENT DATA:
    NUMBER OF REINFORCEMENT SECTIONS:  3
      SECTION  1 DATA:
        SHAPE: Rectangular           TRAN OFFSET:    0.00 (in)       TOP ELEV:   675.50 (ft)
        NUMBER OF FACES:  4          LONG OFFSET:    0.00 (in)       BOT ELEV:   603.00 (ft)
          FACE DATA:
            FACE NUMBER:            1             2             3             4
            TOP BEG X COORD:   -66.92 (in)    66.92 (in)    66.92 (in)   -66.92 (in)
            TOP BEG Y COORD:   -66.92 (in)   -66.92 (in)    66.92 (in)    66.92 (in)
            TOP END X COORD:    66.92 (in)    66.92 (in)   -66.92 (in)   -66.92 (in)
            TOP END Y COORD:   -66.92 (in)    66.92 (in)    66.92 (in)   -66.92 (in)
            TOP RADIUS:          0.00 (in)     0.00 (in)     0.00 (in)     0.00 (in)

            BOT BEG X COORD:   -66.92 (in)    66.92 (in)    66.92 (in)   -66.92 (in)
            BOT BEG Y COORD:   -66.92 (in)   -66.92 (in)    66.92 (in)    66.92 (in)
            BOT END X COORD:    66.92 (in)    66.92 (in)   -66.92 (in)   -66.92 (in)
            BOT END Y COORD:   -66.92 (in)    66.92 (in)    66.92 (in)   -66.92 (in)
            BOT RADIUS:          0.00 (in)     0.00 (in)     0.00 (in)     0.00 (in)

            BARSIZE:               11            11            11            11
            BARS/BUNDLE:            1             1             1             1
            MIN NUM BARS:          13            13            13            13
            MAX NUM BARS:          13            13            13            13
            BAR AT BEG:           Yes            No           Yes            No
            BAR AT END:           Yes            No           Yes            No

      SECTION  2 DATA:
        SHAPE: Square                TRAN OFFSET:    0.00 (in)       TOP ELEV:   675.50 (ft)
        NUMBER OF FACES:  4          LONG OFFSET:    0.00 (in)       BOT ELEV:   603.00 (ft)
          FACE DATA:
            FACE NUMBER:            1             2             3             4
            TOP BEG X COORD:   -53.08 (in)    53.08 (in)    53.08 (in)   -53.08 (in)
            TOP BEG Y COORD:   -53.08 (in)   -53.08 (in)    53.08 (in)    53.08 (in)
            TOP END X COORD:    53.08 (in)    53.08 (in)   -53.08 (in)   -53.08 (in)
            TOP END Y COORD:   -53.08 (in)    53.08 (in)    53.08 (in)   -53.08 (in)
            TOP RADIUS:          0.00 (in)     0.00 (in)     0.00 (in)     0.00 (in)

            BOT BEG X COORD:   -53.08 (in)    53.08 (in)    53.08 (in)   -53.08 (in)
            BOT BEG Y COORD:   -53.08 (in)   -53.08 (in)    53.08 (in)    53.08 (in)
            BOT END X COORD:    53.08 (in)    53.08 (in)   -53.08 (in)   -53.08 (in)
            BOT END Y COORD:   -53.08 (in)    53.08 (in)    53.08 (in)   -53.08 (in)
            BOT RADIUS:          0.00 (in)     0.00 (in)     0.00 (in)     0.00 (in)

            BARSIZE:               11            11            11            11
            BARS/BUNDLE:            1             1             1             1
            MIN NUM BARS:          11             9            11             9
            MAX NUM BARS:          11             9            11             9
            BAR AT BEG:           Yes            No           Yes            No
            BAR AT END:           Yes            No           Yes            No

      SECTION  3 DATA:
        SHAPE: Rectangular           TRAN OFFSET:    0.00 (in)       TOP ELEV:   675.50 (ft)
        NUMBER OF FACES:  4          LONG OFFSET:    0.00 (in)       BOT ELEV:   603.00 (ft)
          FACE DATA:
            FACE NUMBER:            1             2             3             4
            TOP BEG X COORD:   -79.05 (in)    79.05 (in)    79.05 (in)   -79.05 (in)
            TOP BEG Y COORD:   -55.05 (in)   -55.05 (in)    55.05 (in)    55.05 (in)
            TOP END X COORD:    79.05 (in)    79.05 (in)   -79.05 (in)   -79.05 (in)
            TOP END Y COORD:   -55.05 (in)    55.05 (in)    55.05 (in)   -55.05 (in)
            TOP RADIUS:          0.00 (in)     0.00 (in)     0.00 (in)     0.00 (in)

            BOT BEG X COORD:   -79.05 (in)    79.05 (in)    79.05 (in)   -79.05 (in)
            BOT BEG Y COORD:   -55.05 (in)   -55.05 (in)    55.05 (in)    55.05 (in)
            BOT END X COORD:    79.05 (in)    79.05 (in)   -79.05 (in)   -79.05 (in)
            BOT END Y COORD:   -55.05 (in)    55.05 (in)    55.05 (in)   -55.05 (in)
            BOT RADIUS:          0.00 (in)     0.00 (in)     0.00 (in)     0.00 (in)

            BARSIZE:               11            11            11            11
            BARS/BUNDLE:            1             1             1             1
            MIN NUM BARS:           0             6             0             6
            MAX NUM BARS:           0             6             0             6
            BAR AT BEG:            No           Yes            No           Yes
            BAR AT END:            No           Yes            No           Yes


----- FOOTING  1 DATA ------------------------------------------------------------------------------------------

  FOOTING TYPE: Pile Footing
  TOP OF FOOTING ELEVATION:  603.000 (ft)     ROTATION ANGLE:     0.000 (degrees)
  SHEAR DESIGN USING SIMPLIFIED PROCEDURE, AASHTO 5.8.3.4.1
```

REINFORCEMENT PARAMETERS:
YIELD STRENGTH: 60.0 (ksi)
MIN COVER: TOP: 3.0 (in)
BOTTOM: 3.0 (in)
SIDE: 3.0 (in)
STIRRUPS: SIZE: 0
NO.LEGS TOTAL: 0
EXPOSURE FACTOR: 1.000

CONCRETE PARAMETERS:
FPC: 4.0 (ksi)
WEIGHT: 150.0 (pcf)
CTE: 0.0000060

SOIL PARAMETERS:
SOIL ELEVATION: 628.000 (ft)
SOIL WEIGHT: 120.0 (pcf)
SOIL CAPACITY:
UNFACTORED: 0.000 (ksf)
FACTORED: 0.000 (ksf)

FOOTING DIMENSIONS:
TRANSVERSE: 38.000 (ft)
LONGITUDINAL: 38.000 (ft)
DEPTH: 10.000 (ft)

LOCATION OF FIRST COLUMN:
TRANSVERSE: 19.000 (ft)
LONGITUDINAL: 19.000 (ft)

REINFORCEMENT LAYER DATA:
BOTTOM MAT: Transverse bars on bottom at min cover of 3.000 (in) from bottom of footing.
Longitudinal Bars:
MIN SIZE: 8 MIN NUMBER OF BARS: 2
MAX SIZE: 8 MAX NUMBER OF BARS: 10
Transverse Bars:
MIN SIZE: 8 MIN NUMBER OF BARS: 2
MAX SIZE: 8 MAX NUMBER OF BARS: 10

TOP MAT: Longitudinal bars on top at min cover of 3.000 (in) from top of footing.
Transverse Bars:
MIN SIZE: 8 MIN NUMBER OF BARS: 2
MAX SIZE: 8 MAX NUMBER OF BARS: 10
Longitudinal Bars:
MIN SIZE: 8 MIN NUMBER OF BARS: 2
MAX SIZE: 8 MAX NUMBER OF BARS: 10

FOOTING SUPPORT FIXITY:

	DISPLACEMENT	ROTATION ABOUT
TRANSVERSE	Rigid	Rigid
VERTICAL	Rigid	Rigid
LONGITUDINAL	Rigid	Rigid

PILE DATA:

PILE NO.	LABEL	SHAPE	MATL CODE	STIFF CODE	EFF. DIA. (in)	TRAN Z (ft)	LONG X (ft)	VERT Y (ft)	BATTER (1H:__V)	ROTATION (degrees)	AXIAL CAPACITY SERV (kips)	AXIAL CAPACITY STR (kips)
1	R:1 C:1	HP14x117	0	1	8.8	-16.00	-16.00	7.42	0.0	90.0	0	0
2	R:1 C:3	HP14x117	0	1	8.8	0.00	-16.00	7.42	0.0	90.0	0	0
3	R:1 C:5	HP14x117	0	1	8.8	16.00	-16.00	7.42	0.0	90.0	0	0
4	R:2 C:2	HP14x117	0	1	8.8	-8.00	-8.00	7.42	0.0	90.0	0	0
5	R:2 C:4	HP14x117	0	1	8.8	8.00	-8.00	7.42	0.0	90.0	0	0
6	R:3 C:1	HP14x117	0	1	8.8	-16.00	0.00	7.42	0.0	90.0	0	0
7	R:3 C:5	HP14x117	0	1	8.8	16.00	0.00	7.42	0.0	90.0	0	0
8	R:4 C:2	HP14x117	0	1	8.8	-8.00	8.00	7.42	0.0	90.0	0	0
9	R:4 C:4	HP14x117	0	1	8.8	8.00	8.00	7.42	0.0	90.0	0	0
10	R:5 C:1	HP14x117	0	1	8.8	-16.00	16.00	7.42	0.0	90.0	0	0
11	R:5 C:3	HP14x117	0	1	8.8	0.00	16.00	7.42	0.0	90.0	0	0
12	R:5 C:5	HP14x117	0	1	8.8	16.00	16.00	7.42	0.0	90.0	0	0

PILE STIFFNESS COEFFICIENT TABLE DATA:

TABLE NO.	C(1) k/in	C(2) k/in	C(3) in-k/in	C(4) k/in	C(5) in-k/in	C(6) in-k/rad	C(7) k/rad	C(8) in-k/rad	C(9) k/rad	C(10) in-k/rad
1	10.0	10.0	0.00	10.0	0.00	0.00	0.00	0.00	0.00	0.00

----- FOOTING 2 DATA -----

FOOTING TYPE: Pile Footing
TOP OF FOOTING ELEVATION: 603.000 (ft) ROTATION ANGLE: 0.000 (degrees)
SHEAR DESIGN USING SIMPLIFIED PROCEDURE, AASHTO 5.8.3.4.1

REINFORCEMENT PARAMETERS:
YIELD STRENGTH: 60.0 (ksi)
MIN COVER: TOP: 3.0 (in)
BOTTOM: 3.0 (in)
SIDE: 3.0 (in)
STIRRUPS: SIZE: 0
NO.LEGS TOTAL: 0
EXPOSURE FACTOR: 1.000

CONCRETE PARAMETERS:
FPC: 4.0 (ksi)
WEIGHT: 150.0 (pcf)
CTE: 0.0000060

SOIL PARAMETERS:
SOIL ELEVATION: 628.000 (ft)
SOIL WEIGHT: 120.0 (pcf)
SOIL CAPACITY:
UNFACTORED: 0.000 (ksf)
FACTORED: 0.000 (ksf)

FOOTING DIMENSIONS:
TRANSVERSE: 38.000 (ft)
LONGITUDINAL: 38.000 (ft)
DEPTH: 10.000 (ft)

LOCATION OF FIRST COLUMN:
TRANSVERSE: 19.000 (ft)
LONGITUDINAL: 19.000 (ft)

REINFORCEMENT LAYER DATA:
BOTTOM MAT: Transverse bars on bottom at min cover of 3.000 (in) from bottom of footing.
Longitudinal Bars:
MIN SIZE: 8 MIN NUMBER OF BARS: 2
MAX SIZE: 8 MAX NUMBER OF BARS: 10
Transverse Bars:
MIN SIZE: 8 MIN NUMBER OF BARS: 2
MAX SIZE: 8 MAX NUMBER OF BARS: 10

TOP MAT: Longitudinal bars on top at min cover of 3.000 (in) from top of footing.
Transverse Bars:
MIN SIZE: 8 MIN NUMBER OF BARS: 2
MAX SIZE: 8 MAX NUMBER OF BARS: 10
Longitudinal Bars:
MIN SIZE: 8 MIN NUMBER OF BARS: 2

MAX SIZE: 8 MAX NUMBER OF BARS: 10

FOOTING SUPPORT FIXITY:

	DISPLACEMENT	ROTATION ABOUT
TRANSVERSE	Rigid	Rigid
VERTICAL	Rigid	Rigid
LONGITUDINAL	Rigid	Rigid

PILE DATA:

PILE NO.	LABEL	SHAPE	MATL CODE	STIFF CODE	EFF. DIA. (in)	TRAN Z (ft)	LONG X (ft)	VERT Y (ft)	BATTER (1H:__V)	ROTATION (degrees)	AXIAL CAPACITY SERV (kips)	AXIAL CAPACITY STR (kips)
1	R:1 C:1	HP14x117	0	1	8.7	-16.00	-16.00	7.42	0.0	90.0	0	0
2	R:1 C:3	HP14x117	0	1	8.7	0.00	-16.00	7.42	0.0	90.0	0	0
3	R:1 C:5	HP14x117	0	1	8.7	16.00	-16.00	7.42	0.0	90.0	0	0
4	R:2 C:2	HP14x117	0	1	8.7	-8.00	-8.00	7.42	0.0	90.0	0	0
5	R:2 C:4	HP14x117	0	1	8.7	8.00	-8.00	7.42	0.0	90.0	0	0
6	R:3 C:1	HP14x117	0	1	8.7	-16.00	0.00	7.42	0.0	90.0	0	0
7	R:3 C:5	HP14x117	0	1	8.7	16.00	0.00	7.42	0.0	90.0	0	0
8	R:4 C:2	HP14x117	0	1	8.7	-8.00	8.00	7.42	0.0	90.0	0	0
9	R:4 C:4	HP14x117	0	1	8.7	8.00	8.00	7.42	0.0	90.0	0	0
10	R:5 C:1	HP14x117	0	1	8.7	-16.00	16.00	7.42	0.0	90.0	0	0
11	R:5 C:3	HP14x117	0	1	8.7	0.00	16.00	7.42	0.0	90.0	0	0
12	R:5 C:5	HP14x117	0	1	8.7	16.00	16.00	7.42	0.0	90.0	0	0

PILE STIFFNESS COEFFICIENT TABLE DATA:

TABLE NO.	C(1) k/in	C(2) k/in	C(3) in-k/in	C(4) k/in	C(5) in-k/in	C(6) in-k/rad	C(7) k/rad	C(8) in-k/rad	C(9) k/rad	C(10) in-k/rad
1	10.0	10.0	0.00	10.0	0.00	0.00	0.00	0.00	0.00	0.00

----- AASHTO LRFD LOAD OPTIONS -----

AASHTO LIMIT STATES:		LOAD TYPE:	INCLUDED	LOAD TYPE:	INCLUDED
STRENGTH I:	Yes	SELF WEIGHT OF PIER DC:	Yes	BUOYANCY:	No
STRENGTH II:	No	DC-DEAD LOAD SUPER:	Yes	STREAM FLOW:	No
STRENGTH III:	Yes	DW-DEAD LOAD SUPER:	Yes	ICE LOAD:	No
STRENGTH IV:	Yes	USER DEFINED LIVE LOAD:	No	WIND ON STRUCTURE:	Yes
STRENGTH V:	Yes	DESIGN TRUCK LOAD:	Yes	WIND ON LIVE LOAD:	Yes
SERVICE I:	Yes	DESIGN LANE LOAD:	Yes	SUPER TEMPERATURE RISE:	Yes
SERVICE III:	No	PERMIT TRUCK LOAD:	No	SUPER TEMPERATURE FALL:	Yes
FATIGUE:	Yes	FATIGUE TRUCK LOAD:	Yes	SHRINKAGE FROM SUPER:	No
EXTREME EVT I:	No	PEDESTRIAN LOADS:	No	SHRINKAGE OF SUBSTR:	Yes
EXTREME EVT II:	No	CENTRIFUGAL FORCE:	Yes	BRAKING FORCE:	Yes
		EARTHQUAKE:	No	COLLISION LOAD:	No

LIVE LOAD OPTIONS:
APPLY IMPACT: Yes FACTORS: 1.330 (Strength) 1.150 (Fatigue)
APPLY TRUCK LOAD ON MULTIPLE SLABS SIMULTANEOUSLY: Yes
BRAKING FORCE FACTOR × 3.6.4: 0.500
CENTRIFUGAL FORCE FACTOR × 3.6.3: 1.000

----- LOAD INPUT -----

SELF WEIGHT FACTORS:
CAP BEAMS: 1.000
COLUMNS: 1.320
FOOTINGS: 1.000

DC - DEAD LOAD GIRDER REACTIONS:

SLAB NO.	GIRDER LABEL	FORCES (kips) VERT	TRAN	LONG	MOMENTS (ft-k) VERT	TRAN	LONG
1	Girder 1	754.1					
1	Girder 2	880.1					
1	Girder 3	836.1					
1	Girder 4	792.0					
1	Girder 5	578.0					
2	Girder 1	276.4					
2	Girder 2	206.9					
2	Girder 3	202.5					
2	Girder 4	233.8					
3	Girder 1	236.0					
3	Girder 2	225.5					
3	Girder 3	221.6					
3	Girder 4	189.3					
3	Girder 5	183.6					
3	Girder 6	193.7					
3	Girder 7	212.1					
3	Girder 8	211.8					
3	Girder 9	196.5					

DW - DEAD LOAD GIRDER REACTIONS:

SLAB NO.	GIRDER LABEL	FORCES (kips) VERT	TRAN	LONG	MOMENTS (ft-k) VERT	TRAN	LONG
1	Girder 1	153.0					
1	Girder 2	198.0					
1	Girder 3	198.0					
1	Girder 4	198.0					
1	Girder 5	153.0					
2	Girder 1	53.3					
2	Girder 2	42.3					
2	Girder 3	40.9					

2	Girder 4	42.8
3	Girder 1	57.3
3	Girder 2	55.3
3	Girder 3	56.3
3	Girder 4	55.2
3	Girder 5	51.9
3	Girder 6	54.7
3	Girder 7	56.7
3	Girder 8	55.8
3	Girder 9	50.7

TRUCK LOAD REACTIONS (One Lane, No Impact):

SLAB NO.	GIRDER LABEL	FORCES (kips) VERT	TRAN	LONG	MOMENTS (ft-k) VERT	TRAN	LONG
1	Girder 1	0.0					
1	Girder 2	0.0					
1	Girder 3	0.0					
1	Girder 4	0.0					
1	Girder 5	0.0					
2	Girder 1	68.6					
2	Girder 2	68.6					
2	Girder 3	68.6					
2	Girder 4	68.6					
3	Girder 1	69.3					
3	Girder 2	69.3					
3	Girder 3	69.3					
3	Girder 4	69.3					
3	Girder 5	69.3					
3	Girder 6	69.3					
3	Girder 7	69.3					
3	Girder 8	69.3					
3	Girder 9	69.3					

LANE LOAD REACTIONS (One Lane, No Impact):

SLAB NO.	GIRDER LABEL	FORCES (kips) VERT	TRAN	LONG	MOMENTS (ft-k) VERT	TRAN	LONG
1	Girder 1	80.0					
1	Girder 2	80.0					
1	Girder 3	80.0					
1	Girder 4	80.0					
1	Girder 5	80.0					
2	Girder 1	62.9					
2	Girder 2	62.9					
2	Girder 3	62.9					
2	Girder 4	62.9					
3	Girder 1	70.5					
3	Girder 2	70.5					
3	Girder 3	70.5					
3	Girder 4	70.5					
3	Girder 5	70.5					
3	Girder 6	70.5					
3	Girder 7	70.5					
3	Girder 8	70.5					
3	Girder 9	70.5					

MAX FATIGUE TRUCK LOAD REACTIONS (One Lane, No Impact):

SLAB NO.	GIRDER LABEL	FORCES (kips) VERT	TRAN	LONG	MOMENTS (ft-k) VERT	TRAN	LONG
1	Girder 1	70.0					
1	Girder 2	70.0					
1	Girder 3	70.0					
1	Girder 4	70.0					
1	Girder 5	70.0					
2	Girder 1	64.9					
2	Girder 2	64.9					
2	Girder 3	64.9					
2	Girder 4	64.9					
3	Girder 1	66.0					
3	Girder 2	66.0					
3	Girder 3	66.0					
3	Girder 4	66.0					
3	Girder 5	66.0					
3	Girder 6	66.0					
3	Girder 7	66.0					
3	Girder 8	66.0					
3	Girder 9	66.0					

MIN FATIGUE TRUCK LOAD REACTIONS (One Lane, No Impact):

SLAB NO.	GIRDER LABEL	FORCES (kips) VERT	TRAN	LONG	MOMENTS (ft-k) VERT	TRAN	LONG
1	Girder 1	-10.0					
1	Girder 2	-10.0					
1	Girder 3	-10.0					
1	Girder 4	-10.0					
1	Girder 5	-10.0					
2	Girder 1	-4.4					
2	Girder 2	-4.4					

2	Girder 3	-4.4
2	Girder 4	-4.4
3	Girder 1	-4.7
3	Girder 2	-4.7
3	Girder 3	-4.7
3	Girder 4	-4.7
3	Girder 5	-4.7
3	Girder 6	-4.7
3	Girder 7	-4.7
3	Girder 8	-4.7
3	Girder 9	-4.7

REACTIONS DUE TO TEMPERATURE RISE:

SLAB NO.	GIRDER LABEL	FORCES (kips) VERT	TRAN	LONG	MOMENTS (ft-k) VERT	TRAN	LONG
1	Girder 1			1616.0			
1	Girder 2			1616.0			
1	Girder 3			1616.0			
1	Girder 4			1616.0			
1	Girder 5			1616.0			
2	Girder 1			-120.0			
2	Girder 2			-120.0			
2	Girder 3			-120.0			
2	Girder 4			-120.0			
3	Girder 1			-120.0			
3	Girder 2			-120.0			
3	Girder 3			-120.0			
3	Girder 4			-120.0			
3	Girder 5			-120.0			
3	Girder 6			-120.0			
3	Girder 7			-120.0			
3	Girder 8			-120.0			
3	Girder 9			-120.0			

REACTIONS DUE TO TEMPERATURE FALL:

SLAB NO.	GIRDER LABEL	FORCES (kips) VERT	TRAN	LONG	MOMENTS (ft-k) VERT	TRAN	LONG
1	Girder 1			-2424.0			
1	Girder 2			-2424.0			
1	Girder 3			-2424.0			
1	Girder 4			-2424.0			
1	Girder 5			-2424.0			
2	Girder 1			120.0			
2	Girder 2			120.0			
2	Girder 3			120.0			
2	Girder 4			120.0			
3	Girder 1			120.0			
3	Girder 2			120.0			
3	Girder 3			120.0			
3	Girder 4			120.0			
3	Girder 5			120.0			
3	Girder 6			120.0			
3	Girder 7			120.0			
3	Girder 8			120.0			
3	Girder 9			120.0			

SHRINKAGE STRAIN OF SUBSTRUCTURE: 0.00020

WIND LOAD DIRECTIONS:

DIRECTIONS (degrees)		APPLIED
0	(+Tran)	Yes
15		Yes
30		Yes
45		Yes
60		Yes
75		Yes
90	(+Long)	Yes
105		Yes
120		Yes
135		Yes
150		Yes
165		Yes
180	(-Tran)	Yes
195		Yes
210		Yes
225		Yes
240		Yes
255		Yes
270	(-Long)	Yes
285		Yes
300		Yes
315		Yes
330		Yes
345		Yes

EARTHQUAKE LOAD:

DIRECTION	FACTORS TRAN	LONG	APPLIED
0	1.0	0.0	No
1	1.0	0.3	No
2	0.3	1.0	No
3	0.0	1.0	No
4	-0.3	1.0	No
5	-1.0	0.3	No
6	-1.0	0.0	No
7	-1.0	-0.3	No
8	-0.3	-1.0	No
9	0.0	-1.0	No
10	0.3	-1.0	No
11	1.0	-0.3	No

*** WARNING: SLAB 1 TOTAL APPLIED FORCE, 6363.0(kips) EXCEEDS FRICTIONAL CAPACITY, 302.4(kips). ***
EXCESS MUST BE REDISTRIBUTED TO ANOTHER SUBSTRUCTURE UNIT. LIMIT STATE: STR I, LOAD: 1

*** WARNING: SLAB 2 TOTAL APPLIED FORCE,   -252.0(kips) EXCEEDS FRICTIONAL CAPACITY,   72.4(kips). ***
    EXCESS MUST BE REDISTRIBUTED TO ANOTHER SUBSTRUCTURE UNIT. LIMIT STATE: STR I, LOAD: 1

*** WARNING: SLAB 3 TOTAL APPLIED FORCE,   -586.8(kips) EXCEEDS FRICTIONAL CAPACITY,   168.8(kips). ***
    EXCESS MUST BE REDISTRIBUTED TO ANOTHER SUBSTRUCTURE UNIT. LIMIT STATE: STR I, LOAD: 1

*** WARNING: SLAB 1 TOTAL APPLIED FORCE,   6363.0(kips) EXCEEDS FRICTIONAL CAPACITY,   302.4(kips). ***
    EXCESS MUST BE REDISTRIBUTED TO ANOTHER SUBSTRUCTURE UNIT. LIMIT STATE: STR I, LOAD: 2

*** WARNING: SLAB 2 TOTAL APPLIED FORCE,   -252.0(kips) EXCEEDS FRICTIONAL CAPACITY,   72.4(kips). ***
    EXCESS MUST BE REDISTRIBUTED TO ANOTHER SUBSTRUCTURE UNIT. LIMIT STATE: STR I, LOAD: 2

*** WARNING: SLAB 3 TOTAL APPLIED FORCE,   -600.1(kips) EXCEEDS FRICTIONAL CAPACITY,   183.1(kips). ***
    EXCESS MUST BE REDISTRIBUTED TO ANOTHER SUBSTRUCTURE UNIT. LIMIT STATE: STR I, LOAD: 2

*** WARNING: SLAB 1 TOTAL APPLIED FORCE,   6363.0(kips) EXCEEDS FRICTIONAL CAPACITY,   302.4(kips). ***
    EXCESS MUST BE REDISTRIBUTED TO ANOTHER SUBSTRUCTURE UNIT. LIMIT STATE: STR I, LOAD: 3

*** WARNING: SLAB 2 TOTAL APPLIED FORCE,   -252.0(kips) EXCEEDS FRICTIONAL CAPACITY,   72.4(kips). ***
    EXCESS MUST BE REDISTRIBUTED TO ANOTHER SUBSTRUCTURE UNIT. LIMIT STATE: STR I, LOAD: 3

*** WARNING: SLAB 3 TOTAL APPLIED FORCE,   -586.8(kips) EXCEEDS FRICTIONAL CAPACITY,   168.8(kips). ***
    EXCESS MUST BE REDISTRIBUTED TO ANOTHER SUBSTRUCTURE UNIT. LIMIT STATE: STR I, LOAD: 3

*** WARNING MESSAGES LIMITED TO TEN! ***

*** WARNING: SLAB 1 TOTAL APPLIED FORCE,   6399.9(kips) EXCEEDS FRICTIONAL CAPACITY,   302.4(kips). ***
    EXCESS MUST BE REDISTRIBUTED TO ANOTHER SUBSTRUCTURE UNIT. LIMIT STATE: STIII, LOAD: 1

*** WARNING: SLAB 2 TOTAL APPLIED FORCE,   -226.8(kips) EXCEEDS FRICTIONAL CAPACITY,   72.4(kips). ***
    EXCESS MUST BE REDISTRIBUTED TO ANOTHER SUBSTRUCTURE UNIT. LIMIT STATE: STIII, LOAD: 1

*** WARNING: SLAB 3 TOTAL APPLIED FORCE,   -541.8(kips) EXCEEDS FRICTIONAL CAPACITY,   147.3(kips). ***
    EXCESS MUST BE REDISTRIBUTED TO ANOTHER SUBSTRUCTURE UNIT. LIMIT STATE: STIII, LOAD: 1

*** WARNING: SLAB 1 TOTAL APPLIED FORCE,   6363.0(kips) EXCEEDS FRICTIONAL CAPACITY,   266.8(kips). ***
    EXCESS MUST BE REDISTRIBUTED TO ANOTHER SUBSTRUCTURE UNIT. LIMIT STATE: STIII, LOAD: 2

*** WARNING: SLAB 2 TOTAL APPLIED FORCE,   -252.0(kips) EXCEEDS FRICTIONAL CAPACITY,   64.6(kips). ***
    EXCESS MUST BE REDISTRIBUTED TO ANOTHER SUBSTRUCTURE UNIT. LIMIT STATE: STIII, LOAD: 2

*** WARNING: SLAB 3 TOTAL APPLIED FORCE,   -567.0(kips) EXCEEDS FRICTIONAL CAPACITY,   128.7(kips). ***
    EXCESS MUST BE REDISTRIBUTED TO ANOTHER SUBSTRUCTURE UNIT. LIMIT STATE: STIII, LOAD: 2

*** WARNING: SLAB 1 TOTAL APPLIED FORCE,   6326.1(kips) EXCEEDS FRICTIONAL CAPACITY,   302.4(kips). ***
    EXCESS MUST BE REDISTRIBUTED TO ANOTHER SUBSTRUCTURE UNIT. LIMIT STATE: STIII, LOAD: 3

*** WARNING: SLAB 2 TOTAL APPLIED FORCE,   -277.2(kips) EXCEEDS FRICTIONAL CAPACITY,   72.4(kips). ***
    EXCESS MUST BE REDISTRIBUTED TO ANOTHER SUBSTRUCTURE UNIT. LIMIT STATE: STIII, LOAD: 3

*** WARNING: SLAB 3 TOTAL APPLIED FORCE,   -592.2(kips) EXCEEDS FRICTIONAL CAPACITY,   147.3(kips). ***
    EXCESS MUST BE REDISTRIBUTED TO ANOTHER SUBSTRUCTURE UNIT. LIMIT STATE: STIII, LOAD: 3

*** WARNING MESSAGES LIMITED TO TEN! ***

*** WARNING: SLAB 1 TOTAL APPLIED FORCE,   6363.0(kips) EXCEEDS FRICTIONAL CAPACITY,   362.9(kips). ***
    EXCESS MUST BE REDISTRIBUTED TO ANOTHER SUBSTRUCTURE UNIT. LIMIT STATE: STRIV, LOAD: 1

*** WARNING: SLAB 2 TOTAL APPLIED FORCE,   -252.0(kips) EXCEEDS FRICTIONAL CAPACITY,   86.9(kips). ***
    EXCESS MUST BE REDISTRIBUTED TO ANOTHER SUBSTRUCTURE UNIT. LIMIT STATE: STRIV, LOAD: 1

*** WARNING: SLAB 3 TOTAL APPLIED FORCE,   -567.0(kips) EXCEEDS FRICTIONAL CAPACITY,   176.7(kips). ***
    EXCESS MUST BE REDISTRIBUTED TO ANOTHER SUBSTRUCTURE UNIT. LIMIT STATE: STRIV, LOAD: 1

*** WARNING: SLAB 1 TOTAL APPLIED FORCE,   -4242.0(kips) EXCEEDS FRICTIONAL CAPACITY,   362.9(kips). ***
    EXCESS MUST BE REDISTRIBUTED TO ANOTHER SUBSTRUCTURE UNIT. LIMIT STATE: STRIV, LOAD: 2

*** WARNING: SLAB 2 TOTAL APPLIED FORCE,   252.0(kips) EXCEEDS FRICTIONAL CAPACITY,   86.9(kips). ***
    EXCESS MUST BE REDISTRIBUTED TO ANOTHER SUBSTRUCTURE UNIT. LIMIT STATE: STRIV, LOAD: 2

*** WARNING: SLAB 3 TOTAL APPLIED FORCE,   567.0(kips) EXCEEDS FRICTIONAL CAPACITY,   176.7(kips). ***
    EXCESS MUST BE REDISTRIBUTED TO ANOTHER SUBSTRUCTURE UNIT. LIMIT STATE: STRIV, LOAD: 2

*** WARNING: SLAB 1 TOTAL APPLIED FORCE,   6363.0(kips) EXCEEDS FRICTIONAL CAPACITY,   448.0(kips). ***
    EXCESS MUST BE REDISTRIBUTED TO ANOTHER SUBSTRUCTURE UNIT. LIMIT STATE: STRIV, LOAD: 3

*** WARNING: SLAB 2 TOTAL APPLIED FORCE,   -252.0(kips) EXCEEDS FRICTIONAL CAPACITY,   103.8(kips). ***
    EXCESS MUST BE REDISTRIBUTED TO ANOTHER SUBSTRUCTURE UNIT. LIMIT STATE: STRIV, LOAD: 3

*** WARNING: SLAB 3 TOTAL APPLIED FORCE,   -567.0(kips) EXCEEDS FRICTIONAL CAPACITY,   223.4(kips). ***
    EXCESS MUST BE REDISTRIBUTED TO ANOTHER SUBSTRUCTURE UNIT. LIMIT STATE: STRIV, LOAD: 3

*** WARNING MESSAGES LIMITED TO TEN! ***

*** WARNING: SLAB 1 TOTAL APPLIED FORCE,   6377.4(kips) EXCEEDS FRICTIONAL CAPACITY,   302.4(kips). ***
    EXCESS MUST BE REDISTRIBUTED TO ANOTHER SUBSTRUCTURE UNIT. LIMIT STATE: STR V, LOAD: 1

*** WARNING: SLAB 2 TOTAL APPLIED FORCE,   -241.8(kips) EXCEEDS FRICTIONAL CAPACITY,   72.4(kips). ***
    EXCESS MUST BE REDISTRIBUTED TO ANOTHER SUBSTRUCTURE UNIT. LIMIT STATE: STR V, LOAD: 1

*** WARNING: SLAB 3 TOTAL APPLIED FORCE,   -572.1(kips) EXCEEDS FRICTIONAL CAPACITY,   163.9(kips). ***
    EXCESS MUST BE REDISTRIBUTED TO ANOTHER SUBSTRUCTURE UNIT. LIMIT STATE: STR V, LOAD: 1

*** WARNING: SLAB 1 TOTAL APPLIED FORCE,   6377.4(kips) EXCEEDS FRICTIONAL CAPACITY,   302.4(kips). ***
    EXCESS MUST BE REDISTRIBUTED TO ANOTHER SUBSTRUCTURE UNIT. LIMIT STATE: STR V, LOAD: 2

*** WARNING: SLAB 2 TOTAL APPLIED FORCE,   -241.8(kips) EXCEEDS FRICTIONAL CAPACITY,   72.4(kips). ***
    EXCESS MUST BE REDISTRIBUTED TO ANOTHER SUBSTRUCTURE UNIT. LIMIT STATE: STR V, LOAD: 2

*** WARNING: SLAB 3 TOTAL APPLIED FORCE,   -582.3(kips) EXCEEDS FRICTIONAL CAPACITY,   174.9(kips). ***
    EXCESS MUST BE REDISTRIBUTED TO ANOTHER SUBSTRUCTURE UNIT. LIMIT STATE: STR V, LOAD: 2

*** WARNING: SLAB 1 TOTAL APPLIED FORCE,   6377.4(kips) EXCEEDS FRICTIONAL CAPACITY,   302.4(kips). ***
    EXCESS MUST BE REDISTRIBUTED TO ANOTHER SUBSTRUCTURE UNIT. LIMIT STATE: STR V, LOAD: 3

*** WARNING: SLAB 2 TOTAL APPLIED FORCE,   -241.8(kips) EXCEEDS FRICTIONAL CAPACITY,   72.4(kips). ***
    EXCESS MUST BE REDISTRIBUTED TO ANOTHER SUBSTRUCTURE UNIT. LIMIT STATE: STR V, LOAD: 3

*** WARNING: SLAB 3 TOTAL APPLIED FORCE,   -572.1(kips) EXCEEDS FRICTIONAL CAPACITY,   163.9(kips). ***
    EXCESS MUST BE REDISTRIBUTED TO ANOTHER SUBSTRUCTURE UNIT. LIMIT STATE: STR V, LOAD: 3

*** WARNING MESSAGES LIMITED TO TEN! ***

*** WARNING: SLAB 1 TOTAL APPLIED FORCE,   12131.2(kips) EXCEEDS FRICTIONAL CAPACITY,   230.4(kips). ***
    EXCESS MUST BE REDISTRIBUTED TO ANOTHER SUBSTRUCTURE UNIT. LIMIT STATE: SER I, LOAD: 1

*** WARNING: SLAB 2 TOTAL APPLIED FORCE,   -472.0(kips) EXCEEDS FRICTIONAL CAPACITY,   55.2(kips). ***
    EXCESS MUST BE REDISTRIBUTED TO ANOTHER SUBSTRUCTURE UNIT. LIMIT STATE: SER I, LOAD: 1

*** WARNING: SLAB 3 TOTAL APPLIED FORCE,   -1082.8(kips) EXCEEDS FRICTIONAL CAPACITY,   123.9(kips). ***
    EXCESS MUST BE REDISTRIBUTED TO ANOTHER SUBSTRUCTURE UNIT. LIMIT STATE: SER I, LOAD: 1

*** WARNING: SLAB 1 TOTAL APPLIED FORCE,   12131.2(kips) EXCEEDS FRICTIONAL CAPACITY,   230.4(kips). ***
    EXCESS MUST BE REDISTRIBUTED TO ANOTHER SUBSTRUCTURE UNIT. LIMIT STATE: SER I, LOAD: 2

*** WARNING: SLAB 2 TOTAL APPLIED FORCE,   -472.0(kips) EXCEEDS FRICTIONAL CAPACITY,   55.2(kips). ***
    EXCESS MUST BE REDISTRIBUTED TO ANOTHER SUBSTRUCTURE UNIT. LIMIT STATE: SER I, LOAD: 2

*** WARNING: SLAB 3 TOTAL APPLIED FORCE,   -1090.0(kips) EXCEEDS FRICTIONAL CAPACITY,   131.7(kips). ***
    EXCESS MUST BE REDISTRIBUTED TO ANOTHER SUBSTRUCTURE UNIT. LIMIT STATE: SER I, LOAD: 2

*** WARNING: SLAB 1 TOTAL APPLIED FORCE,   12131.2(kips) EXCEEDS FRICTIONAL CAPACITY,   230.4(kips). ***
    EXCESS MUST BE REDISTRIBUTED TO ANOTHER SUBSTRUCTURE UNIT. LIMIT STATE: SER I, LOAD: 3

*** WARNING: SLAB 2 TOTAL APPLIED FORCE,   -472.0(kips) EXCEEDS FRICTIONAL CAPACITY,   55.2(kips). ***
    EXCESS MUST BE REDISTRIBUTED TO ANOTHER SUBSTRUCTURE UNIT. LIMIT STATE: SER I, LOAD: 3

*** WARNING: SLAB 3 TOTAL APPLIED FORCE,   -1082.8(kips) EXCEEDS FRICTIONAL CAPACITY,   123.9(kips). ***
    EXCESS MUST BE REDISTRIBUTED TO ANOTHER SUBSTRUCTURE UNIT. LIMIT STATE: SER I, LOAD: 3

*** WARNING MESSAGES LIMITED TO TEN! ***

----- NUMBER OF LOAD COMBINATIONS -----

LRFD DESIGN OF CAP AND COL:
STRENGTH LIMIT STATE I, NUMBER OF LOAD COMBINATIONS = 12320
STRENGTH LIMIT STATE III, NUMBER OF LOAD COMBINATIONS = 192
STRENGTH LIMIT STATE IV, NUMBER OF LOAD COMBINATIONS = 8
STRENGTH LIMIT STATE V, NUMBER OF LOAD COMBINATIONS = 295680
SERVICE LIMIT STATE I, NUMBER OF LOAD COMBINATIONS = 147840
FATIGUE LIMIT STATE, NUMBER OF LOAD COMBINATIONS = 220

----- CAP BEAM 1 FLEXURAL DESIGN -----

FLEXURAL DESIGN - TRANSVERSE FLEXURE, REINFORCING STEEL REQUIREMENTS:

LRFD MOMENT, MIN STEEL CODE:
a: Design controlled by 1.2 Mcr
b: Design controlled by 4/3 Mdes
c: Design controlled 0.03f'c/fy

				POSITIVE FLEXURE						NEGATIVE FLEXURE					
CAP NO.	HORZ DIST. (ft)	LOCATION	AASHTO LIMIT STATE	LOAD CASE	LRFD MOMENT (ft-k)	d (in)	AREA REQD. (sq-in)	AREA PROV. (sq-in)	NG	LOAD CASE	LRFD MOMENT (ft-k)	d (in)	AREA REQD. (sq-in)	AREA PROV. (sq-in)	NG
1	-101.40 R	CAP	STR I	0	0	0.0	0.00	0.00		0	0	0.0	0.00	0.00	
			STIII	0	0	0.0	0.00	0.00		0	0	0.0	0.00	0.00	
			STRIV	0	0	0.0	0.00	0.00		0	0	0.0	0.00	0.00	
			STR V	0	0	0.0	0.00	0.00		0	0	0.0	0.00	0.00	
1	-95.85 L	GIRD	STR I	0	0	0.0	0.00	0.00		1	-367b	105.8	0.77	124.80	
			STIII	0	0	0.0	0.00	0.00		12327	-367b	105.8	0.77	124.80	
			STRIV	0	0	0.0	0.00	0.00		12513	-440b	105.8	0.93	124.80	
			STR V	0	0	0.0	0.00	0.00		21761	-367b	105.8	0.77	124.80	
1	-95.85 R	GIRD	STR I	0	0	0.0	0.00	0.00		3477	-497b	105.8	1.04	124.80	
			STIII	0	0	0.0	0.00	0.00		12382	-586b	105.8	1.23	124.80	
			STRIV	0	0	0.0	0.00	0.00		12515	-502b	105.8	1.06	124.80	
			STR V	0	0	0.0	0.00	0.00		106857	-547b	105.8	1.15	124.80	
1	-93.23 L	GIRD	STR I	0	0	0.0	0.00	0.00		3474	-3292b	123.9	5.92	124.80	
			STIII	0	0	0.0	0.00	0.00		12382	-2800b	123.9	5.03	124.80	
			STRIV	0	0	0.0	0.00	0.00		12515	-2905b	123.9	5.22	124.80	
			STR V	0	0	0.0	0.00	0.00		106854	-3237b	123.9	5.82	124.80	
1	-93.23 R	GIRD	STR I	0	0	0.0	0.00	0.00		5080	-3455b	123.9	6.22	124.80	
			STIII	0	0	0.0	0.00	0.00		12406	-3057b	123.9	5.50	124.80	
			STRIV	0	0	0.0	0.00	0.00		12516	-2959b	123.9	5.32	124.80	
			STR V	0	0	0.0	0.00	0.00		143880	-3455b	123.9	6.22	124.80	
1	-85.54 L	GIRD	STR I	0	0	0.0	0.00	0.00		5029	-28106b	177.0	35.73	124.80	
			STIII	0	0	0.0	0.00	0.00		12406	-23954b	177.0	30.40	124.80	
			STRIV	0	0	0.0	0.00	0.00		12516	-26486b	177.0	33.65	124.80	
			STR V	0	0	0.0	0.00	0.00		143829	-27346b	177.0	34.75	124.80	
1	-85.54 R	GIRD	STR I	0	0	0.0	0.00	0.00		5029	-28067b	177.0	35.68	124.80	
			STIII	0	0	0.0	0.00	0.00		12406	-24151b	177.0	30.65	124.80	
			STRIV	0	0	0.0	0.00	0.00		12516	-26410b	177.0	33.55	124.80	
			STR V	0	0	0.0	0.00	0.00		143829	-27406b	177.0	34.83	124.80	
1	-84.90 L	FACE	STR I	0	0	0.0	0.00	0.00		5029	-30668b	181.4	38.05	124.80	
			STIII	0	0	0.0	0.00	0.00		12406	-26311b	181.4	32.58	124.80	
			STRIV	0	0	0.0	0.00	0.00		12516	-28863b	181.4	35.78	124.80	
			STR V	0	0	0.0	0.00	0.00		143829	-29921b	181.4	37.11	124.80	
1	-77.90 L	COL	STR I	0	0	0.0	0.00	0.00		5183	-60477b	181.4	76.02	124.80	
			STIII	0	0	0.0	0.00	0.00		12406	-50895b	181.4	63.71	124.80	
			STRIV	0	0	0.0	0.00	0.00		12516	-57100b	181.4	71.67	124.80	
			STR V	0	0	0.0	0.00	0.00		143983	-58668b	181.4	73.69	124.80	
1	-77.90 R	COL	STR I	0	0	0.0	0.00	0.00		5057	-107724	181.4	138.41	124.80	NG
			STIII	0	0	0.0	0.00	0.00		12405	-92416	181.4	117.88	124.80	
			STRIV	0	0	0.0	0.00	0.00		12516	-100117	181.4	128.17	124.80	NG
			STR V	0	0	0.0	0.00	0.00		143857	-105623	181.4	135.57	124.80	NG
1	-75.23 L	GIRD	STR I	0	0	0.0	0.00	0.00		5057	-91118	181.4	116.15	124.80	
			STIII	0	0	0.0	0.00	0.00		12405	-78422	181.4	99.39	124.80	
			STRIV	0	0	0.0	0.00	0.00		12516	-84169	181.4	106.95	124.80	
			STR V	0	0	0.0	0.00	0.00		143857	-89547	181.4	114.07	124.80	
1	-75.23 R	GIRD	STR I	0	0	0.0	0.00	0.00		5057	-91130	181.4	116.17	124.80	
			STIII	0	0	0.0	0.00	0.00		12405	-78550	181.4	99.55	124.80	
			STRIV	0	0	0.0	0.00	0.00		12516	-84112	181.4	106.87	124.80	
			STR V	0	0	0.0	0.00	0.00		143857	-89627	181.4	114.17	124.80	
1	-70.90 L	FACE	STR I	0	0	0.0	0.00	0.00		5080	-66650	181.4	84.02	124.80	
			STIII	0	0	0.0	0.00	0.00		12384	-65470a	181.4	82.48	124.80	
			STRIV	0	0	0.0	0.00	0.00		12515	-65470a	181.4	82.48	124.80	
			STR V	0	0	0.0	0.00	0.00		143880	-65870	181.4	83.00	124.80	
1	-66.40 L	SPEC	STR I	0	0	0.0	0.00	0.00		5080	-52542a	163.8	73.27	99.84	
			STIII	0	0	0.0	0.00	0.00		12406	-51146b	163.8	71.27	99.84	
			STRIV	0	0	0.0	0.00	0.00		12516	-50556b	163.8	70.43	99.84	
			STR V	0	0	0.0	0.00	0.00		143880	-52542a	163.8	73.27	99.84	

1	-66.40 R	SPEC	STR I	0	0	0.0	0.00	0.00	5038	-52542a	163.8	73.27	99.84
			STIII	0	0	0.0	0.00	0.00	12406	-51146b	163.8	71.27	99.84
			STRIV	0	0	0.0	0.00	0.00	12516	-50556b	163.8	70.43	99.84
			STR V	0	0	0.0	0.00	0.00	143838	-52542a	163.8	73.27	99.84
1	-64.92 L	GIRD	STR I	0	0	0.0	0.00	0.00	5080	-48350b	157.3	70.24	99.84
			STIII	0	0	0.0	0.00	0.00	12406	-42886b	157.3	62.10	99.84
			STRIV	0	0	0.0	0.00	0.00	12516	-40891b	157.3	59.14	99.84
			STR V	0	0	0.0	0.00	0.00	143880	-48335b	157.3	70.22	99.84
1	-64.92 R	GIRD	STR I	0	0	0.0	0.00	0.00	5080	-48334b	157.3	70.22	99.84
			STIII	0	0	0.0	0.00	0.00	12406	-43070b	157.3	62.37	99.84
			STRIV	0	0	0.0	0.00	0.00	12516	-40817b	157.3	59.03	99.84
			STR V	0	0	0.0	0.00	0.00	143880	-48404b	157.3	70.32	99.84
1	-61.16 L	GIRD	STR I	6239	2250b	144.6	3.46	68.64	5098	-26105b	140.6	42.04	99.84
			STIII	12418	5930b	144.6	9.15	68.64	12406	-23850b	140.6	38.34	99.84
			STRIV	0	0	0.0	0.00	0.00	12516	-18968b	140.6	30.39	99.84
			STR V	161979	3718b	144.6	5.73	68.64	143898	-26611b	140.6	42.87	99.84
1	-61.16 R	GIRD	STR I	6239	2398b	144.6	3.69	68.64	5098	-26416b	140.6	42.55	99.84
			STIII	12418	6258b	144.6	9.66	68.64	12406	-24308b	140.6	39.09	99.84
			STRIV	0	0	0.0	0.00	0.00	12516	-19228b	140.6	30.81	99.84
			STR V	161979	3952b	144.6	6.09	68.64	143898	-26997b	140.6	43.50	99.84
1	-57.40 L	CAP	STR I	6240	8791b	123.8	15.90	137.28	5099	-13433b	123.8	24.40	99.84
			STIII	12418	10387b	123.8	18.81	137.28	12406	-12645b	123.8	22.95	99.84
			STRIV	12513	1926b	123.8	3.46	137.28	12516	-6477b	123.8	11.69	99.84
			STR V	161980	9916b	123.8	17.95	137.28	143899	-14127b	123.8	25.68	99.84
1	-49.44 L	GIRD	STR I	3177	30945a	123.8	57.14	137.28	0	0	0.0	0.00	0.00
			STIII	12369	28516b	123.8	52.53	137.28	0	0	0.0	0.00	0.00
			STRIV	12515	28251b	123.8	52.03	137.28	0	0	0.0	0.00	0.00
			STR V	88077	30945a	123.8	57.14	137.28	0	0	0.0	0.00	0.00
1	-49.44 R	GIRD	STR I	3177	30945a	123.8	57.14	137.28	0	0	0.0	0.00	0.00
			STIII	12369	28534b	123.8	52.57	137.28	0	0	0.0	0.00	0.00
			STRIV	12515	28188b	123.8	51.91	137.28	0	0	0.0	0.00	0.00
			STR V	88077	30945a	123.8	57.14	137.28	0	0	0.0	0.00	0.00
1	-37.67 L	GIRD	STR I	3185	45777	123.8	85.79	137.28	0	0	0.0	0.00	0.00
			STIII	12369	37421	123.8	69.54	137.28	0	0	0.0	0.00	0.00
			STRIV	12515	41929	123.8	78.27	137.28	0	0	0.0	0.00	0.00
			STR V	88085	44077	123.8	82.46	137.28	0	0	0.0	0.00	0.00
1	-37.67 R	GIRD	STR I	3185	45710	123.8	85.65	137.28	0	0	0.0	0.00	0.00
			STIII	12369	37436	123.8	69.57	137.28	0	0	0.0	0.00	0.00
			STRIV	12515	41884	123.8	78.18	137.28	0	0	0.0	0.00	0.00
			STR V	88085	44041	123.8	82.39	137.28	0	0	0.0	0.00	0.00
1	-29.10 L	GIRD	STR I	3496	54106	123.8	102.26	137.28	0	0	0.0	0.00	0.00
			STIII	12381	44087	123.8	82.48	137.28	0	0	0.0	0.00	0.00
			STRIV	12515	50515	123.8	95.12	137.28	0	0	0.0	0.00	0.00
			STR V	106876	51873	123.8	97.82	137.28	0	0	0.0	0.00	0.00
1	-29.10 R	GIRD	STR I	3496	54164	123.8	102.38	137.28	0	0	0.0	0.00	0.00
			STIII	12381	44089	123.8	82.48	137.28	0	0	0.0	0.00	0.00
			STRIV	12515	50681	123.8	95.45	137.28	0	0	0.0	0.00	0.00
			STR V	106876	51888	123.8	97.85	137.28	0	0	0.0	0.00	0.00
1	-25.90 L	GIRD	STR I	3495	51790	123.8	97.65	137.28	0	0	0.0	0.00	0.00
			STIII	12381	42351	123.8	79.09	137.28	0	0	0.0	0.00	0.00
			STRIV	12515	48102	123.8	90.36	137.28	0	0	0.0	0.00	0.00
			STR V	106875	49763	123.8	93.64	137.28	0	0	0.0	0.00	0.00
1	-25.90 R	GIRD	STR I	3495	51700	123.8	97.47	137.28	0	0	0.0	0.00	0.00
			STIII	12381	42259	123.8	78.91	137.28	0	0	0.0	0.00	0.00
			STRIV	12515	48058	123.8	90.27	137.28	0	0	0.0	0.00	0.00
			STR V	106875	49661	123.8	93.43	137.28	0	0	0.0	0.00	0.00
1	-14.12 L	GIRD	STR I	3846	34964	123.8	64.82	137.28	0	0	0.0	0.00	0.00
			STIII	12369	30945a	123.8	57.14	137.28	0	0	0.0	0.00	0.00
			STRIV	12515	30945a	123.8	57.14	137.28	0	0	0.0	0.00	0.00
			STR V	107226	34107	123.8	63.18	137.28	0	0	0.0	0.00	0.00
1	-14.12 R	GIRD	STR I	3846	34883	123.8	64.66	137.28	0	0	0.0	0.00	0.00
			STIII	12385	30945a	123.8	57.14	137.28	0	0	0.0	0.00	0.00
			STRIV	12515	30945a	123.8	57.14	137.28	0	0	0.0	0.00	0.00
			STR V	107226	34013	123.8	63.00	137.28	0	0	0.0	0.00	0.00
1	-7.65 L	GIRD	STR I	3613	29045b	123.8	53.54	137.28	0	0	0.0	0.00	0.00
			STIII	12382	24521b	123.8	45.00	137.28	12442	-33b	123.8	0.06	99.84
			STRIV	12515	22337b	123.8	40.91	137.28	0	0	0.0	0.00	0.00
			STR V	106993	28811b	123.8	53.09	137.28	0	0	0.0	0.00	0.00
1	-7.65 R	GIRD	STR I	3613	28948b	123.8	53.35	137.28	0	0	0.0	0.00	0.00
			STIII	12382	24400b	123.8	44.78	137.28	0	0	0.0	0.00	0.00
			STRIV	12515	22287b	123.8	40.82	137.28	0	0	0.0	0.00	0.00
			STR V	106993	28693b	123.8	52.87	137.28	0	0	0.0	0.00	0.00
1	-2.90 L	CAP	STR I	3616	13405b	127.8	23.57	68.64	7847	-7022b	123.8	12.68	99.84
			STIII	12382	11683b	127.8	20.51	68.64	12442	-7792b	123.8	14.08	99.84
			STRIV	12515	5205b	127.8	9.09	68.64	12514	-616b	123.8	1.11	99.84
			STR V	106996	13766b	127.8	24.21	68.64	199007	-7957b	123.8	14.38	99.84

1	-1.19 L	GIRD	STR I	6696	10348b	135.4	17.11	68.64	4769	-11906b	131.4	20.33	99.84	
			STIII	12430	9165b	135.4	15.14	68.64	12394	-11886b	131.4	20.29	99.84	
			STRIV	0	0	0.0	0.00	0.00	12516	-5957b	131.4	10.12	99.84	
			STR V	180916	10819b	135.4	17.90	68.64	125089	-12795b	131.4	21.86	99.84	
1	-1.19 R	GIRD	STR I	6696	10260b	135.4	16.97	68.64	4769	-11857b	131.4	20.24	99.84	
			STIII	12430	9062b	135.4	14.97	68.64	12394	-11755b	131.4	20.07	99.84	
			STRIV	0	0	0.0	0.00	0.00	12516	-5901b	131.4	10.03	99.84	
			STR V	180916	10711b	135.4	17.72	68.64	125089	-12711b	131.4	21.71	99.84	
1	2.97 L	GIRD	STR I	6696	982b	153.9	1.42	68.64	4771	-28392b	149.9	42.84	99.84	
			STIII	12430	2776b	153.9	4.02	68.64	12394	-26009b	149.9	39.19	99.84	
			STRIV	0	0	0.0	0.00	0.00	12516	-22726b	149.9	34.17	99.84	
			STR V	180916	2030b	153.9	2.93	68.64	125091	-29086b	149.9	43.91	99.84	
1	2.97 R	GIRD	STR I	6696	1056b	153.9	1.53	68.64	4771	-28614b	149.9	43.18	99.84	
			STIII	12430	2599b	153.9	3.76	68.64	12394	-25964b	149.9	39.12	99.84	
			STRIV	0	0	0.0	0.00	0.00	12516	-22980b	149.9	34.56	99.84	
			STR V	180916	2012b	153.9	2.91	68.64	125091	-29208b	149.9	44.10	99.84	
1	6.10 L	SPEC	STR I	0	0	0.0	0.00	0.00	4771	-47314b	163.8	65.79	99.84	
			STIII	0	0	0.0	0.00	0.00	12393	-43349b	163.8	60.15	99.84	
			STRIV	0	0	0.0	0.00	0.00	12516	-42795b	163.8	59.36	99.84	
			STR V	0	0	0.0	0.00	0.00	125091	-47771b	163.8	66.45	99.84	
1	6.10 R	SPEC	STR I	0	0	0.0	0.00	0.00	4771	-47314b	163.8	65.79	99.84	
			STIII	0	0	0.0	0.00	0.00	12393	-43349b	163.8	60.15	99.84	
			STRIV	0	0	0.0	0.00	0.00	12516	-42795b	163.8	59.36	99.84	
			STR V	0	0	0.0	0.00	0.00	125091	-47771b	163.8	66.45	99.84	
1	10.48 L	GIRD	STR I	0	0	0.0	0.00	0.00	3234	-65104a	180.9	82.27	124.80	
			STIII	0	0	0.0	0.00	0.00	12397	-65104a	180.9	82.27	124.80	
			STRIV	0	0	0.0	0.00	0.00	12515	-65104a	180.9	82.27	124.80	
			STR V	0	0	0.0	0.00	0.00	88134	-65104a	180.9	82.27	124.80	
1	10.48 R	GIRD	STR I	0	0	0.0	0.00	0.00	4780	-65104a	180.9	82.27	124.80	
			STIII	0	0	0.0	0.00	0.00	12393	-65104a	180.9	82.27	124.80	
			STRIV	0	0	0.0	0.00	0.00	12515	-65104a	180.9	82.27	124.80	
			STR V	0	0	0.0	0.00	0.00	125100	-65104a	180.9	82.27	124.80	
1	10.60 L	FACE	STR I	0	0	0.0	0.00	0.00	3235	-65470a	181.4	82.48	124.80	
			STIII	0	0	0.0	0.00	0.00	12397	-65470a	181.4	82.48	124.80	
			STRIV	0	0	0.0	0.00	0.00	12515	-65470a	181.4	82.48	124.80	
			STR V	0	0	0.0	0.00	0.00	88135	-65470a	181.4	82.48	124.80	
1	17.60 L	COL	STR I	0	0	0.0	0.00	0.00	4783	-100250	181.4	128.35	124.80	NG
			STIII	0	0	0.0	0.00	0.00	12393	-87750	181.4	111.69	124.80	
			STRIV	0	0	0.0	0.00	0.00	12516	-94584	181.4	120.77	124.80	
			STR V	0	0	0.0	0.00	0.00	125103	-98763	181.4	126.35	124.80	NG
1	17.60 R	COL	STR I	0	0	0.0	0.00	0.00	4785	-55509b	181.4	69.62	124.80	
			STIII	0	0	0.0	0.00	0.00	12370	-43695b	181.4	54.52	124.80	
			STRIV	0	0	0.0	0.00	0.00	12515	-49175b	181.4	61.51	124.80	
			STR V	0	0	0.0	0.00	0.00	88145	-52892b	181.4	66.26	124.80	
1	22.16 L	GIRD	STR I	0	0	0.0	0.00	0.00	3246	-37362b	181.4	46.49	124.80	
			STIII	0	0	0.0	0.00	0.00	12370	-29345b	181.4	36.39	124.80	
			STRIV	0	0	0.0	0.00	0.00	12515	-32752b	181.4	40.67	124.80	
			STR V	0	0	0.0	0.00	0.00	88146	-35613b	181.4	44.28	124.80	
1	22.16 R	GIRD	STR I	0	0	0.0	0.00	0.00	3246	-37438b	181.4	46.59	124.80	
			STIII	0	0	0.0	0.00	0.00	12370	-29300b	181.4	36.33	124.80	
			STRIV	0	0	0.0	0.00	0.00	12515	-32836b	181.4	40.78	124.80	
			STR V	0	0	0.0	0.00	0.00	88146	-35640b	181.4	44.31	124.80	
1	24.60 L	FACE	STR I	0	0	0.0	0.00	0.00	3246	-29655b	181.4	36.78	124.80	
			STIII	0	0	0.0	0.00	0.00	12370	-23246b	181.4	28.75	124.80	
			STRIV	0	0	0.0	0.00	0.00	12515	-25924b	181.4	32.10	124.80	
			STR V	0	0	0.0	0.00	0.00	88146	-28254b	181.4	35.02	124.80	
1	33.84 L	GIRD	STR I	0	0	0.0	0.00	0.00	3244	-2704b	117.6	5.12	124.80	
			STIII	0	0	0.0	0.00	0.00	12370	-2637b	117.6	5.00	124.80	
			STRIV	0	0	0.0	0.00	0.00	12515	-2706b	117.6	5.13	124.80	
			STR V	0	0	0.0	0.00	0.00	88144	-2737b	117.6	5.19	124.80	
1	33.84 R	GIRD	STR I	0	0	0.0	0.00	0.00	3244	-2749b	117.6	5.21	124.80	
			STIII	0	0	0.0	0.00	0.00	12370	-2606b	117.6	4.94	124.80	
			STRIV	0	0	0.0	0.00	0.00	12515	-2757b	117.6	5.22	124.80	
			STR V	0	0	0.0	0.00	0.00	88144	-2750b	117.6	5.21	124.80	
1	35.03 L	GIRD	STR I	0	0	0.0	0.00	0.00	3244	-597b	109.4	1.21	124.80	
			STIII	0	0	0.0	0.00	0.00	12370	-766b	109.4	1.56	124.80	
			STRIV	0	0	0.0	0.00	0.00	12515	-677b	109.4	1.38	124.80	
			STR V	0	0	0.0	0.00	0.00	88144	-667b	109.4	1.36	124.80	
1	35.03 R	GIRD	STR I	0	0	0.0	0.00	0.00	1	-446b	109.4	0.91	124.80	
			STIII	0	0	0.0	0.00	0.00	12327	-446b	109.4	0.91	124.80	
			STRIV	0	0	0.0	0.00	0.00	12513	-535b	109.4	1.09	124.80	
			STR V	0	0	0.0	0.00	0.00	21761	-446b	109.4	0.91	124.80	
1	41.10 L	CAP	STR I	0	0	0.0	0.00	0.00	0	0	0.0	0.00	0.00	
			STIII	0	0	0.0	0.00	0.00	0	0	0.0	0.00	0.00	
			STRIV	0	0	0.0	0.00	0.00	0	0	0.0	0.00	0.00	
			STR V	0	0	0.0	0.00	0.00	0	0	0.0	0.00	0.00	

----- CAP BEAM 1 FLEXURAL DESIGN ----------

FLEXURAL DESIGN - TRANSVERSE FLEXURAL DESIGN PARAMETERS (Based on As Provided):

				POSITIVE FLEXURE					NEGATIVE FLEXURE				
CAP NO.	HORZ DIST. (ft)	LOCATION	AASHTO LIMIT STATE	LOAD CASE	a (in)	STRAIN es	PHI Ø	ØMn CAP (ft-k)	LOAD CASE	a (in)	STRAIN es	PHI Ø	ØMn CAP (ft-k)
1	-101.40 R	CAP	STR I	0	0.00	0.000000	0.000	0	0	0.00	0.000000	0.000	0
			STIII	0	0.00	0.000000	0.000	0	0	0.00	0.000000	0.000	0
			STRIV	0	0.00	0.000000	0.000	0	0	0.00	0.000000	0.000	0
			STR V	0	0.00	0.000000	0.000	0	0	0.00	0.000000	0.000	0
1	-95.85 L	GIRD	STR I	0	0.00	0.000000	0.000	0	1	15.29	0.015821	0.900	-55110
			STIII	0	0.00	0.000000	0.000	0	12327	15.29	0.015821	0.900	-55110
			STRIV	0	0.00	0.000000	0.000	0	12513	15.29	0.015821	0.900	-55110
			STR V	0	0.00	0.000000	0.000	0	21761	15.29	0.015821	0.900	-55110
1	-95.85 R	GIRD	STR I	0	0.00	0.000000	0.000	0	3477	15.29	0.015821	0.900	-55110
			STIII	0	0.00	0.000000	0.000	0	12382	15.29	0.015821	0.900	-55110
			STRIV	0	0.00	0.000000	0.000	0	12515	15.29	0.015821	0.900	-55110
			STR V	0	0.00	0.000000	0.000	0	106857	15.29	0.015821	0.900	-55110
1	-93.23 L	GIRD	STR I	0	0.00	0.000000	0.000	0	3474	15.29	0.018841	0.900	-65282
			STIII	0	0.00	0.000000	0.000	0	12382	15.29	0.018841	0.900	-65282
			STRIV	0	0.00	0.000000	0.000	0	12515	15.29	0.018841	0.900	-65282
			STR V	0	0.00	0.000000	0.000	0	106854	15.29	0.018841	0.900	-65282
1	-93.23 R	GIRD	STR I	0	0.00	0.000000	0.000	0	5080	15.29	0.018841	0.900	-65282
			STIII	0	0.00	0.000000	0.000	0	12406	15.29	0.018841	0.900	-65282
			STRIV	0	0.00	0.000000	0.000	0	12516	15.29	0.018841	0.900	-65282
			STR V	0	0.00	0.000000	0.000	0	143880	15.29	0.018841	0.900	-65282
1	-85.54 L	GIRD	STR I	0	0.00	0.000000	0.000	0	5029	15.29	0.027694	0.900	-95103
			STIII	0	0.00	0.000000	0.000	0	12406	15.29	0.027694	0.900	-95103
			STRIV	0	0.00	0.000000	0.000	0	12516	15.29	0.027694	0.900	-95103
			STR V	0	0.00	0.000000	0.000	0	143829	15.29	0.027694	0.900	-95103
1	-85.54 R	GIRD	STR I	0	0.00	0.000000	0.000	0	5029	15.29	0.027694	0.900	-95103
			STIII	0	0.00	0.000000	0.000	0	12406	15.29	0.027694	0.900	-95103
			STRIV	0	0.00	0.000000	0.000	0	12516	15.29	0.027694	0.900	-95103
			STR V	0	0.00	0.000000	0.000	0	143829	15.29	0.027694	0.900	-95103
1	-84.90 L	FACE	STR I	0	0.00	0.000000	0.000	0	5029	15.29	0.028436	0.900	-97602
			STIII	0	0.00	0.000000	0.000	0	12406	15.29	0.028436	0.900	-97602
			STRIV	0	0.00	0.000000	0.000	0	12516	15.29	0.028436	0.900	-97602
			STR V	0	0.00	0.000000	0.000	0	143829	15.29	0.028436	0.900	-97602
1	-77.90 L	COL	STR I	0	0.00	0.000000	0.000	0	5183	15.29	0.028436	0.900	-97602
			STIII	0	0.00	0.000000	0.000	0	12406	15.29	0.028436	0.900	-97602
			STRIV	0	0.00	0.000000	0.000	0	12516	15.29	0.028436	0.900	-97602
			STR V	0	0.00	0.000000	0.000	0	143983	15.29	0.028436	0.900	-97602
1	-77.90 R	COL	STR I	0	0.00	0.000000	0.000	0	5057	15.29	0.028436	0.900	-97602
			STIII	0	0.00	0.000000	0.000	0	12405	15.29	0.028436	0.900	-97602
			STRIV	0	0.00	0.000000	0.000	0	12516	15.29	0.028436	0.900	-97602
			STR V	0	0.00	0.000000	0.000	0	143857	15.29	0.028436	0.900	-97602
1	-75.23 L	GIRD	STR I	0	0.00	0.000000	0.000	0	5057	15.29	0.028436	0.900	-97602
			STIII	0	0.00	0.000000	0.000	0	12405	15.29	0.028436	0.900	-97602
			STRIV	0	0.00	0.000000	0.000	0	12516	15.29	0.028436	0.900	-97602
			STR V	0	0.00	0.000000	0.000	0	143857	15.29	0.028436	0.900	-97602
1	-75.23 R	GIRD	STR I	0	0.00	0.000000	0.000	0	5057	15.29	0.028436	0.900	-97602
			STIII	0	0.00	0.000000	0.000	0	12405	15.29	0.028436	0.900	-97602
			STRIV	0	0.00	0.000000	0.000	0	12516	15.29	0.028436	0.900	-97602
			STR V	0	0.00	0.000000	0.000	0	143857	15.29	0.028436	0.900	-97602
1	-70.90 L	FACE	STR I	0	0.00	0.000000	0.000	0	5080	15.29	0.028436	0.900	-97602
			STIII	0	0.00	0.000000	0.000	0	12384	15.29	0.028436	0.900	-97602
			STRIV	0	0.00	0.000000	0.000	0	12515	15.29	0.028436	0.900	-97602
			STR V	0	0.00	0.000000	0.000	0	143880	15.29	0.028436	0.900	-97602
1	-66.40 L	SPEC	STR I	0	0.00	0.000000	0.000	0	5080	12.24	0.032127	0.900	-70862
			STIII	0	0.00	0.000000	0.000	0	12406	12.24	0.032127	0.900	-70862
			STRIV	0	0.00	0.000000	0.000	0	12516	12.24	0.032127	0.900	-70862
			STR V	0	0.00	0.000000	0.000	0	143880	12.24	0.032127	0.900	-70862
1	-66.40 R	SPEC	STR I	0	0.00	0.000000	0.000	0	5038	12.24	0.032127	0.900	-70862
			STIII	0	0.00	0.000000	0.000	0	12406	12.24	0.032127	0.900	-70862
			STRIV	0	0.00	0.000000	0.000	0	12516	12.24	0.032127	0.900	-70862
			STR V	0	0.00	0.000000	0.000	0	143838	12.24	0.032127	0.900	-70862
1	-64.92 L	GIRD	STR I	0	0.00	0.000000	0.000	0	5080	12.24	0.030757	0.900	-67909
			STIII	0	0.00	0.000000	0.000	0	12406	12.24	0.030757	0.900	-67909
			STRIV	0	0.00	0.000000	0.000	0	12516	12.24	0.030757	0.900	-67909
			STR V	0	0.00	0.000000	0.000	0	143880	12.24	0.030757	0.900	-67909
1	-64.92 R	GIRD	STR I	0	0.00	0.000000	0.000	0	5080	12.24	0.030757	0.900	-67909
			STIII	0	0.00	0.000000	0.000	0	12406	12.24	0.030757	0.900	-67909
			STRIV	0	0.00	0.000000	0.000	0	12516	12.24	0.030757	0.900	-67909
			STR V	0	0.00	0.000000	0.000	0	143880	12.24	0.030757	0.900	-67909
1	-61.16 L	GIRD	STR I	6239	8.41	0.041042	0.900	43358	5098	12.24	0.027279	0.900	-60410

			STIII	12418	8.41	0.041042	0.900	43358	12406	12.24	0.027279	0.900	-60410
			STRIV	0	0.00	0.000000	0.000	0	12516	12.24	0.027279	0.900	-60410
			STR V	161979	8.41	0.041042	0.900	43358	143898	12.24	0.027279	0.900	-60410
1	-61.16 R	GIRD	STR I	6239	8.41	0.041042	0.900	43358	5098	12.24	0.027279	0.900	-60410
			STIII	12418	8.41	0.041042	0.900	43358	12406	12.24	0.027279	0.900	-60410
			STRIV	0	0.00	0.000000	0.000	0	12516	12.24	0.027279	0.900	-60410
			STR V	161979	8.41	0.041042	0.900	43358	143898	12.24	0.027279	0.900	-60410
1	-57.40 L	CAP	STR I	6240	16.82	0.016484	0.900	71307	5099	12.24	0.023791	0.900	-52890
			STIII	12418	16.82	0.016484	0.900	71307	12406	12.24	0.023791	0.900	-52890
			STRIV	12513	16.82	0.016484	0.900	71307	12516	12.24	0.023791	0.900	-52890
			STR V	161980	16.82	0.016484	0.900	71307	143899	12.24	0.023791	0.900	-52890
1	-49.44 L	GIRD	STR I	3177	16.82	0.016484	0.900	71307	0	0.00	0.000000	0.000	0
			STIII	12369	16.82	0.016484	0.900	71307	0	0.00	0.000000	0.000	0
			STRIV	12515	16.82	0.016484	0.900	71307	0	0.00	0.000000	0.000	0
			STR V	88077	16.82	0.016484	0.900	71307	0	0.00	0.000000	0.000	0
1	-49.44 R	GIRD	STR I	3177	16.82	0.016484	0.900	71307	0	0.00	0.000000	0.000	0
			STIII	12369	16.82	0.016484	0.900	71307	0	0.00	0.000000	0.000	0
			STRIV	12515	16.82	0.016484	0.900	71307	0	0.00	0.000000	0.000	0
			STR V	88077	16.82	0.016484	0.900	71307	0	0.00	0.000000	0.000	0
1	-37.67 L	GIRD	STR I	3185	16.82	0.016484	0.900	71307	0	0.00	0.000000	0.000	0
			STIII	12369	16.82	0.016484	0.900	71307	0	0.00	0.000000	0.000	0
			STRIV	12515	16.82	0.016484	0.900	71307	0	0.00	0.000000	0.000	0
			STR V	88085	16.82	0.016484	0.900	71307	0	0.00	0.000000	0.000	0
1	-37.67 R	GIRD	STR I	3185	16.82	0.016484	0.900	71307	0	0.00	0.000000	0.000	0
			STIII	12369	16.82	0.016484	0.900	71307	0	0.00	0.000000	0.000	0
			STRIV	12515	16.82	0.016484	0.900	71307	0	0.00	0.000000	0.000	0
			STR V	88085	16.82	0.016484	0.900	71307	0	0.00	0.000000	0.000	0
1	-29.10 L	GIRD	STR I	3496	16.82	0.016484	0.900	71307	0	0.00	0.000000	0.000	0
			STIII	12381	16.82	0.016484	0.900	71307	0	0.00	0.000000	0.000	0
			STRIV	12515	16.82	0.016484	0.900	71307	0	0.00	0.000000	0.000	0
			STR V	106876	16.82	0.016484	0.900	71307	0	0.00	0.000000	0.000	0
1	-29.10 R	GIRD	STR I	3496	16.82	0.016484	0.900	71307	0	0.00	0.000000	0.000	0
			STIII	12381	16.82	0.016484	0.900	71307	0	0.00	0.000000	0.000	0
			STRIV	12515	16.82	0.016484	0.900	71307	0	0.00	0.000000	0.000	0
			STR V	106876	16.82	0.016484	0.900	71307	0	0.00	0.000000	0.000	0
1	-25.90 L	GIRD	STR I	3495	16.82	0.016484	0.900	71307	0	0.00	0.000000	0.000	0
			STIII	12381	16.82	0.016484	0.900	71307	0	0.00	0.000000	0.000	0
			STRIV	12515	16.82	0.016484	0.900	71307	0	0.00	0.000000	0.000	0
			STR V	106875	16.82	0.016484	0.900	71307	0	0.00	0.000000	0.000	0
1	-25.90 R	GIRD	STR I	3495	16.82	0.016484	0.900	71307	0	0.00	0.000000	0.000	0
			STIII	12381	16.82	0.016484	0.900	71307	0	0.00	0.000000	0.000	0
			STRIV	12515	16.82	0.016484	0.900	71307	0	0.00	0.000000	0.000	0
			STR V	106875	16.82	0.016484	0.900	71307	0	0.00	0.000000	0.000	0
1	-14.12 L	GIRD	STR I	3846	16.82	0.016484	0.900	71307	0	0.00	0.000000	0.000	0
			STIII	12369	16.82	0.016484	0.900	71307	0	0.00	0.000000	0.000	0
			STRIV	12515	16.82	0.016484	0.900	71307	0	0.00	0.000000	0.000	0
			STR V	107226	16.82	0.016484	0.900	71307	0	0.00	0.000000	0.000	0
1	-14.12 R	GIRD	STR I	3846	16.82	0.016484	0.900	71307	0	0.00	0.000000	0.000	0
			STIII	12385	16.82	0.016484	0.900	71307	0	0.00	0.000000	0.000	0
			STRIV	12515	16.82	0.016484	0.900	71307	0	0.00	0.000000	0.000	0
			STR V	107226	16.82	0.016484	0.900	71307	0	0.00	0.000000	0.000	0
1	-7.65 L	GIRD	STR I	3613	16.82	0.016484	0.900	71307	0	0.00	0.000000	0.000	0
			STIII	12382	16.82	0.016484	0.900	71307	12442	12.24	0.023791	0.900	-52890
			STRIV	12515	16.82	0.016484	0.900	71307	0	0.00	0.000000	0.000	0
			STR V	106993	16.82	0.016484	0.900	71307	0	0.00	0.000000	0.000	0
1	-7.65 R	GIRD	STR I	3613	16.82	0.016484	0.900	71307	0	0.00	0.000000	0.000	0
			STIII	12382	16.82	0.016484	0.900	71307	0	0.00	0.000000	0.000	0
			STRIV	12515	16.82	0.016484	0.900	71307	0	0.00	0.000000	0.000	0
			STR V	106993	16.82	0.016484	0.900	71307	0	0.00	0.000000	0.000	0
1	-2.90 L	CAP	STR I	3616	8.41	0.035968	0.900	38188	7847	12.24	0.023791	0.900	-52890
			STIII	12382	8.41	0.035968	0.900	38188	12442	12.24	0.023791	0.900	-52890
			STRIV	12515	8.41	0.035968	0.900	38188	12514	12.24	0.023791	0.900	-52890
			STR V	106996	8.41	0.035968	0.900	38188	199007	12.24	0.023791	0.900	-52890
1	-1.19 L	GIRD	STR I	6696	8.41	0.038264	0.900	40527	4769	12.24	0.025369	0.900	-56292
			STIII	12430	8.41	0.038264	0.900	40527	12394	12.24	0.025369	0.900	-56292
			STRIV	0	0.00	0.000000	0.000	0	12516	12.24	0.025369	0.900	-56292
			STR V	180916	8.41	0.038264	0.900	40527	125089	12.24	0.025369	0.900	-56292
1	-1.19 R	GIRD	STR I	6696	8.41	0.038264	0.900	40527	4769	12.24	0.025369	0.900	-56292
			STIII	12430	8.41	0.038264	0.900	40527	12394	12.24	0.025369	0.900	-56292
			STRIV	0	0.00	0.000000	0.000	0	12516	12.24	0.025369	0.900	-56292
			STR V	180916	8.41	0.038264	0.900	40527	125089	12.24	0.025369	0.900	-56292
1	2.97 L	GIRD	STR I	6696	8.41	0.043865	0.900	46234	4771	12.24	0.029219	0.900	-64594
			STIII	12430	8.41	0.043865	0.900	46234	12394	12.24	0.029219	0.900	-64594
			STRIV	0	0.00	0.000000	0.000	0	12516	12.24	0.029219	0.900	-64594
			STR V	180916	8.41	0.043865	0.900	46234	125091	12.24	0.029219	0.900	-64594
1	2.97 R	GIRD	STR I	6696	8.41	0.043865	0.900	46234	4771	12.24	0.029219	0.900	-64594

			STIII	12430	8.41	0.043865	0.900	46234	12394	12.24	0.029219	0.900	-64594
			STRIV	0	0.00	0.000000	0.000	0	12516	12.24	0.029219	0.900	-64594
			STR V	180916	8.41	0.043865	0.900	46234	125091	12.24	0.029219	0.900	-64594
1	6.10 L	SPEC	STR I	0	0.00	0.000000	0.000	0	4771	12.24	0.032127	0.900	-70861
			STIII	0	0.00	0.000000	0.000	0	12393	12.24	0.032127	0.900	-70861
			STRIV	0	0.00	0.000000	0.000	0	12516	12.24	0.032127	0.900	-70861
			STR V	0	0.00	0.000000	0.000	0	125091	12.24	0.032127	0.900	-70861
1	6.10 R	SPEC	STR I	0	0.00	0.000000	0.000	0	4771	12.24	0.032127	0.900	-70861
			STIII	0	0.00	0.000000	0.000	0	12393	12.24	0.032127	0.900	-70861
			STRIV	0	0.00	0.000000	0.000	0	12516	12.24	0.032127	0.900	-70861
			STR V	0	0.00	0.000000	0.000	0	125091	12.24	0.032127	0.900	-70861
1	10.48 L	GIRD	STR I	0	0.00	0.000000	0.000	0	3234	15.29	0.028347	0.900	-97300
			STIII	0	0.00	0.000000	0.000	0	12397	15.29	0.028347	0.900	-97300
			STRIV	0	0.00	0.000000	0.000	0	12515	15.29	0.028347	0.900	-97300
			STR V	0	0.00	0.000000	0.000	0	88134	15.29	0.028347	0.900	-97300
1	10.48 R	GIRD	STR I	0	0.00	0.000000	0.000	0	4780	15.29	0.028347	0.900	-97300
			STIII	0	0.00	0.000000	0.000	0	12393	15.29	0.028347	0.900	-97300
			STRIV	0	0.00	0.000000	0.000	0	12515	15.29	0.028347	0.900	-97300
			STR V	0	0.00	0.000000	0.000	0	125100	15.29	0.028347	0.900	-97300
1	10.60 L	FACE	STR I	0	0.00	0.000000	0.000	0	3235	15.29	0.028436	0.900	-97602
			STIII	0	0.00	0.000000	0.000	0	12397	15.29	0.028436	0.900	-97602
			STRIV	0	0.00	0.000000	0.000	0	12515	15.29	0.028436	0.900	-97602
			STR V	0	0.00	0.000000	0.000	0	88135	15.29	0.028436	0.900	-97602
1	17.60 L	COL	STR I	0	0.00	0.000000	0.000	0	4783	15.29	0.028436	0.900	-97602
			STIII	0	0.00	0.000000	0.000	0	12393	15.29	0.028436	0.900	-97602
			STRIV	0	0.00	0.000000	0.000	0	12516	15.29	0.028436	0.900	-97602
			STR V	0	0.00	0.000000	0.000	0	125103	15.29	0.028436	0.900	-97602
1	17.60 R	COL	STR I	0	0.00	0.000000	0.000	0	4785	15.29	0.028436	0.900	-97602
			STIII	0	0.00	0.000000	0.000	0	12370	15.29	0.028436	0.900	-97602
			STRIV	0	0.00	0.000000	0.000	0	12515	15.29	0.028436	0.900	-97602
			STR V	0	0.00	0.000000	0.000	0	88145	15.29	0.028436	0.900	-97602
1	22.16 L	GIRD	STR I	0	0.00	0.000000	0.000	0	3246	15.29	0.028436	0.900	-97602
			STIII	0	0.00	0.000000	0.000	0	12370	15.29	0.028436	0.900	-97602
			STRIV	0	0.00	0.000000	0.000	0	12515	15.29	0.028436	0.900	-97602
			STR V	0	0.00	0.000000	0.000	0	88146	15.29	0.028436	0.900	-97602
1	22.16 R	GIRD	STR I	0	0.00	0.000000	0.000	0	3246	15.29	0.028436	0.900	-97602
			STIII	0	0.00	0.000000	0.000	0	12370	15.29	0.028436	0.900	-97602
			STRIV	0	0.00	0.000000	0.000	0	12515	15.29	0.028436	0.900	-97602
			STR V	0	0.00	0.000000	0.000	0	88146	15.29	0.028436	0.900	-97602
1	24.60 L	FACE	STR I	0	0.00	0.000000	0.000	0	3246	15.29	0.028436	0.900	-97602
			STIII	0	0.00	0.000000	0.000	0	12370	15.29	0.028436	0.900	-97602
			STRIV	0	0.00	0.000000	0.000	0	12515	15.29	0.028436	0.900	-97602
			STR V	0	0.00	0.000000	0.000	0	88146	15.29	0.028436	0.900	-97602
1	33.84 L	GIRD	STR I	0	0.00	0.000000	0.000	0	3244	15.29	0.017793	0.900	-61751
			STIII	0	0.00	0.000000	0.000	0	12370	15.29	0.017793	0.900	-61751
			STRIV	0	0.00	0.000000	0.000	0	12515	15.29	0.017793	0.900	-61751
			STR V	0	0.00	0.000000	0.000	0	88144	15.29	0.017793	0.900	-61751
1	33.84 R	GIRD	STR I	0	0.00	0.000000	0.000	0	3244	15.29	0.017793	0.900	-61751
			STIII	0	0.00	0.000000	0.000	0	12370	15.29	0.017793	0.900	-61751
			STRIV	0	0.00	0.000000	0.000	0	12515	15.29	0.017793	0.900	-61751
			STR V	0	0.00	0.000000	0.000	0	88144	15.29	0.017793	0.900	-61751
1	35.03 L	GIRD	STR I	0	0.00	0.000000	0.000	0	3244	15.29	0.016427	0.900	-57153
			STIII	0	0.00	0.000000	0.000	0	12370	15.29	0.016427	0.900	-57153
			STRIV	0	0.00	0.000000	0.000	0	12515	15.29	0.016427	0.900	-57153
			STR V	0	0.00	0.000000	0.000	0	88144	15.29	0.016427	0.900	-57153
1	35.03 R	GIRD	STR I	0	0.00	0.000000	0.000	0	1	15.29	0.016427	0.900	-57153
			STIII	0	0.00	0.000000	0.000	0	12327	15.29	0.016427	0.900	-57153
			STRIV	0	0.00	0.000000	0.000	0	12513	15.29	0.016427	0.900	-57153
			STR V	0	0.00	0.000000	0.000	0	21761	15.29	0.016427	0.900	-57153
1	41.10 L	CAP	STR I	0	0.00	0.000000	0.000	0	0	0.00	0.000000	0.000	0
			STIII	0	0.00	0.000000	0.000	0	0	0.00	0.000000	0.000	0
			STRIV	0	0.00	0.000000	0.000	0	0	0.00	0.000000	0.000	0
			STR V	0	0.00	0.000000	0.000	0	0	0.00	0.000000	0.000	0

----- CAP BEAM 1 FLEXURAL DESIGN ----------

FLEXURAL DESIGN - LONGITUDINAL FLEXURE, REINFORCING STEEL REQUIREMENTS:

LRFD MOMENT, MIN STEEL CODE:
a: Design controlled by 1.2 Mcr
b: Design controlled by 4/3 Mdes
c: Design controlled 0.03f'c/fy

				POSITIVE FLEXURE				NEGATIVE FLEXURE			
CAP NO.	HORZ DIST. (ft)	LOCATION	AASHTO LIMIT STATE	LOAD CASE	LRFD MOMENT (ft-k)	d (in)	AREA REQD. (sq-in)	LOAD CASE	LRFD MOMENT (ft-k)	d (in)	AREA REQD. (sq-in)
1	-101.40 R	CAP	STR I	0	0	0.0	0.00	0	0	0.0	0.00
			STIII	0	0	0.0	0.00	0	0	0.0	0.00
			STRIV	0	0	0.0	0.00	0	0	0.0	0.00
			STR V	0	0	0.0	0.00	0	0	0.0	0.00

1	-95.85	L	GIRD	STR I	0	0	0.0	0.00	0	0	0.0	0.00
				STIII	12327	12b	140.9	0.02	0	0	0.0	0.00
				STRIV	0	0	0.0	0.00	0	0	0.0	0.00
				STR V	21761	3b	140.9	0.01	0	0	0.0	0.00
1	-95.85	R	GIRD	STR I	3477	113b	140.9	0.18	0	0	0.0	0.00
				STIII	12382	194b	140.9	0.31	0	0	0.0	0.00
				STRIV	12516	54b	140.9	0.09	0	0	0.0	0.00
				STR V	106857	157b	140.9	0.25	0	0	0.0	0.00
1	-93.23	L	GIRD	STR I	5017	117b	140.9	0.18	0	0	0.0	0.00
				STIII	12406	222b	140.9	0.35	0	0	0.0	0.00
				STRIV	12515	50b	140.9	0.08	0	0	0.0	0.00
				STR V	143817	172b	140.9	0.27	0	0	0.0	0.00
1	-93.23	R	GIRD	STR I	8097	71b	140.9	0.11	0	0	0.0	0.00
				STIII	12394	117b	140.9	0.19	0	0	0.0	0.00
				STRIV	12516	8b	140.9	0.01	0	0	0.0	0.00
				STR V	217737	101b	140.9	0.16	0	0	0.0	0.00
1	-85.54	L	GIRD	STR I	3646	691b	140.9	1.09	0	0	0.0	0.00
				STIII	12396	794b	140.9	1.25	0	0	0.0	0.00
				STRIV	12516	540b	140.9	0.85	0	0	0.0	0.00
				STR V	107026	755b	140.9	1.19	0	0	0.0	0.00
1	-85.54	R	GIRD	STR I	3646	785b	140.9	1.24	0	0	0.0	0.00
				STIII	12395	946b	140.9	1.49	0	0	0.0	0.00
				STRIV	12515	580b	140.9	0.92	0	0	0.0	0.00
				STR V	107026	893b	140.9	1.41	0	0	0.0	0.00
1	-84.90	L	FACE	STR I	3646	819b	140.9	1.29	0	0	0.0	0.00
				STIII	12395	994b	140.9	1.57	0	0	0.0	0.00
				STRIV	12515	606b	140.9	0.96	0	0	0.0	0.00
				STR V	107026	933b	140.9	1.47	0	0	0.0	0.00
1	-77.90	L	COL	STR I	3646	1180b	140.9	1.86	0	0	0.0	0.00
				STIII	12396	1549b	140.9	2.44	0	0	0.0	0.00
				STRIV	12516	881b	140.9	1.39	0	0	0.0	0.00
				STR V	107026	1364b	140.9	2.15	0	0	0.0	0.00
1	-77.90	R	COL	STR I	3535	1415b	140.9	2.23	0	0	0.0	0.00
				STIII	12396	1384b	140.9	2.19	0	0	0.0	0.00
				STRIV	12516	781b	140.9	1.23	0	0	0.0	0.00
				STR V	109995	1467b	140.9	2.32	0	0	0.0	0.00
1	-75.23	L	GIRD	STR I	3597	1272b	140.9	2.01	0	0	0.0	0.00
				STIII	12396	1069b	140.9	1.69	0	0	0.0	0.00
				STRIV	12516	653b	140.9	1.03	0	0	0.0	0.00
				STR V	110057	1256b	140.9	1.98	0	0	0.0	0.00
1	-75.23	R	GIRD	STR I	3597	1376b	140.9	2.17	0	0	0.0	0.00
				STIII	12396	1219b	140.9	1.92	0	0	0.0	0.00
				STRIV	12516	692b	140.9	1.09	0	0	0.0	0.00
				STR V	110057	1390b	140.9	2.19	0	0	0.0	0.00
1	-70.90	L	FACE	STR I	3597	1104b	140.9	1.74	0	0	0.0	0.00
				STIII	12396	647b	140.9	1.02	0	0	0.0	0.00
				STRIV	12516	357b	140.9	0.56	0	0	0.0	0.00
				STR V	106977	1017b	140.9	1.60	0	0	0.0	0.00
1	-66.40	L	SPEC	STR I	6658	890b	140.9	1.40	0	0	0.0	0.00
				STIII	12358	193b	140.9	0.30	0	0	0.0	0.00
				STRIV	12515	50b	140.9	0.08	0	0	0.0	0.00
				STR V	176258	704b	140.9	1.11	0	0	0.0	0.00
1	-66.40	R	SPEC	STR I	6658	890b	140.9	1.40	0	0	0.0	0.00
				STIII	12358	193b	140.9	0.30	0	0	0.0	0.00
				STRIV	12515	50b	140.9	0.08	0	0	0.0	0.00
				STR V	176258	704b	140.9	1.11	0	0	0.0	0.00
1	-64.92	L	GIRD	STR I	3595	947b	140.9	1.49	0	0	0.0	0.00
				STIII	12386	251b	140.9	0.40	0	0	0.0	0.00
				STRIV	12515	163b	140.9	0.26	0	0	0.0	0.00
				STR V	111595	796b	140.9	1.26	0	0	0.0	0.00
1	-64.92	R	GIRD	STR I	6658	951b	140.9	1.50	0	0	0.0	0.00
				STIII	12406	309b	140.9	0.49	0	0	0.0	0.00
				STRIV	12515	118b	140.9	0.19	0	0	0.0	0.00
				STR V	177798	769b	140.9	1.21	0	0	0.0	0.00
1	-61.16	L	GIRD	STR I	3595	1328b	140.9	2.10	0	0	0.0	0.00
				STIII	12387	673b	140.9	1.06	0	0	0.0	0.00
				STRIV	12515	529b	140.9	0.83	0	0	0.0	0.00
				STR V	114675	1191b	140.9	1.88	0	0	0.0	0.00
1	-61.16	R	GIRD	STR I	3595	1282b	140.9	2.02	0	0	0.0	0.00
				STIII	12385	631b	140.9	1.00	0	0	0.0	0.00
				STRIV	12515	461b	140.9	0.73	0	0	0.0	0.00
				STR V	111595	1153b	140.9	1.82	0	0	0.0	0.00
1	-57.40	L	CAP	STR I	3595	1196b	140.9	1.89	0	0	0.0	0.00
				STIII	12385	698b	140.9	1.10	0	0	0.0	0.00
				STRIV	12515	387b	140.9	0.61	0	0	0.0	0.00
				STR V	111595	1115b	140.9	1.76	0	0	0.0	0.00

1	-49.44	L	GIRD	STR I	3623	1079b	140.9	1.70	0	0	0.0	0.00
				STIII	12385	804b	140.9	1.27	0	0	0.0	0.00
				STRIV	12515	230b	140.9	0.36	0	0	0.0	0.00
				STR V	111623	1074b	140.9	1.70	0	0	0.0	0.00
1	-49.44	R	GIRD	STR I	6273	1075b	140.9	1.70	0	0	0.0	0.00
				STIII	12385	721b	140.9	1.14	0	0	0.0	0.00
				STRIV	12515	182b	140.9	0.29	0	0	0.0	0.00
				STR V	111623	1001b	140.9	1.58	0	0	0.0	0.00
1	-37.67	L	GIRD	STR I	3623	1253b	140.9	1.98	0	0	0.0	0.00
				STIII	12385	1115b	140.9	1.76	0	0	0.0	0.00
				STRIV	12515	364b	140.9	0.57	0	0	0.0	0.00
				STR V	111623	1300b	140.9	2.05	0	0	0.0	0.00
1	-37.67	R	GIRD	STR I	3623	1194b	140.9	1.88	0	0	0.0	0.00
				STIII	12385	1034b	140.9	1.63	0	0	0.0	0.00
				STRIV	12515	318b	140.9	0.50	0	0	0.0	0.00
				STR V	111623	1228b	140.9	1.94	0	0	0.0	0.00
1	-29.10	L	GIRD	STR I	3623	1604b	140.9	2.53	0	0	0.0	0.00
				STIII	12385	1481b	140.9	2.34	0	0	0.0	0.00
				STRIV	12515	739b	140.9	1.17	0	0	0.0	0.00
				STR V	110083	1660b	140.9	2.62	0	0	0.0	0.00
1	-29.10	R	GIRD	STR I	3623	1581b	140.9	2.50	0	0	0.0	0.00
				STIII	12385	1467b	140.9	2.32	0	0	0.0	0.00
				STRIV	12515	674b	140.9	1.06	0	0	0.0	0.00
				STR V	110083	1650b	140.9	2.61	0	0	0.0	0.00
1	-25.90	L	GIRD	STR I	3623	1303b	140.9	2.06	0	0	0.0	0.00
				STIII	12385	1250b	140.9	1.97	0	0	0.0	0.00
				STRIV	12515	434b	140.9	0.69	0	0	0.0	0.00
				STR V	110083	1386b	140.9	2.19	0	0	0.0	0.00
1	-25.90	R	GIRD	STR I	3623	1244b	140.9	1.96	0	0	0.0	0.00
				STIII	12385	1169b	140.9	1.85	0	0	0.0	0.00
				STRIV	12515	389b	140.9	0.61	0	0	0.0	0.00
				STR V	110083	1310b	140.9	2.07	0	0	0.0	0.00
1	-14.12	L	GIRD	STR I	5047	1287b	140.9	2.03	0	0	0.0	0.00
				STIII	12373	799b	140.9	1.26	0	0	0.0	0.00
				STRIV	12516	108b	140.9	0.17	0	0	0.0	0.00
				STR V	146927	1245b	140.9	1.97	0	0	0.0	0.00
1	-14.12	R	GIRD	STR I	5047	1292b	140.9	2.04	0	0	0.0	0.00
				STIII	12373	793b	140.9	1.25	0	0	0.0	0.00
				STRIV	12516	148b	140.9	0.23	0	0	0.0	0.00
				STR V	148467	1239b	140.9	1.96	0	0	0.0	0.00
1	-7.65	L	GIRD	STR I	5047	1179b	140.9	1.86	0	0	0.0	0.00
				STIII	12373	723b	140.9	1.14	0	0	0.0	0.00
				STRIV	12516	221b	140.9	0.35	0	0	0.0	0.00
				STR V	148467	1122b	140.9	1.77	0	0	0.0	0.00
1	-7.65	R	GIRD	STR I	3168	1201b	140.9	1.90	0	0	0.0	0.00
				STIII	12373	715b	140.9	1.13	0	0	0.0	0.00
				STRIV	12516	259b	140.9	0.41	0	0	0.0	0.00
				STR V	92688	1132b	140.9	1.79	0	0	0.0	0.00
1	-2.90	L	CAP	STR I	3168	1081b	140.9	1.71	0	0	0.0	0.00
				STIII	12373	512b	140.9	0.81	0	0	0.0	0.00
				STRIV	12515	181b	140.9	0.29	0	0	0.0	0.00
				STR V	92688	981b	140.9	1.55	0	0	0.0	0.00
1	-1.19	L	GIRD	STR I	3168	1038b	140.9	1.64	0	0	0.0	0.00
				STIII	12373	435b	140.9	0.69	0	0	0.0	0.00
				STRIV	12515	154b	140.9	0.24	0	0	0.0	0.00
				STR V	92688	925b	140.9	1.46	0	0	0.0	0.00
1	-1.19	R	GIRD	STR I	3168	1088b	140.9	1.72	0	0	0.0	0.00
				STIII	12374	445b	140.9	0.70	0	0	0.0	0.00
				STRIV	12515	194b	140.9	0.31	0	0	0.0	0.00
				STR V	94228	958b	140.9	1.51	0	0	0.0	0.00
1	2.97	L	GIRD	STR I	9329	847b	140.9	1.34	0	0	0.0	0.00
				STIII	12339	188b	140.9	0.30	0	0	0.0	0.00
				STRIV	12513	42b	140.9	0.07	0	0	0.0	0.00
				STR V	243609	702b	140.9	1.11	0	0	0.0	0.00
1	2.97	R	GIRD	STR I	3169	889b	140.9	1.40	0	0	0.0	0.00
				STIII	12375	218b	140.9	0.34	0	0	0.0	0.00
				STRIV	12515	67b	140.9	0.11	0	0	0.0	0.00
				STR V	94229	745b	140.9	1.18	0	0	0.0	0.00
1	6.10	L	SPEC	STR I	3169	1051b	140.9	1.66	0	0	0.0	0.00
				STIII	12380	350b	140.9	0.55	0	0	0.0	0.00
				STRIV	12515	295b	140.9	0.47	0	0	0.0	0.00
				STR V	103469	904b	140.9	1.43	0	0	0.0	0.00
1	6.10	R	SPEC	STR I	3169	1051b	140.9	1.66	0	0	0.0	0.00
				STIII	12380	350b	140.9	0.55	0	0	0.0	0.00
				STRIV	12515	295b	140.9	0.47	0	0	0.0	0.00
				STR V	103469	904b	140.9	1.43	0	0	0.0	0.00

1	10.48 L	GIRD	STR I	3169	1277b	140.9	2.02	0	0	0.0	0.00
			STIII	12384	801b	140.9	1.26	0	0	0.0	0.00
			STRIV	12515	614b	140.9	0.97	0	0	0.0	0.00
			STR V	106549	1207b	140.9	1.91	0	0	0.0	0.00
1	10.48 R	GIRD	STR I	3500	1335b	140.9	2.11	0	0	0.0	0.00
			STIII	12384	890b	140.9	1.40	0	0	0.0	0.00
			STRIV	12515	658b	140.9	1.04	0	0	0.0	0.00
			STR V	106880	1286b	140.9	2.03	0	0	0.0	0.00
1	10.60 L	FACE	STR I	3500	1339b	140.9	2.11	0	0	0.0	0.00
			STIII	12384	901b	140.9	1.42	0	0	0.0	0.00
			STRIV	12515	663b	140.9	1.05	0	0	0.0	0.00
			STR V	106880	1292b	140.9	2.04	0	0	0.0	0.00
1	17.60 L	COL	STR I	3605	1571b	140.9	2.48	0	0	0.0	0.00
			STIII	12384	1576b	140.9	2.49	0	0	0.0	0.00
			STRIV	12515	948b	140.9	1.50	0	0	0.0	0.00
			STR V	110065	1666b	140.9	2.63	0	0	0.0	0.00
1	17.60 R	COL	STR I	3627	1053b	140.9	1.66	0	0	0.0	0.00
			STIII	12385	1091b	140.9	1.72	0	0	0.0	0.00
			STRIV	12515	769b	140.9	1.21	0	0	0.0	0.00
			STR V	110087	1107b	140.9	1.75	0	0	0.0	0.00
1	22.16 L	GIRD	STR I	3627	860b	140.9	1.36	0	0	0.0	0.00
			STIII	12385	826b	140.9	1.30	0	0	0.0	0.00
			STRIV	12515	650b	140.9	1.03	0	0	0.0	0.00
			STR V	110087	879b	140.9	1.39	0	0	0.0	0.00
1	22.16 R	GIRD	STR I	3627	898b	140.9	1.42	0	0	0.0	0.00
			STIII	12396	912b	140.9	1.44	0	0	0.0	0.00
			STRIV	12515	694b	140.9	1.10	0	0	0.0	0.00
			STR V	110087	937b	140.9	1.48	0	0	0.0	0.00
1	24.60 L	FACE	STR I	3627	726b	140.9	1.15	0	0	0.0	0.00
			STIII	12396	720b	140.9	1.14	0	0	0.0	0.00
			STRIV	12515	553b	140.9	0.87	0	0	0.0	0.00
			STR V	110087	753b	140.9	1.19	0	0	0.0	0.00
1	33.84 L	GIRD	STR I	3627	76b	140.9	0.12	0	0	0.0	0.00
			STIII	12385	44b	140.9	0.07	0	0	0.0	0.00
			STRIV	12515	17b	140.9	0.03	0	0	0.0	0.00
			STR V	111627	71b	140.9	0.11	0	0	0.0	0.00
1	33.84 R	GIRD	STR I	3627	112b	140.9	0.18	0	0	0.0	0.00
			STIII	12394	135b	140.9	0.21	0	0	0.0	0.00
			STRIV	12516	58b	140.9	0.09	0	0	0.0	0.00
			STR V	107007	130b	140.9	0.20	0	0	0.0	0.00
1	35.03 L	GIRD	STR I	5167	90b	140.9	0.14	0	0	0.0	0.00
			STIII	12370	108b	140.9	0.17	0	0	0.0	0.00
			STRIV	12515	46b	140.9	0.07	0	0	0.0	0.00
			STR V	143967	104b	140.9	0.16	0	0	0.0	0.00
1	35.03 R	GIRD	STR I	0	0	0.0	0.00	0	0	0.0	0.00
			STIII	12327	15b	140.9	0.02	0	0	0.0	0.00
			STRIV	0	0	0.0	0.00	0	0	0.0	0.00
			STR V	21761	4b	140.9	0.01	0	0	0.0	0.00
1	41.10 L	CAP	STR I	0	0	0.0	0.00	0	0	0.0	0.00
			STIII	0	0	0.0	0.00	0	0	0.0	0.00
			STRIV	0	0	0.0	0.00	0	0	0.0	0.00
			STR V	0	0	0.0	0.00	0	0	0.0	0.00

----- CAP BEAM 1 SHEAR/TORSION DESIGN -----

SHEAR/TORSION DESIGN, SIMPLIFIED PROCEDURE 5.8.3.4.1:

Notes: Stirrup spacing is based on 6 legs/stirrup total, and 1 leg/stirrup for torsion.

Shears have been modified for torsion as appropriate, in accordance with equation 5.8.2.1-6.

DESIGN CODE LEGEND:
0: No Shear Reinforcement Required
1: Minimum Shear Reinforcement Required
2: Reinforcement Calculated
3: Insufficient Section
4: Insufficient Stirrup Clearance

				FORCES			SHEAR/TORSION DESIGN							
CAP NO.	HORZ DIST. (ft)	LOCATION	AASHTO LIMIT STATE	LOAD CASE	LRFD SHEAR (kips)	LRFD TORSION (ft-k)	dv (in)	TORSION CRACKING øTcr (ft-k)	SHEAR CAPACITY øVn (kips)	STIRRUP AREA SHEAR Av (sq-in /ft)	STIRRUP AREA TORSION At/leg (sq-in /ft)	# 6 STIRRUP SPACING (in)	DSGN CODE	NG
1	-101.40 R	CAP	STR I	0	0	0	0.00	0	0	0.00	0.00	0.00	0	
			STIII	0	0	0	0.00	0	0	0.00	0.00	0.00	0	
			STRIV	0	0	0	0.00	0	0	0.00	0.00	0.00	0	
			STR V	0	0	0	0.00	0	0	0.00	0.00	0.00	0	
1	-95.85 L	GIRD	STR I	1	-106	0	105.73	10106	2600	1.82	0.00	17.39	1	
			STIII	12327	-106	-3	105.73	10106	2600	1.82	0.00	17.39	1	
			STRIV	12513	-127	0	105.72	10106	2600	1.82	0.00	17.39	1	
			STR V	21761	-106	-1	105.73	10106	2600	1.82	0.00	17.39	1	
1	-95.85 R	GIRD	STR I	3474	980	-2962	105.72	10106	2600	1.82	0.30	8.76	1	
			STIII	12382	-592	-2138	105.70	10106	2599	1.82	0.00	17.39	1	

			STRIV	12515	-647	-2329	105.71	10106	2599	1.82	0.00	17.39	1
			STR V	106854	932	-2797	105.71	10106	2599	1.82	0.28	9.01	1
1	-93.23 L	GIRD	STR I	3474	-833	-2989	123.53	12620	3038	1.82	0.00	17.39	1
			STIII	12382	-657	-2152	123.58	12620	3039	1.82	0.00	17.39	1
			STRIV	12515	-724	-2351	123.57	12620	3039	1.82	0.00	17.39	1
			STR V	106854	-799	-2821	123.53	12620	3038	1.82	0.00	17.39	1
1	-93.23 R	GIRD	STR I	5029	-2293	-649	123.52	12620	3037	1.82	0.00	17.39	1
			STIII	12382	-1905	328	123.58	12620	3039	1.82	0.00	17.39	1
			STRIV	12515	-2153	427	123.59	12620	3039	1.82	0.00	17.39	1
			STR V	143829	-2211	-547	123.52	12620	3037	1.82	0.00	17.39	1
1	-85.54 L	GIRD	STR I	5029	-2536	-742	174.80	20624	4298	1.82	0.00	17.39	1
			STIII	12382	-2148	468	175.15	20624	4307	1.82	0.00	17.39	1
			STRIV	12515	-2445	542	174.96	20624	4302	1.82	0.00	17.39	1
			STR V	143829	-2454	-622	174.86	20624	4300	1.82	0.00	17.39	1
1	-85.54 R	GIRD	STR I	5031	-3069	-2717	174.89	20624	4301	1.82	0.00	17.39	1
			STIII	12406	-2478	-1388	175.11	20624	4306	1.82	0.00	17.39	1
			STRIV	12516	-2838	-1746	174.93	20624	4302	1.82	0.00	17.39	1
			STR V	143831	-2948	-2431	174.92	20624	4301	1.82	0.00	17.39	1
1	-84.90 L	FACE	STR I	5031	-3093	-2718	179.19	21328	4406	1.82	0.00	17.39	1
			STIII	12406	-2502	-1387	179.44	21328	4412	1.82	0.00	17.39	1
			STRIV	12516	-2867	-1751	179.25	21328	4408	1.82	0.00	17.39	1
			STR V	143831	-2972	-2431	179.23	21328	4407	1.82	0.00	17.39	1
1	-77.90 L	COL	STR I	5031	-3358	-2718	176.84	21328	4349	1.82	0.00	17.39	1
			STIII	12406	-2766	-1387	177.54	21328	4366	1.82	0.00	17.39	1
			STRIV	12516	-3184	-1751	177.05	21328	4354	1.82	0.00	17.39	1
			STR V	143831	-3237	-2431	176.97	21328	4352	1.82	0.00	17.39	1
1	-77.90 R	COL	STR I	3124	6105	7450	174.27	21328	6105	4.14	0.45	4.64	2
			STIII	12405	5300	3264	174.22	21328	5300	3.12	0.00	10.16	2
			STRIV	12516	6043	3912	173.59	21328	6043	4.09	0.00	7.74	2
			STR V	88024	5836	6590	174.72	21328	5836	3.78	0.40	5.14	2
1	-75.23 L	GIRD	STR I	3124	6006	7450	175.55	21328	6006	3.96	0.45	4.76	2
			STIII	12405	5199	3264	175.35	21328	5199	2.95	0.00	10.75	2
			STRIV	12516	5922	3912	174.89	21328	5922	3.88	0.00	8.16	2
			STR V	88024	5737	6590	175.94	21328	5737	3.60	0.40	5.30	2
1	-75.23 R	GIRD	STR I	3123	5443	5467	175.52	21328	5443	3.25	0.33	6.07	2
			STIII	12405	4878	2115	175.34	21328	4878	2.54	0.00	12.48	2
			STRIV	12516	5539	2473	174.89	21328	5539	3.39	0.00	9.33	2
			STR V	143838	5652	3490	174.61	21328	5652	3.55	0.00	8.92	2
1	-70.90 L	FACE	STR I	3123	5281	5467	176.39	21328	5281	3.01	0.33	6.36	2
			STIII	12405	4714	2115	176.39	21328	4714	2.30	0.00	13.80	2
			STRIV	12516	5342	2473	176.39	21328	5342	3.09	0.00	10.26	2
			STR V	143838	5488	3490	176.39	21328	5488	3.27	0.00	9.69	2
1	-66.40 L	SPEC	STR I	3123	5130	5475	160.32	18200	5130	3.47	0.37	5.58	2
			STIII	12405	4553	2097	159.54	18200	4553	2.70	0.00	11.74	2
			STRIV	12516	5149	2425	159.53	18200	5149	3.53	0.00	8.98	2
			STR V	91103	4910	4660	160.64	18200	4910	3.15	0.31	6.29	2
1	-66.40 R	SPEC	STR I	3123	5130	5475	160.32	18200	5130	3.47	0.37	5.58	2
			STIII	12405	4553	2097	159.54	18200	4553	2.70	0.00	11.74	2
			STRIV	12516	5149	2425	159.53	18200	5149	3.53	0.00	8.98	2
			STR V	91103	4910	4660	160.64	18200	4910	3.15	0.31	6.29	2
1	-64.92 L	GIRD	STR I	3123	5085	5478	154.46	17193	5085	3.67	0.38	5.30	2
			STIII	12405	4503	2091	153.55	17193	4503	2.87	0.00	11.02	2
			STRIV	12516	5090	2409	153.64	17193	5090	3.72	0.00	8.52	2
			STR V	88023	4853	4660	154.80	17193	4853	3.32	0.33	5.99	2
1	-64.92 R	GIRD	STR I	5037	4894	1562	153.10	17193	4894	3.46	0.00	9.15	2
			STIII	12405	4155	813	153.54	17193	4155	2.37	0.00	13.36	2
			STRIV	12516	4654	747	153.65	17193	4654	3.09	0.00	10.26	2
			STR V	143837	4763	1429	153.06	17193	4763	3.27	0.00	9.68	2
1	-61.16 L	GIRD	STR I	5037	4778	1524	138.23	14691	4778	4.04	0.00	7.85	2
			STIII	12405	4039	779	138.36	14691	4039	2.84	0.00	11.14	2
			STRIV	12516	4515	690	138.72	14691	4515	3.59	0.00	8.83	2
			STR V	143837	4647	1397	138.13	14691	4647	3.83	0.00	8.27	2
1	-61.16 R	GIRD	STR I	3167	2949	6075	139.44	14691	3429	1.82	0.48	6.78	1
			STIII	12405	2569	2700	138.32	14691	3401	1.82	0.00	17.39	1
			STRIV	12516	2817	2848	138.69	14691	3410	1.82	0.00	17.39	1
			STR V	106547	2903	5477	139.22	14691	3424	1.82	0.43	7.21	1
1	-57.40 L	CAP	STR I	3167	2878	6043	123.73	12273	3043	1.82	0.53	6.30	1
			STIII	12382	2516	3466	123.28	12273	3031	1.82	0.31	8.65	1
			STRIV	12515	2740	3449	123.69	12273	3042	1.82	0.31	8.67	1
			STR V	106547	2827	5456	123.70	12273	3042	1.82	0.48	6.71	1
1	-49.44 L	GIRD	STR I	3167	2690	6043	120.70	12273	2968	1.82	0.53	6.30	1
			STIII	12382	2317	3466	121.65	12273	2991	1.82	0.31	8.65	1
			STRIV	12515	2500	3449	120.65	12273	2967	1.82	0.31	8.67	1
			STR V	106547	2636	5456	120.97	12273	2975	1.82	0.48	6.71	1
1	-49.44 R	GIRD	STR I	3168	2071	3864	120.75	12273	2969	1.82	0.34	8.18	1
			STIII	12405	1852	1155	122.31	12273	3008	1.82	0.00	17.39	1

			STRIV	12516	1982	1059	121.51	12273	2988	1.82	0.00	17.39	1
			STR V	106548	2047	3352	121.02	12273	2976	1.82	0.30	8.79	1
1	-37.67 L	GIRD	STR I	3168	1788	3864	119.10	12273	2929	1.82	0.34	8.18	1
			STIII	12405	1546	1155	120.34	12273	2959	1.82	0.00	17.39	1
			STRIV	12516	1615	1059	119.65	12273	2942	1.82	0.00	17.39	1
			STR V	106548	1759	3352	119.29	12273	2933	1.82	0.30	8.79	1
1	-37.67 R	GIRD	STR I	5386	1458	68	119.86	12273	2947	1.82	0.00	17.39	1
			STIII	12405	1158	-337	120.34	12273	2959	1.82	0.00	17.39	1
			STRIV	12516	1172	-663	119.65	12273	2942	1.82	0.00	17.39	1
			STR V	144186	1422	27	120.02	12273	2951	1.82	0.00	17.39	1
1	-29.10 L	GIRD	STR I	5386	1235	68	118.49	12273	2914	1.82	0.00	17.39	1
			STIII	12405	936	-337	119.36	12273	2935	1.82	0.00	17.39	1
			STRIV	12516	905	-663	118.59	12273	2916	1.82	0.00	17.39	1
			STR V	144186	1199	27	118.68	12273	2918	1.82	0.00	17.39	1
1	-29.10 R	GIRD	STR I	3198	1040	4356	118.08	12273	2904	1.82	0.39	7.66	1
			STIII	12369	-802	1939	118.81	12273	2922	1.82	0.00	17.39	1
			STRIV	12515	-756	2518	117.99	12273	2901	1.82	0.00	17.39	1
			STR V	106578	946	3977	118.24	12273	2908	1.82	0.35	8.05	1
1	-25.90 L	GIRD	STR I	3198	1092	4356	118.34	12273	2910	1.82	0.39	7.66	1
			STIII	12369	-885	1939	119.13	12273	2929	1.82	0.00	17.39	1
			STRIV	12515	-855	2518	118.30	12273	2909	1.82	0.00	17.39	1
			STR V	106578	998	3977	118.47	12273	2913	1.82	0.35	8.05	1
1	-25.90 R	GIRD	STR I	3187	-1568	-1171	118.05	12273	2903	1.82	0.00	17.39	1
			STIII	12369	-1262	218	119.13	12273	2929	1.82	0.00	17.39	1
			STRIV	12515	-1293	538	118.31	12273	2909	1.82	0.00	17.39	1
			STR V	88087	-1530	-910	118.31	12273	2909	1.82	0.00	17.39	1
1	-14.12 L	GIRD	STR I	3187	-1874	-1171	120.34	12273	2959	1.82	0.00	17.39	1
			STIII	12369	-1568	218	120.34	12273	2959	1.82	0.00	17.39	1
			STRIV	12515	-1660	538	120.34	12273	2959	1.82	0.00	17.39	1
			STR V	88087	-1836	-910	120.34	12273	2959	1.82	0.00	17.39	1
1	-14.12 R	GIRD	STR I	3209	2297	-4023	120.34	12273	2959	1.82	0.36	8.00	1
			STIII	12369	-1903	-1312	120.34	12273	2959	1.82	0.00	17.39	1
			STRIV	12515	-2045	-1203	120.34	12273	2959	1.82	0.00	17.39	1
			STR V	88109	2236	-3462	120.34	12273	2959	1.82	0.31	8.65	1
1	-7.65 L	GIRD	STR I	3209	2456	-4023	121.47	12273	2987	1.82	0.36	8.00	1
			STIII	12369	-2071	-1312	122.10	12273	3002	1.82	0.00	17.39	1
			STRIV	12515	-2247	-1203	121.33	12273	2984	1.82	0.00	17.39	1
			STR V	88109	2397	-3462	121.71	12273	2993	1.82	0.31	8.65	1
1	-7.65 R	GIRD	STR I	3210	2917	-5585	121.26	12273	2982	1.82	0.49	6.62	1
			STIII	12369	-2393	-2789	122.10	12273	3002	1.82	0.00	17.39	1
			STRIV	12516	2656	-3177	121.98	12273	2999	1.82	0.28	9.03	1
			STR V	88110	2839	-5009	121.55	12273	2989	1.82	0.44	7.07	1
1	-2.90 L	CAP	STR I	3210	3033	-5585	127.26	12273	3129	1.82	0.49	6.62	1
			STIII	12369	-2517	-2789	127.83	12273	3143	1.82	0.00	17.39	1
			STRIV	12516	2801	-3177	123.82	12273	3045	1.82	0.28	9.03	1
			STR V	88110	2956	-5009	127.51	12273	3136	1.82	0.44	7.07	1
1	-1.19 L	GIRD	STR I	3210	3066	-5600	131.34	13355	3230	1.82	0.47	6.84	1
			STIII	12369	-2563	-2795	130.85	13355	3218	1.82	0.00	17.39	1
			STRIV	12515	-2821	-2884	131.34	13355	3230	1.82	0.00	17.39	1
			STR V	88110	2991	-5023	131.11	13355	3224	1.82	0.42	7.30	1
1	-1.19 R	GIRD	STR I	3211	3549	-7248	135.33	13355	3549	2.18	0.61	5.44	2
			STIII	12395	2988	-4400	130.31	13355	3204	1.82	0.37	7.87	1
			STRIV	12515	3327	-4660	131.33	13355	3327	1.99	0.39	7.33	2
			STR V	88111	3457	-6659	131.24	13355	3457	2.21	0.56	5.71	2
1	2.97 L	GIRD	STR I	3211	3636	-7301	148.35	16077	3648	1.82	0.54	6.28	1
			STIII	12371	3120	-4405	147.98	16077	3639	1.82	0.32	8.42	1
			STRIV	12515	3456	-4687	148.23	16077	3645	1.82	0.34	8.15	1
			STR V	88111	3549	-6711	148.15	16077	3643	1.82	0.49	6.63	1
1	2.97 R	GIRD	STR I	4677	4843	-4460	147.69	16077	4843	3.64	0.33	5.65	2
			STIII	12369	-4381	-1741	148.01	16077	4381	2.93	0.00	10.80	2
			STRIV	12515	-4918	-1567	148.26	16077	4918	3.73	0.00	8.50	2
			STR V	124997	4771	-4158	147.53	16077	4771	3.54	0.31	5.89	2
1	6.10 L	SPEC	STR I	3234	-5284	-2536	160.44	18200	5284	3.68	0.00	8.62	2
			STIII	12369	-4483	-1726	160.60	18200	4483	2.56	0.00	12.38	2
			STRIV	12515	-5040	-1535	160.63	18200	5040	3.33	0.00	9.51	2
			STR V	88134	-5134	-2437	160.35	18200	5134	3.47	0.00	9.12	2
1	6.10 R	SPEC	STR I	3234	-5284	-2536	160.44	18200	5284	3.68	0.00	8.62	2
			STIII	12369	-4483	-1726	160.60	18200	4483	2.56	0.00	12.38	2
			STRIV	12515	-5040	-1535	160.63	18200	5040	3.33	0.00	9.51	2
			STR V	88134	-5134	-2437	160.35	18200	5134	3.47	0.00	9.12	2
1	10.48 L	GIRD	STR I	3234	-5441	-2503	175.86	21243	5441	3.23	0.00	9.80	2
			STIII	12369	-4639	-1705	175.96	21243	4639	2.22	0.00	14.29	2
			STRIV	12515	-5228	-1491	175.86	21243	5228	2.96	0.00	10.69	2
			STR V	88134	-5291	-2412	175.86	21243	5291	3.04	0.00	10.41	2
1	10.48 R	GIRD	STR I	3137	5615	-6580	175.86	21243	5615	3.45	0.40	5.43	2
			STIII	12369	-5010	-3458	175.96	21243	5010	2.68	0.00	11.80	2

			STRIV	12515	-5651	-3465	175.86	21243	5651	3.50	0.00	9.06	2
			STR V	124984	5526	-6077	175.86	21243	5526	3.34	0.37	5.72	2
1	10.60 L	FACE	STR I	3137	5619	-6580	176.39	21328	5619	3.44	0.40	5.45	2
			STIII	12369	-5014	-3458	176.45	21328	5014	2.67	0.00	11.86	2
			STRIV	12515	-5657	-3465	176.39	21328	5657	3.48	0.00	9.09	2
			STR V	124984	5531	-6077	176.39	21328	5531	3.33	0.37	5.74	2
1	17.60 L	COL	STR I	4783	6298	-5911	173.58	21328	6298	4.42	0.36	4.83	2
			STIII	12369	-5279	-3458	174.86	21328	5279	3.07	0.00	10.33	2
			STRIV	12515	-5974	-3465	174.29	21328	5974	3.97	0.00	7.97	2
			STR V	125103	6105	-5642	173.70	21328	6105	4.17	0.34	5.11	2
1	17.60 R	COL	STR I	3245	3171	3263	177.17	21328	4357	1.82	0.00	17.39	1
			STIII	12394	2448	1679	178.11	21328	4380	1.82	0.00	17.39	1
			STRIV	12516	2806	1697	177.68	21328	4369	1.82	0.00	17.39	1
			STR V	125105	3007	2912	177.38	21328	4362	1.82	0.00	17.39	1
1	22.16 L	GIRD	STR I	3245	2999	3263	178.64	21328	4393	1.82	0.00	17.39	1
			STIII	12394	2275	1679	179.22	21328	4407	1.82	0.00	17.39	1
			STRIV	12516	2599	1697	178.96	21328	4401	1.82	0.00	17.39	1
			STR V	125105	2834	2912	178.76	21328	4396	1.82	0.00	17.39	1
1	22.16 R	GIRD	STR I	4786	2436	1131	178.60	21328	4392	1.82	0.00	17.39	1
			STIII	12370	1905	-341	179.21	21328	4407	1.82	0.00	17.39	1
			STRIV	12515	2178	-580	178.94	21328	4400	1.82	0.00	17.39	1
			STR V	125106	2314	948	178.74	21328	4395	1.82	0.00	17.39	1
1	24.60 L	FACE	STR I	4786	2344	1131	179.20	21328	4407	1.82	0.00	17.39	1
			STIII	12370	1813	-341	179.68	21328	4418	1.82	0.00	17.39	1
			STRIV	12515	2067	-580	179.47	21328	4413	1.82	0.00	17.39	1
			STR V	125106	2222	948	179.31	21328	4409	1.82	0.00	17.39	1
1	33.84 L	GIRD	STR I	4786	2053	1049	117.31	11732	2885	1.82	0.00	17.39	1
			STIII	12370	1522	-282	117.30	11732	2884	1.82	0.00	17.39	1
			STRIV	12515	1717	-465	117.29	11732	2884	1.82	0.00	17.39	1
			STR V	125106	1931	846	117.31	11732	2885	1.82	0.00	17.39	1
1	33.84 R	GIRD	STR I	3244	1370	-2360	117.28	11732	2884	1.82	0.00	17.39	1
			STIII	12370	1165	-1912	117.30	11732	2884	1.82	0.00	17.39	1
			STRIV	12515	1328	-2222	117.28	11732	2884	1.82	0.00	17.39	1
			STR V	88144	1323	-2249	117.28	11732	2884	1.82	0.00	17.39	1
1	35.03 L	GIRD	STR I	3244	1341	-2336	109.34	10600	2689	1.82	0.00	17.39	1
			STIII	12370	1136	-1895	109.32	10600	2688	1.82	0.00	17.39	1
			STRIV	12515	1293	-2199	109.33	10600	2688	1.82	0.00	17.39	1
			STR V	88144	1294	-2228	109.33	10600	2688	1.82	0.00	17.39	1
1	35.03 R	GIRD	STR I	1	118	0	109.36	10600	2689	1.82	0.00	17.39	1
			STIII	12327	118	3	109.36	10600	2689	1.82	0.00	17.39	1
			STRIV	12513	142	0	109.35	10600	2689	1.82	0.00	17.39	1
			STR V	21761	118	1	109.36	10600	2689	1.82	0.00	17.39	1
1	41.10 L	CAP	STR I	0	0	0	0.00	0	0	0.00	0.00	0.00	0
			STIII	0	0	0	0.00	0	0	0.00	0.00	0.00	0
			STRIV	0	0	0	0.00	0	0	0.00	0.00	0.00	0
			STR V	0	0	0	0.00	0	0	0.00	0.00	0.00	0

LONGITUDINAL REINFORCEMENT FOR SHEAR: (Axial Compression Positive)

					FORCES				LONGITUDINAL STEEL			
CAP NO.	HORZ DIST. (ft)	LOCATION	AASHTO LIMIT STATE	LOAD CASE	LRFD AXIAL Nu (kips)	LRFD SHEAR Vu (kips)	LRFD TORSION Tu (ft-k)	LRFD MOMENT Mu (ft-k)	dv (in)	As LONG REQD (sq-in)	As LONG PROV (sq-in)	NG
1	-101.40 R	CAP	STR I	1	0	0	0	0	74.75	0.00	0.00	
			STIII	12321	0	0	0	0	74.75	0.00	0.00	
			STRIV	12513	0	0	0	0	74.75	0.00	0.00	
			STR V	12521	0	0	0	0	74.75	0.00	0.00	
1	-95.85 L	GIRD	STR I	1	0	-106	0	-275	105.73	1.56	124.80	
			STIII	12327	0	-106	-3	-275	105.73	1.56	124.80	
			STRIV	12513	0	-127	0	-330	105.72	1.87	124.80	
			STR V	21761	0	-106	-1	-275	105.73	1.56	124.80	
1	-95.85 R	GIRD	STR I	3474	-17	980	-2962	-359	105.72	12.49	124.80	
			STIII	12382	-34	-592	-2138	-440	105.70	6.72	124.80	
			STRIV	12515	-10	-647	-2329	-377	105.71	6.87	124.80	
			STR V	106854	-26	932	-2797	-400	105.71	11.74	124.80	
1	-93.23 L	GIRD	STR I	3474	-17	-833	-2989	-2469	123.53	12.32	124.80	
			STIII	12382	-34	-657	-2152	-2100	123.58	10.17	124.80	
			STRIV	12515	-10	-724	-2351	-2179	123.57	10.71	124.80	
			STR V	106854	-26	-799	-2821	-2428	123.53	12.01	124.80	
1	-93.23 R	GIRD	STR I	5029	-26	-2293	-649	-2518	123.52	37.85	124.80	
			STIII	12406	-68	-1905	-160	-2292	123.55	30.65	124.80	
			STRIV	12516	-17	-2153	-154	-2219	123.56	34.64	124.80	
			STR V	143829	-45	-2211	-547	-2535	123.52	36.54	124.80	
1	-85.54 L	GIRD	STR I	5029	-26	-2536	-742	-21080	174.80	60.74	124.80	
			STIII	12406	-68	-2148	-212	-17966	175.13	49.92	124.80	
			STRIV	12516	-17	-2445	-269	-19865	174.93	57.40	124.80	
			STR V	143829	-45	-2454	-622	-20510	174.86	58.66	124.80	

1	-85.54 R	GIRD	STR I	5031	-28	-3069	-2717	-20195	174.89	69.48	124.80	
			STIII	12406	-87	-2478	-1388	-18113	175.11	56.39	124.80	
			STRIV	12516	-10	-2838	-1746	-19808	174.93	64.53	124.80	
			STR V	143831	-55	-2948	-2431	-19894	174.92	67.10	124.80	
1	-84.90 L	FACE	STR I	5031	-28	-3093	-2718	-22185	179.19	71.45	124.80	
			STIII	12406	-87	-2502	-1387	-19733	179.44	57.95	124.80	
			STRIV	12516	-10	-2867	-1751	-21647	179.25	66.41	124.80	
			STR V	143831	-55	-2972	-2431	-21811	179.23	68.99	124.80	
1	-77.90 L	COL	STR I	5183	-28	-3358	-2718	-45358	176.78	106.04	124.80	
			STIII	12406	-87	-2766	-1387	-38171	177.54	86.34	124.80	
			STRIV	12516	-10	-3184	-1751	-42825	177.05	99.37	124.80	
			STR V	143983	-55	-3237	-2431	-44001	176.92	102.28	124.80	
1	-77.90 R	COL	STR I	5057	1312	6280	5072	-107724	172.96	207.18	124.80	**
			STIII	12405	1096	5300	3264	-92416	174.22	180.35	124.80	**
			STRIV	12516	1170	6043	3912	-100117	173.59	196.55	124.80	**
			STR V	143857	1280	6081	4614	-105623	173.13	202.91	124.80	**
1	-75.23 L	GIRD	STR I	5057	1312	6179	5072	-91118	174.32	184.20	124.80	**
			STIII	12405	1096	5199	3264	-78422	175.35	161.09	124.80	**
			STRIV	12516	1170	5922	3912	-84169	174.89	174.41	124.80	**
			STR V	143857	1280	5980	4614	-89547	174.45	180.68	124.80	**
1	-75.23 R	GIRD	STR I	5057	1311	5807	3697	-91130	174.32	180.79	124.80	**
			STIII	12405	1080	4878	2115	-78550	175.34	158.47	124.80	**
			STRIV	12516	1177	5539	2473	-84112	174.89	170.70	124.80	**
			STR V	143857	1270	5622	3316	-89627	174.44	177.59	124.80	**
1	-70.90 L	FACE	STR I	5080	1283	5428	2931	-66650	176.29	145.76	124.80	**
			STIII	12405	1080	4714	2115	-57765	176.39	130.34	124.80	**
			STRIV	12516	1177	5342	2473	-60532	176.39	138.49	124.80	**
			STR V	143880	1249	5293	2725	-65870	176.35	143.91	124.80	**
1	-66.40 L	SPEC	STR I	5080	1283	5267	2905	-43664	159.35	118.57	99.84	**
			STIII	12405	1080	4553	2097	-37823	159.54	106.19	99.84	**
			STRIV	12516	1177	5149	2425	-37917	159.53	110.70	99.84	**
			STR V	143880	1249	5132	2708	-43463	159.35	117.45	99.84	**
1	-66.40 R	SPEC	STR I	5080	1283	5267	2905	-43664	159.35	118.57	99.84	**
			STIII	12405	1080	4553	2097	-37823	159.54	106.19	99.84	**
			STRIV	12516	1177	5149	2425	-37917	159.53	110.70	99.84	**
			STR V	143880	1249	5132	2708	-43463	159.35	117.45	99.84	**
1	-64.92 L	GIRD	STR I	5080	1283	5218	2896	-36262	152.96	108.94	99.84	**
			STIII	12406	1052	4359	1772	-32165	153.46	97.70	99.84	
			STRIV	12516	1177	5090	2409	-30668	153.64	100.80	99.84	**
			STR V	143880	1249	5083	2702	-36251	152.96	108.08	99.84	**
1	-64.92 R	GIRD	STR I	5080	1284	4851	1509	-36250	152.97	105.51	99.84	**
			STIII	12406	1032	4089	798	-32302	153.45	95.64	99.84	
			STRIV	12516	1185	4654	747	-30613	153.65	96.59	99.84	
			STR V	143880	1241	4730	1388	-36303	152.96	104.98	99.84	**
1	-61.16 L	GIRD	STR I	6239	348	2171	-344	1688	144.37	27.70	68.64	
			STR I	5037	1270	4778	1524	-17873	138.23	78.83	99.84	
			STIII	12322	506	2579	-637	1447	144.40	33.00	68.64	
			STIII	12406	1032	3973	776	-17887	138.23	74.23	99.84	
			STRIV	12516	1185	4515	690	-14226	138.72	71.54	99.84	
			STR V	161979	336	2074	-348	2788	144.23	27.75	68.64	
			STR V	143837	1230	4647	1397	-18642	138.13	79.34	99.84	
1	-61.16 R	GIRD	STR I	6239	366	1208	1561	1798	144.35	9.83	68.64	
			STR I	5081	1210	3127	3722	-18441	138.15	63.07	99.84	
			STIII	12370	713	1967	1998	79	144.57	17.09	68.64	
			STIII	12406	977	2557	2635	-18231	138.18	54.55	99.84	
			STRIV	12516	1153	2817	2848	-14421	138.69	51.01	99.84	
			STR V	189767	462	1494	2327	5	144.58	11.20	68.64	
			STR V	143881	1166	2980	3544	-19190	138.05	61.72	99.84	
1	-57.40 L	CAP	STR I	3167	966	2878	6043	731	123.73	35.01	137.28	
			STR I	5099	1155	2802	3210	-10075	122.34	47.53	99.84	
			STIII	12373	794	2158	2841	4286	123.21	28.89	137.28	
			STIII	12406	977	2453	2662	-9484	122.43	41.71	99.84	
			STRIV	12515	954	2740	3449	1014	123.69	32.27	137.28	
			STRIV	12516	1153	2692	2858	-4858	123.12	35.54	99.84	
			STR V	91147	926	2689	5260	2351	123.49	34.69	137.28	
			STR V	143899	1124	2775	3157	-10595	122.27	48.36	99.84	
1	-49.44 L	GIRD	STR I	3177	1006	2535	4069	24516	120.34	71.80	137.28	
			STIII	12369	795	1908	2780	21387	120.62	56.11	137.28	
			STRIV	12515	954	2500	3449	21188	120.65	65.30	137.28	
			STR V	88077	956	2370	3718	24401	120.34	69.05	137.28	
1	-49.44 R	GIRD	STR I	3177	995	1817	1372	24455	120.34	57.83	137.28	
			STIII	12369	797	1514	982	21400	120.62	48.82	137.28	
			STRIV	12515	946	1950	1360	21141	120.66	54.63	137.28	
			STR V	88077	951	1713	1233	24370	120.34	56.28	137.28	
1	-37.67 L	GIRD	STR I	3185	1058	1714	1547	45777	118.58	95.93	137.28	
			STIII	12384	793	1505	1388	35531	119.80	75.25	137.28	
			STRIV	12515	946	1583	1360	41929	119.04	87.29	137.28	
			STR V	88085	1000	1564	1368	44077	118.79	90.50	137.28	

1	-37.67 R	GIRD	STR I	3185	1046	1049	-1457	45710	118.59	83.64	137.28	
			STIII	12384	776	1118	-347	35442	119.81	68.10	137.28	
			STRIV	12515	938	1141	-640	41884	119.05	79.11	137.28	
			STR V	88085	993	967	-1342	44041	118.79	79.51	137.28	
1	-29.10 L	GIRD	STR I	3496	1061	958	-1117	54106	117.57	98.51	137.28	
			STIII	12381	777	908	-329	44087	118.79	81.63	137.28	
			STRIV	12515	938	873	-640	50515	118.01	92.05	137.28	
			STR V	106876	993	979	-890	51873	117.85	95.19	137.28	
1	-29.10 R	GIRD	STR I	3496	1071	-709	2153	54164	117.57	96.20	137.28	
			STIII	12369	852	-802	1939	43879	118.81	79.36	137.28	
			STRIV	12515	968	-756	2518	50681	117.99	90.93	137.28	
			STR V	106876	996	-629	2277	51888	117.84	91.82	137.28	
1	-25.90 L	GIRD	STR I	3495	1072	-777	2289	51790	117.86	92.08	137.28	
			STIII	12381	778	-584	2450	42351	118.99	75.25	137.28	
			STRIV	12515	968	-855	2518	48102	118.30	86.75	137.28	
			STR V	106578	928	998	3977	46680	118.47	88.33	137.28	
1	-25.90 R	GIRD	STR I	3187	1034	-1568	-1171	50203	118.05	102.28	137.28	
			STIII	12369	855	-1262	218	41193	119.13	81.00	137.28	
			STRIV	12515	960	-1293	538	48058	118.31	93.81	137.28	
			STR V	88087	1004	-1530	-910	48025	118.31	97.60	137.28	
1	-14.12 L	GIRD	STR I	3846	953	-1409	484	34964	119.87	70.46	137.28	
			STIII	12381	761	-1273	738	29069	120.34	59.06	137.28	
			STRIV	12515	960	-1660	538	30664	120.34	66.81	137.28	
			STR V	107226	898	-1346	598	34107	119.97	68.31	137.28	
1	-14.12 R	GIRD	STR I	3188	1056	2399	-3123	31688	120.25	81.71	137.28	
			STIII	12381	745	-1609	-765	28982	120.34	65.32	137.28	
			STRIV	12515	953	-2045	-1203	30625	120.34	73.96	137.28	
			STR V	107226	881	-1849	-1663	34013	119.98	77.65	137.28	
1	-7.65 L	GIRD	STR I	3613	921	-2007	-1868	21784	120.56	57.20	137.28	
			STIII	12385	756	-1817	-838	17173	121.27	46.91	137.28	
			STIII	12442	569	-1075	-677	-24	123.84	3.78	99.84	
			STRIV	12515	953	-2247	-1203	16753	121.33	51.75	137.28	
			STR V	106993	868	-1923	-1557	21608	120.59	55.95	137.28	
1	-7.65 R	GIRD	STR I	3613	908	2595	-3998	21711	120.57	68.74	137.28	
			STIII	12382	689	-1942	-1961	18300	121.10	52.16	137.28	
			STRIV	12515	946	-2618	-2880	16715	121.34	58.62	137.28	
			STR V	106993	852	2456	-3526	21520	120.60	66.37	137.28	
1	-2.90 L	CAP	STR I	3210	945	3033	-5585	4034	127.26	43.33	68.64	
			STR I	7847	702	-1630	-2292	-5267	123.06	22.01	99.84	
			STIII	12382	689	-2066	-1961	8762	126.58	35.84	68.64	
			STIII	12393	1078	-2490	-3059	-4121	123.23	31.35	99.84	
			STRIV	12515	946	-2766	-2880	3904	127.28	37.13	68.64	
			STRIV	12516	1162	2801	-3177	-130	123.82	29.24	99.84	
			STR V	106996	785	-2273	-2561	10324	126.36	41.32	68.64	
			STR V	199007	705	-1615	-2223	-5968	122.96	22.96	99.84	
1	-1.19 L	GIRD	STR I	6696	393	-1281	-1500	7761	134.36	21.68	68.64	
			STR I	4769	1156	2865	-3603	-8930	130.17	45.11	99.84	
			STIII	12430	261	-1019	-709	6874	134.48	17.69	68.64	
			STIII	12395	1077	-2533	-3058	-8011	130.30	37.86	99.84	
			STRIV	12516	1162	-2789	-3173	-4468	130.79	35.48	99.84	
			STR V	180916	356	-1225	-1312	8114	134.32	21.68	68.64	
			STR V	125089	1154	2838	-3548	-9596	130.07	45.77	99.84	
1	-1.19 R	GIRD	STR I	3211	952	3549	-7248	630	135.33	44.54	68.64	
			STR I	4769	1162	3257	-4922	-8893	130.17	51.98	99.84	
			STIII	12356	786	-2120	-2795	11	135.41	19.63	68.64	
			STIII	12395	1093	2988	-4400	-7917	130.31	46.56	99.84	
			STRIV	12516	1169	3297	-4689	-4426	130.80	44.62	99.84	
			STR V	180916	342	-1591	-2956	8033	134.33	28.48	68.64	
			STR V	125089	1165	3230	-4878	-9533	130.08	52.78	99.84	
1	2.97 L	GIRD	STR I	6696	381	-1785	-3444	737	153.80	17.91	68.64	
			STR I	4771	1169	3374	-4892	-21294	147.26	70.13	99.84	
			STIII	12430	247	-1220	-1236	2082	153.64	11.37	68.64	
			STIII	12369	866	3121	-4397	-15653	147.97	60.31	99.84	
			STRIV	12516	1169	3424	-4662	-17044	147.80	64.44	99.84	
			STR V	180916	342	-1670	-2969	1522	153.71	17.39	68.64	
			STR V	125091	1170	3344	-4855	-21814	147.20	70.36	99.84	
1	2.97 R	GIRD	STR I	6662	400	-2738	-2134	46	153.88	34.33	68.64	
			STR I	4771	1144	-4630	-3186	-21460	147.24	83.99	99.84	
			STIII	12430	227	-1712	-189	1950	153.66	20.17	68.64	
			STIII	12395	1094	-4351	-2757	-19270	147.52	78.69	99.84	
			STRIV	12516	1140	-4886	-2714	-17235	147.77	80.01	99.84	
			STR V	180916	340	-2505	-1261	1509	153.71	32.86	68.64	
			STR V	125091	1156	-4600	-3175	-21906	147.19	84.24	99.84	
1	6.10 L	SPEC	STR I	4771	1144	-4732	-3209	-35486	159.81	103.80	99.84	**
			STIII	12393	1095	-4455	-2789	-32512	160.15	97.64	99.84	
			STRIV	12516	1140	-5008	-2746	-32096	160.20	101.63	99.84	**
			STR V	125091	1156	-4702	-3205	-35829	159.77	103.86	99.84	**
1	6.10 R	SPEC	STR I	4771	1144	-4732	-3209	-35486	159.81	103.80	99.84	**
			STIII	12393	1095	-4455	-2789	-32512	160.15	97.64	99.84	
			STRIV	12516	1140	-5008	-2746	-32096	160.20	101.63	99.84	**

			STR V	125091	1156	-4702	-3205	-35829	159.77	103.86	99.84	**	
1	10.48 L	GIRD	STR I	4780	1228	-5330	-3715	-57200	175.86	133.71	124.80	**	
			STIII	12393	1095	-4612	-2844	-51471	175.86	121.40	124.80		
			STRIV	12516	1140	-5196	-2789	-53506	175.86	128.84	124.80	**	
			STR V	125100	1221	-5199	-3614	-57038	175.86	132.37	124.80	**	
1	10.48 R	GIRD	STR I	4780	1235	-5698	-5095	-57146	175.86	136.96	124.80	**	
			STIII	12393	1111	-4982	-4259	-51338	175.86	124.47	124.80		
			STRIV	12516	1148	-5619	-4378	-53444	175.86	132.59	124.80	**	
			STR V	125100	1233	-5568	-5012	-56947	175.86	135.54	124.80	**	
1	10.60 L	FACE	STR I	4780	1235	-5702	-5095	-57809	176.39	137.71	124.80	**	
			STIII	12393	1111	-4987	-4261	-51917	176.39	125.12	124.80	**	
			STRIV	12516	1148	-5625	-4379	-54099	176.39	133.34	124.80	**	
			STR V	125100	1233	-5573	-5012	-57594	176.39	136.26	124.80	**	
1	17.60 L	COL	STR I	4783	1260	6298	-5911	-100250	173.58	198.45	124.80	**	
			STIII	12393	1111	-5251	-4261	-87750	174.60	173.58	124.80	**	
			STRIV	12516	1148	-5942	-4379	-94584	174.04	188.54	124.80	**	
			STR V	125103	1252	6105	-5642	-98763	173.70	194.75	124.80	**	
1	17.60 R	COL	STR I	4785	0	3171	3242	-41632	177.17	97.50	124.80		
			STIII	12370	-57	2448	1414	-32771	178.10	73.22	124.80		
			STRIV	12515	-6	2806	1386	-36881	177.67	84.66	124.80		
			STR V	88145	-21	3007	2868	-39669	177.38	92.11	124.80		
1	22.16 L	GIRD	STR I	3245	0	2999	3263	-27566	178.64	76.26	124.80		
			STIII	12370	-57	2275	1414	-22009	179.21	56.35	124.80		
			STRIV	12515	-6	2599	1386	-24564	178.95	65.11	124.80		
			STR V	125105	-20	2834	2912	-26344	178.76	71.85	124.80		
1	22.16 R	GIRD	STR I	3246	-10	2436	638	-28078	178.59	66.59	124.80		
			STIII	12370	-53	1905	-341	-21975	179.21	49.42	124.80		
			STRIV	12515	-14	2178	-580	-24627	178.94	57.46	124.80		
			STR V	88146	-26	2314	429	-26730	178.72	62.77	124.80		
1	24.60 L	FACE	STR I	3246	-10	2344	638	-22241	179.19	57.48	124.80		
			STIII	12370	-53	1813	-341	-17434	179.68	41.99	124.80		
			STRIV	12515	-14	2067	-580	-19443	179.47	48.86	124.80		
			STR V	88146	-26	2222	429	-21191	179.29	54.05	124.80		
1	33.84 L	GIRD	STR I	4786	10	2053	1049	-1887	117.31	32.56	124.80		
			STIII	12370	-53	1522	-282	-1978	117.30	23.51	124.80		
			STRIV	12515	-14	1717	-465	-2030	117.29	26.88	124.80		
			STR V	125106	-5	1931	846	-1914	117.31	30.52	124.80		
1	33.84 R	GIRD	STR I	3244	-23	1370	-2360	-2062	117.28	20.59	124.80		
			STIII	12370	-48	1165	-1912	-1954	117.30	16.82	124.80		
			STRIV	12515	-21	1328	-2222	-2068	117.28	19.81	124.80		
			STR V	88144	-33	1323	-2249	-2062	117.28	19.82	124.80		
1	35.03 L	GIRD	STR I	3244	-23	1341	-2336	-448	109.34	17.66	124.80		
			STIII	12370	-48	1136	-1895	-575	109.32	14.35	124.80		
			STRIV	12515	-21	1293	-2199	-508	109.33	16.88	124.80		
			STR V	88144	-33	1294	-2228	-500	109.33	17.00	124.80		
1	35.03 R	GIRD	STR I	1	0	118	0	-334	109.36	1.78	124.80		
			STIII	12321	0	118	0	-334	109.36	1.78	124.80		
			STRIV	12513	0	142	0	-401	109.35	2.13	124.80		
			STR V	21761	0	118	1	-334	109.36	1.78	124.80		
1	41.10 L	CAP	STR I	1	0	0	0	0	74.75	0.00	0.00		
			STIII	12321	0	0	0	0	74.75	0.00	0.00		
			STRIV	12513	0	0	0	0	74.75	0.00	0.00		
			STR V	12521	0	0	0	0	74.75	0.00	0.00		

Notes:
 **: DESIGNER MUST VERIFY SHEAR LONGITUDINAL STEEL REQUIREMENT VERSUS FLEXURAL LONGITUDINAL STEEL REQUIREMENT, DEPENDING ON LOCATION IN CAPBEAM AND STRESS DISTRIBUTION. REFER TO AASHTO LRFD SPECS 5.8.3.5 AND 5.8.3.6.3. IF THE DESIGNER INTENDS TO USE THE SHEAR LONGITUDINAL STEEL VALUE AND IT IS LARGER THAN THE FLEXURAL VALUE, IT IS RECOMMENDED TO RERUN THE FILE WITH THE FLEXURAL BARS INCREASED TO MEET THE SHEAR REQUIREMENT. THIS WILL ENSURE THAT THE LARGER AMOUNT OF STEEL IS CHECKED BY THE FLEXURAL DESIGN ROUTINE TO PREVENT OVER-REINFORCEMENT.

----- CAP BEAM 1 SERVICEABILITY RESULTS -----

FATIGUE LIMIT STATE DATA:

Notes: All fatigue data is computed from Fatigue Limit State.
Axial tension is negative.
T indicates top bars control; B indicates bottom bars control.
** Dead load values may include effects due to shrinkage, refer to load case data.

			FATIGUE											
CAP NO.	HORZ DIST. (ft)	LOCATION	MAX LOAD CASE	MIN LOAD CASE	DL** AXIAL (kips)	DL** MOMENT (ft-k)	MAX LL MOM (ft-k)	CORRES AXIAL (kips)	MIN LL MOM (ft-k)	CORRES AXIAL (kips)	f MIN (ksi)	ACTUAL RANGE (ksi)	ALLOW RANGE (ksi)	NG
1	-101.40 R	CAP	0	0	0	0	0	0	0	0	0.0	0.0	0.0	
1	-95.85 L	GIRD	0	0	0	-210	0	0	0	0	0.0	0.0	0.0	
1	-95.85 R	GIRD	0	456261	0	-210	0	0	-6	-1	0.2	0.0	23.9	T

1	-93.23	L	GIRD	456262	456263	0	-1349	6	0	-105	-1	1.2	0.1	23.6	T
1	-93.23	R	GIRD	456262	456263	0	-1349	6	0	-105	-1	1.2	0.1	23.6	T
1	-85.54	L	GIRD	456264	456265	0	-12529	63	0	-456	-1	7.7	0.3	21.5	T
1	-85.54	R	GIRD	456264	456265	0	-12529	63	0	-456	-1	7.7	0.3	21.5	T
1	-84.90	L	FACE	456264	456265	0	-13695	68	0	-494	-1	8.2	0.3	21.3	T
1	-77.90	L	COL	456264	456265	0	-27142	125	0	-903	-1	16.2	0.6	18.7	T
1	-77.90	R	COL	456266	456267	695	-62270	283	-7	-744	0	34.5	0.5	12.6	T
1	-75.23	L	GIRD	456266	456268	695	-52171	261	-7	-656	0	28.5	0.4	14.6	T
1	-75.23	R	GIRD	456266	456268	695	-52171	261	-7	-656	0	28.5	0.4	14.6	T
1	-70.90	L	FACE	456266	456268	695	-37244	227	-7	-527	0	19.6	0.3	17.5	T
1	-66.40	L	SPEC	456269	456263	695	-22887	224	0	-412	-8	15.3	0.4	18.9	T
1	-66.40	R	SPEC	456269	456263	695	-22887	224	0	-412	-8	15.3	0.4	18.9	T
1	-64.92	L	GIRD	456269	456263	695	-18286	286	0	-399	-8	12.3	0.4	20.0	T
1	-64.92	R	GIRD	456269	456263	695	-18286	286	0	-408	-9	12.3	0.5	20.0	T
1	-61.16	L	GIRD	456270	456263	695	-7880	346	0	-366	-9	4.4	0.5	22.6	T
1	-61.16	R	GIRD	456270	456263	695	-7880	346	0	-366	-9	4.4	0.5	22.6	T
1	-57.40	L	CAP	456271	456263	695	-1820	318	0	-325	-9	0.0	0.5	24.0	T
1	-49.44	L	GIRD	456272	456273	575	13838	458	0	-251	-9	9.3	0.4	20.9	B
1	-49.44	R	GIRD	456272	456273	575	13838	458	0	-251	-9	9.3	0.4	20.9	B
1	-37.67	L	GIRD	456274	456273	575	27156	589	0	-142	-9	20.1	0.5	17.4	B
1	-37.67	R	GIRD	456275	456273	575	27156	588	0	-142	-9	20.1	0.5	17.4	B
1	-29.10	L	GIRD	456276	456277	575	32723	672	0	-95	-2	24.6	0.6	15.9	B
1	-29.10	R	GIRD	456278	456279	575	32723	667	0	-97	-2	24.6	0.6	15.9	B
1	-25.90	L	GIRD	456280	456281	575	31118	619	0	-111	-7	23.3	0.5	16.3	B
1	-25.90	R	GIRD	456280	456281	575	31118	616	0	-111	-7	23.3	0.5	16.3	B
1	-14.12	L	GIRD	456282	456281	575	20194	555	0	-204	-7	14.4	0.5	19.2	B
1	-14.12	R	GIRD	456282	456281	575	20194	552	0	-204	-7	14.4	0.5	19.2	B
1	-7.65	L	GIRD	456283	456281	575	11452	487	0	-255	-7	7.4	0.5	21.6	B
1	-7.65	R	GIRD	456283	456281	575	11452	484	0	-255	-7	7.4	0.5	21.6	B
1	-2.90	L	CAP	456284	456285	475	3207	399	0	-293	-7	4.6	0.7	22.5	B
1	-1.19	L	GIRD	456286	456285	475	772	402	0	-309	-7	3.9	0.6	22.7	B
1	-1.19	R	GIRD	456286	456285	475	772	399	0	-309	-7	3.9	0.6	22.7	B
1	2.97	L	GIRD	456287	456266	695	-10277	372	0	-348	-7	6.0	0.4	22.0	T
1	2.97	R	GIRD	456287	456266	695	-10277	366	0	-348	-7	6.0	0.4	22.0	T
1	6.10	L	SPEC	456263	456266	695	-19762	247	-9	-385	-7	12.8	0.4	19.8	T
1	6.10	R	SPEC	456263	456266	695	-19762	247	-9	-385	-7	12.8	0.4	19.8	T
1	10.48	L	GIRD	456263	456288	695	-33423	280	-9	-448	0	17.4	0.3	18.3	T
1	10.48	R	GIRD	456263	456288	695	-33423	280	-9	-448	0	17.4	0.3	18.3	T
1	10.60	L	FACE	456263	456288	695	-33841	281	-9	-451	0	17.6	0.3	18.2	T
1	17.60	L	COL	456263	456289	695	-59617	345	-9	-655	0	32.9	0.4	13.1	T
1	17.60	R	COL	456290	456266	0	-23385	175	0	-1006	0	13.9	0.6	19.4	T
1	22.16	L	GIRD	456290	456266	0	-15564	131	0	-743	0	9.3	0.5	20.9	T
1	22.16	R	GIRD	456290	456266	0	-15564	131	0	-743	0	9.3	0.5	20.9	T
1	24.60	L	FACE	456290	456266	0	-12273	108	0	-602	0	7.3	0.4	21.6	T
1	33.84	L	GIRD	456290	456266	0	-1241	16	0	-68	0	1.2	0.1	23.6	T
1	33.84	R	GIRD	456290	456266	0	-1241	16	0	-68	0	1.2	0.1	23.6	T
1	35.03	L	GIRD	456291	0	0	-255	5	0	0	0	0.3	0.0	23.9	T
1	35.03	R	GIRD	0	0	0	-255	0	0	0	0	0.0	0.0	0.0	

1	41.10	L	CAP		0	0	0	0	0	0	0	0	0.0	0.0	0.0

DISTRIBUTION OF FLEXURAL REINFORCEMENT DATA:
Note: Reinforcing steel distribution data is based on the maximum area of steel obtained from either Strength Limit State Design, or user defined limits. Moments are based on Service I Limit State.

CAP NO.	HORZ DIST. (ft)	LOCATION	LOAD CASE	FACE	SERV I AXIAL (kips)	SERV I MOMENT (ft-k)	h (in)	dc (in)	ßs	STRESS fs (ksi)	SPACING ACTUAL (in)	SPACING ALLOW. (in)	NG
1	-95.85	L	GIRD	317441	TOP	0	-210	116.34	3.46	1.044	0.23	4.4	137.1	
1	-95.85	R	GIRD	402537	TOP	-21	-310	116.34	3.46	1.044	0.42	4.4	137.1	
1	-93.23	L	GIRD	402534	TOP	-19	-1798	134.45	3.46	1.038	1.70	4.4	137.1	
1	-93.23	R	GIRD	439560	TOP	-41	-1918	134.45	3.46	1.038	1.90	4.4	137.1	
1	-85.54	L	GIRD	439509	TOP	-34	-15116	187.55	3.46	1.027	9.40	4.4	47.5	
1	-85.54	R	GIRD	439509	TOP	-38	-15152	187.55	3.46	1.027	9.44	4.4	47.2	
1	-84.90	L	FACE	439509	TOP	-38	-16542	192.00	3.46	1.026	10.03	4.4	44.1	
1	-77.90	L	COL	439663	TOP	-41	-32447	192.00	3.46	1.026	19.54	4.4	19.3	
1	-77.90	R	COL	439537	TOP	1018	-79377	192.00	3.46	1.026	43.57	4.4	4.8	
1	-75.23	L	GIRD	439537	TOP	1018	-67530	192.00	3.46	1.026	36.50	4.4	7.1	
1	-75.23	R	GIRD	439537	TOP	1011	-67591	192.00	3.46	1.026	36.57	4.4	7.1	
1	-70.90	L	FACE	439560	TOP	995	-50081	192.00	3.46	1.026	26.18	4.4	12.6	
1	-66.40	L	SPEC	439560	TOP	995	-33632	172.00	3.46	1.029	22.72	4.4	15.5	
1	-66.40	R	SPEC	439560	TOP	995	-33632	172.00	3.46	1.029	22.72	4.4	15.5	
1	-64.92	L	GIRD	439560	TOP	995	-28343	165.43	3.46	1.030	19.46	4.4	19.3	
1	-64.92	R	GIRD	439560	TOP	989	-28383	165.43	3.46	1.030	19.52	4.4	19.2	
1	-61.16	L	GIRD	439578	TOP	949	-16397	148.74	3.46	1.034	11.36	4.4	37.8	
				309819	BOT	289	3490	148.74	3.46	1.034	2.68	3.2	137.1	
1	-61.16	R	GIRD	439578	TOP	914	-16611	148.74	3.46	1.034	11.72	4.4	36.4	
				309830	BOT	313	3648	148.74	3.46	1.034	2.74	3.2	137.1	
1	-57.40	L	CAP	439579	TOP	905	-9531	132.00	3.46	1.038	6.32	4.4	73.1	
				309820	BOT	353	8987	132.00	3.46	1.038	6.12	3.2	75.7	
1	-49.44	L	GIRD	383757	BOT	530	21956	132.00	3.46	1.038	16.02	3.2	24.6	
1	-49.44	R	GIRD	383757	BOT	527	21935	132.00	3.46	1.038	16.02	3.2	24.7	
1	-37.67	L	GIRD	383765	BOT	561	36384	132.00	3.46	1.038	27.60	3.2	11.4	
1	-37.67	R	GIRD	383765	BOT	557	36359	132.00	3.46	1.038	27.60	3.2	11.4	
1	-29.10	L	GIRD	402556	BOT	555	42085	132.00	3.46	1.038	32.24	3.2	8.8	
1	-29.10	R	GIRD	402556	BOT	557	42095	132.00	3.46	1.038	32.25	3.2	8.8	
1	-25.90	L	GIRD	402555	BOT	558	40541	132.00	3.46	1.038	30.99	3.2	9.4	
1	-25.90	R	GIRD	402555	BOT	544	40466	132.00	3.46	1.038	30.97	3.2	9.4	
1	-14.12	L	GIRD	402906	BOT	488	29040	132.00	3.46	1.038	21.90	3.2	16.2	
1	-14.12	R	GIRD	402906	BOT	475	28970	132.00	3.46	1.038	21.88	3.2	16.2	
1	-7.65	L	GIRD	402673	BOT	466	19832	132.00	3.46	1.038	14.52	3.2	27.9	
1	-7.65	R	GIRD	402673	BOT	454	19767	132.00	3.46	1.038	14.50	3.2	28.0	
1	-2.90	L	CAP	346847	TOP	814	-5899	132.00	3.46	1.038	2.99	4.4	137.1	
				402676	BOT	407	11508	132.00	3.46	1.038	14.24	3.2	28.6	
1	-1.19	L	GIRD	420769	TOP	928	-8815	139.57	3.46	1.036	4.99	4.4	94.6	
				328756	BOT	306	9024	139.57	3.46	1.036	10.48	3.2	41.4	
1	-1.19	R	GIRD	420769	TOP	937	-8768	139.57	3.46	1.036	4.91	4.4	96.2	
				328756	BOT	295	8956	139.57	3.46	1.036	10.46	3.2	41.5	
1	2.97	L	GIRD	420771	TOP	940	-17769	158.05	3.46	1.032	11.59	4.4	37.0	
				328756	BOT	295	1495	158.05	3.46	1.032	0.29	3.2	137.1	
1	2.97	R	GIRD	420771	TOP	931	-17833	158.05	3.46	1.032	11.69	4.4	36.6	
				328756	BOT	298	1519	158.05	3.46	1.032	0.30	3.2	137.1	
1	6.10	L	SPEC	420771	TOP	931	-28045	172.00	3.46	1.029	18.49	4.4	20.7	
1	6.10	R	SPEC	420771	TOP	931	-28045	172.00	3.46	1.029	18.49	4.4	20.7	

1	10.48	L	GIRD	420780	TOP	977	-43584	191.46	3.46	1.026	22.46	4.4	15.9
1	10.48	R	GIRD	420780	TOP	985	-43516	191.46	3.46	1.026	22.39	4.4	15.9
1	10.60	L	FACE	420780	TOP	985	-43990	192.00	3.46	1.026	22.59	4.4	15.7
1	17.60	L	COL	420783	TOP	999	-74257	192.00	3.46	1.026	40.59	4.4	5.7
1	17.60	R	COL	383825	TOP	-17	-29055	192.00	3.46	1.026	17.42	4.4	22.5
1	22.16	L	GIRD	383826	TOP	-19	-19546	192.00	3.46	1.026	11.74	4.4	36.7
1	22.16	R	GIRD	383826	TOP	-20	-19559	192.00	3.46	1.026	11.76	4.4	36.6
1	24.60	L	FACE	383826	TOP	-20	-15497	192.00	3.46	1.026	9.33	4.4	47.9
1	33.84	L	GIRD	383824	TOP	-24	-1515	128.16	3.46	1.040	1.55	4.4	137.1
1	33.84	R	GIRD	383824	TOP	-25	-1521	128.16	3.46	1.040	1.56	4.4	137.1
1	35.03	L	GIRD	383824	TOP	-25	-378	119.97	3.46	1.042	0.49	4.4	137.1
1	35.03	R	GIRD	317441	TOP	0	-255	119.97	3.46	1.042	0.27	4.4	137.1

DEFLECTION DATA:

Notes: Vertical deflection is positive upward.
Longitudinal deflection is positive upstation.
Transverse deflection is positive to right, when looking upstation.

				DEFLECTIONS											
				TRANSVERSE				LONGITUDINAL				VERTICAL			
CAP NO.	HORZ DIST. (ft)	LOCATION	AASHTO LIMIT STATE	LOAD CASE	MIN (in)	LOAD CASE	MAX (in)	LOAD CASE	MIN (in)	LOAD CASE	MAX (in)	LOAD CASE	MIN (in)	LOAD CASE	MAX (in)
1	-101.40	R	CAP	SER I	439866	-0.29	383740	0.49	331758	-0.12	423934	0.41	402703	-0.38	346851	0.13
1	-95.85	L	GIRD	SER I	439866	-0.28	383740	0.45	331758	-0.12	423934	0.41	402703	-0.40	346851	0.12
1	-95.85	R	GIRD	SER I	439866	-0.28	383740	0.45	331758	-0.12	423934	0.41	402703	-0.40	346851	0.12
1	-93.23	L	GIRD	SER I	439866	-0.27	383740	0.44	331758	-0.12	423934	0.41	402703	-0.42	346851	0.11
1	-93.23	R	GIRD	SER I	439866	-0.27	383740	0.44	331758	-0.12	423934	0.41	402703	-0.42	346851	0.11
1	-85.54	L	GIRD	SER I	439866	-0.25	383740	0.40	331758	-0.12	423934	0.41	402750	-0.44	346936	0.09
1	-85.54	R	GIRD	SER I	439866	-0.25	383740	0.40	331758	-0.12	423934	0.41	402750	-0.44	346936	0.09
1	-84.90	L	FACE	SER I	439866	-0.24	383740	0.40	331758	-0.12	423934	0.41	402813	-0.45	346936	0.09
1	-77.90	L	COL	SER I	439866	-0.22	383740	0.36	331758	-0.12	423991	0.40	402601	-0.50	346753	0.08
1	-77.90	R	COL	SER I	439866	-0.22	383740	0.36	331758	-0.12	423991	0.40	402601	-0.50	346753	0.08
1	-75.23	L	GIRD	SER I	365946	-0.20	383740	0.36	331758	-0.12	423991	0.40	384079	-0.52	365233	0.07
1	-75.23	R	GIRD	SER I	365946	-0.20	383740	0.36	331758	-0.12	423991	0.40	384079	-0.52	365233	0.07
1	-70.90	L	FACE	SER I	365946	-0.18	383740	0.34	331758	-0.12	423991	0.40	383695	-0.58	365708	0.06
1	-66.40	L	SPEC	SER I	365946	-0.16	383740	0.32	331758	-0.12	423991	0.40	383695	-0.64	365619	0.04
1	-66.40	R	SPEC	SER I	365946	-0.16	383740	0.32	331758	-0.12	423991	0.40	383695	-0.64	365619	0.04
1	-64.92	L	GIRD	SER I	365946	-0.16	383740	0.31	331758	-0.12	423991	0.40	383695	-0.66	365619	0.03
1	-64.92	R	GIRD	SER I	365946	-0.16	383740	0.31	331758	-0.12	423991	0.40	383695	-0.66	365619	0.03
1	-61.16	L	GIRD	SER I	365946	-0.14	383807	0.29	331758	-0.12	423991	0.40	383722	-0.72	365619	0.02
1	-61.16	R	GIRD	SER I	365946	-0.14	383807	0.29	331758	-0.12	423991	0.40	383722	-0.72	365619	0.02
1	-57.40	L	CAP	SER I	365946	-0.13	383807	0.27	331758	-0.12	423984	0.40	383722	-0.78	365619	0.00
1	-49.44	L	GIRD	SER I	365946	-0.11	383807	0.21	331900	-0.12	423984	0.41	383765	-0.88	365619	-0.05
1	-49.44	R	GIRD	SER I	365946	-0.11	383807	0.21	331900	-0.12	423984	0.41	383765	-0.88	365619	-0.05
1	-37.67	L	GIRD	SER I	365946	-0.10	383740	0.11	331900	-0.11	423984	0.40	383907	-0.98	365619	-0.11
1	-37.67	R	GIRD	SER I	365946	-0.10	383740	0.11	331900	-0.11	423984	0.40	383907	-0.98	365619	-0.11
1	-29.10	L	GIRD	SER I	439773	-0.10	346842	0.04	331929	-0.11	423895	0.40	402554	-1.00	347139	-0.12
1	-29.10	R	GIRD	SER I	439773	-0.10	346842	0.04	331929	-0.11	423895	0.40	402554	-1.00	347139	-0.12
1	-25.90	L	GIRD	SER I	402813	-0.13	346869	0.04	332020	-0.11	423895	0.40	402554	-1.00	346752	-0.12
1	-25.90	R	GIRD	SER I	402813	-0.13	346869	0.04	332020	-0.11	423895	0.40	402554	-1.00	346752	-0.12
1	-14.12	L	GIRD	SER I	402694	-0.23	346869	0.05	332020	-0.11	423895	0.40	402775	-0.92	346752	-0.08
1	-14.12	R	GIRD	SER I	402694	-0.23	346869	0.05	332020	-0.11	423895	0.40	402775	-0.92	346752	-0.08
1	-7.65	L	GIRD	SER I	402694	-0.29	346869	0.06	332020	-0.11	423895	0.40	402849	-0.85	346752	-0.04

1	-7.65	R	GIRD	SER I	402694	-0.29	346869	0.06	332020	-0.11	423895	0.40	402849	-0.85	346752	-0.04
1	-2.90	L	CAP	SER I	402694	-0.32	346869	0.07	331847	-0.11	423895	0.39	402849	-0.78	346753	-0.01
1	-1.19	L	GIRD	SER I	402694	-0.33	346869	0.08	331847	-0.11	423895	0.39	402849	-0.76	346753	0.00
1	-1.19	R	GIRD	SER I	402694	-0.33	346869	0.08	331847	-0.11	423895	0.39	402849	-0.76	346753	0.00
1	2.97	L	GIRD	SER I	402694	-0.36	346869	0.09	331847	-0.11	423895	0.39	402849	-0.70	346753	0.02
1	2.97	R	GIRD	SER I	402694	-0.36	346869	0.09	331847	-0.11	423895	0.39	402849	-0.70	346753	0.02
1	6.10	L	SPEC	SER I	402694	-0.37	346869	0.10	331847	-0.10	423895	0.39	402861	-0.65	346753	0.04
1	6.10	R	SPEC	SER I	402694	-0.37	346869	0.10	331847	-0.10	423895	0.39	402861	-0.65	346753	0.04
1	10.48	L	GIRD	SER I	402694	-0.39	346869	0.12	331847	-0.10	423895	0.39	402861	-0.58	346739	0.06
1	10.48	R	GIRD	SER I	402694	-0.39	346869	0.12	331847	-0.10	423895	0.39	402861	-0.58	346739	0.06
1	10.60	L	FACE	SER I	402694	-0.39	346869	0.12	331847	-0.10	423895	0.39	402861	-0.58	346739	0.06
1	17.60	L	COL	SER I	402813	-0.42	346869	0.15	331847	-0.10	423895	0.38	383821	-0.49	365743	0.09
1	17.60	R	COL	SER I	402813	-0.42	346869	0.15	331847	-0.10	423895	0.38	383821	-0.49	365743	0.09
1	22.16	L	GIRD	SER I	402813	-0.44	346869	0.17	331847	-0.10	423895	0.38	383958	-0.45	365790	0.10
1	22.16	R	GIRD	SER I	402813	-0.44	346869	0.17	331847	-0.10	423895	0.38	383958	-0.45	365790	0.10
1	24.60	L	FACE	SER I	402813	-0.45	346869	0.18	331847	-0.10	423895	0.38	383829	-0.44	365894	0.11
1	33.84	L	GIRD	SER I	402813	-0.50	346869	0.20	331847	-0.10	423895	0.38	383825	-0.39	365734	0.14
1	33.84	R	GIRD	SER I	402813	-0.50	346869	0.20	331847	-0.10	423895	0.38	383825	-0.39	365734	0.14
1	35.03	L	GIRD	SER I	402813	-0.51	346869	0.21	331847	-0.10	423895	0.38	383825	-0.39	365734	0.15
1	35.03	R	GIRD	SER I	402813	-0.51	346869	0.21	331847	-0.10	423895	0.38	383825	-0.39	365734	0.15
1	41.10	L	CAP	SER I	402813	-0.54	346869	0.22	331847	-0.10	423895	0.38	383825	-0.36	365734	0.17

----- CAP BEAM 1 MOMENT-SHEAR INTERACTION ENVELOPES -----

Note: The moments printed in this table are not modified for minimum reinforcement criteria and thus may differ from those shown in the flexural reinforcement output.

				MOMENT ENVELOPE				SHEAR ENVELOPE			
CAP NO.	HORZ DIST. (ft)	LOCATION	AASHTO LIMIT STATE	MAX LRFD MOMENT (ft-k)	CORRES. SHEAR (kips)	MIN LRFD MOMENT (ft-k)	CORRES. SHEAR (kips)	MAX LRFD SHEAR (kips)	CORRES. MOMENT (ft-k)	MIN LRFD SHEAR (kips)	CORRES. MOMENT (ft-k)
1	-101.40	R CAP	STR I	0	0	0	0	0	0	0	0
			STIII	0	0	0	0	0	0	0	0
			STRIV	0	0	0	0	0	0	0	0
			STR V	0	0	0	0	0	0	0	0
1	-95.85	L GIRD	STR I	-180	-69	-275	-106	-69	-180	-106	-275
			STIII	-169	-69	-275	-106	-69	-180	-106	-275
			STRIV	-330	-127	-330	-127	-127	-330	-127	-330
			STR V	-177	-69	-275	-106	-69	-180	-106	-275
1	-95.85	R GIRD	STR I	-133	-585	-373	-739	-306	-201	-768	-359
			STIII	-28	-296	-440	-592	-212	-61	-592	-440
			STRIV	-283	-647	-377	-647	-563	-369	-647	-377
			STR V	-87	-525	-410	-712	-291	-147	-735	-400
1	-93.23	L GIRD	STR I	-1012	-349	-2469	-833	-349	-1061	-833	-2469
			STIII	-618	-254	-2100	-657	-254	-648	-657	-2100
			STRIV	-1860	-640	-2179	-724	-640	-1950	-724	-2179
			STR V	-911	-333	-2428	-799	-333	-957	-799	-2428
1	-93.23	R GIRD	STR I	-971	-1215	-2591	-2236	-995	-994	-2293	-2518
			STIII	-443	-645	-2292	-1905	-645	-495	-1905	-2134
			STRIV	-1827	-1828	-2219	-2153	-1828	-1827	-2153	-2030
			STR V	-809	-1145	-2591	-2167	-975	-826	-2211	-2535
1	-85.54	L GIRD	STR I	-9201	-1154	-21080	-2536	-1154	-9201	-2536	-21080
			STIII	-5824	-804	-17966	-2148	-804	-5896	-2148	-17745
			STRIV	-16907	-2120	-19865	-2445	-2120	-16907	-2445	-19601
			STR V	-8826	-1134	-20510	-2454	-1134	-8826	-2454	-20510
1	-85.54	R GIRD	STR I	-9227	-1331	-21050	-3009	-1331	-9294	-3069	-20195
			STIII	-5647	-928	-18113	-2478	-928	-5683	-2478	-18113
			STRIV	-16954	-2446	-19808	-2838	-2446	-17077	-2838	-19808
			STR V	-8772	-1306	-20554	-2902	-1306	-8844	-2948	-19894
1	-84.90	L FACE	STR I	-10088	-1347	-23001	-3033	-1347	-10157	-3093	-22185
			STIII	-6233	-944	-19733	-2502	-944	-6270	-2502	-19733
			STRIV	-18538	-2475	-21647	-2867	-2475	-18664	-2867	-21647
			STR V	-9611	-1322	-22441	-2926	-1322	-9685	-2972	-21811
1	-77.90	L COL	STR I	-20122	-1520	-45358	-3358	-1520	-20191	-3358	-44762
			STIII	-13445	-1117	-38171	-2766	-1117	-13482	-2766	-38171
			STRIV	-36975	-2793	-42825	-3184	-2793	-37101	-3184	-42825

			STR V	-19470	-1495	-44001	-3237	-1495	-19544	-3237	-43542
1	-77.90 R	COL	STR I	-40099	2768	-107724	6280	6457	-105547	2768	-40099
			STIII	-26663	2253	-92416	5300	5300	-92416	2253	-26663
			STRIV	-80724	5211	-100117	6043	6043	-100117	5211	-80724
			STR V	-37773	2729	-105623	6081	6218	-103944	2729	-37773
1	-75.23 L	GIRD	STR I	-32809	2702	-91118	6179	6356	-88468	2702	-32809
			STIII	-20744	2188	-78422	5199	5199	-78422	2188	-20744
			STRIV	-66993	5090	-84169	5922	5922	-84169	5090	-66993
			STR V	-30587	2663	-89547	5980	6117	-87503	2663	-30587
1	-75.23 R	GIRD	STR I	-32835	2528	-91130	5807	5844	-88553	2528	-32835
			STIII	-20568	2026	-78550	4878	4878	-78550	2026	-20568
			STRIV	-67040	4771	-84112	5539	5539	-84112	4771	-67040
			STR V	-30532	2484	-89627	5622	5652	-87639	2484	-30532
1	-70.90 L	FACE	STR I	-21888	2512	-66650	5428	5681	-63577	2421	-22109
			STIII	-12019	1919	-57765	4714	4714	-57765	1919	-12019
			STRIV	-46786	4575	-60532	5342	5342	-60532	4575	-46786
			STR V	-19827	2447	-65870	5293	5488	-63499	2377	-19998
1	-66.40 L	SPEC	STR I	-10248	2697	-43664	5267	5519	-39492	2316	-11696
			STIII	-3809	1814	-38360	4408	4553	-37823	1814	-3809
			STRIV	-27291	4381	-37917	5149	5149	-37917	4381	-27291
			STR V	-8661	2565	-43463	5132	5327	-40244	2272	-9778
1	-66.40 R	SPEC	STR I	-10248	2697	-43664	5267	5519	-39492	2316	-11696
			STIII	-3809	1814	-38360	4408	4553	-37823	1814	-3809
			STRIV	-27291	4381	-37917	5149	5149	-37917	4381	-27291
			STR V	-8661	2565	-43463	5132	5327	-40244	2272	-9778
1	-64.92 L	GIRD	STR I	-6298	2744	-36262	5218	5470	-31729	2284	-8374
			STIII	-1211	1782	-32165	4359	4503	-31422	1782	-1211
			STRIV	-21067	4322	-30668	5090	5090	-30668	4322	-21067
			STR V	-4917	2595	-36251	5083	5277	-32755	2240	-6519
1	-64.92 R	GIRD	STR I	-6362	2247	-36250	4851	4894	-35145	2049	-6793
			STIII	-1068	1552	-32302	4089	4155	-31529	1552	-1068
			STRIV	-21114	3954	-30613	4654	4654	-30613	3954	-21114
			STR V	-4904	2149	-36303	4730	4763	-35450	1997	-5237
1	-61.16 L	GIRD	STR I	1688	2171	-19579	4380	4778	-17873	1974	540
			STIII	4447	1476	-17887	3973	4039	-16887	1476	4447
			STRIV	-7067	3815	-14226	4515	4515	-14226	3815	-7067
			STR V	2788	2074	-19958	4340	4647	-18642	1921	1903
1	-61.16 R	GIRD	STR I	1798	1208	-19812	2897	3055	-18441	1202	1778
			STIII	4694	909	-18231	2557	2569	-17216	909	4694
			STRIV	-6908	2429	-14421	2817	2817	-14421	2429	-6908
			STR V	2964	1161	-20248	2858	2980	-19190	1156	2948
1	-57.40 L	CAP	STR I	6593	1352	-10075	2734	2951	-7981	1134	5922
			STIII	7790	841	-9484	2453	2465	-8447	841	7790
			STRIV	1444	2304	-4858	2692	2692	-4858	2304	1444
			STR V	7437	1256	-10595	2709	2876	-8980	1088	6919
1	-49.44 L	GIRD	STR I	24516	2413	3597	1357	2744	14671	999	14406
			STIII	21387	1908	2642	1282	2258	10340	706	13943
			STRIV	21188	2412	13291	2082	2444	15571	2056	18784
			STR V	24401	2261	3037	1380	2669	13080	953	15037
1	-49.44 R	GIRD	STR I	24455	1817	3599	1152	2226	13778	797	14385
			STIII	21400	1514	2604	1054	1852	10328	592	13993
			STRIV	21141	1950	13329	1710	1982	15618	1684	18746
			STR V	24370	1713	3018	1171	2174	12376	754	15041
1	-37.67 L	GIRD	STR I	45777	1714	15033	753	1920	38173	597	22585
			STIII	37421	1208	13835	854	1546	30322	392	19784
			STRIV	41929	1583	31296	1343	1615	36783	1317	36404
			STR V	44077	1564	14895	818	1869	36169	555	22743
1	-37.67 R	GIRD	STR I	45710	1049	15039	564	1458	35000	302	25586
			STIII	37436	830	13795	652	1158	30308	272	19832
			STRIV	41884	1141	31332	988	1172	36828	962	36368
			STR V	44041	967	14879	625	1422	33705	286	25078
1	-29.10 L	GIRD	STR I	54106	958	19151	377	1235	46540	157	27551
			STIII	44087	908	16663	138	936	39283	127	21540
			STRIV	50515	873	38655	721	905	45733	694	43465
			STR V	51873	979	19310	313	1199	44938	140	26903
1	-29.10 R	GIRD	STR I	54164	-709	19078	-340	-4	25209	-986	49607
			STIII	44089	-501	16763	-459	-91	18543	-802	43879
			STRIV	50681	-756	38521	-596	-596	38521	-756	50681
			STR V	51888	-629	19299	-403	-11	24131	-976	48271
1	-25.90 L	GIRD	STR I	51790	-777	17903	-395	-59	25108	-1069	46318
			STIII	42351	-584	15205	-514	-145	18165	-885	41177
			STRIV	48102	-855	36452	-696	-696	36452	-855	48102
			STR V	49763	-700	17921	-458	-65	24010	-1060	45012
1	-25.90 R	GIRD	STR I	51700	-1416	17922	-585	-339	22137	-1568	50203
			STIII	42259	-967	15280	-646	-327	18122	-1262	41193
			STRIV	48058	-1293	36487	-1045	-1045	36487	-1293	48058

			STR V	49661	-1281	17965	-646	-326	21698	-1530	48025
1	-14.12 L	GIRD	STR I	34964	-1409	9244	-879	-539	16971	-1874	29928
			STIII	29069	-1273	6496	-846	-527	13095	-1568	24522
			STRIV	30664	-1660	22014	-1412	-1412	22014	-1660	30664
			STR V	34107	-1346	8700	-919	-526	16682	-1836	28201
1	-14.12 R	GIRD	STR I	34883	-1961	9261	-1042	-734	15773	-2324	31688
			STIII	28982	-1609	6569	-965	-664	13048	-1903	24542
			STRIV	30625	-2045	22044	-1711	-1711	22044	-2045	30625
			STR V	34013	-1849	8741	-1081	-714	15737	-2259	29576
1	-7.65 L	GIRD	STR I	21784	-2007	1909	-1263	-844	10674	-2491	16127
			STIII	18391	-1654	-24	-1075	-773	8403	-2071	11700
			STRIV	16753	-2247	10337	-1912	-1912	10337	-2247	16753
			STR V	21608	-1923	1195	-1277	-824	10766	-2427	14435
1	-7.65 R	GIRD	STR I	21711	-2480	1925	-1421	-1041	9001	-2874	17489
			STIII	18300	-1942	49	-1198	-896	8354	-2393	11721
			STRIV	16715	-2618	10366	-2201	-2201	10366	-2618	16715
			STR V	21520	-2362	1236	-1434	-1012	9454	-2796	15502
1	-2.90 L	CAP	STR I	10054	-2328	-5267	-1630	-1122	3854	-2998	3517
			STIII	8762	-2066	-5844	-1279	-977	3897	-2517	37
			STRIV	3904	-2766	-462	-2350	-2350	-462	-2766	3904
			STR V	10324	-2273	-5968	-1615	-1093	4445	-2919	1905
1	-1.19 L	GIRD	STR I	7761	-1281	-8930	-2786	-1152	2097	-3043	-1299
			STIII	6874	-1019	-8914	-2388	-1007	2356	-2563	-4018
			STRIV	-109	-2431	-4468	-2789	-2404	-4195	-2821	-557
			STR V	8114	-1225	-9596	-2760	-1123	2729	-2965	-2785
1	-1.19 R	GIRD	STR I	7695	-1705	-8893	-3127	-1359	427	-3460	-794
			STIII	6796	-1141	-8816	-2703	-1129	2304	-2904	-3998
			STRIV	-142	-2736	-4426	-3180	-2709	-4162	-3212	-600
			STR V	8033	-1591	-9533	-3101	-1320	1419	-3364	-2378
1	2.97 L	GIRD	STR I	737	-1785	-21294	-3265	-1438	-4964	-3582	-14626
			STIII	2082	-1220	-19507	-2824	-1209	-2195	-3026	-15653
			STRIV	-11211	-2882	-17044	-3326	-2856	-14947	-3358	-13528
			STR V	1522	-1670	-21814	-3235	-1399	-3830	-3486	-15830
1	2.97 R	GIRD	STR I	792	-2669	-21460	-4630	-2138	-6357	-5182	-14268
			STIII	1950	-1712	-19473	-4125	-1701	-2447	-4381	-15318
			STRIV	-11058	-4129	-17235	-4886	-4103	-15099	-4918	-13338
			STR V	1509	-2505	-21906	-4600	-2092	-4999	-5032	-15440
1	6.10 L	SPEC	STR I	-7026	-2546	-35486	-4732	-2204	-12881	-5284	-30071
			STIII	-3397	-1779	-32512	-4455	-1767	-7642	-4483	-28693
			STRIV	-23741	-4252	-32096	-5008	-4225	-27594	-5040	-28401
			STR V	-5923	-2426	-35829	-4702	-2159	-11396	-5134	-30778
1	6.10 R	SPEC	STR I	-7026	-2546	-35486	-4732	-2204	-12881	-5284	-30071
			STIII	-3397	-1779	-32512	-4455	-1767	-7642	-4483	-28693
			STRIV	-23741	-4252	-32096	-5008	-4225	-27594	-5040	-28401
			STR V	-5923	-2426	-35829	-4702	-2159	-11396	-5134	-30778
1	10.48 L	GIRD	STR I	-18027	-2388	-57200	-5330	-2307	-22350	-5441	-52684
			STIII	-11223	-1881	-51471	-4612	-1870	-15256	-4639	-47917
			STRIV	-42110	-4440	-53506	-5196	-4413	-45703	-5228	-50091
			STR V	-16449	-2327	-57038	-5199	-2261	-20689	-5291	-52741
1	10.48 R	GIRD	STR I	-18109	-2828	-57146	-5698	-2501	-22939	-5991	-52575
			STIII	-11329	-2002	-51338	-4982	-1991	-15327	-5010	-47894
			STRIV	-42160	-4774	-53444	-5619	-4747	-45653	-5651	-50154
			STR V	-16554	-2707	-56947	-5568	-2450	-21173	-5801	-52634
1	10.60 L	FACE	STR I	-18445	-2831	-57809	-5702	-2504	-23231	-5996	-53277
			STIII	-11567	-2005	-51917	-4987	-1994	-15559	-5014	-48480
			STRIV	-42720	-4779	-54099	-5625	-4753	-46206	-5657	-50817
			STR V	-16876	-2709	-57594	-5573	-2453	-21460	-5805	-53313
1	17.60 L	COL	STR I	-37370	-2686	-100250	-6227	-2676	-41361	-6260	-96173
			STIII	-26210	-2178	-87750	-5251	-2166	-30119	-5279	-84507
			STRIV	-77286	-5097	-94584	-5942	-5070	-80588	-5974	-91526
			STR V	-35291	-2637	-98763	-6038	-2626	-39239	-6070	-94876
1	17.60 R	COL	STR I	-16482	1293	-41632	3171	3171	-41625	1293	-16482
			STIII	-10047	878	-32771	2448	2448	-32685	878	-10047
			STRIV	-30895	2397	-36881	2806	2806	-36780	2397	-30895
			STR V	-16236	1285	-39669	3007	3007	-39655	1285	-16236
1	22.16 L	GIRD	STR I	-10847	1180	-28022	2816	2999	-27566	1180	-10847
			STIII	-6301	765	-22009	2275	2275	-21923	765	-6301
			STRIV	-20440	2190	-24564	2599	2599	-24463	2190	-20440
			STR V	-10637	1172	-26710	2694	2834	-26344	1172	-10637
1	22.16 R	GIRD	STR I	-10865	1002	-28078	2436	2436	-27918	1002	-10963
			STIII	-6375	661	-21975	1905	1905	-21975	661	-6424
			STRIV	-20391	1857	-24627	2178	2178	-24627	1857	-20569
			STR V	-10682	996	-26730	2314	2314	-26561	996	-10779
1	24.60 L	FACE	STR I	-8492	942	-22241	2344	2344	-22081	942	-8589
			STIII	-4833	601	-17434	1813	1813	-17434	601	-4882
			STRIV	-15991	1746	-19443	2067	2067	-19443	1746	-16169

			STR V	-8323	936	-21191	2222	2222	-21022	936	-8420
1	33.84 L	GIRD	STR I	-787	751	-2028	1708	2053	-1887	751	-852
			STIII	-360	411	-1978	1522	1522	-1978	411	-393
			STRIV	-1609	1397	-2030	1717	1717	-2030	1397	-1728
			STR V	-713	746	-2053	1665	1931	-1914	746	-778
1	33.84 R	GIRD	STR I	-801	588	-2062	1370	1370	-2062	588	-898
			STIII	-412	337	-1954	1165	1165	-1954	337	-459
			STRIV	-1578	1087	-2068	1328	1328	-2068	1087	-1759
			STR V	-744	584	-2062	1323	1323	-2062	584	-841
1	35.03 L	GIRD	STR I	-35	961	-448	1341	1341	-448	569	-213
			STIII	-10	807	-575	1136	1136	-575	318	-82
			STRIV	-294	1293	-508	1293	1293	-508	1052	-485
			STR V	-1	923	-500	1294	1294	-500	566	-164
1	35.03 R	GIRD	STR I	-218	77	-334	118	118	-334	77	-218
			STIII	-206	77	-334	118	118	-334	77	-218
			STRIV	-401	142	-401	142	142	-401	142	-401
			STR V	-215	77	-334	118	118	-334	77	-218
1	41.10 L	CAP	STR I	0	0	0	0	0	0	0	0
			STIII	0	0	0	0	0	0	0	0
			STRIV	0	0	0	0	0	0	0	0
			STR V	0	0	0	0	0	0	0	0

----- CAP BEAM 1 SHEAR-TORSION INTERACTION ENVELOPES -----

				SHEAR ENVELOPE				TORSION ENVELOPE			
CAP NO.	HORZ DIST. (ft)	LOCATION	AASHTO LIMIT STATE	MAX LRFD SHEAR (kips)	CORRES. TORSION (ft-k)	MIN LRFD SHEAR (kips)	CORRES. TORSION (ft-k)	MAX LRFD TORSION (ft-k)	CORRES. SHEAR (kips)	MIN LRFD TORSION (ft-k)	CORRES. SHEAR (kips)
1	-101.40 R	CAP	STR I	0	0	0	0	0	0	0	0
			STIII	0	0	0	0	0	0	0	0
			STRIV	0	0	0	0	0	0	0	0
			STR V	0	0	0	0	0	0	0	0
1	-95.85 L	GIRD	STR I	-69	0	-106	0	0	-106	0	-106
			STIII	-69	3	-106	3	3	-106	-3	-106
			STRIV	-127	0	-127	0	0	-127	0	-127
			STR V	-69	1	-106	1	1	-106	-1	-106
1	-95.85 R	GIRD	STR I	-306	1063	-768	2962	2962	-768	931	-306
			STIII	-212	679	-592	2138	2138	-592	600	-212
			STRIV	-563	1952	-647	2329	2329	-647	1712	-563
			STR V	-291	1008	-735	2797	2797	-735	886	-291
1	-93.23 L	GIRD	STR I	-349	1073	-833	2989	2989	-833	921	-349
			STIII	-254	692	-657	2152	2152	-657	601	-254
			STRIV	-640	1971	-724	2351	2351	-724	1693	-640
			STR V	-333	1021	-799	2821	2821	-799	879	-333
1	-93.23 R	GIRD	STR I	-995	-184	-2293	649	959	-2064	-827	-2077
			STIII	-645	144	-1905	-328	197	-1498	-389	-1817
			STRIV	-1828	-339	-2153	-427	154	-2153	-427	-2153
			STR V	-975	-207	-2211	547	786	-2034	-746	-2005
1	-85.54 L	GIRD	STR I	-1154	-236	-2536	742	1028	-2307	-959	-2321
			STIII	-804	219	-2148	-468	319	-1742	-501	-2117
			STRIV	-2120	-434	-2445	-542	269	-2445	-542	-2445
			STR V	-1134	-244	-2454	622	852	-2258	-857	-2255
1	-85.54 R	GIRD	STR I	-1331	796	-3069	2717	3002	-2840	100	-1560
			STIII	-928	749	-2478	1388	1570	-2391	487	-1379
			STRIV	-2446	1464	-2838	1746	1746	-2838	1083	-2446
			STR V	-1306	805	-2948	2431	2670	-2730	203	-1491
1	-84.90 L	FACE	STR I	-1347	799	-3093	2718	3002	-2864	95	-1576
			STIII	-944	756	-2502	1387	1580	-2415	479	-1395
			STRIV	-2475	1468	-2867	1751	1751	-2867	1079	-2475
			STR V	-1322	810	-2972	2431	2673	-2750	199	-1507
1	-77.90 L	COL	STR I	-1520	799	-3358	2718	3002	-3129	95	-1749
			STIII	-1117	756	-2766	1387	1580	-2680	479	-1567
			STRIV	-2793	1468	-3184	1751	1751	-3184	1079	-2793
			STR V	-1495	810	-3237	2431	2673	-3015	199	-1680
1	-77.90 R	COL	STR I	6457	-5745	2768	-1941	-159	3275	-7450	5989
			STIII	5300	-3264	2253	-1331	-1061	2788	-3549	5052
			STRIV	6043	-3912	5211	-3020	-3020	5211	-3912	6043
			STR V	6218	-5133	2729	-1968	-402	3229	-6590	5741
1	-75.23 L	GIRD	STR I	6356	-5745	2702	-1941	-159	3209	-7450	5888
			STIII	5199	-3264	2188	-1331	-1061	2722	-3549	4951
			STRIV	5922	-3912	5090	-3020	-3020	5090	-3912	5922
			STR V	6117	-5133	2663	-1968	-402	3163	-6590	5640
1	-75.23 R	GIRD	STR I	5844	-3923	2528	-1131	957	3037	-5467	5373
			STIII	4878	-2115	2026	-513	-513	2026	-2230	4639
			STRIV	5539	-2473	4771	-1532	-1532	4771	-2473	5539
			STR V	5652	-3490	2484	-1108	594	2985	-4658	5173
1	-70.90 L	FACE	STR I	5681	-3923	2421	-1131	957	2930	-5467	5209

			STIII	4714	-2115	1919	-513	-513	1919	-2230	4475
			STRIV	5342	-2473	4575	-1532	-1532	4575	-2473	5342
			STR V	5488	-3490	2377	-1108	594	2878	-4658	5009
1	-66.40	L SPEC	STR I	5519	-3907	2316	-1152	903	2825	-5475	5048
			STIII	4553	-2097	1814	-497	-497	1814	-2151	4362
			STRIV	5149	-2425	4381	-1572	-1572	4381	-2425	5149
			STR V	5327	-3481	2272	-1116	532	2773	-4660	4848
1	-66.40	R SPEC	STR I	5519	-3907	2316	-1152	903	2825	-5475	5048
			STIII	4553	-2097	1814	-497	-497	1814	-2151	4362
			STRIV	5149	-2425	4381	-1572	-1572	4381	-2425	5149
			STR V	5327	-3481	2272	-1116	532	2773	-4660	4848
1	-64.92	L GIRD	STR I	5470	-3902	2284	-1159	885	2793	-5478	4999
			STIII	4503	-2091	1782	-491	-491	1782	-2128	4365
			STRIV	5090	-2409	4322	-1585	-1585	4322	-2409	5090
			STR V	5277	-3478	2240	-1118	513	2752	-4660	4788
1	-64.92	R GIRD	STR I	4894	-1562	2049	193	1825	3678	-2969	3218
			STIII	4155	-813	1552	621	653	2695	-813	4155
			STRIV	4654	-747	3954	110	110	3954	-747	4654
			STR V	4763	-1429	1997	230	1496	3515	-2379	3203
1	-61.16	L GIRD	STR I	4778	-1524	1974	164	1765	3562	-2984	3143
			STIII	4039	-779	1476	619	637	2579	-779	4039
			STRIV	4515	-690	3815	62	62	3815	-690	4515
			STR V	4647	-1397	1921	210	1449	3399	-2406	3127
1	-61.16	R GIRD	STR I	3055	-3722	1202	-1596	-133	1416	-6075	2741
			STIII	2569	-2700	909	-445	-445	909	-3464	2532
			STRIV	2817	-2848	2429	-2680	-2199	2455	-3459	2785
			STR V	2980	-3544	1156	-1462	-333	1321	-5477	2732
1	-57.40	L CAP	STR I	2951	-3748	1134	-1593	-142	1348	-6043	2636
			STIII	2465	-2719	841	-432	-432	841	-3466	2427
			STRIV	2692	-2858	2304	-2673	-2207	2330	-3449	2660
			STR V	2876	-3572	1088	-1453	-334	1253	-5456	2627
1	-49.44	L GIRD	STR I	2744	-3748	999	-1593	-142	1213	-6043	2430
			STIII	2258	-2719	706	-432	-432	706	-3466	2221
			STRIV	2444	-2858	2056	-2673	-2207	2082	-3449	2412
			STR V	2669	-3572	953	-1453	-334	1118	-5456	2421
1	-49.44	R GIRD	STR I	2226	-1917	797	-678	976	1008	-3864	1935
			STIII	1852	-1155	592	104	104	592	-1561	1795
			STRIV	1982	-1059	1684	-992	-759	1710	-1360	1950
			STR V	2174	-1797	754	-548	729	917	-3352	1944
1	-37.67	L GIRD	STR I	1920	-1917	597	-678	976	808	-3864	1629
			STIII	1546	-1155	392	104	104	392	-1561	1489
			STRIV	1615	-1059	1317	-992	-759	1343	-1360	1583
			STR V	1869	-1797	555	-548	729	717	-3352	1638
1	-37.67	R GIRD	STR I	1458	-68	302	904	2611	948	-1776	679
			STIII	1158	337	272	667	871	729	-13	641
			STRIV	1172	663	962	614	663	1172	614	962
			STR V	1422	-27	286	868	2232	889	-1388	710
1	-29.10	L GIRD	STR I	1235	-68	157	904	2611	726	-1776	533
			STIII	936	337	127	667	871	506	-13	495
			STRIV	905	663	694	614	663	905	614	694
			STR V	1199	-27	140	868	2232	666	-1388	565
1	-29.10	R GIRD	STR I	-4	-1413	-986	-1728	939	-499	-4356	-624
			STIII	-91	-575	-802	-1939	-332	-475	-2450	-501
			STRIV	-596	-1102	-756	-2518	-1102	-596	-2518	-756
			STR V	-11	-1350	-976	-1720	598	-529	-3977	-563
1	-25.90	L GIRD	STR I	-59	-1413	-1069	-1728	939	-553	-4356	-707
			STIII	-145	-575	-885	-1939	-332	-529	-2450	-584
			STRIV	-696	-1102	-855	-2518	-1102	-696	-2518	-855
			STR V	-65	-1350	-1060	-1720	598	-584	-3977	-647
1	-25.90	R GIRD	STR I	-339	-369	-1568	1171	2353	-878	-2416	-1123
			STIII	-327	113	-1262	-218	489	-1019	-738	-967
			STRIV	-1045	257	-1293	-538	257	-1045	-538	-1293
			STR V	-326	-377	-1530	910	1886	-876	-2089	-1056
1	-14.12	L GIRD	STR I	-539	-369	-1874	1171	2353	-1078	-2416	-1429
			STIII	-527	113	-1568	-218	489	-1325	-738	-1273
			STRIV	-1412	257	-1660	-538	257	-1412	-538	-1660
			STR V	-526	-377	-1836	910	1886	-1076	-2089	-1362
1	-14.12	R GIRD	STR I	-734	367	-2324	3123	4023	-2164	-1178	-1019
			STIII	-664	627	-1903	1312	1784	-1875	177	-676
			STRIV	-1711	1418	-2045	1203	1732	-2013	987	-1737
			STR V	-714	329	-2259	2768	3462	-2136	-907	-937
1	-7.65	L GIRD	STR I	-844	367	-2491	3123	4023	-2332	-1178	-1128
			STIII	-773	627	-2071	1312	1784	-2043	177	-785
			STRIV	-1912	1418	-2247	1203	1732	-2215	987	-1938
			STR V	-824	329	-2427	2768	3462	-2304	-907	-1047
1	-7.65	R GIRD	STR I	-1041	1086	-2874	4685	5585	-2715	-467	-1286

			STIII	-896	1085	-2393	2789	3059	-2366	713	-908
			STRIV	-2201	2544	-2618	2880	3177	-2586	2295	-2228
			STR V	-1012	1016	-2796	4315	5009	-2673	-204	-1204
1	-2.90 L	CAP	STR I	-1122	1086	-2998	4685	5585	-2839	-467	-1367
			STIII	-977	1085	-2517	2789	3059	-2490	713	-989
			STRIV	-2350	2544	-2766	2880	3177	-2734	2295	-2376
			STR V	-1093	1016	-2919	4315	5009	-2796	-204	-1285
1	-1.19 L	GIRD	STR I	-1152	1084	-3043	4696	5600	-2884	-470	-1396
			STIII	-1007	1079	-2563	2795	3058	-2533	709	-1019
			STRIV	-2404	2541	-2821	2884	3173	-2789	2298	-2431
			STR V	-1123	1012	-2965	4325	5023	-2842	-208	-1315
1	-1.19 R	GIRD	STR I	-1359	1899	-3460	5711	7248	-3284	544	-1620
			STIII	-1129	1531	-2904	4364	4400	-2875	1243	-1141
			STRIV	-2709	3724	-3212	4660	4689	-3180	3683	-2736
			STR V	-1320	1777	-3364	5473	6659	-3229	735	-1524
1	2.97 L	GIRD	STR I	-1438	1885	-3582	5750	7301	-3406	545	-1699
			STIII	-1209	1507	-3026	4397	4405	-3024	1236	-1220
			STRIV	-2856	3704	-3358	4687	4687	-3358	3704	-2882
			STR V	-1399	1758	-3486	5514	6711	-3351	733	-1604
1	2.97 R	GIRD	STR I	-2138	1068	-5182	2560	4460	-4780	-1180	-2606
			STIII	-1701	830	-4381	1741	2757	-4351	189	-1712
			STRIV	-4103	2145	-4918	1567	2714	-4886	1208	-4129
			STR V	-2092	912	-5032	2455	4158	-4715	-928	-2457
1	6.10 L	SPEC	STR I	-2204	1081	-5284	2536	4470	-4882	-1218	-2673
			STIII	-1767	822	-4483	1726	2804	-4453	161	-1779
			STRIV	-4225	2172	-5040	1535	2746	-5008	1182	-4252
			STR V	-2159	919	-5134	2437	4178	-4817	-968	-2523
1	6.10 R	SPEC	STR I	-2204	1081	-5284	2536	4470	-4882	-1218	-2673
			STIII	-1767	822	-4483	1726	2804	-4453	161	-1779
			STRIV	-4225	2172	-5040	1535	2746	-5008	1182	-4252
			STR V	-2159	919	-5134	2437	4178	-4817	-968	-2523
1	10.48 L	GIRD	STR I	-2307	1099	-5441	2503	4482	-5039	-1271	-2775
			STIII	-1870	810	-4639	1705	2870	-4610	122	-1881
			STRIV	-4413	2208	-5228	1491	2789	-5196	1146	-4440
			STR V	-2261	928	-5291	2412	4206	-4974	-1023	-2626
1	10.48 R	GIRD	STR I	-2501	1986	-5991	5055	6580	-5516	-144	-3019
			STIII	-1991	1236	-5010	3458	4285	-4980	658	-2002
			STRIV	-4747	3462	-5651	3465	4378	-5619	2704	-4774
			STR V	-2450	1750	-5801	4792	6077	-5441	22	-2854
1	10.60 L	FACE	STR I	-2504	1986	-5996	5055	6580	-5521	-145	-3022
			STIII	-1994	1236	-5014	3458	4287	-4985	657	-2005
			STRIV	-4753	3462	-5657	3465	4379	-5625	2703	-4779
			STR V	-2453	1750	-5805	4792	6077	-5446	20	-2856
1	17.60 L	COL	STR I	-2676	1986	-6260	5055	6580	-5785	-145	-3195
			STIII	-2166	1236	-5279	3458	4287	-5250	657	-2178
			STRIV	-5070	3462	-5974	3465	4379	-5942	2703	-5097
			STR V	-2626	1750	-6070	4792	6077	-5710	20	-3029
1	17.60 R	COL	STR I	3171	-3263	1293	-653	-113	1498	-3727	2948
			STIII	2448	-1679	878	-246	-189	878	-1679	2448
			STRIV	2806	-1697	2397	-1349	-1105	2397	-1697	2806
			STR V	3007	-2912	1285	-597	-148	1443	-3226	2835
1	22.16 L	GIRD	STR I	2999	-3263	1180	-653	-113	1385	-3727	2775
			STIII	2275	-1679	765	-246	-189	765	-1679	2275
			STRIV	2599	-1697	2190	-1349	-1105	2190	-1697	2599
			STR V	2834	-2912	1172	-597	-148	1331	-3226	2662
1	22.16 R	GIRD	STR I	2436	-1131	1002	300	970	2091	-1392	2213
			STIII	1905	341	661	267	626	1855	-262	1905
			STRIV	2178	580	1857	451	580	2178	-115	2178
			STR V	2314	-948	996	340	916	2033	-1149	2142
1	24.60 L	FACE	STR I	2344	-1131	942	300	970	1999	-1392	2121
			STIII	1813	341	601	267	626	1763	-262	1813
			STRIV	2067	580	1746	451	580	2067	-115	2067
			STR V	2222	-948	936	340	916	1940	-1149	2050
1	33.84 L	GIRD	STR I	2053	-1049	751	236	835	1708	-1359	1105
			STIII	1522	282	411	201	483	1472	-127	1201
			STRIV	1717	465	1397	360	465	1717	-6	1397
			STR V	1931	-846	746	264	774	1649	-1080	1438
1	33.84 R	GIRD	STR I	1370	2360	588	966	2360	1370	654	592
			STIII	1165	1912	337	516	1963	1140	370	337
			STRIV	1328	2222	1087	1757	2222	1328	1202	1087
			STR V	1323	2249	584	976	2273	1315	639	596
1	35.03 L	GIRD	STR I	1341	2336	569	955	2336	1341	664	573
			STIII	1136	1895	318	508	1940	1111	371	318
			STRIV	1293	2199	1052	1739	2199	1293	1220	1052
			STR V	1294	2228	566	964	2249	1286	651	577
1	35.03 R	GIRD	STR I	118	0	77	0	0	118	0	118

		STIII	118	-3	77	-3	3	118	-3	118
		STRIV	142	0	142	0	0	142	0	142
		STR V	118	-1	77	-1	1	118	-1	118
1	41.10 L CAP	STR I	0	0	0	0	0	0	0	0
		STIII	0	0	0	0	0	0	0	0
		STRIV	0	0	0	0	0	0	0	0
		STR V	0	0	0	0	0	0	0	0

----- CAP BEAM 1 REINFORCEMENT SUMMARY ----------

SUMMARY OF REQUIRED REINFORCEMENT:

			SHEAR				FLEXURE											
CAP NO.	HORZ DIST. (ft)	LOCATION	# 6 STR SPACING (in)	TOP LONG AREA (sq-in)	BOTTOM LONG AREA (sq-in)	NG	FLEX AREA (sq-in)	LAYER 0 SIZE	QUAN	LAYER 1 SIZE	QUAN	LAYER 2 SIZE	QUAN	LAYER 3 SIZE	QUAN	LAYER 4 SIZE	QUAN
1	-101.40 R CAP		0.00	0.00	0.00		0.00	11	16	11	16	11	22			11	16
11	16	11	16	11	22												
1	-95.85 L GIRD		17.39	1.87	0.00		0.02	11	16	11	16	11	22			11	16
11	16	11	16	11	22												
1	-95.85 R GIRD		8.76	12.49	0.00		0.31	11	16	11	16	11	22			11	16
11	16	11	16	11	22												
1	-93.23 L GIRD		17.39	12.32	0.00		0.35	11	16	11	16	11	22			11	16
11	16	11	16	11	22												
1	-93.23 R GIRD		17.39	37.85	0.00		0.19	11	16	11	16	11	22			11	16
11	16	11	16	11	22												
1	-85.54 L GIRD		17.39	60.74	0.00		1.25	11	16	11	16	11	22			11	16
11	16	11	16	11	22												
1	-85.54 R GIRD		17.39	69.48	0.00		1.49	11	16	11	16	11	22			11	16
11	16	11	16	11	22												
1	-84.90 L FACE		17.39	71.45	0.00		1.57	11	16	11	16	11	22			11	16
11	16	11	16	11	22												
1	-70.90 L FACE		6.36	145.76	0.00	**	1.74	11	16	11	16	11	22			11	16
11	16	11	16	11	22												
1	-66.40 L SPEC		5.58	118.57	0.00	**	1.40	11	16	11	16	11	22				
11	16	11	16	11	22												
1	-66.40 R SPEC		5.58	118.57	0.00	**	1.40	11	16	11	16	11	22				
11	16	11	16	11	22												
1	-64.92 L GIRD		5.30	108.94	0.00	**	1.49	11	16	11	16	11	22				
11	16	11	16	11	22												
1	-64.92 R GIRD		9.15	105.51	0.00	**	1.50	11	16	11	16	11	22				
11	16	11	16	11	22												
1	-61.16 L GIRD		7.85	79.34	33.00		2.10	11	16	11	16	11	22				
11	16	11	16	11	22												
1	-61.16 R GIRD		6.78	63.07	17.09		2.02	11	16	11	16	11	22				
11	16	11	16	11	22												
1	-57.40 L CAP		6.30	48.36	35.01		1.89	11	16	11	16	11	22	11	22		
11	16	11	16	11	22	11	22										
1	-49.44 L GIRD		6.30	0.00	71.80		1.70	11	16	11	16	11	22	11	22		
11	16	11	16	11	22	11	22										
1	-49.44 R GIRD		8.18	0.00	57.83		1.70	11	16	11	16	11	22	11	22		
11	16	11	16	11	22	11	22										
1	-37.67 L GIRD		8.18	0.00	95.93		2.05	11	16	11	16	11	22	11	22		
11	16	11	16	11	22	11	22										
1	-37.67 R GIRD		17.39	0.00	83.64		1.94	11	16	11	16	11	22	11	22		
11	16	11	16	11	22	11	22										
1	-29.10 L GIRD		17.39	0.00	98.51		2.62	11	16	11	16	11	22	11	22		
11	16	11	16	11	22	11	22										
1	-29.10 R GIRD		7.66	0.00	96.20		2.61	11	16	11	16	11	22	11	22		
11	16	11	16	11	22	11	22										
1	-25.90 L GIRD		7.66	0.00	92.08		2.19	11	16	11	16	11	22	11	22		
11	16	11	16	11	22	11	22										
1	-25.90 R GIRD		17.39	0.00	102.28		2.07	11	16	11	16	11	22	11	22		
11	16	11	16	11	22	11	22										

1	-14.12	L	GIRD	17.39	0.00	70.46		2.03	11	16	11	16	11	22	11	22			
11	16	11	16	11	22	11	22												
1	-14.12	R	GIRD	8.00	0.00	81.71		2.04	11	16	11	16	11	22	11	22			
11	16	11	16	11	22	11	22												
1	-7.65	L	GIRD	8.00	3.78	57.20		1.86	11	16	11	16	11	22	11	22			
11	16	11	16	11	22	11	22												
1	-7.65	R	GIRD	6.62	0.00	68.74		1.90	11	16	11	16	11	22	11	22			
11	16	11	16	11	22	11	22												
1	-2.90	L	CAP	6.62	31.35	43.33		1.71	11	16	11	16	11	22					
11	16	11	16	11	22														
1	-1.19	L	GIRD	6.84	45.77	21.68		1.64	11	16	11	16	11	22					
11	16	11	16	11	22														
1	-1.19	R	GIRD	5.44	52.78	44.54		1.72	11	16	11	16	11	22					
11	16	11	16	11	22														
1	2.97	L	GIRD	6.28	70.36	17.91		1.34	11	16	11	16	11	22					
11	16	11	16	11	22														
1	2.97	R	GIRD	5.65	84.24	34.33		1.40	11	16	11	16	11	22					
11	16	11	16	11	22														
1	6.10	L	SPEC	8.62	103.86	0.00	**	1.66	11	16	11	16	11	22					
11	16	11	16	11	22														
1	6.10	R	SPEC	8.62	103.86	0.00	**	1.66	11	16	11	16	11	22					
11	16	11	16	11	22														
1	10.48	L	GIRD	9.80	133.71	0.00	**	2.02	11	16	11	16	11	22					
11	16	11	16	11	16	11	22												
1	10.48	R	GIRD	5.43	136.96	0.00	**	2.11	11	16	11	16	11	22					
11	16	11	16	11	16	11	22												
1	10.60	L	FACE	5.45	137.71	0.00	**	2.11	11	16	11	16	11	22					
11	16	11	16	11	16	11	22												
1	24.60	L	FACE	17.39	57.48	0.00		1.19	11	16	11	16	11	22					
11	16	11	16	11	16	11	22												
1	33.84	L	GIRD	17.39	32.56	0.00		0.12	11	16	11	16	11	22					
11	16	11	16	11	16	11	22												
1	33.84	R	GIRD	17.39	20.59	0.00		0.21	11	16	11	16	11	22					
11	16	11	16	11	16	11	22												
1	35.03	L	GIRD	17.39	17.66	0.00		0.17	11	16	11	16	11	22					
11	16	11	16	11	16	11	22												
1	35.03	R	GIRD	17.39	2.13	0.00		0.02	11	16	11	16	11	22					
11	16	11	16	11	16	11	22												
1	41.10	L	CAP	0.00	0.00	0.00		0.00	11	16	11	16	11	22					
11	16	11	16	11	16	11	22												

**: DESIGNER MUST VERIFY SHEAR LONGITUDINAL STEEL REQUIREMENT VERSUS FLEXURAL LONGITUDINAL STEEL REQUIREMENT, DEPENDING ON LOCATION IN CAPBEAM AND STRESS DISTRIBUTION. REFER TO AASHTO LRFD SPECS 5.8.3.5 AND 5.8.3.6.3. IF THE DESIGNER INTENDS TO USE THE SHEAR LONGITUDINAL STEEL VALUE AND IT IS LARGER THAN THE FLEXURAL VALUE, IT IS RECOMMENDED TO RERUN THE FILE WITH THE FLEXURAL BARS INCREASED TO MEET THE SHEAR REQUIREMENT. THIS WILL ENSURE THAT THE LARGER AMOUNT OF STEEL IS CHECKED BY THE FLEXURAL DESIGN ROUTINE TO PREVENT OVER-REINFORCEMENT.

BEGIN TIME: 06/08/2012 08:27:33
END TIME: 06/08/2012 08:35:50
ELAPSED TIME: 00:08:17

RUN TIME: 06/13/2012 14:20:36.795 PROGRAM'S INTERPRETATION OF INPUT DATA MADE BY:_LER__ DATE_6/08/12
Filename: M:\jobs\49633\Techprod\Bridges\Main Span (Unit 2)\Pier 11\RFI - Misa CHECKED BY:_KDG___ DATE_6/12/12
BACKCHECKED BY:_____ DATE_____
INPUT FILE: m:\jobs\49633\techprod\bridges\main span (unit 2)\pier 11\rfi - misalignment\pier\column\pier 11 column.bdf
INPUT FILE DATE: 06/13/2012 14:20:03
DLL VERSION: 1.2.2.7 DATE: 1/10/2012

ELEMENT SUMMARY:

ELEMENT TYPE	NUMBER OF ELEMENTS
FOOTINGS	2
DRILLED SHAFT	0
PILES	24
COLUMNS	2
CAP BEAMS	1

----- JOB DESCRIPTION AND INITIAL GEOMETRY -----

JOB NUMBER: 49633
JOB NAME: Pier 11 Updated 3-11-11
USER NAME: ajohn
DESIGN CODE: AASHTO 2010
NUMBER OF COLUMNS: 2
NUMBER OF CAPBEAMS: 1
NUMBER OF FOOTINGS: 2
UNITS: (English)

----- DESIGN OPTIONS -----

DESIGN OPTIONS:
CAP:
DESIGN CAPS: No
DESIGN METHOD: LRFD Design
FACE + D: No
DESIGN POINTS: All Points
STIFFEN CAPS OVER COLUMNS: No
COLUMN:
DESIGN COLS: Yes
DESIGN METHOD: LRFD Design
MOMENT MAG.: Apply Moment Magnification
LOCATION: Quarter Points
FOOTING:
DESIGN FOOTS: No
DESIGN METHOD: LRFD Design

LOAD MODIFIER FACTORS:
DUCTILITY: 1.000
REDUNDANCY: 1.050
IMPORTANCE: 1.050

----- ENVIRONMENTAL PARAMETERS -----

STREAM AND ICE FLOW DATA:
HIGH WATER ELEVATION: 0.000 (ft)
LOW WATER ELEVATION : 0.000 (ft)
STREAM VELOCITY: 0.0 (ft/sec)
FLOW DIRECTION: 0.000 (degrees)
LONGITUDINAL DRAG COEFF: 0.000
LATERAL DRAG COEFF: 0.000
EFFECTIVE NOSE WIDTH: 0.000 (ft)
NOSE INCLINATION: VERT: 0.000 (degrees) HORZ: 0.000 (degrees)
ICE FRICTION ANGLE: 0.000 (degrees)
ICE STRENGTH: 0.000 (psi)
ICE THICKNESS: 0.000 (in)

WIND PRESSURE INTENSITY DATA:
SUBSTRUCTURE:
DESIGN VELOCITY: 100.0 (mph)
WIND PRESSURE: 40.000 (psf)

SUPERSTRUCTURE:
DESIGN VELOCITY: 100.0 (mph)
OVERTURNING WIND PRESSURE: 20.000 (psf)
AASHTO STANDARD WIND PRESSURES HAVE BEEN USED, 3.8.1.2.2-1 AND 3.8.1.3-1.

Note: All wind pressures are applied using a base wind velocity of 100 mph. These values are increased or decreased in accordance with AASHTO 3.8.1.2.1 for Strength Limit State III only.

TEMPERATURE DATA:
TEMP RISE: 35.0 Fahr.
TEMP FALL: 45.0 Fahr.

----- CAP BEAM 1 DATA -----

SHEAR DESIGN USING SIMPLIFIED PROCEDURE, AASHTO 5.8.3.4.1

TOP OF CAP BEAM 1 REFERENCE LINE DATA:
NUMBER OF POINTS: 22
POINT 1: OFFSET: -101.396 (ft) ELEV: 686.500 (ft)
POINT 2: OFFSET: -95.560 (ft) ELEV: 686.500 (ft)
POINT 3: OFFSET: -85.870 (ft) ELEV: 686.500 (ft)
POINT 4: OFFSET: -84.896 (ft) ELEV: 686.500 (ft)
POINT 5: OFFSET: -77.896 (ft) ELEV: 686.500 (ft)
POINT 6: OFFSET: -76.180 (ft) ELEV: 686.500 (ft)
POINT 7: OFFSET: -66.490 (ft) ELEV: 686.500 (ft)
POINT 8: OFFSET: -63.500 (ft) ELEV: 686.500 (ft)

```
    POINT  9:  OFFSET:  -50.788 (ft)     ELEV:  686.500 (ft)
    POINT 10:  OFFSET:  -39.088 (ft)     ELEV:  686.500 (ft)
    POINT 11:  OFFSET:  -31.440 (ft)     ELEV:  686.500 (ft)
    POINT 12:  OFFSET:  -27.388 (ft)     ELEV:  686.500 (ft)
    POINT 13:  OFFSET:  -15.688 (ft)     ELEV:  686.500 (ft)
    POINT 14:  OFFSET:   -3.988 (ft)     ELEV:  686.500 (ft)
    POINT 15:  OFFSET:    0.620 (ft)     ELEV:  686.500 (ft)
    POINT 16:  OFFSET:    7.712 (ft)     ELEV:  686.500 (ft)
    POINT 17:  OFFSET:   17.604 (ft)     ELEV:  686.500 (ft)
    POINT 18:  OFFSET:   19.412 (ft)     ELEV:  686.500 (ft)
    POINT 19:  OFFSET:   24.604 (ft)     ELEV:  686.500 (ft)
    POINT 20:  OFFSET:   31.112 (ft)     ELEV:  686.500 (ft)
    POINT 21:  OFFSET:   32.680 (ft)     ELEV:  686.500 (ft)
    POINT 22:  OFFSET:   41.104 (ft)     ELEV:  686.500 (ft)

  NUMBER OF SEGMENTS:  3
  SEGMENT  1 DIMENSIONS:
    SHAPE:   Rectangular
    PROFILE: Linear
    BEGIN SECTION:
      DISTANCE:   -101.40 (ft)      DEPTH:  6.50 (ft)      TOP ELEV:   686.500 (ft)
      BOT SLOPE:   0.0000           WIDTH: 12.00 (ft)      BOT ELEV:   680.000 (ft)
    END SECTION:
      DISTANCE:    -84.90 (ft)      DEPTH: 11.00 (ft)      TOP ELEV:   686.500 (ft)
      BOT SLOPE:   0.0000           WIDTH: 12.00 (ft)      BOT ELEV:   675.500 (ft)

  SEGMENT  2 DIMENSIONS:
    SHAPE:   Rectangular
    PROFILE: Linear
    BEGIN SECTION:
      DISTANCE:    -84.90 (ft)      DEPTH: 11.00 (ft)      TOP ELEV:   686.500 (ft)
      BOT SLOPE:   0.0000           WIDTH: 12.00 (ft)      BOT ELEV:   675.500 (ft)
    END SECTION:
      DISTANCE:     24.60 (ft)      DEPTH: 11.00 (ft)      TOP ELEV:   686.500 (ft)
      BOT SLOPE:   0.0000           WIDTH: 12.00 (ft)      BOT ELEV:   675.500 (ft)

  SEGMENT  3 DIMENSIONS:
    SHAPE:   Rectangular
    PROFILE: Linear
    BEGIN SECTION:
      DISTANCE:     24.60 (ft)      DEPTH: 11.00 (ft)      TOP ELEV:   686.500 (ft)
      BOT SLOPE:   0.0000           WIDTH: 12.00 (ft)      BOT ELEV:   675.500 (ft)
    END SECTION:
      DISTANCE:     41.10 (ft)      DEPTH:  6.50 (ft)      TOP ELEV:   686.500 (ft)
      BOT SLOPE:   0.0000           WIDTH: 12.00 (ft)      BOT ELEV:   680.000 (ft)

  REINFORCEMENT PARAMETERS:             CONCRETE PARAMETERS:
    YIELD  STRENGTH:    60.0 (ksi)        FPC:      4.0 (ksi)
    MIN COVER:    TOP:   3.0 (in)         WEIGHT: 150.0 (pcf)
               BOTTOM:   3.0 (in)         CTE:      0.0000060
                 SIDE:   3.0 (in)
    STIRRUPS:    SIZE:   3
      NO.LEGS TORSION:   1
      NO.LEGS   TOTAL:   2
    EXPOSURE FACTOR:     1.000

  REINFORCEMENT LAYER DATA:
  NUMBER OF SLABS:  3
    Slab No:  1   Label: Slab 1-1
    Slab No:  2   Label: Slab 1-2
    Slab No:  3   Label: Slab 1-3

----- SLAB 1 DATA ------------------------------------------------------------------------------------------

  SLAB:  1     SLAB LABEL: Slab 1-1
  CONNECTED TO: CAPBEAM  1
    SLAB LENGTH:    306.14 (ft)
    SLAB WIDTH:     131.94 (ft)
    SLAB THICK:      10.00 (in)
    DESIGN SPEED:     70.0 (mph)
    SLAB RADIUS:    3522.0 (ft)
    HAUNCH THICK:     2.00 (in)
    PIER SKEW:      18.000 (degrees)
    NUMBER OF ROADWAYS:  1

    SLAB  1 DIMENSIONS:
      LEFT FASCIA:              LEFT BARRIER:             LEFT SIDEWALK:
        WIDTH:    0.000 (in)      WIDTH:   18.000 (in)      WIDTH:    0.000 (ft)
                                  HEIGHT:  32.000 (in)      THICK:    0.000 (in)

      ROADWAY 1 WIDTH = 128.940 (ft)

      RIGHT SIDEWALK:           RIGHT BARRIER:            RIGHT FASCIA:
        WIDTH:    0.000 (ft)      WIDTH:   18.000 (in)      WIDTH:    0.000 (in)
        THICK:    0.000 (in)      HEIGHT:  32.000 (in)

    SLAB  1 CROSS SLOPE DATA:
      NUMBER OF CROSS SLOPE VALUES:  2
        SLOPE: -0.0400          SLOPE: -0.0400
        DIST:   98.455 (ft)     DIST:   38.216 (ft)

    SLAB  1 GIRDER DATA:
      NUMBER OF GIRDERS:  5           GIRDER DEPTH AND PROFILE DISTANCES:
      SPAN LENGTH:                      BACK STATION:             PIER:                  FORWARD STATION:
        BACK STATION:  306.140 (ft)       DEPTH:     10.00 (ft)     DEPTH: 10.00 (ft)     DEPTH:      0.00 (ft)
```

FWD STATION: 0.000 (ft) DISTANCE: 306.14 (ft) DISTANCE: 0.00 (ft)

GIRDER LOCATION DATA:

NO.	NAME	DISTANCE (ft)	GIRDER TYPE	BOT FL WIDTH (in)	TOP FL WIDTH (in)	TOP FL ECCENT (in)	SKEW ANGLE (degrees)	BEARING OFFSET (in)	FIXITY
1	Girder 1	-93.225	I	0.00	0.00	0.00	18.000	-19.50	T
2	Girder 2	-61.162	I	0.00	0.00	0.00	18.000	-19.50	T
3	Girder 3	-29.098	I	0.00	0.00	0.00	18.000	-19.50	T
4	Girder 4	2.965	I	0.00	0.00	0.00	18.000	-19.50	T
5	Girder 5	35.029	I	0.00	0.00	0.00	18.000	-19.50	T

SLAB 1 BEARING DATA:
BEARING HEIGHT: 12.000 (in)
BEARING FRICTION COEFFICIENT: 0.060

----- SLAB 2 DATA -----

SLAB: 2 SLAB LABEL: Slab 1-2
CONNECTED TO: CAPBEAM 1
SLAB LENGTH: 240.00 (ft)
SLAB WIDTH: 37.00 (ft)
SLAB THICK: 9.25 (in)
DESIGN SPEED: 70.0 (mph)
SLAB RADIUS: 3274.0 (ft)
HAUNCH THICK: 3.50 (in)
PIER SKEW: 18.000 (degrees)
NUMBER OF ROADWAYS: 1

SLAB 2 DIMENSIONS:
LEFT FASCIA: LEFT BARRIER: LEFT SIDEWALK:
WIDTH: 0.000 (in) WIDTH: 18.000 (in) WIDTH: 0.000 (ft)
HEIGHT: 32.000 (in) THICK: 0.000 (in)

ROADWAY 1 WIDTH = 34.000 (ft)

RIGHT SIDEWALK: RIGHT BARRIER: RIGHT FASCIA:
WIDTH: 0.000 (ft) WIDTH: 18.000 (in) WIDTH: 0.000 (in)
THICK: 0.000 (in) HEIGHT: 32.000 (in)

SLAB 2 CROSS SLOPE DATA:
NUMBER OF CROSS SLOPE VALUES: 2
SLOPE: -0.0400 SLOPE: -0.0400
DIST: 37.234 (ft) DIST: 61.221 (ft)

SLAB 2 GIRDER DATA:
NUMBER OF GIRDERS: 4 GIRDER DEPTH AND PROFILE DISTANCES:
SPAN LENGTH: BACK STATION: PIER: FORWARD STATION:
BACK STATION: 0.000 (ft) DEPTH: 0.00 (ft) DEPTH: 8.17 (ft) DEPTH: 8.17 (ft)
FWD STATION: 240.000 (ft) DISTANCE: 0.00 (ft) DISTANCE: 240.00 (ft)

GIRDER LOCATION DATA:

NO.	NAME	DISTANCE (ft)	GIRDER TYPE	BOT FL WIDTH (in)	TOP FL WIDTH (in)	TOP FL ECCENT (in)	SKEW ANGLE (degrees)	BEARING OFFSET (in)	FIXITY
1	Girder 1	-95.847	I	0.00	0.00	0.00	18.000	50.50	T
2	Girder 2	-85.540	I	0.00	0.00	0.00	18.000	50.50	T
3	Girder 3	-75.230	I	0.00	0.00	0.00	18.000	50.50	T
4	Girder 4	-64.917	I	0.00	0.00	0.00	18.000	50.50	T

SLAB 2 BEARING DATA:
BEARING HEIGHT: 40.000 (in)
BEARING FRICTION COEFFICIENT: 0.060

----- SLAB 3 DATA -----

SLAB: 3 SLAB LABEL: Slab 1-3
CONNECTED TO: CAPBEAM 1
SLAB LENGTH: 240.00 (ft)
SLAB WIDTH: 87.93 (ft)
SLAB THICK: 9.50 (in)
DESIGN SPEED: 70.0 (mph)
SLAB RADIUS: 3522.0 (ft)
HAUNCH THICK: 2.00 (in)
PIER SKEW: 18.000 (degrees)
NUMBER OF ROADWAYS: 1

SLAB 3 DIMENSIONS:
LEFT FASCIA: LEFT BARRIER: LEFT SIDEWALK:
WIDTH: 0.000 (in) WIDTH: 18.000 (in) WIDTH: 0.000 (ft)
HEIGHT: 32.000 (in) THICK: 0.000 (in)

ROADWAY 1 WIDTH = 84.929 (ft)

RIGHT SIDEWALK: RIGHT BARRIER: RIGHT FASCIA:
WIDTH: 0.000 (ft) WIDTH: 18.000 (in) WIDTH: 0.000 (in)
THICK: 0.000 (in) HEIGHT: 32.000 (in)

SLAB 3 CROSS SLOPE DATA:
NUMBER OF CROSS SLOPE VALUES: 2
SLOPE: -0.0400 SLOPE: -0.0400
DIST: 52.181 (ft) DIST: 38.000 (ft)

SLAB 3 GIRDER DATA:
NUMBER OF GIRDERS: 9 GIRDER DEPTH AND PROFILE DISTANCES:

SPAN LENGTH: BACK STATION: PIER: FORWARD STATION:
BACK STATION: 0.000 (ft) DEPTH: 0.00 (ft) DEPTH: 8.27 (ft) DEPTH: 8.27 (ft)
FWD STATION: 240.000 (ft) DISTANCE: 0.00 (ft) DISTANCE: 240.00 (ft)

GIRDER LOCATION DATA:

NO.	NAME	DISTANCE (ft)	GIRDER TYPE	BOT FL WIDTH (in)	TOP FL WIDTH (in)	TOP FL ECCENT (in)	SKEW ANGLE (degrees)	BEARING OFFSET (in)	FIXITY
1	Girder 1	-49.440	I	0.00	0.00	0.00	18.000	50.50	T
2	Girder 2	-37.671	I	0.00	0.00	0.00	18.000	50.50	T
3	Girder 3	-25.897	I	0.00	0.00	0.00	18.000	50.50	T
4	Girder 4	-14.118	I	0.00	0.00	0.00	18.000	50.50	T
5	Girder 5	-7.655	I	0.00	0.00	0.00	18.000	50.50	T
6	Girder 6	-1.192	I	0.00	0.00	0.00	18.000	50.50	T
7	Girder 7	10.483	I	0.00	0.00	0.00	18.000	50.50	T
8	Girder 8	22.162	I	0.00	0.00	0.00	18.000	50.50	T
9	Girder 9	33.844	I	0.00	0.00	0.00	18.000	50.50	T

SLAB 3 BEARING DATA:
BEARING HEIGHT: 40.000 (in)
BEARING FRICTION COEFFICIENT: 0.060

----- COLUMN 1 DATA -----

COLUMN LINE OFFSET: -77.896 (ft)
NUMBER OF LEVELS: 1
COLUMN FACE LOCATIONS:
CAPBEAM: -TRAN: 84.00 (in) +TRAN: 84.00 (in)
FOOTING: -TRAN: 84.00 (in) +TRAN: 84.00 (in) -LONG: 72.00 (in) +LONG: 72.00 (in)
COLUMN: 1 LEVEL: 1
NUMBER OF SEGMENTS: 1
MAGNIFICATION FACTORS: K-TRAN: 1.20 K-LONG: 2.10
ECCENTRICITIES: TRAN: 0.000 (ft) LONG: 0.000 (ft)
ROTATION ANGLE: 0.000 (degrees)
SEGMENT 1 DIMENSIONS:
SHAPE: User Defined
BEGIN SECTION:
TOP ELEV: 675.500 (ft)
TORSIONAL CONSTANT J: 0.437E+08 (in**4)
NUMBER OF FACES: 18

FACE 1:	BEG	X:	-84.000 (in)	Y:	-60.000 (in)	Rad:	0.000 (in)
	END	X:	-72.000 (in)	Y:	-60.000 (in)		
FACE 2:	BEG	X:	-72.000 (in)	Y:	-60.000 (in)	Rad:	0.000 (in)
	END	X:	-72.000 (in)	Y:	-72.000 (in)		
FACE 3:	BEG	X:	-72.000 (in)	Y:	-72.000 (in)	Rad:	0.000 (in)
	END	X:	72.000 (in)	Y:	-72.000 (in)		
FACE 4:	BEG	X:	72.000 (in)	Y:	-72.000 (in)	Rad:	0.000 (in)
	END	X:	72.000 (in)	Y:	-60.000 (in)		
FACE 5:	BEG	X:	72.000 (in)	Y:	-60.000 (in)	Rad:	0.000 (in)
	END	X:	84.000 (in)	Y:	-60.000 (in)		
FACE 6:	BEG	X:	84.000 (in)	Y:	-60.000 (in)	Rad:	0.000 (in)
	END	X:	84.000 (in)	Y:	60.000 (in)		
FACE 7:	BEG	X:	84.000 (in)	Y:	60.000 (in)	Rad:	0.000 (in)
	END	X:	72.000 (in)	Y:	60.000 (in)		
FACE 8:	BEG	X:	72.000 (in)	Y:	60.000 (in)	Rad:	0.000 (in)
	END	X:	72.000 (in)	Y:	72.000 (in)		
FACE 9:	BEG	X:	72.000 (in)	Y:	72.000 (in)	Rad:	0.000 (in)
	END	X:	-72.000 (in)	Y:	72.000 (in)		
FACE 10:	BEG	X:	-72.000 (in)	Y:	72.000 (in)	Rad:	0.000 (in)
	END	X:	-72.000 (in)	Y:	60.000 (in)		
FACE 11:	BEG	X:	-72.000 (in)	Y:	60.000 (in)	Rad:	0.000 (in)
	END	X:	-84.000 (in)	Y:	60.000 (in)		
FACE 12:	BEG	X:	-84.000 (in)	Y:	60.000 (in)	Rad:	0.000 (in)
	END	X:	-84.000 (in)	Y:	-60.000 (in)		
FACE 13:	BEG	X:	-84.000 (in)	Y:	-60.000 (in)	Rad:	0.000 (in)
	END	X:	-48.000 (in)	Y:	-48.000 (in)		
FACE 14:	BEG	X:	-48.000 (in)	Y:	-48.000 (in)	Rad:	0.000 (in)
	END	X:	-48.000 (in)	Y:	48.000 (in)		
FACE 15:	BEG	X:	-48.000 (in)	Y:	48.000 (in)	Rad:	0.000 (in)
	END	X:	48.000 (in)	Y:	48.000 (in)		
FACE 16:	BEG	X:	48.000 (in)	Y:	48.000 (in)	Rad:	0.000 (in)
	END	X:	48.000 (in)	Y:	-48.000 (in)		
FACE 17:	BEG	X:	48.000 (in)	Y:	-48.000 (in)	Rad:	0.000 (in)
	END	X:	-48.000 (in)	Y:	-48.000 (in)		
FACE 18:	BEG	X:	-48.000 (in)	Y:	-48.000 (in)	Rad:	0.000 (in)
	END	X:	-84.000 (in)	Y:	-60.000 (in)		

END SECTION:
BOT ELEV: 603.000 (ft)
TORSIONAL CONSTANT J: 0.437E+08 (in**4)
NUMBER OF FACES: 18

FACE 1:	BEG	X:	-84.000 (in)	Y:	-60.000 (in)	Rad:	0.000 (in)
	END	X:	-72.000 (in)	Y:	-60.000 (in)		
FACE 2:	BEG	X:	-72.000 (in)	Y:	-60.000 (in)	Rad:	0.000 (in)
	END	X:	-72.000 (in)	Y:	-72.000 (in)		
FACE 3:	BEG	X:	-72.000 (in)	Y:	-72.000 (in)	Rad:	0.000 (in)
	END	X:	72.000 (in)	Y:	-72.000 (in)		
FACE 4:	BEG	X:	72.000 (in)	Y:	-72.000 (in)	Rad:	0.000 (in)
	END	X:	72.000 (in)	Y:	-60.000 (in)		
FACE 5:	BEG	X:	72.000 (in)	Y:	-60.000 (in)	Rad:	0.000 (in)
	END	X:	84.000 (in)	Y:	-60.000 (in)		
FACE 6:	BEG	X:	84.000 (in)	Y:	-60.000 (in)	Rad:	0.000 (in)
	END	X:	84.000 (in)	Y:	60.000 (in)		
FACE 7:	BEG	X:	84.000 (in)	Y:	60.000 (in)	Rad:	0.000 (in)
	END	X:	72.000 (in)	Y:	60.000 (in)		
FACE 8:	BEG	X:	72.000 (in)	Y:	60.000 (in)	Rad:	0.000 (in)

```
                END  X:     72.000 (in)     Y:     72.000 (in)
        FACE  9: BEG  X:     72.000 (in)     Y:     72.000 (in)     Rad:      0.000 (in)
                END  X:    -72.000 (in)     Y:     72.000 (in)
        FACE 10: BEG  X:    -72.000 (in)     Y:     72.000 (in)     Rad:      0.000 (in)
                END  X:    -72.000 (in)     Y:     60.000 (in)
        FACE 11: BEG  X:    -72.000 (in)     Y:     60.000 (in)     Rad:      0.000 (in)
                END  X:    -84.000 (in)     Y:     60.000 (in)
        FACE 12: BEG  X:    -84.000 (in)     Y:     60.000 (in)     Rad:      0.000 (in)
                END  X:    -84.000 (in)     Y:    -60.000 (in)
        FACE 13: BEG  X:    -84.000 (in)     Y:    -60.000 (in)     Rad:      0.000 (in)
                END  X:    -48.000 (in)     Y:    -48.000 (in)
        FACE 14: BEG  X:    -48.000 (in)     Y:    -48.000 (in)     Rad:      0.000 (in)
                END  X:    -48.000 (in)     Y:     48.000 (in)
        FACE 15: BEG  X:    -48.000 (in)     Y:     48.000 (in)     Rad:      0.000 (in)
                END  X:     48.000 (in)     Y:     48.000 (in)
        FACE 16: BEG  X:     48.000 (in)     Y:     48.000 (in)     Rad:      0.000 (in)
                END  X:     48.000 (in)     Y:    -48.000 (in)
        FACE 17: BEG  X:     48.000 (in)     Y:    -48.000 (in)     Rad:      0.000 (in)
                END  X:    -48.000 (in)     Y:    -48.000 (in)
        FACE 18: BEG  X:    -48.000 (in)     Y:    -48.000 (in)     Rad:      0.000 (in)
                END  X:    -84.000 (in)     Y:    -60.000 (in)
REINFORCEMENT PARAMETERS:                   CONCRETE PARAMETERS:
  YIELD  STRENGTH:   60.0 (ksi)               FPC:      4.0 (ksi)
  CONTAINMENT BARS:   TYPE:   Tied            WEIGHT: 150.0 (pcf)
                      SIZE:   6               CTE:      0.0000060
  DISTANCE TO CL VERT BARS:   0.000 (in)
  PERCENT STEEL:       MIN:    1.00
                       MAX:    8.00

COLUMN REINFORCEMENT DATA:
  NUMBER OF REINFORCEMENT SECTIONS:  3
    SECTION  1 DATA:
      SHAPE: Rectangular           TRAN OFFSET:    0.00 (in)       TOP ELEV:   675.50 (ft)
      NUMBER OF FACES:  4          LONG OFFSET:    0.00 (in)       BOT ELEV:   603.00 (ft)
        FACE DATA:
          FACE NUMBER:            1             2             3             4
          TOP BEG X COORD:   -66.92 (in)    66.92 (in)    66.92 (in)   -66.92 (in)
          TOP BEG Y COORD:   -66.92 (in)   -66.92 (in)    66.92 (in)    66.92 (in)
          TOP END X COORD:    66.92 (in)    66.92 (in)   -66.92 (in)   -66.92 (in)
          TOP END Y COORD:   -66.92 (in)    66.92 (in)    66.92 (in)   -66.92 (in)
          TOP RADIUS:          0.00 (in)     0.00 (in)     0.00 (in)     0.00 (in)

          BOT BEG X COORD:   -66.92 (in)    66.92 (in)    66.92 (in)   -66.92 (in)
          BOT BEG Y COORD:   -66.92 (in)   -66.92 (in)    66.92 (in)    66.92 (in)
          BOT END X COORD:    66.92 (in)    66.92 (in)   -66.92 (in)   -66.92 (in)
          BOT END Y COORD:   -66.92 (in)    66.92 (in)    66.92 (in)   -66.92 (in)
          BOT RADIUS:          0.00 (in)     0.00 (in)     0.00 (in)     0.00 (in)

          BARSIZE:               11            11            11            11
          BARS/BUNDLE:            1             1             1             1
          MIN NUM BARS:          13            13            13            13
          MAX NUM BARS:          13            13            13            13
          BAR AT BEG:           Yes            No           Yes            No
          BAR AT END:           Yes            No           Yes            No

    SECTION  2 DATA:
      SHAPE: Square                TRAN OFFSET:    0.00 (in)       TOP ELEV:   675.50 (ft)
      NUMBER OF FACES:  4          LONG OFFSET:    0.00 (in)       BOT ELEV:   603.00 (ft)
        FACE DATA:
          FACE NUMBER:            1             2             3             4
          TOP BEG X COORD:   -53.08 (in)    53.08 (in)    53.08 (in)   -53.08 (in)
          TOP BEG Y COORD:   -53.08 (in)   -53.08 (in)    53.08 (in)    53.08 (in)
          TOP END X COORD:    53.08 (in)    53.08 (in)   -53.08 (in)   -53.08 (in)
          TOP END Y COORD:   -53.08 (in)    53.08 (in)    53.08 (in)   -53.08 (in)
          TOP RADIUS:          0.00 (in)     0.00 (in)     0.00 (in)     0.00 (in)

          BOT BEG X COORD:   -53.08 (in)    53.08 (in)    53.08 (in)   -53.08 (in)
          BOT BEG Y COORD:   -53.08 (in)   -53.08 (in)    53.08 (in)    53.08 (in)
          BOT END X COORD:    53.08 (in)    53.08 (in)   -53.08 (in)   -53.08 (in)
          BOT END Y COORD:   -53.08 (in)    53.08 (in)    53.08 (in)   -53.08 (in)
          BOT RADIUS:          0.00 (in)     0.00 (in)     0.00 (in)     0.00 (in)

          BARSIZE:               11            11            11            11
          BARS/BUNDLE:            1             1             1             1
          MIN NUM BARS:          11             9            11             9
          MAX NUM BARS:          11             9            11             9
          BAR AT BEG:           Yes            No           Yes            No
          BAR AT END:           Yes            No           Yes            No

    SECTION  3 DATA:
      SHAPE: Rectangular           TRAN OFFSET:    0.00 (in)       TOP ELEV:   675.50 (ft)
      NUMBER OF FACES:  4          LONG OFFSET:    0.00 (in)       BOT ELEV:   603.00 (ft)
        FACE DATA:
          FACE NUMBER:            1             2             3             4
          TOP BEG X COORD:   -79.05 (in)    79.05 (in)    79.05 (in)   -79.05 (in)
          TOP BEG Y COORD:   -55.05 (in)   -55.05 (in)    55.05 (in)    55.05 (in)
          TOP END X COORD:    79.05 (in)    79.05 (in)   -79.05 (in)   -79.05 (in)
          TOP END Y COORD:   -55.05 (in)    55.05 (in)    55.05 (in)   -55.05 (in)
          TOP RADIUS:          0.00 (in)     0.00 (in)     0.00 (in)     0.00 (in)

          BOT BEG X COORD:   -79.05 (in)    79.05 (in)    79.05 (in)   -79.05 (in)
          BOT BEG Y COORD:   -55.05 (in)   -55.05 (in)    55.05 (in)    55.05 (in)
          BOT END X COORD:    79.05 (in)    79.05 (in)   -79.05 (in)   -79.05 (in)
          BOT END Y COORD:   -55.05 (in)    55.05 (in)    55.05 (in)   -55.05 (in)
          BOT RADIUS:          0.00 (in)     0.00 (in)     0.00 (in)     0.00 (in)
```

```
            BARSIZE:               11            11            11            11
            BARS/BUNDLE:            1             1             1             1
            MIN NUM BARS:           0             6             0             6
            MAX NUM BARS:           0             6             0             6
            BAR AT BEG:            No           Yes            No           Yes
            BAR AT END:            No           Yes            No           Yes


----- COLUMN  2 DATA ------------------------------------------------------------------------------------------

  COLUMN LINE OFFSET:   17.604 (ft)
  NUMBER OF LEVELS:  1
  COLUMN FACE LOCATIONS:
    CAPBEAM: -TRAN:    84.00 (in)     +TRAN:    84.00 (in)
    FOOTING: -TRAN:    84.00 (in)     +TRAN:    84.00 (in)     -LONG:    72.00 (in)     +LONG:    72.00 (in)
  COLUMN:  2  LEVEL: 1
    NUMBER OF SEGMENTS:  1
    MAGNIFICATION FACTORS:    K-TRAN:  1.20         K-LONG:  2.10
    ECCENTRICITIES:             TRAN:  0.000 (ft)     LONG:  0.000 (ft)
    ROTATION ANGLE:      0.000 (degrees)
    SEGMENT  1 DIMENSIONS:
      SHAPE:   User Defined
      BEGIN SECTION:
        TOP ELEV:    675.500 (ft)
        TORSIONAL CONSTANT J:       0.437E+08 (in**4)
          NUMBER OF FACES: 18
            FACE  1: BEG  X:    -84.000 (in)     Y:    -60.000 (in)     Rad:      0.000 (in)
                     END  X:    -72.000 (in)     Y:    -60.000 (in)
            FACE  2: BEG  X:    -72.000 (in)     Y:    -60.000 (in)     Rad:      0.000 (in)
                     END  X:    -72.000 (in)     Y:    -72.000 (in)
            FACE  3: BEG  X:    -72.000 (in)     Y:    -72.000 (in)     Rad:      0.000 (in)
                     END  X:     72.000 (in)     Y:    -72.000 (in)
            FACE  4: BEG  X:     72.000 (in)     Y:    -72.000 (in)     Rad:      0.000 (in)
                     END  X:     72.000 (in)     Y:    -60.000 (in)
            FACE  5: BEG  X:     72.000 (in)     Y:    -60.000 (in)     Rad:      0.000 (in)
                     END  X:     84.000 (in)     Y:    -60.000 (in)
            FACE  6: BEG  X:     84.000 (in)     Y:    -60.000 (in)     Rad:      0.000 (in)
                     END  X:     84.000 (in)     Y:     60.000 (in)
            FACE  7: BEG  X:     84.000 (in)     Y:     60.000 (in)     Rad:      0.000 (in)
                     END  X:     72.000 (in)     Y:     60.000 (in)
            FACE  8: BEG  X:     72.000 (in)     Y:     60.000 (in)     Rad:      0.000 (in)
                     END  X:     72.000 (in)     Y:     72.000 (in)
            FACE  9: BEG  X:     72.000 (in)     Y:     72.000 (in)     Rad:      0.000 (in)
                     END  X:    -72.000 (in)     Y:     72.000 (in)
            FACE 10: BEG  X:    -72.000 (in)     Y:     72.000 (in)     Rad:      0.000 (in)
                     END  X:    -72.000 (in)     Y:     60.000 (in)
            FACE 11: BEG  X:    -72.000 (in)     Y:     60.000 (in)     Rad:      0.000 (in)
                     END  X:    -84.000 (in)     Y:     60.000 (in)
            FACE 12: BEG  X:    -84.000 (in)     Y:     60.000 (in)     Rad:      0.000 (in)
                     END  X:    -84.000 (in)     Y:    -60.000 (in)
            FACE 13: BEG  X:    -84.000 (in)     Y:    -60.000 (in)     Rad:      0.000 (in)
                     END  X:    -48.000 (in)     Y:    -48.000 (in)
            FACE 14: BEG  X:    -48.000 (in)     Y:    -48.000 (in)     Rad:      0.000 (in)
                     END  X:    -48.000 (in)     Y:     48.000 (in)
            FACE 15: BEG  X:    -48.000 (in)     Y:     48.000 (in)     Rad:      0.000 (in)
                     END  X:     48.000 (in)     Y:     48.000 (in)
            FACE 16: BEG  X:     48.000 (in)     Y:     48.000 (in)     Rad:      0.000 (in)
                     END  X:     48.000 (in)     Y:    -48.000 (in)
            FACE 17: BEG  X:     48.000 (in)     Y:    -48.000 (in)     Rad:      0.000 (in)
                     END  X:    -48.000 (in)     Y:    -48.000 (in)
            FACE 18: BEG  X:    -48.000 (in)     Y:    -48.000 (in)     Rad:      0.000 (in)
                     END  X:    -84.000 (in)     Y:    -60.000 (in)
      END SECTION:
        BOT ELEV:    603.000 (ft)
        TORSIONAL CONSTANT J:       0.437E+08 (in**4)
          NUMBER OF FACES: 18
            FACE  1: BEG  X:    -84.000 (in)     Y:    -60.000 (in)     Rad:      0.000 (in)
                     END  X:    -72.000 (in)     Y:    -60.000 (in)
            FACE  2: BEG  X:    -72.000 (in)     Y:    -60.000 (in)     Rad:      0.000 (in)
                     END  X:    -72.000 (in)     Y:    -72.000 (in)
            FACE  3: BEG  X:    -72.000 (in)     Y:    -72.000 (in)     Rad:      0.000 (in)
                     END  X:     72.000 (in)     Y:    -72.000 (in)
            FACE  4: BEG  X:     72.000 (in)     Y:    -72.000 (in)     Rad:      0.000 (in)
                     END  X:     72.000 (in)     Y:    -60.000 (in)
            FACE  5: BEG  X:     72.000 (in)     Y:    -60.000 (in)     Rad:      0.000 (in)
                     END  X:     84.000 (in)     Y:    -60.000 (in)
            FACE  6: BEG  X:     84.000 (in)     Y:    -60.000 (in)     Rad:      0.000 (in)
                     END  X:     84.000 (in)     Y:     60.000 (in)
            FACE  7: BEG  X:     84.000 (in)     Y:     60.000 (in)     Rad:      0.000 (in)
                     END  X:     72.000 (in)     Y:     60.000 (in)
            FACE  8: BEG  X:     72.000 (in)     Y:     60.000 (in)     Rad:      0.000 (in)
                     END  X:     72.000 (in)     Y:     72.000 (in)
            FACE  9: BEG  X:     72.000 (in)     Y:     72.000 (in)     Rad:      0.000 (in)
                     END  X:    -72.000 (in)     Y:     72.000 (in)
            FACE 10: BEG  X:    -72.000 (in)     Y:     72.000 (in)     Rad:      0.000 (in)
                     END  X:    -72.000 (in)     Y:     60.000 (in)
            FACE 11: BEG  X:    -72.000 (in)     Y:     60.000 (in)     Rad:      0.000 (in)
                     END  X:    -84.000 (in)     Y:     60.000 (in)
            FACE 12: BEG  X:    -84.000 (in)     Y:     60.000 (in)     Rad:      0.000 (in)
                     END  X:    -84.000 (in)     Y:    -60.000 (in)
            FACE 13: BEG  X:    -84.000 (in)     Y:    -60.000 (in)     Rad:      0.000 (in)
                     END  X:    -48.000 (in)     Y:    -48.000 (in)
            FACE 14: BEG  X:    -48.000 (in)     Y:    -48.000 (in)     Rad:      0.000 (in)
                     END  X:    -48.000 (in)     Y:     48.000 (in)
```

```
        FACE 15: BEG  X:    -48.000 (in)     Y:     48.000 (in)     Rad:      0.000 (in)
                 END  X:     48.000 (in)     Y:     48.000 (in)
        FACE 16: BEG  X:     48.000 (in)     Y:     48.000 (in)     Rad:      0.000 (in)
                 END  X:     48.000 (in)     Y:    -48.000 (in)
        FACE 17: BEG  X:     48.000 (in)     Y:    -48.000 (in)     Rad:      0.000 (in)
                 END  X:    -48.000 (in)     Y:    -48.000 (in)
        FACE 18: BEG  X:    -48.000 (in)     Y:    -48.000 (in)     Rad:      0.000 (in)
                 END  X:    -84.000 (in)     Y:    -60.000 (in)
  REINFORCEMENT PARAMETERS:                  CONCRETE PARAMETERS:
    YIELD  STRENGTH:   60.0 (ksi)              FPC:      4.0 (ksi)
    CONTAINMENT BARS:   TYPE:   Tied           WEIGHT: 150.0 (pcf)
                        SIZE:   6              CTE:      0.0000060
    DISTANCE TO CL VERT BARS:   0.000 (in)
    PERCENT STEEL:       MIN:    1.00
                         MAX:    8.00

  COLUMN REINFORCEMENT DATA:
    NUMBER OF REINFORCEMENT SECTIONS:  3
      SECTION  1 DATA:
        SHAPE: Rectangular           TRAN OFFSET:    0.00 (in)       TOP ELEV:   675.50 (ft)
        NUMBER OF FACES:  4          LONG OFFSET:    0.00 (in)       BOT ELEV:   603.00 (ft)
          FACE DATA:
            FACE NUMBER:           1            2            3            4
            TOP BEG X COORD:   -66.92 (in)    66.92 (in)    66.92 (in)   -66.92 (in)
            TOP BEG Y COORD:   -66.92 (in)   -66.92 (in)    66.92 (in)    66.92 (in)
            TOP END X COORD:    66.92 (in)    66.92 (in)   -66.92 (in)   -66.92 (in)
            TOP END Y COORD:   -66.92 (in)    66.92 (in)    66.92 (in)   -66.92 (in)
            TOP RADIUS:          0.00 (in)     0.00 (in)     0.00 (in)     0.00 (in)

            BOT BEG X COORD:   -66.92 (in)    66.92 (in)    66.92 (in)   -66.92 (in)
            BOT BEG Y COORD:   -66.92 (in)   -66.92 (in)    66.92 (in)    66.92 (in)
            BOT END X COORD:    66.92 (in)    66.92 (in)   -66.92 (in)   -66.92 (in)
            BOT END Y COORD:   -66.92 (in)    66.92 (in)    66.92 (in)   -66.92 (in)
            BOT RADIUS:          0.00 (in)     0.00 (in)     0.00 (in)     0.00 (in)

            BARSIZE:               11            11            11            11
            BARS/BUNDLE:            1             1             1             1
            MIN NUM BARS:          13            13            13            13
            MAX NUM BARS:          13            13            13            13
            BAR AT BEG:           Yes            No           Yes            No
            BAR AT END:           Yes            No           Yes            No

      SECTION  2 DATA:
        SHAPE: Square                TRAN OFFSET:    0.00 (in)       TOP ELEV:   675.50 (ft)
        NUMBER OF FACES:  4          LONG OFFSET:    0.00 (in)       BOT ELEV:   603.00 (ft)
          FACE DATA:
            FACE NUMBER:           1            2            3            4
            TOP BEG X COORD:   -53.08 (in)    53.08 (in)    53.08 (in)   -53.08 (in)
            TOP BEG Y COORD:   -53.08 (in)   -53.08 (in)    53.08 (in)    53.08 (in)
            TOP END X COORD:    53.08 (in)    53.08 (in)   -53.08 (in)   -53.08 (in)
            TOP END Y COORD:   -53.08 (in)    53.08 (in)    53.08 (in)   -53.08 (in)
            TOP RADIUS:          0.00 (in)     0.00 (in)     0.00 (in)     0.00 (in)

            BOT BEG X COORD:   -53.08 (in)    53.08 (in)    53.08 (in)   -53.08 (in)
            BOT BEG Y COORD:   -53.08 (in)   -53.08 (in)    53.08 (in)    53.08 (in)
            BOT END X COORD:    53.08 (in)    53.08 (in)   -53.08 (in)   -53.08 (in)
            BOT END Y COORD:   -53.08 (in)    53.08 (in)    53.08 (in)   -53.08 (in)
            BOT RADIUS:          0.00 (in)     0.00 (in)     0.00 (in)     0.00 (in)

            BARSIZE:               11            11            11            11
            BARS/BUNDLE:            1             1             1             1
            MIN NUM BARS:          11             9            11             9
            MAX NUM BARS:          11             9            11             9
            BAR AT BEG:           Yes            No           Yes            No
            BAR AT END:           Yes            No           Yes            No

      SECTION  3 DATA:
        SHAPE: Rectangular           TRAN OFFSET:    0.00 (in)       TOP ELEV:   675.50 (ft)
        NUMBER OF FACES:  4          LONG OFFSET:    0.00 (in)       BOT ELEV:   603.00 (ft)
          FACE DATA:
            FACE NUMBER:           1            2            3            4
            TOP BEG X COORD:   -79.05 (in)    79.05 (in)    79.05 (in)   -79.05 (in)
            TOP BEG Y COORD:   -55.05 (in)   -55.05 (in)    55.05 (in)    55.05 (in)
            TOP END X COORD:    79.05 (in)    79.05 (in)   -79.05 (in)   -79.05 (in)
            TOP END Y COORD:   -55.05 (in)    55.05 (in)    55.05 (in)   -55.05 (in)
            TOP RADIUS:          0.00 (in)     0.00 (in)     0.00 (in)     0.00 (in)

            BOT BEG X COORD:   -79.05 (in)    79.05 (in)    79.05 (in)   -79.05 (in)
            BOT BEG Y COORD:   -55.05 (in)   -55.05 (in)    55.05 (in)    55.05 (in)
            BOT END X COORD:    79.05 (in)    79.05 (in)   -79.05 (in)   -79.05 (in)
            BOT END Y COORD:   -55.05 (in)    55.05 (in)    55.05 (in)   -55.05 (in)
            BOT RADIUS:          0.00 (in)     0.00 (in)     0.00 (in)     0.00 (in)

            BARSIZE:               11            11            11            11
            BARS/BUNDLE:            1             1             1             1
            MIN NUM BARS:           0             6             0             6
            MAX NUM BARS:           0             6             0             6
            BAR AT BEG:            No           Yes            No           Yes
            BAR AT END:            No           Yes            No           Yes

----- FOOTING  1 DATA ----------------------------------------------------------------------------------------

  FOOTING TYPE: Pile Footing
  TOP OF FOOTING ELEVATION:  603.000 (ft)     ROTATION ANGLE:     0.000 (degrees)
```

SHEAR DESIGN USING SIMPLIFIED PROCEDURE, AASHTO 5.8.3.4.1

REINFORCEMENT PARAMETERS:
YIELD STRENGTH: 60.0 (ksi)
MIN COVER: TOP: 3.0 (in)
BOTTOM: 3.0 (in)
SIDE: 3.0 (in)
STIRRUPS: SIZE: 0
NO.LEGS TOTAL: 0
EXPOSURE FACTOR: 1.000

CONCRETE PARAMETERS:
FPC: 4.0 (ksi)
WEIGHT: 150.0 (pcf)
CTE: 0.0000060

SOIL PARAMETERS:
SOIL ELEVATION: 628.000 (ft)
SOIL WEIGHT: 120.0 (pcf)
SOIL CAPACITY:
UNFACTORED: 0.000 (ksf)
FACTORED: 0.000 (ksf)

FOOTING DIMENSIONS:
TRANSVERSE: 38.000 (ft)
LONGITUDINAL: 38.000 (ft)
DEPTH: 10.000 (ft)

LOCATION OF FIRST COLUMN:
TRANSVERSE: 19.000 (ft)
LONGITUDINAL: 19.000 (ft)

REINFORCEMENT LAYER DATA:
BOTTOM MAT: Transverse bars on bottom at min cover of 3.000 (in) from bottom of footing.
Longitudinal Bars:
MIN SIZE: 8 MIN NUMBER OF BARS: 2
MAX SIZE: 8 MAX NUMBER OF BARS: 10
Transverse Bars:
MIN SIZE: 8 MIN NUMBER OF BARS: 2
MAX SIZE: 8 MAX NUMBER OF BARS: 10

TOP MAT: Longitudinal bars on top at min cover of 3.000 (in) from top of footing.
Transverse Bars:
MIN SIZE: 8 MIN NUMBER OF BARS: 2
MAX SIZE: 8 MAX NUMBER OF BARS: 10
Longitudinal Bars:
MIN SIZE: 8 MIN NUMBER OF BARS: 2
MAX SIZE: 8 MAX NUMBER OF BARS: 10

FOOTING SUPPORT FIXITY:

	DISPLACEMENT	ROTATION ABOUT
TRANSVERSE	Rigid	Rigid
VERTICAL	Rigid	Rigid
LONGITUDINAL	Rigid	Rigid

PILE DATA:

PILE NO.	LABEL	SHAPE	MATL CODE	STIFF CODE	EFF. DIA. (in)	TRAN Z (ft)	LONG X (ft)	VERT Y (ft)	BATTER (1H:__V)	ROTATION (degrees)	AXIAL CAPACITY SERV (kips)	AXIAL CAPACITY STR (kips)
1	R:1 C:1	HP14x117	0	1	8.8	-16.00	-16.00	7.42	0.0	90.0	0	0
2	R:1 C:3	HP14x117	0	1	8.8	0.00	-16.00	7.42	0.0	90.0	0	0
3	R:1 C:5	HP14x117	0	1	8.8	16.00	-16.00	7.42	0.0	90.0	0	0
4	R:2 C:2	HP14x117	0	1	8.8	-8.00	-8.00	7.42	0.0	90.0	0	0
5	R:2 C:4	HP14x117	0	1	8.8	8.00	-8.00	7.42	0.0	90.0	0	0
6	R:3 C:1	HP14x117	0	1	8.8	-16.00	0.00	7.42	0.0	90.0	0	0
7	R:3 C:5	HP14x117	0	1	8.8	16.00	0.00	7.42	0.0	90.0	0	0
8	R:4 C:2	HP14x117	0	1	8.8	-8.00	8.00	7.42	0.0	90.0	0	0
9	R:4 C:4	HP14x117	0	1	8.8	8.00	8.00	7.42	0.0	90.0	0	0
10	R:5 C:1	HP14x117	0	1	8.8	-16.00	16.00	7.42	0.0	90.0	0	0
11	R:5 C:3	HP14x117	0	1	8.8	0.00	16.00	7.42	0.0	90.0	0	0
12	R:5 C:5	HP14x117	0	1	8.8	16.00	16.00	7.42	0.0	90.0	0	0

PILE STIFFNESS COEFFICIENT TABLE DATA:

TABLE NO.	C(1) k/in	C(2) k/in	C(3) in-k/in	C(4) k/in	C(5) in-k/in	C(6) in-k/rad	C(7) k/rad	C(8) in-k/rad	C(9) k/rad	C(10) in-k/rad
1	10.0	10.0	0.00	10.0	0.00	0.00	0.00	0.00	0.00	0.00

----- FOOTING 2 DATA -----

FOOTING TYPE: Pile Footing
TOP OF FOOTING ELEVATION: 603.000 (ft) ROTATION ANGLE: 0.000 (degrees)
SHEAR DESIGN USING SIMPLIFIED PROCEDURE, AASHTO 5.8.3.4.1

REINFORCEMENT PARAMETERS:
YIELD STRENGTH: 60.0 (ksi)
MIN COVER: TOP: 3.0 (in)
BOTTOM: 3.0 (in)
SIDE: 3.0 (in)
STIRRUPS: SIZE: 0
NO.LEGS TOTAL: 0
EXPOSURE FACTOR: 1.000

CONCRETE PARAMETERS:
FPC: 4.0 (ksi)
WEIGHT: 150.0 (pcf)
CTE: 0.0000060

SOIL PARAMETERS:
SOIL ELEVATION: 628.000 (ft)
SOIL WEIGHT: 120.0 (pcf)
SOIL CAPACITY:
UNFACTORED: 0.000 (ksf)
FACTORED: 0.000 (ksf)

FOOTING DIMENSIONS:
TRANSVERSE: 38.000 (ft)
LONGITUDINAL: 38.000 (ft)
DEPTH: 10.000 (ft)

LOCATION OF FIRST COLUMN:
TRANSVERSE: 19.000 (ft)
LONGITUDINAL: 19.000 (ft)

REINFORCEMENT LAYER DATA:
BOTTOM MAT: Transverse bars on bottom at min cover of 3.000 (in) from bottom of footing.
Longitudinal Bars:
MIN SIZE: 8 MIN NUMBER OF BARS: 2
MAX SIZE: 8 MAX NUMBER OF BARS: 10
Transverse Bars:
MIN SIZE: 8 MIN NUMBER OF BARS: 2
MAX SIZE: 8 MAX NUMBER OF BARS: 10

TOP MAT: Longitudinal bars on top at min cover of 3.000 (in) from top of footing.
Transverse Bars:
MIN SIZE: 8 MIN NUMBER OF BARS: 2
MAX SIZE: 8 MAX NUMBER OF BARS: 10
Longitudinal Bars:

MIN SIZE: 8 MIN NUMBER OF BARS: 2
MAX SIZE: 8 MAX NUMBER OF BARS: 10

FOOTING SUPPORT FIXITY:

	DISPLACEMENT	ROTATION ABOUT
TRANSVERSE	Rigid	Rigid
VERTICAL	Rigid	Rigid
LONGITUDINAL	Rigid	Rigid

PILE DATA:

PILE NO.	LABEL	SHAPE	MATL CODE	STIFF CODE	EFF. DIA. (in)	TRAN Z (ft)	LONG X (ft)	VERT Y (ft)	BATTER (1H:__V)	ROTATION (degrees)	AXIAL CAPACITY SERV (kips)	AXIAL CAPACITY STR (kips)
1	R:1 C:1	HP14x117	0	1	8.7	-16.00	-16.00	7.42	0.0	90.0	0	0
2	R:1 C:3	HP14x117	0	1	8.7	0.00	-16.00	7.42	0.0	90.0	0	0
3	R:1 C:5	HP14x117	0	1	8.7	16.00	-16.00	7.42	0.0	90.0	0	0
4	R:2 C:2	HP14x117	0	1	8.7	-8.00	-8.00	7.42	0.0	90.0	0	0
5	R:2 C:4	HP14x117	0	1	8.7	8.00	-8.00	7.42	0.0	90.0	0	0
6	R:3 C:1	HP14x117	0	1	8.7	-16.00	0.00	7.42	0.0	90.0	0	0
7	R:3 C:5	HP14x117	0	1	8.7	16.00	0.00	7.42	0.0	90.0	0	0
8	R:4 C:2	HP14x117	0	1	8.7	-8.00	8.00	7.42	0.0	90.0	0	0
9	R:4 C:4	HP14x117	0	1	8.7	8.00	8.00	7.42	0.0	90.0	0	0
10	R:5 C:1	HP14x117	0	1	8.7	-16.00	16.00	7.42	0.0	90.0	0	0
11	R:5 C:3	HP14x117	0	1	8.7	0.00	16.00	7.42	0.0	90.0	0	0
12	R:5 C:5	HP14x117	0	1	8.7	16.00	16.00	7.42	0.0	90.0	0	0

PILE STIFFNESS COEFFICIENT TABLE DATA:

TABLE NO.	C(1) k/in	C(2) k/in	C(3) in-k/in	C(4) k/in	C(5) in-k/in	C(6) in-k/rad	C(7) k/rad	C(8) in-k/rad	C(9) k/rad	C(10) in-k/rad
1	10.0	10.0	0.00	10.0	0.00	0.00	0.00	0.00	0.00	0.00

----- AASHTO LRFD LOAD OPTIONS -----

AASHTO LIMIT STATES:

STRENGTH I:	Yes
STRENGTH II:	No
STRENGTH III:	Yes
STRENGTH IV:	Yes
STRENGTH V:	Yes
SERVICE I:	Yes
SERVICE III:	No
FATIGUE:	Yes
EXTREME EVT I:	No
EXTREME EVT II:	No

LOAD TYPE:	INCLUDED
SELF WEIGHT OF PIER DC:	Yes
DC-DEAD LOAD SUPER:	Yes
DW-DEAD LOAD SUPER:	Yes
USER DEFINED LIVE LOAD:	No
DESIGN TRUCK LOAD:	Yes
DESIGN LANE LOAD:	Yes
PERMIT TRUCK LOAD:	No
FATIGUE TRUCK LOAD:	Yes
PEDESTRIAN LOADS:	No
CENTRIFUGAL FORCE:	Yes
EARTHQUAKE:	No

LOAD TYPE:	INCLUDED
BUOYANCY:	No
STREAM FLOW:	No
ICE LOAD:	No
WIND ON STRUCTURE:	Yes
WIND ON LIVE LOAD:	Yes
SUPER TEMPERATURE RISE:	Yes
SUPER TEMPERATURE FALL:	Yes
SHRINKAGE FROM SUPER:	No
SHRINKAGE OF SUBSTR:	Yes
BRAKING FORCE:	Yes
COLLISION LOAD:	No

LIVE LOAD OPTIONS:
APPLY IMPACT: Yes FACTORS: 1.330 (Strength) 1.150 (Fatigue)
APPLY TRUCK LOAD ON MULTIPLE SLABS SIMULTANEOUSLY: No
BRAKING FORCE FACTOR × 3.6.4: 0.500
CENTRIFUGAL FORCE FACTOR × 3.6.3: 1.000

----- LOAD INPUT -----

SELF WEIGHT FACTORS:
CAP BEAMS: 1.000
COLUMNS: 1.320
FOOTINGS: 1.000

DC - DEAD LOAD GIRDER REACTIONS:

SLAB NO.	GIRDER LABEL	FORCES (kips) VERT	FORCES (kips) TRAN	FORCES (kips) LONG	MOMENTS (ft-k) VERT	MOMENTS (ft-k) TRAN	MOMENTS (ft-k) LONG
1	Girder 1	754.1					
1	Girder 2	880.1					
1	Girder 3	836.1					
1	Girder 4	792.0					
1	Girder 5	578.0					
2	Girder 1	276.4					
2	Girder 2	206.9					
2	Girder 3	202.5					
2	Girder 4	233.8					
3	Girder 1	236.0					
3	Girder 2	225.5					
3	Girder 3	221.6					
3	Girder 4	189.3					
3	Girder 5	183.6					
3	Girder 6	193.7					
3	Girder 7	212.1					
3	Girder 8	211.8					
3	Girder 9	196.5					

DW - DEAD LOAD GIRDER REACTIONS:

SLAB NO.	GIRDER LABEL	FORCES (kips) VERT	FORCES (kips) TRAN	FORCES (kips) LONG	MOMENTS (ft-k) VERT	MOMENTS (ft-k) TRAN	MOMENTS (ft-k) LONG
1	Girder 1	153.0					
1	Girder 2	198.0					
1	Girder 3	198.0					
1	Girder 4	198.0					
1	Girder 5	153.0					
2	Girder 1	53.3					
2	Girder 2	42.3					

2	Girder 3	40.9						
2	Girder 4	42.8						
3	Girder 1	57.3						
3	Girder 2	55.3						
3	Girder 3	56.3						
3	Girder 4	55.2						
3	Girder 5	51.9						
3	Girder 6	54.7						
3	Girder 7	56.7						
3	Girder 8	55.8						
3	Girder 9	50.7						

TRUCK LOAD REACTIONS (One Lane, No Impact):

SLAB NO.	GIRDER LABEL	FORCES (kips) VERT	TRAN	LONG	MOMENTS (ft-k) VERT	TRAN	LONG
1	Girder 1	70.0					
1	Girder 2	70.0					
1	Girder 3	70.0					
1	Girder 4	70.0					
1	Girder 5	70.0					
2	Girder 1	68.6					
2	Girder 2	68.6					
2	Girder 3	68.6					
2	Girder 4	68.6					
3	Girder 1	69.3					
3	Girder 2	69.3					
3	Girder 3	69.3					
3	Girder 4	69.3					
3	Girder 5	69.3					
3	Girder 6	69.3					
3	Girder 7	69.3					
3	Girder 8	69.3					
3	Girder 9	69.3					

LANE LOAD REACTIONS (One Lane, No Impact):

SLAB NO.	GIRDER LABEL	FORCES (kips) VERT	TRAN	LONG	MOMENTS (ft-k) VERT	TRAN	LONG
1	Girder 1	80.0					
1	Girder 2	80.0					
1	Girder 3	80.0					
1	Girder 4	80.0					
1	Girder 5	80.0					
2	Girder 1	62.9					
2	Girder 2	62.9					
2	Girder 3	62.9					
2	Girder 4	62.9					
3	Girder 1	70.5					
3	Girder 2	70.5					
3	Girder 3	70.5					
3	Girder 4	70.5					
3	Girder 5	70.5					
3	Girder 6	70.5					
3	Girder 7	70.5					
3	Girder 8	70.5					
3	Girder 9	70.5					

MAX FATIGUE TRUCK LOAD REACTIONS (One Lane, No Impact):

SLAB NO.	GIRDER LABEL	FORCES (kips) VERT	TRAN	LONG	MOMENTS (ft-k) VERT	TRAN	LONG
1	Girder 1	70.0					
1	Girder 2	70.0					
1	Girder 3	70.0					
1	Girder 4	70.0					
1	Girder 5	70.0					
2	Girder 1	64.9					
2	Girder 2	64.9					
2	Girder 3	64.9					
2	Girder 4	64.9					
3	Girder 1	66.0					
3	Girder 2	66.0					
3	Girder 3	66.0					
3	Girder 4	66.0					
3	Girder 5	66.0					
3	Girder 6	66.0					
3	Girder 7	66.0					
3	Girder 8	66.0					
3	Girder 9	66.0					

MIN FATIGUE TRUCK LOAD REACTIONS (One Lane, No Impact):

SLAB NO.	GIRDER LABEL	FORCES (kips) VERT	TRAN	LONG	MOMENTS (ft-k) VERT	TRAN	LONG
1	Girder 1	-10.0					
1	Girder 2	-10.0					
1	Girder 3	-10.0					
1	Girder 4	-10.0					
1	Girder 5	-10.0					
2	Girder 1	-4.4					

2	Girder 2	-4.4
2	Girder 3	-4.4
2	Girder 4	-4.4
3	Girder 1	-4.7
3	Girder 2	-4.7
3	Girder 3	-4.7
3	Girder 4	-4.7
3	Girder 5	-4.7
3	Girder 6	-4.7
3	Girder 7	-4.7
3	Girder 8	-4.7
3	Girder 9	-4.7

REACTIONS DUE TO TEMPERATURE RISE:

SLAB NO.	GIRDER LABEL	FORCES (kips) VERT	TRAN	LONG	MOMENTS (ft-k) VERT	TRAN	LONG
1	Girder 1			1616.0			
1	Girder 2			1616.0			
1	Girder 3			1616.0			
1	Girder 4			1616.0			
1	Girder 5			1616.0			
2	Girder 1			-120.0			
2	Girder 2			-120.0			
2	Girder 3			-120.0			
2	Girder 4			-120.0			
3	Girder 1			-120.0			
3	Girder 2			-120.0			
3	Girder 3			-120.0			
3	Girder 4			-120.0			
3	Girder 5			-120.0			
3	Girder 6			-120.0			
3	Girder 7			-120.0			
3	Girder 8			-120.0			
3	Girder 9			-120.0			

REACTIONS DUE TO TEMPERATURE FALL:

SLAB NO.	GIRDER LABEL	FORCES (kips) VERT	TRAN	LONG	MOMENTS (ft-k) VERT	TRAN	LONG
1	Girder 1			-2424.0			
1	Girder 2			-2424.0			
1	Girder 3			-2424.0			
1	Girder 4			-2424.0			
1	Girder 5			-2424.0			
2	Girder 1			120.0			
2	Girder 2			120.0			
2	Girder 3			120.0			
2	Girder 4			120.0			
3	Girder 1			120.0			
3	Girder 2			120.0			
3	Girder 3			120.0			
3	Girder 4			120.0			
3	Girder 5			120.0			
3	Girder 6			120.0			
3	Girder 7			120.0			
3	Girder 8			120.0			
3	Girder 9			120.0			

SHRINKAGE STRAIN OF SUBSTRUCTURE: 0.00020

WIND LOAD DIRECTIONS:

DIRECTIONS (degrees)	APPLIED
0 (+Tran)	Yes
15	Yes
30	Yes
45	Yes
60	Yes
75	Yes
90 (+Long)	Yes
105	Yes
120	Yes
135	Yes
150	Yes
165	Yes
180 (-Tran)	Yes
195	Yes
210	Yes
225	Yes
240	Yes
255	Yes
270 (-Long)	Yes
285	Yes
300	Yes
315	Yes
330	Yes
345	Yes

EARTHQUAKE LOAD:

DIRECTION	FACTORS TRAN	LONG	APPLIED
0	1.0	0.0	No
1	1.0	0.3	No
2	0.3	1.0	No
3	0.0	1.0	No
4	-0.3	1.0	No
5	-1.0	0.3	No
6	-1.0	0.0	No
7	-1.0	-0.3	No
8	-0.3	-1.0	No
9	0.0	-1.0	No
10	0.3	-1.0	No
11	1.0	-0.3	No

*** WARNING: SLAB 1 TOTAL APPLIED FORCE, 6681.1(kips) EXCEEDS FRICTIONAL CAPACITY, 317.5(kips). ***
EXCESS MUST BE REDISTRIBUTED TO ANOTHER SUBSTRUCTURE UNIT. LIMIT STATE: STR I, LOAD: 1

*** WARNING: SLAB 2 TOTAL APPLIED FORCE,   -264.6(kips) EXCEEDS FRICTIONAL CAPACITY,   76.0(kips). ***
    EXCESS MUST BE REDISTRIBUTED TO ANOTHER SUBSTRUCTURE UNIT. LIMIT STATE: STR I, LOAD: 1

*** WARNING: SLAB 3 TOTAL APPLIED FORCE,   -595.4(kips) EXCEEDS FRICTIONAL CAPACITY,   164.4(kips). ***
    EXCESS MUST BE REDISTRIBUTED TO ANOTHER SUBSTRUCTURE UNIT. LIMIT STATE: STR I, LOAD: 1

*** WARNING: SLAB 1 TOTAL APPLIED FORCE,   6681.1(kips) EXCEEDS FRICTIONAL CAPACITY,   317.5(kips). ***
    EXCESS MUST BE REDISTRIBUTED TO ANOTHER SUBSTRUCTURE UNIT. LIMIT STATE: STR I, LOAD: 2

*** WARNING: SLAB 2 TOTAL APPLIED FORCE,   -264.6(kips) EXCEEDS FRICTIONAL CAPACITY,   76.0(kips). ***
    EXCESS MUST BE REDISTRIBUTED TO ANOTHER SUBSTRUCTURE UNIT. LIMIT STATE: STR I, LOAD: 2

*** WARNING: SLAB 3 TOTAL APPLIED FORCE,   -595.4(kips) EXCEEDS FRICTIONAL CAPACITY,   164.4(kips). ***
    EXCESS MUST BE REDISTRIBUTED TO ANOTHER SUBSTRUCTURE UNIT. LIMIT STATE: STR I, LOAD: 2

*** WARNING: SLAB 1 TOTAL APPLIED FORCE,   6681.1(kips) EXCEEDS FRICTIONAL CAPACITY,   317.5(kips). ***
    EXCESS MUST BE REDISTRIBUTED TO ANOTHER SUBSTRUCTURE UNIT. LIMIT STATE: STR I, LOAD: 3

*** WARNING: SLAB 2 TOTAL APPLIED FORCE,   -264.6(kips) EXCEEDS FRICTIONAL CAPACITY,   76.0(kips). ***
    EXCESS MUST BE REDISTRIBUTED TO ANOTHER SUBSTRUCTURE UNIT. LIMIT STATE: STR I, LOAD: 3

*** WARNING: SLAB 3 TOTAL APPLIED FORCE,   -616.2(kips) EXCEEDS FRICTIONAL CAPACITY,   177.2(kips). ***
    EXCESS MUST BE REDISTRIBUTED TO ANOTHER SUBSTRUCTURE UNIT. LIMIT STATE: STR I, LOAD: 3

*** WARNING MESSAGES LIMITED TO TEN! ***

*** WARNING: SLAB 1 TOTAL APPLIED FORCE,   6719.9(kips) EXCEEDS FRICTIONAL CAPACITY,   317.5(kips). ***
    EXCESS MUST BE REDISTRIBUTED TO ANOTHER SUBSTRUCTURE UNIT. LIMIT STATE: STIII, LOAD: 1

*** WARNING: SLAB 2 TOTAL APPLIED FORCE,   -238.2(kips) EXCEEDS FRICTIONAL CAPACITY,   76.0(kips). ***
    EXCESS MUST BE REDISTRIBUTED TO ANOTHER SUBSTRUCTURE UNIT. LIMIT STATE: STIII, LOAD: 1

*** WARNING: SLAB 3 TOTAL APPLIED FORCE,   -568.9(kips) EXCEEDS FRICTIONAL CAPACITY,   154.6(kips). ***
    EXCESS MUST BE REDISTRIBUTED TO ANOTHER SUBSTRUCTURE UNIT. LIMIT STATE: STIII, LOAD: 1

*** WARNING: SLAB 1 TOTAL APPLIED FORCE,   6681.1(kips) EXCEEDS FRICTIONAL CAPACITY,   280.1(kips). ***
    EXCESS MUST BE REDISTRIBUTED TO ANOTHER SUBSTRUCTURE UNIT. LIMIT STATE: STIII, LOAD: 2

*** WARNING: SLAB 2 TOTAL APPLIED FORCE,   -264.6(kips) EXCEEDS FRICTIONAL CAPACITY,   67.8(kips). ***
    EXCESS MUST BE REDISTRIBUTED TO ANOTHER SUBSTRUCTURE UNIT. LIMIT STATE: STIII, LOAD: 2

*** WARNING: SLAB 3 TOTAL APPLIED FORCE,   -595.4(kips) EXCEEDS FRICTIONAL CAPACITY,   135.1(kips). ***
    EXCESS MUST BE REDISTRIBUTED TO ANOTHER SUBSTRUCTURE UNIT. LIMIT STATE: STIII, LOAD: 2

*** WARNING: SLAB 1 TOTAL APPLIED FORCE,   6642.4(kips) EXCEEDS FRICTIONAL CAPACITY,   317.5(kips). ***
    EXCESS MUST BE REDISTRIBUTED TO ANOTHER SUBSTRUCTURE UNIT. LIMIT STATE: STIII, LOAD: 3

*** WARNING: SLAB 2 TOTAL APPLIED FORCE,   -291.0(kips) EXCEEDS FRICTIONAL CAPACITY,   76.0(kips). ***
    EXCESS MUST BE REDISTRIBUTED TO ANOTHER SUBSTRUCTURE UNIT. LIMIT STATE: STIII, LOAD: 3

*** WARNING: SLAB 3 TOTAL APPLIED FORCE,   -621.8(kips) EXCEEDS FRICTIONAL CAPACITY,   154.6(kips). ***
    EXCESS MUST BE REDISTRIBUTED TO ANOTHER SUBSTRUCTURE UNIT. LIMIT STATE: STIII, LOAD: 3

*** WARNING MESSAGES LIMITED TO TEN! ***

*** WARNING: SLAB 1 TOTAL APPLIED FORCE,   6681.1(kips) EXCEEDS FRICTIONAL CAPACITY,   381.1(kips). ***
    EXCESS MUST BE REDISTRIBUTED TO ANOTHER SUBSTRUCTURE UNIT. LIMIT STATE: STRIV, LOAD: 1

*** WARNING: SLAB 2 TOTAL APPLIED FORCE,   -264.6(kips) EXCEEDS FRICTIONAL CAPACITY,   91.2(kips). ***
    EXCESS MUST BE REDISTRIBUTED TO ANOTHER SUBSTRUCTURE UNIT. LIMIT STATE: STRIV, LOAD: 1

*** WARNING: SLAB 3 TOTAL APPLIED FORCE,   -595.4(kips) EXCEEDS FRICTIONAL CAPACITY,   185.6(kips). ***
    EXCESS MUST BE REDISTRIBUTED TO ANOTHER SUBSTRUCTURE UNIT. LIMIT STATE: STRIV, LOAD: 1

*** WARNING: SLAB 1 TOTAL APPLIED FORCE,   -4454.1(kips) EXCEEDS FRICTIONAL CAPACITY,   381.1(kips). ***
    EXCESS MUST BE REDISTRIBUTED TO ANOTHER SUBSTRUCTURE UNIT. LIMIT STATE: STRIV, LOAD: 2

*** WARNING: SLAB 2 TOTAL APPLIED FORCE,   264.6(kips) EXCEEDS FRICTIONAL CAPACITY,   91.2(kips). ***
    EXCESS MUST BE REDISTRIBUTED TO ANOTHER SUBSTRUCTURE UNIT. LIMIT STATE: STRIV, LOAD: 2

*** WARNING: SLAB 3 TOTAL APPLIED FORCE,   595.4(kips) EXCEEDS FRICTIONAL CAPACITY,   185.6(kips). ***
    EXCESS MUST BE REDISTRIBUTED TO ANOTHER SUBSTRUCTURE UNIT. LIMIT STATE: STRIV, LOAD: 2

*** WARNING: SLAB 1 TOTAL APPLIED FORCE,   6681.1(kips) EXCEEDS FRICTIONAL CAPACITY,   470.4(kips). ***
    EXCESS MUST BE REDISTRIBUTED TO ANOTHER SUBSTRUCTURE UNIT. LIMIT STATE: STRIV, LOAD: 3

*** WARNING: SLAB 2 TOTAL APPLIED FORCE,   -264.6(kips) EXCEEDS FRICTIONAL CAPACITY,   109.0(kips). ***
    EXCESS MUST BE REDISTRIBUTED TO ANOTHER SUBSTRUCTURE UNIT. LIMIT STATE: STRIV, LOAD: 3

*** WARNING: SLAB 3 TOTAL APPLIED FORCE,   -595.4(kips) EXCEEDS FRICTIONAL CAPACITY,   234.6(kips). ***
    EXCESS MUST BE REDISTRIBUTED TO ANOTHER SUBSTRUCTURE UNIT. LIMIT STATE: STRIV, LOAD: 3

*** WARNING MESSAGES LIMITED TO TEN! ***

*** WARNING: SLAB 1 TOTAL APPLIED FORCE,   6696.3(kips) EXCEEDS FRICTIONAL CAPACITY,   317.5(kips). ***
    EXCESS MUST BE REDISTRIBUTED TO ANOTHER SUBSTRUCTURE UNIT. LIMIT STATE: STR V, LOAD: 1

*** WARNING: SLAB 2 TOTAL APPLIED FORCE,   -253.9(kips) EXCEEDS FRICTIONAL CAPACITY,   76.0(kips). ***
    EXCESS MUST BE REDISTRIBUTED TO ANOTHER SUBSTRUCTURE UNIT. LIMIT STATE: STR V, LOAD: 1

*** WARNING: SLAB 3 TOTAL APPLIED FORCE,   -584.6(kips) EXCEEDS FRICTIONAL CAPACITY,   162.2(kips). ***
    EXCESS MUST BE REDISTRIBUTED TO ANOTHER SUBSTRUCTURE UNIT. LIMIT STATE: STR V, LOAD: 1

*** WARNING: SLAB 1 TOTAL APPLIED FORCE,   6696.3(kips) EXCEEDS FRICTIONAL CAPACITY,   317.5(kips). ***
    EXCESS MUST BE REDISTRIBUTED TO ANOTHER SUBSTRUCTURE UNIT. LIMIT STATE: STR V, LOAD: 2

*** WARNING: SLAB 2 TOTAL APPLIED FORCE,   -253.9(kips) EXCEEDS FRICTIONAL CAPACITY,   76.0(kips). ***
    EXCESS MUST BE REDISTRIBUTED TO ANOTHER SUBSTRUCTURE UNIT. LIMIT STATE: STR V, LOAD: 2

*** WARNING: SLAB 3 TOTAL APPLIED FORCE,   -584.6(kips) EXCEEDS FRICTIONAL CAPACITY,   162.2(kips). ***
    EXCESS MUST BE REDISTRIBUTED TO ANOTHER SUBSTRUCTURE UNIT. LIMIT STATE: STR V, LOAD: 2

*** WARNING: SLAB 1 TOTAL APPLIED FORCE,   6696.3(kips) EXCEEDS FRICTIONAL CAPACITY,   317.5(kips). ***
    EXCESS MUST BE REDISTRIBUTED TO ANOTHER SUBSTRUCTURE UNIT. LIMIT STATE: STR V, LOAD: 3

*** WARNING: SLAB 2 TOTAL APPLIED FORCE,   -253.9(kips) EXCEEDS FRICTIONAL CAPACITY,   76.0(kips). ***
    EXCESS MUST BE REDISTRIBUTED TO ANOTHER SUBSTRUCTURE UNIT. LIMIT STATE: STR V, LOAD: 3

*** WARNING: SLAB 3 TOTAL APPLIED FORCE,   -600.7(kips) EXCEEDS FRICTIONAL CAPACITY,   172.1(kips). ***
    EXCESS MUST BE REDISTRIBUTED TO ANOTHER SUBSTRUCTURE UNIT. LIMIT STATE: STR V, LOAD: 3

*** WARNING MESSAGES LIMITED TO TEN! ***

*** WARNING: SLAB 1 TOTAL APPLIED FORCE,   12131.2(kips) EXCEEDS FRICTIONAL CAPACITY,   230.4(kips). ***
    EXCESS MUST BE REDISTRIBUTED TO ANOTHER SUBSTRUCTURE UNIT. LIMIT STATE: SER I, LOAD: 1

*** WARNING: SLAB 2 TOTAL APPLIED FORCE,   -472.0(kips) EXCEEDS FRICTIONAL CAPACITY,   55.2(kips). ***
    EXCESS MUST BE REDISTRIBUTED TO ANOTHER SUBSTRUCTURE UNIT. LIMIT STATE: SER I, LOAD: 1

*** WARNING: SLAB 3 TOTAL APPLIED FORCE,   -1072.0(kips) EXCEEDS FRICTIONAL CAPACITY,   117.3(kips). ***
    EXCESS MUST BE REDISTRIBUTED TO ANOTHER SUBSTRUCTURE UNIT. LIMIT STATE: SER I, LOAD: 1

*** WARNING: SLAB 1 TOTAL APPLIED FORCE,   12131.2(kips) EXCEEDS FRICTIONAL CAPACITY,   230.4(kips). ***
    EXCESS MUST BE REDISTRIBUTED TO ANOTHER SUBSTRUCTURE UNIT. LIMIT STATE: SER I, LOAD: 2

*** WARNING: SLAB 2 TOTAL APPLIED FORCE,   -472.0(kips) EXCEEDS FRICTIONAL CAPACITY,   55.2(kips). ***
    EXCESS MUST BE REDISTRIBUTED TO ANOTHER SUBSTRUCTURE UNIT. LIMIT STATE: SER I, LOAD: 2

*** WARNING: SLAB 3 TOTAL APPLIED FORCE,   -1072.0(kips) EXCEEDS FRICTIONAL CAPACITY,   117.3(kips). ***
    EXCESS MUST BE REDISTRIBUTED TO ANOTHER SUBSTRUCTURE UNIT. LIMIT STATE: SER I, LOAD: 2

*** WARNING: SLAB 1 TOTAL APPLIED FORCE,   12131.2(kips) EXCEEDS FRICTIONAL CAPACITY,   230.4(kips). ***
    EXCESS MUST BE REDISTRIBUTED TO ANOTHER SUBSTRUCTURE UNIT. LIMIT STATE: SER I, LOAD: 3

*** WARNING: SLAB 2 TOTAL APPLIED FORCE,   -472.0(kips) EXCEEDS FRICTIONAL CAPACITY,   55.2(kips). ***
    EXCESS MUST BE REDISTRIBUTED TO ANOTHER SUBSTRUCTURE UNIT. LIMIT STATE: SER I, LOAD: 3

*** WARNING: SLAB 3 TOTAL APPLIED FORCE,   -1082.8(kips) EXCEEDS FRICTIONAL CAPACITY,   123.9(kips). ***
    EXCESS MUST BE REDISTRIBUTED TO ANOTHER SUBSTRUCTURE UNIT. LIMIT STATE: SER I, LOAD: 3

*** WARNING MESSAGES LIMITED TO TEN! ***

----- NUMBER OF LOAD COMBINATIONS -----

LRFD DESIGN OF CAP AND COL:
STRENGTH LIMIT STATE I, NUMBER OF LOAD COMBINATIONS = 33232
STRENGTH LIMIT STATE III, NUMBER OF LOAD COMBINATIONS = 192
STRENGTH LIMIT STATE IV, NUMBER OF LOAD COMBINATIONS = 8
STRENGTH LIMIT STATE V, NUMBER OF LOAD COMBINATIONS = 797568
SERVICE LIMIT STATE I, NUMBER OF LOAD COMBINATIONS = 398784
FATIGUE LIMIT STATE, NUMBER OF LOAD COMBINATIONS = 212

----- COLUMN DESIGN RESULTS -----

AXIAL-FLEXURAL INTERACTION DATA:
Notes: Applied moment data is not magnified.
Load Ratio = Moment Capacity / (Applied Moment * Mag. Factor) unless otherwise specified.

					APPLIED LOADS					AXIAL-FLEXURAL INTERACTION				
COL NO.	ELEV. (ft)	LOCATION	AASHTO LIMIT STATE	LOAD CASE	LRFD AXIAL (kips)	LRFD MOM-L (ft-k)	MAG. FACTOR	LRFD MOM-T (ft-k)	MAG. FACTOR	CAP. MOM-L (ft-k)	CAP. MOM-T (ft-k)	AREA PROV. (sq-in)	LOAD RATIO	NG
1	603.00	BOT	STR I	13862	11414	-11819	1.22	-33880	1.00	-39052	-91638	162.24	2.70	
			STIII	33318	9848	-2050	1.34	-34890	1.00	-7883	-100136	162.24	2.87	
			STRIV	33428	11622	-11193	1.23	-28001	1.00	-43336	-88170	162.24	3.00j	
			STR V	387922	11140	-8658	1.23	-35693	1.00	-29675	-99177	162.24	2.78	
1	621.12	1/4B	STR I	13712	11089	-10082	1.22	-12783	1.00	-63353	-65700	162.24	3.15j	
			STIII	33317	9558	-4791	1.24	-14614	1.00	-36143	-88828	162.24	3.65j	
			STRIV	33428	11029	-9950	1.22	-9929	1.00	-69720	-56938	162.24	3.16j	
			STR V	387772	10777	-7708	1.23	-14381	1.00	-52220	-79041	162.24	3.24j	
1	639.25	1/2	STR I	13712	10595	-8504	1.22	7587	1.00	-72348	52867	162.24	3.29j	
			STIII	33317	9063	-4852	1.22	4508	1.00	-68825	52212	162.24	3.85j	
			STRIV	33428	10435	-8707	1.22	8143	1.00	-70861	54524	162.24	3.34j	
			STR V	387772	10282	-6878	1.23	6356	1.00	-71202	53572	162.24	3.39j	
1	657.38	1/4T	STR I	13778	9758	-6773	1.22	30248	1.00	-25950	95352	162.24	3.15	
			STIII	33308	8267	-8782	1.16	21641	1.00	-38692	81986	162.24	3.79	
			STRIV	33428	9842	-7464	1.21	26214	1.00	-32007	92860	162.24	3.54	
			STR V	379530	9511	-6222	1.22	28756	1.00	-24887	94637	162.24	3.29	
1	675.50	TOP	STR I	13775	9251	-5269	1.22	51342	1.00	-12129	96659	162.24	1.88	
			STIII	33317	8074	-4974	1.19	42058	1.00	-12906	91433	162.24	2.17	
			STRIV	33428	9248	-6221	1.21	44286	1.00	-16237	95664	162.24	2.16	
			STR V	387835	9020	-5096	1.22	49965	1.00	-11902	95741	162.24	1.92	
2	603.00	BOT	STR I	8719	11261	2500	1.41	17050	1.00	21111	102237	162.24	3.10j	
			STIII	33307	9661	-15426	1.17	30120	1.00	-48168	80278	162.24	2.67	
			STRIV	33427	11166	-1135	1.40	13807	1.00	-12031	104284	162.24	3.12j	
			STR V	336950	10640	-13728	1.20	29026	1.00	-47043	83127	162.24	2.86	
2	621.12	1/4B	STR I	8719	10766	928	1.38	1123	1.00	67800	59304	162.24	3.24j	
			STIII	33281	9193	-4823	1.23	4502	1.00	-69043	52502	162.24	3.79j	
			STRIV	33427	10572	-2078	1.37	-605	1.00	-85653	-18144	162.24	3.30j	
			STR V	237389	10444	-1364	1.37	3093	1.00	-48975	81186	162.24	3.34j	
2	639.25	1/2	STR I	8719	10272	-644	1.36	-14804	1.00	-6054	-102308	162.24	3.40j	
			STIII	33281	8698	-4881	1.21	-11149	1.00	-42816	-80737	162.24	4.01j	
			STRIV	33427	9979	-3021	1.32	-15016	1.00	-25637	-96286	162.24	3.50j	
			STR V	237389	9949	-2307	1.34	-13485	1.00	-22308	-96994	162.24	3.51j	
2	657.38	1/4T	STR I	8670	9168	-5403	1.22	-32763	1.00	-18982	-94674	162.24	2.89	
			STIII	33308	8165	-8701	1.16	-25433	1.00	-33765	-85071	162.24	3.34	
			STRIV	33427	9385	-3965	1.26	-29428	1.00	-16279	-96212	162.24	3.27	
			STR V	237340	8985	-5727	1.21	-31568	1.00	-20468	-93564	162.24	2.96	
2	675.50	TOP	STR I	12821	8646	-7428	1.18	-51167	1.00	-15956	-93202	162.24	1.82	
			STIII	33305	7684	-6350	1.16	-43829	1.00	-15054	-89228	162.24	2.04	
			STRIV	33428	8763	-6467	1.19	-45784	1.00	-15768	-93745	162.24	2.05	
			STR V	337033	8464	-7372	1.18	-50401	1.00	-15891	-92439	162.24	1.83	

Notes:
j: Load ratio is controlled by Axial Capacity øPn / Applied Axial Pu, AASHTO 5.7.4.4.

SLENDERNESS DATA:

			SLENDERNESS DATA							
COL NO.	ELEV. (ft)	LOCATION	TRAN KL (ft)	TRAN r (in)	TRAN KL/r	NG	LONG KL (ft)	LONG r (in)	LONG KL/r	NG
1	603.00	BOT	87.00	56.71	18.4		175.35	47.29	44.5	
1	621.12	1/4B	87.00	56.71	18.4		175.35	47.29	44.5	
1	639.25	1/2	87.00	56.71	18.4		175.35	47.29	44.5	
1	657.38	1/4T	87.00	56.71	18.4		175.35	47.29	44.5	
1	675.50	TOP	87.00	56.71	18.4		175.35	47.29	44.5	
2	603.00	BOT	87.00	56.71	18.4		175.35	47.29	44.5	

2	621.12	1/4B	87.00	56.71	18.4	175.35	47.29	44.5	
2	639.25	1/2	87.00	56.71	18.4	175.35	47.29	44.5	
2	657.38	1/4T	87.00	56.71	18.4	175.35	47.29	44.5	
2	675.50	TOP	87.00	56.71	18.4	175.35	47.29	44.5	

REINFORCEMENT SUMMARY: (Bar size is shown as size followed by bundle quantity)

COL NO.	ELEV. (ft)	LOCATION	AASHTO LIMIT STATE	AREA PROV. (sq-in)	STEEL PERCENT %	ZONE	FACE	SIZE	QUAN	ZONE	FACE	SIZE	QUAN	ZONE	FACE	SIZE	QUAN
1	603.00	BOT	STR I	162.24	1.127	1	1	11-1	13	1	2	11-1	13	1	3	11-1	13
						1	4	11-1	13	2	1	11-1	11	2	2	11-1	9
						2	3	11-1	11	2	4	11-1	9	3	1	11-1	0
						3	2	11-1	6	3	3	11-1	0	3	4	11-1	6
			STIII	162.24	1.127	1	1	11-1	13	1	2	11-1	13	1	3	11-1	13
						1	4	11-1	13	2	1	11-1	11	2	2	11-1	9
						2	3	11-1	11	2	4	11-1	9	3	1	11-1	0
						3	2	11-1	6	3	3	11-1	0	3	4	11-1	6
			STRIV	162.24	1.127	1	1	11-1	13	1	2	11-1	13	1	3	11-1	13
						1	4	11-1	13	2	1	11-1	11	2	2	11-1	9
						2	3	11-1	11	2	4	11-1	9	3	1	11-1	0
						3	2	11-1	6	3	3	11-1	0	3	4	11-1	6
			STR V	162.24	1.127	1	1	11-1	13	1	2	11-1	13	1	3	11-1	13
						1	4	11-1	13	2	1	11-1	11	2	2	11-1	9
						2	3	11-1	11	2	4	11-1	9	3	1	11-1	0
						3	2	11-1	6	3	3	11-1	0	3	4	11-1	6
1	621.12	1/4B	STR I	162.24	1.127	1	1	11-1	13	1	2	11-1	13	1	3	11-1	13
						1	4	11-1	13	2	1	11-1	11	2	2	11-1	9
						2	3	11-1	11	2	4	11-1	9	3	1	11-1	0
						3	2	11-1	6	3	3	11-1	0	3	4	11-1	6
			STIII	162.24	1.127	1	1	11-1	13	1	2	11-1	13	1	3	11-1	13
						1	4	11-1	13	2	1	11-1	11	2	2	11-1	9
						2	3	11-1	11	2	4	11-1	9	3	1	11-1	0
						3	2	11-1	6	3	3	11-1	0	3	4	11-1	6
			STRIV	162.24	1.127	1	1	11-1	13	1	2	11-1	13	1	3	11-1	13
						1	4	11-1	13	2	1	11-1	11	2	2	11-1	9
						2	3	11-1	11	2	4	11-1	9	3	1	11-1	0
						3	2	11-1	6	3	3	11-1	0	3	4	11-1	6
			STR V	162.24	1.127	1	1	11-1	13	1	2	11-1	13	1	3	11-1	13
						1	4	11-1	13	2	1	11-1	11	2	2	11-1	9
						2	3	11-1	11	2	4	11-1	9	3	1	11-1	0
						3	2	11-1	6	3	3	11-1	0	3	4	11-1	6
1	639.25	1/2	STR I	162.24	1.127	1	1	11-1	13	1	2	11-1	13	1	3	11-1	13
						1	4	11-1	13	2	1	11-1	11	2	2	11-1	9
						2	3	11-1	11	2	4	11-1	9	3	1	11-1	0
						3	2	11-1	6	3	3	11-1	0	3	4	11-1	6
			STIII	162.24	1.127	1	1	11-1	13	1	2	11-1	13	1	3	11-1	13
						1	4	11-1	13	2	1	11-1	11	2	2	11-1	9
						2	3	11-1	11	2	4	11-1	9	3	1	11-1	0
						3	2	11-1	6	3	3	11-1	0	3	4	11-1	6
			STRIV	162.24	1.127	1	1	11-1	13	1	2	11-1	13	1	3	11-1	13
						1	4	11-1	13	2	1	11-1	11	2	2	11-1	9
						2	3	11-1	11	2	4	11-1	9	3	1	11-1	0
						3	2	11-1	6	3	3	11-1	0	3	4	11-1	6
			STR V	162.24	1.127	1	1	11-1	13	1	2	11-1	13	1	3	11-1	13
						1	4	11-1	13	2	1	11-1	11	2	2	11-1	9
						2	3	11-1	11	2	4	11-1	9	3	1	11-1	0
						3	2	11-1	6	3	3	11-1	0	3	4	11-1	6
1	657.38	1/4T	STR I	162.24	1.127	1	1	11-1	13	1	2	11-1	13	1	3	11-1	13
						1	4	11-1	13	2	1	11-1	11	2	2	11-1	9
						2	3	11-1	11	2	4	11-1	9	3	1	11-1	0
						3	2	11-1	6	3	3	11-1	0	3	4	11-1	6
			STIII	162.24	1.127	1	1	11-1	13	1	2	11-1	13	1	3	11-1	13
						1	4	11-1	13	2	1	11-1	11	2	2	11-1	9
						2	3	11-1	11	2	4	11-1	9	3	1	11-1	0
						3	2	11-1	6	3	3	11-1	0	3	4	11-1	6
			STRIV	162.24	1.127	1	1	11-1	13	1	2	11-1	13	1	3	11-1	13
						1	4	11-1	13	2	1	11-1	11	2	2	11-1	9
						2	3	11-1	11	2	4	11-1	9	3	1	11-1	0
						3	2	11-1	6	3	3	11-1	0	3	4	11-1	6
			STR V	162.24	1.127	1	1	11-1	13	1	2	11-1	13	1	3	11-1	13
						1	4	11-1	13	2	1	11-1	11	2	2	11-1	9
						2	3	11-1	11	2	4	11-1	9	3	1	11-1	0
						3	2	11-1	6	3	3	11-1	0	3	4	11-1	6
1	675.50	TOP	STR I	162.24	1.127	1	1	11-1	13	1	2	11-1	13	1	3	11-1	13
						1	4	11-1	13	2	1	11-1	11	2	2	11-1	9
						2	3	11-1	11	2	4	11-1	9	3	1	11-1	0
						3	2	11-1	6	3	3	11-1	0	3	4	11-1	6
			STIII	162.24	1.127	1	1	11-1	13	1	2	11-1	13	1	3	11-1	13
						1	4	11-1	13	2	1	11-1	11	2	2	11-1	9
						2	3	11-1	11	2	4	11-1	9	3	1	11-1	0
						3	2	11-1	6	3	3	11-1	0	3	4	11-1	6
			STRIV	162.24	1.127	1	1	11-1	13	1	2	11-1	13	1	3	11-1	13
						1	4	11-1	13	2	1	11-1	11	2	2	11-1	9
						2	3	11-1	11	2	4	11-1	9	3	1	11-1	0
						3	2	11-1	6	3	3	11-1	0	3	4	11-1	6
			STR V	162.24	1.127	1	1	11-1	13	1	2	11-1	13	1	3	11-1	13

						1	4	11-1	13	2	1	11-1	11	2	2	11-1	9
						2	3	11-1	11	2	4	11-1	9	3	1	11-1	0
						3	2	11-1	6	3	3	11-1	0	3	4	11-1	6
2	603.00	BOT	STR I	162.24	1.127	1	1	11-1	13	1	2	11-1	13	1	3	11-1	13
						1	4	11-1	13	2	1	11-1	11	2	2	11-1	9
						2	3	11-1	11	2	4	11-1	9	3	1	11-1	0
						3	2	11-1	6	3	3	11-1	0	3	4	11-1	6
			STIII	162.24	1.127	1	1	11-1	13	1	2	11-1	13	1	3	11-1	13
						1	4	11-1	13	2	1	11-1	11	2	2	11-1	9
						2	3	11-1	11	2	4	11-1	9	3	1	11-1	0
						3	2	11-1	6	3	3	11-1	0	3	4	11-1	6
			STRIV	162.24	1.127	1	1	11-1	13	1	2	11-1	13	1	3	11-1	13
						1	4	11-1	13	2	1	11-1	11	2	2	11-1	9
						2	3	11-1	11	2	4	11-1	9	3	1	11-1	0
						3	2	11-1	6	3	3	11-1	0	3	4	11-1	6
			STR V	162.24	1.127	1	1	11-1	13	1	2	11-1	13	1	3	11-1	13
						1	4	11-1	13	2	1	11-1	11	2	2	11-1	9
						2	3	11-1	11	2	4	11-1	9	3	1	11-1	0
						3	2	11-1	6	3	3	11-1	0	3	4	11-1	6
2	621.12	1/4B	STR I	162.24	1.127	1	1	11-1	13	1	2	11-1	13	1	3	11-1	13
						1	4	11-1	13	2	1	11-1	11	2	2	11-1	9
						2	3	11-1	11	2	4	11-1	9	3	1	11-1	0
						3	2	11-1	6	3	3	11-1	0	3	4	11-1	6
			STIII	162.24	1.127	1	1	11-1	13	1	2	11-1	13	1	3	11-1	13
						1	4	11-1	13	2	1	11-1	11	2	2	11-1	9
						2	3	11-1	11	2	4	11-1	9	3	1	11-1	0
						3	2	11-1	6	3	3	11-1	0	3	4	11-1	6
			STRIV	162.24	1.127	1	1	11-1	13	1	2	11-1	13	1	3	11-1	13
						1	4	11-1	13	2	1	11-1	11	2	2	11-1	9
						2	3	11-1	11	2	4	11-1	9	3	1	11-1	0
						3	2	11-1	6	3	3	11-1	0	3	4	11-1	6
			STR V	162.24	1.127	1	1	11-1	13	1	2	11-1	13	1	3	11-1	13
						1	4	11-1	13	2	1	11-1	11	2	2	11-1	9
						2	3	11-1	11	2	4	11-1	9	3	1	11-1	0
						3	2	11-1	6	3	3	11-1	0	3	4	11-1	6
2	639.25	1/2	STR I	162.24	1.127	1	1	11-1	13	1	2	11-1	13	1	3	11-1	13
						1	4	11-1	13	2	1	11-1	11	2	2	11-1	9
						2	3	11-1	11	2	4	11-1	9	3	1	11-1	0
						3	2	11-1	6	3	3	11-1	0	3	4	11-1	6
			STIII	162.24	1.127	1	1	11-1	13	1	2	11-1	13	1	3	11-1	13
						1	4	11-1	13	2	1	11-1	11	2	2	11-1	9
						2	3	11-1	11	2	4	11-1	9	3	1	11-1	0
						3	2	11-1	6	3	3	11-1	0	3	4	11-1	6
			STRIV	162.24	1.127	1	1	11-1	13	1	2	11-1	13	1	3	11-1	13
						1	4	11-1	13	2	1	11-1	11	2	2	11-1	9
						2	3	11-1	11	2	4	11-1	9	3	1	11-1	0
						3	2	11-1	6	3	3	11-1	0	3	4	11-1	6
			STR V	162.24	1.127	1	1	11-1	13	1	2	11-1	13	1	3	11-1	13
						1	4	11-1	13	2	1	11-1	11	2	2	11-1	9
						2	3	11-1	11	2	4	11-1	9	3	1	11-1	0
						3	2	11-1	6	3	3	11-1	0	3	4	11-1	6
2	657.38	1/4T	STR I	162.24	1.127	1	1	11-1	13	1	2	11-1	13	1	3	11-1	13
						1	4	11-1	13	2	1	11-1	11	2	2	11-1	9
						2	3	11-1	11	2	4	11-1	9	3	1	11-1	0
						3	2	11-1	6	3	3	11-1	0	3	4	11-1	6
			STIII	162.24	1.127	1	1	11-1	13	1	2	11-1	13	1	3	11-1	13
						1	4	11-1	13	2	1	11-1	11	2	2	11-1	9
						2	3	11-1	11	2	4	11-1	9	3	1	11-1	0
						3	2	11-1	6	3	3	11-1	0	3	4	11-1	6
			STRIV	162.24	1.127	1	1	11-1	13	1	2	11-1	13	1	3	11-1	13
						1	4	11-1	13	2	1	11-1	11	2	2	11-1	9
						2	3	11-1	11	2	4	11-1	9	3	1	11-1	0
						3	2	11-1	6	3	3	11-1	0	3	4	11-1	6
			STR V	162.24	1.127	1	1	11-1	13	1	2	11-1	13	1	3	11-1	13
						1	4	11-1	13	2	1	11-1	11	2	2	11-1	9
						2	3	11-1	11	2	4	11-1	9	3	1	11-1	0
						3	2	11-1	6	3	3	11-1	0	3	4	11-1	6
2	675.50	TOP	STR I	162.24	1.127	1	1	11-1	13	1	2	11-1	13	1	3	11-1	13
						1	4	11-1	13	2	1	11-1	11	2	2	11-1	9
						2	3	11-1	11	2	4	11-1	9	3	1	11-1	0
						3	2	11-1	6	3	3	11-1	0	3	4	11-1	6
			STIII	162.24	1.127	1	1	11-1	13	1	2	11-1	13	1	3	11-1	13
						1	4	11-1	13	2	1	11-1	11	2	2	11-1	9
						2	3	11-1	11	2	4	11-1	9	3	1	11-1	0
						3	2	11-1	6	3	3	11-1	0	3	4	11-1	6
			STRIV	162.24	1.127	1	1	11-1	13	1	2	11-1	13	1	3	11-1	13
						1	4	11-1	13	2	1	11-1	11	2	2	11-1	9
						2	3	11-1	11	2	4	11-1	9	3	1	11-1	0
						3	2	11-1	6	3	3	11-1	0	3	4	11-1	6
			STR V	162.24	1.127	1	1	11-1	13	1	2	11-1	13	1	3	11-1	13
						1	4	11-1	13	2	1	11-1	11	2	2	11-1	9
						2	3	11-1	11	2	4	11-1	9	3	1	11-1	0
						3	2	11-1	6	3	3	11-1	0	3	4	11-1	6

BEGIN TIME: 06/13/2012 14:20:36
END TIME: 06/13/2012 14:35:14
ELAPSED TIME: 00:14:38

RUN TIME: 06/08/2012 09:27:08.383 PROGRAM'S INTERPRETATION OF INPUT DATA MADE BY:_LER___ DATE_6/08/12
Filename: M:\jobs\49633\Techprod\Bridges\Main Span (Unit 2)\Pier 11\RFI - Misa CHECKED BY:_KDG___ DATE_6/12/12
BACKCHECKED BY:_____ DATE_____
INPUT FILE: m:\jobs\49633\techprod\bridges\main span (unit 2)\pier 11\rfi - misalignment\pier\column\pier 11 column_0u2.bdf
INPUT FILE DATE: 06/08/2012 09:26:29
DLL VERSION: 1.2.2.7 DATE: 1/10/2012

ELEMENT SUMMARY:

ELEMENT TYPE	NUMBER OF ELEMENTS
FOOTINGS	2
DRILLED SHAFT	0
PILES	24
COLUMNS	2
CAP BEAMS	1

----- JOB DESCRIPTION AND INITIAL GEOMETRY -----

JOB NUMBER: 49633
JOB NAME: Pier 11 Updated 3-11-11
USER NAME: ajohn
DESIGN CODE: AASHTO 2010
NUMBER OF COLUMNS: 2
NUMBER OF CAPBEAMS: 1
NUMBER OF FOOTINGS: 2
UNITS: (English)

----- DESIGN OPTIONS -----

DESIGN OPTIONS:
CAP:
DESIGN CAPS: No
DESIGN METHOD: LRFD Design
FACE + D: No
DESIGN POINTS: All Points
STIFFEN CAPS OVER COLUMNS: No
COLUMN:
DESIGN COLS: Yes
DESIGN METHOD: LRFD Design
MOMENT MAG.: Apply Moment Magnification
LOCATION: Quarter Points
FOOTING:
DESIGN FOOTS: No
DESIGN METHOD: LRFD Design

LOAD MODIFIER FACTORS:
DUCTILITY: 1.000
REDUNDANCY: 1.050
IMPORTANCE: 1.050

----- ENVIRONMENTAL PARAMETERS -----

STREAM AND ICE FLOW DATA:
HIGH WATER ELEVATION: 0.000 (ft)
LOW WATER ELEVATION : 0.000 (ft)
STREAM VELOCITY: 0.0 (ft/sec)
FLOW DIRECTION: 0.000 (degrees)
LONGITUDINAL DRAG COEFF: 0.000
LATERAL DRAG COEFF: 0.000
EFFECTIVE NOSE WIDTH: 0.000 (ft)
NOSE INCLINATION: VERT: 0.000 (degrees) HORZ: 0.000 (degrees)
ICE FRICTION ANGLE: 0.000 (degrees)
ICE STRENGTH: 0.000 (psi)
ICE THICKNESS: 0.000 (in)

WIND PRESSURE INTENSITY DATA:
SUBSTRUCTURE:
DESIGN VELOCITY: 100.0 (mph)
WIND PRESSURE: 40.000 (psf)

SUPERSTRUCTURE:
DESIGN VELOCITY: 100.0 (mph)
OVERTURNING WIND PRESSURE: 20.000 (psf)
AASHTO STANDARD WIND PRESSURES HAVE BEEN USED, 3.8.1.2.2-1 AND 3.8.1.3-1.

Note: All wind pressures are applied using a base wind velocity of 100 mph. These values are increased or decreased in accordance with AASHTO 3.8.1.2.1 for Strength Limit State III only.

TEMPERATURE DATA:
TEMP RISE: 35.0 Fahr.
TEMP FALL: 45.0 Fahr.

----- CAP BEAM 1 DATA -----

SHEAR DESIGN USING SIMPLIFIED PROCEDURE, AASHTO 5.8.3.4.1

TOP OF CAP BEAM 1 REFERENCE LINE DATA:
NUMBER OF POINTS: 22
POINT 1: OFFSET: -101.396 (ft) ELEV: 686.500 (ft)
POINT 2: OFFSET: -95.560 (ft) ELEV: 686.500 (ft)
POINT 3: OFFSET: -85.870 (ft) ELEV: 686.500 (ft)
POINT 4: OFFSET: -84.896 (ft) ELEV: 686.500 (ft)
POINT 5: OFFSET: -77.896 (ft) ELEV: 686.500 (ft)
POINT 6: OFFSET: -76.180 (ft) ELEV: 686.500 (ft)
POINT 7: OFFSET: -66.490 (ft) ELEV: 686.500 (ft)
POINT 8: OFFSET: -63.500 (ft) ELEV: 686.500 (ft)

```
    POINT  9:  OFFSET:  -50.788 (ft)     ELEV:  686.500 (ft)
    POINT 10:  OFFSET:  -39.088 (ft)     ELEV:  686.500 (ft)
    POINT 11:  OFFSET:  -31.440 (ft)     ELEV:  686.500 (ft)
    POINT 12:  OFFSET:  -27.388 (ft)     ELEV:  686.500 (ft)
    POINT 13:  OFFSET:  -15.688 (ft)     ELEV:  686.500 (ft)
    POINT 14:  OFFSET:   -3.988 (ft)     ELEV:  686.500 (ft)
    POINT 15:  OFFSET:    0.620 (ft)     ELEV:  686.500 (ft)
    POINT 16:  OFFSET:    7.712 (ft)     ELEV:  686.500 (ft)
    POINT 17:  OFFSET:   17.604 (ft)     ELEV:  686.500 (ft)
    POINT 18:  OFFSET:   19.412 (ft)     ELEV:  686.500 (ft)
    POINT 19:  OFFSET:   24.604 (ft)     ELEV:  686.500 (ft)
    POINT 20:  OFFSET:   31.112 (ft)     ELEV:  686.500 (ft)
    POINT 21:  OFFSET:   32.680 (ft)     ELEV:  686.500 (ft)
    POINT 22:  OFFSET:   41.104 (ft)     ELEV:  686.500 (ft)

  NUMBER OF SEGMENTS:  3
  SEGMENT  1 DIMENSIONS:
    SHAPE:   Rectangular
    PROFILE: Linear
    BEGIN SECTION:
      DISTANCE:   -101.40 (ft)      DEPTH:  6.50 (ft)      TOP ELEV:   686.500 (ft)
      BOT SLOPE:   0.0000           WIDTH: 12.00 (ft)      BOT ELEV:   680.000 (ft)
    END SECTION:
      DISTANCE:    -84.90 (ft)      DEPTH: 11.00 (ft)      TOP ELEV:   686.500 (ft)
      BOT SLOPE:   0.0000           WIDTH: 12.00 (ft)      BOT ELEV:   675.500 (ft)

  SEGMENT  2 DIMENSIONS:
    SHAPE:   Rectangular
    PROFILE: Linear
    BEGIN SECTION:
      DISTANCE:    -84.90 (ft)      DEPTH: 11.00 (ft)      TOP ELEV:   686.500 (ft)
      BOT SLOPE:   0.0000           WIDTH: 12.00 (ft)      BOT ELEV:   675.500 (ft)
    END SECTION:
      DISTANCE:     24.60 (ft)      DEPTH: 11.00 (ft)      TOP ELEV:   686.500 (ft)
      BOT SLOPE:   0.0000           WIDTH: 12.00 (ft)      BOT ELEV:   675.500 (ft)

  SEGMENT  3 DIMENSIONS:
    SHAPE:   Rectangular
    PROFILE: Linear
    BEGIN SECTION:
      DISTANCE:     24.60 (ft)      DEPTH: 11.00 (ft)      TOP ELEV:   686.500 (ft)
      BOT SLOPE:   0.0000           WIDTH: 12.00 (ft)      BOT ELEV:   675.500 (ft)
    END SECTION:
      DISTANCE:     41.10 (ft)      DEPTH:  6.50 (ft)      TOP ELEV:   686.500 (ft)
      BOT SLOPE:   0.0000           WIDTH: 12.00 (ft)      BOT ELEV:   680.000 (ft)

  REINFORCEMENT PARAMETERS:             CONCRETE PARAMETERS:
    YIELD  STRENGTH:    60.0 (ksi)        FPC:      4.0 (ksi)
    MIN COVER:    TOP:   3.0 (in)         WEIGHT: 150.0 (pcf)
                BOTTOM:   3.0 (in)        CTE:      0.0000060
                  SIDE:   3.0 (in)
    STIRRUPS:     SIZE:   3
      NO.LEGS TORSION:   1
      NO.LEGS   TOTAL:   2
    EXPOSURE FACTOR:     1.000

  REINFORCEMENT LAYER DATA:
  NUMBER OF SLABS:  3
    Slab No:  1   Label: Slab 1-1
    Slab No:  2   Label: Slab 1-2
    Slab No:  3   Label: Slab 1-3

----- SLAB 1 DATA ------------------------------------------------------------------------------------------------

  SLAB:  1     SLAB LABEL: Slab 1-1
  CONNECTED TO: CAPBEAM  1
    SLAB LENGTH:    306.14 (ft)
    SLAB WIDTH:     131.94 (ft)
    SLAB THICK:      10.00 (in)
    DESIGN SPEED:     70.0 (mph)
    SLAB RADIUS:    3522.0 (ft)
    HAUNCH THICK:     2.00 (in)
    PIER SKEW:      18.000 (degrees)
    NUMBER OF ROADWAYS:  1

    SLAB  1 DIMENSIONS:
      LEFT FASCIA:              LEFT BARRIER:             LEFT SIDEWALK:
        WIDTH:    0.000 (in)      WIDTH:   18.000 (in)      WIDTH:    0.000 (ft)
                                  HEIGHT:  32.000 (in)      THICK:    0.000 (in)

      ROADWAY 1 WIDTH = 128.940 (ft)

      RIGHT SIDEWALK:           RIGHT BARRIER:            RIGHT FASCIA:
        WIDTH:    0.000 (ft)      WIDTH:   18.000 (in)      WIDTH:    0.000 (in)
        THICK:    0.000 (in)      HEIGHT:  32.000 (in)

    SLAB  1 CROSS SLOPE DATA:
      NUMBER OF CROSS SLOPE VALUES:  2
        SLOPE: -0.0400          SLOPE: -0.0400
        DIST:   98.455 (ft)     DIST:   38.216 (ft)

    SLAB  1 GIRDER DATA:
      NUMBER OF GIRDERS:  5           GIRDER DEPTH AND PROFILE DISTANCES:
      SPAN LENGTH:                      BACK STATION:              PIER:                  FORWARD STATION:
        BACK STATION:  306.140 (ft)       DEPTH:     10.00 (ft)     DEPTH: 10.00 (ft)     DEPTH:      0.00 (ft)
```

FWD STATION: 0.000 (ft) DISTANCE: 306.14 (ft) DISTANCE: 0.00 (ft)

GIRDER LOCATION DATA:

NO.	NAME	DISTANCE (ft)	GIRDER TYPE	BOT FL WIDTH (in)	TOP FL WIDTH (in)	TOP FL ECCENT (in)	SKEW ANGLE (degrees)	BEARING OFFSET (in)	FIXITY
1	Girder 1	-93.225	I	0.00	0.00	0.00	18.000	-19.50	T
2	Girder 2	-61.162	I	0.00	0.00	0.00	18.000	-19.50	T
3	Girder 3	-29.098	I	0.00	0.00	0.00	18.000	-19.50	T
4	Girder 4	2.965	I	0.00	0.00	0.00	18.000	-19.50	T
5	Girder 5	35.029	I	0.00	0.00	0.00	18.000	-19.50	T

SLAB 1 BEARING DATA:
BEARING HEIGHT: 12.000 (in)
BEARING FRICTION COEFFICIENT: 0.060

----- SLAB 2 DATA -----

SLAB: 2 SLAB LABEL: Slab 1-2
CONNECTED TO: CAPBEAM 1
SLAB LENGTH: 240.00 (ft)
SLAB WIDTH: 37.00 (ft)
SLAB THICK: 9.25 (in)
DESIGN SPEED: 70.0 (mph)
SLAB RADIUS: 3274.0 (ft)
HAUNCH THICK: 3.50 (in)
PIER SKEW: 18.000 (degrees)
NUMBER OF ROADWAYS: 1

SLAB 2 DIMENSIONS:
LEFT FASCIA: LEFT BARRIER: LEFT SIDEWALK:
WIDTH: 0.000 (in) WIDTH: 18.000 (in) WIDTH: 0.000 (ft)
HEIGHT: 32.000 (in) THICK: 0.000 (in)

ROADWAY 1 WIDTH = 34.000 (ft)

RIGHT SIDEWALK: RIGHT BARRIER: RIGHT FASCIA:
WIDTH: 0.000 (ft) WIDTH: 18.000 (in) WIDTH: 0.000 (in)
THICK: 0.000 (in) HEIGHT: 32.000 (in)

SLAB 2 CROSS SLOPE DATA:
NUMBER OF CROSS SLOPE VALUES: 2
SLOPE: -0.0400 SLOPE: -0.0400
DIST: 37.234 (ft) DIST: 61.221 (ft)

SLAB 2 GIRDER DATA:
NUMBER OF GIRDERS: 4 GIRDER DEPTH AND PROFILE DISTANCES:
SPAN LENGTH: BACK STATION: PIER: FORWARD STATION:
BACK STATION: 0.000 (ft) DEPTH: 0.00 (ft) DEPTH: 8.17 (ft) DEPTH: 8.17 (ft)
FWD STATION: 240.000 (ft) DISTANCE: 0.00 (ft) DISTANCE: 240.00 (ft)

GIRDER LOCATION DATA:

NO.	NAME	DISTANCE (ft)	GIRDER TYPE	BOT FL WIDTH (in)	TOP FL WIDTH (in)	TOP FL ECCENT (in)	SKEW ANGLE (degrees)	BEARING OFFSET (in)	FIXITY
1	Girder 1	-95.847	I	0.00	0.00	0.00	18.000	50.50	T
2	Girder 2	-85.540	I	0.00	0.00	0.00	18.000	50.50	T
3	Girder 3	-75.230	I	0.00	0.00	0.00	18.000	50.50	T
4	Girder 4	-64.917	I	0.00	0.00	0.00	18.000	50.50	T

SLAB 2 BEARING DATA:
BEARING HEIGHT: 40.000 (in)
BEARING FRICTION COEFFICIENT: 0.060

----- SLAB 3 DATA -----

SLAB: 3 SLAB LABEL: Slab 1-3
CONNECTED TO: CAPBEAM 1
SLAB LENGTH: 240.00 (ft)
SLAB WIDTH: 87.93 (ft)
SLAB THICK: 9.50 (in)
DESIGN SPEED: 70.0 (mph)
SLAB RADIUS: 3522.0 (ft)
HAUNCH THICK: 2.00 (in)
PIER SKEW: 18.000 (degrees)
NUMBER OF ROADWAYS: 1

SLAB 3 DIMENSIONS:
LEFT FASCIA: LEFT BARRIER: LEFT SIDEWALK:
WIDTH: 0.000 (in) WIDTH: 18.000 (in) WIDTH: 0.000 (ft)
HEIGHT: 32.000 (in) THICK: 0.000 (in)

ROADWAY 1 WIDTH = 84.929 (ft)

RIGHT SIDEWALK: RIGHT BARRIER: RIGHT FASCIA:
WIDTH: 0.000 (ft) WIDTH: 18.000 (in) WIDTH: 0.000 (in)
THICK: 0.000 (in) HEIGHT: 32.000 (in)

SLAB 3 CROSS SLOPE DATA:
NUMBER OF CROSS SLOPE VALUES: 2
SLOPE: -0.0400 SLOPE: -0.0400
DIST: 52.181 (ft) DIST: 38.000 (ft)

SLAB 3 GIRDER DATA:
NUMBER OF GIRDERS: 9 GIRDER DEPTH AND PROFILE DISTANCES:

SPAN LENGTH: BACK STATION: PIER: FORWARD STATION:
BACK STATION: 0.000 (ft) DEPTH: 0.00 (ft) DEPTH: 8.27 (ft) DEPTH: 8.27 (ft)
FWD STATION: 240.000 (ft) DISTANCE: 0.00 (ft) DISTANCE: 240.00 (ft)

GIRDER LOCATION DATA:

NO.	NAME	DISTANCE (ft)	GIRDER TYPE	BOT FL WIDTH (in)	TOP FL WIDTH (in)	TOP FL ECCENT (in)	SKEW ANGLE (degrees)	BEARING OFFSET (in)	FIXITY
1	Girder 1	-49.440	I	0.00	0.00	0.00	18.000	50.50	T
2	Girder 2	-37.671	I	0.00	0.00	0.00	18.000	50.50	T
3	Girder 3	-25.897	I	0.00	0.00	0.00	18.000	50.50	T
4	Girder 4	-14.118	I	0.00	0.00	0.00	18.000	50.50	T
5	Girder 5	-7.655	I	0.00	0.00	0.00	18.000	50.50	T
6	Girder 6	-1.192	I	0.00	0.00	0.00	18.000	50.50	T
7	Girder 7	10.483	I	0.00	0.00	0.00	18.000	50.50	T
8	Girder 8	22.162	I	0.00	0.00	0.00	18.000	50.50	T
9	Girder 9	33.844	I	0.00	0.00	0.00	18.000	50.50	T

SLAB 3 BEARING DATA:
BEARING HEIGHT: 40.000 (in)
BEARING FRICTION COEFFICIENT: 0.060

----- COLUMN 1 DATA -----

COLUMN LINE OFFSET: -77.896 (ft)
NUMBER OF LEVELS: 1
COLUMN FACE LOCATIONS:
CAPBEAM: -TRAN: 84.00 (in) +TRAN: 84.00 (in)
FOOTING: -TRAN: 84.00 (in) +TRAN: 84.00 (in) -LONG: 72.00 (in) +LONG: 72.00 (in)
COLUMN: 1 LEVEL: 1
NUMBER OF SEGMENTS: 1
MAGNIFICATION FACTORS: K-TRAN: 1.20 K-LONG: 2.10
ECCENTRICITIES: TRAN: 0.000 (ft) LONG: 0.000 (ft)
ROTATION ANGLE: 0.000 (degrees)
SEGMENT 1 DIMENSIONS:
SHAPE: User Defined
BEGIN SECTION:
TOP ELEV: 675.500 (ft)
TORSIONAL CONSTANT J: 0.437E+08 (in**4)
NUMBER OF FACES: 18

FACE 1:	BEG	X:	-84.000 (in)	Y:	-60.000 (in)	Rad:	0.000 (in)	
	END	X:	-72.000 (in)	Y:	-60.000 (in)			
FACE 2:	BEG	X:	-72.000 (in)	Y:	-60.000 (in)	Rad:	0.000 (in)	
	END	X:	-72.000 (in)	Y:	-72.000 (in)			
FACE 3:	BEG	X:	-72.000 (in)	Y:	-72.000 (in)	Rad:	0.000 (in)	
	END	X:	72.000 (in)	Y:	-72.000 (in)			
FACE 4:	BEG	X:	72.000 (in)	Y:	-72.000 (in)	Rad:	0.000 (in)	
	END	X:	72.000 (in)	Y:	-60.000 (in)			
FACE 5:	BEG	X:	72.000 (in)	Y:	-60.000 (in)	Rad:	0.000 (in)	
	END	X:	84.000 (in)	Y:	-60.000 (in)			
FACE 6:	BEG	X:	84.000 (in)	Y:	-60.000 (in)	Rad:	0.000 (in)	
	END	X:	84.000 (in)	Y:	60.000 (in)			
FACE 7:	BEG	X:	84.000 (in)	Y:	60.000 (in)	Rad:	0.000 (in)	
	END	X:	72.000 (in)	Y:	60.000 (in)			
FACE 8:	BEG	X:	72.000 (in)	Y:	60.000 (in)	Rad:	0.000 (in)	
	END	X:	72.000 (in)	Y:	72.000 (in)			
FACE 9:	BEG	X:	72.000 (in)	Y:	72.000 (in)	Rad:	0.000 (in)	
	END	X:	-72.000 (in)	Y:	72.000 (in)			
FACE 10:	BEG	X:	-72.000 (in)	Y:	72.000 (in)	Rad:	0.000 (in)	
	END	X:	-72.000 (in)	Y:	60.000 (in)			
FACE 11:	BEG	X:	-72.000 (in)	Y:	60.000 (in)	Rad:	0.000 (in)	
	END	X:	-84.000 (in)	Y:	60.000 (in)			
FACE 12:	BEG	X:	-84.000 (in)	Y:	60.000 (in)	Rad:	0.000 (in)	
	END	X:	-84.000 (in)	Y:	-60.000 (in)			
FACE 13:	BEG	X:	-84.000 (in)	Y:	-60.000 (in)	Rad:	0.000 (in)	
	END	X:	-48.000 (in)	Y:	-48.000 (in)			
FACE 14:	BEG	X:	-48.000 (in)	Y:	-48.000 (in)	Rad:	0.000 (in)	
	END	X:	-48.000 (in)	Y:	48.000 (in)			
FACE 15:	BEG	X:	-48.000 (in)	Y:	48.000 (in)	Rad:	0.000 (in)	
	END	X:	48.000 (in)	Y:	48.000 (in)			
FACE 16:	BEG	X:	48.000 (in)	Y:	48.000 (in)	Rad:	0.000 (in)	
	END	X:	48.000 (in)	Y:	-48.000 (in)			
FACE 17:	BEG	X:	48.000 (in)	Y:	-48.000 (in)	Rad:	0.000 (in)	
	END	X:	-48.000 (in)	Y:	-48.000 (in)			
FACE 18:	BEG	X:	-48.000 (in)	Y:	-48.000 (in)	Rad:	0.000 (in)	
	END	X:	-84.000 (in)	Y:	-60.000 (in)			

END SECTION:
BOT ELEV: 603.000 (ft)
TORSIONAL CONSTANT J: 0.437E+08 (in**4)
NUMBER OF FACES: 18

FACE 1:	BEG	X:	-84.000 (in)	Y:	-60.000 (in)	Rad:	0.000 (in)	
	END	X:	-72.000 (in)	Y:	-60.000 (in)			
FACE 2:	BEG	X:	-72.000 (in)	Y:	-60.000 (in)	Rad:	0.000 (in)	
	END	X:	-72.000 (in)	Y:	-72.000 (in)			
FACE 3:	BEG	X:	-72.000 (in)	Y:	-72.000 (in)	Rad:	0.000 (in)	
	END	X:	72.000 (in)	Y:	-72.000 (in)			
FACE 4:	BEG	X:	72.000 (in)	Y:	-72.000 (in)	Rad:	0.000 (in)	
	END	X:	72.000 (in)	Y:	-60.000 (in)			
FACE 5:	BEG	X:	72.000 (in)	Y:	-60.000 (in)	Rad:	0.000 (in)	
	END	X:	84.000 (in)	Y:	-60.000 (in)			
FACE 6:	BEG	X:	84.000 (in)	Y:	-60.000 (in)	Rad:	0.000 (in)	
	END	X:	84.000 (in)	Y:	60.000 (in)			
FACE 7:	BEG	X:	84.000 (in)	Y:	60.000 (in)	Rad:	0.000 (in)	
	END	X:	72.000 (in)	Y:	60.000 (in)			
FACE 8:	BEG	X:	72.000 (in)	Y:	60.000 (in)	Rad:	0.000 (in)	

```
                END  X:     72.000 (in)     Y:     72.000 (in)
        FACE  9: BEG  X:     72.000 (in)     Y:     72.000 (in)     Rad:      0.000 (in)
                END  X:    -72.000 (in)     Y:     72.000 (in)
        FACE 10: BEG  X:    -72.000 (in)     Y:     72.000 (in)     Rad:      0.000 (in)
                END  X:    -72.000 (in)     Y:     60.000 (in)
        FACE 11: BEG  X:    -72.000 (in)     Y:     60.000 (in)     Rad:      0.000 (in)
                END  X:    -84.000 (in)     Y:     60.000 (in)
        FACE 12: BEG  X:    -84.000 (in)     Y:     60.000 (in)     Rad:      0.000 (in)
                END  X:    -84.000 (in)     Y:    -60.000 (in)
        FACE 13: BEG  X:    -84.000 (in)     Y:    -60.000 (in)     Rad:      0.000 (in)
                END  X:    -48.000 (in)     Y:    -48.000 (in)
        FACE 14: BEG  X:    -48.000 (in)     Y:    -48.000 (in)     Rad:      0.000 (in)
                END  X:    -48.000 (in)     Y:     48.000 (in)
        FACE 15: BEG  X:    -48.000 (in)     Y:     48.000 (in)     Rad:      0.000 (in)
                END  X:     48.000 (in)     Y:     48.000 (in)
        FACE 16: BEG  X:     48.000 (in)     Y:     48.000 (in)     Rad:      0.000 (in)
                END  X:     48.000 (in)     Y:    -48.000 (in)
        FACE 17: BEG  X:     48.000 (in)     Y:    -48.000 (in)     Rad:      0.000 (in)
                END  X:    -48.000 (in)     Y:    -48.000 (in)
        FACE 18: BEG  X:    -48.000 (in)     Y:    -48.000 (in)     Rad:      0.000 (in)
                END  X:    -84.000 (in)     Y:    -60.000 (in)
REINFORCEMENT PARAMETERS:                   CONCRETE PARAMETERS:
  YIELD  STRENGTH:   60.0 (ksi)               FPC:      4.0 (ksi)
  CONTAINMENT BARS:   TYPE:   Tied            WEIGHT: 150.0 (pcf)
                      SIZE:   6               CTE:      0.0000060
  DISTANCE TO CL VERT BARS:   0.000 (in)
  PERCENT STEEL:       MIN:    1.00
                       MAX:    8.00

COLUMN REINFORCEMENT DATA:
  NUMBER OF REINFORCEMENT SECTIONS:  3
    SECTION  1 DATA:
      SHAPE: Rectangular           TRAN OFFSET:    0.00 (in)       TOP ELEV:   675.50 (ft)
      NUMBER OF FACES:  4          LONG OFFSET:    0.00 (in)       BOT ELEV:   603.00 (ft)
        FACE DATA:
          FACE NUMBER:            1             2             3             4
          TOP BEG X COORD:   -66.92 (in)    66.92 (in)    66.92 (in)   -66.92 (in)
          TOP BEG Y COORD:   -66.92 (in)   -66.92 (in)    66.92 (in)    66.92 (in)
          TOP END X COORD:    66.92 (in)    66.92 (in)   -66.92 (in)   -66.92 (in)
          TOP END Y COORD:   -66.92 (in)    66.92 (in)    66.92 (in)   -66.92 (in)
          TOP RADIUS:          0.00 (in)     0.00 (in)     0.00 (in)     0.00 (in)

          BOT BEG X COORD:   -66.92 (in)    66.92 (in)    66.92 (in)   -66.92 (in)
          BOT BEG Y COORD:   -66.92 (in)   -66.92 (in)    66.92 (in)    66.92 (in)
          BOT END X COORD:    66.92 (in)    66.92 (in)   -66.92 (in)   -66.92 (in)
          BOT END Y COORD:   -66.92 (in)    66.92 (in)    66.92 (in)   -66.92 (in)
          BOT RADIUS:          0.00 (in)     0.00 (in)     0.00 (in)     0.00 (in)

          BARSIZE:               11            11            11            11
          BARS/BUNDLE:            1             1             1             1
          MIN NUM BARS:          13            13            13            13
          MAX NUM BARS:          13            13            13            13
          BAR AT BEG:           Yes            No           Yes            No
          BAR AT END:           Yes            No           Yes            No

    SECTION  2 DATA:
      SHAPE: Square                TRAN OFFSET:    0.00 (in)       TOP ELEV:   675.50 (ft)
      NUMBER OF FACES:  4          LONG OFFSET:    0.00 (in)       BOT ELEV:   603.00 (ft)
        FACE DATA:
          FACE NUMBER:            1             2             3             4
          TOP BEG X COORD:   -53.08 (in)    53.08 (in)    53.08 (in)   -53.08 (in)
          TOP BEG Y COORD:   -53.08 (in)   -53.08 (in)    53.08 (in)    53.08 (in)
          TOP END X COORD:    53.08 (in)    53.08 (in)   -53.08 (in)   -53.08 (in)
          TOP END Y COORD:   -53.08 (in)    53.08 (in)    53.08 (in)   -53.08 (in)
          TOP RADIUS:          0.00 (in)     0.00 (in)     0.00 (in)     0.00 (in)

          BOT BEG X COORD:   -53.08 (in)    53.08 (in)    53.08 (in)   -53.08 (in)
          BOT BEG Y COORD:   -53.08 (in)   -53.08 (in)    53.08 (in)    53.08 (in)
          BOT END X COORD:    53.08 (in)    53.08 (in)   -53.08 (in)   -53.08 (in)
          BOT END Y COORD:   -53.08 (in)    53.08 (in)    53.08 (in)   -53.08 (in)
          BOT RADIUS:          0.00 (in)     0.00 (in)     0.00 (in)     0.00 (in)

          BARSIZE:               11            11            11            11
          BARS/BUNDLE:            1             1             1             1
          MIN NUM BARS:          11             9            11             9
          MAX NUM BARS:          11             9            11             9
          BAR AT BEG:           Yes            No           Yes            No
          BAR AT END:           Yes            No           Yes            No

    SECTION  3 DATA:
      SHAPE: Rectangular           TRAN OFFSET:    0.00 (in)       TOP ELEV:   675.50 (ft)
      NUMBER OF FACES:  4          LONG OFFSET:    0.00 (in)       BOT ELEV:   603.00 (ft)
        FACE DATA:
          FACE NUMBER:            1             2             3             4
          TOP BEG X COORD:   -79.05 (in)    79.05 (in)    79.05 (in)   -79.05 (in)
          TOP BEG Y COORD:   -55.05 (in)   -55.05 (in)    55.05 (in)    55.05 (in)
          TOP END X COORD:    79.05 (in)    79.05 (in)   -79.05 (in)   -79.05 (in)
          TOP END Y COORD:   -55.05 (in)    55.05 (in)    55.05 (in)   -55.05 (in)
          TOP RADIUS:          0.00 (in)     0.00 (in)     0.00 (in)     0.00 (in)

          BOT BEG X COORD:   -79.05 (in)    79.05 (in)    79.05 (in)   -79.05 (in)
          BOT BEG Y COORD:   -55.05 (in)   -55.05 (in)    55.05 (in)    55.05 (in)
          BOT END X COORD:    79.05 (in)    79.05 (in)   -79.05 (in)   -79.05 (in)
          BOT END Y COORD:   -55.05 (in)    55.05 (in)    55.05 (in)   -55.05 (in)
          BOT RADIUS:          0.00 (in)     0.00 (in)     0.00 (in)     0.00 (in)
```

```
            BARSIZE:               11            11            11            11
            BARS/BUNDLE:            1             1             1             1
            MIN NUM BARS:           0             6             0             6
            MAX NUM BARS:           0             6             0             6
            BAR AT BEG:            No           Yes            No           Yes
            BAR AT END:            No           Yes            No           Yes


----- COLUMN  2 DATA ------------------------------------------------------------------------------------------

  COLUMN LINE OFFSET:   17.604 (ft)
  NUMBER OF LEVELS:  1
  COLUMN FACE LOCATIONS:
    CAPBEAM: -TRAN:    84.00 (in)     +TRAN:    84.00 (in)
    FOOTING: -TRAN:    84.00 (in)     +TRAN:    84.00 (in)     -LONG:    72.00 (in)     +LONG:    72.00 (in)
  COLUMN:  2  LEVEL: 1
    NUMBER OF SEGMENTS:  1
    MAGNIFICATION FACTORS:    K-TRAN:  1.20         K-LONG:  2.10
    ECCENTRICITIES:             TRAN:  0.000 (ft)     LONG:  0.000 (ft)
    ROTATION ANGLE:      0.000 (degrees)
    SEGMENT  1 DIMENSIONS:
      SHAPE:   User Defined
      BEGIN SECTION:
        TOP ELEV:    675.500 (ft)
        TORSIONAL CONSTANT J:       0.437E+08 (in**4)
          NUMBER OF FACES: 18
            FACE  1: BEG  X:    -84.000 (in)     Y:    -60.000 (in)     Rad:      0.000 (in)
                     END  X:    -72.000 (in)     Y:    -60.000 (in)
            FACE  2: BEG  X:    -72.000 (in)     Y:    -60.000 (in)     Rad:      0.000 (in)
                     END  X:    -72.000 (in)     Y:    -72.000 (in)
            FACE  3: BEG  X:    -72.000 (in)     Y:    -72.000 (in)     Rad:      0.000 (in)
                     END  X:     72.000 (in)     Y:    -72.000 (in)
            FACE  4: BEG  X:     72.000 (in)     Y:    -72.000 (in)     Rad:      0.000 (in)
                     END  X:     72.000 (in)     Y:    -60.000 (in)
            FACE  5: BEG  X:     72.000 (in)     Y:    -60.000 (in)     Rad:      0.000 (in)
                     END  X:     84.000 (in)     Y:    -60.000 (in)
            FACE  6: BEG  X:     84.000 (in)     Y:    -60.000 (in)     Rad:      0.000 (in)
                     END  X:     84.000 (in)     Y:     60.000 (in)
            FACE  7: BEG  X:     84.000 (in)     Y:     60.000 (in)     Rad:      0.000 (in)
                     END  X:     72.000 (in)     Y:     60.000 (in)
            FACE  8: BEG  X:     72.000 (in)     Y:     60.000 (in)     Rad:      0.000 (in)
                     END  X:     72.000 (in)     Y:     72.000 (in)
            FACE  9: BEG  X:     72.000 (in)     Y:     72.000 (in)     Rad:      0.000 (in)
                     END  X:    -72.000 (in)     Y:     72.000 (in)
            FACE 10: BEG  X:    -72.000 (in)     Y:     72.000 (in)     Rad:      0.000 (in)
                     END  X:    -72.000 (in)     Y:     60.000 (in)
            FACE 11: BEG  X:    -72.000 (in)     Y:     60.000 (in)     Rad:      0.000 (in)
                     END  X:    -84.000 (in)     Y:     60.000 (in)
            FACE 12: BEG  X:    -84.000 (in)     Y:     60.000 (in)     Rad:      0.000 (in)
                     END  X:    -84.000 (in)     Y:    -60.000 (in)
            FACE 13: BEG  X:    -84.000 (in)     Y:    -60.000 (in)     Rad:      0.000 (in)
                     END  X:    -48.000 (in)     Y:    -48.000 (in)
            FACE 14: BEG  X:    -48.000 (in)     Y:    -48.000 (in)     Rad:      0.000 (in)
                     END  X:    -48.000 (in)     Y:     48.000 (in)
            FACE 15: BEG  X:    -48.000 (in)     Y:     48.000 (in)     Rad:      0.000 (in)
                     END  X:     48.000 (in)     Y:     48.000 (in)
            FACE 16: BEG  X:     48.000 (in)     Y:     48.000 (in)     Rad:      0.000 (in)
                     END  X:     48.000 (in)     Y:    -48.000 (in)
            FACE 17: BEG  X:     48.000 (in)     Y:    -48.000 (in)     Rad:      0.000 (in)
                     END  X:    -48.000 (in)     Y:    -48.000 (in)
            FACE 18: BEG  X:    -48.000 (in)     Y:    -48.000 (in)     Rad:      0.000 (in)
                     END  X:    -84.000 (in)     Y:    -60.000 (in)
      END SECTION:
        BOT ELEV:    603.000 (ft)
        TORSIONAL CONSTANT J:       0.437E+08 (in**4)
          NUMBER OF FACES: 18
            FACE  1: BEG  X:    -84.000 (in)     Y:    -60.000 (in)     Rad:      0.000 (in)
                     END  X:    -72.000 (in)     Y:    -60.000 (in)
            FACE  2: BEG  X:    -72.000 (in)     Y:    -60.000 (in)     Rad:      0.000 (in)
                     END  X:    -72.000 (in)     Y:    -72.000 (in)
            FACE  3: BEG  X:    -72.000 (in)     Y:    -72.000 (in)     Rad:      0.000 (in)
                     END  X:     72.000 (in)     Y:    -72.000 (in)
            FACE  4: BEG  X:     72.000 (in)     Y:    -72.000 (in)     Rad:      0.000 (in)
                     END  X:     72.000 (in)     Y:    -60.000 (in)
            FACE  5: BEG  X:     72.000 (in)     Y:    -60.000 (in)     Rad:      0.000 (in)
                     END  X:     84.000 (in)     Y:    -60.000 (in)
            FACE  6: BEG  X:     84.000 (in)     Y:    -60.000 (in)     Rad:      0.000 (in)
                     END  X:     84.000 (in)     Y:     60.000 (in)
            FACE  7: BEG  X:     84.000 (in)     Y:     60.000 (in)     Rad:      0.000 (in)
                     END  X:     72.000 (in)     Y:     60.000 (in)
            FACE  8: BEG  X:     72.000 (in)     Y:     60.000 (in)     Rad:      0.000 (in)
                     END  X:     72.000 (in)     Y:     72.000 (in)
            FACE  9: BEG  X:     72.000 (in)     Y:     72.000 (in)     Rad:      0.000 (in)
                     END  X:    -72.000 (in)     Y:     72.000 (in)
            FACE 10: BEG  X:    -72.000 (in)     Y:     72.000 (in)     Rad:      0.000 (in)
                     END  X:    -72.000 (in)     Y:     60.000 (in)
            FACE 11: BEG  X:    -72.000 (in)     Y:     60.000 (in)     Rad:      0.000 (in)
                     END  X:    -84.000 (in)     Y:     60.000 (in)
            FACE 12: BEG  X:    -84.000 (in)     Y:     60.000 (in)     Rad:      0.000 (in)
                     END  X:    -84.000 (in)     Y:    -60.000 (in)
            FACE 13: BEG  X:    -84.000 (in)     Y:    -60.000 (in)     Rad:      0.000 (in)
                     END  X:    -48.000 (in)     Y:    -48.000 (in)
            FACE 14: BEG  X:    -48.000 (in)     Y:    -48.000 (in)     Rad:      0.000 (in)
                     END  X:    -48.000 (in)     Y:     48.000 (in)
```

```
          FACE 15: BEG  X:    -48.000 (in)     Y:     48.000 (in)     Rad:      0.000 (in)
                   END  X:     48.000 (in)     Y:     48.000 (in)
          FACE 16: BEG  X:     48.000 (in)     Y:     48.000 (in)     Rad:      0.000 (in)
                   END  X:     48.000 (in)     Y:    -48.000 (in)
          FACE 17: BEG  X:     48.000 (in)     Y:    -48.000 (in)     Rad:      0.000 (in)
                   END  X:    -48.000 (in)     Y:    -48.000 (in)
          FACE 18: BEG  X:    -48.000 (in)     Y:    -48.000 (in)     Rad:      0.000 (in)
                   END  X:    -84.000 (in)     Y:    -60.000 (in)
    REINFORCEMENT PARAMETERS:                  CONCRETE PARAMETERS:
      YIELD  STRENGTH:   60.0 (ksi)              FPC:      4.0 (ksi)
      CONTAINMENT BARS:   TYPE:   Tied           WEIGHT: 150.0 (pcf)
                          SIZE:   6              CTE:      0.0000060
      DISTANCE TO CL VERT BARS:   0.000 (in)
      PERCENT STEEL:       MIN:    1.00
                           MAX:    8.00

    COLUMN REINFORCEMENT DATA:
      NUMBER OF REINFORCEMENT SECTIONS:  3
        SECTION  1 DATA:
          SHAPE: Rectangular           TRAN OFFSET:    0.00 (in)       TOP ELEV:   675.50 (ft)
          NUMBER OF FACES:  4          LONG OFFSET:    0.00 (in)       BOT ELEV:   603.00 (ft)
            FACE DATA:
              FACE NUMBER:            1            2            3            4
              TOP BEG X COORD:   -66.92 (in)   66.92 (in)   66.92 (in)  -66.92 (in)
              TOP BEG Y COORD:   -66.92 (in)  -66.92 (in)   66.92 (in)   66.92 (in)
              TOP END X COORD:    66.92 (in)   66.92 (in)  -66.92 (in)  -66.92 (in)
              TOP END Y COORD:   -66.92 (in)   66.92 (in)   66.92 (in)  -66.92 (in)
              TOP RADIUS:          0.00 (in)    0.00 (in)    0.00 (in)    0.00 (in)

              BOT BEG X COORD:   -66.92 (in)   66.92 (in)   66.92 (in)  -66.92 (in)
              BOT BEG Y COORD:   -66.92 (in)  -66.92 (in)   66.92 (in)   66.92 (in)
              BOT END X COORD:    66.92 (in)   66.92 (in)  -66.92 (in)  -66.92 (in)
              BOT END Y COORD:   -66.92 (in)   66.92 (in)   66.92 (in)  -66.92 (in)
              BOT RADIUS:          0.00 (in)    0.00 (in)    0.00 (in)    0.00 (in)

              BARSIZE:               11           11           11           11
              BARS/BUNDLE:            1            1            1            1
              MIN NUM BARS:          13           13           13           13
              MAX NUM BARS:          13           13           13           13
              BAR AT BEG:           Yes           No          Yes           No
              BAR AT END:           Yes           No          Yes           No

        SECTION  2 DATA:
          SHAPE: Square                TRAN OFFSET:    0.00 (in)       TOP ELEV:   675.50 (ft)
          NUMBER OF FACES:  4          LONG OFFSET:    0.00 (in)       BOT ELEV:   603.00 (ft)
            FACE DATA:
              FACE NUMBER:            1            2            3            4
              TOP BEG X COORD:   -53.08 (in)   53.08 (in)   53.08 (in)  -53.08 (in)
              TOP BEG Y COORD:   -53.08 (in)  -53.08 (in)   53.08 (in)   53.08 (in)
              TOP END X COORD:    53.08 (in)   53.08 (in)  -53.08 (in)  -53.08 (in)
              TOP END Y COORD:   -53.08 (in)   53.08 (in)   53.08 (in)  -53.08 (in)
              TOP RADIUS:          0.00 (in)    0.00 (in)    0.00 (in)    0.00 (in)

              BOT BEG X COORD:   -53.08 (in)   53.08 (in)   53.08 (in)  -53.08 (in)
              BOT BEG Y COORD:   -53.08 (in)  -53.08 (in)   53.08 (in)   53.08 (in)
              BOT END X COORD:    53.08 (in)   53.08 (in)  -53.08 (in)  -53.08 (in)
              BOT END Y COORD:   -53.08 (in)   53.08 (in)   53.08 (in)  -53.08 (in)
              BOT RADIUS:          0.00 (in)    0.00 (in)    0.00 (in)    0.00 (in)

              BARSIZE:               11           11           11           11
              BARS/BUNDLE:            1            1            1            1
              MIN NUM BARS:          11            9           11            9
              MAX NUM BARS:          11            9           11            9
              BAR AT BEG:           Yes           No          Yes           No
              BAR AT END:           Yes           No          Yes           No

        SECTION  3 DATA:
          SHAPE: Rectangular           TRAN OFFSET:    0.00 (in)       TOP ELEV:   675.50 (ft)
          NUMBER OF FACES:  4          LONG OFFSET:    0.00 (in)       BOT ELEV:   603.00 (ft)
            FACE DATA:
              FACE NUMBER:            1            2            3            4
              TOP BEG X COORD:   -79.05 (in)   79.05 (in)   79.05 (in)  -79.05 (in)
              TOP BEG Y COORD:   -55.05 (in)  -55.05 (in)   55.05 (in)   55.05 (in)
              TOP END X COORD:    79.05 (in)   79.05 (in)  -79.05 (in)  -79.05 (in)
              TOP END Y COORD:   -55.05 (in)   55.05 (in)   55.05 (in)  -55.05 (in)
              TOP RADIUS:          0.00 (in)    0.00 (in)    0.00 (in)    0.00 (in)

              BOT BEG X COORD:   -79.05 (in)   79.05 (in)   79.05 (in)  -79.05 (in)
              BOT BEG Y COORD:   -55.05 (in)  -55.05 (in)   55.05 (in)   55.05 (in)
              BOT END X COORD:    79.05 (in)   79.05 (in)  -79.05 (in)  -79.05 (in)
              BOT END Y COORD:   -55.05 (in)   55.05 (in)   55.05 (in)  -55.05 (in)
              BOT RADIUS:          0.00 (in)    0.00 (in)    0.00 (in)    0.00 (in)

              BARSIZE:               11           11           11           11
              BARS/BUNDLE:            1            1            1            1
              MIN NUM BARS:           0            6            0            6
              MAX NUM BARS:           0            6            0            6
              BAR AT BEG:            No          Yes           No          Yes
              BAR AT END:            No          Yes           No          Yes

----- FOOTING  1 DATA ---------------------------------------------------------------------------------------

  FOOTING TYPE: Pile Footing
  TOP OF FOOTING ELEVATION:  603.000 (ft)     ROTATION ANGLE:     0.000 (degrees)
```

SHEAR DESIGN USING SIMPLIFIED PROCEDURE, AASHTO 5.8.3.4.1

REINFORCEMENT PARAMETERS:
YIELD STRENGTH: 60.0 (ksi)
MIN COVER: TOP: 3.0 (in)
BOTTOM: 3.0 (in)
SIDE: 3.0 (in)
STIRRUPS: SIZE: 0
NO.LEGS TOTAL: 0
EXPOSURE FACTOR: 1.000

CONCRETE PARAMETERS:
FPC: 4.0 (ksi)
WEIGHT: 150.0 (pcf)
CTE: 0.0000060

SOIL PARAMETERS:
SOIL ELEVATION: 628.000 (ft)
SOIL WEIGHT: 120.0 (pcf)
SOIL CAPACITY:
UNFACTORED: 0.000 (ksf)
FACTORED: 0.000 (ksf)

FOOTING DIMENSIONS:
TRANSVERSE: 38.000 (ft)
LONGITUDINAL: 38.000 (ft)
DEPTH: 10.000 (ft)

LOCATION OF FIRST COLUMN:
TRANSVERSE: 19.000 (ft)
LONGITUDINAL: 19.000 (ft)

REINFORCEMENT LAYER DATA:
BOTTOM MAT: Transverse bars on bottom at min cover of 3.000 (in) from bottom of footing.
Longitudinal Bars:
MIN SIZE: 8 MIN NUMBER OF BARS: 2
MAX SIZE: 8 MAX NUMBER OF BARS: 10
Transverse Bars:
MIN SIZE: 8 MIN NUMBER OF BARS: 2
MAX SIZE: 8 MAX NUMBER OF BARS: 10

TOP MAT: Longitudinal bars on top at min cover of 3.000 (in) from top of footing.
Transverse Bars:
MIN SIZE: 8 MIN NUMBER OF BARS: 2
MAX SIZE: 8 MAX NUMBER OF BARS: 10
Longitudinal Bars:
MIN SIZE: 8 MIN NUMBER OF BARS: 2
MAX SIZE: 8 MAX NUMBER OF BARS: 10

FOOTING SUPPORT FIXITY:

	DISPLACEMENT	ROTATION ABOUT
TRANSVERSE	Rigid	Rigid
VERTICAL	Rigid	Rigid
LONGITUDINAL	Rigid	Rigid

PILE DATA:

PILE NO.	LABEL	SHAPE	MATL CODE	STIFF CODE	EFF. DIA. (in)	TRAN Z (ft)	LONG X (ft)	VERT Y (ft)	BATTER (1H:__V)	ROTATION (degrees)	AXIAL CAPACITY SERV (kips)	AXIAL CAPACITY STR (kips)
1	R:1 C:1	HP14x117	0	1	8.8	-16.00	-16.00	7.42	0.0	90.0	0	0
2	R:1 C:3	HP14x117	0	1	8.8	0.00	-16.00	7.42	0.0	90.0	0	0
3	R:1 C:5	HP14x117	0	1	8.8	16.00	-16.00	7.42	0.0	90.0	0	0
4	R:2 C:2	HP14x117	0	1	8.8	-8.00	-8.00	7.42	0.0	90.0	0	0
5	R:2 C:4	HP14x117	0	1	8.8	8.00	-8.00	7.42	0.0	90.0	0	0
6	R:3 C:1	HP14x117	0	1	8.8	-16.00	0.00	7.42	0.0	90.0	0	0
7	R:3 C:5	HP14x117	0	1	8.8	16.00	0.00	7.42	0.0	90.0	0	0
8	R:4 C:2	HP14x117	0	1	8.8	-8.00	8.00	7.42	0.0	90.0	0	0
9	R:4 C:4	HP14x117	0	1	8.8	8.00	8.00	7.42	0.0	90.0	0	0
10	R:5 C:1	HP14x117	0	1	8.8	-16.00	16.00	7.42	0.0	90.0	0	0
11	R:5 C:3	HP14x117	0	1	8.8	0.00	16.00	7.42	0.0	90.0	0	0
12	R:5 C:5	HP14x117	0	1	8.8	16.00	16.00	7.42	0.0	90.0	0	0

PILE STIFFNESS COEFFICIENT TABLE DATA:

TABLE NO.	C(1) k/in	C(2) k/in	C(3) in-k/in	C(4) k/in	C(5) in-k/in	C(6) in-k/rad	C(7) k/rad	C(8) in-k/rad	C(9) k/rad	C(10) in-k/rad
1	10.0	10.0	0.00	10.0	0.00	0.00	0.00	0.00	0.00	0.00

----- FOOTING 2 DATA -----

FOOTING TYPE: Pile Footing
TOP OF FOOTING ELEVATION: 603.000 (ft) ROTATION ANGLE: 0.000 (degrees)
SHEAR DESIGN USING SIMPLIFIED PROCEDURE, AASHTO 5.8.3.4.1

REINFORCEMENT PARAMETERS:
YIELD STRENGTH: 60.0 (ksi)
MIN COVER: TOP: 3.0 (in)
BOTTOM: 3.0 (in)
SIDE: 3.0 (in)
STIRRUPS: SIZE: 0
NO.LEGS TOTAL: 0
EXPOSURE FACTOR: 1.000

CONCRETE PARAMETERS:
FPC: 4.0 (ksi)
WEIGHT: 150.0 (pcf)
CTE: 0.0000060

SOIL PARAMETERS:
SOIL ELEVATION: 628.000 (ft)
SOIL WEIGHT: 120.0 (pcf)
SOIL CAPACITY:
UNFACTORED: 0.000 (ksf)
FACTORED: 0.000 (ksf)

FOOTING DIMENSIONS:
TRANSVERSE: 38.000 (ft)
LONGITUDINAL: 38.000 (ft)
DEPTH: 10.000 (ft)

LOCATION OF FIRST COLUMN:
TRANSVERSE: 19.000 (ft)
LONGITUDINAL: 19.000 (ft)

REINFORCEMENT LAYER DATA:
BOTTOM MAT: Transverse bars on bottom at min cover of 3.000 (in) from bottom of footing.
Longitudinal Bars:
MIN SIZE: 8 MIN NUMBER OF BARS: 2
MAX SIZE: 8 MAX NUMBER OF BARS: 10
Transverse Bars:
MIN SIZE: 8 MIN NUMBER OF BARS: 2
MAX SIZE: 8 MAX NUMBER OF BARS: 10

TOP MAT: Longitudinal bars on top at min cover of 3.000 (in) from top of footing.
Transverse Bars:
MIN SIZE: 8 MIN NUMBER OF BARS: 2
MAX SIZE: 8 MAX NUMBER OF BARS: 10
Longitudinal Bars:

MIN SIZE: 8 MIN NUMBER OF BARS: 2
MAX SIZE: 8 MAX NUMBER OF BARS: 10

FOOTING SUPPORT FIXITY:

	DISPLACEMENT	ROTATION ABOUT
TRANSVERSE	Rigid	Rigid
VERTICAL	Rigid	Rigid
LONGITUDINAL	Rigid	Rigid

PILE DATA:

PILE NO.	LABEL	SHAPE	MATL CODE	STIFF CODE	EFF. DIA. (in)	TRAN Z (ft)	LONG X (ft)	VERT Y (ft)	BATTER (1H:__V)	ROTATION (degrees)	AXIAL CAPACITY SERV (kips)	AXIAL CAPACITY STR (kips)
1	R:1 C:1	HP14x117	0	1	8.7	-16.00	-16.00	7.42	0.0	90.0	0	0
2	R:1 C:3	HP14x117	0	1	8.7	0.00	-16.00	7.42	0.0	90.0	0	0
3	R:1 C:5	HP14x117	0	1	8.7	16.00	-16.00	7.42	0.0	90.0	0	0
4	R:2 C:2	HP14x117	0	1	8.7	-8.00	-8.00	7.42	0.0	90.0	0	0
5	R:2 C:4	HP14x117	0	1	8.7	8.00	-8.00	7.42	0.0	90.0	0	0
6	R:3 C:1	HP14x117	0	1	8.7	-16.00	0.00	7.42	0.0	90.0	0	0
7	R:3 C:5	HP14x117	0	1	8.7	16.00	0.00	7.42	0.0	90.0	0	0
8	R:4 C:2	HP14x117	0	1	8.7	-8.00	8.00	7.42	0.0	90.0	0	0
9	R:4 C:4	HP14x117	0	1	8.7	8.00	8.00	7.42	0.0	90.0	0	0
10	R:5 C:1	HP14x117	0	1	8.7	-16.00	16.00	7.42	0.0	90.0	0	0
11	R:5 C:3	HP14x117	0	1	8.7	0.00	16.00	7.42	0.0	90.0	0	0
12	R:5 C:5	HP14x117	0	1	8.7	16.00	16.00	7.42	0.0	90.0	0	0

PILE STIFFNESS COEFFICIENT TABLE DATA:

TABLE NO.	C(1) k/in	C(2) k/in	C(3) in-k/in	C(4) k/in	C(5) in-k/in	C(6) in-k/rad	C(7) k/rad	C(8) in-k/rad	C(9) k/rad	C(10) in-k/rad
1	10.0	10.0	0.00	10.0	0.00	0.00	0.00	0.00	0.00	0.00

----- AASHTO LRFD LOAD OPTIONS -----

AASHTO LIMIT STATES:		LOAD TYPE:	INCLUDED	LOAD TYPE:	INCLUDED
STRENGTH I:	Yes	SELF WEIGHT OF PIER DC:	Yes	BUOYANCY:	No
STRENGTH II:	No	DC-DEAD LOAD SUPER:	Yes	STREAM FLOW:	No
STRENGTH III:	Yes	DW-DEAD LOAD SUPER:	Yes	ICE LOAD:	No
STRENGTH IV:	Yes	USER DEFINED LIVE LOAD:	No	WIND ON STRUCTURE:	Yes
STRENGTH V:	Yes	DESIGN TRUCK LOAD:	Yes	WIND ON LIVE LOAD:	Yes
SERVICE I:	Yes	DESIGN LANE LOAD:	Yes	SUPER TEMPERATURE RISE:	Yes
SERVICE III:	No	PERMIT TRUCK LOAD:	No	SUPER TEMPERATURE FALL:	Yes
FATIGUE:	Yes	FATIGUE TRUCK LOAD:	Yes	SHRINKAGE FROM SUPER:	No
EXTREME EVT I:	No	PEDESTRIAN LOADS:	No	SHRINKAGE OF SUBSTR:	Yes
EXTREME EVT II:	No	CENTRIFUGAL FORCE:	Yes	BRAKING FORCE:	Yes
		EARTHQUAKE:	No	COLLISION LOAD:	No

LIVE LOAD OPTIONS:
APPLY IMPACT: Yes FACTORS: 1.330 (Strength) 1.150 (Fatigue)
APPLY TRUCK LOAD ON MULTIPLE SLABS SIMULTANEOUSLY: Yes
BRAKING FORCE FACTOR × 3.6.4: 0.500
CENTRIFUGAL FORCE FACTOR × 3.6.3: 1.000

----- LOAD INPUT -----

SELF WEIGHT FACTORS:
CAP BEAMS: 1.000
COLUMNS: 1.320
FOOTINGS: 1.000

DC - DEAD LOAD GIRDER REACTIONS:

SLAB NO.	GIRDER LABEL	FORCES (kips) VERT	TRAN	LONG	MOMENTS (ft-k) VERT	TRAN	LONG
1	Girder 1	754.1					
1	Girder 2	880.1					
1	Girder 3	836.1					
1	Girder 4	792.0					
1	Girder 5	578.0					
2	Girder 1	276.4					
2	Girder 2	206.9					
2	Girder 3	202.5					
2	Girder 4	233.8					
3	Girder 1	236.0					
3	Girder 2	225.5					
3	Girder 3	221.6					
3	Girder 4	189.3					
3	Girder 5	183.6					
3	Girder 6	193.7					
3	Girder 7	212.1					
3	Girder 8	211.8					
3	Girder 9	196.5					

DW - DEAD LOAD GIRDER REACTIONS:

SLAB NO.	GIRDER LABEL	FORCES (kips) VERT	TRAN	LONG	MOMENTS (ft-k) VERT	TRAN	LONG
1	Girder 1	153.0					
1	Girder 2	198.0					
1	Girder 3	198.0					
1	Girder 4	198.0					
1	Girder 5	153.0					
2	Girder 1	53.3					
2	Girder 2	42.3					

2	Girder 3	40.9
2	Girder 4	42.8
3	Girder 1	57.3
3	Girder 2	55.3
3	Girder 3	56.3
3	Girder 4	55.2
3	Girder 5	51.9
3	Girder 6	54.7
3	Girder 7	56.7
3	Girder 8	55.8
3	Girder 9	50.7

TRUCK LOAD REACTIONS (One Lane, No Impact):

SLAB	GIRDER	FORCES (kips)			MOMENTS (ft-k)		
NO.	LABEL	VERT	TRAN	LONG	VERT	TRAN	LONG
1	Girder 1	0.0					
1	Girder 2	0.0					
1	Girder 3	0.0					
1	Girder 4	0.0					
1	Girder 5	0.0					
2	Girder 1	68.6					
2	Girder 2	68.6					
2	Girder 3	68.6					
2	Girder 4	68.6					
3	Girder 1	69.3					
3	Girder 2	69.3					
3	Girder 3	69.3					
3	Girder 4	69.3					
3	Girder 5	69.3					
3	Girder 6	69.3					
3	Girder 7	69.3					
3	Girder 8	69.3					
3	Girder 9	69.3					

LANE LOAD REACTIONS (One Lane, No Impact):

SLAB	GIRDER	FORCES (kips)			MOMENTS (ft-k)		
NO.	LABEL	VERT	TRAN	LONG	VERT	TRAN	LONG
1	Girder 1	80.0					
1	Girder 2	80.0					
1	Girder 3	80.0					
1	Girder 4	80.0					
1	Girder 5	80.0					
2	Girder 1	62.9					
2	Girder 2	62.9					
2	Girder 3	62.9					
2	Girder 4	62.9					
3	Girder 1	70.5					
3	Girder 2	70.5					
3	Girder 3	70.5					
3	Girder 4	70.5					
3	Girder 5	70.5					
3	Girder 6	70.5					
3	Girder 7	70.5					
3	Girder 8	70.5					
3	Girder 9	70.5					

MAX FATIGUE TRUCK LOAD REACTIONS (One Lane, No Impact):

SLAB	GIRDER	FORCES (kips)			MOMENTS (ft-k)		
NO.	LABEL	VERT	TRAN	LONG	VERT	TRAN	LONG
1	Girder 1	70.0					
1	Girder 2	70.0					
1	Girder 3	70.0					
1	Girder 4	70.0					
1	Girder 5	70.0					
2	Girder 1	64.9					
2	Girder 2	64.9					
2	Girder 3	64.9					
2	Girder 4	64.9					
3	Girder 1	66.0					
3	Girder 2	66.0					
3	Girder 3	66.0					
3	Girder 4	66.0					
3	Girder 5	66.0					
3	Girder 6	66.0					
3	Girder 7	66.0					
3	Girder 8	66.0					
3	Girder 9	66.0					

MIN FATIGUE TRUCK LOAD REACTIONS (One Lane, No Impact):

SLAB	GIRDER	FORCES (kips)			MOMENTS (ft-k)		
NO.	LABEL	VERT	TRAN	LONG	VERT	TRAN	LONG
1	Girder 1	-10.0					
1	Girder 2	-10.0					
1	Girder 3	-10.0					
1	Girder 4	-10.0					
1	Girder 5	-10.0					
2	Girder 1	-4.4					

2	Girder 2	-4.4
2	Girder 3	-4.4
2	Girder 4	-4.4
3	Girder 1	-4.7
3	Girder 2	-4.7
3	Girder 3	-4.7
3	Girder 4	-4.7
3	Girder 5	-4.7
3	Girder 6	-4.7
3	Girder 7	-4.7
3	Girder 8	-4.7
3	Girder 9	-4.7

REACTIONS DUE TO TEMPERATURE RISE:

SLAB NO.	GIRDER LABEL	FORCES (kips) VERT	TRAN	LONG	MOMENTS (ft-k) VERT	TRAN	LONG
1	Girder 1			1616.0			
1	Girder 2			1616.0			
1	Girder 3			1616.0			
1	Girder 4			1616.0			
1	Girder 5			1616.0			
2	Girder 1			-120.0			
2	Girder 2			-120.0			
2	Girder 3			-120.0			
2	Girder 4			-120.0			
3	Girder 1			-120.0			
3	Girder 2			-120.0			
3	Girder 3			-120.0			
3	Girder 4			-120.0			
3	Girder 5			-120.0			
3	Girder 6			-120.0			
3	Girder 7			-120.0			
3	Girder 8			-120.0			
3	Girder 9			-120.0			

REACTIONS DUE TO TEMPERATURE FALL:

SLAB NO.	GIRDER LABEL	FORCES (kips) VERT	TRAN	LONG	MOMENTS (ft-k) VERT	TRAN	LONG
1	Girder 1			-2424.0			
1	Girder 2			-2424.0			
1	Girder 3			-2424.0			
1	Girder 4			-2424.0			
1	Girder 5			-2424.0			
2	Girder 1			120.0			
2	Girder 2			120.0			
2	Girder 3			120.0			
2	Girder 4			120.0			
3	Girder 1			120.0			
3	Girder 2			120.0			
3	Girder 3			120.0			
3	Girder 4			120.0			
3	Girder 5			120.0			
3	Girder 6			120.0			
3	Girder 7			120.0			
3	Girder 8			120.0			
3	Girder 9			120.0			

SHRINKAGE STRAIN OF SUBSTRUCTURE: 0.00020

WIND LOAD DIRECTIONS: DIRECTIONS (degrees)	APPLIED	EARTHQUAKE LOAD: DIRECTION	FACTORS TRAN	LONG	APPLIED
0 (+Tran)	Yes	0	1.0	0.0	No
15	Yes				
30	Yes	1	1.0	0.3	No
45	Yes				
60	Yes	2	0.3	1.0	No
75	Yes				
90 (+Long)	Yes	3	0.0	1.0	No
105	Yes				
120	Yes	4	-0.3	1.0	No
135	Yes				
150	Yes	5	-1.0	0.3	No
165	Yes				
180 (-Tran)	Yes	6	-1.0	0.0	No
195	Yes				
210	Yes	7	-1.0	-0.3	No
225	Yes				
240	Yes	8	-0.3	-1.0	No
255	Yes				
270 (-Long)	Yes	9	0.0	-1.0	No
285	Yes				
300	Yes	10	0.3	-1.0	No
315	Yes				
330	Yes	11	1.0	-0.3	No
345	Yes				

*** WARNING: SLAB 1 TOTAL APPLIED FORCE, 6681.1(kips) EXCEEDS FRICTIONAL CAPACITY, 317.5(kips). ***
EXCESS MUST BE REDISTRIBUTED TO ANOTHER SUBSTRUCTURE UNIT. LIMIT STATE: STR I, LOAD: 1

*** WARNING: SLAB 2 TOTAL APPLIED FORCE,   -264.6(kips) EXCEEDS FRICTIONAL CAPACITY,   76.0(kips). ***
    EXCESS MUST BE REDISTRIBUTED TO ANOTHER SUBSTRUCTURE UNIT. LIMIT STATE: STR I, LOAD: 1

*** WARNING: SLAB 3 TOTAL APPLIED FORCE,   -616.2(kips) EXCEEDS FRICTIONAL CAPACITY,   177.2(kips). ***
    EXCESS MUST BE REDISTRIBUTED TO ANOTHER SUBSTRUCTURE UNIT. LIMIT STATE: STR I, LOAD: 1

*** WARNING: SLAB 1 TOTAL APPLIED FORCE,   6681.1(kips) EXCEEDS FRICTIONAL CAPACITY,   317.5(kips). ***
    EXCESS MUST BE REDISTRIBUTED TO ANOTHER SUBSTRUCTURE UNIT. LIMIT STATE: STR I, LOAD: 2

*** WARNING: SLAB 2 TOTAL APPLIED FORCE,   -264.6(kips) EXCEEDS FRICTIONAL CAPACITY,   76.0(kips). ***
    EXCESS MUST BE REDISTRIBUTED TO ANOTHER SUBSTRUCTURE UNIT. LIMIT STATE: STR I, LOAD: 2

*** WARNING: SLAB 3 TOTAL APPLIED FORCE,   -630.1(kips) EXCEEDS FRICTIONAL CAPACITY,   192.3(kips). ***
    EXCESS MUST BE REDISTRIBUTED TO ANOTHER SUBSTRUCTURE UNIT. LIMIT STATE: STR I, LOAD: 2

*** WARNING: SLAB 1 TOTAL APPLIED FORCE,   6681.1(kips) EXCEEDS FRICTIONAL CAPACITY,   317.5(kips). ***
    EXCESS MUST BE REDISTRIBUTED TO ANOTHER SUBSTRUCTURE UNIT. LIMIT STATE: STR I, LOAD: 3

*** WARNING: SLAB 2 TOTAL APPLIED FORCE,   -264.6(kips) EXCEEDS FRICTIONAL CAPACITY,   76.0(kips). ***
    EXCESS MUST BE REDISTRIBUTED TO ANOTHER SUBSTRUCTURE UNIT. LIMIT STATE: STR I, LOAD: 3

*** WARNING: SLAB 3 TOTAL APPLIED FORCE,   -616.2(kips) EXCEEDS FRICTIONAL CAPACITY,   177.2(kips). ***
    EXCESS MUST BE REDISTRIBUTED TO ANOTHER SUBSTRUCTURE UNIT. LIMIT STATE: STR I, LOAD: 3

*** WARNING MESSAGES LIMITED TO TEN! ***

*** WARNING: SLAB 1 TOTAL APPLIED FORCE,   6719.9(kips) EXCEEDS FRICTIONAL CAPACITY,   317.5(kips). ***
    EXCESS MUST BE REDISTRIBUTED TO ANOTHER SUBSTRUCTURE UNIT. LIMIT STATE: STIII, LOAD: 1

*** WARNING: SLAB 2 TOTAL APPLIED FORCE,   -238.2(kips) EXCEEDS FRICTIONAL CAPACITY,   76.0(kips). ***
    EXCESS MUST BE REDISTRIBUTED TO ANOTHER SUBSTRUCTURE UNIT. LIMIT STATE: STIII, LOAD: 1

*** WARNING: SLAB 3 TOTAL APPLIED FORCE,   -568.9(kips) EXCEEDS FRICTIONAL CAPACITY,   154.6(kips). ***
    EXCESS MUST BE REDISTRIBUTED TO ANOTHER SUBSTRUCTURE UNIT. LIMIT STATE: STIII, LOAD: 1

*** WARNING: SLAB 1 TOTAL APPLIED FORCE,   6681.1(kips) EXCEEDS FRICTIONAL CAPACITY,   280.1(kips). ***
    EXCESS MUST BE REDISTRIBUTED TO ANOTHER SUBSTRUCTURE UNIT. LIMIT STATE: STIII, LOAD: 2

*** WARNING: SLAB 2 TOTAL APPLIED FORCE,   -264.6(kips) EXCEEDS FRICTIONAL CAPACITY,   67.8(kips). ***
    EXCESS MUST BE REDISTRIBUTED TO ANOTHER SUBSTRUCTURE UNIT. LIMIT STATE: STIII, LOAD: 2

*** WARNING: SLAB 3 TOTAL APPLIED FORCE,   -595.4(kips) EXCEEDS FRICTIONAL CAPACITY,   135.1(kips). ***
    EXCESS MUST BE REDISTRIBUTED TO ANOTHER SUBSTRUCTURE UNIT. LIMIT STATE: STIII, LOAD: 2

*** WARNING: SLAB 1 TOTAL APPLIED FORCE,   6642.4(kips) EXCEEDS FRICTIONAL CAPACITY,   317.5(kips). ***
    EXCESS MUST BE REDISTRIBUTED TO ANOTHER SUBSTRUCTURE UNIT. LIMIT STATE: STIII, LOAD: 3

*** WARNING: SLAB 2 TOTAL APPLIED FORCE,   -291.0(kips) EXCEEDS FRICTIONAL CAPACITY,   76.0(kips). ***
    EXCESS MUST BE REDISTRIBUTED TO ANOTHER SUBSTRUCTURE UNIT. LIMIT STATE: STIII, LOAD: 3

*** WARNING: SLAB 3 TOTAL APPLIED FORCE,   -621.8(kips) EXCEEDS FRICTIONAL CAPACITY,   154.6(kips). ***
    EXCESS MUST BE REDISTRIBUTED TO ANOTHER SUBSTRUCTURE UNIT. LIMIT STATE: STIII, LOAD: 3

*** WARNING MESSAGES LIMITED TO TEN! ***

*** WARNING: SLAB 1 TOTAL APPLIED FORCE,   6681.1(kips) EXCEEDS FRICTIONAL CAPACITY,   381.1(kips). ***
    EXCESS MUST BE REDISTRIBUTED TO ANOTHER SUBSTRUCTURE UNIT. LIMIT STATE: STRIV, LOAD: 1

*** WARNING: SLAB 2 TOTAL APPLIED FORCE,   -264.6(kips) EXCEEDS FRICTIONAL CAPACITY,   91.2(kips). ***
    EXCESS MUST BE REDISTRIBUTED TO ANOTHER SUBSTRUCTURE UNIT. LIMIT STATE: STRIV, LOAD: 1

*** WARNING: SLAB 3 TOTAL APPLIED FORCE,   -595.4(kips) EXCEEDS FRICTIONAL CAPACITY,   185.6(kips). ***
    EXCESS MUST BE REDISTRIBUTED TO ANOTHER SUBSTRUCTURE UNIT. LIMIT STATE: STRIV, LOAD: 1

*** WARNING: SLAB 1 TOTAL APPLIED FORCE,   -4454.1(kips) EXCEEDS FRICTIONAL CAPACITY,   381.1(kips). ***
    EXCESS MUST BE REDISTRIBUTED TO ANOTHER SUBSTRUCTURE UNIT. LIMIT STATE: STRIV, LOAD: 2

*** WARNING: SLAB 2 TOTAL APPLIED FORCE,   264.6(kips) EXCEEDS FRICTIONAL CAPACITY,   91.2(kips). ***
    EXCESS MUST BE REDISTRIBUTED TO ANOTHER SUBSTRUCTURE UNIT. LIMIT STATE: STRIV, LOAD: 2

*** WARNING: SLAB 3 TOTAL APPLIED FORCE,   595.4(kips) EXCEEDS FRICTIONAL CAPACITY,   185.6(kips). ***
    EXCESS MUST BE REDISTRIBUTED TO ANOTHER SUBSTRUCTURE UNIT. LIMIT STATE: STRIV, LOAD: 2

*** WARNING: SLAB 1 TOTAL APPLIED FORCE,   6681.1(kips) EXCEEDS FRICTIONAL CAPACITY,   470.4(kips). ***
    EXCESS MUST BE REDISTRIBUTED TO ANOTHER SUBSTRUCTURE UNIT. LIMIT STATE: STRIV, LOAD: 3

*** WARNING: SLAB 2 TOTAL APPLIED FORCE,   -264.6(kips) EXCEEDS FRICTIONAL CAPACITY,   109.0(kips). ***
    EXCESS MUST BE REDISTRIBUTED TO ANOTHER SUBSTRUCTURE UNIT. LIMIT STATE: STRIV, LOAD: 3

*** WARNING: SLAB 3 TOTAL APPLIED FORCE,   -595.4(kips) EXCEEDS FRICTIONAL CAPACITY,   234.6(kips). ***
    EXCESS MUST BE REDISTRIBUTED TO ANOTHER SUBSTRUCTURE UNIT. LIMIT STATE: STRIV, LOAD: 3

*** WARNING MESSAGES LIMITED TO TEN! ***

*** WARNING: SLAB 1 TOTAL APPLIED FORCE,   6696.3(kips) EXCEEDS FRICTIONAL CAPACITY,   317.5(kips). ***
    EXCESS MUST BE REDISTRIBUTED TO ANOTHER SUBSTRUCTURE UNIT. LIMIT STATE: STR V, LOAD: 1

*** WARNING: SLAB 2 TOTAL APPLIED FORCE,   -253.9(kips) EXCEEDS FRICTIONAL CAPACITY,   76.0(kips). ***
    EXCESS MUST BE REDISTRIBUTED TO ANOTHER SUBSTRUCTURE UNIT. LIMIT STATE: STR V, LOAD: 1

*** WARNING: SLAB 3 TOTAL APPLIED FORCE,   -600.7(kips) EXCEEDS FRICTIONAL CAPACITY,   172.1(kips). ***
    EXCESS MUST BE REDISTRIBUTED TO ANOTHER SUBSTRUCTURE UNIT. LIMIT STATE: STR V, LOAD: 1

*** WARNING: SLAB 1 TOTAL APPLIED FORCE,   6696.3(kips) EXCEEDS FRICTIONAL CAPACITY,   317.5(kips). ***
    EXCESS MUST BE REDISTRIBUTED TO ANOTHER SUBSTRUCTURE UNIT. LIMIT STATE: STR V, LOAD: 2

*** WARNING: SLAB 2 TOTAL APPLIED FORCE,   -253.9(kips) EXCEEDS FRICTIONAL CAPACITY,   76.0(kips). ***
    EXCESS MUST BE REDISTRIBUTED TO ANOTHER SUBSTRUCTURE UNIT. LIMIT STATE: STR V, LOAD: 2

*** WARNING: SLAB 3 TOTAL APPLIED FORCE,   -611.4(kips) EXCEEDS FRICTIONAL CAPACITY,   183.7(kips). ***
    EXCESS MUST BE REDISTRIBUTED TO ANOTHER SUBSTRUCTURE UNIT. LIMIT STATE: STR V, LOAD: 2

*** WARNING: SLAB 1 TOTAL APPLIED FORCE,   6696.3(kips) EXCEEDS FRICTIONAL CAPACITY,   317.5(kips). ***
    EXCESS MUST BE REDISTRIBUTED TO ANOTHER SUBSTRUCTURE UNIT. LIMIT STATE: STR V, LOAD: 3

*** WARNING: SLAB 2 TOTAL APPLIED FORCE,   -253.9(kips) EXCEEDS FRICTIONAL CAPACITY,   76.0(kips). ***
    EXCESS MUST BE REDISTRIBUTED TO ANOTHER SUBSTRUCTURE UNIT. LIMIT STATE: STR V, LOAD: 3

*** WARNING: SLAB 3 TOTAL APPLIED FORCE,   -600.7(kips) EXCEEDS FRICTIONAL CAPACITY,   172.1(kips). ***
    EXCESS MUST BE REDISTRIBUTED TO ANOTHER SUBSTRUCTURE UNIT. LIMIT STATE: STR V, LOAD: 3

*** WARNING MESSAGES LIMITED TO TEN! ***

*** WARNING: SLAB 1 TOTAL APPLIED FORCE,   12131.2(kips) EXCEEDS FRICTIONAL CAPACITY,   230.4(kips). ***
    EXCESS MUST BE REDISTRIBUTED TO ANOTHER SUBSTRUCTURE UNIT. LIMIT STATE: SER I, LOAD: 1

*** WARNING: SLAB 2 TOTAL APPLIED FORCE,   -472.0(kips) EXCEEDS FRICTIONAL CAPACITY,   55.2(kips). ***
    EXCESS MUST BE REDISTRIBUTED TO ANOTHER SUBSTRUCTURE UNIT. LIMIT STATE: SER I, LOAD: 1

*** WARNING: SLAB 3 TOTAL APPLIED FORCE,   -1082.8(kips) EXCEEDS FRICTIONAL CAPACITY,   123.9(kips). ***
    EXCESS MUST BE REDISTRIBUTED TO ANOTHER SUBSTRUCTURE UNIT. LIMIT STATE: SER I, LOAD: 1

*** WARNING: SLAB 1 TOTAL APPLIED FORCE,   12131.2(kips) EXCEEDS FRICTIONAL CAPACITY,   230.4(kips). ***
    EXCESS MUST BE REDISTRIBUTED TO ANOTHER SUBSTRUCTURE UNIT. LIMIT STATE: SER I, LOAD: 2

*** WARNING: SLAB 2 TOTAL APPLIED FORCE,   -472.0(kips) EXCEEDS FRICTIONAL CAPACITY,   55.2(kips). ***
    EXCESS MUST BE REDISTRIBUTED TO ANOTHER SUBSTRUCTURE UNIT. LIMIT STATE: SER I, LOAD: 2

*** WARNING: SLAB 3 TOTAL APPLIED FORCE,   -1090.0(kips) EXCEEDS FRICTIONAL CAPACITY,   131.7(kips). ***
    EXCESS MUST BE REDISTRIBUTED TO ANOTHER SUBSTRUCTURE UNIT. LIMIT STATE: SER I, LOAD: 2

*** WARNING: SLAB 1 TOTAL APPLIED FORCE,   12131.2(kips) EXCEEDS FRICTIONAL CAPACITY,   230.4(kips). ***
    EXCESS MUST BE REDISTRIBUTED TO ANOTHER SUBSTRUCTURE UNIT. LIMIT STATE: SER I, LOAD: 3

*** WARNING: SLAB 2 TOTAL APPLIED FORCE,   -472.0(kips) EXCEEDS FRICTIONAL CAPACITY,   55.2(kips). ***
    EXCESS MUST BE REDISTRIBUTED TO ANOTHER SUBSTRUCTURE UNIT. LIMIT STATE: SER I, LOAD: 3

*** WARNING: SLAB 3 TOTAL APPLIED FORCE,   -1082.8(kips) EXCEEDS FRICTIONAL CAPACITY,   123.9(kips). ***
    EXCESS MUST BE REDISTRIBUTED TO ANOTHER SUBSTRUCTURE UNIT. LIMIT STATE: SER I, LOAD: 3

*** WARNING MESSAGES LIMITED TO TEN! ***

----- NUMBER OF LOAD COMBINATIONS -----

LRFD DESIGN OF CAP AND COL:
STRENGTH LIMIT STATE I, NUMBER OF LOAD COMBINATIONS = 11728
STRENGTH LIMIT STATE III, NUMBER OF LOAD COMBINATIONS = 192
STRENGTH LIMIT STATE IV, NUMBER OF LOAD COMBINATIONS = 8
STRENGTH LIMIT STATE V, NUMBER OF LOAD COMBINATIONS = 281472
SERVICE LIMIT STATE I, NUMBER OF LOAD COMBINATIONS = 140736
FATIGUE LIMIT STATE, NUMBER OF LOAD COMBINATIONS = 212

----- COLUMN DESIGN RESULTS -----

AXIAL-FLEXURAL INTERACTION DATA:
Notes: Applied moment data is not magnified.
Load Ratio = Moment Capacity / (Applied Moment * Mag. Factor) unless otherwise specified.

					APPLIED LOADS					AXIAL-FLEXURAL INTERACTION				
COL NO.	ELEV. (ft)	LOCATION	AASHTO LIMIT STATE	LOAD CASE	LRFD AXIAL (kips)	LRFD MOM-L (ft-k)	MAG. FACTOR	LRFD MOM-T (ft-k)	MAG. FACTOR	CAP. MOM-L (ft-k)	CAP. MOM-T (ft-k)	AREA PROV. (sq-in)	LOAD RATIO	NG
1	603.00	BOT	STR I	4904	11228	-8531	1.24	-35164	1.00	-29809	-99343	162.24	2.83	
			STIII	11814	9848	-2050	1.34	-34890	1.00	-7883	-100136	162.24	2.87	
			STRIV	11924	11622	-11193	1.23	-28001	1.00	-43336	-88170	162.24	3.00j	
			STR V	137226	11198	-5658	1.27	-36763	1.00	-20049	-102287	162.24	2.78	
1	621.12	1/4B	STR I	4846	11094	-7864	1.24	-13497	1.00	-55355	-76646	162.24	3.14j	
			STIII	11813	9558	-4791	1.24	-14614	1.00	-36143	-88828	162.24	3.65j	
			STRIV	11924	11029	-9950	1.22	-9929	1.00	-69720	-56938	162.24	3.16j	
			STR V	136986	10780	-5998	1.25	-14933	1.00	-43518	-86349	162.24	3.24j	
1	639.25	1/2	STR I	4846	10599	-7889	1.23	6812	1.00	-73279	51599	162.24	3.29j	
			STIII	11813	9063	-4852	1.22	4508	1.00	-68825	52212	162.24	3.85j	
			STRIV	11924	10435	-8707	1.22	8143	1.00	-70861	54524	162.24	3.34j	
			STR V	136986	10286	-6404	1.23	5758	1.00	-72008	52457	162.24	3.39j	
1	657.38	1/4T	STR I	3494	9654	-5671	1.23	31231	1.00	-21407	96049	162.24	3.08	
			STIII	11804	8267	-8782	1.16	21641	1.00	-38692	81986	162.24	3.79	
			STRIV	11924	9842	-7464	1.21	26214	1.00	-32007	92860	162.24	3.54	
			STR V	98984	9425	-4667	1.24	29646	1.00	-18703	95788	162.24	3.23	
1	675.50	TOP	STR I	4870	9172	-7162	1.20	52468	1.00	-15595	95500	162.24	1.82	
			STIII	11813	8074	-4974	1.19	42058	1.00	-12906	91433	162.24	2.17	
			STRIV	11924	9248	-6221	1.21	44286	1.00	-16237	95664	162.24	2.16	
			STR V	137010	8959	-6556	1.20	50834	1.00	-14637	94837	162.24	1.87	
2	603.00	BOT	STR I	3086	11224	-6554	1.26	16233	1.00	-44060	86784	162.24	3.11j	
			STIII	11803	9661	-15426	1.17	30120	1.00	-48168	80278	162.24	2.67	
			STRIV	11923	11166	-1135	1.40	13807	1.00	-12031	104284	162.24	3.12j	
			STR V	119049	10333	-12148	1.19	29883	1.00	-42027	86536	162.24	2.90	
2	621.12	1/4B	STR I	3086	10730	-6856	1.24	566	1.00	-89181	5945	162.24	3.25j	
			STIII	11777	9193	-4823	1.23	4502	1.00	-69043	52502	162.24	3.79j	
			STRIV	11923	10572	-2078	1.37	-605	1.00	-85653	-18144	162.24	3.30j	
			STR V	83916	10416	-7368	1.23	2664	1.00	-83580	24663	162.24	3.35j	
2	639.25	1/2	STR I	3086	10235	-7158	1.22	-15100	1.00	-47504	-81970	162.24	3.41j	
			STIII	11777	8698	-4881	1.21	-11149	1.00	-42816	-80737	162.24	4.01j	
			STRIV	11923	9979	-3021	1.32	-15016	1.00	-25637	-96286	162.24	3.50j	
			STR V	83916	9921	-7332	1.21	-13713	1.00	-51008	-78683	162.24	3.52j	
2	657.38	1/4T	STR I	3069	9189	-5840	1.21	-33065	1.00	-20188	-94472	162.24	2.86	
			STIII	11804	8165	-8701	1.16	-25433	1.00	-33765	-85071	162.24	3.34	
			STRIV	11923	9385	-3965	1.26	-29428	1.00	-16279	-96212	162.24	3.27	
			STR V	83899	9001	-6065	1.20	-31801	1.00	-21408	-93407	162.24	2.94	
2	675.50	TOP	STR I	4534	8669	-7581	1.18	-51837	1.00	-16079	-93273	162.24	1.80	
			STIII	11801	7684	-6350	1.16	-43829	1.00	-15054	-89228	162.24	2.04	
			STRIV	11924	8763	-6467	1.19	-45784	1.00	-15768	-93745	162.24	2.05	
			STR V	119082	8482	-7491	1.17	-50918	1.00	-15986	-92494	162.24	1.82	

Notes:
j: Load ratio is controlled by Axial Capacity øPn / Applied Axial Pu, AASHTO 5.7.4.4.

SLENDERNESS DATA:

			SLENDERNESS DATA							
COL NO.	ELEV. (ft)	LOCATION	TRAN KL (ft)	TRAN r (in)	TRAN KL/r	NG	LONG KL (ft)	LONG r (in)	LONG KL/r	NG
1	603.00	BOT	87.00	56.71	18.4		175.35	47.29	44.5	
1	621.12	1/4B	87.00	56.71	18.4		175.35	47.29	44.5	
1	639.25	1/2	87.00	56.71	18.4		175.35	47.29	44.5	
1	657.38	1/4T	87.00	56.71	18.4		175.35	47.29	44.5	
1	675.50	TOP	87.00	56.71	18.4		175.35	47.29	44.5	
2	603.00	BOT	87.00	56.71	18.4		175.35	47.29	44.5	

2	621.12	1/4B	87.00	56.71	18.4	175.35	47.29	44.5
2	639.25	1/2	87.00	56.71	18.4	175.35	47.29	44.5
2	657.38	1/4T	87.00	56.71	18.4	175.35	47.29	44.5
2	675.50	TOP	87.00	56.71	18.4	175.35	47.29	44.5

REINFORCEMENT SUMMARY: (Bar size is shown as size followed by bundle quantity)

COL NO.	ELEV. (ft)	LOCATION	AASHTO LIMIT STATE	AREA PROV. (sq-in)	STEEL PERCENT %	ZONE	FACE	SIZE	QUAN	ZONE	FACE	SIZE	QUAN	ZONE	FACE	SIZE	QUAN
1	603.00	BOT	STR I	162.24	1.127	1	1	11-1	13	1	2	11-1	13	1	3	11-1	13
						1	4	11-1	13	2	1	11-1	11	2	2	11-1	9
						2	3	11-1	11	2	4	11-1	9	3	1	11-1	0
						3	2	11-1	6	3	3	11-1	0	3	4	11-1	6
			STIII	162.24	1.127	1	1	11-1	13	1	2	11-1	13	1	3	11-1	13
						1	4	11-1	13	2	1	11-1	11	2	2	11-1	9
						2	3	11-1	11	2	4	11-1	9	3	1	11-1	0
						3	2	11-1	6	3	3	11-1	0	3	4	11-1	6
			STRIV	162.24	1.127	1	1	11-1	13	1	2	11-1	13	1	3	11-1	13
						1	4	11-1	13	2	1	11-1	11	2	2	11-1	9
						2	3	11-1	11	2	4	11-1	9	3	1	11-1	0
						3	2	11-1	6	3	3	11-1	0	3	4	11-1	6
			STR V	162.24	1.127	1	1	11-1	13	1	2	11-1	13	1	3	11-1	13
						1	4	11-1	13	2	1	11-1	11	2	2	11-1	9
						2	3	11-1	11	2	4	11-1	9	3	1	11-1	0
						3	2	11-1	6	3	3	11-1	0	3	4	11-1	6
1	621.12	1/4B	STR I	162.24	1.127	1	1	11-1	13	1	2	11-1	13	1	3	11-1	13
						1	4	11-1	13	2	1	11-1	11	2	2	11-1	9
						2	3	11-1	11	2	4	11-1	9	3	1	11-1	0
						3	2	11-1	6	3	3	11-1	0	3	4	11-1	6
			STIII	162.24	1.127	1	1	11-1	13	1	2	11-1	13	1	3	11-1	13
						1	4	11-1	13	2	1	11-1	11	2	2	11-1	9
						2	3	11-1	11	2	4	11-1	9	3	1	11-1	0
						3	2	11-1	6	3	3	11-1	0	3	4	11-1	6
			STRIV	162.24	1.127	1	1	11-1	13	1	2	11-1	13	1	3	11-1	13
						1	4	11-1	13	2	1	11-1	11	2	2	11-1	9
						2	3	11-1	11	2	4	11-1	9	3	1	11-1	0
						3	2	11-1	6	3	3	11-1	0	3	4	11-1	6
			STR V	162.24	1.127	1	1	11-1	13	1	2	11-1	13	1	3	11-1	13
						1	4	11-1	13	2	1	11-1	11	2	2	11-1	9
						2	3	11-1	11	2	4	11-1	9	3	1	11-1	0
						3	2	11-1	6	3	3	11-1	0	3	4	11-1	6
1	639.25	1/2	STR I	162.24	1.127	1	1	11-1	13	1	2	11-1	13	1	3	11-1	13
						1	4	11-1	13	2	1	11-1	11	2	2	11-1	9
						2	3	11-1	11	2	4	11-1	9	3	1	11-1	0
						3	2	11-1	6	3	3	11-1	0	3	4	11-1	6
			STIII	162.24	1.127	1	1	11-1	13	1	2	11-1	13	1	3	11-1	13
						1	4	11-1	13	2	1	11-1	11	2	2	11-1	9
						2	3	11-1	11	2	4	11-1	9	3	1	11-1	0
						3	2	11-1	6	3	3	11-1	0	3	4	11-1	6
			STRIV	162.24	1.127	1	1	11-1	13	1	2	11-1	13	1	3	11-1	13
						1	4	11-1	13	2	1	11-1	11	2	2	11-1	9
						2	3	11-1	11	2	4	11-1	9	3	1	11-1	0
						3	2	11-1	6	3	3	11-1	0	3	4	11-1	6
			STR V	162.24	1.127	1	1	11-1	13	1	2	11-1	13	1	3	11-1	13
						1	4	11-1	13	2	1	11-1	11	2	2	11-1	9
						2	3	11-1	11	2	4	11-1	9	3	1	11-1	0
						3	2	11-1	6	3	3	11-1	0	3	4	11-1	6
1	657.38	1/4T	STR I	162.24	1.127	1	1	11-1	13	1	2	11-1	13	1	3	11-1	13
						1	4	11-1	13	2	1	11-1	11	2	2	11-1	9
						2	3	11-1	11	2	4	11-1	9	3	1	11-1	0
						3	2	11-1	6	3	3	11-1	0	3	4	11-1	6
			STIII	162.24	1.127	1	1	11-1	13	1	2	11-1	13	1	3	11-1	13
						1	4	11-1	13	2	1	11-1	11	2	2	11-1	9
						2	3	11-1	11	2	4	11-1	9	3	1	11-1	0
						3	2	11-1	6	3	3	11-1	0	3	4	11-1	6
			STRIV	162.24	1.127	1	1	11-1	13	1	2	11-1	13	1	3	11-1	13
						1	4	11-1	13	2	1	11-1	11	2	2	11-1	9
						2	3	11-1	11	2	4	11-1	9	3	1	11-1	0
						3	2	11-1	6	3	3	11-1	0	3	4	11-1	6
			STR V	162.24	1.127	1	1	11-1	13	1	2	11-1	13	1	3	11-1	13
						1	4	11-1	13	2	1	11-1	11	2	2	11-1	9
						2	3	11-1	11	2	4	11-1	9	3	1	11-1	0
						3	2	11-1	6	3	3	11-1	0	3	4	11-1	6
1	675.50	TOP	STR I	162.24	1.127	1	1	11-1	13	1	2	11-1	13	1	3	11-1	13
						1	4	11-1	13	2	1	11-1	11	2	2	11-1	9
						2	3	11-1	11	2	4	11-1	9	3	1	11-1	0
						3	2	11-1	6	3	3	11-1	0	3	4	11-1	6
			STIII	162.24	1.127	1	1	11-1	13	1	2	11-1	13	1	3	11-1	13
						1	4	11-1	13	2	1	11-1	11	2	2	11-1	9
						2	3	11-1	11	2	4	11-1	9	3	1	11-1	0
						3	2	11-1	6	3	3	11-1	0	3	4	11-1	6
			STRIV	162.24	1.127	1	1	11-1	13	1	2	11-1	13	1	3	11-1	13
						1	4	11-1	13	2	1	11-1	11	2	2	11-1	9
						2	3	11-1	11	2	4	11-1	9	3	1	11-1	0
						3	2	11-1	6	3	3	11-1	0	3	4	11-1	6
			STR V	162.24	1.127	1	1	11-1	13	1	2	11-1	13	1	3	11-1	13

						1	4	11-1	13	2	1	11-1	11	2	2	11-1	9
						2	3	11-1	11	2	4	11-1	9	3	1	11-1	0
						3	2	11-1	6	3	3	11-1	0	3	4	11-1	6
2	603.00	BOT	STR I	162.24	1.127	1	1	11-1	13	1	2	11-1	13	1	3	11-1	13
						1	4	11-1	13	2	1	11-1	11	2	2	11-1	9
						2	3	11-1	11	2	4	11-1	9	3	1	11-1	0
						3	2	11-1	6	3	3	11-1	0	3	4	11-1	6
			STIII	162.24	1.127	1	1	11-1	13	1	2	11-1	13	1	3	11-1	13
						1	4	11-1	13	2	1	11-1	11	2	2	11-1	9
						2	3	11-1	11	2	4	11-1	9	3	1	11-1	0
						3	2	11-1	6	3	3	11-1	0	3	4	11-1	6
			STRIV	162.24	1.127	1	1	11-1	13	1	2	11-1	13	1	3	11-1	13
						1	4	11-1	13	2	1	11-1	11	2	2	11-1	9
						2	3	11-1	11	2	4	11-1	9	3	1	11-1	0
						3	2	11-1	6	3	3	11-1	0	3	4	11-1	6
			STR V	162.24	1.127	1	1	11-1	13	1	2	11-1	13	1	3	11-1	13
						1	4	11-1	13	2	1	11-1	11	2	2	11-1	9
						2	3	11-1	11	2	4	11-1	9	3	1	11-1	0
						3	2	11-1	6	3	3	11-1	0	3	4	11-1	6
2	621.12	1/4B	STR I	162.24	1.127	1	1	11-1	13	1	2	11-1	13	1	3	11-1	13
						1	4	11-1	13	2	1	11-1	11	2	2	11-1	9
						2	3	11-1	11	2	4	11-1	9	3	1	11-1	0
						3	2	11-1	6	3	3	11-1	0	3	4	11-1	6
			STIII	162.24	1.127	1	1	11-1	13	1	2	11-1	13	1	3	11-1	13
						1	4	11-1	13	2	1	11-1	11	2	2	11-1	9
						2	3	11-1	11	2	4	11-1	9	3	1	11-1	0
						3	2	11-1	6	3	3	11-1	0	3	4	11-1	6
			STRIV	162.24	1.127	1	1	11-1	13	1	2	11-1	13	1	3	11-1	13
						1	4	11-1	13	2	1	11-1	11	2	2	11-1	9
						2	3	11-1	11	2	4	11-1	9	3	1	11-1	0
						3	2	11-1	6	3	3	11-1	0	3	4	11-1	6
			STR V	162.24	1.127	1	1	11-1	13	1	2	11-1	13	1	3	11-1	13
						1	4	11-1	13	2	1	11-1	11	2	2	11-1	9
						2	3	11-1	11	2	4	11-1	9	3	1	11-1	0
						3	2	11-1	6	3	3	11-1	0	3	4	11-1	6
2	639.25	1/2	STR I	162.24	1.127	1	1	11-1	13	1	2	11-1	13	1	3	11-1	13
						1	4	11-1	13	2	1	11-1	11	2	2	11-1	9
						2	3	11-1	11	2	4	11-1	9	3	1	11-1	0
						3	2	11-1	6	3	3	11-1	0	3	4	11-1	6
			STIII	162.24	1.127	1	1	11-1	13	1	2	11-1	13	1	3	11-1	13
						1	4	11-1	13	2	1	11-1	11	2	2	11-1	9
						2	3	11-1	11	2	4	11-1	9	3	1	11-1	0
						3	2	11-1	6	3	3	11-1	0	3	4	11-1	6
			STRIV	162.24	1.127	1	1	11-1	13	1	2	11-1	13	1	3	11-1	13
						1	4	11-1	13	2	1	11-1	11	2	2	11-1	9
						2	3	11-1	11	2	4	11-1	9	3	1	11-1	0
						3	2	11-1	6	3	3	11-1	0	3	4	11-1	6
			STR V	162.24	1.127	1	1	11-1	13	1	2	11-1	13	1	3	11-1	13
						1	4	11-1	13	2	1	11-1	11	2	2	11-1	9
						2	3	11-1	11	2	4	11-1	9	3	1	11-1	0
						3	2	11-1	6	3	3	11-1	0	3	4	11-1	6
2	657.38	1/4T	STR I	162.24	1.127	1	1	11-1	13	1	2	11-1	13	1	3	11-1	13
						1	4	11-1	13	2	1	11-1	11	2	2	11-1	9
						2	3	11-1	11	2	4	11-1	9	3	1	11-1	0
						3	2	11-1	6	3	3	11-1	0	3	4	11-1	6
			STIII	162.24	1.127	1	1	11-1	13	1	2	11-1	13	1	3	11-1	13
						1	4	11-1	13	2	1	11-1	11	2	2	11-1	9
						2	3	11-1	11	2	4	11-1	9	3	1	11-1	0
						3	2	11-1	6	3	3	11-1	0	3	4	11-1	6
			STRIV	162.24	1.127	1	1	11-1	13	1	2	11-1	13	1	3	11-1	13
						1	4	11-1	13	2	1	11-1	11	2	2	11-1	9
						2	3	11-1	11	2	4	11-1	9	3	1	11-1	0
						3	2	11-1	6	3	3	11-1	0	3	4	11-1	6
			STR V	162.24	1.127	1	1	11-1	13	1	2	11-1	13	1	3	11-1	13
						1	4	11-1	13	2	1	11-1	11	2	2	11-1	9
						2	3	11-1	11	2	4	11-1	9	3	1	11-1	0
						3	2	11-1	6	3	3	11-1	0	3	4	11-1	6
2	675.50	TOP	STR I	162.24	1.127	1	1	11-1	13	1	2	11-1	13	1	3	11-1	13
						1	4	11-1	13	2	1	11-1	11	2	2	11-1	9
						2	3	11-1	11	2	4	11-1	9	3	1	11-1	0
						3	2	11-1	6	3	3	11-1	0	3	4	11-1	6
			STIII	162.24	1.127	1	1	11-1	13	1	2	11-1	13	1	3	11-1	13
						1	4	11-1	13	2	1	11-1	11	2	2	11-1	9
						2	3	11-1	11	2	4	11-1	9	3	1	11-1	0
						3	2	11-1	6	3	3	11-1	0	3	4	11-1	6
			STRIV	162.24	1.127	1	1	11-1	13	1	2	11-1	13	1	3	11-1	13
						1	4	11-1	13	2	1	11-1	11	2	2	11-1	9
						2	3	11-1	11	2	4	11-1	9	3	1	11-1	0
						3	2	11-1	6	3	3	11-1	0	3	4	11-1	6
			STR V	162.24	1.127	1	1	11-1	13	1	2	11-1	13	1	3	11-1	13
						1	4	11-1	13	2	1	11-1	11	2	2	11-1	9
						2	3	11-1	11	2	4	11-1	9	3	1	11-1	0
						3	2	11-1	6	3	3	11-1	0	3	4	11-1	6

BEGIN TIME: 06/08/2012 09:27:08
END TIME: 06/08/2012 09:34:28
ELAPSED TIME: 00:07:20

RUN TIME: 06/08/2012 11:05:00.839 PROGRAM'S INTERPRETATION OF INPUT DATA MADE BY:_LER___ DATE_6/08/12
Filename: M:\jobs\49633\Techprod\Bridges\Main Span (Unit 2)\Pier 11\RFI - Misa CHECKED BY:_KDG___ DATE_6/12/12
BACKCHECKED BY:_____ DATE_____
INPUT FILE: m:\jobs\49633\techprod\bridges\main span (unit 2)\pier 11\rfi - misalignment\pier\footing\pier 11 footing.bdf
INPUT FILE DATE: 06/08/2012 10:19:01
DLL VERSION: 1.2.2.7 DATE: 1/10/2012

ELEMENT SUMMARY:

ELEMENT TYPE	NUMBER OF ELEMENTS
FOOTINGS	2
DRILLED SHAFT	0
PILES	24
COLUMNS	2
CAP BEAMS	1

PIER run used for establishing top of footing loads only.

----- JOB DESCRIPTION AND INITIAL GEOMETRY -----

JOB NUMBER: 49633
JOB NAME: Pier 11 Updated 3-11-11
USER NAME: ajohn
DESIGN CODE: AASHTO 2010
NUMBER OF COLUMNS: 2
NUMBER OF CAPBEAMS: 1
NUMBER OF FOOTINGS: 2
UNITS: (English)

----- DESIGN OPTIONS -----

DESIGN OPTIONS:
CAP:
DESIGN CAPS: No
DESIGN METHOD: LRFD Design
FACE + D: No
DESIGN POINTS: All Points
STIFFEN CAPS OVER COLUMNS: No
COLUMN:
DESIGN COLS: No
DESIGN METHOD: LRFD Design
MOMENT MAG.: Apply Moment Magnification
LOCATION: Quarter Points
FOOTING:
DESIGN FOOTS: Yes
DESIGN METHOD: LRFD Design

LOAD MODIFIER FACTORS:
DUCTILITY: 1.000
REDUNDANCY: 1.000
IMPORTANCE: 1.050

----- ENVIRONMENTAL PARAMETERS -----

STREAM AND ICE FLOW DATA:
HIGH WATER ELEVATION: 0.000 (ft)
LOW WATER ELEVATION : 0.000 (ft)
STREAM VELOCITY: 0.0 (ft/sec)
FLOW DIRECTION: 0.000 (degrees)
LONGITUDINAL DRAG COEFF: 0.000
LATERAL DRAG COEFF: 0.000
EFFECTIVE NOSE WIDTH: 0.000 (ft)
NOSE INCLINATION: VERT: 0.000 (degrees) HORZ: 0.000 (degrees)
ICE FRICTION ANGLE: 0.000 (degrees)
ICE STRENGTH: 0.000 (psi)
ICE THICKNESS: 0.000 (in)

WIND PRESSURE INTENSITY DATA:
SUBSTRUCTURE:
DESIGN VELOCITY: 100.0 (mph)
WIND PRESSURE: 40.000 (psf)

SUPERSTRUCTURE:
DESIGN VELOCITY: 100.0 (mph)
OVERTURNING WIND PRESSURE: 20.000 (psf)
AASHTO STANDARD WIND PRESSURES HAVE BEEN USED, 3.8.1.2.2-1 AND 3.8.1.3-1.

Note: All wind pressures are applied using a base wind velocity of 100 mph. These values are increased or decreased in accordance with AASHTO 3.8.1.2.1 for Strength Limit State III only.

TEMPERATURE DATA:
TEMP RISE: 35.0 Fahr.
TEMP FALL: 45.0 Fahr.

----- CAP BEAM 1 DATA -----

SHEAR DESIGN USING SIMPLIFIED PROCEDURE, AASHTO 5.8.3.4.1

TOP OF CAP BEAM 1 REFERENCE LINE DATA:
NUMBER OF POINTS: 22
POINT 1: OFFSET: -101.396 (ft) ELEV: 686.500 (ft)
POINT 2: OFFSET: -95.560 (ft) ELEV: 686.500 (ft)
POINT 3: OFFSET: -85.870 (ft) ELEV: 686.500 (ft)
POINT 4: OFFSET: -84.896 (ft) ELEV: 686.500 (ft)
POINT 5: OFFSET: -77.896 (ft) ELEV: 686.500 (ft)
POINT 6: OFFSET: -76.180 (ft) ELEV: 686.500 (ft)
POINT 7: OFFSET: -66.490 (ft) ELEV: 686.500 (ft)
POINT 8: OFFSET: -63.500 (ft) ELEV: 686.500 (ft)

```
    POINT  9:  OFFSET:  -50.788 (ft)     ELEV:  686.500 (ft)
    POINT 10:  OFFSET:  -39.088 (ft)     ELEV:  686.500 (ft)
    POINT 11:  OFFSET:  -31.440 (ft)     ELEV:  686.500 (ft)
    POINT 12:  OFFSET:  -27.388 (ft)     ELEV:  686.500 (ft)
    POINT 13:  OFFSET:  -15.688 (ft)     ELEV:  686.500 (ft)
    POINT 14:  OFFSET:   -3.988 (ft)     ELEV:  686.500 (ft)
    POINT 15:  OFFSET:    0.620 (ft)     ELEV:  686.500 (ft)
    POINT 16:  OFFSET:    7.712 (ft)     ELEV:  686.500 (ft)
    POINT 17:  OFFSET:   17.604 (ft)     ELEV:  686.500 (ft)
    POINT 18:  OFFSET:   19.412 (ft)     ELEV:  686.500 (ft)
    POINT 19:  OFFSET:   24.604 (ft)     ELEV:  686.500 (ft)
    POINT 20:  OFFSET:   31.112 (ft)     ELEV:  686.500 (ft)
    POINT 21:  OFFSET:   32.680 (ft)     ELEV:  686.500 (ft)
    POINT 22:  OFFSET:   41.104 (ft)     ELEV:  686.500 (ft)

  NUMBER OF SEGMENTS:  3
  SEGMENT  1 DIMENSIONS:
    SHAPE:   Rectangular
    PROFILE: Linear
    BEGIN SECTION:
      DISTANCE:   -101.40 (ft)      DEPTH:  6.50 (ft)      TOP ELEV:   686.500 (ft)
      BOT SLOPE:   0.0000           WIDTH: 12.00 (ft)      BOT ELEV:   680.000 (ft)
    END SECTION:
      DISTANCE:    -84.90 (ft)      DEPTH: 11.00 (ft)      TOP ELEV:   686.500 (ft)
      BOT SLOPE:   0.0000           WIDTH: 12.00 (ft)      BOT ELEV:   675.500 (ft)

  SEGMENT  2 DIMENSIONS:
    SHAPE:   Rectangular
    PROFILE: Linear
    BEGIN SECTION:
      DISTANCE:    -84.90 (ft)      DEPTH: 11.00 (ft)      TOP ELEV:   686.500 (ft)
      BOT SLOPE:   0.0000           WIDTH: 12.00 (ft)      BOT ELEV:   675.500 (ft)
    END SECTION:
      DISTANCE:     24.60 (ft)      DEPTH: 11.00 (ft)      TOP ELEV:   686.500 (ft)
      BOT SLOPE:   0.0000           WIDTH: 12.00 (ft)      BOT ELEV:   675.500 (ft)

  SEGMENT  3 DIMENSIONS:
    SHAPE:   Rectangular
    PROFILE: Linear
    BEGIN SECTION:
      DISTANCE:     24.60 (ft)      DEPTH: 11.00 (ft)      TOP ELEV:   686.500 (ft)
      BOT SLOPE:   0.0000           WIDTH: 12.00 (ft)      BOT ELEV:   675.500 (ft)
    END SECTION:
      DISTANCE:     41.10 (ft)      DEPTH:  6.50 (ft)      TOP ELEV:   686.500 (ft)
      BOT SLOPE:   0.0000           WIDTH: 12.00 (ft)      BOT ELEV:   680.000 (ft)

  REINFORCEMENT PARAMETERS:             CONCRETE PARAMETERS:
    YIELD  STRENGTH:    60.0 (ksi)        FPC:      4.0 (ksi)
    MIN COVER:    TOP:   3.0 (in)         WEIGHT: 150.0 (pcf)
                BOTTOM:   3.0 (in)        CTE:      0.0000060
                  SIDE:   3.0 (in)
    STIRRUPS:     SIZE:   3
      NO.LEGS TORSION:   1
      NO.LEGS   TOTAL:   2
    EXPOSURE FACTOR:     1.000

  REINFORCEMENT LAYER DATA:
  NUMBER OF SLABS:  3
    Slab No:  1   Label: Slab 1-1
    Slab No:  2   Label: Slab 1-2
    Slab No:  3   Label: Slab 1-3

----- SLAB 1 DATA ------------------------------------------------------------------------------------------------

  SLAB:  1     SLAB LABEL: Slab 1-1
  CONNECTED TO: CAPBEAM  1
    SLAB LENGTH:    306.14 (ft)
    SLAB WIDTH:     131.94 (ft)
    SLAB THICK:      10.00 (in)
    DESIGN SPEED:     70.0 (mph)
    SLAB RADIUS:    3522.0 (ft)
    HAUNCH THICK:     2.00 (in)
    PIER SKEW:      18.000 (degrees)
    NUMBER OF ROADWAYS:  1

    SLAB  1 DIMENSIONS:
      LEFT FASCIA:              LEFT BARRIER:             LEFT SIDEWALK:
        WIDTH:    0.000 (in)      WIDTH:   18.000 (in)      WIDTH:    0.000 (ft)
                                  HEIGHT:  32.000 (in)      THICK:    0.000 (in)

      ROADWAY 1 WIDTH = 128.940 (ft)

      RIGHT SIDEWALK:           RIGHT BARRIER:            RIGHT FASCIA:
        WIDTH:    0.000 (ft)      WIDTH:   18.000 (in)      WIDTH:    0.000 (in)
        THICK:    0.000 (in)      HEIGHT:  32.000 (in)

    SLAB  1 CROSS SLOPE DATA:
      NUMBER OF CROSS SLOPE VALUES:  2
        SLOPE: -0.0400          SLOPE: -0.0400
        DIST:   98.455 (ft)     DIST:   38.216 (ft)

    SLAB  1 GIRDER DATA:
      NUMBER OF GIRDERS:  5           GIRDER DEPTH AND PROFILE DISTANCES:
      SPAN LENGTH:                      BACK STATION:              PIER:                  FORWARD STATION:
        BACK STATION:  306.140 (ft)       DEPTH:     10.00 (ft)     DEPTH: 10.00 (ft)     DEPTH:      0.00 (ft)
```

FWD STATION: 0.000 (ft) DISTANCE: 306.14 (ft) DISTANCE: 0.00 (ft)

GIRDER LOCATION DATA:

NO.	NAME	DISTANCE (ft)	GIRDER TYPE	BOT FL WIDTH (in)	TOP FL WIDTH (in)	TOP FL ECCENT (in)	SKEW ANGLE (degrees)	BEARING OFFSET (in)	FIXITY
1	Girder 1	-93.225	I	0.00	0.00	0.00	18.000	-19.50	T
2	Girder 2	-61.162	I	0.00	0.00	0.00	18.000	-19.50	T
3	Girder 3	-29.098	I	0.00	0.00	0.00	18.000	-19.50	T
4	Girder 4	2.965	I	0.00	0.00	0.00	18.000	-19.50	T
5	Girder 5	34.029	I	0.00	0.00	0.00	18.000	-19.50	T

SLAB 1 BEARING DATA:
BEARING HEIGHT: 12.000 (in)
BEARING FRICTION COEFFICIENT: 0.060

----- SLAB 2 DATA -----

SLAB: 2 SLAB LABEL: Slab 1-2
CONNECTED TO: CAPBEAM 1
SLAB LENGTH: 240.00 (ft)
SLAB WIDTH: 37.00 (ft)
SLAB THICK: 9.25 (in)
DESIGN SPEED: 70.0 (mph)
SLAB RADIUS: 3274.0 (ft)
HAUNCH THICK: 3.50 (in)
PIER SKEW: 18.000 (degrees)
NUMBER OF ROADWAYS: 1

SLAB 2 DIMENSIONS:
LEFT FASCIA: LEFT BARRIER: LEFT SIDEWALK:
WIDTH: 0.000 (in) WIDTH: 18.000 (in) WIDTH: 0.000 (ft)
HEIGHT: 32.000 (in) THICK: 0.000 (in)

ROADWAY 1 WIDTH = 34.000 (ft)

RIGHT SIDEWALK: RIGHT BARRIER: RIGHT FASCIA:
WIDTH: 0.000 (ft) WIDTH: 18.000 (in) WIDTH: 0.000 (in)
THICK: 0.000 (in) HEIGHT: 32.000 (in)

SLAB 2 CROSS SLOPE DATA:
NUMBER OF CROSS SLOPE VALUES: 2
SLOPE: -0.0400 SLOPE: -0.0400
DIST: 37.234 (ft) DIST: 61.221 (ft)

SLAB 2 GIRDER DATA:
NUMBER OF GIRDERS: 4 GIRDER DEPTH AND PROFILE DISTANCES:
SPAN LENGTH: BACK STATION: PIER: FORWARD STATION:
BACK STATION: 0.000 (ft) DEPTH: 0.00 (ft) DEPTH: 8.17 (ft) DEPTH: 8.17 (ft)
FWD STATION: 240.000 (ft) DISTANCE: 0.00 (ft) DISTANCE: 240.00 (ft)

GIRDER LOCATION DATA:

NO.	NAME	DISTANCE (ft)	GIRDER TYPE	BOT FL WIDTH (in)	TOP FL WIDTH (in)	TOP FL ECCENT (in)	SKEW ANGLE (degrees)	BEARING OFFSET (in)	FIXITY
1	Girder 1	-92.810	I	0.00	0.00	0.00	18.000	50.50	T
2	Girder 2	-83.120	I	0.00	0.00	0.00	18.000	50.50	T
3	Girder 3	-73.430	I	0.00	0.00	0.00	18.000	50.50	T
4	Girder 4	-63.740	I	0.00	0.00	0.00	18.000	50.50	T

SLAB 2 BEARING DATA:
BEARING HEIGHT: 40.000 (in)
BEARING FRICTION COEFFICIENT: 0.060

----- SLAB 3 DATA -----

SLAB: 3 SLAB LABEL: Slab 1-3
CONNECTED TO: CAPBEAM 1
SLAB LENGTH: 240.00 (ft)
SLAB WIDTH: 87.93 (ft)
SLAB THICK: 9.50 (in)
DESIGN SPEED: 70.0 (mph)
SLAB RADIUS: 3522.0 (ft)
HAUNCH THICK: 2.00 (in)
PIER SKEW: 18.000 (degrees)
NUMBER OF ROADWAYS: 1

SLAB 3 DIMENSIONS:
LEFT FASCIA: LEFT BARRIER: LEFT SIDEWALK:
WIDTH: 0.000 (in) WIDTH: 18.000 (in) WIDTH: 0.000 (ft)
HEIGHT: 32.000 (in) THICK: 0.000 (in)

ROADWAY 1 WIDTH = 84.929 (ft)

RIGHT SIDEWALK: RIGHT BARRIER: RIGHT FASCIA:
WIDTH: 0.000 (ft) WIDTH: 18.000 (in) WIDTH: 0.000 (in)
THICK: 0.000 (in) HEIGHT: 32.000 (in)

SLAB 3 CROSS SLOPE DATA:
NUMBER OF CROSS SLOPE VALUES: 2
SLOPE: -0.0400 SLOPE: -0.0400
DIST: 52.181 (ft) DIST: 38.000 (ft)

SLAB 3 GIRDER DATA:
NUMBER OF GIRDERS: 9 GIRDER DEPTH AND PROFILE DISTANCES:

SPAN LENGTH: BACK STATION: PIER: FORWARD STATION:
BACK STATION: 0.000 (ft) DEPTH: 0.00 (ft) DEPTH: 8.27 (ft) DEPTH: 8.27 (ft)
FWD STATION: 240.000 (ft) DISTANCE: 0.00 (ft) DISTANCE: 240.00 (ft)

GIRDER LOCATION DATA:

NO.	NAME	DISTANCE (ft)	GIRDER TYPE	BOT FL WIDTH (in)	TOP FL WIDTH (in)	TOP FL ECCENT (in)	SKEW ANGLE (degrees)	BEARING OFFSET (in)	FIXITY
1	Girder 1	-49.440	I	0.00	0.00	0.00	18.000	50.50	T
2	Girder 2	-37.671	I	0.00	0.00	0.00	18.000	50.50	T
3	Girder 3	-25.897	I	0.00	0.00	0.00	18.000	50.50	T
4	Girder 4	-14.118	I	0.00	0.00	0.00	18.000	50.50	T
5	Girder 5	-7.655	I	0.00	0.00	0.00	18.000	50.50	T
6	Girder 6	-1.192	I	0.00	0.00	0.00	18.000	50.50	T
7	Girder 7	10.483	I	0.00	0.00	0.00	18.000	50.50	T
8	Girder 8	22.162	I	0.00	0.00	0.00	18.000	50.50	T
9	Girder 9	33.844	I	0.00	0.00	0.00	18.000	50.50	T

SLAB 3 BEARING DATA:
BEARING HEIGHT: 40.000 (in)
BEARING FRICTION COEFFICIENT: 0.060

----- COLUMN 1 DATA -----

COLUMN LINE OFFSET: -77.896 (ft)
NUMBER OF LEVELS: 1
COLUMN FACE LOCATIONS:
CAPBEAM: -TRAN: 84.00 (in) +TRAN: 84.00 (in)
FOOTING: -TRAN: 84.00 (in) +TRAN: 84.00 (in) -LONG: 72.00 (in) +LONG: 72.00 (in)
COLUMN: 1 LEVEL: 1
NUMBER OF SEGMENTS: 1
MAGNIFICATION FACTORS: K-TRAN: 1.20 K-LONG: 2.10
ECCENTRICITIES: TRAN: 0.000 (ft) LONG: 0.000 (ft)
ROTATION ANGLE: 0.000 (degrees)
SEGMENT 1 DIMENSIONS:
SHAPE: User Defined
BEGIN SECTION:
TOP ELEV: 675.500 (ft)
TORSIONAL CONSTANT J: 0.437E+08 (in**4)
NUMBER OF FACES: 18

FACE 1:	BEG	X:	-84.000 (in)	Y:	-60.000 (in)	Rad:	0.000 (in)	
	END	X:	-72.000 (in)	Y:	-60.000 (in)			
FACE 2:	BEG	X:	-72.000 (in)	Y:	-60.000 (in)	Rad:	0.000 (in)	
	END	X:	-72.000 (in)	Y:	-72.000 (in)			
FACE 3:	BEG	X:	-72.000 (in)	Y:	-72.000 (in)	Rad:	0.000 (in)	
	END	X:	72.000 (in)	Y:	-72.000 (in)			
FACE 4:	BEG	X:	72.000 (in)	Y:	-72.000 (in)	Rad:	0.000 (in)	
	END	X:	72.000 (in)	Y:	-60.000 (in)			
FACE 5:	BEG	X:	72.000 (in)	Y:	-60.000 (in)	Rad:	0.000 (in)	
	END	X:	84.000 (in)	Y:	-60.000 (in)			
FACE 6:	BEG	X:	84.000 (in)	Y:	-60.000 (in)	Rad:	0.000 (in)	
	END	X:	84.000 (in)	Y:	60.000 (in)			
FACE 7:	BEG	X:	84.000 (in)	Y:	60.000 (in)	Rad:	0.000 (in)	
	END	X:	72.000 (in)	Y:	60.000 (in)			
FACE 8:	BEG	X:	72.000 (in)	Y:	60.000 (in)	Rad:	0.000 (in)	
	END	X:	72.000 (in)	Y:	72.000 (in)			
FACE 9:	BEG	X:	72.000 (in)	Y:	72.000 (in)	Rad:	0.000 (in)	
	END	X:	-72.000 (in)	Y:	72.000 (in)			
FACE 10:	BEG	X:	-72.000 (in)	Y:	72.000 (in)	Rad:	0.000 (in)	
	END	X:	-72.000 (in)	Y:	60.000 (in)			
FACE 11:	BEG	X:	-72.000 (in)	Y:	60.000 (in)	Rad:	0.000 (in)	
	END	X:	-84.000 (in)	Y:	60.000 (in)			
FACE 12:	BEG	X:	-84.000 (in)	Y:	60.000 (in)	Rad:	0.000 (in)	
	END	X:	-84.000 (in)	Y:	-60.000 (in)			
FACE 13:	BEG	X:	-84.000 (in)	Y:	-60.000 (in)	Rad:	0.000 (in)	
	END	X:	-48.000 (in)	Y:	-48.000 (in)			
FACE 14:	BEG	X:	-48.000 (in)	Y:	-48.000 (in)	Rad:	0.000 (in)	
	END	X:	-48.000 (in)	Y:	48.000 (in)			
FACE 15:	BEG	X:	-48.000 (in)	Y:	48.000 (in)	Rad:	0.000 (in)	
	END	X:	48.000 (in)	Y:	48.000 (in)			
FACE 16:	BEG	X:	48.000 (in)	Y:	48.000 (in)	Rad:	0.000 (in)	
	END	X:	48.000 (in)	Y:	-48.000 (in)			
FACE 17:	BEG	X:	48.000 (in)	Y:	-48.000 (in)	Rad:	0.000 (in)	
	END	X:	-48.000 (in)	Y:	-48.000 (in)			
FACE 18:	BEG	X:	-48.000 (in)	Y:	-48.000 (in)	Rad:	0.000 (in)	
	END	X:	-84.000 (in)	Y:	-60.000 (in)			

END SECTION:
BOT ELEV: 603.000 (ft)
TORSIONAL CONSTANT J: 0.437E+08 (in**4)
NUMBER OF FACES: 18

FACE 1:	BEG	X:	-84.000 (in)	Y:	-60.000 (in)	Rad:	0.000 (in)	
	END	X:	-72.000 (in)	Y:	-60.000 (in)			
FACE 2:	BEG	X:	-72.000 (in)	Y:	-60.000 (in)	Rad:	0.000 (in)	
	END	X:	-72.000 (in)	Y:	-72.000 (in)			
FACE 3:	BEG	X:	-72.000 (in)	Y:	-72.000 (in)	Rad:	0.000 (in)	
	END	X:	72.000 (in)	Y:	-72.000 (in)			
FACE 4:	BEG	X:	72.000 (in)	Y:	-72.000 (in)	Rad:	0.000 (in)	
	END	X:	72.000 (in)	Y:	-60.000 (in)			
FACE 5:	BEG	X:	72.000 (in)	Y:	-60.000 (in)	Rad:	0.000 (in)	
	END	X:	84.000 (in)	Y:	-60.000 (in)			
FACE 6:	BEG	X:	84.000 (in)	Y:	-60.000 (in)	Rad:	0.000 (in)	
	END	X:	84.000 (in)	Y:	60.000 (in)			
FACE 7:	BEG	X:	84.000 (in)	Y:	60.000 (in)	Rad:	0.000 (in)	
	END	X:	72.000 (in)	Y:	60.000 (in)			
FACE 8:	BEG	X:	72.000 (in)	Y:	60.000 (in)	Rad:	0.000 (in)	

```
                END  X:     72.000 (in)     Y:     72.000 (in)
        FACE  9: BEG  X:     72.000 (in)     Y:     72.000 (in)     Rad:      0.000 (in)
                END  X:    -72.000 (in)     Y:     72.000 (in)
        FACE 10: BEG  X:    -72.000 (in)     Y:     72.000 (in)     Rad:      0.000 (in)
                END  X:    -72.000 (in)     Y:     60.000 (in)
        FACE 11: BEG  X:    -72.000 (in)     Y:     60.000 (in)     Rad:      0.000 (in)
                END  X:    -84.000 (in)     Y:     60.000 (in)
        FACE 12: BEG  X:    -84.000 (in)     Y:     60.000 (in)     Rad:      0.000 (in)
                END  X:    -84.000 (in)     Y:    -60.000 (in)
        FACE 13: BEG  X:    -84.000 (in)     Y:    -60.000 (in)     Rad:      0.000 (in)
                END  X:    -48.000 (in)     Y:    -48.000 (in)
        FACE 14: BEG  X:    -48.000 (in)     Y:    -48.000 (in)     Rad:      0.000 (in)
                END  X:    -48.000 (in)     Y:     48.000 (in)
        FACE 15: BEG  X:    -48.000 (in)     Y:     48.000 (in)     Rad:      0.000 (in)
                END  X:     48.000 (in)     Y:     48.000 (in)
        FACE 16: BEG  X:     48.000 (in)     Y:     48.000 (in)     Rad:      0.000 (in)
                END  X:     48.000 (in)     Y:    -48.000 (in)
        FACE 17: BEG  X:     48.000 (in)     Y:    -48.000 (in)     Rad:      0.000 (in)
                END  X:    -48.000 (in)     Y:    -48.000 (in)
        FACE 18: BEG  X:    -48.000 (in)     Y:    -48.000 (in)     Rad:      0.000 (in)
                END  X:    -84.000 (in)     Y:    -60.000 (in)
REINFORCEMENT PARAMETERS:                   CONCRETE PARAMETERS:
  YIELD  STRENGTH:   60.0 (ksi)               FPC:      4.0 (ksi)
  CONTAINMENT BARS:   TYPE:   Tied            WEIGHT: 150.0 (pcf)
                      SIZE:   6               CTE:      0.0000060
  DISTANCE TO CL VERT BARS:   0.000 (in)
  PERCENT STEEL:       MIN:    1.00
                       MAX:    8.00

COLUMN REINFORCEMENT DATA:
  NUMBER OF REINFORCEMENT SECTIONS:  3
    SECTION  1 DATA:
      SHAPE: Rectangular           TRAN OFFSET:    0.00 (in)       TOP ELEV:   675.50 (ft)
      NUMBER OF FACES:  4          LONG OFFSET:    0.00 (in)       BOT ELEV:   603.00 (ft)
        FACE DATA:
          FACE NUMBER:            1             2             3             4
          TOP BEG X COORD:   -66.92 (in)    66.92 (in)    66.92 (in)   -66.92 (in)
          TOP BEG Y COORD:   -66.92 (in)   -66.92 (in)    66.92 (in)    66.92 (in)
          TOP END X COORD:    66.92 (in)    66.92 (in)   -66.92 (in)   -66.92 (in)
          TOP END Y COORD:   -66.92 (in)    66.92 (in)    66.92 (in)   -66.92 (in)
          TOP RADIUS:          0.00 (in)     0.00 (in)     0.00 (in)     0.00 (in)

          BOT BEG X COORD:   -66.92 (in)    66.92 (in)    66.92 (in)   -66.92 (in)
          BOT BEG Y COORD:   -66.92 (in)   -66.92 (in)    66.92 (in)    66.92 (in)
          BOT END X COORD:    66.92 (in)    66.92 (in)   -66.92 (in)   -66.92 (in)
          BOT END Y COORD:   -66.92 (in)    66.92 (in)    66.92 (in)   -66.92 (in)
          BOT RADIUS:          0.00 (in)     0.00 (in)     0.00 (in)     0.00 (in)

          BARSIZE:               11            11            11            11
          BARS/BUNDLE:            1             1             1             1
          MIN NUM BARS:          13            13            13            13
          MAX NUM BARS:          13            13            13            13
          BAR AT BEG:           Yes            No           Yes            No
          BAR AT END:           Yes            No           Yes            No

    SECTION  2 DATA:
      SHAPE: Square                TRAN OFFSET:    0.00 (in)       TOP ELEV:   675.50 (ft)
      NUMBER OF FACES:  4          LONG OFFSET:    0.00 (in)       BOT ELEV:   603.00 (ft)
        FACE DATA:
          FACE NUMBER:            1             2             3             4
          TOP BEG X COORD:   -53.08 (in)    53.08 (in)    53.08 (in)   -53.08 (in)
          TOP BEG Y COORD:   -53.08 (in)   -53.08 (in)    53.08 (in)    53.08 (in)
          TOP END X COORD:    53.08 (in)    53.08 (in)   -53.08 (in)   -53.08 (in)
          TOP END Y COORD:   -53.08 (in)    53.08 (in)    53.08 (in)   -53.08 (in)
          TOP RADIUS:          0.00 (in)     0.00 (in)     0.00 (in)     0.00 (in)

          BOT BEG X COORD:   -53.08 (in)    53.08 (in)    53.08 (in)   -53.08 (in)
          BOT BEG Y COORD:   -53.08 (in)   -53.08 (in)    53.08 (in)    53.08 (in)
          BOT END X COORD:    53.08 (in)    53.08 (in)   -53.08 (in)   -53.08 (in)
          BOT END Y COORD:   -53.08 (in)    53.08 (in)    53.08 (in)   -53.08 (in)
          BOT RADIUS:          0.00 (in)     0.00 (in)     0.00 (in)     0.00 (in)

          BARSIZE:               11            11            11            11
          BARS/BUNDLE:            1             1             1             1
          MIN NUM BARS:          11             9            11             9
          MAX NUM BARS:          11             9            11             9
          BAR AT BEG:           Yes            No           Yes            No
          BAR AT END:           Yes            No           Yes            No

    SECTION  3 DATA:
      SHAPE: Rectangular           TRAN OFFSET:    0.00 (in)       TOP ELEV:   675.50 (ft)
      NUMBER OF FACES:  4          LONG OFFSET:    0.00 (in)       BOT ELEV:   603.00 (ft)
        FACE DATA:
          FACE NUMBER:            1             2             3             4
          TOP BEG X COORD:   -79.05 (in)    79.05 (in)    79.05 (in)   -79.05 (in)
          TOP BEG Y COORD:   -55.05 (in)   -55.05 (in)    55.05 (in)    55.05 (in)
          TOP END X COORD:    79.05 (in)    79.05 (in)   -79.05 (in)   -79.05 (in)
          TOP END Y COORD:   -55.05 (in)    55.05 (in)    55.05 (in)   -55.05 (in)
          TOP RADIUS:          0.00 (in)     0.00 (in)     0.00 (in)     0.00 (in)

          BOT BEG X COORD:   -79.05 (in)    79.05 (in)    79.05 (in)   -79.05 (in)
          BOT BEG Y COORD:   -55.05 (in)   -55.05 (in)    55.05 (in)    55.05 (in)
          BOT END X COORD:    79.05 (in)    79.05 (in)   -79.05 (in)   -79.05 (in)
          BOT END Y COORD:   -55.05 (in)    55.05 (in)    55.05 (in)   -55.05 (in)
          BOT RADIUS:          0.00 (in)     0.00 (in)     0.00 (in)     0.00 (in)
```

```
            BARSIZE:               11            11            11            11
            BARS/BUNDLE:            1             1             1             1
            MIN NUM BARS:           0             6             0             6
            MAX NUM BARS:           0             6             0             6
            BAR AT BEG:            No           Yes            No           Yes
            BAR AT END:            No           Yes            No           Yes


----- COLUMN  2 DATA ------------------------------------------------------------------------------------------

  COLUMN LINE OFFSET:   17.604 (ft)
  NUMBER OF LEVELS:  1
  COLUMN FACE LOCATIONS:
    CAPBEAM: -TRAN:    84.00 (in)     +TRAN:    84.00 (in)
    FOOTING: -TRAN:    84.00 (in)     +TRAN:    84.00 (in)     -LONG:    72.00 (in)     +LONG:    72.00 (in)
  COLUMN:  2  LEVEL: 1
    NUMBER OF SEGMENTS:  1
    MAGNIFICATION FACTORS:    K-TRAN:  1.20         K-LONG:  2.10
    ECCENTRICITIES:             TRAN:  0.000 (ft)     LONG:  0.000 (ft)
    ROTATION ANGLE:      0.000 (degrees)
    SEGMENT  1 DIMENSIONS:
      SHAPE:   User Defined
      BEGIN SECTION:
        TOP ELEV:    675.500 (ft)
        TORSIONAL CONSTANT J:       0.437E+08 (in**4)
          NUMBER OF FACES: 18
            FACE  1: BEG  X:    -84.000 (in)     Y:    -60.000 (in)     Rad:      0.000 (in)
                     END  X:    -72.000 (in)     Y:    -60.000 (in)
            FACE  2: BEG  X:    -72.000 (in)     Y:    -60.000 (in)     Rad:      0.000 (in)
                     END  X:    -72.000 (in)     Y:    -72.000 (in)
            FACE  3: BEG  X:    -72.000 (in)     Y:    -72.000 (in)     Rad:      0.000 (in)
                     END  X:     72.000 (in)     Y:    -72.000 (in)
            FACE  4: BEG  X:     72.000 (in)     Y:    -72.000 (in)     Rad:      0.000 (in)
                     END  X:     72.000 (in)     Y:    -60.000 (in)
            FACE  5: BEG  X:     72.000 (in)     Y:    -60.000 (in)     Rad:      0.000 (in)
                     END  X:     84.000 (in)     Y:    -60.000 (in)
            FACE  6: BEG  X:     84.000 (in)     Y:    -60.000 (in)     Rad:      0.000 (in)
                     END  X:     84.000 (in)     Y:     60.000 (in)
            FACE  7: BEG  X:     84.000 (in)     Y:     60.000 (in)     Rad:      0.000 (in)
                     END  X:     72.000 (in)     Y:     60.000 (in)
            FACE  8: BEG  X:     72.000 (in)     Y:     60.000 (in)     Rad:      0.000 (in)
                     END  X:     72.000 (in)     Y:     72.000 (in)
            FACE  9: BEG  X:     72.000 (in)     Y:     72.000 (in)     Rad:      0.000 (in)
                     END  X:    -72.000 (in)     Y:     72.000 (in)
            FACE 10: BEG  X:    -72.000 (in)     Y:     72.000 (in)     Rad:      0.000 (in)
                     END  X:    -72.000 (in)     Y:     60.000 (in)
            FACE 11: BEG  X:    -72.000 (in)     Y:     60.000 (in)     Rad:      0.000 (in)
                     END  X:    -84.000 (in)     Y:     60.000 (in)
            FACE 12: BEG  X:    -84.000 (in)     Y:     60.000 (in)     Rad:      0.000 (in)
                     END  X:    -84.000 (in)     Y:    -60.000 (in)
            FACE 13: BEG  X:    -84.000 (in)     Y:    -60.000 (in)     Rad:      0.000 (in)
                     END  X:    -48.000 (in)     Y:    -48.000 (in)
            FACE 14: BEG  X:    -48.000 (in)     Y:    -48.000 (in)     Rad:      0.000 (in)
                     END  X:    -48.000 (in)     Y:     48.000 (in)
            FACE 15: BEG  X:    -48.000 (in)     Y:     48.000 (in)     Rad:      0.000 (in)
                     END  X:     48.000 (in)     Y:     48.000 (in)
            FACE 16: BEG  X:     48.000 (in)     Y:     48.000 (in)     Rad:      0.000 (in)
                     END  X:     48.000 (in)     Y:    -48.000 (in)
            FACE 17: BEG  X:     48.000 (in)     Y:    -48.000 (in)     Rad:      0.000 (in)
                     END  X:    -48.000 (in)     Y:    -48.000 (in)
            FACE 18: BEG  X:    -48.000 (in)     Y:    -48.000 (in)     Rad:      0.000 (in)
                     END  X:    -84.000 (in)     Y:    -60.000 (in)
      END SECTION:
        BOT ELEV:    603.000 (ft)
        TORSIONAL CONSTANT J:       0.437E+08 (in**4)
          NUMBER OF FACES: 18
            FACE  1: BEG  X:    -84.000 (in)     Y:    -60.000 (in)     Rad:      0.000 (in)
                     END  X:    -72.000 (in)     Y:    -60.000 (in)
            FACE  2: BEG  X:    -72.000 (in)     Y:    -60.000 (in)     Rad:      0.000 (in)
                     END  X:    -72.000 (in)     Y:    -72.000 (in)
            FACE  3: BEG  X:    -72.000 (in)     Y:    -72.000 (in)     Rad:      0.000 (in)
                     END  X:     72.000 (in)     Y:    -72.000 (in)
            FACE  4: BEG  X:     72.000 (in)     Y:    -72.000 (in)     Rad:      0.000 (in)
                     END  X:     72.000 (in)     Y:    -60.000 (in)
            FACE  5: BEG  X:     72.000 (in)     Y:    -60.000 (in)     Rad:      0.000 (in)
                     END  X:     84.000 (in)     Y:    -60.000 (in)
            FACE  6: BEG  X:     84.000 (in)     Y:    -60.000 (in)     Rad:      0.000 (in)
                     END  X:     84.000 (in)     Y:     60.000 (in)
            FACE  7: BEG  X:     84.000 (in)     Y:     60.000 (in)     Rad:      0.000 (in)
                     END  X:     72.000 (in)     Y:     60.000 (in)
            FACE  8: BEG  X:     72.000 (in)     Y:     60.000 (in)     Rad:      0.000 (in)
                     END  X:     72.000 (in)     Y:     72.000 (in)
            FACE  9: BEG  X:     72.000 (in)     Y:     72.000 (in)     Rad:      0.000 (in)
                     END  X:    -72.000 (in)     Y:     72.000 (in)
            FACE 10: BEG  X:    -72.000 (in)     Y:     72.000 (in)     Rad:      0.000 (in)
                     END  X:    -72.000 (in)     Y:     60.000 (in)
            FACE 11: BEG  X:    -72.000 (in)     Y:     60.000 (in)     Rad:      0.000 (in)
                     END  X:    -84.000 (in)     Y:     60.000 (in)
            FACE 12: BEG  X:    -84.000 (in)     Y:     60.000 (in)     Rad:      0.000 (in)
                     END  X:    -84.000 (in)     Y:    -60.000 (in)
            FACE 13: BEG  X:    -84.000 (in)     Y:    -60.000 (in)     Rad:      0.000 (in)
                     END  X:    -48.000 (in)     Y:    -48.000 (in)
            FACE 14: BEG  X:    -48.000 (in)     Y:    -48.000 (in)     Rad:      0.000 (in)
                     END  X:    -48.000 (in)     Y:     48.000 (in)
```

```
          FACE 15: BEG  X:    -48.000 (in)     Y:     48.000 (in)     Rad:      0.000 (in)
                   END  X:     48.000 (in)     Y:     48.000 (in)
          FACE 16: BEG  X:     48.000 (in)     Y:     48.000 (in)     Rad:      0.000 (in)
                   END  X:     48.000 (in)     Y:    -48.000 (in)
          FACE 17: BEG  X:     48.000 (in)     Y:    -48.000 (in)     Rad:      0.000 (in)
                   END  X:    -48.000 (in)     Y:    -48.000 (in)
          FACE 18: BEG  X:    -48.000 (in)     Y:    -48.000 (in)     Rad:      0.000 (in)
                   END  X:    -84.000 (in)     Y:    -60.000 (in)
    REINFORCEMENT PARAMETERS:                  CONCRETE PARAMETERS:
      YIELD  STRENGTH:   60.0 (ksi)              FPC:      4.0 (ksi)
      CONTAINMENT BARS:   TYPE:   Tied           WEIGHT: 150.0 (pcf)
                          SIZE:   6              CTE:      0.0000060
      DISTANCE TO CL VERT BARS:   0.000 (in)
      PERCENT STEEL:       MIN:    1.00
                           MAX:    8.00

    COLUMN REINFORCEMENT DATA:
      NUMBER OF REINFORCEMENT SECTIONS:  3
        SECTION  1 DATA:
          SHAPE: Rectangular           TRAN OFFSET:    0.00 (in)       TOP ELEV:   675.50 (ft)
          NUMBER OF FACES:  4          LONG OFFSET:    0.00 (in)       BOT ELEV:   603.00 (ft)
            FACE DATA:
              FACE NUMBER:            1            2            3            4
              TOP BEG X COORD:   -66.92 (in)   66.92 (in)   66.92 (in)  -66.92 (in)
              TOP BEG Y COORD:   -66.92 (in)  -66.92 (in)   66.92 (in)   66.92 (in)
              TOP END X COORD:    66.92 (in)   66.92 (in)  -66.92 (in)  -66.92 (in)
              TOP END Y COORD:   -66.92 (in)   66.92 (in)   66.92 (in)  -66.92 (in)
              TOP RADIUS:          0.00 (in)    0.00 (in)    0.00 (in)    0.00 (in)

              BOT BEG X COORD:   -66.92 (in)   66.92 (in)   66.92 (in)  -66.92 (in)
              BOT BEG Y COORD:   -66.92 (in)  -66.92 (in)   66.92 (in)   66.92 (in)
              BOT END X COORD:    66.92 (in)   66.92 (in)  -66.92 (in)  -66.92 (in)
              BOT END Y COORD:   -66.92 (in)   66.92 (in)   66.92 (in)  -66.92 (in)
              BOT RADIUS:          0.00 (in)    0.00 (in)    0.00 (in)    0.00 (in)

              BARSIZE:               11           11           11           11
              BARS/BUNDLE:            1            1            1            1
              MIN NUM BARS:          13           13           13           13
              MAX NUM BARS:          13           13           13           13
              BAR AT BEG:           Yes           No          Yes           No
              BAR AT END:           Yes           No          Yes           No

        SECTION  2 DATA:
          SHAPE: Square                TRAN OFFSET:    0.00 (in)       TOP ELEV:   675.50 (ft)
          NUMBER OF FACES:  4          LONG OFFSET:    0.00 (in)       BOT ELEV:   603.00 (ft)
            FACE DATA:
              FACE NUMBER:            1            2            3            4
              TOP BEG X COORD:   -53.08 (in)   53.08 (in)   53.08 (in)  -53.08 (in)
              TOP BEG Y COORD:   -53.08 (in)  -53.08 (in)   53.08 (in)   53.08 (in)
              TOP END X COORD:    53.08 (in)   53.08 (in)  -53.08 (in)  -53.08 (in)
              TOP END Y COORD:   -53.08 (in)   53.08 (in)   53.08 (in)  -53.08 (in)
              TOP RADIUS:          0.00 (in)    0.00 (in)    0.00 (in)    0.00 (in)

              BOT BEG X COORD:   -53.08 (in)   53.08 (in)   53.08 (in)  -53.08 (in)
              BOT BEG Y COORD:   -53.08 (in)  -53.08 (in)   53.08 (in)   53.08 (in)
              BOT END X COORD:    53.08 (in)   53.08 (in)  -53.08 (in)  -53.08 (in)
              BOT END Y COORD:   -53.08 (in)   53.08 (in)   53.08 (in)  -53.08 (in)
              BOT RADIUS:          0.00 (in)    0.00 (in)    0.00 (in)    0.00 (in)

              BARSIZE:               11           11           11           11
              BARS/BUNDLE:            1            1            1            1
              MIN NUM BARS:          11            9           11            9
              MAX NUM BARS:          11            9           11            9
              BAR AT BEG:           Yes           No          Yes           No
              BAR AT END:           Yes           No          Yes           No

        SECTION  3 DATA:
          SHAPE: Rectangular           TRAN OFFSET:    0.00 (in)       TOP ELEV:   675.50 (ft)
          NUMBER OF FACES:  4          LONG OFFSET:    0.00 (in)       BOT ELEV:   603.00 (ft)
            FACE DATA:
              FACE NUMBER:            1            2            3            4
              TOP BEG X COORD:   -79.05 (in)   79.05 (in)   79.05 (in)  -79.05 (in)
              TOP BEG Y COORD:   -55.05 (in)  -55.05 (in)   55.05 (in)   55.05 (in)
              TOP END X COORD:    79.05 (in)   79.05 (in)  -79.05 (in)  -79.05 (in)
              TOP END Y COORD:   -55.05 (in)   55.05 (in)   55.05 (in)  -55.05 (in)
              TOP RADIUS:          0.00 (in)    0.00 (in)    0.00 (in)    0.00 (in)

              BOT BEG X COORD:   -79.05 (in)   79.05 (in)   79.05 (in)  -79.05 (in)
              BOT BEG Y COORD:   -55.05 (in)  -55.05 (in)   55.05 (in)   55.05 (in)
              BOT END X COORD:    79.05 (in)   79.05 (in)  -79.05 (in)  -79.05 (in)
              BOT END Y COORD:   -55.05 (in)   55.05 (in)   55.05 (in)  -55.05 (in)
              BOT RADIUS:          0.00 (in)    0.00 (in)    0.00 (in)    0.00 (in)

              BARSIZE:               11           11           11           11
              BARS/BUNDLE:            1            1            1            1
              MIN NUM BARS:           0            6            0            6
              MAX NUM BARS:           0            6            0            6
              BAR AT BEG:            No          Yes           No          Yes
              BAR AT END:            No          Yes           No          Yes

----- FOOTING  1 DATA ---------------------------------------------------------------------------------------

  FOOTING TYPE: Pile Footing
  TOP OF FOOTING ELEVATION:  603.000 (ft)     ROTATION ANGLE:     0.000 (degrees)
```

SHEAR DESIGN USING SIMPLIFIED PROCEDURE, AASHTO 5.8.3.4.1

REINFORCEMENT PARAMETERS:
YIELD STRENGTH: 60.0 (ksi)
MIN COVER: TOP: 3.0 (in)
BOTTOM: 3.0 (in)
SIDE: 3.0 (in)
STIRRUPS: SIZE: 0
NO.LEGS TOTAL: 0
EXPOSURE FACTOR: 1.000

CONCRETE PARAMETERS:
FPC: 4.0 (ksi)
WEIGHT: 150.0 (pcf)
CTE: 0.0000060

SOIL PARAMETERS:
SOIL ELEVATION: 628.000 (ft)
SOIL WEIGHT: 120.0 (pcf)
SOIL CAPACITY:
UNFACTORED: 0.000 (ksf)
FACTORED: 0.000 (ksf)

FOOTING DIMENSIONS:
TRANSVERSE: 38.000 (ft)
LONGITUDINAL: 38.000 (ft)
DEPTH: 7.000 (ft)

LOCATION OF FIRST COLUMN:
TRANSVERSE: 19.000 (ft)
LONGITUDINAL: 19.000 (ft)

REINFORCEMENT LAYER DATA:
BOTTOM MAT: Transverse bars on bottom at min cover of 3.000 (in) from bottom of footing.
Longitudinal Bars:
MIN SIZE: 11 MIN NUMBER OF BARS: 96
MAX SIZE: 11 MAX NUMBER OF BARS: 96
Transverse Bars:
MIN SIZE: 11 MIN NUMBER OF BARS: 84
MAX SIZE: 11 MAX NUMBER OF BARS: 84

TOP MAT: Longitudinal bars on top at min cover of 3.000 (in) from top of footing.
Transverse Bars:
MIN SIZE: 11 MIN NUMBER OF BARS: 38
MAX SIZE: 11 MAX NUMBER OF BARS: 38
Longitudinal Bars:
MIN SIZE: 11 MIN NUMBER OF BARS: 38
MAX SIZE: 11 MAX NUMBER OF BARS: 38

FOOTING SUPPORT FIXITY:

	DISPLACEMENT	ROTATION ABOUT
TRANSVERSE	Spring	Rigid
VERTICAL	Spring	Spring
LONGITUDINAL	Spring	Rigid

UNITS:

	1	2	3	4	5	6
1						
2		kips/in		kips/rad		
3						
4						
5	in-kips/in			in-kips/rad		
6						

FOOTING GLOBAL STIFFNESS MATRIX:

	DISPLACEMENT			ROTATION ABOUT		
	TRANS	VERT	LONG	TRANS	VERT	LONG
TRANS	4235.00	0.00000	0.00000	0.00000	0.00000	0.00000
VERT	0.00000	139276.	0.00000	0.00000	0.00000	0.00000
LONG	0.00000	0.00000	1381.00	0.00000	0.00000	0.00000
TRANS	0.00000	0.00000	0.00000	0.00000	0.00000	0.00000
VERT	0.00000	0.00000	0.00000	0.00000	0.100000E+09	0.00000
LONG	0.00000	0.00000	0.00000	0.00000	0.00000	0.00000

PILE DATA:

PILE NO.	LABEL	SHAPE	MATL CODE	STIFF CODE	EFF. DIA. (in)	TRAN Z (ft)	LONG X (ft)	VERT Y (ft)	BATTER (1H:__V)	ROTATION (degrees)	AXIAL CAPACITY SERV (kips)	AXIAL CAPACITY STR (kips)
1	R:1 C:1	HP14x117	0	1	8.8	-16.00	-16.00	4.42	0.0	90.0	0	0
2	R:1 C:3	HP14x117	0	1	8.8	0.00	-16.00	4.42	0.0	90.0	0	0
3	R:1 C:5	HP14x117	0	1	8.8	16.00	-16.00	4.42	0.0	90.0	0	0
4	R:2 C:2	HP14x117	0	1	8.8	-8.00	-8.00	4.42	0.0	90.0	0	0
5	R:2 C:4	HP14x117	0	1	8.8	8.00	-8.00	4.42	0.0	90.0	0	0
6	R:3 C:1	HP14x117	0	1	8.8	-16.00	0.00	4.42	0.0	90.0	0	0
7	R:3 C:5	HP14x117	0	1	8.8	16.00	0.00	4.42	0.0	90.0	0	0
8	R:4 C:2	HP14x117	0	1	8.8	-8.00	8.00	4.42	0.0	90.0	0	0
9	R:4 C:4	HP14x117	0	1	8.8	8.00	8.00	4.42	0.0	90.0	0	0
10	R:5 C:1	HP14x117	0	1	8.8	-16.00	16.00	4.42	0.0	90.0	0	0
11	R:5 C:3	HP14x117	0	1	8.8	0.00	16.00	4.42	0.0	90.0	0	0
12	R:5 C:5	HP14x117	0	1	8.8	16.00	16.00	4.42	0.0	90.0	0	0

PILE STIFFNESS COEFFICIENT TABLE DATA:

TABLE NO.	C(1) k/in	C(2) k/in	C(3) in-k/in	C(4) k/in	C(5) in-k/in	C(6) in-k/rad	C(7) k/rad	C(8) in-k/rad	C(9) k/rad	C(10) in-k/rad
1	10.0	10.0	0.00	10.0	0.00	0.00	0.00	0.00	0.00	0.00

----- FOOTING 2 DATA -----

FOOTING TYPE: Pile Footing
TOP OF FOOTING ELEVATION: 603.000 (ft) ROTATION ANGLE: 0.000 (degrees)
SHEAR DESIGN USING SIMPLIFIED PROCEDURE, AASHTO 5.8.3.4.1

REINFORCEMENT PARAMETERS:
YIELD STRENGTH: 60.0 (ksi)
MIN COVER: TOP: 3.0 (in)
BOTTOM: 3.0 (in)
SIDE: 3.0 (in)
STIRRUPS: SIZE: 0
NO.LEGS TOTAL: 0
EXPOSURE FACTOR: 1.000

CONCRETE PARAMETERS:
FPC: 4.0 (ksi)
WEIGHT: 150.0 (pcf)
CTE: 0.0000060

SOIL PARAMETERS:
SOIL ELEVATION: 628.000 (ft)
SOIL WEIGHT: 120.0 (pcf)
SOIL CAPACITY:
UNFACTORED: 0.000 (ksf)
FACTORED: 0.000 (ksf)

FOOTING DIMENSIONS:
TRANSVERSE: 38.000 (ft)
LONGITUDINAL: 38.000 (ft)
DEPTH: 7.000 (ft)

LOCATION OF FIRST COLUMN:
TRANSVERSE: 19.000 (ft)
LONGITUDINAL: 19.000 (ft)

REINFORCEMENT LAYER DATA:
BOTTOM MAT: Transverse bars on bottom at min cover of 3.000 (in) from bottom of footing.
Longitudinal Bars:
MIN SIZE: 11 MIN NUMBER OF BARS: 96
MAX SIZE: 11 MAX NUMBER OF BARS: 96
Transverse Bars:
MIN SIZE: 11 MIN NUMBER OF BARS: 84
MAX SIZE: 11 MAX NUMBER OF BARS: 84

TOP MAT: Longitudinal bars on top at min cover of 3.000 (in) from top of footing.
Transverse Bars:
MIN SIZE: 11 MIN NUMBER OF BARS: 38
MAX SIZE: 11 MAX NUMBER OF BARS: 38
Longitudinal Bars:
MIN SIZE: 11 MIN NUMBER OF BARS: 38
MAX SIZE: 11 MAX NUMBER OF BARS: 38

FOOTING SUPPORT FIXITY:

	DISPLACEMENT	ROTATION ABOUT
TRANSVERSE	Spring	Rigid
VERTICAL	Spring	Spring
LONGITUDINAL	Spring	Rigid

UNITS:

	1	2	3	4	5	6
1						
2		kips/in		kips/rad		
3						
4						
5		in-kips/in		in-kips/rad		
6						

FOOTING GLOBAL STIFFNESS MATRIX:

	DISPLACEMENT			ROTATION ABOUT		
	TRANS	VERT	LONG	TRANS	VERT	LONG
TRANS	4235.00	0.00000	0.00000	0.00000	0.00000	0.00000
VERT	0.00000	139276.	0.00000	0.00000	0.00000	0.00000
LONG	0.00000	0.00000	1381.00	0.00000	0.00000	0.00000
TRANS	0.00000	0.00000	0.00000	0.00000	0.00000	0.00000
VERT	0.00000	0.00000	0.00000	0.00000	0.100000E+09	0.00000
LONG	0.00000	0.00000	0.00000	0.00000	0.00000	0.00000

PILE DATA:

PILE NO.	LABEL	SHAPE	MATL CODE	STIFF CODE	EFF. DIA. (in)	TRAN Z (ft)	LONG X (ft)	VERT Y (ft)	BATTER (1H:__V)	ROTATION (degrees)	AXIAL CAPACITY SERV (kips)	AXIAL CAPACITY STR (kips)
1	R:1 C:1	HP14x117	0	1	8.8	-16.00	-16.00	4.42	0.0	90.0	0	0
2	R:1 C:3	HP14x117	0	1	8.8	0.00	-16.00	4.42	0.0	90.0	0	0
3	R:1 C:5	HP14x117	0	1	8.8	16.00	-16.00	4.42	0.0	90.0	0	0
4	R:2 C:2	HP14x117	0	1	8.8	-8.00	-8.00	4.42	0.0	90.0	0	0
5	R:2 C:4	HP14x117	0	1	8.8	8.00	-8.00	4.42	0.0	90.0	0	0
6	R:3 C:1	HP14x117	0	1	8.8	-16.00	0.00	4.42	0.0	90.0	0	0
7	R:3 C:5	HP14x117	0	1	8.8	16.00	0.00	4.42	0.0	90.0	0	0
8	R:4 C:2	HP14x117	0	1	8.8	-8.00	8.00	4.42	0.0	90.0	0	0
9	R:4 C:4	HP14x117	0	1	8.8	8.00	8.00	4.42	0.0	90.0	0	0
10	R:5 C:1	HP14x117	0	1	8.8	-16.00	16.00	4.42	0.0	90.0	0	0
11	R:5 C:3	HP14x117	0	1	8.8	0.00	16.00	4.42	0.0	90.0	0	0
12	R:5 C:5	HP14x117	0	1	8.8	16.00	16.00	4.42	0.0	90.0	0	0

PILE STIFFNESS COEFFICIENT TABLE DATA:

TABLE NO.	C(1) k/in	C(2) k/in	C(3) in-k/in	C(4) k/in	C(5) in-k/in	C(6) in-k/rad	C(7) k/rad	C(8) in-k/rad	C(9) k/rad	C(10) in-k/rad
1	10.0	10.0	0.00	10.0	0.00	0.00	0.00	0.00	0.00	0.00

----- AASHTO LRFD LOAD OPTIONS -----

AASHTO LIMIT STATES:		LOAD TYPE:	INCLUDED	LOAD TYPE:	INCLUDED
STRENGTH I:	Yes	SELF WEIGHT OF PIER DC:	Yes	BUOYANCY:	No
STRENGTH II:	No	DC-DEAD LOAD SUPER:	Yes	STREAM FLOW:	No
STRENGTH III:	Yes	DW-DEAD LOAD SUPER:	Yes	ICE LOAD:	No
STRENGTH IV:	Yes	USER DEFINED LIVE LOAD:	No	WIND ON STRUCTURE:	Yes
STRENGTH V:	Yes	DESIGN TRUCK LOAD:	Yes	WIND ON LIVE LOAD:	Yes
SERVICE I:	Yes	DESIGN LANE LOAD:	Yes	SUPER TEMPERATURE RISE:	Yes
SERVICE III:	No	PERMIT TRUCK LOAD:	No	SUPER TEMPERATURE FALL:	Yes
FATIGUE:	Yes	FATIGUE TRUCK LOAD:	Yes	SHRINKAGE FROM SUPER:	No
EXTREME EVT I:	No	PEDESTRIAN LOADS:	No	SHRINKAGE OF SUBSTR:	Yes
EXTREME EVT II:	No	CENTRIFUGAL FORCE:	Yes	BRAKING FORCE:	Yes
		EARTHQUAKE:	No	COLLISION LOAD:	No

LIVE LOAD OPTIONS:
APPLY IMPACT: Yes FACTORS: 1.330 (Strength) 1.150 (Fatigue)
APPLY TRUCK LOAD ON MULTIPLE SLABS SIMULTANEOUSLY: No
BRAKING FORCE FACTOR × 3.6.4: 0.500
CENTRIFUGAL FORCE FACTOR × 3.6.3: 1.000

----- LOAD INPUT -----

SELF WEIGHT FACTORS:
CAP BEAMS: 1.000

COLUMNS: 1.320
FOOTINGS: 1.000

DC - DEAD LOAD GIRDER REACTIONS:

SLAB NO.	GIRDER LABEL	FORCES (kips) VERT	TRAN	LONG	MOMENTS (ft-k) VERT	TRAN	LONG
1	Girder 1	754.1					
1	Girder 2	880.1					
1	Girder 3	836.1					
1	Girder 4	792.0					
1	Girder 5	578.0					
2	Girder 1	276.4					
2	Girder 2	206.9					
2	Girder 3	202.5					
2	Girder 4	233.8					
3	Girder 1	236.0					
3	Girder 2	225.5					
3	Girder 3	221.6					
3	Girder 4	189.3					
3	Girder 5	183.6					
3	Girder 6	193.7					
3	Girder 7	212.1					
3	Girder 8	211.8					
3	Girder 9	196.5					

DW - DEAD LOAD GIRDER REACTIONS:

SLAB NO.	GIRDER LABEL	FORCES (kips) VERT	TRAN	LONG	MOMENTS (ft-k) VERT	TRAN	LONG
1	Girder 1	153.0					
1	Girder 2	198.0					
1	Girder 3	198.0					
1	Girder 4	198.0					
1	Girder 5	153.0					
2	Girder 1	53.3					
2	Girder 2	42.3					
2	Girder 3	40.9					
2	Girder 4	42.8					
3	Girder 1	57.3					
3	Girder 2	55.3					
3	Girder 3	56.3					
3	Girder 4	55.2					
3	Girder 5	51.9					
3	Girder 6	54.7					
3	Girder 7	56.7					
3	Girder 8	55.8					
3	Girder 9	50.7					

TRUCK LOAD REACTIONS (One Lane, No Impact):

SLAB NO.	GIRDER LABEL	FORCES (kips) VERT	TRAN	LONG	MOMENTS (ft-k) VERT	TRAN	LONG
1	Girder 1	70.0					
1	Girder 2	70.0					
1	Girder 3	70.0					
1	Girder 4	70.0					
1	Girder 5	70.0					
2	Girder 1	68.6					
2	Girder 2	68.6					
2	Girder 3	68.6					
2	Girder 4	68.6					
3	Girder 1	69.3					
3	Girder 2	69.3					
3	Girder 3	69.3					
3	Girder 4	69.3					
3	Girder 5	69.3					
3	Girder 6	69.3					
3	Girder 7	69.3					
3	Girder 8	69.3					
3	Girder 9	69.3					

LANE LOAD REACTIONS (One Lane, No Impact):

SLAB NO.	GIRDER LABEL	FORCES (kips) VERT	TRAN	LONG	MOMENTS (ft-k) VERT	TRAN	LONG
1	Girder 1	80.0					
1	Girder 2	80.0					
1	Girder 3	80.0					
1	Girder 4	80.0					
1	Girder 5	80.0					
2	Girder 1	62.9					
2	Girder 2	62.9					
2	Girder 3	62.9					
2	Girder 4	62.9					
3	Girder 1	70.5					
3	Girder 2	70.5					
3	Girder 3	70.5					
3	Girder 4	70.5					
3	Girder 5	70.5					
3	Girder 6	70.5					

3	Girder 7	70.5						
3	Girder 8	70.5						
3	Girder 9	70.5						

MAX FATIGUE TRUCK LOAD REACTIONS (One Lane, No Impact):

SLAB NO.	GIRDER LABEL	FORCES (kips) VERT	TRAN	LONG	MOMENTS (ft-k) VERT	TRAN	LONG
1	Girder 1	70.0					
1	Girder 2	70.0					
1	Girder 3	70.0					
1	Girder 4	70.0					
1	Girder 5	70.0					
2	Girder 1	64.9					
2	Girder 2	64.9					
2	Girder 3	64.9					
2	Girder 4	64.9					
3	Girder 1	66.0					
3	Girder 2	66.0					
3	Girder 3	66.0					
3	Girder 4	66.0					
3	Girder 5	66.0					
3	Girder 6	66.0					
3	Girder 7	66.0					
3	Girder 8	66.0					
3	Girder 9	66.0					

MIN FATIGUE TRUCK LOAD REACTIONS (One Lane, No Impact):

SLAB NO.	GIRDER LABEL	FORCES (kips) VERT	TRAN	LONG	MOMENTS (ft-k) VERT	TRAN	LONG
1	Girder 1	-10.0					
1	Girder 2	-10.0					
1	Girder 3	-10.0					
1	Girder 4	-10.0					
1	Girder 5	-10.0					
2	Girder 1	-4.4					
2	Girder 2	-4.4					
2	Girder 3	-4.4					
2	Girder 4	-4.4					
3	Girder 1	-4.7					
3	Girder 2	-4.7					
3	Girder 3	-4.7					
3	Girder 4	-4.7					
3	Girder 5	-4.7					
3	Girder 6	-4.7					
3	Girder 7	-4.7					
3	Girder 8	-4.7					
3	Girder 9	-4.7					

REACTIONS DUE TO TEMPERATURE RISE:

SLAB NO.	GIRDER LABEL	FORCES (kips) VERT	TRAN	LONG	MOMENTS (ft-k) VERT	TRAN	LONG
1	Girder 1			1616.0			
1	Girder 2			1616.0			
1	Girder 3			1616.0			
1	Girder 4			1616.0			
1	Girder 5			1616.0			
2	Girder 1			-120.0			
2	Girder 2			-120.0			
2	Girder 3			-120.0			
2	Girder 4			-120.0			
3	Girder 1			-120.0			
3	Girder 2			-120.0			
3	Girder 3			-120.0			
3	Girder 4			-120.0			
3	Girder 5			-120.0			
3	Girder 6			-120.0			
3	Girder 7			-120.0			
3	Girder 8			-120.0			
3	Girder 9			-120.0			

REACTIONS DUE TO TEMPERATURE FALL:

SLAB NO.	GIRDER LABEL	FORCES (kips) VERT	TRAN	LONG	MOMENTS (ft-k) VERT	TRAN	LONG
1	Girder 1			-2424.0			
1	Girder 2			-2424.0			
1	Girder 3			-2424.0			
1	Girder 4			-2424.0			
1	Girder 5			-2424.0			
2	Girder 1			120.0			
2	Girder 2			120.0			
2	Girder 3			120.0			
2	Girder 4			120.0			
3	Girder 1			120.0			
3	Girder 2			120.0			
3	Girder 3			120.0			
3	Girder 4			120.0			
3	Girder 5			120.0			

3	Girder 6	120.0
3	Girder 7	120.0
3	Girder 8	120.0
3	Girder 9	120.0

SHRINKAGE STRAIN OF SUBSTRUCTURE: 0.00020

WIND LOAD DIRECTIONS:

DIRECTIONS (degrees)	APPLIED
0 (+Tran)	Yes
15	Yes
30	Yes
45	Yes
60	Yes
75	Yes
90 (+Long)	Yes
105	Yes
120	Yes
135	Yes
150	Yes
165	Yes
180 (-Tran)	Yes
195	Yes
210	Yes
225	Yes
240	Yes
255	Yes
270 (-Long)	Yes
285	Yes
300	Yes
315	Yes
330	Yes
345	Yes

EARTHQUAKE LOAD:

DIRECTION	FACTORS TRAN	FACTORS LONG	APPLIED
0	1.0	0.0	No
1	1.0	0.3	No
2	0.3	1.0	No
3	0.0	1.0	No
4	-0.3	1.0	No
5	-1.0	0.3	No
6	-1.0	0.0	No
7	-1.0	-0.3	No
8	-0.3	-1.0	No
9	0.0	-1.0	No
10	0.3	-1.0	No
11	1.0	-0.3	No

*** WARNING: SLAB 1 TOTAL APPLIED FORCE, 6363.0(kips) EXCEEDS FRICTIONAL CAPACITY, 302.4(kips). ***
EXCESS MUST BE REDISTRIBUTED TO ANOTHER SUBSTRUCTURE UNIT. LIMIT STATE: STR I, LOAD: 1

*** WARNING: SLAB 2 TOTAL APPLIED FORCE, -252.0(kips) EXCEEDS FRICTIONAL CAPACITY, 86.3(kips). ***
EXCESS MUST BE REDISTRIBUTED TO ANOTHER SUBSTRUCTURE UNIT. LIMIT STATE: STR I, LOAD: 1

*** WARNING: SLAB 3 TOTAL APPLIED FORCE, -567.0(kips) EXCEEDS FRICTIONAL CAPACITY, 182.6(kips). ***
EXCESS MUST BE REDISTRIBUTED TO ANOTHER SUBSTRUCTURE UNIT. LIMIT STATE: STR I, LOAD: 1

*** WARNING: SLAB 1 TOTAL APPLIED FORCE, 6363.0(kips) EXCEEDS FRICTIONAL CAPACITY, 302.4(kips). ***
EXCESS MUST BE REDISTRIBUTED TO ANOTHER SUBSTRUCTURE UNIT. LIMIT STATE: STR I, LOAD: 2

*** WARNING: SLAB 2 TOTAL APPLIED FORCE, -285.1(kips) EXCEEDS FRICTIONAL CAPACITY, 101.4(kips). ***
EXCESS MUST BE REDISTRIBUTED TO ANOTHER SUBSTRUCTURE UNIT. LIMIT STATE: STR I, LOAD: 2

*** WARNING: SLAB 3 TOTAL APPLIED FORCE, -567.0(kips) EXCEEDS FRICTIONAL CAPACITY, 182.6(kips). ***
EXCESS MUST BE REDISTRIBUTED TO ANOTHER SUBSTRUCTURE UNIT. LIMIT STATE: STR I, LOAD: 2

*** WARNING: SLAB 1 TOTAL APPLIED FORCE, 6363.0(kips) EXCEEDS FRICTIONAL CAPACITY, 302.4(kips). ***
EXCESS MUST BE REDISTRIBUTED TO ANOTHER SUBSTRUCTURE UNIT. LIMIT STATE: STR I, LOAD: 3

*** WARNING: SLAB 2 TOTAL APPLIED FORCE, -252.0(kips) EXCEEDS FRICTIONAL CAPACITY, 86.3(kips). ***
EXCESS MUST BE REDISTRIBUTED TO ANOTHER SUBSTRUCTURE UNIT. LIMIT STATE: STR I, LOAD: 3

*** WARNING: SLAB 3 TOTAL APPLIED FORCE, -642.2(kips) EXCEEDS FRICTIONAL CAPACITY, 217.4(kips). ***
EXCESS MUST BE REDISTRIBUTED TO ANOTHER SUBSTRUCTURE UNIT. LIMIT STATE: STR I, LOAD: 3

*** WARNING MESSAGES LIMITED TO TEN! ***

*** WARNING: SLAB 1 TOTAL APPLIED FORCE, 6399.9(kips) EXCEEDS FRICTIONAL CAPACITY, 302.4(kips). ***
EXCESS MUST BE REDISTRIBUTED TO ANOTHER SUBSTRUCTURE UNIT. LIMIT STATE: STIII, LOAD: 1

*** WARNING: SLAB 2 TOTAL APPLIED FORCE, -226.8(kips) EXCEEDS FRICTIONAL CAPACITY, 72.4(kips). ***
EXCESS MUST BE REDISTRIBUTED TO ANOTHER SUBSTRUCTURE UNIT. LIMIT STATE: STIII, LOAD: 1

*** WARNING: SLAB 3 TOTAL APPLIED FORCE, -541.8(kips) EXCEEDS FRICTIONAL CAPACITY, 147.3(kips). ***
EXCESS MUST BE REDISTRIBUTED TO ANOTHER SUBSTRUCTURE UNIT. LIMIT STATE: STIII, LOAD: 1

*** WARNING: SLAB 1 TOTAL APPLIED FORCE, 6363.0(kips) EXCEEDS FRICTIONAL CAPACITY, 266.8(kips). ***
EXCESS MUST BE REDISTRIBUTED TO ANOTHER SUBSTRUCTURE UNIT. LIMIT STATE: STIII, LOAD: 2

*** WARNING: SLAB 2 TOTAL APPLIED FORCE, -252.0(kips) EXCEEDS FRICTIONAL CAPACITY, 64.6(kips). ***
EXCESS MUST BE REDISTRIBUTED TO ANOTHER SUBSTRUCTURE UNIT. LIMIT STATE: STIII, LOAD: 2

```
*** WARNING: SLAB  3 TOTAL APPLIED FORCE,     -567.0(kips) EXCEEDS FRICTIONAL CAPACITY,      128.7(kips). ***
    EXCESS MUST BE REDISTRIBUTED TO ANOTHER SUBSTRUCTURE UNIT. LIMIT STATE: STIII, LOAD:     2


*** WARNING: SLAB  1 TOTAL APPLIED FORCE,     6326.1(kips) EXCEEDS FRICTIONAL CAPACITY,      302.4(kips). ***
    EXCESS MUST BE REDISTRIBUTED TO ANOTHER SUBSTRUCTURE UNIT. LIMIT STATE: STIII, LOAD:     3


*** WARNING: SLAB  2 TOTAL APPLIED FORCE,     -277.2(kips) EXCEEDS FRICTIONAL CAPACITY,       72.4(kips). ***
    EXCESS MUST BE REDISTRIBUTED TO ANOTHER SUBSTRUCTURE UNIT. LIMIT STATE: STIII, LOAD:     3


*** WARNING: SLAB  3 TOTAL APPLIED FORCE,     -592.2(kips) EXCEEDS FRICTIONAL CAPACITY,      147.3(kips). ***
    EXCESS MUST BE REDISTRIBUTED TO ANOTHER SUBSTRUCTURE UNIT. LIMIT STATE: STIII, LOAD:     3


*** WARNING MESSAGES LIMITED TO TEN! ***


*** WARNING: SLAB  1 TOTAL APPLIED FORCE,     6363.0(kips) EXCEEDS FRICTIONAL CAPACITY,      362.9(kips). ***
    EXCESS MUST BE REDISTRIBUTED TO ANOTHER SUBSTRUCTURE UNIT. LIMIT STATE: STRIV, LOAD:     1


*** WARNING: SLAB  2 TOTAL APPLIED FORCE,     -252.0(kips) EXCEEDS FRICTIONAL CAPACITY,       86.9(kips). ***
    EXCESS MUST BE REDISTRIBUTED TO ANOTHER SUBSTRUCTURE UNIT. LIMIT STATE: STRIV, LOAD:     1


*** WARNING: SLAB  3 TOTAL APPLIED FORCE,     -567.0(kips) EXCEEDS FRICTIONAL CAPACITY,      176.7(kips). ***
    EXCESS MUST BE REDISTRIBUTED TO ANOTHER SUBSTRUCTURE UNIT. LIMIT STATE: STRIV, LOAD:     1


*** WARNING: SLAB  1 TOTAL APPLIED FORCE,    -4242.0(kips) EXCEEDS FRICTIONAL CAPACITY,      362.9(kips). ***
    EXCESS MUST BE REDISTRIBUTED TO ANOTHER SUBSTRUCTURE UNIT. LIMIT STATE: STRIV, LOAD:     2


*** WARNING: SLAB  2 TOTAL APPLIED FORCE,      252.0(kips) EXCEEDS FRICTIONAL CAPACITY,       86.9(kips). ***
    EXCESS MUST BE REDISTRIBUTED TO ANOTHER SUBSTRUCTURE UNIT. LIMIT STATE: STRIV, LOAD:     2


*** WARNING: SLAB  3 TOTAL APPLIED FORCE,      567.0(kips) EXCEEDS FRICTIONAL CAPACITY,      176.7(kips). ***
    EXCESS MUST BE REDISTRIBUTED TO ANOTHER SUBSTRUCTURE UNIT. LIMIT STATE: STRIV, LOAD:     2


*** WARNING: SLAB  1 TOTAL APPLIED FORCE,     6363.0(kips) EXCEEDS FRICTIONAL CAPACITY,      448.0(kips). ***
    EXCESS MUST BE REDISTRIBUTED TO ANOTHER SUBSTRUCTURE UNIT. LIMIT STATE: STRIV, LOAD:     3


*** WARNING: SLAB  2 TOTAL APPLIED FORCE,     -252.0(kips) EXCEEDS FRICTIONAL CAPACITY,      103.8(kips). ***
    EXCESS MUST BE REDISTRIBUTED TO ANOTHER SUBSTRUCTURE UNIT. LIMIT STATE: STRIV, LOAD:     3


*** WARNING: SLAB  3 TOTAL APPLIED FORCE,     -567.0(kips) EXCEEDS FRICTIONAL CAPACITY,      223.4(kips). ***
    EXCESS MUST BE REDISTRIBUTED TO ANOTHER SUBSTRUCTURE UNIT. LIMIT STATE: STRIV, LOAD:     3


*** WARNING MESSAGES LIMITED TO TEN! ***


*** WARNING: SLAB  1 TOTAL APPLIED FORCE,     6377.4(kips) EXCEEDS FRICTIONAL CAPACITY,      302.4(kips). ***
    EXCESS MUST BE REDISTRIBUTED TO ANOTHER SUBSTRUCTURE UNIT. LIMIT STATE: STR V, LOAD:     1


*** WARNING: SLAB  2 TOTAL APPLIED FORCE,     -241.8(kips) EXCEEDS FRICTIONAL CAPACITY,       83.1(kips). ***
    EXCESS MUST BE REDISTRIBUTED TO ANOTHER SUBSTRUCTURE UNIT. LIMIT STATE: STR V, LOAD:     1


*** WARNING: SLAB  3 TOTAL APPLIED FORCE,     -556.8(kips) EXCEEDS FRICTIONAL CAPACITY,      174.6(kips). ***
    EXCESS MUST BE REDISTRIBUTED TO ANOTHER SUBSTRUCTURE UNIT. LIMIT STATE: STR V, LOAD:     1


*** WARNING: SLAB  1 TOTAL APPLIED FORCE,     6377.4(kips) EXCEEDS FRICTIONAL CAPACITY,      302.4(kips). ***
    EXCESS MUST BE REDISTRIBUTED TO ANOTHER SUBSTRUCTURE UNIT. LIMIT STATE: STR V, LOAD:     2


*** WARNING: SLAB  2 TOTAL APPLIED FORCE,     -267.3(kips) EXCEEDS FRICTIONAL CAPACITY,       94.8(kips). ***
    EXCESS MUST BE REDISTRIBUTED TO ANOTHER SUBSTRUCTURE UNIT. LIMIT STATE: STR V, LOAD:     2


*** WARNING: SLAB  3 TOTAL APPLIED FORCE,     -556.8(kips) EXCEEDS FRICTIONAL CAPACITY,      174.6(kips). ***
    EXCESS MUST BE REDISTRIBUTED TO ANOTHER SUBSTRUCTURE UNIT. LIMIT STATE: STR V, LOAD:     2


*** WARNING: SLAB  1 TOTAL APPLIED FORCE,     6377.4(kips) EXCEEDS FRICTIONAL CAPACITY,      302.4(kips). ***
    EXCESS MUST BE REDISTRIBUTED TO ANOTHER SUBSTRUCTURE UNIT. LIMIT STATE: STR V, LOAD:     3


*** WARNING: SLAB  2 TOTAL APPLIED FORCE,     -241.8(kips) EXCEEDS FRICTIONAL CAPACITY,       83.1(kips). ***
    EXCESS MUST BE REDISTRIBUTED TO ANOTHER SUBSTRUCTURE UNIT. LIMIT STATE: STR V, LOAD:     3


*** WARNING: SLAB  3 TOTAL APPLIED FORCE,     -614.8(kips) EXCEEDS FRICTIONAL CAPACITY,      201.4(kips). ***
    EXCESS MUST BE REDISTRIBUTED TO ANOTHER SUBSTRUCTURE UNIT. LIMIT STATE: STR V, LOAD:     3
```

*** WARNING MESSAGES LIMITED TO TEN! ***

*** WARNING: SLAB 1 TOTAL APPLIED FORCE, 12131.2(kips) EXCEEDS FRICTIONAL CAPACITY, 230.4(kips). ***
EXCESS MUST BE REDISTRIBUTED TO ANOTHER SUBSTRUCTURE UNIT. LIMIT STATE: SER I, LOAD: 1

*** WARNING: SLAB 2 TOTAL APPLIED FORCE, -472.0(kips) EXCEEDS FRICTIONAL CAPACITY, 62.7(kips). ***
EXCESS MUST BE REDISTRIBUTED TO ANOTHER SUBSTRUCTURE UNIT. LIMIT STATE: SER I, LOAD: 1

*** WARNING: SLAB 3 TOTAL APPLIED FORCE, -1072.0(kips) EXCEEDS FRICTIONAL CAPACITY, 131.5(kips). ***
EXCESS MUST BE REDISTRIBUTED TO ANOTHER SUBSTRUCTURE UNIT. LIMIT STATE: SER I, LOAD: 1

*** WARNING: SLAB 1 TOTAL APPLIED FORCE, 12131.2(kips) EXCEEDS FRICTIONAL CAPACITY, 230.4(kips). ***
EXCESS MUST BE REDISTRIBUTED TO ANOTHER SUBSTRUCTURE UNIT. LIMIT STATE: SER I, LOAD: 2

*** WARNING: SLAB 2 TOTAL APPLIED FORCE, -490.0(kips) EXCEEDS FRICTIONAL CAPACITY, 71.0(kips). ***
EXCESS MUST BE REDISTRIBUTED TO ANOTHER SUBSTRUCTURE UNIT. LIMIT STATE: SER I, LOAD: 2

*** WARNING: SLAB 3 TOTAL APPLIED FORCE, -1072.0(kips) EXCEEDS FRICTIONAL CAPACITY, 131.5(kips). ***
EXCESS MUST BE REDISTRIBUTED TO ANOTHER SUBSTRUCTURE UNIT. LIMIT STATE: SER I, LOAD: 2

*** WARNING: SLAB 1 TOTAL APPLIED FORCE, 12131.2(kips) EXCEEDS FRICTIONAL CAPACITY, 230.4(kips). ***
EXCESS MUST BE REDISTRIBUTED TO ANOTHER SUBSTRUCTURE UNIT. LIMIT STATE: SER I, LOAD: 3

*** WARNING: SLAB 2 TOTAL APPLIED FORCE, -472.0(kips) EXCEEDS FRICTIONAL CAPACITY, 62.7(kips). ***
EXCESS MUST BE REDISTRIBUTED TO ANOTHER SUBSTRUCTURE UNIT. LIMIT STATE: SER I, LOAD: 3

*** WARNING: SLAB 3 TOTAL APPLIED FORCE, -1112.9(kips) EXCEEDS FRICTIONAL CAPACITY, 150.4(kips). ***
EXCESS MUST BE REDISTRIBUTED TO ANOTHER SUBSTRUCTURE UNIT. LIMIT STATE: SER I, LOAD: 3

*** WARNING MESSAGES LIMITED TO TEN! ***

----- NUMBER OF LOAD COMBINATIONS -----

LRFD DESIGN OF FOOTING:
STRENGTH LIMIT STATE I, NUMBER OF LOAD COMBINATIONS = 3456
STRENGTH LIMIT STATE III, NUMBER OF LOAD COMBINATIONS = 192
STRENGTH LIMIT STATE IV, NUMBER OF LOAD COMBINATIONS = 8
STRENGTH LIMIT STATE V, NUMBER OF LOAD COMBINATIONS = 82944
SERVICE LIMIT STATE I, NUMBER OF LOAD COMBINATIONS = 41472
FATIGUE LIMIT STATE, NUMBER OF LOAD COMBINATIONS = 212

----- FOOTING 1 DESIGN RESULTS -----

LRFD FACTORED REACTIONS AT TOP OF FOOTINGS:

FOOT NO.	COL NO.	AASHTO LIMIT STATE	LOAD CASE	FORCES AXIAL P (kips)	FORCES TRAN HT (kips)	FORCES LONG HL (kips)	MOMENTS TRAN MT (ft-k)	MOMENTS LONG ML (ft-k)	MOMENTS TORSION (ft-k)
1	1	STR I	2	-8864	-440	-11	-3993	-5247	-14
1	1	STR I	13	-9154	-490	-101	-3777	6067	88
1	1	STR I	445	-9197	-706	102	-15790	-10332	-76
1	1	STR I	880	-10764	-635	-92	-6575	2934	24
1	1	STR I	985	-10399	-645	-129	-7990	7346	113
1	1	STR I	988	-10821	-686	-108	-9097	4283	7
1	1	STR I	1309	-10391	-817	114	-17803	-12333	-94
1	1	STR I	1312	-10805	-848	91	-18410	-12012	-94
1	1	STR I	1420	-10861	-898	77	-20932	-10769	-137
1	1	STR I	1444	-10816	-909	77	-21203	-10770	-130
1	1	STR I	1453	-10635	-932	80	-20913	-10737	-130
1	1	STR I	1747	-5755	-148	-37	2093	283	148
1	1	STR I	2255	-5416	-420	35	-9717	-5121	32
1	1	STIII	3481	-8061	-405	106	-4118	-12024	-225
1	1	STIII	3505	-9231	-326	1	4596	-4685	31
1	1	STIII	3514	-9443	-596	-22	-8180	-2042	220
1	1	STIII	3516	-9521	-686	-92	-12630	2942	251
1	1	STIII	3520	-9518	-677	-173	-12269	8187	194
1	1	STIII	3521	-9491	-642	-175	-10616	8199	166
1	1	STIII	3533	-9295	-572	176	-8704	-17548	-161
1	1	STIII	3539	-9519	-845	56	-21855	-8494	-2
1	1	STIII	3541	-9555	-887	-1	-23916	-4602	-1
1	1	STIII	3542	-9360	-884	-31	-25202	-2061	-83
1	1	STIII	3554	-4394	23	69	11867	-6975	-149
1	1	STRIV	3649	-9831	-511	-56	-4393	73	114
1	1	STRIV	3650	-9854	-699	55	-15046	-8775	-125
1	1	STRIV	3651	-11020	-615	-67	-6084	3	156
1	1	STRIV	3652	-11047	-810	68	-17060	-10775	-143
1	1	STRIV	3654	-9854	-699	55	-15046	-8775	-125
1	1	STRIV	3656	-11047	-810	68	-17060	-10775	-143
1	1	STR V	3658	-8648	-363	4	-272	-5902	-32

1	1	STR V	3672	-9198	-434	-49	-959	463	-35	
1	1	STR V	15876	-9289	-693	99	-15115	-11194	-139	
1	1	STR V	24840	-10378	-530	-52	-2254	-263	6	
1	1	STR V	25056	-10378	-530	-52	-2254	-263	6	
1	1	STR V	30993	-10223	-677	-152	-10228	8503	146	
1	1	STR V	30996	-10549	-708	-136	-11082	6140	64	
1	1	STR V	36069	-10108	-728	141	-14086	-14497	-135	
1	1	STR V	36504	-10439	-765	122	-15183	-14153	-123	
1	1	STR V	39204	-10575	-907	67	-22180	-9797	-88	
1	1	STR V	40500	-10598	-930	39	-23381	-7891	-82	
1	1	STR V	40524	-10564	-939	39	-23590	-7891	-76	
1	1	STR V	40533	-10424	-956	41	-23367	-7866	-76	
1	1	STR V	40716	-10598	-930	39	-23381	-7891	-82	
1	1	STR V	45579	-5592	-89	-2	5528	-2297	85	
1	1	STR V	59479	-5429	-447	41	-11105	-5410	40	
1	1	SER I	87051	-6407	-83	-14	9071	-1768	85	
1	1	SER I	101383	-6322	-557	32	-15287	-5206	10	
1	1	SER I	107784	-7694	-260	-36	5888	-344	3	
1	1	SER I	113937	-7596	-373	-111	-223	6150	109	
1	1	SER I	113940	-7825	-395	-99	-825	4483	50	
1	1	SER I	114156	-7825	-395	-99	-825	4483	50	
1	1	SER I	119013	-7506	-591	103	-13545	-10644	-104	
1	1	SER I	119016	-7731	-607	90	-13875	-10469	-104	
1	1	SER I	119232	-7731	-607	90	-13875	-10469	-104	
1	1	SER I	122580	-7852	-733	40	-20107	-6545	-59	
1	1	SER I	123444	-7862	-743	27	-20588	-5669	-58	
1	1	SER I	123477	-7739	-761	29	-20578	-5652	-53	
1	1	FATGE	128090	-6243	-398	0	-7062	-2736	-8	
1	1	FATGE	128104	-6266	-412	-1	-7555	-2796	-4	
1	1	FATGE	128180	-7000	-467	0	-8255	-3486	15	
1	1	FATGE	128189	-7059	-467	0	-8495	-3560	-6	
1	1	FATGE	128209	-7032	-482	-1	-8706	-3467	0	
1	1	FATGE	128217	-7061	-469	-2	-8621	-3442	7	
1	1	FATGE	128220	-7005	-473	-2	-8584	-3294	18	
1	1	FATGE	128222	-7004	-474	-2	-8584	-3293	18	
1	1	FATGE	128224	-7065	-469	-1	-8618	-3301	7	
1	1	FATGE	128231	-7000	-474	-1	-8572	-3367	2	

----- PILE FORCE SUMMARY -----

LRFD MAX PILE FORCE FT SUMMARY:

FOOT NO.	PILE NO.	AASHTO LIMIT STATE	LOAD CASE	LRFD MAX FORCE FT AXIAL (kips)	TRAN (kips)	LONG (kips)	ALLOW (kips)	(NG)	LRFD CORRES MOMENT TRAN (ft-k)	LONG ML (ft-k)	TOR (ft-k)
1	3	STR I	1747	892.7	-11.7	-2.4	0.0	NG	0.0	0.0	0.0
1	12	STIII	3554	934.4	2.6	5.1	0.0	NG	0.0	0.0	0.0
1	1	STRIV	3649	1539.1	-42.1	-5.1	0.0	NG	0.0	0.0	0.0
1	3	STR V	45579	887.7	-7.1	0.2	0.0	NG	0.0	0.0	0.0
1	3	SER I	87051	1058.7	-6.5	-0.8	0.0	NG	0.0	0.0	0.0
1	10	FATGE	128090	1085.8	-33.1	0.0	0.0	NG	0.0	0.0	0.0

LRFD MAX PILE FORCE FL SUMMARY:

FOOT NO.	PILE NO.	AASHTO LIMIT STATE	LOAD CASE	LRFD MAX FORCE FL AXIAL (kips)	TRAN (kips)	LONG (kips)	ALLOW (kips)	(NG)	LRFD CORRES MOMENT TRAN (ft-k)	LONG ML (ft-k)	TOR (ft-k)
1	10	STR I	1309	1796.1	-67.6	9.9	0.0	NG	0.0	0.0	0.0
1	10	STIII	3533	1663.0	-46.9	15.4	0.0	NG	0.0	0.0	0.0
1	10	STRIV	3652	1861.4	-66.9	6.3	0.0	NG	0.0	0.0	0.0
1	10	STR V	36069	1756.3	-60.1	12.3	0.0	NG	0.0	0.0	0.0
1	10	SER I	119013	1331.1	-48.8	9.0	0.0	NG	0.0	0.0	0.0
1	12	FATGE	128180	984.7	-39.0	0.1	0.0	NG	0.0	0.0	0.0

LRFD MAX PILE FORCE FV SUMMARY:

FOOT NO.	PILE NO.	AASHTO LIMIT STATE	LOAD CASE	LRFD MAX FORCE FV AXIAL (kips)	TRAN (kips)	LONG (kips)	ALLOW (kips)	(NG)	LRFD CORRES MOMENT TRAN (ft-k)	LONG ML (ft-k)	TOR (ft-k)
1	10	STR I	1420	1851.0	-74.2	7.0	0.0	NG	0.0	0.0	0.0
1	10	STIII	3539	1724.2	-70.4	4.7	0.0	NG	0.0	0.0	0.0
1	10	STRIV	3652	1861.4	-66.9	6.3	0.0	NG	0.0	0.0	0.0
1	10	STR V	39204	1829.6	-75.2	6.0	0.0	NG	0.0	0.0	0.0
1	10	SER I	122580	1385.1	-60.8	3.6	0.0	NG	0.0	0.0	0.0
1	10	FATGE	128217	1176.9	-39.1	-0.2	0.0	NG	0.0	0.0	0.0

LRFD MAX PILE MOMENT MT SUMMARY:

FOOT NO.	PILE NO.	AASHTO LIMIT STATE	LOAD CASE	LRFD CORRES FORCE AXIAL (kips)	TRAN (kips)	LONG (kips)	ALLOW (kips)	(NG)	LRFD MAX MOMENT MT TRAN (ft-k)	LONG ML (ft-k)	TOR (ft-k)
1	10	STR I	1420	1851.0	-74.2	7.0	0.0	NG	0.0	0.0	0.0
1	10	STIII	3539	1724.2	-70.4	4.7	0.0	NG	0.0	0.0	0.0
1	10	STRIV	3652	1861.4	-66.9	6.3	0.0	NG	0.0	0.0	0.0
1	10	STR V	39204	1829.6	-75.2	6.0	0.0	NG	0.0	0.0	0.0
1	10	SER I	122580	1385.1	-60.8	3.6	0.0	NG	0.0	0.0	0.0
1	10	FATGE	128217	1176.9	-39.1	-0.2	0.0	NG	0.0	0.0	0.0

LRFD MAX PILE MOMENT ML SUMMARY:

FOOT NO.	PILE NO.	AASHTO LIMIT	LOAD CASE	LRFD CORRES FORCE AXIAL (kips)	TRAN (kips)	LONG (kips)	ALLOW (kips)	(NG)	LRFD MAX MOMENT ML TRAN (ft-k)	LONG ML (ft-k)	TOR (ft-k)

		STATE		(kips)	(kips)	(kips)	(kips)			(ft-k)	(ft-k)	(ft-k)
1	10	STR I	1420	1851.0	-74.2	7.0	0.0	NG		0.0	0.0	0.0
1	10	STIII	3539	1724.2	-70.4	4.7	0.0	NG		0.0	0.0	0.0
1	10	STRIV	3652	1861.4	-66.9	6.3	0.0	NG		0.0	0.0	0.0
1	10	STR V	39204	1829.6	-75.2	6.0	0.0	NG		0.0	0.0	0.0
1	10	SER I	122580	1385.1	-60.8	3.6	0.0	NG		0.0	0.0	0.0
1	10	FATGE	128217	1176.9	-39.1	-0.2	0.0	NG		0.0	0.0	0.0

LRFD MAX PILE MOMENT TOR SUMMARY:

FOOT NO.	PILE NO.	AASHTO LIMIT STATE	LOAD CASE	LRFD CORRES FORCE AXIAL FV (kips)	TRAN FT (kips)	LONG FL (kips)	ALLOW FV (kips)	(NG)	LRFD MAX MOMENT TOR TRAN MT (ft-k)	LONG ML (ft-k)	TOR (ft-k)
1	10	STR I	1420	1851.0	-74.2	7.0	0.0	NG	0.0	0.0	0.0
1	10	STIII	3539	1724.2	-70.4	4.7	0.0	NG	0.0	0.0	0.0
1	10	STRIV	3652	1861.4	-66.9	6.3	0.0	NG	0.0	0.0	0.0
1	10	STR V	39204	1829.6	-75.2	6.0	0.0	NG	0.0	0.0	0.0
1	10	SER I	122580	1385.1	-60.8	3.6	0.0	NG	0.0	0.0	0.0
1	10	FATGE	128217	1176.9	-39.1	-0.2	0.0	NG	0.0	0.0	0.0

LRFD MIN PILE FORCE FT SUMMARY:

FOOT NO.	PILE NO.	AASHTO LIMIT STATE	LOAD CASE	LRFD MIN FORCE FT AXIAL FV (kips)	TRAN FT (kips)	LONG FL (kips)	ALLOW FV (kips)	(NG)	LRFD CORRES MOMENT TRAN MT (ft-k)	LONG ML (ft-k)	TOR (ft-k)
1	1	STR I	1453	1635.2	-78.2	7.2	0.0	NG	0.0	0.0	0.0
1	1	STIII	3542	1647.2	-74.0	-2.2	0.0	NG	0.0	0.0	0.0
1	1	STRIV	3652	1663.6	-68.1	6.3	0.0	NG	0.0	0.0	0.0
1	1	STR V	40533	1667.6	-80.0	3.8	0.0	NG	0.0	0.0	0.0
1	1	SER I	123477	1269.4	-63.7	2.6	0.0	NG	0.0	0.0	0.0
1	10	FATGE	128209	1176.0	-40.1	0.0	0.0	NG	0.0	0.0	0.0

LRFD MIN PILE FORCE FL SUMMARY:

FOOT NO.	PILE NO.	AASHTO LIMIT STATE	LOAD CASE	LRFD MIN FORCE FL AXIAL FV (kips)	TRAN FT (kips)	LONG FL (kips)	ALLOW FV (kips)	(NG)	LRFD CORRES MOMENT TRAN MT (ft-k)	LONG ML (ft-k)	TOR (ft-k)
1	1	STR I	985	1658.5	-53.2	-11.3	0.0	NG	0.0	0.0	0.0
1	1	STIII	3521	1615.6	-52.7	-15.4	0.0	NG	0.0	0.0	0.0
1	1	STRIV	3651	1657.2	-50.6	-6.3	0.0	NG	0.0	0.0	0.0
1	1	STR V	30993	1676.3	-55.7	-13.3	0.0	NG	0.0	0.0	0.0
1	1	SER I	113937	1171.3	-30.6	-9.7	0.0	NG	0.0	0.0	0.0
1	10	FATGE	128220	1170.8	-39.5	-0.2	0.0	NG	0.0	0.0	0.0

LRFD MIN PILE FORCE FV SUMMARY:

FOOT NO.	PILE NO.	AASHTO LIMIT STATE	LOAD CASE	LRFD MIN FORCE FV AXIAL FV (kips)	TRAN FT (kips)	LONG FL (kips)	ALLOW FV (kips)	(NG)	LRFD CORRES MOMENT TRAN MT (ft-k)	LONG ML (ft-k)	TOR (ft-k)
1	3	STR I	2255	697.2	-34.9	3.0	0.0	NG	0.0	0.0	0.0
1	1	STIII	3554	590.6	1.3	6.4	0.0	NG	0.0	0.0	0.0
1	3	STRIV	3654	975.0	-58.8	4.1	0.0	NG	0.0	0.0	0.0
1	3	STR V	59479	682.0	-37.0	3.6	0.0	NG	0.0	0.0	0.0
1	3	SER I	101383	783.0	-46.3	2.7	0.0	NG	0.0	0.0	0.0
1	3	FATGE	128104	875.8	-34.4	-0.1	0.0	NG	0.0	0.0	0.0

LRFD MIN PILE MOMENT MT SUMMARY:

FOOT NO.	PILE NO.	AASHTO LIMIT STATE	LOAD CASE	LRFD CORRES FORCE AXIAL FV (kips)	TRAN FT (kips)	LONG FL (kips)	ALLOW FV (kips)	(NG)	LRFD MIN MOMENT MT TRAN MT (ft-k)	LONG ML (ft-k)	TOR (ft-k)
1	10	STR I	1420	1851.0	-74.2	7.0	0.0	NG	0.0	0.0	0.0
1	10	STIII	3539	1724.2	-70.4	4.7	0.0	NG	0.0	0.0	0.0
1	10	STRIV	3652	1861.4	-66.9	6.3	0.0	NG	0.0	0.0	0.0
1	10	STR V	39204	1829.6	-75.2	6.0	0.0	NG	0.0	0.0	0.0
1	10	SER I	122580	1385.1	-60.8	3.6	0.0	NG	0.0	0.0	0.0
1	10	FATGE	128217	1176.9	-39.1	-0.2	0.0	NG	0.0	0.0	0.0

LRFD MIN PILE MOMENT ML SUMMARY:

FOOT NO.	PILE NO.	AASHTO LIMIT STATE	LOAD CASE	LRFD CORRES FORCE AXIAL FV (kips)	TRAN FT (kips)	LONG FL (kips)	ALLOW FV (kips)	(NG)	LRFD MIN MOMENT ML TRAN MT (ft-k)	LONG ML (ft-k)	TOR (ft-k)
1	10	STR I	1420	1851.0	-74.2	7.0	0.0	NG	0.0	0.0	0.0
1	10	STIII	3539	1724.2	-70.4	4.7	0.0	NG	0.0	0.0	0.0
1	10	STRIV	3652	1861.4	-66.9	6.3	0.0	NG	0.0	0.0	0.0
1	10	STR V	39204	1829.6	-75.2	6.0	0.0	NG	0.0	0.0	0.0
1	10	SER I	122580	1385.1	-60.8	3.6	0.0	NG	0.0	0.0	0.0
1	10	FATGE	128217	1176.9	-39.1	-0.2	0.0	NG	0.0	0.0	0.0

LRFD MIN PILE MOMENT TOR SUMMARY:

FOOT NO.	PILE NO.	AASHTO LIMIT STATE	LOAD CASE	LRFD CORRES FORCE AXIAL FV (kips)	TRAN FT (kips)	LONG FL (kips)	ALLOW FV (kips)	(NG)	LRFD MIN MOMENT TOR TRAN MT (ft-k)	LONG ML (ft-k)	TOR (ft-k)
1	10	STR I	1420	1851.0	-74.2	7.0	0.0	NG	0.0	0.0	0.0
1	10	STIII	3539	1724.2	-70.4	4.7	0.0	NG	0.0	0.0	0.0
1	10	STRIV	3652	1861.4	-66.9	6.3	0.0	NG	0.0	0.0	0.0
1	10	STR V	39204	1829.6	-75.2	6.0	0.0	NG	0.0	0.0	0.0
1	10	SER I	122580	1385.1	-60.8	3.6	0.0	NG	0.0	0.0	0.0
1	10	FATGE	128217	1176.9	-39.1	-0.2	0.0	NG	0.0	0.0	0.0

----- FOOTING SHEAR DESIGN -----

TRANSVERSE FOOTING DESIGN - ONE WAY SHEAR:
SIMPLIFIED PROCEDURE 5.8.3.4.1, NO STIRRUPS USED

FTG NO.	COL NO.	HORIZ DIST. (ft)	LOCATION	AASHTO LIMIT STATE	LOAD CASE	FORCES LRFD SHEAR Vu (kips)	FORCES LRFD TORSION Tu (ft-k)	ONE WAY SHEAR DESIGN TORSION CRACKING dv (in)	ONE WAY SHEAR DESIGN TORSION CRACKING øTcr (ft-k)	ONE WAY SHEAR DESIGN SHEAR CAPACITY øVn (kips)	NG
1	1	5.98	dv	STR I	1420	4012	3155	79.45	25472	4124	
				STIII	3541	3764	1314	79.50	25472	4127	
				STRIV	3652	3982	3147	79.45	25472	4125	
				STR V	40716	4016	2294	79.45	25472	4124	
1	1	12.00	FACE	STR I	1420	6041	3936				
				STIII	3541	5602	1642				
				STRIV	3652	6007	3927				
				STR V	40500	6024	2864				
1	1	26.00	FACE	STR I	880	-4777	1159				
				STIII	3505	-4586	-1674				
				STRIV	3651	-4944	84				
				STR V	24840	-4787	-32				
1	1	32.02	dv	STR I	880	-3070	934	79.63	25472	4134	
				STIII	3505	-3023	-1339	79.64	25472	4134	
				STRIV	3651	-3186	72	79.60	25472	4132	
				STR V	25056	-3102	-22	79.62	25472	4133	

Notes:
Shears have been modified for torsion as appropriate, in accordance with equation 5.8.2.1-6.

TRANSVERSE FOOTING DESIGN - LONGITUDINAL REINFORCEMENT FOR SHEAR:

FTG NO.	COL NO.	HORIZ DIST. (ft)	LOCATION	AASHTO LIMIT STATE	LOAD CASE	FORCES LRFD AXIAL Nu (kips)	FORCES LRFD SHEAR Vu (kips)	FORCES LRFD TORSION Tu (ft-k)	FORCES LRFD MOMENT Mu (ft-k)	LONGITUDINAL STEEL As LONG REQD dv (in)	LONGITUDINAL STEEL As LONG REQD (sq-in)	LONGITUDINAL STEEL As LONG PROV (sq-in)	NG
1	1	5.98	dv	STR I	1420	0	4012	3155	11728	79.45	107.11	131.04	
				STIII	3541	0	3764	1314	10993	79.50	100.44	131.04	
				STRIV	3652	0	3982	3147	11657	79.45	106.33	131.04	
				STR V	40500	0	4016	2294	11732	79.45	107.19	131.04	
1	1	12.00	FACE	STR I	1420	0	6041	3936	35264				
				STIII	3541	0	5602	1642	32845				
				STRIV	3652	0	6007	3927	34890				
				STR V	40500	0	6024	2864	35264				
1	1	26.00	FACE	STR I	880	0	-4777	1159	27047				
				STIII	3505	0	-4586	-1674	26358				
				STRIV	3651	0	-4944	84	28009				
				STR V	24840	0	-4787	-32	27270				
1	1	32.02	dv	STR I	880	0	-3070	934	9274	79.63	82.73	131.04	
				STIII	3505	0	-3023	-1339	9062	79.64	81.26	131.04	
				STRIV	3651	0	-3186	72	9615	79.60	85.85	131.04	
				STR V	24840	0	-3102	-22	9344	79.62	83.52	131.04	

LONGITUDINAL FOOTING DESIGN - ONE WAY SHEAR:
SIMPLIFIED PROCEDURE 5.8.3.4.1, NO STIRRUPS USED

FTG NO.	COL NO.	HORIZ DIST. (ft)	LOCATION	AASHTO LIMIT STATE	LOAD CASE	FORCES LRFD SHEAR Vu (kips)	FORCES LRFD TORSION Tu (ft-k)	ONE WAY SHEAR DESIGN TORSION CRACKING dv (in)	ONE WAY SHEAR DESIGN TORSION CRACKING øTcr (ft-k)	ONE WAY SHEAR DESIGN SHEAR CAPACITY øVn (kips)	NG
1	1	-11.92	dv	STR I	1444	2807	6995	77.98	25472	0	c
				STIII	3542	2689	8113	78.02	25472	0	c
				STRIV	3651	3189	2376	77.87	25472	4042	
				STR V	40524	2825	7709	77.98	25472	0	c
1	1	-6.00	FACE	STR I	988	5097	4069				
				STIII	3520	4704	5194				
				STRIV	3651	5051	2911				
				STR V	30996	5055	4806				
1	1	6.00	FACE	STR I	1312	-5364	-7590				
				STIII	3533	-4946	-3795				
				STRIV	3652	-5447	-7063				
				STR V	36504	-5293	-6339				
1	1	11.92	dv	STR I	1444	-3402	-6999	77.80	25472	0	c
				STIII	3542	-2792	-8115	77.99	25472	0	c
				STRIV	3652	-3484	-5712	77.78	25472	4037	
				STR V	40524	-3257	-7711	77.85	25472	0	c

Notes:
Shears have been modified for torsion as appropriate, in accordance with equation 5.8.2.1-6.

c: Stirrups required for torsion, Tu > 0.25øTcr; no stirrup data entered.

LONGITUDINAL FOOTING DESIGN - LONGITUDINAL REINFORCEMENT FOR SHEAR:

FTG NO.	COL NO.	HORIZ DIST. (ft)	LOCATION	AASHTO LIMIT STATE	LOAD CASE	FORCES: LRFD AXIAL Nu (kips)	LRFD SHEAR Vu (kips)	LRFD TORSION Tu (ft-k)	LRFD MOMENT Mu (ft-k)	LONGITUDINAL STEEL: dv (in)	As LONG REQD (sq-in)	As LONG PROV (sq-in)	NG
1	1	-11.92	dv	STR I	1444	0	2807	6995	12277	77.98	-1.00	149.76	a
				STIII	3542	0	2689	8113	11771	78.02	-1.00	149.76	a
				STRIV	3651	0	3189	2376	13844	77.87	98.55	149.76	
				STR V	40524	0	2825	7709	12344	77.98	-1.00	149.76	a
1	1	-6.00	FACE	STR I	988	0	5097	4069	35635				
				STIII	3520	0	4704	5194	33118				
				STRIV	3651	0	5051	2911	35184				
				STR V	30996	0	5055	4806	35420				
1	1	6.00	FACE	STR I	1312	0	-5364	-7590	37783				
				STIII	3533	0	-4946	-3795	35163				
				STRIV	3652	0	-5447	-7063	38339				
				STR V	36504	0	-5293	-6339	37387				
1	1	11.92	dv	STR I	1444	0	-3402	-6999	14673	77.80	-1.00	149.76	a
				STIII	3542	0	-2792	-8115	12206	77.99	-1.00	149.76	a
				STRIV	3652	0	-3484	-5712	15050	77.78	107.52	149.76	
				STR V	40524	0	-3257	-7711	14090	77.85	-1.00	149.76	a

Notes:
  a: Indicates that longitudinal steel for shear was not checked, due to problem with flexural or shear design.

TWO WAY SHEAR DESIGN AT COLUMNS:

FTG NO.	COL NO.	AASHTO LIMIT STATE	LOAD CASE	bo (in)	dv (in)	TWO WAY SHEAR DESIGN: FACTORED SHEAR Vu (kips)	Av REQD (sq-in)	SHEAR CAPACITY øVc (kips)	SHEAR CAPACITY øVs (kips)	TOTAL CAPACITY øVn (kips)	NG
1	1	STR I	1420	910.52	64.44	-6296	0.00	13307	0	13307	
1	1	STIII	3541	910.52	64.44	-5426	0.00	13307	0	13307	
1	1	STRIV	3656	910.52	64.44	-6768	0.00	13307	0	13307	
1	1	STR V	40500	910.52	64.44	-6121	0.00	13307	0	13307	

----- FOOTING 1 FLEXURAL DESIGN -----

FLEXURAL DESIGN - TRANSVERSE FLEXURE, REINFORCING STEEL REQUIREMENTS:

LRFD MOMENT, MIN STEEL CODE:
  a: Design controlled by 1.2 Mcr
  b: Design controlled by 4/3 Mdes
  c: Design controlled 0.03f'c/fy

FTG NO.	COL NO.	HORZ DIST. (ft)	LOCATION	AASHTO LIMIT STATE	POSITIVE FLEXURE: LOAD CASE	LRFD MOMENT (ft-k)	d (in)	AREA REQD. (sq-in)	AREA PROV. (sq-in)	NG	NEGATIVE FLEXURE: LOAD CASE	LRFD MOMENT (ft-k)	d (in)	AREA REQD. (sq-in)	AREA PROV. (sq-in)	NG
1		5.98	dv	STR I	1420	15638b	80.3	43.74	131.04		-1	0	0.0	0.00	0.00	
				STIII	3541	14657b	80.3	40.97	131.04		-1	0	0.0	0.00	0.00	
				STRIV	3652	15542b	80.3	43.47	131.04		-1	0	0.0	0.00	0.00	
				STR V	40500	15643b	80.3	43.75	131.04		-1	0	0.0	0.00	0.00	
1	1	12.00	FACE	STR I	445	39683a	80.3	112.90	131.04		-1	0	0.0	0.00	0.00	
				STIII	3516	39683a	80.3	112.90	131.04		-1	0	0.0	0.00	0.00	
				STRIV	3650	39683a	80.3	112.90	131.04		-1	0	0.0	0.00	0.00	
				STR V	15876	39683a	80.3	112.90	131.04		-1	0	0.0	0.00	0.00	
1	1	26.00	FACE	STR I	880	36062b	80.3	102.33	131.04		-1	0	0.0	0.00	0.00	
				STIII	3505	35144b	80.3	99.66	131.04		-1	0	0.0	0.00	0.00	
				STRIV	3651	37345b	80.3	106.07	131.04		-1	0	0.0	0.00	0.00	
				STR V	24840	36360b	80.3	103.20	131.04		-1	0	0.0	0.00	0.00	
1		32.02	dv	STR I	880	12365b	80.3	34.51	131.04		-1	0	0.0	0.00	0.00	
				STIII	3505	12082b	80.3	33.71	131.04		-1	0	0.0	0.00	0.00	
				STRIV	3651	12820b	80.3	35.79	131.04		-1	0	0.0	0.00	0.00	
				STR V	24840	12459b	80.3	34.77	131.04		-1	0	0.0	0.00	0.00	

FLEXURAL DESIGN - TRANSVERSE FLEXURAL DESIGN PARAMETERS (Based on As Provided):

FTG NO.	COL NO.	HORZ DIST. (ft)	LOCATION	AASHTO LIMIT STATE	POSITIVE FLEXURE: LOAD CASE	a (in)	STRAIN es	PHI Ø	ØMn CAP (ft-k)	NEGATIVE FLEXURE: LOAD CASE	a (in)	STRAIN es	PHI Ø	ØMn CAP (ft-k)
1		5.98	dv	STR I	1420	5.07	0.037375	0.900	45853	-1	0.00	0.000000	0.000	0
				STIII	3541	5.07	0.037375	0.900	45853	-1	0.00	0.000000	0.000	0
				STRIV	3652	5.07	0.037375	0.900	45853	-1	0.00	0.000000	0.000	0
				STR V	40500	5.07	0.037375	0.900	45853	-1	0.00	0.000000	0.000	0
1	1	12.00	FACE	STR I	445	5.07	0.037375	0.900	45853	-1	0.00	0.000000	0.000	0
				STIII	3516	5.07	0.037375	0.900	45853	-1	0.00	0.000000	0.000	0
				STRIV	3650	5.07	0.037375	0.900	45853	-1	0.00	0.000000	0.000	0
				STR V	15876	5.07	0.037375	0.900	45853	-1	0.00	0.000000	0.000	0
1	1	26.00	FACE	STR I	880	5.07	0.037375	0.900	45853	-1	0.00	0.000000	0.000	0
				STIII	3505	5.07	0.037375	0.900	45853	-1	0.00	0.000000	0.000	0
				STRIV	3651	5.07	0.037375	0.900	45853	-1	0.00	0.000000	0.000	0
				STR V	24840	5.07	0.037375	0.900	45853	-1	0.00	0.000000	0.000	0
1		32.02	dv	STR I	880	5.07	0.037375	0.900	45853	-1	0.00	0.000000	0.000	0

			STIII	3505	5.07	0.037375	0.900	45853		-1	0.00	0.000000	0.000		0
			STRIV	3651	5.07	0.037375	0.900	45853		-1	0.00	0.000000	0.000		0
			STR V	24840	5.07	0.037375	0.900	45853		-1	0.00	0.000000	0.000		0

FLEXURAL DESIGN - LONGITUDINAL FLEXURE, REINFORCING STEEL REQUIREMENTS: LRFD MOMENT, MIN STEEL CODE:
a: Design controlled by 1.2 Mcr
b: Design controlled by 4/3 Mdes
c: Design controlled 0.03f'c/fy

					POSITIVE FLEXURE					NEGATIVE FLEXURE					
FTG NO.	COL NO.	HORZ DIST. (ft)	LOCATION	AASHTO LIMIT STATE	LOAD CASE	LRFD MOMENT (ft-k)	d (in)	AREA REQD. (sq-in)	AREA PROV. (sq-in)	NG	LOAD CASE	LRFD MOMENT (ft-k)	d (in)	AREA REQD. (sq-in)	AREA PROV. (sq-in)	NG
1		-11.92	dv	STR I	988	18634b	78.9	53.19	149.76		-1	0	0.0	0.00	0.00	
				STIII	3520	17452b	78.9	49.77	149.76		-1	0	0.0	0.00	0.00	
				STRIV	3651	18458b	78.9	52.68	149.76		-1	0	0.0	0.00	0.00	
				STR V	30996	18544b	78.9	52.93	149.76		-1	0	0.0	0.00	0.00	
1	1	-6.00	FACE	STR I	13	39683a	78.9	115.03	149.76		-1	0	0.0	0.00	0.00	
				STIII	3514	39683a	78.9	115.03	149.76		-1	0	0.0	0.00	0.00	
				STRIV	3649	39683a	78.9	115.03	149.76		-1	0	0.0	0.00	0.00	
				STR V	3672	39683a	78.9	115.03	149.76		-1	0	0.0	0.00	0.00	
1	1	6.00	FACE	STR I	2	39683a	78.9	115.03	149.76		-1	0	0.0	0.00	0.00	
				STIII	3481	39683a	78.9	115.03	149.76		-1	0	0.0	0.00	0.00	
				STRIV	3649	39683a	78.9	115.03	149.76		-1	0	0.0	0.00	0.00	
				STR V	3658	39683a	78.9	115.03	149.76		-1	0	0.0	0.00	0.00	
1		11.92	dv	STR I	1312	19733b	78.9	56.37	149.76		-1	0	0.0	0.00	0.00	
				STIII	3533	18515b	78.9	52.84	149.76		-1	0	0.0	0.00	0.00	
				STRIV	3652	20066b	78.9	57.33	149.76		-1	0	0.0	0.00	0.00	
				STR V	36504	19558b	78.9	55.86	149.76		-1	0	0.0	0.00	0.00	

FLEXURAL DESIGN - LONGITUDINAL FLEXURAL DESIGN PARAMETERS (Based on As Provided):

					POSITIVE FLEXURE					NEGATIVE FLEXURE				
FTG NO.	COL NO.	HORZ DIST. (ft)	LOCATION	AASHTO LIMIT STATE	LOAD CASE	a (in)	STRAIN es	PHI Ø	ØMn CAP (ft-k)	LOAD CASE	a (in)	STRAIN es	PHI Ø	ØMn CAP (ft-k)
1		-11.92	dv	STR I	988	5.80	0.031708	0.900	51209	-1	0.00	0.000000	0.000	0
				STIII	3520	5.80	0.031708	0.900	51209	-1	0.00	0.000000	0.000	0
				STRIV	3651	5.80	0.031708	0.900	51209	-1	0.00	0.000000	0.000	0
				STR V	30996	5.80	0.031708	0.900	51209	-1	0.00	0.000000	0.000	0
1	1	-6.00	FACE	STR I	13	5.80	0.031708	0.900	51209	-1	0.00	0.000000	0.000	0
				STIII	3514	5.80	0.031708	0.900	51209	-1	0.00	0.000000	0.000	0
				STRIV	3649	5.80	0.031708	0.900	51209	-1	0.00	0.000000	0.000	0
				STR V	3672	5.80	0.031708	0.900	51209	-1	0.00	0.000000	0.000	0
1	1	6.00	FACE	STR I	2	5.80	0.031708	0.900	51209	-1	0.00	0.000000	0.000	0
				STIII	3481	5.80	0.031708	0.900	51209	-1	0.00	0.000000	0.000	0
				STRIV	3649	5.80	0.031708	0.900	51209	-1	0.00	0.000000	0.000	0
				STR V	3658	5.80	0.031708	0.900	51209	-1	0.00	0.000000	0.000	0
1		11.92	dv	STR I	1312	5.80	0.031708	0.900	51209	-1	0.00	0.000000	0.000	0
				STIII	3533	5.80	0.031708	0.900	51209	-1	0.00	0.000000	0.000	0
				STRIV	3652	5.80	0.031708	0.900	51209	-1	0.00	0.000000	0.000	0
				STR V	36504	5.80	0.031708	0.900	51209	-1	0.00	0.000000	0.000	0

----- FOOTING 1 SERVICEABILITY RESULTS -----

FATIGUE LIMIT STATE - TRANSVERSE REINFORCEMENT DATA:
Notes: All fatigue data is computed from Fatigue Limit State.
Axial tension is negative.
T indicates top bars control; B indicates bottom bars control.
** Dead load values may include effects due to shrinkage, refer to load case data.

				FATIGUE									
FTG NO.	COL NO.	HORZ DIST. (ft)	LOCATION	MAX LOAD NO.	MIN LOAD NO.	DL** AXIAL (kips)	DL** MOMENT (ft-k)	MAX LL MOMENT (ft-k)	MIN LL MOMENT (ft-k)	f MIN (ksi)	ACTUAL RANGE (ksi)	ALLOW RANGE (ksi)	NG
1	1	12.00	FACE	128285	0	0	21712	183	0	24.9	1.9	15.2	B
1	1	26.00	FACE	0	128286	0	18149	0	-44	20.5	1.7	16.6	B

FATIGUE LIMIT STATE - LONGITUDINAL REINFORCEMENT DATA:

				FATIGUE									
FTG NO.	COL NO.	HORZ DIST. (ft)	LOCATION	MAX LOAD NO.	MIN LOAD NO.	DL** AXIAL (kips)	DL** MOMENT (ft-k)	MAX LL MOMENT (ft-k)	MIN LL MOMENT (ft-k)	f MIN (ksi)	ACTUAL RANGE (ksi)	ALLOW RANGE (ksi)	NG
1	1	-6.00	FACE	128285	128287	0	21587	205	-35	23.6	0.3	15.6	B
1	1	6.00	FACE	128288	128289	0	23541	191	-41	25.7	0.3	14.9	B

DISTRIBUTION OF TRANSVERSE FLEXURAL REINFORCEMENT:
Notes: Reinforcing steel distribution data is based on the maximum area of steel
obtained from either Strength Limit State Design ,or user defined limits.
Moments are based on Service I Limit State.

				TRANSVERSE STEEL DISTRIBUTION										
FTG NO.	COL NO.	HORZ DIST. (ft)	LOCATION	LOAD CASE	MAT	SERV I AXIAL	SERV I MOMENT	h	dc	ßs	STRESS fs	SPACING ACTUAL	SPACING ALLOW.	NG

		(ft)			(kips)	(ft-k)	(in)	(in)		(ksi)	(in)	(in)		
1	1	12.00	FACE	123444	BOT	0	27009	84.00	3.70	1.066	33.06	5.40	12.45	
1	1	26.00	FACE	107784	BOT	0	22206	84.00	3.70	1.066	27.18	5.40	16.75	

DISTRIBUTION OF LONGITUDINAL FLEXURAL REINFORCEMENT:

				LONGITUDINAL STEEL DISTRIBUTION										
FTG NO.	COL NO.	HORZ DIST. (ft)	LOCATION	LOAD CASE	MAT	SERV I AXIAL (kips)	SERV I MOMENT (ft-k)	h (in)	dc (in)	ßs	STRESS fs (ksi)	SPACING ACTUAL (in)	SPACING ALLOW. (in)	NG
1	1	-6.00	FACE	113940	BOT	0	26255	84.00	5.11	1.093	28.71	4.72	12.08	
1	1	6.00	FACE	119016	BOT	0	27690	84.00	5.11	1.093	30.28	4.72	10.93	

----- FOOTING 2 DESIGN RESULTS ----------

LRFD FACTORED REACTIONS AT TOP OF FOOTINGS:

				FORCES			MOMENTS		
FOOT NO.	COL NO.	AASHTO LIMIT STATE	LOAD CASE	AXIAL P (kips)	TRAN HT (kips)	LONG HL (kips)	TRAN MT (ft-k)	LONG ML (ft-k)	TORSION (ft-k)
2	2	STR I	3	-8642	498	14	2970	-7635	185
2	2	STR I	43	-8834	546	-88	5320	5390	69
2	2	STR I	904	-10198	701	-73	6607	1765	152
2	2	STR I	910	-10584	698	-72	7923	1296	177
2	2	STR I	1009	-9890	617	-106	4157	5819	260
2	2	STR I	1018	-10528	648	-89	5407	2696	180
2	2	STR I	1261	-10528	648	-89	5407	2696	180
2	2	STR I	1339	-10076	749	97	13205	-11404	-120
2	2	STR I	1342	-10546	804	71	14564	-11034	-118
2	2	STR I	1344	-10524	810	19	14991	-9221	-122
2	2	STR I	1347	-10089	838	37	14608	-9483	-75
2	2	STR I	1585	-10546	804	71	14564	-11034	-118
2	2	STR I	1857	-5762	159	-9	-2117	-2830	291
2	2	STR I	2265	-5086	377	23	7164	-4404	-151
2	2	STIII	3483	-7935	754	114	19190	-12737	-292
2	2	STIII	3505	-9244	738	-1	13354	-4676	-40
2	2	STIII	3517	-8945	351	-81	-4676	2486	280
2	2	STIII	3521	-8985	408	-144	-2073	6295	290
2	2	STIII	3529	-9221	863	80	20950	-11882	-271
2	2	STIII	3530	-8994	836	109	21960	-13327	-239
2	2	STIII	3532	-9208	841	137	20021	-15481	-301
2	2	STIII	3533	-9180	805	143	18346	-15699	-280
2	2	STIII	3566	-4105	10	-79	-11741	4816	313
2	2	STIII	3578	-5009	553	89	17775	-9220	-198
2	2	STRIV	3649	-9366	542	-39	4198	-850	104
2	2	STRIV	3651	-10655	653	-47	6094	-1237	137
2	2	STRIV	3652	-10628	773	47	13441	-9631	-124
2	2	STRIV	3654	-9344	669	39	11869	-7771	-115
2	2	STRIV	3655	-10655	653	-47	6094	-1237	137
2	2	STR V	3659	-8513	556	19	6313	-7480	98
2	2	STR V	8994	-8849	440	-85	-197	3644	198
2	2	STR V	24408	-9905	730	-53	9521	151	41
2	2	STR V	24870	-10313	745	-41	10972	-1275	86
2	2	STR V	30162	-10130	543	-102	1294	3854	244
2	2	STR V	30405	-10130	543	-102	1294	3854	244
2	2	STR V	31449	-9663	548	-124	1700	6654	291
2	2	STR V	31458	-10154	572	-111	2664	4245	229
2	2	STR V	31701	-10154	572	-111	2664	4245	229
2	2	STR V	35238	-10279	855	88	17831	-12420	-196
2	2	STR V	35240	-10262	860	48	18161	-11022	-199
2	2	STR V	35243	-9926	881	62	17866	-11224	-163
2	2	STR V	35483	-10262	860	48	18161	-11022	-199
2	2	STR V	36102	-10266	839	95	17101	-12828	-190
2	2	STR V	36345	-10266	839	95	17101	-12828	-190
2	2	STR V	36531	-9892	783	117	15413	-13104	-182
2	2	STR V	50873	-5540	97	-36	-5640	-264	315
2	2	STR V	56033	-5156	461	46	11166	-6368	-212
2	2	SER I	92345	-6253	96	-36	-9206	-272	254
2	2	SER I	97505	-5988	545	44	13814	-6567	-185
2	2	SER I	113106	-7490	270	-75	-6596	2834	180
2	2	SER I	113349	-7490	270	-75	-6596	2834	180
2	2	SER I	114609	-7162	275	-90	-6216	4775	212
2	2	SER I	114645	-7509	292	-80	-5536	3075	168
2	2	SER I	118182	-7606	689	64	16562	-9121	-149
2	2	SER I	118184	-7594	692	36	16795	-8135	-151
2	2	SER I	118187	-7357	707	46	16586	-8277	-126
2	2	SER I	119046	-7596	677	70	15997	-9393	-144
2	2	SER I	119289	-7596	677	70	15997	-9393	-144
2	2	SER I	119475	-7331	636	85	14763	-9571	-137
2	2	FATGE	128083	-5935	399	0	6038	-2802	-14
2	2	FATGE	128084	-5945	407	0	6303	-2811	-12
2	2	FATGE	128119	-5996	396	-1	6138	-2610	-9
2	2	FATGE	128180	-6812	467	0	7353	-3593	15
2	2	FATGE	128196	-6815	466	0	7357	-3392	0
2	2	FATGE	128197	-6782	479	0	7443	-3408	4

2	2	FATGE	128200	-6748	472	0	7308	-3458	5
2	2	FATGE	128207	-6809	465	-1	7240	-3519	16
2	2	FATGE	128217	-6749	464	0	6988	-3493	3
2	2	FATGE	128224	-6749	464	-1	6997	-3354	8
2	2	FATGE	128225	-6813	464	-1	7238	-3323	-1

----- PILE FORCE SUMMARY ----------

LRFD MAX PILE FORCE FT SUMMARY:

FOOT NO.	PILE NO.	AASHTO LIMIT STATE	LOAD CASE	MAX FORCE FT AXIAL FV (kips)	MAX FORCE FT TRAN FT (kips)	MAX FORCE FT LONG FL (kips)	MAX FORCE FT ALLOW FV (kips)	MAX FORCE FT (NG)	CORRES MOMENT TRAN MT (ft-k)	CORRES MOMENT LONG ML (ft-k)	CORRES MOMENT TOR (ft-k)
2	12	STR I	1347	1714.8	70.2	2.8	0.0	NG	0.0	0.0	0.0
2	12	STIII	3529	1723.2	73.1	5.4	0.0	NG	0.0	0.0	0.0
2	12	STRIV	3652	1781.6	64.9	3.4	0.0	NG	0.0	0.0	0.0
2	12	STR V	35243	1748.5	74.1	4.4	0.0	NG	0.0	0.0	0.0
2	12	SER I	118187	1327.1	59.5	3.3	0.0	NG	0.0	0.0	0.0
2	3	FATGE	128197	1082.4	40.0	0.0	0.0	NG	0.0	0.0	0.0

LRFD MAX PILE FORCE FL SUMMARY:

FOOT NO.	PILE NO.	AASHTO LIMIT STATE	LOAD CASE	MAX FORCE FL AXIAL FV (kips)	MAX FORCE FL TRAN FT (kips)	MAX FORCE FL LONG FL (kips)	MAX FORCE FL ALLOW FV (kips)	MAX FORCE FL (NG)	CORRES MOMENT TRAN MT (ft-k)	CORRES MOMENT LONG ML (ft-k)	CORRES MOMENT TOR (ft-k)
2	10	STR I	1339	1422.3	63.0	8.6	0.0	NG	0.0	0.0	0.0
2	10	STIII	3533	1339.8	68.3	13.1	0.0	NG	0.0	0.0	0.0
2	10	STRIV	3652	1480.7	64.9	4.5	0.0	NG	0.0	0.0	0.0
2	10	STR V	36531	1401.9	66.1	10.5	0.0	NG	0.0	0.0	0.0
2	10	SER I	119475	1005.2	53.6	7.7	0.0	NG	0.0	0.0	0.0
2	10	FATGE	128083	912.3	33.3	0.1	0.0	NG	0.0	0.0	0.0

LRFD MAX PILE FORCE FV SUMMARY:

FOOT NO.	PILE NO.	AASHTO LIMIT STATE	LOAD CASE	MAX FORCE FV AXIAL FV (kips)	MAX FORCE FV TRAN FT (kips)	MAX FORCE FV LONG FL (kips)	MAX FORCE FV ALLOW FV (kips)	MAX FORCE FV (NG)	CORRES MOMENT TRAN MT (ft-k)	CORRES MOMENT LONG ML (ft-k)	CORRES MOMENT TOR (ft-k)
2	12	STR I	1342	1766.3	67.5	5.4	0.0	NG	0.0	0.0	0.0
2	12	STIII	3532	1747.3	71.5	10.0	0.0	NG	0.0	0.0	0.0
2	12	STRIV	3652	1781.6	64.9	3.4	0.0	NG	0.0	0.0	0.0
2	12	STR V	35238	1788.3	72.1	6.4	0.0	NG	0.0	0.0	0.0
2	12	SER I	118182	1355.2	58.1	4.7	0.0	NG	0.0	0.0	0.0
2	12	FATGE	128180	1146.1	38.8	0.0	0.0	NG	0.0	0.0	0.0

LRFD MAX PILE MOMENT MT SUMMARY:

FOOT NO.	PILE NO.	AASHTO LIMIT STATE	LOAD CASE	CORRES FORCE AXIAL FV (kips)	CORRES FORCE TRAN FT (kips)	CORRES FORCE LONG FL (kips)	CORRES FORCE ALLOW FV (kips)	CORRES FORCE (NG)	MAX MOMENT MT TRAN MT (ft-k)	MAX MOMENT MT LONG ML (ft-k)	MAX MOMENT MT TOR (ft-k)
2	12	STR I	1342	1766.3	67.5	5.4	0.0	NG	0.0	0.0	0.0
2	12	STIII	3532	1747.3	71.5	10.0	0.0	NG	0.0	0.0	0.0
2	12	STRIV	3652	1781.6	64.9	3.4	0.0	NG	0.0	0.0	0.0
2	12	STR V	35238	1788.3	72.1	6.4	0.0	NG	0.0	0.0	0.0
2	12	SER I	118182	1355.2	58.1	4.7	0.0	NG	0.0	0.0	0.0
2	12	FATGE	128180	1146.1	38.8	0.0	0.0	NG	0.0	0.0	0.0

LRFD MAX PILE MOMENT ML SUMMARY:

FOOT NO.	PILE NO.	AASHTO LIMIT STATE	LOAD CASE	CORRES FORCE AXIAL FV (kips)	CORRES FORCE TRAN FT (kips)	CORRES FORCE LONG FL (kips)	CORRES FORCE ALLOW FV (kips)	CORRES FORCE (NG)	MAX MOMENT ML TRAN MT (ft-k)	MAX MOMENT ML LONG ML (ft-k)	MAX MOMENT ML TOR (ft-k)
2	12	STR I	1342	1766.3	67.5	5.4	0.0	NG	0.0	0.0	0.0
2	12	STIII	3532	1747.3	71.5	10.0	0.0	NG	0.0	0.0	0.0
2	12	STRIV	3652	1781.6	64.9	3.4	0.0	NG	0.0	0.0	0.0
2	12	STR V	35238	1788.3	72.1	6.4	0.0	NG	0.0	0.0	0.0
2	12	SER I	118182	1355.2	58.1	4.7	0.0	NG	0.0	0.0	0.0
2	12	FATGE	128180	1146.1	38.8	0.0	0.0	NG	0.0	0.0	0.0

LRFD MAX PILE MOMENT TOR SUMMARY:

FOOT NO.	PILE NO.	AASHTO LIMIT STATE	LOAD CASE	CORRES FORCE AXIAL FV (kips)	CORRES FORCE TRAN FT (kips)	CORRES FORCE LONG FL (kips)	CORRES FORCE ALLOW FV (kips)	CORRES FORCE (NG)	MAX MOMENT TOR TRAN MT (ft-k)	MAX MOMENT TOR LONG ML (ft-k)	MAX MOMENT TOR TOR (ft-k)
2	12	STR I	1342	1766.3	67.5	5.4	0.0	NG	0.0	0.0	0.0
2	12	STIII	3532	1747.3	71.5	10.0	0.0	NG	0.0	0.0	0.0
2	12	STRIV	3652	1781.6	64.9	3.4	0.0	NG	0.0	0.0	0.0
2	12	STR V	35238	1788.3	72.1	6.4	0.0	NG	0.0	0.0	0.0
2	12	SER I	118182	1355.2	58.1	4.7	0.0	NG	0.0	0.0	0.0
2	12	FATGE	128180	1146.1	38.8	0.0	0.0	NG	0.0	0.0	0.0

LRFD MIN PILE FORCE FT SUMMARY:

FOOT NO.	PILE NO.	AASHTO LIMIT STATE	LOAD CASE	MIN FORCE FT AXIAL FV (kips)	MIN FORCE FT TRAN FT (kips)	MIN FORCE FT LONG FL (kips)	MIN FORCE FT ALLOW FV (kips)	MIN FORCE FT (NG)	CORRES MOMENT TRAN MT (ft-k)	CORRES MOMENT LONG ML (ft-k)	CORRES MOMENT TOR (ft-k)
2	10	STR I	1857	914.0	11.9	-2.0	0.0	NG	0.0	0.0	0.0
2	10	STIII	3566	796.7	-0.6	-8.0	0.0	NG	0.0	0.0	0.0
2	12	STRIV	3649	1503.1	44.7	-2.8	0.0	NG	0.0	0.0	0.0
2	10	STR V	50873	905.4	6.7	-4.4	0.0	NG	0.0	0.0	0.0
2	10	SER I	92345	1062.9	6.8	-4.2	0.0	NG	0.0	0.0	0.0
2	3	FATGE	128119	1009.1	33.0	-0.1	0.0	NG	0.0	0.0	0.0

LRFD MIN PILE FORCE FL SUMMARY:

FOOT NO.	PILE NO.	AASHTO LIMIT STATE	LOAD CASE	AXIAL FV (kips)	TRAN FT (kips)	LONG FL (kips)	ALLOW FV (kips)	(NG)	TRAN MT (ft-k)	LONG ML (ft-k)	TOR (ft-k)
2	1	STR I	1009	1443.4	52.5	-10.0	0.0	NG	0.0	0.0	0.0
2	1	STIII	3521	1437.5	35.3	-13.3	0.0	NG	0.0	0.0	0.0
2	10	STRIV	3651	1474.6	53.8	-4.6	0.0	NG	0.0	0.0	0.0
2	1	STR V	31449	1457.2	46.9	-11.6	0.0	NG	0.0	0.0	0.0
2	1	SER I	114609	1150.0	23.9	-8.4	0.0	NG	0.0	0.0	0.0
2	10	FATGE	128207	978.2	38.7	-0.2	0.0	NG	0.0	0.0	0.0

LRFD MIN PILE FORCE FV SUMMARY:

FOOT NO.	PILE NO.	AASHTO LIMIT STATE	LOAD CASE	MIN FORCE FV: AXIAL FV (kips)	TRAN FT (kips)	LONG FL (kips)	ALLOW FV (kips)	(NG)	CORRES MOMENT: TRAN MT (ft-k)	LONG ML (ft-k)	TOR (ft-k)
2	1	STR I	2265	701.1	30.8	2.6	0.0	NG	0.0	0.0	0.0
2	1	STIII	3578	547.3	45.2	8.3	0.0	NG	0.0	0.0	0.0
2	1	STRIV	3654	971.7	55.2	3.8	0.0	NG	0.0	0.0	0.0
2	1	STR V	56033	649.4	37.4	4.8	0.0	NG	0.0	0.0	0.0
2	1	SER I	97505	756.2	44.6	4.5	0.0	NG	0.0	0.0	0.0
2	1	FATGE	128084	860.3	33.8	0.1	0.0	NG	0.0	0.0	0.0

LRFD MIN PILE MOMENT MT SUMMARY:

FOOT NO.	PILE NO.	AASHTO LIMIT STATE	LOAD CASE	CORRES FORCE: AXIAL FV (kips)	TRAN FT (kips)	LONG FL (kips)	ALLOW FV (kips)	(NG)	MIN MOMENT MT: TRAN MT (ft-k)	LONG ML (ft-k)	TOR (ft-k)
2	12	STR I	1342	1766.3	67.5	5.4	0.0	NG	0.0	0.0	0.0
2	12	STIII	3532	1747.3	71.5	10.0	0.0	NG	0.0	0.0	0.0
2	12	STRIV	3652	1781.6	64.9	3.4	0.0	NG	0.0	0.0	0.0
2	12	STR V	35238	1788.3	72.1	6.4	0.0	NG	0.0	0.0	0.0
2	12	SER I	118182	1355.2	58.1	4.7	0.0	NG	0.0	0.0	0.0
2	12	FATGE	128180	1146.1	38.8	0.0	0.0	NG	0.0	0.0	0.0

LRFD MIN PILE MOMENT ML SUMMARY:

FOOT NO.	PILE NO.	AASHTO LIMIT STATE	LOAD CASE	CORRES FORCE: AXIAL FV (kips)	TRAN FT (kips)	LONG FL (kips)	ALLOW FV (kips)	(NG)	MIN MOMENT ML: TRAN MT (ft-k)	LONG ML (ft-k)	TOR (ft-k)
2	12	STR I	1342	1766.3	67.5	5.4	0.0	NG	0.0	0.0	0.0
2	12	STIII	3532	1747.3	71.5	10.0	0.0	NG	0.0	0.0	0.0
2	12	STRIV	3652	1781.6	64.9	3.4	0.0	NG	0.0	0.0	0.0
2	12	STR V	35238	1788.3	72.1	6.4	0.0	NG	0.0	0.0	0.0
2	12	SER I	118182	1355.2	58.1	4.7	0.0	NG	0.0	0.0	0.0
2	12	FATGE	128180	1146.1	38.8	0.0	0.0	NG	0.0	0.0	0.0

LRFD MIN PILE MOMENT TOR SUMMARY:

FOOT NO.	PILE NO.	AASHTO LIMIT STATE	LOAD CASE	CORRES FORCE: AXIAL FV (kips)	TRAN FT (kips)	LONG FL (kips)	ALLOW FV (kips)	(NG)	MIN MOMENT TOR: TRAN MT (ft-k)	LONG ML (ft-k)	TOR (ft-k)
2	12	STR I	1342	1766.3	67.5	5.4	0.0	NG	0.0	0.0	0.0
2	12	STIII	3532	1747.3	71.5	10.0	0.0	NG	0.0	0.0	0.0
2	12	STRIV	3652	1781.6	64.9	3.4	0.0	NG	0.0	0.0	0.0
2	12	STR V	35238	1788.3	72.1	6.4	0.0	NG	0.0	0.0	0.0
2	12	SER I	118182	1355.2	58.1	4.7	0.0	NG	0.0	0.0	0.0
2	12	FATGE	128180	1146.1	38.8	0.0	0.0	NG	0.0	0.0	0.0

----- FOOTING SHEAR DESIGN -----

TRANSVERSE FOOTING DESIGN - ONE WAY SHEAR:
SIMPLIFIED PROCEDURE 5.8.3.4.1, NO STIRRUPS USED

FTG NO.	COL NO.	HORIZ DIST. (ft)	LOCATION	AASHTO LIMIT STATE	LOAD CASE	FORCES: LRFD SHEAR Vu (kips)	LRFD TORSION Tu (ft-k)	ONE WAY SHEAR DESIGN: TORSION CRACKING dv (in)	TORSION CRACKING øTcr (ft-k)	SHEAR CAPACITY øVn (kips)	NG
2	2	5.98	dv	STR I	1018	3041	-860	79.63	25472	4134	
				STIII	3517	2950	-790	79.66	25472	4135	
				STRIV	3651	3090	306	79.62	25472	4133	
				STR V	30405	3064	-1204	79.63	25472	4134	
2	2	12.00	FACE	STR I	1018	4718	-1066				
				STIII	3517	4465	-980				
				STRIV	3651	4786	387				
				STR V	30162	4716	-1495				
2	2	26.00	FACE	STR I	1344	-5675	-3318				
				STIII	3529	-5353	-4343				
				STRIV	3652	-5697	-3498				
				STR V	35240	-5687	-3997				
2	2	32.02	dv	STR I	1344	-3759	-2656	79.50	25472	4127	
				STIII	3529	-3599	-3480	79.54	25472	4129	
				STRIV	3652	-3776	-2802	79.50	25472	4127	
				STR V	35483	-3784	-3201	79.50	25472	4127	

Notes:
Shears have been modified for torsion as appropriate, in accordance with equation 5.8.2.1-6.

TRANSVERSE FOOTING DESIGN - LONGITUDINAL REINFORCEMENT FOR SHEAR:

FTG NO.	COL NO.	HORIZ DIST. (ft)	LOCATION	AASHTO LIMIT STATE	LOAD CASE	FORCES: LRFD AXIAL Nu (kips)	LRFD SHEAR Vu (kips)	LRFD TORSION Tu (ft-k)	LRFD MOMENT Mu (ft-k)	LONGITUDINAL STEEL: dv (in)	As LONG REQD (sq-in)	As LONG PROV (sq-in)	NG
2	2	5.98	dv	STR I	1018	0	3041	-860	9189	79.63	81.95	131.04	
				STIII	3517	0	2950	-790	8852	79.66	79.32	131.04	
				STRIV	3651	0	3090	306	9338	79.62	83.29	131.04	
				STR V	30162	0	3064	-1204	9234	79.63	82.51	131.04	
2	2	12.00	FACE	STR I	1018	0	4718	-1066	26758				
				STIII	3517	0	4465	-980	25667				
				STRIV	3651	0	4786	387	27099				
				STR V	30162	0	4716	-1495	26901				
2	2	26.00	FACE	STR I	1344	0	-5675	-3318	32901				
				STIII	3529	0	-5353	-4343	31279				
				STRIV	3652	0	-5697	-3498	32946				
				STR V	35240	0	-5687	-3997	33096				
2	2	32.02	dv	STR I	1344	0	-3759	-2656	10993	79.50	100.33	131.04	
				STIII	3529	0	-3599	-3480	10505	79.54	95.99	131.04	
				STRIV	3652	0	-3776	-2802	11052	79.50	100.81	131.04	
				STR V	35240	0	-3784	-3201	11057	79.50	100.98	131.04	

LONGITUDINAL FOOTING DESIGN - ONE WAY SHEAR:
SIMPLIFIED PROCEDURE 5.8.3.4.1, NO STIRRUPS USED

FTG NO.	COL NO.	HORIZ DIST. (ft)	LOCATION	AASHTO LIMIT STATE	LOAD CASE	FORCES: LRFD SHEAR Vu (kips)	LRFD TORSION Tu (ft-k)	ONE WAY SHEAR DESIGN: dv (in)	TORSION CRACKING øTcr (ft-k)	SHEAR CAPACITY øVn (kips)	NG
2	2	-11.92	dv	STR I	1261	3115	-2212	77.89	25472	4043	
				STIII	3530	2279	-7140	78.14	25472	0	c
				STRIV	3651	3062	-2413	77.90	25472	4044	
				STR V	31701	3066	-1349	77.91	25472	4044	
2	2	-6.00	FACE	STR I	1018	4916	-2703				
				STIII	3521	4410	257				
				STRIV	3651	4851	-2954				
				STR V	31458	4819	-1631				
2	2	6.00	FACE	STR I	1342	-5218	6160				
				STIII	3532	-4830	8151				
				STRIV	3652	-5228	5722				
				STR V	36102	-5169	7107				
2	2	11.92	dv	STR I	1585	-3341	4990	77.82	25472	4040	
				STIII	3530	-3019	7135	77.92	25472	0	c
				STRIV	3652	-3346	4637	77.82	25472	4040	
				STR V	36345	-3322	5750	77.83	25472	4040	

Notes:
Shears have been modified for torsion as appropriate, in accordance with equation 5.8.2.1-6.

c: Stirrups required for torsion, Tu > 0.25øTcr; no stirrup data entered.

LONGITUDINAL FOOTING DESIGN - LONGITUDINAL REINFORCEMENT FOR SHEAR:

FTG NO.	COL NO.	HORIZ DIST. (ft)	LOCATION	AASHTO LIMIT STATE	LOAD CASE	FORCES: LRFD AXIAL Nu (kips)	LRFD SHEAR Vu (kips)	LRFD TORSION Tu (ft-k)	LRFD MOMENT Mu (ft-k)	LONGITUDINAL STEEL: dv (in)	As LONG REQD (sq-in)	As LONG PROV (sq-in)	NG
2	2	-11.92	dv	STR I	1018	0	3115	-2212	13498	77.89	96.19	149.76	
				STIII	3530	0	2279	-7140	10129	78.14	-1.00	149.76	a
				STRIV	3651	0	3062	-2413	13331	77.90	94.73	149.76	
				STR V	31458	0	3066	-1349	13292	77.91	94.68	149.76	
2	2	-6.00	FACE	STR I	1018	0	4916	-2703	34335				
				STIII	3521	0	4410	257	31040				
				STRIV	3651	0	4851	-2954	33779				
				STR V	31458	0	4819	-1631	33739				
2	2	6.00	FACE	STR I	1342	0	-5218	6160	36753				
				STIII	3532	0	-4830	8151	34290				
				STRIV	3652	0	-5228	5722	36807				
				STR V	36102	0	-5169	7107	36493				
2	2	11.92	dv	STR I	1342	0	-3341	4990	14424	77.82	103.05	149.76	
				STIII	3530	0	-3019	7135	13100	77.92	-1.00	149.76	a
				STRIV	3652	0	-3346	4637	14492	77.82	103.35	149.76	
				STR V	36102	0	-3322	5750	14340	77.83	102.45	149.76	

Notes:
a: Indicates that longitudinal steel for shear was not checked, due to problem with flexural or shear design.

TWO WAY SHEAR DESIGN AT COLUMNS:

FTG NO.	COL NO.	AASHTO LIMIT	LOAD CASE	bo	dv	FACTORED SHEAR Vu	Av REQD	SHEAR CAPACITY øVc	SHEAR CAPACITY øVs	TOTAL CAPACITY øVn	NG

		STATE		(in)	(in)	(kips)	(sq-in)	(kips)	(kips)	(kips)		
2	2	STR I	910	910.52	64.44	-6112	0.00	13307	0	13307		
2	2	STIII	3505	910.52	64.44	-5219	0.00	13307	0	13307		
2	2	STRIV	3655	910.52	64.44	-6507	0.00	13307	0	13307		
2	2	STR V	24870	910.52	64.44	-5932	0.00	13307	0	13307		

----- FOOTING 2 FLEXURAL DESIGN -----

FLEXURAL DESIGN - TRANSVERSE FLEXURE, REINFORCING STEEL REQUIREMENTS:

LRFD MOMENT, MIN STEEL CODE:
a: Design controlled by 1.2 Mcr
b: Design controlled by 4/3 Mdes
c: Design controlled 0.03f'c/fy

					POSITIVE FLEXURE					NEGATIVE FLEXURE					
FTG NO.	COL NO.	HORZ DIST. (ft)	LOCATION	AASHTO LIMIT STATE	LOAD CASE	LRFD MOMENT (ft-k)	d (in)	AREA REQD. (sq-in)	AREA PROV. (sq-in)	NG	LOAD CASE	LRFD MOMENT (ft-k)	d (in)	AREA REQD. (sq-in)	AREA PROV. (sq-in)	NG
2		5.98	dv	STR I	1018	12252b	80.3	34.19	131.04		-1	0	0.0	0.00	0.00	
				STIII	3517	11802b	80.3	32.92	131.04		-1	0	0.0	0.00	0.00	
				STRIV	3651	12451b	80.3	34.75	131.04		-1	0	0.0	0.00	0.00	
				STR V	30162	12312b	80.3	34.36	131.04		-1	0	0.0	0.00	0.00	
2	2	12.00	FACE	STR I	1018	35677b	80.3	101.21	131.04		-1	0	0.0	0.00	0.00	
				STIII	3517	34223b	80.3	96.98	131.04		-1	0	0.0	0.00	0.00	
				STRIV	3651	36132b	80.3	102.53	131.04		-1	0	0.0	0.00	0.00	
				STR V	30162	35868b	80.3	101.76	131.04		-1	0	0.0	0.00	0.00	
2	2	26.00	FACE	STR I	904	39683a	80.3	112.90	131.04		-1	0	0.0	0.00	0.00	
				STIII	3529	39683a	80.3	112.90	131.04		-1	0	0.0	0.00	0.00	
				STRIV	3651	39683a	80.3	112.90	131.04		-1	0	0.0	0.00	0.00	
				STR V	24408	39683a	80.3	112.90	131.04		-1	0	0.0	0.00	0.00	
2		32.02	dv	STR I	1344	14657b	80.3	40.97	131.04		-1	0	0.0	0.00	0.00	
				STIII	3529	14006b	80.3	39.13	131.04		-1	0	0.0	0.00	0.00	
				STRIV	3652	14735b	80.3	41.19	131.04		-1	0	0.0	0.00	0.00	
				STR V	35240	14742b	80.3	41.21	131.04		-1	0	0.0	0.00	0.00	

FLEXURAL DESIGN - TRANSVERSE FLEXURAL DESIGN PARAMETERS (Based on As Provided):

					POSITIVE FLEXURE					NEGATIVE FLEXURE				
FTG NO.	COL NO.	HORZ DIST. (ft)	LOCATION	AASHTO LIMIT STATE	LOAD CASE	a (in)	STRAIN es	PHI Ø	ØMn CAP (ft-k)	LOAD CASE	a (in)	STRAIN es	PHI Ø	ØMn CAP (ft-k)
2		5.98	dv	STR I	1018	5.07	0.037375	0.900	45853	-1	0.00	0.000000	0.000	0
				STIII	3517	5.07	0.037375	0.900	45853	-1	0.00	0.000000	0.000	0
				STRIV	3651	5.07	0.037375	0.900	45853	-1	0.00	0.000000	0.000	0
				STR V	30162	5.07	0.037375	0.900	45853	-1	0.00	0.000000	0.000	0
2	2	12.00	FACE	STR I	1018	5.07	0.037375	0.900	45853	-1	0.00	0.000000	0.000	0
				STIII	3517	5.07	0.037375	0.900	45853	-1	0.00	0.000000	0.000	0
				STRIV	3651	5.07	0.037375	0.900	45853	-1	0.00	0.000000	0.000	0
				STR V	30162	5.07	0.037375	0.900	45853	-1	0.00	0.000000	0.000	0
2	2	26.00	FACE	STR I	904	5.07	0.037375	0.900	45853	-1	0.00	0.000000	0.000	0
				STIII	3529	5.07	0.037375	0.900	45853	-1	0.00	0.000000	0.000	0
				STRIV	3651	5.07	0.037375	0.900	45853	-1	0.00	0.000000	0.000	0
				STR V	24408	5.07	0.037375	0.900	45853	-1	0.00	0.000000	0.000	0
2		32.02	dv	STR I	1344	5.07	0.037375	0.900	45853	-1	0.00	0.000000	0.000	0
				STIII	3529	5.07	0.037375	0.900	45853	-1	0.00	0.000000	0.000	0
				STRIV	3652	5.07	0.037375	0.900	45853	-1	0.00	0.000000	0.000	0
				STR V	35240	5.07	0.037375	0.900	45853	-1	0.00	0.000000	0.000	0

FLEXURAL DESIGN - LONGITUDINAL FLEXURE, REINFORCING STEEL REQUIREMENTS:

LRFD MOMENT, MIN STEEL CODE:
a: Design controlled by 1.2 Mcr
b: Design controlled by 4/3 Mdes
c: Design controlled 0.03f'c/fy

					POSITIVE FLEXURE					NEGATIVE FLEXURE					
FTG NO.	COL NO.	HORZ DIST. (ft)	LOCATION	AASHTO LIMIT STATE	LOAD CASE	LRFD MOMENT (ft-k)	d (in)	AREA REQD. (sq-in)	AREA PROV. (sq-in)	NG	LOAD CASE	LRFD MOMENT (ft-k)	d (in)	AREA REQD. (sq-in)	AREA PROV. (sq-in)	NG
2		-11.92	dv	STR I	1018	17997b	78.9	51.35	149.76		-1	0	0.0	0.00	0.00	
				STIII	3521	16440b	78.9	46.85	149.76		-1	0	0.0	0.00	0.00	
				STRIV	3651	17774b	78.9	50.70	149.76		-1	0	0.0	0.00	0.00	
				STR V	31458	17722b	78.9	50.55	149.76		-1	0	0.0	0.00	0.00	
2	2	-6.00	FACE	STR I	43	39683a	78.9	115.03	149.76		-1	0	0.0	0.00	0.00	
				STIII	3517	39683a	78.9	115.03	149.76		-1	0	0.0	0.00	0.00	
				STRIV	3649	39683a	78.9	115.03	149.76		-1	0	0.0	0.00	0.00	
				STR V	8994	39683a	78.9	115.03	149.76		-1	0	0.0	0.00	0.00	
2	2	6.00	FACE	STR I	3	39683a	78.9	115.03	149.76		-1	0	0.0	0.00	0.00	
				STIII	3483	39683a	78.9	115.03	149.76		-1	0	0.0	0.00	0.00	
				STRIV	3649	39683a	78.9	115.03	149.76		-1	0	0.0	0.00	0.00	
				STR V	3659	39683a	78.9	115.03	149.76		-1	0	0.0	0.00	0.00	
2		11.92	dv	STR I	1342	19232b	78.9	54.92	149.76		-1	0	0.0	0.00	0.00	
				STIII	3532	18081b	78.9	51.59	149.76		-1	0	0.0	0.00	0.00	
				STRIV	3652	19322b	78.9	55.18	149.76		-1	0	0.0	0.00	0.00	
				STR V	36102	19120b	78.9	54.59	149.76		-1	0	0.0	0.00	0.00	

FLEXURAL DESIGN - LONGITUDINAL FLEXURAL DESIGN PARAMETERS (Based on As Provided):

FTG NO.	COL NO.	HORZ DIST. (ft)	LOCATION	AASHTO LIMIT STATE	POSITIVE FLEXURE LOAD CASE	a (in)	STRAIN es	PHI Ø	ØMn CAP (ft-k)	NEGATIVE FLEXURE LOAD CASE	a (in)	STRAIN es	PHI Ø	ØMn CAP (ft-k)
2		-11.92	dv	STR I	1018	5.80	0.031708	0.900	51209	-1	0.00	0.000000	0.000	0
				STIII	3521	5.80	0.031708	0.900	51209	-1	0.00	0.000000	0.000	0
				STRIV	3651	5.80	0.031708	0.900	51209	-1	0.00	0.000000	0.000	0
				STR V	31458	5.80	0.031708	0.900	51209	-1	0.00	0.000000	0.000	0
2	2	-6.00	FACE	STR I	43	5.80	0.031708	0.900	51209	-1	0.00	0.000000	0.000	0
				STIII	3517	5.80	0.031708	0.900	51209	-1	0.00	0.000000	0.000	0
				STRIV	3649	5.80	0.031708	0.900	51209	-1	0.00	0.000000	0.000	0
				STR V	8994	5.80	0.031708	0.900	51209	-1	0.00	0.000000	0.000	0
2	2	6.00	FACE	STR I	3	5.80	0.031708	0.900	51209	-1	0.00	0.000000	0.000	0
				STIII	3483	5.80	0.031708	0.900	51209	-1	0.00	0.000000	0.000	0
				STRIV	3649	5.80	0.031708	0.900	51209	-1	0.00	0.000000	0.000	0
				STR V	3659	5.80	0.031708	0.900	51209	-1	0.00	0.000000	0.000	0
2		11.92	dv	STR I	1342	5.80	0.031708	0.900	51209	-1	0.00	0.000000	0.000	0
				STIII	3532	5.80	0.031708	0.900	51209	-1	0.00	0.000000	0.000	0
				STRIV	3652	5.80	0.031708	0.900	51209	-1	0.00	0.000000	0.000	0
				STR V	36102	5.80	0.031708	0.900	51209	-1	0.00	0.000000	0.000	0

----- FOOTING 2 SERVICEABILITY RESULTS -----

FATIGUE LIMIT STATE - TRANSVERSE REINFORCEMENT DATA:

Notes: All fatigue data is computed from Fatigue Limit State.
Axial tension is negative.
T indicates top bars control; B indicates bottom bars control.
** Dead load values may include effects due to shrinkage, refer to load case data.

FTG NO.	COL NO.	HORZ DIST. (ft)	LOCATION	FATIGUE MAX LOAD NO.	MIN LOAD NO.	DL** AXIAL (kips)	DL** MOMENT (ft-k)	MAX LL MOMENT (ft-k)	MIN LL MOMENT (ft-k)	f MIN (ksi)	ACTUAL RANGE (ksi)	ALLOW RANGE (ksi)	NG
2	2	12.00	FACE	0	128290	0	17834	0	-19	20.2	1.7	16.7	B
2	2	26.00	FACE	128291	0	0	20825	148	0	23.8	1.8	15.5	B

FATIGUE LIMIT STATE - LONGITUDINAL REINFORCEMENT DATA:

FTG NO.	COL NO.	HORZ DIST. (ft)	LOCATION	FATIGUE MAX LOAD NO.	MIN LOAD NO.	DL** AXIAL (kips)	DL** MOMENT (ft-k)	MAX LL MOMENT (ft-k)	MIN LL MOMENT (ft-k)	f MIN (ksi)	ACTUAL RANGE (ksi)	ALLOW RANGE (ksi)	NG
2	2	-6.00	FACE	128292	128293	0	20874	195	-33	22.8	0.3	15.9	B
2	2	6.00	FACE	128287	128285	0	22845	197	-50	24.9	0.3	15.2	B

DISTRIBUTION OF TRANSVERSE FLEXURAL REINFORCEMENT:

Notes: Reinforcing steel distribution data is based on the maximum area of steel
obtained from either Strength Limit State Design ,or user defined limits.
Moments are based on Service I Limit State.

FTG NO.	COL NO.	HORZ DIST. (ft)	LOCATION	TRANSVERSE STEEL DISTRIBUTION LOAD CASE	MAT	SERV I AXIAL (kips)	SERV I MOMENT (ft-k)	h (in)	dc (in)	ßs	STRESS fs (ksi)	SPACING ACTUAL (in)	SPACING ALLOW. (in)	NG
2	2	12.00	FACE	113106	BOT	0	21883	84.00	3.70	1.066	26.79	5.40	17.10	
2	2	26.00	FACE	118184	BOT	0	25378	84.00	3.70	1.066	31.07	5.40	13.73	

DISTRIBUTION OF LONGITUDINAL FLEXURAL REINFORCEMENT:

FTG NO.	COL NO.	HORZ DIST. (ft)	LOCATION	LONGITUDINAL STEEL DISTRIBUTION LOAD CASE	MAT	SERV I AXIAL (kips)	SERV I MOMENT (ft-k)	h (in)	dc (in)	ßs	STRESS fs (ksi)	SPACING ACTUAL (in)	SPACING ALLOW. (in)	NG
2	2	-6.00	FACE	114645	BOT	0	24941	84.00	5.11	1.093	27.28	4.72	13.26	
2	2	6.00	FACE	119046	BOT	0	26982	84.00	5.11	1.093	29.51	4.72	11.48	

BEGIN TIME: 06/08/2012 11:05:00
END TIME: 06/08/2012 11:10:17
ELAPSED TIME: 00:05:17

RUN TIME: 06/08/2012 11:12:39.164 PROGRAM'S INTERPRETATION OF INPUT DATA MADE BY: LER DATE 6/08/12
Filename: M:\jobs\49633\Techprod\Bridges\Main Span (Unit 2)\Pier 11\RFI - Misa CHECKED BY: KDG DATE 6/12/12
BACKCHECKED BY: DATE

INPUT FILE: m:\jobs\49633\techprod\bridges\main span (unit 2)\pier 11\rfi - misalignment\pier\footing\pier 11 footing zero truck.bdf
INPUT FILE DATE: 06/08/2012 11:12:10
DLL VERSION: 1.2.2.7 DATE: 1/10/2012

PIER run used for establishing top of footing loads only.

ELEMENT SUMMARY:

ELEMENT TYPE	NUMBER OF ELEMENTS
FOOTINGS	2
DRILLED SHAFT	0
PILES	24
COLUMNS	2
CAP BEAMS	1

----- JOB DESCRIPTION AND INITIAL GEOMETRY -----

JOB NUMBER: 49633
JOB NAME: Pier 11 Updated 3-11-11
USER NAME: ajohn
DESIGN CODE: AASHTO 2010
NUMBER OF COLUMNS: 2
NUMBER OF CAPBEAMS: 1
NUMBER OF FOOTINGS: 2
UNITS: (English)

----- DESIGN OPTIONS -----

DESIGN OPTIONS:
CAP:
DESIGN CAPS: No
DESIGN METHOD: LRFD Design
FACE + D: No
DESIGN POINTS: All Points
STIFFEN CAPS OVER COLUMNS: No
COLUMN:
DESIGN COLS: No
DESIGN METHOD: LRFD Design
MOMENT MAG.: Apply Moment Magnification
LOCATION: Quarter Points
FOOTING:
DESIGN FOOTS: Yes
DESIGN METHOD: LRFD Design

LOAD MODIFIER FACTORS:
DUCTILITY: 1.000
REDUNDANCY: 1.000
IMPORTANCE: 1.050

----- ENVIRONMENTAL PARAMETERS -----

STREAM AND ICE FLOW DATA:
HIGH WATER ELEVATION: 0.000 (ft)
LOW WATER ELEVATION : 0.000 (ft)
STREAM VELOCITY: 0.0 (ft/sec)
FLOW DIRECTION: 0.000 (degrees)
LONGITUDINAL DRAG COEFF: 0.000
LATERAL DRAG COEFF: 0.000
EFFECTIVE NOSE WIDTH: 0.000 (ft)
NOSE INCLINATION: VERT: 0.000 (degrees) HORZ: 0.000 (degrees)
ICE FRICTION ANGLE: 0.000 (degrees)
ICE STRENGTH: 0.000 (psi)
ICE THICKNESS: 0.000 (in)

WIND PRESSURE INTENSITY DATA:
SUBSTRUCTURE:
DESIGN VELOCITY: 100.0 (mph)
WIND PRESSURE: 40.000 (psf)

SUPERSTRUCTURE:
DESIGN VELOCITY: 100.0 (mph)
OVERTURNING WIND PRESSURE: 20.000 (psf)
AASHTO STANDARD WIND PRESSURES HAVE BEEN USED, 3.8.1.2.2-1 AND 3.8.1.3-1.

Note: All wind pressures are applied using a base wind velocity of 100 mph. These values are increased or decreased in accordance with AASHTO 3.8.1.2.1 for Strength Limit State III only.

TEMPERATURE DATA:
TEMP RISE: 35.0 Fahr.
TEMP FALL: 45.0 Fahr.

----- CAP BEAM 1 DATA -----

SHEAR DESIGN USING SIMPLIFIED PROCEDURE, AASHTO 5.8.3.4.1

TOP OF CAP BEAM 1 REFERENCE LINE DATA:
NUMBER OF POINTS: 22
POINT 1: OFFSET: -101.396 (ft) ELEV: 686.500 (ft)
POINT 2: OFFSET: -95.560 (ft) ELEV: 686.500 (ft)
POINT 3: OFFSET: -85.870 (ft) ELEV: 686.500 (ft)
POINT 4: OFFSET: -84.896 (ft) ELEV: 686.500 (ft)
POINT 5: OFFSET: -77.896 (ft) ELEV: 686.500 (ft)
POINT 6: OFFSET: -76.180 (ft) ELEV: 686.500 (ft)
POINT 7: OFFSET: -66.490 (ft) ELEV: 686.500 (ft)

```
      POINT  8:  OFFSET:  -63.500 (ft)     ELEV:  686.500 (ft)
      POINT  9:  OFFSET:  -50.788 (ft)     ELEV:  686.500 (ft)
      POINT 10:  OFFSET:  -39.088 (ft)     ELEV:  686.500 (ft)
      POINT 11:  OFFSET:  -31.440 (ft)     ELEV:  686.500 (ft)
      POINT 12:  OFFSET:  -27.388 (ft)     ELEV:  686.500 (ft)
      POINT 13:  OFFSET:  -15.688 (ft)     ELEV:  686.500 (ft)
      POINT 14:  OFFSET:   -3.988 (ft)     ELEV:  686.500 (ft)
      POINT 15:  OFFSET:    0.620 (ft)     ELEV:  686.500 (ft)
      POINT 16:  OFFSET:    7.712 (ft)     ELEV:  686.500 (ft)
      POINT 17:  OFFSET:   17.604 (ft)     ELEV:  686.500 (ft)
      POINT 18:  OFFSET:   19.412 (ft)     ELEV:  686.500 (ft)
      POINT 19:  OFFSET:   24.604 (ft)     ELEV:  686.500 (ft)
      POINT 20:  OFFSET:   31.112 (ft)     ELEV:  686.500 (ft)
      POINT 21:  OFFSET:   32.680 (ft)     ELEV:  686.500 (ft)
      POINT 22:  OFFSET:   41.104 (ft)     ELEV:  686.500 (ft)

  NUMBER OF SEGMENTS:  3
  SEGMENT  1 DIMENSIONS:
    SHAPE:   Rectangular
    PROFILE: Linear
    BEGIN SECTION:
      DISTANCE:   -101.40 (ft)      DEPTH:  6.50 (ft)      TOP ELEV:   686.500 (ft)
      BOT SLOPE:   0.0000           WIDTH: 12.00 (ft)      BOT ELEV:   680.000 (ft)
    END SECTION:
      DISTANCE:    -84.90 (ft)      DEPTH: 11.00 (ft)      TOP ELEV:   686.500 (ft)
      BOT SLOPE:   0.0000           WIDTH: 12.00 (ft)      BOT ELEV:   675.500 (ft)

  SEGMENT  2 DIMENSIONS:
    SHAPE:   Rectangular
    PROFILE: Linear
    BEGIN SECTION:
      DISTANCE:    -84.90 (ft)      DEPTH: 11.00 (ft)      TOP ELEV:   686.500 (ft)
      BOT SLOPE:   0.0000           WIDTH: 12.00 (ft)      BOT ELEV:   675.500 (ft)
    END SECTION:
      DISTANCE:     24.60 (ft)      DEPTH: 11.00 (ft)      TOP ELEV:   686.500 (ft)
      BOT SLOPE:   0.0000           WIDTH: 12.00 (ft)      BOT ELEV:   675.500 (ft)

  SEGMENT  3 DIMENSIONS:
    SHAPE:   Rectangular
    PROFILE: Linear
    BEGIN SECTION:
      DISTANCE:     24.60 (ft)      DEPTH: 11.00 (ft)      TOP ELEV:   686.500 (ft)
      BOT SLOPE:   0.0000           WIDTH: 12.00 (ft)      BOT ELEV:   675.500 (ft)
    END SECTION:
      DISTANCE:     41.10 (ft)      DEPTH:  6.50 (ft)      TOP ELEV:   686.500 (ft)
      BOT SLOPE:   0.0000           WIDTH: 12.00 (ft)      BOT ELEV:   680.000 (ft)

  REINFORCEMENT PARAMETERS:              CONCRETE PARAMETERS:
    YIELD  STRENGTH:    60.0 (ksi)         FPC:      4.0 (ksi)
    MIN COVER:    TOP:   3.0 (in)          WEIGHT: 150.0 (pcf)
               BOTTOM:   3.0 (in)          CTE:      0.0000060
                 SIDE:   3.0 (in)
    STIRRUPS:    SIZE:   3
      NO.LEGS TORSION:   1
      NO.LEGS   TOTAL:   2
    EXPOSURE FACTOR:     1.000

  REINFORCEMENT LAYER DATA:
  NUMBER OF SLABS:  3
    Slab No:  1   Label: Slab 1-1
    Slab No:  2   Label: Slab 1-2
    Slab No:  3   Label: Slab 1-3

----- SLAB 1 DATA ------------------------------------------------------------------------------------------------

  SLAB:  1     SLAB LABEL: Slab 1-1
  CONNECTED TO: CAPBEAM  1
    SLAB LENGTH:    306.14 (ft)
    SLAB WIDTH:     131.94 (ft)
    SLAB THICK:      10.00 (in)
    DESIGN SPEED:     70.0 (mph)
    SLAB RADIUS:    3522.0 (ft)
    HAUNCH THICK:     2.00 (in)
    PIER SKEW:      18.000 (degrees)
    NUMBER OF ROADWAYS:  1

    SLAB  1 DIMENSIONS:
      LEFT FASCIA:              LEFT BARRIER:             LEFT SIDEWALK:
        WIDTH:    0.000 (in)      WIDTH:   18.000 (in)      WIDTH:    0.000 (ft)
                                  HEIGHT:  32.000 (in)      THICK:    0.000 (in)

      ROADWAY 1 WIDTH = 128.940 (ft)

      RIGHT SIDEWALK:           RIGHT BARRIER:            RIGHT FASCIA:
        WIDTH:    0.000 (ft)      WIDTH:   18.000 (in)      WIDTH:    0.000 (in)
        THICK:    0.000 (in)      HEIGHT:  32.000 (in)

    SLAB  1 CROSS SLOPE DATA:
      NUMBER OF CROSS SLOPE VALUES:  2
        SLOPE: -0.0400          SLOPE: -0.0400
        DIST:   98.455 (ft)     DIST:   38.216 (ft)

    SLAB  1 GIRDER DATA:
      NUMBER OF GIRDERS:  5           GIRDER DEPTH AND PROFILE DISTANCES:
      SPAN LENGTH:                      BACK STATION:             PIER:                FORWARD STATION:
```

BACK STATION: 306.140 (ft) DEPTH: 10.00 (ft) DEPTH: 10.00 (ft) DEPTH: 0.00 (ft)
FWD STATION: 0.000 (ft) DISTANCE: 306.14 (ft) DISTANCE: 0.00 (ft)

GIRDER LOCATION DATA:

NO.	NAME	DISTANCE (ft)	GIRDER TYPE	BOT FL WIDTH (in)	TOP FL WIDTH (in)	TOP FL ECCENT (in)	SKEW ANGLE (degrees)	BEARING OFFSET (in)	FIXITY
1	Girder 1	-93.225	I	0.00	0.00	0.00	18.000	-19.50	T
2	Girder 2	-61.162	I	0.00	0.00	0.00	18.000	-19.50	T
3	Girder 3	-29.098	I	0.00	0.00	0.00	18.000	-19.50	T
4	Girder 4	2.965	I	0.00	0.00	0.00	18.000	-19.50	T
5	Girder 5	34.029	I	0.00	0.00	0.00	18.000	-19.50	T

SLAB 1 BEARING DATA:
BEARING HEIGHT: 12.000 (in)
BEARING FRICTION COEFFICIENT: 0.060

----- SLAB 2 DATA -----

SLAB: 2 SLAB LABEL: Slab 1-2
CONNECTED TO: CAPBEAM 1
SLAB LENGTH: 240.00 (ft)
SLAB WIDTH: 37.00 (ft)
SLAB THICK: 9.25 (in)
DESIGN SPEED: 70.0 (mph)
SLAB RADIUS: 3274.0 (ft)
HAUNCH THICK: 3.50 (in)
PIER SKEW: 18.000 (degrees)
NUMBER OF ROADWAYS: 1

SLAB 2 DIMENSIONS:
LEFT FASCIA: LEFT BARRIER: LEFT SIDEWALK:
WIDTH: 0.000 (in) WIDTH: 18.000 (in) WIDTH: 0.000 (ft)
HEIGHT: 32.000 (in) THICK: 0.000 (in)

ROADWAY 1 WIDTH = 34.000 (ft)

RIGHT SIDEWALK: RIGHT BARRIER: RIGHT FASCIA:
WIDTH: 0.000 (ft) WIDTH: 18.000 (in) WIDTH: 0.000 (in)
THICK: 0.000 (in) HEIGHT: 32.000 (in)

SLAB 2 CROSS SLOPE DATA:
NUMBER OF CROSS SLOPE VALUES: 2
SLOPE: -0.0400 SLOPE: -0.0400
DIST: 37.234 (ft) DIST: 61.221 (ft)

SLAB 2 GIRDER DATA:
NUMBER OF GIRDERS: 4 GIRDER DEPTH AND PROFILE DISTANCES:
SPAN LENGTH: BACK STATION: PIER: FORWARD STATION:
BACK STATION: 0.000 (ft) DEPTH: 0.00 (ft) DEPTH: 8.17 (ft) DEPTH: 8.17 (ft)
FWD STATION: 240.000 (ft) DISTANCE: 0.00 (ft) DISTANCE: 240.00 (ft)

GIRDER LOCATION DATA:

NO.	NAME	DISTANCE (ft)	GIRDER TYPE	BOT FL WIDTH (in)	TOP FL WIDTH (in)	TOP FL ECCENT (in)	SKEW ANGLE (degrees)	BEARING OFFSET (in)	FIXITY
1	Girder 1	-92.810	I	0.00	0.00	0.00	18.000	50.50	T
2	Girder 2	-83.120	I	0.00	0.00	0.00	18.000	50.50	T
3	Girder 3	-73.430	I	0.00	0.00	0.00	18.000	50.50	T
4	Girder 4	-63.740	I	0.00	0.00	0.00	18.000	50.50	T

SLAB 2 BEARING DATA:
BEARING HEIGHT: 40.000 (in)
BEARING FRICTION COEFFICIENT: 0.060

----- SLAB 3 DATA -----

SLAB: 3 SLAB LABEL: Slab 1-3
CONNECTED TO: CAPBEAM 1
SLAB LENGTH: 240.00 (ft)
SLAB WIDTH: 87.93 (ft)
SLAB THICK: 9.50 (in)
DESIGN SPEED: 70.0 (mph)
SLAB RADIUS: 3522.0 (ft)
HAUNCH THICK: 2.00 (in)
PIER SKEW: 18.000 (degrees)
NUMBER OF ROADWAYS: 1

SLAB 3 DIMENSIONS:
LEFT FASCIA: LEFT BARRIER: LEFT SIDEWALK:
WIDTH: 0.000 (in) WIDTH: 18.000 (in) WIDTH: 0.000 (ft)
HEIGHT: 32.000 (in) THICK: 0.000 (in)

ROADWAY 1 WIDTH = 84.929 (ft)

RIGHT SIDEWALK: RIGHT BARRIER: RIGHT FASCIA:
WIDTH: 0.000 (ft) WIDTH: 18.000 (in) WIDTH: 0.000 (in)
THICK: 0.000 (in) HEIGHT: 32.000 (in)

SLAB 3 CROSS SLOPE DATA:
NUMBER OF CROSS SLOPE VALUES: 2
SLOPE: -0.0400 SLOPE: -0.0400
DIST: 52.181 (ft) DIST: 38.000 (ft)

SLAB 3 GIRDER DATA:

```
    NUMBER OF GIRDERS:  9            GIRDER DEPTH AND PROFILE DISTANCES:
    SPAN LENGTH:                       BACK STATION:              PIER:                  FORWARD STATION:
      BACK STATION:    0.000 (ft)        DEPTH:      0.00 (ft)      DEPTH:  8.27 (ft)      DEPTH:      8.27 (ft)
      FWD STATION:   240.000 (ft)        DISTANCE:   0.00 (ft)                             DISTANCE: 240.00 (ft)

    GIRDER LOCATION DATA:
      NO.    NAME           DISTANCE   GIRDER   BOT FL   TOP FL   TOP FL    SKEW     BEARING   FIXITY
                                         TYPE    WIDTH    WIDTH    ECCENT    ANGLE     OFFSET
                              (ft)               (in)     (in)     (in)   (degrees)    (in)
        1  Girder 1          -49.440       I       0.00     0.00     0.00    18.000     50.50      T
        2  Girder 2          -37.671       I       0.00     0.00     0.00    18.000     50.50      T
        3  Girder 3          -25.897       I       0.00     0.00     0.00    18.000     50.50      T
        4  Girder 4          -14.118       I       0.00     0.00     0.00    18.000     50.50      T
        5  Girder 5           -7.655       I       0.00     0.00     0.00    18.000     50.50      T
        6  Girder 6           -1.192       I       0.00     0.00     0.00    18.000     50.50      T
        7  Girder 7           10.483       I       0.00     0.00     0.00    18.000     50.50      T
        8  Girder 8           22.162       I       0.00     0.00     0.00    18.000     50.50      T
        9  Girder 9           33.844       I       0.00     0.00     0.00    18.000     50.50      T

   SLAB  3 BEARING DATA:
     BEARING HEIGHT:  40.000 (in)
     BEARING FRICTION COEFFICIENT:    0.060

----- COLUMN  1 DATA ------------------------------------------------------------------------------------------

  COLUMN LINE OFFSET:  -77.896 (ft)
  NUMBER OF LEVELS:  1
  COLUMN FACE LOCATIONS:
    CAPBEAM: -TRAN:    84.00 (in)     +TRAN:    84.00 (in)
    FOOTING: -TRAN:    84.00 (in)     +TRAN:    84.00 (in)     -LONG:    72.00 (in)     +LONG:    72.00 (in)
  COLUMN:  1  LEVEL: 1
    NUMBER OF SEGMENTS:  1
    MAGNIFICATION FACTORS:    K-TRAN:  1.20         K-LONG:  2.10
    ECCENTRICITIES:             TRAN:  0.000 (ft)     LONG:  0.000 (ft)
    ROTATION ANGLE:      0.000 (degrees)
    SEGMENT  1 DIMENSIONS:
      SHAPE:   User Defined
      BEGIN SECTION:
        TOP ELEV:    675.500 (ft)
        TORSIONAL CONSTANT J:       0.437E+08 (in**4)
          NUMBER OF FACES: 18
            FACE  1: BEG  X:    -84.000 (in)     Y:    -60.000 (in)     Rad:      0.000 (in)
                     END  X:    -72.000 (in)     Y:    -60.000 (in)
            FACE  2: BEG  X:    -72.000 (in)     Y:    -60.000 (in)     Rad:      0.000 (in)
                     END  X:    -72.000 (in)     Y:    -72.000 (in)
            FACE  3: BEG  X:    -72.000 (in)     Y:    -72.000 (in)     Rad:      0.000 (in)
                     END  X:     72.000 (in)     Y:    -72.000 (in)
            FACE  4: BEG  X:     72.000 (in)     Y:    -72.000 (in)     Rad:      0.000 (in)
                     END  X:     72.000 (in)     Y:    -60.000 (in)
            FACE  5: BEG  X:     72.000 (in)     Y:    -60.000 (in)     Rad:      0.000 (in)
                     END  X:     84.000 (in)     Y:    -60.000 (in)
            FACE  6: BEG  X:     84.000 (in)     Y:    -60.000 (in)     Rad:      0.000 (in)
                     END  X:     84.000 (in)     Y:     60.000 (in)
            FACE  7: BEG  X:     84.000 (in)     Y:     60.000 (in)     Rad:      0.000 (in)
                     END  X:     72.000 (in)     Y:     60.000 (in)
            FACE  8: BEG  X:     72.000 (in)     Y:     60.000 (in)     Rad:      0.000 (in)
                     END  X:     72.000 (in)     Y:     72.000 (in)
            FACE  9: BEG  X:     72.000 (in)     Y:     72.000 (in)     Rad:      0.000 (in)
                     END  X:    -72.000 (in)     Y:     72.000 (in)
            FACE 10: BEG  X:    -72.000 (in)     Y:     72.000 (in)     Rad:      0.000 (in)
                     END  X:    -72.000 (in)     Y:     60.000 (in)
            FACE 11: BEG  X:    -72.000 (in)     Y:     60.000 (in)     Rad:      0.000 (in)
                     END  X:    -84.000 (in)     Y:     60.000 (in)
            FACE 12: BEG  X:    -84.000 (in)     Y:     60.000 (in)     Rad:      0.000 (in)
                     END  X:    -84.000 (in)     Y:    -60.000 (in)
            FACE 13: BEG  X:    -84.000 (in)     Y:    -60.000 (in)     Rad:      0.000 (in)
                     END  X:    -48.000 (in)     Y:    -48.000 (in)
            FACE 14: BEG  X:    -48.000 (in)     Y:    -48.000 (in)     Rad:      0.000 (in)
                     END  X:    -48.000 (in)     Y:     48.000 (in)
            FACE 15: BEG  X:    -48.000 (in)     Y:     48.000 (in)     Rad:      0.000 (in)
                     END  X:     48.000 (in)     Y:     48.000 (in)
            FACE 16: BEG  X:     48.000 (in)     Y:     48.000 (in)     Rad:      0.000 (in)
                     END  X:     48.000 (in)     Y:    -48.000 (in)
            FACE 17: BEG  X:     48.000 (in)     Y:    -48.000 (in)     Rad:      0.000 (in)
                     END  X:    -48.000 (in)     Y:    -48.000 (in)
            FACE 18: BEG  X:    -48.000 (in)     Y:    -48.000 (in)     Rad:      0.000 (in)
                     END  X:    -84.000 (in)     Y:    -60.000 (in)
      END SECTION:
        BOT ELEV:    603.000 (ft)
        TORSIONAL CONSTANT J:       0.437E+08 (in**4)
          NUMBER OF FACES: 18
            FACE  1: BEG  X:    -84.000 (in)     Y:    -60.000 (in)     Rad:      0.000 (in)
                     END  X:    -72.000 (in)     Y:    -60.000 (in)
            FACE  2: BEG  X:    -72.000 (in)     Y:    -60.000 (in)     Rad:      0.000 (in)
                     END  X:    -72.000 (in)     Y:    -72.000 (in)
            FACE  3: BEG  X:    -72.000 (in)     Y:    -72.000 (in)     Rad:      0.000 (in)
                     END  X:     72.000 (in)     Y:    -72.000 (in)
            FACE  4: BEG  X:     72.000 (in)     Y:    -72.000 (in)     Rad:      0.000 (in)
                     END  X:     72.000 (in)     Y:    -60.000 (in)
            FACE  5: BEG  X:     72.000 (in)     Y:    -60.000 (in)     Rad:      0.000 (in)
                     END  X:     84.000 (in)     Y:    -60.000 (in)
            FACE  6: BEG  X:     84.000 (in)     Y:    -60.000 (in)     Rad:      0.000 (in)
                     END  X:     84.000 (in)     Y:     60.000 (in)
            FACE  7: BEG  X:     84.000 (in)     Y:     60.000 (in)     Rad:      0.000 (in)
                     END  X:     72.000 (in)     Y:     60.000 (in)
```

```
        FACE  8: BEG  X:     72.000 (in)     Y:     60.000 (in)     Rad:      0.000 (in)
                  END  X:     72.000 (in)     Y:     72.000 (in)
        FACE  9: BEG  X:     72.000 (in)     Y:     72.000 (in)     Rad:      0.000 (in)
                  END  X:    -72.000 (in)     Y:     72.000 (in)
        FACE 10: BEG  X:    -72.000 (in)     Y:     72.000 (in)     Rad:      0.000 (in)
                  END  X:    -72.000 (in)     Y:     60.000 (in)
        FACE 11: BEG  X:    -72.000 (in)     Y:     60.000 (in)     Rad:      0.000 (in)
                  END  X:    -84.000 (in)     Y:     60.000 (in)
        FACE 12: BEG  X:    -84.000 (in)     Y:     60.000 (in)     Rad:      0.000 (in)
                  END  X:    -84.000 (in)     Y:    -60.000 (in)
        FACE 13: BEG  X:    -84.000 (in)     Y:    -60.000 (in)     Rad:      0.000 (in)
                  END  X:    -48.000 (in)     Y:    -48.000 (in)
        FACE 14: BEG  X:    -48.000 (in)     Y:    -48.000 (in)     Rad:      0.000 (in)
                  END  X:    -48.000 (in)     Y:     48.000 (in)
        FACE 15: BEG  X:    -48.000 (in)     Y:     48.000 (in)     Rad:      0.000 (in)
                  END  X:     48.000 (in)     Y:     48.000 (in)
        FACE 16: BEG  X:     48.000 (in)     Y:     48.000 (in)     Rad:      0.000 (in)
                  END  X:     48.000 (in)     Y:    -48.000 (in)
        FACE 17: BEG  X:     48.000 (in)     Y:    -48.000 (in)     Rad:      0.000 (in)
                  END  X:    -48.000 (in)     Y:    -48.000 (in)
        FACE 18: BEG  X:    -48.000 (in)     Y:    -48.000 (in)     Rad:      0.000 (in)
                  END  X:    -84.000 (in)     Y:    -60.000 (in)
REINFORCEMENT PARAMETERS:                   CONCRETE PARAMETERS:
  YIELD  STRENGTH:   60.0 (ksi)               FPC:      4.0 (ksi)
  CONTAINMENT BARS:   TYPE:   Tied            WEIGHT: 150.0 (pcf)
                      SIZE:   6               CTE:      0.0000060
  DISTANCE TO CL VERT BARS:   0.000 (in)
  PERCENT STEEL:       MIN:    1.00
                       MAX:    8.00

COLUMN REINFORCEMENT DATA:
  NUMBER OF REINFORCEMENT SECTIONS:  3
    SECTION  1 DATA:
      SHAPE: Rectangular           TRAN OFFSET:    0.00 (in)       TOP ELEV:   675.50 (ft)
      NUMBER OF FACES:  4          LONG OFFSET:    0.00 (in)       BOT ELEV:   603.00 (ft)
        FACE DATA:
          FACE NUMBER:            1            2            3            4
          TOP BEG X COORD:   -66.92 (in)   66.92 (in)   66.92 (in)  -66.92 (in)
          TOP BEG Y COORD:   -66.92 (in)  -66.92 (in)   66.92 (in)   66.92 (in)
          TOP END X COORD:    66.92 (in)   66.92 (in)  -66.92 (in)  -66.92 (in)
          TOP END Y COORD:   -66.92 (in)   66.92 (in)   66.92 (in)  -66.92 (in)
          TOP RADIUS:          0.00 (in)    0.00 (in)    0.00 (in)    0.00 (in)

          BOT BEG X COORD:   -66.92 (in)   66.92 (in)   66.92 (in)  -66.92 (in)
          BOT BEG Y COORD:   -66.92 (in)  -66.92 (in)   66.92 (in)   66.92 (in)
          BOT END X COORD:    66.92 (in)   66.92 (in)  -66.92 (in)  -66.92 (in)
          BOT END Y COORD:   -66.92 (in)   66.92 (in)   66.92 (in)  -66.92 (in)
          BOT RADIUS:          0.00 (in)    0.00 (in)    0.00 (in)    0.00 (in)

          BARSIZE:               11           11           11           11
          BARS/BUNDLE:            1            1            1            1
          MIN NUM BARS:          13           13           13           13
          MAX NUM BARS:          13           13           13           13
          BAR AT BEG:           Yes           No          Yes           No
          BAR AT END:           Yes           No          Yes           No

    SECTION  2 DATA:
      SHAPE: Square                TRAN OFFSET:    0.00 (in)       TOP ELEV:   675.50 (ft)
      NUMBER OF FACES:  4          LONG OFFSET:    0.00 (in)       BOT ELEV:   603.00 (ft)
        FACE DATA:
          FACE NUMBER:            1            2            3            4
          TOP BEG X COORD:   -53.08 (in)   53.08 (in)   53.08 (in)  -53.08 (in)
          TOP BEG Y COORD:   -53.08 (in)  -53.08 (in)   53.08 (in)   53.08 (in)
          TOP END X COORD:    53.08 (in)   53.08 (in)  -53.08 (in)  -53.08 (in)
          TOP END Y COORD:   -53.08 (in)   53.08 (in)   53.08 (in)  -53.08 (in)
          TOP RADIUS:          0.00 (in)    0.00 (in)    0.00 (in)    0.00 (in)

          BOT BEG X COORD:   -53.08 (in)   53.08 (in)   53.08 (in)  -53.08 (in)
          BOT BEG Y COORD:   -53.08 (in)  -53.08 (in)   53.08 (in)   53.08 (in)
          BOT END X COORD:    53.08 (in)   53.08 (in)  -53.08 (in)  -53.08 (in)
          BOT END Y COORD:   -53.08 (in)   53.08 (in)   53.08 (in)  -53.08 (in)
          BOT RADIUS:          0.00 (in)    0.00 (in)    0.00 (in)    0.00 (in)

          BARSIZE:               11           11           11           11
          BARS/BUNDLE:            1            1            1            1
          MIN NUM BARS:          11            9           11            9
          MAX NUM BARS:          11            9           11            9
          BAR AT BEG:           Yes           No          Yes           No
          BAR AT END:           Yes           No          Yes           No

    SECTION  3 DATA:
      SHAPE: Rectangular           TRAN OFFSET:    0.00 (in)       TOP ELEV:   675.50 (ft)
      NUMBER OF FACES:  4          LONG OFFSET:    0.00 (in)       BOT ELEV:   603.00 (ft)
        FACE DATA:
          FACE NUMBER:            1            2            3            4
          TOP BEG X COORD:   -79.05 (in)   79.05 (in)   79.05 (in)  -79.05 (in)
          TOP BEG Y COORD:   -55.05 (in)  -55.05 (in)   55.05 (in)   55.05 (in)
          TOP END X COORD:    79.05 (in)   79.05 (in)  -79.05 (in)  -79.05 (in)
          TOP END Y COORD:   -55.05 (in)   55.05 (in)   55.05 (in)  -55.05 (in)
          TOP RADIUS:          0.00 (in)    0.00 (in)    0.00 (in)    0.00 (in)

          BOT BEG X COORD:   -79.05 (in)   79.05 (in)   79.05 (in)  -79.05 (in)
          BOT BEG Y COORD:   -55.05 (in)  -55.05 (in)   55.05 (in)   55.05 (in)
          BOT END X COORD:    79.05 (in)   79.05 (in)  -79.05 (in)  -79.05 (in)
          BOT END Y COORD:   -55.05 (in)   55.05 (in)   55.05 (in)  -55.05 (in)
```

```
            BOT RADIUS:          0.00 (in)     0.00 (in)     0.00 (in)     0.00 (in)

            BARSIZE:                11            11            11            11
            BARS/BUNDLE:             1             1             1             1
            MIN NUM BARS:            0             6             0             6
            MAX NUM BARS:            0             6             0             6
            BAR AT BEG:             No           Yes            No           Yes
            BAR AT END:             No           Yes            No           Yes


----- COLUMN  2 DATA ------------------------------------------------------------------------------------------

  COLUMN LINE OFFSET:   17.604 (ft)
  NUMBER OF LEVELS:  1
  COLUMN FACE LOCATIONS:
    CAPBEAM: -TRAN:    84.00 (in)     +TRAN:    84.00 (in)
    FOOTING: -TRAN:    84.00 (in)     +TRAN:    84.00 (in)     -LONG:    72.00 (in)     +LONG:    72.00 (in)
  COLUMN:  2  LEVEL: 1
    NUMBER OF SEGMENTS:  1
    MAGNIFICATION FACTORS:    K-TRAN:  1.20         K-LONG:  2.10
    ECCENTRICITIES:             TRAN:  0.000 (ft)     LONG:  0.000 (ft)
    ROTATION ANGLE:      0.000 (degrees)
    SEGMENT  1 DIMENSIONS:
      SHAPE:   User Defined
      BEGIN SECTION:
        TOP ELEV:    675.500 (ft)
        TORSIONAL CONSTANT J:       0.437E+08 (in**4)
          NUMBER OF FACES: 18
            FACE  1: BEG  X:    -84.000 (in)     Y:    -60.000 (in)     Rad:      0.000 (in)
                     END  X:    -72.000 (in)     Y:    -60.000 (in)
            FACE  2: BEG  X:    -72.000 (in)     Y:    -60.000 (in)     Rad:      0.000 (in)
                     END  X:    -72.000 (in)     Y:    -72.000 (in)
            FACE  3: BEG  X:    -72.000 (in)     Y:    -72.000 (in)     Rad:      0.000 (in)
                     END  X:     72.000 (in)     Y:    -72.000 (in)
            FACE  4: BEG  X:     72.000 (in)     Y:    -72.000 (in)     Rad:      0.000 (in)
                     END  X:     72.000 (in)     Y:    -60.000 (in)
            FACE  5: BEG  X:     72.000 (in)     Y:    -60.000 (in)     Rad:      0.000 (in)
                     END  X:     84.000 (in)     Y:    -60.000 (in)
            FACE  6: BEG  X:     84.000 (in)     Y:    -60.000 (in)     Rad:      0.000 (in)
                     END  X:     84.000 (in)     Y:     60.000 (in)
            FACE  7: BEG  X:     84.000 (in)     Y:     60.000 (in)     Rad:      0.000 (in)
                     END  X:     72.000 (in)     Y:     60.000 (in)
            FACE  8: BEG  X:     72.000 (in)     Y:     60.000 (in)     Rad:      0.000 (in)
                     END  X:     72.000 (in)     Y:     72.000 (in)
            FACE  9: BEG  X:     72.000 (in)     Y:     72.000 (in)     Rad:      0.000 (in)
                     END  X:    -72.000 (in)     Y:     72.000 (in)
            FACE 10: BEG  X:    -72.000 (in)     Y:     72.000 (in)     Rad:      0.000 (in)
                     END  X:    -72.000 (in)     Y:     60.000 (in)
            FACE 11: BEG  X:    -72.000 (in)     Y:     60.000 (in)     Rad:      0.000 (in)
                     END  X:    -84.000 (in)     Y:     60.000 (in)
            FACE 12: BEG  X:    -84.000 (in)     Y:     60.000 (in)     Rad:      0.000 (in)
                     END  X:    -84.000 (in)     Y:    -60.000 (in)
            FACE 13: BEG  X:    -84.000 (in)     Y:    -60.000 (in)     Rad:      0.000 (in)
                     END  X:    -48.000 (in)     Y:    -48.000 (in)
            FACE 14: BEG  X:    -48.000 (in)     Y:    -48.000 (in)     Rad:      0.000 (in)
                     END  X:    -48.000 (in)     Y:     48.000 (in)
            FACE 15: BEG  X:    -48.000 (in)     Y:     48.000 (in)     Rad:      0.000 (in)
                     END  X:     48.000 (in)     Y:     48.000 (in)
            FACE 16: BEG  X:     48.000 (in)     Y:     48.000 (in)     Rad:      0.000 (in)
                     END  X:     48.000 (in)     Y:    -48.000 (in)
            FACE 17: BEG  X:     48.000 (in)     Y:    -48.000 (in)     Rad:      0.000 (in)
                     END  X:    -48.000 (in)     Y:    -48.000 (in)
            FACE 18: BEG  X:    -48.000 (in)     Y:    -48.000 (in)     Rad:      0.000 (in)
                     END  X:    -84.000 (in)     Y:    -60.000 (in)
      END SECTION:
        BOT ELEV:    603.000 (ft)
        TORSIONAL CONSTANT J:       0.437E+08 (in**4)
          NUMBER OF FACES: 18
            FACE  1: BEG  X:    -84.000 (in)     Y:    -60.000 (in)     Rad:      0.000 (in)
                     END  X:    -72.000 (in)     Y:    -60.000 (in)
            FACE  2: BEG  X:    -72.000 (in)     Y:    -60.000 (in)     Rad:      0.000 (in)
                     END  X:    -72.000 (in)     Y:    -72.000 (in)
            FACE  3: BEG  X:    -72.000 (in)     Y:    -72.000 (in)     Rad:      0.000 (in)
                     END  X:     72.000 (in)     Y:    -72.000 (in)
            FACE  4: BEG  X:     72.000 (in)     Y:    -72.000 (in)     Rad:      0.000 (in)
                     END  X:     72.000 (in)     Y:    -60.000 (in)
            FACE  5: BEG  X:     72.000 (in)     Y:    -60.000 (in)     Rad:      0.000 (in)
                     END  X:     84.000 (in)     Y:    -60.000 (in)
            FACE  6: BEG  X:     84.000 (in)     Y:    -60.000 (in)     Rad:      0.000 (in)
                     END  X:     84.000 (in)     Y:     60.000 (in)
            FACE  7: BEG  X:     84.000 (in)     Y:     60.000 (in)     Rad:      0.000 (in)
                     END  X:     72.000 (in)     Y:     60.000 (in)
            FACE  8: BEG  X:     72.000 (in)     Y:     60.000 (in)     Rad:      0.000 (in)
                     END  X:     72.000 (in)     Y:     72.000 (in)
            FACE  9: BEG  X:     72.000 (in)     Y:     72.000 (in)     Rad:      0.000 (in)
                     END  X:    -72.000 (in)     Y:     72.000 (in)
            FACE 10: BEG  X:    -72.000 (in)     Y:     72.000 (in)     Rad:      0.000 (in)
                     END  X:    -72.000 (in)     Y:     60.000 (in)
            FACE 11: BEG  X:    -72.000 (in)     Y:     60.000 (in)     Rad:      0.000 (in)
                     END  X:    -84.000 (in)     Y:     60.000 (in)
            FACE 12: BEG  X:    -84.000 (in)     Y:     60.000 (in)     Rad:      0.000 (in)
                     END  X:    -84.000 (in)     Y:    -60.000 (in)
            FACE 13: BEG  X:    -84.000 (in)     Y:    -60.000 (in)     Rad:      0.000 (in)
                     END  X:    -48.000 (in)     Y:    -48.000 (in)
            FACE 14: BEG  X:    -48.000 (in)     Y:    -48.000 (in)     Rad:      0.000 (in)
```

```
                END  X:    -48.000 (in)     Y:     48.000 (in)
        FACE 15: BEG  X:    -48.000 (in)     Y:     48.000 (in)     Rad:      0.000 (in)
                END  X:     48.000 (in)     Y:     48.000 (in)
        FACE 16: BEG  X:     48.000 (in)     Y:     48.000 (in)     Rad:      0.000 (in)
                END  X:     48.000 (in)     Y:    -48.000 (in)
        FACE 17: BEG  X:     48.000 (in)     Y:    -48.000 (in)     Rad:      0.000 (in)
                END  X:    -48.000 (in)     Y:    -48.000 (in)
        FACE 18: BEG  X:    -48.000 (in)     Y:    -48.000 (in)     Rad:      0.000 (in)
                END  X:    -84.000 (in)     Y:    -60.000 (in)
  REINFORCEMENT PARAMETERS:                  CONCRETE PARAMETERS:
    YIELD  STRENGTH:   60.0 (ksi)              FPC:      4.0 (ksi)
    CONTAINMENT BARS:   TYPE:   Tied           WEIGHT: 150.0 (pcf)
                        SIZE:   6              CTE:      0.0000060
    DISTANCE TO CL VERT BARS:   0.000 (in)
    PERCENT STEEL:       MIN:    1.00
                         MAX:    8.00

  COLUMN REINFORCEMENT DATA:
    NUMBER OF REINFORCEMENT SECTIONS:  3
      SECTION  1 DATA:
        SHAPE: Rectangular           TRAN OFFSET:    0.00 (in)       TOP ELEV:   675.50 (ft)
        NUMBER OF FACES:  4          LONG OFFSET:    0.00 (in)       BOT ELEV:   603.00 (ft)
          FACE DATA:
            FACE NUMBER:            1             2             3             4
            TOP BEG X COORD:   -66.92 (in)    66.92 (in)    66.92 (in)   -66.92 (in)
            TOP BEG Y COORD:   -66.92 (in)   -66.92 (in)    66.92 (in)    66.92 (in)
            TOP END X COORD:    66.92 (in)    66.92 (in)   -66.92 (in)   -66.92 (in)
            TOP END Y COORD:   -66.92 (in)    66.92 (in)    66.92 (in)   -66.92 (in)
            TOP RADIUS:          0.00 (in)     0.00 (in)     0.00 (in)     0.00 (in)

            BOT BEG X COORD:   -66.92 (in)    66.92 (in)    66.92 (in)   -66.92 (in)
            BOT BEG Y COORD:   -66.92 (in)   -66.92 (in)    66.92 (in)    66.92 (in)
            BOT END X COORD:    66.92 (in)    66.92 (in)   -66.92 (in)   -66.92 (in)
            BOT END Y COORD:   -66.92 (in)    66.92 (in)    66.92 (in)   -66.92 (in)
            BOT RADIUS:          0.00 (in)     0.00 (in)     0.00 (in)     0.00 (in)

            BARSIZE:               11            11            11            11
            BARS/BUNDLE:            1             1             1             1
            MIN NUM BARS:          13            13            13            13
            MAX NUM BARS:          13            13            13            13
            BAR AT BEG:           Yes            No           Yes            No
            BAR AT END:           Yes            No           Yes            No

      SECTION  2 DATA:
        SHAPE: Square                TRAN OFFSET:    0.00 (in)       TOP ELEV:   675.50 (ft)
        NUMBER OF FACES:  4          LONG OFFSET:    0.00 (in)       BOT ELEV:   603.00 (ft)
          FACE DATA:
            FACE NUMBER:            1             2             3             4
            TOP BEG X COORD:   -53.08 (in)    53.08 (in)    53.08 (in)   -53.08 (in)
            TOP BEG Y COORD:   -53.08 (in)   -53.08 (in)    53.08 (in)    53.08 (in)
            TOP END X COORD:    53.08 (in)    53.08 (in)   -53.08 (in)   -53.08 (in)
            TOP END Y COORD:   -53.08 (in)    53.08 (in)    53.08 (in)   -53.08 (in)
            TOP RADIUS:          0.00 (in)     0.00 (in)     0.00 (in)     0.00 (in)

            BOT BEG X COORD:   -53.08 (in)    53.08 (in)    53.08 (in)   -53.08 (in)
            BOT BEG Y COORD:   -53.08 (in)   -53.08 (in)    53.08 (in)    53.08 (in)
            BOT END X COORD:    53.08 (in)    53.08 (in)   -53.08 (in)   -53.08 (in)
            BOT END Y COORD:   -53.08 (in)    53.08 (in)    53.08 (in)   -53.08 (in)
            BOT RADIUS:          0.00 (in)     0.00 (in)     0.00 (in)     0.00 (in)

            BARSIZE:               11            11            11            11
            BARS/BUNDLE:            1             1             1             1
            MIN NUM BARS:          11             9            11             9
            MAX NUM BARS:          11             9            11             9
            BAR AT BEG:           Yes            No           Yes            No
            BAR AT END:           Yes            No           Yes            No

      SECTION  3 DATA:
        SHAPE: Rectangular           TRAN OFFSET:    0.00 (in)       TOP ELEV:   675.50 (ft)
        NUMBER OF FACES:  4          LONG OFFSET:    0.00 (in)       BOT ELEV:   603.00 (ft)
          FACE DATA:
            FACE NUMBER:            1             2             3             4
            TOP BEG X COORD:   -79.05 (in)    79.05 (in)    79.05 (in)   -79.05 (in)
            TOP BEG Y COORD:   -55.05 (in)   -55.05 (in)    55.05 (in)    55.05 (in)
            TOP END X COORD:    79.05 (in)    79.05 (in)   -79.05 (in)   -79.05 (in)
            TOP END Y COORD:   -55.05 (in)    55.05 (in)    55.05 (in)   -55.05 (in)
            TOP RADIUS:          0.00 (in)     0.00 (in)     0.00 (in)     0.00 (in)

            BOT BEG X COORD:   -79.05 (in)    79.05 (in)    79.05 (in)   -79.05 (in)
            BOT BEG Y COORD:   -55.05 (in)   -55.05 (in)    55.05 (in)    55.05 (in)
            BOT END X COORD:    79.05 (in)    79.05 (in)   -79.05 (in)   -79.05 (in)
            BOT END Y COORD:   -55.05 (in)    55.05 (in)    55.05 (in)   -55.05 (in)
            BOT RADIUS:          0.00 (in)     0.00 (in)     0.00 (in)     0.00 (in)

            BARSIZE:               11            11            11            11
            BARS/BUNDLE:            1             1             1             1
            MIN NUM BARS:           0             6             0             6
            MAX NUM BARS:           0             6             0             6
            BAR AT BEG:            No           Yes            No           Yes
            BAR AT END:            No           Yes            No           Yes


----- FOOTING  1 DATA ----------------------------------------------------------------------------------------

  FOOTING TYPE: Pile Footing
```

TOP OF FOOTING ELEVATION: 603.000 (ft) ROTATION ANGLE: 0.000 (degrees)
SHEAR DESIGN USING SIMPLIFIED PROCEDURE, AASHTO 5.8.3.4.1

REINFORCEMENT PARAMETERS:
YIELD STRENGTH: 60.0 (ksi)
MIN COVER: TOP: 3.0 (in)
BOTTOM: 3.0 (in)
SIDE: 3.0 (in)
STIRRUPS: SIZE: 0
NO.LEGS TOTAL: 0
EXPOSURE FACTOR: 1.000

CONCRETE PARAMETERS:
FPC: 4.0 (ksi)
WEIGHT: 150.0 (pcf)
CTE: 0.0000060

SOIL PARAMETERS:
SOIL ELEVATION: 628.000 (ft)
SOIL WEIGHT: 120.0 (pcf)
SOIL CAPACITY:
UNFACTORED: 0.000 (ksf)
FACTORED: 0.000 (ksf)

FOOTING DIMENSIONS:
TRANSVERSE: 38.000 (ft)
LONGITUDINAL: 38.000 (ft)
DEPTH: 7.000 (ft)

LOCATION OF FIRST COLUMN:
TRANSVERSE: 19.000 (ft)
LONGITUDINAL: 19.000 (ft)

REINFORCEMENT LAYER DATA:
BOTTOM MAT: Transverse bars on bottom at min cover of 3.000 (in) from bottom of footing.
Longitudinal Bars:
MIN SIZE: 11 MIN NUMBER OF BARS: 96
MAX SIZE: 11 MAX NUMBER OF BARS: 96
Transverse Bars:
MIN SIZE: 11 MIN NUMBER OF BARS: 84
MAX SIZE: 11 MAX NUMBER OF BARS: 84

TOP MAT: Longitudinal bars on top at min cover of 3.000 (in) from top of footing.
Transverse Bars:
MIN SIZE: 11 MIN NUMBER OF BARS: 38
MAX SIZE: 11 MAX NUMBER OF BARS: 38
Longitudinal Bars:
MIN SIZE: 11 MIN NUMBER OF BARS: 38
MAX SIZE: 11 MAX NUMBER OF BARS: 38

FOOTING SUPPORT FIXITY:

	DISPLACEMENT	ROTATION ABOUT
TRANSVERSE	Spring	Rigid
VERTICAL	Spring	Spring
LONGITUDINAL	Spring	Rigid

UNITS:

	1	2	3	4	5	6
1						
2		kips/in		kips/rad		
3						
4						
5		in-kips/in		in-kips/rad		
6						

FOOTING GLOBAL STIFFNESS MATRIX:

	DISPLACEMENT			ROTATION ABOUT		
	TRANS	VERT	LONG	TRANS	VERT	LONG
TRANS	4235.00	0.00000	0.00000	0.00000	0.00000	0.00000
VERT	0.00000	139276.	0.00000	0.00000	0.00000	0.00000
LONG	0.00000	0.00000	1381.00	0.00000	0.00000	0.00000
TRANS	0.00000	0.00000	0.00000	0.00000	0.00000	0.00000
VERT	0.00000	0.00000	0.00000	0.00000	0.100000E+09	0.00000
LONG	0.00000	0.00000	0.00000	0.00000	0.00000	0.00000

PILE DATA:

PILE NO.	LABEL	SHAPE	MATL CODE	STIFF CODE	EFF. DIA. (in)	TRAN Z (ft)	LONG X (ft)	VERT Y (ft)	BATTER (1H:__V)	ROTATION (degrees)	AXIAL CAPACITY SERV (kips)	AXIAL CAPACITY STR (kips)
1	R:1 C:1	HP14x117	0	1	8.8	-16.00	-16.00	4.42	0.0	90.0	0	0
2	R:1 C:3	HP14x117	0	1	8.8	0.00	-16.00	4.42	0.0	90.0	0	0
3	R:1 C:5	HP14x117	0	1	8.8	16.00	-16.00	4.42	0.0	90.0	0	0
4	R:2 C:2	HP14x117	0	1	8.8	-8.00	-8.00	4.42	0.0	90.0	0	0
5	R:2 C:4	HP14x117	0	1	8.8	8.00	-8.00	4.42	0.0	90.0	0	0
6	R:3 C:1	HP14x117	0	1	8.8	-16.00	0.00	4.42	0.0	90.0	0	0
7	R:3 C:5	HP14x117	0	1	8.8	16.00	0.00	4.42	0.0	90.0	0	0
8	R:4 C:2	HP14x117	0	1	8.8	-8.00	8.00	4.42	0.0	90.0	0	0
9	R:4 C:4	HP14x117	0	1	8.8	8.00	8.00	4.42	0.0	90.0	0	0
10	R:5 C:1	HP14x117	0	1	8.8	-16.00	16.00	4.42	0.0	90.0	0	0
11	R:5 C:3	HP14x117	0	1	8.8	0.00	16.00	4.42	0.0	90.0	0	0
12	R:5 C:5	HP14x117	0	1	8.8	16.00	16.00	4.42	0.0	90.0	0	0

PILE STIFFNESS COEFFICIENT TABLE DATA:

TABLE NO.	C(1) k/in	C(2) k/in	C(3) in-k/in	C(4) k/in	C(5) in-k/in	C(6) in-k/rad	C(7) k/rad	C(8) in-k/rad	C(9) k/rad	C(10) in-k/rad
1	10.0	10.0	0.00	10.0	0.00	0.00	0.00	0.00	0.00	0.00

----- FOOTING 2 DATA -----

FOOTING TYPE: Pile Footing
TOP OF FOOTING ELEVATION: 603.000 (ft) ROTATION ANGLE: 0.000 (degrees)
SHEAR DESIGN USING SIMPLIFIED PROCEDURE, AASHTO 5.8.3.4.1

REINFORCEMENT PARAMETERS:
YIELD STRENGTH: 60.0 (ksi)
MIN COVER: TOP: 3.0 (in)
BOTTOM: 3.0 (in)
SIDE: 3.0 (in)
STIRRUPS: SIZE: 0
NO.LEGS TOTAL: 0
EXPOSURE FACTOR: 1.000

CONCRETE PARAMETERS:
FPC: 4.0 (ksi)
WEIGHT: 150.0 (pcf)
CTE: 0.0000060

SOIL PARAMETERS:
SOIL ELEVATION: 628.000 (ft)
SOIL WEIGHT: 120.0 (pcf)
SOIL CAPACITY:
UNFACTORED: 0.000 (ksf)
FACTORED: 0.000 (ksf)

FOOTING DIMENSIONS:
TRANSVERSE: 38.000 (ft)
LONGITUDINAL: 38.000 (ft)
DEPTH: 7.000 (ft)

LOCATION OF FIRST COLUMN:
TRANSVERSE: 19.000 (ft)
LONGITUDINAL: 19.000 (ft)

REINFORCEMENT LAYER DATA:
BOTTOM MAT: Transverse bars on bottom at min cover of 3.000 (in) from bottom of footing.
Longitudinal Bars:
MIN SIZE: 11 MIN NUMBER OF BARS: 96
MAX SIZE: 11 MAX NUMBER OF BARS: 96
Transverse Bars:
MIN SIZE: 11 MIN NUMBER OF BARS: 84
MAX SIZE: 11 MAX NUMBER OF BARS: 84

TOP MAT: Longitudinal bars on top at min cover of 3.000 (in) from top of footing.
Transverse Bars:
MIN SIZE: 11 MIN NUMBER OF BARS: 38
MAX SIZE: 11 MAX NUMBER OF BARS: 38
Longitudinal Bars:
MIN SIZE: 11 MIN NUMBER OF BARS: 38
MAX SIZE: 11 MAX NUMBER OF BARS: 38

FOOTING SUPPORT FIXITY:

	DISPLACEMENT	ROTATION ABOUT
TRANSVERSE	Spring	Rigid
VERTICAL	Spring	Spring
LONGITUDINAL	Spring	Rigid

UNITS:

	1	2	3	4	5	6
1						
2	kips/in			kips/rad		
3						
4						
5	in-kips/in			in-kips/rad		
6						

FOOTING GLOBAL STIFFNESS MATRIX:

	DISPLACEMENT			ROTATION ABOUT		
	TRANS	VERT	LONG	TRANS	VERT	LONG
TRANS	4235.00	0.00000	0.00000	0.00000	0.00000	0.00000
VERT	0.00000	139276.	0.00000	0.00000	0.00000	0.00000
LONG	0.00000	0.00000	1381.00	0.00000	0.00000	0.00000
TRANS	0.00000	0.00000	0.00000	0.00000	0.00000	0.00000
VERT	0.00000	0.00000	0.00000	0.00000	0.100000E+09	0.00000
LONG	0.00000	0.00000	0.00000	0.00000	0.00000	0.00000

PILE DATA:

PILE NO.	LABEL	SHAPE	MATL CODE	STIFF CODE	EFF. DIA. (in)	TRAN Z (ft)	LONG X (ft)	VERT Y (ft)	BATTER (1H:__V)	ROTATION (degrees)	AXIAL CAPACITY SERV (kips)	AXIAL CAPACITY STR (kips)
1	R:1 C:1	HP14x117	0	1	8.8	-16.00	-16.00	4.42	0.0	90.0	0	0
2	R:1 C:3	HP14x117	0	1	8.8	0.00	-16.00	4.42	0.0	90.0	0	0
3	R:1 C:5	HP14x117	0	1	8.8	16.00	-16.00	4.42	0.0	90.0	0	0
4	R:2 C:2	HP14x117	0	1	8.8	-8.00	-8.00	4.42	0.0	90.0	0	0
5	R:2 C:4	HP14x117	0	1	8.8	8.00	-8.00	4.42	0.0	90.0	0	0
6	R:3 C:1	HP14x117	0	1	8.8	-16.00	0.00	4.42	0.0	90.0	0	0
7	R:3 C:5	HP14x117	0	1	8.8	16.00	0.00	4.42	0.0	90.0	0	0
8	R:4 C:2	HP14x117	0	1	8.8	-8.00	8.00	4.42	0.0	90.0	0	0
9	R:4 C:4	HP14x117	0	1	8.8	8.00	8.00	4.42	0.0	90.0	0	0
10	R:5 C:1	HP14x117	0	1	8.8	-16.00	16.00	4.42	0.0	90.0	0	0
11	R:5 C:3	HP14x117	0	1	8.8	0.00	16.00	4.42	0.0	90.0	0	0
12	R:5 C:5	HP14x117	0	1	8.8	16.00	16.00	4.42	0.0	90.0	0	0

PILE STIFFNESS COEFFICIENT TABLE DATA:

TABLE NO.	C(1) k/in	C(2) k/in	C(3) in-k/in	C(4) k/in	C(5) in-k/in	C(6) in-k/rad	C(7) k/rad	C(8) in-k/rad	C(9) k/rad	C(10) in-k/rad
1	10.0	10.0	0.00	10.0	0.00	0.00	0.00	0.00	0.00	0.00

----- AASHTO LRFD LOAD OPTIONS -----

AASHTO LIMIT STATES:

		LOAD TYPE:	INCLUDED	LOAD TYPE:	INCLUDED
STRENGTH I:	Yes	SELF WEIGHT OF PIER DC:	Yes	BUOYANCY:	No
STRENGTH II:	No	DC-DEAD LOAD SUPER:	Yes	STREAM FLOW:	No
STRENGTH III:	Yes	DW-DEAD LOAD SUPER:	Yes	ICE LOAD:	No
STRENGTH IV:	Yes	USER DEFINED LIVE LOAD:	No	WIND ON STRUCTURE:	Yes
STRENGTH V:	Yes	DESIGN TRUCK LOAD:	Yes	WIND ON LIVE LOAD:	Yes
SERVICE I:	Yes	DESIGN LANE LOAD:	Yes	SUPER TEMPERATURE RISE:	Yes
SERVICE III:	No	PERMIT TRUCK LOAD:	No	SUPER TEMPERATURE FALL:	Yes
FATIGUE:	Yes	FATIGUE TRUCK LOAD:	Yes	SHRINKAGE FROM SUPER:	No
EXTREME EVT I:	No	PEDESTRIAN LOADS:	No	SHRINKAGE OF SUBSTR:	Yes
EXTREME EVT II:	No	CENTRIFUGAL FORCE:	Yes	BRAKING FORCE:	Yes
		EARTHQUAKE:	No	COLLISION LOAD:	No

LIVE LOAD OPTIONS:
APPLY IMPACT: Yes FACTORS: 1.330 (Strength) 1.150 (Fatigue)
APPLY TRUCK LOAD ON MULTIPLE SLABS SIMULTANEOUSLY: Yes
BRAKING FORCE FACTOR × 3.6.4: 0.500
CENTRIFUGAL FORCE FACTOR × 3.6.3: 1.000

----- LOAD INPUT -----

SELF WEIGHT FACTORS:

CAP BEAMS: 1.000
COLUMNS: 1.320
FOOTINGS: 1.000

DC - DEAD LOAD GIRDER REACTIONS:

SLAB NO.	GIRDER LABEL	FORCES (kips) VERT	TRAN	LONG	MOMENTS (ft-k) VERT	TRAN	LONG
1	Girder 1	754.1					
1	Girder 2	880.1					
1	Girder 3	836.1					
1	Girder 4	792.0					
1	Girder 5	578.0					
2	Girder 1	276.4					
2	Girder 2	206.9					
2	Girder 3	202.5					
2	Girder 4	233.8					
3	Girder 1	236.0					
3	Girder 2	225.5					
3	Girder 3	221.6					
3	Girder 4	189.3					
3	Girder 5	183.6					
3	Girder 6	193.7					
3	Girder 7	212.1					
3	Girder 8	211.8					
3	Girder 9	196.5					

DW - DEAD LOAD GIRDER REACTIONS:

SLAB NO.	GIRDER LABEL	FORCES (kips) VERT	TRAN	LONG	MOMENTS (ft-k) VERT	TRAN	LONG
1	Girder 1	153.0					
1	Girder 2	198.0					
1	Girder 3	198.0					
1	Girder 4	198.0					
1	Girder 5	153.0					
2	Girder 1	53.3					
2	Girder 2	42.3					
2	Girder 3	40.9					
2	Girder 4	42.8					
3	Girder 1	57.3					
3	Girder 2	55.3					
3	Girder 3	56.3					
3	Girder 4	55.2					
3	Girder 5	51.9					
3	Girder 6	54.7					
3	Girder 7	56.7					
3	Girder 8	55.8					
3	Girder 9	50.7					

TRUCK LOAD REACTIONS (One Lane, No Impact):

SLAB NO.	GIRDER LABEL	FORCES (kips) VERT	TRAN	LONG	MOMENTS (ft-k) VERT	TRAN	LONG
1	Girder 1	0.0					
1	Girder 2	0.0					
1	Girder 3	0.0					
1	Girder 4	0.0					
1	Girder 5	0.0					
2	Girder 1	68.6					
2	Girder 2	68.6					
2	Girder 3	68.6					
2	Girder 4	68.6					
3	Girder 1	69.3					
3	Girder 2	69.3					
3	Girder 3	69.3					
3	Girder 4	69.3					
3	Girder 5	69.3					
3	Girder 6	69.3					
3	Girder 7	69.3					
3	Girder 8	69.3					
3	Girder 9	69.3					

LANE LOAD REACTIONS (One Lane, No Impact):

SLAB NO.	GIRDER LABEL	FORCES (kips) VERT	TRAN	LONG	MOMENTS (ft-k) VERT	TRAN	LONG
1	Girder 1	80.0					
1	Girder 2	80.0					
1	Girder 3	80.0					
1	Girder 4	80.0					
1	Girder 5	80.0					
2	Girder 1	62.9					
2	Girder 2	62.9					
2	Girder 3	62.9					
2	Girder 4	62.9					
3	Girder 1	70.5					
3	Girder 2	70.5					
3	Girder 3	70.5					
3	Girder 4	70.5					
3	Girder 5	70.5					

3	Girder 6	70.5						
3	Girder 7	70.5						
3	Girder 8	70.5						
3	Girder 9	70.5						

MAX FATIGUE TRUCK LOAD REACTIONS (One Lane, No Impact):

SLAB	GIRDER	FORCES (kips)			MOMENTS (ft-k)		
NO.	LABEL	VERT	TRAN	LONG	VERT	TRAN	LONG
1	Girder 1	0.0					
1	Girder 2	0.0					
1	Girder 3	0.0					
1	Girder 4	0.0					
1	Girder 5	0.0					
2	Girder 1	64.9					
2	Girder 2	64.9					
2	Girder 3	64.9					
2	Girder 4	64.9					
3	Girder 1	66.0					
3	Girder 2	66.0					
3	Girder 3	66.0					
3	Girder 4	66.0					
3	Girder 5	66.0					
3	Girder 6	66.0					
3	Girder 7	66.0					
3	Girder 8	66.0					
3	Girder 9	66.0					

MIN FATIGUE TRUCK LOAD REACTIONS (One Lane, No Impact):

SLAB	GIRDER	FORCES (kips)			MOMENTS (ft-k)		
NO.	LABEL	VERT	TRAN	LONG	VERT	TRAN	LONG
1	Girder 1	-10.0					
1	Girder 2	-10.0					
1	Girder 3	-10.0					
1	Girder 4	-10.0					
1	Girder 5	-10.0					
2	Girder 1	-4.4					
2	Girder 2	-4.4					
2	Girder 3	-4.4					
2	Girder 4	-4.4					
3	Girder 1	-4.7					
3	Girder 2	-4.7					
3	Girder 3	-4.7					
3	Girder 4	-4.7					
3	Girder 5	-4.7					
3	Girder 6	-4.7					
3	Girder 7	-4.7					
3	Girder 8	-4.7					
3	Girder 9	-4.7					

REACTIONS DUE TO TEMPERATURE RISE:

SLAB	GIRDER	FORCES (kips)			MOMENTS (ft-k)		
NO.	LABEL	VERT	TRAN	LONG	VERT	TRAN	LONG
1	Girder 1			1616.0			
1	Girder 2			1616.0			
1	Girder 3			1616.0			
1	Girder 4			1616.0			
1	Girder 5			1616.0			
2	Girder 1			-120.0			
2	Girder 2			-120.0			
2	Girder 3			-120.0			
2	Girder 4			-120.0			
3	Girder 1			-120.0			
3	Girder 2			-120.0			
3	Girder 3			-120.0			
3	Girder 4			-120.0			
3	Girder 5			-120.0			
3	Girder 6			-120.0			
3	Girder 7			-120.0			
3	Girder 8			-120.0			
3	Girder 9			-120.0			

REACTIONS DUE TO TEMPERATURE FALL:

SLAB	GIRDER	FORCES (kips)			MOMENTS (ft-k)		
NO.	LABEL	VERT	TRAN	LONG	VERT	TRAN	LONG
1	Girder 1			-2424.0			
1	Girder 2			-2424.0			
1	Girder 3			-2424.0			
1	Girder 4			-2424.0			
1	Girder 5			-2424.0			
2	Girder 1			120.0			
2	Girder 2			120.0			
2	Girder 3			120.0			
2	Girder 4			120.0			
3	Girder 1			120.0			
3	Girder 2			120.0			
3	Girder 3			120.0			
3	Girder 4			120.0			

3	Girder 5	120.0
3	Girder 6	120.0
3	Girder 7	120.0
3	Girder 8	120.0
3	Girder 9	120.0

SHRINKAGE STRAIN OF SUBSTRUCTURE: 0.00020

WIND LOAD DIRECTIONS:

DIRECTIONS (degrees)	APPLIED
0 (+Tran)	Yes
15	Yes
30	Yes
45	Yes
60	Yes
75	Yes
90 (+Long)	Yes
105	Yes
120	Yes
135	Yes
150	Yes
165	Yes
180 (-Tran)	Yes
195	Yes
210	Yes
225	Yes
240	Yes
255	Yes
270 (-Long)	Yes
285	Yes
300	Yes
315	Yes
330	Yes
345	Yes

EARTHQUAKE LOAD:

DIRECTION	FACTORS TRAN	FACTORS LONG	APPLIED
0	1.0	0.0	No
1	1.0	0.3	No
2	0.3	1.0	No
3	0.0	1.0	No
4	-0.3	1.0	No
5	-1.0	0.3	No
6	-1.0	0.0	No
7	-1.0	-0.3	No
8	-0.3	-1.0	No
9	0.0	-1.0	No
10	0.3	-1.0	No
11	1.0	-0.3	No

*** WARNING: SLAB 1 TOTAL APPLIED FORCE, 6363.0(kips) EXCEEDS FRICTIONAL CAPACITY, 302.4(kips). ***
EXCESS MUST BE REDISTRIBUTED TO ANOTHER SUBSTRUCTURE UNIT. LIMIT STATE: STR I, LOAD: 1

*** WARNING: SLAB 2 TOTAL APPLIED FORCE, -266.1(kips) EXCEEDS FRICTIONAL CAPACITY, 101.4(kips). ***
EXCESS MUST BE REDISTRIBUTED TO ANOTHER SUBSTRUCTURE UNIT. LIMIT STATE: STR I, LOAD: 1

*** WARNING: SLAB 3 TOTAL APPLIED FORCE, -642.2(kips) EXCEEDS FRICTIONAL CAPACITY, 217.4(kips). ***
EXCESS MUST BE REDISTRIBUTED TO ANOTHER SUBSTRUCTURE UNIT. LIMIT STATE: STR I, LOAD: 1

*** WARNING: SLAB 1 TOTAL APPLIED FORCE, 6363.0(kips) EXCEEDS FRICTIONAL CAPACITY, 302.4(kips). ***
EXCESS MUST BE REDISTRIBUTED TO ANOTHER SUBSTRUCTURE UNIT. LIMIT STATE: STR I, LOAD: 2

*** WARNING: SLAB 2 TOTAL APPLIED FORCE, -266.1(kips) EXCEEDS FRICTIONAL CAPACITY, 101.4(kips). ***
EXCESS MUST BE REDISTRIBUTED TO ANOTHER SUBSTRUCTURE UNIT. LIMIT STATE: STR I, LOAD: 2

*** WARNING: SLAB 3 TOTAL APPLIED FORCE, -642.2(kips) EXCEEDS FRICTIONAL CAPACITY, 217.4(kips). ***
EXCESS MUST BE REDISTRIBUTED TO ANOTHER SUBSTRUCTURE UNIT. LIMIT STATE: STR I, LOAD: 2

*** WARNING: SLAB 1 TOTAL APPLIED FORCE, 6363.0(kips) EXCEEDS FRICTIONAL CAPACITY, 302.4(kips). ***
EXCESS MUST BE REDISTRIBUTED TO ANOTHER SUBSTRUCTURE UNIT. LIMIT STATE: STR I, LOAD: 3

*** WARNING: SLAB 2 TOTAL APPLIED FORCE, -266.1(kips) EXCEEDS FRICTIONAL CAPACITY, 101.4(kips). ***
EXCESS MUST BE REDISTRIBUTED TO ANOTHER SUBSTRUCTURE UNIT. LIMIT STATE: STR I, LOAD: 3

*** WARNING: SLAB 3 TOTAL APPLIED FORCE, -642.2(kips) EXCEEDS FRICTIONAL CAPACITY, 217.4(kips). ***
EXCESS MUST BE REDISTRIBUTED TO ANOTHER SUBSTRUCTURE UNIT. LIMIT STATE: STR I, LOAD: 3

*** WARNING MESSAGES LIMITED TO TEN! ***

*** WARNING: SLAB 1 TOTAL APPLIED FORCE, 6399.9(kips) EXCEEDS FRICTIONAL CAPACITY, 302.4(kips). ***
EXCESS MUST BE REDISTRIBUTED TO ANOTHER SUBSTRUCTURE UNIT. LIMIT STATE: STIII, LOAD: 1

*** WARNING: SLAB 2 TOTAL APPLIED FORCE, -226.8(kips) EXCEEDS FRICTIONAL CAPACITY, 72.4(kips). ***
EXCESS MUST BE REDISTRIBUTED TO ANOTHER SUBSTRUCTURE UNIT. LIMIT STATE: STIII, LOAD: 1

*** WARNING: SLAB 3 TOTAL APPLIED FORCE, -541.8(kips) EXCEEDS FRICTIONAL CAPACITY, 147.3(kips). ***
EXCESS MUST BE REDISTRIBUTED TO ANOTHER SUBSTRUCTURE UNIT. LIMIT STATE: STIII, LOAD: 1

*** WARNING: SLAB 1 TOTAL APPLIED FORCE, 6363.0(kips) EXCEEDS FRICTIONAL CAPACITY, 266.8(kips). ***
EXCESS MUST BE REDISTRIBUTED TO ANOTHER SUBSTRUCTURE UNIT. LIMIT STATE: STIII, LOAD: 2

*** WARNING: SLAB 2 TOTAL APPLIED FORCE, -252.0(kips) EXCEEDS FRICTIONAL CAPACITY, 64.6(kips). ***
EXCESS MUST BE REDISTRIBUTED TO ANOTHER SUBSTRUCTURE UNIT. LIMIT STATE: STIII, LOAD: 2

*** WARNING: SLAB 3 TOTAL APPLIED FORCE,   -567.0(kips) EXCEEDS FRICTIONAL CAPACITY,   128.7(kips). ***
    EXCESS MUST BE REDISTRIBUTED TO ANOTHER SUBSTRUCTURE UNIT. LIMIT STATE: STIII, LOAD: 2

*** WARNING: SLAB 1 TOTAL APPLIED FORCE,   6326.1(kips) EXCEEDS FRICTIONAL CAPACITY,   302.4(kips). ***
    EXCESS MUST BE REDISTRIBUTED TO ANOTHER SUBSTRUCTURE UNIT. LIMIT STATE: STIII, LOAD: 3

*** WARNING: SLAB 2 TOTAL APPLIED FORCE,   -277.2(kips) EXCEEDS FRICTIONAL CAPACITY,   72.4(kips). ***
    EXCESS MUST BE REDISTRIBUTED TO ANOTHER SUBSTRUCTURE UNIT. LIMIT STATE: STIII, LOAD: 3

*** WARNING: SLAB 3 TOTAL APPLIED FORCE,   -592.2(kips) EXCEEDS FRICTIONAL CAPACITY,   147.3(kips). ***
    EXCESS MUST BE REDISTRIBUTED TO ANOTHER SUBSTRUCTURE UNIT. LIMIT STATE: STIII, LOAD: 3

*** WARNING MESSAGES LIMITED TO TEN! ***

*** WARNING: SLAB 1 TOTAL APPLIED FORCE,   6363.0(kips) EXCEEDS FRICTIONAL CAPACITY,   362.9(kips). ***
    EXCESS MUST BE REDISTRIBUTED TO ANOTHER SUBSTRUCTURE UNIT. LIMIT STATE: STRIV, LOAD: 1

*** WARNING: SLAB 2 TOTAL APPLIED FORCE,   -252.0(kips) EXCEEDS FRICTIONAL CAPACITY,   86.9(kips). ***
    EXCESS MUST BE REDISTRIBUTED TO ANOTHER SUBSTRUCTURE UNIT. LIMIT STATE: STRIV, LOAD: 1

*** WARNING: SLAB 3 TOTAL APPLIED FORCE,   -567.0(kips) EXCEEDS FRICTIONAL CAPACITY,   176.7(kips). ***
    EXCESS MUST BE REDISTRIBUTED TO ANOTHER SUBSTRUCTURE UNIT. LIMIT STATE: STRIV, LOAD: 1

*** WARNING: SLAB 1 TOTAL APPLIED FORCE,   -4242.0(kips) EXCEEDS FRICTIONAL CAPACITY,   362.9(kips). ***
    EXCESS MUST BE REDISTRIBUTED TO ANOTHER SUBSTRUCTURE UNIT. LIMIT STATE: STRIV, LOAD: 2

*** WARNING: SLAB 2 TOTAL APPLIED FORCE,   252.0(kips) EXCEEDS FRICTIONAL CAPACITY,   86.9(kips). ***
    EXCESS MUST BE REDISTRIBUTED TO ANOTHER SUBSTRUCTURE UNIT. LIMIT STATE: STRIV, LOAD: 2

*** WARNING: SLAB 3 TOTAL APPLIED FORCE,   567.0(kips) EXCEEDS FRICTIONAL CAPACITY,   176.7(kips). ***
    EXCESS MUST BE REDISTRIBUTED TO ANOTHER SUBSTRUCTURE UNIT. LIMIT STATE: STRIV, LOAD: 2

*** WARNING: SLAB 1 TOTAL APPLIED FORCE,   6363.0(kips) EXCEEDS FRICTIONAL CAPACITY,   448.0(kips). ***
    EXCESS MUST BE REDISTRIBUTED TO ANOTHER SUBSTRUCTURE UNIT. LIMIT STATE: STRIV, LOAD: 3

*** WARNING: SLAB 2 TOTAL APPLIED FORCE,   -252.0(kips) EXCEEDS FRICTIONAL CAPACITY,   103.8(kips). ***
    EXCESS MUST BE REDISTRIBUTED TO ANOTHER SUBSTRUCTURE UNIT. LIMIT STATE: STRIV, LOAD: 3

*** WARNING: SLAB 3 TOTAL APPLIED FORCE,   -567.0(kips) EXCEEDS FRICTIONAL CAPACITY,   223.4(kips). ***
    EXCESS MUST BE REDISTRIBUTED TO ANOTHER SUBSTRUCTURE UNIT. LIMIT STATE: STRIV, LOAD: 3

*** WARNING MESSAGES LIMITED TO TEN! ***

*** WARNING: SLAB 1 TOTAL APPLIED FORCE,   6377.4(kips) EXCEEDS FRICTIONAL CAPACITY,   302.4(kips). ***
    EXCESS MUST BE REDISTRIBUTED TO ANOTHER SUBSTRUCTURE UNIT. LIMIT STATE: STR V, LOAD: 1

*** WARNING: SLAB 2 TOTAL APPLIED FORCE,   -252.7(kips) EXCEEDS FRICTIONAL CAPACITY,   94.8(kips). ***
    EXCESS MUST BE REDISTRIBUTED TO ANOTHER SUBSTRUCTURE UNIT. LIMIT STATE: STR V, LOAD: 1

*** WARNING: SLAB 3 TOTAL APPLIED FORCE,   -614.8(kips) EXCEEDS FRICTIONAL CAPACITY,   201.4(kips). ***
    EXCESS MUST BE REDISTRIBUTED TO ANOTHER SUBSTRUCTURE UNIT. LIMIT STATE: STR V, LOAD: 1

*** WARNING: SLAB 1 TOTAL APPLIED FORCE,   6377.4(kips) EXCEEDS FRICTIONAL CAPACITY,   302.4(kips). ***
    EXCESS MUST BE REDISTRIBUTED TO ANOTHER SUBSTRUCTURE UNIT. LIMIT STATE: STR V, LOAD: 2

*** WARNING: SLAB 2 TOTAL APPLIED FORCE,   -252.7(kips) EXCEEDS FRICTIONAL CAPACITY,   94.8(kips). ***
    EXCESS MUST BE REDISTRIBUTED TO ANOTHER SUBSTRUCTURE UNIT. LIMIT STATE: STR V, LOAD: 2

*** WARNING: SLAB 3 TOTAL APPLIED FORCE,   -614.8(kips) EXCEEDS FRICTIONAL CAPACITY,   201.4(kips). ***
    EXCESS MUST BE REDISTRIBUTED TO ANOTHER SUBSTRUCTURE UNIT. LIMIT STATE: STR V, LOAD: 2

*** WARNING: SLAB 1 TOTAL APPLIED FORCE,   6377.4(kips) EXCEEDS FRICTIONAL CAPACITY,   302.4(kips). ***
    EXCESS MUST BE REDISTRIBUTED TO ANOTHER SUBSTRUCTURE UNIT. LIMIT STATE: STR V, LOAD: 3

*** WARNING: SLAB 2 TOTAL APPLIED FORCE,   -252.7(kips) EXCEEDS FRICTIONAL CAPACITY,   94.8(kips). ***
    EXCESS MUST BE REDISTRIBUTED TO ANOTHER SUBSTRUCTURE UNIT. LIMIT STATE: STR V, LOAD: 3

*** WARNING: SLAB 3 TOTAL APPLIED FORCE,   -614.8(kips) EXCEEDS FRICTIONAL CAPACITY,   201.4(kips). ***
    EXCESS MUST BE REDISTRIBUTED TO ANOTHER SUBSTRUCTURE UNIT. LIMIT STATE: STR V, LOAD: 3

*** WARNING MESSAGES LIMITED TO TEN! ***

*** WARNING: SLAB 1 TOTAL APPLIED FORCE,   12131.2(kips) EXCEEDS FRICTIONAL CAPACITY,   230.4(kips). ***
EXCESS MUST BE REDISTRIBUTED TO ANOTHER SUBSTRUCTURE UNIT. LIMIT STATE: SER I, LOAD: 1

*** WARNING: SLAB 2 TOTAL APPLIED FORCE,   -479.7(kips) EXCEEDS FRICTIONAL CAPACITY,   71.0(kips). ***
EXCESS MUST BE REDISTRIBUTED TO ANOTHER SUBSTRUCTURE UNIT. LIMIT STATE: SER I, LOAD: 1

*** WARNING: SLAB 3 TOTAL APPLIED FORCE,   -1112.9(kips) EXCEEDS FRICTIONAL CAPACITY,   150.4(kips). ***
EXCESS MUST BE REDISTRIBUTED TO ANOTHER SUBSTRUCTURE UNIT. LIMIT STATE: SER I, LOAD: 1

*** WARNING: SLAB 1 TOTAL APPLIED FORCE,   12131.2(kips) EXCEEDS FRICTIONAL CAPACITY,   230.4(kips). ***
EXCESS MUST BE REDISTRIBUTED TO ANOTHER SUBSTRUCTURE UNIT. LIMIT STATE: SER I, LOAD: 2

*** WARNING: SLAB 2 TOTAL APPLIED FORCE,   -479.7(kips) EXCEEDS FRICTIONAL CAPACITY,   71.0(kips). ***
EXCESS MUST BE REDISTRIBUTED TO ANOTHER SUBSTRUCTURE UNIT. LIMIT STATE: SER I, LOAD: 2

*** WARNING: SLAB 3 TOTAL APPLIED FORCE,   -1112.9(kips) EXCEEDS FRICTIONAL CAPACITY,   150.4(kips). ***
EXCESS MUST BE REDISTRIBUTED TO ANOTHER SUBSTRUCTURE UNIT. LIMIT STATE: SER I, LOAD: 2

*** WARNING: SLAB 1 TOTAL APPLIED FORCE,   12131.2(kips) EXCEEDS FRICTIONAL CAPACITY,   230.4(kips). ***
EXCESS MUST BE REDISTRIBUTED TO ANOTHER SUBSTRUCTURE UNIT. LIMIT STATE: SER I, LOAD: 3

*** WARNING: SLAB 2 TOTAL APPLIED FORCE,   -479.7(kips) EXCEEDS FRICTIONAL CAPACITY,   71.0(kips). ***
EXCESS MUST BE REDISTRIBUTED TO ANOTHER SUBSTRUCTURE UNIT. LIMIT STATE: SER I, LOAD: 3

*** WARNING: SLAB 3 TOTAL APPLIED FORCE,   -1112.9(kips) EXCEEDS FRICTIONAL CAPACITY,   150.4(kips). ***
EXCESS MUST BE REDISTRIBUTED TO ANOTHER SUBSTRUCTURE UNIT. LIMIT STATE: SER I, LOAD: 3

*** WARNING MESSAGES LIMITED TO TEN! ***

----- NUMBER OF LOAD COMBINATIONS ----------

LRFD DESIGN OF FOOTING:
STRENGTH LIMIT STATE   I, NUMBER OF LOAD COMBINATIONS =   1152
STRENGTH LIMIT STATE III, NUMBER OF LOAD COMBINATIONS =   192
STRENGTH LIMIT STATE IV, NUMBER OF LOAD COMBINATIONS =   8
STRENGTH LIMIT STATE   V, NUMBER OF LOAD COMBINATIONS = 27648
SERVICE LIMIT STATE   I, NUMBER OF LOAD COMBINATIONS = 13824
FATIGUE LIMIT STATE,   NUMBER OF LOAD COMBINATIONS =   204

----- FOOTING 1 DESIGN RESULTS ----------

LRFD FACTORED REACTIONS AT TOP OF FOOTINGS:

FOOT	COL	AASHTO	LOAD	FORCES			MOMENTS		
NO.	NO.	LIMIT STATE	CASE	AXIAL P (kips)	TRAN HT (kips)	LONG HL (kips)	TRAN MT (ft-k)	LONG ML (ft-k)	TORSION (ft-k)
1	1	STR I	1	-9022	-489	0	-4900	-7270	161
1	1	STR I	6	-9568	-532	-33	-5448	-2977	-136
1	1	STR I	150	-9584	-713	29	-15697	-8262	-86
1	1	STR I	294	-10756	-636	-45	-7140	-3047	-93
1	1	STR I	330	-10853	-721	-77	-11473	-504	-71
1	1	STR I	333	-9789	-537	-83	-5887	1238	584
1	1	STR I	366	-10756	-636	-45	-7140	-3047	-93
1	1	STR I	437	-9931	-763	88	-16506	-10924	-107
1	1	STR I	438	-10777	-823	41	-17711	-10262	-103
1	1	STR I	474	-10874	-907	10	-22044	-7748	-84
1	1	STR I	481	-10833	-925	9	-22798	-7679	-106
1	1	STR I	485	-10546	-964	25	-22241	-8190	-207
1	1	STR I	583	-5782	-150	-20	1899	-2117	168
1	1	STR I	789	-5390	-420	20	-10046	-4257	-103
1	1	STIII	1177	-8061	-405	106	-4118	-12024	-225
1	1	STIII	1201	-9231	-326	1	4596	-4685	31
1	1	STIII	1210	-9443	-596	-22	-8180	-2042	220
1	1	STIII	1212	-9521	-686	-92	-12630	2942	251
1	1	STIII	1216	-9518	-677	-173	-12269	8187	194
1	1	STIII	1217	-9491	-642	-175	-10616	8199	166
1	1	STIII	1229	-9295	-572	176	-8704	-17548	-161
1	1	STIII	1235	-9519	-845	56	-21855	-8494	-2
1	1	STIII	1237	-9555	-887	-1	-23916	-4602	-1
1	1	STIII	1238	-9360	-884	-31	-25202	-2061	-83
1	1	STIII	1250	-4394	23	69	11867	-6975	-149
1	1	STRIV	1345	-9831	-511	-56	-4393	73	114
1	1	STRIV	1346	-9854	-699	55	-15046	-8775	-125
1	1	STRIV	1347	-11020	-615	-67	-6084	3	156
1	1	STRIV	1348	-11047	-810	68	-17060	-10775	-143
1	1	STRIV	1350	-9854	-699	55	-15046	-8775	-125
1	1	STRIV	1352	-11047	-810	68	-17060	-10775	-143

1	1	STR V	1353	-8770	-401	13	-972	-7462	104	
1	1	STR V	2690	-9353	-599	-53	-9584	-696	-38	
1	1	STR V	4850	-9282	-680	33	-15022	-7992	-125	
1	1	STR V	8414	-10372	-531	-15	-2690	-4877	-84	
1	1	STR V	8486	-10372	-531	-15	-2690	-4877	-84	
1	1	STR V	10466	-10573	-735	-111	-12915	2446	4	
1	1	STR V	10469	-9753	-593	-116	-8606	3790	509	
1	1	STR V	12157	-9753	-687	121	-13085	-13410	-145	
1	1	STR V	12302	-10418	-746	84	-14644	-12804	-130	
1	1	STR V	13209	-10553	-927	14	-23620	-7413	-64	
1	1	STR V	13634	-10608	-937	-12	-24239	-5560	-40	
1	1	STR V	13641	-10576	-951	-13	-24821	-5507	-57	
1	1	STR V	13645	-10355	-981	-1	-24391	-5901	-135	
1	1	STR V	13713	-10576	-951	-13	-24821	-5507	-57	
1	1	STR V	15327	-5613	-91	10	5378	-4148	100	
1	1	STR V	19997	-5408	-446	30	-11359	-4743	-64	
1	1	SER I	29151	-6422	-84	-5	8965	-3074	95	
1	1	SER I	33965	-6308	-556	24	-15466	-4736	-63	
1	1	SER I	36062	-7690	-261	-10	5580	-3599	-61	
1	1	SER I	38117	-7264	-314	-85	922	2825	364	
1	1	SER I	38186	-7843	-414	-82	-2118	1877	8	
1	1	SER I	39805	-7255	-561	89	-12839	-9877	-111	
1	1	SER I	39806	-7716	-594	63	-13495	-9517	-109	
1	1	SER I	41001	-7837	-748	3	-21123	-4864	-42	
1	1	SER I	41289	-7846	-757	-10	-21604	-3988	-40	
1	1	SER I	41293	-7690	-779	-1	-21301	-4266	-95	
1	1	SER I	41361	-7846	-757	-10	-21604	-3988	-40	
1	1	FATGE	42826	-6243	-399	0	-7079	-2828	7	
1	1	FATGE	42851	-6266	-412	-1	-7555	-2796	-4	
1	1	FATGE	42928	-7000	-467	0	-8255	-3486	15	
1	1	FATGE	42937	-7059	-467	0	-8495	-3560	-6	
1	1	FATGE	42952	-7032	-482	-1	-8706	-3467	0	
1	1	FATGE	42960	-7061	-469	-2	-8621	-3442	7	
1	1	FATGE	42963	-7005	-473	-2	-8584	-3294	18	
1	1	FATGE	42965	-7004	-474	-2	-8584	-3293	18	
1	1	FATGE	42977	-7000	-474	-1	-8572	-3367	2	

----- PILE FORCE SUMMARY -----

LRFD MAX PILE FORCE FT SUMMARY:

FOOT NO.	PILE NO.	AASHTO LIMIT STATE	LOAD CASE	LRFD MAX FORCE FT: AXIAL FV (kips)	TRAN FT (kips)	LONG FL (kips)	ALLOW FV (kips)	(NG)	LRFD CORRES MOMENT: TRAN MT (ft-k)	LONG ML (ft-k)	TOR (ft-k)
1	3	STR I	583	871.1	-11.7	-1.0	0.0	NG	0.0	0.0	0.0
1	12	STIII	1250	934.4	2.6	5.1	0.0	NG	0.0	0.0	0.0
1	1	STRIV	1345	1539.1	-42.1	-5.1	0.0	NG	0.0	0.0	0.0
1	3	STR V	15327	871.1	-7.1	1.3	0.0	NG	0.0	0.0	0.0
1	3	SER I	29151	1047.0	-6.6	0.1	0.0	NG	0.0	0.0	0.0
1	1	FATGE	42826	1036.3	-33.2	0.0	0.0	NG	0.0	0.0	0.0

LRFD MAX PILE FORCE FL SUMMARY:

FOOT NO.	PILE NO.	AASHTO LIMIT STATE	LOAD CASE	LRFD MAX FORCE FL: AXIAL FV (kips)	TRAN FT (kips)	LONG FL (kips)	ALLOW FV (kips)	(NG)	LRFD CORRES MOMENT: TRAN MT (ft-k)	LONG ML (ft-k)	TOR (ft-k)
1	10	STR I	437	1730.5	-63.1	7.8	0.0	NG	0.0	0.0	0.0
1	10	STIII	1229	1663.0	-46.9	15.4	0.0	NG	0.0	0.0	0.0
1	10	STRIV	1348	1861.4	-66.9	6.3	0.0	NG	0.0	0.0	0.0
1	10	STR V	12157	1705.7	-56.6	10.7	0.0	NG	0.0	0.0	0.0
1	10	SER I	39805	1295.4	-46.3	7.9	0.0	NG	0.0	0.0	0.0
1	12	FATGE	42928	984.7	-39.0	0.1	0.0	NG	0.0	0.0	0.0

LRFD MAX PILE FORCE FV SUMMARY:

FOOT NO.	PILE NO.	AASHTO LIMIT STATE	LOAD CASE	LRFD MAX FORCE FV: AXIAL FV (kips)	TRAN FT (kips)	LONG FL (kips)	ALLOW FV (kips)	(NG)	LRFD CORRES MOMENT: TRAN MT (ft-k)	LONG ML (ft-k)	TOR (ft-k)
1	10	STR I	481	1836.2	-76.6	1.2	0.0	NG	0.0	0.0	0.0
1	10	STIII	1235	1724.2	-70.4	4.7	0.0	NG	0.0	0.0	0.0
1	10	STRIV	1348	1861.4	-66.9	6.3	0.0	NG	0.0	0.0	0.0
1	10	STR V	13209	1818.1	-77.0	1.5	0.0	NG	0.0	0.0	0.0
1	10	SER I	41001	1377.0	-62.1	0.4	0.0	NG	0.0	0.0	0.0
1	10	FATGE	42960	1176.9	-39.1	-0.2	0.0	NG	0.0	0.0	0.0

LRFD MAX PILE MOMENT MT SUMMARY:

FOOT NO.	PILE NO.	AASHTO LIMIT STATE	LOAD CASE	LRFD CORRES FORCE: AXIAL FV (kips)	TRAN FT (kips)	LONG FL (kips)	ALLOW FV (kips)	(NG)	LRFD MAX MOMENT MT: TRAN MT (ft-k)	LONG ML (ft-k)	TOR (ft-k)
1	10	STR I	481	1836.2	-76.6	1.2	0.0	NG	0.0	0.0	0.0
1	10	STIII	1235	1724.2	-70.4	4.7	0.0	NG	0.0	0.0	0.0
1	10	STRIV	1348	1861.4	-66.9	6.3	0.0	NG	0.0	0.0	0.0
1	10	STR V	13209	1818.1	-77.0	1.5	0.0	NG	0.0	0.0	0.0
1	10	SER I	41001	1377.0	-62.1	0.4	0.0	NG	0.0	0.0	0.0
1	10	FATGE	42960	1176.9	-39.1	-0.2	0.0	NG	0.0	0.0	0.0

LRFD MAX PILE MOMENT ML SUMMARY:

FOOT NO.	PILE NO.	AASHTO LIMIT	LOAD CASE	LRFD CORRES FORCE: AXIAL FV	TRAN FT	LONG FL	ALLOW FV	(NG)	LRFD MAX MOMENT ML: TRAN MT	LONG ML	TOR

		STATE		(kips)	(kips)	(kips)	(kips)			(ft-k)	(ft-k)	(ft-k)
1	10	STR I	481	1836.2	-76.6	1.2	0.0	NG		0.0	0.0	0.0
1	10	STIII	1235	1724.2	-70.4	4.7	0.0	NG		0.0	0.0	0.0
1	10	STRIV	1348	1861.4	-66.9	6.3	0.0	NG		0.0	0.0	0.0
1	10	STR V	13209	1818.1	-77.0	1.5	0.0	NG		0.0	0.0	0.0
1	10	SER I	41001	1377.0	-62.1	0.4	0.0	NG		0.0	0.0	0.0
1	10	FATGE	42960	1176.9	-39.1	-0.2	0.0	NG		0.0	0.0	0.0

LRFD MAX PILE MOMENT TOR SUMMARY:

FOOT NO.	PILE NO.	AASHTO LIMIT STATE	LOAD CASE	CORRES FORCE AXIAL (kips)	CORRES FORCE TRAN FT (kips)	CORRES FORCE LONG FL (kips)	CORRES FORCE ALLOW FV (kips)	(NG)	MAX MOMENT TOR TRAN MT (ft-k)	MAX MOMENT TOR LONG ML (ft-k)	MAX MOMENT TOR TOR (ft-k)
1	10	STR I	481	1836.2	-76.6	1.2	0.0	NG	0.0	0.0	0.0
1	10	STIII	1235	1724.2	-70.4	4.7	0.0	NG	0.0	0.0	0.0
1	10	STRIV	1348	1861.4	-66.9	6.3	0.0	NG	0.0	0.0	0.0
1	10	STR V	13209	1818.1	-77.0	1.5	0.0	NG	0.0	0.0	0.0
1	10	SER I	41001	1377.0	-62.1	0.4	0.0	NG	0.0	0.0	0.0
1	10	FATGE	42960	1176.9	-39.1	-0.2	0.0	NG	0.0	0.0	0.0

LRFD MIN PILE FORCE FT SUMMARY:

FOOT NO.	PILE NO.	AASHTO LIMIT STATE	LOAD CASE	MIN FORCE FT AXIAL (kips)	MIN FORCE FT TRAN FT (kips)	MIN FORCE FT LONG FL (kips)	MIN FORCE FT ALLOW FV (kips)	(NG)	CORRES MOMENT TRAN MT (ft-k)	CORRES MOMENT LONG ML (ft-k)	CORRES MOMENT TOR (ft-k)
1	1	STR I	485	1665.8	-81.3	3.0	0.0	NG	0.0	0.0	0.0
1	1	STIII	1238	1647.2	-74.0	-2.2	0.0	NG	0.0	0.0	0.0
1	1	STRIV	1348	1663.6	-68.1	6.3	0.0	NG	0.0	0.0	0.0
1	1	STR V	13645	1691.2	-82.4	0.6	0.0	NG	0.0	0.0	0.0
1	1	SER I	41293	1286.1	-65.3	0.4	0.0	NG	0.0	0.0	0.0
1	10	FATGE	42952	1176.0	-40.1	0.0	0.0	NG	0.0	0.0	0.0

LRFD MIN PILE FORCE FL SUMMARY:

FOOT NO.	PILE NO.	AASHTO LIMIT STATE	LOAD CASE	MIN FORCE FL AXIAL (kips)	MIN FORCE FL TRAN FT (kips)	MIN FORCE FL LONG FL (kips)	MIN FORCE FL ALLOW FV (kips)	(NG)	CORRES MOMENT TRAN MT (ft-k)	CORRES MOMENT LONG ML (ft-k)	CORRES MOMENT TOR (ft-k)
1	1	STR I	333	1528.2	-42.1	-9.5	0.0	NG	0.0	0.0	0.0
1	1	STIII	1217	1615.6	-52.7	-15.4	0.0	NG	0.0	0.0	0.0
1	1	STRIV	1347	1657.2	-50.6	-6.3	0.0	NG	0.0	0.0	0.0
1	1	STR V	10469	1575.9	-47.2	-11.9	0.0	NG	0.0	0.0	0.0
1	1	SER I	38117	1100.4	-24.5	-8.8	0.0	NG	0.0	0.0	0.0
1	10	FATGE	42963	1170.8	-39.5	-0.2	0.0	NG	0.0	0.0	0.0

LRFD MIN PILE FORCE FV SUMMARY:

FOOT NO.	PILE NO.	AASHTO LIMIT STATE	LOAD CASE	MIN FORCE FV AXIAL (kips)	MIN FORCE FV TRAN FT (kips)	MIN FORCE FV LONG FL (kips)	MIN FORCE FV ALLOW FV (kips)	(NG)	CORRES MOMENT TRAN MT (ft-k)	CORRES MOMENT LONG ML (ft-k)	CORRES MOMENT TOR (ft-k)
1	3	STR I	789	700.4	-35.4	1.2	0.0	NG	0.0	0.0	0.0
1	1	STIII	1250	590.6	1.3	6.4	0.0	NG	0.0	0.0	0.0
1	3	STRIV	1350	975.0	-58.8	4.1	0.0	NG	0.0	0.0	0.0
1	3	STR V	19997	684.5	-37.5	2.2	0.0	NG	0.0	0.0	0.0
1	3	SER I	33965	784.7	-46.6	1.7	0.0	NG	0.0	0.0	0.0
1	3	FATGE	42851	875.8	-34.4	-0.1	0.0	NG	0.0	0.0	0.0

LRFD MIN PILE MOMENT MT SUMMARY:

FOOT NO.	PILE NO.	AASHTO LIMIT STATE	LOAD CASE	CORRES FORCE AXIAL (kips)	CORRES FORCE TRAN FT (kips)	CORRES FORCE LONG FL (kips)	CORRES FORCE ALLOW FV (kips)	(NG)	MIN MOMENT MT TRAN MT (ft-k)	MIN MOMENT MT LONG ML (ft-k)	MIN MOMENT MT TOR (ft-k)
1	10	STR I	481	1836.2	-76.6	1.2	0.0	NG	0.0	0.0	0.0
1	10	STIII	1235	1724.2	-70.4	4.7	0.0	NG	0.0	0.0	0.0
1	10	STRIV	1348	1861.4	-66.9	6.3	0.0	NG	0.0	0.0	0.0
1	10	STR V	13209	1818.1	-77.0	1.5	0.0	NG	0.0	0.0	0.0
1	10	SER I	41001	1377.0	-62.1	0.4	0.0	NG	0.0	0.0	0.0
1	10	FATGE	42960	1176.9	-39.1	-0.2	0.0	NG	0.0	0.0	0.0

LRFD MIN PILE MOMENT ML SUMMARY:

FOOT NO.	PILE NO.	AASHTO LIMIT STATE	LOAD CASE	CORRES FORCE AXIAL (kips)	CORRES FORCE TRAN FT (kips)	CORRES FORCE LONG FL (kips)	CORRES FORCE ALLOW FV (kips)	(NG)	MIN MOMENT ML TRAN MT (ft-k)	MIN MOMENT ML LONG ML (ft-k)	MIN MOMENT ML TOR (ft-k)
1	10	STR I	481	1836.2	-76.6	1.2	0.0	NG	0.0	0.0	0.0
1	10	STIII	1235	1724.2	-70.4	4.7	0.0	NG	0.0	0.0	0.0
1	10	STRIV	1348	1861.4	-66.9	6.3	0.0	NG	0.0	0.0	0.0
1	10	STR V	13209	1818.1	-77.0	1.5	0.0	NG	0.0	0.0	0.0
1	10	SER I	41001	1377.0	-62.1	0.4	0.0	NG	0.0	0.0	0.0
1	10	FATGE	42960	1176.9	-39.1	-0.2	0.0	NG	0.0	0.0	0.0

LRFD MIN PILE MOMENT TOR SUMMARY:

FOOT NO.	PILE NO.	AASHTO LIMIT STATE	LOAD CASE	CORRES FORCE AXIAL (kips)	CORRES FORCE TRAN FT (kips)	CORRES FORCE LONG FL (kips)	CORRES FORCE ALLOW FV (kips)	(NG)	MIN MOMENT TOR TRAN MT (ft-k)	MIN MOMENT TOR LONG ML (ft-k)	MIN MOMENT TOR TOR (ft-k)
1	10	STR I	481	1836.2	-76.6	1.2	0.0	NG	0.0	0.0	0.0
1	10	STIII	1235	1724.2	-70.4	4.7	0.0	NG	0.0	0.0	0.0
1	10	STRIV	1348	1861.4	-66.9	6.3	0.0	NG	0.0	0.0	0.0
1	10	STR V	13209	1818.1	-77.0	1.5	0.0	NG	0.0	0.0	0.0
1	10	SER I	41001	1377.0	-62.1	0.4	0.0	NG	0.0	0.0	0.0
1	10	FATGE	42960	1176.9	-39.1	-0.2	0.0	NG	0.0	0.0	0.0

----- FOOTING SHEAR DESIGN ----------

TRANSVERSE FOOTING DESIGN - ONE WAY SHEAR:
SIMPLIFIED PROCEDURE 5.8.3.4.1, NO STIRRUPS USED

FTG NO.	COL NO.	HORIZ DIST. (ft)	LOCATION	AASHTO LIMIT STATE	LOAD CASE	FORCES LRFD SHEAR Vu (kips)	FORCES LRFD TORSION Tu (ft-k)	ONE WAY SHEAR DESIGN TORSION CRACKING dv (in)	ONE WAY SHEAR DESIGN TORSION CRACKING øTcr (ft-k)	ONE WAY SHEAR DESIGN SHEAR CAPACITY øVn (kips)	NG
1	1	5.98	dv	STR I	481	4058	2202	79.44	25472	4124	
				STIII	1237	3764	1314	79.50	25472	4127	
				STRIV	1348	3982	3147	79.45	25472	4125	
				STR V	13713	4052	1559	79.44	25472	4124	
1	1	12.00	FACE	STR I	481	6100	2752				
				STIII	1237	5602	1642				
				STRIV	1348	6007	3927				
				STR V	13641	6070	1950				
1	1	26.00	FACE	STR I	294	-4753	-1036				
				STIII	1201	-4586	-1674				
				STRIV	1347	-4944	84				
				STR V	8414	-4769	-1725				
1	1	32.02	dv	STR I	366	-3053	-825	79.63	25472	4134	
				STIII	1201	-3023	-1339	79.64	25472	4134	
				STRIV	1347	-3186	72	79.60	25472	4132	
				STR V	8486	-3088	-1379	79.63	25472	4133	

Notes:
Shears have been modified for torsion as appropriate, in accordance with equation 5.8.2.1-6.

TRANSVERSE FOOTING DESIGN - LONGITUDINAL REINFORCEMENT FOR SHEAR:

FTG NO.	COL NO.	HORIZ DIST. (ft)	LOCATION	AASHTO LIMIT STATE	LOAD CASE	FORCES LRFD AXIAL Nu (kips)	FORCES LRFD SHEAR Vu (kips)	FORCES LRFD TORSION Tu (ft-k)	FORCES LRFD MOMENT Mu (ft-k)	LONGITUDINAL STEEL As LONG REQD dv (in)	LONGITUDINAL STEEL As LONG REQD (sq-in)	LONGITUDINAL STEEL As LONG PROV (sq-in)	NG
1	1	5.98	dv	STR I	481	0	4058	2202	11860	79.44	108.33	131.04	
				STIII	1237	0	3764	1314	10993	79.50	100.44	131.04	
				STRIV	1348	0	3982	3147	11657	79.45	106.33	131.04	
				STR V	13641	0	4052	1559	11833	79.44	108.13	131.04	
1	1	12.00	FACE	STR I	481	0	6100	2752	35682				
				STIII	1237	0	5602	1642	32845				
				STRIV	1348	0	6007	3927	34890				
				STR V	13641	0	6070	1950	35587				
1	1	26.00	FACE	STR I	294	0	-4753	-1036	26885				
				STIII	1201	0	-4586	-1674	26358				
				STRIV	1347	0	-4944	84	28009				
				STR V	8414	0	-4769	-1725	27145				
1	1	32.02	dv	STR I	294	0	-3053	-825	9223	79.63	82.27	131.04	
				STIII	1201	0	-3023	-1339	9062	79.64	81.26	131.04	
				STRIV	1347	0	-3186	72	9615	79.60	85.85	131.04	
				STR V	8414	0	-3088	-1379	9304	79.63	83.16	131.04	

LONGITUDINAL FOOTING DESIGN - ONE WAY SHEAR:
SIMPLIFIED PROCEDURE 5.8.3.4.1, NO STIRRUPS USED

FTG NO.	COL NO.	HORIZ DIST. (ft)	LOCATION	AASHTO LIMIT STATE	LOAD CASE	FORCES LRFD SHEAR Vu (kips)	FORCES LRFD TORSION Tu (ft-k)	ONE WAY SHEAR DESIGN TORSION CRACKING dv (in)	ONE WAY SHEAR DESIGN TORSION CRACKING øTcr (ft-k)	ONE WAY SHEAR DESIGN SHEAR CAPACITY øVn (kips)	NG
1	1	-11.92	dv	STR I	481	2902	7468	77.95	25472	0	c
				STIII	1238	2689	8113	78.02	25472	0	c
				STRIV	1347	3189	2376	77.87	25472	4042	
				STR V	13641	2898	8073	77.96	25472	0	c
1	1	-6.00	FACE	STR I	330	4935	4958				
				STIII	1216	4704	5194				
				STRIV	1347	5051	2911				
				STR V	10466	4929	5491				
1	1	6.00	FACE	STR I	438	-5282	-7311				
				STIII	1229	-4946	-3795				
				STRIV	1348	-5447	-7063				
				STR V	12302	-5230	-6124				
1	1	11.92	dv	STR I	481	-3315	-7471	77.83	25472	0	c
				STIII	1238	-2792	-8115	77.99	25472	0	c
				STRIV	1348	-3484	-5712	77.78	25472	4037	
				STR V	13641	-3190	-8075	77.87	25472	0	c

Notes:
Shears have been modified for torsion as appropriate, in accordance with equation 5.8.2.1-6.

c: Stirrups required for torsion, Tu > 0.25øTcr; no stirrup data entered.

LONGITUDINAL FOOTING DESIGN - LONGITUDINAL REINFORCEMENT FOR SHEAR:

FTG NO.	COL NO.	HORIZ DIST. (ft)	LOCATION	AASHTO LIMIT STATE	LOAD CASE	FORCES: LRFD AXIAL Nu (kips)	LRFD SHEAR Vu (kips)	LRFD TORSION Tu (ft-k)	LRFD MOMENT Mu (ft-k)	LONGITUDINAL STEEL: dv (in)	As LONG REQD (sq-in)	As LONG PROV (sq-in)	NG
1	1	-11.92	dv	STR I	481	0	2902	7468	12649	77.95	-1.00	149.76	a
				STIII	1238	0	2689	8113	11771	78.02	-1.00	149.76	a
				STRIV	1347	0	3189	2376	13844	77.87	98.55	149.76	
				STR V	13641	0	2898	8073	12631	77.96	-1.00	149.76	a
1	1	-6.00	FACE	STR I	330	0	4935	4958	34331				
				STIII	1216	0	4704	5194	33118				
				STRIV	1347	0	5051	2911	35184				
				STR V	10466	0	4929	5491	34413				
1	1	6.00	FACE	STR I	438	0	-5282	-7311	37161				
				STIII	1229	0	-4946	-3795	35163				
				STRIV	1348	0	-5447	-7063	38339				
				STR V	12302	0	-5230	-6124	36907				
1	1	11.92	dv	STR I	481	0	-3315	-7471	14334	77.83	-1.00	149.76	a
				STIII	1238	0	-2792	-8115	12206	77.99	-1.00	149.76	a
				STRIV	1348	0	-3484	-5712	15050	77.78	107.52	149.76	
				STR V	13641	0	-3190	-8075	13829	77.87	-1.00	149.76	a

Notes:
  a: Indicates that longitudinal steel for shear was not checked, due to problem with flexural or shear design.

TWO WAY SHEAR DESIGN AT COLUMNS:

FTG NO.	COL NO.	AASHTO LIMIT STATE	LOAD CASE	bo (in)	dv (in)	TWO WAY SHEAR DESIGN: FACTORED SHEAR Vu (kips)	Av REQD (sq-in)	SHEAR CAPACITY øVc (kips)	SHEAR CAPACITY øVs (kips)	TOTAL CAPACITY øVn (kips)	NG
1	1	STR I	474	910.52	64.44	-6305	0.00	13307	0	13307	
1	1	STIII	1237	910.52	64.44	-5426	0.00	13307	0	13307	
1	1	STRIV	1352	910.52	64.44	-6768	0.00	13307	0	13307	
1	1	STR V	13634	910.52	64.44	-6128	0.00	13307	0	13307	

----- FOOTING 1 FLEXURAL DESIGN -----

FLEXURAL DESIGN - TRANSVERSE FLEXURE, REINFORCING STEEL REQUIREMENTS:

LRFD MOMENT, MIN STEEL CODE:
  a: Design controlled by 1.2 Mcr
  b: Design controlled by 4/3 Mdes
  c: Design controlled 0.03f'c/fy

FTG NO.	COL NO.	HORZ DIST. (ft)	LOCATION	AASHTO LIMIT STATE	POSITIVE FLEXURE: LOAD CASE	LRFD MOMENT (ft-k)	d (in)	AREA REQD. (sq-in)	AREA PROV. (sq-in)	NG	NEGATIVE FLEXURE: LOAD CASE	LRFD MOMENT (ft-k)	d (in)	AREA REQD. (sq-in)	AREA PROV. (sq-in)	NG
1		5.98	dv	STR I	481	15813b	80.3	44.24	131.04		-1	0	0.0	0.00	0.00	
				STIII	1237	14657b	80.3	40.97	131.04		-1	0	0.0	0.00	0.00	
				STRIV	1348	15542b	80.3	43.47	131.04		-1	0	0.0	0.00	0.00	
				STR V	13641	15778b	80.3	44.14	131.04		-1	0	0.0	0.00	0.00	
1	1	12.00	FACE	STR I	150	39683a	80.3	112.90	131.04		-1	0	0.0	0.00	0.00	
				STIII	1212	39683a	80.3	112.90	131.04		-1	0	0.0	0.00	0.00	
				STRIV	1346	39683a	80.3	112.90	131.04		-1	0	0.0	0.00	0.00	
				STR V	4850	39683a	80.3	112.90	131.04		-1	0	0.0	0.00	0.00	
1	1	26.00	FACE	STR I	294	35847b	80.3	101.70	131.04		-1	0	0.0	0.00	0.00	
				STIII	1201	35144b	80.3	99.66	131.04		-1	0	0.0	0.00	0.00	
				STRIV	1347	37345b	80.3	106.07	131.04		-1	0	0.0	0.00	0.00	
				STR V	8414	36194b	80.3	102.71	131.04		-1	0	0.0	0.00	0.00	
1		32.02	dv	STR I	294	12297b	80.3	34.32	131.04		-1	0	0.0	0.00	0.00	
				STIII	1201	12082b	80.3	33.71	131.04		-1	0	0.0	0.00	0.00	
				STRIV	1347	12820b	80.3	35.79	131.04		-1	0	0.0	0.00	0.00	
				STR V	8414	12406b	80.3	34.62	131.04		-1	0	0.0	0.00	0.00	

FLEXURAL DESIGN - TRANSVERSE FLEXURAL DESIGN PARAMETERS (Based on As Provided):

FTG NO.	COL NO.	HORZ DIST. (ft)	LOCATION	AASHTO LIMIT STATE	POSITIVE FLEXURE: LOAD CASE	a (in)	STRAIN es	PHI Ø	ØMn CAP (ft-k)	NEGATIVE FLEXURE: LOAD CASE	a (in)	STRAIN es	PHI Ø	ØMn CAP (ft-k)
1		5.98	dv	STR I	481	5.07	0.037375	0.900	45853	-1	0.00	0.000000	0.000	0
				STIII	1237	5.07	0.037375	0.900	45853	-1	0.00	0.000000	0.000	0
				STRIV	1348	5.07	0.037375	0.900	45853	-1	0.00	0.000000	0.000	0
				STR V	13641	5.07	0.037375	0.900	45853	-1	0.00	0.000000	0.000	0
1	1	12.00	FACE	STR I	150	5.07	0.037375	0.900	45853	-1	0.00	0.000000	0.000	0
				STIII	1212	5.07	0.037375	0.900	45853	-1	0.00	0.000000	0.000	0
				STRIV	1346	5.07	0.037375	0.900	45853	-1	0.00	0.000000	0.000	0
				STR V	4850	5.07	0.037375	0.900	45853	-1	0.00	0.000000	0.000	0
1	1	26.00	FACE	STR I	294	5.07	0.037375	0.900	45853	-1	0.00	0.000000	0.000	0
				STIII	1201	5.07	0.037375	0.900	45853	-1	0.00	0.000000	0.000	0
				STRIV	1347	5.07	0.037375	0.900	45853	-1	0.00	0.000000	0.000	0
				STR V	8414	5.07	0.037375	0.900	45853	-1	0.00	0.000000	0.000	0
1		32.02	dv	STR I	294	5.07	0.037375	0.900	45853	-1	0.00	0.000000	0.000	0

	STIII	1201	5.07	0.037375	0.900	45853	-1	0.00	0.000000	0.000	0		
	STRIV	1347	5.07	0.037375	0.900	45853	-1	0.00	0.000000	0.000	0		
	STR V	8414	5.07	0.037375	0.900	45853	-1	0.00	0.000000	0.000	0		

FLEXURAL DESIGN - LONGITUDINAL FLEXURE, REINFORCING STEEL REQUIREMENTS: LRFD MOMENT, MIN STEEL CODE:
a: Design controlled by 1.2 Mcr
b: Design controlled by 4/3 Mdes
c: Design controlled 0.03f'c/fy

					POSITIVE FLEXURE					NEGATIVE FLEXURE					
FTG NO.	COL NO.	HORZ DIST. (ft)	LOCATION	AASHTO LIMIT STATE	LOAD CASE	LRFD MOMENT (ft-k)	d (in)	AREA REQD. (sq-in)	AREA PROV. (sq-in)	NG	LOAD CASE	LRFD MOMENT (ft-k)	d (in)	AREA REQD. (sq-in)	AREA PROV. (sq-in)	NG
1		-11.92	dv	STR I	330	17968b	78.9	51.26	149.76		-1	0	0.0	0.00	0.00	
				STIII	1216	17452b	78.9	49.77	149.76		-1	0	0.0	0.00	0.00	
				STRIV	1347	18458b	78.9	52.68	149.76		-1	0	0.0	0.00	0.00	
				STR V	10466	18030b	78.9	51.44	149.76		-1	0	0.0	0.00	0.00	
1	1	-6.00	FACE	STR I	6	39683a	78.9	115.03	149.76		-1	0	0.0	0.00	0.00	
				STIII	1210	39683a	78.9	115.03	149.76		-1	0	0.0	0.00	0.00	
				STRIV	1345	39683a	78.9	115.03	149.76		-1	0	0.0	0.00	0.00	
				STR V	2690	39683a	78.9	115.03	149.76		-1	0	0.0	0.00	0.00	
1	1	6.00	FACE	STR I	1	39683a	78.9	115.03	149.76		-1	0	0.0	0.00	0.00	
				STIII	1177	39683a	78.9	115.03	149.76		-1	0	0.0	0.00	0.00	
				STRIV	1345	39683a	78.9	115.03	149.76		-1	0	0.0	0.00	0.00	
				STR V	1353	39683a	78.9	115.03	149.76		-1	0	0.0	0.00	0.00	
1		11.92	dv	STR I	438	19424b	78.9	55.47	149.76		-1	0	0.0	0.00	0.00	
				STIII	1229	18515b	78.9	52.84	149.76		-1	0	0.0	0.00	0.00	
				STRIV	1348	20066b	78.9	57.33	149.76		-1	0	0.0	0.00	0.00	
				STR V	12302	19320b	78.9	55.17	149.76		-1	0	0.0	0.00	0.00	

FLEXURAL DESIGN - LONGITUDINAL FLEXURAL DESIGN PARAMETERS (Based on As Provided):

					POSITIVE FLEXURE					NEGATIVE FLEXURE				
FTG NO.	COL NO.	HORZ DIST. (ft)	LOCATION	AASHTO LIMIT STATE	LOAD CASE	a (in)	STRAIN es	PHI Ø	ØMn CAP (ft-k)	LOAD CASE	a (in)	STRAIN es	PHI Ø	ØMn CAP (ft-k)
1		-11.92	dv	STR I	330	5.80	0.031708	0.900	51209	-1	0.00	0.000000	0.000	0
				STIII	1216	5.80	0.031708	0.900	51209	-1	0.00	0.000000	0.000	0
				STRIV	1347	5.80	0.031708	0.900	51209	-1	0.00	0.000000	0.000	0
				STR V	10466	5.80	0.031708	0.900	51209	-1	0.00	0.000000	0.000	0
1	1	-6.00	FACE	STR I	6	5.80	0.031708	0.900	51209	-1	0.00	0.000000	0.000	0
				STIII	1210	5.80	0.031708	0.900	51209	-1	0.00	0.000000	0.000	0
				STRIV	1345	5.80	0.031708	0.900	51209	-1	0.00	0.000000	0.000	0
				STR V	2690	5.80	0.031708	0.900	51209	-1	0.00	0.000000	0.000	0
1	1	6.00	FACE	STR I	1	5.80	0.031708	0.900	51209	-1	0.00	0.000000	0.000	0
				STIII	1177	5.80	0.031708	0.900	51209	-1	0.00	0.000000	0.000	0
				STRIV	1345	5.80	0.031708	0.900	51209	-1	0.00	0.000000	0.000	0
				STR V	1353	5.80	0.031708	0.900	51209	-1	0.00	0.000000	0.000	0
1		11.92	dv	STR I	438	5.80	0.031708	0.900	51209	-1	0.00	0.000000	0.000	0
				STIII	1229	5.80	0.031708	0.900	51209	-1	0.00	0.000000	0.000	0
				STRIV	1348	5.80	0.031708	0.900	51209	-1	0.00	0.000000	0.000	0
				STR V	12302	5.80	0.031708	0.900	51209	-1	0.00	0.000000	0.000	0

----- FOOTING 1 SERVICEABILITY RESULTS -----

FATIGUE LIMIT STATE - TRANSVERSE REINFORCEMENT DATA:
Notes: All fatigue data is computed from Fatigue Limit State.
Axial tension is negative.
T indicates top bars control; B indicates bottom bars control.
** Dead load values may include effects due to shrinkage, refer to load case data.

				FATIGUE								
FTG NO.	COL NO.	HORZ DIST. (ft)	LOCATION	MAX LOAD NO.	MIN LOAD NO.	DL** AXIAL (kips)	DL** MOMENT (ft-k)	MAX LL MOMENT (ft-k)	MIN LL MOMENT (ft-k)	f MIN (ksi)	ACTUAL RANGE (ksi)	ALLOW RANGE (ksi)	NG
1	1	12.00	FACE	43029	0	0	21712	174	0	24.9	1.9	15.2	B
1	1	26.00	FACE	0	43030	0	18149	0	-44	20.5	1.7	16.6	B

FATIGUE LIMIT STATE - LONGITUDINAL REINFORCEMENT DATA:

				FATIGUE								
FTG NO.	COL NO.	HORZ DIST. (ft)	LOCATION	MAX LOAD NO.	MIN LOAD NO.	DL** AXIAL (kips)	DL** MOMENT (ft-k)	MAX LL MOMENT (ft-k)	MIN LL MOMENT (ft-k)	f MIN (ksi)	ACTUAL RANGE (ksi)	ALLOW RANGE (ksi)	NG
1	1	-6.00	FACE	43029	43031	0	21587	154	-35	23.6	0.2	15.6	B
1	1	6.00	FACE	43032	43033	0	23541	191	-41	25.7	0.3	14.9	B

DISTRIBUTION OF TRANSVERSE FLEXURAL REINFORCEMENT:
Notes: Reinforcing steel distribution data is based on the maximum area of steel
obtained from either Strength Limit State Design ,or user defined limits.
Moments are based on Service I Limit State.

				TRANSVERSE STEEL DISTRIBUTION										
FTG NO.	COL NO.	HORZ DIST. (ft)	LOCATION	LOAD CASE	MAT	SERV I AXIAL	SERV I MOMENT	h	dc	ßs	STRESS fs	SPACING ACTUAL	SPACING ALLOW.	NG

		(ft)			(kips)	(ft-k)	(in)	(in)		(ksi)	(in)	(in)		
1	1	12.00	FACE	41289	BOT	0	27237	84.00	3.70	1.066	33.34	5.40	12.29	
1	1	26.00	FACE	36062	BOT	0	22118	84.00	3.70	1.066	27.08	5.40	16.84	

DISTRIBUTION OF LONGITUDINAL FLEXURAL REINFORCEMENT:

				LONGITUDINAL STEEL DISTRIBUTION										
FTG NO.	COL NO.	HORZ DIST. (ft)	LOCATION	LOAD CASE	MAT	SERV I AXIAL (kips)	SERV I MOMENT (ft-k)	h (in)	dc (in)	ßs	STRESS fs (ksi)	SPACING ACTUAL (in)	SPACING ALLOW. (in)	NG
1	1	-6.00	FACE	38186	BOT	0	25545	84.00	5.11	1.093	27.94	4.72	12.70	
1	1	6.00	FACE	39806	BOT	0	27352	84.00	5.11	1.093	29.91	4.72	11.19	

----- FOOTING 2 DESIGN RESULTS ----------

LRFD FACTORED REACTIONS AT TOP OF FOOTINGS:

				FORCES			MOMENTS		
FOOT NO.	COL NO.	AASHTO LIMIT STATE	LOAD CASE	AXIAL P (kips)	TRAN HT (kips)	LONG HL (kips)	TRAN MT (ft-k)	LONG ML (ft-k)	TORSION (ft-k)
2	2	STR I	1	-8628	484	16	2334	-8203	50
2	2	STR I	293	-9537	606	-66	5475	1807	199
2	2	STR I	304	-10558	687	-21	7296	-5239	252
2	2	STR I	339	-9587	554	-88	3357	3558	114
2	2	STR I	343	-10389	606	-57	2830	-1769	345
2	2	STR I	348	-10388	542	-53	514	-2787	177
2	2	STR I	415	-10389	606	-57	2830	-1769	345
2	2	STR I	420	-10388	542	-53	514	-2787	177
2	2	STR I	447	-9607	712	71	12612	-9972	-113
2	2	STR I	448	-10541	821	18	15340	-9239	-106
2	2	STR I	449	-10106	849	36	14957	-9501	-60
2	2	STR I	457	-10537	818	18	15214	-9305	-88
2	2	STR I	520	-10541	821	18	15340	-9239	-106
2	2	STR I	529	-10537	818	18	15214	-9305	-88
2	2	STR I	619	-5719	116	-13	-4114	-2617	245
2	2	STR I	752	-5067	369	21	7020	-4261	-108
2	2	STIII	1179	-7935	754	114	19190	-12737	-292
2	2	STIII	1201	-9244	738	-1	13354	-4676	-40
2	2	STIII	1213	-8945	351	-81	-4676	2486	280
2	2	STIII	1217	-8985	408	-144	-2073	6295	290
2	2	STIII	1225	-9221	863	80	20950	-11882	-271
2	2	STIII	1226	-8994	836	109	21960	-13327	-239
2	2	STIII	1228	-9208	841	137	20021	-15481	-301
2	2	STIII	1229	-9180	805	143	18346	-15699	-280
2	2	STIII	1262	-4105	10	-79	-11741	4816	313
2	2	STIII	1274	-5009	553	89	17775	-9220	-198
2	2	STRIV	1345	-9366	542	-39	4198	-850	104
2	2	STRIV	1347	-10655	653	-47	6094	-1237	137
2	2	STRIV	1348	-10628	773	47	13441	-9631	-124
2	2	STRIV	1350	-9344	669	39	11869	-7771	-115
2	2	STRIV	1351	-10655	653	-47	6094	-1237	137
2	2	STR V	1353	-8502	546	21	5823	-7918	-6
2	2	STR V	8269	-9498	665	-44	8679	-284	117
2	2	STR V	8280	-10285	728	-10	10084	-5720	157
2	2	STR V	8424	-10293	736	-1	10489	-6316	144
2	2	STR V	10196	-10023	461	-74	-2480	-376	241
2	2	STR V	10619	-9429	500	-110	1083	4909	178
2	2	STR V	10623	-10047	539	-86	676	800	356
2	2	STR V	10695	-10047	539	-86	676	800	356
2	2	STR V	11880	-10275	868	47	18430	-11036	-187
2	2	STR V	11881	-9939	889	61	18135	-11238	-152
2	2	STR V	12177	-10259	850	54	17603	-11495	-167
2	2	STR V	12311	-9530	754	96	14956	-12000	-176
2	2	STR V	17091	-5507	64	-39	-7180	-100	279
2	2	STR V	18808	-5141	455	45	11055	-6257	-179
2	2	SER I	30915	-6230	72	-39	-10293	-157	229
2	2	SER I	32632	-5978	540	43	13736	-6490	-162
2	2	SER I	37844	-7414	212	-55	-9259	-151	178
2	2	SER I	37916	-7414	212	-55	-9259	-151	178
2	2	SER I	38123	-6989	230	-79	-7147	3571	139
2	2	SER I	38343	-7434	269	-63	-6938	645	258
2	2	SER I	39528	-7603	698	36	16985	-8145	-143
2	2	SER I	39529	-7366	713	46	16776	-8287	-118
2	2	SER I	39600	-7603	698	36	16985	-8145	-143
2	2	SER I	39825	-7591	685	41	16351	-8453	-128
2	2	SER I	39959	-7076	616	70	14440	-8792	-133
2	2	FATGE	42835	-5935	399	0	6038	-2802	-14
2	2	FATGE	42836	-5945	407	0	6303	-2811	-12
2	2	FATGE	42858	-5932	396	0	5887	-2780	-5
2	2	FATGE	42928	-6812	467	0	7353	-3593	15
2	2	FATGE	42930	-6782	479	0	7432	-3556	5
2	2	FATGE	42943	-6748	472	0	7308	-3458	5
2	2	FATGE	42950	-6809	465	-1	7240	-3519	16
2	2	FATGE	42960	-6749	464	0	6988	-3493	3
2	2	FATGE	42975	-6746	470	-1	7190	-3390	4

----- PILE FORCE SUMMARY -----

LRFD MAX PILE FORCE FT SUMMARY: LRFD LRFD

FOOT NO.	PILE NO.	AASHTO LIMIT STATE	LOAD CASE	MAX FORCE FT AXIAL FV (kips)	MAX FORCE FT TRAN FT (kips)	MAX FORCE FT LONG FL (kips)	MAX FORCE FT ALLOW FV (kips)	(NG)	CORRES MOMENT TRAN MT (ft-k)	CORRES MOMENT LONG ML (ft-k)	CORRES MOMENT LONG TOR (ft-k)
2	12	STR I	449	1719.9	71.0	2.7	0.0	NG	0.0	0.0	0.0
2	12	STIII	1225	1723.2	73.1	5.4	0.0	NG	0.0	0.0	0.0
2	12	STRIV	1348	1781.6	64.9	3.4	0.0	NG	0.0	0.0	0.0
2	12	STR V	11881	1752.5	74.8	4.4	0.0	NG	0.0	0.0	0.0
2	12	SER I	39529	1329.9	60.0	3.3	0.0	NG	0.0	0.0	0.0
2	3	FATGE	42930	1081.1	39.9	0.0	0.0	NG	0.0	0.0	0.0

LRFD MAX PILE FORCE FL SUMMARY: LRFD LRFD

FOOT NO.	PILE NO.	AASHTO LIMIT STATE	LOAD CASE	MAX FORCE FL AXIAL FV (kips)	MAX FORCE FL TRAN FT (kips)	MAX FORCE FL LONG FL (kips)	MAX FORCE FL ALLOW FV (kips)	(NG)	CORRES MOMENT TRAN MT (ft-k)	CORRES MOMENT LONG ML (ft-k)	CORRES MOMENT LONG TOR (ft-k)
2	10	STR I	447	1376.2	59.8	6.4	0.0	NG	0.0	0.0	0.0
2	10	STIII	1229	1339.8	68.3	13.1	0.0	NG	0.0	0.0	0.0
2	10	STRIV	1348	1480.7	64.9	4.5	0.0	NG	0.0	0.0	0.0
2	10	STR V	12311	1366.3	63.7	8.8	0.0	NG	0.0	0.0	0.0
2	10	SER I	39959	980.0	51.9	6.5	0.0	NG	0.0	0.0	0.0
2	10	FATGE	42835	912.3	33.3	0.1	0.0	NG	0.0	0.0	0.0

LRFD MAX PILE FORCE FV SUMMARY: LRFD LRFD

FOOT NO.	PILE NO.	AASHTO LIMIT STATE	LOAD CASE	MAX FORCE FV AXIAL FV (kips)	MAX FORCE FV TRAN FT (kips)	MAX FORCE FV LONG FL (kips)	MAX FORCE FV ALLOW FV (kips)	(NG)	CORRES MOMENT TRAN MT (ft-k)	CORRES MOMENT LONG ML (ft-k)	CORRES MOMENT LONG TOR (ft-k)
2	12	STR I	448	1755.4	68.9	1.0	0.0	NG	0.0	0.0	0.0
2	12	STIII	1228	1747.3	71.5	10.0	0.0	NG	0.0	0.0	0.0
2	12	STRIV	1348	1781.6	64.9	3.4	0.0	NG	0.0	0.0	0.0
2	12	STR V	11880	1779.9	73.2	3.1	0.0	NG	0.0	0.0	0.0
2	12	SER I	39528	1349.3	58.8	2.3	0.0	NG	0.0	0.0	0.0
2	12	FATGE	42928	1146.1	38.8	0.0	0.0	NG	0.0	0.0	0.0

LRFD MAX PILE MOMENT MT SUMMARY: LRFD LRFD

FOOT NO.	PILE NO.	AASHTO LIMIT STATE	LOAD CASE	CORRES FORCE AXIAL FV (kips)	CORRES FORCE TRAN FT (kips)	CORRES FORCE LONG FL (kips)	CORRES FORCE ALLOW FV (kips)	(NG)	MAX MOMENT MT TRAN MT (ft-k)	MAX MOMENT MT LONG ML (ft-k)	MAX MOMENT MT LONG TOR (ft-k)
2	12	STR I	448	1755.4	68.9	1.0	0.0	NG	0.0	0.0	0.0
2	12	STIII	1228	1747.3	71.5	10.0	0.0	NG	0.0	0.0	0.0
2	12	STRIV	1348	1781.6	64.9	3.4	0.0	NG	0.0	0.0	0.0
2	12	STR V	11880	1779.9	73.2	3.1	0.0	NG	0.0	0.0	0.0
2	12	SER I	39528	1349.3	58.8	2.3	0.0	NG	0.0	0.0	0.0
2	12	FATGE	42928	1146.1	38.8	0.0	0.0	NG	0.0	0.0	0.0

LRFD MAX PILE MOMENT ML SUMMARY: LRFD LRFD

FOOT NO.	PILE NO.	AASHTO LIMIT STATE	LOAD CASE	CORRES FORCE AXIAL FV (kips)	CORRES FORCE TRAN FT (kips)	CORRES FORCE LONG FL (kips)	CORRES FORCE ALLOW FV (kips)	(NG)	MAX MOMENT ML TRAN MT (ft-k)	MAX MOMENT ML LONG ML (ft-k)	MAX MOMENT ML LONG TOR (ft-k)
2	12	STR I	448	1755.4	68.9	1.0	0.0	NG	0.0	0.0	0.0
2	12	STIII	1228	1747.3	71.5	10.0	0.0	NG	0.0	0.0	0.0
2	12	STRIV	1348	1781.6	64.9	3.4	0.0	NG	0.0	0.0	0.0
2	12	STR V	11880	1779.9	73.2	3.1	0.0	NG	0.0	0.0	0.0
2	12	SER I	39528	1349.3	58.8	2.3	0.0	NG	0.0	0.0	0.0
2	12	FATGE	42928	1146.1	38.8	0.0	0.0	NG	0.0	0.0	0.0

LRFD MAX PILE MOMENT TOR SUMMARY: LRFD LRFD

FOOT NO.	PILE NO.	AASHTO LIMIT STATE	LOAD CASE	CORRES FORCE AXIAL FV (kips)	CORRES FORCE TRAN FT (kips)	CORRES FORCE LONG FL (kips)	CORRES FORCE ALLOW FV (kips)	(NG)	MAX MOMENT TOR TRAN MT (ft-k)	MAX MOMENT TOR LONG ML (ft-k)	MAX MOMENT TOR LONG TOR (ft-k)
2	12	STR I	448	1755.4	68.9	1.0	0.0	NG	0.0	0.0	0.0
2	12	STIII	1228	1747.3	71.5	10.0	0.0	NG	0.0	0.0	0.0
2	12	STRIV	1348	1781.6	64.9	3.4	0.0	NG	0.0	0.0	0.0
2	12	STR V	11880	1779.9	73.2	3.1	0.0	NG	0.0	0.0	0.0
2	12	SER I	39528	1349.3	58.8	2.3	0.0	NG	0.0	0.0	0.0
2	12	FATGE	42928	1146.1	38.8	0.0	0.0	NG	0.0	0.0	0.0

LRFD MIN PILE FORCE FT SUMMARY: LRFD LRFD

FOOT NO.	PILE NO.	AASHTO LIMIT STATE	LOAD CASE	MIN FORCE FT AXIAL FV (kips)	MIN FORCE FT TRAN FT (kips)	MIN FORCE FT LONG FL (kips)	MIN FORCE FT ALLOW FV (kips)	(NG)	CORRES MOMENT TRAN MT (ft-k)	CORRES MOMENT LONG ML (ft-k)	CORRES MOMENT LONG TOR (ft-k)
2	10	STR I	619	927.9	8.6	-2.2	0.0	NG	0.0	0.0	0.0
2	10	STIII	1262	796.7	-0.6	-8.0	0.0	NG	0.0	0.0	0.0
2	12	STRIV	1345	1503.1	44.7	-2.8	0.0	NG	0.0	0.0	0.0
2	10	STR V	17091	916.1	4.1	-4.5	0.0	NG	0.0	0.0	0.0
2	10	SER I	30915	1070.4	5.0	-4.3	0.0	NG	0.0	0.0	0.0
2	3	FATGE	42858	1000.1	33.0	0.0	0.0	NG	0.0	0.0	0.0

LRFD MIN PILE FORCE FL SUMMARY: LRFD LRFD

FOOT NO.	PILE NO.	AASHTO LIMIT STATE	LOAD CASE	MIN FORCE FL AXIAL FV (kips)	MIN FORCE FL TRAN FT (kips)	MIN FORCE FL LONG FL (kips)	MIN FORCE FL ALLOW FV (kips)	(NG)	CORRES MOMENT TRAN MT (ft-k)	CORRES MOMENT LONG ML (ft-k)	CORRES MOMENT LONG TOR (ft-k)
2	1	STR I	339	1406.8	46.7	-7.8	0.0	NG	0.0	0.0	0.0
2	1	STIII	1217	1437.5	35.3	-13.3	0.0	NG	0.0	0.0	0.0

2	10	STRIV	1347	1474.6	53.8	-4.6	0.0	NG	0.0	0.0	0.0
2	1	STR V	10619	1429.0	42.4	-9.9	0.0	NG	0.0	0.0	0.0
2	1	SER I	38123	1134.5	19.8	-7.2	0.0	NG	0.0	0.0	0.0
2	10	FATGE	42950	978.2	38.7	-0.2	0.0	NG	0.0	0.0	0.0

LRFD MIN PILE FORCE FV SUMMARY: LRFD LRFD

				MIN FORCE FV					CORRES MOMENT		
FOOT NO.	PILE NO.	AASHTO LIMIT STATE	LOAD CASE	AXIAL FV (kips)	TRAN FT (kips)	LONG FL (kips)	ALLOW FV (kips)	(NG)	TRAN MT (ft-k)	LONG ML (ft-k)	TOR (ft-k)
2	1	STR I	752	702.5	30.3	2.2	0.0	NG	0.0	0.0	0.0
2	1	STIII	1274	547.3	45.2	8.3	0.0	NG	0.0	0.0	0.0
2	1	STRIV	1350	971.7	55.2	3.8	0.0	NG	0.0	0.0	0.0
2	1	STR V	18808	650.5	37.1	4.5	0.0	NG	0.0	0.0	0.0
2	1	SER I	32632	756.9	44.3	4.3	0.0	NG	0.0	0.0	0.0
2	1	FATGE	42836	860.3	33.8	0.1	0.0	NG	0.0	0.0	0.0

LRFD MIN PILE MOMENT MT SUMMARY: LRFD LRFD

				CORRES FORCE					MIN MOMENT MT		
FOOT NO.	PILE NO.	AASHTO LIMIT STATE	LOAD CASE	AXIAL FV (kips)	TRAN FT (kips)	LONG FL (kips)	ALLOW FV (kips)	(NG)	TRAN MT (ft-k)	LONG ML (ft-k)	TOR (ft-k)
2	12	STR I	448	1755.4	68.9	1.0	0.0	NG	0.0	0.0	0.0
2	12	STIII	1228	1747.3	71.5	10.0	0.0	NG	0.0	0.0	0.0
2	12	STRIV	1348	1781.6	64.9	3.4	0.0	NG	0.0	0.0	0.0
2	12	STR V	11880	1779.9	73.2	3.1	0.0	NG	0.0	0.0	0.0
2	12	SER I	39528	1349.3	58.8	2.3	0.0	NG	0.0	0.0	0.0
2	12	FATGE	42928	1146.1	38.8	0.0	0.0	NG	0.0	0.0	0.0

LRFD MIN PILE MOMENT ML SUMMARY: LRFD LRFD

				CORRES FORCE					MIN MOMENT ML		
FOOT NO.	PILE NO.	AASHTO LIMIT STATE	LOAD CASE	AXIAL FV (kips)	TRAN FT (kips)	LONG FL (kips)	ALLOW FV (kips)	(NG)	TRAN MT (ft-k)	LONG ML (ft-k)	TOR (ft-k)
2	12	STR I	448	1755.4	68.9	1.0	0.0	NG	0.0	0.0	0.0
2	12	STIII	1228	1747.3	71.5	10.0	0.0	NG	0.0	0.0	0.0
2	12	STRIV	1348	1781.6	64.9	3.4	0.0	NG	0.0	0.0	0.0
2	12	STR V	11880	1779.9	73.2	3.1	0.0	NG	0.0	0.0	0.0
2	12	SER I	39528	1349.3	58.8	2.3	0.0	NG	0.0	0.0	0.0
2	12	FATGE	42928	1146.1	38.8	0.0	0.0	NG	0.0	0.0	0.0

LRFD MIN PILE MOMENT TOR SUMMARY: LRFD LRFD

				CORRES FORCE					MIN MOMENT TOR		
FOOT NO.	PILE NO.	AASHTO LIMIT STATE	LOAD CASE	AXIAL FV (kips)	TRAN FT (kips)	LONG FL (kips)	ALLOW FV (kips)	(NG)	TRAN MT (ft-k)	LONG ML (ft-k)	TOR (ft-k)
2	12	STR I	448	1755.4	68.9	1.0	0.0	NG	0.0	0.0	0.0
2	12	STIII	1228	1747.3	71.5	10.0	0.0	NG	0.0	0.0	0.0
2	12	STRIV	1348	1781.6	64.9	3.4	0.0	NG	0.0	0.0	0.0
2	12	STR V	11880	1779.9	73.2	3.1	0.0	NG	0.0	0.0	0.0
2	12	SER I	39528	1349.3	58.8	2.3	0.0	NG	0.0	0.0	0.0
2	12	FATGE	42928	1146.1	38.8	0.0	0.0	NG	0.0	0.0	0.0

----- FOOTING SHEAR DESIGN -----

TRANSVERSE FOOTING DESIGN - ONE WAY SHEAR:
SIMPLIFIED PROCEDURE 5.8.3.4.1, NO STIRRUPS USED

						FORCES		ONE WAY SHEAR DESIGN			
FTG NO.	COL NO.	HORIZ DIST. (ft)	LOCATION	AASHTO LIMIT STATE	LOAD CASE	LRFD SHEAR Vu (kips)	LRFD TORSION Tu (ft-k)	TORSION CRACKING dv (in)	TORSION CRACKING øTcr (ft-k)	SHEAR CAPACITY øVn (kips)	NG
2	2	5.98	dv	STR I	420	3149	744	79.61	25472	4133	
				STIII	1213	2950	-790	79.66	25472	4135	
				STRIV	1347	3090	306	79.62	25472	4133	
				STR V	10196	3148	34	79.61	25472	4133	
2	2	12.00	FACE	STR I	348	4851	935				
				STIII	1213	4465	-980				
				STRIV	1347	4786	387				
				STR V	10196	4819	50				
2	2	26.00	FACE	STR I	448	-5696	-3323				
				STIII	1225	-5353	-4343				
				STRIV	1348	-5697	-3498				
				STR V	11880	-5703	-4000				
2	2	32.02	dv	STR I	520	-3773	-2659	79.50	25472	4127	
				STIII	1225	-3599	-3480	79.54	25472	4129	
				STRIV	1348	-3776	-2802	79.50	25472	4127	
				STR V	11880	-3795	-3204	79.50	25472	4127	

Notes:
Shears have been modified for torsion as appropriate, in accordance with equation 5.8.2.1-6.

TRANSVERSE FOOTING DESIGN - LONGITUDINAL REINFORCEMENT FOR SHEAR:

						FORCES				LONGITUDINAL STEEL			
FTG NO.	COL NO.	HORIZ DIST. (ft)	LOCATION	AASHTO LIMIT STATE	LOAD CASE	LRFD AXIAL Nu (kips)	LRFD SHEAR Vu (kips)	LRFD TORSION Tu (ft-k)	LRFD MOMENT Mu (ft-k)	dv (in)	As LONG REQD (sq-in)	As LONG PROV (sq-in)	NG

2	2	5.98	dv	STR I	348	0	3149	744	9489	79.61	84.81	131.04
				STIII	1213	0	2950	-790	8852	79.66	79.32	131.04
				STRIV	1347	0	3090	306	9338	79.62	83.29	131.04
				STR V	10196	0	3148	34	9465	79.61	84.71	131.04
2	2	12.00	FACE	STR I	348	0	4851	935	27720			
				STIII	1213	0	4465	-980	25667			
				STRIV	1347	0	4786	387	27099			
				STR V	10196	0	4819	50	27644			
2	2	26.00	FACE	STR I	448	0	-5696	-3323	33038			
				STIII	1225	0	-5353	-4343	31279			
				STRIV	1348	0	-5697	-3498	32946			
				STR V	11880	0	-5703	-4000	33201			
2	2	32.02	dv	STR I	448	0	-3773	-2659	11035	79.50	100.72	131.04
				STIII	1225	0	-3599	-3480	10505	79.54	95.99	131.04
				STRIV	1348	0	-3776	-2802	11052	79.50	100.81	131.04
				STR V	11880	0	-3795	-3204	11089	79.50	101.28	131.04

LONGITUDINAL FOOTING DESIGN - ONE WAY SHEAR:
SIMPLIFIED PROCEDURE 5.8.3.4.1, NO STIRRUPS USED

						FORCES		ONE WAY SHEAR DESIGN			
						LRFD	LRFD	TORSION	SHEAR		
FTG NO.	COL NO.	HORIZ DIST. (ft)	LOCATION	AASHTO LIMIT STATE	LOAD CASE	SHEAR Vu (kips)	TORSION Tu (ft-k)	CRACKING dv (in)	CAPACITY øTcr (ft-k)	øVn (kips)	NG
2	2	-11.92	dv	STR I	415	2957	-1430	77.94	25472	4046	
				STIII	1226	2279	-7140	78.14	25472	0	c
				STRIV	1347	3062	-2413	77.90	25472	4044	
				STR V	10695	2944	-746	77.94	25472	4046	
2	2	-6.00	FACE	STR I	343	4693	-1729				
				STIII	1217	4410	257				
				STRIV	1347	4851	-2954				
				STR V	10623	4647	-880				
2	2	6.00	FACE	STR I	457	-5144	6411				
				STIII	1228	-4830	8151				
				STRIV	1348	-5228	5722				
				STR V	12177	-5112	7301				
2	2	11.92	dv	STR I	529	-3286	5191	77.84	25472	4041	
				STIII	1226	-3019	7135	77.92	25472	0	c
				STRIV	1348	-3346	4637	77.82	25472	4040	
				STR V	12177	-3279	5906	77.84	25472	4041	

Notes:
Shears have been modified for torsion as appropriate, in accordance with equation 5.8.2.1-6.

c: Stirrups required for torsion, Tu > 0.25øTcr; no stirrup data entered.

LONGITUDINAL FOOTING DESIGN - LONGITUDINAL REINFORCEMENT FOR SHEAR:

						FORCES				LONGITUDINAL STEEL			
						LRFD	LRFD	LRFD	LRFD	As	As		
FTG NO.	COL NO.	HORIZ DIST. (ft)	LOCATION	AASHTO LIMIT STATE	LOAD CASE	AXIAL Nu (kips)	SHEAR Vu (kips)	TORSION Tu (ft-k)	MOMENT Mu (ft-k)	dv (in)	LONG REQD (sq-in)	LONG PROV (sq-in)	NG
2	2	-11.92	dv	STR I	343	0	2957	-1430	12859	77.94	91.42	149.76	
				STIII	1226	0	2279	-7140	10129	78.14	-1.00	149.76	a
				STRIV	1347	0	3062	-2413	13331	77.90	94.73	149.76	
				STR V	10623	0	2944	-746	12799	77.94	91.00	149.76	
2	2	-6.00	FACE	STR I	343	0	4693	-1729	32637				
				STIII	1217	0	4410	257	31040				
				STRIV	1347	0	4851	-2954	33779				
				STR V	10623	0	4647	-880	32429				
2	2	6.00	FACE	STR I	457	0	-5144	6411	36187				
				STIII	1228	0	-4830	8151	34290				
				STRIV	1348	0	-5228	5722	36807				
				STR V	12177	0	-5112	7301	36057				
2	2	11.92	dv	STR I	457	0	-3286	5191	14212	77.84	101.42	149.76	
				STIII	1226	0	-3019	7135	13100	77.92	-1.00	149.76	a
				STRIV	1348	0	-3346	4637	14492	77.82	103.35	149.76	
				STR V	12177	0	-3279	5906	14177	77.84	101.20	149.76	

Notes:
a: Indicates that longitudinal steel for shear was not checked, due to problem with flexural or shear design.

TWO WAY SHEAR DESIGN AT COLUMNS:

			TWO WAY SHEAR DESIGN							
					FACTORED		SHEAR	SHEAR	TOTAL	
FTG NO.	COL NO.	AASHTO LIMIT STATE	LOAD CASE	bo (in)	dv (in)	SHEAR Vu (kips)	Av REQD (sq-in)	CAPACITY øVc (kips)	CAPACITY øVs (kips)	CAPACITY øVn (kips)	NG
2	2	STR I	304	910.52	64.44	-6094	0.00	13307	0	13307	
2	2	STIII	1201	910.52	64.44	-5219	0.00	13307	0	13307	
2	2	STRIV	1351	910.52	64.44	-6507	0.00	13307	0	13307	
2	2	STR V	8424	910.52	64.44	-5918	0.00	13307	0	13307	

----- FOOTING 2 FLEXURAL DESIGN -----

FLEXURAL DESIGN - TRANSVERSE FLEXURE, REINFORCING STEEL REQUIREMENTS:

LRFD MOMENT, MIN STEEL CODE:
a: Design controlled by 1.2 Mcr
b: Design controlled by 4/3 Mdes
c: Design controlled 0.03f'c/fy

FTG NO.	COL NO.	HORZ DIST. (ft)	LOCATION	AASHTO LIMIT STATE	POSITIVE FLEXURE LOAD CASE	POSITIVE FLEXURE LRFD MOMENT (ft-k)	POSITIVE FLEXURE d (in)	POSITIVE FLEXURE AREA REQD. (sq-in)	POSITIVE FLEXURE AREA PROV. (sq-in)	NG	NEGATIVE FLEXURE LOAD CASE	NEGATIVE FLEXURE LRFD MOMENT (ft-k)	NEGATIVE FLEXURE d (in)	NEGATIVE FLEXURE AREA REQD. (sq-in)	NEGATIVE FLEXURE AREA PROV. (sq-in)	NG
2		5.98	dv	STR I	348	12652b	80.3	35.31	131.04		-1	0	0.0	0.00	0.00	
				STIII	1213	11802b	80.3	32.92	131.04		-1	0	0.0	0.00	0.00	
				STRIV	1347	12451b	80.3	34.75	131.04		-1	0	0.0	0.00	0.00	
				STR V	10196	12620b	80.3	35.23	131.04		-1	0	0.0	0.00	0.00	
2	2	12.00	FACE	STR I	348	36960b	80.3	104.94	131.04		-1	0	0.0	0.00	0.00	
				STIII	1213	34223b	80.3	96.98	131.04		-1	0	0.0	0.00	0.00	
				STRIV	1347	36132b	80.3	102.53	131.04		-1	0	0.0	0.00	0.00	
				STR V	10196	36858b	80.3	104.65	131.04		-1	0	0.0	0.00	0.00	
2	2	26.00	FACE	STR I	304	39683a	80.3	112.90	131.04		-1	0	0.0	0.00	0.00	
				STIII	1225	39683a	80.3	112.90	131.04		-1	0	0.0	0.00	0.00	
				STRIV	1347	39683a	80.3	112.90	131.04		-1	0	0.0	0.00	0.00	
				STR V	8280	39683a	80.3	112.90	131.04		-1	0	0.0	0.00	0.00	
2		32.02	dv	STR I	448	14713b	80.3	41.13	131.04		-1	0	0.0	0.00	0.00	
				STIII	1225	14006b	80.3	39.13	131.04		-1	0	0.0	0.00	0.00	
				STRIV	1348	14735b	80.3	41.19	131.04		-1	0	0.0	0.00	0.00	
				STR V	11880	14785b	80.3	41.33	131.04		-1	0	0.0	0.00	0.00	

FLEXURAL DESIGN - TRANSVERSE FLEXURAL DESIGN PARAMETERS (Based on As Provided):

FTG NO.	COL NO.	HORZ DIST. (ft)	LOCATION	AASHTO LIMIT STATE	POSITIVE FLEXURE LOAD CASE	POSITIVE FLEXURE a (in)	POSITIVE FLEXURE STRAIN es	POSITIVE FLEXURE PHI Ø	POSITIVE FLEXURE ØMn CAP (ft-k)	NEGATIVE FLEXURE LOAD CASE	NEGATIVE FLEXURE a (in)	NEGATIVE FLEXURE STRAIN es	NEGATIVE FLEXURE PHI Ø	NEGATIVE FLEXURE ØMn CAP (ft-k)
2		5.98	dv	STR I	348	5.07	0.037375	0.900	45853	-1	0.00	0.000000	0.000	0
				STIII	1213	5.07	0.037375	0.900	45853	-1	0.00	0.000000	0.000	0
				STRIV	1347	5.07	0.037375	0.900	45853	-1	0.00	0.000000	0.000	0
				STR V	10196	5.07	0.037375	0.900	45853	-1	0.00	0.000000	0.000	0
2	2	12.00	FACE	STR I	348	5.07	0.037375	0.900	45853	-1	0.00	0.000000	0.000	0
				STIII	1213	5.07	0.037375	0.900	45853	-1	0.00	0.000000	0.000	0
				STRIV	1347	5.07	0.037375	0.900	45853	-1	0.00	0.000000	0.000	0
				STR V	10196	5.07	0.037375	0.900	45853	-1	0.00	0.000000	0.000	0
2	2	26.00	FACE	STR I	304	5.07	0.037375	0.900	45853	-1	0.00	0.000000	0.000	0
				STIII	1225	5.07	0.037375	0.900	45853	-1	0.00	0.000000	0.000	0
				STRIV	1347	5.07	0.037375	0.900	45853	-1	0.00	0.000000	0.000	0
				STR V	8280	5.07	0.037375	0.900	45853	-1	0.00	0.000000	0.000	0
2		32.02	dv	STR I	448	5.07	0.037375	0.900	45853	-1	0.00	0.000000	0.000	0
				STIII	1225	5.07	0.037375	0.900	45853	-1	0.00	0.000000	0.000	0
				STRIV	1348	5.07	0.037375	0.900	45853	-1	0.00	0.000000	0.000	0
				STR V	11880	5.07	0.037375	0.900	45853	-1	0.00	0.000000	0.000	0

FLEXURAL DESIGN - LONGITUDINAL FLEXURE, REINFORCING STEEL REQUIREMENTS:

LRFD MOMENT, MIN STEEL CODE:
a: Design controlled by 1.2 Mcr
b: Design controlled by 4/3 Mdes
c: Design controlled 0.03f'c/fy

FTG NO.	COL NO.	HORZ DIST. (ft)	LOCATION	AASHTO LIMIT STATE	POSITIVE FLEXURE LOAD CASE	POSITIVE FLEXURE LRFD MOMENT (ft-k)	POSITIVE FLEXURE d (in)	POSITIVE FLEXURE AREA REQD. (sq-in)	POSITIVE FLEXURE AREA PROV. (sq-in)	NG	NEGATIVE FLEXURE LOAD CASE	NEGATIVE FLEXURE LRFD MOMENT (ft-k)	NEGATIVE FLEXURE d (in)	NEGATIVE FLEXURE AREA REQD. (sq-in)	NEGATIVE FLEXURE AREA PROV. (sq-in)	NG
2		-11.92	dv	STR I	343	17146b	78.9	48.89	149.76		-1	0	0.0	0.00	0.00	
				STIII	1217	16440b	78.9	46.85	149.76		-1	0	0.0	0.00	0.00	
				STRIV	1347	17774b	78.9	50.70	149.76		-1	0	0.0	0.00	0.00	
				STR V	10623	17065b	78.9	48.65	149.76		-1	0	0.0	0.00	0.00	
2	2	-6.00	FACE	STR I	293	39683a	78.9	115.03	149.76		-1	0	0.0	0.00	0.00	
				STIII	1213	39683a	78.9	115.03	149.76		-1	0	0.0	0.00	0.00	
				STRIV	1345	39683a	78.9	115.03	149.76		-1	0	0.0	0.00	0.00	
				STR V	8269	39683a	78.9	115.03	149.76		-1	0	0.0	0.00	0.00	
2	2	6.00	FACE	STR I	1	39683a	78.9	115.03	149.76		-1	0	0.0	0.00	0.00	
				STIII	1179	39683a	78.9	115.03	149.76		-1	0	0.0	0.00	0.00	
				STRIV	1345	39683a	78.9	115.03	149.76		-1	0	0.0	0.00	0.00	
				STR V	1353	39683a	78.9	115.03	149.76		-1	0	0.0	0.00	0.00	
2		11.92	dv	STR I	457	18949b	78.9	54.10	149.76		-1	0	0.0	0.00	0.00	
				STIII	1228	18081b	78.9	51.59	149.76		-1	0	0.0	0.00	0.00	
				STRIV	1348	19322b	78.9	55.18	149.76		-1	0	0.0	0.00	0.00	
				STR V	12177	18902b	78.9	53.96	149.76		-1	0	0.0	0.00	0.00	

FLEXURAL DESIGN - LONGITUDINAL FLEXURAL DESIGN PARAMETERS (Based on As Provided):

FTG NO.	COL NO.	HORZ DIST.	LOCATION	AASHTO LIMIT	POSITIVE FLEXURE LOAD CASE	POSITIVE FLEXURE a (in)	POSITIVE FLEXURE STRAIN es	POSITIVE FLEXURE PHI Ø	POSITIVE FLEXURE ØMn CAP (ft-k)	NEGATIVE FLEXURE LOAD CASE	NEGATIVE FLEXURE a (in)	NEGATIVE FLEXURE STRAIN es	NEGATIVE FLEXURE PHI Ø	NEGATIVE FLEXURE ØMn CAP (ft-k)

		(ft)		STATE										
2		-11.92	dv	STR I	343	5.80	0.031708	0.900	51209	-1	0.00	0.000000	0.000	0
				STIII	1217	5.80	0.031708	0.900	51209	-1	0.00	0.000000	0.000	0
				STRIV	1347	5.80	0.031708	0.900	51209	-1	0.00	0.000000	0.000	0
				STR V	10623	5.80	0.031708	0.900	51209	-1	0.00	0.000000	0.000	0
2	2	-6.00	FACE	STR I	293	5.80	0.031708	0.900	51209	-1	0.00	0.000000	0.000	0
				STIII	1213	5.80	0.031708	0.900	51209	-1	0.00	0.000000	0.000	0
				STRIV	1345	5.80	0.031708	0.900	51209	-1	0.00	0.000000	0.000	0
				STR V	8269	5.80	0.031708	0.900	51209	-1	0.00	0.000000	0.000	0
2	2	6.00	FACE	STR I	1	5.80	0.031708	0.900	51209	-1	0.00	0.000000	0.000	0
				STIII	1179	5.80	0.031708	0.900	51209	-1	0.00	0.000000	0.000	0
				STRIV	1345	5.80	0.031708	0.900	51209	-1	0.00	0.000000	0.000	0
				STR V	1353	5.80	0.031708	0.900	51209	-1	0.00	0.000000	0.000	0
2		11.92	dv	STR I	457	5.80	0.031708	0.900	51209	-1	0.00	0.000000	0.000	0
				STIII	1228	5.80	0.031708	0.900	51209	-1	0.00	0.000000	0.000	0
				STRIV	1348	5.80	0.031708	0.900	51209	-1	0.00	0.000000	0.000	0
				STR V	12177	5.80	0.031708	0.900	51209	-1	0.00	0.000000	0.000	0

----- FOOTING 2 SERVICEABILITY RESULTS -----

FATIGUE LIMIT STATE - TRANSVERSE REINFORCEMENT DATA:

Notes: All fatigue data is computed from Fatigue Limit State.
Axial tension is negative.
T indicates top bars control; B indicates bottom bars control.
** Dead load values may include effects due to shrinkage, refer to load case data.

				FATIGUE									
FTG NO.	COL NO.	HORZ DIST. (ft)	LOCATION	MAX LOAD NO.	MIN LOAD NO.	DL** AXIAL (kips)	DL** MOMENT (ft-k)	MAX LL MOMENT (ft-k)	MIN LL MOMENT (ft-k)	f MIN (ksi)	ACTUAL RANGE (ksi)	ALLOW RANGE (ksi)	NG
2	2	12.00	FACE	0	43034	0	17834	0	-19	20.2	1.7	16.7	B
2	2	26.00	FACE	43031	0	0	20825	139	0	23.8	1.8	15.5	B

FATIGUE LIMIT STATE - LONGITUDINAL REINFORCEMENT DATA:

				FATIGUE									
FTG NO.	COL NO.	HORZ DIST. (ft)	LOCATION	MAX LOAD NO.	MIN LOAD NO.	DL** AXIAL (kips)	DL** MOMENT (ft-k)	MAX LL MOMENT (ft-k)	MIN LL MOMENT (ft-k)	f MIN (ksi)	ACTUAL RANGE (ksi)	ALLOW RANGE (ksi)	NG
2	2	-6.00	FACE	43035	43029	0	20874	130	-33	22.8	0.2	15.9	B
2	2	6.00	FACE	43031	43036	0	22845	197	-49	24.9	0.3	15.2	B

DISTRIBUTION OF TRANSVERSE FLEXURAL REINFORCEMENT:

Notes: Reinforcing steel distribution data is based on the maximum area of steel obtained from either Strength Limit State Design ,or user defined limits.
Moments are based on Service I Limit State.

				TRANSVERSE STEEL DISTRIBUTION									
FTG NO.	COL NO.	HORZ DIST. (ft)	LOCATION	LOAD CASE	MAT	SERV I AXIAL (kips)	SERV I MOMENT (ft-k)	h (in)	dc (in)	ßs	STRESS fs (ksi)	SPACING ACTUAL (in)	SPACING ALLOW. (in)	NG
2	2	12.00	FACE	37916	BOT	0	22407	84.00	3.70	1.066	27.43	5.40	16.53	
2	2	26.00	FACE	39600	BOT	0	25452	84.00	3.70	1.066	31.16	5.40	13.67	

DISTRIBUTION OF LONGITUDINAL FLEXURAL REINFORCEMENT:

				LONGITUDINAL STEEL DISTRIBUTION									
FTG NO.	COL NO.	HORZ DIST. (ft)	LOCATION	LOAD CASE	MAT	SERV I AXIAL (kips)	SERV I MOMENT (ft-k)	h (in)	dc (in)	ßs	STRESS fs (ksi)	SPACING ACTUAL (in)	SPACING ALLOW. (in)	NG
2	2	-6.00	FACE	38343	BOT	0	24017	84.00	5.11	1.093	26.27	4.72	14.16	
2	2	6.00	FACE	39825	BOT	0	26674	84.00	5.11	1.093	29.17	4.72	11.73	

BEGIN TIME: 06/08/2012 11:12:39
END TIME: 06/08/2012 11:17:10
ELAPSED TIME: 00:04:31

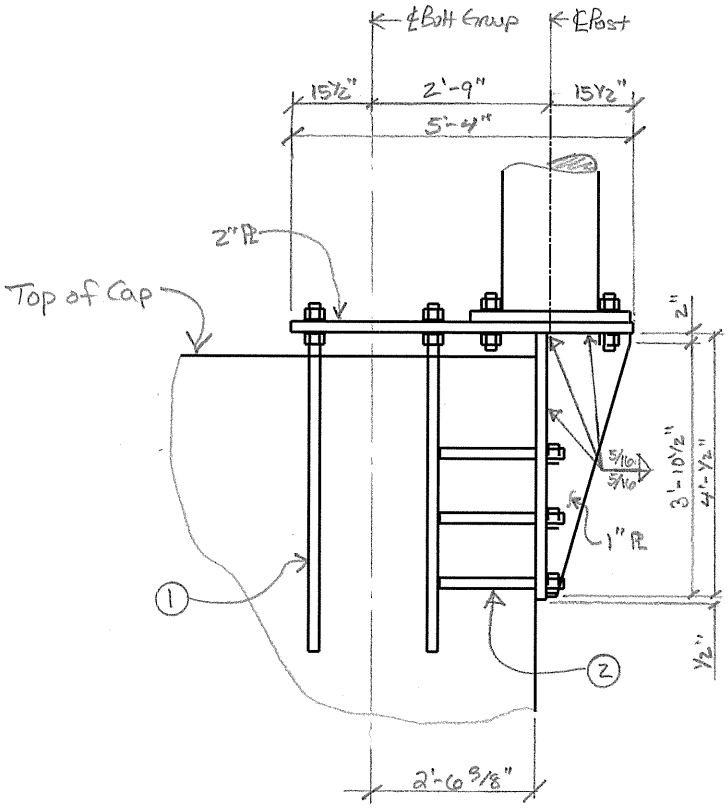

Side View

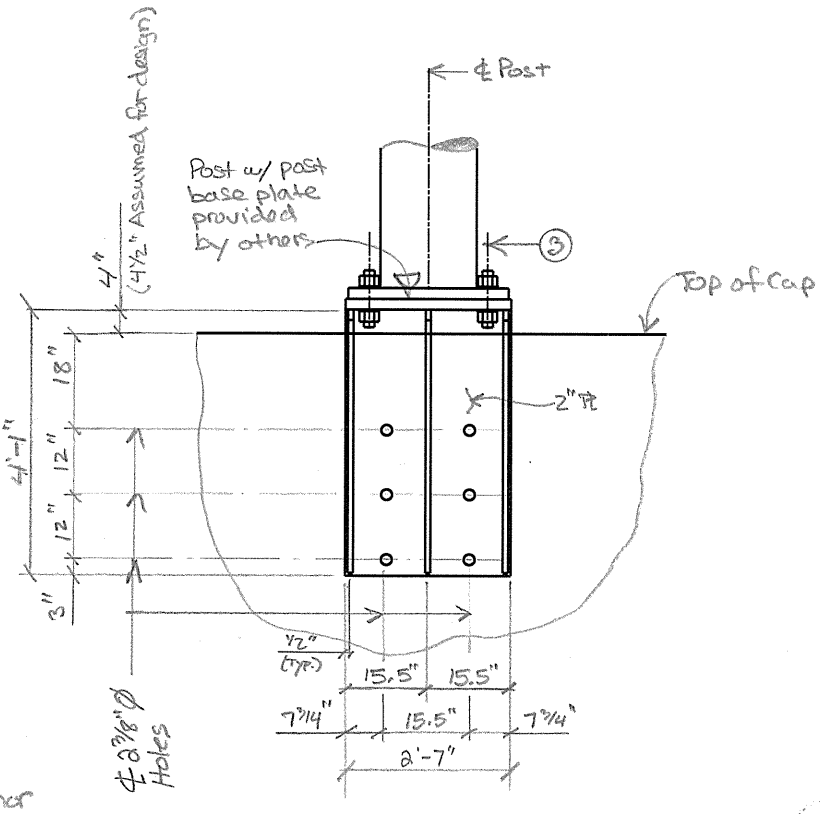

End View

① 2"Ø F1554 Anchor Rod Cast w/ Cap (8 total)

② 2"Ø F1554 Anchor Rods w/ Heavy Hex Nut and Hardened washer. Embed 18" with HIT-HY 150 Max. Adhesive, or approved equal. (8 Total)

③ 2"Ø F1554 Threaded Rod w/ 2 Heavy Hex Nuts and 2 Hardened Washers (8 Total)

Notes (cont.)

4. All plates shall be galv. in accordance with CMS Section 711.02.
5. All F1554 rods, nuts, and washers shall be galv. in accordance with F8329.
6. Drill and install anchors at cap end face

Notes:

1. The contractor shall field verify all dimensions prior to ordering materials.
2. All steel shall be ASTM A709 Grade 50.
3. Anchor rods and threaded rods shall be F1554 Grade 105

Pier 11 - Sign Post Sup. Bracket
LER 6/20/12.
KDG 6/22/12

Piet. 11 49633
LER 6/20/12
KDG 6/22/12

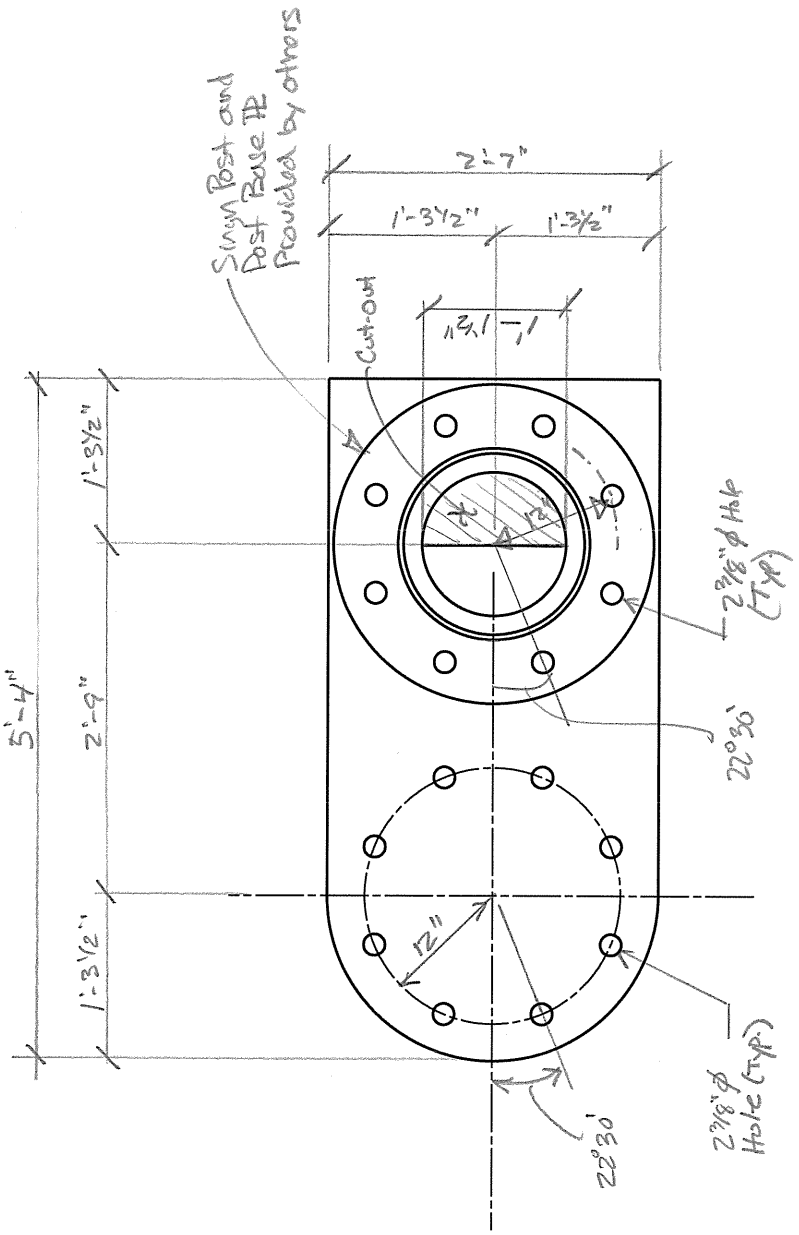

Plan View

FOR: Pier 11 - Sign Support	JOB NO: 49633	SHEET NO:
MADE BY: LER	CHECKED BY: KDG	BACKCHECKED BY:
DATE: 6/18/12	DATE: 6/22/12	DATE:

HNTB

Sign OH-785 Support Bracket

Design a support bracket for OH-785 which was impacted by the misalignment of the pier. See attached sketches for schematic details.

Assume existing bolt group at top of cap and additional bolt group at cap end face share equaly in resistance of design forces exerted at base of sign post. (except as noted)

Forces at post base taken from calculations provided by sign support manufacturer

See attached excerpts from said calculations package and shop drawings.

Materials

Concrete: $f'_c = 4$ ksi

Steel: $f_y = 50$ ksi (ASTM A709)

Anchor Rods: F1554 Grade 105
$F_y = 105$ ksi

Loads

These are service loads per Standard Specifications for Structural Supports for Highway Signs, Luminaires and Traffic Signals.

$P_x = 4.74$ k
$V_y = 1.01$ k
$V_z = -4.59$ k
$M_x = 59.15$ k
$M_y = 156.02$ k
$M_z = 67.57$ k

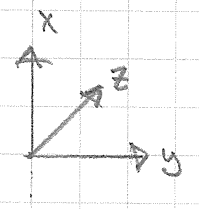

local coordinate system looking upstation

Wind applied in +Z direction
∴ V_z, M_y, & M_x are reversible.

Apply a load factor of 2.0 to all loads and design braket using LRFD AASHTO Bridge Specifications.

$P_{x_u} = 9.5$ k
$V_{y_u} = 2.0$ k
$V_{z_u} = -9.2$ k
$M_{x_u} = 1118$ k·ft
$M_{y_u} = 312$ k·ft
$M_{z_u} = 135$ k·ft

FOR: Pier 11 - Sign Support	JOB NO: 49633	SHEET NO:
MADE BY: LEP	CHECKED BY: KDG	BACKCHECKED BY:
DATE: 6/18/12	DATE: 6/22/12	DATE:

HNTB

Anchor Rod Group 1

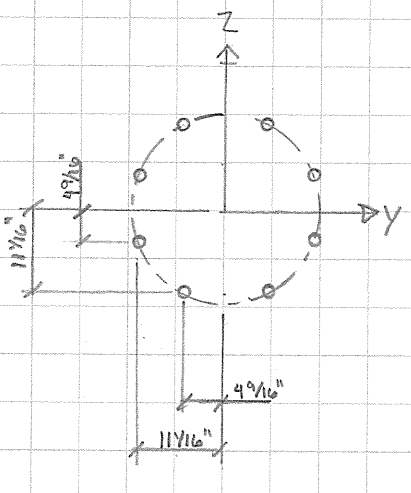

$I_y = 2(2)(11.0625)^2 + (2)(2)(4.5625)^2$

$= 489.52 + 83.87$

$= 572.79 \text{ in}^2/\text{bolt}$

$I_z = I_y$

$J = I_y + I_z$

$= 2(572.79)$

$= 1145.58 \text{ in}^2/\text{bolt}$

$n = 8$ bolts

Anchor Rod Group 2

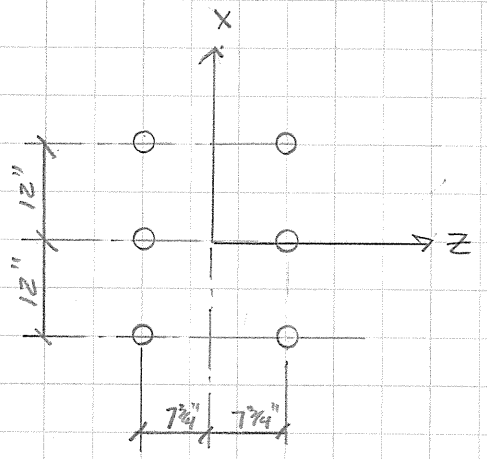

$I_z = 2(2)(12)^2 = 576 \text{ in}^2$

$I_x = 2(3)(7.75)^2 = 360.4 \text{ in}^2$

$J = 576 + 360.4$

$= 936.4 \text{ in}^2$

$n = 6$ bolts

FOR: Pier 11-Sign Support	JOB NO: 49633	SHEET NO:
MADE BY: LER	CHECKED BY: KDG	BACKCHECKED BY:
DATE: 6/18/12	DATE: 6/22/12	DATE:

HNTB

Anchor Rod Design Forces

Calculate design tension and shear anchor rod forces for existing (group 1) and additional (group 2) anchor rods.

1) Axial Load (P_z)

Assume additional anchor rods resist full axial load in post.

$$V_{u_{2(x)}} = \frac{9.5\ K}{6\ bolts} = 1.6\ K \uparrow$$

2) Shear Force (V_y)

$$V_{u_{1(y)}} = \frac{\frac{1}{2}(2\ K)}{8} = 0.1\ K \rightarrow$$

$$V_{u_{2(y)}} = \frac{\frac{1}{2}(2)}{6} = 0.17\ K \rightarrow$$

3) Shear Force (V_z)

$$V_{u_{1(z)}} = \frac{-9.2\left(\frac{1}{2}\right)}{8} = 0.6\ K \leftarrow$$

$$V_{u_{2(z)}} = \frac{-9.2\left(\frac{1}{2}\right)}{6} = 0.8\ K \leftarrow$$

4) Moment (M_x)

Assume fully resisted by group 1.

$$V_{u_{1(z)}} = \frac{M_x c_y}{J}$$

$$= \frac{(118\ K\cdot ft)(12)(11.0625)}{1145.58}$$

$$= 13.7\ K$$

$$V_{u_{1(y)}} = \frac{M_x c_z}{J}$$

$$= \frac{(118\ K\cdot ft)(12)(11.0625)}{1145.58}$$

$$= 13.7\ K$$

ME-101-1204

FOR: Pier 11-Sign Support	JOB NO: 49633	SHEET NO:
MADE BY: LER	CHECKED BY: KDG	BACKCHECKED BY:
DATE: 6/18/12	DATE: 6/22/12	DATE:

HNTB

5) Moment (M_y)
Assume fully resisted by group 2.

$$V_{u2(x)} = \frac{M_y C_z}{J}$$

$$= \frac{(312 \text{ k-ft})(12)(7.75")}{936.4}$$

$$= 31 \text{ K}$$

$$V_{u2(z)} = \frac{M_y C_x}{J}$$

$$= \frac{(312)(12)(12)}{936.4}$$

$$= 48 \text{ K}$$

6) Moment (M_z)
Assume M_z resisted by force couple developed by groups 1 & 2.

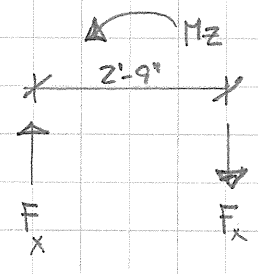

$$F_x = \frac{M_z}{2.75'} = \frac{135 \text{ k-ft}}{2.75} = \underline{49.1 \text{ k}}$$

$$\pm V_{u1(x)} = \frac{-49.1 \text{ k}}{8} = -6.1 \text{ k} \quad \text{(comp.)}$$

$$V_{u2(x)} = \frac{49.1 \text{ k}}{6} = 8.2 \text{ k} \downarrow$$

FOR: Pier 11 - Sign Support	JOB NO: 49433	SHEET NO:
MADE BY: LEB	CHECKED BY: KDG	BACKCHECKED BY:
DATE: 6/18/12	DATE: 6/22/12	DATE:

HNTB

Summary of Anchor Rod Forces:

① Group 1 –

$T_{u_1} = -6.1$ K/bolt (comp.)

$V_{u_1} = \sqrt{(6.1+13.7)^2 + (0.6+13.7)^2}$

$= 19.9$ K/bolt

② Group 2 –

$T_{u_2} = 0.25$ K/bolt

$V_{u_2} = \sqrt{(1.6+31+8.2)^2 + (0.8+48)^2}$

$= 64$ K

$V_{u2_x} = 1.6+31+8.2 = 40.8$ K

$V_{u2_z} = 0.8+48 = 48.8$ K

FOR: Pier 11-Sign Support	JOB NO: 49633	SHEET NO:
MADE BY: LER	CHECKED BY: KDG	BACKCHECKED BY:
DATE: 6/19/12	DATE: 6/22/12	DATE:

HNTB

Check Group 1 Anchor Rods

Calculate shear resistance of anchor bolts per AASHTO 6.13.2.12.

$$\phi R_n = \phi 0.48 A_b F_{ub} N_s$$

$\phi = 0.75$

$F_{ub} = 125$ ksi

$A_b = \frac{\pi}{4}(2")^2$

$= 3.14 \text{ in}^2$

$\phi R_n = 0.75(0.48)(3.14)(125)(1)$

$= 141 \text{ K} > R_u = 20 \text{ K}$ ok

Design Group 2 Anchor Rods

Calculate required bolt ϕ to resist factored shear force.

$R_u = 64$ K

$\phi R_n = \phi 0.48 A_b F_{ub} N_s$

Assume anchor rods are F1554 material. (Grade 105).

$64 \text{ K} = 0.75(0.48) A_b (125 \text{ ksi})(1)$

$A_b = 1.42 \text{ in}^2$

$d_b = \sqrt{\frac{4}{\pi}(1.42)}$

$= 1.35 \text{ in}^2$

Check cap. for $\phi_b = 2"$

$A_b = 3.14 \text{ in}^2$

$\phi R_n = 0.75(0.48)(3.14)(125)$

$= 141 \text{ K}$ ok

FOR: Pier 11 - Sign Support	JOB NO: 49633	SHEET NO:
MADE BY: LER	CHECKED BY: KDG	BACKCHECKED BY:
DATE: 6/19/12	DATE: 6/22/12	DATE:

HNTB

Bracket Assembly

Design base plate and vertical plate of bracket assembly.

① Base Plate

Check for combined bending due to M_x & M_z.

Bending in plate due to M_z:

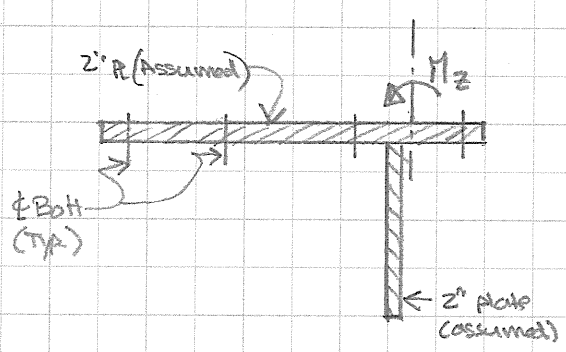

Structural Model –

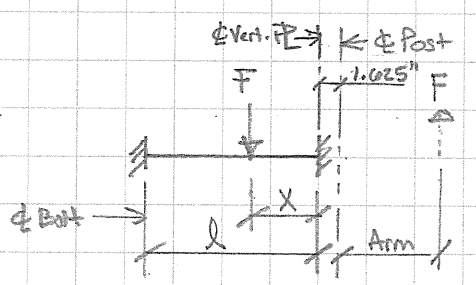

Arm = dist. from ℄ Post to c.g. of ½ of bolt group

$$= \frac{2(11.0625) + 2(4.5625)}{4}$$

$$= 7.8125 \text{ in}$$

$$F = \frac{M_z}{2 \times Arm} = \frac{135 \text{ k-ft} \times 12 \text{"/'}}{2 \times 7.8125}$$

$$= 104 \text{ k}$$

X = dist. from ℄ of vert. plate to force F

$$= 7.8125" - [2.75' - 2.53' - 1.625"/12] \times 12"/'$$

$$= 6.1875"$$

$$l = 2.75 \times 12 - 7.8125" - 1.625"$$

$$= 23.5625"$$

$$M_{u_2} = \frac{F(l-x)^2 x}{l^2}$$

$$= \frac{104 \text{ k} (23.5625 - 6.1875)^2 (6.1875)}{(23.5625)^2}$$

$$= 350 \text{ k-in}$$

$$= 29.2 \text{ k-ft}$$

$$\phi M_{n_2} = \phi F_y Z_{p_2}$$

$\phi = 1.0$

$F_y = 50$ ksi

$Z_{p_2} = \frac{1}{4} b t^2$

$= \frac{1}{4} (31") (2)^2$

$= 31 \text{ in}^3$

$$\phi M_{z} = (1)(50)(31) \text{ k/12}$$

$$= 129.2 \text{ k-ft}$$

ME-101-1204

FOR: Pier 11 - Sign Support	JOB NO: 49633	SHEET NO:
MADE BY: LER	CHECKED BY: KDG	BACKCHECKED BY:
DATE: 6/19/12	DATE: 6/22/12	DATE:

HNTB

Bending Moment in plate due to M_x:

$M_{x_u} = 118$ k-ft

$\phi M_{n_x} = \phi F_y Z_{p_x}$

$Z_{p_x} = \frac{1}{4}(31)^2(2)$
$= 480.5 \text{ in}^3$

$\phi M_{n_x} = (1)(50)(480.5)(\frac{1}{12})$
$= 2000$ k-ft

Combined bending interaction:

$R = \frac{M_{ux}}{\phi M_{n\,x}} + \frac{M_{uz}}{\phi M_{nz}}$

$= \frac{118}{2000} + \frac{29.2}{129.2}$

$= 0.059 + 0.226$

$= 0.285 < 1.0$ ok

(2) Vertical Plate

Check plate for moment M_y.

$M_{y_u} = 312$ k-ft

$\phi M_n = 2000$ k-ft $> M_{y_u}$ ok
(see prev. calc. for ϕM_{n_x} for base plate)

Check bolt bearing. [AASHTO 6.13.2.9]

Spacing (s) = 12"
Edge Dist. (E) = 3"

$d_{hole} = 2.375"$
$d_{bolt} = 2.0"$

$R_u = 64$ k/bolt
(assume resultant force acts normal to edge w/ least edge dist.)

$l_c = 12" - 2.375"$
$= 9.625" > 2d_{bolt} = 4.0"$

$l_e = 3 - \frac{1}{2}(2.375)$
$= 1.8125" < 2d_{bolt} = 4.0"$

$\therefore \phi R_n = \phi 1.2 L_c t F_u$
$\phi = 0.80$

$\phi R_n = (0.80)1.2(1.8125)(2)(65)$
$= 226 \text{ k} > 64 \text{ k}$ ok

Block shear ok by inspection.

FOR: Pier 11 - Sign Support	JOB NO: 49633	SHEET NO:
MADE BY: LER	CHECKED BY: KDG	BACKCHECKED BY:
DATE: 6/19/12	DATE: 6/22/12	DATE:

HNTB

Fin Plates Connection

Design connection of fin plates to vertical plate and base plate for tension force due to M_z and M_y.

Tension force due to M_z:

$$T_{u_{M_z}} = \frac{M_z}{2.75'} \frac{1}{n}$$

n = 3 plates

$$T_{u_{M_z}} = \frac{135 \text{ k-ft} \times 12 \text{"/'}}{2.75 \times 12 \times 3}$$

$$= 16.4 \text{ k}$$

Tension force due to M_y:

$$T_{u_{M_y}} = \frac{M_y}{\ell}$$

ℓ = dist bt. centers of ext. fins

$$= 31" - 2[0.5 + 1/2(2)]$$

$$= 28"$$

$$T_{u_{M_y}} = \frac{312 \times 12}{28}$$

$$= 134 \text{ K}$$

$$T_u = 16.4 + 134$$

$$= \underline{150 \text{ K}}$$

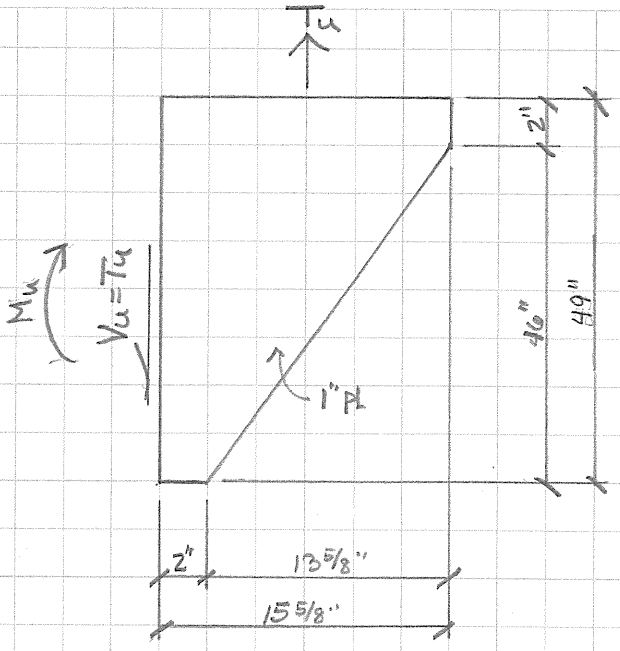

Assume T_u applied at center of top edge and transferred into plate through fillet weld (each side)

t_{min} = 5/16"
F_{exx} = 70 ksi

Weld strength calculated per AASHTO 6.13.3.2.4b.

$$\phi R_n = \phi 0.6 F_{exx} l_w 0.707 t_w \times 2$$

l_w = 15.625 − 0.25
= 15.375"
ϕ = 0.80

ϕR_n = 0.80(0.6)(70)(15.375)(0.707)(0.3125)(2)
= 228 K > 150 OK

ME-101-1204

FOR: Pier 11 - Sign Support	JOB NO: 49033	SHEET NO:
MADE BY: LER	CHECKED BY: KDG	BACKCHECKED BY:
DATE: 6/19/12	DATE: 6/22/12	DATE:

HNTB

Check weld at vertical edge.

$V_u = 150^k$

$M_u = 150^k \times \frac{1}{2}(15.625)$

$= 1172 \text{ k·in}$

Weld Properties:

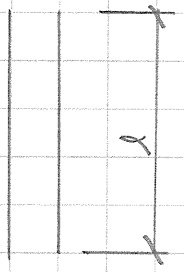

$l = 49 - 0.25" = 48.75"$

$A = 2(48.75")(1) = 97.5 \text{ in}^2$

$I = \frac{1}{12}(1)(48.75)^3 \times 2$

$= 19310 \text{ in}^4$

$v_u = \frac{150^k}{97.5} = 1.54 \text{ k/in}$

$t_u = \frac{1172 \text{ k·in}\ (\frac{1}{2})(48.75)}{19310}$

$= 1.48$

$V_u = \sqrt{(1.54)^2 + (1.48)^2}$

$= 2.1 \text{ k/in}$

$\phi R_n = \phi 0.60 F_{exx}\ 0.707\ t_w$

$= 0.80(0.60)(70)(0.707)(0.3125)$

$= 7.42 \text{ k/in} > R_u$ ok

Use 5/16" weld at top and vertical edges of fin (both sides).

Check bending of fin plate due to M_u:

$\phi M_n = \phi F_y Z_p$

$Z = \frac{1}{4}(49)^2(1)$

$= 600 \text{ in}^3$

$\phi M_n = (1.0)(50)(600) \frac{1}{12}$

$= 2500 \text{ k·ft} > 98 \text{ k·ft}$ ok

ME-101-1204

FOR: Pier 11-Sign Support	JOB NO: 49633	SHEET NO:
MADE BY: LER	CHECKED BY: KDG	BACKCHECKED BY:
DATE: 6/19/12	DATE: 6/22/12	DATE:

HNTB

Check fatigue stress on fillet welds due to galloping and natural wind gusts.

a) Galloping

$M_z = 37.5$ k-ft (@ Post Base)

$T_g = \frac{37.5 \text{ k-ft}}{(2.75')(3)}$

$= 4.5$ K

$V_g = T_g$

$M_g = T_g \times \frac{1}{2}(15.625)$

$= 4.5(0.5)(15.625)$

$= 35.16$ k-in

$V_1 = \frac{4.5}{97.5} = 0.05$ K/in

$V_2 = \frac{35.16 \text{ K-in}\,(\frac{1}{2})(48.75)}{19310 \text{ in}^4}$

$= 0.04$ K/in

$V = \sqrt{(0.05)^2 + (0.04)^2}$

$= 0.06$ K/in

$f_g = \frac{0.06 \text{ K/in}}{0.707(0.3125)}$

$= 0.27$ ksi

For Cat E detail w/ infinite life

$\Delta F_{TH} = 4.5$ ksi

The calculated fatigue stress is assumed unfactored. Apply load factor for Fat I.

$f_g' = 1.5\ (0.27)$

$= 0.405$ ksi ok

b) Natural Wind Gusts

$M_{NW} = 37.4$ k-ft

$T_{NW} = \frac{37.4 \times 12}{28"} = 16.0$ K

$= 16$ K

$V_{NW} = 16$ K

$M_{NW} = (16\text{K})(\frac{1}{2})(15.625)$

$= 125$ K-in

$V_1 = \frac{16}{97.5} = 0.16$ K/in

$V_2 = \frac{(125)(\frac{1}{2})(48.75)}{19310}$

$= 0.16$ K/in

$V = \sqrt{0.16^2 + 0.16^2} = 0.23$ K/in

$f_{NW} = \frac{0.23}{0.707(0.3125)} = 1.04$ ksi

$f_{NW}' = 1.5 \times 1.04 = 1.56$ ksi < 4.5 ok

FOR: Pier 11 - Sign Support	JOB NO: 49633	SHEET NO:
MADE BY: LEB	CHECKED BY: KDG	BACKCHECKED BY:
DATE: 6/19/22	DATE: 6/22/22	DATE:

HNTB

Anchor Embedment

Determine anchor rod embedment at vertical face of cap beam to develop the required anchor shear load.

$V_{u\perp} = V_{uzx} = 40.8^k$

$V_{u//} = V_{uzz} = 48.8^k$

Evaluate anchor embedment requirements using ACI Appendix D.

Shear strength of anchor has already been considered. Consider concrete breakout strength and concrete pryout strength in shear.

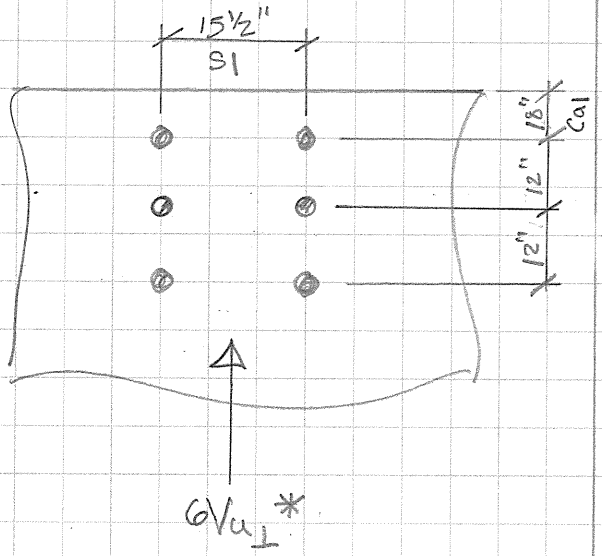

* Assume 6 x shear force ⊥ to edge on critical anchor acts on anchor group. By inspection, shear ⊥ to edge will control. (See RD.6.2.1).

a) Concrete Breakout (D.6.2)

$\phi = 0.70$ (Cond. B)

$V_{cbg} = \frac{A_{Vc}}{A_{Vco}} \psi_{ec} \psi_{ed} \psi_c \psi_h V_b$

A_{Vc} = proj. area of failure surface on the side of the concrete member at its edge for a group of anchors.

A_{Vco} = projected area for a single anchor in a deep member with a distance from edges equal to or greater than $1.5 c_{a1}$ in dir. ⊥ to shear

$= 4.5 (c_{a1})^2$

V_b = basic concrete breakout strength in shear of a single anchor in cracked conc.

$= \left(7 \left(\frac{l_e}{d_a}\right)^{0.2} \sqrt{d_a}\right) \lambda \sqrt{f'_c} (c_{a1})^{1.5}$

$l_e = h_{ef} \leq 8 d_a$

ψ_{ec} = mod. for ecc. loading
= assume 1.0

ψ_{ed} = mod. for edge effect
= 1.0 ($c_{a2} > 1.5 c_{a1}$)

ψ_c = mod. for uncracked conc.
= 1.4 (assume uncracked)

FOR: Pier 11 - Sign Support	JOB NO: 49633	SHEET NO:
MADE BY: LEP	CHECKED BY: KDG	BACKCHECKED BY:
DATE: 6/19/22	DATE: 6/22/22	DATE:

HNTB

ψ_h = mod. for member thickness, $h_a < 1.5 c_{a1}$
= 1.0 (the cap is much longer than $1.5 c_{a1}$)

d_a = diam. of anchor
= 2.0
λ = 1.0 (non-light wt. conc.)

h_{ef} = anchor embedment

Assume anchor rods are embeded 18".

$\therefore h_{ef} = 18"$

Two cases should be considered:

i) $c_{a1} = 18"$
ii) $c_{a1} = 30"$

[see Fig. RDe.2.1(b)]

i) $c_{a1} = 18"$ (to resist $\frac{1}{3}(\phi V_u)$)
$1.5 c_{a1} = 27"$

$A_{Vco} = 4.5(18)^2$
$= 1458 \text{ in}^2$

$A_{Vc} = [2(1.5 c_{a1}) + s_1] 1.5 c_{a1}$
$= [2(27) + 15.5](27)$
$= 1876.5 \text{ in}^2$

$V_b = \left[7\left(\frac{l_e}{d_a}\right)^{0.2}\sqrt{d_a}\right]\sqrt{f'_c}\,(c_{a1})^{1.5}$

$l_e = 18" \le 8(2") = 16"$
$= 16"$

$V_b = \left[7\left(\frac{16}{2}\right)^{0.2}\sqrt{2.5}\right]\sqrt{4000}\,(18)^{1.5}\ {}^{1}/_{1000}$

$= 72.5 \text{ K}$

$\phi V_{cbg} = \frac{1876.5}{1458}(1)(1)(1.4)(1)(72.5)\overset{\phi}{(0.7)}$

$= 91.4$

$\frac{\phi V_{cbg}}{2} = 45.7 \text{ K/bolt} > 40.8 \text{ K}$ ok

ME-101-1204

FOR: Pier 11 - Sign Support	JOB NO: 49633	SHEET NO:
MADE BY: LER	CHECKED BY: KDG	BACKCHECKED BY:
DATE: 6/19/22	DATE: 6/22/12	DATE:

HNTB

ii) $C_{a1} = 30''$ (to resist $\frac{2}{3}(6V_u)$)

$1.5\,C_{a1} = 45''$

$A_{vco} = 4.5(30)^2$

$= 4050\ in^2$

$A_{vc} = [2(1.5\,C_{a1}) + S_1]\,1.5\,C_{a1}$

$= [2(45) + 15.5]\,(45)$

$= 4747.5\ in^2$

$V_b = \left[7\left(\frac{16}{2}\right)^{0.2}\sqrt{2}\right]\sqrt{4000}\,(30)^{1.5} \times 1/1000$

$= 156\ k$

$\phi V_{cbg} = (0.7)\,\frac{4747.5}{4050}\,(156^k)(1.4)$

$= 179\ K$

$\frac{\phi V_{cbg}}{4} = 44.8\ K/bolt > 40.8\ K$ ok

b) Concrete Pryout (D.6.3)

$V_{cpg} = K_{cp} N_{cbg}$

$K_{cp} = 2.0$ for $h_{ef} > 2.5''$

N_{cbg} = concrete break out strength for group of anchors in tension

$= \frac{A_{NC}}{A_{NCO}}\,\psi_{ec}\,\psi_{ed}\,\psi_b\,\psi_{cp}\,N_b$

A_{NC} = projected concrete failure area of a single anchor or group of anchors; $\leq n A_{NCO}$

A_{NCO} = projected concrete failure area a single answer w/ edge distance equal to or greater than $1.5\,h_{ef}$

$= 9\,h_{ef}^2$

N_b = basic concrete breakout strength of a single anchor

$= K_c \lambda \sqrt{f'_c}\,h_{ef}^{1.5}$

$K_c = 17$ (post-installed anchors)

$\lambda = 1.0$

ME-101-1204

FOR: Pell-Sign Support	JOB NO: 49633	SHEET NO:
MADE BY: LER	CHECKED BY: KDG	BACKCHECKED BY:
DATE: 6/20/12	DATE: 6/22/12	DATE:

HNTB

ψ_{ec} = mod. factor for ecc. load; assume 1.0

ψ_{ed} = mod. factor for edge effects

$c_{a,min} = 18" < 1.5h_{ef} = 27"$

$\therefore \psi_{ed} = 0.7 + 0.3\frac{c_{a,min}}{1.5h_{ef}}$

$= 0.7 + 0.3\left(\frac{18"}{1.5(18)}\right)$

$= 0.90$

ψ_c = mod. for uncracked conc.

$= 1.4$ (assume uncracked

ψ_{cp} = mod. factor for post-installed anchors designed for uncracted concrete; NA for post installed adhesive anchors w/ threaded rods

$= 1.0$

$A_{Nc} = [(2\times(1.5h_{ef}) + s_1][c_{a1}+2(s_2)+1.5h_e$

$= [(2\times(27)+15.5][18+2(12)+27]$

$= 69.5" + 69"$

$= 4795.5\ in^2 < 6A_{Nco} = 17496\ in^2$

$A_{Nco} = 9(18)^2 = 2916\ in^2$

$N_b = 17(1)\sqrt{4000}\ (18)^{1.5}\ \frac{1}{1000}$

$= 82.1$

$N_{cbg} = \frac{4795.5}{2916}(1)(0.9)(1.4)(1.0)(82.1)$

$= 170.\text{K}$

$\phi V_{cpg} = (0.70)(2)(170)$

$= 238.2$

$\frac{\phi V_{cpg}}{6} = 210\ \text{K} \approx 40.8\text{K}$ Say OK

∴ use 18" embedment w/ HiHi HIT-HY 150 Max Adhesive or approved equal.

ϕV_{cpg} is also applicable to $V_{u//}$, in which case $\frac{1}{6}\phi V_{cpg} < V_{u//}$. However, the maximum shear force will only occur in the top and bottom to anchors and in opposing directions. The group will ∴ never see $6\times V_{u//}$ in one direction, no $6\times V_{u\perp}$ for that matter

FOR: Pier 11 – Support Bracket	JOB NO: 49033	SHEET NO:
MADE BY: LER	CHECKED BY: KDG	BACKCHECKED BY:
DATE: 6/21/12	DATE: 6/22/12	DATE:

HNTB

Fin Plate Design

Check flexural yielding and local buckling on the free edge of the triangular fin plate due to the compression load caused by $M_z + M_y + P_x$

$$P_{u_1} = \frac{P_x}{3\ \text{fins}} = \frac{9.5}{3} = 3.1\ \text{k (comp.)}$$

$$P_{u_2} = \frac{M_y}{\ell} = \frac{32\ \text{k-ft} \times 12}{28"} = 134\ \text{k (comp.)}$$

$$P_{u_3} = \frac{M_z}{3 \times 2.75} = \frac{135\ \text{k-ft}}{3(2.75)} = 16.4\ \text{k (tension)}$$

$P_u = \Sigma P$ (ignore P_{u_3}, tn.)

$= 3.1 + 134 = \underline{137\ \text{k}}$

See attached excerpt from AISC Steel Manual (2nd Ed., 1998) for approach to checking compression & buckling on the free edge.

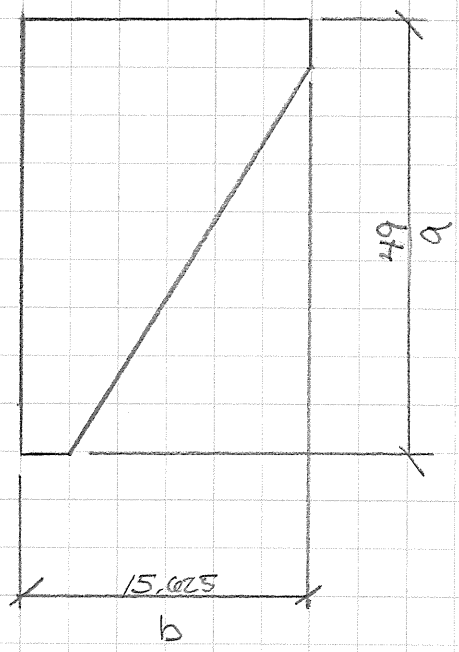

Local Buckling

Local buckling of the free edge will be prevented for

$$0.5 \le b/a < 1.0, \text{ if}$$

$$\frac{b}{t} \le \frac{250}{\sqrt{F_y}}$$

$$\frac{b}{a} = \frac{15.625"}{49} = 0.32 < 0.5 \quad \underline{\text{ok}}$$

$$b/t = 15.625/1 = 15.625$$

$$\frac{250}{\sqrt{50}} = 35.4 > 15.625 \quad \underline{\text{ok}}$$

FOR: Pier 11-Support Bracket	JOB NO: 49633	SHEET NO:
MADE BY: LER	CHECKED BY: KDG	BACKCHECKED BY:
DATE: 6/21/12	DATE: 6/22/12	DATE:

HNTB

Flexural Yielding on Free Edge

$$\phi P_n = 0.85\, F_y\, z\, b t$$

$$Z = 1.39 - 2.2\left(\frac{b}{a}\right) + 1.27\left(\frac{b}{a}\right)^2 - 0.25\left(\frac{b}{a}\right)^3$$

$b = 15.625"$

$t = 1"$

$a = 49"$

$b/a = 0.32$

$$Z = 1.39 - 2.2(0.32) + 1.27(0.32)^2 - 0.25(0.32)^3$$

$$= 0.81$$

$$\phi P_n = 0.85(50)(0.81)(15.625)(1)$$

$$= 538\ k$$

$P_u = 137\ K$ ok

BRACKET PLATES

A bracket plate, illustrated in Figure 12-1, acts as a cantilevered beam. The design strengths of the bolts and/or welds and connected elements must be determined in accordance with the LRFD Specification; the applicable limit states are discussed in Part 8. Additionally, the design must consider flexural yielding and rupture at the section of maximum moment as well as local buckling and flexural yielding on the free edge of the bracket.

In lieu of a more detailed analysis, Salmon and Johnson (1990) recommend that the design strength of a triangular-shaped bracket plate in flexural yielding on the free edge be determined as:

$$\phi P_n = 0.85 F_y z b t$$

where

$$z = 1.39 - 2.2\left(\frac{b}{a}\right) + 1.27\left(\frac{b}{a}\right)^2 - 0.25\left(\frac{b}{a}\right)^3$$

b = width of bracket plate as shown in Figure 12-1, in.
a = depth of bracket plate as shown in Figure 12-1, in.
t = thickness of bracket plate, in.

For flexural yielding, the design strength of the bracket plate is ϕM_n where $\phi = 0.90$, and

$$M_n = F_y S_x$$

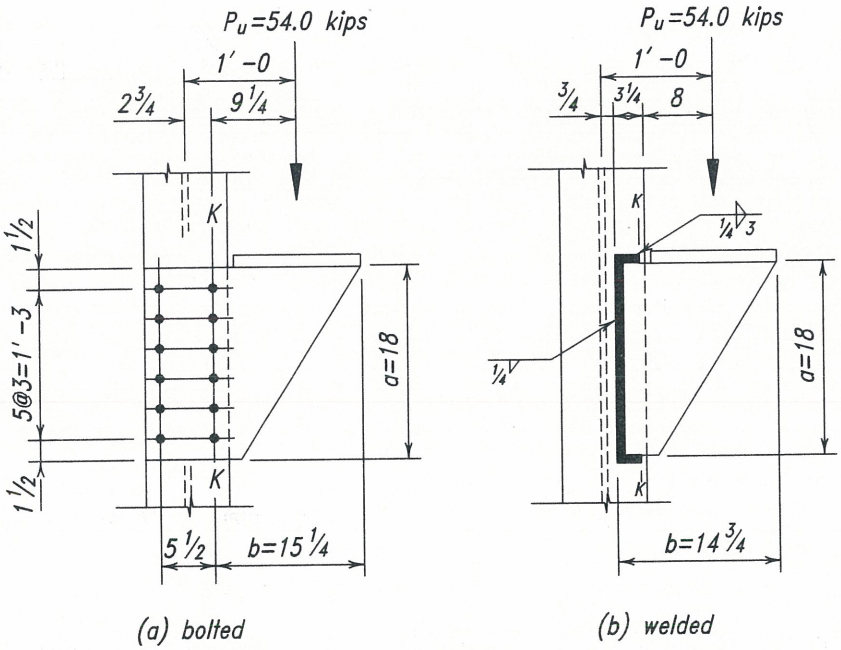

Fig. 12-1. Bracket plate.

numbers of fasteners spaced three inches on center, the usual spacing for these connections.

Furthermore, local buckling will not occur (Salmon and Johnson, 1990) if, for $0.5 < b/a < 1.0$,

$$\frac{b}{t} \le \frac{250}{\sqrt{F_y}}$$

nor if, for $1.0 \le b/a \le 2.0$,

$$\frac{b}{t} \le \frac{250}{\sqrt{F_y}}\left(\frac{b}{a}\right)$$

Two assumptions must be satisfied if this simplified approach is to be used. First, the centroid of the applied load must be approximately $0.6b$ from the line of support (line K in Figure 12-1a). Second, the lateral movement of the outstanding portion of the bracket plate must be prevented.

Example 12-1

Given:

Refer to Figure 12-1a. Design a bracket plate to support the factored force indicated. Use ⅞-in. diameter A325-N bolts. For the plate, assume F_y = 36 ksi and F_u = 58 ksi.

Solution:

Select bolt group.

For ⅞-in. diameter A325-N bolts in single shear, ϕr_n = 21.6 kips (Table 8-11). Thus,

$$C_{\min} = \frac{R_u}{\phi r_n} = \frac{54.0 \text{ kips}}{21.6 \text{ kips}} = 2.50$$

From Table 8-20 with θ = 0°, a 5½-in. gage with s = 3 in., e_x = 12 in., and n = 6 provides

$C = 4.53 > 2.50$ **o.k.**

Try PL ⅜-in.×18 in.

Check bolt bearing.

With l_v = 1½-in. and s = 3 in., ϕr_n = 91.4 kips/bolt (Table 8-13)

Since this is greater than the single-shear strength of one bolt, bolt bearing is not critical.

Check flexure in the bracket plate.

On line K, the required strength M_u is

3. Buckling of Flat Plates in Compression.

The deformed shape of a buckled flat plate depends on the edge constraints. In Figure 1, three deformed shapes are illustrated. In all, the loaded edges are clamped. The lateral edges may be free or fixed, and the fixed edges can be simply supported or clamped.

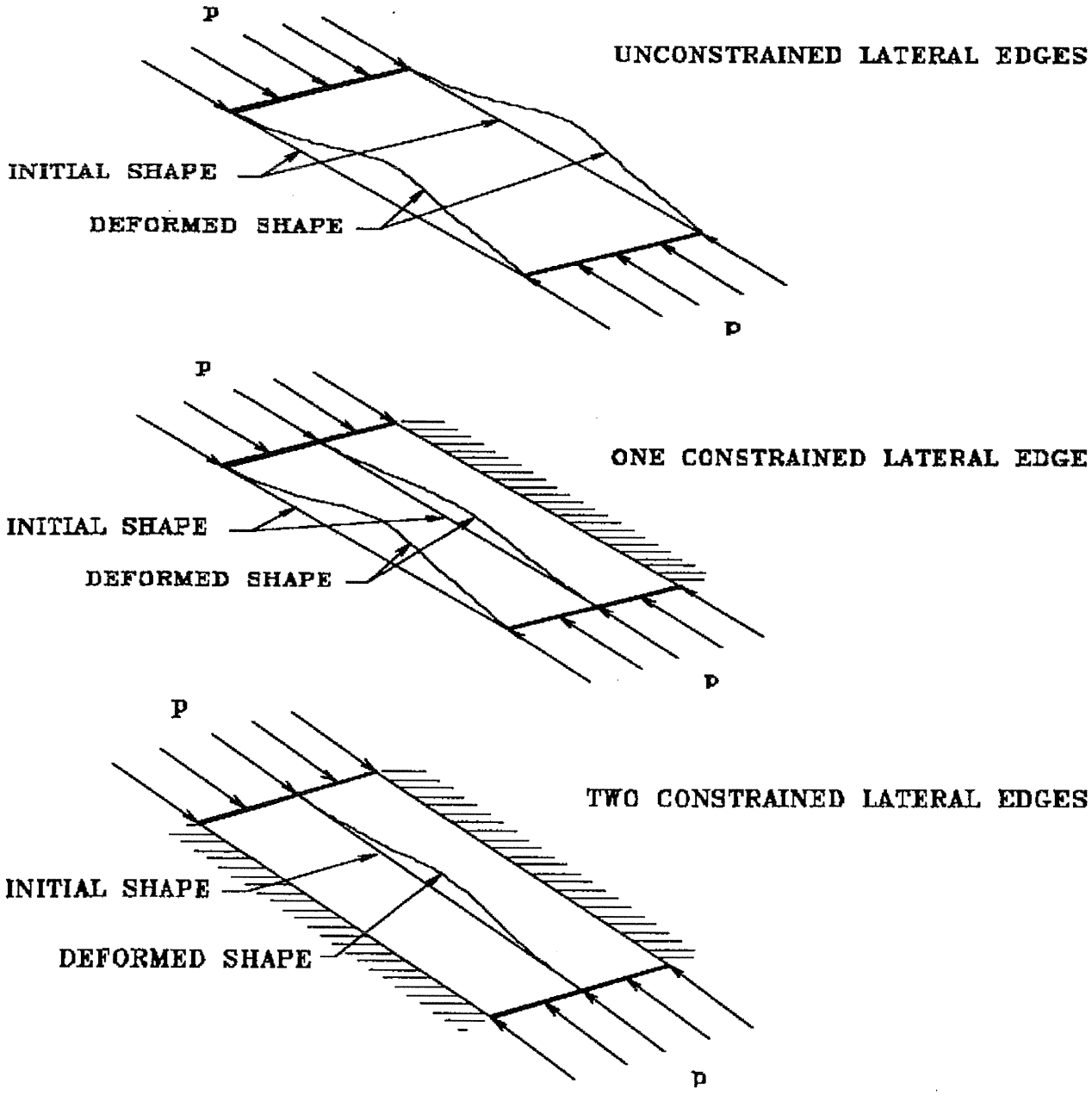

Figure 1: Flat Plates in Compression

The Solution of **Gerard and Becker** is inconvenient to write in closed form. It is usually written as follows. For:

$E := 10.4 \cdot 10^6$	Young's modulus (psi)
$\nu := 0.30$	Poisson's Ratio
$k_c := 6.0$	Compressive buckling coefficient; the non-linearity is imbedded in this factor
$a := 10.0$	length of lateral edges (not the loaded edges) (inches)
$b := 5.0$	length of loaded edges (inches)
$t := 0.125$	thickness of plate (inches)

The critical buckling stress is:

$$\sigma_{cr} := \frac{\pi^2 \cdot k_c \cdot E}{12 \cdot (1 - \nu^2)} \cdot \left(\frac{t}{b}\right)^2 \qquad \sigma_{cr} = 3.525 \cdot 10^4 \quad \text{(psi)} \qquad [5]$$

At first glance, it appears that the length of the lateral edge does not enter into the calculation. However, the value of k_c depends on the ratio a/b. To permit easy utilization of this solution, Gerard and Becker plotted kc versus a/b. This plot is displayed in Figure 2. In the figure, the symbol c refers to a clamped, lateral edge, and the symbol ss refers to a simply supported lateral edge.

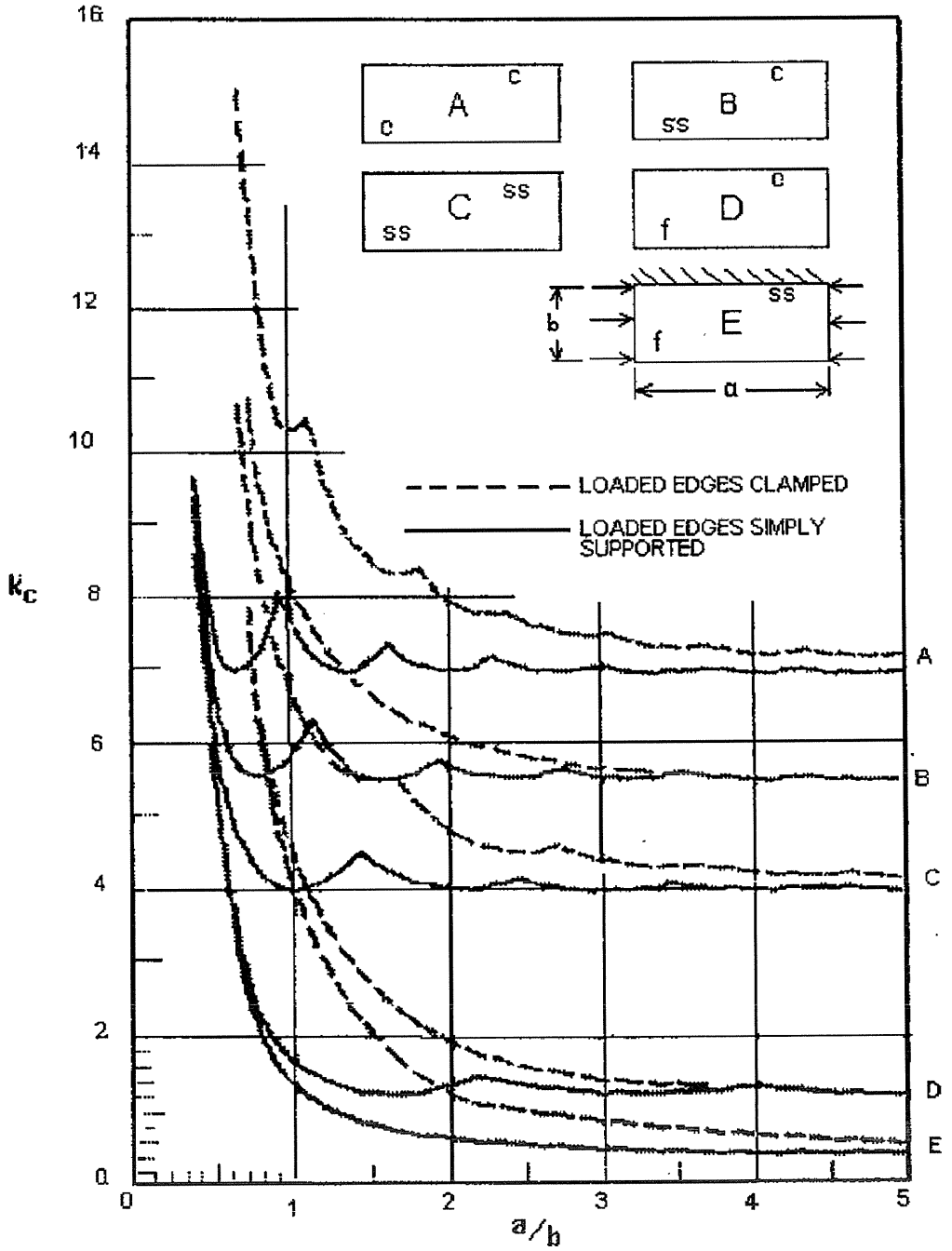

Figure 2: Compressive buckling coefficients for flat, rectanglar plates.

C1

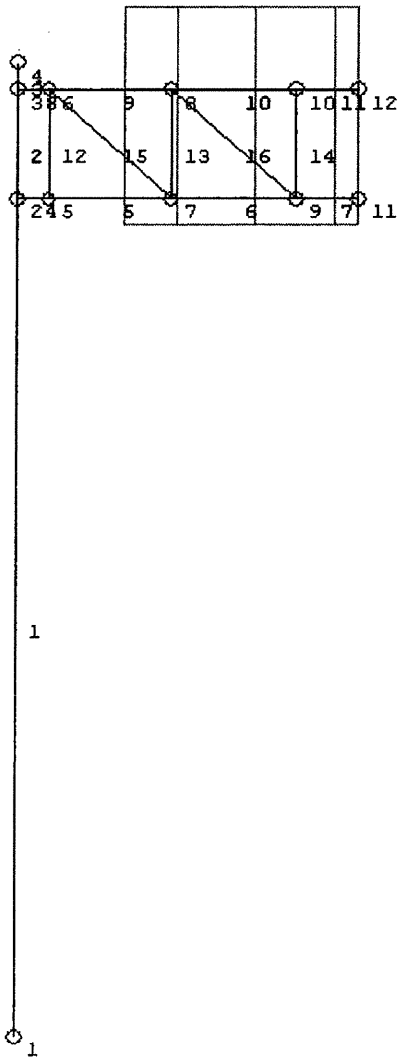

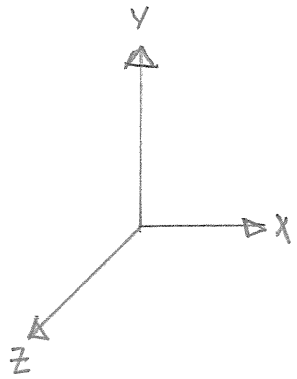

global coord. system

C3

TABLE 1.1 : DEFINITION OF JOINTS
****

NO.	COORDINATES X (FT)	Y (FT)	Z (FT)	SUPPORTS TRANS			ROT		
1	0.00	53.36	0.00	1	1	1	1	1	1
2	0.00	84.36	0.00	0	0	0	0	0	0
3	0.00	88.36	0.00	0	0	0	0	0	0
4	0.00	89.36	0.00	0	0	0	0	0	0
5	2.06	84.36	0.00	0	0	0	0	0	0
6	2.06	88.36	0.00	0	0	0	0	0	0
7	10.06	84.36	0.00	0	0	0	0	0	0
8	10.06	88.36	0.00	0	0	0	0	0	0
9	18.06	84.36	0.00	0	0	0	0	0	0
10	18.06	88.36	0.00	0	0	0	0	0	0
11	22.00	84.36	0.00	0	0	0	0	0	0
12	22.00	88.36	0.00	0	0	0	0	0	0

TABLE 10. 2 : MEMBER-END-ACTIONS FOR GROUP 2 --DL +W
****
(WIND COMBINATION 1 IN THE +Z DIRECTION)

UNIT NO.	MEM NO. (IN LOCAL	JOINT NO. COORD	AXIAL LOAD SYSTEM)	SHEAR Y (K)	SHEAR Z (K)	MOMENT Y-Y (FT-K)	MOMENT Z-Z (FT-K)	TORSION X-X (FT-K)
1	1	1	4.74	1.01	-4.59	156.02	67.57	59.15
1	1	2	-4.74	-1.01	4.59	-13.68	-36.24	-59.15
1	2	2	-0.29	6.97	-2.14	11.11	27.93	29.41
1	2	3	0.29	-6.97	2.14	-2.53	-0.05	-29.41
1	3	3	0.05	0.01	-0.06	0.03	0.00	0.00
1	3	4	-0.05	-0.01	0.06	0.03	0.01	0.00
0	4	2	6.45	3.36	-2.12	29.74	8.31	-2.58
0	4	5	-6.45	-3.36	2.12	-25.37	-1.39	2.58
2	5	5	6.40	0.26	-1.98	25.29	1.49	-2.41
2	5	7	-6.40	-0.26	1.98	-9.44	0.63	2.41
2	6	7	2.81	-0.11	-1.13	9.57	-0.47	-1.55
2	6	9	-2.81	0.11	1.13	-0.56	-0.44	1.55
2	7	9	0.00	0.15	-0.16	0.63	0.60	-0.10
2	7	11	0.00	-0.15	0.16	0.00	0.00	0.10
0	8	3	-6.45	-0.61	-2.06	29.41	0.03	-2.53
0	8	6	6.45	0.61	2.06	-25.16	-1.29	2.53
3	9	6	-2.88	0.25	-2.02	24.98	1.39	-2.40
3	9	8	2.88	-0.25	2.02	-8.83	0.59	2.40
3	10	8	-0.07	-0.11	-0.89	8.95	-0.43	-1.48
3	10	10	0.07	0.11	0.89	-1.81	-0.46	1.48
3	11	10	0.00	0.15	-0.48	1.89	0.60	-0.10
3	11	12	0.00	-0.15	0.48	0.00	0.00	0.10
0	12	5	2.87	-0.05	-0.07	0.17	-0.10	0.08
0	12	6	-2.87	0.05	0.07	0.13	-0.10	-0.08
0	13	7	1.57	-0.07	-0.30	0.63	-0.15	0.07
0	13	8	-1.57	0.07	0.30	0.59	-0.15	-0.07
0	14	9	0.67	-0.07	-0.60	1.22	-0.13	0.08
0	14	10	-0.67	0.07	0.60	1.19	-0.13	-0.08
0	15	6	-3.93	0.00	-0.01	0.23	0.00	-0.12
0	15	7	3.93	0.00	0.01	-0.17	-0.01	0.12
0	16	8	-3.06	0.00	0.03	-0.08	-0.02	-0.03
0	16	9	3.06	0.00	-0.03	-0.14	-0.02	0.03

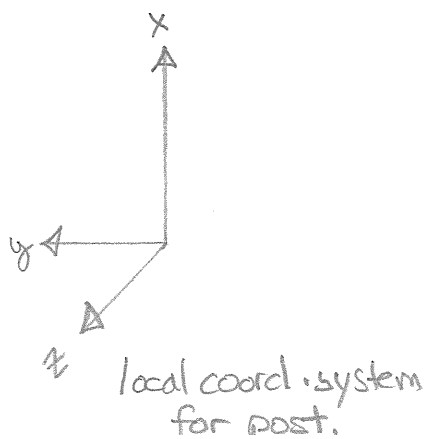

C12

TABLE 20.1 : AXIAL, MOMENT AND STRESS RANGE DUE TO GALLOPING
****

MEM. NO.	AXIAL RANGE (KIPS)	ZZ MOM RANGE (K-FT)	YY MOM (K-FT)	STRESS RANGE AXIAL (KSI)	Z-MOM (KSI)	Y-MOM (KSI)	AXIAL RANGE (KIPS)	ZZ MOM RANGE (K-FT)	YY MOM (K-FT)	STRESS RANGE AXIAL (KSI)	Z-MOM (KSI)	Y-MOM (KSI)
	START						END				CAT--CSR--	
1	2.5	37.5	0.0	0.09	3.74	0.00	2.5	36.7	0.0	0.09	3.66	0.00
											E 0.85	
2	0.7	28.4	0.0	0.03	2.83	0.00	0.7	0.0	0.0	0.03	0.00	0.00
											E 0.63	
3	0.0	0.0	0.0	0.00	0.00	0.00	0.0	0.0	0.0	0.00	0.00	0.00
											E 0.00	
4	7.1	8.3	0.0	0.59	3.22	0.00	7.1	1.6	0.0	0.59	0.62	0.00
											E 0.85	
5	7.0	1.7	0.0	0.59	0.66	0.00	7.0	0.6	0.0	0.59	0.23	0.00
											E 0.28	
6	3.0	0.4	0.0	0.25	0.15	0.00	3.0	0.1	0.0	0.25	0.05	0.00
											E 0.09	
7	0.0	0.0	0.0	0.00	0.00	0.00	0.0	0.0	0.0	0.00	0.00	0.00
											E 0.00	
8	7.1	0.0	0.0	0.59	0.00	0.00	7.1	1.5	0.0	0.59	0.58	0.00
											E 0.26	
9	3.1	1.6	0.0	0.26	0.62	0.00	3.1	0.6	0.0	0.26	0.22	0.00
											E 0.20	
10	0.1	0.4	0.0	0.00	0.14	0.00	0.1	0.1	0.0	0.00	0.04	0.00
											E 0.03	
11	0.0	0.0	0.0	0.00	0.00	0.00	0.0	0.0	0.0	0.00	0.00	0.00
											E 0.00	
12	3.0	0.1	0.0	1.33	0.69	0.00	3.0	0.1	0.0	1.33	0.69	0.00
											E1 0.78	
13	2.0	0.2	0.0	0.90	1.15	0.00	2.0	0.2	0.0	0.90	1.13	0.00
											E1 0.79	
14	1.1	0.1	0.0	0.49	0.68	0.00	1.1	0.1	0.0	0.49	0.67	0.00
											E1 0.45	
15	4.4	0.0	0.0	1.97	0.04	0.00	4.4	0.0	0.0	1.97	0.09	0.00
											E1 0.79	
16	3.3	0.0	0.0	1.47	0.13	0.00	3.3	0.0	0.0	1.47	0.09	0.00
											E1 0.62	

TABLE 20.2 : AXIAL, MOMENT AND STRESS RANGE DUE TO NATURAL WIND GUSTS

****

MEM. NO.	AXIAL RANGE (KIPS)	ZZ MOM RANGE (K-FT)	YY MOM (K-FT)	STRESS RANGE AXIAL (KSI)	Z-MOM (KSI)	Y-MOM (KSI)	AXIAL RANGE (KIPS)	ZZ MOM RANGE (K-FT)	YY MOM (K-FT)	STRESS RANGE AXIAL (KSI)	Z-MOM (KSI)	Y-MOM (KSI)	CAT	CSR
	START						END							
1	0.0	0.0	37.4	0.00	0.00	3.73	0.0	0.0	2.3	0.00	0.00	0.23	E	0.83
2	0.0	0.0	1.9	0.00	0.00	0.19	0.0	0.0	0.4	0.00	0.00	0.04	E	0.04
3	0.0	0.0	0.0	0.00	0.00	0.00	0.0	0.0	0.0	0.00	0.00	0.00	E	0.00
4	0.0	0.0	5.3	0.00	0.00	2.04	0.0	0.0	4.4	0.00	0.00	1.72	E	0.45
5	0.0	0.0	4.4	0.00	0.00	1.72	0.0	0.0	1.6	0.00	0.00	0.62	E	0.38
6	0.0	0.0	1.6	0.00	0.00	0.63	0.0	0.0	0.0	0.00	0.00	0.01	E	0.14
7	0.0	0.0	0.0	0.00	0.00	0.00	0.0	0.0	0.0	0.00	0.00	0.00	E	0.00
8	0.0	0.0	5.2	0.00	0.00	2.00	0.0	0.0	4.4	0.00	0.00	1.70	E	0.44
9	0.0	0.0	4.4	0.00	0.00	1.69	0.0	0.0	1.5	0.00	0.00	0.57	E	0.38
10	0.0	0.0	1.5	0.00	0.00	0.58	0.0	0.0	0.0	0.00	0.00	0.00	E	0.13
11	0.0	0.0	0.0	0.00	0.00	0.00	0.0	0.0	0.0	0.00	0.00	0.00	E	0.00
12	0.0	0.0	0.0	0.00	0.00	0.22	0.0	0.0	0.0	0.00	0.00	0.18	E1	0.09
13	0.0	0.0	0.1	0.00	0.00	0.84	0.0	0.0	0.1	0.00	0.00	0.80	E1	0.32
14	0.0	0.0	0.2	0.00	0.00	1.38	0.0	0.0	0.2	0.00	0.00	1.35	E1	0.53
15	0.0	0.0	0.0	0.00	0.00	0.26	0.0	0.0	0.0	0.00	0.00	0.21	E1	0.10
16	0.0	0.0	0.0	0.00	0.00	0.12	0.0	0.0	0.0	0.00	0.00	0.18	E1	0.07

TABLE 20.3 : AXIAL, MOMENT AND STRESS RANGE DUE TO TRUCK GUSTS
****

MEM. NO.	AXIAL RANGE (KIPS)	ZZ MOM RANGE (K-FT)	YY MOM (K-FT)	STRESS RANGE AXIAL (KSI)	Z-MOM (KSI)	Y-MOM (KSI)	AXIAL RANGE (KIPS)	ZZ MOM RANGE (K-FT)	YY MOM (K-FT)	STRESS RANGE AXIAL (KSI)	Z-MOM (KSI)	Y-MOM (KSI)
	START						END				CAT--CSR--	
1	0.3	4.5	0.0	0.01	0.44	0.00	0.3	4.4	0.0	0.01	0.43	0.00
											E 0.10	
2	0.1	3.4	0.0	0.00	0.34	0.00	0.1	0.0	0.0	0.00	0.00	0.00
											E 0.08	
3	0.0	0.0	0.0	0.00	0.00	0.00	0.0	0.0	0.0	0.00	0.00	0.00
											E 0.00	
4	0.9	1.0	0.0	0.07	0.37	0.00	0.9	0.2	0.0	0.07	0.07	0.00
											E 0.10	
5	0.9	0.2	0.0	0.07	0.07	0.00	0.9	0.0	0.0	0.07	0.02	0.00
											E 0.03	
6	0.4	0.0	0.0	0.03	0.01	0.00	0.4	0.0	0.0	0.03	0.01	0.00
											E 0.01	
7	0.0	0.0	0.0	0.00	0.00	0.00	0.0	0.0	0.0	0.00	0.00	0.00
											E 0.00	
8	0.9	0.0	0.0	0.07	0.01	0.00	0.9	0.2	0.0	0.07	0.07	0.00
											E 0.03	
9	0.4	0.2	0.0	0.03	0.07	0.00	0.4	0.0	0.0	0.03	0.01	0.00
											E 0.02	
10	0.0	0.0	0.0	0.00	0.01	0.00	0.0	0.0	0.0	0.00	0.01	0.00
											E 0.00	
11	0.0	0.0	0.0	0.00	0.00	0.00	0.0	0.0	0.0	0.00	0.00	0.00
											E 0.00	
12	0.3	0.0	0.0	0.16	0.07	0.00	0.3	0.0	0.0	0.16	0.07	0.00
											E1 0.09	
13	0.2	0.0	0.0	0.11	0.14	0.00	0.2	0.0	0.0	0.11	0.14	0.00
											E1 0.10	
14	0.2	0.0	0.0	0.09	0.10	0.00	0.2	0.0	0.0	0.09	0.10	0.00
											E1 0.07	
15	0.5	0.0	0.0	0.22	0.00	0.00	0.5	0.0	0.0	0.22	0.01	0.00
											E1 0.09	
16	0.4	0.0	0.0	0.20	0.01	0.00	0.4	0.0	0.0	0.20	0.01	0.00
											E1 0.08	

C21

BASE PLATE DESIGN
REVISION 1/27/93
09:43:44 03-09-2012

Overhead Structure OH-785
CUY-90-14.90
Cuyahoga County, OH
OH-12161

DATA FROM FILE 121613

TUBE DATA

SHAPE: ROUND

OUTSIDE DIAMETER	18.00	INCHES
WALL THICKNESS	0.5000	INCHES
APPLIED BENDING STRESS	0.00	KSI
DESIGN MOMENT	170.0	KIP FT
APPLIED AXIAL FORCE	4.7	KIPS

BOLT DATA

BOLT TYPE	105	KSI
BOLTS ARE EVENLY SPACED		
DIAMETER	2.000	INCHES
EFFECTIVE AREA	2.500	SQ IN
NUMBER OF BOLTS WERE SPECIFIED		
NUMBER OF BOLTS	8	
BOLT CIRCLE DIAMETER	24.00	INCHES
BOLT C TO C	9.184	INCHES
ALLOWABLE STRESS	69.9	KSI
APPLIED AXIAL STRESS	17.2	KSI
MAX BOLT FORCE	43.1	KIPS

PLATE DATA

DIAMETER OF PLATE	30.00	INCHES
THICKNESS	2.000	INCHES
BOLT HOLE DIAMETER	2.375	INCHES
CENTER HOLE SIZE	18.00	INCHES
NET WEIGHT	236.0	POUNDS
RAW STOCK WEIGHT	509.4	POUNDS
SURFACE AREA	5.79	SQ FT
ALLOWABLE STRESS	28.79	KSI
MAX APPLIED STRESS	9.84	KSI

STRESS CALCULATION AT THE FACE OF THE TUBE

Full Penetration Groove Weld connection

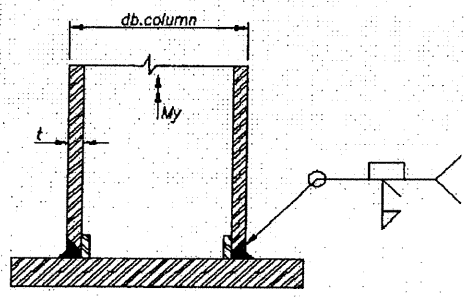

Full penetration groove weld detail 11

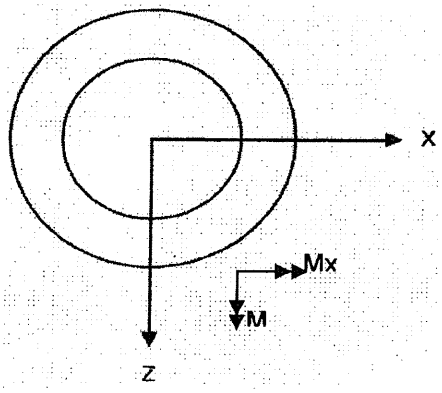

Diameter d_{column} =	16	in
Thickness t_{column} =	0.5	in
$(M_z)_{max}$ =	450	kip-in
$(M_x)_{max}$ =	0	kip-in
$(M_y)_{max}$ =	0	kip-in
Base shear V_x =	0	kip
Base shear V_z =	0.03	kip

Moment of inertia of column

$I_{col} = \pi/64 \times (d_{col}^4-(d_{col}-2t_{col})^4)$

I_{col} = 1052.636 in^4

$I_{col\,(tor)}$ = 2105.272 in^4

$A_{col} = \pi/4 \times (d_{col}^2-(d_{col}-2t_{col})^2)$

A_{col} = 27.475 in^2

$V_R = Sqrt(V_x^2+V_z^2)$

V_R = 0.03

$(f_R)_{col} = (M_x+M_z)_G\, c/I_{col} + M_y\, c/I_{col(tor)} + V_r/A_{col}$

$(f_R)_{col}$= 3.85 Ksi Category E, CAFL=4.5 **OK**

3.85ksi is less than CAFL permitted for detail 11,full penetration welded connection, category E the connection is safe

C23

Brookfield Fabricating Corp.

3/9/2012 10:13

Project: OH-785
Project 3000-10
Cuyahoga County, OH
Brookfield Job # OH-12161

Design Of Headed Anchor Bolts

Normal Moment =	Mt=	156.02	ft-k
Transverse Moment =	MI=	67.57	ft-k
	St=	1.01	k
	SI=	4.59	k
Torsion =	Mt=	59.15	ft-k
Axial Compression =	C=	4.74	k
Number of anchor bolts =	n=	8	
Anchor Size =	D=	2	in (dia)
Anchor Bolt Circle =	BC=	24	in (dia)
Anchor Bolt Yield =	Fy=	105	ksi

Bolt thrds per inch =	Nt=		4.5	tpi
Resultant Moment =	MR(foot kips)=	(Mt^2 + MI^2)^0.5	170.02337	ft-k
Resultanat Shear =	SR(kips)=	(St^2 + SI^2)^0.5	4.6998085	k
Tensile area of anchor bolts	At=	PI/4 *(D-(.9743/Nt))^2	2.4982201	in^2
Gross area of anchor bolts	Ag=	(PI*d^2)/4	3.1415927	in^2
Tension per Anchor Bolt=	T=	4(MR)12/n(BC)	42.505842	Kips
Shear per Anchor Bolt due to SR=	SV=	SR/n	0.5874761	Kips
Shear per Anchor Bolt due to MT=	ST=	4(MT)12/n(BC)	14.7875	Kips
Combined Shear per Anchor Bolt =	CS=	(SV^2 + ST^2)^.5	14.799165	Kips
	ft(ksi) =	T/At	17.01445	ksi
	fv(ksi) =	CS/Ag	4.7107205	ksi
Allowable tension =	Ft(ksi) =	.5 Fy * 1.33	69.825	ksi
Allowable Shear =	Fv(ksi) =	.3 Fy * 1.33	41.895	ksi
Combined Stress Ratio =	CSR =	(fv/FV)^2+(ft/Ft)^2 = or < 1.0	0.072	

Standard Specifications For Structural Supports for Highway Signs, Luminaires and Traffic Signals 5th edition 2009

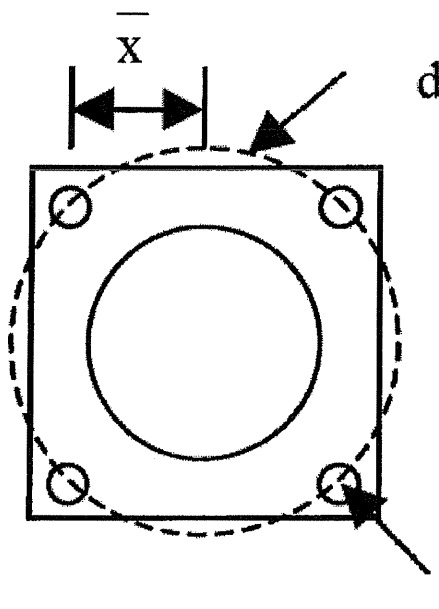

Anchor rod stress calculation for N rods

3/21/12

Dia d_{ar} =	2	in	Red ink cells are for input
Thread series =	4.5	unc	
Crcle dia d_{arc} =	24	in	
$(M)_{xbot}$ =	448.8	kip-in	
Farthest Z for $(M)_x$=	11.0866	in	
$(M)_{zbot}$ =	450	kip-in	
Farthest x for $(M)_z$=	11.0866	in	
No. of bolts =	8		(min. 4 bolts)

Thread pitch = 0.216511 in

$A_T=\pi/4(d_{ar}-0.9743/n)^2$

A_T = 2.49822 in^2

$I_{ar,z} = \Sigma A_T x^2$

$I_{ar,z}$ = 1460.715 in^4

Stress range

$(f_R)_{z,rod}= (M)_{zbot} \times c_x/I_{ar}$

c_x = 11.0866 in

$(f_R)_{z,rod}$ = **3.42** ksi Category D, CAFL=7ksi **OK**

3.42ksi is less than CAFL permitted for detail 5, bolted connection, category D the connection is safe

$I_{ar,x} = \Sigma A_T z^2$

$I_{ar,x}$ = 1460.717 in^4

Stress range

$(f_R)_{x,rod}= (M)x_{bot} \times c_z/I_{ar}$

c_z = 11.0866 in

$(f_R)_{x,rod}$ = **3.41** ksi Category D, CAFL=7ksi **OK**

3.41ksi is less than CAFL permitted for detail 5, bolted connection, category D the connection is safe

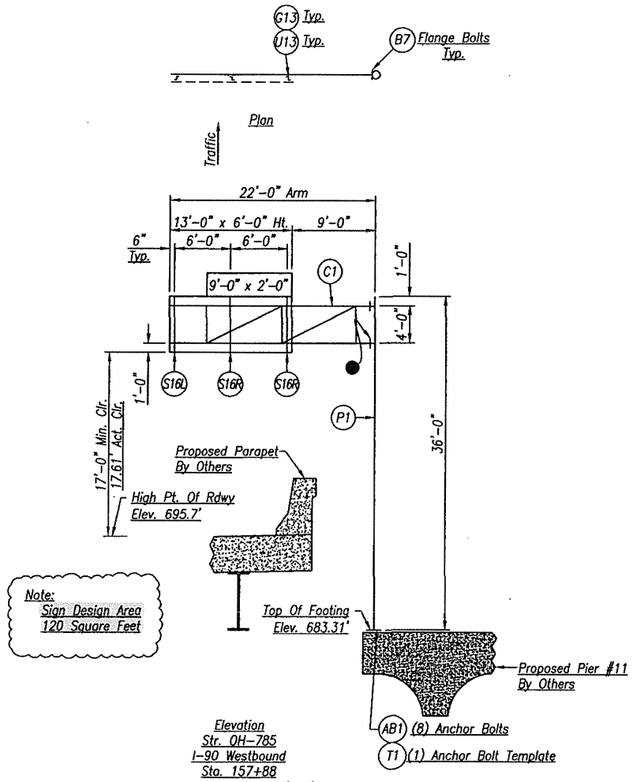

Elevation
Str. OH-785
I-90 Westbound
Sta. 157+88
TC-12.30 Design 5 (Mod)
Looking Upstation Eastbound

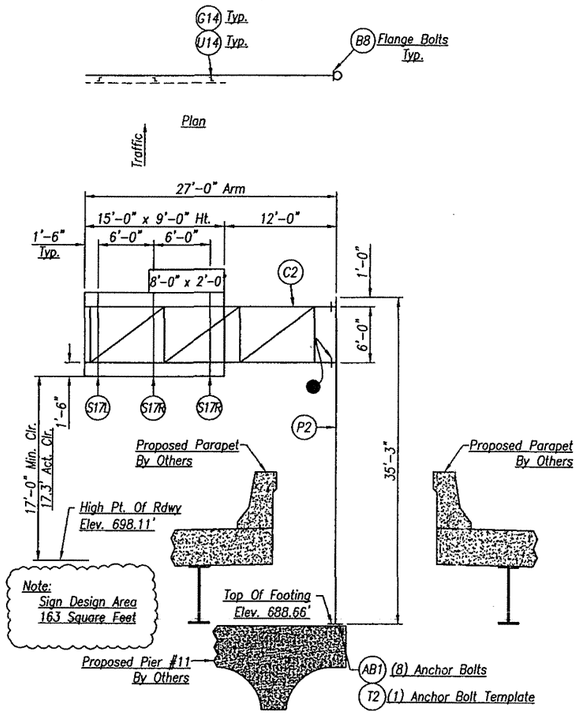

Elevation
Str. OH-786
I-90 Westbound
Sta. 158+15.25
TC-12.30 Design 8 (Mod)
Looking Downstation Westbound

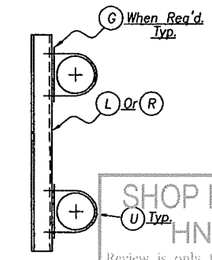

Typical Section

SHOP DRAWING REVIEW
HNTB OHIO, INC.
Review is only for general conformance with the design concept of the contract documents. Markings or comments shall not be construed as relieving the contractor from compliance with the project plans and specifications, nor departures therefrom. The contractor remains solely responsible for details and accuracy, for confirming and correlating all quantities and dimensions, for selecting fabricating processes, for techniques of assembly, for safety and for satisfactory performance of his work.
☒ No Exceptions Taken
☐ Approved as Noted By KDI
☐ Amend and Resubmit
☐ Rejected – See Remarks Date 03/30/2012

Design Note:
Structures Where Designed Using AASHTO 2009 LTS-5 Specifications With Interim Specifications Thru 2010.

Notes:
Sign Sizes, Elevations, Arm Lengths, & Endframe Heights Are Per The Contract Plans. Contractor To Verify Prior To Fabrication.

● – Cantilever Arm Section MK No's. Are Stamped On The Top Of The Bottom Flanges

Wind Design Speed: 90 MPH
Ice Loading: 3.00 PSF

Pay Items:
1 ~ Overhead Sign Support, TC-12.30, Design 5, (Mod.)
1 ~ Overhead Sign Support, TC-12.30, Design 8, (Mod.)

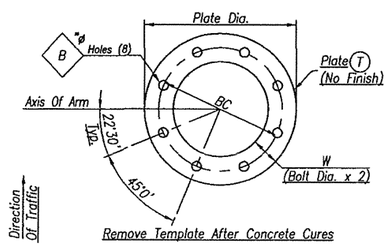

Remove Template After Concrete Cures

Anchor Bolts
(Eight Bolt)

Qty.	Mk	Plate Dia.	W	BC	B	℄ Thk.
1	T1	2'-4"	4"	24"	2 1/16"	1/4"
1	T2	2'-10"	4"	30"	2 1/16"	1/4"

Anchor Bolt Nut Tightening:
The Anchor Bolts Shall Be Tightened Using The ODOT Road And Bridge Specifications.

MATERIAL SPECIFICATIONS:
Steel Plates: A.S.T.M. A36 (No Finish)
Steel Anchor Rod: A.S.T.M. F1554, Gr. 105
Hvy. Structural Steel Nuts: A.S.T.M. A563 Gr. DH Or A194 Gr. 2H
Hard. Flat Washers: A.S.T.M. F436
Galvanize Hardware: A.S.T.M. F2329

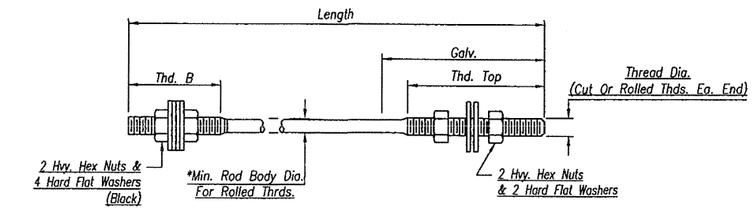

*Note: Full Body Dia. Rod May Be Used For Cut Or Rolled Threads.

Anchor Bolt Detail

Qty.	Mk.	Length	Thread Dia.	Rod Body Dia.	Thd. Top	Thd. B	Galv.	Embed.	Proj.
16	AB1	5'-4"	2"	1.8433"	10"	6"	12"	4'-7"	9"

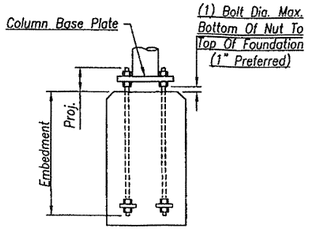

PRINTS ISSUED

FOR	NO.	DATE	FOR	NO.	DATE

REVISIONS

NO.	DATE	DESCRIPTION
1	3-13-12	Rev. Per Apprvd. Dwgs. (JL)

Brookfield Fabricating Corp
P.O. Box 406– Brookfield, Missouri 64628– (660)258–2214

Customer: M.P. Dory Co.

Project: 3000–10
Cuyahoga County, Ohio

Description: Erection Details For Overhead Structure Type TC-12.30, Des. 5 (Mod.) Str. No: OH-785 & TC-12-30, Des. 8 Mod. Str. No: OH-786

Sht. No. 1 of 4

Printed For	Drawn By	Date	Checked By	Date	Job No.	Rev.
Ohio	JL	12-22-11	CR AM	12-30-11	OH-12161	

Y:\states\OH\12000-12999\12161\12161 Part D\1216101D.dwg

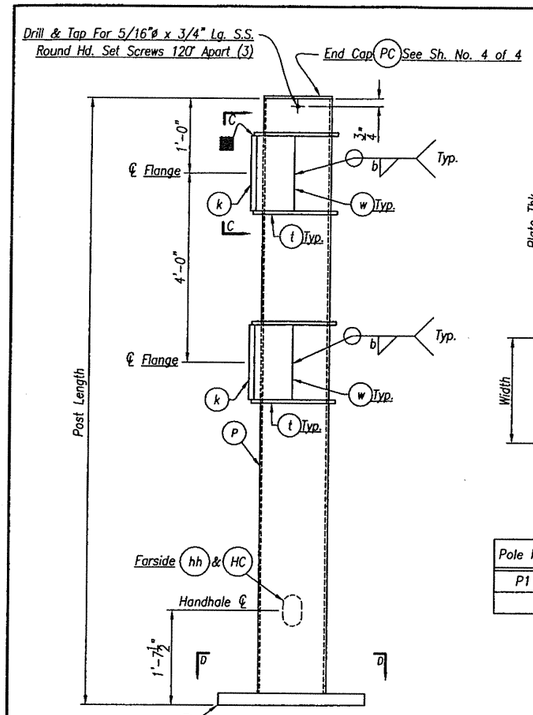

Contilever Support Post

Qty.	Mk.	Struct. No.	Post Length	Base ℄ mk.	Post ℄ mk.	"PC"	Post Size
1	P1	OH-785	36'-0"	bp3	k1	PC1	18" O.D. x .500" W. Pipe

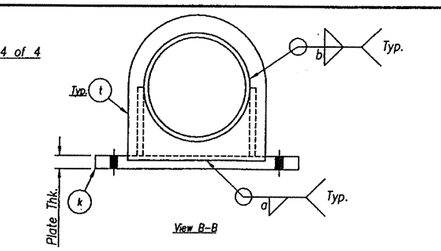

Pole Mk	Width	℄ Thk.	Side Plates Mk "w"	Top & Bott. ℄ Mk "t"	a	b
P1	1'-8"	1"	w1	t1	1/4	1/4

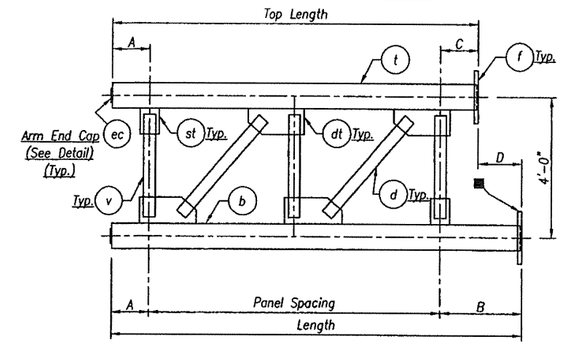

Note: Final Welding Of Arm Flanges Shall Be Accomplished During Shop Fit-Up, To Ensure Proper Amount Of Camber.

Elevation

Qty.	Mk.	Top Length	Bottom Length	Panel Spacing	A	B	C	D	"d"	"v"	"ec"	"k"	"st"	"dt"
1	C1	20'-10 3/8"	20'-11"	2 Spa @ 8'-0" = 16'-0"	3'-11"	1'-0"	11 3/8"	5/8"	d11	v1	ec8	f1	st1	dt1

Bill Of Materials

Qty.	Mk	Description	Length	Remarks
1	P1	18" O.D. x .500" W. Pipe	35'-9 3/4"	
1	C1t	10.75" O.D. x .365" W. Pipe	20'-8 5/8"	
1	C1b	do	20'-9 1/4"	
1	bp3	℄ 2" x 2'-6" Dia.	---	
2	k1	℄ 1" x 20"	2'-5 1/2"	
2	f1	℄ 1 1/2" x 20"	2'-5 1/2"	
4	t1	℄ 1/2" x 20"	1'-10 3/4"	See Detail
4	w1	℄ 1/2" x 12"	1'-8"	
2	ec8	F.B. 6" x 1/4"	0'-10 1/2"	Cut To Fit
1	br1	F.B. 1" x 1/4"	4'-4 5/8"	
1	br2	do	2'-6 11/16"	
12	B7	1 1/4"ø x 4 1/2" H.S. Hex Bolt & Nut W/2~Flat Washers		(A325 Galv.)
1	HC	FB 5" x 1/4"	0'-9"	Cut To Fit
1	hh	FB 2 1/2" x 1/2"	1'-10 1/8"	Or Cut From 2 1/2" Plate
2	tp	FB 3/4" x 1/4"	0'-1"	
2	HB	1/4"ø x 3/4" S.S. Hex Bolt		

SHOP DRAWING REVIEW
HNTB OHIO, INC.
Review is only for general conformance with the design concept of the contract documents. Markings or comments shall not be construed as relieving the contractor from compliance with the project plans and specifications, nor departures therefrom. The contractor remains solely responsible for details and accuracy, for confirming and correlating all quantities and dimensions, for selecting fabricating processes, for techniques of assembly, for safety and for satisfactory performance of his work.
☒ No Exceptions Taken
☐ Approved as Noted By KDI
☐ Amend and Resubmit
☐ Rejected - See Remarks Date 03/30/2012

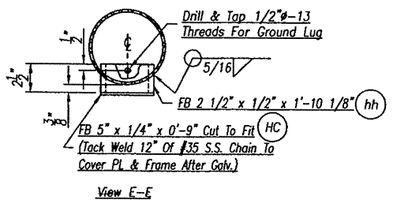

View E-E

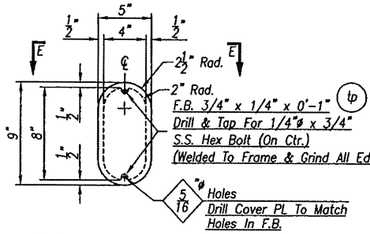

HandHole & Cover Plate Detail

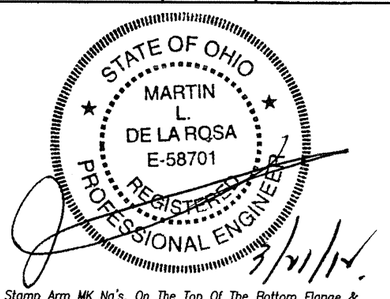

■ NOTE: Stamp Arm MK No's. On The Top Of The Bottom Flange & Top Of Column Flange.

See Sheet 4 Of 4 For Pc. Mk's. "dt", "st", "d" & "v".

MATERIAL SPECIFICATIONS:
- Steel Pipe For Columns & Arms: Steel Pipe Or Tube Meeting 52 KSI Min. Yield
- Steel Plate & Flat Bar: A.S.T.M. A36
- All Steel To Be Galvanized Per A.S.T.M. A123
- H.S. Bolts, Nuts, & Washers: A.S.T.M. A325
- Galvanize Hardware Per A.S.T.M. A153
- S.S. Hardware: A.S.T.M. A320 Passivated Commerical Gr. (AISI 300 Series)

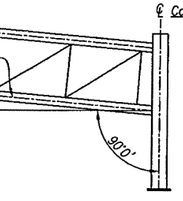

Arm Camber Diagram

Struct. No.	Camber
OH-785	3"

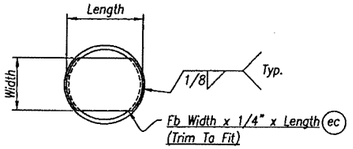

End Cap Detail

Qty.	Mk	Width	Length	Chard Size
2	ec8	6"	10 1/2"	10.75" O.D. x .365 W. Pipe

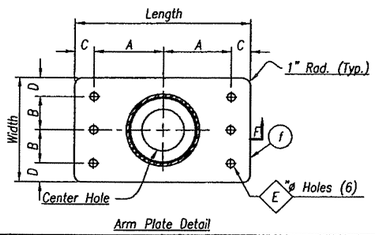

Arm Plate Detail

Qty.	Mk	Length	Width	℄ Thk.	A	B	C	D	E	Center Hole
2	f1	2'-5 1/2"	1'-8"	1 1/2"	1'-0 1/4"	7 1/2"	2 1/2"	2 1/2"	1 3/8"	8 1/16"

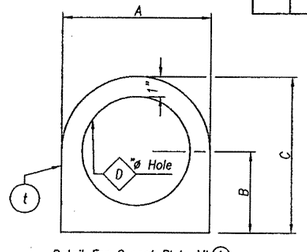

Detail For Gusset Plate Mk (t)

Qty.	Mk.	A	B	C	D	℄ Thk
4	t1	1'-8"	1'-0 3/4"	1'-10 3/4"	18 1/8"	1/2"

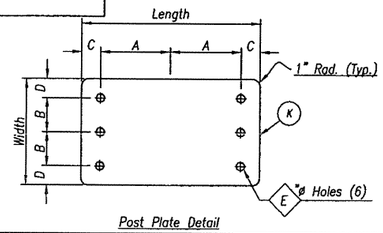

Post Plate Detail

Qty.	Mk	Length	Width	℄ Thk.	A	B	C	D	E
2	k1	2'-5 1/2"	1'-8"	1"	1'-0 1/4"	7 1/2"	2 1/2"	2 1/2"	1 3/8"

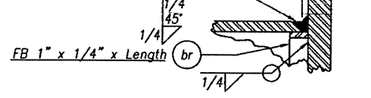

Arm Flange Connection Detail

Section F

Arm Mk	Backing Ring Mk "br"	Flange Plate Mk "f"
C1	br2	f1

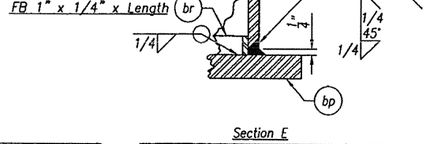

Section E

Pole Mk	Backing Ring Mk "br"	Base Plate Mk "bp"
P1	br1	bp3

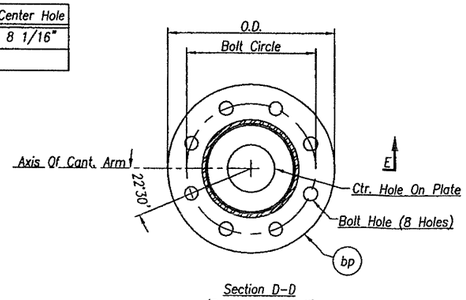

Section D-D (Base Plate Detail)

Qty.	Base Plate Mk.	Plate Thk.	Ctr. Hole	Bolt Circle	O.D.	Bolt Hole
1	bp3	2"	1'-1 1/2"	2'-0"	2'-6"	2 3/8"

PRINTS ISSUED FOR	NO.	DATE	FOR	NO.	DATE

REVISIONS NO.	DATE	DESCRIPTION
1	3-13-12	Rev. Per Apprvd. Dwgs. (JL)

Brookfield Fabricating Corp
P.O. Box 406- Brookfield, Missouri 64628- (660)258-2214

Customer: M.P. Dory Co.

Project: 3000-10
Cuyahoga County, Ohio

Description: Fabrication Details Of TC-12.30 Des. 5 (Mod.) Cantilever Sign
Structure No: OH-785

Sheet No. 2 of 4

Printed For	Drawn By	Date	Checked By	Date	Job No.	Rev.
Ohio	JL	12-22-11	CR AM	12-30-11	OH-12161	

Y:\states\OH\12000-12999\12161\12161 Part D\1216102D.dwg