FORM DQP 2.01-1
LEVEL 1 CHECK PRINT SIGN-OFF SHEET

Client Name: **Ohio Department of Transportation**

Job Title: **Cleveland Innerbelt Design-Build Contract**

Job Number: **CUY-90-14.90**

Document Title: Lateral Bracing Calculation revisions for NDC0027

Check Level (Mark One):
- ☒ 1A 100% Document Check
- ☐ 1B 100% Input Check

Enter description below:

	Print Name	Signature	Date
☒ Originator	CHRIS ENGEL		9-21-11
☒ Checker	Carl Schipfmann		9-21-11
☒ Backchecker	CHRIS ENGEL		9-21-11
☒ Updater	CHRIS ENGEL		9-21-11
☒ Validater	Carl Schipfmann		9-21-11

Insert an "X" in the box to indicate a required QC activity.

Form DQP 2.01-1

CMS 9-21-11
dBT 9-22-11

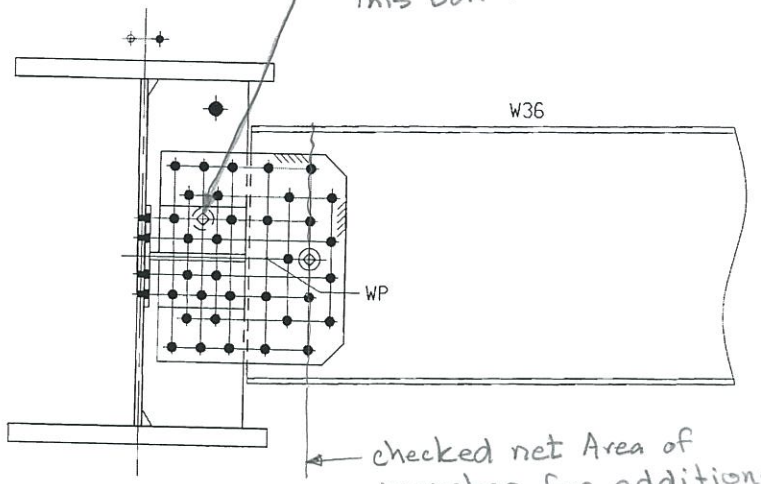

Re-Designed Splice assuming this bolt removed.

checked net Area of member for additional 1"φ hole

TYPICAL DELTA LEG GIRDER/LATERAL STRUT CONNECTION

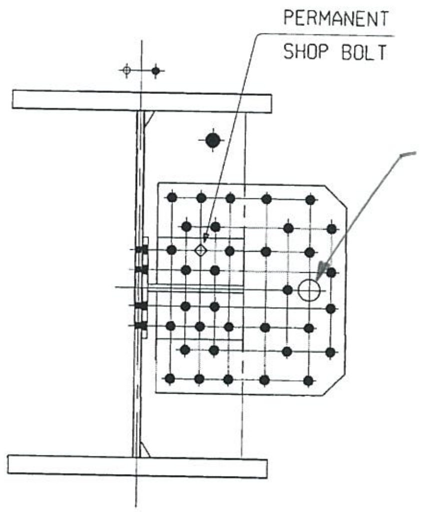

2½"φ hole to accomodate bolt head and washer

ERECT LAT. STRUT TO GIRDER.
CONN. PLATES OVER LAP
(NO FIELD COORDINATION)

DELTA LEG GIRDER DETAIL

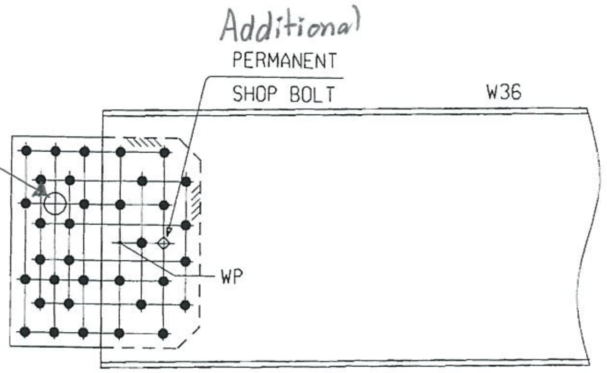

LATERAL STRUT DETAIL

SK-091911-A

CMS 9-21-11
dBT 9-2-11

LATERAL BRACING ERECTION BOLTS

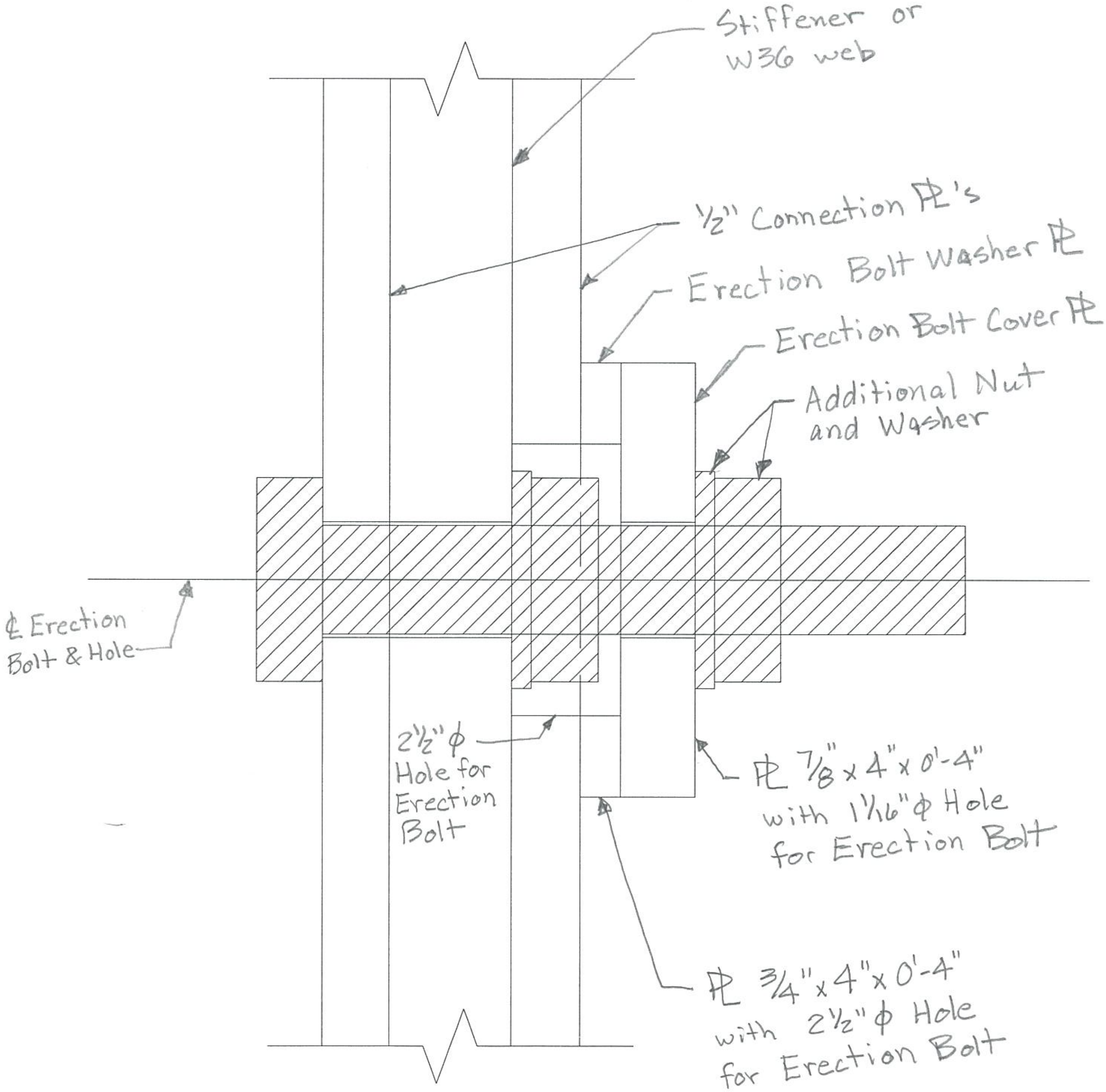

SECTION THRU ERECTION BOLT

ERECTION BOLTS MAY BE USED TO FACILITATE INSTALLATION OF FLOORBEAMS. IF ERECTION BOLTS ARE USED, THEY SHALL BE PER THE ERECTION BOLT DETAIL SHOWN AND SHALL REMAIN IN PLACE AS PART OF THE PERMANENT CONNECTION. LOCATIONS OF ERECTION BOLTS SHALL BE SHOWN ON SHOP DRAWINGS AND SUBMITTED FOR APPROVAL.

For CLEVELAND | Job no. 49633 | Sheet no.
Made by SJL | Checked by JBT | Backchecked by SJL
Date 9-14-11 | Date 9/16/11 | Date 9-16-11

UNIT 2 - DIAPHRAGMS

ERECTION BOLT COVER PL

→ Determine Required thickness for Erection Bolt cover PL to resist bending under bolt tension force

→ Bolt Tension Force for 1"ø Bolt
= 51k (AASHTO Tbl. 6.13.2.8.1)

Area under Washer:
$A = \pi (2'')^2/4 = 3.14 \text{ in}^2$

Area of 1 1/16"ø Hole:
$A = \pi(1\ 1/16'')^2/4 = 0.887 \text{ in}^2$

Net Area under Washer:
$= 3.14 \text{ in}^2 - 0.887 \text{ in}^2 = 2.25 \text{ in}^2$

Distributed Force $= \dfrac{51k}{2.25 \text{ in}^2} = 22.7 \text{ ksi}$

Assume cover PL is a cantilever with 1" width

$P \quad w = (22.7 \text{ ksi})(1'')$

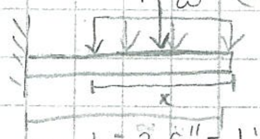

$x = \dfrac{2'' - 1\ 1/16''}{2} = 0.47''$

say $L = \dfrac{2.5'' - 1\ 1/16''}{2} = 0.72''$

$M_u = Pb = (22.7 \text{ k/in})(0.47'')(0.72'' - 0.47''/2)$

$\underline{M_u = 5.2 \text{ k}\cdot\text{in}}$

Assume 50 ksi steel

$50 \text{ ksi} = \sigma = \dfrac{m}{S} = \dfrac{m_u}{bt^2/6} = \dfrac{5.2 \text{ k}\cdot\text{in}}{(1'')(t)^2/6}$

$\underline{t \geq 0.79''}$

Check Shear:
Shear Area $= \pi(2'')t = 6.28''t$

$\phi V_n = \phi\, 0.58 F_y A \qquad \phi = 1.0$
$\phi V_n = (1)(0.58)(50 \text{ ksi})(6.28'')t > 51k$
$\Rightarrow \underline{t > 0.28''}$

→ Use $\underline{t = 7/8''}$ for Erection Bolt cover PL

Delta Leg Lateral K-Bracing Design - All Lateral Members except those Adjacent to Piers AASHTO LRFD 5th Edition

- **Rolled Steel I Sections**
- **CL of web is oriented vertically (Y-Y axis)**
- **Z-Z axis is perpendicular to web**

No. of load cases investigating

$N_{loads} := 10$

Number of cross sections investigating

$N_{sections} := 1$

Material Properties:

$F_y := 50ksi$	Yield strength of steel	$\phi_y := 0.95$	Resistance factor for yielding in tension
$F_u := 65ksi$	Ultimate tensile strength of steel	$\phi_u := 0.80$	Resistance factor for fracture in tension
$E := 29000ksi$	Elastic modulus of steel	$\phi_c := 0.90$	Resistance factor for steel compression
$G := E \cdot 0.385$	Shear modulus of steel	$\phi_f := 1.00$	Resistance factor for flexure
		$\phi_v := 1.00$	Resistance factor for shear
		$\phi_{e2} := 0.8$	Resistance factor for shear in throat of fillet weld

$m := 0 .. N_{loads} - 1$

$i := 0 .. N_{sections} - 1$

Member Design Forces

P = axial force (+ = tension)
Mz = strong axis bending moment (+ = bottom tension)
My = weak axis bending moment
V = shear (+ = down)

$L_{bz_i} := 31.583ft$ Maximum unbraced length bending about Z axis - Work point to work point. Top, upstation lateral at Pier 10 governs

$L_{by_i} := \frac{L_{bz_i}}{2}$ Maximum unbraced length bending about Y axis - Work point to work point.

STRENGTH

Taken from T187 HL93 - CSI Lat Brace Force Comparison_CSE.xlsx dated 8/06/2011

To envelope live load effects between T187 and CSI Bridge models, the live load axial force and strong axis bending moments were swapped out with the corresponding T187 live load effects in the STRENGTH load combinations. The governing cases are shown below. Vu and Muy are taken from the T187 results since they were not provided with the CSI Bridge results.

Also, since CSI forces provided did not specify "end" or "midspan" location, each load case is checked with a positive Muz value (midspan) and negative Muz (end connection). This was deemed a conservative assessment to envelope the live load effects from both models.

$$P_U := \begin{pmatrix} 335 \\ 610 \\ 341 \\ 422 \\ -345 \\ 335 \\ 610 \\ 341 \\ 422 \\ -345 \end{pmatrix} kip_* \quad V_U := \begin{pmatrix} 1 \\ 5 \\ 14 \\ -16 \\ -5 \\ 1 \\ 5 \\ 14 \\ -16 \\ -5 \end{pmatrix} kip \quad M_{Uz} := \begin{pmatrix} -201 \\ -101 \\ -220 \\ -145 \\ -98 \\ 201 \\ 101 \\ 220 \\ 145 \\ 98 \end{pmatrix} kip \cdot ft \quad M_{Uy} := \begin{pmatrix} -21 \\ -17 \\ -5 \\ 8 \\ 16 \\ -21 \\ -17 \\ -5 \\ 8 \\ 16 \end{pmatrix} kip \cdot ft$$

End
End
End
End
End
Mid
Mid
Mid
Mid
Mid

SERVICE II - For slip check of end connections

To estimate the CSI SERVICE II force effects, conservatively multiply the STRENGTH loads by 0.80. This is greater than the approximate ratio between SERVICE and STRENGTH max/min T187 forces. Also, the dominant forces for these members are DL and LL. In comparing Strength I and Service II the maximum ratio between these loads is 0.80.

$P_{SRVII_m} := 0.8 \cdot P_{U_m}$

$V_{SRVII_m} := \left(0.8 V_U\right)_m$

$M_{SRVIIz_m} := 0.8\, M_{Uz_m}$

$M_{SRVIIy_m} := 0.8\, M_{Uy_m}$

Catwalk Design Forces

Catwalk DL and LL factored forces need to be added to the design forces above since they were not accounted for in the structural analysis model.

Based on Sheet 73/83 from Unit2Steel-PlanSet dated 06/09/11, catwalk on lateral bracing is located in one exterior bay and on only one side of each pier. For Piers 3-9, catwalk is located midway between girders 4 and 5. Pier 10, catwalk is shifted towards girder 5.

Assume:

- Catwalk is supported at midspan of all laterals.
- Use the worst case rotation of the lateral member (about its axis to be perpendicular to bottom flange of delta leg). This would be the bottom most lateral rotation angle. This will maximize the weak axis bending in the member from the catwalk.

$\theta := 25deg$ Angle of rotation to vertical axis of bottom most lateral member

$Span_{catwalk} := 15ft$ Max span of catwalk (conservative)

$w_{handrails} := 14.34plf \cdot 2$ Handrail weight (From *Delta Girder Catwalk Design,* pg1)

$w_{gripstrutGrating} := 19.6plf$ Heavy duty grip 24" McNichols H-5509-W 9 gauge grip strut (Increased from H-5510-W in *Delta Girder Catwalk Design* for large clear span)

$w_{railingPost} := \dfrac{80lbf \cdot 2}{Span_{catwalk}} = 10.6667 \cdot plf$ Post weight (From *Delta Girder Catwalk Design,* pg1)

$w_{catwalkDL} := w_{handrails} + w_{gripstrutGrating} + w_{railingPost} = 58.9467 \cdot plf$

$w_{catwalkLL} := 85psf \cdot 2ft = 170 \cdot plf$ Pedestrian live load on catwalk

$P_{catwalkDL} := w_{catwalkDL} \cdot Span_{catwalk} = 0.8842 \cdot kip$ Concentrated DL from catwalk on lateral

$P_{catwalkLL} := w_{catwalkLL} \cdot Span_{catwalk} = 2.55 \cdot kip$ Concentrated LL from catwalk on lateral

STRENGTH Factored Catwalk Forces

$$P_{catwalkU} := 1.05 \cdot \left(1.25 \cdot P_{catwalkDL} + 1.75 \cdot P_{catwalkLL}\right) = 5.8461 \cdot kip$$

STRENGTH I factored concentrated load from catwalk on lateral. Conservatively add effects of this on all STRENGTH loads from T187.

$$P_{catwalkUy} := P_{catwalkU} \cdot \cos(\theta) = 5.2984 \cdot kip$$

Factored catwalk force applied in vertical direction relative to axis of lateral

$$P_{catwalkUz} := P_{catwalkU} \cdot \sin(\theta) = 2.4707 \cdot kip$$

Factored catwalk force applied in horizontal direction relative to axis of lateral at top flange

Lateral end connections to delta leg girders are partially restrained (PR) connections for strong axis bending but modeled as fully fixed in T187. For catwalk load distribution to laterals, conservatively assume lateral is simply supported for strong axis moment at midspan, but fully fixed for strong axis moment at ends. Assume pinned connections at end connections to delta legs for lateral bending.

$$M_{catwalkUz_m} := \begin{cases} \dfrac{-P_{catwalkUy} \cdot L_{bz_0}}{8} & \text{if } m \le 4 \\ \dfrac{P_{catwalkUy} \cdot L_{bz_0}}{4} & \text{otherwise} \end{cases}$$

Max factored strong axis bending from catwalk loading

$$M_{catwalkUy_m} := \begin{cases} 0 & \text{if } m \le 4 \\ \dfrac{P_{catwalkUz} \cdot L_{bz_0}}{4} & \text{otherwise} \end{cases}$$

Max factored weak axis bending from catwalk loading

$$V_{catwalkUy} := \frac{P_{catwalkUy}}{2} = 2.6492 \cdot kip$$

Factored vertical shear from catwalk

$$V_{catwalkUz} := \frac{P_{catwalkUz}}{2} = 1.2353 \cdot kip$$

Factored lateral shear from catwalk

$$T_{catwalkU} := P_{catwalkUz} \cdot \frac{36in}{2} = 3.706 \cdot kip \cdot ft$$

Applied factored torque to lateral at catwalk

SERVICE II Factored Catwalk Forces

$$P_{catwalkSRVII} := 1.00\cdot\left(1.00\cdot P_{catwalkDL} + 1.30\cdot P_{catwalkLL}\right) = 4.1992\cdot kip$$

SERVICE II factored concentrated load from catwalk on lateral. Conservatively add effects of this on all SERVICE II loads from T187.

$$P_{catwalkSRVIIy} := P_{catwalkSRVII}\cdot\cos(\theta) = 3.8058\cdot kip$$

Factored catwalk force applied in vertical direction relative to axis of lateral

$$P_{catwalkSRVIIz} := P_{catwalkSRVII}\cdot\sin(\theta) = 1.7747\cdot kip$$

Factored catwalk force applied in horizontal direction relative to axis of lateral at top flange

$$M_{catwalkSRVIIz_m} := \left| \begin{array}{ll} \dfrac{-P_{catwalkSRVIIy}\cdot L_{bz_0}}{8} & \text{if } m \le 4 \\ 0 & \text{otherwise} \end{array} \right.$$

Max factored strong axis bending from catwalk loading. Only inlude forces at ends since we just need to check connections for SERVICE II.

$$M_{catwalkSRVIIy_m} := \left| \begin{array}{ll} 0kip\cdot ft & \text{if } m \le 4 \\ 0kip\cdot ft & \text{otherwise} \end{array} \right.$$

Max factored weak axis bending from catwalk loading. Only inlude forces at ends since we just need to check connections for SERVICE II.

$$V_{catwalkSRVIIy} := \frac{P_{catwalkSRVIIy}}{2} = 1.9029\cdot kip$$

Factored vertical shear from catwalk

$$V_{catwalkSRVIIz} := \frac{P_{catwalkSRVIIz}}{2} = 0.8873\cdot kip$$

Factored lateral shear from catwalk

$$T_{catwalkSRVII} := P_{catwalkSRVIIz}\cdot\frac{36in}{2} = 2.662\cdot kip\cdot ft$$

Applied factored torque to lateral at catwalk

Section Property Table

$j := 0..8$ Number of data columns

prop_table :=

	0	1	2	3	4	5	6	7	8
0	SECTION"	"b_flange"	"t_flange"	"t_web"	"d_total"	"Cw"	"J"	"k"	"k1"
1	"Sect 1"	11.95	0.79	0.6	35.55	6.81·104	6.99	1.688	1.125

W36 x 135

Define sections

$$sect_i := \left| \begin{array}{l} \text{"Sect 1"} \ \text{ if } \ i = 0 \\ \text{"Sect 2"} \ \text{ if } \ i = 1 \\ \text{"Sect 3"} \ \text{ if } \ i = 2 \\ \text{"Sect 4"} \ \text{ if } \ i = 3 \end{array} \right.$$

$$r_i := \left| \begin{array}{l} 1 \ \text{ if } \ sect_i = \text{"Sect 1"} \\ 2 \ \text{ if } \ sect_i = \text{"Sect 2"} \\ 3 \ \text{ if } \ sect_i = \text{"Sect 3"} \\ 4 \ \text{ otherwise} \end{array} \right.$$

Row of Property Table for looking up section properties

Section Dimensions:

$t_{f_i} := \text{prop\_table}_{r_i,2} \cdot \text{in}$ Flange thickness

$b_{f_i} := \text{prop\_table}_{r_i,1} \cdot \text{in}$ Flange width

$t_{w_i} := \text{prop\_table}_{r_i,3}\,\text{in}$ Thickness of web plate

$d_i := \text{prop\_table}_{r_i,4}\,\text{in}$ Total depth

$C_{w_i} := \text{prop\_table}_{r_i,5}\,\text{in}^6$ Warping constant

$J_i := \text{prop\_table}_{r_i,6}\,\text{in}^4$ Torsonal constant

$\text{fillet}_i := \text{prop\_table}_{r_i,7}\,\text{in}$ k dimension

$k1_i := \text{prop\_table}_{r_i,8}\,\text{in}$ k1 dimension

$D_i := d_i - t_{f_i} \cdot 2$ Depth of web

Gross Section Properties

$A_{g_i} := t_{w_i} \cdot D_i + 2 \cdot t_{f_i} \cdot b_{f_i}$ $A_g = (39.263) \cdot \text{in}^2$ Gross Area -

$$y_i := \frac{t_{f_i} \cdot b_{f_i} \cdot \left(d_i - \frac{t_{f_i}}{2}\right) + t_{f_i} \cdot b_{f_i} \cdot \left(\frac{t_{f_i}}{2}\right) + t_{w_i} \cdot D_i \cdot \frac{d_i}{2}}{A_{g_i}}$$

$y = (17.775) \cdot \text{in}$ Neutral axis (Z-Z) from bottom

$$z_i := \frac{t_{f_i} \cdot b_{f_i} \cdot \frac{b_{f_i}}{2} \cdot 2 + t_{w_i} \cdot D_i \cdot \frac{b_{f_i}}{2}}{A_{g_i}}$$

$z = (5.975) \cdot \text{in}$ Neutral axis (Y-Y) from left

$$I_{z_i} := \frac{1}{12} \cdot b_{f_i} \cdot \left(t_{f_i}\right)^3 \cdot 2 + t_{f_i} \cdot b_{f_i} \cdot \left(y_i - \frac{t_{f_i}}{2}\right)^2 \cdot 2 + \frac{1}{12} \cdot t_{w_i} \cdot \left(D_i\right)^3 + t_{w_i} \cdot D_i \cdot \left(y_i - \frac{d_i}{2}\right)^2 \qquad I_z = (7664.2625) \cdot in^4$$

Moment of inertia about Z-Z axis

$$I_{y_i} := \frac{1}{12} \cdot \left(b_{f_i}\right)^3 \cdot t_{f_i} \cdot 2 + t_{f_i} \cdot b_{f_i} \cdot \left(z_i - \frac{b_{f_i}}{2}\right)^2 \cdot 2 + \left[\frac{1}{12} \cdot \left(t_{w_i}\right)^3 \cdot \left(D_i\right) + t_{w_i} \cdot D_i \cdot \left(z_i - \frac{b_{f_i}}{2}\right)^2\right]$$

Moment of inertia about Y-Y axis

$$I_y = (225.2993) \cdot in^4$$

$$S_{z\_t_i} := \frac{I_{z_i}}{d_i - y_i} \qquad S_{z\_b_i} := \frac{I_{z_i}}{-y_i} \qquad S_{z\_t} = (431.1821) \cdot in^3$$

Section modulus about Z-Z axis

$$S_{z\_b} = (-431.1821) \cdot in^3$$

$$S_{y_i} := \frac{I_{y_i}}{z_i}$$

$$S_y = (37.707) \cdot in^3$$

Section modulus about Y-Y axis

$$r_{z_i} := \sqrt{\frac{I_{z_i}}{A_{g_i}}} \qquad r_{y_i} := \sqrt{\frac{I_{y_i}}{A_{g_i}}}$$

Radius of gyration

$$r_y = (2.3955) \cdot in \qquad r_z = (13.9715) \cdot in$$

Member Design Forces with Catwalk Loads

Additional shear forces and stresses are minor by inspection relative to the bending moments induced and shear capacities of the member and connection elements. Add effects of bending to the loads from T187.

First, compute the lateral flange bending from torsion using the flexural analogy.

See Table 8.6.1 from Salmon and Johnson, *Steel Structures Design and Behavior*, 4th Edition

$$\lambda := \sqrt{\frac{G \cdot J_0}{E \cdot C_{w_0}}} = 0.0754 \frac{1}{ft}$$

Eq 8.5.11 Salmon and Johnson

With $\lambda \cdot L_{bz_0} = 2.3825$ and a = 0.5, concentrated torsion at midspan, Table 8.6.1 gives

$$\beta := \frac{(0.6 - 0.76)}{(3.0 - 2.0)} \cdot \left(\lambda \cdot L_{bz_0} - 2.0\right) + 0.76 = 0.6988$$

Interpolate Beta from Table 8.6.1

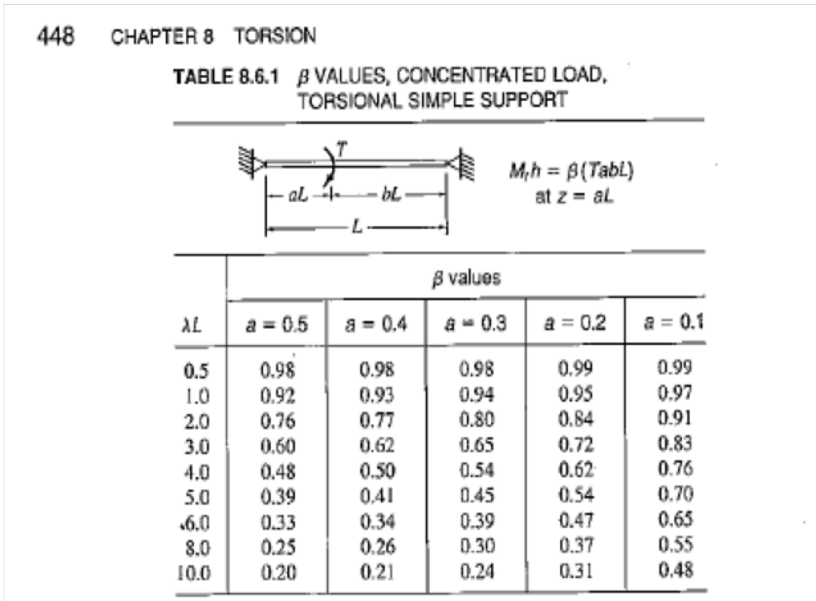

448 CHAPTER 8 TORSION

TABLE 8.6.1 β VALUES, CONCENTRATED LOAD, TORSIONAL SIMPLE SUPPORT

λL	a = 0.5	a = 0.4	a = 0.3	a = 0.2	a = 0.1
	β values				
0.5	0.98	0.98	0.98	0.99	0.99
1.0	0.92	0.93	0.94	0.95	0.97
2.0	0.76	0.77	0.80	0.84	0.91
3.0	0.60	0.62	0.65	0.72	0.83
4.0	0.48	0.50	0.54	0.62	0.76
5.0	0.39	0.41	0.45	0.54	0.70
6.0	0.33	0.34	0.39	0.47	0.65
8.0	0.25	0.26	0.30	0.37	0.55
10.0	0.20	0.21	0.24	0.31	0.48

Using flexural analogy for torsion, lateral bending moment from torsion acting on ONE flange is:

$$M_{f\_TcatwalkU_m} := \begin{cases} 0 & \text{if } m \le 4 \\ \dfrac{\beta \cdot \left(T_{catwalkU} \cdot 0.5 \cdot 0.5 \cdot L_{bz_0}\right)}{d_0} & \text{otherwise} \end{cases}$$

STRENGTH I lateral flange bending moment at midspan from torsion for one flange.

$$M_{f\_TcatwalkSRVII_m} := \begin{cases} 0 & \text{if } m \le 4 \\ 0 & \text{otherwise} \end{cases}$$

SERVICE II lateral flange bending moment at midspan from torsion for one flange. Only inlude forces at ends since we just need to check connections for SERVICE II.

Member Forces: Add catewalk force effects to those from T187

$$M_{Uz_m} := \left| \begin{array}{l} \text{if } m \le 4 \\ \quad \left| \begin{array}{ll} \left(M_{Uz_m} + M_{catwalkUz_m}\right) & \text{if } M_{Uz_m} \le 0 \\ M_{Uz_m} & \text{otherwise} \end{array} \right. \\ \text{otherwise} \\ \quad \left| \begin{array}{ll} \left(M_{Uz_m} + M_{catwalkUz_m}\right) & \text{if } M_{Uz_m} \ge 0 \\ M_{Uz_m} & \text{otherwise} \end{array} \right. \end{array} \right.$$

Revised factored strong axis bending moment with catwalk forces. At ends, add fixed end negative moment only if T187 shows a negative moment. At midspan, add simple span moment only if T187 shows a positive moment.

$$M_{Uy_m} := \left|M_{Uy_m}\right| + M_{catwalkUy_m} + 2\,M_{f\_TcatwalkU_m}$$

Revised factored strong axis bending moment with catwalk forces. Add only to midspan. Assume pinned at ends.

$$V_{U_m} := \left|V_{U_m}\right| + V_{catwalkUz} + D_0 \cdot t_{w_0} \cdot \frac{T_{catwalkU} \cdot 0.5 \cdot t_{w_0}}{J_0}$$

Revised factored vertical shear with catwalk forces. Include St. Venant's torsional shear stress times the area of the web

$$M_{SRVIIz_m} := \left| \begin{array}{l} \text{if } m \le 4 \\ \quad \left| \begin{array}{ll} \left(M_{SRVIIz_m} + M_{catwalkSRVIIz_m}\right) & \text{if } M_{SRVIIz_m} \le 0 \\ M_{SRVIIz_m} & \text{otherwise} \end{array} \right. \\ \text{otherwise} \\ \quad \left| \begin{array}{ll} \left(M_{SRVIIz_m} + M_{catwalkSRVIIz_m}\right) & \text{if } M_{SRVIIz_m} \ge 0 \\ M_{SRVIIz_m} & \text{otherwise} \end{array} \right. \end{array} \right.$$

Revised factored strong axis bending moment with catwalk forces. At ends, add fixed end negative moment only if T187 shows a negative moment. At midspan, add simple span moment only if T187 shows a positive moment.

$$V_{SRVII_m} := \left| \begin{array}{ll} \left|V_{SRVII_m}\right| + V_{catwalkSRVIIz} + D_0 \cdot t_{w_0} \cdot \dfrac{T_{catwalkSRVII} \cdot 0.5 \cdot t_{w_0}}{J_0} & \text{if } m \le 4 \\ 0 & \text{otherwise} \end{array} \right.$$

Revised factored vertical shear with catwalk forces. Include St. Venant's torsional shear stress times the area of the web.

Connection Design Forcess (End Forces)

STRENGTH

$$P_{CU_m} := \begin{cases} P_{U_m} & \text{if } m \le 4 \\ 0 & \text{otherwise} \end{cases}$$

$$V_{CU_m} := \begin{cases} V_{U_m} & \text{if } m \le 4 \\ 0 & \text{otherwise} \end{cases}$$

$$M_{CUz_m} := \begin{cases} M_{Uz_m} & \text{if } m \le 4 \\ 0 & \text{otherwise} \end{cases}$$

$$M_{CUy_m} := \begin{cases} M_{Uy_m} & \text{if } m \le 4 \\ 0 & \text{otherwise} \end{cases}$$

Member Design:

Net Section Properties:

Preliminary Connection properties - Assume connecting web only with two connection plates

$d_b := 1in$ Bolt diameter

$N_{br} := 4$ Number of individual bolt columns

Webs - Staggered bolt spacing:

$s_w := 3in$ Bolt spacing in webs

$g_w := 3.125in$ Average gage of web bolt rows

$N_r := 9$ Number of bolts rows

$L_{edge} := 2in$ Edge distance

$L_{end\_web} := 2.5in$ End distance to edge of web

$L_{end} := 2in$ End distance for everything else

$$A_{n1_i} := A_{g_i} - 8\cdot\left(d_b + \frac{1}{8}in\right)\cdot t_{w_i} + \frac{{s_w}^2}{4\cdot 4in}\cdot 2\cdot t_{w_i} + \frac{{s_w}^2}{4\cdot 3.25in}\cdot 2\cdot t_{w_i} + \frac{{s_w}^2}{4\cdot 2.75in}\cdot 2\cdot t_{w_i}$$

Staggered net area shown below

$$A_{n3_i} := A_{g_i} - 9\cdot\left(d_b + \frac{1}{8}in\right)\cdot t_{w_i} + \frac{{s_w}^2}{4\cdot 4in}\cdot 2\cdot t_{w_i} + \frac{{s_w}^2}{4\cdot 3.25in}\cdot 2\cdot t_{w_i} + \frac{{s_w}^2}{4\cdot 2.75in}\cdot 2\cdot t_{w_i} + \frac{{s_w}^2}{4\cdot 2.5in}\cdot 2\cdot t_{w_i}$$

Staggered net area thru RFI bolt

$$A_{n2_i} := A_{g_i} - 5\cdot\left(d_b + \frac{1}{8}in\right)\cdot t_{w_i}$$

$$A_{n_i} := \min\left(A_{n1_i}, A_{n2_i}, A_{n3_i}\right)$$

$A_{n3} = (36.7556)\cdot in^2$ Staggered net area

$A_{n1} = (36.3506)\cdot in^2$ Staggered net area

$A_{n2} = (35.888)\cdot in^2$ Straight net area

$A_g = (39.263)\cdot in^2$ Gross area

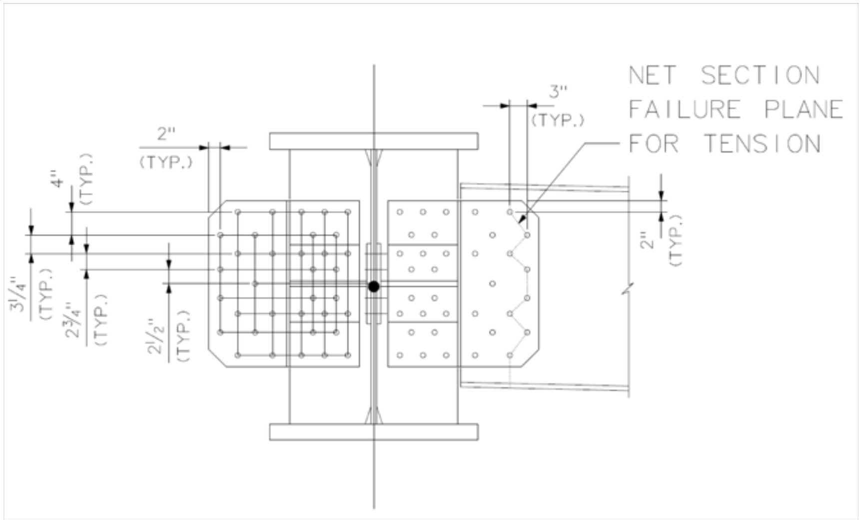

Tensile Capacity (6.8)

$$x_{bar_i} := 0.5in + \frac{t_{w_i}}{2}$$

See Table 6.8.2.2-1 Case 2: Assume connection plate = 0.5 in

$L_{conn} := (N_{br} - 1)\cdot s_w$ Assume 4 total rows of bolts

$$U_i := 1 - \frac{x_{bar_i}}{L_{conn}}$$

$U = (0.9111)$ Shear lag reduction factor

$$P_{r\_t_i} := \min\left(\phi_y\cdot F_y\cdot A_{g_i}, \phi_u\cdot F_u\cdot A_{n_i}\cdot U_i\right)$$

$P_{r\_t} = (1700)\cdot kip$ Factored Tensile Resistance

Compression Capacity (6.9)

Cross-Section	Without Slender Elements ($Q = 1.0$)		With Slender Elements ($Q < 1.0$)	
	Potential Buckling Mode	Applicable Equation for P_e	Potential Buckling Mode	Applicable Equations for P_e and Q
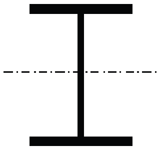	FB	(6.9.4.1.2-1)	FB	(6.9.4.1.2-1)
	and if $K_z\ell_z > K_y\ell_y$: TB	(6.9.4.1.3-1) Note: see also Article C6.9.4.1.3	and if $K_z\ell_z > K_y\ell_y$: TB	(6.9.4.1.3-1) Note: see also Article C6.9.4.1.3
			and: FLB	(6.9.4.2.2-1) or (6.9.4.2.2-2) or (6.9.4.2.2-7) or (6.9.4.2.2-8)
			and/or: WLB	(6.9.4.2.2-11)

Nonslender and Slender Member Elements (6.9.4.2)

Flanges: $k_{f_i} := 0.56$ (Table 6.9.4.2.1-1)

$$\frac{\frac{b_f}{2}}{t_f} = 7.563 \qquad k_f\sqrt{\frac{E}{F_y}} = (13.4866)$$

$$pl\_buckling_{f_i} := \left| \begin{array}{ll} \text{"Nonslender Flanges"} & \text{if } \frac{\frac{b_{f_i}}{2}}{t_{f_i}} \le k_{f_i}\sqrt{\frac{E}{F_y}} \\ \text{"Slender Flanges"} & \text{otherwise} \end{array} \right.$$

$pl\_buckling_f = (\text{"Nonslender Flanges"})$

Webs: $k_{w_i} := 1.49$ (Table 6.9.4.2.1-1)

$$\frac{d - fillet\cdot 2}{t_w} = 53.625 \qquad k_w\cdot\sqrt{\frac{E}{F_y}} = (35.884)$$

$$pl\_buckling_{w_i} := \left| \begin{array}{ll} \text{"Nonslender Web"} & \text{if } \frac{d_i - fillet_i\cdot 2}{t_{w_i}} \le k_{w_i}\cdot\sqrt{\frac{E}{F_y}} \\ \text{"Slender Web"} & \text{otherwise} \end{array} \right.$$

$pl\_buckling_w = (\text{"Slender Web"})$

Slender Member Elements (6.9.4.2.2)

Flanges: Unstiffened elements

$$Q_{s_i} := \begin{cases} 1.0 & \text{if } pl\_buckling_{f_i} = \text{"Nonslender Flanges"} \\ 1.415 - 0.74\cdot\dfrac{\frac{b_{f_i}}{2}}{t_{f_i}}\cdot\sqrt{\dfrac{E}{F_y}} & \text{if } 0.56\cdot\sqrt{\dfrac{E}{F_y}} < \dfrac{\frac{b_{f_i}}{2}}{t_{f_i}} \le 1.03\cdot\sqrt{\dfrac{E}{F_y}} \\ \dfrac{0.69\cdot E}{F_y\cdot\left(\dfrac{\frac{b_{f_i}}{2}}{t_{f_i}}\right)^2} & \text{otherwise} \end{cases}$$

$$Q_s = (1)$$

Web: Stiffened elements

$$b_{e_i} := \begin{cases} d_i - fillet_i\cdot 2 & \text{if } \left[1.92\cdot t_{w_i}\cdot\sqrt{\dfrac{E}{Q_{s_i}\cdot F_y}}\left[1 - \dfrac{0.34}{\left(\dfrac{d_i - fillet_i\cdot 2}{t_{w_i}}\right)}\cdot\sqrt{\dfrac{E}{F_y}}\right]\right] > d_i - fillet_i\cdot 2 \\ \left[1.92\cdot t_{w_i}\cdot\sqrt{\dfrac{E}{Q_{s_i}\cdot F_y}}\left[1 - \dfrac{0.34}{\left(\dfrac{d_i - fillet_i\cdot 2}{t_{w_i}}\right)}\cdot\sqrt{\dfrac{E}{F_y}}\right]\right] & \text{otherwise} \end{cases}$$

$$d - fillet\cdot 2 = (32.175)\cdot in$$

$$b_e = (23.5075)\cdot in$$

$$A_{eff_i} := t_{w_i}\cdot\left(b_{e_i}\right) + 2\cdot t_{f_i}\cdot b_{f_i}$$

$$A_{eff} = (32.9855)\cdot in^2$$

NOTE TO CHECKER: THE EQUATION FOR Aeff DEFINED IN 6.9.4.2.2-9 OF 2010 AASHTO LRFD DOES NOT SEEM CORRECT. AISC APPEARS TO DEFINE Aeff as the sum of (beff)*t not (b-beff)*t as in AASHTO LRFD 2010. IF AASHTO IS USED HERE, Qa drops to 0.61. INCREASES IN WEB THICKNESS RESULT IN LOWER Qs WHICH DOES NOT MAKE SENSE. USE AISC Aeff.

$$Q_{a_i} := \begin{cases} 1.0 & \text{if } pl\_buckling_{w_i} = \text{"Nonslender Web"} \\ \dfrac{A_{eff_i}}{A_{g_i}} & \text{otherwise} \end{cases}$$

$$Q_a = (0.8401)$$

$$Q_i := Q_{s_i}\cdot Q_{a_i}$$

$$Q = (0.8401)$$

Limiting Slenderness Ratio (6.9.3):

$K := 0.75$ (4.6.2.5)

$$\text{Slenderness}_i := \begin{cases} \text{"OK"} & \text{if } \max\left(\frac{K \cdot L_{bz_i}}{r_{z_i}}, \frac{K \cdot L_{by_i}}{r_{y_i}}\right) \le 120 \\ \text{"NG"} & \text{otherwise} \end{cases}$$

$$\frac{K \cdot L_{bz}}{r_z} = 20.3448$$

$$\frac{K \cdot L_{by}}{r_y} = 59.3305$$

$\text{Slenderness}_i = (\text{"OK"})$

Compressive Capacity

Elastic Flexural Buckling Resistance (6.9.4.1.2)

$$P_{e\_FB_i} := \frac{\pi^2 \cdot E}{\left(\max\left(\frac{K \cdot L_{bz_i}}{r_{z_i}}, \frac{K \cdot L_{by_i}}{r_{y_i}}\right)\right)^2} \cdot A_{g_i}$$

$P_{e\_FB} = (3192.4624) \cdot \text{kip}$

Elastic Torsional Buckling and Flexural Torsional Buckling Resistance (6.9.4.1.3)

Assume diagonal of K-brace is a WT connected to web (not flanges) of this lateral member. In this case, torsional unbraced length is twice the lateral unbraced length and torsional buckling is an applicable limit state under compression. Take torsional unbraced length as full length of member - Lbz

$$P_{e\_TB_i} := \left[\frac{\pi^2 \cdot E \cdot C_{w_i}}{\left(L_{bz_i}\right)^2} + G \cdot J_i\right] \cdot \frac{A_{g_i}}{I_{z_i} + I_{y_i}}$$

$P_{e\_TB} = (1063.7033) \cdot \text{kip}$

Nominal Compressive Resistance

$P_{o_i} := Q_i \cdot F_y \cdot A_{g_i}$

Equivalent nominal yield resistance

$P_o = (1649.2744) \cdot kip$

$$P_{n\_c_i} := \begin{cases} \left[\left[0.658^{\left(\frac{P_{o_i}}{\min\left(P_{e\_FB_i}, P_{e\_TB_i}\right)}\right)}\right] \cdot P_{o_i}\right] & \text{if } \frac{\min\left(P_{e\_FB_i}, P_{e\_TB_i}\right)}{P_{o_i}} \geq 0.44 \\ \left(0.877 \cdot \min\left(P_{e\_FB_i}, P_{e\_TB_i}\right)\right) & \text{otherwise} \end{cases}$$

$P_{n\_c} = (861.8898) \cdot kip$

Factored Compressive Resistance

$P_{r\_c_i} := P_{n\_c_i} \cdot \phi_c$

$P_{r\_c} = (775.7009) \cdot kip$

I Section Z-Z Flexural Resistance (6.10)

Web Proportions (6.10.2.1.1)

$$\text{Proportions}_{w_i} := \begin{cases} \text{"OK"} & \text{if } \dfrac{d_i - 2 \cdot t_{f_i}}{t_{w_i}} \le 150 \\ \text{"NG"} & \text{otherwise} \end{cases}$$

$$\text{Proportions}_{w_i} = (\text{"OK"})$$

Flange Proportions (6.10.2.2)

$$\text{Proportions}_{f_i} := \begin{cases} \text{"OK"} & \text{if } \dfrac{b_{f_i}}{2\, t_{f_i}} \le 12 \wedge b_{f_i} \ge \dfrac{d_i - 2 \cdot t_{f_i}}{6} \wedge t_{f_i} \ge 1.1\, t_{w_i} \\ \text{"NG"} & \text{otherwise} \end{cases}$$

$$\text{Proportions}_{f_i} = (\text{"OK"})$$

Web Bend Buckling Resistance (6.10.1.9)

Calculate Dc (depth of web in compression in elastic range) (D6.3.2)

$D_{c_i} := d_i - 2 \cdot t_{f_i}$ Take Dcp as full depth of "web"

$k_i := 7.2$ Bend buckling coefficient $k = (7.2)$

$$\text{bend\_buckling}_i := \begin{cases} \text{"OK"} & \text{if } \dfrac{0.9 \cdot E \cdot k_i}{\left(\dfrac{d_i - 2 \cdot t_{f_i}}{t_{w_i}}\right)^2} \ge F_y \\ \text{"NG"} & \text{otherwise} \end{cases}$$

$\text{bend\_buckling} = (\text{"OK"})$

Web Load Shedding Factor (6.10.1.10.2)

$D_{c_i} := d_i - 2 \cdot t_{f_i}$ Conservatively take Dc = full depth of web

$a_{wc_i} := \dfrac{2 \cdot D_{c_i} \cdot t_{w_i}}{b_{f_i} \cdot t_{f_i}}$ $\lambda_{rw} := 5.7 \cdot \sqrt{\dfrac{E}{F_y}}$

$$R_{b_i} := \begin{cases} 1.0 & \text{if } \dfrac{2 \cdot D_{c_i}}{t_{w_i}} \le \lambda_{rw} \\ \text{otherwise} & \begin{cases} 1 - \left(\dfrac{a_{wc_i}}{1200 + 300 \cdot a_{wc_i}}\right) \cdot \left(\dfrac{2 \cdot D_{c_i}}{t_{w_i}} - \lambda_{rw}\right) & \text{if } 1 - \left(\dfrac{a_{wc_i}}{1200 + 300 \cdot a_{wc_i}}\right) \cdot \left(\dfrac{2 \cdot D_{c_i}}{t_{w_i}} - \lambda_{rw}\right) \le 1 \\ 1 & \text{otherwise} \end{cases} \end{cases}$$

$R_b = (1)$

Flexural Resistance of Compression Flanges about Z-Z axis (6.10.8.2)

Local Buckling Resistance (6.10.8.2.2)

$\lambda_{pf} := 0.38 \cdot \sqrt{\frac{E}{F_y}}$ $\lambda_{pf} = 9.1516$ Limiting slenderness ratio for compact flange

$\lambda_{rf} := 0.56 \cdot \sqrt{\frac{E}{0.7F_y}}$ $\lambda_{rf} = 16.1196$ Limiting slenderness ratio for noncompact flange

$\lambda_{f_i} := \frac{b_{f_i}}{2 \cdot t_{f_i}}$ $\lambda_f = (7.5633)$ Slenderness ratio of compression flange

$$F_{nc\_lb_i} := \left| \begin{array}{ll} R_{b_i} \cdot F_y & \text{if } \lambda_{f_i} \le \lambda_{pf} \\ \left[1 - \left(1 - \frac{0.7 \cdot F_y}{F_y}\right) \cdot \frac{\lambda_{f_i} - \lambda_{pf}}{\lambda_{rf} - \lambda_{pf}}\right] \cdot R_{b_i} \cdot F_y & \text{otherwise} \end{array} \right.$$

Local buckling resistance of compression flange

$F_{nc\_lb} = (50) \cdot ksi$

Lateral Torsional Buckling Resistance (6.10.8.2.3)

$$r_{t_i} := \frac{b_{f_i}}{\sqrt{12 \cdot \left(1 + \frac{1}{3} \cdot \frac{D_{c_i}}{b_{f_i} \cdot t_{f_i}} \cdot t_{w_i}\right)}}$$

$C_b := 1.0$ Conservative

$L_{p_i} := 1.0 \cdot r_{t_i} \cdot \sqrt{\frac{E}{F_y}}$ Limiting unbraced length to achieve full nominal moment resistance under uniform bending

$L_{r_i} := \pi \cdot r_{t_i} \cdot \sqrt{\frac{E}{0.7F_y}}$ Limiting unbraced length to achieve the onset of nominal yielding in either flange under uniform bending without consideration of compression flange residual stress effects

$$F_{cr_i} := \left| \begin{array}{ll} F_y & \text{if } \frac{C_b \cdot R_{b_i} \pi^2 \cdot E}{\left(\frac{L_{by_i}}{r_{t_i}}\right)^2} > F_y \\ \frac{C_b \cdot R_{b_i} \pi^2 \cdot E}{\left(\frac{L_{by_i}}{r_{t_i}}\right)^2} & \text{otherwise} \end{array} \right.$$

Elastic lateral torsional buckling stress

$$F_{nc\_ltb_i} := \left| \begin{array}{ll} R_{b_i} \cdot F_y & \text{if } L_{by_i} \le L_{p_i} \\ \left[1 - \left(1 - \frac{0.7 \cdot F_y}{F_y}\right) \cdot \frac{L_{by_i} - L_{p_i}}{L_{r_i} - L_{p_i}}\right] \cdot C_b R_{b_i} \cdot F_y & \text{if } L_{p_i} \le L_{by_i} \le L_{r_i} \\ F_{cr_i} & \text{otherwise} \end{array} \right.$$

Local buckling resistance of compression flange

$F_{ncz_i} := \min\left(F_{nc\_lb_i}, F_{nc\_ltb_i}\right)$

$F_{ncz} = (39.1587) \cdot ksi$

Flexural resistance about Z-Z axis

$M_{rz_i} := \phi_f \cdot F_{ncz_i} \cdot S_{z\_t_i}$ $\boxed{M_{rz} = (1407.044) \cdot kip \cdot ft}$

Flexural Resistance about Y-Y axis (6.12.2.2.1) of H Shaped Members

$\lambda_{pf} := 0.38 \cdot \sqrt{\frac{E}{F_y}}$ $\lambda_{pf} = 9.1516$ Limiting slenderness ratio for compact flange

$\lambda_{rf} := 0.83 \cdot \sqrt{\frac{E}{F_y}}$ $\lambda_{rf} = 19.989$ Limiting slenderness ratio for noncompact flange

$M_{py_i} := 1.5 \cdot F_y \cdot S_{y_i}$ Plastic moment of H section about weak Y-Y axis

$Z_{y_i} := \frac{M_{py_i}}{F_y}$ Plastic modulus about Y-Y axis

$$M_{ny_i} := \begin{cases} M_{py_i} & \text{if } \lambda_{f_i} \le \lambda_{pf} \\ \left[1 - \left(1 - \frac{S_{y_i}}{Z_{y_i}}\right) \cdot \frac{\lambda_{f_i} - \lambda_{pf}}{0.45 \cdot \sqrt{\frac{E}{F_y}}}\right] \cdot F_y \cdot Z_{y_i} & \text{otherwise} \end{cases}$$

Local buckling resistance of compression flange

$M_{ry_i} := \phi_f \cdot M_{ny_i}$ $M_{ry} = (235.6687) \cdot kip \cdot ft$

Shear Capacity (6.10.9.2)

$$V_{p_i} := 0.58 \cdot F_y \cdot D_i \cdot t_{w_i}$$

Assume web is unstiffened: $k := 5$

$$C_i := \left| \begin{array}{l} 1.0 \ \text{ if } \ \dfrac{D_i}{t_{w_i}} \le 1.12 \cdot \sqrt{\dfrac{E \cdot k}{F_y}} \\ \dfrac{1.12}{\dfrac{D_i}{t_{w_i}}} \cdot \sqrt{\dfrac{E \cdot k}{F_y}} \ \text{ if } \ 1.12 \cdot \sqrt{\dfrac{E \cdot k}{F_y}} \le \dfrac{D_i}{t_{w_i}} \le 1.40 \sqrt{\dfrac{E \cdot k}{F_y}} \\ \dfrac{1.57}{\left(\dfrac{D_i}{t_{w_i}}\right)^2} \cdot \dfrac{E \cdot k}{F_y} \ \text{ otherwise} \end{array} \right.$$

$$V_{r_i} := \phi_v \cdot V_{p_i} \cdot C_i$$

$$\boxed{V_r = (591.078) \cdot kip}$$

Calculate Number of Bolts Required in Webs at Ends of Members (Assume A325 with threads excluded in shear plane)

(6.13.1)

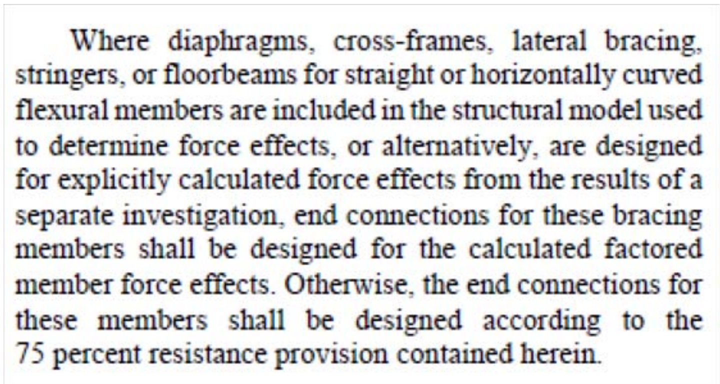

Where diaphragms, cross-frames, lateral bracing, stringers, or floorbeams for straight or horizontally curved flexural members are included in the structural model used to determine force effects, or alternatively, are designed for explicitly calculated force effects from the results of a separate investigation, end connections for these bracing members shall be designed for the calculated factored member force effects. Otherwise, the end connections for these members shall be designed according to the 75 percent resistance provision contained herein.

Define connection resistance factors:

$\phi_s := 0.8$ Resistance factor for A325 bolts in shear

$\phi_{bs} := 0.8$ Resistance factor for block shear

$\phi_{bb} := 0.8$ Resistance factor for bolt bearing

$d_b = 1\cdot in$ Bolt diameter of A325 bolt $A_b := \pi\cdot\frac{{d_b}^2}{4}$

$F_{ub} := 120ksi$

$N_{sp} := 1$ Number of shear planes

Bolt Shear Strength (6.13.2.7)

$R_{rs} := \phi_s\cdot 0.48\cdot A_b\cdot F_{ub}\cdot N_{sp}$ $R_{rs} = 36.1911\cdot kip$ per bolt per shear plane

Bolt Hole Bearing (6.13.2.9)

Assume clear distance between holes or between hole and edge is less than 2d.

$$L_c := \min\left[L_{end\_web} - \frac{d_b + \frac{1}{16}in}{2}, 3\cdot in - \left(d_b + \frac{1}{16}in\right)\right]$$

Min of clear end distance and
Min between bolts

$R_{rbb_i} := \phi_{bb}\cdot 1.2\cdot L_c\cdot t_{w_i}\cdot F_u\cdot N_{sp}$ $R_{rbb} = (72.54)\cdot kip$ per bolt per shear plane

Slip Resistance (6.13.2.8)

$K_h := 1.0$ Standard holes $K_s := 0.5$ Class B Slip

$P_t := 51kip$ 1" dia A325 $N_s := 1$ Number of slip planes

$R_{rslip} := K_h\cdot K_s\cdot N_s\cdot P_t$ $R_{rslip} = 25.5\cdot kip$ per bolt per slip plane

Number of bolts required for STRENGTH

$$N_{b\_STR_{i,m}} := \frac{\left|P_{CU_m}\right|}{\min\left(2R_{rs}, R_{rbb_0}\right)}$$

Bolts required for STRENGTH - Section 1

$$\mathrm{ceil}\left(N_{b\_STR_{0,m}}\right) = \begin{pmatrix} 5 \\ 9 \\ 5 \\ 6 \\ 5 \\ 0 \\ 0 \\ 0 \\ 0 \\ 0 \end{pmatrix}$$

Number of bolts required for SERVICE II - Slip Resistance

$$N_{b\_SRVII_{i,m}} := \frac{\left|P_{SRVII_m}\right|}{2R_{rslip}}$$

$\mathrm{ceil}\left(N_{b\_SRVII_{0,m}}\right) =$

6
10
6
7
6
6
10
6
7
6

Bolts required for Slip Resistance - Section 1

$N_{total} := 15$

$$\mathrm{Number\_bolts}_m := \begin{cases} \text{"OK"} & \text{if } N_{total} \ge \max\left(\mathrm{ceil}\left(N_{b\_STR_{0,m}}\right), \mathrm{ceil}\left(N_{b\_SRVII_{0,m}}\right)\right) \\ \text{"NG"} & \text{otherwise} \end{cases}$$

Number_bolts =

	0
0	"OK"
1	"OK"
2	"OK"
3	"OK"
4	"OK"
5	"OK"
6	"OK"
7	"OK"
8	"OK"
9	"OK"

Check Block Shear Rupture in Web (6.13.4)

Possible Block Shear Tear-Out Scenarios

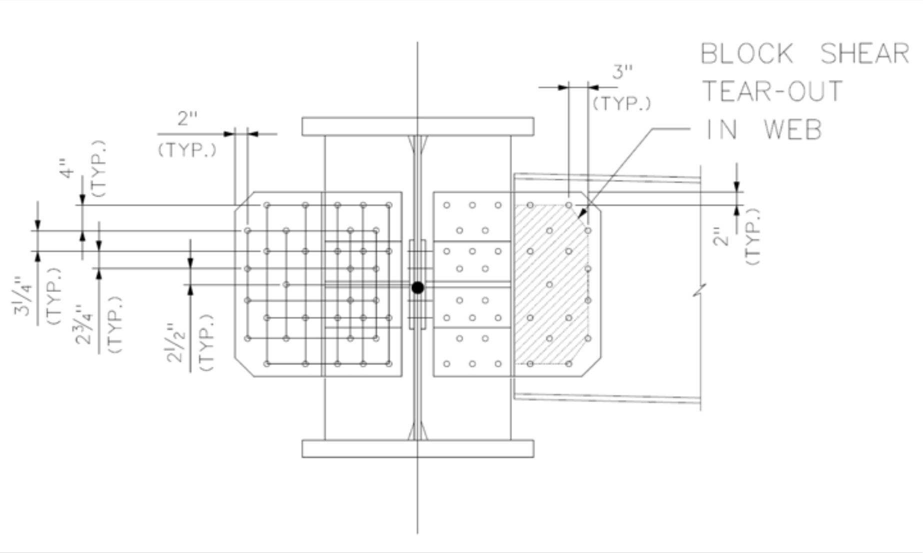

Case 1:
Gross area along the plane resisting shear

$$A_{vg1_i} := t_{w_i} \cdot \left[L_{end\_web} + (2) \cdot s_w \right] \cdot 2$$

Net area along the plane resisting shear

$$A_{vn1_i} := A_{vg1_i} - (1.5) \cdot \left(d_b + \frac{1}{8} in \right) \cdot 2 \cdot t_{w_i}$$

Gross area along plane subject tension

$$A_{tg1_i} := t_{w_i} \cdot (8) \cdot g_w$$

Net area along plane subject tension

$$A_{tn1_i} := A_{tg1_i} - (5) \cdot \left(d_b + \frac{1}{8} in \right) \cdot t_{w_i} + \frac{s_w^{\,2}}{4 \cdot 4in} \cdot t_{w_i} \cdot (2)$$

$A_{vg1} = (10.2) \cdot in^2$ $A_{vn1} = (8.175) \cdot in^2$ $A_{tg1} = (15) \cdot in^2$ $A_{tn1} = (12.3) \cdot in^2$

Case 2:

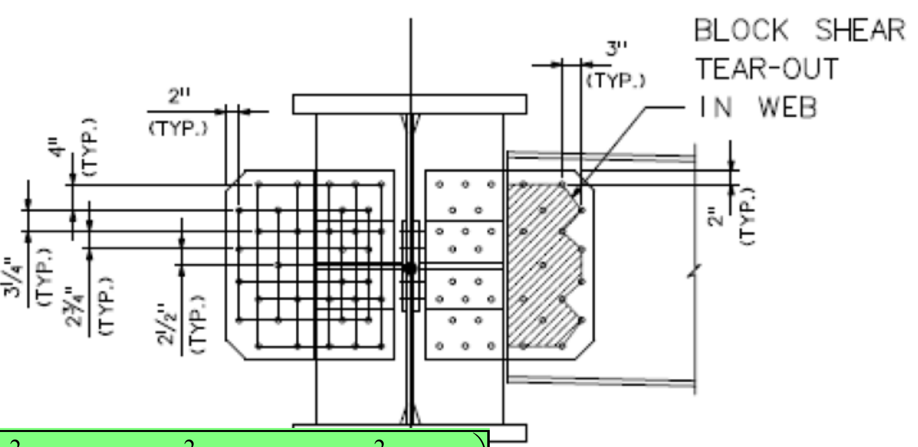

Gross area along the plane resisting shear

$A_{vg2_i} := A_{vg1_i}$

Net area along the plane resisting shear

$A_{vn2_i} := A_{vn1_i}$

Gross area along plane subject tension

$A_{tg2_i} := t_{w_i} \cdot (8) \cdot g_w$

Net area along plane subject tension

$$A_{tn2_i} := A_{tg2_i} - 7 \cdot \left(d_b + \frac{1}{8} in\right) \cdot t_{w_i} + \left(\frac{s_w^2}{4 \cdot 4in} \cdot 2 \cdot t_{w_i} + \frac{s_w^2}{4 \cdot 3.25in} \cdot 2 \cdot t_{w_i} + \frac{s_w^2}{4 \cdot 2.75in} \cdot 2 \cdot t_{w_i}\right)$$

$A_{vg2} = (10.2) \cdot in^2$ $A_{vn2} = (8.175) \cdot in^2$ $A_{tg2} = (15) \cdot in^2$ $A_{tn2} = (12.7626) \cdot in^2$

Case 3:

$A_{vg3_i} := t_{w_i} \cdot \left[L_{end\_web} + (3) \cdot s_w\right] \cdot 2$

$A_{tg3_i} := t_{w_i} \cdot (8) \cdot g_w$

$A_{vn3_i} := A_{vg3_i} - (2) \cdot \left(d_b + \frac{1}{8} in\right) \cdot 2 \cdot t_{w_i}$

$A_{tn3_i} := A_{tg3_i} - 4 \cdot \left(d_b + \frac{1}{8} in\right) \cdot t_{w_i}$

$A_{vg3} = (13.8) \cdot in^2$ $A_{vn3} = (11.1) \cdot in^2$ $A_{tg3} = (15) \cdot in^2$ $A_{tn3} = (12.3) \cdot in^2$

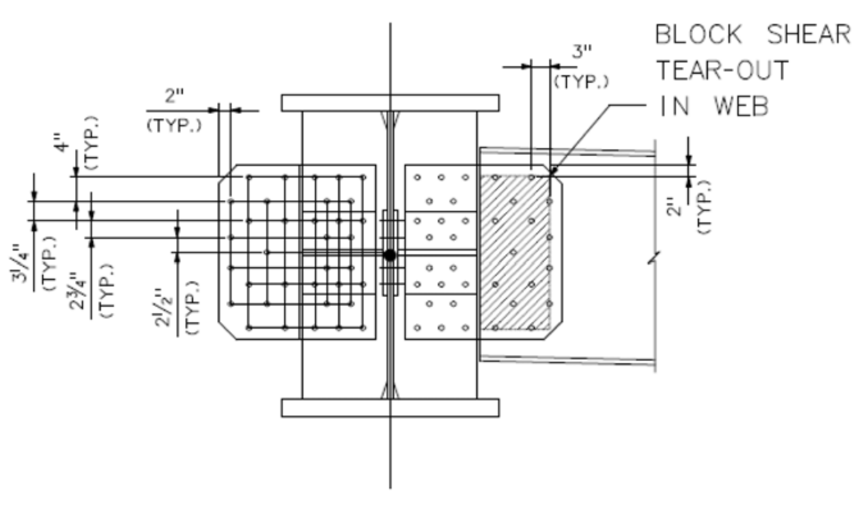

$R_p := 1.0$ Reduction factor for holes taken equal to 0.9 for bolt holes punched full size and 1.0 for bolt holes drilled full size or subpunched and reamed to size

$U_{bs} := 1$ Reduction factor for block shear rupture resistance taken equal to 0.5 when the tension stress is non-uniform and 1.0 when the tension stress is uniform.

By inspection use Case 1

$$R_{rbs1A_i} := \phi_{bs} \cdot R_p \cdot \left(0.58 \cdot F_u \cdot A_{vn1_i} + U_{bs} \cdot F_u \cdot A_{tn1_i}\right)$$

$$R_{rbs1B_i} := \phi_{bs} \cdot R_p \cdot \left(0.58 \cdot F_y \cdot A_{vg1_i} + U_{bs} \cdot F_u \cdot A_{tn1_i}\right)$$

Block shear resistance - Failure Plane 1

$$P_{r\_bs_i} := \left| \begin{array}{ll} R_{rbs1B_i} & \text{if } R_{rbs1A_i} > R_{rbs1B_i} \\ R_{rbs1A_i} & \text{otherwise} \end{array} \right.$$

$$P_{r\_bs} = (876.24) \cdot kip$$

Axial Resistance Summary and Check

Tension

$P_{r\_t} = (1700.2937) \cdot kip$

Block Shear - Tension

$P_{r\_bs} = (876.24) \cdot kip$

Compression

$P_{r\_c} = (775.7009) \cdot kip$

Length

$L_{bz} = (31.583)\ ft$

Bolt Strength

$N_{total} \cdot \min\left(2R_{rs}, R_{rbb_0}\right) = 1085.7344 \cdot kip$

Number of Bolts

$N_{total} = 15$

$$\text{Axial\_Capacity\_Check}_m := \begin{array}{|l} \text{if } P_{U_m} \geq 0kip \\ \quad \begin{array}{|ll} \text{"OK"} & \text{if } \min\left(P_{r\_t_0}, P_{r\_bs_0}, N_{total} \cdot \min\left(2R_{rs}, R_{rbb_0}\right)\right) \geq \left|P_{U_m}\right| \\ \text{"NG"} & \text{otherwise} \end{array} \\ \text{if } P_{U_m} < 0kip \\ \quad \begin{array}{|ll} \text{"OK"} & \text{if } \min\left(P_{r\_c_0}, N_{total} \cdot \min\left(2R_{rs}, R_{rbb_0}\right)\right) \geq \left|P_{U_m}\right| \\ \text{"NG"} & \text{otherwise} \end{array} \end{array}$$

Section 1

Axial_Capacity_Check =

	0
0	"OK"
1	"OK"
2	"OK"
3	"OK"
4	"OK"
5	"OK"
6	"OK"
7	"OK"
8	"OK"
9	"OK"

Shear Resistance Check

$$\text{Shear\_Capacity\_Check}_m := \left| \begin{array}{ll} \text{"OK"} & \text{if } V_{r_0} \geq \left|V_{U_m}\right| \\ \text{"NG"} & \text{otherwise} \end{array} \right.$$

Shear_Capacity_Check =

	0
0	"OK"
1	"OK"
2	"OK"
3	"OK"
4	"OK"
5	"OK"
6	"OK"
7	"OK"
8	"OK"
9	"OK"

Axial and Flexure Interaction Check

$$DC_m := \left|\begin{array}{l} \text{if } P_{U_m} \ge 0\text{kip} \\ \quad \left|\begin{array}{l} \text{if } m \le 4 \\ \quad \left\|\begin{array}{ll} \left[\dfrac{\left|P_{U_m}\right|}{2\cdot\min\left(P_{r\_t_0}, P_{r\_bs_0}\right)} + \left(\dfrac{\left|M_{Uz_m}\right|}{M_{rz_0}} + \dfrac{\left|M_{Uy_m}\right|}{M_{ry_0}}\right)\right] & \text{if } \dfrac{\left|P_{U_m}\right|}{\min\left(P_{r\_t_0}, P_{r\_bs_0}\right)} < 0.2 \\ \left[\dfrac{\left|P_{U_m}\right|}{\min\left(P_{r\_t_0}, P_{r\_bs_0}\right)} + \dfrac{8}{9}\left(\dfrac{\left|M_{Uz_m}\right|}{M_{rz_0}} + \dfrac{\left|M_{Uy_m}\right|}{M_{ry_0}}\right)\right] & \text{otherwise} \end{array}\right. \\ \text{otherwise} \\ \quad \left\|\begin{array}{ll} \left[\dfrac{\left|P_{U_m}\right|}{2\cdot\min\left(P_{r\_t_0}\right)} + \left(\dfrac{\left|M_{Uz_m}\right|}{M_{rz_0}} + \dfrac{\left|M_{Uy_m}\right|}{M_{ry_0}}\right)\right] & \text{if } \dfrac{\left|P_{U_m}\right|}{\min\left(P_{r\_t_0}, P_{r\_bs_0}\right)} < 0.2 \\ \left[\dfrac{\left|P_{U_m}\right|}{\min\left(P_{r\_t_0}\right)} + \dfrac{8}{9}\left(\dfrac{\left|M_{Uz_m}\right|}{M_{rz_0}} + \dfrac{\left|M_{Uy_m}\right|}{M_{ry_0}}\right)\right] & \text{otherwise} \end{array}\right. \end{array}\right. \\ \text{if } P_{U_m} < 0\text{kip} \\ \quad \left\|\begin{array}{ll} \left[\dfrac{\left|P_{U_m}\right|}{2\,P_{r\_c_0}} + \left(\dfrac{\left|M_{Uz_m}\right|}{M_{rz_0}} + \dfrac{\left|M_{Uy_m}\right|}{M_{ry_0}}\right)\right] & \text{if } \dfrac{\left|P_{U_m}\right|}{P_{r\_c_0}} < 0.2 \\ \left[\dfrac{\left|P_{U_m}\right|}{P_{r\_c_0}} + \dfrac{8}{9}\left(\dfrac{\left|M_{Uz_m}\right|}{M_{rz_0}} + \dfrac{\left|M_{Uy_m}\right|}{M_{ry_0}}\right)\right] & \text{otherwise} \end{array}\right. \end{array}\right.$$

$$Axial\_Flexure\_Interaction_m := \left|\begin{array}{ll} \text{"OK"} & \text{if } DC_m \le 1.0 \\ \text{"NG"} & \text{otherwise} \end{array}\right.$$

Axial_Flexure_Interaction =

	0
0	"OK"
1	"OK"
2	"OK"
3	"OK"
4	"OK"
5	"OK"
6	"OK"
7	"OK"
8	"OK"
9	"OK"

DC =

	0
0	0.6017
1	0.8373
2	0.5602
3	0.6166
4	0.5802
5	0.5553
6	0.6388
7	0.5105
8	0.522
9	0.7191

Check Bolt Group in Web of Lateral for Combined Forces

Define bolt pattern:

$j := 0..\left(N_{br}-1\right)$ Row indicies in direction of axial loading

$k := 0..\left(N_r-1\right)$ Bolt indicies perpendicular to direction of axial loa

$x_{w_{k,j}} := j \cdot s_w$ X dimension of web bolts from left bolt line

$N_r = 9$ $N_{br} = 4$

$$y_{w_{k,j}} := \begin{cases} (12.5in) & \text{if } k = 0 \\ (8.5in) & \text{if } k = 1 \\ (5.25in) & \text{if } k = 2 \\ (2.5in) & \text{if } k = 3 \\ (0in) & \text{if } k = 4 \\ (-2.5in) & \text{if } k = 5 \\ (-5.25in) & \text{if } k = 6 \\ (-8.5in) & \text{if } k = 7 \\ (-12.5in) & \text{if } k = 8 \end{cases}$$

Y dimension of web bolts from mid depth of beam and CL of connection

$$bolt_{w_{k,j}} := \begin{cases} \text{if } j = 0 \lor j = 2 \\ \quad \begin{cases} 0 & \text{if } k = 1 \lor k = 3 \lor k = 4 \lor k = 5 \lor k = 7 \\ 1 & \text{otherwise} \end{cases} \\ \text{if } j = 1 \\ \quad \begin{cases} 0 & \text{if } k = 0 \lor k = 2 \lor k = 3 \lor k = 5 \lor k = 6 \lor k = 8 \\ 1 & \text{otherwise} \end{cases} \\ \text{if } j = 3 \\ \quad \begin{cases} 0 & \text{if } k = 0 \lor k = 2 \lor k = 4 \lor k = 6 \lor k = 8 \\ 1 & \text{otherwise} \end{cases} \\ 0 \quad \text{otherwise} \end{cases}$$

Define bolt locations on grid lines

Dimensions to actual bolts in web of lateral

$X_{k,j} := x_{w_{k,j}} \cdot bolt_{w_{k,j}}$ $\quad$ $Y_{k,j} := y_{w_{k,j}} \cdot bolt_{w_{k,j}}$

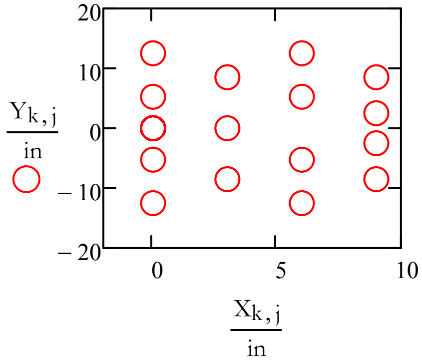

$$N_{boltsPerRow_j} := \sum_k bolt_{w_{k,j}} \qquad N_{boltsPerRow} = \begin{pmatrix} 4 \\ 3 \\ 4 \\ 4 \end{pmatrix}$$

Total number of bolts per row

$$N_{webBolts} := \sum_j N_{boltsPerRow_j} = 15$$

Total number of bolts per web

$L_{end} = 2 \cdot in$

End distance to web connection plate edge

Calculate Centroid of Bolt Group

$$x_{cb} := \frac{\sum_k X_{k,0} + \sum_k X_{k,1} + \sum_k X_{k,2} + \left(\sum_k X_{k,3}\right)}{N_{webBolts}}$$

$x_{cb} = 4.6 \cdot in$ From inside line of bolts

$$y_{cb} := \frac{\sum_k Y_{k,0} + \sum_k Y_{k,1} + \sum_k Y_{k,2} + \left(\sum_k Y_{k,3}\right)}{N_{webBolts}}$$

$y_{cb} = 0 \cdot in$ From mid depth of web

Calculate Moments of Inertia of Bolt Group to Resist Bending in the Plane of the Web (Strong-axis bending of beam)

$$I_{xb} := \sum_k \left[bolt_{w_{k,0}} \left(Y_{k,0} - y_{cb}\right)^2\right] + \sum_k \left[bolt_{w_{k,1}} \left(Y_{k,1} - y_{cb}\right)^2\right] \dots \quad = 1036.75 \cdot in^2$$
$$+ \sum_k \left[bolt_{w_{k,2}} \left(Y_{k,2} - y_{cb}\right)^2\right] + \left[\sum_k \left[bolt_{w_{k,3}} \left(Y_{k,3} - y_{cb}\right)^2\right]\right]$$

$$I_{yb} := \sum_k \left[bolt_{w_{k,0}} \left(X_{k,0} - x_{cb}\right)^2\right] + \sum_k \left[bolt_{w_{k,1}} \left(X_{k,1} - x_{cb}\right)^2\right] \dots \quad = 177.6 \cdot in^2$$
$$+ \sum_k \left[bolt_{w_{k,2}} \left(X_{k,2} - x_{cb}\right)^2\right] + \left[\sum_k \left[bolt_{w_{k,3}} \left(X_{k,3} - x_{cb}\right)^2\right]\right]$$

$$J_b := I_{xb} + I_{yb} = 1214.35 \cdot in^2$$

$d_{boltWeb_{k,j}} := \sqrt{\left(X_{k,j} - x_{cb}\right)^2 + \left(Y_{k,j} - y_{cb}\right)^2}$ Distance from CG to each bolt

$d_{critWeb} := \max\left(d_{boltWeb}\right) = 13.3195 \cdot in$ Critical bolt distance from CG of group (extreme top and bottom bolts)

$$d_{critWeb\_x} := \left|X_{0,1} - x_{cb}\right| = 4.6 \cdot in$$

$$d_{critWeb\_y} := \left|Y_{0,0} - y_{cb}\right| = 12.5 \cdot in$$

Horizontal bolt force + = right
Vertical bolt force + = down

STRENGTH Check - Compute shear in bolts:

Additional moment due to eccentricity of shear. Treat like web splice

$$\text{shear\_ecc\_web} := x_{cb} + \frac{\frac{1}{2}\text{in}}{2} + L_{end\_web} = 7.35\cdot\text{in}$$

Shear eccentricity: Take X distance between from c.g. of bolt group to CL of splice.

Max horizontal bolt shear force

$$F_{HwebTopBolt_m} := \frac{\left|P_{CU_m}\right|}{N_{webBolts}} + \frac{\left(\left|V_{CU_m}\right|\cdot\text{shear\_ecc\_web} + \left|M_{CUz_m}\right|\right)\cdot d_{critWeb\_y}}{J_b}$$

$F_{HwebTopBolt} =$

	0
0	52.8576
1	59.1413
2	56.5881
3	52.8752
4	41.1041
5	0
6	0
7	0
8	0
9	0

Max vertical bolt shear force

$$F_{VwebTopBolt_m} := \frac{\left|V_{CU_m}\right|}{N_{webBolts}} + \frac{\left(\left|V_{CU_m}\right|\cdot\text{shear\_ecc\_web} + \left|M_{CUz_m}\right|\right)\cdot d_{critWeb\_x}}{J_b}$$

$F_{VwebTopBolt} =$

	0
0	13.9755
1	9.8079
2	16.0678
3	12.8476
4	9.6715
5	0
6	0
7	0
8	0
9	0

Max resultant bolt shear force

$$F_{RwebTopBolt_m} := \sqrt{\left(F_{HwebTopBolt_m}\right)^2 + \left(F_{VwebTopBolt_m}\right)^2}$$

$F_{RwebTopBolt} =$ (·kip)

	0
0	54.674
1	59.949
2	58.8251
3	54.4137
4	42.2266
5	0
6	0
7	0
8	0
9	0

Check max bolt shear forces against bolt shear strength and bolt bearing strength in web. Minimum connection plates will be 1/2" thick so total thickness will be > web thickness; therefore, bearing at bolt holes in connection plates will not govern.

$$Bolt\_Strength_{web_m} := \begin{cases} \text{"OK"} & \text{if } \max\left(F_{RwebTopBolt_m}\right) \le \min\left(2R_{rs}, R_{rbb_0}\right) \\ \text{"NG"} & \text{otherwise} \end{cases}$$

$Bolt\_Strength_{web} =$

	0
0	"OK"
1	"OK"
2	"OK"
3	"OK"
4	"OK"
5	"OK"
6	"OK"
7	"OK"
8	"OK"
9	"OK"

SERVICE II Check - Slip resistance:

Max horizontal bolt shear force

$$F_{H\_SRVIIwebTopBolt_m} := \frac{\left|P_{SRVII_m}\right|}{N_{webBolts}} + \frac{\left(\left|V_{SRVII_m}\right| \cdot shear\_ecc\_web + \left|M_{SRVIIz_m}\right|\right) \cdot d_{critWeb\_y}}{J_b}$$

$F_{H\_SRVIIwebTopBolt} =$

	0
0	41.8268
1	46.8538
2	44.8112
3	41.8409
4	32.424
5	37.7291
6	42.514
7	39.9267
8	36.8353
9	28.0842

$\cdot kip$

Max vertical bolt shear force

$$F_{V\_SRVIIwebTopBolt_m} := \frac{\left|V_{SRVII_m}\right|}{N_{webBolts}} + \frac{\left(\left|V_{SRVII_m}\right| \cdot shear\_ecc\_web + \left|M_{SRVIIz_m}\right|\right) \cdot d_{critWeb\_x}}{J_b}$$

$F_{V\_SRVIIwebTopBolt} =$

	0
0	10.7927
1	7.4586
2	12.4665
3	9.8904
4	7.3495
5	7.3094
6	3.6729
7	8.0003
8	5.2729
9	3.5638

$\cdot kip$

$$F_{R\_SRVIIwebTopBolt_m} := \sqrt{\left(F_{H\_SRVIIwebTopBolt_m}\right)^2 + \left(F_{V\_SRVIIwebTopBolt_m}\right)^2}$$

Max resultant bolt shear force

$F_{R\_SRVIIwebTopBolt} =$ ·kip

	0
0	43.1968
1	47.4437
2	46.513
3	42.994
4	33.2465
5	38.4307
6	42.6723
7	40.7203
8	37.2108
9	28.3094

$$Bolt\_SERVICEII_{web_m} := \begin{cases} \text{"OK"} & \text{if } \max\left(F_{R\_SRVIIwebTopBolt_m}\right) \le 2 \cdot R_{rslip} \\ \text{"NG"} & \text{otherwise} \end{cases}$$

$$\frac{F_{R\_SRVIIwebTopBolt_m}}{2R_{rslip}} =$$

0.847
0.9303
0.912
0.843
0.6519
0.7535
0.8367
0.7984
0.7296
0.5551

$Bolt\_SERVICEII_{web} =$

	0
0	"OK"
1	"OK"
2	"OK"
3	"OK"
4	"OK"
5	"OK"
6	"OK"
7	"OK"
8	"OK"
9	"OK"

Check Bolt Group in Delta Leg Stiffener for Combined Forces

Define bolt pattern:

$j := 0..4$ Row indicies in direction of axial loading

$k := 0..(8-1)$ Bolt indicies perpendicular to direction of axial loading

$x_{st_{k,j}} := j \cdot 2in$ X dimension of stiffener bolts from left bolt line

$$y_{st_{k,j}} := \begin{array}{|l} (12.5in) \text{ if } k = 0 \\ (8.5in) \text{ if } k = 1 \\ (5.25in) \text{ if } k = 2 \\ (2.5in) \text{ if } k = 3 \\ (-2.5in) \text{ if } k = 4 \\ (-5.25in) \text{ if } k = 5 \\ (-8.5in) \text{ if } k = 6 \\ (-12.5in) \text{ if } k = 7 \end{array}$$

Y dimension of stiffener bolts from mid depth of beam and CL of connection

$$bolt_{st} := \begin{pmatrix} 1 & 0 & 1 & 0 & 1 \\ 0 & 1 & 0 & 1 & 0 \\ 1 & 0 & 0 & 0 & 1 \\ 0 & 1 & 0 & 1 & 0 \\ 0 & 1 & 0 & 1 & 0 \\ 1 & 0 & 1 & 0 & 1 \\ 0 & 1 & 0 & 1 & 0 \\ 1 & 0 & 1 & 0 & 1 \end{pmatrix}$$

Define bolt locations on grid lines

Dimensions to actual bolts in web of lateral

$X_{st_{k,j}} := x_{st_{k,j}} \cdot bolt_{st_{k,j}}$ $Y_{st_{k,j}} := y_{st_{k,j}} \cdot bolt_{st_{k,j}}$

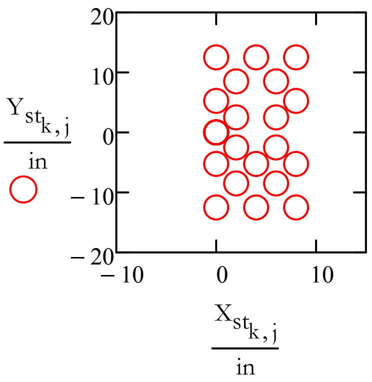

$N_{boltsPerRow_j} := \sum_k bolt_{st_{k,j}}$ $N_{boltsPerRow} = \begin{pmatrix} 4 \\ 4 \\ 3 \\ 4 \\ 4 \end{pmatrix}$ Total number of bolts per row

$N_{stiffenerBolts} := \sum_j N_{boltsPerRow_j} = 19$ Total number of bolts per web

$L_{end} = 2 \cdot in$ End distance to connection plate edge

Calculate Centroid of Bolt Group

$$x_{st\_cb} := \frac{\sum_k X_{st_{k,0}} + \sum_k X_{st_{k,1}} + \sum_k X_{st_{k,2}} + \sum_k X_{st_{k,3}} + \sum_k X_{st_{k,4}}}{N_{stiffenerBolts}} = 4 \cdot in$$

From inside line of bolts

$$y_{st\_cb} := \frac{\sum_k Y_{st_{k,0}} + \sum_k Y_{st_{k,1}} + \sum_k Y_{st_{k,2}} + \sum_k Y_{st_{k,3}} + \sum_k Y_{st_{k,4}}}{N_{stiffenerBolts}} = -0.2763 \cdot in$$

From mid depth of web

Calculate Moments of Inertia of Bolt Group to Resist Bending in the Plane of the Web (Strong-axis bending of beam)

$$I_{st\_xb} := \sum_k \left[bolt_{st_{k,0}} \left(Y_{st_{k,0}} - y_{st\_cb}\right)^2\right] + \sum_k \left[bolt_{st_{k,1}} \left(Y_{st_{k,1}} - y_{st\_cb}\right)^2\right] \cdots$$
$$+ \sum_k \left[bolt_{st_{k,2}} \left(Y_{st_{k,2}} - y_{st\_cb}\right)^2\right] + \sum_k \left[bolt_{st_{k,3}} \left(Y_{st_{k,3}} - y_{st\_cb}\right)^2\right] + \sum_k \left[bolt_{st_{k,4}} \left(Y_{st_{k,4}} - y_{st\_cb}\right)^2\right]$$

$$I_{st\_xb} = 1387.8618 \cdot in^2$$

$$I_{st\_yb} := \sum_k \left[bolt_{st_{k,0}} \left(X_{st_{k,0}} - x_{st\_cb}\right)^2\right] + \sum_k \left[bolt_{st_{k,1}} \left(X_{st_{k,1}} - x_{st\_cb}\right)^2\right] \cdots$$
$$+ \sum_k \left[bolt_{st_{k,2}} \left(X_{st_{k,2}} - x_{st\_cb}\right)^2\right] + \sum_k \left[bolt_{st_{k,3}} \left(X_{st_{k,3}} - x_{st\_cb}\right)^2\right] + \sum_k \left[bolt_{st_{k,4}} \left(X_{st_{k,4}} - x_{st\_cb}\right)^2\right]$$

$$I_{st\_yb} = 160 \cdot in^2$$

$$J_{st\_b} := I_{st\_xb} + I_{st\_yb} = 1547.8618 \cdot in^2$$

$$d_{boltStiffener_{k,j}} := \sqrt{\left(X_{st_{k,j}} - x_{st\_cb}\right)^2 + \left(Y_{st_{k,j}} - y_{st\_cb}\right)^2}$$

Distance from CG to each bolt

$$d_{critStiffener} := \max\left(d_{boltStiffener}\right) = 13.3878 \cdot in$$

Critical bolt distance from CG of group (extreme top and bottom bolts)

$$d_{critStiffener\_x} := \left|X_{st_{0,0}} - x_{st\_cb}\right| = 4 \cdot in$$

$$d_{critStiffener\_y} := \left|Y_{st_{0,0}} - y_{st\_cb}\right| = 12.7763 \cdot in$$

STRENGTH Check - Compute shear in bolts:

Forces are same as for web connection except with additional moment due to eccentricity of shear.

$$\mathrm{shear\_ecc} := x_{\mathrm{st\_cb}} + \frac{\frac{1}{2}\mathrm{in}}{2} + L_{\mathrm{end}} = 6.25\cdot\mathrm{in}$$

Shear eccentricity: Take X distance between from c.g. of bolt group to CL of splice.

Max horizontal bolt shear force

$$F_{\mathrm{HstiffenerTopBolt}_m} := \frac{\left|P_{\mathrm{CU}_m}\right|}{N_{\mathrm{stiffenerBolts}}} + \frac{\left(\left|V_{\mathrm{CU}_m}\right|\cdot\mathrm{shear\_ecc} + \left|M_{\mathrm{CUz}_m}\right|\right)\cdot d_{\mathrm{critStiffener\_y}}}{J_{\mathrm{st\_b}}}$$

$F_{\mathrm{HstiffenerTopBolt}} =$ ·kip

	0
0	41.7348
1	46.5098
2	44.6032
3	41.5407
4	32.2653
5	0
6	0
7	0
8	0
9	0

Max vertical bolt shear force

$$F_{\mathrm{VstiffenerTopBolt}_m} := \frac{\left|V_{\mathrm{CU}_m}\right|}{N_{\mathrm{stiffenerBolts}}} + \frac{\left(\left|V_{\mathrm{CU}_m}\right|\cdot\mathrm{shear\_ecc} + \left|M_{\mathrm{CUz}_m}\right|\right)\cdot d_{\mathrm{critStiffener\_x}}}{J_{\mathrm{st\_b}}}$$

$F_{\mathrm{VstiffenerTopBolt}} =$ ·kip

	0
0	9.7114
1	6.8855
2	11.1948
3	9.0065
4	6.7924
5	0
6	0
7	0
8	0
9	0

Max resultant bolt shear force

$$F_{RstiffenerTopBolt_m} := \sqrt{\left(F_{HstiffenerTopBolt_m}\right)^2 + \left(F_{VstiffenerTopBolt_m}\right)^2}$$

$F_{RstiffenerTopBolt} =$ $\cdot ki$

	0
0	42.8498
1	47.0167
2	45.9866
3	42.5059
4	32.9725
5	0
6	0
7	0
8	0
9	0

Check max bolt shear forces against bolt shear strength.

$$\text{Bolt\_Strength}_{stiffener_m} := \left| \begin{array}{ll} \text{"OK"} & \text{if } \max\left(F_{RstiffenerTopBolt_m}\right) \le 2R_{rs} \\ \text{"NG"} & \text{otherwise} \end{array} \right.$$

$\text{Bolt\_Strength}_{stiffener} =$

	0
0	"OK"
1	"OK"
2	"OK"
3	"OK"
4	"OK"
5	"OK"
6	"OK"
7	"OK"
8	"OK"
9	"OK"

SERVICE II Check - Slip resistance:

Max horizontal bolt shear force

$$F_{H\_SRVIIstiffenerTopBolt_m} := \frac{\left|P_{SRVII_m}\right|}{N_{stiffenerBolts}} + \frac{\left(\left|V_{SRVII_m}\right| \cdot shear\_ecc + \left|M_{SRVIIz_m}\right|\right) \cdot d_{critStiffener\_y}}{J_{st\_b}}$$

$F_{H\_SRVIIstiffenerTopBolt} =$ ·kip

	0
0	33.0493
1	36.8693
2	35.344
3	32.8941
4	25.4737
5	30.0325
6	33.6875
7	31.7907
8	29.2582
9	22.2918

Max vertical bolt shear force

$$F_{V\_SRVIIstiffenerTopBolt_m} := \frac{\left|V_{SRVII_m}\right|}{N_{stiffenerBolts}} + \frac{\left(\left|V_{SRVII_m}\right| \cdot shear\_ecc + \left|M_{SRVIIz_m}\right|\right) \cdot d_{critStiffener\_x}}{J_{st\_b}}$$

$F_{V\_SRVIIstiffenerTopBolt} =$

	0
0	7.4905
1	5.2298
2	8.6772
3	6.9266
4	5.1553
5	4.9865
6	2.5056
7	5.4579
8	3.5972
9	2.4312

$\cdot k$

Max resultant bolt shear force

$$F_{R\_SRVIIstiffenerTopBolt_m} := \sqrt{\left(F_{H\_SRVIIstiffenerTopBolt_m}\right)^2 + \left(F_{V\_SRVIIstiffenerTopBolt_m}\right)^2}$$

$F_{R\_SRVIIstiffenerTopBolt} =$

	0
0	33.8875
1	37.2384
2	36.3936
3	33.6155
4	25.9902
5	30.4437
6	33.7805
7	32.2558
8	29.4785
9	22.424

$\cdot$

Bolt holes in stiffener will be oversized. Reduce slip resistance for presence of oversized holes. (Table 6.13.2.8-2)

$R_{rslip\_stiffener} := R_{rslip} \cdot 0.85 = 21.675 \cdot kip$ per bolt per slip plane

$$Bolt\_SRVII_{stiffener_m} := \left| \begin{array}{ll} \text{"OK"} & \text{if } \max\left(F_{R\_SRVIIstiffenerTopBolt_m}\right) \le 2R_{rslip\_stiffener} \\ \text{"NG"} & \text{otherwise} \end{array} \right.$$

$Bolt\_SRVII_{stiffener} =$

	0
0	"OK"
1	"OK"
2	"OK"
3	"OK"
4	"OK"
5	"OK"
6	"OK"
7	"OK"
8	"OK"
9	"OK"

Check Double Connection Plates (web splice plates):

$t_{webConnPL} := \frac{1}{2} in$

Thickness of each connection plate - two total

Connection Plate Section Properties:

$d_{webConnPL} := 29in$

Depth of web connection plate

$A_{g\_webCP} := t_{webConnPL} \cdot d_{webConnPL} = 14.5 \cdot in^2$

Gross area of single web connection plate

$hole_{webCP} := \left(d_b + \frac{1}{8} in\right) \cdot t_{webConnPL} = 0.5625 \cdot in^2$

Area of one hole in web splice plate

Net Section Failure Plane

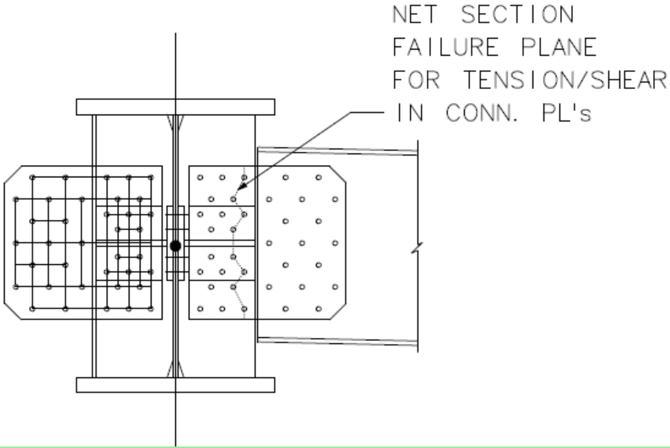

$$A_{n\_webCP} := \begin{cases} \left(0.85 \cdot A_{g\_webCP}\right) & \text{if } A_{g\_webCP} - hole_{webCP} \cdot 8 + \left[\frac{2 \cdot (2in)^2}{4 \cdot 4in} + \frac{4 \cdot (2in)^2}{4 \cdot 2.75in}\right] \cdot t_{webConnPL} > 0.85 \cdot A_{g\_webCP} \\ A_{g\_webCP} - hole_{webCP} \cdot 8 + \left[\frac{2 \cdot (2in)^2}{4 \cdot 4in} + \frac{4 \cdot (2in)^2}{4 \cdot 2.75in}\right] \cdot t_{webConnPL} & \text{otherwise} \end{cases}$$

Net area of web splice plate

$A_{n\_webCP} = 10.9773 \cdot in^2$

$I_{webCP} := \frac{1}{12} \cdot t_{webConnPL} \cdot d_{webConnPL}{}^3 = 1016.2083 \cdot in^4$

Gross moment of inertia of a single connection plate

Tensile Capacity Check of Web Connection Plates (6.13.5.2)

$U := 1$ $\quad U = 1$ Shear lag reduction factor

$P_{r\_tWebConnPL} := \min\left(\phi_y \cdot F_y \cdot 2A_{g\_webCP}, \phi_u \cdot F_u \cdot 2A_{n\_webCP} \cdot U\right) = 1141.6364 \cdot kip$ Factored tensile resistance of web connection plates

$$Tension_{webConnPL_m} := \begin{cases} \text{"OK"} & \text{if } P_{r\_tWebConnPL} \geq P_{CU_m} \\ \text{"NG"} & \text{otherwise} \end{cases}$$

$Tension_{webConnPL} =$

	0
0	"OK"
1	"OK"
2	"OK"
3	"OK"
4	"OK"
5	"OK"
6	"OK"
7	"OK"
8	"OK"
9	"OK"

Axial plus Flexural Stress Check in Web Connection Plates (6.13.6.1.4b)

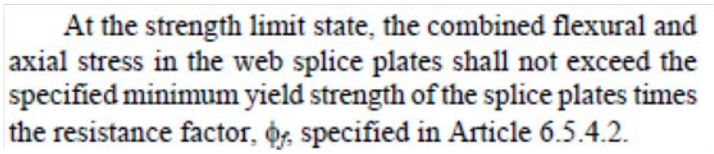

At the strength limit state, the combined flexural and axial stress in the web splice plates shall not exceed the specified minimum yield strength of the splice plates times the resistance factor, ϕ_y, specified in Article 6.5.4.2.

$$f_{UwebCP\_top_m} := \frac{\left|P_{CU_m}\right|}{2A_{g\_webCP}} + \frac{\left(\left|V_{CU_m}\right|\cdot shear\_ecc + \left|M_{CUz_m}\right|\right)\cdot\frac{d_{webConnPl}}{2}}{2I_{webCP}}$$

$f_{UwebCP\_top} =$

	0
0	32.3849
1	33.4848
2	34.7981
3	31.2595
4	24.0901
5	0
6	0
7	0
8	0
9	0

$\cdot ksi$

$$f_{UwebCP\_bot_m} := \frac{\left|P_{CU_m}\right|}{2A_{g\_webCP}} + \frac{\left(\left|V_{CU_m}\right|\cdot shear\_ecc + \left|M_{CUz_m}\right|\right)\cdot\frac{d_{webConnPL}}{2}}{2I_{webCP}}$$

$f_{UwebCP\_bot} =$

	0
0	32.3849
1	33.4848
2	34.7981
3	31.2595
4	24.0901
5	0
6	0
7	0
8	0
9	0

$\cdot ksi$

$$\text{Axial\_Flexure}_{\text{webConnPL}_m} := \begin{cases} \text{"OK"} & \text{if } \max\left(\left|f_{\text{UwebCP\_top}_m}\right|, \left|f_{\text{UwebCP\_bot}_m}\right|\right) \le \phi_f \cdot F_y \\ \text{"NG"} & \text{otherwise} \end{cases}$$

$\text{Axial\_Flexure}_{\text{webConnPL}} =$

	0
0	"OK"
1	"OK"
2	"OK"
3	"OK"
4	"OK"
5	"OK"
6	"OK"
7	"OK"
8	"OK"
9	"OK"

Shear Capacity Check of Web Connection Plates (6.13.5.3)

$$R_{r\_YwebConnPL} := \phi_v \cdot 0.58 \cdot F_y \cdot 2A_{g\_webCP} = 841 \cdot kip$$

Connection plate shear yielding resistance (2 plates)

$$R_{r\_RwebConnPL} := \phi_u \cdot 0.58 \cdot R_p \cdot F_u \cdot 2A_{n\_webCP} = 662.1491 \cdot kip$$

$$Shear\_Capacity_{webConnPL_m} := \left| \begin{array}{ll} \text{"OK"} & \text{if } \min\left(R_{r\_YwebConnPL}, R_{r\_RwebConnPL}\right) \geq \left|V_{CU_m}\right| \\ \text{"NG"} & \text{otherwise} \end{array} \right.$$

$Shear\_Capacity_{webConnPL} =$

	0
0	"OK"
1	"OK"
2	"OK"
3	"OK"
4	"OK"
5	"OK"
6	"OK"
7	"OK"
8	"OK"
9	"OK"

Block Shear Capacity of Web Connection Plates (6.13.4)

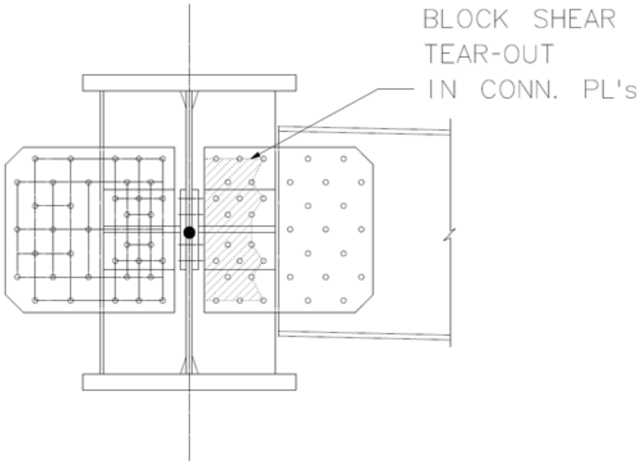

Gross area along the plane resisting shear for one plate

$$A_{vg\_webCP} := t_{webConnPL} \cdot \left(L_{end} + 2in \cdot 4\right) \cdot 2 = 10 \cdot in^2$$

Net area along the plane resisting shear for one plate

$$A_{vn\_webCP} := A_{vg\_webCP} - 2.5 \cdot hole_{webCP} \cdot 2 = 7.1875 \cdot in^2$$

Gross area along plane subject tension for one plate

$$A_{tg\_webCP} := A_{g\_webCP} - 2 \cdot L_{edge} \cdot t_{webConnPL} = 12.5 \cdot in^2$$

Net area along plane subject tension

$$A_{tn\_webCP} := A_{n\_webCP} - 2 \cdot L_{edge} \cdot t_{webConnPL} + 1 \cdot hole_{webCP} = 9.5398 \cdot in^2$$

$$R_{rbsA\_webCP} := \phi_{bs} \cdot R_p \cdot \left(0.58 \cdot F_u \cdot A_{vn\_webCP} \cdot 2 + U_{bs} \cdot F_u \cdot A_{tn\_webCP} \cdot 2\right) = 1425.6864 \cdot kip$$

$$R_{rbsB\_webCP} := \phi_{bs} \cdot R_p \cdot \left(0.58 \cdot F_y \cdot A_{vg\_webCP} \cdot 2 + U_{bs} \cdot F_u \cdot A_{tn\_webCP} \cdot 2\right) = 1456.1364 \cdot kip$$

$$P_{rbs\_webCP} := \left| \begin{array}{ll} R_{rbsB\_webCP} & \text{if } R_{rbsA\_webCP} > R_{rbsB\_webCP} \\ R_{rbsA\_webCP} & \text{otherwise} \end{array} \right. = 1425.6864 \cdot kip$$

Block shear resistance

Check Delta Leg Stiffener Fillet Welds Exterior Delta Leg - Top Lateral with No Diagonal (At bottom radial stiffener)

For interior delta legs, moment and axial force will be transferred to the adjacent lateral member through the flange and web welds or directly to the diagonal. For the exterior legs, moment gets transferred to the delta legs and axial force directly to the diagonal. For the top most lateral near the knuckle, assume no diagonal is available to resist axial force, which must be transferred directly to the delta leg flanges.

First check the latter case, such that moment and axial force get transferred through the stiffener to flange welds. Shear gets transferred through the web welds in all cases.

Fillet weld resistance (6.13.3.2.4)

$F_{exx} := 65ksi$

$t_{weldTop} := \frac{5}{8}in$

$d_{stiffener} := 48in$

$b_{stiffener} := 14in$

$horiz\_clip_{stiffener} := 1in$

$$R_{rweldTop} := 0.6 \cdot \phi_{e2} \cdot F_{exx} \cdot t_{weldTop} \cdot 0.707 = 13.7865 \cdot \frac{kip}{in}$$

Per weld

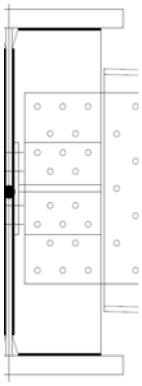

$$F_{weldTop_m} := \frac{\frac{\left|P_{CU_m}\right|}{2} + \frac{\left(\left|V_{CU_m}\right| \cdot shear\_ecc + \left|M_{CUz_m}\right|\right)}{d_{stiffener}}}{\left(b_{stiffener} - horiz\_clip_{stiffener}\right) \cdot 2}$$

$vert\_clip_{stiffener} := 3in$

$F_{weldTop} =$

	0
0	8.7821
1	13.1291
2	9.1453
3	9.9919
4	8.0041
5	0
6	0
7	0
8	0
9	0

$\cdot \frac{kip}{in}$

$$F_{weldBot_m} := \frac{\dfrac{\left|P_{CU_m}\right|}{2} + \dfrac{\left(\left|V_{CU_m}\right| \cdot shear\_ecc + \left|M_{CUz_m}\right|\right)}{d_{stiffener}}}{\left(b_{stiffener} - horiz\_clip_{stiffener}\right) \cdot 2}$$

.

$F_{weldBot} =$ $\cdot \frac{kip}{in}$

	0
0	8.7821
1	13.1291
2	9.1453
3	9.9919
4	8.0041
5	0
6	0
7	0
8	0
9	0

$$F_{weldWeb_m} := \frac{\left|V_{CU_m}\right|}{\left[\left(d_{stiffener} - 2vert\_clip_{stiffener}\right) \cdot 2\right]}$$

$F_{weldWeb} =$ $\cdot \frac{kip}{in}$

	0
0	0.4897
1	0.5374
2	0.6445
3	0.6683
4	0.5374
5	0
6	0
7	0
8	0
9	0

$$\text{Stiffener\_Welds\_Top}_m := \left| \begin{array}{ll} \text{"OK"} & \text{if } \max\left(\left|F_{weldTop_m}\right|, \left|F_{weldBot_m}\right|, \left|F_{weldWeb_m}\right|\right) \le R_{rweldTop} \\ \text{"NG"} & \text{otherwise} \end{array} \right.$$

Stiffener_Welds_Top =

	0
0	"OK"
1	"OK"
2	"OK"
3	"OK"
4	"OK"
5	"OK"
6	"OK"
7	"OK"
8	"OK"
9	"OK"

Check Delta Leg Stiffener Plate Capacity at Top Lateral (Bottom Radial Stiffener at Knuckle)

$t_{stiffener} := 1.5in$ Use minimum radial stiffener thickness

$$\text{Stiffener\_thickness} := \left| \begin{array}{ll} \text{"OK"} & \text{if } t_{stiffener} \ge 2 \cdot t_{webConnPL} \\ \text{"NG"} & \text{otherwise} \end{array} \right. = \text{"OK"}$$

By inspection, stiffener as connection plate is OK.

Check Shear in Stiffener at Flange Welds

$$R_{rvStiffener} := \phi_v \cdot 0.58 \cdot t_{stiffener} \cdot F_y = 43.5 \cdot \frac{kip}{in}$$

$$\text{Shear\_Stiffener}_m := \left| \begin{array}{ll} \text{"OK"} & \text{if } R_{rvStiffener} \ge \max\left(\left|F_{weldTop_m}\right|, \left|F_{weldBot_m}\right|\right) \\ \text{"NG increase stiffener size"} & \text{otherwise} \end{array} \right.$$

Shear_Stiffener =

	0
0	"OK"
1	"OK"
2	"OK"
3	"OK"
4	"OK"
5	"OK"
6	"OK"
7	"OK"
8	"OK"
9	"OK"

Check Delta Leg Stiffener Fillet Welds Exterior Delta Leg -Typical Lateral with Diagonal Taking Axial Load

Fillet weld resistance (6.13.3.2.4)

$$t_{weldTyp} := \frac{5}{16} in$$

$$R_{rweldTyp} := 0.6 \cdot \phi_{e2} \cdot F_{exx} \cdot t_{weldTyp} \cdot 0.707 = 6.8933 \cdot \frac{kip}{in}$$

$$F_{weldTop_m} := \frac{\dfrac{\left(\left|V_{CU_m}\right| \cdot shear\_ecc + \left|M_{CUz_m}\right|\right)}{d_{stiffener}}}{\left(b_{stiffener} - horiz\_clip_{stiffener}\right) \cdot 2}$$

$F_{weldTop} =$ $\cdot \frac{kip}{in}$

	0
0	2.3398
1	1.3983
2	2.5876
3	1.8765
4	1.3695
5	0
6	0
7	0
8	0
9	0

$$F_{weldBot_m} := \frac{\dfrac{\left|V_{CU_m}\right| \cdot shear\_ecc + \left|M_{CUz_m}\right|}{d_{stiffener}}}{\left(b_{stiffener} - horiz\_clip_{stiffener}\right)\cdot 2}$$

$$F_{weldWeb_m} := \frac{\left|V_{CU_m}\right|}{\left[\left(d_{stiffener} - 2vert\_clip_{stiffener}\right)\cdot 2\right.}$$

$F_{weldWeb} =$

	0
0	0.4897
1	0.5374
2	0.6445
3	0.6683
4	0.5374
5	0
6	0
7	0
8	0
9	0

$\cdot \dfrac{kip}{in}$

$F_{weldBot} =$

	0
0	2.3398
1	1.3983
2	2.5876
3	1.8765
4	1.3695
5	0
6	0
7	0
8	0
9	0

$\cdot \dfrac{kip}{in}$

$$Stiffener\_Welds\_Typ_m := \begin{array}{|ll} \text{"OK"} & \text{if } \max\left(\left|F_{weldTop_m}\right|, \left|F_{weldBot_m}\right|, \left|F_{weldWeb_m}\right|\right) \le R_{rweldTyp} \\ \text{"NG"} & \text{otherwise} \end{array}$$

Stiffener_Welds_Typ =

	0
0	"OK"
1	"OK"
2	"OK"
3	"OK"
4	"OK"
5	"OK"
6	"OK"
7	"OK"
8	"OK"
9	"OK"

Check Delta Leg Stiffener Plate Capacity at Typical Intermediate Connections to Delta Leg

$t_{stiffener} := \frac{7}{8} in$

$b_{girder\_fl} := 45in$

Max delta leg flange width

Check Projecting Width (6.10.11.1.2)

$$Stiffener\_Projecting\_Width := \left| \begin{array}{ll} "OK" & \text{if } b_{stiffener} \ge 2.0in + \frac{D_0}{30} \wedge 16 \cdot t_{stiffener} \ge b_{stiffener} \ge \frac{b_{girder\_fl}}{4} \\ "NG" & \text{otherwise} \end{array} \right. = "OK"$$

Check Shear in Stiffener at Flange Welds

$$R_{rvStiffener} := \phi_v \cdot 0.58 \cdot t_{stiffener} \cdot F_y = 25.375 \cdot \frac{kip}{in}$$

$$Shear\_Stiffener := \left| \begin{array}{ll} "OK" & \text{if } R_{rvStiffener} \ge \max\left(\left|F_{weldBot}\right|, \left|F_{weldTop}\right|\right) \\ "NG increase stiffener size" & \text{otherwise} \end{array} \right. = "OK"$$

Check Bolt Hole Bearing in Stiffener with Oversized Holes (6.13.2.9)

Assume clear distance between holes or between hole and edge is less than 2d.

$$L_{c\_stiffener} := L_{end} - \frac{1in + \frac{3}{16}in}{2}$$

Clear end distance. Contractor wants 1 3/16" oversized holes in 1 ply of each connection

$$R_{rbb\_stiffener} := \phi_{bb} \cdot 1.2 \cdot L_{c\_stiffener} \cdot t_{stiffener} \cdot F_u \cdot N_{sp} = 76.7813 \cdot kip$$

per bolt per shear plane

$$Bolt\_Bearing_{stiffener_m} := \left| \begin{array}{ll} "OK" & \text{if } \max\left(F_{RstiffenerTopBolt_m}\right) \le R_{rbb\_stiffener} \\ "NG" & \text{otherwise} \end{array} \right.$$

$Bolt\_Bearing_{stiffener} =$

	0
0	"OK"
1	"OK"
2	"OK"
3	"OK"
4	"OK"
5	"OK"
6	"OK"
7	"OK"
8	"OK"
9	"OK"