CUY - Center Street Swing Bridge
210159 PID - 109597
Dist 12 3/11/2021

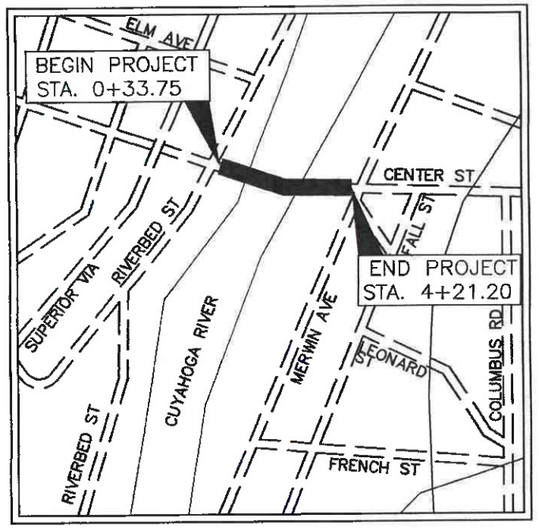

LOCATION MAP

LATITUDE: 41°29'38" LONGITUDE: 81°42'12"

SCALE IN FEET
0 250 500

N

LEGEND

PORTION TO BE IMPROVED

OTHER ROADS

DESIGN DESIGNATION

CURRENT ADT (2015)	3176
DESIGN YEAR ADT (2038)	4408
DESIGN HOURLY VOLUME (2038)	N/A
DIRECTIONAL DISTRIBUTION	0.59
TRUCKS (24 HOUR B&C)	5%
DESIGN SPEED	25 MPH
LEGAL SPEED	25 MPH

DESIGN FUNCTIONAL CLASSIFICATION:
05 URBAN COLLECTOR

NHS PROJECT — NO

DESIGN EXCEPTIONS

NONE

UNDERGROUND UTILITIES
Contact Two Working Days Before You Dig
OHIO811.org Before You Dig
OHIO811, 8-1-1, or 1-800-362-2764
(Non-members must be called directly)

PLANS PREPARED BY:

WSP USA
1660 W. 2ND ST, STE 820
CLEVELAND, OH 44113
PHONE: (216) 781-7888

G & T ASSOCIATES
11925 PEARL RD, STE 401
CLEVELAND, OH 44136
PHONE: (440) 572-0555

STATE OF OHIO
DEPARTMENT OF TRANSPORTATION

CUY-CENTER STREET SWING BRIDGE

CITY OF CLEVELAND
CUYAHOGA COUNTY

INDEX OF SHEETS:

TITLE SHEET	1
SCHEMATIC PLAN	2
TYPICAL SECTIONS	3
GENERAL NOTES	4–5
MAINTENANCE OF TRAFFIC NOTES	6–7
DETOUR PLAN	8
GENERAL SUMMARY	9–11
ESTIMATED QUANTITIES AND GENERAL NOTES	12
PLAN AND PROFILE	13
CROSS SECTIONS	14
TRAFFIC CONTROL	15–16
SITE PLAN	17
STRUCTURE GENERAL NOTES	18–24
STRUCTURE ESTIMATED QUANTITIES	25–26
BRIDGE REHABILITATION DETAILS – STRUCTURAL	27–67
BRIDGE REHABILITATION DETAILS – MECHANICAL	68–72
BRIDGE REHABILITATION DETAILS – ELECTRICAL	73–109

PROJECT DESCRIPTION

THE PROPOSED PROJECT INCLUDES PAINTING OF THE STRUCTURAL STEEL ELEMENTS THROUGHOUT THE BRIDGE, REPLACEMENT OF THE ROADWAY DECK AND SIDEWALK ON THE LAND SPAN, PIVOT PIER SPAN AND RIVER SPAN OF THE TRUSS, REPLACEMENT OF THE TRUSS SPAN END FLOORBEAMS AND END CHANNEL ASSEMBLIES, INSTALLATION OF SIDEWALK LIGHTING AND TRAFFIC RAIL, MINOR MECHANICAL AND ELECTRICAL REHABILITATION, AND MINOR IMPROVEMENTS TO THE OPERATOR'S HOUSE INCLUDING RELOCATION OF THE OPERATOR'S HOUSE STAIRS FOR THE CENTER STREET SWING BRIDGE IN CLEVELAND, OHIO.

PROJECT EARTH DISTURBED AREA:	0.52
ESTIMATED CONTRACTOR EARTH DISTURBED AREA:	N/A
NOTICE OF INTENT EARTH DISTURBED AREA:	N/A*

* NOI NOT REQUIRED, AS PROJECT EDA < 1.0 ACRE

2019 SPECIFICATIONS

THE STANDARD SPECIFICATIONS OF THE STATE OF OHIO, DEPARTMENT OF TRANSPORTATION, INCLUDING CHANGES AND SUPPLEMENTAL SPECIFICATIONS LISTED IN THE PROPOSAL SHALL GOVERN THIS IMPROVEMENT.

MAINTENANCE OF TRAFFIC ENDORSEMENT

I HEREBY APPROVE THESE PLANS AND DECLARE THAT THE MAKING OF THIS IMPROVEMENT WILL REQUIRE THE CLOSING TO TRAFFIC OF THE HIGHWAY AND THAT DETOURS WILL BE PROVIDED AS INDICATED ON SHEET 8.

ENGINEER'S SEAL:

STATE OF OHIO
WESLEY REED WEIR
69991
REGISTERED PROFESSIONAL ENGINEER
11/13/2020

SIGNED:
DATE: November 13, 2020

ENGINEER'S SEAL:

STATE OF OHIO
KIRAN C. PATEL
E-051670
REGISTERED PROFESSIONAL ENGINEER
11/13/20

SIGNED:
DATE: Nov 13 2020

STANDARD CONSTRUCTION DRAWINGS	SUPPLEMENTAL SPECIFICATIONS	SPECIAL PROVISIONS
ODOT STANDARD DRAWINGS:	800, DTD 1/15/21	ELECTRICAL REHABILITATION WORK DTD 10/23/20
BP-2.1 7/17/15	832, DTD 10/19/18	
BP-5.1 1/18/19	847, DTD 1/20/17	
DM-4.4 1/15/16	849, DTD 1/18/13	
MT-101.60 1/17/20		MECHANICAL REHABILITATION WORK DTD 10/23/20
MT-105.10 1/17/20		
MT-110.10 7/19/13		
RM-4.2 4/17/20		
TC-52.10 10/18/13		
TC-52.20 7/20/18		

APPROVED
DATE 12/7/20 DISTRICT DEPUTY DIRECTOR

Digitally signed by Tom Pannett
Date: 2021.01.29 08:49:46-05'00'

APPROVED
DATE
DIRECTOR, DEPARTMENT OF TRANSPORTATION

FEDERAL PROJECT NO. E190939
PID NO. 109597
CONSTRUCTION PROJECT NO.
RAILROAD INVOLVEMENT NONE
CUY-CENTER ST. SWING BRIDGE

Contract Proposal available @
www.contracts.dot.state.oh.us

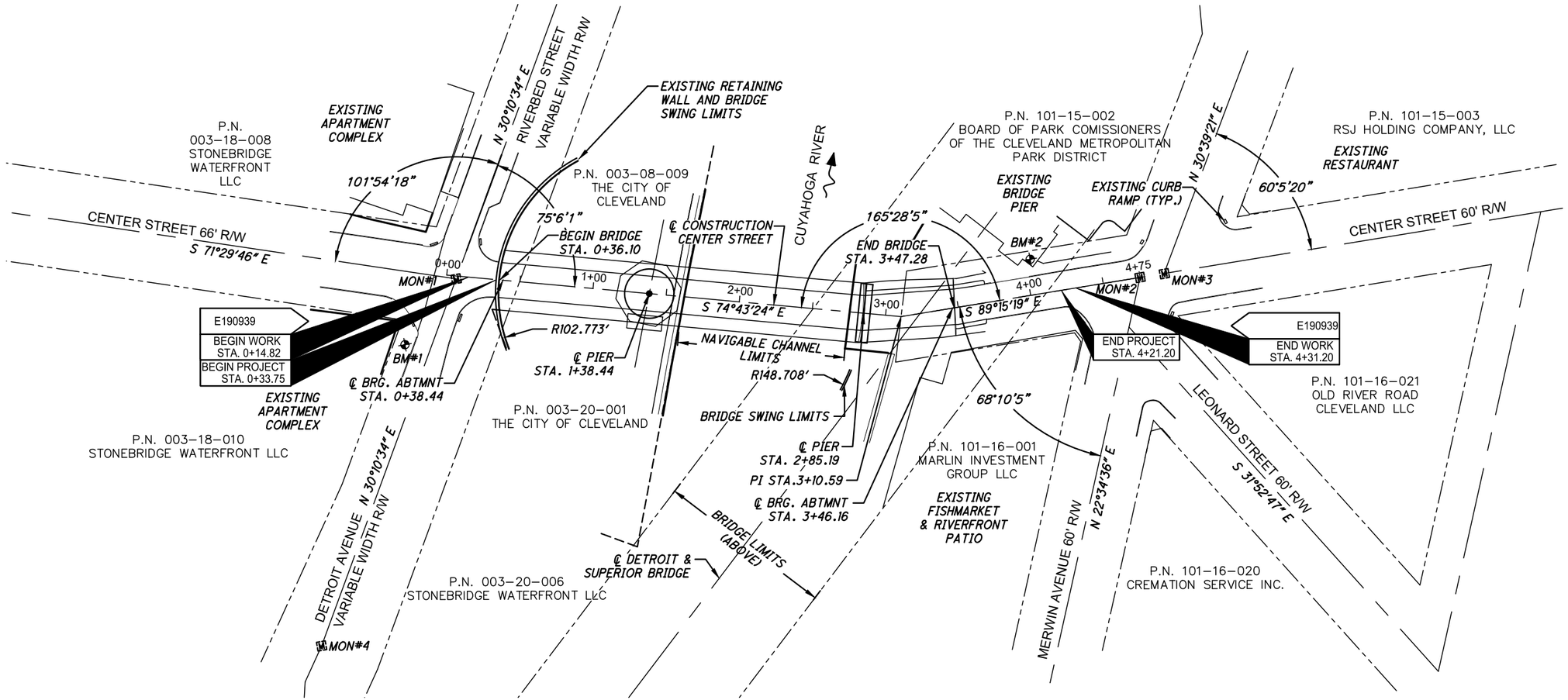

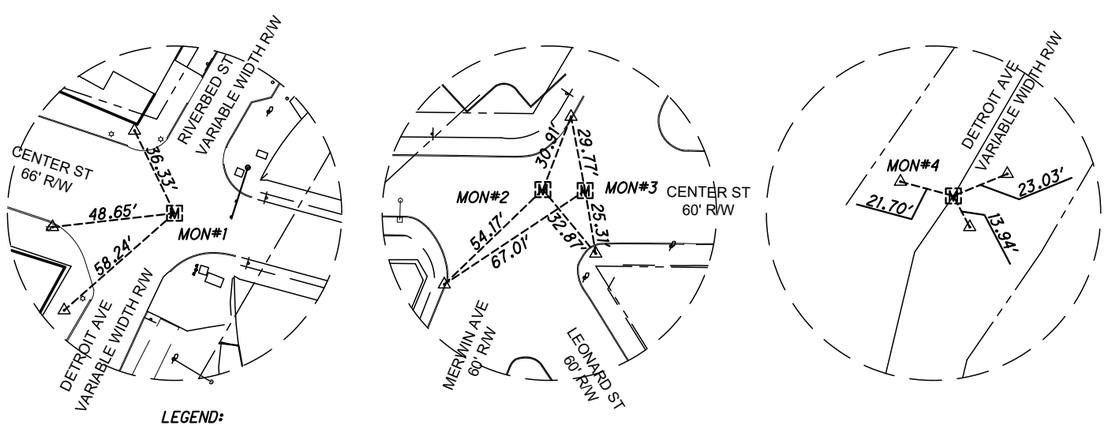

LEGEND:

△ REFERENCE MAG NAIL SET

3-POINT TIES
N.T.S.

PROJECT CONTROL POINTS TABLE

POINT #	NORTHING	EASTING	ELEVATION	℄ CONSTRUCTION CENTER STREET STATION	OFFSET	DESCRIPTION
MON#1	666898.27	2186567.90	-	0+6.64	2.01' RT	DRILLED HOLE IN STONE
MON#2	666817.98	2187026.49	-	4+75.46	℄	DRILLED HOLE IN STONE
MON#3	666817.58	2187043.22	-	4+91.73	0.18' RT	DRILLED HOLE IN STONE
MON#4	666668.20	2186434.01	-	0-61.89	259.22' RT	N/A
BM#1	666860.25	2186525.70	591.65	0-24.04	49.80' RT	SOUTH FLANGE BOLT OF EX. HYDRANT
BM#2	666843.22	2186954.95	585.71	4+03.60	24.31' LT	VERTICAL DATUM DISC ON EX. PIER WALL

HORIZONTAL SCALE IN FEET 0 20 40 80

CALCULATED MM
CHECKED RJW

SCHEMATIC PLAN

CUY-CENTER ST. SWING BRIDGE

J:\192622 - Center St Swing Bridge\5.0 Project Data\5.7 Structural\Sheets\Roadway\Schematic Plan.dwg 27-Nov-20 12:01 PM

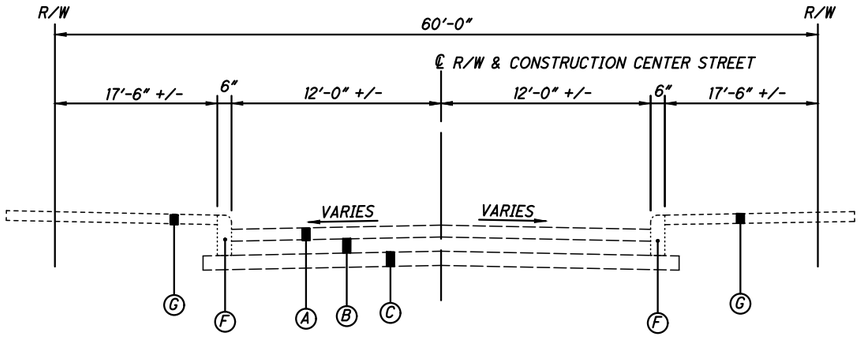

EXISTING TYPICAL SECTION - CENTER STREET

0+14.82 TO STA. 0+33.75 = 19 LF +/-

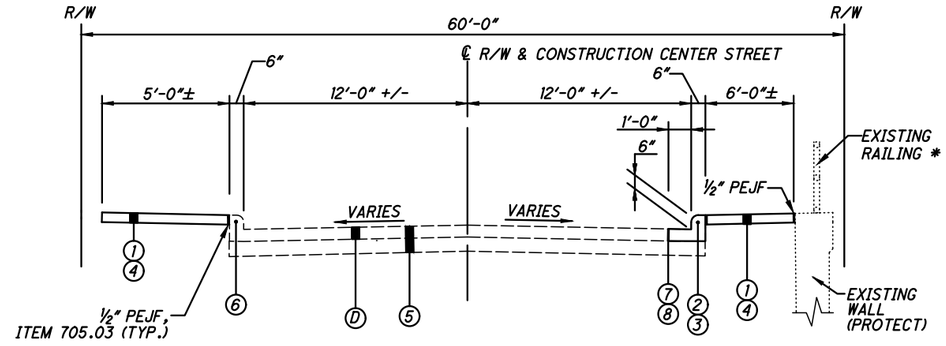

* - EXISTING RAILING TO BE PAINTED AND PROTECTED UP TO STA. 4+07± AND REMOVED BEYOND, TO STA. 4+21±

PROPOSED TYPICAL SECTION - CENTER STREET

STA. 3+68± TO STA. 4+15± = 47'± (RT)
STA. 4+03± TO STA. 4+13± = 10'± (LT)

NOTES:

1. EXISTING TYPICAL SECTION PAVEMENT BUILDUP INFORMATION BASED ON AVAILABLE RECORD INFORMATION AND GENERAL ENGINEERING KNOWLEDGE ABOUT CITY OF CLEVELAND HISTORY OF SECTIONS BUILT. ACTUAL SECTIONS MAY VARY.
2. ALL SECTIONS ARE DRAWN NOT TO SCALE.

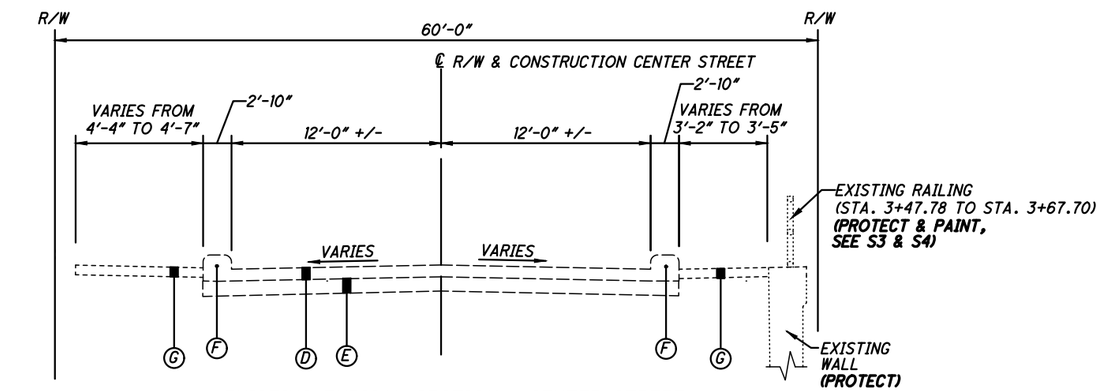

EXISTING TYPICAL SECTION - CENTER STREET

STA. 3+47.78 TO STA. 3+67.70 = 20 LF +/- (RT)
STA. 3+47.78 TO STA. 3+70.23 = 22 LF +/- (LT)

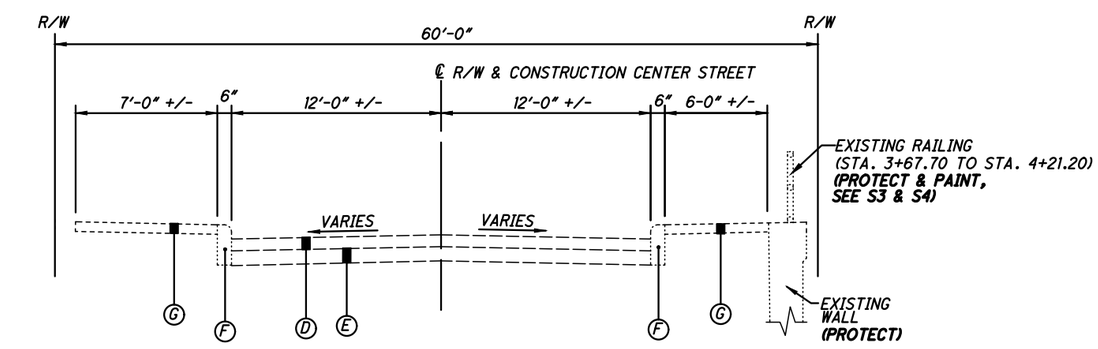

EXISTING TYPICAL SECTION - CENTER STREET

STA. 3+67.70 TO 4+31.20 = 64 LF +/- (RT)
STA. 3+70.23 TO 4+31.20 = 61 LF +/- (LT)

EXISTING LEGEND

- (A) ASPHALT SURFACE
- (B) BRICK PAVING
- (C) CONCRETE BASE
- (D) 9" +/- REINFORCED CONCRETE
- (E) 6" +/- SUBBASE
- (F) CURB
- (G) CONCRETE WALK

PROPOSED LEGEND

- (1) ITEM 608 - 6" CONCRETE WALK, AS PER PLAN
- (2) ITEM 609 - CURB, TYPE 2-A, AS PER PLAN
- (3) ITEM 202 - CURB REMOVED, AS PER PLAN
- (4) ITEM 202 - CONCRETE WALK REMOVED
- (5) EXISTING SECTION TO REMAIN
- (6) EXISTING CURB TO REMAIN
- (7) SAWCUT, PER (3)
- (8) BUTT JOINT, PER ODOT SCD BP-2.1

TYPICAL SECTIONS

CUY-CENTER ST. SWING BRIDGE

J:\192622 - Center St Swing Bridge\5.0 Project Data\5.7 Structural\Sheets\Roadway\Typical Sections.dwg 27-Nov-20 12:01 PM

GENERAL:

SCOPE OF WORK

THE WORKS WITHIN THE LIMITS OF THE CENTER STREET SWING BRIDGE IMPROVEMENT INCLUDES:

- PAINT THE ENTIRE BRIDGE INCLUDING BUT NOT LIMITED TO STRUCTURAL STEEL ELEMENTS THROUGHOUT, BRIDGE RAILING, APPROACH PEDESTRIAN RAILING, AND OPERATOR'S HOUSE.
- REPLACEMENT OF DECK ON THE TRUSS SPANS.
- REPLACEMENT OF TRUSS RIVER SPAN AND PIVOT PIER SPAN STRINGERS.
- INSTALLATION OF SIDEWALK LIGHTING ON THE TRUSS SPANS AND REPLACEMENT OF TRAFFIC RAIL ON THE EAST APPROACH SPAN.
- REPLACEMENT OF END FLOORBEAMS AND END CHANNEL COMPONENTS ON TRUSS SPANS AT FLOORBEAMS 0 AND 16.
- HEAT STRAIGHTENING OF BENT TRUSS MEMBERS.
- REPLACEMENT OF PEDESTRIAN SIDEWALKS ON BOTH SIDES OF THE TRUSS SPANS WITH FIBERGLASS OPEN GRID DECK.
- RELOCATION OF OPERATOR'S HOUSE STAIRS OVER THE SOUTH SIDEWALK TO OUTBOARD OF THE SOUTH SIDE OF THE BRIDGE.
- IMPROVE NAVIGATION LIGHTING
- REPLACEMENT OF THE EAST MOTOR CONTROL CENTER AND REHABILITATION OF THE WEST MOTOR CONTROL CENTER, REMOVAL AND REPLACEMENT OF AND INSTALL NEW FIRE ALARM SYSTEM, RELOCATION OF 37.5 KVA TRANSFORMER, REMOVAL AND REPLACEMENT OF PANELBOARDS.
- INSTALLATION OF CUSTOM MOTOR BRAKE COVERS, REPLACEMENT OF SEALS ON THE PRIMARY REDUCERS ACCESS COVER, INSTALLATION OF A NEW GASKET FOR THE METAL ACCESS STRIPS AROUND THE CIRCUMFERENCE OF THE RIM BEARING, CLEANING, LUBRICATION AND REPLACEMENT OF SEALS ON ALL FLOATING SHAFT AND PINION SHAFT GEAR COUPLINGS, INSTALLATION OF NEW SLEWING RING BEARING ACCESS COVER PLATES, CLEANING AND LUBRICATION OF ALL MACHINERY COMPONENTS, AND PAINTING OF ALL OPERATING MACHINERY COMPONENTS IN ACCORDANCE WITH OSHA/ANSI SPECIFICATIONS FOR MACHINERY COMPONENTS.
- REMOVAL, AND REPLACEMENT OF THE WEST WARNING GATES REUSING EXISTING FOUNDATIONS.
- REMOVAL, REPLACEMENT, AND RELOCATION OF THE EAST WARNING GATES USING NEW FOUNDATIONS.
- REMOVAL, REPLACEMENT, AND RELOCATION OF THE EAST SIGNALS TREE.
- OTHER RELATED ITEMS AS SHOWN ON THE PLANS, STIPULATED IN THE NOTES OR AS DIRECTED BY THE ENGINEER.

UNLESS NOTED OTHERWISE ELSEWHERE IN THESE NOTES, ALL WORK PERFORMED SHALL BE IN ACCORDANCE WITH THE RESPECTIVE CLAUSES OF THE 2019 ODOT CONSTRUCTION AND MATERIAL SPECIFICATION AND/OR PERTINENT SUPPLEMENTAL SPECIFICATIONS.

ELEVATION DATUM

ALL ELEVATIONS ARE BASED ON THE NAVD88.

CONTINGENCY QUANTITIES

THE CONTRACTOR SHALL NOT ORDER MATERIALS OR PERFORM WORK FOR WORK DESIGNATED BY PLAN NOTE TO BE USED "AS DIRECTED BY THE ENGINEER" UNLESS AUTHORIZED BY THE ENGINEER. THE ACTUAL WORK LOCATIONS AND QUANTITIES USED FOR SUCH ITEMS SHALL BE INCORPORATED INTO THE FINAL CHANGE ORDER GOVERNING COMPLETION OF THIS PROJECT.

THE FOLLOWING ARE ADDED TO GENERAL SUMMARY AS A CONTINGENCY QUANTITIES TO BE USED AS DIRECTED BY THE ENGINEER:

ITEM 202 - WALK REMOVED	25 SQ. FT.
ITEM 202 - CURB REMOVED	10 FT.
ITEM 203 - EXCAVATION	10 CU. YD.
ITEM 203 - EMBANKMENT	10 CU. YD.
ITEM 608 - 6" CONCRETE WALK, AS PER PLAN	25 SQ. FT.
ITEM 609 - CURB, TYPE 6	10 FT.
ITEM 659 - TOPSOIL	30 CU. YD.
ITEM 659 - SEEDING AND MULCHING	250 SQ. YD.

WORK LIMITS

THE WORK LIMITS SHOWN ON THESE PLANS ARE FOR PHYSICAL CONSTRUCTION ONLY. PROVIDE THE INSTALLATION AND OPERATION OF ALL WORK ZONE TRAFFIC CONTROL AND WORK ZONE TRAFFIC CONTROL DEVICES REQUIRED BY THESE PLANS WHETHER INSIDE OR OUTSIDE THESE WORK LIMITS.

RIGHT OF WAY

ALL WORK SHALL BE PERFORMED WITHIN THE EXISTING RIGHT OF WAY OR TEMPORARY EASEMENTS.

EXISTING TYPICAL SECTIONS

EXISTING TYPICAL SECTIONS HAVE BEEN DEVELOPED FROM FIELD SURVEYS AND RECORD PLANS, AND ARE BELIEVED TO REPRESENT THE WIDTH AND COMPOSITION OF THE EXISTING PAVEMENT, BUT ODOT OR THE CITY OF CLEVELAND DOES NOT GUARANTEE THE ACCURACY OF SAME.

CONSTRUCTION NOISE

ACTIVITIES AND LAND USE ADJACENT TO THIS PROJECT MAY BE AFFECTED BY CONSTRUCTION NOISE. IN ORDER TO MINIMIZE ANY ADVERSE CONSTRUCTION NOISE IMPACTS, DO NOT OPERATE POWER OPERATED CONSTRUCTION-TYPE DEVICE BETWEEN THE HOURS OF 7 P.M. AND 7 A.M. IN ADDITION, DO NOT OPERATE AT ANY TIME ANY DEVICE IN SUCH A MANNER THAT THE NOISE CREATED SUBSTANTIALLY EXCEEDS THE NOISE CUSTOMARILY AND NECESSARILY ATTENDANT TO THE REASONABLE AND EFFICIENT PERFORMANCE OF SUCH EQUIPMENT. THE NOISE LEVEL RESULTING FROM CONSTRUCTION SHALL BE WITHIN THE LIMITS SPECIFIED IN OSHA REGULATIONS AND IN ALL LOCAL ORDINANCES.
THE CONTRACTOR SHALL APPLY FOR A NOISE VARIANCE TO PERFORM NIGHT TIME WORK. IN THE EVENT A NOISE VARIANCE IS NOT GRANTED BY THE DIRECTOR OF SAFETY, WORK SHALL COMMENCE DURING DAYTIME HOURS AT NO ADDITIONAL COST.

CONTRACTOR WORK HOURS

THE DEFAULT CONTRACTOR WORK HOURS SHALL BE AN EIGHT-HOUR DAY, FIVE DAYS A WEEK FOR A MAXIMUM OF 40 HOURS, UNLESS A DIFFERENT WORK SCHEDULE HAS BEEN SUBMITTED BY THE CONTRACTOR AND APPROVED BY THE CITY.

THE CONTRACTOR SHALL RESTRICT HIS WORKING HOURS TO THOSE PERMITTED BY LOCAL OR OTHER APPLICABLE ORDINANCE, LAWS AND REGULATIONS UNLESS A WRITTEN VARIANCE HAS BEEN ACCEPTED FROM THE APPROPRIATE GOVERNING AUTHORITIES.

LOCAL LAWS, ORDINANCES AND REGULATIONS

IN ACCORDANCE WITH SECTION 107.01 OF THE GENERAL PROVISIONS, THE CONTRACTOR SHALL STAY FULLY INFORMED OF ALL LOCAL LAWS, ORDINANCES, REGULATIONS, ORDERS, AND DECREES THAT AFFECT THE WORK. IT IS THE CONTRACTORS RESPONSIBILITY TO OBSERVE AND COMPLY WITH ALL SUCH LAWS, ORDINANCES, REGULATIONS, ORDERS, AND DECREES AT NO ADDITIONAL COST TO THE PROJECT/CITY.

CONTRACTOR'S RESPONSIBILITY FOR UTILITY PROPERTY AND SERVICES

AT PROJECT LOCATIONS WHERE THE CONTRACTOR IS WORKING ADJACENT TO PROPERTY OR SERVICES OF UTILITY COMPANIES SUCH AS, BUT NOT LIMITED TO, POWER, TELECOMMUNICATIONS, GAS, ETC. WORK SHALL NOT COMMENCE UNTIL ARRANGEMENTS FOR PROPER PROTECTION OF SUCH FACILITIES HAVE BEEN MADE, AS DIRECTED IN SECTION 107 OF THE ODOT CMS.

COOPERATION BETWEEN CONTRACTORS

IT IS ANTICIPATED THAT OTHER CONTRACTORS WILL BE WORKING ON PROJECTS ADJACENT TO OR WITHIN THE LIMITS OF THIS PROJECT, EITHER FOR THE CITY OR FOR OTHER PUBLIC AGENCIES. THE CONTRACTOR SHALL COOPERATE AND COORDINATE HIS OPERATIONS, INCLUDING PROVISIONS FOR THE MAINTENANCE OF TRAFFIC, WITH THE CONTRACTORS OF OTHER PROJECTS THAT MAY BE IN FORCE DURING THE LIFE OF THIS CONTRACT INCLUDING BUT NOT LIMITED TO NEORSD, WPC, CWD, DOMINION EAST OHIO GAS COMPANY, CPP, FIRST ENERGY, TIME WARNER CABLE, VERIZON, AT&T, ODOT CONTRACTORS, ETC.

PROJECT PROGRESS MEETINGS

CONTRACTOR SHALL CONDUCT WEEKLY (UNLESS THE FREQUENCY IS OTHERWISE DETERMINED AT THE PRECONSTRUCTION MEETING) PROGRESS MEETINGS TO DISCUSS WORK AREAS, SCHEDULING, SAFETY, ETC. WITH THE RESIDENT ENGINEER AND OTHER APPROPRIATE OFFICIALS. MINUTES FROM THE MEETINGS SHALL BE PREPARED BY THE CONTRACTOR, FURNISHED TO ALL ATTENDEES PRIOR TO SUBSEQUENT MEETING, AND KEPT ON FILE AT THE FIELD OFFICE.

UTILITIES NOTIFICATION

AT LEAST THREE WORKING DAYS PRIOR TO COMMENCING CONSTRUCTION OPERATIONS IN THE AREA WHICH MAY INVOLVE UNDERGROUND UTILITY FACILITIES, THE CONTRACTOR SHALL NOTIFY THE PROJECT ENGINEER, THE OHIO UTILITIES PROTECTION SERVICE AND THE OWNER OF EACH UNDERGROUND UTILITY FACILITY SHOWN IN THE PLANS.

THE OWNER OF THE UNDERGROUND UTILITY FACILITY SHALL, WITHIN FORTY-EIGHT HOURS, EXCLUDING SATURDAYS, SUNDAYS AND LEGAL HOLIDAYS, AFTER NOTICE IS RECEIVED, STAKE, MARK OR OTHERWISE DESIGNATE THE LOCATION OF THE UNDERGROUND UTILITIES FACILITIES IN THE CONSTRUCTION AREA IN SUCH A MANNER AS TO INDICATE THEIR COURSE TOGETHER WITH THE APPROXIMATE DEPTH AT WHICH THEY ARE INSTALLED. THE MARKING OR LOCATING SHALL BE COORDINATED TO STAY APPROXIMATELY TWO DAYS AHEAD OF THE PLANNED CONSTRUCTION.

UTILITIES

LISTED BELOW ARE ALL UTILITIES WITHIN THE PROJECT CONSTRUCTION LIMITS, BASED ON RECORD PLANS AND SUE PERFORMED ON MAY 4, 2020, TOGETHER WITH THEIR RESPECTIVE OWNERS:

NORTHEAST OHIO REGIONAL SEWER DISTRICT (NEORSD)
3900 EUCLID AVENUE, CLEVELAND, OHIO 44115
CONTACT: MARY MACIEJOWSKI @ (216) 881-6600 X6466
maciejowskim@NEORSD.org

DOMINION EAST OHIO (DEOG)
320 SPRINGSIDE DRIVE, SUITE 320, AKRON, OHIO 44333
CONTACT: BRYAN DAYTON (GAS DISTRIBUTION DESIGN) @ (330) 664-2409
CONTACT: KEVIN BIRT @ (330) 684-2409
relocation@dom.com

ILLUMINATING COMPANY (CEI)
6896 MILLER ROAD, SUITE 110, BRECKSVILLE, OH 44141
CONTACT: JOHN ZASSICK @ (440) 546-8738
JMZassick@firstenergycorp.com

AT&T
13630 LORAIN AVENUE, ROOM 350, CLEVELAND, OH 44111
CONTACT: JAMES JANIS @ (216) 476-6142
PJ8191@att.com

CLEVELAND THERMAL
1921 HAMILTON AVENUE, CLEVELAND, OHIO 44114
CONTACT: SCOTT TEMPLETON @ (216) 241-3636
Scott.Templeton@corix.com

TIME WARNER CABLE/CHARTER COMMUNICATIONS
8150 DOW CIRCLE, STRONGSVILLE, OH 44136
CONTACT: GARY NAUMANN @ (216) 392-7963
gary.naumann1@charter.com

VERIZON/MCI/XO
1150 WEST 3RD STREET, CLEVELAND, OH 44256
CONTACT: DANIEL ARZ @ (330) 819-1444
daniel.arz@verizon.com

SPRINT
11370 ENTERPRISE PARK DRIVE, SHARONVILLE, OH 45241
CONTACT: JOSEPH THOMAS @ (440) 447-6163

WESTERN RESERVE COMMUNICATIONS
2801 HAMILTON AVENUE, CLEVELAND, OH 44114
CONTACT: LOWELL KATZ @ (216) 621-8121
wrcwireless@sbcglobal.net

EVERSTREAM
1228 EUCLID AVENUE, CLEVELAND, OH 44115
CONTACT: SARAH HATFIELD @ (216) 923-2206
shatfield@everstream.net

ZAYO FIBER SOLUTIONS
4199 KINROSS LAKES PARKWAY, SUITE 10, RICHFIELD, OH 44286
CONTACT: DAVE GALUSKA @ (234) 281-0025
dave.galuska@zayo.com

THE LOCATION OF THE UNDERGROUND UTILITIES SHOWN ON THE PLANS ARE AS OBTAINED FROM THE OWNERS AS REQUIRED BY SECTION 153.64 O.R.C. THE CITY DOES NOT GUARANTEE THE ACCURACY OR COMPLETENESS OF THE UTILITY INFORMATION SHOWN. THE CITY IS NOT LIABLE FOR UTILITIES OR CONNECTIONS NOT SHOWN ON THE PLANS OR ABANDONED UTILITIES OR CONNECTIONS. THE CONTRACTOR SHALL CUT OUT ANY ABANDONED UTILITIES AND ALL COSTS INCURRED FOR THIS WORK SHALL BE INCLUDED IN THE BID ITEM FOR THAT WORK. THE CONTRACTOR SHALL LOCATE ALL UTILITIES PRIOR TO CONSTRUCTION.

CALL OHIO UTILITIES PROTECTION SERVICE (OUPS) @ 811
3 DAYS BEFORE YOU DIG
NON-MEMBERS MUST BE CALLED DIRECTLY
OUPS TICKET NUMBERS: A917703065, A917703098, A917703112, A917703130 & A917703151

J:\192622 - Center St Swing Bridge\5.0 Project Data\5.7 Structural\Sheets\Roadway\General Notes.dwg 27-Nov-20 12:01 PM

GENERAL (CONT.):

CITY OF CLEVELAND

CITY OF CLEVELAND DIVISION OF ENGINEERING AND CONSTRUCTION
601 LAKESIDE AVENUE, ROOM 518, CLEVELAND, OHIO 44114
CONTACT: RICHARD ORTMAN @ (216) 664-7421
DOrtmanII@city.cleveland.oh.us

CITY OF CLEVELAND DIVISION OF TRAFFIC ENGINEERING
601 LAKESIDE AVENUE, CLEVELAND, OHIO 44114
CONTACT: ROBERT MAVEC @ (216) 664-3194
rmavec@city.cleveland.oh.us

CITY OF CLEVELAND BUREAU OF DOCKS AND BRIDGES
2300 EAST 67TH STREET, CLEVELAND, OHIO 44104
CONTACT: TERRELL PRUITT @ (216) 432-6797
TPruitt2@city.cleveland.oh.us

CITY OF CLEVELAND DIVISION OF WATER (CWD)
1201 LAKESIDE AVENUE, CLEVELAND, OHIO 44114-1175
CONTACT: FRED ROBERTS @ (216) 664-2444 X75590
Fred_Robert s@clevelandwater.com

CITY OF CLEVELAND DIVISION OF WATER POLLUTION CONTROL (WPC)
12302 KIRBY AVENUE, CLEVELAND, OHIO 44108
CONTACT: ELIE RAMY @ (216) 664-2756
ERamy@clevelandwpc.com

CITY OF CLEVELAND DIVISION OF PUBLIC POWER (CPP)
1300 LAKESIDE AVENUE, CLEVELAND, OHIO 44114
CONTACT: CHRIS HIRZEL (ELECTRIC) @ (216) 664-3922 X76115
CHirzel@CPP.org
CONTACT: BRYAN SHEPHERD (STREETLIGHTING) @ (216) 664-3922 X76457
BShepherd@CPP.org

GREATER CLEVELAND REGIONAL TRANSIT AUTHORITY (GCRTA)
1240 WEST 6TH STREET, CLEVELAND, OHIO 44113
CONTACT: BRIAN TEMMING @ (216) 356-3270
btemming@gcrta.org

CLEVELAND METROPARKS
4101 FULTON PARKWAY, CLEVELAND, OHIO 44144
CONTACT: SEAN MCDERMOTT @ (216) 635-3258
semi@clevelandmetroparks.com

PERMIT

IN THE CITY OF CLEVELAND, ALL PERMITS MUST BE OBTAINED FROM THE DIVISION OF ASSESSMENTS AND LICENSES PRIOR TO BEGINNING ANY WORK WITHIN THE CITY OF CLEVELAND RIGHT OF WAY. PERMITS INCLUDE BUT ARE NOT LIMITED TO STREET OPENING PERMIT, OVERLOAD PERMIT, OBSTRUCTION PERMIT AND/OR SIDEWALK PERMIT AND MAY BE OBTAINED THROUGH THE FOLLOWING CONTACT:

TRAVIS EVANS
DEPARTMENT OF FINANCE - DIVISION OF ASSESSMENTS AND LICENSES
601 LAKESIDE AVENUE, ROOM 122, CLEVELAND, OHIO 44114
PHONE: (216) 664-2174
EMAIL: DALPERMITS@CITY.CLEVELAND.OH.US

ALL STREET OPENING REPAIRS, CURB REPAIRS, AND/OR SIDEWALK REPAIRS EITHER INCIDENTAL TO THE PROJECT OR PART OF THE PROJECT MUST BE PERFORMED IN ACCORDANCE TO CITY OF CLEVELAND STANDARDS. A COPY OF THE STANDARDS CAN BE OBTAINED ON-LINE UNDER THE "FORMS AND PUBLICATIONS" TAB OF THE CAPITAL PROJECTS WEBSITE OR FROM THE DIVISION OF ENGINEERING AND CONSTRUCTION BY CALLING (216) 664-2381.

ALL PERMITS, FEES AND CHARGES SHALL BE THE RESPONSIBILITY OF THE CONTRACTOR AND THEIR ASSOCIATED COST SHALL BE INCLUDED IN THE CONTRACT UNIT PRICE BID FOR THE PERTINENT WORK ITEMS. FOR BIDDING PURPOSES, THE FOLLOWING FEES AND CHARGES HAVE BEEN ESTIMATED BY THE CITY OF CLEVELAND DIVISION OF ENGINEERING AND CONSTRUCTION ON BEHALF OF THE DIVISION OF ASSESSMENTS AND LICENSES (DAL):

$2,305 (TWO THOUSAND THREE HUNDRED AND FIVE)

DAL HAS ASSIGNED STP NUMBER STP2003163 TO THIS PROJECT. THE AWARDED CONTRACTOR SHALL CONTACT DAL AS DESCRIBED ABOVE, USING THE ASSIGNED STP NUMBER FOR REFERENCE. THE CONTRACTOR SHALL PROVIDE DAL WITH THEIR CERTIFICATE OF INSURANCE (COI) MEETING THE CITY OF CLEVELAND REQUIREMENTS. UPON SUBMITTAL OF THE COI AND RECEIPT OF PAYMENT, DAL WILL ISSUE THE PERMIT.

EROSION CONTROL:

SEEDING AND MULCHING

THE FOLLOWING ITEMS ARE PROVIDED TO PROMOTE GROWTH AND CARE OF PERMANENT SEEDED AREAS:

ITEM 659 - SOIL ANALYSIS TEST	EACH
ITEM 659 - TOPSOIL	CU. YD.
ITEM 659 - SEEDING AND MULCHING, CLASS 1	SQ. YD.
ITEM 659 - REPAIR SEEDING AND MULCHING	SQ. YD.
ITEM 659 - INTER-SEEDING	SQ. YD.
ITEM 659 - COMMERCIAL FERTILIZER	TON
ITEM 659 - LIME	ACRES
ITEM 659 - WATER	M. GAL.
ITEM 659 - MOWING	M. SQ. FT.

SEEDING AND MULCHING SHALL BE APPLIED TO ALL AREAS OF EXPOSED SOIL WITHIN THE STAGING AREA. QUANTITY CALCULATIONS FOR SEEDING AND MULCHING ARE BASED ON THESE LIMITS, AND SHOWN ON ESTIMATED QUANTITIES SHEET.

WATER SUPPLY

WATER WILL BE SUPPLIED TO THE CONTRACTOR AT THE NEAREST HYDRANT. THE COST OF THE WATER SUPPLY SHALL BE BORNE BY THE CONTRACTOR. THE CONTRACTOR SHALL OBTAIN THE NECESSARY PERMIT FROM THE CITY OF CLEVELAND WATER DEPARTMENT.

THE CONTRACTOR WILL BE REQUIRED TO PROVIDE APPROVED STANDARD TIGHT HOSE AND FITTINGS WITH WHICH TO MAKE CONNECTIONS TO HYDRANTS AND OUTLETS. NO IMPROPER, WASTEFUL OR UNDUE USE OF WATER WILL BE PERMITTED.

SPECIAL - INLET PROTECTION

IN ADDITION TO ITEM 832 INLET PROTECTION PER SCD DM-4.4, THE CONTRACTOR MAY UTILIZE OTHER EPA APPROVED INLET PROTECTION SUCH AS SAND OR GRAVEL BAGS, DANDY BAGS AND SEDIMENT TRAPS. IF THE CONTRACTOR UTILIZES DANDY BAGS FOR INLET PROTECTION, HE WILL BE COMPENSATED FOR EACH DANDY BAG AT THE RATE OF INLET PROTECTION PER FOOT OF INLET (PERIMETER OF BASIN) AS DETAILED IN THE STANDARD CONSTRUCTION DRAWINGS AND MODIFIED BY SUPPLEMENTAL SPEC 832, APPENDIX F.

THE CONTRACTOR IS RESPONSIBLE FOR CONTACTING THE CITY'S DIVISION OF WATER POLLUTION CONTROL FOR INITIAL CATCH BASIN CLEANING NO LATER THAN THREE WEEKS PRIOR TO THE START OF THE PROJECT AND THE INSTALLATION OF THIS SPECIFIC INLET PROTECTION. THE CONTRACTOR SHALL BE RESPONSIBLE FOR PROTECTING, MAINTAINING AND PROPER DISPOSAL OF THE DEBRIS CAUGHT BY THESE BAGS. ALL DAMAGED BAGS SHALL BE REPLACED IN KIND AT THE CONTRACTOR'S COST DURING THE COURSE OF CONSTRUCTION.

SITE RESTORATION

IN ADDITION TO WHAT IS COVERED IN CMS 104.04, THE CONTRACTOR IS REQUIRED TO KEEP THE GRASS MOWED WITHIN THE FENCED PORTION OF THE PROJECT SITE.

THE COST OF THE ABOVE IS INCIDENTAL TO ALL CONTRACT ITEMS.

CONSTRUCTION ACCESS ROAD

CONTRACTOR SHALL INSTALL A TEMPORARY CONSTRUCTION ACCESS ROAD AT THE LOCATION AS SHOWN IN THE PLANS AND ACCORDING TO ODOT SUPPLEMENTAL SPECIFICATION 832 TEMPORARY SEDIMENT AND EROSION CONTROL, POINT 832.05/L - CONSTRUCTION ENTRANCES.

CONSTRUCTION ACCESS ROAD MUST BE SUFFICIENT TO SUPPORT CONSTRUCTION LOADS AND MUST BE MAINTAINED DURING THE LENGTH OF THE PROJECT TO THE SATISFACTION OF THE ENGINEER.

PAYMENT FOR THE CONSTRUCTION ACCESS ROAD SHALL BE INCIDENTAL TO BID ITEM 832 - EROSION CONTROL, AS PER PLAN, AND SHALL INCLUDE ALL MATERIALS, LABOR, EQUIPMENT TO PROPERLY INSTALL, MAINTAIN AND REMOVE CONSTRUCTION ACCESS ROAD.

TEMPORARY SEDIMENT AND EROSION CONTROL

THE FOLLOWING ESTIMATED QUANTITY IS PROVIDED FOR TEMPORARY SEDIMENT AND EROSION CONTROL (TSEC) IN ACCORDANCE WITH APPLICABLE REQUIREMENTS OF THE ODOT SUPPLEMENTAL SPECIFICATIONS.

ITEM 832 - EROSION CONTROL, AS PER PLAN 7,500 EACH

UNLESS OTHERWISE APPROVED BY THE ENGINEER, DAMAGED FILTER FABRIC FENCE SHALL BE REPLACED IN LIEU OF ANY/ALL METHODS OF REPAIR.

ROADWAY:

MONUMENT MISC: MONUMENT REFERENCING

THE CONTRACTOR SHALL LOCATE AND REFERENCE ALL EXISTING ROADWAY AND/OR CENTERLINE MONUMENTS WITHIN THE LIMITS OF THE PROPOSED WORK FOR THE PURPOSES OF RESETTING/REESTABLISHING THEIR EXACT LOCATION IN THE EVENT THEY ARE DISPLACED OR DAMAGED DURING CONSTRUCTION. ALL WORK SHALL BE PERFORMED UNDER THE SUPERVISION OF A LICENSED SURVEYOR PROVIDED BY THE CONTRACTOR AND SHALL BE COMPLETED PRIOR TO THE START OF ANY PROXIMATE GRADING, PAVING OR OPERATIONS THAT COULD DISTURB THE MONUMENTS. CARE AND PROTECTIVE MEASURES SHALL BE EMPLOYED BY THE CONTRACTOR TO PRESERVE EXISTING MONUMENTS.

UPON LOCATING THE EXISTING MONUMENTS, THE MONUMENT IRON PINS OR DRILL HOLES IN STONE (IF MONUMENT BOX IS EMPTY, NOTIFY CITY OF CLEVELAND IMMEDIATELY) SHALL BE CAREFULLY EXPOSED AND REFERENCED TO NO LESS THAN THREE (3) PERMANENT OBJECTS. ANY EXISTING MONUMENTS THAT MIGHT REQUIRE REPLACEMENT SHALL BE NOTED. PRIOR TO BEGINNING ANY WORK, THE CONTRACTOR SHALL DELIVER A COPY OF ALL SURVEY AND REFERENCE NOTES TO THE ENGINEER AND TO THE CHIEF SURVEYOR AT THE CITY OF CLEVELAND, DIVISION OF ENGINEERING AND CONSTRUCTION, 601 LAKESIDE AVENUE ROOM 518, CLEVELAND, OH 44114, ATTN GREG ESBER AT (216) 664-2460, GESBER@CITY.CLEVELAND.OH.US.

ADJUSTMENTS OR REPLACEMENTS OF MONUMENT BOXES OR ASSEMBLIES MAY NOT COMMENCE UNTIL THE REFERENCES HAVE BEEN CHECKED/VERIFIED AND APPROVED BY THE ENGINEER. THE REFERENCES SHALL MEET THE FOLLOWING REQUIREMENTS:

- CONSIST OF DURABLE POINTS OUTSIDE OF THE CONSTRUCTION LIMITS SUCH AS PK OR MAG NAILS IN POLES OR PAVEMENT, DRILL HOLES, IRON PINS, SPECIFICALLY DEFINED BUILDING CORNERS, ETC.
- SPECIFICALLY DEFINED AND LOCATABLE TO WITHIN 0.01 FEET.
- TIED TO EXISTING MONUMENT TO WITHIN 0.01 FEET. ERROR IS NOT TO EXCEED THIS AMOUNT.
- A MINIMUM OF THREE POINTS PER MONUMENT REFERENCED.
- LOCATED 100 FEET OR LESS FROM MONUMENT, SUCH THAT A STEEL TAPE COULD BE USED TO RE-ESTABLISH POSITION.

THE PER EACH UNIT PRICE PAYMENT FOR THIS WORK SHALL INCLUDE LOCATING THE MONUMENTS, CAREFULLY CLEANING OUT THE MONUMENT BOXES AND/OR EXPOSING THE MONUMENT PINS/POINTS, REFERENCING THE MONUMENTS AND ALL RELATED NOTATION. THE FOLLOWING ESTIMATED QUANTITY IS PROVIDED IN THE GENERAL SUMMARY FOR ALL MONUMENTS KNOWN TO EXIST OR INITIALLY FOUND/ENCOUNTERED WITHIN THE WORK LIMITS:

ITEM 623 - MONUMENT MISC: MONUMENT REFERENCING 3 EACH

MAINTENANCE OF TRAFFIC:

ITEM 614 - MAINTAINING TRAFFIC, AS PER PLAN

THE MAKING OF THIS IMPROVEMENT REQUIRES THAT CENTER STREET BE CLOSED TO THROUGH TRAFFIC.

LOCAL ACCESS FOR ABUTTING PROPERTIES SHALL BE MAINTAINED AT ALL TIMES.

ALL CONSTRUCTION TRAFFIC CONTROL DEVICES SHALL BE IN ACCORDANCE WITH THE MOST RECENT EDITION OF THE OHIO MANUAL OF UNIFORM TRAFFIC CONTROL DEVICES. ALL SIGNS, SUPPORTS, PAVEMENT MARKINGS AND OTHER TRAFFIC CONTROL DEVICES SHALL BE FURNISHED, ERECTED, MAINTAINED AND REMOVED BY THE CONTRACTOR.

ALL CONSTRUCTION TRAFFIC CONTROL DEVICES SUCH AS BARRICADES, LIGHTING, FLAGGERS, DRUMS, ETC. SHALL BE PROVIDED SO AS TO AVOID DAMAGE AND/OR INJURY TO VEHICLES AND PERSONS USING THE ROADWAY DURING CONSTRUCTION.

THE BRIDGE CAN ONLY BE CLOSED TO TRAFFIC FOR A MAXIMUM DURATION OF 365 CONSECUTIVE CALENDAR DAYS. LIQUIDATED DAMAGES OF $1,500/DAY WILL BE ASSESSED FOR EACH CALENDAR DAY BEYOND THE LIMIT.

THE CONTRACTOR SHALL INSPECT ALL CONTRACTOR INSTALLED SIGNS DAILY AND REPAIR OR REPLACE ANY DAMAGED OR MISSING SIGNS.

FLAGGERS MAY BE REQUIRED TO DIRECT TRAFFIC WHEN CONSTRUCTION VEHICLES ARE ENTERING OR EXITING THE WORK SITE.

PAYMENT FOR ALL LABOR, EQUIPMENT, AND MATERIALS SHALL BE INCLUDED IN THE LUMP SUM UNIT PRICE FOR ITEM 614, MAINTAINING TRAFFIC, AS PER PLAN.

NOTIFICATION

THE CONTRACTOR SHALL NOTIFY IN WRITING THE FOLLOWING AGENCIES AT LEAST TWO WEEKS PRIOR TO THE START OF CONSTRUCTION, AND AT LEAST SEVEN (7) CALENDAR DAYS BEFORE IMPLEMENTING ANY SUBSTANTIAL CHANGE IN TRAFFIC PATTERN OR CLOSING ANY STREET TO TRAFFIC:

CITY OF CLEVELAND:
601 LAKESIDE AVE, CLEVELAND, OH 44114

DIVISION OF ENGINEERING AND CONSTRUCTION	216-664-2381
DIVISION OF STREETS	216-664-2150
DIVISION OF TRAFFIC ENGINEERING	216-664-3194

CITY OF CLEVELAND DEPARTMENT OF PUBLIC SAFETY:
601 LAKESIDE AVE, CLEVELAND, OH 44114

DIVISION OF EMERGENCY MEDICAL SERVICE (EMS)	216-664-2066
DIVISION OF FIRE	216-664-6800
DIVISION OF POLICE	216-664-1234

CLEVELAND METROPOLITAN SCHOOL DISTRICT — 216-574-8000
1111 SUPERIOR AVE E, SUITE 1800, CLEVELAND, OH 44114

GREATER CLEVELAND REGIONAL TRANSIT AUTHORITY (RTA) — 216-566-5100
1240 WEST 6TH ST, CLEVELAND, OH 44113

OHIO DEPARTMENT OF TRANSPORTATION — 216-584-4030
DISTRICT 12 - PUBLIC INFORMATION OFFICE
5500 TRANSPORTATION BLVD, GARFIELD HTS, OH 44125

FLATS FORWARD NEIGHBORHOOD GROUP — 216-736-7799
1010 EUCLID AVENUE, CLEVELAND, OH 44115

CLEVELAND METROPARKS — 216-635-3286
4101 FULTON PARKWAY, CLEVELAND, OH 44144

NOTICE OF CLOSURE SIGN

NOTICE OF CLOSURE SIGNS, AS DETAILED IN THESE PLANS, SHALL BE ERECTED BY THE CONTRACTOR AT LEAST TWO WEEKS IN ADVANCE OF THE SCHEDULED ROAD CLOSURE. SIGNS SHALL BE ERECTED ON THE RIGHT-HAND SIDE OF THE ROAD FACING TRAFFIC. THEY SHALL BE PLACED SO AS NOT TO INTERFERE WITH THE VISIBILITY OF ANY OTHER TRAFFIC CONTROL SIGNS. ON ROADWAYS, THEY SHOULD BE ERECTED AT THE POINT OF CLOSURE. THE SIGNS SHALL BE ERECTED AT THE INTERSECTION OF CENTER STREET AND RIVERBED STREET AND AT THE INTERSECTION OF CENTER STREET AND MERWIN AVENUE.

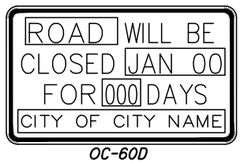

OC-60D

ITEM 614 - PORTABLE CHANGEABLE MESSAGE SIGNS, AS PER PLAN

THE CONTRACTOR SHALL FURNISH, INSTALL, MAINTAIN AND REMOVE, WHEN NO LONGER NEEDED, TWO CHANGEABLE MESSAGE SIGNS, ON SITE, FOR THE DURATION OF TWO WEEKS BEFORE THE START OF THE PROJECT. THE SIGNS SHALL BE OF A TYPE SHOWN ON A LIST OF APPROVED PCMS UNITS MAINTAINED BY THE DIRECTOR (OFFICE OF MATERIALS MANAGEMENT). THE APPROVED LIST OF PORTABLE CHANGEABLE MESSAGE SIGNS CAN BE FOUND ON THE ODOT WEBSITE BY CLICKING ON THE SERVICES MENU, THEN CLICKING ON MATERIALS MANAGEMENT. THE LIST CONTAINS CLASS A AND B UNITS WITH MINIMUM LEGIBILITY DISTANCES OF 650 FT. AND 475 FT., RESPECTIVELY.

EACH SIGN SHALL BE TRAILER-MOUNTED AND EQUIPPED WITH A FUNCTIONAL DIMMING MECHANISM, TO DIM THE SIGN DURING DARKNESS, AND A TAMPER AND VANDAL PROOF ENCLOSURE. EACH SIGN SHALL BE PROVIDED WITH APPROPRIATE TRAINING AND OPERATION INSTRUCTIONS TO ENABLE ON-SITE PERSONNEL TO OPERATE AND TROUBLESHOOT THE UNIT. THE SIGN SHALL ALSO BE CAPABLE OF BEING POWERED BY AN ELECTRICAL SERVICE DROP FROM A LOCAL UTILITY COMPANY. PCMS TRAILERS SHALL BE DELINEATED ON A PERMANENT BASIS BY AFFIXING CONSPICUITY TAPE CONFORMING TO CMS 614.03, IN A CONTINUOUS LINE ON THE FACE OF THE TRAILER AS SEEN BY ONCOMING ROAD USERS.

PLACEMENT, OPERATION, MAINTENANCE AND ALL ACTIVATION OF THE SIGNS BY THE CONTRACTOR SHALL BE AS DIRECTED BY THE ENGINEER. THE PCMS SHALL BE LOCATED IN A HIGHLY VISIBLE POSITION YET PROTECTED FROM TRAFFIC. THE CONTRACTOR SHALL, AT THE DIRECTION OF THE ENGINEER, RELOCATE THE PCMS TO IMPROVE VISIBILITY OR ACCOMMODATE CHANGED CONDITIONS. WHEN NOT IN USE, THE PCMS SHALL BE TURNED OFF. ADDITIONALLY, WHEN NOT IN USE FOR EXTENDED PERIODS OF TIME, THE PCMS SHALL BE TURNED, FACING AWAY FROM ALL TRAFFIC, AND SHALL DISPLAY ONE OR MORE YELLOW RETROREFLECTIVE SHEETING SURFACES OF 9-INCH BY 15-INCH MINIMUM SIZE FACING TRAFFIC.

THE ENGINEER SHALL BE PROVIDED ACCESS TO EACH SIGN UNIT AND SHALL BE PROVIDED WITH APPROPRIATE TRAINING AND OPERATION INSTRUCTIONS TO ENABLE ODOT PERSONNEL TO OPERATE AND TROUBLESHOOT THE UNIT, AND TO REVISE SIGN MESSAGES, IF NECESSARY.

(THE CONTRACTOR SHALL IMPLEMENT A SYSTEM WHEREBY CHANGEABLE MESSAGES WILL BE IMPLEMENTED WITHIN 12 HOURS FOLLOWING TELEPHONE NOTIFICATION FROM THE PROJECT ENGINEER TO A DESIGNATED PHONE.)

ALL MESSAGES TO BE DISPLAYED ON THE SIGN WILL BE PROVIDED BY THE ENGINEER. A LIST OF ALL REQUIRED PREPROGRAMMED MESSAGES WILL BE GIVEN TO THE CONTRACTOR AT THE PROJECT PRECONSTRUCTION CONFERENCE. THE SIGN SHALL HAVE THE CAPABILITY TO STORE UP TO 99 MESSAGES. MESSAGE MEMORY OR PRE-PROGRAMMED DISPLAYS SHALL NOT BE LOST AS A RESULT OF POWER FAILURES TO THE ON-BOARD COMPUTER. THE SIGN LEGEND SHALL BE CAPABLE OF BEING CHANGED IN THE FIELD. THREE-LINE PRESENTATION FORMATS WITH UP TO SIX MESSAGE PHASES SHALL BE SUPPORTED. PCMS FORMAT SHALL PERMIT THE COMPLETE MESSAGE FOR EACH PHASE TO BE READ AT LEAST TWICE.

THE PCMS SHALL CONTAIN AN ACCURATE CLOCK AND PROGRAMMING LOGIC WHICH WILL ALLOW THE SIGN TO BE ACTIVATED, DEACTIVATED OR MESSAGES CHANGED AUTOMATICALLY AT DIFFERENT TIMES OF THE DAY FOR DIFFERENT DAYS OF THE WEEK.

THE PCMS SHALL CONTAIN A CELLULAR TELEPHONE DATA LINK WHICH WILL (IN ACTIVE CELLULAR PHONE AREAS) ALLOW REMOTE SIGN ACTIVATION, MESSAGE CHANGES, MESSAGE ADDITIONS AND REVISIONS TO TIME OF DAY PROGRAMS. THE SYSTEM SHALL ALSO PERMIT VERIFICATION OF CURRENT AND PROGRAMMED MESSAGES. ONE REMOTE DATA INPUT DEVICE (LAPTOP COMPUTER PLUS MODEM OR EQUIVALENT) SHALL BE FURNISHED FOR USE BY THE DISTRICT TRAFFIC ENGINEER, OR EQUIVALENT, AND SHALL BE INSURED AGAINST THEFT.

THE PCMS UNIT SHALL BE MAINTAINED IN GOOD WORKING ORDER BY THE CONTRACTOR IN ACCORDANCE WITH THE PROVISIONS OF CMS 614.07. THE CONTRACTOR SHALL, PRIOR TO ACTIVATING THE UNIT, MAKE ARRANGEMENTS, WITH AN AUTHORIZED SERVICE AGENT FOR THE PCMS, TO ASSURE PROMPT SERVICE IN THE EVENT OF FAILURE. ANY FAILURE SHALL NOT RESULT IN THE SIGN BEING OUT OF SERVICE FOR MORE THAN 12 HOURS, INCLUDING WEEKENDS. FAILURE TO COMPLY MAY RESULT IN AN ORDER TO STOP WORK AND OPEN ALL TRAFFIC LANES AND/OR IN THE DEPARTMENT TAKING APPROPRIATE ACTION TO SAFELY CONTROL TRAFFIC. THE ENTIRE COST TO CONTROL TRAFFIC, ACCRUED BY THE DEPARTMENT DUE TO THE CONTRACTOR'S NONCOMPLIANCE, WILL BE DEDUCTED FROM MONEYS DUE, OR TO BECOME DUE THE CONTRACTOR ON HIS CONTRACT.

THE CONTRACTOR SHALL BE RESPONSIBLE FOR 24-HOUR-PER-DAY OPERATION AND MAINTENANCE OF THESE SIGNS ON THE PROJECT FOR THE DURATION OF THE PHASES WHEN THE PLAN REQUIRES THEIR USE.

PAYMENT FOR THE ABOVE DESCRIBED ITEM SHALL BE AT THE CONTRACT UNIT PRICE. PAYMENT SHALL INCLUDE ALL LABOR, MATERIALS, EQUIPMENT, FUELS, LUBRICATING OILS, SOFTWARE, HARDWARE AND INCIDENTALS TO PERFORM THE ABOVE DESCRIBED WORK. THE CONTRACTOR SHALL ONLY BE PAID FOR PCMS UNITS WHEN THEY ARE IN OPERATION ON THE PROJECT AS SPECIFIED IN THE PLANS OR BY THE ENGINEER.

ITEM 614 - PORTABLE CHANGEABLE MESSAGE SIGN, AS PER PLAN — 2 MONTHS

ITEM 614 - DETOUR SIGNING, AS PER PLAN

ADVANCE TRAFFIC SIGNING AND SUPPORTS, INCLUDING DETOUR SIGNING, CONSTRUCTION WORK ZONE APPROACH SIGNING, BARRACADES AND SIGNS ON BARRACADES SHOWN ON THE PLANS BEYOND THE WORK LIMITS SHALL BE FURNISHED, ERECTED, MAINTAINED, AND SUBSEQUENTLY REMOVED BY THE CONTRACTOR.

FLUORESCENT ORANGE TYPE G SIGN SHEETING SHALL BE USED FOR ALL DETOUR AND CONSTRUCTION WARNING SIGNS.

PAYMENT FOR ALL LABOR, EQUIPMENT AND MATERIALS SHALL BE INCLUDED IN THE LUMP SUM UNIT PRICE FOR ITEM 614, DETOUR SIGNING, AS PER PLAN.

FOR INFORMATION ONLY, SEE SHEET 8 FOR DETOUR PLAN

ITEM 614 - DETOUR

	D3		M4-8a-30	M4-9R-30	M4-9L-30	M4-9S-30		M4-10L-48	M4-10R-48		R11-2-48	R11-3b-60		W20-1-36*	W20-2-36	W20-3-36*		SPECIAL		TYPE A WARNING LIGHT	TYPE B WARNING LIGHT **
CENTER STREET	33		2	8	5	16		3	1		2	2		11	4	11		3		22	6

* INDICATES TYPE A WARNING LIGHT

** TYPE B WARNING LIGHTS, TO BE INSTALLED ON TYPE III BARRICADES, ONE LIGHT PER EACH LANE CLOSED

TRAFFIC SIGNING

ADVANCE TRAFFIC SIGNING, INCLUDING DETOUR SIGNING, CONSTRUCTION WORK ZONE APPROACH SIGNING, BARRICADES AND SIGNS ON BARRICADES SHOWN ON THE PLANS BEYOND THE WORK LIMITS SHALL BE FURNISHED, ERECTED, MAINTAINED, AND REMOVED BY THE CONTRACTOR.

LAW ENFORCEMENT OFFICER (WITH PATROL CAR) FOR ASSISTANCE DURING CONSTRUCTION OPERATIONS

USE OF LAW ENFORCEMENT OFFICERS (LEOS) BY CONTRACTORS OTHER THAN THE USES SPECIFIED BELOW WILL NOT BE PERMITTED AT PROJECT COST. LEOS SHOULD NOT BE USED WHERE THE OMUTCD INTENDS THAT FLAGGERS BE USED.

IN ADDITION TO THE REQUIREMENTS OF C&MS 614 AND THE OMUTCD, A UNIFORMED LEO WITH AN OFFICIAL PATROL CAR (CAR WITH TOP-MOUNTED EMERGENCY FLASHING LIGHTS AND COMPLETE MARKINGS OF THE APPROPRIATE LAW ENFORCEMENT AGENCY) SHALL BE PROVIDED FOR THE FOLLOWING TRAFFIC CONTROL TASKS:

- DURING THE ENTIRE ADVANCE PREPARATION AND CLOSURE OF CENTER STREET.

THE LEO SHALL REPORT IN TO THE CONTRACTOR PRIOR TO THE START OF THE SHIFT, IN ORDER TO RECEIVE INSTRUCTIONS REGARDING SPECIFIC WORK ASSIGNMENTS DURING HIS/HER SHIFT. THE LEO IS EXPECTED TO STAY AT THE PROJECT SITE FOR THE ENTIRE DURATION OF HIS/HER SHIFT. THE LEO SHALL REPORT TO THE CONTRACTOR AT THE END OF HIS/HER SHIFT. ONCE THE LEO HAS COMPLETED THE DUTIES DESCRIBED ABOVE AND STILL HAS TIME REMAINING ON HIS/HER SHIFT, THE LEO MAY BE ASKED TO PATROL THROUGH THE WORK ZONE (WITH FLASHING LIGHTS OFF) OR BE PLACED AT A LOCATION TO DETER MOTORISTS FROM SPEEDING. SHOULD IT BE NECESSARY TO LEAVE THE PROJECT SITE, THE LEO SHALL NOTIFY THE ENGINEER. THE CONTRACTOR SHALL PROVIDE THE LEO WITH A TWO-WAY COMMUNICATION DEVICE WHICH SHALL BE RETURNED TO THE CONTRACTOR AT THE END OF HIS/HER SHIFT. LEOS (WITH PATROL CAR) REQUIRED BY THE TRAFFIC MAINTENANCE TASKS ABOVE SHALL BE PAID FOR ON A UNIT PRICE (HOURLY) BASIS UNDER ITEM 614, LAW ENFORCEMENT OFFICER (WITH PATROL CAR) FOR ASSISTANCE.

THE FOLLOWING ESTIMATED QUANTITIES HAVE BEEN CARRIED TO THE GENERAL SUMMARY.

ITEM 614 - LAW ENFORCEMENT OFFICER WITH PATROL CAR FOR ASSISTANCE — 40 HOURS

THE HOURS PAID SHALL INCLUDE ANY MINIMUM SHOW-UP TIME REQUIRED BY THE LAW ENFORCEMENT AGENCY INVOLVED.

ANY ADDITIONAL COSTS (ADMINISTRATIVE OR OTHERWISE) INCURRED BY THE CONTRACTOR TO OBTAIN THE SERVICES OF AN LEO ARE INCLUDED WITH THE BID UNIT PRICE FOR ITEM 614, LAW ENFORCEMENT OFFICER WITH PATROL CAR FOR ASSISTANCE.

ESTIMATED QUANTITIES FOR MAINTAINING TRAFFIC

THE FOLLOWING ESTIMATED QUANTITIES HAVE BEEN INCLUDED IN THE GENERAL SUMMARY TO BE USED AS DIRECTED BY THE ENGINEER FOR MAINTAINING TRAFFIC.

ITEM 614 - MAINTAINING TRAFFIC, AS PER PLAN — LUMP SUM

J:\192622 - Center St Swing Bridge\5.0 Project Data\5.7 Structural\Sheets\Roadway\MOT.dwg 27-Nov-20 12:01 PM

MAINTENANCE OF TRAFFIC (CONT.):

REPLACEMENT SIGNS

FLAT SHEET SIGNS FURNISHED BY THE CONTRACTOR IN ACCORDANCE WITH THE REQUIREMENTS OF THE PLANS, SPECIFICATIONS, AND PROPOSAL WHICH BECOME DAMAGED BY TRAFFIC FOR REASONS BEYOND THE CONTROL OF THE CONTRACTOR SHALL BE REPLACED IN KIND WHEN ORDERED BY THE ENGINEER. REPLACEMENT SIGNS SHALL BE NEW. OTHER MATERIALS MAY BE IN USED, BUT GOOD, CONDITION SUBJECT TO THE APPROVAL OF THE ENGINEER.

PAYMENT FOR THE NEW SIGNS SHALL BE INCLUDED IN THE LUMP SUM BID FOR ITEM 614 - MAINTAINING TRAFFIC, AS PER PLAN, AND SHALL INCLUDE THE COST OF REMOVING AND DISPOSING OF DAMAGED SIGNS, HARDWARE AND SUPPORTS, AND PROVIDING THE NECESSARY REPLACEMENT HARDWARE, SUPPORTS, ETC.

CONTRACTOR'S VEHICLES AND EQUIPMENT

ALL VEHICLES AND EQUIPMENT BELONGING TO THE CONTRACTOR OR THE CONTRACTOR'S WORKERS MUST BE PARKED IN ACCORDANCE WITH CITY REGULATIONS, VEHICLES AND EQUIPMENT MAY NOT BE PARKED IN PRIVATE PARKING LOTS OR OTHER PRIVATE PROPERTY UNLESS WRITTEN APPROVAL OF THE OWNER AND THE ENGINEER HAS BEEN GRANTED. THE CONTRACTOR OR CONTRACTOR'S WORKERS MAY NOT PARK VEHICLES OR EQUIPMENT OR STORE MATERIALS WHERE IT IS DEEMED BY THE ENGINEER TO BE A SAFETY HAZARD; NOR IN MANNER WHICH OBSTRUCTS SIGNS, BARRIERS, BARRICADES, OR OTHER TRAFFIC CONTROL DEVICES OR INTERFERES WITH ACCESS TO ABUTTING PROPERTIES.

PORTABLE CONCRETE BARRIER

CONTRACTOR TO INSTALL PORTABLE CONCRETE BARRIERS AS SHOWN IN THE PLANS OR DIRECTED BY THE ENGINEER, AND ACCORDING TO ODOT RM-4.2 STANDARD DETAIL.

PAYMENT FOR THE PORTABLE CONCRETE BARRIER SHALL BE INCLUDED IN THE LUMP SUM BID FOR ITEM 614 - MAINTAINING TRAFFIC, AS PER PLAN, AND SHALL INCLUDE THE COST OF THE LABOR, EQUIPMENT, MAINTENANCE AND ALL INCIDENTALS REQUIRED TO INSTALL, MAINTAIN AND REMOVE PORTABLE CONCRETE BARRIER.

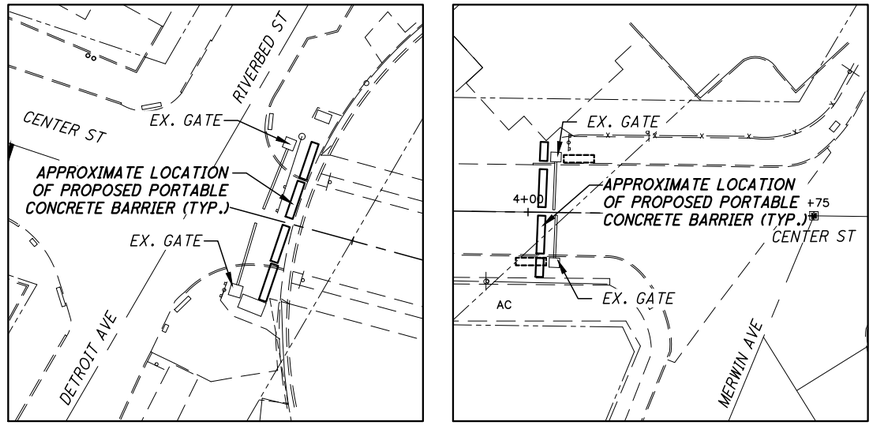

PORTABLE CONCRETE BARRIER INSTALLATION DETAILS
N.T.S.

MAINTENANCE OF TRAFFIC NOTES

CUY-CENTER ST.
SWING BRIDGE

J:\192622 - Center St Swing Bridge\5.0 Project Data\5.7 Structural\Sheets\Roadway\MOT.dwg 27-Nov-20 12:01 PM

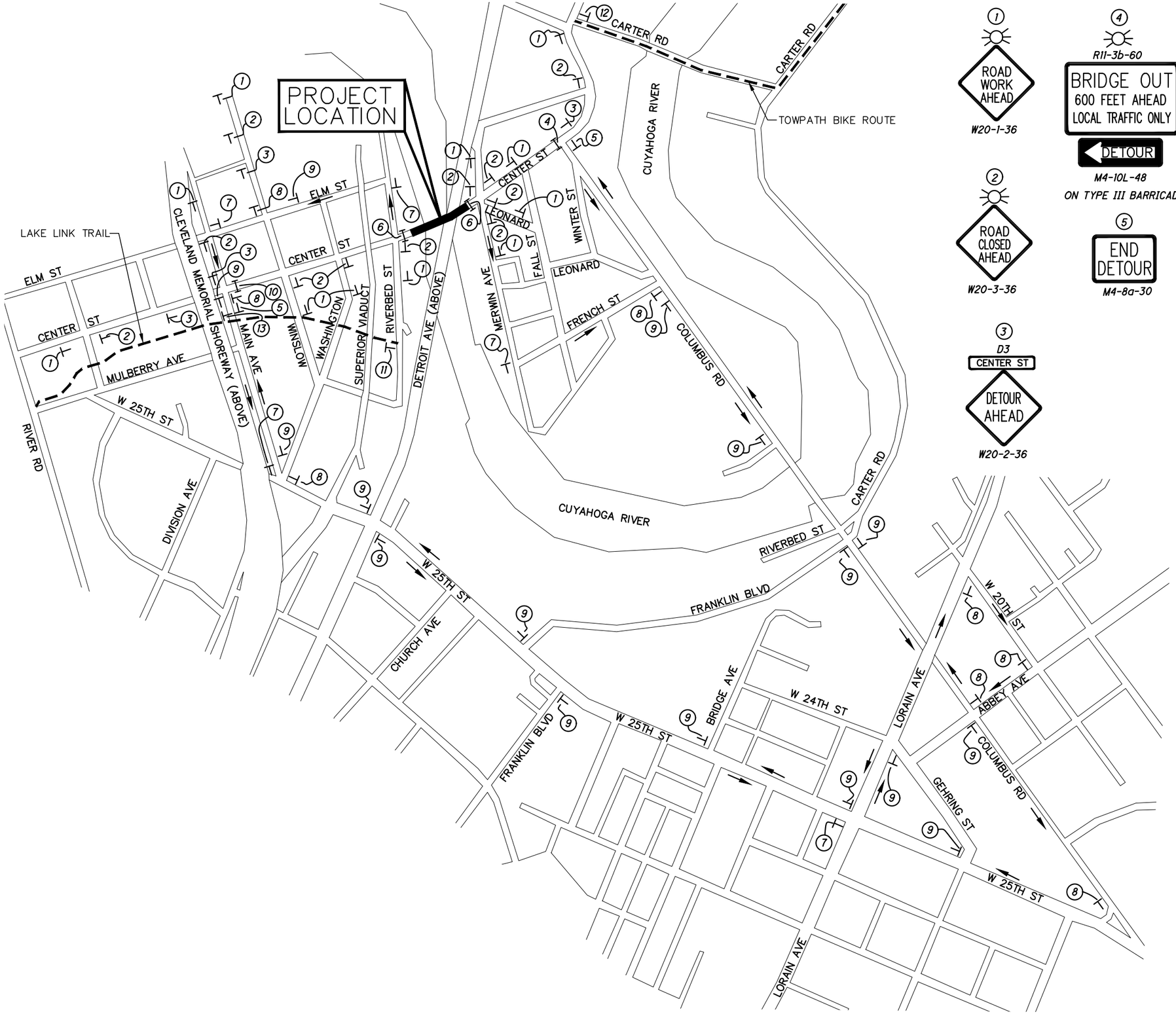

1
ROAD WORK AHEAD
W20-1-36

2
ROAD CLOSED AHEAD
W20-3-36

3
D3
CENTER ST
DETOUR AHEAD
W20-2-36

4
R11-3b-60
BRIDGE OUT
600 FEET AHEAD
LOCAL TRAFFIC ONLY
DETOUR
M4-10L-48
ON TYPE III BARRICADE

5
END DETOUR
M4-8a-30

6
R11-2-48
ROAD CLOSED
DETOUR
M4-10L-48
ON TYPE III BARRICADE

7
D3
CENTER ST
DETOUR
M4-9L-30

8
D3
CENTER ST
DETOUR
M4-9R-30

9
D3
CENTER ST
DETOUR
M4-9S-30

10
R11-3b-60
BRIDGE OUT
900 FEET AHEAD
LOCAL TRAFFIC ONLY
DETOUR
M4-10R-48
ON TYPE III BARRICADE

NOTES:

1. SEE SHEET 8A & 8B FOR DETAILS FOR SIGNS 11 THROUGH 13.
2. CONTRACTOR IS TO COVER "TRAFFIC DOES NOT STOP" SIGNS BELOW STOP SIGNS AT INTERSECTIONS ON EITHER SIDE OF THE CENTER STREET BRIDGE DURING CONSTRUCTION. THIS WORK SHALL BE PAID FOR UNDER ITEM 614 - MAINTAINING TRAFFIC, AS PER PLAN.

0 125 250 500
HORIZONTAL SCALE IN FEET

CALCULATED MM
CHECKED RJW

DETOUR PLAN

CUY-CENTER ST. SWING BRIDGE

J:\192622 - Center St Swing Bridge\5.0 Project Data\5.7 Structural\Sheets\Roadway\MOT.dwg 27-Nov-20 12:01 PM

SIGN #11

(11)

SIGN #12

(12)

NOTES:

1. MANUFACTURER TO LEAVE ROOM ON EACH "SPECIAL" BICYCLE DETOUR SIGN FOR A 8"x8" QR CODE STICKER (SUPPLIED BY THE CLEVELAND METROPARKS). CONTRACTOR/MANUFACTURER TO ATTACH PROVIDED STICKERS ONTO EACH SIGN AS DIRECTED BY THE METROPARKS.
2. SIGNS BACKGROUNDS SHALL BE ORANGE WITH BLACK LETTERING.

0 125 250 500
HORIZONTAL SCALE IN FEET

CALCULATED MM
CHECKED RJW

DETOUR PLAN SIGN DETAILS 1

CUY-CENTER ST. SWING BRIDGE

J:\192622 - Center St Swing Bridge\5.0 Project Data\5.7 Structural\Sheets\Roadway\MOT.dwg 27-Nov-20 12:15 PM

SIGN #13

13

NOTES:

1. *MANUFACTURER TO LEAVE ROOM ON EACH "SPECIAL" BICYCLE DETOUR SIGN FOR A 8"x8" QR CODE STICKER (SUPPLIED BY THE CLEVELAND METROPARKS). CONTRACTOR/MANUFACTURER TO ATTACH PROVIDED STICKERS ONTO EACH SIGN AS DIRECTED BY THE METROPARKS.*
2. *SIGNS BACKGROUNDS SHALL BE ORANGE WITH BLACK LETTERING.*

0 125 250 500
HORIZONTAL SCALE IN FEET

CALCULATED MM
CHECKED RJW

DETOUR PLAN SIGN DETAILS 2

CUY-CENTER ST.
SWING BRIDGE

J:\192622 - Center St Swing Bridge\5.0 Project Data\5.7 Structural\Sheets\Roadway\MOT.dwg 27-Nov-20 12:15 PM

SHEET NUMBER							PARTICIPATION		ITEM	ITEM EXT.	GRAND TOTAL	UNIT	DESCRIPTION	
		4	5	6	12	15	01/BRO/BR	02/BRO/BR						
													ROADWAY	
		25			491		516		202	30000	516	SQ FT	WALK REMOVED	
		10					10		202	32000	10	FOOT	CURB REMOVED	
					47		47		202	32001	47	FOOT	CURB REMOVED, AS PER PLAN	12
					2		2		202	98100	2	EACH	REMOVAL, MISC.: BARRIER REMOVED	12
					2		2		202	98100	2	EACH	REMOVAL, MISC.: WOOD POST REMOVED	12
					14		14		202	98200	14	FOOT	REMOVAL, MISC.: HAND RAIL REMOVED	12
		10					10		203	10000	10	CU YD	EXCAVATION	
		10					10		203	20000	10	CU YD	EMBANKMENT	
					85		85		516	13200	85	SQ FT	½" PREFORMED EXPANSION JOINT FILLER	
		25			491		516		608	13001	516	SQ FT	6" CONCRETE WALK, AS PER PLAN	12
					47		47		609	14001	47	FOOT	CURB, TYPE-2A, AS PER PLAN	12
		10					10		609	26000	10	FOOT	CURB, TYPE 6	
			3				3		623	40900	3	EACH	MONUMENT MISC.: MONUMENT REFERENCING	5
													EROSION CONTROL	
					2		2		659	00100	2	EACH	SOIL ANALYSIS TEST	
		30			280		310		659	00300	310	CY YD	TOPSOIL	
		250			2,525		2,775		659	00500	2,775	SQ YD	SEEDING AND MULCHING, CLASS 1	
					126		126		659	14000	126	SQ YD	REPAIR SEEDING AND MULCHING	
					126		126		659	15000	126	SQ YD	INTER-SEEDING	
					0.35		0.35		659	20000	0.35	TON	COMMERCIAL FERTILIZER	
					0.52		0.52		659	31000	0.52	ACRE	LIME	
					13.98		13.98		659	35000	13.98	M GAL	WATER	
					23		23		659	40000	23	M SQ FT	MOWING	
			7500				7500		832	30001	7500	EACH	EROSION CONTROL, AS PER PLAN	5
													TRAFFIC CONTROL	
						10.75	10.75		630	80100	10.75	SQ FT	SIGN, FLAT SHEET	
						1	1		630	86310	1	EACH	REMOVAL OF STRUCTURE MOUNTED SIGN AND DISPOSAL	
						4	4		630	97700	4	EACH	SIGNING, MISC.: REMOVAL OF BRIDGE/POST MOUNTED SIGN AND REERECTION	15
						4	4		630	97700	4	EACH	SIGNING, MISC.: REMOVAL OF POST MOUNTED SIGN AND DISPOSAL	15
						0.08	0.08		642	00300	0.08	MILE	CENTER LINE, TYPE 1	
						12	12		642	00500	12	FOOT	STOP LINE, TYPE 1	
													MAINTENANCE OF TRAFFIC	
				40			40		614	11110	40	HOUR	LAW ENFORCEMENT OFFICER WITH PATROL CAR FOR ASSISTANCE	6
				2			2		614	18601	2	MONTH	PORTABLE CHANGEABLE MESSAGE SIGN, AS PER PLAN	6
				LUMP			LUMP		614	12421	LUMP	LUMP	DETOUR SIGNING, AS PER PLAN	6
													SEE NEXT SHEET FOR CONTINUATION	

CALCULATED MM
CHECKED RJW

GENERAL SUMMARY

CUY-CENTER ST.
SWING BRIDGE

J:\192622 - Center St Swing Bridge\5.0 Project Data\5.7 Structural\Sheets\Roadway\General Summary.dwg 15-Dec-20 2:36 PM

SHEET NUMBER							PARTICIPATION		ITEM	ITEM EXT.	GRAND TOTAL	UNIT	DESCRIPTION	
					25		01/BRO/BR	02/BRO/BR						
													STRUCTURE 20 FOOT SPAN AND OVER (SFN 1869345)	
					1,028		1,028		202	11305	1,028	SQ YD	PORTIONS OF STRUCTURE REMOVED, AS PER PLAN	S3
					71,324		71.324		202	11401	71,324	POUND	PORTIONS OF STRUCTURE REMOVED, AS PER PLAN	S3
					13		13		202	30601	13	SQ YD	CONCRETE MEDIAN REMOVED, AS PER PLAN	S3
					124		124		202	38501	124	FOOT	BRIDGE RAILING REMOVED, AS PER PLAN	S3
					53		53		512	10050	53	SQ YD	SEALING OF CONCRETE SURFACES (NON-EPOXY)	
					3,738		3,738		513	10200	3,738	POUND	STRUCTURAL STEEL MEMBERS, LEVEL UF	
					65,164		65,164		513	10261	65,164	POUND	STRUCTURAL STEEL MEMBERS, LEVEL 3, AS PER PLAN	S3
					24,833		24,833		513	10320	24,833	POUND	STRUCTURAL STEEL MEMBERS, LEVEL 6	
					8		8		513	95030	8	EACH	STRUCTURAL STEEL, MISC.: INSTALL FLOORBEAM COVER PLATE	S3
					4		4		513	95030	4	EACH	STRUCTURAL STEEL, MISC.: CURB PLATE REPAIR	S4
					6		6		513	95030	6	EACH	STRUCTURAL STEEL, MISC.: STIFFENER REINFORCING PLATE	S3
					LUMP		LUMP		514	00101	LUMP	LUMP	SURFACE PREPARATION OF EXISTING STRUCTURAL STEEL, AS PER PLAN	S4
					LUMP		LUMP		514	00201	LUMP	LUMP	FIELD PAINTING OF EXISTING STRUCTURAL STEEL, PRIME COAT, AS PER PLAN	S4
					LUMP		LUMP		514	00301	LUMP	LUMP	FIELD PAINTING STRUCTURAL STEEL, INTERMEDIATE COAT, AS PER PLAN	S4
					LUMP		LUMP		514	00401	LUMP	LUMP	FIELD PAINTING STRUCTURAL STEEL, FINISH COAT, AS PER PLAN	S4
					264		264		514	00504	264	MAN HR	GRINDING FINS, TEARS, SLIVERS ON EXISTING STRUCTURAL STEEL	
					61		61		514	10000	61	EACH	FINAL INSPECTION REPAIR	
					LUMP		LUMP		514	27800	LUMP	LUMP	FIELD PAINTING, MISC.: PAINTING OF EXISTING OPERATOR'S HOUSE	S5
					40		40		516	14600	40	FOOT	STRUCTURAL JOINT OR JOINT SEALER MISC.: COMPRESSION JOINT SEAL REPLACEMENT	S5
					2		2		516	15000	2	EACH	STRUCTURAL JOINT OR JOINT SEALER MISC.: EAST ABUTMENT MEDIAN EXPANSION JOINT RETROFIT	S5
					LUMP		LUMP		516	47000	LUMP	LUMP	JACKING AND TEMPORARY SUPPORT OF SUPERSTRUCTURE	
					124		124		517	76300	124	FOOT	RAILING, MISC.: EAST APPROACH NEW WYOMING RAIL	S6
					1		1		519	10000	1	SQ YD	PATCHING CONCRETE BRIDGE DECK OVERLAY WITH MICRO-SILICA MODIFIED CONCRETE	S7
					24		24		519	11101	24	SQ FT	PATCHING CONCRETE STRUCTURE, AS PER PLAN	S6
					LUMP		LUMP		SPECIAL	530E00200	LUMP	LUMP	STRUCTURES - RELOCATE OPERATOR'S HOUSE STAIRS	S7
					LUMP		LUMP		SPECIAL	530E00200	LUMP	LUMP	STRUCTURES - COUNTERWEIGHT MODIFICATION	S7
					LUMP		LUMP		SPECIAL	530E00200	LUMP	LUMP	STRUCTURES - WARNING GATE FOUNDATIONS	S8
					100		100		SPECIAL	530E00400	100	EACH	STRUCTURES - REPLACEMENT OF STRUCTURAL FASTENER, AS DIRECTED BY ENGINEER	S6
					8		8		SPECIAL	530E00400	8	EACH	STRUCTURES - REPLACEMENT OF PIVOT PIER ENCLOSURE PANELS	S7
					2,754		2,754		SPECIAL	530E00600	2,754	SQ FT	STRUCTURES - FIBERGLASS OPEN GRID DECK	S7
					3,146		3,146		SPECIAL	530E00600	3,146	SQ FT	STRUCTURES - OPEN GRID STEEL ROADWAY DECK	S6
					2,790		2,790		SPECIAL	530E00600	2,790	SQ FT	STRUCTURES - CONCRETE FILLED GRID STEEL ROADWAY DECK	S6
					10		10		SPECIAL	530E01300	10	FOOT	STRUCTURES - FIELD WELDING, AS DIRECTED BY ENGINEER	S6
					13		13		609	72001	13	SQ YD	CONCRETE MEDIAN, AS PER PLAN	S6
					LUMP		LUMP		SPECIAL	690E91000	LUMP	LUMP	AS-BUILT CONSTRUCTION PLANS	S8
					23		23		847	30201	23	CU YD	FULL DEPTH REPAIR, AS PER PLAN	S8
					LUMP		LUMP		849	10000	LUMP	LUMP	DAMAGE ASSESMENT	
					LUMP		LUMP		849	10700	LUMP	LUMP	STRAIGHTENING DAMAGED MEMBERS	
													SEE NEXT SHEET FOR CONTINUATION	

CALCULATED MM
CHECKED RJW

GENERAL SUMMARY

CUY-CENTER ST.
SWING BRIDGE

J:\192622 - Center St Swing Bridge\5.0 Project Data\5.7 Structural\Sheets\Roadway\General Summary.dwg 27-Nov-20 12:02 PM

SHEET NUMBER							PARTICIPATION		ITEM	ITEM EXT.	GRAND TOTAL	UNIT	DESCRIPTION	
			6	13	25	26	01/BRO/BR	02/BRO/BR						
													ITEMS OF WORK (MECHANICAL)	
						LUMP	LUMP		SPECIAL	690E98400	LUMP	LUMP	MECHANICAL WORK - REHABILITATE SPAN DRIVE MACHINERY	M1
						LUMP	LUMP		SPECIAL	690E98400	LUMP	LUMP	MECHANICAL WORK - REHABILITATE SPAN SUPPORT MACHINERY	M1
						LUMP	LUMP		SPECIAL	690E98400	LUMP	LUMP	MECHANICAL WORK - CLEAN, PAINT, AND LUBRICATE ALL MECHANICAL COMPONENTS	M1
						LUMP	LUMP		SPECIAL	690E98400	LUMP	LUMP	MECHANICAL WORK - SPAN BALANCE	M1
						LUMP		LUMP	SPECIAL	690E98400	LUMP	LUMP	MECHANICAL WORK - MECHANICAL SPARE PARTS	M1
						LUMP	LUMP		SPECIAL	690E98400	LUMP	LUMP	MECHANICAL WORK - END FLOORBEAM REPLACEMENT	M1
													ELECTRICAL	
						LUMP	LUMP		SPECIAL	690E98400	LUMP	LUMP	ELECTRICAL WORK - REPLACE EAST MOTOR CONTROL CENTER	E4
						LUMP	LUMP		SPECIAL	690E98400	LUMP	LUMP	ELECTRICAL WORK - REHABILITATE WEST MOTOR CONTROL CENTER	E4
						LUMP	LUMP		SPECIAL	690E98400	LUMP	LUMP	ELECTRICAL WORK - REPLACE NAVIGATIONAL LIGHTS	E4
						LUMP	LUMP		SPECIAL	690E98400	LUMP	LUMP	ELECTRICAL WORK - REPLACE PANELBOARDS	E4
						LUMP	LUMP		SPECIAL	690E98400	LUMP	LUMP	ELECTRICAL WORK - REPLACE FIRE ALARM SYSTEM	E4
						LUMP	LUMP		SPECIAL	690E98400	LUMP	LUMP	ELECTRICAL WORK - INSTALL SIDEWALK LIGHTING	E4
						LUMP	LUMP		SPECIAL	690E98400	LUMP	LUMP	ELECTRICAL WORK - RELOCATE TRANSFORMER	E4
						LUMP	LUMP		SPECIAL	690E98400	LUMP	LUMP	ELECTRICAL WORK - REPLACE HVAC UNIT	E4
						LUMP	LUMP		SPECIAL	690E98400	LUMP	LUMP	ELECTRICAL WORK - FINAL ACCEPTANCE TESTING	E4
						LUMP		LUMP	SPECIAL	690E98400	LUMP	LUMP	ELECTRICAL WORK - ELECTRICAL SPARE PARTS	E4
						LUMP	LUMP		SPECIAL	690E98400	LUMP	LUMP	ELECTRICAL WORK - END FLOORBEAM REPLACEMENT	E4
						LUMP	LUMP		SPECIAL	690E98400	LUMP	LUMP	ELECTRICAL WORK - REPLACE EAST TRAFFIC TREE	E4
						LUMP	LUMP		SPECIAL	690E98400	LUMP	LUMP	ELECTRICAL WORK - REPLACE WARNING GATES	E4
						LUMP		LUMP	SPECIAL	690E98400	LUMP	LUMP	ELECTRICAL WORK - ELECTRICAL SPARE PARTS WARNING GATE	E4
													INCIDENTALS	
						LUMP	LUMP		108	10000	LUMP	LUMP	CPM PROGRESS SCHEDULE	
			LUMP				LUMP		614	11001	LUMP	LUMP	MAINTAINING TRAFFIC, AS PER PLAN	6
						15	15		619	16020	15	MONTH	FIELD OFFICE, TYPE C	
						LUMP	LUMP		623	10000	LUMP	LUMP	CONSTRUCTION LAYOUT STAKES AND SURVEYING	
						LUMP	LUMP		624	10000	LUMP	LUMP	MOBILIZATION	

CALCULATED MM
CHECKED RJW

GENERAL SUMMARY

CUY-CENTER ST.
SWING BRIDGE

J:\192622 - Center St Swing Bridge\5.0 Project Data\5.7 Structural\Sheets\Roadway\General Summary.dwg 27-Nov-20 12:02 PM

NOTES:

ITEM 202 - CURB REMOVED, AS PER PLAN

THE WORK INCLUDES SAWCUTTING THE EXISTING PAVEMENT AS SHOWN IN THE PLANS AND/OR DIRECTED BY THE ENGINEER AND REMOVAL OF ASSOCIATED CURB.

PAYMENT SHALL BE AT THE UNIT PRICE BID PER FOOT FOR ITEM 202 - CURB REMOVED, AS PER PLAN WHICH PRICE SHALL INCLUDE ALL LABOR, EQUIPMENT AND ALL INCIDENTALS REQUIRED TO REMOVE THE CURB.

ITEM 202 - REMOVAL, MISC.: BARRIER REMOVED

THIS WORK CONSISTS OF REMOVING AND DISPOSING OF EXISTING CONCRETE PORTABLE BARRIER, AS SHOWN IN THE PLANS AND/OR DIRECTED BY THE ENGINEER.

PAYMENT SHALL BE AT THE UNIT PRICE BID PER EACH FOR ITEM 202 - REMOVAL, MISC.: BARRIER REMOVED WHICH PRICE SHALL INCLUDE ALL LABOR, EQUIPMENT AND ALL INCIDENTALS REQUIRED TO REMOVE AND DISPOSE PORTABLE CONCRETE BARRIER.

ITEM 202 - REMOVAL, MISC.: HAND RAIL REMOVED

THIS WORK CONSISTS OF REMOVING THE HAND RAIL AS SHOWN IN THE PLANS OR DIRECTED BY THE ENGINEER. RAIL SHOULD BE REMOVED AT THE NEAREST POST OUTSIDE THE LIMITS SHOWN IN THE PLANS, UNLESS OTHERWISE REQUESTED BY THE ENGINEER. CONTRACTOR IS TO CUT AND GRIND PEDESTRIAN RAIL ANCHOR BOLTS FLUSH WITH THE TOP OF THE CONCRETE.

PAYMENT SHALL BE AT THE UNIT PRICE BID PER FOOT FOR ITEM 202 - REMOVAL, MISC.: HAND RAIL REMOVED WHICH PRICE SHALL INCLUDE ALL LABOR, EQUIPMENT AND ALL INCIDENTALS REQUIRED TO REMOVE THE HAND RAIL AND ITS DISPOSAL.

ITEM 202 - REMOVAL, MISC.: WOOD POST REMOVED

THIS WORK CONSISTS OF REMOVING AND DISPOSAL OF 8" SQUARE WOOD POST AT THE LOCATION SHOWN IN THE PLANS, UNLESS OTHERWISE DIRECTED BY THE ENGINEER. CONTRACTOR SHALL ALSO CUT EXISTING CHAIN FLUSH WITH THE POST FACE OF TO THE FIRST POST TO REMAIN.

PAYMENT SHALL BE AT THE UNIT PRICE BID PER EACH FOR ITEM 202 - REMOVAL, MISC.: WOOD POST REMOVED WHICH PRICE SHALL INCLUDE ALL LABOR, EQUIPMENT AND ALL INCIDENTALS REQUIRED TO REMOVE THE POST, CUT AND REMOVE THE CHAIN AND DISPOSAL.

ITEM 608 - 6" CONCRETE WALK, AS PER PLAN

THIS WORK CONSISTS OF INSTALLING A 6" MINIMUM CONCRETE WALK ON TOP OF A 2" COMPACTED SCREENING BED WHICH MEETS THE REQUIREMENTS OF 703.10 (LIMITED TO CRUSHED STONE), AS SHOWN IN THE PLANS AND/OR DIRECTED BY THE ENGINEER.

PAYMENT SHALL BE AT THE UNIT PRICE BID PER SQUARE FOOT FOR ITEM 608 - 6" CONCRETE WALK, AS PER PLAN WHICH PRICE SHALL INCLUDE ALL LABOR, MATERIALS, EQUIPMENT AND ALL INCIDENTALS REQUIRED TO PLACE AND COMPACT SCREENINGS BED, LAYOUT AND FORM WORK AND INSTALL A NEW CONCRETE WALK.

ITEM 609 - CURB, TYPE-2A, AS PER PLAN

IN ADDITION TO WHAT IS REQUIRED IN ITEM 609, CONTRACTOR IS TO INSTALL A BUTT JOINT PER ODOT SCD BP-2.1 AND BP-5.1.

PAYMENT SHALL BE AT THE UNIT PRICE BID PER FOOT FOR ITEM 609 - CURB, TYPE-2A, AS PER PLAN WHICH PRICE SHALL INCLUDE ALL LABOR, MATERIALS, EQUIPMENT AND ALL INCIDENTALS REQUIRED TO INSTALL A CONCRETE CURB.

REFERENCE NO.	SHEET NO.	STATION FROM	STATION TO	SIDE	202 WALK REMOVED (SQ FT)	202 CURB REMOVED, AS PER PLAN (FOOT)	202 REMOVAL, MISC.: BARRIER REMOVED (EACH)	202 REMOVAL, MISC.: HAND RAIL REMOVED (FOOT)	202 REMOVAL, MISC.: WOOD POST REMOVED (EACH)	516 ½" PREFORMED EXPANSION JOINT FILLER (SQ FT)	608 6" CONCRETE WALK, AS PER PLAN (SQ FT)	609 CURB, TYPE-2A, AS PER PLAN (FOOT)	NOTES
C-1	13	3+46	3+68	RT									INCLUDED IN STRUCTURE QUANTITIES, SEE SHEET 25
C-2	13	3+49	3+70	LT									INCLUDED IN STRUCTURE QUANTITIES, SEE SHEET 25
SW-1	13	3+46	3+68	RT	70					22	70		
SW-2	13	3+49	3+70	LT	89					11	89		
ADD ALTERNATE 1:													
R-1	13	4+13		LT			1						
R-2	13	4+01		RT			1						
R-3	13	4+09	4+18	LT					2				
R-4	13	4+07	4+21	RT				14					
C-3	13	3+68	4+15	RT		47						47	
SW-3	13	3+68	4+15	RT	282					47	282		
SW-4	13	4+03	4+13	LT	50					5	50		
TOTALS CARRIED TO GENERAL SUMMARY					491	47	2	14	2	85	491	47	

ITEM 659 - EROSION CONTROL QUANTITIES

SOIL ANALYSIS TESTS		2 EACH
SEEDING AND MULCHING	STAGING AREA (PLANIMETERED)	2,525 SQ YD
TOPSOIL	$\frac{111 \text{ CY YD}}{1{,}000 \text{ SQ YD OF SEEDING}} \times 2{,}525 \text{ SQ YD}$	280 CY YD
COMMERCIAL FERTILIZER	$\frac{1 \text{ TON}}{7{,}410 \text{ SQ YD OF SEEDING}} \times 2{,}525 \text{ SQ YD} + \frac{1 \text{ TON}}{11{,}110 \text{ SQ YD OF SEEDING}} \times 126 \text{ SQ YD}$	0.35 TON
LIME	$\frac{9}{43{,}560} \times 2{,}525 \text{ SQ YD}$	0.52 ACRE
INTER-SEEDING	$\frac{5}{100} \times 2{,}525 \text{ SQ YD}$	126 SQ YD
REPAIR SEEDING AND MULCHING	$\frac{5}{100} \times 2{,}525 \text{ SQ YD}$	126 SQ YD
WATER	$\frac{2 \times .0027 \text{ M GAL}}{1 \text{ SQ YD OF SEEDING}} \times 2{,}525 \text{ SQ YD} + \frac{.0027 \text{ M GAL}}{1 \text{ SQ YD OF SEEDING}} \times 126 \text{ SQ YD}$	13.98 M GAL
MOWING	$\frac{9 \text{ SQ FT}}{1 \text{ SQ YD}} \times \frac{1 \text{ M SQ FT}}{1000 \text{ SQ FT}} \times 2{,}525 \text{ SQ YD}$	23 M SQ FT
QUANTITIES CARRIED TO GENERAL SUMMARY		

CALCULATED MM
CHECKED RJW

ESTIMATED QUANTITIES & GENERAL NOTES

CUY-CENTER ST.
SWING BRIDGE

J:\192622 - Center St Swing Bridge\5.0 Project Data\5.7 Structural\Sheets\Roadway\Estimated Quantities & Notes.dwg 27-Nov-20 12:02 PM

NOTES:

1. ACTUAL SIDEWALK REMOVAL LIMITS TO BE TO THE NEAREST JOINT OUTSIDE THE LIMITS IDENTIFIED ON THE PLANS, OR AS DIRECTED BY THE ENGINEER.

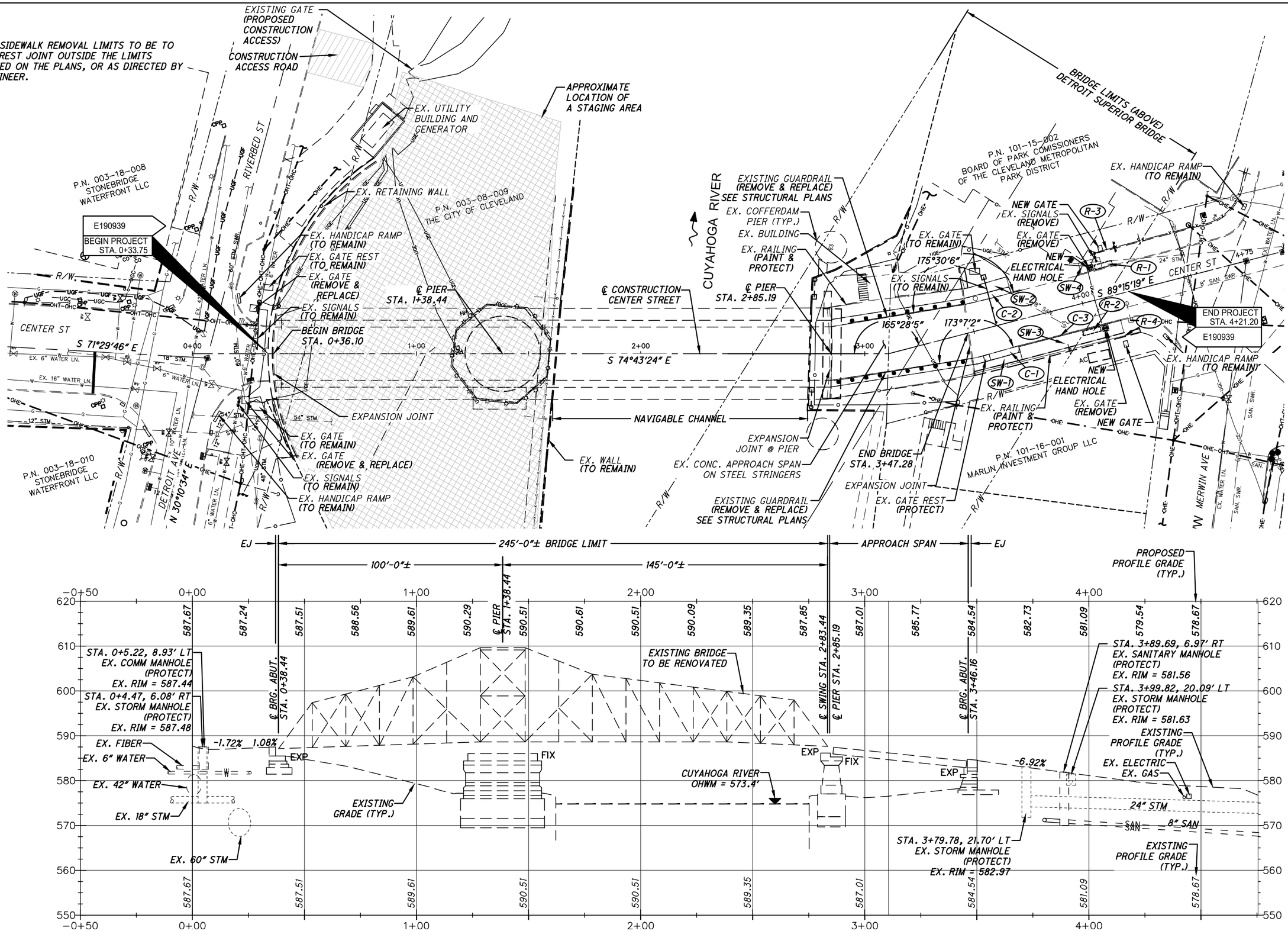

HORIZONTAL SCALE IN FEET 0 10 20 40

CALCULATED RJW
CHECKED MM

PLAN AND PROFILE STA. 0+00 TO STA. 4+75

CUY-CENTER ST. SWING BRIDGE

J:\192622 - Center St Swing Bridge\5.0 Project Data\5.7 Structural\Sheets\Roadway\Plan and Profile.dwg 27-Nov-20 12:02 PM

SEEDING	
END WIDTH	SQ. YDS.

END AREA		VOLUME	
CUT	FILL	CUT	FILL

CALCULATED MM
CHECKED RJW

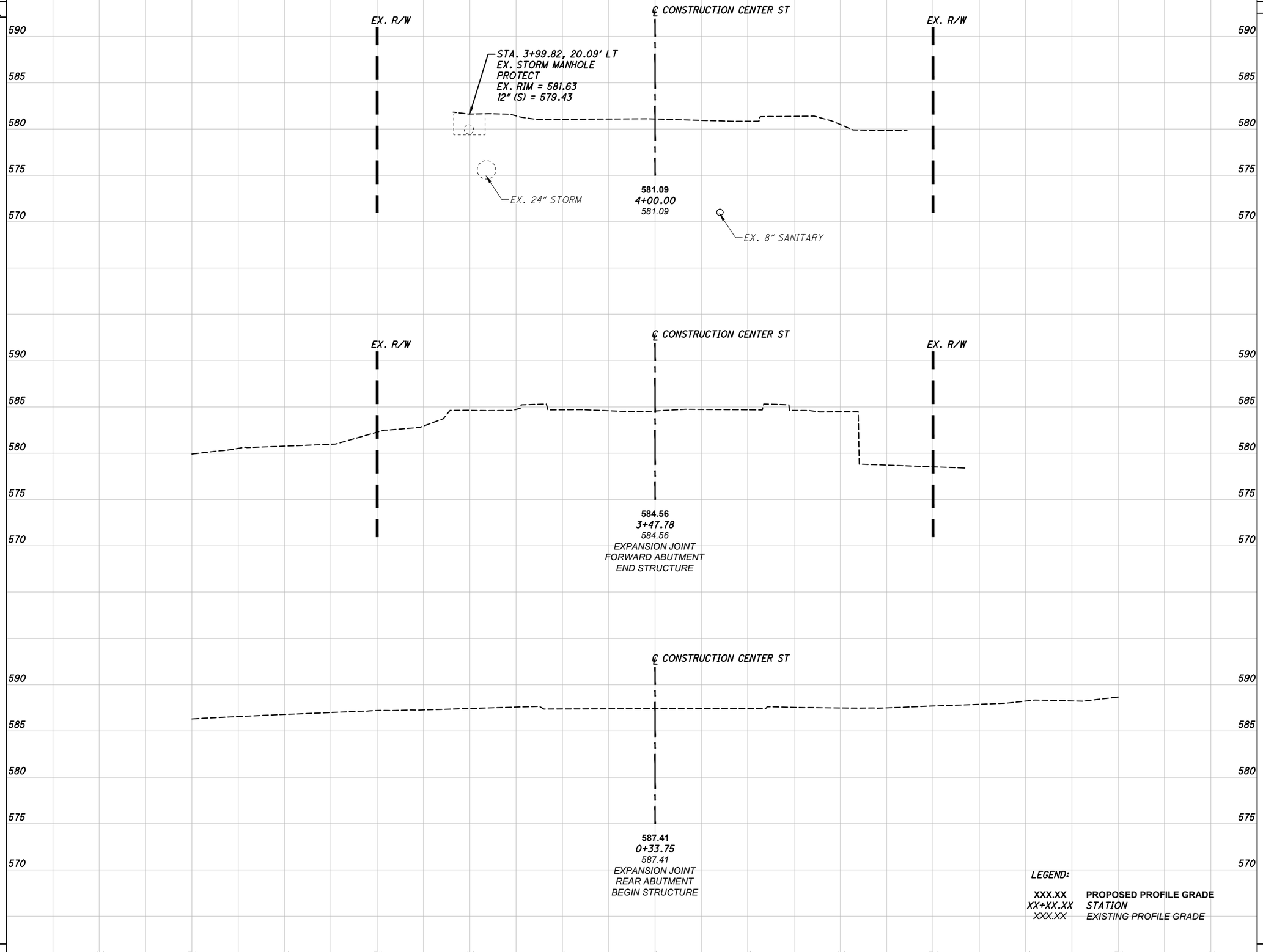

CROSS SECTIONS - CENTER STREET
STA. 0+33.76 TO STA. 4+00.00

CUY-CENTER ST. SWING BRIDGE

J:\192622 - Center St Swing Bridge\5.0 Project Data\5.7 Structural\Sheets\Roadway\X_Sections.dwg 27-Nov-20 12:02 PM

NOTES:

ITEM 630 - SIGNING, MISC.: REMOVAL OF BRIDGE/ POST MOUNTED SIGN AND REERECTION

THIS WORK CONSISTS OR REMOVING, STORING AND REERECTING THE BRIDGE MOUNTED SIGN. NEW HARDWARE MAY BE REQUIRED TO PROPERLY INSTALL THE SIGN. ALL WORK SHALL BE DONE TO THE ENGINEER'S APPROVAL.

PAYMENT SHALL BE AT THE UNIT PRICE BID PER EACH FOR ITEM 630 - SIGNING, MISC.: REMOVAL OF BRIDGE MOUNTED SIGN AND REERECTION WHICH PRICE SHALL INCLUDE ALL MATERIALS, LABOR, EQUIPMENT, STORAGE AND OTHER INCIDENTALS NEEDED TO REMOVE THE SIGN AND REERECTION.

ITEM 630 - SIGNING, MISC.: REMOVAL OF POST MOUNTED SIGN AND DISPOSAL

THIS WORK CONSISTS OF REMOVING OF THE POST MOUNTED SIGN AND ITS DISPOSAL, AS DIRECTED BY THE ENGINEER AND TO THE ENGINEER'S APPROVAL.
THE POST ITSELF IS TO REMAIN AND BE PROTECTED DURING CONSTRUCTION.
CONTRACTOR TO COORDINATE WITH THE CITY IF ANY OF THESE SIGNS SHOULD BE RETURNED TO THEM IN LIEU OF DISPOSAL.

PAYMENT SHALL BE AT THE UNIT PRICE BID PER EACH FOR ITEM 630 - SIGNING, MISC.: REMOVAL OF POST MOUNTED SIGN AND DISPOSAL WHICH PRICE SHALL INCLUDE ALL LABOR, EQUIPMENT, DISPOSAL AND OTHER INCIDENTALS NEEDED TO REMOVE THE SIGN AND DISPOSAL.

SHEET NO.	REFERENCE NO.	LOCATION	STATION	SIDE	CODE	SIZE (INCHES)	630				NOTES
							SIGN, FLAT SHEET	SIGNING, MISC.: REMOVAL OF BRIDGE/ POST MOUNTED SIGN AND REERECTION	REMOVAL OF STRUCTURE MOUNTED SIGN AND DISPOSAL	SIGNING, MISC.: REMOVAL OF POST MOUNTED SIGN AND DISPOSAL	
						W X H	SQ FT	EACH	EACH	EACH	
16	S-1	CENTER STREET	2+16	LT	-	96 X 20		1			PROTECT EXISTING BRIDGE ATTACHMENT FOR REUSE
16	S-2	CENTER STREET	0+30	LT	-						EXISTING TO REMAIN
16	S-3	CENTER STREET	0+40	LT	-			1		2	PROTECT EXISTING POST FOR REUSE
16	S-4	CENTER STREET	0+40	LT	-	18 X 8					EXISTING TO BE REERECTED, SEE S-3
					W8-5	30 x 30	6.25				
					W8-10P	18 x 24	3.00				
16	S-5	CENTER STREET	4+31	LT	-					1	
16	S-6	CENTER STREET	4+55	LT	-						EXISTING TO REMAIN
16	S-7	CENTER STREET	4+84	LT	-						EXISTING TO REMAIN
16	S-8	CENTER STREET	0-40	RT	-						EXISTING TO REMAIN
16	S-9	CENTER STREET	0+09	RT	-						EXISTING TO REMAIN
16	S-10	CENTER STREET	2+16	RT	-	96 X 20		1			PROTECT EXISTING BRIDGE ATTACHMENT FOR REUSE
16	S-11	CENTER STREET	0+40	RT	-					1	PROTECT EXISTING POST FOR REUSE
16	S-12	CENTER STREET	2+68±	RT	R7-1D	12 X 18	1.50				
					-	12 X 18					EXISTING TO BE REERECTED, SEE S-13
16	S-13	CENTER STREET	2+68±	RT	-			1	1		PROTECT EXISTING BRIDGE ATTACHMENT FOR REUSE
16	S-14	CENTER STREET	3+90	RT	-						EXISTING TO REMAIN AND BE PROTECTED
16	S-15	CENTER STREET	4+19	RT	-						EXISTING TO REMAIN
16	S-16	CENTER STREET	4+92	RT	-						EXISTING TO REMAIN
TOTALS CARRIED TO GENERAL SUMMARY							10.75	4	1	4	

SHEET NO.	REFERENCE NO.	LOCATION	STATION		SIDE	642	642
						CENTER LINE (SOLID DOUBLE), YELLOW	STOP LINE, WHITE
			FROM	TO		MILE	FOOT
16	CL-1	CENTER STREET	0+15	4+31	℄	0.079	
16	SL-1	CENTER STREET	4+31		LT		12
TOTALS CARRIED TO GENERAL SUMMARY						0.08	12

CALCULATED MM
CHECKED RJW

TRAFFIC CONTROL SUBSUMMARY, DETAILS AND NOTES

CUY-CENTER ST. SWING BRIDGE

J:\192622 - Center St Swing Bridge\5.0 Project Data\5.7 Structural\Sheets\Roadway\Traffic Control Subsummary & Notes.dwg 27-Nov-20 12:02 PM

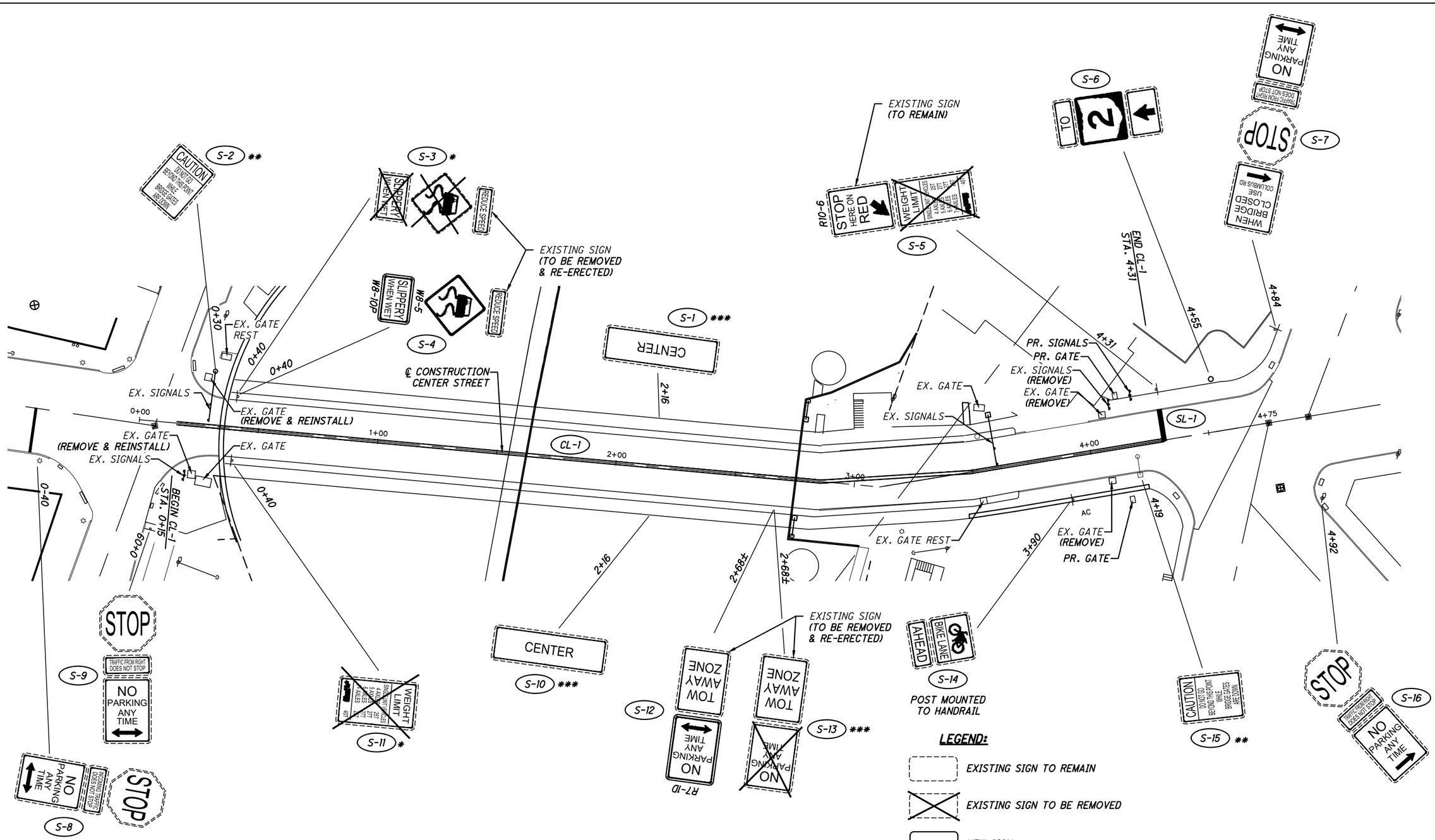

NOTES:

1. BASE BID DOES NOT INCLUDE GATES AND SIGNALS WORK. REMOVAL OF EXISTING GATES AND SIGNALS, AS WELL AS INSTALLATION OF NEW ONES IS SHOWN HERE FOR INFORMATION ONLY AS PART OF ADD ALTERNATE 1 WORK. SEE ELECTRICAL PLANS FOR DETAILS.

LEGEND:

- EXISTING SIGN TO REMAIN
- EXISTING SIGN TO BE REMOVED
- NEW SIGN
- (S-X) SIGN IDENTIFICATION NUMBER
- (CL-X) PAVEMENT MARKING: CENTERLINE, DOUBLE YELLOW
- (SL-X) PAVEMENT MARKING: STOP LINE, WHITE

* INDICATES SIGN AND POST ARE MOUNTED TO STRUCTURE
** INDICATES SIGN IS MOUNTED TO EXISTING UTILITY POLE
*** INDICATES SIGN IS MOUNTED DIRECTLY TO THE STRUCTURE

N

0 10 20 40
HORIZONTAL SCALE IN FEET

CALCULATED MM
CHECKED RJW

TRAFFIC CONTROL PAVEMENT MARKING AND SIGNING PLAN

CUY-CENTER ST. SWING BRIDGE

J:\192622 – Center St Swing Bridge\5.0 Project Data\5.7 Structural\Sheets\Roadway\Traffic Control.dwg 27-Nov-20 12:02 PM

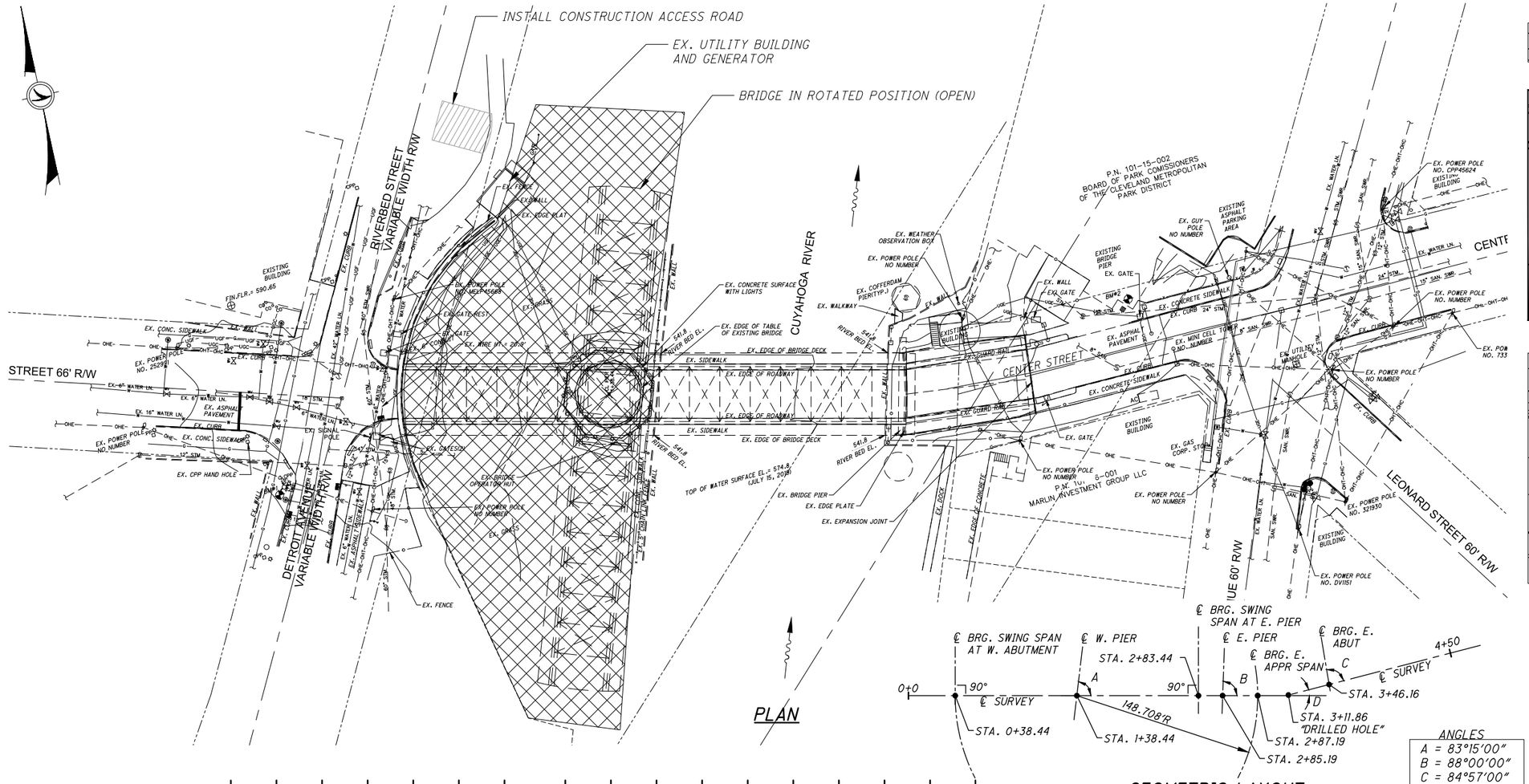

ANGLES
A = 83°15'00"
B = 88°00'00"
C = 84°57'00"
D = 14°33'50"

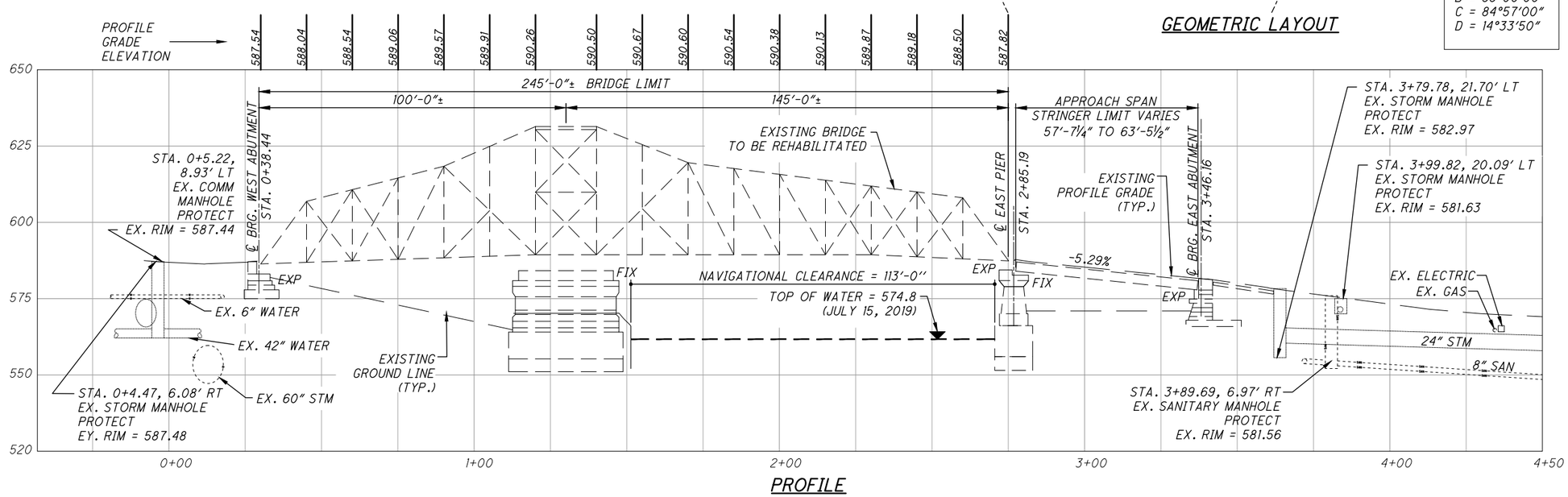

PROFILE

EXISTING STRUCTURE

SUBSTRUCTURE: REINFORCED CONCRETE PIERS, MASONRY ABUTMENTS WITH CONCRETE CAPS
CENTER SWING SPAN DECK: OPEN AND CONCRETE FILLED STEEL GRID DECK
APPROACH SPAN: REINFORCED CONCRETE DECK ON STEEL BEAMS
APPROACH SLAB: 25' E
WEARING SURFACE: 1" MONOLITHIC CONCRETE
ROADWAY: 24' F TO F CURB & TWO 5'-2" SIDEWALKS
ALIGNMENT: TANGENT
SUPERELEVATION: NONE
DATE BUILT: 1901
STRUCTURE FILE NO.: 1869345
SKEW: 0°0'0"
LOADING: HS 20 (CASE II) AND ALTERNATE MILITARY LOADING

PROPOSED STRUCTURE

PROPOSED WORK: REPLACEMENT OF RIVER SPAN ROADWAY STRINGERS, ROADWAY DECK, SIDEWALK DECK, AND MINOR MECHANICAL AND ELECTRICAL IMPROVEMENTS.
APPROACH SLAB: 20' E
ROADWAY: 24' F TO F CURB & TWO 5'-2" SIDEWALKS
ALIGNMENT: TANGENT
SUPERELEVATION: NONE
SKEW: 0°0'0"
LOADING: HS 20 (CASE II) AND ALTERNATE MILITARY LOADING
LATITUDE: 41°29'38"
LONGITUDE: 81°42'12"

DESIGN AGENCY
WSP
1660 WEST 2ND STREET SUITE 850
CLEVELAND, OHIO 44113

DATE	REVIEWED	DRAWN	DESIGNED	CHECKED
09/11/20	WRW	KHN	KHN	NRF

STRUCTURE FILE NUMBER 1869345
REVISED ---

SITE PLAN

CITY OF CLEVELAND BRIDGE NO. 1:003M
CENTER STREET SWING BRIDGE OVER THE CUYAHOGA RIVER

CUY-CENTER ST. SWING BRIDGE
PID NO: 109597

STANDARD DRAWINGS AND SUPPLEMENTAL SPECIFICATIONS

THE FOLLOWING SUPPLEMENTAL SPECIFICATIONS ARE REFERENCED IN THE PLANS:

SUPPLEMENTAL SPEC 800	DATED	7/17/20
SUPPLEMENTAL SPEC 832	DATED	10/19/18
SUPPLEMENTAL SPEC 847	DATED	1/20/17
SUPPLEMENTAL SPEC 849	DATED	1/18/13

DESIGN SPECIFICATIONS

THE NEW DESIGN ON THIS STRUCTURE CONFORMS TO THE AMERICAN ASSOCIATION OF STATE HIGHWAY AND TRANSPORTATION OFFICIALS LRFD BRIDGE DESIGN SPECIFICATIONS, 8TH EDITION, INCLUDING ALL INTERIM SPECIFICATIONS, AND THE 2020 ODOT BRIDGE DESIGN MANUAL WITH 01-17-20 INTERIMS.

REFERENCE SHALL BE MADE TO ODOT'S CONSTRUCTION AND MATERIAL SPECIFICATION (CMS), DATED JANUARY 18, 2019.

DESIGN LOADING

HL93 OR THE ALTERNATE MILITARY LOADING WITH NO FUTURE WEARING SURFACE FOR TRUSS ROADWAY FRAMING.
HS20 FOR STEEL ROADWAY GRID DECK.
HS20 OR THE ALTERNATE MILITARY LOADING FOR THE TRUSS COMPONENTS.

DESIGN STRESSES

CONCRETE CLASS QC2 - 4500 PSI COMPRESSIVE STRENGTH

STRUCTURAL STEEL - ASTM A709 GRADE 50
YIELD STRENGTH 50 KSI
REINFORCING STEEL - ASTM A615 GRADE 60
YIELD STRENGTH 60 KSI

EXISTING STRUCTURE VERIFICATION

DETAILS AND DIMENSIONS SHOWN ON THESE PLANS PERTAINING TO THE EXISTING STRUCTURE HAVE BEEN OBTAINED FROM PLANS OF THE EXISTING STRUCTURE AND/OR FIELD OBSERVATIONS AND MEASUREMENTS. CONSEQUENTLY, THEY ARE INDICATIVE OF THE EXISTING STRUCTURE AND THE PROPOSED WORK, BUT THEY SHALL BE CONSIDERED TENTATIVE AND APPROXIMATE. IT IS THE INTENT OF THESE PLANS THAT THE PROPOSED ADDITIONS TO THE STRUCTURE MATCH THE EXISTING CONDITIONS. THE CONTRACTOR IS REFERRED TO CMS SECTIONS 102.05, 105.02 AND 513.04.

BASE CONTRACT BID PRICES UPON A RECOGNITION OF THE UNCERTAINTIES DESCRIBED ABOVE AND UPON A PREBID EXAMINATION OF THE EXISTING STRUCTURE. HOWEVER, THE DEPARTMENT WILL PAY FOR ALL PROJECT WORK BASED UPON ACTUAL DETAILS AND DIMENSIONS THAT HAVE BEEN VERIFIED IN THE FIELD.

ENVIRONMENTAL COMMITMENT DATA

THE PROJECT IS LOCATED WITHIN THE KNOWN HABITAT RANGES OF THE FEDERALLY LISTED AND PROTECTED INDIANA BAT AND NORTHERN LONG-EARED BAT. THE CONTRACTOR SHALL NOT REMOVE TREES UNDER THIS PROJECT FROM APRIL 1 THROUGH SEPTEMBER 30. ALL NECESSARY TREE REMOVAL SHALL OCCUR FROM OCTOBER 1 THROUGH MARCH 31. THE CONTRACTOR SHALL DEMARCATE CLEARING LIMITS IN THE FIELD TO AVOID ANY UNAUTHORIZED TREE CLEARING. THIS REQUIREMENT IS NECESSARY TO AVOID AND MINIMIZE IMPACTS TO THESE SPECIES AS REQUIRED BY THE ENDANGERED SPECIES ACT. FOR THE PURPOSES OF THIS NOTE, A TREE IS DEFINED AS A LIVE, DYING, OR DEAD WOODY PLANT, WITH A TRUNK THREE INCHES OR GREATER IN DIAMETER AT A HEIGHT OF 4.5 FEET ABOVE THE GROUND SURFACE, AND WITH A MINIMUM HEIGHT OF 13 FEET.

A LICENSED ASBESTOS HAZARD EVALUATION SPECIALIST INSPECTED THE STRUCTURE SCHEDULED FOR DEMOLITION AND/OR REHABILITATION; THE ASBESTOS INSPECTION DETERMINED THAT ASBESTOS IS PRESENT ON THE CUY-CENTER STREET SWING BRIDGE (ROOF AREA OF THE GATEMAN'S HOUSE) IN EXCESS OF THE ALLOWABLE REGULATORY LIMITS AND REQUIRES ABATEMENT. THE CONTRACTOR SHALL ENSURE THAT THE ABATEMENT, TRANSPORT, AND DISPOSAL OF ASBESTOS CONTAINING MATERIAL IS CONDUCTED IN ACCORDANCE WITH ALL FEDERAL, STATE AND LOCAL REGULATIONS. THE CONTRACTOR WILL ENSURE THAT ALL DOCUMENTATION RELATED TO THE ABATEMENT, TRANSPORT AND DISPOSAL OF ASBESTOS CONTAINING MATERIALS IS SUBMITTED TO THE PROJECT ENGINEER OR DISTRICT ENVIRONMENTAL STAFF FOR RECORD KEEPING WITHIN 2 WEEKS OF COMPLETION. THE CONTRACTOR SHALL SUBMIT ELECTRONICALLY TO OEPA A COMPLETED NOTIFICATION OF DEMOLITION & RENOVATION FORM (NDRF) AND APPLICABLE FEES ALONG WITH THE ASBESTOS SURVEY REPORT. THE COMPLETED NDRF MUST BE SUBMITTED TO OEPA AT LEAST 10 DAYS PRIOR TO DEMOLITION AND/OR RENOVATION ACTIVITY. THE CONTRACTOR IS RESPONSIBLE FOR RETAINING AN ELECTRONIC COPY OF THE NDRF (IN PDF FORM) FOR SUBMISSION TO THE DISTRICT ENVIRONMENTAL STAFF AND ONE HARD COPY TO THE PROJECT ENGINEER. THE CONTRACTOR MAY ELECT TO SUBMIT A HARD COPY OF THE COMPLETED NDRF AND PAYMENT ALONG WITH THE ASBESTOS SURVEY REPORT TO THE FOLLOWING: ASBESTOS PROGRAM OHIO EPA, DAPC PO BOX 1049 COLUMBUS, OHIO 43216-1049 OR ASBESTOS PROGRAM OHIO EPA, DAPC 50 W. TOWN STREET, SUITE 700 COLUMBUS, OHIO 43215 IF THE CONTRACTOR ELECTS TO SUBMIT A HARD COPY TO OEPA THEY ARE RESPONSIBLE FOR RETAINING A HARD COPY OF THE NDRF FOR SUBMISSION TO THE DISTRICT ENVIRONMENTAL STAFF AND ONE HARD COPY TO THE PROJECT ENGINEER. THE COMPLETED NDRF MUST BE SUBMITTED TO OEPA AT LEAST 10 DAYS PRIOR TO DEMOLITION AND/OR RENOVATION ACTIVITY.

NOTIFICATION

IN THE EVENT THAT A BRIDGE OPERATOR IS NEEDED DURING CONSTRUCTION, THE CONTRACTOR IS TO NOTIFY THE CITY 48 HOURS IN ADVANCE. THE CONTRACTOR SHALL NOTIFY IN WRITING THE FOLLOWING AGENCIES AT LEAST 2 WEEKS PRIOR TO THE START OF CONSTRUCTION, AND AT LEAST 7 DAYS BEFORE IMPLEMENTING ANY SUBSTANTIAL CHANGE IN TRAFFIC PATTERN OR CLOSING ANY STREET TO TRAFFIC:

THE OHIO DEPARTMENT OF TRANSPORTATION
DISTRICT 12 PUBLIC INFORMATION OFFICE
PHONE: (216) 584-2006

THE CUYAHOGA COUNTY DEPARTMENT OF PUBLIC WORKS
PUBLIC INFORMATION OFFICE
PHONE: (216) 384-3824

THE CITY OF CLEVELAND:
DIVISION OF ENGINEERING AND CONSTRUCTION
PHONE: (216) 664-2381
DIVISION OF STREETS
PHONE: (216) 664-2150
DIVISION OF TRAFFIC ENGINEERING
PHONE: (216) 664-3194

THE CITY OF CLEVELAND DEPARTMENT OF PUBLIC SAFETY:
DIVISION OF EMERGENCY MEDICAL SERVICES (EMS)
PHONE: (216) 664-2099
DIVISION OF FIRE
PHONE: (216) 664-6356
DIVISION OF POLICE
PHONE: (216) 623-5179

NORTHEAST OHIO REGIONAL SEWER DISTRICT
PHONE: (216) 881-8247

THE CITY OF CLEVELAND DIVISION OF AIR QUALITY
PHONE: (216) 664-2297

THE CLEVELAND/CUYAHOGA COUNTY PORT AUTHORITY
PHONE: (216) 241-8004

THE ARMY CORPS OF ENGINEERS
PHONE: (216) 685-1200

THE CITY OF CLEVELAND, BUREAU OF BRIDGES AND DOCKS
DIVISION OF STREETS
2300 EAST 67TH STREET
CLEVELAND, OHIO 44104
ATTN: TERRELL PRUITT
PHONE: (216) 664-6797

LAKE CARRIERS' ASSOCIATION
20325 CENTER RIDGE ROAD
ROCKY RIVER, OHIO 44116-3572
ATTN: GLEN NEKVASIL, VICE PRESIDENT-CORPORATE COMMUNICATIONS
PHONE: (440) 333-9996

HISTORIC WAREHOUSE DISTRICT DEVELOPMENT CORPORATION
614 WEST SUPERIOR AVENUE, SUITE 680
CLEVELAND, OHIO 44113
ATTN: THOMAS STARINSKY. ASSOCIATE DIRECTOR
PHONE: (216) 409-7054

FLATS FORWARD
ATTN: MARK LAMMON, DIRECTOR
PHONE: (216) 973-2217

FLATS INDUSTRY ASSOCIATION
820 WEST SUPERIOR AVENUE
CLEVELAND, OHIO 44113
ATTN: JIM COX, DIRECTOR
PHONE: (216) 241-8060

WORK IN AND OVER THE CUYAHOGA RIVER

NO WORK SHALL BE PERFORMED BELOW THE ORDINARY HIGH WATER MARK OR ABOVE THE CUYAHOGA RIVER.

DESIGN AGENCY
1660 WEST 2ND STREET
SUITE 850
CLEVELAND, OHIO 44113

DESIGNED	DRAWN	REVIEWED	DATE
NRF	NRF	WRW	09/11/20
CHECKED	REVISED	STRUCTURE FILE NUMBER	
NBR	---	1869345	

GENERAL NOTES 1 OF 7
CITY OF CLEVELAND BRIDGE NO. 1:003M
CENTER STREET SWING BRIDGE OVER THE CUYAHOGA RIVER

CUY-CENTER ST.
SWING BRIDGE
PID NO: 109597

PRELIMINARY WALKTHROUGH PROCEDURE

PRIOR TO COMMENCING WORK ON THE PROJECT, THE CONTRACTOR, PROJECT ENGINEER AND A REPRESENTATIVE FROM THE CITY OF CLEVELAND SHALL HAVE A FIELD REVIEW OF THE PROJECT SITE. THE CONTRACTOR SHALL DOCUMENT THE EXISTING CONDITION OF THE STRUCTURE BEFORE ALL CONSTRUCTION WORK. DOCUMENTATION OF THE OVERALL CONDITION OF THE STRUCTURE SHALL INCLUDE WRITTEN TEXT, PHOTOGRAPHS AND DIGITAL A COPY OF ALL DOCUMENTATION SHALL BE GIVEN TO THE PROJECT ENGINEER, THE REPRESENTATIVE OF THE CITY OF CLEVELAND AND THE CONTRACTOR. THE OVERALL EXISTING CONDITION OF THE STRUCTURE SHALL BE FORMALLY AGREED UPON BY ALL PARTIES. PROTECTION AND RESTORATION OF THE PROPERTY SHALL FOLLOW CMS 107.10.

ITEM 202 - PORTIONS OF STRUCTURE REMOVED, AS PER PLAN

DESCRIPTION:
THIS ITEM SHALL INCLUDE THE ELEMENTS INDICATED IN THE PLANS AND GENERAL NOTES AND THAT ARE NOT SEPARATELY LISTED FOR PAYMENT. ITEMS TO BE REMOVED INCLUDE ALL EXISTING MATERIALS BEING REPLACED BY NEW CONSTRUCTION, NOT INCLUDED IN OTHER PAY ITEMS, AND ALONG WITH MISCELLANEOUS ITEMS THAT ARE NOT SHOWN TO BE INCORPORATED INTO THE FINAL CONSTRUCTION AND ARE DIRECTED TO BE REMOVED BY THE ENGINEER.

PERFORM ALL STEEL REMOVAL WORK IN A MANNER THAT WILL NOT CUT, ELONGATE OR DAMAGE THE EXISTING STEEL TO BE PRESERVED. THE USE OF EXPLOSIVES, HEADACHE BALLS AND/OR HOE-RAMS WILL NOT BE PERMITTED. THE METHOD OF CONCRETE REMOVAL AND THE WEIGHT OF HAMMER SHALL BE APPROVED BY THE ENGINEER.

CHIPPING HAMMERS SHALL NOT BE HEAVIER THAN THE NOMINAL 90-POUND CLASS. PNEUMATIC HAMMERS SHALL NOT BE PLACED IN DIRECT CONTACT WITH REINFORCING STEEL THAT IS TO BE RETAINED IN THE REBUILT STRUCTURE. SUBMIT CONSTRUCTION PLANS ACCORDING TO CMS 501.05.

END FLOORBEAMS 0 AND 16 AND END CHANNEL ASSEMBLIES:
THIS WORK CONSISTS OF THE REMOVAL OF THE STEEL END FLOORBEAMS AND END CHANNEL ASSEMBLIES AT FLOORBEAMS 0 AND 16, USING THE METHODS DESCRIBED IN THE PLANS AND AS SHOWN PER PLANS DETAILS. ANY EXCESS WELD MATERIAL REMAINING ON THE WEBS OF THE STRINGERS AND COUNTERWEIGHT BEAMS TO REMAIN AT FLOORBEAM 16 SHALL BE GROUND FLUSH WITH THE WEB. ANY NICKS OR GOUGES TO THE STRINGERS AND COUNTERWEIGHT BEAMS TO REMAIN RESULTING FROM THE REMOVAL OF THE ITEM LISTED ABOVE SHALL BE REPAIRED TO THE SATISFACTION OF THE ENGINEER AT NO COST TO THE PROJECT. THE UNIT FOR THIS REMOVAL IS PER POUND.

CURB PLATE ASSEMBLIES:
THIS WORK CONSISTS OF THE REMOVAL OF THE STEEL CURB PLATE ASSEMBLY COMPONENTS TO FACILITATE THE REPLACEMENT OF THE END FLOORBEAMS 0 AND 16, USING THE METHODS DESCRIBED IN THE PLANS AND AS SHOWN PER PLANS DETAILS. ANY EXCESS WELD MATERIAL REMAINING ON THE ANGLES TO REMAIN SHALL BE GROUND FLUSH WITH THE ANGLE WEB. ANY NICKS OR GOUGES TO THE ANGLE MEMBERS TO REMAIN RESULTING FROM THE REMOVAL OF THE ITEM LISTED ABOVE SHALL BE REPAIRED TO THE SATISFACTION OF THE ENGINEER AT NO COST TO THE PROJECT. THE UNIT FOR THIS REMOVAL IS PER POUND.

CONCRETE FILLED GRID STEEL ROADWAY DECK DESCRIPTION:
THIS WORK CONSISTS OF THE REMOVAL OF THE CONCRETE FILLED GRID STEEL ROADWAY DECK AND ASSOCIATED CONNECTIONS ON THE TRUSS SPANS USING THE METHODS DESCRIBED IN THE PLANS AND AS SHOWN PER PLANS DETAILS. THE UNIT FOR THIS REMOVAL IS PER SQUARE YARD. ANY EXCESS WELD MATERIAL REMAINING ON THE STRINGERS SHALL BE GROUND FLUSH WITH THE TOP FLANGE OF THE STRINGER TO PROVIDE A FLAT SURFACE FOR NEW GRID DECK WITH THE EXCEPTION OF THE PIVOT PIER SPAN. ANY NICKS OR GOUGES TO THE STRINGERS TO REMAIN RESULTING FROM THE REMOVAL OF THE ITEM LISTED ABOVE SHALL BE REPAIRED TO THE SATISFACTION OF THE ENGINEER AT NO COST TO THE PROJECT.

OPEN GRID STEEL ROADWAY DECK DESCRIPTION:
THIS WORK CONSISTS OF THE REMOVAL OF THE OPEN GRID STEEL ROADWAY DECK AND ASSOCIATED CONNECTIONS ON THE TRUSS SPANS USING THE METHODS DESCRIBED IN THE PLANS, AS SHOWN PER PLANS DETAILS. THE UNIT FOR THIS REMOVAL IS PER SQUARE YARD.

CONCRETE FILLED GRID STEEL SIDEWALK DECK DESCRIPTION:
THIS WORK CONSISTS OF THE REMOVAL OF THE CONCRETE FILLED GRID STEEL SIDEWALK DECK AND ASSOCIATED CONNECTIONS ON THE TRUSS SPANS USING THE METHODS DESCRIBED IN THE PLANS AND AS SHOWN PER PLANS DETAILS. THE UNIT FOR THIS REMOVAL IS PER SQUARE YARD. ANY EXCESS WELD MATERIAL REMAINING ON THE CONNECTING STEEL SHALL BE GROUND FLUSH WITH THE EXISTING SURFACE WITH THE EXCEPTION OF THE INTERIOR SIDEWALK STRINGERS TO BE REPLACED. ANY NICKS OR GOUGES TO THE STRINGERS TO REMAIN RESULTING FROM THE REMOVAL OF THE ITEM LISTED ABOVE SHALL BE REPAIRED TO THE SATISFACTION OF THE ENGINEER AT NO COST TO THE PROJECT.

PIVOT PIER FIBERGLASS PANELS DESCRIPTION:
THIS WORK CONSISTS OF THE REMOVAL OF THE PIVOT PIER FIBERGLASS PANELS BETWEEN ROADWAY STRINGERS IN THE BAY BETWEEN FLOORBEAM 9 AND FLOORBEAM 10, AS SHOWN IN THE PLANS. THE UNIT FOR THIS REMOVAL IS PER SQUARE YARD.

PIVOT PIER SPAN AND RIVER SPAN ROADWAY STRINGER DESCRIPTION (L0 TO L10):
THIS WORK CONSISTS OF THE REMOVAL OF THE STEEL ROADWAY STRINGERS AND ASSOCIATED CONNECTIONS IN THE PIVOT PIER SPAN AND RIVER SPAN OF THE TRUSS USING THE METHODS DESCRIBED IN THE PLANS AND AS SHOWN PER PLANS DETAILS. THE UNIT FOR THIS REMOVAL IS PER POUND.

THE TEMPORARY SUPPORT, REMOVAL, AND REINSTALLATION OF ANY CONDUIT OR APPURTENANCES NECESSARY TO PERFORM THE REMOVAL OF THE STEEL ROADWAY STRINGERS AS SHOWN IN THE PLANS IS ALSO INCLUDED FOR PAYMENT WITH THIS ITEM.

TRUSS SPANS INTERIOR SIDEWALK STRINGER DESCRIPTION (FULL LENGTH OF TRUSS SPANS):
THIS WORK CONSISTS OF THE REMOVAL OF THE STEEL INTERIOR SIDEWALK STRINGERS AND ASSOCIATED CONNECTIONS IN THE TRUSS SPANS, USING THE METHODS DESCRIBED IN THE PLANS AND AS SHOWN PER PLANS DETAILS. ANY EXCESS WELD MATERIAL REMAINING ON THE FLOORBEAMS SHALL BE GROUND FLUSH WITH THE TOP FLANGE OF THE FLOORBEAM. ANY NICKS OR GOUGES TO THE FLOORBEAMS TO REMAIN RESULTING FROM THE REMOVAL OF THE ITEM LISTED ABOVE SHALL BE REPAIRED TO THE SATISFACTION OF THE ENGINEER AT NO COST TO THE PROJECT. THE UNIT FOR THIS REMOVAL IS PER POUND.

THE TEMPORARY SUPPORT, REMOVAL, AND REINSTALLATION OF ANY CONDUIT OR APPURTENANCES NECESSARY TO PERFORM THE REMOVAL OF THE STEEL SIDEWALK STRINGERS AS SHOWN IN THE PLANS IS ALSO INCLUDED FOR PAYMENT WITH THIS ITEM.

MEASUREMENT AND PAYMENT:
PAYMENT SHALL INCLUDE FULL COMPENSATION FOR MATERIAL, TOOLS, EQUIPMENT, LABOR AND ACCESS TO COMPLETE THE REPAIRS. PAYMENT FOR CUTTING AND GRINDING AS PART OF THIS REPAIR IS CONSIDERED INCIDENTAL FOR PAYMENT IN THIS ITEM. THE ACCEPTED QUANTITIES FOR THE COMPLETED WORK AS DESCRIBED WILL BE MEASURED AND PAID FOR USING THE FOLLOWING CONTRACT ITEM (PAY ITEM):

ITEM	UNIT	DESCRIPTION
202	SY	PORTIONS OF STRUCTURE REMOVED, AS PER PLAN
202	LB	PORTIONS OF STRUCTURE REMOVED, AS PER PLAN

ITEM 202 - CONCRETE MEDIAN REMOVED, AS PER PLAN

DESCRIPTION:
THIS WORK CONSISTS OF REMOVING THE CONCRETE MEDIANS AND APPURTENANCES ON THE EAST APPROACH SLAB, AS SHOWN IN THE PLANS.

MEASUREMENT AND PAYMENT:
THE ACCEPTED QUANTITIES FOR THE COMPLETED WORK AS DESCRIBED WILL BE MEASURED AND PAID FOR USING THE FOLLOWING CONTRACT ITEM (PAY ITEM):

ITEM	UNIT	DESCRIPTION
202	SY	CONCRETE MEDIAN REMOVED, AS PER PLAN

ITEM 202 - BRIDGE RAILING REMOVED, AS PER PLAN

DESCRIPTION:
THIS WORK CONSISTS OF REMOVING THE EXISTING BRIDGE RAILING COMPONENTS ON THE EAST APPROACH SPAN DOWN TO THE CONCRETE MEDIAN, AS SHOWN IN THE PLANS.

MEASUREMENT AND PAYMENT:
THE ACCEPTED QUANTITIES FOR THE COMPLETED WORK AS DESCRIBED WILL BE MEASURED AND PAID FOR USING THE FOLLOWING CONTRACT ITEM (PAY ITEM):

ITEM	UNIT	DESCRIPTION
202	FT	BRIDGE RAILING REMOVED, AS PER PLAN

ITEM 513 - STRUCTURAL STEEL MEMBERS, LEVEL 3, AS PER PLAN

DESCRIPTION:
THIS WORK INCLUDES FURNISHING ALL LABOR, MATERIALS, AND EQUIPMENT NECESSARY TO ERECT STRUCTURAL STEEL AS SHOWN IN THE PLANS COMPLETE AND IN PLACE AND SHALL CONFORM TO THE REQUIREMENTS OF CMS 513 SUPPLEMENTED WITH THE FOLLOWING ADDITIONAL INFORMATION.

THE STRUCTURAL STEEL ITEMS INCLUDED IN THIS ITEM ARE: PIVOT PIER SPAN ROADWAY STRINGERS AND RIVER SPAN ROADWAY STRINGERS. ALL NEW STEEL SHALL BE ASTM A709 GRADE 50 AND FASTNERS SHALL BE A325 TYPE 1.

THE COST OF ALL LABOR, MATERIALS, FIELD DRILLING OF NEW CONNECTION BOLTS AND EQUIPMENT REQUIRED FOR RELOCATION OF ANY CONDUITS OR APPURTENANCES NECESSITATED BY THE REPLACEMENT OF THE STEEL MEMBERS IN THIS ITEM SHALL BE CONSIDERED INCIDENTAL TO THIS ITEM.

MEASUREMENT AND PAYMENT:
PAYMENT SHALL INCLUDE FULL COMPENSATION FOR MATERIAL, TOOLS, EQUIPMENT, LABOR AND ACCESS TO COMPLETE THE REPAIRS. PAYMENT FOR CUTTING AND GRINDING AS PART OF THIS REPAIR IS CONSIDERED INCIDENTAL FOR PAYMENT IN THIS ITEM. THE ACCEPTED QUANTITIES FOR THE COMPLETED WORK AS DESCRIBED WILL BE MEASURED AND PAID FOR USING THE FOLLOWING CONTRACT ITEM (PAY ITEM):

ITEM	UNIT	DESCRIPTION
513	LB	STRUCTURAL STEEL MEMBERS, LEVEL 3, AS PER PLAN

ITEM 513 - STRUCTURAL STEEL, MISC.: INSTALL FLOORBEAM COVER PLATE

DESCRIPTION:
THIS WORK INCLUDES ALL LABOR, MATERIALS, AND EQUIPMENT NECESSARY TO LOCATE AND FIELD DRILL BOLT HOLES, FABRICATE AND INSTALL THE COVER PLATES, AND BOLTING WITH NEW HIGH STRENGTH BOLTS ALONG THE BOTTOM FLANGES OF THE INTERIOR RIVER SPAN FLOORBEAMS 1 THROUGH 8 AS DETAILED IN THE PLANS. THIS WORK SHALL CONFORM TO THE REQUIREMENTS OF ITEM 513. THE EXISTING STEEL FAYING SURFACES ALONG THE COVER PLATE CONNECTION SHALL BE PREPARED PER 513.20. NEW PLATES SHALL BE A709 GRADE 50.

THE NEW COVER PLATES ARE DESIGNATED CVN AND SHALL MEET THE MINIMUM CHARPY V-NOTCH TOUGHNESS REQUIREMENTS OF CMS 711.01.

MEASUREMENT AND PAYMENT:
PAYMENT SHALL INCLUDE FULL COMPENSATION FOR MATERIAL, TOOLS, EQUIPMENT, LABOR AND ACCESS TO COMPLETE THE REPAIRS. PREPARATION OF EXISTING STEEL SURFACES, DRILLING, AND BOLTING ARE INCLUDED FOR PAYMENT IN THIS ITEM. THE UNIT "EACH" REFERS TO A SINGLE FLOORBEAM LOCATION. THE ACCEPTED QUANTITIES FOR THE COMPLETED WORK AS DESCRIBED WILL BE MEASURED AND PAID FOR USING THE FOLLOWING CONTRACT ITEM (PAY ITEM):

ITEM	UNIT	DESCRIPTION
513	EACH	STRUCTURAL STEEL, MISC.: INSTALL FLOORBEAM COVER PLATE

ITEM 513 - STRUCTURAL STEEL, MISC.: STIFFENER REINFORCING PLATE

DESCRIPTION:
THIS WORK INCLUDES ALL LABOR, MATERIALS, AND EQUIPMENT NECESSARY TO LOCATE AND FIELD DRILL BOLT HOLES, FABRICATE AND INSTALL THE STIFFENER REINFORCING PLATES, REMOVING PORTIONS OF THE DETERIORATED EXISTING STIFFENER, AND BOLTING THE STIFFENER REINFORCING PLATES TO THE EXISTING STIFFENERS AND STRINGERS AT THE LOCATIONS SHOWN IN THE PLANS. THE FABRICATION OF THE REINFORCING PLATES ALSO INCLUDES THE WELDING OF A FILL PLATE AT THE LOCATIONS OF LOCALIZED DETERIORATED EXISTING STIFFENER REMOVALS. THIS WORK SHALL CONFORM TO THE REQUIREMENTS OF ITEM 513. THE EXISTING STEEL FAYING SURFACES SHALL BE PREPARED PER 513.20.

MEASUREMENT AND PAYMENT:
PAYMENT SHALL INCLUDE FULL COMPENSATION FOR MATERIAL, TOOLS, EQUIPMENT, LABOR AND ACCESS TO COMPLETE THE REPAIRS. PREPARATION OF EXISTING STEEL SURFACES, LOCALIZED REMOVAL OF EXISTING STIFFENERS, DRILLING, AND BOLTING ARE INCLUDED FOR PAYMENT IN THIS ITEM. THE UNIT "EACH" REFERS TO A SINGLE STIFFENER LOCATION. THE ACCEPTED QUANTITIES FOR THE COMPLETED WORK AS DESCRIBED WILL BE MEASURED AND PAID FOR USING THE FOLLOWING CONTRACT ITEM (PAY ITEM):

ITEM	UNIT	DESCRIPTION
513	EACH	STRUCTURAL STEEL, MISC.: STIFFENER REINFORCING PLATE

DESIGN AGENCY
1660 WEST 2ND STREET
SUITE 850
CLEVELAND, OHIO 44113

DESIGNED	DRAWN	REVIEWED	DATE
NRF	NRF	WRW	09/11/20
CHECKED	REVISED	STRUCTURE FILE NUMBER	
NBR	---	1869345	

GENERAL NOTES 2 OF 7
CITY OF CLEVELAND BRIDGE NO. 1:003M
CENTER STREET SWING BRIDGE OVER THE CUYAHOGA RIVER

CUY-CENTER ST.
SWING BRIDGE
PID NO: 109597

ITEM 513 - STRUCTURAL STEEL, MISC.: CURB PLATE REPAIR

DESCRIPTION:
THIS WORK INCLUDES ALL LABOR, MATERIALS, AND EQUIPMENT NECESSARY TO GRIND THE WELDS FLUSH WITH THE TOP SURFACE OF THE PLATES, FABRICATE THE REPAIR PLATES, INSTALL AND WELD THE REPAIR PLATES AT THE LOCATIONS ON THE EXISTING CURB PLATES AS DETAILED IN THE PLANS. THIS WORK ALSO INCLUDES CAULKING THE EXISTING CURB PLATE JOINTS THAT EXTEND PAST THE REPAIR PLATES. THIS WORK SHALL CONFORM TO THE REQUIREMENTS OF ITEM 513. THE CAULK SHALL BE AN EXTERIOR GRADE SILICON-BASED CAULKING PER 514.19.

MEASUREMENT AND PAYMENT:
PAYMENT SHALL INCLUDE FULL COMPENSATION FOR MATERIAL, TOOLS, EQUIPMENT, LABOR AND ACCESS TO COMPLETE THE REPAIRS. PREPARATION OF EXISTING STEEL SURFACES, GRINDING, PLATING AND WELDING, AND CAULKING ARE INCLUDED FOR PAYMENT IN THIS ITEM. THE UNIT "EACH" REFERS TO THE INSTALLATION OF A SINGLE PLATE, INCLUDING GRINDING AND CAULKING. THE ACCEPTED QUANTITIES FOR THE COMPLETED WORK AS DESCRIBED WILL BE MEASURED AND PAID FOR USING THE FOLLOWING CONTRACT ITEM (PAY ITEM):

ITEM	UNIT	DESCRIPTION
513	EACH	STRUCTURAL STEEL, MISC.: CURB PLATE REPAIR

ITEM 514 - SURFACE PREPARATION OF EXISTING STRUCTURAL STEEL, AS PER PLAN

ITEM 514 - FIELD PAINTING OF EXISTING STRUCTURAL STEEL, PRIME COAT, AS PER PLAN

ITEM 514 - FIELD PAINTING STRUCTURAL STEEL, INTERMEDIATE COAT, AS PER PLAN

ITEM 514 - FIELD PAINTING STRUCTURAL STEEL, FINISH COAT, AS PER PLAN

DESCRIPTION:
THIS ITEM INCLUDES THE SURFACE PREPARATION AND COATING OF THE EXISTING STEEL MEMBERS TO REMAIN AND COATING OF NEW STEEL MEMBERS, AS PER PLAN. THE CONTRACTOR SHALL COMPLETE REMOVALS AND INSTALLATIONS PER ITEMS 202 AND 513 PRIOR TO PAINTING OF THE AREAS SPECIFIED TO BE REPAIRED OR REMOVED. SURFACE PREPARATION OF THE FAYING SURFACE BETWEEN ANY NEW STEEL AND EXISTING SURFACES SHALL BE PER CMS 514. THE COST OF SURFACE PREPARATION AND APPLICATION OF THE PRIME COAT SHALL BE INCLUDED IN THE UNIT PRICE BID FOR FIELD PAINTING OF THE EXISTING STRUCTURAL STEEL. AT THE CONTRACTOR'S OPTION, NEW STEEL MAY BE GIVEN A PRELIMINARY CLEANING IN THE SHOP.

THE COLOR OF THE FINISH COAT FOR ALL STRUCTURAL STEEL SHALL BE FEDERAL COLOR NUMBER 22190.

ALL STRUCTURAL STEEL SURFACES ON THE SWING SPAN TRUSS AND EAST APPROACH SPAN ARE TO BE PREPARED AND PAINTED UNDER THIS CONTRACT IN ACCORDANCE WITH THE PROJECT PLANS AND SPECIFICATIONS. THE STEEL SURFACES TO BE PAINTED INCLUDE, BUT MAY NOT BE LIMITED TO, THE FOLLOWING:
ALL MAIN STRUCTURAL STEEL COMPRISING THE SWING SPAN, INCLUDING THE PIVOT PIER COMPONENTS, ALL PEDESTRIAN RAILING (INCLUDING COMPONENTS ON THE EAST APPROACH), ALL DOWNSPOUTS AND SUPPORTS, ALL ACCESS LADDERS AND PROTECTIVE CAGING, ALL CATWALK SUPPORTS AND RAILINGS, ALL STEEL SUPPORT HANGERS AND HARDWARE OR MISCELLANEOUS CONDUITS, INTERNAL AND EXTERIOR PORTIONS OF RING GIRDER, INTERIOR AND EXTERIOR PORTIONS OF COUNTERWEIGHT TRAYS, TRUSS CURB PLATE ASSEMBLY AND AND ANY OTHER STEEL SURFACES NOT INDIVIDUALLY LISTED BUT AS DIRECTED BY THE ENGINEER.

MISCELLANEOUS STEEL SURFACES THAT WILL NOT BE PREPARED AND PAINTED UNDER THIS CONTRACT INCLUDE, BUT MAY NOT BE LIMITED TO, THE FOLLOWING:

THE GALVANIZED STEEL WYOMING RAIL ON THE EAST APPROACH SPAN, THE GALVANIZED GRID STEEL DECK ON THE TRUSS SPANS, ANY OTHER BRIDGE COMPONENTS WHERE SURFACE PREPARATION AND PAINTING WOULD ADVERSELY AFFECT THE OPERATION AND MAINTENANCE OF THE ELECTRICAL AND MECHANICAL SYSTEMS ON THE BRIDGE, AND ANY OTHER STEEL SURFACES NOT INDIVIDUALLY LISTED BUT AS DIRECTED BY THE ENGINEER.

THE REQUIREMENTS OF CMS 514 SHALL APPLY WITH THE FOLLOWING ADDITIONS/MODIFICATIONS:

514.13.C - ABRASIVE BLASTING (QCP #3):
PORTIONS OF THE INSIDE OF BUILT-UP MEMBERS ARE IDENTIFIED AS BEING POSSIBLY INACCESSIBLE. THE CONTRACTOR SHALL MAKE A REASONABLE EFFORT TO CLEAN STEEL SURFACES IN THESE AREAS, AND IN ALL OTHER AREAS DETERMINED BY THE ENGINEER AS BEING INACCESSIBLE, ACCORDING TO SSPC-6 (COMMERCIAL BLAST CLEANING) AS SHOWN ON THE PICTORIAL SURFACE PREPARATION STANDARDS FOR PAINTING STEEL SURFACES IN SSPC-VIS 1.

THE CONTRACTOR SHALL TAKE ALL NECESSARY MEASURES TO PROTECT ALL SURFACES NOT BEING PAINTED UNDER THIS PAY ITEM DURING ALL CONTAINMENT CONSTRUCTION, SURFACE PREPARATION, PACK RUST REPAIR, CAULKING, AND COATING OPERATIONS. THESE SURFACES INCLUDE MISCELLANEOUS ELECTRICAL AND MECHANICAL COMPONENTS, LIGHT FIXTURES (STREET, UTILITY, SIGNAL, AND NAVIGATION), CAMERA HOUSINGS, CONTROL BOXES, PLASTIC CONDUITS, ETC. THAT ARE ADJACENT TO OR ATTACHED TO THE STRUCTURAL STEEL BEING PAINTED. THE CONTRACTOR MAY COVER AND PROTECT, REMOVE AND REINSTALL, OR TEMPORARILY DISCONNECT AND SUPPORT ANY AND ALL APPURTENANCES ATTACHED TO THE STRUCTURE, AS NECESSARY, IN ORDER TO PERFORM SURFACE PREPARATION AND PAINT SYSTEM APPLICATION IN ACCORDANCE WITH THE CONTRACT SPECIFICATIONS. THE CONTRACTOR SHALL INCLUDE ALL SPECIFIC MEASURES FOR PROTECTING THE SURFACES NOT BEING PREPARED AND PAINTED WITH THE CONTAINMENT PLAN SUBMITTAL SPECIFIED BELOW. ALL COSTS ASSOCIATED WITH PROTECTION, REMOVAL AND REINSTALLATION, OR TEMPORARY DISCONNECTION AND SUPPORT, SHALL BE INCLUDED IN THIS PAY ITEM.

WHERE AREAS ARE DETERMINED BY THE ENGINEER AS BEING INACCESSIBLE TO OBTAIN PROPER CLEANING, THE PRIME COAT SHALL BE AN ALUMINUM-FILLED EPOXY MASTIC PRIMER WITH AN ESTIMATED BUILD-UP OF THE EPOXY MASTIC PRIMER OF 8-10 MILS. EPOXY MASTIC PRIMER IS TO BE:

EPOXY MASTIC ALUMINUM II, MANUFACTURED BY THE
SHERWIN-WILLIAMS COMPANY
101 WEST PROSPECT AVENUE
CLEVELAND, OH 44115
(216) 566-2000

OR

CARBOMASTIC 15, MANUFACTURED BY CARBOLINE
COMPANY
2150 SCHUETZ ROAD
ST. LOUIS, MISSOURI 63146
(800) 848-4645

ALL OTHER ACCESSIBLE STEEL SURFACES SHALL BE BLASTED TO SSPC-SP 10 AS PER CMS 514.13.C AND COATED WITH TRADITIONAL ORGANIC ZINC PRIME COAT PER CMS 514.02.

IN ADDITION, THIS WORK WILL INCLUDE THE REPAIR OF PACK-RUSTED AREAS OF THE EXISTING STEEL AS DIRECTED BY THE ENGINEER. PACK RUSTED AREAS ARE DEFINED AS THOSE LOCATIONS WHERE IMPACTED RUST HAS PRODUCED A GAP BETWEEN ADJACENT STEEL PLATES MORE THAN 1/4". PACK RUST SHALL BE REMOVED FROM THE JOINTS RUSTED APART MORE THAN 1/4" BY CHIPPING, HAMMERING, PUNCHING, CHISELING OR BY OTHER SUITABLE MEANS, TO A DEPTH OF AT LEAST EQUAL TO THE WIDTH OF THE GAP. ALL JOINTS SHALL THEN BE VACUUMED WITH A COMMERCIAL VACUUM CLEANER HAVING A NOZZLE OPENING OF 1" TO 1 1/2" OR AIR BLOWN SUCH THAT ALL DUST AND DEBRIS ARE REMOVED TO THE SATISFACTION OF THE ENGINEER. DISASSEMBLY OF PACK RUSTED ELEMENTS IS NOT REQUIRED FOR CLEANING.

514.13.D - CONTAINMENT/WASTE DISPOSAL (QCP#4):
THE CONTRACTOR SHALL INSTALL AND MAINTAIN CONTAINMENT SYSTEMS SURROUNDING THE WORK FOR THE PURPOSE OF CONTROLLING EMISSIONS OF DUST AND DEBRIS IN ACCORDANCE WITH THE REQUIREMENTS OF CMS 514. WORKING PLATFORMS AND CONTAINMENT MATERIALS THAT ARE USED SHALL BE FIRM AND STABLE, AND PLATFORMS SHALL BE DESIGNED TO SUPPORT THE WORKERS, INSPECTORS, SPENT SURFACE PREPARATION MEDIA (E.G. ABRASIVES) AND EQUIPMENT DURING ALL PHASES OF SURFACE PREPARATION AND PAINTING. PLATFORMS, CABLES AND OTHER SUPPORTING STRUCTURES SHALL BE DESIGNED IN ACCORDANCE WITH THE APPLICABLE REQUIREMENTS OF THE OHIO INDUSTRIAL COMMISSION AND OSHA. INSPECTION ACCESS SHALL BE IN ACCORDANCE WITH THE REQUIREMENTS OF CMS 514.10.

IF THE CONTAINMENT IS PROPOSED TO BE ATTACHED TO THE STRUCTURE, THE CONTAINMENT SHALL BE ATTACHED BY BOLTING, CLAMPING OR SIMILAR MEANS. WELDING ONTO OR DRILLING INTO THE STRUCTURE IS PROHIBITED. THE CONTRACTOR SHALL PROVIDE DRAWINGS SHOWING THE CONTAINMENT SYSTEM AND INDICATING THE METHODS OF SUPPORTING THE WORKING PLATFORMS AND CONTAINMENT MATERIALS.

IN THE EVENT OF SUSTAINED WINDS OF 40 MPH OR GREATER, THE CONTAINMENT SHALL BE DROPPED AND ALL MATERIALS AND EQUIPMENT SHALL BE SECURED TO AVOID OVERSTRESSJNG AND/OR DAMAGING THE BRIDGE STRUCTURE.

THE CONTRACTOR SHALL SUBMIT CALCULATIONS AND DRAWINGS SIGNED, SEALED, AND DATED BY AN OHIO REGISTERED PROFESSIONAL ENGINEER IN THE EMPLOY OF THE CONTRACTOR, ASSURING THE STRUCTURAL INTEGRITY OF THE BRIDGE UNDER THE DEAD LOADS AND DESIGN WIND LOADING. DESIGN SHALL BE IN ACCORDANCE WITH APPLICABLE PROVISIONS OF THE MOST CURRENT VERSIONS OF AASHTO'S "STANDARD SPECIFICATIONS FOR HIGHWAY BRIDGES" AND ODOT'S "BRIDGE DESIGN MANUAL". THE CONTAINMENT SUBMITTAL SHALL INCLUDE CALCULATIONS THAT ASSURE STRUCTURAL INTEGRITY OF THE BRIDGE WHEN IT SUPPORTS THE CONTAINMENT.

THE CONTRACTOR SHALL NOT OVERSPRAY ONTO THE CONCRETE AND STONE SUBSTRUCTURE COMPONENTS (BACKWALLS, ABUTMENTS, PIERS AND PEDESTALS), OPERATOR'S HOUSE, OR MASONRY TENDER'S HOUSE. PAINTING SHALL BE CONFINED TO ALL FACES OF STRUCTURAL STEEL. STRUCTURAL STEEL CONSISTS OF ANY STEEL ON THE STRUCTURE, SUCH AS STRINGERS, FLOORBEAMS, BEAMS, LATERAL BRACING, TRUSS UPPER AND LOWER CHORDS, TRUSS VERTICALS, TRUSS DIAGONALS, SWAY BRACING, HOUSE SUPPORTS, MACHINERY SUPPORTS, PEDESTRIAN RAILING, AND ALL OTHER STEEL NOT EXPLICITLY CALLED OUT AS NOT TO BE PAINTED.

514.17 COATING APPLICATION:
IN ADDITION TO THE REQUIREMENTS OF CMS 514, A STRIPE COATING OF THE PRIME COAT SHALL BE APPLIED TO ALL WELDS, CREVICES, RIVET HEADS, NUTS, BOLT HEADS, BOLT THREADS AND OTHER SURFACE IRREGULARITIES. THE STRIPE COATING SHALL BE APPLIED TO THE SPECIFIED SURFACES BEFORE THE APPLICATION OF THE FULL PRIME COAT OVER THE SAME AREAS AND ADJACENT PREPARED SURFACES. STRIPING SHALL EXTEND A MINIMUM OF 1" FROM THE EDGES REQUIRING STRIPE COATING. THE STRIPE COATING SHALL SET TO TOUCH BEFORE APPLICATION OF THE FULL PRIME COAT OVER THE SAME AREA; HOWEVER, THE STRIPE COATING SHALL NOT BE PERMITTED TO DRY FOR A PERIOD LONG ENOUGH TO ALLOW RUSTING OF THE ADJACENT UNPRIMED STEEL SURFACES BEFORE THE FULL PRIME COAT CAN BE APPLIED TO THE AREA.

THE CONTRACTOR SHALL THOROUGHLY COAT ALL SURFACES RECEIVING A STRIPE COATING, PAYING PARTICULAR ATTENTION TO HARD-TO-REACH AREAS AND IRREGULAR SURFACES, SUCH AS BOLT HEADS, LAP SPLICES, GUSSET PLATES, ETC. WHEN STRIPE COATING MULTI-PLANED SURFACE CONFIGURATIONS, SUCH AS ON NUTS AND BOLT THREADS, THE CONTRACTOR SHALL APPLY THE STRIPE COATING FROM MULTIPLE DIRECTIONS TO ENSURE COMPLETE COVERAGE OF ALL SURFACES, CREVICES, CORNERS AND SHARP EDGES.

ENSURE COMPLETE COVERAGE OF ALL SURFACES, CREVICES, CORNERS AND SHARP EDGES.

514.19 CAULKING (QCP#9):
AFTER THE INTERMEDIATE COAT HAS BEEN APPLIED, THE CONTRACTOR SHALL CAULK ALL GAPS OR CREVICES GREATER THAN 1/4". THE INTERMEDIATE COAT SHALL BE FREE OF CONTAMINANTS WHEN THE CAULKING IS APPLIED. CAULKING SHALL BE INCIDENTAL TO THE INTERMEDIATE COAT.

CAULKING COLOR IS TO MATCH THE PAINT COLOR OF THE BRIDGE AND SHALL BE APPROVED BY THE ENGINEER. THE CAULKING SHALL BE APPLIED EVENLY TO THE JOINTS AND GAPS. VOIDS SHALL BE COMPLETELY FILLED WITH CAULKING WHICH SHALL BE APPLIED BY TROWEL OR CAULKING GUN AND SHALL BE SPREAD SMOOTHLY USING HEAVY PRESSURE TO DISPLACE AIR BUBBLES. EXCESS MATERIAL SHALL BE REMOVED IMMEDIATELY. ALL PROCEDURES SHALL CONFORM TO THE REQUIREMENTS OF THE MANUFACTURER'S WRITTEN SPECIFICATIONS AND TO THE SATISFACTION OF THE ENGINEER.

MEASUREMENT AND PAYMENT
THE ACCEPTED QUANTITIES FOR THE COMPLETED WORK AS DESCRIBED WILL BE PAID FOR USING THE FOLLOWING CONTRACT ITEM (PAY ITEMS):

ITEM	UNIT	DESCRIPTION
514	LUMP	SURFACE PREPARATION OF EXISTING STRUCTURAL STEEL, AS PER PLAN
514	LUMP	FIELD PAINTING OF EXISTING STRUCTURAL STEEL, PRIME COAT, AS PER PLAN
514	LUMP	FIELD PAINTING STRUCTURAL STEEL, INTERMEDIATE COAT, AS PER PLAN
514	LUMP	FIELD PAINTING STRUCTURAL STEEL, FINISH COAT, AS PER PLAN

DESIGN AGENCY
WSP
1660 WEST 2ND STREET
SUITE 850
CLEVELAND, OHIO 44113

DESIGNED	DRAWN	REVIEWED	DATE
NRF	NRF	WRW	09/11/20
CHECKED	REVISED	STRUCTURE FILE NUMBER	
NBR	---	1869345	

GENERAL NOTES 3 OF 7
CITY OF CLEVELAND BRIDGE NO. 1:003M
CENTER STREET SWING BRIDGE OVER THE CUYAHOGA RIVER

CUY-CENTER ST.
SWING BRIDGE
PID NO: 109597

ITEM 514 - FIELD PAINTING, MISC.:PAINTING OF EXISTING OPERATOR'S HOUSE

DESCRIPTION:
THIS ITEM INCLUDES THE SURFACE PREPARATION AND PAINTING OF THE EXTERIOR SURFACES OF THE EXISTING OPERATOR'S HOUSE. SURFACES INCLUDE THE FOLLOWING: TEXTURED PLYWOOD CLADDING AND CEILING, WOOD TRIM, AND ALUMINUM GUTTERING AND DOWNSPOUTS.

COLORS:
FIELD COLOR FOR VERTICAL AND HORIZONTAL SURFACES: FEDERAL COLOR 22190, RED.
TRIM AND DOOR PANELS: FEDERAL COLOR 24091 OR 20227, GRAY.
GUTTERING, DOWNSPOUTS: MATCH COLOR OF SURFACE, CLADDING OR TRIM, DIRECTLY BEHIND OR ADJACENT..

PREPARATION:
COMPLY WITH MANUFACTURER'S WRITTEN INSTRUCTIONS AND RECOMMENDATIONS IN "MPI ARCHITECTURAL PAINTING SPECIFICATION MANUAL" APPLICABLE TO SUBSTRATES AND PAINT SYSTEMS INDICATED. REMOVE HARDWARE, COVERS, PLATES, AND SIMILAR ITEMS ALREADY IN PLACE THAT ARE REMOVABLE AND ARE NOT TO BE PAINTED. IF REMOVAL IS IMPRACTICAL OR IMPOSSIBLE BECAUSE OF SIZE OR WEIGHT OF ITEM, PROVIDE SURFACE-APPLIED PROTECTION BEFORE SURFACE PREPARATION AND PAINTING. AFTER COMPLETING PAINTING OPERATIONS, USE WORKERS SKILLED IN THE TRADES INVOLVED TO REINSTALL ITEMS THAT WERE REMOVED. REMOVE SURFACE-APPLIED PROTECTION. CLEAN SUBSTRATES OF SUBSTANCES THAT COULD IMPAIR BOND OF PAINTS, INCLUDING DUST, DIRT, OIL, GREASE, AND INCOMPATIBLE PAINTS AND ENCAPSULANTS. REMOVE INCOMPATIBLE PRIMERS AND RE-PRIME SUBSTRATE WITH COMPATIBLE PRIMERS OR APPLY TIE COAT AS REQUIRED TO PRODUCE PAINT SYSTEMS INDICATED.

ALUMINUM: REMOVE LOOSE SURFACE OXIDATION

WOOD SUBSTRATES: SCRAPE AND CLEAN KNOTS. BEFORE APPLYING PRIMER, APPLY COAT OF KNOT SEALER RECOMMENDED IN WRITING BY TOPCOAT MANUFACTURER FOR EXTERIOR USE IN PAINT SYSTEM INDICATED. SAND SURFACES THAT ARE EXPOSED TO VIEW AND DUST OFF. PRIME ALL EXPOSED EDGES, ENDS, FACES, UNDERSIDES, AND BACKSIDES. AFTER PRIMING, FILL HOLES AND IMPERFECTIONS IN THE FINISH SURFACES WITH PUTTY OR PLASTIC WOOD FILLER AND THEN SAND SMOOTH WHEN DRIED.

APPLICATION:
APPLY PAINTS ACCORDING TO MANUFACTURER'S WRITTEN INSTRUCTIONS AND RECOMMENDATIONS IN "MPI ARCHITECTURAL PAINTING SPECIFICATION MANUAL." USE APPLICATORS AND TECHNIQUES SUITED FOR PAINT AND SUBSTRATE INDICATED. PAINT SURFACES BEHIND MOVABLE ITEMS SAME AS SIMILAR EXPOSED SURFACES. PAINT BOTH SIDES AND EDGES OF EXTERIOR DOORS AND ENTIRE EXPOSED SURFACE OF EXTERIOR DOOR FRAMES. PAINT ENTIRE EXPOSED SURFACE OF WINDOW FRAMES AND SASHES. DO NOT PAINT OVER LABELS OF INDEPENDENT TESTING AGENCIES OR EQUIPMENT NAME, IDENTIFICATION, PERFORMANCE RATING, OR NOMENCLATURE PLATES.

TINT UNDERCOATS SAME COLOR AS TOPCOAT, BUT TINT EACH UNDERCOAT A LIGHTER SHADE TO FACILITATE IDENTIFICATION OF EACH COAT IF MULTIPLE COATS OF SAME MATERIAL ARE TO BE APPLIED. PROVIDE SUFFICIENT DIFFERENCE IN SHADE OF UNDERCOATS TO DISTINGUISH EACH SEPARATE COAT. IF UNDERCOATS OR OTHER CONDITIONS SHOW THROUGH TOPCOAT, APPLY ADDITIONAL COATS UNTIL CURED FILM HAS A UNIFORM PAINT FINISH, COLOR, AND APPEARANCE. APPLY PAINTS TO PRODUCE SURFACE FILMS WITHOUT CLOUDINESS, SPOTTING, HOLIDAYS, LAPS, BRUSH MARKS, ROLLER TRACKING, RUNS, SAGS, ROPINESS, OR OTHER SURFACE IMPERFECTIONS. CUT IN SHARP LINES AND COLOR BREAKS.

CLEANING AND PROTECTION:
AT END OF EACH WORKDAY, REMOVE RUBBISH, EMPTY CANS, RAGS, AND OTHER DISCARDED MATERIALS FROM PROJECT SITE. AFTER COMPLETING PAINT APPLICATION, CLEAN SPATTERED SURFACES. REMOVE SPATTERED PAINTS BY WASHING, SCRAPING, OR OTHER METHODS. DO NOT SCRATCH OR DAMAGE ADJACENT FINISHED SURFACES. PROTECT WORK OF OTHER TRADES AGAINST DAMAGE FROM PAINT APPLICATION. CONTRACTOR IS TO PROTECT EXISTING WINDOW GLAZING. CORRECT DAMAGE TO WORK OF OTHER TRADES BY CLEANING, REPAIRING, REPLACING, AND REFINISHING, AS APPROVED BY THE ENGINEER, AND LEAVE IN AN UNDAMAGED CONDITION. AT COMPLETION OF CONSTRUCTION ACTIVITIES OF OTHER TRADES, TOUCH UP AND RESTORE DAMAGED OR DEFACED PAINTED SURFACES.

EXTERIOR PAINT SCHEDULE:
SUBJECT TO COMPLIANCE WITH REQUIREMENTS, PROVIDE THE GIVEN BASIS OF DESIGN PRODUCT DEFINED WITHIN EACH CATEGORY OR COMPARABLE PRODUCT BY ONE OF THE FOLLOWING OR VIA APPROVED SUBSTITUTION REQUEST: BENJAMIN MOORE & COMPANY, PPG PAINTS, RUST-OLEUM, OR SHERWIN WILLIAMS.

ALUMINUM SUBSTRATES:

LATEX SYSTEM, MPI EXT 5.4H
PRIME COAT SHALL BE A PRIMER, QUICK DRY FOR ALUMINUM, MPI #95, AND SHALL BE:

MULTIPRIME 4160/ DEVGUARD 4160
MANUFACTURED BY PPG PROTECTIVE AND MARINE COATINGS
11605 VIMY RIDGE ROAD
ALEXANDER, AR 72002
PHONE: (501) 455-4500

OR

XIM, X SEAL 11301
MANUFACTURED BY RUST-OLEUM
11 HATHORN PARKWAY
VERNON HILLS, IL 60061
PHONE: (847) 367-7700

OR APPROVED EQUAL

INTERMEDIATE COAT SHALL BE LATEX, EXTERIOR, MATCHING TOPCOAT.

TOP COAT SHALL BE A LATEX, EXTERIOR, SEMIGLOSS (MPI GLOSS LEVEL 5), MPI #11, AND SHALL BE:

DURATION, EXTERIOR ACRYLIC COATING
MANUFACTURED BY SHERWIN-WILLIAMS COMPANY
101 WEST PROSPECT AVENUE
CLEVELAND, OH 44115
PHONE: (216) 566-2000

OR

SUN PROOF EXTERIOR SEMI-GLOSS 100% ACRYLIC
LATEX PAINT 78-45XI / 78-45XIC
MANUFACTURED BY PPG

WOOD SUBSTRATES:
LATEX OVER LATEX PRIMER SYSTEM, MPI EXT 6.3L
PRIME COAT SHALL BE A PRIMER, LATEX FOR EXTERIOR WOOD, MPI #6, AND SHALL BE:

PREPRITE PROBLOCK PRIMER/SEALER, INTERIOR/EXTERIOR LATEX B51W00620
MANUFACTURED BY SHERWIN-WILLIAMS COMPANY
101 WEST PROSPECT AVENUE
CLEVELAND, OH 44115
PHONE: (216) 566-20000

OR

PPG PAINTS, SEAL GRIP INTERIOR/EXTERIOR ACRYLIC UNIVERSAL PRIMER/SEALER 17-921XI SERIES
MANUFACTURED BY PPG
ONE PPG PLACE
PITTSBURGH, PA 15272
PHONE: (412) 434-3131

OR APPROVED EQUAL

INTERMEDIATE COAT SHALL BE LATEX, EXTERIOR, MATCHING TOPCOAT.

TOP COAT SHALL BE A LATEX, EXTERIOR, SEMI-GLOSS (MPI GLOSS LEVEL 5), MPI #111, AND SHALL BE:

DURATION, EXTERIOR ACRYLIC COATING
MANUFACTURED BY SHERWIN-WILLIAMS COMPANY
101 WEST PROSPECT AVENUE
CLEVELAND, OH 44115
PHONE: (216) 566-2000

OR

SUN PROOF EXTERIOR SEMI-GLOSS 100% ACRYLIC
LATEX PAINT 78-45XI / 78-45XIC
MANUFACTURED BY PPG
ONE PPG PLACE
PITTSBURGH, PA 15272
PHONE: (412) 434-3131

OR APPROVED EQUAL

MEASUREMENT AND PAYMENT:
PAYMENT SHALL INCLUDE FULL COMPENSATION FOR MATERIAL, TOOLS, EQUIPMENT, LABOR AND ACCESS TO COMPLETE THE REPAIRS. THE ACCEPTED QUANTITIES FOR THE COMPLETED WORK AS DESCRIBED WILL BE PAID FOR USING THE FOLLOWING CONTRACT ITEM (PAY ITEM):

ITEM	UNIT	DESCRIPTION
514	LUMP	FIELD PAINTING, MISC.: PAINTING OF EXISTING OPERATOR'S HOUSE

ITEM 516 - STRUCTURAL JOINT OR JOINT SEALER, MISC.: EAST ABUTMENT MEDIAN EXPANSION JOINT RETROFIT

DESCRIPTION:
THIS WORK CONSISTS OF REMOVAL AND REPLACEMENT OF THE SLIDING PLATE COMPONENTS OF THE MEDIAN JOINT LOCATED AT THE EAST ABUTMENT EXPANSION JOINT. REMOVAL OF THE EXISTING JOINT COVER PLATE COMPONENTS ON BOTH SIDES OF THE EXPANSION JOINT DOWN TO THE DECK JOINT ARMOR, REMOVAL OF THE EXISTING PORTIONS OF THE EAST ABUTMENT MEDIAN AND BACKWALL DESIGNATED FOR REMOVAL, INSTALLATION OF THE NEW JOINT COVER PLATE COMPONENTS, AND INSTALLATION OF THE NEW PORTIONS OF BACKWALL AS SHOWN IN THE PLANS ARE CONSIDERED INCIDENTAL TO THIS ITEM.

MEASUREMENT AND PAYMENT:
PAYMENT SHALL INCLUDE FULL COMPENSATION FOR MATERIAL, TOOLS, EQUIPMENT, LABOR AND ACCESS TO COMPLETE THE REPAIRS. PAYMENT FOR CUTTING, GRINDING, WELDING, DRILLING OF DOWEL HOLES, DOWELING, AND CLEANING AS PART OF THIS REPAIR IS CONSIDERED INCIDENTAL FOR PAYMENT IN THIS ITEM. THE ACCEPTED QUANTITIES FOR THE COMPLETED WORK AS DESCRIBED WILL BE PAID FOR USING THE FOLLOWING CONTRACT ITEM (PAY ITEM):

ITEM	UNIT	DESCRIPTION
516	EACH	STRUCTURAL JOINT OR JOINT SEALER, MISC.: EAST ABUTMENT MEDIAN EXPANSION JOINT RETROFIT

ITEM 516 - STRUCTURAL JOINT OR JOINT SEALER, MISC.: COMPRESSION JOINT SEAL REPLACEMENT

DESCRIPTION:
THIS ITEM INCLUDES ALL MATERIAL, EQUIPMENT, AND LABOR ASSOCIATED WITH THE REMOVAL OF EXISTING JOINT SEAL AT THE EAST ABUTMENT, CLEANING OF EXISTING JOINT ARMOR TO REMAIN, AND INSTALLATION OF THE NEW JOINT SEAL AS SHOWN IN THE PLANS.

MEASUREMENT AND PAYMENT:
THE ACCEPTED QUANTITIES FOR THE COMPLETED WORK AS DESCRIBED WILL BE MEASURED AND PAID FOR USING THE FOLLOWING CONTRACT ITEM (PAY ITEM):

ITEM	UNIT	DESCRIPTION
516	FT	STRUCTURAL JOINT OR JOINT SEALER, MISC.: COMPRESSION JOINT SEAL REPLACEMENT

DESIGN AGENCY
WSP
1660 WEST 2ND STREET
SUITE 850
CLEVELAND, OHIO 44113

DESIGNED	DRAWN	REVIEWED	DATE
NRF	NRF	WRW	09/11/20
CHECKED	REVISED	STRUCTURE FILE NUMBER	
NBR	---	1869345	

GENERAL NOTES 4 OF 7
CITY OF CLEVELAND BRIDGE NO. 1:003M
CENTER STREET SWING BRIDGE OVER THE CUYAHOGA RIVER

CUY-CENTER ST.
SWING BRIDGE
PID NO: 109597

ITEM 517 - RAILING, MISC.: EAST APPROACH NEW WYOMING RAIL

DESCRIPTION:
THIS WORK CONSISTS OF INSTALLING A NEW WYOMING TYPE BRIDGE RAILING ON THE EAST APPROACH SPAN, AS SHOWN IN THE PLANS.

GENERAL:
FABRICATE AND CONSTRUCT BRIDGE RAILING IN ACCORDANCE WITH CMS SECTIONS 513 AND 517. ALL STEEL IS TO BE GALVANIZED UNLESS NOTED OTHERWISE IN THE PLANS.

FABRICATION:
ENSURE THAT VENTING AND PICK-UP HOLES IN RAILS AND SLEEVES ARE SHOWN ON THE FABRICATOR'S SHOP DRAWINGS. PLACE VENT HOLES ON THE UNDERSIDE OF THE RAIL MEMBERS AS INSTALLED.

ENSURE THAT POST PLATES ARE FLAT AFTER FABRICATION.

GRIND ROUGH EDGES ON POSTS AND RAILS SMOOTH BEFORE GALVANIZING. GALVANIZE RAILING AND HARDWARE IN ACCORDANCE WITH CMS 711.02. IN ADDITION TO THE REQUIREMENTS OF AASHTO M 111, ENSURE THAT THE GALVANIZING IS FREE OF GENERAL ROUGHNESS, DROSS PIMPLES, BLISTERS, AND WET STORAGE STRAIN.

USE NONMETALLIC SPACERS AT LEAST 1½" THICK TO SEPARATE RAILS BUNDLED TOGETHER FOR STORAGE OR SHIPMENT. ENSURE THAT METAL BUNDLING STRAPS DO NOT TOUCH THE RAILS.

ERECTION:
AFTER INSTALLING RAIL ELEMENTS, PAINT THE EXPOSE RAIL BOLT THREADS WITH TWO COATS OF ZINC-RICH PAINT IN ACCORDANCE WITH ASTM A 780.

PLACE AND PROPERLY ALIGN RAILING POSTS BEFORE PLACING NEW CONCRETE.

MEASUREMENT AND PAYMENT:
PAYMENT SHALL INCLUDE FULL COMPENSATION FOR MATERIAL, TOOLS, EQUIPMENT, LABOR AND ACCESS TO COMPLETE THE REPAIRS. PAYMENT FOR CUTTING, GRINDING, AND CLEANING AS PART OF THIS REPAIR IS CONSIDERED INCIDENTAL FOR PAYMENT IN THIS ITEM. THE ACCEPTED QUANTITIES FOR THE COMPLETED WORK AS DESCRIBED WILL BE PAID FOR USING THE FOLLOWING CONTRACT ITEM (PAY ITEM):

ITEM	UNIT	DESCRIPTION
517	FT	RAILING, MISC.: EAST APPROACH NEW WYOMING RAIL

ITEM 519 - PATCHING CONCRETE STRUCTURE, AS PER PLAN

DESCRIPTION:
CONCRETE SURFACES SHALL BE PATCHED IN ACCORDANCE WITH CMS 519 AND THE FOLLOWING ADDITIONS.

ESTIMATED PATCHING QUANTITIES ARE BASED ON THE 2019 INSPECTION OF THE STRUCTURE. AREAS TO BE PATCHED HAVE BEEN DETAILED IN THE PLANS. IT IS POSSIBLE THAT ADDITIONAL AREAS REQUIRING PATCHING MAY HAVE DEVELOPED SINCE THE 2019 INSPECTION OF THE STRUCTURE. THEREFORE, THE CONTRACTOR SHALL SOUND AND MARK THE SURROUNDING PERIMETER OF THE AREA TO BE PATCHED AND PATCH NEW AREAS APPROVED BY THE ENGINEER THAT HAVE NOT BEEN DETAILED IN THE PLANS.

PRIOR TO THE SURFACE CLEANING SPECIFIED IN 519.04 AND WITHIN 24 HOURS OF PLACING PATCHING MATERIAL, SANDBLAST OR WATERBLAST EXPOSED SURFACES TO REMOVE LOOSE CONCRETE CHIPS AND SURFACE LAITANCE. EXPOSED REINFORCING IS TO BE SANDBLASTED OR WIRE BRUSH CLEANED AND COATED WITH ZINC RICH COATING.

MEASUREMENT AND PAYMENT:
PAYMENT SHALL INCLUDE FULL COMPENSATION FOR MATERIAL, TOOLS, EQUIPMENT, LABOR AND ACCESS TO COMPLETE THE REPAIRS. PAYMENT FOR CUTTING, GRINDING, DRILLING OF DOWEL HOLES, AND CLEANING AS PART OF THIS REPAIR IS CONSIDERED INCIDENTAL FOR PAYMENT IN THIS ITEM. THE ACCEPTED QUANTITIES FOR THE COMPLETED WORK AS DESCRIBED WILL BE MEASURED AND PAID FOR USING THE FOLLOWING CONTRACT ITEM (PAY ITEM):

ITEM	UNIT	DESCRIPTION
519	SF	PATCHING CONCRETE STRUCTURE, AS PER PLAN

ITEM 609 - CONCRETE MEDIAN, AS PER PLAN

DESCRIPTION:
THIS WORK CONSISTS OF INSTALLING A NEW MEDIAN ON THE EAST APPROACH SLAB AS SHOWN IN THE PLANS. THIS WORK ALSO INCLUDES SEALING OF THE MEDIAN AND SEALING OF THE CONSTRUCTION JOINT WITH HMWM.

MEASUREMENT AND PAYMENT:
PAYMENT SHALL INCLUDE FULL COMPENSATION FOR MATERIAL, TOOLS, EQUIPMENT, LABOR AND ACCESS TO COMPLETE THE REPAIRS. PAYMENT FOR CUTTING, GRINDING, CLEANING, SEALING, AND DOWELING AS PART OF THIS REPAIR IS CONSIDERED INCIDENTAL FOR PAYMENT IN THIS ITEM. THE ACCEPTED QUANTITIES FOR THE COMPLETED WORK AS DESCRIBED WILL BE PAID FOR USING THE FOLLOWING CONTRACT ITEM (PAY ITEM):

ITEM	UNIT	DESCRIPTION
609	SY	CONCRETE MEDIAN, AS PER PLAN

ITEM SPECIAL - REPLACEMENT OF STRUCTURAL FASTENER, AS DIRECTED BY ENGINEER

DESCRIPTION:
THIS WORK CONSISTS OF REMOVING EXISTING STRUCTURAL FASTENERS AND REPLACING WITH NEW HIGH STRENGTH BOLTS, AS DIRECTED BY ENGINEER IN THE FIELD.

A CONTINGENCY QUANTITY OF 100 EACH HAS BEEN INCLUDED.

RIVET REMOVAL PROCEDURE:
THE PROCEDURE FOR RIVET REMOVAL AND PREPARATION OF THE EXISTING HOLES FOR NEW BOLTS SHALL BE AS FOLLOWS:

RIVET REMOVAL - EXISTING RIVETS MAY BE REMOVED BY FIRST SAW CUTTING OR CHISELING HEADS OFF AND THEN REMOVING THE REMAINDER OF THE RIVET BY CHISELING OR OTHER MECHANICAL METHOD MEETING WITH THE APPROVAL OF THE ENGINEER. AT NO TIME SHALL FLAME CUTTING OR LANCING BE ALLOWED. CARE SHALL BE TAKEN TO ENSURE THAT REMOVAL OF THE EXISTING FASTENERS CAUSES NO DAMAGE TO THE CONNECTED ELEMENTS THAT ARE TO REMAIN. THE CONTRACTOR SHALL SUBMIT FOR APPROVAL A METHOD OF REPAIR TO THE ENGINEER FOR ANY EXISTING ELEMENTS DAMAGED DURING RIVET REMOVAL. ALL REPAIRS TO DAMAGED STEEL SHALL BE MADE AT NO ADDITIONAL COST TO THE PROJECT.

REAMING - OPEN RIVET HOLES THAT WILL RECEIVE NEW HIGH STRENGTH BOLTS SHALL BE PROPERLY SIZED TO A DIAMETER THAT IS ONE-SIXTEENTH INCH (1/16") LARGER THAN THE NEW BOLTS. IN THE EVENT THAT THE EXISTING RIVET HOLE IS NOT ADEQUATE TO ACCEPT THE NEW SPECIFIED BOLT, THE HOLE SHALL BE DRILLED OR REAMED AS REQUIRED TO PROVIDE A PROPER SIZED HOLE.

MEASUREMENT AND PAYMENT:
PAYMENT SHALL INCLUDE FULL COMPENSATION FOR MATERIAL, TOOLS, EQUIPMENT, LABOR AND ACCESS TO COMPLETE THE REPAIRS. PAYMENT FOR CHISELING, CUTTING, DRILLING, REAMING AND GRINDING AS PART OF THIS REPAIR IS CONSIDERED INCIDENTAL FOR PAYMENT IN THIS ITEM. THE ACCEPTED QUANTITIES FOR THE COMPLETED WORK AS DESCRIBED WILL BE PAID FOR USING THE FOLLOWING CONTRACT ITEM (PAY ITEM):

ITEM	UNIT	DESCRIPTION
SPECIAL	EACH	REPLACEMENT OF STRUCTURAL FASTENER, AS DIRECTED BY ENGINEER

ITEM SPECIAL - FIELD WELDING, AS DIRECTED BY ENGINEER

DESCRIPTION:
THIS WORK CONSISTS OF REMOVING EXISTING WELD MATERIAL AND RE-WELDING AREAS, AS DIRECTED BY ENGINEER IN THE FIELD. THIS WORK IS TO BE COMPLETED AFTER BLASTING OPERATIONS AND BEFORE PRIME COAT APPLICATION. CONTRACTOR SHALL SUBMIT WELDING PROCEDURE TO ENGINEER FOR APPROVAL.

A CONTINGENCY QUANTITY OF 10 FEET HAS BEEN INCLUDED.

MEASUREMENT AND PAYMENT:
PAYMENT SHALL INCLUDE FULL COMPENSATION FOR MATERIAL, TOOLS, EQUIPMENT, LABOR AND ACCESS TO COMPLETE THE REPAIRS. GRINDING AS PART OF THIS REPAIR IS CONSIDERED INCIDENTAL FOR PAYMENT IN THIS ITEM. THE ACCEPTED QUANTITIES FOR THE COMPLETED WORK AS DESCRIBED WILL BE PAID FOR USING THE FOLLOWING CONTRACT ITEM (PAY ITEM):

ITEM	UNIT	DESCRIPTION
SPECIAL	FT	FIELD WELDING, AS DIRECTED BY ENGINEER

ITEM SPECIAL - CONCRETE FILLED GRID STEEL ROADWAY DECK

DESCRIPTION:
THIS WORK CONSISTS OF INSTALLING NEW CONCRETE FILLED GRID STEEL DECK ON THE ROADWAY. THE CONCRETE FILLED GRID STEEL ROADWAY DECK SHALL BE A CUSTOMIZED NON-SERRATED, GALVANIZED RIVETED RETICULINE GRID DECK WITH DIMENSIONS AS SHOWN ON THE PLANS, AND ABLE TO WITHSTAND AN HS20 WHEEL LOADING FOR THE REQUIRED SPAN. THE CUSTOM GRID SHALL BE:

37 R 5, LITE 5 3/16" x 1/4" RIVETED GRATING MANUFACTURED BY OHIO GRATINGS
5299 SOUTHWAY ST. SW, CANTON, OHIO 44706 PHONE: (330) 477-6707

OR SIMILAR RIVETED GRID MANUFACTURED BY

IKG INDUSTRIES
1514 S. SHELDON ROAD, CHANNELVIEW, TX 77530 PHONE: (704) 220-6350

OR APPROVED EQUAL

OR APPROVED EQUAL. SUBMIT THE CATALOG CUT AND GEOMETRIC DOCUMENTATION OF THE ABOVE GRID OR EQUAL TO THE ENGINEER FOR APPROVAL. THE CONNECTIONS OF THE GRID PANELS TO THE STRINGERS SHALL BE AS SHOWN ON THE PLANS. THIS ITEM INCLUDES THE CONCRETE FILL. ALL STEEL FOR THIS ITEM SHALL MEET THE CVN REQUIREMENTS IN CMS 711.01, AND SHALL BE GALVANIZED AS PER CMS 711.02. CONTRACTOR IS TO REPAIR ANY GALVANIZED AREAS DAMAGED BY WELDING OPERATIONS PER CMS 711.02 PRIOR TO STEEL PAINTING OPERATIONS. CONCRETE FILL SHALL BE NORMAL WEIGHT CONCRETE, CLASS QC2. PANS SHALL BE INSTALLED FLUSH AN UNIFORM ACROSS THE BOTTOM OF THE GRATING.

MEASUREMENT AND PAYMENT:
PAYMENT SHALL INCLUDE FULL COMPENSATION FOR MATERIAL, TOOLS, EQUIPMENT, LABOR AND ACCESS TO COMPLETE THE WORK. PAYMENT FOR WELDING, GRINDING, SHOP DRAWINGS, FABRICATION OF NEW PANELS, FURNISHING, INSTALLATION, CONNECTIONS AND CONCRETE FILL AS PART OF THIS WORK IS CONSIDERED INCIDENTAL FOR PAYMENT IN THIS ITEM. THE ACCEPTED QUANTITIES FOR THE COMPLETED WORK AS DESCRIBED WILL BE PAID FOR USING THE FOLLOWING CONTRACT ITEM (PAY ITEM):

ITEM	UNIT	DESCRIPTION
SPECIAL	SF	CONCRETE FILLED GRID STEEL ROADWAY DECK

ITEM SPECIAL - OPEN GRID STEEL ROADWAY DECK

DESCRIPTION:
THIS WORK CONSISTS OF INSTALLING NEW OPEN GRID STEEL DECK ON THE ROADWAY. THE OPEN FILLED GRID STEEL ROADWAY DECK SHALL BE A CUSTOMIZED SERRATED, GALVANIZED RIVETED RETICULINE GRID DECK WITH DIMENSIONS AS SHOWN ON THE PLANS, AND ABLE TO WITHSTAND AN HS20 WHEEL LOADING FOR THE REQUIRED SPAN. THE CUSTOM GRID SHALL BE:

37 R 5, LITE 5 3/16" x 1/4" RIVETED GRATING MANUFACTURED BY OHIO GRATINGS
5299 SOUTHWAY ST. SW, CANTON, OHIO 44706 PHONE: (330) 477-6707

OR SIMILAR RIVETED GRID MANUFACTURED BY

IKG INDUSTRIES
1514 S. SHELDON ROAD, CHANNELVIEW, TX 77530 PHONE: (704) 220-6350

OR APPROVED EQUAL.

SUBMIT THE CATALOG CUT AND GEOMETRIC DOCUMENTATION OF THE ABOVE GRID OR EQUAL TO THE ENGINEER FOR APPROVAL. THE CONNECTIONS OF THE GRID PANELS TO THE STRINGERS SHALL BE AS SHOWN ON THE PLANS. ALL STEEL FOR THIS ITEM SHALL MEET THE CVN REQUIREMENTS IN CMS 711.01, AND SHALL BE GALVANIZED AS PER CMS 711.02. CONTRACTOR IS TO REPAIR ANY GALVANIZED AREAS DAMAGED BY WELDING OPERATIONS PER CMS 711.02 PRIOR TO PAINTING OPERATIONS.

MEASUREMENT AND PAYMENT:
PAYMENT SHALL INCLUDE FULL COMPENSATION FOR MATERIAL, TOOLS, EQUIPMENT, LABOR AND ACCESS TO COMPLETE THE WORK. PAYMENT FOR WELDING, GRINDING, SHOP DRAWINGS, FABRICATION OF NEW PANELS, FURNISHING, INSTALLATION, AND CONNECTIONS AS PART OF THIS WORK IS CONSIDERED INCIDENTAL FOR PAYMENT IN THIS ITEM. THE ACCEPTED QUANTITIES FOR THE COMPLETED WORK AS DESCRIBED WILL BE PAID FOR USING THE FOLLOWING CONTRACT ITEM (PAY ITEM):

ITEM	UNIT	DESCRIPTION
SPECIAL	SF	OPEN GRID STEEL ROADWAY DECK

DESIGN AGENCY
WSP
1660 WEST 2ND STREET
SUITE 850
CLEVELAND, OHIO 44113

DESIGNED	DRAWN	REVIEWED	DATE
NRF	NRF	WRW	09/11/20
CHECKED	REVISED	STRUCTURE FILE NUMBER	
NBR	---	1869345	

GENERAL NOTES 5 OF 7
CITY OF CLEVELAND BRIDGE NO. 1:003M
CENTER STREET SWING BRIDGE OVER THE CUYAHOGA RIVER

CUY-CENTER ST.
SWING BRIDGE
PID NO: 109597

ITEM SPECIAL - FIBERGLASS OPEN GRID DECK

DESCRIPTION:
THIS WORK CONSISTS OF INSTALLING NEW FIBERGLASS OPEN GRID DECK ON BOTH SIDEWALKS OF THE SWING SPAN TRUSS. THE FIBERGLASS GRID SHALL BE A 2" DEEP COMPOSITE FIBERGLASS REINFORCED GRID, COVERED WITH A BONDED GRIT ANTI- SKID SURFACE AND ULTRAVIOLET INHIBITOR. THE GRID CROSS BARS SHALL BE 6" ON CENTER. THE GRID MUST BE CAPABLE OF WITHSTANDING A UNIFORM LOAD OF 100 PSF OVER THE REQUIRED SPAN WITH ¼" DEFLECTION OR LESS. THE GRID SHALL A MAXIMUM CLEAR OPENING OF ½" BETWEEN BARS TO CONFORM TO ADA STANDARDS.

THE GRID SHALL BE:

DURAGRID T-3300, WITH 2" T BEARING BARS SPACED 1½" ON CENTER WITH "INSERT CLIP" TYPE CONNECTORS MANUFACTURED BY STRONGWELL CHATFIELD DIVISION
1610 HIGHWAY 52 SOUTH, CHATFIELD, MINNESOTA
55923-9799.
PHONE: (507) 867-3479

OR

SAFE-T-SPAN T3320, WITH 2" T BEARING BARS SPACED 1½" ON CENTER WITH "FC-3" TYPE CONNECTORS MANUFACTURED BY FIBERGRATE
5151 BELTLINE RD, SUITE 1212
DALLAS, TEXAS 75254
PHONE: (800) 527-4043

OR APPROVED EQUAL. THE GRID SHALL BE THE STANDARD GRAY AS SUPPLIED BY THE MANUFACTURERS.

THE HOLD-DOWN CONNECTIONS AND QUANTITY FOR THE FIBERGLASS GRID AND THE PANEL CONNECTIONS BETWEEN ADJACENT GRID PANELS SHALL BE AS RECOMMENDED BY THE MANUFACTURER; HOWEVER, NO SURFACE MOUNTED CONNECTIONS SHALL BE USED, AND THE CONNECTORS SHALL BE MADE OF STAINLESS STEEL. NO LESS THAN 9 HOLD DOWN CLIPS PER PANEL IS REQUIRED. THE CONNECTION BOLTS TO THE FIBERGLASS GRID CONNECTIONS ARE INCIDENTAL TO THE COST OF THE FIBERGLASS GRID. SUBMIT GRID CATALOG CUT, CONNECTION AND GEOMETRIC DOCUMENTATION OF ABOVE GRID OR EQUAL TO THE ENGINEER FOR APPROVAL.

MEASUREMENT AND PAYMENT:
THE ACCEPTED QUANTITIES FOR THE COMPLETED WORK AS DESCRIBED WILL BE MEASURED AND PAID FOR USING THE FOLLOWING CONTRACT ITEM (PAY ITEM):

ITEM	UNIT	DESCRIPTION
SPECIAL	SF	FIBERGLASS OPEN GRID DECK

ITEM 519 - PATCHING CONCRETE BRIDGE DECK OVERLAY WITH MICRO-SILICA MODIFIED CONCRETE

DESCRIPTION:
THIS ITEM SHALL CONSIST OF FURNISHING ALL NECESSARY LABOR, MATERIALS, AND EQUIPMENT TO REPAIR THE CONCRETE WEARING SURFACE, INCLUDING THE REMOVAL OF LOOSE AND UNSOUND CONCRETE, BITUMINOUS PATCHES, SURFACE PREPARATION, BONDING COAT, AND THE MIXING, PLACING, FINISHING, CURING, COMPRESSIVE STRENGTH TESTING AND SEALING OF ALL PATCHES AS SHOWN IN THE PLANS AND DIRECTED BY THE ENGINEER.

FOR INFORMATION REGARDING MATERIAL REQUIREMENTS AND THE SEQUENCE OF CONSTRUCTION FOR THIS ITEM, REFER TO PROPOSAL NOTE 511.

MEASUREMENT AND PAYMENT:
THE ACCEPTED QUANTITIES FOR THE COMPLETED WORK AS DESCRIBED WILL BE MEASURED AS THE ACTUAL AREA OF DECK REPAIRED. THE QUANTITY MEASURED SHALL INCLUDE ALL ACCESS, LABOR, MATERIALS, EQUIPMENT AND INCIDENTALS NECESSARY TO PERFORM THE WORK AND SHALL BE PAID FOR UNDER THE FOLLOWING CONTRACT ITEM (PAY ITEM):

ITEM	UNIT	DESCRIPTION
519	SQ YD	PATCHING CONCRETE BRIDGE DECK OVERLAY WITH MICRO-SILICA MODIFIED CONCRETE

ITEM SPECIAL - RELOCATE OPERATOR'S HOUSE STAIRS

DESCRIPTION:
THIS WORK CONSISTS OF ALL ACCESS, LABOR, MATERIALS, AND EQUIPMENT NECESSARY TO REMOVE THE EXISTING OPERATOR'S HOUSE STAIRS AND INSTALL NEW OPERATOR'S HOUSE STAIRS, ACCESS PLATFORMS AND ASSOCIATED SECURITY FENCING, ON THE STAIRS, PLATFORM, AND OPERATOR'S HOUSE AS DETAILED IN THE PLANS.

CONTRACTOR IS TO ENSURE THAT TEMPORARY ACCESS TO THE OPERATOR'S HOUSE IS MAINTAINED THROUGHOUT THE DURATION OF THE WORK.

CONTRACTOR IS TO COORDINATE WITH CITY OF CLEVELAND TO HAVE THEM REMOVE THE PROPRIETARY LOCK FROM THE EXISTING SECURITY GATE PRIOR TO DEMOLITION AND INSTALL A NEW LOCK ON NEW SECURITY GATE AFTER INSTALLATION. CONTACT DAVID PECK (DPeck@city.cleveland.oh.us) ONE WEEK PRIOR TO REMOVAL OR INSTALLATION TO COORDINATE THIS WORK.

REMOVAL OF EXISTING SECURITY FENCING, SUPPORTS AND GATE, INSTALLATION OF NEW SECURITY FENCING, SUPPORTS AND GATE, STAIR TREADS AND ASSOCIATED ATTACHMENTS, PLATFORM GRATING AND ASSOCIATED ATTACHMENTS, REMOVAL OF BRIDGE RAILING, INSTALLATION OF NEW BRIDGE RAILING AND PLATFORMS, AND INSTALLATION OF NEW TRANSFORMER SUPPORT PLATFORM MEMBERS ARE ALSO INCLUDED AS PART OF THIS PAY ITEM. THE STRUCTURAL STEEL MEMBERS FOR THE PLATFORM AND STAIR MEMBERS SHALL BE GRADE 50. PLATFORM GRATING AND STAIRS TREADS SHALL BE A 2" FIBERGLASS GRID DECK. THE FIBERGLASS GRID SHALL BE A 2" DEEP COMPOSITE FIBERGLASS REINFORCED GRID, COVERED WITH A BONDED GRIT ANTI- SKID SURFACE AND ULTRAVIOLET INHIBITOR. THE GRID CROSS BARS SHALL BE 6" ON CENTER. THE GRID MUST BE CAPABLE OF WITHSTANDING A UNIFORM LOAD OF 100 PSF OVER THE REQUIRED SPAN WITH 1/4" DEFLECTION OR LESS. THE GRID SHALL A MAXIMUM CLEAR OPENING OF 1/2" BETWEEN BARS TO CONFORM TO ADA STANDARDS.

SECURITY FENCING AND GATE REQUIREMENTS:
THE SECURITY FENCING TO BE INSTALLED AS PART OF THIS ITEM SHALL BE VANDAL PROOF EXPANDED METAL FENCE AND GATE OUTLINED BELOW. FENCING IS TO BE PLACED AROUND THE STAIRS, PLATFORM, AND OPERATOR'S HOUSE AS DETAILED IN THE PLANS.

THE SYSTEM WILL INCLUDE CARBON STEEL HIGH SECURITY EXPANDED METAL MESH PANELS AND FITTINGS.

THE MANUFACTURER SHALL HAVE A MINIMUM OF 10 YEARS EXPERIENCE IN THE MANUFACTURE OF EXPANDED METAL FENCING. THE CONTRACTOR SHALL PROVIDE INSTALLERS THAT ARE EXPERIENCED WITH THE INSTALLATION OF EXPANDED METAL SECURITY FENCING.

THE FENCE AND GATE SHALL ADHERE TO THE MANUFACTURER'S DESIGN AND INSTALLATION SPECIFICATIONS AND ASTM F2548-12 - EXPANDED METAL FENCE SYSTEMS FOR SECURITY PURPOSES.

THE EXPANDED CARBON STEEL MESH PANELS SHALL HAVE THE FOLLOWING PROPERTIES.

A. TYPE: ¾" #9R
B. STRAND WIDTH: 0.150"
C. STRAND THICKNESS: 0.134"
D. SWD: 0.923"
E. LWD: 2.0"
F. PERCENT OPEN AREA: 68%
G. GALVANIZED WEIGHT PER SQ. FT: 1.98 LBS

THE POSTS, FRAMES, AND HORIZONTAL RAILS SHALL MEET THE MANUFACTURER'S SPECIFICATIONS FOR THE DIFFERENT LOCATIONS, HEIGHTS, AND AREAS SHOWN IN THE PLANS.

THE SECURITY GATE SHALL HAVE THE FOLLOWING PROPERTIES:
A. TYPE: SINGLE SWING PEDESTRIAN GATE
B. GATE FRAME: 1.90" ROUND PIPE FULLY WELDED
C. MESH TO ATTACH TO OUTSIDE OF FRAME WITH FITTINGS
D. STANDARD INDUSTRIAL HINGES TO MATCH POST SIZE
E. TRUSS ROD TIGHTENERS, POST CAPS, AND BRACKETS WILL BE IRON OR STEEL HOT DIPPED GALVANIZED IN ACCORDANCE WITH ASTM F626

THE EXPANDED METAL FENCE PANELS SHALL BE INSTALLED USING HOT DIP GALVANIZED STEEL FITTINGS SIZED TO THE FRAMEWORK SPECIFIC TO THE PROJECT. 11 GAGE x 1" STEEL BANDS SHALL BE SIZED TO MATCH THE OUTSIDE DIAMETER OF THE TERMINAL, CORNER, AND GATE POSTS AND SHALL BE USED TO ATTACH EXPANDED METAL MESH TO POSTS.

C-CLAMPS SHALL BE USED TO ATTACH EXPANDED METAL MESH TO LINE POSTS AND RAILS. 11 GAGE x 1" STEEL BAR CLAMPS SHALL BE USED IN PAIRS TO JOIN MESH VERTICALLY BETWEEN RAILS. NUTS AND BOLTS SHALL BE STAINLESS STEEL CARRIAGE BOLTS WITH BREAKAWAY NUTS TO MAXIMIZE SECURITY. BOLT SIZE IS CONTINGENT ON MESH AND FITTINGS. 14 GAGE PRESSED STEEL RAIL CLAMPS SHALL BE USED TO SECURE RAILS TO POSTS.

THE GATE SHALL BE OF A WELDED CONSTRUCTION AND BE DESIGNED TO OPERATE UNDER THE ADDED WEIGHT OF THE EXPANDED METAL SECURITY MESH PANELS AND THE AFFECTS OF ADDITIONAL WIND LOADING. THE GATE SHALL BE DESIGNED PER ASTM F900 SPECIFICATION FOR INDUSTRIAL AND COMMERCIAL SWING GATES.

THE GATE SHALL BE COVERED WITH MESH FABRIC AND SHALL FIT FLUSH ON ALL SIDES OF THE GATE FRAME ALLOWING NO OPEN SPACES BETWEEN THE FABRIC AND THE GATE FRAME. 11 GAGE x 1" STEEL BANDS SHALL SECURE THE MESH TO THE GATE FRAME.

ALTERNATIVELY THE EXPANDED METAL MESH CAN BE BE WELDED DIRECTLY TO THE GATE FRAME. USE 11 GAGE x 1" STEEL C-CLAMPS FOR BRACING. C-CLAMPS SHALL BE SPACED NO MORE THAN 16H APART ON GATE BRACES. GATE HINGES SHALL BE STRUCTURALLY CAPABLE OF SUPPORTING THE GATE LEAF AND ALLOW THE GATE TO OPEN AND CLOSE WITHOUT BINDING. THE INSTALLED GATE LATCH SHALL BE CAPABLE OF RETAINING THE GATE IN A CLOSED POSITION.

INSTALLATION AND LAYOUT OF THE FENCE SHALL BE APPROVED BY THE OWNER PRIOR TO FABRICATION VIA SHOP DRAWING SUBMITTAL. INSTALL POSTS PLUMB AND SET ON CENTER PER MANUFACTURER'S DRAWINGS. INSTALL ALL RAIL LINES LEVEL. THE BOTTOM RAIL SHALL BE INSTALLED 3" TO 6" FROM ABOVE THE BOTTOM OF THE EXPANDED METAL PANEL. THE TOP RAIL SHALL BE INSTALLED 3" TO 6" FROM THE TOP OF THE EXPANDED METAL PANEL. EXPANDED METAL PANELS SHALL FIT FLUSH TO ALL END POSTS, GATE POSTS, AND GATE FRAMES. TOUCH UP, REPAIR, OR REPLACE DAMAGED PRODUCTS BEFORE SUBSTANTIAL COMPLETION.

NEW SECURITY GATE AND DECORATIVE GATE LOCKING MECHANISMS ARE TO BE PROVIDED AND INSTALLED BY CITY PERSONNEL AFTER INSTALLATION OF NEW GATES.

MEASUREMENT AND PAYMENT:
PAYMENT SHALL INCLUDE FULL COMPENSATION FOR MATERIAL, TOOLS, EQUIPMENT, LABOR AND ACCESS TO COMPLETE THE WORK. PAYMENT FOR CUTTING, GRINDING, DRILLING, WELDING, AND PREPARATION OF SHOP DRAWINGS AS PART OF THIS WORK IS CONSIDERED INCIDENTAL FOR PAYMENT IN THIS ITEM. THE ACCEPTED QUANTITIES FOR THE COMPLETED WORK AS DESCRIBED WILL BE PAID FOR USING THE FOLLOWING CONTRACT ITEM (PAY ITEM):

ITEM	UNIT	DESCRIPTION
SPECIAL	LUMP	RELOCATE OPERATOR'S HOUSE STAIRS

ITEM SPECIAL - COUNTERWEIGHT MODIFICATION

DESCRIPTION:
THIS WORK CONSISTS MODIFYING THE EXISTING VARIABLE COUNTERWEIGHT TRAYS AND INSTALLING NEW ACCESS HATCHES AS SHOWN IN THE PLANS. RELOCATION OF EXISTING COUNTERWEIGHT BLOCKS IN THE AREAS OF THE VARIABLE COUNTERWEIGHT TRAYS IS ALSO INCLUDED IN THIS ITEM. STEEL TO BE USED IN THIS ITEM SHALL BE A MINIMUM OF GRADE A36 AND HINGES SHALL BE STAINLESS STEEL.

MEASUREMENT AND PAYMENT:
PAYMENT SHALL INCLUDE FULL COMPENSATION FOR ALL MATERIAL, TOOLS, EQUIPMENT, LABOR AND ACCESS TO COMPLETE THE WORK. PAYMENT FOR CUTTING, GRINDING, DRILLING, AND WELDING AS PART OF THIS WORK IS CONSIDERED INCIDENTAL FOR PAYMENT IN THIS ITEM. THE ACCEPTED QUANTITIES FOR THE COMPLETED WORK AS DESCRIBED WILL BE PAID FOR USING THE FOLLOWING CONTRACT ITEM (PAY ITEM):

ITEM	UNIT	DESCRIPTION
SPECIAL	LUMP	COUNTERWEIGHT MODIFICATION

ITEM SPECIAL - REPLACEMENT OF PIVOT PIER ENCLOSURE PANELS

DESCRIPTION:
THIS WORK CONSISTS OF REMOVING THE EXISTING PANELS ON THE PIVOT PIER ENCLOSURE AND REPLACING THEM WITH NEW PANELS. PANELS SHALL BE 40"X40"X26 GAGE CORRUGATED STEEL TO MATCH EXISTING FABRAL U-PANELS. ENGINEER IS TO IDENTIFY PANELS FOR REPLACEMENT. CONTRACTOR SHALL CUT NEW PANELS TO MATCH EXISTING PANEL TO BE REPLACED.

A QUANTITY OF 8 PANELS WAS ASSUMED FOR THIS WORK.

MEASUREMENT AND PAYMENT:
PAYMENT SHALL INCLUDE FULL COMPENSATION FOR ALL MATERIAL, TOOLS, EQUIPMENT, LABOR AND ACCESS TO COMPLETE THE WORK. PAYMENT FOR ATTACHMENT TO STRUCTURE, SUPPORT, CAULKING AND CUTTING AS PART OF THIS WORK IS CONSIDERED INCIDENTAL FOR PAYMENT IN THIS ITEM. THE ACCEPTED QUANTITIES FOR THE COMPLETED WORK AS DESCRIBED WILL BE PAID FOR USING THE FOLLOWING CONTRACT ITEM (PAY ITEM):

ITEM	UNIT	DESCRIPTION
SPECIAL	EACH	REPLACEMENT OF PIVOT PIER ENCLOSURE PANELS

DESIGN AGENCY
1660 WEST 2ND STREET
SUITE 850
CLEVELAND, OHIO 44113

DESIGNED	DRAWN	REVIEWED	DATE
NRF	NRF	WRW	09/11/20
CHECKED	REVISED	STRUCTURE FILE NUMBER	
NBR	---	1869345	

GENERAL NOTES 6 OF 7
CITY OF CLEVELAND BRIDGE NO. 1:003M
CENTER STREET SWING BRIDGE OVER THE CUYAHOGA RIVER

CUY-CENTER ST.
SWING BRIDGE
PID NO: 109597

ITEM SPECIAL - WARNING GATE FOUNDATIONS

DESCRIPTION:
THIS WORK INCLUDES ALL LABOR, MATERIALS, AND EQUIPMENT NECESSARY REMOVE THE EXISTING CONCRETE WARNING GATE FOUNDATIONS AND FURNISH NEW CONCRETE FOUNDATIONS, AS SHOWN IN THE PLANS. THIS ITEM INCLUDES EXCAVATION AS PER CMS 503, EPOXY COATED REINFORCEMENT PER CMS 509, CLASS CONCRETE PER CMS 511, ANCHOR BOLTS PER CMS 730.02, 1" PEJF, AND NON-PERFORATED POLYVINYL CHLORIDE (PVC) PIPE AND FITTINGS. THE ANCHOR BOLTS SHALL BE GALVANIZED AS PER CMS 711.02. THE FOUNDATIONS SHALL BE BUILT TO THE DIMENSIONS AS SHOWN IN THE PLANS.

MEASUREMENT AND PAYMENT:
PAYMENT SHALL INCLUDE FULL COMPENSATION FOR MATERIAL, TOOLS, EQUIPMENT, LABOR AND ACCESS TO COMPLETE THE REMOVAL OF THE EXISTING WARNING GATE FOUNDATIONS AND CONSTRUCTION OF THE NEW WARNING GATE FOUNDATIONS. NEW CONCRETE, REINFORCING BARS, PVC PIPES AND FITTINGS, 1" PEJF AND EXCAVATION ARE INCLUDED FOR PAYMENT IN THIS ITEM. THE ACCEPTED QUANTITIES FOR THE COMPLETED WORK AS DESCRIBED WILL BE MEASURED AND PAID FOR USING THE FOLLOWING CONTRACT ITEM (PAY ITEM):

ITEM	UNIT	DESCRIPTION
690	LUMP	WARNING GATE FOUNDATIONS

ITEM 847 - FULL DEPTH REPAIR, AS PER PLAN

DESCRIPTION:
THIS WORK CONSISTS OF ALL ACCESS, LABOR, MATERIALS, AND EQUIPMENT NECESSARY TO REMOVE AND REPLACE THE EXISTING CONCRETE MEDIAN ON THE EAST APPROACH SPAN FOR THE FULL DEPTH OF THE SLAB, AS DETAILED IN THE PLANS. INSTALLATION OF THE SHEAR STUDS ON THE EXISTING JOINT ARMOR ON THE WEST EXPANSION JOINT WITH THE SWING SPAN AS SHOWN IN THE PLANS IS ALSO CONSIDERED INCIDENTAL TO THIS ITEM.

MEASUREMENT AND PAYMENT
PAYMENT SHALL INCLUDE FULL COMPENSATION FOR MATERIAL, TOOLS, EQUIPMENT, LABOR AND ACCESS TO COMPLETE THE WORK. PAYMENT FOR CHIPPING, CUTTING, GRINDING, DRILLING, AND CLEANING AS PART OF THIS WORK IS CONSIDERED INCIDENTAL FOR PAYMENT IN THIS ITEM. THE ACCEPTED QUANTITIES FOR THE COMPLETED WORK AS DESCRIBED WILL BE PAID FOR USING THE FOLLOWING CONTRACT ITEM (PAY ITEM):

ITEM	UNIT	DESCRIPTION
847	CY	FULL DEPTH REPAIR, AS PER PLAN

ITEM 690 - AS-BUILT CONSTRUCTION PLANS

IN ADDITION TO THE ODOT REQUIREMENTS FOR "AS-BUILT" OR RECORD DRAWINGS. THE FOLLOWING SHALL APPLY AND BE PAID FOR UNDER THIS PAY ITEM.

THE CONTRACTOR SHALL MAINTAIN AND PROVIDE THE ENGINEER WITH RECORD DRAWINGS AS SPECIFIED HEREIN. RECORD DRAWINGS SHALL INCLUDE COMPLETE DOCUMENTATION OF FIELD REVISIONS TO THE CONTRACT DOCUMENTS.

FILING:
1. THE CONTRACTOR SHALL MAINTAIN IN HIS FIELD OFFICE IN A CLEAN, DRY, LEGIBLE CONDITION THE FOLLOWING: CONTRACT DRAWINGS, SPECIFICATIONS, ADDENDA, CONFORMING SHOP DRAWINGS CHANGE ORDERS, OTHER MODIFICATIONS TO THE CONTRACT, TEST RECORDS, SURVEY DATA AND ALL OTHER DOCUMENTS PERTINENT TO THE CONTRACTOR'S WORK.
2. THE CONTRACTOR SHALL PROVIDE FILES AND RACKS FOR PROPER STORAGE AND EASY ACCESS. FILING SHALL BE ESTABLISHED IN A FORMAT ACCEPTABLE TO ODOT.
3. THE CONTRACTOR SHALL MAKE DOCUMENTS AVAILABLE AT ALL TIMES FOR INSPECTION BY ODOT OR THEIR REPRESENTATIVES.
4. RECORD DRAWINGS SHALL NOT BE USED FOR ANY OTHER PURPOSE AND SHALL NOT BE REMOVED FROM THEIR LOCATIONS WITHOUT ODOT APPROVAL.
5. RECORDS MUST BE KEPT CURRENT IN ELECTRONIC FORMAT AND FURNISHED AT ANY TIME THROUGHOUT THE PROJECT. UPON REQUEST.

RECORDING:
1. THE CONTRACTOR SHALL KEEP ALL RECORD DRAWINGS CURRENT
2. THE CONTRACTOR SHALL NOT PERMANENTLY CONCEAL ANY WORK UNTIL REQUIRED INFORMATION HAS BEEN RECORDED.
3. CONTRACT DRAWINGS SHALL BE LEGIBLY MARKED TO RECORD ACTUAL CONSTRUCTION INCLUDING:

   A. DEPTHS OF VARIOUS ELEMENTS OF FOUNDATION IN RELATION TO DATUM.
   B. HORIZONTAL AND VERTICAL LOCATIONS OF UNDERGROUND UTILITIES AND APPURTENANCES REFERENCED TO PERMANENT SURFACE IMPROVEMENTS.
   C. FIELD CHANGES OF DIMENSION AND DETAIL.
   D. CHANGES MADE BY CHANGE ORDER OR FIELD ORDER.
   E. DETAILS NOT ON ORIGINAL CONTRACT DOCUMENTS.

4. SPECIFICATIONS AND ADDENDA. LEGIBLY MARK EACH SECTION TO RECORD:

   A. MANUFACTURER, TRADE NAME, CATALOG NUMBER AND SUPPLIER OF EACH PRODUCT AND ITEM OF EQUIPMENT ACTUALLY INSTALLED.
   B. CHANGES MADE BY CHANGE ORDER OR FIELD ORDER.
   C. OTHER MATTERS NOT ORIGINALLY SPECIFIED.

MAINTENANCE:
1. THE CONTRACTOR SHALL MAINTAIN THE PROJECT DURING THE COURSE OF CONSTRUCTION INCLUDING THE PERIOD OF THE AS-BUILT CERTIFICATION AND SHALL NOTIFY THE ENGINEER A MINIMUM OF TWO (2) WEEKS PRIOR TO COMPLETION.
2. THE CONTRACTOR SHALL MAINTAIN THE INTEGRITY OF THE PROJECT UNTIL THE FINAL ACCEPTANCE OF THE RECORD DRAWINGS AND A DETERMINATION BY THE ENGINEER THAT NO ERRORS OR OMISSIONS HAVE BEEN MADE BY THE CONTRACTOR DURING THE COURSE OF CONSTRUCTION. THE ENGINEER SHALL NOTIFY THE CONTRACTOR AS TO THE ACCEPTABILITY OR REJECTION OF THE CONSTRUCTION OF THE PROJECT. THE CONTRACTOR SHALL CORRECT ANY ERRORS/OMISSIONS PRIOR TO FINAL ACCEPTANCE OF THE RECORD DRAWINGS OF THE PROJECT.
3. THE CONTRACTOR SHALL MAINTAIN SHOP DRAWINGS AND LEGIBLY ANNOTATE CHANGES MADE AFTER THE REVIEW.

RECORD RETENTION:
AS ODOT MAY LEGITIMATELY REQUEST FROM TIME TO TIME, THE CONTRACTOR AGREES TO MAKE AVAILABLE FOR INSPECTION AND/OR REPRODUCTION BY THE LPA OR ODOT, ALL RECORDS, BOOKS, AND DOCUMENTS OF ANY KIND AND DESCRIPTION GENERATED BY THE CONTRACTOR THAT RELATE TO THIS CONTRACT. THESE RECORDS MUST BE MADE AVAILABLE IN ELECTRONIC FORMAT.

SUBMITTALS:
1. THE CONTRACTOR SHALL ANNOTATE ALL RECORD DRAWING REVISIONS ONTO ELECTRONIC COPIES OF PLAN DRAWINGS PROVIDED BY THE ENGINEER USING AUTOCAD 2016 OR LATER SOFTWARE, AS APPROVED BY THE ENGINEER. AT THE COMPLETION OF THE PROJECT, DELIVER ONE (1) MYLAR COPY 22"X34" HOLE PUNCHED AND BOUND, ONE (1) COMPLETE PAPER COPY, AND ONE (1) COMPLETE ELECTRONIC COPY IN AUTOCAD AND TIFF FORMAT OF RECORD DRAWING ORIGINAL DOCUMENTS TO THE ENGINEER FOR DELIVERY TO THE CITY. HIGHLIGHT CHANGES WITH CLOUDS AND SHOW CHANGES ON A SEPARATE AUTOCAD LAYER.

2. PROVIDE A TRANSMITTAL LETTER CONTAINING THE FOLLOWING INFORMATION:

   A. DATE
   B. PROJECT TITLE AND PROJECT NUMBER
   C. CONTRACTOR'S NAME AND ADDRESS
   D. TITLE AND NUMBER OF EACH DRAWING
   E. CERTIFICATION THAT EACH DOCUMENT AS SUBMITTED IS COMPLETE AND ACCURATE
   F. SIGNATURE OF CONTRACTOR OR HIS/HER AUTHORIZED REPRESENTATIVE

MEASUREMENT AND PAYMENT:
PAYMENT FOR ALL THE ABOVE SHALL BE LUMP SUM UPON THE PROPER EXECUTION OF ALL THE WORK OF THIS ITEM AS DETERMINED BY THE ENGINEER.

ITEM	UNIT	DESCRIPTION
690	LUMP	AS-BUILT CONSTRUCTION PLANS

LIST OF ABBREVIATIONS

APPR.	APPROACH
APPROX.	APPROXIMATE
B/B	BACK TO BACK
C/C	CENTER TO CENTER
CLR.	CLEAR
CMS	ODOT 2019 CONSTRUCTION AND MATERIAL SPECIFICATIONS
CVN	CHARPY V-NOTCH
CONSTR.	CONSTRUCTION
DELAM.	DELAMINATION
DIA.	DIAMETER
DIAG.	DIAGONAL
E.F.	EACH FACE
ELEV.	ELEVATION
EX.	EXISTING
EXIST.	EXISTING
EXP.	EXPANSION
F.F.	FAR FACE
FT.	FOOT/FEET
GALV.	GALVANIZED
H.S.	HIGH STRENGTH
HORZ.	HORIZONTAL
INT.	INTERNAL
LAT.	LATERAL
L.C.	LOWER CHORD
MAX.	MAXIMUM
MECH.	MECHANICAL
MIN.	MINIMUM
N	NORTH
N.F.	NEAR FACE
PP	PANEL POINT
PT.	POINT
QTY.	QUANTITY
R	RADIUS
REINF.	REINFORCEMENT
REM	REMOVAL
S	SOUTH
SECT.	SECTION
SF	SQUARE FEET
SDWK.	SIDEWALK
SPA.	SPACE
STIFF.	STIFFENER
STR.	STRINGER
TYP.	TYPICAL
U.N.O.	UNLESS NOTED OTHERWISE
U.C.	UPPER CHORD
VPF	VANDAL PROTECTION FENCE
VERT.	VERTICAL
W.P.	WORKING POINT
WWF	WELDED WIRE FABRIC

MADE BY: JEJT	DATE: 11/13/20
CHECKED BY: NRF	DATE: 11/13/20

ITEM	EXTENSION	TOTAL	01/BRO/BR	02/BRO/BR	UNIT	ESTIMATED QUANTITIES DESCRIPTION	SEE SHEET NO.
STRUCTURE 20 FOOT SPAN AND OVER (SFN 1869345)							
202	11305	1028	1028		SY	PORTIONS OF STRUCTURE REMOVED, AS PER PLAN	S3
202	11401	71324	71324		POUND	PORTIONS OF STRUCTURE REMOVED, AS PER PLAN	S3
202	30601	13	13		SY	CONCRETE MEDIAN REMOVED, AS PER PLAN	S3
202	38501	124	124		FT	BRIDGE RAILING REMOVED, AS PER PLAN	S3
512	10050	53	53		SY	SEALING OF CONCRETE SURFACES (NON-EPOXY)	
513	10200	3738	3738		POUND	STRUCTURAL STEEL MEMBERS, LEVEL UF	
513	10261	65164	65164		POUND	STRUCTURAL STEEL MEMBERS, LEVEL 3, AS PER PLAN	S3
513	10320	24833	24833		POUND	STRUCTURAL STEEL MEMBERS, LEVEL 6	
513	95030	8	8		EACH	STRUCTURAL STEEL, MISC.: INSTALL FLOORBEAM COVER PLATE	S3
513	95030	4	4		EACH	STRUCTURAL STEEL, MISC.: CURB PLATE REPAIR	S4
513	95030	6	6		EACH	STRUCTURAL STEEL, MISC.: STIFFENER REINFORCING PLATE	S3
514	00101	LUMP	LUMP		LUMP	SURFACE PREPARATION OF EXISTING STRUCTURAL STEEL, AS PER PLAN	S4
514	00201	LUMP	LUMP		LUMP	FIELD PAINTING OF EXISTING STRUCTURAL STEEL, PRIME COAT, AS PER PLAN	S4
514	00301	LUMP	LUMP		LUMP	FIELD PAINTING STRUCTURAL STEEL, INTERMEDIATE COAT, AS PER PLAN	S4
514	00401	LUMP	LUMP		LUMP	FIELD PAINTING STRUCTURAL STEEL, FINISH COAT, AS PER PLAN	S4
514	00504	264	264		MAN HR	GRINDING FINS, TEARS, SLIVERS ON EXISTING STRUCTURAL STEEL	
514	10000	61	61		EACH	FINAL INSPECTION REPAIR	
514	27800	LUMP	LUMP		LUMP	FIELD PAINTING, MISC.: PAINTING OF EXISTING OPERATOR'S HOUSE	S5
516	14600	40	40		FT	STRUCTURAL JOINT OR JOINT SEALER MISC.: COMPRESSION JOINT SEAL REPLACEMENT	S5
516	15000	2	2		EACH	STRUCTURAL JOINT OR JOINT SEALER MISC.: EAST ABUTMENT MEDIAN EXPANSION JOINT RETROFIT	S5
516	47000	LUMP	LUMP		LUMP	JACKING AND TEMPORARY SUPPORT OF SUPERSTRUCTURE	
517	76300	124	124		FT	RAILING, MISC.: EAST APPROACH NEW WYOMING RAIL	S6
519	10000	1	1		SY	PATCHING CONCRETE BRIDGE DECK OVERLAY WITH MICRO-SILICA MODIFIED CONCRETE	S7
519	11101	24	24		SQ FT	PATCHING CONCRETE STRUCTURE, AS PER PLAN	S6
SPECIAL	530E00200	LUMP	LUMP		LUMP	STRUCTURES - WARNING GATE FOUNDATIONS	S8
SPECIAL	530E00200	LUMP	LUMP		LUMP	STRUCTURES - RELOCATE OPERATOR'S HOUSE STAIRS	S7
SPECIAL	530E00200	LUMP	LUMP		LUMP	STRUCTURES - COUNTERWEIGHT MODIFICATION	S7
SPECIAL	530E00400	100	100		EACH	STRUCTURES - REPLACEMENT OF STRUCTURAL FASTENER, AS DIRECTED BY ENGINEER	S6
SPECIAL	530E00400	8	8		EACH	STRUCTURES - REPLACEMENT OF PIVOT PIER ENCLOSURE PANELS	S7
SPECIAL	530E00600	2754	2754		SQ FT	STRUCTURES - FIBERGLASS OPEN GRID DECK	S7
SPECIAL	530E00600	3146	3146		SQ FT	STRUCTURES - OPEN GRID STEEL ROADWAY DECK	S6
SPECIAL	530E00600	2790	2790		SQ FT	STRUCTURES - CONCRETE FILLED GRID STEEL ROADWAY DECK	S6
SPECIAL	530E01300	10	10		FT	STRUCTURES - FIELD WELDING, AS DIRECTED BY ENGINEER	S6
609	72001	13	13		SY	CONCRETE MEDIAN, AS PER PLAN	S6
SPECIAL	690E91000	LUMP	LUMP		LUMP	AS-BUILT CONSTRUCTION PLANS	S8
847	30201	23	23		CY	FULL DEPTH REPAIR, AS PER PLAN	S8
849	10000	LUMP	LUMP		LUMP	DAMAGE ASSESSMENT	
849	10700	LUMP	LUMP		LUMP	STRAIGHTENING DAMAGED MEMBERS	

DESIGN AGENCY
wsp
1660 WEST 2ND STREET
SUITE 850
CLEVELAND, OHIO 44113

DESIGNED JEJT | CHECKED NRF | DRAWN JEJT | REVISED --- | REVIEWED WRW | DATE 09/11/20 | STRUCTURE FILE NUMBER 1869345

ESTIMATED QUANTITIES 1
CITY OF CLEVELAND BRIDGE NO. 1:003M
CENTER STREET SWING BRIDGE OVER THE CUYAHOGA RIVER

CUY-CENTER ST.
SWING BRIDGE
PID NO: 109597

MADE BY: JEJT	DATE: 11/13/20
CHECKED BY: NRF	DATE: 11/13/20

ITEM	EXTENSION	TOTAL	ESTIMATED QUANTITIES		UNIT	DESCRIPTION	SEE SHEET NO.
			01/BRO/BR	02/BRO/BR			
ITEMS OF WORK (MECHANICAL)							
SPECIAL	690E98400	LUMP	LUMP		LUMP	MECHANICAL WORK - REHABILITATE SPAN DRIVE MACHINERY	M1
SPECIAL	690E98400	LUMP	LUMP		LUMP	MECHANICAL WORK - REHABILITATE SPAN SUPPORT MACHINERY	M1
SPECIAL	690E98400	LUMP	LUMP		LUMP	MECHANICAL WORK - CLEAN, PAINT, AND LUBRICATE ALL MECHANICAL COMPONENTS	M1
SPECIAL	690E98400	LUMP	LUMP		LUMP	MECHANICAL WORK - SPAN BALANCE	M1
SPECIAL	690E98400	LUMP		LUMP	LUMP	MECHANICAL WORK - MECHANICAL SPARE PARTS	M1
SPECIAL	690E98400	LUMP	LUMP		LUMP	MECHANICAL WORK - END FLOORBEAM REPLACEMENT	M1
ELECTRICAL							
SPECIAL	690E98400	LUMP	LUMP		LUMP	ELECTRICAL WORK - REPLACE EAST MOTOR CONTROL CENTER	E4
SPECIAL	690E98400	LUMP	LUMP		LUMP	ELECTRICAL WORK - REHABILITATE WEST MOTOR CONTROL CENTER	E4
SPECIAL	690E98400	LUMP	LUMP		LUMP	ELECTRICAL WORK - REPLACE NAVIGATIONAL LIGHTS	E4
SPECIAL	690E98400	LUMP	LUMP		LUMP	ELECTRICAL WORK - REPLACE PANELBOARDS	E4
SPECIAL	690E98400	LUMP	LUMP		LUMP	ELECTRICAL WORK - REPLACE FIRE ALARM SYSTEM	E4
SPECIAL	690E98400	LUMP	LUMP		LUMP	ELECTRICAL WORK - INSTALL SIDEWALK LIGHTING	E4
SPECIAL	690E98400	LUMP	LUMP		LUMP	ELECTRICAL WORK - RELOCATE TRANSFORMER	E4
SPECIAL	690E98400	LUMP	LUMP		LUMP	ELECTRICAL WORK - REPLACE HVAC UNIT	E4
SPECIAL	690E98400	LUMP	LUMP		LUMP	ELECTRICAL WORK - FINAL ACCEPTANCE TESTING	E4
SPECIAL	690E98400	LUMP		LUMP	LUMP	ELECTRICAL WORK - ELECTRICAL SPARE PARTS	E4
SPECIAL	690E98400	LUMP	LUMP		LUMP	ELECTRICAL WORK - REPLACE EAST TRAFFIC TREE	E4
SPECIAL	690E98400	LUMP	LUMP		LUMP	ELECTRICAL WORK - REPLACE WARNING GATES	E4
SPECIAL	690E98400	LUMP		LUMP	LUMP	ELECTRICAL WORK - ELECTRICAL SPARE PARTS WARNING GATE	E4
SPECIAL	690E98400	LUMP	LUMP		LUMP	ELECTRICAL WORK - END FLOORBEAM REPLACEMENT	E4
INCIDENTALS							
108	10000	LUMP	LUMP		LUMP	CPM PROGRESS SCHEDULE	
619	16020	15	15		MONTH	FIELD OFFICE, TYPE C	
623	10000	LUMP	LUMP		LUMP	CONSTRUCTION LAYOUT STAKES AND SURVEYING	
624	10000	LUMP	LUMP		LUMP	MOBILIZATION	

DESIGN AGENCY
WSP
1660 WEST 2ND STREET
SUITE 850
CLEVELAND, OHIO 44113

DESIGNED	DRAWN	REVIEWED	DATE
JEJT	JEJT	WRW	09/11/20
CHECKED	REVISED	STRUCTURE FILE NUMBER	
NRF	---	1869345	

ESTIMATED QUANTITIES 2
CITY OF CLEVELAND BRIDGE NO. 1:003M
CENTER STREET SWING BRIDGE OVER THE CUYAHOGA RIVER

CUY-CENTER ST.
SWING BRIDGE
PID NO: 109597

S10/S51

ITEM 519 - CONCRETE PATCHING						
CALLOUT	TYPE	APPROX. LENGTH	APPROX. HEIGHT	APPROX. AREA	LOCATION	REPAIR DETAIL
1	SPALL	6'-0"	1'-0"	6 SF	PIVOT PIER	TYPE 1
2	SPALL	2'-0"	2'-0"	4 SF	EAST PIER	TYPE 1
3	SPALL	3'-0"	2'-0"	6 SF	EAST PIER	TYPE 1

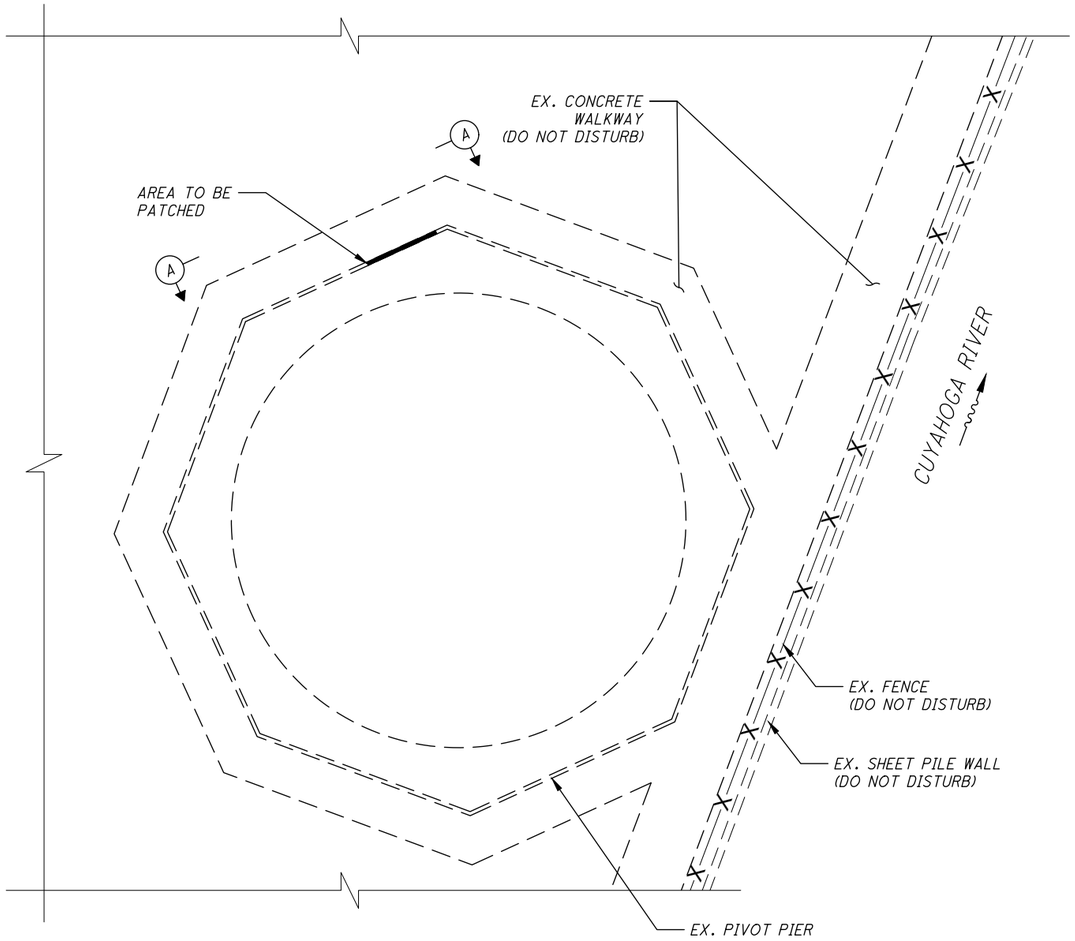

PIVOT PIER PLAN

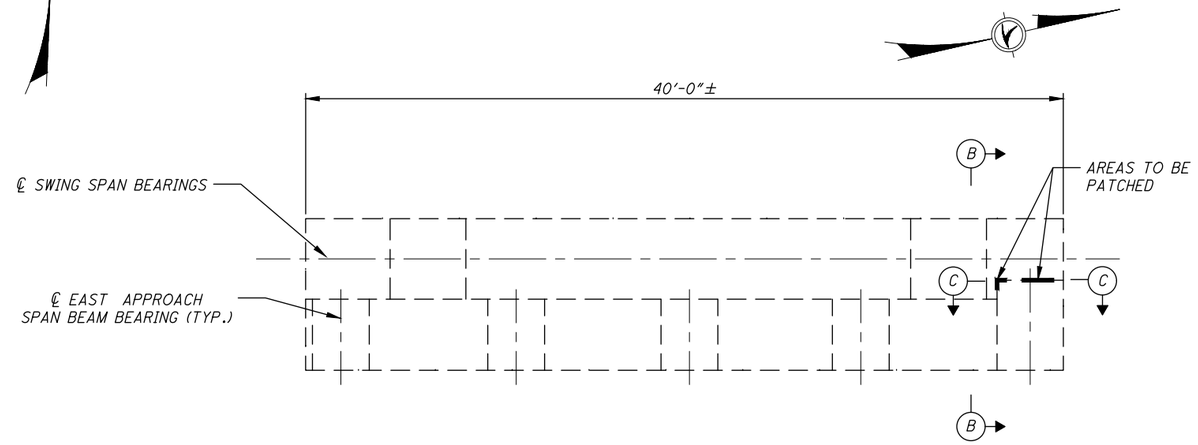

EAST PIER PLAN

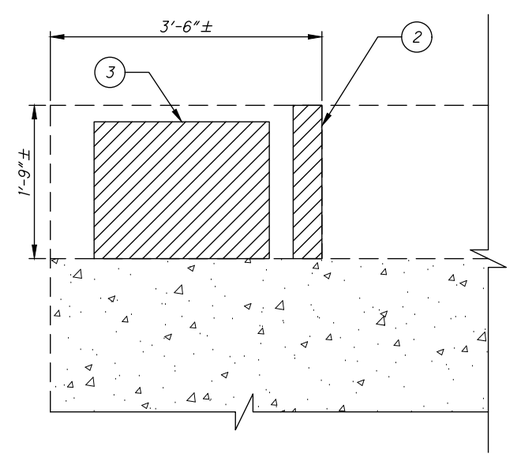

SECTION C-C
(REINFORCING NOT SHOWN FOR CLARITY)

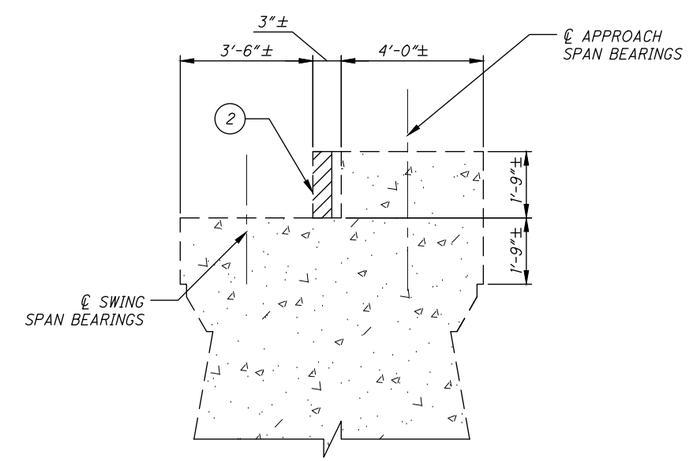

SECTION B-B
(REINFORCING NOT SHOWN FOR CLARITY)

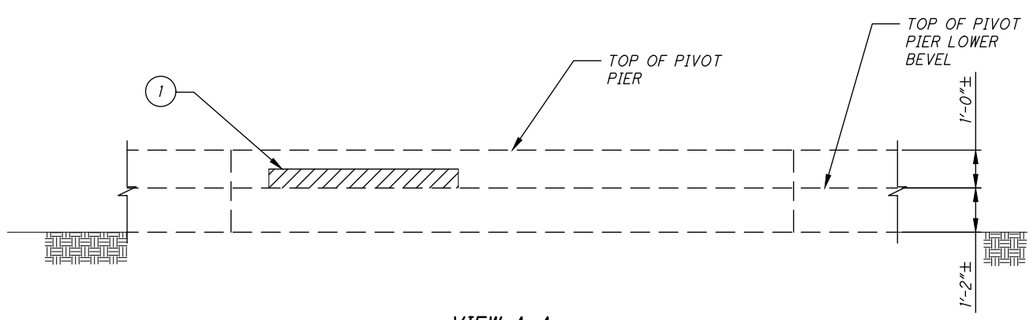

VIEW A-A

AREA TO BE PATCHED

NOTES:

1. FOR ADDITIONAL PATCHING DETAILS, SEE SHEET S12/S51.
2. CONCRETE PATCHING SHALL BE INCLUDED FOR PAYMENT UNDER ITEM 519 - PATCHING CONCRETE STRUCTURE, AS PER PLAN.

DESIGN AGENCY
WSP
1660 WEST 2ND STREET SUITE 850 CLEVELAND, OHIO 44113

DESIGNED	DRAWN	REVIEWED	DATE
KHN	KHN	WRW	09/11/20
CHECKED	REVISED	STRUCTURE FILE NUMBER	
NRF	---	1869345	

PIER PATCHING DETAILS
CITY OF CLEVELAND BRIDGE NO. 1:003M
CENTER STREET SWING BRIDGE OVER THE CUYAHOGA RIVER

CUY-CENTER ST. SWING BRIDGE
PID NO: 109597

S11/S51

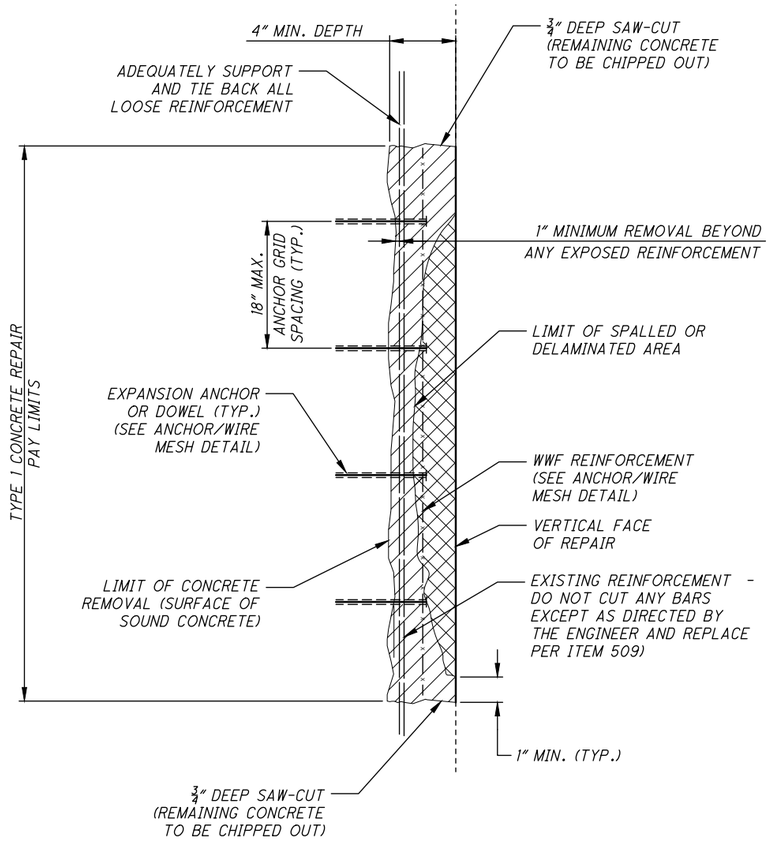

TYPE 1 CONCRETE REPAIR

(NOT TO SCALE)
(FOR VERTICAL AND HORIZONTAL TOP SURFACE REPAIRS)

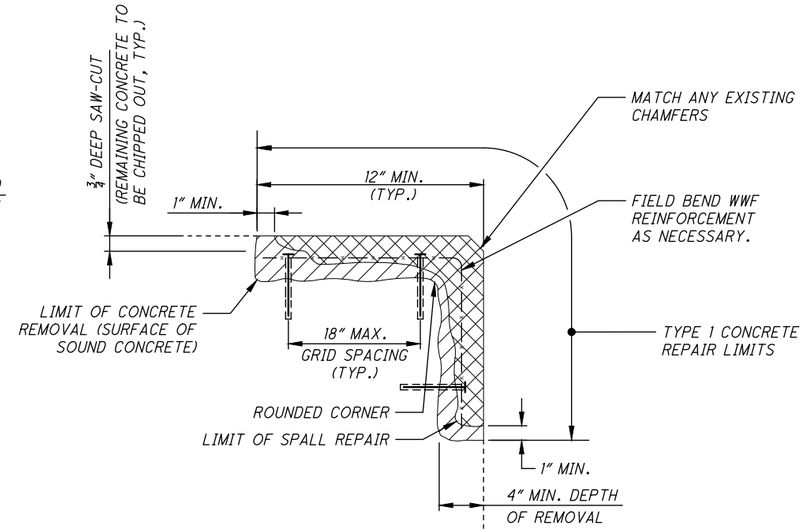

TYPE 1 CONCRETE REPAIR AT CORNER

(NOT TO SCALE)
(FOR INFORMATION NOT SHOWN, SEE TYPE 1 CONCRETE REPAIR)

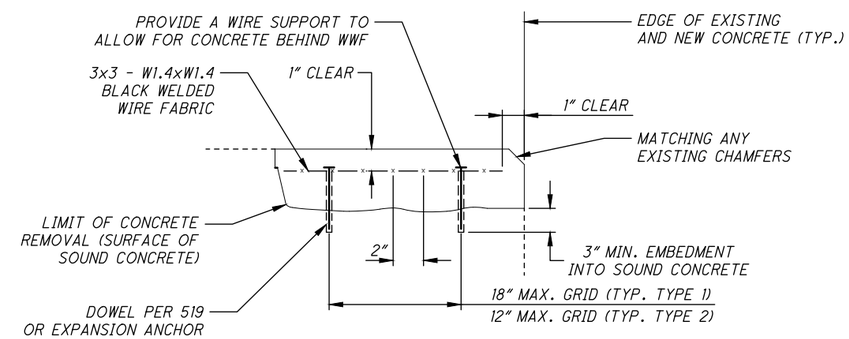

ANCHOR/WIRE MESH DETAIL

(NOT TO SCALE)
(EXISTING REINFORCEMENT NOT SHOWN)

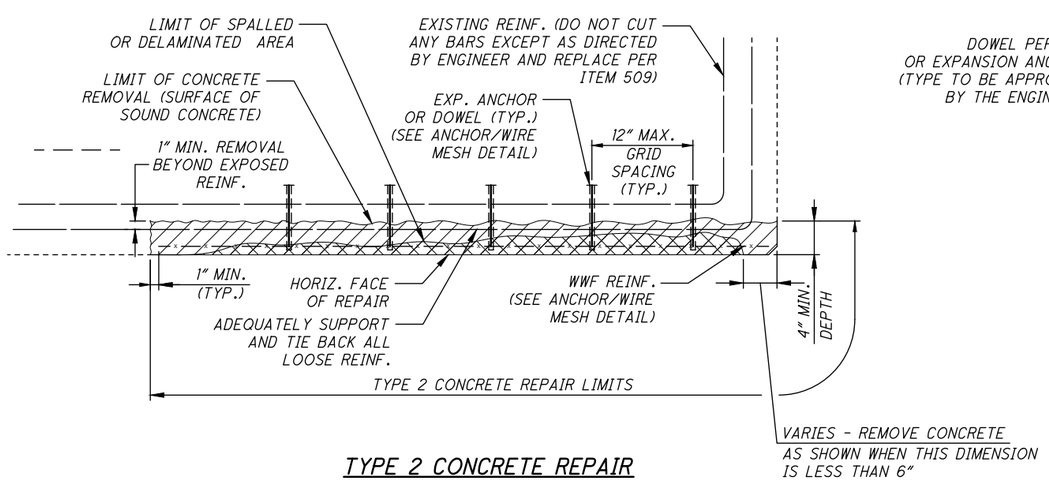

TYPE 2 CONCRETE REPAIR

(NOT TO SCALE)
(FOR HORIZONTAL AND SLOPING OVERHEAD PATCHING APPLICATIONS)

GENERAL PROCEDURE FOR CONCRETE REPAIRS

A. ALL AREAS FOR REPAIR ARE SUBJECT TO MODIFICATION IN THE FIELD BY THE ENGINEER.

B. SAWCUT PERIPHERY OF EACH ARE TO BE REPAIRED AS SHOWN.

C. REMOVE DETERIORATED CONCRETE AS SHOWN TO SOUND CONCRETE, PLUS AN ADDITIONAL ¼" TO 1" (MAX.) OF SOUND CONCRETE PROVIDED THAT THE MINIMUM DEPTH IS MAINTAINED.

D. SANDBLAST OR WATERBLAST EXPOSED SURFACES TO REMOVE LOOSE CONCRETE CHIPS AND SURFACE LAITANCE.

E. SANDBLAST OR WIRE BRUSH EXPOSED REINFORCEMENT AND COAT WITH ZINC RICH COATING.

F. INSTALL WELDED WIRE FABRIC (WWF) AS DIRECTED IN ITEM 519.

G. USE FORMS TO ENSURE ADHERENCE OR REPAIR TO MATCH ORIGINAL SURFACE PROFILE PER ITEM 519. FORMS MAY BE NEEDED TO FOLLOW TAPERED SURFACES.

LEGEND:

INDICATES LIMITS OF CONCRETE REMOVAL INTO SOUND CONCRETE FOR CONCRETE REPAIR

EXISTING CONCRETE SPALL AND/OR DELAMINATION (APPROXIMATE LIMITS OF UNSOUND CONCRETE)

NOTES:

1. FOR GENERAL NOTES, SEE SHEET S6 /S51 .
2. ALL WORK AND MATERIALS FOR TYPE 1 AND TYPE 2 REPAIRS OF DETERIORATED CONCRETE AS PRESENTED IN THESE DETAILS ARE INCLUDED IN ITEMS 519 - PATCHING CONCRETE STRUCTURE, AS PER PLAN.
3. SUBMIT FOR APPROVAL METHODS FOR CONCRETE PLACEMENT TO LIMIT OR ELIMINATE VOIDS AND AIR POCKETS IN PATCHED AREAS. INCLUDE METHOD OF REPAIR IF THERE ARE VOIDS OR AIR POCKETS DISCOVERED UPON REMOVAL OF FORM WORK.
4. SANDBLAST OR WIRE BRUSH REINFORCEMENT AND COAT WITH ZINC RICH COATING PER ASTM A780.
5. CONTRACTOR SHALL SUBMIT REPAIR PROCEDURE TO THE ENGINEER FOR APPROVAL.

DESIGN AGENCY
WSP
1660 WEST 2ND STREET
SUITE 850
CLEVELAND, OHIO 44113

DESIGNED	DRAWN	REVIEWED	DATE
NRF	PCS	WRW	09/11/20
CHECKED	REVISED	STRUCTURE FILE NUMBER	
TLC	---	1869345	

CONCRETE PATCHING REPAIR DETAILS

CITY OF CLEVELAND BRIDGE NO. 1:003M
CENTER STREET SWING BRIDGE OVER THE CUYAHOGA RIVER

CUY-CENTER ST.
SWING BRIDGE
PID NO: 109597

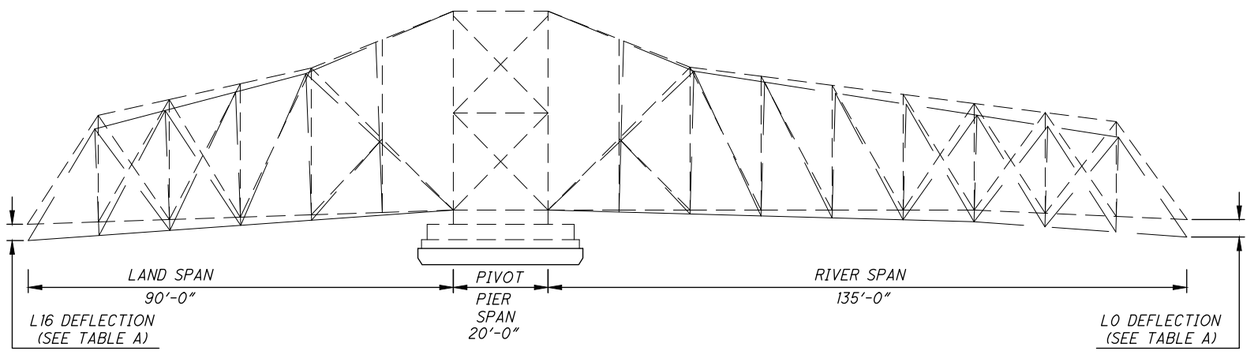

SOUTH ELEVATION OF DEFLECTED TRUSS WITH END JACKS DISENGAGED

(DEFLECTION EXAGGERATED)

PANEL POINT	TEMPERATURE (SEE NOTE 4)	TABLE A - TRUSS DEFLECTIONS (SEE NOTE 4)		
		SOUTH EDGE OF SOUTH SIDEWALK	ROADWAY CENTERLINE	NORTH EDGE OF NORTH SIDEWALK
L0	40° F	1 1/2"	1 5/8"	1 5/8"
	60° F	1 7/16"	1 5/8"	1 5/8"
	80° F	1 3/8"	1 5/8"	1 5/8"
L16	40° F	1/8"	1/4"	1/4"
	60° F	1/4"	3/8"	1/4"
	80° F	3/8"	1/2"	1/4"

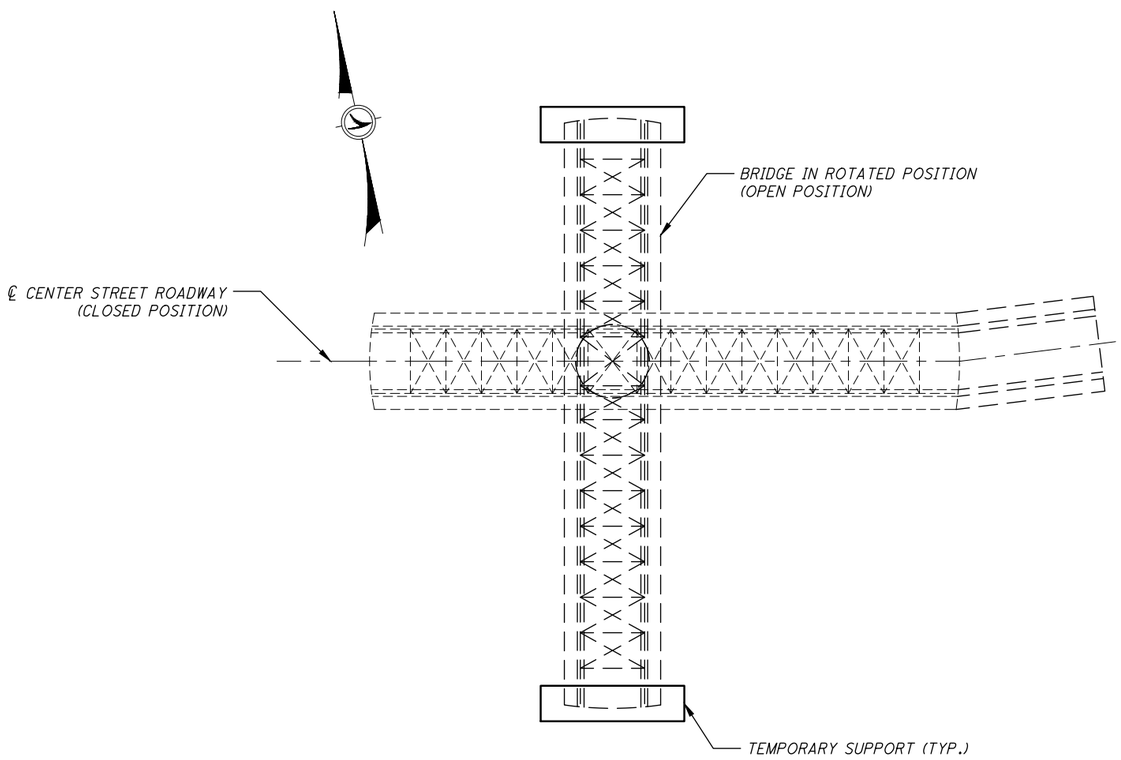

PLAN VIEW

TEMPORARY SUPPORT NOTES:

THIS WORK CONSISTS OF THE DESIGN, FABRICATION, ERECTION AND MONITORING OF TEMPORARY SUPPORT STRUCTURES. THE CONTRACTOR SHALL SUBMIT DETAILS AND CALCULATIONS, PREPARED AND SEALED BY AN OHIO LICENSED ENGINEER. SOIL INFORMATION AT THE TEMPORARY SUPPORT LOCATIONS ARE NOT AVAILABLE. THE DESIGN SHALL INCLUDE THE NECESSARY SOIL BORINGS AND INVESTIGATION TO COMPUTE ALLOWABLE BEARING PRESSURES TO COMPLETE THE DESIGN OF THE TEMPORARY SUPPORTS, AND PROVIDE DESIGN CALCULATIONS FOR THE SUPPORTS, AND DRAWINGS PER CMS 501.05. AN AGGREGATE LEVELING BASE MAY BE USED BELOW ANY TIMBER MATS OR OTHER SUPPORT STRUCTURE. CONTRACTOR IS TO ENSURE THAT ADDITIONAL LOADS FROM THE TEMPORARY SUPPORT WILL NOT COMPROMISE THE ADJACENT RIVER BULKHEAD.

THE TEMPORARY SUPPORTS SHALL BE DESIGNED IN ACCORDANCE WITH THE AASHTO GUIDE SPECIFICATIONS FOR BRIDGE TEMPORARY WORKS (2ND EDITION, 2017) TO SUPPORT THE FULL DEAD LOAD OF THE SWING SPANS AND THE EQUIPMENT REACTION LOADS OF THE END JACKS AND ANY OTHER MINOR, TEMPORARY LOADING NECESSARY FOR THE WORK TO BE COMPLETED.

THE UNFACTORED, VERTICAL DEAD LOADS AT EACH BEARING WERE COMPUTED FROM TRUSS MEMBER DEAD LOADS TAKEN FROM THE OCTOBER 6, 2017 RICHLAND ENGINEERING TRUSS BRIDGE ANALYSIS AND RATING REPORT AND ARE SHOWN BELOW:

L0 = 80 K
L16 = 105 K

IN ADDITION, THE EQUIPMENT REACTIONS DUE TO THE END JACKS SHALL BE TAKEN AS THE RATED THRUST OF 33,000 LBS AS INDICATED ON THE 1986 REHABILITATION PLANS.

THE DESIGN SHALL BE BY LRFD OR ASD USING THE APPROPRIATE LOAD FACTOR COMBINATIONS OR FACTORS OF SAFETY FOR THE CHOSEN MATERIALS AND DESIGN METHODOLOGY.

THE TEMPORARY SUPPORTS SHALL BE PROVIDED WITH A SUPPORT SURFACE EQUAL IN CONTACT AREA AND SHAPE OF THE ROLLER STOP PLATE UNDER THE END JACKS DETAILED IN THE 2009 REHABILITATION PLANS. THE BEARING SEAT OF THE TEMPORARY SUPPORT FOR L0 AND L16 SHALL MATCH THE ELEVATION OF THE EXISTING PIER SEAT ELEVATIONS AT THE END JACKS. SHIM AS NECESSARY TO MAINTAIN THE SEAT ELEVATIONS UNDER DEFLECTION OF TEMPORARY SUPPORT SYSTEM.

THE CONTRACTOR SHALL RETAIN THE TEMPORARY SUPPORT MATERIALS AFTER THE TEMPORARY SUPPORT IS NO LONGER REQUIRED, WITH THE EXCEPTION OF THE TEMPORARY SUPPORT BEARING PLATES, WHICH ARE TO BE GIVEN TO THE CITY. RETURN THE GROUND TO THE CONDITION PRIOR TO TEMPORARY SUPPORT ERECTION.

THIS WORK, INCLUDING THE SOIL INVESTIGATION, SUPPORT DESIGN, END JACK SEAT ELEVATION SURVEY, REMOVAL OF TEMPORARY SUPPORTS, AND ALL MATERIALS AND LABOR TO TEMPORARILY SUPPORT THE ENDS OF THE SWING SPAN IS INCLUDED WITH THE TEMPORARY SUPPORT. SEE NOTE 2 ON THIS SHEET.

NOTES:

1. ALL WORK ON THE STRUCTURE IS TO BE PERFORMED WITH THE BRIDGE CLOSED TO VEHICULAR AND PEDESTRIAN TRAFFIC WITH THE BRIDGE SWING OVER LAND.
2. CONTRACTOR IS TO PROVIDE TEMPORARY SUPPORT AT THE TOES OF THE TRUSS AND JACK THE TRUSS SO THAT IT RETURNS TO ITS NORMAL CLOSED (NON-DEFLECTED) SHAPE IN ORDER TO PERFORM THE STRINGER REPLACEMENT OPERATIONS. TEMPORARY SUPPORT AND JACKING SHALL BE PAID FOR UNDER ITEM 516 - JACKING AND TEMPORARY SUPPORT OF SUPERSTRUCTURE.
3. CONTRACTOR IS TO SURVEY DEFLECTIONS OF SPAN WITH END JACKS DISENGAGED PRIOR TO PERFORMING WORK TO VERIFY THE VALUES SHOWN IN TABLE A. CONTRACTOR IS TO NOTIFY ENGINEER IF VALUES DIFFER FROM THOSE SHOWN ON THIS SHEET. FOLLOWING THE COMPLETION OF WORK, THE CONTRACTOR IS TO VERIFY THAT THE DEFLECTION IS LESS THAN OR EQUAL THAN THE DEFLECTION MEASURED PRIOR TO CONSTRUCTION. THE COST FOR MEASURING THESE DEFLECTIONS SHALL BE CONSIDERED INCIDENTAL TO ITEM 516 - JACKING AND TEMPORARY SUPPORT OF SUPERSTRUCTURE.
4. FOR TEMPERATURES IN BETWEEN THOSE SHOWN, CONTRACTOR IS TO LINEARLY INTERPOLATE THE DEFLECTION VALUES. VALUES IN TABLE ARE "AS IS" WITH DAMAGED EYEBARS.
5. SEE SHEET S13A/S51 FOR SUGGESTED SEQUENCE OF CONSTRUCTION AND END FLOORBEAM TEMPORARY SUPPORT DETAILS.

DESIGN AGENCY
1660 WEST 2ND STREET
SUITE 850
CLEVELAND, OHIO 44113

DESIGNED	DRAWN	REVIEWED	DATE
NRF	NRF	WRW	09/11/20
CHECKED	REVISED	STRUCTURE FILE NUMBER	
NBR	---	1869345	

TEMPORARY SUPPORT DETAILS
CITY OF CLEVELAND BRIDGE NO. 1:003M
CENTER STREET SWING BRIDGE OVER THE CUYAHOGA RIVER

CUY-CENTER ST.
SWING BRIDGE
PID NO: 109597

SUGGESTED SEQUENCE OF CONSTRUCTION OPERATIONS:

STEP 1. FULLY CLOSE BRIDGE TO VEHICULAR TRAFFIC. FIELD VERIFY STRINGER, FLOORBEAM, AND FLOORBEAM PEDESTAL GRADES WITH THE BRIDGE IN THE CLOSED POSITION (END JACKS ENGAGED) VIA SURVEY. PERFORM ITEM 849 DAMAGE ASSESSMENT FOR PRODUCING HEAT STRAIGHTENING WORK PLAN PRIOR TO THIS WORK.

STEP 2. SURVEY THE ELEVATION OF THE FLOORBEAMS AND ENDS OF TRUSSES WHEN THE BRIDGE IS IN THE CLOSED POSITION WITH THE END JACKS ENGAGED. MEASURE AND VERIFY THE END OF SWING SPAN DEFLECTIONS VIA SURVEY WHEN THE END JACKS ARE DISENGAGED. PERFORM INITAL SPAN BALANCE TESTING PER MECHANICAL SPECIAL PROVISIONS.

STEP 3. SWING THE BRIDGE TO THE OPEN POSITION FOR UNRESTRICTED RIVER NAVIGATION.

STEP 4. UNINSTALL THE END JACK ASSEMBLIES TO BE CLEANED, PAINTED AND STORED.

STEP 5. TEMPORARILY SUPPORT THE ENDS OF THE SWING SPANS AT THE EXISTING END FLOORBEAMS UNDER L0 AND L16 TRUSS PANEL POINTS USING JACKS WITH AT LEAST 24" STROKE ON THE PRIMARY TEMPORARY SUPPORT. JACKS ARE TO BE PLACED AT THE CENTERLINES OF EACH TRUSS IN LINE WITH THE CENTER BEARING STIFFENER ON THE EXISTING END FLOORBEAMS. JACK AND PROVIDE THE PRIMARY TEMPORARY SUPPORTS UNDER THE FLOORBEAMS TO THE ELEVATION MEASURED IN STEP 2 AND TO REMOVE THE DEFLECTIONS. VERIFY THAT ELEVATIONS OF BRIDGE ENDS MATCH THOSE OF THE BRIDGE WITH THE JACKS ENGAGED VIA SURVEY.

STEP 6. PERFORM HEAT STRAIGHTENING OF DAMAGED MEMBERS.

STEP 7. REMOVE THE DECK, ROADWAY STRINGERS, SIDEWALKS, OPERATOR'S HOUSE STAIRS, TEMPORARY COUNTERWEIGHT, LATERAL BRACING CONNECTIONS AT THE END FLOORBEAMS, AND PORTIONS OF EXISTING RAILING AS DETAILED IN THE PLANS. NEW STEEL STRINGERS AND GRID DECK SHALL NOT BE INSTALLED UNTIL END FLOORBEAM REPLACEMENT WORK HAS BEEN PERFORMED.

STEP 8. DELIVER NEW END FLOORBEAMS, WHICH HAVE BEEN FIELD VERIFIED AND FABRICATED THROUGHOUT PREVIOUS STEPS, TO SITE.

STEP 9. REMOVE ALL CONTRACTOR'S EQUIPMENT AND CONSTRUCTION MATERIALS FROM THE SWING SPAN AFTER REMOVAL OF ALL STRUCTURAL COMPONENTS SHOWN IN PLANS (EXCEPT END FLOORBEAMS) AND AFTER DELIVERY OF NEW END FLOORBEAMS, PROVIDE THE SECONDARY TEMPORARY SUPPORT OF THE TRUSSES ADJACENT TO THE END FLOORBEAMS AT THE SAME ELEVATION. TEMPORARILY SUPPORT THE ENDS OF THE STRINGERS AND COUNTERWEIGHT BEAMS THAT CONNECT INTO FLOORBEAM 16.

STEP 10. REMOVE THE STRINGER AND BEAM CONNECTIONS TO FLOORBEAM 16. REMOVE THE FASTENERS THAT CONNECT THE EXISTING END FLOORBEAMS TO THE TRUSSES. LOWER THE EXISTING END FLOORBEAMS FROM THE TRUSSES AND REMOVE THEM.

STEP 11. INSTALL THE NEW END FLOORBEAMS. CONNECT THE NEW END FLOORBEAMS TO THE TRUSSES AND MAINTAIN THE PRIMARY TEMPORARY SUPPORT UNDER THE NEW END FLOORBEAMS. CONNECT THE STRINGERS, LATERAL BRACING, AND BEAMS TO THE END FLOORBEAMS.

STEP 12. LOWER THE SECONDARY TEMPORARY SUPPORTS LEAVING THE ENDS OF THE SWING SPAN SUPPORTED BY THE PRIMARY TEMPORARY SUPPORTS AT THE SAME ELEVATIONS ACHIEVED IN STEP 5.

STEP 13. CLEAN AND PAINT THE SUPERSTRUCTURE.

STEP 14. INSTALL THE ROADWAY STRINGERS.

STEP 15. INSTALL THE GRID DECK, FIBERGLASS OPEN GRID SIDEWALK, AND FINISH STAIRWAY MODIFICATION WORK. DO NOT POUR CONCRETE FILL INTO GRID DECK.

STEP 16. PERFORM BALANCE TESTING PER MECHANICAL SPECIAL PROVISIONS WHILE ALSO PERFORMING INTERIM DEFLECTION CHECK VIA SURVEY TO CONFIRM THAT DEFLECTION IS NOT GREATER THAN SURVEYED DEFLECTIONS IN STEP 2, TAKING INTO ACCOUNT END JACK ASSEMBLIES TO BE INSTALLED IN STEP 22 AND CONCRETE TO BE POURED IN STEP 17.

STEP 17. AFTER RE-SUPPORTING THE ENDS OF THE TRUSS ON THE PRIMARY TEMPORARY SUPPORT AND ENSURING THAT ELEVATIONS ARE THE SAME AS THOSE ACHIEVED IN STEP 5, POUR CONCRETE FILL IN PIVOT PIER SPAN AND LAND SPAN.

STEP 18. PERFORM BALANCE TESTING PER MECHANICAL SPECIAL PROVISIONS WHILE ALSO PERFORMING INTERIM DEFLECTION CHECK VIA SURVEY TO CONFIRM THAT DEFLECTION IS NOT GREATER THAN SURVEYED DEFLECTIONS IN STEP 2, TAKING INTO ACCOUNT END JACK ASSEMBLIES TO BE INSTALLED IN STEP 22 AND CONCRETE TO BE POURED IN STEP 19.

STEP 19. AFTER RE-SUPPORTING THE ENDS OF THE TRUSS ON THE PRIMARY TEMPORARY SUPPORT AND ENSURING THAT ELEVATIONS ARE THE SAME AS THOSE ACHIEVED IN STEP 5, POUR CONCRETE FILL AT L0.

STEP 20. REENGAGE SECONDARY TEMPORARY SUPPORT. CONTRACTOR'S MEANS AND METHODS SHALL NOT OVERSTRESS THE LOWER CHORD AT THE SECONDARY TEMPORARY SUPPORT LOCATIONS.

STEP 21. RELEASE THE JACKING SUPPORTS AT THE END FLOORBEAMS. REMOVE THE PRIMARY TEMPORARY SUPPORT STRUCTURES LEAVING THE BRIDGE SUPPORTED BY THE SECONDARY TEMPORARY SUPPORT.

STEP 22. INSTALL THE END JACK ASSEMBLIES AND PERFORM ALIGNMENT.

STEP 23. REMOVE SECONDARY TEMPORARY SUPPORT.

STEP 24. PERFORM ANY REMAINING MECHANICAL AND ELECTRICAL WORK OR TESTING. PERFORM FINAL BALANCE TESTING PER MECHANICAL SPECIAL PROVISIONS. PERFORM TEST OPERATIONS OF SWING SPAN.

STEPS 5-8

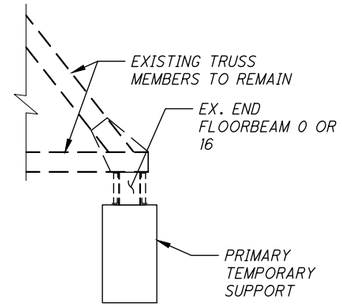

ERECT TEMPORARY SUPPORTS AT FLOORBEAMS 0 AND 16. JACK AND TEMPORARILY SUPPORT SWING TRUSS ENDS. PERFORM REMOVAL OF ALL MEMBERS IDENTIFIED FOR REPLACEMENT IN THE PLANS (GRID DECK, STRINGERS, SIDEWALK, ETC.) EXCEPT END FLOORBEAM MEMBERS.

STEPS 9

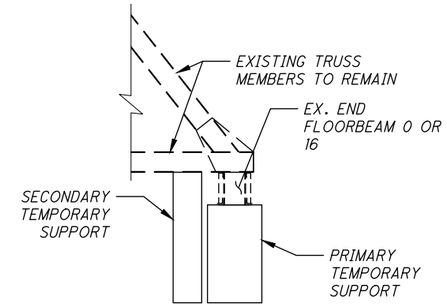

ERECT SECONDARY TEMPORARY SUPPORT FOR TRUSS TO FACILITATE REMOVAL OF END FLOORBEAM MEMBERS. BRACE TRUSSES FROM LATERAL MOVEMENT.

STEP 10

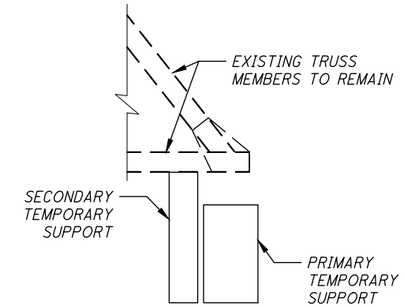

REMOVE END FLOORBEAMS.

STEP 11

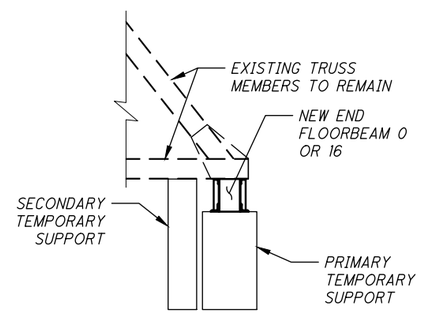

INSTALL NEW END FLOORBEAMS.

STEPS 12-19

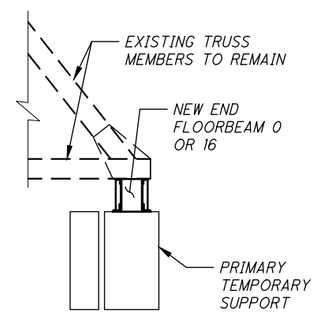

MAINTAIN PRIMARY TEMPORARY SUPPORTS. LOWER SECONDARY TEMPORARY SUPPORTS AND REMOVE ANY TEMPORARY LATERAL TRUSS BRACING THAT WAS INSTALLED. PERFORM REPLACEMENT OF COMPONENTS IDENTIFIED IN PLANS.

STEP 20

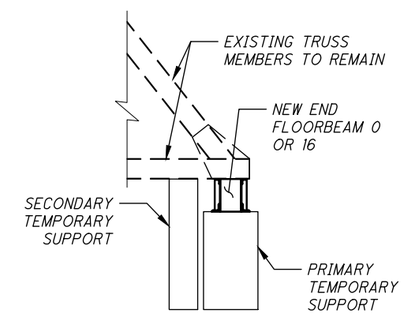

REENGAGE SECONDARY TEMPORARY SUPPORT.

STEPS 21 & 22

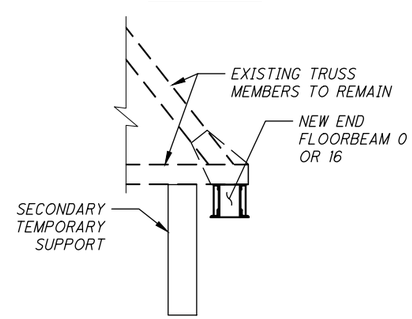

MAINTAIN SECONDARY TEMPORARY SUPPORT AND REMOVE PRIMARY TEMPORARY SUPPORT. INSTALL AND ALIGN END JACK ASSEMBLIES.

NOTES:

1. FOR ADDITIONAL NOTES, SEE SHEET S13/S51 .
2. FOR TEMPORARY SUPPORT DETAILS, SEE SHEET S13B/S51.
3. THERE SHALL BE NO WELDING TO THE EXISTING MEMBERS.
4. PAYMENT FOR THE PRIMARY AND SECONDARY TEMPORARY SUPPORTS IS INCLUDED FOR PAYMENT IN ITEM 516 - JACKING AND TEMPORARY SUPPORT OF SUPERSTRUCTURE.

DESIGN AGENCY
wsp
1660 WEST 2ND STREET
SUITE 850
CLEVELAND, OHIO 44113

DESIGNED	DRAWN	REVIEWED	DATE
NBR	JEJT	WRW	11/13/20
CHECKED	REVISED	STRUCTURE FILE NUMBER	
NRF	---	1869345	

SUGGESTED SEQUENCE OF CONSTRUCTION
CITY OF CLEVELAND BRIDGE NO. 1:003M
CENTER STREET SWING BRIDGE OVER THE CUYAHOGA RIVER

CUY-CENTER ST.
SWING BRIDGE
PID NO: 109597

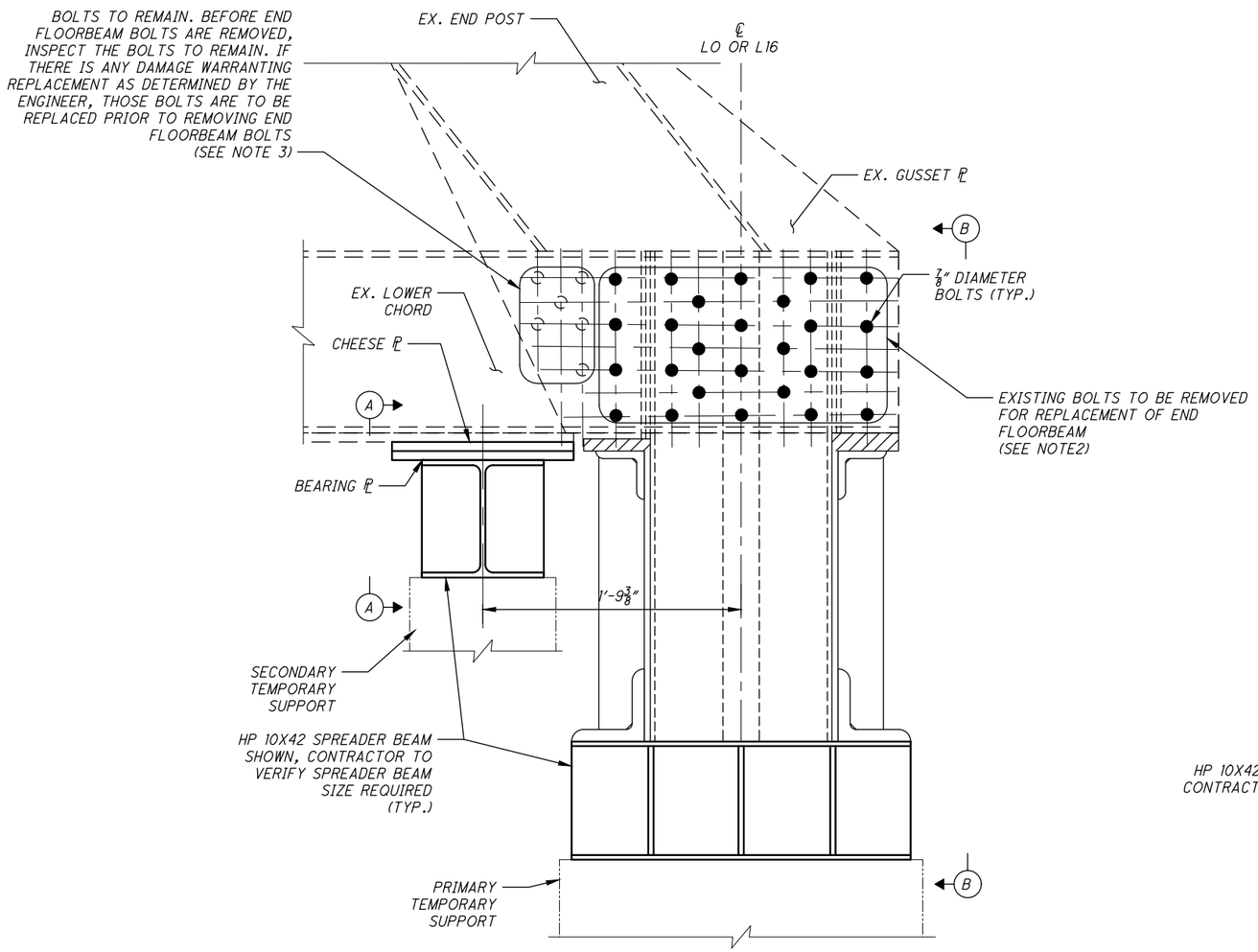

TEMPORARY SUPPORT DETAILS
(JACKS AND CRIBBING NOT SHOWN)

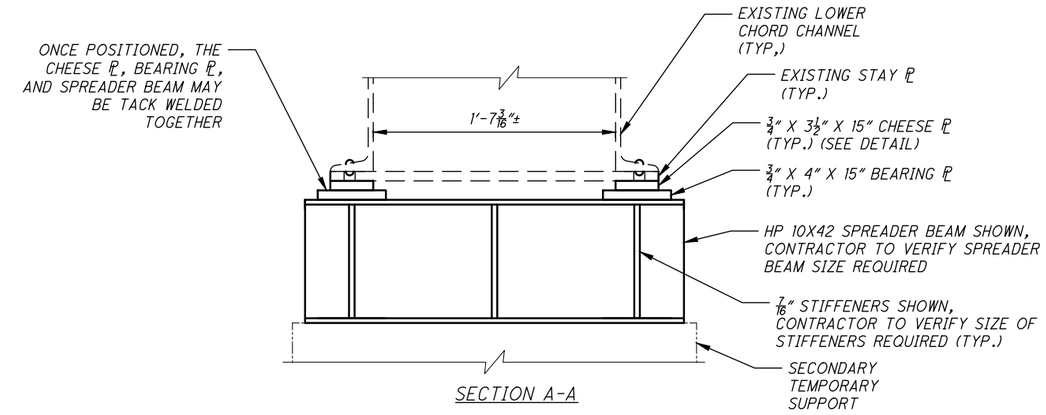

SECTION A-A

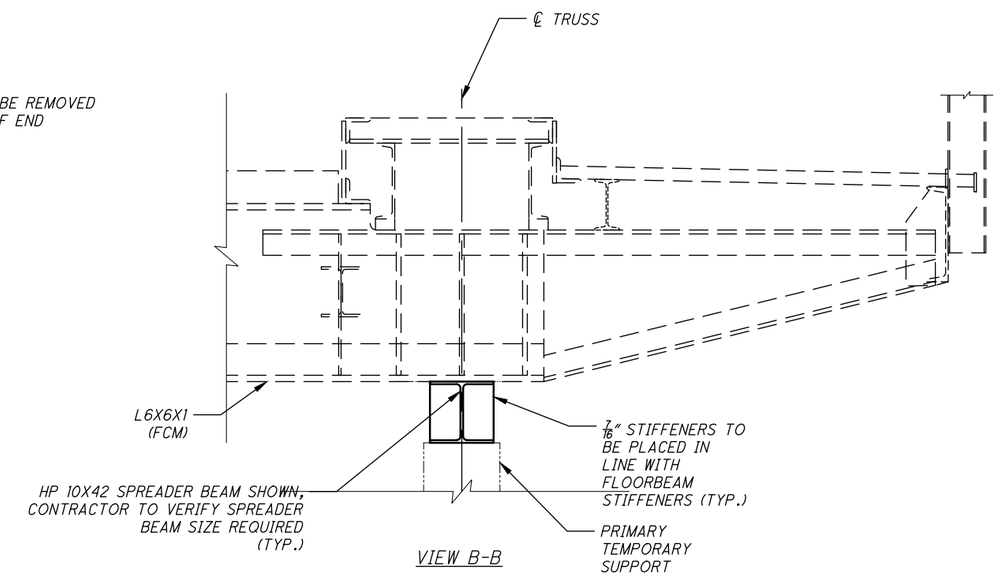

VIEW B-B

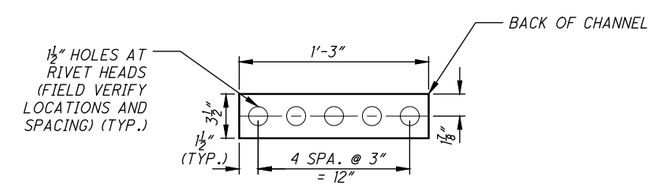

CHEESE PLATE DETAIL

NOTES:

1. FOR SUGGESTED SEQUENCE OF CONSTRUCTION OPERATIONS, SEE SHEET S13A/S51.
2. REMOVAL OF BOLTS WILL REQUIRE REMOVAL OF CURB PLATE ASSEMBLY. SEE SHEETS S26A/S51 AND S26B/S51 FOR REMOVAL AND REPLACEMENT DETAILS.
3. PAYMENT FOR THE PRIMARY AND SECONDARY TEMPORARY SUPPORTS IS INCLUDED FOR PAYMENT IN ITEM 516 - JACKING AND TEMPORARY SUPPORT OF SUPERSTRUCTURE. PAYMENT FOR BOLT REPLACEMENT AS NECESSARY IS INCLUDED IN ITEM SPECIAL - REPLACEMENT OF STRUCTURAL FASTENER, AS DIRECTED BY ENGINEER.

DESIGN AGENCY
1660 WEST 2ND STREET SUITE 850 CLEVELAND, OHIO 44113

DESIGNED	DRAWN	REVIEWED	DATE
NBR	JEJT	WRW	11/13/20
CHECKED	REVISED	STRUCTURE FILE NUMBER	
NRF	---	1869345	

TEMPORARY SUPPORT DETAILS
CITY OF CLEVELAND BRIDGE NO. 1:003M
CENTER STREET SWING BRIDGE OVER THE CUYAHOGA RIVER

CUY-CENTER ST. SWING BRIDGE
PID NO: 109597

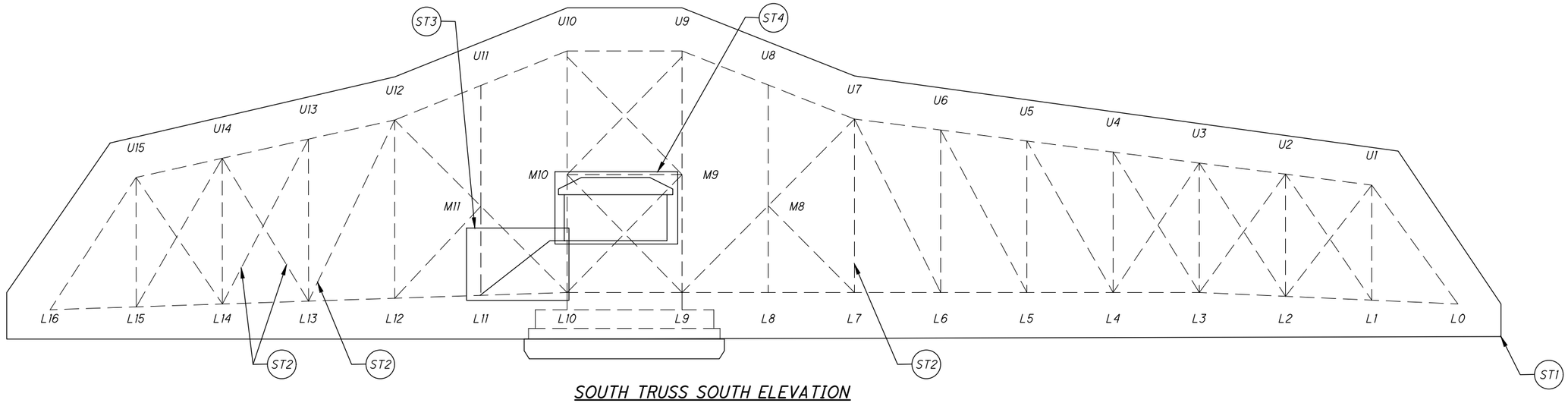

SOUTH TRUSS SOUTH ELEVATION

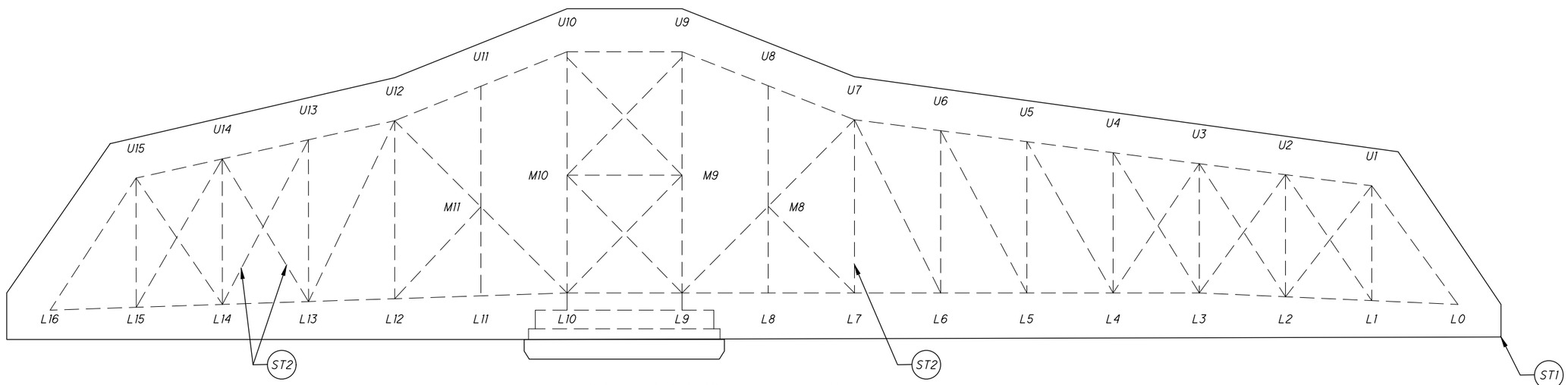

NORTH TRUSS SOUTH ELEVATION

TRUSS STRUCTURAL WORK IDENTIFICATION SCHEDULE		
MARK NO.	DESCRIPTION	REFERENCE DRAWINGS
ST1	CLEAN AND PAINT ENTIRE STRUCTURE, INCLUDING TRUSS SPANS AND EAST APPROACH SPAN	S16-S18, S42
ST2	HEAT STRAIGHTEN MEMBERS	S27-S29
ST3	RELOCATE OPERATOR'S HOUSE STAIRS	S30-S38
ST4	PAINT OPERATOR'S HOUSE	S5

DESIGN AGENCY
WSP
1660 WEST 2ND STREET
SUITE 830
CLEVELAND, OHIO 44113

DESIGNED	DRAWN	REVIEWED	DATE
NRF	NRF	WRW	09/11/20
CHECKED	REVISED	STRUCTURE FILE NUMBER	
NBR	---	1869345	

TRUSS WORK IDENTIFICATION
CITY OF CLEVELAND BRIDGE NO. 1:003M
CENTER STREET SWING BRIDGE OVER THE CUYAHOGA RIVER

CUY-CENTER ST.
SWING BRIDGE
PID NO: 109597

S14/S51

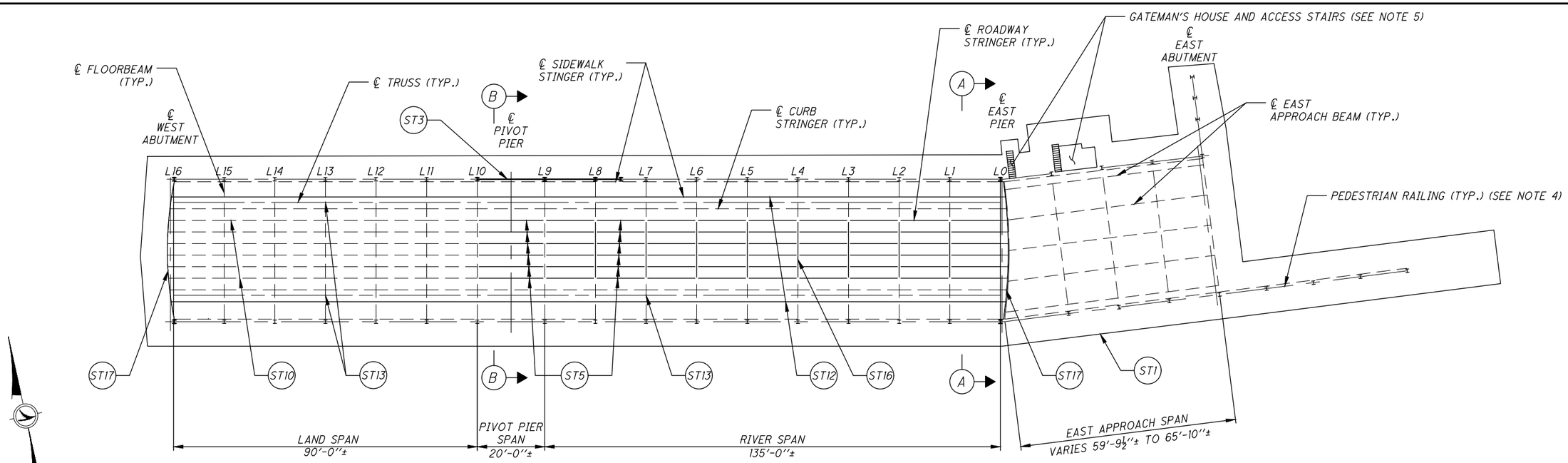

FRAMING AND RAILING PLAN

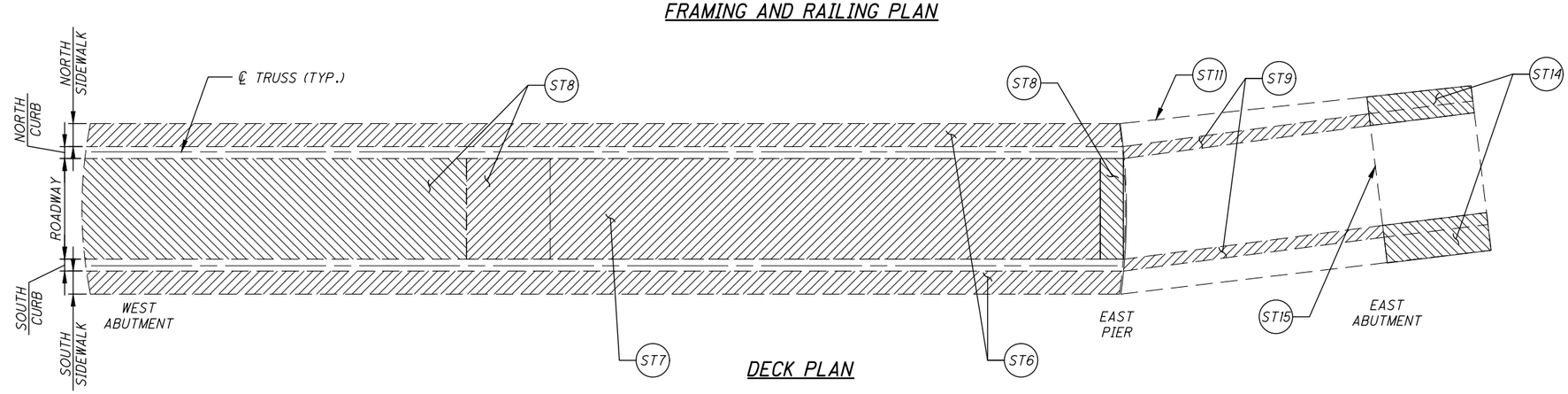

DECK PLAN

DECK AND FRAMING PLAN STRUCTURAL WORK IDENTIFICATION SCHEDULE		
MARK NO.	DESCRIPTION	REFERENCE DRAWINGS
ST1	CLEAN AND PAINT ENTIRE STRUCTURE, INCLUDING TRUSS SPANS AND EAST APPROACH SPAN	S16-S18, S42
ST3	RELOCATE OPERATOR'S HOUSE STAIRS	S30-S38
ST5	REMOVE AND REPLACE EXISTING ROADWAY STRINGERS IN RIVER AND PIVOT PIER SPAN (PP0 TO PP10)	S19-S22
ST6	REMOVE AND REPLACE EXISTING SIDEWALK ON TRUSS SPANS	S24-S25
ST7	REMOVE AND REPLACE EXISTING OPEN GRID STEEL ROADWAY DECK IN RIVER SPAN (PP0 TO PP9)	S24-S25
ST8	REMOVE AND REPLACE CONCRETE FILLED GRID STEEL ROADWAY DECK IN LAND SPAN (PP9 TO PP16)	S24-S25
ST9	REMOVE EXISTING GUARDRAIL AND CURB ON EAST APPROACH AND REPLACE WITH WYOMING TYPE RAIL	S40-S44
ST10	MODIFY COUNTERWEIGHT ACCESS HATCHES	S39
ST11	PATCH SPALL IN EDGE OF DECK	S40
ST12	REMOVE AND REPLACE EXISTING INTERIOR SIDEWALK STRINGERS ON TRUSS SPANS	S23
ST13	REPAIR CURB PLATE	S26
ST14	REMOVE AND REPLACE EXISTING MEDIAN AND SIDEWALK ON EAST APPROACH SLAB	S45-S48

DECK AND FRAMING PLAN STRUCTURAL WORK IDENTIFICATION SCHEDULE		
MARK NO.	DESCRIPTION	REFERENCE DRAWINGS
ST15	REMOVE AND REPLACE EXISTING COMPRESSION SEAL AT EAST ABUTMENT	S48
ST16	INSTALL NEW FLOORBEAM BOTTOM FLANGE COVER PLATES ON FLOORBEAMS 1 THRU 8	S19
ST17	REMOVE AND REPLACE END FLOORBEAMS AND JOINT COMPONENTS AT FLOORBEAMS 0 AND 16	S19A-S19E

NOTES:

1. SEE SHEET S16/S51 FOR SECTION A-A.
2. SEE SHEET S17/S51 FOR SECTION B-B.
3. FOR TYPICAL TRUSS SECTION, SEE SHEET S18/S51.
4. ALL PEDESTRIAN RAILING, INCLUDING RAILING EXTENDING PAST BRIDGE LIMITS ONTO EAST APPROACH ROADWAY IS TO BE PAINTED UNDER ITEM 514.
5. SECURITY FENCING AND STAIR ACCESS ADJACENT TO GATEMAN'S HOUSE AND EAST PIER ARE TO BE PAINTED UNDER ITEM 514.

DESIGN AGENCY
wsp
1660 WEST 2ND STREET
SUITE 850
CLEVELAND, OHIO 44113

DESIGNED	DRAWN	REVIEWED	DATE
NRF	NRF	WRW	11/13/20
CHECKED	REVISED	STRUCTURE FILE NUMBER	
JET	---	1869345	

STRUCTURAL AND PAINTING WORK IDENTIFICATION
CITY OF CLEVELAND BRIDGE NO. 1:003M
CENTER STREET SWING BRIDGE OVER THE CUYAHOGA RIVER

CUY-CENTER ST.
SWING BRIDGE
PID NO: 109597

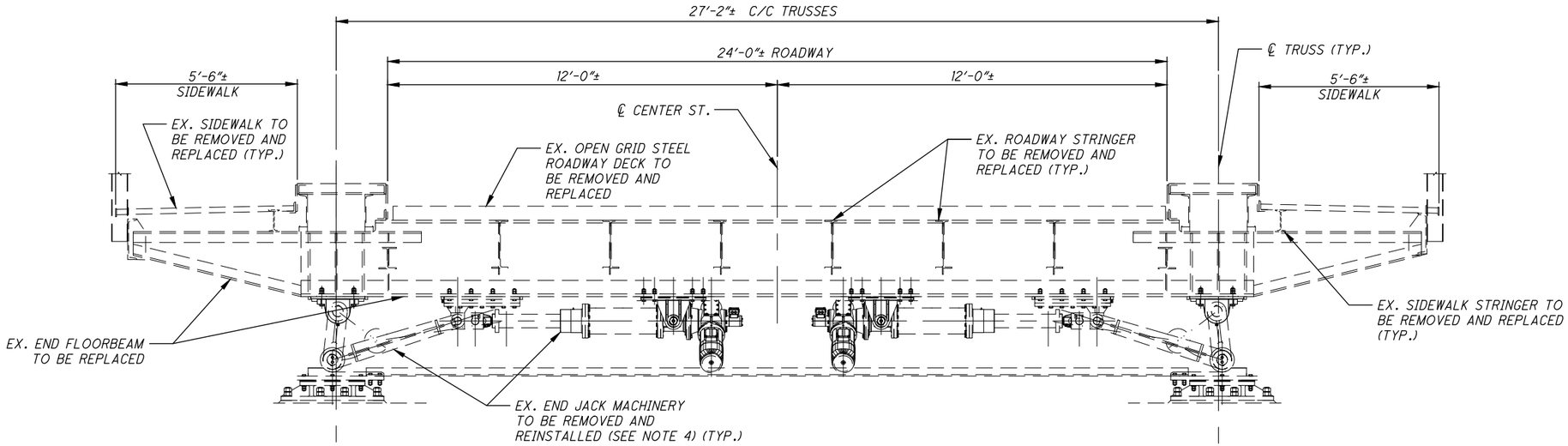

SECTION A-A (EXISTING)

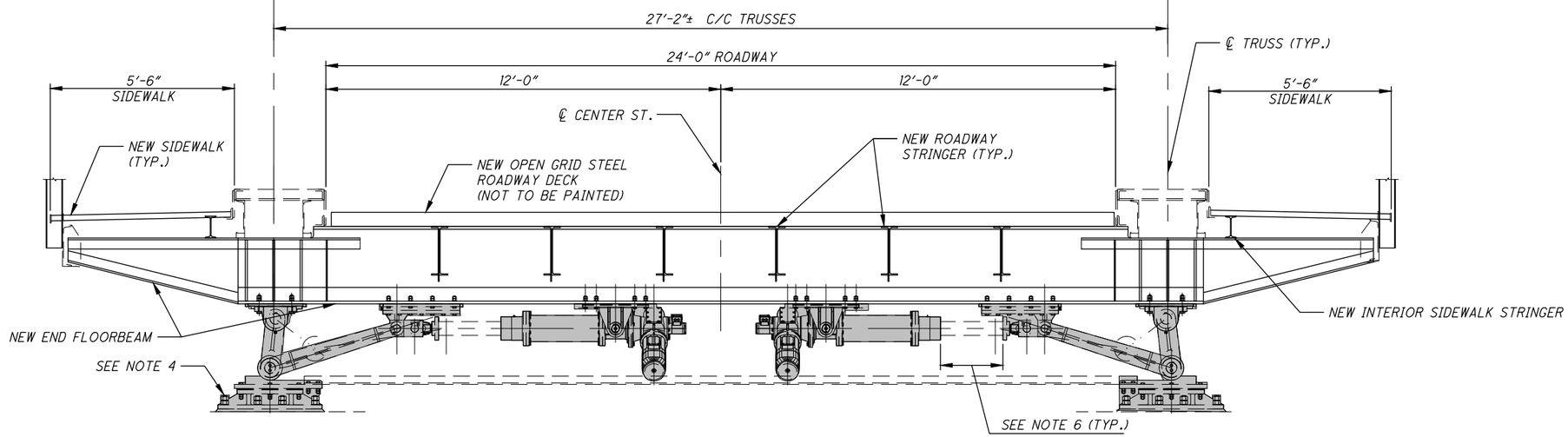

SECTION A-A (PROPOSED)

NOTES:

1. ALL STEEL SURFACES ON THIS SHEET ARE TO BE PAINTED PER ITEM 514, UNLESS NOTED OTHERWISE.
2. FOR LOCATION OF SECTION A-A, SEE SHEET S15/S51.
3. FOR PAINTING NOTES, SEE SHEET S4/S51.
4. FOR MECHANICAL PAINTING SPECIFICATIONS AND END JACK REMOVAL AND REPLACEMENT SPECIFICATION, SEE MECHANICAL SPECIAL PROVISIONS.
5. CONTRACTOR IS TO ADEQUATELY SEAL, PROTECT, AND COVER ALL MECHANICAL AND ELECTRICAL COMPONENTS DURING BLASTING AND PAINTING OF STRUCTURAL STEEL TO PREVENT DAMAGE.
6. CONTACT SURFACES OF MECHANICAL COMPONENTS AND ACTUATOR RODS ARE NOT TO BE PAINTED.

LEGEND:

- PORTIONS OF MECHANICAL COMPONENTS TO BE PAINTED UNDER ITEM SPECIAL- PAINTING MECHANICAL, SEE NOTE 5

DESIGN AGENCY
WSP
1660 WEST 2ND STREET
SUITE 850
CLEVELAND, OHIO 44113

DESIGNED	DRAWN	REVIEWED	DATE
KHN	KHN	WRW	11/13/20
CHECKED	REVISED	STRUCTURE FILE NUMBER	
NRF	---	1869345	

TYPICAL FLOORBEAM SECTION
CITY OF CLEVELAND BRIDGE NO. 1:003M
CENTER STREET SWING BRIDGE OVER THE CUYAHOGA RIVER

CUY-CENTER ST.
SWING BRIDGE
PID NO: 109597

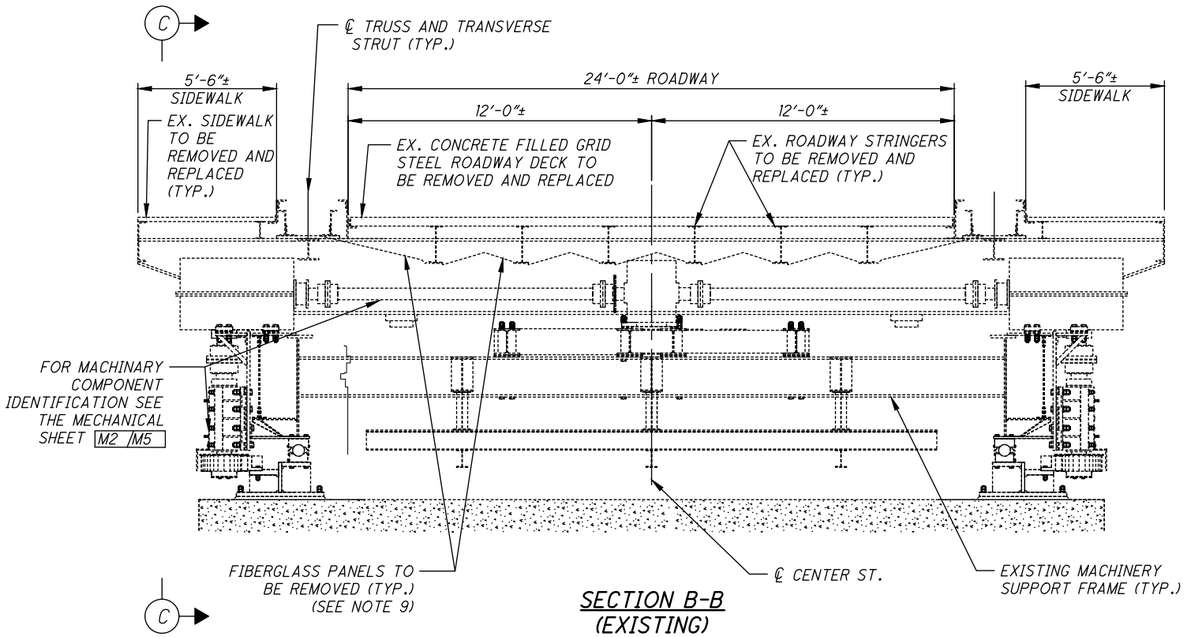

SECTION B-B
(EXISTING)

(TRUSS WEB MEMBERS AND RAILING NOT SHOWN FOR CLARITY)

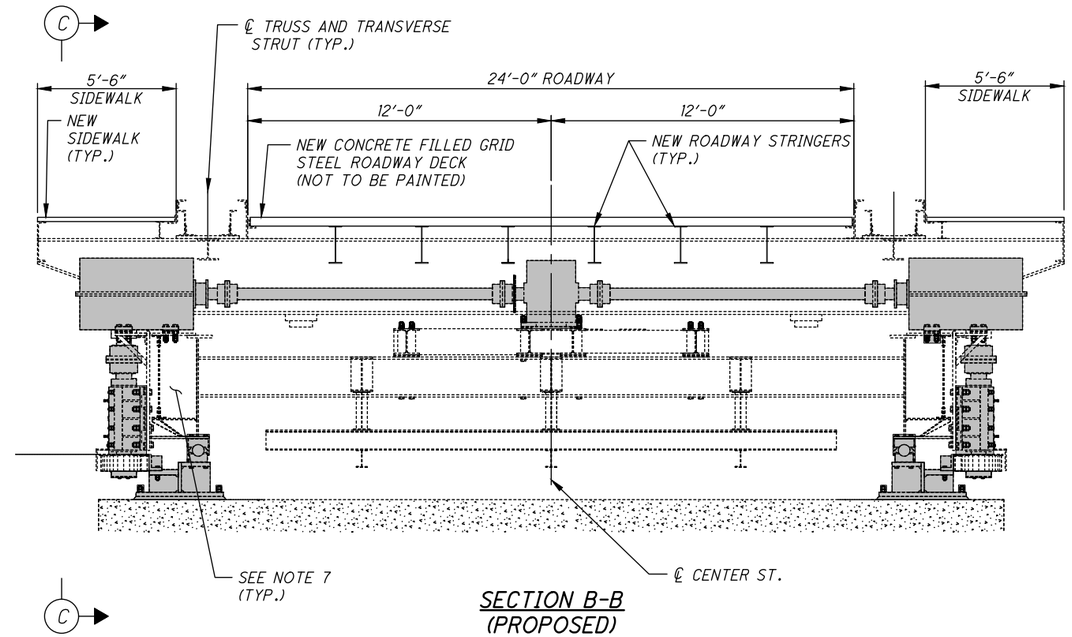

SECTION B-B
(PROPOSED)

(TRUSS WEB MEMBERS AND RAILING NOT SHOWN FOR CLARITY)

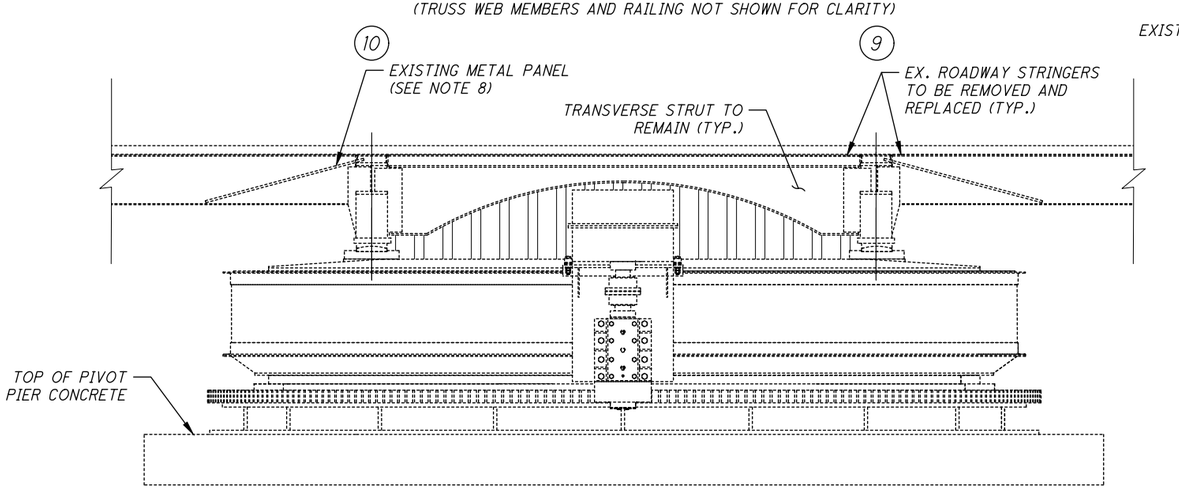

SECTION C-C
(EXISTING)

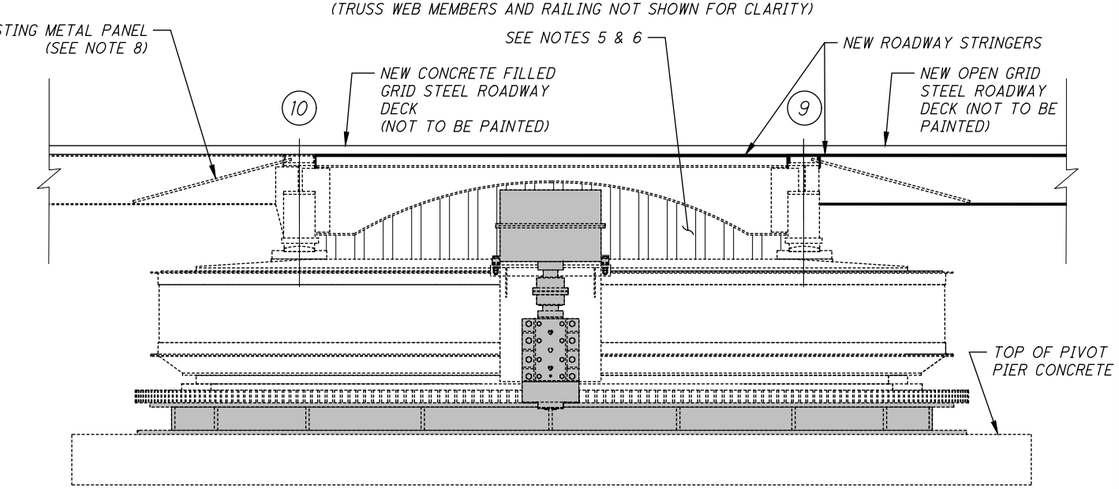

SECTION C-C
(PROPOSED)

NOTES:

1. ALL STEEL SURFACES ON THIS SHEET TO BE PAINTED PER ITEM 514, UNLESS NOTED OTHERWISE.
2. CONTRACTOR IS TO ADEQUATELY SEAL, PROTECT, AND COVER ALL MECHANICAL AND ELECTRICAL COMPONENTS DURING BLASTING AND PAINTING OF STRUCTURAL STEEL TO PREVENT DAMAGE AND CONTAMINATION. CONTACT SURFACES OF MECHANICAL COMPONENTS ARE NOT TO BE PAINTED. SEE MECHANICAL SPECIAL PROVISIONS FOR MECHANICAL PAINTING DETAILS.
3. FOR LOCATION OF SECTION B-B, SEE SHEET S15 /S51 .
4. FOR PAINTING NOTES, SEE SHEET S4 /S51 .
5. SHEET METAL ENCLOSURE ON EXTERIOR OF RING GIRDER IS COMPRISED OF FABRAL U-PANEL SHEETING. SHEET METAL PANELS PANELS ARE TO BE CLEANED PER MANUFACTURER'S RECOMMENDATIONS AND PAINTED AS PART OF THIS WORK. CONTRACTOR IS TO TAKE CARE NOT TO DAMAGE THE CONTRACTOR IS TO TAKE CARE NOT TO DAMAGE THE EXISTING SHEET METAL CAULKING AND SEALANT DURING PAINTING AND BLASTING OPERATIONS ON STRUCTURAL STEEL. ANY AREAS DAMAGED DURING PAINTING AND BLASTING SHALL BE REPAIRED TO THE SATISFACTION OF THE ENGINEER AT NO COST TO THE PROJECT.
6. CONTRACTOR IS TO REPLACE ANY DETERIORATED PANELS PRIOR TO PAINTING OF THE SHEET METAL ENCLOSURE. SEE GENERAL NOTES FOR ADDITIONAL DETAILS. ALL WORK AND MATERIALS ASSOCIATED WITH THE REMOVAL OF EXISTING PANELS AND INSTALLATION OF NEW PANELS SHALL BE PAID FOR UNDER ITEM 690 - REPLACEMENT OF PIVOT PIER ENCLOSURE PANELS.
7. INTERIOR OF RING GIRDER, WHICH IS TO BE PAINTED AS PART OF THIS WORK, IS ACCESSIBLE THROUGH BOLTED PORTHOLE HATCHES ON TOP OF THE GIRDER.
8. EXISTING METAL PANELS BETWEEN STRINGERS ARE TO BE REMOVED TO FACILITATE PAINTING AND REPLACEMENT OF STRINGERS AND REINSTALLED AFTER PAINTING OPERATIONS HAVE BEEN COMPLETED. METAL PANELS ARE TO BE PAINTED BEFORE REINSTALLATION, COST FOR THIS WORK SHALL BE INCIDENTAL TO ITEM 514.
9. REMOVAL OF EXISTING FIBERGLASS PANELS SHALL BE INCLUDED FOR PAYMENT UNDER ITEM 202 - PORTIONS OF STRUCTURE REMOVED, AS PER PLAN.

LEGEND:

- PORTIONS OF MECHANICAL COMPONENTS TO BE PAINTED UNDER ITEM SPECIAL- PAINTING MECHANICAL (SEE NOTE 2)
- EXISTING METAL PANEL TO REMAIN (SEE NOTES 5 AND 6)

DESIGN AGENCY
wsp
1660 WEST 2ND STREET SUITE 850 CLEVELAND, OHIO 44113

DESIGNED	DRAWN	REVIEWED	DATE
NRF	BLM	WRW	09/11/20
CHECKED	REVISED	STRUCTURE FILE NUMBER	
NBR	---	1869345	

RING GIRDER DETAILS

CITY OF CLEVELAND BRIDGE NO. 1:003M
CENTER STREET SWING BRIDGE OVER THE CUYAHOGA RIVER

CUY-CENTER ST.
SWING BRIDGE
PID NO: 109597

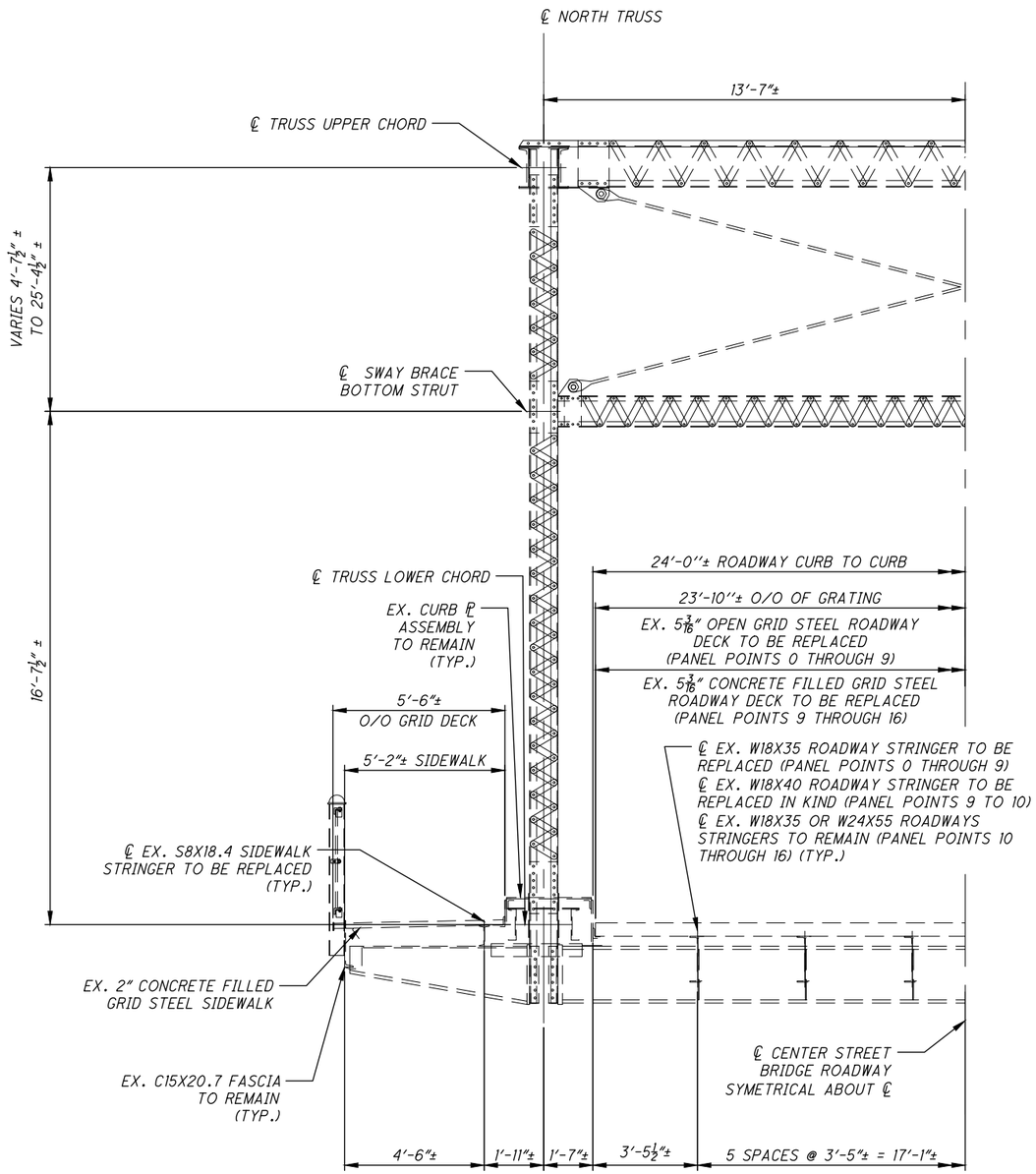

TYPICAL SECTION THROUGH TRUSS (EXISTING)

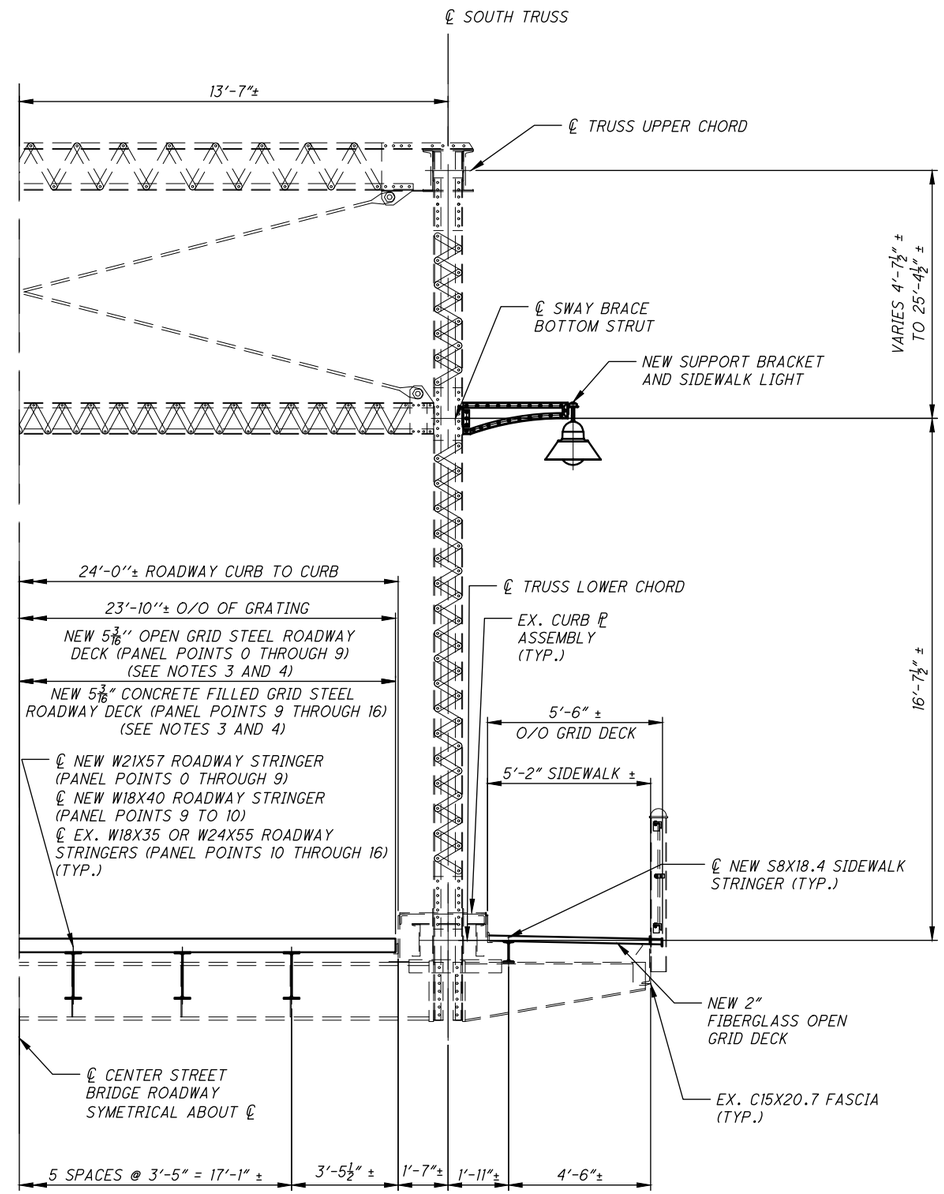

TYPICAL SECTION THROUGH TRUSS (PROPOSED)

NOTES:

1. SEE SHEET S14/S51 FOR TRUSS WORK IDENTIFICATION.
2. SEE SHEET S15/S51 FOR FRAMING PLAN AND DECK WORK IDENTIFICATION.
3. CONTRACTOR IS TO FIELD VERIFY ALL DIMENSIONS PRIOR TO FABRICATION OF CUSTOM DECK PANELS.
4. OPEN GRID STEEL DECK SHALL BE CUSTOM FABRICATED, SERRATED DECK AND CONCRETE FILLED GRID STEEL DECK SHALL BE CUSTOM FABRICATED NON-SERRATED DECK. SEE SHEETS S24/S51 AND S25/S51 FOR ADDITIONAL DETAILS.

DESIGN AGENCY
WSP
1660 WEST 2ND STREET
SUITE 850
CLEVELAND, OHIO 44113

DESIGNED	DRAWN	REVIEWED	DATE
NRF	JEJT	WRW	09/11/20
CHECKED	REVISED	STRUCTURE FILE NUMBER	
NBR	---	1869345	

TYPICAL TRUSS SECTION
CITY OF CLEVELAND BRIDGE NO. 1:003M
CENTER STREET SWING BRIDGE OVER THE CUYAHOGA RIVER

CUY-CENTER ST.
SWING BRIDGE
PID NO: 109597

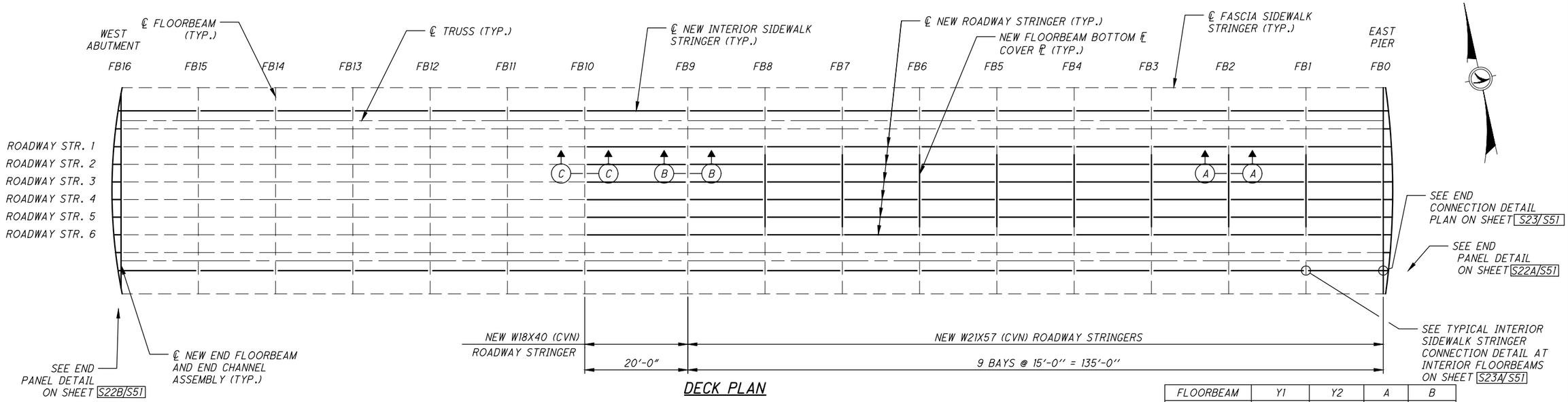

DECK PLAN

FLOORBEAM	Y1	Y2	A	B
1	11/16"	11/16"	3¾"	3½"
2	11/16"	11/16"	3¾"	3½"
3	11/16"	11/16"	4½"	4½"
4	¼"	¼"	3½"	3¼"
5	¼"	⅛"	3"	3"
6	⅛"	⅛"	2¾"	2¾"
7	1/16"	1/16"	2¾"	2¾"
8	1/16"	1/16"	2¾"	2¾"

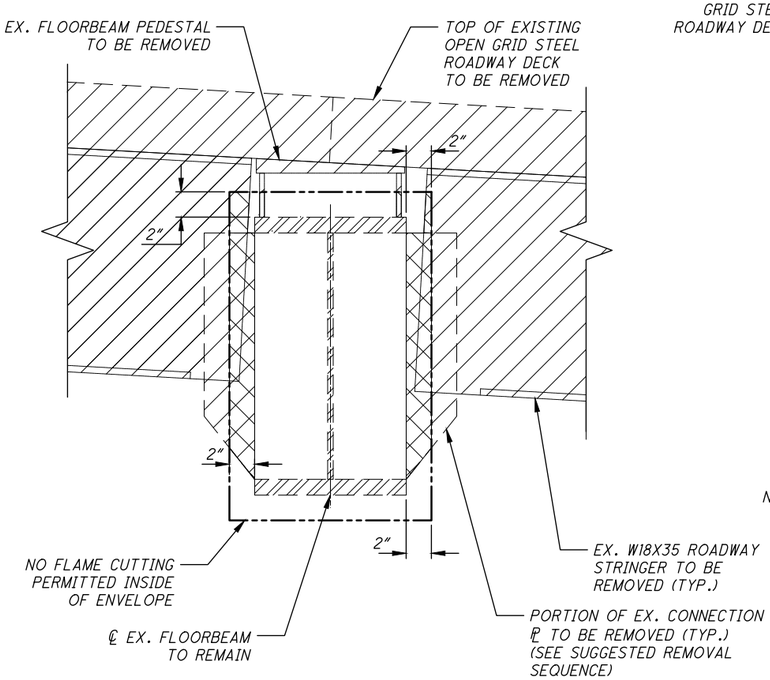

SECTION A-A (EXISTING)

(TYPICAL FOR FLOORBEAMS 1 THROUGH 8)

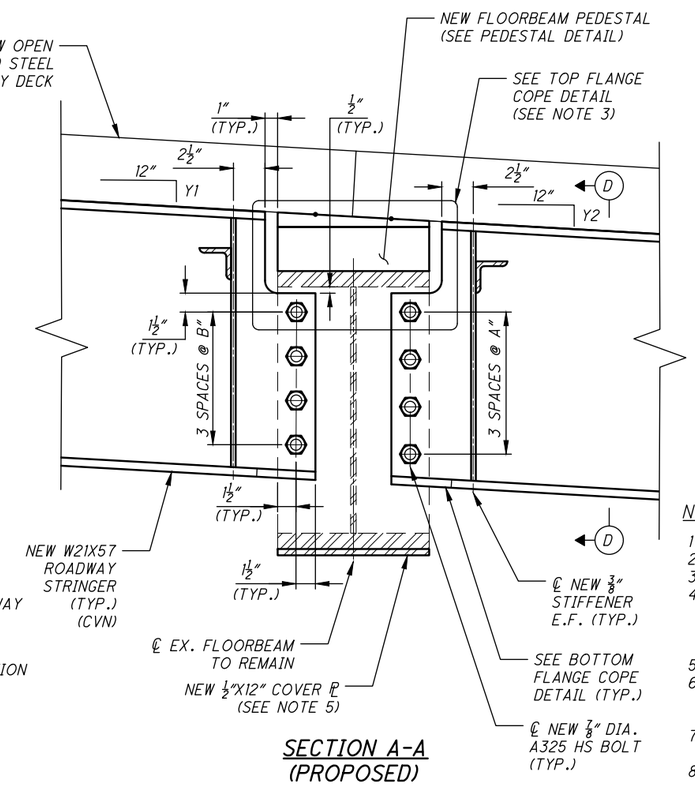

SECTION A-A (PROPOSED)

(TYPICAL FOR FLOORBEAMS 1 THROUGH 8)

LEGEND:

- PORTIONS OF STRUCTURE TO BE REMOVED, BY FLAME CUTTING
- PORTIONS OF STRUCTURE TO BE REMOVED, BY MECHANICAL HAND METHODS

REMOVAL SEQUENCE:

1. NO FLAME CUTTING WITHIN 2" ENVELOPE OF FLOORBEAM FLANGES WILL BE PERMITTED. FLAME CUT AND REMOVE EXISTING ROADWAY GRATING, STRINGER, AND CONNECTION PLATE UP TO 2" FROM FLOORBEAM FLANGE.
2. REMOVE EXISTING WELDED FLOORBEAM PEDESTAL ON TOP FLANGE AND ANY REMAINING PORTION OF THE GRATING USING CUTTING WHEEL TO CUT PEDESTAL LEGS JUST ABOVE THE WELDED CONNECTIONS TO TOP FLANGE AND THEN GRINDING REMAINDER OF CONNECTION FLUSH WITH TOP FLANGE.
3. THE CUT CONNECTION PLATE SHALL BE CUT VERTICALLY IN A STRAIGHT LINE USING MECHANICAL METHODS (I.E. HANDHELD BANDSAW, CUT WHEEL, ETC.). THE REMAINING PORTION OF THE PLATE SHALL SHALL NOT EXTEND MORE THAN 1/4" PROUD OF THE VERTICAL FACE OF THE FLOORBEAM FLANGE EDGE.
4. GRIND ANY BURRED OR ROUGH EDGES ON CUT EDGE TO PROVIDE SMOOTH SURFACE TO THE SATISFACTION OF THE ENGINEER.

NOTES:

1. FOR FLOORBEAM PEDESTAL DETAIL, SEE SHEET S20/S51.
2. FOR SECTIONS B-B AND C-C, SEE SHEET S21/S51.
3. FOR SECTION D-D AND COPE DETAILS, SEE SHEET S22/S51.
4. PRIOR TO REMOVAL OF THE EXISTING STRINGERS AND FLOORBEAM PEDESTALS AND PRIOR TO FABRICATION OF NEW STRINGERS AND FLOORBEAM PEDESTALS, CONTRACTOR IS TO FIELD VERIFY GRADE ANGLES OF STRINGERS AND HEIGHTS AND BEVEL OF FLOORBEAM PEDESTALS.
5. FOR FLOORBEAM COVER PLATE DETAIL, SEE SHEET S22/S51.
6. TO FACILITATE INSTALLATION OF NEW ROADWAY STRINGERS, STRINGERS MAY BE REQUIRED TO BE "STACKED" ON FLOORBEAM BOTTOM FLANGE PRIOR TO FINAL PLACEMENT AND CONNECTING.
7. WHERE A SHAPE OR PLATE IS DESIGNATED CVN, FURNISH MATERIAL THAT MEETS THE MINIMUM NOTCH TOUGHNESS REQUIREMENTS AS SPECIFIED IN CMS 711.01.
8. ALL WORK AND MATERIALS ASSOCIATED WITH REMOVAL OF THE STRINGERS, PEDESTALS AND PORTIONS OF THE FLOORBEAM STIFFENERS SHALL BE PAID FOR UNDER ITEM 202 - PORTIONS OF STRUCTURE REMOVED, AS PER PLAN.
9. ALL WORK AND MATERIALS ASSOCIATED WITH REMOVAL OF THE GRID STEEL ROADWAY DECK SHALL BE PAID FOR UNDER ITEM 202 - PORTIONS OF STRUCTURE REMOVED, AS PER PLAN.
10. ALL WORK AND MATERIALS ASSOCIATED WITH INSTALLATION OF NEW STRINGERS INCLUDING FIELD DRILLING SHALL BE PAID FOR UNDER ITEM 513 - STRUCTURAL STEEL, LEVEL 3, AS PER PLAN.
11. ALL WORK AND MATERIALS ASSOCIATED WITH INSTALLATION OF NEW FLOORBEAM COVER PLATES, INCLUDING FIELD DRILLING OF BOLT HOLES IN EXISTING FLOORBEAM, SHALL BE PAID FOR UNDER ITEM 513-STRUCTURAL STEEL, MISC.: INSTALL FLOORBEAM COVER PLATE.

DESIGN AGENCY
wsp
1660 WEST 2ND STREET SUITE 850 CLEVELAND, OHIO 44113

DESIGNED	DRAWN	REVIEWED	DATE
NRF	NRF	WRW	11/13/20
CHECKED	REVISED	STRUCTURE FILE NUMBER	
TLC	---	1869345	

TRUSS STRINGER REPLACEMENT DETAILS 1

CITY OF CLEVELAND BRIDGE NO. 1:003M
CENTER STREET SWING BRIDGE OVER THE CUYAHOGA RIVER

CUY-CENTER ST. SWING BRIDGE
PID NO: 109597

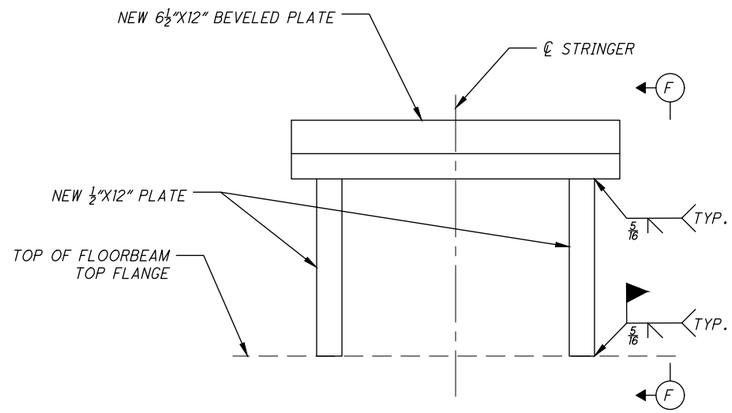

PEDESTAL DETAIL

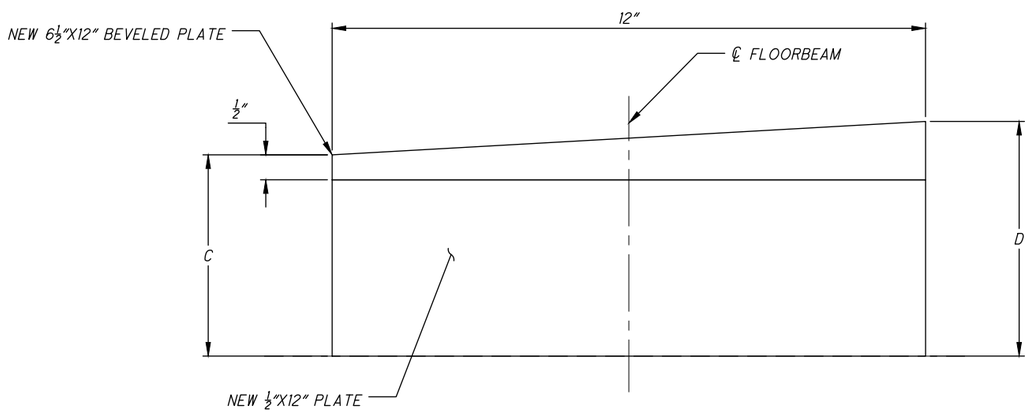

VIEW F-F

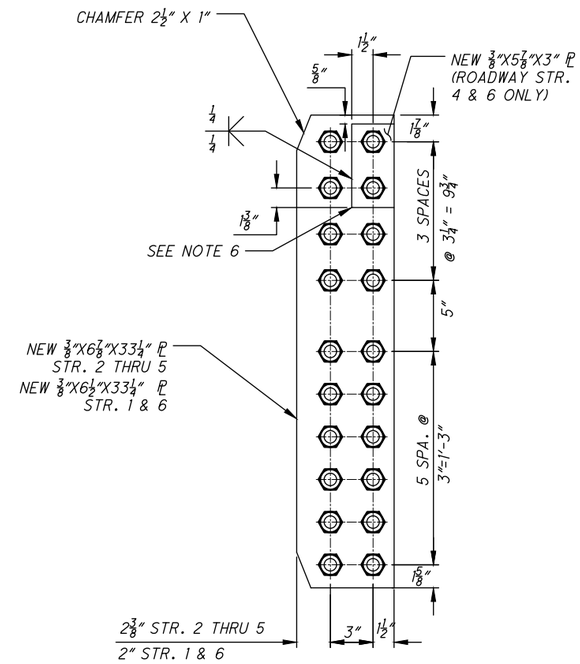

REINFORCEMENT PLATE DETAIL
(PROPOSED)

PEDESTAL DETAIL DIMENSIONS (SEE NOTE 3)		
FLOORBEAM	EAST HEIGHT (C)	WEST HEIGHT (D)
1	4½"	5 3/16"
2	4"	4 9/16"
3*	1⅞"	2¼"
4	5 1/16"	5 5/16"
5	6⅜ "	6½"
6	7 1/16"	7⅛"
7	7⅜"	7 7/16"
8	7 3/16"	7"
9	5¾"	5½"

* SEE NOTE 4

LEGEND:

- PORTIONS OF STRUCTURE TO BE REMOVED, BY FLAME CUTTING
- PORTIONS OF STRUCTURE TO BE REMOVED, BY MECHANICAL HAND METHODS

NOTES:

1. FOR SECTION D-D AND COPE DETAILS, SEE SHEET S22/S51 .
2. PRIOR TO REMOVAL OF THE EXISTING STRINGERS AND FLOORBEAM PEDESTALS AND PRIOR TO FABRICATION OF NEW STRINGERS AND FLOORBEAM PEDESTALS, CONTRACTOR IS TO FIELD VERIFY GRADE ANGLES OF STRINGERS AND HEIGHTS AND BEVEL OF FLOORBEAM PEDESTALS.
3. PEDESTALS AT FLOORBEAM 3 MAY BE REPLACED WITH SOLID BEVELED PLATES OF EQUAL HEIGHT CONNECTED WITH AN ALL-AROUND WELD.
4. FOR REMOVAL SEQUENCE, SEE SHEET S19/S51 .
5. CONTRACTOR MAY CLIP CORNERS OF FILL PLATE TO ALLOW FOR EASE OF INSTALLATION.
6. WHERE A SHAPE OR PLATE IS DESIGNATED CVN, FURNISH MATERIAL THAT MEETS THE MINIMUM NOTCH TOUGHNESS REQUIREMENTS AS SPECIFIED IN CMS 711.01.
7. ALL WORK AND MATERIALS ASSOCIATED WITH REMOVAL OF THE STRINGERS, PEDESTALS AND PORTIONS OF THE FLOORBEAM STIFFENERS SHALL BE PAID FOR UNDER ITEM 202 - PORTIONS OF STRUCTURE REMOVED, AS PER PLAN.
8. ALL WORK AND MATERIALS ASSOCIATED WITH INSTALLATION OF NEW STRINGERS SHALL BE PAID FOR UNDER ITEM 513 - STRUCTURAL STEEL, LEVEL 3, AS PER PLAN.
9. ALL WORK AND MATERIALS ASSOCIATED WITH REMOVAL OF THE GRID STEEL ROADWAY DECK SHALL BE PAID FOR UNDER ITEM 202 - PORTIONS OF STRUCTURE REMOVED, AS PER PLAN.

DESIGN AGENCY
WSP
1660 WEST 2ND STREET
SUITE 850
CLEVELAND, OHIO 44113

DESIGNED	DRAWN	REVIEWED	DATE
NRF	NRF	WRW	09/11/20
CHECKED	REVISED	STRUCTURE FILE NUMBER	
TLC	---	1869345	

TRUSS STRINGER REPLACEMENT DETAILS 2
CITY OF CLEVELAND BRIDGE NO. 1:003M
CENTER STREET SWING BRIDGE OVER THE CUYAHOGA RIVER

CUY-CENTER ST.
SWING BRIDGE
PID NO: 109597

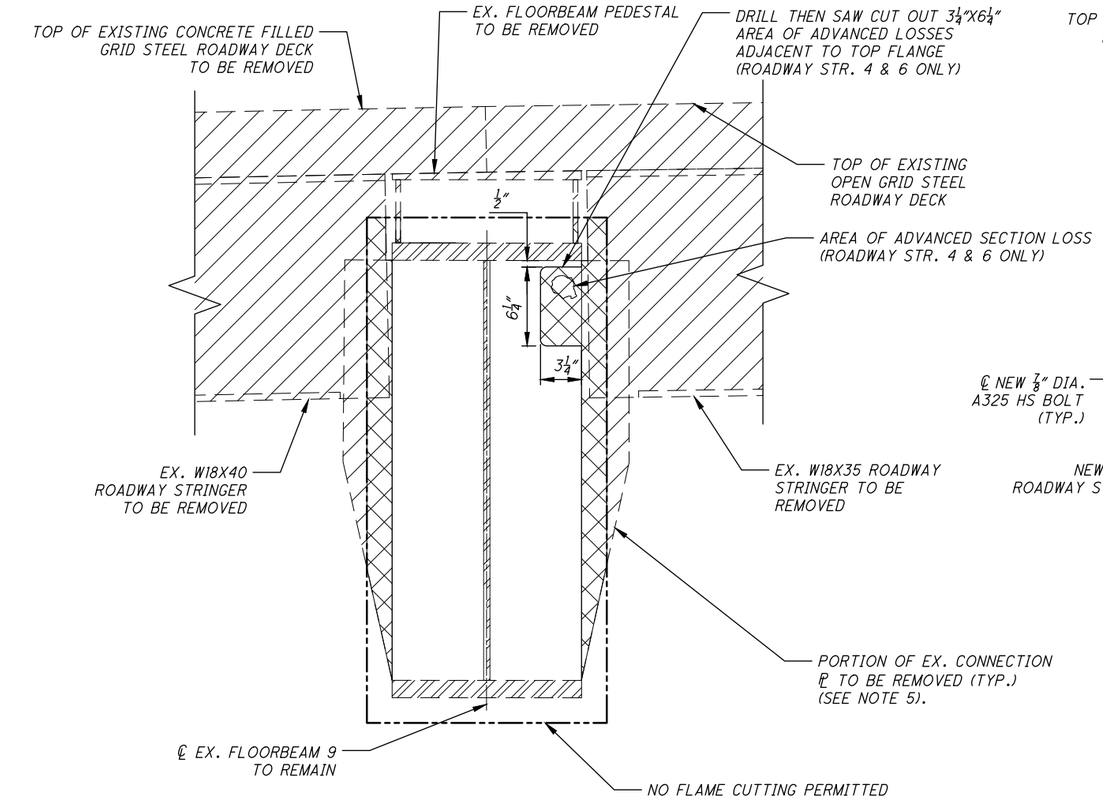

SECTION B-B (EXSITING)

(FLOORBEAM 9)

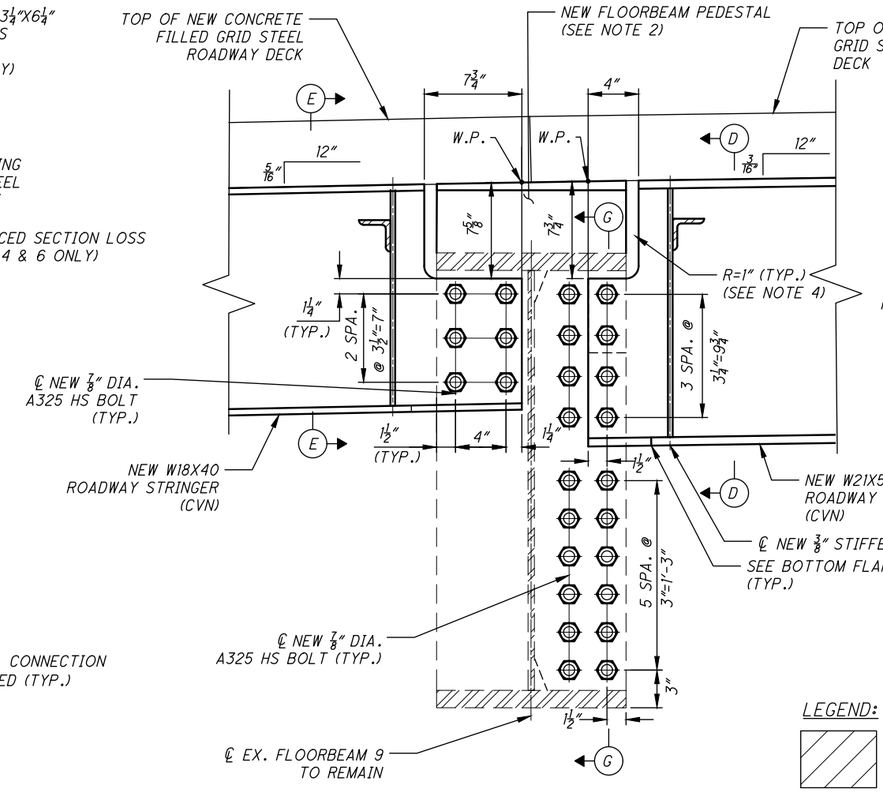

SECTION B-B (PROPOSED)

(FLOORBEAM 9)

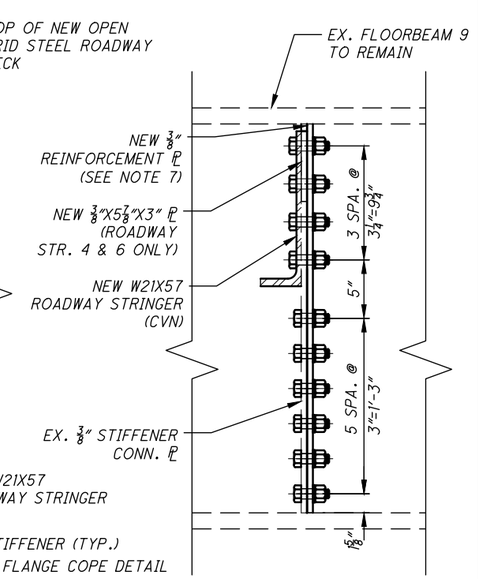

SECTION G-G (PROPOSED)

(FLOORBEAM 9)

LEGEND:

- PORTIONS OF STRUCTURE TO BE REMOVED, BY FLAME CUTTING
- PORTIONS OF STRUCTURE TO BE REMOVED, BY MECHANICAL HAND METHODS

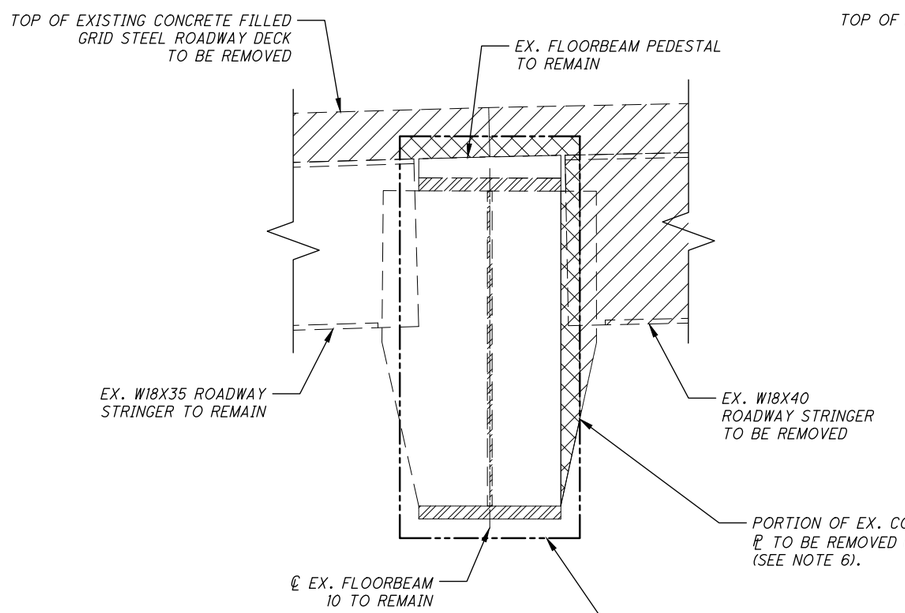

SECTION C-C (EXSITING)

(FLOORBEAM 10)

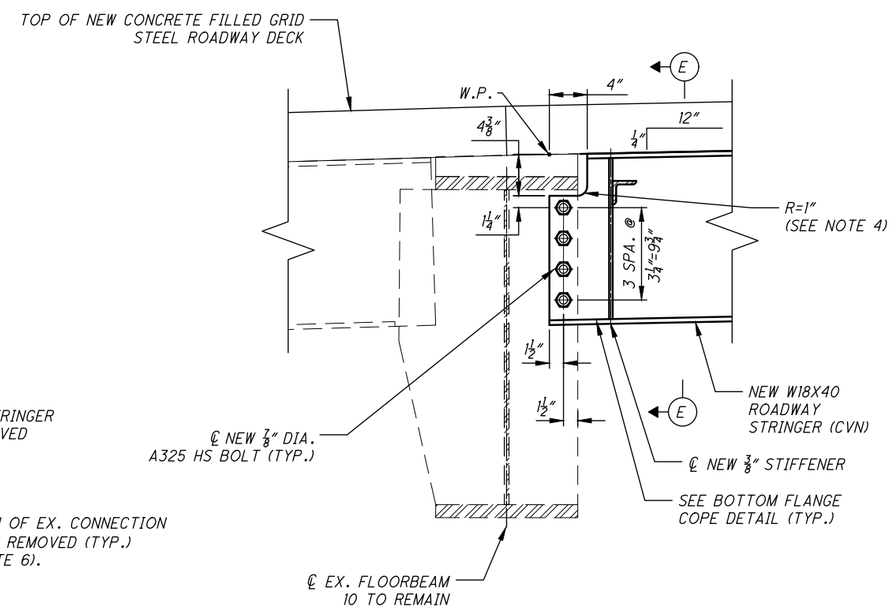

SECTION C-C (PROPOSED)

(FLOORBEAM 10)

NOTES:

1. FOR LOCATION OF SECTIONS B-B AND C-C, SEE SHEET S19/S51.
2. FOR PEDESTAL DETAIL, SEE SHEET S20/S51.
3. FOR SECTIONS D-D AND E-E AND BOTTOM FLANGE COPE DETAIL, SEE SHEET S22/S51.
4. A MINIMUM CLEARANCE OF ¼" IS TO BE MAINTAINED BETWEEN THE FLANGE EDGE AND BEAM COPE.
5. PRIOR TO REMOVAL OF THE EXISTING STRINGERS AND FLOORBEAM PEDESTALS AND PRIOR TO FABRICATION OF NEW STRINGERS AND FLOORBEAM PEDESTALS, CONTRACTOR IS TO FIELD VERIFY GRADE ANGLES OF STRINGERS AND HEIGHTS AND BEVEL OF FLOORBEAM PEDESTALS.
6. FOR REMOVAL SEQUENCE, SEE SHEET S19/S51.
7. FOR REINFORCEMENT PLATE DETAIL, SEE SHEET S20/S51.
8. WHERE A SHAPE OR PLATE IS DESIGNATED CVN, FURNISH MATERIAL THAT MEETS THE MINIMUM NOTCH TOUGHNESS REQUIREMENTS AS SPECIFIED IN CMS 711.01.
9. ALL WORK AND MATERIALS ASSOCIATED WITH REMOVAL OF THE STRINGERS, PEDESTALS, AND PORTIONS OF THE FLOORBEAM STIFFENERS SHALL BE PAID FOR UNDER ITEM 202 - PORTIONS OF STRUCTURE REMOVED, AS PER PLAN.
10. ALL WORK AND MATERIALS ASSOCIATED WITH REMOVAL OF THE GRID STEEL ROADWAY DECK SHALL BE PAID FOR UNDER ITEM 202 - PORTIONS OF STRUCTURE REMOVED, AS PER PLAN.
11. ALL WORK AND MATERIALS ASSOCIATED WITH INSTALLATION OF NEW STRINGERS SHALL BE PAID FOR UNDER ITEM 513 - STRUCTURAL STEEL, LEVEL 3, AS PER PLAN.
12. ALL WORK AND MATERIALS ASSOCIATED WITH INSTALLATION OF NEW STIFFENER REINFORCEMENT PLATES, INCLUDING REMOVAL OF DETERIORATED PORTION OF THE EXISTING STIFFENER SHALL BE PAID FOR UNDER ITEM 513 - STRUCTURAL STEEL, MISC.: STIFFENER REINFORCING PLATE.

DESIGN AGENCY
WSP
1660 WEST 2ND STREET SUITE 850 CLEVELAND, OHIO 44113

DESIGNED	DRAWN	REVIEWED	DATE
NRF	NRF	WRW	09/11/20
CHECKED	REVISED	STRUCTURE FILE NUMBER	
TLC	---	1869345	

TRUSS STRINGER REPLACEMENT DETAILS 3
CITY OF CLEVELAND BRIDGE NO. 1:003M
CENTER STREET SWING BRIDGE OVER THE CUYAHOGA RIVER

CUY-CENTER ST. SWING BRIDGE
PID NO: 109597

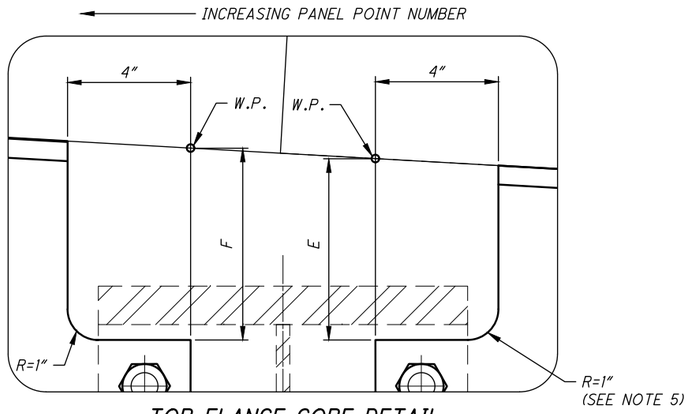

TOP FLANGE COPE DETAIL

(FLOORBEAMS 1 TO 8)
(PEDESTAL NOT SHOWN FOR CLARITY)

FLOORBEAM	COPES	
	DISTANCE E	DISTANCE F
1	6 7/16"	6 3/4"
2	5 15/16"	6 1/4"
3	3 15/16"	3 7/8"
4	6 13/16"	7"
5	8 3/16"	8 1/4"
6	8 13/16"	8 7/8"
7	9 1/8"	9 3/16"
8	8 15/16"	8 13/16"

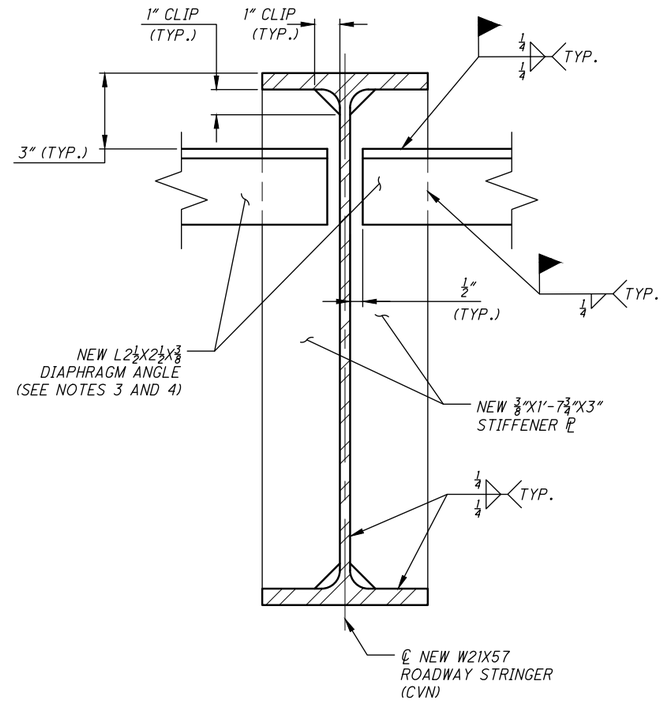

SECTION D-D

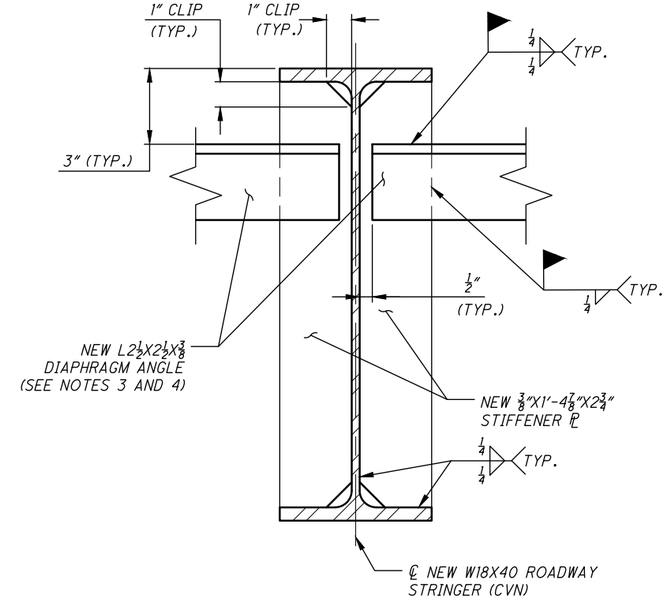

SECTION E-E

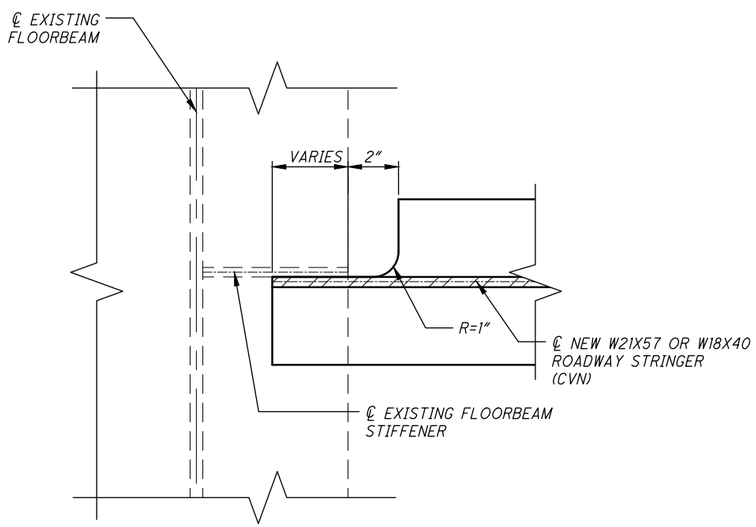

BOTTOM FLANGE COPE DETAIL

(FLOORBEAMS 1 TO 10)

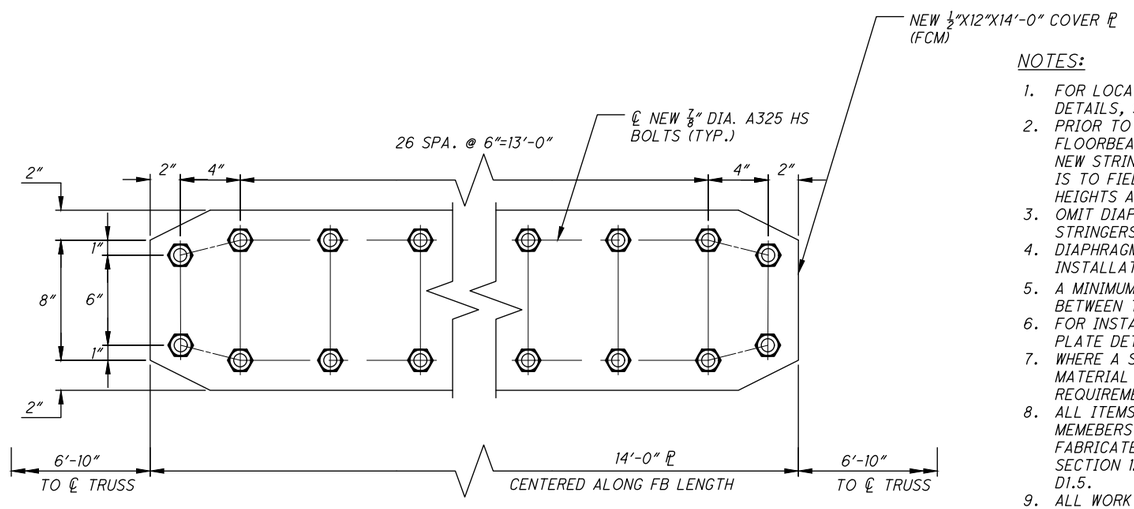

COVER PLATE DETAIL FOR FLOORBEAMS 1 THRU 8

(SEE NOTE 6)

NOTES:

1. FOR LOCATIONS OF SECTIONS D-D AND E-E AND COPE DETAILS, SEE SHEETS S19/S51 THROUGH S21/S51.
2. PRIOR TO REMOVAL OF THE EXISTING STRINGERS AND FLOORBEAM PEDESTALS AND PRIOR TO FABRICATION OF NEW STRINGERS AND FLOORBEAM PEDESTALS, CONTRACTOR IS TO FIELD VERIFY GRADE ANGLES OF STRINGERS AND HEIGHTS AND BEVEL OF FLOORBEAM PEDESTALS.
3. OMIT DIAPHRAGM ANGLE ON OUTBOARD SIDE OF EXTERIOR STRINGERS.
4. DIAPHRAGM ANGLES ARE TO BE INSTALLED PRIOR TO INSTALLATION OF NEW GRID DECK.
5. A MINIMUM CLEARANCE OF 1/4" IS TO BE MAINTAINED BETWEEN THE FLANGE EDGE AND BEAM COPE.
6. FOR INSTALLATION LOCATIONS OF FLOORBEAM COVER PLATE DETAIL, SEE SHEET S19/S51.
7. WHERE A SHAPE OR PLATE IS DESIGNATED CVN, FURNISH MATERIAL THAT MEETS THE MINIMUM NOTCH TOUGHNESS REQUIREMENTS AS SPECIFIED IN CMS 711.01.
8. ALL ITEMS DESIGNATED FCM ARE FRACTURE CRITICAL MEMEBERS AND COMPONENTS AND SHALL BE FURNISHED AND FABRICATED ACCORDING TO THE REQUIREMENTS OF SECTION 12 OF THE AASHTO/AWS BRIDGE WELDING CODE D1.5.
9. ALL WORK AND MATERIALS ASSOCIATED WITH INSTALLATION OF NEW STRINGERS SHALL BE PAID FOR UNDER ITEM 513 - STRUCTURAL STEEL, LEVEL 3, AS PER PLAN.
10. ALL WORK AND MATERIALS ASSOCIATED WITH INSTALLATION OF NEW FLOORBEAM COVER PLATES, INCLUDING FIELD DRILLING OF BOLT HOLES IN EXISTING FLOORBEAM , SHALL BE PAID FOR UNDER ITEM 513 - STRUCTURAL STEEL, MISC.: INSTALL FLOORBEAM COVER PLATE.

DESIGN AGENCY
WSP
1660 WEST 2ND STREET
SUITE 850
CLEVELAND, OHIO 44113

DESIGNED	DRAWN	REVIEWED	DATE
NRF	NRF	WRW	09/11/20
CHECKED	REVISED	STRUCTURE FILE NUMBER	
TLC	---	1869345	

TRUSS STRINGER REPLACEMENT DETAILS 4
CITY OF CLEVELAND BRIDGE NO. 1:003M
CENTER STREET SWING BRIDGE OVER THE CUYAHOGA RIVER

CUY-CENTER ST.
SWING BRIDGE
PID NO: 109597

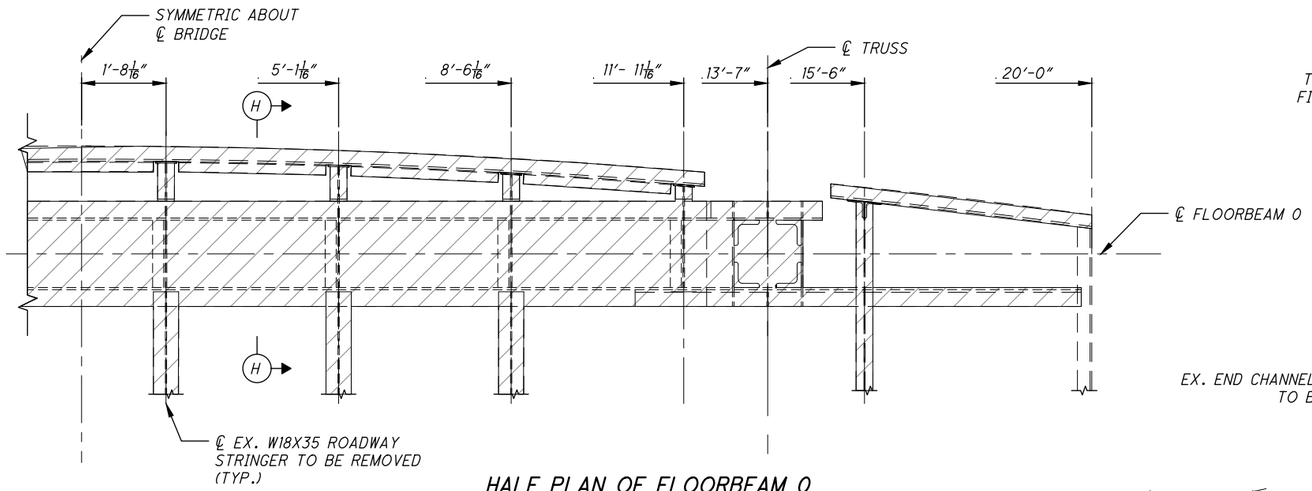

HALF PLAN OF FLOORBEAM 0
(EXISTING)

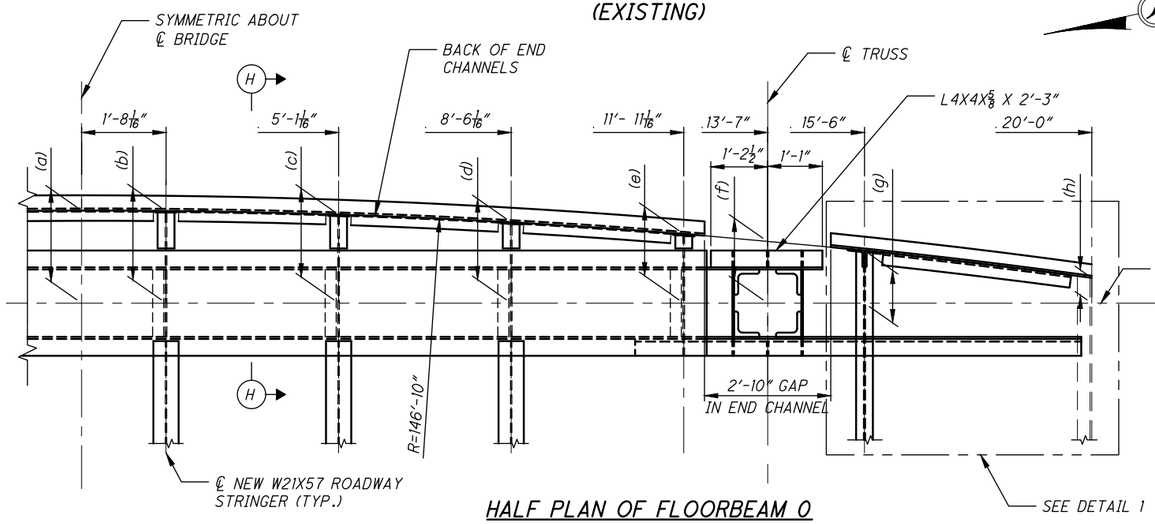

HALF PLAN OF FLOORBEAM 0
(PROPOSED)

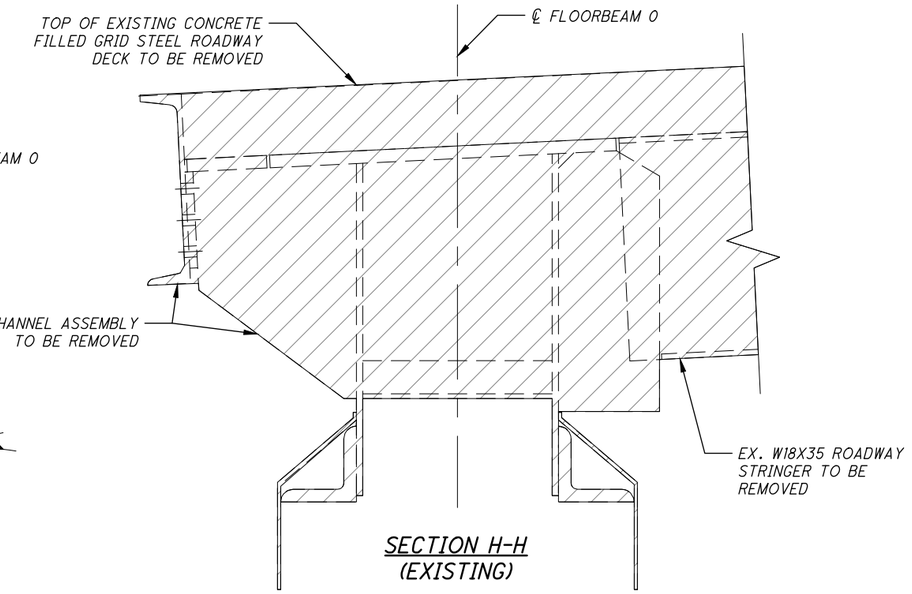

SECTION H-H
(EXISTING)

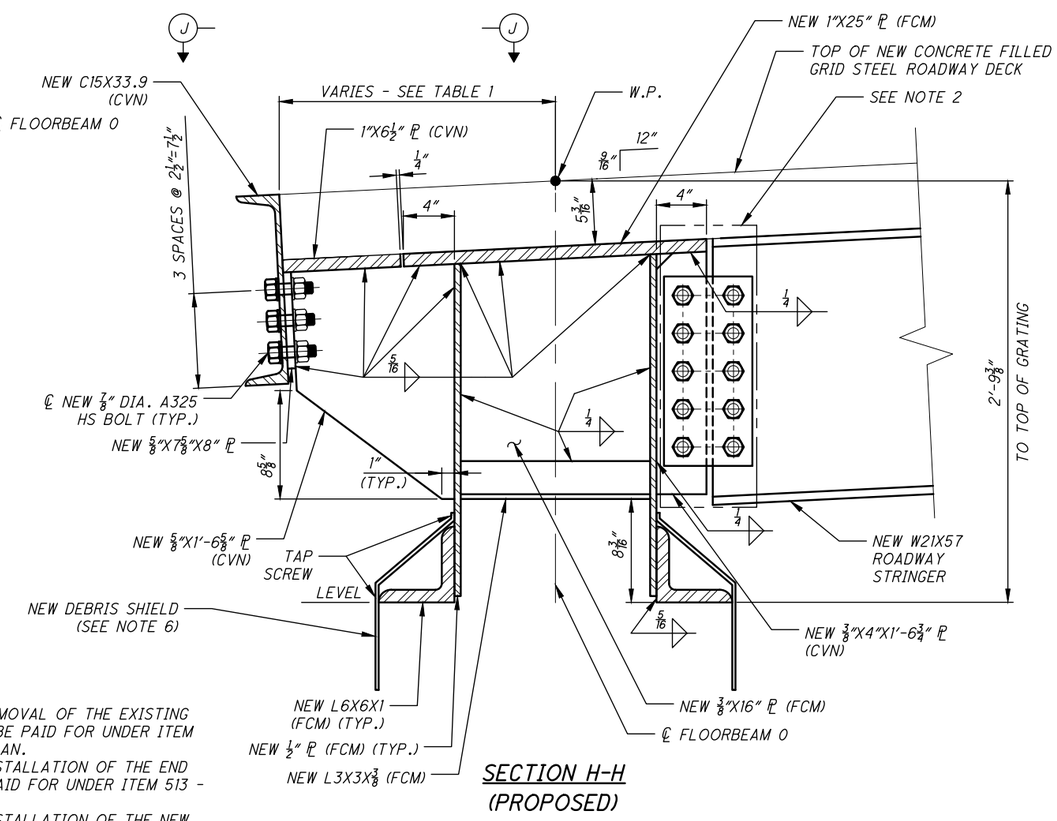

SECTION H-H
(PROPOSED)

DIMENSION TABLE 1 - ℄ FLOORBEAM 0 TO BACK OF END CHANNEL								
DIMENSION	(a)	(b)	(c)	(d)	(e)	(f)	(g)	(h)
FB0	1'-10"	1'-9 7/8"	1'-8 15/16"	1'-7"	1'-4 1/8"	1'-2 7/16"	1'-0 1/8"	5 9/16"

DIMENSIONS (a) - (h) ARE SYMMETRICAL ABOUT CENTERLINE CENTER STREET BRIDGE AND THEY ARE HORIZONTAL DISTANCES AT THE TOP OF ROADWAY (SEE SECTION A-A)

NOTES:

1. SEE SHEET S19/S51 FOR STRINGER REMOVAL SEQUENCE.
2. FOR STRINGER CONNECTION DETAILS, SEE SHEET S22E/S51.
3. SEE SHEET S13A/S51 FOR END FLOORBEAM REMOVAL SEQUENCE OF CONSTRUCTION.
4. FOR DETAIL 1, AND VIEW J-J, SEE SHEET S22D/S51.
5. FOR ELEVATION OF PROPOSED FLOORBEAM, SEE SHEET S22C/S51.
6. STAINLESS STEEL DEBRIS SHIELD IS TO BE REPLACED IN KIND AND ATTACHED TO FLOORBEAM WITH TAP SCREWS AT LOCATIONS SHOWN AND SPACED AT 12".
7. ALL ITEMS DESIGNATED FCM ARE FRACTURE CRITICAL MEMBERS AND COMPONENTS AND SHALL BE FURNISHED AND FABRICATED ACCORDING TO THE REQUIREMENTS OF SECTION 12 OF THE AASHTO/AWS BRIDGE WELDING CODE D1.5.
8. WHERE A SHAPE OR PLATE IS DESIGNATED CVN, FURNISH MATERIAL THAT MEETS THE MINIMUM NOTCH TOUGHNESS REQUIREMENTS AS SPECIFIED IN CMS 711.01.
9. ALL LABOR AND MATERIALS ASSOCIATED WITH THE REMOVAL OF THE EXISTING END FLOORBEAM AND END CHANNEL ASSEMBLY SHALL BE PAID FOR UNDER ITEM 202 - PORTIONS OF STRUCTURE REMOVED, AS PER PLAN.
10. ALL LABOR AND MATERIALS ASSOCIATED WITH THE INSTALLATION OF THE END FLOORBEAM AND END CHANNEL ASSEMBLY SHALL BE PAID FOR UNDER ITEM 513 - STRUCTURAL STEEL, LEVEL 6.
11. ALL LABOR AND MATERIALS ASSOCIATED WITH THE INSTALLATION OF THE NEW ROADWAY STRINGERS SHALL BE PAID FOR UNDER ITEM 513 - STRUCTURAL STEEL, LEVEL 3, AS PER PLAN.

LEGEND:

INDICATES LIMITS OF REMOVAL BY FLAME CUTTING

DESIGN AGENCY
WSP
1660 WEST 2ND STREET
SUITE 850
CLEVELAND, OHIO 44113

DESIGNED	DRAWN	REVIEWED	DATE
NBR	BLM	WRW	11/13/20
CHECKED	REVISED	STRUCTURE FILE NUMBER	
NRF	---	1869345	

END FLOORBEAM 0 REPLACEMENT DETAILS
CITY OF CLEVELAND BRIDGE NO. 1:003M
CENTER STREET SWING BRIDGE OVER THE CUYAHOGA RIVER

CUY-CENTER ST.
SWING BRIDGE
PID NO: 109597

S22A/S51

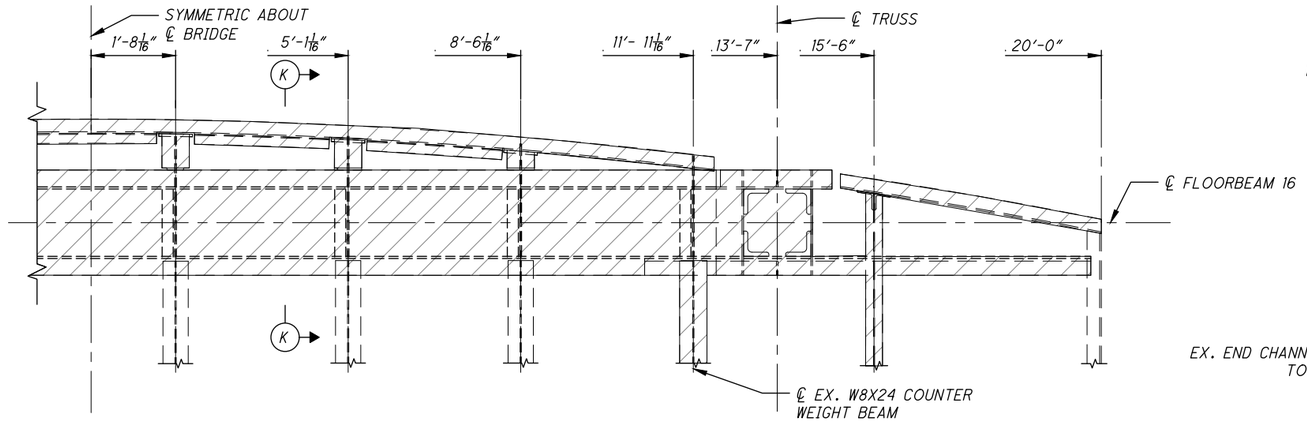

HALF PLAN OF FLOORBEAM 16 (EXISTING)

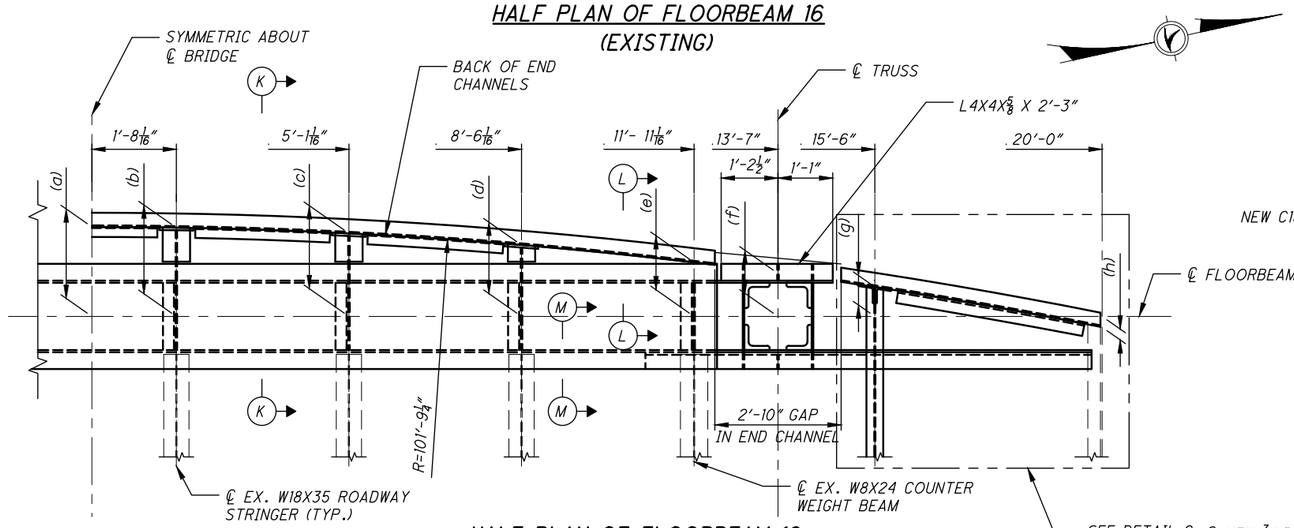

HALF PLAN OF FLOORBEAM 16 (PROPOSED)

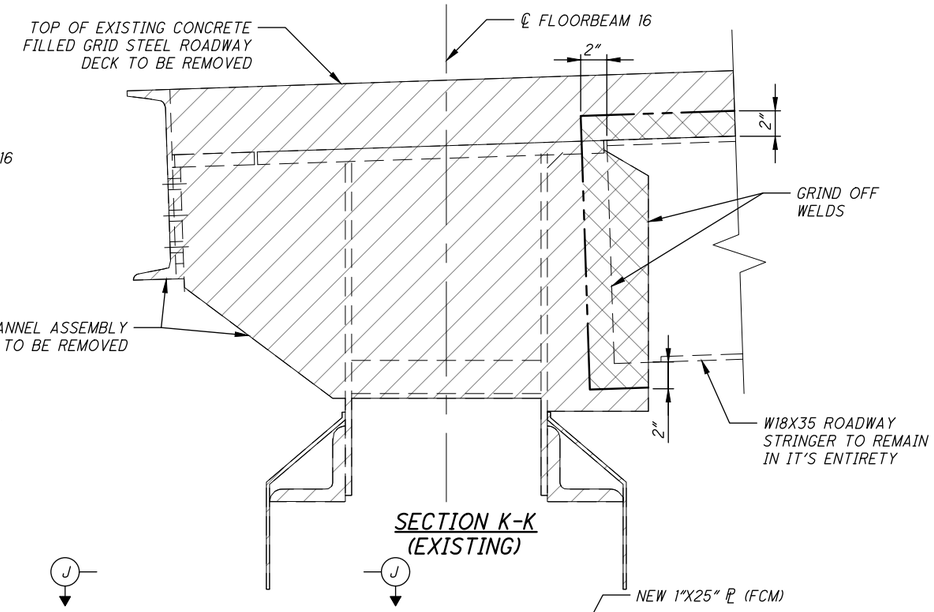

SECTION K-K (EXISTING)

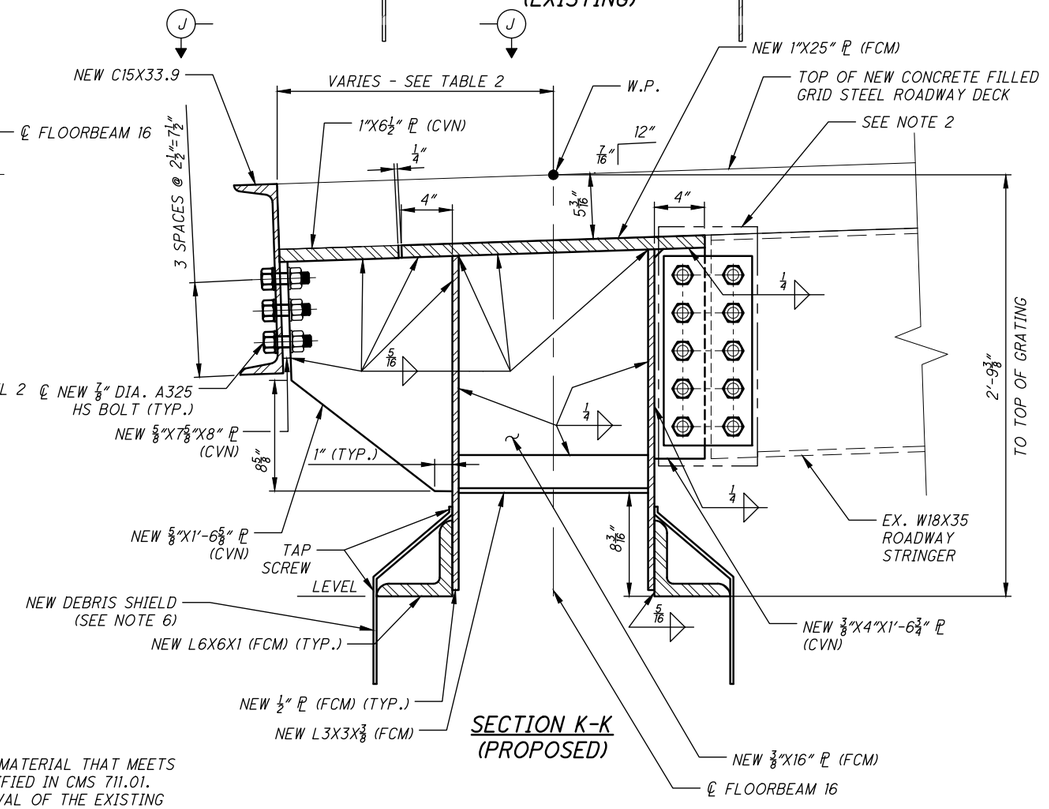

SECTION K-K (PROPOSED)

DIMENSION TABLE 2 - ℄ FLOORBEAM 16 TO BACK OF END CHANNEL								
DIMENSION	(a)	(b)	(c)	(d)	(e)	(f)	(g)	(h)
FB16	1'-9 1/4"	1'-9 1/16"	1'-7 11/16"	1'-4 15/16"	1'-0 5/8"	10 5/16"	7"	-2 9/16"

DIMENSIONS (a) - (h) ARE SYMMETRICAL ABOUT CENTERLINE CENTER STREET BRIDGE AND THEY ARE HORIZONTAL DISTANCES AT THE TOP OF ROADWAY (SEE SECTION B-B)

NOTES:

1. SEE SHEET S19/S51 FOR STRINGER REMOVAL SEQUENCE.
2. FOR SECTION M-M AND STRINGER CONNECTION DETAILS, SEE SHEET S22E/S51 .
3. SEE SHEET S13A/S51 FOR END FLOORBEAM REMOVAL SEQUENCE OF CONSTRUCTION.
4. FOR DETAIL 2, SECTION L-L AND VIEW J-J, SEE SHEET S22D/S51.
5. FOR ELEVATION OF PROPOSED FLOORBEAM, SEE SHEET S22C/S51.
6. STAINLESS STEEL DEBRIS SHIELD IS TO BE REPLACED IN KIND AND ATTACHED TO FLOORBEAM WITH TAP SCREWS AT LOCATIONS SHOWN AND SPACED AT 12".
7. ALL ITEMS DESIGNATED FCM ARE FRACTURE CRITICAL MEMBERS AND COMPONENTS AND SHALL BE FURNISHED AND FABRICATED ACCORDING TO THE REQUIREMENTS OF SECTION 12 OF THE AASHTO/AWS BRIDGE WELDING CODE D1.5.
8. WHERE A SHAPE OR PLATE IS DESIGNATED CVN, FURNISH MATERIAL THAT MEETS THE MINIMUM NOTCH TOUGHNESS REQUIREMENTS AS SPECIFIED IN CMS 711.01.
9. ALL LABOR AND MATERIALS ASSOCIATED WITH THE REMOVAL OF THE EXISTING END FLOORBEAM AND END CHANNEL ASSEMBLY SHALL BE PAID FOR UNDER ITEM 202 - PORTIONS OF STRUCTURE REMOVED, AS PER PLAN.
10. ALL LABOR AND MATERIALS ASSOCIATED WITH THE INSTALLATION OF THE END FLOORBEAM AND END CHANNEL ASSEMBLY SHALL BE PAID FOR UNDER ITEM 513 - STRUCTURAL STEEL, LEVEL 6.
11. ALL LABOR AND MATERIALS ASSOCIATED WITH THE INSTALLATION OF THE NEW ROADWAY STRINGERS SHALL BE PAID FOR UNDER ITEM 513 - STRUCTURAL STEEL, LEVEL 3, AS PER PLAN.

LEGEND:

INDICATES LIMITS OF REMOVAL BY FLAME CUTTING

PORTION OF STRUCTURE TO BE REMOVED, BY MECHANICAL HAND METHODS

DESIGN AGENCY
WSP
1660 WEST 2ND STREET SUITE 850 CLEVELAND, OHIO 44113

DESIGNED	DRAWN	REVIEWED	DATE
NBR	BLM	WRW	11/13/20
CHECKED	REVISED	STRUCTURE FILE NUMBER	
NRF	---	1869345	

END FLOORBEAM 16 REPLACEMENT DETAILS

CITY OF CLEVELAND BRIDGE NO. 1:003M
CENTER STREET SWING BRIDGE OVER THE CUYAHOGA RIVER

CUY-CENTER ST. SWING BRIDGE
PID NO: 109597

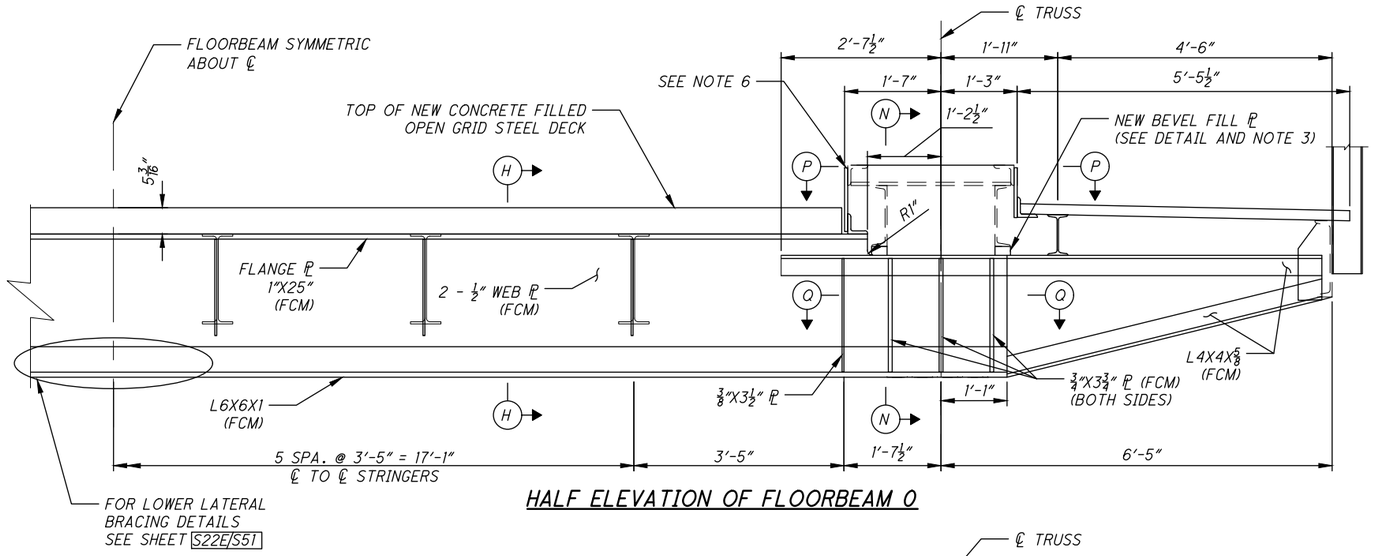

HALF ELEVATION OF FLOORBEAM O

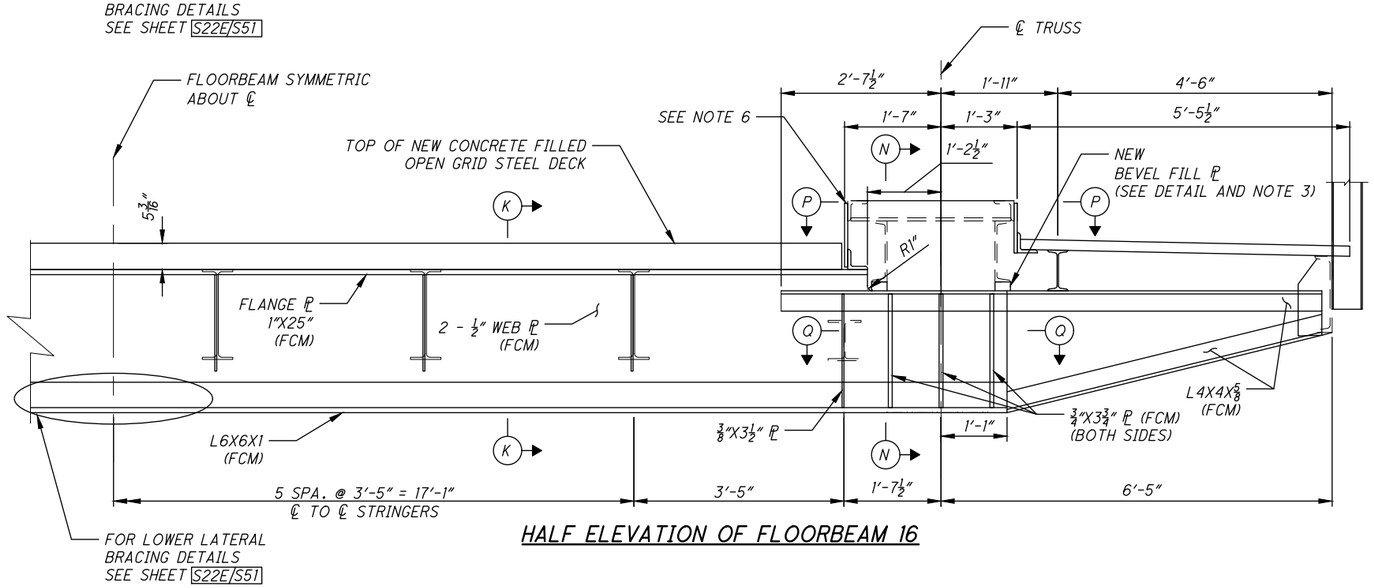

HALF ELEVATION OF FLOORBEAM 16

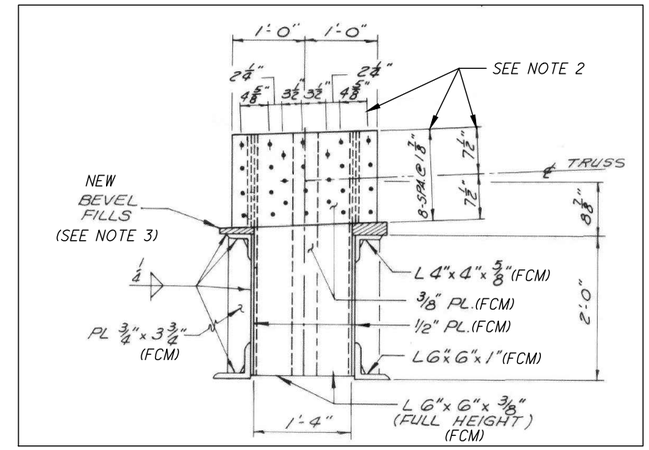

SECTION N-N *

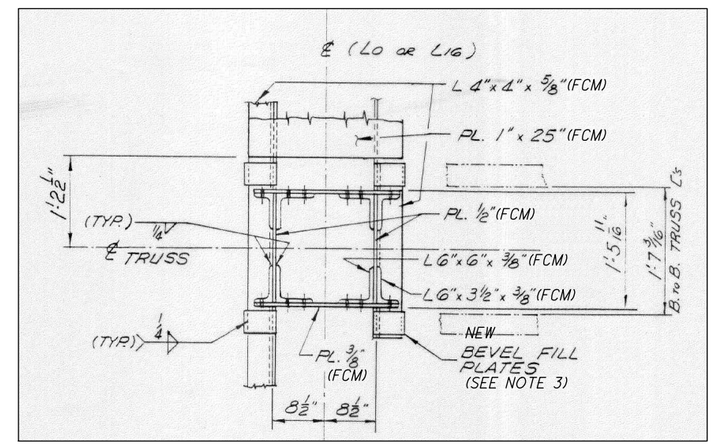

SECTION P-P *

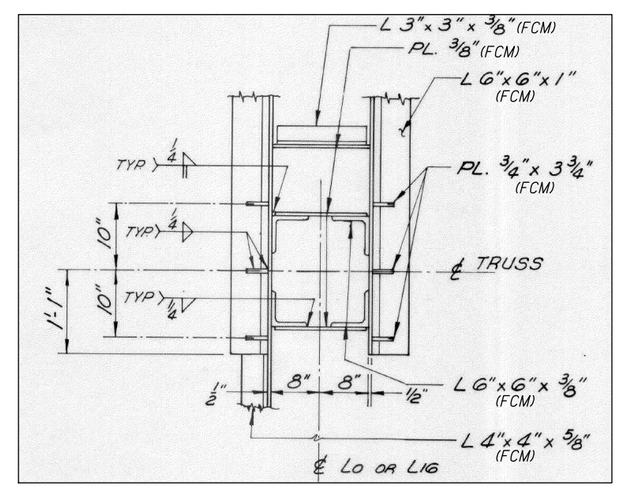

SECTION Q-Q *

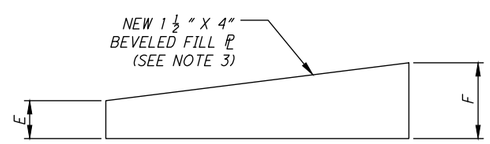

END FLOORBEAM BEVELED FILL PLATE DETAIL

END FLOORBEAM BEVELED FILL PLATE DIMENSIONS				
FILL PLATE LOCATION	FLOORBEAM 0		FLOORBEAM 16	
	HEIGHT (E)	HEIGHT (F)	HEIGHT (E)	HEIGHT (F)
EAST	¾"	1 1/16"	1⅛"	1¾"
WEST	1¾"	2"	⅞"	1 1/16"

NOTES:

1. ALL ITEMS DESIGNATED FCM ARE FRACTURE CRITICAL MEMBERS AND COMPONENTS AND SHALL BE FURNISHED AND FABRICATED ACCORDING TO THE REQUIREMENTS OF SECTION 12 OF THE AASHTO/AWS BRIDGE WELDING CODE D1.5.
2. CONTRACTOR IS TO FIELD VERIFY DIMENSIONS AND FABRICATE THE STRUCTURAL STEEL TO FIT PROPERLY WITH THE PORTIONS OF STRUCTURE TO REMAIN.
3. CONTRACTOR IS TO FIELD VERIFY THICKNESSES AND GRADES OF EXISTING BEVELED PLATES PRIOR TO FABRICATION OF NEW BEVELED PLATES. ADDITIONALLY, WIDTH OF PLATES SHALL ENSURE FULL AND PROPER BEARING OF THE LOWER CHORD CHANNELS AND GUSSET PLATES ON THE FLOORBEAM TOP FLANGE.
4. SEE SHEET S22A/S51 AND S22B/S51 FOR PLAN VIEW OF END FLOORBEAMS AND END CHANNEL ASSEMBLIES AND SECTIONS H-H AND K-K.
5. SEE SHEET W5A/M5 FOR END JACK MACHINERY DETAILS.
6. FOR CURB PLATE ASSEMBLY REMOVAL AND REPLACEMENT DETAILS, SEE SHEETS S26A/S51 AND S26B/S51.
7. ALL LABOR AND MATERIALS ASSOCIATED WITH FIELD VERIFICATION, FABRICATION, ERECTION AND INSTALLATION OF THE NEW END FLOORBEAM MEMBERS AND END CHANNEL ASSEMBLIES SHALL BE PAID FOR UNDER ITEM 513 - STRUCTURAL STEEL, LEVEL 6.

* = TAKEN FROM THE 1985 REHABILITATION PLANS.

DESIGN AGENCY
wsp
1660 WEST 2ND STREET SUITE 850
CLEVELAND, OHIO 44113

DESIGNED	DRAWN	REVIEWED	DATE
JEJT	BLM	WRW	10/23/20
CHECKED	REVISED	STRUCTURE FILE NUMBER	
NRF	---	1869345	

END FLOORBEAM REPLACEMENT DETAILS 1
CITY OF CLEVELAND BRIDGE NO. 1:003M
CENTER STREET SWING BRIDGE OVER THE CUYAHOGA RIVER

CUY-CENTER ST. SWING BRIDGE
PID NO: 109597

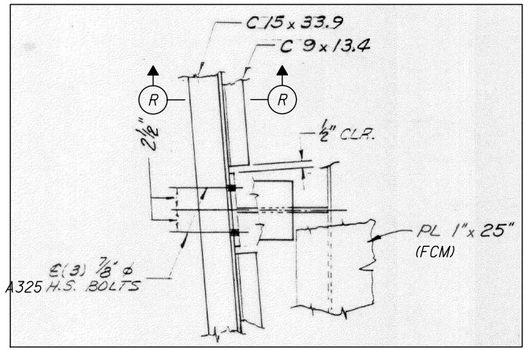

VIEW J-J *

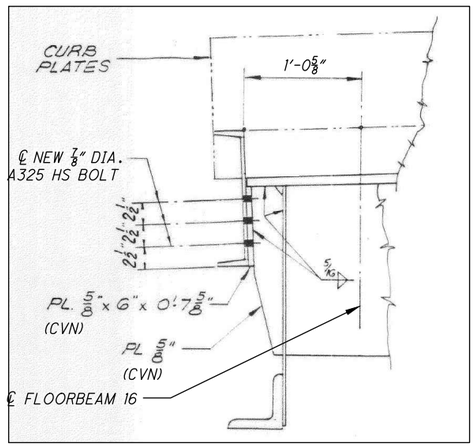

SECTION L-L *

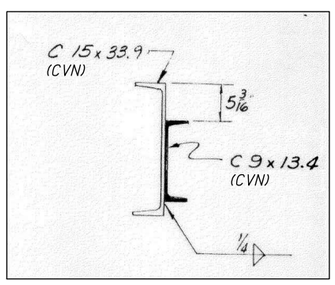

SECTION R-R *

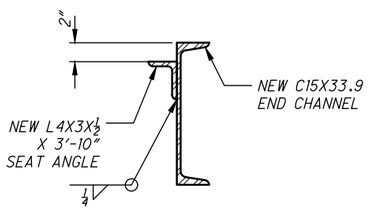

SECTION X-X

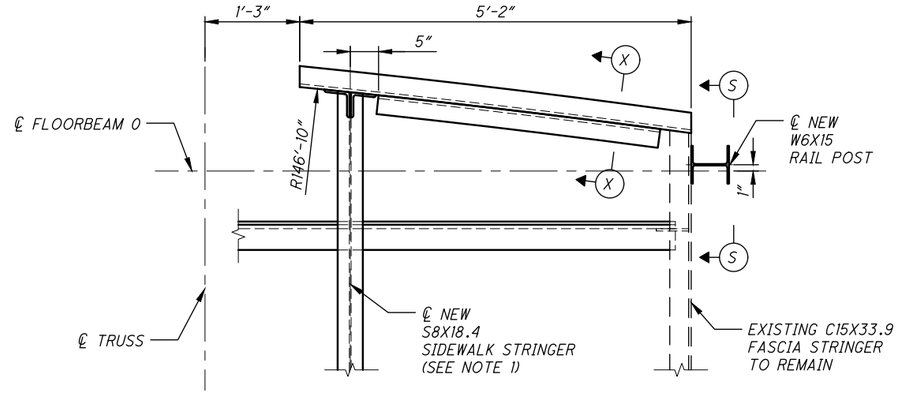

DETAIL 1
(FLOORBEAM 0)

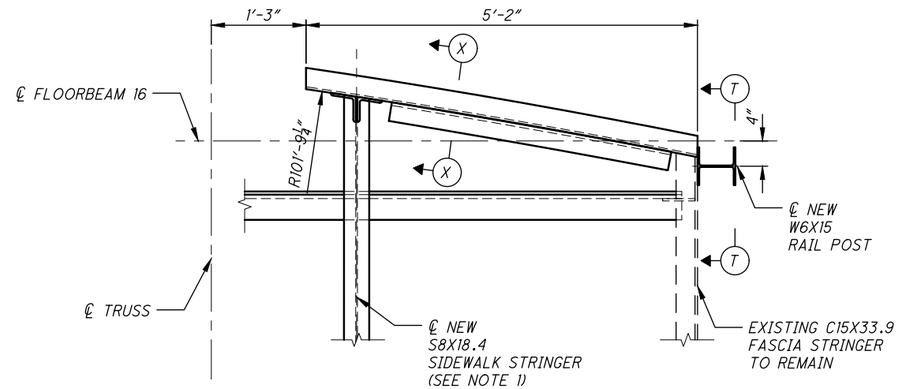

DETAIL 2
(FLOORBEAM 16)

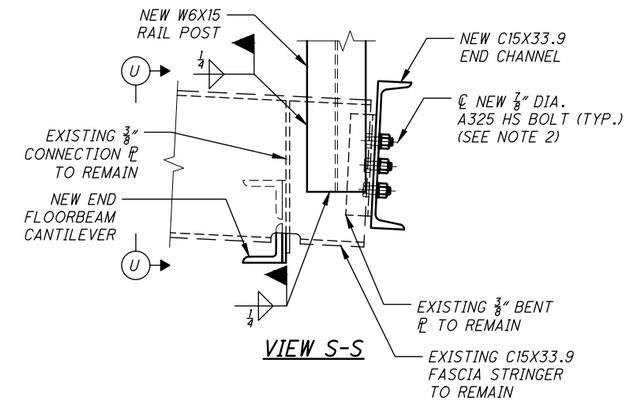

VIEW S-S

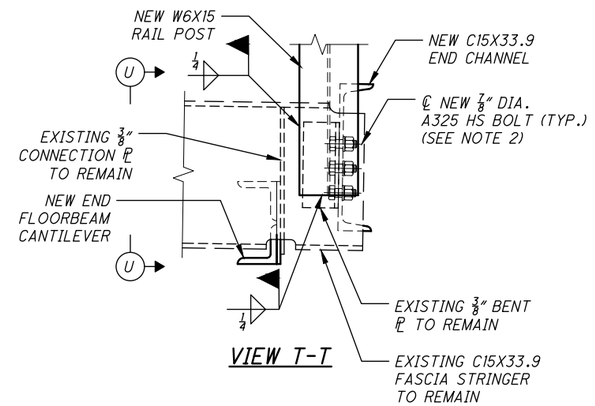

VIEW T-T

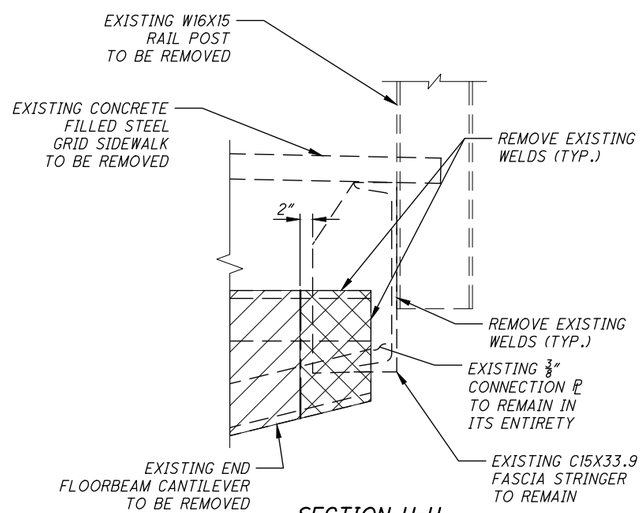

SECTION U-U
(EXISTING)

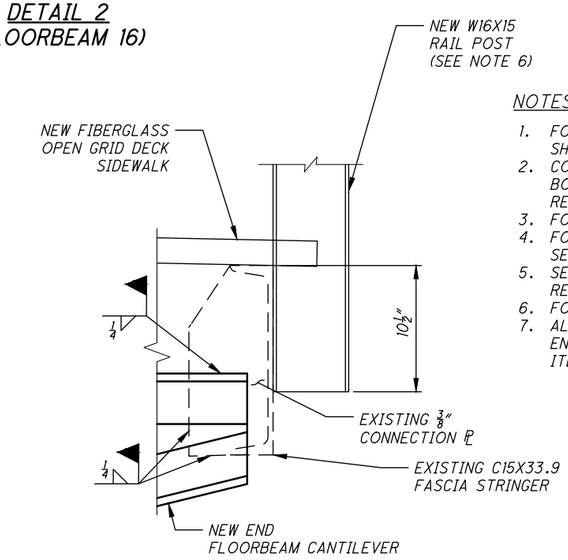

SECTION U-U
(PROPOSED)

NOTES:

1. FOR NEW SIDEWALK STRINGER REMOVAL AND REPLACEMENT DETAILS, SEE SHEET S23/S51.
2. CONTRACTOR IS TO FIELD VERIFY LOCATION AND SPACING OF EXISTING BOLT HOLES IN BENT PLATE CONNECTION ON FASCIA STRINGER TO BE REUSED.
3. FOR LOCATION OF DETAIL 1, SEE SHEET S22A/S51.
4. FOR LOCATION OF DETAIL 2, SECTION J-J, AND VIEW L-L, SEE SHEET S22B/S51.
5. SECTION L-L, VIEW J-J, AND SECTION R-R ARE TAKEN FROM THE 1985 REHABILITATION PLANS.
6. FOR POST DETAILS SEE SHEET S37/S51.
7. ALL LABOR AND MATERIALS ASSOCIATED WITH THE INSTALLATION OF THE END FLOORBEAM AND END CHANNEL ASSEMBLY SHALL BE PAID FOR UNDER ITEM 513 - STRUCTURAL STEEL, LEVEL 6.

* = TAKEN FROM THE 1985 REHABILITATION PLANS.

LEGEND:

- PORTIONS OF STRUCTURE TO BE REMOVED, BY FLAME CUTTING
- PORTIONS OF STRUCTURE TO BE REMOVED, BY MECHANICAL HAND METHODS

DESIGN AGENCY
WSP
1660 WEST 2ND STREET
SUITE 850
CLEVELAND, OHIO 44113

DESIGNED	DRAWN	REVIEWED	DATE
JEJT	BLM	WRW	10/23/20
CHECKED	REVISED	STRUCTURE FILE NUMBER	
NRF	---	1869345	

END FLOORBEAM REPLACEMENT DETAILS 2
CITY OF CLEVELAND BRIDGE NO. 1:003M
CENTER STREET SWING BRIDGE OVER THE CUYAHOGA RIVER

CUY-CENTER ST.
SWING BRIDGE
PID NO: 109597

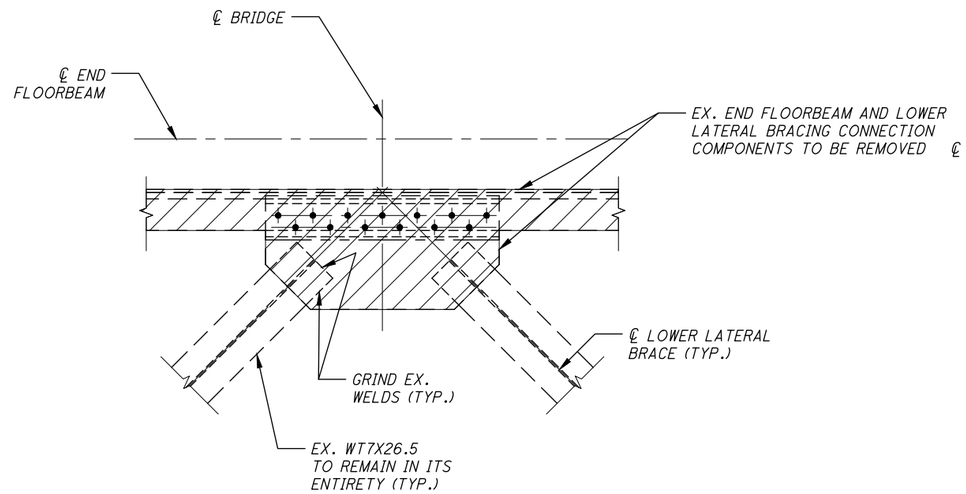

END FLOORBEAM LOWER LATERAL BRACING CONNECTION (EXISTING)

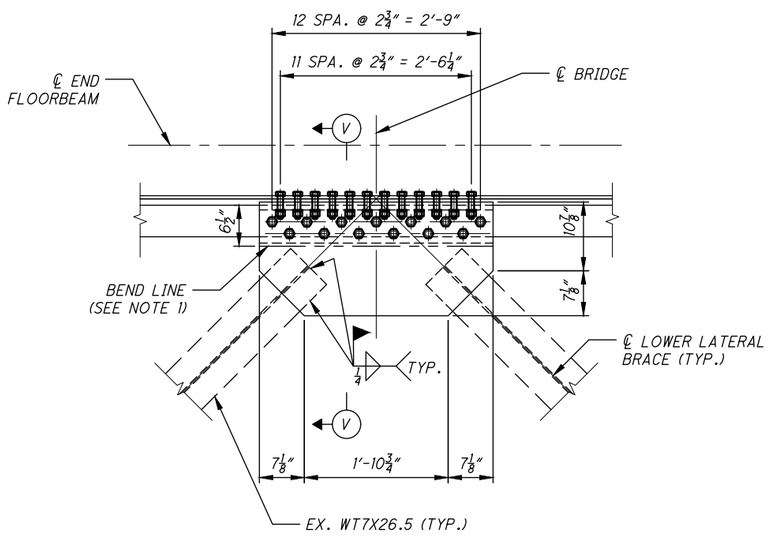

END FLOORBEAM LOWER LATERAL BRACING CONNECTION (PROPOSED)

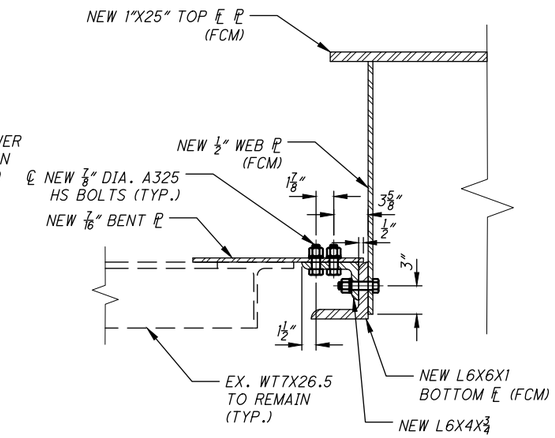

SECTION V-V

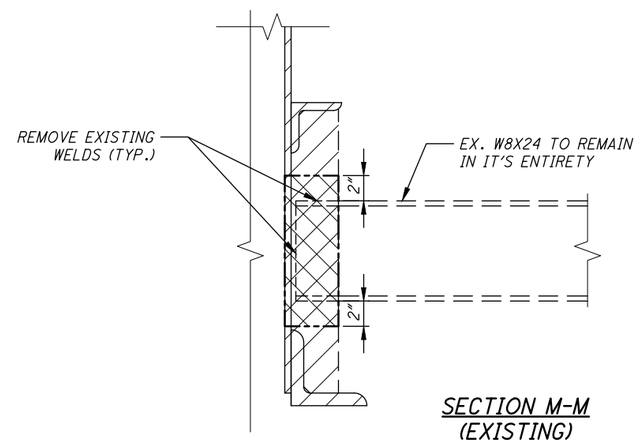

SECTION M-M (EXISTING)

(DEBRIS SHIELD NOT SHOWN FOR CLARITY)

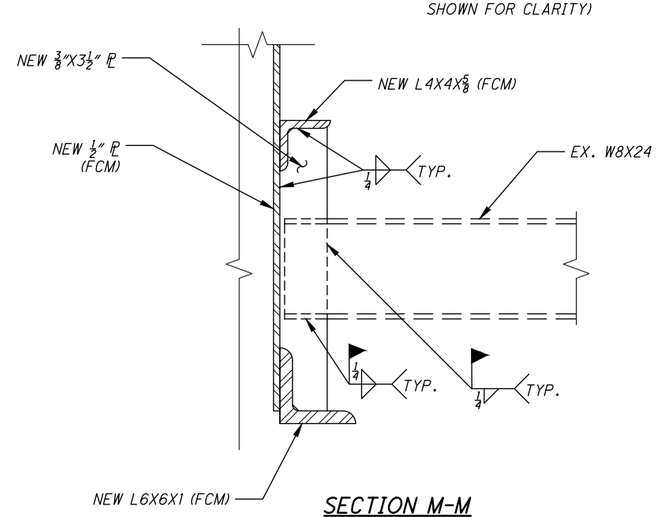

SECTION M-M (PROPOSED)

(DEBRIS SHIELD NOT SHOWN FOR CLARITY)

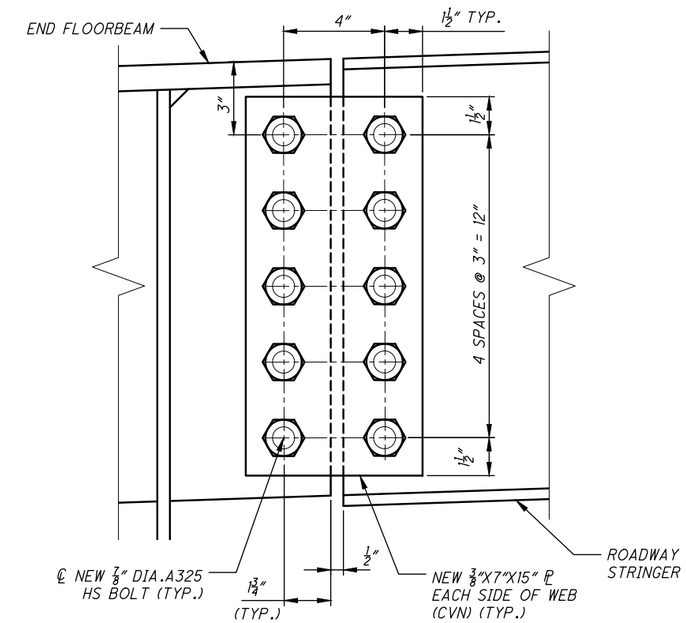

STRINGER CONNECTION DETAIL

LEGEND:

- PORTIONS OF STRUCTURE TO BE REMOVED, BY FLAME CUTTING
- PORTIONS OF STRUCTURE TO BE REMOVED, BY MECHANICAL HAND METHODS

NOTES:

1. CONTRACT IS TO FIELD VERIFY BENDS AND MANUFACTURE PLATES TO MATCH EXISTING BENDS ON LATERAL BRACING CONNECTION PLATE IN FIELD.
2. FOR LOCATIONS OF END FLOORBEAM LOWER LATERAL BRACE CONNECTIONS, SEE SHEET S22C/S51.
3. FOR LOCATIONS OF STRINGER CONNECTION DETAILS, SEE SHEETS S22A/S51 AND S22B/S51.
4. FOR LOCATION OF SECTION M-M, SEE SHEET S22B/S51.
5. ALL ITEMS DESIGNATED FCM ARE FRACTURE CRITICAL MEMBERS AND COMPONENTS AND SHALL BE FURNISHED AND FABRICATED ACCORDING TO THE REQUIREMENTS OF SECTION 12 OF THE AASHTO/AWS BRIDGE WELDING CODE D1.5.
6. WHERE A SHAPE OR PLATE IS DESIGNATED CVN, FURNISH MATERIAL THAT MEETS THE MINIMUM NOTCH TOUGHNESS REQUIREMENTS AS SPECIFIED IN CMS 711.01.
7. ALL LABOR AND MATERIALS ASSOCIATED WITH THE REMOVAL OF THE EXISTING LOWER LATERAL BRACING CONNECTION AND FLOORBEAM ELEMENTS SHALL BE PAID FOR UNDER ITEM 202 - PORTIONS OF STRUCTURE REMOVED, AS PER PLAN.
8. ALL LABOR AND MATERIALS ASSOCIATED WITH THE INSTALLATION OF THE NEW LOWER LATERAL BRACING CONNECTION ELEMENTS,AND INSTALLATION OF NEW STRINGERS AND CONNECTION ELEMENTS, INCLUDING FIELD DRILLING, SHALL BE PAID FOR UNDER ITEM 513 - STRUCTURAL STEEL, LEVEL 3, AS PER PLAN

DESIGN AGENCY
wsp
1660 WEST 2ND STREET SUITE 850 CLEVELAND, OHIO 44113

DESIGNED	DRAWN	REVIEWED	DATE
NRF	BLM	WRW	10/23/20
CHECKED	REVISED	STRUCTURE FILE NUMBER	
JEJT	---	1869345	

END FLOORBEAM REPLACEMENT DETAILS 3

CITY OF CLEVELAND BRIDGE NO. 1:003M
CENTER STREET SWING BRIDGE OVER THE CUYAHOGA RIVER

CUY-CENTER ST. SWING BRIDGE
PID NO: 109597

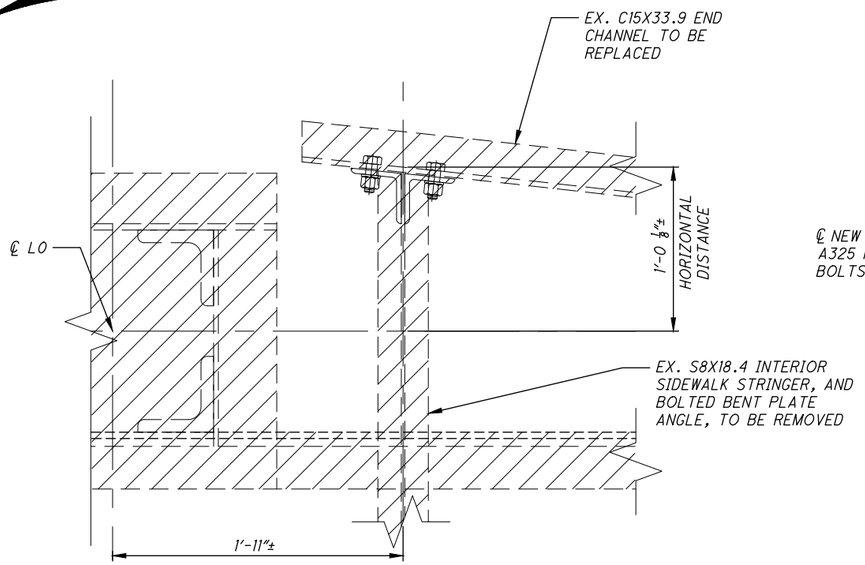

END CONNECTION DETAIL PLAN - EXISTING

(SOUTH STRINGER AT L0 SHOWN, NORTH STRINGER AT L16 SIMILAR. NORTH STRINGER AT L0 AND SOUTH STRINGER AT L16 OPPOSITE HAND.)

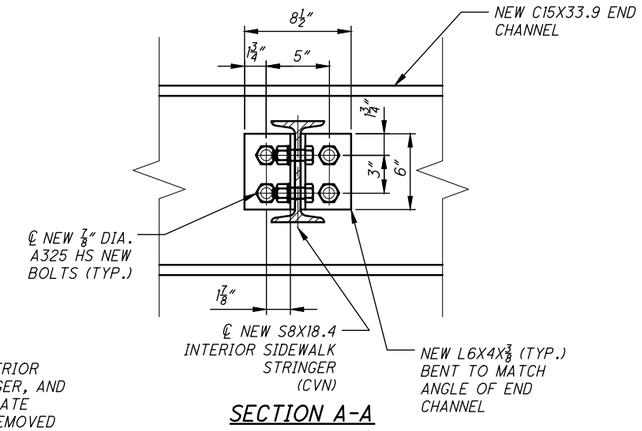

SECTION A-A

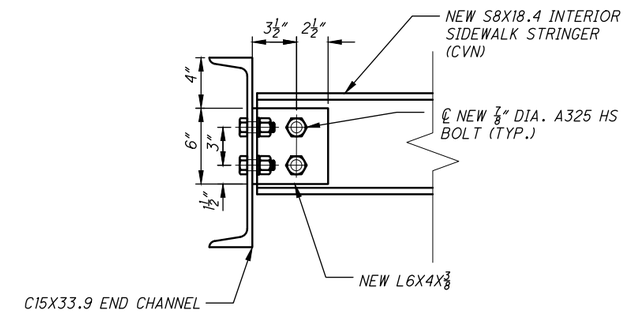

VIEW B-B

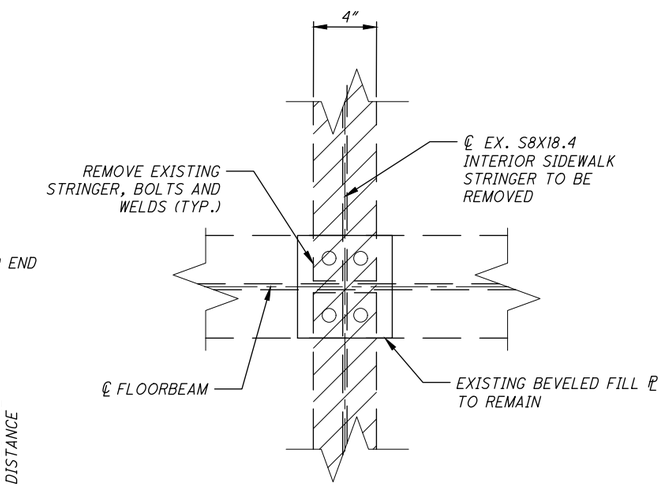

TYPICAL INTERIOR SIDEWALK STRINGER CONNECTION AT INTERIOR FLOORBEAMS PLAN - EXISTING

(SEE NOTE 2)

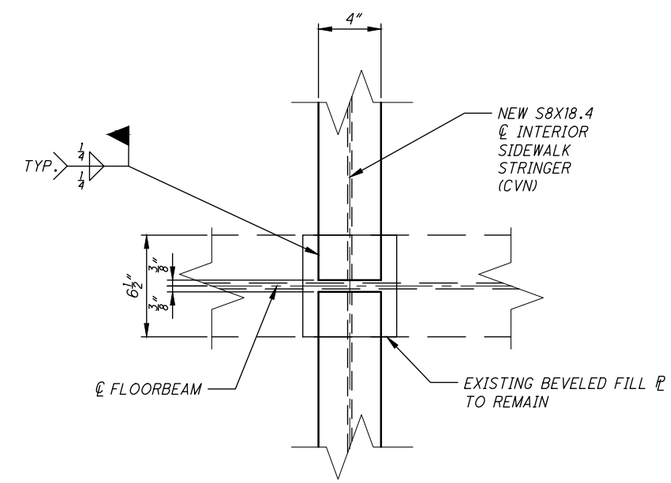

TYPICAL INTERIOR SIDEWALK STRINGER CONNECTION AT INTERIOR FLOORBEAMS PLAN - PROPOSED

(SEE NOTE 2)

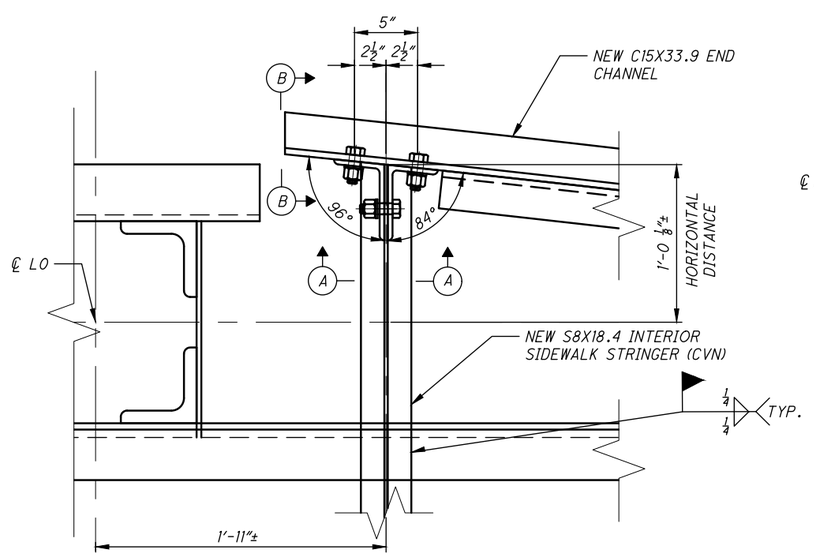

END CONNECTION DETAIL PLAN - PROPOSED

(SOUTH STRINGER AT L0 SHOWN, NORTH STRINGER AT L16 SIMILAR. NORTH STRINGER AT L0 AND SOUTH STRINGER AT L16 OPPOSITE HAND.)

LEGEND:

PORTIONS OF STRUCTURE TO BE REMOVED

NOTES:

1. SEE FRAMING PLAN ON SHEET S19/S51 FOR LOCATIONS OF INTERIOR SIDEWALK STRINGERS.
2. PRIOR TO REMOVAL OF EXISTING SIDEWALK STRINGERS, CONTRACTOR IS TO FIELD VERIFY STRINGER GRADES, AND STRINGER CONNECTIONS TO THE INTERIOR FLOORBEAMS. THE CONNECTION TO INTERIOR FLOORBEAM IS TAKEN FROM THE 1987 REHABILITATION PLANS, BUT A CONTINUOUS CONNECTION MAY HAVE BEEN USED. THESE TO BE REPLACED IN-KIND.
3. WHERE A SHAPE OR PLATE IS DESIGNATED CVN, FURNISH MATERIAL THAT MEETS THE MINIMUM NOTCH TOUGHNESS REQUIREMENTS AS SPECIFIED IN CMS 711.01.
4. ALL LABOR AND MATERIALS ASSOCIATED WITH REMOVAL OF EXISTING INTERIOR SIDEWALK STRINGERS SHALL BE PAID FOR UNDER ITEM 202 - PORTIONS OF STRUCTURE REMOVED, AS PER PLAN.
5. ALL LABOR AND MATERIALS INCLUDED WITH INSTALLATION OF NEW INTERIOR SIDEWALK STRINGERS INCLUDING CONNECTION ANGLES, SHALL BE PAID FOR UNDER ITEM 513 - STRUCTURAL STEEL MEMBERS, LEVEL 3, AS PER PLAN.

DESIGN AGENCY
WSP
1660 WEST 2ND STREET SUITE 850 CLEVELAND, OHIO 44113

DESIGNED	DRAWN	REVIEWED	DATE
NBR	JEJT	WRW	09/11/20
CHECKED	REVISED	STRUCTURE FILE NUMBER	
NRF	---	1869345	

INTERIOR SIDEWALK STRINGER REPLACEMENT DETAILS
CITY OF CLEVELAND BRIDGE NO. 1:003M
CENTER STREET SWING BRIDGE OVER THE CUYAHOGA RIVER

CUY-CENTER ST. SWING BRIDGE
PID NO: 109597

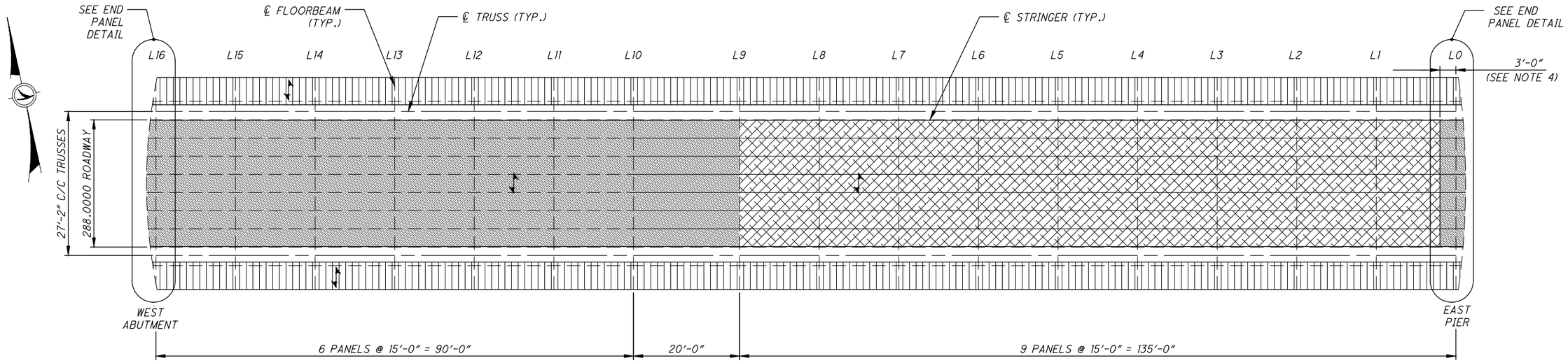

DECK PLAN

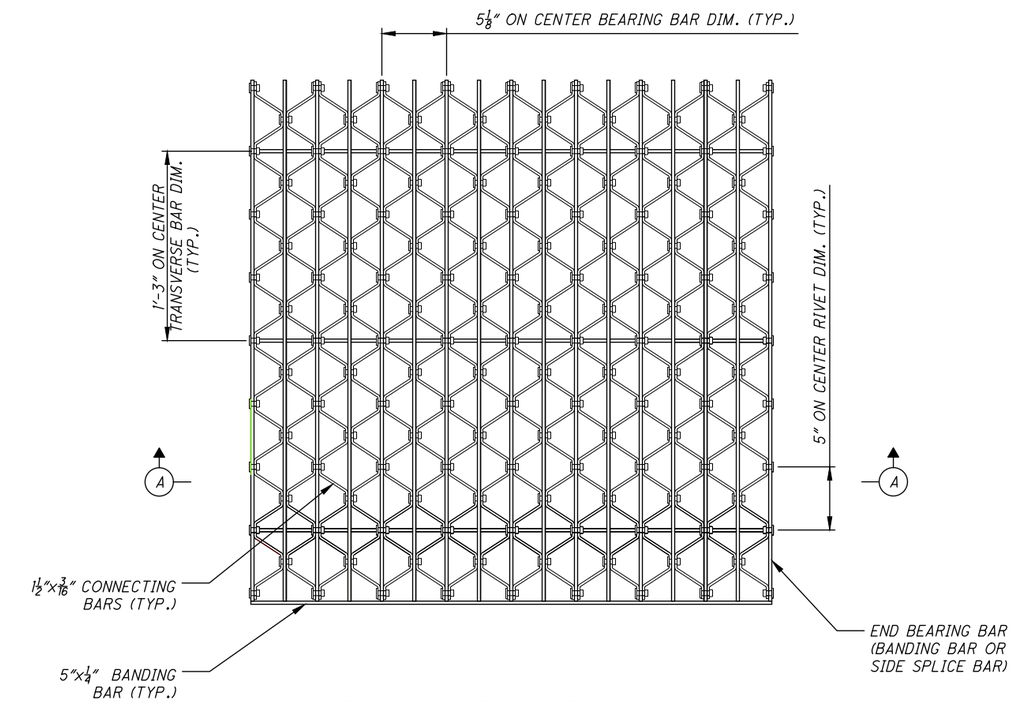

TYPICAL GRID FLOORING PLAN

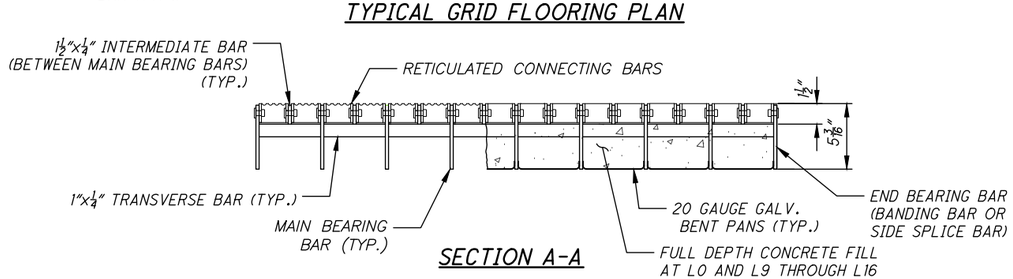

SECTION A-A

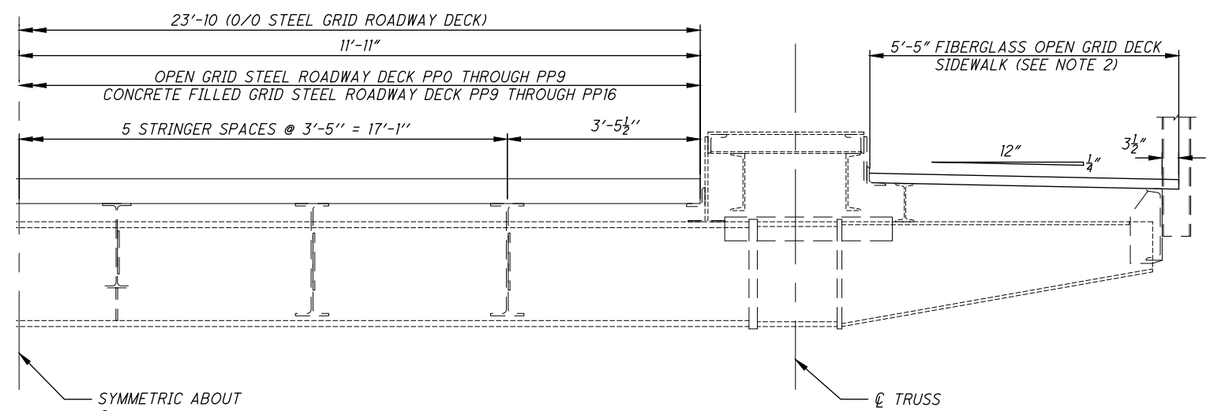

TYPICAL SWING TRUSS SPAN HALF SECTION

(L10 THROUGH L16 SHOWN, L0 THROUGH L10 SIMILAR)

LEGEND:

- ITEM SPECIAL - CONCRETE FILLED GRID STEEL ROADWAY DECK
- ITEM SPECIAL - OPEN GRID STEEL ROADWAY DECK
- ITEM SPECIAL - FIBERGLASS OPEN GRID DECK
- DIRECTION OF BEARING BARS

NOTES:

1. FOR END PANEL DETAIL AND ADDITIONAL ROADWAY GRATING AND SIDEWALK FIBERGLASS GRID DECK DETAILS, SEE SHEET S25/S51.
2. CONTRACTOR IS TO TRIM THE FIBERGLASS OPEN GRID DECK AS NECESSARY AROUND ALL FENCE POSTS AND OPERATOR'S HOUSE VERTICAL SUPPORTS.
3. GRID DECK PANELS SHALL BE FABRICATED AND INSTALLED WITH UNIFORM SPACES BETWEEN PANELS
4. LENGTH OF DECK CONCRETE FILL IS DEPENDANT ON THE FINAL BALANCING OF THE BRIDGE. AS SUCH, THIS VALUE MAY CHANGE IN FIELD AFTER FINAL BALANCED CONDITION IS ACHIEVED. SEE MECHANICAL SPECIAL PROVISIONS FOR BALANCING PROCEDURE. CONCRETE FILL SHALL BE INCIDENTAL TO ITEM SPECIAL - CONCRETE FILLED GRID STEEL ROADWAY DECK.
5. ALL LABOR AND MATERIALS ASSOCIATED WITH INSTALLATION OF THE NEW OPEN GRID STEEL ROADWAY DECK SHALL BE PAID FOR UNDER ITEM SPECIAL - OPEN GRID STEEL ROADWAY DECK.
6. ALL LABOR AND MATERIALS ASSOCIATED WITH INSTALLATION OF THE NEW CONCRETE FILLED GRID STEEL ROADWAY DECK, INCLUDING CONCRETE FILL, SHALL BE PAID FOR UNDER ITEM SPECIAL - CONCRETE FILLED GRID STEEL ROADWAY DECK.
7. ALL LABOR AND MATERIALS ASSOCIATED WITH INSTALLATION OF THE NEW FIBERGLASS OPEN GRID SIDEWALK DECK SHALL BE PAID FOR UNDER ITEM SPECIAL - FIBERGLASS OPEN GRID DECK.

DESIGN AGENCY
WSP
1660 WEST 2ND STREET
SUITE 850
CLEVELAND, OHIO 44113

DESIGNED	DRAWN	REVIEWED	DATE
NRF	PCS	WRW	09/11/20
CHECKED	REVISED	STRUCTURE FILE NUMBER	
NBR	---	1869345	

DECK AND SIDEWALK PLAN AND DETAILS 1

CITY OF CLEVELAND BRIDGE NO. 1:003M
CENTER STREET SWING BRIDGE OVER THE CUYAHOGA RIVER

CUY-CENTER ST.
SWING BRIDGE
PID NO: 109597

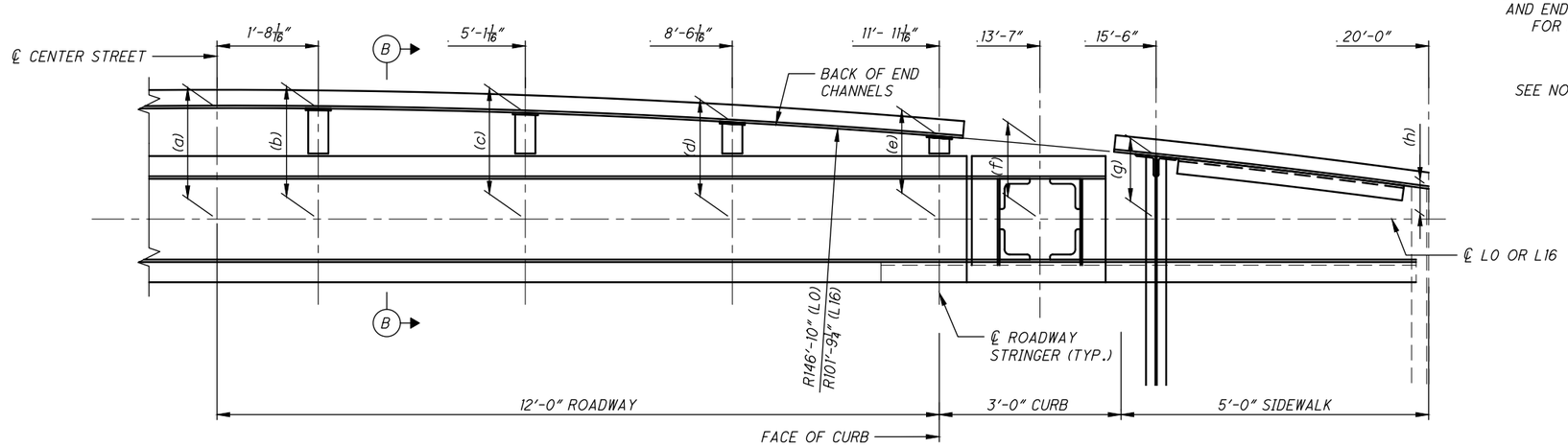

END PANEL DETAIL

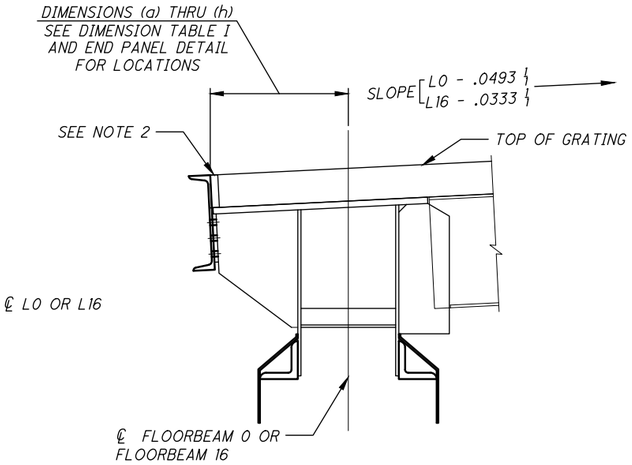

SECTION B-B

DIMENSION TABLE 1 - ℄ FLOORBEAM TO BACK OF END CHANNEL								
DIMENSION	(a)	(b)	(c)	(d)	(e)	(f)	(g)	(h)
LO	1'-10"	1'-9 7/8"	1'-8 15/16"	1'-7"	1'-4 1/8"	1'-2 7/16"	1'-0 1/8"	5 9/16"
L16	1'-9 1/4"	1'-9 1/16"	1'-7 11/16"	1'-4 15/16"	1'-0 5/8"	10 5/16"	7"	-2 9/16"

DIMENSIONS (a) - (h) ARE SYMMETRICAL ABOUT CENTERLINE CENTER STREET BRIDGE AND THEY ARE HORIZONTAL DISTANCES AT THE TOP OF ROADWAY (SEE SECTION B-B)

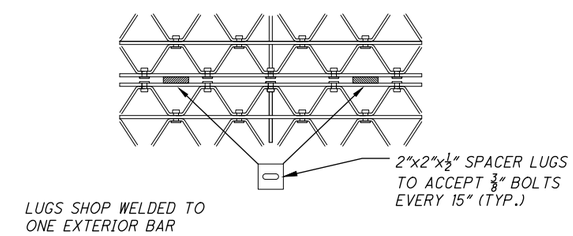

JOINT DETAIL BETWEEN ADJACENT PANELS

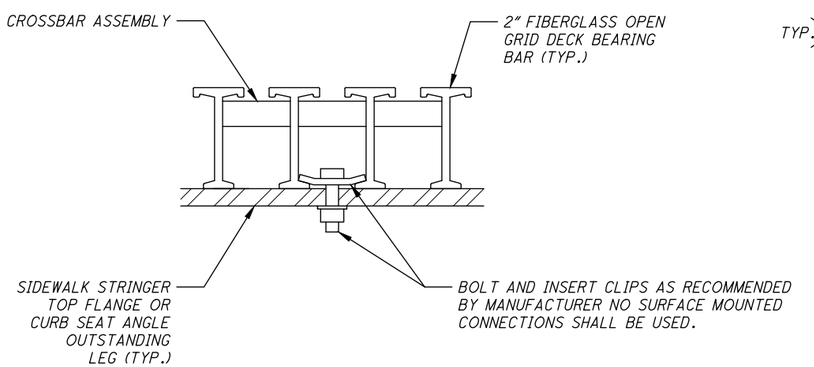

TYPICAL HOLD-DOWN CONNECTIONS FOR FIBERGLASS

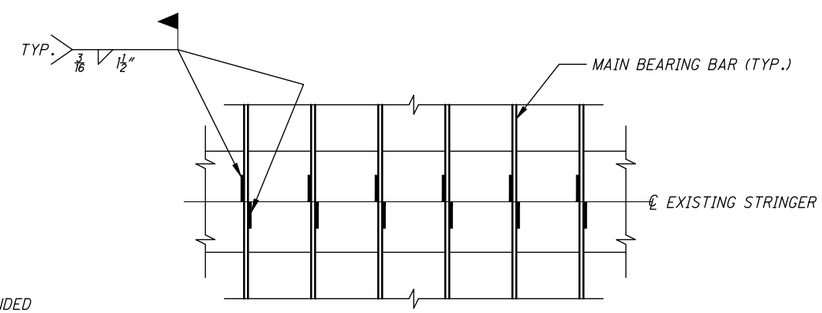

CONTINUOUS GRID CONNECTION TO STRINGER TOP FLANGE

(LONGITUDINAL AND RETICULINE BARS NOT SHOWN FOR CLARITY)

NOTES:

1. FOR LOCATION OF END DETAIL AND ADDITIONAL SIDEWALK AND ROADWAY GRATING INFORMATION, SEE SHEET S24/S51.
2. FABRICATOR TO DETAIL BANDING BARS TO MATCH RADIUS OF EXISTING END CHANNELS.
3. ALL LABOR AND MATERIALS ASSOCIATED WITH INSTALLATION OF THE NEW OPEN GRID STEEL ROADWAY DECK SHALL BE PAID FOR UNDER ITEM SPECIAL - OPEN GRID STEEL ROADWAY DECK, AS PER PLAN.
4. ALL LABOR AND MATERIALS ASSOCIATED WITH INSTALLATION OF THE NEW CONCRETE FILLED GRID STEEL ROADWAY DECK, INCLUDING CONCRETE FILL, SHALL BE PAID FOR UNDER ITEM SPECIAL - CONCRETE FILLED GRID STEEL ROADWAY DECK, AS PER PLAN.
5. ALL LABOR AND MATERIALS ASSOCIATED WITH INSTALLATION OF THE NEW FIBERGLASS OPEN GRID SIDEWALK DECK SHALL BE PAID FOR UNDER ITEM SPECIAL - FIBERGLASS OPEN GRID DECK, AS PER PLAN.
6. ALL LABOR AND MATERIALS ASSOCIATED WITH INSTALLATION OF THE SIDEWALK SUPPORT ANGLE SHALL BE PAID FOR UNDER ITEM 513 - STRUCTURAL STEEL, LEVEL UF.

DESIGN AGENCY
WSP
1660 WEST 2ND STREET
SUITE 850
CLEVELAND, OHIO 44113

DESIGNED	DRAWN	REVIEWED	DATE
NRF	PCS	WRW	09/11/20
CHECKED	REVISED	STRUCTURE FILE NUMBER	
NBR	---	1869345	

DECK AND SIDEWALK PLAN AND DETAILS 2
CITY OF CLEVELAND BRIDGE NO. 1:003M
CENTER STREET SWING BRIDGE OVER THE CUYAHOGA RIVER

CUY-CENTER ST.
SWING BRIDGE
PID NO: 109597

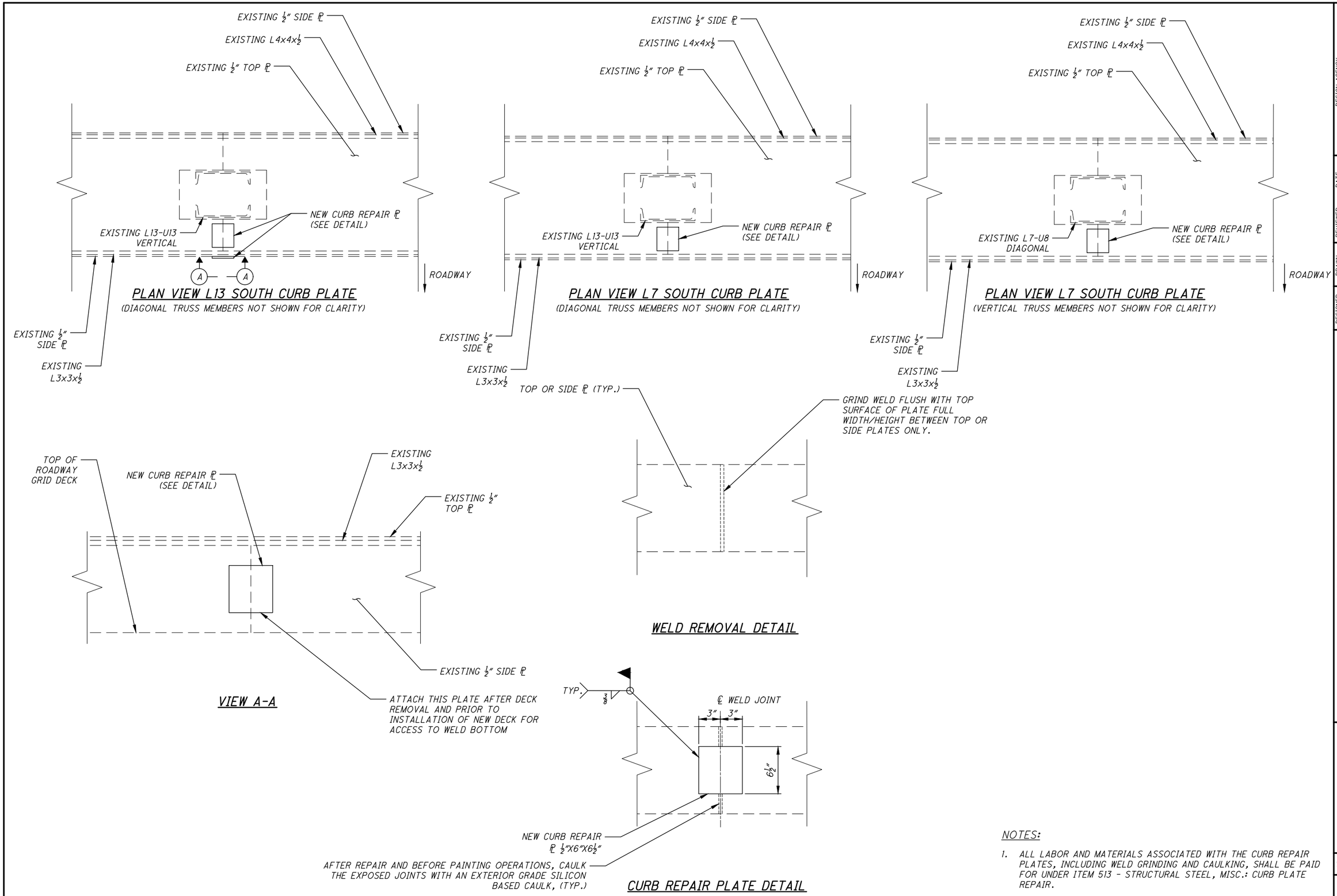

NOTES:

1. ALL LABOR AND MATERIALS ASSOCIATED WITH THE CURB REPAIR PLATES, INCLUDING WELD GRINDING AND CAULKING, SHALL BE PAID FOR UNDER ITEM 513 - STRUCTURAL STEEL, MISC.: CURB PLATE REPAIR.

DESIGN AGENCY
WSP
1660 WEST 2ND STREET
SUITE 850
CLEVELAND, OHIO 44113

DESIGNED	DRAWN	REVIEWED	DATE
NBR	BLM	WRW	09/11/20
CHECKED	REVISED	STRUCTURE FILE NUMBER	
NRF	---	1869345	

CURB PLATE REPAIR DETAILS
CITY OF CLEVELAND BRIDGE NO. 1:003M
CENTER STREET SWING BRIDGE OVER THE CUYAHOGA RIVER

CUY-CENTER ST.
SWING BRIDGE
PID NO: 109597

S26/S51

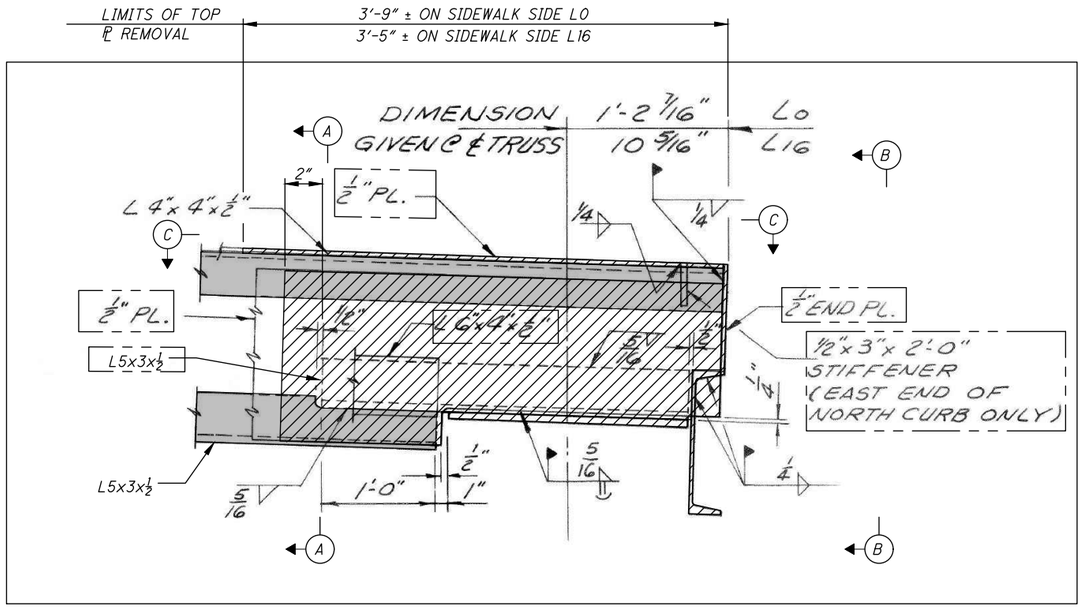

CURB DETAIL AT ENDS OF TRUSS *

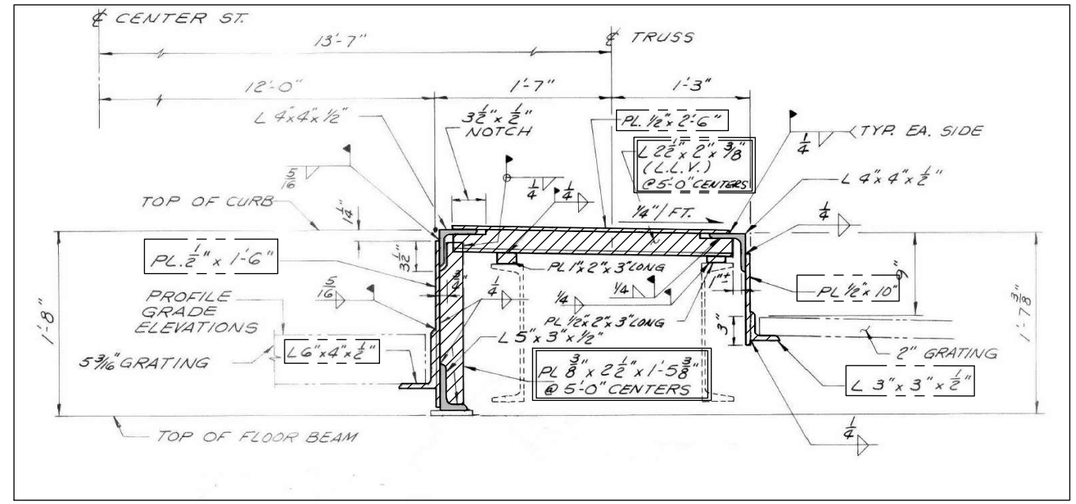

SECTION A-A *

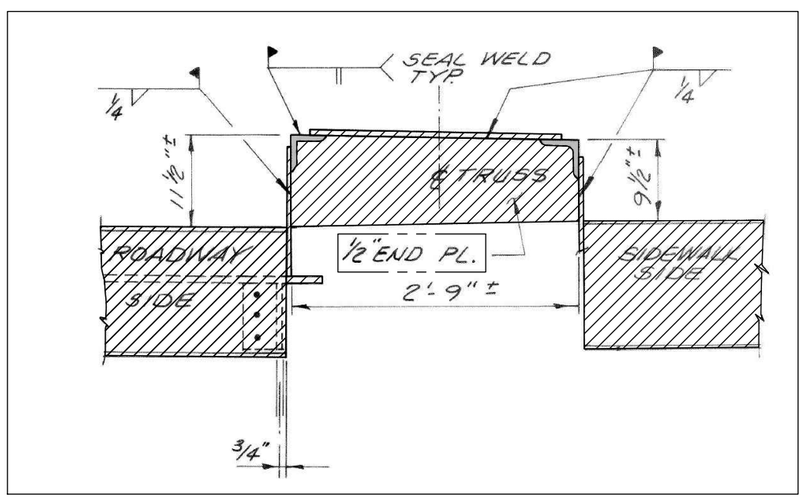

VIEW B-B *

* = TAKEN FROM 1985 REHABILITATION PLANS

NOTES:

1. CONTRACTOR IS TO GRIND EXISTING WELDS SMOOTH ON EXISTING MEMBERS TO REMAIN.
2. FOR VIEW C-C, SEE SHEET S26B/S51 .
3. ALL LABOR AND MATERIALS ASSOCIATED WITH REMOVAL OF EXISTING CURB PLATE MEMBERS, INCLUDING GRINDING OF WELDS, IS TO BE PAID FOR UNDER ITEM 202 - PORTIONS OF STRUCTURE TO BE REMOVED, AS PER PLAN.
4. ALL LABOR AND MATERIALS ASSOCIATED WITH INSTALLATION OF NEW CURB PLATE MEMBERS, INCLUDING WELDING, SHALL BE PAID FOR UNDER ITEM 513 - STRUCTURAL STEEL, LEVEL UF.

LEGEND:

- COMPONENTS TO BE REMOVED AND REPLACED IF NEEDED
- COMPONENTS TO BE REMOVED AND REPLACED
- PORTIONS OF CURB PLATE ASSEMBLY TO REMAIN
- PORTIONS OF CURB PLATE ASSEMBLY TO BE REMOVED

DESIGN AGENCY
WSP
1660 WEST 2ND STREET SUITE 850 CLEVELAND, OHIO 44113

DESIGNED	DRAWN	REVIEWED	DATE
NRF	BLM	WRW	11/13/20
CHECKED	REVISED	STRUCTURE FILE NUMBER	
NBR	---	1869345	

CURB PLATE REPLACEMENT DETAILS 1
CITY OF CLEVELAND BRIDGE NO. 1:003M
CENTER STREET SWING BRIDGE OVER THE CUYAHOGA RIVER

CUY-CENTER ST. SWING BRIDGE
PID NO: 109597

S26A/S51

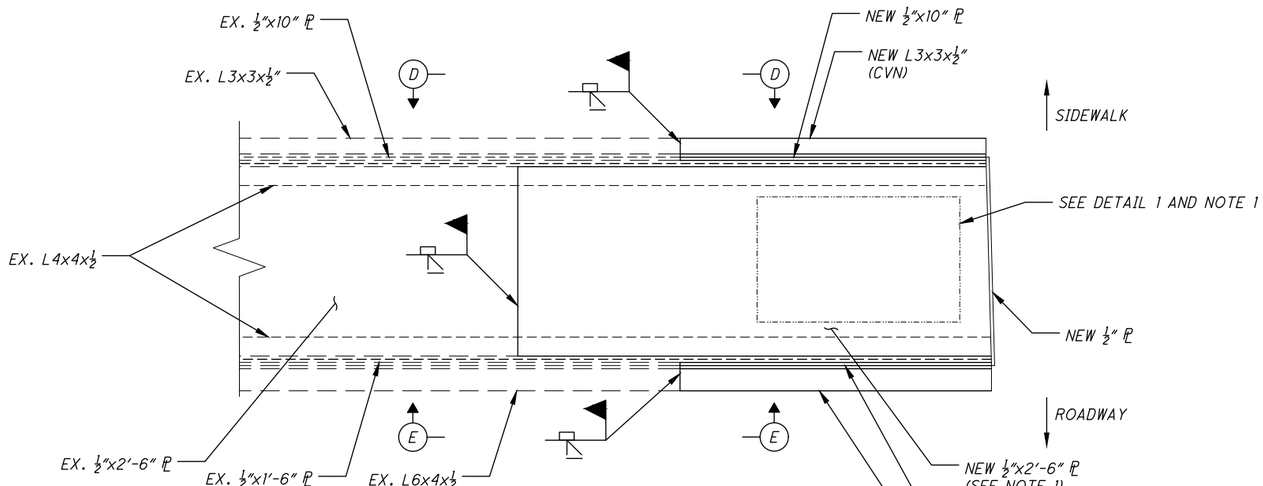

PLAN VIEW C-C

(NORTH CURB ASSEMBLY AT L0 SHOWN, OTHER LOCATIONS SIMILAR)
(EXISTING END POST MEMBER NOT-SHOWN FOR CLARITY, SEE NOTE 1)

DETAIL 1

(NORTH CURB ASSEMBLY AT L16 SHOWN, OTHER LOCATIONS SIMILAR)

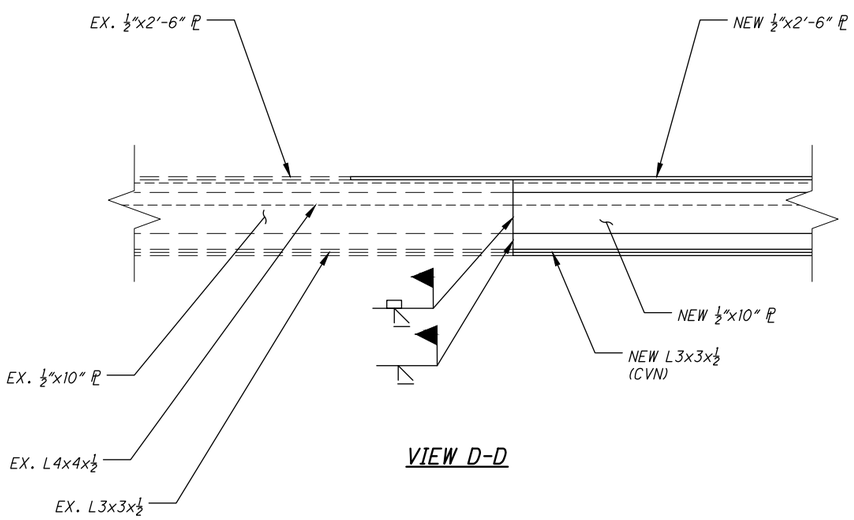

VIEW D-D

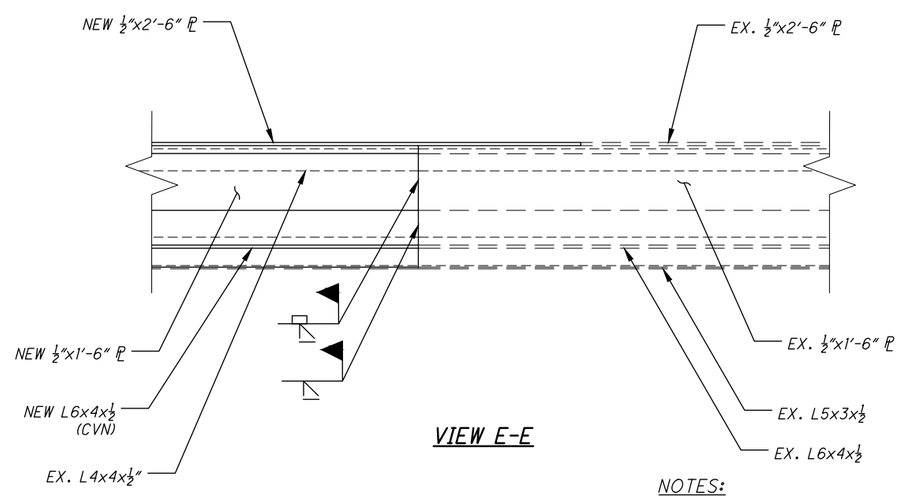

VIEW E-E

NOTES:

1. CONTRACTOR IS TO TRIM TOP PLATE AND ANGLE LEGS AROUND TRUSS END POST, GUSSET PLATE AND CONNECTORS LEAVING ¼" TO ½" GAP BETWEEN PLATE EDGE AND MEMBER.
2. FOR LOCATION OF VIEW C-C, SEE SHEET S26A/S51 .
3. ALL LABOR AND MATERIALS ASSOCIATED WITH REMOVAL OF EXISTING CURB PLATE MEMBERS, INCLUDING GRINDING OF WELDS, IS TO BE PAID FOR UNDER ITEM 202 - PORTIONS OF STRUCTURE TO BE REMOVED, AS PER PLAN.
4. ALL LABOR AND MATERIALS ASSOCIATED WITH INSTALLATION OF NEW CURB PLATE MEMBERS, INCLUDING WELDING, SHALL BE PAID FOR UNDER ITEM 513 - STRUCTURAL STEEL, LEVEL UF.
5. WHERE A SHAPE OR PLATE IS DESIGNATED CVN, FURNISH MATERIAL THAT MEETS THE MINIMUM NOTCH TOUGHNESS REQUIREMENTS AS SPECIFIED IN CMS 711.01.

DESIGN AGENCY
WSP
1660 WEST 2ND STREET
SUITE 850
CLEVELAND, OHIO 44113

DESIGNED	DRAWN	REVIEWED	DATE
NRF	BLM	WRW	11/13/20
CHECKED	REVISED	STRUCTURE FILE NUMBER	
NBR	---	1869345	

CURB PLATE REPLACEMENT DETAILS 2

CITY OF CLEVELAND BRIDGE NO. 1:003M
CENTER STREET SWING BRIDGE OVER THE CUYAHOGA RIVER

CUY-CENTER ST.
SWING BRIDGE
PID NO: 109597

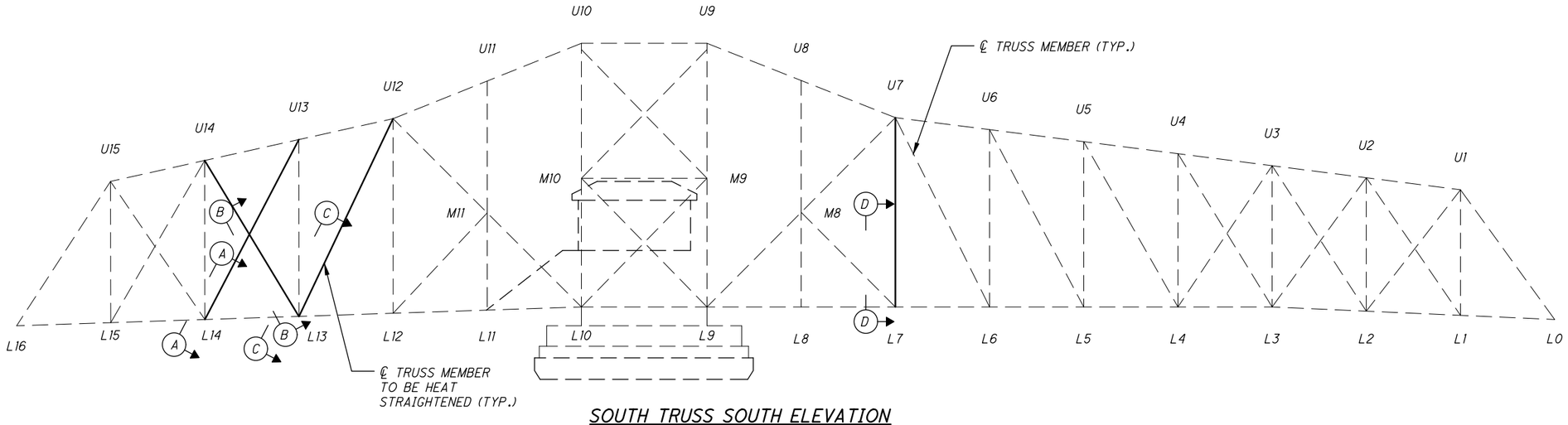

SOUTH TRUSS SOUTH ELEVATION

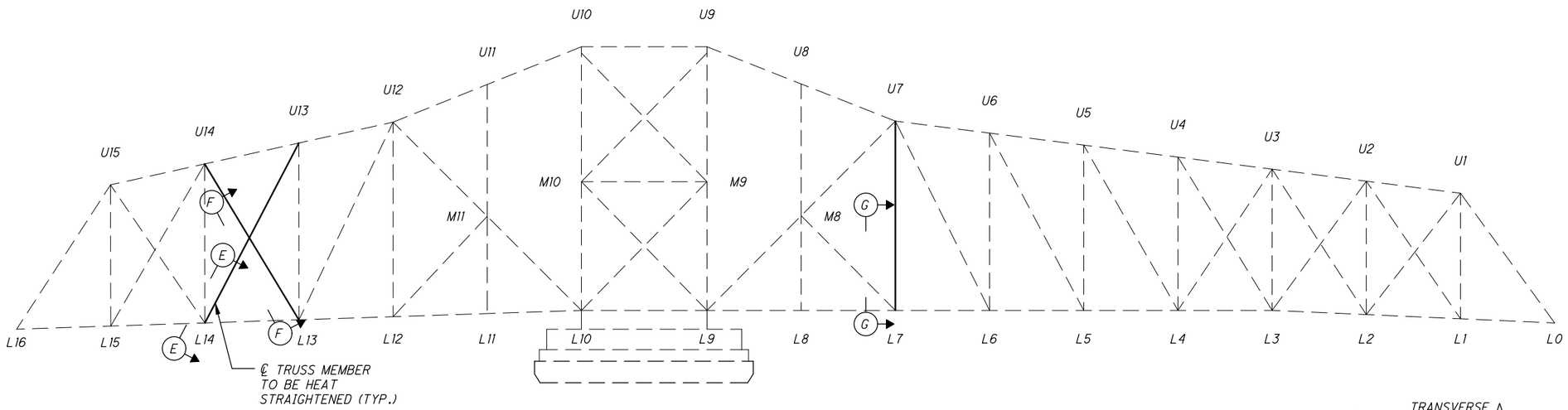

NORTH TRUSS SOUTH ELEVATION

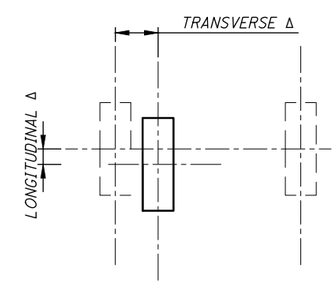

DELTA ORIENTATION

ITEM 849 - STRAIGHTENING DAMAGE MEMBER SUMMARY TABLE				
MEMBER ID	SIZE	TRANSVERSE Δ	LONGITUDINAL Δ	APPROXIMATE LENGTH OF DEFORMATION ALONG MEMBER
L7-U7	3" x 1" EYEBAR	$\frac{1}{2}$"	5"	5'-0"
L13-U14	2" x 1" TIE ROD	$1\frac{1}{2}$"	0	2'-0"
L14-U13	5" x $1\frac{7}{16}$" EYEBAR	$\frac{1}{4}$"	2"	2'-0"
L7-U7	3" x 1" EYEBAR	1"	$\frac{1}{2}$"	2'-0"
L13-U12	5" x $1\frac{7}{16}$" EYEBAR	1"	$\frac{1}{2}$"	2'-0"
L13-U14	2" x 1" TIE ROD	0	$\frac{1}{2}$"	2'-0"
L14-U13	5" x $1\frac{7}{16}$" EYEBAR	$\frac{1}{8}$"	$1\frac{1}{2}$"	3'-0"

NOTES:

1. FOR VIEWS A-A THROUGH D-D, SEE SHEET S28/S51.
2. FOR VIEWS E-E THROUGH G-G, SEE SHEET S29/S51.
3. ALL LABOR AND MATERIALS ASSOCIATED WITH THE HEAT STRAIGHTENING OF THE TRUSS MEMBERS AS SHOWN ON THIS SHEET SHALL BE PAID FOR UNDER ITEM 849 - STRAIGHTENING DAMAGED MEMBERS.
4. CONTRACTOR IS TO PERFORM A DAMAGE ASSESSMENT INSPECTION PRIOR TO PERFORMING WORK TO CONFIRM LENGTHS AND DEFLECTIONS SHOWN ON THESE PLAN SHEETS AND TO DETERMINE IF ANY SUBSEQUENT DAMAGE HAS OCCURRED. THIS WORK SHALL BE PAID FOR UNDER ITEM 849 - DAMAGE ASSESSMENT.

DESIGN AGENCY
WSP
1660 WEST 2ND STREET
SUITE 850
CLEVELAND, OHIO 44113

DESIGNED	DRAWN	REVIEWED	DATE
NRF	MN	WRW	09/11/20
CHECKED	REVISED	STRUCTURE FILE NUMBER	
TLC	---	1869345	

TRUSS MEMBER HEAT STRAIGHTENING DETAILS 1
CITY OF CLEVELAND BRIDGE NO. 1:003M
CENTER STREET SWING BRIDGE OVER THE CUYAHOGA RIVER

CUY-CENTER ST.
SWING BRIDGE
PID NO: 109597

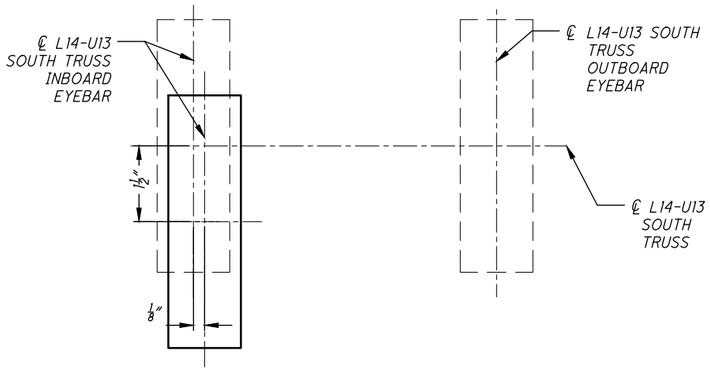

SECTION H-H
(OFFSETS EXAGGERATED)

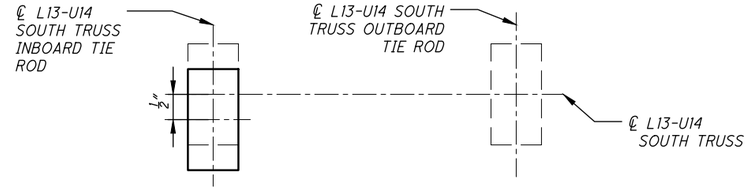

SECTION J-J
(OFFSETS EXAGGERATED)

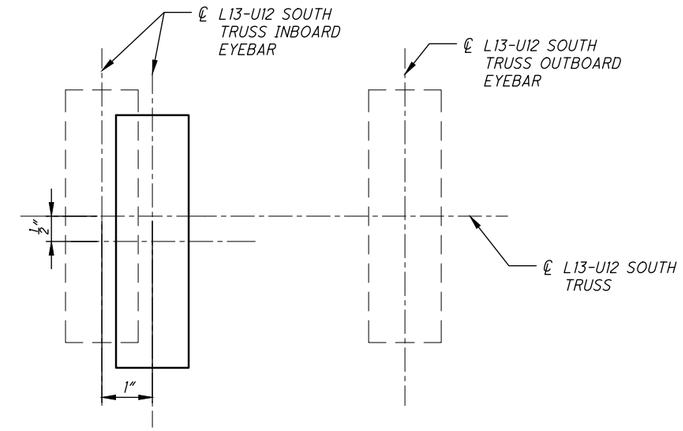

SECTION K-K
(OFFSETS EXAGGERATED)

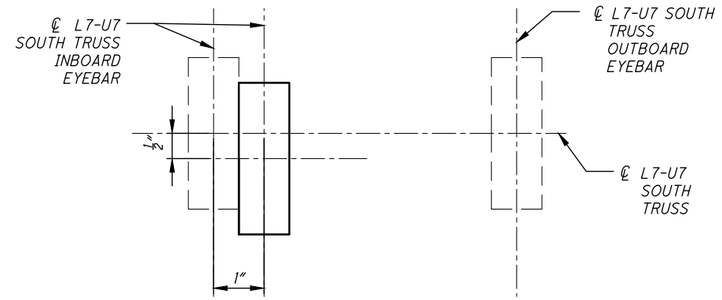

SECTION L-L
(OFFSETS EXAGGERATED)

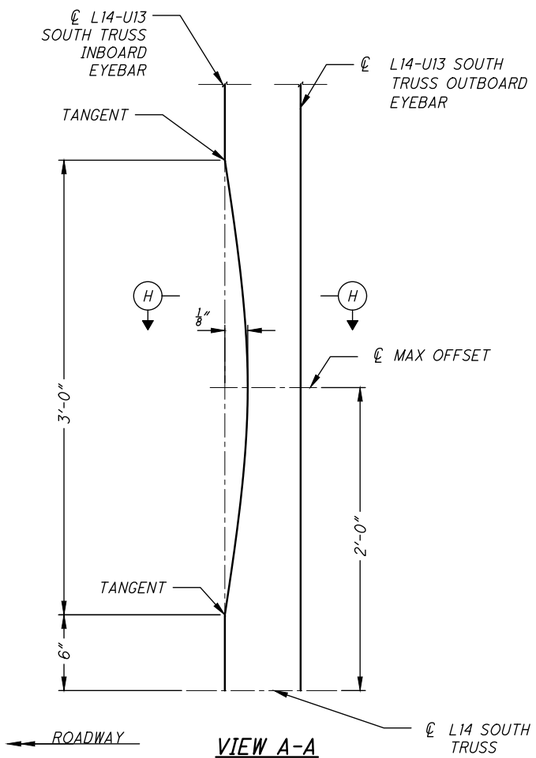

VIEW A-A
(OFFSETS EXAGGERATED)

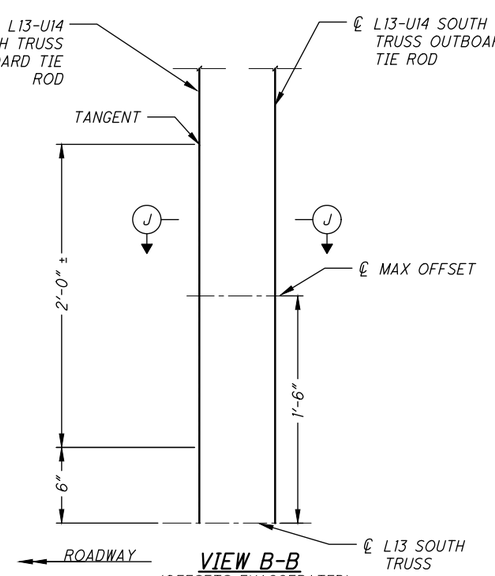

VIEW B-B
(OFFSETS EXAGGERATED)

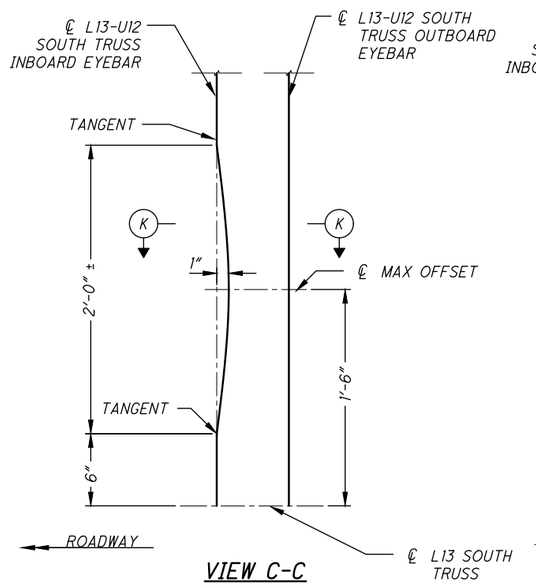

VIEW C-C
(OFFSETS EXAGGERATED)

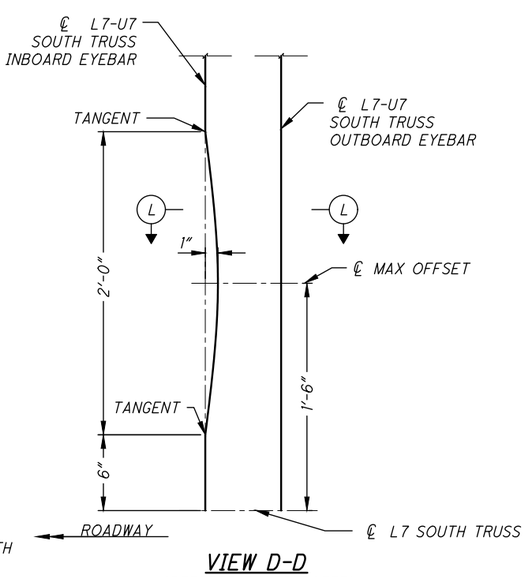

VIEW D-D
(OFFSETS EXAGGERATED)

NOTES:

1. FOR LOCATION OF VIEWS A-A THROUGH D-D, SEE SHEET S27/S51.
2. ALL LABOR AND MATERIALS ASSOCIATED WITH THE HEAT STRAIGHTENING OF THE TRUSS MEMBERS AS SHOWN ON THIS SHEET SHALL BE PAID FOR UNDER ITEM 849 - STRAIGHTENING DAMAGED MEMBERS.

DESIGN AGENCY
WSP
1660 WEST 2ND STREET SUITE 850 CLEVELAND, OHIO 44113

DESIGNED	DRAWN	REVIEWED	DATE
NRF	MN	WRW	09/11/20
CHECKED	REVISED	STRUCTURE FILE NUMBER	
TLC	---	1869345	

TRUSS MEMBER HEAT STRAIGHTENING DETAILS 2
CITY OF CLEVELAND BRIDGE NO. 1:003M
CENTER STREET SWING BRIDGE OVER THE CUYAHOGA RIVER

CUY-CENTER ST. SWING BRIDGE
PID NO: 109597

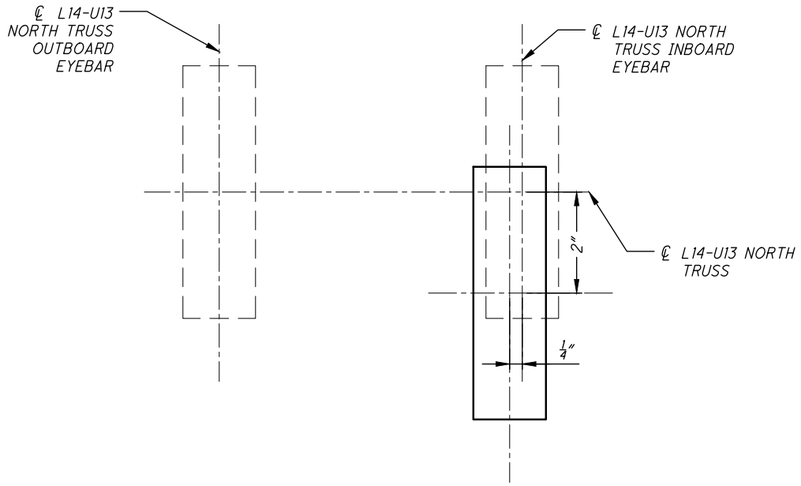

SECTION M-M
(OFFSETS EXAGGERATED)

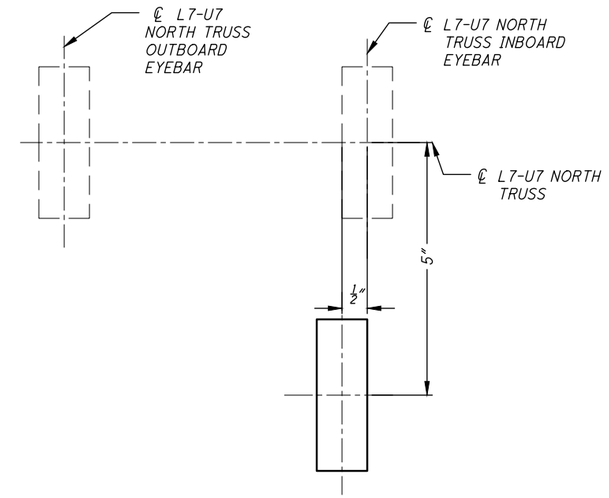

SECTION N-N
(OFFSETS EXAGGERATED)

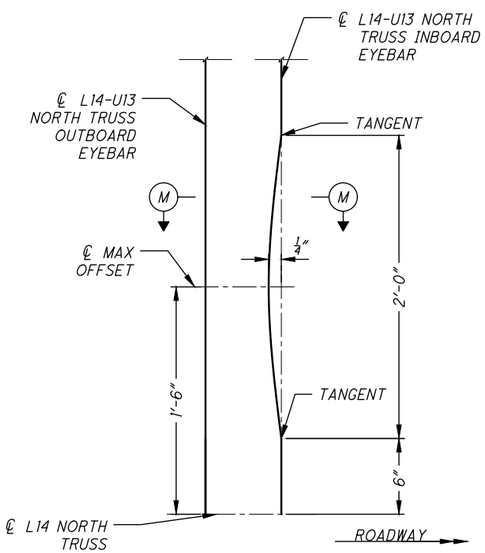

VIEW E-E
(OFFSETS EXAGGERATED)

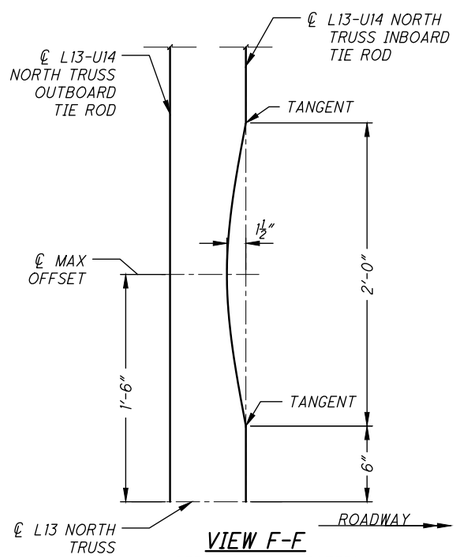

VIEW F-F
(OFFSETS EXAGGERATED)

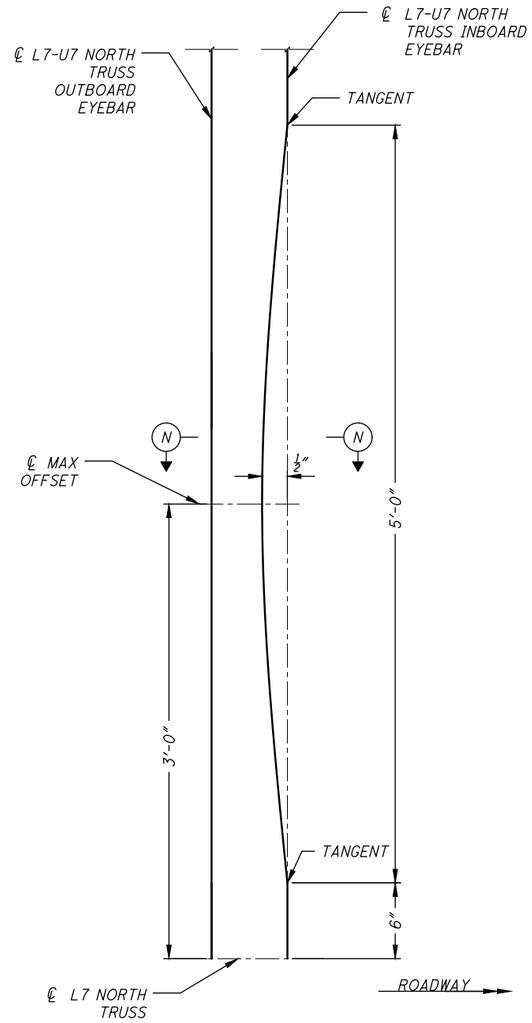

VIEW G-G
(OFFSETS EXAGGERATED)

NOTES:

1. FOR LOCATION OF VIEWS E-E THROUGH G-G, SEE SHEET S27/S51.
2. ALL LABOR AND MATERIALS ASSOCIATED WITH THE HEAT STRAIGHTENING OF THE TRUSS MEMBERS AS SHOWN ON THIS SHEET SHALL BE PAID FOR UNDER ITEM 849 - STRAIGHTENING DAMAGED MEMBERS.

DESIGN AGENCY
WSP
1660 WEST 2ND STREET
SUITE 850
CLEVELAND, OHIO 44113

DESIGNED	DRAWN	REVIEWED	DATE
NRF	MN	WRW	09/11/20
CHECKED	REVISED	STRUCTURE FILE NUMBER	
TLC	---	1869345	

TRUSS MEMBER HEAT STRAIGHTENING DETAILS 3
CITY OF CLEVELAND BRIDGE NO. 1:003M
CENTER STREET SWING BRIDGE OVER THE CUYAHOGA RIVER

CUY-CENTER ST.
SWING BRIDGE
PID NO: 109597

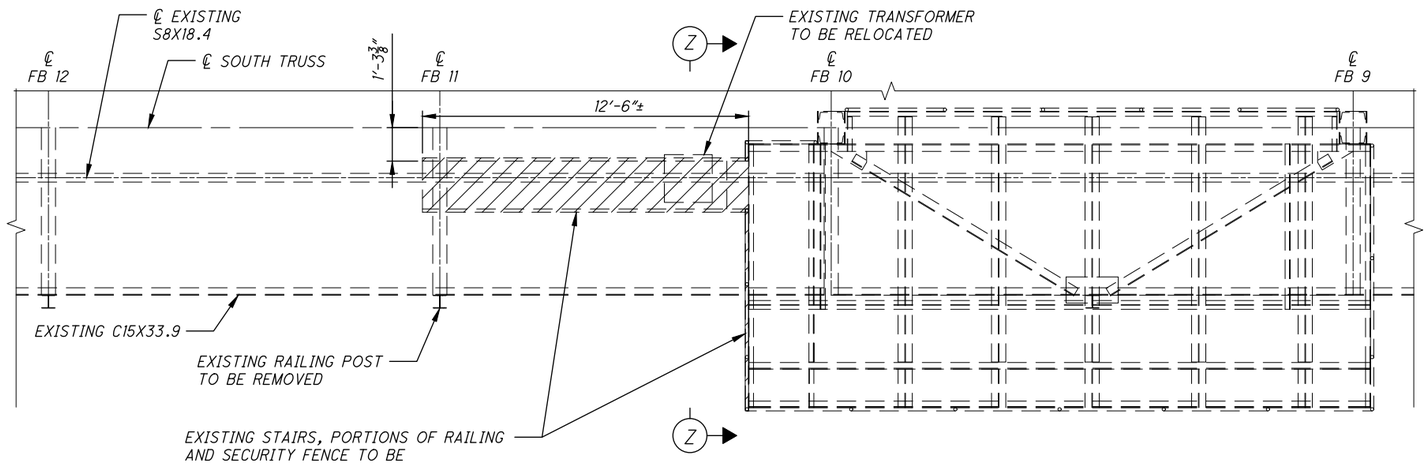

EXISTING PLAN VIEW

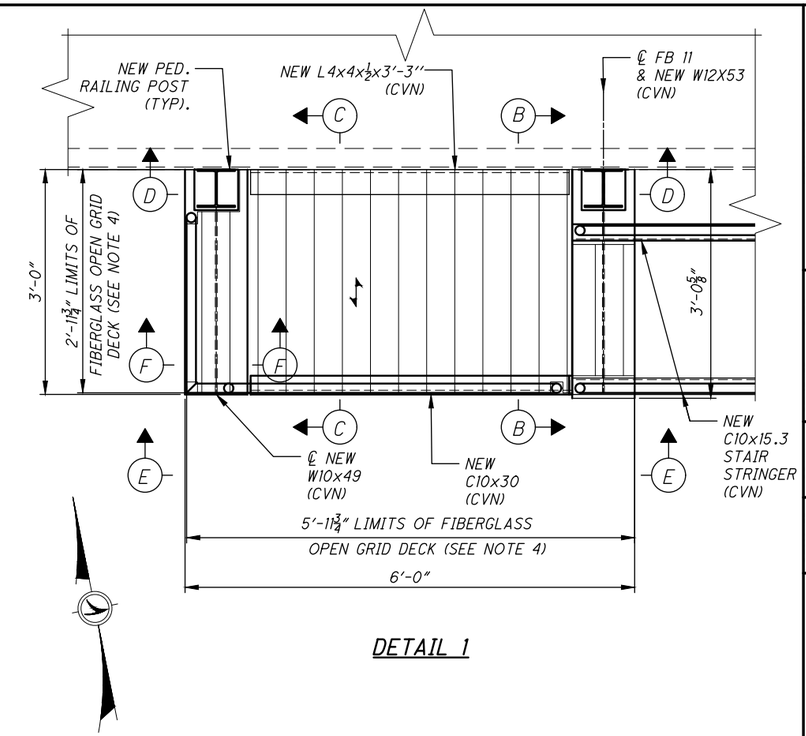

DETAIL 1

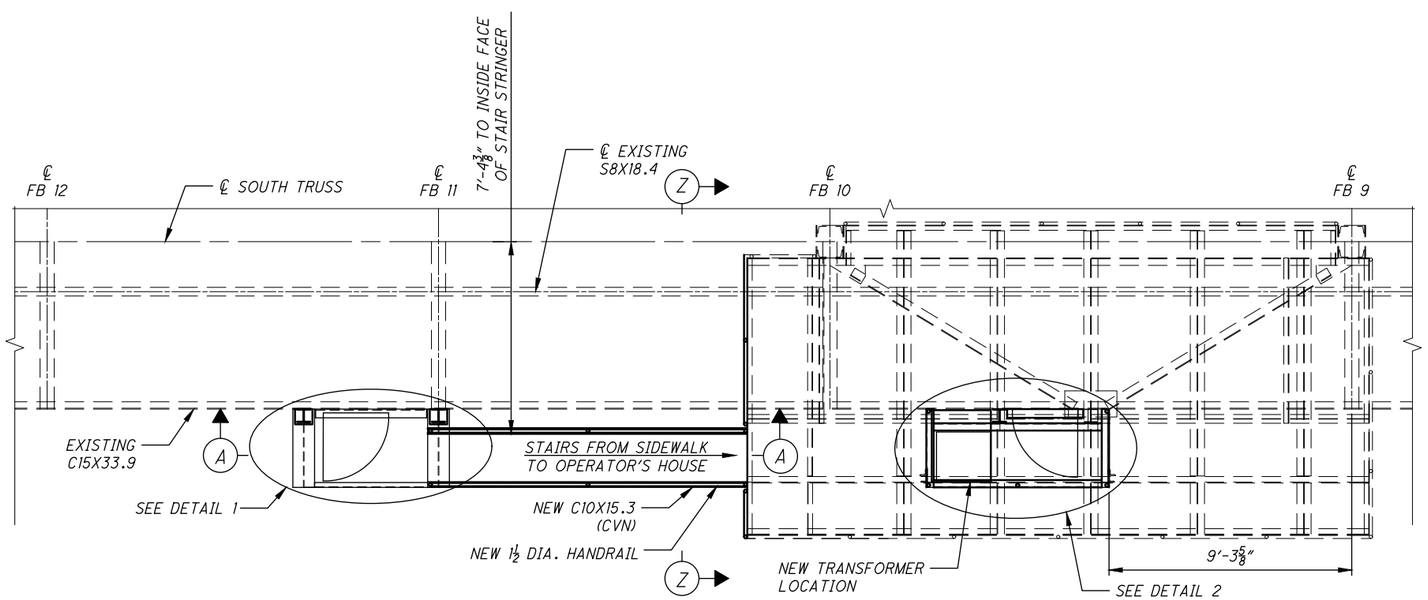

PROPOSED PLAN VIEW

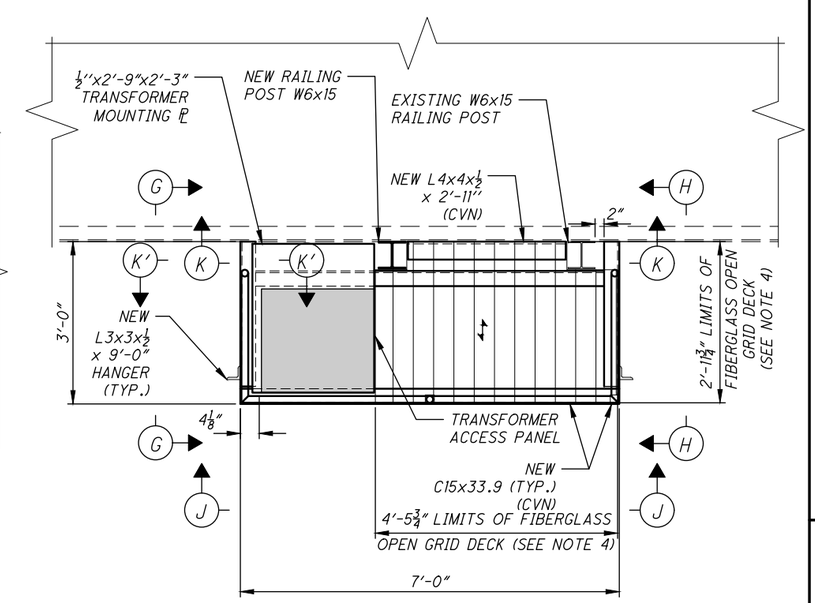

DETAIL 2

LEGEND:

- PORTIONS OF STRUCTURE TO BE REMOVED
- ITEM SPECIAL - FIBERGLASS OPEN GRID DECK
- DIRECTION OF BEARING BARS

NOTES:

1. FOR SECTIONS A-A THRU C-C, SEE SHEET S31/S51.
2. FOR SECTIONS D-D AND F-F AND VIEW E-E, SEE SHEET S32/S51.
3. FOR SECTIONS G-G, H-H, K-K AND K'-K' AND VIEW J-J, SEE SHEET S34/S51.
4. GRID DECK SHALL BE 2" FIBERGLASS OPEN GRID DECK TO MATCH THE GRID DECK ON THE NEW SIDEWALKS. SEE SHEET S7/S51 FOR REQUIREMENTS AND SHEET S25/S51 FOR CONNECTION DETAILS. CONTRACTOR IS TO CLIP THE GRID DECK TO FIT AROUND HANDRAIL POSTS.
5. CONTRACTOR IS TO RELOCATE OPERATOR'S DOWNSPOUTS IN THE EVENT THAT THEY INTERFERE WITH PLACEMENT OF NEW STAIRS, PLATFORMS, OR SECURITY FENCE. THIS WORK SHALL BE INCIDENTAL TO ITEM SPECIAL - RELOCATE OPERATOR'S HOUSE STAIRS.
6. FOR SECTION Z-Z AND FRAMING PLANS OF PROPOSED PLATFORMS, SEE SHEET S33/S51.
7. ALL WORK AND MATERIALS ASSOCIATED WITH WORK SHOWN ON THIS SHEET, WITH THE EXCEPTION OF THE RELOCATION OF THE TRANSFORMER SHALL BE PAID FOR UNDER ITEM SPECIAL - RELOCATE OPERATOR'S HOUSE STAIRS.
8. RELOCATION OF THE TRANSFORMER SHALL BE PAID FOR UNDER ITEM SPECIAL - ELECTRICAL WORK - RELOCATE TRANSFORMER.

DESIGN AGENCY
WSP
1660 WEST 2ND STREET SUITE 850 CLEVELAND, OHIO 44113

DESIGNED	DRAWN	REVIEWED	DATE
JEJT	JEJT	WRW	09/11/20
CHECKED	REVISED	STRUCTURE FILE NUMBER	
NRF	---	1869345	

OPERATOR'S HOUSE STAIR RELOCATION DETAILS 1
CITY OF CLEVELAND BRIDGE NO. 1:003M
CENTER STREET SWING BRIDGE OVER THE CUYAHOGA RIVER

CUY-CENTER ST. SWING BRIDGE
PID NO: 109597

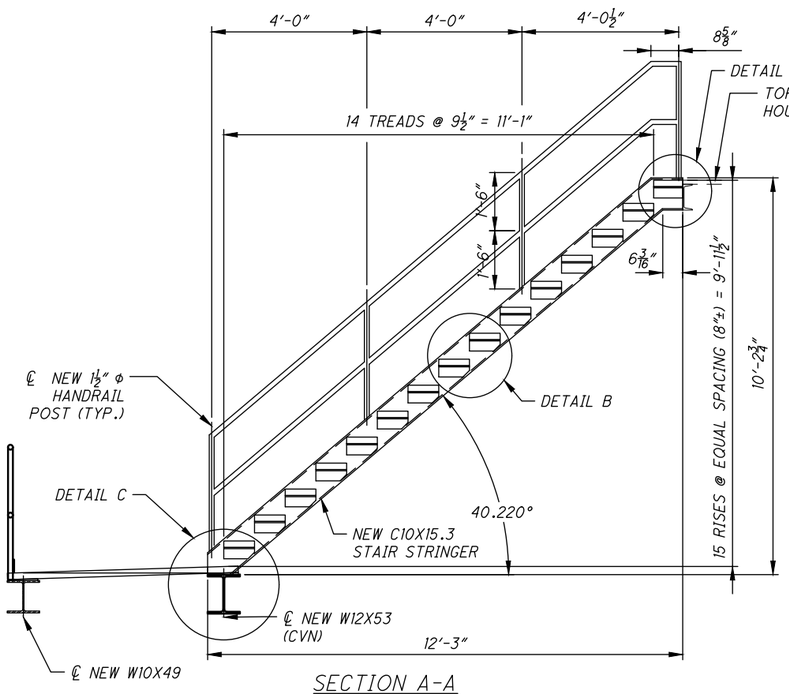

SECTION A-A

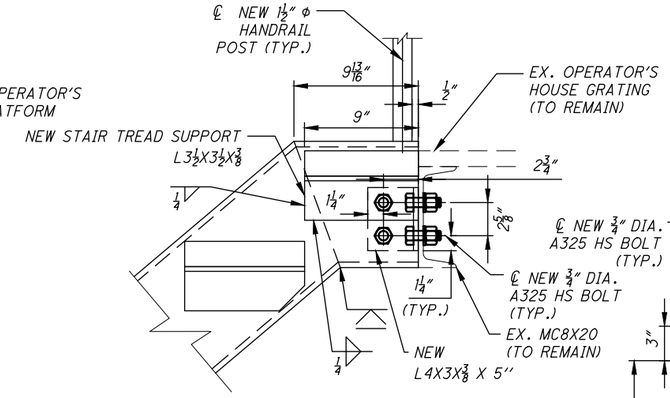

DETAIL A

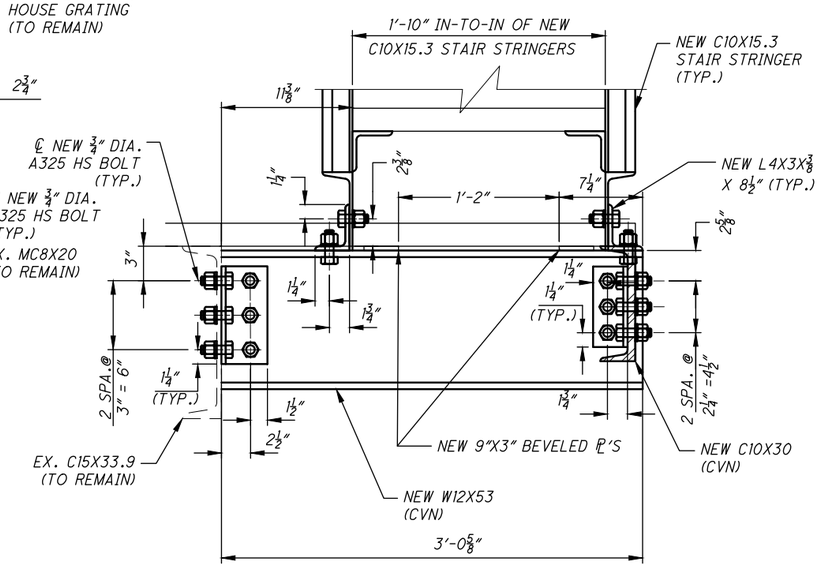

SECTION B-B

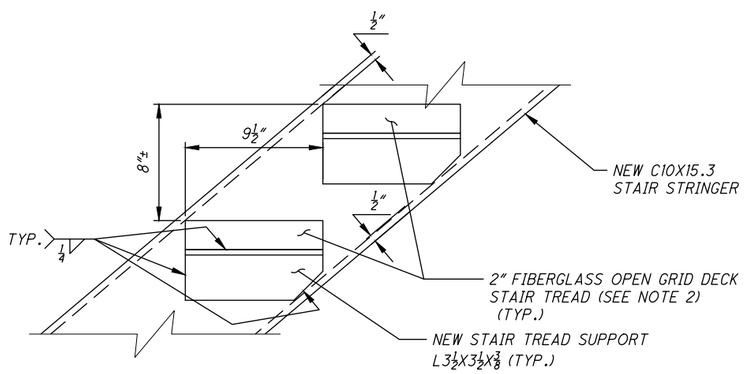

DETAIL B

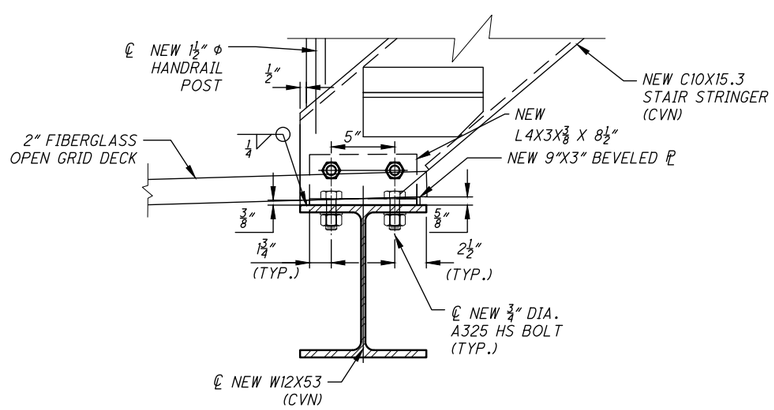

DETAIL C

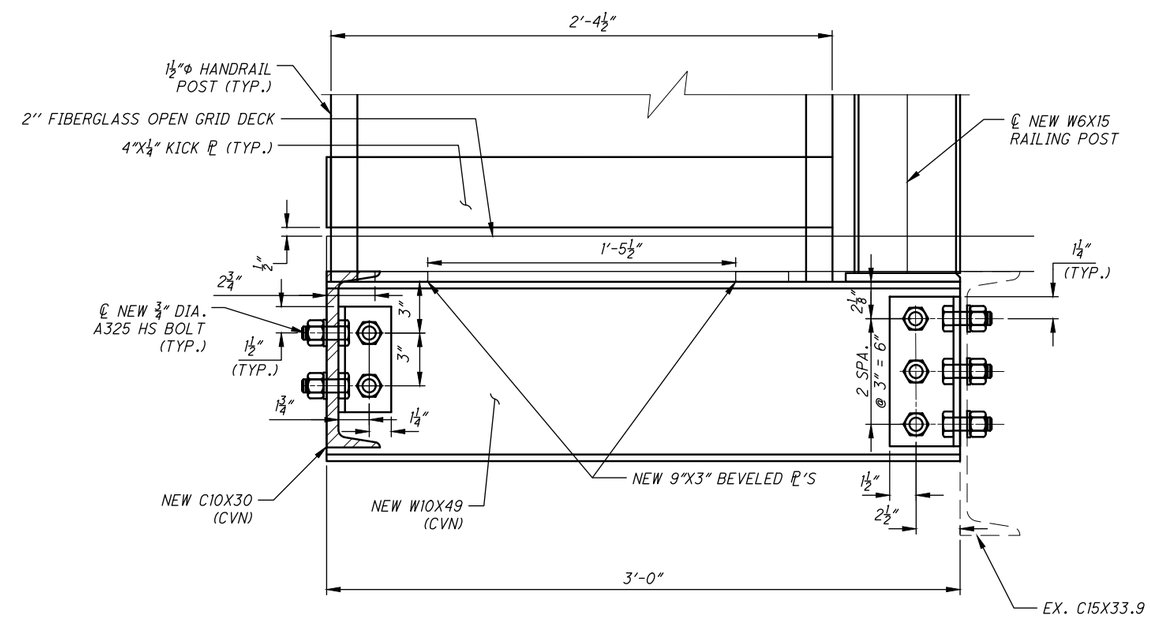

SECTION C-C

NOTES:

1. FOR LOCATION OF SECTIONS A-A THRU C-C, SEE SHEET S30/S51.
2. STAIR TREADS SHALL BE 2" FIBERGLASS OPEN GRID DECK TO MATCH THE GRID DECK ON THE NEW SIDEWALKS. SEE SHEET S7/S51 FOR REQUIREMENTS AND SHEET S25/S51 FOR CONNECTION DETAILS. ALL WORK AND MATERIALS ASSOCIATED WITH WORK SHOWN ON THIS SHEET SHALL BE PAID FOR UNDER ITEM SPECIAL - RELOCATE OPERATOR'S HOUSE STAIRS.

DESIGN AGENCY
WSP
1660 WEST 2ND STREET SUITE 850 CLEVELAND, OHIO 44113

DESIGNED	DRAWN	REVIEWED	DATE
JEJT	JEJT	WRW	09/11/20
CHECKED	REVISED	STRUCTURE FILE NUMBER	
NRF	---	1869345	

OPERATOR'S HOUSE STAIR RELOCATION DETAILS 2

CITY OF CLEVELAND BRIDGE NO. 1:003M
CENTER STREET SWING BRIDGE OVER THE CUYAHOGA RIVER

CUY-CENTER ST. SWING BRIDGE
PID NO: 109597

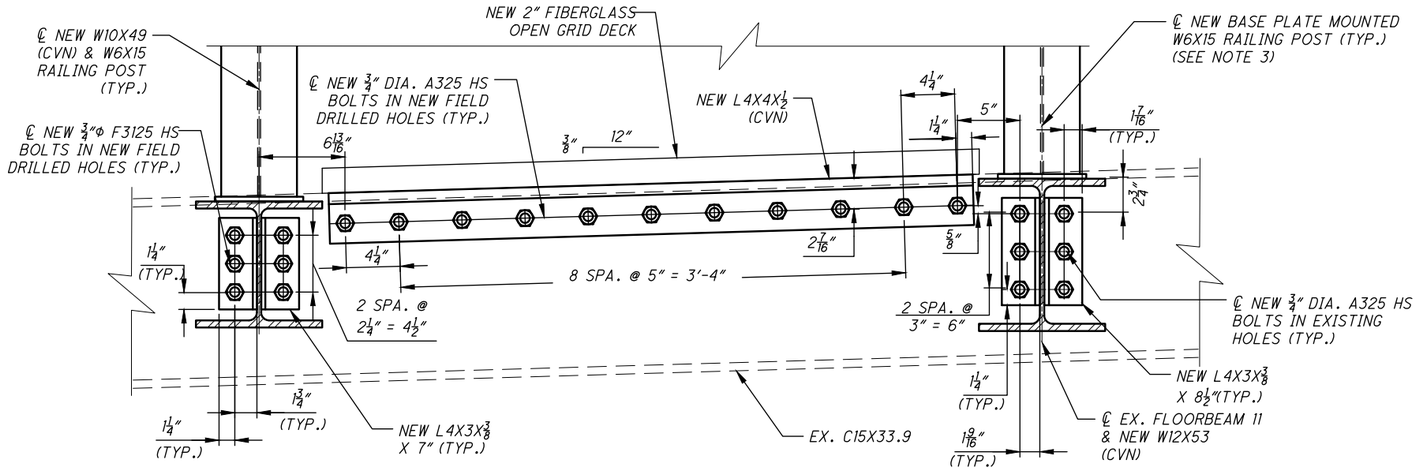

SECTION D-D

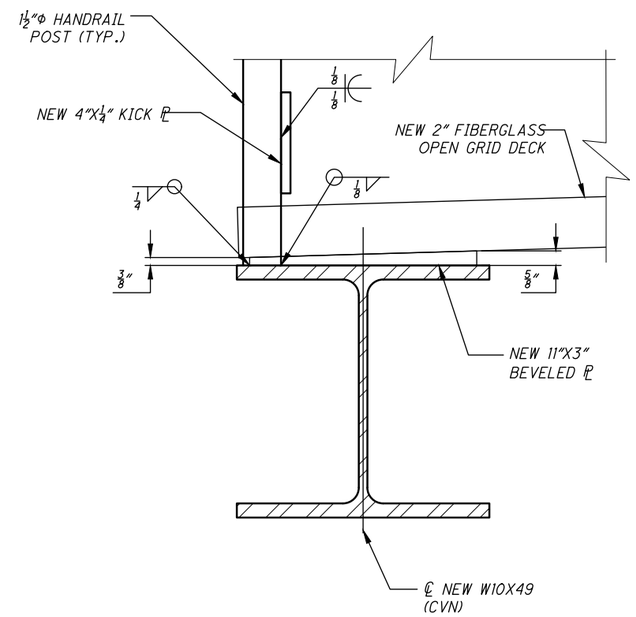

SECTION F-F

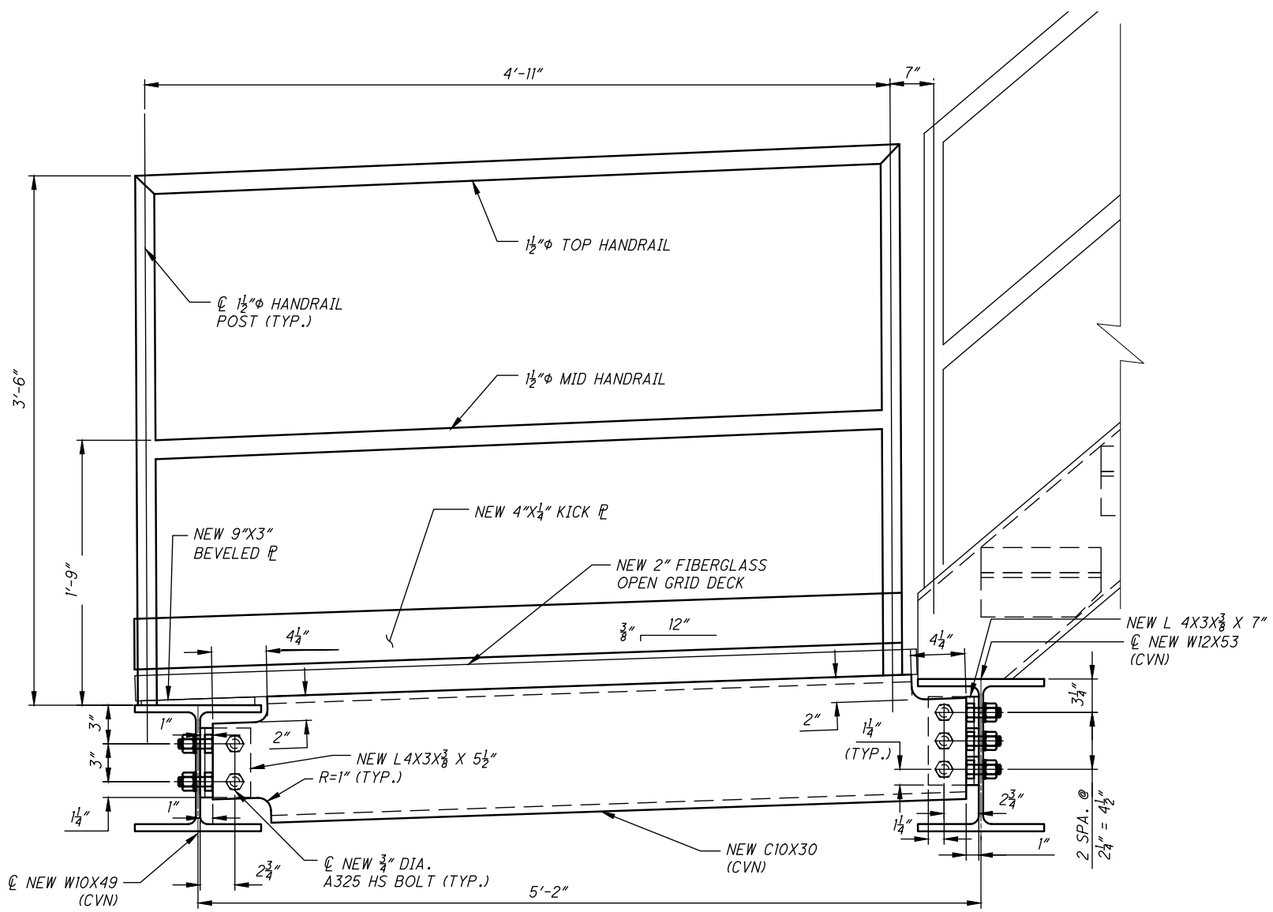

VIEW E-E

NOTES:

1. FOR LOCATION OF SECTIONS D-D AND F-F AND VIEW E-E, SEE SHEET S30/S51.
2. GRID DECK SHALL BE 2" FIBERGLASS OPEN GRID DECK TO MATCH THE GRID DECK ON THE NEW SIDEWALKS. SEE SHEET S7/S51 FOR REQUIREMENTS AND SHEET S25/S51 FOR CONNECTION DETAILS. CONTRACTOR IS TO CLIP THE GRID DECK TO FIT AROUND HANDRAIL POSTS.
3. SEE SHEET S37/S51 FOR RAILING POST DETAILS
4. ALL WORK AND MATERIALS ASSOCIATED WITH WORK SHOWN ON THIS SHEET SHALL BE PAID FOR UNDER ITEM SPECIAL - RELOCATE OPERATOR'S HOUSE STAIRS.

DESIGN AGENCY
WSP
1660 WEST 2ND STREET SUITE 850 CLEVELAND, OHIO 44113

DESIGNED	DRAWN	REVIEWED	DATE
JEJT	JEJT	WRW	09/11/20
CHECKED	REVISED	STRUCTURE FILE NUMBER	
NRF	---	1869345	

OPERATOR'S HOUSE STAIR RELOCATION DETAILS 3

CITY OF CLEVELAND BRIDGE NO. 1:003M
CENTER STREET SWING BRIDGE OVER THE CUYAHOGA RIVER

CUY-CENTER ST.
SWING BRIDGE
PID NO: 109597

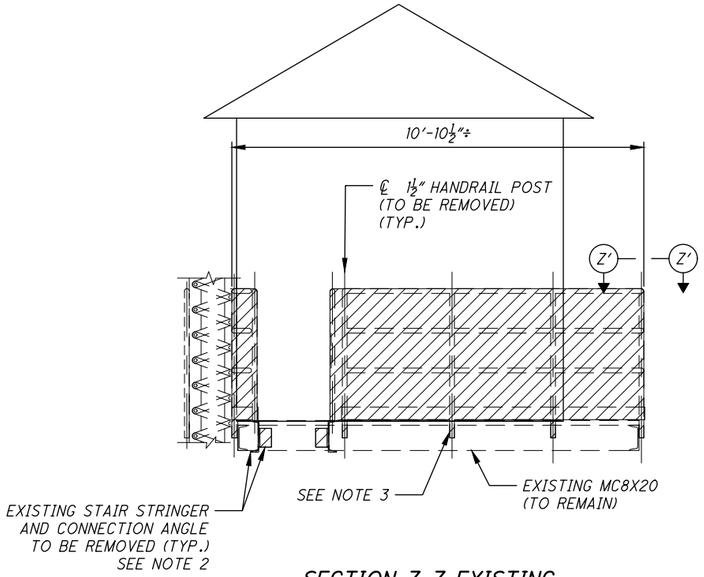

SECTION Z-Z EXISTING

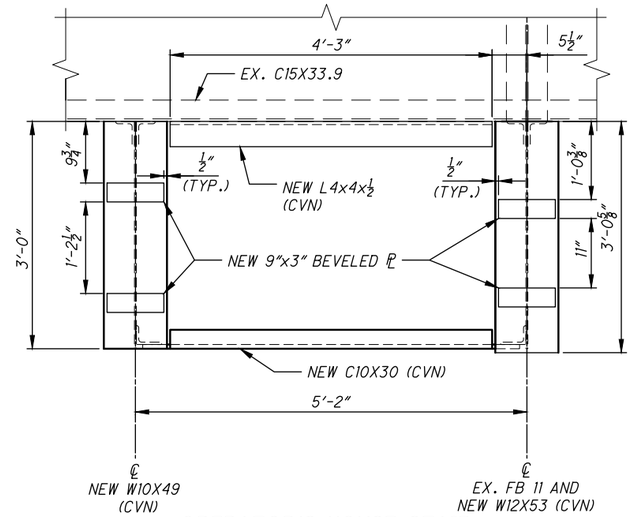

OPERATOR'S HOUSE STAIR PLATFORM FRAMING PLAN

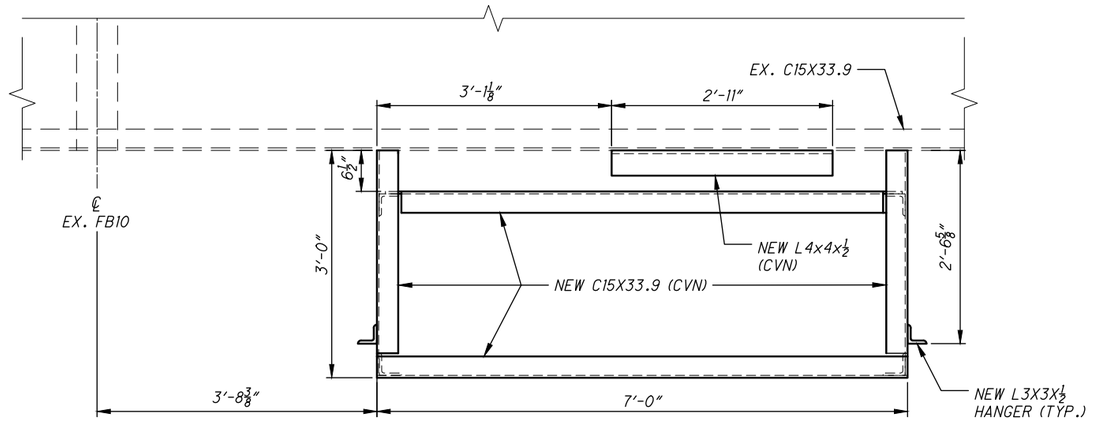

TRANSFORMER PLATFORM FRAMING PLAN

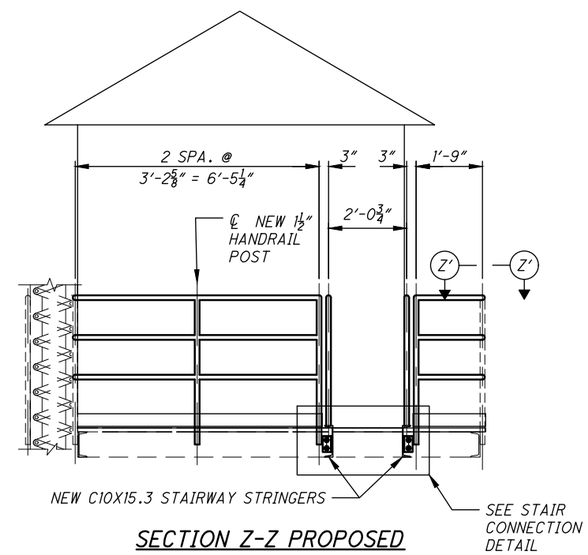

SECTION Z-Z PROPOSED

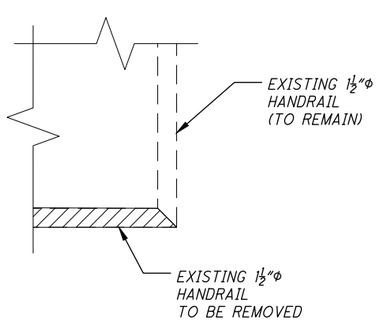

VIEW Z'-Z' EXISTING

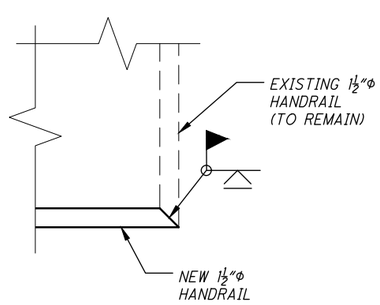

VIEW Z'-Z' PROPOSED

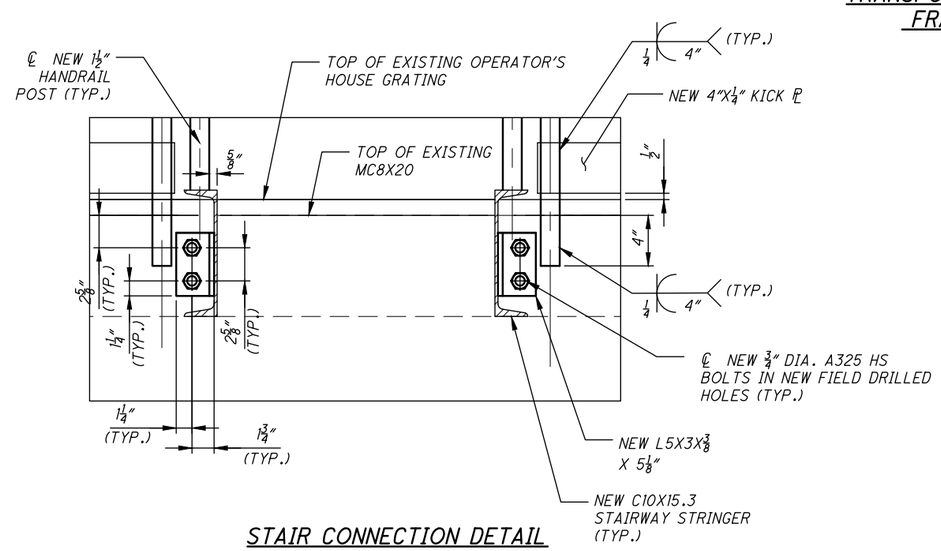

STAIR CONNECTION DETAIL

NOTES:

1. FOR LOCATION OF SECTION Z-Z, AND FRAMING PLANS SEE SHEET S30/S51 .
2. WELDED CONNECTIONS BETWEEN EXISTING STAIR STRINGER CONNECTION ANGLES AND OPERATOR'S HOUSE MC8X20 ARE TO BE REMOVED AND GROUND SMOOTH.
3. WELDED CONNECTIONS BETWEEN EXISTING HANDRAIL POSTS AND OPERATOR'S HOUSE MC8X20 ARE TO BE REMOVED AND GROUND SMOOTH.
4. ALL WORK AND MATERIALS ASSOCIATED WITH WORK SHOWN ON THIS SHEET SHALL BE PAID FOR UNDER ITEM SPECIAL - RELOCATE OPERATOR'S HOUSE STAIRS.

LEGEND:

- PORTIONS OF STRUCTURE TO BE REMOVED

DESIGN AGENCY
WSP
1660 WEST 2ND STREET SUITE 850 CLEVELAND, OHIO 44113

DESIGNED	DRAWN	REVIEWED	DATE
NRF	JEJT	WRW	09/11/20
CHECKED	REVISED	STRUCTURE FILE NUMBER	
TLC	---	1869345	

OPERATOR'S HOUSE STAIR RELOCATION DETAILS 4
CITY OF CLEVELAND BRIDGE NO. 1:003M
CENTER STREET SWING BRIDGE OVER THE CUYAHOGA RIVER

CUY-CENTER ST. SWING BRIDGE
PID NO: 109597

S33/S51

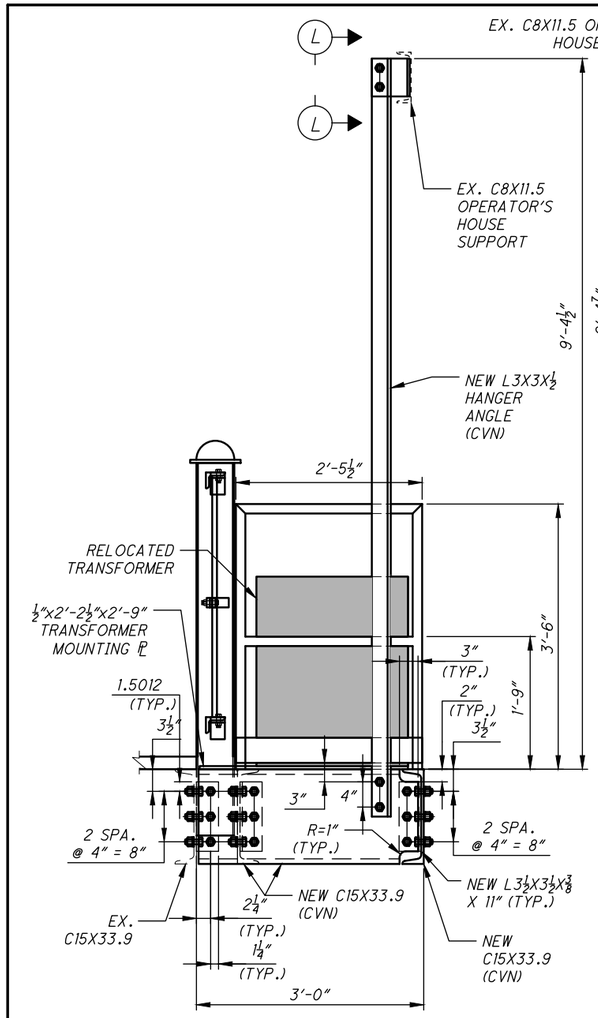

VIEW G-G

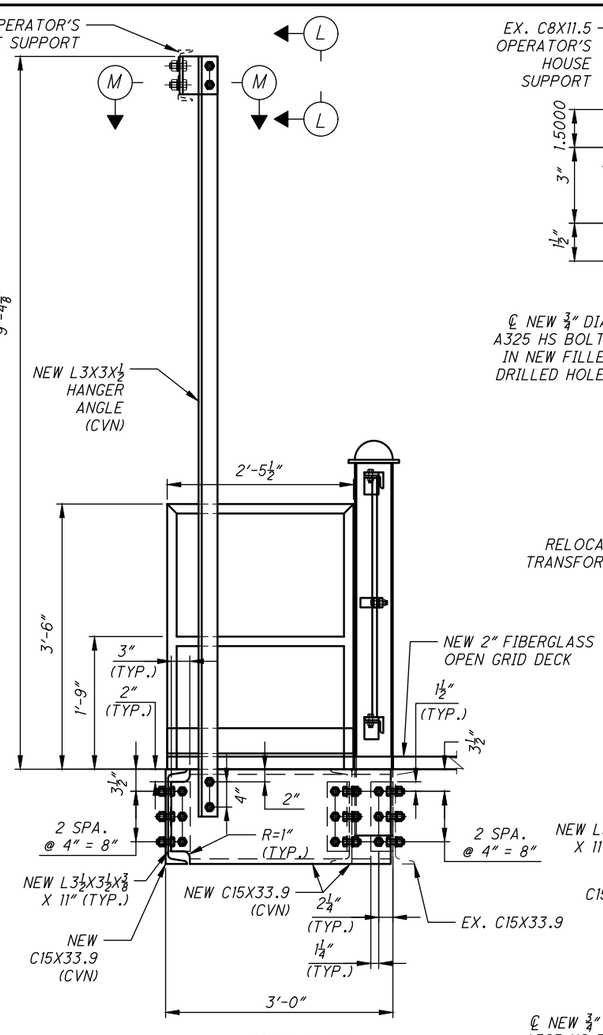

VIEW H-H

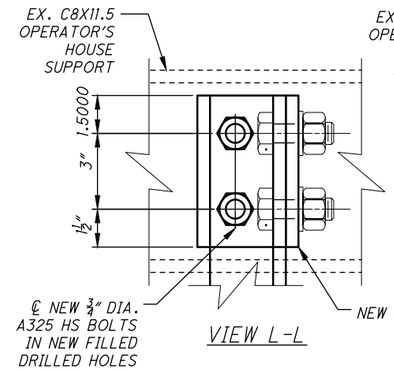

VIEW L-L

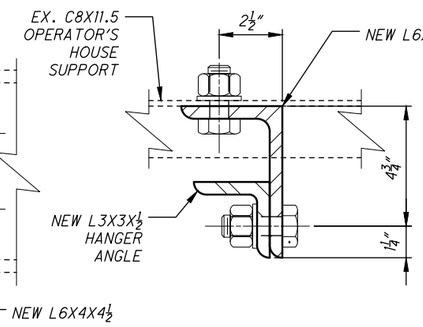

SECTION M-M

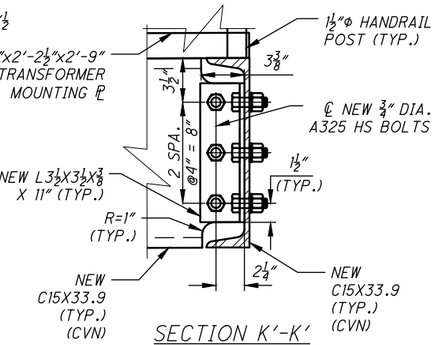

SECTION K'-K'

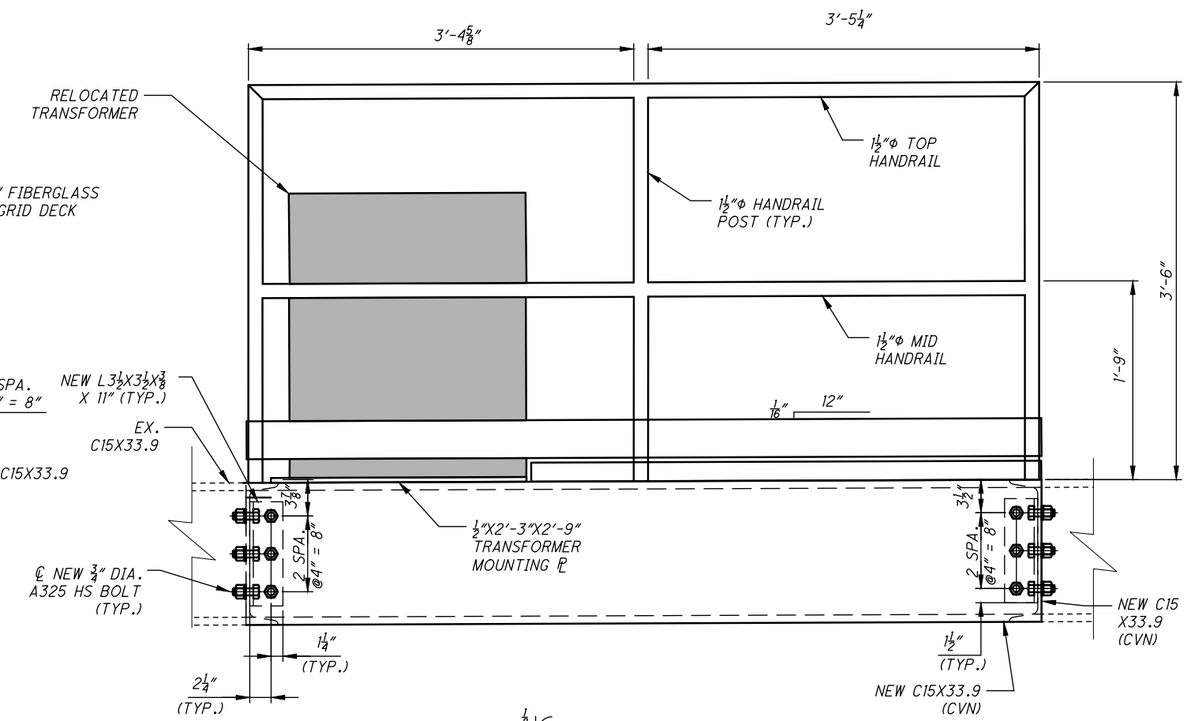

VIEW J-J

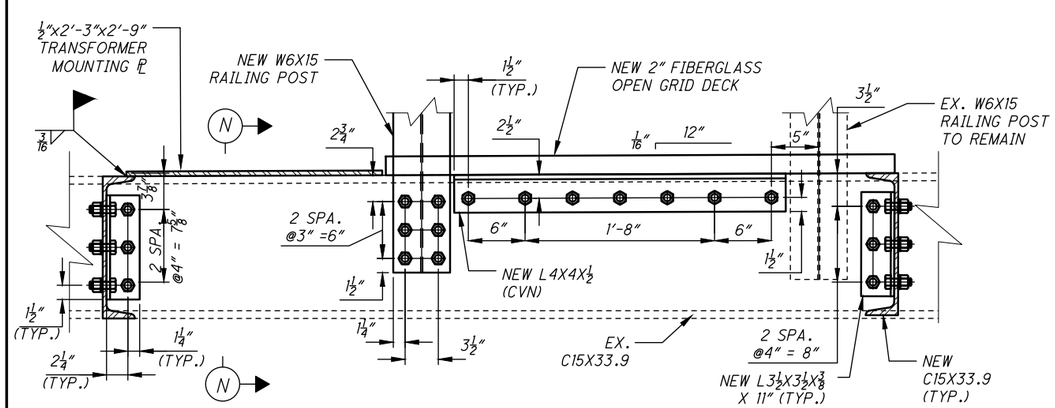

SECTION K-K

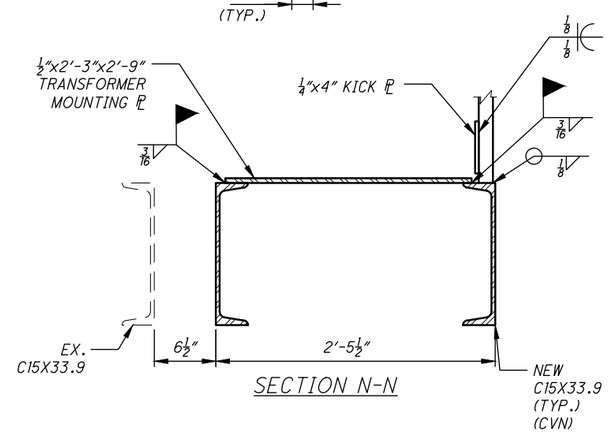

SECTION N-N

NOTES:

1. FOR LOCATION OF VIEWS G-G, H-H, AND J-J AND SECTIONS K'-K' AND K-K, SEE SHEET S30/S51.
2. FOR TRANSFORMER RELOCATION DETAILS, SEE ELECTRICAL SPECIAL PROVISIONS.
3. GRID DECK SHALL BE 2" FIBERGLASS OPEN GRID DECK TO MATCH THE GRID DECK ON THE NEW SIDEWALKS. SEE SHEET S7/S51 FOR REQUIREMENTS AND SHEET S25/S51 FOR CONNECTION DETAILS. CONTRACTOR IS TO CLIP THE GRID DECK TO FIT AROUND HANDRAIL POSTS.
4. ALL WORK AND MATERIALS ASSOCIATED WITH WORK SHOWN ON THIS SHEET, WITH THE EXCEPTION OF THE RELOCATION OF THE TRANSFORMER, SHALL BE PAID FOR UNDER ITEM SPECIAL - RELOCATION OF OPERATOR'S HOUSE STAIRS.
5. RELOCATION OF THE TRANSFORMER SHALL BE PAID FOR UNDER ITEM SPECIAL - ELECTRICAL WORK - RELOCATE TRANSFORMER.

DESIGN AGENCY
wsp
1660 WEST 2ND STREET SUITE 850 CLEVELAND, OHIO 44113

DESIGNED	DRAWN	REVIEWED	DATE
NRF	NRF	WRW	09/11/20
CHECKED	REVISED	STRUCTURE FILE NUMBER	
NBR	---	1869345	

TRANSFORMER PLATFORM DETAILS

CITY OF CLEVELAND BRIDGE NO. 1:003M
CENTER STREET SWING BRIDGE OVER THE CUYAHOGA RIVER

CUY-CENTER ST. SWING BRIDGE
PID NO: 109597

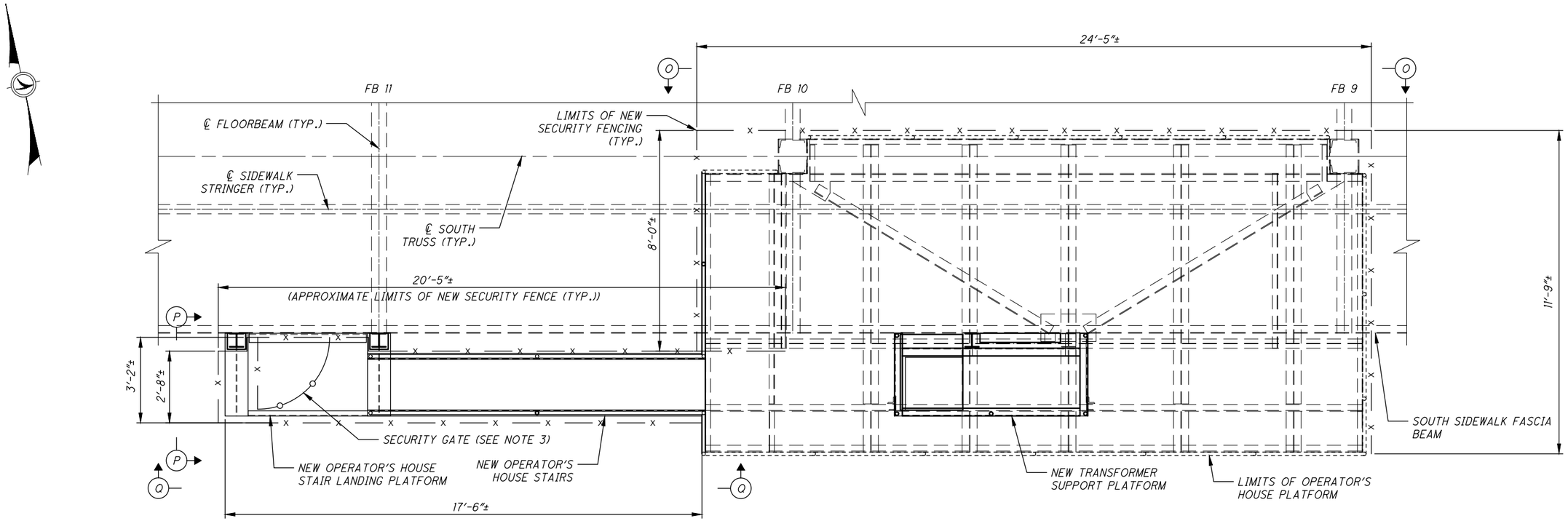

PROPOSED PLAN VIEW OF OPERATOR'S HOUSE SECURITY FENCE

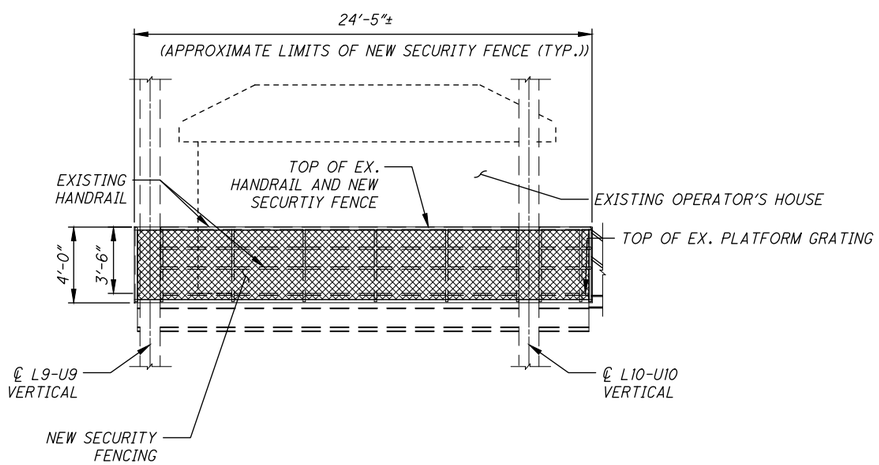

VIEW O-O

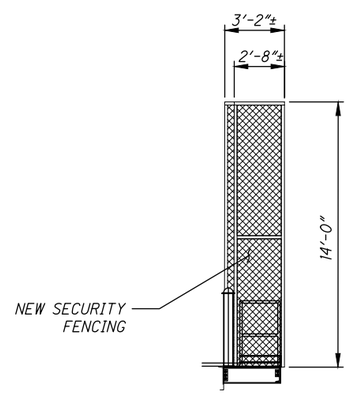

VIEW P-P

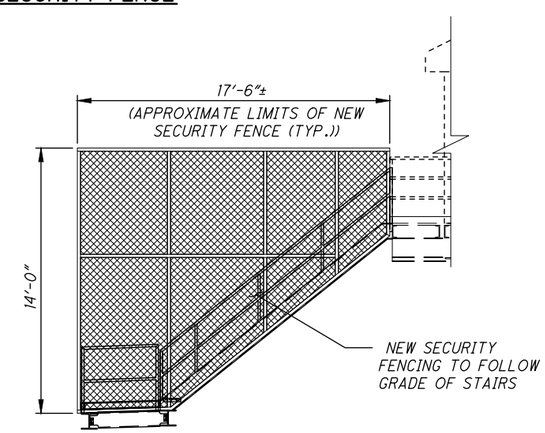

VIEW Q-Q

NOTES:

1. CONTRACTOR IS TO WORK WITH FENCING MANUFACTURER TO DEVELOP SUPPORT DETAILS FOR MOUNTING THE SECURITY FENCING TO THE STRUCTURE IN THE AREAS SHOWN. CONTRACTOR SHALL SUBMIT SHOP DRAWINGS FOR APPROVAL SHOWING LIMITS OF FENCING AND CONNECTION DETAILS PRIOR TO FABRICATION OF FENCING.
2. FOR SECURITY FENCING REQUIREMENTS, SEE NOTES ON SHEET S7/S51.
3. FOR SECURITY GATE INFORMATION AND VIEW OF RAILING ALONG FASCIA STRINGER, SEE SHEET S36/S51.
4. CONTRACTOR IS TO RELOCATE OPERATOR'S DOWNSPOUTS IN THE EVENT THAT THEY INTERFERE WITH PLACEMENT OF NEW STAIRS, PLATFORMS, OR SECURITY FENCE. THIS WORK SHALL BE INCIDENTAL TO ITEM SPECIAL - RELOCATE OPERATOR'S HOUSE STAIRS.
5. ALL MATERIALS, ACCESS, AND WORK ASSOCIATED WITH INSTALLATION OF THE NEW SECURITY FENCING SHALL BE PAID FOR UNDER ITEM SPECIAL - RELOCATE OPERATOR'S HOUSE STAIRS.
6. INSTALLATION OF SECURITY FENCING AND GATE TO BE COORDINATED WITH SIDEWALK RAILING WORK

DESIGN AGENCY
WSP
1660 WEST 2ND STREET
SUITE 850
CLEVELAND, OHIO 44113

DESIGNED	DRAWN	REVIEWED	DATE
NRF	NRF	WRW	09/11/20
CHECKED	REVISED	STRUCTURE FILE NUMBER	
NBR	---	1869345	

OPERATOR'S HOUSE SECURITY FENCE DETAILS
CITY OF CLEVELAND BRIDGE NO. 1:003M
CENTER STREET SWING BRIDGE OVER THE CUYAHOGA RIVER

CUY-CENTER ST.
SWING BRIDGE
PID NO: 109597

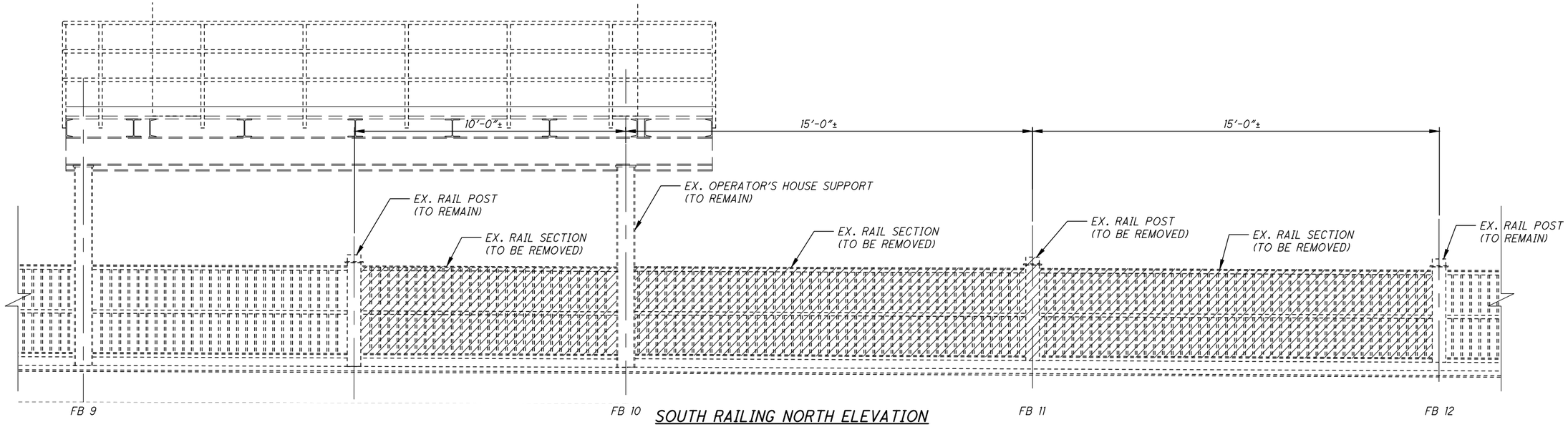

SOUTH RAILING NORTH ELEVATION (EXISTING)

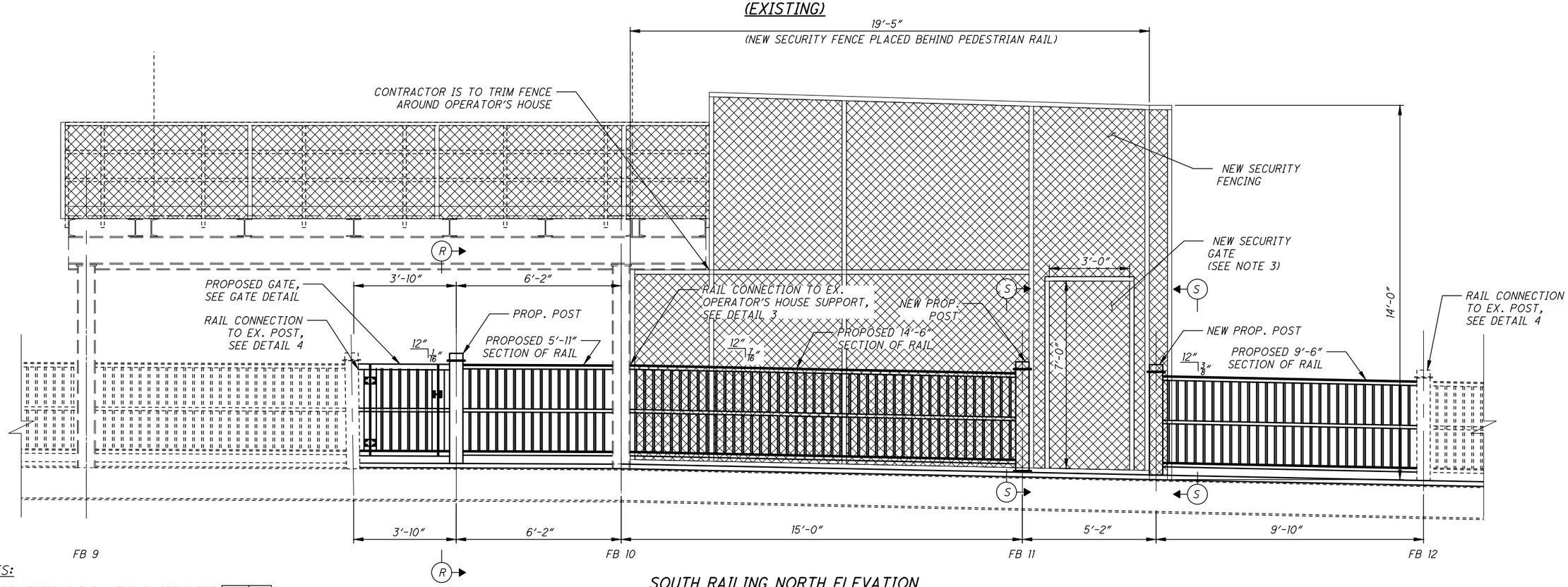

SOUTH RAILING NORTH ELEVATION (PROPOSED)

NOTES:

1. FOR SECTIONS R-R AND S-S, SEE SHEET S37/S51.
2. FOR GATE DETAIL AND DETAILS 3 AND 4, SEE SHEET S38/S51.
3. FOR SECURITY GATE REQUIREMENTS, SEE SHEET S7/S51.
4. ALL WORK SHOWN ON THIS SHEET, SHALL BE PAID FOR UNDER ITEM SPECIAL - RELOCATE OPERATOR'S HOUSE STAIRS.

LEGEND:

INDICATES LIMITS OF REMOVAL

DESIGN AGENCY
WSP
1660 WEST 2ND STREET
SUITE 850
CLEVELAND, OHIO 44113

DESIGNED	DRAWN	REVIEWED	DATE
TLC	TLC	WRW	09/11/20
CHECKED	REVISED	STRUCTURE FILE NUMBER	
NRF	---	1869345	

PEDESTRIAN RAIL MODIFICATION DETAILS 1
CITY OF CLEVELAND BRIDGE NO. 1:003M
CENTER STREET SWING BRIDGE OVER THE CUYAHOGA RIVER

CUY-CENTER ST.
SWING BRIDGE
PID NO: 109597

S36/S51

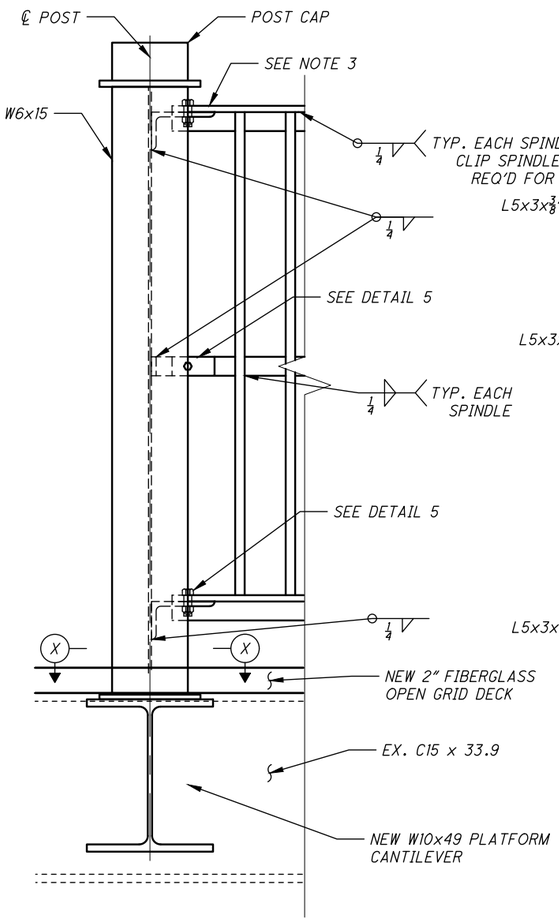

SECTION T-T

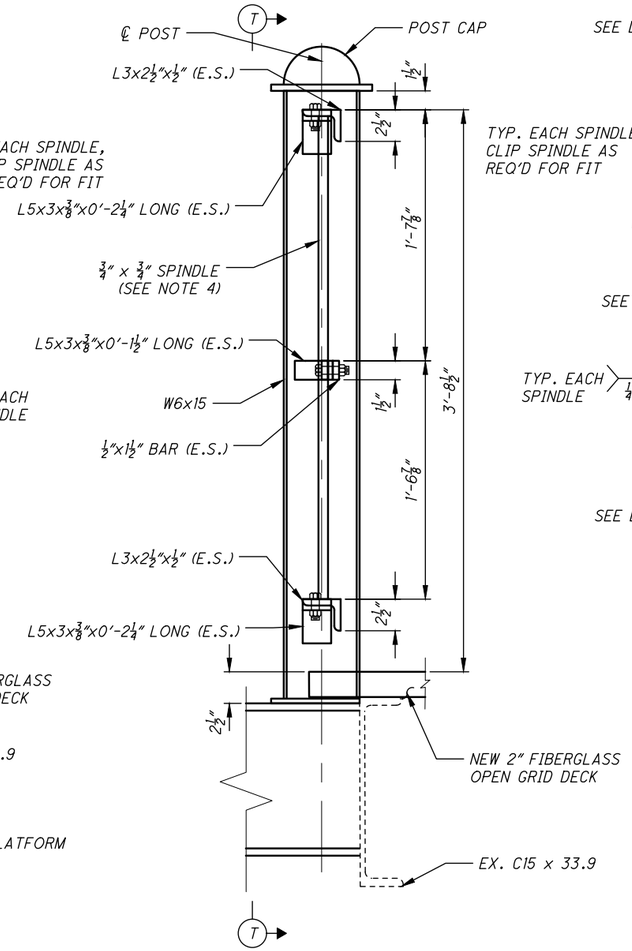

SECTION S-S

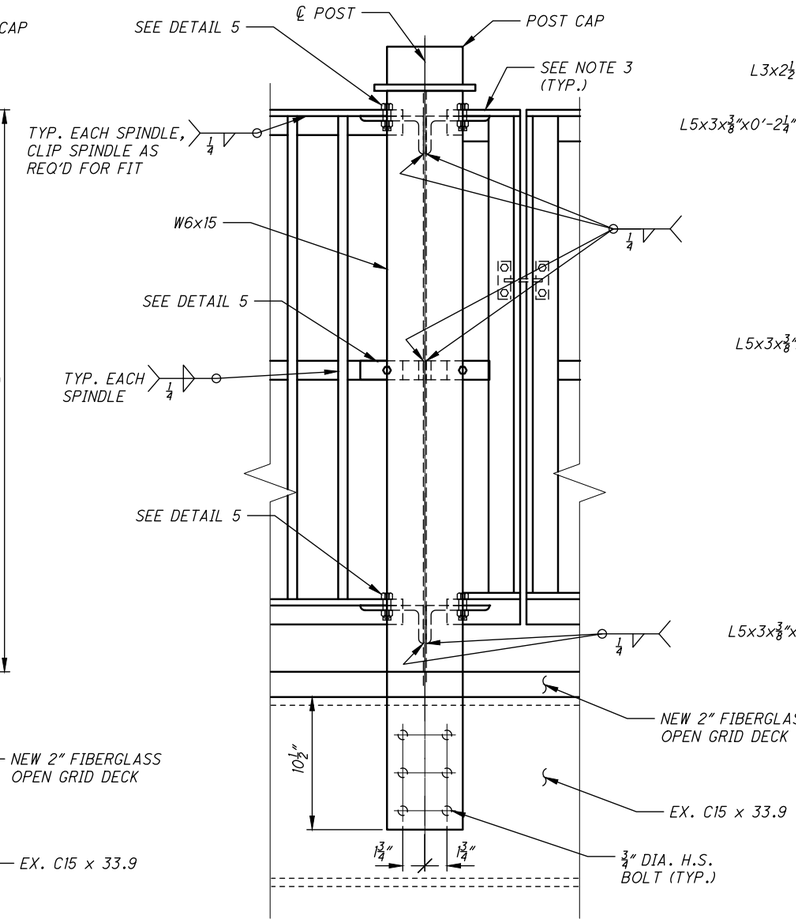

VIEW U-U

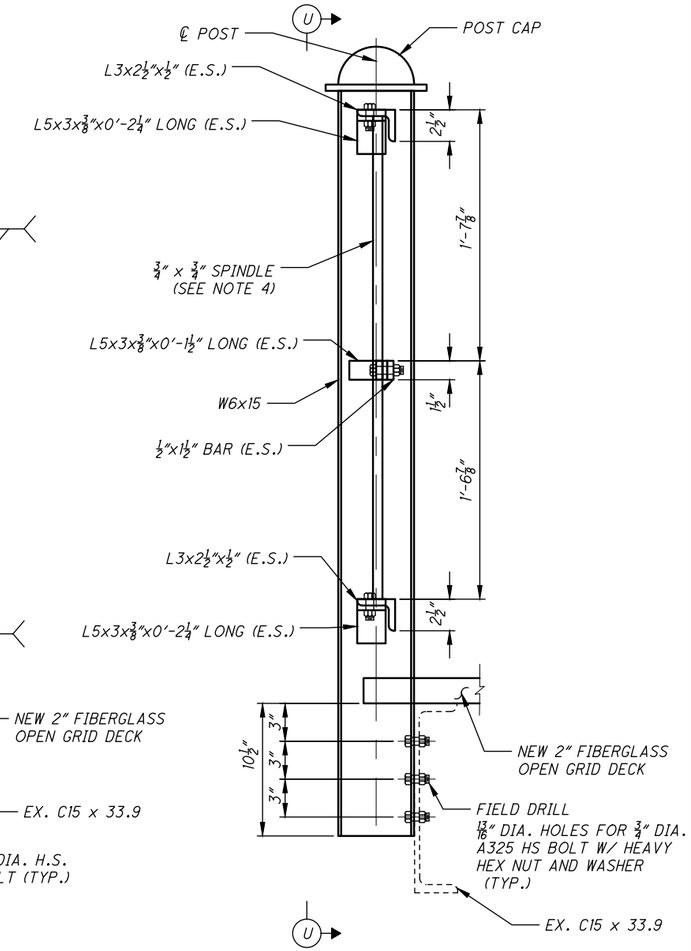

SECTION R-R

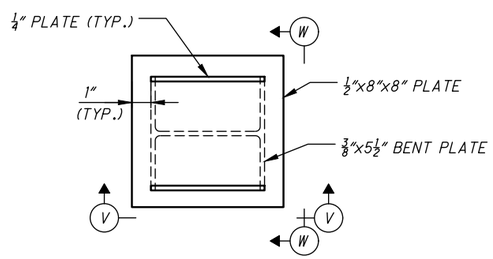

POST CAP PLAN

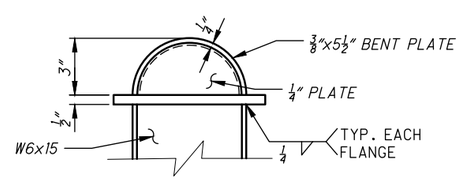

SECTION V-V

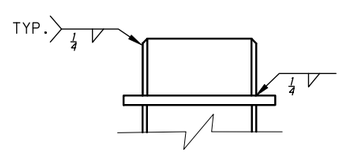

SECTION W-W

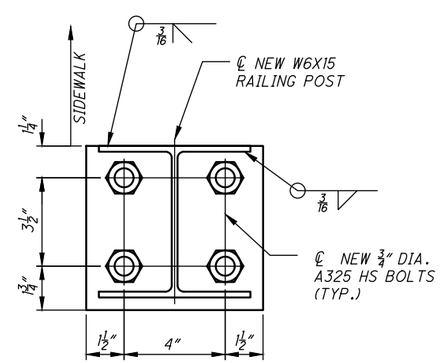

SECTION X-X

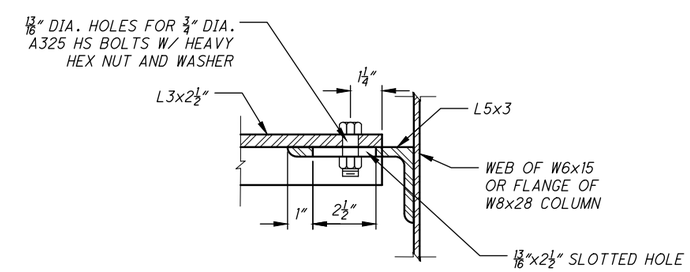

DETAIL 5

LEGEND:

E.S. = EACH SIDE

NOTES:

1. FOR LOCATION OF SECTIONS R-R AND S-S, SEE SHEET S36/S51.
2. LATCH AND HINGES ARE TO BE SUBMITTED TO ENGINEER FOR APPROVAL.
3. CONNECTION ANGLES ARE TO BE BENT TO MATCH GRADE.
4. RAILING PANELS ARE TO BE FABRICATED SO THAT SPINDLES ARE VERTICAL.
5. ALL WORK SHOWN ON THIS SHEET, SHALL BE PAID FOR UNDER ITEM SPECIAL - OPERATOR'S HOUSE STAIRS.

DESIGN AGENCY
WSP
1660 WEST 2ND STREET SUITE 850
CLEVELAND, OHIO 44113

DESIGNED	DRAWN	REVIEWED	DATE
TLC	TLC	WRW	09/11/20
CHECKED	REVISED	STRUCTURE FILE NUMBER	
NRF	---	1869345	

PEDESTRIAN RAIL MODIFICATION DETAILS 2
CITY OF CLEVELAND BRIDGE NO. 1:003M
CENTER STREET SWING BRIDGE OVER THE CUYAHOGA RIVER

CUY-CENTER ST. SWING BRIDGE
PID NO: 109597

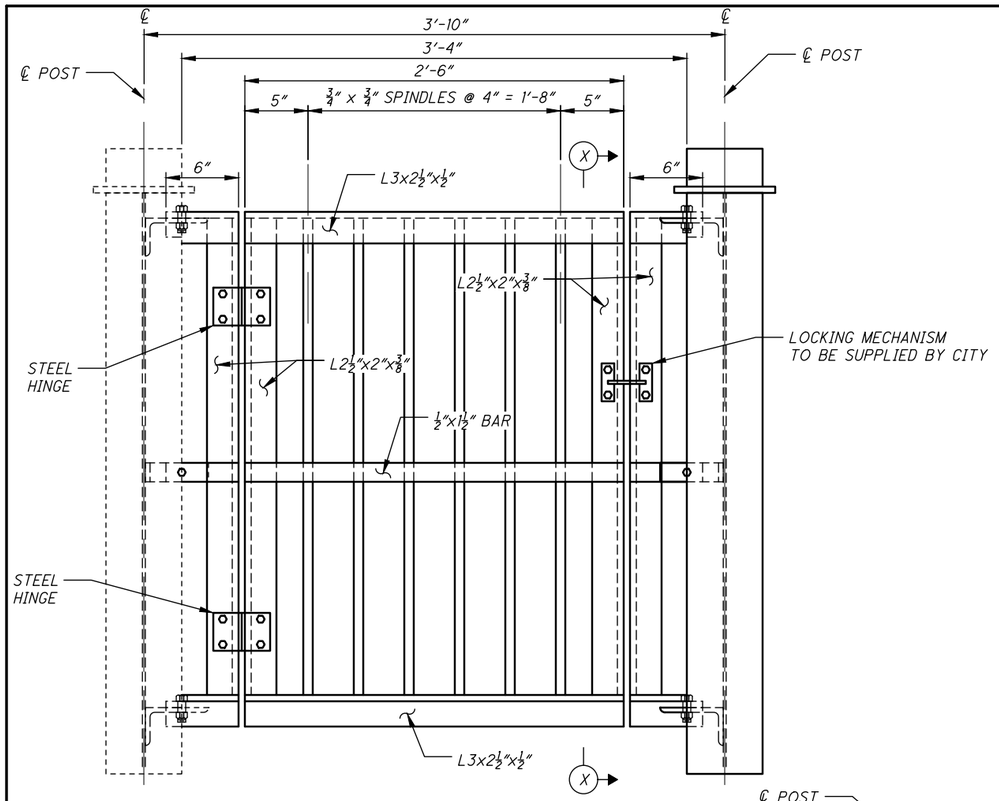

GATE DETAIL

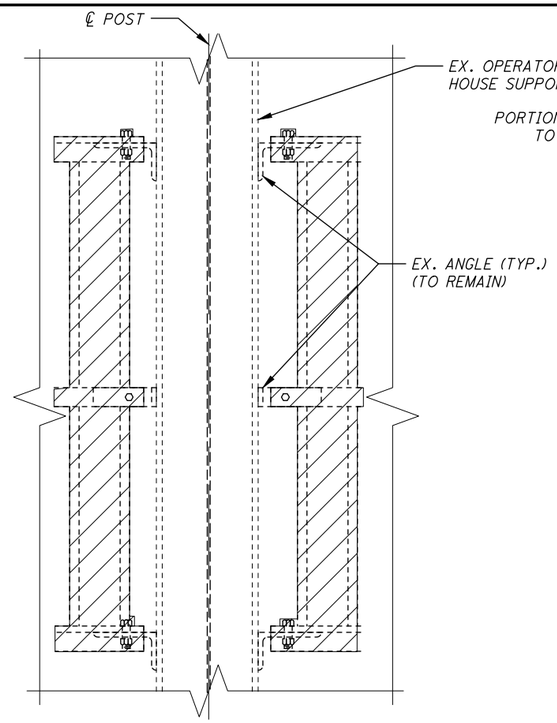

DETAIL 3
(EXISTING)

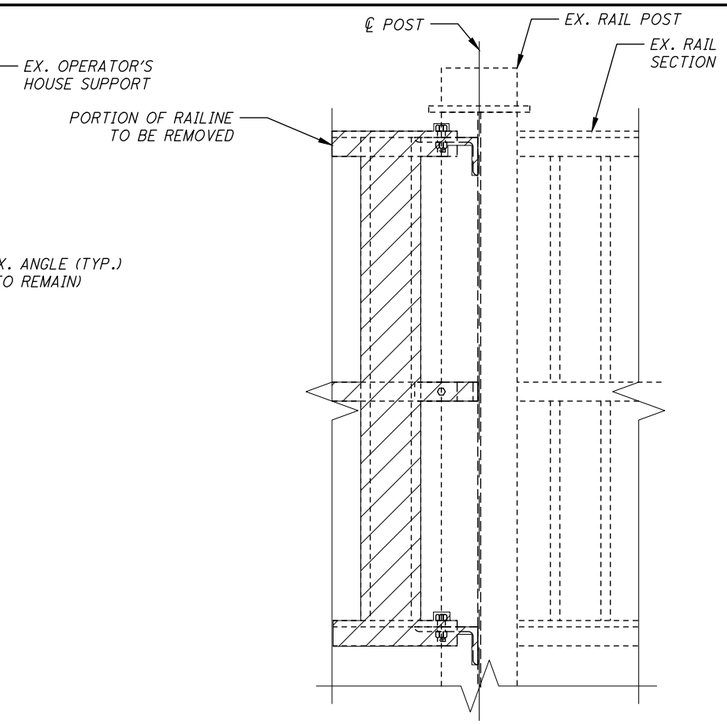

DETAIL 4
(EXISTING)

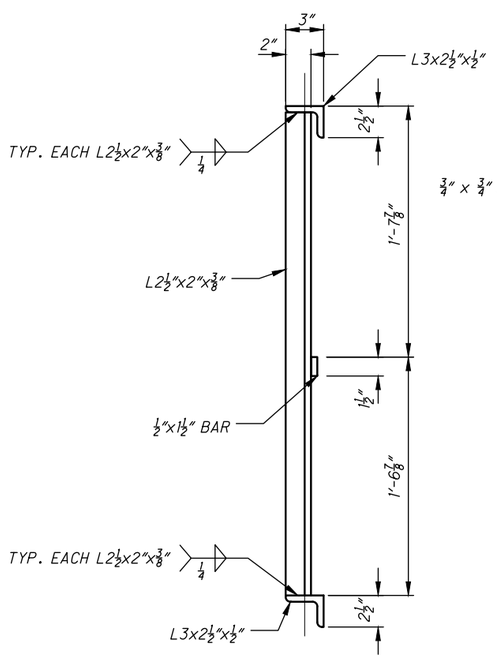

SECTION X-X

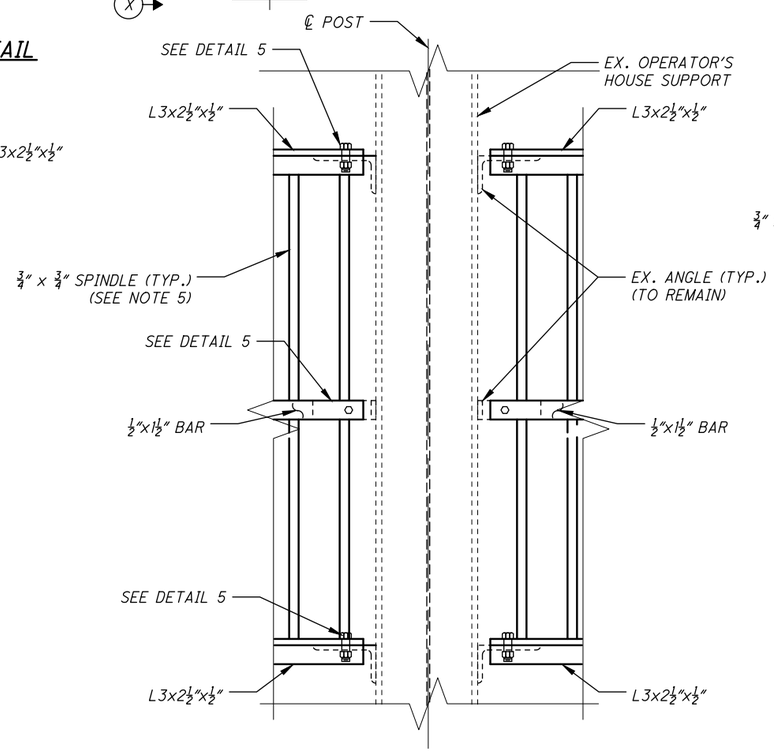

DETAIL 3
(PROPOSED)

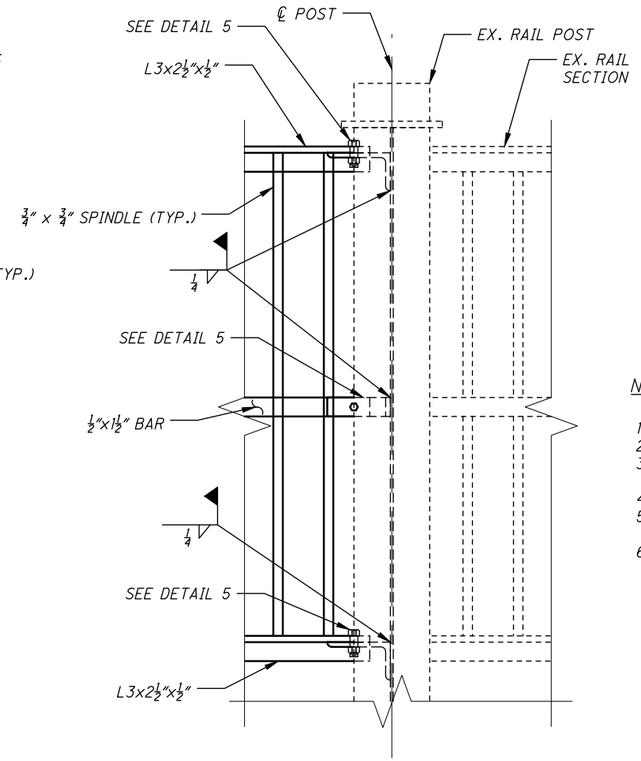

DETAIL 4
(PROPOSED)

NOTES:

1. FOR LOCATION OF GATE DETAIL, SEE SHEET S36/S51.
2. FOR DETAIL 5, SEE SHEET S37/S51.
3. LATCH AND HINGES ARE TO BE SUBMITTED TO ENGINEER FOR APPROVAL.
4. CONNECTION ANGLES ARE TO BE BENT TO MATCH GRADE.
5. RAILING PANELS ARE TO BE FABRICATED SO THAT SPINDLES ARE VERTICAL.
6. ALL WORK SHOWN ON THIS SHEET, SHALL BE PAID FOR UNDER ITEM SPECIAL - RELOCATE OPERATOR'S HOUSE STAIRS.

LEGEND:

INDICATES LIMITS OF REMOVAL

E.S. = EACH SIDE

DESIGN AGENCY
WSP
1660 WEST 2ND STREET
SUITE 850
CLEVELAND, OHIO 44113

DESIGNED	DRAWN	REVIEWED	DATE
TLC	TLC	WRW	09/11/20
CHECKED	REVISED	STRUCTURE FILE NUMBER	
NRF	---	1869345	

PEDESTRIAN RAIL MODIFICATION DETAILS 3
CITY OF CLEVELAND BRIDGE NO. 1:003M
CENTER STREET SWING BRIDGE OVER THE CUYAHOGA RIVER

CUY-CENTER ST.
SWING BRIDGE
PID NO: 109597

S38/S51

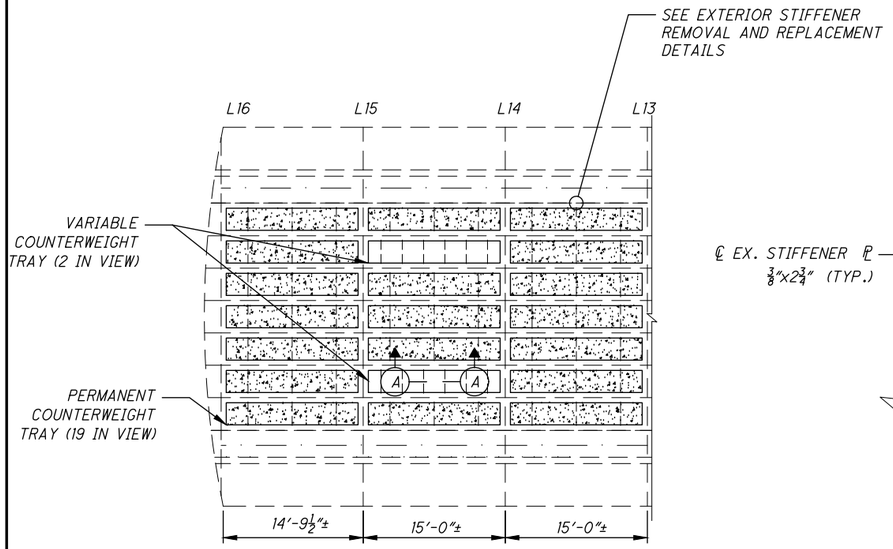

COUNTER WEIGHT FRAMING PLAN

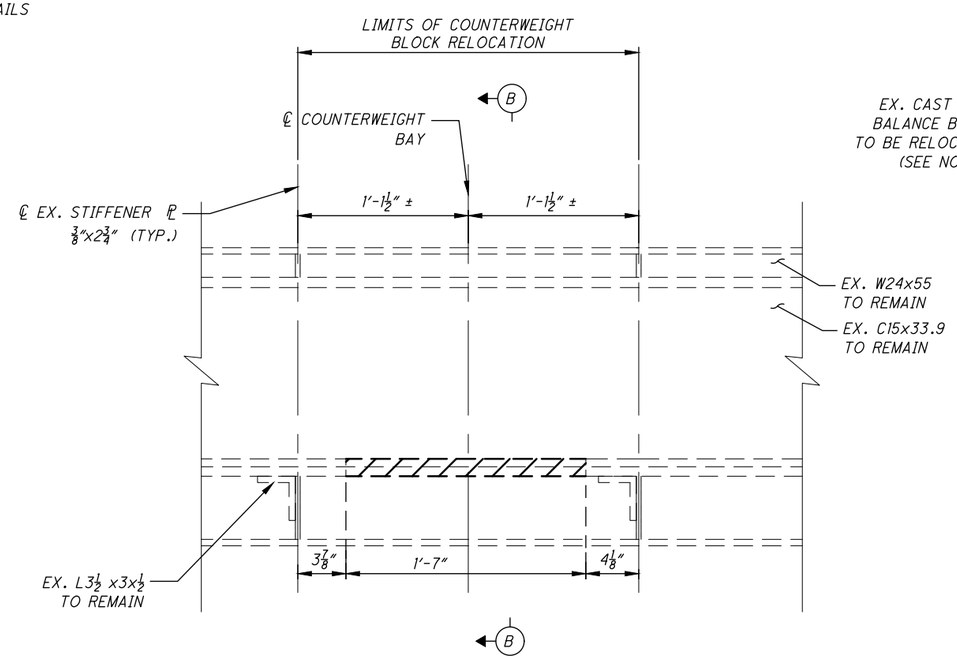

SECTION A-A (EXISTING)

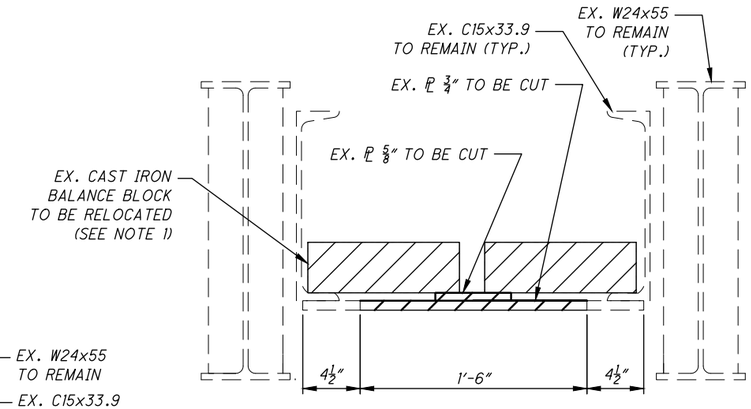

SECTION B-B (EXISTING)

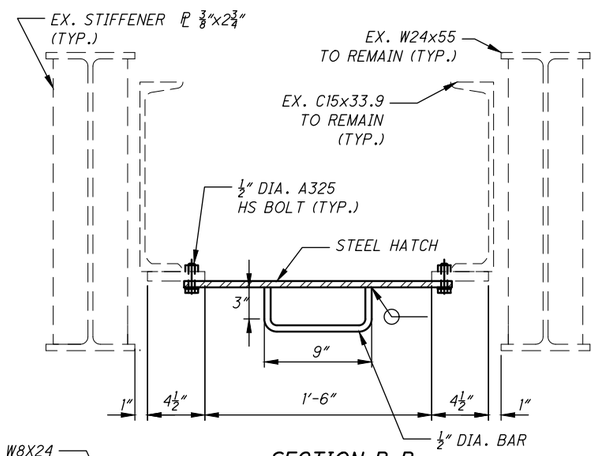

SECTION B-B (PROPOSED)

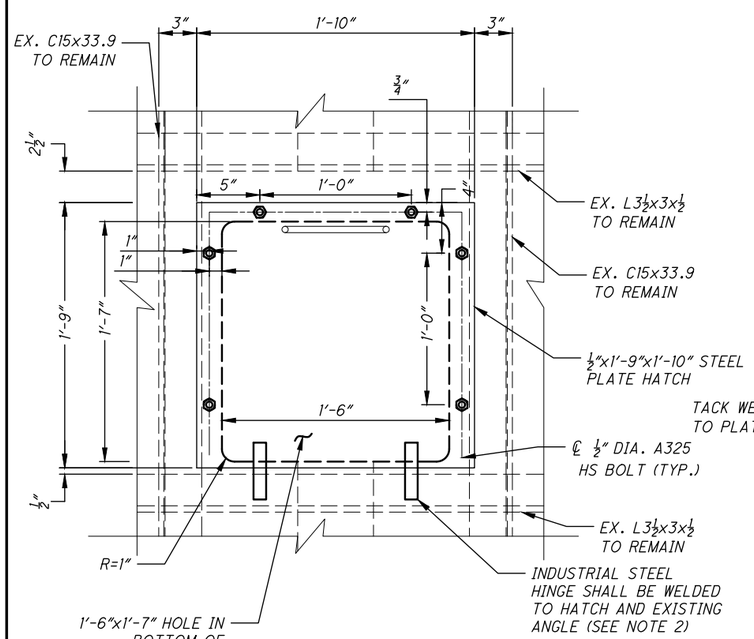

HATCH DETAIL

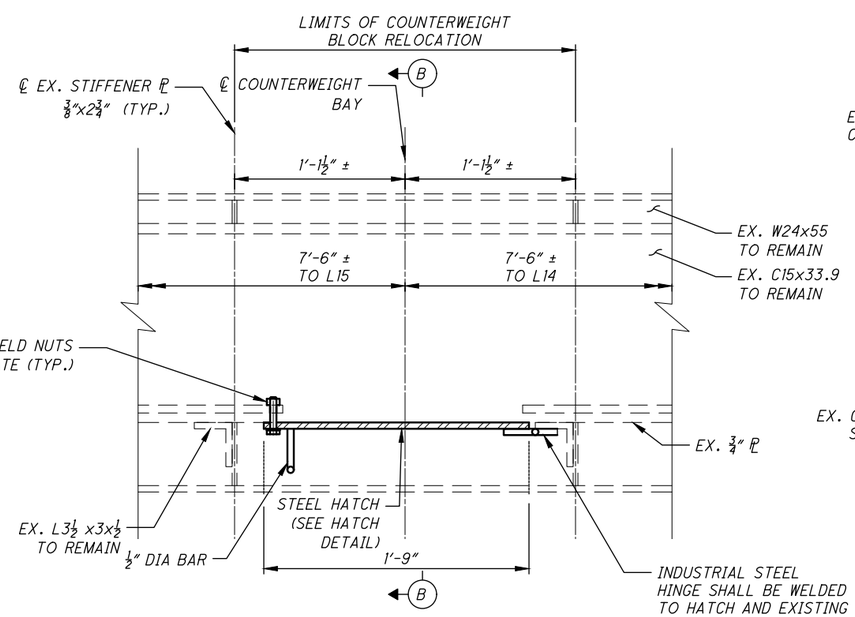

SECTION A-A (PROPOSED)

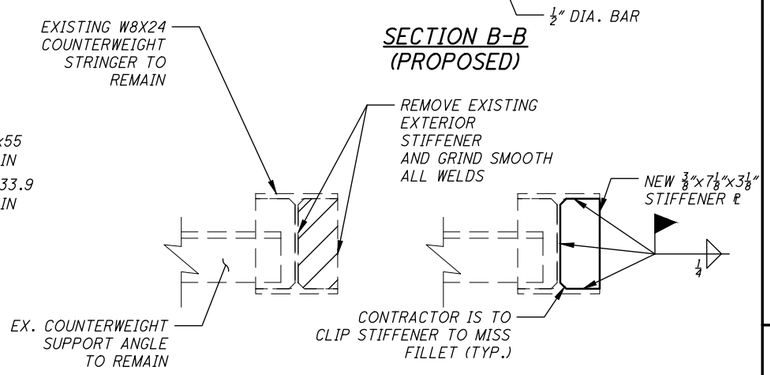

EXTERIOR STIFFENER REMOVAL AND REPLACEMENT DETAILS

LEGEND:

PORTIONS OF STRUCTURE TO BE REMOVED

NOTES:

1. COUNTERWEIGHT BLOCKS THAT ARE CURRENTLY IN THE VICINITY OF THE LOCATION OF THE PROPOSED HATCHES SHALL BE RELOCATED TO OTHER AREAS OF VARIABLE COUNTERWEIGHT TRAYS PRIOR TO PERFORMING FINAL SPAN BALANCING.
2. CONTRACTOR IS TO SUBMIT HINGE FOR APPROVAL BY ENGINEER.
3. OPENING IN COUNTERWEIGHT TRAY IS TO BE FLAME CUT AND THEN EDGES ARE TO BE GROUND SMOOTH.
4. ALL LABOR AND MATERIALS ASSOCIATED WITH INSTALLATION OF THE COUNTERWEIGHT HATCHES, INCLUDING RELOCATION OF COUNTERWEIGHT BLOCKS AND STIFFENER REPLACEMENT SHALL BE PAID FOR UNDER ITEM SPECIAL - COUNTERWEIGHT MODIFICATION.

DESIGN AGENCY
WSP
1660 WEST 2ND STREET SUITE 850 CLEVELAND, OHIO 44113

DESIGNED	DRAWN	REVIEWED	DATE
NRF	MN	WRW	09/11/20
CHECKED	REVISED	STRUCTURE FILE NUMBER	
TLC	---	1869345	

COUNTERWEIGHT MODIFICATIONS
CITY OF CLEVELAND BRIDGE NO. 1:003M
CENTER STREET SWING BRIDGE OVER THE CUYAHOGA RIVER

CUY-CENTER ST. SWING BRIDGE
PID NO: 109597

ITEM 519 - CONCRETE PATCHING						
CALLOUT	TYPE	APPROX. LENGTH	APPROX. HEIGHT	APPROX. AREA	LOCATION	REPAIR DETAIL
1	SPALL	8'-0"	1'-0"	8 SF	APPROACH SPAN DECK	TYPE 2

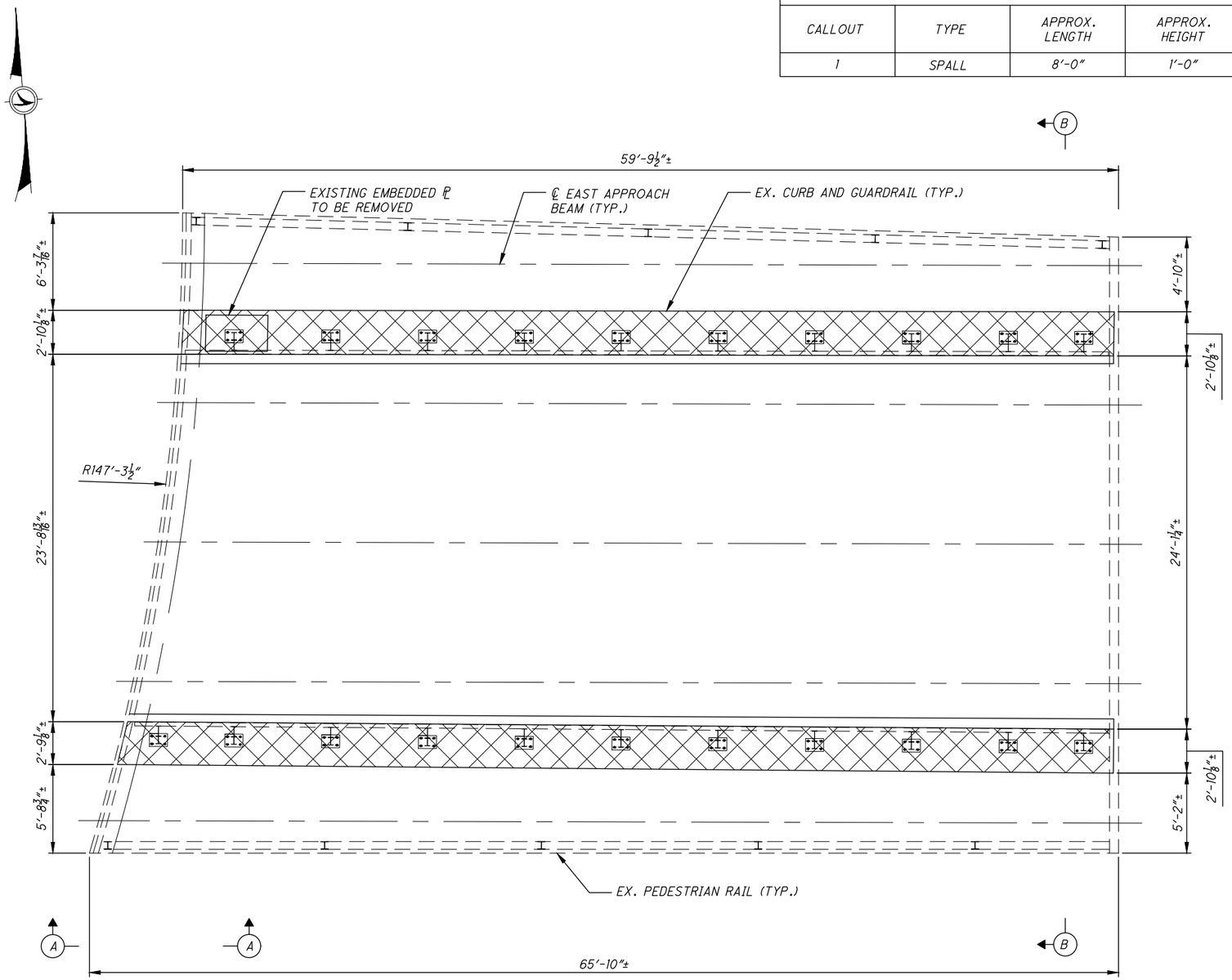

EAST APPROACH SPAN PLAN
(EXISTING)

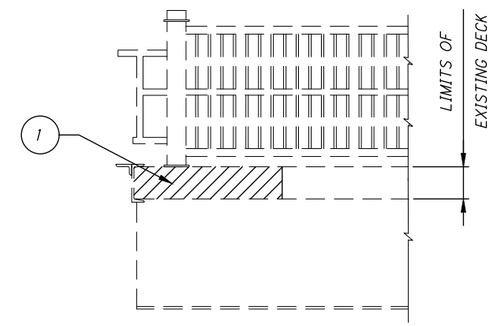

VIEW A-A
(BEARING AND PIER NOT SHOWN FOR CLARITY)

LEGEND:

LIMITS OF PATCHING

LIMITS OF FULL DEPTH REPAIR

NOTES:

1. FOR PATCHING DETAILS, SEE SHEET S12/S51.
2. FOR SECTION B-B, SEE SHEET S42/S51.
3. ALL LABOR AND MATERIALS ASSOCIATED WITH CONCRETE PATCHING SHALL BE INCLUDED FOR PAYMENT UNDER ITEM 519 - PATCHING CONCRETE STRUCTURE, AS PER PLAN.
4. ALL LABOR AND MATERIALS ASSOCIATED WITH THE REMOVAL OF GUARDRAIL SHALL BE INCLUDED FOR PAYMENT UNDER ITEM 202 - BRIDGE RAILING REMOVED, AS PER PLAN.
5. ALL LABOR AND MATERIALS RELATED TO THE REMOVAL OF THE EXISTING CURB SHALL BE INCLUDED FOR PAYMENT UNDER ITEM 847 - FULL DEPTH REPAIR, AS PER PLAN.

DESIGN AGENCY
wsp
1660 WEST 2ND STREET
SUITE 850
CLEVELAND, OHIO 44113

DESIGNED	DRAWN	REVIEWED	DATE
NRF	PCS	WRW	09/11/20
CHECKED	REVISED	STRUCTURE FILE NUMBER	
EWH	---	1869345	

EAST APPROACH SPAN REPAIR DETAILS 1
CITY OF CLEVELAND BRIDGE NO. 1:003M
CENTER STREET SWING BRIDGE OVER THE CUYAHOGA RIVER

CUY-CENTER ST.
SWING BRIDGE
PID NO: 109597

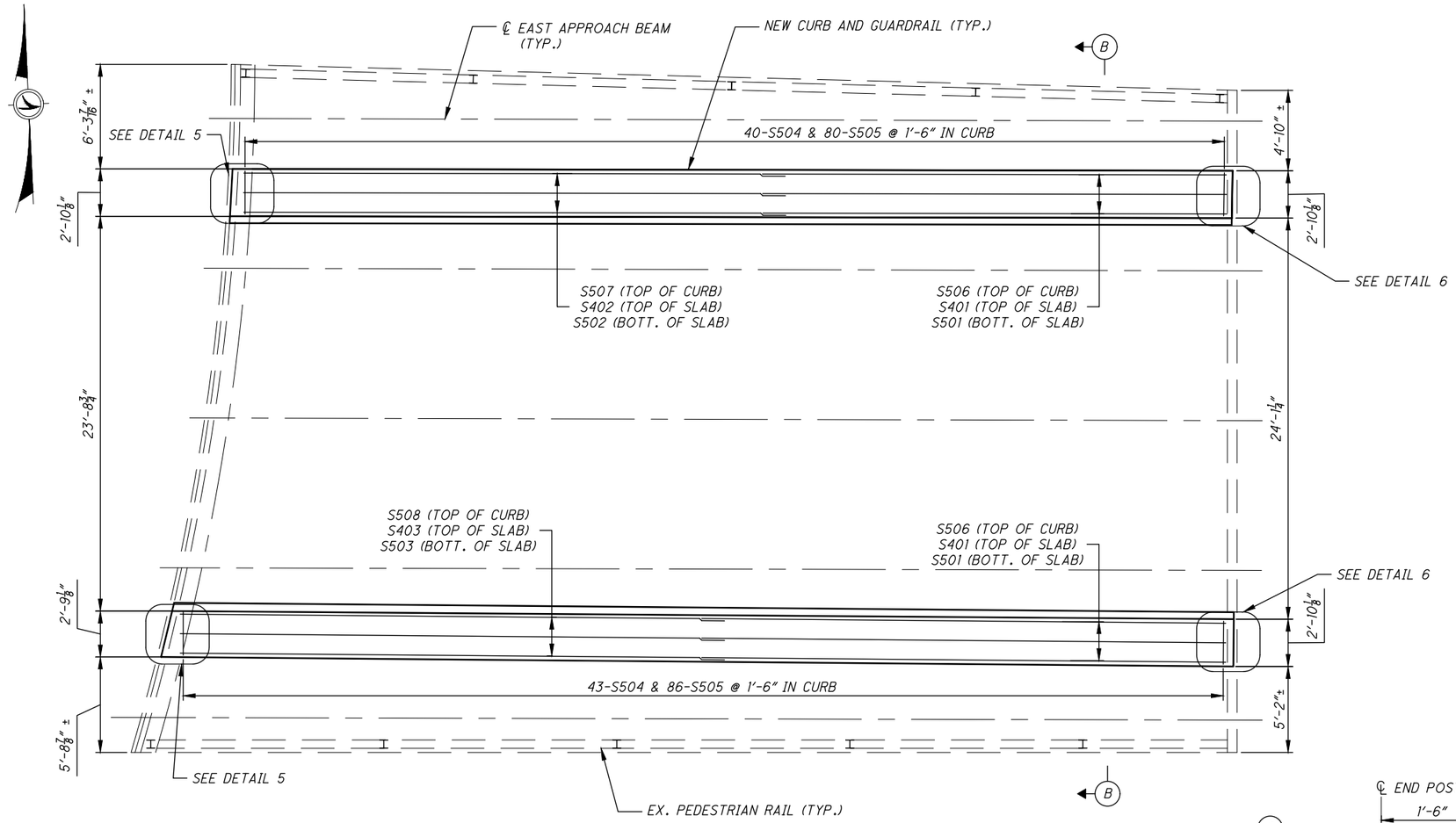

EAST APPROACH SPAN PLAN

(PROPOSED)

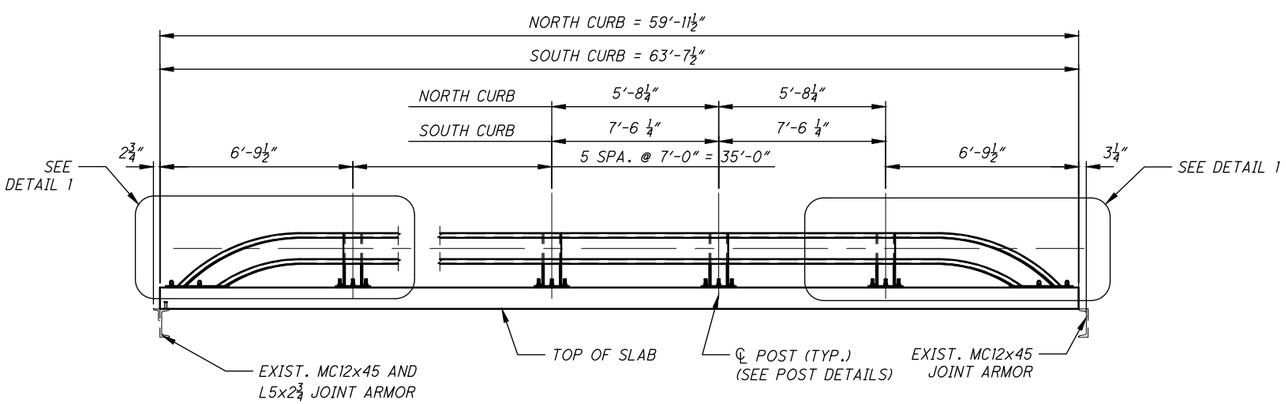

GUARDRAIL ELEVATION

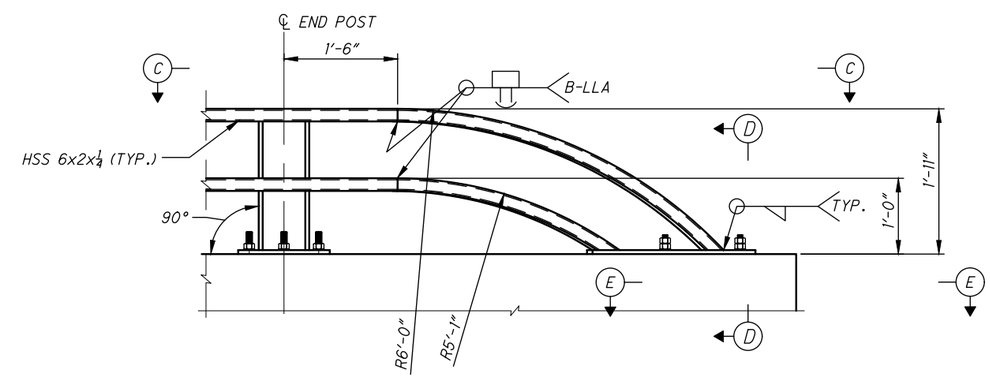

DETAIL 1

NOTES:

1. FOR SECTION B-B, SEE SHEET S42/S51.
2. ENSURE FABRICATOR PREPARES A SAMPLE OF THE INDICATED JOINT AND IT IS MACRO ETCHED TO DEMONSTRATE THAT THE REQUIRED EFFECTIVE THROAT IS ACHIEVED.
3. FOR SECTION/VIEWS C-C THROUGH E-E, SEE SHEET S43/S51.
4. FOR POST DETAILS AND DETAIL 5, SEE SHEET S44/S51.
5. FOR DETAIL 6, SEE SHEET S48/S51.
6. ALL LABOR AND MATERIALS ASSOCIATED WITH REMOVAL AND REPLACEMENT OF EXISTING CURB AND SLAB SHOWN ON THIS SHEET, INCLUDING NEW REINFORCING BARS, SHALL BE PAID FOR UNDER ITEM 847 - FULL DEPTH REPAIR, AS PER PLAN.
7. ALL LABOR AND MATERIALS ASSOCIATED WITH THE INSTALLATION OF THE NEW RAILING SHALL BE PAID FOR UNDER ITEM 517 - RAILING, MISC,: EAST APPROACH NEW WYOMING RAIL, AS PER PLAN.

DESIGN AGENCY
WSP
1660 WEST 2ND STREET
SUITE 850
CLEVELAND, OHIO 44113

DESIGNED	DRAWN	REVIEWED	DATE
NRF	PCS	WRW	09/11/20
CHECKED	REVISED	STRUCTURE FILE NUMBER	
EWH	---	1869345	

EAST APPROACH SPAN REPAIR DETAILS 2

CITY OF CLEVELAND BRIDGE NO. 1:003M
CENTER STREET SWING BRIDGE OVER THE CUYAHOGA RIVER

CUY-CENTER ST.
SWING BRIDGE
PID NO: 109597

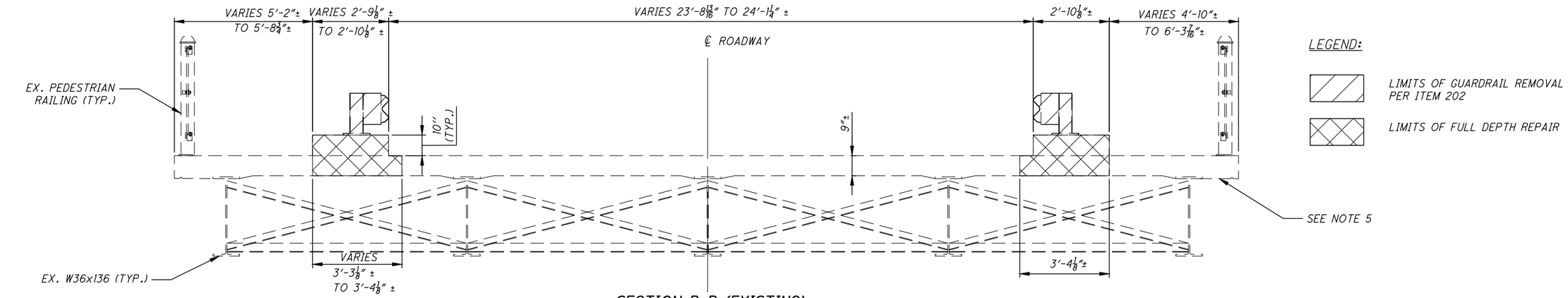

SECTION B-B (EXISTING)

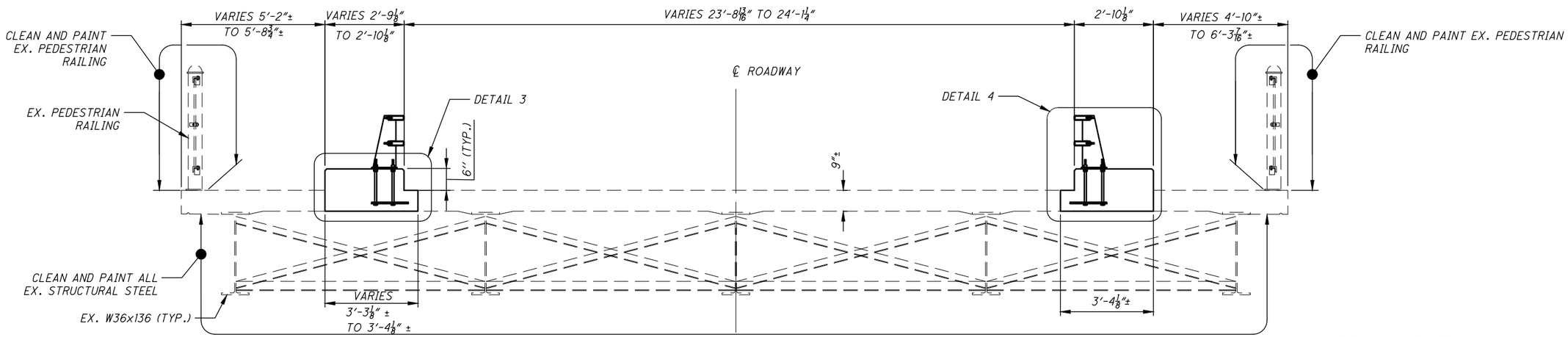

SECTION B-B (PROPOSED)

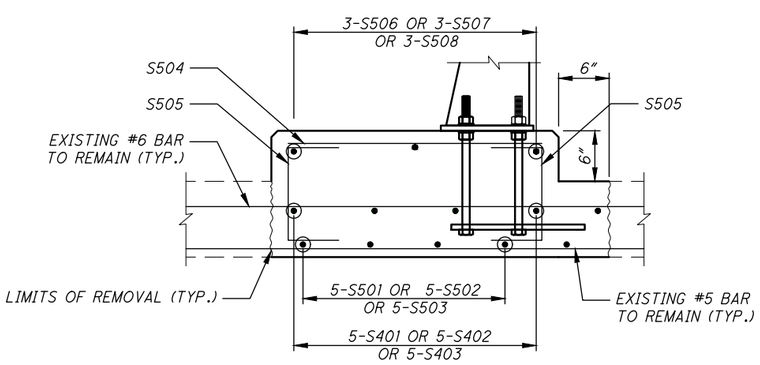

DETAIL 3

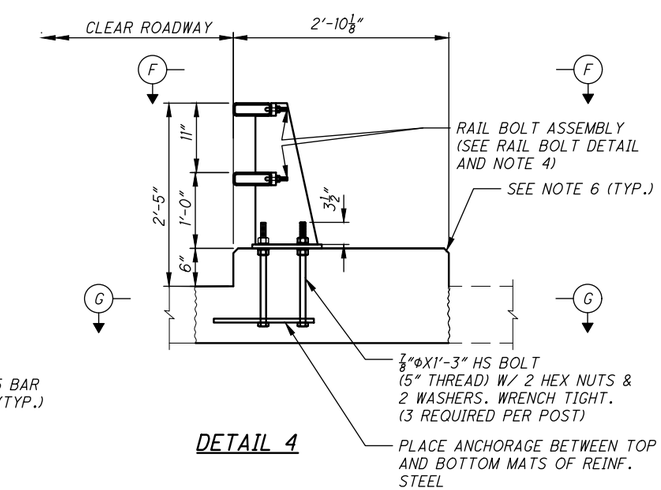

DETAIL 4

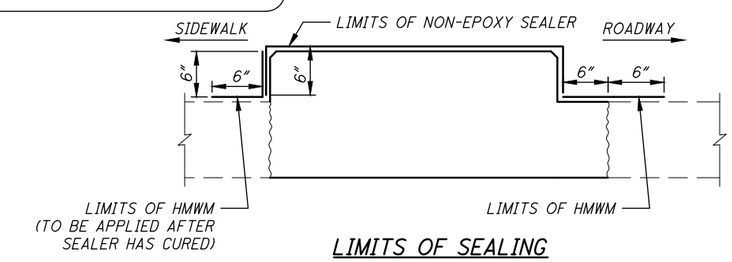

LIMITS OF SEALING

LEGEND:

- LIMITS OF GUARDRAIL REMOVAL PER ITEM 202
- LIMITS OF FULL DEPTH REPAIR

NOTES:

1. FOR LOCATION OF SECTION B-B, SEE SHEETS S40/S51 AND S41/S51.
2. FOR VIEW F-F AND SECTION G-G, SEE SHEET S43/S51
3. CONTRACTOR IS TO TAKE CARE NOT TO DAMAGE EXISTING REINFORCING TO REMAIN. ANY DAMAGED REBAR SHALL BE REPLACED AT NO COST TO THE PROJECT.
4. AT POST LOCATIONS, DRILL TWO 1 1/16" DIAMETER HOLES IN THE RAILS TO RECEIVE RAIL BOLTS (SHOP OR FIELD). SEE POST DETAILS ON SHEET S44/S51 FOR HOLE SPACING.
5. CONTRACTOR IS TO PROVIDE TEMPORARY SUPPORT OF DECK OVERHANG DURING REMOVAL AND REPLACEMENT OF CURB AND RAILING CAPABLE OF SUPPORTING 200 LB PER LINEAR FOOT. TEMPORARY SUPPORT SHALL BE INCIDENTAL TO ITEM 847-FULL DEPTH REPAIR, AS PER PLAN.
6. CHAMFER ALL CONCRETE EDGES ¾".
7. ALL LABOR AND MATERIALS ASSOCIATED WITH REMOVAL AND REPLACEMENT OF EXISTING CURB AND SLAB AS SHOWN ON THIS SHEET, INCLUDING NEW REINFORCING BARS, SHALL BE PAID FOR UNDER ITEM 847 - FULL DEPTH REPAIR, AS PER PLAN.
8. ALL LABOR AND MATERIALS ASSOCIATED WITH INSTALLATION OF THE NEW RAILING SHALL BE PAID FOR UNDER ITEM 517 - RAILING, MISC.: EAST APPROACH NEW WYOMING RAIL, AS PER PLAN
9. ALL PAINTING WORK SHOWN ON THIS SHEET SHALL BE PAID FOR UNDER ITEM 514.
10. SEALING OF CURB WITH NON-EPOXY SEALER SHALL BE PAID FOR UNDER ITEM 512 - SEALING OF CONCRETE SURFACES (NON-EPOXY).
11. SEAL JOINTS BETWEEN FULL DEPTH REPAIR AND EXISTING DECK WITH HMWM PER ITEM 847.
12. ALL LABOR AND MATERIALS ASSOCIATED WITH REMOVAL OF RAILING HARDWARE DOWN TO THE CURB SHALL BE PAID FOR UNDER ITEM - 202 BRIDGE RAILING REMOVED, AS PER PLAN

DESIGN AGENCY
WSP
1660 WEST 2ND STREET SUITE 850 CLEVELAND, OHIO 44113

DESIGNED	DRAWN	REVIEWED	DATE
NRF	PCS	WRW	09/11/20
CHECKED	REVISED	STRUCTURE FILE NUMBER	
EWH	---	1869345	

EAST APPROACH SPAN REPAIR DETAILS 3

CITY OF CLEVELAND BRIDGE NO. 1:003M
CENTER STREET SWING BRIDGE OVER THE CUYAHOGA RIVER

CUY-CENTER ST. SWING BRIDGE
PID NO: 109597

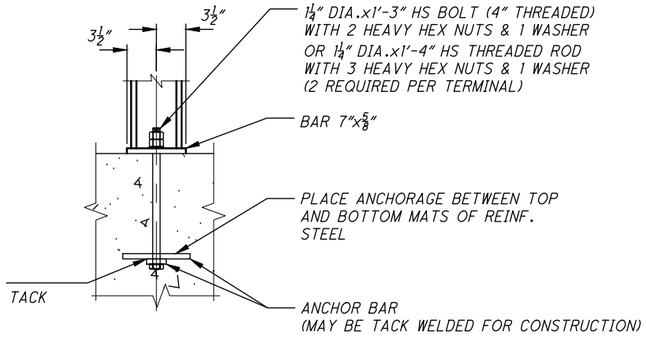

SECTION D-D

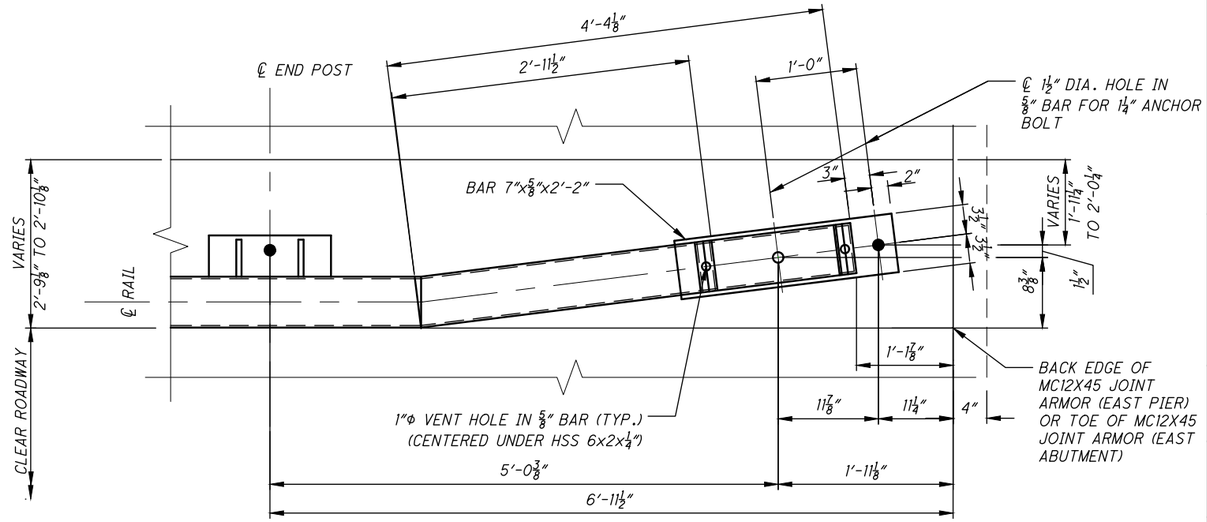

VIEW C-C

(BOLTS NOT SHOWN)

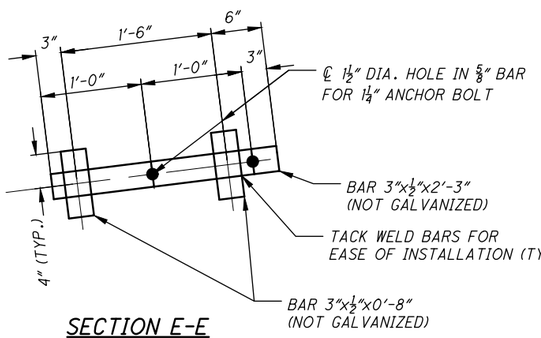

SECTION E-E

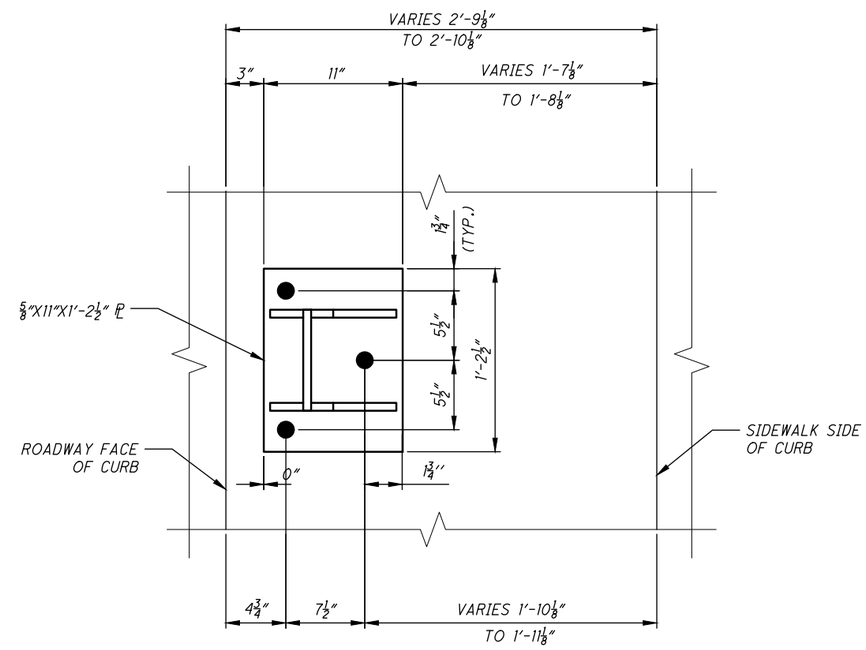

VIEW F-F

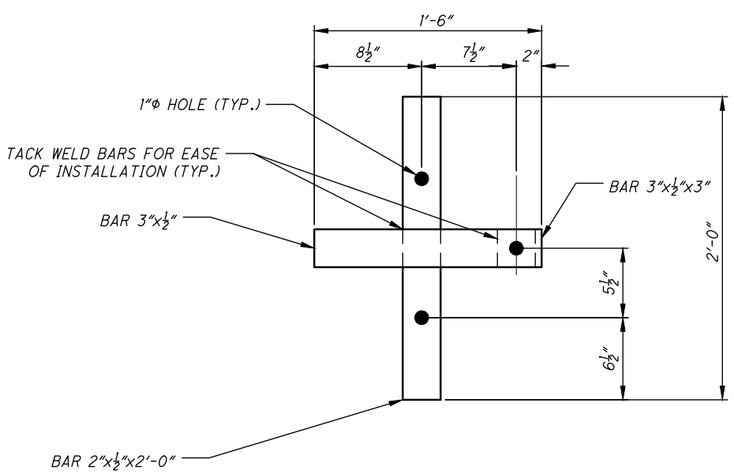

SECTION G-G

(ALL BARS SHOWN NOT GALVANIZED)

NOTES:

1. FOR LOCATIONS OF SECTIONS/VIEWS C-C THROUGH E-E, SEE SHEET S41/S51.
2. FOR LOCATIONS OF VIEW F-F AND SECTION G-G, SEE SHEET S42/S51.
3. FOR ADDITIONAL NOTES, SEE SHEET S44/S51.

DESIGN AGENCY
WSP
1660 WEST 2ND STREET SUITE 850 CLEVELAND, OHIO 44113

DESIGNED	DRAWN	REVIEWED	DATE
NRF	PCS	WRW	09/11/20
CHECKED	REVISED	STRUCTURE FILE NUMBER	
EWH	---	1869345	

EAST APPROACH SPAN RAILING DETAILS 1

CITY OF CLEVELAND BRIDGE NO. 1:003M
CENTER STREET SWING BRIDGE OVER THE CUYAHOGA RIVER

CUY-CENTER ST. SWING BRIDGE
PID NO: 109597

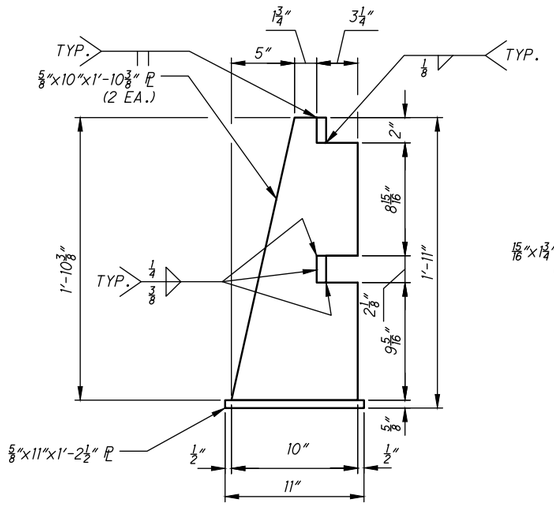

SIDE VIEW

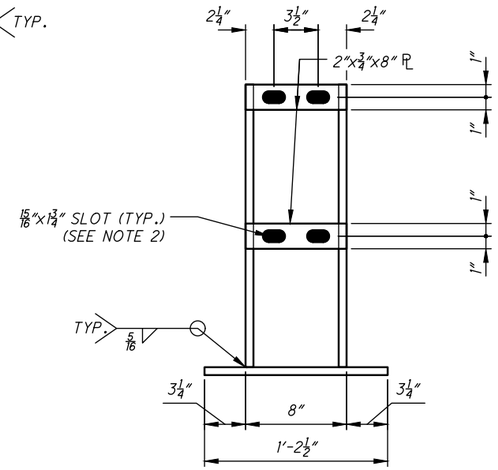

FRONT VIEW

POST DETAILS

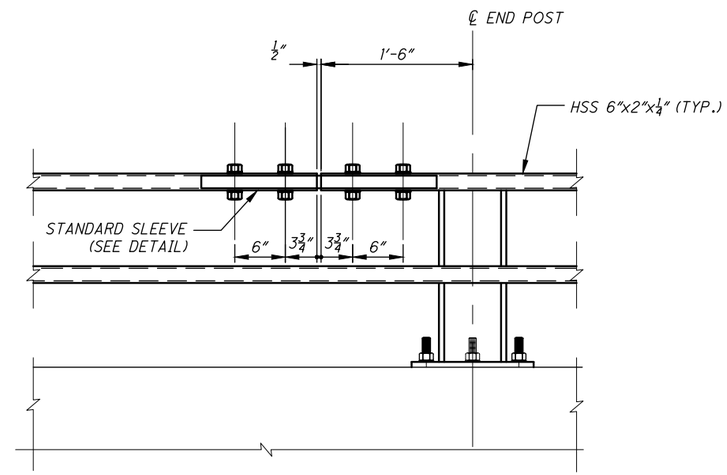

SPLICE DETAIL
(TOP OR BOTTOM RAIL)

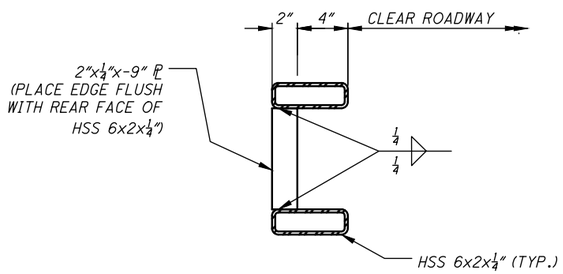

BRACE BAR DETAIL
(SEE NOTE 6)

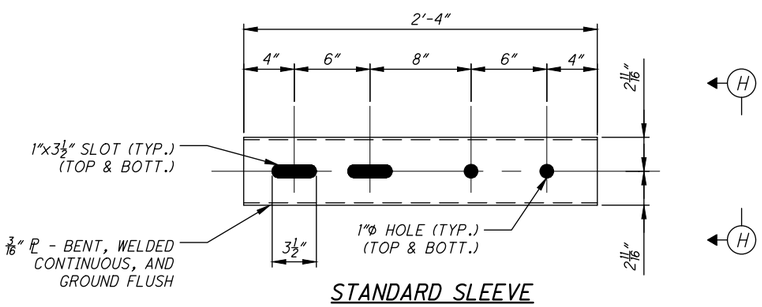

STANDARD SLEEVE

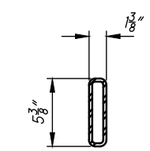

VIEW H-H

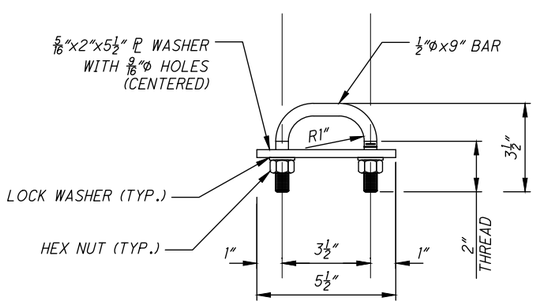

RAIL BOLT DETAIL

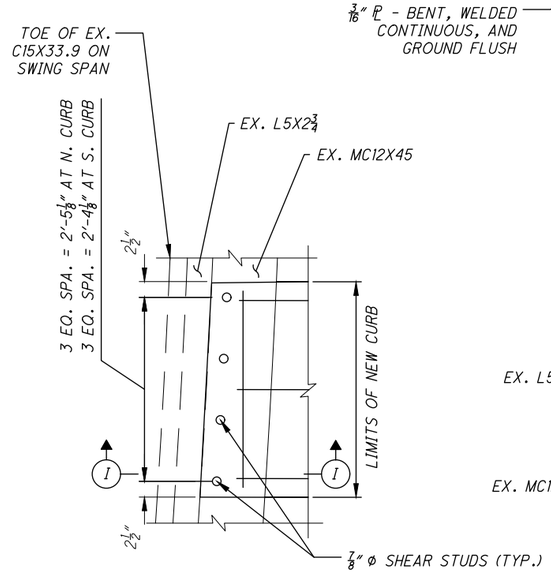

DETAIL 5

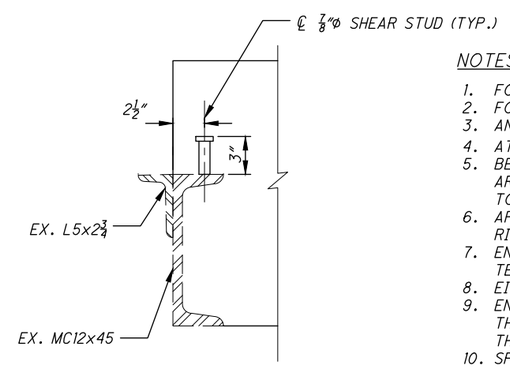

SECTION I-I

NOTES:

1. FOR LOCATION OF DETAILS, SEE SHEETS S42/S51 AND S43/S51.
2. FOR LOCATION OF DETAIL 5, SEE SHEET S41/S51.
3. ANCHOR BOLTS MAY BE TACK WELD TO ANCHORAGE (SHOP OR FIELD).
4. AT POST LOCATIONS, DRILL TWO 1 1/16" Φ HOLES IN THE RAILS TO RECEIVE RAIL BOLTS.
5. BEFORE INSTALLING RAILS, PAINT CUT, DRILLED OR OTHERWISE DAMAGED SURFACE AREAS OF THE RAILING COMPONENTS WITH TWO COATS OF ZINC RICH PAINT CONFORMING TO REQUIREMENTS OF ASTM A780.
6. AFTER INSTALLING THE RAILS, PAINT EXPOSED BOLT THREADS WITH TWO COATS OF ZINC RICH PAINT CONFORMING TO THE REQUIREMENTS OF ASTM A780.
7. ENSURE A BRACE BAR IS PLACED 2'-0" FROM THE SPLICE END OF THE SHORTER TUBE AT TERMINATIONS.
8. EITHER TOP OR BOTTOM IN TERMINAL SECTION MAY BE LONGER RAIL.
9. ENSURE EACH RAIL LENGTH IS CONTINUOUS OVER A MINIMUM OF TWO POSTS. RAILING THAT IS PART OF A TERMINAL IS CONTINUOUS IF EITHER THE TOP OR BOTTOM RAIL IN THE TERMINALS IS CONTINUOUS OVER A MINIMUM OF TWO POSTS.
10. SPLICES MAY BE LOCATED ON EITHER SIDE OF THE POST.
11. NOT MORE THAN ONE SPLICE IS PERMITTED PER SIDE OF POST.
12. DO NOT SHOP SPLICE RAILS.
13. FOR RAILING GENERAL NOTES, SEE SHEET S6/S51.
14. ALL WORK ASSOCIATED WITH INSTALLATION OF NEW CURB, INCLUDING NEW REBAR AND SHEAR STUDS IS TO PAID FOR UNDER ITEM 847 - FULL DEPTH REPAIR, AS PER PLAN.
15. ALL WORK ASSOCIATED WITH THE INSTALLATION OF THE NEW RAILING SHALL BE PAID FOR UNDER ITEM 517 - RAILING, MISC.: EAST APPROACH NEW WYOMING RAILING, AS PER PLAN.

DESIGN AGENCY
WSP
1660 WEST 2ND STREET
SUITE 850
CLEVELAND, OHIO 44113

DESIGNED	DRAWN	REVIEWED	DATE
NRF	PCS	WRW	09/11/20
CHECKED	REVISED	STRUCTURE FILE NUMBER	
EWH	---	1869345	

EAST APPROACH SPAN RAILING DETAILS 2

CITY OF CLEVELAND BRIDGE NO. 1:003M
CENTER STREET SWING BRIDGE OVER THE CUYAHOGA RIVER

CUY-CENTER ST.
SWING BRIDGE
PID NO: 109597

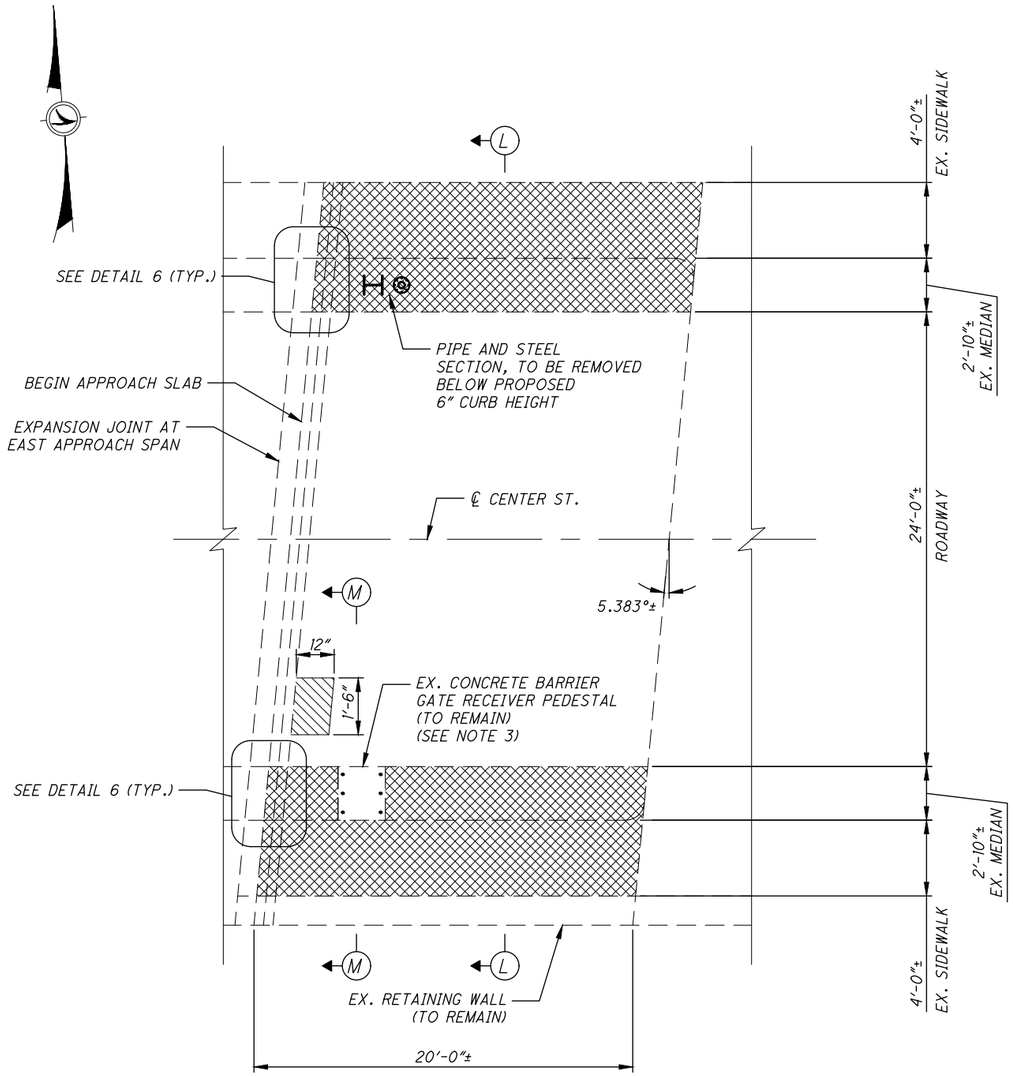

EAST APPROACH SLAB EXISTING

GENERAL PROCEDURE FOR CONCRETE CURB REMOVAL

A. ALL AREAS FOR REPAIR ARE SUBJECT TO MODIFICATION IN THE FIELD BY THE ENGINEER.

B. CHIP MEDIAN CONCRETE DOWN 3" TO 4" BELOW ROADWAY SURFACE. AT THE BARRIER GATE RECEIVER PEDESTAL SAWCUT VERTICALLY 3" TO 4" INTO THE MEDIAN ON EITHER SIDE BEFORE CHIPPING AWAY CONCRETE, BEING CAREFUL TO MAINTAIN THE PEDESTAL.

C. CUT OFF PIPE AND STEEL SECTION WITHIN MEDIAN AT NORTH SIDE OF APPROACH SLAB IF THEY ARE NOT KNOCKED LOOSE DURING CONCRETE CHIPPING.

D. CUT AND REMOVED ANY EXPOSED EXISTING REINFORCING.

E. SANDBLAST OR WATERBLAST EXPOSED SURFACES TO REMOVE LOOSE CONCRETE CHIPS AND SURFACE LAITANCE.

LEGEND:

INDICATES LIMITS OF CONCRETE REMOVAL

LIMITS OF PATCHING PER ITEM 519 - PATCHING CONCRETE BRIDGE DECK OVERLAY WITH MICROSILICA MODIFIED CONCRETE

NOTES:

1. FOR GENERAL NOTES, SEE SHEETS S3/S51 AND S6/S51.
2. FOR SECTIONS L-L AND M-M SEE SHEET S46/S51.
3. MEDIAN REMOVAL TO INCLUDE REMOVAL OF CONCRETE 3" TO 4" BELOW THE ROADWAY SURFACE. EXISTING REINFORCING WILL NEED TO BE CUT OFF AND REMOVED DURING MEDIAN REMOVAL. EXISTING CONCRETE BARRIER GATE RECEIVER PEDESTAL SHALL NOT BE REMOVED.
4. FOR DETAIL 6, SEE SHEET S48/S51.
5. CONTRACTOR SHALL SUBMIT REPAIR PROCEDURE TO THE ENGINEER FOR APPROVAL.
6. ALL LABOR AND MATERIALS ASSOCIATED WITH REMOVAL OF EXISTING CURB INCLUDING JOINT ARMOR COMPONENTS AND APPURTENANCES SHALL BE PAID FOR UNDER ITEM 202 - CONCRETE MEDIAN REMOVED, AS PER PLAN.
7. ALL LABOR AND MATERIALS ASSOCIATED WITH REMOVAL OF EXISTING SIDEWALK SHALL BE PAID FOR UNDER ITEM 202 - WALK REMOVED.

DESIGN AGENCY
WSP
1660 WEST 2ND STREET SUITE 850 CLEVELAND, OHIO 44113

DESIGNED	DRAWN	REVIEWED	DATE
NRF	PCS	WRW	09/11/20
CHECKED	REVISED	STRUCTURE FILE NUMBER	
EWH	---	1869345	

EAST APPROACH SLAB DETAILS 1
CITY OF CLEVELAND BRIDGE NO. 1:003M
CENTER STREET SWING BRIDGE OVER THE CUYAHOGA RIVER

CUY-CENTER ST. SWING BRIDGE
PID NO: 109597

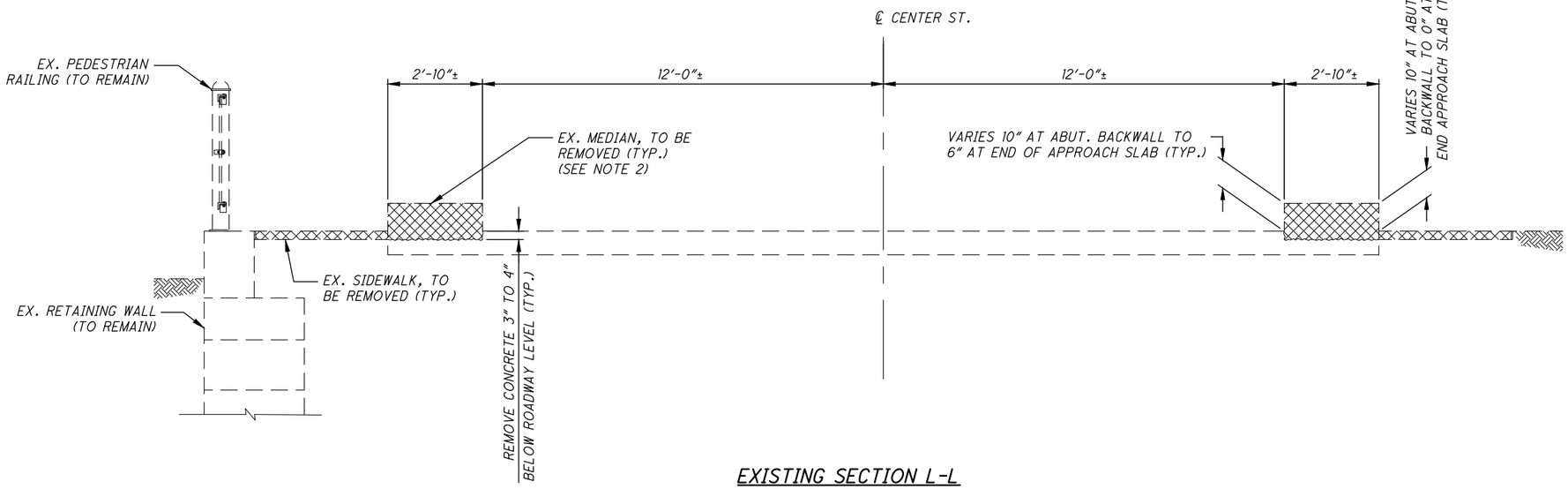

EXISTING SECTION L-L
(REINFORCING NOT SHOWN FOR CLARITY)

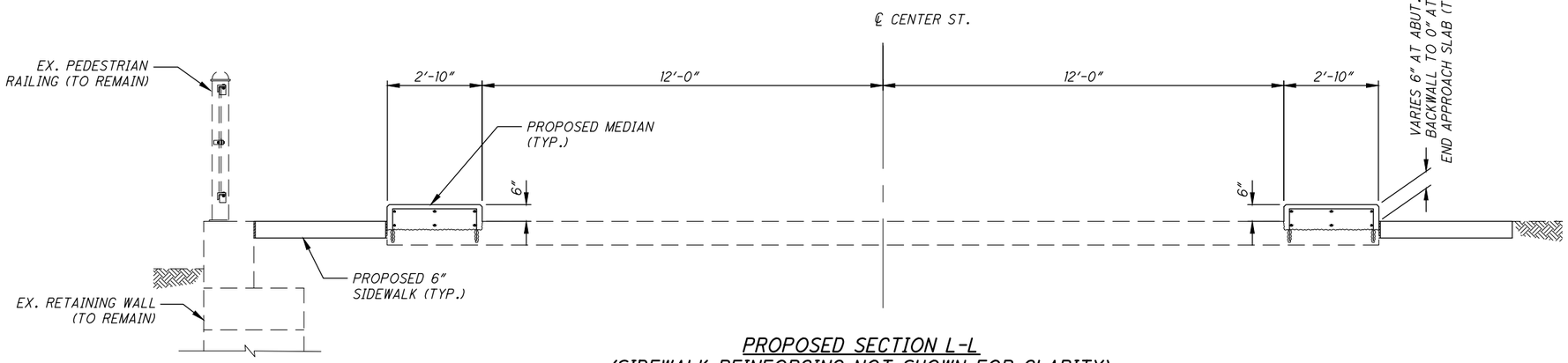

PROPOSED SECTION L-L
(SIDEWALK REINFORCING NOT SHOWN FOR CLARITY)

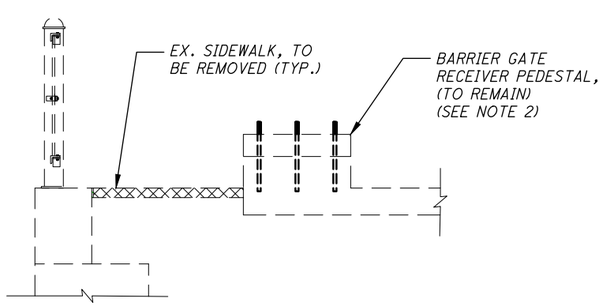

SECTION M-M

LEGEND:

INDICATES LIMITS OF CONCRETE REMOVAL

NOTES:

1. FOR GENERAL NOTES, SEE SHEETS S3/S51 AND S6/S51.
2. FOR LOCATION OF SECTIONS L-L AND M-M, SEE SHEET S45/S51.
3. MEDIAN REMOVAL TO INCLUDE REMOVAL OF CONCRETE 3" TO 4" BELOW THE ROADWAY SURFACE. EXISTING REINFORCING WILL NEED TO BE CUT OFF AND REMOVED DURING MEDIAN REMOVAL. EXISTING CONCRETE BARRIER GATE RECEIVER PEDESTAL SHALL NOT BE REMOVED. SEE PEDESTAL DETAIL, THIS SHEET.
4. CONTRACTOR SHALL SUBMIT REPAIR PROCEDURE TO THE ENGINEER FOR APPROVAL.
5. ALL LABOR AND MATERIALS ASSOCIATED WITH REMOVAL OF EXISTING MEDIAN INCLUDING JOINT ARMOR COMPONENTS AND APPURTENANCES SHALL BE PAID FOR UNDER ITEM 202 - CONCRETE MEDIAN REMOVED, AS PER PLAN.
6. ALL LABOR AND MATERIALS ASSOCIATED WITH REMOVAL OF EXISTING SIDEWALK SHALL BE PAID FOR UNDER ITEM 202 - WALK REMOVED.
7. ALL LABOR AND MATERIALS ASSOCIATED WITH INSTALLATION OF NEW MEDIANS, INCLUDING REBAR, DOWELING, AND NEW JOINT COMPONENTS SHALL BE PAID FOR UNDER ITEM 609 - CONCRETE MEDIAN, AS PER PLAN.
8. ALL LABOR AND MATERIALS ASSOCIATED WITH INSTALLATION OF NEW SIDEWALK SHALL BE PAID FOR UNDER ITEM 608 - 6" CONCRETE SIDEWALK.

DESIGN AGENCY
WSP
1660 WEST 2ND STREET
SUITE 820
CLEVELAND, OHIO 44113

DESIGNED	DRAWN	REVIEWED	DATE
NRF	PCS	WRW	09/11/20
CHECKED	REVISED	STRUCTURE FILE NUMBER	
EWH	---	1869345	

EAST APPROACH SLAB DETAILS 2
CITY OF CLEVELAND BRIDGE NO. 1:003M
CENTER STREET SWING BRIDGE OVER THE CUYAHOGA RIVER

CUY-CENTER ST.
SWING BRIDGE
PID NO: 109597

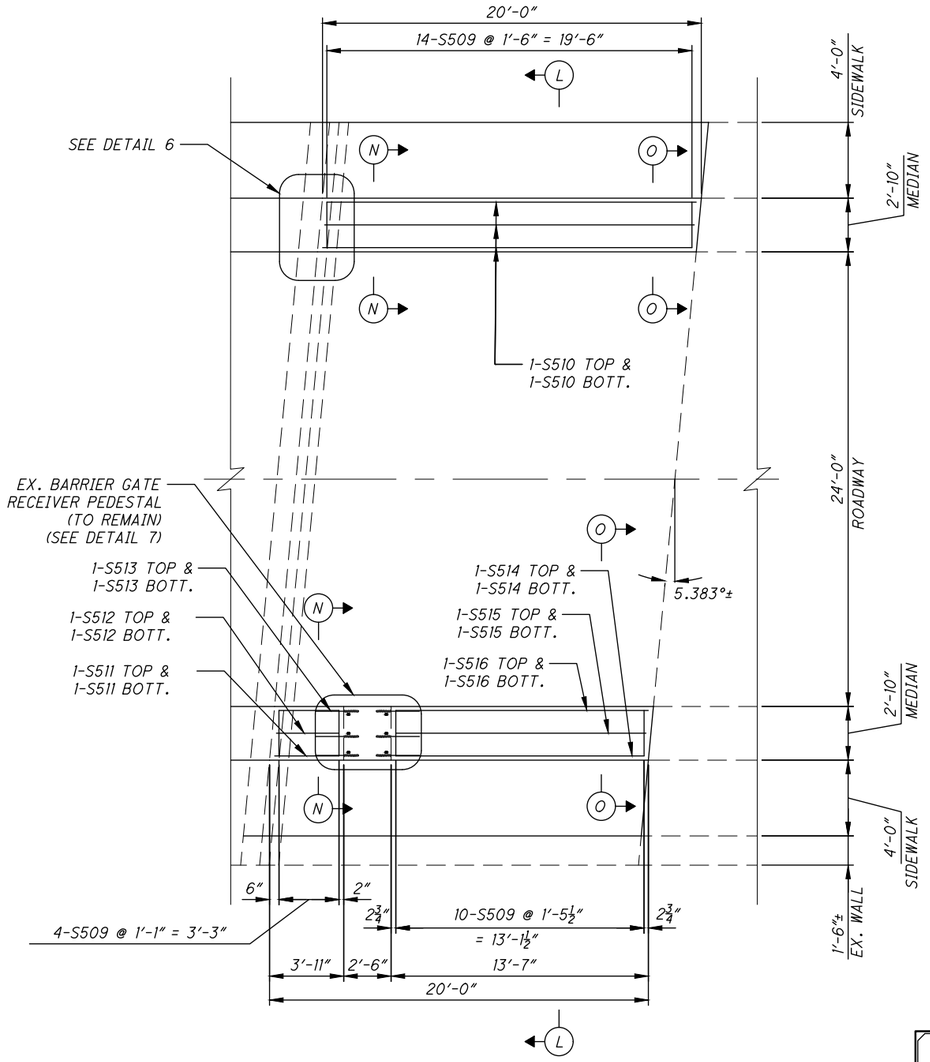

EAST APPROACH SLAB PROPOSED

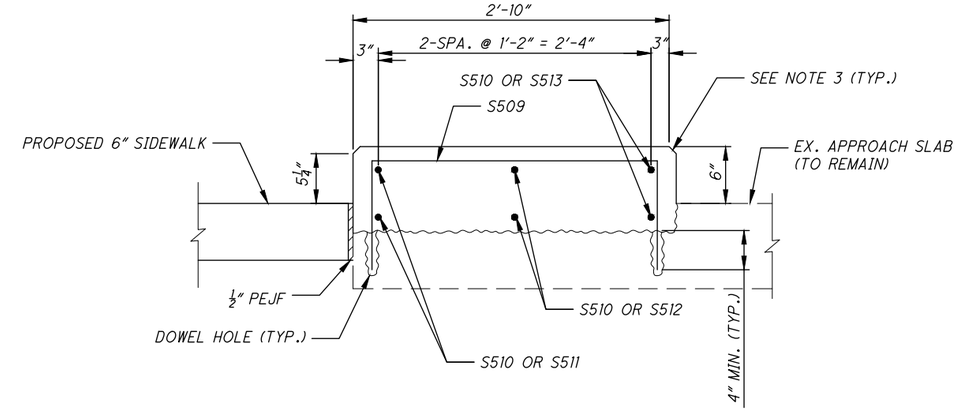

SECTION N-N

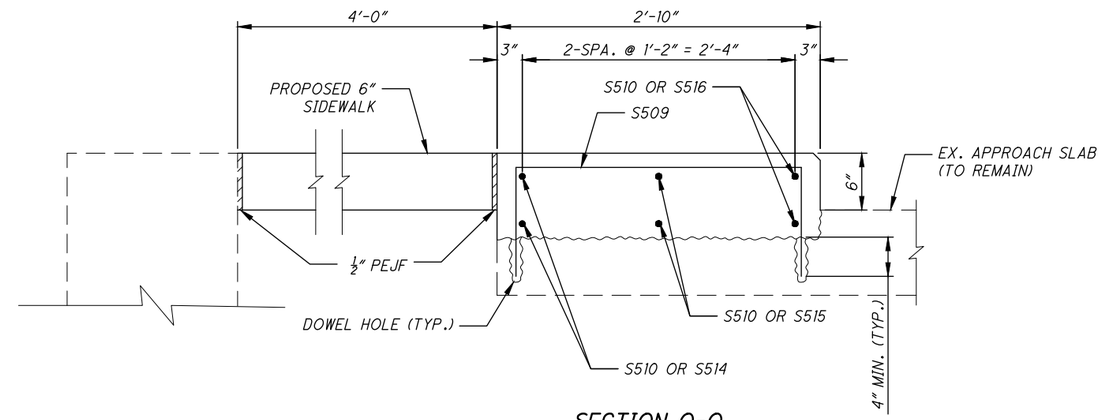

SECTION O-O

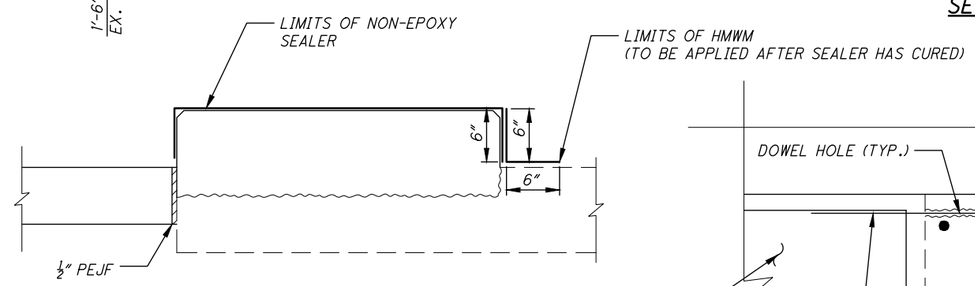

LIMITS OF SEALING

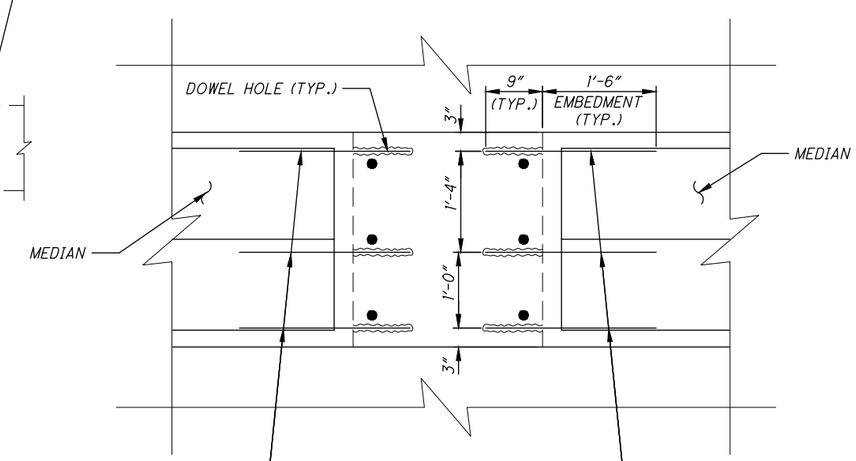

DETAIL 7

NOTES:

1. FOR SECTIONS L-L AND M-M SEE SHEET S46/S51.
2. FOR DETAIL 6, SEE SHEET S48/S51.
3. CHAMFER ALL CONCRETE EDGES ¾".
4. ALL LABOR AND MATERIALS ASSOCIATED WITH INSTALLATION OF NEW MEDIANS, INCLUDING REBAR, DOWELING, SEALING WITH HMWM AND NEW JOINT COMPONENTS SHALL BE PAID FOR UNDER ITEM 609 - CONCRETE MEDIAN, AS PER PLAN.

DESIGN AGENCY
WSP
1660 WEST 2ND STREET
SUITE 850
CLEVELAND, OHIO 44113

DESIGNED	DRAWN	REVIEWED	DATE
NRF	PCS	WRW	09/11/20
CHECKED	REVISED	STRUCTURE FILE NUMBER	
EWH	---	1869345	

EAST APPROACH SLAB DETAILS 3
CITY OF CLEVELAND BRIDGE NO. 1:003M
CENTER STREET SWING BRIDGE OVER THE CUYAHOGA RIVER

CUY-CENTER ST.
SWING BRIDGE
PID NO: 109597

S47/S51

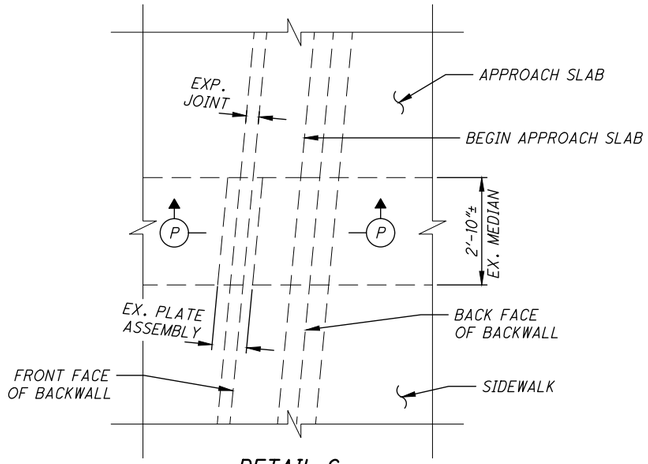

DETAIL 6 (EXISTING)

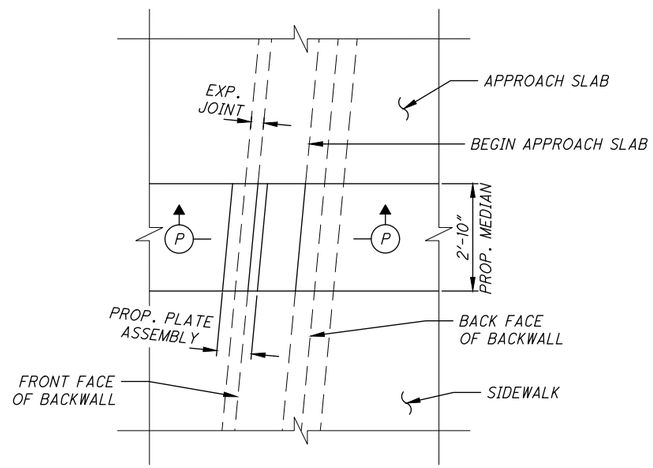

DETAIL 6 (PROPOSED)

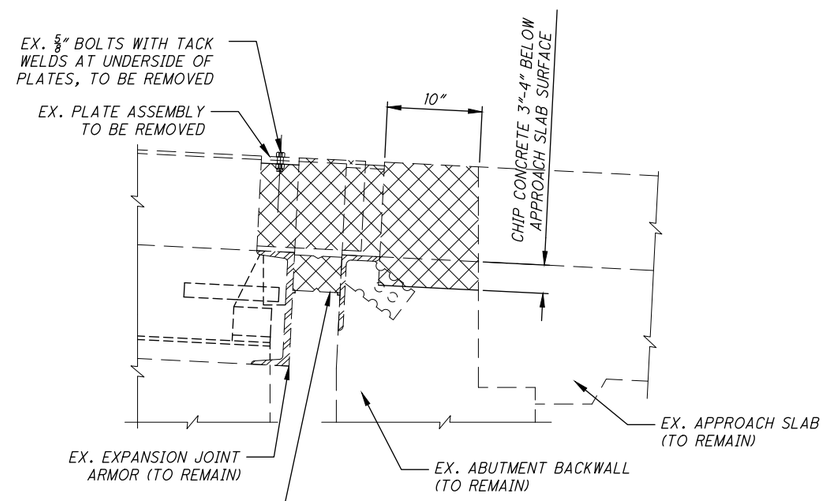

SECTION P-P (EXISTING)

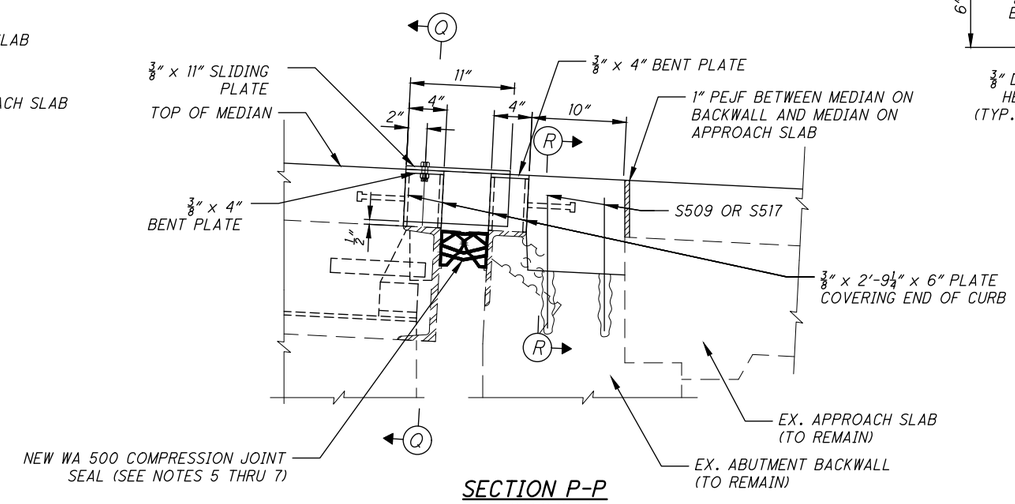

SECTION P-P (PROPOSED)

GENERAL PROCEDURE FOR JOINT REMOVAL

A. GRIND OFF THE WELDS CONNECTING THE 3-SIDED SLIDING PLATE ASSEMBLIES FLUSH TO THE TOP FACE OF JOINT ARMOR AND REMOVE THE PLATE ASSEMBLIES.

B. CHIP MEDIAN CONCRETE OVER BACKWALL DOWN 3"-4" BELOW SURFACE OF APPROACH SLAB, BEING CAREFUL NOT TO INTERFERE WITH EXPANSION JOINT WHICH IS TO REMAIN.

C. CUT OFF AND REMOVE ANY EXPOSED REINFORCING BARS WITHIN THE REMOVED PORTION OF THE MEDIAN.

D. SANDBLAST OR WATERBLAST EXPOSED SURFACES TO REMOVE LOOSE CONCRETE CHIPS AND SURFACE LAITANCE.

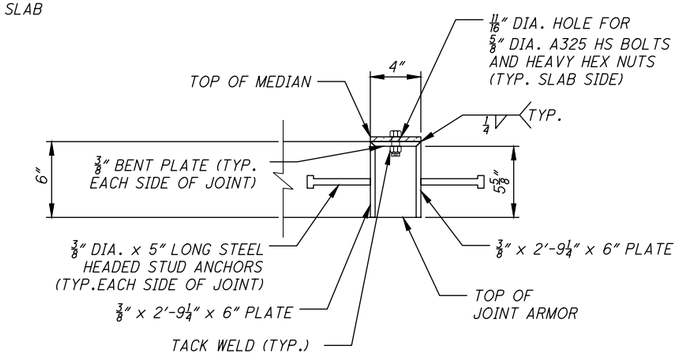

SECTION S-S

LEGEND:

INDICATES LIMITS OF REMOVAL

NOTES:

1. FOR GENERAL NOTES, SEE SHEETS S3/S51 AND S6/S51.
2. FOR LOCATION OF DETAIL 6, SEE SHEET S45/S51.
3. THE EXPANSION JOINT IS NOT BEING REPLACED AND CARE SHOULD BE TAKEN NOT TO DAMAGE THE JOINT WHEN REMOVAL WORK IS BEING DONE IN ITS VICINITY.
4. CONTRACTOR SHALL SUBMIT REPAIR PROCEDURE TO THE ENGINEER FOR APPROVAL.
5. DETAILS SHOWN ARE FOR A WABO COMPRESSION SEAL SUPPLIED BY WATSON BOWMAN ACME CORP. THE CONTRACTOR HAS THE OPTION OF USING AN EQUIVALENT JOINT SEAL SUPPLIED BY THE DS BROWN COMPANY OR APPROVED EQUAL.
6. NEW SEAL SHALL BE ONE PIECE ACROSS THE TOTAL WIDTH OF THE JOINT. NO SPLICES WILL BE ACCEPTED.
7. JOINT SEAL SIZE BASED ON LIMITED INFORMATION FROM EXISTING PLANS. CONTRACTOR IS TO CONFIRM SIZE OF EXISTING SEAL, PRIOR TO ORDERING NEW SEAL.
8. ALL LABOR AND MATERIALS ASSOCIATED WITH THE REMOVAL OF EXISTING AND INSTALLATION OF NEW JOINT COMPONENTS ON BOTH SIDES OF EXPANSION JOINT AS DETAILED ON THIS SHEET SHALL BE PAID FOR UNDER ITEM 516 - STRUCTURAL JOINT OR JOINT SEALER, MISC.: EAST ABUTMENT MEDIAN EXPANSION JOINT RETROFIT
9. ALL LABOR AND MATERIALS ASSOCIATED WITH THE REMOVAL OF EXISTING AND INSTALLATION OF NEW COMPRESSION JOINT SEAL SHALL BE PAID FOR UNDER ITEM 516 - STRUCTURAL JOINT OR JOINT SEALER, MISC.: COMPRESSION JOINT SEAL REPLACEMENT.

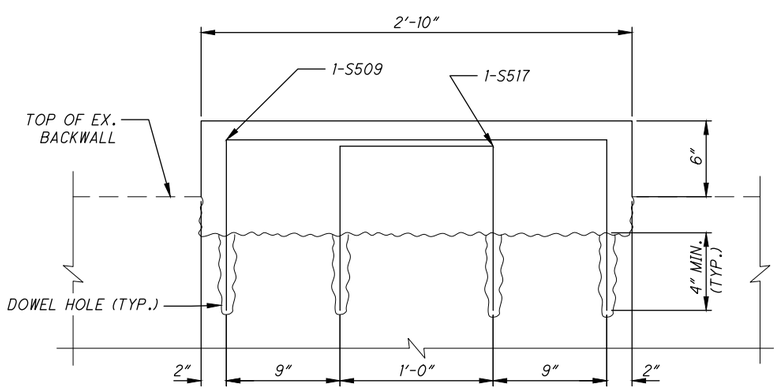

SECTION R-R

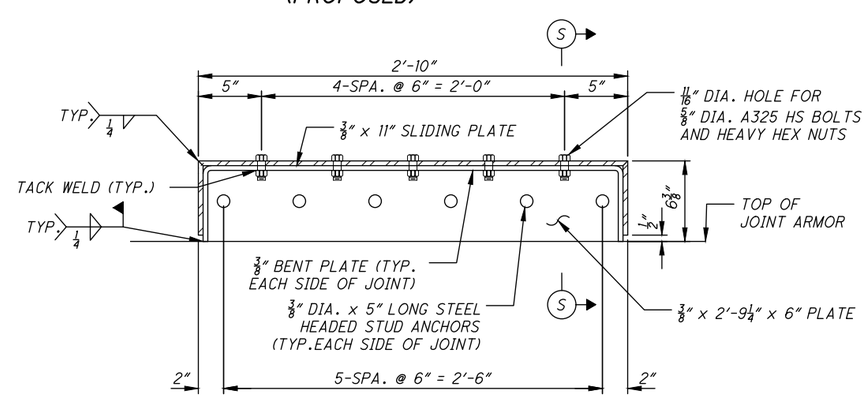

SECTION Q-Q

DESIGN AGENCY
WSP
1660 WEST 2ND STREET SUITE 850 CLEVELAND, OHIO 44113

DESIGNED	DRAWN	REVIEWED	DATE
NRF	PCS	WRW	09/11/20
CHECKED	REVISED	STRUCTURE FILE NUMBER	
EWH	---	1869345	

EAST APPROACH SLAB DETAILS 4
CITY OF CLEVELAND BRIDGE NO. 1:003M
CENTER STREET SWING BRIDGE OVER THE CUYAHOGA RIVER

CUY-CENTER ST. SWING BRIDGE
PID NO: 109597

S48/S51

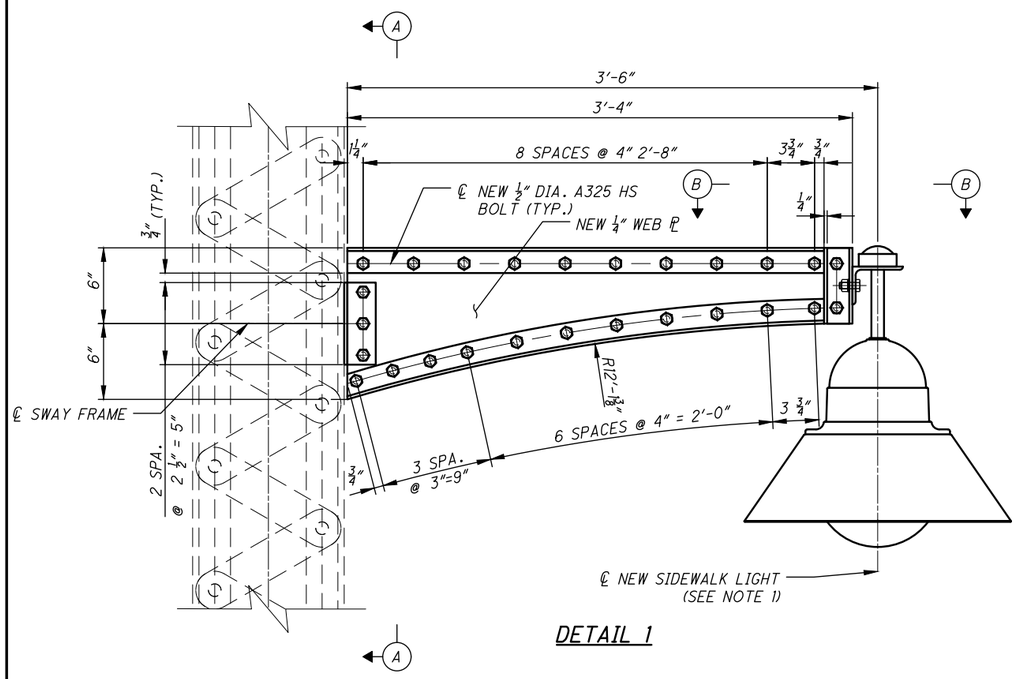

DETAIL 1

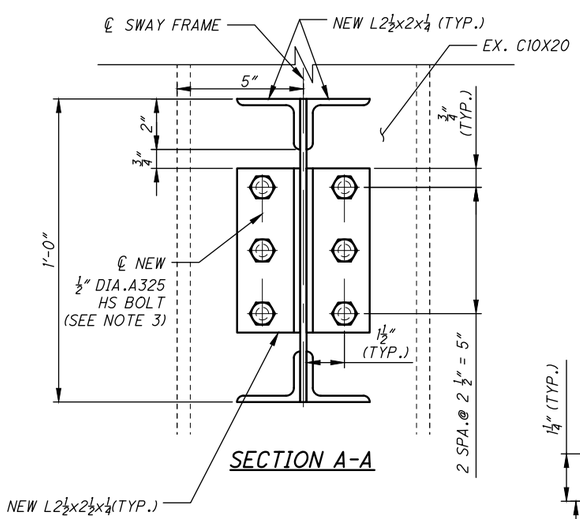

SECTION A-A

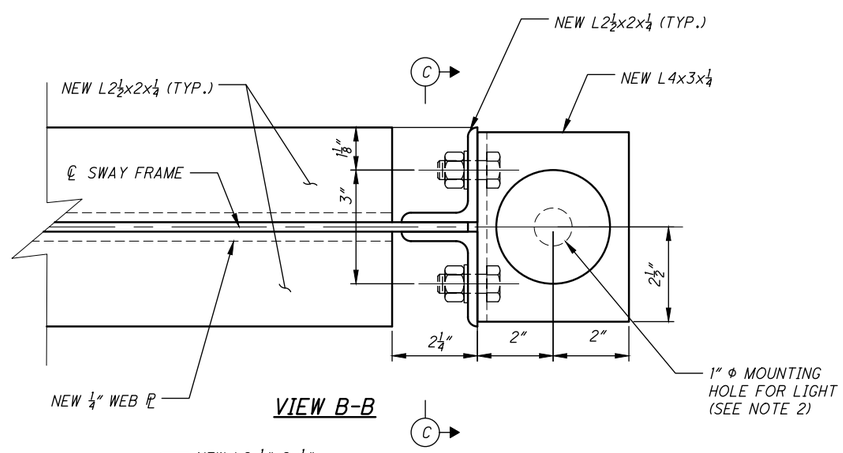

VIEW B-B

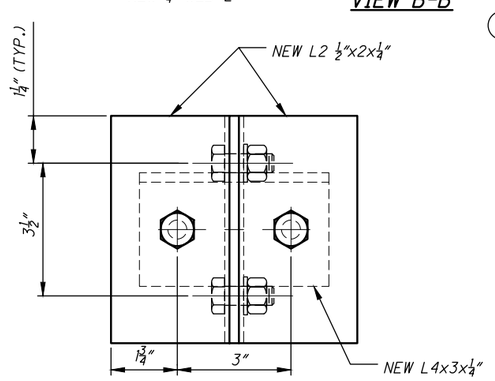

SECTION C-C

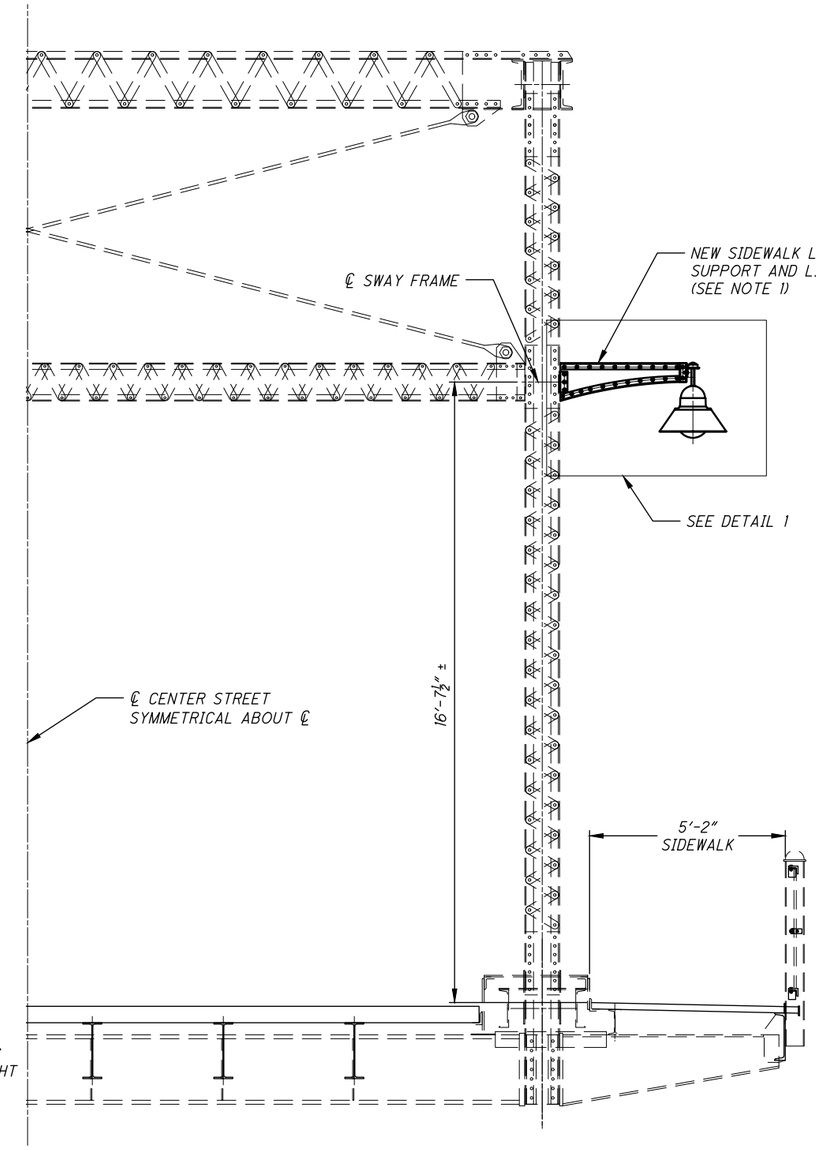

PROPOSED NEW HALF SECTION

NOTES:

1. SEE SHEET E18/E37 AND ELECTRICAL SPECIAL PROVISIONS FOR SIDEWALK LIGHT DETAILS AND LOCATIONS.
2. SIDEWALK LIGHTS ARE TO BE INSTALLED PER MANUFACTURER'S RECOMMENDATIONS.
3. CONTRACTOR IS TO FIELD DRILL 9/16" DIAMETER HOLES IN EXISTING TRUSS VERTICALS FOR CONNECTION OF LIGHTING BRACKETS.
4. ALL BOLTS ARE TO BE ½" DIA. A325 HS BOLTS IN 9/16" DIA. HOLES
5. LIGHTING SUPPORT BRACKETS ARE TO BE PAINTED SAME COLOR AS BRIDGE. BRACKETS SHALL BE INSTALLED ONTO STRUCTURE PRIOR TO APPLICATION OF INTERMEDIATE COAT. PAINTING SHALL BE INCLUDED UNDER ITEM 514.
6. NEW LIGHT FIXTURES SHALL BE BLACK IN COLOR.
7. LIGHTING BRACKETS, INCLUDING FIELD DRILLING OF THE HOLES IN TRUSS VERTICALS, SHALL BE PAID FOR UNDER ITEM 513 - STRUCTURAL STEEL MEMBERS, LEVEL UF .
8. ALL LABOR AND MATERIALS ASSOCIATED WITH INSTALLATION OF THE LIGHTS ON THE BRACKETS, INCLUDING CONDUIT AND CONDUCTORS, SHALL BE PAID FOR UNDER ITEM SPECIAL - ELECTRICAL WORK - INSTALL SIDEWALK LIGHTING.

DESIGN AGENCY
wsp
1660 WEST 2ND STREET
SUITE 870
CLEVELAND, OHIO 44113

DESIGNED	DRAWN	REVIEWED	DATE
NRF	PCS	WRW	09/11/20
CHECKED	REVISED	STRUCTURE FILE NUMBER	
NBR	---	1869345	

TRUSS SIDEWALK LIGHTING DETAILS
CITY OF CLEVELAND BRIDGE NO. 1:003M
CENTER STREET SWING BRIDGE OVER THE CUYAHOGA RIVER

CUY-CENTER ST.
SWING BRIDGE
PID NO: 109597

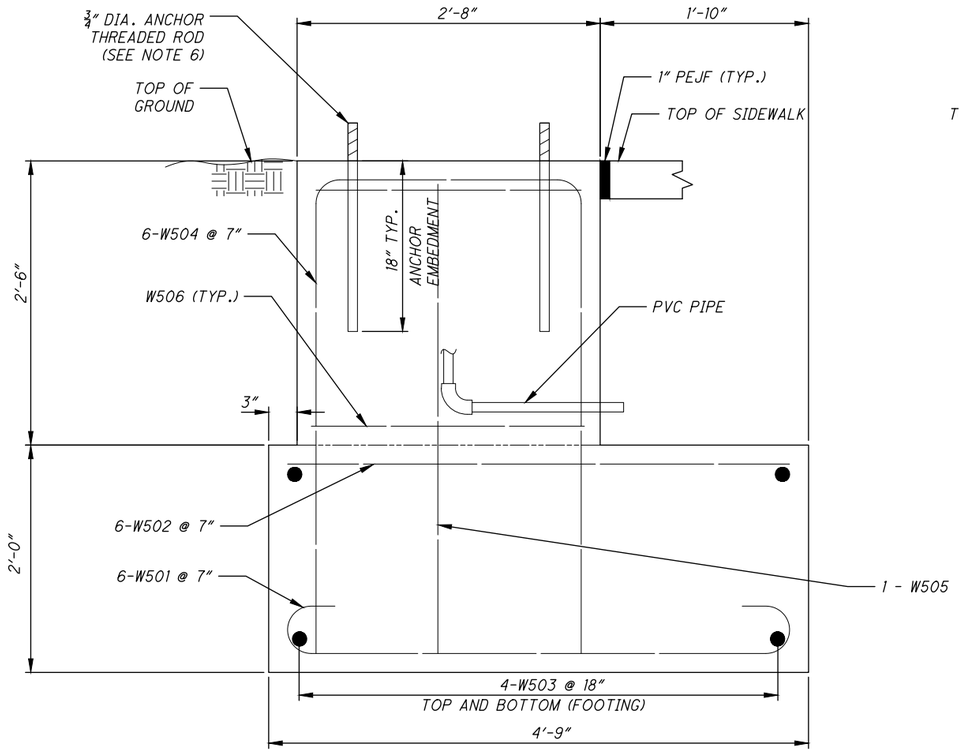

NORTH WARNING GATE FOUNDATION ELEVATION

(LOOKING EAST)

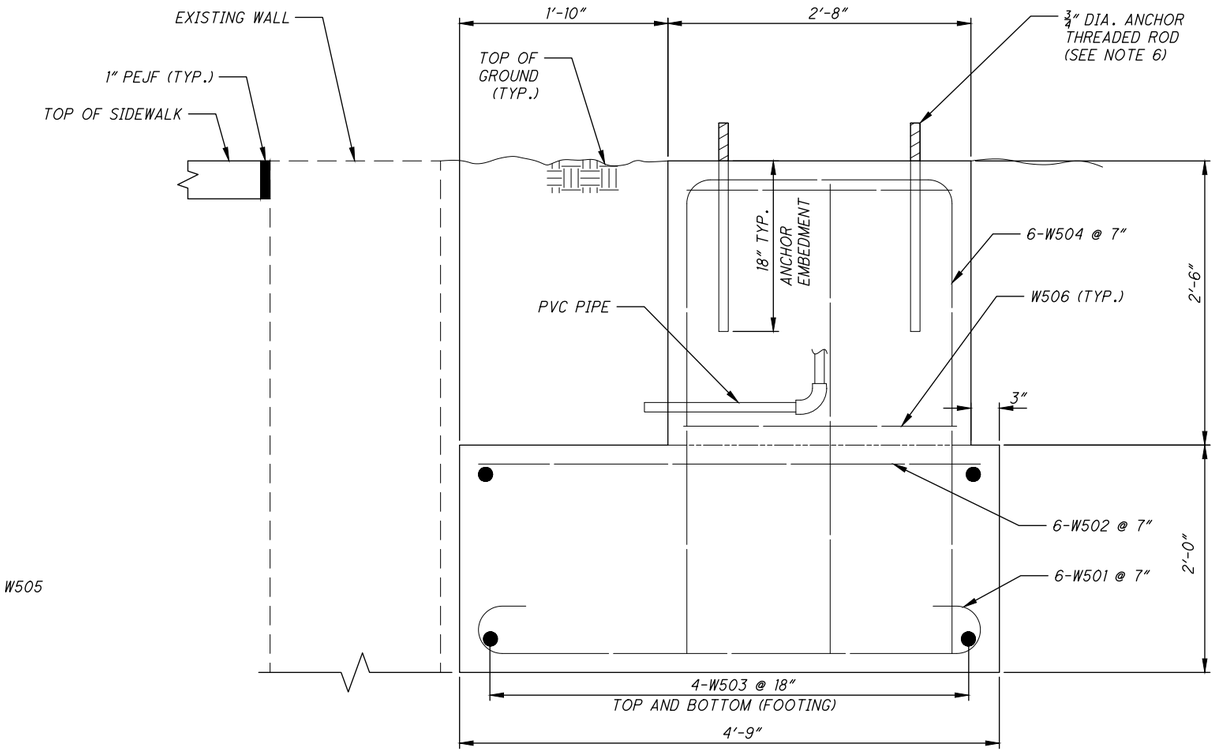

SOUTH WARNING GATE FOUNDATION ELEVATION

(LOOKING EAST)

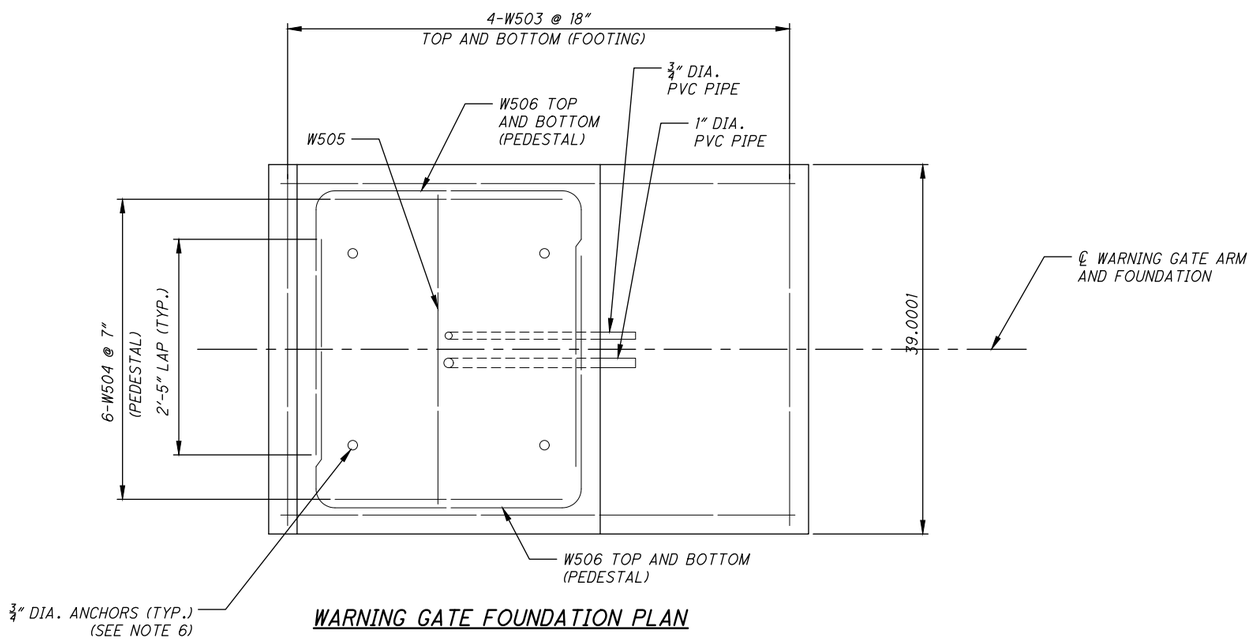

WARNING GATE FOUNDATION PLAN

NOTES:

1. FOUNDATIONS FOR THE NORTH AND SOUTH TRAFFIC WARNING GATES ARE THE SAME.
2. FOR WARNING GATE, LOCATIONS, SEE SHEET E35/E37 .
3. THE CONCRETE , ANCHOR BOLTS, REINFORCING BARS, PVC PIPES,C 1" PEJF, AND THE EXCAVATION FOR THE WARNING GATE FOUNDATIONS, SHALL BE PAID FOR UNDER ITEM SPECIAL - STRUCTURE, MISC.: WARNING GATE FOUNDATIONS.
4. FOR REINFORCING SCHEDULE, SEE SHEET S51/S51 .
5. SEE THE ELECTRICAL WORK SPECIAL PROVISIONS FOR WARNING GATE SPECIFICATIONS.
6. THE NUMBER, PLACEMENT, GRADE, AND FINISH OF THE ANCHOR BOLTS SHALL CONFORM TO THE SPECIFICATIONS OF THE MANUFACTURER OF THE WARNING GATE SYSTEM.

DESIGN AGENCY
1660 WEST 2ND STREET SUITE 850 CLEVELAND, OHIO 44113

DESIGNED	DRAWN	REVIEWED	DATE
NBR	BLM	WRW	09/11/20
CHECKED	REVISED	STRUCTURE FILE NUMBER	
NRF	---	1869345	

EAST END WARNING GATE FOUNDATION DETAILS
CITY OF CLEVELAND BRIDGE NO. 1:003M
CENTER STREET SWING BRIDGE OVER THE CUYAHOGA RIVER

CUY-CENTER ST. SWING BRIDGE
PID NO: 109597

ITEM 847 - FULL DEPTH REPAIR, AS PER PLAN
EAST APPROACH SPAN - EPOXY COATED REINFORCING BARS

MARK	NUMBER TOTAL	LENGTH	WEIGHT	TYPE	DIMENSIONS A	B	C	D
S-401	10	30'-0"	160	STR				
S-402	5	31'-6"	84	STR				
S-403	5	37'-3"	100	STR				
S-501	10	30'-0"	251	STR				
S-502	5	32'-0"	134	STR				
S-503	5	37'-9"	158	STR				
S-504	83	2'-6"	216	STR				
S-505	166	2'-0"	346	2	0'-6"	1'-3"		
S-506	6	30'-0"	188	STR				
S-507	3	31'-9"	99	STR				
S-508	3	37'-3"	117	STR				
TOTAL WEIGHT (SEE NOTE 1)			1853					

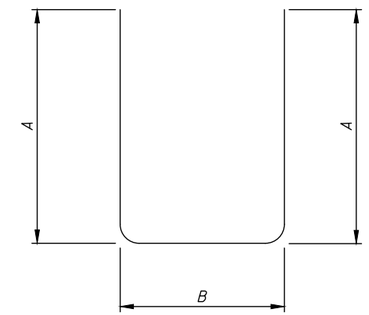

TYPE - 2

ITEM 609 - CONCRETE MEDIAN, AS PER PLAN
EAST APPROACH SLAB - EPOXY COATED REINFORCING BARS

MARK	NUMBER TOTAL	LENGTH	WEIGHT	TYPE	DIMENSIONS A	B	C	D
S-509	30	4'-4"	136	2	0'-11"	2'-6"		
S-510	6	19'-8"	123	STR				
S-511	2	3'-6"	7	STR				
S-512	2	3'-5"	7	STR				
S-513	2	3'-4"	7	STR				
S-514	2	13'-3"	28	STR				
S-515	2	13'-4"	28	STR				
S-516	2	13'-5"	28	STR				
S-517	2	2'-10"	6	2	0'-11"	1'-0"		
S-518	12	2'-3"	28	STR				
TOTAL WEIGHT (SEE NOTE 2)			398					

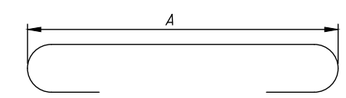

TYPE - 7

EAST ONCOMING AND OFFGOING WARNING GATE ARM FOUNDATIONS ON EAST APPROACH - EPOXY COATED BARS

MARK	NUMBER TOTAL	LENGTH	WEIGHT	TYPE	DIMENSIONS A	B	C	D
W-501	12	5'-7"	70	7	4'-5"			
W-502	12	4'-5"	56	STR				
W-503	16	2'-11"	49	STR				
W-504	12	10'-4"	130	2	4'-2"	2'-3"	4'-2"	
W-505	2	10'-9"	23	2	4'-1"	2'-10"	4'-1"	
W-506	8	7'-5"	62	2	2'-8"	2'-4"	2'-8"	
TOTAL WEIGHT (SEE NOTE 3)			390					

NOTES:

1. REINFORCING WEIGHT FOR THE FULL DEPTH REPAIR IS FOR INFORMATION ONLY. THE FULL DEPTH REPAIR REINFORCING IS PAID FOR UNDER ITEM 847 - FULL DEPTH REPAIR, AS PER PLAN.
2. REINFORCING WEIGHT FOR THE CONCRETE MEDIAN IS FOR INFORMATION ONLY. THE CONCRETE MEDIAN REPAIR REINFORCING IS PAID FOR UNDER ITEM 609 - CONCRETE MEDIAN, AS PER PLAN.
3. REINFORCING WEIGHT FOR THE WARNING GATE FOUNDATIONS IS FOR INFORMATION ONLY. THE WARNING GATE FOUNDATION REINFORCING IS PAID FOR UNDER ITEM SPECIAL - STRUCTURE, MISC.: WARNING GATE FOUNDATIONS.

DESIGN AGENCY
WSP
1660 WEST 2ND STREET
SUITE 850
CLEVELAND, OHIO 44113

DESIGNED	DRAWN	REVIEWED	DATE
JEJT	PCS	WRW	09/11/20
CHECKED	REVISED	STRUCTURE FILE NUMBER	
NRF	---	1869345	

SOUTH APPROACH SPAN DECK REINFORCING STEEL SHEET
CITY OF CLEVELAND BRIDGE NO. 1:003M
CENTER STREET SWING BRIDGE OVER THE CUYAHOGA RIVER

CUY-CENTER ST.
SWING BRIDGE
PID NO: 109597

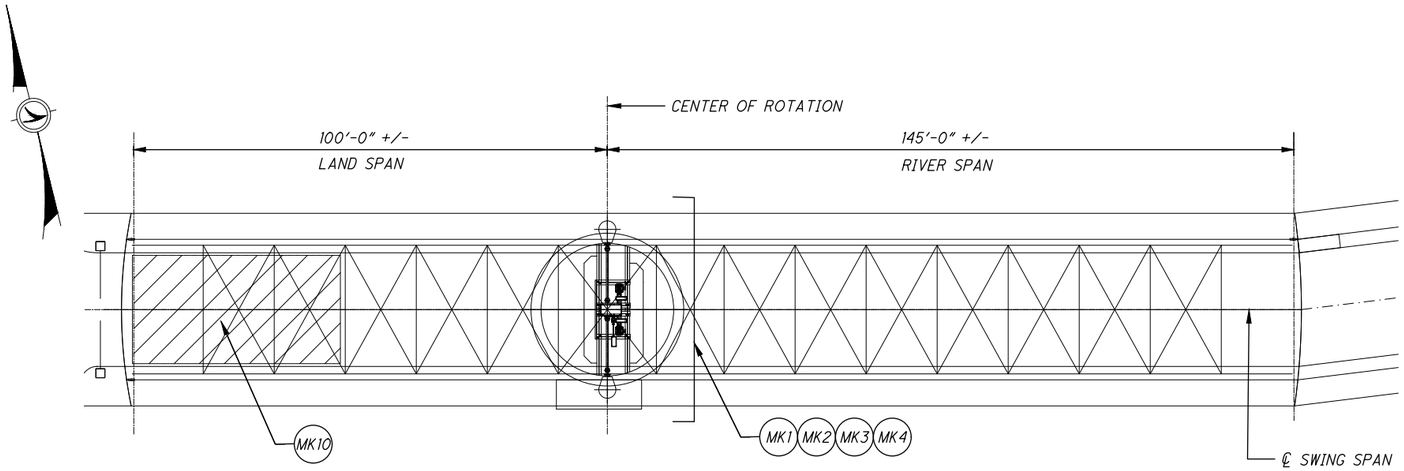

SWING SPAN PLAN

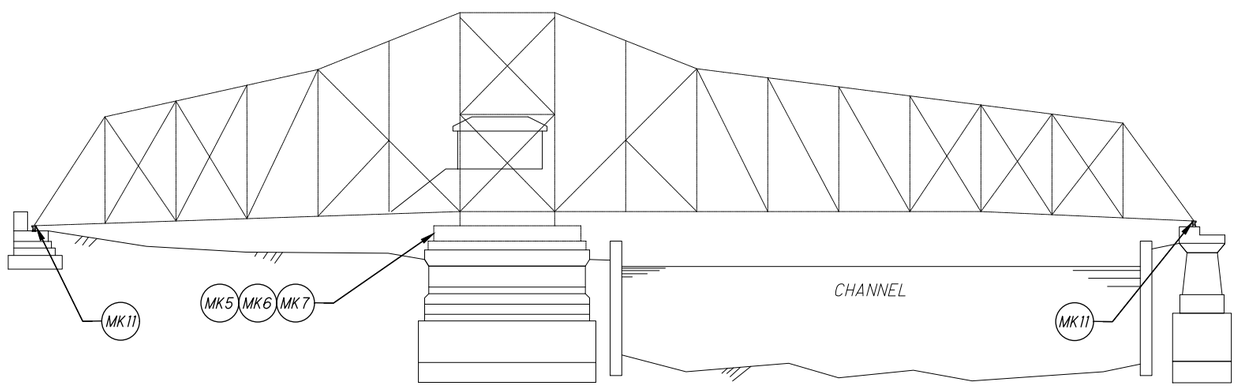

SWING SPAN ELEVATION

MACHINERY NOTES:

1. ALL EXISTING DIMENSIONS ARE TAKEN FROM THE EXISTING BRIDGE PLANS. THE CONTRACTOR SHALL VERIFY ALL DIMENSIONS AND NOTIFY THE ENGINEER OF ALL DEVIATIONS, IF ANY, BEFORE WORK BEGINS.
2. DETAILS OF MACHINERY SHALL CONFORM TO AASHTO LRFD MOVABLE BRIDGE SPECIFICATIONS, 2ND EDITION, AND ALL SUBSEQUENT INTERIM REVISIONS. WELDING SHALL BE IN ACCORDANCE WITH AASHTO/AWS D1.5 BRIDGE WELDING CODE 7TH EDITION.
3. ALL DIMENSIONS FOR MACHINE FINISHED SURFACES SHALL BE HELD TO 0.010 INCH EXCEPT AS OTHERWISE REQUIRED, SHOWN ON THE PLANS, BY SPECIFICATIONS OR AS DIRECTED BY THE ENGINEER.
4. MATERIALS: THE FOLLOWING ITEMS SHALL BE OF THE MATERIAL SPECIFIED AND CONFORM TO THE FOLLOWING UNLESS OTHERWISE NOTED
   - WELDMENTS AND PLATES: ASTM A709 GRADE 50
5. ALL MACHINERY SUPPORT SURFACES SHALL BE FLAT, LEVEL, AND PARALLEL TO EACH OTHER AND THE MOUNTING BASE PLATE. THICKNESS OF MOUNTING PLATES GIVEN ARE FOR AFTER FINISHING.
6. PROVIDE ASTM A449 FINISHED BODY H.S. (HIGH STRENGTH) BOLTS AS REQUIRED TO CONNECT MACHINERY TO STRUCTURAL STEEL. ALL ASTM A449 H.S. BOLTS FOR STRUCTURAL STEEL CONNECTIONS SHALL BE REAMED TO PROVIDE A CLEARANCE OF NOT MORE THAN 0.010 INCH BETWEEN THE BODY OF THE BOLT AND THE HOLE. ALL TURNED BOLTS SHALL BE FITTED IN HOLES TO AN LC6 FIT.
7. ALL H.S. FASTENERS SHALL HAVE NUTS CONFORMING TO ASTM A563. ALL NUTS SHALL BE SECURED BY EFFECTIVE LOCKS. IF DOUBLE NUTS ARE USED, BOTH NUTS SHALL BE OF THE SAME THICKNESS. ALL HIGH STRENGTH FASTENERS SHALL HAVE A HARDENED PLAIN WASHER UNDER THE HEAD AND OF THE NUT. ALL HARDENED STEEL PLAIN WASHERS SHALL CONFORM TO ASTM F436. BOLTS THAT HAVE BEEN TORQUED SHALL NOT BE REUSED.
8. REPLACEMENT OF TURNED BOLTS IN EXISTING HOLES SHALL BE OF THE SAME NOMINAL SIZE AS THE EXISTING, EXCEPT AS SHOWN. EXISTING BOLT AREA AND BOLT HOLES SHALL BE CLEANED BY A WIRE BRUSH BEFORE NEW BOLT INSTALLATION.
9. PROVIDE TYPE 316 STAINLESS STEEL SHIMS FOR LEVELING AND ALIGNING ALL MACHINERY COMPONENTS. SHIMS SHALL BE ½ INCH NOMINAL THICKNESS, UNLESS OTHERWISE SPECIFIED, WITH ADJUSTMENT VARIATIONS AS DESCRIBED IN THE SPECIFICATIONS.
10. ANY REFERENCE TO THE "SPECIFICATIONS" INCLUDES REFERENCE TO ALL SPECIAL PROVISIONS AND SPECIFICATIONS REFERENCED HERE-IN.
11. THE CONTRACTOR SHALL PERFORM ALL WORK WITH CARE SUCH THAT ANY MATERIALS THAT ARE TO REMAIN IN PLACE, THAT ARE TO BE RE-USED, OR THAT ARE TO REMAIN THE PROPERTY OF THE CITY OF CLEVELAND WILL NOT BE DAMAGED. IF THE CONTRACTOR DAMAGES ANY SUCH MATERIALS, THE DAMAGED MATERIALS SHALL BE REPAIRED OR REPLACED IN A MANNER SATISFACTORY TO THE ENGINEER, AT NO ADDITIONAL COST TO THE PROJECT.
12. ALL SHOP DRAWINGS SHALL BE SUBMITTED WITH FIELD MEASUREMENTS.

MECHANICAL WORK IDENTIFICATION SCHEDULE

ID NO.	QNTY.	COMPONENT	DESCRIPTION (SEE SPECIAL PROVISIONS FOR ADDITIONAL INFORMATION)	REFERENCE DRAWINGS
MK1	1	BRAKES	PROVIDE AND INSTALL NEW CUSTOM MOTOR AND MACHINERY BRAKE COVERS	M2
MK2	1	PRIMARY REDUCER	REPLACE SEALS ON PRIMARY REDUCER ACCESS COVERS	M2
MK3	1	PRIMARY REDUCER	DRAIN AND FLUSH-CLEAN PRIMARY REDUCER OF EXISTING OIL, REPLACE WITH NEW OIL, AND REPLACE EXISTING BREATHER FILTER	M2
MK4	1	COUPLINGS	CLEAN, RELUBRICATE, AND REPLACE SEALS ON ALL FLOATING SHAFT AND PINION SHAFT GEAR COUPLINGS	M2
MK5	1	SPAN SUPPORT MACHINERY	REMOVE EXISTING, FURNISH AND INSTALL NEW SLEWING RING BEARING ACCESS UPPER AND LOWER COVER PLATES	M3
MK6	1	SPAN SUPPORT MACHINERY	CLEAN, PURGE AND LUBRICATE EXISTING SLEWING RING BEARING; INSTALL NEW GASKET AT ACCESS COVER PLATE	M3
MK7	1	SPAN SUPPORT MACHINERY	REPLACE SLEWING RING BEARING MOUNTING FASTENERS EXHIBITING SECTION LOSS	M3
MK8	1	N/A	CLEAN CORROSION AND PAINT ALL MACHINERY COMPONENTS	N/A
MK9	1	N/A	CLEAN, PURGE AND LUBRICATE ALL MACHINERY COMPONENTS	N/A
MK10	1	N/A	BALANCE THE BRIDGE IN ACCORDANCE WITH THE SPECIFICATIONS	M5
MK11	1	END LIFT MACHINERY	TEMPORARILY REMOVE EXISTING END JACK MACHINERY AND STORE DURING FLOORBEAM REPLACEMENT. REINSTALL EXISTING END JACK MACHINERY ON NEW FLOORBEAM.	M5A

MECHANICAL PAY ITEMS

ITEM	EXTEN	TOTAL QUANTITY	DESCRIPTION	ID NOS.
SPECIAL	690E98400	LUMP SUM	SPECIAL - MECHANICAL WORK - REHABILITATE SPAN DRIVE MACHINERY	MK1, MK2, MK3, MK4
SPECIAL	690E98400	LUMP SUM	SPECIAL - MECHANICAL WORK - REHABILITATE SPAN SUPPORT MACHINERY	MK5, MK6, MK7
SPECIAL	690E98400	LUMP SUM	SPECIAL - MECHANICAL WORK - CLEAN, PAINT, AND LUBRICATE ALL MECHANICAL COMPONENTS	MK8, MK9, MK10
SPECIAL	690E98400	LUMP SUM	SPECIAL - MECHANICAL WORK - SPAN BALANCE	MK11
SPECIAL	690E98400	LUMP SUM	SPECIAL - MECHANICAL WORK - SPARE PARTS	-
SPECIAL	690E98400	LUMP SUM	SPECIAL - MECHANICAL WORK - END FLOORBEAM REPLACEMENT	MK12

DESIGN AGENCY
WSP
1660 WEST 2ND STREET
SUITE 850
CLEVELAND, OHIO 44113

DESIGNED	DRAWN	REVIEWED	DATE
RA	RA	WRW	09/11/20
CHECKED	REVISED	STRUCTURE FILE NUMBER	
DN	---	1869345	

MECHANICAL WORK IDENTIFICATION
CITY OF CLEVELAND BRIDGE NO. 1:003M
CENTER STREET SWING BRIDGE OVER THE CUYAHOGA RIVER

CUY-CENTER ST.
SWING BRIDGE
PID NO: 109597

M1 / M5

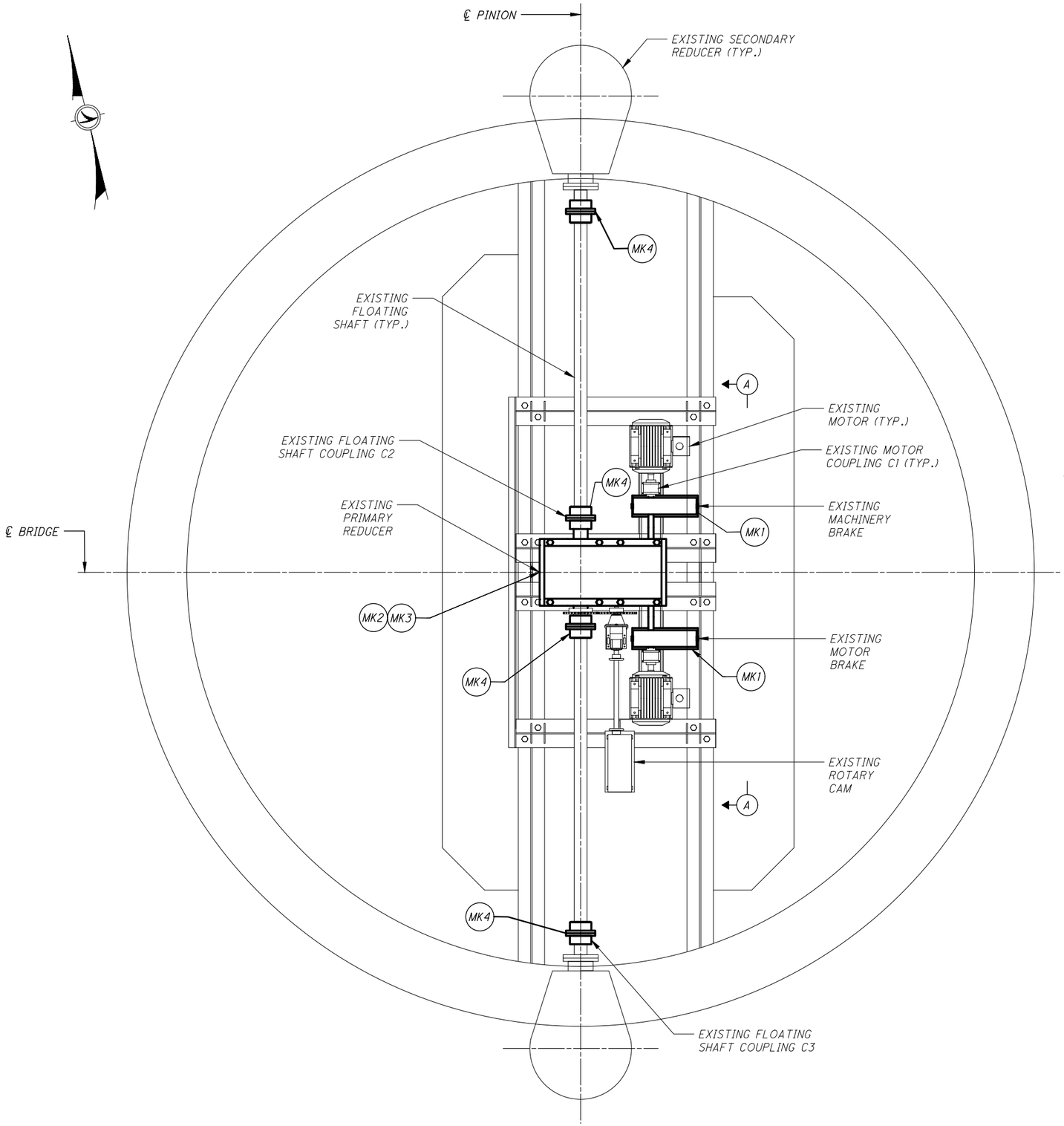

PLAN VIEW OF SPAN DRIVE MACHINERY

SPAN DRIVE MACHINERY REPAIR SCHEDULE		
MARK NO.	COMPONENT	DESCRIPTION (SEE SPECIAL PROVISIONS FOR ADDITIONAL INFORMATION)
MK1	BRAKES	PROVIDE AND INSTALL NEW CUSTOM MOTOR AND MACHINERY BRAKE COVERS
MK2	PRIMARY REDUCER	REPLACE SEALS ON PRIMARY REDUCER ACCESS COVERS
MK3	PRIMARY REDUCER	DRAIN AND FLUSH-CLEAN PRIMARY REDUCER OF EXISTING OIL, REPLACE WITH NEW OIL, AND REPLACE EXISTING BREATHER FILTER
MK4	FLOATING SHAFT AND PINION SHAFT COUPLINGS	CLEAN, LUBRICATE, AND REPLACE SEALS ON ALL FLOATING SHAFT AND PINION SHAFT GEAR COUPLINGS, INSPECT COUPLINGS DURING DISASSEMBLY

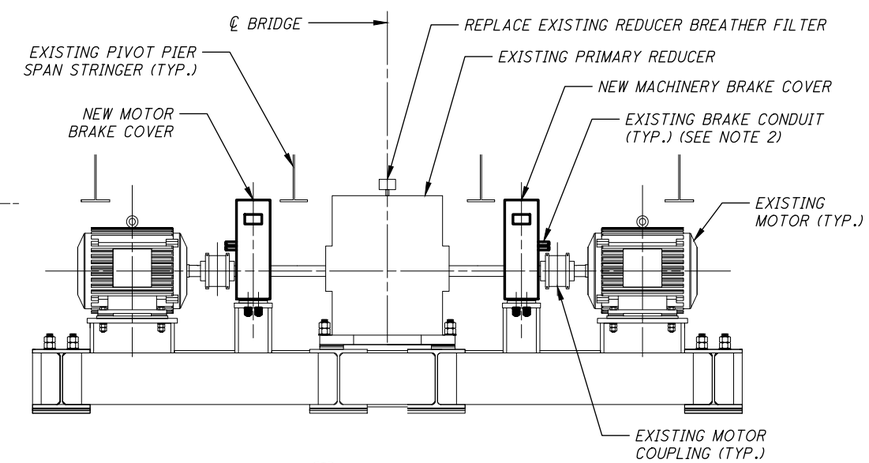

A VIEW
NOT TO SCALE

NOTES:

1. FOR MACHINERY GENERAL NOTES AND PAY ITEMS LIST, SEE SHEET M1/M5.
2. NEW MOTOR AND MACHINERY BRAKE COVER SHALL HAVE A CUT OUT FOR EXISTING CONDUIT. BRAKE COVER PANEL SECTION WITH CUT-OUT SHALL BE REMOVABLE AND FASTENED WITH S.S. FASTENERS. REFER TO THE SPECIFICATIONS.
3. SUBMIT SHOP DRAWING OF NEW BRAKE COVER. SUBMITTAL SHALL INCLUDE DETAIL OF BRAKE COVER REMOVAL AND ALL FIELD VERIFIED CLEARANCES WITH EXISTING MACHINERY/STRUCTURE.
4. FIELD VERIFY ALL DIMENSIONS BEFORE BEGINNING FABRICATION AND SUBMISSION OF SHOP DRAWINGS.
5. CLEAN AND PAINT ALL MACHINERY COMPONENT IN ACCORDANCE WITH THE SPECIFICATIONS.
6. ALL REMOVAL AND DISPOSALS SHALL BE IN ACCORDANCE WITH ALL LOCAL AND FEDERAL REGULATIONS.

DESIGN AGENCY
WSP
1660 WEST 2ND STREET
SUITE 850
CLEVELAND, OHIO 44113

DESIGNED	DRAWN	REVIEWED	DATE
RA	RA	WRW	09/11/20
CHECKED	REVISED	STRUCTURE FILE NUMBER	
DN	---	1869345	

SPAN DRIVE MACHINERY REPAIRS
CITY OF CLEVELAND BRIDGE NO. 1:003M
CENTER STREET SWING BRIDGE OVER THE CUYAHOGA RIVER

CUY-CENTER ST.
SWING BRIDGE
PID NO: 109597

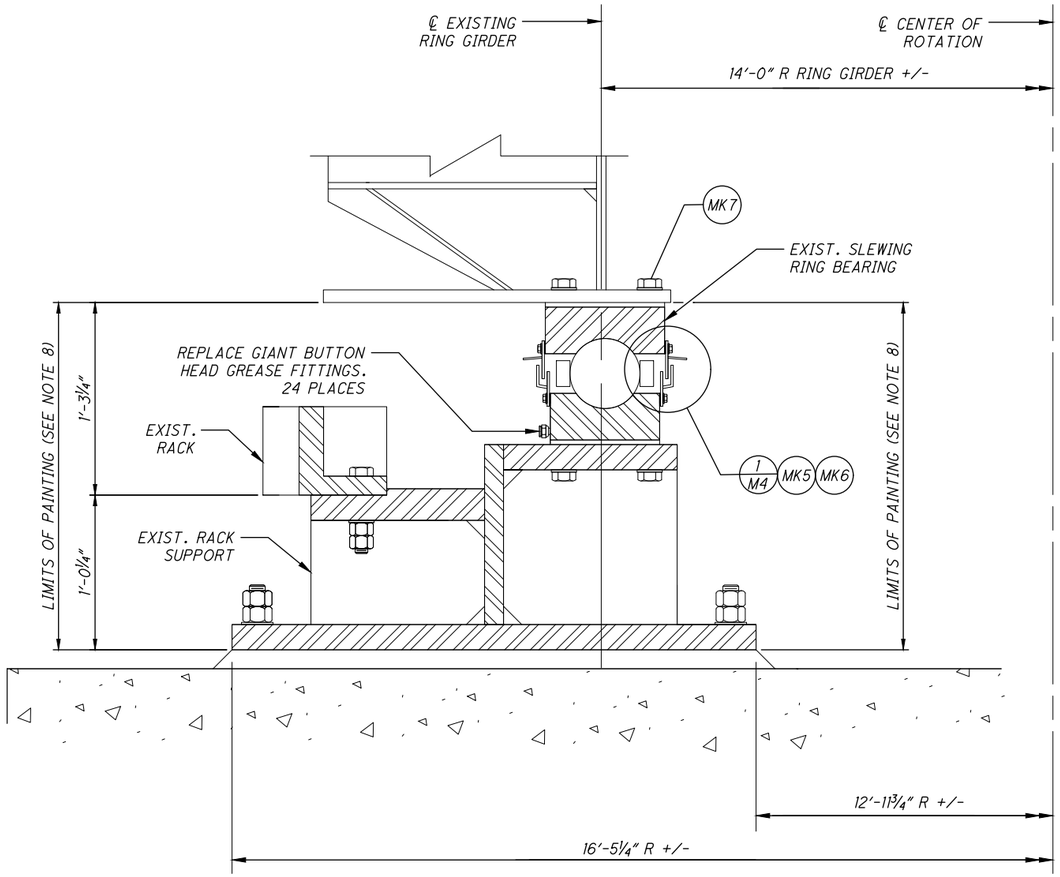

SPAN SUPPORT ASSEMBLY ELEVATION
NOT TO SCALE

NOTES:

1. FOR MACHINERY GENERAL NOTES AND PAY ITEMS LIST, SEE SHEET M1/M5.
2. REPLACE EXISTING DEBRIS SHIELDS AT INBOARD AND OUTBOARD FACE OF SLEWING RING. ALL SHIELDS TO ENCOMPASS FULL CIRCUMFERENCE OF SLEWING RING. MATCH EXISTING SEGMENT LENGTHS. REPLACE ALL HARDWARE WITH STAINLESS STEEL HARDWARE.
3. CLEANING, PURGING, AND LUBRICATING THE EXISTING SLEWING RING BEARING SHALL BE IN ACCORDANCE WITH THE MANUFACTURER'S RECOMMENDATIONS AND THE SPECIFICATIONS.
4. NEW GREASE PUMPED SHALL BE SUFFICIENT TO COMPLETELY PURGE EXISTING GREASE FROM BEARING. OPERATE THE BRIDGE WHILE PUMPING IN NEW LUBRICANT TO ENSURE EQUAL DISTRIBUTION THROUGHOUT THE RACEWAY.
5. NO SOLVENTS, WATER, OR OTHER MATERIALS SHALL BE USED ON THE INNER AND OUTER RACES OF THE BEARING. DO NOT PRESSURE WASH OR BLAST ANY BEARING COMPONENTS.
6. SUBMIT SLEWING RING BEARING CLEANING AND LUBRICATION PROCEDURE IN ACCORDANCE WITH THE SPECIFICATIONS AND MANUFACTURER'S RECOMMENDATIONS. MEET THE SUGGESTED PROCEDURE PROVIDED AT A MINIMUM.
7. CLEAN FAYING SURFACE OF SLEWING RING OF ALL CORROSION AND DEBRIS FOLLOWING EXISTING DEBRIS SHIELD REMOVAL.
8. CLEAN INBOARD AND OUTBOARD OF THE RING GIRDER PER SSPC-SP3 TO REMOVE ALL ACCUMULATED DEBRIS AND CORROSION. PAINT AT COMPLETION OF WORK IN ACCORDANCE WITH THE SPECIAL PROVISIONS.

MINIMUM SUGGESTED CLEANING AND LUBRICATION PROCEDURE

1. REMOVE EXISTING SLEWING RING BEARING ACCESS COVER PLATES.
2. CLEAN ACCESS COVER PLATE MOUNTING SURFACES OF ALL GREASE AND DEBRIS.
3. INSTALL NEW SLEWING RING BEARING ACCESS COVER PLATES AND GASKETS.
4. SEAL ALL GAPS BETWEEN BEARING ACCESS COVER PLATES AND GASKET SEGMENTS WITH AN APPROVED SEALANT.
5. WHILE OPERATING THE BRIDGE, PURGE EXISTING GREASE FROM BEARING BY PUMPING NEW GREASE VIA NEW GREASE PORTS.
6. CONFIRM NO LEAKAGE AT GASKETS AND SEALED LOCATIONS.
7. ONCE THE BEARING HAS BEEN PURGED AND LUBRICATED, EXCESS GREASE SHALL BE CLEANED AND REMOVED.
8. COLLECT, CONTAIN, AND PROPERLY DISPOSE OF ALL PURGED LUBRICANT IN ACCORDANCE WITH THE SPECIFICATIONS.

SPAN SUPPORT MACHINERY REPAIR SCHEDULE

MARK NO.	COMPONENT	DESCRIPTION (SEE SPECIAL PROVISIONS FOR ADDITIONAL INFORMATION)
MK5	SLEWING RING BEARING	PROVIDE AND INSTALL NEW SLEWING RING BEARING ACCESS PLATES AND GASKETS
MK6	SLEWING RING BEARING	CLEAN AND LUBRICATE EXISTING SLEWING RING BEARING
MK7	SLEWING RING BEARING	REPLACE SLEWING RING BEARING MOUNTING FASTENERS EXHIBITING SECTION LOSS

DESIGN AGENCY
WSP
1660 WEST 2ND STREET
SUITE 850
CLEVELAND, OHIO 44113

DESIGNED	DRAWN	REVIEWED	DATE
RA	RA	WRW	09/11/20
CHECKED	REVISED	STRUCTURE FILE NUMBER	
DN	---	1869345	

SPAN SUPPORT MACHINERY REPAIRS
CITY OF CLEVELAND BRIDGE NO. 1:003M
CENTER STREET SWING BRIDGE OVER THE CUYAHOGA RIVER

CUY-CENTER ST.
SWING BRIDGE
PID NO: 109597

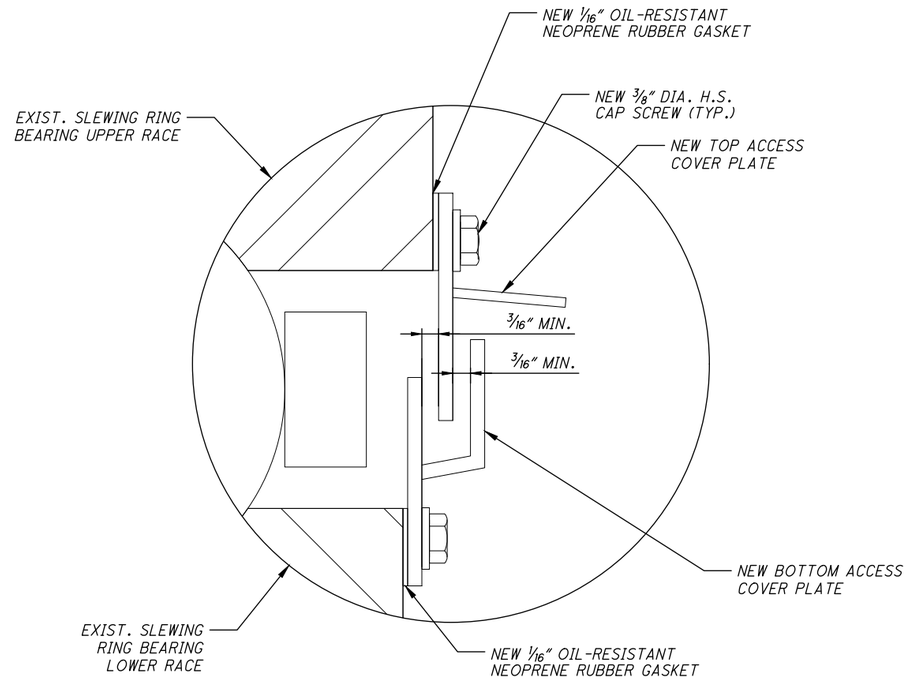

1 / M3 DETAIL
NOT TO SCALE

NOTES:

1. FOR MACHINERY GENERAL NOTES AND PAY ITEMS LIST, SEE SHEET M1/M5.
2. NEW COVERS SHALL BE PROVIDED IN 4 EQUAL LENGTH SEGMENTS AROUND THE ENTIRE CIRCUMFERENCE OF THE BEARING WITH NO GAPS. SEAL ALL INTERFACES BETWEEN SEGMENTS WITH AN APPROVED RTV SILICONE SEALANT. REFER TO THE SPECIFICATIONS FOR FURTHER REQUIREMENTS.
3. NEW COVERS SHALL BE TYPE 316 STAINLESS STEEL.
4. NEW COVER PLATE BOLT SPACING AND LOCATION TO MATCH EXISTING.
5. WELDMENTS SHALL BE STRESS RELIEVED AFTER WELDING.
6. COVER PLATE DIMENSIONS ARE CONCEPTUAL AND BASED ON THE AVAILABLE EXISTING PLANS. CONTRACTOR TO FIELD VERIFY DIMENSION AND SUBMIT TO THE ENGINEER FOR REVIEW AND APPROVAL.

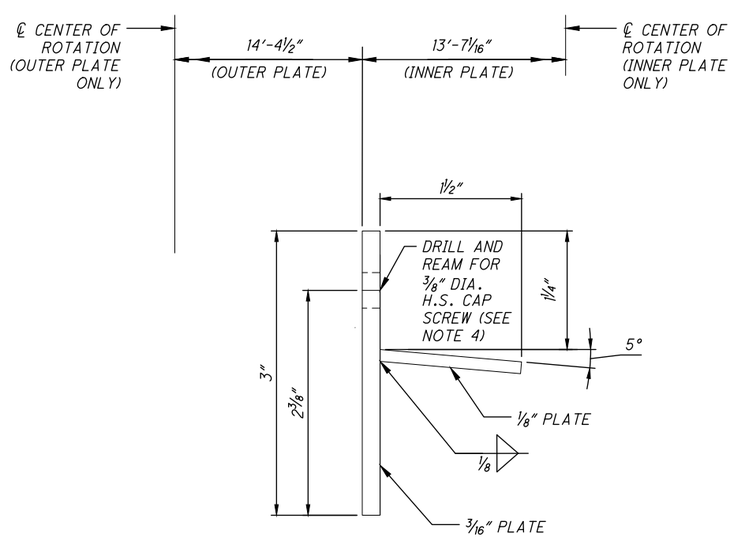

TOP ACCESS COVER PLATE DETAIL
NOT TO SCALE

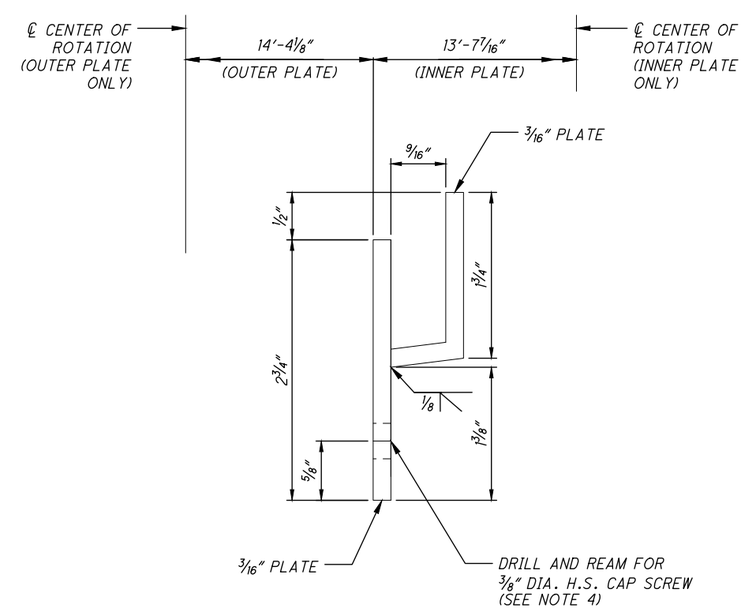

BOTTOM ACCESS COVER PLATE DETAIL
NOT TO SCALE

DESIGN AGENCY
WSP
1660 WEST 2ND STREET
SUITE 850
CLEVELAND, OHIO 44113

DESIGNED	DRAWN	REVIEWED	DATE
RA	RA	WRW	09/11/20
CHECKED	REVISED	STRUCTURE FILE NUMBER	
DN	---	1869345	

SPAN SUPPORT MACHINERY REPAIRS DETAILS
CITY OF CLEVELAND BRIDGE NO. 1:003M
CENTER STREET SWING BRIDGE OVER THE CUYAHOGA RIVER

CUY-CENTER ST.
SWING BRIDGE
PID NO: 109597

M4 / M5

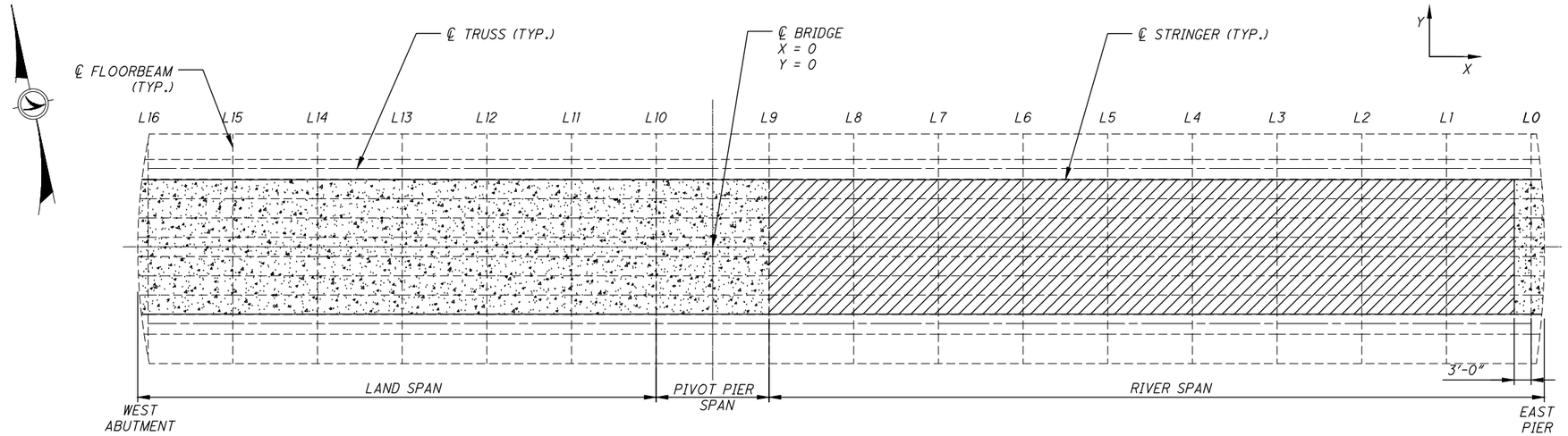

FRAMING PLAN (SHOWING NEW ROADWAY DECK)

LEGEND

CONCRETE FILLED GRID DECK

OPEN GRID DECK

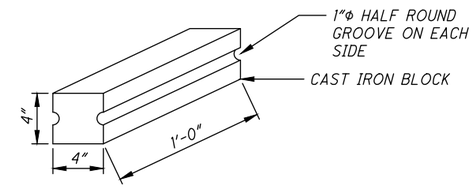

WEIGHT OF EACH BLOCK = 47.55 LBS.

BALANCE BLOCK

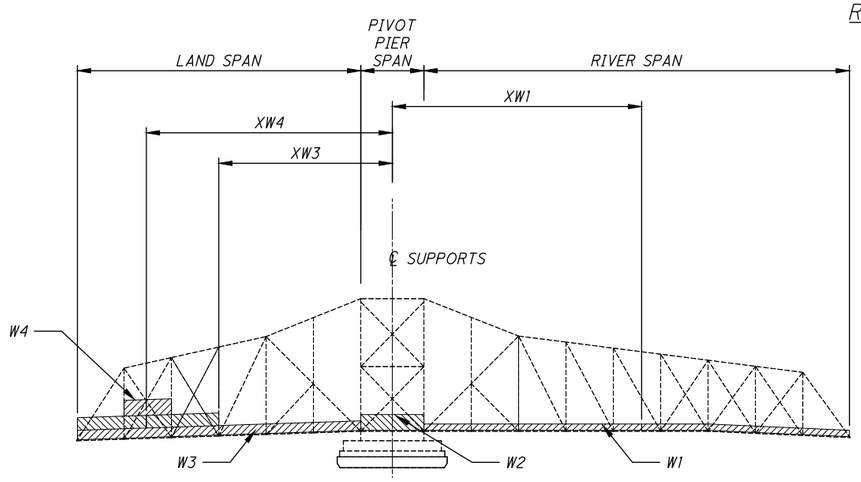

SWING SPAN BALANCING DETAILS

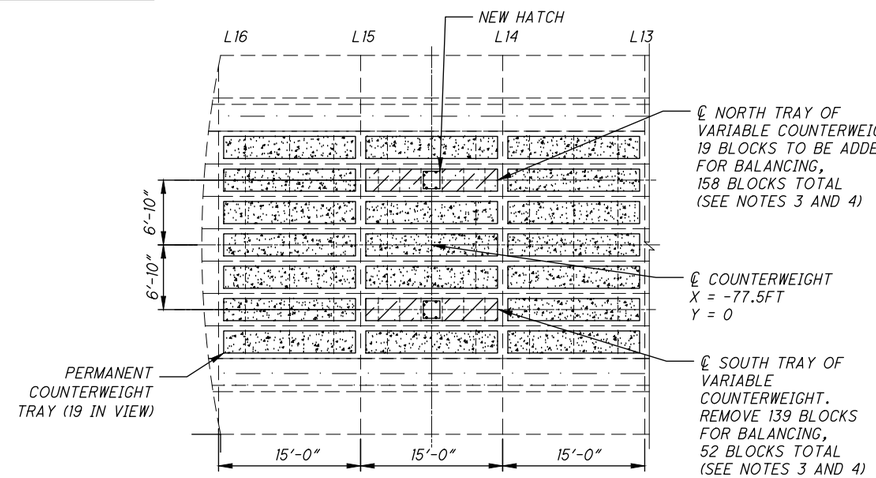

COUNTERWEIGHT FRAMING PLAN

NUMBER OF BLOCKS FOR BALANCING: 210 BLOCKS
NUMBER OF BLOCKS FOR FUTURE USE: 300 BLOCKS
TOTAL NUMBER OF BLOCKS REQUIRED: 510 BLOCKS

NOTES:

1. PROVIDE INVENTORY OF WEIGHTS AND CENTER OF GRAVITY LOCATIONS OF MATERIALS REMOVED AND ADDED FROM THE EXISTING SWING SPANS IN ACCORDANCE TO THE SIGN CONVENTION SHOWN ON THIS SHEET AND PER THE REQUIREMENTS OF THE MECHANICAL SPECIAL PROVISIONS.
2. REMOVALS AND ADDITIONS SHALL BE COORDINATED WITH THE CONSTRUCTION SEQUENCING LISTED IN THE STRUCTURAL PLANS AND THE REQUIREMENTS OF THE MECHANICAL SPECIAL PROVISIONS.
3. ALL COUNTERWEIGHT BLOCKS ARE TO BE REMOVED AND REPLACED WITH NEW BLOCKS.
4. THE NUMBER OF BLOCKS TO BE PLACED IN EACH COUNTERWEIGHT IS BASED ON LIMITED PLAN DETAILS. CONTRACTOR IS TO TAKE INVENTORY OF EXISTING BLOCKS DURING REMOVAL AND ADJUST THE NUMBER OF BLOCKS ACCORDINGLY. THE FINAL NUMBER OF BLOCKS TO BE PLACED IN EACH POCKET WILL BE DETERMINED THROUGH FINAL BALANCE TESTING.
5. LOADS DENOTED W1 TO W4 IN THE TABLE ARE APPROXIMATE AND ARE PROVIDED AS INFORMATION TO AID IN BRIDGE BALANCING.
6. ALL MATERIALS REMOVED SHALL BE VERIFIED BY WEIGHING TO CONFIRM CALCULATED WEIGHTS.
7. ALL LABOR, MATERIALS, AND WORK INVOLVED WITH BALANCING, TESTING, SURVEYING, REMOVAL OF EXISTING BALANCE BLOCKS, FURNISHING OF NEW BALANCE BLOCKS, PLACEMENT OF NEW BALANCE BLOCKS, AND ALL OTHER WORK DESCRIBED IN THE MECHANICAL SPECIAL PROVISIONS PERTAINING TO THE SPAN BALANCING SHALL BE PAID FOR UNDER ITEM SPECIAL - MECHANICAL WORK - SPAN BALANCE.

DESIGNATION	NET WEIGHT(LBS.)	DISTANCE TO ℄ OF SUPPORT		DESCRIPTION
		X(FT)	Y(FT)	
W1	-33,128	71.86	0	NET CHANGE IN THE RIVER SPAN
W2	-4,535	0.89	3.33	NET CHANGE IN THE CENTER SPAN
W3	-38,441	-55.52	0.5	NET CHANGE IN THE SHORE SPAN
W4	-3,234	-77.5	0	NET CHANGE IN THE VARIABLE COUNTERWEIGHT
TOTAL	-79,337			

SPAN BALANCING MOMENTS	W x X(LB-FT)	W x Y(LB-FT)
W1 x (X,Y)	-2,380,610	0
W2 x (X,Y)	-4,030	-15,110
W3 x (X,Y)	2,134,370	-19,090
W4 x (X,Y)	250,589	34,442
TOTALS	318	242

DESIGN AGENCY
WSP
1660 WEST 2ND STREET
SUITE 850
CLEVELAND, OHIO 44113

DESIGNED	DRAWN	REVIEWED	DATE
NRF	NRF	WRW	09/11/20
CHECKED	REVISED	STRUCTURE FILE NUMBER	
JET	---	1869345	

SPAN BALANCING AND COUNTERWEIGHT DETAILS
CITY OF CLEVELAND BRIDGE NO. 1:003M
CENTER STREET SWING BRIDGE OVER THE CUYAHOGA RIVER

CUY-CENTER ST.
SWING BRIDGE
PID NO: 109597

M5 / M5

NOTES:

1. SEE SHEET M1 FOR GENERAL NOTES APPLICABLE TO THIS DRAWING.
2. FIELD VERIFY ALL EXISTING DIMENSIONS PRIOR TO REMOVAL OF EXISTING END JACK ASSEMBLY. VERIFY DIMENSIONS WITH THE END JACK IN BOTH THE ENGAGED AND DISENGAGED POSITIONS. SUBMIT FIELD VERIFIED DIMENSION TO THE ENGINEER.
3. REMOVE ALL EXISTING END JACK ASSEMBLY COMPONENTS INCLUDING BUT NOT LIMITED TO ACTUATOR, CLEVISES, LINK ARM, PIVOT ARM, BEARINGS, GUIDES, BRACKETS AND STORE IN ACCORDANCE WITH THE SPECIAL PROVISIONS.
4. REINSTALL EXISTING END-JACK ASSEMBLY ON THE NEW FLOORBEAM IN ACCORDANCE WITH THESE PLANS AND SPECIAL PROVISIONS. PROPERLY ALIGN ALL END JACK MACHINERY COMPONENTS IN ACCORDANCE WITH THE SPECIFICATIONS AND THE FIELD VERIFIED DIMENSIONS.
5. SUBDRILL NEW BOLTS IN FLOORBEAM FROM SOLID AT FIELD ASSEMBLY FOR MACHINERY COMPONENT FIT-UP AFTER INSTALLATION OF THE NEW FLOORBEAM.
6. SUBMIT FIELD INSTALLATION PROCEDURE AND FIT-UP FOR REVIEW AND APPROVAL PRIOR TO REMOVAL OF END JACK MACHINERY. INCLUDE ALL FIELD VERIFIED DIMENSIONS AS REQUIRED BY THE ENGINEER. REFER TO THE SPECIFICATIONS FOR PROCEDURE REQUIREMENTS.
7. PROVIDE NEW $\frac{1}{4}$" DIA. GIANT BUTTON HEAD LUBE FITTINGS AT ALL GREASE PORTS IN EXISTING AND NEW COMPONENTS.
8. CLEAN AND PAINT ALL END JACK MACHINERY AFTER FINAL INSTALLATION ON THE NEW FLOORBEAM.

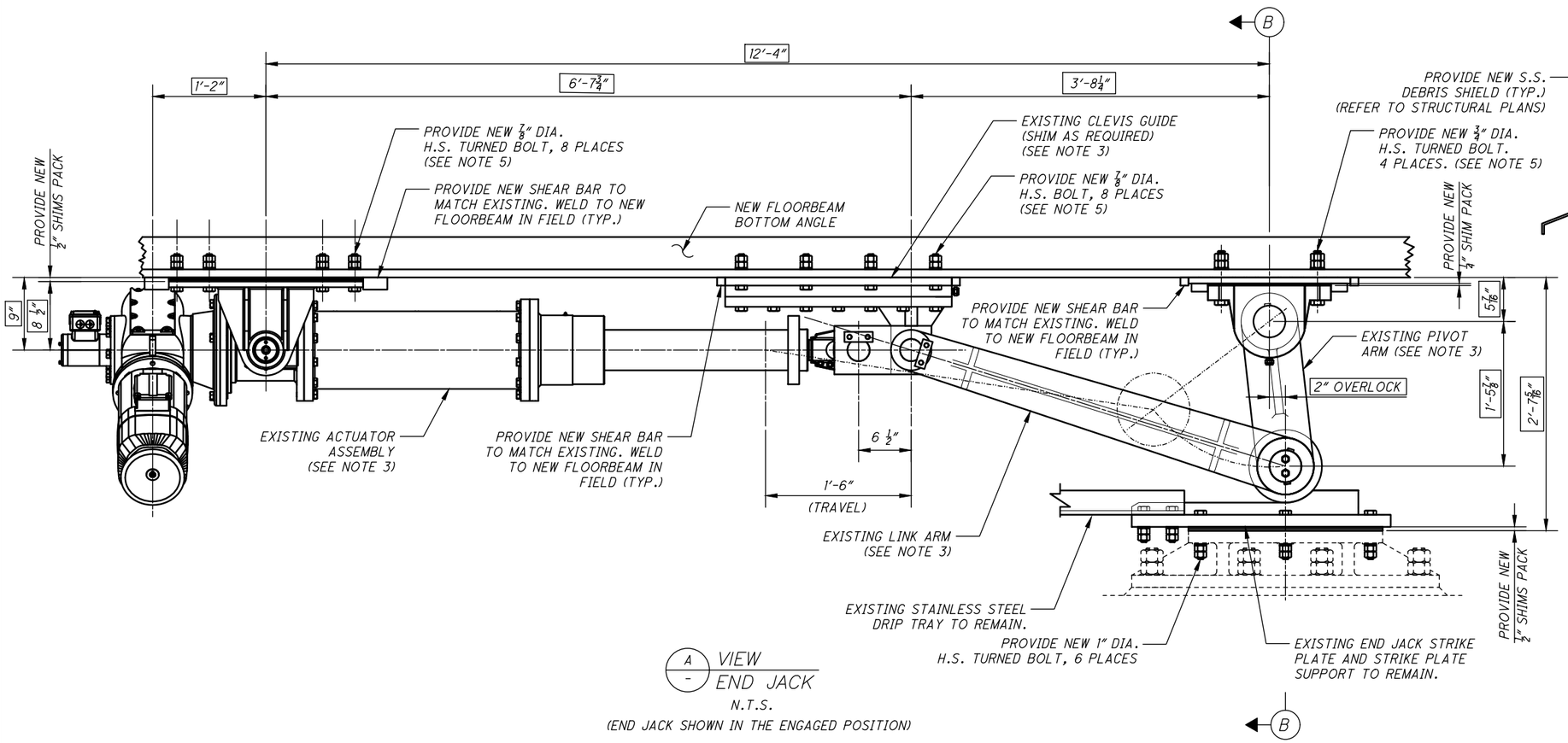

A / - VIEW END JACK
N.T.S.
(END JACK SHOWN IN THE ENGAGED POSITION)

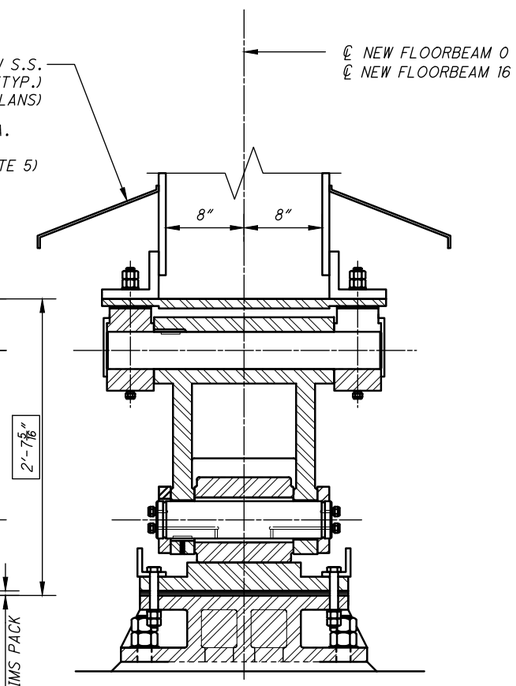

B / - SECTION
N.T.S.

LEGEND:

X'-XX" - MEASUREMENT TO BE FIELD VERIFIED (SEE NOTE 2).

DESIGN AGENCY
WSP
1660 WEST 2ND STREET
SUITE 850
CLEVELAND, OHIO 44113

DESIGNED	DRAWN	REVIEWED	DATE
RA	BLM	DN	10/22/20
CHECKED	REVISED	STRUCTURE FILE NUMBER	
DN	---	1869345	

END JACK MACHINERY ASSEMBLY
CITY OF CLEVELAND BRIDGE NO. 1:003M
CENTER STREET SWING BRIDGE OVER THE CUYAHOGA RIVER

CUY-CENTER ST.
SWING BRIDGE
PID NO: 109597

M5A / M5

72A
109

DESCRIPTION OF BRIDGE ELECTRICAL FACILITIES

ELECTRIC SERVICE:

THE 480 VOLT AC, 3 PHASE ELECTRIC SERVICE TO THE BRIDGE ELECTRICAL DRIVE SYSTEMS AND AUXILIARIES IS SUPPLIED FROM CLEVELAND PUBLIC POWER (CPP). THE ATS IS UTILIZED TO TRANSFER TO GENERATOR POWER IN THE EVENT OF UTILITY FAILURE. SEVERAL TRANSFORMERS ARE LOCATED THROUGHOUT THE BRIDGE THAT STEP DOWN TO 240/120 VOLT FEEDING THE PANELBOARDS. THE EXISTING SERVICE EQUIPMENT, ATS AND GENERATOR ARE TO REMAIN IN USE.

SPAN DRIVE SYSTEM:

SPAN OPERATION IS PROVIDED BY THE EXISTING 30 HP SQUIRREL CAGE INDUCTION MOTORS, VARIABLE FREQUENCY DRIVES (VFD), DYNAMIC BRAKING RESISTORS, MOTOR BRAKE AND MACHINERY BRAKE. THE SPAN DRIVE MOTORS, VFD, RESISTORS, AND BRAKES SHALL REMAIN.

CONTROL SYSTEM:

THE CONTROL LOGIC OPERATION OF THE BRIDGE AND TRAFFIC EQUIPMENT IS ACHIEVED BY A RELAY-BASED SYSTEM INTERCONNECTED AS SHOWN ON THE PLANS. THE SPAN DRIVE SYSTEMS, NAVIGATIONAL LIGHTS, AND TRAFFIC DEVICES OPERATIONS AND MONITORING IS ACHIEVED VIA CONTROL SWITCHES, INDICATING LIGHTS AND METERS LOCATED ON THE EXISTING CONTROL CONSOLE.

MOTOR CONTROL CENTER (MCC):

THE WEST MCC (POWER HOUSE) SHALL HAVE ALL BUCKETS REPLACED WITH MODERNIZED EQUIPMENT. THE EAST MCC (GATEMAN'S HOUSE) SHALL BE REPLACED WITH A NEW MCC.

NAVIGATION LIGHTS:

FENDER LIGHTS, CHANNEL NAVIGATION LIGHTS AND MARINE HORN ARE EXISTING ON THE BRIDGE. THE FENDER LIGHTS AND MARINE HORN ARE TO REMAIN. THE CHANNEL NAVIGATION LIGHTS, LOCATED ON TOP OF THE MOVABLE SPAN, SHALL BE REPLACED ALONG WITH THEIR ASSOCIATED CONDUITS, CONDUCTORS, AND SUPPORTS.

TRAFFIC SIGNALS:

THE TRAFFIC SIGNALS AND TRAFFIC TREE STOP SIGNALS ARE LOCATED AT BOTH BRIDGE APPROACHES. ALL TRAFFIC SIGNALS ARE TO REMAIN. THE EAST TRAFFIC TREE STOP SIGNAL AND GONG SHALL BE REMOVED AND REPLACED IN A NEW LOCATION. THE WEST TRAFFIC TREE STOP SIGNAL SHALL REMAIN.

WARNING GATES AND BARRIER GATES:

ONE WARNING GATE IS EXISTING FOR EACH LANE OF TRAFFIC, FOUR TOTAL. ONE BARRIER GATE IS EXISTING FOR EACH APPROACH, TWO TOTAL. THE WEST WARNING GATES SHALL BE REPLACED IN THE SAME LOCATION. THE EAST WARNING GATES SHALL BE REPLACED IN A NEW LOCATION. ALL BARRIER GATES SHALL REMAIN.

JACK MOTORS:

DISCONNECT ALL END JACK MOTORS, AS WELL AS ASSOCIATED LIMIT SWITCHES, DISCONNECT SWITCHES, LIQUID TIGHT FLEXIBLE METALLIC CONDUIT, JUNCTION BOXES. ONCE END FLOORBEAM IS REPLACED, ALL END JACK MOTORS, AS WELL AS ASSOCIATED LIMIT SWITCHES, DISCONNECT SWITCHES, LIQUID TIGHT FLEXIBLE METALLIC CONDUIT, JUNCTION BOXES ARE TO BE REINSTALLED.

PANELBOARDS:

PANEL LP-1 IS LOCATED IN THE CONTROL HOUSE. PANEL LP-3 IS LOCATED IN THE POWER HOUSE. PANEL LP-4 IS LOCATED IN THE GATEMAN'S HOUSE. ALL PANELBOARDS ARE 240/120 VOLT SINGLE PHASE. ALL PANELBOARDS ARE TO BE REPLACED. ALL BRANCH CIRCUIT CONDUCTORS ARE TO BE REUSED UNLESS SPECIFIED ELSEWHERE IN THE PLANS OR SPECIAL PROVISIONS. PANELBOARD FEEDERS SHALL BE REPLACED UP TO THE CLOSEST JUNCTION BOX OR TERMINATION.

LIMIT SWITCHES:

THERE ARE TWO OVERTRAVEL LIMIT SWITCHES, ONE SPAN ROTARY CAM LIMIT SWITCH, AND SIX BRAKE LIMIT SWITCHES IN THE MACHINERY ROOM. ALL LIMIT SWITCHES IN THE MACHINERY ROOM SHALL REMAIN.

FIRE ALARM SYSTEM:

A FIRE ALARM PANEL, SMOKE DETECTOR AND FIRE ALARM HORN ARE LOCATED IN THE CONTROL HOUSE. TWO SMOKE DETECTORS ARE LOCATED IN THE POWER HOUSE. A SMOKE DETECTOR IS LOCATED IN THE GATEMAN'S HOUSE. THE FIRE ALARM PANEL, ALL SMOKE DETECTORS AND ASSOCIATED CONDUCTORS SHALL BE REPLACED. A NEW SMOKE DETECTOR SHALL BE INSTALLED IN THE MACHINERY ROOM. A NEW PULL STATION AND FIRE ALARM HORN AND STROBE SHALL BE INSTALLED IN THE POWER HOUSE, MACHINERY ROOM, AND GATEMAN'S HOUSE.

SIDEWALK LIGHTING:

INSTALL NEW SIDEWALK LIGHTING FIXTURES ON BOTH SIDES OF THE MOVABLE SPAN.

CCTV:

THE EXISTING CCTV SYSTEM ON THE BRIDGE SHALL REMAIN.

TESTING:

PROVIDE ALL SHOP TESTING AS CALLED OUT IN THE SPECIFICATIONS INCLUDING COORDINATION FOR OWNER/ENGINEER WITNESSING. PERFORM PRELIMINARY TESTING TO TROUBLESHOOT AND MAKE CORRECTIONS PRIOR TO WITNESS TESTING. SUBMIT TESTING PROCEDURE FOR REVIEW AND APPROVAL BY THE ENGINEER AND ENHANCEMENT BY THE ENGINEER. PERFORM ACCEPTANCE TESTING IN ACCORDANCE WITH THE TESTING REQUIREMENTS IN THE SPECIFICATIONS.

WARRANTY:

WARRANT ALL SUPPLIED EQUIPMENT, INSTALLATION METHODS, WIRING AND OPERATION AGAINST EQUIPMENT FAILURE AND/OR WEAR AND DETERIORATION AND ANY OPERATIONAL FAILURE FOR A PERIOD OF ONE YEAR FROM THE DATE OF FINAL ACCEPTANCE OF THE BRIDGE BY THE OWNER UNLESS SPECIFIED OTHERWISE.

DESIGN AGENCY
WSP
1660 WEST 2ND STREET
SUITE 850
CLEVELAND, OHIO 44113

DESIGNED	DRAWN	REVIEWED	DATE
RMD	RMD	GSP	10/23/20
CHECKED	REVISED	STRUCTURE FILE NUMBER	
BLC	---	1869345	

DESCRIPTION OF BRIDGE ELECTRICAL FACILITIES
CITY OF CLEVELAND BRIDGE NO. 1:003M
CENTER STREET SWING BRIDGE OVER THE CUYAHOGA RIVER

CUY-CENTER ST.
SWING BRIDGE
PID NO: 109597

GENERAL NOTES

1. ALL WORK SHALL BE PERFORMED IN ACCORDANCE WITH THE LATEST ODOT STANDARD SPECIFICATIONS, NATIONAL ELECTRIC CODE, NFPA 72, NFPA 101, AASHTO, US COAST GUARD 33 CFR 118.70, ANSI/NETA STANDARD FOR ACCEPTANCE TESTING SPECIFICATIONS, AND ALL LOCAL ORDINANCE AND REGULATIONS.

2. INDOOR ELECTRICAL CABINETS AND ENCLOSURES SHALL HAVE A MINIMUM NEMA-12 RATING OR AS INDICATED. ALL OUTDOOR CABINETS AND ENCLOSURES SHALL BE NEMA 4X RATED. BOXES AND CABINETS IN EXPOSED LOCATIONS SHALL BE CONSTRUCTED OF CAST ALUMINUM, HOT-DIP GALVANIZED CAST IRON, OR STAINLESS STEEL. HARDWARE SHALL BE BRASS OR STAINLESS STEEL. ENCLOSURES SHALL BE ISOLATED FROM CONCRETE THROUGH THE USE OF NEOPRENE OR SIMILAR MATERIAL. ALL ENCLOSURES SHALL HAVE PERMANENT LABELS INDICATING THE DESIGNATION OF THE CABINET.

3. LOCATIONS AND DIMENSIONS OF ELECTRICAL EQUIPMENT AND ASSOCIATED DEVICES ARE APPROXIMATE BASED ON EXISTING CONDITIONS AND BEST AVAILABLE PERTINENT INFORMATION AND PLANS. HOWEVER, THE CONTRACTOR SHALL BE RESPONSIBLE FOR FIELD VERIFYING EXACT LOCATIONS AND PROPOSED EQUIPMENT DIMENSIONS AS PART OF THE CONSTRUCTION AND SHOP DRAWING SUBMITTAL PROCESS. AS-BUILT DRAWINGS SHALL BE BASED UPON APPROVED SHOP DRAWINGS, FIELD SURVEYS, MEASUREMENTS, AND APPROVED INSTALLED EQUIPMENT ONLY.

4. ALL CONDUIT AND WIRING FURNISHED AND INSTALLED UNDER THIS CONTRACT SHALL BE NEW AND MEET NEC AND AASHTO CODE REQUIREMENTS.

5. EXACT CONDUIT RUNS, JUNCTION AND PULL BOX QUANTITY AND LOCATIONS, MOUNTING HARDWARE AND SUPPORTS, AND STUB-UP LOCATIONS ARE TO BE DETERMINED BASED ON FIELD CONDITIONS AND BRIDGE ELECTRICAL SYSTEM REQUIREMENTS AS SPECIFIED AND SHOWN ON THE PLANS.

6. PROVIDE EXPANSION AND DEFLECTION CONDUIT FITTINGS OF THE APPROVED TYPE AT THE LOCATIONS WHERE CONDUIT PASSES THROUGH STRUCTURAL EXPANSION JOINTS AND OTHER CRITICAL LOCATIONS, OR MINIMUM EVERY 200 FEET ON STRAIGHT CONDUIT RUNS.

7. THE CONTRACTOR SHALL PERFORM FULL CONTINUITY, INSULATION AND GROUNDING INTEGRITY TESTS ON NEW CONDUCTORS IN ACCORDANCE WITH NEMA. THE CONTRACTOR SHALL PERFORM FULL ACCEPTANCE TESTS OF ALL BRIDGE ELECTRICAL SYSTEMS.

8. PVC COATED RIGID METALLIC CONDUIT (RMC) SHALL BE USED IN OUTDOOR LOCATIONS. RIGID HOT DIPPED GALVANIZED STEEL (RGS) SHALL BE USED IN INDOOR LOCATIONS. INDOOR LOCATIONS INCLUDE THE POWER HOUSE, GATEMAN'S HOUSE, MACHINERY ROOM AND CONTROL HOUSE. ALL OTHER LOCATIONS ARE CONSIDERED OUTDOORS.

9. STANDARD RADIUS FACTORY MADE CONDUIT ELBOWS ARE ACCEPTABLE IN ABOVE GROUND INSTALLATION. UNLESS OTHERWISE NOTED ON THE PLANS, FIELD BEND CONDUITS SHALL HAVE A MINIMUM RADIUS OF SIX TIMES THE INTERNAL CONDUIT DIAMETER. CONDUIT BENDS SHALL NEVER BE SO SHARP AS TO ROUGHEN THE INSIDE SURFACE OF THE CONDUIT OR FLATTEN OR REDUCE THE CROSS-SECTIONAL AREA.

10. ALL CONDUCTORS SHALL BE PULLED INTO THEIR CONDUITS BY THE APPLICATION OF A SUITABLE INDUSTRIAL GRADE NON-HARDENING PULLING COMPOUND. PULLING DISTANCE SHALL NOT EXCEED THE EQUIVALENT OF 100 FEET STRAIGHT RUN AND A PULL SHALL CONTAIN NO MORE THAN THE EQUIVALENT OF THREE 90 DEGREE BENDS. PULL BOXES SHALL BE USED WHERE NECESSARY.

11. GROUNDING IS TO BE PROVIDED IN ACCORDANCE WITH NEC REQUIREMENTS.

12. UNLESS NOTED OTHERWISE, ALL CONDUCTORS SHALL BE XHHW-2 INSULATED, STRANDED, 600 VOLT RATED, AND A MINIMUM #12 AWG ON THE BRIDGE STRUCTURE. #14 AWG SHALL BE ALLOWED WITHIN FACTORY WIRED EQUIPMENT.

13. THE CONDUCTOR COUNT AND CONDUIT SIZES ARE APPROXIMATE, CONTRACTOR SHALL PROVIDE AS NECESSARY AT NO ADDITIONAL COST.

14. ALL ELECTRICAL BOXES SHALL BE PROVIDED WITH DRAINS AT THE LOW POINT OF THE ENCLOSURE.

15. ALL EXTERIOR ELECTRICAL BOXES SHALL HAVE BOTTOM OR SIDE ENTRY. THERE SHALL BE NO TOP ENTRY.

16. ALL RELAYS AND CONTACTORS SHALL BE FURNISHED WITH MANUFACTURER SUPPLIED SURGE SUPPRESSORS.

17. CONTRACTOR SHALL PREPARE SCHEDULE AND TABULATION OF ALL CONDUIT AND WIRING REQUIRED TO COMPLETE ALL PORTIONS OF THE PROJECT.

18. ALL CONDUIT HUBS SHALL BE GROUNDED AND BONDED AND PROVIDED WITH AN INSULATED THROAT.

19. ALL ELECTRICAL EQUIPMENT SHALL BE ARRANGED TO ASSURE WORKING CLEARANCES IN ACCORDANCE WITH THE REQUIREMENTS OF THE NEC.

20. NO CONDUIT SUPPORTS SHALL BE MORE THAN 5 FEET APART UNLESS THERE ARE STRUCTURAL LIMITATIONS. COST OF ALL MOUNTING HARDWARE SHALL BE INCLUDED IN UNIT PRICE BID FOR CORRESPONDING ELECTRICAL ITEMS, UNLESS OTHERWISE NOTED. ALL HARDWARE AND SUPPORTS SHALL BE STAINLESS STEEL.

21. THE CONTRACTOR SHALL VISIT THE SITE BEFORE SUBMITTING BID PRICES. MODIFICATIONS MAY BE REQUIRED FOR CONDUIT ROUTING, AND CONDUIT AND BOX SUPPORTS TO AVOID INTERFERENCE WITH EXISTING STRUCTURES.

22. THE ELECTRICAL CONTRACTOR SHALL COORDINATE THE WORK WITH THE OTHER DISCIPLINES.

23. WHERE CONDUCTORS TERMINATE IN A BOX WITHOUT GOING THROUGH FOR CONNECTION TO ELECTRICAL EQUIPMENT, THE CONDUCTORS SHALL BE CAPPED IN THE BOX WITH SLACK PROVIDED FOR EACH CONDUCTOR. ALL CONDUCTORS SHALL BE INSTALLED WITH TAGS SHOWING CIRCUIT DESIGNATIONS.

24. ALL WIRES WITHIN EACH JUNCTION BOX SHALL BE IDENTIFIED AND TAGGED WITH WIRE TAGS. CONDUCTORS SHALL BE LABELED WITH PERMANENT, OIL AND WATER RESISTANT, PREPRINTED IDENTIFICATION BANDS OR SLEEVES. CONDUCTORS SHALL BE IDENTIFIED AT EVERY TAP, TERMINATION, AND IN ALL JUNCTION BOXES AND ENCLOSURES.

25. ALL CONDUIT FITTINGS SHALL BE GROUNDED AND BONDED.

26. SPLICES SHALL BE MADE USING TUBULAR COMPRESSION SPLICES COVERED WITH HEAT-SHRINK SLEEVES OR MOLD-POURED EPOXY RESIN SPLICE KITS WITH A VOLTAGE RATING EQUAL TO OR EXCEEDING THE CONDUCTOR INSULATION RATING. WIRE NUTS ARE RESTRICTED TO 120 VOLT BRANCH CIRCUITS RATED 20 AMPS OR LESS SERVING LIGHTS OR RECEPTACLES. SPLIT BOLT CONNECTORS SHALL NOT BE PERMITTED.

27. ALL CONDUITS SHALL BE SPECIFIED TO BE UL LISTED AND INSTALLED IN ACCORDANCE WITH THE APPROPRIATE SECTION OF THE NEC.

28. IN NO CASE SHALL CONDUITS LESS THAN 3/4" DIAMETER BE USED.

29. METAL CONDUITS SHALL BE PROVIDED WITH INSULATED THROAT GROUNDING BUSHINGS AND SHALL BE ELECTRICALLY BONDED WITH A BONDING WIRE TO ALL METAL ENCLOSURES OR WIREWAYS THAT THEY ENTER.

30. RIGID STEEL CONDUIT AND FITTINGS SHALL BE HOT-DIP GALVANIZED. ALL FIELD CUTS, OR OTHER INTERRUPTIONS IN THE GALVANIZED COATING SHALL BE TOUCHED UP WITH ZINC RICH COLD GALVANIZING COMPOUND.

31. ALL NICKS, CUTS, AND SCRATCHES IN THE PVC COATING ON PVC COATED RMC SHALL BE TOUCHED UP WITH TOUCH-UP COMPOUND SUPPLIED BY THE CONDUIT MANUFACTURER.

32. INTERIOR AND THREADS OF PLASTIC COATED CONDUITS SHALL HAVE A URETHANE COATING, 0.05 MM NOMINAL THICKNESS.

33. GROUNDING FOR ALL EQUIPMENT, CABINETS, AND ENCLOSURES CONTAINING ELECTRICAL EQUIPMENT SHALL BE BY DEDICATED GROUNDING CONDUCTORS RUN IN EACH CONDUIT AND RACEWAY FROM EACH PIECE OF EQUIPMENT BACK TO THE SYSTEM GROUND BUS. CONDUIT AND RACEWAYS SHALL NOT BE UTILIZED AS THE SOLE GROUNDING MEANS FOR ELECTRIC EQUIPMENT. THE GROUNDING CONDUCTORS SHALL BE SIZED ACCORDING TO THE NEC.

34. PROVIDE ONE SPARE COMPLETE SET OF MOVABLE AND STATIONARY CONTACTS FOR EACH SIZE OF CONTACTOR AND STARTER USED, ONE COIL FOR EACH SIZE OF CONTACTOR AND STARTER USED, ONE SPARE CONTROL RELAY FOR EACH TYPE USED, ONE COMPLETE NAVIGATION LIGHT ASSEMBLY FOR EACH TYPE USED (INCLUDING ONE LENS OF EACH COLOR AND SIZE USED), AND ANY OTHER SPARE PARTS REQUESTED BY THE CITY.

35. NEW CONTROL WIRING ROUTED TO WARNING GATES SHALL INCLUDE 20% (MINIMUM TWO) SPARE CONDUCTORS.

36. WHERE MULTI-CONDUCTOR CABLES ARE USED, THE INDIVIDUAL CONDUCTORS IN THE CABLE SHALL HAVE COLOR CODING AND/OR STAMPED NUMBERS BY THE MANUFACTURER. WHERE SINGLE CONDUCTORS TO EQUIPMENT OR A DEVICE ARE USED, EACH INDIVIDUAL CONDUCTOR SHALL BE LABELED WITH ONE WIRE NUMBER AS SHOWN ON THE SHOP DRAWINGS.

DESIGN AGENCY
WSP
1660 WEST 2ND STREET
SUITE 850
CLEVELAND, OHIO 44113

DESIGNED	DRAWN	REVIEWED	DATE
RMD	RMD	GSP	10/23/20
CHECKED	REVISED	STRUCTURE FILE NUMBER	
BLC	---	1869345	

GENERAL NOTES
CITY OF CLEVELAND BRIDGE NO. 1:003M
CENTER STREET SWING BRIDGE OVER THE CUYAHOGA RIVER

CUY-CENTER ST.
SWING BRIDGE
PID NO: 109597

ONE-LINE DIAGRAM

- CIRCUIT BREAKER
- MOTOR CONTACTOR, NON REVERSING, FVNR
- F R — MOTOR CONTACTOR, REVERSING, FVR
- OVERLOAD RELAY
- # — MOTOR, # = HORSEPOWER
- DISCONNECT SWITCH, NON-FUSED
- ATS N E L — AUTOMATIC TRANSFER SWITCH (ATS)
  - N = NORMAL
  - E = EMERGENCY
  - L = LOAD
- ENC, SP SW — ENCODER, SPEED SWITCH
- GENERATOR
- VSD — MOTOR DRIVE, VSD = VARIABLE SPEED DRIVE
- TRANSFORMER
- ISO TX — ISOLATION TRANSFORMER
- CURRENT TRANSFORMER (CT)
- V — VOLTMETER
- A — AMMETER
- W — WATTMETER
- POWER RECEPTACLE
- CONNECTED
- NOT CONNECTED
- CONDUCTOR
- CONTINUED
- SPD — SURGE PROTECTION DEVICE
- DYNAMIC BRAKING RESISTOR

DEVICES

- CN — CHANNEL NAVIGATION LIGHT
- RW — ROADWAY LIGHTING LUMINAIRE
- SW — SIDEWALK LIGHTING LUMINAIRE
- EXISTING UNDERGROUND CONDUIT
- EXISTING DEVICE
- PROPOSED DEVICE
- FA — FIRE ALARM HORN AND STROBE LIGHT
- PS — PULL STATION
- SD — SMOKE DETECTOR
- END OF LINE RESISTOR

SCHEMATIC DIAGRAM

- R — INDICATING LIGHT
  - R = RED
  - G = GREEN
  - A = AMBER
  - B = BLUE
  - W = WHITE
- M — COIL
  - M = MOTOR STARTER
  - MF = MOTOR FORWARD
  - MR = MOTOR REVERSE
  - C = CONTACTOR
  - CR = CONTROL RELAY
  - TR = TIMER RELAY
  - IR = CURRENT RELAY
  - PE = PHOTOELECTRIC RELAY
  - HR = ELAPSED TIME METER
  - S = SOLENOID
- RELAY CONTACTS
  - N.O. = NORMALLY OPEN
  - N.C. = NORMALLY CLOSED
- H O A — SWITCHES
  - SELECTOR SWITCH
  - HAND-OFF-AUTO
- PUSH BUTTON, MOMENTARY
  - NORMALLY CLOSED
  - NORMALLY OPEN
- PUSH BUTTON, MAINTAINED
  - NORMALLY CLOSED
  - PUSH-TO-OPEN
- PUSH BUTTON, KEY OPERATED
  - NORMALLY OPEN
- TIMER RELAY CONTACTS
  - DELAY-ON-MAKE
  - DELAY-ON-BREAK
- LIMIT SWITCHES
  - N.C. @ CLOSED
  - N.C. @ OPEN
  - N.O. @ OPEN
  - N.O. @ CLOSED
- TEMPERATURE SWITCH
  - N.C. OPEN ON HIGH TEMP.
  - N.O. CLOSED ON HIGH TEMP.
- MOTOR DISC SWITCH
- WIRING
  - PROPOSED
  - EXISTING
  - AERIAL CABLE
  - SHIELDED PAIR
  - TWISTED PAIR
  - OUTER SHIELD
  - CONNECTED
  - NOT CONNECTED
  - GROUND
- PRESSURE SWITCHES
  - N.O. @ OPEN
  - N.C. @ CLOSED
- SS A3 — SURGE SUPPRESSOR
  - A3,B3,C3 = CATEGORY
- MOTOR HEATER

ABBREVIATIONS

A, AMP	AMPERES
AF	AMP FRAME
AT	AMP TRIP
ATS	AUTOMATIC TRANSFER SWITCH
BG	BARRIER GATE
BP	BYPASS
CAM	ROTARY CAM LIMIT SWITCH
CB	CIRCUIT BREAKER
CCTV	CLOSED CIRCUIT TELEVISION
CL	CLEARANCE LIGHT
CP	CONTROL PANEL
CR	CONTROL RELAY
CT	CURRENT TRANSFORMER
DISC	DISCONNECT
E.G.	EARTH GROUND
EMERG	EMERGENCY POWER
ENG/GEN	ENGINE GENERATOR SET
EOC	EAST-ON-COMING
EOCD	EOC GATE DOWN
EOCU	EOC GATE UP
EOG	EAST-OFF-GOING
EOGD	EOG GATE DOWN
EOGU	EOG GATE UP
EOT	END OF TRAVEL
ESTOP	EMERGENCY STOP
FA	FAR ADJACENT
FC	(SPAN) FULLY CLOSED
FD	FRONT DOOR (WARNING GATE)
FO	(SPAN) FULLY OPEN
FO	FAR OPPOSITE
FL	FLASHING LIGHTS
FU	FUSE
FVR	FULL VOLTAGE REVERSING
FVNR	FULL VOLTAGE NON-REVERSING
G, GND	GROUND
GEN	GENERATOR
GL	GAUGE LIGHT
HC	HAND CRANK (WARNING GATE)
HP	HORSEPOWER
IL	INDICATING LIGHT
IR	CURRENT RELAY
JB	JUNCTION BOX (W/TB'S)
JMTR	JACK MOTOR
KW	KILOWATTS
LA	LIGHTNING ARRESTOR
LGT	LIGHT
LP	LIGHTING PANEL
LS	LIMIT SWITCH
M	MOTOR CONTACTOR
MACB	MACHINERY BRAKE
MCC	MOTOR CONTROL CENTER
MD	MAIN DISC. SW.
MTR	MOTOR
MTRB	MOTOR BRAKE
NA	NEAR ADJACENT
NAV	NAVIGATION
NC	(SPAN) NEARLY CLOSED
N-MTR	NEAR MOTOR
NO	(SPAN) NEARLY OPEN
NO	NEAR OPPOSITE
PA	PUBLIC ADDRESS SYSTEM
PB	PUSH BUTTON, PULL BOX
PERM	PERMISSIVE
PL	PIER LIGHT
PLFA	POWER LIMITED FIRE ALARM
PP	POWER PANEL
RD	REAR DOOR (WARNING GATE)
RECPT	RECEPTACLE
REL	RELEASED
RES	RESISTOR BANK
RGS	RIGID GALVANIZED STEEL
RMC	RIGID METALLIC CONDUIT
SL	SPAN LOCK
SPD	SURGE PROTECTION DEVICE
SW	SWITCH
TC	TERMINATION CABINET
TG	TRAFFIC GATE
THERMO	THERMOSTAT
TL	TRAFFIC LIGHT
TS	THERMOSTAT SWITCH
V	VOLTS
VFD	VARIABLE FREQUENCY DRIVE
W	WATTS
WOC	WEST ON-COMING
WOCD	WOC GATE DOWN
WOCU	WOC GATE UP
WOG	WEST OFF-GOING
WOGD	WOG GATE DOWN
WOGU	WOG GATE UP
XDUCER	TRANSDUCER
XFMR	TRANSFORMER
ZI	POSITION INDICATOR
ZT	POSITION TRANSMITTER

CONTROL DEVICES

LOCATION LEGEND

- 1 — CONTROL PANEL, CP-1
- 2 — CONTROL PANEL, CP-2
- D — DRIVE SYSTEM PANEL
- F — FIELD LOCATED DEVICE
- G — GATES
- L — LIGHTING PANEL
- M — MOTOR CONTACTOR, MCC
- T — TRAFFIC LIGHTS
- ⊠ — XFER. SW.
- S — SUB CABLE-BOX, CABLE, BOX
- U — UPS, UNINTERRUPTABLE POWER SUPPLY
- J — END JACKS
- SS — SURGE SUPPRESSORS

DESIGN AGENCY
WSP
1660 WEST 2ND STREET
SUITE 850
CLEVELAND, OHIO 44113

DESIGNED	DRAWN	REVIEWED	DATE
RMD	RMD	GSP	10/23/20
CHECKED	REVISED	STRUCTURE FILE NUMBER	
BLC	---	1869345	

ELECTRICAL LEGEND

CITY OF CLEVELAND BRIDGE NO. 1:003M
CENTER STREET SWING BRIDGE OVER THE CUYAHOGA RIVER

CUY-CENTER ST.
SWING BRIDGE
PID NO: 109597

LEGEND

EXISTING

PROPOSED

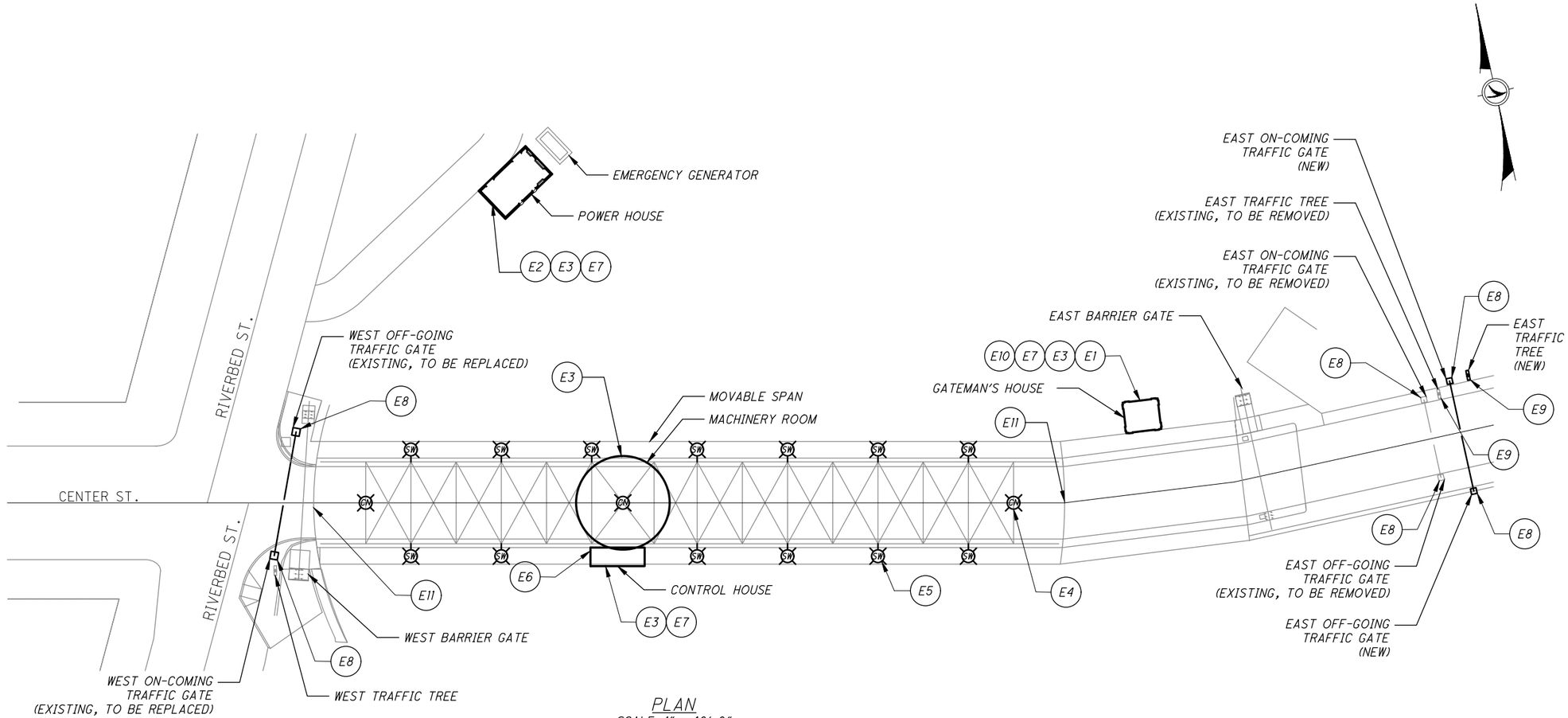

PLAN

SCALE: 1" = 40'-0"

ELETRICAL WORK IDENTIFICATION SCHEDULE		
MARK NO.	DESCRIPTION	REFERENCE DRAWINGS
E1	REMOVE EXISTING MOTOR CONTROL CENTER. FURNISH AND INSTALL NEW MOTOR CONTROL CENTER.	E5, E9, E10
E2	REMOVE EXISTING BUCKETS IN MOTOR CONTROL CENTER. FURNISH AND INSTALL NEW BUCKETS IN MOTOR CONTROL CENTER.	E5, E6, E10
E3	REMOVE EXISTING FIRE ALARM EQUIPMENT AND CONDUCTORS. FURNISH AND INSTALL NEW FIRE ALARM EQUIPMENT AND CONDUCTORS.	E6, E7, E9, E12
E4	REMOVE EXISTING CHANNEL NAVIGATION LIGHTS, CONDUIT, CONDUCTORS, AND CONDUIT SUPPORTS. FURNISH AND INSTALL NEW CHANNEL NAVIGATION LIGHTS, CONDUIT, CONDUCTORS AND CONDUIT SUPPORTS..	E14, E15
E5	FURNISH AND INSTALL NEW SIDEWALK LIGHTING FIXTURES, CONDUIT, AND CONDUCTORS.	E18
E6	RELOCATE EXISTING 37.5 KVA TRANSFORMER UNDER NEW OPERATOR'S HOUSE STAIRS. REFER TO SPECIAL PROVISIONS FOR ADDITIONAL INFORMATION.	S30
E7	REMOVE EXISTING PANELBOARD. FURNISH AND INSTALL NEW PANELBOARD.	E6, E7, E9, E11
E8	REMOVE EXISTING WARNING GATES. FURNISH AND INSTALL NEW WARNING GATES	E34, E35, E36, E37
E9	REMOVE EXISTING EAST TRAFFIC TREE. FURNISH AND INSTALL NEW EAST TRAFFIC TREE.	E34, E35
E10	REMOVE EXISTING HVAC UNIT. FURNISH AND INSTALL NEW HVAC UNIT.	E9
E11	REMOVE AND REINSTALL THE END JACK ELECTRICAL COMPONENTS TO FACILITATE REPLACEMENT OF END FLOORBEAMS.	-

ELECTRICAL PAY ITEMS				
ITEM	EXTEN	TOTAL QUANTITY	DESCRIPTION	ID NO
SPECIAL	690E98400	LUMP SUM	SPECIAL-ELECTRICAL WORK - REPLACE EAST MOTOR CONTROL CENTER	-
SPECIAL	690E98400	LUMP SUM	SPECIAL-ELECTRICAL WORK - REHABILITATE WEST MOTOR CONTROL CENTER	-
SPECIAL	690E98400	LUMP SUM	SPECIAL-ELECTRICAL WORK - REPLACE FIRE ALARM SYSTEM	-
SPECIAL	690E98400	LUMP SUM	SPECIAL-ELECTRICAL WORK - REPLACE CHANNEL NAVIGATION LIGHTS	-
SPECIAL	690E98400	LUMP SUM	SPECIAL-ELECTRICAL WORK - INSTALL NEW SIDEWALK LIGHTING	-
SPECIAL	690E98400	LUMP SUM	SPECIAL-ELECTRICAL WORK - RELOCATE TRANSFORMER	-
SPECIAL	690E98400	LUMP SUM	SPECIAL-ELECTRICAL WORK - REPLACE PANELBOARDS	-
SPECIAL	690E98400	LUMP SUM	SPECIAL-ELECTRICAL WORK - REPLACE HVAC UNIT	-
SPECIAL	690E98400	LUMP SUM	SPECIAL-ELECTRICAL WORK - FINAL ACCEPTANCE TESTING	-
SPECIAL	690E98400	LUMP SUM	SPECIAL-ELECTRICAL WORK - ELECTRICAL SPARE PARTS	-
SPECIAL	690E98400	LUMP SUM	SPECIAL-ELECTRICAL WORK - REPLACE WARNING GATES	-
SPECIAL	690E98400	LUMP SUM	SPECIAL-ELECTRICAL WORK - REPLACE EAST TRAFFIC TREE	-
SPECIAL	690E98400	LUMP SUM	SPECIAL-ELECTRICAL WORK - END FLOORBEAM REPLACEMENT	-

DESIGN AGENCY
WSP
1660 WEST 2ND STREET
SUITE 850
CLEVELAND, OHIO 44113

DESIGNED	DRAWN	REVIEWED	DATE
RMD	RMD	GSP	10/23/20
CHECKED	REVISED	STRUCTURE FILE NUMBER	
BLC	---	1869345	

ELECTRICAL WORK IDENTIFICATION

CITY OF CLEVELAND BRIDGE NO. 1:003M

CENTER STREET SWING BRIDGE OVER THE CUYAHOGA RIVER

CUY-CENTER ST.
SWING BRIDGE
PID NO: 109597

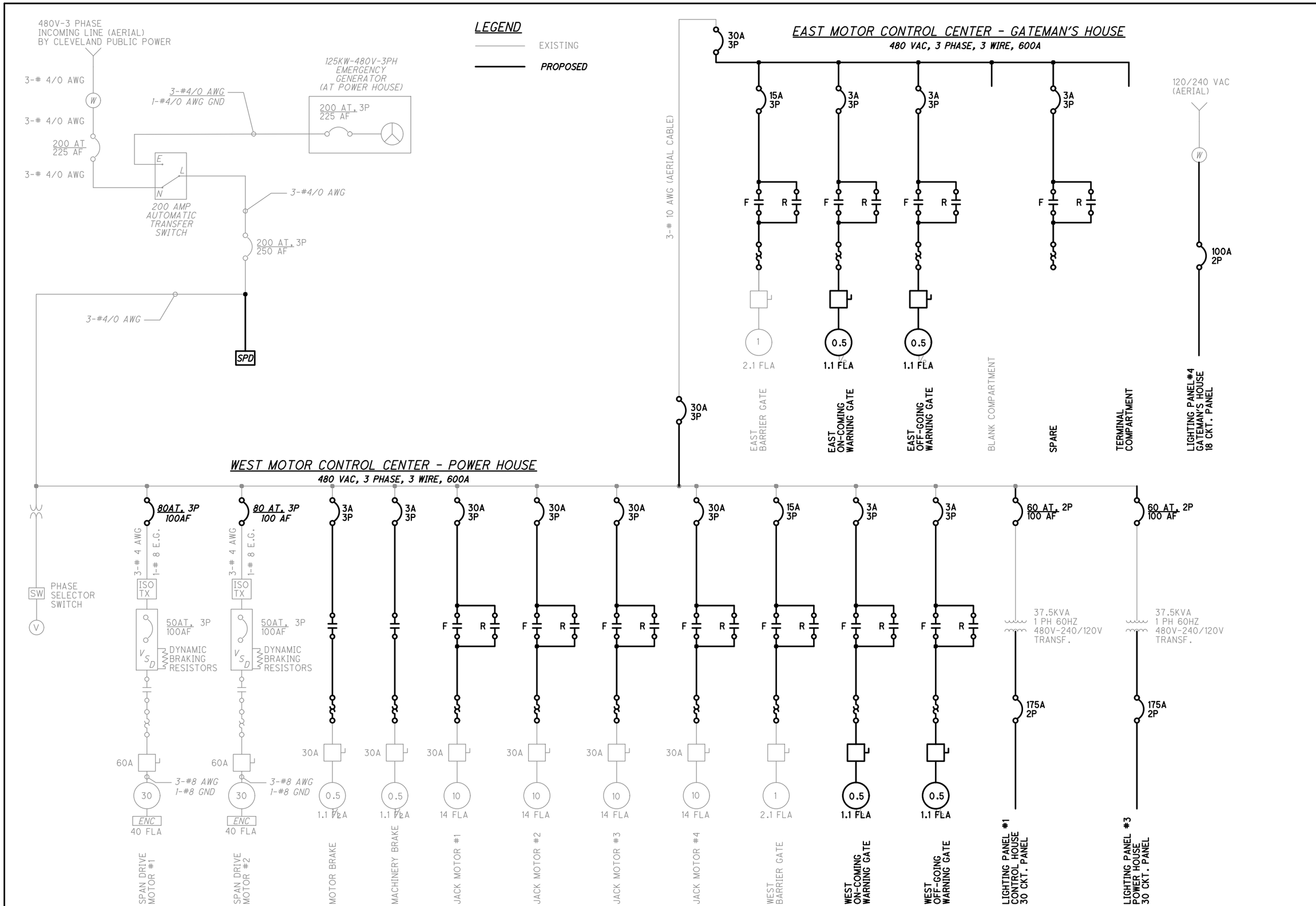

DESIGN AGENCY
WSP
1600 WEST 2ND STREET
SUITE 1000
CLEVELAND, OHIO 44113

DESIGNED	DRAWN	REVIEWED	DATE
RMD	RMD	GSP	10/23/20
CHECKED	REVISED	STRUCTURE FILE NUMBER	
BLC	---	1869345	

ELECTRICAL ONE LINE DIAGRAM

CITY OF CLEVELAND BRIDGE NO. 1:003M
CENTER STREET SWING BRIDGE OVER THE CUYAHOGA RIVER

CUY-CENTER ST.
SWING BRIDGE
PID NO: 109597

E5 / E37

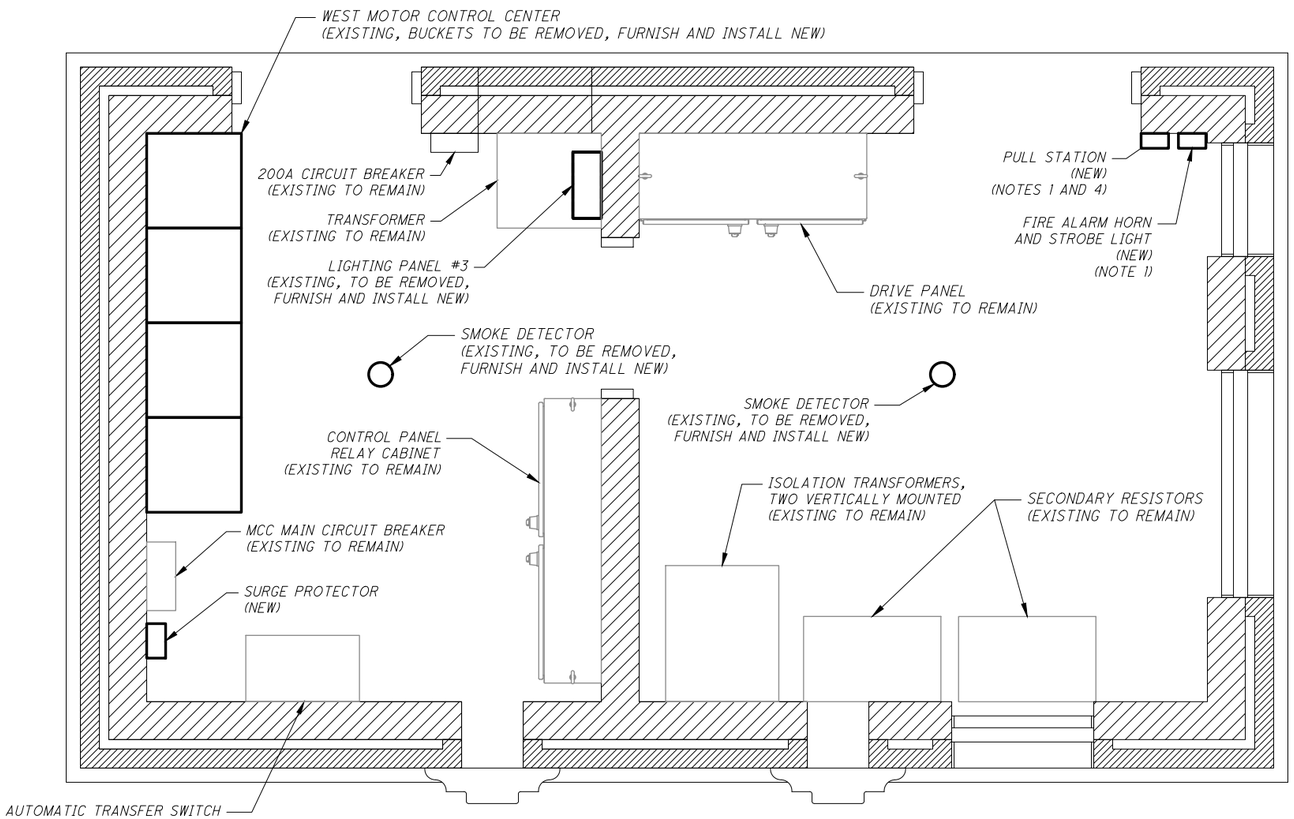

POWER HOUSE
NTS

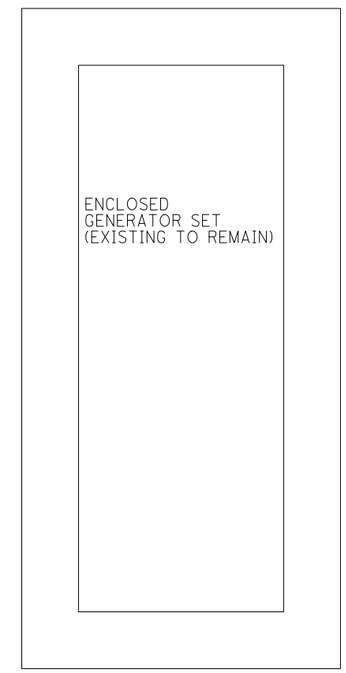

NOTES:

1. FIRE ALARM EQUIPMENT FED FROM THE PANEL LP-3.
2. FOR DETAILED TERMINAL CONNECTIONS, REFER TO INSTALLATION INSTRUCTIONS INCLUDED WITH DEVICES.
3. FOR DETAILS ON CABLE USES AND PERMITTED SUBSTITUTES, REFER TO NEC 760, TABLE 760-61(D).
4. INSTALL PULL STATION WITHIN 60" OF THE EXIT DOORWAY DETWEEN 42" AND 48" TO THE CENTER OF THE HANDLE. PULL STATION SHALL BE RED IN COLOR.
5. REFER TO NFPA 72 FOR FIRE ALARM INSTALLATION DETAILS.
6. INSTALL SURGE PROTECTION DEVICE ON LOAD SIDE OF MCC MAIN CIRCUIT BREAKER.

LEGEND

EXISTING

PROPOSED

DESIGN AGENCY
WSP
1660 WEST 2ND STREET
SUITE 850
CLEVELAND, OHIO 44113

DESIGNED	DRAWN	REVIEWED	DATE
RMD	RMD	GSP	10/23/20
CHECKED	REVISED	STRUCTURE FILE NUMBER	
BLC	---	1869345	

POWER HOUSE ELECTRICAL LAYOUT
CITY OF CLEVELAND BRIDGE NO. 1:003M
CENTER STREET SWING BRIDGE OVER THE CUYAHOGA RIVER

CUY-CENTER ST.
SWING BRIDGE
PID NO: 109597

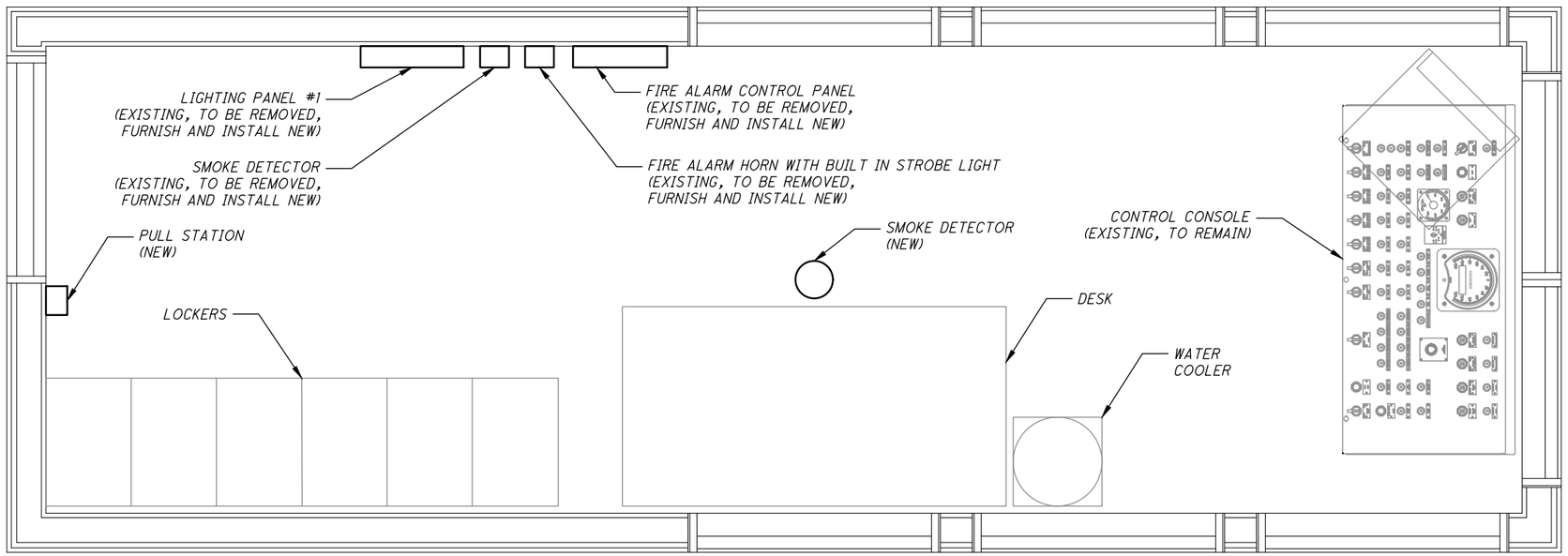

CONTROL HOUSE
NTS

NOTES:

1. FOR DETAILED TERMINAL CONNECTIONS, REFER TO INSTALLATION INSTRUCTIONS INCLUDED WITH DEVICES.
2. FOR DETAILS ON CABLE USES AND PERMITTED SUBSTITUTES, REFER TO NEC 760, TABLE 760-61(D).
3. INSTALL PULL STATION WITHIN 60" OF THE EXIT DOORWAY DETWEEN 42" AND 48" TO THE CENTER OF THE HANDLE. PULL STATION SHALL BE RED IN COLOR.
4. REFER TO NFPA 72 FOR FIRE ALARM INSTALLATION DETAILS.
5. RELOCATE 37.5KVA TRANSFORMER UNDER NEW CONTROL HOUSE STAIRS. INTERCEPT EXISTING CONDUIT AND EXTEND TO THE NEW TRANSFORMER LOCATION. REPLACE PRIMARY CONDUCTORS BETWEEN THE TRANSFORMER AND EXISTING JUNCTION BOX LOCATED UNDER THE CONTROL HOUSE. REPLACE SECONDARY CONDUCTORS BETWEEN THE TRANSFORMER AND PANEL LP#1 IN THE CONTROL HOUSE. ENSURE TRANSFORMER IS CONNECTED TO THE BRIDGE GROUND SYSTEM IN ACCORDANCE WITH NEC 250.

LEGEND

EXISTING

PROPOSED

DESIGN AGENCY
WSP
1660 WEST 2ND STREET
SUITE 850
CLEVELAND, OHIO 44113

DESIGNED	DRAWN	REVIEWED	DATE
RMD	RMD	GSP	10/23/20
CHECKED	REVISED	STRUCTURE FILE NUMBER	
BLC	---	1869345	

CONTROL HOUSE ELECTRICAL LAYOUT
CITY OF CLEVELAND BRIDGE NO. 1:003M
CENTER STREET SWING BRIDGE OVER THE CUYAHOGA RIVER

CUY-CENTER ST.
SWING BRIDGE
PID NO: 109597

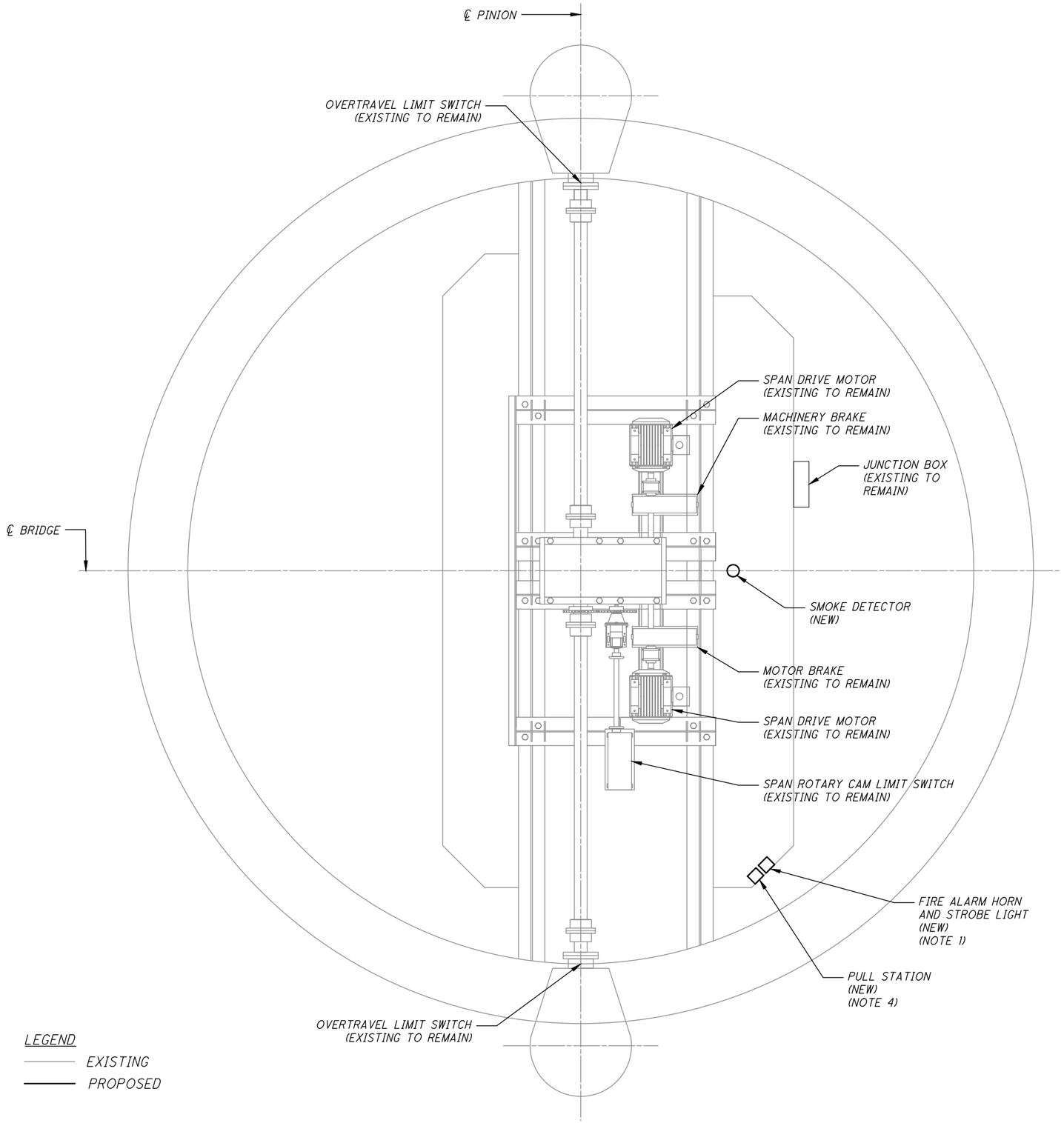

LEGEND

EXISTING

PROPOSED

MACHINERY ROOM

NTS

NOTES:

1. FIRE ALARM EQUIPMENT FED FROM THE JUNCTION BOX ON THE EAST WALL OF THE MACHINERY ROOM.
2. FOR DETAILED TERMINAL CONNECTIONS, REFER TO INSTALLATION INSTRUCTIONS INCLUDED WITH DEVICES.
3. FOR DETAILS ON CABLE USES AND PERMITTED SUBSTITUTES, REFER TO NEC 760, TABLE 760-61(D).
4. INSTALL PULL STATION WITHIN 60" OF THE EXIT DOORWAY BETWEEN 42" AND 48" TO THE CENTER OF THE HANDLE. PULL STATION SHALL BE RED IN COLOR.
5. REFER TO NFPA 72 FOR FIRE ALARM INSTALLATION DETAILS.

DESIGN AGENCY
WSP
1660 WEST 2ND STREET
SUITE 850
CLEVELAND, OHIO 44113

DESIGNED	DRAWN	REVIEWED	DATE
RMD	RMD	GSP	10/23/20
CHECKED	REVISED	STRUCTURE FILE NUMBER	
BLC	---	1869345	

MACHINERY ROOM ELECTRICAL LAYOUT

CITY OF CLEVELAND BRIDGE NO. 1:003M
CENTER STREET SWING BRIDGE OVER THE CUYAHOGA RIVER

CUY-CENTER ST.
SWING BRIDGE
PID NO: 109597

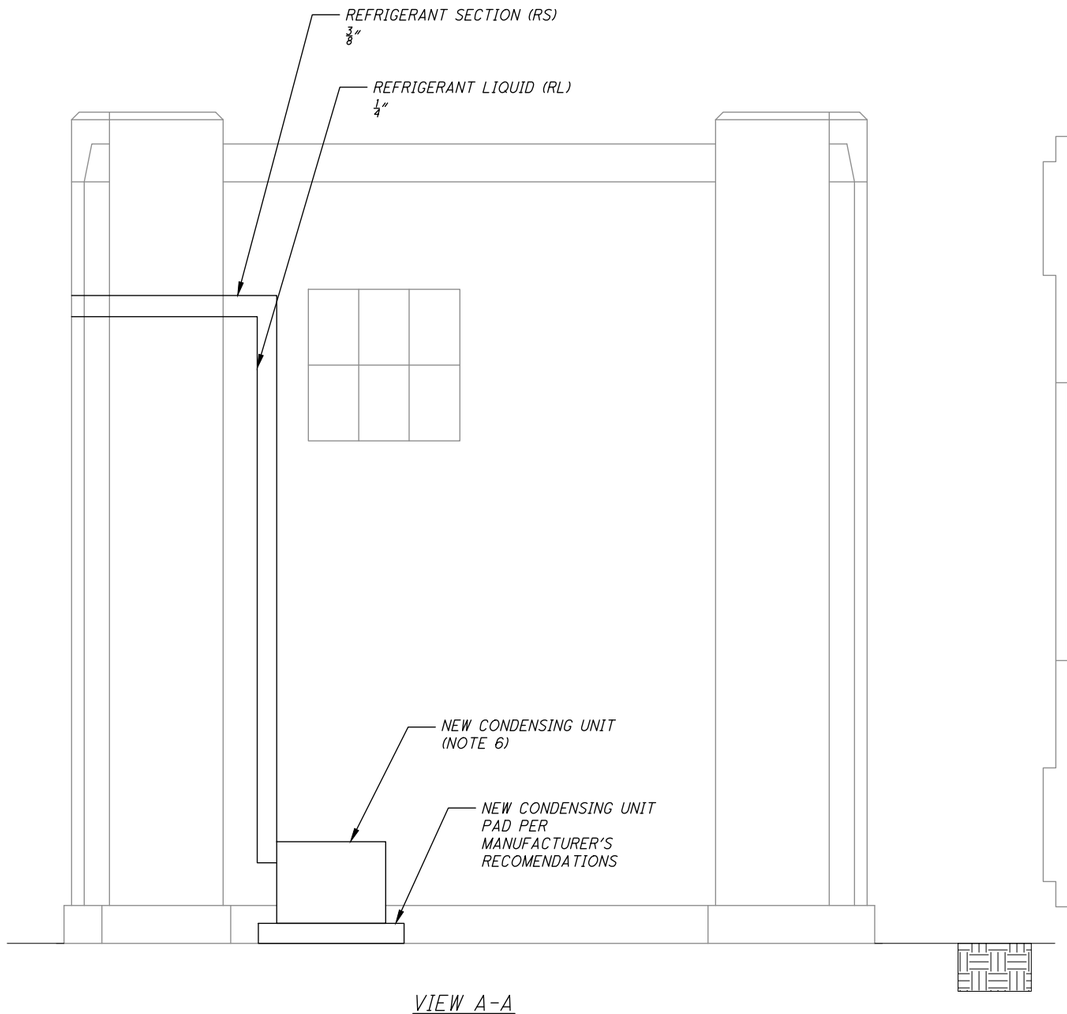

VIEW A-A
NTS

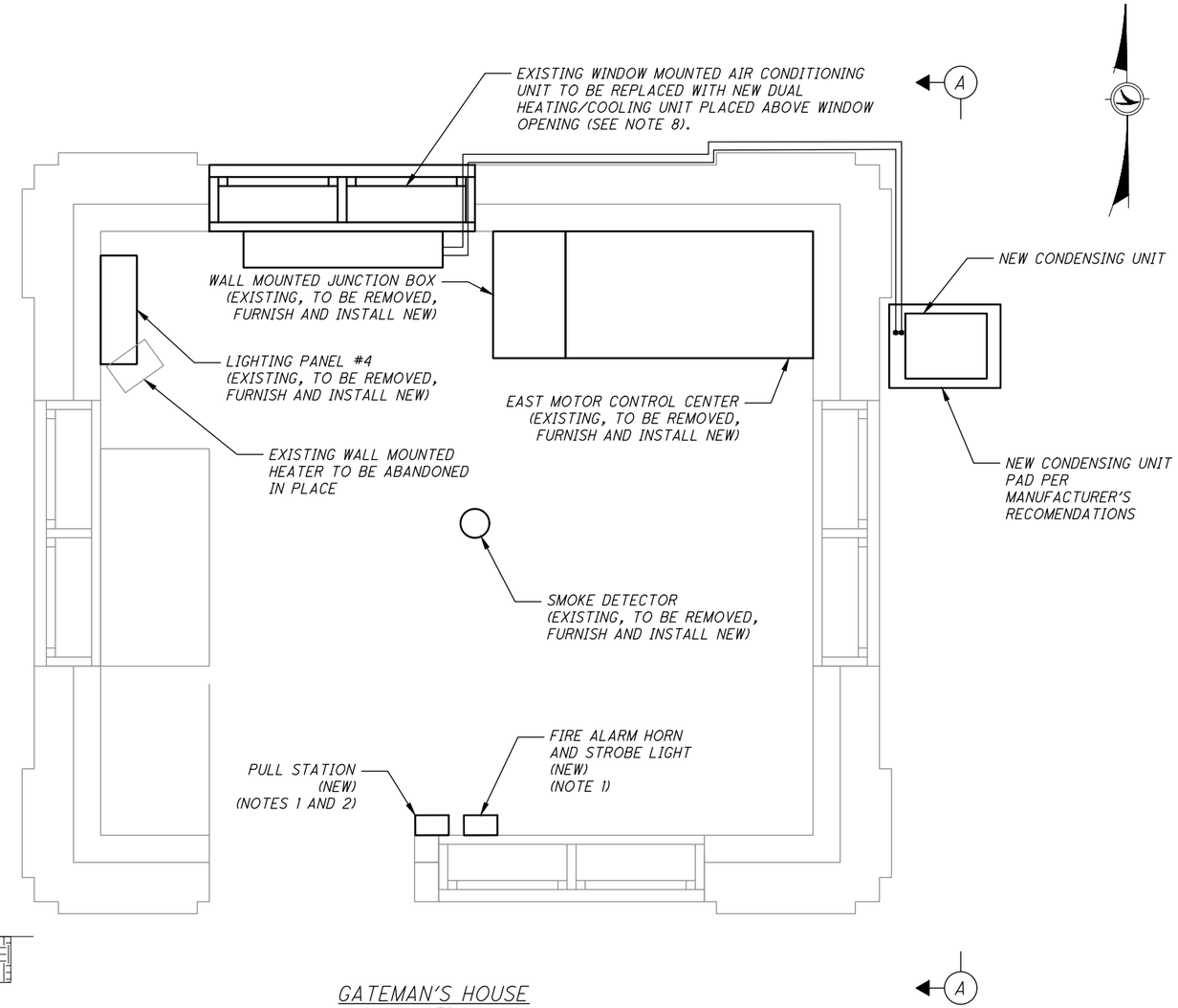

GATEMAN'S HOUSE
NTS

NOTES:

1. FIRE ALARM EQUIPMENT FED FROM LIGHTING PANEL LP-4.
2. FOR DETAILED TERMINAL CONNECTIONS, REFER TO INSTALLATION INSTRUCTIONS INCLUDED WITH DEVICES.
3. FOR DETAILS ON CABLE USES AND PERMITTED SUBSTITUTES, REFER TO NEC 760, TABLE 760-61(D).
4. INSTALL PULL STATION WITHIN 60" OF THE EXIT DOORWAY DETWEEN 42" AND 48" TO THE CENTER OF THE HANDLE. PULL STATION SHALL BE RED IN COLOR.
5. REFER TO NFPA 72 FOR FIRE ALARM INSTALLATION DETAILS.
6. NEW HVAC UNIT SHALL BE A DUAL PURPOSE HEATING AND COOLING SYSTEM.
7. PROVIDE POWER TO NEW HVAC UNIT FROM LIGHTING PANEL #4.
8. CONTRACTOR IS TO PROPERLY SEAL OPENING LEFT IN WINDOW FRAME WITH INSULATED BOARD.

LEGEND
EXISTING
PROPOSED

DESIGN AGENCY
WSP
1660 WEST 2ND STREET
SUITE 850
CLEVELAND, OHIO 44113

DESIGNED	DRAWN	REVIEWED	DATE
RMD	RMD	GSP	10/23/20
CHECKED	REVISED	STRUCTURE FILE NUMBER	
BLC	---	1869345	

GATEMAN'S HOUSE ELECTRICAL LAYOUT
CITY OF CLEVELAND BRIDGE NO. 1:003M
CENTER STREET SWING BRIDGE OVER THE CUYAHOGA RIVER

CUY-CENTER ST.
SWING BRIDGE
PID NO: 109597

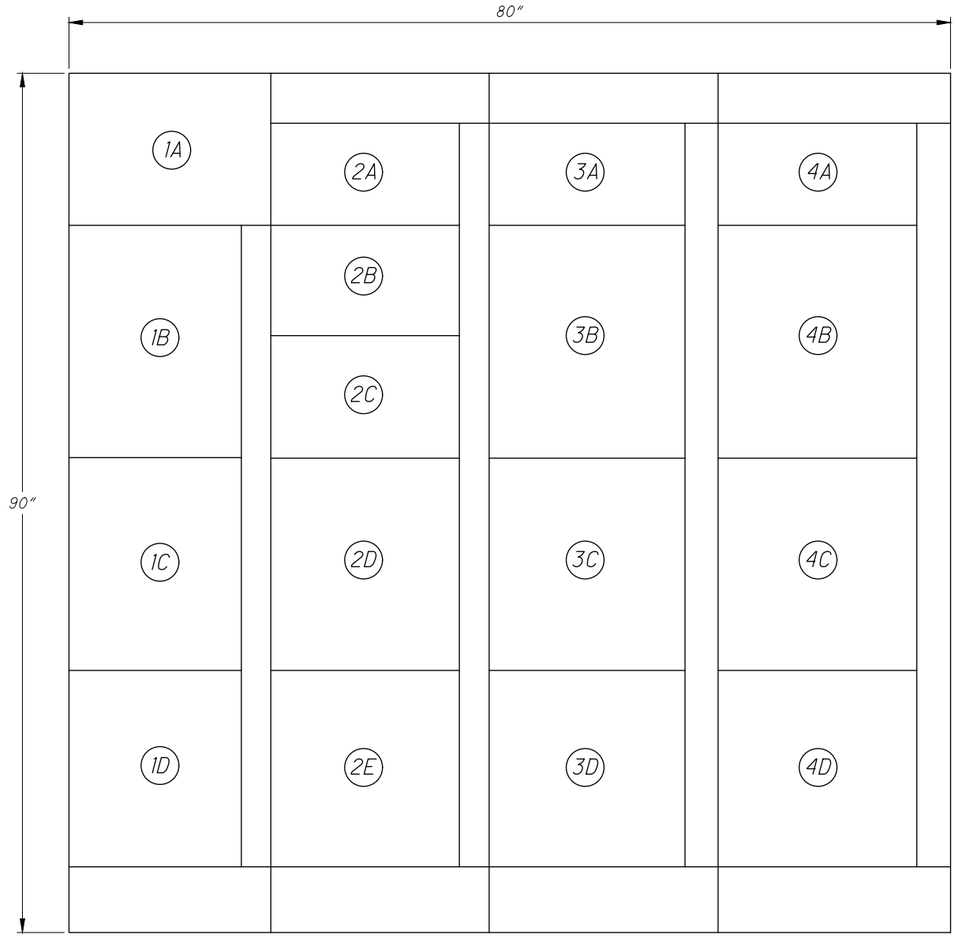

ELEVATION
SCALE: NTS

WEST MOTOR CONTROL CENTER

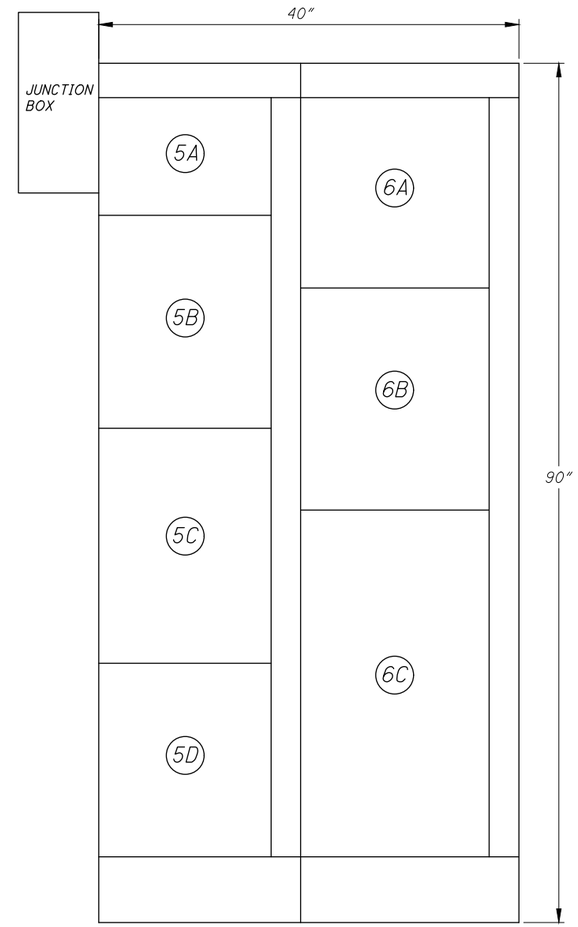

ELEVATION
SCALE: NTS

EAST MOTOR CONTROL CENTER

UNIT LOC	NAMEPLATE DESIGNATION	UNIT TYPE	SIZE	HP
1A	MAIN BREAKER	-	-	-
1B	METERING COMPARTMENT	-	-	-
1C	SPAN DRIVE MOTOR A AND B ISO TRANSFORMERS	-	-	-
1D	NORTH EAST JACK MOTOR	FVR	NEMA 1	10
2A	SPARE	SPARE	-	-
2B	MOTOR BRAKE	FVNR	NEMA 1	0.5
2C	MACHINERY BRAKE	FVNR	NEMA 1	0.5
2D	NORTH WEST JACK MOTOR	FVR	NEMA 1	10
2E	SOUTH EAST JACK MOTOR	FVR	NEMA 1	10
3A	CONTROL HOUSE LIGHTING PANEL AND GATEMAN'S HOUSE FEEDER	BRANCH BREAKER	-	-
3B	EAST BANK TERMINATIONS	-	-	-
3C	SOUTH WEST JACK MOTOR	FVR	NEMA 1	10
3D	CONTROL PANEL 2 TERMINATIONS	-	-	-
4A	POWER HOUSE LIGHTING PANEL FEEDER	BRANCH BREAKER	-	-
4B	WEST BARRIER GATE	FVR	NEMA 1	1
4C	WEST ONCOMING WARNING GATE	FVR	NEMA 1	0.5
4D	WEST OFFGOING WARNING GATE	FVR	NEMA 1	0.5
5A	MAIN BREAKER	-	-	-
5B	EAST ONCOMING WARNING GATE	FVR	NEMA 1	0.5
5C	EAST OFFGOING WARNING GATE	FVR	NEMA 1	0.5
5D	EAST BARRIER GATE	FVR	NEMA 1	1
6A	BLANK	-	-	-
6B	SPARE	FVR	NEMA 1	-
6C	EAST BANK TERMINATIONS	SPARE	-	-

NOTES:

GENERAL:

1. ALL SHOWN CABINETS SHALL BE NEMA 12 FOR INDOOR LOCATION UNLESS OTHERWISE NOTED.
2. UNIT LATCHES, DOOR HARDWARE, WIREWAY BARRIERS, UNIT SUPPORT PANS, AND OTHER IMPLANTED PARTS SHALL BE SUITABLY PLATED FOR RESISTANCE TO CORROSION.
3. EACH COMBINATION STARTER UNIT OR OTHER UNIT CONFIGURATION SHALL HAVE AN INDIVIDUAL DOOR GIVING ACCESS ONLY TO THAT UNIT.
4. OPERATING HANDLES ON EACH UNIT SHALL BE PADLOCKABLE IN THE OFF POSITION.
5. NAMEPLATES BEARING THE NAME OF THE EQUIPMENT SERVED SHALL BE PROVIDED ON EACH UNIT OF EACH MCC CABINET. NAMEPLATES SHALL BE PERMANENTLY ATTACHED TO THE FRONT OF EACH UNIT WITH CORROSION-PROOF MACHINE SCREWS.
6. EACH CONTACTOR, CIRCUIT BREAKER, AND RELAY SHALL BE LABELED WITH ITS OWN INDIVIDUAL NAMEPLATE ACCORDING TO ITS DESIGNATION ON THE DRAWINGS, AND LOCATED INSIDE EACH MCC UNIT ADJACENT TO THE RESPECTIVE DEVICE.
7. CONTACTORS SHALL BE FULL VOLTAGE MAGNETIC, HORSEPOWER RATED WITH WELD RESISTANT CONTACTS. CONTACTS SHALL BE GRAVITY DROP-OUT. ARC COVERS SHALL BE EASILY REMOVABLE FOR INSPECTION AND REPLACEMENT OF THE CONTACTS. CONTACTORS SHALL HAVE PROVISIONS FOR INSTALLATION OF AUXILIARY CONTACTS.
8. GENERAL PURPOSE MOTOR OVERLOAD RELAYS SHALL BE AMBIENT COMPENSATED BIMETALLIC-TYPE. OVERLOAD RELAYS SHALL BE SPECIFIED TO INCLUDE REMOVABLE HEATER ELEMENTS AND TEST TRIP BUTTON.
9. OVERLOAD RELAYS SHALL BE CONNECTED SUCH THAT AN OVERLOAD ON ANY ONE PHASE TRIPS ALL THREE PHASES OF THE MOTOR CIRCUIT.

WEST MCC:

10. REPLACE BUCKETS, INTERNAL COMPONENTS, AND DOORS.

EAST MCC:

11. REMOVE EXISTING MCC, FURNISH AND INSTALL NEW MCC.
12. MCC SHALL BE UL LISTED, WIRING SHALL BE NEMA CLASS II, TYPE C.
13. ALL WEIGHT BEARING MEMBERS AND CONDUIT ENTRY ROOF PLATES SHALL BE 2.6 MM THICK STEEL OR HEAVIER.
14. HORIZONTAL WIREWAYS SHALL BE PROVIDED ON BOTH TOP AND BOTTOM. THE WIREWAYS SHALL BE COMPLETELY ISOLATED FROM ALL BUSES. A FULL HEIGHT VERTICAL WIREWAY SHALL BE PROVIDED IN EACH STANDARD VERTICAL SECTION.
15. CABINET FINISH SHALL BE BAKED ENAMEL, OR EPOXY, COLOR AS SPECIFIED. CABINET INTERIOR SURFACES SHALL BE ENAMEL COATED. HALF-HEIGHT UNITS SHALL NOT BE PERMITTED.

DESIGN AGENCY
1660 WEST 2ND STREET
SUITE 850
CLEVELAND, OHIO 44113

DESIGNED	DRAWN	REVIEWED	DATE
RMD	RMD	GSP	10/23/20
CHECKED	REVISED	STRUCTURE FILE NUMBER	
BLC	---	1869345	

MOTOR CONTROL CENTER ARRANGEMENT
CITY OF CLEVELAND BRIDGE NO. 1:003M
CENTER STREET SWING BRIDGE OVER THE CUYAHOGA RIVER

CUY-CENTER ST.
SWING BRIDGE
PID NO: 109597

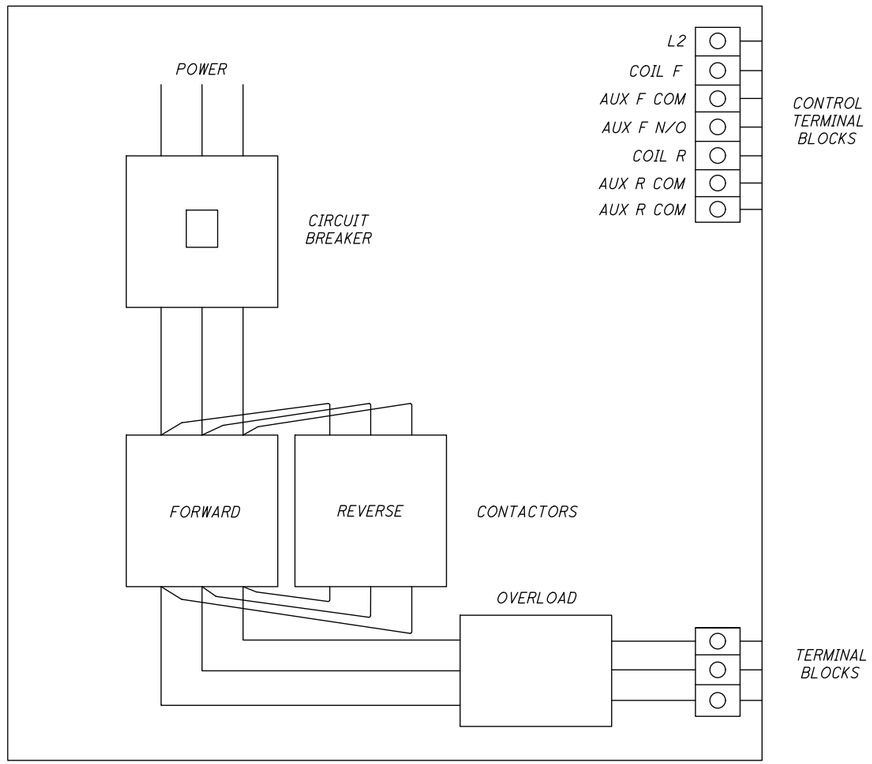

FULL VOLTAGE REVERSING

SCALE: NTS

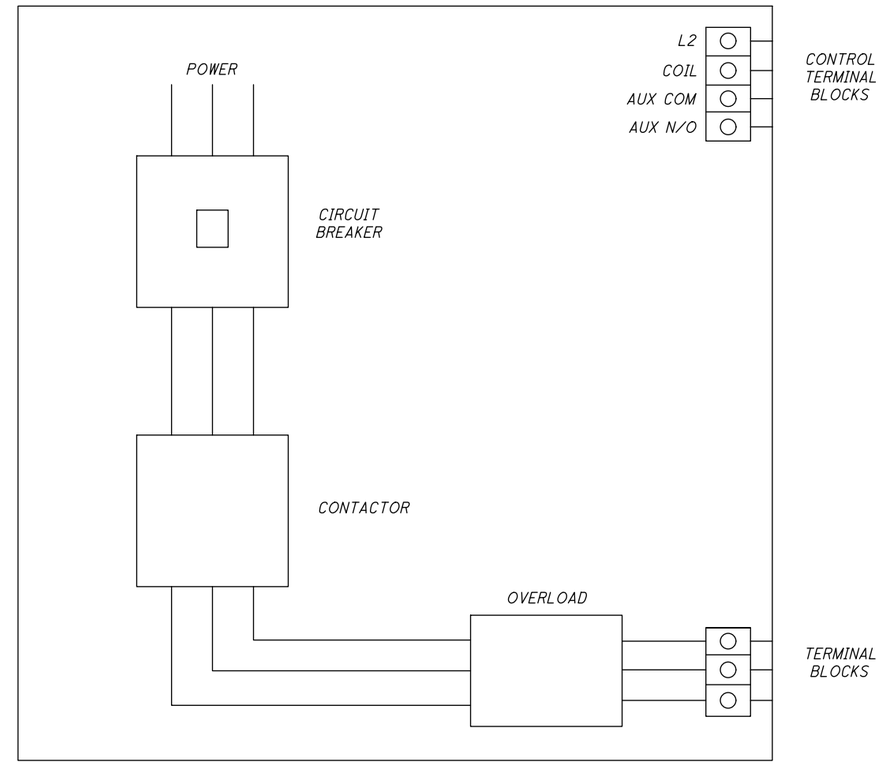

FULL VOLTAGE NON-REVERSING

SCALE: NTS

NOTES:

1. CONTROL WIRING NUMBER OF CONDUCTORS VARIES BY BUCKET. CONTROL WIRING TO BE REUSED.

DESIGN AGENCY
WSP
1660 WEST 2ND STREET
SUITE 850
CLEVELAND, OHIO 44113

DESIGNED	DRAWN	REVIEWED	DATE
RMD	RMD	GSP	10/23/20
CHECKED	REVISED	STRUCTURE FILE NUMBER	
BLC	---	1869345	

MOTOR CONTROL CENTER INTERIOR
CITY OF CLEVELAND BRIDGE NO. 1:003M
CENTER STREET SWING BRIDGE OVER THE CUYAHOGA RIVER

CUY-CENTER ST.
SWING BRIDGE
PID NO: 109597

E11/E37

83/109

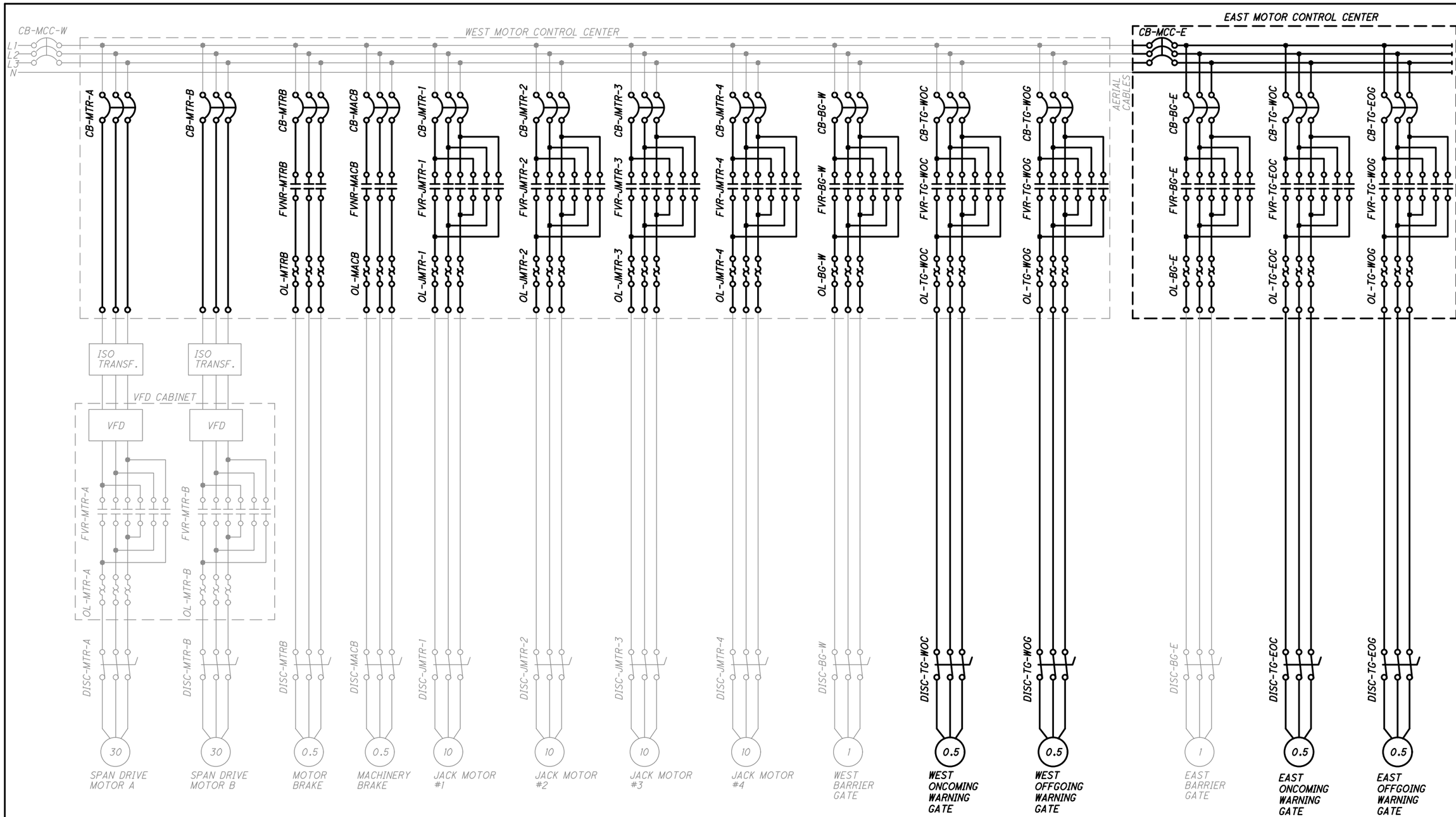

LEGEND

EXISTING

PROPOSED

DESIGN AGENCY

1600 WEST 2ND STREET
SUITE 850
CLEVELAND, OHIO 44113

DESIGNED	DRAWN	REVIEWED	DATE
RMD	RMD	GSP	10/23/20
CHECKED	REVISED	STRUCTURE FILE NUMBER	
BLC	---	1869345	

MOTOR STARTER WIRING DIAGRAM: THREE LINE

CITY OF CLEVELAND BRIDGE NO. 1:003M
CENTER STREET SWING BRIDGE OVER THE CUYAHOGA RIVER

CUY-CENTER ST.
SWING BRIDGE
PID NO: 109597

E12 / E37

PANEL LP-1

CKT NO.	SERVICE	CB (A)	SOLID NEUTRAL	CB (A)	SERVICE	CKT NO.
1	HORN	20		20	AIR CONDITIONING UNIT	2
3	PIER AUX	20				4
5	SPARE	-		20	STREET LIGHTS	6
7				20	SPAN NAVIGATION LIGHTS	8
9	SPARE	-		20	FIRE ALARM	10
11	CONTROL SYSTEM UPS POWER	20		20	CCTV SYSTEM	12
13	DRIVE PLATFORM	20		20	EAST JACK MOTOR HEATERS	14
15	CONTROL HOUSE LIGHTS	20		20	WEST JACK MOTOR HEATERS	16
17	CONTROL HOUSE RECEP.	20		20	CCTV CAMERA	18
19	MACHINERY ROOM HEATER	20		20	CCTV CAMERA	20
21				20	CCTV CAMERA	22
23	CONTROL HOUSE HEATER	30		20	CCTV CAMERA	24
25				20	CCTV CAMERA	26
27	SIDEWALK LIGHTING CKT. 1	20		-	SPARE	28
29	SIDEWALK LIGHTING CKT. 2	20		-	SPARE	30

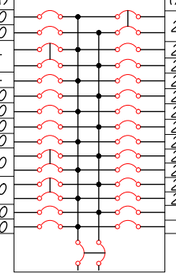

SERVICE CHARACTERISTICS

30 CIRCUIT PANEL
240/120 VOLT, 1 PHASE, 3 WIRE
MAIN CB: 22KA SHORT CIRCUIT RATING
MIN CB: 18KA SHORT CIRCUIT RATING
175 AMP MAIN CIRCUIT BREAKER
PANEL MOUNTING: SURFACE
ENCLOSURE: NEMA 4X
LOCATION: CONTROL HOUSE

PANEL LP-4

CKT NO.	SERVICE	CB (A)	SOLID NEUTRAL	CB (A)	SERVICE	CKT NO.
1	BATHROOM RECEP.	20		20	NOAA	2
3	BATHROOM LIGHTS	20		20	GATEMAN'S HOUSE RECEP.	4
5	EAST FENDER NAV LIGHTS	20		20	SPARE	6
7	HOT WATER TANK	20		20	EAST CAMERA HEATER	8
9	BATHROOM HEATER	30		20	AIR CONDITIONING UNIT	10
11						12
13	SPARE	-		-	SPARE	14
15	SPARE	-		-	SPARE	16
17	SPARE	-		-	SPARE	18

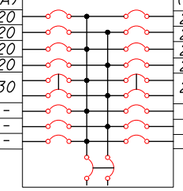

SERVICE CHARACTERISTICS

18 CIRCUIT PANEL
240/120 VOLT, 1 PHASE, 3 WIRE
MAIN CB: 22KA SHORT CIRCUIT RATING
MIN CB: 18KA SHORT CIRCUIT RATING
100 AMP MAIN CIRCUIT BREAKER
PANEL MOUNTING: SURFACE
ENCLOSURE: NEMA 4X
LOCATION: GATEMAN'S HOUSE

PANEL LP-3

CKT NO.	SERVICE	CB (A)	SOLID NEUTRAL	CB (A)	SERVICE	CKT NO.
1	POWER HOUSE HEATER	20		20	POWER HOUSE HEATER	2
3						4
5	POWER HOUSE LIGHTING	20		20	EXHAUST LOUVER	6
7	POWER HOUSE RECEP.	20		-	SPARE	8
9	WEST FENDER NAV LIGHTS	20		20	WARNING GATE GONG/LIGHTS	10
11	GENERATOR POWER	20		-	SPARE	12
13	SPARE	-		-	SPARE	14
15	POLE LIGHT	20		-	SPARE	16
17	SPARE	-		-	SPARE	18
19	SPARE	-		-	SPARE	20
21	SPARE	-		20	SPAN DRIVE MOTOR HEATER	22
23	SPARE	-		20	WEST WARNING GATE RECEP.	24
25	SPARE	-		20	EAST WARNING GATE RECEP.	26
27	SPARE	-		-	SPARE	28
29	SPARE	-		-	SPARE	30

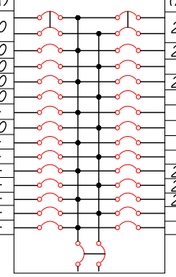

SERVICE CHARACTERISTICS

30 CIRCUIT PANEL
240/120 VOLT, 1 PHASE, 3 WIRE
MAIN CB: 22KA SHORT CIRCUIT RATING
MIN CB: 18KA SHORT CIRCUIT RATING
175 AMP MAIN CIRCUIT BREAKER
PANEL MOUNTING: SURFACE
ENCLOSURE: NEMA 4X
LOCATION: POWER HOUSE

NOTES:

1. CIRCUIT BREAKERS SHALL BE MOLDED CASE-TYPE WITH THERMAL-MAGNETIC TRIP.
2. BRANCH CIRCUITS SHALL BE REUSED UNLESS SPECIFIED ELSEWHERE IN THE PLANS OR SPECIFICATIONS.
3. REPLACE FEEDERS UP TO THE CLOSEST JUNCTION BOX OR TERMINATION.

DESIGN AGENCY
WSP
1660 WEST 2ND STREET
SUITE 850
CLEVELAND, OHIO 44113

DESIGNED	DRAWN	REVIEWED	DATE
RMD	RMD	GSP	10/23/20
CHECKED	REVISED	STRUCTURE FILE NUMBER	
BLC	---	1869345	

PANELBOARD SCHEDULE
CITY OF CLEVELAND BRIDGE NO. 1:003M
CENTER STREET SWING BRIDGE OVER THE CUYAHOGA RIVER

CUY-CENTER ST.
SWING BRIDGE
PID NO: 109597

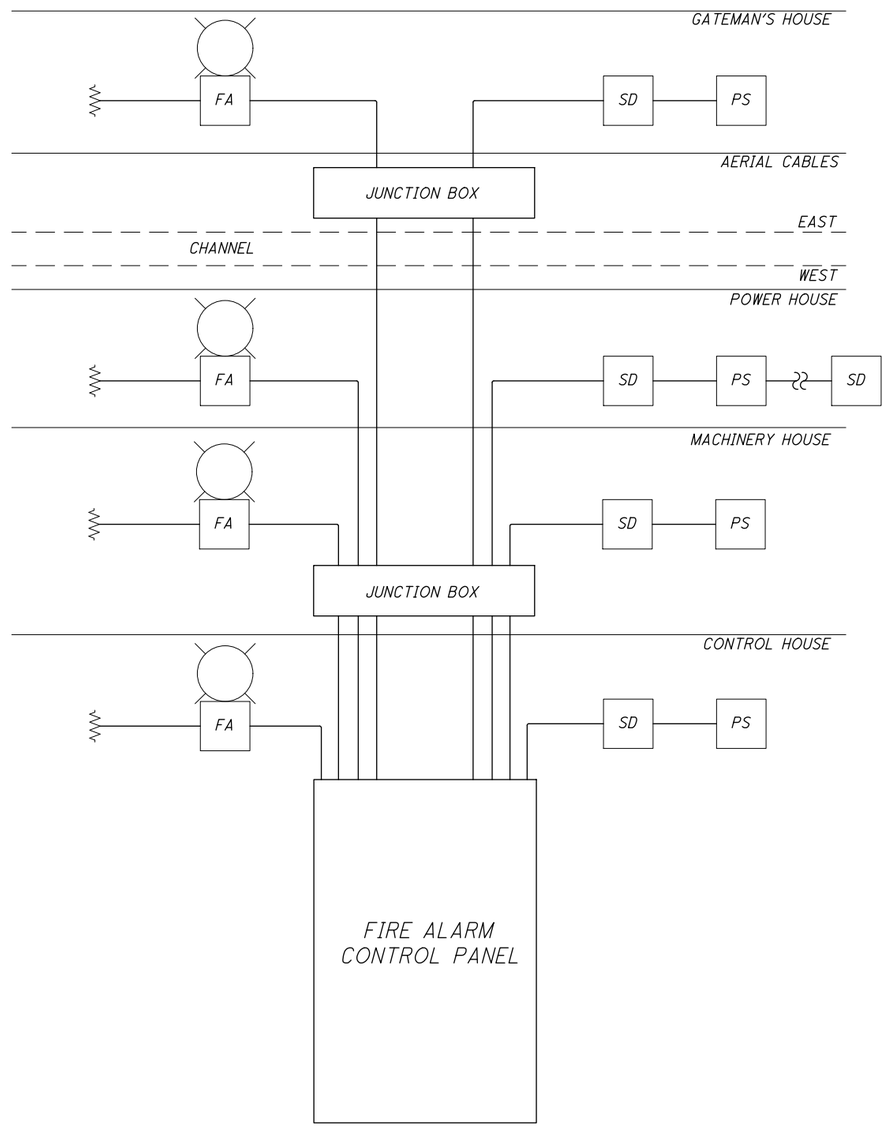

LEGEND:

FA	FIRE ALARM HORN AND STROBE LIGHT
PS	PULL STATION
SD	SMOKE DETECTOR
~~	END OF LINE RESISTOR

NOTES:

1. RISER DIAGRAM IS FOR WIRING AND CIRCUIT INFORMATION ONLY, DO NOT USE AS A CONDUIT REFERENCE.
2. ALL NEW WIRING MUST TEST FREE OF GROUNDS, SHORTS, CROSSES, AND OPENS.
3. FOR DETAILED TERMINAL CONNECTIONS, REFER TO INSTALLATION INSTRUCTIONS INCLUDED WITH DEVICES.
4. FOR DETAILS ON CABLE USES AND PERMITTED SUBSTITUTIONS, REFER TO NEC 760, TABLE 760-61(D).
5. INSTALL PULL STATION WITHIN 60" OF THE EXIT DOORWAY BETWEEN 42" AND 48" TO THE CENTER OF THE HANDLE. PULL STATION SHALL BE RED IN COLOR.
6. REFER TO NFPA 72 FOR FIRE ALARM INSTALLATION DETAILS.
7. ALL EXISTING FIRE ALARM CONDUCTORS, NOT INCLUDING AERIAL CABLE, SHALL BE REPLACED.
8. CONDUITS ROUTED FROM THE FIRE ALARM CONTROL PANEL TO THE MACHINERY HOUSE SHALL BE NEW. CONDUITS FEEDING ALL PULL STATIONS AND FIRE ALARM HORN AND STROBE LIGHTS SHALL BE NEW.
9. CONDUIT IN THE CONTROL HOUSE FEEDING THE SMOKE DETECTOR SHALL BE REPLACED DUE TO THE SMOKE DETECTOR RELOCATION.

DESIGN AGENCY
WSP
1660 WEST 2ND STREET
SUITE 850
CLEVELAND, OHIO 44113

DESIGNED	DRAWN	REVIEWED	DATE
RMD	RMD	GSP	10/23/20
CHECKED	REVISED	STRUCTURE FILE NUMBER	
BLC	---	1869345	

FIRE ALARM RISER DIAGRAM

CITY OF CLEVELAND BRIDGE NO. 1:003M
CENTER STREET SWING BRIDGE OVER THE CUYAHOGA RIVER

CUY-CENTER ST.
SWING BRIDGE
PID NO: 109597

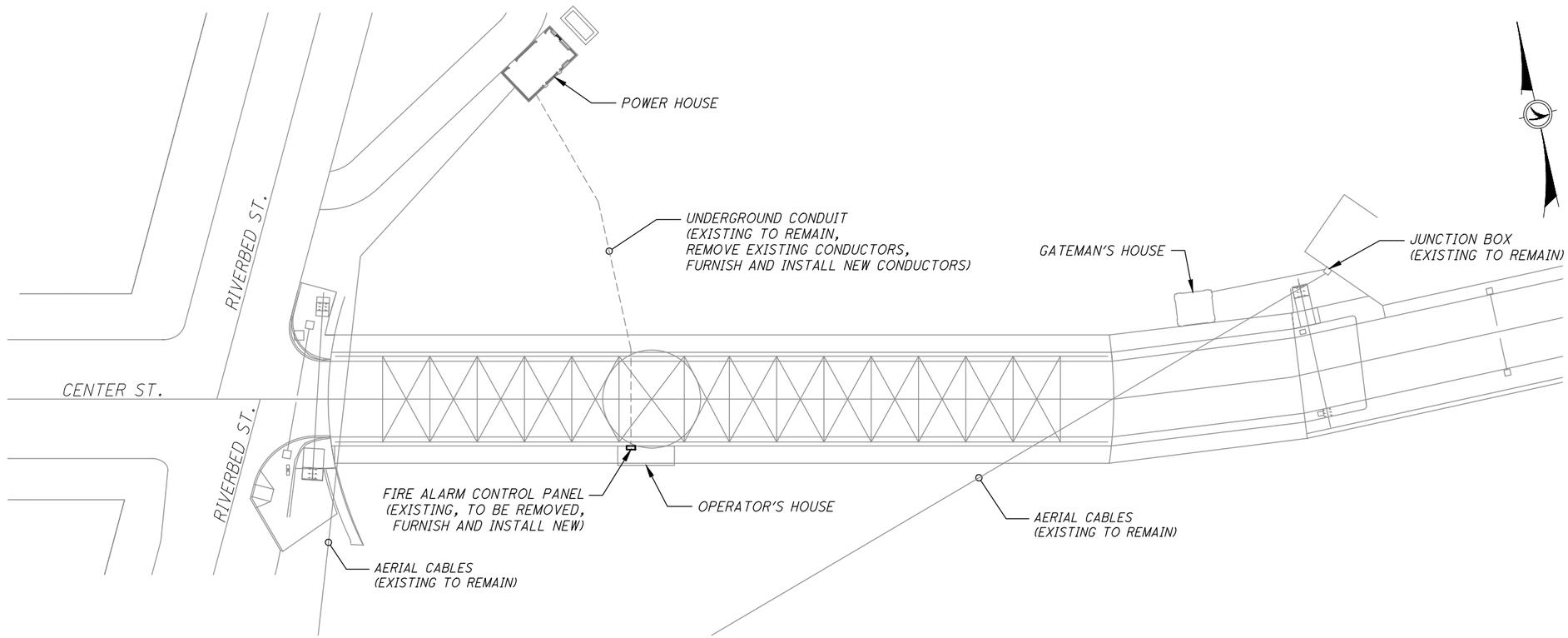

PLAN
SCALE: 1" = 40'-0"

NOTES:

1. PLFA CABLES SHALL MEET THE REQUIREMENTS OF NEC TABLE 760.154. PLFA CABLE INSTALLED WITHIN BUILDINGS MUST BE LISTED AS BEING RESISTANT TO THE SPREAD OF FIRE AND OTHER CRITERIA IN ACCORDANCE WITH 760.179(A) THROUGH (H) AND SHALL BE MARKED IN ACCORDANCE WITH 760.179(I).
2. REFER TO NFPA 72 FOR FIRE ALARM INSTALLATION DETAILS.
3. NEW FIRE ALARM CONDUCTORS SHALL BE #14 AWG.

DESIGN AGENCY
WSP
1660 WEST 2ND STREET
SUITE 850
CLEVELAND, OHIO 44113

DESIGNED	DRAWN	REVIEWED	DATE
RMD	RMD	GSP	10/23/20
CHECKED	REVISED	STRUCTURE FILE NUMBER	
BLC	---	1869345	

FIRE ALARM CONDUIT ROUTING
CITY OF CLEVELAND BRIDGE NO. 1:003M
CENTER STREET SWING BRIDGE OVER THE CUYAHOGA RIVER

CUY-CENTER ST.
SWING BRIDGE
PID NO: 109597

E15 / E37

87
109

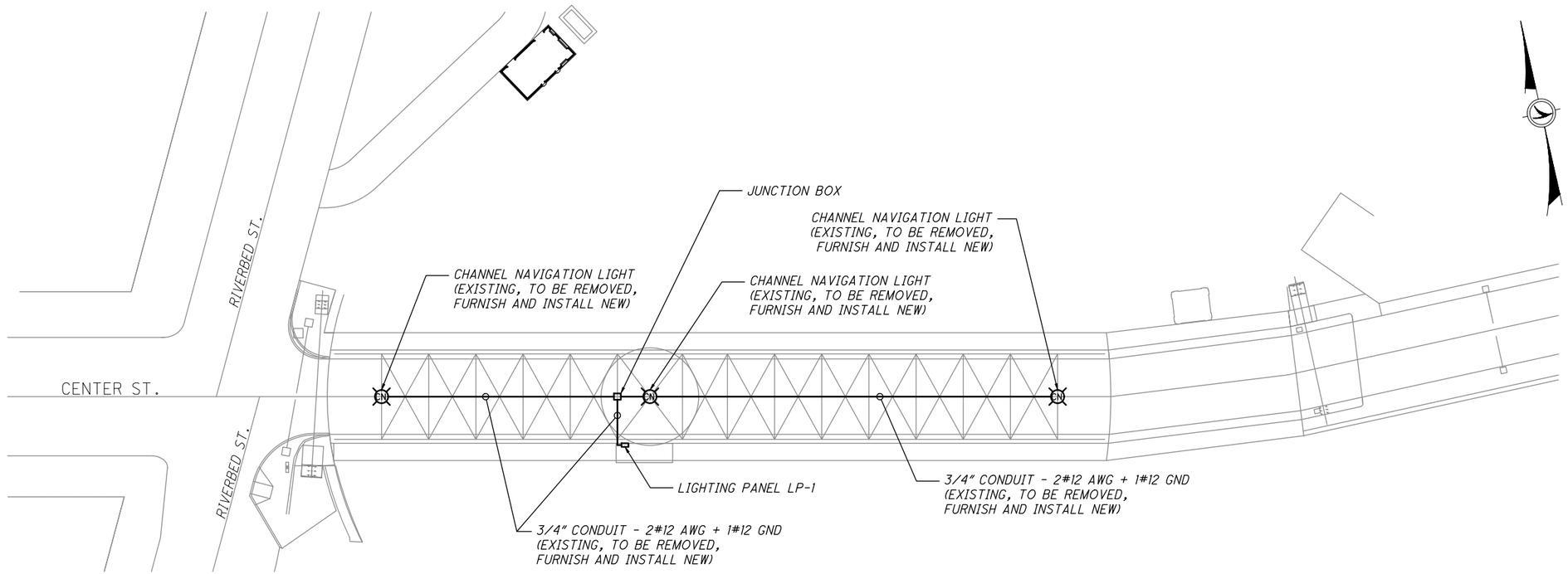

PLAN

SCALE: 1" = 40'-0"

NOTES:

1. CONDUIT ROUTED FROM PANEL LP-1 IN THE CONTROL HOUSE TO EACH CHANNEL NAVIGATION LIGHT ON TOP OF THE MOVABLE SPAN.
2. JUNCTION BOX SHALL BE A MINIMUM OF 6"X6"X6".

DESIGN AGENCY
WSP
1660 WEST 2ND STREET
SUITE 850
CLEVELAND, OHIO 44113

DESIGNED	DRAWN	REVIEWED	DATE
RMD	RMD	GSP	10/23/20
CHECKED	REVISED	STRUCTURE FILE NUMBER	
BLC	---	1869345	

CHANNEL NAVIGATION LIGHT CONDUIT ROUTING

CITY OF CLEVELAND BRIDGE NO. 1:003M
CENTER STREET SWING BRIDGE OVER THE CUYAHOGA RIVER

CUY-CENTER ST.
SWING BRIDGE
PID NO: 109597

E16/E37

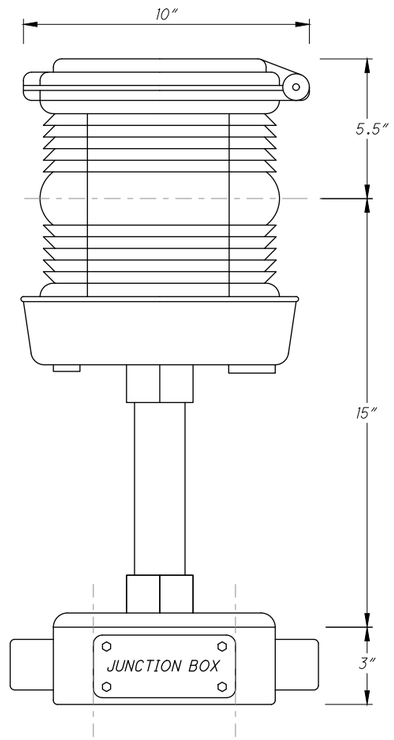

BASIC DIMENSIONS

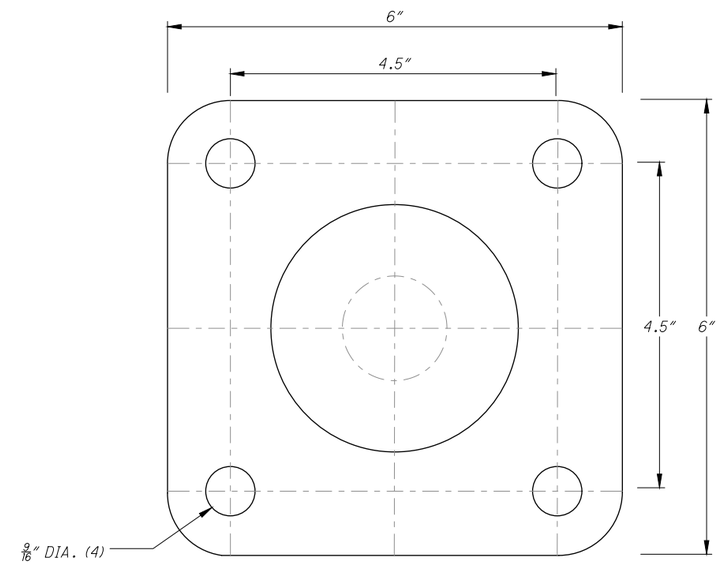

MOUNTING PATTERN

CHANNEL NAVIGATION LIGHT MOUNTING DETAILS
SCALE: NTS

NOTES:

1. CHANNEL NAVIGATION LIGHTS SHALL BE RED-GREEN 90 DEGREE SWING SPAN LIGHTS.
2. SUPPORTS SHALL CONSIST OF FOUR 1/2″ DIAMETER BOLTS THROUGH THE BASE. THE EXISTING DRILLED HOLES SHALL BE USED IF POSSIBLE.
3. THE RED SECTIONS OF THE CHANNEL NAVIGATION LIGHTS SHALL FACE EACH DIRECTION OF THE MARINE CHANNEL WHEN THE SPAN IS IN THE CLOSED POSITION.

DESIGN AGENCY
WSP
1660 WEST 2ND STREET
SUITE 850
CLEVELAND, OHIO 44113

DESIGNED	DRAWN	REVIEWED	DATE
RMD	RMD	GSP	10/23/20
CHECKED	REVISED	STRUCTURE FILE NUMBER	
BLC	---	1869345	

CHANNEL NAVIGATION LIGHT MOUNTING
CITY OF CLEVELAND BRIDGE NO. 1:003M
CENTER STREET SWING BRIDGE OVER THE CUYAHOGA RIVER

CUY-CENTER ST.
SWING BRIDGE
PID NO: 109597

E17/E37

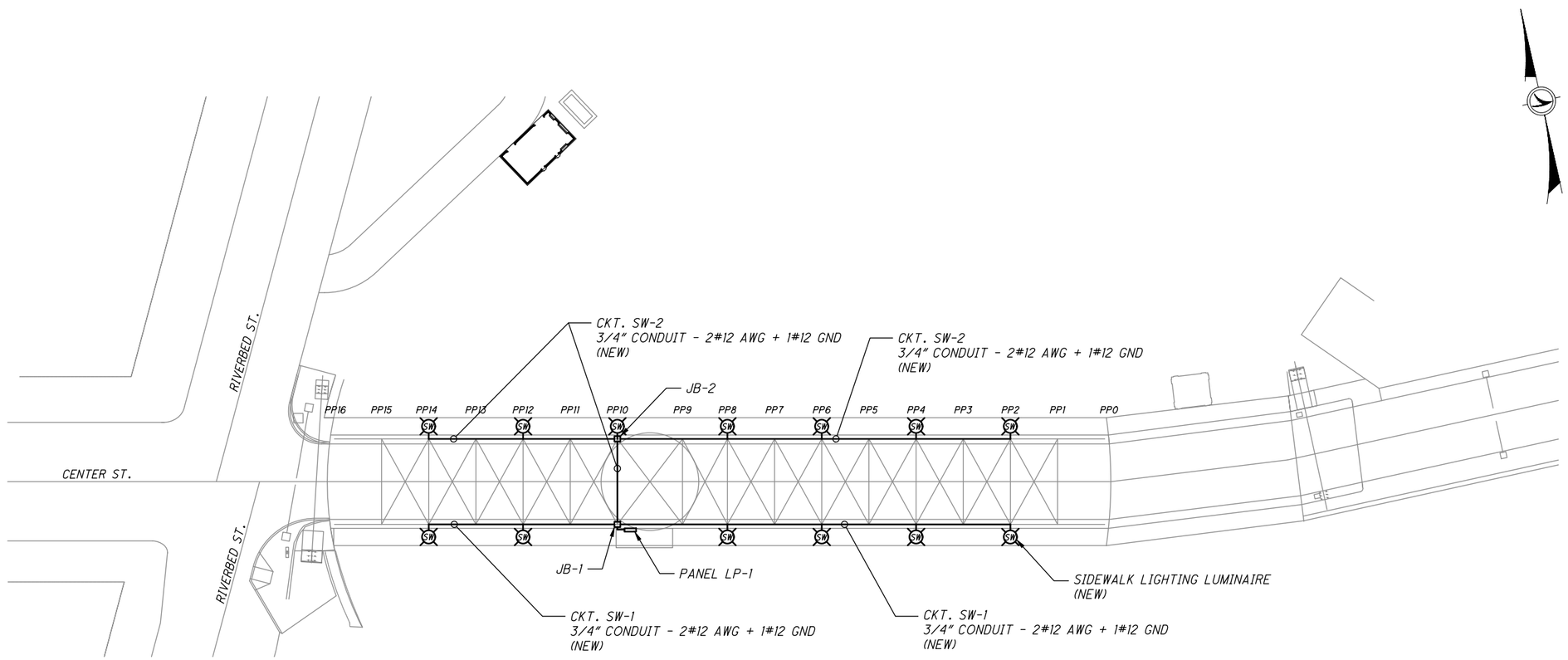

PLAN
SCALE: 1" = 40'-0"

NOTES:

1. CONDUIT ROUTED FROM PANEL LP-1 IN THE CONTROL HOUSE.
2. JUNCTION BOXES SHALL BE A MINIMUM OF 6"X6"X6".
3. LUMINAIRES SHALL BE STERNBERG LIGHTING 1970LED GALLERY SERIES TYPE LUMINAIRES OR HOLOPHANE GLASWERKS LED HALLBROOK TYPE LUMINAIRES OR APPROVED EQUAL. SEE THE SPECIFICATIONS FOR ADDITIONAL DETAIL.
4. SEE STRUCTURAL SHEET S49 FOR MOUNTING HEIGHT, LOCATION, AND SUPPORT DETAILS.

DESIGN AGENCY
WSP
1660 WEST 2ND STREET
SUITE 850
CLEVELAND, OHIO 44113

DESIGNED	DRAWN	REVIEWED	DATE
RMD	RMD	GSP	10/23/20
CHECKED	REVISED	STRUCTURE FILE NUMBER	
BLC	---	1869345	

SIDEWALK LIGHTING CONDUIT ROUTING
CITY OF CLEVELAND BRIDGE NO. 1:003M
CENTER STREET SWING BRIDGE OVER THE CUYAHOGA RIVER

CUY-CENTER ST.
SWING BRIDGE
PID NO: 109597

E18 / E37

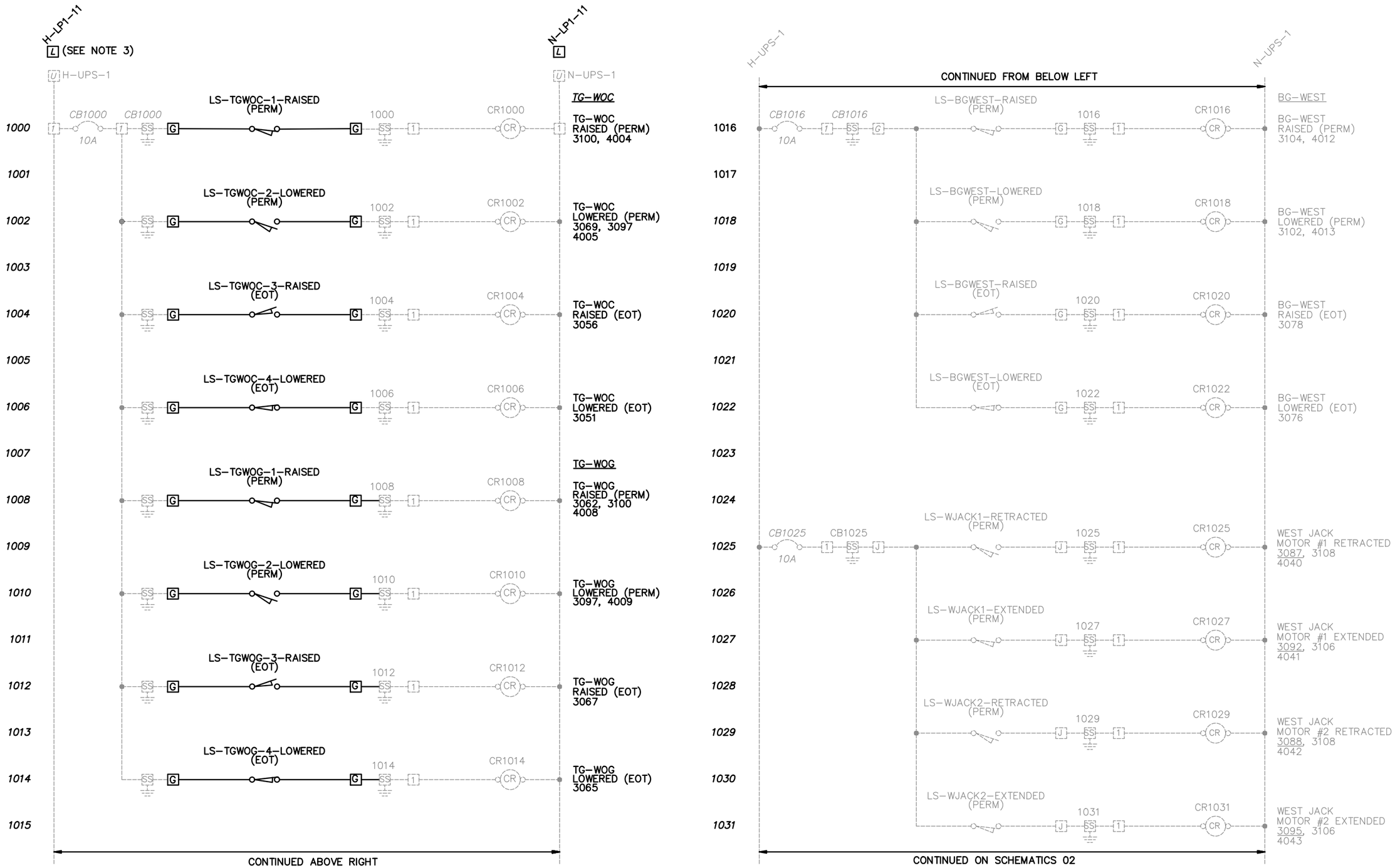

NOTES:

1. ALL CIRCUITS ARE SHOWN WITH THE TRAFFIC LIGHTS GREEN, WARNING GATES RAISED, BARRIER GATES RAISED, JACKS EXTENDED, AND SPAN CENTERED.
2. CONTROL SCHEMATICS ARE PROVIDED AS A GENERAL REPRESENTATION OF THE PROJECT REQUIREMENTS FOR CONTROL CIRCUITS TO AID THE CONTRACTOR IN BIDDING. REGARDLESS OF DETAILS OMITTED FROM THE PLANS FOR CLARITY, THE CONTRACTOR SHALL BE RESPONSIBLE FOR SUBMITTING SHOP DRAWINGS DETAILING ALL CONTROL AND POWER CIRCUITS AND PROPOSED DEVIATIONS AND SHALL VERIFY PROPER OPERATION PER THE BRIDGE LOGIC DIAGRAMS IN THE PLANS.
3. THE CONTRACTOR SHALL LOCATE AND REUSE CONTROL AND POWER CIRCUITS FOR NEWLY INSTALLED EQUIPMENT UNLESS SPECIFIED OTHERWISE IN THE PLANS OR SPECIFICATIONS.

DESIGN AGENCY
1600 WEST 2ND STREET SUITE 850 CLEVELAND, OHIO 44113

DESIGNED	DRAWN	REVIEWED	DATE
RMD	RMD	GSP	10/23/20
CHECKED	REVISED	STRUCTURE FILE NUMBER	
BLC	---	1869345	

ELECTRICAL SCHEMATICS 01
CITY OF CLEVELAND BRIDGE NO. 1:003M
CENTER STREET SWING BRIDGE OVER THE CUYAHOGA RIVER

CUY-CENTER ST. SWING BRIDGE
PID NO: 109597

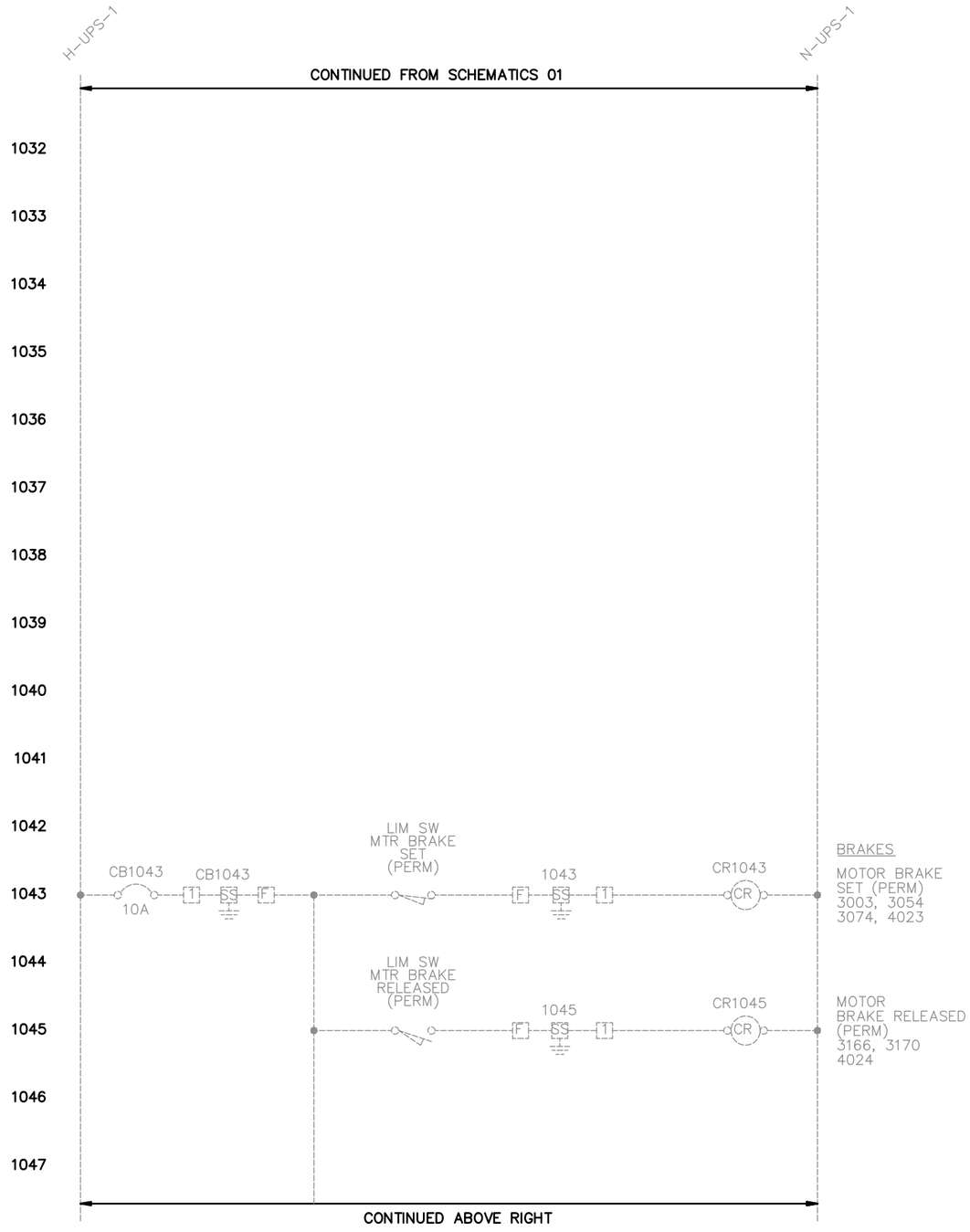

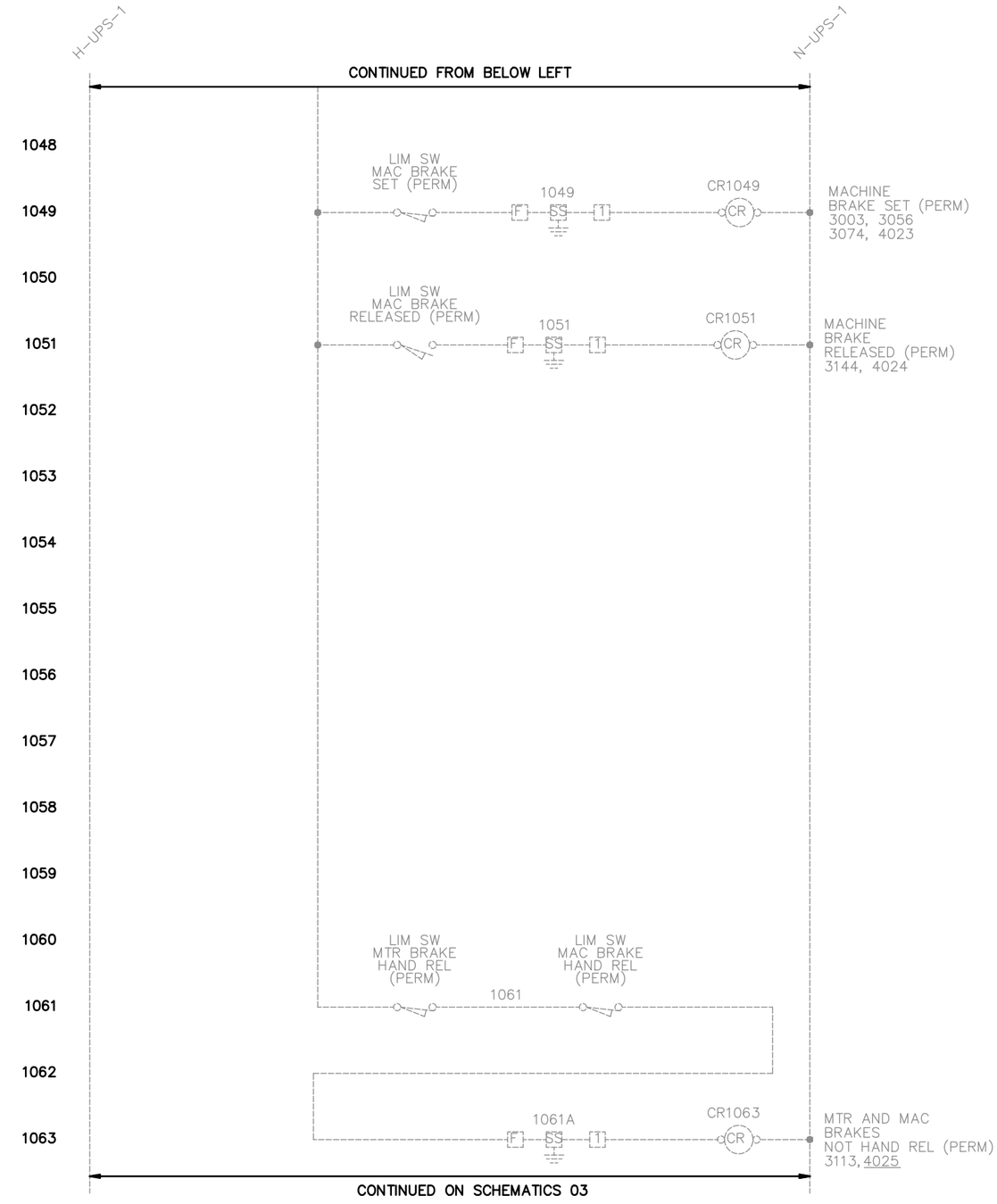

NOTES:

1. ALL CIRCUITS ARE SHOWN WITH THE TRAFFIC LIGHTS GREEN, WARNING GATES RAISED, BARRIER GATES RAISED, JACKS EXTENDED, AND SPAN CENTERED.
2. CONTROL SCHEMATICS ARE PROVIDED AS A GENERAL REPRESENTATION OF THE PROJECT REQUIREMENTS FOR CONTROL CIRCUITS TO AID THE CONTRACTOR IN BIDDING. REGARDLESS OF DETAILS OMITTED FROM THE PLANS FOR CLARITY, THE CONTRACTOR SHALL BE RESPONSIBLE FOR SUBMITTING SHOP DRAWINGS DETAILING ALL CONTROL AND POWER CIRCUITS AND PROPOSED DEVIATIONS AND SHALL VERIFY PROPER OPERATION PER THE BRIDGE LOGIC DIAGRAMS IN THE PLANS.
3. THE CONTRACTOR SHALL LOCATE AND REUSE CONTROL AND POWER CIRCUITS FOR NEWLY INSTALLED EQUIPMENT UNLESS SPECIFIED OTHERWISE IN THE PLANS OR SPECIFICATIONS.

DESIGN AGENCY
1400 WEST 2ND STREET
SUITE 850
CLEVELAND, OHIO 44113

DESIGNED	DRAWN	REVIEWED	DATE
RMD	RMD	GSP	10/23/20
CHECKED	REVISED	STRUCTURE FILE NUMBER	
BLC	---	1869345	

ELECTRICAL SCHEMATICS 02
CITY OF CLEVELAND BRIDGE NO. 1:003M
CENTER STREET SWING BRIDGE OVER THE CUYAHOGA RIVER

CUY-CENTER ST.
SWING BRIDGE
PID NO: 109597

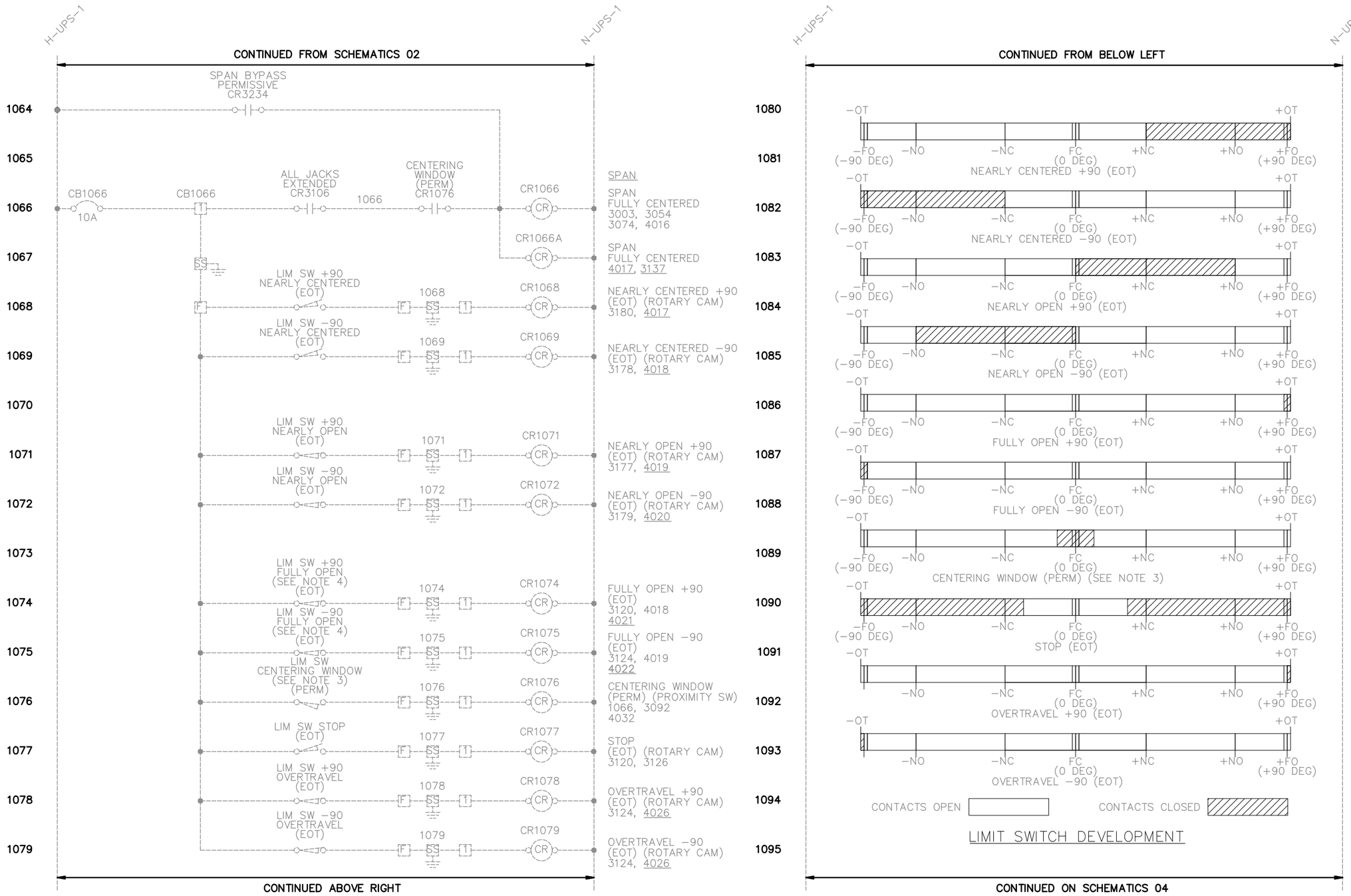

NOTES:

1. ALL CIRCUITS ARE SHOWN WITH THE TRAFFIC LIGHTS GREEN, WARNING GATES RAISED, BARRIER GATES RAISED, JACKS EXTENDED, AND SPAN CENTERED.
2. CONTROL SCHEMATICS ARE PROVIDED AS A GENERAL REPRESENTATION OF THE PROJECT REQUIREMENTS FOR CONTROL CIRCUITS TO AID THE CONTRACTOR IN BIDDING. REGARDLESS OF DETAILS OMITTED FROM THE PLANS FOR CLARITY, THE CONTRACTOR SHALL BE RESPONSIBLE FOR SUBMITTING SHOP DRAWINGS DETAILING ALL CONTROL AND POWER CIRCUITS AND PROPOSED DEVIATIONS AND SHALL VERIFY PROPER OPERATION PER THE BRIDGE LOGIC DIAGRAMS IN THE PLANS.
3. THE CONTRACTOR SHALL LOCATE AND REUSE CONTROL AND POWER CIRCUITS FOR NEWLY INSTALLED EQUIPMENT UNLESS SPECIFIED OTHERWISE IN THE PLANS OR SPECIFICATIONS.

DESIGN AGENCY
1600 WEST 2ND STREET SUITE 850 CLEVELAND, OHIO 44113

DESIGNED	DRAWN	REVIEWED	DATE
RMD	RMD	GSP	10/23/20
CHECKED	REVISED	STRUCTURE FILE NUMBER	
BLC	---	1869345	

ELECTRICAL SCHEMATICS 03
CITY OF CLEVELAND BRIDGE NO. 1:003M
CENTER STREET SWING BRIDGE OVER THE CUYAHOGA RIVER

CUY-CENTER ST. SWING BRIDGE
PID NO: 109597

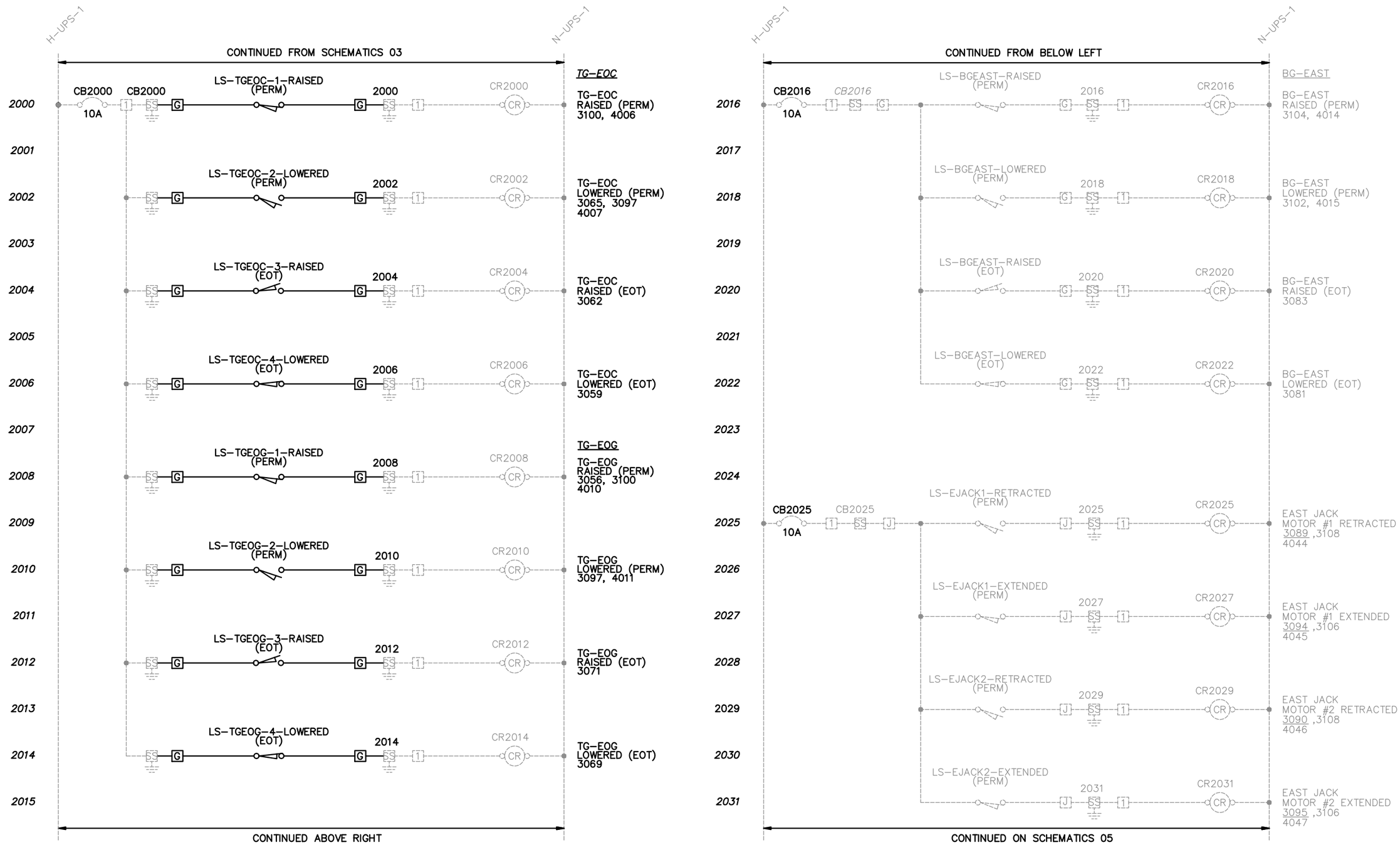

NOTES:

1. ALL CIRCUITS ARE SHOWN WITH THE TRAFFIC LIGHTS GREEN, WARNING GATES RAISED, BARRIER GATES RAISED, JACKS EXTENDED, AND SPAN CENTERED.
2. CONTROL SCHEMATICS ARE PROVIDED AS A GENERAL REPRESENTATION OF THE PROJECT REQUIREMENTS FOR CONTROL CIRCUITS TO AID THE CONTRACTOR IN BIDDING. REGARDLESS OF DETAILS OMITTED FROM THE PLANS FOR CLARITY, THE CONTRACTOR SHALL BE RESPONSIBLE FOR SUBMITTING SHOP DRAWINGS DETAILING ALL CONTROL AND POWER CIRCUITS AND PROPOSED DEVIATIONS AND SHALL VERIFY PROPER OPERATION PER THE BRIDGE LOGIC DIAGRAMS IN THE PLANS.
3. THE CONTRACTOR SHALL LOCATE AND REUSE CONTROL AND POWER CIRCUITS FOR NEWLY INSTALLED EQUIPMENT UNLESS SPECIFIED OTHERWISE IN THE PLANS OR SPECIFICATIONS.

DESIGN AGENCY
1600 WEST 2ND STREET SUITE 500 CLEVELAND, OHIO 44113

DESIGNED	DRAWN	REVIEWED	DATE
RMD	RMD	GSP	10/23/20
CHECKED	REVISED	STRUCTURE FILE NUMBER	
BLC	---	1869345	

ELECTRICAL SCHEMATICS 04
CITY OF CLEVELAND BRIDGE NO. 1:003M
CENTER STREET SWING BRIDGE OVER THE CUYAHOGA RIVER

CUY-CENTER ST. SWING BRIDGE
PID NO: 109597

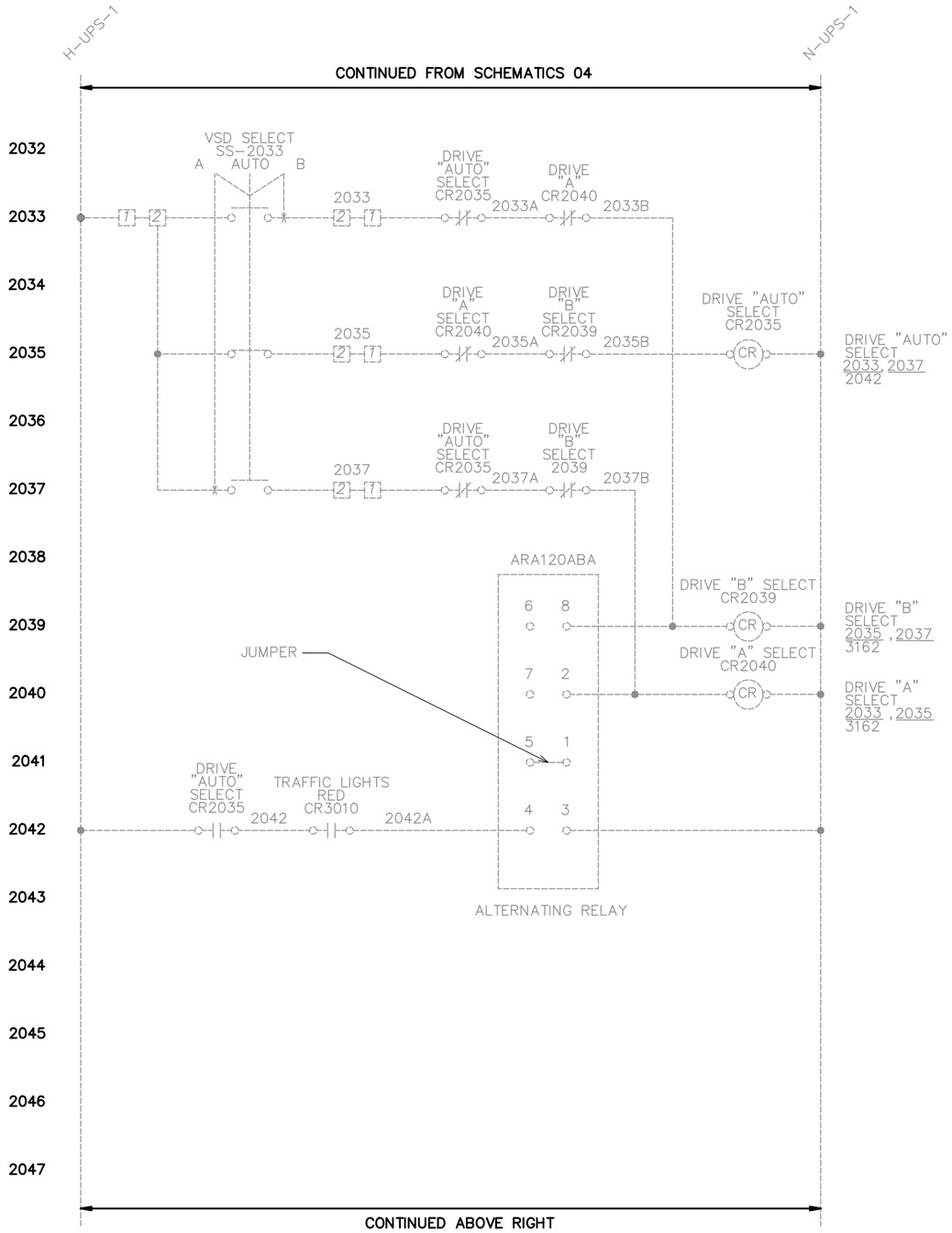

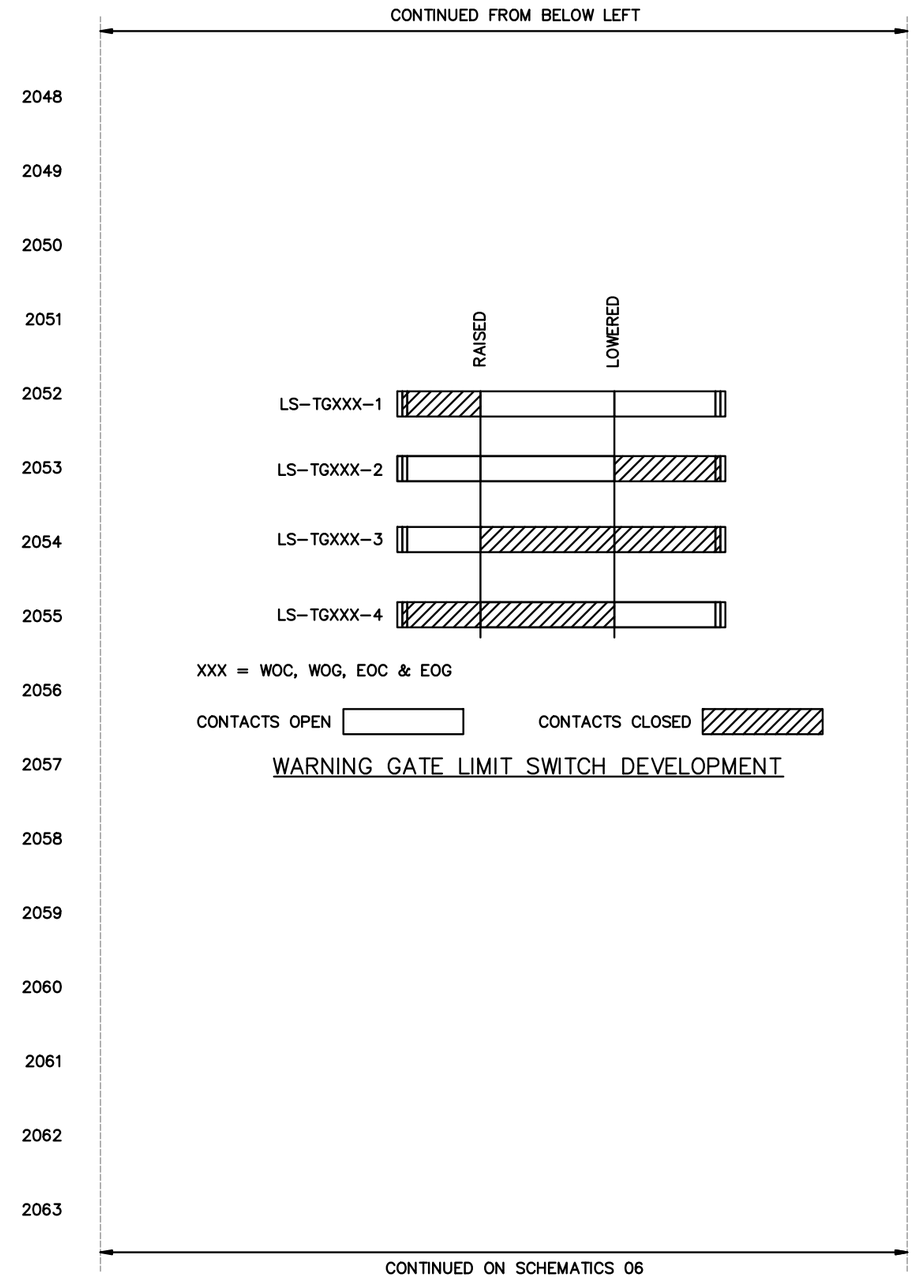

NOTES:

1. ALL CIRCUITS ARE SHOWN WITH THE TRAFFIC LIGHTS GREEN, WARNING GATES RAISED, BARRIER GATES RAISED, JACKS EXTENDED, AND SPAN CENTERED.
2. CONTROL SCHEMATICS ARE PROVIDED AS A GENERAL REPRESENTATION OF THE PROJECT REQUIREMENTS FOR CONTROL CIRCUITS TO AID THE CONTRACTOR IN BIDDING. REGARDLESS OF DETAILS OMITTED FROM THE PLANS FOR CLARITY, THE CONTRACTOR SHALL BE RESPONSIBLE FOR SUBMITTING SHOP DRAWINGS DETAILING ALL CONTROL AND POWER CIRCUITS AND PROPOSED DEVIATIONS AND SHALL VERIFY PROPER OPERATION PER THE BRIDGE LOGIC DIAGRAMS IN THE PLANS.
3. THE CONTRACTOR SHALL LOCATE AND REUSE CONTROL AND POWER CIRCUITS FOR NEWLY INSTALLED EQUIPMENT UNLESS SPECIFIED OTHERWISE IN THE PLANS OR SPECIFICATIONS.

DESIGN AGENCY
WSP
1600 WEST 2ND STREET
SUITE 850
CLEVELAND, OHIO 44113

DESIGNED	DRAWN	REVIEWED	DATE
RMD	RMD	GSP	10/23/20
CHECKED	REVISED	STRUCTURE FILE NUMBER	
BLC	---	1869345	

ELECTRICAL SCHEMATICS 05
CITY OF CLEVELAND BRIDGE NO. 1:003M
CENTER STREET SWING BRIDGE OVER THE CUYAHOGA RIVER

CUY-CENTER ST.
SWING BRIDGE
PID NO: 109597

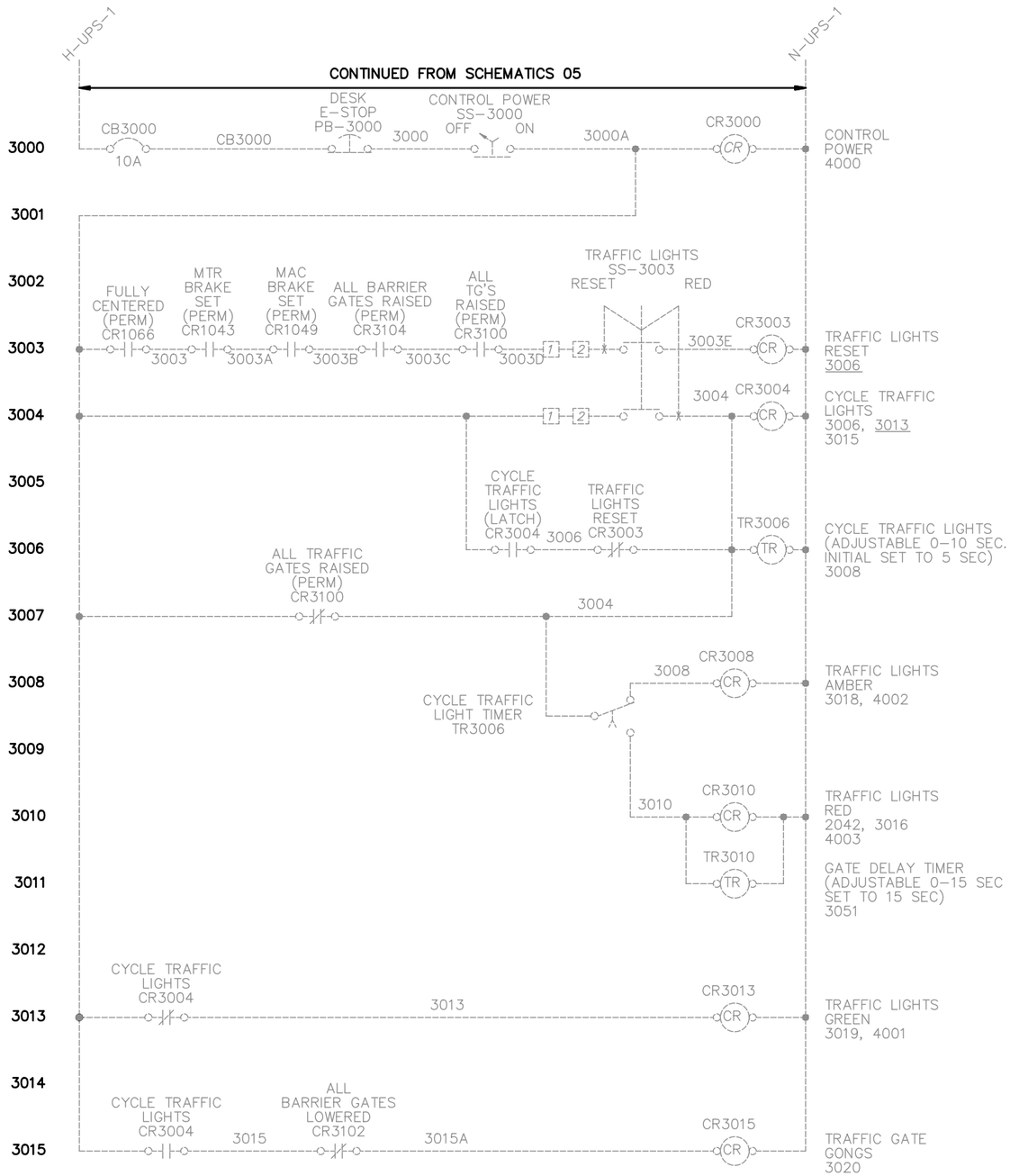

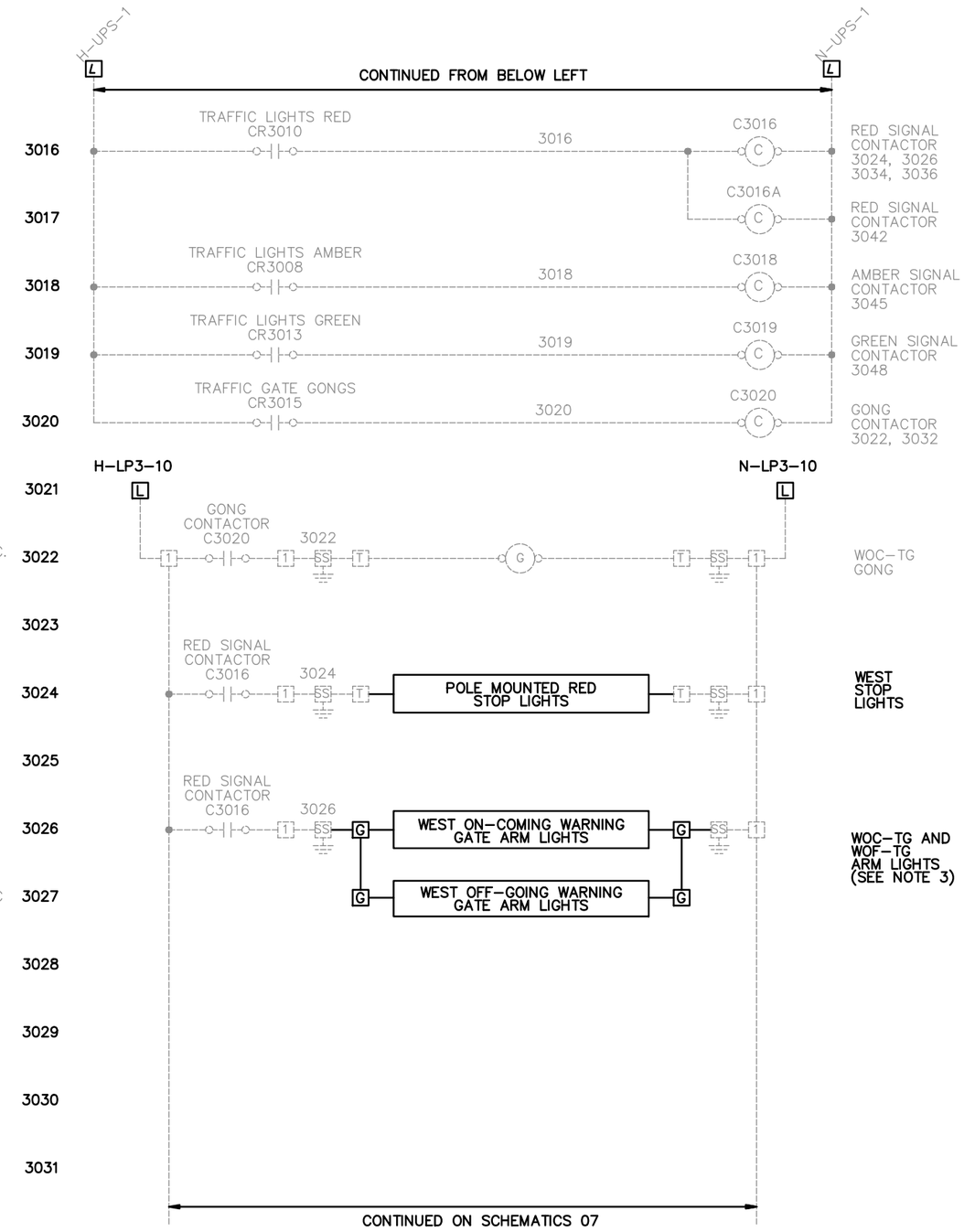

NOTES:

1. ALL CIRCUITS ARE SHOWN WITH THE TRAFFIC LIGHTS GREEN, WARNING GATES RAISED, BARRIER GATES RAISED, JACKS EXTENDED, AND SPAN CENTERED.
2. CONTROL SCHEMATICS ARE PROVIDED AS A GENERAL REPRESENTATION OF THE PROJECT REQUIREMENTS FOR CONTROL CIRCUITS TO AID THE CONTRACTOR IN BIDDING. REGARDLESS OF DETAILS OMITTED FROM THE PLANS FOR CLARITY, THE CONTRACTOR SHALL BE RESPONSIBLE FOR SUBMITTING SHOP DRAWINGS DETAILING ALL CONTROL AND POWER CIRCUITS AND PROPOSED DEVIATIONS AND SHALL VERIFY PROPER OPERATION PER THE BRIDGE LOGIC DIAGRAMS IN THE PLANS.
3. THE CONTRACTOR SHALL LOCATE AND REUSE CONTROL AND POWER CIRCUITS FOR NEWLY INSTALLED EQUIPMENT UNLESS SPECIFIED OTHERWISE IN THE PLANS OR SPECIFICATIONS.

DESIGN AGENCY
1600 WEST 2ND STREET SUITE 500 CLEVELAND, OHIO 44113

DESIGNED	DRAWN	REVIEWED	DATE
RMD	RMD	GSP	10/23/20
CHECKED	REVISED	STRUCTURE FILE NUMBER	
BLC	---	1869345	

ELECTRICAL SCHEMATIC 06
CITY OF CLEVELAND BRIDGE NO. 1:003M
CENTER STREET SWING BRIDGE OVER THE CUYAHOGA RIVER

CUY-CENTER ST. SWING BRIDGE
PID NO: 109597

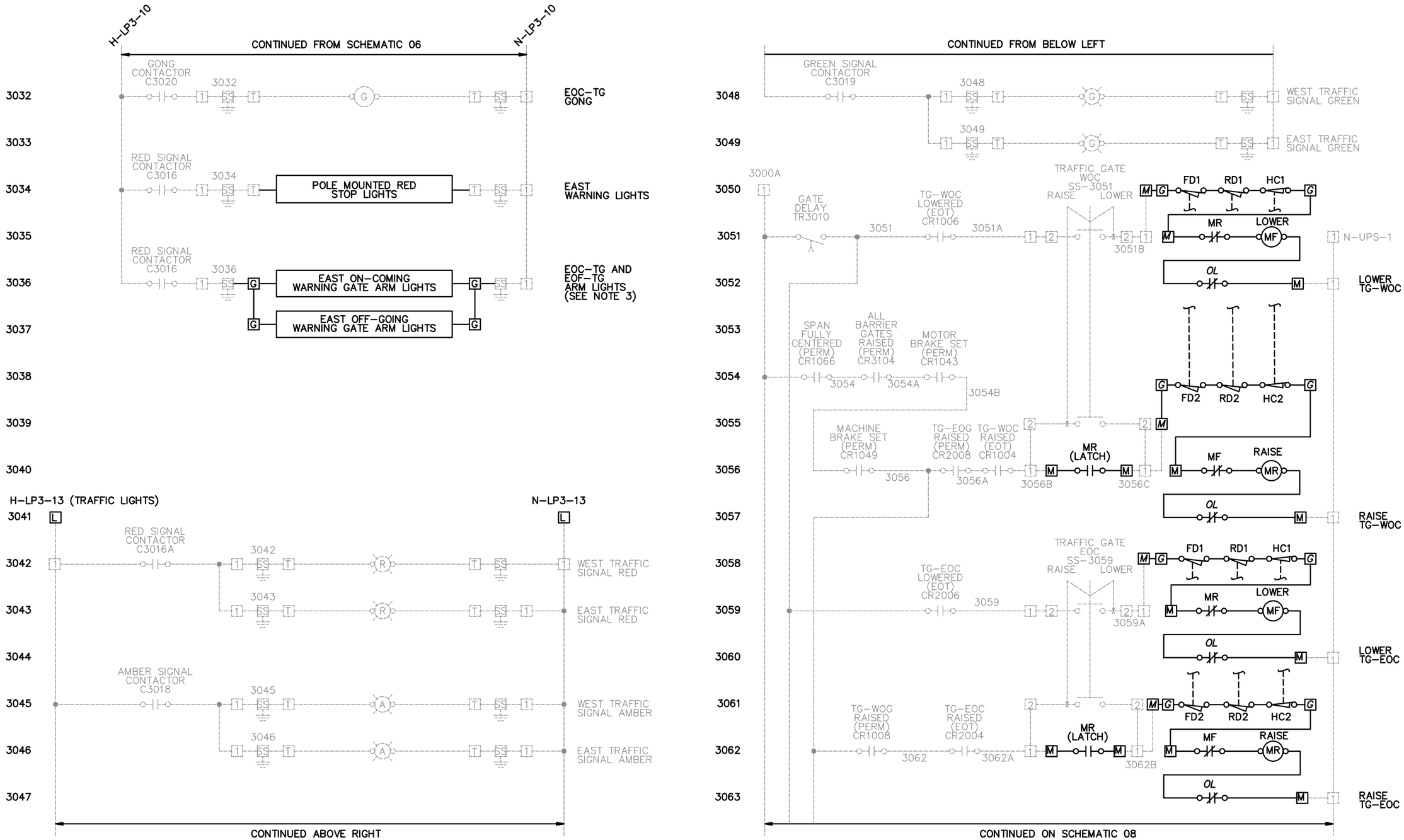

NOTES:

1. ALL CIRCUITS ARE SHOWN WITH THE TRAFFIC LIGHTS GREEN, WARNING GATES RAISED, BARRIER GATES RAISED, JACKS EXTENDED, AND SPAN CENTERED.
2. CONTROL SCHEMATICS ARE PROVIDED AS A GENERAL REPRESENTATION OF THE PROJECT REQUIREMENTS FOR CONTROL CIRCUITS TO AID THE CONTRACTOR IN BIDDING. REGARDLESS OF DETAILS OMITTED FROM THE PLANS FOR CLARITY, THE CONTRACTOR SHALL BE RESPONSIBLE FOR SUBMITTING SHOP DRAWINGS DETAILING ALL CONTROL AND POWER CIRCUITS AND PROPOSED DEVIATIONS AND SHALL VERIFY PROPER OPERATION PER THE BRIDGE LOGIC DIAGRAMS IN THE PLANS.
3. THE CONTRACTOR SHALL LOCATE AND REUSE CONTROL AND POWER CIRCUITS FOR NEWLY INSTALLED EQUIPMENT UNLESS SPECIFIED OTHERWISE IN THE PLANS OR SPECIFICATIONS.

DESIGN AGENCY
WSP
1600 WEST 2ND STREET SUITE 850 CLEVELAND, OHIO 44113

DESIGNED	DRAWN	REVIEWED	DATE
RMD	RMD	GSP	10/23/20
CHECKED	REVISED	STRUCTURE FILE NUMBER	
BLC	---	1869345	

ELECTRICAL SCHEMATICS 07
CITY OF CLEVELAND BRIDGE NO. 1:003M
CENTER STREET SWING BRIDGE OVER THE CUYAHOGA RIVER

CUY-CENTER ST. SWING BRIDGE
PID NO: 109597

E25/E37

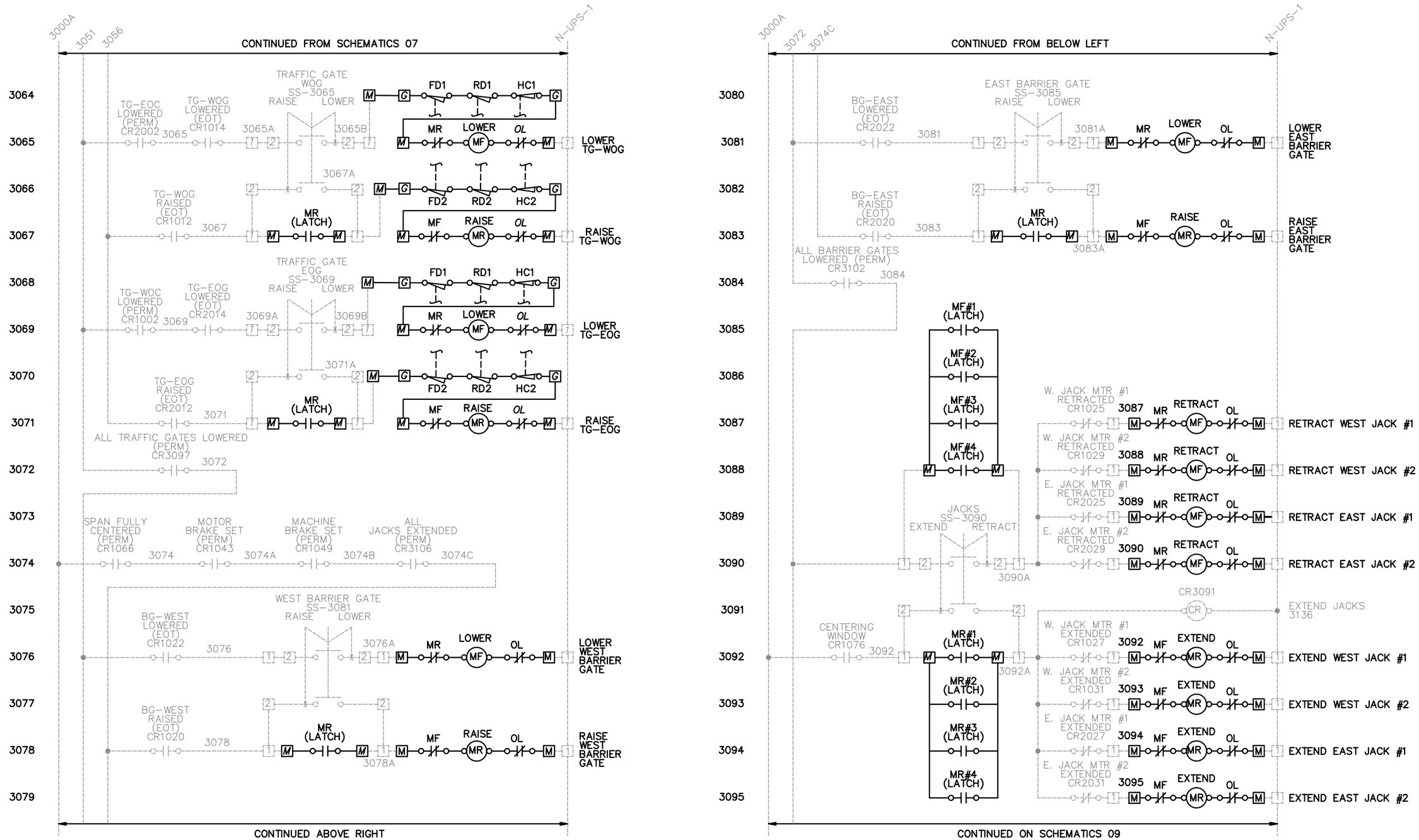

NOTES:

1. ALL CIRCUITS ARE SHOWN WITH THE TRAFFIC LIGHTS GREEN, WARNING GATES RAISED, BARRIER GATES RAISED, JACKS EXTENDED, AND SPAN CENTERED.
2. CONTROL SCHEMATICS ARE PROVIDED AS A GENERAL REPRESENTATION OF THE PROJECT REQUIREMENTS FOR CONTROL CIRCUITS TO AID THE CONTRACTOR IN BIDDING. REGARDLESS OF DETAILS OMITTED FROM THE PLANS FOR CLARITY, THE CONTRACTOR SHALL BE RESPONSIBLE FOR SUBMITTING SHOP DRAWINGS DETAILING ALL CONTROL AND POWER CIRCUITS AND PROPOSED DEVIATIONS AND SHALL VERIFY PROPER OPERATION PER THE BRIDGE LOGIC DIAGRAMS IN THE PLANS.
3. THE CONTRACTOR SHALL LOCATE AND REUSE CONTROL AND POWER CIRCUITS FOR NEWLY INSTALLED EQUIPMENT UNLESS SPECIFIED OTHERWISE IN THE PLANS OR SPECIFICATIONS.

DESIGN AGENCY
1600 WEST 2ND STREET SUITE 850 CLEVELAND, OHIO 44113

DESIGNED	DRAWN	REVIEWED	DATE
RMD	RMD	GSP	10/23/20
CHECKED	REVISED	STRUCTURE FILE NUMBER	
BLC	---	1869345	

ELECTRICAL SCHEMATICS 08
CITY OF CLEVELAND BRIDGE NO. 1:003M
CENTER STREET SWING BRIDGE OVER THE CUYAHOGA RIVER

CUY-CENTER ST. SWING BRIDGE
PID NO: 109597

E26/E37

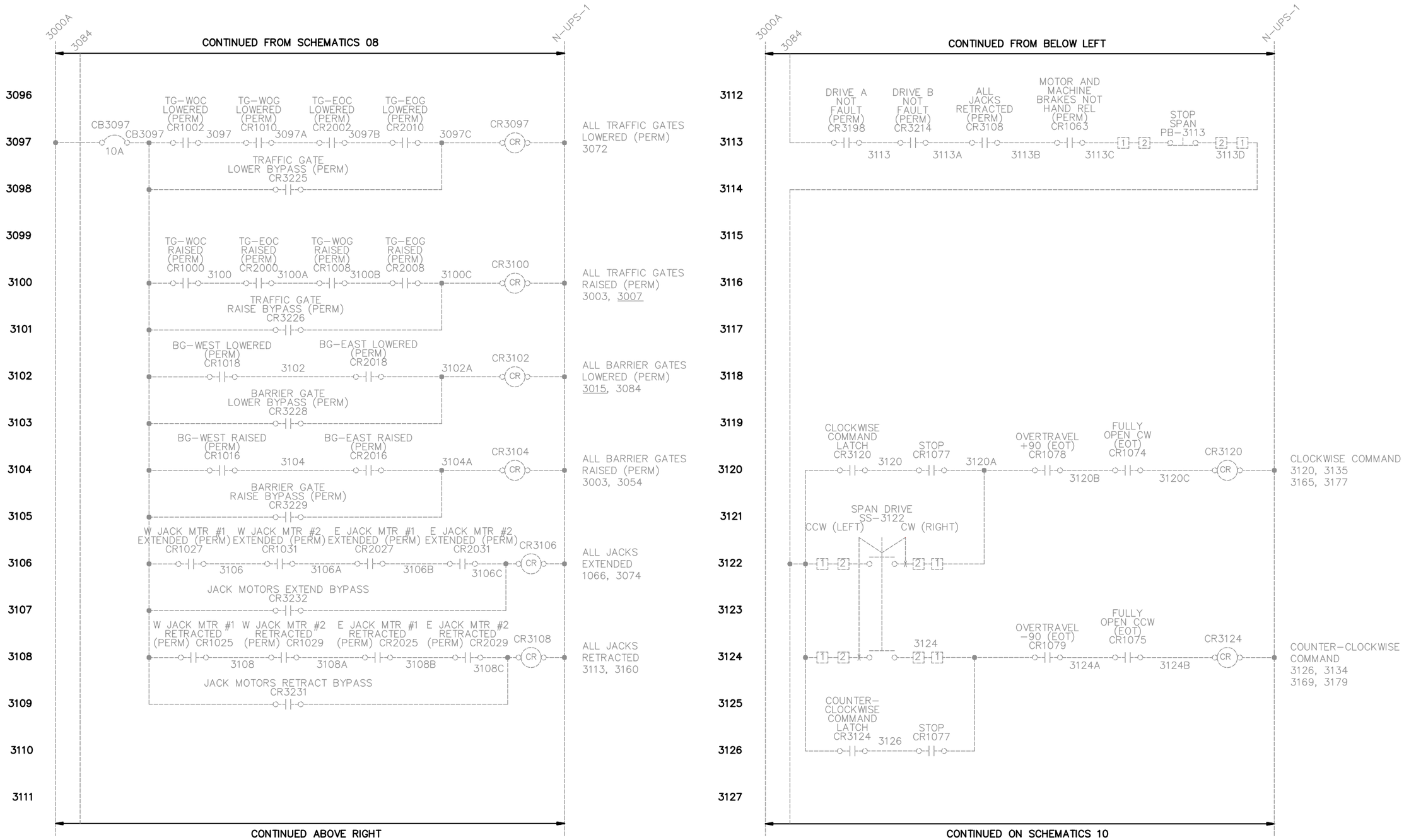

NOTES:

1. ALL CIRCUITS ARE SHOWN WITH THE TRAFFIC LIGHTS GREEN, WARNING GATES RAISED, BARRIER GATES RAISED, JACKS EXTENDED, AND SPAN CENTERED.
2. CONTROL SCHEMATICS ARE PROVIDED AS A GENERAL REPRESENTATION OF THE PROJECT REQUIREMENTS FOR CONTROL CIRCUITS TO AID THE CONTRACTOR IN BIDDING. REGARDLESS OF DETAILS OMITTED FROM THE PLANS FOR CLARITY, THE CONTRACTOR SHALL BE RESPONSIBLE FOR SUBMITTING SHOP DRAWINGS DETAILING ALL CONTROL AND POWER CIRCUITS AND PROPOSED DEVIATIONS AND SHALL VERIFY PROPER OPERATION PER THE BRIDGE LOGIC DIAGRAMS IN THE PLANS.
3. THE CONTRACTOR SHALL LOCATE AND REUSE CONTROL AND POWER CIRCUITS FOR NEWLY INSTALLED EQUIPMENT UNLESS SPECIFIED OTHERWISE IN THE PLANS OR SPECIFICATIONS.

DESIGN AGENCY
1600 WEST 2ND STREET SUITE 850 CLEVELAND, OHIO 44113

DESIGNED	DRAWN	REVIEWED	DATE
RMD	RMD	GSP	10/23/20
CHECKED	REVISED	STRUCTURE FILE NUMBER	
BLC	---	1869345	

ELECTRICAL SCHEMATICS 09
CITY OF CLEVELAND BRIDGE NO. 1:003M
CENTER STREET SWING BRIDGE OVER THE CUYAHOGA RIVER

CUY-CENTER ST. SWING BRIDGE
PID NO: 109597

E27/E37

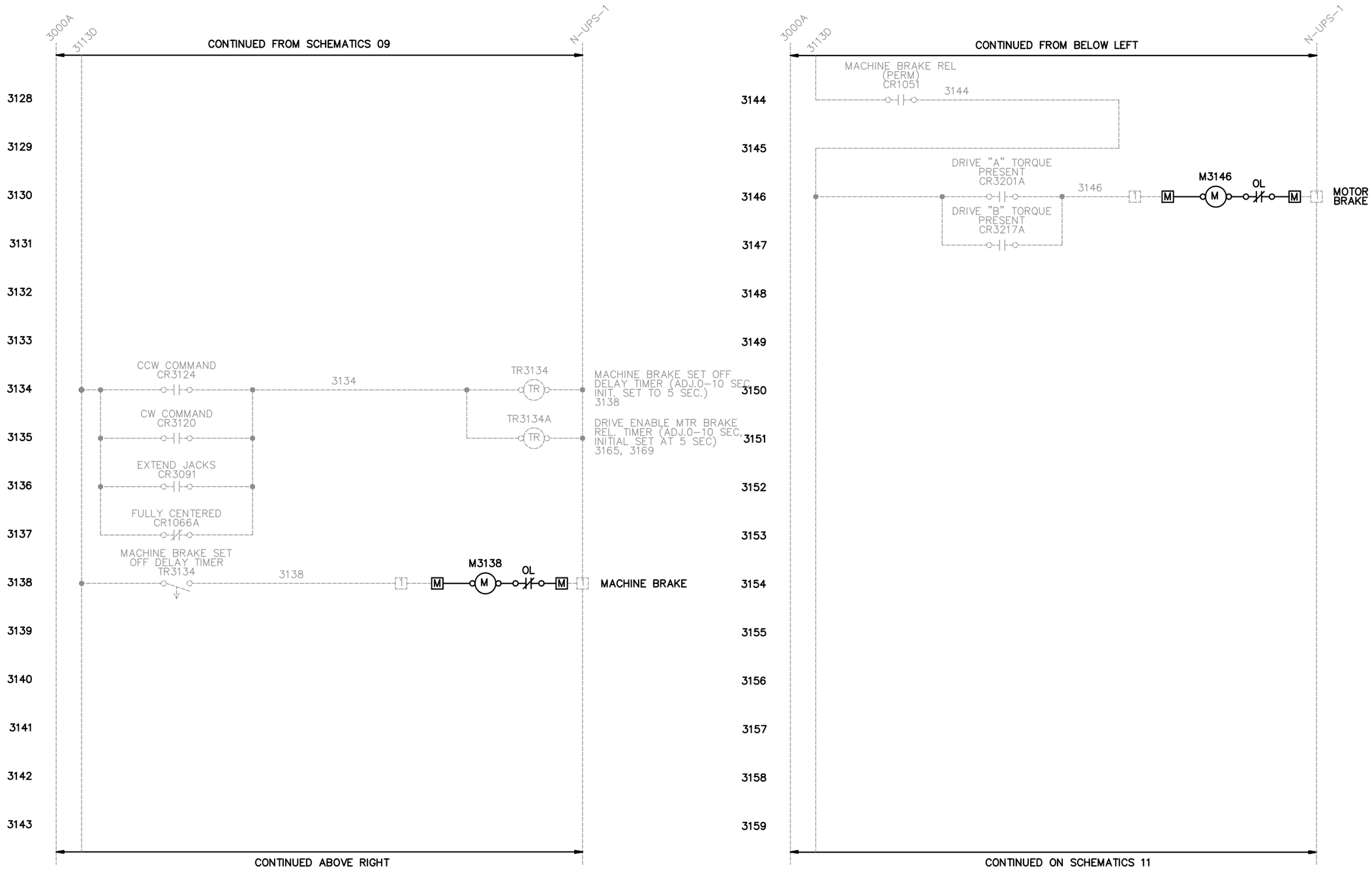

NOTES:

1. ALL CIRCUITS ARE SHOWN WITH THE TRAFFIC LIGHTS GREEN, WARNING GATES RAISED, BARRIER GATES RAISED, JACKS EXTENDED, AND SPAN CENTERED.
2. CONTROL SCHEMATICS ARE PROVIDED AS A GENERAL REPRESENTATION OF THE PROJECT REQUIREMENTS FOR CONTROL CIRCUITS TO AID THE CONTRACTOR IN BIDDING. REGARDLESS OF DETAILS OMITTED FROM THE PLANS FOR CLARITY, THE CONTRACTOR SHALL BE RESPONSIBLE FOR SUBMITTING SHOP DRAWINGS DETAILING ALL CONTROL AND POWER CIRCUITS AND PROPOSED DEVIATIONS AND SHALL VERIFY PROPER OPERATION PER THE BRIDGE LOGIC DIAGRAMS IN THE PLANS.
3. THE CONTRACTOR SHALL LOCATE AND REUSE CONTROL AND POWER CIRCUITS FOR NEWLY INSTALLED EQUIPMENT UNLESS SPECIFIED OTHERWISE IN THE PLANS OR SPECIFICATIONS.

DESIGN AGENCY
1600 WEST 2ND STREET SUITE 850 CLEVELAND, OHIO 44113

DESIGNED	DRAWN	REVIEWED	DATE
RMD	RMD	GSP	10/23/20
CHECKED	REVISED	STRUCTURE FILE NUMBER	
BLC	---	1869345	

ELECTRICAL SCHEMATICS 10
CITY OF CLEVELAND BRIDGE NO. 1:003M
CENTER STREET SWING BRIDGE OVER THE CUYAHOGA RIVER

CUY-CENTER ST.
SWING BRIDGE
PID NO: 109597

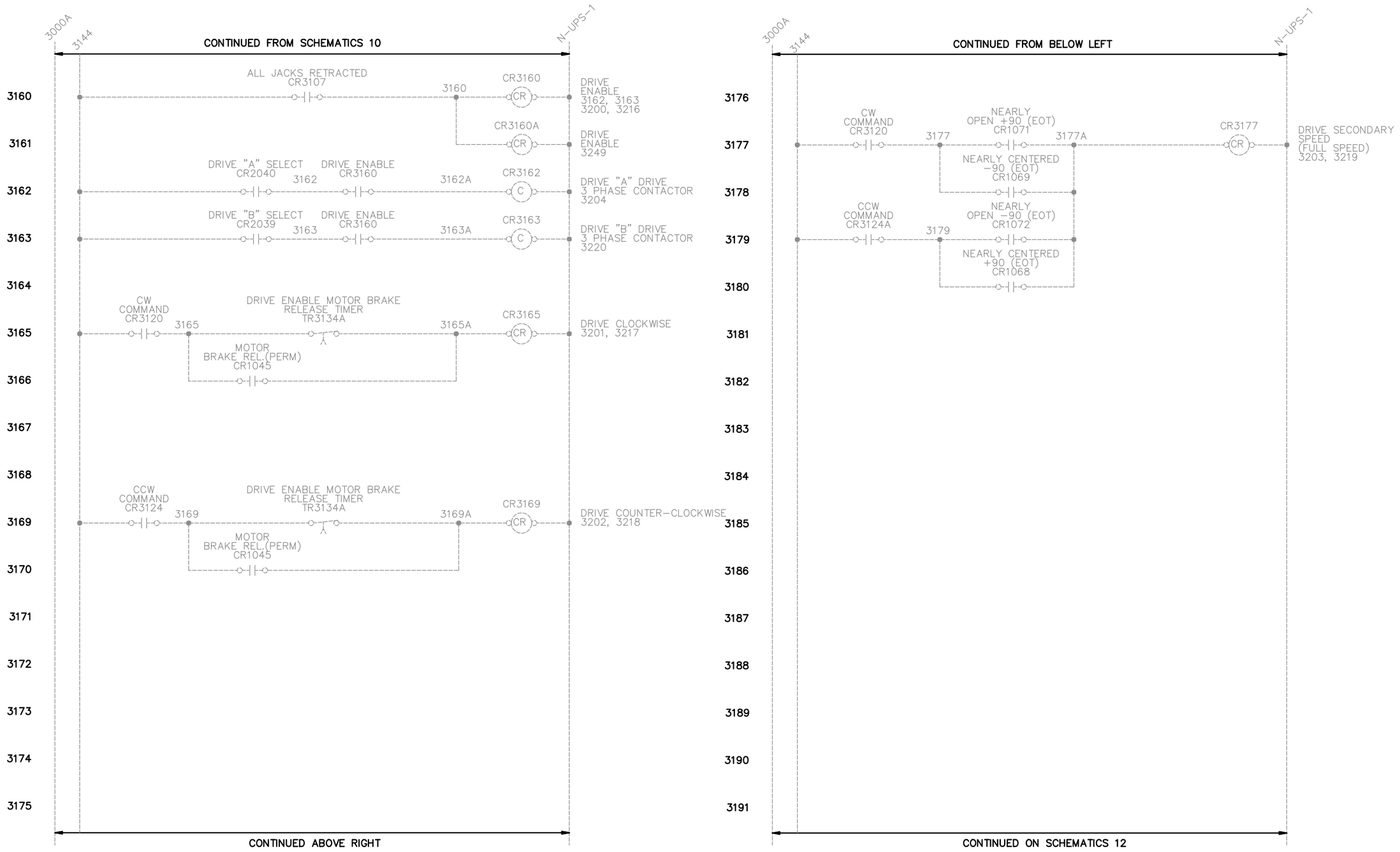

NOTES:

1. ALL CIRCUITS ARE SHOWN WITH THE TRAFFIC LIGHTS GREEN, WARNING GATES RAISED, BARRIER GATES RAISED, JACKS EXTENDED, AND SPAN CENTERED.
2. CONTROL SCHEMATICS ARE PROVIDED AS A GENERAL REPRESENTATION OF THE PROJECT REQUIREMENTS FOR CONTROL CIRCUITS TO AID THE CONTRACTOR IN BIDDING. REGARDLESS OF DETAILS OMITTED FROM THE PLANS FOR CLARITY, THE CONTRACTOR SHALL BE RESPONSIBLE FOR SUBMITTING SHOP DRAWINGS DETAILING ALL CONTROL AND POWER CIRCUITS AND PROPOSED DEVIATIONS AND SHALL VERIFY PROPER OPERATION PER THE BRIDGE LOGIC DIAGRAMS IN THE PLANS.
3. THE CONTRACTOR SHALL LOCATE AND REUSE CONTROL AND POWER CIRCUITS FOR NEWLY INSTALLED EQUIPMENT UNLESS SPECIFIED OTHERWISE IN THE PLANS OR SPECIFICATIONS.

DESIGN AGENCY
1400 WEST 2ND STREET SUITE 500 CLEVELAND, OHIO 44113

DESIGNED	DRAWN	REVIEWED	DATE
RMD	RMD	GSP	10/23/20
CHECKED	REVISED	STRUCTURE FILE NUMBER	
BLC	---	1869345	

ELECTRICAL SCHEMATICS 11
CITY OF CLEVELAND BRIDGE NO. 1:003M
CENTER STREET SWING BRIDGE OVER THE CUYAHOGA RIVER

CUY-CENTER ST. SWING BRIDGE
PID NO: 109597

E29/E37

101/109

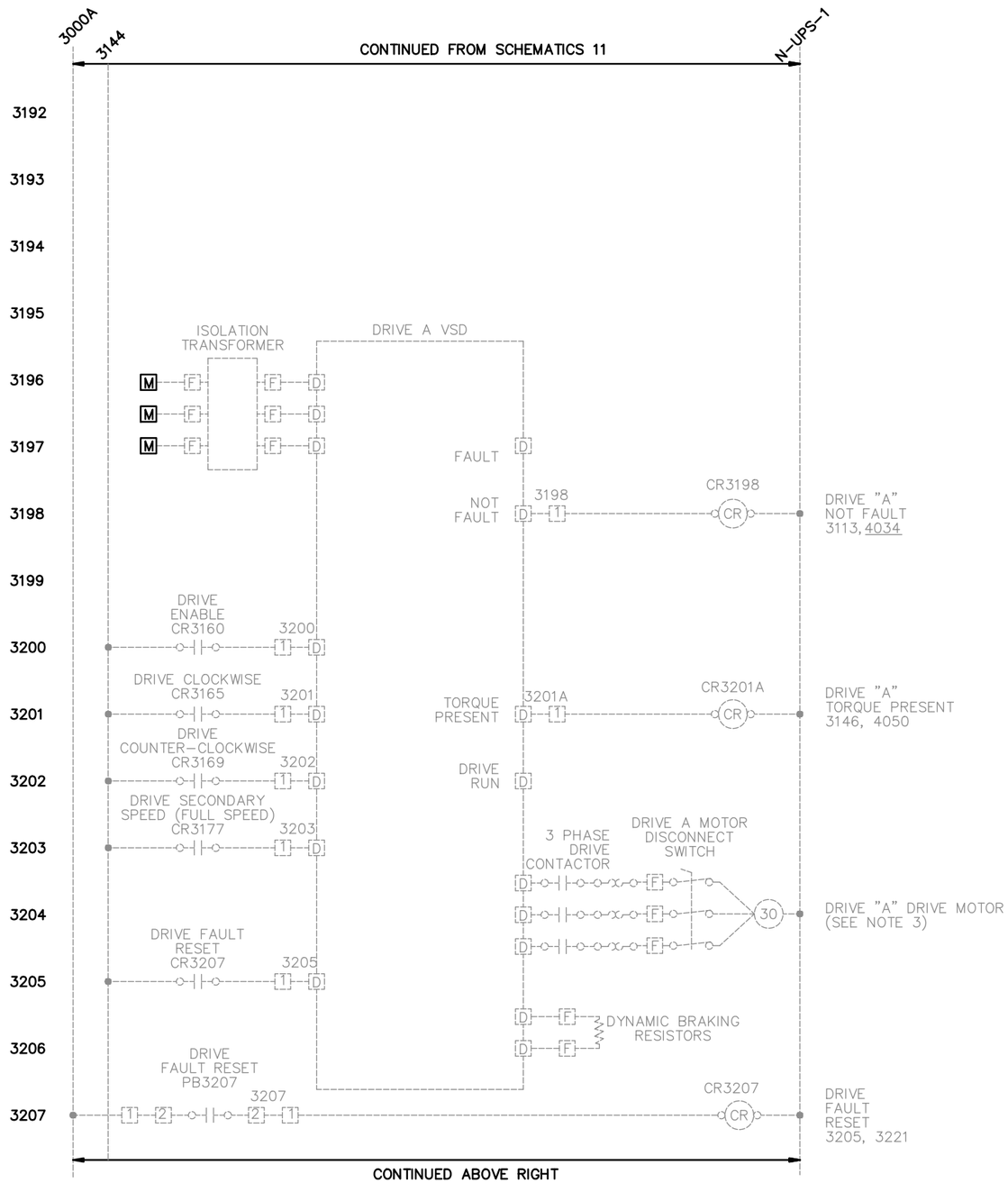

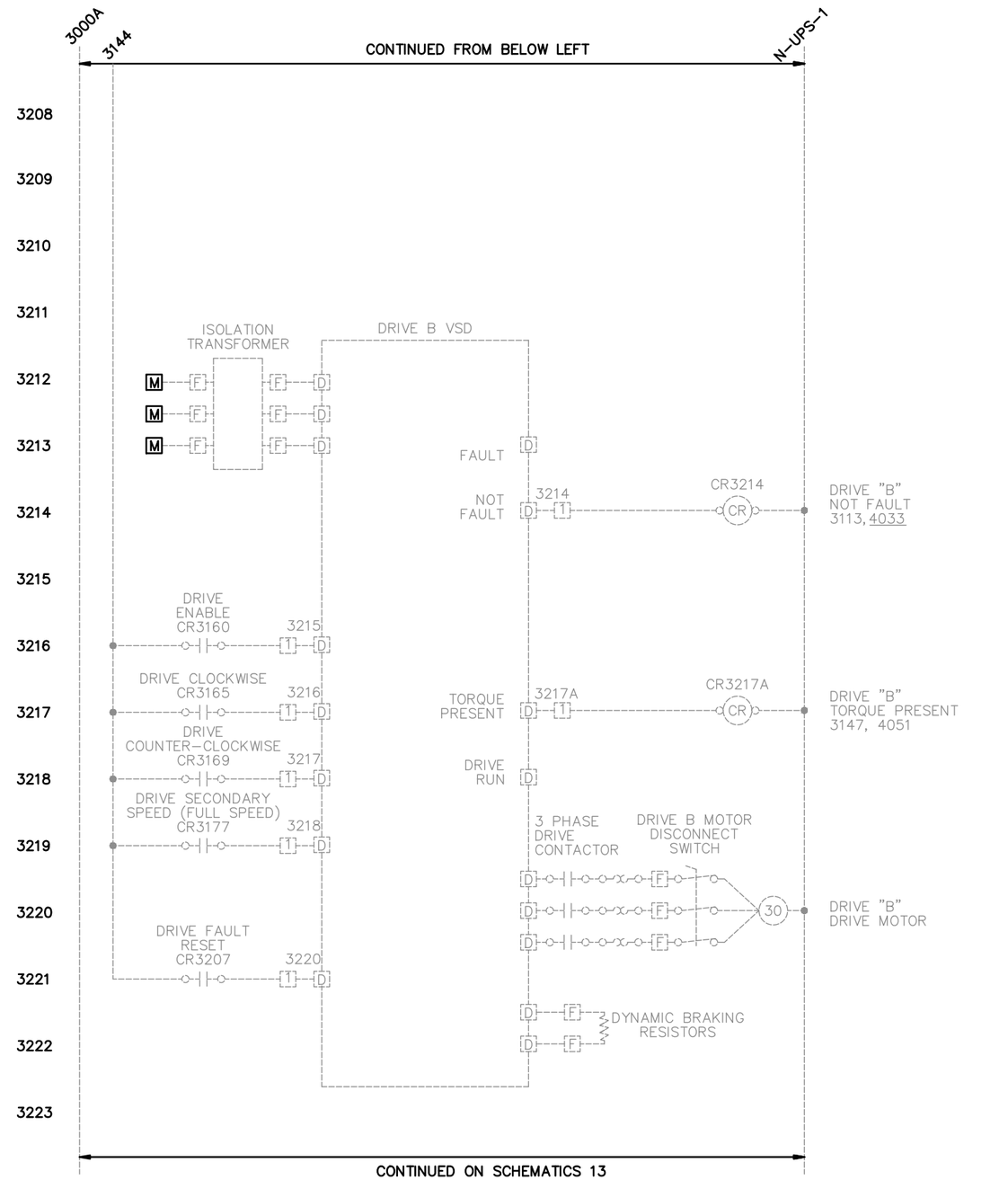

NOTES:

1. ALL CIRCUITS ARE SHOWN WITH THE TRAFFIC LIGHTS GREEN, WARNING GATES RAISED, BARRIER GATES RAISED, JACKS EXTENDED, AND SPAN CENTERED.
2. CONTROL SCHEMATICS ARE PROVIDED AS A GENERAL REPRESENTATION OF THE PROJECT REQUIREMENTS FOR CONTROL CIRCUITS TO AID THE CONTRACTOR IN BIDDING. REGARDLESS OF DETAILS OMITTED FROM THE PLANS FOR CLARITY, THE CONTRACTOR SHALL BE RESPONSIBLE FOR SUBMITTING SHOP DRAWINGS DETAILING ALL CONTROL AND POWER CIRCUITS AND PROPOSED DEVIATIONS AND SHALL VERIFY PROPER OPERATION PER THE BRIDGE LOGIC DIAGRAMS IN THE PLANS.
3. THE CONTRACTOR SHALL LOCATE AND REUSE CONTROL AND POWER CIRCUITS FOR NEWLY INSTALLED EQUIPMENT UNLESS SPECIFIED OTHERWISE IN THE PLANS OR SPECIFICATIONS.

DESIGN AGENCY
1600 WEST 2ND STREET SUITE 850 CLEVELAND, OHIO 44113

DESIGNED	DRAWN	REVIEWED	DATE
RMD	RMD	GSP	10/23/20
CHECKED	REVISED	STRUCTURE FILE NUMBER	
BLC	---	1869345	

ELECTRICAL SCHEMATICS 12
CITY OF CLEVELAND BRIDGE NO. 1:003M
CENTER STREET SWING BRIDGE OVER THE CUYAHOGA RIVER

CUY-CENTER ST. SWING BRIDGE
PID NO: 109597

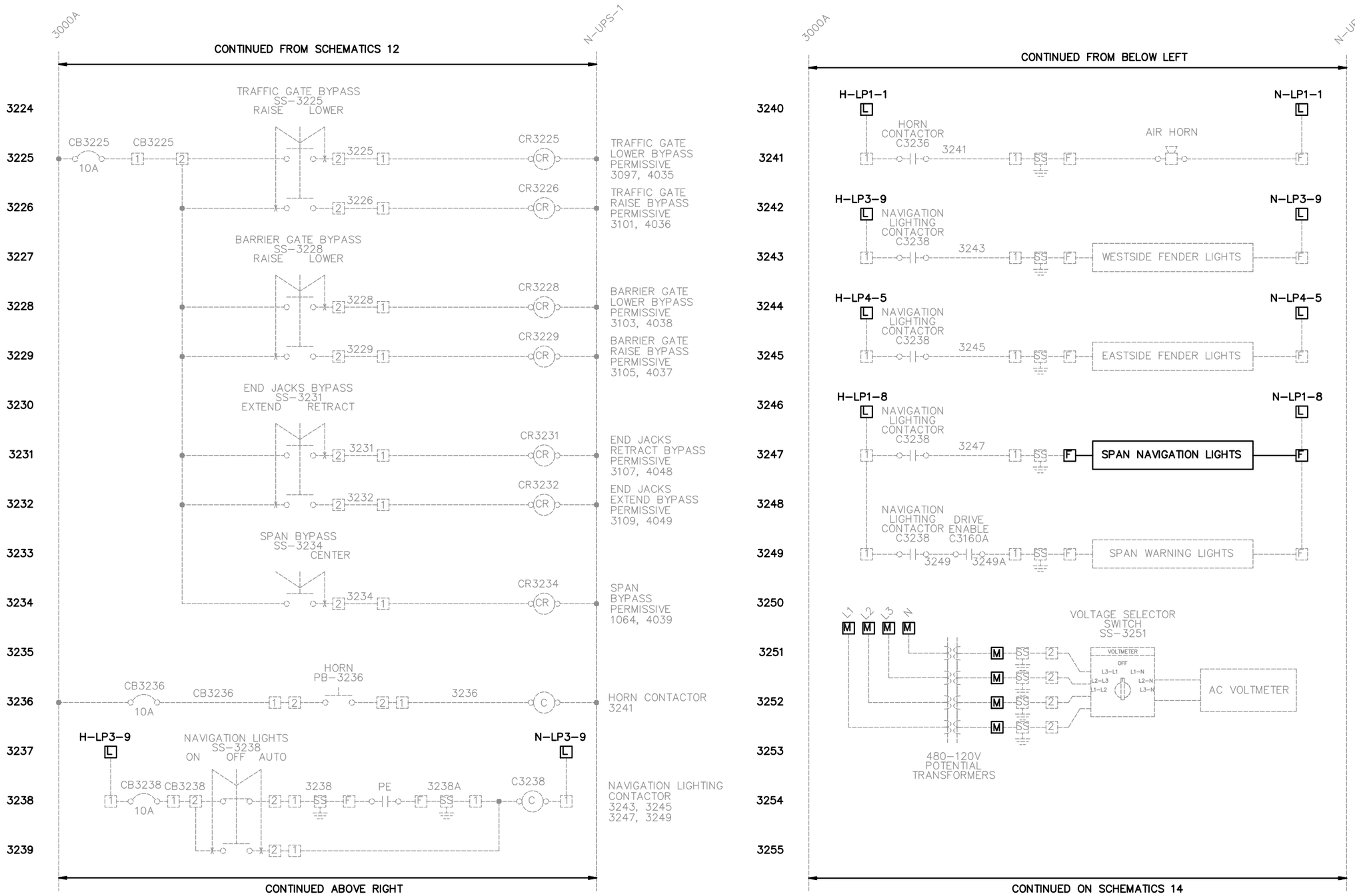

NOTES:

1. ALL CIRCUITS ARE SHOWN WITH THE TRAFFIC LIGHTS GREEN, WARNING GATES RAISED, BARRIER GATES RAISED, JACKS EXTENDED, AND SPAN CENTERED.
2. CONTROL SCHEMATICS ARE PROVIDED AS A GENERAL REPRESENTATION OF THE PROJECT REQUIREMENTS FOR CONTROL CIRCUITS TO AID THE CONTRACTOR IN BIDDING. REGARDLESS OF DETAILS OMITTED FROM THE PLANS FOR CLARITY, THE CONTRACTOR SHALL BE RESPONSIBLE FOR SUBMITTING SHOP DRAWINGS DETAILING ALL CONTROL AND POWER CIRCUITS AND PROPOSED DEVIATIONS AND SHALL VERIFY PROPER OPERATION PER THE BRIDGE LOGIC DIAGRAMS IN THE PLANS.
3. THE CONTRACTOR SHALL LOCATE AND REUSE CONTROL AND POWER CIRCUITS FOR NEWLY INSTALLED EQUIPMENT UNLESS SPECIFIED OTHERWISE IN THE PLANS OR SPECIFICATIONS.

DESIGN AGENCY
1400 WEST 2ND STREET SUITE 850 CLEVELAND, OHIO 44113

DESIGNED	DRAWN	REVIEWED	DATE
RMD	RMD	GSP	10/23/20
CHECKED	REVISED	STRUCTURE FILE NUMBER	
BLC	---	1869345	

ELECTRICALSCHEMATICS 13
CITY OF CLEVELAND BRIDGE NO. 1:003M
CENTER STREET SWING BRIDGE OVER THE CUYAHOGA RIVER

CUY-CENTER ST. SWING BRIDGE
PID NO: 109597

E31/E37

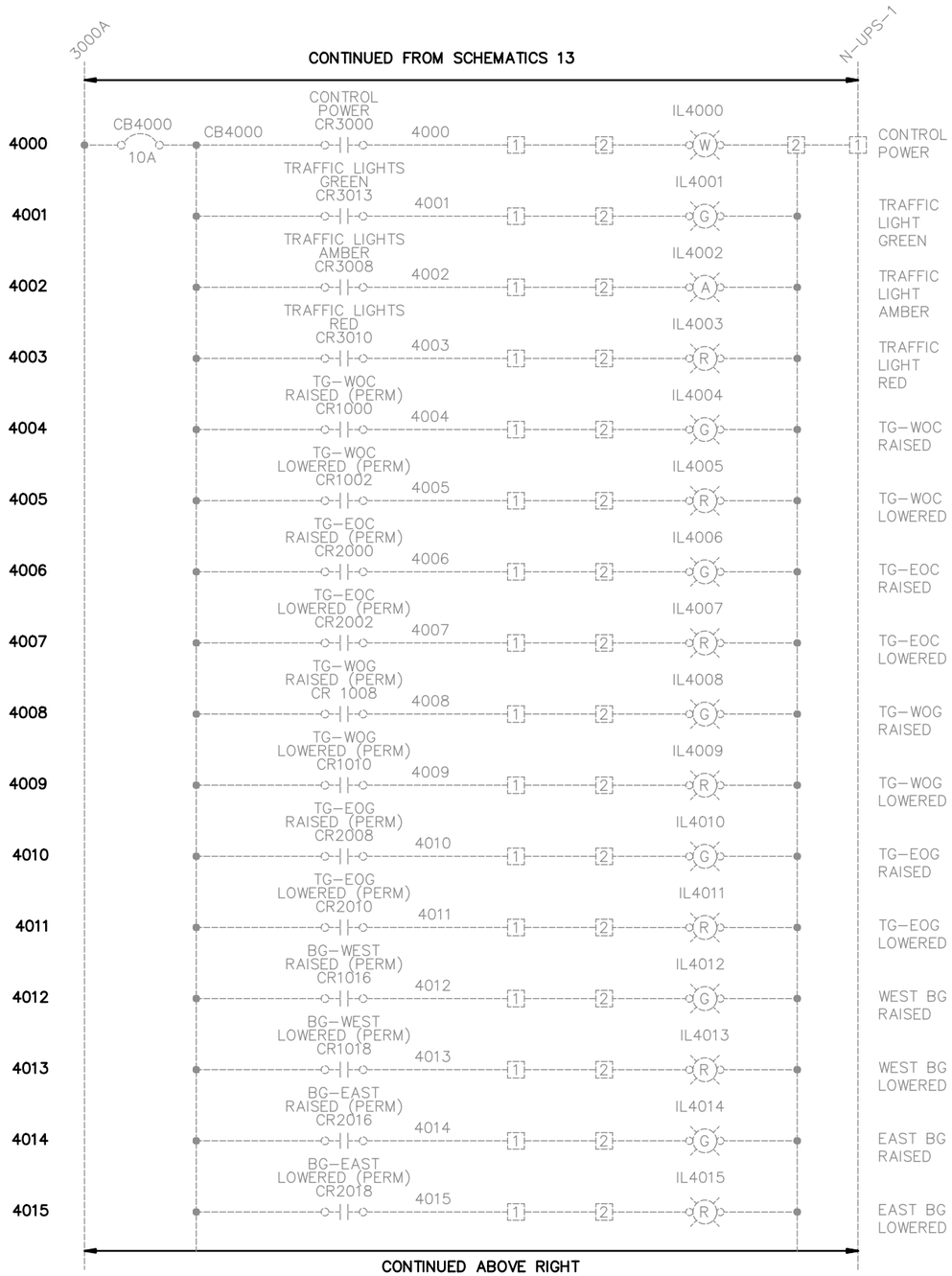

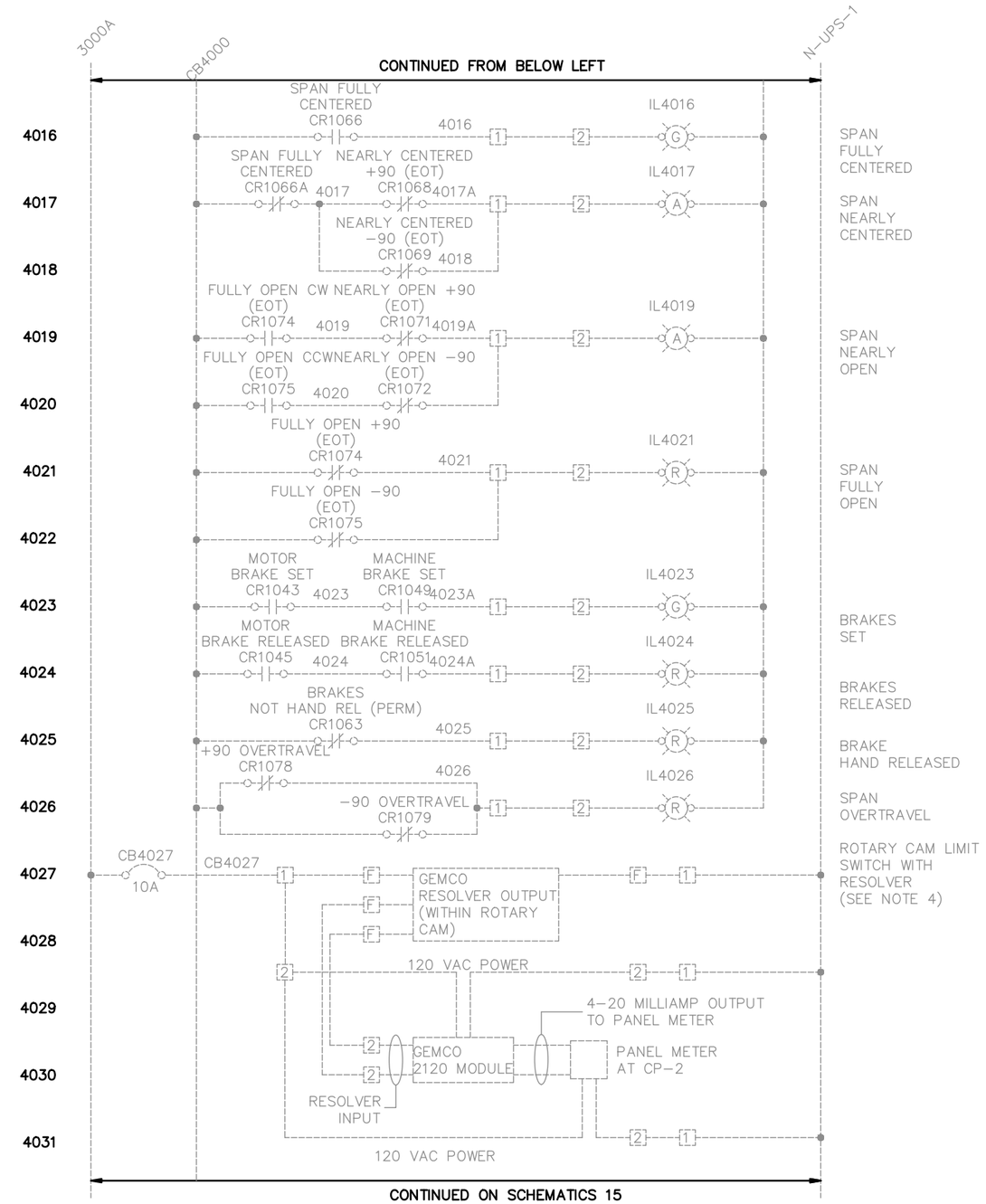

NOTES:

1. ALL CIRCUITS ARE SHOWN WITH THE TRAFFIC LIGHTS GREEN, WARNING GATES RAISED, BARRIER GATES RAISED, JACKS EXTENDED, AND SPAN CENTERED.
2. CONTROL SCHEMATICS ARE PROVIDED AS A GENERAL REPRESENTATION OF THE PROJECT REQUIREMENTS FOR CONTROL CIRCUITS TO AID THE CONTRACTOR IN BIDDING. REGARDLESS OF DETAILS OMITTED FROM THE PLANS FOR CLARITY, THE CONTRACTOR SHALL BE RESPONSIBLE FOR SUBMITTING SHOP DRAWINGS DETAILING ALL CONTROL AND POWER CIRCUITS AND PROPOSED DEVIATIONS AND SHALL VERIFY PROPER OPERATION PER THE BRIDGE LOGIC DIAGRAMS IN THE PLANS.
3. THE CONTRACTOR SHALL LOCATE AND REUSE CONTROL AND POWER CIRCUITS FOR NEWLY INSTALLED EQUIPMENT UNLESS SPECIFIED OTHERWISE IN THE PLANS OR SPECIFICATIONS.

DESIGN AGENCY
1400 WEST 2ND STREET SUITE 500 CLEVELAND, OHIO 44113

DESIGNED	DRAWN	REVIEWED	DATE
RMD	RMD	GSP	10/23/20
CHECKED	REVISED	STRUCTURE FILE NUMBER	
BLC	---	1869345	

ELECTRICAL SCHEMATICS 14
CITY OF CLEVELAND BRIDGE NO. 1:003M
CENTER STREET SWING BRIDGE OVER THE CUYAHOGA RIVER

CUY-CENTER ST. SWING BRIDGE
PID NO: 109597

E32/E37

104/109

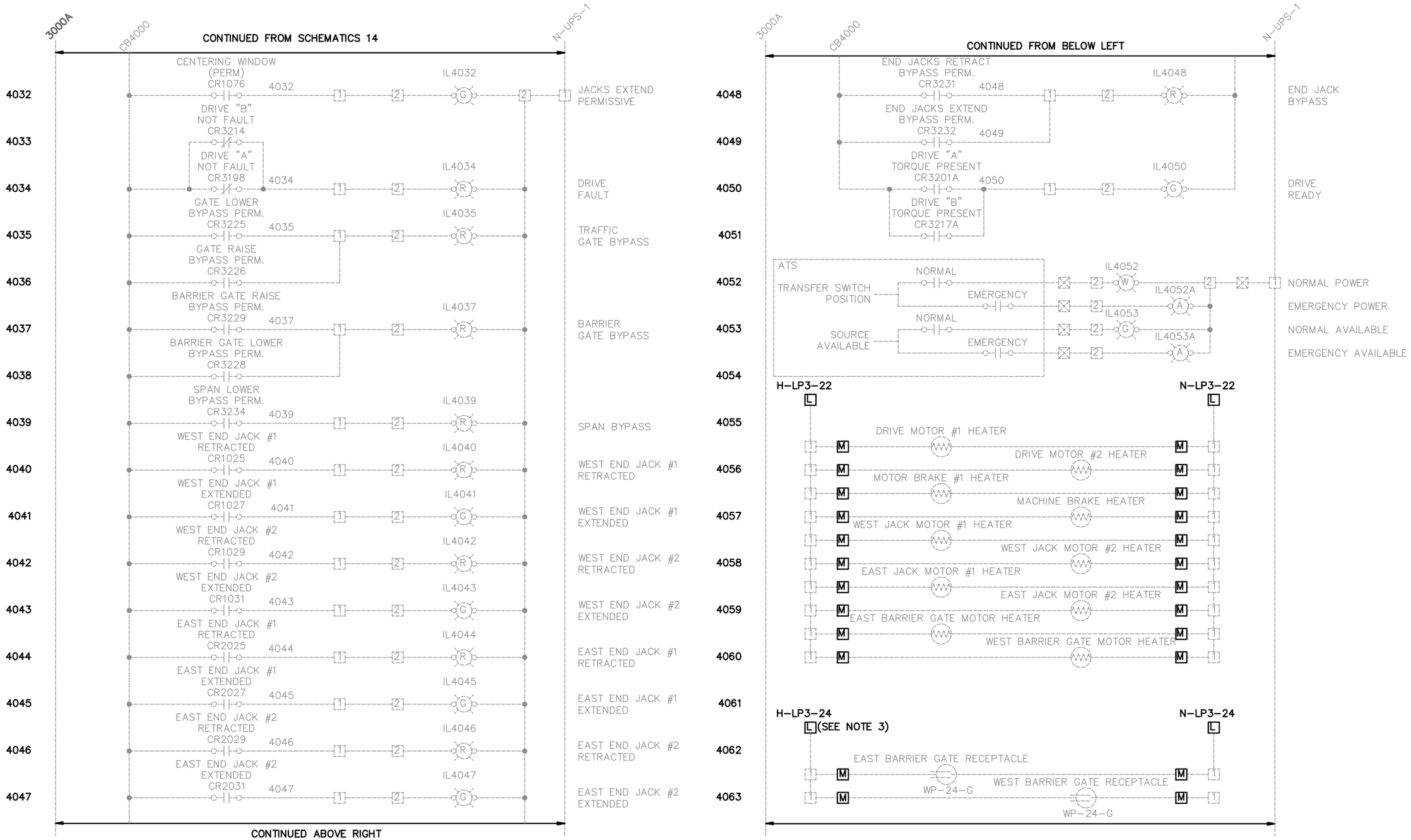

NOTES:

1. ALL CIRCUITS ARE SHOWN WITH THE TRAFFIC LIGHTS GREEN, WARNING GATES RAISED, BARRIER GATES RAISED, JACKS EXTENDED, AND SPAN CENTERED.
2. CONTROL SCHEMATICS ARE PROVIDED AS A GENERAL REPRESENTATION OF THE PROJECT REQUIREMENTS FOR CONTROL CIRCUITS TO AID THE CONTRACTOR IN BIDDING. REGARDLESS OF DETAILS OMITTED FROM THE PLANS FOR CLARITY, THE CONTRACTOR SHALL BE RESPONSIBLE FOR SUBMITTING SHOP DRAWINGS DETAILING ALL CONTROL AND POWER CIRCUITS AND PROPOSED DEVIATIONS AND SHALL VERIFY PROPER OPERATION PER THE BRIDGE LOGIC DIAGRAMS IN THE PLANS.
3. THE CONTRACTOR SHALL LOCATE AND REUSE CONTROL AND POWER CIRCUITS FOR NEWLY INSTALLED EQUIPMENT UNLESS SPECIFIED OTHERWISE IN THE PLANS OR SPECIFICATIONS.

DESIGN AGENCY
1400 WEST 2ND STREET SUITE 500 CLEVELAND, OHIO 44113

DESIGNED	DRAWN	REVIEWED	DATE
RMD	RMD	GSP	10/23/20
CHECKED	REVISED	STRUCTURE FILE NUMBER	
BLC	---	1869345	

ELECTRICAL SCHEMATICS 15
CITY OF CLEVELAND BRIDGE NO. 1:003M
CENTER STREET SWING BRIDGE OVER THE CUYAHOGA RIVER

CUY-CENTER ST. SWING BRIDGE
PID NO: 109597

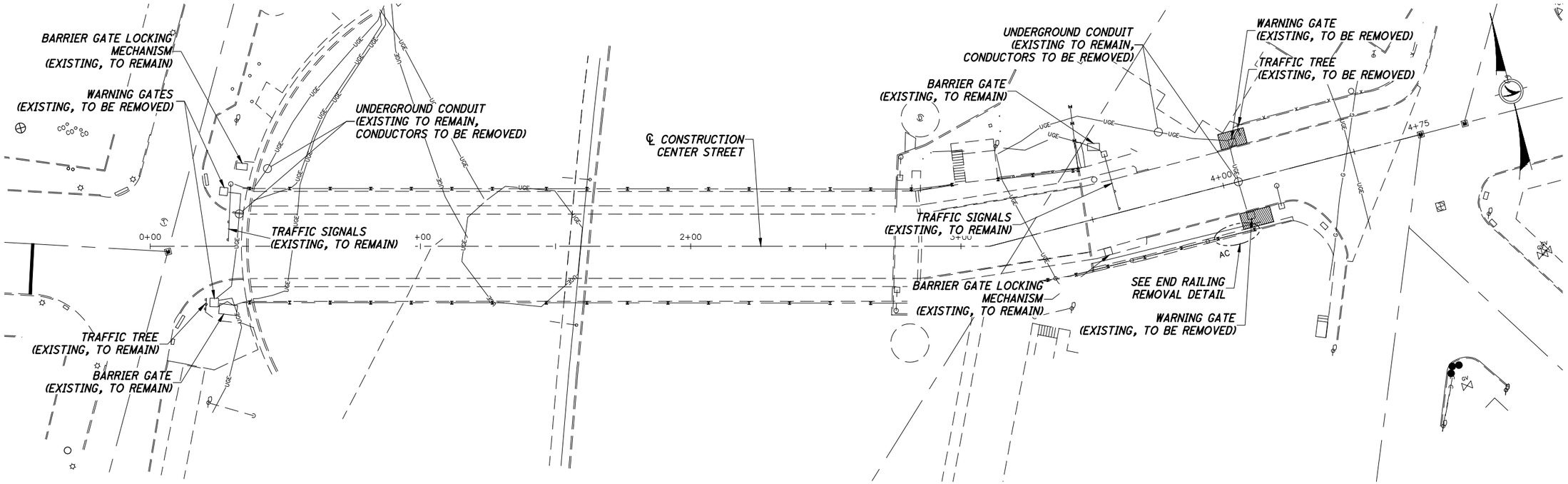

PLAN

SCALE: 1" = 20'-0"

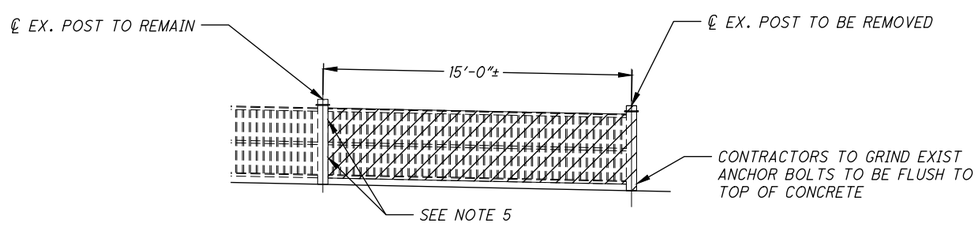

END RAILING AND POST REMOVAL AT EAST OFFGOING WARNING GATE

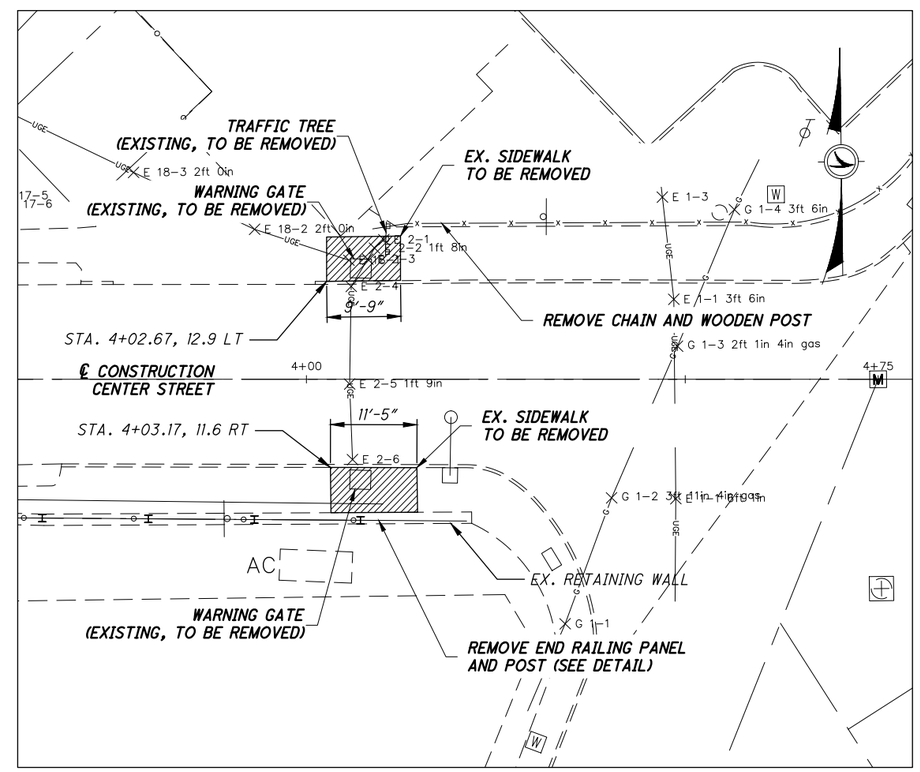

EAST APPROACH WARNING GATE REMOVAL DETAILS

SCALE: 1" = 10'-0"

NOTES:

1. FOR SIDEWALK, CHAIN AND WOODEN POST REMOVAL DETAILS, SEE SHEETS 3 /109 AND 13 /109 .
2. ALL LABOR AND MATERIALS ASSOCIATED WITH THE REMOVAL OF THE EXISTING WARNING GATES SHALL BE PAID FOR UNDER ITEM SPECIAL - ELECTRICAL WORK - REPLACE WARNING GATES.
3. ALL LABOR AND MATERIALS ASSOCIATED WITH THE REMOVAL OF THE EXISTING EAST WARNING GATE FOUNDATIONS SHALL BE PAID FOR UNDER ITEM SPECIAL - STRUCTURE, MISC.: WARNING GATE FOUNDATIONS.
4. REMOVAL OF END RAILING PANEL AND POST, SIDEWALK, CURB, CHAIN AND WOODEN POST WILL BE PAID FOR AS PART OF ROADWAY WORK SEE SHEET 12 /109 .
5. CONTRACTOR IS TO UNBOLT PANEL TO BE REMOVED FROM POST TO REMAIN AND CUT AND GRIND OUTSTANDING LEGS OF EAST CONNECTION ANGLES FLUSH AND SMOOTH WITH VERTICAL LEG ON POST TO REMAIN.

LEGEND:

INDICATES LIMITS OF REMOVAL

DESIGN AGENCY
WSP
1660 WEST 2ND STREET SUITE 850 CLEVELAND, OHIO 44113

DESIGNED	DRAWN	REVIEWED	DATE
NRF	BLM	GSP	10/23/20
CHECKED	REVISED	STRUCTURE FILE NUMBER	
NBR	---	1869345	

WARNING GATE REMOVAL PLAN

CITY OF CLEVELAND BRIDGE NO. 1:003M
CENTER STREET SWING BRIDGE OVER THE CUYAHOGA RIVER

CUY-CENTER ST. SWING BRIDGE
PID NO: 109597

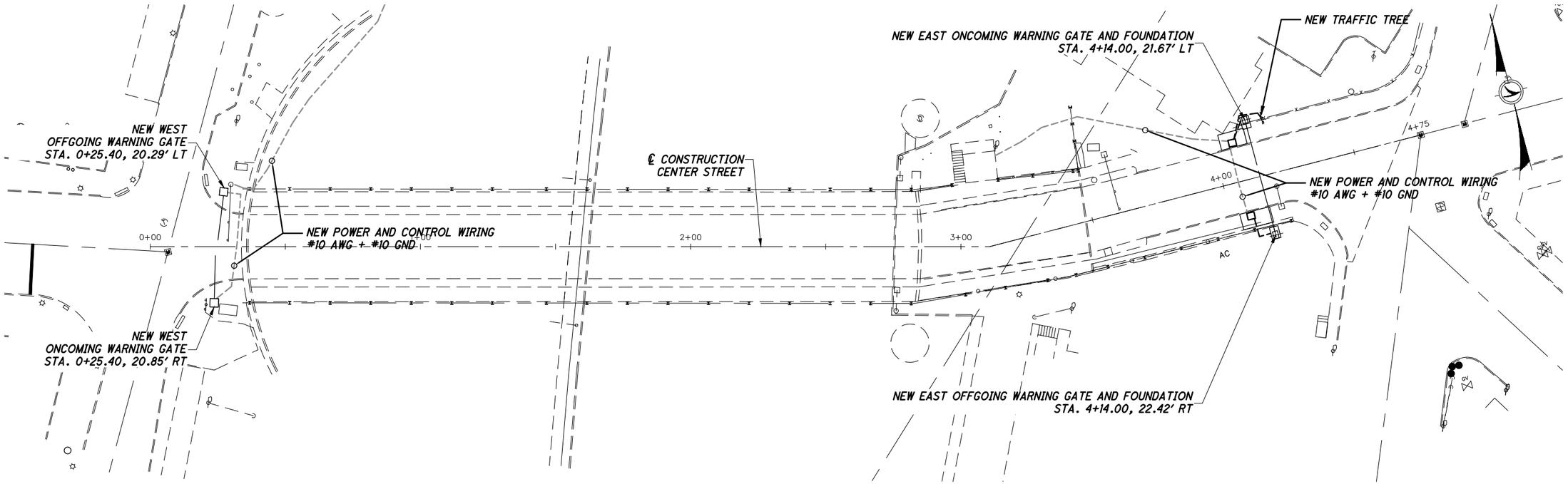

PLAN
SCALE: 1" = 20'-0"

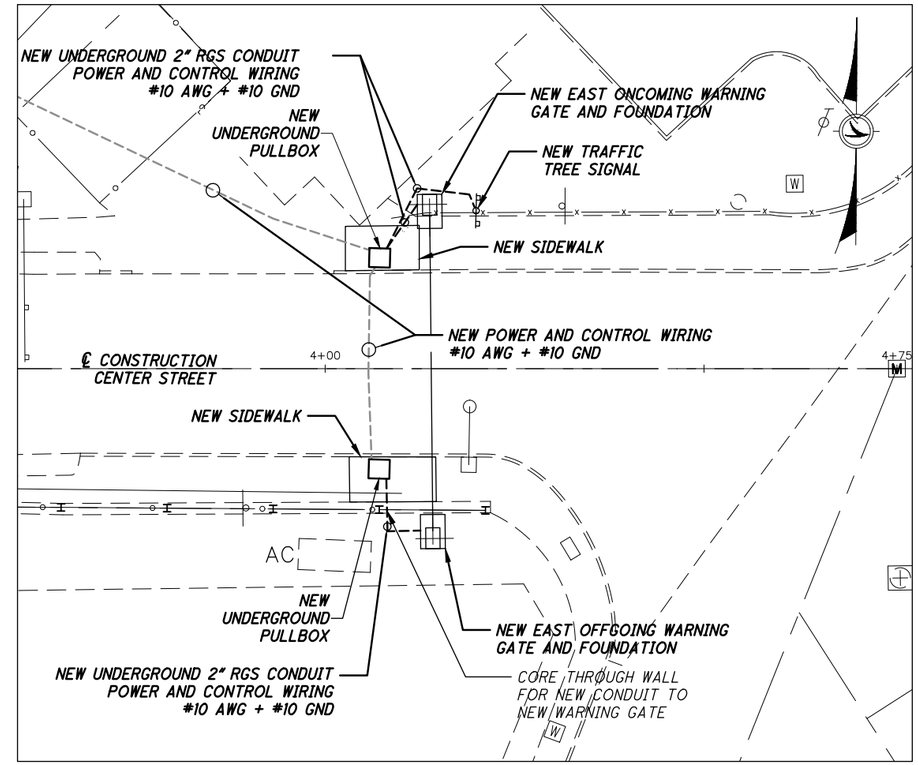

EAST APPROACH NEW WARNING GATE DETAILS
SCALE: 1" = 10'-0"

NOTES:

1. FOR SIDEWALK REPLACEMENT DETAILS, SEE SHEETS 3 /109 AND 10 /109.
2. ALL LABOR AND MATERIALS ASSOCIATED WITH THE REPLACEMENT OF THE EXISTING WARNING GATES SHALL BE PAID FOR UNDER ITEM SPECIAL - ELECTRICAL WORK - REPLACE WARNING GATES.
3. ALL LABOR AND MATERIALS ASSOCIATED WITH THE EXCAVATION AND PLACEMENT OF THE NEW EAST WARNING GATE FOUNDATIONS SHALL BE PAID FOR UNDER ITEM SPECIAL - STRUCTURE, MISC.: WARNING GATE FOUNDATIONS.

DESIGN AGENCY
wsp
1660 WEST 2ND STREET
SUITE 850
CLEVELAND, OHIO 44113

DESIGNED	DRAWN	REVIEWED	DATE
NRF	BLM	GSP	10/23/20
CHECKED	REVISED	STRUCTURE FILE NUMBER	
NBR	---	1869345	

WARNING GATE REPLACEMENT PLAN
CITY OF CLEVELAND BRIDGE NO. 1:003M
CENTER STREET SWING BRIDGE OVER THE CUYAHOGA RIVER

CUY-CENTER ST.
SWING BRIDGE
PID NO: 109597

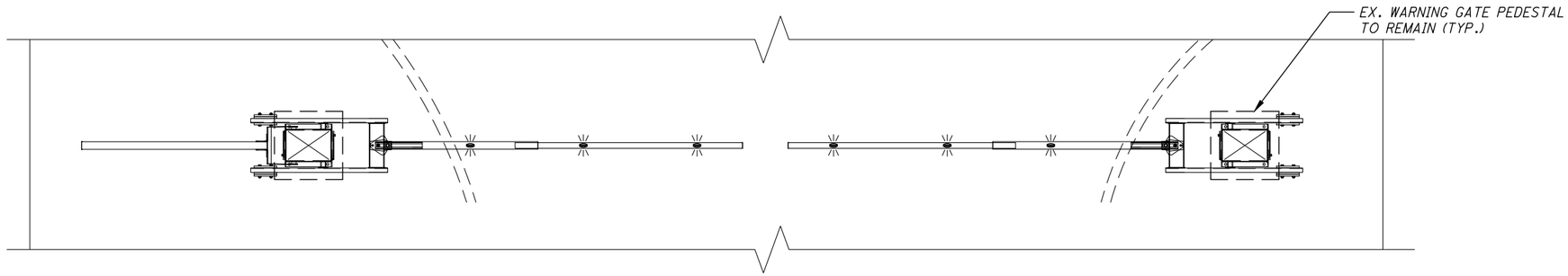

WEST END WARNING GATE DETAILS - PLAN VIEW

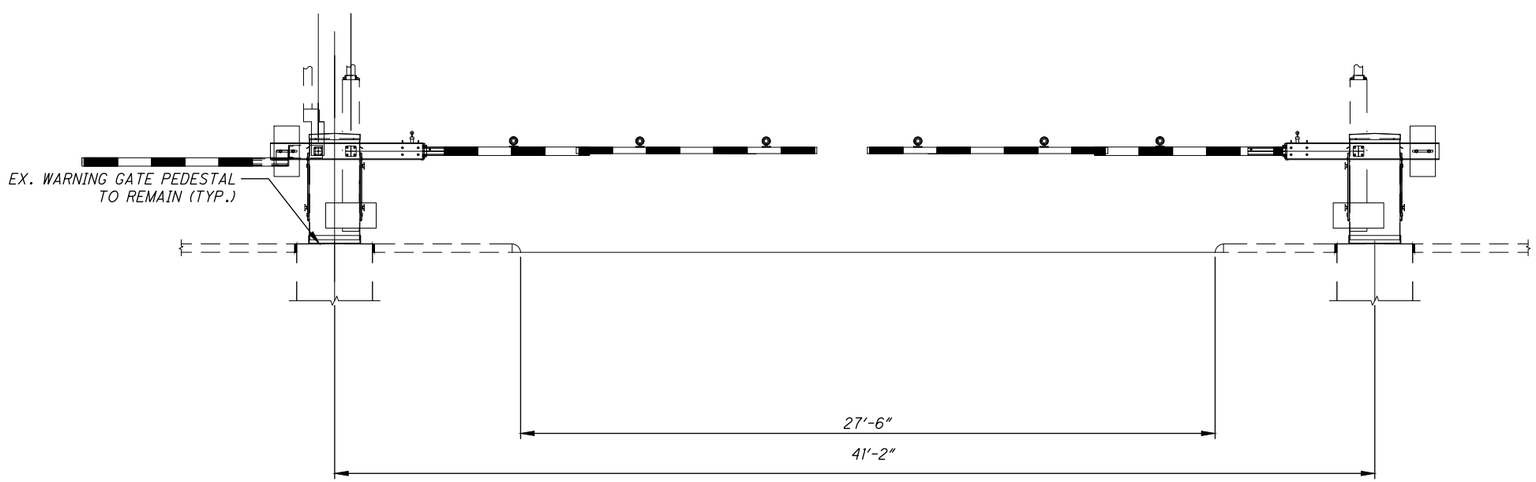

WEST END WARNING GATE DETAILS - ELEVATION
(LOOKING WEST)

NOTES:

1. CONTRACTOR SHALL FIELD VERIFY ALL DIMENSIONS INCLUDING GATE ARM LENGTH DIMENSIONS.
2. PROPERLY SIZE, LOCATE AND INSTALL COUNTERWEIGHT AS REQUIRED FOR EVEN BALANCE.
3. NEW WARNING GATES ARE TO MAKE USE OF EXISTING ANCHOR BOLTS OR PROVIDE NEW ANCHOR BOLTS PER MANUFACTURER'S RECOMMENDATIONS AT NO COST TO THE PROJECT.
4. SPECIFIC GATE MOUNTING LOCATIONS SHALL ALLOW FOR FULL ACCESS TO GATE HOUSING INTERIORS PER THE NEC.
5. CONTRACTOR SHALL REFERENCE ELECTRICAL SPECIAL PROVISION FOR ADDITIONAL INFORMATION.

DESIGN AGENCY
WSP
1660 WEST 2ND STREET
SUITE 850
CLEVELAND, OHIO 44113

DESIGNED	DRAWN	REVIEWED	DATE
NRF	BLM	WRW	09/11/20
CHECKED	REVISED	STRUCTURE FILE NUMBER	
JEJT	---	1869345	

WEST WARNING GATE DETAILS
CITY OF CLEVELAND BRIDGE NO. 1:003M
CENTER STREET SWING BRIDGE OVER THE CUYAHOGA RIVER

CUY-CENTER ST.
SWING BRIDGE
PID NO: 109597

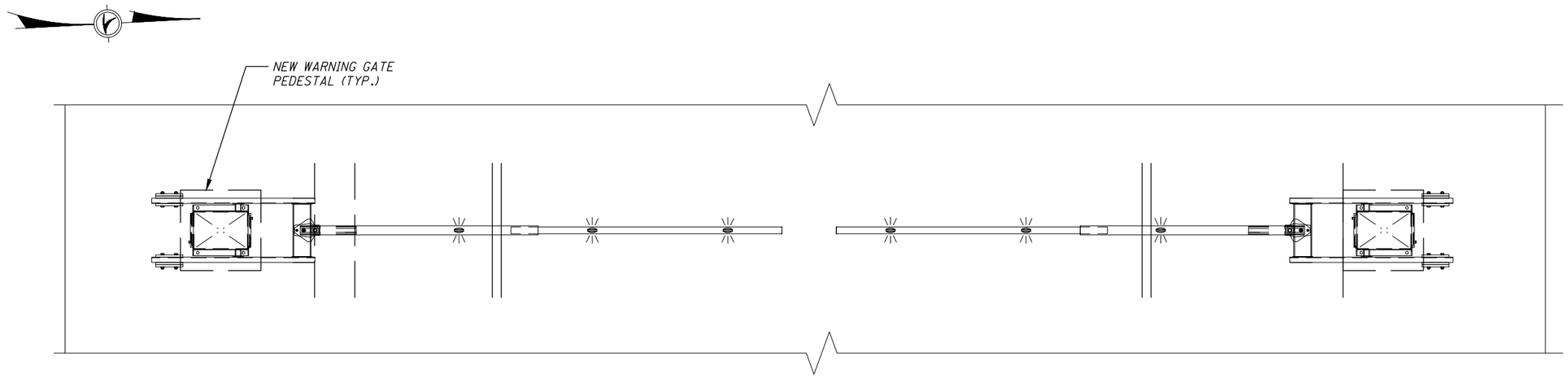

EAST END WARNING GATE DETAILS - PLAN VIEW

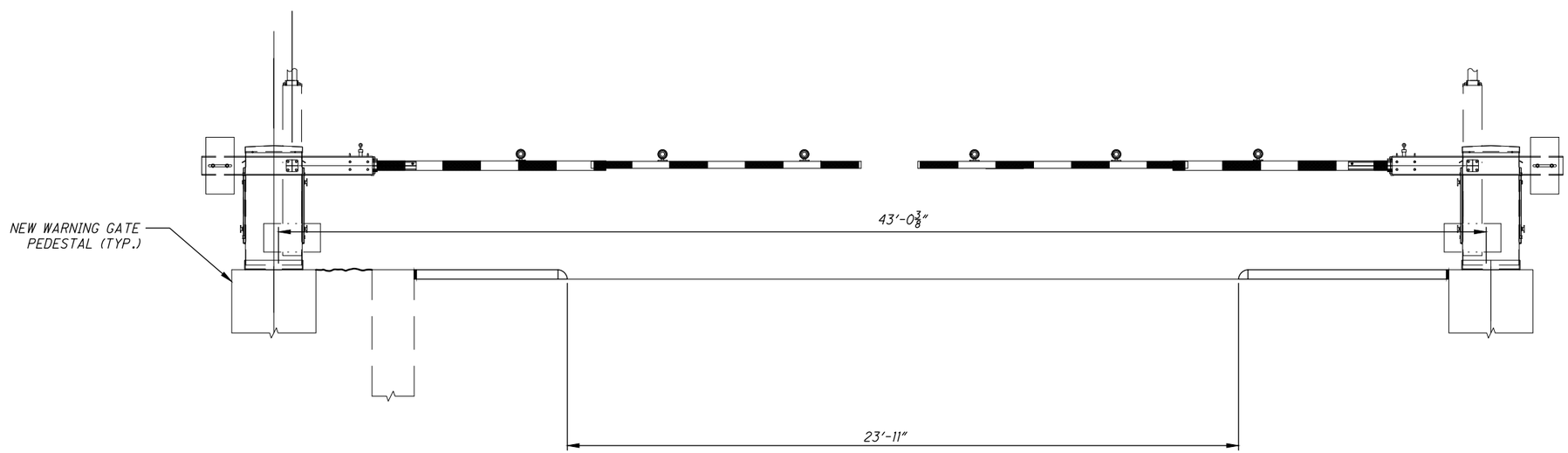

EAST END WARNING GATE DETAILS - PLAN VIEW
(LOOKING WEST)

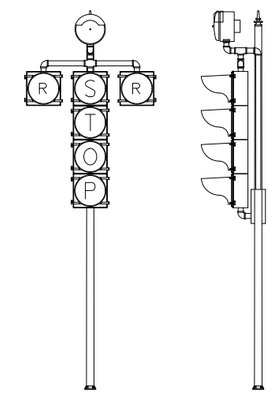

TRAFFIC TREE DETAIL

NOTES:

1. CONTRACTOR SHALL FIELD VERIFY ALL DIMENSIONS INCLUDING GATE ARM LENGTH DIMENSIONS.
2. PROPERLY SIZE, LOCATE AND INSTALL COUNTERWEIGHT AS REQUIRED FOR EVEN BALANCE.
3. GATE ANCHOR BOLTS SHALL BE PER THE MANUFACTURER'S RECOMMENDATIONS.
4. SPECIFIC GATE MOUNTING LOCATIONS SHALL ALLOW FOR FULL ACCESS TO GATE HOUSING INTERIORS PER THE NEC.
5. CONTRACTOR SHALL REFERENCE ELECTRICAL SPECIAL PROVISION FOR ADDITIONAL INFORMATION.
6. FOR GATE FOUNDATION DETAILS, SEE SHEET S50/S51

DESIGN AGENCY
WSP
1660 WEST 2ND STREET
SUITE 870
CLEVELAND, OHIO 44113

DESIGNED	DRAWN	REVIEWED	DATE
NRF	BLM	WRW	09/11/20
CHECKED	REVISED	STRUCTURE FILE NUMBER	
JEJT	---	1869345	

EAST WARNING GATE DETAILS
CITY OF CLEVELAND BRIDGE NO. 1:003M
CENTER STREET SWING BRIDGE OVER THE CUYAHOGA RIVER

CUY-CENTER ST.
SWING BRIDGE
PID NO: 109597

OHIO DEPARTMENT OF TRANSPORTATION
SPECIAL PROVISIONS FOR
ELECTRICAL REHABILITATION WORK

October 23, 2020

I. DESCRIPTION

General
Under the item Electrical Work, the Contractor shall remove and dispose of electrical equipment not limited to existing conduits, conductors, electrical boxes, east motor control center, west motor control center buckets and doors, fire alarm equipment, channel navigation lights, and panelboards. The Contractor shall remove from the bridge and properly dispose of all materials that are removed as part of this work once the Electrical Work described above is complete. The Contractor shall exercise care in the removal of all existing components so as not to cause damage. The Contractor shall repair any damage that may occur as a result of removal of any existing components to the satisfaction of the Owner at no additional cost.

The Contractor shall furnish and install new conduits, conductors, electrical boxes, east motor control center, west motor control center buckets and doors, fire alarm equipment, channel navigation lights, panelboards and associated hardware. The Contractor shall verify that all Electrical Work is complete and all equipment is in operable condition, as shown on the Contract Plans and as specified in these Special Provisions.

Each of the Electrical Work items is described in greater detail on the Contract Plans and in these Special Provisions.

Unless otherwise permitted by the Engineer in writing, the Contractor shall not remove or disable any electrical components until the associated replacement electrical component has been submitted in shop drawing format, approved by the Engineer, and shop tested with a favorable recommendation by the Engineer. If the Contractor wishes to have an exception to this requirement, then a petition shall be submitted in writing and approved by the Engineer.

It is the intent of these Special Provisions that only individuals of high competence and experience be utilized to perform the work of these Special Provisions. It is not the intent of these Special Provisions and Contract Plans to identify all necessary methods, means, or equipment that will be required in order to accomplish the Electrical Work of these Special Provisions and Contract Plans. Unless otherwise specified, all manufactured items, fabrications, components, and assemblies that are to be removed, rehabilitated, furnished new, installed or reinstalled under these Special Provisions and Contract Plans is classified as electrical construction.

The Contract Plans and these Special Provisions were developed based on field observations and existing design plans. The Contractor is obligated to confirm all field conditions. If any field condition related to the Electrical Work to be performed differs from the information shown in the Contract documents is discovered at the site by the Contractor, the Contractor shall notify the Engineer in a timely manner for resolution as to prevent additional cost to the Owner. Dimensions indicated on the Contract Plans are nominal and intended for information. The dimensions indicated on the Contract Plans have been obtained from limited site survey and review of the available documents for the bridge. The Contractor shall coordinate the interface of the Electrical Work with structural and mechanical components in the preparation of the Shop Drawings.

After project completion, provide as-built documentation for all electrical equipment installed, user manuals, operation and maintenance manuals, and all other pertinent materials to the Engineer. Electrical as-built documentation shall provide identification for components, including wire numbers, that match the Contract Plans and the existing numbering system. A two-number system showing

new and existing may be used for clarity. Submit the shop drawings and as-builts electronically in pdf format.

Prepare detailed design plan drawings of electrical and control system conduit and wiring to provide the functionality specified in these Special Provisions and Contract Plans. Provide drawings of the proposed equipment complete with conduit and wire schedule to the Engineer for approval.

Wire and cable routing shown is approximate unless dimensioned. Route wire and cable, as required, to meet project conditions. Determine exact routing and lengths required where wire and cable routing is not shown, and destination only is indicated.

Locate operating and control equipment to provide easy access and arrange entire electrical work with adequate access for operation and maintenance as per the latest National Electrical Code (NEC) requirements.

Ensure all Electrical Work is in compliance with the requirements of the current National Electrical Code and to all applicable local rules and ordinances.

Hierarchy of Plans, Specifications, and Industrial Standards
If there is a discrepancy between the AASHTO LRFD Movable Bridge Design Specifications, the Contract Plans, these Special Provisions, and/or any other relevant standards listed, the most stringent requirement as determined by the Engineer will apply.

Standards
Ensure the electrical installation is in accordance with the latest version of all applicable codes, standards, laws, and ordinances. The following codes and standards are applicable and are not considered all inclusive:

1. American Association of State Highway Transportation Officials (AASHTO)
2. National Electric Code (NEC)
3. National Electrical Manufacturers Association (NEMA)
4. National Fire Protection Association (NFPA)
5. National Electrical Safety Code (NESC)
6. American National Standards Institute (ANSI)
7. Environmental Protection Agency (EPA)
8. Occupational Safety and Health Act (OSHA)
9. Underwriter's Laboratories, Inc. (UL)
10. American Wire Gauge (AWG)
11. National Electric Testing Association (NETA)
12. United States Coast Guard (USCG) Bridge Lighting and Other Signals
13. Manual on Uniform Traffic Control Devices (MUTCD)
14. National Electrical Contractors Association (NECA)

Permits
Receive approval from the United States Coast Guard (USCG) for all construction channel closures and temporary navigation lighting required. All local and/or state permits needed are the responsibility of the contractor to obtain.
Workforce
The installation and adjustment of all electrical work defined in these Contract Documents shall be performed by electricians experienced in this class of work. The electricians must have a minimum of five years of experience in the wide range of skills typically associated with the electrician profession. The workers shall have demonstrated experience with all aspects of the tools and equipment typically associated with this type of work. Evidence of experience shall be submitted in resume format to the Engineer for approval and shall include the following:

1. Description of applicable projects over a five-year period, to include types of electrical equipment associated with the project

2. Duration of each project including start and completion dates

3. Position held for each project

4. Location of each project

5. References, including names and current contact information for each project

Any evidence that indicates that the relevant aspects of the work for one or more of the projects submitted as experience was not performed by the candidate or that the project was not successful will be cause for rejection. The electrical work shall be conducted only by personnel who have been approved by the Engineer.

Submittals
Shop Drawings, As-Built Drawings, Certified Drawings, Operation and Maintenance Manuals, Installation Procedures and other required submittals specified within these Special Provisions shall be submitted to the Engineer for review in accordance with Section 105.02 of the ODOT Construction and Material Specifications. Submittals that do not meet the minimum requirements identified in the Contract Documents will be considered non-responsive and will be returned without review. Submittals that have not been approved or require correction shall be resubmitted until they are acceptable to the Engineer, and such procedure shall not be considered cause for delay. The Contractor shall bear all costs for damages which may result from ordering or fabrication of any materials prior to acceptance of Shop Drawings. The Contractor may request in writing from the Engineer approval to order raw materials of the correct type for later fabrication from approved Shop Drawings after they have been accepted. Such approval by the Engineer shall be in writing. No installation or assembly of electrical components shall commence without approved installation and alignment procedures and supporting Assembly or Erection Drawings.

II. MATERIALS

Provide all apparatus, devices, circuits, appliances, material, or labor not specifically mentioned or included but that may be found necessary to complete or perfect the installation and equipment in a manner acceptable to the engineer as if specifically included in these Specifications and without any extra cost.

Conformance
Provide all electrical equipment and install in accordance with the requirements of the latest revision of the AASHTO LRFD Movable Highway Bridge Design Specifications and as specified in these Special Provisions.

Obtain all required permits and approvals of all Departments or Agencies having jurisdiction.

Equipment and Material Provisions
Ensure all equipment and materials are new. Provide first class equipment, materials, and workmanship. Manufacture and erect to the satisfaction of the engineer. Warrantee the in-service working of the electrical installations for 5 years following project acceptance. If the Contractor has any objection to any feature of the electrical equipment as designed and laid out, they must state their objection prior to bidding and in writing to the Engineer, otherwise their objection will be ignored if offered as an excuse for malfunctioning of the equipment or for defective or broken apparatus.

Provide each piece of electrical equipment and apparatus with a corrosion-resisting metal nameplate on which is stamped the name of the manufacturer, catalog number, and the rating or capacity of the equipment or apparatus. Provide corrosion-resisting material for all metal parts of the installation,

except structural steel, such as aluminum, bronze, or type-316 stainless steel. Use cast-iron, malleable iron, or steel with a hot-dip galvanized finish as specified. Where aluminum surfaces come into contact with metals other than stainless steel or zinc, paint the dissimilar metals with a prime coat of zinc-chromate primer followed by one coat of a suitable protective coating, excluding those containing lead pigmentations.

Ensure all mounting hardware, and all wiring terminals are vibration proof. If any departures from the Plans or these Specifications are deemed necessary, submit the details of such departures and the reasons for it to the Engineer. Do not start any work until approved by the engineer.

West Motor Control Center (MCC)
Ensure the manufacturer of the MCC buckets and doors is the manufacturer of the existing MCC assembly. For the equipment specified, the manufacturer must be ISO 9001 or 9002 certified. The manufacturer of this equipment must have produced similar electrical equipment for a minimum period of 5 years. When requested by the Engineer, provide an acceptable list of installations with similar equipment demonstrating compliance with this requirement.

Provide standard size compartments for mounting control units based on 6 inch increments. Ensure all full voltage starter units and all feeder breakers are of the draw-out type. Ensure draw-out provisions include a positive guide rail system and stab shrouds to absolutely ensure alignment of stabs with the vertical bus. Provide draw-out units with a tin-plated stab assembly for connection to the vertical bus. Ensure no wiring to these stabs extends outside the draw-out unit. Paint interior of all units white for increased visibility. Equip units with side-mounted, positive latch pull-apart type control terminal blocks rated 600 volts. Provide knockouts for the addition of future terminal blocks. Ensure wiring type is Class II-B.

Secure all draw-out units by a spring-loaded, quarter turn, indicating type fastening device located at the top front of the unit. Provide each compartment of the unit with an individual front door. Ensure it is mechanically interlocked with the unit door to prevent access, unless the disconnect is in the “OFF” position. Provide a defeater to bypass this interlock. With the door open, provide an interlock to prevent removal or closing of the disconnect. Provide a second interlock to prevent removal or reinsertion of the unit while in the “ON” position. Provide padlocking facilities to positively lock the disconnect in the “OFF” position with up to 3 padlocks with the door open or closed. In addition, provide means to padlock the unit in a partially withdrawn position with the stabs free of the vertical bus.

Ensure nameplates, terminal markings, wire insulation, wire markers are as called out elsewhere in this specification.

Install a dielectric mat in front of the motor control center. Ensure they are 3/8-inch thick and rated for 26,500VAC with a corrugated top and knurled bottom and certification engraved to meet ASTM D-178-Type II, Class 3.

East Motor Control Center (MCC)
Ensure the manufacturer of the assembly is the manufacturer of the major components within the assembly. For the equipment specified, the manufacturer must be ISO 9001 or 9002 certified. The manufacturer of this equipment must have produced similar electrical equipment for a minimum period of 5 years. When requested by the Engineer, provide an acceptable list of installations with similar equipment demonstrating compliance with this requirement. Ensure the motor control center bear a UL label. Supply certified copies of production test reports demonstrating compliance with these standards when requested by the Engineer.

Provide structure 90 inches high, 20 inches deep, and 20 inches wide, type NEMA 12, totally enclosed, dead-front, free-standing assemblies unless shown otherwise on the Plans. Ensure structures contain a horizontal wireway at the top isolated from the horizontal bus via metal barriers

and is readily accessible through a hinged cover and a horizontal wireway at the bottom. Provide adequate space for conduit and wiring to enter the top or bottom without structural interference.

Provide standard size compartments for mounting control units based on 6 inch increments. Provide a vertical wireway adjacent to each vertical unit and covered by a hinged door. Ensure wireways contain steel rod cable supports. Ensure all full voltage starter units and all feeder breakers are of the draw-out type. Ensure draw-out provisions include a positive guide rail system and stab shrouds to absolutely ensure alignment of stabs with the vertical bus. Provide draw-out units with a tin-plated stab assembly for connection to the vertical bus. Ensure no wiring to these stabs extends outside the draw-out unit. Paint interior of all units white for increased visibility. Equip units with side-mounted, positive latch pull-apart type control terminal blocks rated 600 volts. Provide knockouts for the addition of future terminal blocks. Ensure wiring type is Class II-B.

Secure all draw-out units by a spring-loaded, quarter turn, indicating type fastening device located at the top front of the unit. Provide each compartment of the unit with an individual front door. Ensure it is mechanically interlocked with the unit door to prevent access, unless the disconnect is in the “OFF” position. Provide a defeater to bypass this interlock. With the door open, provide an interlock to prevent removal or closing of the disconnect. Provide a second interlock to prevent removal or reinsertion of the unit while in the “ON” position. Provide padlocking facilities to positively lock the disconnect in the “OFF” position with up to 3 padlocks with the door open or closed. In addition, provide means to padlock the unit in a partially withdrawn position with the stabs free of the vertical bus.

Ensure each structure contains a main horizontal tin-plated copper bus with a minimum ampacity as shown on the Plans. Ensure the horizontal bus is rated at 65 degrees C temperature rise over a 40 degrees C ambient in compliance with UL standards. Ensure vertical bus feeding unit compartments are tin-plated copper and are securely bolted to the horizontal main bus. Ensure all joints are front-accessible for ease maintenance. Ensure the vertical bus has a minimum rating amperage as shown on the Plans. Ensure both vertical and horizontal bus are fully rated. Vertical bus must not be reduced rated via center feeding, and must be fully rated, top and bottom, from centerline of bus.

Ensure the vertical bus is completely isolated and insulated by means of a barrier. It must effectively isolate the vertical buses to prevent any fault-generated gases to pass from one phase to another. Ensure the vertical bus includes a shutter mechanism every 6 inches that will allow the stabs to engage the vertical bus and provide complete isolation of the vertical bus when a unit is removed.

Ensure nameplates, terminal markings, wire insulation, wire markers are as called out elsewhere in this specification.

Install a dielectric mat in front of the motor control center. Ensure they are 3/8-inch thick and rated for 26,500VAC with a corrugated top and knurled bottom and certification engraved to meet ASTM D-178-Type II, Class 3.

Channel Navigation Lights
Furnish and install unpainted housings of cast bronze with cushioned lenses, weatherproof gasketed joints and large service access door equipped with 180 degrees, standard marine molded single-piece fresnel type, rigid, heat resistant glass, 7 to 8 inch diameter, I.D. Lens sections shall be 90 degrees green alternating with 90 degrees red. Four lens sections shall be used to complete a 360 degree section.

At the center and each end of the movable span, mount a channel navigation light as shown on the Plans..

For all channel navigation lights, ensure the doors and lenses are gasketed and each entire unit is completely weatherproof. Provide non-corroding fittings and porcelain mounted sockets on shock absorbers. Provide cast bronze housings for all units and install a light with a brass base in each

socket. The bulbs shall be equipped with an LED lamp. A single medium base, 120V, 100,000 hour LED lamp.

The top of each unit shall have bird spikes.

Navigation lights shall be installed in accordance to Code of Federal Regulations CFR 33 Navigation and Navigable Waters Part 118 Bridge Lighting and Other Signals.

Panelboards
Provide only circuit breaker equipped panelboards. Provide panelboards with general purpose enclosures and surface mounted except where noted. Provide panelboards rated for the intended voltage and in accordance with NEMA PB 1. Provide a factory nameplate listing panel type and ratings. Label panelboards that are to be used as service entrance equipment. Ensure the manufacturer is a company specializing in manufacturing the product specified with a minimum of five years documented experience.

Panelboards shall be installed with a height of 6 feet to the top. Filler plates shall be used for unused spaces and circuit directory shall be typed. Panelboard enclosures shall be grounded and bonded in accordance with the NEC Article 250.

The panelboard bus shall contain copper carrying components and ratings as indicated on the drawings. Furnish copper bus in each panelboard and insulated ground bus. Circuit breakers shall be molded case bolt-on type with magnetic trip and a common trip handle for all poles. The cabinet shall be surface mounted with a metal directory frame and flush lock keyed handle, finished in manufacturer’s standard gray color.

Inspect and test panelboards in accordance with NETA Acceptance Testing Standards (ATS). Perform circuit breaker inspection and tests in accordance with NETA ATS.

Replace feeders between panel LP-1 and the transformer feeding it. Replace feeders between panel LP-3 and the transformer feeding it. Replace feeders between panel LP-4 and the junction box adjacent to the East MCC. All branch circuits shall be reused unless specified elsewhere in the plans or specifications.

Fire Alarm System
Ensure the fire alarm control panel provides system control, synchronization, and monitoring of all devices, continuously scanning each device for status change. Ensure the panel is able to provide one way communication, alarm tones, and digitally prerecorded voice messages to alert occupants of a fire or other emergency situations.

Ensure the sensor bases have integral addressable electronics and constantly monitor the status of the photoelectric or heat sensor. Ensure each sensor output is digitized and transmitted to the system control every 4 seconds.

Ensure the manual pull stations are single action stations operated by a pull handle. Mechanically latch the activated alarm and indicate by the extended handle. Reset the manual station handle by key.

Ensure the manual station enclosure is a surface mount stamped steel box with terminal connections for in or out wiring.

Ensure the audible and visible notification appliance are a piezoelectric sounder with xenon strobe assembly. Ensure the energized audible and visible appliance produces a continuous tone from the piezoelectric sounder and a 1 hertz flash rate from the xenon strobe.

Ensure the system equipment complies with the applicable provisions of the National Fire Protection Association – 72, Underwriter Laboratories and the Life Safety Code – 101. Ensure the fire detection and fire alarm system consists of all necessary equipment to perform fire detection and fire alarm operations. Ensure each item of the fire detection and fire alarm system is listed as a product of a single manufacturer of established reputation and experience under the appropriate category by the Underwriter's Laboratories, Inc. (UL) and bears the "UL" label. Ensure all electrical equipment is listed or recognized by the Underwriter's Laboratories, Inc.

Sidewalk Lighting
Sidewalk lighting shall be Sternberg Lighting 1970LED Gallery Series type luminaires, Holophane Glaswerks Hallbrook LED or approved equal, mounted on the custom fabricated arm shown in the structural plans approximately 16.5 feet above the sidewalk. The arm shall extend to the centerline of the sidewalk. The fixture shall be 4ARC LED at 350mA, with a color temp of 45(00), a straight edge shade, mounting configuration SH44, sag glass lens, voltage shall be 120V, and the distribution shall be type T2.

Transformer Relocation
Relocate existing 37.5KVA transformer under new control house stairs. Intercept existing conduit and extend to the new transformer location. Replace primary conductors between the transformer and existing junction box located under the control house. Replace secondary conductors between the transformer and panel LP-1 in the control house. Ensure the transformer is connected to the bridge ground system in accordance with NEC Article 250. Route a ground conductor from the secondary neutral or ground bus to the bridge ground system; bond the transformer frame to this ground connection. The ground conductor shall extend along with the secondary and neutral conductors to panel LP-1.

End Jack Floor Beam Replacement Electrical (Additional Work)
Disconnect all jack motors, as well as associated limit switches, disconnect switches, liquidtight flexible metallic conduit, junction boxes. Remove conduits and conductors feeding the jack motors and limit switches back to a coupling of fitting so it will not interfere with the end jack floor beam replacement. At the point the conduit is cut, provide a terminal box with terminal blocks to terminate the existing conductors up until that point in the circuit. All other electrical equipment in the end jack area, such as the PA system, shall be protected from damage during construction.

Once the end jack floor beam replacement work is complete, install jack motors in compliance with these specifications and so the jack motors function as they did prior to construction. Jack motor disconnect switches shall be install in accordance with the specifications. New 3/4-inch PVC coated RGS shall be installed from the intercepted conduit terminal box to the local disconnect switches, and from the local disconnect switches to the motors via new liquid tight flexible metallic conduit. New conductors shall be installed from the intercepted conduit terminal box terminal block to the disconnect switches, jack motors and limit switches.

Jack Motors
Re-install motors and associated limit switches per manufacturers' instructions. Utilize millwright for field installations, base modifications, and alignment of the motors.

Terminal Blocks
Group terminal blocks for easy accessibility unrestricted by interference from structural members and instruments.

Provide 2 inches minimum on each side of each terminal block and between terminals and wire duct to allow an orderly arrangement of all leads to be terminated on the block and to allow for wire labels.

Do not terminate more than two (2) wires on any one terminal position.

Permanently label each terminal block, device, fuse block, and both ends of each conductor to coincide with the identification indicated on the schematic and wiring diagrams. Terminal blocks and devices already numbered on the plans must be so numbered on the equipment supplied.

Conduit
Furnish and install conduit and raceways in the quantities and sizes required to complete the work as shown in the Plans. If conduit size is not shown in the Plans, determine the size as required by the NEC, minimum conduit size allowed is 3/4 inch. Furnish products listed and classified by UL for purpose specified and shown. Do not use non-metallic flexible conduit, aluminum conduit, or electrical metallic tubing (EMT). Recombine conduit and circuits indicated in the Plans, diagrams, and schedules where appropriate and as approved by the Engineer.

PVC Coated Metal Conduit
Install all wiring in conduit or raceways. Provide all indoor conduits of standard weight, threaded, rigid steel conduit in accordance with the requirements of ANSI Standard C80.1. Provide all conduits hot-dip galvanized, inside and out, to meet the requirements of the above standard for protective coating. Make conduit couplings and fittings of malleable iron or steel, hot-dip galvanized.

Ensure all conduits, boxes and fittings to be installed in outdoor locations are PVC coated hot dipped galvanized. All coating shall be factory applied and purchased as PVC coated rigid conduit. Ensure conduit fittings, including couplings, unions, elbows, expansion and deflection fittings, and other items are also PVC coated hot dipped galvanized. Provide conduits and fittings which are to be PVC coated with a factory applied PVC coating in the following manner.

Hot dipped galvanized, inside and out, rigid steel conduit (ANSI C80.1) with hot galvanized threads and external PVC coating 40 mils thick; meeting the requirements of NEMA RN 1 and fittings and conduit bodies meeting the requirements of ANSI/NEMA FB 1 with steel fittings with internal and external PVC coatings to match conduit. Provide 40 mils thick PVC coating on the outside of conduit couplings and a series of raised longitudinal ribs to protect the coating from tool damage during installation.

Ensure the bond between the PVC coating and the conduit surface is greater than the tensile strength of the coating. Verify this bond by testing described in NEMA Standard RN-1, section 3.8.
Uniformly and consistently apply a nominal 2-mil thick urethane coating to the interior of all conduit and fittings. Conduit or fittings having pinholes or areas with thin or no coating are unacceptable. Protect all factory cut threads on conduit, elbows, nipples, and fittings by application of a urethane coating. The PVC exterior and urethane interior coatings applied to the conduit must afford sufficient flexibility to permit field bending without cracking or flaking at temperatures above 30 degrees F.

Furnish right angle beam clamps and U bolts specially formed and sized to snugly fit the outside diameter of the PVC coated conduit. All U bolts will be supplied with plastic encapsulated nuts that cover the exposed portions of the threads.
Ensure that only tools designed and approved by the conduit manufacturer for use on PVC coated materials are used and the workmen performing the installation are trained and certified in the installation and use of PVC coated conduit and fittings by the manufacturer. Install PVC coated conduit in accordance with the manufacturer's installation manual. Repair all damaged PVC coating.

All PVC coated conduit, boxes, fittings, and accessories which serve as part of the raceway must be supplied by the same manufacturer.

Ensure the PVC coated, hot-dip galvanized steel conduit is UL labeled and listed.

Provide all conduit ends with insulated throat grounding hubs. Ensure unions to connect sections of conduit that cannot be joined to each other or to boxes in the regular manner are of malleable iron or steel, hot-dip galvanized, PVC coated.

Liquid-Tight Flexible Metal Conduit
UL 360 listed, interlocked galvanized steel construction, with integral ground continuity and PVC jacket. Use only PVC coated fittings, meeting the requirements of ANSI/NEMA FB 1.

Use flexible metal conduit only for the connection of motors, limit switches, and other devices whose position has to be adjusted periodically. Make connections between the rigid conduit system and all movable motors and movable limit switches with flexible metal conduit with couplings and threaded terminal fittings. Use only fully interlocked flexible metal conduit. Do not use flexible metal conduit extensions longer than 2 feet in length and provide with bonding jumpers. Install flexible metal conduit as to drain away from the device it serves.

Wiring and Cables
Single conductor insulated wire. Provide XHHW-2 rated 600 VAC unless otherwise noted. Provide SE, or RHW insulated wire for incoming services unless otherwise noted.

Use seven or nineteen strand copper, minimum 98% conductivity conductors for field wiring. Furnish connector accessories for copper in sufficient quantities for a complete installation. Do not use aluminum or solid copper conductors. In cases of low level audio or digital signals, use twisted shielded pairs when required.

Use no wire smaller than No. 12 AWG for power and lighting circuits and no smaller than No. 14 AWG for control wiring between cabinets, except that control wiring within a manufactured cabinet may be smaller. Use of wires smaller than No. 18 AWG requires approval by the Engineer. Multi conductor ribbon cables, between components within a cabinet, are allowed if approved by the Engineer. Install per the requirements of UL 508.

Minimum field wire size is No. 12 AWG for control conductors between cabinets and field devices and No. 10 AWG for motor loads. Use pigtails, no longer than 12 inch, for connection of field devices that cannot accommodate a No. 12 AWG wire. Use No. 10 AWG for 20 A, 120 VAC, branch circuit home runs longer than 75 feet, and for 20 A, 277 VAC, branch circuit home runs longer than 200 feet.

Surge Protection Device (SPD)
Furnish and install surge protection and suppression on the load side of the west motor control center circuit breaker.

Furnish suppressors that provide clamping phase to phase and from each phase conductor to ground. Provide a multi-stage hybrid shunt-series-shunt design, rated for Type 1, service suppressor. Provide visible indication of suppressor failure. Arrange shunt TVSS elements to fail open.

Provide suppressors that meet the following criteria: Single impulse withstand rating of 25,000 Amp (8 by 20 µS waveform) per phase; Pulse lifetime rating (10,000 A - 8 by 20 µS plus power-follow) of 1000 occurrences; Maximum clamping voltage (voltage with input current of 10,000 A - 8 by 20 µS) of approx. 400 percent normal voltage and energy rating of 10,000 joules.

Ensure it is a heavy-duty unit with internal disconnect switch and protection, audible alarm, event counter and status LED's. Mount it to be clearly visible with no obstructions. Provide it with a UL1449 label and include a 5-year warranty.

Warning Gates
Install two traffic warning gates on each side of the bridge, four total. The east side traffic warning gates shall have one arm over the roadway. The west side oncoming traffic warning gate shall have

one arm over the roadway. The west side offgoing gate shall have two arms, one for over the roadway and one pedestrian arm over the sidewalk.

Ensure all warning gate equipment and materials are new. Use Model VW-4 as manufactured by B&B Roadway, or a warning gate manufactured by Automatic Power or Approved Equal. Ensure all equipment and their installations conform to the requirements of the latest revision of AASHTO LRFD Movable Highway Bridge Design Specifications, NEC, MUTCD, and local ordinances unless specified otherwise. Design the gates for use as a traffic warning gate specifically for movable bridges.

Install each warning gate with a stainless steel, bronze or aluminum nameplate. The nameplate shall include the manufacturer catalog number, serial number, and the rating/capacity of equipment. Provide a pocket on the gate enclosure door with a laminated copy of the gate wiring diagram and operating mechanism information.

Use vibration proof and weatherproof materials for all mounting hardware, wire, and cable terminals. All welding shall be performed by a certified welder. Assemble the system with galvanized and stainless steel fasteners. Ensure all bolts, nuts, and washers are Commercial Quality "American National Standard". Provide all mounting bolts with flat washers, lock washers and nuts, and double nuts.

Perform factory operational tests of the warning gates. In the event of a failed test, adjust, repair, or replace defective components as required for a satisfactory acceptance. Demonstrate by wind tunnel testing that the warning gates can operate under basic wind speed, natural wind gust, truck-induced gust, swirling wind, updraft, and downdraft. Use a basic wind speed of 100mph.

Provide and install all apparatus for controlling the operation of the warning gates and all conduits, boxes, wiring, cables, and other equipment required to extend the necessary circuits from the MCC to the warning gate housing. Ensure platforms, brackets, and foundations for mounting the warning gates are as shown on the structural plans.

Arrange and provide all necessary field tests, as directed by the engineer to demonstrate that the warning gates are in proper working order and as shown on the plans and as specified in the specifications. Make adjustments or replacements to make the installation satisfactory to the engineer at no extra cost.

Provide 1 draft copy each of the operation, maintenance, and servicing manuals for the warning gates to the engineer for approval before all copies are made. Ensure the draft copy includes all sections and information of the final manuals.

Provide 10 copies each of the complete operation, maintenance, and servicing manuals for the warning gates after incorporation of review comments on draft manuals.

Provide a 1-year warranty covering the gate and related equipment against defective material and components. Ensure the Manufacturer provides replacement parts for a minimum of 10 years. Ensure replacement parts for standard components are normally available within 1 working day. Ensure cover lamps, fuses, and other components designed for a life less than 1 year are covered for the rated life of the component or warranty period of the component manufacturer.

Warning Gate Housing
For each warning gate, provide a weatherproof welded steel housing to enclose the motor, disconnect switch, gear train, transmission gearing, limit switch, fuses, door interlock switches, brake interlock switches, positioning switches, etc. Fabricate the housing from 0.188-inch carbon steel plate, hot dip galvanize the steel plate after fabrication, paint exterior surfaces aluminum color, and incorporate O-ring reals on arm shaft openings.

Ensure all anchor bolts, washers, and nuts are included with the system. Supply template provided by the manufacturer.

Provide housing doors large enough for convenient removal of the largest component of the operating mechanism. Mount front and rear access doors on hinge straps with stainless steel padlock strap. Hang front and rear access doors on slip-off type hinges with stainless steel pins and seal with a lockable vise action to compress neoprene bulb-type gaskets. Provide a Double Pole Double Throw (DPDT) safety interlock switch with two normally open and two normally closed contacts, and a chain-attached bronze padlock with common keys for each door. Ensure opening of a housing door will disable the electrical motor and controls and stop any warning gate operation.

Equip each warning gate housing with a thermostatically controlled heater; switched service light; and a duplex, 15A, 120V, Specification Grade GFI receptacle. Mount a 15A circuit breaker to each gate housing to protect these devices.

Provide a hand crank and electric drill operated crank with each warning gate housing to operate the gate during installation or an emergency. Provide an easily accessible but secure opening for inserting either hand crank. Insertion of either crank must release the brake and operate a DPDT limit switch with two normally open and two normally closed contacts to make the gate electrical controls inoperative. Store the hand crank inside the warning gate housing.

Warning Gate Arm
The gate arm shall be 4-inch square 6005-T5 aluminum extruded tubing. Front and rear arm surfaces shall be covered with alternating red and white high intensity reflective sheeting. Stripes shall be 16 inches wide and vertical in accordance with MUTCD. Remaining exposed surfaces shall be painted white.

A pair of carbon steel channels, hot dip galvanized, painted aluminum, shall be rigidly affixed to the ends of the main arm shaft. The channels and a steel crossmember shall provide a sturdy mount for the arm, arm base assembly and counterweights.

The arm base shall be designed with a shear pin mechanism to minimize damage to the gate and vehicle in the event of a collision. In the event of an impact, the shear pin shall break, allowing the arm to swing approximately 75 to 80 degrees. At the full open position, a spring-loaded latch shall engage, preventing the arm from swinging back into traffic. The arm shall be easily reset by manually releasing the latch, rotating the arm back into position and replacing the shear pin.
Brace each gate arm to resist wind loads of 100 miles per hour. Providing bracing and guy wires to reduce whipping and prevent sagging. Equip gate arms with guy wires in such a way that they do not project beyond the gate housing into the sidewalk when the gate is in the vertical position.

Each arm assembly shall include a minimum of three weatherproof, two-way, cast-aluminum light units with red Fresnel lenses front and back. Interconnect and ground the lights with a 4-conductor portable cord using watertight connectors at the fixtures. Install a 12V clear traffic LED signal lamp in each fixture. Connect the lights so that adjacent units will flash alternatively with the exception of the tip light. Provide and connect tip light with steady burn circuitry. Include a 120/12V solid state flasher for each gate housing. Flasher must have auto-reset overload feature to provide fuse-like protection for all the arm lights.

Warning Gate Operating Mechanism
The traffic warning gate main arm shaft shall be 2” (51mm) diameter AISI 4141 high strength alloy steel with a minimum tensile strength of 140,000 psi. The shaft shall be mounted in heavy duty relubricable ball bearings.

The warning arm shall pivot in the vertical plane via a mechanical 4-bar linkage. The linkage shall utilize cranks keyed to the main arm shaft and transmission shaft and an adjustable connecting rod between a pair of self-aligning spherical rod ends. The connecting rod shall be of 1” (25mm)

diameter AISI 4150. The linkage shall be driven by a fully enclosed, double reduction, worm gear speed reducer.

Use an auxiliary crank paired with the transmission crank to reduce the load on the transmission and to better balance and stabilize the load on the housing and mounting structure. Mount the auxiliary crank in a permanently lubricated bronze bearing.

During the opening and closing cycles, ensure the gate arm will begin with zero velocity and accelerate smoothly reaching maximum velocity at mid-stroke (45 degrees). The arm will then decelerate smoothly to zero velocity at full stroke (90 degrees) preventing bounce or whip of the arm. Use a gear ratio to produce a standard operating time to open or close the gate of approximately 11 seconds.

Warning Gate Motor and Motor Brake
Ensure the motor for each warning gate is 460V, 60 Hz. cycle, 3 phase, totally enclosed, rated for not less than 1/2 horsepower, ball-bearing induction motor capable of withstanding instant reversal when running at full speed. The motor shall be of C-face design mounted directly to the transmission. Install a solenoid actuated brake on the non-drive end of the motor. Ensure the brake allows for manual operation of the gate with a release lever.

Warning Gate Rotary Cam Limit Switch
The gate limit switch assembly shall be a self-contained unit. The assembly shall provide 8 independent SPDT control switches. Switches shall be rated for 15 amps at 480 VAC. Switches shall be controlled by individually adjustable cams. The limit switch assembly design shall permit adjustment of all cams with the gate in any position. The limit switch assembly shall have a removable cover to help prevent accidental contact with switch terminals. Shaft, cams, bushings and housing pieces shall be of non-ferrous corrosion resistant materials.

Warning Gate Safety Switches, Terminal Blocks, and Wiring
A manual disconnect switch shall be provided, pre-wired at the factory to break the main motor leads, to protect personnel during service. A hand crank safety switch shall be provided to prevent powered actuation of the gate during manual operation. Door safety switches shall be installed and set at the factory to break the control circuit when either access door is opened. Door safety switches shall have a pull-to-override feature for test operation and shall automatically reset when doors are closed. Control components and terminal blocks shall be mounted inside an electrical enclosure mounted facing the rear side access opening, except where custom components required by the customer prevent this arrangement. Pressure-type, modular terminal blocks shall be fully labeled and clearly coded to wiring diagrams. All control wiring shall be clearly coded to wiring diagrams and shall terminate at the terminal block. Connections to screw-type terminals shall have lugs. Conductors shall be type XHHW #14 AWG stranded, minimum.

Warning Gate Counterweights
At the rear end of the side arm channels, hot dip galvanized counterweights shall be mounted to balance the arm. Counterweights shall be sectional and shall permit at least 10% adjustment.

Warning Gate Grounding
Bond all metallic conduits, equipment enclosures, frames, housing, and all other metal parts of electrical systems installed or connected under this item, in the proximity of current-carrying conductors or equipment to the bridge ground system. Provide all grounding and bonding per NEC requirements.

Traffic Tree
The “STOP” traffic tree on the west side shall remain. The “STOP” traffic tree on the east side shall be replaced and installed in a new location, as indicated on the plans. The new “STOP” traffic tree shall be four vertical signal heads with 12 inch red LED type lens displaying the letters “S”, “T”, “O”, “P” and two horizontally mounted signal heads with 12-inch red lens mounted on a round pole made of

aluminum alloy 6061-T6, 12-feet in height, 4-inches in outside diameter, and a 0.125-inch wall. Provide a flasher unit, rated for 120 volts AC, to alternate the two horizontally mounted signal heads. A warning gong shall be provided on top of the traffic tree pole. The warning gong housing shall be of heavy duty, cast aluminum construction. Gong assembly shall be equipped with an aluminum mounting adapter for mounting to the top of the 4-inch traffic tree pole. Mounting shall be designed to enclose all wiring. A hinged and gasketed rear door shall provide service access. A cast aluminum guard above the shell shall provide weather protection. The warning gong shall provide a sound level of 90db at 10 feet and operate at 120 volts AC power. The gong shell shall be made of silicon bronze. The traffic control equipment shall be in compliance with MUTCD.

Spare Parts
The contractor shall provide the following spare parts for the bridge electrical system:

1. A full set of contactor main contacts for each kind of starter. For units that do not incorporate replaceable contacts, provide a complete unit with an operating coil rated for the control voltage.
2. One coil rated for the control voltage for each size contactor installed.
3. One MCC control terminal block and one motor terminal block
4. Three heaters for overload relays of each size.
5. For channel navigation lights: six lens gaskets, six lamps, and one complete navigation light assembly, including one lens of each color and size used.
6. One of each size and type of sidewalk lighting fixture installed.
7. One fire alarm pull station, one fire alarm horn and strobe, and one smoke detector.
8. One bolt on type circuit breaker for each size in the new panel boards.
9. One spare Surge Protection Device (SPD).

Spare Parts (Warning Gate)

The contractor shall provide the following spare parts for the warning gate additional work:

1. One warning gate arm for each warning gate arm length complete with all electrical components, and fittings.
2. One ½ HP, 480V, 3 Phase Motor.
3. One rotary cam limit switch.
4. Three warning gate light fixtures as specified herein.
5. Three 12V LED lamps.
6. Three warning gate limit switch contact blocks.
7. One warning gate flasher module.
8. One warning gate light fixture.
9. One box of fuses for each size and type used in the warning gates.

10. One warning gate door switch.
11. One warning gate brake interlock switch.

Arrange the spare parts in uniform size cartons of substantial construction with typed and clearly varnished labels to indicate their contents. Provide large spare parts with moisture-proof wrapping. Provide a directory of permanent type describing the parts. The directory shall state the name of each part, the manufacture's number thereof, and the rating of the device for which the part is spare. Mark the spare parts to correspond with their respective item numbers as indicated on the elementary wiring diagram.

HVAC Replacement
<u>Outdoor Unit</u>

1. Approved Units
   - Mitubishi MSZ – GL09 NA – U1
   - Carrier 38 MHR size 09k
   - Or Approved Equal
2. System Description
   - Outdoor air−cooled split system compressor sections suitable for on−the−ground, rooftop, wall hung or balcony mounting. Units consist of a rotary compressor, an air−cooled coil, propeller−type draw−through outdoor fan, reversing valve (HP), accumulator (HP units), metering device(s), and a control box. Units discharge air horizontally as shown on the contract drawings. Units function as the outdoor component of an air−to−air cooling only, or heat pump system.
   - Units are to be used in a refrigeration circuit matched to ductless heat pump fan coil units.
3. Agency Listings
   - Unit construction complies with ANSI/ASHRAE 15, latest revision, and with the NEC.
   - Units are evaluated in accordance with UL standard 1995.
   - Units are listed in the CEC directory.
   - Unit cabinet is capable of withstanding 500−hour salt spray test per Federal Test Standard No. 141 (method 6061).
   - Air−cooled condenser coils are leak tested at 550 psig.
4. Delivery, Storage, And Handling
   - Units are shipped in one piece and are stored and handled per unit manufacturer's recommendations.
5. Equipment
   - General:

   Factory assembled, single piece, air−cooled outdoor unit. Contained within the unit enclosure is all the factory wiring, piping, controls, and the compressor.
   - Unit Cabinet:
     - Unit cabinet is constructed of galvanized steel, bonderized and coated with a baked−enamel finish on the inside and outside (PANTONE 7527U).
     - Unit access panels is removable with minimal screws and provides full access to the compressor, fan, and control components.
     - The outdoor compartment is isolated and has an acoustic lining to assure quiet operation.
   - Fans:
     - Outdoor fans are the direct drive propeller type, and discharges air horizontally. Fans draw air through the outdoor coil.

- Outdoor fan motors are totally enclosed, single phase motors with class E insulation and permanently lubricated ball bearings. Motor shall be protected by internal thermal overload protection.
- The shaft has inherent corrosion resistance.
- Fan blades are non−metallic and statically and dynamically balanced.
- Outdoor fan openings are equipped with a PVC metal/mesh coated protection grille over the fan.

- Compressor:
  - Compressor is the fully hermetic rotary type.
  - Compressor is equipped with an oil system, operating oil charge, and a motor.
  - Motor is NEMA rated class E, suitable for operation in a refrigerant atmosphere.
  - Compressor assembly is installed on rubber vibration isolators.

- Outdoor Coil:
  - The coil is constructed of aluminum blue hydrophilic pre−coated fins mechanically bonded to seamless copper tubes, which are cleaned, dehydrated, and sealed.

- Refrigeration Components:
  - Refrigerant circuit components include a brass external liquid line service valve with service gage port connections, a suction line service valve with a service gage connection port, service gage port connections on compressor suction and discharge lines with Schrader type fittings with brass caps, accumulator, reversing valve.

- Controls and Safeties:

Operating controls and safeties are factory selected, assembled, and tested. The minimum control functions include the following:

  - Controls:
    - A time delay control sequence is provided standard through the fan coil board
    - Automatic outdoor fan motor protection.
  - Safeties:
    - System diagnostics
    - Compressor motor current and temperature overload protection
  - Outdoor fan failure protection.

- Electrical Requirements:
  - Unit operates on single−phase, 60 Hz power at 115V for unit sizes 09−12 and 208/230V for unit sizes 09, 12, 18, and 24 as specified.
  - Unit electrical power has a single point connection.
  - Unit Control voltage to the indoor fan coil is 0−15V DC.
  - All power and control wiring must be installed per NEC and all local electrical codes.
  - The unit has high and low voltage terminal block connections.

<u>Indoor Wall</u>

1. Approved Units
   - Mitubishi MSZ – GL09 NA
   - Carrier 40 MHH size 09k
   - Or Approved Equal

2. System Description
   - Indoor, wall−mounted, direct−expansion fan coils are matched with the cooling only or the heat pump outdoor unit.

3. Agency Listings
   - Unit is rated per AHRI Standards 210/240 and listed in the AHRI directory as a matched system.

4. Delivery, Storage, And Handling
   - Units are stored and handled per the unit manufacturer's recommendations.

5. Equipment
   - General: Indoor, direct−expansion, wall−mounted fan coil
     - The unit is complete with a cooling/heating coil, fan, fan motor, piping connectors, electrical controls, microprocessor control system, and integral temperature sensing. The unit is furnished with an integral wall mounting bracket and mounting hardware.

   - Unit Cabinet:
     - Cabinet discharge and inlet grilles are attractively styled, high−impact polystyrene. The Cabinet is fully insulated for improved thermal and acoustic performance.

   - Fans:
     - Fan is the tangential direct−drive blower type with air intake at the top of the unit and discharge at the bottom front. An automatic, motor−driven vertical air sweep is provided as standard equipment.
     - The air sweep operation is user selectable. The vertical sweep may be adjusted (using the remote control). The horizontal air direction may be set manually

   - Coil:
     - The coil is a copper tube with aluminum fins and galvanized steel tube sheets. The fins are bonded to the tubes by mechanical expansion and blue hydrophilic pre−coated. A drip pan under the coil has a drain connection for the hose attachment to remove condensate. The condensate pan has an internal trap.

   - Motors:
     - Motors are open drip−proof, with a permanently lubricated ball bearing. The fan motors shall be 4−speed.

   - Controls:
     - Controls consist of a microprocessor−based control system which shall control space temperature, determine optimum fan speed, and run self-diagnostics. The temperature control range is from 62°F to 86°F (17°C to 30°C) in increments of 1°F or 1°C and have 46°F Heating Mode (Heating Setback). The wireless remote controller has the ability to act as the temperature sensing location for room comfort.

The unit has the following functions as a minimum:

1. An automatic restart after a power failure at the same operating conditions as at the failure.
2. A timer function to provide a minimum 24−hour timer cycle for system Auto Start/Stop.
3. Temperature−sensing controls have sense return air temperature.
4. Indoor coil freeze protection.
5. Wireless infrared remote control to enter set points and operating conditions.
6. Automatic air sweep control to provide on or off activation of air sweep louvers.
7. Dehumidification mode provides increased latent removal capability by modulating the system operation and the set point temperature.
8. Fan−only operation to provide room air circulation when no cooling is required.
9. Diagnostics provide continuous checks of unit operation and warn of possible malfunctions. Error messages appear on the unit.
10. Fan speed control is user−selectable: turbo, high, medium, low, or microprocessor controlled automatic operation during all operating modes.

11. Automatic heating−to−cooling changeover in the heat pump mode. The control includes a deadband to prevent rapid mode cycling between heating and cooling.
12. Indoor coil high temperature protection are provided to detect excessive indoor discharge temperature when the unit is in the heat pump mode.

- Filters:
  - Unit has a filter track with factory−supplied cleanable filters.

- Electrical Requirements:
  - Indoor fan motor to operate on 115V on model sizes 09−12 and on 208−230V on model sizes 09−24, as specified. Power is supplied by the outdoor unit.

- Operating Characteristics:
  - The system has a minimum SEER (Seasonal Energy Efficiency Ratio) and HSPF at AHRI conditions, as listed on the specifications table.

- Refrigerant Lines:
  - All units should have refrigerant lines that can be oriented to connect from the left, right or back of unit. Both refrigerant lines need to be insulated.

- Special Features (Field Installed):
  - All units should have refrigerant lines that can be oriented to connect from the left, right or back of unit. Both refrigerant lines need to be insulated.
  - Condensate Pump:
    - The condensate pump removes condensate from the drain pan when gravity drainage cannot be used. The pump is designed for quiet operation. The pump consists of two parts: an internal reservoir/sensor assembly, and a remote sound−shielded pump assembly. A liquid level sensor in the reservoir stops the cooling operation if the liquid level in the reservoir is unacceptable.

III. CONSTRUCTION

Shop and Working Drawings

The electrical work may not proceed without approved shop and working drawings. Any work performed before all required submissions being returned approved will be considered unauthorized and will not be paid for. Submit procedures providing a step-by-step breakdown of all construction activities for each major work item identified on the Contract Plans. The procedures should clearly indicate the order in which each item is to be performed and should accurately reflect the flow of construction in the field. The procedures should constitute a suitable working document for construction supervision in the field by a construction engineering inspector. Submit drawings according to CMS 625.06. Ensure the shop and working drawings consist of, but are not limited to, the following:

1. Certified dimension prints of all electrical equipment. All drawings shall be drawn to scale. All details of a given part shall be clearly visible at the scale selected for that part with the exception of enlarged views of small details within a part may be used to improve clarity and prevent excessively large drawings. Drawings shall be prepared using the English system of units.

2. A complete schematic wiring diagram including all power, control, and lighting connections. Identify both electrical devices and each wire between devices by an individual unique designation of letters, numbers, or a combination of both. Use such designations wherever the devices or wires appear on other drawings. Include a complete set of fully edited catalog cuts for materials provided for review at the time of schematic submittal.

3. Layout drawings and internal connection diagrams of new/rehabilitated electrical equipment.

4. Identify conflicts between manufacturer's instructions and the Contract Documents and submit a resolution for review and approval.

5. Identify variations between Contract Documents and product or system limitations that may be detrimental to the successful performance of the completed work.

6. A schedule of electrical apparatus which lists each electrical device by its designation as shown on the schematic wiring diagram and states for each device its rating, number of poles or contacts, function, catalog number, and location.

7. A schematic conduit and wiring diagram of the fire alarm system.

8. Assembly drawings of the warning gate housings locating and identifying all apparatus and equipment inside.

9. Arrangement and complete construction details of the warning gates operating machinery.

10. Detailed drawings showing the construction of the warning gate arms, including guying and bracing.

11. Provide wiring diagrams of all warning gate electrical equipment. Development diagrams for the gate limit switch, rotary cam limit switch, door limit switches, and manual operation interlock switches. Suitably number all wires, color code, or both.

12. Certified dimension prints of warning gate apparatus. Ensure certification states at a minimum the following: name and number of project, quantity required, left-hand or right-hand assembly, electrical rating, dimensions of outline of entire assembled gate in both the raised and lowered direction and the operation clearance needed, the mounting hole sizes and locations, housing and all external component material, and any other pertinent data to show that the apparatus meets the requirements of the plans and specifications.

13. Results of warning gate wind testing.

14. A complete set of layout and installation drawings for the electrical work showing the location and installation, including support and mounting details, of all electrical equipment and conduit physical layouts. Ensure these drawings are made to scale and show the exact location of all conduits, cables, boxes, and other electrical equipment as well as the method of supporting them. These drawings shall clearly indicate how the work is to be performed.

15. A complete list of all spare parts provided as part of the contract.

16. Final As-Built drawings shall be submitted at the completion of the project. Any deviations from the approved shop drawings shall be clearly indicated. These drawings shall be stamped "As-Built" above the title block.

17. Provide sequential numbers on all transmittal forms. Resubmittals shall be numbered with an original submittal number and an alphabetic suffix.

18. Submit all layout and installation drawings for the electrical work before the submission of pertinent working drawings for the structure so that provision for mounting of conduits, cables, and other electrical equipment, where required, can be shown on the structural working drawings.

19. Ensure certified dimension prints of the apparatus state in the certification the name of the job, the application of the apparatus, device designation, number required, right-hand or left-hand assembly, electrical rating, number of poles or contacts, material, finish, and all other pertinent data to show that the apparatus meets the specified requirements.

Protection of Electrical Equipment
Protect electrical equipment from water damage, rain, condensation, and water dripping or splashing on equipment and wiring, at all times during shipment, storage and construction (prior to final acceptance).

Provide temporary electrical connections to equipment heaters, or provide temporary heaters, as required to prevent damage from moisture. Provide climate-controlled environment for the storage of control equipment/ assemblies during construction. Protect equipment from damage from mishandling, dropping, or impact. Do not install damaged equipment.

Thoroughly dry out and put through special dielectric tests any apparatus subjected to possible injury by water or dampness (including the interiors of motor control equipment or any other electrical devices).

Provide spare parts in sealed, uniform-sized cartons, with typed and clearly varnished labels to indicate their contents, and stored in a portioned lockable box. Also, provide a directory of permanent type describing the parts including the name of each part, the manufacturers' number, and the rating of the device for which the part is a spare. Mark the spare parts to correspond with their respective item numbers as indicated on the elementary wiring diagram.

Ensure spare parts are available at time of Functional Checkout. Replace spare parts used during Functional Checkout.

Construction Methods
It is the intent of this Contract Document that only individuals of high competence and experience be utilized to perform this work. It is not the intent of these Contract Documents to identify all necessary methods, means, equipment, or appurtenances that will be required in order to accomplish the work required of this contract. Unless otherwise specified, all manufactured items, fabrications, components, assemblies and appurtenances that are to be removed, salvaged, repaired, rehabilitated, furnished new, installed or reinstalled under these Contract Documents is classified as Electrical Work.

Prepare the detailed electrical shop drawings as required to fabricate and furnish the electrical equipment, define the installation and interconnection of the electrical equipment, and test and verify that the completed electrical system installation and performance is satisfactory with respect to the requirements of these Contract Documents.

Prepare detailed shop drawings of electrical system conduit and wiring to provide the functionality specified in the Contract Documents.

Factory Inspection and Testing
Provide the testing plan including testing forms, acceptance criteria and equipment included in the testing to the engineer for review and acceptance. The engineer will witness all standard tests and special tests required. Do not ship any equipment from the factory until it has been released for shipment by the engineer. Provide notification a minimum of 21-day notice in advance of the date of the tests so that arrangements can be made for the engineer to be present at the tests.

During the witnessed inspection also check for conformity all nameplate legends, conductor identifications, instrument scales, escutcheon plate engraving, and all other details of construction. The West MCC buckets and East MCC require a factory inspection before being shipped to the bridge.

Conduits

Install conduit in accordance with NECA Standard Practice and in accordance with manufacturer's instructions.

Provide the interior surfaces having a smooth finish and free of burrs or projections which might cause injury to the cables. Ensure all conduits are free from blisters, cracks, or injurious defects. Ream conduits at each end after being threaded. Connect sections to each other with screw couplings made up so that the ends of both conduits will butt squarely against each other inside of the coupling. Install conduits to be continuous and watertight between boxes or equipment. Protect conduits from the entrance of water or other foreign matter by being well-plugged overnight or when the work is temporarily suspended.

Make conduit bends and offsets by cold bending using approved methods and equipment. The use of a pipe tee or vise for bending conduit will not be permitted. Discard all conduit that have been crushed or in any way deformed. Ensure all bends are long sweep, free from kinks, and of such easy curvatures as to permit the drawing of conductors without injury. Make conduit runs with as few couplings as standard lengths will permit. Ensure the total angle of all bends between any 2 boxes or cabinets does not exceed three 90-degree bends, not exceeding 270 degrees, unless otherwise approved by the Department. Ensure the radius of curvature of pipe bends is not less than 8 times the inside diameter of said conduit. Long running threads will not be permitted. Use pull boxes whenever necessary to facilitate the installation of the wire.

Securely clamp and support all conduits at intervals not exceeding 6 feet in length in accordance with AASHTO Section 8.10.1 general requirements. If structural steel or other obstructions prevent 6 foot spacing it must be approved by the Engineer. Securely clamp conduit runs exposed on the steel structure to the steel work. Ensure the clamps, in general, consist of U-bolts attached to structural steel supports bolted to the members. Ensure the minimum thickness of the structural supports is 3/8 inch. Arrange supports so that conduits rest on top of the support and U-bolts rest on top of the conduits. Unistrut is also permitted to be used. The use of J-bolts to fasten structural supports or to clamp conduits will not be permitted.

At any point where a conduit crosses an expansion joint longitudinally and or laterally or where movement between adjacent sections of conduit can be expected, install conduit expansion/deflection fittings. Provide bronze expansion fittings with flexible bonding jumpers to maintain the electrical continuity across the joints. Ensure the fittings permit a total conduit movement of 4 inches.

Do not use condulets for pulling more than ten conductors or for making such turns in conduit runs or for branching conductors, except for indoor wiring to lighting fixtures and receptacles. At any point where a conduit crosses an expansion joint, or where movement between adjacent sections of conduit can be expected, install bronze or alloy expansion fittings. Arrange conduit to maintain headroom and present neat appearance. Route exposed conduit parallel and perpendicular to walls. Maintain adequate clearance between conduit and piping. Maintain minimum 6 inches crossing and 12 inches paralleling clearance between conduit and surfaces with temperatures exceeding 40 degrees C.

Carefully examine all conduit and fittings before installing. Set aside all pieces having defects and remove from the site. Make all bends with standard size conduit elbows. Bends and offsets can be made with a power bender or hicky without kinking or destroying the plastic surface or smooth bore of the conduit when approved by the engineer. Assemble the conduit hand tight and then using strap wrenches tighten 2 more turns. Touch up wrench marks or chuck marks with the appropriate touch-up compound. Perform all cuttings and threading as recommended by the conduit manufacturer. Coat all exposed threads with conduit manufacturer's supplied coating material.

Cap the ends of conduits under installation, spare conduits, empty conduits, and stubs during and after construction with plastic caps, tape is not acceptable. Ensure that no moisture or other matter is in or enters the conduits. Provide the ends of all conduits projecting into boxes and equipment enclosures with bronze insulated grounding bushings. Ensure the insulated portion is of molded

phenolic compound, and each fitting has a screw type combination lug for bonding. Bond together all bushings in all boxes or enclosures with No. 8 AWG bare copper wire.

Carefully clean all conduits both before and after installation. Upon completion of the conduit and box installation, clear each conduit by snaking with a steel band and attach to it an approved tube cleaner equipped with a mandrel of a diameter at least 85 percent of the nominal inside diameter of the conduit and with a wire brush of the same diameter as the conduit. Then pull the cables. Provide both ends of each conduit run, entry into enclosures, boxes, equipment fixtures, etc., with a brass tag having the same number stamped thereon according to the conduit diagrams.

Use flexible metal conduit only for the connection of motors, limit switches, and other devices whose position has to be adjusted periodically. Make connections between the rigid conduit system and all movable motors and movable limit switches with flexible metal conduit with couplings and threaded terminal fittings. Use only fully interlocked flexible metal conduit. Do not use flexible metal conduit extensions longer than 2 feet in length and provide with bonding jumpers. Install flexible metal conduit as to drain away from the device it serves.

Fire alarm conduit and wiring must be separate from all other conduit and wiring.

Boxes
Stainless Steel Box – Ensure junction and terminal boxes and cabinets are NEMA 4X type 316 stainless steel enclosures with hinged, stainless steel doors supported by a continuous stainless steel hinge with removable pin. Continuously weld seams and ground smooth. Provide each enclosure with stainless steel fast operating door clamp assemblies and oil-resistant gasket to ensure a watertight seal. Provide all boxes with breathers and drains.

Provide surface mounted interior and exterior boxes with external mounting lugs. Do not drill box for more conduits or cables than actually enter it. Provide exterior boxes with 1/2-inch combination drain and breather fittings.

Provide terminal boxes of sufficient size to provide ample room for the terminal blocks, interior wiring, and the installation of conduit terminations. Provide interior mounting buttons with tapped holes for mounting the terminal blocks. Provide terminal blocks in each terminal box for the connection of all conductors including spare conductors entering the box plus at least 10 percent spare terminals. Mount all terminal blocks and boards on suitable straps or structural steel brackets in such a manner as to permit routing the conductors behind the terminal blocks. Provide terminal blocks of 1 piece blocks suitable for use in highly corrosive atmospheres.

Cast Iron Box – Provide cast iron pull, junction, and terminal boxes, hot-dip galvanized inside and out, and with gasketed, checked, steel recessed covers held with stainless steel screws and provided with drains.

Provide slip holes for conduit entrances into boxes. Fasten with lock nuts so as to be concrete tight. Size all boxes in accordance with the requirements of the National Electrical Code.

Provide terminal boxes of sufficient size to provide ample room for the terminal blocks, interior wiring, and the installation of conduit terminations. Provide interior mounting buttons with tapped holes for mounting the terminal blocks.

Concrete Box – Provide concrete pull, junction, and terminal boxes with precast concrete construction with a bottom that allows for drainage.

Provide terminal boxes of sufficient size to provide ample room for the terminal blocks, interior wiring, and the installation of conduit terminations.

Size all boxes in accordance with the requirements of the National Electrical Code.

Hardware and Supports
Fabricate supports for conduits, cables, boxes, cabinets, disconnect switches, small limit switches, and other separately mounted items of electrical equipment from structural steel a minimum of 3/8 inch thick. Include clip angles and other supporting members which are fabricated from structural steel plates and shapes and bolted to the structural members with the structural steel.

Provide structural steel brackets, boxes, and other equipment mounted on concrete surfaces with a full neoprene gasket at least 1/16-inch thick between the equipment and the surface of the concrete.

Provide expansion anchors for fastening equipment or brackets to concrete surfaces of wedge type anchor bolts locked in place by an expansion wedge as the nut is tightened. Ensure all parts of the expansion anchors are type 316 stainless steel. Drill holes for the anchors to the size and depth recommended by the manufacturer using carbide tipped masonry drills.

Provide type 316 stainless steel mounting bolts, nuts, washers, and other detail parts used for fastening boxes, conduit clamps, brackets, and other electrical equipment. Provide hexagonal bolt heads and nuts with medium-series lock washers. Performed metal framing channels such as unistrut shall be type 316 stainless steel.

Wiring and Cables
Provide wiring and cables of sufficient size and number as may be required for the installation in accordance with the Contract Plans or approved working drawings.

Do not install wiring in any conduit before all joints are made up tightly and the conduits rigidly secured in place. Draw the cables into conduits without injury to the wires or their insulation or covering. Leave sufficient slack in all cables to permit proper connections in boxes, cabinets, and enclosures.

Permanently and clearly tag both ends of every single length of conductor in accordance with the same numbers or designations appearing on the approved wiring diagrams with typed heat shrink labels.

Neatly form conductors inside terminal boxes, the control console, and control panels into cables and lace with approved cable ties with the individual conductors leaving the cable at their respective terminal points. Loop these conductors to allow a minimum of 3 inches of free conductor when disconnected. Hold the formed cables securely away from the terminals and from contact with the enclosure by means of approved insulating supports.

Permanently mark each terminal of all terminal blocks to show the same number or designation as appears on the wire connected thereto.

Wire nut splices shall not be permitted for splicing or terminating conductors. Wherever it becomes necessary to join or branch conductors, use terminal blocks or tubular compression splices with shrink wrap sleeves. Clearly tag wires and terminal blocks.

Terminal Boxes
Ensure pull boxes, terminal boxes, and all other miscellaneous housings used for pulling wires, terminating wires, or otherwise used to install electrical equipment, are NEMA 4X stainless steel.

Provide drip proof enclosure opening with a rolled edge and cover held closed with clamps.

Provide enclosures larger than 12 inch in any dimension with a continuous stainless steel hinged cover with a glued in neoprene gasket.

Provide sheet metal enclosures with O-ring sealing hub connectors, drain fittings, and not less than four mounting lugs.

Terminal Blocks
Furnish and install terminal blocks rated at 600 V. Furnish channel mounted screw cage box clamp type terminal blocks for No. 8 AWG and smaller conductors, with vibration proof nonferrous screw.

Provide terminal blocks in groups of 12 with interlocking “finger safe” type barriers with white marking strips.

Furnish power distribution terminal blocks for No. 6 AWG and larger conductors, three-pole, suitable for copper conductors, UL rated for amperage equal to the largest conductor it accommodates and made of copper.

Provide all current carrying components with corrosion resistant plating on nonferrous hardware. Do not use aluminum components if installed outside of the conditioned spaces of the Tender House.

Provide terminal blocks with wire protectors to physically isolate the conductor from the terminal screw.

Do not use terminal blocks that require special tools.

Grounding and Bonding
Prevent the energizing of enclosures, cabinets, electrical raceway and boxes, light poles, and any other conductive items. Ensure all enclosures and electrical equipment and all other metal parts in the proximity of current carrying conductors or equipment are bonded together and solidly connected to a ground bus. Ensure ground testing is performed in accordance with the requirement of the NETA-ATS.

Final Acceptance Testing
Demonstrate by testing that all electrical equipment is in working order within the manufacturer’s published limits. Ensure all voltmeters, ammeters, insulation resistance testers, etc. have been calibrated within one year of the start of testing and calibration certificates are available for review. Start testing after the contractor has performed internal checks and testing to prove the electrical equipment has been set to the contract parameters. The contractor is responsible for installing the electrical equipment correctly and verifying the electrical system is fully functional prior to final acceptance testing witnessed by the engineer.

Produce test documentation, submit for acceptance, and arrange for and provide all the necessary field tests to demonstrate that the entire electrical and mechanical systems are in proper working order and as specified. Include continuity and insulation resistance testing of conductors, operational testing of channel navigation lights, fire alarm, sidewalk lighting, motor control centers, panelboards, surge protector, transformer, warning gates and traffic tree, for proper wiring, connection to ground, and functionality.

Prepare a detailed testing plan, in spreadsheet format with a pass/fail checklist, including testing forms, acceptance criteria and equipment included in the testing to the engineer for review and acceptance. Submit the procedure to the engineer for approval at least 30 days before testing. All testing and values obtained are subject to review and acceptance. Should the tests show that any piece of equipment, cable or wiring connection, in the judgment of the engineer, is defective or functions improperly, make such adjustments, replacements, or both as to make the installation satisfactory to the engineer and at no extra cost. Ensure any deviation from the acceptance criteria stated in the provided forms is brought to the attention of the engineer and upon resolution, is retested until it is brought into compliance. The engineer shall be notified at least 30 days in advance of when final acceptance testing will take place. Ensure all field testing is witnessed by the engineer.

Operate all mechanical and electrical systems through a minimum of 10 continuous cycles of operation without failure, overheating, or any other abnormal conditions. Ensure the testing covers all modes of operation and includes all possible interlocking failures and recovery. Simulate all faults and alarms and detail their responses. If failure, overheating, or any other abnormal conditions exist, repair the equipment at no additional cost and repeat the 10 continuous test cycles until successful completion.

Ensure all testing and analysis complies with the latest ANSI/NETA ATS manual.

Ensure the warning gate manufacturer representative is available to witness the final acceptance testing. Ensure the representative can supervise all adjustments to the equipment; locating faults or defects and correcting them if possible; and obtaining from the manufacturer new parts or replacements for apparatus that do not perform satisfactorily.

Ensure field operational tests of the warning gates demonstrate the proper manual operation, proper automatic operation, balance condition of the gate arms such that a stationary arm remains in the same position when the brake is released, normal motor running current at all positions and directions of operation, wind resistance, and other operational features specified herein.

Warranty
All electrical equipment and systems installed on the bridge shall be warranted against material defects and workmanship for a minimum period of one year after the date of the final bridge acceptance unless specifically noted otherwise within these Specifications or in the Contract Plans.

Training and Operation & Maintenance Manuals
Provide training materials and training facilities for bridge operator and bridge service personnel. All training material shall relate directly to and be cross referenced to the Operating and Maintenance manuals. Submit material for training 30 days in advance for review and acceptance. Include layout drawings, working drawings, catalog cut sheets, as-built wiring diagrams, operating instructions, maintenance instructions, parts identification listings, maintenance schedules, and a suppliers list with the manuals to be provided to the engineer.

IV. METHOD OF MEASUREMENT AND BASIS OF PAYMENT

Measurement

The Contractor shall complete all work specified in these Special Provisions and as shown on the Contract Plans. Measurement of the electrical work shall be based on completion of the following work items:

Item #	Locations	Pay Quantity
Special – Electrical Work – Rehabilitate West Motor Control Center	1	1
Special – Electrical Work – Replace East Motor Control Center	1	1
Special – Electrical Work – Replace Navigational Lights	1	1
Special – Electrical Work – Replace Panelboards	3	1
Special – Electrical Work – Replace Fire Alarm System	3	1
Special – Electrical Work – Install Sidewalk Lighting	1	1
Special – Electrical Work – Relocate Transformer	1	1
Special – Electrical Work – Replace HVAC Unit	1	1
Special – Electrical Work – Electrical Spare Parts	1	1
Special – Electrical Work – Final Acceptance Testing	1	1
Special – Electrical Work – Replace East Traffic Tree	1	1
Special – Electrical Work – Replace Warning Gates	4	1
Special – Electrical Work – Electrical Spare Parts Warning Gate	1	1
Special – Electrical Work – End Floorbeam Replacement	2	1

The locations are listed only for the Contractor's convenience in determining the volume of work involved and are not guaranteed to be accurate. Prospective bidders shall verify these quantities before submitting a bid. No adjustments other than for approved changes will be made in the lump sum contract prices, even though the actual locations required may deviate from those listed.

Basis of Payment

The lump sum contract price for each work item shall be full pay for performing the work in the Contract Documents.

Item #	Pay Quantity	Description	Unit
Special – Electrical Work – Rehabilitate West Motor Control Center	1	Rehabilitate	Lump Sum
Special – Electrical Work – Replace East Motor Control Center	1	Furnish and Install	Lump Sum
Special – Electrical Work – Replace Navigational Lights	1	Furnish and Install	Lump Sum
Special – Electrical Work – Replace Panelboards	1	Furnish and Install	Lump Sum
Special – Electrical Work – Replace Fire Alarm System	1	Furnish and Install	Lump Sum
Special – Electrical Work – Install Sidewalk Lighting	1	Furnish and Install	Lump Sum
Special – Electrical Work – Relocate Transformer	1	Relocate	Lump Sum
Special – Electrical Work – Replace HVAC Unit	1	Furnish and Install	Lump Sum
Special – Electrical Work – Electrical Spare Parts	1	Spare Parts	Lump Sum
Special – Electrical Work – Final Acceptance Testing	1	Final Testing	Lump Sum
Special – Electrical Work – Replace East Traffic Tree	1	Furnish and Install	Lump Sum
Special – Electrical Work – Replace Warning Gates	1	Furnish and Install	Lump Sum
Special – Electrical Work – Electrical Spare Parts Warning Gate	1	Spare Parts	Lump Sum
Special – Electrical Work – End Floorbeam Replacement	1	Disconnect, Furnish and Install	Lump Sum

OHIO DEPARTMENT OF TRANSPORTATION
SPECIAL PROVISION FOR
MECHANICAL REHABILITATION WORK

October 23, 2020

I. DESCRIPTION

General
The mechanical work shall be as shown on sheets M1 though M5A of the Contract Plans and as specified in these Special Provisions. This work shall consist of the following:

- Install new brake covers with removable side panel.
- Remove Existing, Furnish and install new slewing ring bearing access upper and lower cover plates
- Purge, Flush and Clean Center Bearing and all associated components
- Install new gasket at the slewing ring bearing access cover plates.
- Completely Grease all Center Bearing Components
- Purge, clean and properly re-lubricate all lubricated mechanical components including but not limited to, primary reducer, all couplings, bearings, end jack assemblies and open gearing
- Replace primary reducer access covers seals
- Replace floating shaft coupling seals and vertical gear shaft floating seals.
- Clean and paint all operating machinery in accordance with OSHA/ANSI specifications for machinery components.
- Temporarily remove the existing end jack machinery assembly and store during floorbeam replacement. Reinstall existing end jack machinery on new floorbeam.

The Contractor shall be responsible for the coordination of this work with all other work items necessary to complete this work while meeting the requirements of the Contract Documents.

All existing machinery shall be protected from damage, dirt, and paint. The Contractor shall repair any damage to existing machinery that may occur as a result of construction activities to the satisfaction of the Engineer at no additional cost to the project.

Hierarchy of Plans, Specifications, and Industrial Standards
All machinery shall conform to the requirements of the 2007 AASHTO Standard Specifications for Movable Highway Bridges (SSMHB) and all interim revisions. If there is a discrepancy between the AASHTO Specifications, the Contract Plans, and/or these Special Provisions, the most stringent requirement as determined by the Engineer will apply.

Standards
Standards referred to in the Special Provisions and on the Contract Plans are published by the following organizations and are directly applicable to the material and workmanship required for this work:

1. American Society for Testing and Materials (ASTM)
2. American National Standards Institute (ANSI)
3. American Association of State Highway Transportation Officials (AASHTO)
4. American Iron and Steel Institute (AISI)
5. American Gear Manufacturers Association (AGMA)
6. Society of Automotive Engineers (SAE)
7. National Electrical Manufacturers Association (NEMA)
8. American Welding Society (AWS)
9. Society for Protective Coatings (SSPC)

Substitutions
Items specified by manufacturer name or part number within these Special Provisions may be replaced by an equivalent item by another manufacturer, subject to approval by the Engineer, with the understanding that all changes required by the substitution shall be made by the Contractor at no additional cost to the project. Item equivalency shall be determined at the sole discretion of the Engineer and may be based on one or more of the following: quality, function, ease of maintenance, physical size, reliability, value, load capacity (static and dynamic), durability, standardized component, availability and other criteria as deemed appropriate by the Engineer.

Qualifications
Only individuals of high competence shall be utilized to perform the work required by this Contract. Competence shall be evaluated through the following criteria:

Supervising Personnel
The mechanical work as defined in these Special Provisions and shall be supervised and directed by foremen and supervising engineers, each with a minimum installation and design experience of two movable bridge machinery projects. Evidence of experience shall be submitted in resume format to the Engineer for approval and shall include the following:

1. Description of two movable bridge machinery projects to include the type of bridge and type and size of mechanical machinery drives associated with the project
2. Duration of each project including start and completion dates
3. Position held for each project
4. Location of each project
5. References, including names and current contact information for each project

Workforce
The work defined in these Special Provisions shall be performed by millwrights experienced in this class of work. The millwrights must have a minimum of five years' experience in the wide range of skills typically associated with the millwright profession. The workers' experience shall include disassembly and installation of bearings, couplings, gearing and other mechanical machinery of similar size to the machinery to be worked on or supplied under this Contract. In addition, the workers shall have demonstrated experience with all aspects of the tools and equipment typically associated with this type of work. Evidence of experience shall be submitted in resume format to the Engineer for approval and shall include the following:

1. Description of applicable projects over a five-year period, to include types and size of mechanical machinery associated with the project
2. Duration of each project including start and completion dates
3. Position held for each project
4. Location of each project
5. References, including names and current contact information for each project

Any evidence that indicates that the relevant aspects of the work for one or more of the projects submitted as experience was not performed by the candidate or that the project was not successful will be cause for rejection. The mechanical work shall be conducted only by personnel who have been approved by the Engineer.

Submittals
Shop Drawings, Final Record Drawings, Certified Drawings, Operation and Maintenance Manual, Machinery Installation Procedures and other required submittals specified within these Special Provisions shall be submitted to the Engineer for review. Submittals that do not meet the minimum requirements identified below will be considered non-responsive and will be returned without review. Submittals that have not been approved or require correction shall be resubmitted until such time as they are acceptable to the Engineer, and such procedure shall not be considered cause for delay. The Contractor shall bear all costs for damages which may result from ordering or fabrication of any materials prior to acceptance of Shop Drawings. The Contractor may request in writing from the Engineer approval to order raw materials of the correct type for later fabrication from approved Shop Drawings after they have been accepted. Such approval by the Engineer shall be in writing. No installation, repairs or painting of mechanical components shall commence without approved work and installation procedures, supporting drawings and documents.

Material Submittals
The Contractor shall submit copies of all manufacturers information and data for raw materials or standard, custom or proprietary products. These shall include specifications, maintenance, installation and repair instructions and procedures for the following items, but not excluding other items, materials and documents not specifically mentioned.

1. Brake covers
2. Slewing ring bearing sealant and access cover plates
3. Coupling Seals
4. Primary reducer access cover seals
5. Bolts, Nuts, Washers, and other Fasteners
6. Paint
7. Lubricants
8. Standard stocked items

Field Verified Dimensions
Dimensions indicated on the Contract Plans are nominal and intended for information. The Contractor shall coordinate the interface of the mechanical systems with the structure in the preparation of the Shop and Assembly Drawings. The dimensions indicated on the Contract Plans have been obtained from limited site survey and review of the available documents for the bridge.

The Contractor shall field survey and measure the existing machinery and structural support components, as required, to ensure that the replacement components and other system modifications and repairs as designed and detailed in the plans will fit into the existing machinery systems as intended. All such survey and measurement shall be done before preparation of the shop plans or working drawings and before performing work at the bridge. The Contractor shall be responsible to ensure the field measuring accuracy is sufficient to properly fabricate and repair mechanical components. The Contractor shall notify the Engineer of any dimensional deviations found during the field verification.

Certified Drawings
The Contractor shall obtain certified drawings and data sheets for all manufactured standard and custom products and lubricants and utilize it in the preparation of the Shop and other Drawings. The certified drawings shall be submitted in support of the Shop and other Drawings. The Contractor shall notify the Engineer of any deviations from the Contract Plans.

Drawing Submittals
Working drawings shall be prepared to depict all work to be performed as part of this Contract. Shop and Assembly Drawings shall be submitted for all components that are custom built for this project. Any deviations from the work depicted on the Contract Plans

or alterations proposed by the Contractor which affect the integrity or capacity of the machinery shall be signed and sealed by a Professional Engineer licensed in the state of Ohio.

Under no circumstance shall mechanical components be fabricated from the Contract Plans. Working drawings which are reproductions of the Contract Drawings, either in part or in their entirety, shall be considered non-responsive and shall be returned without review.

The Contractor shall submit electronic version of all working drawings and paper copies upon request, unless otherwise directed, that include Shop and Assembly Drawings. All working drawings shall conform to the following:

1. All drawings shall be drawn to scale. All details of a given part shall be clearly visible at the scale selected for that part with the exception that enlarged views of small details within a part may be used to improve clarity and prevent excessively large drawings.
2. Separate details shall be provided for all opposite hand components.
3. Drawings shall be prepared using the English system of units. This shall apply to all dimensions, surface finishes and fits between mating components. The Contractor may include metric units parenthetically if so desired.
4. All field-verified dimensions shall be clearly identified and distinguished from other dimensions on the Shop Drawings.
5. Tolerances shall be provided for all drawing dimensions, either directly or via a standard tolerance block.
6. Parts shall be dimensioned with appropriate tolerances to ensure that components of a common purpose that are fabricated from the same detail are interchangeable.
7. Materials for each item shall be given using reference to standard specifications by the organizations listed under General Materials (Section II).
8. All appropriate weld symbols along with stress relieving process for weldments.
9. Instructions for cleaning and painting the machinery.
10. Proprietary parts shall be shown in outline on the drawings with sufficient dimensions and data to determine the clearances required for installation and operation.
11. Certified dimension prints and data sheets from manufacturers shall state pertinent ratings of the equipment and material, and shall indicate, when applicable, provisions for adding, draining, and checking the lubricant, method of lubrication, amount and type of lubricant required and type of fittings, the location of inspection openings and the location and type of venting devices.
12. The Contractor shall identify conflicts between manufacturers' instructions and Contract Documents and submit resolution for review and approval.
13. The Contractor shall identify variations between Contract Documents and product or system limitations that may be detrimental to the successful performance of the completed work.
14. Complete shop Bill of Materials shall be included for all materials. The computed shipping and operating weights of materials shall be stated on the Shop Drawing upon which it is detailed.
15. Complete Assembly and Construction Drawings shall be furnished. These drawings shall clearly indicate how all work is to be performed.
16. Assembly and Construction Drawings shall be given identifying marks and essential dimensions for locating each part or assembled unit with respect to the bridge or equipment foundation. Each part shall be cross-referenced to the Shop Drawing on which it is detailed.
17. Final "As-Built" Shop, Assembly and Construction Drawings shall be submitted at the completion of the project. Any deviations from the approved Shop Drawings shall be clearly indicated. Reproducible drawings shall be made on the Contractor's

standard title block and drafted to the City's standards. These drawings shall be stamped "As Built", immediately above the title block.

18. The Contractor shall sequentially number all transmittal forms. Resubmittals shall be numbered with original submittal number and an alphabetic suffix.

Procedure Submittals
The Contractor shall submit procedures providing a step-by-step breakdown of all construction activities for each major work item identified on sheet M1 of the Contract Plans. The procedures should clearly indicate the order in which each item is to be performed and should accurately reflect the flow of construction in the field. The procedures should constitute a suitable working document for construction supervision in the field.

The procedures shall address machinery repair means and methods including but not limited to the following:

- New brake cover installation
- New slewing ring cover plate and sealant installation
- Coupling seal replacement
- Center Bearing Components Purging, Flushing, Cleaning and Re-lubrication.
- Primary reducer draining, flushing, cleaning, and lubricating process
- Lubrication removal, disposal and re-lubrication processes
- Cleaning, painting and containment procedures of all mechanical components
- Reinstallation and alignment of existing end jack machinery on the new floorbeam

The procedures shall contain sufficient detail to demonstrate to the Engineer that the Contractor has full knowledge of the work to be performed.

Installation procedures for components of standard manufacture shall contain the manufacturer's recommended alignment tolerances for a new installation, which will be the basis for acceptance of such parts. Installation procedures for custom-manufactured components shall contain alignment tolerances as specified in the Contract Documents.

Submittal quantities and acceptance guidelines shall be per the Drawing Submittals requirements.

Schedule Submittals
The Contractor shall submit a detailed work schedule identifying the progression of work to be performed under this Contract. The schedule shall include, as a minimum, all major work items identified on sheet M1 of the Contract Plans. When work is to be performed during a marine and/or vehicular outage, the schedule shall provide a daily or hourly task breakdown clearly identifying those tasks on the critical path to return the bridge to service within the allotted outage. All tasks shall be referenced to the main work items in the approved work procedures.

Schedules for all work that must be performed during a marine and/or vehicular outage must be submitted a minimum of 6 weeks in advance of the outage and approved 14 days in advance of the outage or the outage will be delayed accordingly.

Submittal quantities and acceptance guidelines shall be per the Drawing Submittals requirements.

General Quality Assurance
The Engineer reserves the right to inspect all machinery at the point of manufacture prior to shipping. No items shall be fabricated, machined, welded, cast or forged without sufficient advance notification

to the Engineer to permit scheduling of inspection. The Contractor shall furnish all facilities and provide for free access at the plant or shop for the inspection of material and workmanship, and to witness shop tests.

The Inspector shall base all inspections on the requirements of the Contract Plans, the Special Provisions, any referenced codes or standards and the Contractor's approved submittal documents. The Inspector shall have the authority to recommend to the Engineer rejection of material or workmanship that does not satisfy Contract requirements. The final decision for rejection shall be made by the Engineer. The Contractor shall replace or repair to the satisfaction of the Engineer any such rejected item. All such replacements or repairs shall be made at no cost to the project.

The Engineer or its designated representative will make inspections of equipment and machinery throughout the construction period. Any defects, deficiencies, or deviations from the Contract Plans or Special Provisions discovered during such inspections shall be corrected at no cost to the project. Shop approval of machinery does not relieve the Contractor from making such repairs to parts which are found to be deficient at a later time (regardless of prior inspection or approval) as directed by the Engineer.

The Contractor shall furnish without charge test specimens required and all labor, testing machines, tools, and equipment necessary for physical tests and chemical analyses. Copies of test reports for all tests shall be submitted to the Engineer.

II. GENERAL MATERIALS

All materials shall be new and shall meet the minimum requirements of the standards indicated on the Contract Plans and as specified herein unless otherwise noted. All materials shall be supplied by manufacturers who have supplied similar materials for similar applications for a period of not less than 10 years.

Fasteners
Provide all bolts for connecting machinery parts to each other or to supporting members as shown on the Plans or specified otherwise and ensure the bolts conform to one of the following types:

1. Machinery Fit, High-Strength Bolts
2. High Strength Turned Bolts, Turned Cap Screws and Turned Studs.
2. Stainless Steel Bolts

Ensure all high strength bolts shown on the Mechanical Plans are machinery fit unless otherwise noted. Ensure all high strength bolts meet the requirements of ASTM A449. Connect all high strength bolts using nuts meeting the requirements of ASTM A563.

Individually ream holes for Machinery Fit high strength bolts to provide a clearance of not more than 0.01-inch with the actual bolt for that hole. Check clearance with a 0.011-inch wire. The hole is considered too large if the wire can be inserted into the hole together with the bolt. The maximum clearance for Structural Fit high strength bolts is 1/16-inch between the bolt shank and hole.

Provide turned bolts, turned cap screws, and turned studs with turned shanks and cut threads. Ensure each turned bolts have semi-finished, washer-faced, hexagonal heads and two hexagonal head nuts. Ensure turned cap screws have finished washer-faced, hexagonal heads. Ensure all finished shanks of turned fasteners are 1/16-inch larger in diameter than the diameter of the thread, which determine the head and nut dimensions. Ensure the shanks of all turned fasteners have Class LC6 fit in the finished holes per ANSI Standard B4.1. Detail all turned fasteners on Working Drawings.

Provide stainless steel bolts meet the requirements of ASTM A193, Grade B7 unless otherwise noted. Connect stainless steel bolts using ASTM A194 nuts.

Conform to ANSI Standard B18.2.3.7 – Heavy Hex Structural Bolts for the dimensions of all bolt heads, up to and including size 1 1/2-inch. Conform to ANSI B18.2.3.5 – Hex Bolts for bolt sizes 1 5/8-inch to 4-inches. ANSI Standard B18.2.4.6 – Heavy Hex Nuts specifies the requirements of all Heavy Hex nuts and ANSI Standard B18.2.4.2 – Hex Nuts specifies the requirements of all Hex Nuts.

Conform to ANSI Standard B18.3 for the dimensions of socket-head cap screws, socket flathead cap screws, and socket-set screws. Furnish screws made of heat-treated alloy steel, cadmium-plated, and with a self-locking nylon pellet embedded in the threaded section. Unless otherwise called for on the Plans or specified herein, provide set screws of the headless safety type, with coarse thread series, and cup points. Do not use set screws to transmit torsion nor as the fastening or stop for any equipment that contributes to the stability or operation of the bridge.

Provide coarse thread series threads for bolts, nuts, and cap screws with a tolerance Class 2A bolts and nuts per ASME Standard for Unified Inch Screw Threads.

Spotface bolt holes through unfinished surfaces for the head and nut, square with the axis of the hole. Unless otherwise called for, subdrill all bolt holes in machinery parts or connecting these parts to the supporting steel work at least 1/16-inch smaller in diameter than the bolt diameter. After the parts are correctly assembled and aligned, ream assemble for the proper fit at assembly or at erection with the steel work.

Drill or ream assembled all elements connected by bolts to assure accurate alignment of the hole and accurate clearance over the entire length of the bolt within the specified limit.

Ream or drill holes in shims and fills for machinery parts to the same tolerances as the connected parts at final assembly.

Wherever possible, insert high strength bolts connecting machinery parts to structural parts or other machinery parts through the thinner element into the thicker element.

Install high-strength bolts with an ASTM F436 hardened plain washer at each end.

Furnish positive locks of an approved type for all nuts, unless otherwise noted. If double nuts shall be used for all connections requiring occasional opening or adjustment. Lock washers used for securing will be made of tempered steel and dimension of lock washers will be per SAE regular dimensions. Ensure the lock washer material meets SAE tests for temper and toughness.

Provide fasteners manufactured in the United States and clearly mark with the manufacturer's designation.

Lubrication
Size of grease lubricating fittings shall be standardized and shall be of the giant button head type unless indicated otherwise on the Contract Plans or the location of the fitting requires the use of a fitting that is smaller than the giant button head fitting. Under no circumstance shall the use of more than two different types of grease fittings be permitted. Fittings shall be located in a protected and conveniently accessible position for use and shall be connected to the points requiring lubrication by pipe extensions where necessary. All fittings and pipe material shall be stainless steel meeting ASTM A312 Type 304 or 316. All piping necessary to provide access for lubrication shall be clearly indicated on the Shop Drawings and all pipe components listed in the Bill of Materials.

Lubricant to be removed from mechanical components shall be properly contained when removing and transporting off the bridge. The bridge structure and all other components of the bridge shall not be fouled at any time of the removal or re-lubrication of the various mechanical components. No lubricant shall be allowed to contaminate the river or surrounding environment or adjacent land. The removal and disposal of all lubricants shall be in accordance with all governing regulations regarding the disposal of these items.

During installation, the Contractor shall lubricate all rotating and sliding parts with lubricant as indicated on the approved charts. The surfaces of components which will rotate or slide relative to one another once assembled shall be lubricated prior to assembly. All clearance fits involving mating steel components shall be installed with a marine duty anti seize compound prior to assembly.

Enclosed Gear Reducers:
Reducer lubricant shall be as specified by the existing reducer manufacturer.

Open Gears:
The open gear lubricant utilized must bond strongly to gear teeth to maintain a continuous film on bearing surfaces despite high loading and high load repetition, contain an EP (Extreme Pressure) additive, repel water, resist throw-off and dripping, maintain consistency over wide temperature variations, and allow for ease in application and removal. The lubricant shall have an operating range of 0°F to 210°F and shall be considered a heavy bodied, adhesive type open gear lubricant by its reputable lubricant manufacturer. Some adhesive lubricants are available in a diluted form for ease of application. This type of lubricant is diluted with solvent that quickly evaporates after application leaving behind an adhesive tacky film. If such a lubricant is desired, the solvent must be non-flammable and the mixture must not pose any hazard to health. The detailed specifications for open gear lubricants that will satisfy the above requirements do vary. Recommended Lubricant: Unleaded, non-diluent type, non-chlorinated open gear grease, SUS 7,000 @ 100°F viscosity, water resistant, anti-wear/extreme pressure.

Sleeve Bearings:
The lubricant chosen shall be approved for use in sleeve bearings by the lubricant manufacturer. Recommended Lubricant: NLGI No. 2 grease with rust and oxidation inhibiting additives, 280 Worked Penetration at 77°F [25°C], 340°F [171°C] (or higher) ASTM Drop Point, SUS 900 @ 100°F, water resistant, anti-wear/extreme pressure.

End Jack machinery:
End Jack assemblies cleaning, lubricating and maintenance shall be as specified by the manufacturer. Old lubrication, dirt and debris shall be removed and components shall be properly re-lubricated as outlined in the approved work plan. Old lubrication shall be properly transported off the bridge and disposed. Coordinate lubrication work with End jack machinery work.

Couplings:
Coupling lubricant and its maintenance shall be as specified by the existing coupling manufacturer.

Slewing Ring Bearing:
Slewing Ring Bearing lubricant and its maintenance shall be as specified by the existing bearing manufacturer.

Proprietary units will use lubricants approved by the manufacturer.

Contact the Engineer to obtain a list of lubricants currently in use. The Contractor shall provide lubrication to the existing machinery based on this list of lubricants or as recommended by the manufacturer.

At the completion of the work, the Contractor shall furnish an additional supply of lubrication for future maintenance use to include 25 lb. of each type of grease, and 100 gal of gear oil for the speed reducers. All lubricant shall be provided in the original manufacturer’s sealed container to prevent contamination. The Contractor shall protect all lubricants used during construction from contamination.

Painting
Paint for Bridge Machinery and touch-up of field damaged paint shall be in conformance with ODOT and City requirements.

All machinery shall be cleaned and painted in its entirety except for machined contact surfaces (e.g. brakewheel friction surfaces, etc.). Painted surfaces shall include, but are not limited to, brake assemblies, couplings, bearings, motors, shafts, open gearing, reducers, machinery supports, slewing ring bearing, end jacks, fasteners, washers, nuts, exposed edges of shims, and all associated components. Paint on existing machinery that is damaged as part of the rehabilitation shall be touched up in the field.

All painting shall be in accordance with these Special Provisions and with the paint manufacturer's specification for surface preparation. Detailed instructions for painting, including paint manufacture information and surface preparation of the machinery, shall be provided on the Shop Drawings for review by the Engineer.

Field painting of all mechanical components shall consist of a three coat system with a penetrating sealer or a modified aluminum epoxy mastic primer, a second coat of epoxy paint, and a final coat of Urethane paint. All surface, structures and machinery components as well as the river and surrounding environment shall be protected during painting.

Preparation of surfaces prior to painting shall be as recommended by the paint manufacturer and as approved by the Engineer. Caution shall be exercised during cleaning and painting operations to prevent cleaning and painting materials from entering machinery components and coming into contact with sliding surfaces on components such as bearings, seals, gears, couplings, and other components which would be damaged by such intrusion. Nameplates shall be clean and kept free of paint.

The third coat of paint shall color code the machinery in accordance with OSHA and City requirements. Color for the final coat will be safety orange for all moving parts including shafts, couplings, brakewheel hubs, and any other non-contact moving parts. Color for the final coat shall be green for all stationary parts including, machinery supports and any other stationary part.

Proper care should be taken during the cleaning and painting of the mechanical components to protect the bridge structure and all other components along with the river and surrounding environment from dirt and debris, old lubrication and old and new paint. Old paint may contain lead and should be properly contained when removing and disposed of in accordance with all governing regulations regarding the disposal of lead paint. When painting the mechanical components, the bridge and associated components as well as the river and surrounding environment shall be protected from new paint.

Spare Parts
The Contractor shall supply the following spare parts for the mechanical machinery:

1. Materials as required to replace the wearing components of the seals for all couplings. Sufficient materials shall be provided to replace or each of the seals on every coupling at least 1 time.
2. Lubricants, as indicated above under the lubrication item.

Spare parts shall be covered under pay item "SPECIAL – MECHANICAL WORK – SPARE PARTS."

Welding
Welding required for the work shall be done in accordance with the requirements of the Bridge Welding Code as stated in AWS D1.5. Treat all machinery and weldments that support machinery as main members, all welds as joining primary components, unless otherwise specified in the Contract

Documents. All welds are subject to reversing tension and compression loading. Do not perform field welding unless specified in the Contract Documents.

Under no circumstances shall open ended welds be acceptable. All welded machinery parts or supports shall be stress relieved by heat prior to machining. The Contractor shall include welding and stress relieving procedures with the Shop Drawings for parts that require welding.

III. CONSTRUCTION DETAILS

The Contractor shall supply all apparatus, tools, devices, materials and labor as necessary for all work as outlined in the Contract Documents. Any apparatus, tools, devices, materials and labor incidental to the work but not specifically stated or included, which may be necessary for the work, shall be furnished by the Contractor at no additional cost to the project. The disassembly and re-lubrication of all machinery shall be done by millwrights experienced in this class of work. The Contractor shall submit the resumes of the millwrights to the Engineer for approval.

The Contractor shall coordinate and schedule work to suit requirements of ODOT and the U.S. Coast Guard, as directed and approved by the Engineer.

Delivery, Storage, and Handling
All machinery items and material shall be delivered to the off-site assembly location in accordance with the approved schedule of work. All machinery, materials and items, shall be properly protected for shipment and storage.

All machinery items shall be stored as to permit easy access for inspection and identification. Material shall be stored in a building in manner that will cause no distortion or damage. No outdoor storage of machinery components shall be used regardless of the methods of protection provided.

All finished metal surfaces and unpainted metal surfaces that would be damaged by corrosion, shall be coated as soon as practical after finishing with a protective coating such as No-Ox-Id, A-Special, as manufactured by Sanchem, Inc. of Chicago, IL or approved equal. This coating shall be removed from all surfaces prior to lubrication for operation and from all surfaces prior to painting after erection.

Completely seal and protect the slewing ring bearing from debris and blasting media during painting and related work.

Assembled units shall be mounted on skids or otherwise crated for protection from weather, dirt and all other injurious conditions during shipment and storage as approved by the machinery manufacturer. The Contractor shall submit advance information as to methods and materials which will be used for protection for approval by the Engineer.

Any damage that occurs to the machinery components as a result of improper protection during shipment or storage shall be corrected by the Contractor to the satisfaction of the Engineer at no cost to the project.

Installation
Work shall not commence until all required drawings, procedures and schedules have been approved, any necessary permits have been obtained and all necessary coordination has been completed with the machinery suppliers whose work is on the critical path to returning the bridge to service.

During installation, the Contractor shall maintain and lubricate all rotating and sliding parts of the machinery, including span drive machinery, slewing ring and end jack machinery. The surfaces of new and/or rehabilitated components which will rotate or slide relative to one another once assembled shall be lubricated prior to assembly.

Match Marking

Connecting parts assembled in the shop for the purpose of reaming or drilling holes in connections shall be match marked, and a diagram showing such marks shall be furnished to the Inspector and Engineer prior to disassembly.

Existing components that are to be removed from the bridge and reinstalled on the bridge shall be match marked. A diagram showing such marks shall be furnished to the Engineer prior to disassembly. The intent of match marking is to ensure that existing components are returned to the original location in the same orientation as prior to removal.

Components for which a specific fit or tolerance is required when assembled with other components shall be match marked with those other components so that the desired fit is achieved at assembly.

Field Installation
All mechanical components shall be erected, located, adjusted, leveled and plumbed to the position and tolerances as shown on the Contract Plans by competent millwrights skilled in the type of work involved.

Any mechanical components not erected to the specified tolerance will be rejected. Rejection shall be due caused for the Engineer to stop future work which would be constructed using or with referenced to these parts until such parts are properly aligned.

Alignment-General
All components of standard manufacture (i.e., couplings, brakes, etc) shall be aligned to the tolerances specified by the manufacturer of that component. The manufacturer's recommended alignment tolerances for a new installation shall be the basis for alignment and shall be included in the relevant procedures.

All components of custom manufacture shall be aligned to the tolerances provide in these Contract Documents.

Final reaming of holes for turned bolts shall occur only after the Engineer's approval of the field alignment.

Coordination
The Contractor shall be responsible for the coordination of the machinery installation with all other aspects of the construction project. This coordination relates to the sequencing of work so that all machinery can be installed in a safe and effective manner. Certain sequences of installation may be required in order to ensure that all items can be installed on the bridge.

IV. REHABILITATE SPAN DRIVE MACHINERY

General
The work shall consist of furnishing all labor, materials, plants and incidentals required to rehabilitate the operating machinery in accordance with the Plans, Specifications, and the directions of the Engineer.

Work shall include but not be limited to:
1. Provide and install new custom motor and machinery brake covers.
2. Replace seals on primary reducer access covers.
3. Drain and flush primary reducer of existing oil and replace with new oil.
4. Clean, lubricate, and replace seals on all floating shaft and vertical pinion shaft gear couplings.

Brakes

Provide and install new custom motor brake covers as described in these Contract Documents. The new brake covers shall facilitate the easy removal and installation within the limited space constraints of the existing machinery room.

Brake covers shall be fabricated in accordance with Contract Plans and per the design intent of the Engineer and these specifications. The new covers shall be the split type/clam-shell covers with side openings to allow for shafts, manual hand release, and conduit to pass through. Each cover shall have a removable panel at the location where the conduit passes through the cover. With the panel removed, the new brake covers shall be able to slide away the support without interfering with the conduit or the overhead swing span stringers. The removable panel shall be fastened using stainless steel fasteners to the cover in a way that facilitates assembly and disassembly by hand tools. The covers shall have a catch to prevent the removable panel from falling off when all bolts are removed.

Submit shop drawings of the new brake covers. Submittal shall include a letter of endorsement of the new brake cover design from the existing brake manufacturer or be produced by the existing brake manufacturer. Field verify clearance with new brake cover design and submit detail of verified dimensions with shop drawing.

Reducer
Completely drain and flush-clean all oil, grease, dirt, and debris out of the existing primary reducer in accordance with the existing reducer manufacturer recommendations. This includes complete cleaning of upper and lower housing and all gear components in accordance with manufacturers recommendations. Flush-clean reducer by cycling oil through a micron filter to remove contaminants. With the reducer oil completely drained, inspect the interior of the gearbox. Note any damage observed and report back to the Engineer.

Replace existing oil with new oil. New oil shall be in accordance with existing primary reducer manufacturer's recommendations. Do not operate the bridge during work while the oil level is below the low-level marking on the sight gage. Contractor shall ensure oil shall be filled to the proper level as indicated on the reducers. In addition, replace all reducer breather filters in accordance with the manufacturer's recommendations.

Components shall be reassembled with new gaskets. Seals are to be cleaned and lubricated before installing new gaskets. Provide new gaskets for all inspection covers. Gaskets shall be in accordance with existing reducer manufacturer's recommendations.

Care should be taken to properly contain and protect all surface, structures and machinery components from old and new lubrication. Old lubrication shall be properly transported off the bridge and disposed.

Couplings

Disassemble all floating shaft couplings and vertical pinion shaft coupling as shown on the Contract Documents and inspect couplings. Measure the coupling alignment and report to the Engineer as a part of the coupling inspection. Any deficiencies indicating of rust and corrosion or apparent problems that will contribute to unsatisfactory coupling operation that are observed shall be reported to the Engineer. Replace couplings seals and gaskets in-kind as recommended by the original manufacturer. Clean and lubricate the couplings adequately using the manufacturer recommended lubricant. Replace all corroded cover fasteners in-kind. New coupling gasket, seals, and lubricant to be used shall be fully compatible with the existing couplings

V. REHABILITATE SPAN SUPPORT MACHINERY

General
The work shall consist of furnishing all labor, materials, plants and incidentals required to rehabilitate the operating machinery in accordance with the Plans, Specifications, and the directions of the Engineer.

Work shall include but not be limited to:
1. Provide new slewing ring cover plates and gaskets.
2. Clean, purge, and lubricate existing slewing ring bearing.
3. Replace slewing ring bearing mounting fasteners.

Provide new slewing ring access cover plates and associated fasteners in accordance with the Contract Documents. Each cover shall be provided in 4 equal length segment around the entire circumference of the bearing. Seal all interfaces between each segment with an approved RTV silicone sealant. New cover plates shall be Type 316 stainless steel. Provide new slewing ring gaskets between the new access cover plates and the bearing in accordance with the Contract Documents. Gaskets shall be provided on all top and bottom covers. Gasket material shall be as specified in the Plans. Ensure after final installation the top and bottom panels do not interfere with bridge operation of the bridge in any way or at any time.

Purge the existing grease after installation of the new access cover plates by pumping new grease through the existing grease fittings in accordance with the manufacturer's recommendations and the Contract Documents. New lubrication shall be pumped into the ring gear while the bridge is operated to purge old lubrication and to ensure equal distribution throughout the raceway. Provide sufficient grease to completely flush all existing grease from the bearing. Verify no leakage between cover plate gaskets and the bearing housing as a part of the purging procedure and report to the Engineer. Verify no damage to new gaskets and seals after purging and report to the Engineer. Replace any damaged gaskets and seals after purging at no additional cost to the City. Submit cleaning, purging, and lubricating procedure for approval. Procedure shall include a letter of endorsement of the lubrication procedure from the existing slewing ring bearing manufacturer.

Completely clean the existing slewing ring bearing of all excess grease, dirt, and debris in accordance with the slewing ring bearing manufacturer's recommendations to the satisfaction of the Engineer. Properly remove and dispose of all cleaned material in accordance with all governing regulations regarding the disposal of these items. No solvents, water, or other materials shall be used on the inner and outer races of the bearing. Do not pressure wash or blast any bearing component. The inner components of the bearing shall not be scrapped or cleaned by any other method accept those recommended by the manufacturer. Bearing lubricant and amount shall be as specified by the manufacturer.

Replace existing slewing ring bearing mounting fasteners exhibiting section loss with new H.S. Turned Cap Screws as shown in the Contract Documents. Replace bearing lubrication fittings with new giant button head grease fittings prior to purging.

Submit shop drawings for all new slewing ring bearing cover plates, gaskets, and sealants in accordance with the Contract Documents. Field verify match-up of new cover plate with existing bearing and submit verified dimensions with drawings.

VI. CLEAN, PAINT, AND LUBRICATE MACHINERY COMPONENTS

Description
This work shall consist of furnishing all equipment, tools, labor, and materials to clean, paint, and lubricate all existing span drive operating machinery including gearing, racks, pinions, shafts, couplings, bearings, brakes, motors, end jack machinery, span support machinery, connections, and supports as described in the plans and these specifications. In addition, this work item shall include erecting containment, providing correct atmospheric conditions for application, masking areas not to be painted, collecting and proper disposal of potentially lead-based residue from these operations.

All existing span drive operating machinery shall be cleaned and painted. The existing machinery components to be cleaned and painted shall include but not limited to the following:

1. Gearing
2. Racks
3. Pinions
4. Reducers
5. Shaft
6. Couplings
7. Bearings
8. Brakes
9. Motors
10. End Jack Assemblies
11. Span Support Machinery including Slewing Ring Bearing
12. Connections
13. Supports and Weldments

The existing machinery components to be lubricated shall include but not limited to the following:

1. Primary Reducer (refer to section on Span Drive Machinery)
2. Bearings
3. Couplings (refer to section on Span Drive Machinery)
4. Slewing Ring Bearing (refer to section on Span Support Machinery)
5. End Jack Assemblies

Replace all bearing grease fittings. New grease fittings shall be in accordance with these specifications.

Materials
Paint and lubrication shall meet the requirements outlined in the plans and these specifications.

VII. END JACK MACHINERY

General

Temporarily remove the existing end jack machinery from the existing floorbeams, store, and reinstall the existing end jack machinery onto the new end floorbeams in accordance with the Plans and these Specifications. Provide new H.S. turned bolts and shim pack assemblies as required. Remove the existing debris shield and replace and install new stainless steel debris shields in-kind.

Coordinate all end jack machinery work with related electrical and structural work.

Removal and Storage

Prior to removal, field verify existing end jack dimensions with the end jack in the engaged and disengaged positions as required by the Plans. In addition, field verify the difference in elevation at the roadway end joints with the end jack assemblies engaged and disengaged. Report all field verified measurements to the Engineer. Field verified dimensions shall be used for final fit-up and alignment of end jack machinery during reinstallation on the new floorbeam.

Carefully remove the existing end jack machinery prior to removal of the existing floorbeam. Ensure no portion of the end jack machinery is damaged. Report any damage to the Engineer. If any damage is reported, repair or replace damage component at no additional cost to the Project.

Completely clean all machinery parts after removal. Promptly apply a rust-inhibiting preservative to all finished metal surfaces and unpainted metal surfaces that may be damaged by corrosion during storage. Remove this coating from all surfaces prior to erection and painting.

Tag or mark all machinery components with a clear identification showing the designation to be used on the reinstallation procedure.

Protect all machinery parts from weather, dirt, and all other injurious conditions during storage. Do not store any machinery or components outdoors. Mount assembled units on skids or otherwise crate for protection during handling and storage. Properly protect all equipment, when stored, as per the manufacturers recommendation prior to reinstallation or activation.

Installation

Prior to reinstallation of the existing end jack machinery on the new floorbeam, submit an installation procedure for review and approval. Installation procedure shall include at a minimum:

1. Installation and alignment procedures for all machinery equipment.
2. Locating and drilling all holes and providing specified fit between holes and bolts.
3. Method of cleaning and relubricating all machinery components.
4. Include all field verified dimensions taken prior to disassembly of the existing end jack machinery.
5. Include detail of new debris shields for review and approval.

The end jacks shall be aligned to provide 100% contact area between the roller and the jack base around the full arc of the jack base when fully driven. The 100% contact criteria shall be demonstrated through a layout dye check and thickness gage check between the roller and jack base surfaces.

Lubricate, clean, and paint all end jack assemblies in accordance with these specifications after reinstallation of end jack assembly and prior to operational testing.

Field Testing

Field test all end jack assemblies after completion of field installation and all structural floorbeam work. Coordinate tests with electrical and structural work.

Submit a field testing procedure for approval. Coordinate the testing procedure with tests required for any of the electrical equipment and include measurements of power and current drawn by the motors when operating under load as required hereinafter. Do not to exceed the electrical design ratings of any component during all testing.

The testing procedure shall include but is not limited to the verification of the proper operation and/or final adjustment of the following:

1. End jack components alignment
2. Machinery mounting integrity
3. Functional operation of end jack assemblies.
4. Span alignment and roadway joint elevations.

VIII. SPAN BALANCING AND BALANCE TESTING

General

Perform span balancing and balance testing of the movable span to ensure compliance with the design criteria listed on the Plans and as specified. Perform balance testing using calibrated hydraulic jacks as described in these specifications. Calculate and document the span balance procedure and methods. Provide all work required to complete the span balance, including furnishing, placing, removing and adjusting the location of the balance blocks/ is included in this item.

Provide all labor, materials, and equipment necessary to perform the work, including but not limited to: all analyses, testing, and Professional Engineer services; fabricating and transporting the balance material to the site; installing, removing and/or adjusting the location of balance material to achieve interim and final balance as shown on the Plans and Specifications.

Prepare balance calculations for all phases of work prior to performing any work potentially affecting the span balance. Base calculations on approved working drawings and material tests, and submit to the Engineer for review and approval.

In all cases, prior to performing balance testing submit balance calculations and summary tables to the Engineer for review. Perform span balance calculations of the movable span for the removal of existing movable span components and installation of the new components to determine the interim and final balance of the span. Format the calculations such that each removal and installation is in sequential order according to the Contractor's planned schedule.

Inventory the existing balance blocks and plates in the counterweight pockets. Ensure inventory includes documenting and recording the weight and location of the existing balance blocks and plates in the pockets. Weight measure the existing blocks and plates in the pockets for the inventory.

Ensure the swing span is balanced prior to final acceptance and at all times when temporary supports or end jack machinery are not engaged. Perform span balancing of the swing span as required including but not limited to prior to any bridge balance testing. Balance adjustments shall be included in balance calculations and shall only be made after calculations are approved. This work shall consist of balancing the swing span by adding, removing, or shifting existing balance blocks in the counterweight pockets or providing temporary ballast as required. Details of anticipated temporary ballast including size, location, and weight shall be submitted to the Engineer for approval. Ballast shall be strapped down to the swing span at all times. Do not exceed the maximum calculated span imbalance as shown on the Plans.

The Contractor shall make every effort to adjust the final balance such that the bridge is balanced about the center of rotation. The maximum measured imbalance moment in any direction shall not exceed 470 kip*ft.

Measure the imbalance moment and determine the location of the span center of gravity a minimum of four times as specified below:

1. Existing Condition. Determine the existing balance condition prior to construction.
2. Prior to Placement of Concrete in the Grid Deck. Determine the balance condition when all removals and replacements have been completed but prior to the placement of the concrete fill in the grid deck between panel points L9 and L16 (Pivot Pier Span and Land Span) and at L0. Temporary ballast based on the theoretical balance calculation log kept by the contractor to mimic the final balanced condition with the concrete placed will need to be placed on the structure to perform this work. Perform deflection check as specified in structural sequence of construction.
3. After Placement of Concrete in Pivot Pier Span and Land Span. Determine the balance condition after placement of the concrete fill in the grid deck between panel points L9 and L16 (Pivot Pier Span and Land Span) but prior to the placement of concrete fill in the grid deck at L0. Temporary ballast will need to be placed at L0 to mimic the final balanced condition with the concrete placed at L0 to verify the required width of concrete that needs to be placed west of L0. Perform deflection check as specified in structural sequence of construction.
4. Construction Completion. After span construction is completed to determine the balance condition and to determine the required final adjustments.

For each of the above span balance tests, provide a detailed balance report for review and approval by the Engineer.

Do not perform span balance testing during the floorbeam replacement work.

Coordinate all span balance testing with span deflection testing.

The Contractor shall assume full responsibility for the correctness of final detailing of swing span balancing and construction so that when completed, the swing span will be properly balanced for all angles of operation.

Span Balance Blocks and Plates

Provide new cast iron balance blocks as detailed on the Plans.

Calculation of Span Balance During Construction

Submit balance calculations a minimum of 5 intervals as specified herein to the Engineer for review and approval. A Professional Engineer licensed in the State of Ohio must perform the balance calculations.

Format calculations such that each removal and installation is in sequential order according to the Contractor's planned schedule. Base these calculations on weights of approved shop details and material tests for the actual material on the movable span, including the counterweight box.

Develop weights for new work on the working drawings for each component. Develop and show summary balance tables on the working drawings. Develop summary tables for all phases of the balance and the proposed imbalances. Ensure the format of these tables is as shown on the balance tables shown in the Plans.

Account for temporary balance material, if used, in the summary tables. Submit all summary tables and back-up materials for review. Include a narrative with the outline of the proposed phasing, the duration of the imbalance condition, and all other aspects of the work as indicated in the approved construction schedule. Coordinate this information with scheduling requirements and submit to the Engineer for review.

Ensure the calculated weight is extremely accurate and account for all material, weld fillets, bolt heads, washers, nuts, paint, normal overruns on plate thickness, etc. Compute weights of individual components to the nearest 0.1 lb accuracy. Summarize weights of assemblies to the nearest lb accuracy. Summarize span weight to the nearest 1.0 lb accuracy.

Locate the Center of Gravity (C.G.) of each component or assembly of components both transversely and longitudinally.

1. The C.G.'s shall be referenced longitudinally to the center of rotation as shown in the Plans:

    a. Positive (+) distances are recorded for elements forward of the center of rotation (i.e. toward the river span).

    b. Negative (-) distances are recorded for elements behind the center of rotation (i.e. toward the shore span).

2. The C.G.'s shall be referenced transversely to the center of rotation as shown in the Plans:

    a. Positive (+) distances are recorded for elements to the left side the longitudinal axis through the center bearing (looking toward the river arm)

    b. Negative (-) distances are recorded for elements to the right side the longitudinal axis through the center bearing (looking toward the river arm)

Report the weights and C.G. of each proposed component and each existing component to be removed, as well as actual weight and C.G. of the existing swing span in Engineer terminology as follows:

1. Weight, W in lbs (to the nearest 1 lb); Positive (+) for new and existing component to remain and negative (-) for existing components to be removed.

2. Distances from the center of rotation to C.G., X (longitudinal) and Y (transverse) in feet to the nearest 0.04 inch.

3. The component contribution to unbalance torque in lb shown as the products W*X and W*Y (to the nearest lb-ft).

4. Sum the component weights and unbalanced torques to produce totals for the swing spans.

Update the balance calculations and summary tables throughout construction and submit to the Engineer periodically as required to meet the requirements in these Special Provisions and in the Plans. Ensure the balance calculations are approved by the Engineer before removal operations can begin. Prepare the balance calculations summary using an Excel spreadsheet. Submit the calculations and results with a Microsoft Windows compatible CD.

Review of the balance calculations, counterweight details, quantity and location of balance material does not relieve the Contractor from making such changes in the counterweights and balance material as deemed necessary to balance the movable span. Submit all changes to the Engineer for approval.

Compute the quantity and location of balance material required based on the specified balance requirements and the weight and center of gravity of the swing span. Ensure the balance calculations incorporate the distributions of span weight in the horizontal and transverse directions.

Weight Test Data

In addition to the balance calculations, submit all concrete deck fill, counterweight block unit weight test data, and grating panel weights including the galvanizing to the Engineer prior to grid deck panel placement. The Contractor shall also submit counterweight details based on the completed balance calculations, for each counterweight pocket as required, that would achieve the proper balanced condition and to allow for the required adjustment for the swing span.

Test cylinders shall be made for the purpose of determining the unit weight of the concrete for the deck fill concrete. Use the same materials proposed for use in the final construction in making the test cylinders.

In order to establish a close average unit weight of the concrete, not less than ten cylinders shall be made of each design mix and the blocks shall be weighed not more than two days after pouring. During this time, they shall be stored under shelter in the open air and no water shall be applied to them for purpose of curing.

During the deck fill pour a unit weight test will be performed per concrete truck to ensure a close average unit weight of the concrete. A wet unit weight will be recorded for each concrete truck. Prior to releasing any concrete truck, the wet unit weight will be input into the calculations provided by ASTM Specification C567 in order to determine the equilibrium unit weight. This number will be checked against the theoretical unit weight found on contract plans and or specifications. Any concrete trucks containing a mix that exceeds the theoretical unit weight will be rejected.

An additional set of ten (10) test cylinders of each design mix shall be made, cured and weighed just prior to pouring the deck concrete and at a minimum of 14 days after deck pour for the purpose of verifying the weight of concrete.

Test cylinders shall be made of the concrete actually placed in the deck panels as per the Standard Specifications.

Measurement of Span Balance

Field measure and test for the span balance of the rehabilitated swing span in accordance with the specifications, including counterweight concrete and counterweight blocks and revise the balance as required based on the field-measured conditions and to meet the minimum balance requirements. Balance tests shall be performed under the direction of an Engineer licensed in the state of Ohio.

The as-constructed weight of the swing span shall be obtained by using calibrated hydraulic jacks with the end jacks withdrawn. In addition, the Contractor shall obtain the end reactions at each of the four comers of the swing span using calibrated hydraulic jacks. A procedure for testing for the swing span balance and obtaining the end reactions shall be submitted to the Engineer for approval.

Submit the complete test procedure along with the resume of the Engineer conducting the tests for approval prior to any balance testing. The test procedure shall include the following at a minimum:

1. Prior testing experience.
2. Test method.
3. List of equipment.
4. Sample Calculations related to determining the balance of the bridge using hydraulic jacks.
5. Report format.

After the balance tests have been completed, the Contractor shall submit a formal report signed and sealed by the Professional Engineer licensed in the State of Ohio who conducted the tests. The report shall include the following:

1. Introduction
2. Test procedure and equipment.
3. Method of analyzing the recorded data.
4. Presentation of balance results.
5. Discussion of error, if any.
6. Figures depicting the location of the equipment set-up
7. Any calculations performed

All calculations shall be prepared in English Units.

After the balance requirements have been met satisfactorily, run a confirmation balance test and record in the same manner as directed above. If the confirmation test indicates a need for further adjustment, make all adjustments required. Run a second confirmation test. Repeat this procedure until the swing span is balanced to the satisfaction of the Engineer and per minimum balance requirements.

Temporary Ballast

Provide temporary balance material, temporary bracing and supports as required to stabilize the movable span during construction. Coordinate work such that the movable span is never in an unbalanced condition that may be detrimental in any way to the structure, electrical/mechanical components or the safety of construction personnel.

IX. METHOD OF MEASUREMENT AND BASIS OF PAYMENT

Measurement
The Contractor shall complete all work specified in these Special Provisions and as shown on Sheets M1 to M6 of the Contract Plans.

Basis of Payment
The lump sum contract price for each work item shall be full pay for performing the work in the Contract Documents.

Item	Description	Pay Quantity	Unit
Special	Special – Mechanical Work – Rehabilitate Span Drive Machinery	1	Lump Sum
Special	Special – Mechanical Work – Rehabilitate Span Support Machinery	1	Lump Sum
Special	Special – Mechanical Work – Clean, Paint, and Lubricate All Mechanical Components	1	Lump Sum
Special	Special – Mechanical Work – Span Balance	1	Lump Sum
Special	Special – Mechanical Work – Spare Parts	1	Lump Sum
Special	Special – Mechanical Work – End Floorbeam Replacement	1	Lump Sum