Final

Technical Proposal

February 14, 2025

Submitted by:

The Kokosing DBT

Project 3003 (24)
Project: LOR-90-10.76
PID 107714

Final

Technical Proposal

Part A – Project Narrative

February 14, 2025

Project 3003 (24)
Project: LOR-90-10.76
PID 107714

kokosing CONSTRUCTION COMPANY, INC.

E.L. ROBINSON ENGINEERING

The Kokosing DBT is pleased to present our ~~Intermediate~~ Technical Proposal for the ~~Proprietary Technical Information (PTI) submittal for the~~ LOR-90-10.76 Design Build project. As stated in the scope, this Project will replace 7.5 miles and resurface 0.30 miles of IR-90 while widening to add a third lane in each direction from the I-90/SR-2 split to the French Creek Bridge. This Project will also replace approximately 0.52 miles of SR-2 from Murray Ridge Road bridge to IR-90. Work also includes full ramp replacement and widening at the SR-254 interchange, noise wall construction, lighting modifications, ITS, guardrail replacement, traffic control, bridge deck replacement for two bridges, and miscellaneous bridge repairs. We understand the Department's Goals of:

1. Minimize duration of traffic impacts to I-90 and complete the Project by August 31, 2028.
2. Deliver the Project at or below budget while meeting all required Contract Requirements.
3. Maximize quality, meeting, or exceeding applicable standards in all areas.
4. Deliver the Project with zero lost-time incidents.
5. Effectively manage DBE Outreach and DBE Utilization with the use of an Open-Ended DBE Performance Plan (OEPP).

We have studied the proposal documents, addenda, and reference information to formulate our approach to achieving these goals. This document summarizes our approach to the design and construction of the project.

Part A.1 - Schedule

To achieve the first goal of the project, the DBT has prepared a preliminary CPM schedule outlining the necessary design and construction activities that must be completed to successfully complete the project. This schedule is shown as Exhibit 1 at the end of Part A. The DBT acknowledges the 12 month lead time on waterway permits from the time the DBT provides the plans and summary data to the Department. We have included this task in the schedule. Work may begin prior to receiving this permit, but it will not impact the associated resources covered by the permit.

Part A.2 – Bridges over Murray Ridge Road (LOR-90-11.385L and LOR-90-11.570R)

The DBT will ensure the structures carrying eastbound and westbound I-90 over Murray Ridge Road seamlessly integrate with the adjacent reconstructed roadway. Preliminary coordination efforts will include reviewing horizontal, vertical, and cross-section alignments both on and off the structures.

Each structure, originally constructed in 1974,will undergo significant updates to increase the longevity of the structure. The original non-composite deck, approach slabs, bridge parapet, scuppers, and bituminous asphalt wearing surface will be removed. These components will be replaced with a new composite reinforced concrete with 42-inch single-slope barriers and 25-foot full-width approach slabs featuring Type A end treatments.

The existing three-span bridge carrying westbound I-90 over Murray Ridge Road (LOR-90-11.385L) will maintain the 40'-6" travel way across the deck and the approach slabs with an 0.016 foot/foot cross slope for the lanes and inside shoulder. The 11'-3" outside shoulder will be adjusted to include a ½ inch/foot cross slope. This change in cross-section geometry necessitates a scupper near the rear abutment on the inside shoulder. Changes in deck cross slope and the required 1-inch minimum haunch thickness over the existing beam moment and splice plates will create taller-than-normal haunches over the three interior beams and the

right fascia beam, with the left fascia beam controlling the cross section. Preliminary estimates indicate that these taller-than-normal haunches will require reinforcement.

On the existing LOR-90-11.570R three-span bridge carrying eastbound I-90 over Murray Ridge Road (LOR-90-11.570R) a 40'-6" travel way across the deck and approach slabs will be maintained with a 0.047 foot/foot cross slope for the lanes and outside shoulder. The 5'-3" inside shoulder will be modified with the addition of a 4' shoulder rounding that transitions into a ½ inch/foot cross slope per BDM requirements. This change in cross slope and geometry eliminates the need for scuppers on the bridge. Changes in the deck cross slope and the required 1-inch minimum haunch thickness over the existing beam moment and splice plates will create in taller-than-normal haunches over the four interior beams and the right fascia beam, with the left fascia beam controlling the cross section. Preliminary estimates do not indicate that these taller than normal haunches will require reinforcement.

For the westbound structure's outside shoulder and the eastbound structure's inside shoulder, roadway shoulder cross slope transitions will be managed outside the limits of the approach slab. The guardrail adjacent to the roadway shoulders will require transitioning to meet the new 42-inch single-slope barriers on the bridge. This transition will be achieved with Type 1 bride terminal assemblies on the approach end of the bridge and Type 2 bridge terminal assemblies on the trailing end of the bridge.

Each structure will reuse the existing rolled steel beam superstructure. Flange splice plate retrofits will be added at the ends of the moment plates to add redundancy against potential fatigue cracking. For the westbound structure, these retrofits will be installed over Piers 1 and 2, while for the eastbound structure, they will be installed over Pier 1.

The superstructures of both bridges will be raised to replace the existing pier bearing masonry plates. The current plates have a lower profile than the proposed expansion elastomeric bearings assemblies, which include beveled load plates. The adjustment will slightly increase the vertical clearance over Murray Ridge Road, exceeding the required minimums of 14'-7" for the westbound structure and 20'-0" for the eastbound structure.

The change in the cross section on both the westbound and eastbound structures, maintaining the minimum haunch, and the increased bearing height will result in the need to raise the profile over the bridges. The proposed profile will provide a smooth transition between the roadway and bridge. This will also necessitate modifications to the abutment bearings. To achieve this, the DBT proposes the addition of steel plates welded on top of the existing masonry plates and to the bottom flange of the beam ends.

For each bridge substructure, the existing integral abutment diaphragms will be replaced. The existing #6 integral hinge bars embedded in the existing abutment will be re-used, ensuring the superstructure remains integral with the abutments. Since the pier bearings are being replaced with expansion elastomeric bearings and the abutments will remain integral (noting that the existing #6 hinge bars are adequate to handle the seismic loading), no further seismic retrofits will be proposed which is in line with ODOT's updated seismic policy. Fiber wrapping will be applied to the existing pier columns for corrosion protection and to the pier caps to enhance shear strength following Proposal Note 519.

Part A.3 – Maintenance of Traffic

The DBT considered several MOT schemes to safely and efficiently construct the project. In doing so, our evaluation indicated that the SR-2/I-90 turnpike connection interchange was a unique constraint that would not likely follow the rest of the project setup. East of the interchange a part-width/contraflow scheme was identified as the most efficient method to

construct the project. As shown in the MOT typicals in Part B, the eastern portion of the project is constructed in three main phases. Subphases will be utilized for ramp reconstruction.

- Phase 1 – Build inside using part-width.
- Phase 2 – Build eastbound outside using contraflow.
- Phase 3 – Build westbound outside using contraflow.

During Phase 1, the SR-2/I-90 turnpike connector interchange and areas west of Ford Rd are expected to be built. As shown in the roll plots in Part B, this construction is expected to require multiple subphases.

- Phase 1A – Build westbound and temporary pavement using part-width.
- Phase 1B – Build westbound and temporary pavement ~~at~~ west of gore using part-width.
- ~~Phase 1C – Build strip of westbound using contraflow~~
- Phase ~~1D~~ 1C – Build outside westbound using contraflow to nearly complete westbound.
- Phase 1D – Build remaining inside westbound using contraflow
- Phase 1E – Build eastbound using contraflow.
    - Begin closure of I-90 westbound to the turnpike.
    - Construct rubblize and roll and bridge over Murray Ridge Rd during closure.
- Phase 1F – Build the remaining portion of eastbound and westbound.
    - Continue closure of I-90 westbound to the turnpike
- ~~Phase 1G – Build final tie into westbound gore.~~
    - ~~Can be done under closure or part-width as time permits.~~

Currently, the eastbound I-90 turnpike connector is planned to be constructed near the end of the project as Phase 4 once the area east of Ford Rd is built full width. This section is built full width with the westbound I-90 turnpike connector reduced to one lane and the eastbound traffic crossed over to a face-on-face configuration on the westbound side. The section could be adjusted to be built at any time after Phase 1G as time permits.

To expedite construction the DBT plans to work over winter on grading, drainage and removals that can be completed out of season. This will allow weather-dependent activities to start as early in the season as possible. The MOT Typical Sections in Part B illustrate the anticipated lane configuration for each phase.

The DBT acknowledges that signing will be crucial to the successful implementation of the MOT scheme. Contraflow phases will be signed per Standard Construction Drawing MT-95.72 or MT-95.73. During detailed design, lane shifts and splits will be evaluated to ease driver confusion while maintaining constructability and efficiency during construction. The DBT also confirms that adequate space is provided in the MOT scheme for stepped phase construction joints. This is shown in the typical sections which provide for an additional 1' separation (3' total provided) behind the back of portable barrier.

One prebid item that has impacted the accuracy of the current layout is the lack of survey in the SR-2 and far east end beyond SR-611. Additionally, segments of the project such as near the eastern railroad bridge were under construction at the time of the survey. The linework in these areas is approximate and will be verified post bid.

Part A.4 – Drainage Design and Best Management Practices (BMPs)

The DBT has reviewed the drainage scope of work and developed an anticipated plan to achieve the project goals. Existing drainage patterns will be propagated in so far as practical. We are familiar with ODOT BMP requirements and have identified adequate areas to meet treatment requirements. Based on current layouts we anticipate approximately 175 acres of disturbance. We anticipate 35 acres of treatment based on a 20% treatment requirement for water quality. The scope also requires 10 additional acres of water quality and quantity treatment.

Median slopes provide an optimal location for BMPs. Amended Vegetated Filter Strips (AVFS) are anticipated to treat the 10 acres of water quality and quantity required by the scope. We have identified potential areas with the median to achieve this requirement. With a minimum width of 4' for AVFS, we do not foresee any issues providing the required treatment within the median. To achieve the project water quality treatment of 35 acres, the DBT anticipates using vegetated biofilters (VBF). With the VBF, the flat bottom ditch width will be increased to at least 4'. Again, with the length of the project and contributing area flowing to the median ditch (inside shoulder and inside lane), we do not anticipate any issues achieving the required treatment. Vegetated Filter Strips (VFS) are also an option; however, the contributing pavement width requires the VFS to be too wide for most of the median areas. We are confident that areas along the outside shoulder could be identified should additional treatment using VFS be needed.

Overall drainage design will involve evaluating ditches, culverts, and storm sewers for capacity. Condition repairs identified in the scope will be incorporated. The DBT's prebid design efforts will capture needed improvement including preliminary median catch basin spacing and outlet locations, culvert lining, and other replacements as needed. Many of these features are shown on the roll plot in Part B.

Part A.5 – Anticipated ATCs

The DBT submitted 17 Alternative Technical Concepts (ATCs) for the Department's consideration. Based on the ATC meeting and subsequent feedback received, the DBT has identified the following ATCs as being used on the project. All ATCs listed below were accepted as revised based on the DBT's ATC Meeting Minutes or the Department's response.

- ATC 03 – Revise Pavement Composition Option C (Pavement)
    - The Department accepted the revised language submitted by the DBT in the ATC Meeting Minutes.
    - The anticipated build for Pavement Design 1 increases the intermediate course thickness to 2.5" while reducing the asphalt base course to 7.25" which can be constructed in 1 lift. In Design 2, the asphalt base course will be thickened to 9.25" while using the 2.5" intermediate course.
- ATC 04 – Convert Locations to Item 320 Rubblize and Roll vs Full Depth Replacement (Pavement)
    - The Department accepted the revised language submitted by the DBT in the ATC Meeting Minutes.
    - The DBT intends to utilize rubblize and roll along the I-90 connectors between the toll booth and Murray Ridge Road.
    - The pavement build up will likely utilize 1.5" of surface course, 2.75" of intermediate course and 7.75" of asphalt base over 9.~~5~~0" of rubblize and roll.

The shoulders will utilize 9.~~5~~0" of aggregate base in lieu of the rubblize and roll.

- ATC 08 – Elimination of Winter Shutdown Period (Maintenance of Traffic)
  - The DBT concurs with the Department's scope language noted in the Department's response to the ATC Meeting Minutes.
  - See the MOT typical section in Part B for the anticipated setup during the 2025/2026 winter to construct median drainage and grading.
- ATC 10 – Reduce Temporary Barrier Offsets to 1' in Specific Areas (Maintenance of Traffic)
  - The DBT concurs with the Department's scope language noted in the Department's response to the ATC Meeting Minutes.
  - While this ATC was approved, subsequent prebid question response indicates that a scope change is forthcoming to permit the use of exceptions to the standard shoulder width at short occurrences.
  - At this time, we anticipate this will be needed along SR-2 over Murray Ridge Rd and the railroad bridge. We may also use this approaching the Lake Ave Bridge due to the part-width construction of the approach roadway.
- ATC 11 – Eliminate MOT Reconstruction of Shoulders in Newly Constructed Areas (Maintenance of Traffic)
  - The Department accepted the revised language submitted by the DBT in the ATC Meeting Minutes.
  - The DBT anticipates resurfacing the existing shoulders identified in the MOT roll plot in Part B to eliminate rumble strips and provide a stable surface for traffic.
- ATC 15 – Utilization of ODOT Property for Waste Material (Roadway)
  - The DBT concurs with the Department's scope language noted in the Department's response to the ATC Meeting Minutes.
  - The DBT has identified several potential sites as shown in the roll plot in Part B. Locations and sizes may vary as final earthwork needs are evaluated. Conditions noted in the ATC document will be met and details provided for review early in the design process.
- ATC 16 – Utilization of Portland Cement Crushed Concrete in Undercuts (Roadway)
  - The Department accepted the revised language submitted by the DBT in the ATC Meeting Minutes.
  - Given the revised language in Addendum B, the DBT ~~is still evaluating the~~does not intend to use ~~of~~ this ATC. If used, the stipulations in the ATC will be met.

ODOT LOR-90-10.76 MAJOR REHABILITATION | PID 107714 - ODOT 243003 | 13-Feb-25

Name	ID	Start	Finish	Planned Duration
ODOT LOR-90-10.76 MAJOR REHABILITATION - TEST	ODOT LOR-90-10...	14-Feb-25	31-Aug-28	1,295d
0 - 0 - ADMINISTRATIVE	0	14-Feb-25	31-Aug-28	1,294d
BID DATE	A1020	14-Feb-25		0d
PROJECT END DATE	A1030		31-Aug-28	0d
1 - 1 - DESIGN PHASE	1	07-Apr-25	20-Apr-26	397d
STRUCTURES DESIGN	A1040	07-Apr-25	05-Jan-26	274d
MOT DESIGN	A1050	07-Apr-25	04-Aug-25	120d
ELECTRICAL DESIGN	A1060	07-Apr-25	05-Jan-26	274d
TRAFFIC CONRTOL DESIGN	A1070	07-Apr-25	27-Feb-26	327d
DRAINAGE DESIGN	A1080	07-Apr-25	06-Oct-25	183d
ROADWAY DESIGN	A1090	07-Apr-25	27-Feb-26	327d
PLAN AND WATERWAY SUBMITTAL	A1100	07-Apr-25	20-Apr-25	13d
WATERWAY PERMITS	A1110	21-Apr-25	20-Apr-26	365d
2 - 2 - CONSTRUCTION PHASES	2	04-Aug-25	31-Aug-28	1,124d
2.1 - 2.1 - PREPHASE	2.1	04-Aug-25	06-Apr-26	246d
MOT PAVEMENTS	A1120	04-Aug-25	14-Nov-25	103d
MOT - I-90 (981+00 - 663+00)	A1130	04-Aug-25	05-Sep-25	33d
MEDIAN GRADING	A1140	08-Sep-25	06-Apr-26	211d
MEDIAN DRAINAGE	A1150	06-Oct-25	06-Apr-26	183d
2.2 - 2.2 - PHASE 1	2.2	06-Apr-26	04-Apr-27	364d
1A - I-90 MEDIAN	A1160	06-Apr-26	13-Nov-26	222d
1A - SR2 WB MEDIAN (57 TO I-80/90)	A1170	06-Apr-26	10-May-26	35d
1B - SR2 WB MEDIAN (I-80/90 TO MURRAY BRIDGE)	A1180	13-Apr-26	15-May-26	35d
1C - SR2 WB RIGHT	A1190	18-May-26	21-Jun-26	35d
1D - SR2 WB LEFT	A1200	22-Jun-26	26-Jul-26	35d
1E/F - SR2 EB/I-80 WB ROADWAY/STRUCTURE (CLOSURE)	A1210	27-Jul-26	24-Oct-26	90d
ALL LANES RETURNED FOR WINTER PHASE 1	A1220		13-Nov-26	0d
1/2 - WINTER DRAINAGE / REMOVALS	A1230	16-Nov-26	04-Apr-27	140d
2.3 - 2.3 - PHASE 2	2.3	05-Apr-27	22-Aug-27	140d
2A - I-90 EB RIGHT	A1240	05-Apr-27	18-Jul-27	105d
2B - SR-57/SR-254/SR-611	A1250	17-May-27	18-Jul-27	63d
2C - I-90 EB RIGHT	A1260	19-Jul-27	22-Aug-27	35d
2.4 - 2.4 - PHASE 3	2.4	23-Aug-27	30-Jul-28	343d
3A - I-90 WB RIGHT (841+00 - 981+00)	A1270	23-Aug-27	06-Nov-27	76d
2/3 - MOT FOR WINTER	A1280	08-Nov-27	14-Nov-27	7d
2/3 - WINTER DRAINAGE REMOVALS	A1290	15-Nov-27	02-Apr-28	140d
3A - I-90 WB RIGHT (716+00 - 841+00)	A1300	03-Apr-28	28-May-28	56d
3B - SR-57/SR-254/SR-611	A1310	29-May-28	30-Jul-28	63d
2.5 - 2.5 - PHASE 4	2.5	05-Apr-28	31-Aug-28	123d
4 - I-80 EB ROADWAY/STRUCTURE	A1320	03-Apr-28	01-Jul-28	90d
4 - FINAL SR2 EB/WB	A1330	01-May-28	28-May-28	28d
4 - FINAL EB/WB EAST END	A1340	29-May-28	25-Jun-28	28d

Exhibit 1

OVERALL FORMAT CHANGED, BUT ONLY CLOUDED ACTIVITIES REVISED FROM PTI

LOR-90-10.76 TECH PROPOSAL SCHEDULE
ODOT 243003
BID DATE: 02/14/2025

Kokosing Construction Company

Date	Revision	Checked	Approved

Name	ID	Start	Finish	Planned Duration
4 - FINAL I-80 EB/WB	A1350	03-Jul-28	30-Jul-28	28d
4 - FINAL EB/WB WEST END	A1360	31-Jul-28	27-Aug-28	28d
4 - FINAL TRAFFIC CONTROL	A1370	21-Aug-28	31-Aug-28	11d

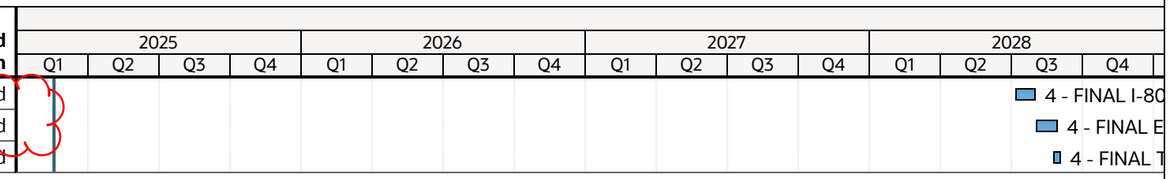

Exhibit 1

OVERALL FORMAT CHANGED, BUT ONLY CLOUDED ACTIVITIES REVISED FROM PTI

LOR-90-10.76 TECH PROPOSAL SCHEDULE
ODOT 243003
BID DATE: 02/14/2025

Kokosing Construction Company

Date	Revision	Checked	Approved

Final

Technical Proposal

Part B – Technical Approach - Plans

February 14, 2025

Project 3003 (24)
Project: LOR-90-10.76
PID 107714

kokosing CONSTRUCTION COMPANY, INC.

E.L. ROBINSON ENGINEERING

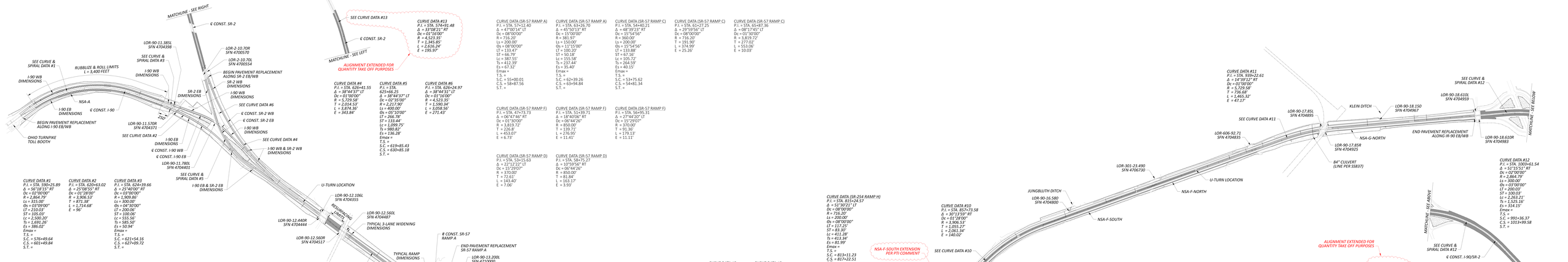
MATCHLINE - SEE RIGHT
MATCHLINE - SEE LEFT
℄ CONST. SR-2
SEE CURVE DATA #13
CURVE DATA #13
P.I. = STA. 574+81.48
Δ = 33°08'21" RT
Dc = 01°16'00"
R = 4,523.35'
T = 1,345.85'
L = 2,616.24'
E = 195.97'
ALIGNMENT EXTENDED FOR QUANTITY TAKE OFF PURPOSES
CURVE DATA (SR-57 RAMP A)
P.I. = STA. 57+12.40
Δ = 47°00'14" LT
Dc = 08°00'00"
R = 716.20'
Ls = 200.00'
θs = 08°00'00"
LT = 133.47'
ST = 66.79'
Lc = 387.55'
Ts = 412.39'
Es = 67.32'
Emax =
T.S. =
S.C. = 55+00.01
C.S. = 58+87.56
S.T. =
CURVE DATA (SR-57 RAMP A)
P.I. = STA. 63+26.70
Δ = 45°50'13" RT
Dc = 15°00'00"
R = 381.97'
Ls = 150.00'
θs = 11°15'00"
LT = 100.20'
ST = 50.18'
Lc = 155.58'
Ts = 237.44'
Es = 35.40'
Emax =
T.S. =
S.C. = 62+39.26
C.S. = 63+94.84
S.T. =
CURVE DATA (SR-57 RAMP C)
P.I. = STA. 54+40.21
Δ = 48°39'23" RT
Dc = 15°54'56"
R = 360.00'
Ls = 200.00'
θs = 15°54'56"
LT = 133.88'
ST = 67.16'
Lc = 105.72'
Ts = 264.59'
Es = 40.15'
Emax =
T.S. =
S.C. = 53+75.62
C.S. = 54+81.34
S.T. =
CURVE DATA (SR-57 RAMP C)
P.I. = STA. 61+27.25
Δ = 29°59'56" LT
Dc = 08°00'00"
R = 716.20'
T = 191.90'
L = 374.99'
E = 25.26'
CURVE DATA (SR-57 RAMP C)
P.I. = STA. 65+87.36
Δ = 08°17'45" LT
Dc = 01°30'00"
R = 3,819.72'
T = 277.02'
L = 553.06'
E = 10.05'
CURVE DATA #11
P.I. = STA. 939+22.61
Δ = 14°39'12" RT
Dc = 01°00'00"
R = 5,729.58'
T = 736.68'
L = 1,465.32'
E = 47.17'
SEE CURVE & SPIRAL DATA #12
LOR-90-18.610L
SFN 4704959
MATCHLINE - SEE BELOW
LOR-90-18.150
SFN 4704967
KLEIN DITCH
LOR-90-17.85L
SFN 4704895
SEE CURVE DATA #11
LOR-606-92.71
SFN 4704835
NSA-G-NORTH
END PAVEMENT REPLACEMENT ALONG I#-90 EB/WB
LOR-90-18.610R
SFN 4704983
LOR-90-17.85R
SFN 4704925
84" CULVERT (LINE PER SS837)
LOR-301-23.490
SFN 4706730
U-TURN LOCATION
NSA-F-NORTH
JUNGBLUTH DITCH
LOR-90-16.580
SFN 4704800
NSA-F-SOUTH
CURVE DATA #10
P.I. = STA. 857+73.58
Δ = 30°13'59" RT
Dc = 01°28'00"
R = 3,906.53'
T = 1,055.27'
L = 2,061.34'
E = 140.02'
SEE CURVE DATA #10
CURVE DATA #12
P.I. = STA. 1003+61.54
Δ = 51°15'51" RT
Dc = 02°00'00"
R = 2,864.79'
Ls = 300.00'
θs = 03°00'00"
LT = 200.03'
ST = 100.03'
Lc = 2,263.21'
Ts = 1,525.16'
Es = 314.15'
Emax =
T.S. =
S.C. = 991+36.37
C.S. = 1013+99.58
S.T. =
MATCHLINE - SEE ABOVE
SEE CURVE & SPIRAL DATA #12
℄ CONST. I-90/SR-2
ALIGNMENT EXTENDED FOR QUANTITY TAKE OFF PURPOSES
SEE CURVE DATA #14
CURVE DATA #4
P.I. = STA. 626+41.55
Δ = 38°44'37" LT
Dc = 01°00'00"
R = 5,729.58'
T = 2,014.53'
L = 3,874.36'
E = 343.84'
CURVE DATA #5
P.I. = STA. 625+66.25
Δ = 38°44'37" LT
Dc = 01°30'00"
R = 3,819.72'
T = 1,342.71'
L = 2,581.34'
E = 228.91'
CURVE DATA #6
P.I. = STA. 626+24.97
Δ = 38°44'31" LT
Dc = 01°16'00"
R = 4,523.35'
T = 1,590.34'
L = 3,058.56'
E = 271.43'
CURVE DATA (SR-57 RAMP E)
P.I. = STA. 47+73.73
Δ = 06°47'46" RT
Dc = 01°30'00"
R = 3,819.72'
T = 226.8'
L = 453.07'
E = 6.73'
CURVE DATA (SR-57 RAMP F)
P.I. = STA. 51+39.71
Δ = 18°40'00" RT
Dc = 06°44'26"
R = 850.00'
T = 139.71'
L = 276.95'
E = 11.41'
CURVE DATA (SR-57 RAMP F)
P.I. = STA. 56+95.31
Δ = 27°44'20" LT
Dc = 15°29'07"
R = 370.00'
T = 91.36'
L = 179.13'
E = 11.11'
CURVE DATA (SR-57 RAMP D)
P.I. = STA. 53+15.63
Δ = 22°12'22" LT
Dc = 15°29'07"
R = 370.00'
T = 72.61'
L = 143.40'
E = 7.00'
CURVE DATA (SR-57 RAMP D)
P.I. = STA. 58+75.27
Δ = 10°59'56" RT
Dc = 06°44'26"
R = 850.00'
T = 81.84'
L = 163.17'
E = 3.93'
CURVE DATA #1
P.I. = STA. 590+25.89
Δ = 56°18'15" RT
Dc = 02°00'00"
R = 2,864.79'
Ls = 315.00'
θs = 03°09'00"
LT = 210.03'
ST = 105.03'
Lc = 2,500.20'
Ts = 1,691.26'
Es = 386.02'
Emax =
T.S. =
S.C. = 576+49.64
C.S. = 601+49.84
S.T. =
CURVE DATA #2
P.I. = STA. 620+63.02
Δ = 25°08'55" RT
Dc = 01°28'00"
R = 3,906.53'
T = 871.38'
L = 1,714.68'
E = 96'
CURVE DATA #3
P.I. = STA. 624+39.66
Δ = 25°40'00" RT
Dc = 03°00'00"
R = 1,909.86'
Ls = 300.00'
θs = 04°30'00"
LT = 200.06'
ST = 100.06'
Lc = 555.56'
Ts = 585.50'
Es = 50.94'
Emax =
T.S. =
S.C. = 621+54.16
C.S. = 627+09.72
S.T. =
SEE CURVE & SPIRAL DATA #1
I-90 WB DIMENSIONS
RUBBLIZE & ROLL LIMITS
L = 3,400 FEET
LOR-90-11.385L
SFN 4704398
SEE CURVE & SPIRAL DATA #3
I-90 WB DIMENSIONS
LOR-2-10.70R
SFN 4700570
LOR-2-10.70L
SFN 4700554
BEGIN PAVEMENT REPLACEMENT ALONG SR-2 EB/WB
SR-2 WB DIMENSIONS
I-90 WB DIMENSIONS
SR-2 EB DIMENSIONS
NSA-A
I-90 EB DIMENSIONS
℄ CONST. I-90
SEE CURVE DATA #6
℄ CONST. SR-2 WB
℄ CONST. SR-2 EB
BEGIN PAVEMENT REPLACEMENT ALONG I-90 EB/WB
LOR-90-11.570R
SFN 4704371
I-90 WB DIMENSIONS
OHIO TURNPIKE TOLL BOOTH
SEE CURVE DATA #2
I-90 EB DIMENSIONS
SEE CURVE DATA #4
℄ CONST. I-90 WB
I-90 WB & SR-2 WB DIMENSIONS
℄ CONST. I-90 EB
LOR-90-11.780L
SFN 4704401
SEE CURVE & SPIRAL DATA #5
I-90 EB & SR-2 EB DIMENSIONS
U-TURN LOCATION
LOR-90-12.106L
SFN 4704355
RESURFACING LIMITS
LOR-90-12.560L
SFN 4704487
TYPICAL 3-LANE WIDENING DIMENSIONS
LOR-90-12.440R
SFN 4704444
LOR-90-12.560R
SFN 4704517
℄ CONST. SR-57 RAMP A
END PAVEMENT REPLACEMENT SR-57 RAMP A
LOR-90-13.200L
SFN 4710000
TYPICAL RAMP DIMENSIONS
℄ CONST. I-90/SR-2
END PAVEMENT REPLACEMENT SR-57 RAMP F
℄ CONST. SR-57 RAMP C
RESURFACING LIMITS
℄ CONST. SR-57 RAMP F
END PAVEMENT REPLACEMENT SR-57 RAMP C
LOR-90-13.200R
SFN 4710001
TYPICAL RAMP DIMENSIONS
END RESURFACING LIMITS SR-57 RAMP C
APPROACH SLAB OVERLAY
℄ CONST. SR-57 RAMP D
84" CULVERT (LINE PER SS837)
LOR-90-13.550L
SFN 4710002
END RESURFACING LIMITS SR-57 RAMP D
WIDENING SECTION DIMENSIONS
LOR-90-13.550R
SFN 4710003
APPROACH SLAB OVERLAY
CURVE DATA #7
P.I. = STA. 734+67.56
Δ = 59°49'51" LT
Dc = 01°59'22"
R = 2,879.81'
T = 1,657.00'
L = 3,007.23'
E = 442.68'
LOR-90-14.118L
SFN 4704665
SEE CURVE DATA #7
108" CULVERT (LINE PER SS837)
CURVE DATA #8
P.I. = STA. 765+82.20
Δ = 30°12'32" RT
Dc = 02°30'00"
R = 2,292.83'
Ls = 400.00'
θs = 05°00'00"
LT = 266.72'
ST = 133.43'
Lc = 1,048.36'
Ts = 950.18'
Es = 122.43'
Emax =
T.S. =
S.C. = 760+32.02
C.S. = 770+80.37
S.T. =
CURVE DATA #9
P.I. = STA. 831+91.93
Δ = 62°20'54" LT
Dc = 02°28'42"
R = 2,308.74'
T = 1,388.71'
L = 2,515.87'
E = 390.21'
SEE CURVE & SPIRAL DATA #8
LOR-90-14.254L
SFN 4704738
RESURFACING LIMITS
LOR-C17-33.70
SFN 4704789
LOR-90-14.430R
SFN 4704754
LOR-90-14.260R
SFN 4704738
NSA-E-EAST
NSA-F-SOUTH EXTENSION PER PTI COMMENT
℄ CONST. SR-254 RAMP K
℄ CONST. SR-254 RAMP J
TYPICAL RAMP DIMENSIONS CHANGE
INCREASED RAMP TURN LANE LENGTHS PER PTI COMMENTS
END PAVEMENT REPLACEMENT SR-254 RAMP J
END PAVEMENT REPLACEMENT SR-254 RAMP H
℄ CONST. SR-254 RAMP H
TYPICAL RAMP DIMENSIONS CHANGE PER PTI COMMENTS
SEE CURVE DATA #9
℄ CONST. SR-254 RAMP L
TYPICAL RAMP DIMENSIONS
END PAVEMENT REPLACEMENT SR-254 RAMP K
LOR-254-19.10
SFN 4706277
END PAVEMENT REPLACEMENT SR-254 RAMP L
INCREASED RAMP TURN LANE LENGTHS PER PTI COMMENTS
CURVE DATA (SR-254 RAMP H)
P.I. = STA. 815+24.57
Δ = 51°30'21" LT
Dc = 08°00'00"
R = 716.20'
Ls = 200.00'
θs = 08°00'00"
LT = 117.25'
ST = 63.30'
Lc = 411.28'
Ts = 413.34'
Es = 81.99'
Emax =
T.S. =
S.C. = 813+11.23
C.S. = 817+22.51
S.T. =
CURVE DATA (SR-254 RAMP J)
P.I. = STA. 824+38.98
Δ = 42°12'18" RT
Dc = 16°00'00"
R = 358.20'
Ls = 200.00'
T = 263.78'
E = 25.74'
CURVE DATA (SR-254 RAMP J)
P.I. = STA. 829+83.71
Δ = 32°03'19" LT
Dc = 08°00'00"
R = 716.20'
T = 205.74'
L = 400.68'
E = 28.93'
CURVE DATA (SR-254 RAMP J)
P.I. = STA. 834+38.17
Δ = 07°46'24" LT
Dc = 08°00'00"
R = 1,819.72'
T = 259.51'
L = 518.22'
E = 8.81'
CURVE DATA (SR-254 RAMP J)
P.I. = STA. 828+01.90
Δ = 17°48'00" LT
Dc = 08°00'00"
R = 358.19'
T = 56.08'
L = 111.25'
E = 4.36'
CURVE DATA (SR-254 RAMP K)
P.I. = STA. 833+22.35
Δ = 39°39'18" RT
Dc = 16°00'00"
R = 716.20'
Ls = 200.00'
θs = 08°00'00"
LT = 133.43'
ST = 66.79'
Lc = 295.69'
Ts = 359.03'
Es = 47.61'
Emax =
T.S. =
S.C. = 831+63.34
C.S. = 834+59.03
S.T. =
CURVE DATA (SR-254 RAMP L)
P.I. = STA. 815+93.76
Δ = 03°52'26" LT
Dc = 01°00'00"
R = 5,729.58'
T = 193.76'
L = 387.38'
E = 3.28'
CURVE DATA (SR-254 RAMP L)
P.I. = STA. 821+68.80
Δ = 23°15'50" RT
Dc = 08°00'00"
R = 716.20'
T = 147.43'
L = 290.8'
E = 15.02'
CURVE DATA (SR-254 RAMP L)
P.I. = STA. 826+72.28
Δ = 43°40'15" LT
Dc = 22°00'00"
R = 260.44'
T = 104.62'
L = 198.96'
E = 20.23'
CURVE DATA (SR-254 RAMP L)
P.I. = STA. 1037+44.89
Δ = 05°40'38" LT
Dc = 02°28'00"
R = 2,308.74'
T = 608.77'
L = 1,216.55'
E = 15.08'
LEGEND:
AVFS LOCATIONS (WATER QUANTITY & QUALITY TREATMENT)
VEGETATED BIO-FILTERS (WATER QUALITY)
RESURFACING LOCATIONS
APPROACH SLAB OVERLAY LOCATIONS
MOT RESURFACING LOCATIONS
RUBBLIZE & ROLL LOCATION
PROJECT WASTE AREAS
LOR-90-10.76 DESIGN-BUILD PTI SCHEMATIC
THE KOKOSING DBT
PID 107714
DATE: 02/14/2024
0
500
250
1000

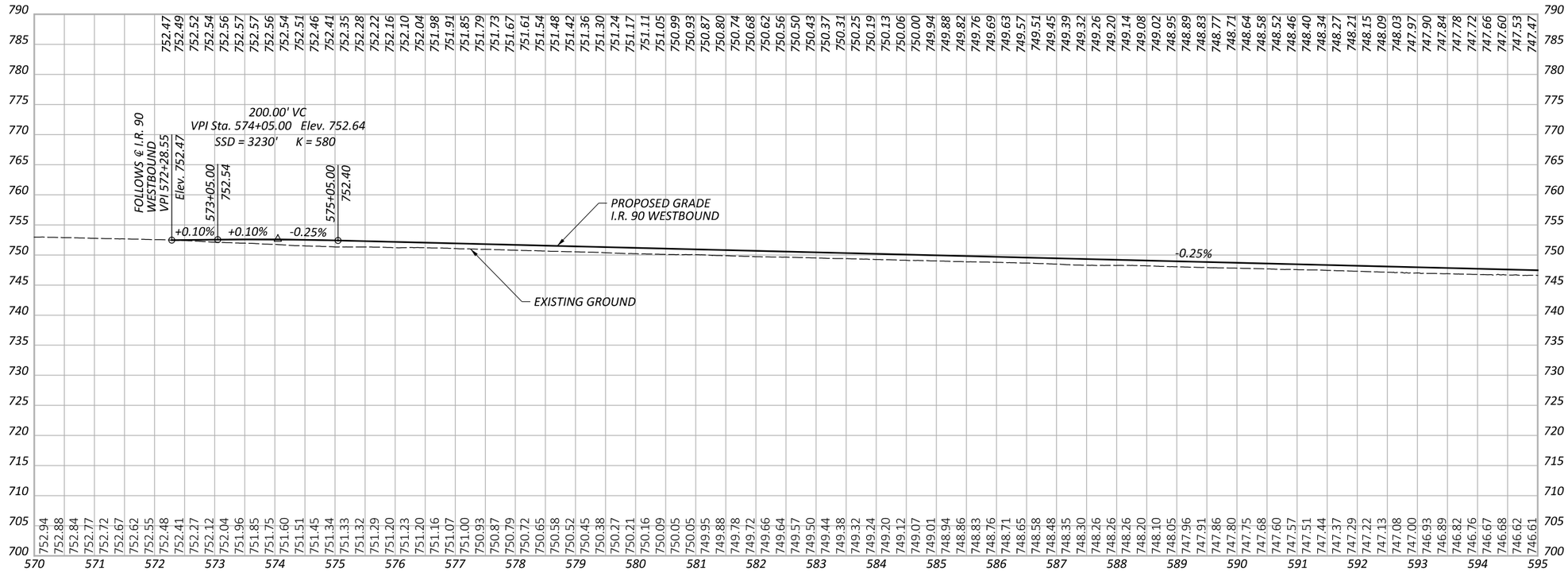

I.R. 90 WESTBOUND - 100 SCALE

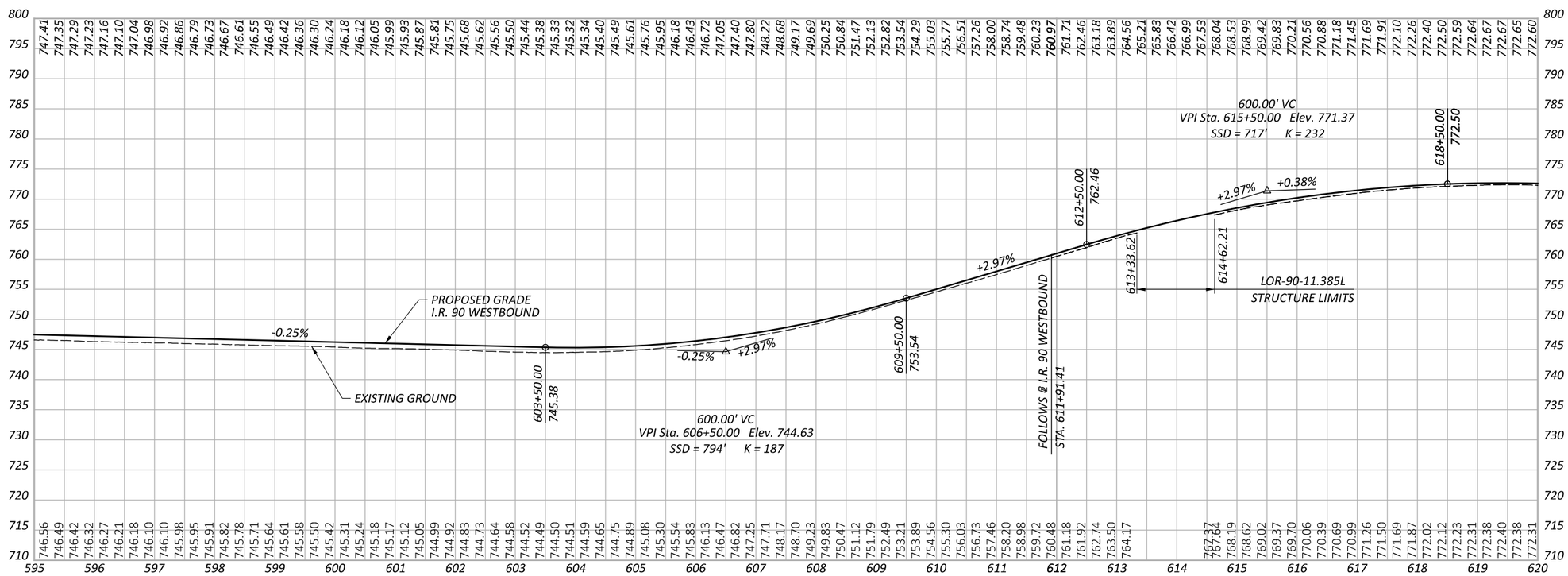

I.R. 90 WESTBOUND - 100 SCALE

THE KOKOSING DBT - B2

PROFILE - I.R. 90 WESTBOUND
STA. 572+28.55 TO STA. 620+00.00

LOR-90-10.76

MODEL: P_I090_WB_TP_1 - Profile 1 [Sheet] PAPERSIZE: 17x11 (in.) DATE: 2/3/2025 TIME: 1:30:17 PM USER: mlutes
P:_OHDOTCEx02_Worksets\107714\400-Engineering\Roadway\Sheets\107714_GF001_L.dgn

DESIGN AGENCY

E.L. ROBINSON ENGINEERING

1468 West 9th St, Suite 800
Cleveland, Ohio
950 Goodale Blvd, Suite 180
Grandview Heights, Ohio

DESIGNER	SWC
REVIEWER	MLL 01/14/25
PROJECT ID	107714
SHEET	1
TOTAL	16

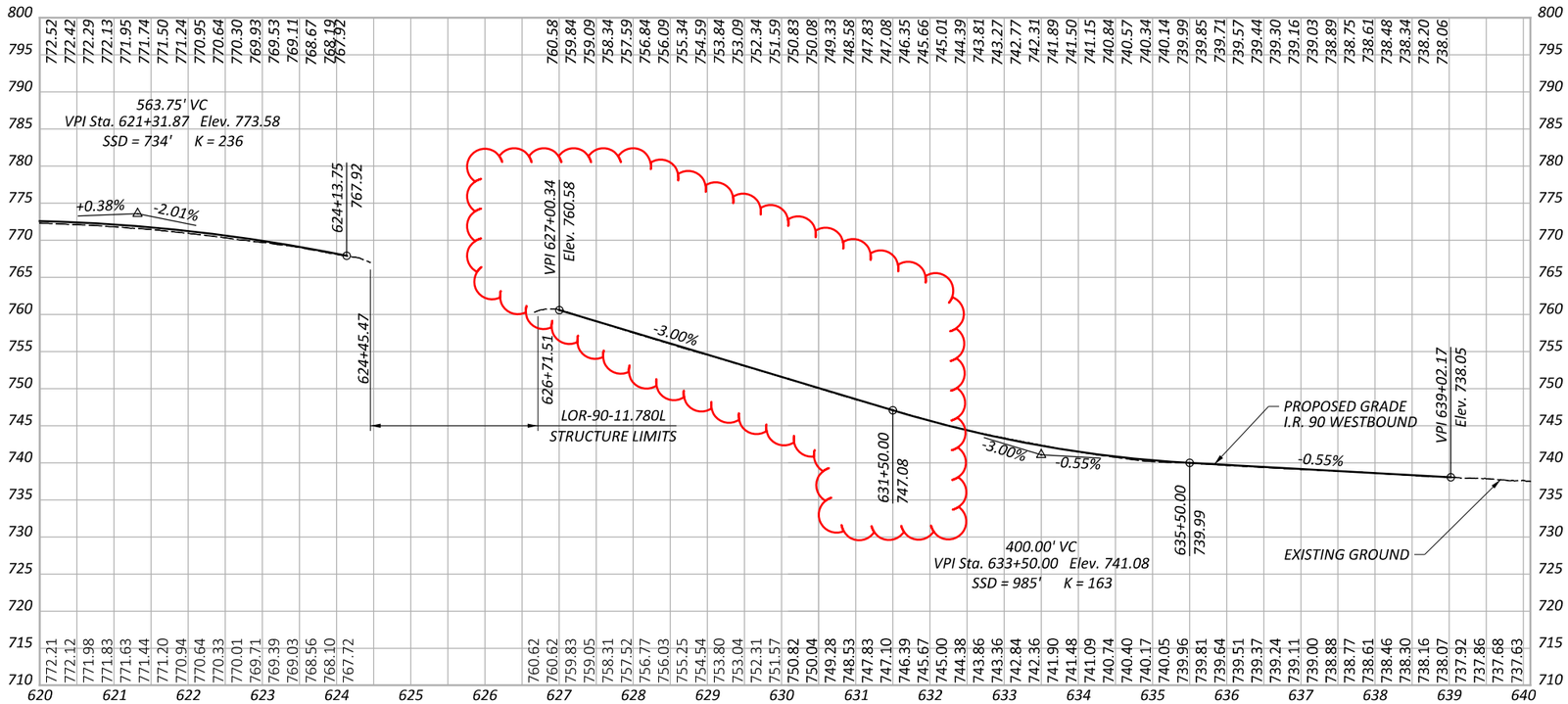

I.R. 90 WESTBOUND - 100 SCALE

PROFILE - I.R. 90 WESTBOUND
STA. 620+00.00 TO STA. 639+02.17

LOR-90-10.76

MODEL: P_I090_WB_TP_2 - Profile 1 [Sheet] PAPERSIZE: 17x11 (in.) DATE: 2/3/2025 TIME: 1:15:00 PM USER: mlutes
P:_OHDOTCEx02_Worksets\107714\400-Engineering\Roadway\Sheets\107714_GF001_L.dgn

DESIGN AGENCY
E.L. ROBINSON ENGINEERING
1468 West 9th St, Suite 800
Cleveland, Ohio
950 Goodale Blvd, Suite 180
Grandview Heights, Ohio

DESIGNER
SWC

REVIEWER
MLL 01/14/25

PROJECT ID
107714

SHEET 2 TOTAL 16

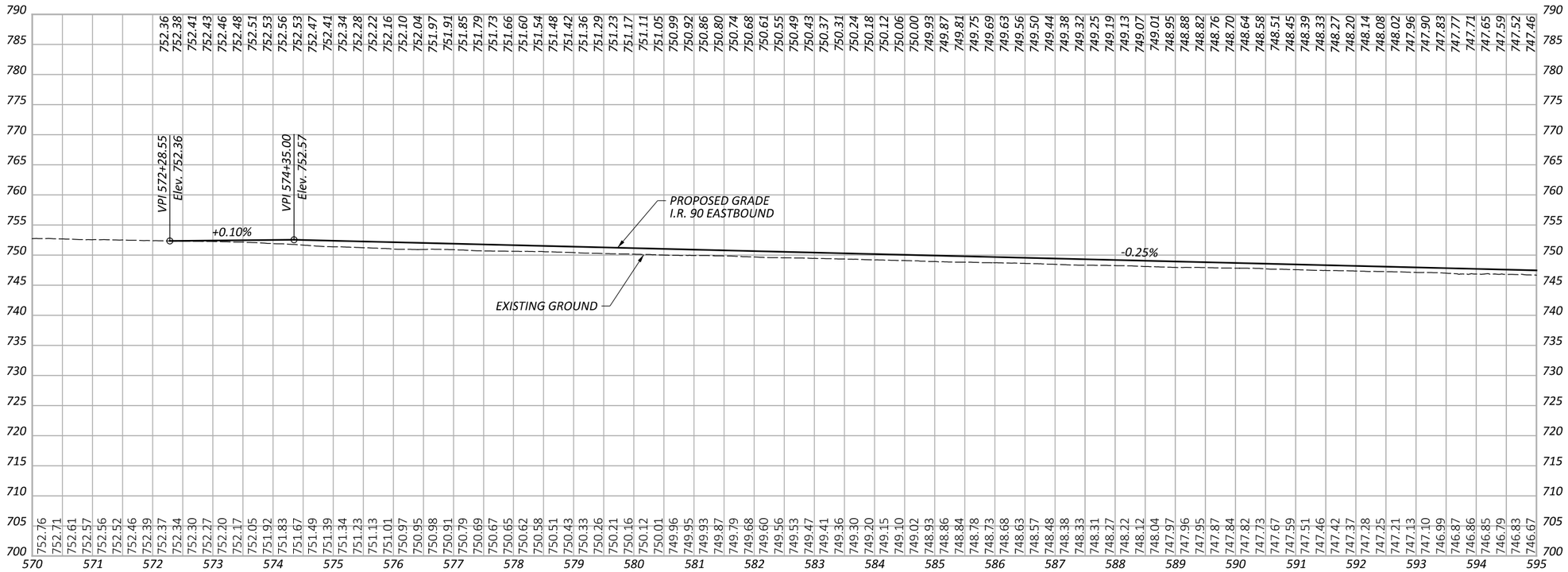

I.R. 90 EASTBOUND - 100 SCALE

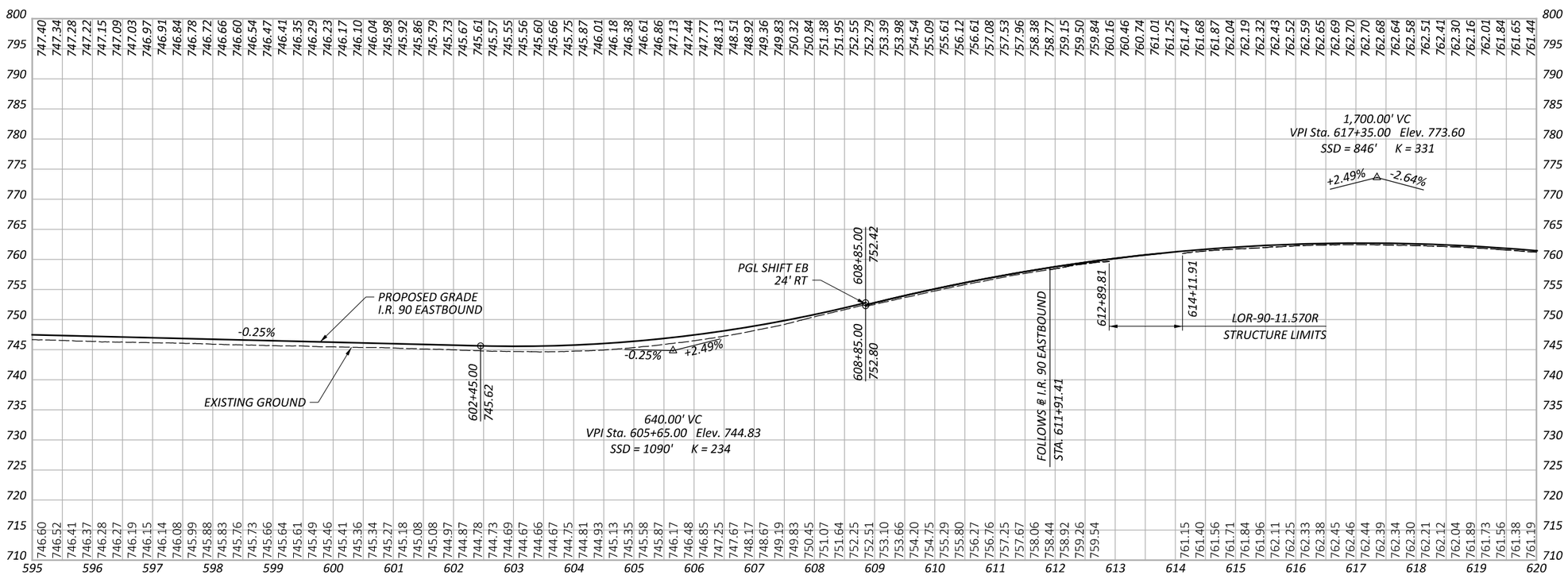

I.R. 90 EASTBOUND - 100 SCALE

THE KOKOSING DBT - B4

LOR-90-10.76

MODEL: P_I090_WB_TP_1 - Profile 1 [Sheet] PAPERSIZE: 17x11 (in.) DATE: 2/3/2025 TIME: 1:15:18 PM USER: mlutes
P:_OHDOTEv02_Worksets\107714\400-Engineering\Roadway\Sheets\107714_GF001_R.dgn

PROFILE - I.R. 90 EASTBOUND
STA. 572+28.55 TO STA. 620+00.00

DESIGN AGENCY

E.L. ROBINSON ENGINEERING
1468 West 9th St, Suite 800
Cleveland, Ohio
950 Goodale Blvd, Suite 180
Grandview Heights, Ohio

DESIGNER: SWC

REVIEWER: MLL 01/14/25

PROJECT ID: 107714

SHEET 3 TOTAL 16

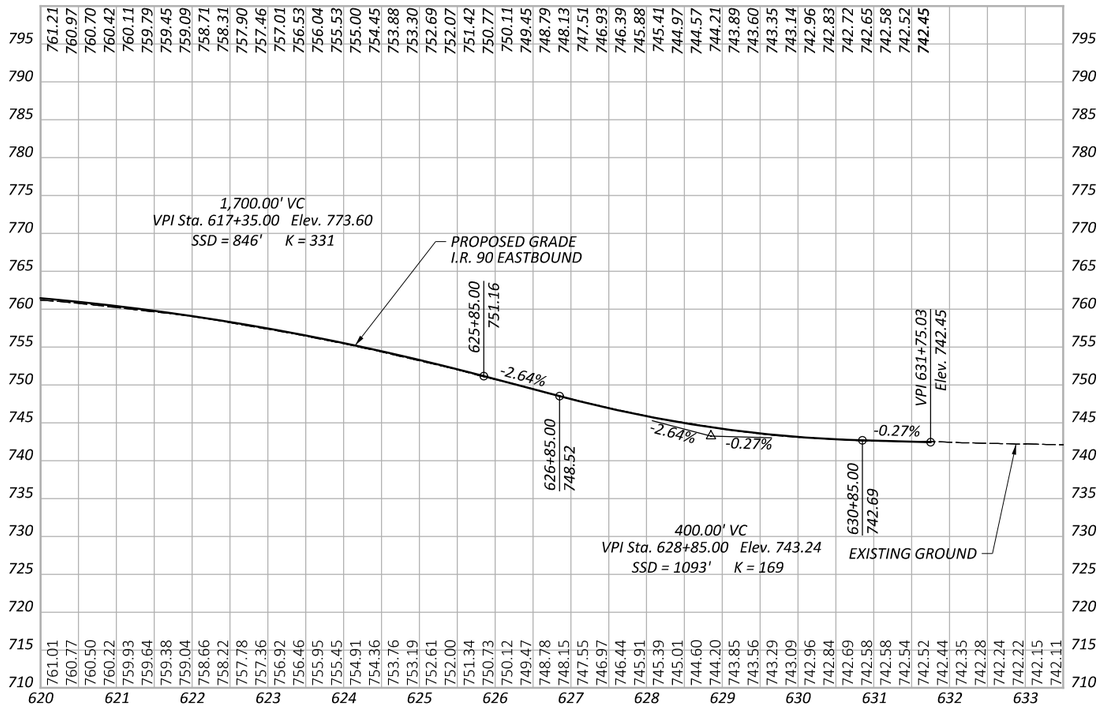

I.R. 90 EASTBOUND - 100 SCALE

PROFILE - I.R. 90 EASTBOUND
STA. 620+00.00 TO STA. 631+75.03

DESIGN AGENCY

E.L. ROBINSON ENGINEERING
1468 West 9th St, Suite 800
Cleveland, Ohio
950 Goodale Blvd, Suite 180
Grandview Heights, Ohio

DESIGNER
SWC

REVIEWER
MLL 01/14/25

PROJECT ID
107714

SHEET 4 TOTAL 16

LOR-90-10.76

MODEL: P_I090_EB_TP_2 - Profile 1 [Sheet] PAPERSIZE: 17X11 (in.) DATE: 2/3/2025 TIME: 1:15:19 PM USER: mlutes
P:_OHDOTCEx02_Worksets\107714\400-Engineering\Roadway\Sheets\107714_GF001_R.dgn

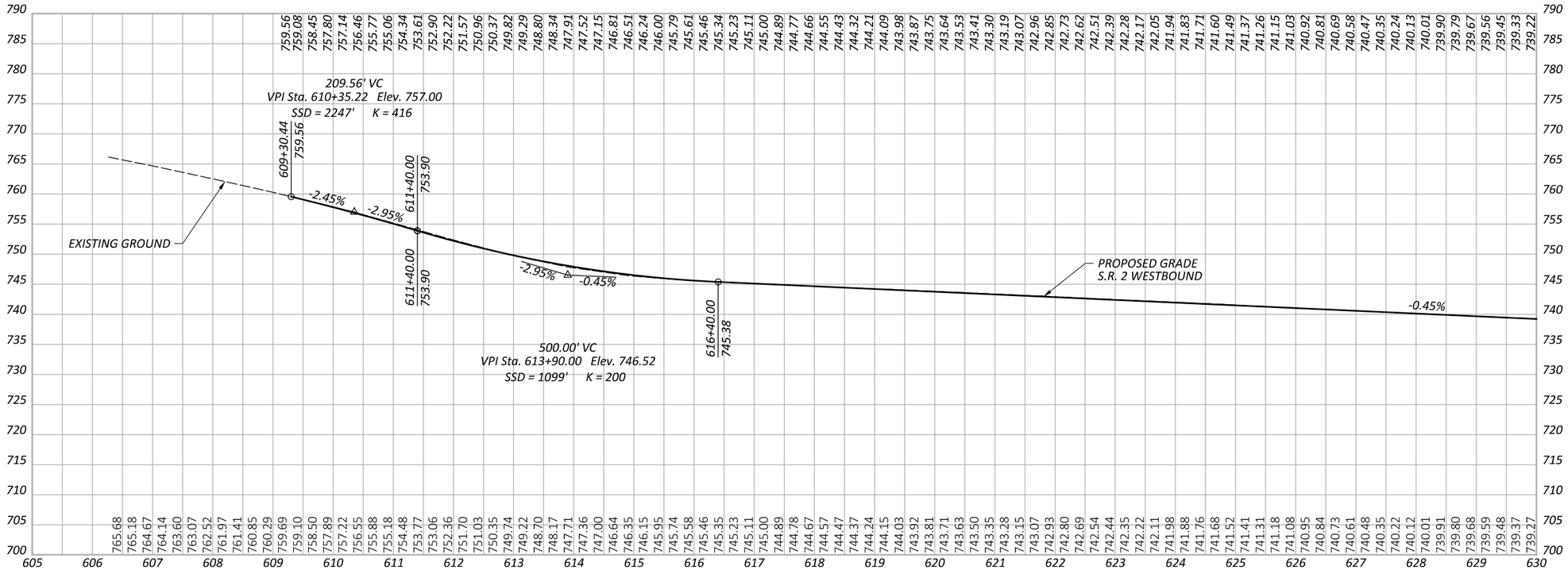

S.R. 2 WESTBOUND - 100 SCALE

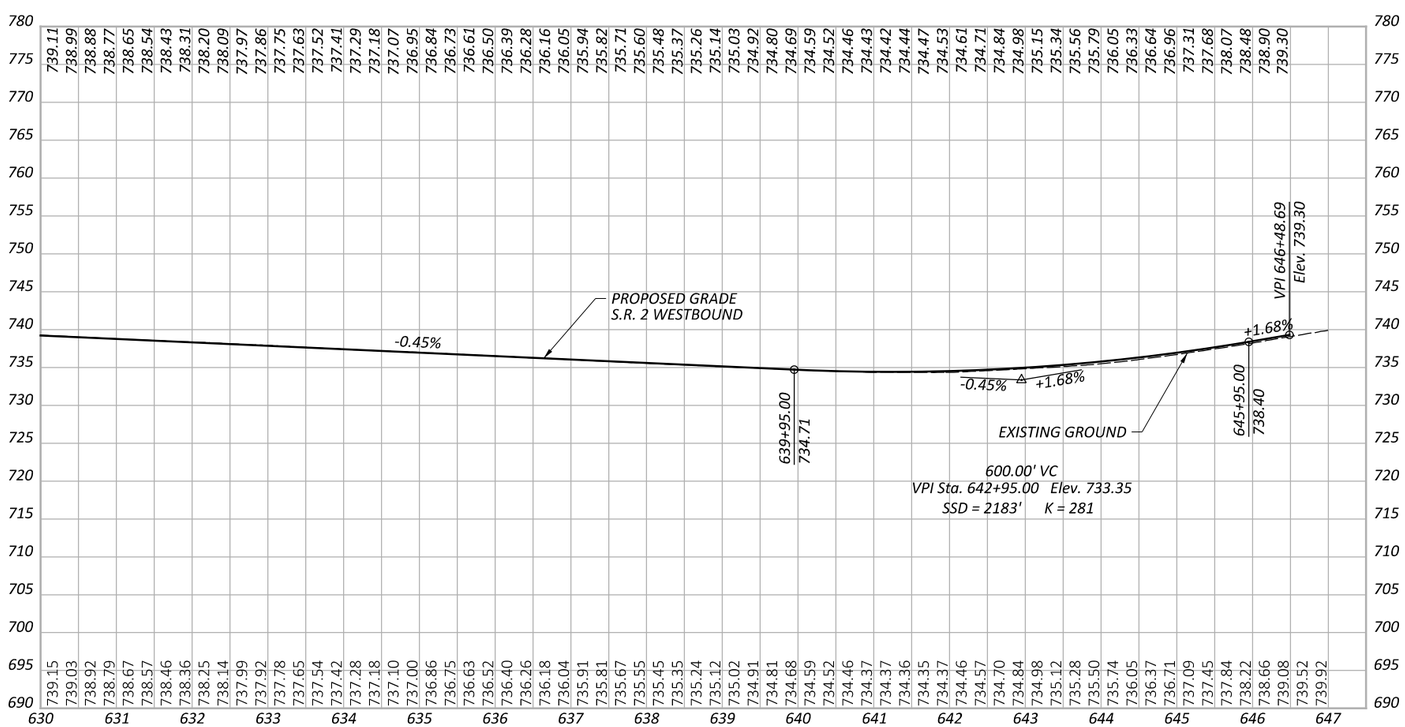

S.R. 2 WESTBOUND - 100 SCALE

THE KOKOSING DBT - B6

PROFILE - S.R. 2 WESTBOUND
STA. 609+30.44 TO STA. 646+48.69

DESIGN AGENCY

E.L. ROBINSON ENGINEERING
1468 West 9th St, Suite 800
Cleveland, Ohio
950 Goodale Blvd, Suite 180
Grandview Heights, Ohio

DESIGNER: SWC

REVIEWER: MLL 01/14/25

PROJECT ID: 107714

SHEET 5 TOTAL 16

LOR-90-10.76

MODEL: PGL - Profile 2 [Sheet] PAPERSIZE: 17x11 (in.) DATE: 2/3/2025 TIME: 1:16:42 PM USER: mlutes
P:_OHDOTCEv02_Worksets\107714\400-Engineering\Roadway\Sheets\107714_GF002_1.dgn

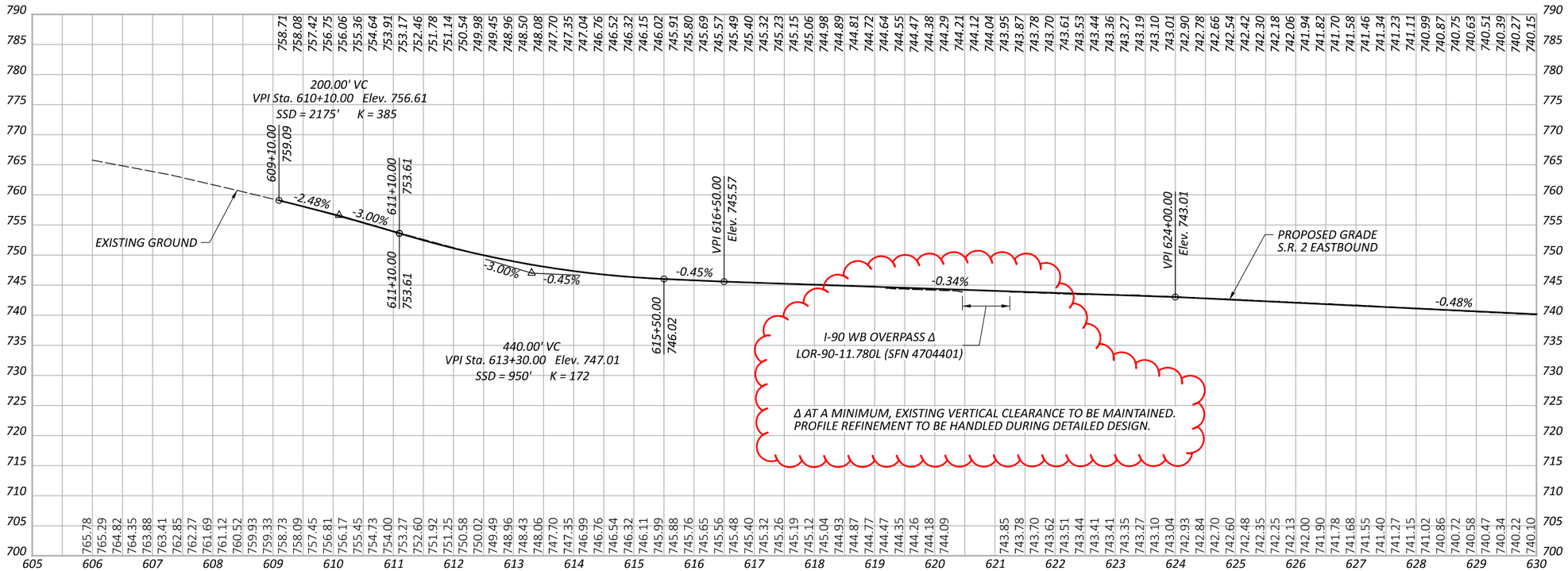

S.R. 2 EASTBOUND - 100 SCALE

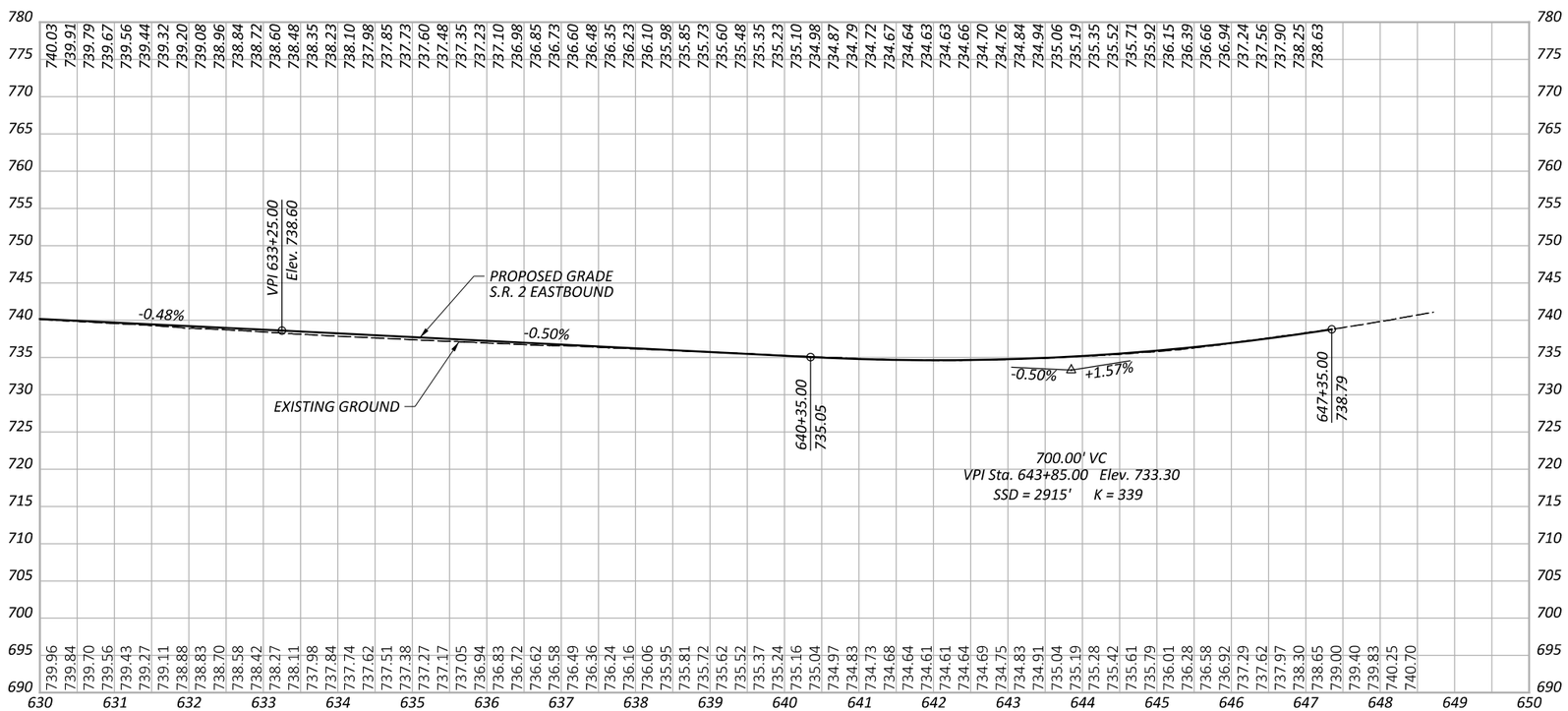

S.R. 2 EASTBOUND - 100 SCALE

THE KOKOSING DBT - B7

PROFILE - S.R. 2 EASTBOUND
STA. 609+10.00 TO STA. 647+35.00

DESIGN AGENCY

E.L. ROBINSON ENGINEERING
1468 West 9th St., Suite 800
Cleveland, Ohio
950 Goodale Blvd. Suite 180
Grandview Heights, Ohio

DESIGNER	SWC
REVIEWER	MLL 01/14/25
PROJECT ID	107714
SHEET	6
TOTAL	16

LOR-90-10.76

MODEL: PGL - Profile 2 [Sheet] PAPERSIZE: 17x11 (in.) DATE: 2/3/2025 TIME: 1:19:23 PM USER: mlutes
P:_OHDOTCEv02_Worksets\107714\V00-Engineering\Roadway\Sheets\107714_GF002_R.dgn

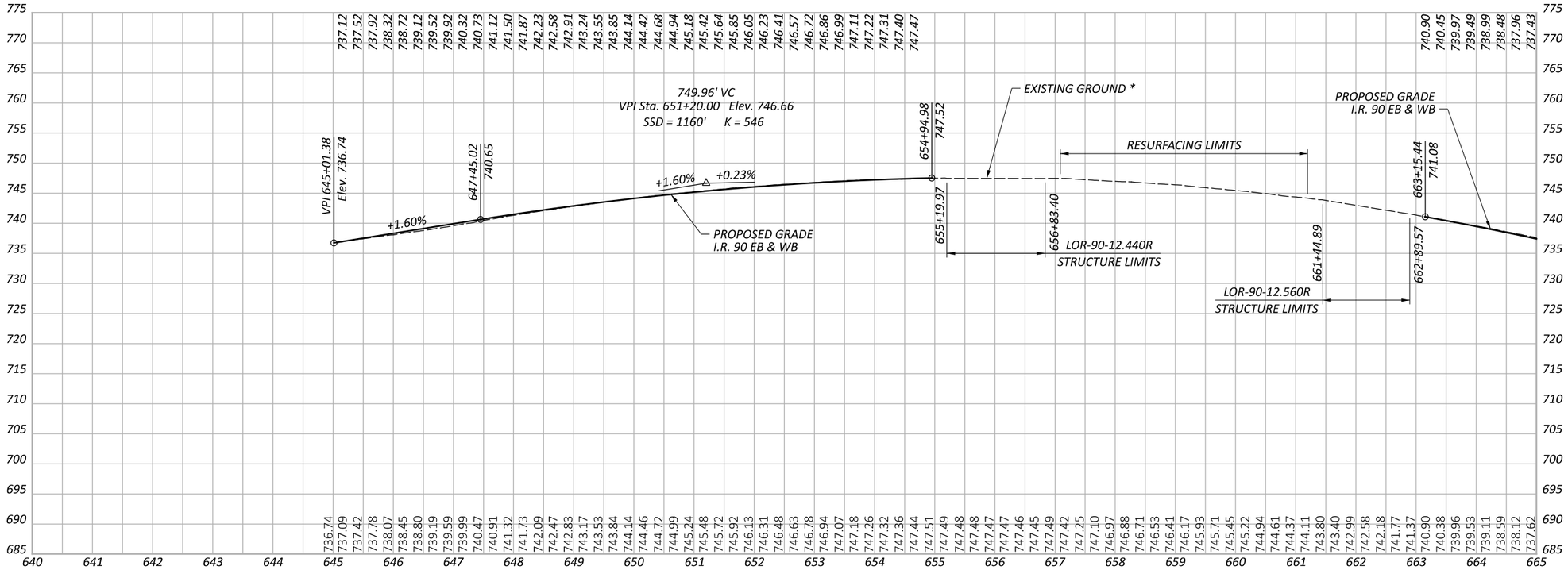

I.R. 90 - 100 SCALE

* EXISTING GROUND FOLLOWS RIGHT PGL

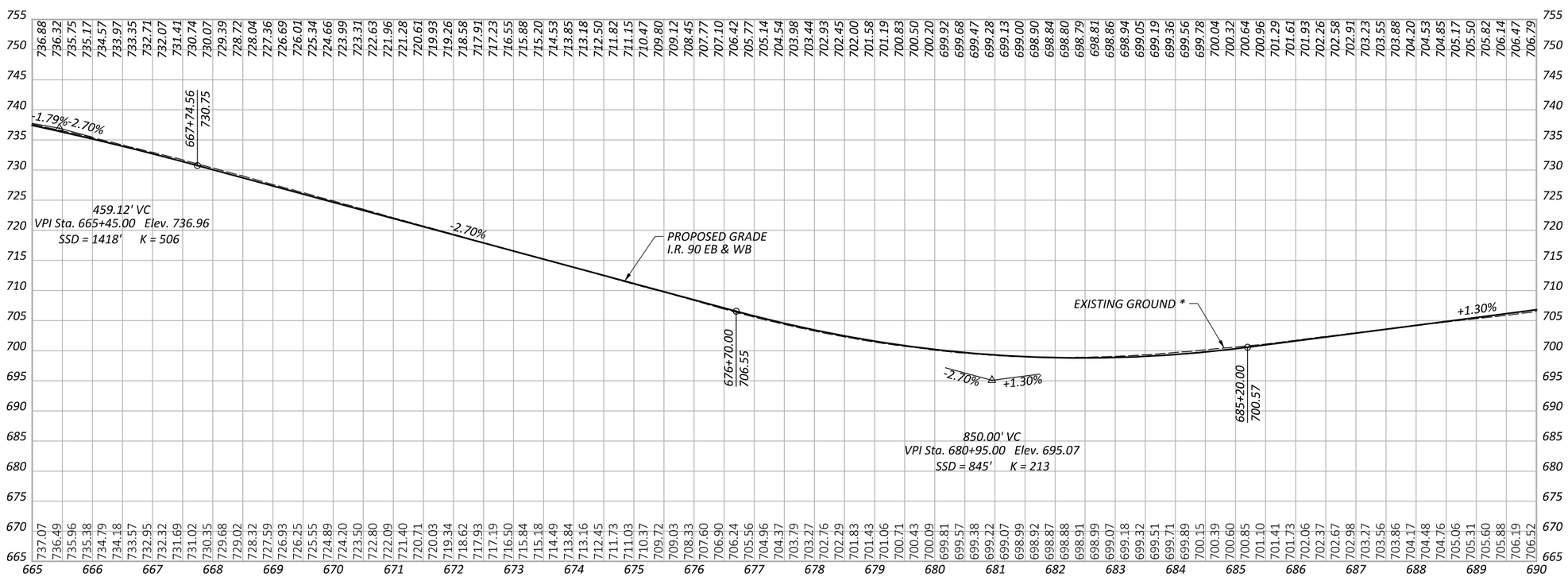

I.R. 90 - 100 SCALE

THE KOKOSING DBT - B8

PROFILE - I.R. 90

STA. 645+01.38 TO STA. 690+00.00

DESIGN AGENCY

E.L. ROBINSON ENGINEERING

1468 West 9th St, Suite 800
Cleveland, Ohio
950 Goodale Blvd, Suite 180
Grandview Heights, Ohio

DESIGNER: SWC

REVIEWER: MLL 01/14/25

PROJECT ID: 107714

SHEET 7 TOTAL 16

LOR-90-10.76

MODEL: Plan- - Profile 1 [Sheet] PAPERSIZE: 17x11 (in.) DATE: 2/3/2025 TIME: 1:19:29 PM USER: mlutes
P:_OHDOTCEv02_Worksets\107714\400-Engineering\Roadway\Sheets\107714_GF003.dgn

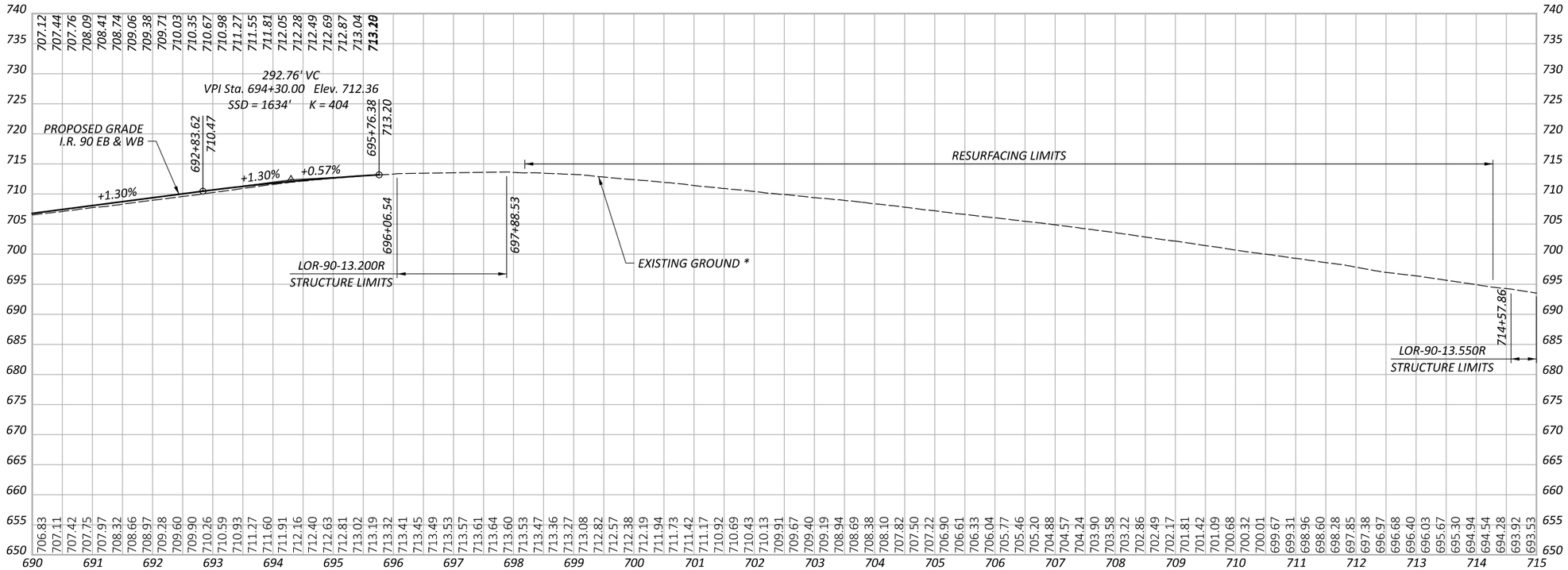

I.R. 90 - 100 SCALE

* EXISTING GROUND FOLLOWS RIGHT PGL

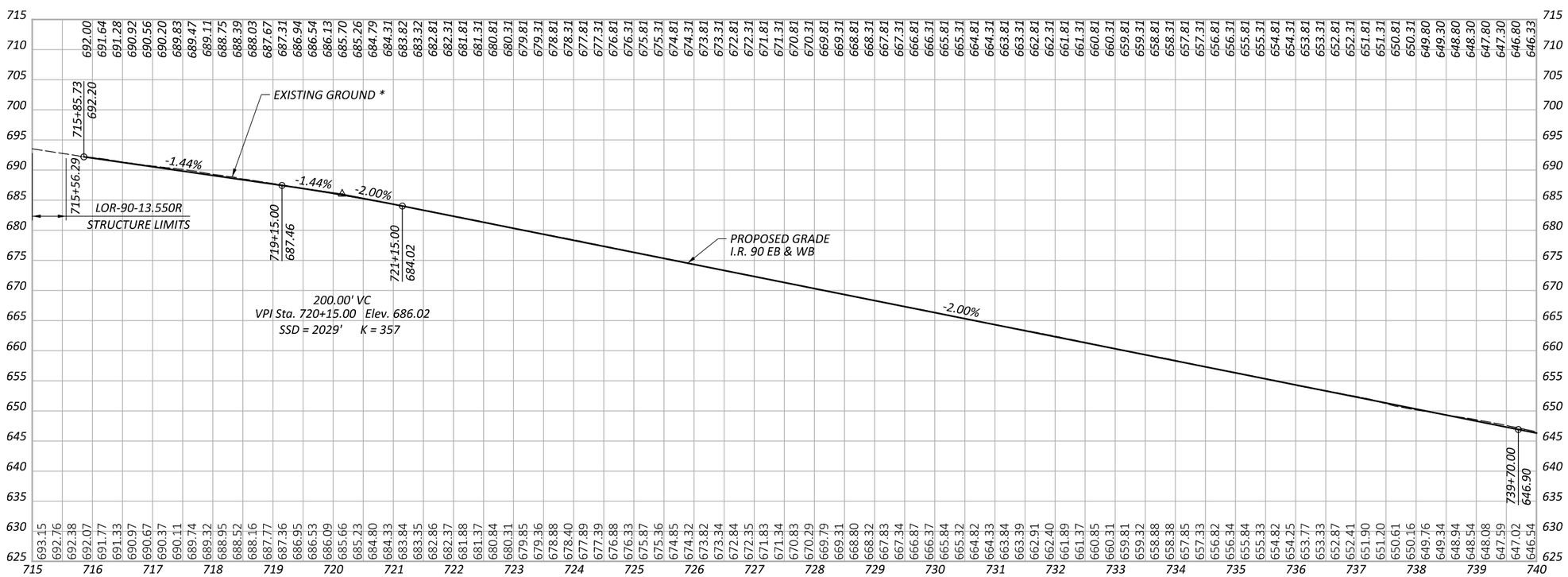

I.R. 90 - 100 SCALE

PROFILE - I.R. 90

STA. 690+00.00 TO STA. 740+00.00

LOR-90-10.76

MODEL: Plan - Profile 3 [Sheet] PAPERSIZE: 17X11 (in.) DATE: 2/3/2025 TIME: 1:19:31 PM USER: mlutes
P:_OHDOTCEx02_Worksets\107714\400-Engineering\Roadway\Sheets\107714_GF003.dgn

DESIGN AGENCY

E.L. ROBINSON ENGINEERING

1468 West 9th St, Suite 800
Cleveland, Ohio
950 Goodale Blvd, Suite 180
Grandview Heights, Ohio

DESIGNER	SWC
REVIEWER	MLL 01/14/25
PROJECT ID	107714
SHEET	8
TOTAL	16

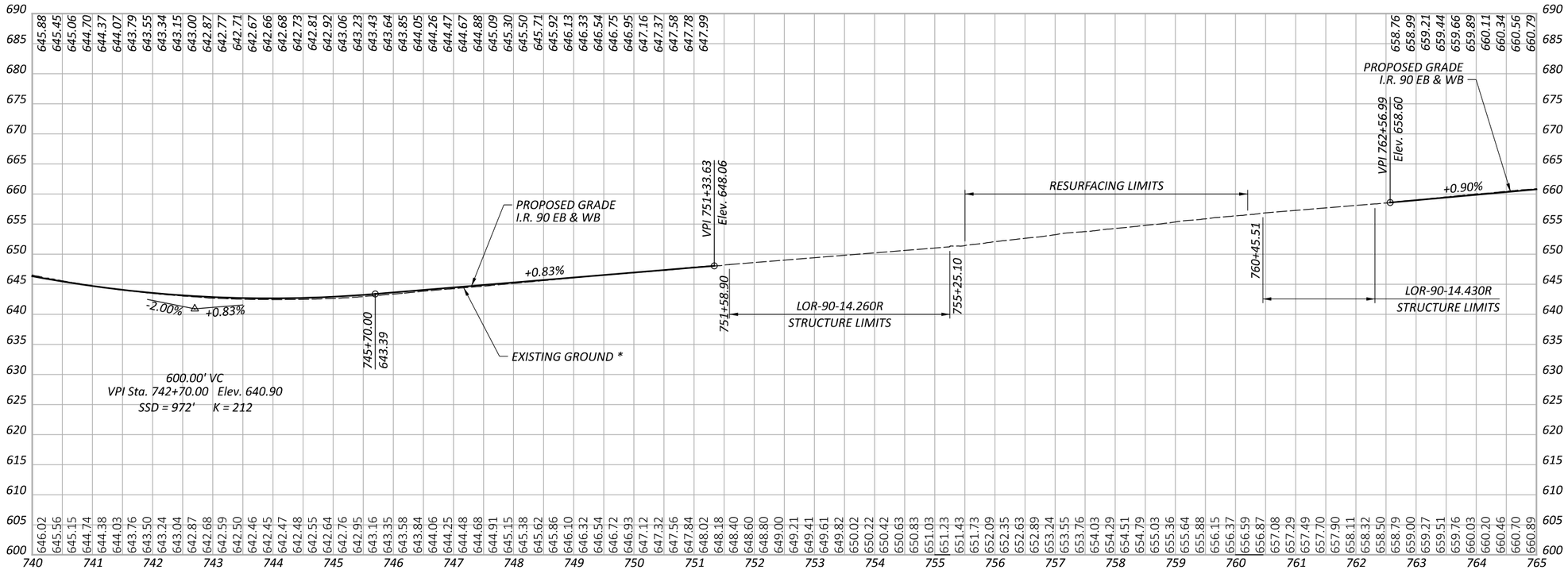

I.R. 90 - 100 SCALE * EXISTING GROUND FOLLOWS RIGHT PGL

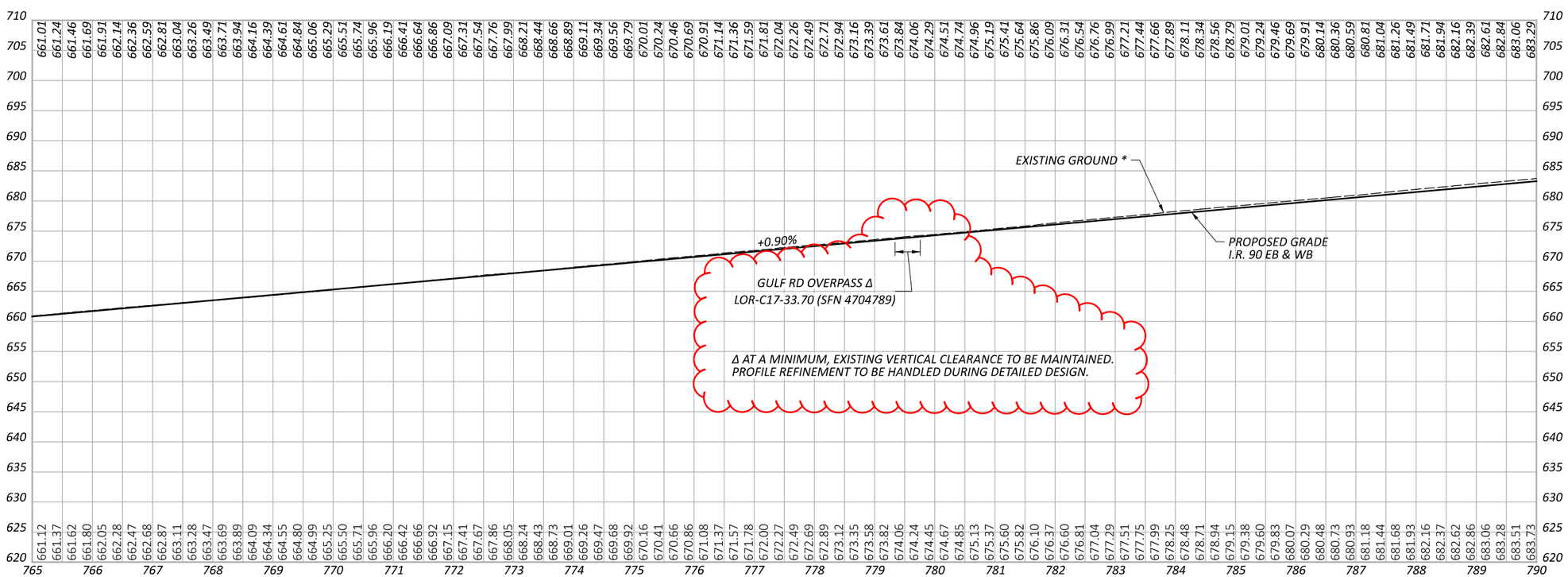

I.R. 90 - 100 SCALE

THE KOKOSING DBT - B10

PROFILE - I.R. 90

STA. 740+00.00 TO STA. 790+00.00

DESIGN AGENCY

E.L. ROBINSON ENGINEERING

1468 West 9th St, Suite 800
Cleveland, Ohio
950 Goodale Blvd, Suite 180
Grandview Heights, Ohio

DESIGNER: SWC

REVIEWER: MLL 01/14/25

PROJECT ID: 107714

SHEET 9 TOTAL 16

LOR-90-10.76

MODEL: Plan - Profile 5 [Sheet] PAPERSIZE: 17x11 (in.) DATE: 2/3/2025 TIME: 1:19:33 PM USER: mlutes
P:_OHDOTCEx02_Worksets\107714\400-Engineering\Roadway\Sheets\107714_GF003.dgn

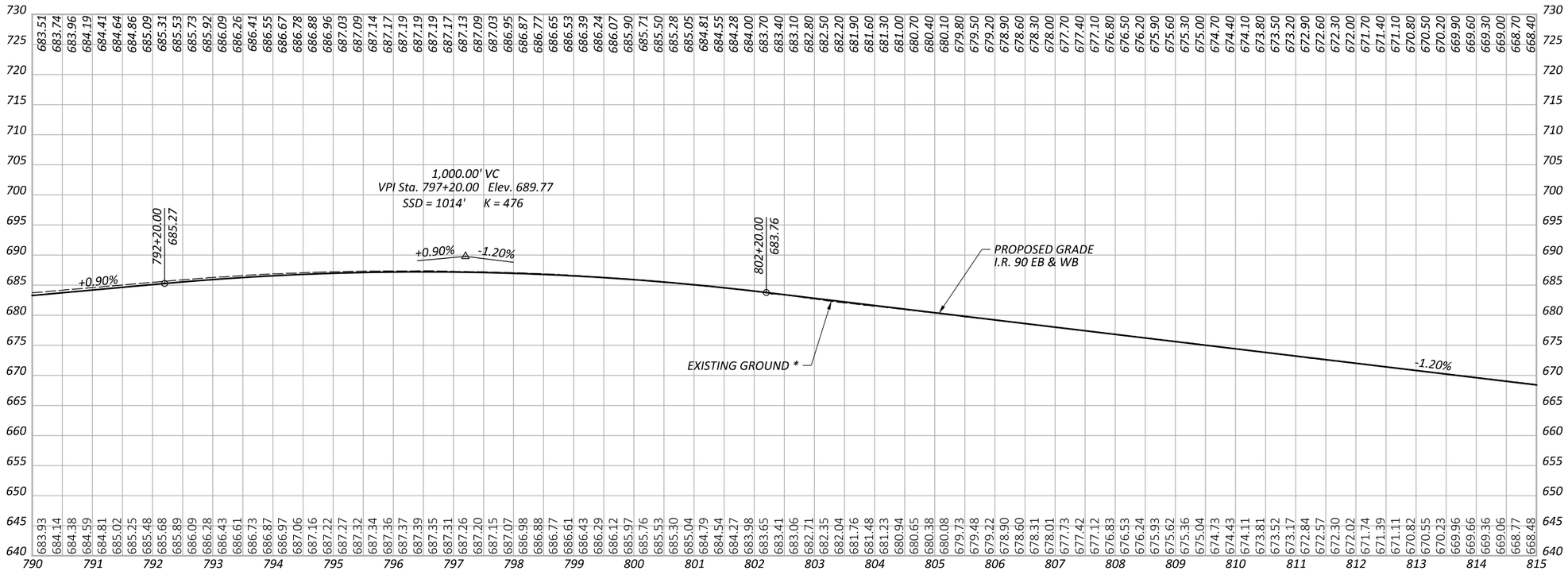

I.R. 90 - 100 SCALE

* EXISTING GROUND FOLLOWS RIGHT PGL

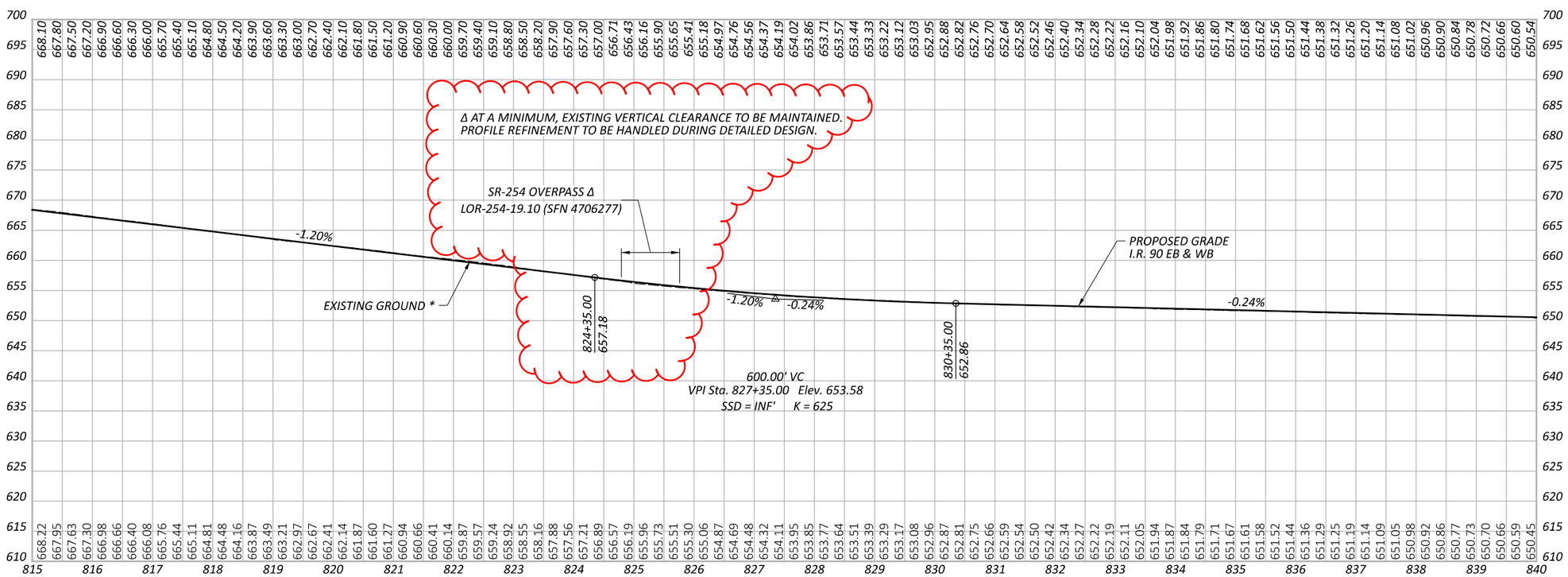

I.R. 90 - 100 SCALE

PROFILE - I.R. 90

STA. 790+00.00 TO STA. 840.00.00

DESIGN AGENCY

E.L. ROBINSON ENGINEERING

1468 West 9th St., Suite 800
Cleveland, Ohio
950 Goodale Blvd., Suite 180
Grandview Heights, Ohio

DESIGNER: SWC

REVIEWER: MLL 01/14/25

PROJECT ID: 107714

SHEET 10 TOTAL 16

LOR-90-10.76

MODEL: Plan - Profile 7 [Sheet] PAPERSIZE: 17x11 (in.) DATE: 2/3/2025 TIME: 1:19:35 PM USER: mlutes
P:_OHDOTCEx02_Worksets\107714\400-Engineering\Roadway\Sheets\107714_GF003.dgn

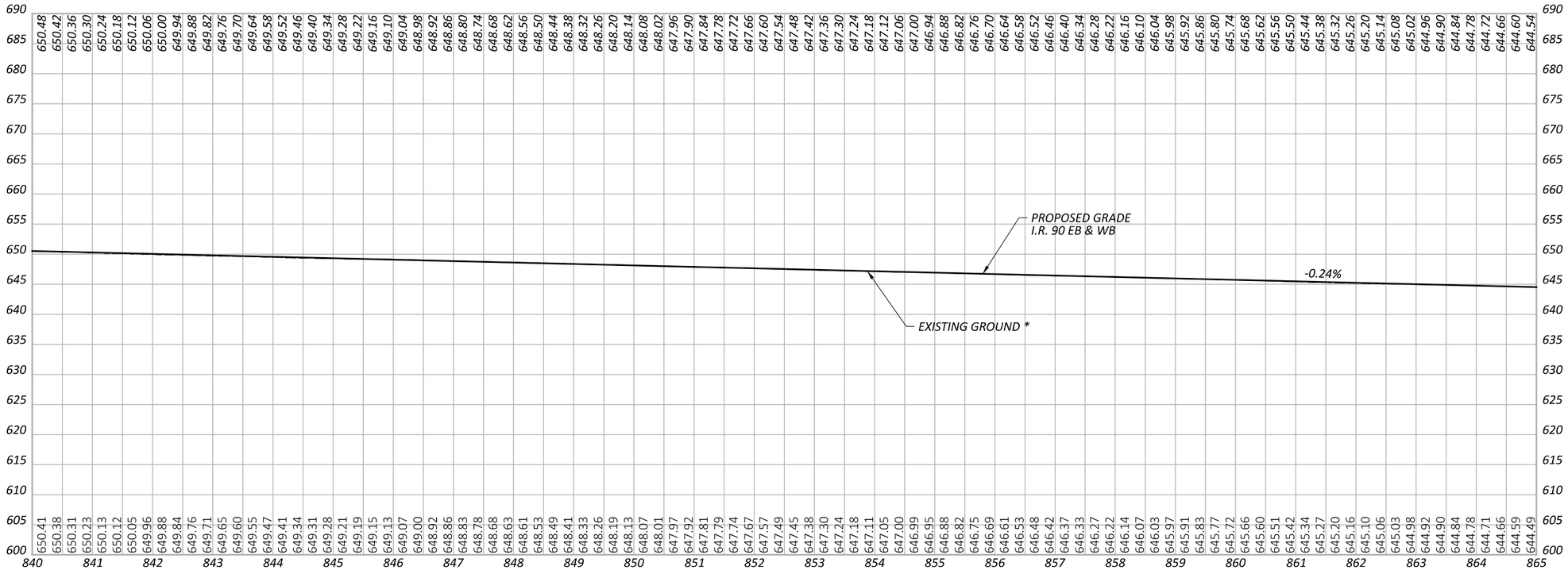

I.R. 90 - 100 SCALE

* EXISTING GROUND FOLLOWS RIGHT PGL

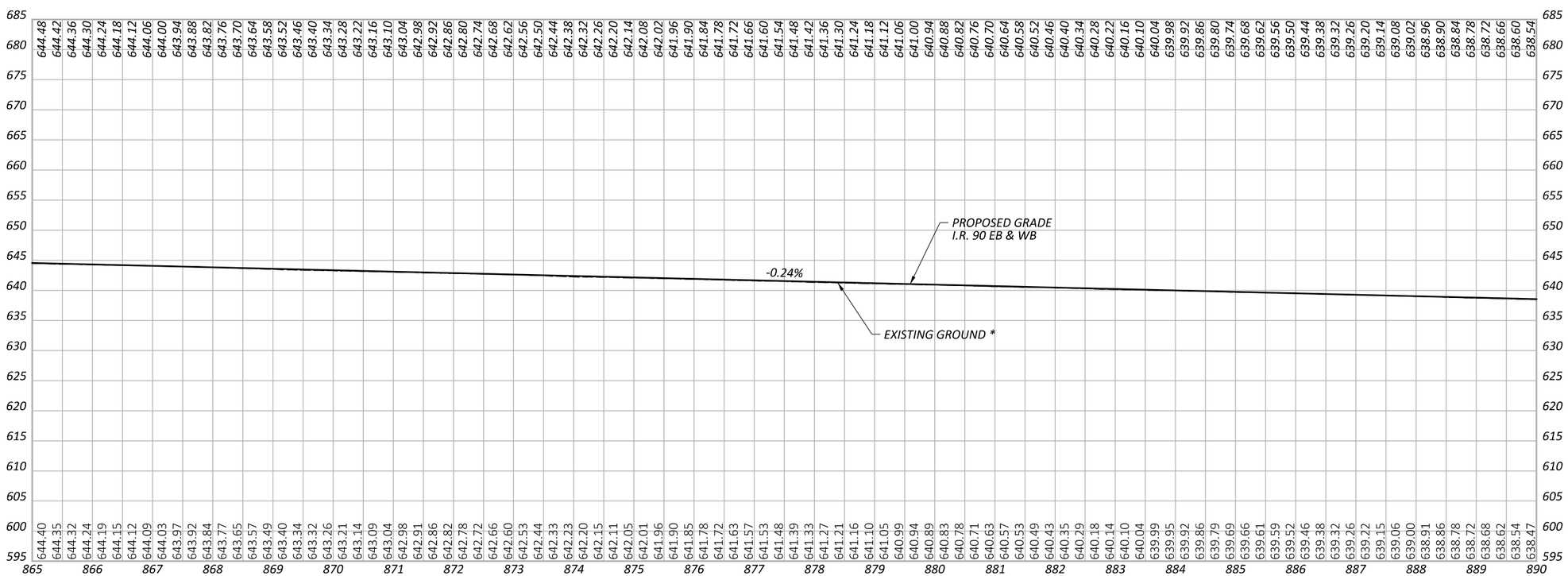

I.R. 90 - 100 SCALE

THE KOKOSING DBT - B12

PROFILE - I.R. 90

STA. 840.00.00 TO STA. 890+00.00

DESIGN AGENCY

E.L. ROBINSON ENGINEERING

1468 West 9th St., Suite 800
Cleveland, Ohio
950 Goodale Blvd., Suite 180
Grandview Heights, Ohio

DESIGNER: SWC

REVIEWER: MLL 01/14/25

PROJECT ID: 107714

SHEET 11 | TOTAL 16

LOR-90-10.76

MODEL: Plan - Profile 9 [Sheet] PAPERSIZE: 17X11 (in.) DATE: 2/3/2025 TIME: 1:19:37 PM USER: mlutes
P:_OHDOTCEx02_Worksets\107714\400-Engineering\Roadway\Sheets\107714_GF003.dgn

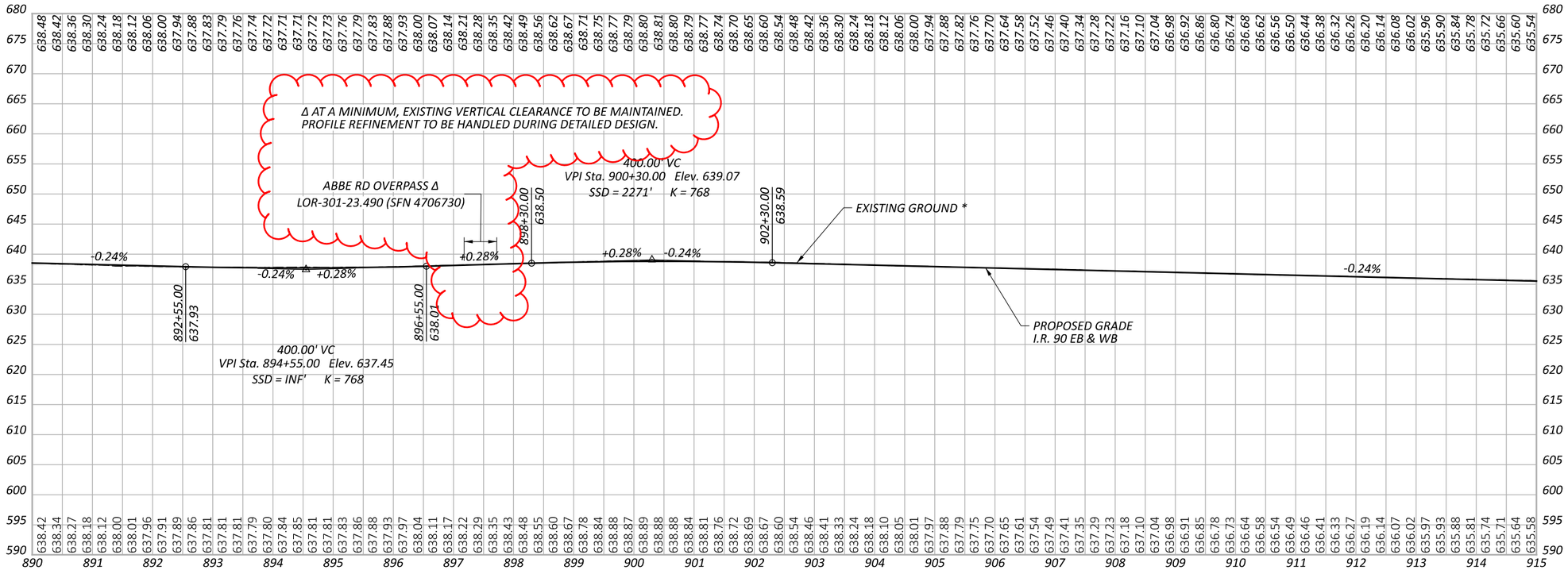

I.R. 90 - 100 SCALE

* EXISTING GROUND FOLLOWS RIGHT PGL

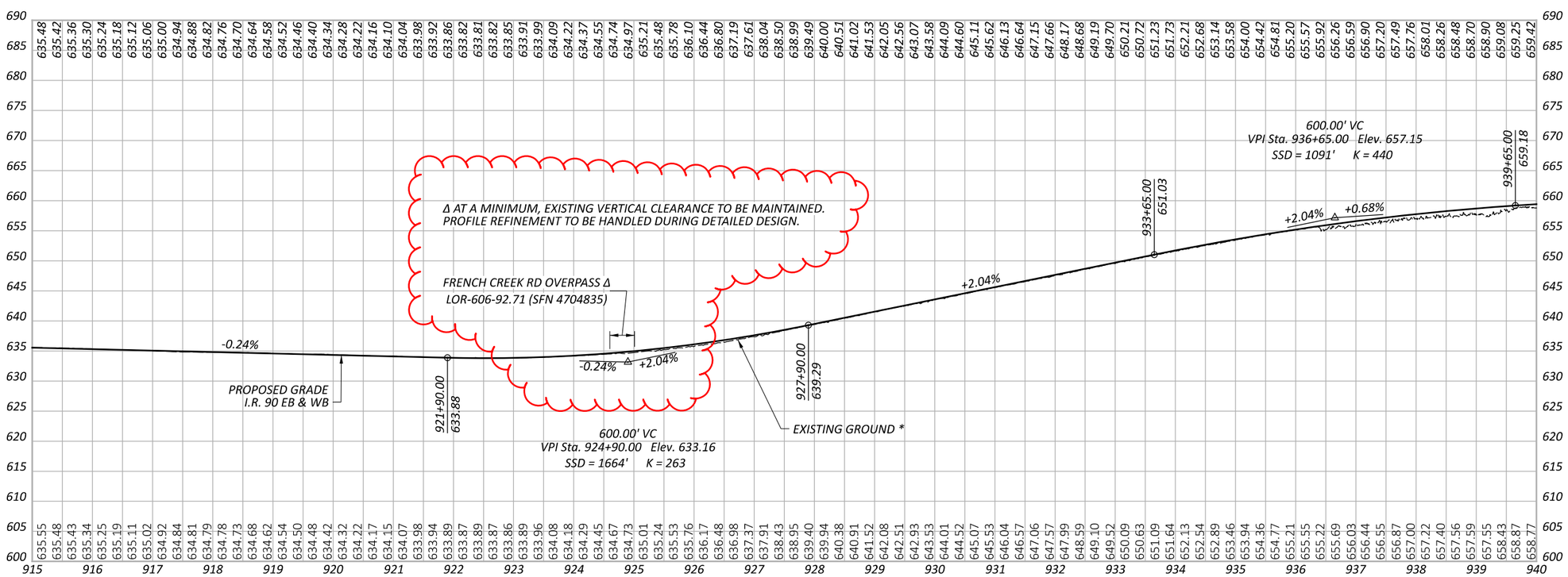

I.R. 90 - 100 SCALE

PROFILE - I.R. 90

STA. 890+00.00 TO STA. 940+00.00

DESIGN AGENCY

E.L. ROBINSON ENGINEERING

1468 West 9th St., Suite 800
Cleveland, Ohio
950 Goodale Blvd. Suite 180
Grandview Heights, Ohio

DESIGNER	SWC
REVIEWER	MLL 01/14/25
PROJECT ID	107714
SHEET	12
TOTAL	16

LOR-90-10.76

MODEL: Plan - Profile 11 [Sheet] PAPERSIZE: 17x11 (in.) DATE: 2/3/2025 TIME: 1:50:41 PM USER: mlutes
P:_OHDOTCEx02_Worksets\107714\400-Engineering\Roadway\Sheets\107714_GF003.dgn

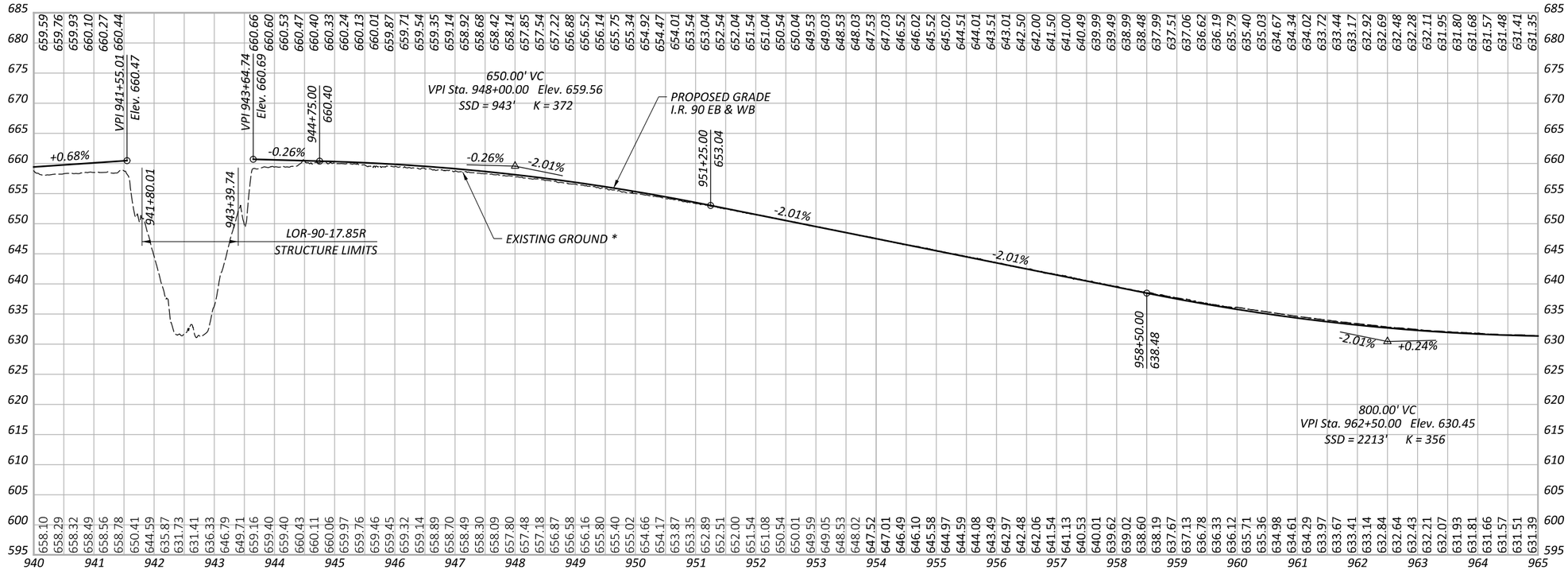

I.R. 90 - 100 SCALE

* EXISTING GROUND FOLLOWS RIGHT PGL

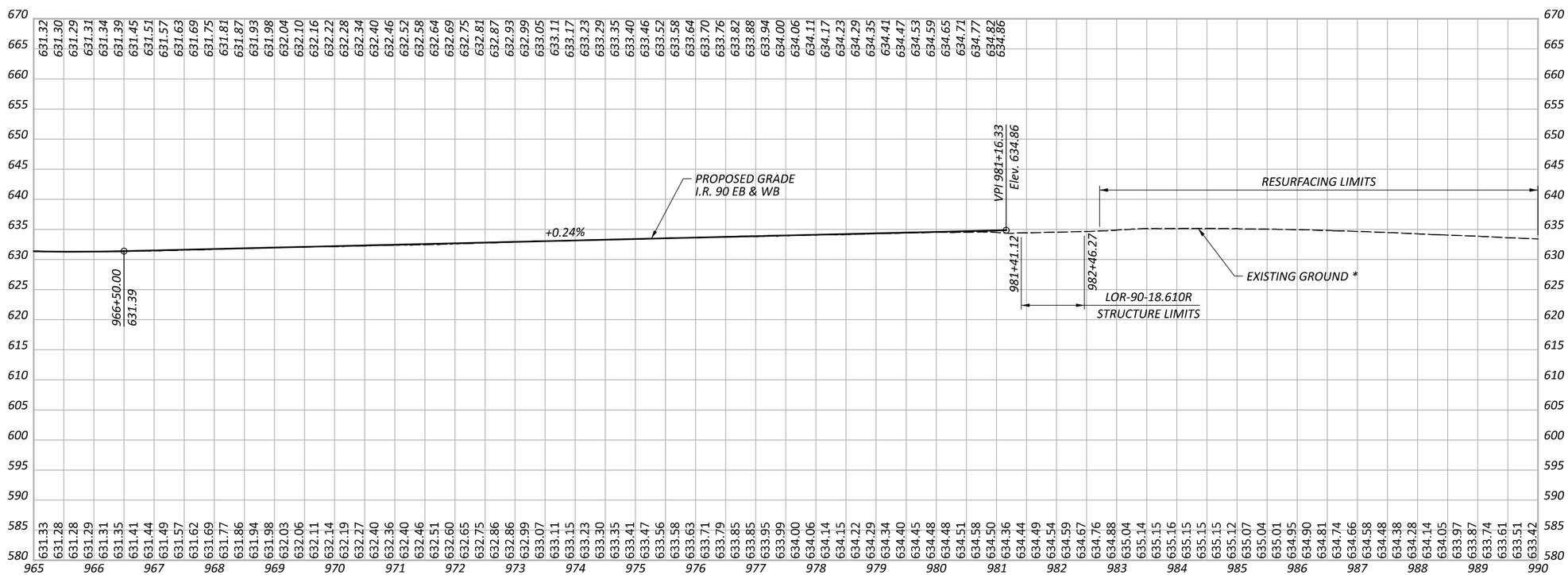

I.R. 90 - 100 SCALE

THE KOKOSING DBT - B14

PROFILE - I.R. 90

STA. 940+00.00 TO STA.990+00.00

LOR-90-10.76

MODEL: Plan-1 - Profile 1 [Sheet] PAPERSIZE: 17x11 (in.) DATE: 2/3/2025 TIME: 1:19:41 PM USER: mlutes
P:_OHDOTCEv02_Worksets\107714\400-Engineering\Roadway\Sheets\107714_GF003.dgn

DESIGN AGENCY

E.L. ROBINSON ENGINEERING

1468 West 9th St., Suite 800
Cleveland, Ohio
950 Goodale Blvd, Suite 180
Grandview Heights, Ohio

DESIGNER	SWC
REVIEWER	MLL 01/14/25
PROJECT ID	107714
SHEET	13
TOTAL	16

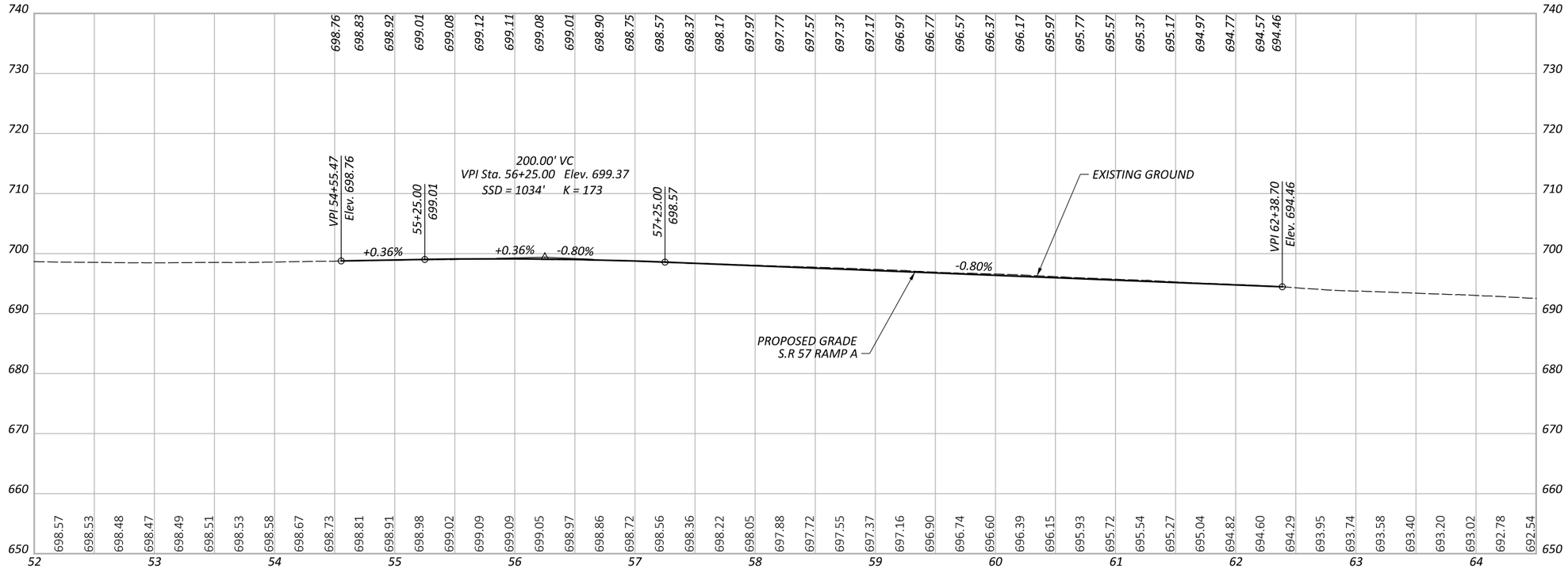

S.R. 57 RAMP A - 50 SCALE

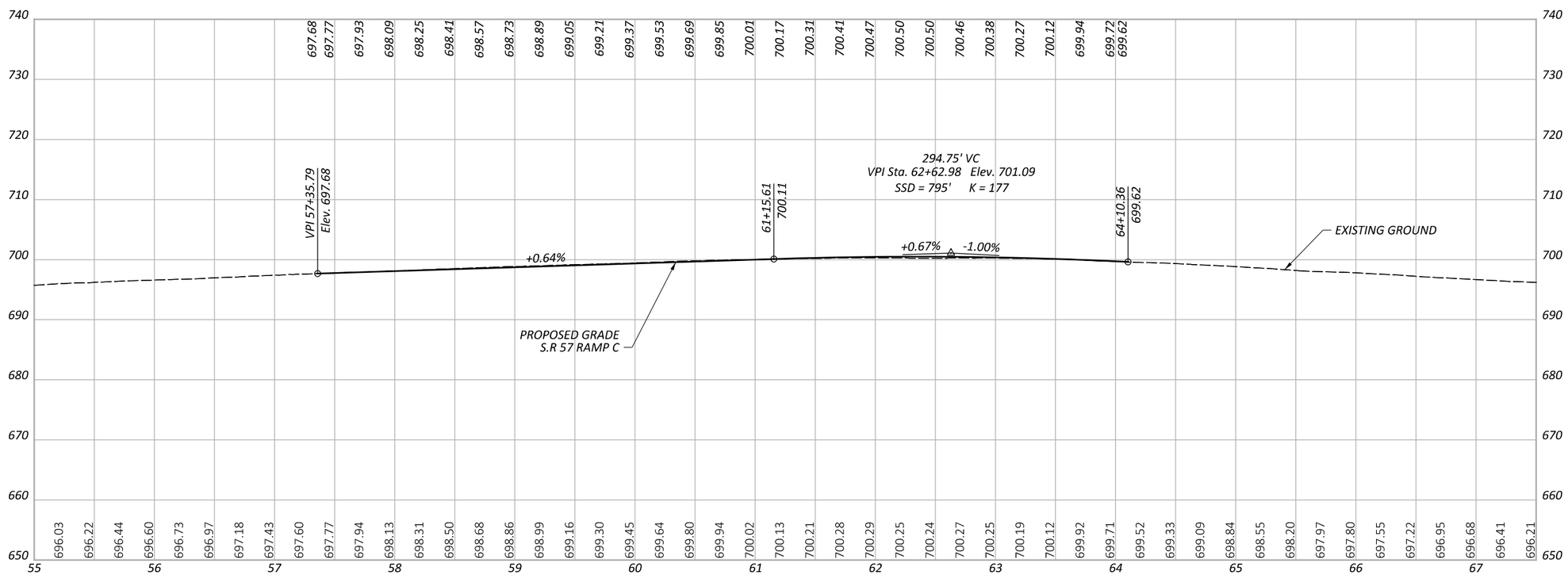

S.R. 57 RAMP C - 50 SCALE

THE KOKOSING DBT - B15

PROFILE - S.R 57 RAMPS
BEGIN WORK TO END WORK

DESIGN AGENCY

E.L. ROBINSON ENGINEERING

1468 West 9th St, Suite 800
Cleveland, Ohio
950 Goodale Blvd, Suite 180
Grandview Heights, Ohio

DESIGNER	SWC
REVIEWER	MLL 01/14/25
PROJECT ID	107714
SHEET	14
TOTAL	16

LOR-90-10.76

MODEL: SR 57 Ramps PAPERSIZE: 17x11 (in.) DATE: 2/3/2025 TIME: 1:20:30 PM USER: mlutes
P:_OHDOTCEv02_Worksets\107714\400-Engineering\Roadway\Sheets\107714_GF200.dgn

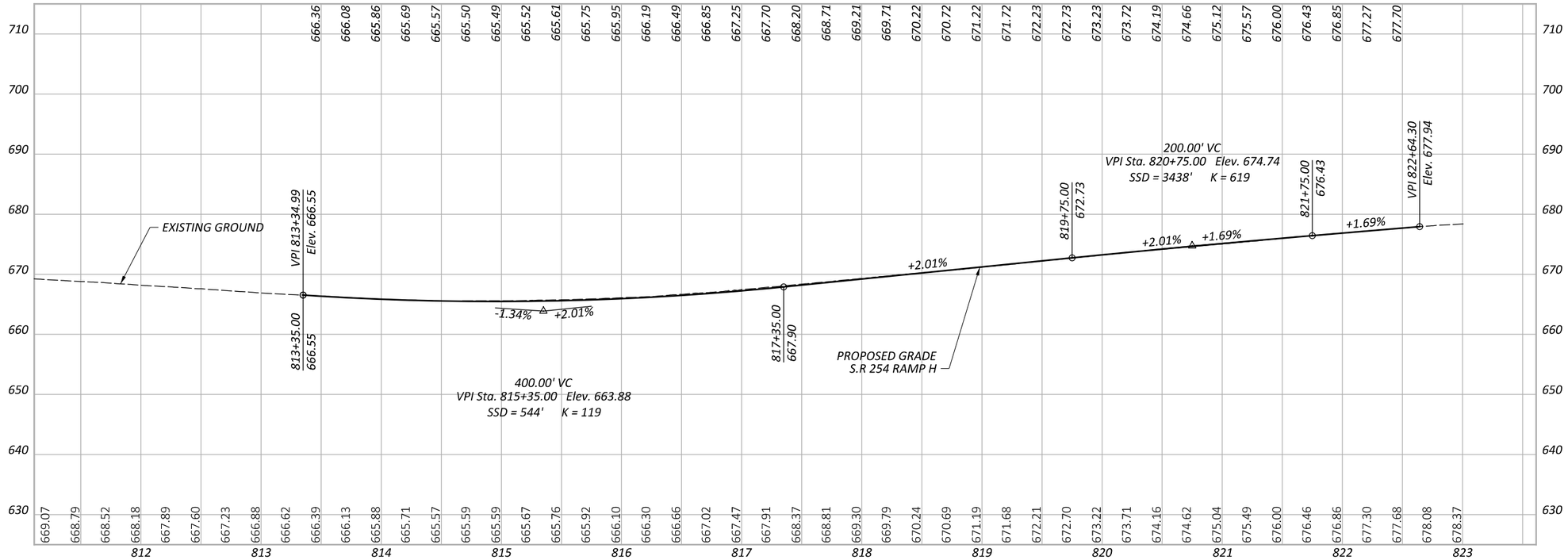

S.R. 254 RAMP H - 50 SCALE

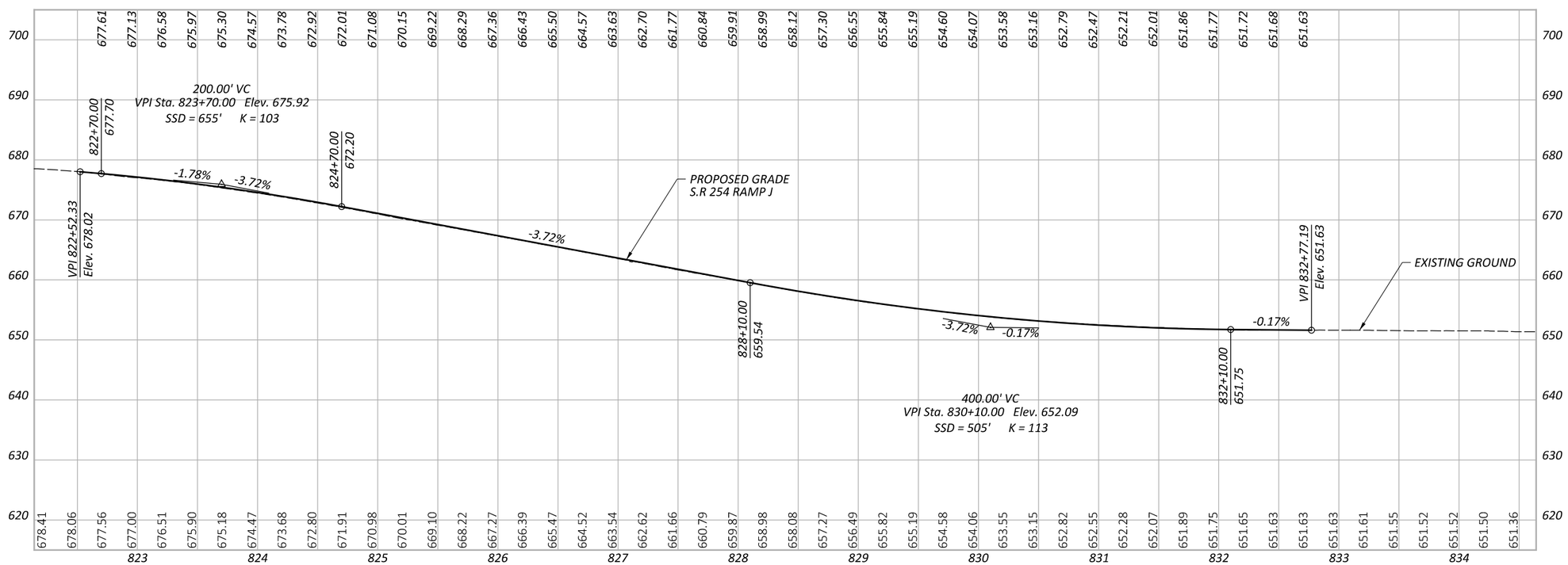

S.R. 254 RAMP J - 50 SCALE

THE KOKOSING DBT - B16

PROFILE - S.R. 254 RAMPS
BEGIN WORK TO END WORK

DESIGN AGENCY

E.L. ROBINSON ENGINEERING
1468 West 9th St, Suite 800 Cleveland, Ohio
950 Goodale Blvd, Suite 180 Grandview Heights, Ohio

DESIGNER: SWC

REVIEWER: MLL 01/14/25

PROJECT ID: 107714

SHEET 15 TOTAL 16

LOR-90-10.76

MODEL: SR 254 Ramp Profile 1 [Sheet] PAPERSIZE: 17x11 (in.) DATE: 2/3/2025 TIME: 1:20:44 PM USER: mlutes
P:_OHDOTCEv02_Worksets\107714\00-Engineering\Roadway\Sheets\107714_GF300.dgn

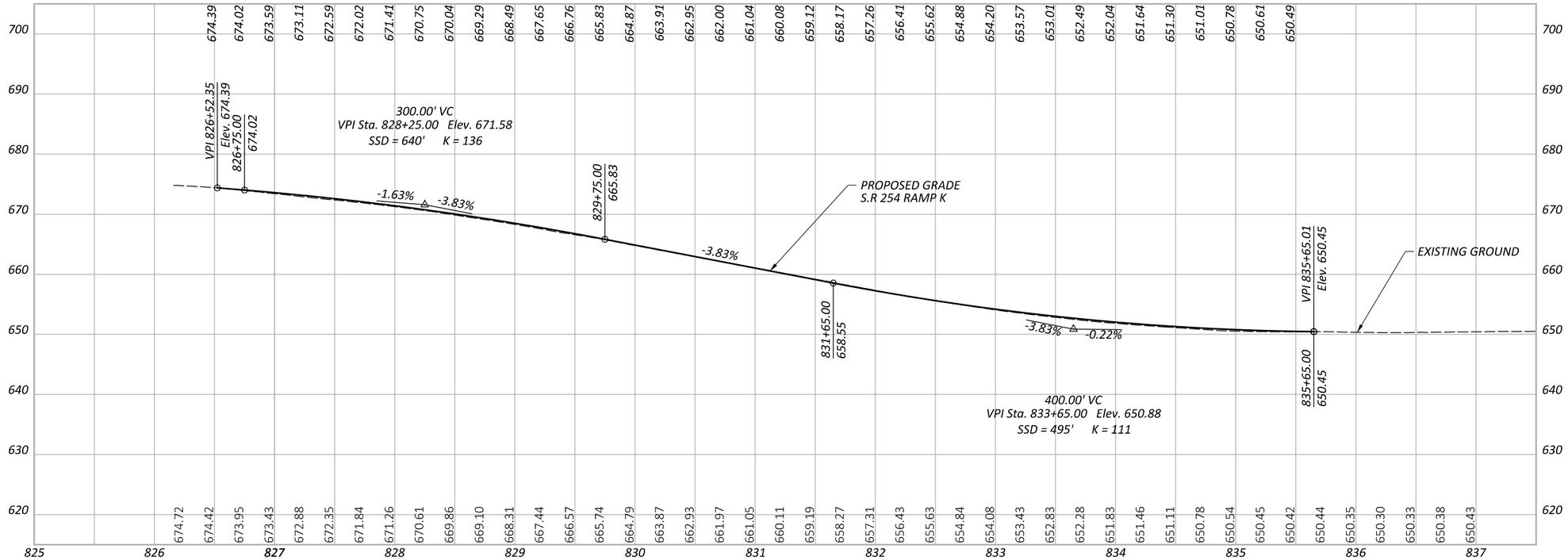

S.R. 254 RAMP K - 50 SCALE

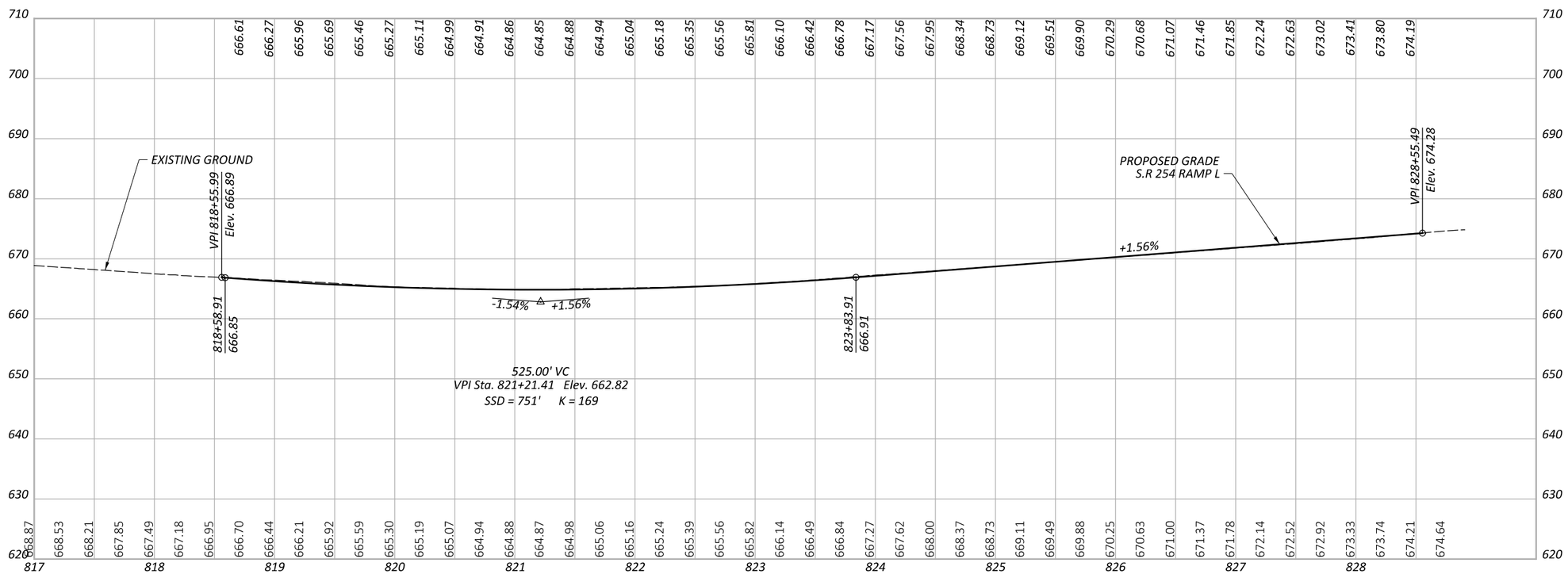

S.R. 254 RAMP L - 50 SCALE

THE KOKOSING DBT - B17

PROFILE - S.R. 254 RAMPS
BEGIN WORK TO END WORK

DESIGN AGENCY

E.L. ROBINSON ENGINEERING
1468 West 9th St., Suite 800
Cleveland, Ohio
950 Goodale Blvd., Suite 180
Grandview Heights, Ohio

DESIGNER	SWC
REVIEWER	MLL 01/14/25
PROJECT ID	107714
SHEET	16
TOTAL	16

LOR-90-10.76

MODEL: SR 254 Ramp Profile 2 [Sheet] PAPERSIZE: 17x11 (in.) DATE: 2/3/2025 TIME: 1:20:45 PM USER: mlutes
P:_OHDOTCEv02_Worksets\107714\00-Engineering\Roadway\Sheets\107714_GF300.dgn

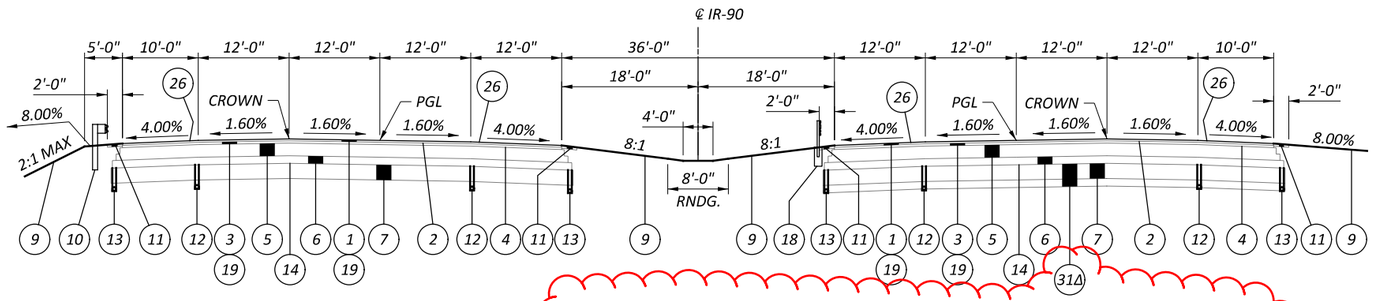

IR 90 NORMAL SECTION
STA. 645+01 TO STA. 715+76
STA. 750+52 TO STA. 751+33
STA. 774+36 TO STA. 796+47
STA. 824+53 TO STA. 844+23
STA. 870+73 TO STA. 918+25

ΔITEM APPLIES IN EASTBOUND DIRECTION ONLY
BETWEEN STA. 733+50 TO STA. 753+55

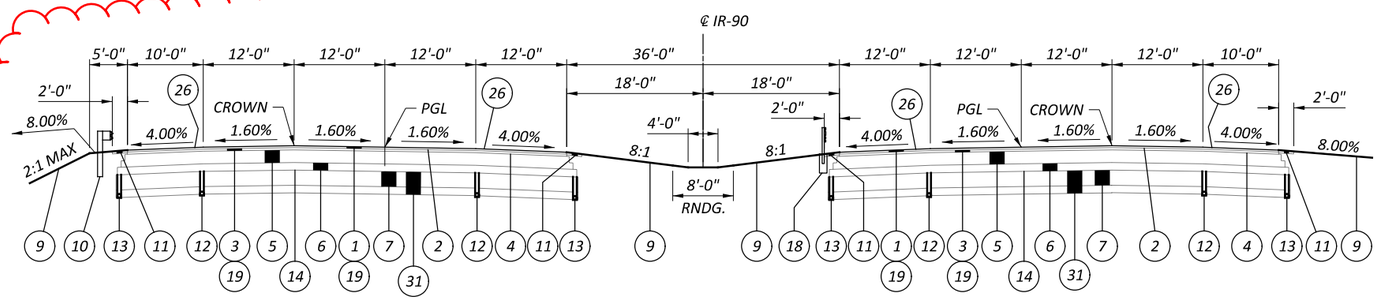

IR 90 NORMAL SECTION
STA. 918+25 TO STA. 929+41
STA. 948+94 TO STA. 981+17

LEGEND

1. ITEM 442 - 1.50" ASPHALT CONCRETE SURFACE COURSE, 12.5MM, TYPE A (447)
2. ITEM 407 - TACK COAT
3. ITEM 442 - 2.0" ASPHALT CONCRETE INTERMEDIATE COURSE, 12.5MM, TYPE A (446)
4. ITEM 407 - TACK COAT FOR INTERMEDIATE COURSE
5. ITEM 302 - 7.75" ASPHALT CONCRETE BASE
6. ITEM 304 - 6" AGGREGATE BASE
7. ITEM 206 - CEMENT STABILIZED SUBGRADE, 12 INCHES DEEP (PER SCOPE SECTION 10.2)
8. ITEM 452 - 10.5" NON-REINFORCED CONCRETE PAVEMENT, CLASS QC1P WITH QC/QA
9. ITEM 659 - SEEDING & MULCHING
10. ITEM 606 - GUARDRAIL, TYPE MGS
11. ITEM 617 - 2" COMPACTED AGGREGATE
12. ITEM 605 - 6" SHALLOW PIPE UNDERDRAIN WITH GEOTEXTILE FABRIC (19" DEEP)
13. ITEM 605 - 6" BASE PIPE UNDERDRAIN WITH GEOTEXTILE FABRIC (18" DEEP)
14. ITEM 204 - PROOF ROLLING
15. ITEM 204 - SUBGRADE COMPACTION
16. ITEM 204 - GEOGRID FOR SUBGRADE STABILIZATION
17. ITEM 204 - EXCAVATION OF SUBGRADE (T=12")
18. ITEM 606 - CABLE BARRIER
19. ITEM 442 - ANTI-SEGREGATION EQUIPMENT (TRAVEL LANES ONLY)
20. ITEM 320 - RUBBLIZE AND ROLL (T=9")
21. ITEM 442 - 2.75" ASPHALT CONCRETE INTERMEDIATE COURSE, 19MM, TYPE A (446)
22. ITEM 254 - PAVEMENT PLANING, ASPHALT CONCRETE (VARIABLE DEPTH)
23. ITEM 304 - 9.0" AGGREGATE BASE
24. ITEM 254 - PAVEMENT PLANING, ASPHALT CONCRETE (T=1.50")
25. ITEM 254 - PAVEMENT PLANING, ASPHALT CONCRETE (T=3.25")
26. ITEM 618 - RUMBLE STRIPS (ASPHALT CONCRETE)
27. ITEM 304 - 12" AGGREGATE BASE (FOR SUBGRADE STABILIZATION)
28. ITEM 442 - 1.75" ASPHALT CONCRETE INTERMEDIATE COURSE, 12.5MM, TYPE A (446)
29. ITEM 690 - SPECIAL - PAVEMENT OVERLAY FABRIC COMPOSITE
30. ITEM 302 - 7.75" ASPHALT CONCRETE BASE
31. ITEM 203 - 18" EXCAVATION (PER SCOPE SECTION 10.2)
    ITEM 203 - 18" EMBANKMENT (PER SCOPE SECTION 10.2)
32. ITEM 302 - 10" ASPHALT CONCRETE BASE (TWO EQUAL LIFTS)
33. ITEM 304 - 6.5" AGGREGATE BASE

A. EX. ASPHALT (3.25"±)
B. EX. CONCRETE (9"±)
C. EX. ASPHALT (13.75"±)
D. EX. ASPHALT (16"±)
E. EX. ASPHALT (6.5"±)
F. EX. AGGREGATE BASE (6"±)
G. EX. UNDERDRAIN
H. EX. ASPHALT (17.5"±)
I. EX. AGGREGATE BASE (8"±)

TYPICAL SECTIONS

DESIGN AGENCY
E.L. ROBINSON ENGINEERING
1468 West 9th St. Suite 800 Cleveland, Ohio
950 Goodale Blvd. Suite 180 Grandview Heights, Ohio

DESIGNER RLL
REVIEWER MLL 01/15/25
PROJECT ID 107714
SHEET P.1 TOTAL 7

LOR-90-10.76

MODEL: Sheet PAPERSIZE: 17x11 (in.) DATE: 2/13/2025 TIME: 9:19:46 AM USER: mlutes
P:_OHDOTCEv02_Worksets\107714\400-Engineering\Roadway\Sheets\107714_GY001.dgn

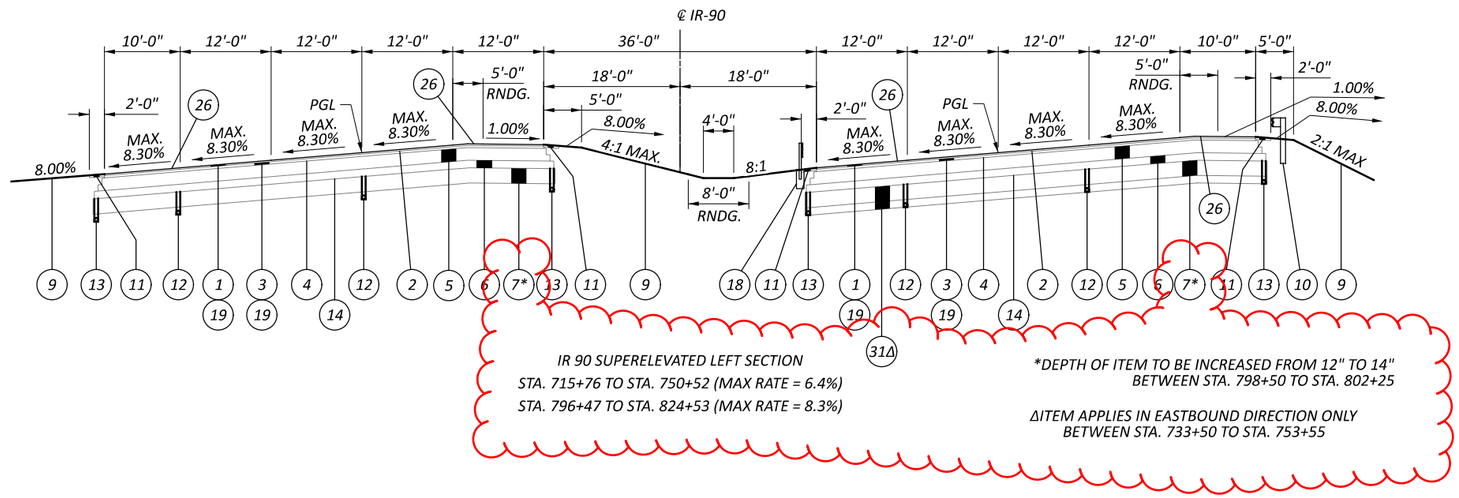

IR 90 SUPERELEVATED LEFT SECTION
STA. 715+76 TO STA. 750+52 (MAX RATE = 6.4%)
STA. 796+47 TO STA. 824+53 (MAX RATE = 8.3%)

*DEPTH OF ITEM TO BE INCREASED FROM 12" TO 14" BETWEEN STA. 798+50 TO STA. 802+25

ΔITEM APPLIES IN EASTBOUND DIRECTION ONLY BETWEEN STA. 733+50 TO STA. 753+55

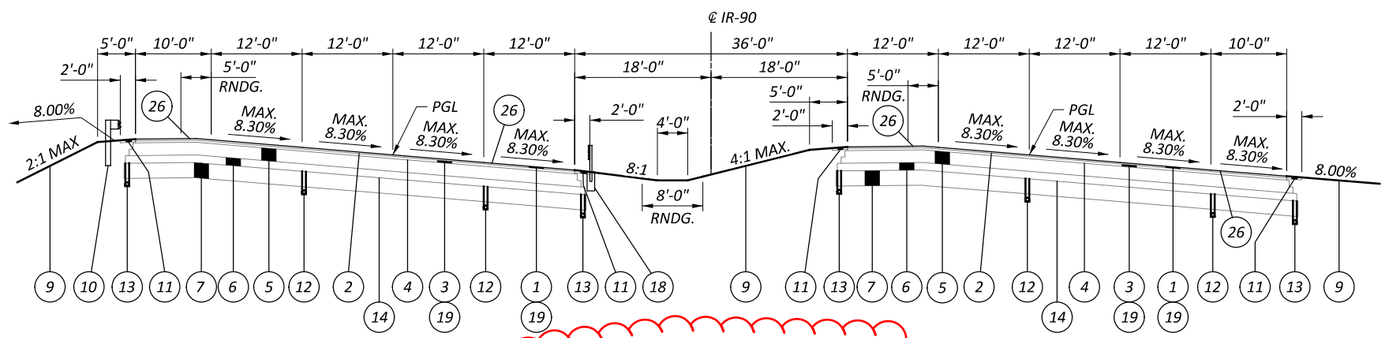

IR 90 SUPERELEVATED RIGHT SECTION
STA. 762+39 TO STA. 774+36 (MAX RATE = 8.3%)
STA. 844+23 TO STA. 870+73 (MAX RATE = 4.6%)

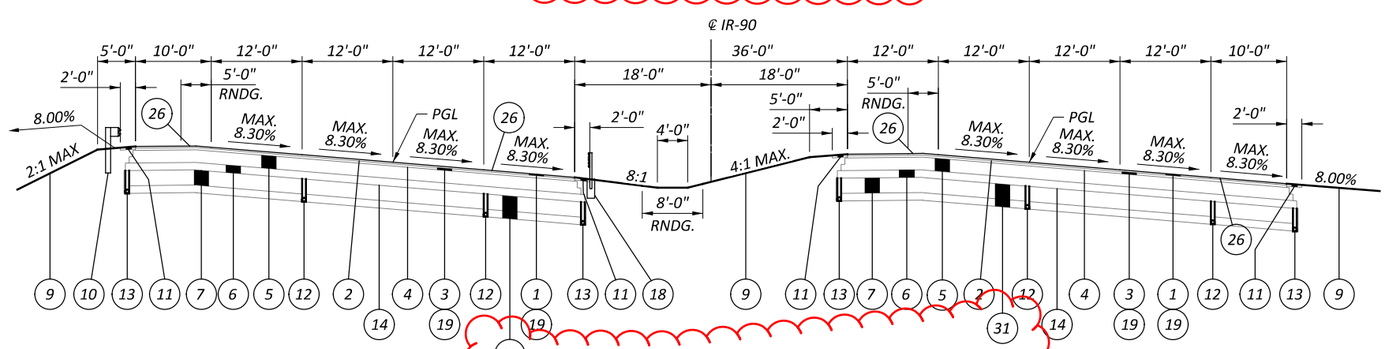

IR 90 SUPERELEVATED RIGHT SECTION
STA. 929+41 TO STA. 948+94 (MAX RATE = 3.6%)

FOR LEGEND, SEE SHEET P.1

LOR-90-10.76

MODEL: Sheet PAPERSIZE: 17x11 (in.) DATE: 2/7/2025 TIME: 12:19:06 PM USER: mlutes
P:_OHDOTCEv02_Worksets\107714\400-Engineering\Roadway\Sheets\107714_GY002.dgn

TYPICAL SECTIONS

DESIGN AGENCY
E.L. ROBINSON ENGINEERING
1468 West 9th St, Suite 800
Cleveland, Ohio
850 Goodale Blvd, Suite 180
Grandview Heights, Ohio

DESIGNER	RLL
REVIEWER	MLL 01/15/25
PROJECT ID	107714
SHEET	P.2
TOTAL	7

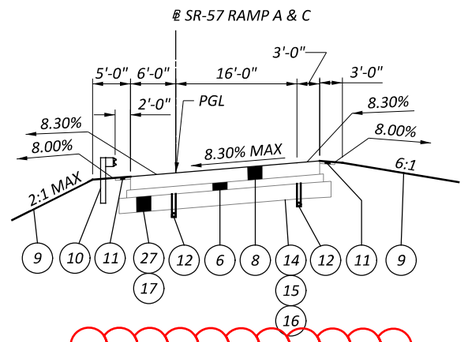

RAMP SUPERELEVATED LEFT SECTION
STA. 54+55 TO STA. 60+88 (RAMP A)
STA. 57+35 TO STA. 64+10 (RAMP C)

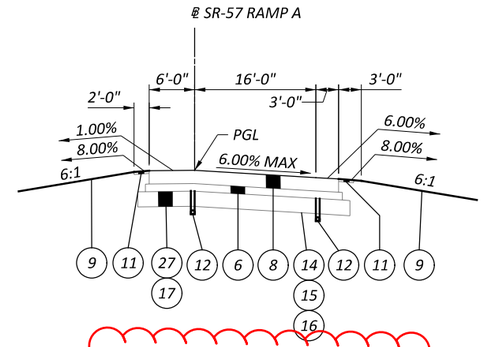

RAMP SUPERELEVATED RIGHT SECTION
STA. 60+88 TO STA. 62+39 (RAMP A)

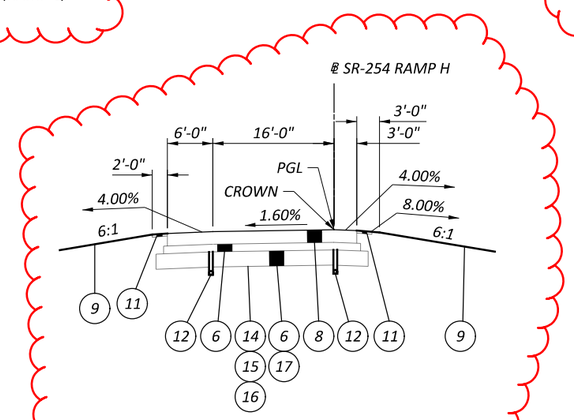

RAMP NORMAL SECTION
STA. 819+23 TO STA. 822+02 (RAMP H)

◊ RAMP H - 16'-0" MIN & 24'-0" MAX
RAMP J - 16'-0" MIN & 48'-0" MAX

▽ RAMP K - 16'-0" MIN & 24'-0" MAX
RAMP L- 16'-0" MIN & 36'-0" MAX

ᵒ RAMP H - 3'-0" MIN & 4'-0" MAX
RAMP K - 3'-0" MIN & 4'-0" MAX

‡ RAMP H - 6'-0" MIN & 10'-0" MAX
RAMP K - 6'-0" MIN & 10'-0" MAX

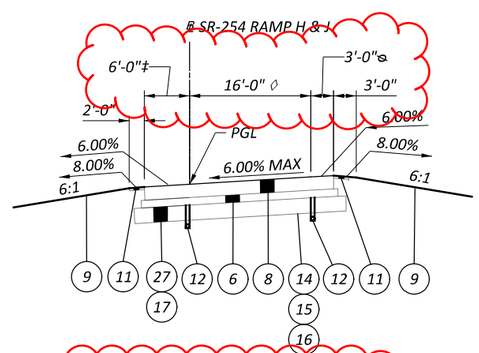

RAMP SUPERELEVATED LEFT SECTION
STA. 813+95 TO STA. 819+23 (RAMP H - 6.0% MAX LEFT)
STA. 822+63 TO STA. 826+59 (RAMP J - 6.0% MAX RIGHT)
STA. 826+59 TO STA. 832+77 (RAMP J - 6.0% MAX LEFT)

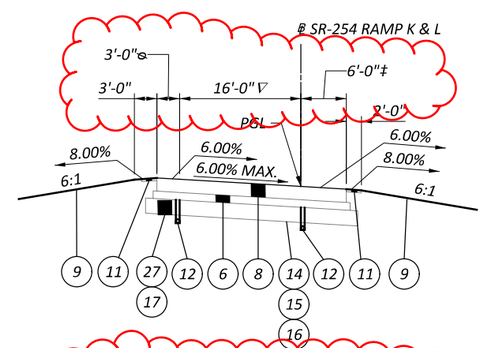

RAMP SUPERELEVATED RIGHT SECTION
STA. 826+77 TO STA. 829+05 (RAMP K - 2.5% MAX LEFT)
STA. 829+05 TO STA. 834+11 (RAMP K - 6.0% MAX RIGHT)
STA. 818+56 TO STA. 824+02 (RAMP L - 6.0% MAX RIGHT)
STA. 824+02 TO STA. 828+55 (RAMP L - 6.0% MAX LEFT)

FOR LEGEND, SEE SHEET P.1

TYPICAL SECTIONS

LOR-90-10.76
MODEL: Sheet PAPERSIZE: 17x11 (in.) DATE: 2/7/2025 TIME: 12:19:09 PM USER: mlutes
P:_OHDOTCEv02_Worksets\107714\400-Engineering\Roadway\Sheets\107714_GY003.dgn

DESIGN AGENCY
E.L. ROBINSON ENGINEERING
1468 West 9th St., Suite 800
Cleveland, Ohio
950 Goodale Blvd, Suite 180
Grandview Heights, Ohio

DESIGNER
CMW

REVIEWER
MLL 01/15/25

PROJECT ID
107714

SHEET P.3 TOTAL 7

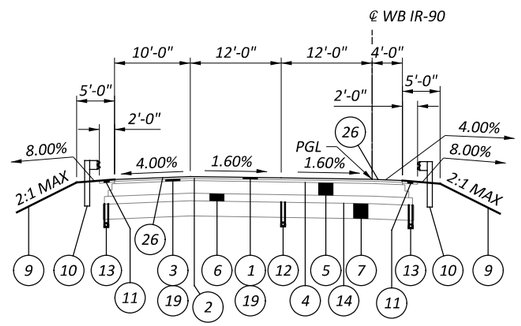

WESTBOUND IR 90 NORMAL SECTION
STA. 614+85 TO STA. 617+80
STA. 631+50 TO STA. 635+41

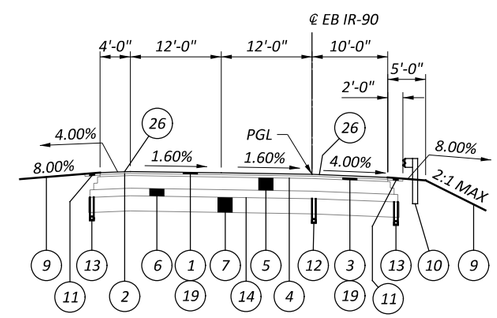

EASTBOUND IR 90 NORMAL SECTION
STA. 630+00 TO STA. 631+75

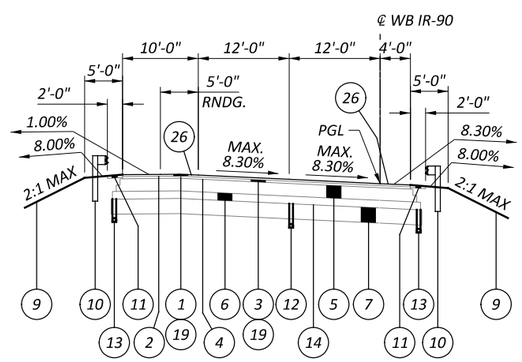

WESTBOUND IR 90 SUPERELEVATED RIGHT SECTION
STA. 617+80 TO STA. 631+50

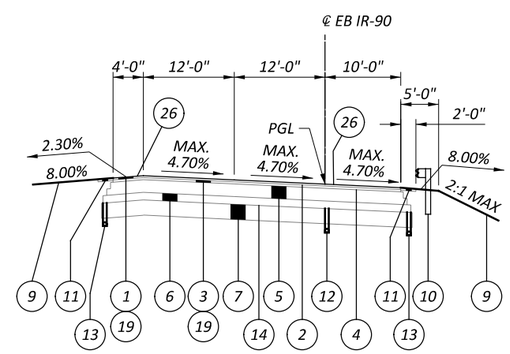

EASTBOUND IR 90 SUPERELEVATED RIGHT SECTION
STA. 614+33 TO STA. 630+00

FOR LEGEND, SEE SHEET P.1

TYPICAL SECTIONS

LOR-90-10.76

MODEL: Sheet PAPERSIZE: 17x11 (in.) DATE: 2/7/2025 TIME: 12:19:11 PM USER: mlutes
P:_OHDOTCEv02_Worksets\107714\400-Engineering\Roadway\Sheets\107714_GY004.dgn

DESIGN AGENCY
E.L. ROBINSON ENGINEERING
1468 West 9th St, Suite 800
Cleveland, Ohio
950 Goodale Blvd, Suite 180
Grandview Heights, Ohio

DESIGNER
RLL

REVIEWER
MLL 01/15/25

PROJECT ID
107714

SHEET P.4 TOTAL 7

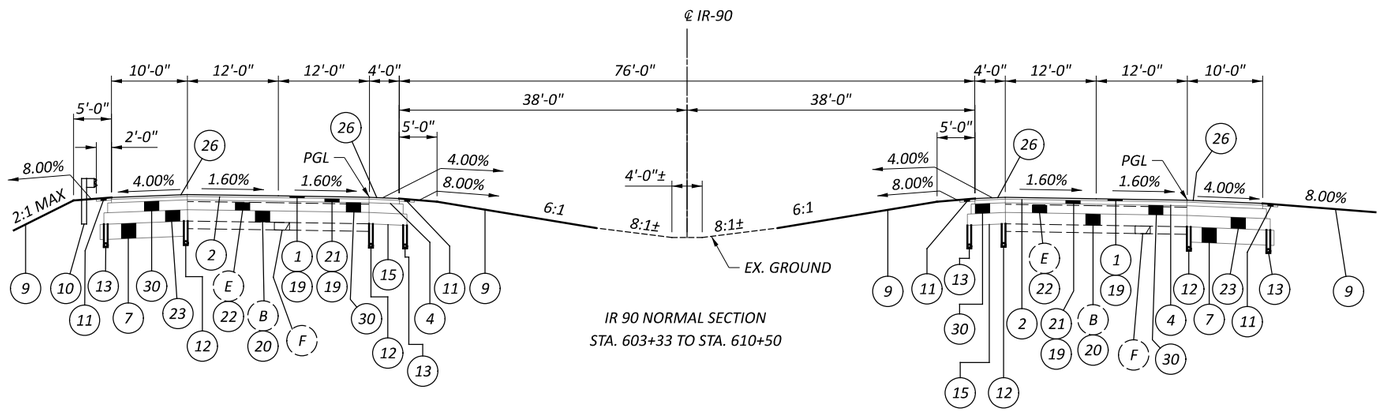

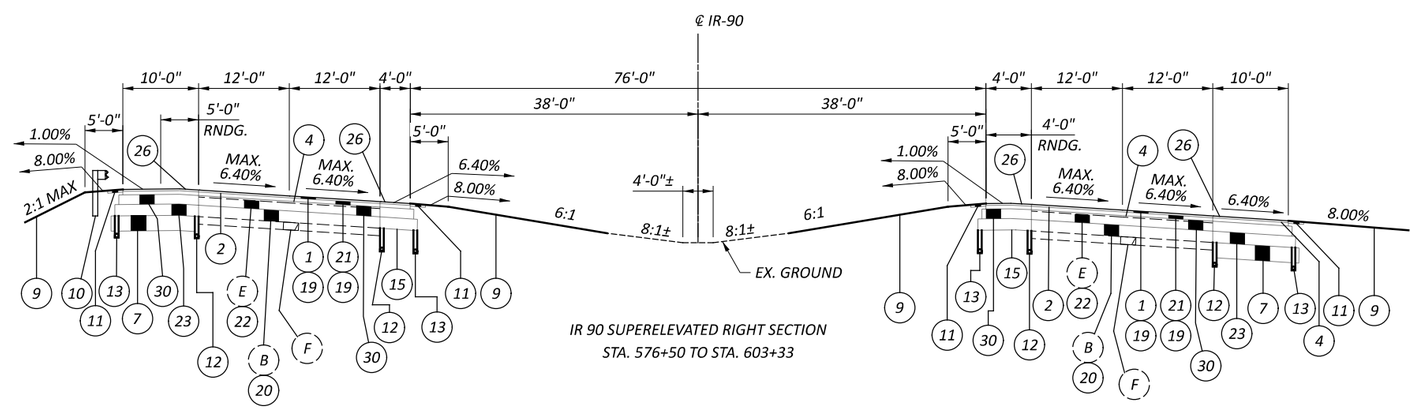

FOR LEGEND, SEE SHEET P.1

THE KOKOSING DBT - B22

TYPICAL SECTIONS

DESIGN AGENCY

E.L. ROBINSON ENGINEERING

1468 West 9th St, Suite 800
Cleveland, Ohio
950 Goodale Blvd, Suite 180
Grandview Heights, Ohio

DESIGNER
RLL

REVIEWER
MLL 01/15/25

PROJECT ID
107714

SHEET P.5 TOTAL 7

LOR-90-10.76

MODEL: Sheet PAPERSIZE: 17x11 (in.) DATE: 2/7/2025 TIME: 12:19:13 PM USER: mlutes
P:_OHDOTCEv02_Worksets\107714\400-Engineering\Roadway\Sheets\107714_GY005.dgn

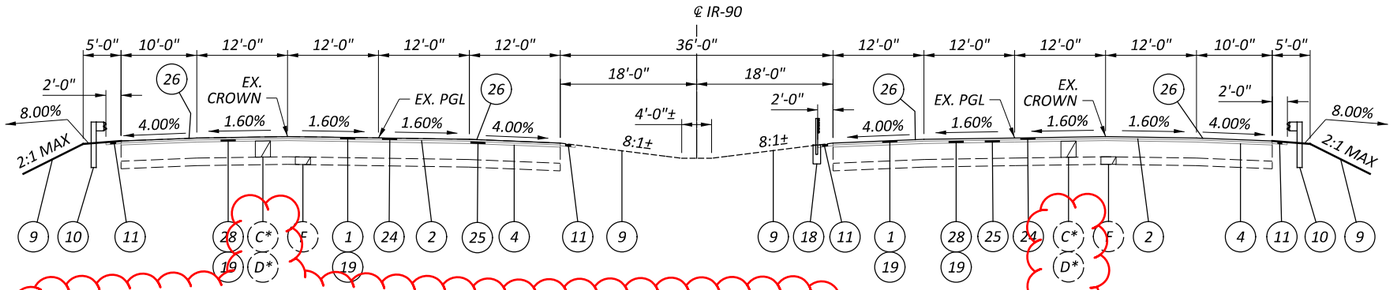

(C*) APPLIES: STA. 755+40 TO STA. 760+39

(D*) APPLIES: STA. 656+80 TO STA. 661+26

FULL RESURFACING NORMAL SECTION
STA. 656+80 TO STA. 661+26
STA. 755+40 TO STA. 760+39

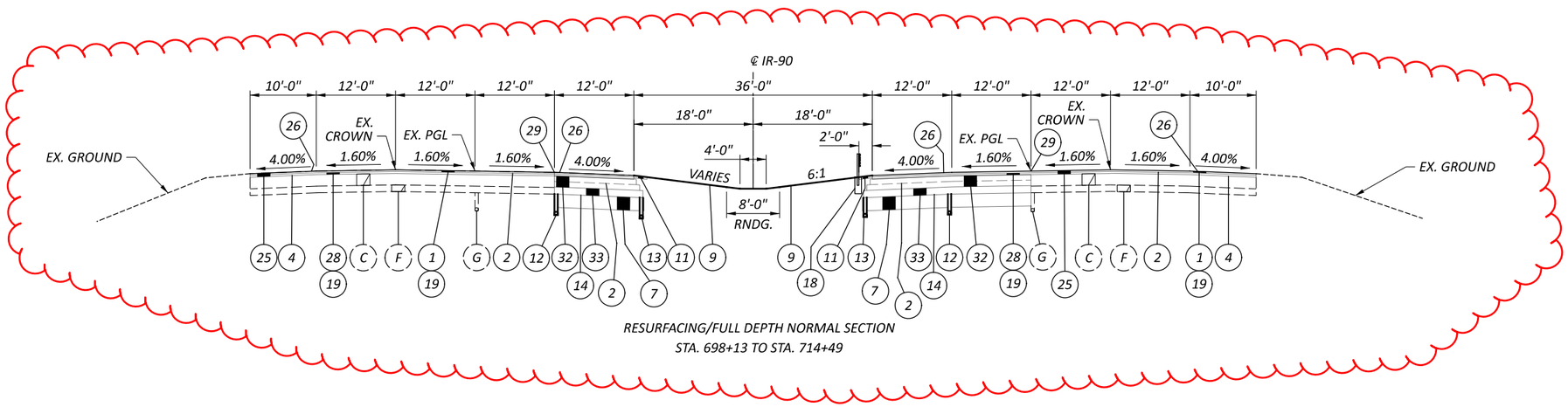

RESURFACING/FULL DEPTH NORMAL SECTION
STA. 698+13 TO STA. 714+49

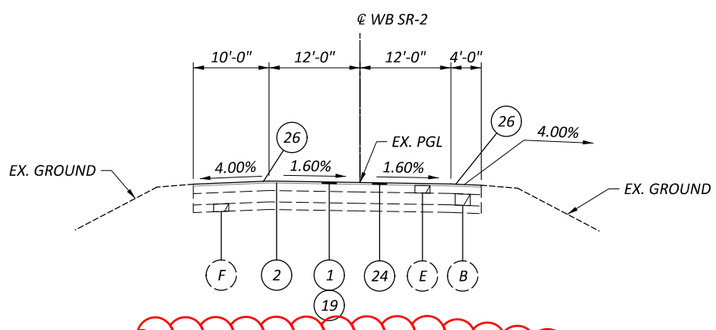

WESTBOUND SR 2 MOT RESURFACING NORMAL SECTION
STA. 580+63 TO STA. 606+59

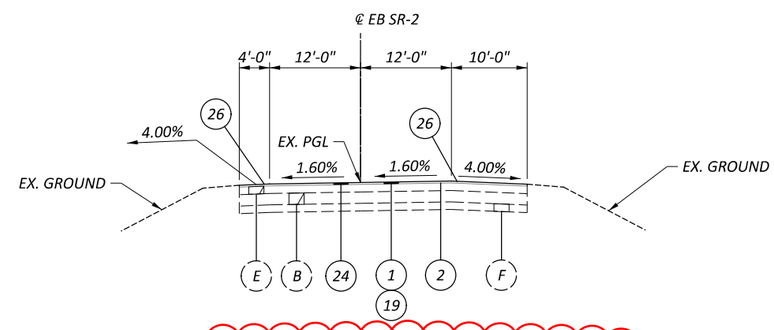

EASTBOUND SR 2 MOT RESURFACING NORMAL SECTION
STA. 581+23 TO STA. 607+01

FOR LEGEND, SEE SHEET P.1

THE KOKOSING DBT - B23

TYPICAL SECTIONS

LOR-90-10.76

MODEL: Sheet PAPERSIZE: 17x11 (in.) DATE: 2/7/2025 TIME: 12:19:15 PM USER: mlutes
P:_OHDOTCEv02_Worksets\107714\400-Engineering\Roadway\Sheets\107714_GY006.dgn

DESIGN AGENCY
E.L. ROBINSON ENGINEERING
1468 West 9th St, Suite 800 Cleveland, Ohio
950 Goodale Blvd, Suite 180 Grandview Heights, Ohio

DESIGNER: CMW
REVIEWER: MLL 01/15/25
PROJECT ID: 107714
SHEET: P.6 TOTAL: 7

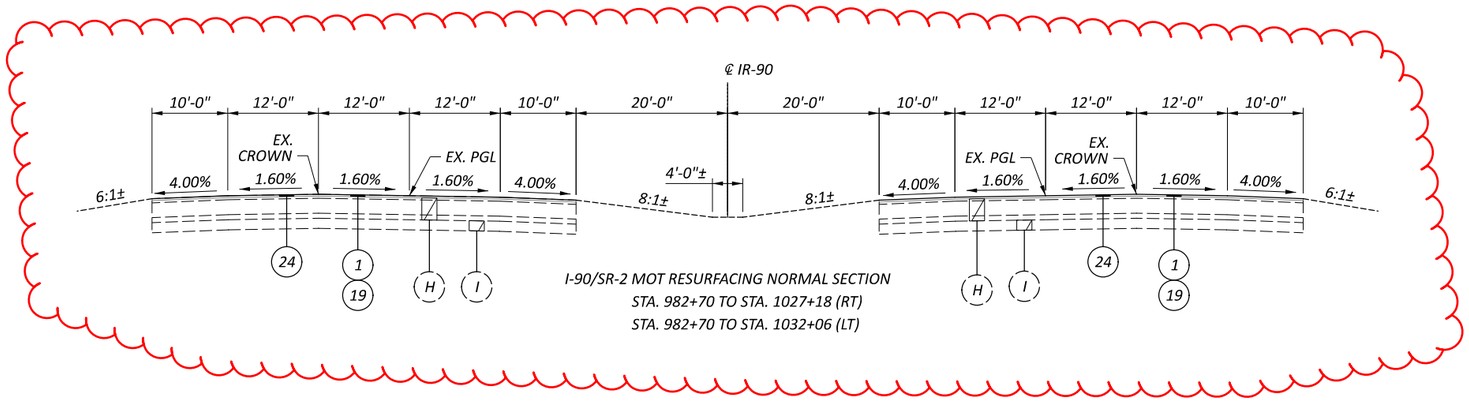

I-90/SR-2 MOT RESURFACING NORMAL SECTION
STA. 982+70 TO STA. 1027+18 (RT)
STA. 982+70 TO STA. 1032+06 (LT)

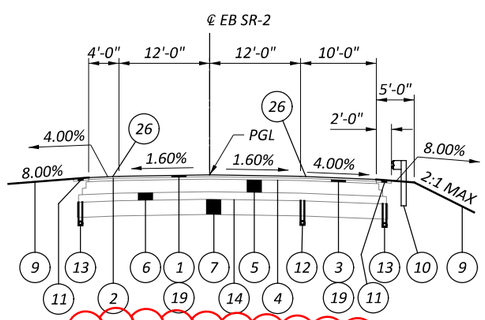

EASTBOUND SR 2 NORMAL SECTION
STA. 608+98 TO STA. 616+27

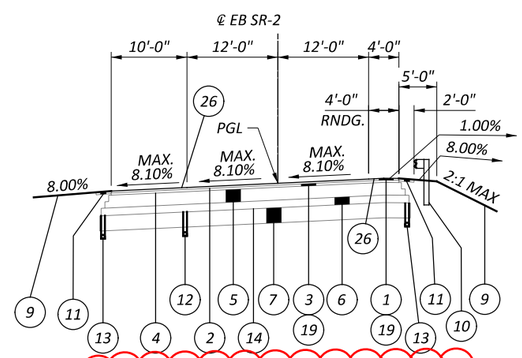

EASTBOUND SR 2 SUPERELEVATED LEFT SECTION
STA. 616+27 TO STA. 627+64

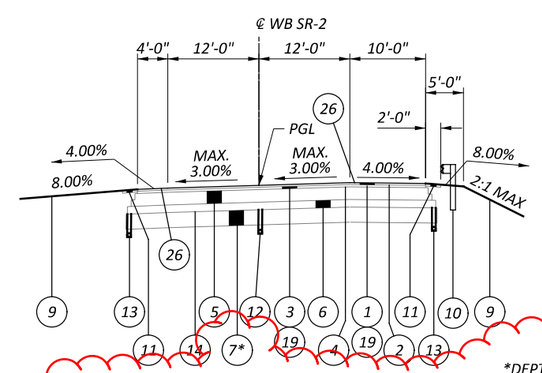

WESTBOUND SR 2 SUPERELEVATED LEFT SECTION
STA. 609+18 TO STA. 630+62

*DEPTH OF ITEM TO BE INCREASED FROM 12" TO 14"
BETWEEN STA. 624+35 TO STA. 626+35

FOR LEGEND, SEE SHEET P.1

TYPICAL SECTIONS

LOR-90-10.76

MODEL: Sheet PAPERSIZE: 17x11 (in.) DATE: 2/7/2025 TIME: 12:19:18 PM USER: mlutes
P:_OHDOTCEv02_Worksets\107714\400-Engineering\Roadway\Sheets\107714_GY007.dgn

DESIGN AGENCY
E.L. ROBINSON ENGINEERING
1468 West 9th St, Suite 800
Cleveland, Ohio
950 Goodale Blvd, Suite 180
Grandview Heights, Ohio

DESIGNER
RLL

REVIEWER
MLL 01/15/25

PROJECT ID
107714

SHEET P.7 TOTAL 7

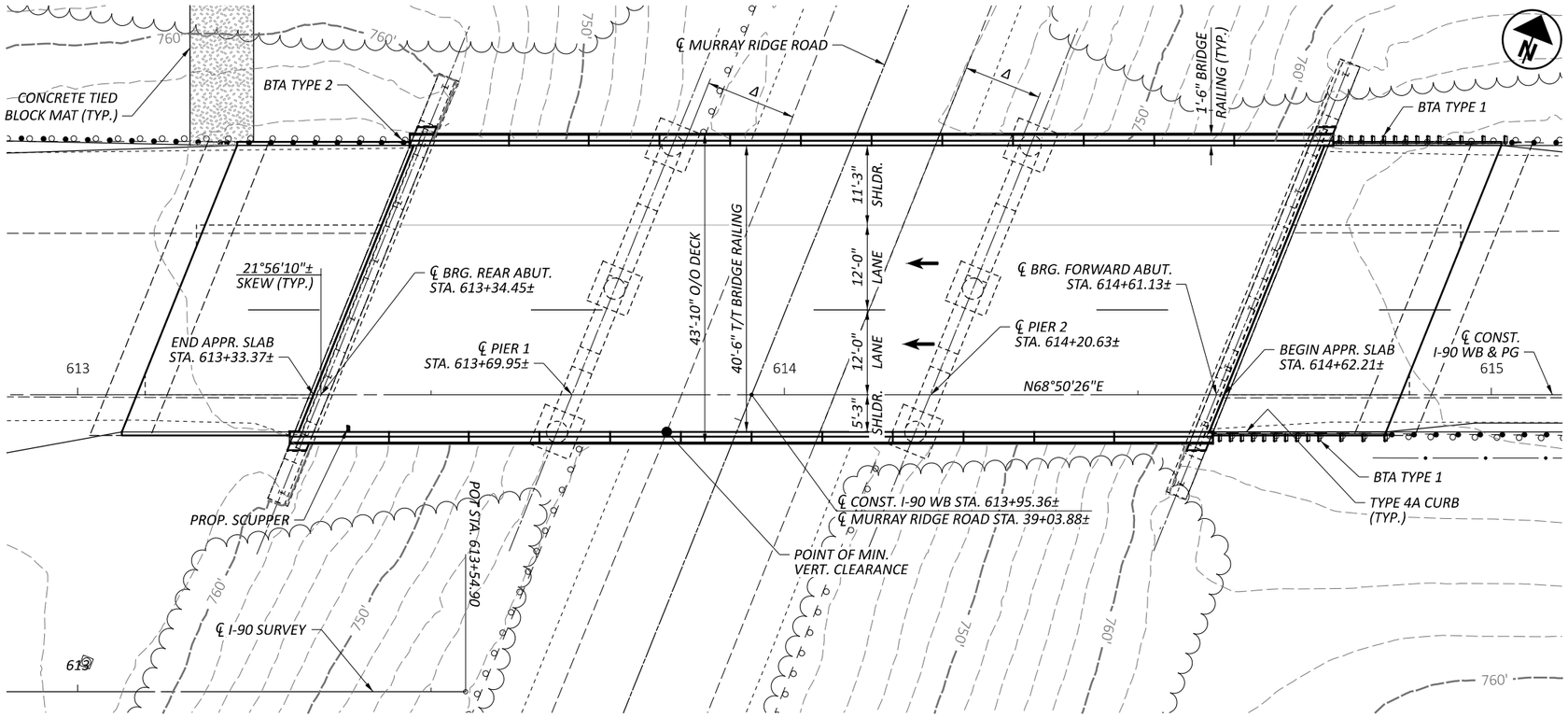

PLAN

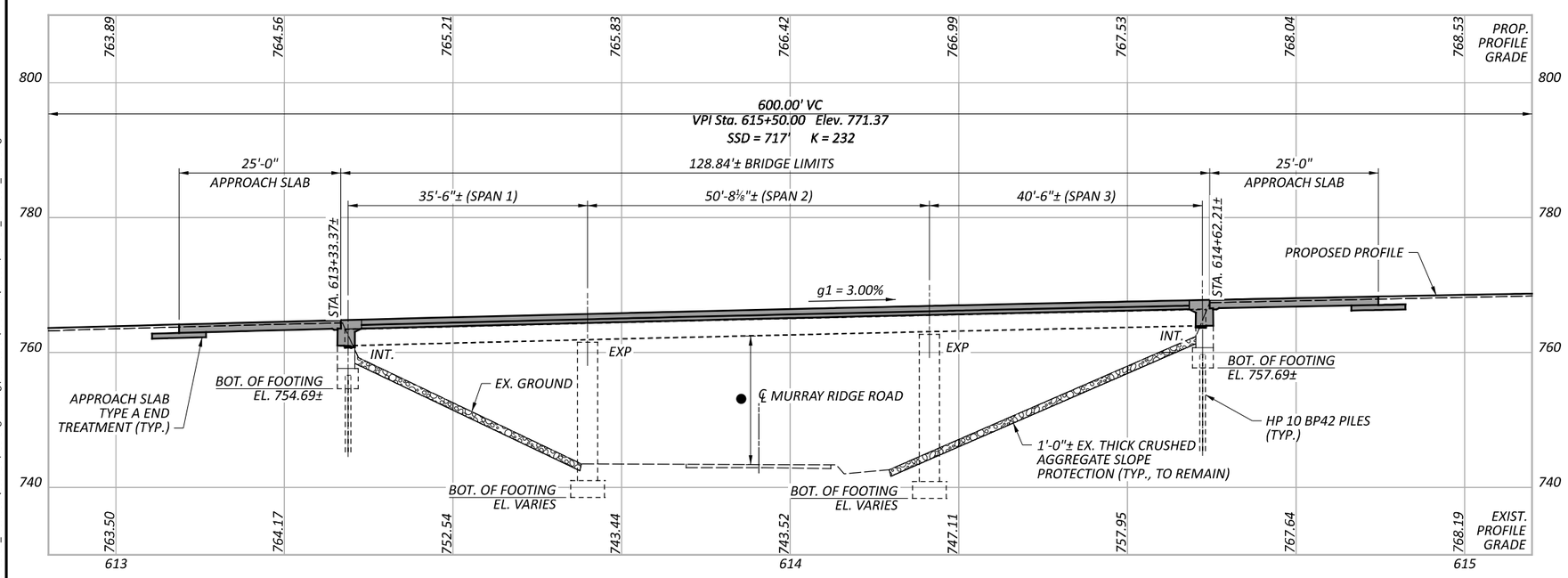

PROFILE ALONG ℄ CONSTRUCTION I-90 WB

THE KOKOSING DBT - B25

BENCHMARK DATA

BM #1 STA.	,	ELEV.	,	OFFSET	,	
BM #2 STA.	,	ELEV.	,	OFFSET	,	
BM #3 STA.	,	ELEV.	,	OFFSET	,	
BM #4 STA.	,	ELEV.	,	OFFSET	,	

FOR ADDITIONAL BENCHMARK INFORMATION. SEE ROADWAY PLAN SHEETS.

NOTES

1. EARTHWORK LIMITS SHOWN ARE APPROXIMATE. ACTUAL SLOPES ARE TO CONFORM TO PLAN CROSS SECTIONS.
2. EXISTING ELEVATIONS UNDER BRIDGE ARE APPROXIMATED BASED ON EXISTING PLANS.

TRAFFIC DATA

2025 ADT = 7,360 2025 ADTT = 2,732
2045 ADT = 8,640 2045 ADTT = 3,629
DIRECTIONAL DISTRIBUTION = 0.56

LEGEND

● 20'-0" MINIMUM VERTICAL CLEARANCE REQUIRED BY SCOPE
20'-0 11/16"± ESTIMATED MINIMUM VERTICAL CLEARANCE

Δ 10'-0" REQUIRED MINIMUM HORIZONTAL CLEARANCE
10'-0 ± PROVIDED MINIMUM HORIZONTAL CLEARANCE

EXISTING STRUCTURE

TYPE: THREE SPAN CONTINUOUS ROLLED STEEL BEAM SUPERSTRUCTURE WITH COMPOSITE REINFORCED CONCRETE DECK ON INTEGRAL ABUTMENTS WITH H-PILES TO ROCK AND CAP-AND-COLUMN PIERS ON SPREAD FOUNDATIONS
SPANS: 35'-6"±, 50'-8⅛"±, 40'-6"± C/C BEARINGS
ROADWAY: 40'-6"± T/T BRIDGE RAILING
LOADING: HS20-44 & THE INTERSTATE ALTERNATE LOAD
SKEW: 21°56'10"± L.F.
WEARING SURFACE: 4"± BITUMINOUS ASPHALT
APPROACH SLABS: 25'-0"± LONG (AS-1-67)
ALIGNMENT: TANGENT
SUPERELEVATION: 0.0156 FT/FT±
STRUCTURE FILE NUMBER: 4704398
DATE BUILT: 7/1/1974
DISPOSITION: TO BE REHABILITATED

PROPOSED STRUCTURE

TYPE: THREE SPAN CONTINUOUS ROLLED STEEL BEAM SUPERSTRUCTURE WITH COMPOSITE REINFORCED CONCRETE DECK ON INTEGRAL ABUTMENTS WITH H-PILES TO ROCK AND CAP-AND-COLUMN PIERS ON SPREAD FOUNDATIONS
SPANS: 35'-6"±, 50'-8⅛"±, 40'-6"± C/C BEARINGS
ROADWAY: 40'-6" T/T BRIDGE RAILING
LOADING: HL93 AND 60 PSF FUTURE WEARING SURFACE (SUPERSTRUCTURE)
HS20-44 & THE INTERSTATE ALTERNATE LOAD (SUBSTRUCTURE)
SKEW: 21°56'10"± L.F.
WEARING SURFACE: N/A
APPROACH SLABS: 25'-0"LONG WITH TYPE A END TREATMENT (AS-1-15 & AS-2-15)
ALIGNMENT: TANGENT
SUPERELEVATION: 0.0156 FT/FT±
DECK AREA: 5653 SF
COORDINATES: LATITUDE N 41°42'10.7"
LONGITUDE W 82°08'54.6"

SITE PLAN
BRIDGE NO. LOR-00090-11.385L
I-90 WB OVER MURRAY RIDGE RD.

SFN 4704398
DESIGN AGENCY
E.L. ROBINSON ENGINEERING
1468 West 9th St. Suite 800 Cleveland, Ohio
950 Goodale Blvd. Suite 180 Grandview Heights, Ohio
DESIGNER FIB | CHECKER RER
REVIEWER XXX MM-DD-YY
PROJECT ID 107714
SUBSET 1 | TOTAL 4
SHEET P.1 | TOTAL 8

LOR-90-10.76

MODEL: CLX_RW_5090_WB - Plan 1 PAPERSIZE: 17x11 (in.) DATE: 1/20/2025 TIME: 10:31:25 AM USER: mvogt
P:_OHDOTCEv02_Worksets\107714\400-Engineering\Structures\4704398\Sheets\107714_4704398_SP001.dgn

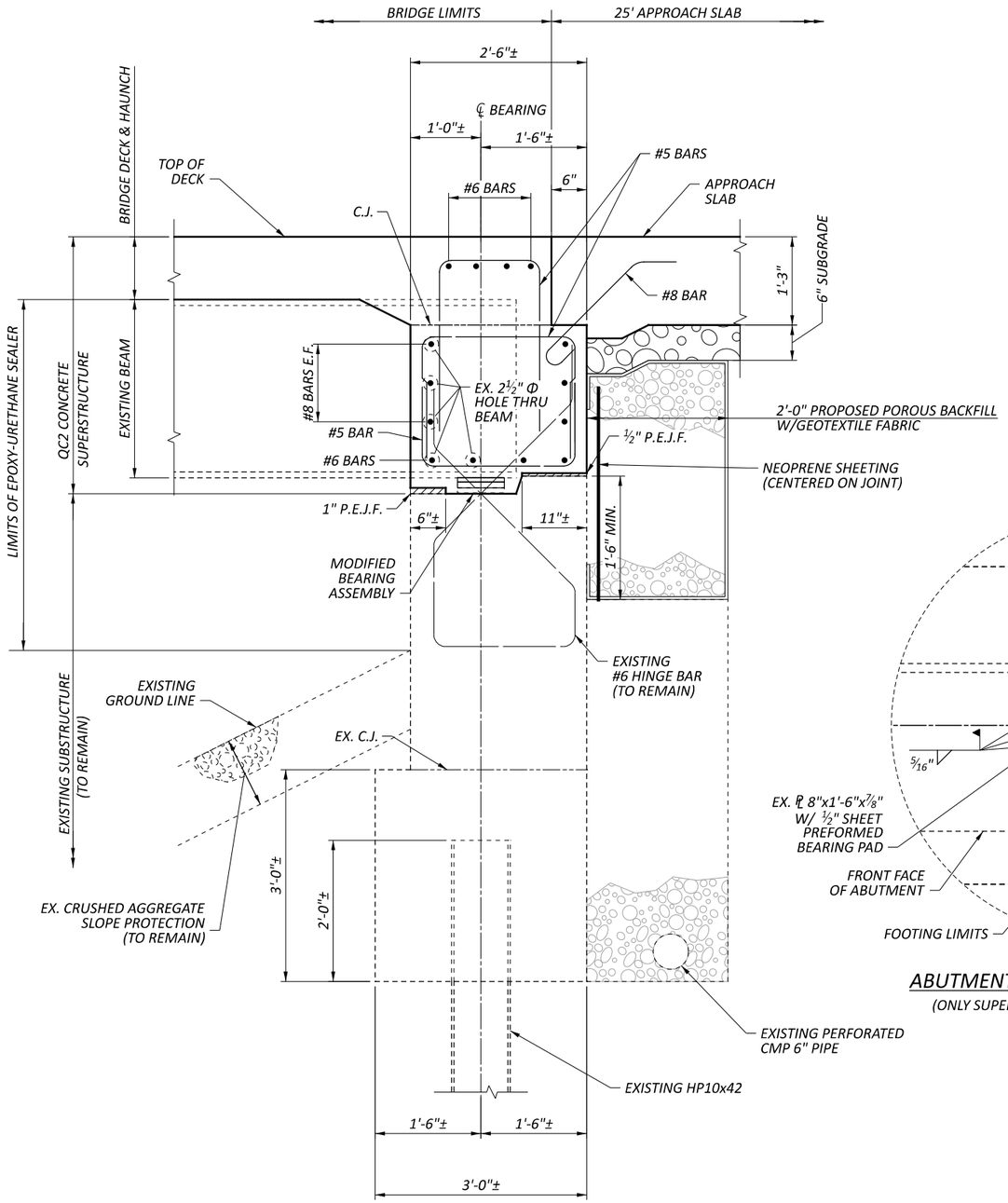

PROPOSED ABUTMENT SECTION

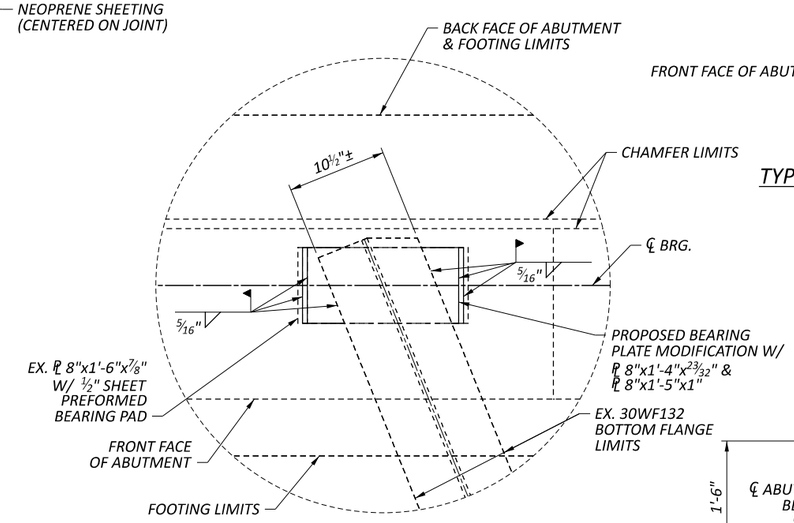

ABUTMENT BEARING MODIFICATION PLAN

(ONLY SUPERSTRUCTURE STEEL SHOWN FOR CLARITY)

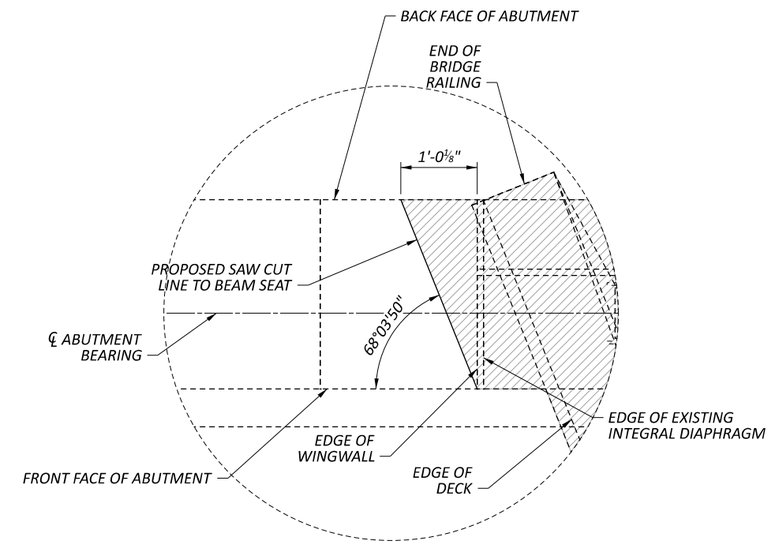

TYPICAL WINGWALL MODIFICATION REMOVAL DETAIL

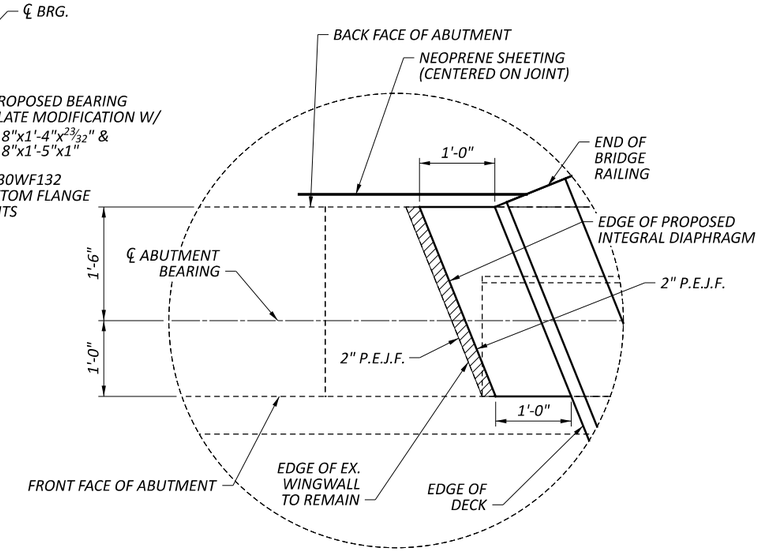

TYPICAL WINGWALL MODIFICATION DETAIL

TYPICAL ABUTMENT SECTIONS
BRIDGE NO. LOR-00090-11.385L
I-90 WB OVER MURRAY RIDGE RD.

SFN	4704398
DESIGN AGENCY	E.L. ROBINSON ENGINEERING, 1468 West 9th St, Suite 800, Cleveland, Ohio; 950 Goodale Blvd, Suite 180, Grandview Heights, Ohio
DESIGNER	BCW
CHECKER	MRV
REVIEWER	XXX MM-DD-YY
PROJECT ID	107714
SUBSET	2
TOTAL	4
SHEET	P.2
TOTAL	8

LOR-90-10.76

MODEL: Sheet - Type C PAPERSIZE: 17x11 (in.) DATE: 1/20/2025 TIME: 10:31:34 AM USER: mvogt
P:_OHDOTCEv02_Worksets\107714\400-Engineering\Structures\4704398\Sheets\107714_4704398_SR001.dgn

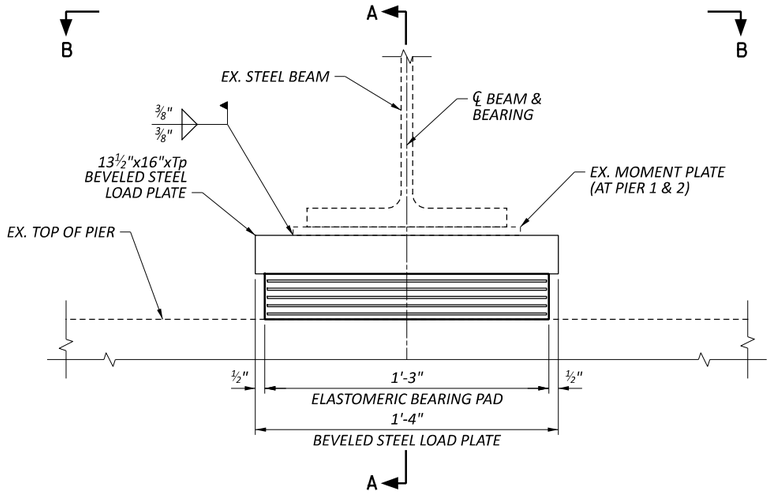

PIER BEARING ELEVATION

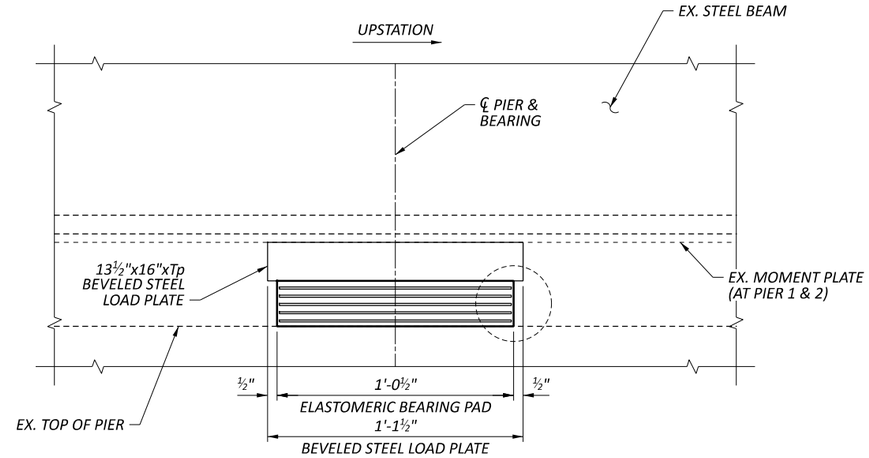

SECTION A-A

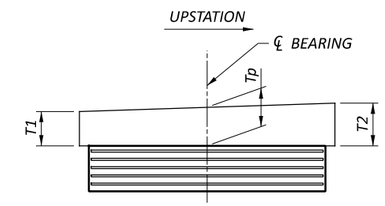

BEVELED PLATE DETAIL

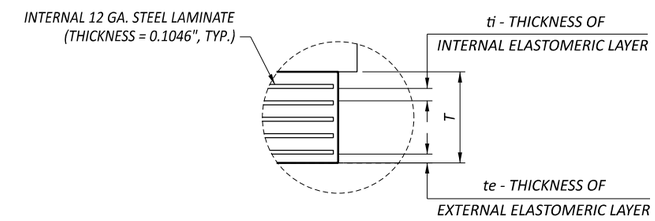

DETAIL 'A'

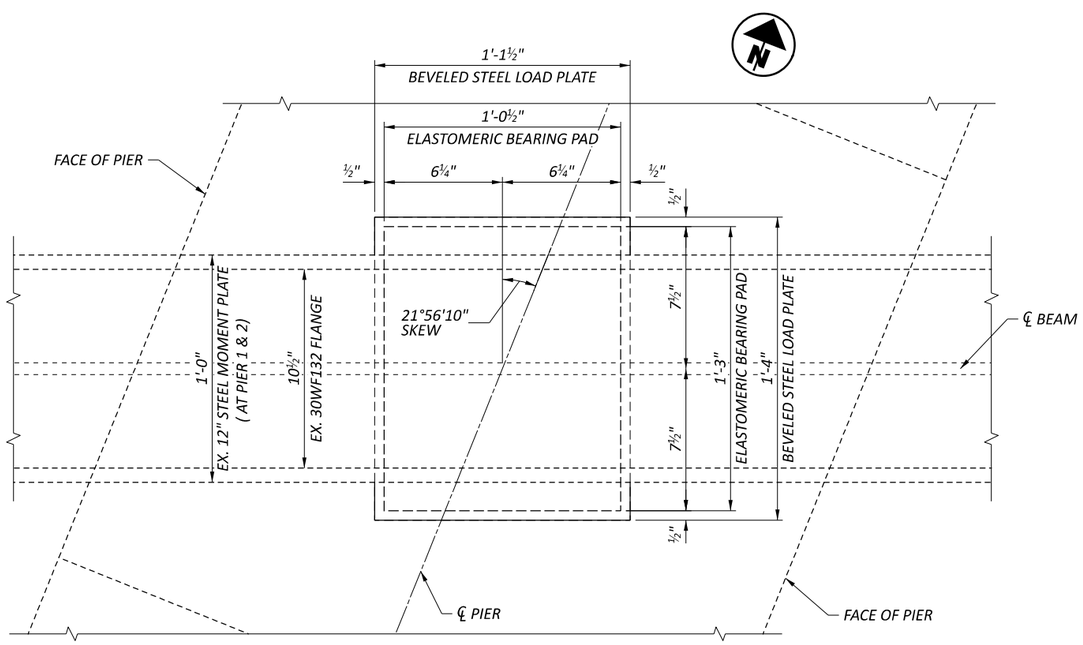

SECTION B-B

ELASTOMERIC BEARING ASSEMBLY DATA													
LOCATION	TYPE	NO. REQ'D.	DL (KIP)	LL W/O IMPACT (KIP)	MAX DESIGN LOAD (DL + LL) (KIP)	ti (IN.)	te (IN.)	NO. OF INTERNAL LAMINATES (ti)	NO. OF EXTERNAL LAMINATES (te)	T (IN.)	T1 (IN.)	Tp (IN.)	T2 (IN.)
PIER 1 & 2	EXP.	10	68	140	110	0.3300	0.2310	5	1	2.4040	1.8125	2.03125	2.2500

NOTES:

1. THE ELASTOMER IS TO HAVE A HARDNESS OF 50 DUROMETER. THE BEARINGS WERE DESIGNED IN ACCORDANCE WITH SECTION 14.7.6 (METHOD A) OF THE AASHTO LRFD BRIDGE DESIGN SPECIFICATIONS. THE LONG-TERM COMPRESSION PROOF LOAD TEST (AASHTO STANDARD SPECIFICATIONS FOR HIGHWAY BRIDGES, DIVISION II, SECTION 18.7.2.6) IS NOT REQUIRED.
2. THE STEEL LOAD PLATES AND HP SHAPES ARE TO BE ASTM A36 GRADE 36 STEEL AND PRIME PAINTED IN ACCORDANCE WITH C&MS 708.01.
3. THE STEEL LOAD PLATE IS TO BE BONDED BY VULCANIZATION TO THE ELASTOMER DURING THE MOLDING PROCESS. CONTROL WELDING SO THAT THE PLATE TEMPERATURE AT THE ELASTOMER BONDED SURFACE DOES NOT EXCEED 300°F AS DETERMINED BY THE USE OF PYROMETRIC STICKS OR OTHER TEMPERATURE MONITORING DEVICES.
4. TOTAL DESIGN LOAD FOR BEARINGS EQUALS THE SUM OF THE DEAD LOADS AND LIVE LOADS TABULATED IN THE BEARING TABLE. IMPACT IS NOT INCLUDED.
5. BASIS OF PAYMENT: THE UNIT BID PRICE FOR ALL PIER BEARINGS IS TO INCLUDE THE LOAD PLATE, PRIME COAT PAINT AND ALL MATERIALS, LABOR, TESTING, AND INCIDENTALS NECESSARY TO FURNISH AND INSTALL LAMINATED ELASTOMER BEARINGS. PAYMENT WILL BE MADE AT THE CONTRACT PRICE FOR ITEM 516 - ELASTOMERIC BEARINGS WITH INTERNAL LAMINATES AND LOAD PLATE, AS PER PLAN (12½"x15"x2.404" W/ LOAD PLATE)
6. ALL BEARINGS ARE TO BE MARKED PRIOR TO SHIPPING. THE MARKS ARE TO INCLUDE THE BEARING LOCATION ON THE BRIDGE, AND A DIRECTION ARROW THAT POINTS UPSTATION. ALL MARKS ARE TO BE PERMANENT AND BE VISIBLE AFTER THE BEARING IS INSTALLED.

PIER BEARING DETAILS
BRIDGE NO. LOR-00090-11.385L
I-90 WB OVER MURRAY RIDGE RD.

SFN 4704398
DESIGN AGENCY
E.L. ROBINSON ENGINEERING
1468 West 9th St, Suite 800 Cleveland, Ohio
950 Goodale Blvd, Suite 180 Grandview Heights, Ohio
DESIGNER MRV | CHECKER RER
REVIEWER XXX MM-DD-YY
PROJECT ID 107714
SUBSET 3 | TOTAL 4
SHEET P.3 | TOTAL 8

LOR-90-10.76
MODEL: Sheet PAPERSIZE: 17x11 (in.) DATE: 1/20/2025 TIME: 10:31:36 AM USER: mvogt
P:_OHDOTCEx02_Worksets\107714\400-Engineering\Structures\4704398\Sheets\107714_4704398_S8001.dgn

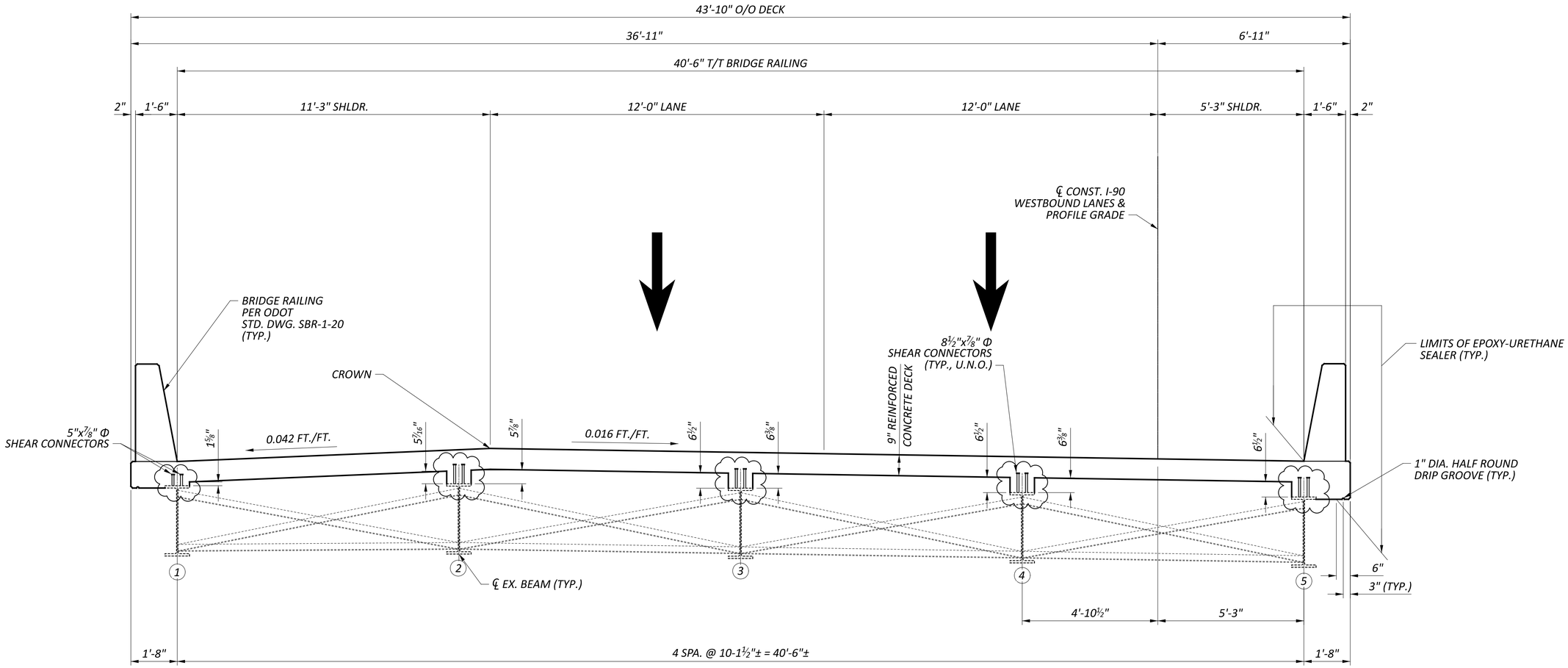

TRANSVERSE SECTION

(LOOKING UPSTATION)

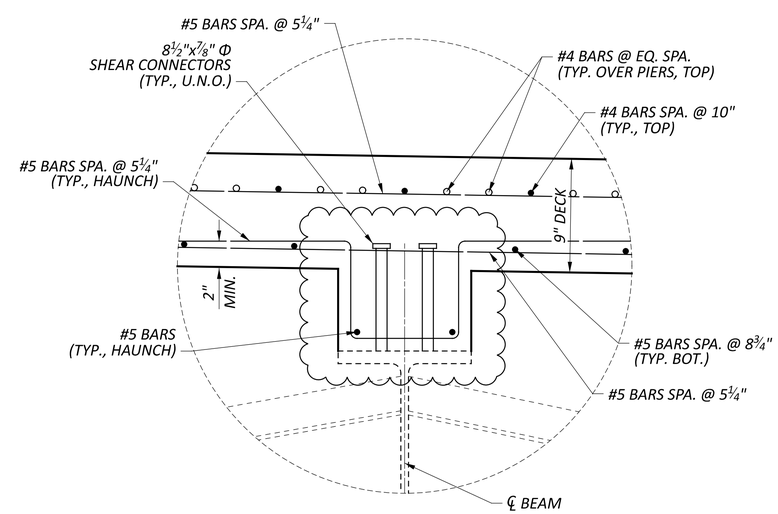

TYPICAL HAUNCH REINFORCING DETAIL

(APPLIES TO BEAMS 2 THRU 5)

TRANSVERSE SECTION
BRIDGE NO. LOR-00090-11.385L
I-90 WB OVER MURRAY RIDGE RD.

SFN	4704398
DESIGN AGENCY	E.L. ROBINSON ENGINEERING, 1468 West 9th St, Suite 800 Cleveland, Ohio; 950 Goodale Blvd, Suite 180 Grandview Heights, Ohio
DESIGNER	MRV
CHECKER	RER
REVIEWER	XXX MM-DD-YY
PROJECT ID	107714
SUBSET	4
TOTAL	8
SHEET	P.4
TOTAL	8

LOR-90-10.76

MODEL: Sheet PAPERSIZE: 34x22 (in.) DATE: 2/5/2025 TIME: 1:18:35 PM USER: mvogt
P:_OHDOTCEv02_Worksets\107714\400-Engineering\Structures\4704398\Sheets\107714_4704398_ST001.dgn

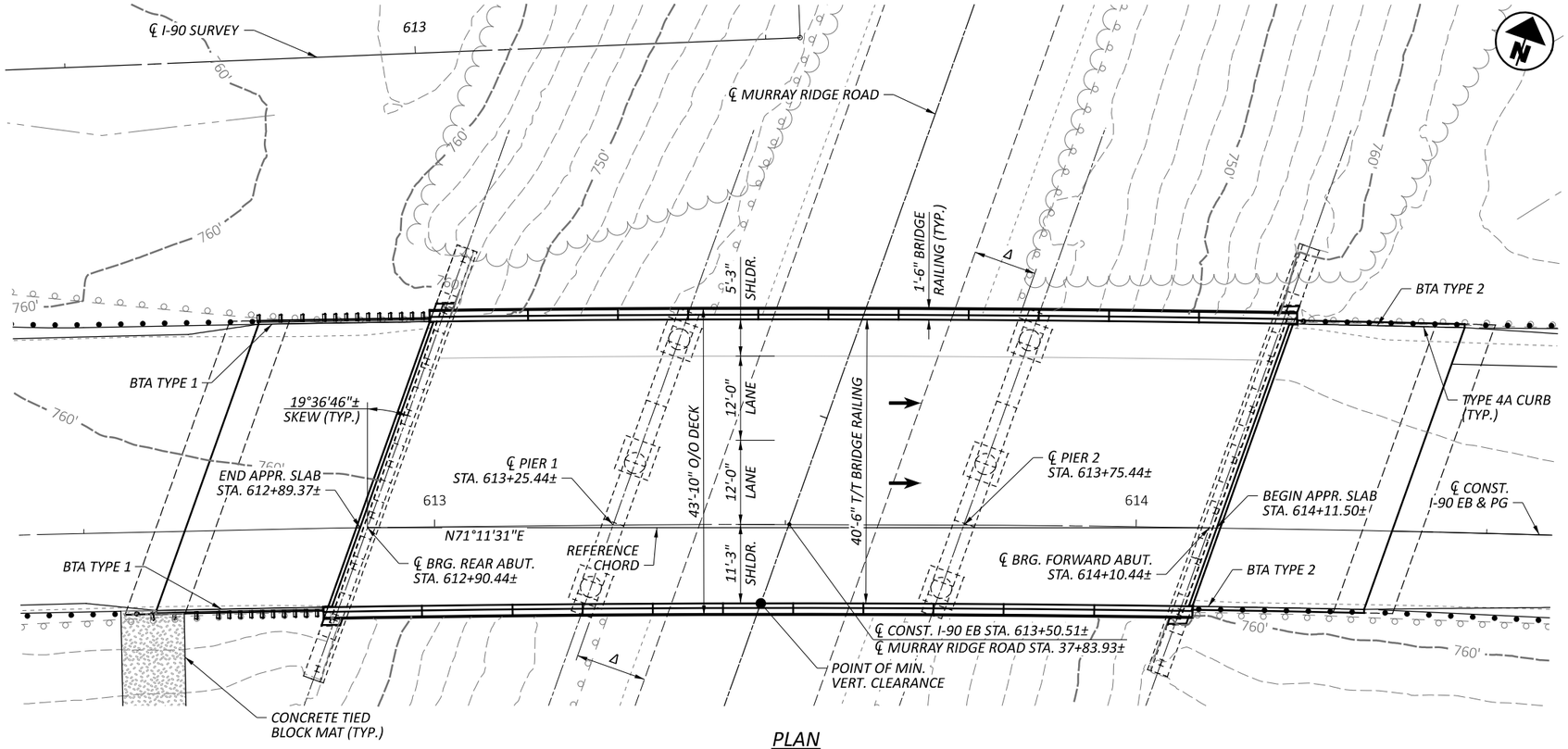

PLAN

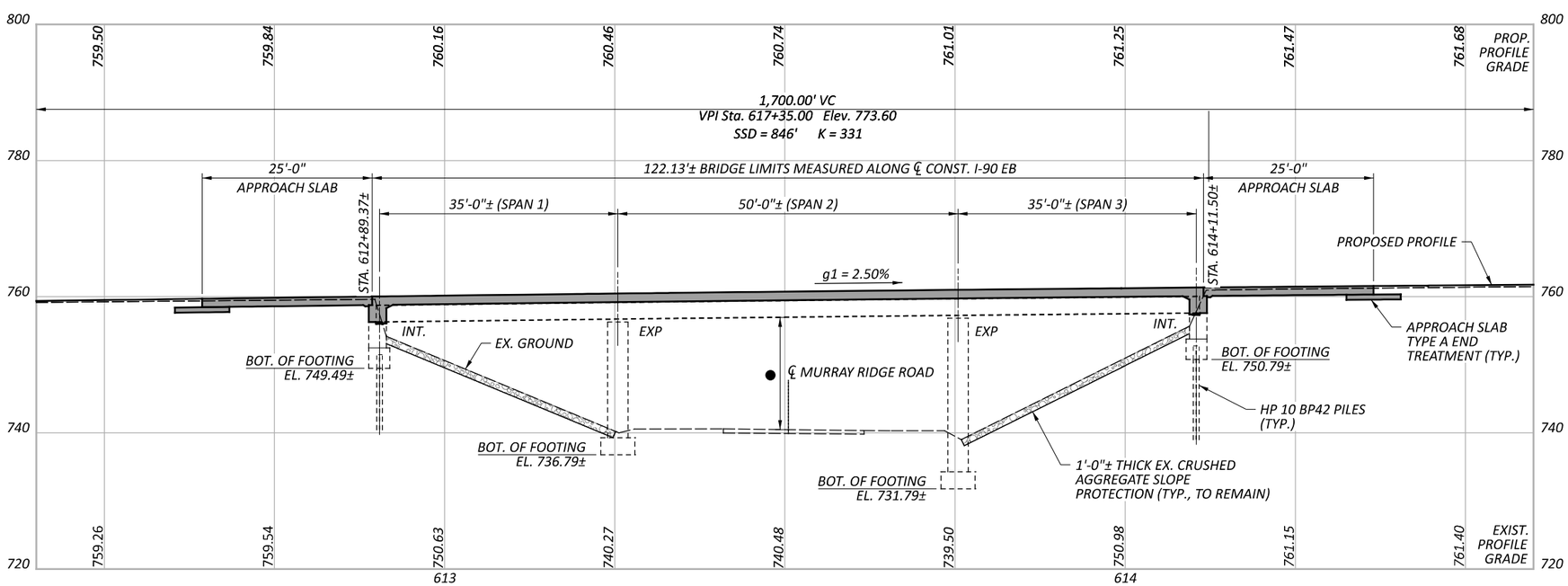

PROFILE ALONG ℄ CONSTRUCTION I-90 EB

BENCHMARK DATA

BM #1 STA.	,	ELEV.	,	OFFSET	,
BM #2 STA.	,	ELEV.	,	OFFSET	,
BM #3 STA.	,	ELEV.	,	OFFSET	,
BM #4 STA.	,	ELEV.	,	OFFSET	,

FOR ADDITIONAL BENCHMARK INFORMATION. SEE ROADWAY PLAN SHEETS.

NOTES

1. EARTHWORK LIMITS SHOWN ARE APPROXIMATE. ACTUAL SLOPES ARE TO CONFORM TO PLAN CROSS SECTIONS.
2. EXISTING ELEVATIONS UNDER BRIDGE ARE APPROXIMATED BASED ON EXISTING PLANS.

TRAFFIC DATA

I-90 EB DESIGN TRAFFIC (ONE-WAY):

2025 ADT = 8,640 2025 ADTT = 2,506
2045 ADT = 11,950 2045 ADTT = 3,824
DIRECTIONAL DISTRIBUTION = 0.56

CURVE DATA

P.I. = STA. 620+62.79
Δ = 25°08'55" RT
Dc = 01°28'00"
R = 3,906.53'
T = 871.38'
L = 1,714.68'
E = 96'

LEGEND

● 14'-7" MINIMUM VERTICAL CLEARANCE REQUIRED BY SCOPE
14'-9 5/16"± ESTIMATED MINIMUM VERTICAL CLEARANCE

Δ 10'-0" REQUIRED MINIMUM HORIZONTAL CLEARANCE
10'-0 5/8"± PROVIDED MINIMUM HORIZONTAL CLEARANCE

EXISTING STRUCTURE

TYPE: THREE SPAN CONTINUOUS ROLLED STEEL BEAM SUPERSTRUCTURE WITH COMPOSITE REINFORCED CONCRETE DECK ON INTEGRAL ABUTMENTS WITH H-PILES TO ROCK AND CAP-AND-COLUMN PIERS ON SPREAD FOUNDATIONS
SPANS: 35'-0"±, 50'-0"±, 35'-0"± C/C BRG. ALONG ℄ CONST. I-90 EB
ROADWAY: 40'-6"± T/T BRIDGE RAILING
LOADING: HS20-44 & THE INTERSTATE ALTERNATE LOAD
SKEW: 19°36'46"± L.F. TO LOCAL TANGENT
WEARING SURFACE: 4"± BITUMINOUS ASPHALT
APPROACH SLABS: 25'-0"± LONG (AS-1-67)
ALIGNMENT: 1°28'± CURVE RT.
SUPERELEVATION: 0.047 FT/FT±
STRUCTURE FILE NUMBER: 4704371
DATE BUILT: 7/1/1974
DISPOSITION: TO BE REHABILITATED

PROPOSED STRUCTURE

TYPE: THREE SPAN CONTINUOUS ROLLED STEEL BEAM SUPERSTRUCTURE WITH COMPOSITE REINFORCED CONCRETE DECK ON INTEGRAL ABUTMENTS WITH H-PILES TO ROCK AND CAP-AND-COLUMN PIERS ON SPREAD FOUNDATIONS
SPANS: 35'-0"±, 50'-0"±, 35'-0"± C/C BRG. ℄ CONST. I-90 EB
ROADWAY: 40'-6" T/T BRIDGE RAILING
LOADING: HL93 AND 60 PSF FUTURE WEARING SURFACE (SUPERSTRUCTURE)
HS20-44 & THE INTERSTATE ALTERNATE LOAD (SUBSTRUCTURE)
SKEW: 19°36'46"± L.F. TO LOCAL TANGENT
WEARING SURFACE: N/A
APPROACH SLABS: 25'-0"LONG WITH TYPE A END TREATMENT (AS-1-15 & AS-2-15)
ALIGNMENT: 1°28'± CURVE RT.
SUPERELEVATION: 0.047 FT/FT
DECK AREA: 5357 SF
COORDINATES: LATITUDE N 44°24'09.6"
LONGITUDE W 82°08'54.6"

SITE PLAN
BRIDGE NO. LOR-00090-11.570R
I-90 EB OVER MURRAY RIDGE RD.

SFN 4704371
DESIGN AGENCY
E.L. ROBINSON ENGINEERING
1468 West 9th St, Suite 800 Cleveland, Ohio
950 Goodale Blvd, Suite 180 Grandview Heights, Ohio

DESIGNER	CHECKER
FIB	RER

REVIEWER XXX MM-DD-YY
PROJECT ID 107714

SUBSET	TOTAL
1	4

SHEET	TOTAL
P.5	8

LOR-90-10.76

MODEL: CLX_S090_EB - LOR-00090-11.57R PAPERSIZE: 17x11 (in.) DATE: 1/20/2025 TIME: 10:31:58 AM USER: mvogt
P:_OHDOTCEv02_Worksets\107714\400-Engineering\Structures\4704371\Sheets\107714_4704371_SP001.dgn

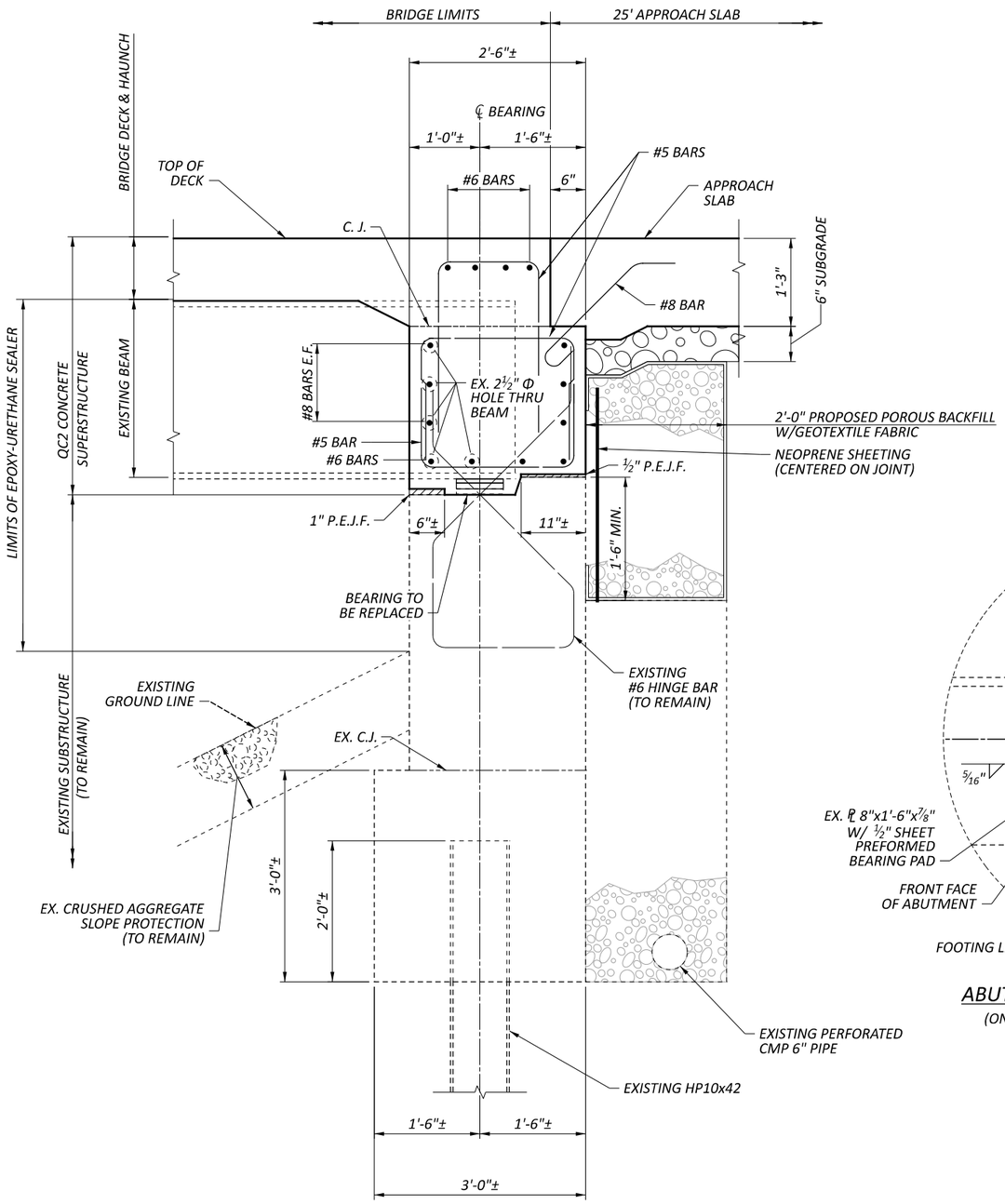

PROPOSED ABUTMENT SECTION

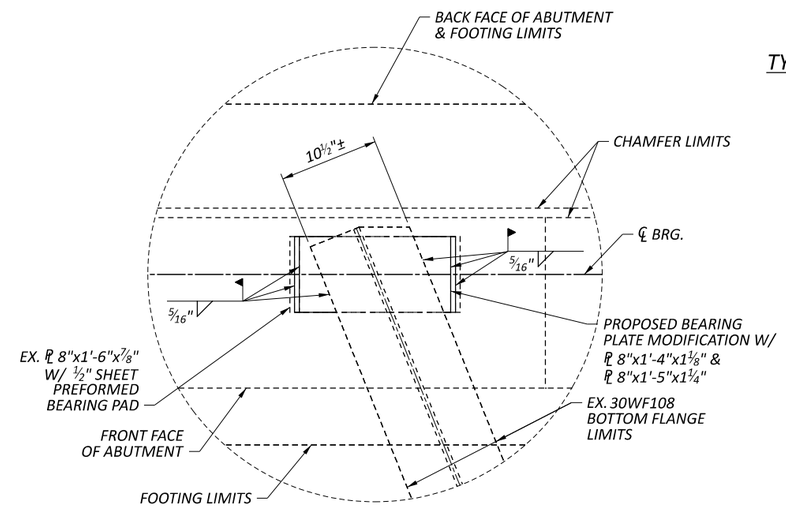

ABUTMENT BEARING MODIFICATION PLAN

(ONLY SUPERSTRUCTURE STEEL SHOWN FOR CLARITY)

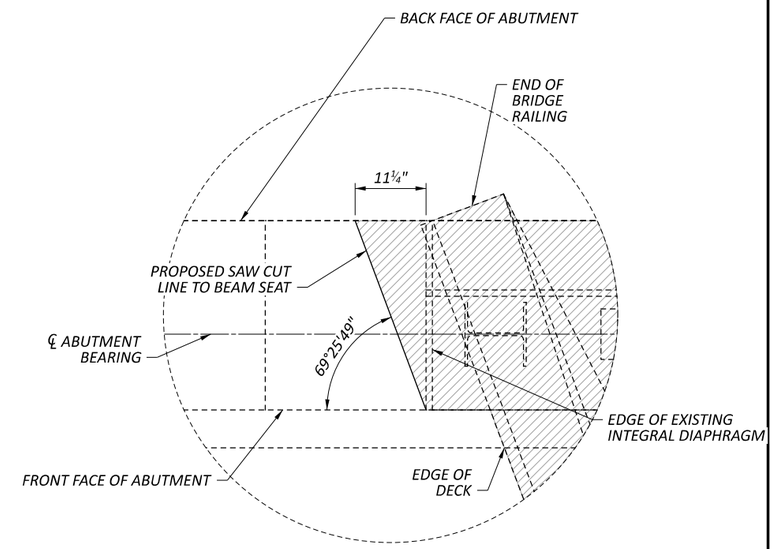

TYPICAL WINGWALL MODIFICATION REMOVAL DETAIL

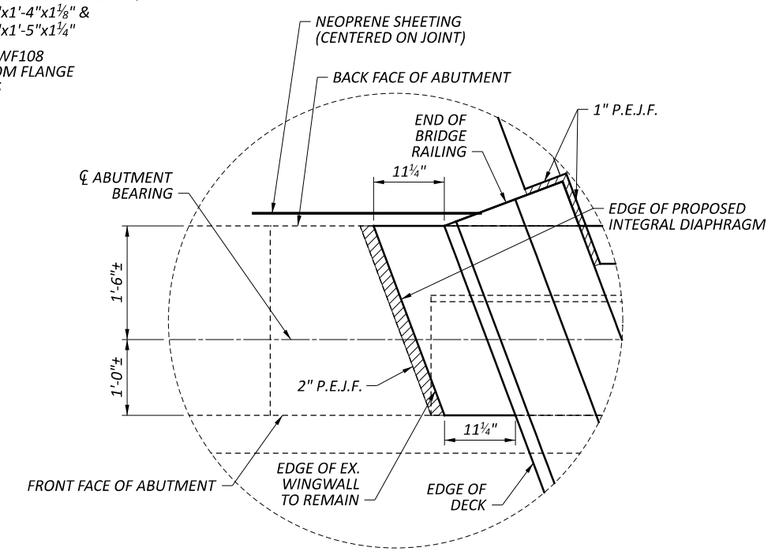

TYPICAL WINGWALL MODIFICATION DETAIL

TYPICAL ABUTMENT SECTIONS
BRIDGE NO. LOR-00090-11.570R
I-90 EB OVER MURRAY RIDGE RD.

SFN	4704371
DESIGN AGENCY	E.L. ROBINSON ENGINEERING, 1468 West 9th St., Suite 800, Cleveland, Ohio; 950 Goodale Blvd., Suite 180, Grandview Heights, Ohio
DESIGNER	BCW
CHECKER	MRV
REVIEWER	XXX MM-DD-YY
PROJECT ID	107714
SUBSET	2
TOTAL	4
SHEET	P.6
TOTAL	8

LOR-90-10.76

MODEL: Sheet PAPERSIZE: 17x11 (in.) DATE: 1/20/2025 TIME: 10:32:02 AM USER: mvogt
P:_OHDOTCEv02_Worksets\107714\400-Engineering\Structures\4704371\Sheets\107714_4704371_SR001.dgn

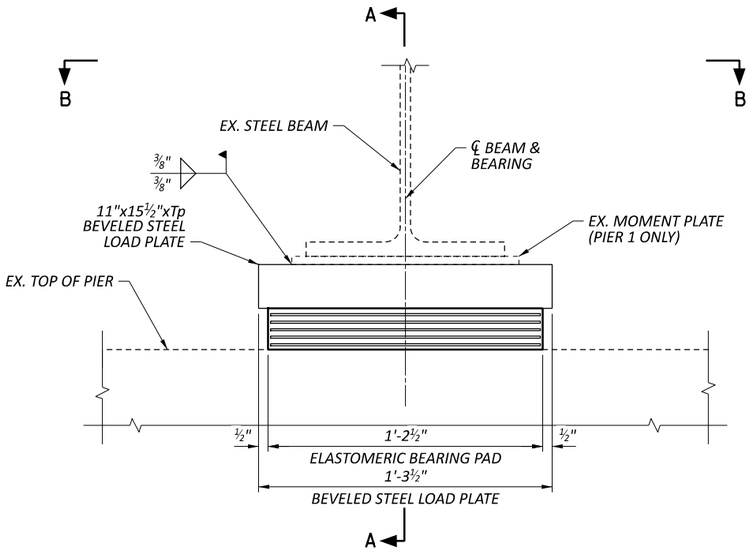

PIER BEARING ELEVATION

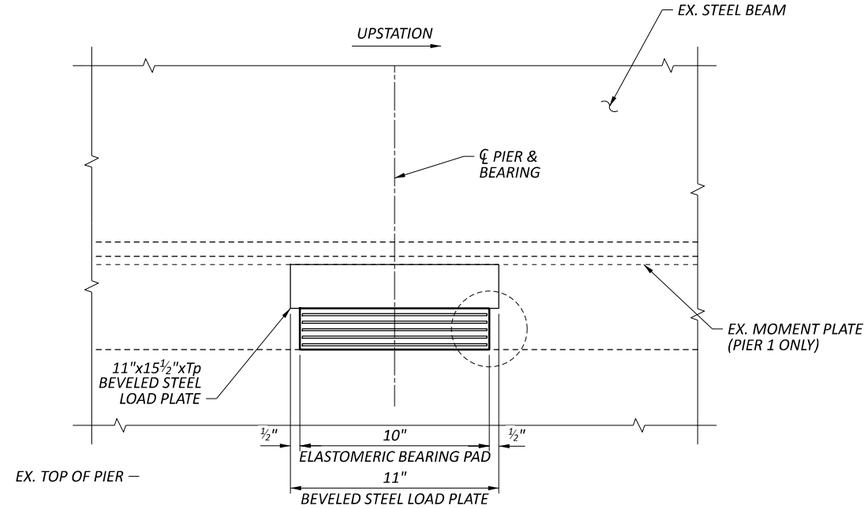

SECTION A-A

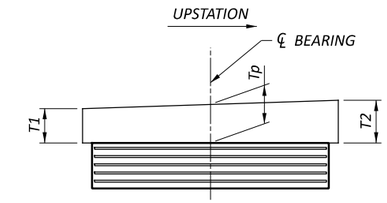

BEVELED PLATE DETAIL

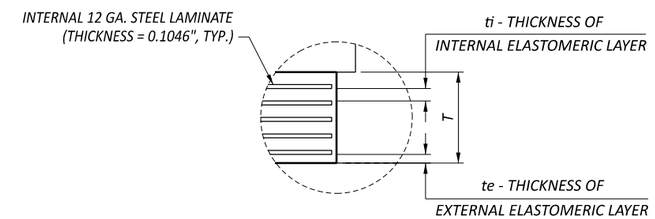

DETAIL 'A'

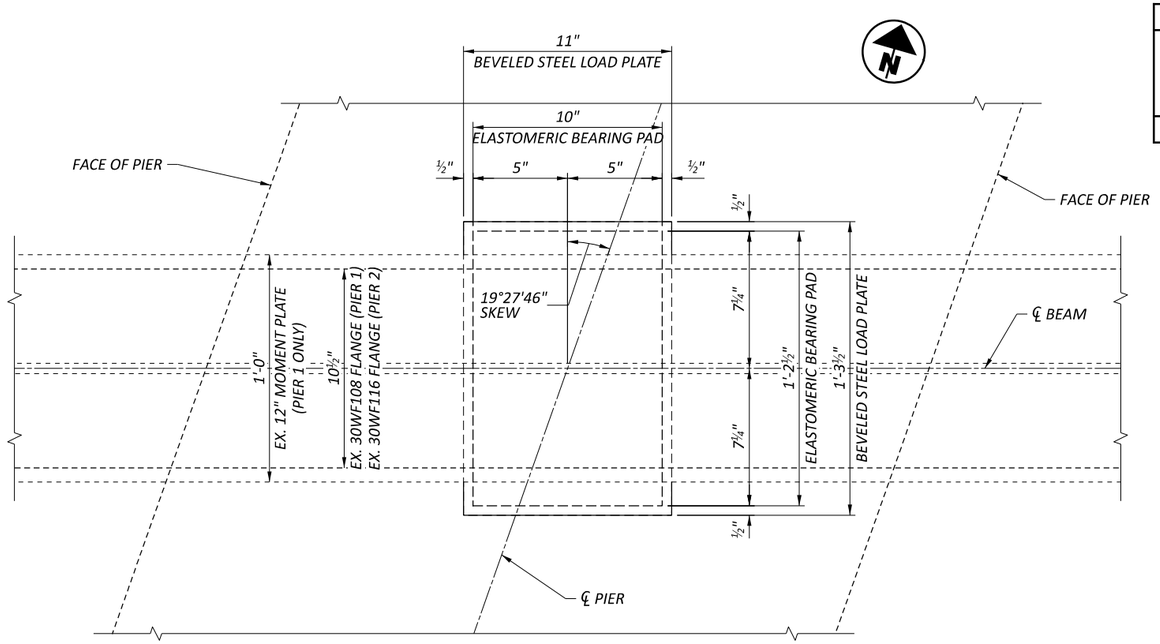

SECTION B-B

ELASTOMERIC BEARING ASSEMBLY DATA

LOCATION	TYPE	NO. REQ'D.	DL (KIP)	LL W/O IMPACT (KIP)	MAX DESIGN LOAD (DL + LL) (KIP)	ti (IN.)	te (IN.)	NO. OF INTERNAL LAMINATES (ti)	NO. OF EXTERNAL LAMINATES (te)	T (IN.)	T1 (IN.)	Tp (IN.)	T2 (IN.)
PIER 1 & 2	EXP.	12	81	114	195	0.2900	0.2030	5	1	2.1760	2.2500	2.3125	2.37500

NOTES:

1. THE ELASTOMER IS TO HAVE A HARDNESS OF 50 DUROMETER. THE BEARINGS WERE DESIGNED IN ACCORDANCE WITH SECTION 14.7.6 (METHOD A) OF THE AASHTO LRFD BRIDGE DESIGN SPECIFICATIONS. THE LONG-TERM COMPRESSION PROOF LOAD TEST (AASHTO STANDARD SPECIFICATIONS FOR HIGHWAY BRIDGES, DIVISION II, SECTION 18.7.2.6) IS NOT REQUIRED.
2. THE STEEL LOAD PLATES AND HP SHAPES ARE TO BE ASTM A36 GRADE 36 STEEL AND PRIME PAINTED IN ACCORDANCE WITH C&MS 708.01.
3. THE STEEL LOAD PLATE IS TO BE BONDED BY VULCANIZATION TO THE ELASTOMER DURING THE MOLDING PROCESS. CONTROL WELDING SO THAT THE PLATE TEMPERATURE AT THE ELASTOMER BONDED SURFACE DOES NOT EXCEED 300°F AS DETERMINED BY THE USE OF PYROMETRIC STICKS OR OTHER TEMPERATURE MONITORING DEVICES.
4. TOTAL DESIGN LOAD FOR BEARINGS EQUALS THE SUM OF THE DEAD LOADS AND LIVE LOADS TABULATED IN THE BEARING TABLE. IMPACT IS NOT INCLUDED.
5. BASIS OF PAYMENT: THE UNIT BID PRICE FOR ALL PIER BEARINGS IS TO INCLUDE THE LOAD PLATE, PRIME COAT PAINT AND ALL MATERIALS, LABOR, TESTING, AND INCIDENTALS NECESSARY TO FURNISH AND INSTALL LAMINATED ELASTOMER BEARINGS. PAYMENT WILL BE MADE AT THE CONTRACT PRICE FOR ITEM 516 - ELASTOMERIC BEARINGS WITH INTERNAL LAMINATES AND LOAD PLATE, AS PER PLAN (10"x14½"x2.176" W/ LOAD PLATE)
6. ALL BEARINGS ARE TO BE MARKED PRIOR TO SHIPPING. THE MARKS ARE TO INCLUDE THE BEARING LOCATION ON THE BRIDGE, AND A DIRECTION ARROW THAT POINTS UPSTATION. ALL MARKS ARE TO BE PERMANENT AND BE VISIBLE AFTER THE BEARING IS INSTALLED.

PIER BEARING DETAILS
BRIDGE NO. LOR-00090-11.570R
I-90 EB OVER MURRAY RIDGE RD.

SFN 4704371
DESIGN AGENCY
E.L. ROBINSON ENGINEERING
1468 West 9th St, Suite 800 Cleveland, Ohio
950 Goodale Blvd, Suite 180 Grandview Heights, Ohio
DESIGNER MRV | CHECKER RER
REVIEWER XXX MM-DD-YY
PROJECT ID 107714
SUBSET 3 | TOTAL 4
SHEET P.7 | TOTAL 8

LOR-90-10.76
MODEL: Sheet PAPERSIZE: 17x11 (in.) DATE: 1/20/2025 TIME: 10:32:04 AM USER: mvogt
P:_OHDOTCEv02_Worksets\107714\400-Engineering\Structures\4704371\Sheets\107714_4704371_S8001.dgn

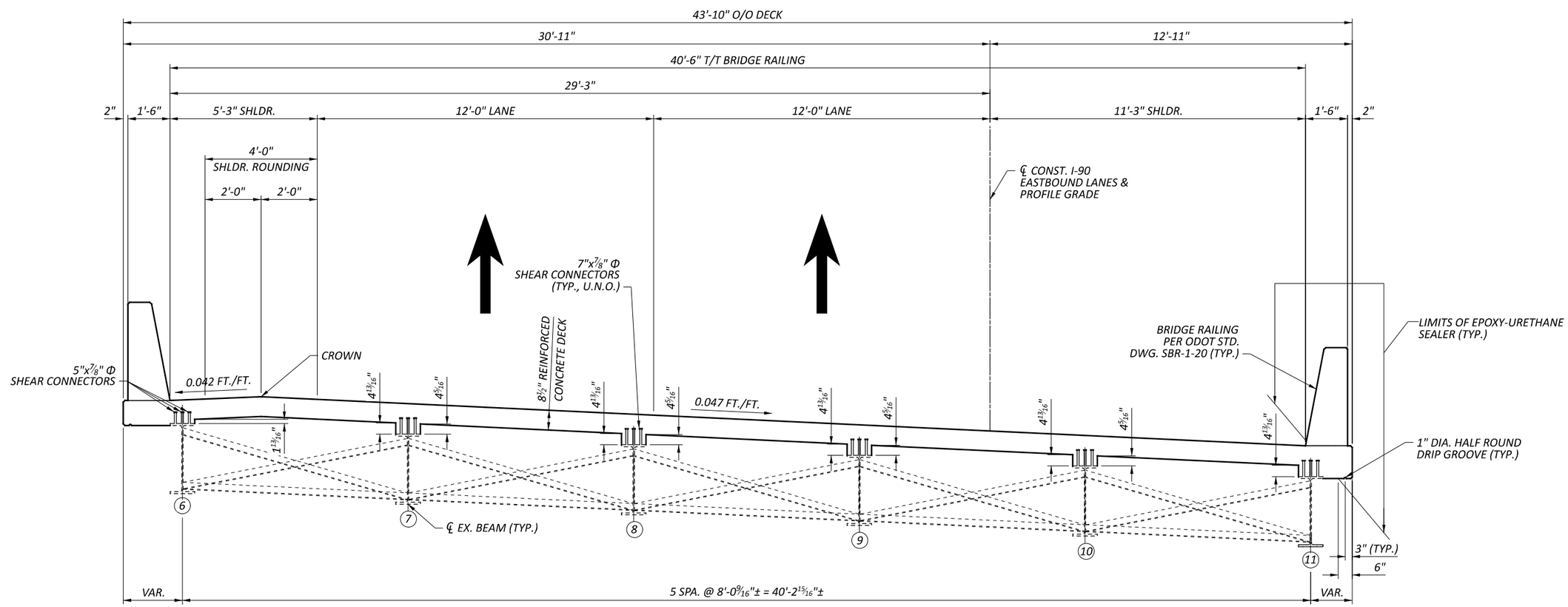

TRANSVERSE SECTION
(LOOKING UPSTATION)

TRANSVERSE SECTION
BRIDGE NO. LOR-00090-11.570R
I-90 EB OVER MURRAY RIDGE RD.

SFN	4704371
DESIGN AGENCY	E.L. ROBINSON ENGINEERING, 1468 West 9th St, Suite 800 Cleveland, Ohio; 950 Goodale Blvd, Suite 180 Grandview Heights, Ohio
DESIGNER	MRV
CHECKER	RER
REVIEWER	XXX MM-DD-YY
PROJECT ID	107714
SUBSET	4
TOTAL	4
SHEET	P.8
TOTAL	8

LOR-90-10.76

MODEL: Sheet PAPERSIZE: 17x11 (in.) DATE: 1/20/2025 TIME: 10:32:06 AM USER: mvogt
P:_OHDOTCEv02_Worksets\107714\400-Engineering\Structures\4704371\Sheets\107714_4704371_ST001.dgn

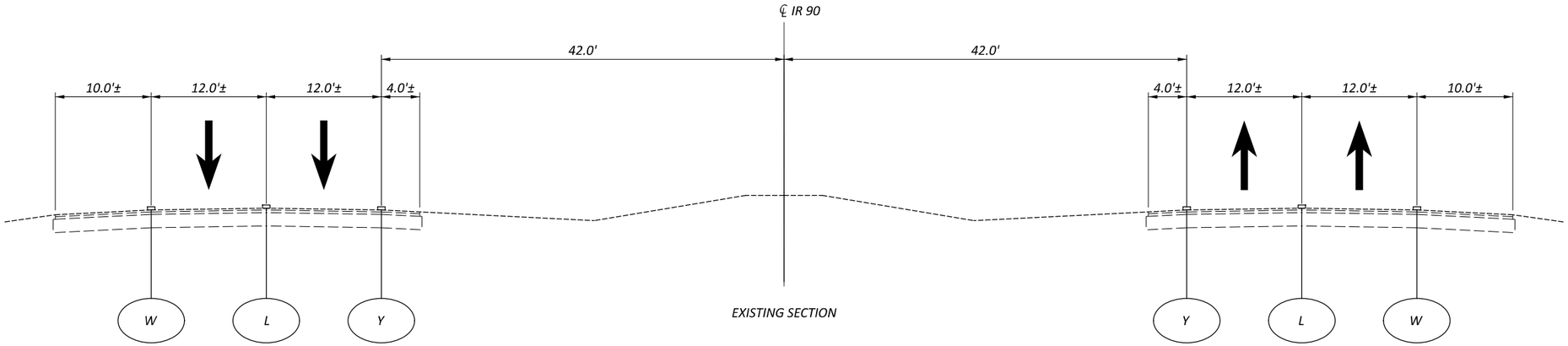

EXISTING SECTION

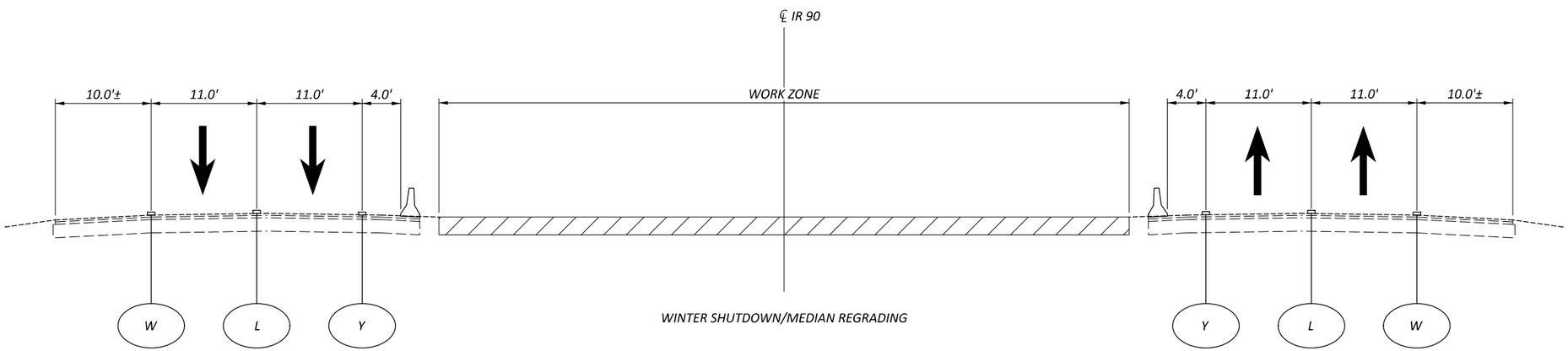

WINTER SHUTDOWN/MEDIAN REGRADING

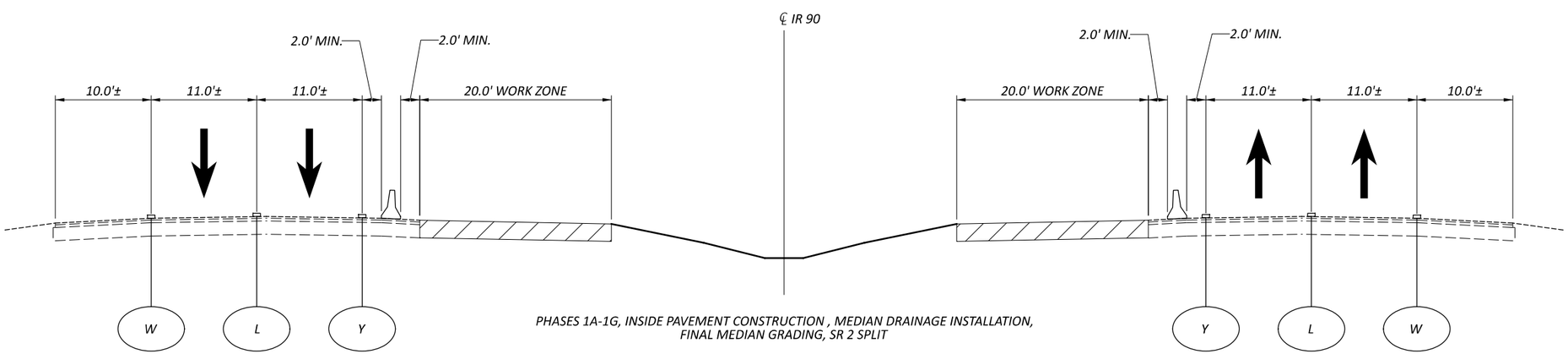

PHASES 1A-1G, INSIDE PAVEMENT CONSTRUCTION , MEDIAN DRAINAGE INSTALLATION,
FINAL MEDIAN GRADING, SR 2 SPLIT

MAINTENANCE OF TRAFFIC TYPICAL SECTIONS

DESIGN AGENCY

E.L. ROBINSON ENGINEERING

1468 West 9th St, Suite 800
Cleveland, Ohio
950 Goodale Blvd, Suite 180
Grandview Heights, Ohio

DESIGNER
XXX

REVIEWER
XXX MM-DD-YY

PROJECT ID
107714

SHEET P.0 TOTAL 0

LOR-90-10.76

MODEL: Sheet PAPERSIZE: 17x11 (in.) DATE: 2/7/2025 TIME: 5:13:46 PM USER: sbing
P:_OHDOTCEv02_Worksets\107714\400-Engineering\MOT\Sheets\107714_MY101.dgn

Typicals now shown on roll plots

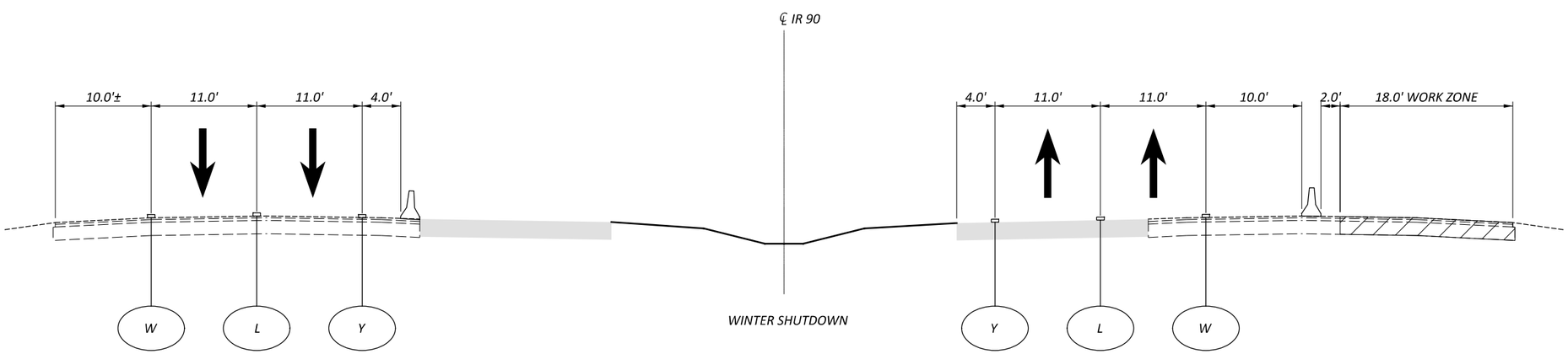

MAINTENANCE OF TRAFFIC TYPICAL SECTIONS

LOR-90-10.76

MODEL: Sheet PAPERSIZE: 17x11 (in.) DATE: 2/7/2025 TIME: 5:13:47 PM USER: sbing
P:_OHDOTCEv02_Worksets\107714\00>Engineering\MOT\Sheets\107714_MY102.dgn

DESIGN AGENCY
E.L. ROBINSON ENGINEERING
1468 West 9th St, Suite 800 Cleveland, Ohio
950 Goodale Blvd, Suite 180 Grandview Heights, Ohio

DESIGNER
XXX

REVIEWER
XXX MM-DD-YY

PROJECT ID
107714

SHEET P.0 TOTAL 0

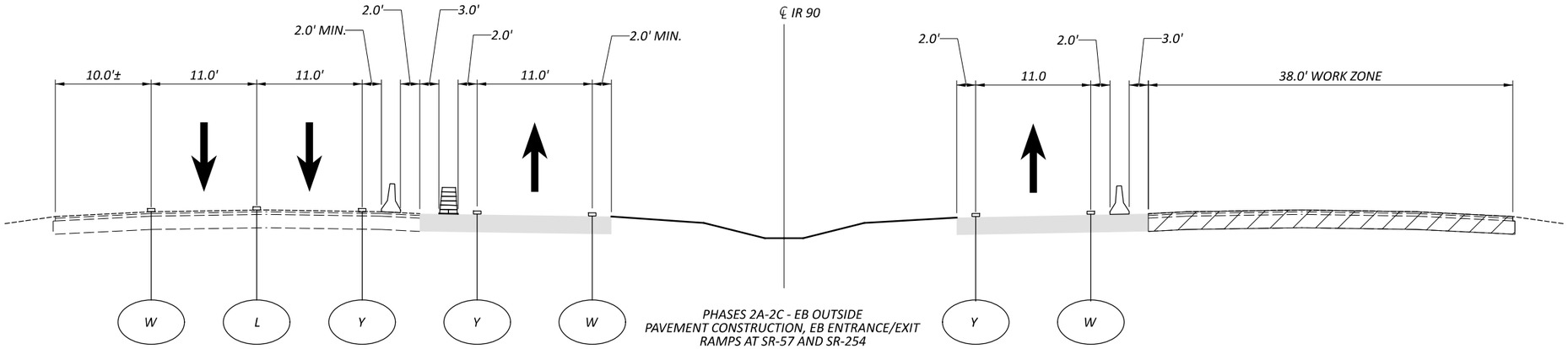

PHASES 2A-2C - EB OUTSIDE PAVEMENT CONSTRUCTION, EB ENTRANCE/EXIT RAMPS AT SR-57 AND SR-254

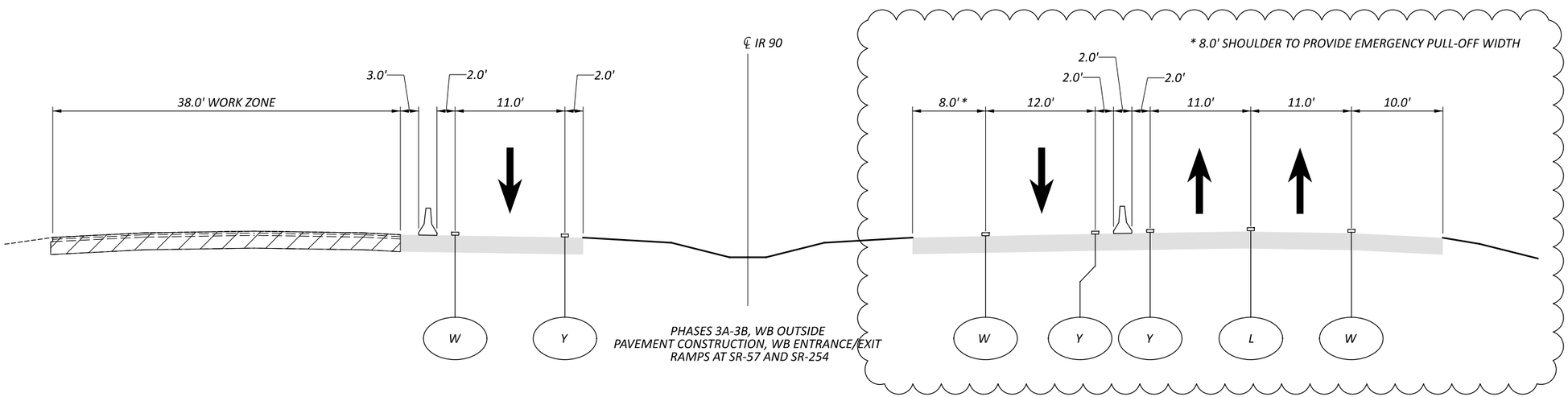

PHASES 3A-3B, WB OUTSIDE PAVEMENT CONSTRUCTION, WB ENTRANCE/EXIT RAMPS AT SR-57 AND SR-254

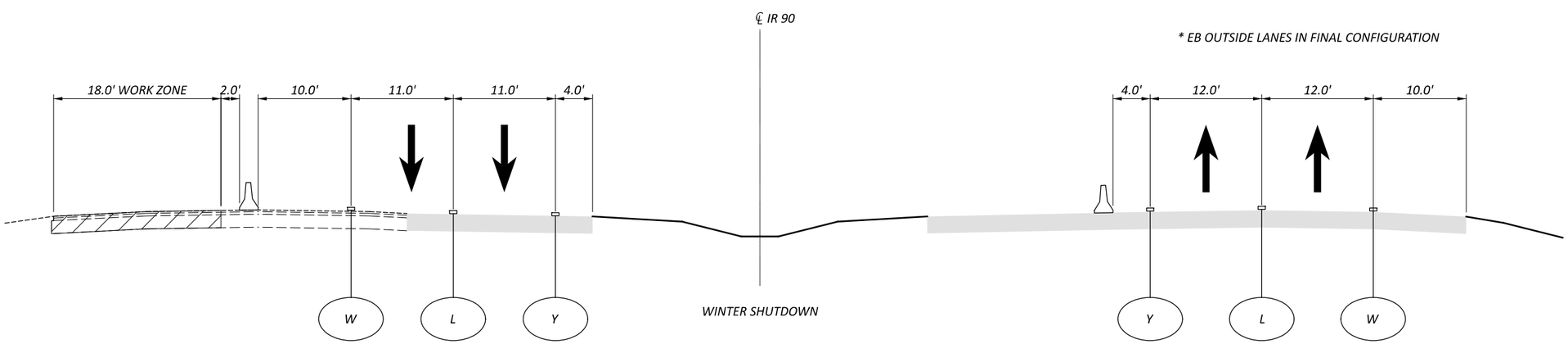

WINTER SHUTDOWN

MAINTENANCE OF TRAFFIC TYPICAL SECTIONS

DESIGN AGENCY

E.L. ROBINSON ENGINEERING

1468 West 9th St., Suite 800
Cleveland, Ohio
950 Goodale Blvd., Suite 180
Grandview Heights, Ohio

DESIGNER: XXX

REVIEWER: XXX MM-DD-YY

PROJECT ID: 107714

SHEET: P.0 TOTAL: 0

LOR-90-10.76

MODEL: Sheet PAPERSIZE: 17x11 (in.) DATE: 2/7/2025 TIME: 5:13:47 PM USER: sbing
P:_OHDOTCEv02_Worksets\107714\400-Engineering\MOT\Sheets\107714_MY103.dgn

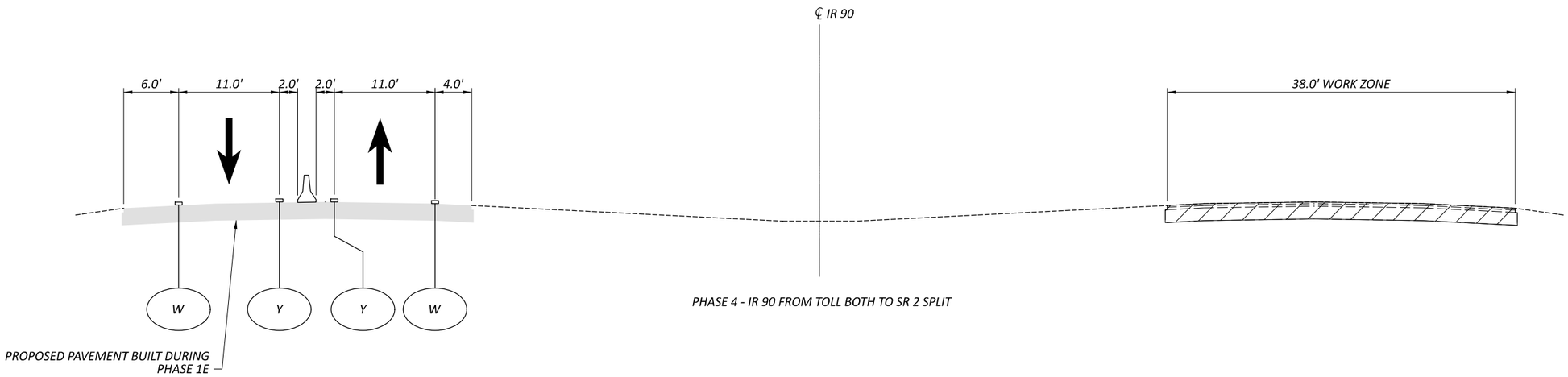

PHASE 4 - IR 90 FROM TOLL BOTH TO SR 2 SPLIT

MAINTENANCE OF TRAFFIC TYPICAL SECTIONS

LOR-90-10.76

MODEL: Sheet PAPERSIZE: 17x11 (in.) DATE: 2/7/2025 TIME: 5:13:47 PM USER: sbling
P:_OHDOTCEv02_Worksets\107714\400-Engineering\MOT\Sheets\107714_MY104.dgn

DESIGN AGENCY
E.L. ROBINSON ENGINEERING
1468 West 9th St, Suite 800
Cleveland, Ohio
950 Goodale Blvd, Suite 180
Grandview Heights, Ohio

DESIGNER
XXX

REVIEWER
XXX MM-DD-YY

PROJECT ID
107714

SHEET P.0 TOTAL 0

C1

P.I. Sta. 101+02.62
Δ = 3° 45' 41" (LT)
Dc = 1° 50' 00"
R = 3,125.23'
T = 102.62'
L = 205.16'
E = 1.68'
C = 205.13'

C2

P.I. Sta. 104+17.85
Δ = 7° 47' 12" (RT)
Dc = 1° 50' 00"
R = 3,125.23'
T = 212.69'
L = 424.73'
E = 7.23'
C = 424.40'

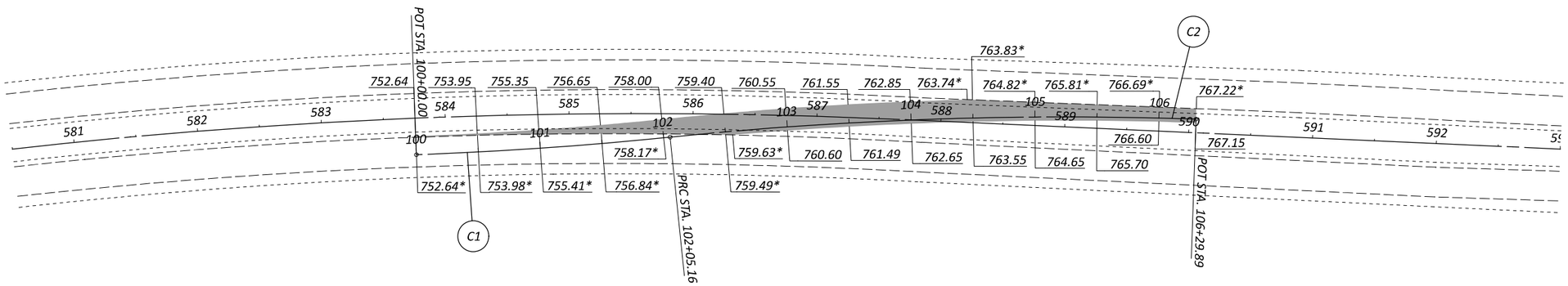

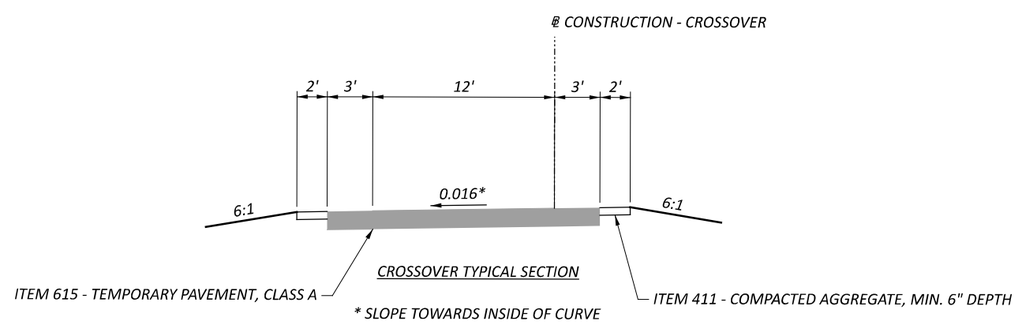

* DENOTES EXISTING ELEVEATION

HORIZONTAL SCALE IN FEET
0 15 50 100

CROSSOVER DETAIL

LOR-90-10.76

MODEL: 107714_MM1052 PAPERSIZE: 34x22 (in.) DATE: 2/7/2025 TIME: 2:51:08 PM USER: cmwood
P:_OHDOTCEx02_Worksets\107714\400-Engineering\MOT\Sheets\107714_MM1052.dgn

DESIGN AGENCY
E.L. ROBINSON ENGINEERING
1468 West 9th St, Suite 500 Cleveland, Ohio
950 Goodville Blvd, Suite 180 Grandview Heights, Ohio

DESIGNER
DWB

REVIEWER
XXX MM-DD-YY

PROJECT ID
107714

SHEET P.0 TOTAL 0

C1

P.I. Sta. 101+86.34
Δ = 6° 49' 27" (RT)
Dc = 1° 50' 00"
R = 3,125.23'
T = 186.34'
L = 372.23'
E = 5.55'
C = 372.01'

C2

P.I. Sta. 105+45.48
Δ = 6° 20' 45" (LT)
Dc = 1° 50' 00"
R = 3,125.23'
T = 173.25'
L = 346.14'
E = 4.80'
C = 345.96'

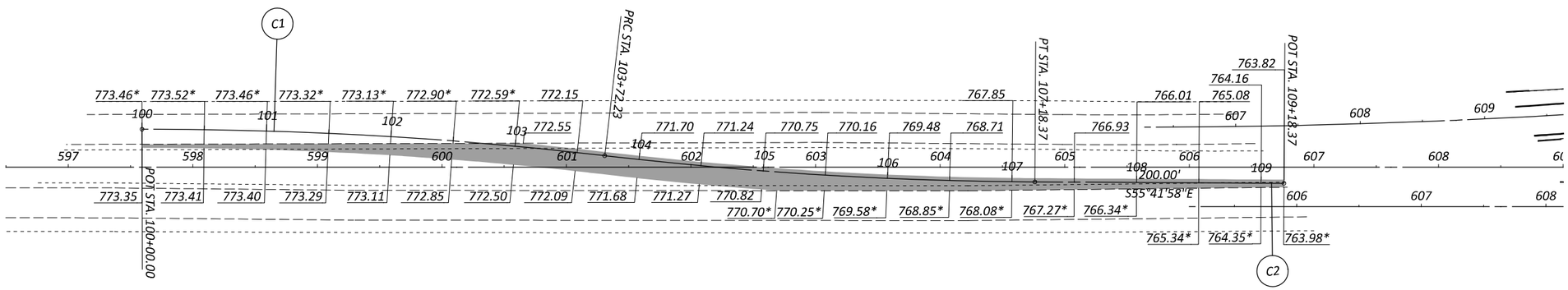

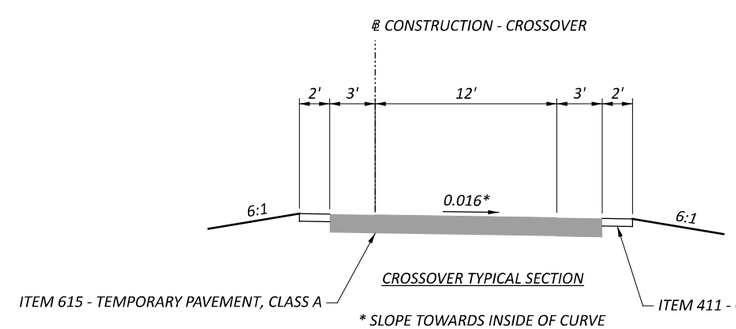

* DENOTES EXISTING ELEVEATION

HORIZONTAL SCALE IN FEET
0 25 50 100

CROSSOVER DETAIL

LOR-90-10.76

MODEL: 107714_MM1031 PAPERSIZE: 34x22 (in.) DATE: 2/7/2025 TIME: 2:47:13 PM USER: cmwood
P:_OHDOTCEv02_Worksets\107714\400-Engineering\MOT\Sheets\107714_MM1031.dgn

DESIGN AGENCY
E.L. ROBINSON ENGINEERING
1468 West 9th St, Suite 800 Cleveland, Ohio
959 Goodville Blvd, Suite 180 Grandview Heights, Ohio

DESIGNER
DWB

REVIEWER
XXX MM-DD-YY

PROJECT ID
107714

SHEET P.0 TOTAL 0

C1

P.I. Sta. 105+25.98
Δ = 19° 06' 25" (LT)
Dc = 1° 50' 00"
R = 3,125.23'
T = 525.98'
L = 1,042.19'
E = 43.95'
C = 1,037.37'

C2

P.I. Sta. 111+38.05
Δ = 3° 30' 50" (RT)
Dc = 1° 50' 00"
R = 3,125.23'
T = 95.86'
L = 191.66'
E = 1.47'
C = 191.63'

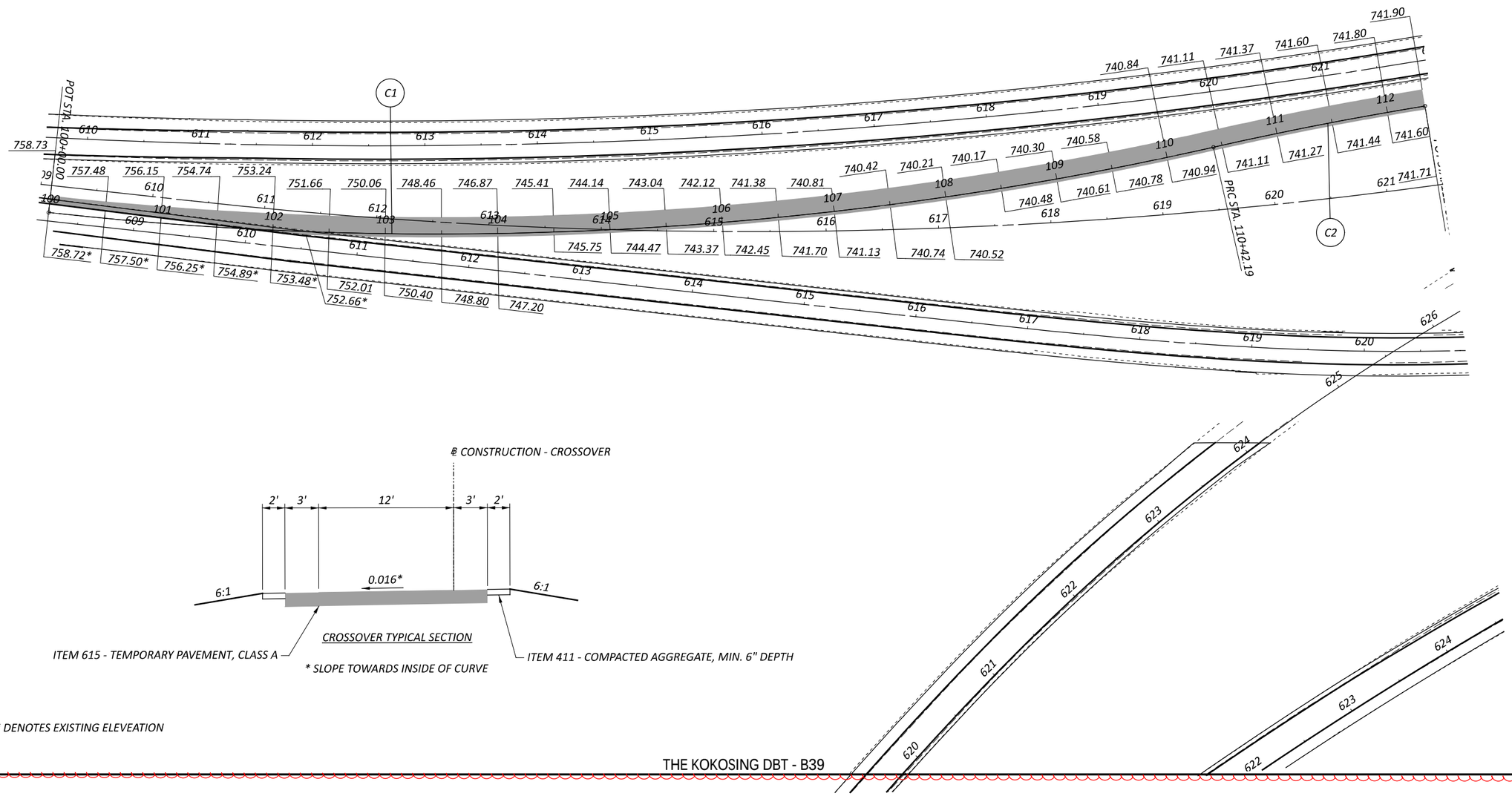

* DENOTES EXISTING ELEVEATION

THE KOKOSING DBT - B39

HORIZONTAL SCALE IN FEET
0 25 50 100

CROSSOVER DETAIL

DESIGN AGENCY
E.L. ROBINSON ENGINEERING
1468 West 9th St., Suite 800
Cleveland, Ohio
250 Goodale Blvd, Suite 180
Grandview Heights, Ohio

DESIGNER: DWB
REVIEWER: XXX MM-DD-YY
PROJECT ID: 107714
SHEET: P.0 TOTAL: 0

LOR-90-10.76

MODEL: 107714_MM1032 PAPERSIZE: 34x22 (in.) DATE: 2/7/2025 TIME: 2:48:30 PM USER: cmwood
P:_OHDOTCEv02_Worksets\107714\400-Engineering\MOT\Sheets\107714_MM1032.dgn

C1

P.I. Sta. 202+59.20
Δ = 12° 54' 15" (LT)
Dc = 2° 29' 59"
R = 2,292.00'
T = 259.20'
L = 516.21'
E = 14.61'
C = 515.12'

C2

P.I. Sta. 208+23.88
Δ = 11° 14' 43" (RT)
Dc = 1° 50' 00"
R = 3,125.23'
T = 307.68'
L = 613.38'
E = 15.11'
C = 612.39'

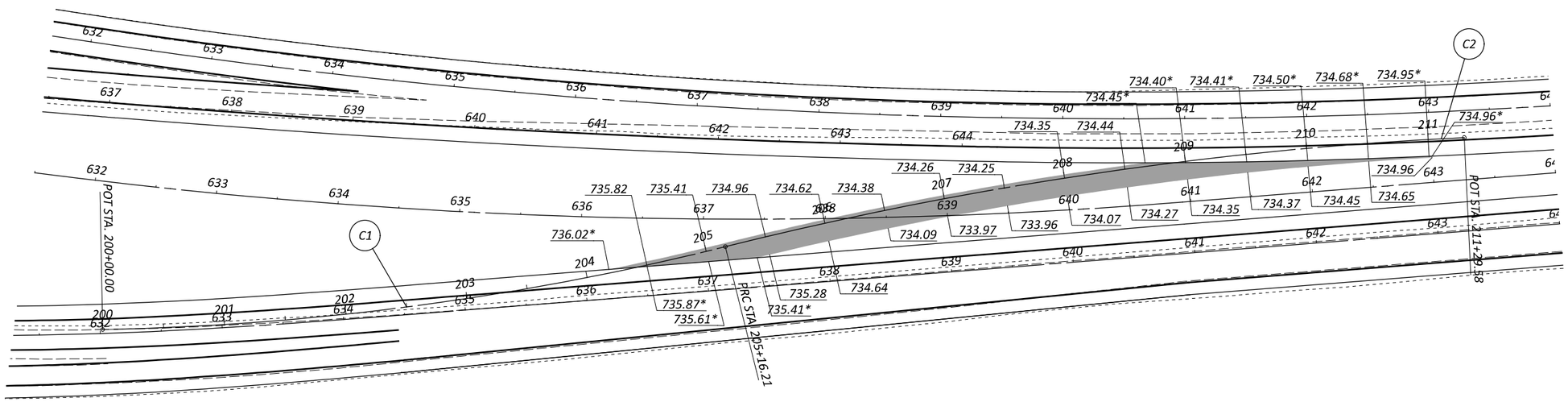

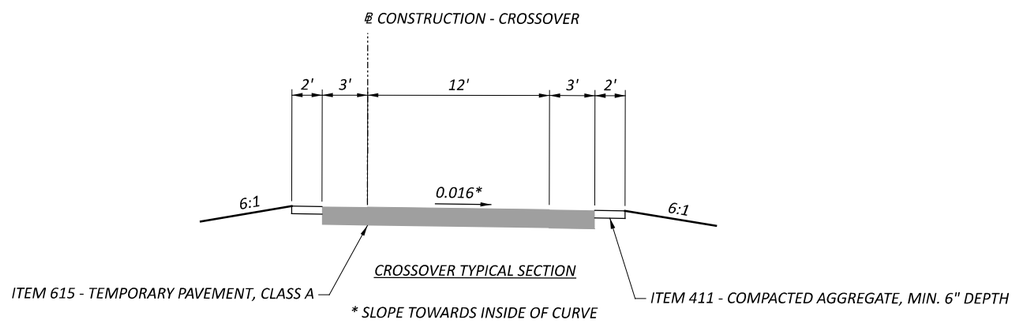

CROSSOVER TYPICAL SECTION

* SLOPE TOWARDS INSIDE OF CURVE

* DENOTES EXISTING ELEVEATION

HORIZONTAL SCALE IN FEET
0 25 50 100

CROSSOVER DETAIL

LOR-90-10.76

MODEL: CLP_90 - Plan 1 PAPERSIZE: 34x22 (in.) DATE: 2/7/2025 TIME: 2:40:17 PM USER: cmwood
P:_OHDOTCEs\02_Worksets\107714\400-Engineering\MOT\Sheets\107714_MM201.dgn

DESIGN AGENCY
E.L. ROBINSON ENGINEERING
1468 West 9th St, Suite 800 Cleveland, Ohio
050 Goodale Blvd, Suite 180 Grandview Heights, Ohio

DESIGNER: DWB
REVIEWER: XXX MM-DD-YY
PROJECT ID: 107714
SHEET: P.0 TOTAL: 0

C1

P.I. Sta. 301+63.12
Δ = 5° 58' 32" (RT)
Dc = 1° 50' 00"
R = 3,125.23'
T = 163.12'
L = 325.94'
E = 4.25'
C = 325.79'

C2

P.I. Sta. 306+09.43
Δ = 10° 21' 59" (LT)
Dc = 1° 50' 00"
R = 3,125.23'
T = 283.49'
L = 565.43'
E = 12.83'
C = 564.66'

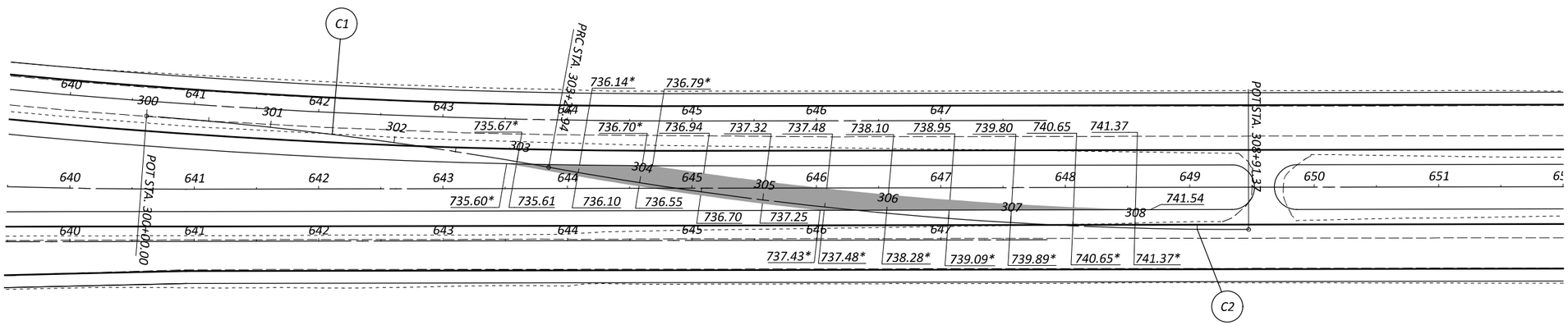

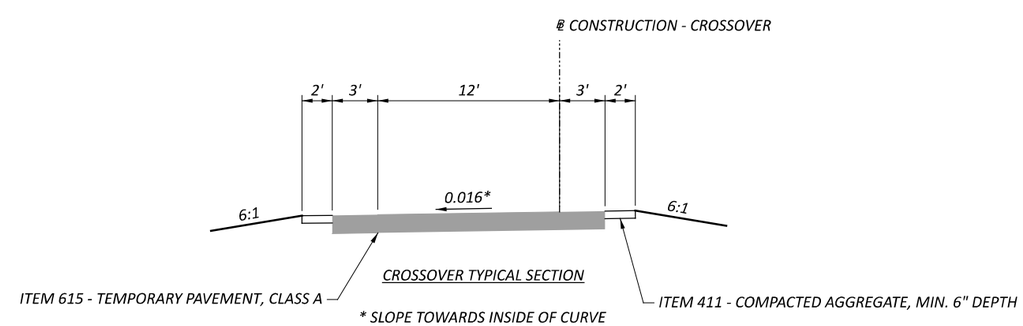

* DENOTES EXISTING ELEVEATION

THE KOKOSING DBT - B41

HORIZONTAL SCALE IN FEET
0 25 50 100

CROSSOVER DETAIL

DESIGN AGENCY
E.L. ROBINSON ENGINEERING
1468 West 9th St, Suite 500
Cleveland, Ohio
950 Goodale Blvd, Suite 180
Grandview Heights, Ohio

DESIGNER
DWB

REVIEWER
XXX MM-DD-YY

PROJECT ID
107714

SHEET P.0 TOTAL 0

LOR-90-10.76

MODEL: 107714_MM301 PAPERSIZE: 34x22 (in.) DATE: 2/7/2025 TIME: 2:43:04 PM USER: cmwood
P:_OHDOTEv02_Worksets\107714\100-Engineering\MOT\Sheets\107714_MM301.dgn

C1

P.I. Sta. 101+78.36
Δ = 6° 31' 58" (RT)
Dc = 1° 50' 00"
R = 3,125.23'
T = 178.36'
L = 356.34'
E = 5.09'
C = 356.15'

C2

P.I. Sta. 106+20.88
Δ = 9° 40' 37" (LT)
Dc = 1° 50' 00"
R = 3,125.23'
T = 264.54'
L = 527.83'
E = 11.18'
C = 527.20'

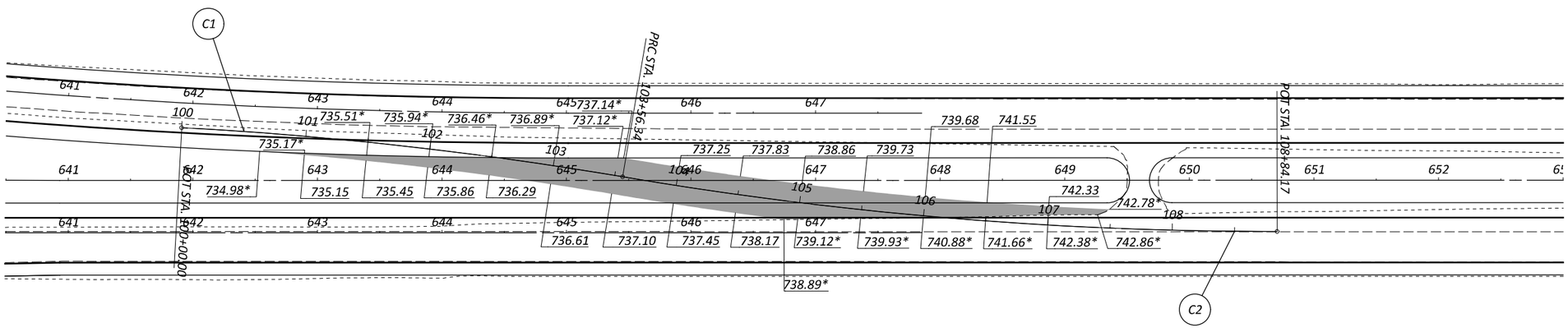

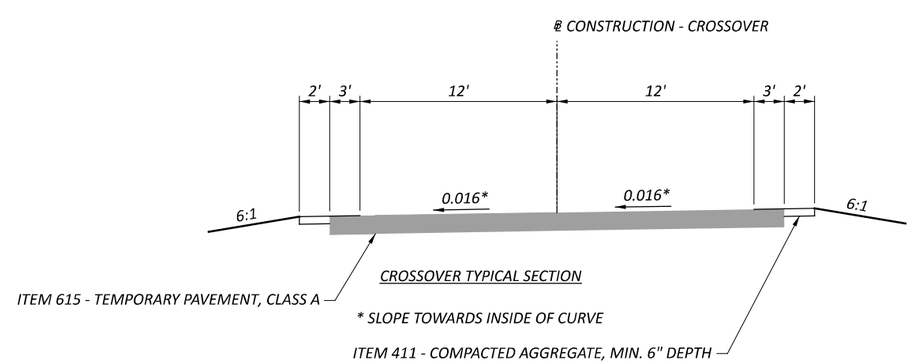

* DENOTES EXISTING ELEVEATION

THE KOKOSING DBT - B42

HORIZONTAL SCALE IN FEET
0 25 50 100

CROSSOVER DETAIL

DESIGN AGENCY
E.L. ROBINSON ENGINEERING
1468 West 9th St, Suite 800
Cleveland, Ohio
959 Goodale Blvd, Suite 180
Grandview Heights, Ohio

DESIGNER: DWB
REVIEWER: XXX MM-DD-YY
PROJECT ID: 107714
SHEET: P.0 TOTAL: 0

LOR-90-10.76

MODEL: 107714_MM1054 PAPERSIZE: 34x22 (in.) DATE: 2/7/2025 TIME: 2:49:49 PM USER: cmwood
P:_OHDOTCEv02_Worksets\107714\400-Engineering\MOT\Sheets\107714_MM1051.dgn

C1

P.I. Sta. 402+20.64
Δ = 8° 04' 36" (RT)
Dc = 1° 50' 00"
R = 3,125.23'
T = 220.64'
L = 440.55'
E = 7.78'
C = 440.19'

C2

P.I. Sta. 406+61.19
Δ = 8° 04' 36" (LT)
Dc = 1° 50' 00"
R = 3,125.23'
T = 220.64'
L = 440.55'
E = 7.78'
C = 440.19'

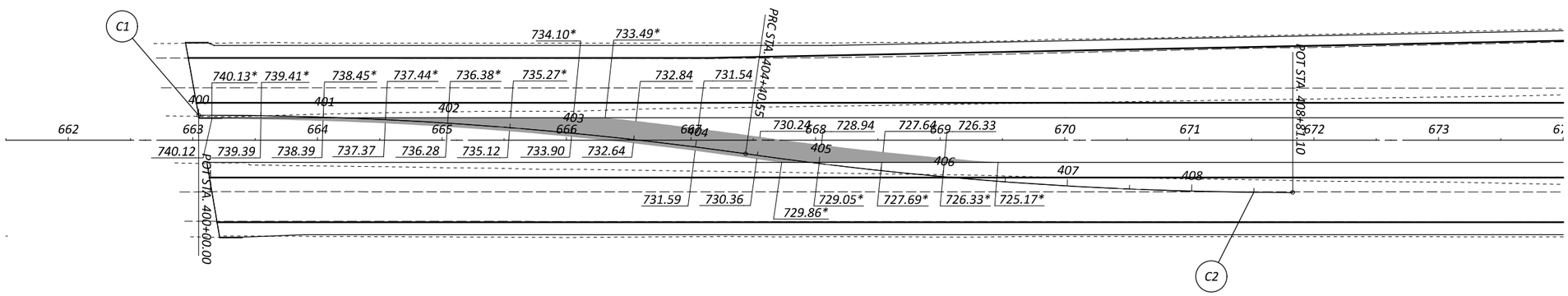

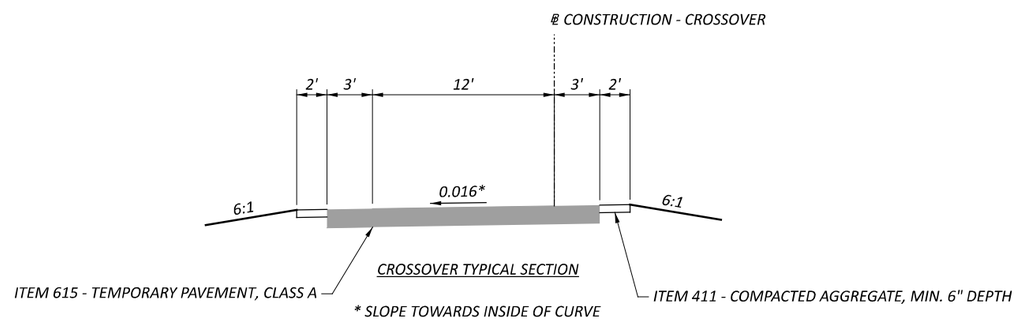

* DENOTES EXISTING ELEVEATION

HORIZONTAL SCALE IN FEET
0 25 50 100

CROSSOVER DETAIL

LOR-90-10.76

MODEL: 107714_MM401 PAPERSIZE: 34x22 (in.) DATE: 2/7/2025 TIME: 2:45:08 PM USER: cmwood
P:_OHDOTCEv02_Worksets\107714\400-Engineering\MOT\Sheets\107714_MM401.dgn

DESIGN AGENCY
E.L. ROBINSON ENGINEERING
1468 West 9th St, Suite 800 Cleveland, Ohio
950 Goodale Blvd, Suite 180 Grandview Heights, Ohio

DESIGNER: DWB
REVIEWER: XXX MM-DD-YY
PROJECT ID: 107714
SHEET: P.0 TOTAL: 0

C1

P.I. Sta. 202+57.74
Δ = 9° 25' 45" (RT)
Dc = 1° 50' 00"
R = 3,125.23'
T = 257.74'
L = 514.32'
E = 10.61'
C = 513.74'

C2

P.I. Sta. 206+86.40
Δ = 6° 18' 11" (LT)
Dc = 1° 50' 00"
R = 3,125.23'
T = 172.07'
L = 343.80'
E = 4.73'
C = 343.63'

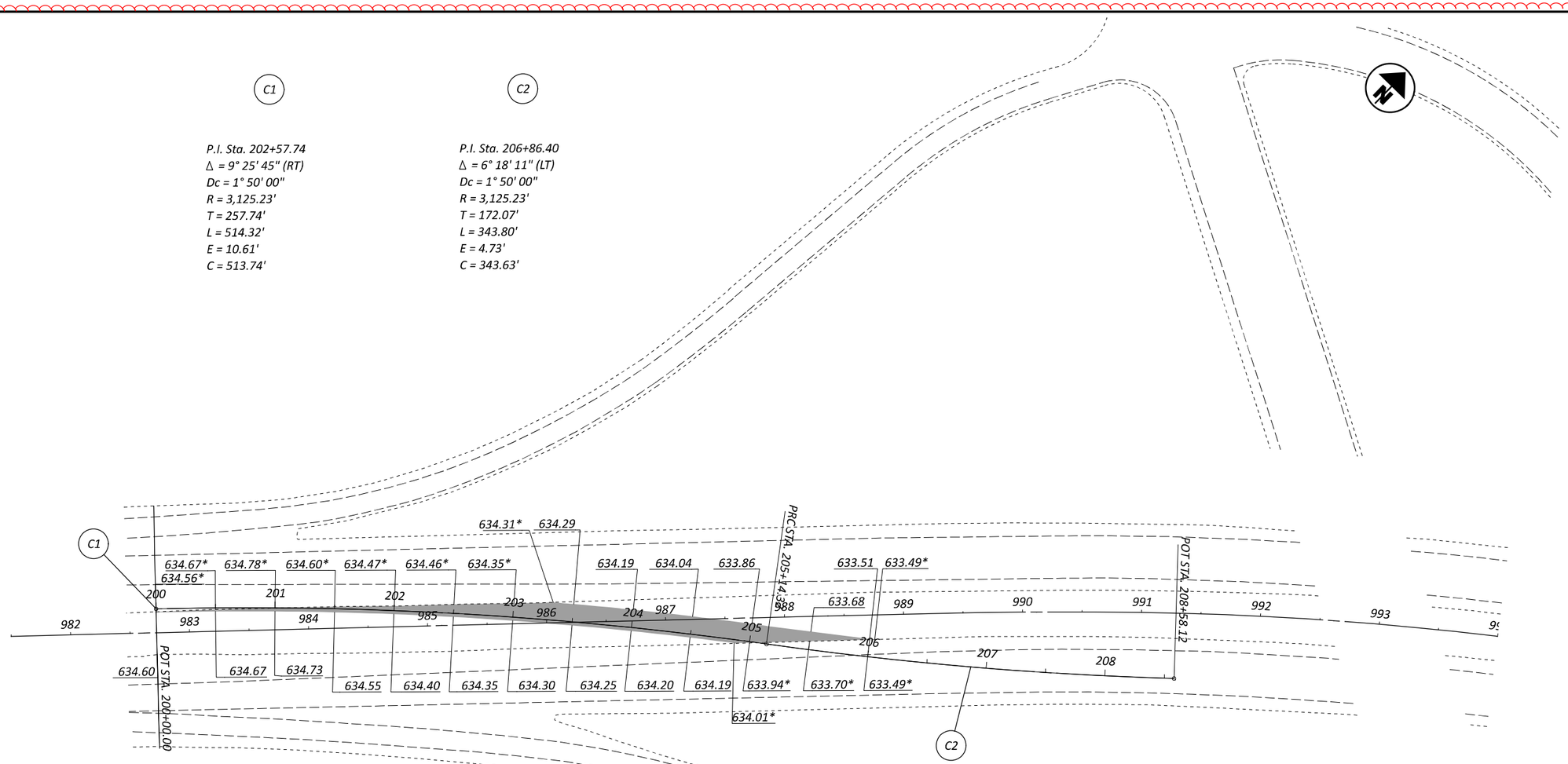

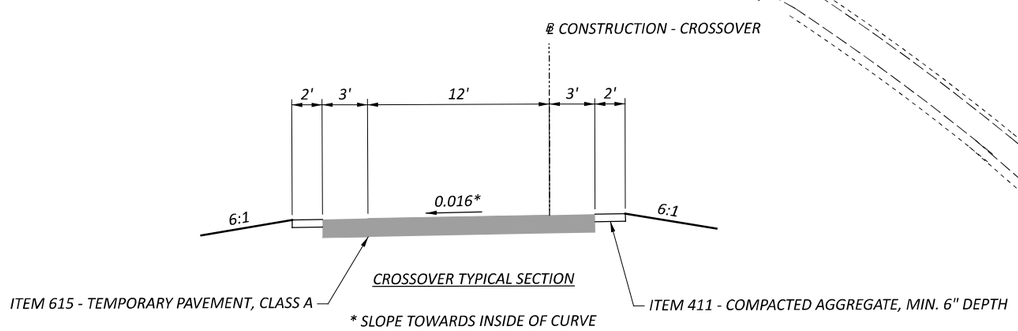

* DENOTES EXISTING ELEVEATION

HORIZONTAL SCALE IN FEET
0 15 50 100

CROSSOVER DETAIL

DESIGN AGENCY
E.L. ROBINSON ENGINEERING
1468 West 9th St. Suite 500 Cleveland, Ohio
350 Goodale Blvd. Suite 180 Grandview Heights, Ohio

DESIGNER: DWB
REVIEWER: XXX MM-DD-YY
PROJECT ID: 107714
SHEET: P.0 TOTAL: 0

LOR-90-10.76

MODEL: 107714_MM202 PAPERSIZE: 34x22 (in.) DATE: 2/7/2025 TIME: 2:41:58 PM USER: cmwood
P:_OHDOTCfx02_Worksets\107714\400-Engineering\MOT\Sheets\107714_MM202.dgn

C1

P.I. Sta. 302+22.18
Δ = 8° 07' 58" (LT)
Dc = 1° 50' 00"
R = 3,125.23'
T = 222.18'
L = 443.61'
E = 7.89'
C = 443.24'

C2

P.I. Sta. 306+66.40
Δ = 8° 09' 18" (RT)
Dc = 1° 50' 00"
R = 3,125.23'
T = 222.79'
L = 444.83'
E = 7.93'
C = 444.45'

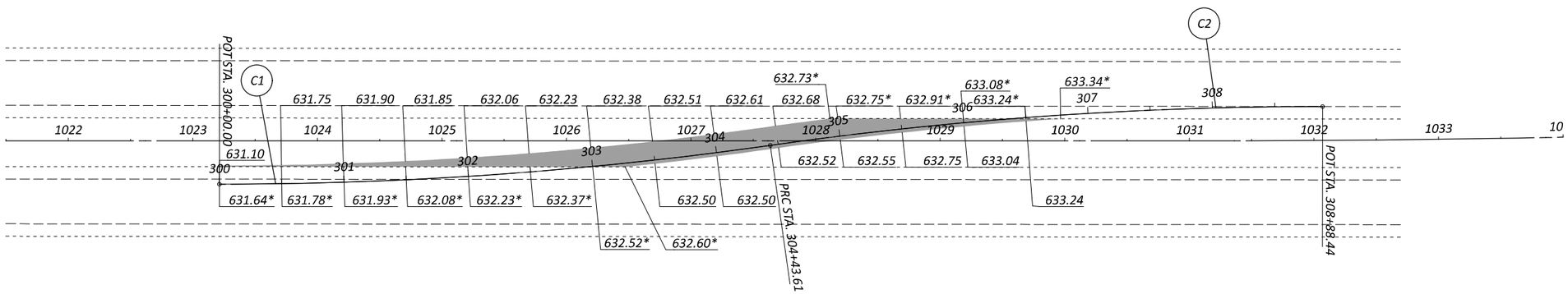

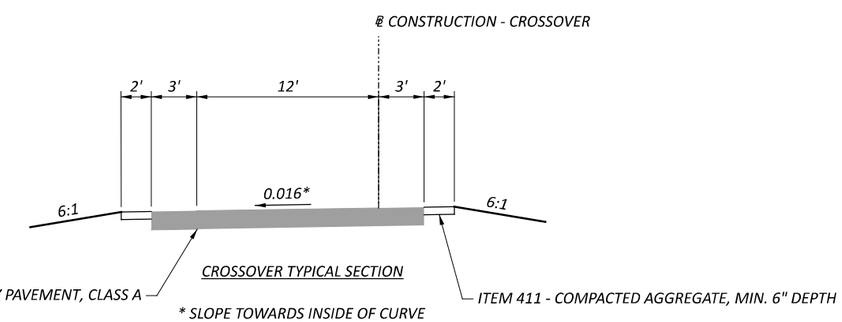

* DENOTES EXISTING ELEVEATION

HORIZONTAL SCALE IN FEET
0 15 50 100

CROSSOVER DETAIL

DESIGN AGENCY
E.L. ROBINSON ENGINEERING
1468 West 9th St. Suite 500 Cleveland, Ohio
350 Goodville Blvd. Suite 180 Grandview Heights, Ohio

DESIGNER: DWB
REVIEWER: XXX MM-DD-YY
PROJECT ID: 107714
SHEET: P.0 TOTAL: 0

LOR-90-10.76

MODEL: 107714_MM302 PAPERSIZE: 34x22 (in.) DATE: 2/7/2025 TIME: 2:44:09 PM USER: cmwood
P:_OHDOTCEs02_Worksets\107714\400-Engineering\MOT\Sheets\107714_MM302.dgn

LOR-90-10.76 MAINTENANCE OF TRAFFIC - PHASE 1A

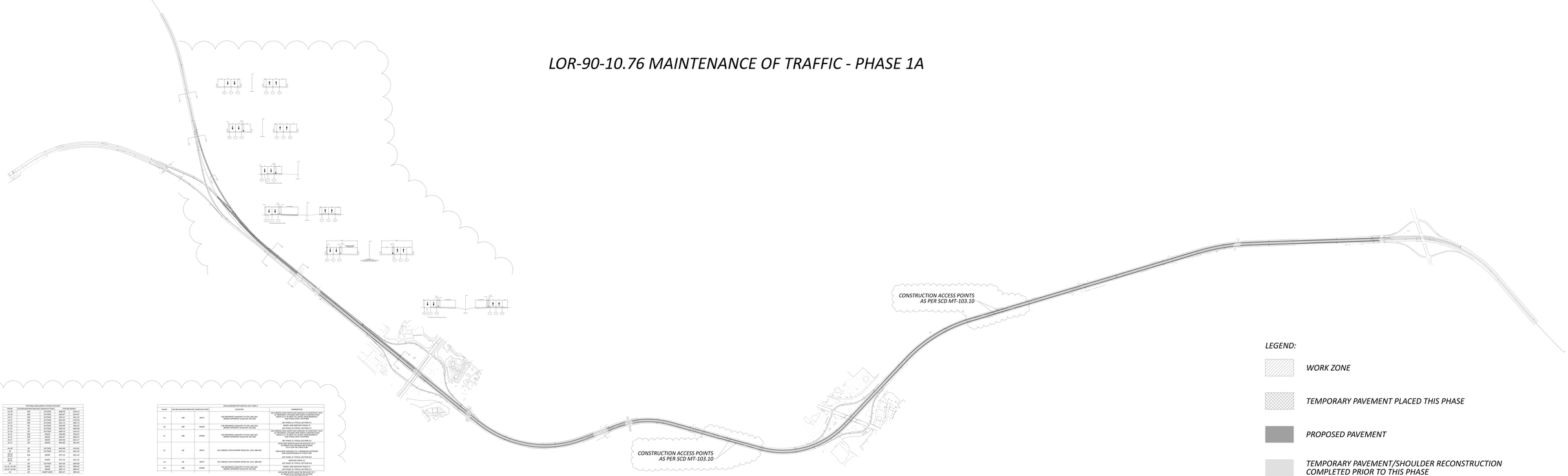

EXISTING SHOULDERS UTILIZED FOR MOT				
PHASE	LOR/TRANS/MAT/RB/ABC	INSIDE/OUTSIDE	LOCATION	COMMENTS
1A-1F	WB	OUTSIDE	1.00 MILE	1.00 MILE
1A-1F	WB	OUTSIDE	0.80 MILE	0.80 MILE
1A-1F	WB	OUTSIDE	0.50 MILE	0.50 MILE
1A-1F	WB	OUTSIDE	0.25 MILE	0.25 MILE
1A-1F	WB	OUTSIDE	0.00 MILE	0.00 MILE
1C-1F	EB	OUTSIDE	0.00 MILE	0.00 MILE
1C-1F	EB	OUTSIDE	0.25 MILE	0.25 MILE
1C-1F	EB	OUTSIDE	0.50 MILE	0.50 MILE
1C-1F	EB	OUTSIDE	0.80 MILE	0.80 MILE
1C-1F	EB	OUTSIDE	1.00 MILE	1.00 MILE
1A-1B	LR	OUTSIDE	0.00 MILE	0.00-0.07
1A-1B	LR	OUTSIDE	0.25 MILE	0.25-0.32
1B-1C	WB	INSIDE	0.00 MILE	0.00-0.17
1B-1C	WB	INSIDE	0.25 MILE	0.25-0.42
1C-1D	LR	OUTSIDE	0.00 MILE	0.00-0.07
1C-1D	LR	OUTSIDE	0.25 MILE	0.25-0.32
1D-1E	LR	OUTSIDE	0.00 MILE	0.00-0.07
1D-1E	LR	OUTSIDE	0.25 MILE	0.25-0.32
1E-1F	WB	INSIDE	0.00 MILE	0.00-0.17
1E-1F	WB	INSIDE	0.25 MILE	0.25-0.42
1F	LR	INSIDE	0.00 MILE	0.00-0.07
1F	LR	INSIDE	0.25 MILE	0.25-0.32
1F-1G	WB	INSIDE	0.00 MILE	0.00-0.17
1F-1G	WB	INSIDE	0.25 MILE	0.25-0.42
1G-1H	LR	INSIDE	0.00 MILE	0.00-0.07
1G-1H	LR	INSIDE	0.25 MILE	0.25-0.32
1H-1I	WB	INSIDE	0.00 MILE	0.00-0.17
1H-1I	WB	INSIDE	0.25 MILE	0.25-0.42
1I-1J	LR	INSIDE	0.00 MILE	0.00-0.07
1I-1J	LR	INSIDE	0.25 MILE	0.25-0.32
1J-1K	WB	INSIDE	0.00 MILE	0.00-0.17
1J-1K	WB	INSIDE	0.25 MILE	0.25-0.42
1K-1L	LR	INSIDE	0.00 MILE	0.00-0.07
1K-1L	LR	INSIDE	0.25 MILE	0.25-0.32
1L-1M	WB	INSIDE	0.00 MILE	0.00-0.17
1L-1M	WB	INSIDE	0.25 MILE	0.25-0.42
1M-1N	LR	INSIDE	0.00 MILE	0.00-0.07
1M-1N	LR	INSIDE	0.25 MILE	0.25-0.32
1N-1O	WB	INSIDE	0.00 MILE	0.00-0.17
1N-1O	WB	INSIDE	0.25 MILE	0.25-0.42
1O-1P	LR	INSIDE	0.00 MILE	0.00-0.07
1O-1P	LR	INSIDE	0.25 MILE	0.25-0.32
1P-1Q	WB	INSIDE	0.00 MILE	0.00-0.17
1P-1Q	WB	INSIDE	0.25 MILE	0.25-0.42
1Q-1R	LR	INSIDE	0.00 MILE	0.00-0.07
1Q-1R	LR	INSIDE	0.25 MILE	0.25-0.32
1R-1S	WB	INSIDE	0.00 MILE	0.00-0.17
1R-1S	WB	INSIDE	0.25 MILE	0.25-0.42
1S-1T	LR	INSIDE	0.00 MILE	0.00-0.07
1S-1T	LR	INSIDE	0.25 MILE	0.25-0.32
1T-1U	WB	INSIDE	0.00 MILE	0.00-0.17
1T-1U	WB	INSIDE	0.25 MILE	0.25-0.42
1U-1V	LR	INSIDE	0.00 MILE	0.00-0.07
1U-1V	LR	INSIDE	0.25 MILE	0.25-0.32
1V-1W	WB	INSIDE	0.00 MILE	0.00-0.17
1V-1W	WB	INSIDE	0.25 MILE	0.25-0.42
1W-1X	LR	INSIDE	0.00 MILE	0.00-0.07
1W-1X	LR	INSIDE	0.25 MILE	0.25-0.32
1X-1Y	WB	INSIDE	0.00 MILE	0.00-0.17
1X-1Y	WB	INSIDE	0.25 MILE	0.25-0.42
1Y-1Z	LR	INSIDE	0.00 MILE	0.00-0.07
1Y-1Z	LR	INSIDE	0.25 MILE	0.25-0.32
1Z	LR	INSIDE	0.00 MILE	0.00-0.07
1Z	LR	INSIDE	0.25 MILE	0.25-0.32

EXISTING/RUPTOR WHITE LINE TYPE 2				
PHASE	LOR/TRANS/MAT/RB/ABC	INSIDE/OUTSIDE	LOCATION	COMMENTS
1A	WB	BOTH	1.00 MILE	1.00 MILE
1A	WB	BOTH	0.80 MILE	0.80 MILE
1A	WB	BOTH	0.50 MILE	0.50 MILE
1A	WB	BOTH	0.25 MILE	0.25 MILE
1A	WB	BOTH	0.00 MILE	0.00 MILE
1B	WB	INSIDE	0.00 MILE	0.00 MILE
1B	WB	INSIDE	0.25 MILE	0.25 MILE
1C	WB	INSIDE	0.00 MILE	0.00-0.17
1C	WB	INSIDE	0.25 MILE	0.25-0.42
1C	EB	BOTH	1M 0 BRIDGE OVER MURRAY ROAD RD. (ITN. 008+00)	1M 0 BRIDGE OVER MURRAY ROAD RD. (ITN. 008+00)
1D	EB	BOTH	1M 0 BRIDGE OVER MURRAY ROAD RD. (ITN. 008+00)	1M 0 BRIDGE OVER MURRAY ROAD RD. (ITN. 008+00)
1D	EB	INSIDE	0.00 MILE	0.00-0.17
1D	EB	INSIDE	0.25 MILE	0.25-0.42
1E	EB	BOTH	1M 0 BRIDGE OVER MURRAY ROAD RD. (ITN. 008+00)	1M 0 BRIDGE OVER MURRAY ROAD RD. (ITN. 008+00)
1E	EB	INSIDE	0.00 MILE	0.00-0.17
1E	EB	INSIDE	0.25 MILE	0.25-0.42
1F	EB	BOTH	1M 0 BRIDGE OVER MURRAY ROAD RD. (ITN. 008+00)	1M 0 BRIDGE OVER MURRAY ROAD RD. (ITN. 008+00)
1F	EB	INSIDE	0.00 MILE	0.00-0.17
1F	EB	INSIDE	0.25 MILE	0.25-0.42
1G	WB	BOTH	1M 0 BRIDGE OVER MURRAY ROAD RD. (ITN. 008+00)	1M 0 BRIDGE OVER MURRAY ROAD RD. (ITN. 008+00)
1G	WB	BOTH	1M 0 BRIDGE OVER MURRAY ROAD RD. (ITN. 008+00)	1M 0 BRIDGE OVER MURRAY ROAD RD. (ITN. 008+00)
1G	WB	INSIDE	0.00 MILE	0.00-0.17
1G	WB	INSIDE	0.25 MILE	0.25-0.42
1H	WB	BOTH	1M 0 BRIDGE OVER MURRAY ROAD RD. (ITN. 008+00)	1M 0 BRIDGE OVER MURRAY ROAD RD. (ITN. 008+00)
1H	WB	BOTH	1M 0 BRIDGE OVER MURRAY ROAD RD. (ITN. 008+00)	1M 0 BRIDGE OVER MURRAY ROAD RD. (ITN. 008+00)
1H	WB	INSIDE	0.00 MILE	0.00-0.17
1H	WB	INSIDE	0.25 MILE	0.25-0.42
1I	WB	BOTH	1M 0 BRIDGE OVER MURRAY ROAD RD. (ITN. 008+00)	1M 0 BRIDGE OVER MURRAY ROAD RD. (ITN. 008+00)
1I	WB	BOTH	1M 0 BRIDGE OVER MURRAY ROAD RD. (ITN. 008+00)	1M 0 BRIDGE OVER MURRAY ROAD RD. (ITN. 008+00)
1I	WB	INSIDE	0.00 MILE	0.00-0.17
1I	WB	INSIDE	0.25 MILE	0.25-0.42
1J	WB	BOTH	1M 0 BRIDGE OVER MURRAY ROAD RD. (ITN. 008+00)	1M 0 BRIDGE OVER MURRAY ROAD RD. (ITN. 008+00)
1J	WB	BOTH	1M 0 BRIDGE OVER MURRAY ROAD RD. (ITN. 008+00)	1M 0 BRIDGE OVER MURRAY ROAD RD. (ITN. 008+00)
1J	WB	INSIDE	0.00 MILE	0.00-0.17
1J	WB	INSIDE	0.25 MILE	0.25-0.42
1K	WB	BOTH	1M 0 BRIDGE OVER MURRAY ROAD RD. (ITN. 008+00)	1M 0 BRIDGE OVER MURRAY ROAD RD. (ITN. 008+00)
1K	WB	BOTH	1M 0 BRIDGE OVER MURRAY ROAD RD. (ITN. 008+00)	1M 0 BRIDGE OVER MURRAY ROAD RD. (ITN. 008+00)
1K	WB	INSIDE	0.00 MILE	0.00-0.17
1K	WB	INSIDE	0.25 MILE	0.25-0.42
1L	WB	BOTH	1M 0 BRIDGE OVER MURRAY ROAD RD. (ITN. 008+00)	1M 0 BRIDGE OVER MURRAY ROAD RD. (ITN. 008+00)
1L	WB	BOTH	1M 0 BRIDGE OVER MURRAY ROAD RD. (ITN. 008+00)	1M 0 BRIDGE OVER MURRAY ROAD RD. (ITN. 008+00)
1L	WB	INSIDE	0.00 MILE	0.00-0.17
1L	WB	INSIDE	0.25 MILE	0.25-0.42
1M	WB	BOTH	1M 0 BRIDGE OVER MURRAY ROAD RD. (ITN. 008+00)	1M 0 BRIDGE OVER MURRAY ROAD RD. (ITN. 008+00)
1M	WB	BOTH	1M 0 BRIDGE OVER MURRAY ROAD RD. (ITN. 008+00)	1M 0 BRIDGE OVER MURRAY ROAD RD. (ITN. 008+00)
1M	WB	INSIDE	0.00 MILE	0.00-0.17
1M	WB	INSIDE	0.25 MILE	0.25-0.42
1N	WB	BOTH	1M 0 BRIDGE OVER MURRAY ROAD RD. (ITN. 008+00)	1M 0 BRIDGE OVER MURRAY ROAD RD. (ITN. 008+00)
1N	WB	BOTH	1M 0 BRIDGE OVER MURRAY ROAD RD. (ITN. 008+00)	1M 0 BRIDGE OVER MURRAY ROAD RD. (ITN. 008+00)
1N	WB	INSIDE	0.00 MILE	0.00-0.17
1N	WB	INSIDE	0.25 MILE	0.25-0.42
1O	WB	BOTH	1M 0 BRIDGE OVER MURRAY ROAD RD. (ITN. 008+00)	1M 0 BRIDGE OVER MURRAY ROAD RD. (ITN. 008+00)
1O	WB	BOTH	1M 0 BRIDGE OVER MURRAY ROAD RD. (ITN. 008+00)	1M 0 BRIDGE OVER MURRAY ROAD RD. (ITN. 008+00)
1O	WB	INSIDE	0.00 MILE	0.00-0.17
1O	WB	INSIDE	0.25 MILE	0.25-0.42
1P	WB	BOTH	1M 0 BRIDGE OVER MURRAY ROAD RD. (ITN. 008+00)	1M 0 BRIDGE OVER MURRAY ROAD RD. (ITN. 008+00)
1P	WB	BOTH	1M 0 BRIDGE OVER MURRAY ROAD RD. (ITN. 008+00)	1M 0 BRIDGE OVER MURRAY ROAD RD. (ITN. 008+00)
1P	WB	INSIDE	0.00 MILE	0.00-0.17
1P	WB	INSIDE	0.25 MILE	0.25-0.42
1Q	WB	BOTH	1M 0 BRIDGE OVER MURRAY ROAD RD. (ITN. 008+00)	1M 0 BRIDGE OVER MURRAY ROAD RD. (ITN. 008+00)
1Q	WB	BOTH	1M 0 BRIDGE OVER MURRAY ROAD RD. (ITN. 008+00)	1M 0 BRIDGE OVER MURRAY ROAD RD. (ITN. 008+00)
1Q	WB	INSIDE	0.00 MILE	0.00-0.17
1Q	WB	INSIDE	0.25 MILE	0.25-0.42
1R	WB	BOTH	1M 0 BRIDGE OVER MURRAY ROAD RD. (ITN. 008+00)	1M 0 BRIDGE OVER MURRAY ROAD RD. (ITN. 008+00)
1R	WB	BOTH	1M 0 BRIDGE OVER MURRAY ROAD RD. (ITN. 008+00)	1M 0 BRIDGE OVER MURRAY ROAD RD. (ITN. 008+00)
1R	WB	INSIDE	0.00 MILE	0.00-0.17
1R	WB	INSIDE	0.25 MILE	0.25-0.42
1S	WB	BOTH	1M 0 BRIDGE OVER MURRAY ROAD RD. (ITN. 008+00)	1M 0 BRIDGE OVER MURRAY ROAD RD. (ITN. 008+00)
1S	WB	BOTH	1M 0 BRIDGE OVER MURRAY ROAD RD. (ITN. 008+00)	1M 0 BRIDGE OVER MURRAY ROAD RD. (ITN. 008+00)
1S	WB	INSIDE	0.00 MILE	0.00-0.17
1S	WB	INSIDE	0.25 MILE	0.25-0.42
1T	WB	BOTH	1M 0 BRIDGE OVER MURRAY ROAD RD. (ITN. 008+00)	1M 0 BRIDGE OVER MURRAY ROAD RD. (ITN. 008+00)
1T	WB	BOTH	1M 0 BRIDGE OVER MURRAY ROAD RD. (ITN. 008+00)	1M 0 BRIDGE OVER MURRAY ROAD RD. (ITN. 008+00)
1T	WB	INSIDE	0.00 MILE	0.00-0.17
1T	WB	INSIDE	0.25 MILE	0.25-0.42
1U	WB	BOTH	1M 0 BRIDGE OVER MURRAY ROAD RD. (ITN. 008+00)	1M 0 BRIDGE OVER MURRAY ROAD RD. (ITN. 008+00)
1U	WB	BOTH	1M 0 BRIDGE OVER MURRAY ROAD RD. (ITN. 008+00)	1M 0 BRIDGE OVER MURRAY ROAD RD. (ITN. 008+00)
1U	WB	INSIDE	0.00 MILE	0.00-0.17
1U	WB	INSIDE	0.25 MILE	0.25-0.42
1V	WB	BOTH	1M 0 BRIDGE OVER MURRAY ROAD RD. (ITN. 008+00)	1M 0 BRIDGE OVER MURRAY ROAD RD. (ITN. 008+00)
1V	WB	BOTH	1M 0 BRIDGE OVER MURRAY ROAD RD. (ITN. 008+00)	1M 0 BRIDGE OVER MURRAY ROAD RD. (ITN. 008+00)
1V	WB	INSIDE	0.00 MILE	0.00-0.17
1V	WB	INSIDE	0.25 MILE	0.25-0.42
1W	WB	BOTH	1M 0 BRIDGE OVER MURRAY ROAD RD. (ITN. 008+00)	1M 0 BRIDGE OVER MURRAY ROAD RD. (ITN. 008+00)
1W	WB	BOTH	1M 0 BRIDGE OVER MURRAY ROAD RD. (ITN. 008+00)	1M 0 BRIDGE OVER MURRAY ROAD RD. (ITN. 008+00)
1W	WB	INSIDE	0.00 MILE	0.00-0.17
1W	WB	INSIDE	0.25 MILE	0.25-0.42
1X	WB	BOTH	1M 0 BRIDGE OVER MURRAY ROAD RD. (ITN. 008+00)	1M 0 BRIDGE OVER MURRAY ROAD RD. (ITN. 008+00)
1X	WB	BOTH	1M 0 BRIDGE OVER MURRAY ROAD RD. (ITN. 008+00)	1M 0 BRIDGE OVER MURRAY ROAD RD. (ITN. 008+00)
1X	WB	INSIDE	0.00 MILE	0.00-0.17
1X	WB	INSIDE	0.25 MILE	0.25-0.42
1Y	WB	BOTH	1M 0 BRIDGE OVER MURRAY ROAD RD. (ITN. 008+00)	1M 0 BRIDGE OVER MURRAY ROAD RD. (ITN. 008+00)
1Y	WB	BOTH	1M 0 BRIDGE OVER MURRAY ROAD RD. (ITN. 008+00)	1M 0 BRIDGE OVER MURRAY ROAD RD. (ITN. 008+00)
1Y	WB	INSIDE	0.00 MILE	0.00-0.17
1Y	WB	INSIDE	0.25 MILE	0.25-0.42

LEGEND:

- *WORK ZONE*
- *TEMPORARY PAVEMENT PLACED THIS PHASE*
- *PROPOSED PAVEMENT*
- *TEMPORARY PAVEMENT/SHOULDER RECONSTRUCTION COMPLETED PRIOR TO THIS PHASE*
- *EXISTING SHOULDER BEING UTILIZED FOR MOT*

LOR-90-10.76 MAINTENANCE OF TRAFFIC - PHASE 1B

EXISTING SHOULDERS UTILIZED FOR MOT				
PHASE	EASTBOUND/WESTBOUND	INSIDE/OUTSIDE	STATION RANGE	
1A-1B	WB	OUTSIDE	608+58	634+12
1A-1B	WB	OUTSIDE	640+67	654+67
1A-1F	WB	OUTSIDE	656+57	661+25
1A-1F	WB	OUTSIDE	662+95	676+94
1A-1F	WB	OUTSIDE	691+72	695+72
1C-1D	EB	OUTSIDE	585+99	594+25
1C-1F	EB	OUTSIDE	596+54	606+98
1C-1D	EB	OUTSIDE	609+19	616+75
1E-1F	WB	INSIDE	590+89	594+67
1E-1F	WB	INSIDE	596+97	606+57
1E-1F	EB	INSIDE	646+96	655+17
1E-1F	EB	INSIDE	656+82	661+42
2A-2B	EB	OUTSIDE	640+98	655+01
2A	EB	OUTSIDE	657+14	661+25
1B-1D 2A-2C	WB	INSIDE	657+14	661+25
1E-1F 2B-2C	EB	INSIDE	657+14	661+25
2A	EB	OUTSIDE	663+20	668+00
2A-2C, 3A-3B	WB	INSIDE	982+71	986+05
2A-2C, 3A-3B	EB	INSIDE	982+71	984+97
2A	EB	RAMP GORE	983+47	985+64
3A-3B	WB	INSIDE	986+05	997+01
3A-3B	EB	INSIDE	984+97	1026+46
3A-3B	WB	INSIDE	1028+10	1032+06

SHOULDER/BUFFER WIDTHS LESS THAN 2'				
PHASE	EASTBOUND/WESTBOUND	INSIDE/OUTSIDE	LOCATION	COMMENT(S)
1A	WB	BOTH	I-90 PAVEMENT ADJACENT TO THE LAKE AVE. BRIDGE APPROACH SLAB (STA. 655+00)	58.0' BRIDGE DECK WIDTH NOT ENOUGH TO CONSTRUCT 58.0' OF PAVEMENT UTILIZING PART WIDTH CONSTRUCTION (NEED 61.0' TO MEET ALL OFFSET REQUIREMENTS AND PHASE JOINT STEPPING) SEE PHASE 1A TYPICAL SECTION E-E
1B	WB	INSIDE	1-90 PAVEMENT ADJACENT TO THE LAKE AVE. BRIDGE APPROACH SLAB (STA. 655+00)	INSIDE LANE MATCHES PHASE 1C SEE PHASE 1B TYPICAL SECTION E-E
1C	WB	INSIDE	I-90 PAVEMENT ADJACENT TO THE LAKE AVE. BRIDGE APPROACH SLAB (STA. 655+00)	58.0' BRIDGE DECK WIDTH NOT ENOUGH TO CONSTRUCT 58.0' OF PAVEMENT UTILIZING PART WIDTH CONSTRUCTION (NEED 61.0' TO MEET ALL OFFSET REQUIREMENTS AND PHASE JOINT STEPPING) SEE PHASE 1C TYPICAL SECTION E-E
1C	EB	BOTH	SR-2 BRIDGE OVER MURRAY RIDGE RD. (STA. 608+00)	SHOULDER WIDTHS MUST BE REDUCED TO 1' IN ORDER FOR CONTRAFLOW SCHEME TO FIT ON THE STRUCTURE SHOULDERS WIDENED TO 2' MINIMUM UPSTREAM AND DOWNSTREAM OF STRUCTURE SEE PHASE 1C TYPICAL SECTION B-B
1D	EB	BOTH	SR-2 BRIDGE OVER MURRAY RIDGE RD. (STA. 608+00)	MATCHES PHASE 1C SEE PHASE 1D TYPICAL SECTION B-B
1D	WB	INSIDE	I-90 PAVEMENT ADJACENT TO THE LAKE AVE. BRIDGE APPROACH SLAB (STA. 655+00)	INSIDE LANE MATCHES PHASE 1C SEE PHASE 1D TYPICAL SECTION E-E
1E	WB	BOTH	SR-2 BRIDGE OVER LAKE SHORE RAILWAY (STA. 596+00)	SHOULDER WIDTHS MUST BE REDUCED TO 1' IN ORDER FOR CONTRAFLOW SCHEME TO FIT ON THE STRUCTURE SHOULDERS WIDENED TO 2' MINIMUM UPSTREAM AND DOWNSTREAM OF STRUCTURE SEE PHASE 1E TYPICAL SECTION A-A
1E	WB	BOTH	SR-2 BRIDGE OVER MURRAY RIDGE RD. (STA. 608+00)	SHOULDER WIDTHS MUST BE REDUCED TO 1' IN ORDER FOR CONTRAFLOW SCHEME TO FIT ON THE STRUCTURE SHOULDERS WIDENED TO 2' MINIMUM UPSTREAM AND DOWNSTREAM OF STRUCTURE SEE PHASE 1E TYPICAL SECTION B-B
1F	WB	BOTH	SR-2 BRIDGE OVER LAKE SHORE RAILWAY (STA. 596+00)	MATCHES PHASE 1E SEE PHASE 1F TYPICAL SECTION A-A
1F	WB	BOTH	SR-2 BRIDGE OVER MURRAY RIDGE RD. (STA. 608+00)	MATCHES PHASE 1E SEE PHASE 1F TYPICAL SECTION B-B

LEGEND:

- WORK ZONE
- TEMPORARY PAVEMENT PLACED THIS PHASE
- PROPOSED PAVEMENT
- TEMPORARY PAVEMENT/SHOULDER RECONSTRUCTION COMPLETED PRIOR TO THIS PHASE
- EXISTING SHOULDER BEING UTILIZED FOR MOT

LOR-90-10.76 MAINTENANCE OF TRAFFIC - PHASE 1C

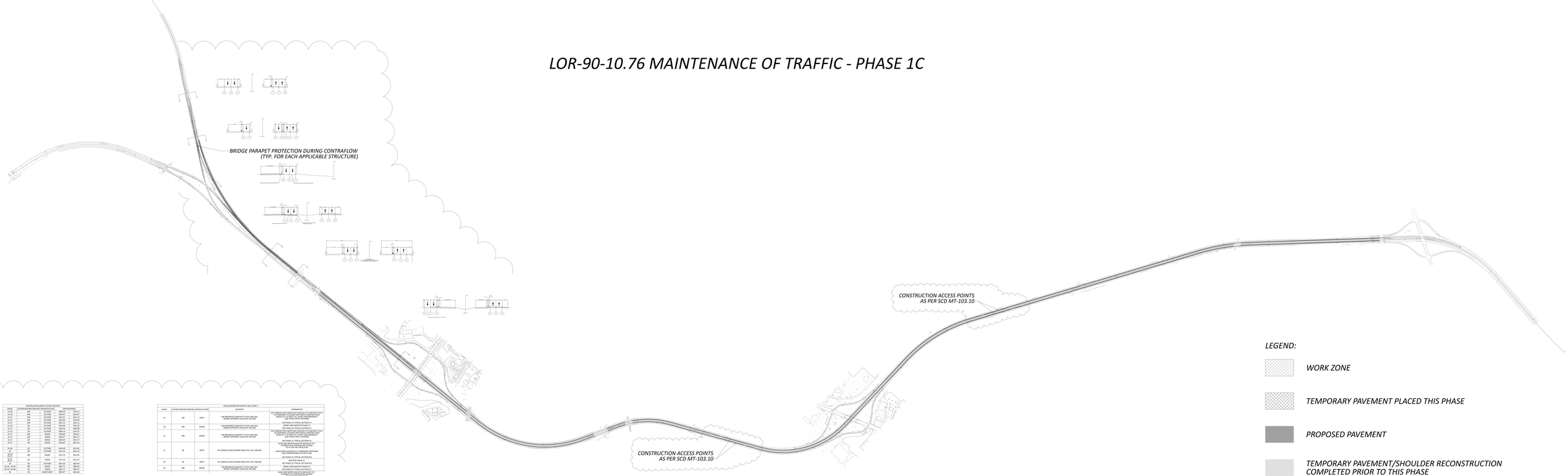

EXISTING SHOULDERS UTILIZED FOR MOT

PHASE	LOCATION(S)/ROUTE(S)/ MILE	DESCRIPTION	DATES RANGE	
1A-1F	WB	BOTH	09/2020	10/2020
1A-1F	WB	OUTSIDE	10/2020	10/2017
1A-1F	WB	OUTSIDE	10/2017	10/2019
1A-1F	WB	OUTSIDE	10/2019	10/2020
1A-1F	WB	OUTSIDE	10/2020	10/2021
1A-1F	WB	OUTSIDE	10/2021	10/2022
1C-1F	EB	OUTSIDE	09/2020	10/2020
1C-1F	EB	OUTSIDE	10/2020	10/2017
1C-1F	EB	OUTSIDE	10/2017	10/2019
1C-1F	EB	OUTSIDE	10/2019	10/2020
1C-1F	EB	OUTSIDE	10/2020	10/2021
1C-1F	EB	OUTSIDE	10/2021	10/2022
1D-1E	EB	INSIDE	09/2020	10/2020
1D-1E	EB	INSIDE	10/2020	10/2017
1D-1E	EB	INSIDE	10/2017	10/2019
1D-1E	EB	INSIDE	10/2019	10/2020
1D-1E	EB	INSIDE	10/2020	10/2021
1D-1E	EB	INSIDE	10/2021	10/2022
1D-1E	EB	INSIDE	10/2022	10/2023
1D-1E	EB	INSIDE	10/2023	10/2024
1D-1E	EB	INSIDE	10/2024	10/2025
1D-1E	EB	INSIDE	10/2025	10/2026
1D-1E	EB	INSIDE	10/2026	10/2027
1D-1E	EB	INSIDE	10/2027	10/2028
1D-1E	EB	INSIDE	10/2028	10/2029
1D-1E	EB	INSIDE	10/2029	10/2030
1D-1E	EB	INSIDE	10/2030	10/2031
1D-1E	EB	INSIDE	10/2031	10/2032
1D-1E	EB	INSIDE	10/2032	10/2033
1D-1E	EB	INSIDE	10/2033	10/2034
1D-1E	EB	INSIDE	10/2034	10/2035
1D-1E	EB	INSIDE	10/2035	10/2036

EXCLUSION/BUFFER WIDTHS (USE TYPIC 2)

PHASE	LOCATION(S)/ROUTE(S)/ MILE	DIRECTION/TYPE	LOCATION	COMMENTS
1A	WB	BOTH	I-84 ENGLISH JUNCTION TO THE LAKE BRIDGE APPROACHES (N ST/W LAKE)	NOT BRIDGE DECK WATERPROOFING/ RECONSTRUCTION OF 1/2 OF PAVEMENT, SECTION PARTIAL/CONTROLLED PRESENT, AS WELL AS OTHER PROGRAMMATIC ACTIVITIES ON BRIDGE SEE PHASE 1C TYPICAL SECTION A-2
1B	WB	INSIDE	I-84 ENGLISH JUNCTION TO THE LAKE BRIDGE APPROACHES (N ST/W LAKE)	SEE PHASE 1C TYPICAL SECTION B-2
1C	WB	INSIDE	I-84 ENGLISH JUNCTION TO THE LAKE BRIDGE APPROACHES (N ST/W LAKE)	NOT BRIDGE DECK WATERPROOFING/ RECONSTRUCTION OF 1/2 OF PAVEMENT, SECTION PARTIAL/CONTROLLED PRESENT, AS WELL AS OTHER PROGRAMMATIC ACTIVITIES ON BRIDGE SEE PHASE 1C TYPICAL SECTION C-2
1D	EB	INSIDE	I-84 ENGLISH JUNCTION TO THE LAKE BRIDGE APPROACHES (N ST/W LAKE)	SEE PHASE 1C TYPICAL SECTION D-2
1E	EB	INSIDE	I-84 ENGLISH JUNCTION TO THE LAKE BRIDGE APPROACHES (N ST/W LAKE)	SHOULDER WIDTH LIMITED BY BRIDGE DECK WATERPROOFING/ RECONSTRUCTION AS WELL AS CONTROLLED PRESENT SEE PHASE 1C TYPICAL SECTION E-2
1F	EB	BOTH	I-84 ENGLISH JUNCTION TO THE LAKE BRIDGE APPROACHES (N ST/W LAKE)	SHOULDER WIDTH LIMITED BY BRIDGE DECK WATERPROOFING/ RECONSTRUCTION AS WELL AS CONTROLLED PRESENT SEE PHASE 1C TYPICAL SECTION F-2
1G	10	BOTH	I-84 BRIDGE OVER MURRAY ROAD NO. (ETA: 1084-00)	SEE PHASE 1C TYPICAL SECTION G-2
1H	10	BOTH	I-84 BRIDGE OVER MURRAY ROAD NO. (ETA: 1084-00)	SHOULDER WIDTH LIMITED BY BRIDGE DECK WATERPROOFING/ RECONSTRUCTION AS WELL AS CONTROLLED PRESENT SEE PHASE 1C TYPICAL SECTION H-2
1I	WB	INSIDE	I-84 ENGLISH JUNCTION TO THE LAKE BRIDGE APPROACHES (N ST/W LAKE)	SEE PHASE 1C TYPICAL SECTION A-4
1J	WB	INSIDE	I-84 ENGLISH JUNCTION TO THE LAKE BRIDGE APPROACHES (N ST/W LAKE)	SEE PHASE 1C TYPICAL SECTION B-4
1K	10	BOTH	I-84 BRIDGE OVER MURRAY ROAD NO. (ETA: 1084-00)	SHOULDER WIDTH LIMITED BY BRIDGE DECK WATERPROOFING/ RECONSTRUCTION AS WELL AS CONTROLLED PRESENT SEE PHASE 1C TYPICAL SECTION K-2
1L	WB	BOTH	I-84 BRIDGE OVER LAKE SHORE RAILWAY (ETA: 1084-00)	SHOULDER WIDTH LIMITED BY BRIDGE DECK WATERPROOFING/ RECONSTRUCTION AS WELL AS CONTROLLED PRESENT SEE PHASE 1C TYPICAL SECTION L-2
1M	WB	BOTH	I-84 BRIDGE OVER LAKE SHORE RAILWAY (ETA: 1084-00)	SEE PHASE 1C TYPICAL SECTION M-2
1N	WB	BOTH	I-84 BRIDGE OVER MURRAY ROAD NO. (ETA: 1084-00)	SHOULDER WIDTH LIMITED BY BRIDGE DECK WATERPROOFING/ RECONSTRUCTION AS WELL AS CONTROLLED PRESENT SEE PHASE 1C TYPICAL SECTION N-2
1O	WB	BOTH	I-84 BRIDGE OVER LAKE SHORE RAILWAY (ETA: 1084-00)	SEE PHASE 1C TYPICAL SECTION O-2
1P	WB	BOTH	I-84 BRIDGE OVER MURRAY ROAD NO. (ETA: 1084-00)	WIDTHS PHASE 1E SEE PHASE 1C TYPICAL SECTION A-4
1Q	WB	BOTH	I-84 BRIDGE OVER MURRAY ROAD NO. (ETA: 1084-00)	WIDTHS PHASE 1E SEE PHASE 1C TYPICAL SECTION B-4

LOR-90-10.76 MAINTENANCE OF TRAFFIC - PHASE 1D

EXISTING SHOULDERS UTILIZED FOR MOT				
PHASE	EASTBOUND/WESTBOUND	INSIDE/OUTSIDE	STATION RANGE	
1A-1B	WB	OUTSIDE	608+58	634+12
1A-1B	WB	OUTSIDE	640+67	654+67
1A-1F	WB	OUTSIDE	656+57	661+25
1A-1F	WB	OUTSIDE	662+95	676+94
1A-1F	WB	OUTSIDE	691+72	695+72
1C-1D	EB	OUTSIDE	585+99	594+25
1C-1F	EB	OUTSIDE	596+54	606+98
1C-1D	EB	OUTSIDE	609+19	616+75
1E-1F	WB	INSIDE	590+89	594+67
1E-1F	WB	INSIDE	596+97	606+57
1E-1F	EB	INSIDE	646+96	655+17
1E-1F	EB	INSIDE	656+82	661+42
2A-2B	EB	OUTSIDE	640+98	655+01
2A	EB	OUTSIDE	657+14	661+25
1B-1D 2A-2C	WB	INSIDE	657+14	661+25
1E-1F 2B-2C	EB	INSIDE	657+14	661+25
2A	EB	OUTSIDE	663+20	668+00
2A-2C, 3A-3B	WB	INSIDE	982+71	986+05
2A-2C, 3A-3B	EB	INSIDE	982+71	984+97
2A	EB	RAMP GORE	983+47	985+64
3A-3B	WB	INSIDE	986+05	997+01
3A-3B	EB	INSIDE	984+97	1026+46
3A-3B	WB	INSIDE	1028+10	1032+06

SHOULDER/BUFFER WIDTHS LESS THAN 2'				
PHASE	EASTBOUND/WESTBOUND	INSIDE/OUTSIDE	LOCATION	COMMENT(S)
1A	WB	BOTH	I-90 PAVEMENT ADJACENT TO THE LAKE AVE. BRIDGE APPROACH SLAB (STA. 655+00)	58.0' BRIDGE DECK WIDTH NOT ENOUGH TO CONSTRUCT 58.0' OF PAVEMENT UTILIZING PART WIDTH CONSTRUCTION (NEED 61.0' TO MEET ALL OFFSET REQUIREMENTS AND PHASE JOINT STEPPING) SEE PHASE 1A TYPICAL SECTION E-E
1B	WB	INSIDE	1-90 PAVEMENT ADJACENT TO THE LAKE AVE. BRIDGE APPROACH SLAB (STA. 655+00)	INSIDE LANE MATCHES PHASE 1C SEE PHASE 1B TYPICAL SECTION E-E
1C	WB	INSIDE	I-90 PAVEMENT ADJACENT TO THE LAKE AVE. BRIDGE APPROACH SLAB (STA. 655+00)	58.0' BRIDGE DECK WIDTH NOT ENOUGH TO CONSTRUCT 58.0' OF PAVEMENT UTILIZING PART WIDTH CONSTRUCTION (NEED 61.0' TO MEET ALL OFFSET REQUIREMENTS AND PHASE JOINT STEPPING) SEE PHASE 1C TYPICAL SECTION E-E
1C	EB	BOTH	SR-2 BRIDGE OVER MURRAY RIDGE RD. (STA. 608+00)	SHOULDER WIDTHS MUST BE REDUCED TO 1' IN ORDER FOR CONTRAFLOW SCHEME TO FIT ON THE STRUCTURE SHOULDERS WIDENED TO 2' MINIMUM UPSTREAM AND DOWNSTREAM OF STRUCTURE SEE PHASE 1C TYPICAL SECTION B-B
1D	EB	BOTH	SR-2 BRIDGE OVER MURRAY RIDGE RD. (STA. 608+00)	MATCHES PHASE 1C SEE PHASE 1D TYPICAL SECTION B-B
1D	WB	INSIDE	I-90 PAVEMENT ADJACENT TO THE LAKE AVE. BRIDGE APPROACH SLAB (STA. 655+00)	INSIDE LANE MATCHES PHASE 1C SEE PHASE 1D TYPICAL SECTION E-E
1E	WB	BOTH	SR-2 BRIDGE OVER LAKE SHORE RAILWAY (STA. 596+00)	SHOULDER WIDTHS MUST BE REDUCED TO 1' IN ORDER FOR CONTRAFLOW SCHEME TO FIT ON THE STRUCTURE SHOULDERS WIDENED TO 2' MINIMUM UPSTREAM AND DOWNSTREAM OF STRUCTURE SEE PHASE 1E TYPICAL SECTION A-A
1E	WB	BOTH	SR-2 BRIDGE OVER MURRAY RIDGE RD. (STA. 608+00)	SHOULDER WIDTHS MUST BE REDUCED TO 1' IN ORDER FOR CONTRAFLOW SCHEME TO FIT ON THE STRUCTURE SHOULDERS WIDENED TO 2' MINIMUM UPSTREAM AND DOWNSTREAM OF STRUCTURE SEE PHASE 1E TYPICAL SECTION B-B
1F	WB	BOTH	SR-2 BRIDGE OVER LAKE SHORE RAILWAY (STA. 596+00)	MATCHES PHASE 1E SEE PHASE 1F TYPICAL SECTION A-A
1F	WB	BOTH	SR-2 BRIDGE OVER MURRAY RIDGE RD. (STA. 608+00)	MATCHES PHASE 1E SEE PHASE 1F TYPICAL SECTION B-B

LEGEND:

- WORK ZONE
- TEMPORARY PAVEMENT PLACED THIS PHASE
- PROPOSED PAVEMENT
- TEMPORARY PAVEMENT/SHOULDER RECONSTRUCTION COMPLETED PRIOR TO THIS PHASE
- EXISTING SHOULDER BEING UTILIZED FOR MOT

LOR-90-10.76 MAINTENANCE OF TRAFFIC - PHASE 1E

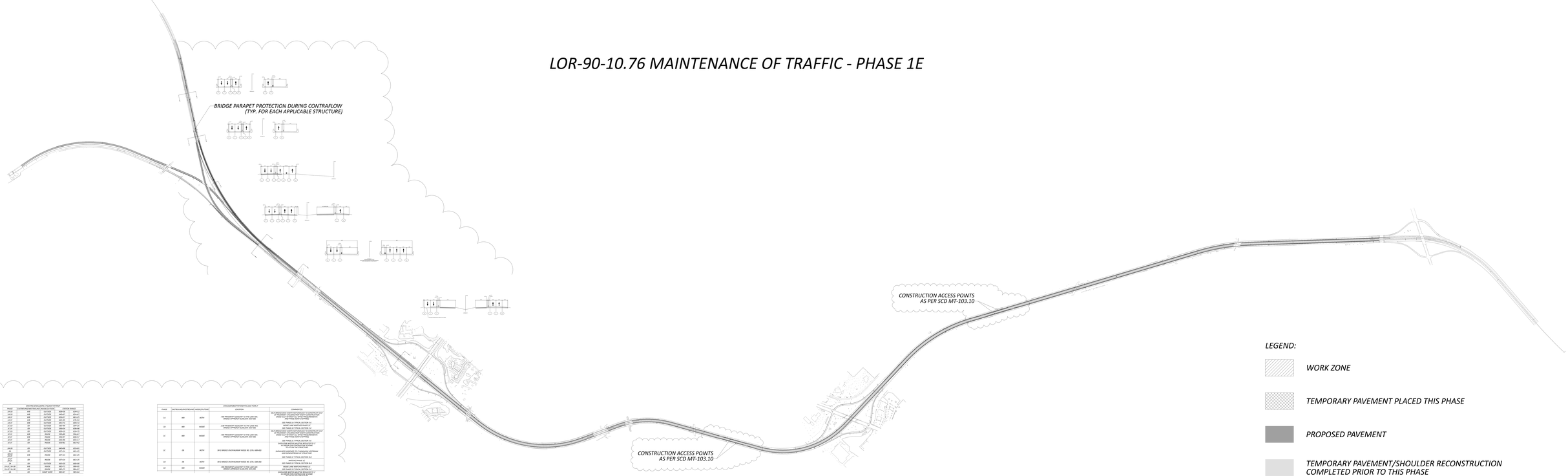

EXISTING SHOULDERS UTILIZED FOR MOT			
PHASE	DIRECTION/LOCATION/TYPE	DESCRIPTION	STATION RANGE
1A	WB	OUTSIDE	188+00 - 207+00
1A-1F	WB	OUTSIDE	189+00 - 223+47
1A-1F	WB	OUTSIDE	223+47 - 265+05
1A-1F	WB	OUTSIDE	265+05 - 287+00
1A-1F	WB	OUTSIDE	287+00 - 290+75
1A-1F	WB	OUTSIDE	290+75 - 293+00
1F-1J	EB	OUTSIDE	286+50 - 328+98
1F-1J	EB	OUTSIDE	328+98 - 358+75
1F-1J	EB	OUTSIDE	358+75 - 374+00
1F-1J	EB	INSIDE	296+00 - 305+17
1F-1J	EB	INSIDE	305+17 - 321+47
1F-1J	EB	INSIDE	321+47 - 374+00
1H-1K	EB	OUTSIDE	449+00 - 472+00
1J	EB	OUTSIDE	375+00 - 401+00
1H-1J	WB	INSIDE	375+00 - 401+00
1H-1J	WB	INSIDE	401+00 - 424+00
1H-1K	WB	INSIDE	424+00 - 449+00
1K	EB	INSIDE	449+00 - 472+00
1K-1M	EB	OUTSIDE	472+00 - 501+00
1K-1M	EB	INSIDE	472+00 - 501+00
1L-1M	EB	OUTSIDE	501+00 - 528+00
1L-1M	EB	INSIDE	501+00 - 528+00
1L-1M	WB	INSIDE	501+00 - 528+00
1L	EB	INSIDE	528+00 - 541+00
1L	EB	INSIDE (CURB)	541+00 - 565+64
1M-1N	WB	INSIDE	528+00 - 565+00
1M-1N	EB	INSIDE	528+00 - 565+00
1M-1N	EB	INSIDE	565+00 - 583+00
1M-1N	EB	INSIDE	583+00 - 605+00

DIVERSIONS/DETOUR ROUTING (USE TYPICAL 2)				
PHASE	DIRECTION/LOCATION/TYPE	INSULATION TYPE	LOCATION	COMMENTS
1A	WB	BOTH	I-90 DIVERSION AVAILABLE TO THE LEFT AND BRIDGE APPROACH SLAB ON LEFT	SEE F.BRIDGE DECK WATERPROOFING TO CONSTRUCT 1/2 OF AN INSIDE DIVERSION AND PERFORM CONSTRUCTION PROCEDURES AS WELL AS OUTSIDE PROCEDURES TO CONSTRUCT 1/2 OF THE OUTSIDE DIVERSION SEE PHASE 1A TYPICAL SECTION A-2
1B	WB	INSIDE	I-90 DIVERSION AVAILABLE TO THE LEFT AND BRIDGE APPROACH SLAB ON LEFT (CURB)	SEE PHASE 1A TYPICAL SECTION A-2
1C	WB	INSIDE	I-90 DIVERSION AVAILABLE TO THE LEFT AND BRIDGE APPROACH SLAB ON LEFT (CURB)	SEE F.BRIDGE DECK WATERPROOFING TO CONSTRUCT 1/2 OF AN INSIDE DIVERSION AND PERFORM CONSTRUCTION PROCEDURES AS WELL AS INSIDE PROCEDURES TO CONSTRUCT 1/2 OF THE INSIDE DIVERSION SEE PHASE 1C TYPICAL SECTION A-2
1C	EB	BOTH	I-90 & BRIDGE OVER MURRAY ROAD RD. (CTL 108+00)	SEE F.BRIDGE DECK WATERPROOFING TO CONSTRUCT 1/2 OF AN INSIDE DIVERSION AND PERFORM CONSTRUCTION PROCEDURES AS WELL AS OUTSIDE PROCEDURES TO CONSTRUCT 1/2 OF THE OUTSIDE DIVERSION SHOULDER WIDENED TO 14' BRINGING LEFTMOST AND RIGHTMOST LANES TO STANDARD SEE PHASE 1C TYPICAL SECTION A-4
1D	EB	BOTH	I-90 & BRIDGE OVER MURRAY ROAD RD. (CTL 108+00)	SEE PHASE 1C TYPICAL SECTION A-4 BEFORE PHASE 1E
1D	WB	INSIDE	I-90 DIVERSION AVAILABLE TO THE LEFT AND BRIDGE APPROACH SLAB ON LEFT (CURB)	SEE PHASE 1C TYPICAL SECTION A-2
1E	WB	BOTH	I-90 & BRIDGE OVER LAKE SHORE RAILWAY (CTL 108+00)	SEE PHASE 1C TYPICAL SECTION A-4 SHOULDER WIDTH UNDER THE BRIDGES TO 17' BRINGING LEFTMOST AND RIGHTMOST LANES TO STANDARD SEE PHASE 1E TYPICAL SECTION A-1
1F	WB	BOTH	I-90 & BRIDGE OVER LAKE SHORE RAILWAY (CTL 108+00)	SHOULDER WIDENED TO 14' BRINGING LEFTMOST AND RIGHTMOST LANES TO STANDARD SEE PHASE 1F TYPICAL SECTION A-4
1F	WB	BOTH	I-90 & BRIDGE OVER LAKE SHORE RAILWAY (CTL 108+00)	SEE PHASE 1F TYPICAL SECTION A-4 SHOULDER WIDENED TO 14' BRINGING LEFTMOST AND RIGHTMOST LANES TO STANDARD SEE PHASE 1F TYPICAL SECTION A-4
1F	WB	BOTH	I-90 & BRIDGE OVER LAKE SHORE RAILWAY (CTL 108+00)	BEFORE PHASE 1E SEE PHASE 1F TYPICAL SECTION A-4
1F	WB	BOTH	I-90 & BRIDGE OVER MURRAY ROAD RD. (CTL 108+00)	SEE PHASE 1F TYPICAL SECTION A-4

LOR-90-10.76 MAINTENANCE OF TRAFFIC - PHASE 1F

EXISTING SHOULDERS UTILIZED FOR MOT				
PHASE	EASTBOUND/WESTBOUND	INSIDE/OUTSIDE	STATION RANGE	
1A-1B	WB	OUTSIDE	608+58	634+12
1A-1B	WB	OUTSIDE	640+67	654+67
1A-1F	WB	OUTSIDE	656+57	661+25
1A-1F	WB	OUTSIDE	662+95	676+94
1A-1F	WB	OUTSIDE	691+72	695+72
1C-1D	EB	OUTSIDE	585+99	594+25
1C-1F	EB	OUTSIDE	596+54	606+98
1C-1D	EB	OUTSIDE	609+19	616+75
1E-1F	WB	INSIDE	590+89	594+67
1E-1F	WB	INSIDE	596+97	606+57
1E-1F	EB	INSIDE	646+96	655+17
1E-1F	EB	INSIDE	656+82	661+42
2A-2B	EB	OUTSIDE	640+98	655+01
2A	EB	OUTSIDE	657+14	661+25
1B-1D 2A-2C	WB	INSIDE	657+14	661+25
1E-1F 2B-2C	EB	INSIDE	657+14	661+25
2A	EB	OUTSIDE	663+20	668+00
2A-2C, 3A-3B	WB	INSIDE	982+71	986+05
2A-2C, 3A-3B	EB	INSIDE	982+71	984+97
2A	EB	RAMP GORE	983+47	985+64
3A-3B	WB	INSIDE	986+05	997+01
3A-3B	EB	INSIDE	984+97	1026+46
3A-3B	WB	INSIDE	1028+10	1032+06

SHOULDER/BUFFER WIDTHS LESS THAN 2'				
PHASE	EASTBOUND/WESTBOUND	INSIDE/OUTSIDE	LOCATION	COMMENT(S)
1A	WB	BOTH	I-90 PAVEMENT ADJACENT TO THE LAKE AVE. BRIDGE APPROACH SLAB (STA. 655+00)	58.0' BRIDGE DECK WIDTH NOT ENOUGH TO CONSTRUCT 58.0' OF PAVEMENT UTILIZING PART WIDTH CONSTRUCTION (NEED 61.0' TO MEET ALL OFFSET REQUIREMENTS AND PHASE JOINT STEPPING) SEE PHASE 1A TYPICAL SECTION E-E
1B	WB	INSIDE	1-90 PAVEMENT ADJACENT TO THE LAKE AVE. BRIDGE APPROACH SLAB (STA. 655+00)	INSIDE LANE MATCHES PHASE 1C SEE PHASE 1B TYPICAL SECTION E-E
1C	WB	INSIDE	I-90 PAVEMENT ADJACENT TO THE LAKE AVE. BRIDGE APPROACH SLAB (STA. 655+00)	58.0' BRIDGE DECK WIDTH NOT ENOUGH TO CONSTRUCT 58.0' OF PAVEMENT UTILIZING PART WIDTH CONSTRUCTION (NEED 61.0' TO MEET ALL OFFSET REQUIREMENTS AND PHASE JOINT STEPPING) SEE PHASE 1C TYPICAL SECTION E-E
1C	EB	BOTH	SR-2 BRIDGE OVER MURRAY RIDGE RD. (STA. 608+00)	SHOULDER WIDTHS MUST BE REDUCED TO 1' IN ORDER FOR CONTRAFLOW SCHEME TO FIT ON THE STRUCTURE SHOULDERS WIDENED TO 2' MINIMUM UPSTREAM AND DOWNSTREAM OF STRUCTURE SEE PHASE 1C TYPICAL SECTION B-B
1D	EB	BOTH	SR-2 BRIDGE OVER MURRAY RIDGE RD. (STA. 608+00)	MATCHES PHASE 1C SEE PHASE 1D TYPICAL SECTION B-B
1D	WB	INSIDE	I-90 PAVEMENT ADJACENT TO THE LAKE AVE. BRIDGE APPROACH SLAB (STA. 655+00)	INSIDE LANE MATCHES PHASE 1C SEE PHASE 1D TYPICAL SECTION E-E
1E	WB	BOTH	SR-2 BRIDGE OVER LAKE SHORE RAILWAY (STA. 596+00)	SHOULDER WIDTHS MUST BE REDUCED TO 1' IN ORDER FOR CONTRAFLOW SCHEME TO FIT ON THE STRUCTURE SHOULDERS WIDENED TO 2' MINIMUM UPSTREAM AND DOWNSTREAM OF STRUCTURE SEE PHASE 1E TYPICAL SECTION A-A
1E	WB	BOTH	SR-2 BRIDGE OVER MURRAY RIDGE RD. (STA. 608+00)	SHOULDER WIDTHS MUST BE REDUCED TO 1' IN ORDER FOR CONTRAFLOW SCHEME TO FIT ON THE STRUCTURE SHOULDERS WIDENED TO 2' MINIMUM UPSTREAM AND DOWNSTREAM OF STRUCTURE SEE PHASE 1E TYPICAL SECTION B-B
1F	WB	BOTH	SR-2 BRIDGE OVER LAKE SHORE RAILWAY (STA. 596+00)	MATCHES PHASE 1E SEE PHASE 1F TYPICAL SECTION A-A
1F	WB	BOTH	SR-2 BRIDGE OVER MURRAY RIDGE RD. (STA. 608+00)	MATCHES PHASE 1E SEE PHASE 1F TYPICAL SECTION B-B

LEGEND:

- WORK ZONE
- TEMPORARY PAVEMENT PLACED THIS PHASE
- PROPOSED PAVEMENT
- TEMPORARY PAVEMENT/SHOULDER RECONSTRUCTION COMPLETED PRIOR TO THIS PHASE
- EXISTING SHOULDER BEING UTILIZED FOR MOT

LOR-90-10.76 MAINTENANCE OF TRAFFIC - PHASE 2A

EXISTING SHOULDERS UTILIZED FOR MOT				
PHASE	EASTBOUND/WESTBOUND	INSIDE/OUTSIDE	STATION RANGE	
1A-1B	WB	OUTSIDE	608+58	634+12
1A-1B	WB	OUTSIDE	640+67	654+67
1A-1F	WB	OUTSIDE	656+57	661+25
1A-1F	WB	OUTSIDE	662+95	676+94
1A-1F	WB	OUTSIDE	691+72	695+72
1C-1D	EB	OUTSIDE	585+99	594+25
1C-1F	EB	OUTSIDE	596+54	606+98
1C-1D	EB	OUTSIDE	609+19	616+75
1E-1F	WB	INSIDE	590+89	594+67
1E-1F	WB	INSIDE	596+97	606+57
1E-1F	EB	INSIDE	646+96	655+17
1E-1F	EB	INSIDE	656+82	661+42
2A-2B	EB	OUTSIDE	640+98	655+01
2A	EB	OUTSIDE	657+14	661+25
1B-1D 2A-2C	WB	INSIDE	657+14	661+25
1E-1F 2B-2C	EB	INSIDE	657+14	661+25
2A	EB	OUTSIDE	663+20	668+00
2A-2C, 3A-3B	WB	INSIDE	982+71	986+05
2A-2C, 3A-3B	EB	INSIDE	982+71	984+97
2A	EB	RAMP GORE	983+47	985+64
3A-3B	WB	INSIDE	986+05	997+01
3A-3B	EB	INSIDE	984+97	1026+46
3A-3B	WB	INSIDE	1028+10	1032+06

SHOULDER/BUFFER WIDTHS LESS THAN 2'				
PHASE	EASTBOUND/WESTBOUND	INSIDE/OUTSIDE	LOCATION	COMMENT(S)
1A	WB	BOTH	I-90 PAVEMENT ADJACENT TO THE LAKE AVE. BRIDGE APPROACH SLAB (STA. 655+00)	58.0' BRIDGE DECK WIDTH NOT ENOUGH TO CONSTRUCT 58.0' OF PAVEMENT UTILIZING PART WIDTH CONSTRUCTION (NEED 61.0' TO MEET ALL OFFSET REQUIREMENTS AND PHASE JOINT STEPPING) SEE PHASE 1A TYPICAL SECTION E-E
1B	WB	INSIDE	1-90 PAVEMENT ADJACENT TO THE LAKE AVE. BRIDGE APPROACH SLAB (STA. 655+00)	INSIDE LANE MATCHES PHASE 1C SEE PHASE 1B TYPICAL SECTION E-E
1C	WB	INSIDE	I-90 PAVEMENT ADJACENT TO THE LAKE AVE. BRIDGE APPROACH SLAB (STA. 655+00)	58.0' BRIDGE DECK WIDTH NOT ENOUGH TO CONSTRUCT 58.0' OF PAVEMENT UTILIZING PART WIDTH CONSTRUCTION (NEED 61.0' TO MEET ALL OFFSET REQUIREMENTS AND PHASE JOINT STEPPING) SEE PHASE 1C TYPICAL SECTION E-E
1C	EB	BOTH	SR-2 BRIDGE OVER MURRAY RIDGE RD. (STA. 608+00)	SHOULDER WIDTHS MUST BE REDUCED TO 1' IN ORDER FOR CONTRAFLOW SCHEME TO FIT ON THE STRUCTURE SHOULDERS WIDENED TO 2' MINIMUM UPSTREAM AND DOWNSTREAM OF STRUCTURE SEE PHASE 1C TYPICAL SECTION B-B
1D	EB	BOTH	SR-2 BRIDGE OVER MURRAY RIDGE RD. (STA. 608+00)	MATCHES PHASE 1C SEE PHASE 1D TYPICAL SECTION B-B
1D	WB	INSIDE	I-90 PAVEMENT ADJACENT TO THE LAKE AVE. BRIDGE APPROACH SLAB (STA. 655+00)	INSIDE LANE MATCHES PHASE 1C SEE PHASE 1D TYPICAL SECTION E-E
1E	WB	BOTH	SR-2 BRIDGE OVER LAKE SHORE RAILWAY (STA. 596+00)	SHOULDER WIDTHS MUST BE REDUCED TO 1' IN ORDER FOR CONTRAFLOW SCHEME TO FIT ON THE STRUCTURE SHOULDERS WIDENED TO 2' MINIMUM UPSTREAM AND DOWNSTREAM OF STRUCTURE SEE PHASE 1E TYPICAL SECTION A-A
1E	WB	BOTH	SR-2 BRIDGE OVER MURRAY RIDGE RD. (STA. 608+00)	SHOULDER WIDTHS MUST BE REDUCED TO 1' IN ORDER FOR CONTRAFLOW SCHEME TO FIT ON THE STRUCTURE SHOULDERS WIDENED TO 2' MINIMUM UPSTREAM AND DOWNSTREAM OF STRUCTURE SEE PHASE 1E TYPICAL SECTION B-B
1F	WB	BOTH	SR-2 BRIDGE OVER LAKE SHORE RAILWAY (STA. 596+00)	MATCHES PHASE 1E SEE PHASE 1F TYPICAL SECTION A-A
1F	WB	BOTH	SR-2 BRIDGE OVER MURRAY RIDGE RD. (STA. 608+00)	MATCHES PHASE 1E SEE PHASE 1F TYPICAL SECTION B-B

LOR-90-10.76 MAINTENANCE OF TRAFFIC - PHASE 2B

EXISTING SHOULDERS UTILIZED FOR MOT				
PHASE	EASTBOUND/WESTBOUND	INSIDE/OUTSIDE	STATION RANGE	
1A-1B	WB	OUTSIDE	608+58	634+12
1A-1B	WB	OUTSIDE	640+67	654+67
1A-1F	WB	OUTSIDE	656+57	661+25
1A-1F	WB	OUTSIDE	662+95	676+94
1A-1F	WB	OUTSIDE	691+72	695+72
1C-1D	EB	OUTSIDE	585+99	594+25
1C-1F	EB	OUTSIDE	596+54	606+98
1C-1D	EB	OUTSIDE	609+19	616+75
1E-1F	WB	INSIDE	590+89	594+67
1E-1F	WB	INSIDE	596+97	606+57
1E-1F	EB	INSIDE	646+96	655+17
1E-1F	EB	INSIDE	656+82	661+42
2A-2B	EB	OUTSIDE	640+98	655+01
2A	EB	OUTSIDE	657+14	661+25
1B-1D 2A-2C	WB	INSIDE	657+14	661+25
1E-1F 2B-2C	EB	INSIDE	657+14	661+25
2A	EB	OUTSIDE	663+20	668+00
2A-2C, 3A-3B	WB	INSIDE	982+71	986+05
2A-2C, 3A-3B	EB	INSIDE	982+71	984+97
2A	EB	RAMP GORE	983+47	985+64
3A-3B	WB	INSIDE	986+05	997+01
3A-3B	EB	INSIDE	984+97	1026+46
3A-3B	WB	INSIDE	1028+10	1032+06

SHOULDER/BUFFER WIDTHS LESS THAN 2'				
PHASE	EASTBOUND/WESTBOUND	INSIDE/OUTSIDE	LOCATION	COMMENT(S)
1A	WB	BOTH	I-90 PAVEMENT ADJACENT TO THE LAKE AVE. BRIDGE APPROACH SLAB (STA. 655+00)	58.0' BRIDGE DECK WIDTH NOT ENOUGH TO CONSTRUCT 58.0' OF PAVEMENT UTILIZING PART WIDTH CONSTRUCTION (NEED 61.0' TO MEET ALL OFFSET REQUIREMENTS AND PHASE JOINT STEPPING) SEE PHASE 1A TYPICAL SECTION E-E
1B	WB	INSIDE	1-90 PAVEMENT ADJACENT TO THE LAKE AVE. BRIDGE APPROACH SLAB (STA. 655+00)	INSIDE LANE MATCHES PHASE 1C SEE PHASE 1B TYPICAL SECTION E-E
1C	WB	INSIDE	I-90 PAVEMENT ADJACENT TO THE LAKE AVE. BRIDGE APPROACH SLAB (STA. 655+00)	58.0' BRIDGE DECK WIDTH NOT ENOUGH TO CONSTRUCT 58.0' OF PAVEMENT UTILIZING PART WIDTH CONSTRUCTION (NEED 61.0' TO MEET ALL OFFSET REQUIREMENTS AND PHASE JOINT STEPPING) SEE PHASE 1C TYPICAL SECTION E-E
1C	EB	BOTH	SR-2 BRIDGE OVER MURRAY RIDGE RD. (STA. 608+00)	SHOULDER WIDTHS MUST BE REDUCED TO 1' IN ORDER FOR CONTRAFLOW SCHEME TO FIT ON THE STRUCTURE SHOULDERS WIDENED TO 2' MINIMUM UPSTREAM AND DOWNSTREAM OF STRUCTURE SEE PHASE 1C TYPICAL SECTION B-B
1D	EB	BOTH	SR-2 BRIDGE OVER MURRAY RIDGE RD. (STA. 608+00)	MATCHES PHASE 1C SEE PHASE 1D TYPICAL SECTION B-B
1D	WB	INSIDE	I-90 PAVEMENT ADJACENT TO THE LAKE AVE. BRIDGE APPROACH SLAB (STA. 655+00)	INSIDE LANE MATCHES PHASE 1C SEE PHASE 1D TYPICAL SECTION E-E
1E	WB	BOTH	SR-2 BRIDGE OVER LAKE SHORE RAILWAY (STA. 596+00)	SHOULDER WIDTHS MUST BE REDUCED TO 1' IN ORDER FOR CONTRAFLOW SCHEME TO FIT ON THE STRUCTURE SHOULDERS WIDENED TO 2' MINIMUM UPSTREAM AND DOWNSTREAM OF STRUCTURE SEE PHASE 1E TYPICAL SECTION A-A
1E	WB	BOTH	SR-2 BRIDGE OVER MURRAY RIDGE RD. (STA. 608+00)	SHOULDER WIDTHS MUST BE REDUCED TO 1' IN ORDER FOR CONTRAFLOW SCHEME TO FIT ON THE STRUCTURE SHOULDERS WIDENED TO 2' MINIMUM UPSTREAM AND DOWNSTREAM OF STRUCTURE SEE PHASE 1E TYPICAL SECTION B-B
1F	WB	BOTH	SR-2 BRIDGE OVER LAKE SHORE RAILWAY (STA. 596+00)	MATCHES PHASE 1E SEE PHASE 1F TYPICAL SECTION A-A
1F	WB	BOTH	SR-2 BRIDGE OVER MURRAY RIDGE RD. (STA. 608+00)	MATCHES PHASE 1E SEE PHASE 1F TYPICAL SECTION B-B

LEGEND:

- WORK ZONE
- TEMPORARY PAVEMENT PLACED THIS PHASE
- PROPOSED PAVEMENT
- TEMPORARY PAVEMENT/SHOULDER RECONSTRUCTION COMPLETED PRIOR TO THIS PHASE
- EXISTING SHOULDER BEING UTILIZED FOR MOT

LOR-90-10.76 MAINTENANCE OF TRAFFIC - PHASE 2C

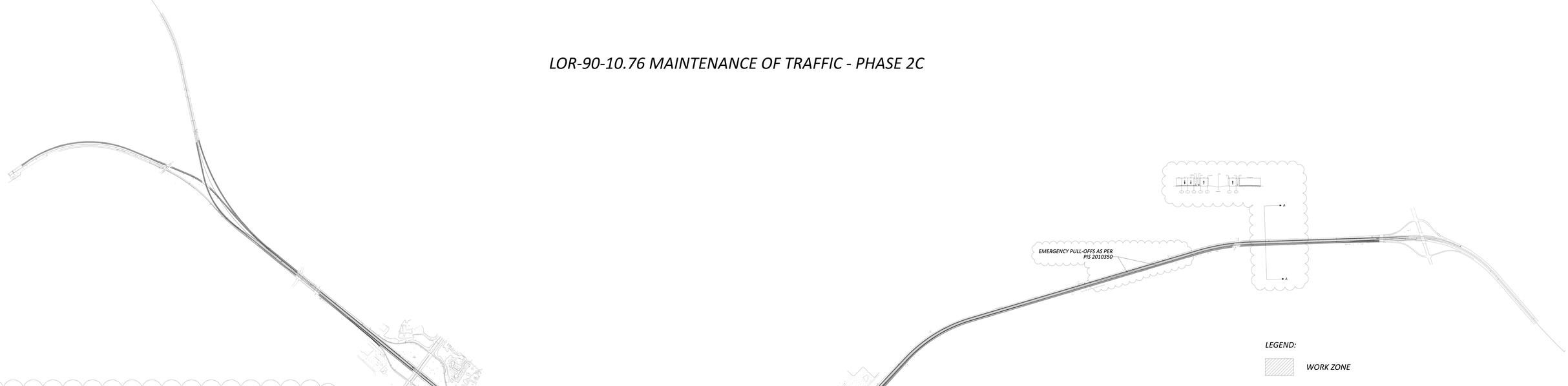

EXISTING SHOULDERS UTILIZED FOR MOT			
PHASE	DIRECTION/LOCATION	DESCRIPTION	TIMEFRAME
1A	WB	2ND STREET	2006-07 - 2009-07
1A-1F	WB	OUTRIGHT	2009-07 - 2014-07
1A-1F	WB	OUTRIGHT	2014-07 - 2015-05
1A-1F	WB	OUTRIGHT	2015-05 - 2015-11
1A-1F	WB	OUTRIGHT	2015-11 - 2016-05
1A-1F	WB	OUTRIGHT	2016-05 - 2016-11
1F-2F	EB	OUTRIGHT	2016-11 - 2017-05
1F-2F	EB	OUTRIGHT	2017-05 - 2017-11
1F-2F	EB	OUTRIGHT	2017-11 - 2018-05
1F-2F	EB	OUTRIGHT	2018-05 - 2018-11
1F-2F	EB	INSIDE	2018-11 - 2019-05
1F-2F	EB	INSIDE	2019-05 - 2019-11
1F-2F	EB	INSIDE	2019-11 - 2020-05
1F-2F	EB	INSIDE	2020-05 - 2020-11
2F-2I	EB	OUTRIGHT	2020-11 - 2021-05
2F-2I	EB	OUTRIGHT	2021-05 - 2021-11
2F-2I	EB	INSIDE	2021-11 - 2022-05
2F-2I	EB	INSIDE	2022-05 - 2022-11
2I-2J	EB	OUTRIGHT	2022-11 - 2023-05
2I-2J	EB	OUTRIGHT	2023-05 - 2023-11
2I-2J	EB	INSIDE	2023-11 - 2024-05
2I-2J	EB	INSIDE	2024-05 - 2024-11
2I-2J	EB	INSIDE	2024-11 - 2025-05
2I-2J	EB	INSIDE	2025-05 - 2025-11
2I-2J	EB	INSIDE	2025-11 - 2026-05
2I-2J	EB	INSIDE	2026-05 - 2026-11
2I-2J	EB	INSIDE	2026-11 - 2027-05
2I-2J	EB	INSIDE	2027-05 - 2027-11
2I-2J	EB	INSIDE	2027-11 - 2028-05
2I-2J	EB	INSIDE	2028-05 - 2028-11
2I-2J	EB	INSIDE	2028-11 - 2029-05
2I-2J	EB	INSIDE	2029-05 - 2029-11
2I-2J	EB	INSIDE	2029-11 - 2030-05
2I-2J	EB	INSIDE	2030-05 - 2030-11
2I-2J	EB	INSIDE	2030-11 - 2031-05
2I-2J	EB	INSIDE	2031-05 - 2031-11
2I-2J	EB	INSIDE	2031-11 - 2032-05
2I-2J	EB	INSIDE	2032-05 - 2032-11
2I-2J	EB	INSIDE	2032-11 - 2033-05
2I-2J	EB	INSIDE	2033-05 - 2033-11
2I-2J	EB	INSIDE	2033-11 - 2034-05
2I-2J	EB	INSIDE	2034-05 - 2034-11
2I-2J	EB	INSIDE	2034-11 - 2035-05
2I-2J	EB	INSIDE	2035-05 - 2035-11
2I-2J	EB	INSIDE	2035-11 - 2036-05
2I-2J	EB	INSIDE	2036-05 - 2036-11
2I-2J	EB	INSIDE	2036-11 - 2037-05
2I-2J	EB	INSIDE	2037-05 - 2037-11
2I-2J	EB	INSIDE	2037-11 - 2038-05
2I-2J	EB	INSIDE	2038-05 - 2038-11
2I-2J	EB	INSIDE	2038-11 - 2039-05
2I-2J	EB	INSIDE	2039-05 - 2039-11
2I-2J	EB	INSIDE	2039-11 - 2040-05
2I-2J	EB	INSIDE	2040-05 - 2040-11
2I-2J	EB	INSIDE	2040-11 - 2041-05
2I-2J	EB	INSIDE	2041-05 - 2041-11
2I-2J	EB	INSIDE	2041-11 - 2042-05
2I-2J	EB	INSIDE	2042-05 - 2042-11
2I-2J	EB	INSIDE	2042-11 - 2043-05
2I-2J	EB	INSIDE	2043-05 - 2043-11
2I-2J	EB	INSIDE	2043-11 - 2044-05
2I-2J	EB	INSIDE	2044-05 - 2044-11
2I-2J	EB	INSIDE	2044-11 - 2045-05
2I-2J	EB	INSIDE	2045-05 - 2045-11
2I-2J	EB	INSIDE	2045-11 - 2046-05
2I-2J	EB	INSIDE	2046-05 - 2046-11
2I-2J	EB	INSIDE	2046-11 - 2047-05
2I-2J	EB	INSIDE	2047-05 - 2047-11
2I-2J	EB	INSIDE	2047-11 - 2048-05
2I-2J	EB	INSIDE	2048-05 - 2048-11
2I-2J	EB	INSIDE	2048-11 - 2049-05
2I-2J	EB	INSIDE	2049-05 - 2049-11
2I-2J	EB	INSIDE	2049-11 - 2050-05
2I-2J	EB	INSIDE	2050-05 - 2050-11
2I-2J	EB	INSIDE	2050-11 - 2051-05
2I-2J	EB	INSIDE	2051-05 - 2051-11
2I-2J	EB	INSIDE	2051-11 - 2052-05
2I-2J	EB	INSIDE	2052-05 - 2052-11
2I-2J	EB	INSIDE	2052-11 - 2053-05
2I-2J	EB	INSIDE	2053-05 - 2053-11
2I-2J	EB	INSIDE	2053-11 - 2054-05
2I-2J	EB	INSIDE	2054-05 - 2054-11
2I-2J	EB	INSIDE	2054-11 - 2055-05
2I-2J	EB	INSIDE	2055-05 - 2055-11
2I-2J	EB	INSIDE	2055-11 - 2056-05
2I-2J	EB	INSIDE	2056-05 - 2056-11
2I-2J	EB	INSIDE	2056-11 - 2057-05
2I-2J	EB	INSIDE	2057-05 - 2057-11
2I-2J	EB	INSIDE	2057-11 - 2058-05
2I-2J	EB	INSIDE	2058-05 - 2058-11
2I-2J	EB	INSIDE	2058-11 - 2059-05
2I-2J	EB	INSIDE	2059-05 - 2059-11
2I-2J	EB	INSIDE	2059-11 - 2060-05
2I-2J	EB	INSIDE	2060-05 - 2060-11
2I-2J	EB	INSIDE	2060-11 - 2061-05
2I-2J	EB	INSIDE	2061-05 - 2061-11
2I-2J	EB	INSIDE	2061-11 - 2062-05
2I-2J	EB	INSIDE	2062-05 - 2062-11
2I-2J	EB	INSIDE	2062-11 - 2063-05
2I-2J	EB	INSIDE	2063-05 - 2063-11
2I-2J	EB	INSIDE	2063-11 - 2064-05
2I-2J	EB	INSIDE	2064-05 - 2064-11
2I-2J	EB	INSIDE	2064-11 - 2065-05
2I-2J	EB	INSIDE	2065-05 - 2065-11
2I-2J	EB	INSIDE	2065-11 - 2066-05
2I-2J	EB	INSIDE	2066-05 - 2066-11
2I-2J	EB	INSIDE	2066-11 - 2067-05
2I-2J	EB	INSIDE	2067-05 - 2067-11
2I-2J	EB	INSIDE	2067-11 - 2068-05
2I-2J	EB	INSIDE	2068-05 - 2068-11
2I-2J	EB	INSIDE	2068-11 - 2069-05
2I-2J	EB	INSIDE	2069-05 - 2069-11
2I-2J	EB	INSIDE	2069-11 - 2070-05
2I-2J	EB	INSIDE	2070-05 - 2070-11
2I-2J	EB	INSIDE	2070-11 - 2071-05
2I-2J	EB	INSIDE	2071-05 - 2071-11
2I-2J	EB	INSIDE	2071-11 - 2072-05
2I-2J	EB	INSIDE	2072-05 - 2072-11
2I-2J	EB	INSIDE	2072-11 - 2073-05
2I-2J	EB	INSIDE	2073-05 - 2073-11
2I-2J	EB	INSIDE	2073-11 - 2074-05
2I-2J	EB	INSIDE	2074-05 - 2074-11
2I-2J	EB	INSIDE	2074-11 - 2075-05
2I-2J	EB	INSIDE	2075-05 - 2075-11
2I-2J	EB	INSIDE	2075-11 - 2076-05
2I-2J	EB	INSIDE	2076-05 - 2076-11
2I-2J	EB	INSIDE	2076-11 - 2077-05
2I-2J	EB	INSIDE	2077-05 - 2077-11
2I-2J	EB	INSIDE	2077-11 - 2078-05
2I-2J	EB	INSIDE	2078-05 - 2078-11
2I-2J	EB	INSIDE	2078-11 - 2079-05
2I-2J	EB	INSIDE	2079-05 - 2079-11
2I-2J	EB	INSIDE	2079-11 - 2080-05
2I-2J	EB	INSIDE	2080-05 - 2080-11
2I-2J	EB	INSIDE	2080-11 - 2081-05
2I-2J	EB	INSIDE	2081-05 - 2081-11
2I-2J	EB	INSIDE	2081-11 - 2082-05
2I-2J	EB	INSIDE	2082-05 - 2082-11
2I-2J	EB	INSIDE	2082-11 - 2083-05
2I-2J	EB	INSIDE	2083-05 - 2083-11
2I-2J	EB	INSIDE	2083-11 - 2084-05
2I-2J	EB	INSIDE	2084-05 - 2084-11
2I-2J	EB	INSIDE	2084-11 - 2085-05
2I-2J	EB	INSIDE	2085-05 - 2085-11
2I-2J	EB	INSIDE	2085-11 - 2086-05
2I-2J	EB	INSIDE	2086-05 - 2086-11
2I-2J	EB	INSIDE	2086-11 - 2087-05
2I-2J	EB	INSIDE	2087-05 - 2087-11
2I-2J	EB	INSIDE	2087-11 - 2088-05
2I-2J	EB	INSIDE	2088-05 - 2088-11
2I-2J	EB	INSIDE	2088-11 - 2089-05
2I-2J	EB	INSIDE	2089-05 - 2089-11
2I-2J	EB	INSIDE	2089-11 - 2090-05
2I-2J	EB	INSIDE	2090-05 - 2090-11
2I-2J	EB	INSIDE	2090-11 - 2091-05
2I-2J	EB	INSIDE	2091-05 - 2091-11
2I-2J	EB	INSIDE	2091-11 - 2092-05
2I-2J	EB	INSIDE	2092-05 - 2092-11
2I-2J	EB	INSIDE	2092-11 - 2093-05
2I-2J	EB	INSIDE	2093-05 - 2093-11
2I-2J	EB	INSIDE	2093-11 - 2094-05
2I-2J	EB	INSIDE	2094-05 - 2094-11
2I-2J	EB	INSIDE	2094-11 - 2095-05
2I-2J	EB	INSIDE	2095-05 - 2095-11
2I-2J	EB	INSIDE	2095-11 - 2096-05
2I-2J	EB	INSIDE	2096-05 - 2096-11
2I-2J	EB	INSIDE	2096-11 - 2097-05
2I-2J	EB	INSIDE	2097-05 - 2097-11
2I-2J	EB	INSIDE	2097-11 - 2098-05
2I-2J	EB	INSIDE	2098-05 - 2098-11
2I-2J	EB	INSIDE	2098-11 - 2099-05
2I-2J	EB	INSIDE	2099-05 - 2099-11
2I-2J	EB	INSIDE	2099-11 - 2100-05
2I-2J	EB	INSIDE	2100-05 - 2100-11

DIVOLS/DIVERSION WITHIN LESS THAN 2'				
PHASE	DIRECTION/LOCATION	DIVOLS/DIVERSION	LOCATION	COMMENTS
1A	WB	BOTH	I-90 SHOULDER AHEADOF TO THE LAKE BRIDGE APPROACHES ON EB TOW LANES	SEE BRIDGE DECK WATERPROOFING & CONSTRUCTION OF 10' OF SHOULDER, SECTION PARTIALLY COMPLETED PRIOR TO PHASE 1A (PRIOR TO ANY TRAFFIC PROCEDURES) AND WORK ON SECTION PROCEEDING
1B	WB	INSIDE	WB BRIDGE APPROACHES ON TOW LANES	SEE PHASE 1A TYPICAL SECTION A-2
1C	WB	INSIDE	WB BRIDGE APPROACHES ON TOW LANES	SEE PHASE 1A TYPICAL SECTION A-2
1C	WB	INSIDE	I-90 SHOULDER AHEADOF TO THE LAKE BRIDGE APPROACHES ON EB TOW LANES	SEE BRIDGE DECK WATERPROOFING & CONSTRUCTION OF 10' OF SHOULDER, SECTION PARTIALLY COMPLETED PRIOR TO PHASE 1A (PRIOR TO ANY TRAFFIC PROCEDURES) AND WORK ON SECTION PROCEEDING
1C	EB	BOTH	2ND STREET	SEE PHASE 1C TYPICAL SECTION A-2
1C	EB	BOTH	I-90 BRIDGE OVER MILWRAW ROUE NO. 2276 - 0300-0D2	SEE PHASE 1C TYPICAL SECTION A-2 AND SHOULDER WIDENED TO 14' MINIMUM LEFTMOST SHOULDER TO ALLOW FOR STRUCTURE AND DIVERSTRIAL OF STRUCTURE
1D	1D	BOTH	I-90 BRIDGE OVER MILWRAW ROUE NO. 2276 - 0300-0D2	SEE PHASE 1D TYPICAL SECTION A-2
1D	WB	INSIDE	I-90 SHOULDER AHEADOF TO THE LAKE WB BRIDGE APPROACHES ON EB TOW LANES	SEE PHASE 1D TYPICAL SECTION A-2
1D	WB	INSIDE	WB BRIDGE APPROACHES ON TOW LANES	SEE PHASE 1D TYPICAL SECTION A-2
1E	WB	BOTH	I-90 BRIDGE OVER LAKE SHORE RAILWAY STA. 1300-0D2	SHOULDER WIDTH UNDER 10' REDUCED TO 2' MINIMUM LEFTMOST SHOULDER TO ALLOW FOR STRUCTURE AND DIVERSTRIAL OF STRUCTURE
1E	WB	INSIDE	WB BRIDGE APPROACHES ON TOW LANES	SEE PHASE 1E TYPICAL SECTION A-2
1F	WB	BOTH	I-90 BRIDGE OVER LAKE SHORE RAILWAY STA. 1300-0D2	SEE PHASE 1F TYPICAL SECTION A-2 AND SHOULDER WIDENED TO 14' MINIMUM LEFTMOST SHOULDER TO ALLOW FOR STRUCTURE AND DIVERSTRIAL OF STRUCTURE
1F	WB	BOTH	I-90 BRIDGE OVER LAKE SHORE RAILWAY STA. 1300-0D2	SEE PHASE 1F TYPICAL SECTION A-2
1F	WB	BOTH	I-90 BRIDGE OVER MILWRAW ROUE NO. 2276 - 0300-0D2	SEE PHASE 1F TYPICAL SECTION A-4
1F	WB	BOTH	I-90 BRIDGE OVER MILWRAW ROUE NO. 2276 - 0300-0D2	SEE PHASE 1F TYPICAL SECTION A-4

LEGEND:

- *WORK ZONE*
- *TEMPORARY PAVEMENT PLACED THIS PHASE*
- *PROPOSED PAVEMENT*
- *TEMPORARY PAVEMENT/SHOULDER RECONSTRUCTION COMPLETED PRIOR TO THIS PHASE*
- *EXISTING SHOULDER BEING UTILIZED FOR MOT*

LOR-90-10.76 MAINTENANCE OF TRAFFIC - PHASE 3A

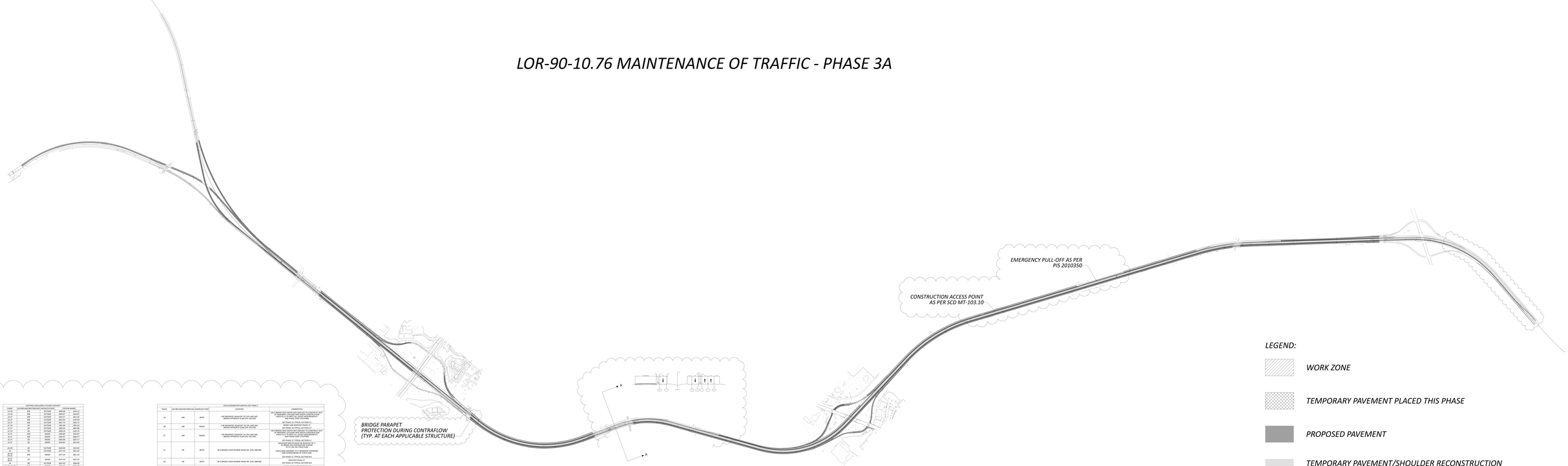

EXISTING SHOULDERS UTILIZED FOR MOT			
PHASE	DIRECTION/LANE/TRAFFIC	DESCRIPTION	STATION RANGE
1A-1F	WB	OUTSIDE	1000+00 - 1010+00
1F-1I	WB	OUTSIDE	1010+00 - 1014+47
1I-1T	WB	OUTSIDE	1014+47 - 1021+25
1T-1Y	WB	OUTSIDE	1021+25 - 1025+00
1Y-2C	WB	OUTSIDE	1025+00 - 1031+75
2C-2F	WB	OUTSIDE	1031+75 - 1035+00
2F-2I	WB	OUTSIDE	1035+00 - 1038+00
2I-2L	WB	OUTSIDE	1038+00 - 1041+00
2L-2P	WB	OUTSIDE	1041+00 - 1044+00
2P-2T	WB	INSIDE	1044+00 - 1047+00
2T-2Y	WB	INSIDE	1047+00 - 1050+00
2Y-3F	WB	INSIDE	1050+00 - 1057+00
3F-3I	EB	OUTSIDE	1040+00 - 1031+00
3I-3L	EB	OUTSIDE	1031+00 - 1027+00
3L-3P	EB	OUTSIDE	1027+00 - 1021+00
3P-3T	EB	INSIDE	1021+00 - 1018+00
3T-3Y	EB	INSIDE	1018+00 - 1015+00
3Y-4C, 4C-4F	EB	OUTSIDE	1015+00 - 1008+00
4F-4I, 4I-4L	EB	INSIDE	1008+00 - 1001+00
4L-4Q, 4Q-4R	EB	INSIDE	1001+00 - 1000+00
4R	EB	INSIDE (CONT)	1000+00 - 989+00
4R-4V	WB	INSIDE	989+00 - 997+00
4V-5B	EB	INSIDE	1000+00 - 1006+00
5B-5E	EB	INSIDE	1006+00 - 1009+00
5E-5I	EB	INSIDE	1009+00 - 1015+00

EXISTING/MOT/PUBLIC INSULATION			
PHASE	DIRECTION/LANE/TRAFFIC	INSULATION	LOCATION / COMMENTS
1A	WB	BOTH	1A1 BRIDGE OVER MILWRAW ROAD NO. 2276 - 0300+00 1A4 SHOULDER GUAGUETTE TO THE LAKE BR BRIDGE APPROACH SLAB ON LEFT LANE
			SEE PHASE 1C TYPICAL SECTION A-A SEE PHASE 1C TYPICAL SECTION B-B
1B	WB	INSIDE	1A4 SHOULDER GUAGUETTE TO THE LAKE BR BRIDGE APPROACH SLAB ON LEFT LANE
			SEE PHASE 1C TYPICAL SECTION C-C
1C	WB	INSIDE	1A4 SHOULDER GUAGUETTE TO THE LAKE BR BRIDGE APPROACH SLAB ON LEFT LANE
			SEE PHASE 1C TYPICAL SECTION D-D SEE PHASE 1C TYPICAL SECTION E-E
1D	WB	INSIDE	1A4 SHOULDER GUAGUETTE TO THE LAKE BR BRIDGE APPROACH SLAB ON LEFT LANE
			SEE PHASE 1C TYPICAL SECTION F-F SEE PHASE 1C TYPICAL SECTION G-G
1E	WB	INSIDE	1A4 SHOULDER GUAGUETTE TO THE LAKE BR BRIDGE APPROACH SLAB ON LEFT LANE
			SEE PHASE 1C TYPICAL SECTION H-H SEE PHASE 1C TYPICAL SECTION I-I
1F	WB	INSIDE	1A4 SHOULDER GUAGUETTE TO THE LAKE BR BRIDGE APPROACH SLAB ON LEFT LANE
			SEE PHASE 1C TYPICAL SECTION J-J SEE PHASE 1C TYPICAL SECTION K-K
1G	EB	INSIDE	1A4 SHOULDER GUAGUETTE TO THE LAKE BR BRIDGE APPROACH SLAB ON LEFT LANE
			SEE PHASE 1C TYPICAL SECTION L-L SEE PHASE 1C TYPICAL SECTION M-M
1H	EB	INSIDE	1A4 SHOULDER GUAGUETTE TO THE LAKE BR BRIDGE APPROACH SLAB ON LEFT LANE
			SEE PHASE 1C TYPICAL SECTION N-N SEE PHASE 1C TYPICAL SECTION O-O
1I	EB	INSIDE	1A4 SHOULDER GUAGUETTE TO THE LAKE BR BRIDGE APPROACH SLAB ON LEFT LANE
			SEE PHASE 1C TYPICAL SECTION P-P SEE PHASE 1C TYPICAL SECTION Q-Q
1J	EB	INSIDE	1A4 SHOULDER GUAGUETTE TO THE LAKE BR BRIDGE APPROACH SLAB ON LEFT LANE
			SEE PHASE 1C TYPICAL SECTION R-R SEE PHASE 1C TYPICAL SECTION S-S
1K	EB	INSIDE	1A4 SHOULDER GUAGUETTE TO THE LAKE BR BRIDGE APPROACH SLAB ON LEFT LANE
			SEE PHASE 1C TYPICAL SECTION T-T SEE PHASE 1C TYPICAL SECTION U-U
1L	EB	INSIDE	1A4 SHOULDER GUAGUETTE TO THE LAKE BR BRIDGE APPROACH SLAB ON LEFT LANE
			SEE PHASE 1C TYPICAL SECTION V-V SEE PHASE 1C TYPICAL SECTION W-W
1M	EB	INSIDE	1A4 SHOULDER GUAGUETTE TO THE LAKE BR BRIDGE APPROACH SLAB ON LEFT LANE
			SEE PHASE 1C TYPICAL SECTION X-X SEE PHASE 1C TYPICAL SECTION Y-Y
1N	EB	INSIDE	1A4 SHOULDER GUAGUETTE TO THE LAKE BR BRIDGE APPROACH SLAB ON LEFT LANE
			SEE PHASE 1C TYPICAL SECTION Z-Z SEE PHASE 1C TYPICAL SECTION A-A
1O	EB	INSIDE	1A4 SHOULDER GUAGUETTE TO THE LAKE BR BRIDGE APPROACH SLAB ON LEFT LANE
			SEE PHASE 1C TYPICAL SECTION B-B SEE PHASE 1C TYPICAL SECTION C-C
1P	EB	INSIDE	1A4 SHOULDER GUAGUETTE TO THE LAKE BR BRIDGE APPROACH SLAB ON LEFT LANE
			SEE PHASE 1C TYPICAL SECTION D-D SEE PHASE 1C TYPICAL SECTION E-E
1Q	EB	INSIDE	1A4 SHOULDER GUAGUETTE TO THE LAKE BR BRIDGE APPROACH SLAB ON LEFT LANE
			SEE PHASE 1C TYPICAL SECTION F-F SEE PHASE 1C TYPICAL SECTION G-G
1R	EB	INSIDE	1A4 SHOULDER GUAGUETTE TO THE LAKE BR BRIDGE APPROACH SLAB ON LEFT LANE
			SEE PHASE 1C TYPICAL SECTION H-H SEE PHASE 1C TYPICAL SECTION I-I
1S	EB	INSIDE	1A4 SHOULDER GUAGUETTE TO THE LAKE BR BRIDGE APPROACH SLAB ON LEFT LANE
			SEE PHASE 1C TYPICAL SECTION J-J SEE PHASE 1C TYPICAL SECTION K-K
1T	EB	INSIDE	1A4 SHOULDER GUAGUETTE TO THE LAKE BR BRIDGE APPROACH SLAB ON LEFT LANE
			SEE PHASE 1C TYPICAL SECTION L-L SEE PHASE 1C TYPICAL SECTION M-M
1U	EB	INSIDE	1A4 SHOULDER GUAGUETTE TO THE LAKE BR BRIDGE APPROACH SLAB ON LEFT LANE
			SEE PHASE 1C TYPICAL SECTION N-N SEE PHASE 1C TYPICAL SECTION O-O
1V	EB	INSIDE	1A4 SHOULDER GUAGUETTE TO THE LAKE BR BRIDGE APPROACH SLAB ON LEFT LANE
			SEE PHASE 1C TYPICAL SECTION P-P SEE PHASE 1C TYPICAL SECTION Q-Q
1W	EB	INSIDE	1A4 SHOULDER GUAGUETTE TO THE LAKE BR BRIDGE APPROACH SLAB ON LEFT LANE
			SEE PHASE 1C TYPICAL SECTION R-R SEE PHASE 1C TYPICAL SECTION S-S
1X	EB	INSIDE	1A4 SHOULDER GUAGUETTE TO THE LAKE BR BRIDGE APPROACH SLAB ON LEFT LANE
			SEE PHASE 1C TYPICAL SECTION T-T SEE PHASE 1C TYPICAL SECTION U-U
1Y	EB	INSIDE	1A4 SHOULDER GUAGUETTE TO THE LAKE BR BRIDGE APPROACH SLAB ON LEFT LANE
			SEE PHASE 1C TYPICAL SECTION V-V SEE PHASE 1C TYPICAL SECTION W-W
1Z	EB	INSIDE	1A4 SHOULDER GUAGUETTE TO THE LAKE BR BRIDGE APPROACH SLAB ON LEFT LANE
			SEE PHASE 1C TYPICAL SECTION X-X SEE PHASE 1C TYPICAL SECTION Y-Y
1A	WB	BOTH	1A1 BRIDGE OVER MILWRAW ROAD NO. 2276 - 0300+00 1A4 SHOULDER GUAGUETTE TO THE LAKE BR BRIDGE APPROACH SLAB ON LEFT LANE
			SEE PHASE 1C TYPICAL SECTION A-A SEE PHASE 1C TYPICAL SECTION B-B
1B	WB	INSIDE	1A4 SHOULDER GUAGUETTE TO THE LAKE BR BRIDGE APPROACH SLAB ON LEFT LANE
			SEE PHASE 1C TYPICAL SECTION C-C
1C	WB	INSIDE	1A4 SHOULDER GUAGUETTE TO THE LAKE BR BRIDGE APPROACH SLAB ON LEFT LANE
			SEE PHASE 1C TYPICAL SECTION D-D SEE PHASE 1C TYPICAL SECTION E-E
1D	WB	INSIDE	1A4 SHOULDER GUAGUETTE TO THE LAKE BR BRIDGE APPROACH SLAB ON LEFT LANE
			SEE PHASE 1C TYPICAL SECTION F-F SEE PHASE 1C TYPICAL SECTION G-G
1E	WB	INSIDE	1A4 SHOULDER GUAGUETTE TO THE LAKE BR BRIDGE APPROACH SLAB ON LEFT LANE
			SEE PHASE 1C TYPICAL SECTION H-H SEE PHASE 1C TYPICAL SECTION I-I
1F	WB	INSIDE	1A4 SHOULDER GUAGUETTE TO THE LAKE BR BRIDGE APPROACH SLAB ON LEFT LANE
			SEE PHASE 1C TYPICAL SECTION J-J SEE PHASE 1C TYPICAL SECTION K-K
1G	EB	INSIDE	1A4 SHOULDER GUAGUETTE TO THE LAKE BR BRIDGE APPROACH SLAB ON LEFT LANE
			SEE PHASE 1C TYPICAL SECTION L-L SEE PHASE 1C TYPICAL SECTION M-M
1H	EB	INSIDE	1A4 SHOULDER GUAGUETTE TO THE LAKE BR BRIDGE APPROACH SLAB ON LEFT LANE
			SEE PHASE 1C TYPICAL SECTION N-N SEE PHASE 1C TYPICAL SECTION O-O
1I	EB	INSIDE	1A4 SHOULDER GUAGUETTE TO THE LAKE BR BRIDGE APPROACH SLAB ON LEFT LANE
			SEE PHASE 1C TYPICAL SECTION P-P SEE PHASE 1C TYPICAL SECTION Q-Q
1J	EB	INSIDE	1A4 SHOULDER GUAGUETTE TO THE LAKE BR BRIDGE APPROACH SLAB ON LEFT LANE
			SEE PHASE 1C TYPICAL SECTION R-R SEE PHASE 1C TYPICAL SECTION S-S
1K	EB	INSIDE	1A4 SHOULDER GUAGUETTE TO THE LAKE BR BRIDGE APPROACH SLAB ON LEFT LANE
			SEE PHASE 1C TYPICAL SECTION T-T SEE PHASE 1C TYPICAL SECTION U-U
1L	EB	INSIDE	1A4 SHOULDER GUAGUETTE TO THE LAKE BR BRIDGE APPROACH SLAB ON LEFT LANE
			SEE PHASE 1C TYPICAL SECTION V-V SEE PHASE 1C TYPICAL SECTION W-W
1M	EB	INSIDE	1A4 SHOULDER GUAGUETTE TO THE LAKE BR BRIDGE APPROACH SLAB ON LEFT LANE
			SEE PHASE 1C TYPICAL SECTION X-X SEE PHASE 1C TYPICAL SECTION Y-Y
1N	EB	INSIDE	1A4 SHOULDER GUAGUETTE TO THE LAKE BR BRIDGE APPROACH SLAB ON LEFT LANE
			SEE PHASE 1C TYPICAL SECTION Z-Z SEE PHASE 1C TYPICAL SECTION A-A
1O	EB	INSIDE	1A4 SHOULDER GUAGUETTE TO THE LAKE BR BRIDGE APPROACH SLAB ON LEFT LANE
			SEE PHASE 1C TYPICAL SECTION B-B SEE PHASE 1C TYPICAL SECTION C-C
1P	EB	INSIDE	1A4 SHOULDER GUAGUETTE TO THE LAKE BR BRIDGE APPROACH SLAB ON LEFT LANE
			SEE PHASE 1C TYPICAL SECTION D-D SEE PHASE 1C TYPICAL SECTION E-E
1Q	EB	INSIDE	1A4 SHOULDER GUAGUETTE TO THE LAKE BR BRIDGE APPROACH SLAB ON LEFT LANE
			SEE PHASE 1C TYPICAL SECTION F-F SEE PHASE 1C TYPICAL SECTION G-G
1R	EB	INSIDE	1A4 SHOULDER GUAGUETTE TO THE LAKE BR BRIDGE APPROACH SLAB ON LEFT LANE
			SEE PHASE 1C TYPICAL SECTION H-H SEE PHASE 1C TYPICAL SECTION I-I
1S	EB	INSIDE	1A4 SHOULDER GUAGUETTE TO THE LAKE BR BRIDGE APPROACH SLAB ON LEFT LANE
			SEE PHASE 1C TYPICAL SECTION J-J SEE PHASE 1C TYPICAL SECTION K-K
1T	EB	INSIDE	1A4 SHOULDER GUAGUETTE TO THE LAKE BR BRIDGE APPROACH SLAB ON LEFT LANE
			SEE PHASE 1C TYPICAL SECTION L-L SEE PHASE 1C TYPICAL SECTION M-M
1U	EB	INSIDE	1A4 SHOULDER GUAGUETTE TO THE LAKE BR BRIDGE APPROACH SLAB ON LEFT LANE
			SEE PHASE 1C TYPICAL SECTION N-N SEE PHASE 1C TYPICAL SECTION O-O
1V	EB	INSIDE	1A4 SHOULDER GUAGUETTE TO THE LAKE BR BRIDGE APPROACH SLAB ON LEFT LANE
			SEE PHASE 1C TYPICAL SECTION P-P SEE PHASE 1C TYPICAL SECTION Q-Q
1W	EB	INSIDE	1A4 SHOULDER GUAGUETTE TO THE LAKE BR BRIDGE APPROACH SLAB ON LEFT LANE
			SEE PHASE 1C TYPICAL SECTION R-R SEE PHASE 1C TYPICAL SECTION S-S
1X	EB	INSIDE	1A4 SHOULDER GUAGUETTE TO THE LAKE BR BRIDGE APPROACH SLAB ON LEFT LANE
			SEE PHASE 1C TYPICAL SECTION T-T SEE PHASE 1C TYPICAL SECTION U-U
1Y	EB	INSIDE	1A4 SHOULDER GUAGUETTE TO THE LAKE BR BRIDGE APPROACH SLAB ON LEFT LANE
			SEE PHASE 1C TYPICAL SECTION V-V SEE PHASE 1C TYPICAL SECTION W-W
1Z	EB	INSIDE	1A4 SHOULDER GUAGUETTE TO THE LAKE BR BRIDGE APPROACH SLAB ON LEFT LANE
			SEE PHASE 1C TYPICAL SECTION X-X SEE PHASE 1C TYPICAL SECTION Y-Y

LEGEND:

- *WORK ZONE*
- *TEMPORARY PAVEMENT PLACED THIS PHASE*
- *PROPOSED PAVEMENT*
- *TEMPORARY PAVEMENT/SHOULDER RECONSTRUCTION COMPLETED PRIOR TO THIS PHASE*
- *EXISTING SHOULDER BEING UTILIZED FOR MOT*

LOR-90-10.76 MAINTENANCE OF TRAFFIC - PHASE 3B

EXISTING SHOULDERS UTILIZED FOR MOT				
PHASE	EASTBOUND/WESTBOUND	INSIDE/OUTSIDE	STATION RANGE	
1A-1B	WB	OUTSIDE	608+58	634+12
1A-1B	WB	OUTSIDE	640+67	654+67
1A-1F	WB	OUTSIDE	656+57	661+25
1A-1F	WB	OUTSIDE	662+95	676+94
1A-1F	WB	OUTSIDE	691+72	695+72
1C-1D	EB	OUTSIDE	585+99	594+25
1C-1F	EB	OUTSIDE	596+54	606+98
1C-1D	EB	OUTSIDE	609+19	616+75
1E-1F	WB	INSIDE	590+89	594+67
1E-1F	WB	INSIDE	596+97	606+57
1E-1F	EB	INSIDE	646+96	655+17
1E-1F	EB	INSIDE	656+82	661+42
2A-2B	EB	OUTSIDE	640+98	655+01
2A	EB	OUTSIDE	657+14	661+25
1B-1D 2A-2C	WB	INSIDE	657+14	661+25
1E-1F 2B-2C	EB	INSIDE	657+14	661+25
2A	EB	OUTSIDE	663+20	668+00
2A-2C, 3A-3B	WB	INSIDE	982+71	986+05
2A-2C, 3A-3B	EB	INSIDE	982+71	984+97
2A	EB	RAMP GORE	983+47	985+64
3A-3B	WB	INSIDE	986+05	997+01
3A-3B	EB	INSIDE	984+97	1026+46
3A-3B	EB	OUTSIDE	1009+50	1032+75
3A-3B	WB	INSIDE	1028+10	1032+06

SHOULDER/BUFFER WIDTHS LESS THAN 2'				
PHASE	EASTBOUND/WESTBOUND	INSIDE/OUTSIDE	LOCATION	COMMENT(S)
1A	WB	BOTH	I-90 PAVEMENT ADJACENT TO THE LAKE AVE. BRIDGE APPROACH SLAB (STA. 655+00)	58.0' BRIDGE DECK WIDTH NOT ENOUGH TO CONSTRUCT 58.0' OF PAVEMENT UTILIZING PART WIDTH CONSTRUCTION (NEED 61.0' TO MEET ALL OFFSET REQUIREMENTS AND PHASE JOINT STEPPING) SEE PHASE 1A TYPICAL SECTION E-E
1B	WB	INSIDE	1-90 PAVEMENT ADJACENT TO THE LAKE AVE. BRIDGE APPROACH SLAB (STA. 655+00)	INSIDE LANE MATCHES PHASE 1C SEE PHASE 1B TYPICAL SECTION E-E
1C	WB	INSIDE	I-90 PAVEMENT ADJACENT TO THE LAKE AVE. BRIDGE APPROACH SLAB (STA. 655+00)	58.0' BRIDGE DECK WIDTH NOT ENOUGH TO CONSTRUCT 58.0' OF PAVEMENT UTILIZING PART WIDTH CONSTRUCTION (NEED 61.0' TO MEET ALL OFFSET REQUIREMENTS AND PHASE JOINT STEPPING) SEE PHASE 1C TYPICAL SECTION E-E
1C	EB	BOTH	SR-2 BRIDGE OVER MURRAY RIDGE RD. (STA. 608+00)	SHOULDER WIDTHS MUST BE REDUCED TO 1' IN ORDER FOR CONTRAFLOW SCHEME TO FIT ON THE STRUCTURE SHOULDERS WIDENED TO 2' MINIMUM UPSTREAM AND DOWNSTREAM OF STRUCTURE SEE PHASE 1C TYPICAL SECTION B-B
1D	EB	BOTH	SR-2 BRIDGE OVER MURRAY RIDGE RD. (STA. 608+00)	MATCHES PHASE 1C SEE PHASE 1D TYPICAL SECTION B-B
1D	WB	INSIDE	I-90 PAVEMENT ADJACENT TO THE LAKE AVE. BRIDGE APPROACH SLAB (STA. 655+00)	INSIDE LANE MATCHES PHASE 1C SEE PHASE 1D TYPICAL SECTION E-E
1E	WB	BOTH	SR-2 BRIDGE OVER LAKE SHORE RAILWAY (STA. 596+00)	SHOULDER WIDTHS MUST BE REDUCED TO 1' IN ORDER FOR CONTRAFLOW SCHEME TO FIT ON THE STRUCTURE SHOULDERS WIDENED TO 2' MINIMUM UPSTREAM AND DOWNSTREAM OF STRUCTURE SEE PHASE 1E TYPICAL SECTION A-A
1E	WB	BOTH	SR-2 BRIDGE OVER MURRAY RIDGE RD. (STA. 608+00)	SHOULDER WIDTHS MUST BE REDUCED TO 1' IN ORDER FOR CONTRAFLOW SCHEME TO FIT ON THE STRUCTURE SHOULDERS WIDENED TO 2' MINIMUM UPSTREAM AND DOWNSTREAM OF STRUCTURE SEE PHASE 1E TYPICAL SECTION B-B
1F	WB	BOTH	SR-2 BRIDGE OVER LAKE SHORE RAILWAY (STA. 596+00)	MATCHES PHASE 1E SEE PHASE 1F TYPICAL SECTION A-A
1F	WB	BOTH	SR-2 BRIDGE OVER MURRAY RIDGE RD. (STA. 608+00)	MATCHES PHASE 1E SEE PHASE 1F TYPICAL SECTION B-B

LEGEND:

- WORK ZONE
- TEMPORARY PAVEMENT PLACED THIS PHASE
- PROPOSED PAVEMENT
- TEMPORARY PAVEMENT/SHOULDER RECONSTRUCTION COMPLETED PRIOR TO THIS PHASE
- EXISTING SHOULDER BEING UTILIZED FOR MOT

LOR-90-10.76 MAINTENANCE OF TRAFFIC - PHASE 4

EXISTING SHOULDERS UTILIZED FOR MOT				
PHASE	EASTBOUND/WESTBOUND	INSIDE/OUTSIDE	STATION RANGE	
1A-1B	WB	OUTSIDE	608+58	634+12
1A-1B	WB	OUTSIDE	640+67	654+67
1A-1F	WB	OUTSIDE	656+57	661+25
1A-1F	WB	OUTSIDE	662+95	676+94
1A-1F	WB	OUTSIDE	691+72	695+72
1C-1D	EB	OUTSIDE	585+99	594+25
1C-1F	EB	OUTSIDE	596+54	606+98
1C-1D	EB	OUTSIDE	609+19	616+75
1E-1F	WB	INSIDE	590+89	594+67
1E-1F	WB	INSIDE	596+97	606+57
1E-1F	EB	INSIDE	646+96	655+17
1E-1F	EB	INSIDE	656+82	661+42
2A-2B	EB	OUTSIDE	640+98	655+01
2A	EB	OUTSIDE	657+14	661+25
1B-1D 2A-2C	WB	INSIDE	657+14	661+25
1E-1F 2B-2C	EB	INSIDE	657+14	661+25
2A	EB	OUTSIDE	663+20	668+00
2A-2C, 3A-3B	WB	INSIDE	982+71	986+05
2A-2C, 3A-3B	EB	INSIDE	982+71	984+97
2A	EB	RAMP GORE	983+47	985+64
3A-3B	WB	INSIDE	986+05	997+01
3A-3B	EB	INSIDE	984+97	1026+46
3A-3B	WB	INSIDE	1028+10	1032+06

SHOULDER/BUFFER WIDTHS LESS THAN 2'				
PHASE	EASTBOUND/WESTBOUND	INSIDE/OUTSIDE	LOCATION	COMMENT(S)
1A	WB	BOTH	I-90 PAVEMENT ADJACENT TO THE LAKE AVE. BRIDGE APPROACH SLAB (STA. 655+00)	58.0' BRIDGE DECK WIDTH NOT ENOUGH TO CONSTRUCT 58.0' OF PAVEMENT UTILIZING PART WIDTH CONSTRUCTION (NEED 61.0' TO MEET ALL OFFSET REQUIREMENTS AND PHASE JOINT STEPPING) SEE PHASE 1A TYPICAL SECTION E-E
1B	WB	INSIDE	1-90 PAVEMENT ADJACENT TO THE LAKE AVE. BRIDGE APPROACH SLAB (STA. 655+00)	INSIDE LANE MATCHES PHASE 1C SEE PHASE 1B TYPICAL SECTION E-E
1C	WB	INSIDE	I-90 PAVEMENT ADJACENT TO THE LAKE AVE. BRIDGE APPROACH SLAB (STA. 655+00)	58.0' BRIDGE DECK WIDTH NOT ENOUGH TO CONSTRUCT 58.0' OF PAVEMENT UTILIZING PART WIDTH CONSTRUCTION (NEED 61.0' TO MEET ALL OFFSET REQUIREMENTS AND PHASE JOINT STEPPING) SEE PHASE 1C TYPICAL SECTION E-E
1C	EB	BOTH	SR-2 BRIDGE OVER MURRAY RIDGE RD. (STA. 608+00)	SHOULDER WIDTHS MUST BE REDUCED TO 1' IN ORDER FOR CONTRAFLOW SCHEME TO FIT ON THE STRUCTURE SHOULDERS WIDENED TO 2' MINIMUM UPSTREAM AND DOWNSTREAM OF STRUCTURE SEE PHASE 1C TYPICAL SECTION B-B
1D	EB	BOTH	SR-2 BRIDGE OVER MURRAY RIDGE RD. (STA. 608+00)	MATCHES PHASE 1C SEE PHASE 1D TYPICAL SECTION B-B
1D	WB	INSIDE	I-90 PAVEMENT ADJACENT TO THE LAKE AVE. BRIDGE APPROACH SLAB (STA. 655+00)	INSIDE LANE MATCHES PHASE 1C SEE PHASE 1D TYPICAL SECTION E-E
1E	WB	BOTH	SR-2 BRIDGE OVER LAKE SHORE RAILWAY (STA. 596+00)	SHOULDER WIDTHS MUST BE REDUCED TO 1' IN ORDER FOR CONTRAFLOW SCHEME TO FIT ON THE STRUCTURE SHOULDERS WIDENED TO 2' MINIMUM UPSTREAM AND DOWNSTREAM OF STRUCTURE SEE PHASE 1E TYPICAL SECTION A-A
1E	WB	BOTH	SR-2 BRIDGE OVER MURRAY RIDGE RD. (STA. 608+00)	SHOULDER WIDTHS MUST BE REDUCED TO 1' IN ORDER FOR CONTRAFLOW SCHEME TO FIT ON THE STRUCTURE SHOULDERS WIDENED TO 2' MINIMUM UPSTREAM AND DOWNSTREAM OF STRUCTURE SEE PHASE 1E TYPICAL SECTION B-B
1F	WB	BOTH	SR-2 BRIDGE OVER LAKE SHORE RAILWAY (STA. 596+00)	MATCHES PHASE 1E SEE PHASE 1F TYPICAL SECTION A-A
1F	WB	BOTH	SR-2 BRIDGE OVER MURRAY RIDGE RD. (STA. 608+00)	MATCHES PHASE 1E SEE PHASE 1F TYPICAL SECTION B-B

LEGEND:

- WORK ZONE
- TEMPORARY PAVEMENT PLACED THIS PHASE
- PROPOSED PAVEMENT
- TEMPORARY PAVEMENT/SHOULDER RECONSTRUCTION COMPLETED PRIOR TO THIS PHASE
- EXISTING SHOULDER BEING UTILIZED FOR MOT