FED. RD. DIVISION	STATE	PROJECT	
2	OHIO	S-712(9)	

1/51

HANCOCK COUNTY
HAN-69-(1.14)(1.97)(2.31)(3.28)(4.23)(6.17)

STATE OF OHIO
DEPARTMENT OF HIGHWAYS
HAN-69-(1.14)(1.97)(2.31)(3.28)(4.23)(6.17)
HANCOCK COUNTY
ORANGE & UNION TOWNSHIPS

S-712(9)

MICROFILMED
OCT 11 1978
REPRODUCTION

MICROFILMED
JUL 15 1986

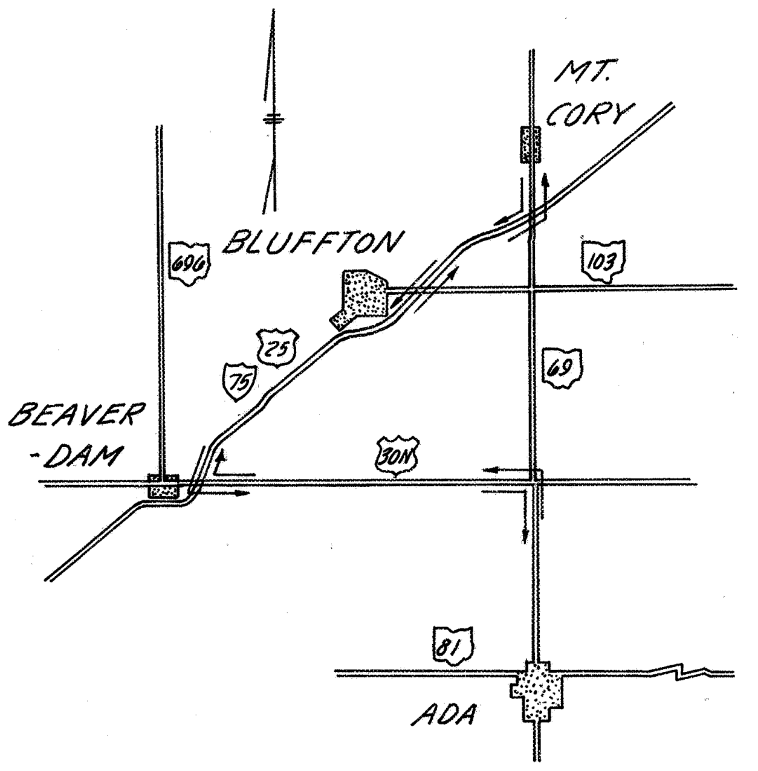
MT. CORY
BLUFFTON
BEAVER-DAM
ADA
103
69
75
30N
81

DETOUR MAP
0 1 2 3 4 5 6
Scale in Miles

DESIGN DESIGNATION

CURRENT A. D. T. (1966 Est.) (750)
DESIGN YEAR A.D.T. (1986) (940)
D. H. V. (95)
D. (60%)
T. (10%)
V. 50 M.P.H.

CONVENTIONAL SIGNS

County Line
Township Line
Section Line
Center Line
Property Line
Fence
Guard Rail (Existing)
Guard Rail (Proposed)
Power Poles
Telephone Poles
Trees and Stumps (Existing)
Trees and Stumps (To be removed)
Railroad
Right-of-Way — R/W

INDEX OF SHEETS

Title Sheet			1			
Typical Sections			2			
General Notes & Details			3 & 3A			
Summary			4			
Plan & Profile	5	9	14	18	23	27
Cross Sections	6-7	10-11	15-16	19-20	24-25	28-29
Channel Sections	8	12	17	21-22		
Intersections		13				
Structures 20' span & under					26	
Structures over 20' span	30-46					
Right-of-way	47-51					

Sheet Nos. 31, 34, 38 and 44 Rev. 4-16-70 - GFJ

LINE DATA

Begin Project, Sta. 60+00;	Suspend Project, Sta. 69+25	PART-I	925	Lin. Ft.
Resume Project, Sta. 104+25;	Suspend Project, Sta. 112+00	PART-II	775	Lin. Ft.
Resume Project, Sta. 121+75;	Suspend Project, Sta. 131+50	PART-III	975	Lin. Ft.
Resume Project, Sta. 173+00;	Suspend Project, Sta. 182+25	PART-IV	925	Lin. Ft.
Resume Project, Sta. 223+50;	Suspend Project, Sta. 231+33	PART-V	783	Lin. Ft.
Resume Project, Sta. 326+00;	End Project, Sta. 331+00	PART-VI	500	Lin. Ft.
Net length of Project			4,883	Lin. Ft. = 0.924 Mi.

Net length of Work equals Net length of Project.

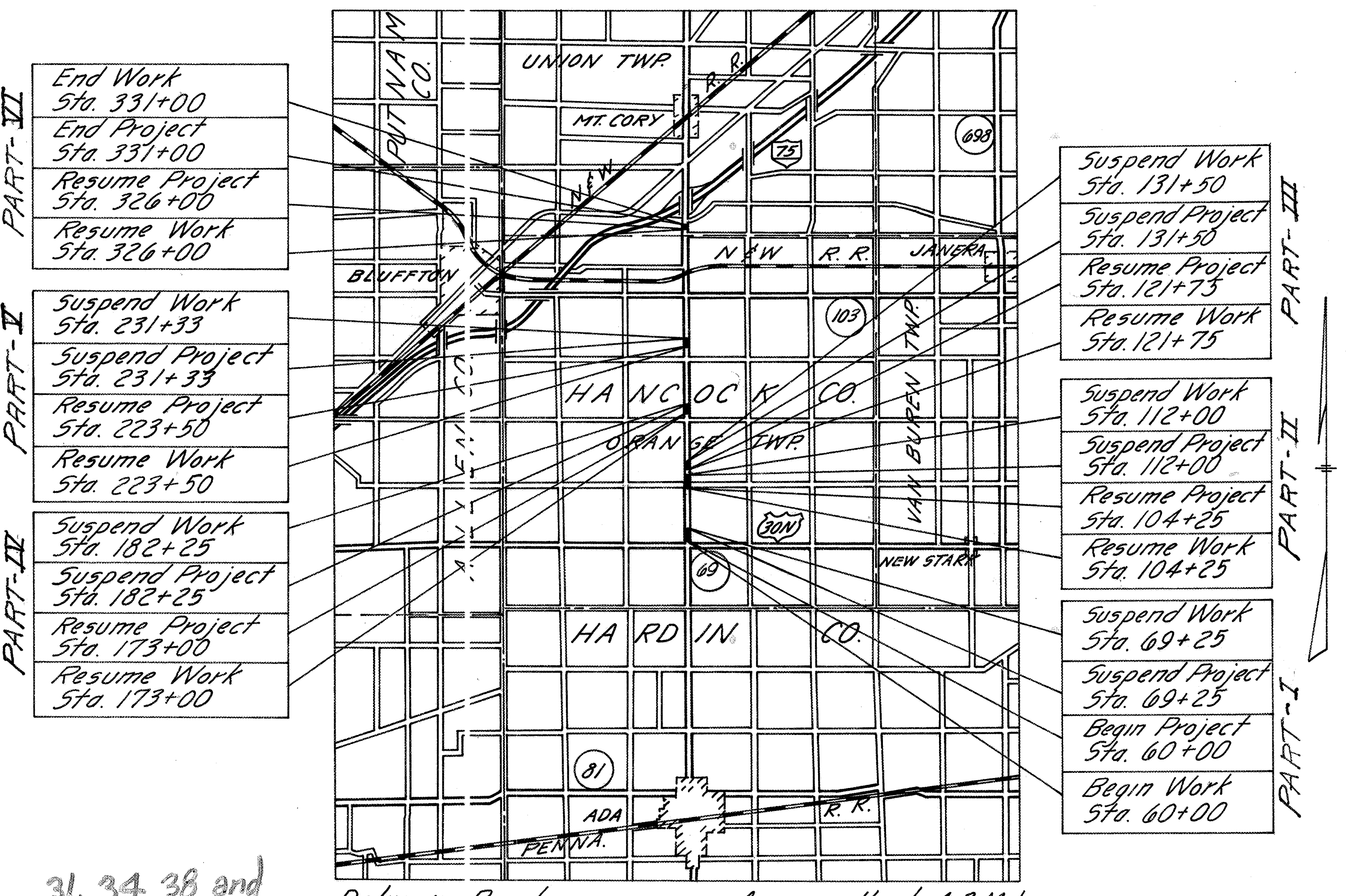
PART-VI
End Work Sta. 331+00
End Project Sta. 331+00
Resume Project Sta. 326+00
Resume Work Sta. 326+00
PART-V
Suspend Work Sta. 231+33
Suspend Project Sta. 231+33
Resume Project Sta. 223+50
Resume Work Sta. 223+50
PART-IV
Suspend Work Sta. 182+25
Suspend Project Sta. 182+25
Resume Project Sta. 173+00
Resume Work Sta. 173+00
PART-III
Suspend Work Sta. 131+50
Suspend Project Sta. 131+50
Resume Project Sta. 121+75
Resume Work Sta. 121+75
PART-II
Suspend Work Sta. 112+00
Suspend Project Sta. 112+00
Resume Project Sta. 104+25
Resume Work Sta. 104+25
PART-I
Suspend Work Sta. 69+25
Suspend Project Sta. 69+25
Begin Project Sta. 60+00
Begin Work Sta. 60+00
PUTNAM CO.
UNION TWP.
MT. CORY
R.R.
NEW
75
698
BLUFFTON
NEW R.R.
JENERA
103
HANCOCK CO.
ORANGE TWP.
VAN BUREN TWP.
30N
69
NEW STARK
HARDIN CO.
81
ADA
PENNA.
R.R.

Delivery Point: Average Haul: 4.3 Mile
Parts I, II & III, Ada.-Penna. R.R.
Parts IV, V & VI, Mt. Cory-N & W R.R.

SCALE IN MILES
0 1 2 3 4 5

LOCATION MAP

Portion to be improved
State Highways
Other Roads
Detour Route

SCALE

Plan — 0 50 100
Profile (Horizontal) — 0 50 100
Profile (Vertical) — 0 5 10
Cross Sections — 0 5 10

1967 SPECIFICATIONS

The Standard Specifications of the State of Ohio Department of Highways, including changes and supplemental specification listed in the proposal shall govern this improvement.

The Right-of-Way for this improvement will be provided by the State of Ohio.

I hereby approve these plans and declare that the making of this improvement will require the closing to traffic of the highway, except as noted on sheet 3, and that detours will be provided as indicated on the plans.

Approved Norman R. Conn
Date 5-10-67 Division Deputy Director

Approved C. H. Altvater
Date 12-5-67 Engineer of Bridges

Approved R. E. Catlin
Date 12-6-67 Engineer of Location and Design

Approved R. E. Shultz
Date 12-7-67 Deputy Director of Design and Construction

Approved T. H. Borland
Date 12-21-67 Deputy Director of Right-of-Way

No RR
HBVJ
12-5-67

Approved Thomas M. Major
Date 12-21-67 Deputy Director of Planning and Programming

Approved E. W. Wilson
Date 12-21-67 First Assistant Director

Approved P. E. Masheter
Date 12-21-67 Director of Highways

DEPARTMENT OF TRANSPORTATION
FEDERAL HIGHWAY ADMINISTRATION
BUREAU OF PUBLIC ROADS
APPROVED:

DIVISION ENGINEER DATE

STANDARD DRAWINGS

AS-1-54	8-10-65	MC-1	10-1-67	P-1-54	11-8-65
BP-5	6-1-65	MC-3	5-1-66	CS-1-65	6-1-65
BP-6	6-1-65	MC-4	6-1-65	SB-1-64 (Sh. 1 & 2)	11-8-65
CB-2.2-A & B	6-1-65	SP-53	6-30-61		
GR-1	1-1-67	FACI-1	9-15-67	BP-3	1-10-67
GR-2A	1-1-67	FACI-2	6-1-65		
L-1	6-1-65	A-1-54	11-8-65		

SUPPLEMENTAL SPECIFICATIONS	
808	1-13-67
825	1-1-67
1001	3-21-66

Quantities Checked By	Date
R. E. J.	5-8-67

File No.	Hancock County HAN-69-(1.14)(1.97)(2.31)(3.28)(4.23)(6.17)
	Date of Letting 19
	Contract No.

FED. RD. DIVISION	STATE	PROJECT	
2	OHIO		

2
51

HANCOCK COUNTY
HAN-69-(1.14)(1.97)(2.31)(3.28)(4.23)(6.17)

TYPICAL SECTIONS

TYPE 404

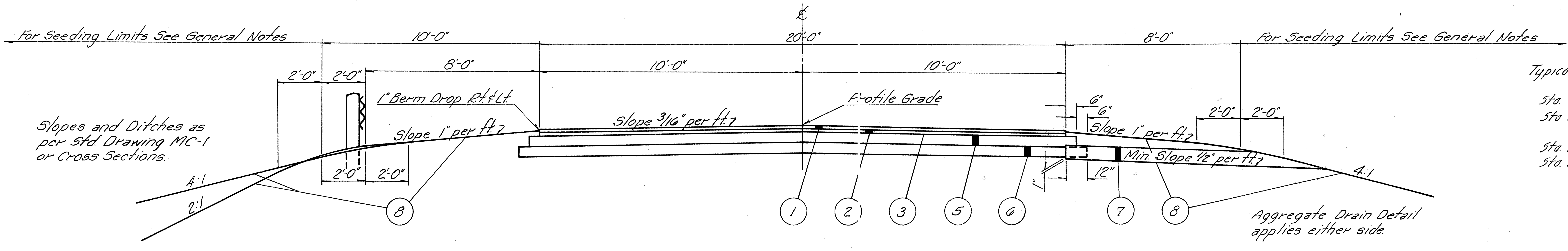

For Seeding Limits See General Notes
10'-0"
20'-0"
8'-0"
For Seeding Limits See General Notes
2'-0"
2'-0"
8'-0"
10'-0"
10'-0"
1" Berm Drop Rt & Lt
Profile Grade
6"
6"
2'-0"
2'-0"
Slopes and Ditches as per Std. Drawing MC-1 or Cross Sections.
Slope 3/16" per ft.
Slope 1" per ft.
Slope 1" per ft.
Min. Slope 1/2" per ft.
2'-0"
2'-0"
12"
1"
4:1
2:1
4:1
8
1
2
3
5
6
7
8
Aggregate Drain Detail applies either side.

Typical Section at left applies:
Part I
Sta. 62+00 to Sta. 63+38.24 = 138.24 Lin. Ft.
Sta. 64+41.76 to Sta. 67+20 = 278.24 Lin. Ft.
Part II
Sta. 105+60 to Sta. 107+47.69 = 187.69 Lin. Ft.
Sta. 108+20.31 to Sta. 109+75 = 154.69 Lin. Ft.
Total = 758.86 Lin. Ft.

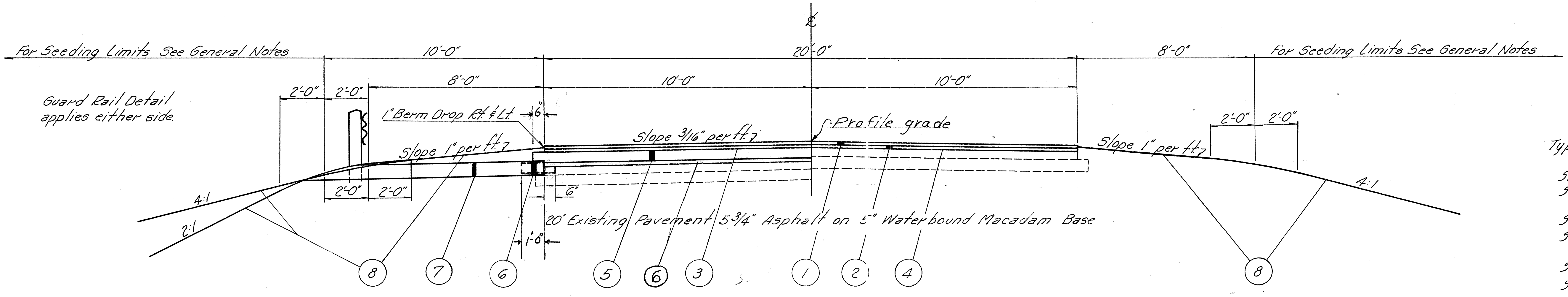

For Seeding Limits See General Notes
10'-0"
20'-0"
8'-0"
For Seeding Limits See General Notes
Guard Rail Detail applies either side.
2'-0"
2'-0"
8'-0"
10'-0"
10'-0"
1" Berm Drop Rt & Lt
6"
Profile grade
2'-0"
2'-0"
Slope 1" per ft.
Slope 3/16" per ft.
Slope 1" per ft.
2'-0"
2'-0"
6"
1'-0"
4:1
2:1
4:1
20' Existing Pavement 5 3/4" Asphalt on 5" Waterbound Macadam Base
8
7
6
5
6
3
1
2
4
8

Typical Section at left applies:
Part I
Sta. 60+00 to Sta. 62+00 = 200 Lin. Ft.
Sta. 67+20 to Sta. 69+25 = 205 Lin. Ft.
Part II
Sta. 104+25 to Sta. 105+60 = 135 Lin. Ft.
Sta. 109+75 to Sta. 112+00 = 225 Lin. Ft.
Part III
Sta. 121+75 to Sta. 124+84.75 = 309.75 Lin. Ft.
Sta. 125+61.25 to Sta. 131+50 = 588.75 Lin. Ft.
Part IV
Sta. 173+00 to Sta. 177+04.99 = 404.99 Lin. Ft.
Sta. 178+41.01 to Sta. 182+25 = 383.99 Lin. Ft.
Part V
Sta. 223+50 to Sta. 231+33 = 783 Lin. Ft.
Part VI
Sta. 326+00 to Sta. 328+15.25 = 215.25 Lin. Ft.
Sta. 328+89.75 to Sta. 331+00 = 210.25 Lin. Ft.
Total = 3,660.98 Lin. Ft.

①	Item 404	1 1/4" Asphalt Concrete (85-100).
②	Item 402	1 3/4" Asphalt Concrete (85-100).
③	Item 408	Bituminous Prime Coat using 702.09 RT-2 or RT-3 applied at the rate of 0.40 Gal. per Sq. Yd.
④	Item 407	Tack Coat 702.04 MS-2 or RS-1 or 702.02 RC-70 or RC-250 applied at the rate of 0.10 Gal. per Sq. Yd.
⑤	Item 304	5" Aggregate Base.
⑥	Item 310	5" Subbase.
⑦	Item 605	Aggregate Drains. See General Notes.
⑧	Item 659	Seeding and Mulching.

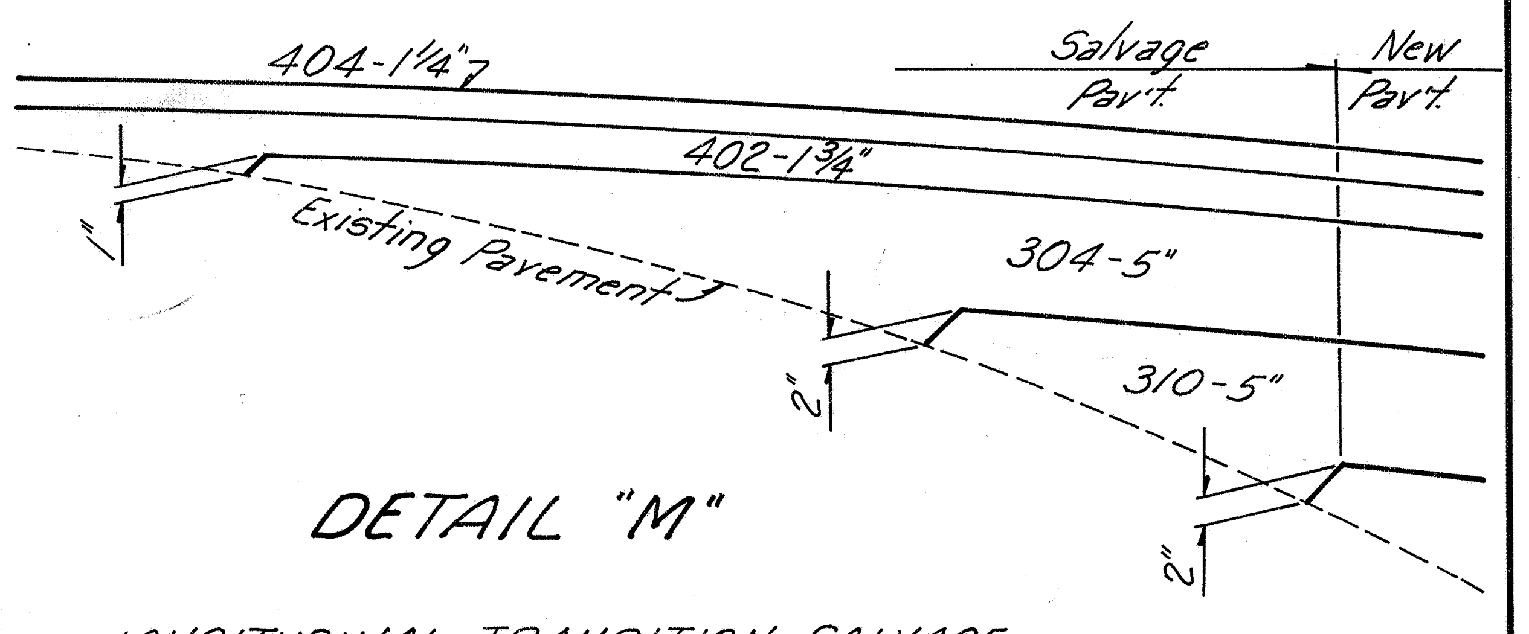

404-1 1/4"
Salvage Pavt.
New Pavt.
402-1 3/4"
1"
Existing Pavement
304-5"
2"
310-5"
2"

DETAIL "M"

LONGITUDINAL TRANSITION SALVAGE TO NEW PAVEMENT

FED. RD. DIVISION	STATE	PROJECT	
2	OHIO	S-712(9)	

HANCOCK COUNTY
HAN-69-(1.14)(1.97)(2.31)(3.28)(4.23)(6.17)

GENERAL NOTES

ROUNDING OF CORNERS SHOWN ON CROSS SECTIONS ∽ The rounded corners shown on Standard Drawing MC-1, apply to all cross sections, even though otherwise shown on these plans.

[illegible]

FIELD OFFICE ∽ The contractor shall, in addition to the requirements of 105.152, provide a suitable field office having a minimum of 300 sq. ft. of floor space. The contractor shall have a telephone installed and maintained in this office during the construction of this project. The contractor shall also provide and maintain sanitary provisions as per 107.06. All the above is included in the lump sum price bid for the field office.

ELEVATION DATUM ∽ All elevations refer to U.S.G.S. datum.

CONNECTIONS TO EXISTING PIPE ∽ At places where the plans provide for proposed pipe to be connected to existing pipe, it shall be the responsibility of the contractor to locate the existing pipe both as to line and grade before he starts to lay the proposed pipe. The cost of this operation shall be included in the unit price bid for the pertinent 603 conduit item.

ITEM 604 ∽ All Standard 2-2A Catch Basins designated in these plans shall be built with a 12" sump.

EROSION CONTROL ∽ Items 601 and 660 are provided in these plans for erosion control. The Engineer will check and non-perform or adjust locations and quantities for these items where indicated by field conditions during construction.

REMOVAL OF TREES AND STUMPS ∽ All trees and stumps specifically marked for removal within the construction limits of this project shall be removed under the lump sum price bid for the Item 201 Clearing and Grubbing, except those trees and stumps designated by the Engineer to be preserved.

The following is an approximate estimate of the number of trees and stumps to be removed.

	No. of Trees						No. of Stumps					
Sizes	Part I	Part II	Part III	Part IV	Part V	Part VI	Part I	Part II	Part III	Part IV	Part V	Part VI
18"		2							1			
30"												
48"												

The above estimate is approximate and the State of Ohio reserves the right to order the removal of additional trees or stumps outside of the limits of construction but within the right-of-way and/or easement lines. Payment for the removal of these additional trees or stumps shall be included in the lump sum price bid for Item 201 Clearing and Grubbing.

SEEDING ∽ Quantities for seeding are calculated for the soil areas between the work limits as shown on the cross sections.

SEEDING FORMULA ∽ The following seed mixture shall, in lieu of the mixtures listed in 659.09 be used throughout the limits of this project.

60% Kentucky Blue Grass
25% Chewings Fescue
15% Red Top

Any stone or other debris 2" or greater in dimension shall be removed from the exposed surface of the seed bed.

DRIVEWAYS ∽ All driveways shown on these plans shall be Type 1 Standard Drawing BP-6, modified by deleting the 12" offset at the edge of pavement. Field drives shall be 6", Item 304.

DETOUR LIMITATION ∽ Two-way traffic shall be maintained at all times, except that for a period not to exceed 180 consecutive calendar days, through traffic may be detoured as shown on sheet No. 1. AN Estimated Quantity of ten (10) C.Y. of Item 410-Traffic Compacted Surface has been carried to the General Summary to be used for maintaining traffic, As directed by the Engineer.

CONSTRUCTION LAYOUT STAKES ∽ See note in the proposal describing the work included in this lump sum.

ITEM 605 AGGREGATE DRAINS ∽ Aggregate drains shall be placed at fifty (50) foot intervals on each side of normal crowned sections, or as directed by the Engineer.

FEDERAL AID CONSTRUCTION IDENTIFICATION SIGNS ∽ The contractor shall furnish, erect, maintain and subsequently remove Federal Aid Construction Identification Signs at each of the following approximate locations:

1. Sta. 60+00 (Right)
2. Sta. 331+00 (Left)

Sign Details shall be as specified on FACI Code N-54(1) 96(2). The signs shall be erected in accordance with Standard Drawing FACI-2. Additional requirements shall be in accordance with notes in the proposal.

ESTIMATED QUANTITIES:

Specific locations and usage of estimated quantities set up on this plan to be used "as directed by the Engineer" shall be made a matter of record by incorporation into the final change order governing completion of this project.

GUARD RAIL MODIFIED AS PER PLAN: (See Detail on Sheet 3A)

Post spacing for all Type 4 guard rail shall be at 6'-3" intervals with Spacer blocks attached between the posts and rail element.

Type 4 guard rail shall be constructed with the new guard rail approach end assemblies on both ends, except when one end is adjacent to or continues across a bridge.

Type 4 guard rail with post spacing at 6'-3", spacer blocks, and new approach end assemblies will be paid for as 606 Guard Rail, Type 4 Modified as per plan, complete in place.

ADJUSTING GUARD RAIL LOCATIONS:

Prior to staking the guard rail, the Engineer shall make a field inspection and, if necessary, adjust the stations of the end posts to accommodate field conditions and to provide better protection for traffic.

DETAIL OF SODDING AT CATCH BASINS

AREA 16 SQ. YDS.

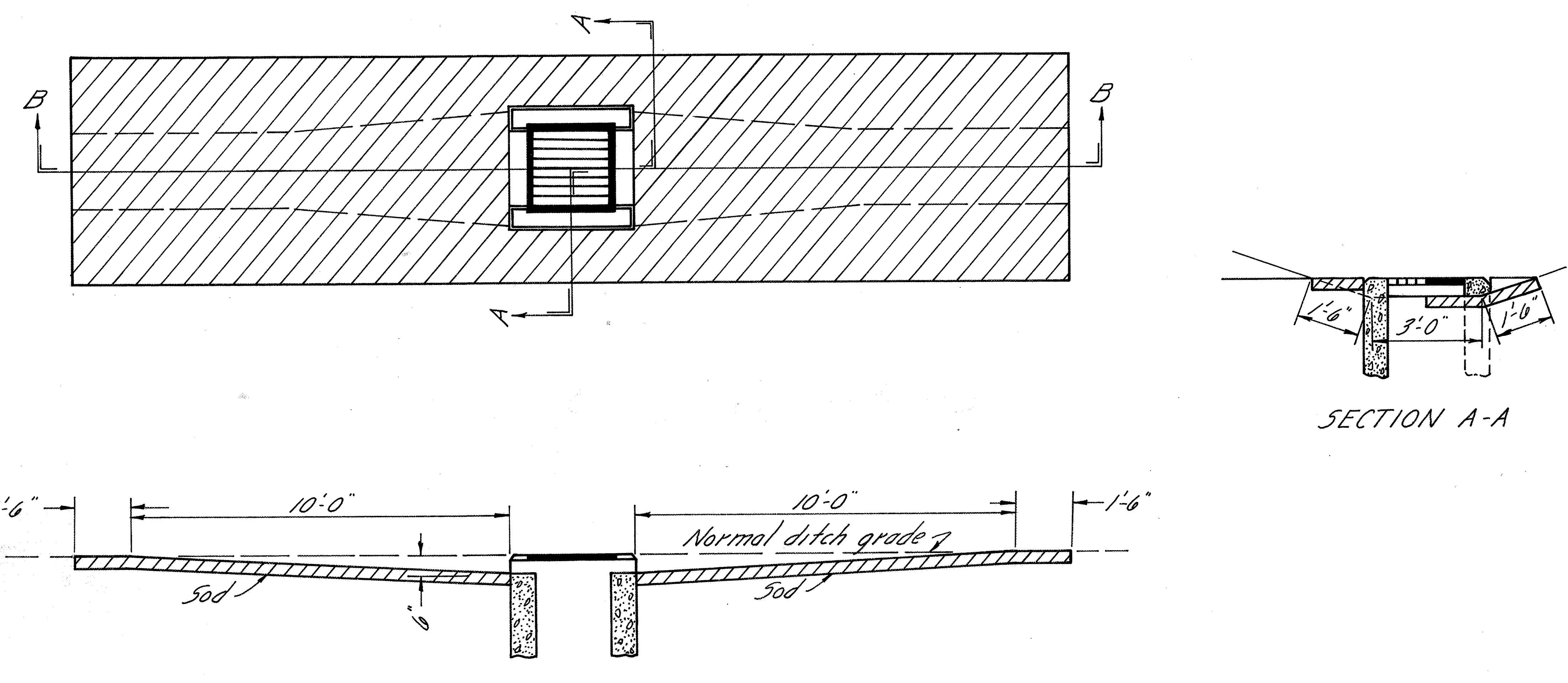

SECTION A-A

SECTION B-B

GENERAL NOTES & DETAILS

FED RD DIVISION	STATE	PROJECT	
2	OHIO		

3-A
51

NOTES

For details not shown, see Standard Drawings GR-1 and GR-2A.

All steel parts shall be galvanized in accordance with ASTM A123, A153 or A525, whichever may apply.

This drawing shall govern where a conflict arises.

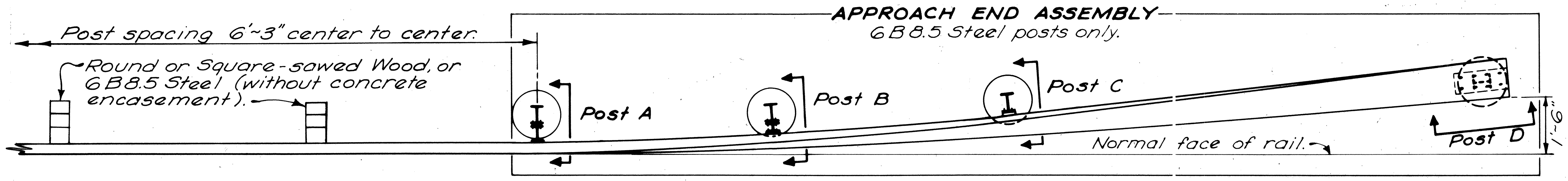
APPROACH END ASSEMBLY
6B8.5 Steel posts only.
Post spacing 6'-3" center to center.
Round or Square-sawed Wood, or 6B8.5 Steel (without concrete encasement).
Post A
Post B
Post C
Post D
Normal face of rail.
1'-6"

SINGLE RAIL ~ PLAN VIEW

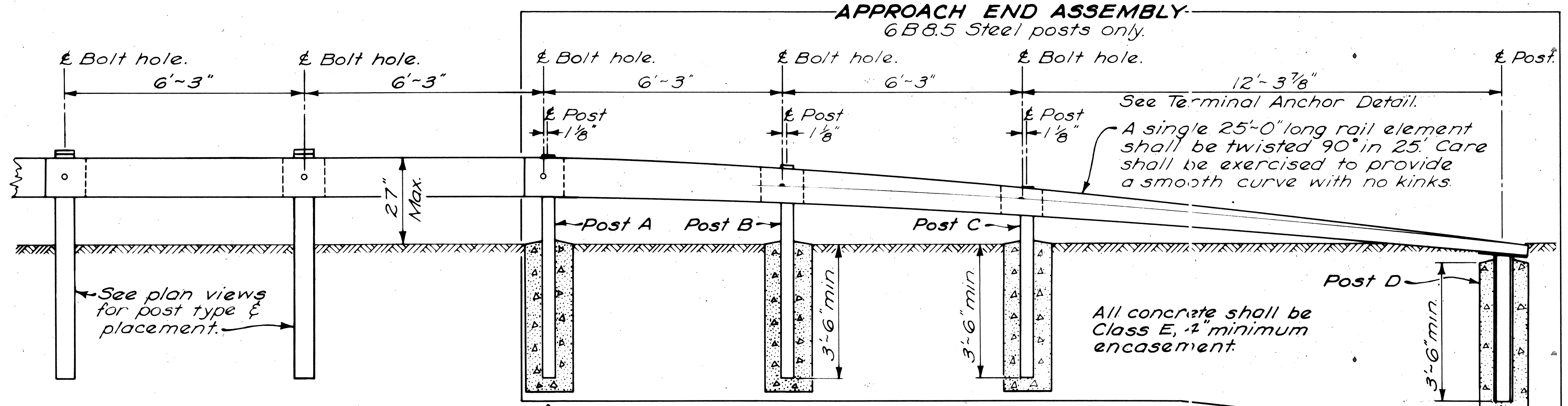
APPROACH END ASSEMBLY
6B8.5 Steel posts only.
℄ Bolt hole.
℄ Bolt hole.
℄ Bolt hole.
℄ Bolt hole.
℄ Bolt hole.
℄ Post.
6'-3"
6'-3"
6'-3"
6'-3"
12'-3 7/8"
See Terminal Anchor Detail.
℄ Post 1 1/8"
℄ Post 1 1/8"
℄ Post 1 1/8"
27" Max.
Post A
Post B
Post C
Post D
3'-6" min.
3'-6" min.
3'-6" min.
See plan views for post type & placement.

A single 25'-0" long rail element shall be twisted 90° in 25'. Care shall be exercised to provide a smooth curve with no kinks.

All concrete shall be Class E, 4" minimum encasement.

SINGLE & BARRIER RAIL ~ ELEVATION

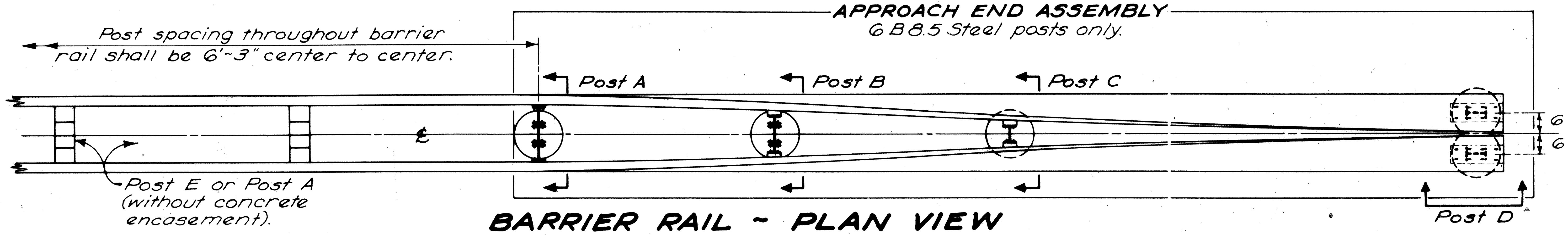
APPROACH END ASSEMBLY
6B8.5 Steel posts only.
Post spacing throughout barrier rail shall be 6'-3" center to center.
Post A
Post B
Post C
℄
Post E or Post A (without concrete encasement).
6 1/2"
6 1/2"
Post D

BARRIER RAIL ~ PLAN VIEW

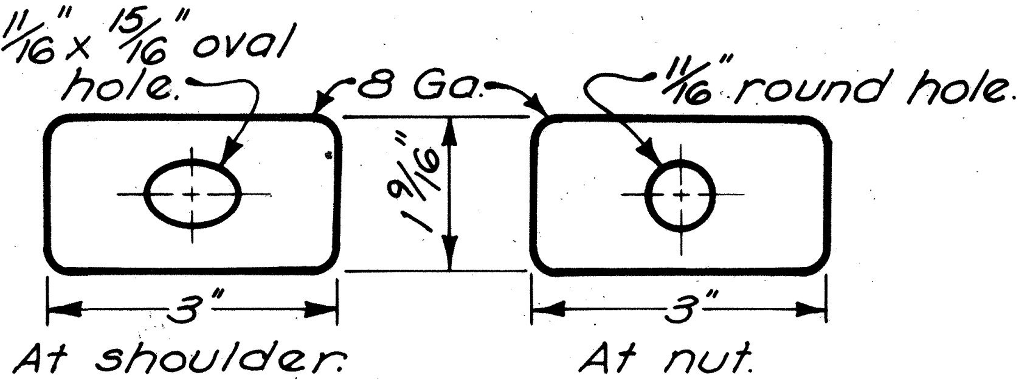
11/16" x 15/16" oval hole.
8 Ga.
11/16" round hole.
1 9/16"
3"
3"
At shoulder.
At nut.

POST BOLT WASHERS

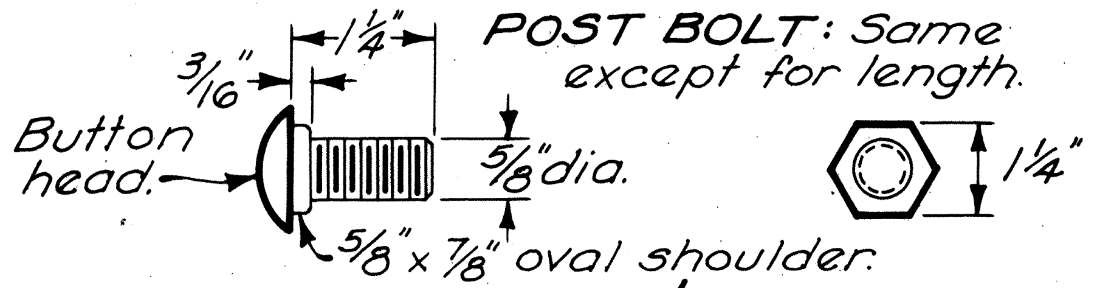
1 1/4"
3/16"
Button head.
POST BOLT: Same except for length.
5/8" dia.
5/8" x 7/8" oval shoulder.
1 1/4"

SPLICE BOLT & NUT

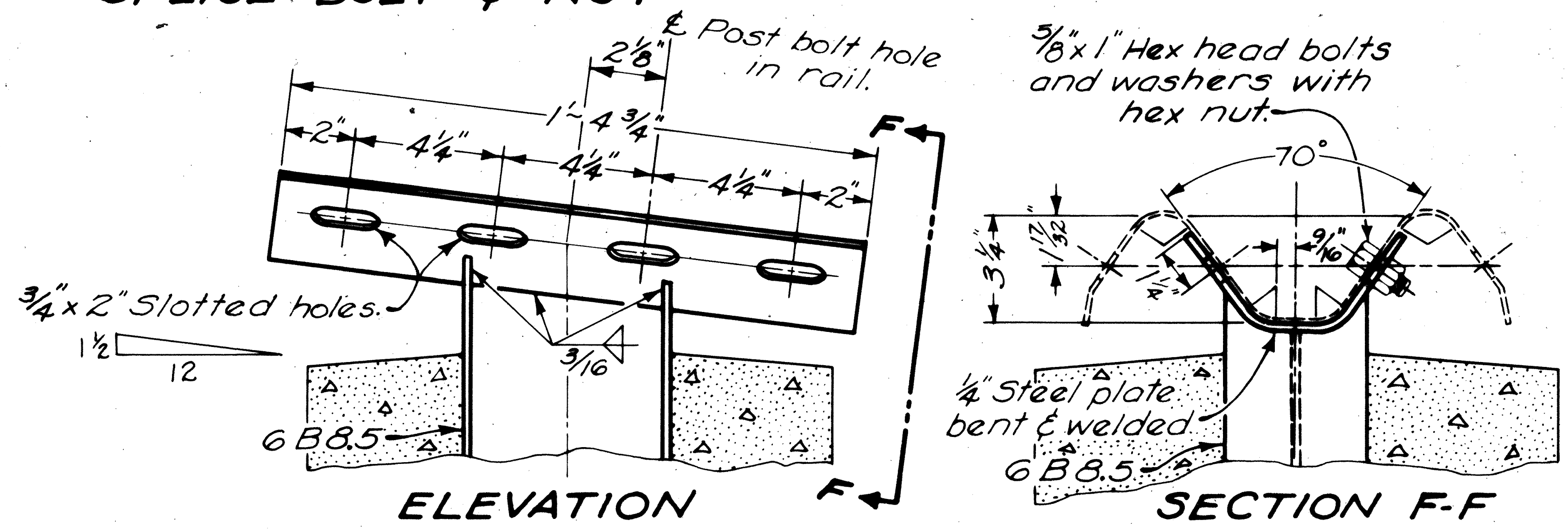
℄ Post bolt hole in rail.
2 1/8"
1'-4 3/4"
2"
4 1/4"
4 1/4"
4 1/4"
2"
F
F
3/4" x 2" Slotted holes.
1½
12
3/16
6B8.5
ELEVATION
5/8" x 1" Hex head bolts and washers with hex nut.
70°
3 1/4
1 1/32
9/16
1/4" Steel plate bent & welded.
6B8.5
SECTION F-F

TERMINAL ANCHOR DETAIL

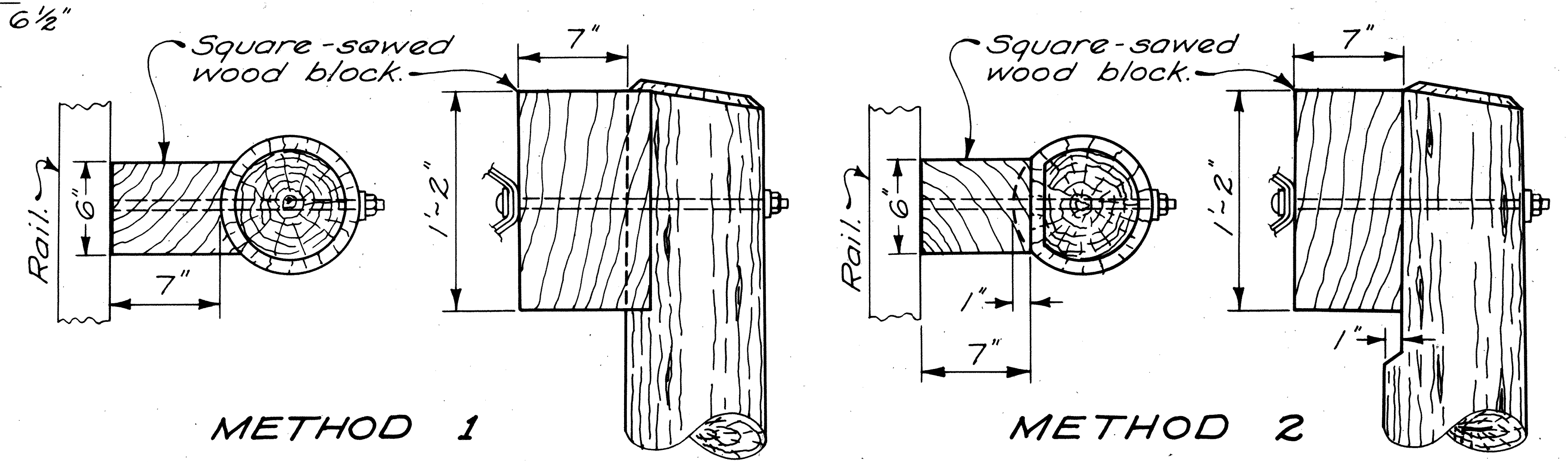
Square-sawed wood block.
Rail
6"
7"
7"
1'-2"
Square-sawed wood block.
Rail
6"
1"
7"
7"
1'-2"
1"

METHOD 1

METHOD 2

ROUND WOOD POSTS*

Alternate methods of placing the spacer blocks on the round posts may be submitted for consideration and approval by the Engineer.

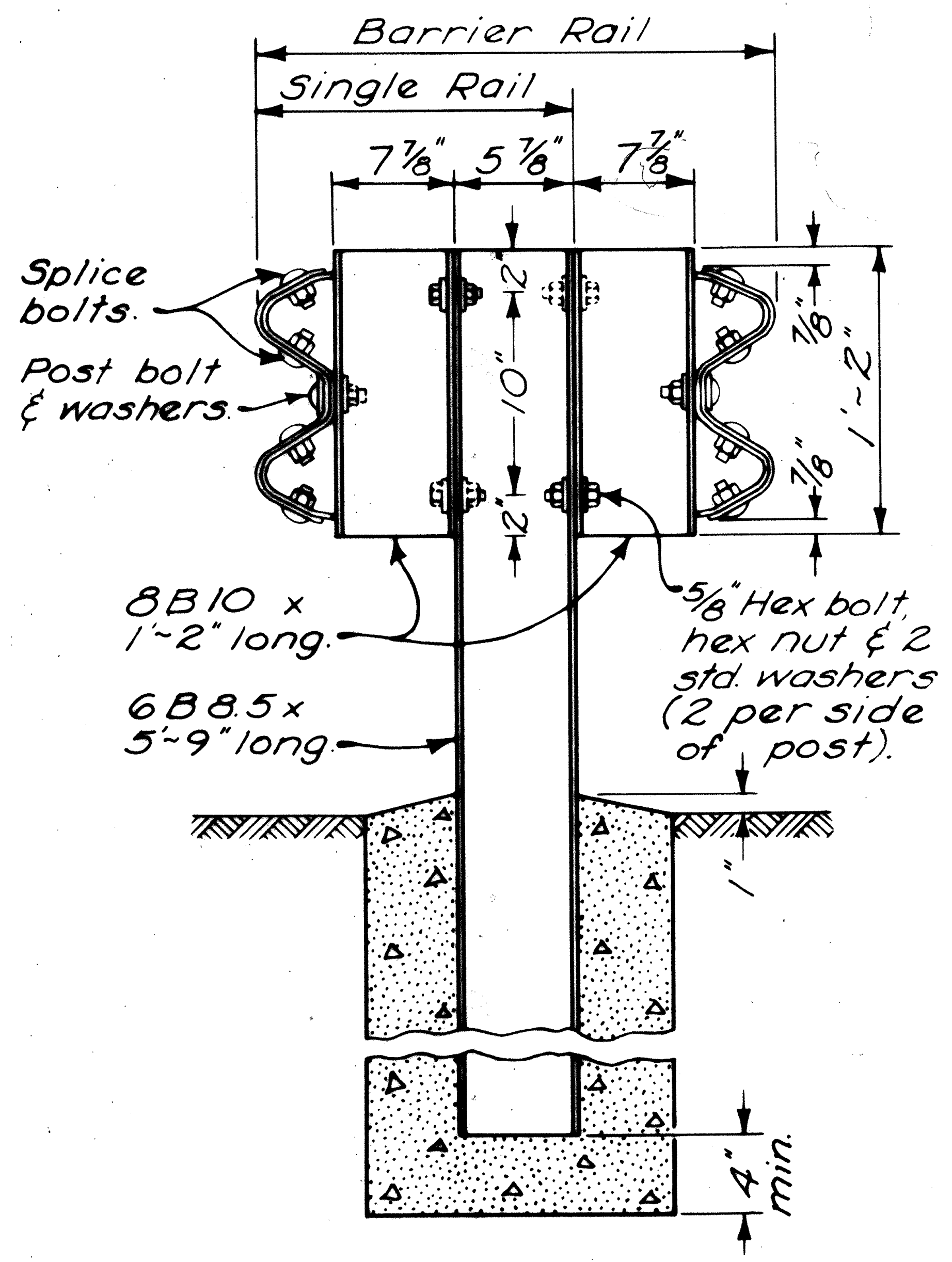
Barrier Rail
Single Rail
7 7/8"
5 7/8"
7 7/8"
Splice bolts.
Post bolt & washers.
2"
10"
2"
7/8"
7/8"
1'-2"
8B10 x 1'-2" long.
5/8" Hex bolt, hex nut & 2 std. washers (2 per side of post).
6B8.5 x 5'-9" long
1"
4" min.

POST A

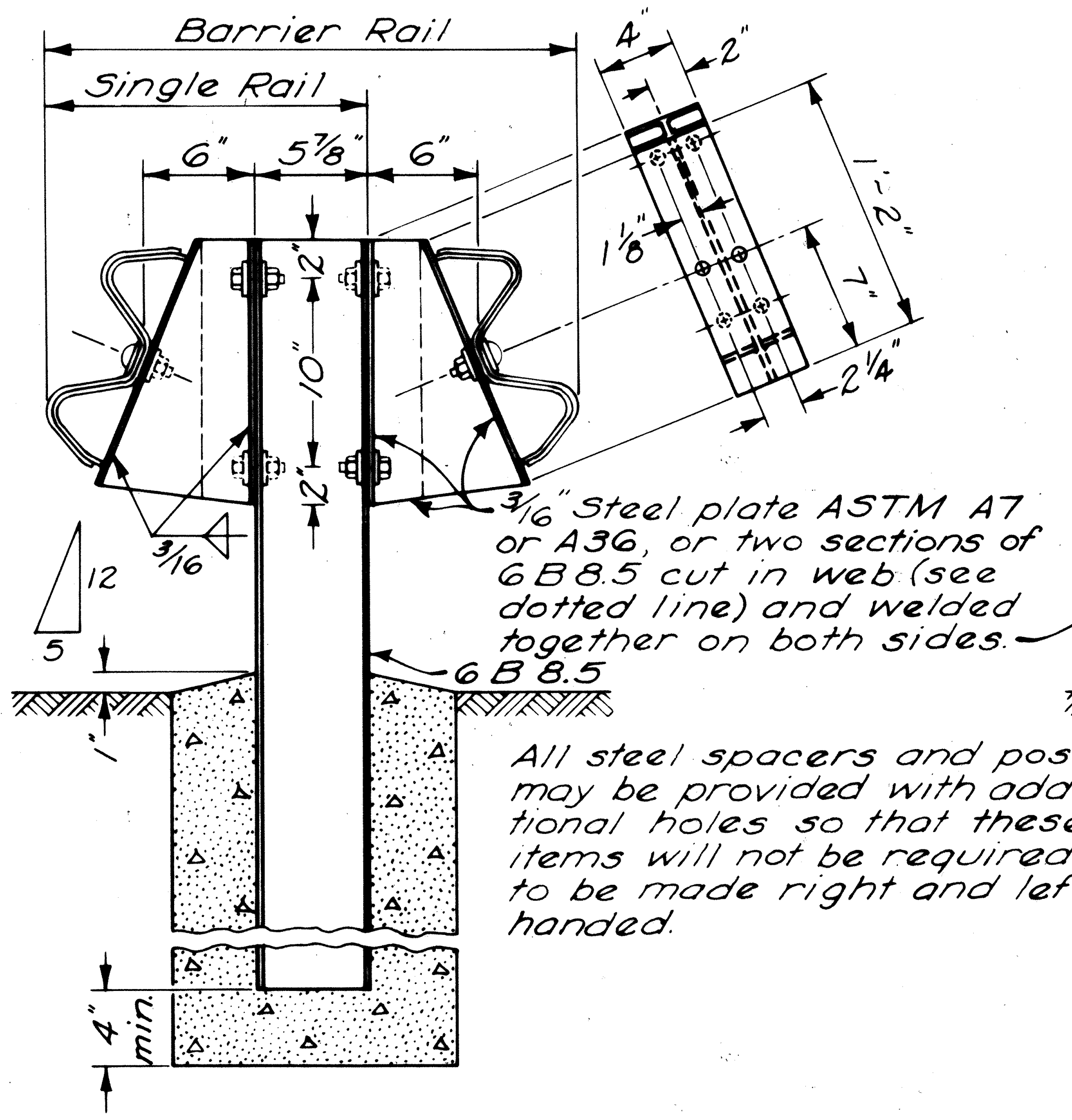
Barrier Rail
Single Rail
6"
5 7/8"
6"
4"
2"
1 1/8"
1'-2"
7"
2 1/4"
2"
10"
2"
3/16
12
5
3/16" Steel plate ASTM A7 or A36, or two sections of 6B8.5 cut in web (see dotted line) and welded together on both sides.
6B8.5
1"
4" min.

All steel spacers and posts may be provided with additional holes so that these items will not be required to be made right and left handed.

POST B

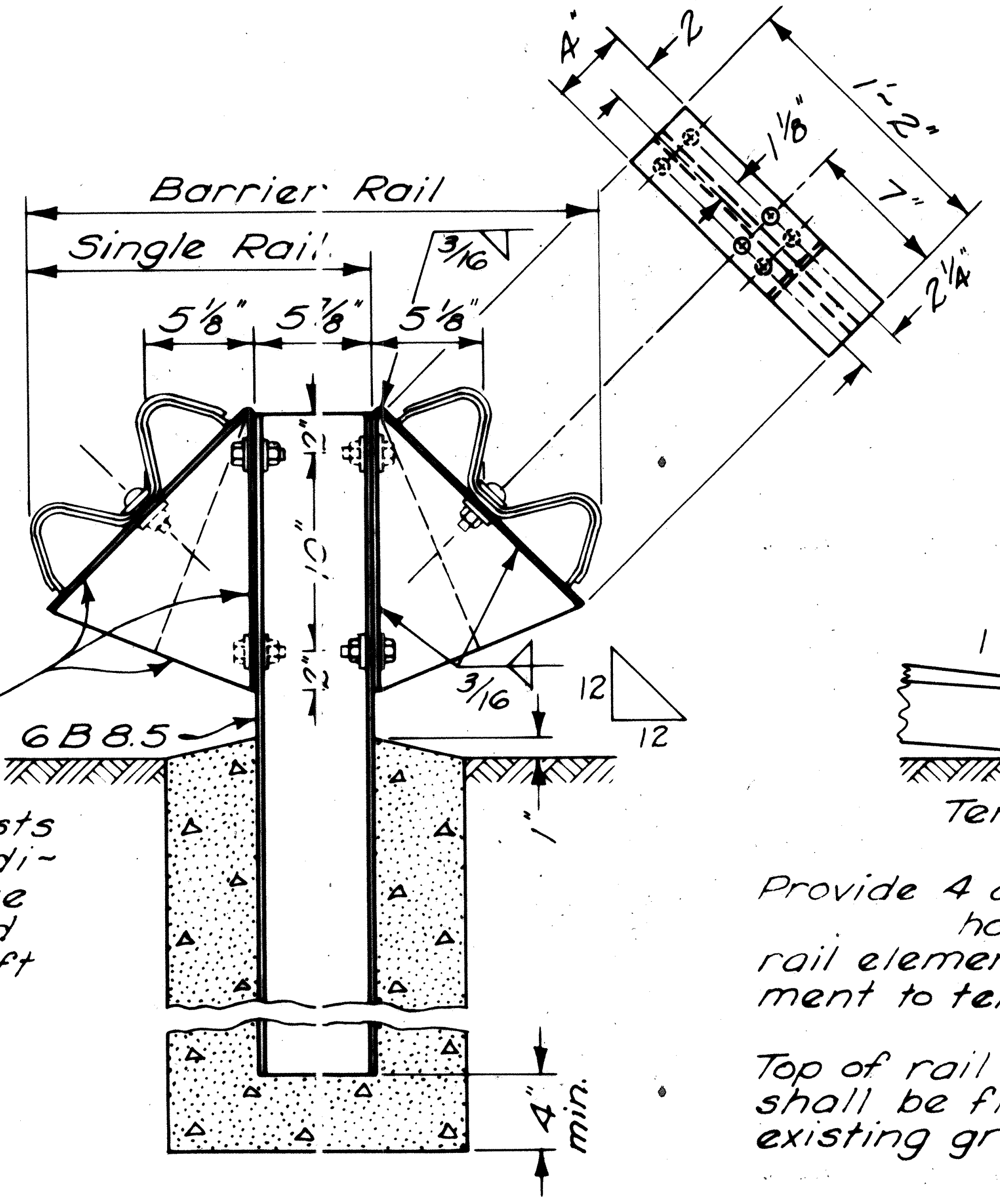
Barrier Rail
Single Rail
5 1/8"
5 7/8"
5 1/8"
3/16
4"
2"
1 1/8"
1'-2"
7"
2 1/4"
2"
10"
2"
3/16
12
12
6B8.5
1"
4" min.

POST C

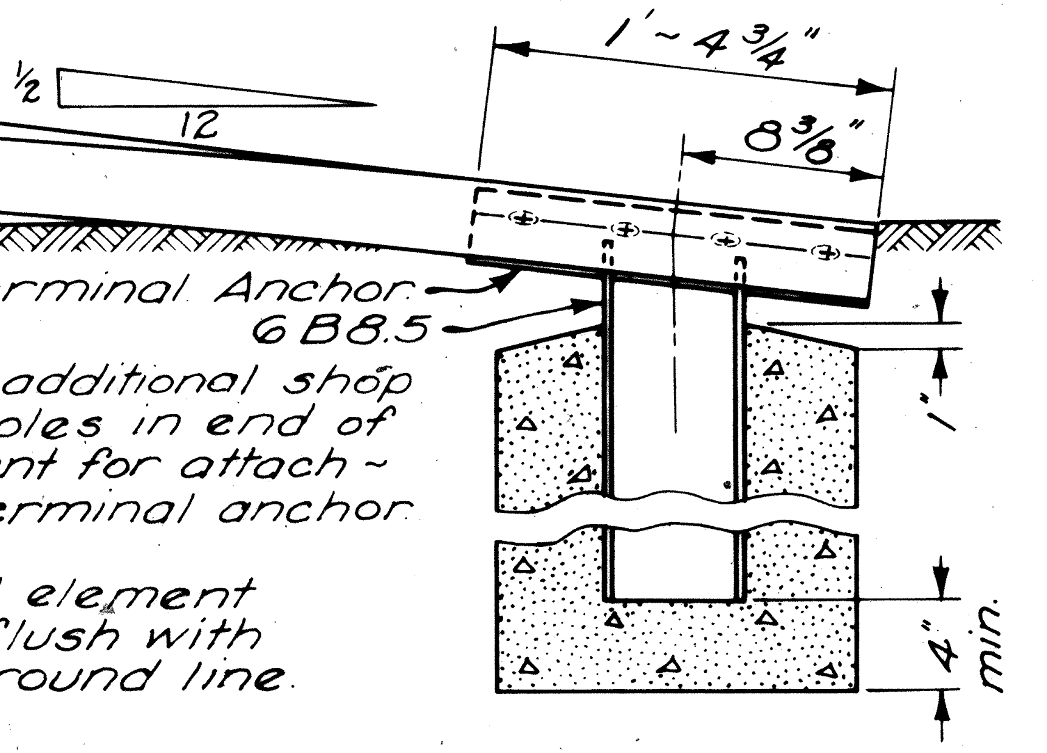
1'-4 3/4"
8 3/8"
1½
12
Terminal Anchor.
6B8.5
1"
4" min.

Provide 4 additional shop holes in end of rail element for attachment to terminal anchor.

Top of rail element shall be flush with existing ground line.

POST D

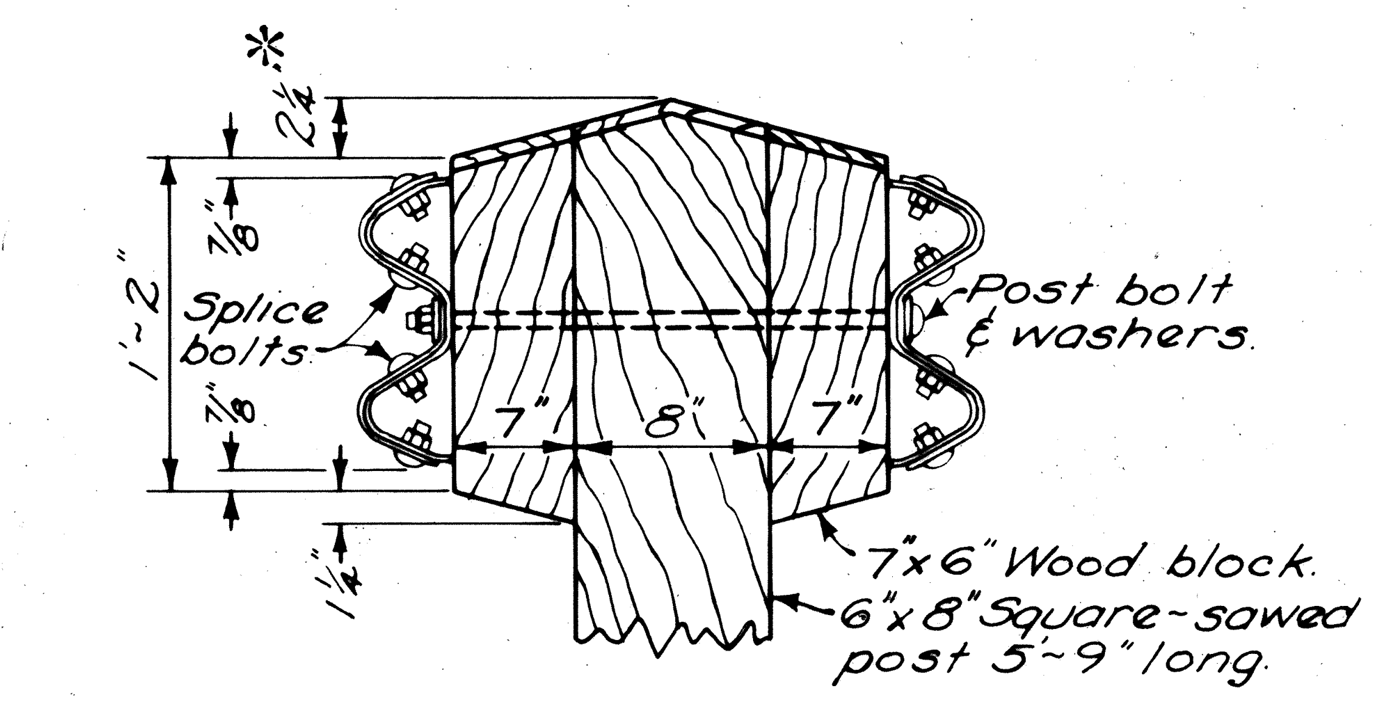
2 1/4 *
7/8
7/8
1'-2"
Splice bolts.
Post bolt & washers.
7"
8"
7"
7" x 6" Wood block.
6" x 8" Square-sawed post 5'-9" long.
1 1/4"

All wood posts and wood spacer blocks shall be pressure treated as per 710.14.

POST E

* Tops of driven posts need not be trimmed.

GUARD RAIL ~ APPROACH END ASSEMBLY

Rev. 8-28-67

FED. RD. DIVISION	STATE	PROJECT	
2	OHIO		

4/51

HANCOCK COUNTY
HAN-69-(1.14)(1.97)(2.31)(3.28)(4.23)(6.17)

PAVEMENT COMPUTATIONS

Station				404	402	407	408		304	310	611	203	202
				1¼" Asphalt Concrete	1¾" Asphalt Concrete	Tack Coat	Bituminous Prime Coat	Cover Aggregate	Aggregate Base	Subbase	Reinforced Concrete Approach Slabs	Subgrade Preparation	Existing Pavement Removed & Disposed of (Appr. Slabs)
From	To	Lin. Ft.		Cu. Yds.	Cu. Yds.	Gals.	Gals.	Cu. Yds.	Cu. Yds.	Cu. Yds.	Sq. Yds.	Sq. Yds.	Sq. Yds.
Bridge No. 0121 Part I													
60+00	62+00	200.00	Salvage	14.16	14.91	17	117	1.17	35.46	17.05			
62+00	63+38.24	138.24	New	10.67	14.93		129	1.29	44.80	46.93		307	
63+38.24	64+41.76	103.52	Br.&Appr.							19.15	111	98	40
64+41.76	67+20	278.24	New	21.47	30.06		260	2.60	90.17	94.46		618	
67+20	69+25	205.00	Salvage	13.76	15.02	17	121	1.21	33.28	20.09			
From Sheet No. 5									10.30				
Total Part I		925.00		60.06	74.92	34	627	6.27	214.01	197.68	111	1023	40
Bridge No. 0204 Part II													
104+25	105+60	135.00	Salvage	10.75	11.00	11	79	0.79	27.40	18.88			
105+60	107+47.69	187.69	New	14.48	20.28		175	1.75	60.83	63.72		417	
107+47.69	108+20.31	72.62	Br.&Appr.							19.15	111	98	44
108+20.31	109+75	154.69	New	11.94	16.71		144	1.44	50.13	52.52		344	
109+75	112+00	225.00	Salvage	16.77	17.12	22	117	1.17	37.35	23.39			
Intersection No. 1-P				23.87	31.02	9	248	2.48	91.00	88.58		613	
From Sheet No. 9									9.10				
Total Part II		775.00		77.81	96.13	42	763	7.63	275.81	266.24	111	1472	44
Bridge No. 0237 Part III													
121+75	124+84.75	309.75	Salvage	24.62	28.59	22	196	1.96	73.33	50.06			
124+84.75	125+61.25	76.50	Br.&Appr.							19.15	111		44
125+61.25	131+50	588.75	Salvage	46.45	57.43	22	456	4.56	139.58	121.76			
From Sheet No. 14									11.30				
Total Part III		975.00		71.07	86.02	44	652	6.52	224.21	190.97	111		44
Bridge No. 0336 Part IV													
173+00	177+04.99	404.99	Salvage	30.09	33.46	33	238	2.38	83.02	77.24			
177+04.99	178+41.01	136.02	Br.&Appr.							19.15	111		62
178+41.01	182+25	383.99	Salvage	29.94	35.76	17	288	2.88	91.86	67.10			
From Sheet No. 18									30.90				
Total Part IV		925.00		60.03	69.22	50	526	5.26	205.78	163.49	111		62
Structure No. 0430 Part V													
223+50	231+33	783.00	Salvage	62.18	70.95	74	420	4.20	143.15	*72.04			44
From Sheet No. 23									30.90				
Total Part V				62.18	70.95	74	420	4.20	174.05	*72.04			44
Bridge No. 0622 Part VI													
326+00	328+15.25	215.25	Salvage	14.08	24.59	48							
328+15.25	328+89.75	74.50	Br.&Appr.							19.15	111		40
328+89.75	331+00	210.25	Salvage	13.41	23.87	47							
Total Part VI		500.00		27.49	48.46	95				19.15	111		40
Grand Total				358.64	445.70	339	2988	29.88	1093.86	909.57	555	2495	274

*Includes pavt. replacement for pipe crossover

MISCELLANEOUS COMPUTATIONS

	Part I	Part II	Part III	Part IV	Part V	Part VI
Seeding and Mulching						
From Table,	5040	4993	5380	4787	4377	2458
Deduct 660 Sodding	43		16	32	127	20
Deduct 601 Dumped Rock Channel Protection	42	42	42	44	62	52
Net Seeding, Sq. Yds.	4955	4951	5322	4711	4188	2386
Item 659 Comm. Fertilizer, 12-12-12						
Seeding and Mulching	4955	4951	5322	4711	4188	2386
660 Sodding	43		16	32	127	20
Quantity = S.Y. x 9 x 20 ÷ 1000 ÷ 2000	$\frac{4998 \times 9 \times 20}{2000000} = .450$	$\frac{4951 \times 9 \times 20}{2000000} = .446$	$\frac{5338 \times 9 \times 20}{2000000} = .480$	$\frac{4743 \times 9 \times 20}{2000000} = .427$	$\frac{4315 \times 9 \times 20}{2000000} = .388$	$\frac{2406 \times 9 \times 20}{2000000} = .217$
Item 605 Aggregate Drains						
Number of Drains	28	27	34	28	23	11
Average Length (est.)	11.5	11.5	11.5	11.5	11.5	11.5
Quantity, Lin. Ft.	322	311	391	322	265	127

GENERAL SUMMARY

Item	6201 (*Exceptions as noted)							Unit	Description
	Part I	Part II	Part III	Part IV	Part V	Part VI	Total		
									ROADWAY
201	Lump	Lump	Lump	Lump	Lump	Lump	Lump	Lump	Clearing and Grubbing
202					Lump		Lump	Lump	Existing Structures removed
202	4	3	2	1	2		12	Each	Catch Basin and Inlet removed
203	669	672	737	973	358	493	3902	Cu. Yd.	Excavation not including Embankment Construction,
203	1234	1543	1201	767	471	196	5412	Cu. Yd.	Embankment
203	1023	1472					2495	Sq. Yd.	Subgrade Preparation
606	705.46	604.76	497.00	352.96	637.50	551.00	3348.68	Lin. Ft.	Guard Rail, Type 4, modified as per plan
202	40	44	44	62	44	40	274	Sq. Yd.	Pavement removed and disposed of
410							10	Cu. Yd.	Traffic Compacted Surface, Type A or B
									EROSION CONTROL
*659	4955	4951	5322	4711	4188	2386	26513	Sq. Yd.	Seeding and Mulching, as per plan
*601	21	21	21	22.	47.	26.	158	Cu. Yd.	Dumped Rock Channel Protection
*660	43		16	32	127	20	238	Sq. Yd.	Sodding
*659	0.45	0.45	0.48	0.43	0.39	0.22	2.42	Ton	Commercial Fertilizer (12-12-12)
									DRAINAGE
603			10		10		20	Lin. Ft.	6" Conduit, Type F
603	10	20		50	24	10	114	Lin. Ft.	8" Conduit, Type F
603	32		45		18	10	105	Lin. Ft.	10" Conduit, Type F
603	26	40	10		10		86	Lin. Ft.	12" Conduit, Type F
603						10	10	Lin. Ft.	18" Conduit, Type F
603						10	10	Lin. Ft.	24" Conduit, Type F
603						10	10	Lin. Ft.	6" Conduit, Type E
603				6	38	38	82	Lin. Ft.	8" Conduit, Type E
603	28					50	78	Lin. Ft.	10" Conduit, Type E
603	12		18		22		52	Lin. Ft.	12" Conduit, Type E
603									
603						58	58	Lin. Ft.	24" Conduit, Type E
603	28		62	90	28		208	Lin. Ft.	12" Conduit, Type D
603		12					12	Lin. Ft.	8" Conduit, Type B with Class B Bedding
603		35					35	Lin. Ft.	12" Conduit, Type B with Class B Bedding
603					72		72	Lin. Ft.	8'-7" x 5'-11" Conduit, Type A with Class B Bedding, 707.03, 10-10 Gage ✓
604	1	2	1		2		6	Each	Std. 2-2A Catch Basin, Modified as per plan
602					7.3		7.3	Cu. Yd.	Concrete Masonry
605	322	311	391	322	265	127	1738	Lin. Ft.	Aggregate Drains
									PAVEMENT
310	198	266	191	164	72	19	910	Cu. Yds.	Subbase
304	214	276	224	206	174		1094	Cu. Yds.	Aggregate Base
408	627	763	652	526	420		2988	Gals.	Bituminous Prime Coat, 702.09 RT-2 or RT-3
408	6	8	7	5	4		30	Cu. Yds.	Cover Aggregate
407	34	42	44	50	74	95	339	Gals.	Tack Coat, 702.04 MS-2 or RS-1; 702.02 RC-70 or RC-250
402	75	96	86	69	71	49	446	Cu. Yds.	Asphalt Concrete (85-100)
404	60	78	71	60	62	28	359	Cu. Yds.	Asphalt Concrete (85-100)
611	111	111	111	111		111	555	Sq. Yds.	Reinforced Concrete Approach Slabs (T=13")
614	Lump	Lump	Lump	Lump	Lump	Lump	Lump	Lump	Maintaining Traffic
	Lump	Lump	Lump	Lump	Lump	Lump	Lump	Lump	Construction Layout Stakes
								Lump	Field Office
									STRUCTURES 20' SPAN AND OVER
									Han-69-0121, See Sheet No. 31
									Han-69-0204, See Sheet No. 34
									Han-69-0237, See Sheet No. 38
									Han-69-0336, See Sheet No. 41
									Han-69-0622, See Sheet No. 44

* Code No. Y005

EARTHWORK-203

Sheet No.	Part No.	Embankment, C.Y.	Excavation, C.Y.
5	I	1234	669
9	II	1543	672
14	III	1201	737
18	IV	767	973
23	V	471	358
27	VI	196	493
Totals		5412	3902

SEEDING-659

Sheet No.	Part No.	Sq. Yds.
6	I	5040
10	II	4993
15	III	5380
19	IV	4787
24	V	4377
28	VI	2458
Total		27035

PAVEMENT COMPUTATIONS, GENERAL SUMMARY & MISCELLANEOUS COMPUTATIONS

HANCOCK COUNTY
HAN-69-(1.14)(1.97)(2.31)(3.28)(4.23)(6.17)

(Br. 0121)

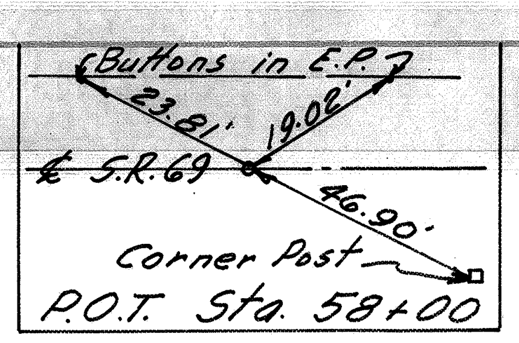
Buttons in E.P.
23.81'
19.02'
℄ S.R. 69
46.90'
Corner Post
P.O.T. Sta. 58+00

EXISTING STRUCTURE
Span ~ 23'-0"
Type ~ Concrete Slab
Roadway ~ 24'-0"
Skew ~ None
Loading ~ CF 130

PROPOSED STRUCTURE
Type ~ Continuous Reinf. Conc. Slab
with capped pile substructure
Spans ~ 16'-20'-16' c/c Bearings
Roadway ~ 36'-0" f/f Guardrail
Load Frequency ~ CF-130(57)
Skew ~ 10° R.F.
Wearing Surface ~ 1" Monolithic Concrete
Approach Slabs ~ AS-1-54 (25' Long)
Alignment ~ Tangent

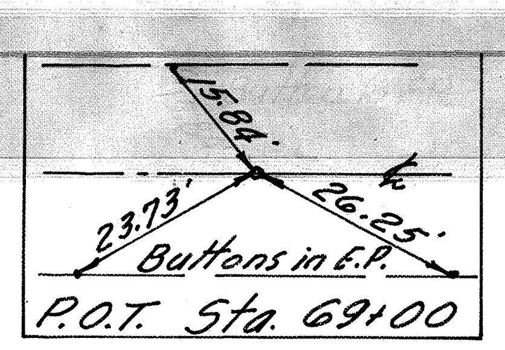
15.84'
℄
23.73'
26.25'
Buttons in E.P.
P.O.T. Sta. 69+00

UTILITIES
Paulding Putnam Electric Co-op. Inc.
General Telephone Co. Marion, Ohio

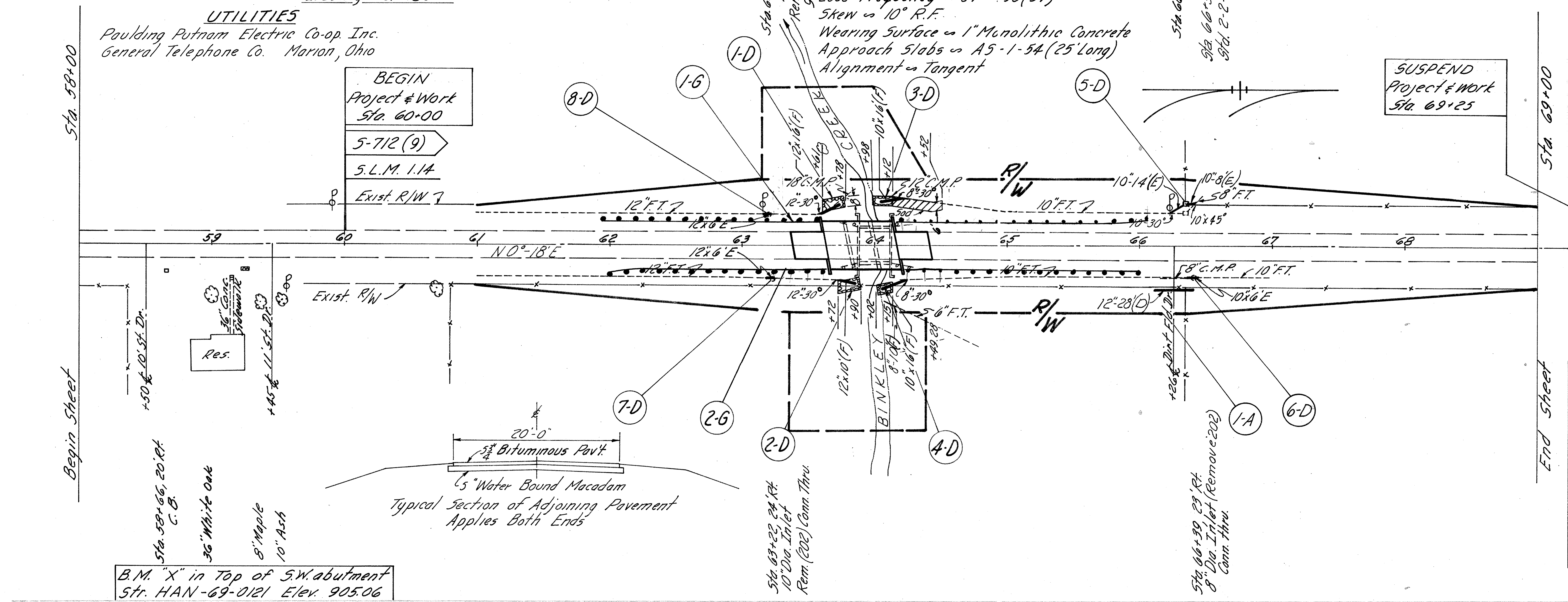
Sta. 58+00
Begin Sheet
BEGIN
Project & Work
Sta. 60+00
S-7/2 (9)
S.L.M. 1.14
Exist. R/W
Exist. R/W
59
60
61
62
63
64
65
66
67
68
N 0°-18' E
R/W
R/W
12" F.T.
12"x6' E
10" F.T.
CREEK
BINKLEY
1-D
2-D
3-D
4-D
5-D
6-D
7-D
8-D
1-G
2-G
1-A
12"x16'(F)
10"x16'(F)
12"x10'(F)
8"(F)
10"x16'(F)
12" C.M.P.
18" C.M.P.
8" C.M.P.
10"x14'(E)
10"x45°
10"x6' E
12"x28'(D)
5'-6" F.T.
Res.
+50, 10' St. Dr.
+45, 11' St. Dr.
36" Conc. Sidewalk
Sta. 58+66, 20' Rt. C.B.
36" White Oak
8" Maple
10" Ash
Sta. 63+20, 24' Lt. 10" Dia. Inlet Rem. (202) Conn. Thru. 9" Black Ash
Sta. 63+22, 24' Rt. 10" Dia. Inlet Rem. (202) Conn. Thru.
Sta. 66+34, 25' Lt. C.B. (Remove 202)
Sta. 66+34, 31' Lt. Std. 2-2-A, C.B. (Mod.)
Sta. 66+29, 29' Rt. 8" Dia. Inlet (Remove 202) Conn. thru
SUSPEND
Project & Work
Sta. 69+25
Sta. 69+00
End Sheet
20'-0"
1 3/4" Bituminous Pav't.
5" Water Bound Macadam
Typical Section of Adjoining Pavement
Applies Both Ends

B.M. "X" in Top of S.W. abutment
Str. HAN-69-0121 Elev. 905.06

ROADWAY DRAINAGE "D"

Ref. No.	Station From	Station To	Side	601 Dumped Rock Channel Prot. 18" Thick Cu. Yd.	660 Sodding Sq. Yd.	603 Conduit Lin. Ft. F 8"	F 12"	F 10"	E 10"	E 8"	E 12"	202 C.B.'s & Inlets Removed	604 Catch Basin Std. 2-2-A (Mod) Each	602		Bends & Branches Each
1-D	63+60	63+78	Lt.	5.2			16									1
2-D	63+72	63+90	Rt.	5.2			10									1
3-D	63+98	64+52	Lt.	5.2	27			16								1
4-D	64+02	64+24	Rt.	5.2		10		16								1
5-D	66+23	66+34	Lt.		16				22			1	1			2
6-D	66+29		Rt.						6			1				
7-D	63+22		Rt.								6	1				
8-D	63+20		Lt.								6	1				
Totals				20.8	43	10	26	32	28		12	4	1			

GUARD RAIL "G"

Ref. No.	Station From	Station To	Side	606 Guard Rail Type 4 Lin. Ft. Straight
1-G	61+93.22 *	66+05.72	Lt.	358.98
2-G	61+99.28 *	65+99.28	Rt.	346.48
Totals				705.46

*Deduct 53.52' for Bridge Rail

MICROFILMED
JUL 15 1986

SIDE APPPOACHES "A"

Item No.	Station	Side	304 Aggr. Base Cu. yd.	Conduit Type "D" Lin. Ft. 12"		Length Lin. Ft.	Remarks
1-A	66+26	Rt.	*10.3	28			Field Drive
Total			10.3	28			

*Place 304 Aggregate to 25' Length (Back of Radius)

907.24
907.01
906.83
906.69
906.58
906.52
906.50
906.50
906.50
906.50
906.50
906.50
906.50
906.53
906.62
906.78
906.99
907.27
907.61
Salvage
New
New
Salvage
+00
+20
Bridge Limits = 53.52'
Sta. 63+63.24
Sta. 64+16.76
150' V.C.
150' V.C.
910
905
900
895
890
885
880
-0.99%
0.00%
+1.48%
12" Rt.
12" Rt.
12" Lt.
12" Lt.
6" Rt.
10" Rt.
10" Lt.
10" Rt.
12"(D)
8" Lt.
+12, 31' Rt. 902.41
+40, 31' Rt. 902.68
+75, P.I. 906.50
+50, P.I. 906.50
908.14
908.04
907.93
907.72
907.24
906.19
905.25
904.74
904.76
904.86
904.86
904.78
904.66
904.74
904.77
905.12
905.88
907.24
58
59
60
61
62
63
64
65
66
67
68
69

10 Yr. Hi-Water Elev. 903.0
5 Yr. Hi-Water Elev. 902.0
Flow Line Elev. 896.4
Highest Known Hi-Water Elev. ... 904.9

Excavation 669 Cu. yds.
Embankment 1234 Cu. yds.

Seeding Wide	Seeding Sq. Yd.
60	
	162
60	
	265
65	
	667
55	
	528
40	
	222
0	
Total Sheet #6	1844
" " #	3196
Total Part I	5040

STRUCTURE NO. HAN-69-0121

45 40 35 30 25 20 15 10 5 ℄ 5 10 15 20 25 30 35 40 45
R/W
2:1
901.2
906.50
63+62.48
904.75
Back of Abutment Skew
2:1
Add for Roadway Ditches Ahead
Back
900.8
12"F.T.
3:1
Back
Ahead
906.50
63+38.24
904.75
3:1
901.7
901.0
12"F.T.
Begin Approach Slab
Sta. 63+20, 24' Lt.
10" Dia. Inlet (Exist.)
Remove (202) Conn. Thru.
4:1
901.8
906.50
63+00
904.74
Transition from 4:1 Slope @ Sta. 63+00 Rt. & Lt.
to 2:1 Slope @ Sta. 63+60 Rt. & Lt.
Sta. 63+22, 24' Rt.
10" Dia. Inlet (Exist.)
Remove (202) Conn. Thru.
4:1
901.7
12"F.T.
903.5
906.50
62+00
905.25
Begin New Pavement
902.9
12"F.T.
Transition from 10' Shoulder width @ Sta. 62+00 Rt. & Lt.
to 8' Shoulder width @ Sta. 61+75 Rt. & Lt.
904.5
906.58
61+00
906.19
904.9
12"F.T.
Exist. R/W
60+00
907.24
Begin Work & Project
Sta. 60+00
59+45
907.72
Drive Rt.
59+00
907.93
58+50
908.04
Drive Rt.
58+00
908.14

End Area Cut	End Area Fill	Cu. Yd. Cut	Cu. Yd. Fill
		13	
9	63		
		9	50
12	48		
12	59		
		13	88
7	65		
		24	172
6	28		
		19	63
4	6		
		7	11
0	0		
Total Sheet #6		85	384
" " #7		141	785
" " #8		443	65
Total Part I		669	1234

FED. RD. DIVISION	STATE	PROJECT	
2	OHIO		

HANCOCK COUNTY
HAN-69-(1.14)(1.97)(2.31)(3.28)(4.23)(6.17)

6
51

Sta. 58+00 to Sta. 63+87

FED. RD. DIVISION	STATE	PROJECT	
2	OHIO		

7
51

HANCOCK COUNTY
HAN-69-(1.14)(1.97)(2.31)(3.28)(4.23)(6.17)

End Area Cut Fill
Cu. Yd. Cut Fill
Seeding
Wide Sq. Yd.
Sheet Total
Sta. 69+25, Suspend Project and Work
Exist. R/W
69+00
907.24
Sta. 69+25
R/W
908.53
68+00
905.88
904.0
904.5
Sta. 67+20, Begin Salvage
908.50
67+00
905.12
903.1
903.5
10' F.T.
8' F.T.
908.50
66+42 Rt.
904.80
+34 Lt.
904.77
902.58
5'8" Inlet (Rem. & Conn. thru) 20E
Sta. 66+34.31 Lt.
Std. 2-A C.B. (Mod.)
F.L. Elev. 902.50
2'x2' C.B.
10' (E) Back
10' (E) Ahead
Corr. For Dr. Rt.
Corr. for Dr. Rt.
12" (D)
8" C.M.P. (Aban.)
Field Drive Rt.
908.50
66+26
904.74
908.50
66+00
904.66
902.2
902.3
908.50
65+00
904.65
901.3
901.5
4:1
Transition from 10' Shoulder width @ Sta. 66+00 Rt. & Lt. to 8' Shoulder width @ Sta. 66+25 Rt. & Lt.
Transition from 2:1 Slope @ Sta. 64+20 Rt. & Lt. to 4:1 Slope @ Sta. 65+00 Rt. & Lt.
Sta. 64+41.76 Ahead Back
Ahead Sta. 64+17.52
Carried to Sheet No. 6
2.5:1
900.76
901.4
908.50
64+41.76
904.75
End Approach Slab
End Sod, Sta. 64+52 Lt.
Ahead
Back
908.50
64+17.52
904.82
Back of Abutment Skew
900.1
899.7
2:1
Begin Sod, Sta. 64+19 Lt.
63+62.48
Sta. 64+13 to Sta. 69+00
45 40 35 30 25 20 15 10 5 ℄ 5 10 15 20 25 30 35 40 45
0 0 19 24
8 10 24 87
5 37 18 104
11 55 1
15 86
10 63 37 261
10 78 19 161
8 71 8 61
10 76 8 62
141 785
0 320 46 544 52 379 60 -70 260 60 717 69 411 58 162 62 373 60 3196

FED. RD. DIVISION	STATE	PROJECT	
2	OHIO		

8
51

HANCOCK COUNTY
HAN-69-(1.14)(1.97)(2.31)(3.28)(4.23)(6.17)

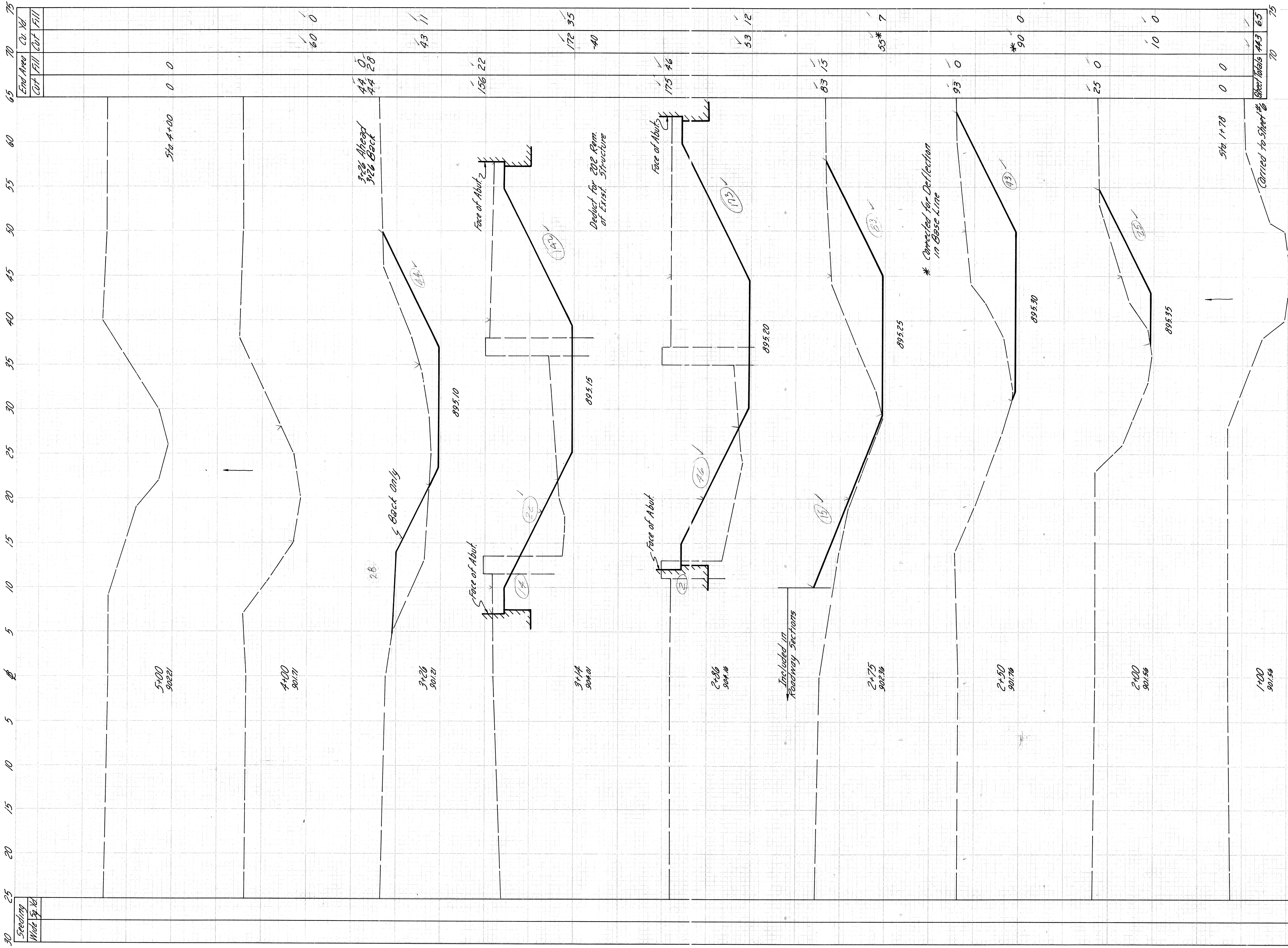
End Area Cut Fill
Cu. Yd. Cut Fill
Sheet Totals 443 65
Sheet #6
Sta. 4+00
3+26 Ahead
3+26 Back
Face of Abut.
Deduct for 202 Rem. of Exist. Structure
Corrected for Deflection in Base Line
Sta. 1+78
Carried to Sheet #6
Back Only
Included in Roadway Sections
5+00 902.21
4+00 901.71
3+26 901.21
3+14 904.01
2+86 904.18
2+75 902.39
2+50 901.78
2+00 901.56
1+00 901.58
895.10
895.15
895.20
895.25
895.30
895.35
Seeding
Wide Sq. Yd.

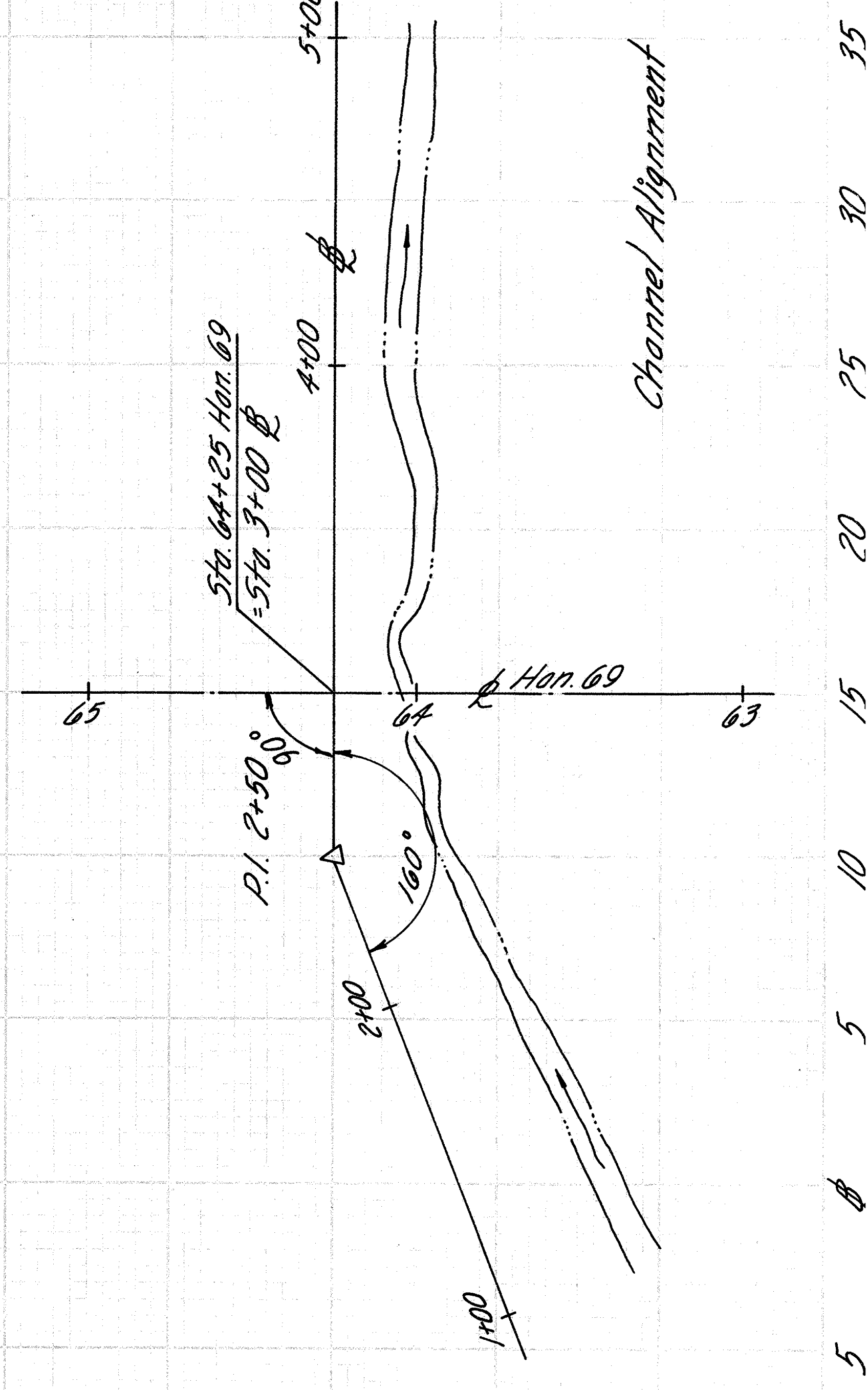
Channel Alignment
5+00
4+00
Sta. 64+25 Han. 69
Sta. 3+00 ℄
℄ Han. 69
65
64
63
P.I. 2+50.0
160°
2+00
1+00

Channel Sections, Sta. 1+00 to Sta. 5+00, Binkley Creek

HANCOCK COUNTY
HAN-69-(1.14)(1.97)(2.31)(3.28)(4.23)(6.17)
(Br. 0204)

MICROFILMED
JUL 15 1986

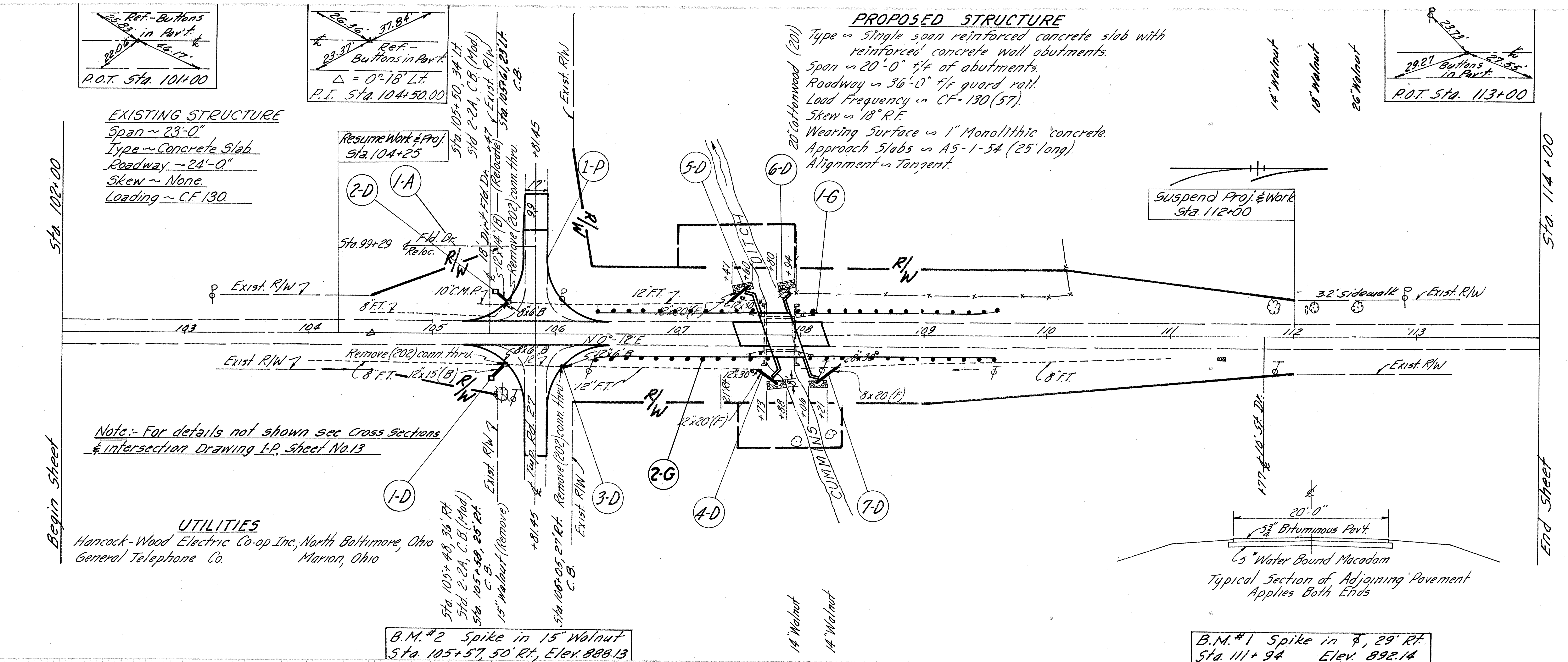
Ref.-Buttons in Pav't.
25.83'
22.06'
46.17'
P.O.T. Sta. 101+00
26.36'
37.84'
23.37'
Ref.-Buttons in Pav't.
Δ = 0°-18' Lt.
P.I. Sta. 104+50.00
Resume Work & Proj. Sta. 104+25
Sta. 105+50, 34' Lt. Std. 2-2A, C.B. (Mod)
Exist. R/W
Sta. 105+61, 23' Lt. C.B.
+81.45
1-P
2-D
1-A
5-D
6-D
1-G
Sta. 99+29 ℄ Fld. Dr. Reloc.
18' Dirt Fld. Dr.
12"x14' (B) (Relocate) +47
Remove (202) conn. thru.
10"C.M.P.
8" F.T.
12" F.T.
R/W
Exist. R/W
DITCH
20" Cottonwood (201)
14" Walnut
18" Walnut
26" Walnut
29.27
Buttons in Pav't.
23.73'
27.55'
P.O.T. Sta. 113+00
Suspend Proj. & Work Sta. 112+00
3.2' Sidewalk
N 0° 12' E
103
104
106
107
108
109
110
111
112
113
Remove (202) conn. thru.
8" F.T. 12"x15' (B)
12"x30"
8"x20 (F)
12"x20 (F)
Twp. Rd. 27
CUMMINS
1-D
3-D
2-G
4-D
7-D
Sta. 105+48, 36' Rt. Std. 2-2A, C.B. (Mod)
Sta. 105+58, 25' Rt. C.B.
15" Walnut (Remove)
Sta. 106+05, 27' Rt. C.B.
Remove (202) conn. thru.
+77 10 St. Dr.
Sta. 102+00
Begin Sheet
Sta. 114+00
End Sheet
14" Walnut
14" Walnut

PROPOSED STRUCTURE

Type ~ Single span reinforced concrete slab with reinforced concrete wall abutments.
Span ~ 20'-0" ⅊ of abutments.
Roadway ~ 36'-0" f/f guard rail.
Load Frequency ~ CF=130 (57).
Skew ~ 18° R.F.
Wearing Surface ~ 1" Monolithic concrete.
Approach Slabs ~ AS-1-54 (25' long).
Alignment ~ Tangent.

EXISTING STRUCTURE

Span ~ 23'-0"
Type ~ Concrete Slab
Roadway ~ 24'-0"
Skew ~ None.
Loading ~ CF 130.

Note:- For details not shown see Cross Sections & intersection Drawing 1-P, Sheet No. 13

UTILITIES

Hancock-Wood Electric Co-op Inc., North Baltimore, Ohio
General Telephone Co. Marion, Ohio

20'-0"
1½" Bituminous Pavt.
5" Water Bound Macadam
Typical Section of Adjoining Pavement Applies Both Ends

B.M. #2 Spike in 15" Walnut Sta. 105+57, 50' Rt., Elev. 888.13

B.M. #1 Spike in ℄, 29' Rt. Sta. 111+94 Elev. 892.14

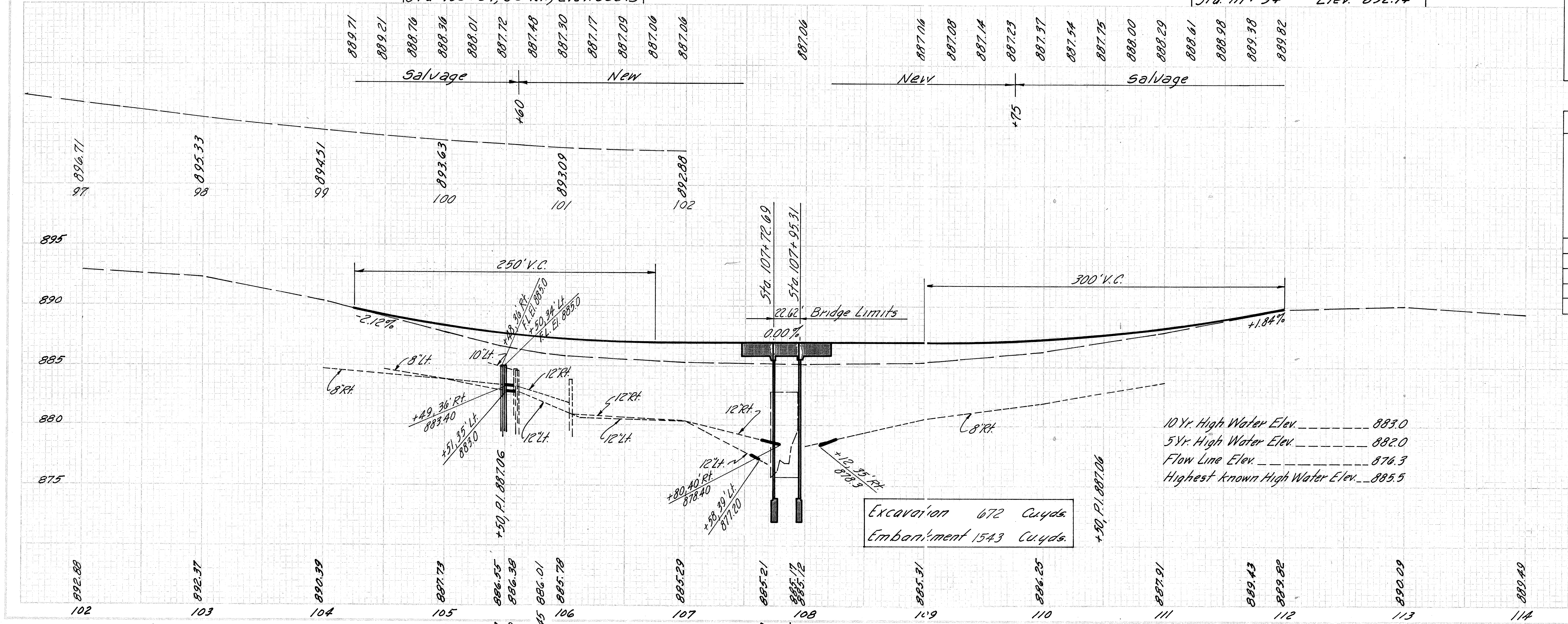
889.71
889.21
888.70
888.30
888.01
887.72
887.48
887.30
887.17
887.09
887.06
887.06
887.06
887.16
887.08
887.14
887.23
887.37
887.54
887.75
888.00
888.29
888.61
888.98
889.38
889.82
Salvage
New
New
Salvage
+60
+75
896.71
895.33
894.51
893.63
893.09
892.88
97
98
99
100
101
102
895
890
885
880
875
250' V.C.
300' V.C.
Sta. 107+72.69
Sta. 107+95.31
22.62' Bridge Limits
0.00%
-2.12%
+1.84%
8' Lt.
8' Rt.
10' Lt.
12' Rt.
12' Lt.
+49.36' Rt. 883.40
+51.35' Lt. 883.0
+48.36' Rt. Fl. El. 883.0
+50.34' Lt. Fl. El. 883.0
12' Rt.
12' Lt.
12' Lt.
+80.40' Rt. 878.40
+58.39' Lt. 877.20
+12.35' Rt. 878.3
8' Rt.
+50, P.I. 887.06
+50, P.I. 887.06
14" Walnut
14" Walnut
892.88
892.37
890.39
887.73
886.55
886.38
886.01
885.78
885.29
885.21
885.17
885.12
885.31
886.25
887.91
889.43
889.82
890.09
889.49
102
103
104
105
+47
+60
+81.45
106
107
+69
108
+95
109
110
111
+77
112
113
114

10 Yr. High Water Elev. ________ 883.0
5 Yr. High Water Elev. ________ 882.0
Flow Line Elev. ____________ 876.3
Highest known High Water Elev. __ 885.5

Excavation 672 Cu.yds.
Embankment 1543 Cu.yds.

ROADWAY DRAINAGE "D"

Ref. No.	Station From	Station To	Side	601 Dump. Rock Chan. Prot. 18" Thick Cu. Yd.	660 Sodding Sq. Yd.	603 Conduit Lin. Ft. B 12"	603 Conduit Lin. Ft. B 8"	603 Conduit Lin. Ft. F 12"	603 Conduit Lin. Ft. F 8"	202 Catch Basins Removed Each	604 Catch Basins (Mod.) 2-2A Each	Bends & Branches Each
1-D	105+48	105+58	Rt.			15	6			1	1	
2-D	105+50	105+61	Lt.			14	6			1	1	
3-D	106+05		Rt.			6				1		
4-D	107+65	107+88	Rt.	5.2				20				1
5-D	107+42	107+60	Lt.	5.2				20				1
6-D	107+80	107+94	Lt.	5.2								
7-D	108+06	108+21	Rt.	5.2					20			1
Totals				20.8		35	12	40	20	3	2	

SIDE APPROACHES "A"

Ref. No.	Station	Side	304 Aggr. Base Cu. Yd.	Conduit Type D Lin. Ft.	Length Lin. Ft.	Remarks
1-A	99+29 Twp. Rd #27	Lt.	9.1		20	Field Drive
Totals			9.1			

GUARD RAIL "G"

Ref. No.	Station From	Station To	Side	606 Guard Rail Type 4 Lin. Ft. Straight
1-G	106+34.55	109+59.55*	Lt.	302.38
2-G	106+33.45	109+58.45*	Rt.	302.38
Totals				604.76

*Deduct 22.62' for Bridge

Sta. 102+00 to Sta. 114+00 PART-II

HANCOCK COUNTY
HAN-69-(1.14)(1.97)(2.31)(3.28)(4.23)(6.17)

10
51

Seeding
Wide
Sq. Yd.
End Area
Cut
Fill
Cu. Yd.
Cut
Fill
45 40 35 30 25 20 15 10 5 ℄ 5 10 15 20 25 30 35 40 45
R/W 55'
67
887.12
106+40
885.56
881.3
882.1
12"
12"
4
68
R/W
887.27
106+05
885.72
12"
Remove (202) connect thru.
500
Correction for Intersection
Correction for Intersection
16
75
887.30
106+00
885.78
12"
12"
520
35
163
INTERSECTION I-P
Sta. 105+81.45, S.R. 69 =
Sta. 100+00, Twp. Rd. 27
Prop. Grade Twp. Rd. #27
887.43
105+81.45 Twp. Rd. #27
886.01
12"
12"
Sta. 105+50, 34' Lt.
Std. 2-2A, C.B. (Mod)
F.L. Elev. 885.00
Sta. 105+48, 36' Rt.
Std. 2-2A, C.B. (Mod)
F.L. Elev. 885.00
Sta. 105+60, Begin New Pav't.
R/W
20
42
R/W 70'
50
12"x14"(B)
Remove (202) connect thru.
887.61
887.64
Lt. +61
105+58 Rt.
886.38
Remove (202) connect thru.
12"x15"(B)
Sta. 105+51, 35' Lt.
883.00
Sta. 105+49, 36' Rt.
883.40
R/W 67'
340
885.2
31
61
-74
Corr. for Dr. Lt.
(Relocate) Fld. Dr. Lt.
887.75
105+47
886.55
Corr. for Dr. Lt.
4
0
R/W
R/W
52
886.0
886.0
8
13
202
888.36
105+00 Drive Lt.
887.73
10
17
0
Sta. 104+30
Sta. 104+30
0
0
Sta. 104+25 Resume Project & Work
Exist. R/W
Exist. R/W
104+00
890.39
103+00
892.37
Sheet No. 10
Sheet No. 11
Sheet No. 12
96
316
195
1216
381
11
Total Part II
Sheet Total
672
1543
102+00
892.88
101+00
893.12
1488 Sheet No. 10
3505 Sheet No. 11
4993
Total Part II
45 40 35 30 25 20 15 10 5 ℄ 5 10 15 20 25 30 35 40 45

Sta. 101+00 to Sta. 106+40

FED. RD. DIVISION	STATE	PROJECT	
2	OHIO		

11
51

HANCOCK COUNTY
HAN-69-(1.14)(1.97)(2.31)(3.28)(4.23)(6.17)

End Area
Cut
Fill
Cu. Yd.
Cut
Fill
Sheet Total
195
1216
Seeding
Wide Sq. Yd.
3505
113+00
890.09
112+00 Suspend Project & Work
889.82
111+77 Stone Dr. Rt.
889.43
Sta. 111+75
111+00
888.29
887.91
Sta. 109+75, Begin Salvage Pav't.
110+00
887.37
886.25
109+00
887.06
885.31
108+20.31
End Approach Slab (Skew)
107+94.78
Back Prop. Abutment (Skew)
BRIDGE NO. HAN-69-0204
107+73.22
Back Prop. Abutment (Skew)
107+47.69
Begin Approach Slab (Skew)
107+00
Exist. R/W
R/W
R/W 55'
Channel Exc.
Transition from 2:1 slope @ Sta. 108+18 Rt. to 4:1 slope @ Sta. 108+55 Rt.
Transition from 10' shoulder width @ Sta. 109+60 Rt. to 8' shoulder width @ Sta. 109+85 Rt.
Transition from 10' shoulder width @ Sta. 109+60 Lt. to 8' shoulder width @ Sta. 109+85 Lt.
Transition from 2:1 slope @ Sta. 108+00 Lt. to 4:1 slope @ Sta. 108+55 Lt.
Transition from 4:1 slope @ Sta. 107+00 Rt. to 2:1 slope @ Sta. 107+70 Rt.
Transition from 4:1 slope @ Sta. 107+10 Lt. to 2:1 slope @ Sta. 107+53 Lt.
Transition from 8' shoulder width @ Sta. 106+10 Rt. to 10' shoulder width @ Sta. 106+35 Rt.
Transition from 8' shoulder width @ Sta. 106+10 Lt. to 10' shoulder width @ Sta. 106+35 Lt.
Carried to Sheet No. 10
Sheet Total (Carried to Sheet No. 10)
Sta. 107+94.78 (Ahead)
Sta. 107+93 Ahead
Sta. 107+73.22 (Back)
Sta. 107+75 Back
Sta. 107+47.69 Bo.
Sta. 106+40
4:1
3:1
2:1
2.5:1
12"
Sta. 107+00 to Sta. 113+00

FED. RD. DIVISION	STATE	PROJECT	
2	OHIO		

12
51

HANCOCK COUNTY
HAN-69-(1.14)(1.97)(2.31)(3.28)(4.23)(6.17)

	4+00	3+40	3+15	2+85.5	2+74	2+00	Sheet Totals
End Area Cut	0	73	123	137	74	0	
End Area Fill	0	2	6	1	2	0	
Cu. Yds. Cut		50	91	142	45	53	381
Cu. Yds. Fill		1	4	4	1	1	11

(Carried to Sheet No. 10)

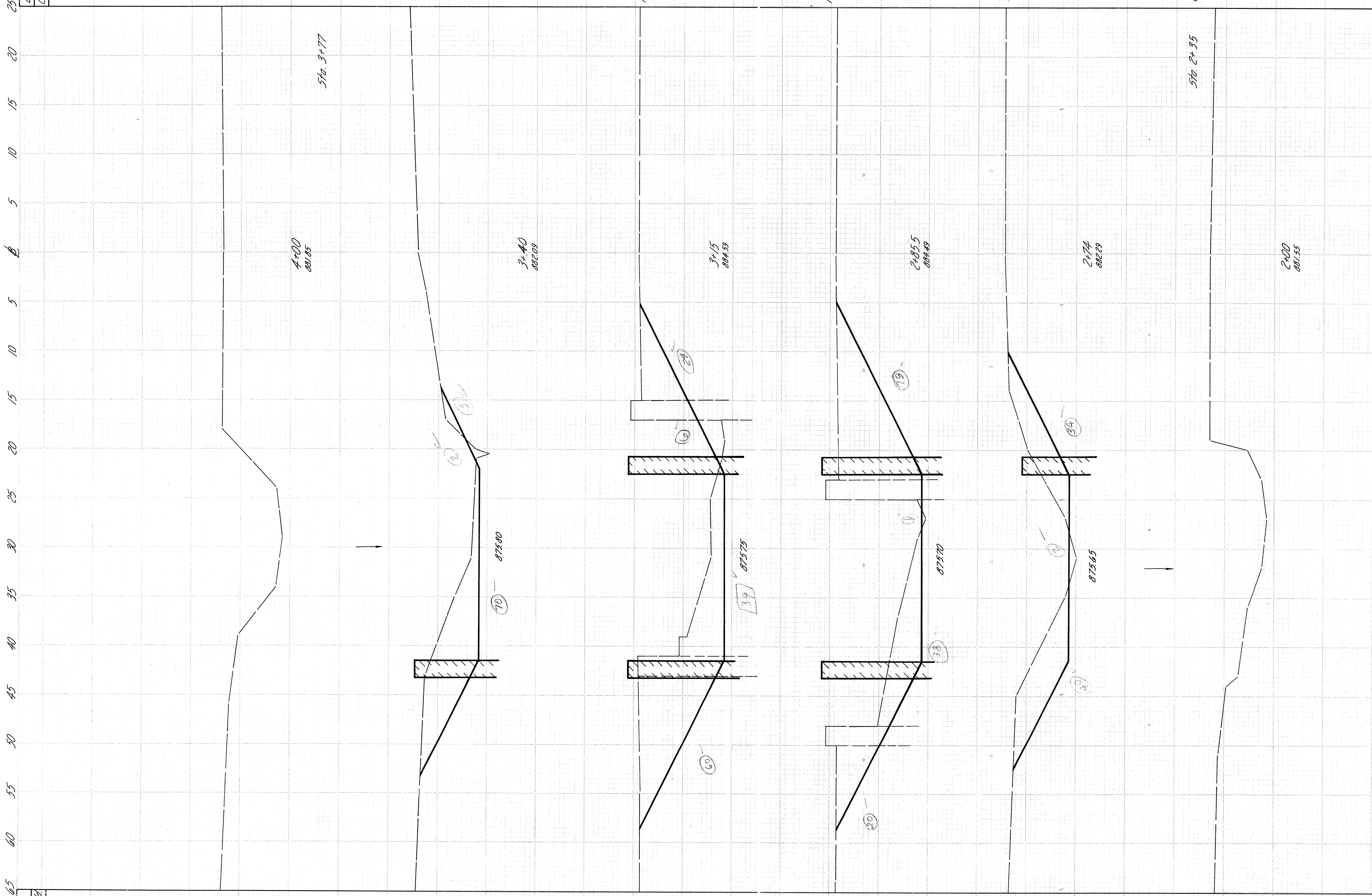

25
20
15
10
5
℄
5
10
15
20
25
30
35
40
45
50
55
60
65
Sta. 3+77
4+00
881.85
3+40
882.09
31
12
873.80
70
3+15
884.59
24
10
873.75
39
60
2+85.5
884.49
29
873.70
38
30
2+74
882.29
34
873.65
40
Sta. 2+35
2+00
881.55

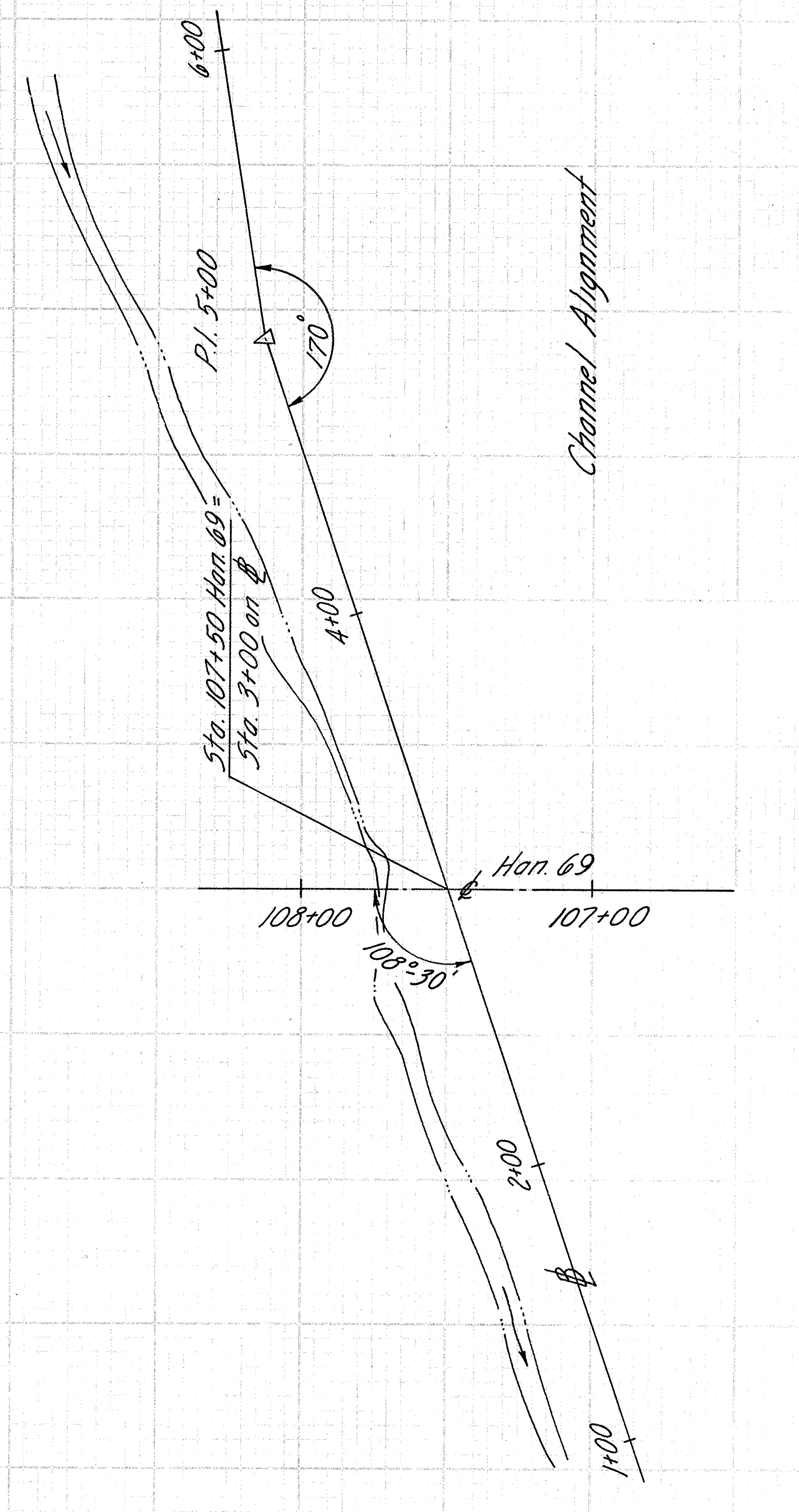

6+00
P.I. 5+00
170°
Sta. 107+50 Han. 69 =
Sta. 3+00 on ℄
4+00
Han. 69
108+00
107+00
108°30'
2+00
℄
1+00

Channel Alignment

Seeding	
Wide	
Sq. Yd.	

Sheet Total

Channel Sections, Sta. 2+00 to Sta. 4+00, Cummins Ditch, 1st Crossing

FED. RD. DIVISION	STATE	PROJECT	
2	OHIO		

13/51

HANCOCK COUNTY
HAN-69-(1.14)(1.97)(2.31)(3.28)(4.23)(6.17)

INTERSECTION NO. 1-P

Sta. 105+81.45 Han-69
Scale 0 10 20 40 Feet

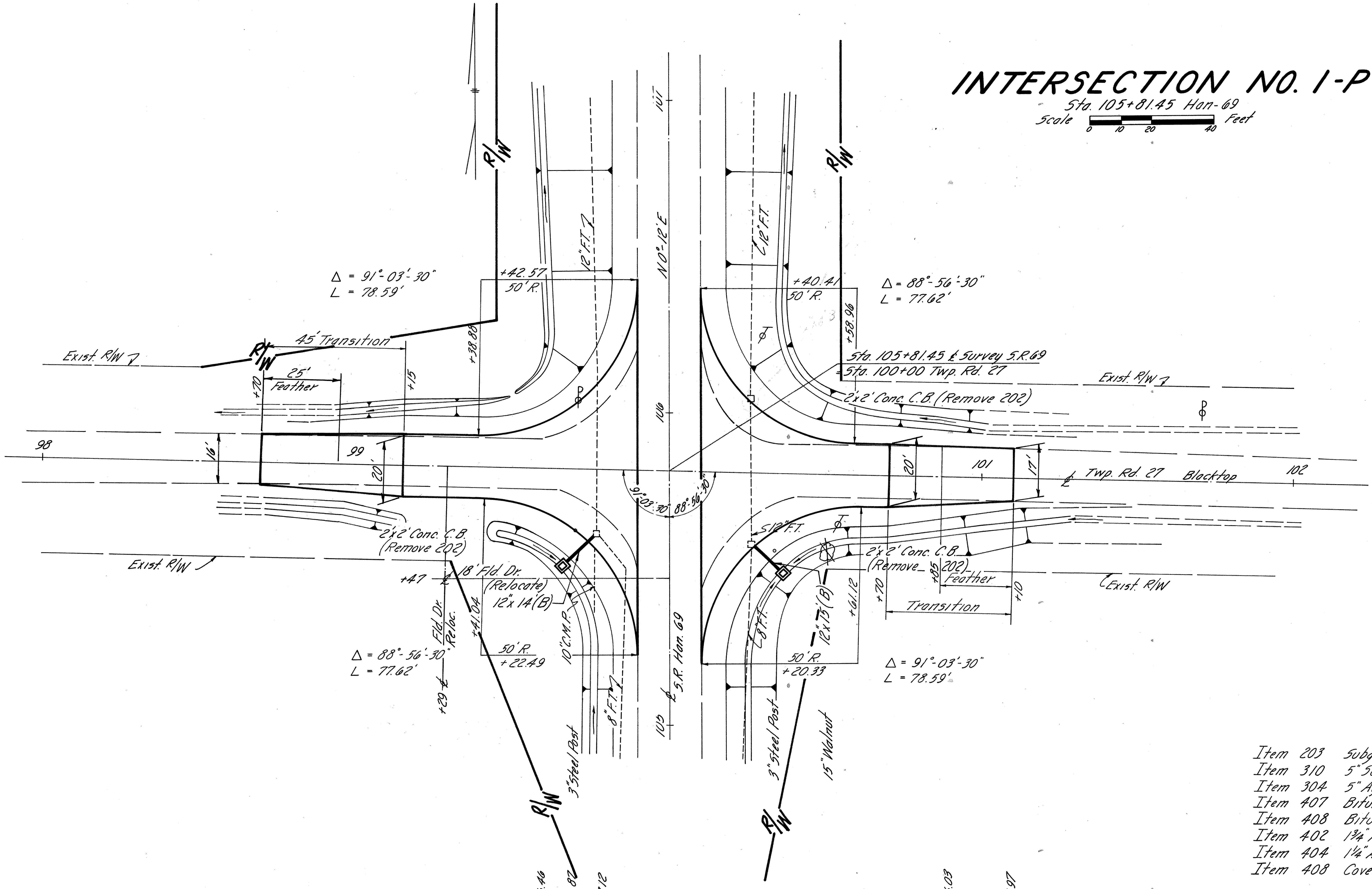
R/W
R/W
N 0° 12' E
12' F.T.
12' F.T.
Δ = 91°-03'-30"
L = 78.59'
+42.57
50' R.
+38.80
45' Transition
25' Feather
+70
+15
Exist. R/W
99
16'
20'
98
Δ = 88°-56'-30"
L = 77.62'
+40.41
50' R.
+58.96
Sta. 105+81.45 ℄ Survey S.R. 69
Sta. 100+00 Twp. Rd. 27
2'x2' Conc. C.B. (Remove 202)
Exist. R/W
106
101
20'
17'
℄ Twp. Rd. 27 Blacktop
102
91°-03'-30"
88°-56'-30"
2'x2' Conc. C.B. (Remove 202)
Exist. R/W
+47
18" Fld. Dr. (Relocate) 12"x14"(B)
Fld. Dr. Reloc.
+41.04
10" C.M.P.
50' R.
+22.49
Δ = 88°-56'-30"
L = 77.62'
+29 ℄
8' F.T.
105
℄ S.R. Han. 69
3" Steel Post
R/W
5' 10' F.T.
2'x2' Conc. C.B. (Remove 202)
+85
Feather
+10
+70
Transition
Exist. R/W
8' F.T.
12"x15"(B)
+61.12
50' R.
+20.33
Δ = 91°-03'-30"
L = 78.59'
3" Steel Post
15" Walnut
R/W

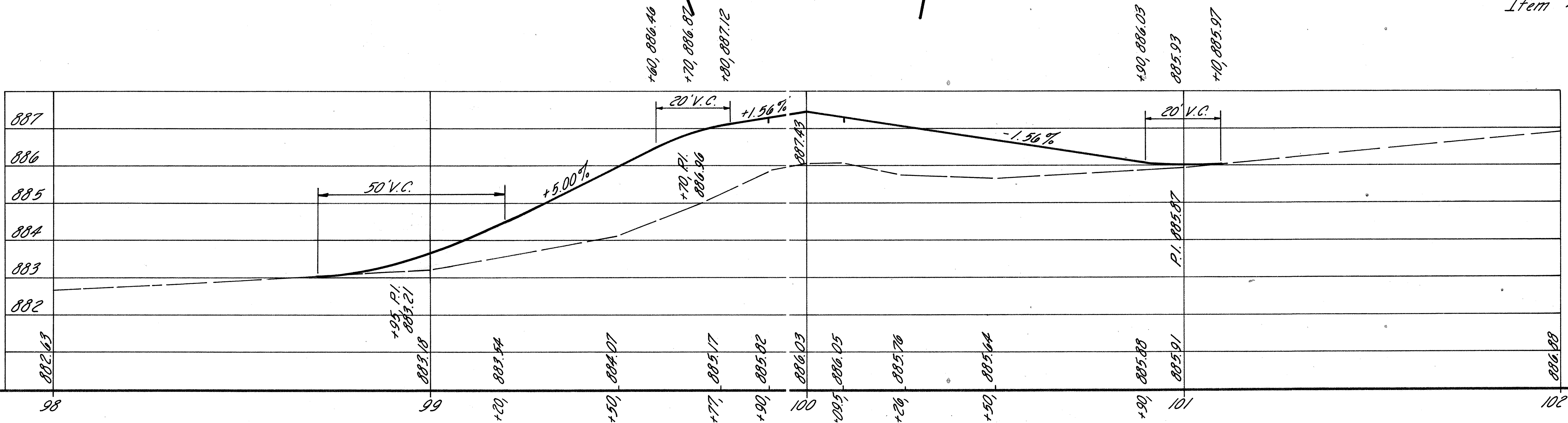
+60, 886.46
+70, 886.82
+80, 887.12
+90, 886.03
885.93
+10, 885.97
887
886
885
884
883
882
20' V.C.
+1.56%
887.43
-1.56%
20' V.C.
50' V.C.
+5.00%
+70 P.I. 886.36
P.I. 885.87
+95 P.I. 883.21
882.63
883.18
883.54
884.07
885.17
885.82
886.03
886.05
885.76
885.64
885.88
885.91
886.88
98
99
+20
+50
+77
+90
100
+20.5
+26
+50
+90
101
102

*ESTIMATED QUANTITIES

Item 203	Subgrade Preparation	613	Sq. Yd.
Item 310	5" Subbase	88.58	Cu. Yd.
Item 304	5" Aggregate Base	91.00	Cu. Yd.
Item 407	Bituminous Tack Coat	9	Gal.
Item 408	Bituminous Prime Coat	248	Gal.
Item 402	1¾" Asphalt Concrete	31.02	Cu. Yd.
Item 404	1¼" Asphalt Concrete	23.87	Cu. Yd.
Item 408	Cover Aggregate	2.48	Cu. Yd.

*Quantities carried to Pavement Computations, Sheet No. 4

Note: Pavement edge dimensions as shown on Typical Sections.

Intersection Detail No. 1-P

FED. RD. DIVISION	STATE	PROJECT	
2	OHIO		

14
51

HANCOCK COUNTY
HAN-69-(1.14)(1.97)(2.31)(3.28)(4.23)(6.17)

(Br. 0237)

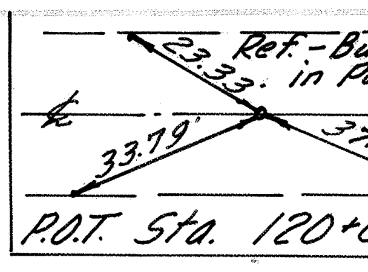
Ref.-Buttons in Pav't.
23.33'
33.79'
37.62'
℄
P.O.T. Sta. 120+00

EXISTING STRUCTURE

Span ~ 25'-0"
Type ~ Concrete Slab
Roadway ~ 24'-0"
Skew ~ None
Loading ~ CF 130

UTILITIES

General Telephone Co.	Marion, Ohio
Ohio Power Co.	Canton, Ohio

PROPOSED STRUCTURE

Type ~ Single span reinforced concrete slab with reinforced concrete wall abutments.
Span ~ 24'-0" f/f of abutments.
Roadway ~ 36'-0" f/f guard rail.
Load Frequency ~ CF = 130 (57).
Skew ~ None
Wearing Surface ~ 1" Monolithic concrete.
Approach Slabs ~ AS-1-54 (25' long)
Alignment ~ Tangent.

Resume
Project & Work
Sta. 121+75

Suspend
Project & Work
Sta. 131+50

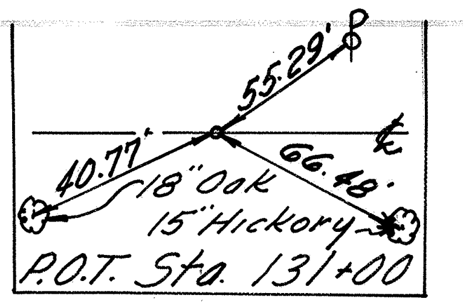
55.29'
40.77'
66.48'
℄
18" Oak
15" Hickory
P.O.T. Sta. 131+00

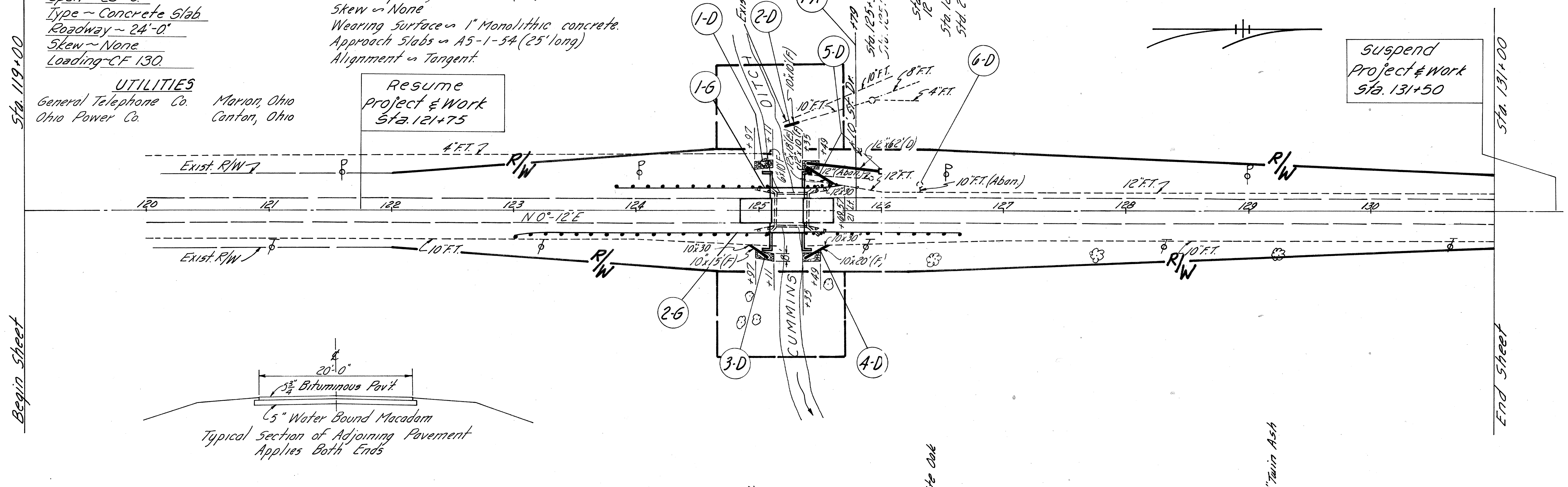
Sta. 119+00
Begin Sheet
Exist. R/W
Exist. R/W
4" F.T.
R/W
R/W
R/W
R/W
10" F.T.
120
121
122
123
124
125
126
127
128
129
130
N 0°-12' E
1-D
1-G
2-D
1-A
5-D
6-D
2-G
3-D
4-D
Exist. C.M.P. (No Work)
12" Stump Rem. (201)
Sta. 125+90, 90' Lt. 12" Inlet
(Remove 202)
Sta. 126+31.5, 22' Lt. 12" Inlet (Remove 202)
Sta. 126+00, 32' Lt. Std. 2-2A, C.B. (Mod.)
+79
DITCH
10"x10'(F)
10" F.T.
8" F.T.
4" F.T.
10" F.T.
10' St. Dr.
12"x62'(D)
12" (Aban.)
12" F.T.
10" F.T. (Aban.)
12" F.T.
6"x10'(F)
12"x18'(E)
12"x10'(F)
12"x30
+97
+11
+35
+49
+69.57 21' Lt.
10"x30
10"x15'(F)
10"x30
10"x20'(F)
CUMMINS
+97
+11
+35
+49
10" F.T.
Sta. 131+00
End Sheet
℄
20'-0"
3/4" Bituminous Pav't.
5" Water Bound Macadam
Typical Section of Adjoining Pavement
Applies Both Ends

18" Ash
52" Oak
12" Ash
30" Elm
42" White Oak
26" Twin Ash

B.M. #2 Spike in ℘, 31' Lt.
Sta. 121+58 Elev. 880.05

B.M. #3 Spike in Twin Ash, 36' Rt.
Sta. 129+24 Elev. 878.20

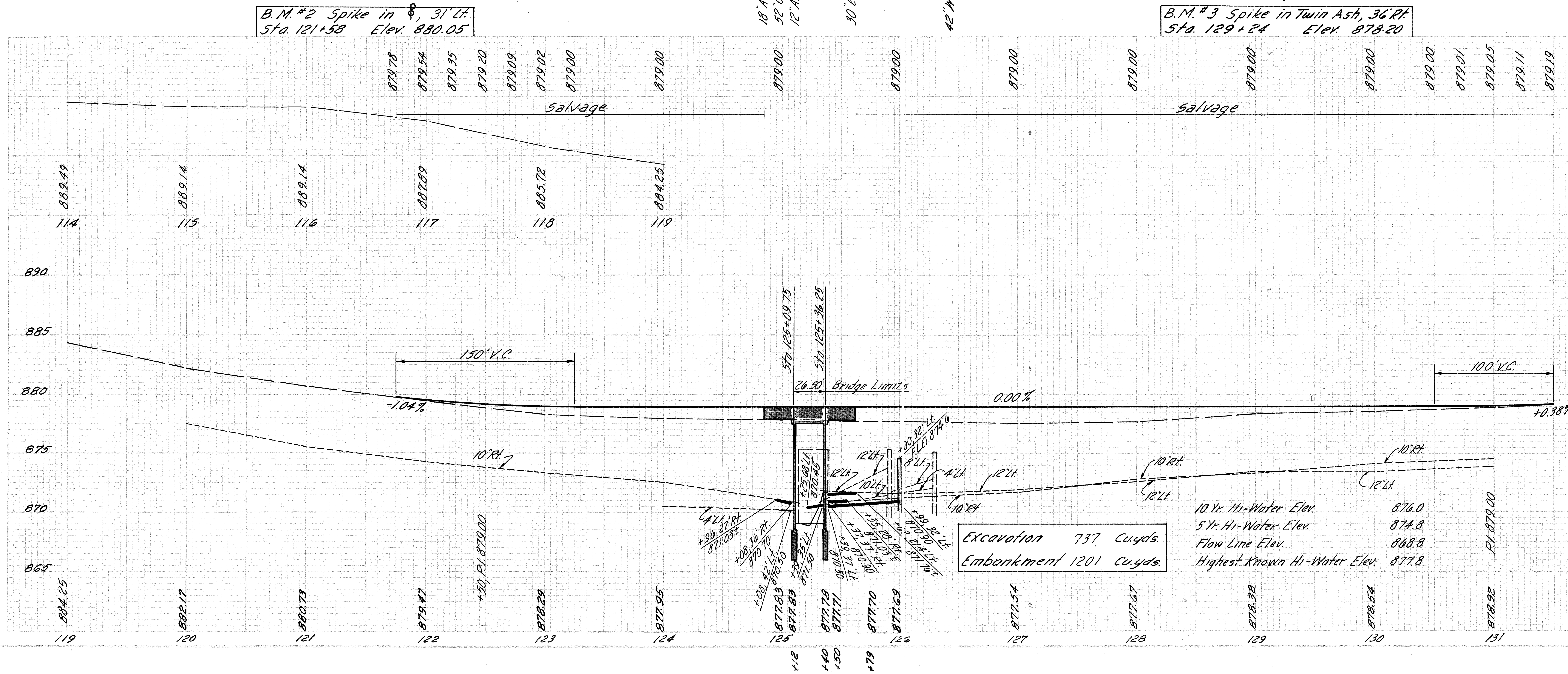
879.78
879.54
879.35
879.20
879.09
879.02
879.00
879.00
879.00
879.00
879.00
879.00
879.00
879.00
879.01
879.05
879.11
879.19
Salvage
Salvage
889.49
889.14
889.14
887.89
885.72
884.25
114
115
116
117
118
119
890
885
880
875
870
865
150' V.C.
100' V.C.
-1.04%
0.00%
+0.38%
Sta. 125+09.75
Sta. 125+36.25
26.50' Bridge Limits
10" Rt.
12" Lt.
12" Lt.
10" Lt.
+30.32' Lt.
F.L.El. 874.6
4" Lt.
12" Lt.
10" Rt.
10" Rt.
12" Lt.
10" Rt.
12" Lt.
4" Lt.
+96.22' Rt.
871.03
+08.36' Rt.
870.70
+08.32' Lt.
870.90
+25.60' Lt.
870.45
+99.32' Lt.
870.90
21.4' Lt.
871.76
+50, P.I. 879.00
P.I. 879.00
884.25
882.17
880.73
879.47
878.29
877.95
877.83
877.83
877.79
877.71
877.70
877.69
877.54
877.67
878.38
878.54
878.92
119
120
121
122
123
124
125
126
127
128
129
130
131
+12
+40
+50
+79

Excavation	737	Cu.yds.
Embankment	1201	Cu.yds.

10 Yr. Hi-Water Elev.	876.0
5 Yr. Hi-Water Elev.	874.8
Flow Line Elev.	868.8
Highest Known Hi-Water Elev.	877.8

ROADWAY DRAINAGE "D"

Ref. No.	Station From	Station To	Side	601 Dump Rock Chan. Prot. 18" Thick Cu. Yd.	660 Sodding Sq. Yd.	603 Conduit Lin. Ft. E 12"	603 Conduit Lin. Ft. F 10"	603 Conduit Lin. Ft. F 12"	603 Conduit Lin. Ft. F 6"	202 Inlets Removed Each	604 Catch Basins 2-2A Each			Bends & Branches Each
1-D	124+97	125+11	Lt.	5.2					10					
2-D	125+26	125+36	Lt.				10							
3-D	124+95	125+11	Rt.	5.2			15							1
4-D	125+35	125+55	Rt.	5.2			20							1
5-D	125+35	126+00	Lt.	5.2	16	18		10		1	1			1
6-D	126+31.5		Lt.							1				
Totals				20.8	16	18	45	10	10	2	1			

SIDE APPROACHES "A"

Ref. No.	Station	Side	304 Aggr. Base Cu. Yd.	603 Conduit D Lin. Ft. 12"	Length Lin. Ft.	Remarks
1-A	125+79	Lt.	11.3	62	30	Farm Drive
	Totals		11.3	62		

GUARD RAIL "G"

Ref. No.	Station From	Station To	Side	606 Guard Rail Type 4 Lin. Ft. Straight
1-G	123+82.23	*125+69.73	Lt.	161.00
2-G	123+00.98	*126+63.48	Rt.	336.00
Totals				497.00

*Deduct 26.50' for Bridge

Sta. 119+00 to Sta. 131+00 PART-III

FED. RD. DIVISION	STATE	PROJECT	
2	OHIO		

15
51

HANCOCK COUNTY

HAN-69-(1.14)(1.97)(2.31)(3.28)(4.23)(6.17)

END AREA CUT FILL
CU. YD. CUT FILL
SEEDING WIDE SQ. YD.
R/W
BRIDGE NO. HAN. 69-0237
Sta. 125+61.25
End Approach Slab
125+36.75
Back of Prop. Abutment
125+09.25
Sta. 124+98 Rt. Begin D.R.C.P.
Sta. 124+97 Lt. Begin D.R.C.P.
Sta. 124+84.75
Begin Approach Slab
124+00
123+00
122+00
121+00
120+00
Sta. 121+75, Resume Work ¢ Project
Transition from 8' Shoulder width @ Sta. 122+75 Rt. to 10' Shoulder width @ Sta. 123+00 Rt.
Transition from 8' Shoulder width @ Sta. 123+55 Lt. to 10' Shoulder width @ Sta. 123+80 Lt.
Profile 10' Stone Dr. Lt.
Corr. for Dr. Lt.
125+79
Ahead
Back
Exist. R/W
Sheet No. 15
Sheet No. 16
Sheet No. 17
Totals Part III
Total Sheet No. 15
Total Sheet No. 16
Total Part III
4:1
2:1
10' F.T.
12' F.T.
4' F.T.
12" (D)

Sta. 120+00 to Sta. 125+79

FED. RD. DIVISION	STATE	PROJECT	
2	OHIO		

16
51

HANCOCK COUNTY
HAN-69-(1.14)(1.97)(2.31)(3.28)(4.23)(6.17)

END AREA CUT FILL
CU. YD. CUT FILL
0 0
6 7
6 7
26 33
8 11
33 48
10 15
35 98
9 38
33 157
9 47
28 194
6 58
15 88
15 66
176 625
Sheet Totals
Sta. 131+50
Sta. 131+50 Suspend Project & Work
131+50
Exist. R/W
10' F.T.
12" F.T.
876.8
876.6
879.05
131+00
878.92
R/W
876.6
876.3
879.00
130+00
878.54
876.4
876.0
879.00
129+00
878.38
875.6
875.7
879.00
128+00
877.67
Sta. 127+00
Sta. 126+00
Sta. 125+61.25
Ahead Sta. 125+61.25
10' F.T. 875.0
Carried to Sheet No. 15.
875.5
879.00
127+00
877.54
Transition from 10' Shoulder width @ Sta. 126+65 Rt. to 8' Shoulder width @ Sta. 126+90 Rt.
873.8
12"(D)(Back)
100.32 Lt. 870.80
879.00
126+00
877.69
Sta. 126+00, 32' Lt.
Std. 2-A, C.B. (Mod.)
Fl. Elev. 874.60
125+61.25
Sheet Totals (Carried to Sheet No. 15)
SEEDING WIDTH SQ. YD.
0
122
44
500
46
522
48
572
55
633
59
678
63
282
68
3309
40 35 30 25 20 15 10 5 ℄ 5 10 15 20 25 30 35 40 45 50

Sta. 126+00 to Sta. 131+00

2 OHIO

17
51

HANCOCK COUNTY
HAN-69-(1.14)(1.97)(2.31)(3.28)(4.23)(6.17)

	Sta. 4+00		Sta. 3+26		Sta. 3+14		Sta. 2+86		Sta. 2+75		Sta. 2+50		Sta. 2+00	Sheet Totals
End Area Cut	0		83		128		115		68		54		0	0
End Area Fill	0		0		0		1		2		0		0	0
Cu. Yds. Cut		114		47		126		37		56		50		430
Cu. Yds. Fill		0		0		1		1		1		0		3

60
55
50
45
40
35
30
25
20
15
10
5
℄
5
10
15
20
25
30
Sta. 4+00
4+00
874.06
3+26
874.19
869.00
83
3+14
876.79
869.05
Proposed Abutment
66
29
Proposed Wing Wall
33
2+86
876.77
869.10
Proposed Abutment
61
1
19
Proposed Abutment
34
2+75
874.27
869.15
Proposed Wing Wall
20
2
Proposed Wing Wall
18
2+50
873.47
869.20
54
Sta. 2+00
(Carried to Sheet No. 15)
Channel Alignment
5+00
P.I. 4+36
147°
4+00
P.I. Sta. 125+51 Han. 69
= Sta. 3+00 on ℄
93°
℄ Han. 69
126+00
125+00
83°
℄
2+00
P.I. 1+45
156°
1+00
Sheet Total

Seeding Wide	Sq. Yd.

Channel Sections, Sta. 2+00 to Sta. 4+00, Cummins Ditch, 2nd Crossing

Fed. Rd. Division	State	Project
2	OHIO	

HANCOCK COUNTY
HAN-69-(1.14)(1.97)(2.31)(3.28)(4.23)(6.17)
(Br. 0336)

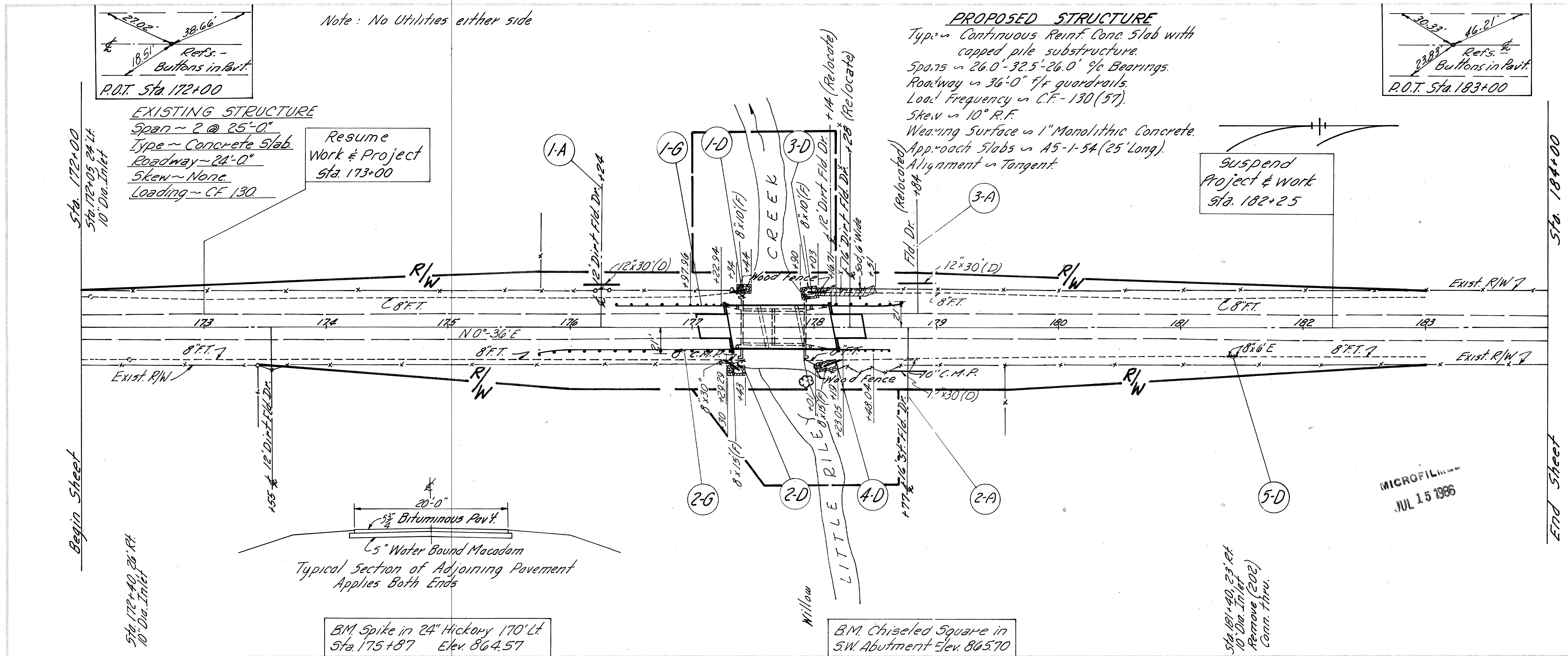
27.02'
38.66'
18.51'
℄
Refs. - Buttons in Pavt.
P.O.T. Sta. 172+00
30.33'
46.21'
23.83'
Refs. - Buttons in Pavt.
P.O.T. Sta. 183+00
Sta. 172+00
Sta. 172+05 24' Lt. 10" Dia. Inlet
Begin Sheet
Resume Work & Project Sta. 173+00
1-A
1-G
1-D
3-D
3-A
2-G
2-D
4-D
2-A
5-D
12" Dirt Fld. Dr. +24
12"x30'(D)
8"x10'(F)
8"x10'(F)
12" Dirt Fld. Dr.
+14 (Relocate)
+28 (Relocate)
Fld. Dr. (Relocated)
Wood Fence
C R E E K
L I T T L E   R I L E Y
Willow
R/W
℄ 8' F.T.
N 0°-36' E
8' F.T.
Exist. R/W
12" Dirt Fld. Dr. +55
10" C.M.P.
12"x30'(D)
8"x6' E
Exist. R/W
Suspend Project & Work Sta. 182+25
Sta. 184+00
End Sheet
173
174
175
176
177
178
179
180
181
182
183
℄
20'-0"
5¾" Bituminous Pavt.
5" Water Bound Macadam
Typical Section of Adjoining Pavement Applies Both Ends
Sta. 172+40 26' Rt. 10" Dia. Inlet
Sta. 181+40 23' Rt. 10" Dia. Inlet Remove (202) Conn. thru.

Note: No Utilities either side

EXISTING STRUCTURE
Span ~ 2 @ 25'-0"
Type ~ Concrete Slab
Roadway ~ 24'-0"
Skew ~ None
Loading ~ CF 130

PROPOSED STRUCTURE
Type ~ Continuous Reinf. Conc. Slab with capped pile substructure.
Spans ~ 26.0'-32.5'-26.0' c/c Bearings.
Roadway ~ 36'-0" f/f guardrails.
Load Frequency ~ CF-130(57).
Skew ~ 10° R.F.
Wearing Surface ~ 1" Monolithic Concrete.
Approach Slabs ~ AS-1-54 (25' Long).
Alignment ~ Tangent.

B.M. Spike in 24" Hickory 170' Lt.
Sta. 175+87 Elev. 864.57

B.M. Chiseled Square in S.W. Abutment Elev. 865.70

MICROFILMED
JUL 15 1986

ROADWAY DRAINAGE "D"

Ref. No.	Station From	Station To	Side	601 Dumped Rock Chan. Prot. 18" Thick Cu. Yds.	660 Sodding Sq. Yds.	603 Conduit Lin. Ft. F 8"	603 Conduit Lin. Ft. E 8"	604 Std. No. 2-2A C.B. (Mod.) Each			202 Inlet Removed Each	Bends & Branches Each
1-D	177+30	177+44	Lt.	4.5		10						
2-D	177+28	177+43	Rt.	5.5		15						1
3-D	177+90	178+07	Lt.	7.2	32	10						
4-D	178+01	178+20	Rt.	5.0		15						1
5-D	181+37	181+43	Rt.				6				1	
Totals				22.2	32	50	6				1	

GUARD RAIL "G"

Ref. No.	Station From	Station To	Side	606 Guard Rail Type 4 Lin. Ft. Straight
1-G	176+35.46#	178+72.96	Lt.	151.48
2-G	175+73.04#	178+60.54	Rt.	201.48
Totals				352.96

Deduct 86.02' for Bridge

SIDE APPROACHES "A"

Ref. No.	Station	Side	304 Aggr. Base Cu. Yd.	603 Conduit, D Lin. Ft. 12"	603 Conduit, D Lin. Ft.	Length	Remarks
1-A	176+24	Lt.	* 10.3	30			Field Drive
2-A	178+77	Rt.	* 10.3	30			Field Drive
3-A	178+84	Lt.	* 10.3	30			Field Drive
Totals			30.9	90			

* Place 304 Aggregate to 25' Length (Back of Radius)

875
870
865
860
855
salvage
salvage
167
168
169
170
171
172
874.85
871.94
869.60
867.55
866.10
865.35
865.25
865.29
865.35
865.43
865.53
865.66
865.94
866.07
866.18
866.28
866.30
866.42
866.46
866.49
866.50
866.50
866.50
866.52
866.57
866.66
866.78
866.94
867.19
867.30
867.62
Bridge Limits 86.02'
Sta. 177+29.99
Sta. 178+16.01
150' V.C.
200' V.C.
200' V.C.
+0.56%
0.00%
+1.12%
8' Rt.
8' Lt.
8' Lt.
8' Rt.
8' Rt.
8' Lt.
℄ 8' Rt.
8' Lt.
8' Rt.
12"(D)
+09.35 5' Lt. 861.37
+30.28' Lt. 858.0±
+27.28' Lt. 858.45
+62.34 8' Rt.
+69.35 5' Lt. 861.0
+99.36' Lt. 861.50
10' Rt.
865.35
865.25
865.27
865.25
865.13
866.17
865.25
865.24
865.38
865.48
865.41
865.40
865.37
865.34
865.57
866.13
866.55
867.30
867.62
867.95
868.60
870.41
+75 P.I. 865.24
P.I. 866.50
+25 P.I. 866.50
172
173
174
175
176
177
178
179
180
181
182
183
184

10 Yr. Hi-Water Elev. ___ 863.5
5 Yr. Hi-Water Elev. ___ 862.5
Normal Water Elev. ___ 855.8
Flow Line Elev. ___ 854.6
Highest Known Hi-Water ___ 865.3

Excavation 973 Cu. yds
Embankment 767 Cu. yds.

FED. RD. DIVISION	STATE	PROJECT	
3	OHIO		19 51

HANCOCK COUNTY
HAN-69-(1.14)(1.97)(2.31)(3.28)(4.23)(6.17)

End Area Cut Fill
Cu. Yd. Cut Fill
Seeding Wide Sq. Yd.
R/W
177+50 Back
177+29.23
863.53
Back of Prop. Abut. Skew
Transition from 4:1 Slope @ Sta. 176+75 Lt. to 2:1 Slope @ Sta. 177+25 Lt.
177+04.99
Begin Approach Slab
Transition from 4:1 Slope @ Sta. 176+75 Rt. to 2:1 Slope @ Sta. 177+30 Rt.
Transition from 8' Shoulder width @ Sta. 176+10 Lt. to 10' Shoulder width @ Sta. 176+35 Lt.
Corr. for Dr.
Corr. for Dr. Lt.
Field Dr. Lt.
176+24
Transition from 8' Shoulder width at Sta. 175+45 Rt. to 10' Shoulder width at Sta. 175+70 Rt.
176+00
175+00
174+00
Sta. 173+70
173+70
173+55
Field Dr. Rt.
173+00 Resume Project & Work
172+40
10" Inlet
Exist. R/W
172+05
172+00
8" F.T.
Total Sheet No. 19
" " 20
" " 21
" " 22
Total Part IV

Sta. 172+00 to Sta. 177+29.23

FED. RD. DIVISION	STATE	PROJECT	
2	OHIO		

46
51

HAN-69-(1.14)(1.97)(2.31)(3.28)(4.23)(6.17)

REINFORCING STEEL LIST

Mark	No.	Length	Weight	Shp.
Abutment				
A501	78	4'-1"	332	B
A502	96	7'-8"	768	S
A503	16	27'-10"	464	S
A504	36	9'-2"	344	S
A505	4	8'-2"	34	S
A506	20	7'-2"	149	S
A507	8	6'-2"	51	S
A508	16	5'-2"	86	S
A509	32	6'-2"	206	S
A510	26	6'-4"	172	B
A511	4	2'-3"	9	S
A512	2	14'-0"	29	S
A513	8	25'-0"	209	S
A514	4	7'-2"	30	S
A515	4	3'-8"	15	S
A516	4	28'-0"	117	S
A517	12	30'-4"	380	S
A518	30	6'-10"	214	S
A519	10	21'-6"	224	S
A520	20	8'-0"	167	S
A521	4	5'-0"	21	S
A522	4	18'-2"	76	S
Superstructure				
A833	79	26'-2"	5519	B
B601	50	35'-6"	2666	S
C501	13	24'-0"	325	S
Replacement Bars				
RE801	1	6'-6"	–	S
RE601	1	5'-11"	–	S
RE501	1	5'-7"	–	S

Bending Diagrams

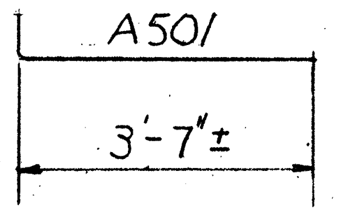

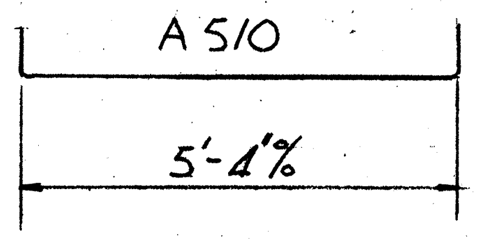

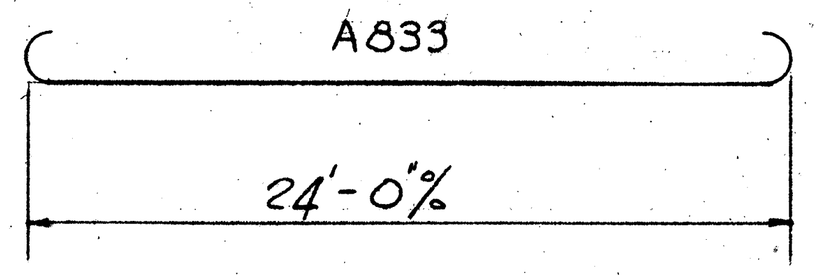

MICROFIL
JUL 15 1986

STATE OF OHIO
DEPARTMENT OF HIGHWAYS
DIVISION OF DESIGN AND CONSTRUCTION
BUREAU OF BRIDGES

4

REINFORCING STEEL LIST

BRIDGE NO. HAN-69-0622 OVER
MARSH RUN HANCOCK CO.

DESIGNED	DRAWN	TRACED	CHECKED	REVIEWED	DATE	REVISED
J.E.M.	J.E.M.	J.E.M.	FPK	BFG	5-31-67	

FED. RD. DIVISION	STATE	
2	OHIO	

HANCOCK COUNTY
HAN-69-(1.14)(1.97)(2.31)(3.28)(4.23)(6.17)

20
51

50 45 40 35 30 25 20 15 10 5 ℄ 5 10 15 20 25 30 35 40
Exist. R/W
Exist. R/W
183+00
868.60
8" F.T.
8" F.T.
Sta. 182+25
182+25
Sta. 182+25, Suspend Project & Work
R/W
R/W
867.36
182+00
867.30
865.3
③
8" F.T.
8" F.T.
R/W
R/W
③
④
864.5
④
864.4
⑦
866.82
181+40
866.65
10" Inlet
Remove (202)
8" F.T.
Conn. Thru.
8" F.T.
R/W
R/W
④
④
864.3
⑤
864.1
⑨
866.57
181+00
866.13
8" F.T.
8" F.T.
R/W
R/W
⑨
863.0
②
862.4
⑤
866.50
180+00
865.57
8" F.T.
8" F.T.
R/W
R/W
⑰
861.3
④
861.3
866.50
179+00
865.35
8" F.T.
8" F.T.
Sta. 178+77 Corr. for Dr. Rt. & Lt.
Transition from 10' Shoulder width @ Sta. 178+70 Rt. & Lt.
to 8' Shoulder width @ Sta. 179+10 Rt. & Lt.
R/W
R/W
Corr. for Dr. Rt.
Corr. for Dr. Lt.
10%
10%
12"(D)
12"(D)
866.50
178+84 Field Dr. Lt., 178+77 Field Dr. Rt.
865.34
10" CMP
8" F.T.
R/W
R/W
15 Ahead
14 Back
29 Ahead
28 Back
Ahead
Back
⑪
3:1
861.1
⑦
861.1
⑤
861.50
178+41.01
865.37
End Approach Slab
8" F.T.
8" F.T.
Ahead
Back
Ahead 178+16.77
R/W
861.0
861.50
Profile 13' Fld. Dr. Lt. (Abandon) 178+27
865.37
8" F.T.
Carried to Sheet No. 19
R/W
R/W
29
29
⑪
3:1
860.9
860.9
⑤
861.50
178+16.77
865.41
Back of Prop. Abut.
8" C.M.P.
177+95 Ahead
Carried to Sheet No. 19

End Area Cut	End Area Fill	Cu. Yd. Cut	Cu. Yd. Fill
0	0		
		2	0
3	0		
		15	8
11	7		
		18	11
14	8		
		39	50
7	19		
		26	100
7	35		
			8
		21	86
12	44		
23	42		
		20	45
22	58		
Sheet Totals		141	308

Seeding Wide	Seeding Sq. Yd.
0	
	28
20	
	230
49	
	220
50	
	594
57	
	689
67	
	417
	-65
	-65
60	
	159
58	
	150
66	2357

STRUCTURE NO. HAN-69-0336

Sta. 178+16.77 to Sta. 183+00

FED. RD. DIVISION	STATE	PROJECT	
2	OHIO		

21
51

HANCOCK COUNTY
HAN-69-(1.14)(1.97)(2.31)(3.28)(4.23)(6.17)

Seeding	
Wide	Sq. Yd.

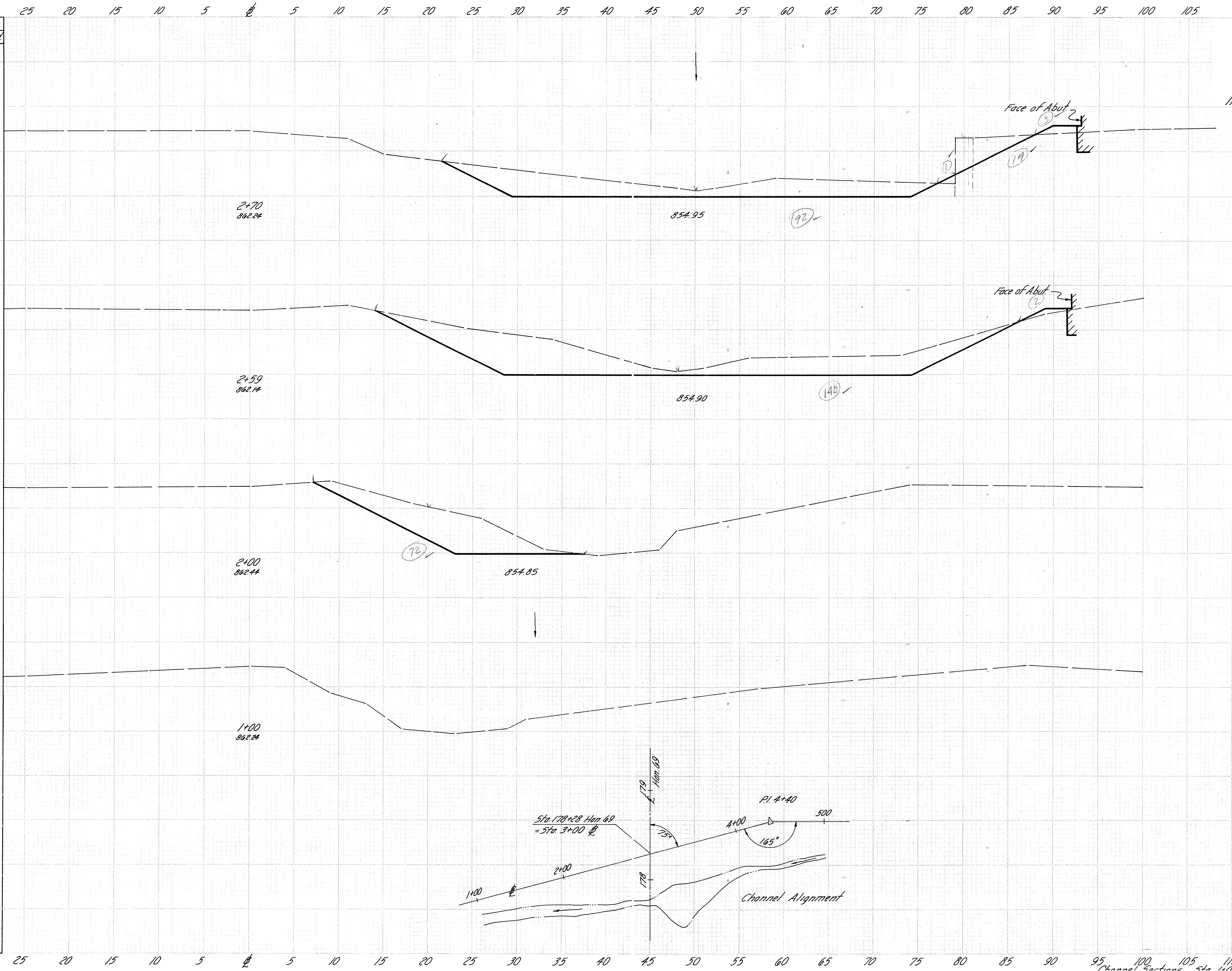

25 20 15 10 5 ℄ 5 10 15 20 25 30 35 40 45 50 55 60 65 70 75 80 85 90 95 100 105 110 115 120 125
Face of Abut.
③
⑲
⑪
2+70
862.24
854.95
(92)
Face of Abut.
②
2+59
862.14
854.90
(140)
2+00
862.44
854.85
(72)
1+00
862.24
Sta. 178+28 Han. 69
= Sta. 3+00 ℄
℄ 179 Han. 69
178
75°
P.I. 4+40
4+00
500
165°
2+00
1+00
℄
Channel Alignment

End Area		Cu. Yd.	
Cut	Fill	Cut	Fill
111	4		
		52	1
148	2		
		240	2
72	0		
		53	0
0	0		
Sheet Totals		345	3

Sta. 1+60

Carried to Sheet No. 19

Channel Sections Sta. 1+00 to Sta. 2+70 Little Riley Creek

FED. RD. DIVISION	STATE	PROJECT	
2	OHIO		

22
51

HANCOCK COUNTY
HAN-69-(1.14)(1.97)(2.31)(3.28)(4.23)(6.17)

Seeding	
Wide	Sq. Yd.

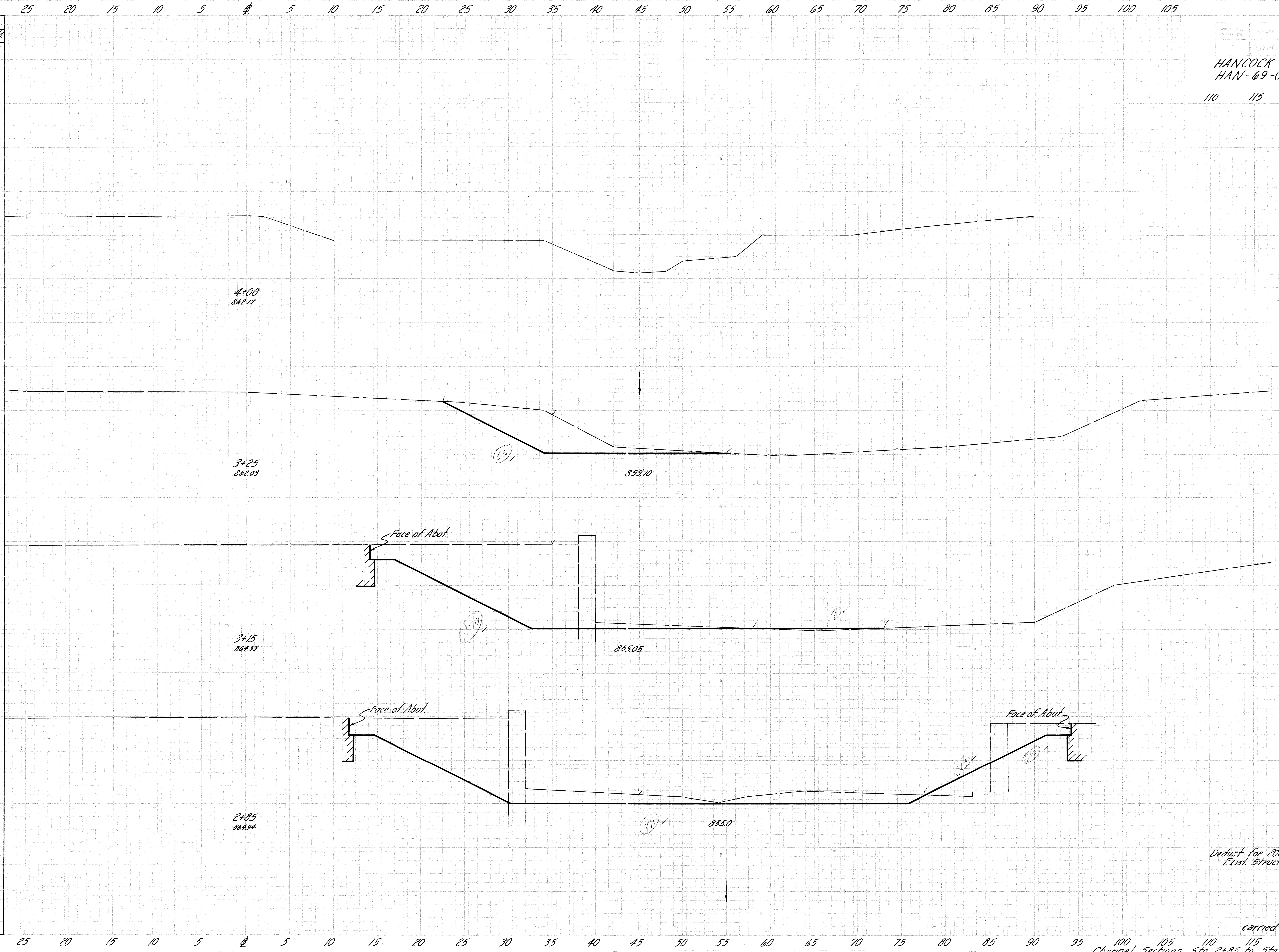

25 20 15 10 5 ℄ 5 10 15 20 25 30 35 40 45 50 55 60 65 70 75 80 85 90 95 100 105
110 115 120 125
4+00
862.17
56
3+25
862.03
855.10
Face of Abut.
170
1
3+15
864.53
855.05
Face of Abut.
Face of Abut.
12
22
2+85
864.94
171
855.0
25 20 15 10 5 ℄ 5 10 15 20 25 30 35 40 45 50 55 60 65 70 75 80 85 90 95 100 105 110 115 120 125

	End Area		Cu. Yd.	
	Cut	Fill	Cut	Fill
Sta. 3+92	0	0		
			70	0
	56	0		
			42	1
	170	1		
			203	8
	195	13		
			86	5
Deduct for 202, Rem. of Exist. Structure			-50	
Sta. 2+70	114	4		
carried to Sheet No.19	Sheet Totals		351	14

Channel Sections Sta. 2+85 to Sta. 4+00 Little Riley Creek

HANCOCK COUNTY
HAN-69-(1.14)(1.97)(2.31)(3.28)(4.23)(6.17)
(Br. 0430)

UTILITIES
Hancock-Wood Electric Co-op Inc.
North Baltimore, Ohio

EXISTING STRUCTURE
Span ~ 18'-0"
Type ~ Concrete Slab
Roadway ~ 24'-0"
Skew ~ None
Loading ~ CF 130
Area ~ 109 Sq. Ft.

Resume
Work & Project
Sta. 223+50

Suspend
Project & Work
Sta. 231+33

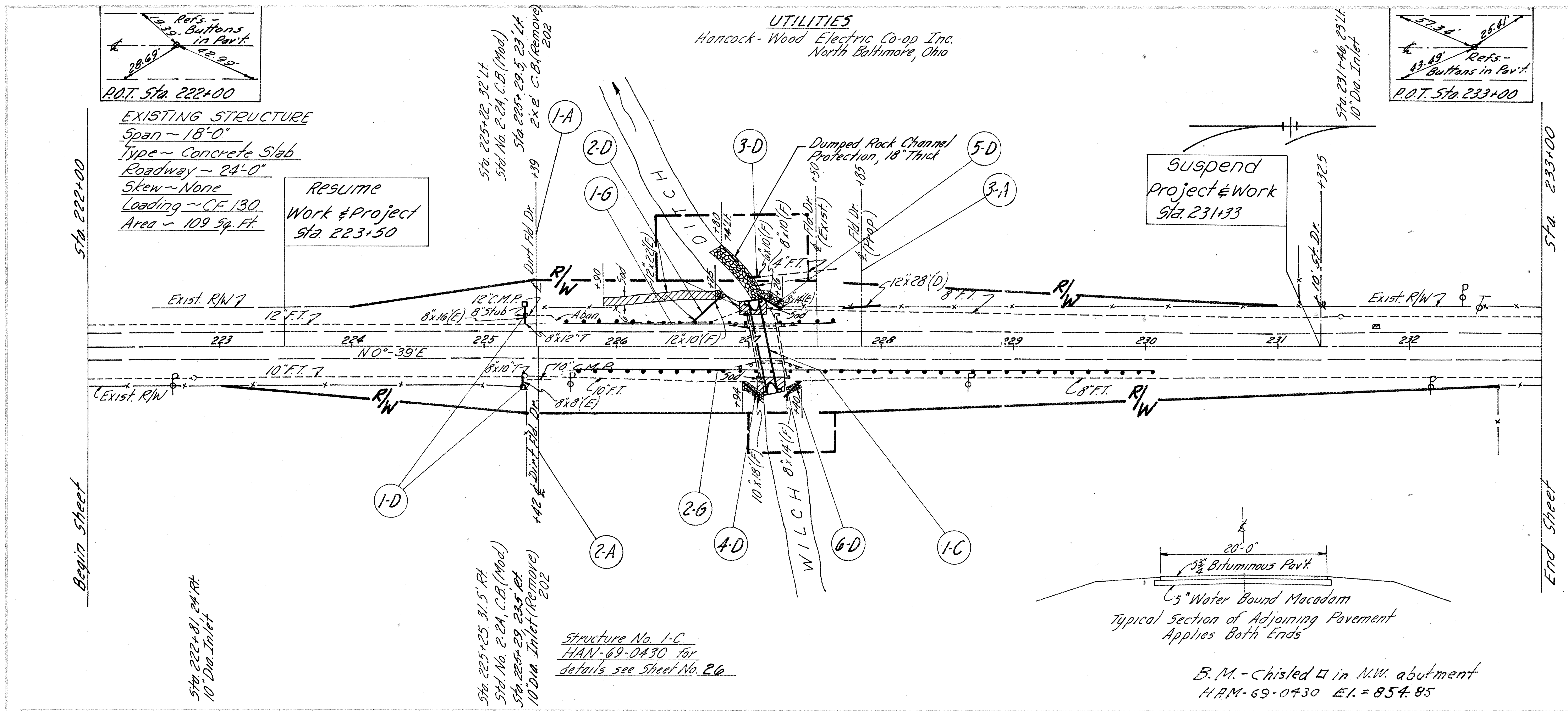
Refs. - Buttons in Pav't.
19.39'
28.69'
42.99'
P.O.T. Sta. 222+00
Refs. - Buttons in Pav't.
57.34'
25.41'
43.69'
P.O.T. Sta. 233+00
Sta. 222+00
Begin Sheet
Sta. 233+00
End Sheet
Exist. R/W
12" F.T.
8"x16"(E)
8" Stub
12" C.M.P.
8"x12" T
Aban.
10" F.T.
8"x10" T
10" C.M.P.
8"x8"(E)
Dump Rock Channel Protection, 18" Thick
12"x28"(D)
8" F.T.
R/W
N 0°-39' E
223
224
225
226
227
228
229
230
231
232
DITCH
WILCH
Dirt Fld. Dr.
Fld. Dr. (Exist.)
Fld. Dr. (Prop.)
10" x 18"(F)
8"x12"(F)
Sod
Sta. 225+22, 32' Lt.
Std. No. 2-CA, C.B. (Mod.)
Sta. 225+29.5, 23' Lt.
2'x2' C.B. (Remove) 202
Sta. 225+25, 31.5' Rt.
Std. No. 2-CA, C.B. (Mod.)
Sta. 225+29, 23.5' Rt.
10" Dia. Inlet (Remove) 202
Sta. 222+81, 24' Rt.
10" Dia. Inlet
Sta. 231+46, 23' Lt.
10" Dia. Inlet
1-A
2-A
3-A
1-C
1-D
2-D
3-D
4-D
5-D
6-D
1-G
2-G
20'-0"
5 1/2" Bituminous Pav't.
5" Water Bound Macadam

Typical Section of Adjoining Pavement
Applies Both Ends

Structure No. 1-C
HAN-69-0430 for
details see Sheet No. 26

B.M.-Chisled □ in N.W. abutment
HAN-69-0430 El. = 854.85

ROADWAY DRAINAGE "D"

Ref. No.	Station From	Station To	Side	601 Dump. Rock Channel Protection 18" Thick Cu. Yd.	660 Sodding Sq. Yd.	603 Conduit Lin. Ft. A	603 E 8"	603 E 12"	603 F 6"	603 F 10"	603 F 12"	603 F 8"	202 Removal of Exist. Struct. Lump	604 Catch Basins (Mod.) 2-2A Each	602 Masonry C.Y.	202 C.B. Removed Each	202 Inlet Remov. Each	Bends & Branches Each
1-D	225+29		Rt. & Lt.		32	8'-7"x5'-11"	24							2		1	1	2
2-D	225+90	226+85	Lt.	3	57			22			10							1
3-D	227+00	227+07	Lt.						10									
4-D	226+94	227+09	Rt.	4						18								1
5-D	226+73	227+26	Lt.	7			14					10						1
6-D	227+25	227+40	Rt.	6								14						1
*1-C	226+93	227+27	Rt. & Lt.	27	38	72							Lump		7.3			
Totals				47	127	72	38	22	10	18	10	24	Lump	2	7.3	1	1	

* See Sheet No. 26 for Details

GUARD RAIL "G"

Ref. No.	Station From	Station To	Side	606 Guard Rail Type 4 Lin. Ft. Straight
1-G	225+62.5	227+62.5	Lt.	200.00
2-G	225+67.5	230+04.5	Rt.	437.50
Total				637.50

SIDE APPROACHES "A"

Ref. No.	Station	Side	304 Aggr. Base Cu. Yd.	Conduit Type D Lin. Ft. 12"	Conduit Type D Lin. Ft.	Length Lin. Ft.	Remarks
1-A	225+39	Lt.	*10.3			35	Field Drive
2-A	225+42	Rt.	*10.3			38	Field Drive
3-A	227+85	Lt.	*10.3	28		42	Field Drive
Totals			30.9	28			

* Place 304 Aggregate to 25' length (Back of Radius)

853.67
853.72
853.81
853.93
854.08
854.27
854.49
854.73
854.95
855.13
855.27
855.37
855.43
855.45
855.45
855.45
855.45
855.47
855.53
855.79
855.98
856.21
856.48
856.79
857.79
858.24
salvage
+33
855
856.63
855.98
855.50
854.90
854.20
218
219
220
221
222
860
855
850
845
150' V.C.
150' V.C.
200' V.C.
+0.13%
+0.96%
0.00%
+1.34%
10' Rt.
12' Lt.
10' Rt.
12' Lt.
10' Rt.
8' Lt.
8' Rt.
4' Lt.
8' Rt.
8' Lt.
8' Rt.
8'-7" x 5'-11" Structural Plate Pipe Arch
+00.52' Lt. 849.10
+80.42' Lt. 846.30
+00.39' Rt. 846.90
+25 P.I. 853.77
P.I. 855.45
+25 P.I. 855.45
854.21
853.66
853.67
854.08
854.24
854.28
854.34
854.38
854.46
854.47
854.58
854.47
854.90
856.21
857.61
858.24
859.19
859.85
860.31
860.89
860.70
859.71
859.11
222
223
224
225
226
227
228
229
230
231
232
233
+29
+42
+50
+02
+38
+50
+33

10 yr. Hi-Water — Elev. 852.5
5 yr. Hi-Water — Elev. 851.0
Flow Line — Elev. 846.2
Highest Known Hi-Water — Elev. 852.5

Excavation 358 Cu. yds.
Embankment 471 Cu. yds.

FED. RD. DIVISION	STATE	PROJECT	
2	OHIO		

24
51

HANCOCK COUNTY
HAN-69-(1.14)(1.97)(2.31)(3.28)(4.23)(6.17)

END AREA CUT FILL
CU. YD. CUT FILL
SEEDING WIDE SQ.YD.
R/W
Sta 227+10 Structure No. Han 0430
855.45 227+02 Back of Abutment (Exist) 854.66
8'-7" x 5'-11" Structural Plate Pipe Arch
F.L. Wild Ditch
2:1
10" F.T.
855.43 226+50 854.38
850.7
848.3
3:1
12" F.T.
Transition from 8' Shoulder width at Sta. 225+42 Rt. to 10' Shoulder width at Sta. 225+67 Rt.
Transition from 4:1 side slopes at Sta 226+00 Lt & Rt to 2:1 side slopes at Sta. 227+00 Lt & Rt
Transition from 8' Shoulder width at Sta. 225+37 Lt. to 10' Shoulder width at Sta. 225+62 Lt.
855.27 226+00 854.34
830.8
830.6
4:1
Sta. 225+90 Lt. Begin Sod
Corr. for Dr. Rt.
10" C.M.P.
854.75 225+42 Drive Right (Dirt) 854.28
Corr. for Dr. Lt.
854.74 225+39 Drive Left (Dirt) 854.28
8" F.T.
Sta. 225+23 31.5' Rt. Std. No. 2-2A, C.B. (Mod) F.L. Elev. 850.80
18" 8' (E)
30.5' Rt. +23.00± 848.00±
10" F.T. (Ah. & Bk.) Remove (202)
Inlet Right
854.73 225+29 854.24
C.B. +29.5 Left
8' Ahead
Remove (202)
18" 16' (E)
+22.3' Lt. 848.03±
Sta. 225+22 32' Lt. Std. No. 2-2A, C.B. (Mod) F.L. Elev. 850.80
854.49 225+00 854.08
851.3
851.5
224+00 853.67
Sta. 223+50, Resume Work & Project
223+50
Sta. 223+50 Total Sheet No. 24 Total Sheet No. 25 Total Part V
223+00 853.66
222+00 854.21
Exist R/W
Total Sheet No. 24 Total Sheet No. 25 Total Part V
12 43
6 38
17 75
29 76
16 20
11 17
5 11
22 22
7 1
0 0
88 191
270 280
358 471
68 364
63 497
-65
63 184
51 517
42 172
20
1604 2773
4377
Sta. 222+00 to Sta. 227+02

FED. RD. DIVISION	STATE	PROJECT	
2	OHIO		

25
51

HANCOCK COUNTY

HAN-69-(1.14)(1.97)(2.31)(3.28)(4.23)(6.17)

END AREA CUT FILL
CU. YD. CUT FILL
SEEDING WIDE SQ.YD.
Sta. 231+33, SUSPEND PROJ. ℄ WORK
233+00 859.85
232+00 859.19
231+33 Drive Left. (Stone) 858.24
Sta. 231+20
857.79 231+00 857.61
856.48 230+00 856.21
855.64 229+00 854.96
855.45 228+00 854.47
855.45 227+85 854.51 Dr. Lt. (Relocated)
855.45 227+50 Drive Left. (Dirt) Abdn. 854.58
855.45 227+23.8 Back of Abutment (Exist.) 854.67
Exist. R/W
R/W
8" F.T.
Corr. for Dr. Lt.
Transition 10' shoulder width at Sta. 230+05 Rt. to 8' shoulder width at Sta. 230+30 Rt.
Transition 10' shoulder width @ Sta. 227+62 Lt. to 8' shoulder width @ Sta. 227+87 Lt.
Sta. 227+50
Sta. 227+23.8
Sta. 226+50
(Carried to Sheet No. 24)
Transition 2:1 slope at Sta. 227+30 Rt. to 4:1 slope at Sta. 228+00 Rt.
Transition 2:1 slopes at Sta. 227+25 Lt. to 4:1 slopes at Sta. 228+00 Lt.
Sta. 226+50 Sheet Total (Carried to Sheet No. 24)
Sheet Total
280
270
2773
846.8
848.8

Sta. 227+23.8 to Sta. 233+00

FED. RD. DIVISION	STATE	PROJECT	
2	OHIO		

(26/51)

HANCOCK COUNTY
HAN-69-(1.14)(1.97)(2.31)(3.28)(4.23)(6.17)
STRUCTURE 0430

STRUCTURE NO. 1-C

Sta. 227+10, Han. 69

Scale: 0 5 10 20 Feet

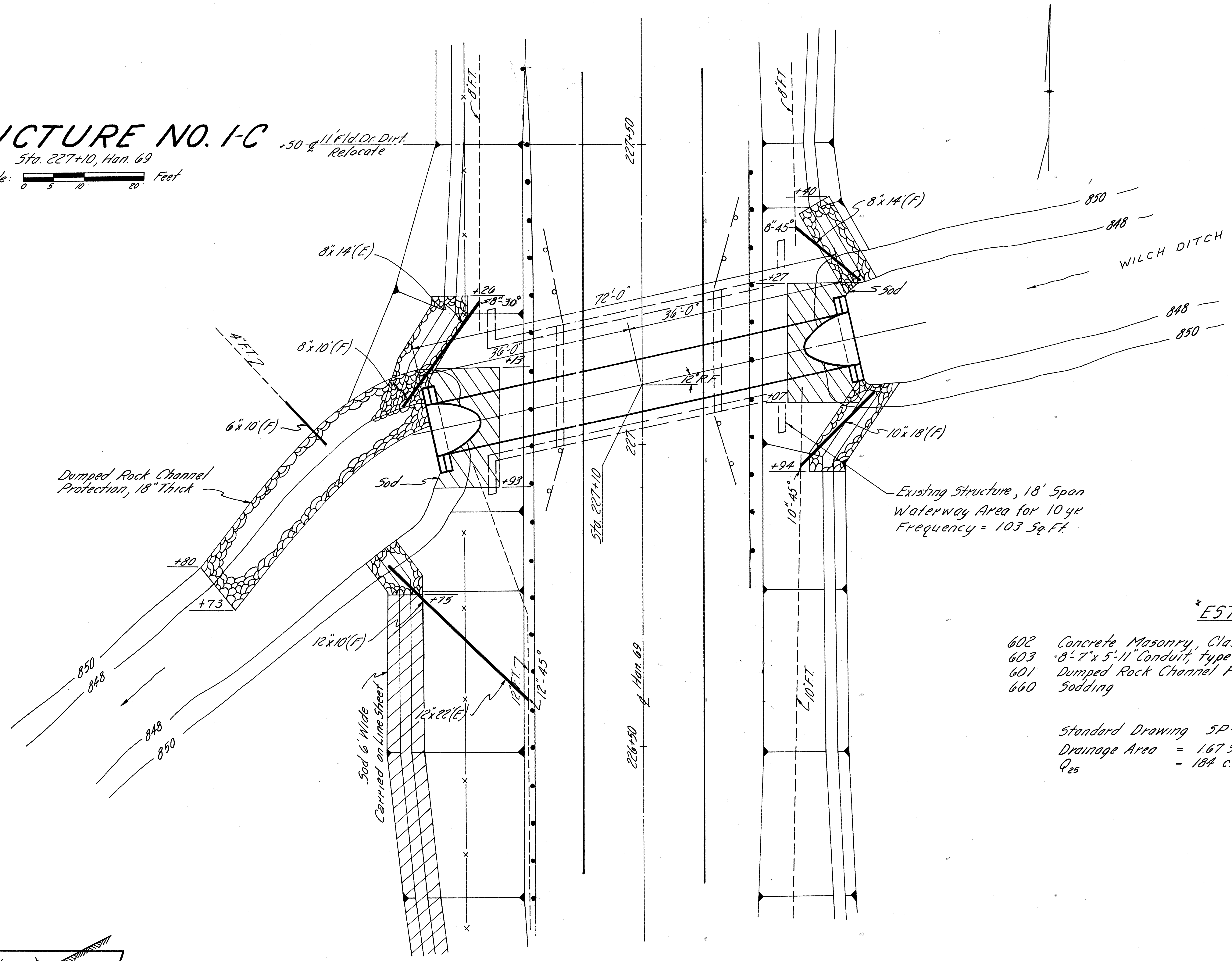

+50 ℄ 11' Fld. Dr. Dirt. Relocate
8' F.T.
227+50
8' F.T.
+40
8"x 14'(F)
8"-45°
850
848
WILCH DITCH
8"x 14'(E)
+26
8"-30°
72'-0"
36'-0"
36'-0"
+13
+27
Sod
848
850
8"x 10'(F)
4' F.T.
12° R.F.
+07
10"x 18'(F)
6"x 10'(F)
227
Sta. 227+10
+94
10"-45°
Existing Structure, 18' Span
Waterway Area for 10 yr. Frequency = 103 Sq. Ft.
Dumped Rock Channel Protection, 18" Thick
Sod
+93
+80
+73
+75
12"x 10'(F)
12"-45°
10' F.T.
℄ Han. 69
10' F.T.
850
848
848
850
12"x 22'(E)
Sod 6' Wide Carried on Line Sheet
226+50

*ESTIMATED QUANTITIES

602	Concrete Masonry, Class C	7.30	Cu. Yds
603	8'-7"x 5'-11" Conduit, type A with Class B Bedding, 707.03, 10-10 Gage	72	Lin. Ft.
601	Dumped Rock Channel Protection	27	Cu. Yds.
660	Sodding	38	Sq. Yds.

Standard Drawing SP-53
Drainage Area = 1.67 Sq. Mi.
Q_{25} = 184 c.f.s.

* Quantities Carried to Line Sheet No. 23

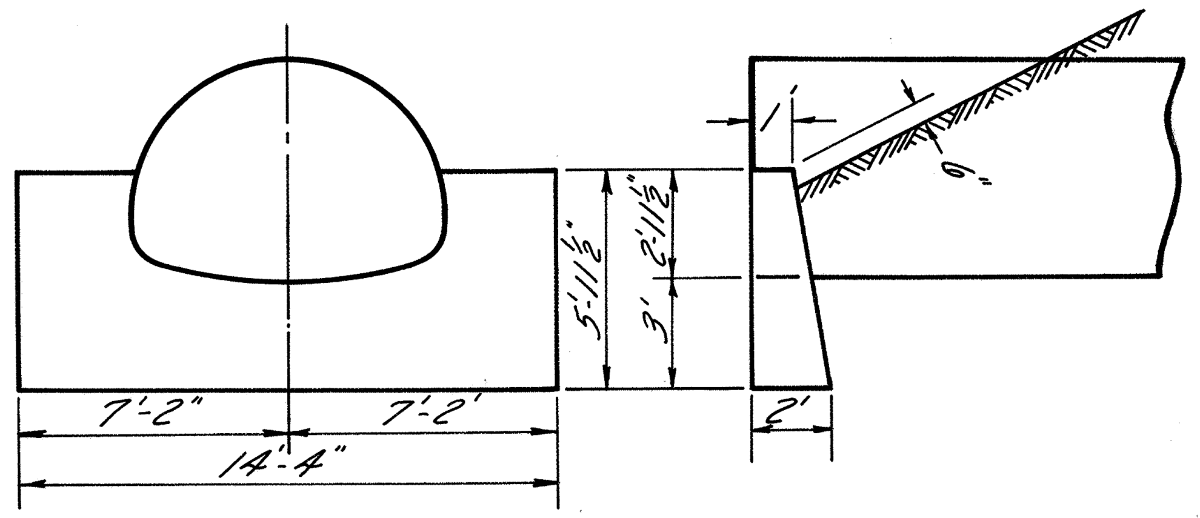

5'-11½"
3'-2½"
1
9
7'-2"
7'-2"
14'-4"
2'

ENDWALL DETAIL

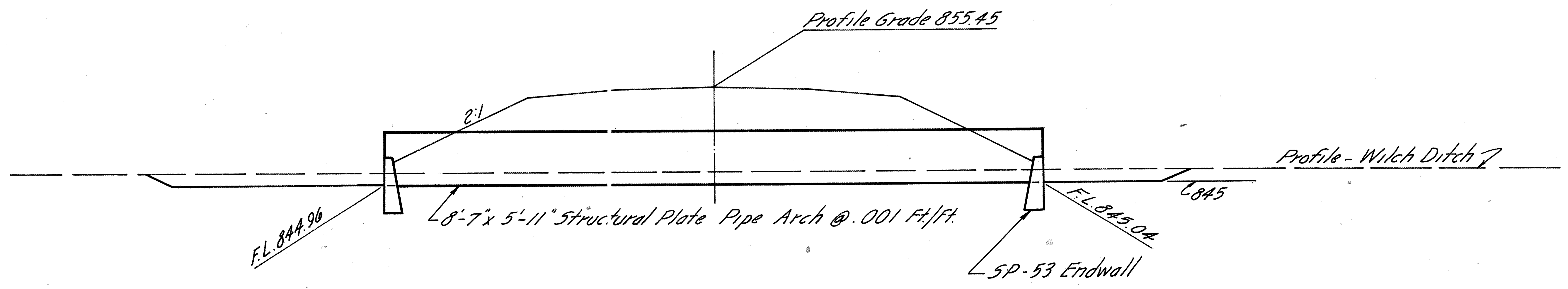

Profile Grade 855.45
2:1
Profile - Wilch Ditch
℄ 845
F.L. 844.96
8'-7"x 5'-11" Structural Plate Pipe Arch @ .001 Ft/Ft.
F.L. 845.04
SP-53 Endwall

Structure Detail No. 1-C

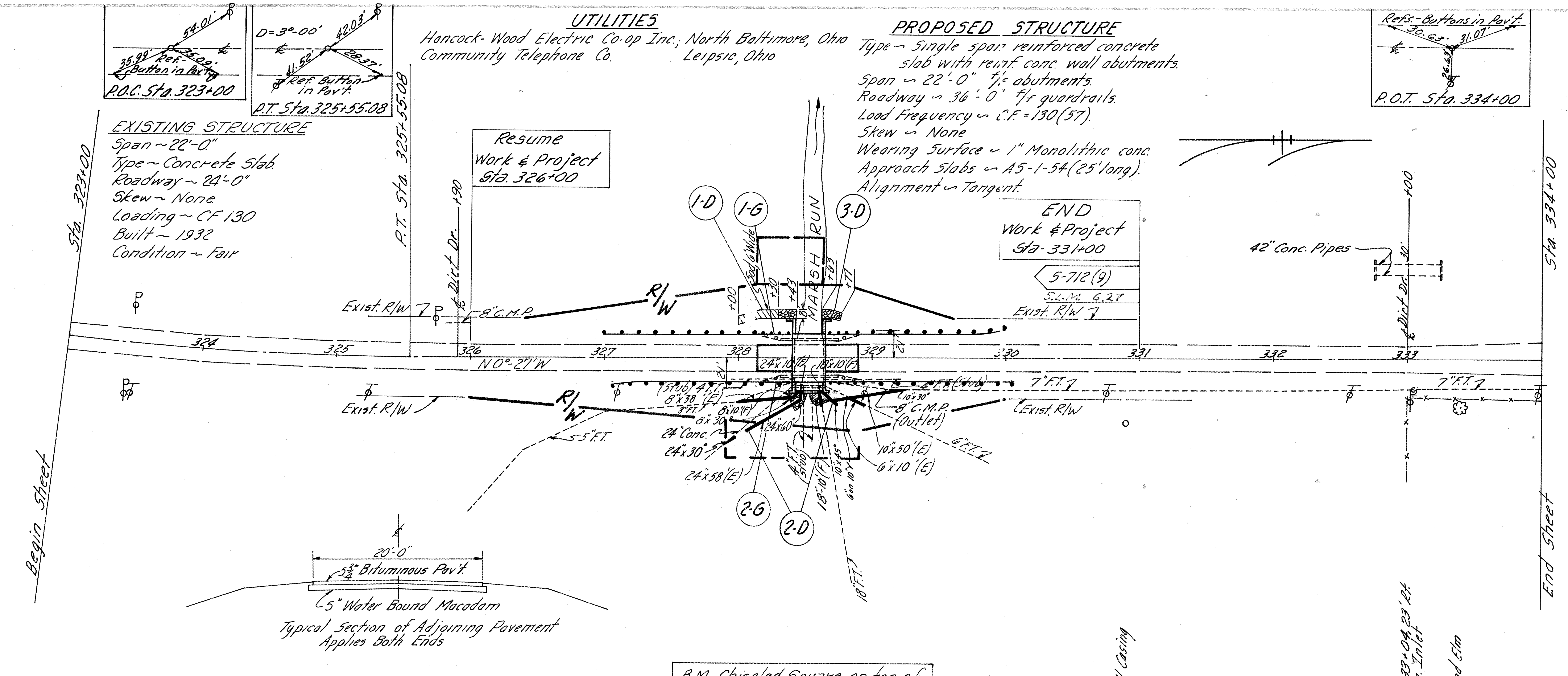
54.01'
35.99' Ref. Button in Pav't.
35.09'
P.O.C. Sta. 323+00
D=3°-00'
42.03'
41.52'
28.37'
Ref. Button in Pav't.
P.T. Sta. 325+55.08
Refs.-Buttons in Pav't.
30.63'
31.07'
24.63'
P.O.T. Sta. 334+00
Sta. 323+00
P.T. Sta. 325+55.08
Dirt Dr. +90
Resume Work & Project Sta. 326+00
END Work & Project Sta-331+00
S-712(9)
S.L.M. 6.27
MARSH RUN
Sod 6' Wide
1-D
1-G
3-D
2-G
2-D
R/W
Exist. R/W
8" C.M.P.
8" C.M.P. (Outlet)
324
325
326
327
328
329
330
331
332
333
N0°-27'W
7' F.T.
5.5' F.T.
6' F.T.
18' F.T.
24"x30"
24"x38" (E)
24"x60"
24" Conc.
8"x38" (E)
10"x50" (E)
6"x10" (E)
18"x10" (F)
42" Conc. Pipes
Dirt Dr.
Begin Sheet
End Sheet
Sta. 334+00
20'-0"
5/8" Bituminous Pav't.
5" Water Bound Macadam

Typical Section of Adjoining Pavement
Applies Both Ends

UTILITIES

Hancock-Wood Electric Co-op Inc.; North Baltimore, Ohio
Community Telephone Co. Leipsic, Ohio

EXISTING STRUCTURE

Span ~ 22'-0"
Type ~ Concrete Slab.
Roadway ~ 24'-0"
Skew ~ None
Loading ~ CF 130
Built ~ 1932
Condition ~ Fair

PROPOSED STRUCTURE

Type ~ Single span reinforced concrete slab with reinf. conc. wall abutments.
Span ~ 22'-0" f/f abutments.
Roadway ~ 36'-0" f/f guardrails.
Load Frequency ~ C.F. = 130(57).
Skew ~ None
Wearing Surface ~ 1" Monolithic conc.
Approach Slabs ~ AS-1-54 (25' long).
Alignment ~ Tangent.

ROADWAY DRAINAGE "D"

Ref. No.	Station From	Station To	Side	601 Dump Rock Chann. Prot. 18" Thick Cu. Yd.	660 Sodding Sq. Yd.	603 Conduit Lin. Ft. E 6"	E 8"	E 10"	E 24"	F 8"	F 10"	F 18"	F 24"		Bends & Branches
1-D	328+00	328+43	Lt.	5.0	20.										
2-D	327+91	328+86	Rt.	16.0		10	38	50	58	10	10	10	10		6
3-D	328+63	328+77	Lt.	5.0											
Totals				26.0	20	10	38	50	58	10	10	10	10		

GUARD RAIL "G"

Ref. No.	Station From	Station To	Side	606 Guard Rail Type 4 Lin. Ft. Straight
1-G	326+99.37*	329+99.37	Lt.	275.5
2-G	327+05.62*	330+05.62	Rt.	275.5
Totals				551.0

* Deduct 24.5' for Bridge

MICROFILMED
JUL 15 1986

B.M. No.1 Spike in ℘ 39' Rt.
Sta. 323+45 Elev. 828.64

B.M. Chiseled Square on top of
North Post of E. Banister
HAN-69-06.22 Elev. 831.93

B.M. No. 2 Chiseled "X" End Wall, 60' Lt.
Sta. 332+75 Elev. 828.60

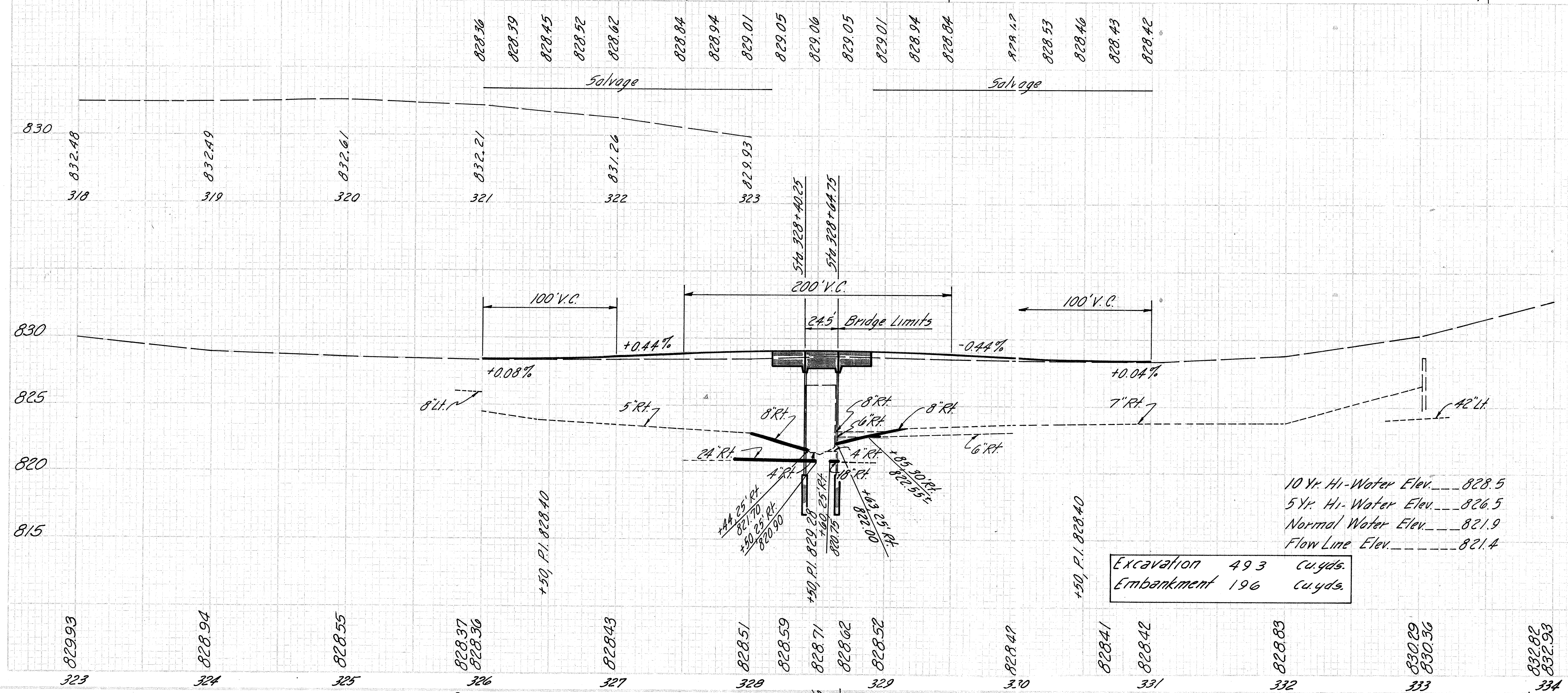
6" Well Casing
Sta. 333+04.23' Lt. 8" Dia. Inlet
30" Dead Elm
828.36
828.39
828.45
828.52
828.62
828.84
828.94
829.01
829.05
829.06
829.05
829.01
828.94
828.84
828.53
828.46
828.43
828.42
Salvage
Salvage
830
832.48
832.49
832.61
832.21
831.26
829.93
318
319
320
321
322
323
Sta. 328+40.25
Sta. 328+64.75
200' V.C.
100' V.C.
100' V.C.
24.5' Bridge Limits
+0.08%
+0.44%
-0.44%
+0.04%
830
825
820
815
8" Lt.
5" Rt.
8" Rt.
24" Rt.
4" Rt.
8" Rt.
6" Rt.
8" Rt.
6" Rt.
4" Rt.
7" Rt.
42" Lt.
+44.25' Rt. 821.70
+50.25' Rt. 820.90
+50, P.I. 829.28
+60.25' Rt. 820.70
+63.25' Rt. 822.00
+85.90' Rt. 822.55' Lt.
+50, P.I. 828.40
+50, P.I. 828.40
829.93
828.94
828.55
828.37
828.36
828.43
828.51
828.59
828.71
828.62
828.52
828.41
828.42
828.83
830.29
830.36
832.82
832.93
323
324
325
326
327
328
329
330
331
332
333
334
190
.30
.526
.745
.70
.04
96.5

10 Yr. Hi-Water Elev.___828.5
5 Yr. Hi-Water Elev.___826.5
Normal Water Elev.___821.9
Flow Line Elev.______821.4

Excavation	493	cu. yds.
Embankment	196	cu. yds.

FED. RD. DIVISION	STATE	PROJECT	
2	OHIO		

28
51

HANCOCK COUNTY
HAN-69-(1.14)(1.97)(2.31)(3.28)(4.23)(6.17)

End Area
Cut
Fill
Cu. Yd.
Cut
Fill
Seeding
Wide
Sq. Yd.
STRUCTURE NO. — HAN-69-0622
Add for Channel Excavation
BACK OF PROP. ABUTMENT
829.03
328+39.75
828.71
Transition from 4:1 slope @ Sta. 328+15 Rt. to 2:1 slope @ Sta. 328+40 Rt.
BEGIN APPROACH SLAB
829.03
328+15.25
828.55
Ahead
Back
Transition from 4:1 slope @ Sta. 328+00 Lt. to 2:1 slope @ Sta. 328+35 Lt.
Transition from 8' Shoulder width @ Sta. 326+75 Rt. & Lt. to 10' Shoulder width @ Sta. 327+00 Rt. & Lt.
829.01
328+00
828.51
828.62
327+00
828.43
RESUME WORK & PROJECT
326+00
828.36
Field Dr. Lt.
325+00
828.37
8" C.M.P.
Exist. R/W
325+00
828.55
324+00
828.94
323+00
828.93
Total Sheet No. 28
Total Sheet No. 29
Total Part VI
R/W
55'
R/W
55'
R/W
53'
2:1
3:1
4:1
822.1
821.8
824.1
824.2
824.2
825.7
825.0
825.9
5' F.T.
8' F.T.
24" F.T.
200
66 64
21 8
50 31
20 9
357 112
136 84
493 196
60 125
85 17
60 17
16 12
11 5
0 0
75 208
78 117
60 611
50 278
0
1214
1244
2458

Sta. 323+00 to Sta. 328+52.6

FED. RD. DIVISION	STATE	PROJECT
2	OHIO	

HANCOCK COUNTY
HAN-69-(1.14)(1.97)(2.31)(3.28)(4.23)(6.17)

29
51

Seeding
Wide
Sq. Yd.
End Area
Cut
Fill
Cu. Yd.
Cut
Fill
45 40 35 30 25 20 15 10 5 ℄ 5 10 15 20 25 30 35 40 45
334+00
832.93
333+96.5
832.82
333+04
830.36
7" F.T.
8" Inlet
Field Dr. Lt.
333+00
830.29
7" F.T.
332+00
828.83
7" F.T.
331+00
828.42
END WORK & PROJECT
7" F.T.
Exist. R/W
828.42
330+70
828.41
7" F.T.
0
Sta. 330+70
Sta. 330+70
0 0
175
22 1
Exist. R/W
826.8
R/W
Sta. 330+00
45
17 1
828.62
330+00
828.42
7" F.T.
76 26
686
Sta. 328+89.75
Ahead 20 12
Back 40 12
Ahead Sta. 328+65.25 44 114
38 57
R/W 51'
(Carried to Sheet No. 28
Sheet Total 136 84
R/W 54'
67
3:1
826.5
Ahead cut
Back (22)
Ahead cut
3:1
823.9
829.03
328+89.75
828.52
END APPROACH SLAB
Transition from 2:1 slope @ Sta. 328+70 Lt. to 4:1 slope @ Sta. 329+00 Lt.
Transition from 2:1 slope @ Sta. 328+70 Rt. to 4:1 slope @ Sta. 329+02 Rt.
182
Transition from 10' shoulder width @ Sta. 330+00 Lt. to 8' shoulder width @ Sta. 330+25 Lt.
Transition from 10' shoulder width @ Sta. 328+90 Rt. to 8' shoulder width @ Sta. 329+10 Rt.
67
2:1
2:1
829.03
328+65.25
828.62
BACK OF PROP. ABUTMENT
4" Stub
6" F.T.
821.8
822.0
R/W 55'
201
R/W 53'
75
Sta. 328+39.75
Sheet Total (Carried to Sheet No. 28)
1244
Sta. 328+74.5 to Sta. 334+00

FED. RD. DIVISION	STATE	PROJECT		
2	OHIO			

30
51

HANCOCK COUNTY
HAN-69-(1.14)(1.97)(2.31)(3.28)(4.23)(6.17)

3.9± Miles North of Ada

901.7
904.9
901.2
902.4
BINKLEY CREEK
900
Elev. 895.2±
901.4
903.4
903.4
904.3
902.4
906.5
904.5
902.6
902
901.8
1984 Design Traffic = 884 v.p.d.
903.3
904.8
903.0
902.4
906
902.8
Skew 10°
2:1
4:1
Transition
Begin Appr. Slab
Sta. 64+16.76
904
+55.72
+18.22
904.86
℄ Survey Proposed S.R. 69
61
62
63
64
65
66
67
N 0°-18' E
3'-0"
+61.78
+24.28
End Appr. Slab
Sta. 63+63.24
902
902.7
904
Transition slopes 4:1 to 2:1 at all four corners
902.6
901.1
Elev. 895.2±
Clears Assumed 5-10 Year High Water by 2.4'±
906.4
904.8
903.5
EARTHWORK limits shown are schematic. Actual slopes shall conform to plan cross-sections.
901.7
902.6
904.5
901.7
903.1
BRIDGE LIMITS = 53.52'
Sta. 63+63.24
Sta. 64+16.76
902.3
B.M. No. 1 Spike in ⌀ 31' Lt. Sta 59+89 Elev. 909.19
B.M. No. 2 Spike in ⌀ 30' Lt. Sta 70+09 Elev. 909.15
B.M. YELLOW PAINTED SQUARE N.E. CORNER HEADWALL
906.69
906.58
906.52
906.50
906.50
906.50
906.50
906.50
906.50
150' V.C.
910
900
890
880
P.I. Sta. 60+75 El. 906.50
Assumed 5-10 Year High Water EL. 902.5
0%
Highest Known Hi. Water Elev. 904.9
Rear & Fwd. Bench Elev. 902.9±
(Norm)
Flow Line Elev. 896.4
Excavate channel thru structure to Elev. 895.2±
906.19
905.25
904.74
904.76
904.86
904.86
904.78
904.65
904.66
+87
+13
+23

Estimated Average Pay Length: 17 ft. for both Abutments & 20 ft. for both piers
All piling shall be 14" cast-in-place reinforced concrete piles

EXISTING STRUCTURE
SPAN ~ 23'-0" Clear
TYPE ~ Concrete Slab
ROADWAY ~ 24'-0"
SKEW ~ None
LOADING - H-15
APPR. SLABS ~ AS-31
BUILT ~ 1932
CONDITION ~ Fair
DRAINAGE AREA - 2.4 Sq. miles

PROPOSED STRUCTURE

TYPE: Continuous Reinforced Concrete slab with capped pile substructure
SPANS: 16'-20'-16' c/c Bearings
ROADWAY: 36'-0" f/f Guardrail
LOAD FREQUENCY: CF-130(57)
SKEW: 10° Right Forward
WEARING SURFACE: 1" Monolithic Concrete
APPROACH SLABS: AS-1-54 (25' long)
ALIGNMENT: Tangent

MICROFILMED JUL 15 1966

STATE OF OHIO
DEPARTMENT OF HIGHWAYS
BUREAU OF BRIDGES

1/3

SITE PLAN

BRIDGE NO. HAN-69-0121
OVER BINKLEY CREEK
HANCOCK CO SR-69
SEC.
STA. 63+63.24
SCALE 1" = 20' STA. 64+16.76

PRESENT TOPOGRAPHY		PROPOSED WORK			
SURVEYED	DRAWN	DESIGNED	DRAWN	CHECKED	REVIEWED
AERIAL SURVEY	AERIAL SURVEY	R.E.J.	R.E.J.	N.J.B.	P.E.S.

BFG 1-31-67

01448

FED. RD. DIVISION	STATE	PROJECT
2	OHIO	

31/51

~~HAN~~-69-(1.14)(1.97)(2.31)(3.28)(4.23)(6.17)

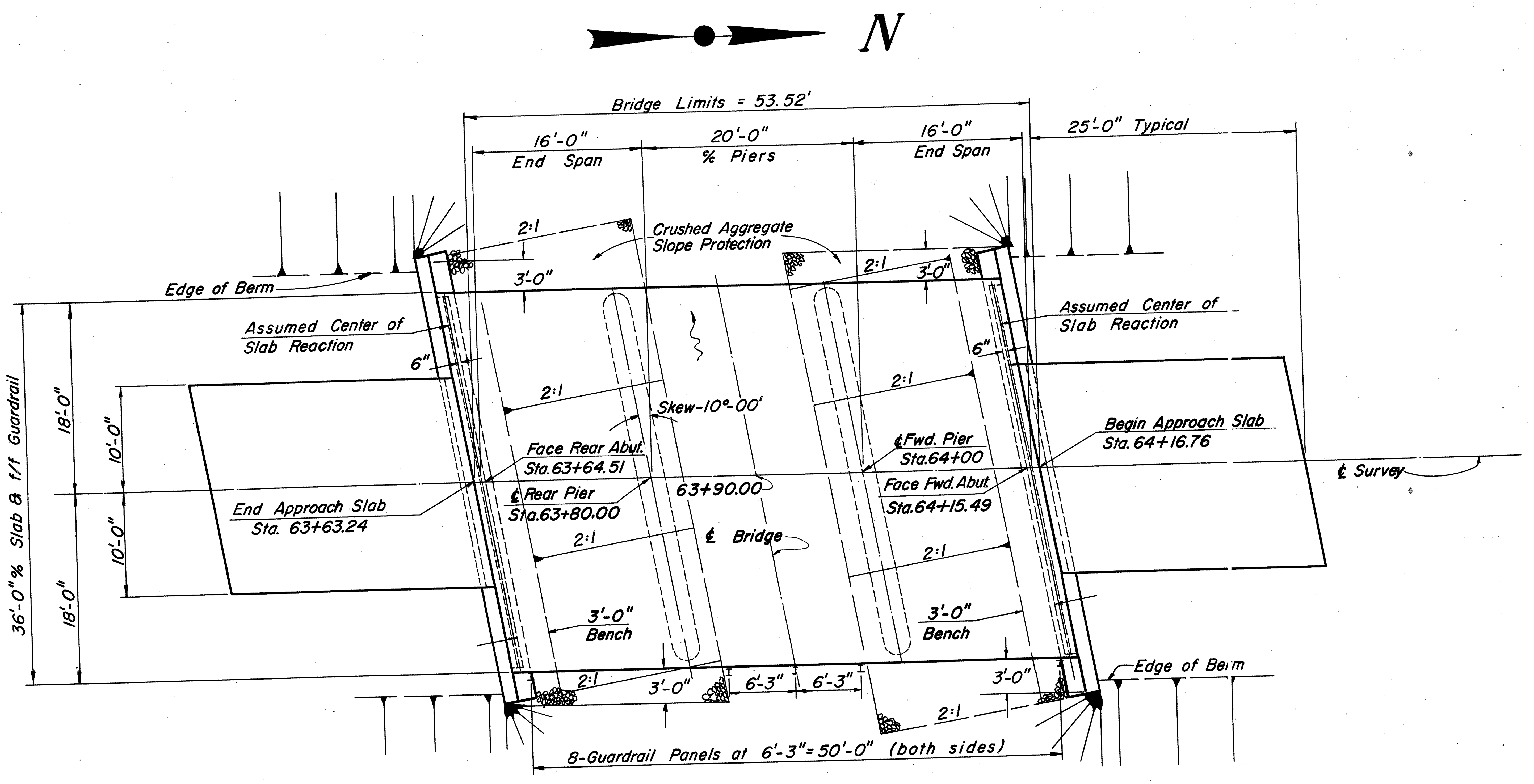

N
Bridge Limits = 53.52'
16'-0" End Span
20'-0" % Piers
16'-0" End Span
25'-0" Typical
2:1
3'-0"
Crushed Aggregate Slope Protection
Edge of Berm
Assumed Center of Slab Reaction
6"
Assumed Center of Slab Reaction
Skew-10°-00'
Face Rear Abut. Sta.63+64.51
℄ Rear Pier Sta.63+80.00
63+90.00
℄ Bridge
℄ Fwd. Pier Sta.64+00
Face Fwd. Abut. Sta.64+15.49
Begin Approach Slab Sta. 64+16.76
℄ Survey
End Approach Slab Sta. 63+63.24
36'-0" % Slab & f/f Guardrail
18'-0"
10'-0"
10'-0"
18'-0"
3'-0" Bench
3'-0" Bench
6'-3"
6'-3"
Edge of Berm
8-Guardrail Panels at 6'-3" = 50'-0" (both sides)

GENERAL PLAN

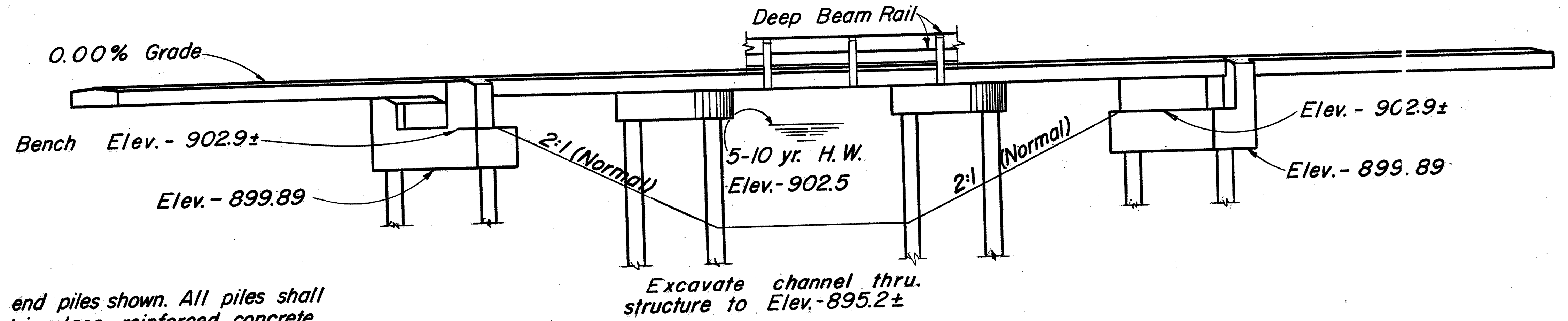

Deep Beam Rail
0.00% Grade
Bench Elev. - 902.9±
Elev. - 899.89
2:1 (Normal)
5-10 yr. H.W. Elev.-902.5
2:1 (Normal)
Elev. - 902.9±
Elev. - 899.89
Excavate channel thru. structure to Elev.-895.2±

Note: Only end piles shown. All piles shall be 14" cast-in-place reinforced concrete.

ELEVATION

ESTIMATED QUANTITIES									
ITEM	TOTAL	UNIT	DESCRIPTION	SUPER	PIERS	ABUTS	GEN'L	AS BUILT	
202	Lump	Sum	Existing structure removed				Lump		
503	71	Cu. Yds.	Unclassified excavation			71			
505	Lump	Sum	First test pile				Lump		
507	480	Lin. Ft.	14" Cast-in-place reinforced concrete piles		240	240		C-59	421
509	24,770	Lbs.	Reinforcing steel	16,234	3,689	4,847			
511	87	Cu. Yds.	Class C concrete, superstructure and pier caps	74	13				
511	43	Cu. Yds.	Class E concrete, abutments			43			
517	107.04	Lin. Ft.	Railing (Two deep beam rails with steel posts and bolts)	107.04					
518	15	Cu. Yds.	Porous backfill			15			
601	197	Sq. Yds.	Crushed aggregate slope protection				197		
808	87	Units	Water-reducing, set-retarding admixture	74	13			C-87	—
825	230	Sq. Yds.	Concrete surface treatment	230					

GENERAL NOTES

REFERENCE shall be made to Standard Drawings A-1-54 and P-1-54, both revised 11-8-65, CS-1-65 dated 6-1-65, and to Supplemental Specifications 808 dated 1-13-67 & 825 dated 1-1-67.

DESIGN DATA:
Design Loading-CF 130(57)
Concrete Class C-Basic unit stress 1,333 p.s.i.
Concrete Class E-Basic unit stress 1,133 p.s.i.
Reinforcing Steel-ASTM A15, A16, A160, Deformed, Intermediate or Hard Grade. Basic unit stress 20,000 p.s.i.

REMOVAL OF EXISTING STRUCTURE:
When no longer needed to maintain traffic the existing structure shall be removed.

EXCAVATION QUANTITY for the abutments in addition to that outlined in Section 503.10 includes the removal of material bounded by the proposed bench, by the front vert. plane described in Sec. 503.10 and by the finished slope of the cut.

PILES shall be driven to a maximum bearing capacity of 18 tons per pile for the abutments and 23 tons per pile for the piers.

PIER PILE ENCASEMENT as shown on Standard Drawing No. P-1-54 may be omitted provided the tapered portion, if any, of all pier piles does not extend above the stream bed or the proposed surface of the ground. If the tapered portion of any pile extends above these limitations, the encasement will be required for all the pier piles. If the encasement is omitted the pile casings shall have a thickness of metal not less than No.7 ga. and the painting of the piles shall extend to low water elevation or, if the proposed surface of the ground is above low water, the painting shall extend to at least one foot below the proposed surface of the ground.

That portion of the lower guard rail that projects outside the bridge limits shall be included, for payment, with the bridge railing.

MICROFILMED
JUL 15 1986

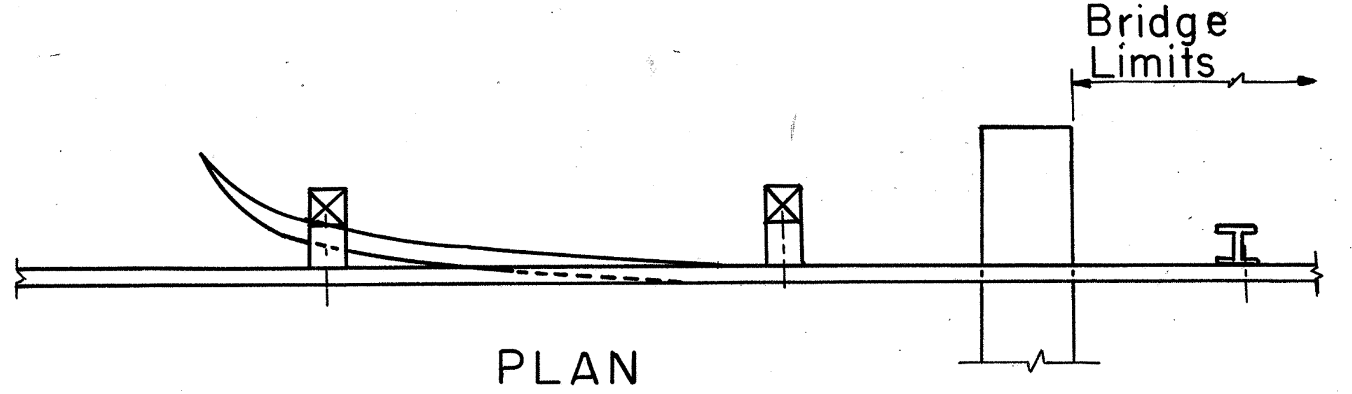

Bridge Limits

PLAN

TERMINATION OF LOWER RAIL

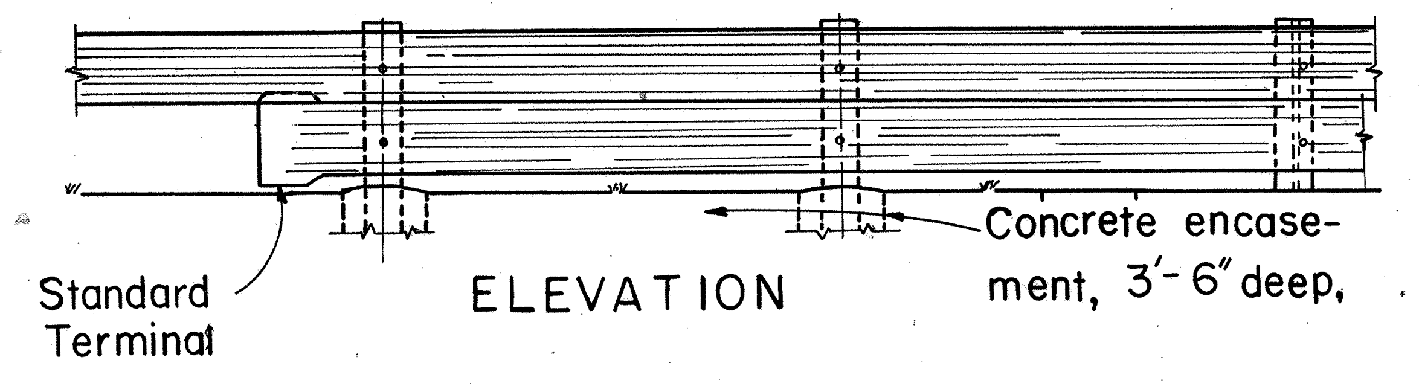

Standard Terminal
Concrete encasement, 3'-6" deep.

ELEVATION

TWO DEEP BEAM RAILING

STATE OF OHIO
DEPARTMENT OF HIGHWAYS
DIVISION OF DESIGN AND CONSTRUCTION
BUREAU OF BRIDGES

2

GENERAL PLAN & ELEVATION
GENERAL NOTES & ESTIMATED QUANTITIES

BRIDGE NO. HAN-69-0121
Over Binkley Creek

STA. 63+63.24 To 64+16.76

DESIGNED	DRAWN	TRACED	CHECKED	REVIEWED	DATE	REVISED
B.W.E.	E.P.M.III	E.P.M.III	FFE	BFG	1-31-67	

REV 4-16-70 GFJ

FED. RD. DIVISION	STATE	PROJECT		
2	OHIO			

32/51

HAN-69-(1.14)(1.97)(2.31)(3.28)(4.23)(6.17)

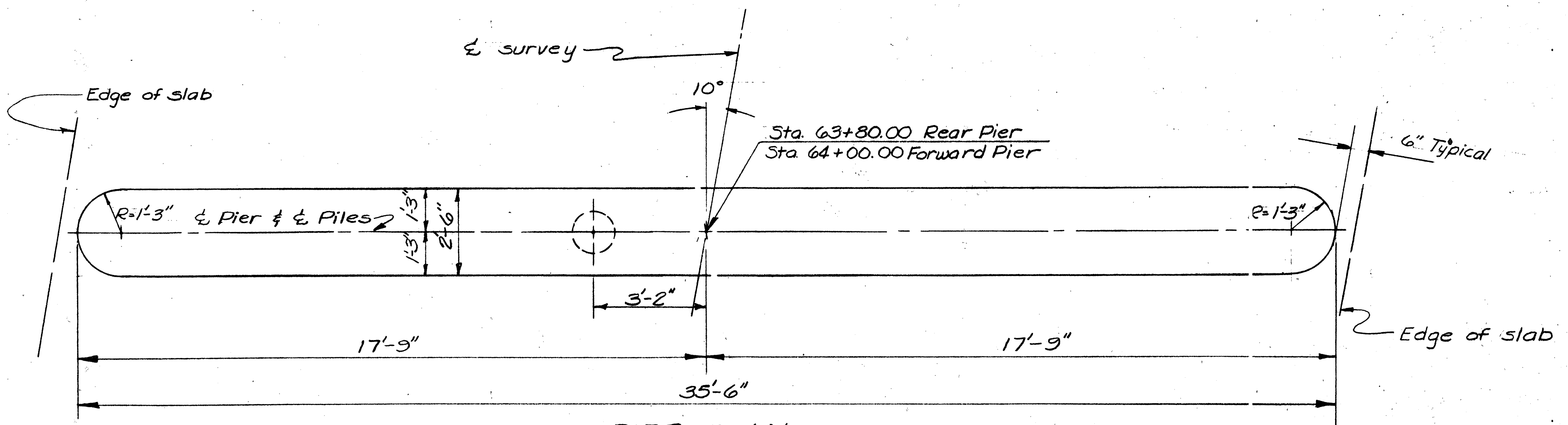

℄ survey
10°
Edge of slab
Sta. 63+80.00 Rear Pier
Sta. 64+00.00 Forward Pier
6" Typical
R=1'-3"
℄ Pier & ℄ Piles
1'3"
1'3"
2'-6"
R=1'-3"
3'-2"
17'-9"
17'-9"
35'-6"
Edge of slab

PIER PLAN

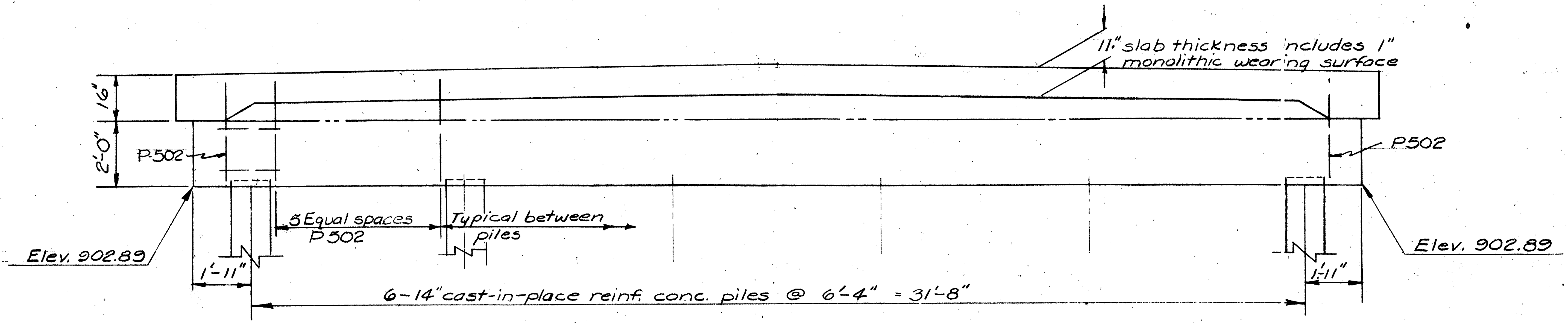

11" slab thickness includes 1" monolithic wearing surface
1'6"
2'-0"
P502
P502
5 Equal spaces P502
Typical between piles
Elev. 902.89
Elev. 902.89
1'-11"
1'-11"
6-14" cast-in-place reinf. conc. piles @ 6'-4" = 31'-8"

PIER ELEVATION

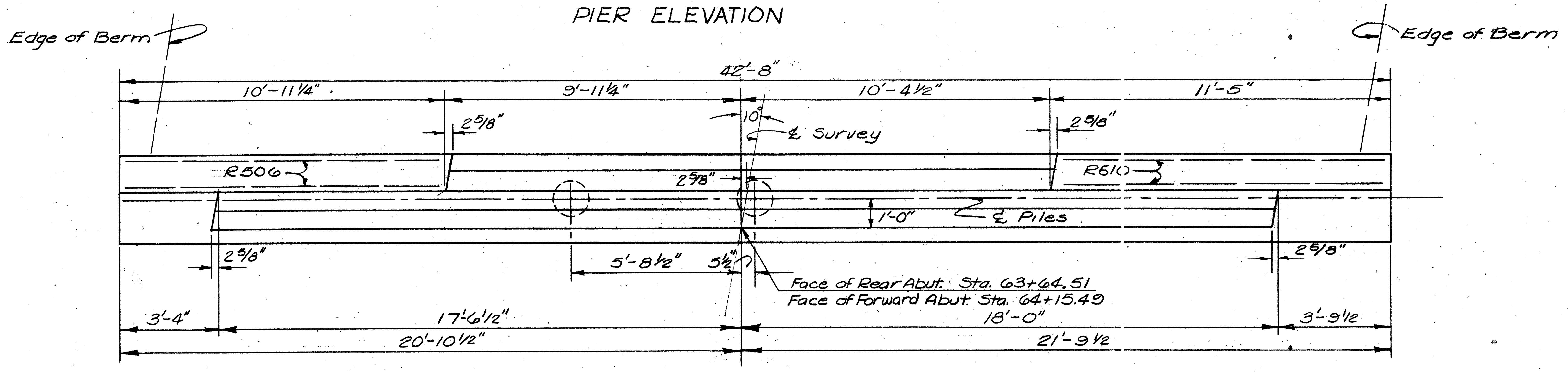

Edge of Berm
Edge of Berm
42'-8"
10'-11¼"
9'-11¼"
10'-4½"
11'-5"
2⅝"
2⅝"
10°
℄ Survey
R506
R510
2⅝"
1'-0"
℄ Piles
2⅝"
2⅝"
5'-8½"
5½"
Face of Rear Abut. Sta. 63+64.51
Face of Forward Abut. Sta. 64+15.49
3'-4"
17'-6½"
18'-0"
3'-9½"
20'-10½"
21'-9½"

ABUTMENT PLAN

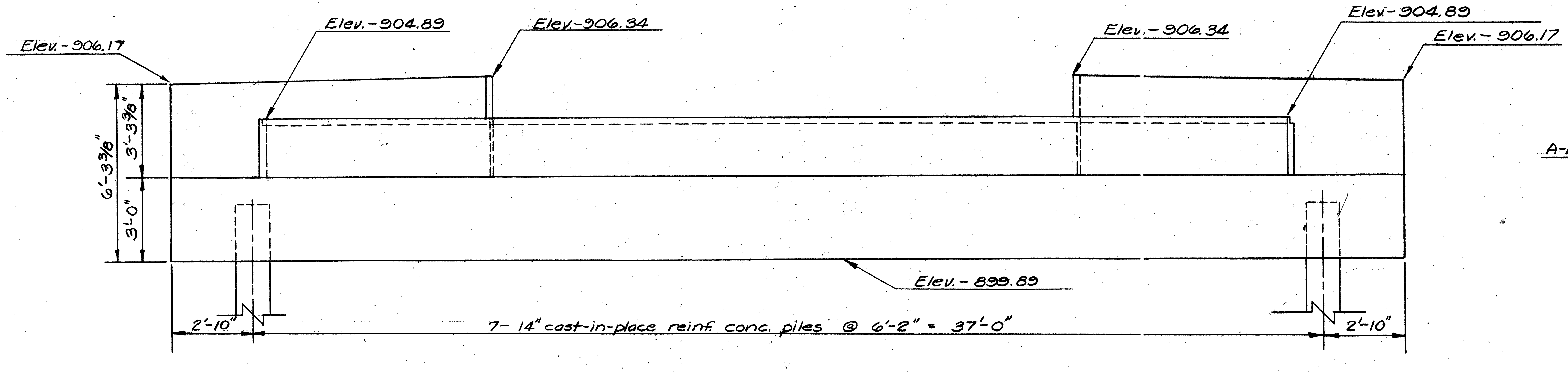

Elev.-906.17
Elev.-904.89
Elev.-906.34
Elev.-906.34
Elev.-904.89
Elev.-906.17
6'-3⅜"
3'-3⅜"
3'-0"
Elev.-899.89
2'-10"
7-14" cast-in-place reinf. conc. piles @ 6'-2" = 37'-0"
2'-10"

ABUTMENT ELEVATION

REINFORCING STEEL LIST

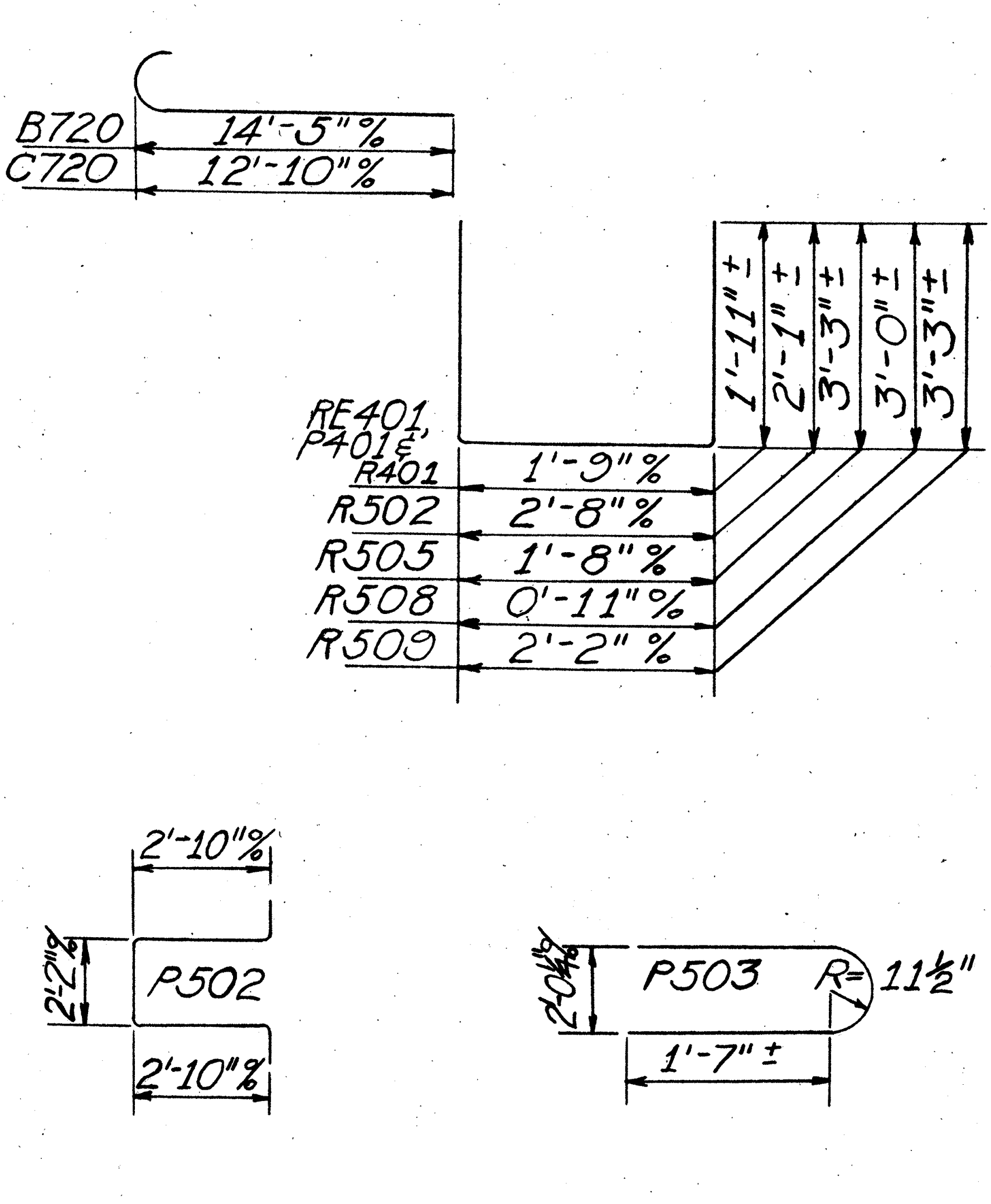

Bending Diagram
B720
C720
14'-5"%
12'-10"%
RE401, P401 & R401
R502
R505
R508
R509
1'-9"%
2'-8"%
1'-8"%
0'-11"%
2'-2"%
1'-11"±
2'-1"±
3'-3"±
3'-0"±
3'-3"±
2'-10"%
P502
2'-2"%
2'-10"%
P503
R=11½"
2'-0½"%
1'-7"±

Mark	No.	Length	Weight	Shp
Superstructure				
A720	102	19'-3"	4,013	S
B720	34	15'-3"	1,060	B
C720	32	13'-8"	894	B
D720	17	15'-6"	539	S
E720	16	11'-0"	360	S
F820	58	14'-10"	2,297	S
G820	28	9'-4"	698	S
H820	28	8'-4"	623	S
J601	30	11'-5"	514	S
K601	15	9'-2"	207	S
M601	52	36'-0"	2,812	S
N601	41	36'-0"	2,217	S
Piers				
P1001	8	36'-0"	1,239	S
P901	8	33'-0"	898	S
P701	72	4'-0"	589	S
P501	4	33'-0"	138	S
P502	64	9'-0"	601	B
P503	8	6'-4"	53	B
P401	48	5'-4"	171	B

Mark	No.	Length	Weight	Shp
Abutments				
R1001	16	19'-2"	1,320	S
R801	16	22'-5"	958	S
R501	16	22'-0"	367	S
R502	136	6'-7"	934	B
R503	8	18'-4"	153	S
R504	24	5'-4"	134	S
R505	28	7'-11"	231	B
R506	4	10'-7"	44	S
R507	16	5'-0"	83	S
R508	24	6'-8"	167	B
R509	24	8'-5"	211	B
R510	4	10'-10"	45	S
R401	56	5'-4"	200	B
Replacement bars				
RE1001	1	7'-2"	—	S
RE901	1	6'-10"	—	S
RE801	1	6'-6"	—	S
RE701	1	6'-2"	—	S
RE601	1	5'-11"	—	S
RE501	1	5'-7"	—	S
RE401	1	5'-4"	—	B

MICROFILMED
JUL 15 1986

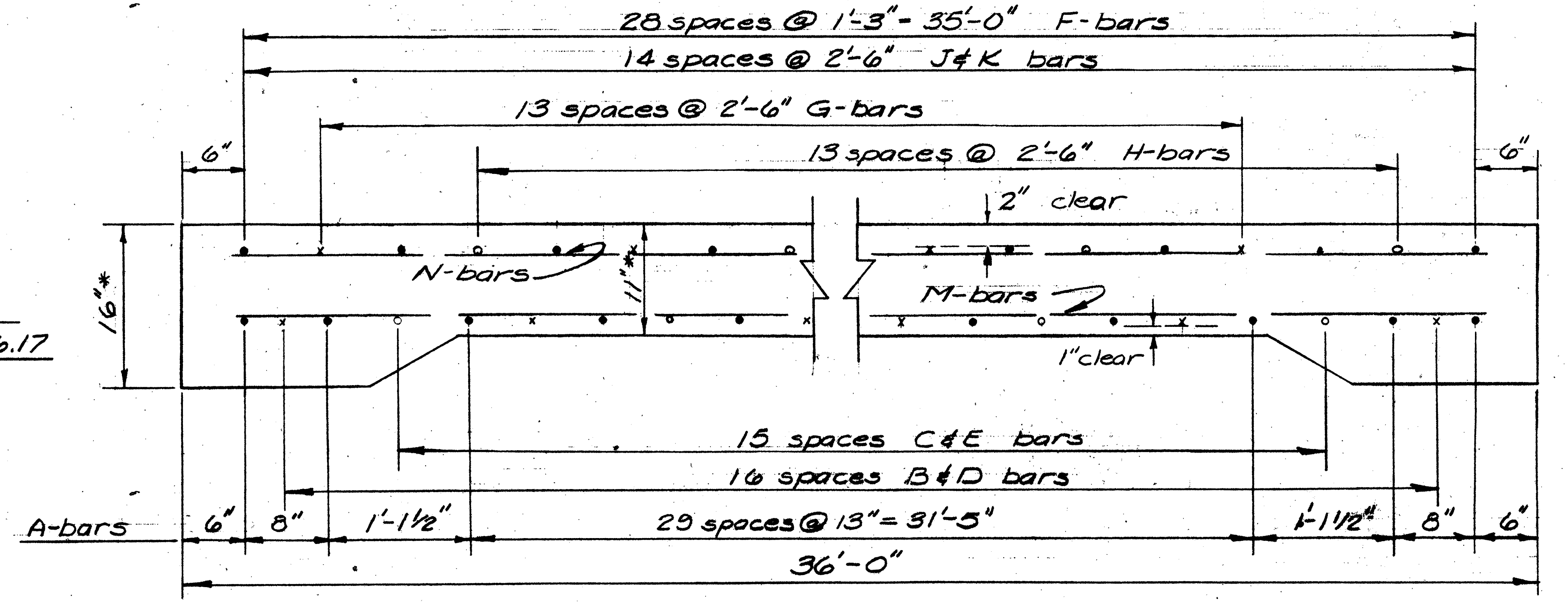

28 spaces @ 1'-3" = 35'-0" F-bars
14 spaces @ 2'-6" J & K bars
13 spaces @ 2'-6" G-bars
13 spaces @ 2'-6" H-bars
6"
6"
2" clear
N-bars
M-bars
16"*
11"*
1" clear
15 spaces C & E bars
16 spaces B & D bars
A-bars
6"
8"
1'-1½"
29 spaces @ 13" = 31'-5"
1'-1½"
8"
6"
36'-0"

COMPOSITE TRANSVERSE SECTION

* Note: The 16" & 11" dimensions shown include a 1" monolithic wearing surface.

For complete details refer to Standard Drawing CS-1-65 Sections B-B, C-C, & D-D

STATE OF OHIO
DEPARTMENT OF HIGHWAYS
DIVISION OF DESIGN AND CONSTRUCTION
BUREAU OF BRIDGES

3/3

ABUTMENT and PIER DETAILS,
COMPOSITE TRANSVERSE
SECTION & REINFORCING STEEL
LIST
BRIDGE No. HAN-69-0121
over Binkley Creek

DESIGNED	DRAWN	TRACED	CHECKED	REVIEWED	DATE	REVISED
BWE	BWE		FFE	BFG	1-31-67	

FED. RD. DIVISION	STATE	PROJECT	
2	OHIO	67 S–	

33/51

HANCOCK COUNTY
HAN-69-(1.14)(1.97)(2.31)(3.28)(4.23)(6.17)

5.5± Miles south of Mt. Cory

881.2
885.1
887.6
881.4
881.2
881.6
882.5
885.0
887.1
885.1
881.6
881.5
881.3
881.1
881.8
883.1
887.7
CUMMINS DITCH
880
Elev. 875.7±
Transition slopes 2:1 to 4:1 at all four corners
2:1
4:1
18°
+59.55
+87.05
+70.95
+08.45
CB
105
106
107
108
109
110
111
N 0°-12' E
885.21
End Appr. Slab Sta. 107+72.69
Begin Appr. Slab Sta. 107+95.31
890
889.5
881.7
881.7
881.7
882.9
883.6
Elev. 875.7±
889.2
885.6
885.4
883.3
881.6
880.9
891.0
884.8
882.6
882.3
885.5
883.2
881.5
883.5
Clears 5 Year High Water Elev. 3.5'±
BRIDGE LIMITS 22.62'
Sta. 107+72.69
Sta. 107+95.31
B.M. YELLOW PAINTED SQUARE N.E. HEADWALL
BM. No. 2 Spike in 14" Walnut 50' Rt. Sta. 105+57 Elev. 888.13
BM. No. 1 Spike in ⊄ 29' Rt. Sta. 111+94 Elev. 892.14
Highest Known High Water Elev. 885.5
10-Year High Water Elev. 883.0
5-Year High Water Elev. 882.0
250' V.C.
300' V.C.
-2.12%
0.00%
0.00%
2:1 (Norm)
Limits of channel excavation
Excavate channel thru structure to Elev. 875.7±
Ftg. Elev. 872.0
880
870
860
889.21
888.76
888.36
888.01
887.72
887.48
887.30
887.17
887.09
887.06
887.06
887.06
887.06
887.08
887.14
887.23
887.37
887.73
P.I. Sta. 105+50 El. 887.06
886.65
886.38
886.01
885.78
885.29
885.21
885.17
885.12
885.31
886.25
+47
+60
+83
+69
+95

EARTHWORK limits shown are schematic. Actual slopes shall conform to plan cross-sections.

EXISTING STRUCTURE
SPAN ~ 23'-0" (Clear)
TYPE ~ Concrete Slab
ROADWAY ~ 24'-0"
SKEW ~ None
LOADING ~ H-15
BUILT ~ 1932
CONDITION ~ Poor
1984 DESIGN TRAFFIC = 884 A.D.T.
DRAINAGE AREA ~ 2.87 sq. mi.

PROPOSED STRUCTURE

TYPE: Single span reinforced concrete slab with reinforced concrete wall abutments
SPANS: 20'-0" face to face of abutments
ROADWAY: 36'-0" f/f guard rail
LOAD FREQUENCY: CF=130(57)
SKEW: 18° R.F.
WEARING SURFACE: 1" monolithic concrete
APPROACH SLABS: AS-1-54 (25' long)
ALIGNMENT: Tangent

MICROFILMED JUL 15 1968

STATE OF OHIO
DEPARTMENT OF HIGHWAYS
BUREAU OF BRIDGES

1/4

SITE PLAN

BRIDGE NO. HAN-69-0204
OVER CUMMINS DITCH
HANCOCK CO SR-69
SEC.
STA. 107+72.69
107+95.31
SCALE 1" = 20'

PRESENT TOPOGRAPHY		PROPOSED WORK			
SURVEYED	DRAWN	DESIGNED	DRAWN	CHECKED	REVIEWED
		D.H.S.	D.H.S.	R.E.J.	P.E.S.

BFG 6-6-67
R.M.M.
01448

FED. RD. DIVISION	STATE	PROJECT	
2	OHIO		

~~HAN-69-(1.14)(1.97)(2.31)(3.28)(4.23)~~(6.17)

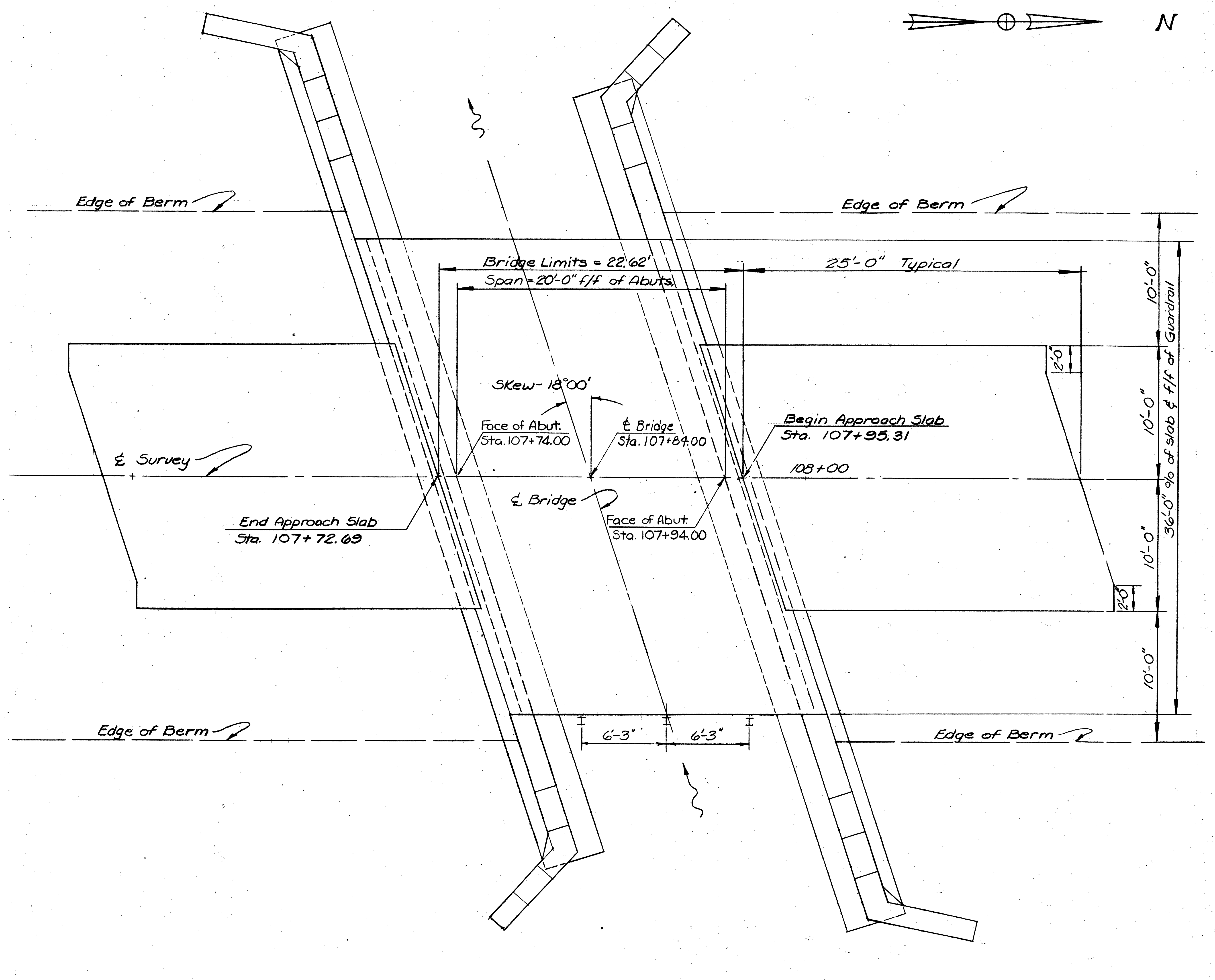
N
Edge of Berm
Edge of Berm
Bridge Limits = 22.62'
Span = 20'-0" f/f of Abuts.
25'-0" Typical
10'-0"
10'-0"
36'-0" o/o of Slab & f/f of Guardrail
10'-0"
10'-0"
2'-0"
2'-0"
Skew - 18°00'
Face of Abut. Sta. 107+74.00
℄ Bridge Sta. 107+84.00
Begin Approach Slab Sta. 107+95.31
℄ Survey
108+00
℄ Bridge
Face of Abut. Sta. 107+94.00
End Approach Slab Sta. 107+72.69
Edge of Berm
6'-3"
6'-3"
Edge of Berm

GENERAL PLAN

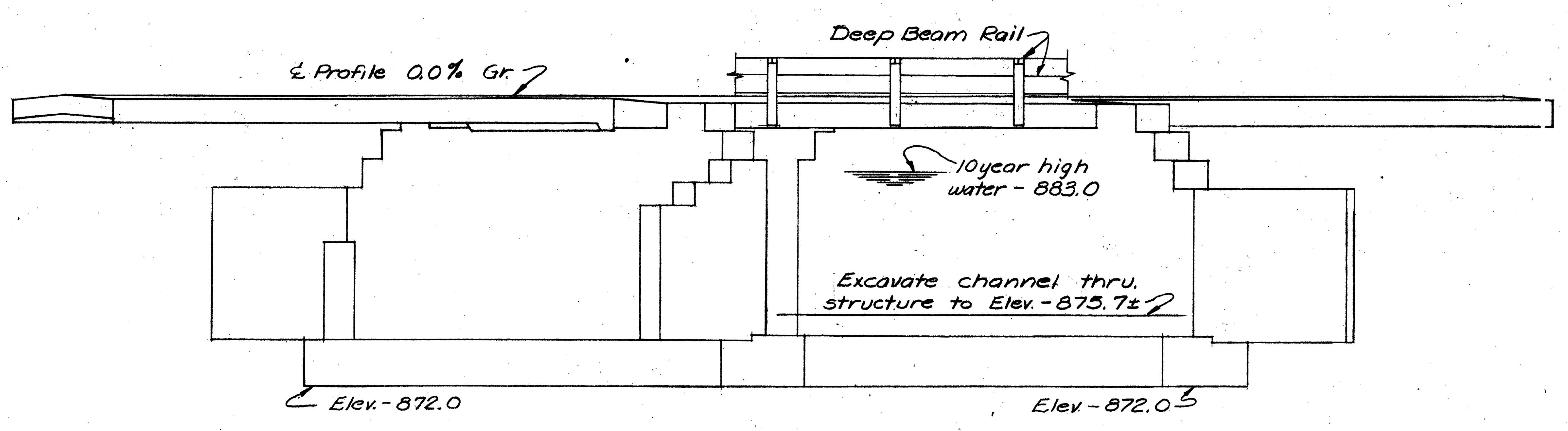
Deep Beam Rail
℄ Profile 0.0% Gr.
10 year high water - 883.0
Excavate channel thru. structure to Elev. - 875.7±
Elev. - 872.0
Elev. - 872.0

ELEVATION

For two deep beam railing see sheet 31

GENERAL NOTES

REFERENCE shall be made to Standard Drawings SB-1-64, sheets 1 and 2, revised 11-8-65 and to Supplemental Specifications 808 dated 1-13-67 and 825 dated 1-1-67.

DESIGN SPECIFICATIONS: This structure conforms to the requirements of "Design Specifications for Highway Structures" of the State of Ohio, Department of Highways, dated 9-1-57, together with current revisions thereof.

DESIGN DATA:
Design Loading - CF 130(57).
Concrete Class C - basic unit stress 1,333 p.s.i.
Concrete Class E - basic unit stress 1,133 p.s.i.

DESIGN DATA: (Cont.)
Reinforcing Steel - ASTM A15, A16, A160, Deformed, Intermediate or Hard Grade. Basic unit stress 20,000 p.s.i.

REMOVAL OF EXISTING STRUCTURE: When no longer needed to maintain traffic the existing structure shall be removed.

FOOTINGS shall extend a minimum of 3" into undisturbed rock or to the elevation shown, whichever is lower.

FOUNDATION BEARING PRESSURE: Footings are designed for a maximum bearing pressure of 4.0 tons per sq. ft.

ESTIMATED QUANTITIES

Item	Total	Unit	Description	Super	Abuts.	Gen'l.	As Built	
202	Lump	Sum	Existing structure removed			Lump		
503	Lump	Sum	Cofferdams, Cribs and Sheeting			Lump		
503	155	Cu. Yds.	Unclassified excavation, including rock		155			
509	12,864	Lbs.	Reinforcing steel	7,725	5,139			
511	38	Cu. Yds.	Class C concrete, superstructure	38				
511	105	Cu. Yds.	Class E concrete, abutments above footings		105			
511	58	Cu. Yds.	Class E concrete, footings		58			
516	11	Sq. ft.	½" Preformed expansion joint filler, AASHO M-153			11		
517	45.24	Lin. ft.	Railing, (Two deep beam rails with steel posts and bolts)	45.24				
518	69	Cu. Yds.	Porous backfill			69		
808	38	Units	Water-reducing, set-retarding admixture	38			c-1 38	
825	100	Sq. Yds.	Concrete surface treatment	100				

MICROFILMED
JUL 15 1986

STATE OF OHIO
DEPARTMENT OF HIGHWAYS
DIVISION OF DESIGN AND CONSTRUCTION
BUREAU OF BRIDGES

2/4

GENERAL PLAN & ELEVATION,
NOTES, & ESTIMATED QUANTITIES

BRIDGE No. HAN-69-0204
over CUMMINS DITCH

DESIGNED	DRAWN	TRACED	CHECKED	REVIEWED	DATE	REVISED
BWE	BWE	N.R.B	INNES 5-25-67	BFG	6-6-67	

REV 4-16-70 GFJ

FED. RD. DIVISION	STATE	PROJECT	
2	OHIO		

35/51

HAN-69-(1.14)(1.97)(2.31)(3.28)(4.23)(6.17)

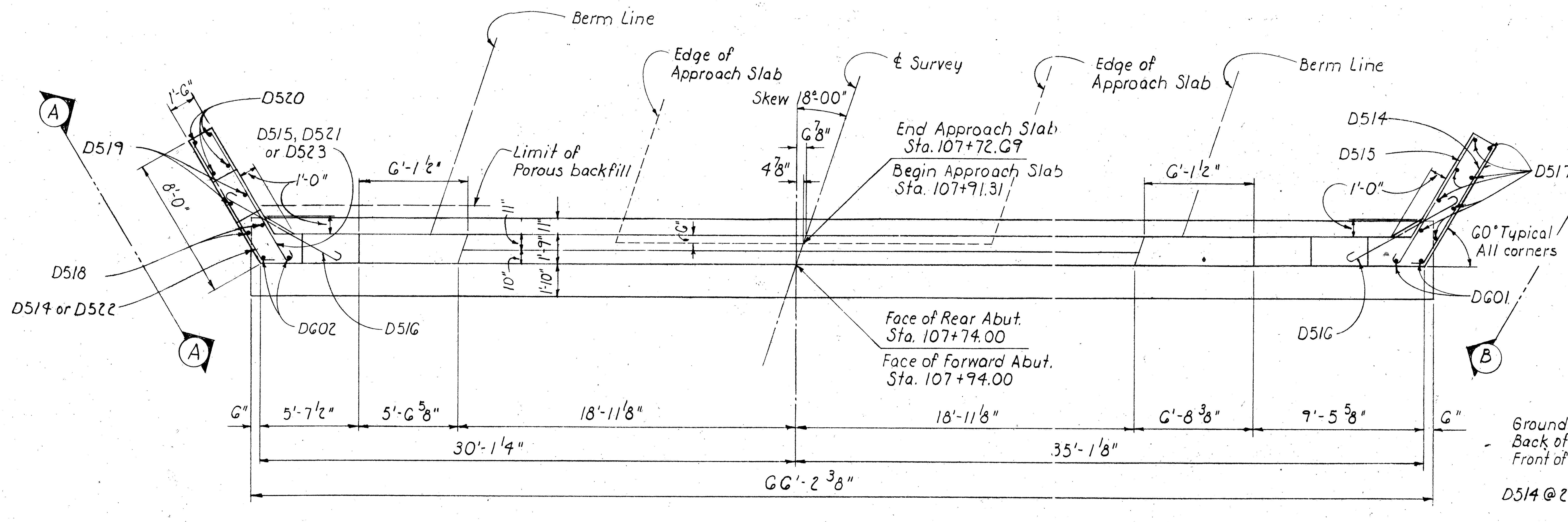

Berm Line
Edge of Approach Slab
℄ Survey
Skew 18°-00"
Edge of Approach Slab
Berm Line
A
D519
1'-6"
D520
D515, D521 or D523
1'-0"
8'-0"
D518
D514 or D522
A
D602
D516
6'-1 1/2"
Limit of Porous backfill
11"
10"
1'-10"
1'-9"
11"
6"
6 7/8"
4 7/8"
End Approach Slab Sta. 107+72.69
Begin Approach Slab Sta. 107+91.31
6'-1 1/2"
D514
D515
1'-0"
D517
60° Typical All corners
B
B
D601
D516
Face of Rear Abut. Sta. 107+74.00
Face of Forward Abut. Sta. 107+94.00
6"
5'-7 1/2"
5'-6 5/8"
18'-11 1/8"
18'-11 1/8"
6'-8 3/8"
9'-5 5/8"
6"
30'-1 1/4"
35'-1 1/8"
66'-2 3/8"

ABUTMENT PLAN

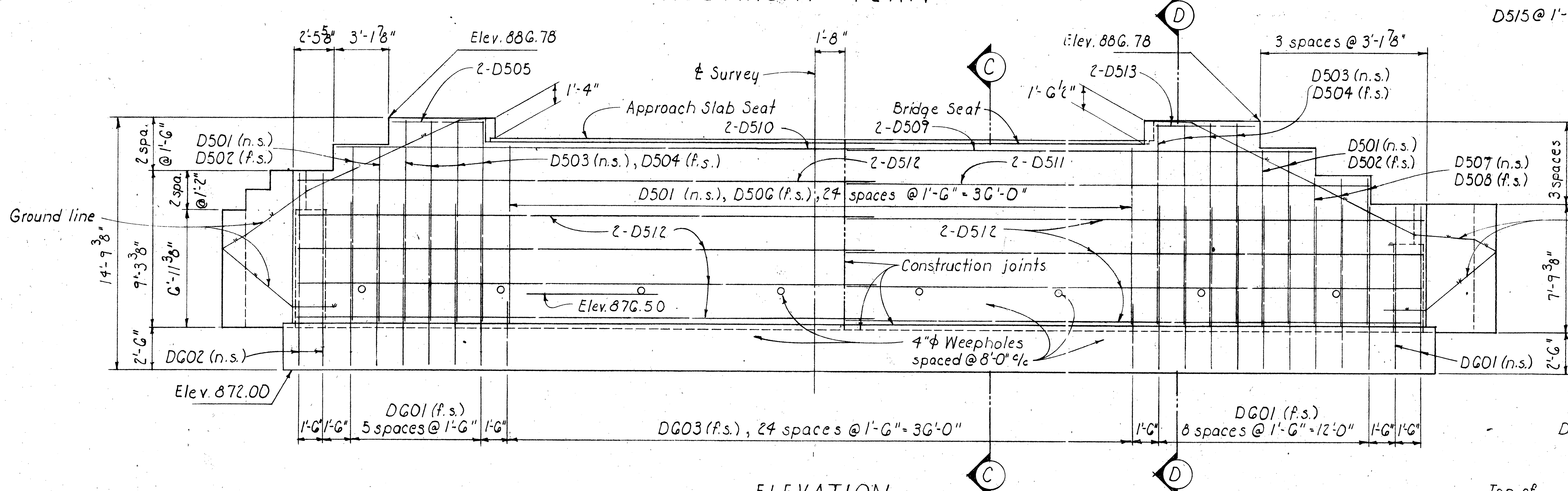

2'-5 5/8"
3'-1 7/8"
Elev. 886.78
2-D505
1'-4"
1'-8"
℄ Survey
Approach Slab Seat
2-D510
D
Elev. 886.78
C
2-D513
1'-6 1/2"
Bridge Seat
2-D509
3 spaces @ 3'-1 7/8"
D503 (n.s.)
D504 (f.s.)
D501 (n.s.)
D502 (f.s.)
D503 (n.s.), D504 (f.s.)
2-D512
2-D511
D501 (n.s.)
D502 (f.s.)
D507 (n.s.)
D508 (f.s.)
2 spa. @ 1'-6"
2 spa. @ 1'-2"
D501 (n.s.), D506 (f.s.), 24 spaces @ 1'-6" = 36'-0"
3 spaces @ 1'-6" = 4'-6"
Ground line
14'-9 3/8"
9'-3 3/8"
6'-1 3/8"
2-D512
2-D512
Construction joints
Elev. 876.50
7'-9 3/8"
14'-9 3/8"
4"ϕ Weepholes spaced @ 8'-0" c/c
2'-6"
DG02 (n.s.)
D601 (n.s.)
2'-6"
Elev. 872.00
1'-6"
1'-6"
D601 (f.s.) 5 spaces @ 1'-6"
1'-6"
D603 (f.s.), 24 spaces @ 1'-6" = 36'-0"
1'-6"
D601 (f.s.) 8 spaces @ 1'-6" = 12'-0"
1'-6"
1'-6"
C
D

ELEVATION

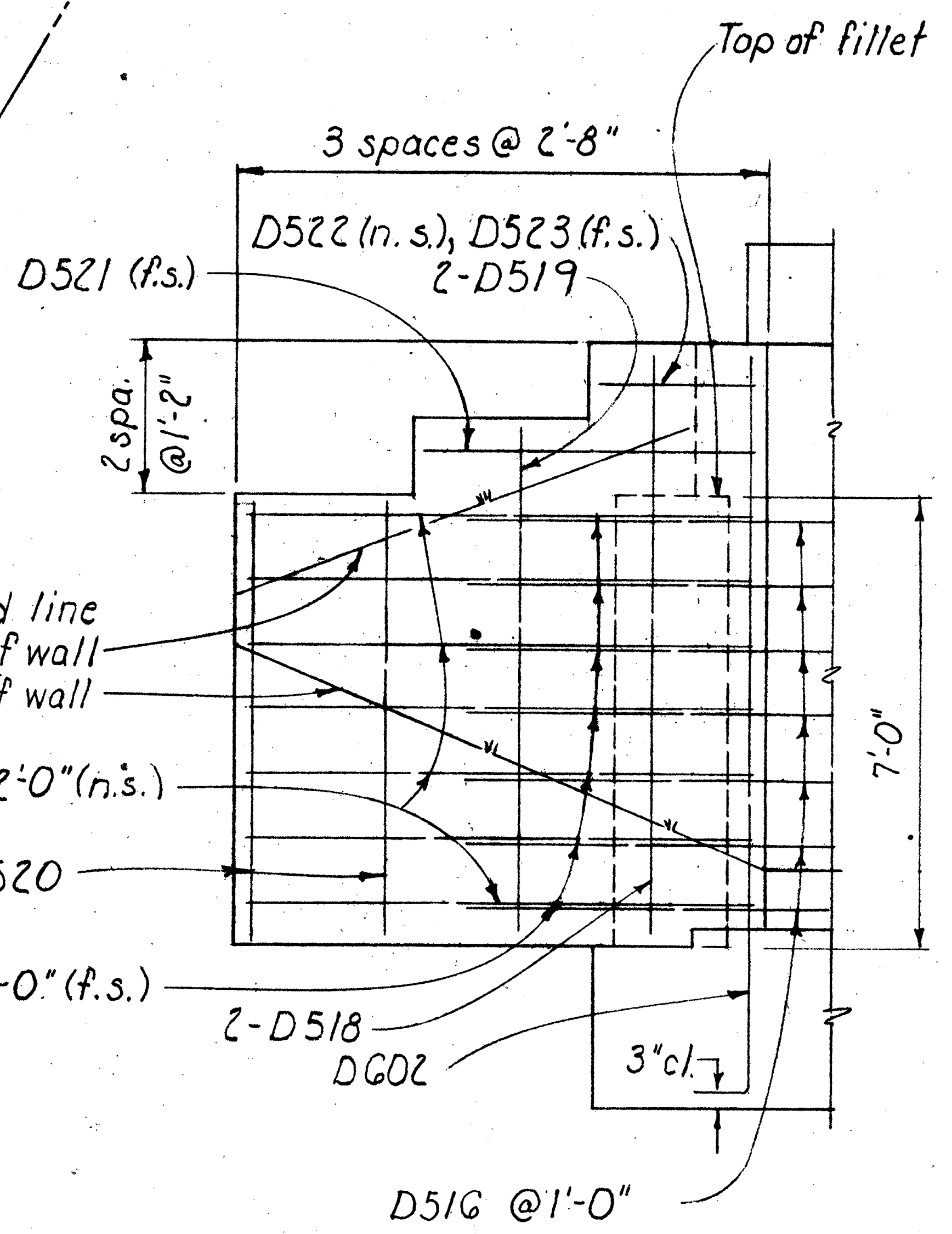

Top of fillet
3 spaces @ 2'-8"
D522 (n.s.), D523 (f.s.)
2-D519
D521 (f.s.)
2 spa. @ 1'-2"
Ground line
Back of wall
Front of wall
D514 @ 2'-0" (n.s.)
2-D520
7'-0"
D515 @ 1'-0" (f.s.)
2-D518
D602
3"cl.
D516 @ 1'-0"

VIEW A-A

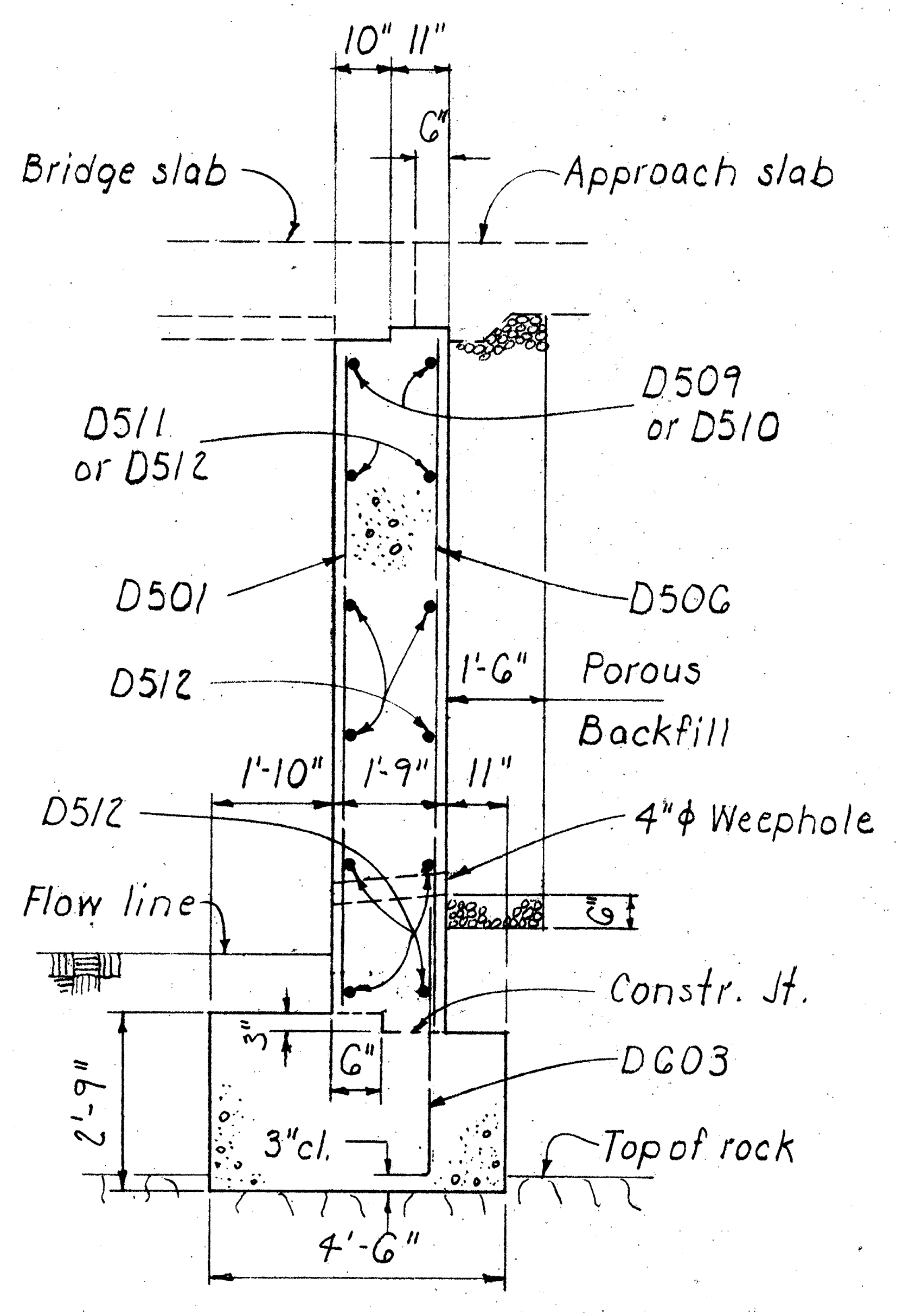

10"
11"
6"
Bridge slab
Approach slab
D511 or D512
D509 or D510
D501
D506
D512
1'-6"
Porous Backfill
1'-10"
1'-9"
11"
D512
4"ϕ Weephole
Flow line
6"
Constr. Jt.
3"
6"
D603
2'-9"
3"cl.
Top of rock
4'-6"

SECTION C-C

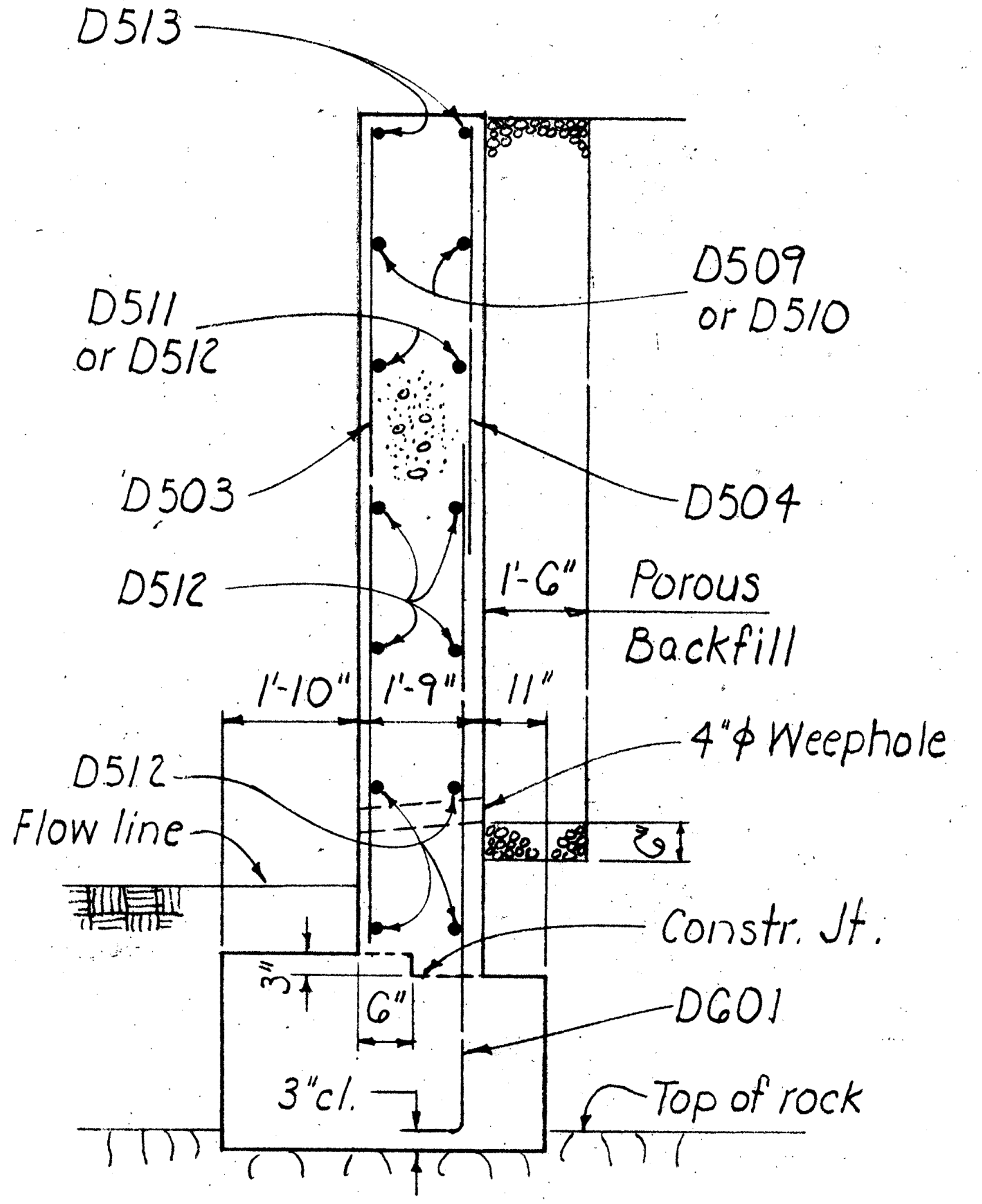

D513
D509 or D510
D511 or D512
D503
D504
D512
1'-6"
Porous Backfill
1'-10"
1'-9"
11"
D512
4"ϕ Weephole
Flow line
6"
Constr. Jt.
3"
6"
D601
3"cl.
Top of rock

SECTION D-D

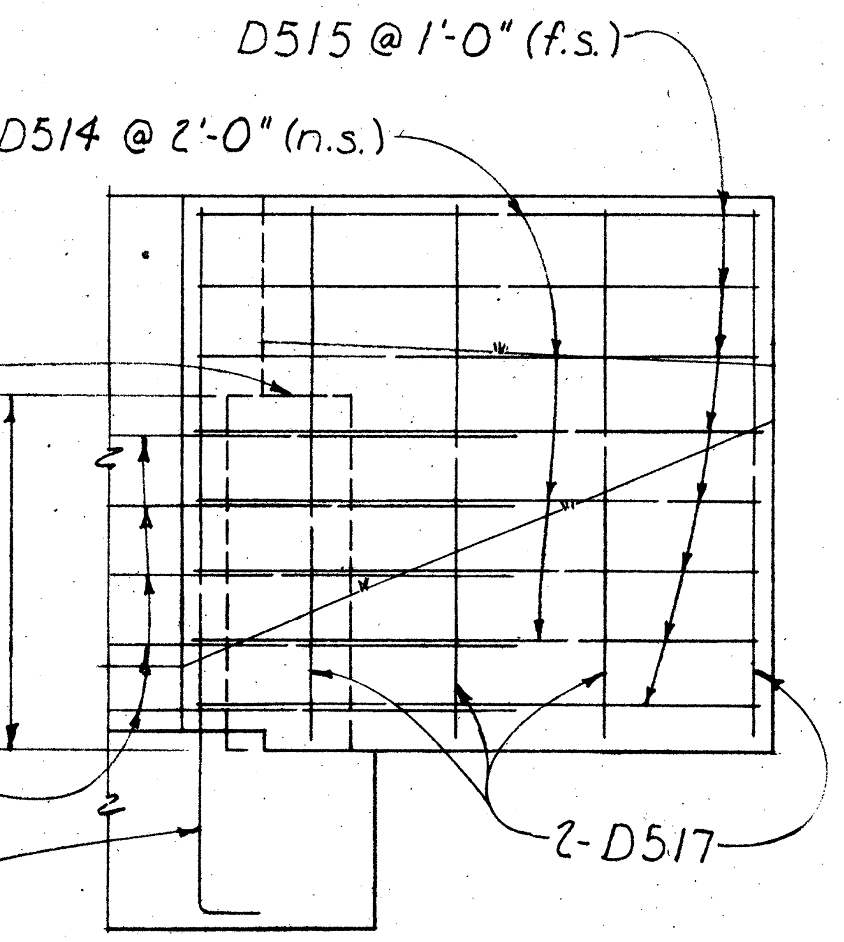

D515 @ 1'-0" (f.s.)
D514 @ 2'-0" (n.s.)
Top of fillet
5'-0"
D516 @ 1'-0"
D601
2-D517

VIEW B-B

NOTES

FOOTINGS shall extend a minimum of 3" into undisturbed rock or to the elevation shown, whichever is lower.

POROUS BACKFILL shall extend from 6" below weepholes upward to the approach slab and to the surface of the earth shoulders. Backfill shall not be placed higher than one-third of the abutment height prior to placing of deck slab.

LEGEND: n.s. denotes near side; f.s. denotes far side.

DETAILS: Both forward and rear abutments identical.

MICRO ... JUL 15 1986

STATE OF OHIO
DEPARTMENT OF HIGHWAYS
DIVISION OF DESIGN AND CONSTRUCTION
BUREAU OF BRIDGES

3/4

ABUTMENT DETAILS
BRIDGE NO. HAN-69-0204
OVER CUMMINS DITCH

DESIGNED	DRAWN	TRACED	CHECKED	REVIEWED	DATE	REVISED
HEN	HEN			BFG	6-6-67	

FED. RD. DIVISION	STATE	PROJECT	
2	OHIO		

36
51

HAN-69-(1.14)(1.97)(2.31)(3.28)(4.23)(6.17)

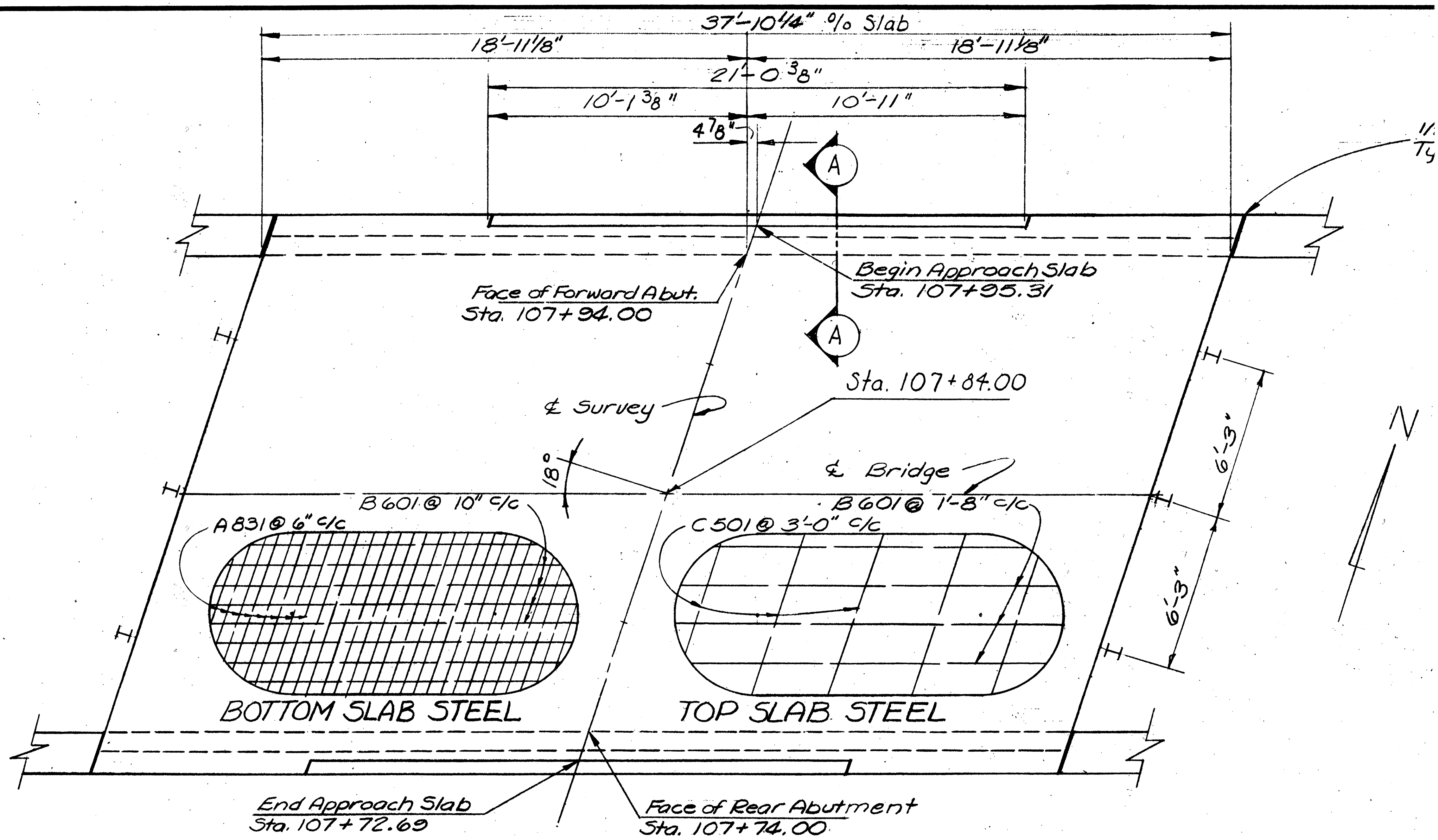
37'-10¼" o/o Slab
18'-11⅛"
18'-11⅛"
21'-0⅜"
10'-1⅜"
10'-11"
4⅞"
A
A
½" preformed expansion joint filler
Typical at all four corners
Begin Approach Slab
Sta. 107+95.31
Face of Forward Abut.
Sta. 107+94.00
Sta. 107+84.00
℄ Survey
℄ Bridge
18°
B601 @ 10" c/c
B601 @ 1'-8" c/c
A831 @ 6" c/c
C501 @ 3'-0" c/c
6'-3"
6'-3"
N
BOTTOM SLAB STEEL
TOP SLAB STEEL
End Approach Slab
Sta. 107+72.69
Face of Rear Abutment
Sta. 107+74.00

SUPERSTRUCTURE DETAILS

Longitudinal bars are spaced parallel to the face of abutment.

REINFORCING STEEL LIST

Mark	No.	Length	Weight	Shp.
Superstructure				
A831	76	24'-2"	4904	B
B601	45	37'-4"	2523	S
C501	13	22'-0"	298	S
Abutments				
D601	34	10'-6"	536	B
D602	4	12'-0"	72	B
D603	50	4'-10"	363	B
D501	58	10'-4"	625	S
D502	8	4'-9"	40	S
D503	16	11'-10"	198	S
D504	16	6'-3"	104	S
D505	4	5'-2"	22	S
D506	50	10'-9"	561	S
D507	6	8'-10"	55	S
D508	6	3'-1"	19	S
D509	4	26'-11"	112	S
D510	4	30'-10"	129	S
D511	4	30'-1"	126	S
D512	36	33'-3"	1249	S

Bending Diagram

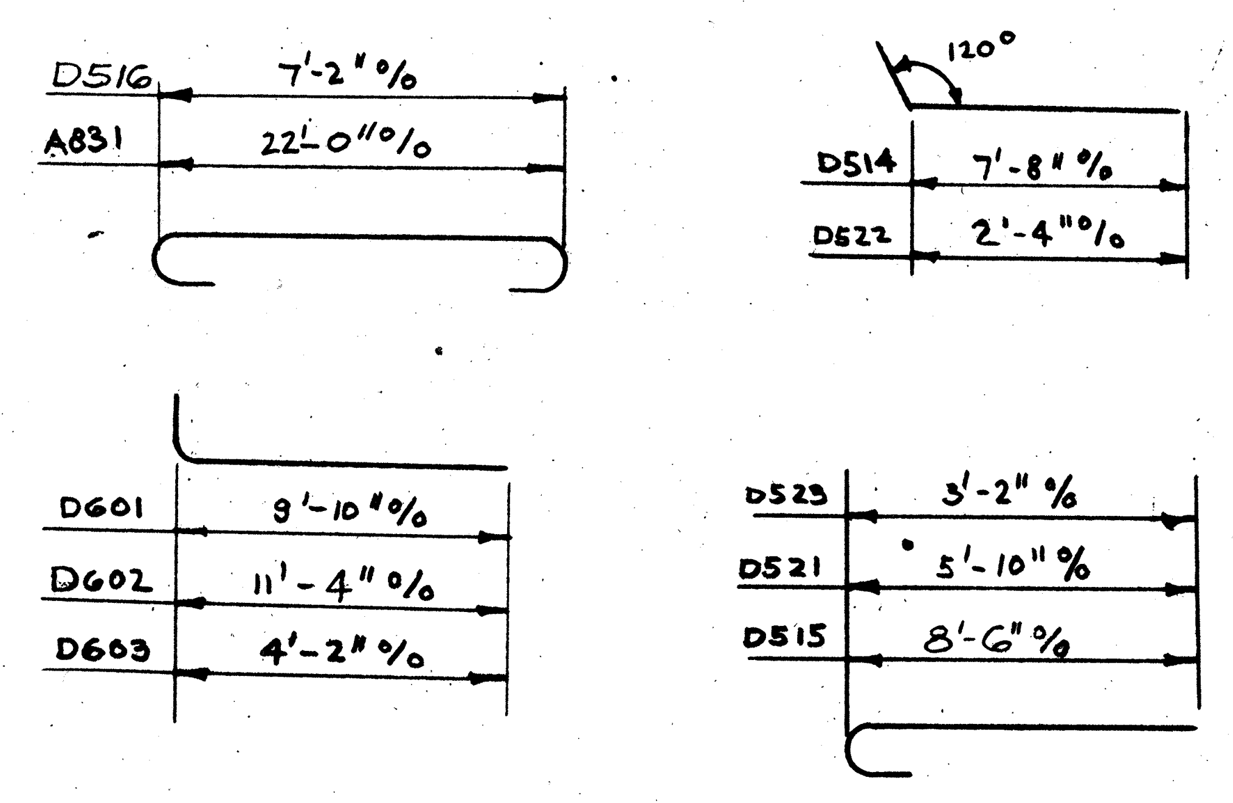
D516
7'-2" o/o
A831
22'-0" o/o
120°
D514
7'-8" o/o
D522
2'-4" o/o
D601
9'-10" o/o
D602
11'-4" o/o
D603
4'-2" o/o
D523
3'-2" o/o
D521
5'-10" o/o
D515
8'-6" o/o

Mark	No.	Length	Weight	Shp.
Abutments (Con't.)				
D513	4	5'-9"	24	S
D514	16	8'-2"	136	B
D515	30	9'-1"	284	B
D516	24	8'-4"	209	B
D517	16	7'-5"	124	S
D518	4	8'-11"	37	S
D519	4	7'-9"	32	S
D520	8	6'-7"	55	S
D521	2	6'-5"	13	B
D522	2	2'-10"	6	B
D523	2	3'-9"	8	B
Replacement Bars				
RE801	1	6'-6"	—	S
RE601	1	5'-11"	—	S
RE501	1	5'-7"	—	S

BAR SIZE is indicated in the bar mark. The first digit where three digits are used, and the first two digits where four are used, indicate the bar size number.. For example, A700 is a No. 7 size bar and A1014 is a No. 10 size.

* SPECIAL NOTE :

EXCAVATION QUANTITY includes the removal of material described by the shaded area shown in Detail-A, for the full length of the abutment. The quantity shall be measured as a solid bounded on the bottom and sides by the planes described in Sec. 503.10 and bounded on the top by the limits of channel excavation.

MICROFIL...
JUL 15 1986

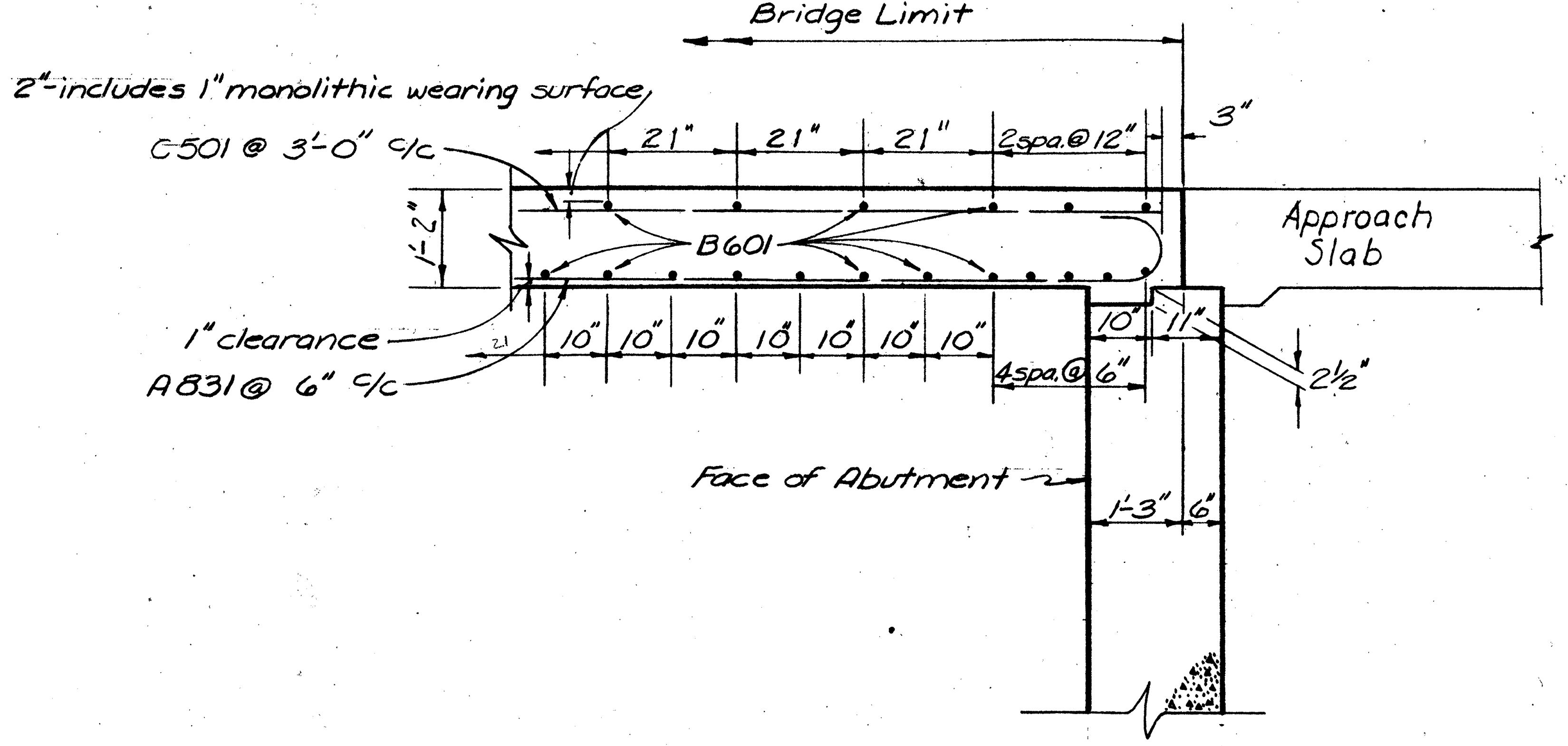
Bridge Limit
2"-includes 1" monolithic wearing surface
C501 @ 3'-0" c/c
21"
21"
21"
2spa.@12"
3"
1'-2"
B601
Approach Slab
1" clearance
A831 @ 6" c/c
10"
10"
10"
10"
10"
10"
10"
10"
11"
4spa.@6"
2½"
Face of Abutment
1'-3"
6"

SECTION A~A

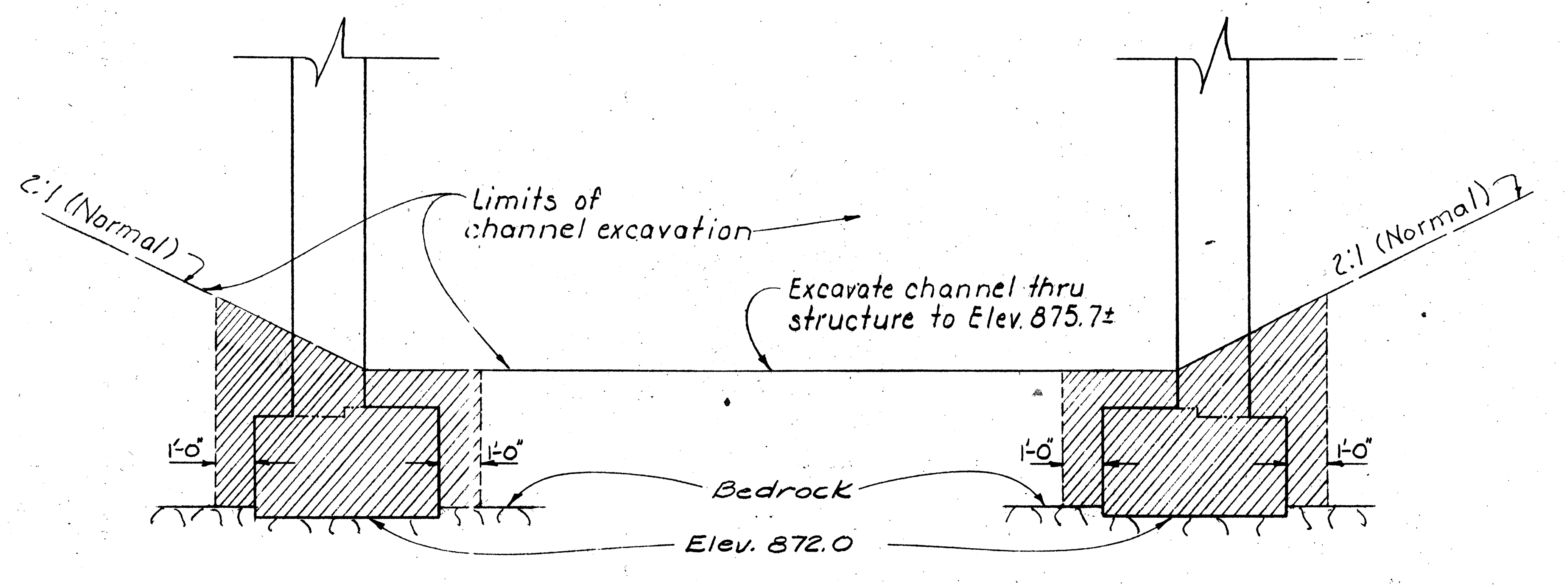
2:1 (Normal)
2:1 (Normal)
Limits of channel excavation
Excavate channel thru structure to Elev. 875.7±
1'-0"
1'-0"
1'-0"
1'-0"
Bedrock
Elev. 872.0

DETAIL-A *

STATE OF OHIO
DEPARTMENT OF HIGHWAYS
DIVISION OF DESIGN AND CONSTRUCTION
BUREAU OF BRIDGES

4/4

SUPERSTRUCTURE DETAILS &
REINFORCING STEEL LIST,
EXCAVATION QUANTITY DETAIL
Bridge No. - HAN-69-0204
over Cummins Ditch

DESIGNED	DRAWN	TRACED	CHECKED	REVIEWED	DATE	REVISED
B.W.E.	B.W.E. R.M.W.		INNES	BFG	6-6-67	

FED. RD. DIVISION	STATE	PROJECT	
2	OHIO	67 S-	

37
51

HANCOCK COUNTY
HAN-69-(1.14)(1.97)(2.31)(3.28)(4.23)(6.17)
5.2 ± Miles south of Mt. Cory

877.4
875.2
876
876
878
876.6
874.6
875.2
875.6
873.5
Elev. 869.0 ±
874
874
DITCH
CUMMINS
2:1
Elev. 869.0
876.6
878
876
4:1
2:1
+07.23
+38.48
122
123
124
125
126
127
128
N 0°-12' E
877.92
End Appr. Slab
Sta. 125+09.75
Begin Appr. Slab
Sta. 125+36.25
+07.23
+38.48
876
876
Elev. 869.0 ±
Transition slopes 2:1 to 4:1 at all four corners
874.3
874.7
875.6
877.0
878.9
873.7
Elev. 869.0 ±
874
Clears 5 year High Water Elevation 2.6' ±
877.0
874
BRIDGE LIMITS = 26.50'
874.2
B.M. No. 2 Spike in ⌀ 31' Lt. Sta. 121+58 Elev. 880.05
B.M. No. 3 Spike in Twin Ash 36' Rt. Sta. 129+24 Elev. 878.20
B.M. YELLOW PAINTED SQUARE N.E. HEADWALL
879.54
879.35
879.20
879.09
879.02
879.00
879.00
Sta. 125+09.75
Sta. 125+36.25
879.00
879.00
150' V.C.
880
870
860
850
-1.04%
0.00%
0.00%
Limit channel excavation
2:1
2:1
Highest Known Hi Water Elev. 877.8
10 Yr. High Water Elev. 876.0
5 Yr. High Water Elev. 874.8
Ftg. Elev. 866.00
Excavate channel thru structure to elevation 869.0 ±
P.I. Sta. 122+50
El. 879.00
879.47
878.29
877.95
877.83
877.78
877.71
877.70
877.69
877.54
122
123
124
125
+12
+40
+50
+79
126
127

1984 DESIGN TRAFFIC = 884 A.D.T.

EXISTING STRUCTURE
SPAN ~ 25'-0"
TYPE ~ Concrete Slab
ROADWAY ~ 24'-0"
SKEW ~ None
LOADING ~ H-15
BUILT ~ 1932
DRAINAGE AREA ~ 375 square miles

MICRO... JUL 15 1986

PROPOSED STRUCTURE

TYPE: Single span reinforced concrete slab with reinforced concrete wall abutments
SPANS: 24'-0" face to face of abutments
ROADWAY: 36'-0" face to face of guard rails
LOAD FREQUENCY: CF = 130 (57)
SKEW: None
WEARING SURFACE: 1" monolithic concrete
APPROACH SLABS: AS-1-54 (25' long)
ALIGNMENT: Tangent

1/3

STATE OF OHIO
DEPARTMENT OF HIGHWAYS
BUREAU OF BRIDGES

SITE PLAN

BRIDGE NO. HAN-69-0237
OVER CUMMINS DITCH
HANCOCK CO SR. 69
SEC.
STA. 125+09.75
125+36.25
SCALE 1" = 20'

PRESENT TOPOGRAPHY		PROPOSED WORK			
SURVEYED	DRAWN	DESIGNED	DRAWN	CHECKED	REVIEWED
AERIAL SURVEY	AERIAL SURVEY	D.H.S.	D.H.S.	R.E.J.	P.E.S.

BFG 3-1-67

01448

FED. RD. DIVISION	STATE	PROJECT	
2	OHIO		

38
51

HANCOCK COUNTY
HAN-69 ~~(1.14)~~ (1.97)(2.31)(3.28)(4.23)(6.17)

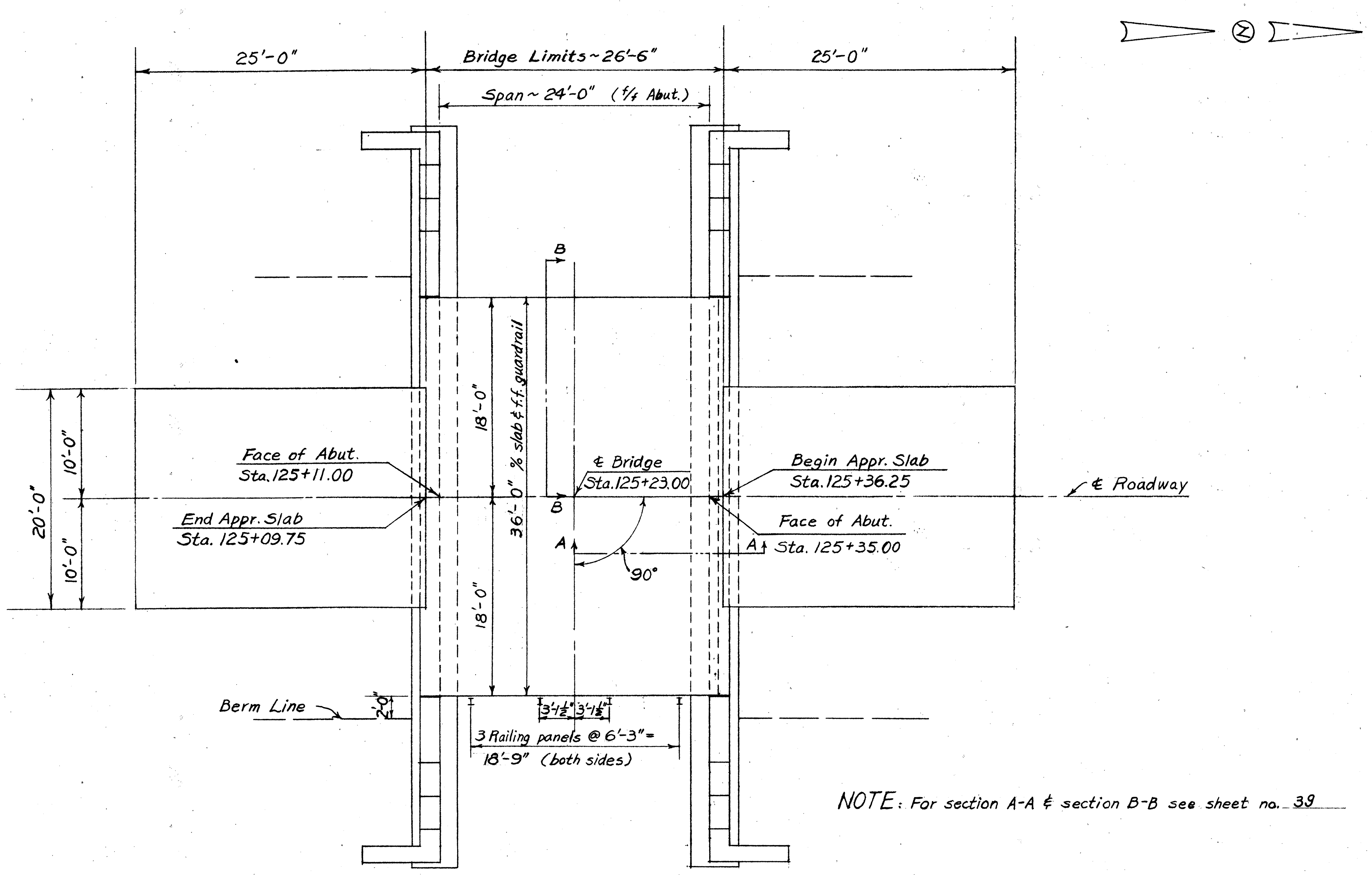

Ⓝ
25'-0"
Bridge Limits ~ 26'-6"
25'-0"
Span ~ 24'-0" (℄ Abut.)
B
B
18'-0"
36'-0" ℅ slab & f.f. guardrail
18'-0"
20'-0"
10'-0"
10'-0"
Face of Abut.
Sta. 125+11.00
End Appr. Slab
Sta. 125+09.75
℄ Bridge
Sta. 125+23.00
Begin Appr. Slab
Sta. 125+36.25
Face of Abut.
Sta. 125+35.00
℄ Roadway
A
A
90°
Berm Line
2'-0"
3'-4½"
3'-4½"
3 Railing panels @ 6'-3" =
18'-9" (both sides)

NOTE: For section A-A & section B-B see sheet no. 39

GENERAL PLAN

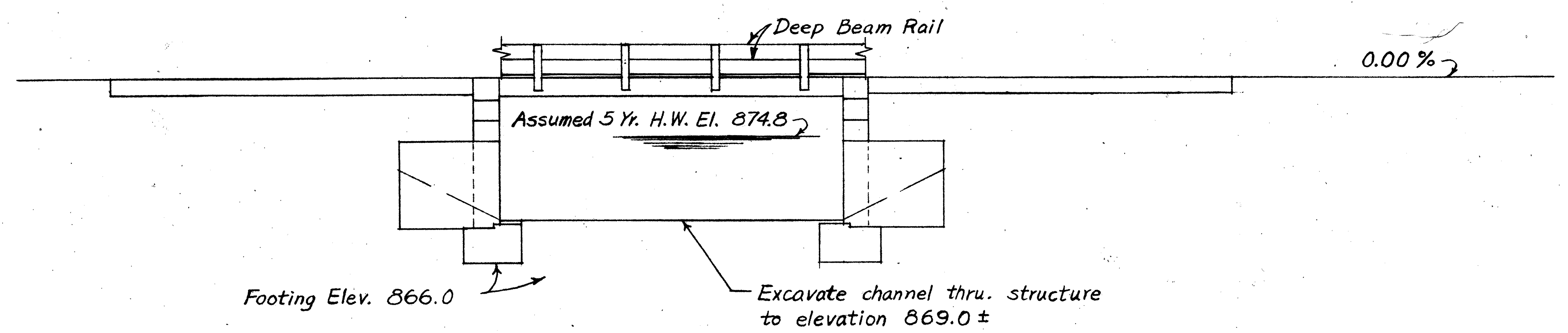

Deep Beam Rail
0.00 %
Assumed 5 Yr. H.W. El. 874.8
Footing Elev. 866.0
Excavate channel thru. structure
to elevation 869.0 ±

ELEVATION

GENERAL NOTES

Reference shall be made to Standard Drawings SB-1-64 sheets 1 and 2 revised 11-8-65, and to Supplemental Specifications 808 dated 1-13-67 and 825 dated 1-1-67.

Design Data:
Design Loading - CF 130 (57)
Concrete Class C - Basic unit stress 1,333 p.s.i.
Concrete Class E - Basic unit stress 1,133 p.s.i.
Reinforcing Steel - ASTM A15, A16, A160, Deformed,
Intermediate or Hard Grade.
Basic unit stress 20,000 p.s.i.

Removal of Existing Structure: When no longer needed to maintain traffic the existing structure shall be removed.

Footings shall extend to a minimum of 3" into undisturbed rock or to the elevation shown, whichever is lower.

Foundation Bearing Pressure: Abutment footings are designed for a maximum bearing pressure of 4.0 tons per sq. ft.

Slab Thickness is 15¾" which includes 1" for monolithic wearing surface.

For Two-deep beam railing see sheet 31

ESTIMATED QUANTITIES

Item	Total	Unit	Description	Super.	Abts.	Gen'l	As Built	
202	Lump	Sum	Existing structure removed			Lump		
503	49	Cu. Yds.	Unclassified excavation		49			
503	42	Cu. Yds.	Rock excavation		42			
503	Lump	Sum	Cofferdams, cribs and sheeting		Lump			
509	13,807	Lbs.	Reinforcing steel	9478	4329			
511	48	Cu. Yds.	Class C concrete, superstructure	48				
511	78	Cu. Yds.	Class E concrete, abutment walls		78			
511	55	Cu. Yds.	Class E concrete, abutment footings		55			
516	10	Sq. Ft.	½" Preformed expansion joint filler, AASHO M-153		10			
517	53.00	Lin. Ft.	Railing (Two deep beam rails with galvanized steel posts & bolts	53.00				
518	50	Cu. Yds.	Porous backfill		50		c-1 +7	57
808	48	Units	Water-reducing, set-retarding admixture	48			c-1 -48	—
825	115	Sq. Yds.	Concrete surface treatment	115				

STATE OF OHIO
DEPARTMENT OF HIGHWAYS
DIVISION OF DESIGN AND CONSTRUCTION
BUREAU OF BRIDGES

2

GENERAL PLAN, ELEVATION, NOTES, AND ESTIMATED QUANTITIES
BRIDGE No. HAN-69-0237
OVER CUMMINS DITCH

DESIGNED	DRAWN	TRACED	CHECKED	REVIEWED	DATE	REVISED
E.S.T.	E.S.T.	E.P.M.	J.D.R. 2-9-67	BFG	3-1-67	

REV. 4-16-70 GFJ

FED. RD. DIVISION	STATE	PROJECT	
2	OHIO		

HANCOCK COUNTY
HAN-69-(1.14)(1.97)(2.31)(3.28)(4.23)(6.17)

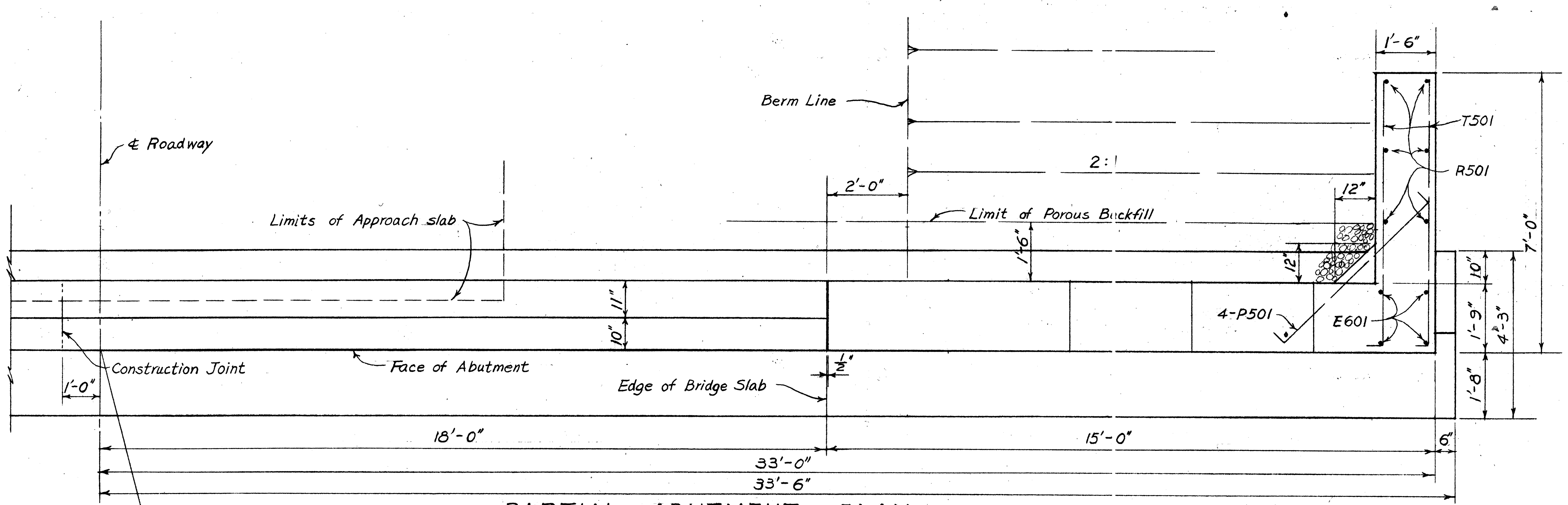
℄ Roadway
Berm Line
2:1
2'-0"
1'-6"
12"
Limits of Approach slab
Limit of Porous Backfill
T501
R501
4-P501
E601
7'-0"
10"
1'-9"
4'-3"
1'-8"
10"
11"
1'-6"
¾"
Construction Joint
Face of Abutment
Edge of Bridge Slab
1'-0"
18'-0"
15'-0"
6"
33'-0"
33'-6"
Face of Rear Abut. Sta. 125+11.00
Face of Fwd. Abut. Sta. 125+35.00

PARTIAL ABUTMENT PLAN

REINFORCING STEEL LIST

Mark	No.	Length	Weight	Shp.
Superstructure				
A834	82	28'-2"	6,167	B
B601	56	35'-6"	2,986	S
C501	12	26'-0"	325	S
Abutments				
E601	52	8'-5"	657	B
D501	46	4'-4"	208	B
L501	32	33'-8"	1,124	S
L502	8	30'-8"	256	S
L503	8	27'-8"	231	S
L504	8	5'-7"	47	S
M501	46	8'-5"	404	S
N501	46	8'-0"	384	S

Bending Diagram

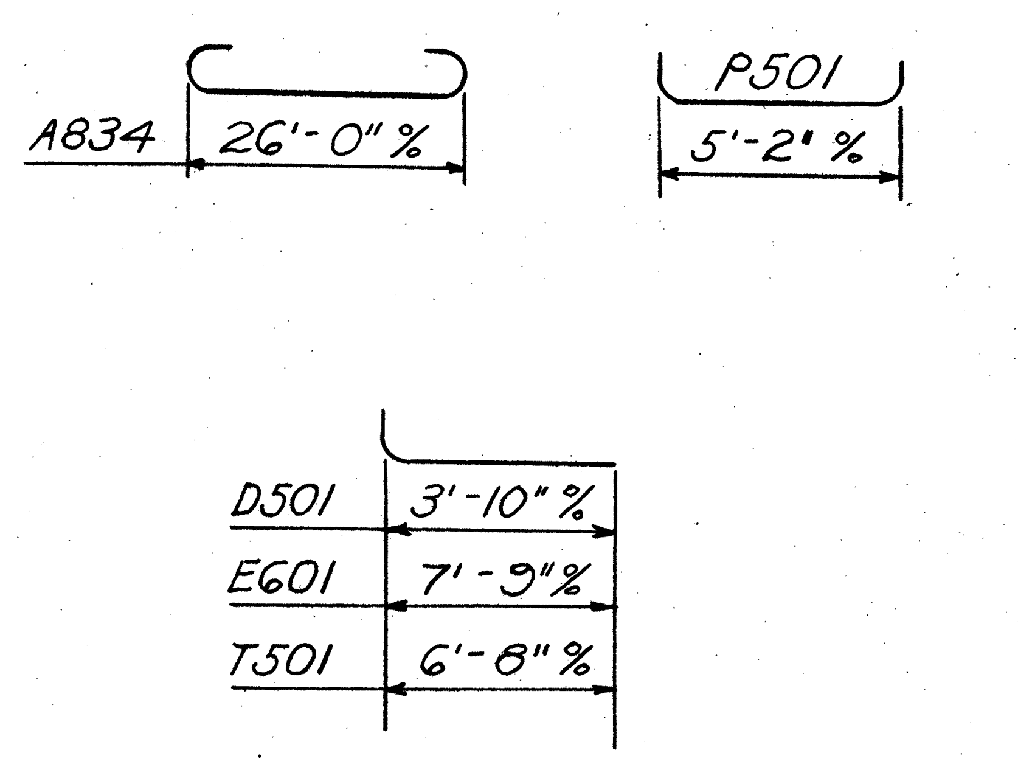
A834
26'-0" %
P501
5'-2" %
D501
3'-10" %
E601
7'-9" %
T501
6'-8" %

Mark	No.	Length	Weight	Shp.
Abutments (Cont.)				
P501	16	6'-2"	103	B
Q501	20	6'-0"	125	S
Q502	8	4'-6"	38	S
Q503	8	3'-0"	25	S
S501	20	9'-7"	200	S
S502	8	8'-1"	67	S
S503	8	6'-7"	55	S
R501	24	5'-5"	136	S
T501	36	7'-2"	269	B
Replacement Bars				
RE801	1	6'-6"	—	S
RE601	1	5'-11"	—	S
RE501	1	5'-7"	—	S

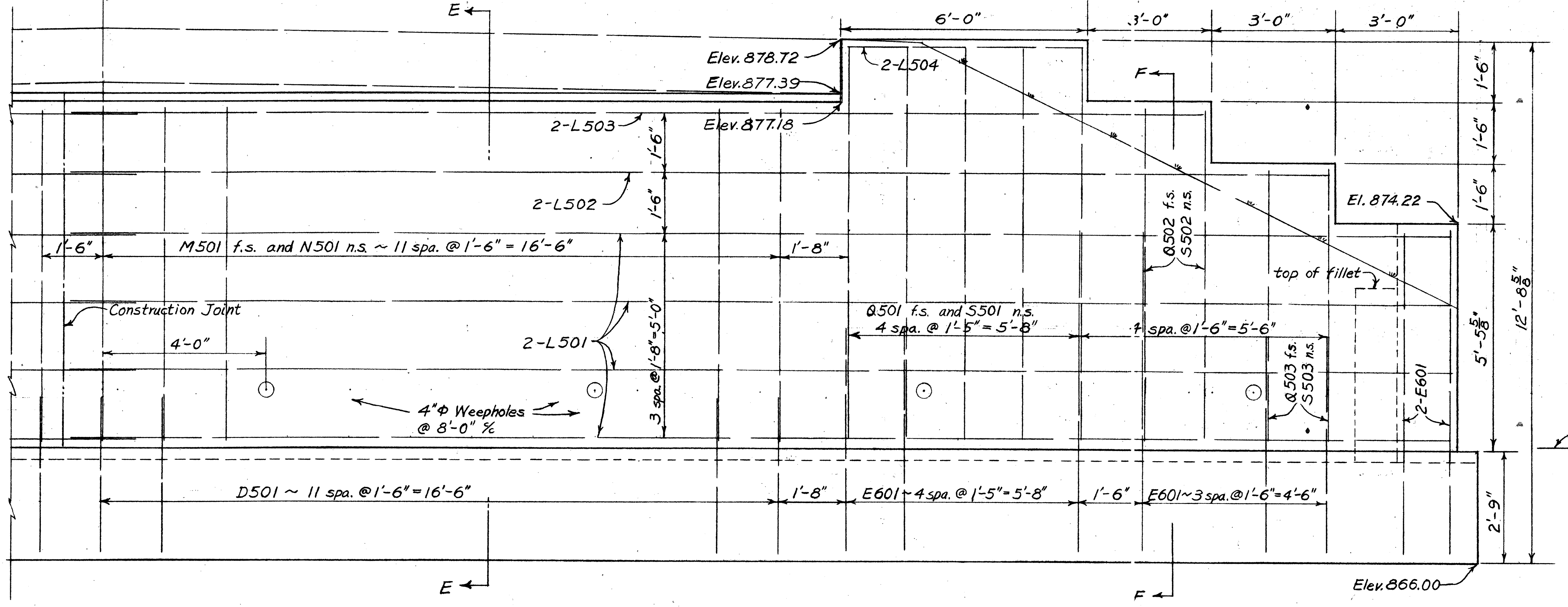
E
F
6'-0"
3'-0"
3'-0"
3'-0"
Elev. 878.72
Elev. 877.39
Elev. 877.18
2-L504
2-L503
2-L502
2-L501
1'-6"
1'-6"
El. 874.22
Q502 f.s.
S502 n.s.
top of fillet
1'-6"
M501 f.s. and N501 n.s. ~ 11 spa. @ 1'-6" = 16'-6"
1'-8"
Construction Joint
4'-0"
Q501 f.s. and S501 n.s.
4 spa. @ 1'-5" = 5'-8"
4 spa. @ 1'-6" = 5'-6"
3 spa. @ 1'-8" = 5'-0"
4"Φ Weepholes @ 8'-0" %
Q503 f.s.
S503 n.s.
2-E601
5'-5⅝"
12'-8⅝"
Flow Line El. 869.0±
D501 ~ 11 spa. @ 1'-6" = 16'-6"
1'-8"
E601 ~ 4 spa. @ 1'-5" = 5'-8"
1'-6"
E601 ~ 3 spa. @ 1'-6" = 4'-6"
2'-9"
Elev. 866.00

PARTIAL ELEVATION

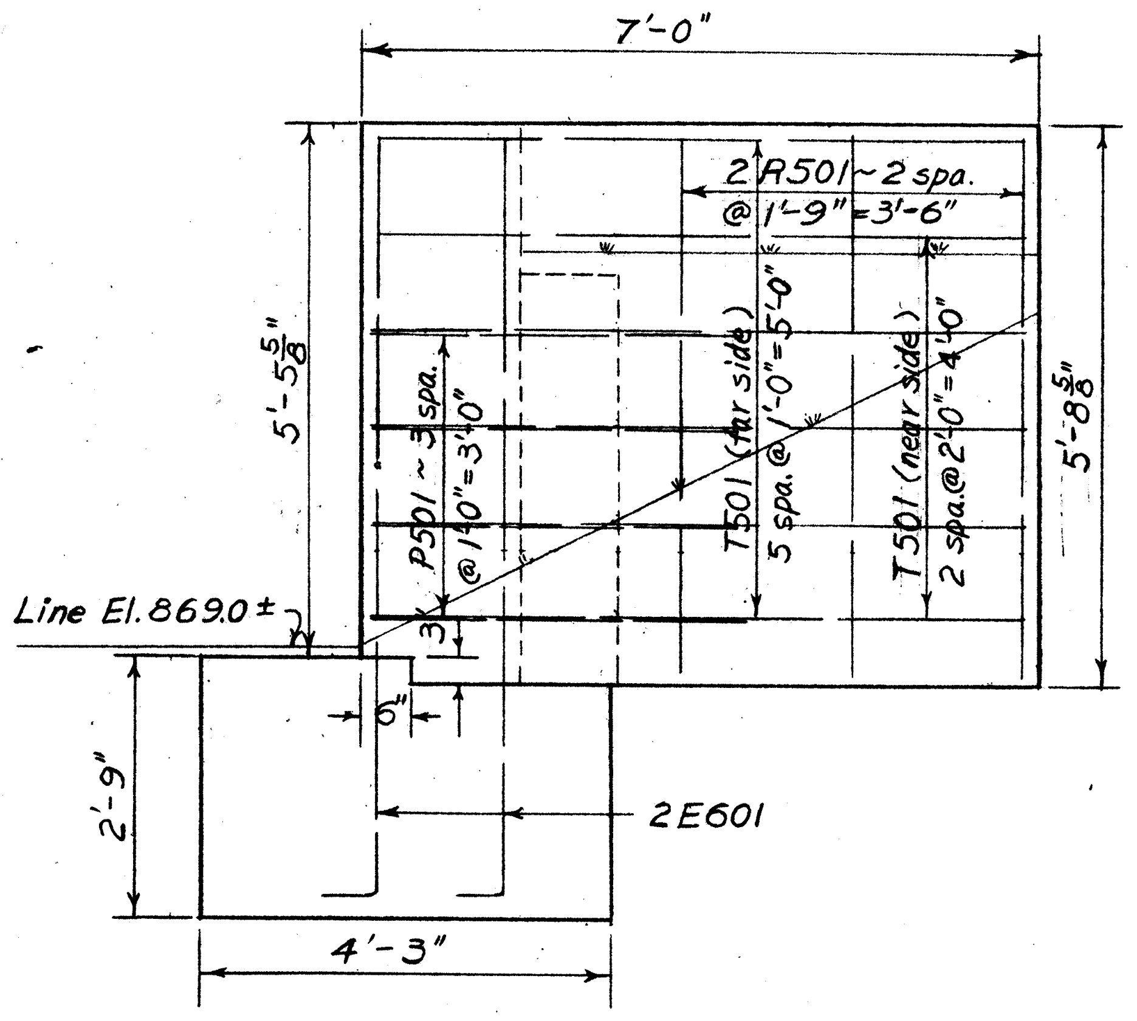
7'-0"
2 R501 ~ 2 spa. @ 1'-9" = 3'-6"
5'-5⅝"
5'-8⅝"
P501 ~ 3 spa. @ 1'-0" = 3'-0"
T501 (far side) 5 spa. @ 1'-0" = 5'-0"
T501 (near side) 2 spa. @ 2'-0" = 4'-0"
2'-9"
2 E601
4'-3"

END VIEW

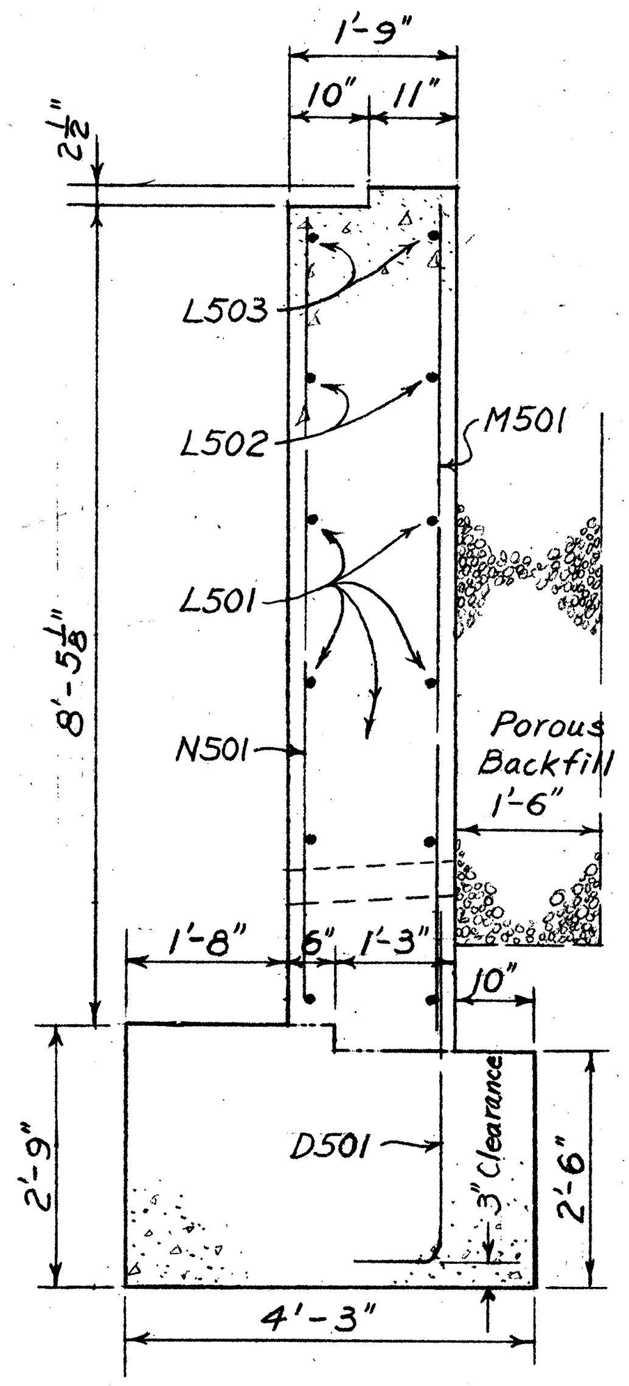
1'-9"
10"
11"
2¼"
L503
L502
M501
L501
N501
8'-5⅝"
Porous Backfill 1'-6"
1'-8"
6"
1'-3"
10"
D501
3" Clearance
2'-6"
2'-9"
4'-3"

SECTION E-E

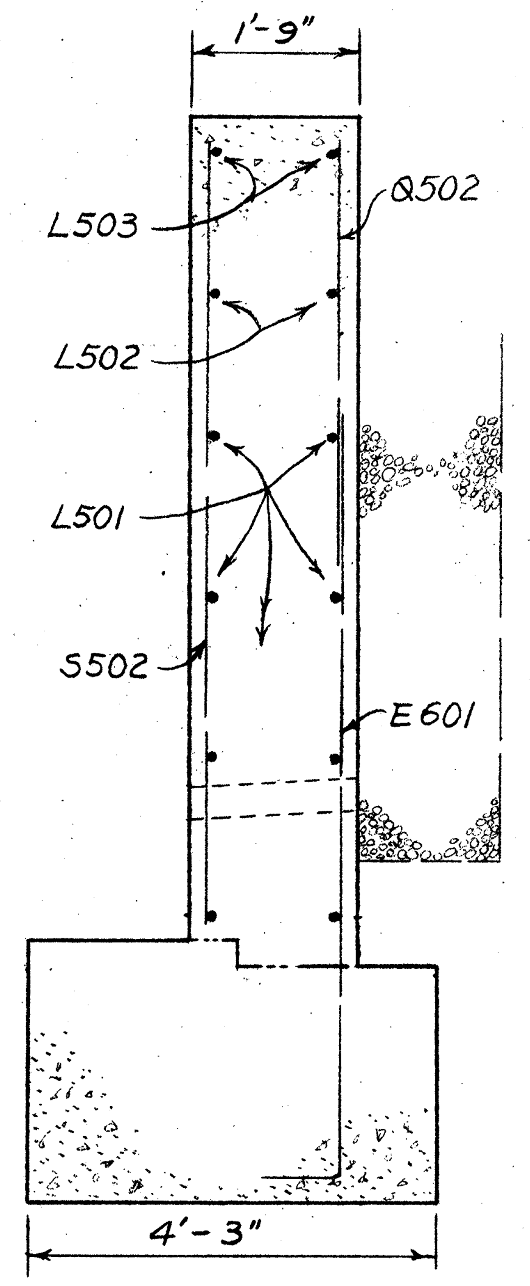
1'-9"
Q502
L503
L502
L501
S502
E601
4'-3"

SECTION F-F

Note:
For additional superstructure details see Std. Dwg. SB-1-64, Sheet 1.
n.s denotes near side, f.s. denotes far side.

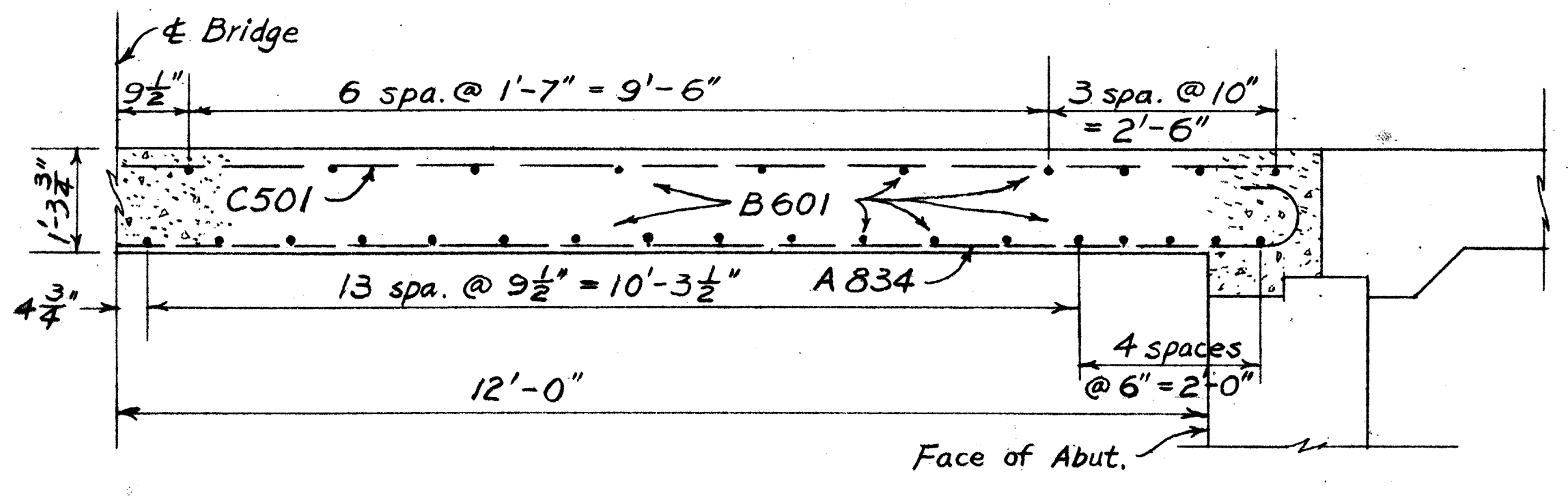
℄ Bridge
9½"
6 spa. @ 1'-7" = 9'-6"
3 spa. @ 10" = 2'-6"
1'-3¾"
4¾"
C501
B601
13 spa. @ 9½" = 10'-3½"
A834
4 spaces @ 6" = 2'-0"
12'-0"
Face of Abut.

SECTION A-A

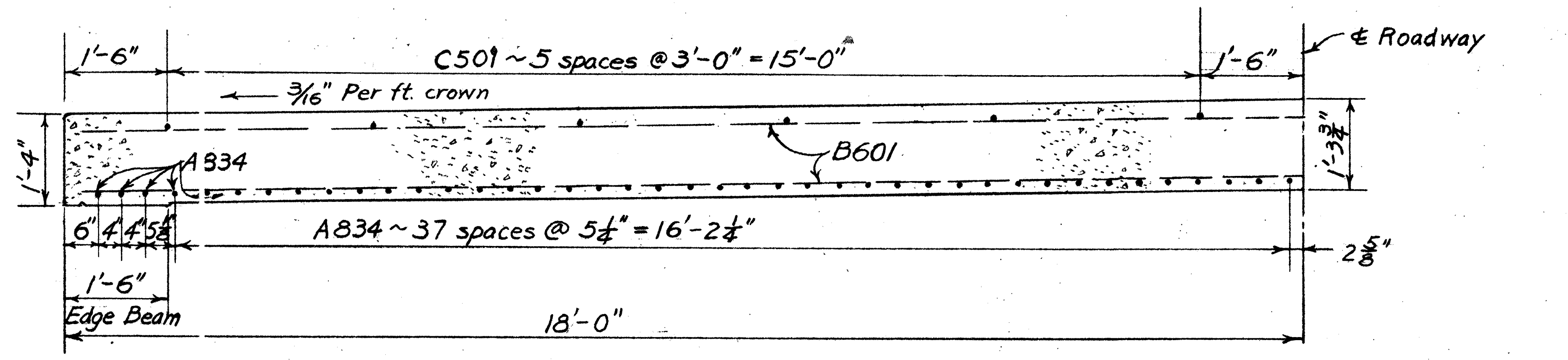
1'-6"
C501 ~ 5 spaces @ 3'-0" = 15'-0"
1'-6"
℄ Roadway
3/16" Per ft crown
B601
A834
1'-4"
1'-3⅜"
6"
4
4
5½
A834 ~ 37 spaces @ 5¼" = 16'-2¼"
2⅝"
1'-6"
Edge Beam
18'-0"

SECTION B-B

MICROFILMED
JUL 15 1986

STATE OF OHIO
DEPARTMENT OF HIGHWAYS
DIVISION OF DESIGN AND CONSTRUCTION
BUREAU OF BRIDGES

3/3

PARTIAL ABUTMENT PLAN, ELEVATION, REINFORCING STEEL DETAIL AND LIST
BRIDGE No. HAN-69-0237
OVER CUMMINS DITCH

DESIGNED	DRAWN	TRACED	CHECKED	REVIEWED	DATE	REVISED
E.S.T.	E.S.T.		J.D.R.	BFG	3-1-67	

FED. RD. DIVISION	STATE	PROJECT	
2	OHIO		

40/51

HANCOCK COUNTY
HAN-69-(1.14)(1.97)(2.31)(3.28)(4.23)(6.17)
4.2± miles South of Mt. Cory.

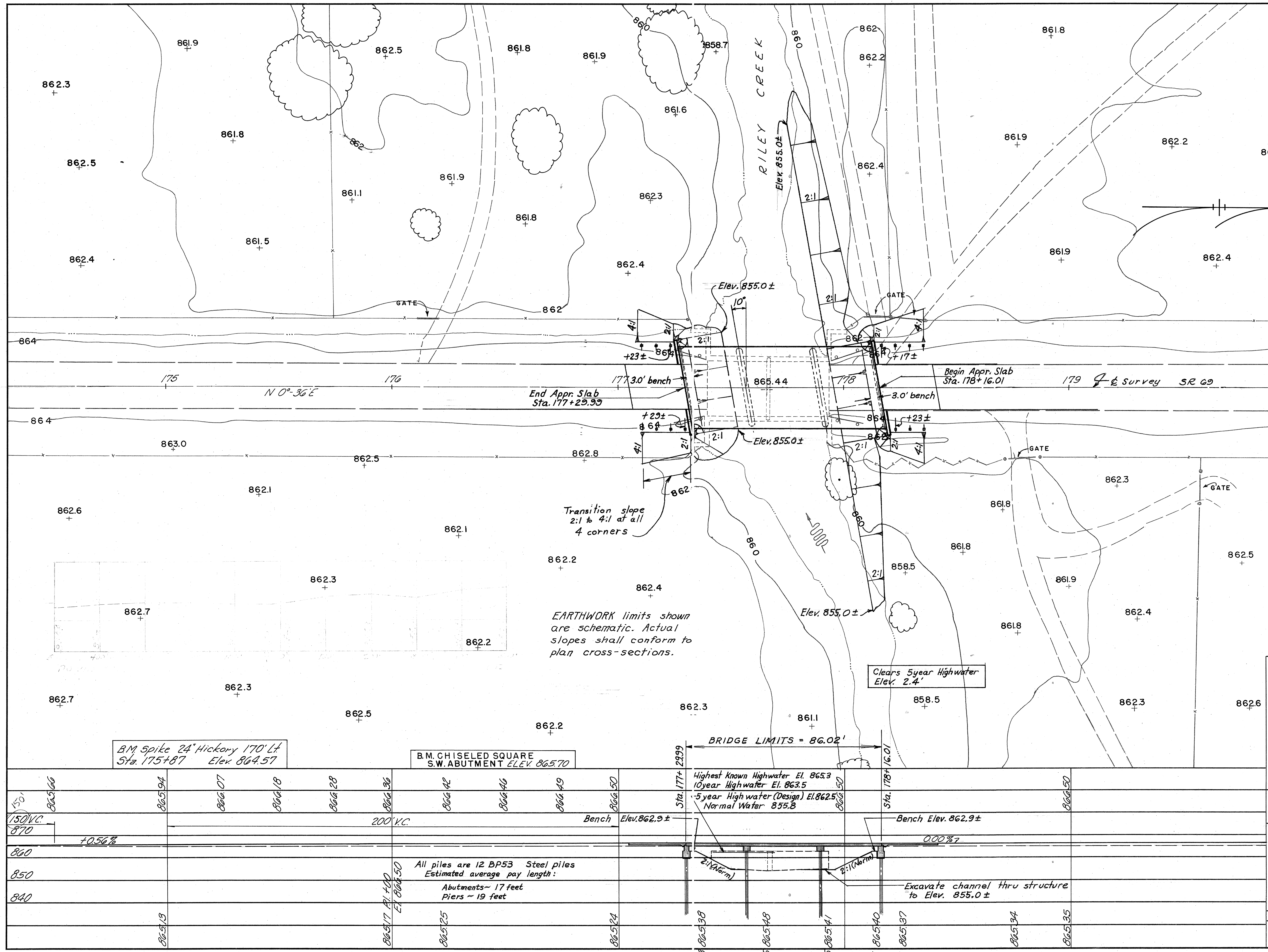
RILEY CREEK
GATE
N 0°-36' E
175
176
177
178
179
180
181
℄ Survey SR 69
865.44
Elev. 855.0±
10°
2:1
4:1
+23±
+29±
+17±
3.0' bench
End Appr. Slab Sta. 177+29.99
Begin Appr. Slab Sta. 178+16.01
Transition slope 2:1 to 4:1 at all 4 corners
BRIDGE LIMITS = 86.02'
Sta. 177+29.99
Sta. 178+16.01
Bench Elev. 862.9±
0.00%
+0.56%
200' V.C.
150' V.C.
2:1 (Norm)
Excavate channel thru structure to Elev. 855.0±
870
860
850
840

EARTHWORK limits shown are schematic. Actual slopes shall conform to plan cross-sections.

Clears 5year Highwater Elev. 2.4'

BM Spike 24" Hickory 170' Lt.
Sta. 175+87 Elev. 864.57

B.M. CHISELED SQUARE
S.W. ABUTMENT ELEV. 865.70

Highest Known Highwater El. 865.3
10year Highwater El. 863.5
5year Highwater (Design) El. 862.5
Normal Water 855.8

All piles are 12 BP53 Steel piles
Estimated average pay length:
Abutments ~ 17 feet
Piers ~ 19 feet

EXISTING STRUCTURE
SPAN ~ 2@ 25'-0" (Clear)
TYPE ~ Concrete Slab
ROADWAY ~ 24'-0"
SKEW ~ None
LOADING ~ H-15
BUILT 1932
CONDITION — Fair
DRAINAGE AREA ~ 13.2 Sq. Mi.

1984 DESIGN TRAFFIC: 884 ADT

PROPOSED STRUCTURE

TYPE: Continuous reinforced concrete slab with capped pile substructure
SPANS: 26.0'-32.5'-26.0' c/c brgs.
ROADWAY: 36'-0" f/f guard rails
LOAD FREQUENCY: CF = 130 (57)
SKEW: 10° R.F.
WEARING SURFACE: 1" monolithic concrete
APPROACH SLABS: AS-1-54 (25' long)
ALIGNMENT: Tangent

MICRO JUL 15 1986

STATE OF OHIO
DEPARTMENT OF HIGHWAYS
BUREAU OF BRIDGES

SITE PLAN

BRIDGE NO. HAN-69-0336
OVER RILEY CREEK
HANCOCK CO SR 69
SEC.
STA. 177+29.99
178+16.01
SCALE 1" = 20'

PRESENT TOPOGRAPHY		PROPOSED WORK			
SURVEYED	DRAWN	DESIGNED	DRAWN	CHECKED	REVIEWED
AERIAL SURVEY	AERIAL SURVEY	D.H.S.	D.H.S.	N.J.B.	P.E.S.

01448

BFG 2-20-67

FED. RD. DIVISION	STATE	PROJECT	
2	OHIO		

41
51

HANCOCK COUNTY
HAN-69-~~(1.14)(1.97)(2.31)(3.28)(4.23)~~(6.17)

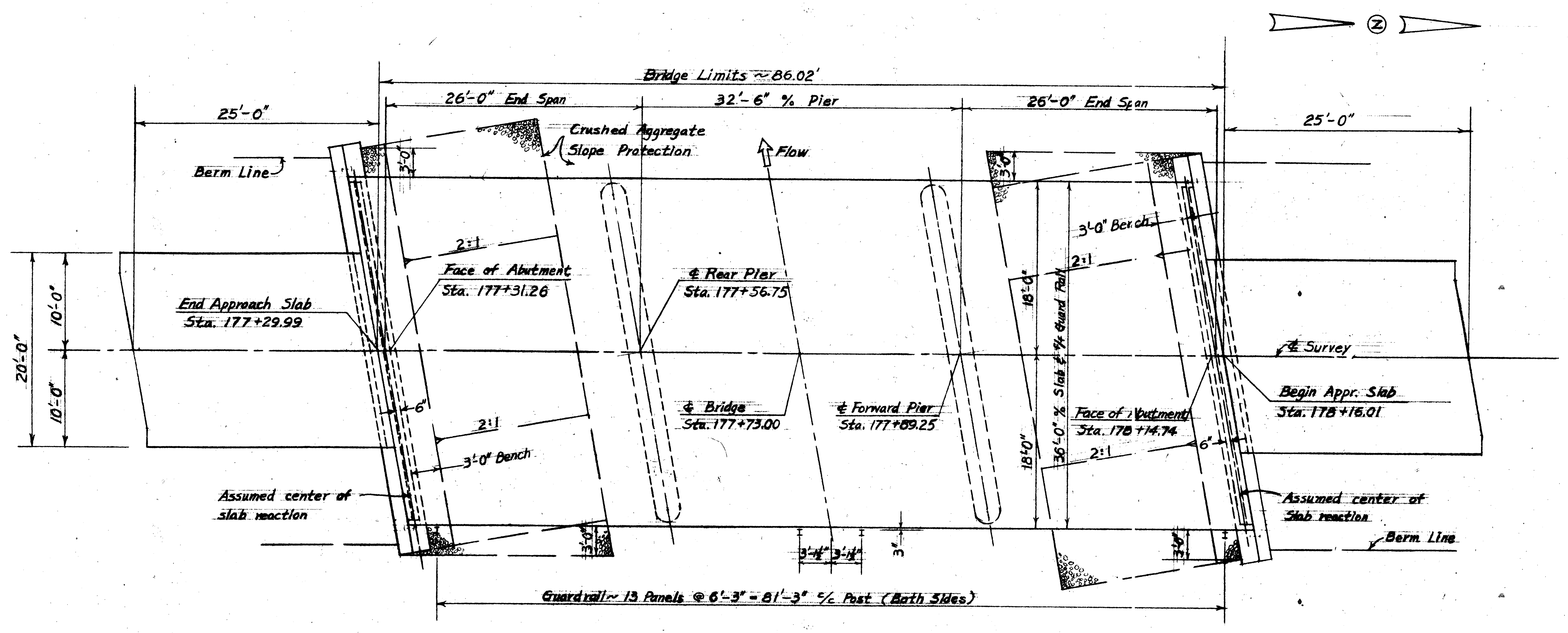
Z
Bridge Limits ~ 86.02'
25'-0"
26'-0" End Span
32'-6" % Pier
26'-0" End Span
25'-0"
Berm Line
Crushed Aggregate Slope Protection
Flow
3'-0"
2:1
Face of Abutment Sta. 177+31.26
End Approach Slab Sta. 177+29.99
℄ Rear Pier Sta. 177+56.75
℄ Bridge Sta. 177+73.00
℄ Forward Pier Sta. 177+89.25
3'-0" Bench
18'-0"
36'-0" % Slab ℄ % Guard Rail
Face of Abutment Sta. 178+14.74
℄ Survey
Begin Appr. Slab Sta. 178+16.01
20'-0"
10'-0"
10'-0"
6"
Assumed center of slab reaction
Berm Line
3'-1½"
3'-1½"
3"
Guardrail ~ 13 Panels @ 6'-3" = 81'-3" % Post (Both Sides)

GENERAL PLAN

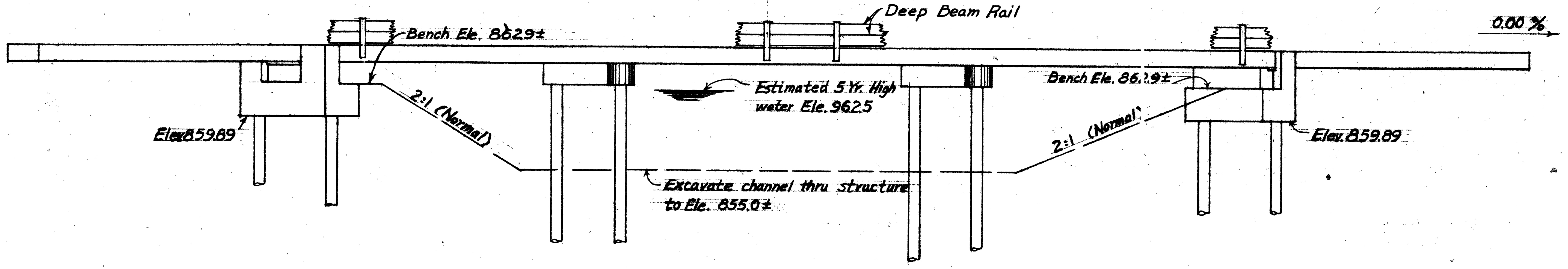
Bench Ele. 862.9±
Deep Beam Rail
0.00 %
Estimated 5 Yr. High water Ele. 962.5
Elev. 859.89
2:1 (Normal)
Excavate channel thru structure to Ele. 855.0±
Bench Ele. 862.9±
2:1 (Normal)
Elev. 859.89

ELEVATION

ESTIMATED QUANTITIES

Item	Total	Unit	Description	Super.	Piers	Abuts.	Gen'l.	As Built
202	Lump	Sum	Existing structures removed				Lump	
503	83	Cu. Yds.	Unclassified excavation			83		
505	Lump	Sum	First test pile				Lump	
507	510	Lin. Ft.	Steel piles (12BP53)		270	240		
509	39,565	Lbs.	Reinforcing steel	31,703	3,017	4,845		
511	149	Cu. Yds.	Class C concrete, superstructure & pier caps	136	13			
511	44	Cu. Yds.	Class E concrete, abutments			44		
517	172.04	Lin. Ft.	Railing (Two deep beam rails with steel posts & bolts)	172.04				
518	14	Cu. Yds.	Porous backfill			14		
601	200	Sq. Yds.	Crushed aggregate slope protection			200		
808	149	Units	Water-reducing, set-retarding admixture	136	13			
825	370	Sq. Yds.	Concrete surface treatment	370				

GENERAL NOTES

REFERENCE shall be made to Std. Drwgs. CS-1-65 dated 6-1-65, P-1-54 revised 11-8-65, A-1-54 revised 11-8-65, and to Supplemental Specifications No. 808 dated 1-13-67 & 825 dated 1-1-67.

DESIGN LOADING = CF = 130(57)
Concrete class "C" basic unit stress 1,333 p.s.i.
Concrete class "E" basic unit stress 1,133 p.s.i.
Reinforcing Steel-ASTM A15, A16, A160, Deformed, Intermediate or Hard Grade, basic unit stress 20,000 p.s.i.

REMOVAL OF EXISTING STRUCTURE: When no longer needed to maintain traffic the existing structure shall be removed.

PILES shall be driven through the existing subsoils to firm contact with bedrock at both abutments and both piers. If the length of penetration is approximately equal to the depth to rock according to the bridge foundation investigation report, the firm contact shall be considered as attained when the capacity according to the formula in Sec. 507.05 is not less than the following value for a pile hammer of the indicated energy rating.
For the abutment piles:
40 tons per pile using a 7,000 ft. lb. hammer
35 tons per pile using an 11,000 ft. lb. hammer
30 tons per pile using a 15,000 ft. lb. or greater hammer.
For the pier piles:
50 tons per pile using a 7,000 ft. lb. hammer
45 tons per pile using an 11,000 ft. lb. hammer
40 tons per pile using a 15,000 ft. lb. hammer
If the energy rating of the hammer is between the ratings as shown above, the required formula capacity shall be determined by interpolation. The design load of the abutment piles is 23 tons per pile and the pier piles is 30-32 tons per pile.

PIER PILE ENCASEMENT as shown on Std. Drwg. P-1-54 is not required. The painting of the piles shall extend to low water elevation or, if the proposed surface of the ground is above low water, it shall extend to at least one foot below the proposed surface of the ground.

For Two deep beam railing see sheet 31

STATE OF OHIO
DEPARTMENT OF HIGHWAYS
DIVISION OF DESIGN AND CONSTRUCTION
BUREAU OF BRIDGES

2

GENERAL PLAN, ELEVATION, NOTES, AND ESTIMATED QUANTITIES
BRIDGE No. HAN-69-0336
OVER RILEY CREEK

DESIGNED	DRAWN	TRACED	CHECKED	REVIEWED	DATE	REVISED
E.S.T.	E.S.T.		INNES 2-3-67	BFG	2-20-67	

FED. RD. DIVISION	STATE	PROJECT	
2	OHIO		

HANCOCK COUNTY
HAN-69 -(1.14)(1.97)(2.31)(3.28)(4.23)(6.17)

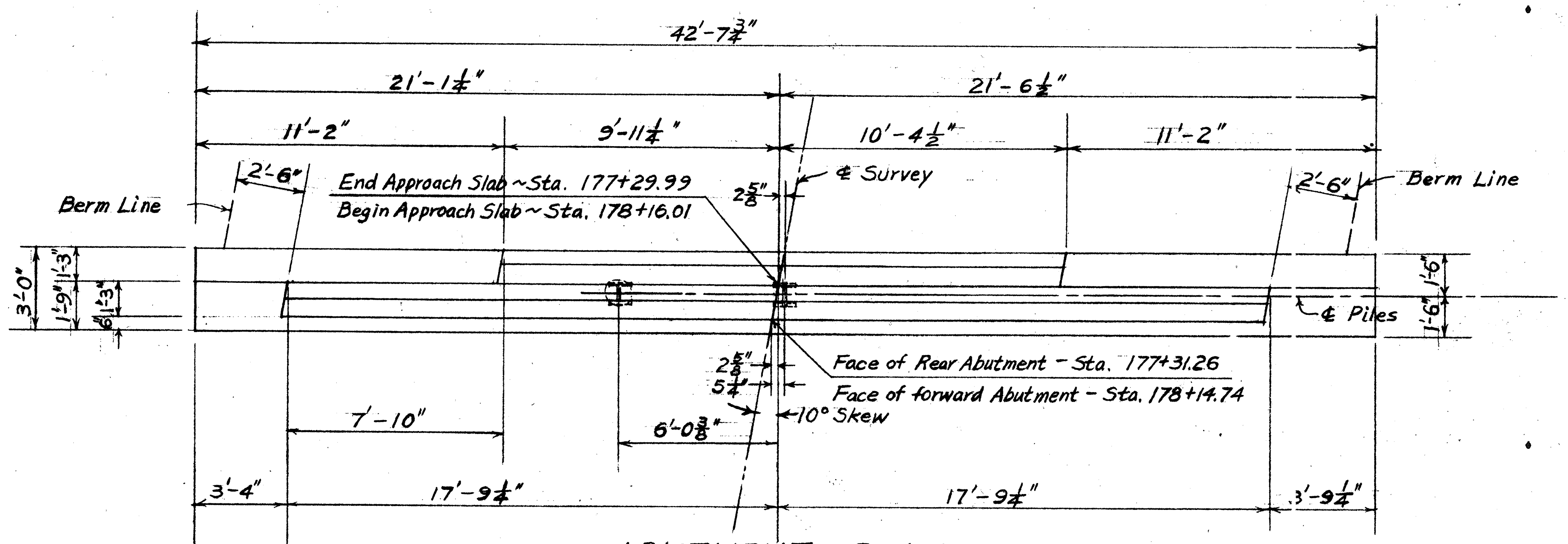
42'-7 3/4"
21'-1 1/4"
21'-6 1/2"
11'-2"
9'-11 1/4"
10'-4 1/2"
11'-2"
Berm Line
2'-6"
End Approach Slab ~ Sta. 177+29.99
Begin Approach Slab ~ Sta. 178+16.01
2 5/8"
℄ Survey
2'-6"
Berm Line
3'-0"
1'-9"
1'-3"
6"
1'-3"
1'-6"
1'-6"
℄ Piles
2 5/8"
5 1/4"
Face of Rear Abutment - Sta. 177+31.26
Face of forward Abutment - Sta. 178+14.74
10° Skew
7'-10"
6'-0 3/8"
3'-4"
17'-9 1/4"
17'-9 1/4"
3'-9 1/4"

ABUTMENT PLAN

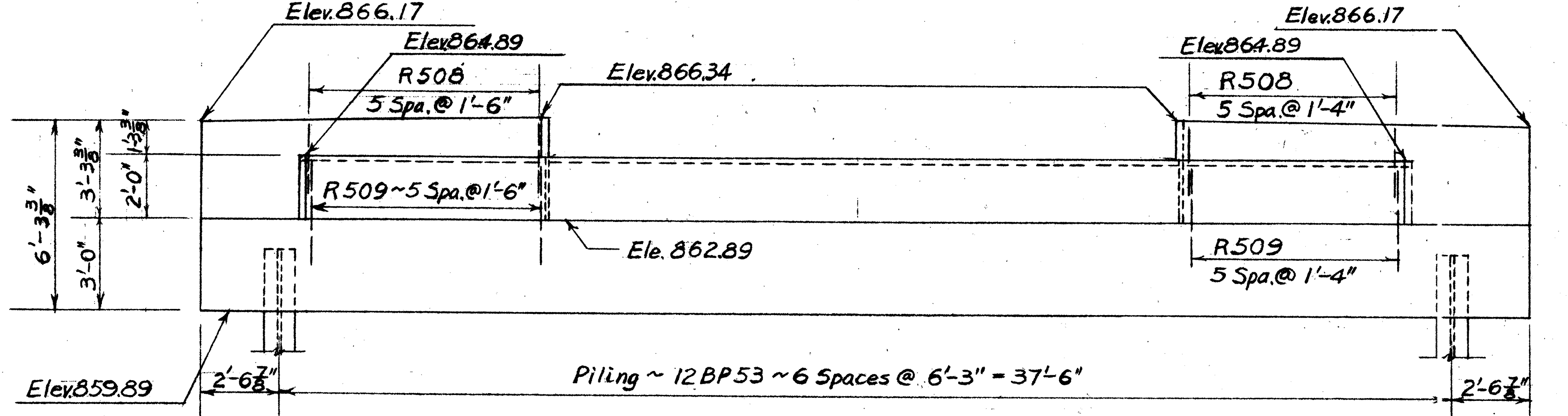
Elev. 866.17
Elev. 864.89
R508
5 Spa. @ 1'-6"
Elev. 866.34
Elev. 864.89
Elev. 866.17
R508
5 Spa. @ 1'-4"
6'-3 3/8"
3'-3 3/8"
2'-0"
1'-3 3/8"
3'-0"
R509 ~ 5 Spa. @ 1'-6"
Ele. 862.89
R509
5 Spa. @ 1'-4"
Elev. 859.89
2'-6 7/8"
Piling ~ 12 BP53 ~ 6 Spaces @ 6'-3" = 37'-6"
2'-6 7/8"

ABUTMENT ELEVATION

Note: All piles are 12 BP53 steel piles

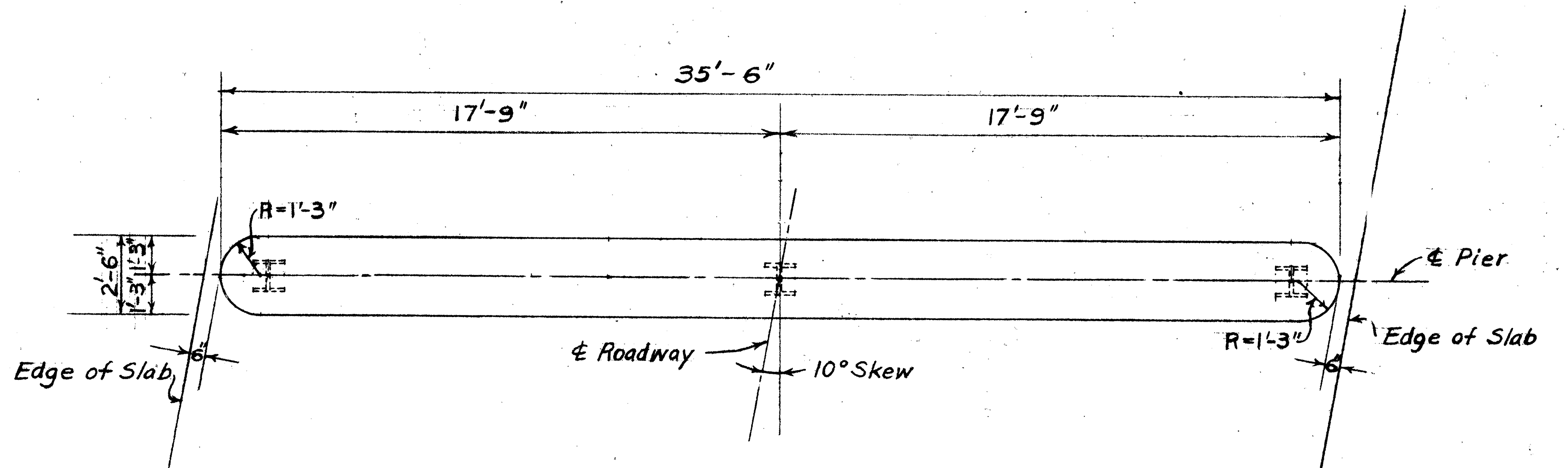
35'-6"
17'-9"
17'-9"
R=1'-3"
2'-6"
1'-3"
1'-3"
℄ Pier
Edge of Slab
℄ Roadway
10° Skew
R=1'-3"
Edge of Slab

PIER PLAN

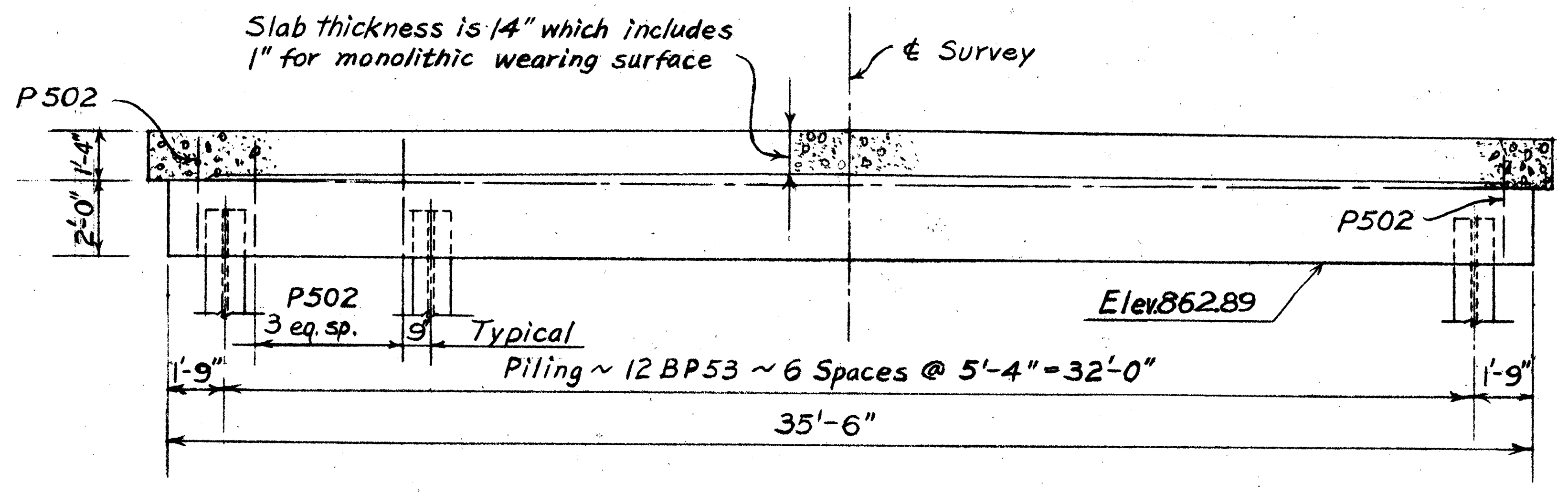
Slab thickness is 14" which includes 1" for monolithic wearing surface
℄ Survey
P502
1'-4"
2'-0"
P502
P502
3 eq. sp.
9"
Typical
Elev. 862.89
1'-9"
Piling ~ 12 BP53 ~ 6 Spaces @ 5'-4" = 32'-0"
1'-9"
35'-6"

PIER ELEVATION

REINFORCING STEEL LIST

Mark	No.	Length	Weight	Shp.
Superstructure				
A825	108	30'-3"	8,723	S
B825	34	22'-2"	2,013	B
C825	36	19'-3"	1,850	B
D825	17	20'-10"	945	S
E825	18	15'-8"	753	S
F925	70	24'-5"	5,812	S
G925	36	12'-5"	1,520	S
H925	32	9'-7"	1,042	S
J601	36	16'-6"	892	S
K601	18	12'-11"	349	S
M601	87	36'-1"	4,715	S
N601	57	36'-1"	3,089	S
Piers				
P1001	8	36'-1"	1,241	S
P901	8	33'-0"	898	S
P501	4	33'-0"	138	S
P502	52	9'-0"	488	B
P503	8	6'-4"	53	B
P401	56	5'-4"	199	B
Abutments				
R1001	16	19'-3"	1,323	S
R801	16	22'-5"	958	S
R501	16	21'-11"	366	S
R502	136	6'-7"	933	B
R503	8	18'-4"	153	S
R504	24	5'-4"	133	S
R505	28	7'-11"	231	B
R506	8	10'-8"	89	S
R507	16	4'-11"	82	S
R508	24	6'-8"	167	B
R509	24	8'-5"	211	B
R401	56	5'-4"	199	B
Replacement bars				
RE1001	1	7'-2"	—	S
RE901	1	6'-10"	—	S
RE801	1	6'-6"	—	S
RE601	1	5'-11"	—	S
RE501	1	5'-7"	—	S
RE401	1	5'-4"	—	B

Bending Diagram

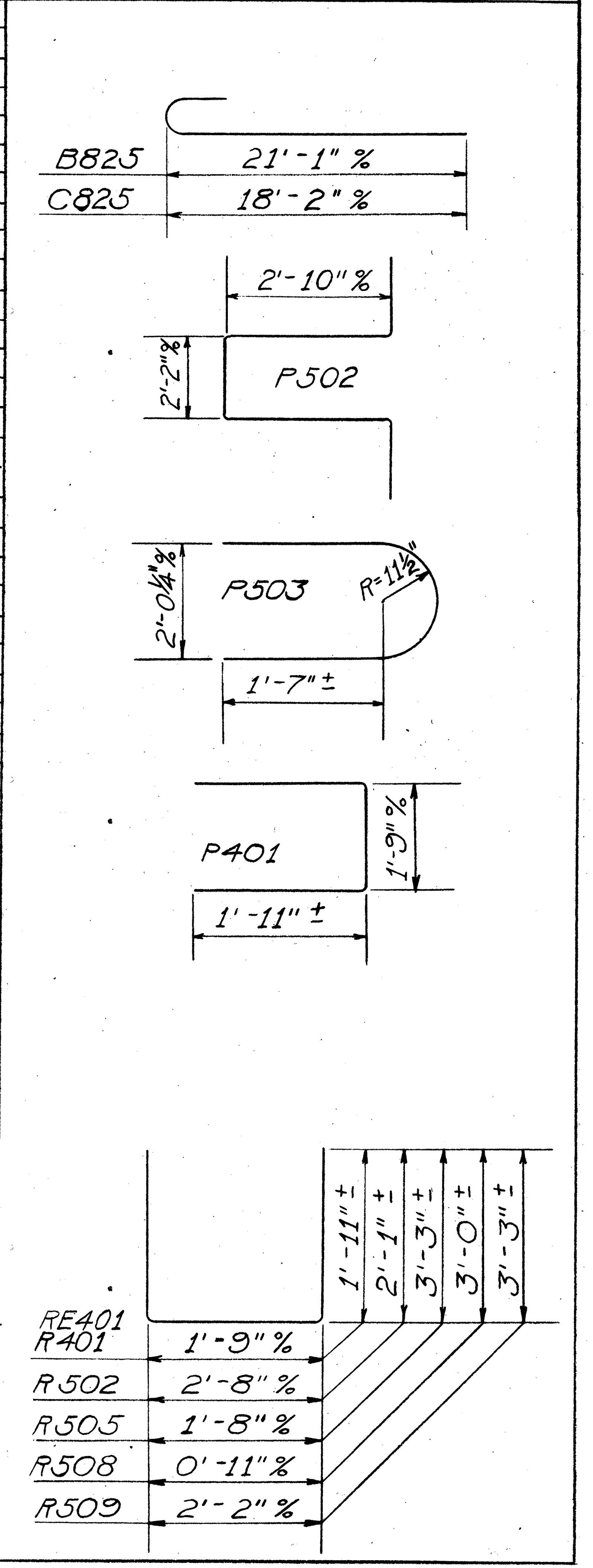
B825
C825
21'-1" %
18'-2" %
2'-10" %
2'-2" %
P502
2'-0 1/4" %
P503
R=11 1/2"
1'-7" ±
P401
1'-9" %
1'-11" ±
1'-11" ±
2'-1" ±
3'-3" ±
3'-0" ±
3'-3" ±
RE401
R401
1'-9" %
R502
2'-8" %
R505
1'-8" %
R508
0'-11" %
R509
2'-2" %

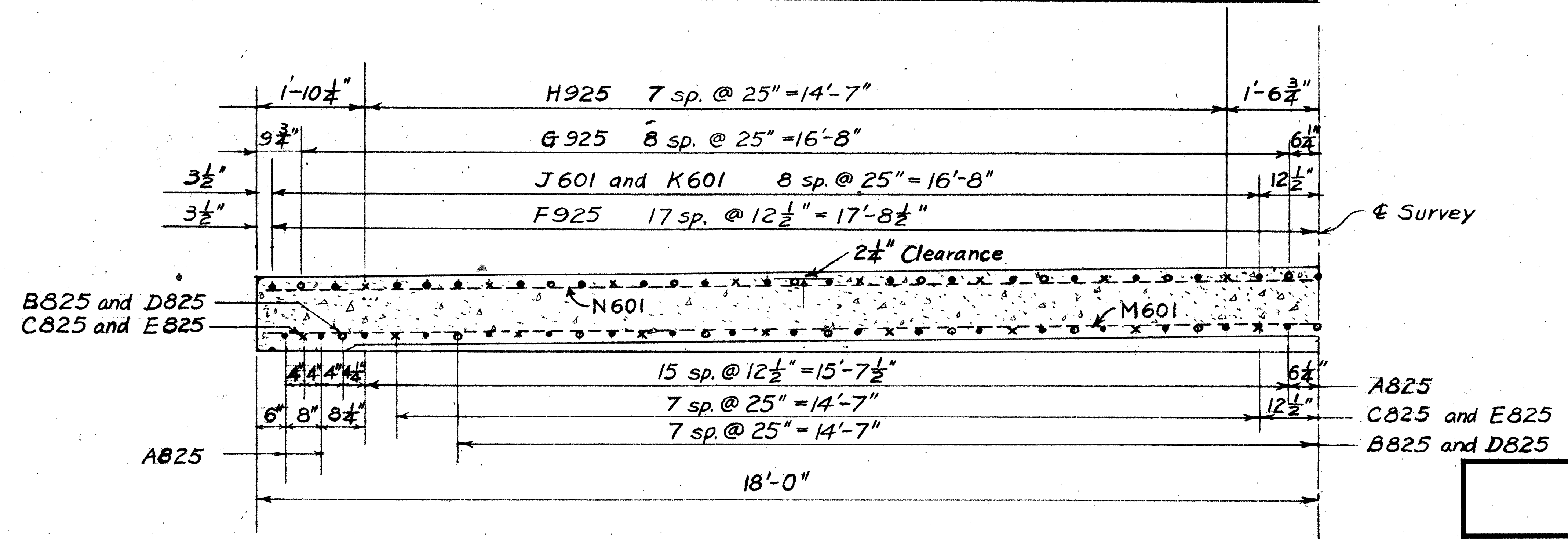
1'-10 1/4"
H925 7 sp. @ 25" = 14'-7"
1'-6 3/4"
9 3/4"
G925 8 sp. @ 25" = 16'-8"
6 1/4"
3 1/2"
J601 and K601 8 sp. @ 25" = 16'-8"
12 1/2"
3 1/2"
F925 17 sp. @ 12 1/2" = 17'-8 1/2"
℄ Survey
2 1/4" Clearance
B825 and D825
C825 and E825
N601
M601
4 1/4" 4"
15 sp. @ 12 1/2" = 15'-7 1/2"
6 1/4"
A825
6" 8" 8 1/4"
7 sp. @ 25" = 14'-7"
12 1/2"
C825 and E825
7 sp. @ 25" = 14'-7"
B825 and D825
A825
18'-0"

SLAB REINFORCING DETAIL

Note: for more detail see standard drawing C S-1-65

MICROFIL
JUL 15 1986

STATE OF OHIO
DEPARTMENT OF HIGHWAYS
DIVISION OF DESIGN AND CONSTRUCTION
BUREAU OF BRIDGES

3/3

ABUTMENT, PIER AND SLAB REIN.
DETAIL AND STEEL LIST
BRIDGE No. HAN-69-0336
OVER RILEY CREEK

DESIGNED	DRAWN	TRACED	CHECKED	REVIEWED	DATE	REVISED
E.S.T.	E.S.T.		INNES	BFG	2-20-67	

FED. RD. DIVISION	STATE	PROJECT	
2	OHIO	67 S-	

43
51

HANCOCK COUNTY
HAN-69-(1.14)(1.97)(2.31)(3.28)(4.23)(6.17)

1.36 mi. South of Mt. Cory

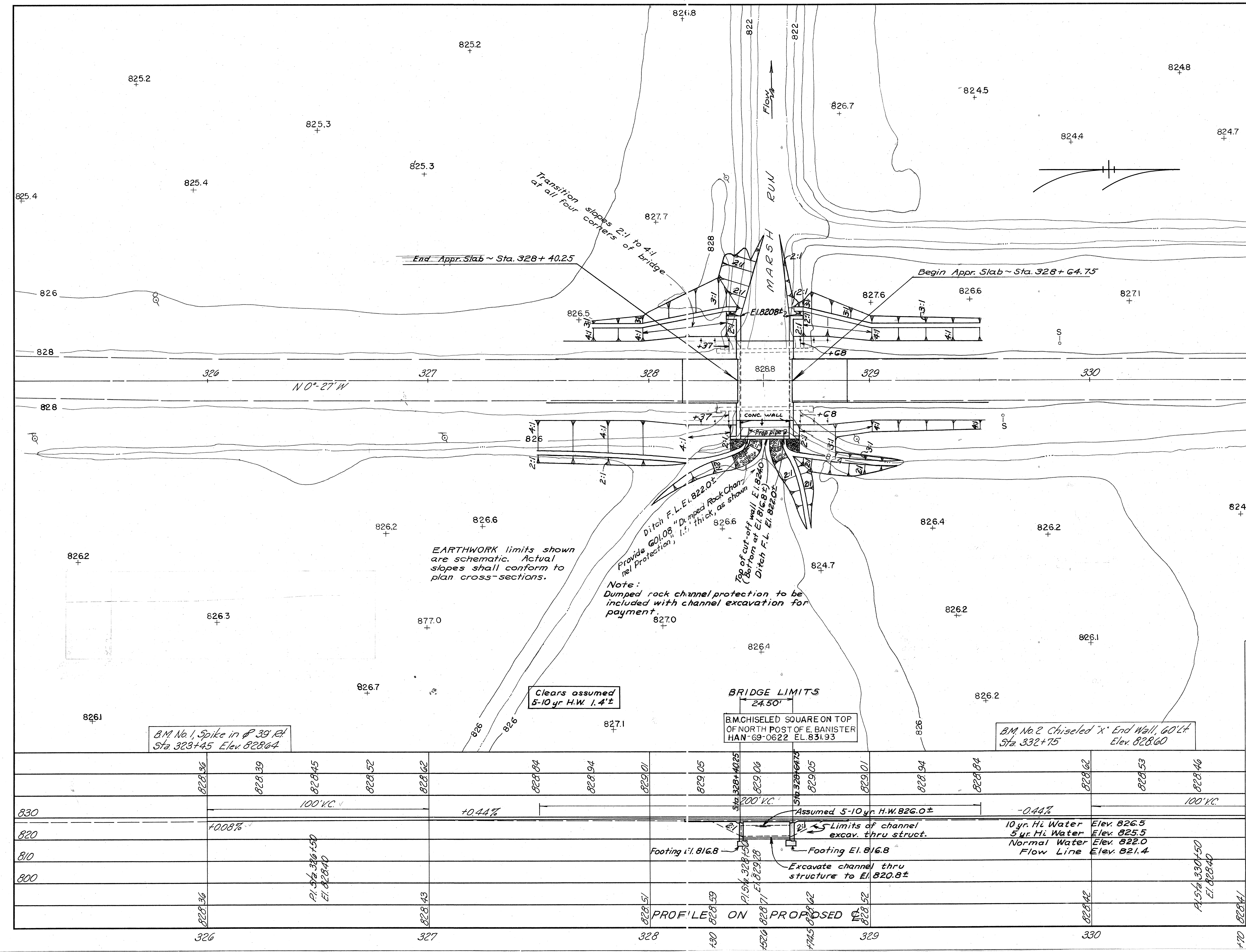

826.8
825.2
825.2
825.3
825.3
825.4
825.4
822
822
Flow
MARSH RUN
826.7
824.5
824.8
824.4
824.7
826.1
827.7
Transition slopes 2:1 to 4:1 at all four corners of bridge
End Appr. Slab ~ Sta. 328+40.25
Begin Appr. Slab ~ Sta. 328+64.75
El. 820.8±
826
826.5
827.6
826.6
827.1
827.2
827.6
828
+37
+68
326
327
328
329
330
331
N 0°-27' W
828.8
CONC. WALL
Prop pipe
2:1
3:1
4:1
Ditch F.L. El. 822.0±
Provide 601.08 "Dumped Rock Channel Protection" 1.5' thick, as shown
Top of cut-off wall El. 824.0 (Bottom at El. 816.8±)
Ditch F.L. El. 822.0±
826.2
826.6
826.6
826.2
826.4
826.2
824.7
824.7
826.3
877.0
827.0
826.4
826.1
826.2
826.7
826.1
827.1
Clears assumed 5-10 yr H.W. 1.4'±
BRIDGE LIMITS
24.50'
826
826
B.M. No. 1, Spike in ℙ 39' Rt. Sta. 323+45 Elev. 828.64
B.M. CHISELED SQUARE ON TOP OF NORTH POST OF E. BANISTER HAN-69-0622 EL. 831.93
B.M. No. 2 Chiseled "X" End Wall, 60' Lt. Sta. 332+75 Elev. 828.60
828.36
828.39
828.45
828.52
828.62
828.84
828.94
829.01
829.05
Sta. 328+40.25
829.06
Sta. 328+64.75
829.05
829.01
828.94
828.84
828.62
828.53
828.46
100' V.C.
+0.44%
200' V.C.
-0.44%
100' V.C.
+0.08%
830
820
810
800
P.I. Sta. 326+50 El. 828.40
Assumed 5-10 yr. H.W. 826.0±
Limits of channel excav. thru struct.
Footing El. 816.8
Footing El. 816.8
Excavate channel thru structure to El. 820.8±
P.I. Sta. 328+50 El. 829.28
10 yr. Hi Water Elev. 826.5
5 yr. Hi Water Elev. 825.5
Normal Water Elev. 822.0
Flow Line Elev. 821.4
P.I. Sta. 330+50 El. 828.40
828.36
828.43
828.51
828.59
828.71
828.62
828.52
828.42
828.41
PROFILE ON PROPOSED ℄
326
327
328
+30
+52.0
+74.5
329
330
+70

EARTHWORK limits shown are schematic. Actual slopes shall conform to plan cross-sections.

Note:
Dumped rock channel protection to be included with channel excavation for payment.

1984 DESIGN TRAFFIC = 975 ADT

EXISTING STRUCTURE
SPAN ~ 22'-0"
TYPE ~ Concrete Slab
ROADWAY ~ 24'-0"
SKEW ~ None
LOADING ~
BUILT ~ 1932
CONDITION ~ Fair

DRAINAGE AREA ~ 1681 Acres
or 2.63 sq. miles

PROPOSED STRUCTURE

TYPE: Single span reinforced concrete slab with reinforced concr. wall abutments.
SPAN: 22'-0' f/f abutments
ROADWAY: 36'-0" f/f guardrails
LOAD FREQUENCY: CF = 130 (57)
SKEW: None
WEARING SURFACE: 1" Monolithic concr.
APPROACH SLABS: AS-1-54 (25' long)
ALIGNMENT: Tangent

MICROFILMED JUL 15 1986

STATE OF OHIO
DEPARTMENT OF HIGHWAYS
BUREAU OF BRIDGES

1/4

SITE PLAN

BRIDGE NO. HAN-69-0622
OVER MARSH RUN
HANCOCK CO SR 69
SEC.
STA. 328+40.25
328+64.75
SCALE 1" = 20'

PRESENT TOPOGRAPHY		PROPOSED WORK			
SURVEYED	DRAWN	DESIGNED	DRAWN	CHECKED	REVIEWED
AERIAL SURVEY	AERIAL SURVEY	D.G.M.	D.G.M. N.R.B.	D.H.S.	P.E.S.

01448

BFG 5-31-67

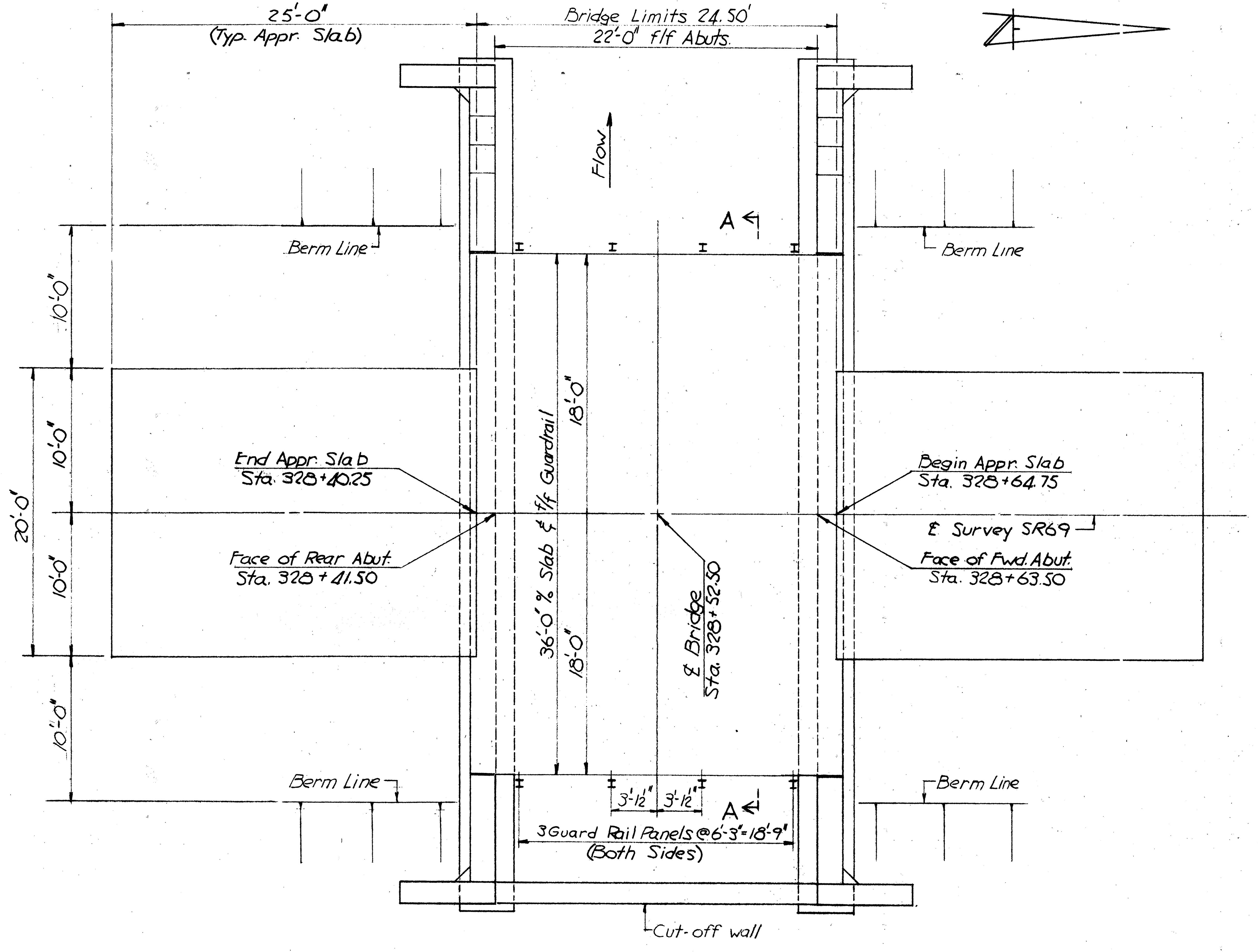

25'-0"
(Typ. Appr. Slab)
Bridge Limits 24.50'
22'-0" f/f Abuts.
Flow
A
Berm Line
Berm Line
10'-0"
10'-0"
10'-0"
10'-0"
20'-0"
End Appr. Slab
Sta. 328+40.25
Face of Rear Abut.
Sta. 328+41.50
36'-0" ℄ Slab ℄ f/f Guardrail
18'-0"
18'-0"
℄ Bridge
Sta. 328+52.50
Begin Appr. Slab
Sta. 328+64.75
℄ Survey SR69
Face of Fwd. Abut.
Sta. 328+63.50
Berm Line
Berm Line
3'-1½"
3'-1½"
A
3 Guard Rail Panels @ 6'-3" = 18'-9"
(Both Sides)
Cut-off wall

GENERAL PLAN

Vertical Curve Data
L - 200', P.I. Sta. 328+50
Elev. 829.28
$G_1 = +0.44\%$, $G_2 = -0.44\%$

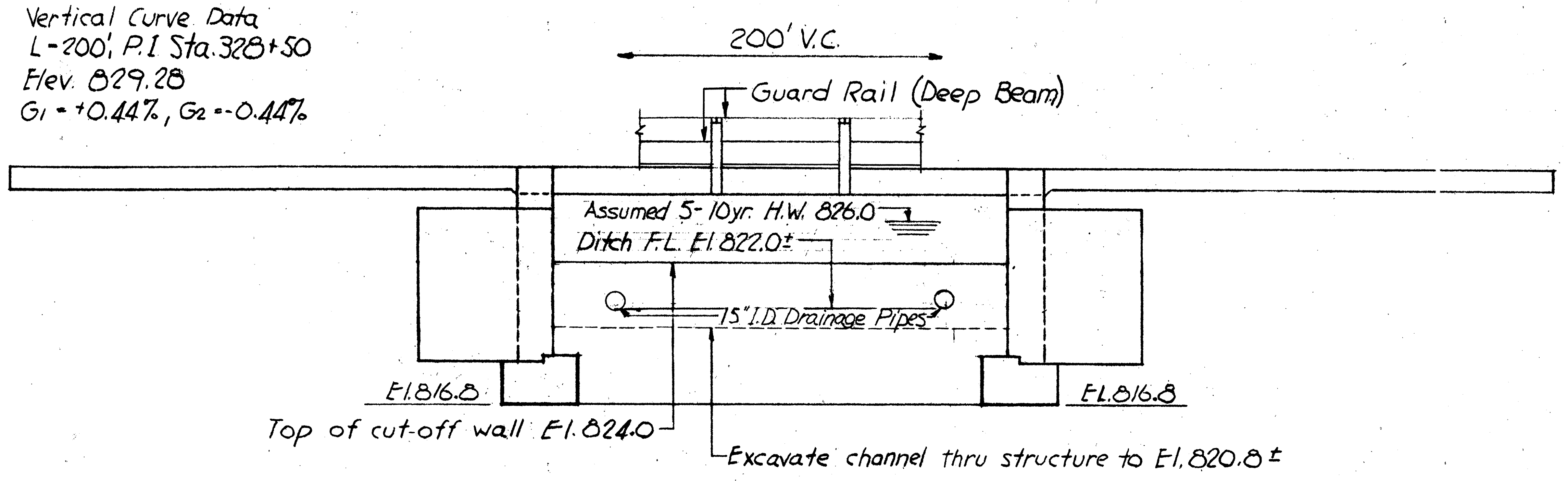

200' V.C.
Guard Rail (Deep Beam)
Assumed 5-10 yr. H.W. 826.0
Ditch F.L. El 822.0±
15" I.D. Drainage Pipes
El. 816.8
El. 816.8
Top of cut-off wall El. 824.0
Excavate channel thru structure to El. 820.8±

ELEVATION

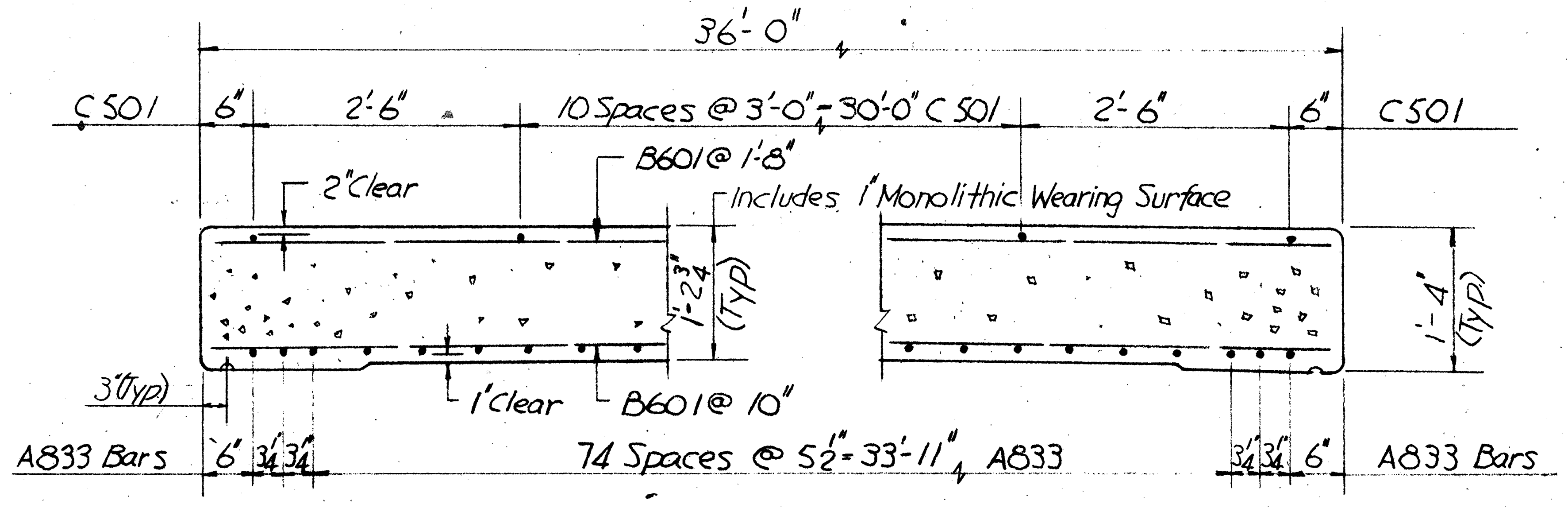

36'-0"
C501
6"
2'-6"
10 Spaces @ 3'-0" = 30'-0" C501
2'-6"
6"
C501
B601 @ 1'-8"
2" Clear
Includes 1" Monolithic Wearing Surface
1'-2¾" (Typ)
1'-4" (Typ)
3" (Typ)
1" Clear
B601 @ 10"
A833 Bars
6"
3¼"
3¼"
74 Spaces @ 5½" = 33'-11", A833
3¼"
3¼"
6"
A833 Bars

SECTION A-A

GENERAL NOTES

~~HAN-69-(1.14)~~(1.97)(2.31)(3.28)(4.23)(6.17)

REFERENCE shall be made to Standard Drawing SB-1-64 sheets 1 and 2 revised 11-8-65, and to Supplemental Specifications 808 dated 1-13-67 and 825 dated 1-1-67.

DESIGN DATA:

Design Loading - CF 130 (57)

Concrete Class C - basic unit stress 1,333 p.s.i.
Concrete Class E - basic unit stress 1,133 p.s.i.

Reinforcing Steel - ASTM A15, A16, A160, Deformed, Intermediate or Hard Grade. Basic unit stress 20,000 p.s.i.

FOUNDATION BEARING PRESSURE: Abutment footings are designed for a maximum bearing pressure of 2.5 tons per sq. ft.

FOOTING EXCAVATION shall extend for a distance 1' foot beyond the edge of the footings to elevation 812.8. The excavation shall than be backfilled to elevation 816.8, with a compacted granular material meeting the gradations of Item 310.

For Two deep beam railing see sheet 31

ESTIMATED QUANTITIES

Item	Total	Unit	Description	Super	Abuts		Gen'l	As Built	
202	Lump	Sum	Existing structure removed				Lump		
310	110	Cu. Yds	Subbase		110				
503	Lump	Sum	Cofferdams, cribs and sheeting				Lump		
503	250	Cu. Yds	Unclassified excavation		250				
509	12,608	lbs.	Reinforcing steel	8,511	4,097				
511	43	Cu. Yds	Class C concrete, superstructure	43					
511	79	Cu. Yds.	Class E concrete, abutment walls, wings & cut-off wall.		79				
511	43	Cu. Yds.	Class E concrete, abutment footings		43				
516	10	Sq. ft.	½" Preformed expansion Joint filler AASHO Spec. M-153	10					
517	49	Lin. ft.	Railing (Two deep beam rails with steel posts and bolts)	49.0					
518	36	Cu. Yds	Porous backfill		36				
808	43	Units	Water-reducing, set-retarding admixture	43				43	
825	105	Sq. Yds.	Concrete surface treatment	105					

MICROFILMED
JUL 15 1986

STATE OF OHIO
DEPARTMENT OF HIGHWAYS
DIVISION OF DESIGN AND CONSTRUCTION
BUREAU OF BRIDGES

2

GENERAL PLAN & ELEVATION
NOTES & ESTIMATED QUANTITIES

BRIDGE NO. HAN-69-0622 OVER
MARSH RUN HANCOCK CO.

DESIGNED	DRAWN	TRACED	CHECKED	REVIEWED	DATE	REVISED
JEM	JEM	JEM	FPK	BFG	5-31-67	

Rev. 9-16-70 GFJ

FED. RD. DIVISION	STATE	PROJECT	
2	OHIO		

~~HAN-69-(1.14)~~(1.97)(2.31)(3.28)(4.23)(6.17)

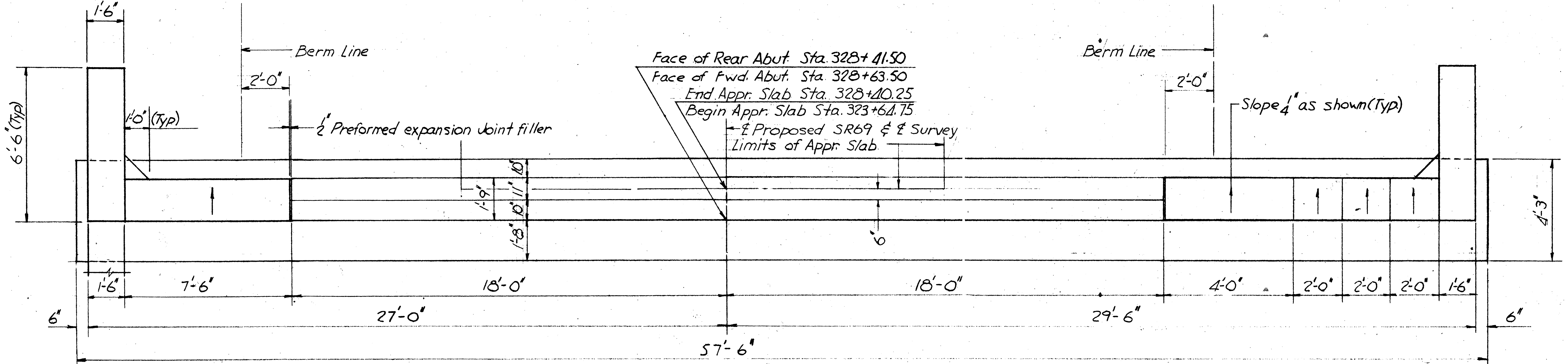
1'-6"
Berm Line
2'-0"
Face of Rear Abut. Sta. 328+41.50
Face of Fwd. Abut. Sta. 328+63.50
End Appr. Slab Sta. 328+40.25
Begin Appr. Slab Sta. 323+64.75
℄ Proposed SR69 & ℄ Survey
Limits of Appr. Slab
Berm Line
2'-0"
Slope 1/4" as shown (Typ)
6'-6" (Typ)
1'-0" (Typ)
1/2" Preformed expansion joint filler
1'-9"
10"
11"
10"
1'-8"
6"
4'-3"
1'-6"
7'-6"
18'-0"
18'-0"
4'-0"
2'-0"
2'-0"
2'-0"
1'-6"
6"
27'-0"
29'-6"
6"
57'-6"

PLAN (Rear Abutment shown / Fwd. Abutment opposite hand)

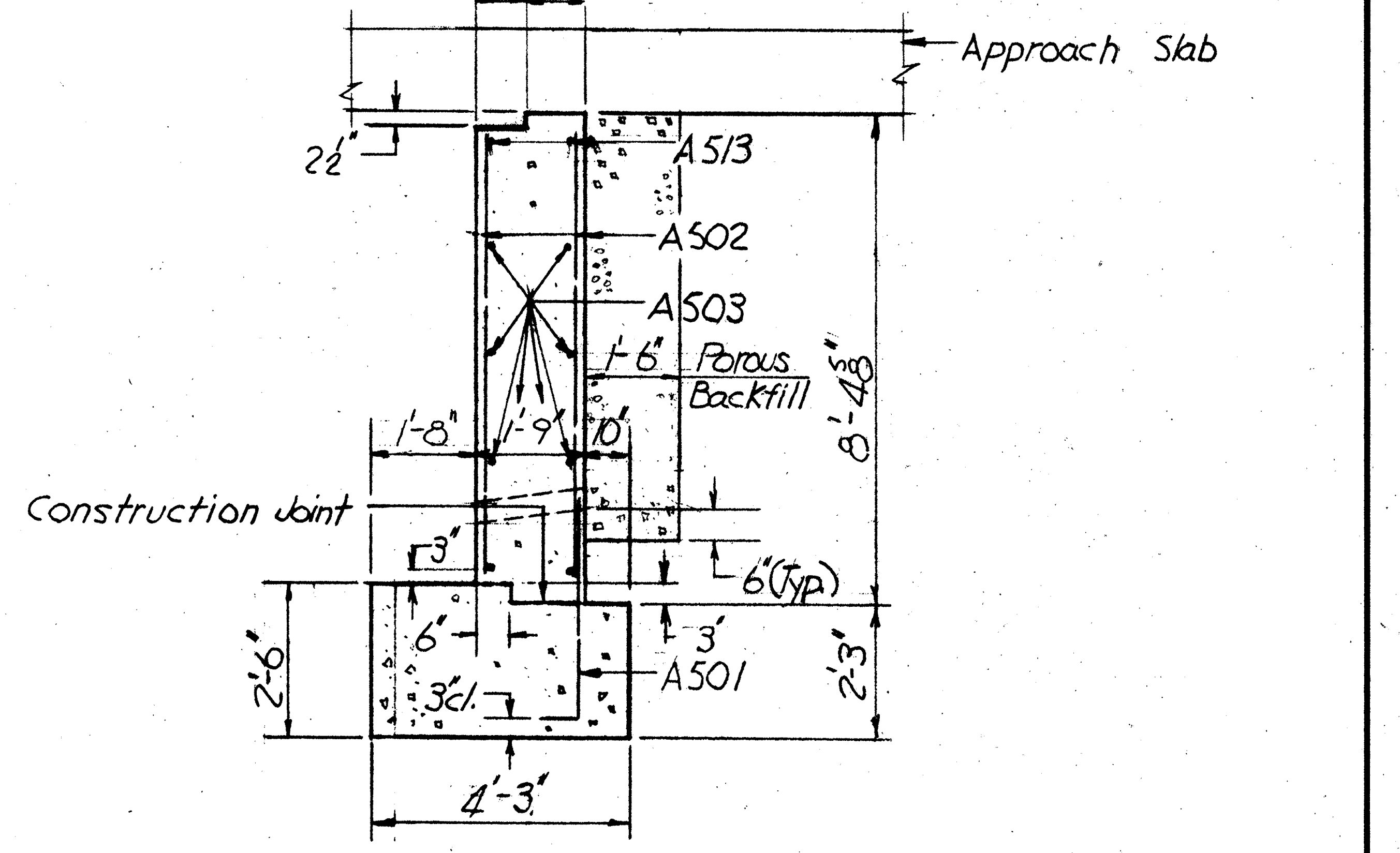
10"
11"
Approach Slab
2 1/2"
A513
A502
A503
1'-6" Porous Backfill
8'-4 3/8"
1'-8"
1'-9"
10"
Construction Joint
3"
6"(Typ)
6"
3"
3'-0"
A501
2'-6"
2'-3"
4'-3"

SECTION A-A

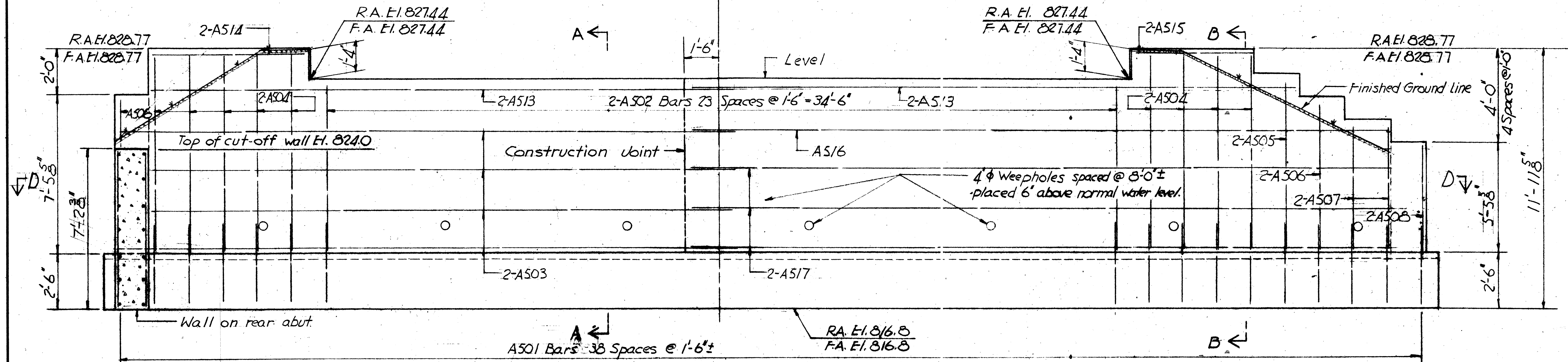
R.A.El. 828.77
F.A.El. 828.77
2-A514
R.A. El. 827.44
F.A. El. 827.44
A
1'-6"
Level
R.A. El. 827.44
F.A. El. 827.44
2-A515
B
R.A.El. 828.77
F.A.El. 828.77
2'-0"
1'-4"
1'-4"
A506
2-A504
2-A513
2-A502 Bars 23 Spaces @ 1'-6" = 34'-6"
2-A513
2-A504
Finished Ground Line
4'-0"
4 Spaces @ 1'-0"
Top of cut-off wall El. 824.0
2-A505
Construction Joint
A516
D
7'-5 3/8"
7'-4 3/8"
4" ϕ Weepholes spaced @ 8'-0" ± placed 6" above normal water level.
2-A506
2-A507
2-A508
D
5'-5 3/8"
11'-11 3/8"
2'-6"
2-A503
2-A517
2'-6"
Wall on rear abut.
A
R.A. El. 816.8
F.A. El. 816.8
B
A501 Bars 38 Spaces @ 1'-6" ±

ELEVATION
(Rear Abutment shown / Fwd. Abutment opposite hand)

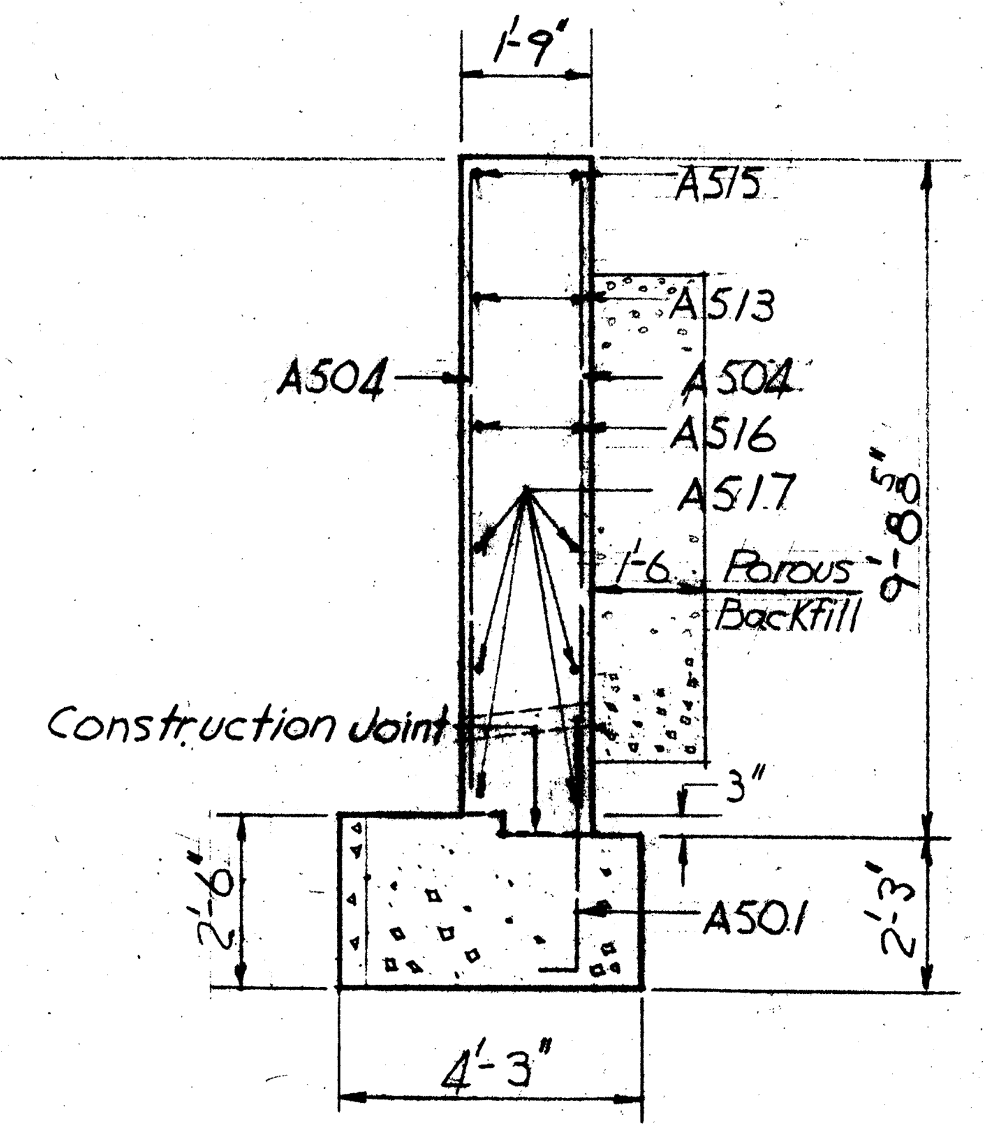
1'-9"
A515
A513
A504
A504
A516
A517
1'-6" Porous Backfill
9'-8 3/8"
Construction Joint
3"
A501
2'-6"
2'-3"
4'-3"

SECTION B-B

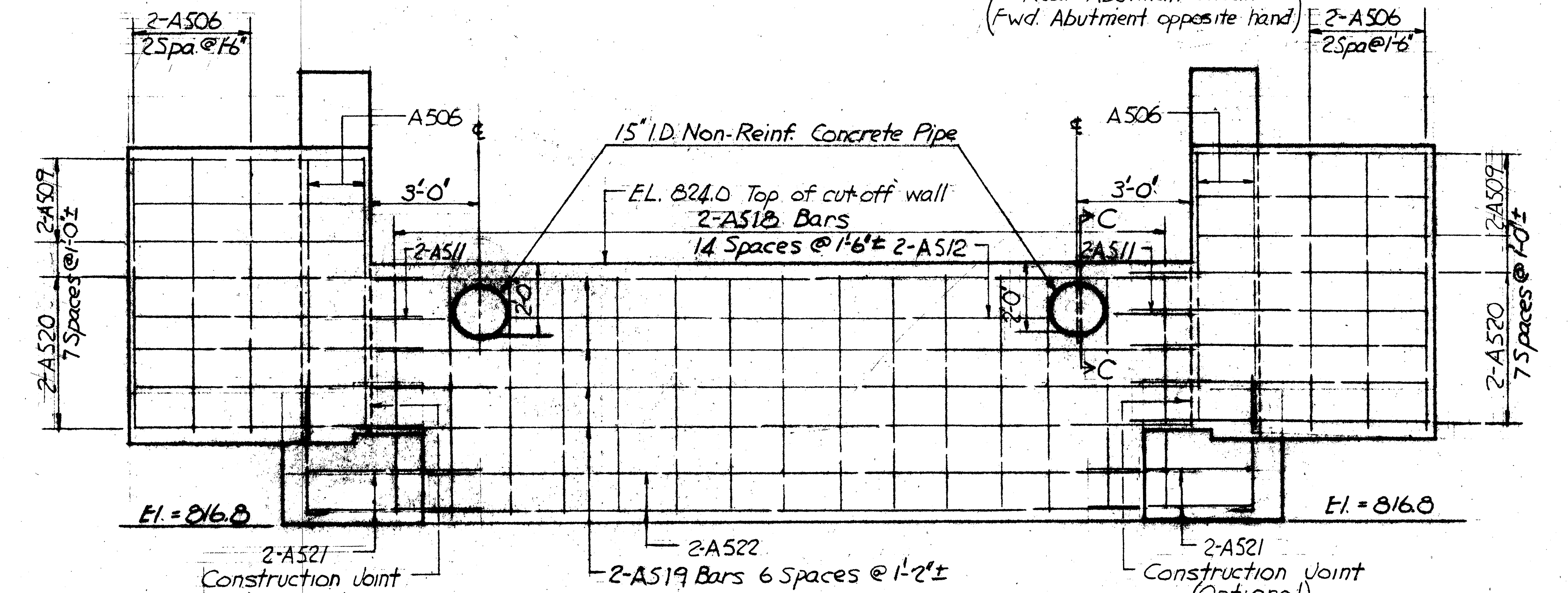
2-A506
2 Spa. @ 1'-6"
A506
℄
15" I.D. Non-Reinf. Concrete Pipe
℄
A506
2-A506
2 Spa @ 1'-6"
3'-0"
3'-0"
El. 824.0 Top of cut-off wall
2-A518 Bars
14 Spaces @ 1'-6" ± 2-A512
C
2-A511
2-A511
2'-0"
2'-0"
C
2-A509
2-A520
7 Spaces @ 1'-0" ±
2-A509
2-A520
7 Spaces @ 1'-0" ±
El. = 816.8
El. = 816.8
2-A521
Construction Joint (Optional)
2-A522
2-A519 Bars 6 Spaces @ 1'-2" ±
2-A521
Construction Joint (Optional)

ELEVATION
(Cut-off wall)

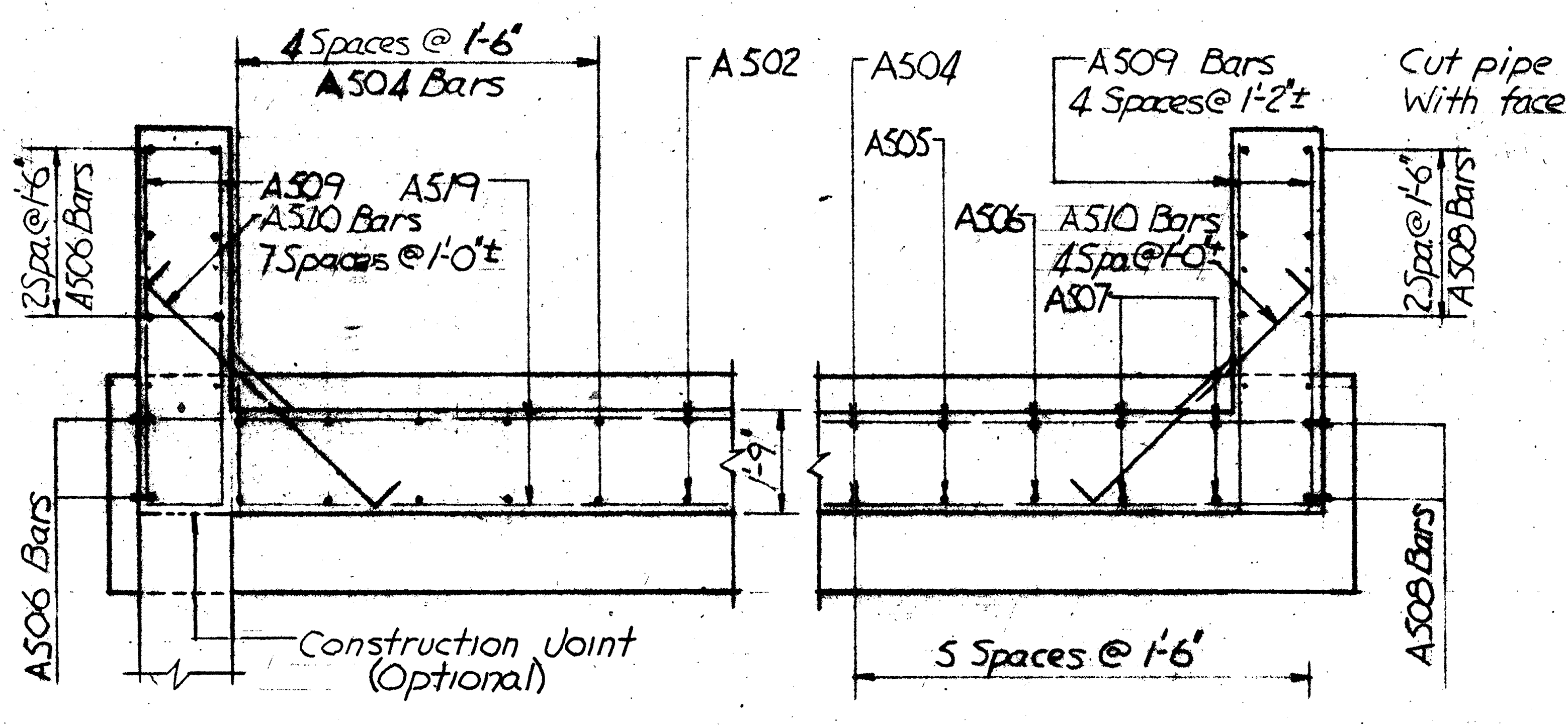
4 Spaces @ 1'-6"
A504 Bars
A502
A504
A505
A509 Bars
4 Spaces @ 1'-2" ±
A509
A519
A510 Bars
7 Spaces @ 1'-0" ±
A506
A510 Bars
4 Spa @ 1'-0" ±
A507
2 Spa @ 1'-6"
A506 Bars
2 Spa @ 1'-6"
A509 Bars
1'-9"
A506 Bars
Construction Joint (Optional)
5 Spaces @ 1'-6"
A509 Bars

SECTION D-D

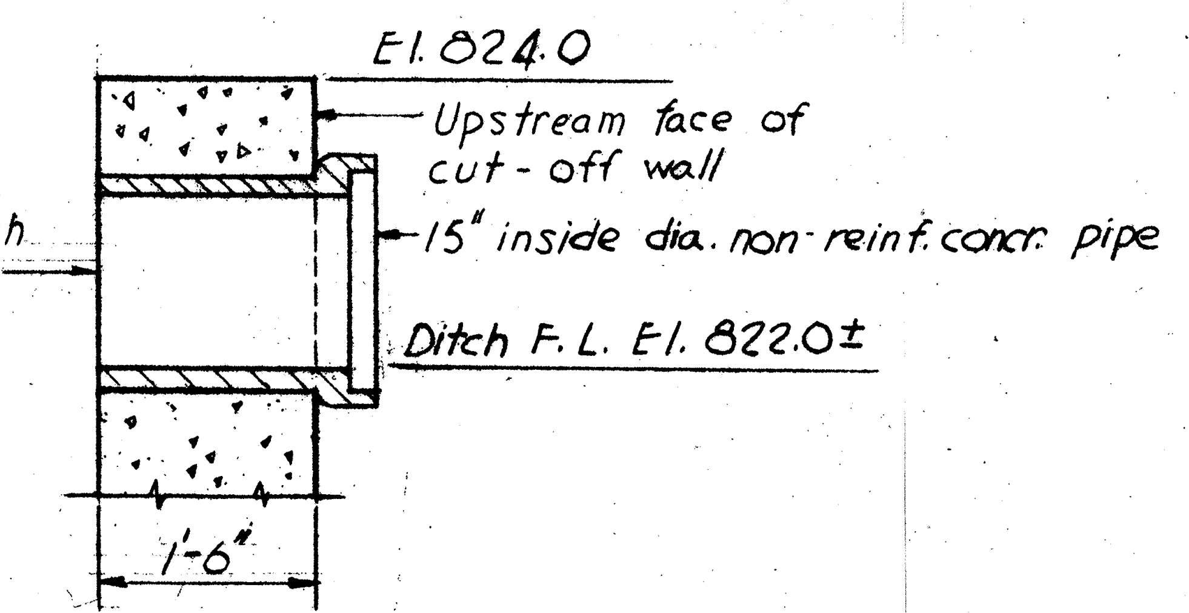
El. 824.0
Upstream face of cut-off wall
Cut pipe off flush with face of wall
15" inside dia. non-reinf. concr. pipe
Ditch F.L. El. 822.0 ±
1'-6"

SECTION C-C

MICROFILM
JUL 15 1986

STATE OF OHIO
DEPARTMENT OF HIGHWAYS
DIVISION OF DESIGN AND CONSTRUCTION
BUREAU OF BRIDGES

3

ABUTMENT DETAILS

BRIDGE NO. HAN-69-0622
OVER MARSH RUN

HANCOCK CO.

DESIGNED	DRAWN	TRACED	CHECKED	REVIEWED	DATE	REVISED
JEM	JEM		FPK	BFG	5-31-67	