ALL-75-5.553 P1/ALL-117/309 P2
PID 76691
130002
DIST 1
01/24/2013
Contract Proposal Available
@www.contracts.dot.
state.oh.us/home
J:\Projects\ALL\76691\roadway\sheets\76691GT001.dgn 10-SEP

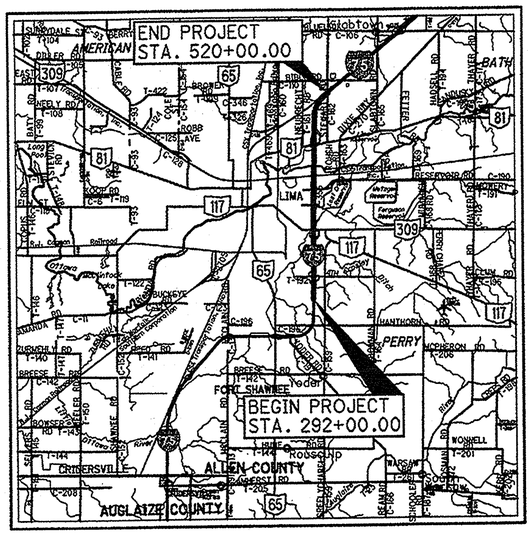

LOCATION MAP

LATITUDE: 40°43'02" LONGITUDE: 84°04'30"

SCALE IN MILES

0 1.5 3 4.5 6

PORTION TO BE IMPROVED

INTERSTATE HIGHWAY

STATE & FEDERAL ROUTES

COUNTY & TOWNSHIP ROADS

OTHER ROADS

DESIGN DESIGNATION (I-75)

CURRENT ADT (2015)	24770
DESIGN YEAR ADT (2035)	30120
DESIGN HOURLY VOLUME (2035)	2910
DIRECTIONAL DISTRIBUTION	50%
TRUCKS (24 HOUR B&C)	43%
T$_D$	0.35
DESIGN SPEED	70
LEGAL SPEED	65
DESIGN FUNCTIONAL CLASSIFICATION:	URBAN INTERSTATE
NHS PROJECT	

DESIGN EXCEPTIONS - SEE SHEET 2

PLAN PREPARED BY:

PARSONS BRINCKERHOFF

PB AMERICAS, INC.
2545 FARMERS DRIVE, SUITE 350
COLUMBUS, OHIO 43235

ENGINEERS SEAL:	ENGINEERS SEAL:
STATE OF OHIO ANDREW B. SCHETTER E-71848 REGISTERED PROFESSIONAL ENGINEER	STATE OF OHIO ERIC B. SHERER E-56409 REGISTERED PROFESSIONAL ENGINEER
SIGNED: Andrew B Schetter	SIGNED: Eric B Sherer
DATE: 7/27/2012	DATE: 7/27/2012

STATE OF OHIO
DEPARTMENT OF TRANSPORTATION

ALL-75-5.53 PART 1

FOR PART 2, SEE ALL-117/309-18.65/15.17

CITY OF LIMA
PERRY & BATH TOWNSHIPS
ALLEN COUNTY

INDEX OF SHEETS:

TITLE	1	S.R. 81 - CROSS SECTIONS
DESIGN DESIGNATIONS	2	S.R. 81 RAMPS - PLAN & PROFILES
BENCHMARKS	3 - 8	S.R. 81 RAMPS - CROSS SECTIONS
SCHEMATIC	9 - 14	NEUBRECHT RD. - PLAN & PROFILE
TYPICAL SECTIONS	15 - 36	NEUBRECHT RD. - CROSS SECTIONS
GENERAL NOTES	37 - 48, 37A	SERVICE RD. 3 - PLAN & PROFILE
MAINTENANCE OF TRAFFIC	49 - 138	SERVICE RD. 3 - CROSS SECTIONS
GENERAL SUMMARIES	139 - 147	SUPERELEVATION TABLES
ROADWAY SUMMARIES	148 - 152	GRADING DETAILS
UNDERDRAIN SUBSUMMARY	153 - 168	INTERSECTION DETAILS
POST CONSTRUCTION BMP	169 - 170	JOINT DETAILS
PROJECT SITE PLAN	171 - 175	PAVEMENT DETAILS
I-75 MAINLINE - PLAN & PROFILES	176 - 221	DRIVEWAY SUBSUMMARY
I-75 MAINLINE - CROSS SECTIONS	222 - 366	DRIVE DETAILS
4TH ST. RAMPS - PLAN & PROFILES	367 - 374	CULVERT DETAILS
4TH ST. RAMPS - CROSS SECTIONS	375 - 398	CHANNEL RELOCATION DETAILS
S.R. 309 - PLAN & PROFILES	399 - 416	NOISE BARRIER PLANS
S.R. 309 - CROSS SECTIONS	417 - 431	RETAINING WALLS
S.R. 309 RAMPS - PLAN & PROFILES	432 - 442	TRAFFIC CONTROL
S.R. 309 RAMPS - CROSS SECTIONS	443 - 466	SIGNAL PLANS
BRYN MAWR AVE. & WELLESLEY DR. - PLAN & PROFILES	467 - 469	LIGHTING PLANS
BRYN MAWR AVE. & WELLESLEY DR. - CROSS SECTIONS	470 - 476	LANDSCAPING PLANS
LOST CREEK BLVD./DEAN AVE. - PLAN & PROFILES	477 - 479	STRUCTURES (UNDER 20')
LOST CREEK BLVD. - CROSS SECTIONS	480 - 481	STRUCTURES (OVER 20')
S.R. 81 - PLAN & PROFILES	482 - 503	FENCING PLANS
	504 - 529	RIGHT OF WAY
	530 - 535	RAILROAD PLAT
	536 - 558	SOIL PROFILE/FOUNDATION INVESTIGATION
	559 - 561	
	562 - 567	
	568 - 574	
	575 - 590	
	591 - 606	
	607 - 612	
	613 - 619	
	620 - 649	
	650 - 671	
	672	
	673 - 678	
	679 - 697	
	698	
	699 - 745	
	746 - 766	
	767 - 837	
	838 - 864, 840A, 840B	
	865 - 899	
	900 - 905	
	906 - 935	
	936 - 1084	
	1085 - 1110	
	1111 - 1221	
	1222 - 1224	

STANDARD CONSTRUCTION DRAWINGS

BP-2.1	7/18/08	RM-1.1	7/15/11	HL-50.11	1/19/07	DM-1.2	7/20/12	TC-21.10	1/19/07	TC-71.10	1/21/11	MT-98.11	7/20/12	F-3.4	7/28/00
BP-2.2	7/18/08	RM-3.1	10/15/10	HL-50.21	7/20/12	DM-1.4	7/20/12	TC-21.20	4/15/11	TC-72.20	7/20/12	MT-98.20	7/20/12		
BP-2.3	7/16/04	RM-4.2	10/15/10	HL-60.11	10/21/11	DM-2.1	7/20/12	TC-22.10	1/19/01	TC-73.10	4/20/12	MT-98.21	7/20/12	**SUPPLEMENTAL**	
BP-3.1	4/20/12	RM-4.3	10/21/11	HL-60.12	10/21/11	DM-3.1	7/20/12	TC-22.20	1/21/11	TC-81.21	7/20/12	MT-98.22	7/20/12	**SPECIFICATIONS**	
BP-4.1	7/16/04	RM-4.4	10/16/09	HL-60.31	1/19/07	DM-4.1	7/20/12	TC-32.10	1/19/07	TC-83.10	1/19/07	MT-98.28	7/20/12	800	10/19/12
BP-5.1	7/28/00	RM-4.5	10/16/09	CB-1.1	7/20/12	DM-4.2	7/20/12	TC-32.11	1/19/07	TC-83.20	4/20/12	MT-98.29	7/20/12	802	1/20/12
BP-6.1	1/21/11	RM-4.6	4/16/10	CB-1.2	7/20/12	DM-4.3	7/20/12	TC-41.10	10/19/07	TC-84.20	1/21/11	MT-99.20	7/20/12	816	1/20/12
BP-7.1	10/15/10	RM-5.1	4/18/03	CB-2.1	7/20/12	DM-4.4	7/20/12	TC-41.20	1/19/01	TC-84.21	1/19/07	MT-99.30	4/15/11	821	4/20/12
BP-9.1	4/15/05	RM-7.1	7/15/05	CB-2.2	7/20/12	WQ-1.3	7/20/12	TC-41.30	1/19/07	TC-85.10	10/16/09	MT-101.60	7/20/12	823	7/20/12
GR-1.1	7/20/12	RM-7.2	7/15/05	CB-2.3	7/20/12	AS-1-81	7/19/02	TC-41.40	7/16/04	TC-85.20	7/15/11	MT-101.70	4/15/11	832	5/5/09
GR-2.1	7/20/12	HL-10.11	4/17/09	CB-3.2	7/20/12	BR-1	7/19/02	TC-41.41	1/21/11	MT-95.30	7/20/12	MT-101.90	10/21/11	835	4/18/08
GR-2.3	7/20/12	HL-10.12	10/15/10	CB-3.3	7/20/12	CS-1-08	7/18/08	TC-41.50	1/19/07	MT-95.31	7/20/12	MT-102.10	7/20/12	837	1/20/12
GR-2.4	7/20/12	HL-10.13	10/16/09	CB-4.1	7/20/12	GSD-1-96	7/19/02	TC-42.10	1/19/07	MT-95.32	7/20/12	MT-102.20	7/20/12	840	4/20/12
GR-3.1	7/20/12	HL-20.11	1/19/07	CB-4.2	7/20/12	ICD-1-82	7/19/02	TC-42.20	1/21/11	MT-95.40	7/20/12	MT-102.30	7/20/12	861	7/15/11
GR-3.2	7/20/12	HL-30.11	10/16/09	HW-1.1	7/20/12	PCB-91	7/19/02	TC-51.11	1/21/11	MT-95.41	7/20/12	MT-105.10	7/20/12	880	7/18/08
GR-4.2	7/20/12	HL-30.21	10/21/11	HW-2.1	7/20/12	PSID-1-99	7/18/08	TC-51.12	10/21/11	MT-95.50	7/20/12	MT-120.00	7/20/12	888	10/21/11
GR-5.1	4/16/10	HL-30.22	4/17/09	HW-2.2	7/20/12	SICD-1-96	7/19/02	TC-52.10	1/19/07	MT-95.60	7/20/12	F-1.1	4/16/10	896	4/18/08
GR-5.2	4/16/10	HL-30.31	4/17/09	I-2.3	7/20/12	TC-15.115	1/21/11	TC-52.20	1/19/07	MT-95.61	7/20/12	F-2.1	7/28/00	898	10/21/11
GR-5.3	4/16/10	HL-30.32	4/17/09	MH-1.1	7/20/12	TC-16.21	4/15/11	TC-61.10	4/20/12	MT-96.26	1/16/09	F-3.1	4/16/10	902	1/20/12
GR-6.1	4/16/10	HL-30.33	4/17/09	MH-1.2	7/20/12	TC-18.24	1/21/11	TC-65.10	4/20/12	MT-97.10	7/20/12	F-3.2	4/16/10	907	1/20/12
GR-6.2	4/16/10	HL-40.10	1/19/07	DM-1.1	7/20/12	TC-18-26	1/21/11	TC-65.11	4/20/12	MT-98.10	7/20/12	F-3.3	7/28/00	921	4/20/12

PROJECT DESCRIPTION

PROJECT CONSISTS OF 4.32 MILES OF 4-LANE INTERSTATE HIGHWAY RECONSTRUCTION WITH PROVISIONS FOR A FUTURE ADDITIONAL MEDIAN LANE. INCLUDES THREE INTERCHANGES; AT FOURTH STREET, SR 309, AND SR 81. SIDEWALKS WILL BE ADDED AT SR 309, AND SR 81. ALSO INCLUDED ARE VARIOUS SIDE ROAD AND INTERSECTION IMPROVEMENTS AS WELL AS AN SOUTHBOUND AUXILIARY LANE FROM SR 309 TO FOURTH STREET. THE PROJECT UPGRADES PAVEMENT, ALIGNMENT, AND VARIOUS OTHER DEFICIENCIES.

PROJECT EARTH DISTURBED AREA: *170.09 ACRES*
ESTIMATED CONTRACTOR EARTH DISTRUBED AREA: *51.0 ACRES*
NOTICE OF INTENT EARTH DISTURBED AREA: *221.16 ACRES*

LIMITED ACCESS

THIS IMPROVEMENT IS ESPECIALLY DESIGNED FOR THROUGH TRAFFIC AND HAS BEEN DECLARED A LIMITED ACCESS HIGHWAY OR FREEWAY BY ACTION OF THE DIRECTOR IN ACCORDANCE WITH THE PROVISIONS OF SECTION 5511.02 OF THE OHIO REVISED CODE.

2010 SPECIFICATIONS

THE STANDARD SPECIFICATIONS OF THE STATE OF OHIO, DEPARTMENT OF TRANSPORTATION, INCLUDING CHANGES AND SUPPLEMENTAL SPECIFICATIONS LISTED IN THE PROPOSAL SHALL GOVERN THIS IMPROVEMENT.

UNDERGROUND UTILITIES
CONTACT BOTH SERVICES
CALL TWO WORKING DAYS
BEFORE YOU DIG
CALL
1-800-362-2764
(TOLL FREE)
OHIO UTILITIES PROTECTION SERVICE
NON-MEMBERS
MUST BE CALLED DIRECTLY
OIL & GAS PRODUCERS PROTECTIVE SERVICE CALL: 1-800-925-0988

I HEREBY APPROVE THESE PLANS AND DECLARE THAT THE MAKING OF THIS IMPROVEMENT WILL NOT REQUIRE THE CLOSING TO TRAFFIC OF THE HIGHWAY EXCEPT AS NOTED ON SHTS. 57-58 & EXCEPT FOR THE SIDE ROADS AS DESCRIBED ON SHEETS 57-58 AND THAT PROVISIONS FOR THE MAINTENANCE AND SAFETY OF TRAFFIC WILL BE AS SET FORTH ON THE PLANS AND ESTIMATES.

UNDER AUTHORITY OF SECTION 4511.21, DIVISION (H) OF THE OHIO REVISED CODE, THE REVISED PRIMA FACIE SPEED LIMITS AS INDICATED HEREIN ARE DETERMINED TO BE REASONABLE AND SAFE, AND ARE HEREBY ESTABLISHED FOR THE DURATION OF THIS PROJECT. THE PRIMA FACIE SPEED LIMIT OR LIMITS HEREBY ESTABLISHED SHALL BECOME EFFECTIVE WHEN APPROPRIATE SIGNS GIVING NOTICE THEREOF ARE ERECTED.

APPROVED _____
DATE 9/11/12 DISTRICT DEPUTY DIRECTOR

APPROVED _____
DATE 10-5-12 DIRECTOR, DEPARTMENT OF TRANSPORTATION

FEDERAL PROJECT NO. E036702
PID NO. 76691
CONSTRUCTION PROJECT NO.
RAILROAD INVOLVEMENT CHICAGO - FT. WAYNE & EASTERN RAILROAD
ALL-75-5.53
1 / 1224

DESIGN DESIGNATION - FOURTH ST.

CURRENT ADT (2015)	8,150
DESIGN YEAR ADT (2035)	9,830
DESIGN HOURLY VOLUME (2035)	980
DIRECTIONAL DISTRIBUTION	53% EB / 47% WB
TRUCKS (24 HOUR B&C) AVG.	14%
DESIGN SPEED	45 MPH
LEGAL SPEED	45 MPH

DESIGN FUNCTIONAL CLASSIFICATION - URBAN MINOR ARTERIAL & COLLECTOR

DESIGN DESIGNATION - S.R. 309

CURRENT ADT (2015)	32,330
DESIGN YEAR ADT (2035)	35,530
DESIGN HOURLY VOLUME (2035)	3,320
DIRECTIONAL DISTRIBUTION	50%
TRUCKS (24 HOUR B&C) AVG.	6%
DESIGN SPEED	40 MPH
LEGAL SPEED	40 MPH

DESIGN FUNCTIONAL CLASSIFICATION - URBAN PRINCIPAL ARTERIAL

DESIGN DESIGNATION - S.R. 117 (SHOWN FOR INFORMATION PURPOSE ONLY)

CURRENT ADT (2015)	12,320
DESIGN YEAR ADT (2035)	13,700
DESIGN HOURLY VOLUME (2035)	910
DIRECTIONAL DISTRIBUTION	50%
TRUCKS (24 HOUR B&C) AVG.	6%
DESIGN SPEED	40 MPH
LEGAL SPEED	40 MPH

DESIGN FUNCTIONAL CLASSIFICATION - URBAN PRINCIPAL & MINOR ARTERIAL

DESIGN DESIGNATION - S.R. 81

CURRENT ADT (2015)	22,500
DESIGN YEAR ADT (2035)	25,000
DESIGN HOURLY VOLUME (2035)	2,420
DIRECTIONAL DISTRIBUTION	50%
TRUCKS (24 HOUR B&C) AVG.	17%
DESIGN SPEED	45 MPH
LEGAL SPEED	45 MPH

DESIGN FUNCTIONAL CLASSIFICATION - URBAN PRINCIPAL & MINOR ARTERIAL

DESIGN DESIGNATION - NEUBRECHT RD.

CURRENT ADT (2015)	3,278
DESIGN YEAR ADT (2035)	6,050
DESIGN HOURLY VOLUME (2035)	790
DIRECTIONAL DISTRIBUTION	68% NB / 32% SB
TRUCKS (24 HOUR B&C) AVG.	23%SB / 13% NB
DESIGN SPEED	55 MPH
LEGAL SPEED	55 MPH

DESIGN FUNCTIONAL CLASSIFICATION - URBAN LOCAL

DESIGN DESIGNATION - BRYN MAWR AVE.

CURRENT ADT (2015)	2880
DESIGN YEAR ADT (2035)	3100
DESIGN HOURLY VOLUME (2035)	341
DIRECTIONAL DISTRIBUTION	69% SB / 31% NB
TRUCKS (24 HOUR B&C) AVG.	2%
DESIGN SPEED	35 MPH
LEGAL SPEED	35 MPH - LOST CREEK TO ELM UNKNOWN - ELM TO RESERVOIR (POSTED 25 MPH)

DESIGN FUNCTIONAL CLASSIFICATION - URBAN LOCAL

DESIGN EXCEPTIONS

HORIZONTAL ALIGNMENT (DEGREE OF CURVATURE & SUPERELEVATION):	APPROVAL DATE:	SHEET NO.
FOURTH ST. RAMP A - CURVE 4THA-3	5/28/10	368
FOURTH ST. RAMP D - CURVE 4THD-1	5/28/10	372
NEUBRECHT RD. - CURVE NEU-1	5/28/10	559
BRYN MAWR - WELLESLY AVE. - CURVE WEL-1	1/19/11	467 & 467

CALCULATED RP | CHECKED JB

ROADWAY DESIGN DESIGNATIONS

ALL-75-5.53

2
1224

J:\Projects\ALL\76691\roadway\sheets\76691GM001.dgn 11-SEP-2012 8:46PM reddenj

POINT ID	MONUMENT TYPE	NORTHING PROJECT GROUND (SURVEY FEET)	EASTING PROJECT GROUND (SURVEY FEET)	ELEVATION NAVD88 (FEET)	MAINLINE STATION/OFFSET	NORTHING OHIO STATE PLANE GRID NAD 83(95) (SURVEY FEET)	EASTING OHIO STATE PLANE GRID NAD 83(95) (SURVEY FEET)
DEFI	CORS (PID AJ7186)	592510.4063	1442696.3534	713.92		592462.4287	1442579.5333
KNTN	CORS (PID DF4052)	353137.7123	1659218.2350	987.26		353109.1175	1659083.8824
SIDN	CORS (PID AJ7196)	238997.4152	1502588.4531	1071.47		238978.0628	1502466.7833
ALL 75 0560	NGS Monument (PID LA2540)			904.80			
ALL 75 06.10	NGS Monument (PID LA2541)	386465.0200	1531903.2380	896.22	318+59.85, 93.52' LT.	386433.7266	1531779.1945
ALL 75 07.00	NGS Monument (PID LA2542)	391375.9667	1532109.0532	885.12	367+73.81, 96.18' RT.	391344.2756	1531984.9931
ALL 75 09.51	NGS Monument (PID LA2476)	405455.5303	1532593.9908	876.90	508+54.08, 192.72' LT.	405422.6992	1532469.8914
AUG 75 12.45	NGS Monument (PID LA2478)	364837.1369	1516115.2583	897.90		364807.5948	1515992.4932
ALL I75 006	Concrete Refusal Monument	385649.9753	1531912.4976	896.60	310+45.07, 70.74' LT.	385618.7479	1531788.4534
ALL I75 007	Concrete Refusal Monument	387705.3553	1532102.4948	897.17	331+02.24, 87.35' RT.	387673.9615	1531978.4352
ALL I75 008	Concrete Refusal Monument	388563.8041	1532100.6985	887.03	339+59.37, 91.62' RT.	388532.3408	1531976.6390
ALL I75 009	Concrete Refusal Monument	390854.4901	1532109.6609	886.40	362+52.37, 102.95' RT.	390822.8413	1531985.6007
ALL I75 010	Concrete Refusal Monument	392401.9386	1532081.5450	883.04	377+99.38, 56.54' RT.	392370.1645	1531957.4871
ALL I75 011	Concrete Refusal Monument	393408.4146	1532131.2865	888.59	388+06.38, 94.38' RT.	393376.5590	1532007.2246
ALL I75 012	Concrete Refusal Monument	398823.8339	1532176.2415	879.15	442+22.33, 47.35' RT.	398791.5398	1532052.1759
ALL I75 013	Concrete Refusal Monument	399849.8600	1532238.7292	882.42	452+49.28, 91.47' RT.	399817.4828	1532114.6586
ALL I75 014	Concrete Refusal Monument	401770.1477	1532244.9276	890.46	471+69.38, 63.69' RT.	401737.6150	1532120.8565
ALL I75 015	Concrete Refusal Monument	402605.4857	1532251.6817	886.25	480+04.71, 55.66' RT.	402572.8853	1532127.6100
ALL I75 016	Concrete Refusal Monument	403728.9508	1532286.1662	877.92	491+28.88, 70.23' RT.	403696.2595	1532162.0917
308	3/4" Iron Pin w/Punch	386495.4586	1532002.5700		318+91.93, 5.29' RT.	386464.1627	1531878.5185
310	3/4" Iron Pin w/Punch	394874.1935	1532111.2670	882.64	402+72.16, 53.32' RT.	394842.2192	1531987.2067
311	3/4" Iron Pin w/Punch	395750.2484	1532125.7012	874.64	411+48.33, 52.02' RT.	395718.2031	1532001.6397
312	3/4" Iron Pin w/Punch	396496.2169	1532140.7170	873.00	418+94.45, 53.64' RT.	396464.1112	1532016.6543
313	3/4" Iron Pin w/Punch	397299.7159	1532140.5926	883.42	426+97.81, 39.08' RT.	397267.5452	1532016.5299
314	3/4" Iron Pin w/Punch	397885.2639	1532155.4732	879.28	432+83.53, 43.44' RT.	397853.0458	1532031.4093
315	3/4" Iron Pin w/Punch	400571.9374	1532196.2598	893.23	459+70.50, 36.23' RT.	400539.5017	1532072.1926
316	3/4" Iron Pin w/Punch	406181.0138	1533597.8799	882.41	520+48.88, 5.12'LT.	406148.1239	1533473.6992
317	3/4" Iron Pin w/Punch	406756.4398	1534292.4060		529+50.80, 0.86' LT.	406723.5033	1534168.1691
318	3/4" Iron Pin w/Punch	407506.0683	1535212.0258		541+37.15, 14.20' RT.	407473.0711	1535087.7144
319	3/4" Iron Pin w/Punch	408268.8054	1536101.5260		553+08.80, 0.11' LT.	408235.7465	1535977.1426
17035	Concrete Monument w/Alum. Disk	386608.6170	1532941.7270	905.50	320+20.66, 942.44' RT.	386577.3120	1532817.5994
17036	Concrete Monument w/Alum. Disk	386680.4450	1530984.2100			386649.1342	1530860.2409
17037	Concrete Monument w/Alum. Disk	391545.3470	1532780.4000	889.37	369+51.11, 765.48' RT.	391513.6422	1532656.2855
17038	Concrete Monument w/Alum. Disk	391565.5250	1531355.2210		369+54.44, 659.84' LT.	391533.8186	1531231.2219
17041	Concrete Monument w/Alum. Disk	396982.7613	1532138.2834		423+80.87, 42.46' RT.	396950.6162	1532014.2209
17042	Concrete Monument w/Alum. Disk	397525.5676	1532144.4108		429+23.70, 38.84' RT.	397493.3786	1532020.3478
17043	Concrete Monument w/Alum. Disk	398330.4154	1532157.4023	878.72	437+28.65, 37.37' RT.	398298.1612	1532033.3382
17044	Concrete Monument w/Alum. Disk	398544.9751	1532162.1021	879.21	439+43.26, 38.22' RT.	398512.7035	1532038.0377
17045	Concrete Monument w/Alum. Disk	398499.8776	1532258.0654	875.06	438+99.89, 134.98' RT.	398467.6097	1532133.9932
17046	Concrete Monument w/Alum. Disk	400988.5228	1532486.3108	876.03	463+92.15, 318.86' RT.	400956.0534	1532362.2201
17047	Concrete Monument w/Alum. Disk	400637.7776	1530997.2694	866.25	460+15.11, 1163.74' LT.	400605.3366	1530873.2993
17048	Concrete Monument w/Alum. Disk	400875.2122	1533018.9655	892.29	462+88.28, 853.44' RT.	400842.7520	1532894.8317
17051	Tablet in wall	397266.2189	1532119.5839	865.75	426+63.94, 18.68' RT.	397234.0509	1531995.5229
BM 1	3/4" rebar (Reservoir)	395903.8200	1532215.5000	890.64	413+03.49, 139.05' RT.	395871.7623	1532091.4312
BM 2	Guardrail bolt (Reservoir)	395853.8580	1531828.4750	885.89	412+46.58, 247.02' LT.	395821.8044	1531704.4376
BM 41	X on guardrail bolt (4th St)	386568.4188	1532490.8201	903.40	319+72.98, 492.26' RT.	386537.1170	1532366.7290
BM 42	X on guardrail bolt (4th St)	386583.1320	1531214.7257	898.20	319+66.52, 783.90' LT.	386551.8290	1531090.7380
BM 2656	Bolt on base of light pole (SR 81)	400776.8222	1532358.2256	878.55	461+78.22, 194.54' RT.	400744.3699	1532234.1453
BM 3200	Bolt on base of light pole (SR 81)	400603.5000	1531578.6000	871.44	459+91.08, 581.90' LT.	400571.0618	1531454.5828
BM 4748	X on light pole base (SR 309)	391563.9712	1532136.4777	883.57	369+62.12, 121.38' RT.	391532.2649	1532012.4153
BM 8504	square cut on base of light pole	400485.7663	1530917.3205	869.20	458+61.71, 1240.98' LT.	400453.3376	1530793.3569

PROJECT CONTROL

NOTE: ALL MAPPING AND PLANS ARE PROJECT GROUND COORDINATES. TO OBTAIN PROJECT GROUND COORDINATES MULTIPLY EACH GRID NORTHING AND GRID EASTING BY THE P.A.F. (1.00008098).

PRIMARY CONTROL POINTS/BENCHMARKS COORDINATE TABLE

CALCULATED HM | CHECKED CC

ALL-75-5.53

J:\Projects\ALL\76691\roadway\sheets\76691GM002.dgn 11-SEP-2012 8:46PM reddenj

ALL 75 0560 292+78, 95' RT.+-

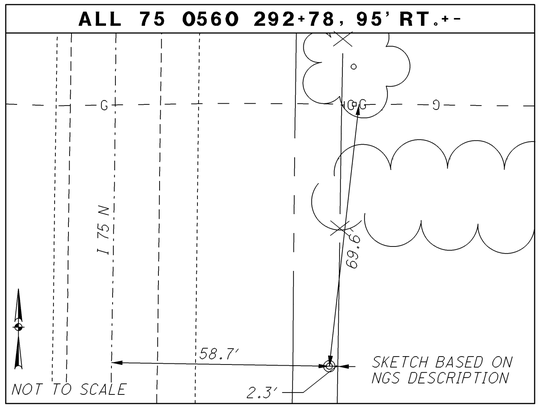

ALL I75 006 310+45.07, 70.74' LT.

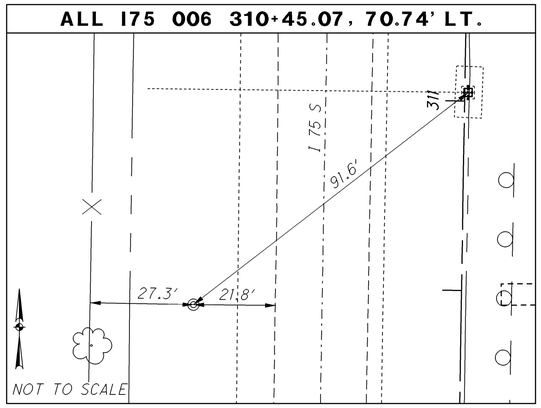

ALL 75 06.10 318+59.91, 93.54' LT.

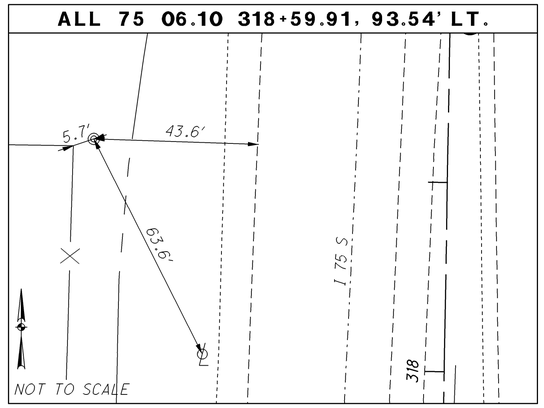

308 318+91.93, 5.29' RT.

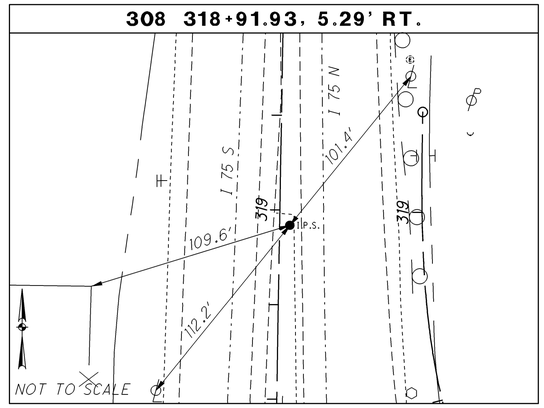

BM 42 319+66.52, 783.90' LT.

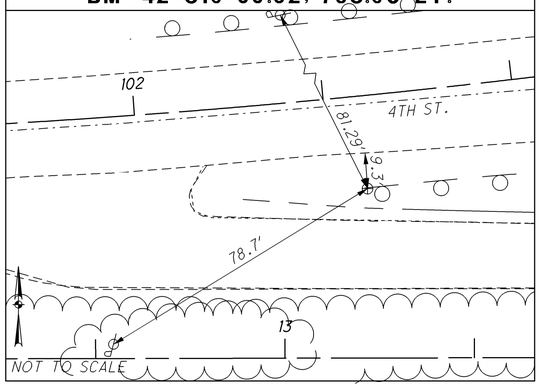

BM 41 319+72.98, 492.26' RT.

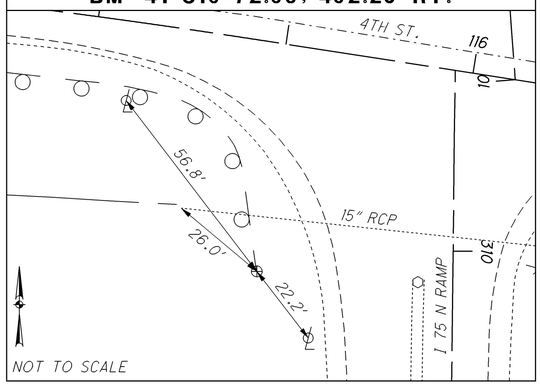

17035 320+20.66, 942.44' RT.

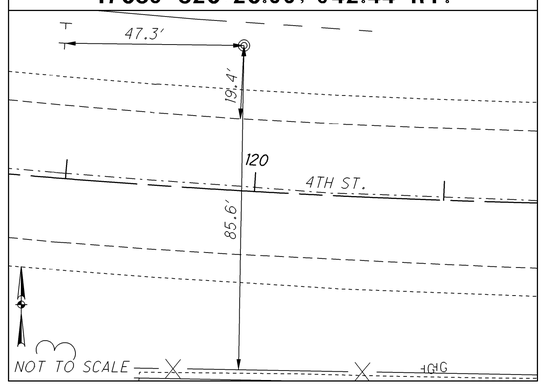

17036 320+59.99, 1016.00' LT.

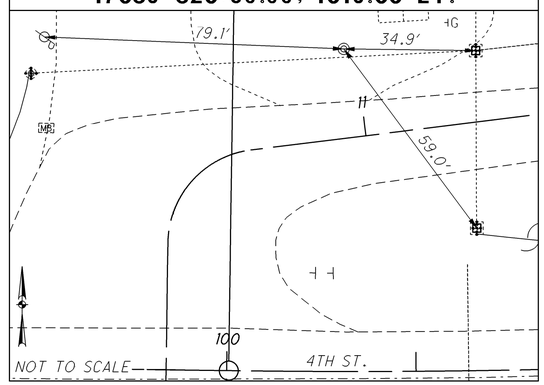

ALL I75 007 331+02.24, 87.35' RT.

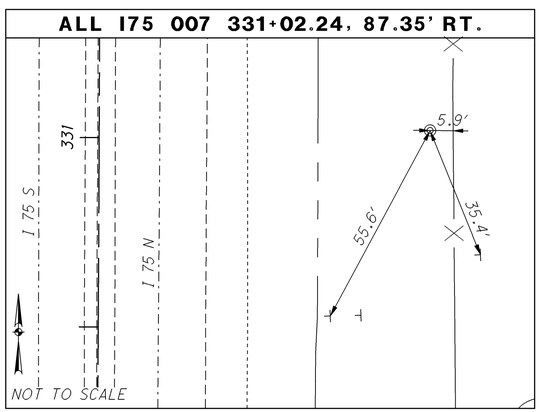

ALL I75 008 339+59.37, 91.62' RT.

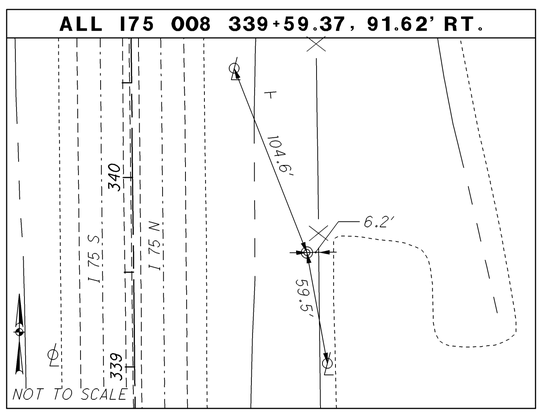

ALL I75 009 362+52.37, 102.95' RT.

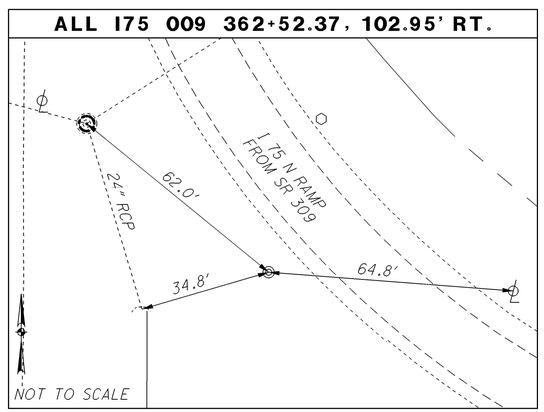

ALL 75 07.00 367+73.81, 96.18' RT.

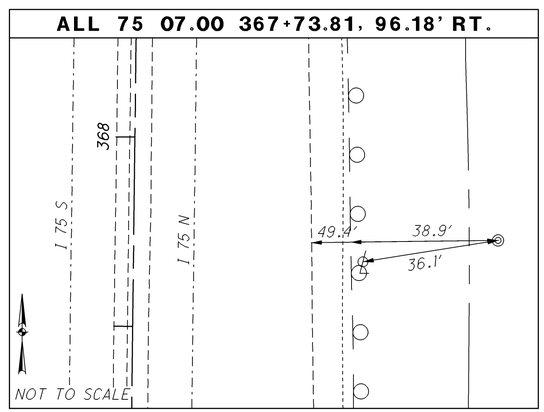

PRIMARY CONTROL POINTS/BENCHMARKS REFERENCE SKETCHES

CALCULATED HM
CHECKED CC

ALL-75-5.53

4
1224

J:\Projects\ALL\76691\roadway\sheets\76691GM003.dgn 11-SEP-2012 8:46PM reddenj

17037 369+51.11, 765.48' RT.

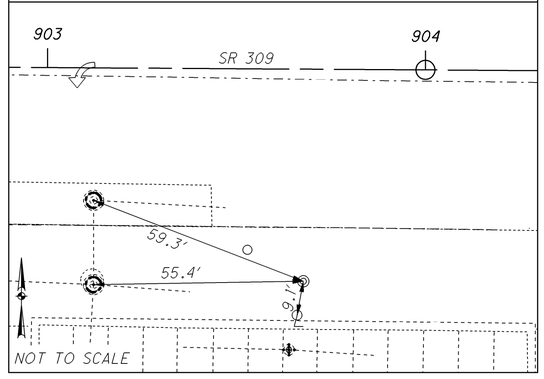

17038 369+54.44, 659.84' LT.

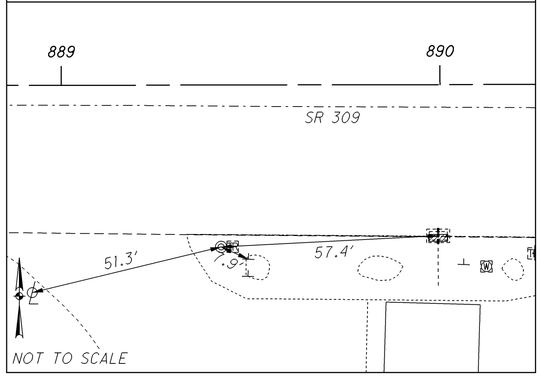

BM 4748 369+62.12, 121.38' RT.

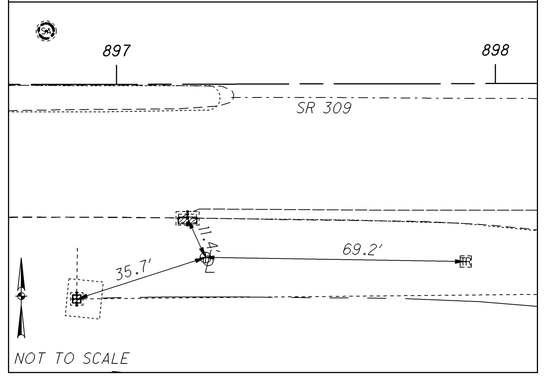

ALL I75 010 377+99.38, 56.54' RT.

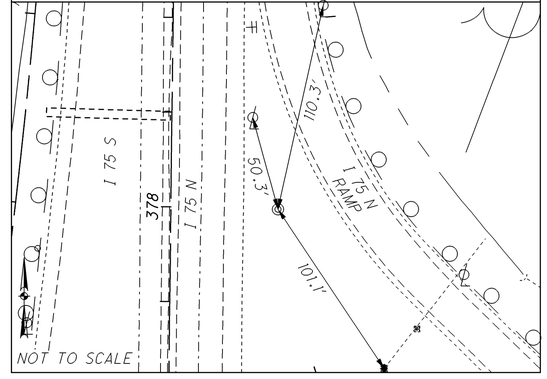

ALL I75 011 388+06.38, 94.38' RT.

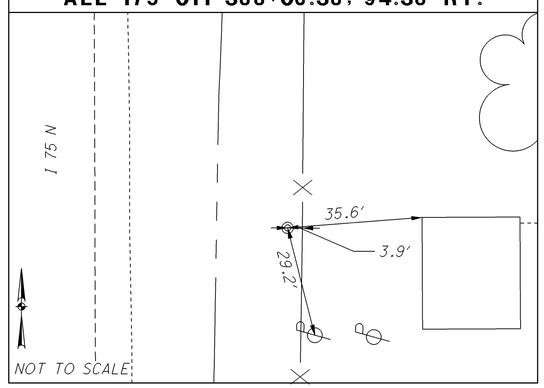

310 402+72.16, 53.32' RT.

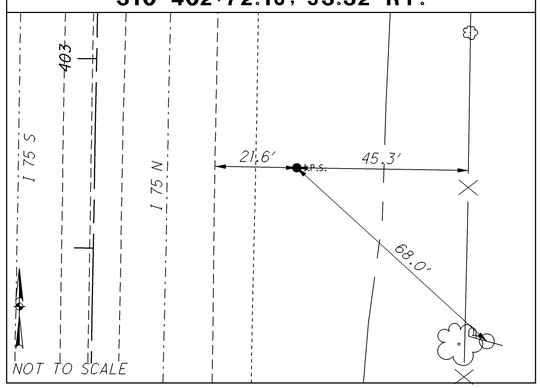

311 411+48.33, 52.02' RT.

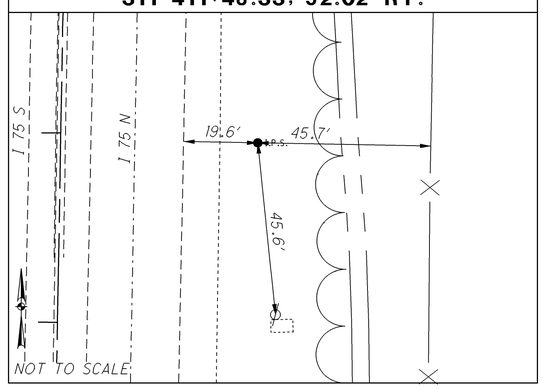

17039 412+37, 729' LT. +-

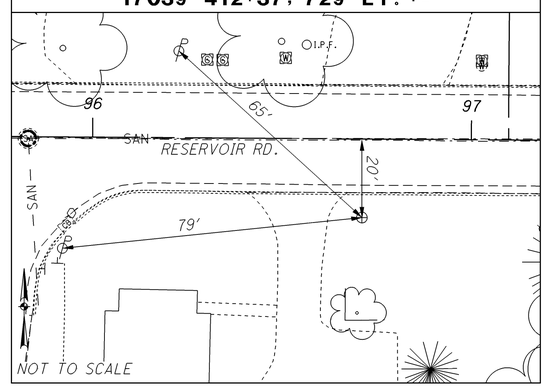

BM 2 412+46.58, 247.02' LT.

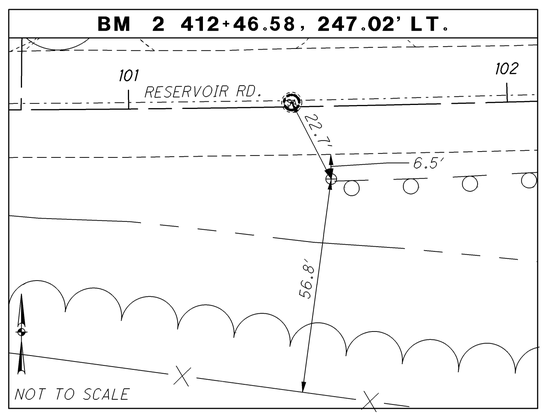

BM 1 413+03.49, 139.05' RT.

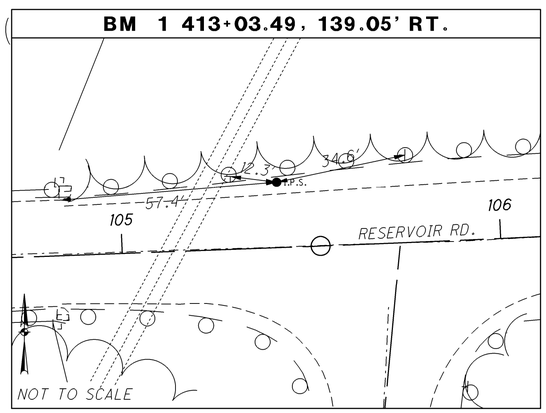

17040 413+27, 783' RT.+-

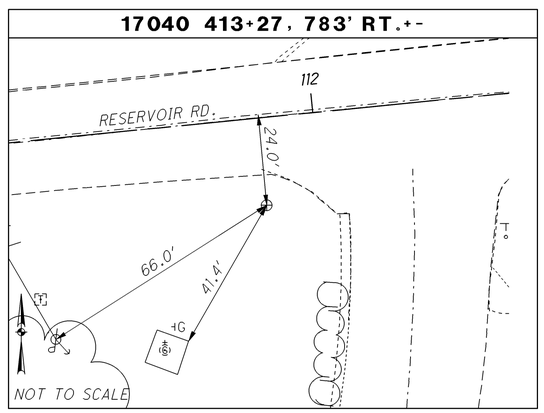

312 418+94.45, 53.64' RT.

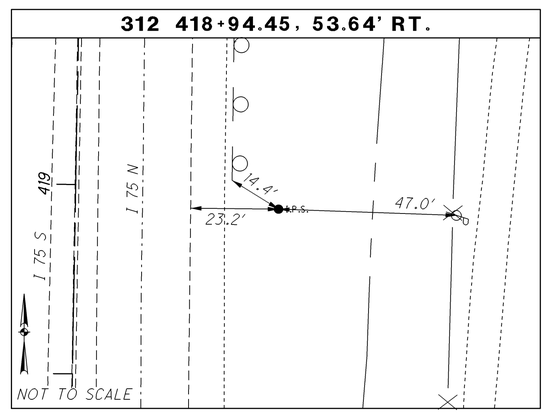

PRIMARY CONTROL POINTS/BENCHMARKS REFERENCE SKETCHES

CALCULATED HM
CHECKED CC

ALL-75-5.53

5
1224

J:\Projects\ALL\76691\roadway\sheets\76691GM004.dgn 11-SEP-2012 8:46PM reddenj

17041 423+80.87, 42.46' RT.

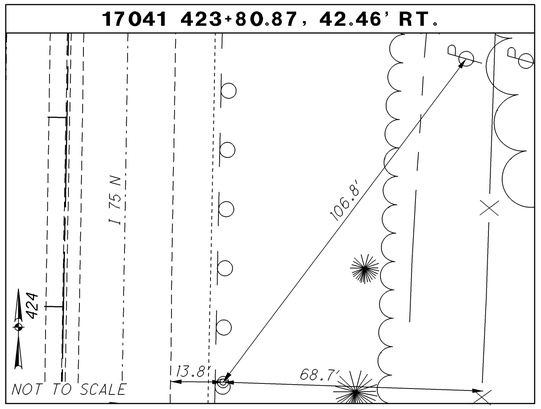

17051 426+63.94, 18.68' RT.

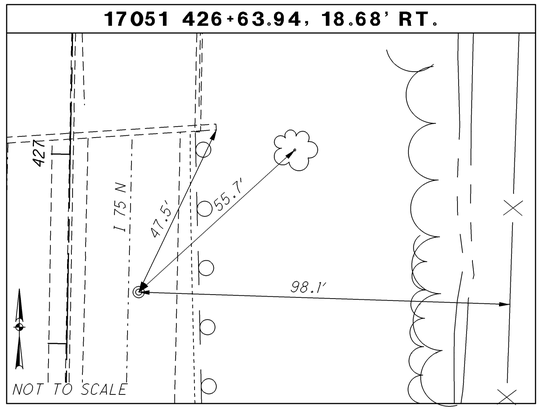

313 426+97.81, 39.08' RT.

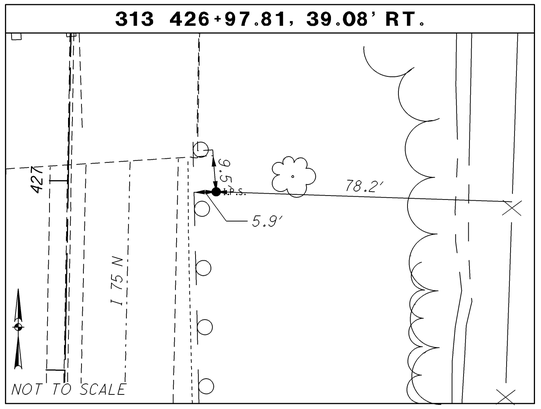

17042 429+23.70, 38.84' RT.

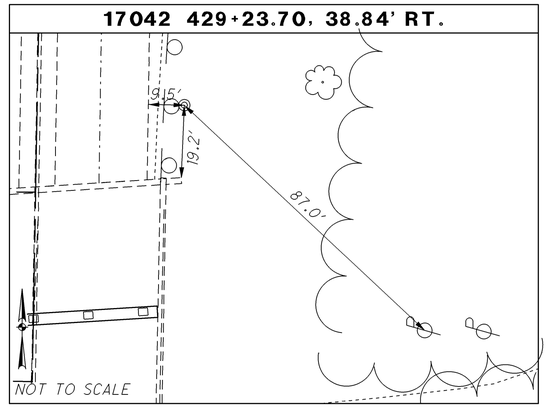

314 432+83.53, 43.44' RT.

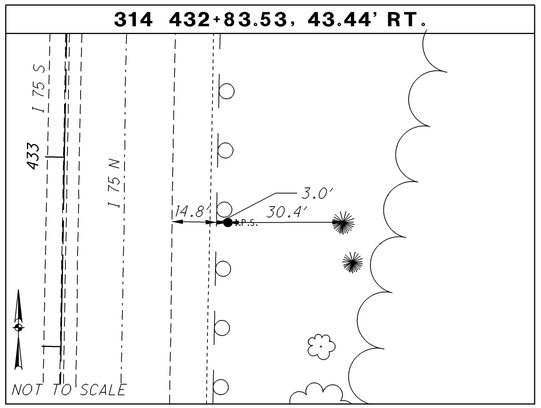

17043 437.28.65, 37.37' RT.

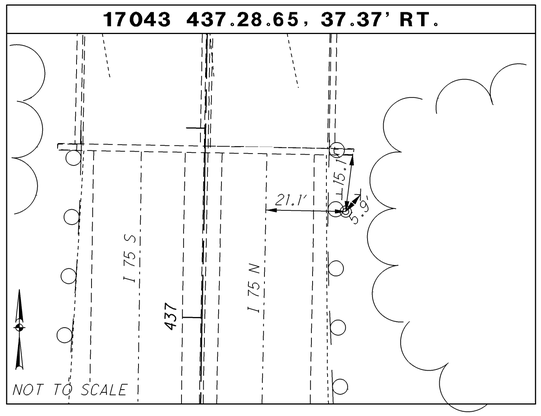

17045 438+99.89, 134.98' RT.

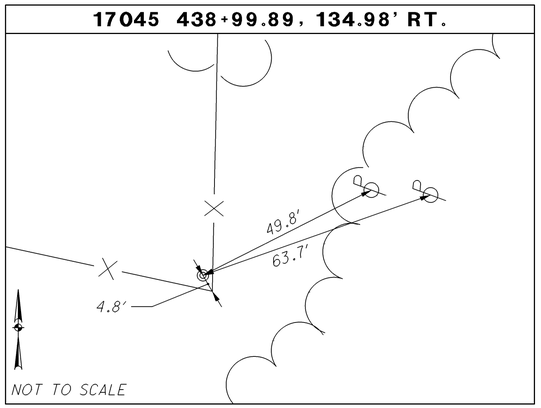

17044 439+43.26, 38.22' RT.

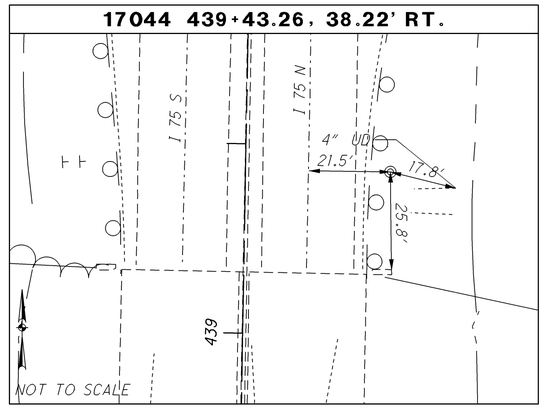

ALL I75 012 442+22.33, 47.35' RT.

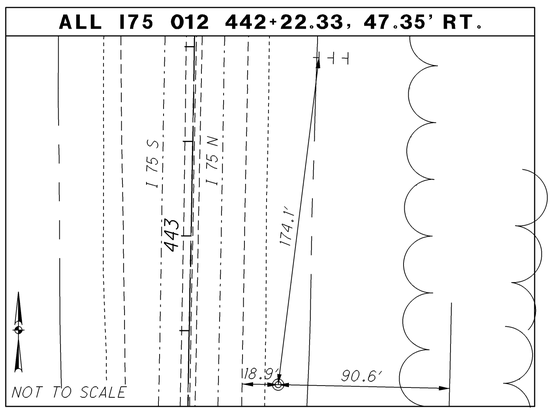

ALL I75 013 452+49.28, 91.47' RT.

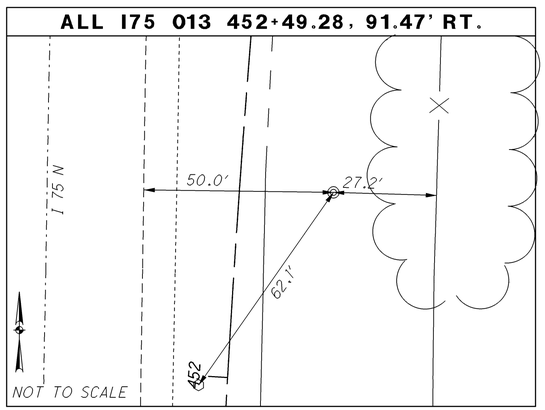

BM 8504 458+61.71, 1240.98' LT.

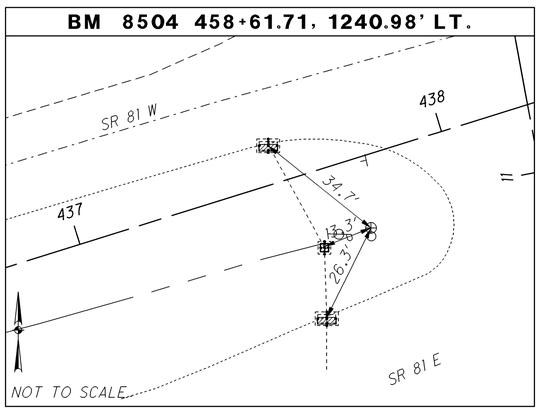

315 459+70.50, 36.23' RT.

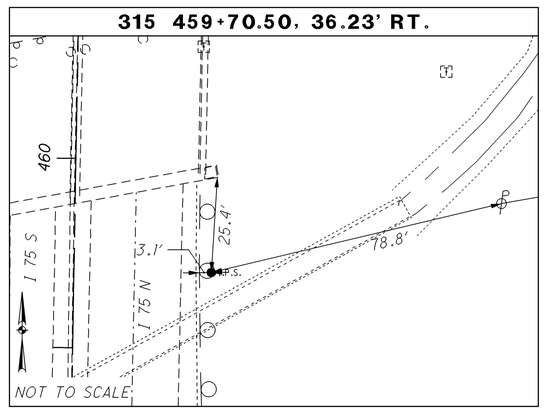

CALCULATED HM
CHECKED CC

PRIMARY CONTROL POINTS/BENCHMARKS REFERENCE SKETCHES

ALL-75-5.53

6
1224

J:\Projects\ALL\76691\roadway\sheets\76691GM005.dgn 11-SEP-2012 8:46PM reddenj

BM 3200 459+91.08, 581.90' LT.

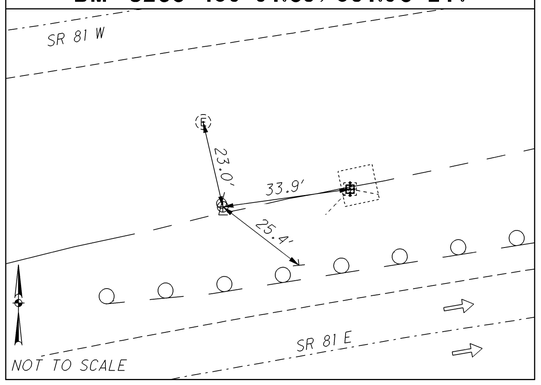

17047 460+15.11, 1163.74' LT.

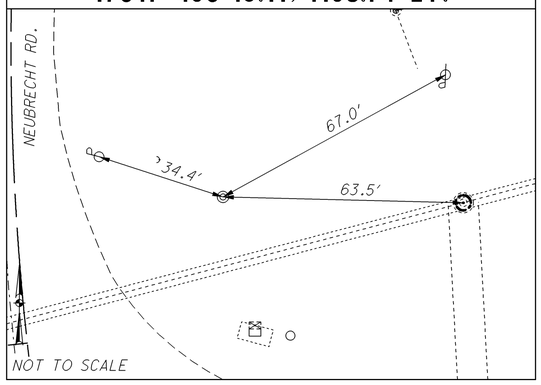

BM 2656 461+78.22, 194.54' RT.

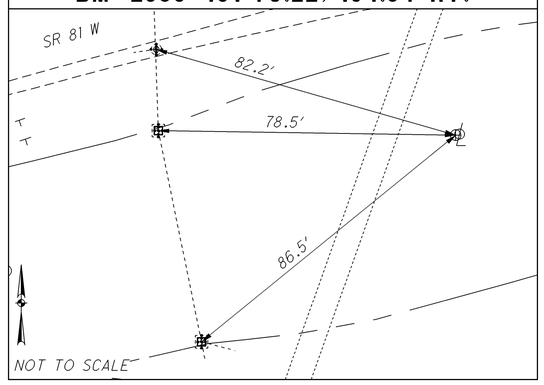

17048 462+88.28, 853.44' RT.

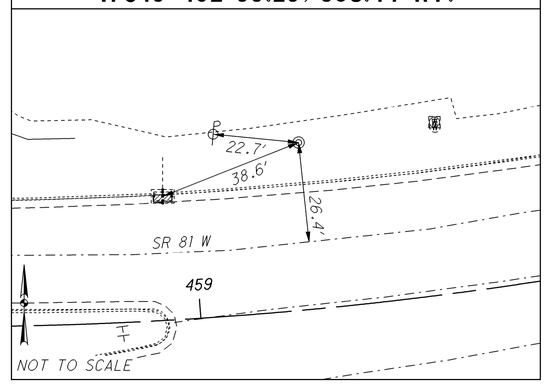

17046 463+92.15, 318.86' RT.

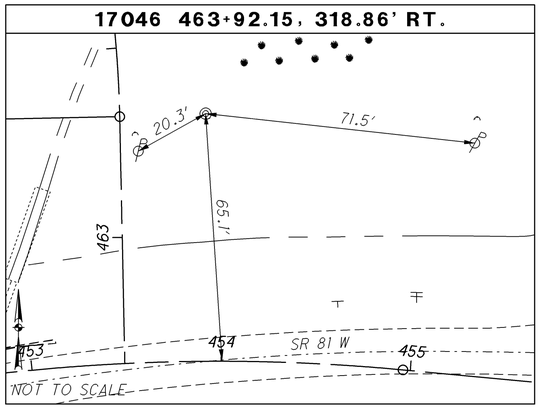

ALL I75 014 471+69.38, 63.69' RT.

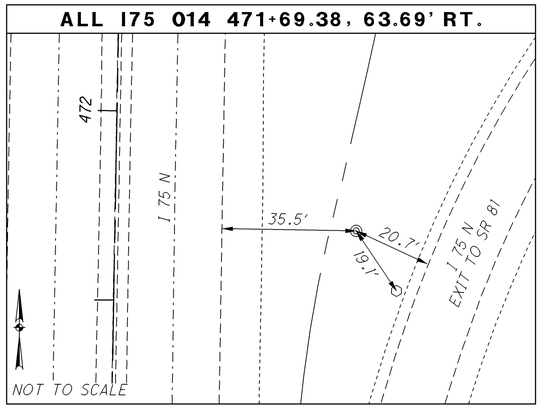

ALL I75 015 480+04.71, 55.66' RT.

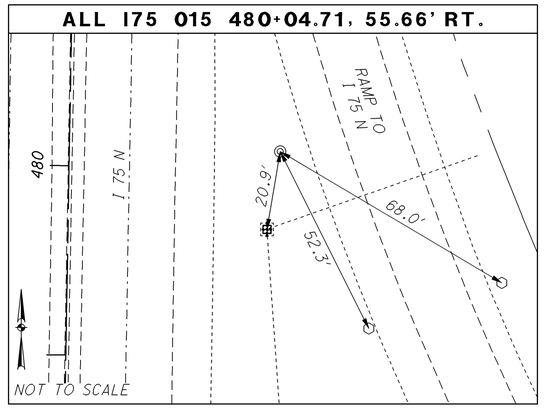

ALL I75 016 491+28.88, 70.23' RT.

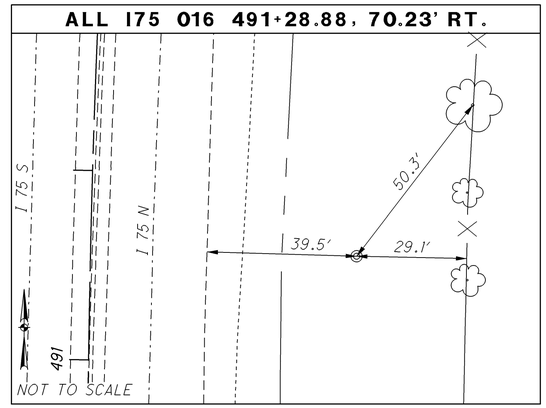

PRIMARY CONTROL POINTS/BENCHMARKS
REFERENCE SKETCHES

CALCULATED HM
CHECKED CC

ALL-75-5.53

7
1224

J:\Projects\ALL\76691\roadway\sheets\76691GM006.dgn 11-SEP-2012 8:46PM reddenj

ALL 75 09.51, 508+54.08, 192.72' LT.

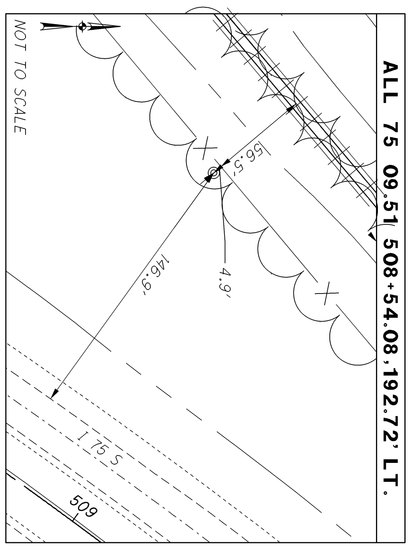

319 553+08.80, 0.11' LT.

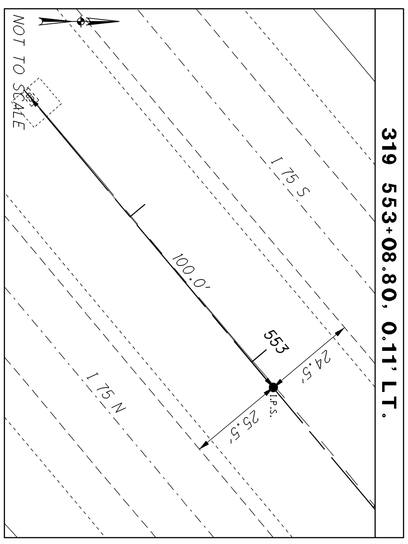

316 520+48.88, 5.12' LT.

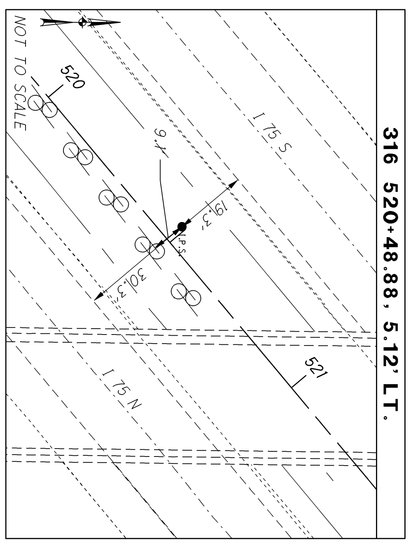

317 529+50.80, 0.86' LT.

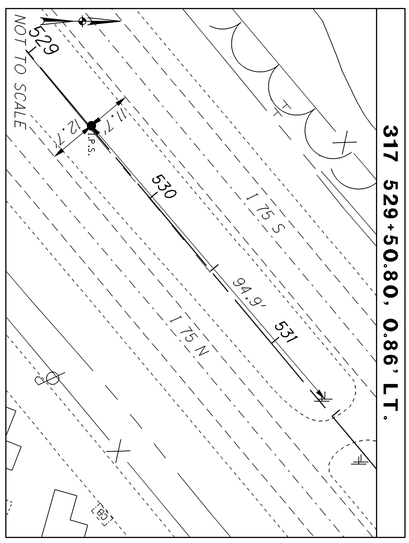

318 541+37.15, 14.20' RT.

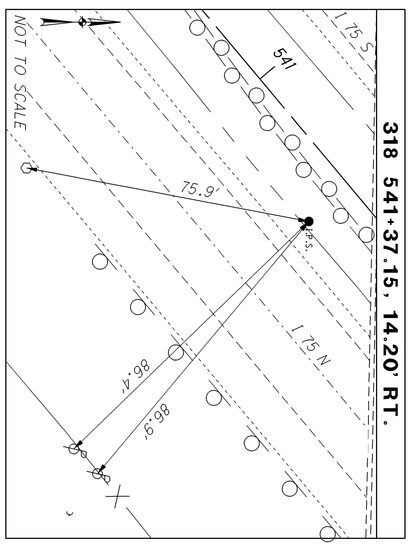

LEGEND

- WETLAND

CITY OF LIMA

BP PIPE LINE

12" MARATHON PIPE LINE

16" COLUMBIA GAS

EXIST. 20" CULVERT

MATCH LINE STA. 300+00.00

℄ R/W & CONST. I-75

CS Sta. 275+12.14

ST Sta. 280+47.14

RR SPUR

CITY OF LIMA

N 0° 57' 03" E

20" COLUMBIA GAS

PROP. 30" TYPE A

EXISTING I-75

CS Sta. 275+16.14

ST Sta. 280+51.74

S.L.M = 5.53

END PROJECT STA. 292+00 ALL-75-0.21

BEGIN PROJECT STA. 292+00 ALL-75-5.53

BEGIN WORK STA. 286+00 ALL-75-5.53

HANTHORN RD.

PERRY TWP. SECTION 17

PERRY TWP. SECTION 8

GREELY CHAPEL RD.

HORIZONTAL SCALE IN FEET

0 100 200 400

SCHEMATIC PLAN

ALL-75-5.53

9
1224

J:\Projects\ALL\76691\roadway\sheets\76691GB006.dgn 11-SEP-2012 8:47PM reddenj

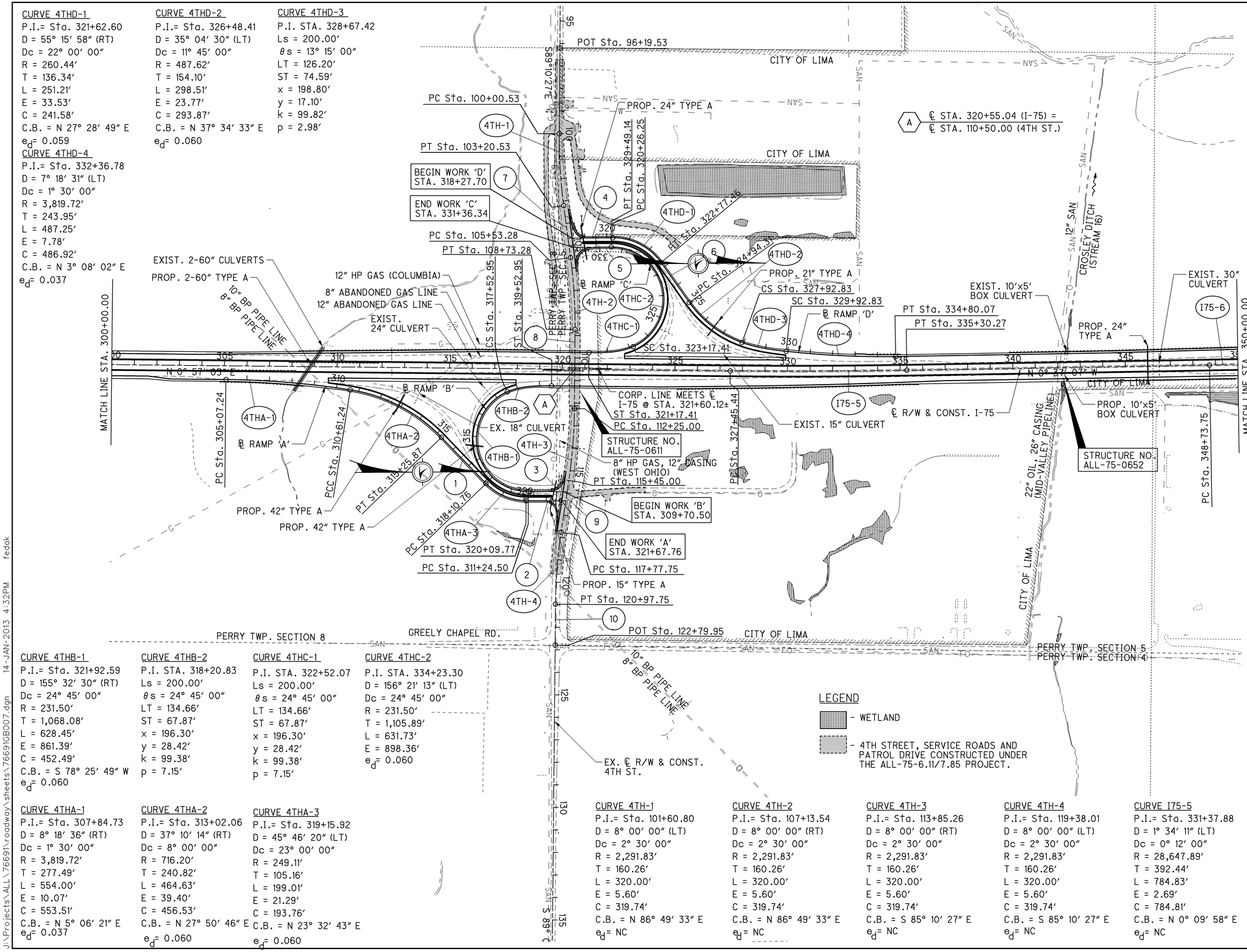

CURVE 4THD-1
P.I.= Sta. 321+62.60
D = 55° 15' 58" (RT)
Dc = 22° 00' 00"
R = 260.44'
T = 136.34'
L = 251.21'
E = 33.53'
C = 241.58'
C.B. = N 27° 28' 49" E
e_d= 0.059

CURVE 4THD-2
P.I.= Sta. 326+48.41
D = 35° 04' 30" (LT)
Dc = 11° 45' 00"
R = 487.62'
T = 154.10'
L = 298.51'
E = 23.77'
C = 293.87'
C.B. = N 37° 34' 33" E
e_d= 0.060

CURVE 4THD-3
P.I. STA. 328+67.42
Ls = 200.00'
θs = 13° 15' 00"
LT = 126.20'
ST = 74.59'
x = 198.80'
y = 17.10'
k = 99.82'
p = 2.98'

CURVE 4THD-4
P.I.= Sta. 332+36.78
D = 7° 18' 31" (LT)
Dc = 1° 30' 00"
R = 3,819.72'
T = 243.95'
L = 487.25'
E = 7.78'
C = 486.92'
C.B. = N 3° 08' 02" E
e_d= 0.037

CURVE 4THB-1
P.I.= Sta. 321+92.59
D = 155° 32' 30" (RT)
Dc = 24° 45' 00"
R = 231.50'
T = 1,068.08'
L = 628.45'
E = 861.39'
C = 452.49'
C.B. = S 78° 25' 49" W
e_d= 0.060

CURVE 4THB-2
P.I. STA. 318+20.83
Ls = 200.00'
θs = 24° 45' 00"
LT = 134.66'
ST = 67.87'
x = 196.30'
y = 28.42'
k = 99.38'
p = 7.15'

CURVE 4THC-1
P.I. STA. 322+52.07
Ls = 200.00'
θs = 24° 45' 00"
LT = 134.66'
ST = 67.87'
x = 196.30'
y = 28.42'
k = 99.38'
p = 7.15'

CURVE 4THC-2
P.I. STA. 334+23.30
D = 156° 21' 13" (LT)
Dc = 24° 45' 00"
R = 231.50'
T = 1,105.89'
L = 631.73'
E = 898.36'
e_d= 0.060

CURVE 4THA-1
P.I.= Sta. 307+84.73
D = 8° 18' 36" (RT)
Dc = 1° 30' 00"
R = 3,819.72'
T = 277.49'
L = 554.00'
E = 10.07'
C = 553.51'
C.B. = N 5° 06' 21" E
e_d= 0.037

CURVE 4THA-2
P.I.= Sta. 313+02.06
D = 37° 10' 14" (RT)
Dc = 8° 00' 00"
R = 716.20'
T = 240.82'
L = 464.63'
E = 39.40'
C = 456.53'
C.B. = N 27° 50' 46" E
e_d= 0.060

CURVE 4THA-3
P.I.= Sta. 319+15.92
D = 45° 46' 20" (LT)
Dc = 23° 00' 00"
R = 249.11'
T = 105.16'
L = 199.01'
E = 21.29'
C = 193.76'
C.B. = N 23° 32' 43" E
e_d= 0.060

CURVE 4TH-1
P.I.= Sta. 101+60.80
D = 8° 00' 00" (LT)
Dc = 2° 30' 00"
R = 2,291.83'
T = 160.26'
L = 320.00'
E = 5.60'
C = 319.74'
C.B. = N 86° 49' 33" E
e_d= NC

CURVE 4TH-2
P.I.= Sta. 107+13.54
D = 8° 00' 00" (RT)
Dc = 2° 30' 00"
R = 2,291.83'
T = 160.26'
L = 320.00'
E = 5.60'
C = 319.74'
C.B. = N 86° 49' 33" E
e_d= NC

CURVE 4TH-3
P.I.= Sta. 113+85.26
D = 8° 00' 00" (RT)
Dc = 2° 30' 00"
R = 2,291.83'
T = 160.26'
L = 320.00'
E = 5.60'
C = 319.74'
C.B. = S 85° 10' 27" E
e_d= NC

CURVE 4TH-4
P.I.= Sta. 119+38.01
D = 8° 00' 00" (LT)
Dc = 2° 30' 00"
R = 2,291.83'
T = 160.26'
L = 320.00'
E = 5.60'
C = 319.74'
C.B. = S 85° 10' 27" E
e_d= NC

CURVE I75-5
P.I.= Sta. 331+37.88
D = 1° 34' 11" (LT)
Dc = 0° 12' 00"
R = 28,647.89'
T = 392.44'
L = 784.83'
E = 2.69'
C = 784.81'
C.B. = N 0° 09' 58" E
e_d= NC

CURVE I75-6
P.I.= Sta. 352+62.60
D = 1° 17' 46" (RT)
Dc = 0° 10' 00"
R = 34,377.47'
T = 388.85'
L = 777.67'
E = 2.20'
C = 777.65'
C.B. = N 0° 01' 46" E
e_d= NC

SCHEMATIC PLAN

ALL-75-5.53

10
1224

J:\Projects\ALL\76691\roadway\sheets\76691GB007.dgn 14-JAN-2013 4:32PM fedak

CURVE I75-6
P.I.= Sta. 352+62.60
D = 1° 17′ 46″ (RT)
Dc = 0° 10′ 00″
R = 34,377.47′
T = 388.85′
L = 777.67′
E = 2.20′
C = 777.65′
C.B. = N 0° 01′ 46″ E
e_d= NC

LEGEND

▨ - WETLAND

(1) - N 16° 42′ 47″ W
(2) - N 0° 05′ 07″ W
(3) - N 12° 54′ 53″ E
(4) - N 19° 40′ 02″ E
(5) - N 0° 05′ 07″ W
(6) - N 0° 05′ 07″ W
(7) - N 17° 51′ 56″ W
(8) - N 17° 26′ 09″ E
(9) - N 12° 38′ 28″ W
(10) - N 13° 35′ 30″ E
(11) - S 89° 52′ 58″ E
(12) - N 0° 04′ 24″ W
(13) - N 46° 48′ 09″ E
(14) - S 87° 59′ 09″ E
(15) - S 89° 38′ 36″ E
(16) - S 13° 35′ 30″ W
(17) - S 89° 52′ 58″ E

INTERSECTION EQUATIONS:
STA. 893+23.92 (S.R. 309) = STA. 370+26.30 (RAMP 'A'
STA. 893+33.67 (S.R. 309) = STA. 369+78.11 (RAMP 'C')
STA. 896+02.95 (S.R. 309) = STA. 370+05.72 (I-75)
STA. 898+87.84 (S.R. 309) = STA. 369+81.23 (RAMP 'E')
STA. 898+95.84 (S.R. 309) = STA. 370+37.18 (RAMP 'F'

CURVE 309A-1
P.I. STA. 358+21.67
Ls = 200.00′
θs = 3° 00′ 00″
LT = 133.35′
ST = 66.68′
x = 199.95′
y = 3.49′
k = 99.99′
p = 0.87′

CURVE 309A-2
P.I.= Sta. 360+77.61
D = 17° 23′ 25″ (LT)
Dc = 3° 00′ 00″
R = 1,909.86′
D c = 14° 23′ 25″ (LT)
Lc = 479.68′
Es = 22.65′
C = 478.42′
C.B.1 = N 0° 19′ 21″ W
C.B. = N 9° 31′ 04″ W
e_d= 0.055

CURVE 309A-3
P.I.= Sta. 367+44.61
D = 16° 37′ 40″ (RT)
Dc = 6° 30′ 00″
R = 881.47′
T = 128.81′
L = 255.81′
E = 9.36′
C = 254.92′
C.B. = N 8° 23′ 57″ W
e_d= 0.044

CURVE 309C-1
P.I.= Sta. 371+35.77
D = 4° 31′ 15″ (RT)
Dc = 5° 00′ 00″
R = 1,145.92′
T = 45.23′
L = 90.42′
E = 0.89′
C = 90.40′
C.B. = N 15° 10′ 31″ E
e_d= 0.039

CURVE 309C-2
P.I.= Sta. 375+58.84
D = 8° 26′ 54″ (LT)
Dc = 5° 00′ 00″
R = 1,145.92′
T = 84.64′
L = 168.97′
E = 3.12′
C = 168.82′
C.B. = N 13° 12′ 42″ E
e_d= 0.060

CURVE 309C-3
P.I.= Sta. 379+20.66
D = 8° 18′ 36″ (LT)
Dc = 1° 30′ 00″
R = 3,819.72′
T = 277.49′
L = 554.00′
E = 10.07′
C = 553.51′
C.B. = N 4° 49′ 57″ E
e_d= 0.037

* - TWP. LINE MEETS ℄ I-75 @ 370+05.72
** - CORP. LINE MEETS ℄ I-75 @ STA. 369+59.94±

HORIZONTAL SCALE IN FEET
0 100 200 400

BEGIN WORK STA. 886+22.51
POT Sta. 883+75.83
CITY OF LIMA
S. ROBERTS AVE.
PROP. 16'X7' CONDUIT TYPE A
LOST CREEK
5-8" OIL (BUCKEYE PIPE LINE)
℄ R/W & CONSTRUCTION S.R. 117/S.R. 309
10" WATER LINE
LENORE ST.
STRUCTURE NO. ALL-117-1844
STRUCTURE NO. ALL-75-0703 L/R
EXIST. TWIN 10′-8"X6′-11" WITH 6"-6" TYPE A INSERTS
138Kv LINES (AEP)
℄ RAMP 'C'
EXIST. 36" CMP TYPE A
EXIST. TWIN 11′-0" TYPE A
STRUCTURE NO. ALL-75-0711
FEDERAL ST.
S. LEONARD AVE.
LINDEN ST.
HILL ST.
E. EUREKA ST.
E. ELM ST.
TURNER AVE.
ALTON AVE.
5-8" OIL (BUCKEYE PIPE LINE)
℄ R/W & CONST. I-75
PROPOSED NOISE BARRIER
2-8" GAS, 16" CASING (BUCKEYE PIPE LINE)
12" GAS, 16" CASING (BUCKEYE PIPE LINE)
POT Sta. 396+67.24
MATCH LINE STA. 350+00.00
MATCH LINE STA. 400+00.00
I75-6
PT Sta. 356+51.41
ST Sta. 356+88.32
SC Sta. 358+88.32
PT Sta. 363+68.00
PC Sta. 366+15.80
PT Sta. 368+11.61
PC Sta. 370+80.54
PT Sta. 373+80.96
PC Sta. 374+74.20
PCC Sta. 376+43.17
PT Sta. 381+97.17
309A-1
309A-2
309A-3
309C-1
309C-2
309C-3
℄ RAMP 'A'
PROP. 36" TYPE A
PROP. 30" TYPE A
℄ RAMP 'F'
309F-1
309F-2
309F-3
F1
F2
F3
F4
PC Sta. 354+74.74
PI Sta. 899+50.00
PI Sta. 901+65.00
PC Sta. 371+07.40
8" HP, 12" CASING (DOMINION GAS)
℄ RAMP 'E'
DEAN AVE.
309E-1
SARATOGA AVE.
309E-2
309E-3
STRUCTURE NO. BTH-TR509-0.01
EXIST. TWIN 11′-0" TYPE A
SEE DETAIL 'A', SHEET 12.
138Kv LINES (AEP)
PROPOSED NOISE BARRIER 21" PVC
PROPOSED 24" TYPE A
BRYN MAWR AVE.
CHEVY CHASE BLVD.
SMEAD AVE.
LOST CREEK BLVD.
ROSCHMAN AVE.
EASTERN AVE.
℄ CONST. S.R. 117/S.R. 309 (HARDING HWY)
EQUATION: Sta 904+00.11 BK = Sta 904+00.00 AH
END WORK STA. 907+00
PERRY TWP. SEC. 5
BATH TWP. SEC. 32
BELLEFONTAINE RD.
PERRY TWP. SECTION 5
PERRY TWP. SECTION 4
MOTEL AVE.
POT Sta. 908+79.96 (CONST. ℄)
WILLARD AVE.
BATH TWP. SECTION 32
BATH TWP. SECTION 33
WELLESLEY DR.
℄ R/W S.R. 117/S.R. 309 (HARDING HIGHWAY)
POT Sta. 910+20.78
BRISTOL AVE.
N 0° 40′ 39″ E
N 1° 01′ 48″ E

CURVE 309E-1
P.I.= Sta. 371+88.87
D = 17° 46′ 49″ (LT)
Dc = 11° 00′ 00″
R = 520.87′
T = 81.47′
L = 161.64′
E = 6.33′
C = 160.99′
C.B. = N 8° 58′ 31″ W
e_d= 0.055

CURVE 309E-2
P.I.= Sta. 377+61.43
D = 12° 49′ 42″ (RT)
Dc = 4° 15′ 00″
R = 1,348.14′
T = 151.56′
L = 301.84′
E = 8.49′
C = 301.21′
C.B. = N 11° 27′ 05″ W
e_d= 0.060

CURVE 309E-3
P.I. STA. 379+83.43
Ls = 215.00′
θs = 4° 34′ 08″
LT = 143.38′
ST = 71.71′
x = 214.86′
y = 5.71′
k = 107.48′
p = 1.43′

CURVE 309F-1
P.I.= Sta. 357+60.27
D = 8° 33′ 00″ (RT)
Dc = 1° 30′ 00″
R = 3,819.72′
T = 285.53′
L = 570.00′
E = 10.66′
C = 569.47′
C.B. = N 4° 39′ 28″ E
e_d= 0.037

CURVE 309F-2
P.I.= Sta. 361+88.28
D = 10° 44′ 03″ (RT)
Dc = 3° 45′ 00″
R = 1,527.89′
T = 143.54′
L = 286.25′
E = 6.73′
C = 285.83′
C.B. = N 14° 18′ 00″ E
e_d= 0.050

CURVE 309F-3
P.I.= Sta. 367+25.14
D = 19° 45′ 08″ (LT)
Dc = 5° 00′ 00″
R = 1,145.92′
T = 199.50′
L = 395.05′
E = 17.24′
C = 393.09′
C.B. = N 9° 47′ 28″ E
e_d= 0.039

(F1) - PCC STA. 360+44.74
(F2) - PT STA. 363+30.99
(F3) - PC STA. 365+25.64
(F4) - PT STA. 369+20.69

(E1) - PT STA. 372+69.04
(E2) - PC STA. 376+09.87
(E3) - CS STA. 379+11.72
(E4) - ST STA. 381+26.72

SCHEMATIC PLAN

ALL-75-5.53

11
1224

J:\Projects\ALL\76691\roadway\sheets\76691GB008.dgn 11-SEP-2012 8:47PM redden

D1 - POT STA. 5+27.36
D2 - PC STA. 7+93.54
D3 - PC STA. 8+29.72
D4 - PC STA. 9+21.62
D5 - PT STA. 9+57.58
D6 - POT STA. 10+00.00

W1 - POT STA. 5+87.48
W2 - PC STA. 7+95.87
W3 - PT STA. 10+75.53
W4 - POT STA. 13+52.77

L1 - POT STA. 50+00.00
L2 - PC STA. 50+26.90
L3 - PT STA. 51+53.59
L4 - POT STA. 53+00.01

16 - S 13° 35′ 30″ W
17 - S 89° 52′ 58″ E
18 - N 0° 07′ 02″ E
19 - N 0° 04′ 24″ W

CURVE WEL-1
P.I. Sta. 9+92.21
Δ = 103° 28′ 28″ (LT)
Dc = 37° 00′ 00″
R = 154.85′
T = 196.34′
L = 279.66′
E = 95.21′
C = 243.18′
C.B. = S 38° 08′ 44″ E

CURVE LOST-1
P.I.Sta. 50+94.03
Δ = 46° 52′ 33″ (RT)
Dc = 37° 00′ 00″
R = 154.85′
T = 67.13′
L = 126.69′
E = 13.93′
C = 123.19′
C.B. = N 23° 21′ 53″ E

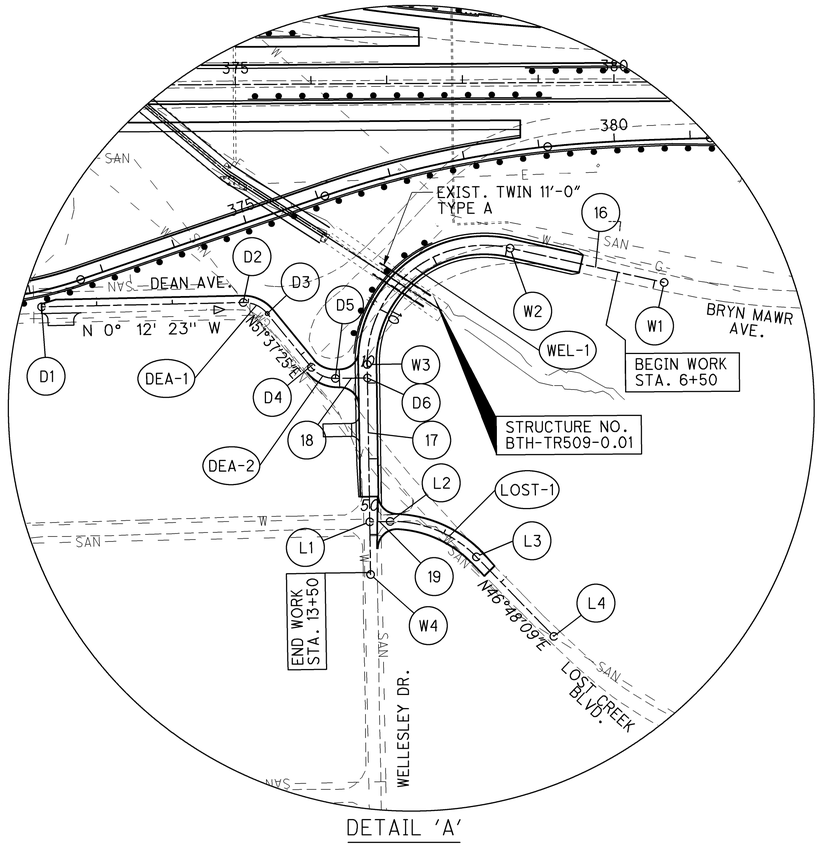

DETAIL 'A'

CURVE DEA-1
P.I.Sta. 8+12.98
Δ = 51° 49′ 48″ (RT)
Dc = 143° 14′ 22″
R = 40.00′
T = 19.44′
L = 36.18′
E = 4.47′
C = 34.96′
C.B. = N 25° 42′ 31″ E

CURVE DEA-2
P.I.Sta. 9+40.92
Δ = 51° 30′ 23″ (LT)
Dc = 143° 14′ 22″
R = 40.00′
T = 19.30′
L = 35.96′
E = 4.41′
C = 34.76′
C.B. = N 25° 52′ 13″ E

LEGEND
- WETLAND
- RESERVOIR ROAD AND BRYN MAWR AVE. CONSTRUCTED UNDER THE ALL-75-6.11/7.85 PROJECT.

HORIZONTAL SCALE IN FEET
0 100 200 400

SCHEMATIC PLAN

ALL-75-5.53

12
1224

J:\Projects\ALL\76691\roadway\sheets\76691GB009.dgn 11-SEP-2012 8:47PM reddenj

LEGEND

- WETLAND

℄ R/W EXIST. SR 81 (FINDLAY RD.)

INTERSECTION EQUATIONS:
STA. 448+15.19 (S.R. 81) = STA. 461+75.24 (RAMP 'D')

STA. 448+20.11 (S.R. 81) = STA. 461+31.81 (RAMP 'F')

STA. 450+66.08 (S.R 81) = STA. 462+10.70 (I-75)

STA. 453+41.20 (S.R. 81) = STA. 462+89.83 (RAMP 'C')

STA. 453+49.21 (S.R. 81) = STA. 462+33.32 (RAMP 'B')

STA. 438+23.91 (S.R. 81) = STA. 11+18.04 (NEUBRECHT RD.)

STA. 38+20.23 (SERVICE RD. 3) = STA. 9+99.01 (NEUBRECHT RD.)

EQUATION: Sta 442+69.06 BK = Sta 429+00.00 AH

BEGIN WORK STA. 425+50

PC Sta. 28+77.71

PT Sta. 29+97.22

PC Sta. 431+26.40

PT Sta. 433+56.52

SERVICE RD. 3

END WORK STA. 18+75

PT Sta. 12+89.62

POT Sta. 18+75.11

NEUBRECHT RD.

℄ R/W & CONST. PROP. NEUBRECHT RD

PC Sta. 11+46.49

℄ R/W & CONST. PROP. S.R. 81

PC Sta. 440+24.77

8" WATER LINE

EXIST. 12" CULVERT
PROP. 21" TYPE A
EXIST 24" CULVERT
PROP. 24" TYPE A

STRUCTURE NO. ALL-75-0875 L/R

CS Sta. 469+50.57

SC Sta. 471+50.57

POT Sta. 476+04.05

℄ RAMP 'D'
PROP. 36" TYPE A

PT Sta. 446+33.68

PC Sta. 45+21.23

POT Sta. 449+68.71

TS Sta. 450+66.93

SC Sta. 452+86.93

℄ RAMP 'F'

℄ R/W & CONST. I-75

PROP. 54" TYPE A

EXIST. 42" CULVERT

MATCH LINE STA. 448+00.00

MATCH LINE STA. 501+00.00

PC Sta. 491+17.53

PC Sta. 451+94.59

N 1° 00' 50" E

℄ RAMP 'C'

EXIST. 30" CULVERT

PROP. 48" TYPE A
EXIST. 60" CULVERT
EXIST. 24" CULVERT
PROP. 36" TYPE A
PROP. 48" TYPE A

2" GAS, 4" CASING (DOMINION GAS)

PT Sta. 454+96.18

PC Sta. 463+63.73

PROP. 48" TYPE A

PC Sta. 457+34.35

PT Sta. 460+21.15

END WORK STA. 464+15

8" WATER LINE

POT Sta. 464+80.60

POT Sta. 465+03.91

STEWART RD.

℄ RAMP 'B'

PT Sta. 465+40.97

PC Sta. 467+67.17

CS Sta. 471+73.81

ST Sta. 473+83.81

BATH TWP. SECTION 20
BATH TWP. SECTION 29

BATH TWP. SECTION 29
BATH TWP. SECTION 28

BATH TWP. SECTION 20
BATH TWP. SECTION 21

NORFOLK SOUTHERN

CURVE SRV-2
P.I. Sta. 45+83.83
Δ = 42° 08' 15" (LT)
Dc = 35° 15' 32"
R = 162.50'
T = 62.60'
L = 119.51'
E = 11.64'
C = 116.83'
C.B. = N 58° 30' 00" E

CURVE SRV-1
P.I. Sta. 29+40.31
Δ = 42° 08' 15" (RT)
Dc = 35° 15' 32"
R = 162.50'
T = 62.60'
L = 119.51'
E = 11.64'
C = 116.83'
C.B. = N 58° 30' 00" E

CURVE NEU-1
P.I.= Sta. 12+18.30
D = 11° 27' 00" (RT)
Dc = 8° 00' 00"
R = 716.20'
T = 71.80'
L = 143.13'
E = 3.59'
C = 142.89'
C.B. = N 4° 50' 04" W
e_d = NC

CURVE I75-7
P.I.= Sta. 504+36.28
D = 49° 04' 23" (RT)
Dc = 1° 59' 00"
R = 2,888.86'
T = 1,318.76'
L = 2,474.27'
E = 286.77'
C = 2,399.34'
C.B. = N 25° 33' 02" E
e_d = 0.055

CURVE SR81-1
P.I.= Sta. 432+41.60
D = 6° 54' 12" (LT)
Dc = 3° 00' 00"
R = 1,909.86'
T = 115.20'
L = 230.11'
E = 3.47'
C = 229.97
C.B. = N 76° 07' 01" E
e_d = NC

CURVE SR81-2
P.I.= Sta. 443+29.51
D = 6° 05' 21" (RT)
Dc = 1° 00' 00"
R = 5,729.58'
T = 304.74'
L = 608.91'
E = 8.10'
C = 608.63'
C.B. = N 75° 42' 36" E
e_d = NC

CURVE SR81-3
P.I.= Sta. 453+46.45
D = 16° 35' 17" (RT)
Dc = 5° 30' 00"
R = 1,041.74'
T = 151.86'
L = 301.60'
E = 11.01'
C = 300.55'
C.B. = N 87° 02' 54" E
e_d = NC

CURVE SR81-4
P.I.= Sta. 458+78.67
D = 15° 46' 26" (LT)
Dc = 5° 30' 00"
R = 1,041.74'
T = 144.31'
L = 286.80'
E = 9.95'
C = 285.89'
C.B. = N 87° 27' 20" E
e_d = NC

CURVE 81B-1
P.I.= Sta. 464+52.99
D = 16° 50' 17" (LT)
Dc = 9° 30' 00"
R = 603.11'
T = 89.26'
L = 177.24'
E = 6.57'
C = 176.60'
C.B. = N 9° 37' 13" W
e_d = 0.052

CURVE 81B-2
P.I.= Sta. 469+71.54
D = 14° 13' 57" (RT)
Dc = 3° 30' 00"
R = 1,637.02'
T = 204.37'
L = 406.64'
E = 12.71'
C = 405.59'
C.B. = N 10° 55' 23" W
e_d = 0.058

CURVE 81B-3
P.I. STA. 472+43.84
Ls = 210.00'
θs = 3° 40' 30"
LT = 140.03'
ST = 70.03'
x = 209.91'
y = 4.49'
k = 104.99'
p = 1.12'

CURVE 81D-1
P.I. STA. 452+13.61
Ls = 220.00'
θs = 1° 55' 30"
LT = 146.68'
ST = 73.34'
x = 219.98'
y = 2.46'
k = 110.00'
p = 0.62'

CURVE 81D-2
P.I.= Sta. 456+09.25
D = 15° 07' 22" (LT)
Dc = 1° 45' 00"
R = 3,274.04'
D c = 13° 11' 52" (LT)
Lc = 754.16'
Es = 29.03'
C = 752.49'
C.B.1 = N 0° 45' 52" W
C.B. = N 8° 38' 48" W
e_d = 0.041

CURVE 81F-1
P.I.= Sta. 463+83.93
D = 26° 38' 53" (RT)
Dc = 13° 00' 00"
R = 440.74'
T = 104.38'
L = 204.99'
E = 12.19'
C = 203.14'
C.B. = N 5° 04' 43" E
e_d = 0.058

CURVE 81F-2
P.I.= Sta. 468+60.86
D = 5° 50' 11" (LT)
Dc = 3° 15' 00"
R = 1,762.95'
T = 89.87'
L = 179.58'
E = 2.29'
C = 179.50'
C.B. = N 15° 29' 04" E
e_d = 0.058

CURVE 81F-3
P.I. STA. 470+38.34
Ls = 200.00'
θs = 4° 45' 00"
LT = 112.34'
ST = 87.77'
x = 199.81'
y = 7.27'
k = 99.98'
p = 0.51'

CURVE 81F-4
P.I.= Sta. 473+77.58
D = 6° 48' 08" (LT)
Dc = 1° 30' 00"
R = 3,819.72'
T = 227.01'
L = 453.48'
E = 6.74'
C = 453.22'
C.B. = N 4° 24' 54" E
e_d = 0.037

CURVE 81C-1
P.I.= Sta. 452+78.18
D = 6° 48' 08" (RT)
Dc = 1° 30' 00"
R = 3,819.72'
T = 227.01'
L = 453.48'
E = 6.74'
C = 453.22'
C.B. = N 4° 24' 54" E
e_d = 0.037

CURVE 81C-2
P.I. STA. 456+23.82
Ls = 200.00'
θs = 7° 00' 00"
LT = 119.17'
ST = 81.06'
x = 199.63'
y = 9.88'
k = 99.95'
p = 1.16'

CURVE 81C-3
P.I.= Sta. 457+85.42
D = 8° 52' 00" (RT)
Dc = 5° 30' 00"
R = 1,041.74'
T = 80.77'
L = 161.21'
E = 3.13'
C = 161.05'
C.B. = N 19° 14' 59" E
e_d = 0.060

CURVE 81C-4
P.I.= Sta. 461+36.60
D = 24° 53' 03" (LT)
Dc = 16° 30' 00"
R = 347.25'
T = 76.61'
L = 150.81'
E = 8.35'
C = 149.63'
C.B. = N 11° 14' 27" E
e_d = 0.060

(1) - N 15° 14' 43" W
(2) - N 8° 14' 44" W
(3) - N 18° 24' 09" E
(4) - N 23° 40' 59" E
(5) - N 1° 12' 04" W
(6) - N 1° 12' 04" W
(7) - N 18° 02' 21" W
(8) - N 79° 34' 07" E
(9) - N 72° 39' 55" E
(10) - N 78° 45' 16" E
(11) - S 84° 39' 27" E
(12) - N 79° 34' 07" E
(13) - N 10° 33' 34" W
(14) - N 0° 53' 26" E
(15) - N 79° 34' 07" E
(C1) - CS STA. 455+04.65
(C2) - SC STA. 457+04.65
(C3) - PT STA. 458+65.86
(C4) - PC STA. 460+59.98
(C5) - PT STA. 462+10.80
(D1) - PT STA. 460+41.09
(F1) - PC STA. 462+79.55
(F2) - PT STA. 464+84.54
(F3) - PC STA. 467+70.99
(S1) - PT STA. 46+40.74

HORIZONTAL SCALE IN FEET
0 100 200 400

SCHEMATIC PLAN

ALL-75-5.53

13
1224

J:\Projects\ALL\76691\roadway\sheets\76691GB010.dgn 11-SEP-2012 8:47PM reddenj

LEGEND

▒ - WETLAND

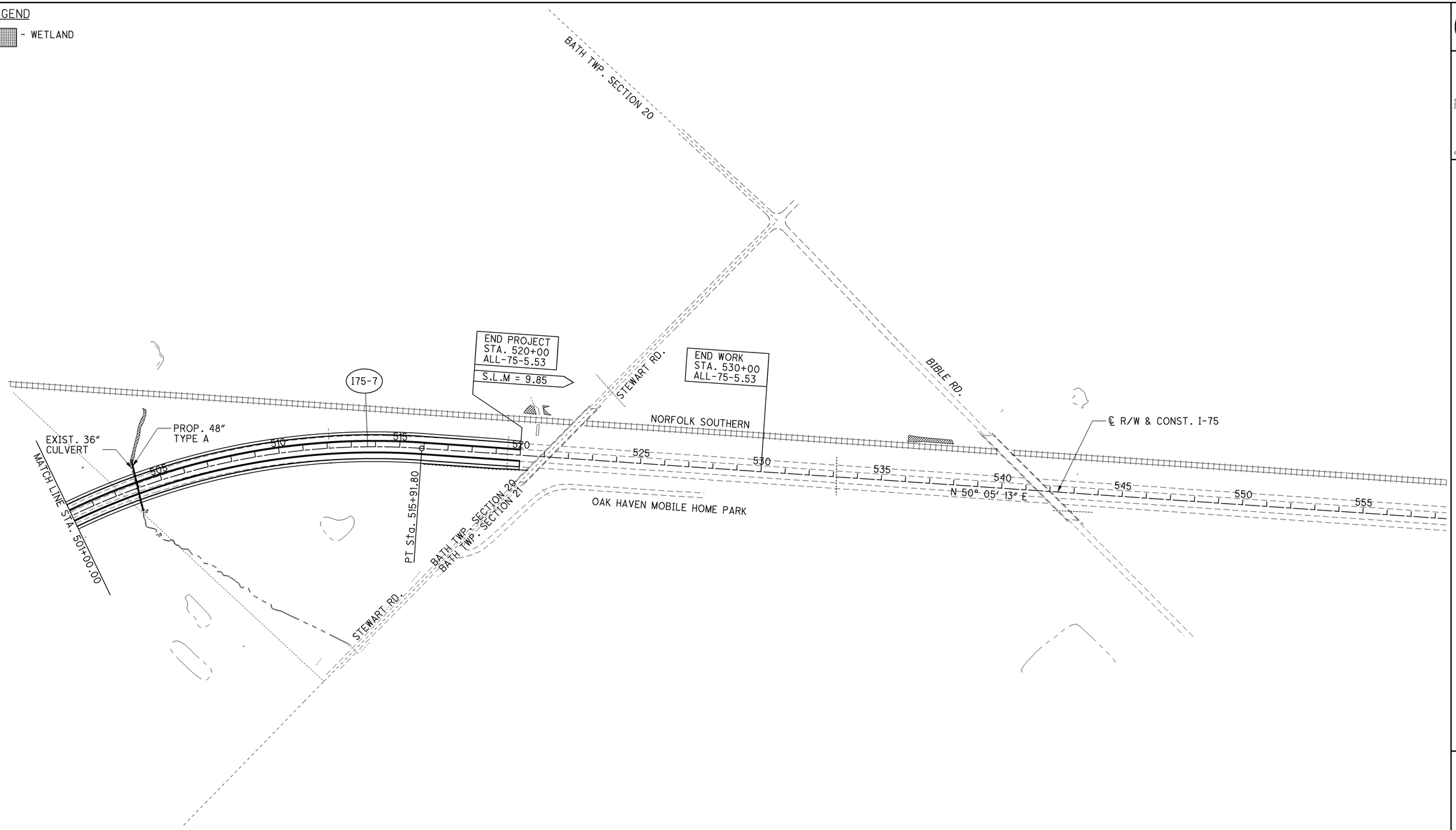

CURVE I75-7
P.I.= Sta. 504+36.28
D = 49° 04' 23" (RT)
Dc = 1° 59' 00"
R = 2,888.86'
T = 1,318.76'
L = 2,474.27'
E = 286.77'
C = 2,399.34'
C.B. = N 25° 33' 02" E
e_d = 0.055

HORIZONTAL SCALE IN FEET
0 100 200 400

SCHEMATIC PLAN

ALL-75-5.53

14
1224

J:\Projects\ALL\76691\roadway\sheets\76691GB011.dgn 11-SEP-2012 8:47PM reddenj

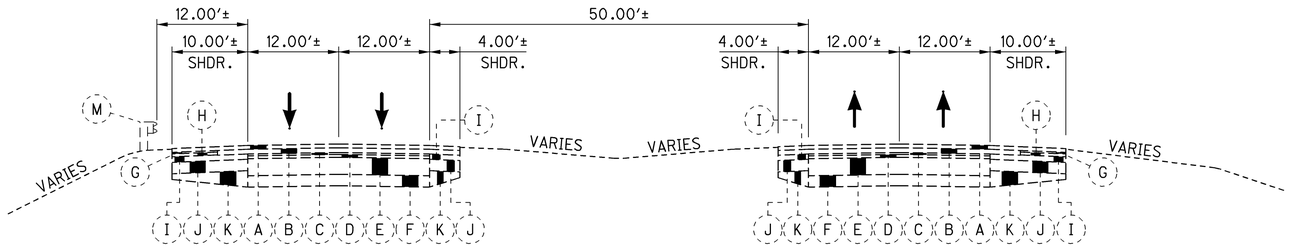

EXISTING I-75 W/ GRASS MEDIAN

APPROXIMATE LIMITS:
STA. 292+00.00 TO STA. 317+45.63

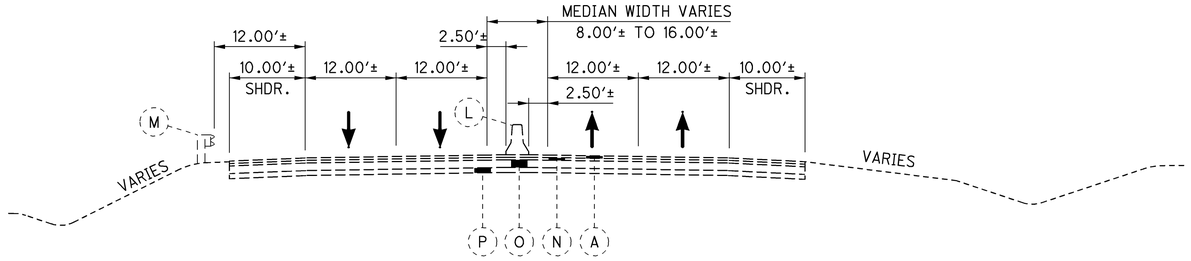

EXISTING I-75 NORMAL W/ MEDIAN BARRIER

APPROXIMATE LIMITS:
STA. 317+45.63 TO STA. 323+80.13
STA. 342+11.13 TO STA. 346+16.13
STA. 366+10.39 TO STA. 369+10.39
STA. 370+94.22 TO STA. 373+94.22
STA. 409+60.09 TO STA. 415+95.09
STA. 423+89.12 TO STA. 426+89.12
STA. 429+16.22 TO STA. 437+29.84
STA. 439+33.34 TO STA. 442+33.34
STA. 456+75.03 TO STA. 459+75.03
STA. 463+11.08 TO STA. 466+11.08

EX STRUCTURE ALL-75-0703
STA. 369+10.39 TO STA. 370+94.22

EX STRUCTURE ALL-25-81
STA. 426+89.12 TO STA. 429+16.22

EX STRUCTURE ALL-25-83
STA. 437+29.84 TO STA. 439+33.34

EX STRUCTURE ALL-25-87
STA. 459+75.03 TO STA. 463+11.08

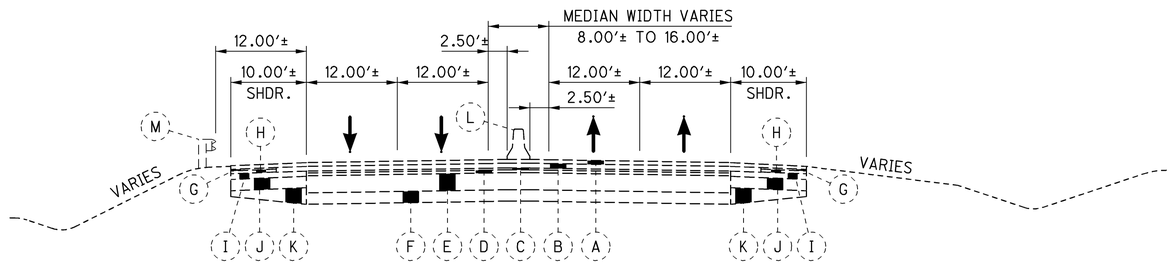

EXISTING I-75 NORMAL W/ MEDIAN BARRIER

APPROXIMATE LIMITS:
STA. 323+80.13 TO STA. 342+11.13
STA. 346+16.13 TO STA. 366+10.39
STA. 373+94.22 TO STA. 409+60.09
STA. 415+95.09 TO STA. 423+89.12
STA. 442+33.34 TO STA. 456+75.03
STA. 466+11.08 TO STA. 493+12.70

EXISTING PAVEMENT BUILDUP LEGEND:

- (A) 2"± SUPERPAVE ASPHALT SURFACE COURSE (2004)
- (B) 2½"± ASPHALT CONCRETE INTERMEDIATE COURSE (1996)
- (C) 1"± ASPHALT CONCRETE SURFACE COURSE (1973)
- (D) 1½"± ASPHALT CONCRETE INTERMEDIATE COURSE (1973)
- (E) 9"± REINFORCED PORTLAND CEMENT (1955 NB & 1957 SB)
- (F) 6"± STABILIZED CRUSHED AGGREGATE (1955 NB & 1957 SB)
- (G) ¾"± ASPHALT CONCRETE SURFACE COURSE (1983)
- (H) 1½"± ASPHALT CONCRETE INTERIOR COURSE (1983)
- (I) 3"± BITUMINOUS AGGREGATE BASE (1973)
- (J) 6"± AGGREGATE BASE (1973)
- (K) SUBBASE (1973)
- (L) CONCRETE BARRIER (1973)
- (M) GUARDRAIL
- (N) 1¼"± ASPHALT CONCRETE INTERMEDIATE COURSE (1996)
- (O) 12"± BITUMINOUS AGGREGATE BASE (1996)
- (P) 8"± AGGREGATE BASE

EXISTING TYPICAL SECTIONS I-75

ALL-75-5.53

15
1224

J:\Projects\ALL\76691\roadway\sheets\76691GY001.dgn 11-SEP-2012 8:47PM redden

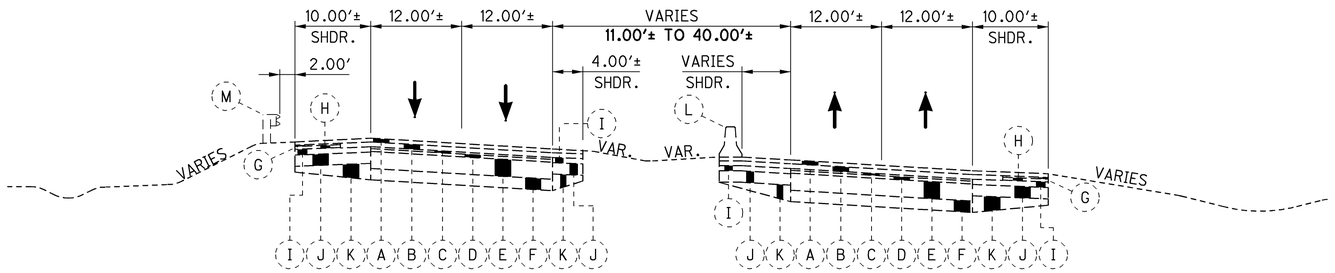

EXISTING I-75 SUPERELEVATION W/ MEDIAN BARRIER

APPROXIMATE LIMITS:
STA. 493+12.70 TO STA. 506+12.98

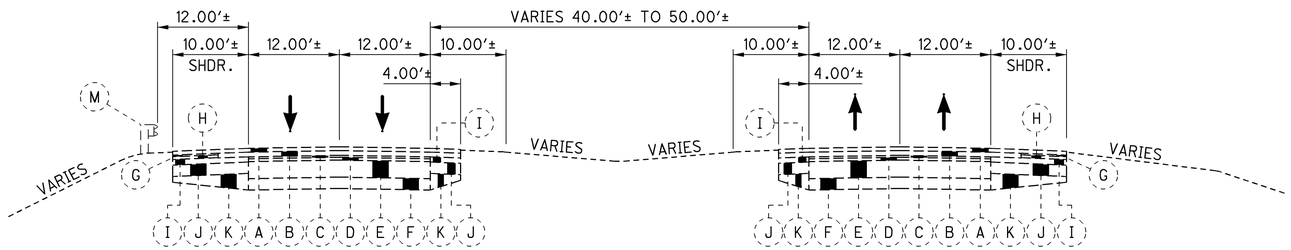

EXISTING I-75 W/ GRASS MEDIAN

APPROXIMATE LIMITS:
STA. 506+12.98 TO STA. 520+00

EXISTING PAVEMENT BUILDUP LEGEND:

- (A) 2"± SUPERPAVE ASPHALT SURFACE COURSE (2004)
- (B) 2½"± ASPHALT CONCRETE INTERMEDIATE COURSE (1996)
- (C) 1"± ASPHALT CONCRETE SURFACE COURSE (1973)
- (D) 1½"± ASPHALT CONCRETE INTERMEDIATE COURSE (1973)
- (E) 9"± REINFORCED PORTLAND CEMENT (1955 NB & 1957 SB)
- (F) 6"± STABILIZED CRUSHED AGGREGATE (1955 NB & 1957 SB)
- (G) ¾"± ASPHALT CONCRETE SURFACE COURSE (1983)
- (H) 1½"± ASPHALT CONCRETE INTERIOR COURSE (1983)
- (I) 3"± BITUMINOUS AGGREGATE BASE (1973)
- (J) 6"± AGGREGATE BASE (1973)
- (K) SUBBASE (1973)
- (L) CONCRETE BARRIER (1973)
- (M) GUARDRAIL
- (N) 1¼"± ASPHALT CONCRETE INTERMEDIATE COURSE (1996)
- (O) 12"± BITUMINOUS AGGREGATE BASE (1996)
- (P) 8"± AGGREGATE BASE

EXISTING TYPICAL SECTIONS I-75

ALL-75-5.53

16
1224

J:\Projects\ALL\76691\roadway\sheets\76691GY002.dgn 11-SEP-2012 8:47PM reddenj

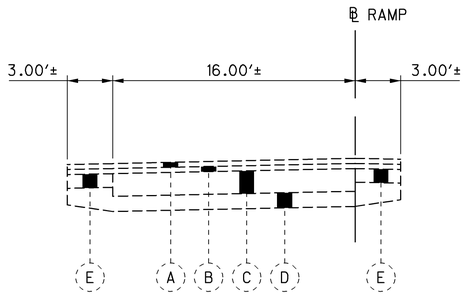

EXISTING RAMP NORMAL SECTION

TYPICAL SECTION SHOWN APPLYS TO:

4TH STREET
S.R. 117/309
S.R. 81

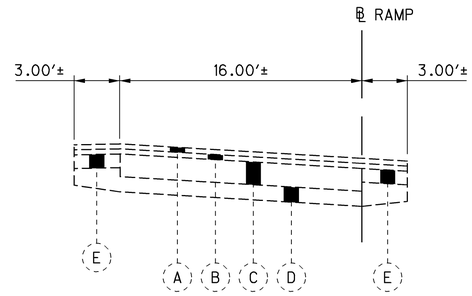

EXISTING RAMP SUPERELEVATED SECTION

TYPICAL SECTION SHOWN APPLYS TO:

4TH STREET
S.R. 117/309
S.R. 81

EXISTING PAVEMENT BUILDUP LEGEND:

- (A) 1½"± ASPHALT CONCRETE SURFACE COURCE
- (B) 1¾"± ASPHALT CONCRETE INTERMEDIATE COURSE
- (C) 9"± REINFORCED PORTLAND CEMENT CONCRETE PAVEMENT
- (D) 6"± SUBBASE
- (E) 6"± AGGREGATE BASE

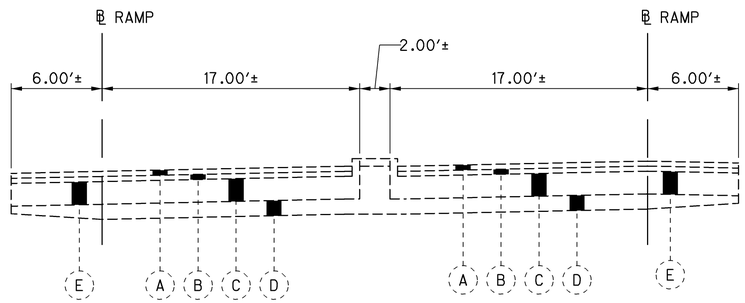

EXISTING TWO-WAY RAMP SUPERELEVATED SECTION

TYPICAL SECTION SHOWN APPLYS TO:

4TH STREET
S.R. 117/309

EXISTING TYPICAL SECTIONS RAMPS

ALL-75-5.53

17
1224

J:\Projects\ALL\76691\roadway\sheets\76691GY003.dgn 11-SEP-2012 8:47PM reddenj

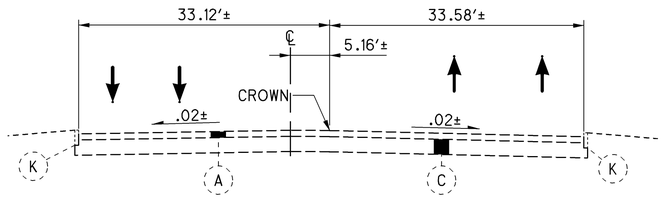

EXISTING S.R. 117/309
STA. 888+75.00

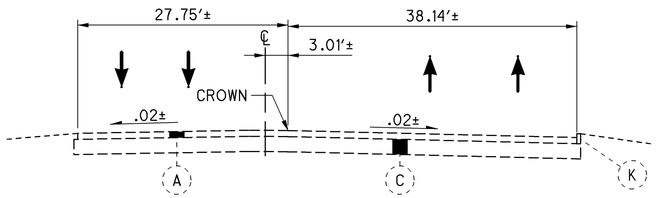

EXISTING S.R. 117/309
STA. 904+00.00

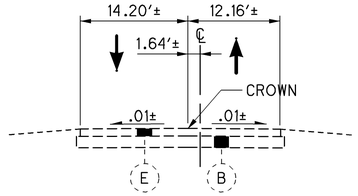

EXISTING NEUBRECHT RD.
STA. 15+80.00

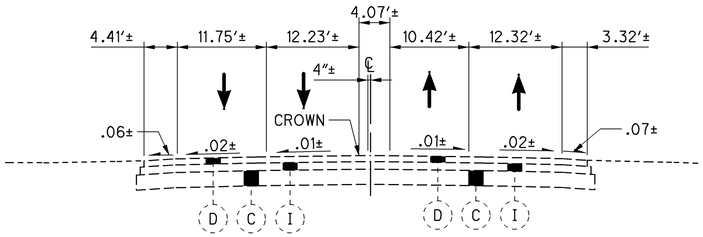

EXISTING S.R. 81
STA. 429+00.00

LIMITING STATIONS
WESTBOUND LANES
STA. 429+00.00 TO STA. 429+23.89
STA. 458+00.00 TO STA. 461+40.00
EASTBOUND LANES
STA. 429+00.00 TO STA. 452+98.51
STA. 458+67.15 TO STA. 461+40.00

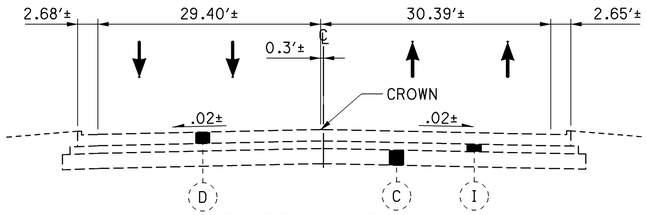

EXISTING S.R. 81
STA. 461+40.00

LIMITING STATIONS
WESTBOUND LANES
STA. 429+23.89 TO STA. 458+00.00
EASTBOUND LANES
STA. 452+98.51 TO STA. 458+67.15

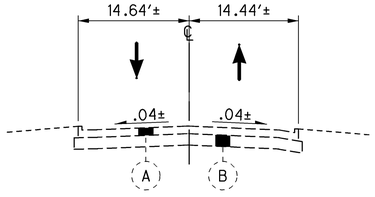

EXISTING DEAN AVE.

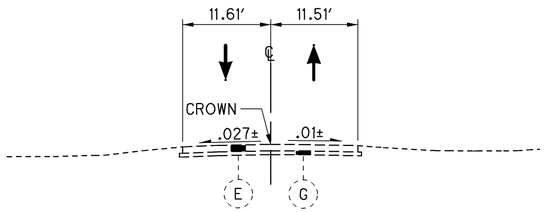

BYRN MAWR AVE.\WELLESLEY DR.
STA. 7+00.00

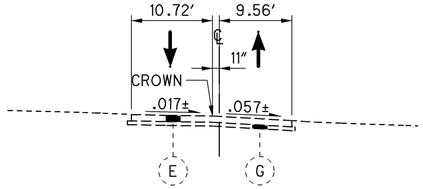

BYRN MAWR AVE.\WELLESLEY DR.
STA. 12+50.00

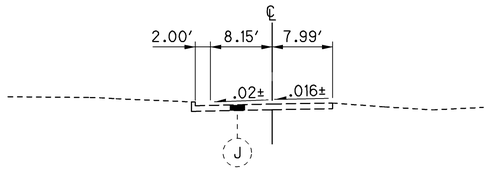

SERVICE RD. 3

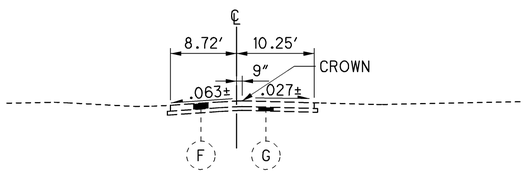

LOST CREEK BLVD.
STA. 51+78.66

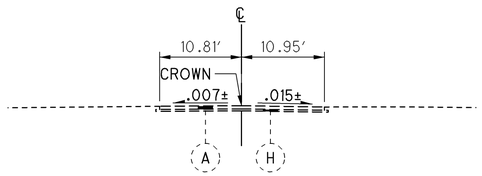

TURNER AVE.

EXISTING PAVEMENT BUILDUP LEGEND:

- (A) 5″± ASPHALT
- (B) 8″± GRANULAR BASE
- (C) 11″± GRANULAR BASE
- (D) 4″± ASPHALT
- (E) 10″± ASPHALT
- (F) 9″± ASPHALT
- (G) 6″± GRANULAR BASE
- (H) 3″± GRANULAR BASE
- (I) 6″± CONCRETE
- (J) 9″± PORTLAND CEMENT CONCRETE
- (K) CURB

EXISTING TYPICAL SECTIONS SIDE ROADS

EXISTING

ALL-75-5.53

18
1224

J:\Projects\ALL\76691\roadway\sheets\76691GY004.dgn 10-JAN-2013 2:45PM fedak

NOTES:

FUTURE INSIDE LANE ADDITIONS

* FUTURE CROSS SLOPES. NOTE: 4 FT INSIDE SHOULDER AT 4% SLOPE WILL BE REMOVED PRIOR TO CONSTRUCTING THE FUTURE LANE.

** LIFT THICKNESSES AND STEP WIDTHS SHOWN IN THE PLAN ARE FOR QUANTITY ESTIMATION ONLY AND ARE NOT REQUIRED LIFT THICKNESSES FOR ACTUAL CONSTRUCTION.

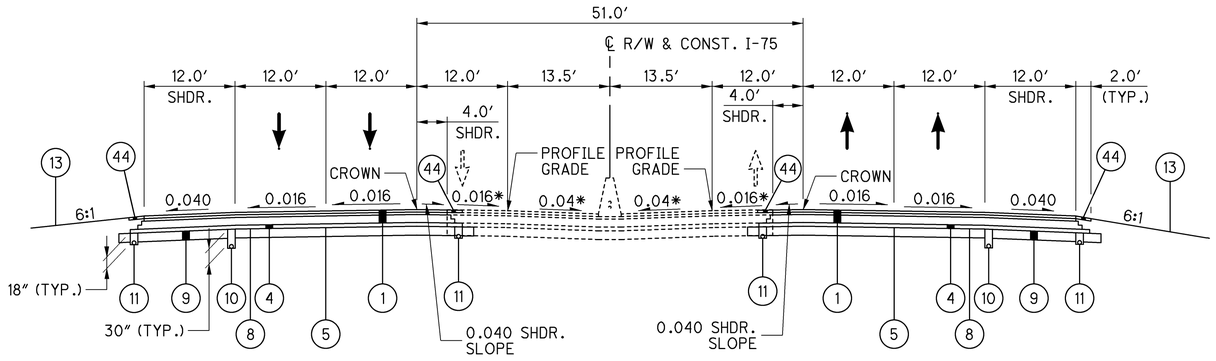

I-75 NORMAL SECTION

(DEPICTS P.G.L. AND CROWN LOCATIONS ALONG WITH CROSS SLOPES AND FUTURE LANES; USING FLEXIBLE PAVEMENT)

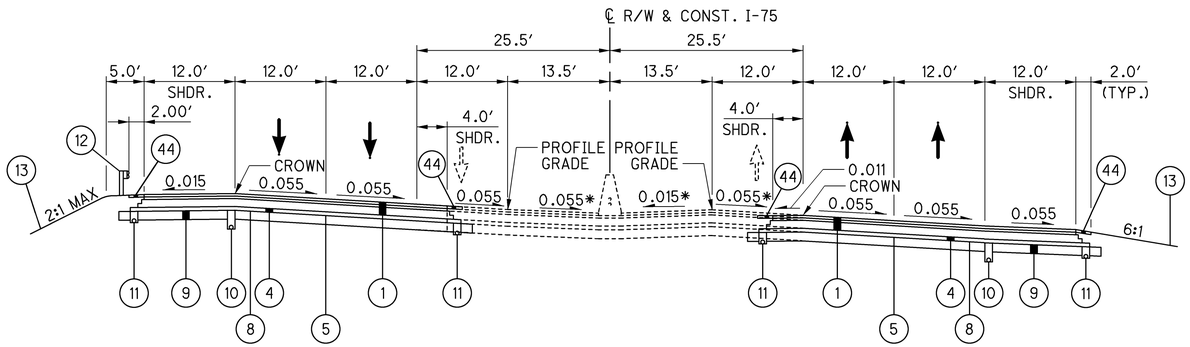

I-75 SUPERELEVATED SECTION (RT)

(DEPICTS P.G.L. AND CROWN LOCATIONS ALONG WITH CROSS SLOPES AND FUTURE LANES; USING FLEXIBLE PAVEMENT)

PROPOSED PAVEMENT BUILDUP LEGEND:

(1) - ITEM 880 15.75″ ASPHALT CONCRETE (7 YEAR WARRANTY) **

CONVENTIONAL EQUIVALENT:
ITEM 442 1.5″ ASPHALT CONCRETE SURFACE COURSE, 12.5MM, TYPE A (446)
ITEM 442 1.75″ ASPHALT CONCRETE INTERMEDIATE COURSE, 19 MM, TYPE A (446)
ITEM 302 12.5″ ASPHALT CONCRETE BASE, PG64-22
ITEM 407 TACK COAT FOR INTERMEDIATE COURSE (0.075 GAL./S.Y.)

(4) - ITEM 304 6″ AGGREGATE BASE
(5) - ITEM 206 CURING COAT
(7) - ITEM 407 TACK COAT (0.075 GAL./S.Y.)
(8) - ITEM 204 PROOF ROLLING
(9) - ITEM 206 CEMENT STABILIZED SUBGRADE, 14 INCHES DEEP
(10) - ITEM 605 6″ SHALLOW PIPE UNDERDRAINS
(11) - ITEM 605 6″ BASE PIPE UNDERDRAINS
(12) - ITEM 606 GUARDRAIL, TYPE 5
(13) - ITEM 659 SEEDING AND MULCHING
(14) - ITEM 896 14″ PORTLAND CEMENT CONCRETE PAVEMENT (7 YEAR WARRANTY)
(15) - ITEM 448 1.25″ ASPHALT CONCRETE SURFACE COURSE, TYPE 1, PG64-22
(16) - ITEM 448 1.75″ ASPHALT CONCRETE INTERMEDIATE COURSE, TYPE 2, PG64-22
(17) - ITEM 301 4″ ASPHALT CONCRETE BASE, PG64-22
(19) - ITEM 608 4″ CONCRETE WALK
(20) - ITEM 452 10″ NON-REINFORCED CONCRETE PAVEMENT
(21) - ITEM 452 9″ NON-REINFORCED CONCRETE PAVEMENT
(22) - ITEM 452 8″ NON-REINFORCED CONCRETE PAVEMENT
(23) - ITEM 609 CURB, TYPE 6
(24) - ITEM 609 CURB, TYPE 4-C
(25) - ITEM 609 CURB, TYPE 4-A
(26) - ITEM 609 COMBINATION CURB AND GUTTER, TYPE 2
(27) - ITEM 609 COMBINATION CURB & GUTTER, TYPE 2, AS PER PLAN
(28) - ITEM 898 QC/QA CONCRETE, CLASS QSC2, SUPERSTRUCTURE (APPROACH SLAB), (T-15″), AS PER PLAN
(29) - ITEM 898 QC/QA CONCRETE, CLASS QSC2, SUPERSTRUCTURE (APPROACH SLAB), (T-17″), AS PER PLAN
(30) - ITEM 898 QC/QA CONCRETE, CLASS QSC2, SUPERSTRUCTURE (PARAPET)
(31) - ITEM 606 SPECIAL-NOISE BARRIER (REFLECTIVE)
(32) - ITEM 622 CONCRETE BARRIER, SINGLE SLOPE, TYPE D
(33) - ITEM 609 6″ CONCRETE TRAFFIC ISLAND
(34) - ITEM 206 CEMENT STABILIZED SUBGRADE, 12 INCHES DEEP
(35) - ITEM 204 GRANULAR MATERIAL, TYPE B
(36) - ITEM 204 SUBGRADE COMPACTION
(37) - ITEM 448 2.0″ ASPHALT CONCRETE INTERMEDIATE COURSE, TYPE 1, PG64-22, AS PER PLAN
(38) - ITEM 606 GUARDRAIL, MISC.: TENSIONED CABLE WITH CONCRETE FOUNDATION LINE POST (SOCKETED)
(39) - ITEM 301 3″ ASPHALT CONCRETE BASE, PG64-22
(40) - ITEM 304 3″ AGGREGATE BASE
(41) - ITEM 608 6″ CONCRETE WALK
(42) - ITEM 204 GRANULAR MATERIAL, TYPE B
(43) - ITEM 861 GEOGRID FOR SUBGRADE STABILIZATION
(44) - ITEM 617 COMPACTED AGGREGATE (3.25″ THICK)

PROPOSED TYPICAL SECTION DETAILS - I-75 (PROFILE GRADE LINE IN RELATION TO CROWN LINE)

ALL-75-5.53

J:\Projects\ALL\76691\roadway\sheets\76691GY005.dgn 11-SEP-2012 8:47PM redden

PROPOSED TYPICAL SECTIONS I-75 (FLEXIBLE)

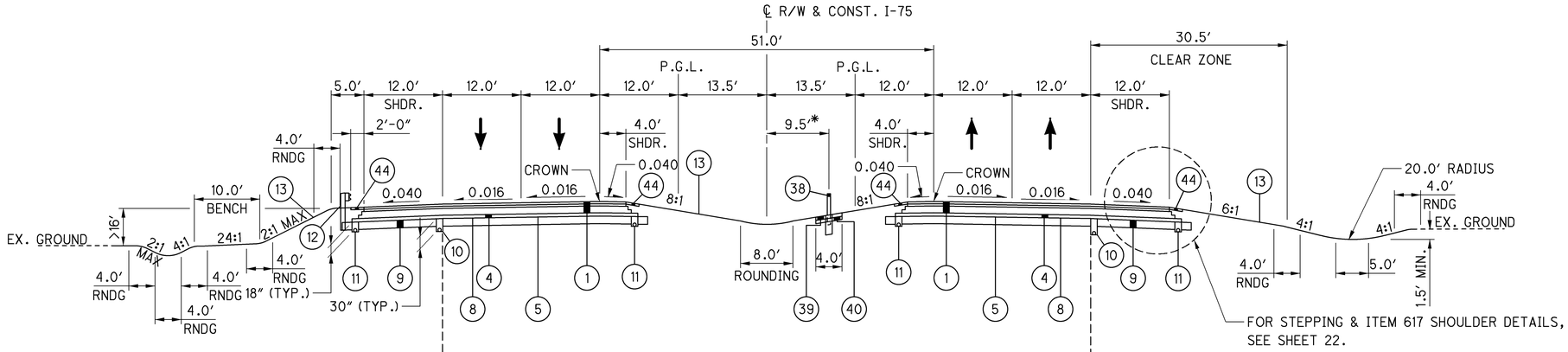

I-75 NORMAL SECTION

STA. 292+00.00 TO STA. 334+08.07
STA. 344+38.32 TO STA. 368+67.88
STA. 371+31.55 TO STA. 426+70.94
STA. 439+26.64 TO STA. 461+16.00
STA. 463+05.41 TO STA. 488+47.53

*CABLE RAIL MAY BE LT OR RT OF ℄ AS LISTED IN THE ESTIMATED QUANTITIES

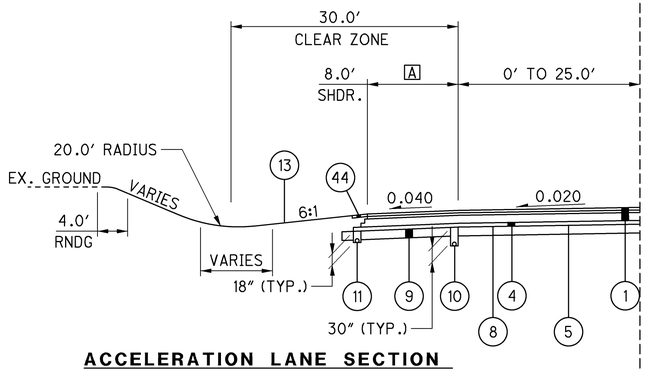

ACCELERATION LANE SECTION

STA. 303+67.41 TO STA. 321+17.41
STA. 344+38.32 TO STA. 356+88.32
STA. 438+16.93 TO STA. 450+66.93

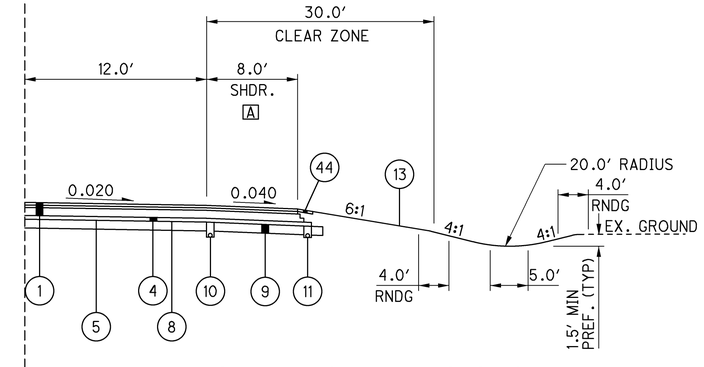

DECELERATION LANE SECTION

STA. 301+61.24 TO STA. 305+07.24
STA. 351+44.74 TO STA. 354+74.74
STA. 447+04.65 TO STA. 450+51.17

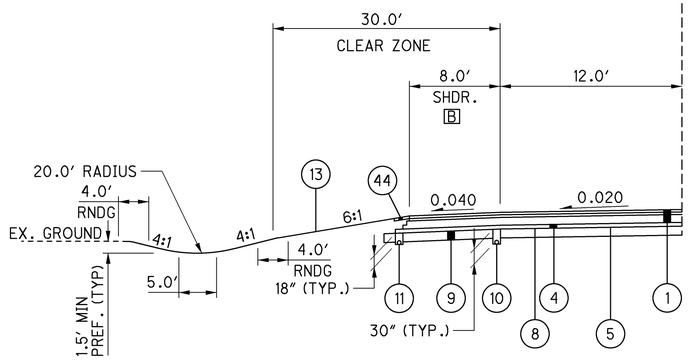

DECELERATION LANE SECTION

STA. 381+97.17 TO STA. 385+43.17
STA. 476+04.05 TO STA. 479+50.56

Ⓐ VARIES FROM 12′ TO 8′
STA. 301+61.24 TO STA. 302+61.24 (RT)
STA. 303+67.42 TO STA. 305+67.34 (LT)
STA. 351+44.74 TO STA. 352+44.74 (RT)
STA. 438+16.93 TO STA. 440+16.85 (LT)
STA. 447+04.65 TO STA. 448+04.65 (RT)

Ⓑ VARIES FROM 8′ TO 12′
STA. 335+01.48 TO STA. 337+02.46 (RT)
STA. 384+43.17 TO STA. 385+43.17 (LT)
STA. 391+76.79 TO STA. 393+76.71 (RT)
STA. 478+50.56 TO STA. 479+50.56 (LT)
STA. 484+33.89 TO STA. 486+33.81 (RT)

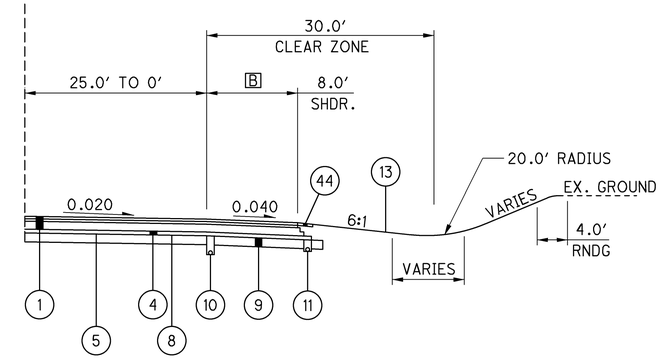

ACCELERATION LANE SECTION

STA. 319+52.95 TO STA. 337+02.95
STA. 381+26.72 TO STA. 393+76.71
STA. 473+83.81 TO STA. 486+33.81

NOTE:
FOR PROPOSED PAVEMENT BUILDUP LEGEND, SEE SHEET 19.

ALL-75-5.53

J:\Projects\ALL\76691\roadway\sheets\76691GY006.dgn 11-SEP-2012 8:47PM reddenj

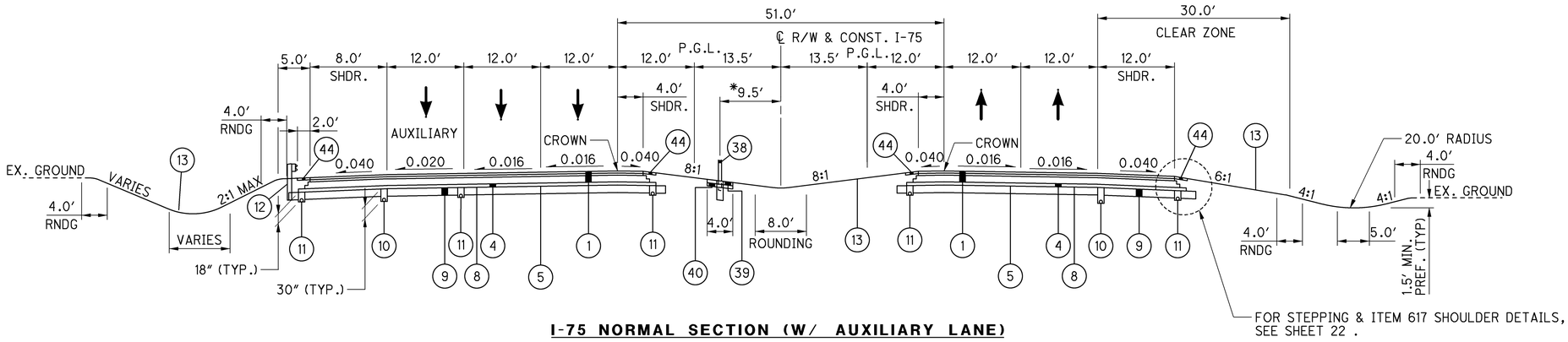

I-75 NORMAL SECTION (W/ AUXILIARY LANE)

STA. 334+08.07 TO STA. 344+38.32

*CABLE RAIL MAY BE LT OR RT OF ℄
AS LISTED IN THE ESTIMATED QUANTITIES

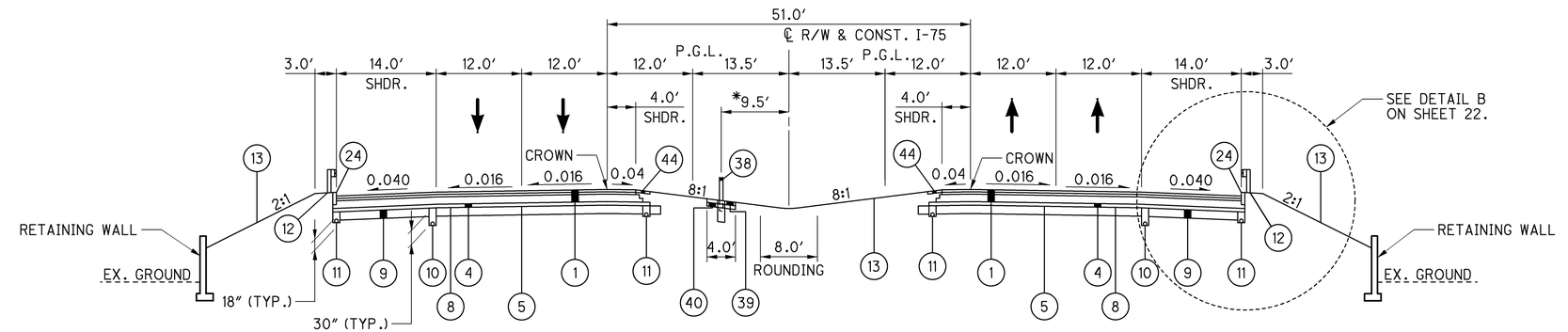

I-75 NORMAL SECTION (W/ CURBED SHOULDER)

STA. 429+37.95 TO STA. 437+34.64

*CABLE RAIL MAY BE LT OR RT OF ℄
AS LISTED IN THE ESTIMATED QUANTITIES

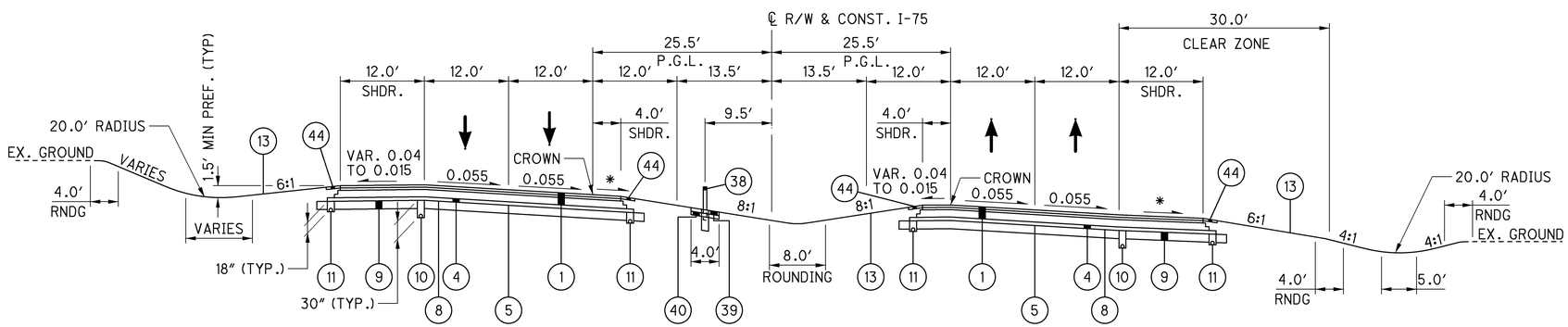

I-75 SUPERELEVATED SECTION (RIGHT)

STA. 488+47.53 TO STA. 519+00.00

* 0.040 OR RATE OF SUPER IF GREATER

NOTE:
FOR PROPOSED PAVEMENT BUILDUP LEGEND, SEE SHEET 19.

PROPOSED TYPICAL SECTIONS I-75 (FLEXIBLE)

ALL-75-5.53

J:\Projects\ALL\76691\roadway\sheets\76691GY007.dgn 11-SEP-2012 8:47PM reddenj

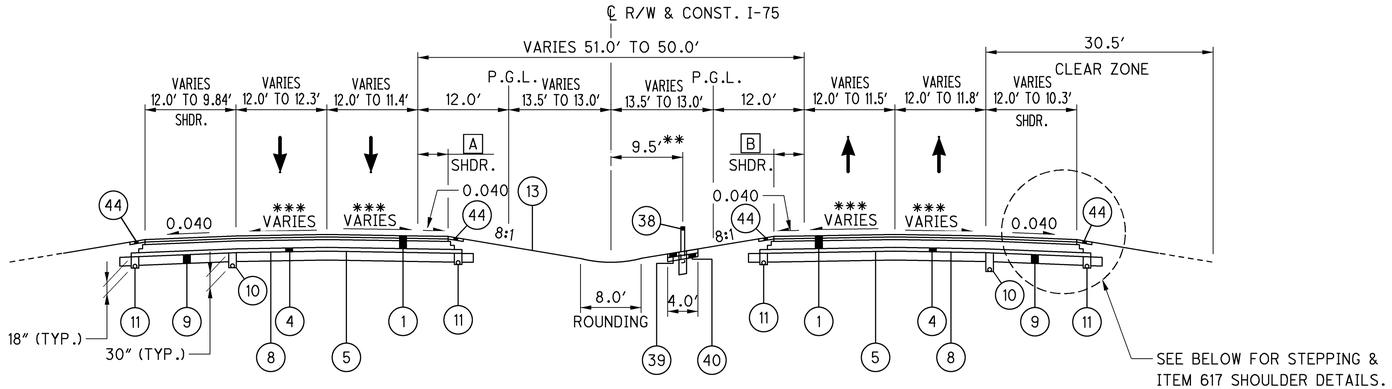

I-75 NORMAL SECTION

STA. 519+00.00 TO STA. 520+00.00

A VARIES 4.0′ TO 4.21′

B VARIES 4.0′ TO 3.40′

** CABLE BARRIER MAY BE LT OT RT OF ℄ AS LISTED IN THE ESTIMATED QUANTITIES

*** SEE PAVEMENT DETAIL SHEET .

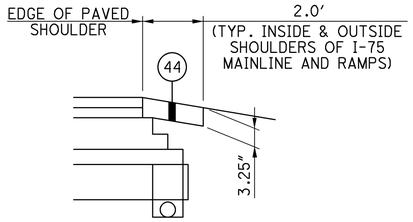

ITEM 617 - SHOULDER DETAIL

NOTE:

(44) - ITEM 617 COMPACTED AGGEGATE, SEE SHEET 36 FOR QUANTITIES.

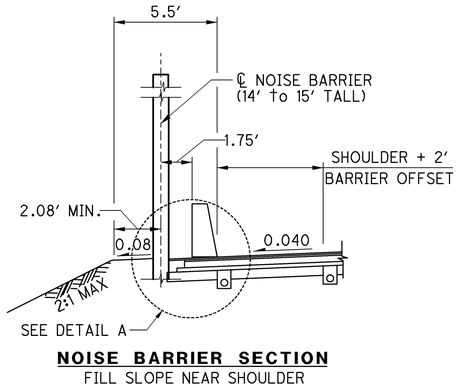

NOISE BARRIER SECTION

FILL SLOPE NEAR SHOULDER

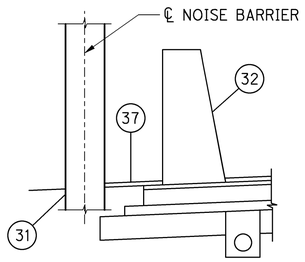

DETAIL A

NOTE:

(37) - ITEM 448 2″ASPHALT CONCRETE INTERMEDIATE COURSE, TYPE 1, PG64-22, AS PER PLAN: 5 CU YD

TOTAL CARRIED TO GENERAL SUMMARY

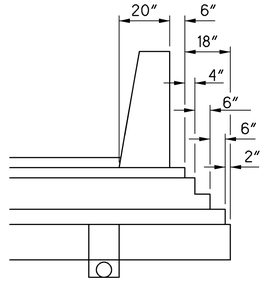

I-75 ASPHALT BARRIER EDGE STEP DETAIL

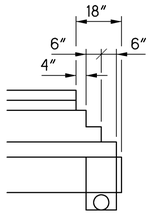

I-75 ASPHALT EDGE STEP DETAIL

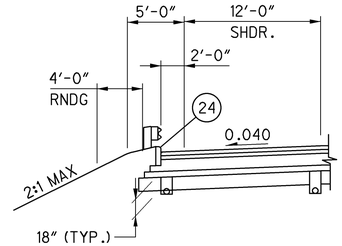

DETAIL B

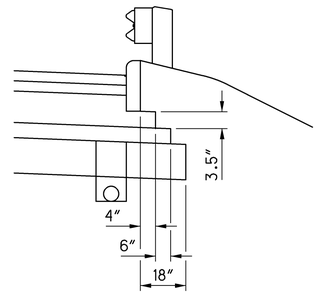

I-75 CURBED ASPHALT EDGE STEP DETAIL

NOTE:
FOR PROPOSED PAVEMENT BUILDUP LEGEND, SEE SHEET 19.

PROPOSED TYPICAL SECTIONS I-75 (FLEXIBLE)

ALL-75-5.53

22
1224

J:\Projects\ALL\76691\roadway\sheets\76691GY008.dgn 11-SEP-2012 8:47PM redden

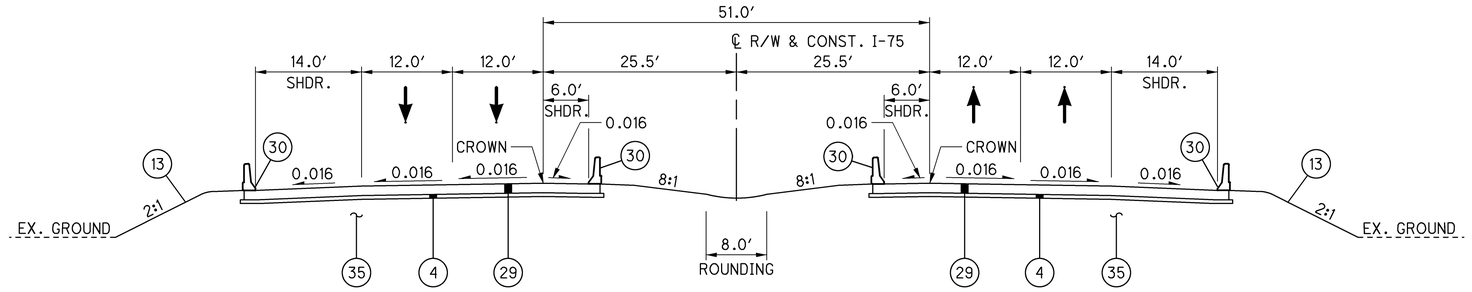

I-75 APPROACH SLAB NORMAL SECTION

(ALL-75-0703)
STA. 368+67.88 TO STA. 368+92.88
STA. 371+06.55 TO STA. 371+31.55

(ALL-75-0875)
STA. 461+16.00 TO STA. 461+46.00
STA. 462+75.41 TO STA. 463+05.41

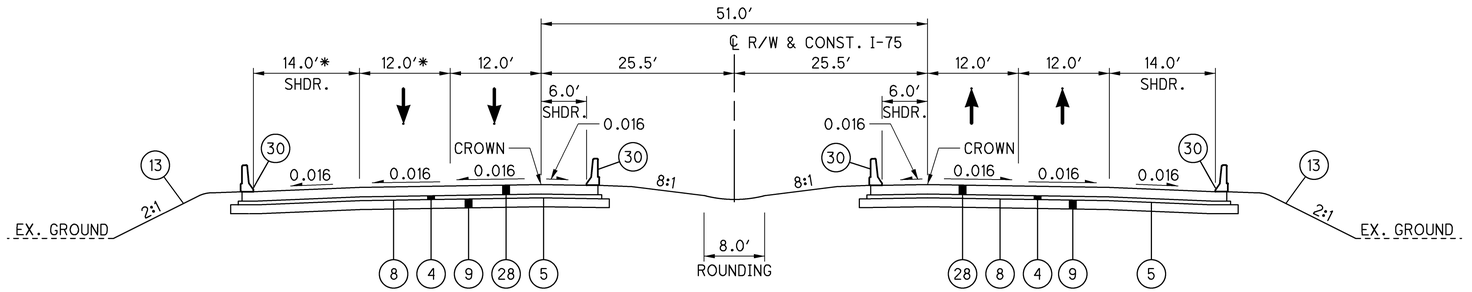

I-75 APPROACH SLAB NORMAL SECTION

(ALL-75-0813)
STA. 426+70.94 TO STA. 426+95.94
STA. 429+12.95 TO STA. 429+37.95

(ALL-75-0832)
STA. 437+34.64 TO STA. 437+64.64
STA. 438+96.64 TO STA. 439+26.64

* FORWARD APPROACH SLAB (ALL-75-0832),
SHOULDER WIDTH VARIES 12.41′ TO 11.91′
AND LANE WIDTH VARIES 13.59′ TO 14.09′

NOTE:
FOR PROPOSED PAVEMENT BUILDUP LEGEND,
SEE SHEET 19.

PROPOSED TYPICAL SECTIONS - APPROACH SLABS

ALL-75-5.53

J:\Projects\ALL\76691\roadway\sheets\76691GY009.dgn 11-SEP-2012 8:47PM reddenj

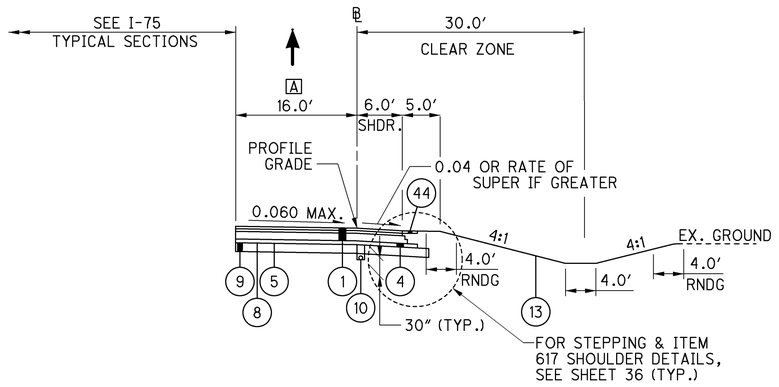

RAMP SUPERELEVATION SECTION (RIGHT)

RAMP 'A'
STA. 305+07.24 TO STA. 309+60.72

RAMP 'B'
STA. 317+97.50 TO STA. 319+52.95

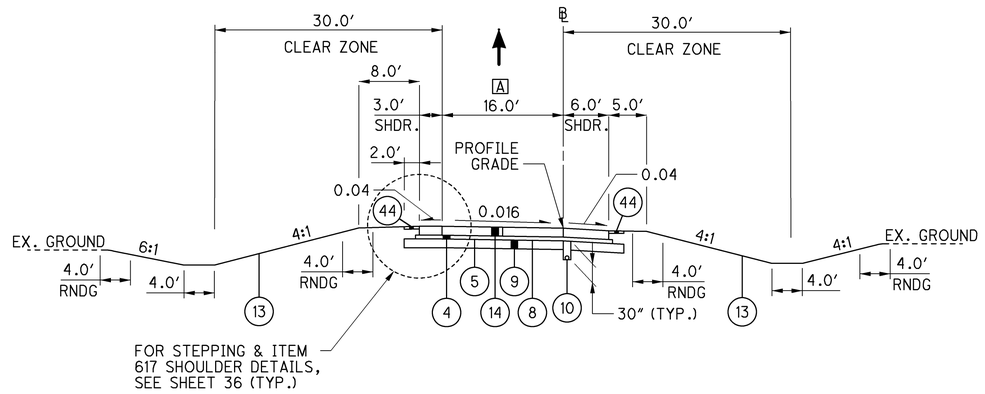

RAMP NORMAL SECTION

RAMP 'A'
STA. 315+85.20 TO STA. 316+84.23

A VARIES FROM 12′ TO 16′
STA. 305+07.24 TO STA. 306+81.70

B VARIES FROM 8′ TO 6′
STA. 309+60.52 TO STA. 310+10.60 (RAMP 'A')
VARIES FROM 6′ TO 8′
STA. 319+02.95 TO STA. 319+52.95 (RAMP 'B')

NOTE:
FOR PROPOSED PAVEMENT BUILDUP LEGEND,
SEE SHEET 19.

* - VARIES 3′-0″ TO 6′-0″
RAMP 'A' STA. 317+62.22 TO STA. 320+19.64
RAMP 'B' STA. 311+24.50 TO STA. 313+45.32

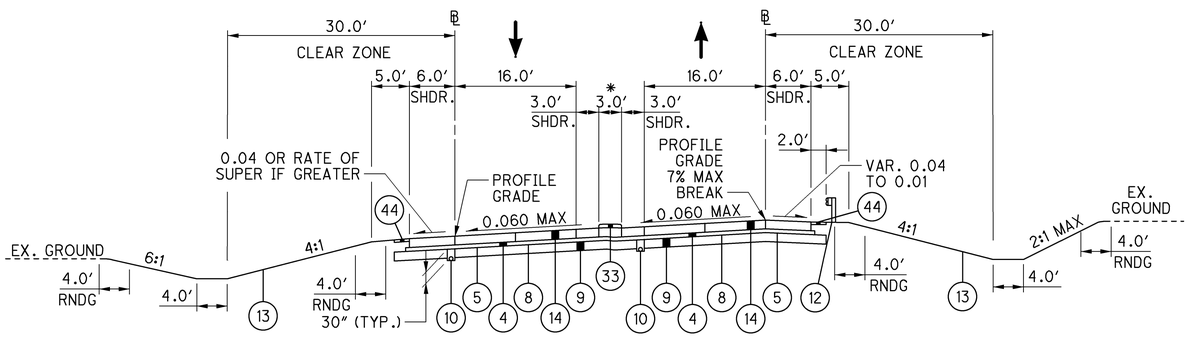

RAMP SUPERELEVATION SECTION

RAMP 'A'
STA. 316+84.23 TO STA. 321+85.94

RAMP 'B'
STA. 309+52.32 TO STA. 313+45.32

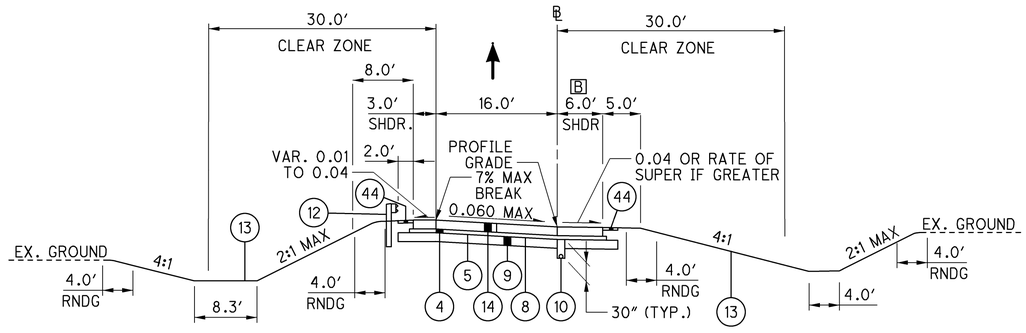

RAMP SUPERELEVATION SECTION (RIGHT)

RAMP 'A'
STA. 309+60.72 TO STA. 315+85.20

RAMP 'B'
STA. 313+45.32 TO STA. 317+97.50

PROPOSED TYPICAL SECTIONS - FOURTH STREET RAMPS A & B

ALL-75-5.53

J:\Projects\ALL\76691\roadway\sheets\76691GY010.dgn 11-SEP-2012 8:47PM reddenj

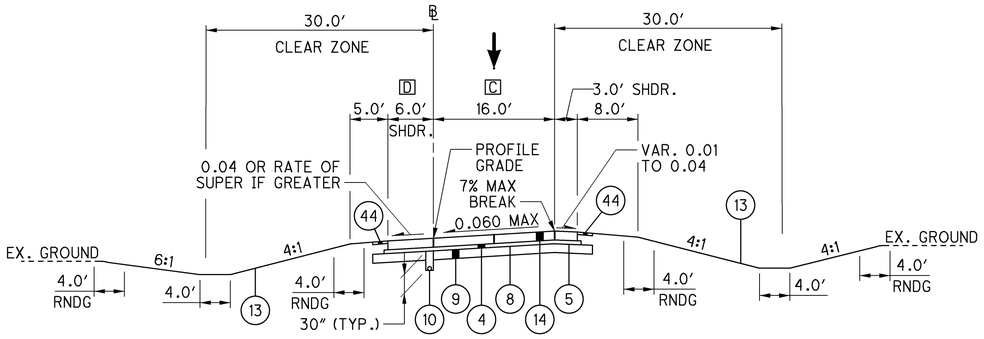

RAMP SUPERELEVATION SECTION (LEFT)

RAMP 'C'
STA. 321+17.41 TO STA. 326+89.94
RAMP 'D'
STA. 323+88.85 TO STA. 334+80.07

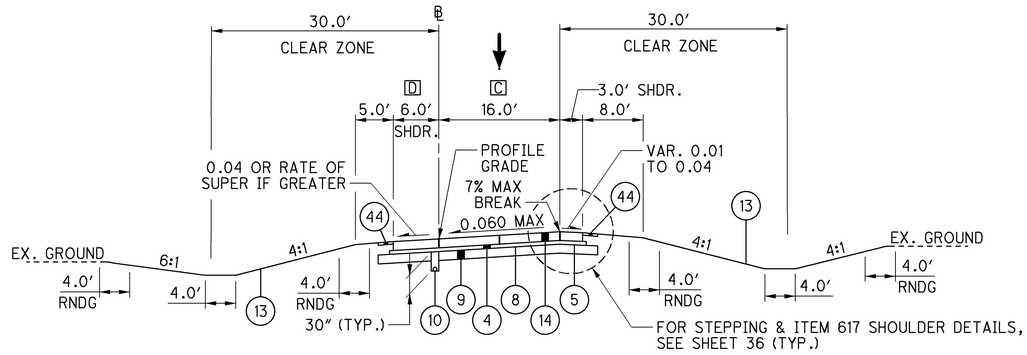

RAMP SUPERELEVATION SECTION (LEFT)

RAMP 'C'
STA. 321+17.41 TO STA. 326+89.94
RAMP 'D'
STA. 323+88.85 TO STA. 334+80.07

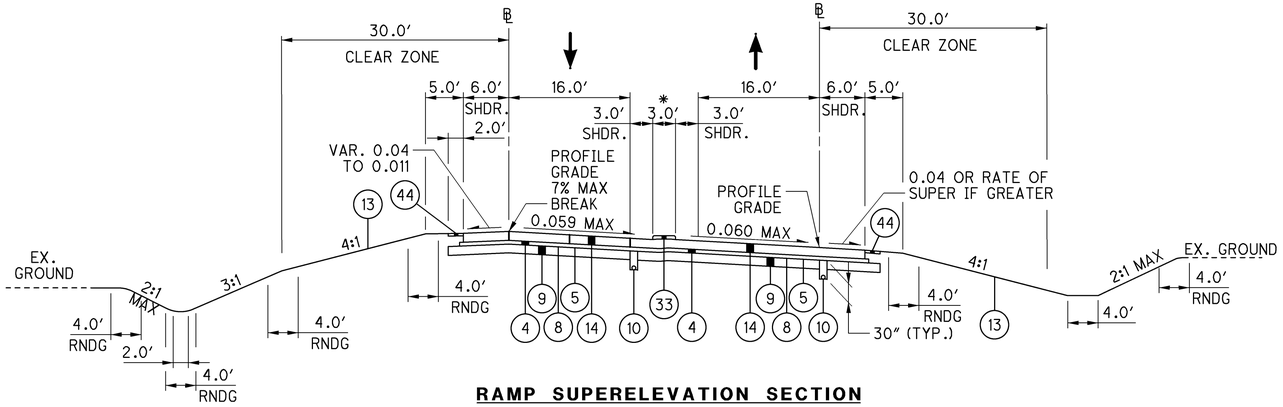

RAMP SUPERELEVATION SECTION

RAMP 'C'
STA. 326+89.94 TO STA. 331+36.34

RAMP 'D'
STA. 318+27.70 TO STA. 323+88.85

[C] VARIES FROM 16′ TO 12′
STA. 332+92.59 TO STA. 334+80.07

[D] VARIES FROM 8′ TO 6′
STA. 321+17.41 TO STA. 321+67.41 (RAMP 'C')
VARIES FROM 6′ TO 8′
STA. 329+42.83 TO STA. 329+92.83 (RAMP 'D')

* - VARIES 3′-0″ TO 6′-0″
RAMP 'C' STA. 326+89.94 TO STA. 329+49.14
RAMP 'D' STA. 320+19.94 TO STA. 323+22.47

NOTE:
FOR PROPOSED PAVEMENT BUILDUP LEGEND,
SEE SHEET 19.

PROPOSED TYPICAL SECTIONS - FOURTH STREET RAMPS C & D

ALL-75-5.53

J:\Projects\ALL\76691\roadway\sheets\76691GY010A.dgn 11-SEP-2012 8:47PM reddenj

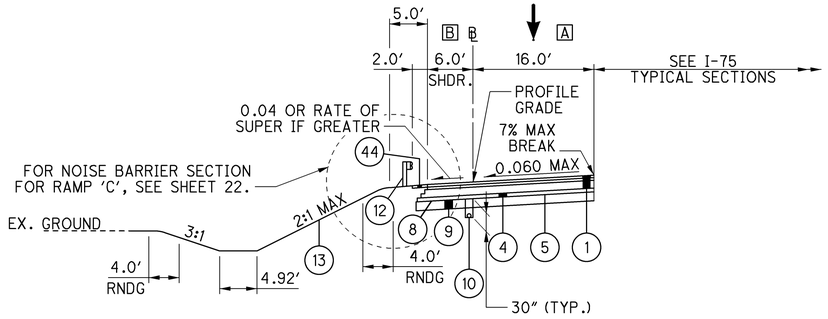

RAMP SUPERELEVATION SECTION (LEFT)

RAMP 'A'
STA. 356+88.32 TO STA. 364+08.98
(BEGIN CONCRETE PAV'T STA. 360+11.44)

RAMP 'C'
STA. 375+50.24 TO STA. 381+97.17
(END CONCRETE PAV'T STA. 377+43.69)

A VARIES 16′ TO 12′
STA. 380+22.72 TO STA. 381+97.17 RAMP 'C'

B VARIES 8′ TO 6′
STA. 356+88.32 TO STA. 357+38.32 RAMP 'A'
VARIES 6′ TO 8′
STA. 376+43.17 TO STA. 377+43.17 RAMP 'C'

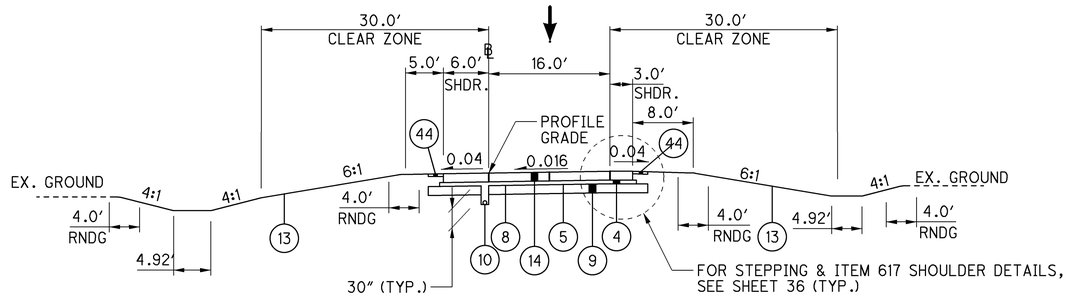

RAMP NORMAL SECTION

RAMP 'A'
STA. 364+08.98 TO STA. 365+17.35

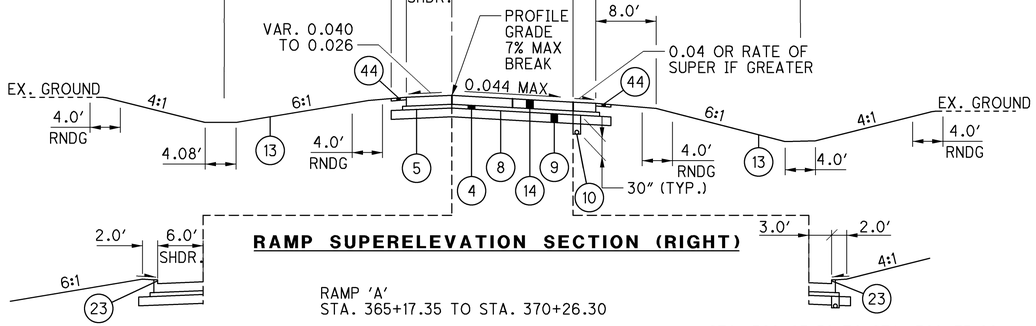

RAMP SUPERELEVATION SECTION (RIGHT)

RAMP 'A'
STA. 365+17.35 TO STA. 370+26.30

STA. 369+00.00 TO STA. 369+73.33



STA. 368+93.58 TO STA. 369+75.80

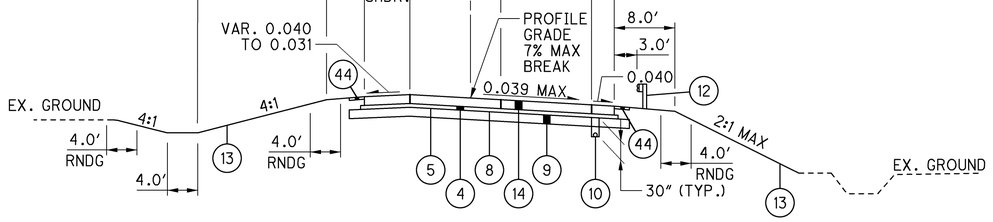

RAMP 'C'
STA. 369+78.11 TO STA. 372+78.19

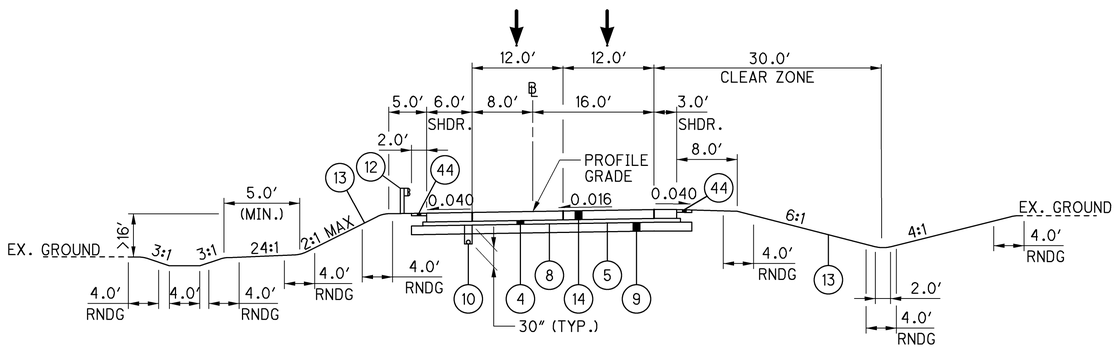

RAMP NORMAL SECTION

RAMP 'C'
STA. 372+78.19 TO STA. 373+92.20

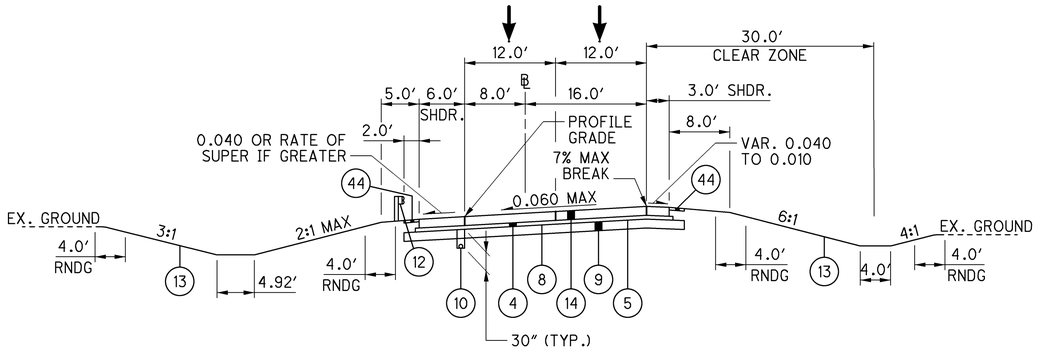

RAMP SUPERELEVATION SECTION (LEFT)

RAMP 'C'
STA. 373+92.20 TO STA. 375+50.24

NOTE:
FOR PROPOSED PAVEMENT BUILDUP LEGEND,
SEE SHEET 19.

PROPOSED TYPICAL SECTIONS
S.R. 309 RAMPS A & C

ALL-75-5.53

J:\Projects\ALL\76691\roadway\sheets\76691GY011.dgn 11-SEP-2012 8:47PM reddenj

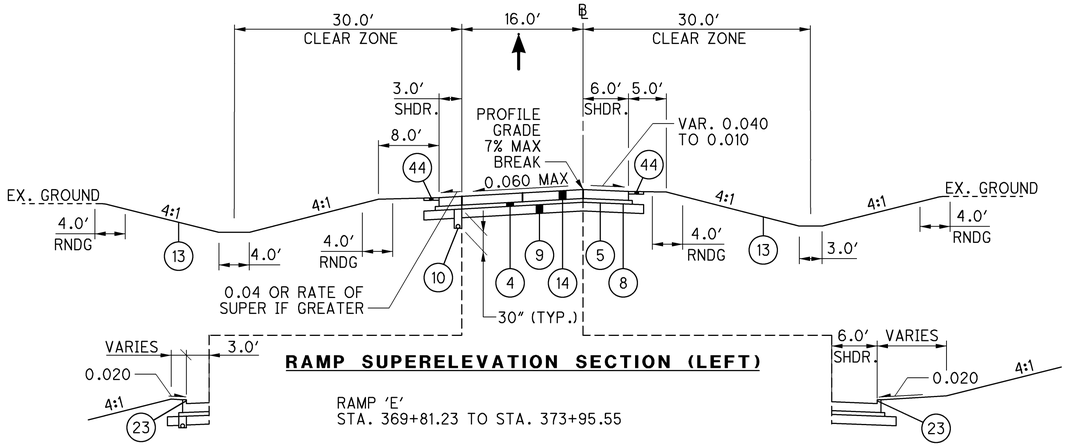

RAMP SUPERELEVATION SECTION (LEFT)

RAMP 'E'
STA. 369+81.23 TO STA. 373+95.55

STA. 370+19.73 TO STA. 370+75.56

STA. 370+35.19 TO STA. 371+27.35

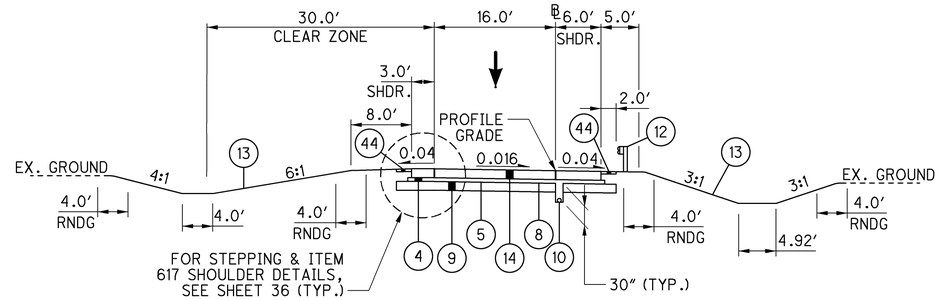

RAMP NORMAL SECTION

RAMP 'E'
STA. 373+95.55 TO STA. 375+38.20

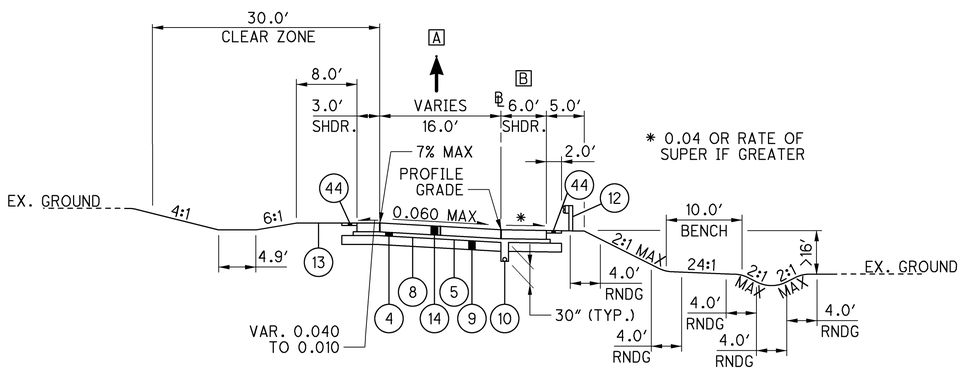

RAMP SUPERELEVATION SECTION (RIGHT)

RAMP 'E'
STA. 375+38.20 TO STA. 378+77.27

RAMP 'F'
STA. 359+44.80 TO STA. 364+33.66

Ⓐ VARIES 12′ TO 16′
STA. 354+74.74 TO STA. 356+59.81

Ⓑ VARIES 6′ TO 8′
STA. 380+76.72 TO STA. 381+26.72 RAMP 'E'
VARIES 8′ TO 6′
STA. 359+44.58 TO STA. 359+94.58 RAMP 'F'

Ⓒ VARIES 16′ TO 24′
STA. 365+91.86 TO STA. 366+41.86

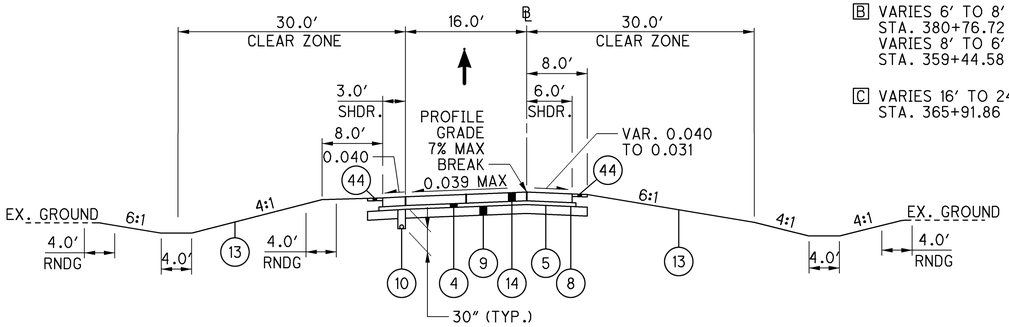

RAMP SUPERELEVATION SECTION (LEFT)

RAMP 'F'
STA. 364+33.66 TO STA. 365+91.86

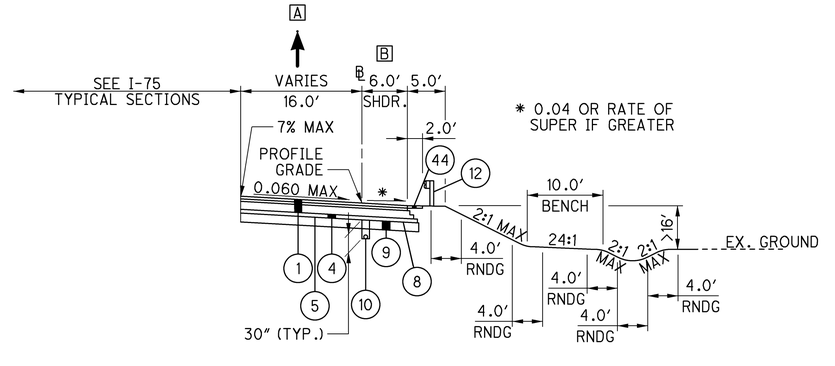

RAMP SUPERELEVATION SECTION (RIGHT)

RAMP 'E'
STA. 378+77.27 TO STA. 381+26.72

RAMP 'F'
STA. 354+74.74 TO STA. 359+44.80

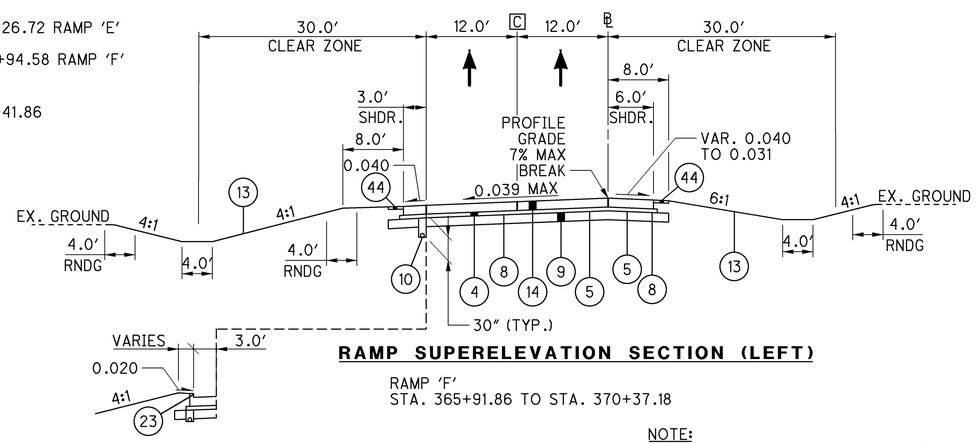

RAMP SUPERELEVATION SECTION (LEFT)

RAMP 'F'
STA. 365+91.86 TO STA. 370+37.18

STA. 369+48.28 TO STA. 369+86.17

NOTE:
FOR PROPOSED PAVEMENT BUILDUP LEGEND,
SEE SHEET 19.

PROPOSED TYPICAL SECTIONS - S.R. 309 RAMPS E & F

ALL-75-5.53

J:\Projects\ALL\76691\roadway\sheets\76691GY012.dgn 11-SEP-2012 8:47PM reddenj

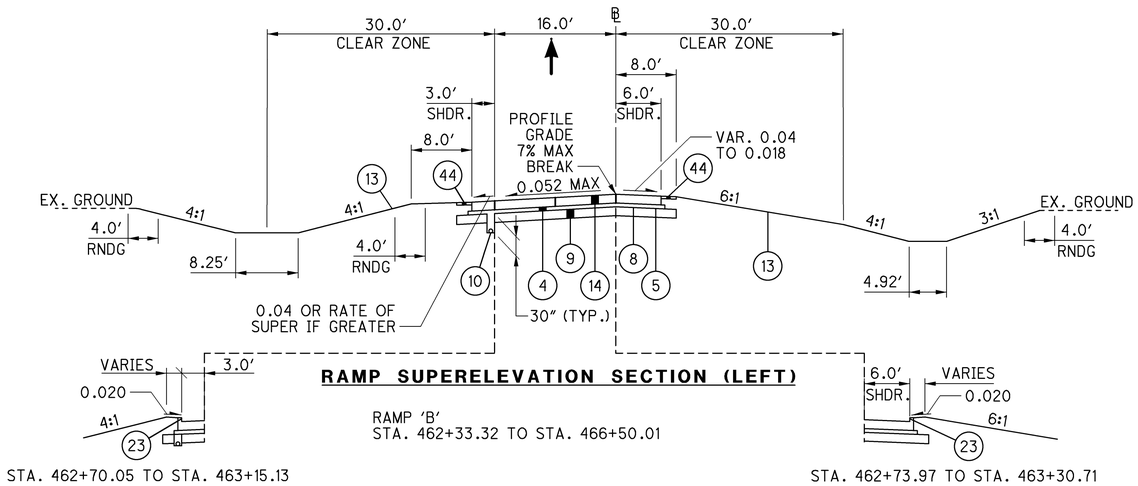

RAMP SUPERELEVATION SECTION (LEFT)

RAMP 'B'
STA. 462+33.32 TO STA. 466+50.01

STA. 462+70.05 TO STA. 463+15.13

STA. 462+73.97 TO STA. 463+30.71

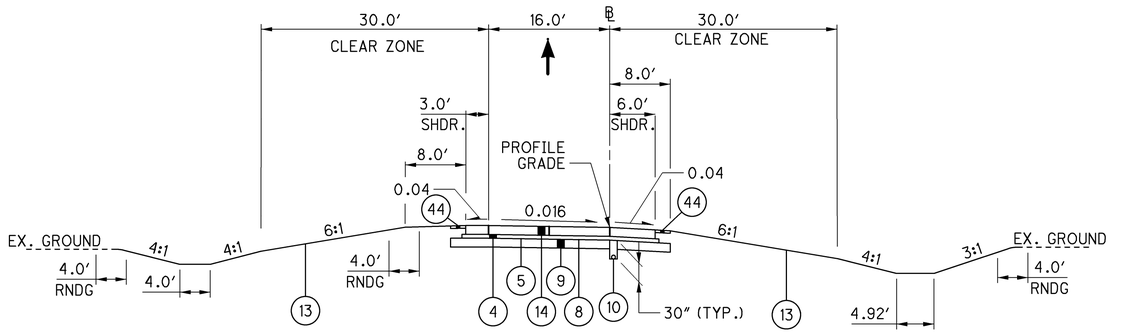

RAMP NORMAL SECTION

RAMP 'B'
STA. 466+50.01 TO STA. 467+20.78

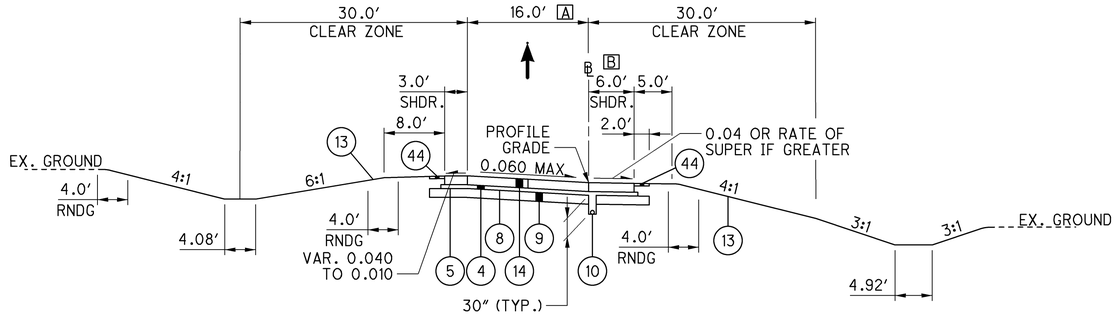

RAMP SUPERELEVATION SECTION (RIGHT)

RAMP 'B'
STA. 467+20.78 TO STA. 471+21.68

RAMP 'C'
STA. 455+04.65 TO STA. 457+66.16

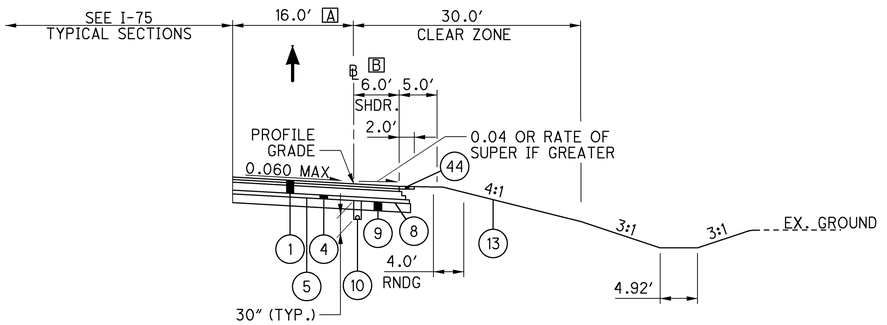

RAMP SUPERELEVATION SECTION (RIGHT)

RAMP 'B'
STA. 471+21.68 TO STA. 473+83.81

RAMP 'C'
STA. 450+51.17 TO STA. 455+04.65

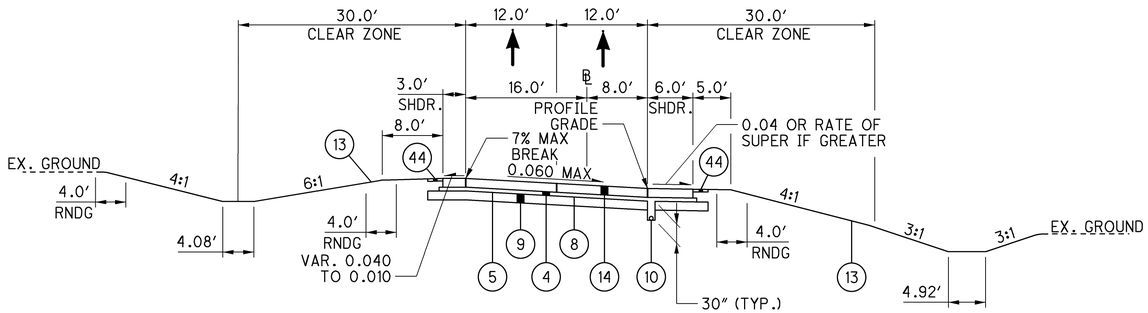

RAMP SUPERELEVATION SECTION (RIGHT)

RAMP 'C'
STA. 457+66.16 TO STA. 459+68.37

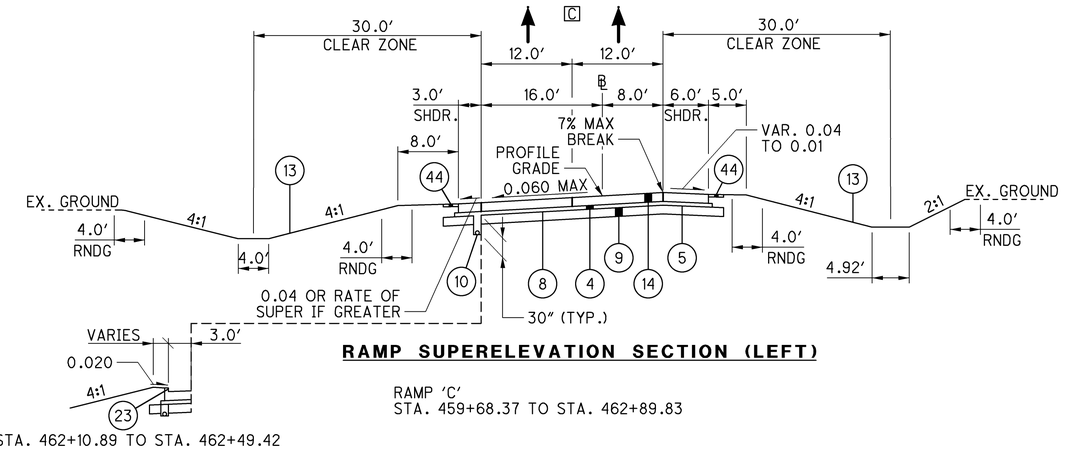

RAMP SUPERELEVATION SECTION (LEFT)

RAMP 'C'
STA. 459+68.37 TO STA. 462+89.83

STA. 462+10.89 TO STA. 462+49.42

A VARIES FROM 12′ TO 16′
STA. 450+51.17 TO STA. 452+25.63 (RAMP 'C')

B VARIES FROM 8′ TO 6′
STA. 455+04.65 TO STA. 456+04.65 (RAMP 'C')
VARIES FROM 6′ TO 8′
STA. 473+33.81 TO STA. 473+83.81 (RAMP 'B')

C VARIES FROM 16′ TO 24′
STA. 457+66.16 TO STA. 458+16.16 (RAMP 'C')

NOTE:
FOR PROPOSED PAVEMENT BUILDUP LEGEND, SEE SHEET 19.

PROPOSED TYPICAL SECTIONS - S.R. 81 RAMPS B & C

ALL-75-5.53

28
1224

J:\Projects\ALL\76691\roadway\sheets\76691GY013.dgn 11-SEP-2012 8:47PM reddenj

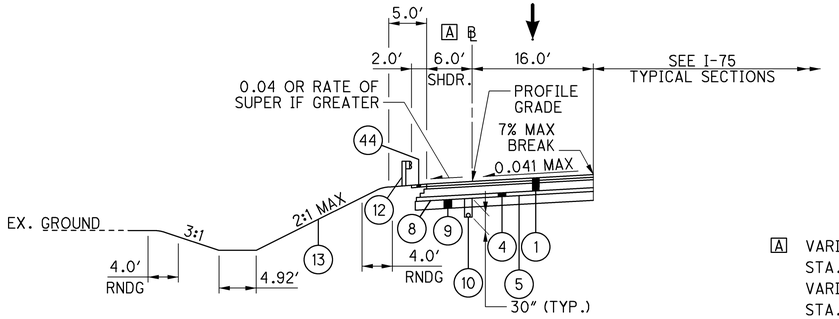

RAMP SUPERELEVATION SECTION (LEFT)

RAMP 'D'
STA. 450+66.93 TO STA. 460+66.74
(BEGIN CONCRETE STA. 453+89.90)

A VARIES FROM 8′ TO 6′
STA. 450+66.93 TO STA. 451+16.93 (RAMP 'D')
VARIES FROM 6′ TO 8′
STA. 471+00.53 TO STA. 471+50.57 (RAMP 'F')

B VARIES FROM 16′ TO 12′
STA. 474+29.59 TO STA. 476+04.05

C VARIES FROM 24′ TO 16′
STA. 466+45.01 TO STA. 466+95.01

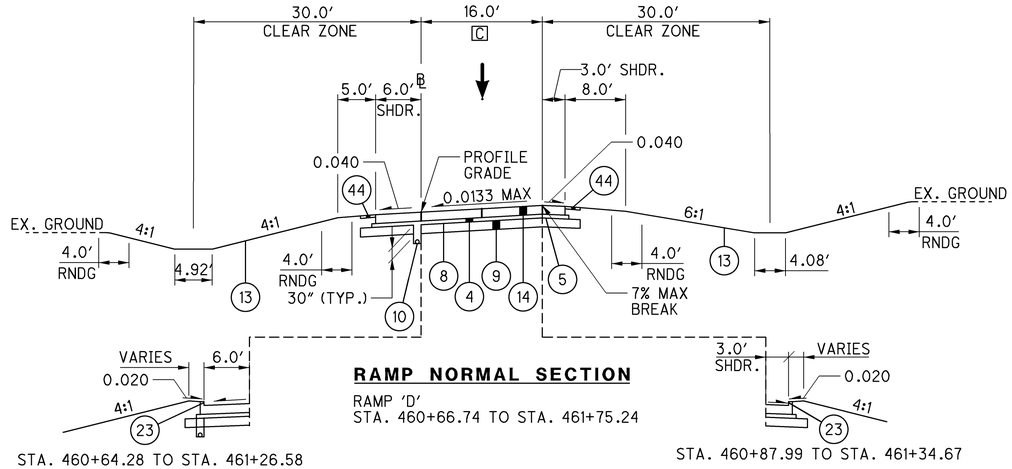

RAMP NORMAL SECTION

RAMP 'D'
STA. 460+66.74 TO STA. 461+75.24

STA. 460+64.28 TO STA. 461+26.58

STA. 460+87.99 TO STA. 461+34.67

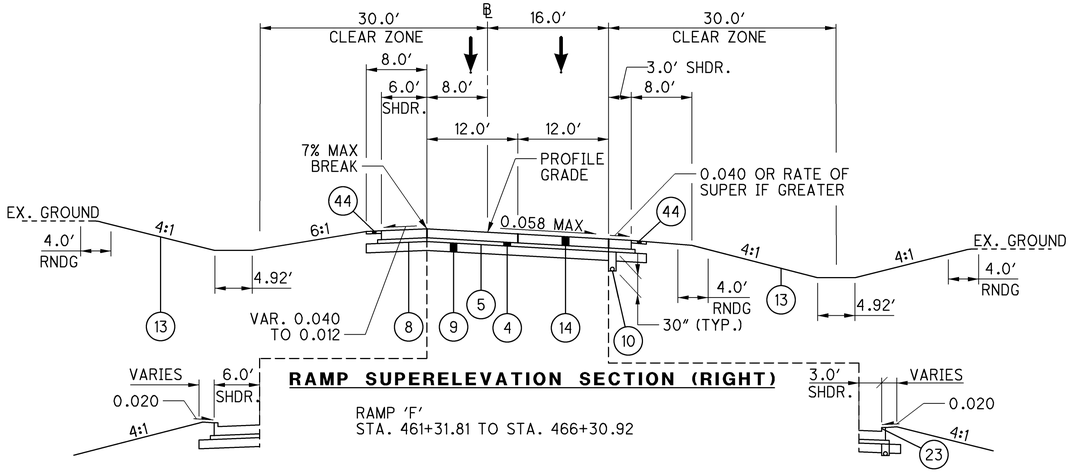

RAMP SUPERELEVATION SECTION (RIGHT)

RAMP 'F'
STA. 461+31.81 TO STA. 466+30.92

STA. 461+74.31 TO STA. 462+22.44

STA. 461+71.15 TO STA. 462+03.35

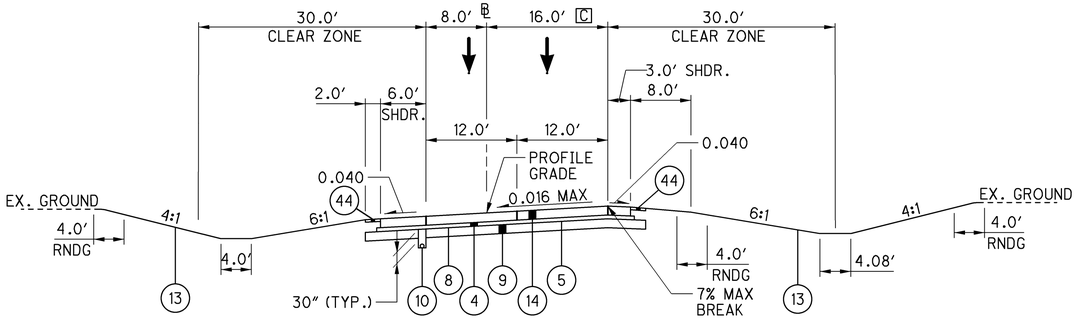

RAMP NORMAL SECTION

RAMP 'F'
STA. 466+30.92 TO STA. 466+83.19

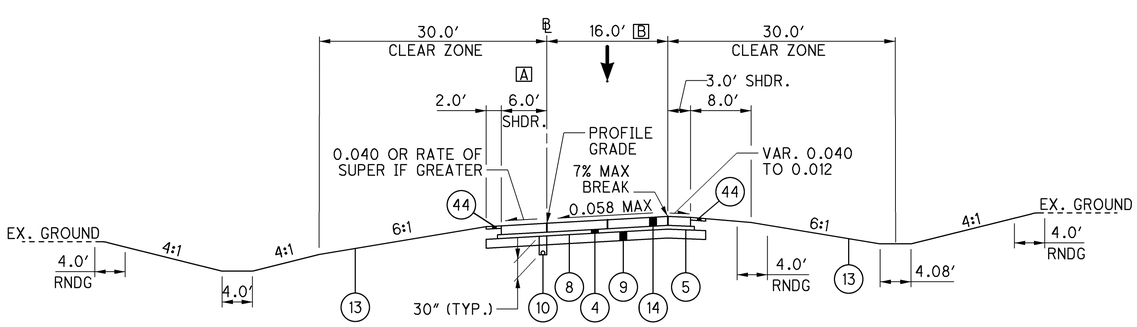

RAMP SUPERELEVATION SECTION (LEFT)

RAMP 'F'
STA. 466+83.19 TO STA. 471+50.57

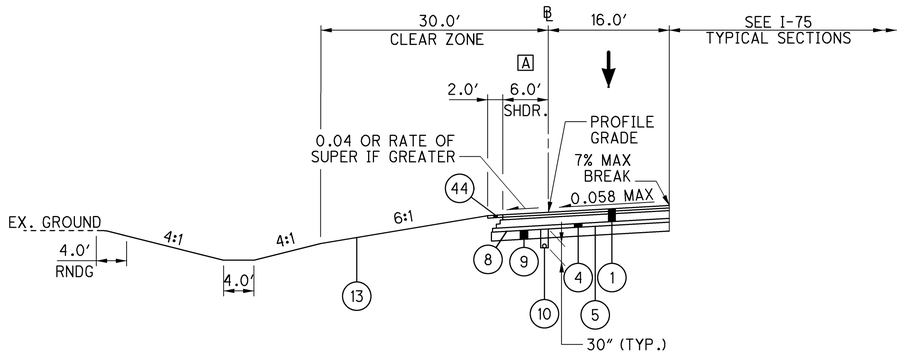

RAMP SUPERELEVATION SECTION (LEFT)

RAMP 'F'
STA. 471+50.57 TO STA. 476+04.05

NOTE:
FOR PROPOSED PAVEMENT BUILDUP LEGEND,
SEE SHEET 19.

PROPOSED TYPICAL SECTIONS - S.R. 81 RAMPS D & F

ALL-75-5.53

J:\Projects\ALL\76691\roadway\sheets\76691GY014.dgn 11-SEP-2012 8:47PM reddenj

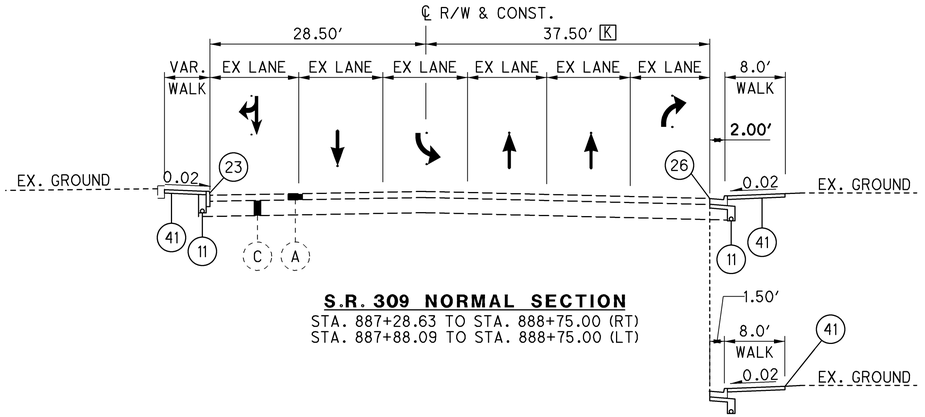

S.R. 309 NORMAL SECTION
STA. 887+28.63 TO STA. 888+75.00 (RT)
STA. 887+88.09 TO STA. 888+75.00 (LT)

STA. 887+28.63 TO STA. 887+90.00
K VARIES 34.69′ TO 37.5′

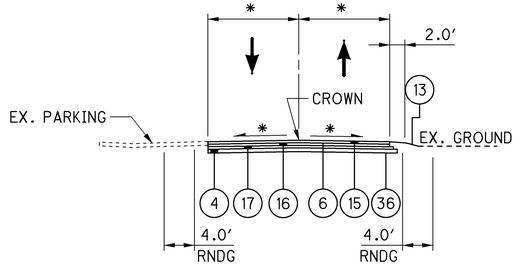

TURNER AVENUE NORMAL SECTION
CROSS SLOPES AND PAVEMENT WIDTHS
TO MATCH INTERSECTION DETAIL

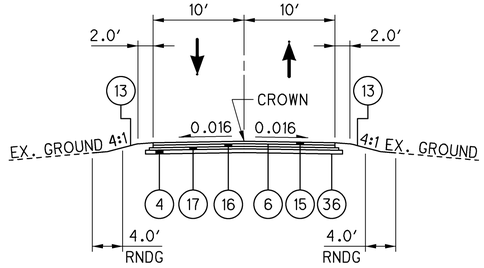

LENORE STREET NORMAL SECTION

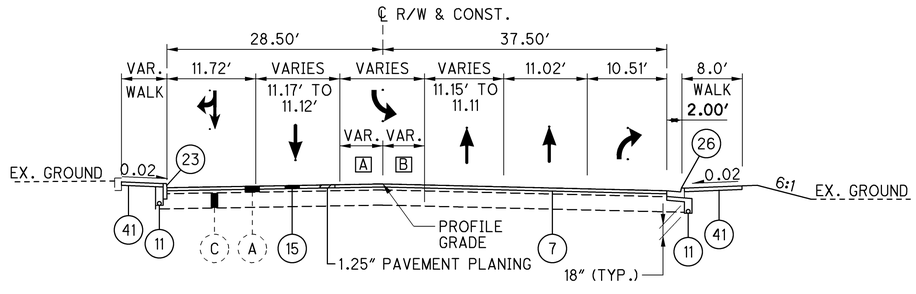

S.R. 309 NORMAL SECTION
STA. 888+50.00 TO STA. 888+75.00

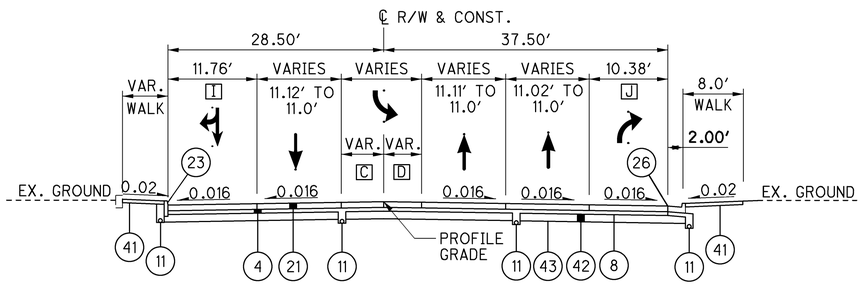

S.R. 309 NORMAL SECTION
STA. 888+75.00 TO STA. 889+50.00

A VARIES 5.66′ TO 5.62′
B VARIES 4.82′ TO 4.99′
C VARIES 5.62′ TO 5.50′
D VARIES 4.99′ TO 5.50′
E VARIES 11.0′ TO 11.32′
STA. 890+15.00 TO STA. 891+00.00
F VARIES 0′ TO 2.12′
STA. 890+15.00 TO STA. 891+00.00
G VARIES 7.62′ TO 12.0′
STA. 891+00.00 TO STA. 892+75.00
H VARIES 11.32′ TO 12.0′
STA. 891+00.00 TO STA. 892+75.00
I VARIES 11.76′ TO 13.0′
STA. 889+00.00 TO STA. 889+50.00
J VARIES 10.38′ TO 11.0′
STA. 889+00.00 TO STA. 889+50.00

NOTE:
FOR EXISTING PAVEMENT BUILDUP LEGEND,
SEE SHEET 18.

FOR PROPOSED PAVEMENT BUILDUP LEGEND,
SEE SHEET 19.

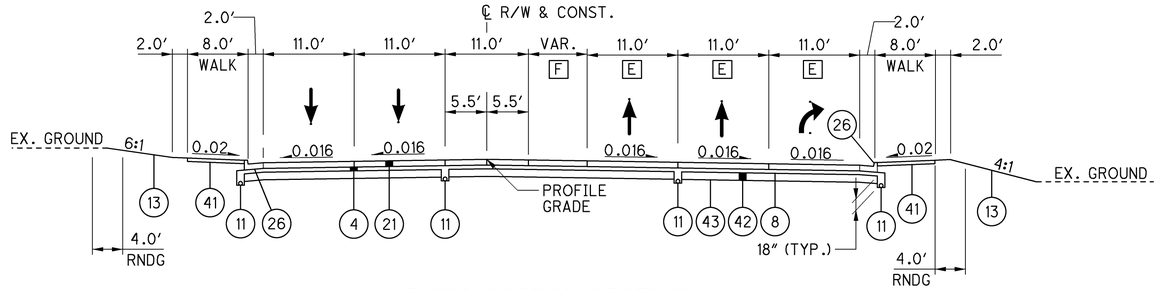

S.R. 309 NORMAL SECTION
STA. 889+50.00 TO STA. 891+00.00

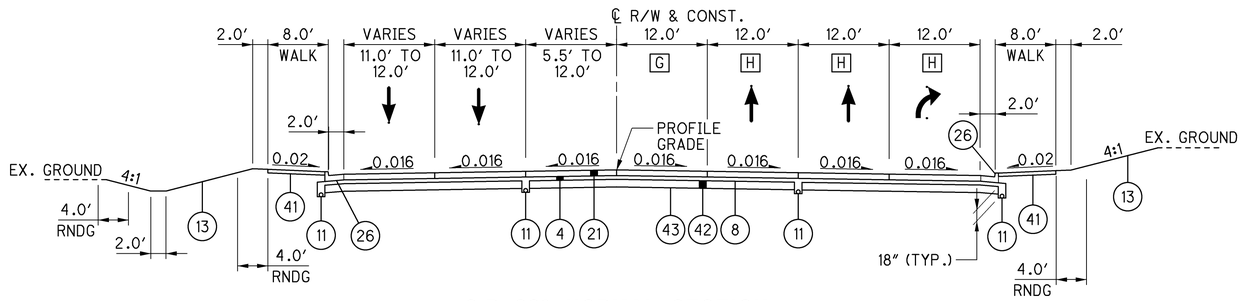

S.R. 309 NORMAL SECTION
STA. 891+00.00 TO STA. 893+30.00

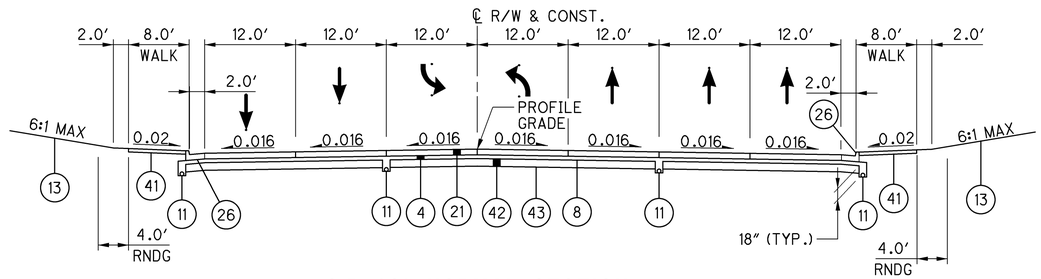

S.R. 309 NORMAL SECTION
STA. 893+30.00 TO STA. 899+50.00

PROPOSED TYPICAL SECTIONS - S.R. 309

ALL-75-5.53

J:\Projects\ALL\76691\roadway\sheets\76691GY015.dgn 11-SEP-2012 8:47PM reddenj

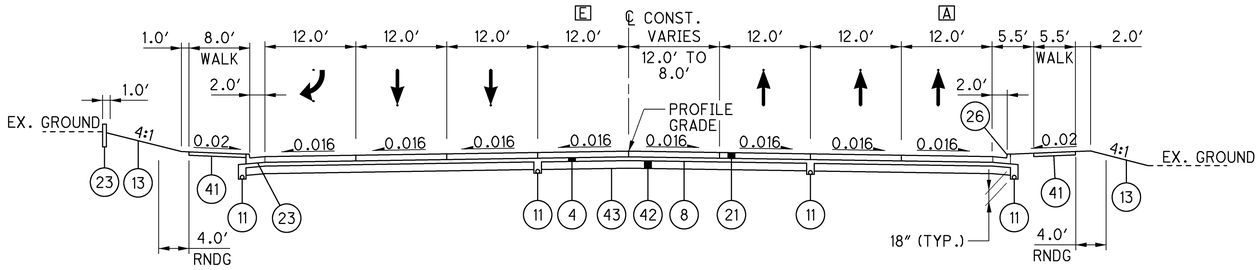

S.R. 309 NORMAL SECTION

STA. 899+50.00 TO STA. 901+65.00

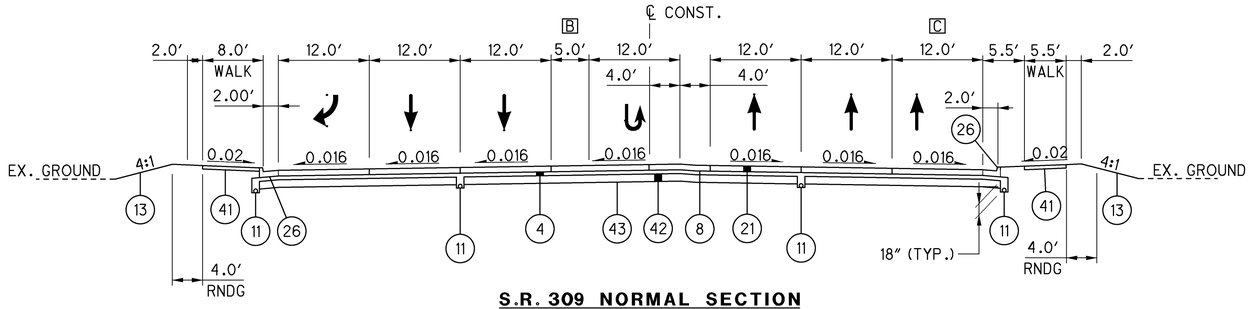

S.R. 309 NORMAL SECTION

STA. 901+65.00 TO STA. 903+50.11

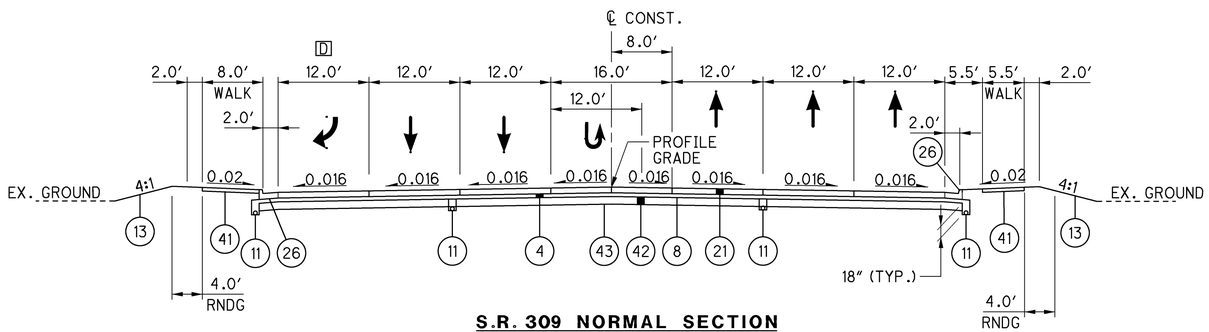

S.R. 309 NORMAL SECTION

STA. 903+50.11 TO STA. 904+00.00

A VARIES FROM 12′ TO 15′
STA. 900+85.00 TO STA. 901+65.00

B VARIES FROM 5′ TO 0′
STA. 902+15.00 TO STA. 903+50.11

C VARIES FROM 15′ TO 12′
STA. 902+25.00 TO STA. 903+05.00

D VARIES FROM 12′ TO 0′
STA. 903+50.11 TO STA. 904+00.00

E VARIES FROM 12′ TO 13′
STA. 899+50.00 TO STA. 901+65.00

NOTE:
FOR PROPOSED PAVEMENT BUILDUP LEGEND, SEE SHEET 19.

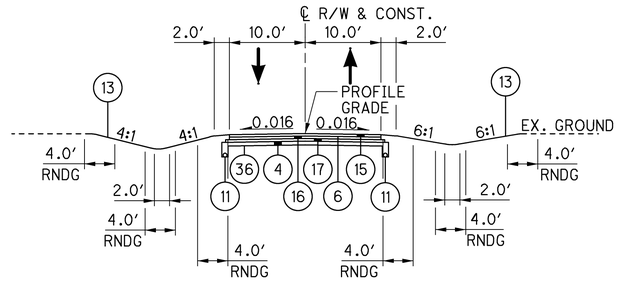

LOST CREEK BLVD. NORMAL SECTION

STA. 50+00.00 TO STA. 51+78.66

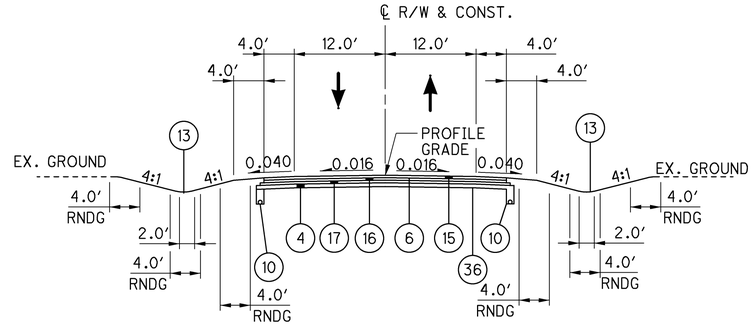

BRYN MAWR AVE. &
WELLESLEY DR. NORMAL SECTION

STA. 7+00.00 TO STA. 7+49.87
STA. 11+21.53 TO STA. 12+50.00

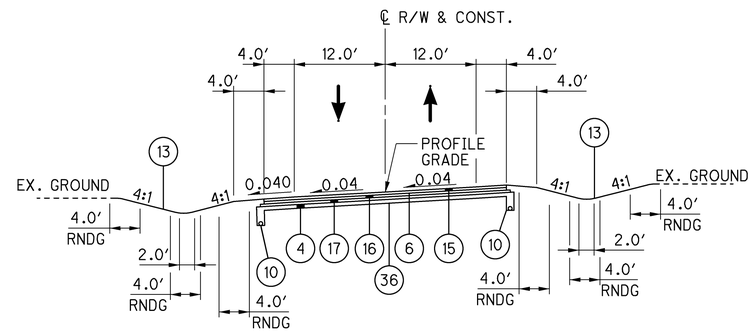

BRYN MAWR AVE. & WELLESLEY DR.
SUPERELEVATION SECTION

STA. 7+49.87 TO STA. 11+21.53

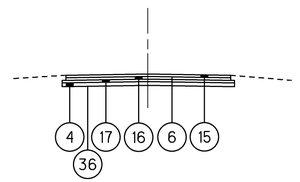

TURNER AVE. CUL-DE-SAC &
LENORE AVE. TEE
PAVEMENT BUILDUP

PROPOSED TYPICAL SECTIONS
S.R. 309, LOST CREEK BLVD., BYRN MAWR., & WELLESLEY DR.

ALL-75-5.53

J:\Projects\ALL\76691\roadway\sheets\76691GY016.dgn 11-SEP-2012 8:47PM reddenj

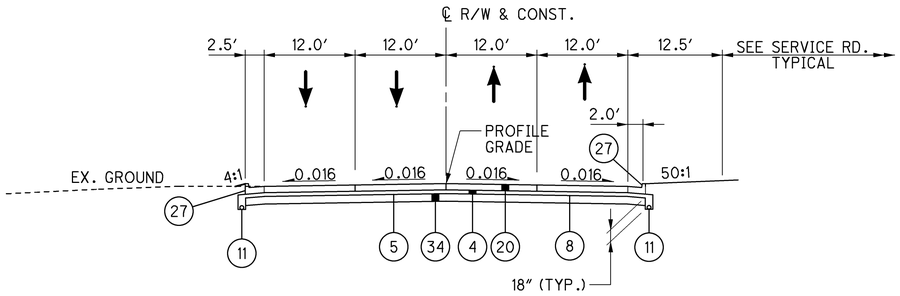

S.R. 81 NORMAL SECTION
STA. 429+00.00 TO STA. 430+10.00

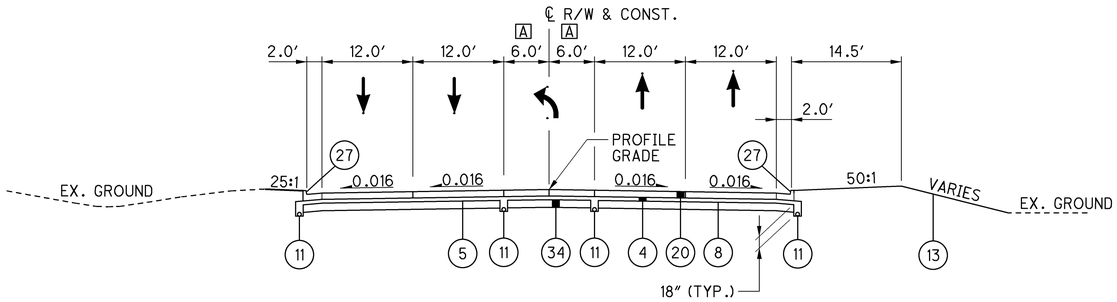

S.R. 81 NORMAL SECTION
STA. 430+10.00 TO STA. 438+23.91

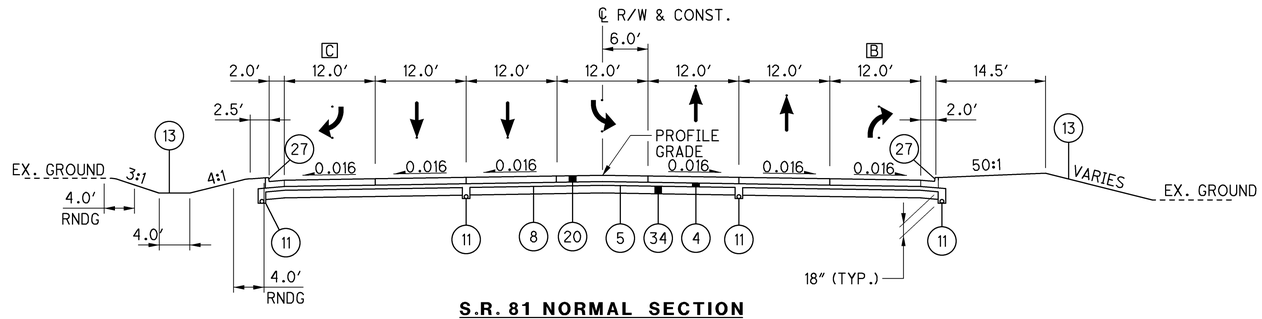

S.R. 81 NORMAL SECTION
STA. 438+23.91 TO STA. 444+98.31

A VARIES FROM 0.0′ TO 6.0′
STA. 431+28.74 TO STA. 433+54.01

B VARIES FROM 0.0′ TO 12.0′
STA. 442+15.10 TO STA. 442+65.47

C VARIES FROM 12.0′ TO 0.0′
STA. 443+50.10 TO STA. 444+00.10

D VARIES FROM 6.0′ TO 12.0′
STA. 444+98.31 TO STA. 447+00.10

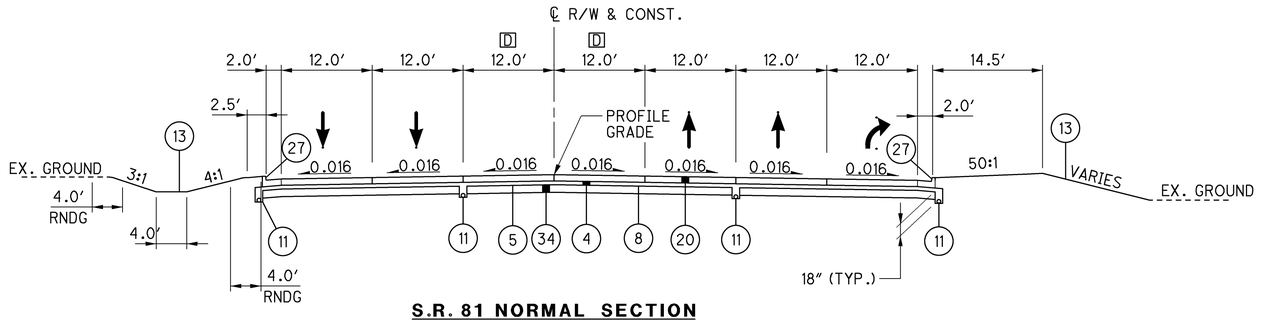

S.R. 81 NORMAL SECTION
STA. 444+98.31 TO STA. 448+20.11

NOTE:
FOR PROPOSED PAVEMENT BUILDUP LEGEND, SEE SHEET 19.

PROPOSED TYPICAL SECTIONS - S.R. 81 & NEUBRECHT RD.

ALL-75-5.53

J:\Projects\ALL\76691\roadway\sheets\76691GY017.dgn 11-SEP-2012 8:47PM redden

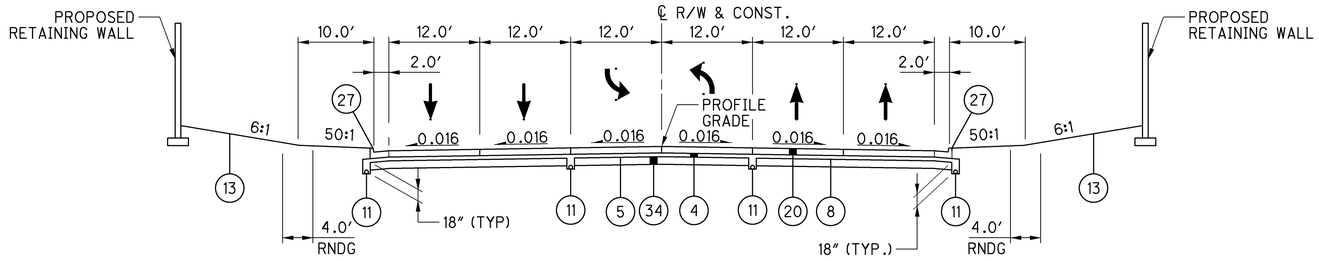

S.R. 81 NORMAL SECTION
STA. 448+20.11 TO STA. 454+96.19

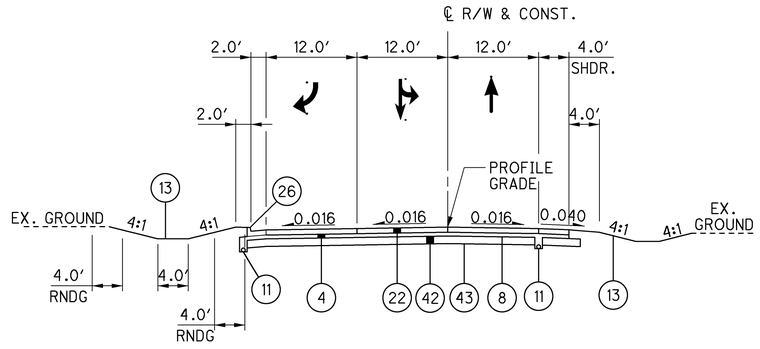

NEUBRECHT RD. NORMAL SECTION
STA. 11+18.04 TO STA. 15+18.81

Ⓐ VARIES FROM 12.0′ TO 6.0′
STA. 454+96.19 TO STA. 456+98.69

Ⓑ VARIES FROM 12.0′ TO 10.53′
STA. 15+30.00 TO STA. 15+80.00

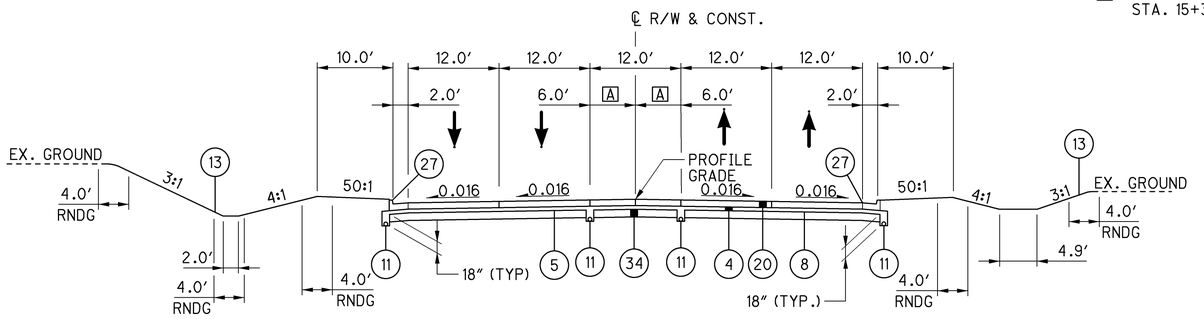

S.R. 81 NORMAL SECTION
STA. 454+96.19 TO STA. 461+40.00

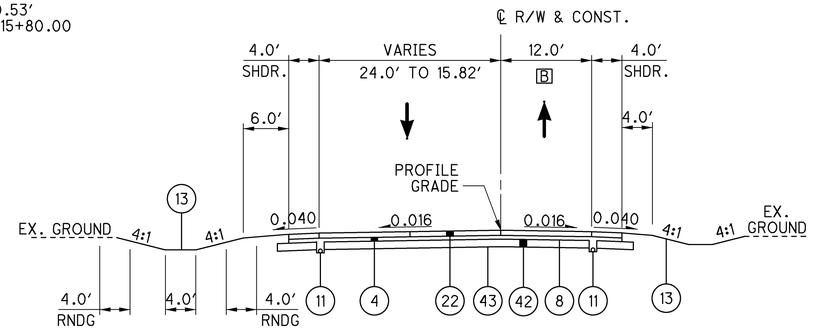

NEUBRECHT RD. NORMAL SECTION
STA. 15+18.81 TO STA. 15+80.00

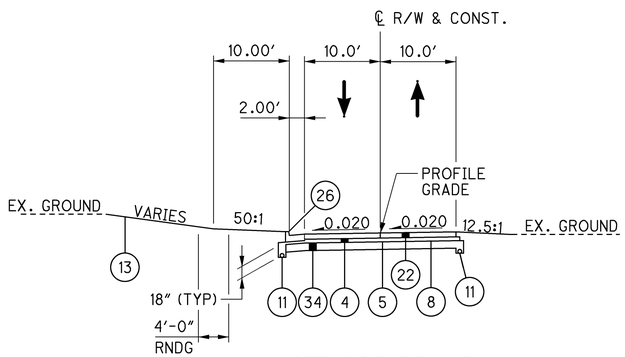

SERVICE RD. #3
STA. 28+77.71 TO STA. 33+20.00

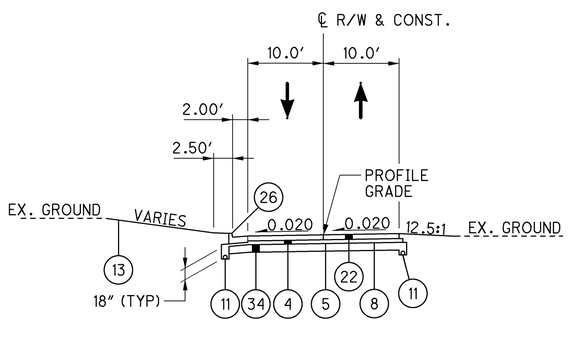

SERVICE RD. #3
STA. 33+20.00 TO STA. 46+40.74

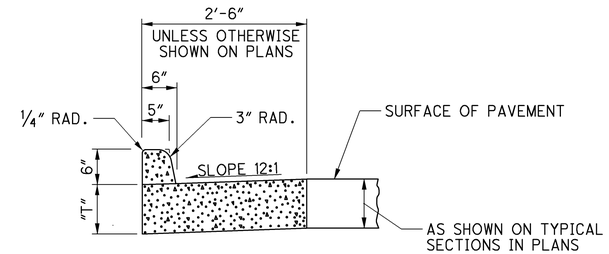

T = 10″ ALONG S.R. 81
T = 8″ ALONG SERVICE RD. #3 & NEUBRECHT RD.

(27) - **CURB & GUTTER, TYPE 2 AS PER PLAN DETAIL**

NOTE:
FOR PROPOSED PAVEMENT BUILDUP LEGEND, SEE SHEET 19.

PROPOSED TYPICAL SECTIONS
S.R. 81 & NEUBRECHT RD., SERVICE RD. #3

ALL-75-5.53

J:\Projects\ALL\76691\roadway\sheets\76691GY018.dgn 11-SEP-2012 8:47PM reddenj

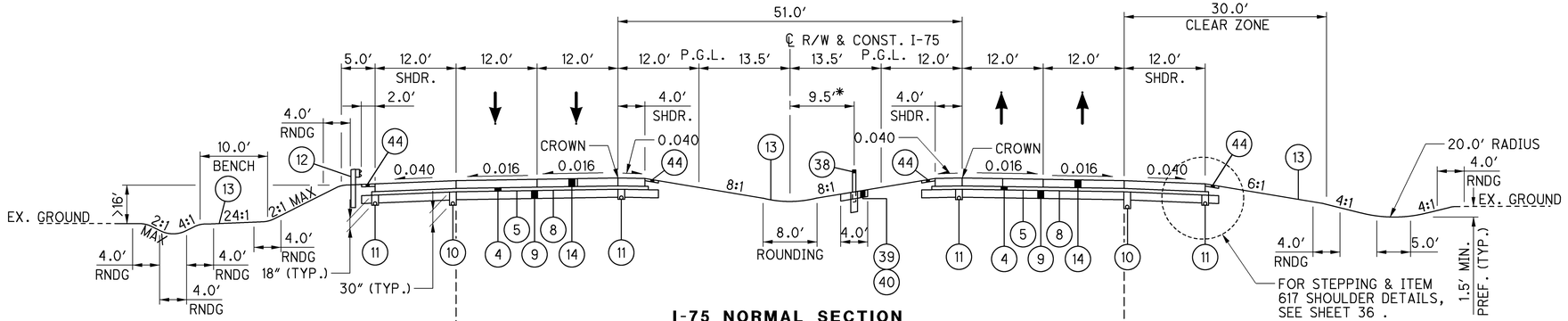

I-75 NORMAL SECTION

STA. 292+00.00 TO STA. 334+08.07
STA. 344+38.32 TO STA. 368+67.88
STA. 371+31.55 TO STA. 426+70.94
STA. 439+26.64 TO STA. 461+16.00
STA. 463+05.41 TO STA. 488+47.53
STA. 519+00.00 TO STA. 520+00.00#
*CABLE RAIL MAY BE LT OR RT OF ℄
AS LISTED IN THE ESTIMATED QUANTITIES

SLOPES VARY TO TIE
INTO EXISTING PAVEMENT

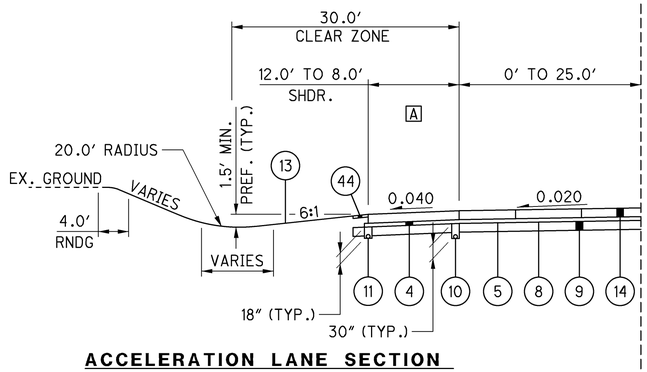

ACCELERATION LANE SECTION

STA. 303+67.41 TO STA. 321+17.41
STA. 344+38.32 TO STA. 356+88.32
STA. 438+16.93 TO STA. 450+66.93

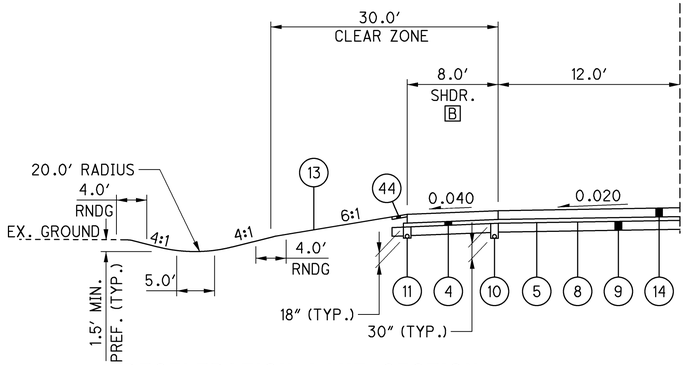

DECELERATION LANE SECTION

STA. 381+97.17 TO STA. 385+43.17
STA. 476+04.05 TO STA. 479+50.56

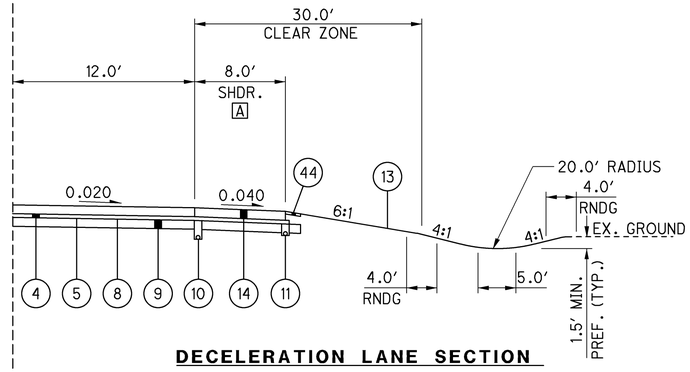

DECELERATION LANE SECTION

STA. 301+61.24 TO STA. 305+07.24
STA. 351+44.74 TO STA. 354+74.74
STA. 447+04.65 TO STA. 450+51.17

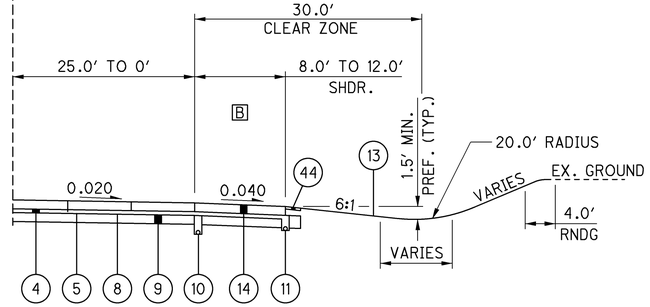

ACCELERATION LANE SECTION

STA. 319+52.95 TO STA. 337+02.95
STA. 381+26.71 TO STA. 393+76.71
STA. 473+83.81 TO STA. 486+33.81

A VARIES FROM 12′ TO 8′
STA. 301+61.24 TO STA. 302+61.24 (RT)
STA. 303+67.42 TO STA. 305+67.34 (LT)
STA. 351+44.74 TO STA. 352+44.74 (RT)
STA. 438+16.93 TO STA. 440+16.85 (LT)
STA. 447+04.65 TO STA. 448+04.65 (RT)

B VARIES FROM 8′ TO 12′
STA. 335+01.48 TO STA. 337+02.46 (RT)
STA. 384+43.17 TO STA. 385+43.17 (LT)
STA. 391+76.79 TO STA. 393+76.71 (RT)
STA. 478+50.56 TO STA. 479+50.56 (LT)
STA. 484+33.89 TO STA. 486+33.81 (RT)

NOTE:
FOR PROPOSED PAVEMENT BUILDUP LEGEND, SEE SHEET 19.

PROPOSED TYPICAL SECTIONS I-75 (RIGID)

PROPOSED

ALL-75-5.53

J:\Projects\ALL\76691\roadway\sheets\76691GY019.dgn 11-SEP-2012 8:47PM reddenj

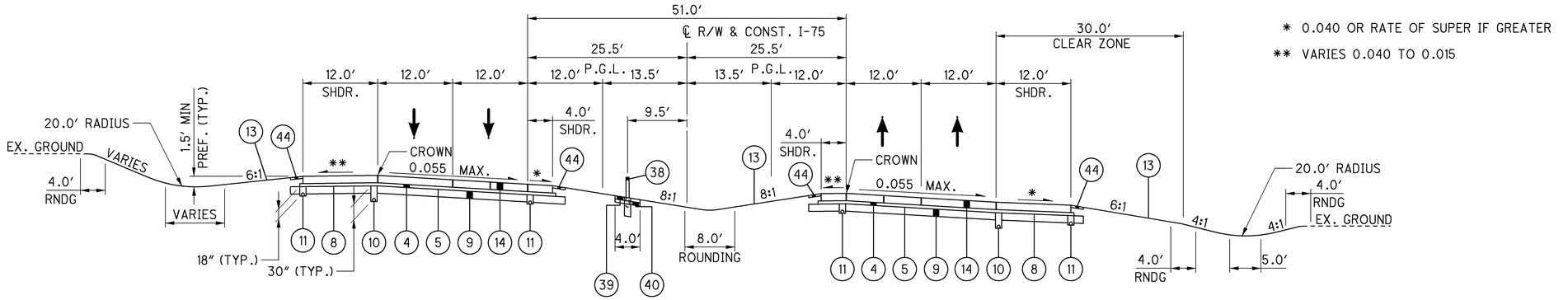

I-75 SUPERELEVATED SECTION (RIGHT)

STA. 488+47.53 TO STA. 519+00.00

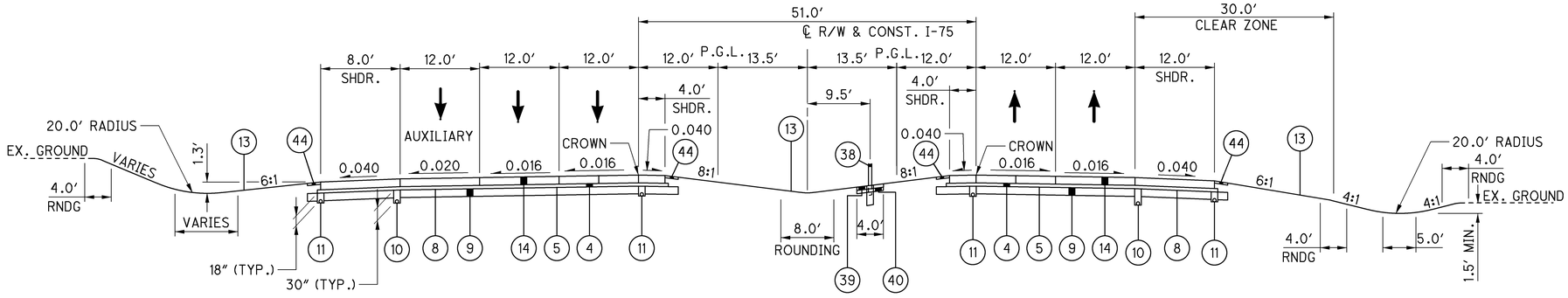

I-75 NORMAL SECTION W/ AUXILIARY LANE

STA. 334+08.07 TO STA. 344+38.32

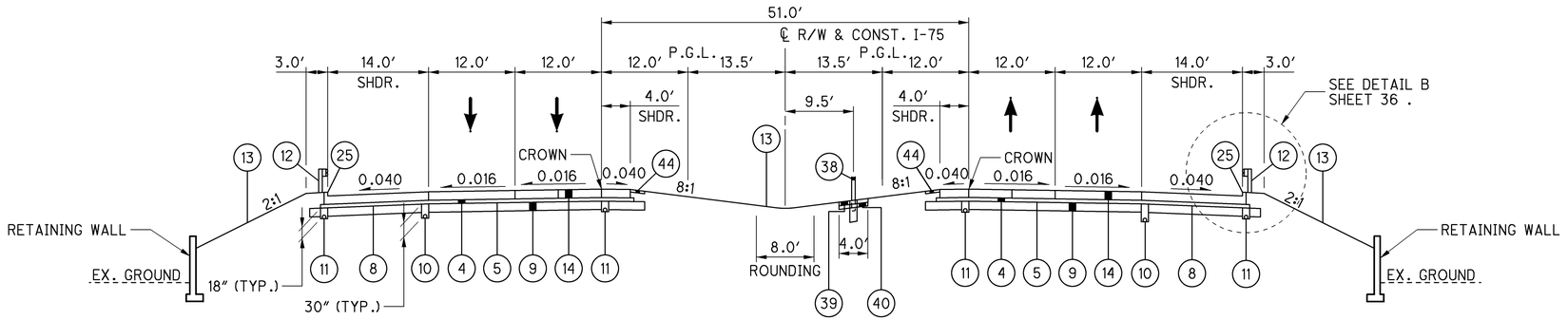

I-75 NORMAL SECTION CURBED SHOULDER

STA. 429+37.95 TO STA. 437+34.64

NOTE:
FOR PROPOSED PAVEMENT BUILDUP LEGEND, SEE SHEET 19.

PROPOSED TYPICAL SECTIONS I-75 (RIGID)

ALL-75-5.53

J:\Projects\ALL\76691\roadway\sheets\76691GY020.dgn 11-SEP-2012 8:47PM reddenj

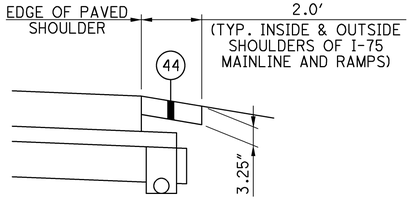

ITEM 617 - SHOULDER DETAIL

NOTE:

(44) - ITEM 617 COMPACTED AGGEGATE (3.25″ THICK)
I-75 MAINLINE: 1695 CU YD
RAMPS: 395 CU YD
TOTAL: 2090 CU YD

TOTAL CARRIED TO GENERAL SUMMARY

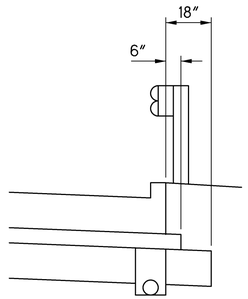

I-75 CURBED CONCRETE EDGE STEP DETAIL

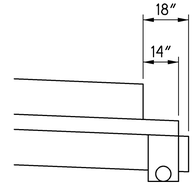

I-75 CONCRETE EDGE STEP DETAIL

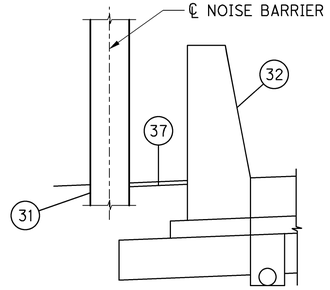

DETAIL A

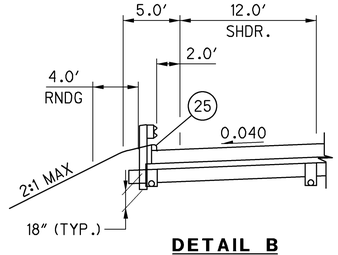

DETAIL B

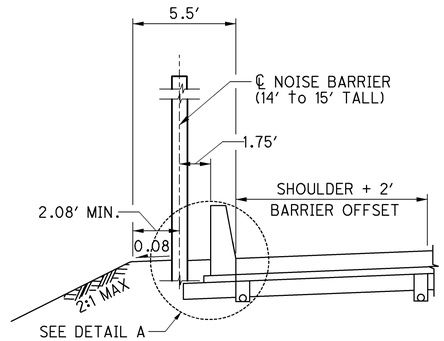

NOISE BARRIER SECTION
FILL SLOPE NEAR SHOULDER

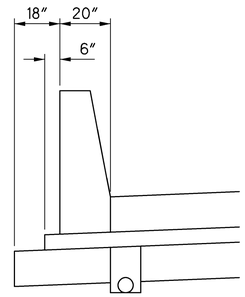

I-75 CONCRETE BARRIER EDGE STEP DETAIL

NOTE:
FOR PROPOSED PAVEMENT BUILDUP LEGEND, SEE SHEET 19.

PROPOSED TYPICAL SECTIONS I-75 (RIGID)

ALL-75-5.53

J:\Projects\ALL\76691\roadway\sheets\76691GY021.dgn 11-SEP-2012 8:47PM redden

CALCULATED SJG CHECKED EJC

GENERAL NOTES

UTILITIES

THE LOCATION OF THE UNDERGROUND UTILITIES SHOWN ON THE PLANS ARE AS OBTAINED FROM THE OWNERS AS REQUIRED BY SECTION 153.64 O.R.C.

LISTED BELOW ARE ALL UTILITIES LOCATED WITHIN THE PROJECT CONSTRUCTION LIMITS TOGETHER WITH THEIR RESPECTIVE OWNERS:

AEP
209 N. Wood Street,
Fostoria, Ohio 44830
Attn.: Jeff Meyers
AEP (419) 436-2008
Email: jdmeyers@aep.com

Dan Wilson
369 E. O'Connor Ave.
Lima, Ohio 45801
419-998-5103
dewilson@aep.com

Ms. Tram Trinh
AEP Transmission
700 Morrison Road
Gahanna, OH 43240

Allen County Sanitary
Engineer's Office
Brad Niemeyer,
Assistant Sanitary Engineer
(419) 228-3700
3230 N. Cole St.
Lima, Oh 45801

BP Oil Pipeline
Adam Neu (419) 222-7221
Email: Neua1@bp.com
1771 Buckeye Rd
Lima, OH 45804

Mike Lerma
(419) 655-2966
Email: Michael.lerma@bp.com
12716 Tank Farm Road
Cygnet, OH 43413

Buckeye Partners
Buckeye Pipe Line Co. LP
940 Buckeye Rd
Lima, Ohio 45802
ATTN: Marty White
(419) 236-7766
Email: mwhite@buckeye.com

City of Lima Sanitary Department
50 Town Square
Lima, Oh 45801
ATTN: Dave Schnipke,
Env. Compliance Manager
(419-221-5294)
Email: Dave.Schnipke@cityhall.lima.oh.us

City of Lima Water Department
1405 Reservoir Road
Lima, Oh 45804
ATTN: Kent Shoemaker (419-221-5283)

Columbia Gas Transmission
1804 Broad Ave.
Findlay, OH 45840
Attn: Kevin Coppes
(419) 427-3200

Dominion East Ohio Gas Company
150 S. Jackson St.
Lima, Ohio 45801
ATTN: John Downing (419) 226-4864
email: John483@dom.com
(800) 877-4715

TEPPCO
2700 Hart Road
Lebanon, Ohio 45036
ATTN: Bob Sanders (513) 932-5886
cell (513) 304-0758; fax (513) 932-7077
rgsaunders@epco.com

Time Warner Cable
3100 Elida Rd
Lima, Ohio 45805
ATTN: Gary Hohenbrink

Embarq
122 S Elizabeth Street
Lima, Ohio 45801
ATTN: Bill Perrin
(419) 226-6220
Email: William.r.perrin@embarq.com

Marathon Pipe Line LLC
539 S. Main St., Room 7642
Findlay, OH 45840
Attn: Dave Wisner
(419) 421-2211
Email: dswisner@marathonoil.com

Telephone Service Company
2 Willipie St.
PO Box 408
Wapakoneta, OH 45895
Randy Heinl
(419) 739-2241
Email: randy@telserco.com

Mid Valley Pipeline
PO 219
Cygnet, OH 43413
Or
5152 Rockridge Road
Cygnet, OH 43413
Attn: Chester Wilson
(419) 236-6887
Email: cwilson@sunocologistics.com
(888) 786-3260

Qwest Communications
2626 N. Wapak Rd.
Elida, OH 45807
Attn: Mike Adams
(cell) 419-392-4133;
office 419-229-7355)
Email: mike.adams@qwest.com
George McElvain-Denver
(303)-837-3926
for plans and legal issues.

RAILROADS

David Murphy - General Manager
Chicago, Fort Wayne, and Eastern Railroad (CFER)
3010 East Pontiac Street
Ft. Wayne, IN 46803
Office: 317-308-9198
E-Mail David.Murphy@RailAmerica.com

OR

Brady Peters - Roadmaster
Chicago, Fort Wayne, and Eastern Railroad (CFER)
3010 East Pontiac Street
Ft. Wayne, IN 46803
Mobile: 513-218-9058
E-Mail: Brady.Peters@RailAmerica.com

SUBSURFACE UTILITY EXPLORATION (SUE)

DISTRICT 1 CONTRACTED WITH A SUE CONSULTANT TO PERFORM EXPLORATION SERVICES ALONG THE MAINLINE OF I-75. THE CONTRACTOR SHALL CONTACT THE DISTRICT 1 UTILITY COORDINATOR TO REVIEW THE PLAN, NOTES, AND DATA PRIOR TO BIDDING AND CONSTRUCTION.

ROUNDING

THE ROUNDING AT SLOPE BREAKPOINTS SHOWN ON THE TYPICAL SECTIONS APPLY TO ALL CROSS-SECTIONS EVEN THOUGH OTHERWISE SHOWN.

WORK LIMITS

THE WORK LIMITS SHOWN ON THESE PLANS ARE FOR PHYSICAL CONSTRUCTION ONLY. PROVIDE THE INSTALLATION AND OPERATION OF ALL WORK ZONE TRAFFIC CONTROL AND WORK ZONE TRAFFIC CONTROL DEVICES REQUIRED BY THESE PLANS WHETHER INSIDE OR OUTSIDE THESE WORK LIMITS.

EXISTING PLANS

EXISTING PLANS ENTITLED FOR PAST PROJECTS MAY BE INSPECTED IN THE ODOT DISTRICT 1 OFFICE AT 1885 N. MCCULLOUGH ST., LIMA, OHIO 45801.

SURVEYING PARAMETERS

USE THE FOLLOWING VERTICAL POSITIONING AND HORIZONTAL POSITIONING PARAMETERS FOR ALL SURVEYING:

VERTICAL POSITIONING

ORTHOMETRIC HEIGHT DATUM: NAVD88
GEOID: 03

HORIZONTAL POSITIONING

REFERENCE FRAME: NAD83(95)
ELLIPSOID: WGS84
MAP PROJECTION: LAMBERT
COORDINATE SYSTEM: OHIO STATE PLANE NORTH ZONE
COMBINED SCALE FACTOR: 0.999919027
UNITS ARE IN U.S. SURVEY FEET. USE THE FOLLOWING CONVERSION FACTOR: 1 METER = 3.280833333 U.S. SURVEY FEET.

ITEM SPECIAL - MISCELLANEOUS METAL

EXISTING CASTINGS MAY PROVE TO BE UNSUITABLE FOR REUSE, AS DETERMINED BY THE ENGINEER. IT SHALL BE THE CONTRACTOR'S RESPONSIBILITY TO PROVIDE THE CASTINGS OF THE REQUIRED TYPE, SIZE AND STRENGTH (HEAVY OR LIGHT DUTY) FOR THE PARTICULAR STRUCTURE IN QUESTION. ALL MATERIAL SHALL MEET ITEM 604 OF THE SPECIFICATIONS AND SHALL HAVE THE PRIOR APPROVAL OF THE ENGINEER.

THE FOLLOWING ESTIMATED QUANTITY HAS BEEN CARRIED TO THE GENERAL SUMMARY FOR USE AS DIRECTED BY THE ENGINEER.

SPECIAL, MISCELLANEOUS METAL	500	POUNDS

THE CONTRACTOR IS CAUTIONED TO USE EXTREME CARE IN THE REMOVAL, STORAGE AND REPLACEMENT OF ALL EXISTING CASTINGS. CASTINGS DAMAGED BY THE NEGLIGENCE OF THE CONTRACTOR, AS DETERMINED BY THE ENGINEER, SHALL BE REPLACED WITH THE PROPER NEW CASTINGS AT THE EXPENSE OF THE CONTRACTOR.

ITEM 203 - EMBANKMENT, AS PER PLAN

PLACE AND COMPACT EMBANKMENT MATERIAL IN 6 INCH LIFTS FOR THE CONSTRUCITON OF THE APPROACH EMBANKMENT.

PROTECTION OF RIGHT-OF-WAY LANDSCAPING

PRIOR TO BEGINNING WORK, THE CONTRACTOR, THE PROJECT ENGINEER, AND A REPRESENTATIVE OF THE MAINTAINING AGENCY WILL REVIEW AND RECORD ALL LANDSCAPING ITEMS WITHIN THE RIGHT OF WAY (BOTH WITHIN AND OUTSIDE THE CONSTRUCTION LIMITS) A RECORD OF THIS REVIEW WILL BE KEPT IN THE PROJECT ENGINEER'S FILES. PRIOR TO FINAL ACCEPTANCE, A FINAL REVIEW OF LANDSCAPING ITEMS IN EACH AREA WILL BE MADE.

CONSTRICT ALL ACTIVITIES, EQUIPMENT STORAGE, AND STAGING TO WITHIN THE CONSTRUCTION LIMITS. UNLESS OTHERWISE IDENTIFIED IN THE PLANS OR PROPOSAL, THE CONSTRUCTION LIMITS ARE IDENTIFIED AS 30 FEET FROM THE EDGE OF PAVEMENT.

SUBMIT A WRITTEN REQUEST TO THE PROJECT ENGINEER TO USE ANY AREA OUTSIDE THESE LIMITS. THE DOCUMENT SUBMITTED MUST CLEARLY IDENTIFY THE AREA AND EXPLAIN THE PROPOSED USE AND RESTORATION OF THE AREA. EXCEPT AS PERMITED BY THE ENGINEER, USE OF THESE AREAS FOR DISPOSAL OF WASTE MATERIAL AND CONSTRUCTION DEBRIS, EXCAVATION OF BORROW MATERIAL AND PLACEMENT OF PORTABLE PLANTS IS PROHIBITED.

THE REQUEST MUST BE APPROVED, IN WRITING, BEFORE THE CONTRACTOR HAS PERMISSION TO USE THE AREA.

ANY ITEMS DAMAGED IN AREAS BEYOND THE CONSTRUCTION LIMITS AS DEFINED ABOVE WILL BE REPLACED IN KIND OR AS APPROVED BY THE PROJECT ENGINEER.

SEEDING AND MULCHING

THE FOLLOWING QUANTITIES ARE PROVIDED TO PROMOTE GROWTH AND CARE OF PERMANENT SEEDED AREAS:

ITEM 659, SOIL ANALYSIS TEST	7	EACH
ITEM 659, TOPSOIL	64,925	CU. YD.
ITEM 659, REPAIR SEEDING AND MULCHING	29,246	SQ. YD
ITEM 659, INTER-SEEDING	29,246	SQ. YD.
ITEM 659, COMMERCIAL FERTILIZER	82	TON
ITEM 659, LIME	121	ACRES
ITEM 659, WATER	1,658	M. GAL.
ITEM 659, MOWING	1,316	M. SQ. FT.

SEEDING AND MULCHING SHALL BE APPLIED TO ALL AREAS OF EXPOSED SOIL BETWEEN THE RIGHT-OF-WAY LINES, AND WITHIN THE CONSTRUCTION LIMITS FOR AREAS OUTSIDE THE RIGHT-OF-WAY LINES COVERED BY WORK AGREEMENT OR SLOPE EASEMENT. QUANTITY CALCULATIONS FOR SEEDING AND MULCHING ARE BASED ON THESE LIMITS.

CLEARING AND GRUBBING

REMOVE ALL TREES AND STUMPS SPECIFICALLY MARKED FOR REMOVAL WITHIN THE CONSTRUCTION LIMITS UNDER THE LUMP SUM BID FOR ITEM 201, CLEARING AND GRUBBING. THE FOLLOWING IS AN APPROXIMATE ESTIMATE OF THE NUMBER OF TREES AND STUMPS TO BE REMOVED.

SIZES	NO. TREES	NO. STUMPS	TOTAL
18"	314	15	329
30"	87	5	92
48"	13	3	16
60"	0	0	0

ITEM 607 - FENCE REMOVE AND REBUILT

CAREFULLY RECONDITION AND RE-ERECT FENCE AND COMPONENT PARTS AS DETAILED ON THE PLANS. DO NOT DAMAGE THE FENCE OR COMPONENT PARTS. ANY NEW PARTS WHICH ARE NEEDED, AS DETERMINED BY THE ENGINEER, WILL BE SUPPLIED BY THE CONTRACTOR AT NO ADDITIONAL COST TO THE STATE.

THE AMOUNT OF REBUILT FENCE TO BE PAID FOR WILL BE THE NUMBER OF FEET REBUILT, COMPLETE IN PLACE AND MEASURED AS PROVIDED FOR IN 607.09.

PAYMENT FOR THE ABOVE WILL BE PAID FOR AT THE CONTRACT PRICE PER FOOT FOR ITEM 607, FENCE REBUILT, TYPE 47.

FENCE LENGTHS

THE LENGTHS OF FENCE SHOWN IN THE PLANS ARE HORIZONTAL DIMENSIONS. MEASUREMENTS OF THE FINAL QUANTITIES WILL BE IN ACCORDANCE WITH ITEM 607.

ITEM 607 - FENCE, TYPE CLT, AS PER PLAN

ALL MATERIALS NECESSARY FOR THE INSTALLATION OF FENCE, TYPE CLT, AS PER PLAN, INCLUDING ALL POSTS AND RAILS SHALL BE FEDERAL COLOR NUMBER 27038, BLACK. THE PVC COATING FOR THE FABRIC SHALL BE BLACK IN COLOR CLOSELY APPROACHING FEDERAL COLOR NUMBER 27038. ALL LABOR AND MATERIAL FOR COASTING SHALL BE INCLUDED WITH THIS ITEM FOR PAYMENT.

MONUMENT ASSEMBLIES

CONSTRUCT MONUMENT ASSEMBLIES IN ACCORDANCE WITH THE DETAILS SHOWN ON THE STANDARD CONSTRUCTION DRAWINGS AND AT THE LOCATIONS SHOWN ON CENTERLINE PLAT SHEET 1133.

ITEM 607 - FENCE, TYPE 47, AS PER PLAN

TYPE 47 FENCE SHALL BE INSTALLED PER THE APPLICABLE ODOT STANDARD CONSTRUCTION DRAWINGS EXCEPT THAT THE BARBED WIRE SHALL NOT BE INSTALLED.

BUILDING DEMOLITION

DEMOLITION OF BUILDINGS TO BEGIN WITHIN 2 WEEKS OF THE SIGNING OF THE CONTRACT. AFTER WHICH THE CONTRACTOR WILL HAVE 30 DAYS TO COMPLETE THE BUILDING DEMOLITION WORK.

ALL-75-5.53

J:\Projects\ALL\76691\roadway\sheets\76691GN001.dgn 11-SEP-2012 8:47PM reddenj

ITEM 823 - PROVIDING ELECTRONIC INSTRUMENTATION, AS PER PLAN

THE FOLLOWING NOTES SHALL SUPERSEDE THE PORTION OF NOTES IN THE SUPPLEMENTAL SPECIFICATIONS 823.10.

IF THE CONTRACTOR ELECTS TO PERFORM ANY PORTION OF THE PROJECTS CONSTRUCTION LAYOUT BY GLOBAL POSITIONING METHODS ACCORDING TO SS 823, THE CONTRACTOR SHALL PROVIDE THE OHIO DEPARTMENT OF TRANSPORTATION'S PROJECT ENGINEER WITH A NEW SURVEY GRADE GLOBAL POSITIONING SYSTEM (GPS) RECEIVER AND DATA COLLECTOR. THIS GPS RECEIVER WILL BE DUAL FREQUENCY AND HAVE THE ABILITY TO RECEIVE GLONASS SIGNALS AS WELL AS REAL TIME CORRECTIONS VIA RADIO TRANSMISSIONS OR VIA ODOT'S VRS (VIRTUAL REFERENCE SYSTEM). THE GPS RECEIVER MUST HAVE A MINIMUM HORIZONTAL ACCURACY SPECIFICATION OF +/- 10 MM +1 PPM RMS AND A MINIMUM VERTICAL ACCURACY OF +/- 20MM + 1 PPM RMS. THE DATA COLLECTOR'S OPERATING SYSTEM MUST BE THE MOST CURRENT STANDARD MICROSOFT MOBILE OPERATING SYSTEM CAPABLE OF PERFORMING CONSTRUCTION LAYOUT ROUTINES, REAL-TIME STATION AND OFFSET CALCULATIONS, AUTOMATED CUT AND FILL COMPUTATIONS, ABLE TO PERFORM COORDINATE GEOMETRY FUNCTIONS, STORE, DELETE AND MODIFY COLLECTED POINTS AND IMPORT INDUSTRY STANDARD FILE FORMATS AS WELL AS OPEN SOURCE ASCII FILE FORMATS. THESE REQUIREMENTS WILL PERMIT THE DEPARTMENT TO VERIFY THE CONSTRUCTION LAYOUT, PERFORM AUTOMATED CROSS SECTION VERIFICATION, DOCUMENT PAY ITEMS, AND OTHER PROJECT RELATED ITEMS SUCH AS ROADWAY PROFILES, AND CROSS SLOPE.

THE CONTRACTOR SHALL PROVIDE ALL ELECTRONIC DATA RELATED TO THE PROJECT EITHER DIRECTLY OR INDIRECTLY RELATED TO THE DESIGN, CONSTRUCTION, OR FINALIZATION OF THE SAID PROJECT. ALL ELECTRONIC FILES GENERATED BY THE CONTRACTOR WILL BE PROVIDED TO THE DEPARTMENT FOR REVIEW. THESE ELECTRONIC FILES WILL CONFORM TO ODOT STANDARDS AND SPECIFICATIONS. IF NO STANDARD EXISTS THE CONTRACTOR WILL SUBMIT THE ELECTRONIC DATA IN AN INDUSTRY STANDARD FORMAT AND PROVIDE THE SOFTWARE FOR CREATION, MANIPULATION OF THAT DATA. EXAMPLES OF THESE FILES INCLUDE BUT ARE NOT LIMITED TO 3D MODELS, SITE CALIBRATION, RAW DATA FILES FROM DATA COLLECTORS, COGO FILES, ASCII FILES DIGITAL TERRAIN MODELS, TRIANGULATED IRREGULAR NETWORKS, ETC. THE CONTRACTOR SHALL PROVIDE ALL EQUIPMENT AND SOFTWARE NECESSARY TO PERFORM THE SAID PROCESSES. ALL SAID EQUIPMENT AND SOFTWARE WILL BE APPROVED BY THE DISTRICTS INFORMATION TECHNOLOGY DEPARTMENT TO ENSURE COMPATIBILITY WITH ODOT'S EXISTING COMPUTER SYSTEMS AND SPECIFICATIONS.

THE CONTRACTOR WILL PROVIDE TECHNICAL TRAINING TO THE ENGINEER AND SUPPORT STAFF ON HOW TO USE THE PROVIDED EQUIPMENT AND SOFTWARE. TWENTY FOUR HOURS SHALL BE SPENT WITH THE AUTHORIZED TRAINING REPRESENTATIVE, THE ENGINEER, SUPPORT STAFF, AND THE CONTRACTOR BOTH IN THE CLASSROOM AND THE FIELD.

UPON COMPLETION OF THE PROJECT, THIS EQUIPMENT WILL REMAIN PROPERTY OF THE OHIO DEPARTMENT OF TRANSPORTATION TO ENSURE THE SAID PROJECT CAN BE EFFICIENTLY MAINTAINED THROUGHOUT ITS LIFE CYCLE.

THE FOLLOWING QUNATITY HAS BEEN CARRIED TO THE GENERAL SUMMARY FOR THE ABOVE MENTIONED WORK/ITEM:

ITEM 823 - PROVIDING ELECTRONIC INSTRUMENTATION, AS PER PLAN [LUMP]

ITEM 619 - FIELD OFFICE, TYPE C, AS PER PLAN

THIS ITEM SHALL BE IN ACCORDANCE WITH ITEM 619 OF THE 2010 OHIO DEPARTMENT OF TRANSPORTATION CONSTRUCTION AND MATERIAL SPECIFICATIONS EXCEPT AS MODIFIED BY THE FOLLOWING:

1. A CONFERENCE ROOM SHALL BE SUPPLIED WITH A MINIMUM OF 300 SQUARE FEET OF FLOOR SPACE. THE ROOM SHALL BE SUPPLIED WITH TABLES AND CHAIRS CAPABLE OF SEATING A MINIMUM OF 20 ATTENDEES. THE ROOM SHALL INCLUDE A SEPARATE PHONE LINE WITH SPEAKER PHONE CAPABILITIES.

2. FLOOR SPACE TO BE PROVIDED SHALL BE INCREASED TO A MINIMUM OF 2500 SQUARE FEET INCLUDING THE CONFERENCE ROOM.

3. THE REQUIREMENT OF ONE SEPARATE ROOM SHALL BE INCREASED TO FOUR SEPARATE ENCLOSED ROOMS OF 150 SQUARE FEET PER ROOM.

4. THE CONTRACTOR SHALL PROVIDE A COPIER, PRINTER, FAX, AND SCANNER SYSTEM PER THE SPECIFICATIONS LISTED BELOW.

5. THE ALL-WEATHER PARKING SPACES PROVIDED SHALL BE INCREASED TO 25 AND INCLUDE SNOW REMOVAL.

6. PROVIDE BROADBAND INTERNET CONNECTION CAPABLE OF DOWNLOAD SPEEDS GREATER THAN 5 MBPS. THIS AMENDS NOTE 6 IN 619.02 OF THE ODOT C&MS.

7. SECURITY SHALL BE PROVIDED FOR THE FIELD OFFICE AND SURROUNDING PARKING FACILITIES BY ILLUMINATING ALL SIDES OF THE FIELD OFFICE.

8. PROVIDE A SEPARATE STORAGE FACILITY FOR NUCLEAR DENSITY GAUGES TO BE USED ON THE PROJECT. THIS FACILITY MUST BE A MINIMUM OF 15 FEET AWAY FROM ANY STORAGE OR WORK PROJECT. THIS FACILITY MUST BE A MINIMUM OF 15 FEET AWAY FROM ANY STORAGE OR WORK AREAS, LARGE ENOUGH TO HOLD TWO NUCLEAR GAUGE STORAGE BOXES (APPROX. 4'x3'x3') THAT CAN BE SECURED TO THE WALLS OR FLOOR, AND BE LOCKABLE. THE AREA PROVIDED FOR THE STORAGE FACILITY SHALL BE IN ADDITION TO THE SQUARE FOOT REQUIREMENTS SHOWN ABOVE AND IN 619.02-1 OF THE ODOT C&MS. ODOT EMPLOYEES WILL BE THE ONLY PERSONNEL PERMITTED IN THE FACILITY. THIS FACILITY MUST HAVE ADEQUATE ELECTRICAL OUTLETS FOR CHARGING DENSITY GAUGES AND BE ABLE TO MAINTAIN TEMPERATURES BETWEEN 50f AND 90f. THE DEPARTMENT'S RSO WILL HAVE FINAL APPROVAL OF THE GAUGE STORAGE FACILITY.

9. THE BASE RADIO WITH 4 HAND HELD UNITS WILL NOT BE REQUIRED.

NO ADDITIONAL COMPENSATION WILL BE GRANTED FOR ADDITIONAL REQUIREMENTS STATED ABOVE. THE DEPARTMENT WILL MEASURE FIELD OFFICE TYPE C APP BY THE NUMBER OF MONTHS THE OFFICE IS MAINTAINED.

10. THE CONTRACTOR SHALL PROVIDE JANITORIAL SERVICES AT A MINIMUM OF BI-WEEKLY.

COLOR COPIER, PRINTER, FAX, AND SCANNING SYSTEM SPECIFICATIONS:

- AUTOMATIC DOCUMENT FEEDER WITH 80*SHEET ARDF EQUIPPED TO HANDLE PAPER UP TO AND INCLUDING 11"x17" (ORIGINALS AND COPIES)
- REDUCTION AND ENLARGEMENT FEATURES
- UNLIMITED DUPLEXING FOR ALL SIZE ORIGINALS 8-1/2" x 11" THROUGH 11" x 17"
- MANUAL AND SELECTABLE AUTOMATIC EXPOSURE SETTINGS
- OPERATE ON STANDARD VOLTAGE WITH NO SPECIAL OR DEDICATED LINES
- STAPLER/FINISHER SUPPORT WITH THE FOLLOWING FEATURES:
  - PAPER SIZE SUPPORT FOR 5.5"x8.5" TO 11"x17"/a6 TO a3
  - PAPER WEIGHT SUPPORT FROM 6 TO 42 LB. BOND/ 60 TO 157g/m2
  - STAPLE POSITION 3 POSITIONS (1 STAPLE/2 POSITIONS; 2 STAPLES/1 POSITION)
  - STAPLE CAPACITY - 50 SHTS (8.5"x11") 30 SHTS (8.5"x14" OR LARGER)
- 99 TO 999 SORT CAPABILITY
- PAPER CAPACITY - 500 SHTS x 4 TRAYS, 50 SHT BYPASS TRAY
- PAPER WEIGHT SUPPORT - 20 TO 28 LB. BOND/64 TO 105g/m2 (TRAYS 1,2,3 & 4) /6 TO 44 LB. BOND/52 TO 163g/m2 (BYPASS) 20 TO 28 LB. BOND/64 TO 105g/m2 (DUPLEX)
- ENERGY STAR COMPLIANT
- NETWORK PRINTER CAPABILITY WITH 10BASET/100BASETX
- NETWORK CARD
- PRINT SPEED 35 PPM
- NETWORK PROTOCOL SUPPORT FOR TCP/IP
- NETWORK OPERATING SYSTEM SUPPORT FOR WINDOWS 2008
- CLIENT PRINT DRIVER SUPPORT FOR WINDOWS XP/VISTA (BOTH pcl/ps DRIVERS)
- MINIMUM PRINT RESOLUTION OF 600 X 600 DPI
- SECURE PRINTING WITH PASSWORD OR PIN
- NETWORK SCANNING THAT SUPPORTS THE FOLLOWING:
  - SCAN SPEED 52 IPM (@200 DPI)
  - SCAN AREA UP TO 11" X 17"
  - GRAYSCALE 256 LEVELS (COLOR OPTIONAL)
  - SCANNING RESOLUTION - 600 DPI
  - SCANNING PROTOCOL SUPPORT - TCP/IP, SMTP, SMB, FTP, POP3, NCP
  - SCANNING SUPPORT FOR SCAN-TO-EMAIL, HDD, FOLDER, URL, AND TWAIN
  - FILE FORMATS - SINGLE PAGE TIFF, JPEG, PDF, MULTI- PAGE TIFF, PDF
  - ADDRESS BOOK SUPPORT FOR MULTIPLE ITEMS
  - OCR SOFTWARE THAT SUPPORTS TIFF, PDF, MULTI- PAGE TIFF, AND MULTI-PAGE PDF
  - OCR SOFTWARE MUST SUPPORT BATCH WORKFLOW PROCESSING OF DOCUMENTS
- MINIMUM SHARED MEMORY CAPACITY FOR ALL OPTIONS - 384 MB HARD DISK DRIVE; 40 GB DRIVE FOR INTERNAL STORAGE AND NETWORK SCANNING
- ANALOG FAX SUPPORT FOR PSTN, PBX THAT SUPPORTS THE FOLLOWING:
  - RESOLUTION - 200 X 200//00 DPI 400 X 400 DPI (OPTIONAL)
  - 33.6 KBPS WITH AUTO FALLBACK
  - ADDRESS BOOK AND AUTO-DIAL NUMBER STORAGE

ODOT CURRENTLY HAS A FIELD OFFICE LOCATION AT 3021 HARDING HWY, LIMA, OH 45807 FOR PROJECT 12-0027. IT IS ODOT'S DESIRE TO REMAIN AT THIS LOCATION AND UTILIZE THIS FIELD OFFICE THROUGHOUT THE LIFE OF THIS PROJECT. CONTACT THE DISTRICT CONSTRUCTION OFFICE FOR PROPERTY OWNER CONTACT INFORMATION.

THE FOLLOWING QUANTITIY HAS BEEN CARRIED TO THE GENERAL SUMMARY:

ITEM 619 - FIELD OFFICE, TYPE C, AS PER PLAN [24] MONTH

CALCULATED SJG CHECKED EJC

GENERAL NOTES

ALL-75-5.53

37A
1224

\\DOTFS101\L_Drive\Pdf\76691\Final Cadd Files\Projects\ALL\76691\roadway\sheets\76691GN013.dgn 11-DEC-2012 10:37AM jclark1

REVIEW OF DRAINAGE FACILITIES

BEFORE ANY WORK IS STARTED ON THE PROJECT AND AGAIN BEFORE FINAL ACCEPTANCE BY THE STATE, REPRESENTATIVES OF THE STATE AND THE CONTRACTOR, ALONG WITH LOCAL REPRESENTATIVES, SHALL MAKE AN INSPECTION OF ALL EXISTING SEWERS WHICH ARE TO REMAIN IN SERVICE AND WHICH MAY BE AFFECTED BY THE WORK. THE CONDITION OF THE EXISTING CONDUITS AND THEIR APPURTENANCE SHALL BE DETERMINED FROM FIELD OBSERVATIONS. RECORDS OF THE INSPECTION SHALL BE KEPT IN WRITING BY THE STATE.

ALL NEW CONDUITS, INLETS, CATCH BASINS, AND MANHOLES CONSTRUCTED AS A PART OF THE PROJECT SHALL BE FREE OF ALL FOREIGN MATTER AND IN A CLEAN CONDITION BEFORE THE PROJECT WILL BE ACCEPTED BY THE STATE.

ALL EXISTING SEWERS INSPECTED INITIALLY BY THE ABOVE MENTIONED PARTIES SHALL BE MAINTAINED AND LEFT IN A CONDITION REASONABLY COMPARABLE TO THAT DETERMINED BY THE ORIGINAL INSPECTION. ANY CHANGE IN THE CONDITION RESULTING FROM THE CONTRACTOR'S OPERATIONS SHALL BE CORRECTED BY THE CONTRACTOR TO THE SATISFACTION OF THE ENGINEER.

PAYMENT FOR ALL OPERATIONS DESCRIBED ABOVE SHALL BE INCLUDED IN THE CONTRACT PRICE FOR THE PERTINENT 603 CONDUIT ITEMS.

UNRECORDED STORM WATER DRAINAGE

FURNISH A CONTINUANCE FOR ALL UNRECORDED STORM WATER DRAINAGE, SUCH AS ROOF DRAINS, FOOTER DRAINS, OR YARD DRAINS, DISTURBED BY THE WORK. FURNISH EITHER AN OPEN CONTINUANCE OR AN UNOBSTRUCTED CONTINUANCE BY CONNECTING A CONDUIT THROUGH THE CURB OR INTO A DRAINAGE STRUCTURE. THE LOCATION, TYPE, SIZE AND GRADE OF THE NEEDED CONDUIT TO REPLACE OR EXTEND AN EXISTING DRAIN WILL BE DETERMINED BY THE ENGINEER. ALL SUCH CONTINUANCE REQUIRES A RIGHT OF WAY USE PERMIT.

THE FOLLOWING CONDUIT TYPES MAY BE USED: 707.33, 707.41 NON-PERFORATED, 707.42, 707.43, 707.45, 707.46, 707.47, 707.51, 707.52 SDR35.

THE FOLLOWING ESTIMATED QUANTITIES HAVE BEEN INCLUDED IN THE GENERAL SUMMARY FOR USE AS DIRECTED BY THE ENGINEER FOR THE WORK NOTED ABOVE:

ITEM 603, 6 " CONDUIT, TYPE B, FOR DRAINAGE CONNECTION 200 FT.

ITEM 603, 8 " CONDUIT, TYPE B, FOR DRAINAGE CONNECTION 300 FT.

ITEM 603, 4 " CONDUIT, TYPE C, FOR DRAINAGE CONNECTION 200 FT.

ITEM 603, 6 " CONDUIT, TYPE C, FOR DRAINAGE CONNECTION 200 FT.

ITEM 603, 12 " CONDUIT, TYPE C, FOR DRAINAGE CONNECTION 200 FT.

ITEM 603, 6 " CONDUIT, TYPE E, FOR DRAINAGE CONNECTION 200 FT.

ITEM 603, 6 " CONDUIT, TYPE F, FOR DRAINAGE CONNECTION 200 FT.

UNRECORDED ACTIVE SANITARY SEWER CONNECTIONS

FURNISH A CONTINUANCE FOR ALL UNRECORDED ACTIVE SANITARY SEWER CONNECTIONS SUCH AS SANITARY, WASTEWATER, CURTAIN/GRADIENT DRAINS, AND FOUNDATION FLOOR DRAINS DISTURBED BY THE WORK. FURNISH AN UNOBSTRUCTED CONTINUANCE OF THE UNRECORDED ACTIVE SANITARY SEWER CONNECTIONS TO THE SATISFACTION OF THE ENGINEER. ALL SUCH CONTINUANCE REQUIRES A RIGHT OF WAY USE PERMIT. ALL SANITARY AND SANITARY WASTEWATER CONTINUANCE MAY ALSO REQUIRE A NPDES PERMIT FROM THE OHIO ENVIRONMENTAL PROTECTION AGENCY. REPORT ALL CONTINUANCE TO THE LOCAL HEALTH DEPARTMENT.

THE FOLLOWING CONDUIT TYPES MAY BE USED: 707.42, 707.43, 707.44, 707.45, 707.46, 707.47, 707.51, 707.52 SDR35, 706.01, 706.02, OR 706.08 WITH JOINTS AS PER 706.11 OR 706.12.

THE FOLLOWING ESTIMATED QUANTITIES HAVE BEEN INCLUDED IN THE GENERAL SUMMARY FOR USE AS DIRECTED BY THE ENGINEER FOR THE WORK NOTED ABOVE:

ITEM 603, 6 " CONDUIT, TYPE B, FOR SANITARY	200 FT.
ITEM 603, 6 " CONDUIT, TYPE C, FOR SANITARY	200 FT.
ITEM 603, 8 " CONDUIT, TYPE B, FOR SANITARY	100 FT.
ITEM 603, 8 " CONDUIT, TYPE C, FOR SANITARY	100 FT.

UNRECORDED UNTREATED NON-STORMWATER DRAINAGE

FURNISH NO CONTINUANCE FOR ANY UNRECORDED UNTREATED NON-STORMWATER DRAINAGE SUCH AS UNTREATED SEPTIC, UNTREATED WASTEWATER, UNTREATED CURTAIN/GRADIENT DRAINS, AND UNTREATED FOUNDATION FLOOR DRAINS DISTURBED BY THE WORK. PLUG ANY UNRECORDED UNTREATED NON-STORMWATER DRAINAGE WITH CLASS C CONCRETE AT THE RIGHT OF WAY LINE. PAYMENT FOR PLUGGING SHALL BE INCLUDED IN THE CONTRACT PRICE FOR THE PERTINENT 202 OR 203 ITEM.

EXISTING UNDERDRAINS

PROVIDE UNOBSTRUCTED OUTLETS FOR ALL EXISTING UNDERDRAINS ENCOUNTERED DURING CONSTRUCTION.

PROVIDE AN OUTLET PER STANDARD CONSTRUCTION DRAWING DM-1.1 FOR ALL UNDERDRAINS THAT OUTLET TO A SLOPE.

UNDERDRAINS THAT CAN BE CONNECTED TO THE NEW OR EXISTING UNDERDRAINS AT THE END OF THE PROJECT LIMITS AS WELL AS ALL NECESSARY BENDS OR BRANCHES REQUIRED FOR CONNECTION ARE INCLUDED IN THE BASIS OF PAYMENT FOR UNCLASSIFIED PIPE UNDERDRAINS.

THE FOLLOWING ESTIMATED QUANTITIES HAVE BEEN INCLUDED IN THE GENERAL SUMMARY FOR THE WORK NOTED ABOVE:

ITEM 601, TIED CONCRETE BLOCK MAT, TYPE 1 12 SQ. YD.

ITEM 603, 6 IN. CONDUIT, TYPE F 360 FT.

ITEM 604, PRECAST REINFORCED CONCRETE OUTLET 6 EACH

ITEM 605, 6 IN. UNCLASSIFIED PIPE UNDERDRAINS 400 FT.

ITEM 603 - CONDUIT BORED OR JACKED

WHERE IT IS SPECIFIED THAT A CONDUIT BE INSTALLED BY THE METHOD OF BORING OR JACKING, NO TRENCH EXCAVATION SHALL BE CLOSER THAN 30 FEET ALONG I-75 AND 17 FEET AT ALL OTHER LOCATIONS TO THE (EDGE OF PAVEMENT) (NEAREST RAIL). PROVIDE A 0.50 INCH UNGALVANIZED CASING PIPE CONFORMING TO 748.06 THAT HAS JOINTS WITH A CIRCUMFERENCIAL FULLY PENETRATING B-U4B WELD THAT IS PERFORMED BY AN ODOT APPROVED FIELD WELDER. THE INSTALLED CASING PIPE IS THE STORM WATER CONVEYANCE CARRIER UNLESS OTHERWISE SPECIFIED IN THE PLANS. HYDROSTATIC TESTING IS NOT REQUIRED FOR THE CASING PIPE.

ITEM SPECIAL - FILL AND PLUG EXISTING CONDUIT

THIS ITEM SHALL CONSIST OF THE CONSTRUCTION OF BULKHEADS IN AN EXISTING CONDUIT AND FILLING THE AREA THUS SEALED OFF WITH ITEM 613, SAND OR OTHER MATERIAL APPROVED BY THE ENGINEER.

BULKHEADS SHALL BE LOCATED AT THE LIMITS OF THE AREA TO BE FILLED AS INDICATED ON THE PLANS. THE BULKHEADS SHALL CONSIST OF BRICK OR CONCRETE MASONRY WITH A MINIMUM THICKNESS OF 12 INCHES.

THE FILL MATERIAL SHALL BE PUMPED INTO PLACE, OR PLACED BY OTHER MEANS APPROVED BY THE ENGINEER, SO THAT, AFTER SETTLEMENT, AT LEAST 90 PERCENT OF THE CROSS-SECTIONAL AREA OF THE CONDUIT, FOR ITS ENTIRE LENGTH, SHALL BE FILLED. THE LENGTH OF FILLED AND PLUGGED CONDUIT TO BE PAID FOR SHALL BE THE ACTUAL NUMBER OF FEET (MEASURED ALONG THE CENTERLINE OF EACH CONDUIT FROM OUTER FACE TO OUTER FACE OF BULKHEADS) FILLED AND PLUGGED AS DESCRIBED ABOVE.

IN LIEU OF FILLING AND PLUGGING THE EXISTING CONDUIT, THE PIPE MAY BE CRUSHED AND BACKFILLED IN ACCORDANCE WITH THE PROVISIONS OF 203, OR IT MAY BE REMOVED. THE LENGTH, MEASURED AS PROVIDED ABOVE, SHALL BE PAID FOR AT THE CONTRACT PRICE PER FOOT FOR, ITEM SPECIAL, FILL AND PLUG EXISTING CONDUIT.

ITEM SPECIAL - PIPE CLEANOUT

THIS WORK SHALL CONSIST OF REMOVING SEDIMENT AND DEBRIS FROM THE EXISTING DRAINAGE CONDUITS SPECIFIED IN THE PLANS. ALL MATERIAL REMOVED SHALL BE DISPOSED OF AS PER 105.16 AND 105.17. ALL SEWERS SHALL BE CLEANED OUT TO THE SATISFACTION OF THE ENGINEER.

CLEANOUT OF THE PIPE SHALL BE PAID FOR AT THE UNIT PRICE BID FOR ITEM SPECIAL - PIPE CLEANOUT. THIS PRICE SHALL INCLUDE THE COST FOR MATERIAL, EQUIPMENT, LABOR, AND ALL INCIDENTALS REQUIRED TO COMPLETE THE CLEANOUT.

THE FOLLOWING ESTIMATED QUANTITIES HAVE BEEN INCLUDED IN THE GENERAL SUMMARY FOR THE ABOVE NOTED WORK:

SPECIAL, PIPE CLEANOUT 127 FT. (I-75 STA. 342+30.20)

CROSSINGS AND CONNECTIONS TO EXISTING PIPES AND UTILITIES

WHERE PLANS PROVIDE FOR A PROPOSED CONDUIT TO BE CONNECTED TO, OR CROSS OVER OR UNDER AN EXISTING SEWER OR UNDERGROUND UTILITY, THE CONTRACTOR SHALL LOCATE THE EXISTING PIPES OR UTILITIES BOTH AS TO LINE AND GRADE BEFORE STARTING TO LAY THE PROPOSED CONDUIT.

IF IT IS DETERMINED THAT THE ELEVATION OF THE EXISTING CONDUIT, OR EXISTING APPURTENANCE TO BE CONNECTED, DIFFERS FROM THE PLAN ELEVATION OR RESULTS IN A CHANGE IN THE PLAN CONDUIT SLOPE, THE ENGINEER SHALL BE NOTIFIED BEFORE STARTING CONSTRUCTION OF ANY PORTION OF THE PROPOSED CONDUIT WHICH WILL BE AFFECTED BY THE VARIANCE IN THE EXISTING ELEVATIONS.

IF IT IS DETERMINED THAT THE PROPOSED CONDUIT WILL INTERSECT AN EXISTING SEWER OR UNDERGROUND UTILITY IF CONSTRUCTED AS SHOWN ON THE PLAN, THE ENGINEER SHALL BE NOTIFIED BEFORE STARTING CONSTRUCTION OF ANY PORTION OF THE PROPOSED CONDUIT WHICH WOULD BE AFFECTED BY THE INTERFERENCE WITH AN EXISTING FACILITY.

PAYMENT FOR ALL THE OPERATIONS DESCRIBED ABOVE SHALL BE INCLUDED IN THE CONTRACT PRICE FOR THE PERTINENT 603 CONDUIT ITEM.

POST CONSTRUCTION STORM WATER TREATMENT

THIS PLAN UTILIZES STRUCTURAL BEST MANAGEMENT PRACTICES (BMP'S) FOR POST CONSTRUCTION STORM WATER TREATMENT.

INFILTRATION TRENCH (OR BASIN)

THIS PLAN UTILIZES INFILTRATION FOR POST CONSTRUCTION STORM WATER TREATMENT. CONSTRUCT THE COMPLETED INFILTRATION TRENCH(ES) (AND OR BASIN(S)) AFTER ALL CONTRIBUTING DRAINAGE AREAS ARE STABILIZED AS SHOWN IN THE CONTRACT PLANS AND TO THE SATISFACTION OF THE ENGINEER. DO NOT USE INFILTRATION DEVICES AS TEMPORARY SEDIMENT CONTROL FACILITIES DURING CONSTRUCTION. DO NOT OPERATE HEAVY EQUIPMENT WITHIN THE PERIMETER OF AN INFILTRATION DEVICE DURING EXCAVATION OR BACKFILLING OF THE FACILITY.

FARM DRAINS

ALL FARM DRAINS, WHICH ARE ENCOUNTERED DURING CONSTRUCTION, SHALL BE PROVIDED WITH UNOBSTRUCTED OUTLETS. EXISTING COLLECTORS WHICH ARE LOCATED BELOW THE ROADWAY DITCH ELEVATIONS, AND WHICH CROSS THE ROADWAY, SHALL BE REPLACED WITHIN THE (RIGHT OF WAY) (CONSTRUCTION) LIMITS BY ITEM 603 CONDUIT, TYPE B, ONE COMMERCIAL SIZE LARGER THAN THE EXISTING CONDUIT.

EXISTING COLLECTORS AND ISOLATED FARM DRAINS, WHICH ARE ENCOUNTERED ABOVE THE ELEVATION OF ROADWAY DITCHES, SHALL BE OUTLETTED INTO THE ROADWAY DITCH BY 603 TYPE F CONDUIT. THE OPTIMUM OUTLET ELEVATION SHALL BE ONE FOOT ABOVE THE FLOWLINE ELEVATION OF THE DITCH. LATERAL FIELD TILES WHICH CROSS THE ROADWAY SHALL BE INTERCEPTED BY 603, TYPE E CONDUIT, AND CARRIED IN A LONGITUDINAL DIRECTION TO AN ADEQUATE OUTLET OR ROADWAY CROSSING.

THE LOCATION, TYPE, SIZE AND GRADE OF REPLACEMENTS SHALL BE DETERMINED BY THE ENGINEER AND PAYMENT SHALL BE MADE ON FINAL MEASUREMENTS.

EROSION CONTROL PADS AND ANIMAL GUARDS SHALL BE PROVIDED AT THE OUTLET END OF ALL FARM DRAINS AS PER STANDARD CONSTRUCTION DRAWING DM-1.1, EXCEPT WHEN THEY OUTLET INTO A DRAINAGE STRUCTURE. PAYMENT FOR THE EROSION CONTROL PADS AND ANIMAL GUARDS AND ANY NECESSARY BENDS OR BRANCHES SHALL BE INCLUDED FOR PAYMENT IN THE PERTINENT CONDUIT ITEMS.

THE FOLLOWING ESTIMATED QUANTITIES HAVE BEEN INCLUDED IN THE GENERAL SUMMARY FOR THE WORK NOTED ABOVE:

ITEM 603, 6 " CONDUIT, TYPE B 500 FT.

ITEM 603, 6 " CONDUIT, TYPE E 1000 FT.

ITEM 603, 6 " CONDUIT, TYPE F 500 FT.

ITEM 601, ROCK CHANNEL PROTECTION, TYPE C WITH FILTER 10 CU. YD.

TEMPORARY DRAINAGE ITEMS

TEMPORARY DRAINAGE ITEMS LABELED ON THE MAINTENANCE OF TRAFFIC PLAN ARE ITEMIZED ON THE MOT PLANS. PAYMENT FOR THE TEMPORARY DRAINAGE ITEMS ARE INCLUDED IN ITEM 614 LUMP SUM.

ITEM 511 WINGWALLS, HEADWALLS, AND FOOTERS FOR 603 ITEMS

FOR ITEMS 706.05, 706.051, 706.052 AND 706.053 WITH A CAST-IN-PLACE WINGWALL, HEADWALL, OR FOOTER, A PRECAST ALTERNATIVE MAY BE FURNISHED PER 602.03. THE PRECAST ALTERNATIVE WILL MEET THE CAST-IN-PLACE STRUCTURAL DESIGN LOADINGS, DESIGN HEIGHT, AND DESIGN LENGTH DIMENSIONS.

FULL COMPENSATION FOR THE PRECAST WINGWALL, HEADWALL, OR FOOTER IS THE NUMBER OF CUBIC YARDS OF ITEM 511 OR SUPPLEMENTAL SPECIFICATION 898, AND POUNDS OF ITEM 509 FOR THE CORRESPONDING CAST-IN-PLACE STRUCTURE.

CALCULATED SJG CHECKED EJC

GENERAL NOTES

ALL-75-5.53

J:\Projects\ALL\76691\roadway\sheets\76691GN002.dgn 11-SEP-2012 8:47PM reddenj

CALCULATED SJG CHECKED EJC

GENERAL NOTES

ITEM 606 - GUARDRAIL

LOCATING THE PROPOSED GUARDRAIL AT THE FACE OF CURB WILL RESULT IN POST CONFLICTS WITH THE PROPOSED CATCH BASIN STRUCTURES IN SEVERAL LOCATIONS. WHERE THESE CONFLICTS OCCUR, THE CONTRACTOR IS TO USE DOUBLE BLOCKOUT PER STANDARD CONSTRUCTION DRAWING GR-2.3, SECTION C-C ALONG I-75 TO MAINTAIN CLEARANCE BETWEEN THE POSTS AND THE BACK OF THE STRUCTURE. THE HARDWARE, LABOR, EQUIPMENT, ETC., TO CONSTRUCT THE GUARDRAIL AS SPECIFIED SHALL BE INCLUDED IN THIS ITEM 606 FOR PAYMENT.

ITEM 606 - ANCHOR ASSEMBLY, TYPE E

THIS ITEM SHALL CONSIST OF FURNISHING AND INSTALLING ANY OF THE GUARDRAIL END TERMINALS AS LISTED ON ROADWAY ENGINEERING'S WEB PAGE UNDER ROADSIDE SAFETY DEVICES FOR APPROVED GUARDRAIL END TREATMENTS. INSTALLATION SHALL BE AT THE LOCATIONS SPECIFIED IN THE PLANS, IN ACCORDANCE WITH THE MANUFACTURER'S SPECIFICATIONS.

THE FACE OF THE TYPE E IMPACT HEAD SHALL BE COVERED WITH A SHEET OF TYPE G REFLECTIVE SHEETING, PER CMS 730.19.

REFER TO THE MANUFACTURER'S INSTRUCTIONS REGARDING THE INSTALLATION OF, AND THE GRADING AROUND THE FOUNDATION TUBES AND GROUND STRUT. THE TOP OF ANY FOUNDATION TUBE SHOULD BE LESS THAN 4 INCHES ABOVE THE GROUND. THE PLACEMENT OF THE FOUNDATION TUBES SHOULD BE AN APPROPRIATE DEPTH BELOW THE LEVEL LINE IN ORDER TO MAINTAIN THE FINISHED GUARDRAIL HEIGHT OF 27.75 INCHES FROM THE EDGE OF THE SHOULDER.

ON-SITE GRADING IS REQUIRED IF THE TOP OF THE FOUNDATION TUBES OR TOP OF THE GROUND STRUT DOES PROJECT MORE THAN 4 INCHES ABOVE THE GROUND LINE.

PAYMENT FOR THE ABOVE WORK SHALL BE MADE AT THE UNIT PRICE BID FOR ITEM 606, ANCHOR ASSEMBLY, TYPE E, EACH, AND SHALL INCLUDE ALL LABOR, TOOLS, EQUIPMENT AND MATERIALS NECESSARY TO CONSTRUCT A COMPLETE AND FUNCTIONAL ANCHOR ASSEMBLY SYSTEM, INCLUDING ALL RELATED TRANSITIONS, REFLECTIVE SHEETING, HARDWARE, GRADING, EMBANKMENT AND EXCAVATION NOT SEPARATELY SPECIFIED, AS REQUIRED BY THE MANUFACTURER.

ITEM 606 - IMPACT ATTENUATOR, TYPE 1 (UNIDIRECTIONAL OR BIDIRECTIONAL)

THIS ITEM SHALL CONSIST OF FURNISHING AND INSTALLING ANY ONE OF THE TYPE 1 IMPACT ATTENUATORS AS LISTED ON THE OFFICE OF ROADWAY ENGINEERING'S WEB PAGE. INSTALLATION SHALL BE AT THE LOCATIONS SPECIFIED IN THE PLANS, IN ACCORDANCE WITH THE MANUFACTURER'S SPECIFICATIONS.

THE FACE OF THE TYPE 1 IMPACT HEAD SHALL BE COVERED WITH A SHEET OF TYPE G REFLECTIVE SHEETING, PER CMS 730.19. PAYMENT FOR THE ABOVE WORK SHALL BE MADE AT THE UNIT PRICE BID FOR ITEM 606, IMPACT ATTENUATOR, TYPE 1 [(UNIDIRECTIONAL OR BIDIRECTIONAL)], EACH, AND SHALL INCLUDE ALL LABOR, TOOLS, EQUIPMENT AND MATERIALS NECESSARY TO CONSTRUCT A COMPLETE AND FUNCTIONAL IMPACT ATTENUATOR SYSTEM, INCLUDING ALL RELATED TRANSITIONS, HARDWARE, REFLECTIVE SHEETING AND GRADING, NOT SEPARATELY SPECIFIED, AS REQUIRED BY THE MANUFACTURER.

ITEM 606 - CABLE GUARDRAIL

THIS ITEM SHALL CONSIST OF FURNISHING AND INSTALLING ANY ONE OF THE HIGH TENSION FOUR CABLE GUARDRAIL SYSTEMS AS LISTED ON THE OFFICE OF ROADWAY ENGINEERING'S WEB PAGE. PAYMENT FOR THE ABOVE WORK SHALL BE MADE AT THE UNIT PRICE BID FOR ITEM 606, GUARDRAIL, MISC., TENSIONED CABLE WITH CONCRETE FOUNDATION LINE POSTS (SOCKETED), AND ITEM 606, GUARDRAIL, MISC. TENSIONED CABLE ANCHOR TERMININAL AND SHALL INCLUDE ALL LABOR, TOOLS, EQUIPMENT AND MATERIALS NECESSARY TO CONSTRUCT A COMPLETE AND FUNCTIONAL HIGH TENSION CABLE GUARDRAIL SYSTEM NOT SEPARATELY SPECIFIED, AS REQUIRED BY THE MANUFACTURER.

INSTALLATION SHALL BE AT THE LOCATIONS SPECIFIED IN THE PLANS, IN ACCORDANCE WITH THE MANUFACTURER'S SPECIFICATIONS.

SYSTEMS SHALL HAVE A MAXIMUM DEFLECTION OF 8 FEET AND THE MAXIMUM LONGITUDINAL DISTANCE BETWEEN POSTS SHALL BE 15 FEET.

INSTALLATION WILL BE A FOUR CABLE HIGH TENSION SYSTEM INSTALLED IN SOCKETED POSTS FOUNDATION WITH A FOUR FOOT WIDE "MOW STRIP".

CONTRACTOR SHALL PROVIDE DELINEATORS ON THE POSTS AT A MINIMUM INTERVAL OF 100 FEET AND ON ALL ANCHOR TERMINALS.

TRANSITIONS TO W-BEAM GUARDRAIL ARE NOT ALLOWED.

REFER TO MANUFACURER FOR MAXIMUM OFFSET FROM BREAK POINT.

TORPEDO OR BULLET SPLICES ARE NOT ALLOWED. ALL CABLE SPLICES SHALL BE A SWAGED OR OPEN BODY DESIGN THAT ALLOWS FOR ANNUAL INSPECTION BETWEEN THE WEDGE AND STRANDS OF CABLE.

POSTS ARE SET IN SOCKETED CONCRETE FOUNDATIONS AND SHALL NOT BE PERMANENTLY INSTALLED UNTIL THEIR RESPECTIVE RUNS OF TENSIONED CABLE GUARDRAIL ARE READY FOR FINAL CONNECTION TO THE END TERMINAL ASSEMBLY. THE CONTRACTOR SHALL REPLACE ANY POSTS DAMAGED DURING INSTALLATION AS DETERMINED BY THE ENGINEER AT NO ADDITIONAL COST TO THE STATE.

ITEM 690 SPECIAL - MISC.: MOW STRIP

THE CONTRACTOR HAS THE OPTION OF USING A 4 FOOT WIDE BY 4 INCH DEPTH MOW STRIP WITH MATERIALS CONFORMING TO ITEM 608 - CONCRETE WALK IN LIEU OF THE MOW STRIP SHOWN IN THE TYPICAL SECTIONS ON SHEET 20.

THE MOW STRIP SHALL BE PLACED ON COMPACTED EARTH AND CONSTRUCTED USING CLASS C CONCRETE WITH A CURING COMPOUND MEETING THE SPECIFICATIONS OF 705.07 OF THE CMS. THE MOW STRIP SHALL BE INTEGRAL TO THE SOCKETED CONCRETE FOUNDATION.

THE MOW STRIP SHALL HAVE A TRANSVERSE JOINT EVERY EIGHT FEET AND AN EXPANSION JOINT EVERY 100 FEET. THE JOINTS AND MATERIALS TO CONSTRUCT THE JOINTS SHALL CONFORM TO 608.03 (C) OF THE CMS.

IF MATERIAL FROM THE EXCAVATION OF THE MOW STRIP AND THE SOCKETED CONCRETE FOUNDATION IS WASTED ADJACENT TO THE MOW STRIP THE AREA SHALL BE SEEDED AND MULCHED TO THE SPECIFICATIONS OF ITEM 659 IN THE CMS. PAYMENT FOR THIS WORK IS INCLUDED WITH THE UNIT BID PRICE FOR ITEM 690 SPECIAL - MISC.: MOW STRIP.

ALL MATERIAL, LABOR AND EQUIPMENT TO CONSTRUCT THE MOW STRIP SHALL BE PAID FOR UNDER ITEM 690 SPECIAL - MISC.: MOW STRIP.

CONNECTION BETWEEN EXISTING AND PROPOSED GUARDRAIL

WHEN IT IS NECESSARY TO SPLICE PROPOSED GUARDRAIL TO EXISTING GUARDRAIL, ONLY THE EXISTING GUARDRAIL SHALL BE CUT, DRILLED, OR PUNCHED. THE CONNECTION SHALL BE MADE USING A "W-BEAM RAIL SPLICE" AS SHOWN IN AASHTO M 180. PAYMENT SHALL BE INCLUDED IN THE CONTRACT PRICE FOR THE RESPECTIVE GUARDRAIL ITEMS.

PAVEMENT

MEDIAN AND/OR CURBING ON APPROACH SLABS

WITHIN THE LIMITS OF THE APPROACH SLAB, TRANSITION THE SHAPE OF THE MEDIAN AND/OR CURBING ON APPROACH SLABS FROM THE STANDARD SECTION ON THE APPROACHES TO THE SECTION USED ON THE BRIDGE.

PART-WIDTH CONSTRUCTION

BECAUSE OF THE NECESSITY TO BUILD PORTIONS OF THIS PROJECT UNDER TRAFFIC AND TO CONSTRUCT THE FULL PAVEMENT WIDTH IN STAGES, EXERCISE CARE TO PREVENT THE CONSTRUCTION OF A BUTT JOINT IN THE BASE COURSES. LAP LONGITUDINAL JOINTS AS SHOWN ON STANDARD CONSTRUCTION DRAWING BP-3.1.

CONTRACTION AND/OR EXPANSION JOINTS

ALTHOUGH SPECIFIC LOCATIONS OF CERTAIN CONTRACTION AND EXPANSION JOINTS HAVE BEEN DETAILED ON THIS PLAN, NO WAIVER OF THE SPECIFICATIONS IS INTENDED. IN ALL CASES, THE PROVISION OF EXPANSION JOINTS AT ALL MAJOR STRUCTURES INCLUDING THE MAXIMUM SPACING BETWEEN CONTRACTION JOINTS IS IN ACCORDANCE WITH STANDARD CONSTRUCTION DRAWING BP-2.2 AND THE SPECIFICATIONS.

SURFACE SMOOTHNESS REQUIREMENTS FOR PAVEMENTS

THE REQUIREMENTS OF THE LATEST VERSION OF PROPOSAL NOTE 420 (PN 420) SHALL APPLY ONLY TO INTERSTATE 75.

ITEM 204 - PROOF ROLLING

A QUANTITY IS PROVIDED IN THE GENERAL SUMMARY TO ADDRESS LOCATIONS REQUIRING PROOF ROLLING. SEE TYPICAL SECTION SHEETS AND PAVEMENT CALCULATIONS FOR ADDITIONAL INFORMATION.

ALL-75-5.53

J:\Projects\ALL\76691\roadway\sheets\76691GN003.dgn 14-SEP-2012 2:40PM reddenj

ADDITIONAL SOIL INFORMATION

THE SOIL PROFILE AND/OR STRUCTURE FOUNDATION INVESTIGATIONS SHEETS CONTAIN ALL AVAILABLE SOIL AND BEDROCK INFORMATION WHICH CAN BE CONVENIENTLY SHOWN. ADDITIONAL SUBSURFACE INVESTIGATION INFORMATION, INCLUDING THE MULTIPLE SUBSURFACE INVESTIGATION REPORTS PREPARED FOR THIS PROJECT, IS AVAILABLE FROM THE ODOT DISTRICT 1 OFFICE IN 1885 N. MCCULLOUGH ST., LIMA, OHIO 45801.

SPECIAL BENCHING

ACCORDING TO ODOT GEOTECHNICAL BULLETIN GB2 (DEC. 20, 2010), SPECIAL BENCHING IS RECOMMENDED WHEN THERE WILL BE A STABILITY PROBLEM AND/OR WEAK SOILS IN AN EXISTING SLOPE. BASED ON THE STABILITY ANALYSES PERFORMED FOR THIS PROJECT, NONE OF THE SLOPES EVALUATED WILL REQUIRE SPECIAL BENCHING. HOWEVER, SPECIAL BENCHING WILL GENERALLY BE NECESSARY AT LOCATIONS OF THIN "SLIVER" FILLS OF THREE FEET OR LESS. AT THESE LOCATIONS, THE EXISTING SLOPE IS TO BE EXCAVATED USING BENCHES WITH A MINIMUM WIDTH OF 8 FEET AND 1 (VERTICAL) TO 1 (HORIZONTAL) BACKSLOPES. SPECIAL BENCHING HAS BEEN SHOWN ON THE CROSS SECTIONS IN THE FOLLOWING AREAS:

STA. 465+50.00 TO STA. 467+00.00 (I-75)
STA. 370+50.00 TO STA. 371+25.00 (S.R. 309 RAMP C)
STA. 377+75.00 TO STA. 378+25.00 (S.R. 309 RAMP E)

BENCHING OF FOUNDATION SLOPES

ALTHOUGH CROSS-SECTIONS INDICATE SPECIFIC DIMENSIONS FOR PROPOSED BENCHING OF THE EMBANKMENT FOUNDATIONS IN CERTAIN AREAS, NO WAIVER OF THE SPECIFICATIONS IS INTENDED. BENCH ALL OTHER SLOPED EMBANKMENT AREAS AS SET FORTH IN 203.05. NO ADDITIONAL PAYMENT WILL BE MADE FOR BENCHING REQUIRED UNDER THE PROVISIONS OF 203.05.

ITEM 204 - SUBGRADE COMPACTION AND PROOF ROLLING

CONSTRUCT THE SUBGRADE AS FOLLOWS AND IN THE FOLLOWING SEQUENCE FOR BRYN MAWR, LOST CREEK BLVD, TURNER AVE., AND LENORE ST.:

1. SHAPE THE SUBGRADE TO WITHIN 0.2 FEET OF THE PLAN SUBGRADE ELEVATION.

2. EXCAVATE AND REPLACE UNSUITABLE SUBGRADE BEFORE PROOF ROLLING.

   UNSUITABLE SUBGRADE INCLUDES UNSUITABLE SOIL (A-4B, A-2-5, A-5, A-7-5, AND SOIL WITH A LIQUID LIMIT GREATER THAN 65) AND ANY COAL, SHALE, OR ROCK WHICH NEEDS TO BE REMOVED ACCORDING TO 204.05.

   IF THERE IS UNSUITABLE SUBGRADE IN A SHALLOW FILL LOCATION, EXCAVATE AND REPLACE THE UNSUITABLE SUBGRADE BEFORE CONSTRUCTING THE SHALLOW FILL AND SHAPING THE SUBGRADE.

3. COMPACT THE SUBGRADE ACCORDING TO 204.03.

4. THE ENGINEER WILL IDENTIFY THE ACTUAL LIMITS OF EXCAVATION FOR UNSTABLE SUBGRADE BASED ON THE PROOF ROLLING RESULTS AND VISUAL OBSERVATIONS.

   PROOF ROLL THE COMPACTED SUBGRADE ACCORDING TO 204.06

5. EXCAVATE UNSTABLE SUBGRADE AS DIRECTED BY THE ENGINEER AND STABILIZE BY REPLACING WITH THE SPECIFIED MATERIALS ACCORDING TO 204.07. EXCAVATIONS WILL EXTEND 18 INCHES BEYOND THE EDGE OF THE SURFACE OF THE PAVEMENT, PAVED SHOULDERS, OR PAVED MEDIANS.

6. PROOF ROLL THE STABILIZED AREAS ACCORDING TO 204.06 TO VERIFY STABILITY.

7. FINE GRADE THE SUBGRADE TO THE SPECIFIED GRADE.

THE QUANTITIES FOR EXCAVATING THE UNSUITABLE SUBGRADE AND UNSTABLE SUBGRADE ARE BOTH PAID UNDER ITEM 204 EXCAVATION OF SUBGRADE.

THE FOLLOWING QUANTITIES ARE PROVIDED AS DIRECTED BY THE ENGINEER FOR UNSUITABLE SUBGRADE:

ITEM	QUANTITY	UNIT	DESCRIPTION
ITEM 204	520	CU. YD.	EXCAVATION OF SUBGRADE
ITEM 204	1.0	HOUR	PROOF ROLLING

REINFORCED SOIL SLOPES

1.0 DESCRIPTION

THIS WORK CONSISTS OF FURNISHING AND INSTALLING GEOGRID REINFORCEMENT TO THE LINES, GRADES, AND ORIENTATION SHOWN IN THE PLANS, OR AS DIRECTED BY THE ENGINEER.

2.0 MATERIALS

2.1 GEOGRID

FURNISH GEOGRID OF THE TYPE SHOWN IN THE PLANS AND AS DETAILED BELOW. FURNISH GEOGRID THAT CONSISTS OF A REGULAR NETWORK OF INTEGRALLY CONNECTED POLYMER ELEMENTS WITH APERTURE GEOMETRY SUFFICIENT TO PERMIT SIGNIFICANT MECHANICAL INTERLOCK WITH THE SURROUNDING SOIL. THE GEOGRID MUST BE DIMENSIONALLY STABLE AND ABLE TO RETAIN ITS GEOMETRY UNDER CONSTRUCTION STRESSES. FURNISH GEOGRID THAT HAS A HIGH RESISTANCE TO ULTRAVIOLET DEGRADATION AND TO ALL FORMS OF CHEMICAL AND BIOLOGICAL DEGRADATION ENCOUNTERED IN THE SOIL BEING REINFORCED. THE GEOGRID MUST BE RECOMMENDED BY THE MANUFACTURER FOR THE INTENDED USE IN THE REINFORCED SLOPE CONSTRUCTION.

FURNISH GEOGRID THAT MEETS THE FOLLOWING MINIMUM TENSILE PROPERTIES. TEST METHODS WITH THE GRI PREFIX REFER TO STANDARD PRACTICE OF THE GEOSYNTHETIC RESEARCH INSTITUTE. NO PRELOADING IS PERMITTED IN DETERMINATION OF TENSILE STRENGTH.

TABLE 2.1A - GEOGRID STRENGTH

TENSILE STRENGTH	METHOD	Type P1
5% STRAIN (LB/FT) (KN/M)	ASTM D6637	1850 (27)
ULTIMATE (LB/FT) (KN/M)	ASTM D6637	-- --
LONG TERM DESIGN (LB/FT) (KN/M)	(SEE BELOW)	1300 (19)

2.1.1 LONG-TERM DESIGN TENSILE STRENGTH

LONG-TERM DESIGN STRENGTH (T_A) IS DEFINED BY THE EQUATION BELOW. THE CALCULATED VALUE MUST BE GREATER THAN OR EQUAL TO THE CORRESPONDING VALUE IN TABLE 2.1A FOR THE GEOGRID TYPE SPECIFIED BY THE DESIGNER.

$$T_A = \frac{T_{ULT}}{(RF_{CR} \times RF_{ID} \times RF_D \times RF_{JNT})}$$

2.1.2 ULTIMATE TENSILE STRENGTH, T_{ULT}

ULTIMATE TENSILE STRENGTH (AS WELL AS THE TENSILE STRENGTH AT 5% STRAIN) IS THE MINIMUM AVERAGE ROLL VALUE (MARV) AS TESTED PER ASTM D6637. THE MINIMUM AVERAGE ROLL VALUE IS THE AVERAGE VALUE MINUS TWO STANDARD DEVIATIONS.

2.1.3 PARTIAL REDUCTION FACTOR FOR CREEP, RF_{CR}

THIS VALUE IS THE RATIO OF T_{ULT} TO CREEP LIMITED STRENGTH DETERMINED IN ACCORDANCE WITH ASTM D5262 AND EXTRAPOLATED FOR A 75-YEAR DESIGN LIFE PER APPENDIX H OF FHWA PUBLICATION NO. FHWA-NHI-07-092. CREEP PERFORMANCE TESTING AT A DESIGNATED TEMPERATURE IS LIMITED TO ONE ORDER OF MAGNITUDE IN EXTRAPOLATION. ELEVATED TEMPERATURE TESTING, AS WELL AS IN-SITU TEMPERATURE TESTING, ARE NEEDED FOR A MINIMUM OF 10,000 HOURS IN ORDER TO EXTRAPOLATE THE CREEP TEST DATA TO A 75-YEAR DESIGN LIFE. CREEP TESTING WILL BE PERFORMED ON REPRESENTATIVE SAMPLES OF THE PRODUCT AND NOT ON A SINGLE COMPONENT OF GEOGRID. DEFAULT VALUES FOR FS_{CR} WILL NOT BE ACCEPTED. THE MINIMUM VALUE PERMITTED IS 2.00.

2.1.4 PARTIAL REDUCTION FACTOR FOR INSTALLATION DAMAGE, RF_{ID}

THIS VALUE WILL BE DETERMINED FROM INSTALLATION DAMAGE TESTS CONSISTENT WITH ASTM D5818 MODIFIED AS PER FHWA PUBLICATION NO. FHWA-NHI-09-087, CORROSION/DEGRADATION OF SOIL REINFORCEMENTS FOR MECHANICALLY STABILIZED EARTH WALLS AND REINFORCED SOIL SLOPES, SECTION 5.1. THE BACKFILL AND COMPACTION METHODS USED FOR TESTING WILL BE EQUAL TO OR MORE SEVERE THAN THOSE FOR THE PROPOSED CONSTRUCTION. MINIMUM VALUES PERMITTED BASED ON TESTING FOR THE SPECIFIC POLYMER TYPES, ALONG WITH DEFAULT VALUES IF TESTING IS NOT PERFORMED, WILL BE AS INDICATED IN THE FOLLOWING TABLE.

TABLE 2.1B
PARTIAL REDUCTION FACTOR FOR INSTALLATION DAMAGE, RF_{ID}

	EMBANKMENT MAX. PARTICLE SIZE ≤ 3/4"		EMBANKMENT MAX. PARTICLE SIZE > 3/4"	
GEOSYNTHETIC	MIN. VALUE	DEFAULT VALUE	MIN. VALUE	DEFAULT VALUE
HDPE	1.1	1.2	1.2	1.45
COATED PET	1.2	1.4	1.3	2.05
PP	1.1	1.2	1.2	1.45

2.1.5 PARTIAL REDUCTION FACTOR FOR DURABILITY, RF_D

ONLY GEOGRIDS MEETING THE FOLLOWING CRITERIA ARE PERMITTED. FOR COATED 'PET' GEOGRIDS, TESTING BY THE INHERENT VISCOSITY METHOD (ASTM D4603) WITH CORRELATION OR DETERMINATION DIRECTLY USING GEL PERMEATION CHROMATOGRAPHY MUST YIELD A MOLECULAR WEIGHT GREATER THAN 25,000; AND THE CARBOXYL END GROUP NUMBER MUST BE LESS THAN 30 AS DETERMINED BY GRI:GG7. FOR HDPE AND PP GEOGRIDS, TESTING ACCORDING TO ASTM D4355 MUST YIELD A RETAINED STRENGTH OF NOT LESS THAN 70 PERCENT AFTER 500 HOURS.

FOR SPECIFIC GEOGRID TYPES MEETING THESE CRITERIA, THE VALUES INDICATED BELOW WILL BE USED:

HDPE, RETAINED STRENGTH > 90% AT 500 HRS. PER ASTM D4355	1.10
HDPE, RETAINED STRENGTH BETWEEN 70 AND 90% AT 500 HRS. PERASTM D4355	1.40
COATED PET	1.30
PP, RETAINED STRENGTH > 90% AT 500 HRS. PER ASTM D4355	1.10
PP, RETAINED STRENGTH BETWEEN 70 AND 90 % AT 500 HRS. PER ASTM D4355	1.40

2.1.6 PARTIAL REDUCTION FACTOR FOR JOINTS, RF_{JNT}

THIS FACTOR WILL BE APPLIED WHEN SEPARATE LENGTHS OF GEOGRIDS ARE MECHANICALLY CONNECTED. THE VALUE OF RF_{JNT} WILL BE TAKEN AS THE RATIO OF THE UNJOINTED SPECIMEN STRENGTH TO THE JOINED SPECIMEN STRENGTH. TESTING WILL BE CONDUCTED IN ACCORDANCE WITH ASTM D5262 FOR MECHANICALLY CONNECTED JOINTS, WITH SUSTAINED TENSION TESTS LASTING A MINIMUM OF 1,000 HOURS. THE LOADING WILL BE NOT LESS THAN THE LONG-TERM DESIGN TENSILE STRENGTH. DEFAULT VALUES FOR RF_{JNT} WILL NOT BE ACCEPTED. OVERLAP JOINTS IN THE DIRECTION OF THE PRIMARY REINFORCEMENT WILL NOT BE PERMITTED. THE MINIMUM VALUE PERMITTED WILL BE 1.00 IF THERE IS NO REDUCTION IN STRENGTH OF THE JOINED SPECIMEN OR IF NO JOINTS ARE USED.

CALCULATED JMR
CHECKED EJC

GENERAL NOTES

ALL-75-5.53

J:\Projects\ALL\76691\roadway\sheets\76691GN010.dgn 11-SEP-2012 8:47PM redden

2.1.7 CERTIFICATION AND TESTING

SUBMIT CERTIFIED TEST DATA, ACCORDING TO ITEM 101.03, FOR EACH GEOGRID MATERIAL TO BE UTILIZED IN THE REINFORCED SLOPE CONSTRUCTION, MEASURED IN FULL ACCORDANCE WITH THE TEST METHODS AND STANDARDS SPECIFIED, TO COVER EACH SHIPMENT OF MATERIAL. (SEE TABLE 2.1C BELOW FOR A COMPLETE LIST OF THE REQUIRED TEST DATA.) SUBMIT THE PROPOSED GEOGRID AND CERTIFIED TEST DATA AT LEAST 30 DAYS PRIOR TO COMMENCEMENT OF ANY REINFORCED SLOPE WORK. ALLOW 10 WORKING DAYS FOR DEPARTMENT ACCEPTANCE. DO NOT BEGIN WORK UNTIL THE DEPARTMENT ACCEPTS THE PROPOSED MATERIAL FOR USE IN THE REINFORCED SLOPE CONSTRUCTION. UPON REQUEST OF THE ENGINEER, PROVIDE DOCUMENTED TEST RESULTS FROM AN INDEPENDENT TESTING LABORATORY FOR ANY OF THE CRITERIA SPECIFIED. NO EXTRA PAYMENT WILL BE MADE FOR THIS TESTING. THE DEPARTMENT WILL ACCEPT TEST DATA FROM THE NATIONAL TRANSPORTATION PRODUCT EVALUATION PROGRAM (NTPEP) AS CERTIFIED TEST DATA.

2.2 EMBANKMENT SOIL

FURNISH EMBANKMENT SOIL TO BE USED IN CONJUNCTION WITH THE GEOGRID REINFORCEMENT THAT IS NATURAL SOIL AS DEFINED IN 203.02.I AND 703.16.A, OR NATURAL GRANULAR MATERIAL AS DEFINED IN 203.02.H AND 703.16.B. REJECT SOIL WITH AN ORGANIC CONTENT, AS DETERMINED BY AASHTO T 267, THAT IS GREATER THAN 2.0%, OR WITH A PLASTICITY INDEX, AS DETERMINED BY AASHTO T 90, THAT IS GREATER THAN 20.

FURNISH EMBANKMENT SOIL THAT HAS A pH IN THE RANGE OF 3 TO 9. TESTING OF THE EMBANKMENT MATERIAL WITH RESPECT TO pH MAY NOT BE NECESSARY. AT THE ENGINEER'S DISCRETION, WHEN SOILS POTENTIALLY CORROSIVE TO THE GEOGRID ARE SUSPECTED, THE ENGINEER WILL PERFORM THE pH TESTING IN ACCORDANCE WITH ASTM G51. EMBANKMENT SOILS HAVING A pH OUTSIDE THE ACCEPTABLE RANGE WILL BE REJECTED.

TABLE 2.1C GEOGRID REQUIREMENTS

TEST DATA SUPPLIED BY MANUFACTURER, INDEPENDENT LABORATORY OR NTPEP

FACTOR OR PROPERTY	TEST METHOD	TEST DATA REQUIRED?	REQUIRED VALUE	MIN. VALUE FOR EQUATION	DEFAULT VALUE FOR EQUATION
TENSILE STRENGTH @ 5% STRAIN	ASTM D6637	YES	SEE TABLE 2.1A	--	--
ULTIMATE TENSILE STRENGTH	ASTM D6637	YES	SEE TABLE 2.1A	--	--
LONG TERM DESIGN TENSILE STRENGTH	SEE EQUATION IN SECTION 2.1.1	--	SEE TABLE 2.1A	--	--
RF_{CR}	ASTM D5262 PER FHWA-NHI-07-092, APPENDIX H	YES	--	2.0	--
RF_{ID}	ASTM D5818 PER FHWA-NHI-09-087, SECTION 5.1	NO	--	SEE TABLE 2.1B	SEE TABLE 2.1B
RF_{D}	--	--	--	--	SEE SECTION 2.1.6
MOLECULAR WT. FOR 'PET' GEOGRIDS	ASTM D4603	YES	> 25,000	--	--
CARBOXYL END GROUP NO. FOR 'PET' GEOGRIDS	GRI:GG7	YES	< 30	--	--
ULTRAVIOLET STABILITY FOR HDPE AND PP GEOGRIDS	ASTM D4355	YES	≥ 70% AT 500 HRS.	--	--
RF_{JNT}	ASTM D5262	MECHANICAL JOINTS NOT PERMITTED	--	1.0	--

3.0 CONSTRUCTION

3.1 STORAGE AND HANDLING

FOLLOW ASTM D 4873 FOR GEOGRID LABELING, SHIPMENT, AND STORAGE. FURNISH PRODUCT LABELS THAT CLEARLY SHOW THE MANUFACTURER'S OR SUPPLIER'S NAME, PRODUCT TYPE, LOT NUMBER, ROLL NUMBER, MANUFACTURED DATE, AND ROLL DIMENSION. FURNISH A NOTATION FOR EACH SHIPPING DOCUMENT CERTIFYING THAT THE MATERIAL IS IN ACCORDANCE WITH THE MANUFACTURER'S CERTIFICATE.

DURING SHIPMENT AND STORAGE, PROTECT THE GEOGRID FROM DIRECT SUNLIGHT, ULTRAVIOLET RAYS, TEMPERATURES GREATER THAN 160 °F (71 °C), FLAMES INCLUDING WELDING SPARKS, MUD, DIRT, DUST, AND DEBRIS. KEEP THE GEOGRID DRY DURING STORAGE AND DO NOT STORE DIRECTLY ON THE GROUND

THE GEOGRID WILL BE REJECTED IF IT HAS DEFECTS, TEARS, PUNCTURES, FLAWS, DETERIORATION, OR DAMAGE INCURRED DURING MANUFACTURING, TRANSPORTATION, OR STORAGE. IF APPROVED BY THE ENGINEER, TORN OR PUNCTURED SECTIONS MAY BE REPAIRED BY PLACING A PATCH OVER THE DAMAGED AREA AND MECHANICALLY CONNECTING THE EDGES TO THE GEOGRID BENEATH.

3.2 SITE EXCAVATION

PREPARE A LEVEL SURFACE FOR PLACEMENT OF THE FIRST LAYER OF GEOGRID INCLUDING REMOVING ANY DELETERIOUS MATERIALS, SHARP OBJECTS, AND LOOSE OR OTHERWISE UNSUITABLE SOILS. PREPARATION OF THE FOUNDATION MUST CONFORM TO ALL OF THE APPLICABLE REQUIREMENTS OF ITEM 203. THE DEPARTMENT WILL INSPECT THE FOUNDATION TO VERIFY THAT THE SUBSURFACE CONDITIONS ARE THE SAME AS THOSE ANTICIPATED DURING THE DESIGN. AFTER THE FOUNDATION HAS BEEN ACCEPTED, AND IF IT IS NOT SATURATED, BUT IS DRY OR STABLE, THEN PLACEMENT OF THE FIRST LAYER OF GEOGRID CAN BEGIN.

3.3 GEOGRID PLACEMENT

PLACE THE GEOGRID HORIZONTALLY AT THE ELEVATIONS AND ORIENTATIONS SHOWN ON THE PLANS. MAINTAIN THE VERTICAL POSITION OF EACH LAYER WITHIN 2 INCHES (51 MM) OF THE DESIGN ELEVATION. VERIFY THE CORRECT ORIENTATION (ROLL DIRECTION) OF THE GEOGRID. TYPE P1 GEOGRIDS WILL HAVE THEIR ROLL DIRECTIONS PERPENDICULAR TO THE SLOPE FACE AND NO OVERLAP IS REQUIRED BETWEEN ADJACENT ROLLS.

SECURE THE GEOGRID IN PLACE TO PREVENT MOVEMENT DURING FILL OPERATIONS. SECURE THE GEOGRID WITH STAPLES, PINS, SANDBAGS, FILL OR AS DIRECTED BY THE ENGINEER.

3.4 MECHANICAL CONNECTIONS

PLACE THE GEOGRID IN CONTINUOUS STRIPS IN THE DIRECTION SPECIFIED. MECHANICAL JOINTS AND OVERLAP CONNECTIONS WILL NOT BE PERMITTED.

3.5 FILL PLACEMENT

PLACEMENT OF THE EMBANKMENT MATERIAL MUST CONFORM TO ALL OF THE APPLICABLE REQUIREMENTS OF ITEM 203, EXCEPT THAT COMPACTION WILL BE NOT LESS THAN 95 PERCENT OF MAXIMUM DRY DENSITY OR MAXIMUM TEST SECTION DRY DENSITY ACCORDING TO SUPPLEMENT 1015.

PLACE, SPREAD AND COMPACT THE EMBANKMENT IN A MANNER THAT PREVENTS THE DEVELOPMENT OF WRINKLES OR MOVEMENT OF THE GEOGRID. DO NOT OPERATE TRACKED CONSTRUCTION EQUIPMENT DIRECTLY UPON THE GEOGRID. A MINIMUM FILL THICKNESS OF 6 INCHES (152 mm) IS REQUIRED PRIOR TO OPERATION OF TRACKED VEHICLES OVER THE GEOGRID. TURNING OF TRACKED VEHICLES MUST BE KEPT TO A MINIMUM TO PREVENT TRACKS FROM DISPLACING THE FILL AND DAMAGING THE GEOGRID. IF RECOMMENDED BY THE GEOGRID MANUFACTURER AND APPROVED BY THE ENGINEER, RUBBER-TIRED EQUIPMENT MAY PASS OVER THE GEOGRID AT SLOW SPEEDS, LESS THAN 10 MPH (16 KM/H). SUDDEN BRAKING AND SHARP TURNING MUST BE AVOIDED. DAMAGED GEOGRIDS WILL BE REPLACED OR REPAIRED AT NO COST TO THE DEPARTMENT.

USE LIGHTWEIGHT COMPACTION EQUIPMENT NEAR THE SLOPE FACE TO HELP MAINTAIN FACE ALIGNMENT. USE A 6 INCH (152 mm) MAXIMUM LIFT THICKNESS WHERE HAND-OPERATED EQUIPMENT IS USED.

3.6 FACE CONSTRUCTION

USE LIGHTWEIGHT COMPACTION EQUIPMENT ON THE FACE ITSELF. IF NOT OTHERWISE PROTECTED, PLANT VEGETATION ON REINFORCED SLOPES IMMEDIATELY (OR SOON) AFTER CONSTRUCTION TO PREVENT OR MINIMIZE EROSION DUE TO RAINFALL AND RUNOFF ON THE FACE.

4.0 METHOD OF MEASUREMENT

THE DEPARTMENT WILL MEASURE GEOGRID BY THE NUMBER OF SQUARE YARDS (SQUARE METERS) COMPLETED AND ACCEPTED IN PLACE ACCORDING TO THE GEOGRID LAYOUT DIMENSIONS SHOWN ON THE PLANS, EXCLUSIVE OF THE AREA OF ANY OVERLAPS.

THE DEPARTMENT WILL MEASURE REINFORCED EMBANKMENT BY THE NUMBER OF CUBIC YARDS (CUBIC METERS) USED IN THE COMPLETED AND ACCEPTED WORK, AS DETERMINED BY ITEM 203.

5.0 BASIS OF PAYMENT.

THE DEPARTMENT WILL PAY FOR THE ACCEPTED QUANTITIES AT CONTRACT PRICES AS FOLLOWS:

ITEM	QUANTITY	UNIT	DESCRIPTION
SPECIAL	1,878	SQ. YD.	GEOGRID, TYPE P1
SPECIAL	1,347	CU. YD.	REINFORCED EMBANKMENT

(SEE CROSS SECTION SHEET 308)

GEOGRID LAYER	LOCATION (STA)	LOCATION (STA)	ELEVATION	EMBEDDED LENGTH (FT)	SPECIAL - ITEM 690, GEOGRID, TYPE P1 (SQ YD)
A	421+50.00	422+50.00	857.33	10	111.1
B	421+25.00	422+50.00	858.66	4	55.6
C	421+00.00	422+50.00	860.00	10	166.7
D	421+00.00	422+50.00	861.33	4	66.7
E	421+00.00	422+50.00	862.67	10	166.7
F	421+00.00	422+50.00	864.00	4	66.7
G	421+00.00	422+50.00	865.33	10	166.7
H	421+00.00	422+50.00	866.67	4	66.7
I	421+00.00	422+50.00	868.00	10	166.7
J	421+00.00	422+50.00	869.33	4	66.7
K	421+00.00	422+50.00	870.67	10	166.7
L	421+00.00	422+50.00	872.00	4	66.7
M	421+00.00	422+50.00	873.33	10	166.7
N	421+00.00	422+50.00	874.67	4	66.7
O	421+00.00	422+50.00	876.00	10	166.7
P	421+00.00	422+50.00	877.33	4	66.7
Q	422+00.00	422+50.00	878.67	10	55.6
R	422+00.00	422+50.00	880.00	4	22.2
				TOTAL:	1,878

CALCULATED JMR CHECKED EJC

GENERAL NOTES

ALL-75-5.53

J:\Projects\ALL\76691\roadway\sheets\76691GN011.dgn 11-SEP-2012 8:47PM reddenj

TABLE FROM THE REMARKS BOX IN SECTION H OF THE CE-4 ENVIRONMENTAL DOCUMENT			
PROPERTY ID FROM ESA REPORTS	PROPERTY NAME	ADDRESS	REQUIRED PLAN NOTE
21	BP	1703 HARDING HWY. SR309 STA 900+00, 75' LT	PCS + REG. H_2O (LSM f/storm sewer backfill)
23	CITGO (VACANT)	1601 HARDING HWY. SR309 STA 892+25, 65' LT	PCS + REG. H_2O (LSM f/storm sewer backfill)
113, 114	SAN-LOR CO. (LIMA-75 LLC)	708-724 DEAN AVE. SR309 STA 897+50, 125' LT	PCS + REG. H_2O (LSM f/storm sewer backfill)
117	BINCKLEY PERFORMANCE	1908 LENORE STREET SR309 STA 893+50, 245' LT	PCS + REG. H_2O (LSM f/storm sewer backfill)
232	TPC TRUCKING CO.	1925 LENORE ST. 619 TURNER AVE. 622 ALTON AVE. SR309 STA 893+50, 500' LT	PCS + REG. H_2O (LSM f/storm sewer backfill)

PCS - PETROLEUM CONTAMINATED SOIL
REG. H_2O - REGULATED WATER
(LSM f/storm sewer backfill) - LOW STRENGTH MORTAR

ENVIRONMENTAL WORK: ALL-75-5.53 PID: 76691

ENVIRONMENTAL STUDIES HAVE SHOWN THAT THERE IS A POTENTIAL OF ENCOUNTERING PETROLEUM CONTAMINATED SOIL AND/OR OTHER REGULATED SUBSTANCES DURING EXCAVATIONS FOR CONSTRUCTION ACTIVITIES AT THE SITES LISTED IN THE TABLE ABOVE.

THE ENGINEER WILL INITIALLY DETERMINE IF THE EXCAVATED MATERIAL APPEARS TO BE PETROLEUM CONTAMINATED SOIL OR GROUNDWATER BASED ON THE MATERIAL'S APPEARANCE, ODOR, AND THE ENGINEER'S PAST EXPERIENCE. THE CONTRACTOR WILL BE RESPONSIBLE FOR ANY TESTING NECESSARY TO DETERMINE IF THE MATERIAL IS IN FACT PETROLEUM CONTAMINATED. ANY POTENTIAL PETROLEUM CONTAMINATED MATERIALS SHALL BE TESTED FOR BENZENE, TOLUENE, ETHYLBENZENE, AND XYLENE (BTEX) USING USEPA SW-846, METHOD 8060 AND TOTAL PETROLEUM HYDROCARBONS (TPH) USING USEPA SW-846, METHOD 8015, PER BUSTR GUIDELINES. ANY POTENTIAL PETROLEUM CONTAMINATED GROUND WATER SHALL BE TESTED FOR BTEX AND METHYL TERT-BUTYL ETHER (MTBE) USING USEPA SW-846, METHOD 8260. ONCE LAB ANALYSIS RESULTS ARE RECEIVED FOR THE MATERIAL(S), THE CONCENTRATIONS OF THE CHEMICALS OF CONCERN SHALL BE COMPARED TO BUSTR'S RE-USE ACTION LEVELS IN TABLE 1 UNDER PARAGRAPH (D)(1) OF OAC 1301:7-9-16 TO DETERMINE IF THE MATERIAL IS INDEED PETROLEUM CONTAMINATED SOIL. THIS FINAL DETERMINATION SHALL BE MADE BY THE ENGINEER.

IN THE EVENT PETROLEUM-CONTAMINATED SOIL AND/OR OTHER REGULATED SUBSTANCES ARE ENCOUNTERED, THE CONTRACTOR SHALL MANAGE THIS MATERIAL ACCORDING TO THE FOLLOWING GUIDELINES. THE ESTIMATED QUANTITIES HAVE BEEN INCLUDED IN THE GENERAL SUMMARY FOR THIS WORK. ALL EXCAVATIONS AT THE AFOREMENTIONED LOCATION SHALL BE PAID FOR UNDER THE ORIGINAL PLAN BID ITEMS. ALL MATERIAL EXCAVATED BY THE CONTRACTOR AT THIS LOCATION SHALL BE SUBJECT TO TESTING BY AN INSPECTOR PROVIDED BY THE ENGINEER.

ALL POTENTIAL PETROLEUM CONTAMINATED SOIL, WITHIN THE AFOREMENTIONED LIMITS, EXCAVATED BY THE CONTRACTOR AT THIS LOCATION MAY BE STOCKPILED IN AN AREA PROVIDED BY THE CONTRACTOR AND APPROVED BY THE ENGINEER. THE ENGINEER MAY PERMIT TEMPORARY STORAGE OF THE EXCAVATED MATERIAL IN A LINED AND COVERED ROLL-OFF BOX. THE ENGINEER MAY PERMIT TEMPORARY STORAGE OF THE EXCAVATED MATERIAL ON AN IMPERMEABLE MEMBRANE. THE MEMBRANE SHALL BE SURROUNDED BY BALES OF STRAW TO PREVENT THE SUSPECTED SOIL FROM COMING IN CONTACT WITH THE ORIGINAL SOIL. AN IMPERMEABLE MEMBRANE SHALL BE PLACED OVER THE STOCKPILE TO PREVENT CONTACT WITH PRECIPITATION AND/OR SURFACE RUN-OFF. THE ENGINEER MAY PERMIT THE CONTRACTOR TO DIRECT LOAD THE EXCAVATED CONTAMINATED MATERIAL INTO TRUCKS.

IF EXCAVATIONS WITHIN THE AFOREMENTIONED LIMITS REQUIRE DEWATERING FOR CONSTRUCTION PURPOSES, THE CONTRACTOR SHALL DEWATER, CONTAINERIZE, TEST THE WATER AND DISPOSE OF BY METHODS APPROVED BY THE ENGINEER. THE CONTRACTOR SHALL OBTAIN ALL THE NECESSARY PERMITS AND/OR AUTHORIZATIONS NEEDED TO STORE, TRANSPORT AND DISPOSE OF THE WATER IN ACCORDANCE WITH APPLICABLE LOCAL, STATE OR FEDERAL REGULATIONS. DEPENDING UPON THE TEST RESULTS, THE ENGINEER WILL CLASSIFY THE WATER AS REGULATED OR NON-REGULATED WATER. THE CONTRACTOR SHALL BE RESPONSIBLE FOR DISPOSAL OF REGULATED WATER WITH A METHOD APPROVED BY THE ENGINEER. WORK INVOLVED WITH THIS ITEM SPECIAL INCLUDES COMPLYING WITH THE HANDLING, STORAGE, AND DISPOSAL OF REGULATED AND NON-REGULATED WATER.

THIS MATERIAL SHALL BE PROPERLY TESTED, TRANSPORTED, AND DISPOSED OF IN A LICENSED (BY THE LOCAL HEALTH DEPARTMENT) AND PERMITTED (BY THE OHIO ENVIRONMENTAL PROTECTION AGENCY) SOLID WASTE FACILITY.

THE CONTRACTOR SHALL BE RESPONSIBLE FOR OBTAINING ALL NECESSARY PERMITS AND APPROVALS AND TO TRANSPORT THE MATERIAL TO A LICENSED AND PERMITTED SOLID WASTE DISPOSAL FACILITY. THE CONTRACTOR SHALL CONTACT THE FACILITY TO DETERMINE IF ANY ADDITIONAL TESTING IS REQUIRED FOR DISPOSAL AND WILL BE RESPONSIBLE FOR CONDUCTING ANY ADDITIONAL SAMPLING AND ANALYSIS OF THIS MATERIAL.

THE CONTRACTOR SHALL FURNISH ALL THE LABOR, EQUIPMENT, AND MATERIALS NECESSARY TO PROPERLY HANDLE, STORE (IF NECESSARY), TEST FOR DISPOSAL, TRANSPORT, AND DISPOSE OF REGULATED MATERIALS, INCLUDING ANY REQUIRED PERMITS, APPROVALS, OR FEES WITHIN THE LIMITS IDENTIFIED ABOVE. PAYMENT FOR THIS WORK SHALL BE MADE AT THE CONTRACT PRICE BID PER TON AND/OR GALLON. THE BASIS FOR CONVERSION FROM TONS TO CUBIC YARDS IS 1.5 TON/CUBIC YARD. ALL EXCAVATIONS WITHIN THE AFOREMENTIONED LIMITS SHALL BE PAID FOR UNDER THE ORIGINAL PLAN BID ITEMS. THE FOLLOWING ESTIMATED QUANTITIES HAVE BEEN INCLUDED IN THE GENERAL SUMMARY FOR THE WORK NOTED ABOVE:

690E65010 ITEM SPECIAL - WORK INVOLVING SOLID WASTE
30 TON
690E65016 ITEM SPECIAL - WORK INVOLVING PETROLEUM CONTAMINATED SOIL
100 TON
690E65024 ITEM SPECIAL - WORK INVOLVING REGULATED WATER
1,000 GAL
690E65020 ITEM SPECIAL - WORK INVOLVING WATER
1,000 GAL

USE OF LOW STRENGTH MORTAR BACKFILL

ENVIRONMENTAL SITE ASSESSMENTS (ESA'S) HAVE IDENTIFIED THE PRESENCE OR POTENTIAL PRESENCE OF HAZARDOUS MATERIALS AND/OR PETROLEUM WITHIN THE IDENTIFIED PROJECTS LIMITS. AS DIRECTED BY THE ENGINEER, LOW STRENGTH MORTAR BACKFILL MEETING THE SPECIFICATIONS OF ITEM 613 WILL BE USED TO BED & BACKFILL AROUND PIPES AND CONDUITS WITHIN AREAS OF IDENTIFIED HAZARDOUS MATERIALS AND/OR PETROLEUM TO PREVENT THE PIPE BEDDING FROM ACTING AS A PATHWAY FOR POSSIBLE CONTAMINANT MIGRATION. THE INSTALLATION AND USE OF LOW STRENGTH MORTAR BACKFILL WILL EXTEND FOR NOT LESS THAN 10 HORIZONTAL FEET ALONG PIPES AND CONDUITS BEYOND THE IDENTIFIED LIMITS OF HAZARDOUS MATERIALS AND/OR PETROLEUM. BACKFILL SHALL BE PUMPED, OR PLACED BY OTHER MEANS APPROVED BY THE ENGINEER, SO THAT AFTER SETTLEMENT AT LEAST 90 PERCENT OF THE CROSS-SECTIONAL AREA OF THE PIPE OR CONDUIT TRENCH SHALL BE FILLED.

ESTIMATED QUANTITIES HAVE BEEN CARRIED TO THE GENERAL SUMMARY TO ESTABLISH UNIT PRICES FOR THE ABOVE ITEM AND SHALL BE USED ONLY AS DIRECTED BY THE ENGINEER:

ITEM 613, LOW STRENGTH MORTAR BACKFILL & BEDDING
30 CU YD

SITE SPECIFIC HEALTH AND SAFETY PLAN

THE CONTRACTOR SHALL CERTIFY IN WRITING TO THE ENGINEER WITHIN TWO WEEKS AFTER CONTRACT EXECUTION THAT THE CONTRACTOR HAS PREPARED A SSHSP IN ACCORDANCE WITH OSHA 29 CFR PART 1910.120 FOR OPERATIONS INVOLVING HAZARDOUS SUBSTANCES WITHIN THE AFORE-MENTIONED LIMITS. THE CONTRACTOR SHALL MAKE THE SSHSP AVAILABLE AT THE PROJECT SITE. COPIES OF THE ENVIRONMENTAL STUDIES ARE AVAILABLE FOR EXAMINATION IN THE OFFICE OF CONTRACTS AND THE ODOT DISTRICT 1, OFFICE OF PLANNING. THIS INFORMATION MAY BE USED BY THE CONTRACTOR TO DEVELOP THE SSHSP.

ENVIRONMENTAL COMMITMENTS & RESOURCES TO BE AVOIDED

THE SEQUENCING OF CONSTRUCTION WILL BE PROGRAMMED TO MINIMIZE TRAFFIC DELAYS THROUGHOUT THE I-75 CORRIDOR. A MAINTENANCE OF TRAFFIC PLAN WILL BE IMPLEMENTED DURING CONSTRUCTION TO ENSURE CONTINUOUS, UNINTERRUPTED TRAFFIC FLOW ON I-75. IMPACTS TO ADJACENT BUSINESSES WILL BE MINIMIZED BY MAINTAINING ACCESS TO ALL PROPERTIES DURING CONSTRUCTION. THE OHIO DEPARTMENT OF TRANSPORTATION WILL BE RESPONSIBLE TO NOTIFY THE EMERGENCY RESPONSE FORCES PRIOR TO ANY TEMPORARY LANE AND RAMP CLOSURES, AND TO COORDINATE WITH THE CITY OF LIMA AND THE ALLEN COUNTY ENGINEER TO ESTABLISH APPROPRIATE LOCAL DETOUR ROUTES, AND TO ACCOMMODATE ANY LOCAL SPECIAL EVENTS OR FESTIVALS. THE GENERAL PUBLIC WILL BE INFORMED AND UPDATED ON THE PROJECT CONSTRUCTION DETAILS THROUGH THE USE OF PRESS RELEASES TO LOCAL NEWSPAPERS AND RADIO STATIONS, WELL IN ADVANCE OF DETOURS, TEMPORARY CLOSINGS, AND OTHER CONSTRUCTION RELATED ACTIVITIES THAT WOULD CAUSE INCONVENIENCES TO THE TRAVELING PUBLIC.

ANY UNAVOIDABLE TREE REMOVAL WILL TAKE PLACE BETWEEN SEPTEMBER 30 AND APRIL 1 TO AVOID DIRECT IMPACTS TO THE INDIANA BAT. (ODOT WILL FOLLOW ALL OF THE CONSERVATION MEASURES OUTLINED IN THE USFWS'S 08/05/09 RESPONSE LETTER.)

ACCESS TO THE OTTAWA RIVER BIKEWAY PHASE III SHALL BE MAINTAINED THROUGHOUT CONSTRUCTION ACTIVITIES AND IT SHALL BE THE RESPONSIBILITY OF THE CONTRACTOR TO NOTIFY ODOT DISTRICT 1 AND THE JOHNNY APPLESEED METROPOLITAN PARK DISTRICT 14 DAYS PRIOR TO THE BEGINNING OF CONSTRUCTION ACTIVITIES.

THE BIKEWAY WILL REMAIN OPEN DURING CONSTRUCTION IN A SAFE AND USEABLE OPERATING CONDITION.

FLAGGERS WILL BE UTILIZED WHEN NECESSARY TO TEMPORARILY STOP BIKE AND PEDESTRIAN TRAFFIC DURING OVERHEAD WORK.

INSTALLATION OF TEMPORARY CONSTRUCTION FENCING ALONG CONSTRUCTION LIMITS ADJACENT TO BIKEWAY AND 'ROAD WORK AHEAD' WARNING SIGNS WILL BE USED TO DIRECT TRAFFIC.

AT NO TIME WILL CONSTRUCTION MATERIALS OR EQUIPMENT WILL BE STAGED ON THE BIKEWAY.

PERSONAL PROTECTIVE EQUIPMENT (PPE)

THE CONTRACTOR SHALL FOLLOW ALL REQUIREMENTS OF SECTIONS III AND X OF THE OHIO DEPARTMENT OF TRANSPORTATION SAFETY &HEALTH STANDARD OPERATING PROCEDURE 220-006(SP) EFFECTIVE: JUNE 1, 2009 (EXCEPT AS AMENDED BELOW) AND ALL SUBSEQUENT UPDATES POSTED AT THE FOLLOWING WEBSITE:

HTTP://WWW.DOT.STATE.OH.US/POLICY/POLICIESANDSOPS/POLICIES/220-006(SP).PDF

AMENDMENTS TO THE REQUIREMENTS OF THIS DOCUMENT ARE:

III. HEAD PROTECTION (HARD HATS)

ALL PERSONS WITHIN THE RIGHT-OF-WAY OF ANY HIGHWAY OR ANY OTHER TYPE OF ROADWAY OR CONSTRUCTION SITE WHO ARE EXPOSED TO EITHER TRAFFIC (VEHICLES USING THE HIGHWAY FOR PURPOSES OF TRAVEL) OR CONSTRUCTION EQUIPMENT WITHIN THE WORK AREA, REGARDLESS OF JOB TYPE, SHALL WEAR APPROPRIATE HEAD PROTECTION. ALL HARD HATS MUST MEET OR EXCEED ANSI Z89.1-2003 TYPE 1 CLASS E - G REQUIREMENTS.

X. HIGH VISIBILITY SAFETY APPAREL

ALL PERSONS WITHIN THE RIGHT-OF-WAY OF ANY HIGHWAY OR ANY OTHER TYPE OF ROADWAY OR CONSTRUCTION SITE WHO ARE EXPOSED TO EITHER TRAFFIC (VEHICLES USING THE HIGHWAY FOR PURPOSES OF TRAVEL) OR CONSTRUCTION EQUIPMENT WITHIN THE WORK AREA, REGARDLESS OF JOB TYPE, SHALL WEAR A HIGH-VISIBILITY SAFETY VEST THAT MEETS THE PERFORMANCE CLASS 2 OR CLASS 3 REQUIREMENTS OF THE ANSI/ISEA 107-2004 PUBLICATION ENTITLED "AMERICAN NATIONAL STANDARD FOR HIGH-VISIBILITY SAFETY APPAREL AND HEADWEAR."

WORKERS MAY WEAR AN ANSI CLASS II OR ANSI CLASS III APPROVED RAIN SUIT OR JACKET WITHOUT A SAFETY VEST OVER IT. HIGH-VISIBILITY T-SHIRTS, SWEATSHIRTS, OR ZIP UP HOODIES ARE NOT ACCEPTABLE. ALL WORKERS SHALL WEAR A SAFETY VEST OVER THE T-SHIRTS, SWEATSHIRTS, AND ZIP-UP HOODIES, REGARDLESS OF THEIR ANSI RATING.

CALCULATED SJG CHECKED EJC

GENERAL NOTES

ALL-75-5.53

J:\Projects\ALL\76691\roadway\sheets\76691GN008.dgn 11-SEP-2012 8:48PM reddenj

SPEEDINFO DEVICES WITHIN PROJECT LIMITS

THE CONTRACTOR SHALL TAKE MEASURES TO MAINTAIN THE PROPER OPERATION OF ANY SPEEDINFO DEVICES WITHIN THE PROJECT LIMITS. THE DEVICES ARE CYLINDRICAL TUBES WITH SOLAR PANELS ATTACHED TO THEM. ODOT WILL COORDINATE THE RELOCATION OF ANY DEVICES THAT MAY BE AFFECTED BY THE CONTRACTOR'S OPERTION. THE CONTRACTOR SHALL NOTIFY THE PROJECT ENGINEER A MINIMUM OF TEN (10) CALENDAR DAYS PRIOR TO PERFORMING ANY WORK WHICH REQUIRES DEVICE RELOCATION. THE PROJECT ENGINEER SHALL THEN NOTIFY SPEEDINFO, INC. AND ODOT OFFICE OF TRAFFIC ENGINEERING OF ANY DEVICES THAT REQUIRE RELOCATION. IF IMMEDIATE ATTENTION IS REQUIRED, THE CONTRACTOR SHALL CONTACT THE REGIONAL INSTALLER FOR SPEEDINFO, INC. FROM THE PROVIDED CONTACT INFORMATION AND ALSO NOTIFY ODOT.

1. Regional Contacts

Dayton/Springfield, Columbus, and Cincinnati
Matt Slusher, Capital Electric
(937) 531-7518
mslusher@capitalelectric.com

Joe Hutsell, Capital Electric
(937) 604-5838
jhutsell@capitalelectric.com

2. Statewide Contacts

Charlie Armiger, SpeedInfo
Office: (408) 333-9960,
Cell: (408) 425-4684
carmiger@speedinfo.com

George Saylor, ODOT
(614) 752-8099
george.saylor@dot.state.oh.us

Jason Yeray, ODOT
(614) 466-2168
jason.yeray@dot.state.oh.us

Bryan Comer, ODOT
(614) 387-1253
bryan.comer@dot.state.oh.us

THE SPEEDINFO DEVICES WITHIN THE PROJECT LIMITS ARE LOCATED AT THE BELOW LOCATIONS. THE CONTRACTOR SHALL BE ADVISED THAT THESE LOCATIONS MAY HAVE CHANGED BY THE TIME OF CONSTRUCTION AND SHALL USE THE ABOVE PROCEDURE FOR ANY OTHER SPEED DETECTION DEVICES.

Description	Mounting Type
I-75 N @ E 4th St offamp light pole (1st pole) Point- South App- N Rec-S MP 124.95	Light Pole
I-75 N @ OH-309n Harding Hwy/Dean Ave on ramp light pole (5th pole from gore pt Point- North App-S Rec-N MP 126.55	Light Pole
I-75 N @ Exit 127 A/B OH-81 E Ada OH-81 W Lima Diagram-road sign Extension required Point- South App-N Rec -S MP 127.6	Sign

RAILROAD

RAILROAD
ALL MOVEMENTS OF EQUIPMENT WITHIN RAILROAD PROPERTY MUST BE COORDINATED WITH THE RAILROAD FLAGGER.

DURING TRAIN MOVEMENTS THROUGH THE PROJECT LOCATION, VEHICLES, EQUIPMENT, AND PERSONNEL WILL NOT BE ALLOWED TO OPERATE WITHIN 25 FEET OF THE TRACK.

ANY DAMAGE CAUSED BY THE ROADWAY WORK TO THE TRACK OR RAILROAD PROPERTY WILL REQUIRE REPAIR BY THE ROADWAY AUTHORITY OR THEIR DESIGNATED CONTRACTOR IMMEDIATELY UPON NOTIFICATION FROM THE RAILROAD OR THEIR DESIGNATED PERSONNEL OR CONTRACTOR.

RAILROAD COORDINATOR & FLAGGER
THE ROADWAY AUTHORITY, OR DESIGNATED CONTRACTOR, SHALL COORDINATE WITH THE RAILROAD WHENEVER CONTRACTOR'S WORK ACTIVITIES ARE LOCATED OVER, UNDER, OR WITHIN THE RAILROAD RIGHT-OF-WAY. A MINIMUM OF 72 HOURS NOTICE IN ADVANCE OF ANY WORK PERFORMED WITHIN OR ADJACENT TO THE RAILROAD RIGHT-OF-WAY. TO SCHEDULE A RAILROAD FLAGGER OR COORDINATE ALL RAILROAD ACTIVITIES, CONTACT THE FOLLOWING RAILROAD PERSONNEL:

RAILROAD FLAGGER AND PROTECTIVE SERVICES AND DEVICES WILL BE REQUIRED AND FURNISHED WHEN CONTRACTOR'S WORK ACTIVITIES ARE LOCATED OVER, UNDER, OR WITHIN THE RAILROAD RIGHT-OF-WAY. THE CONTRACTOR SHALL PROVIDE THE RAILROAD A MINIMUM OF 72 HOURS NOTICE IN ADVANCE OF ANY WORK PERFORMED WITHIN OR ADJACENT TO THE RAILROAD RIGHT-OF-WAY.

DAVID MURPHY - GENERAL MANAGER
CHICAGO, FORT WAYNE, AND EASTERN RAILROAD (CFER)
3010 EAST PONTIAC STREET
FT. WAYNE, IN 46803
OFFICE: 317-308-9198
E-MAIL DAVID.MURPHY@RAILAMERICA.COM
OR
BRADY PETERS - ROADMASTER
CHICAGO, FORT WAYNE, AND EASTERN RAILROAD (CFER)
3010 EAST PONTIAC STREET
FT. WAYNE, IN 46803
MOBILE: 513-218-9058
E-MAIL: BRADY.PETERS@RAILAMERICA.COM

CONTRACTOR MUST SUBMIT DETAILED DEMOLITION PLANS, STAMPED AND SIGNED BY A OHIO LICENSED PROFESSIONAL ENGINEER, TO THE CFER AT LEAST 45 DAYS PRIOR TO COMMENCING ANY WORK. THE PLANS MUST BE REVIEWED AND APPROVED BY THE CFER PRIOR TO COMMENCING WORK. THIS WORK SHALL BE CONSIDERED INCIDENTAL TO THE EXISTING BRIDGE REMOVAL, ITEM 202.

CONTRACTOR SHALL SUBMIT TO CF&E RR ANY TEMPORARY SCAFFOLDING OR TEMPORARY STRUCTURES DETAILS TO BE CONSTRUCTED WITHIN THE RAILROAD R/W FOR APPROVAL PRIOR TO BEGINNING WORK.

ANY ENTRY OR CONSTRUCT ACTIVITIES ON THE RAILROAD RIGHT-OF-WAY MUST BE AUTHORIZED BY THE RAILROAD IN WRITING PRIOR TO THE COMMENCEMENT OF WORK. WRITTEN AUTHORIZATION IS OBTAINED THROUGH A RIGHT OF ENTRY PERMIT OR CONTRACTOR OCCUPANCY/ACCESS AGREEMENT. THE APPLICATION IS ACCESSIBLE VIA THE FOLLOWING LINK ENTITLED "ACCESSING PROPERTY" FOUND AT THE RAILAMERICA WEB SITE:

HTTP://WWW.RAILAMERICA.COM/REALESTATE/ACCESSING PROPERTY.ASPX

PLEASE CONTACT THE REAL ESTATE DEPARTMENT AT 904-538-6365 WITH ANY QUESTIONS ABOUT RIGHT OF ENTRY PERMITS.

SEE ALL-75-0813 L/R STRUCTURE PLANS FOR ADDITIONAL RAILROAD NOTES.

ITEM SPECIAL - MAILBOX SUPPORT

THIS WORK SHALL CONSIST OF FURNISHING AND ERECTING MAIL-BOX SUPPORTS AND ANY ASSOCIATED MOUNTING HARDWARE IN ACCORDANCE WITH PLAN DETAILS, AND ATTACHING AN OWNER-SUPPLIED MAILBOX AT LOCATIONS SPECIFIED IN THE PLAN, OR OTHERWISE ESTABLISHED BY THE ENGINEER.

WOOD POSTS SHALL BE NOMINAL 4" BY 4" SQUARE OR 4 1/2" DIAMETER ROUND, AND CONFORM TO 710.14.

STEEL POSTS SHALL BE NOMINAL PIPE SIZE 2" I.D. O.D., AND CONFORM TO AASHTO M 181.

ALL HARDWARE INCLUDING BUT NOT LIMITED TO PLATES, SCREWS, BOLTS, AND ETC. SHALL BE COMMERCIAL-GRADE GALVANIZED STEEL.

POSTS SHALL BE SET PER THE FIRST PARAGRAPH OF 606.03, AND SHALL IN NO INSTANCE BE ENCASED IN CONCRETE.

SUPPORT HARDWARE SHALL ACCOMMODATE EITHER A SINGLE OR A DOUBLE MAILBOX INSTALLATION, AND NO MORE THAN TWO BOXES MAY BE MOUNTED ON A SINGLE POST.
THE MAILBOX SHALL BE SECURELY AND NEATLY ATTACHED BY THE CONTRACTOR TO THE NEW SUPPORT. THE CONTRACTOR SHALL FURNISH ALL NECESSARY ATTACHMENT HARDWARE (NUTS, BOLTS, PLATES, SPACERS, AND WASHERS) AS NECESSARY TO ACCOMMODATE THE COMPLETE INSTALLATION.

IN THE ABSENCE OF A NEW BOX SUPPLIED BY THE OWNER, THE CONTRACTOR SHALL SALVAGE THE EXISTING BOX AND PLACE IT ON THE NEW SUPPORT. DUE CARE SHALL BE EXERCISED IN SUCH AN OPERATION, AND THE CONTRACTOR SHALL BE RESPONSIBLE FOR REPAIRING OR REPLACING ANY BOX DAMAGED BY IMPROPER HANDLING ON HIS PART, AS JUDGED AND DIRECTED BY THE ENGINEER.

THE CONTRACTOR SHALL BE RESPONSIBLE FOR COORDINATING WITH THE LOCAL POST MASTER REGARDING THE TIMING OF THE MOVEMENT OF ANY MAILBOX TO A NEW LOCATION.

PAYMENT UNDER THIS ITEM SHALL BE LIMITED TO FINAL PERMANENT INSTALLATIONS. TEMPORARY INSTALLATIONS SHALL BE IN ACCORDANCE WITH 107.10. HOWEVER, THE SAME MATERIAL AND SIZE LIMITATIONS AS FOR PERMANENT INSTALLATIONS SHALL APPLY.

MAILBOX SUPPORTS, COMPLETE IN PLACE, WILL BE PAID FOR AT THE CONTRACT UNIT PRICE PER EACH, FOR ITEM SPECIAL MAILBOX SUPPORT SYSTEM, (SINGLE) (DOUBLE).

RIGHT-OF-WAY MONUMENT RESET

CONSTRUCT RIGHT-OF-WAY MONUMENTS IN ACCORDANCE WITH THE DETAILS SHOWN ON THE STANDARD CONSTRUCTION DRAWINGS AND AT THE LOCATIONS SHOWN IN THE TABLE BELOW. COORDINATES SHOWN IN THE TABLE ARE GROUND COORDINATES.

THE FOLLOWING QUANTITY HAS BEEN CARRIED TO THE GENERAL SUMMARY:

ITEM 823 - RIGHT-OF-WAY MONUMENT 41 EACH

STATION	OFFSET	NORTHING (GROUND)	EASTING (GROUND)
I-75			
372+39.55	228.00' RT	391,839.4116	1,532,306.3665
372+39.95	316.82' RT	391,839.4716	1,532,335.1911
373+10.00	267.00' RT	391,910.1018	1,532,286.2008
373+81.82	245.00' LT	391,987.9708	1,531,775.0857
373+97.00	230.00' LT	392,002.9714	1,531,790.2641
374+32.00	230.00' LT	392,037.9708	1,531,790.6779
376+30.00	267.00' RT	392,230.0795	1,532,289.9839
377+76.00	160.00' RT	392,377.3342	1,532,184.7174
379+17.64	160.00' RT	392,518.9676	1,532,186.3919
379+67.65	160.00' RT	392,568.9680	1,532,186.9831
379+90.00	160.00' RT	392,591.3193	1,532,187.2473
381+16.57	130.00' RT	392,718.2350	1,532,158.7458
381+65.12	130.00' RT	392,766.7861	1,532,159.3198
413+42.04	125.00' LT	395,947.1081	1,531,952.1885
414+08.61	112.47' RT	396,009.4076	1,532,190.8129
422+91.39	120.00' LT	396,896.2149	1,531,974.2391
427+53.24	120.00' LT	397,357.9927	1,531,982.5344
S.R. 309			
889+00.00	35.00' LT	391,642.9518	1,531,312.6174
889+00.00	42.00' LT	391,649.9517	1,531,312.6070
889+75.23	42.00' LT	391,650.0636	1,531,387.8395
891+12.94	47.00' LT	391,655.2682	1,531,525.5438
891+19.51	55.00' RT	391,553.2781	1,531,532.2616
893+49.65	130.00' RT	391,478.6202	1,531,762.5121
893+49.65	70.00' RT	391,538.6201	1,531,762.4230
893+99.65	70.00' RT	391,538.6944	1,531,812.4229
899+23.99	85.00' LT	391,694.4735	1,532,336.5353
899+40.00	65.00' LT	391,674.4973	1,532,352.5717
899+84.00	59.00' LT	391,668.5627	1,532,396.5805
901+35.00	54.50' LT	391,664.2871	1,532,547.5871
902+21.20	64.00' LT	391,673.9152	1,532,633.7742
902+41.00	52.00' LT	391,661.9447	1,532,653.5907
SR 81			
439+25.63	91.92' RT	400,460.9119	1,531,083.1533
446+84.00	82.00' RT	400,657.8072	1,531,805.5360

SERVICE RD 3			
30+15.00	17.18' RT	400,238.6515	1,530,191.6611
31+32.80	18.80' RT	400,258.3837	1,530,307.8107
33+25.30	21.00' RT	400,291.0733	1,530,497.5267
33+33.19	14.00' LT	400,326.9224	1,530,498.9437
36+50.00	30.00' LT	400,400.0192	1,530,807.6246
40+54.62	16.00' RT	400,428.0389	1,531,213.8872
41+35.33	16.00' RT	400,442.6509	1,531,293.2576

NEUBRECHT RD			
15+09.19	40.00' LT	400,908.8608	1,530,904.8244

CALCULATED SJG CHECKED EJC

GENERAL NOTES

ALL-75-5.53

J:\Projects\ALL\76691\roadway\sheets\76691GN009.dgn 11-SEP-2012 8:48PM reddenj

CALCULATED JRW CHECKED EJC

GENERAL NOTES

WATER WORK

SPECIFICATIONS

THE FOLLOWING SPECIFICATIONS ARE FOR AREAS SERVED BY THE CITY OF LIMA, INCLUDING THE FORT SHAWNEE SERVICE AREA. CONSTRUCTION WITHIN THE ALLEN WATER DISTRICT SHALL COMPLY WITH THE DISTRICT'S SPECIFICATIONS WHICH ALSO REQUIRE APPROVAL BY THE CITY OF LIMA.

WATERLINE MATERIAL

NOTE: ALL AMERICAN NATIONAL STANDARD INSTITUTE (ANSI) OR AMERICAN WATER WORKS ASSOCIATION (AWWA), SPECIFICATIONS SHALL BE THE LATEST REVISIONS. ALL MATERIALS SHALL BE OF AMERICAN MANUFACTURE.

1) DUCTILE IRON PIPE:

ALL PIPE USED SHALL BE MANUFACTURED OF DUCTILE IRON IN CONFORMANCE WITH ANSI A21.51 (AWWA C151) DUCTILE IRON PIPE, CENTRIFUGALLY CAST IN METAL MOLDS OR SAND LINED MOLDS, FOR WATER OR OTHER LIQUIDS AND ANSI A21.50 (AWWA C150) THICKNESS DESIGN OF IRON PIPE. THE PIPE SHALL BE LINED WITH A CEMENT MORTAR IN ACCORDANCE WITH ANSI A21.4 (AWWA C104)"CEMENT MORTAR LINING FOR CAST IRON AND DUCTILE IRON PIPE AND FITTINGS FOR WATER." DUCTILE IRON PIPE SHALL BE WITH "PUSH ON" RUBBER GASKET JOINTS IN ACCORDANCE WITH SPECIFICATIONS MEETING ANSI A21.11 (AWWA C111) AND ANSI A21.51 (AWWA C151).

DIAMETERS OF DUCTILE IRON PIPE 4 INCH THROUGH 16 INCH SHALL BE IN PRESSURE CLASS 350. OTHER PRESSURE CLASSES (WALL THICKNESS) MAY BE REQUIRED IN SUCH AREAS AS HIGHWAY CROSSINGS, STREAM CROSSINGS, EXTRA DEPTH OR FOR OTHER PIPE SIZES AND UNUSUAL INSTALLATIONS.

2) FITTINGS:

FITTINGS SHALL BE DUCTILE IRON AND DESIGNED FOR WORKING PRESSURES OF AT LEAST 350 POUNDS PER SQUARE INCH WORKING PRESSURE IN CONFORMANCE WITH ANSI A21.10 (AWWA C110) "GRAY IRON AND DUCTILE IRON FITTINGS, 3 INCHES THROUGH 48 INCHES, FOR WATER AND OTHER LIQUIDS" AND ANSI A21.53 88 (AWWA C153) DUCTILE IRON COMPACT FITTINGS 3 INCHES THROUGH 16 INCHES.

3) VALVES:

VALVES 4 INCHES THROUGH 16 INCHES SHALL BE OF RESILIENT SEATED GATE VALVE DESIGN. THE VALVES SHALL BE CONSTRUCTED WITH IRON BODY, FUSION BONDED EPOXY COATING ON ALL INTERIOR AND EXTERIOR SURFACES, NON RISING VALVE STEM, THE VALVE WEDGE SHALL BE DUCTILE IRON COMPLETELY ENCLOSED IN RUBBER. THE VALVE SHALL OPEN WHEN THE STEM WITH 2 INCH SQUARE NUT IS TURNED COUNTER CLOCKWISE. VALVES SHALL BE DESIGNED FOR A WORKING PRESSURE OF 200 PSI WHEN USED IN NON SHOCK COLD WATER. SERVICE STEM SEAL TO BE RUBBER O RING. VALVES SHALL CONFORM TO ANSI/AWWA STANDARD C509.

4) VALVE BOXES:

VALVE BOXES SHALL BE BUFFALO TYPE, WITH BASE, 5 1/4INCH SHAFT, SIZE "B", SCREW TYPE, EXTENDABLE 36 48 INCHES, LID TO MARKED "WATER". NOTE: VALVES MORE THAN 5 FOOT DEEP SHALL BE EQUIPPED WITH AN EXTENSION ROD WITH OPERATING NUT AT A DEPTH TO TOP OF NUT NOT MORE THAN 36 INCHES. SEE VALVE DETAILS (DETAIL PAGE NO.6. - 10/26/2010) ON SHEET 46.

DISTRIBUTION SYSTEM

1) DESIGN

THE DISTRIBUTION SYSTEM SHOULD BE LAID OUT IN A GRID SYSTEM WHERE POSSIBLE. WATER MAINS SHALL BE LOCATED 2 FEET BEHIND CURB AND WITH A MINIMUM OF 4 FEET OF COVER. THE WATER LINES SHALL HAVE A MINIMUM 1 FOOT CLEARANCE FROM ALL STRUCTURES.

2) PRESSURE

ALL WATER MAINS, INCLUDING THOSE NOT DESIGNATED TO PROVIDE FIRE PROTECTION, SHALL BE SIZED AFTER A HYDRAULIC ANALYSIS BASED ON FLOW DEMAND AND PRESSURE REQUIREMENTS. THE SYSTEM SHALL BE DESIGNED TO MAINTAIN A MINIMUM PRESSURE OF 20 PSI AT GROUND LEVEL AT ALL POINTS IN THE DISTRIBUTION SYSTEM UNDER ALL CONDITIONS OF FLOW.

3) DIAMETERS OF PIPE

THE MINIMUM SIZE OF WATER MAIN FOR PROVIDING FIRE PROTECTION AND SERVING FIRE HYDRANTS SHALL BE 6 INCH DIAMETER.
IN RESIDENTIAL DISTRICTS, MAINS SHALL BE NO LESS THAN 6 INCHES IN DIAMETER. 6 INCH MAINS MAY NOT EXCEED 600 FEET IN LENGTH BETWEEN MAJOR INTERSECTING MAINS.
IN COMMERCIAL DISTRICTS, THE MINIMUM SIZE WATER MAIN SHALL BE 8 INCH DIAMETER, WITH INTERSECTING MAINS ON EACH STREET AND 12 INCH MAINS ON ALL PRINCIPAL STREETS.
ANY DEPARTURE FROM THE MINIMUM REQUIREMENTS SHALL BE APPROVED BY THE UTILITIES DEPARTMENT. ONLY IN SPECIAL LOOPING REQUIREMENTS WILL A 4 INCH PIPE BE ALLOWED IN THE DISTRIBUTION SYSTEM.
THE OVERALL MASTER DEVELOPMENT PLAN FOR FUTURE WATER USE MAY REQUIRE LARGER SIZED MAINS THAN ARE NEEDED TO SERVE A SPECIFIC AREA, BASED ON THE CURRENT WATER DISTRIBUTION NODE MAP.

4) DEAD ENDS

DISTRIBUTION MAINS CONNECTING WITH ARTERIAL MAINS, LOOPED AROUND THE AREA SERVED, SHALL CONTAIN NO DEAD ENDS. WHERE DEAD END MAINS OCCUR, DUE TO PHASED DEVELOPMENT, THEY SHALL BE PROVIDED WITH A FIRE HYDRANT IF FLOW AND PRESSURE ARE SUFFICIENT, OR WITH AN APPROVED FLUSHING HYDRANT OR BLOW OFF FOR FLUSHING PURPOSES. NO FLUSHING DEVICE SHALL BE DIRECTLY CONNECTED TO ANY SEWER.

5) VALVES

SUFFICIENT VALVES SHALL BE PROVIDED ON WATER MAINS SO THAT INCONVENIENCE AND SANITARY HAZARDS WILL BE MINIMIZED DURING REPAIRS.

VALVES SHALL BE LOCATED AT NOT MORE THAN 500 FOOT INTERVALS IN COMMERCIAL DISTRICTS AND AT NOT MORE THAN ONE BLOCK OR 700 FOOT INTERVALS IN RESIDENTIAL DISTRICTS. VALVES LOCATED IN THE CENTER OF BLOCKS SHALL BE LOCATED AT PROPERTY BOUNDARY LINES.
VALVES ARE TO BE LOCATED OUT OF THE SURFACED STREET AREA, WHERE POSSIBLE. TOP OF VALVE BOXES SHALL BE BROUGHT TO GRADE LEVEL.
THE LOCATION OF VALVES AT TEES AND CROSSES SHALL BE IN ACCORDANCE WITH THE APPROVED PLANS AND SHALL PROVIDE FULL CONTROL OF THE FLOW IN EACH BRANCH LINE.
A VALVE SHALL BE REQUIRED AT LOCATIONS WHERE A MAIN ENTERS AN EASEMENT ONTO PRIVATE PROPERTY.
THE INTERFACE OF A SUBDIVISION, WHICH IS BEING SECTIONALLY DEVELOPED, SHALL HAVE THE MAINS VALVED AT SUCH INTERFACE. THE SECTIONAL DEVELOPMENT IS TO BE INDICATED ON THE OVERALL PLAN OF THE SUBDIVISION.

INSTALLATION OF MAINS

A CONTINUOUS AND UNIFORM BEDDING SHALL BE PROVIDED IN THE TRENCH FOR ALL BURIED PIPE IN ACCORDANCE TO THE UTILITIES DEPARTMENT SPECIFICATIONS. SEE TRENCH DETAIL ON SHEET 46. BACKFILL MATERIAL, 1 FOOT CLEAN EARTH MINIMUM, SHALL BE TAMPED AROUND THE PIPE AND TO A SUFFICIENT HEIGHT ABOVE PIPE TO ADEQUATELY SUPPORT AND PROTECT PIPE. STONES FOUND IN THE TRENCH SHALL BE REMOVED FOR DEPTH OF AT LEAST SIX INCHES BELOW THE BOTTOM OF PIPE.
ALL TEES, BENDS, PLUGS AND HYDRANTS SHALL BE PROVIDED WITH CONCRETE REACTION BLOCKING, SUPPORTS AND/OR BUTTRESSES. SEE CONCRETE THRUST RESTRAINT DETAIL ON SHEET 46. RESTRAINING MECHANISMS AND ANCHORING SYSTEMS, UPON APPROVAL FROM THE UTILITIES DEPARTMENT MAY BE USED IN LIEU OF CONCRETE BLOCKING AND MAY BE REQUIRED IN CERTAIN APPLICATIONS.

SEPARATION OF WATER MAINS AND SEWERS

IF POSSIBLE, SANITARY SEWERS AND SEWAGE FORCE MAINS SHOULD BE LAID WITH AT LEAST A 10 FOOT HORIZONTAL SEPARATION FROM ANY WATER MAIN. SEWERS (OR SEWAGE FORCE MAINS) MAY BE LAID CLOSER THAN 10 FEET TO A WATER MAIN, IF IT IS LAID IN A SEPARATE TRENCH AND ELEVATION OF THE CROWN OF THE SEWER (OR SEWAGE FORCE MAIN) IS AT LEAST 18 INCHES BELOW THE BOTTOM OF THE WATER MAIN. IF IT IS IMPOSSIBLE TO MAINTAIN THE 18 INCH VERTICAL SEPARATION WHEN THE SEWER IS LAID CLOSER THAT 10 FEET TO THE WATER MAIN, THE SANITARY SEWER SHOULD BE CONSTRUCTED OF (OR ENCASED IN) WATER MAIN TYPE MATERIALS WHICH WILL WITHSTAND A 50 PSI WATER PRESSURE TEST.

IF A SEWAGE FORCE MAIN IS LAID CLOSER THAN 10 FEET TO A WATER MAIN, IN NO CASE SHOULD THE SEWAGE FORCE MAIN BE LAID SUCH THAT THE CROWN OF THE SEWAGE FORCE MAIN IS LESS THAN 18 INCHES BELOW THE WATER MAIN.

WHENEVER A SANITARY SEWER AND WATER MAIN MUST CROSS, THE SEWER SHALL BE LAID AT SUCH AN ELEVATION THAT THE CROWN OF THE SEWER IS AT LEAST 18 INCHES BELOW THE BOTTOM OF THE WATER MAIN. IF IT IS ABSOLUTELY IMPOSSIBLE TO MAINTAIN THE 18 INCH VERTICAL SEPARATION, THE SANITARY SEWER SHOULD BE CONSTRUCTED OF (OR ENCASED IN) WATER MAIN TYPE MATERIALS WHICH WILL WITHSTAND A 50 PSI PRESSURE TEST FOR A DISTANCE OF 10 FEET ON BOTH SIDES OF THE WATER MAIN.

WHENEVER A SEWAGE FORCE MAIN AND WATER MAIN MUST CROSS, THE SEWAGE FORCE MAIN SHALL BE LAID AT SUCH AN ELEVATION THAT THE CROWN OF SEWAGE FORCE MAIN IS AT LEAST 18 INCHES BELOW THE BOTTOM OF THE WATER MAIN.

CROSS CONNECTIONS

THERE SHALL BE NO CONNECTIONS BETWEEN THE DISTRIBUTION SYSTEM AND ANY PIPES, PUMPS, HYDRANTS OR TANKS WHEREBY UNSAFE WATER OR OTHER CONTAMINATING MATERIALS MAY BE DISCHARGED OR DRAWN INTO THE SYSTEM.

SERVICE CONNECTIONS

EACH SERVICE CONNECTION SHALL BE INDIVIDUALLY METERED, INCLUDING FIRE PROTECTION SERVICES. FIRE SERVICE DETECTOR CHECKS SHALL REQUIRE A SIDE METER, CHECK VALVE AND GATE VALVE. SEE DETECTOR CHECK DETAILS ON SHEET 47.

FOR A METER LOCATION INSIDE THE BUILDING, PRIOR APPROVAL MUST BE GIVEN THE SYSTEM BY THE UTILITIES DEPARTMENT.

REGULATIONS GOVERNING WATER SERVICE REQUIRES THE FOLLOWING:
1. ANY DAMAGE OR MALFUNCTION OF THE METER SHALL BE REPORTED TO THE UTILITIES DEPARTMENT.
2. THE UNAUTHORIZED TAMPERING WITH ANY BY PASS VALVES, SERVICE VALVES, METERS OR FIXTURES SHALL BE CONSIDERED AN ILLEGAL USE OF WATER.
3. THE UTILITIES DEPARTMENT SHALL APPROVE THE USE OF WATER AND SHALL RETAIN THE RIGHT TO CONDUCT SANITARY AND USAGE SURVEYS FOR COMPLIANCE TO THE RULES AND REGULATIONS OF THE DEPARTMENT.

CONSTRUCTION METHODS

PIPE INTERIORS WILL BE KEPT FREE OF ALL DIRT AND FOREIGN MATTER PRIOR TO LAYING AND, IN THE EVENT THAT DIRT OR FOREIGN MATTER SHOULD APPEAR ON THE INTERIOR, THE PIPE SHALL BE THOROUGHLY CLEANED BY BRUSHING OR SWABBING BEFORE LAYING. MEANS SHALL BE PROVIDED TO PREVENT THE ENTRY OF DIRT DURING THE PROCESS OF INSTALLATION, ESPECIALLY DURING INTERRUPTION OF CONSTRUCTION. OPEN ENDS SHALL BE SECURELY PROTECTED AT THE CLOSE OF EACH DAY'S WORK TO PREVENT THE ENTRANCE OF ANY FOREIGN OBJECT.

MINIMUM COVER SHALL BE FOUR FEET EXCEPT AT SUCH LOCATIONS AS THE UTILITIES DEPARTMENT REPRESENTATIVE MAY CONSIDER A LESSER COVER PERMISSIBLE. IN LOCATIONS WHERE A LESSER COVER IS TO BE PROVIDED, APPROVAL SHALL BE MADE IN WRITING BY THE REPRESENTATIVE OF THE UTILITIES DEPT., CLEARLY DESCRIBING THE LOCATION AND STATING THE LESSER AMOUNT OF COVER TO BE PROVIDED.

THE GENERAL PROPOSED LOCATION OF THE WATER LINE, VALVES AND FITTINGS AS WELL AS CONNECTIONS TO THE EXISTING WATER LINES SHALL BE AS SHOWN ON THE APPROVED CONSTRUCTION DRAWING. IF, DURING THE COURSE OF THE WORK, UNFORESEEN CONDITIONS ARISE, THE LOCATION OF THE WATER LINE MAY BE CHANGED AS DIRECTED BY THE UTILITIES DEPT. REPRESENTATIVE.

THE CONTRACTOR OR DEVELOPER SHALL PLACE FIELD STAKES AT 10 FOOT OFFSET SHOWING CENTER LINE AND GRADE OF WATERLINE. INSPECTORS WILL REQUIRE THE CONTRACTOR TO ADHERE TO APPROVED PLANS AND FIELD STAKING IN ALL CASES UNLESS CHANGES ARE APPROVED BY THE UTILITIES DIRECTOR OR HIS DESIGNATED REPRESENTATIVE. STAKING DISTANCE 25 FOOT CURVE, 50 FOOT DEVELOPED AREAS, 100 FOOT RURAL AREAS. WHEN REQUESTING SERVICE TAPS, ALL LOTS MUST BE PROPERLY IDENTIFIED BY PERMANENT LOT NUMBER OR ADDRESS.

IF CONSTRUCTION IS BY UTILITIES DEPARTMENT FORCES, STREET MUST BE SUB GRADED BY CONTRACTOR PRIOR TO WATER LINE CONSTRUCTION.

THE WATER LINE PIPE SHALL BE LAID, BEDDED AND BACKFILLED IN THE EXCAVATED TRENCH IN ACCORDANCE WITH AWWA STANDARD C600. SEE TRENCH DETAILS ON GENERAL NOTE SHEET 46. GRANULAR BACKFILL IS TO BE USED IN ALL AREAS OF EXISTING AND FUTURE PAVING. FOR CONSTRUCTION IN PAVED AREAS, SEE PAVEMENT REPLACEMENT DETAILS ON SHEET 46.

POLY WRAP 8 MIL BLUE POLYETHYLENE WRAP SHALL BE USED ON ALL DUCTILE IRON PIPE, VALVES AND FITTINGS. ADDITIONAL PROTECTION MAY BE REQUIRED IN AREAS OF POTENTIALLY CORROSIVE CONDITIONS. POLY WRAP AND METHODS USED SHALL CONFORM TO AWWA STANDARD C105. SEE POLY WRAP DETAILS ON SHEET 46.

CONCRETE BLOCKING, SUPPORTS AND /OR BUTTRESSES SHALL BE PROVIDED AT ALL TEES, BENDS AND VALVES AND OTHER LOCATIONS AS SHOWN ON APPROVED CONSTRUCTION DRAWINGS OR AS DIRECTED BY THE UTILITIES DEPARTMENT. SEE CONCRETE THRUST RESTRAINT DETAILS ON SHEET 46. RESTRAINING MECHANISMS AND ANCHORING SYSTEMS, UPON APPROVAL BY THE UTILITIES DEPARTMENT MAY BE USED IN LIEU OF CONCRETE BLOCKING. LOOSE OR SANDY SOIL CONDITIONS WILL REQUIRE THE USE OF RESTRAINING MECHANISMS OR ANCHORING SYSTEMS.

ALL-75-5.53

J:\Projects\ALL\76691\roadway\sheets\76691GN004.dgn 11-SEP-2012 8:48PM reddenj

CALCULATED JRW CHECKED EJC

GENERAL NOTES

CONSTRUCTION METHODS CONT'D.

BORINGS/ROADWAY CROSSINGS - ALL STATE OF OHIO HIGHWAYS SHALL BE BORED AND CASED. CROSSINGS OF ANY ALLEN COUNTY, TOWNSHIP OR CITY OF LIMA ROADWAY MUST HAVE PRIOR APPROVAL FOR METHOD OF CROSSING. ALL BORINGS SHALL COMPLY WITH CURRENT ODOT STANDARDS. STAINLESS STEEL CASING SPACERS LIKE THOSE MANUFACTURED BY CASCADE WATERWORKS MFG. OR AN APPROVED EQUAL SHALL BE USED. THE SPACERS ARE TO BE PLACED AT 10 FT. INTERVALS. THE ENDS OF THE CASING SHALL BE SEALED WITH 8 INCH BRICKS AND MORTAR OR APPROVED RUBBER END SEALS. THE FOLLOWING CASING SIZES SHALL BE USED: 6" PIPE - 16" CASING, 8" PIPE - 18" CASING, 10" PIPE - 22" CASING, 12" PIPE - 24" CASING, 16" PIPE - 30" CASING.

SPECIAL INSTRUCTIONS

THE CONTRACTOR WILL BE RESPONSIBLE FOR CONTACTING THE UTILITIES DEPARTMENT OF THE CITY OF LIMA 48 HOURS PRIOR TO THE START OF ANY WORK. IF ANY DISRUPTION OF WATER SERVICE IS PLANNED IN THE PROJECT THE CONTRACTOR MUST NOTIFY ALL PEOPLE INVOLVED AT LEAST 24 HOURS IN ADVANCE OF THE DISRUPTION OF SERVICE. THE CONTRACTOR SHALL CONTACT OHIO UTILITIES PROTECTION SERVICE (800) 362-2764 AT LEAST TWO WORKING DAYS BEFORE BEGINNING WORK, AND NOTIFY ANY OTHER UTILITIES NOT MEMBERS OF OUPS.

THE CONTRACTOR SHALL MAKE ALL CONNECTIONS SHOWN ON APPROVED CONSTRUCTION DRAWINGS. IF FIELD CONDITIONS REQUIRE ADJUSTMENTS OR DEVIATIONS, ALL SUCH CHANGES SHALL BE APPROVED BY THE UTILITIES DEPARTMENT REPRESENTATIVE.

PIPE AND FITTINGS SHALL BE HANDLED AND UNLOADED CAREFULLY. ROLLING PIPE FROM TRUCKS IS PROHIBITED AND SHALL BE CAUSE FOR REJECTION.

INSPECTION

ALL WATERLINE CONSTRUCTION PROJECTS MUST HAVE CONTINUOUS INSPECTION BY A TECHNICALLY QUALIFIED REPRESENTATIVE OF THE CONSULTING ENGINEER OR THE CITY OF LIMA. THE CITY OF LIMA RESERVES THE RIGHT TO CHARGE THE PROJECT DEVELOPER FOR INSPECTION SERVICES PROVIDED BY A CITY OF LIMA REPRESENTATIVE IF NO INSPECTOR IS PROVIDED BY THE CONSULTING ENGINEER. THE CITY OF LIMA ALSO RESERVES THE RIGHT TO FURNISH A REPRESENTATIVE TO OBSERVE THE PROJECT TO ENSURE THAT ALL SPECIFICATIONS ARE BEING FOLLOWED.

WATER MAIN PROJECTS AND INSPECTION MUST INCLUDE THE FOLLOWING:

1. PRIOR TO THE CONSTRUCTION OF ANY WATER MAIN PROJECT, 2 SETS OF APPROVED CONSTRUCTION DRAWINGS, COMPLETE WITH ALL MATERIAL AND CONSTRUCTION SPECIFICATIONS SHALL BE DELIVERED TO THE UTILITIES DEPT.
2. THE CITY OF LIMA DEPT OF UTILITIES MUST BE NOTIFIED 48 HOURS PRIOR TO START OF ANY WATER LINE PROJECT. FAILURE TO NOTIFY MAY REQUIRE EXCAVATING INSTALLED MATERIALS OR REFUSAL BY THE CITY OF LIMA TO PROVIDE WATER TO THE PROJECT.
3. ALL MATERIALS AND INSTALLATION PRACTICES MEET THE CITY OF LIMA SPECIFICATIONS.
4. THE MANUFACTURER'S NAME OF ALL WATER MAIN, FIRE HYDRANTS AND VALVES SHALL BE RECORDED, AS WELL AS THE NUMBER OF TURNS NECESSARY TO OPERATE EACH SIZE OF VALVE. THIS DATA MUST BE PROVIDED TO THE DEPT. UTILITIES UPON COMPLETION OF THE PROJECT.
5. ALL VALVE LOCATIONS SHALL MEASURED FROM FIRE HYDRANTS AND THE CENTERLINE OF THE ROADWAY.
6. ANY CHANGE OF LOCATION OR DEPTHS FROM CONSTRUCTION DRAWINGS MUST BE NOTED AND REFERENCED TO AN EXISTING LANDMARK.
7. ALL VALVE AND SERVICE BOXES ARE REQUIRED TO BE "TO GRADE" WITH THE OPERATING NUT CENTERED, AND OPERATING NUT EXTENSIONS INSTALLED ON VALVES IF REQUIRED PER SPECIFICATIONS.
8. PRESSURE TESTING SHALL BE SUPERVISED AND SHALL BE CONDUCTED IN ACCORDANCE WITH AWWA C600 AND CITY OF LIMA SPECIFICATIONS.
9. ALL VALVE AND SERVICE BOXES MUST BE TO GRADE WITH NO DAMAGE AFTER GRADING AND SEEDING.

UPON COMPLETION OF ALL WATERLINE CONSTRUCTION PROJECTS, THE CITY OF LIMA UTILITIES DEPARTMENT OR IT'S REPRESENTATIVE SHALL CONDUCT A FINAL INSPECTION OF THE PROJECT BEFORE A FINAL APPROVAL IS GIVEN.

"AS BUILT" DRAWINGS AND THE DEDICATED FINAL PLAT, SHOWING LOT NUMBERS SHALL BE FURNISHED TO THE UTILITIES DEPARTMENT ON REPRODUCIBLE MEDIA. IF DRAWINGS ARE PRODUCED ON AUTOCAD SOFTWARE, DRAWING FILES ON DISKETTE SHALL BE FURNISHED. AS-BUILT DRAWINGS MUST BE SUBMITTED IN ORDER TO RECEIVE FINAL PROJECT APPROVAL.

HYDROSTATIC TESTS

AFTER COMPLETION OF THE LINE CONSTRUCTION, THE CONTRACTOR SHALL UNDER THE SUPERVISION OF THE CITY OF LIMA OR THE AUTHORIZED INSPECTOR, SUBJECT THE LINE TO A PRESSURE TEST.(IN CONFORMANCE WITH ANSI/AWWA STANDARD C600)

EACH VALVED SECTION OF WATER MAIN SHALL BE TESTED INDEPENDENTLY OF ONE ANOTHER UNLESS OTHERWISE APPROVED BY THE CITY OF LIMA. IN NO CASE SHALL THE VALVED SECTION EXCEED 2000 FEET. ANY TESTING AGAINST EXISTING VALVES SHALL BE AT THE CONTRACTORS RISK AND IN STRICT COMPLIANCE WITH THE CITY OF LIMA. IF SATISFACTORY RESULTS CANNOT BE OBTAINED AGAINST AN EXISTING VALVE, THE NEW LINE SHALL BE DISCONNECTED FROM THE EXISTING, PLUGGED AND RETESTED. ANY DAMAGE CAUSED TO EXISTING LINES, VALVES AND SERVICE CONNECTIONS SHALL BE REPAIRED BY THE CONTRACTOR AT THE CONTRACTOR'S EXPENSE.

THE CONTRACTOR SHALL FURNISH THE PUMP, GAUGES AND OTHER APPARATUS FOR THE ABOVE TEST INCLUDING MEASURABLE WATER CONTAINER. SUCH WATER CONTAINER SHALL BE FREE OF FOREIGN MATTER AND DISINFECTED.

THE LINE SHALL NOT BE TESTED BEFORE CONCRETE USED AS THRUST BLOCKING SHALL HAVE TAKEN A PERMANENT SET.

THE FOLLOWING TESTING PROCEDURE SHALL BE FOLLOWED:

THE LINE SHALL BE SLOWLY FILLED WITH WATER ALLOWING AIR TO BE EXPELLED THRU HYDRANTS AND/OR CORPORATION STOPS, INSTALLED AT ALL HIGH POINTS ON THE MAIN. ALL HYDRANT WATCH VALVES WITHIN THE SECTION BEING TESTED SHALL BE IN THE OPEN POSITION. HYDROSTATIC PRESSURE SHALL BE APPLIED BY MEANS OF A PUMP, TAKING WATER FROM A CLEAN AUXILIARY SUPPLY. THE TEST PRESSURE SHALL BE AT LEAST 150 PSI OR 1.5 TIMES THE WORKING PRESSURE AT THE POINT OF TESTING AND THE DURATION OF THE TEST SHALL BE NOT LESS THAN 2 HOURS. ALLOWABLE LEAKAGE SHALL NOT EXCEED THE AMOUNT SHOWN ON THE ENCLOSED TABLE. (TAKEN FROM ANSI/AWWA STANDARD C600 87 PAGE 19)

ALLOWABLE LEAKAGE PER 1000 FT OF PIPELINE* - GPH

AVG. TEST PRESSURE PSI	NOMINAL PIPE DIAMETER - IN.						
	2	4	6	8	10	12	16
250	0.24	0.47	0.71	0.95	1.19	1.42	1.9
225	0.23	0.45	0.68	0.9	1.13	1.35	1.8
200	0.21	0.43	0.64	0.85	1.06	1.28	1.7
175	0.2	0.4	0.59	0.8	0.99	1.19	1.59
150	0.19	0.37	0.55	0.74	0.92	1.1	1.47

*FOR PIPE WITH 18 FT. LENGTHS.

DISINFECTION

AFTER THE LINE HAS BEEN FLUSHED AND HAS PASSED THE PRESSURE TEST, THE LINE SHALL BE DISINFECTED IN ACCORDANCE WITH AWWA STANDARD C651. A CHLORINE SOLUTION SHALL BE INTRODUCED IN SUFFICIENT STRENGTH SO AS TO ACHIEVE A MINIMUM 50 MG/L(PPM) AVAILABLE CHLORINE IN THE PIPE SECTION TO BE TESTED, AS DETERMINED BY THE UTILITIES DEPT.

THE CHLORINATED WATER SHALL BE RETAINED IN THE MAIN FOR AT LEAST 24 HOURS, DURING WHICH TIME ALL VALVES AND HYDRANTS IN THE SECTION TO BE TESTED SHALL BE OPERATED IN ORDER TO DISINFECT THE APPURTENANCES. AT THE END OF THIS 24 HOUR PERIOD, THE TREATED WATER SHALL CONTAIN NO LESS THAN 25 MG/L(PPM) RESIDUAL CHLORINE THROUGHOUT THE LENGTH OF THE MAIN.

AFTER DETERMINING THAT THE MAIN TO BE TESTED HAS A CHLORINE RESIDUAL OF 25 MG/L(PPM) OR MORE, THE MAIN SHALL BE FLUSHED UNTIL THE CONCENTRATION OF CHLORINE HAS BEEN REDUCED TO THAT IN THE MAINS IN SERVICE IN THE AREA. AFTER THIS HAS BEEN ACCOMPLISHED, BACTERIA TESTS SHALL BE COLLECTED FROM EVERY 1200 FT. OF NEW MAIN, FROM THE END OF THE LINE, AT ALL "DEAD ENDS" AND SECTIONS ISOLATED BY VALVES. TESTS SHALL BE TAKEN ON COPPER SERVICES INSTALLED FOR THE PURPOSE OF CHLORINATION AND BACTERIA TESTING. THE TEST POINTS WILL BE INSTALLED PAST VALVES USED FOR "DEAD ENDS" AND ISOLATING SECTIONS OR AS DIRECTED BY THE UTILITIES DEPT. AT NO TIME SHALL FIRE HYDRANTS BE USED FOR BACTERIA TESTS.

ALL VALVES ON ACTIVE MAINS SHALL BE OPERATED ONLY BY UTILITIES DEPT. PERSONNEL TO ENSURE A POSITIVE FLOW AND TO PREVENT CONTAMINATION OF ACTIVE MAINS. A SECOND SET OF BACTERIA TESTS SHALL BE TAKEN IN 24 HOURS AT THE SAME TEST POINTS. THE ACTUAL TESTING (AS MENTIONED ABOVE) SHALL BE DONE BY THE UTILITIES DEPT. AT NO COST TO THE CONTRACTOR. THE CONTRACTOR SHALL BE RESPONSIBLE TO OPERATE VALVES, HYDRANTS AND TO SUPPLY AND USE A PROPANE TORCH TO HEAT THE COPPER TEST POINTS AT TIME OF TESTING. IF BACTERIA TESTS INDICATE THAT WATER FROM THE LINE IS NOT OF SATISFACTORY SANITARY QUALITY, THE ABOVE PROCEDURES SHALL BE REPEATED UNTIL SATISFACTORY RESULTS ARE OBTAINED. THIS ADDITIONAL TESTING SHALL BE AT THE EXPENSE OF THE CONTRACTOR.

AFTER COMPLETION OF BACTERIA TESTING, ALL TEST COPPER MUST BE REMOVED AND EXCAVATIONS FILLED BEFORE WATER MAIN IS PUT IN SERVICE.

SERVICE & METER REQUIREMENTS

THE ITEMS INDICATED BELOW ARE A PARTIAL LISTING OF SERVICE REQUIREMENTS. FOR A COMPLETE EXPLANATION OF THE RULES AND REGULATIONS AND POLICIES, THE CITY OF LIMA DEPT OF UTILITIES SHOULD BE CONTACTED.

1. TAPS AND SERVICES SHALL BE INSTALLED ONLY BY AUTHORIZED AGENTS OF THE CITY. APPLICATIONS SHALL BE MADE AT THE DEPARTMENT OF UTILITIES. PRIOR TO INSTALLATION, THE OWNER OR APPLICANT SHALL PLACE A STAKE AT THE DESIRED WATER SERVICE LOCATION AND IDENTIFY THE HOUSE AND/OR LOT NUMBER OF THE PROPERTY. CONTRACTOR SHALL CONTACT THE CITY TO DETERMINE REQUIRED LEAD-TIME TO SCHEDULE THE WORK.
2. ONLY AUTHORIZED AGENTS OF THE CITY SHALL OPERATE ANY VALVE, STOP COCK, CORPORATION STOP OR HYDRANT OPERATOR.
3. NO ADDITION OR ALTERATION IN ANY PIPE BETWEEN THE WATER MAIN AND THE METER OR CHANGE OF ANY METER SHALL BE MADE WITHOUT WRITTEN PERMISSION OF THE UTILITIES DEPARTMENT.
4. ALL SERVICE LINES ON THE WATER MAIN SIDE OF ALL METERS OF 2 INCH AND LESS INSIDE DIAMETER SHALL BE OF TYPE "K" COPPER. FLARED, APPROVED COMPRESSION OR SILVER SOLDER FITTINGS SHALL BE UTILIZED FOR COPPER PIPE.

   SERVICE LINES LARGER THAN 2 IN. SHALL BE MANUFACTURED OF DUCTILE IRON.

   PLASTIC PIPE AND OTHER MATERIALS, ALL MEETING THE STATE PLUMBING CODE SPECIFICATIONS FOR DISTRIBUTION OF POTABLE WATER, MAY BE USED ONLY ON THE PROPERTY SIDE OF THE METER. ALL PIPE ON THE CITY SIDE OF THE METER, INCLUDING THE PIPE FROM THE CURB STOP TO A CITY METER LOCATED INSIDE A FACILITY, SHALL BE TYPE "K" COPPER FOR PIPE SIZES 2 IN. AND LESS.

   WHERE A SERVICE VAULT IS INSTALLED, DUCTILE IRON PIPE SHALL BE USED FROM THE MAINLINE THROUGH THE VAULT FOR PIPE SIZES LARGER THAN 2 IN. SIZES 2 IN AND LESS SHALL USE TYPE "K" COPPER. SERVICE VAULTS SHALL BE INSTALLED IN ACCORDANCE WITH DEPARTMENT SPECIFICATIONS.

   NO SERVICE LINE SHOULD BE INSTALLED NEARER THAN 10 FEET OF ANY SEWER LINE, IF THIS IS IMPRACTICAL, THE INSTALLATION SHALL BE IN ACCORDANCE WITH THE OHIO ENVIRONMENTAL PROTECTION AGENCY (OEPA) SPECIFICATIONS.

   FIRE SERVICE INSTALLATIONS SHALL BE APPROVED BY THE UTILITIES DEPARTMENT.
5. NO PERSON, FIRM OR CORPORATION SHALL ESTABLISH AND/OR MAINTAIN A PRIVATE, AUXILIARY OR EMERGENCY WATER SUPPLY CONNECTION TO THE PUBLIC SYSTEM, ANY EXCEPTION MUST MEET THE OEPA SPECIFICATIONS WITH THE INSTALLATION OF THE PROPER BACKFLOW PREVENTION DEVICE AND WRITTEN APPROVAL BY THE DIRECTOR OF UTILITIES. SUCH CONNECTIONS INCLUDE, BUT NOT LIMITED TO, PRIVATE WELL SUPPLIES USED FOR DRINKING, LAWN WATERING, FIRE FIGHTING AND/OR PRODUCTION WATER.
6. ALL METER INSTALLATIONS SHALL RECEIVE APPROVAL FROM THE DEPARTMENT. SEE METER INSTALLATION DETAIL ON SHEET 47. INSIDE METERS SHOULD BE INSTALLED SUCH THAT SUFFICIENT CLEARANCE OF THE OUTSIDE WALL IS PROVIDED TO COMPLETE THE METER CONNECTIONS, BUT LIMITED TO THE SPACE REQUIRED FOR THE METER AND VALVING, IMMEDIATELY ADJACENT TO THE OUTSIDE WALL WHERE THE SERVICE ENTERS.

   NO CUSTOMER DISTRIBUTION LINES SHALL BE ALLOWED PRIOR TO THE METERING OF THE WATER.

   METERS 2 INCH AND LARGER; INSTALLED 1 FOOT ABOVE FLOOR LEVEL

   METERS 1 ½INCH AND SMALLER, INSTALLED NO HIGHER THAN 3 FEET ABOVE FLOOR LEVEL.

   ONE (1) INCH AND SMALLER INSTALLATIONS; REQUIRES A SHUT OFF VALVE AHEAD OF AND BEHIND THE METER.

   ONE AND ONE HALF (1 1/2) INCH AND LARGER INSTALLATIONS; REQUIRES SHUT OFF VALVES AHEAD AND BEHIND METER. ALL COMPOUND METERS SHALL HAVE A SPOOL PIECE OR EQUIVALENT OF AT LEAST 10 INCHES BETWEEN THE METER AND THE OUTLET VALVE.

   ALL METERS SHALL HAVE STRAIGHT PIPE ON THE INLET SIDE OF THE METER EQUAL TO EIGHT (8) TIMES THE DIAMETER OF THE PIPE AND TWO (2)TIMES THE PIPE DIA. ON THE OUTLET SIDE.

   PRIOR TO RELEASE OF METERS FOR INSTALLATION BY PRIVATE CONTRACTORS, THE SITE OF INSTALLATION SHALL BE INSPECTED FOR COMPLIANCE TO DEPARTMENT SPECIFICATIONS.

   THE CITY OF LIMA SHALL PROVIDE ALL METERS UTILIZED FOR METERING OF DOMESTIC WATER.

   DETECTOR CHECKS WITH THE SIDE BY PASS METER SHALL BE THE RESPONSIBILITY OF THE OWNER APPLICANT. THE BY PASS METER INSTALLATION SHALL BE OF THE STANDARD SIZE, BASED ON THE DIA. OF THE THREADED BOSS PROVIDED ON THE DETECTOR CHECKS.

ALL-75-5.53

J:\Projects\ALL\76691\roadway\sheets\76691GN005.dgn 11-SEP-2012 8:48PM reddenj

CALCULATED JRW | CHECKED ABS

GENERAL NOTES

WATER LINE TRENCH DETAILS

NOTE: ALL WATER LINES SHALL HAVE A MINIMUM OF 4'-0" OF COVER AND SHALL BE LAID 2 FT. BEHIND THE CURB UNLESS A WAIVER IS GIVEN BY THE DEPARTMENT OF UTILITIES. A MINIMUM OF 1 FT. CLEARANCE SHALL BE REQUIRED FROM ANY STRUCTURE.

CONTRACTOR OR DEVELOPER SHALL PLACE FIELD STAKES AT 10 FT. OFFSET SHOWING CENTER LINE AND GRADE OF WATER LINE. INSPECTORS WILL REQUIRE CONTRACTOR TO ADHERE TO APPROVED PLANS AND FIELD STAKING IN ALL CASES UNLESS CHANGES ARE APPROVED BY UTILITIES DIRECTOR OR DESIGNATED REPRESENTATIVE.

IF CONSTRUCTION IS BY UTILITIES DEPARTMENT PERSONNEL, STREET MUST BE SUBGRADED BY CONTRACTOR PRIOR TO WATER LINE CONSTRUCTION.

ALL PIPE, VALVES AND FITTINGS SHALL HAVE BLUE POLYETHYLENE WRAP APPLIED PRIOR TO BACKFILLING TRENCH WITH EITHER GRANULAR MATERIAL OR SELECT SOIL.

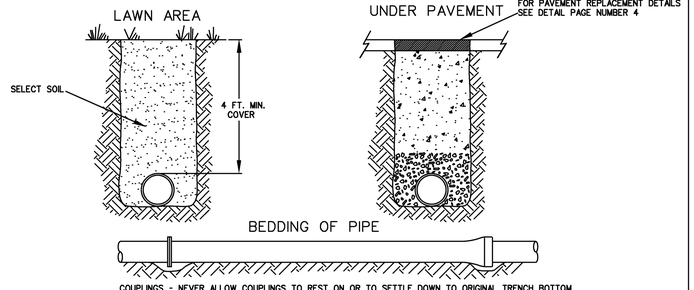

FILE NAME:DPN3

DETAIL PAGE NUMBER 3

LAYING CONDITIONS: IN ACCORDANCE WITH AWWA C600
LAWN AREA - TYPE 1 (FLAT BOTTOM TRENCH - SELECT SOIL BACKFILL)
PAVEMENT AREA - TYPE 1 (FLAT BOTTOM TRENCH - 9"FT. MINIMUN GRANULAR WITH POLY WRAP AND CONTROLLED DENSITY FILL)
ROCK AREA - TYPE 5 (PIPE BEDDED IN COMPACTED GRANULAR TO 1 FT. ABOVE PIPE WITH BLUE POLY WRAP)

CITY OF LIMA, DEPT. OF UTILITIES
WATERLINE GENERAL SPECIFICATIONS
WATER LINE TRENCH DETAILS

DRAWN:	DATE:	DETAIL PAGE NUMBER 3
K.SHOEMAKER	10/26/10	

PAVEMENT REPLACEMENT DETAILS

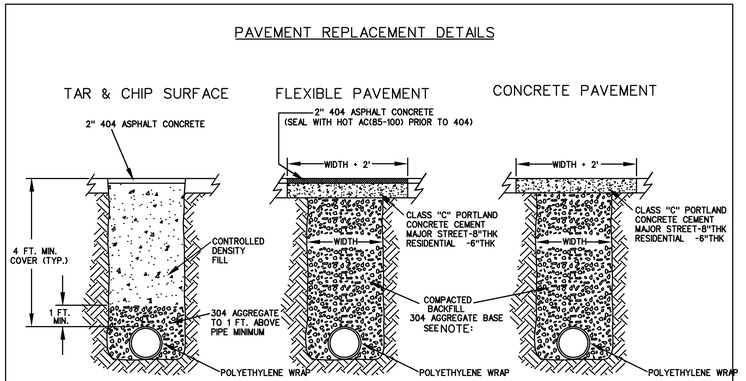

FILE NAME:DPN4

DETAIL PAGE NUMBER 4

NOTE: ALL BACKFILL SHALL BE COMPACTED IN 6" LIFTS TO THE TOP OF THE PIPE BY TAMPING. ABOVE PIPE COMPACTION MAY BE COMPLETED BY SAME METHOD OR BY JETTING TRENCH BY ACCEPTABLE METHOD.

CITY OF LIMA, DEPT. OF UTILITIES
WATERLINE GENERAL SPECIFICATIONS
PAVEMENT REPLACEMENT DETAILS

DRAWN:	DATE:	DETAIL PAGE NUMBER 4
K.SHOEMAKER	10/26/10	

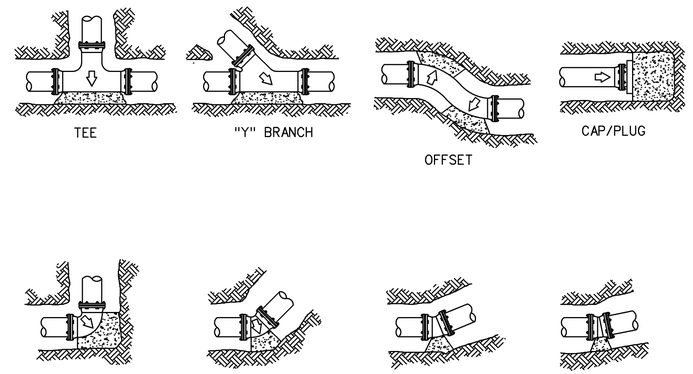

FILE NAME:DPN5

DETAIL PAGE NUMBER 5

NOTE:
THESE ILLUSTRATIONS FOR REFERENCE ONLY ACTUAL DIMENSIONS OF THRUST RESTRAINT TO BE DETERMINED BY ENGINEER OR DEPT. OF UTILITIES REPRESENTATIVE

CITY OF LIMA, DEPT. OF UTILITIES
WATERLINE GENERAL SPECIFICATIONS
CONCRETE THRUST RESTRAINT

DRAWN:	DATE:	DETAIL PAGE NUMBER 5
K.SHOEMAKER	10/26/10	

TYPICAL VALVE AND DEAD END INSTALLATION

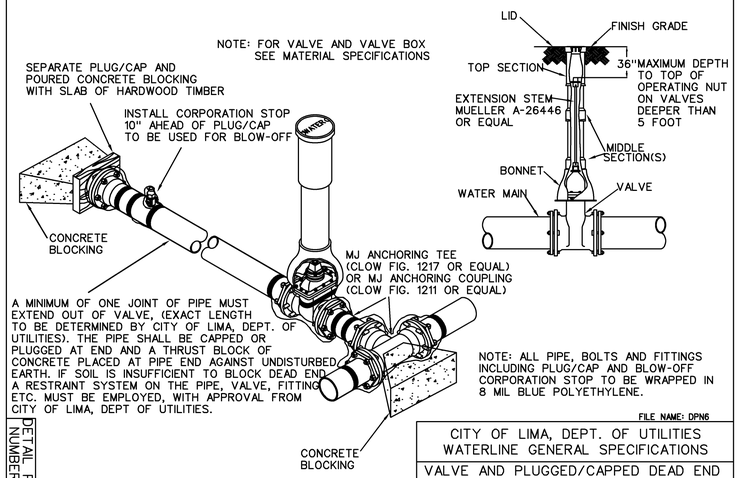

FILE NAME: DPN6

DETAIL PAGE NUMBER 6

CITY OF LIMA, DEPT. OF UTILITIES
WATERLINE GENERAL SPECIFICATIONS
VALVE AND PLUGGED/CAPPED DEAD END

DRAWN:	DATE:	DETAIL PAGE NUMBER 6
K.SHOEMAKER	10/26/10	

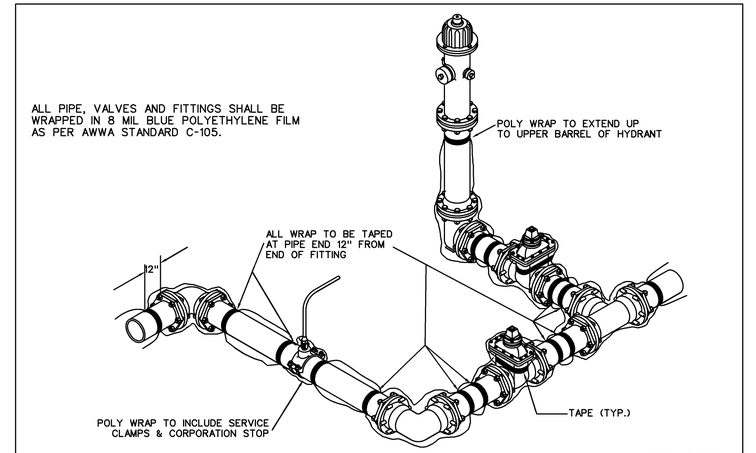

FILE NAME:DPN7

DETAIL PAGE NUMBER 7

CITY of LIMA, DEPT. of UTILITIES
WATERLINE GENERAL SPECIFICATIONS
POLY WRAP INSTALLATION

DRAWN:	DATE:	DETAIL PAGE NUMBER 7
K.SHOEMAKER	10/26/10	

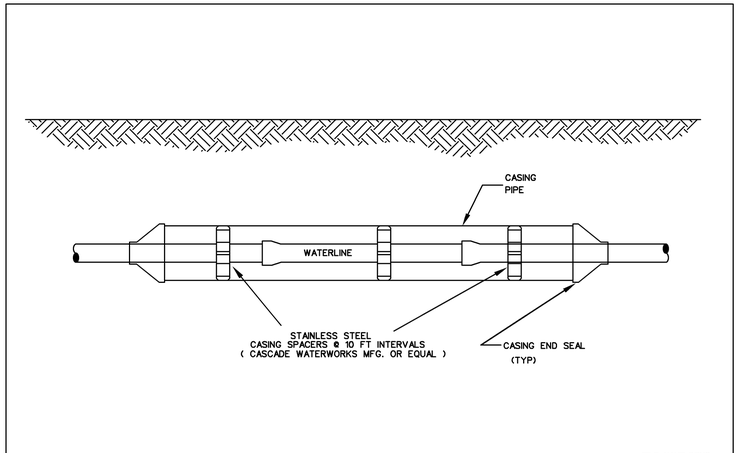

FILE NAME:DPN8

DETAIL PAGE NUMBER 8

SEE ADDITIONAL INFORMATION IN GENERAL SPECIFICATIONS PAGE 8

CITY OF LIMA, DEPT. OF UTILITIES
WATERLINE GENERAL SPECIFICATIONS
CASING DETAIL

DRAWN:	DATE:	DETAIL PAGE NUMBER 8
K.SHOEMAKER	10/26/10	

J:\Projects\ALL\76691\roadway\sheets\76691GN006.dgn 11-SEP-2012 8:48PM reddenj

ALL-75-5.53

FIRE HYDRANTS

FIRE HYDRANTS MUST BE OF THE DRY BARREL DESIGN. THEY MUST BE NON-DRAINING, WITH A 5.25 INCH MAIN VALVE. HYDRANTS MUST MEET OR EXCEED THE AMERICAN WATER WORKS ASSOCIATION'S C-502 SPECIFICATION.

HYDRANTS MUST CONSIST OF A ONE PIECE LOWER BARREL AND ONE PIECE UPPER BARREL. HYDRANT SHOES WILL BE 6 INCH MECHANICAL JOINT WITH ACCESORIES.

THE HYDRANT MUST EMPLOY A TRAFFIC DESIGN AND ALLOW FOR A 360 DEGREE FACING OF NOZZLES. THE NOZZLES SHOULD BE AT LEAST 18 INCHES FROM THE GROUND (TRAFFIC BREAK-AWAY) LINE.

HYDRANTS ARE TO HAVE 1.5 INCH PENTAGON NUTS AND BE OPEN LEFT IN DESIGN. THERE WILL BE TWO (2)- 2.5 INCH NST HOSE NOZZLES AND ONE (1)- 5 INCH STORZ CONNECTION. FIRE HYDRANTS WILL BE PAINTED SAFETY YELLOW.

THE ONLY HYDRANTS THE CITY WILL ACCEPT ARE CLOW EDDY MODEL F-2641, AND MUELLER SUPER CENTURION.

SEE FIRE HYDRANT DETAILS, ON THIS SHEET.

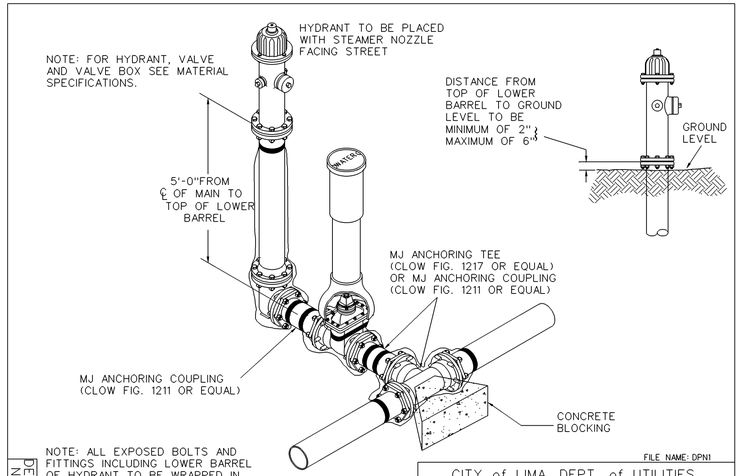

NOTE: ALL EXPOSED BOLTS AND FITTINGS INCLUDING LOWER BARREL OF HYDRANT TO BE WRAPPED IN 8 MIL BLUE POLYETHYLENE.

FILE NAME: DPN1

DETAIL PAGE NUMBER 1

CITY of LIMA, DEPT. of UTILITIES WATERLINE GENERAL SPECIFICATIONS		
TYPICAL HYDRANT INSTALLATION		
DRAWN: K.SHOEMAKER	DATE: 10/26/10	DETAIL PAGE NUMBER 1

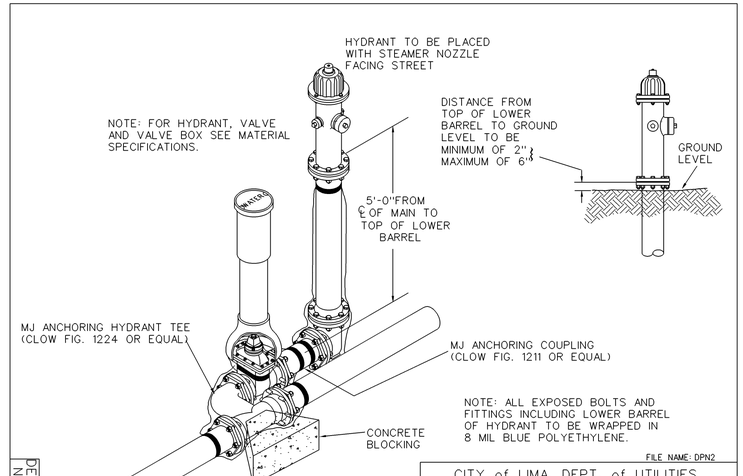

NOTE: ALL EXPOSED BOLTS AND FITTINGS INCLUDING LOWER BARREL OF HYDRANT TO BE WRAPPED IN 8 MIL BLUE POLYETHYLENE.

FILE NAME: DPN2

DETAIL PAGE NUMBER 2

CITY of LIMA, DEPT. of UTILITIES WATERLINE GENERAL SPECIFICATIONS		
HYDRANT INST. (COMB. HYD. TEE & 90° BEND)		
DRAWN: K.SHOEMAKER	DATE: 10/26/10	DETAIL PAGE NUMBER 2

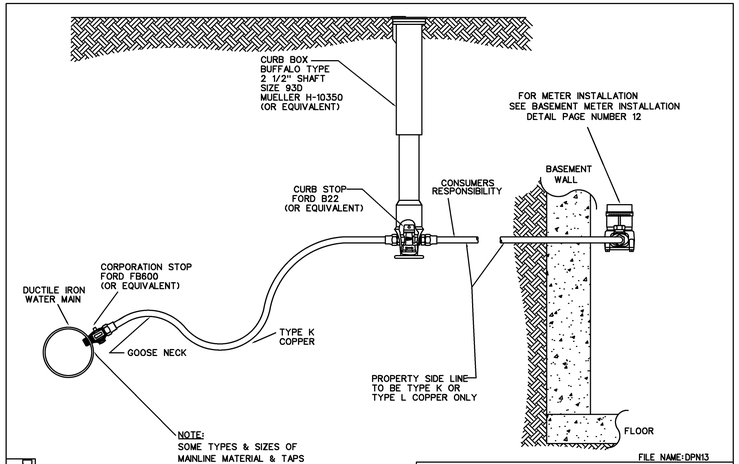

FILE NAME:DPN13

DETAIL PAGE NUMBER 13

NOTE: SEE ADDITIONAL INFORMATION IN GENERAL SPECIFICATIONS PAGE 12 & 13.

CITY of LIMA, DEPT. of UTILITIES WATERLINE GENERAL SPECIFICATIONS		
STANDARD CURB BOX INSTALLATION		
DRAWN: K.SHOEMAKER	DATE: 10/26/10	DETAIL PAGE NUMBER13

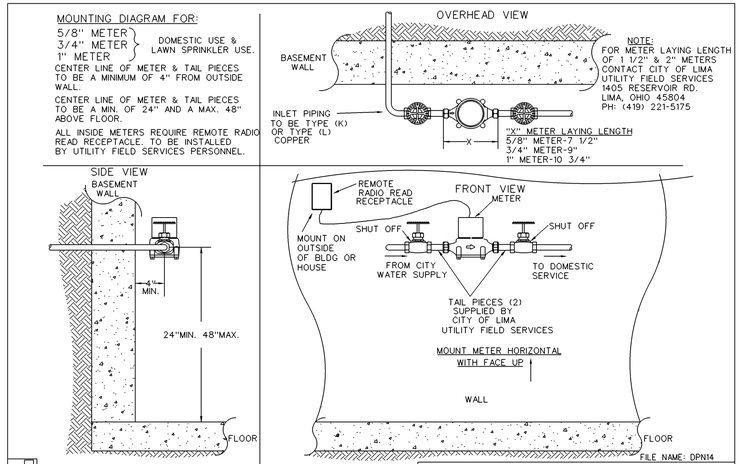

FILE NAME: DPN14

DETAIL PAGE NUMBER 14

NOTE: SEE ADDITIONAL INFORMATION IN GENERAL SPECIFICATIONS PAGE 12 & 13.

CITY of LIMA, DEPT. of UTILITIES WATERLINE GENERAL SPECIFICATIONS		
BASEMENT METER INSALLATION		
DRAWN: K.SHOEMAKER	DATE: 10/26/10	DETAIL PAGE NUMBER 14

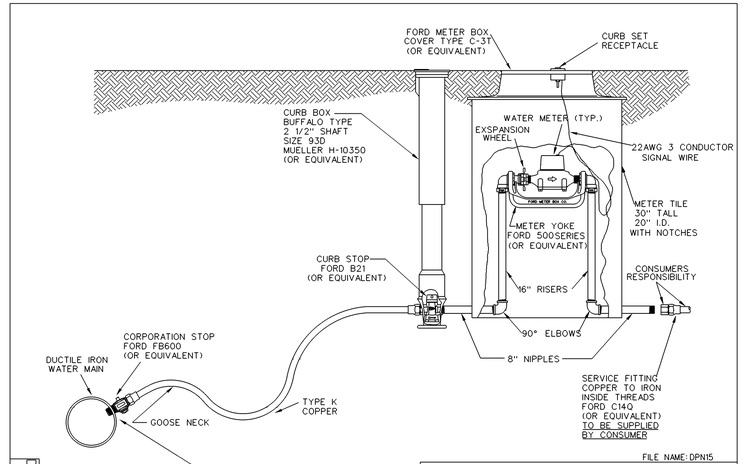

FILE NAME: DPN15

DETAIL PAGE NUMBER 15

NOTE: SEE ADDITIONAL INFORMATION IN GENERAL SPECIFICATIONS PAGE 12 & 13.

CITY of LIMA, DEPT. of UTILITIES WATERLINE GENERAL SPECIFICATIONS		
CURB METER SET		
DRAWN: K.SHOEMAKER	DATE: 10/26/10	DETAIL PAGE NUMBER 15

SANITARY SEWERS

GENERAL

ALL WORK SHALL CONFORM TO THE SANITARY SEWER SPECIFICATIONS OF THE ALLEN COUNTY, OHIO. ITEMIZED SPECIFICATIONS REFER TO THE CONSTRUCTION AND MATERIAL SPECIFICATIONS OF THE OHIO DEPARTMENT OF TRANSPORTATION.

FITTINGS

ALL PLUGS, FITTINGS, AND OTHER APPURTENANCES CALLED FOR OR OTHERWISE SPECIFIED IN THE PLANS OR SPECIFICATIONS SHALL BE PROVIDED IN THE LOCATION AS SHOWN OR OTHERWISE NOTED ON THE PLANS. THE FITTINGS COVERED BY THESE SPECIFICATIONS INCLUDE TEES, BENDS, WYES, VEE, STOPPERS ETC. NECESSARY FOR CONNECTIONS OR AS OTHERWISE REQUIRED IN CONNECTION WITH THE WORK.

PVC SEWER FITTINGS SHALL CONFORM TO THE REQUIREMENTS OF ASTM D-3034-89 SPECIFICATION. WALL THICKNESS OF FITTINGS SHALL BE SDR 35. GASKETS FOR ELASTOMETRIC JOINTS SHALL BE MOLDED WITH A MINIMUM CROSS SECTIONAL AREA OF 0.20 SQUARE INCHES AND CONFORM TO ASTM F-477 SPECIFICATION.

SHORING AND BRACING

WHERE NECESSARY TO PREVENT CAVING OF THE TRENCH AND OTHER EXCAVATIONS DURING PROGRESS OF THE WORK AND WHENEVER AND WHEREVER IT IS NECESSARY EITHER TO PROVIDE SAFE WORKING CONDITIONS OR TO AVOID THE DANGER OF DAMAGE TO EXISTING STRUCTURES OR STRUCTURES BEING BUILT, THE CONTRACTOR SHALL SUPPORT THE SIDES OF THE EXCAVATION BY ADEQUATE AND SUITABLE SHEETING, SHORING AND BRACING IN ACCORDANCE WITH OSHA REGULATIONS, 29 CFR, PART 1926, SUBPART P - EXCAVATIONS, TRENCHING AND SHORING. COSTS ARE TO BE INCLUDED IN THE PRICE OF PIPE.

THIS IS TO INCLUDE PROTECTION WHERE SOIL CONDITIONS NECESSITATE UNUSUALLY WIDE TRENCHES CAUSING DAMAGE TO STREET PAVEMENT, TREES, STRUCTURES, POLES AND OTHER PRIVATE AND PUBLIC PROPERTY.

SHEETING AND BRACING THAT IS NOT ORDERED TO BE LEFT IN PLACE AND WHICH DOES NOT EXTEND BELOW THE CENTERLINE OF THE PIPE MAY BE REMOVED AT THE DISCRETION AND RESPONSIBILITY OF THE CONTRACTOR WITHOUT ENDANGERING STRUCTURES AFTER THE TRENCH BACKFILL HAS BEEN PLACED AND COMPACTED TO A LEVEL AT LEAST TWO FEET ABOVE THE TOP OF THE PIPE. FOLLOWING REMOVAL OF SHEETING AND BRACING, THE SPACE LEFT DUE TO SUCH REMOVAL SHALL BE FILLED IMMEDIATELY AND THE BACK FILL RECOMPACTED.

WHERE IT IS NECESSARY TO DRIVE SHEETING BELOW THE CENTERLINE OF THE PIPE, IT SHALL BE DRIVEN ON DOWN BELOW THE BOTTOM OF THE PIPE. THE SHEETING BELOW TWO FEET ABOVE THE TOP OF THE PIPE SHALL BE LEFT IN PLACE. THE CONTRACTOR SHALL REMOVE OR LEAVE SHEETING IN PLACE AT HIS OWN EXPENSE. SHEETING AND BRACING SHALL NOT BE REMOVED UNTIL AFTER THE TRENCH BACKFILL HAS BEEN PLACED AND COMPACTED TO A LEVEL AT LEAST TWO FEET ABOVE THE TOP OF THE PIPE.

WHERE SHEETING IS PULLED AFTER BACKFILLING HAS BEEN COMPLETED OR PARTIALLY COMPLETED, THE SHEETING SHALL BE PULLED IN INCREMENTS NOT TO EXCEED THREE TO FOUR FEET IN ORDER TO AVOID THE DANGER OF BREAKING THE PIPE DUE TO THE WEIGHT OF THE BACKFILL.

ALL SHEETING AND BRACING SHALL BE OF SOUND LUMBER SUITABLE FOR THE PURPOSE INTENDED AND SHALL BE SO ARRANGED AS TO SUPPORT THE TRENCH WALLS AND ANY EXISTING STRUCTURES AND UTILITIES. SHEETING LEFT IN PLACE SHALL BE CUT OFF NOT LESS THAN 18 INCHES BELOW THE SURFACE OF THE GROUND. NO SHEETING, SHORING, OR BRACING WILL BE PAID FOR BY THE OWNER UNLESS IT IS LEFT IN PLACE ON WRITTEN ORDER OF THE ENGINEER.

PROTECTION OF EXISTING UTILITIES

EXISTING UTILITIES AND OBSTRUCTIONS ALONG THE ROUTE OF THE SEWER SHALL BE LOCATED AND THEIR ELEVATIONS DETERMINED AT LEAST 400 FEET IN ADVANCE OF PIPE-LAYING BY THE CONTRACTOR.

ALL UTILITIES WHEN ENCOUNTERED SHALL BE ADEQUATELY SUPPORTED, SHORED UP OR OTHERWISE PROTECTED WHENEVER EXPOSED IN THE EXCAVATION AT THE DIRECTION OF THE ENGINEER.

WHILE THE PLANS INDICATE THE LOCATION OF EXISTING UTILITIES, IN ACCORDANCE WITH THE BEST INFORMATION PRESENTLY AVAILABLE, NEITHER THE OWNER NOR THE ENGINEER ASSUMES ANY RESPONSIBILITY FOR THE ACCURACY OF THEIR LOCATION OR THAT ALL UTILITIES ARE SHOWN.

THERE SHALL BE AT LEAST A 10 FOOT HORIZONTAL SEPARATION BETWEEN WATER MAINS AND SEWER MAINS. SEWER MAINS CROSSING WATER MAINS SHALL BE LAID TO PROVIDE A MINIMUM VERTICAL DISTANCE OF 18 INCHES BETWEEN THE OUTSIDE OF THE SEWER MAIN AND THE OUTSIDE OF THE WATER MAIN. THIS SHALL BE THE CASE WHERE THE WATER MAIN IS EITHER ABOVE OR BELOW THE SEWER MAIN. AT CROSSINGS, ONE FULL LENGTH OF WATER PIPE SHALL BE LOCATED SO BOTH JOINTS WILL BE FAR FROM THE SEWER MAIN AS POSSIBLE. SPECIAL STRUCTURAL SUPPORT FOR THE WATER MAIN AND THE SEWER MAIN MAY BE REQUIRED.

DETECTABLE TRACER TAPE SHALL CONSIST OF A CONTINUOUS ALUMINUM FOIL CORE INSEPARABLY BONDED TO BOTH SIDES WITH TOUGH HIGH DENSITY CROSS LAMINATED PLASTIC FILMS PIGMENTED IN BLUE WARNING COLORS. BOND STRENGTH OF THE TRACER TAPE MUST PREVENT PITTING OR DEGRADATION AFTER 30 HOURS CONTINUOUS TESTING PER ASTM B-117. TRACER TAPE SHALL HAVE FINAL ELONGATION OF THREE TIMES ITS ORIGINAL LENGTH BEFORE PARTING. DETECTABLE TRACER TAPE ON THE ABOVE PROJECT SHALL BE EQUAL TO ALARMATAPE AS MANUFACTURED BY PAUL POTTER WARNING TAPES, INC., WHEATON, ILLINOIS; OR EQUAL. SPECIFY CATALOG NUMBERS #AT-3100-BW, 3 INCHES X 1,000 FOOT ROLLS WITH IDENTIFICATION BURIED FORCE MAIN BELOW. IDENTIFYING PRINTING SHALL BE 1½ INCH HIGH BOLD BLACK LETTERS REPEATED EVERY 21 INCHES. THREE INCHES (3") WIDE ALARMATAPE IS TO BE BURIED 30 INCHES DEEP.

WHERE FORCE MAINS ARE CONSTRUCTED OF MATERIAL WHICH MIGHT CAUSE THE FORCE MAIN TO BE CONFUSED WITH POTABLE WATER MAINS, THE FORCE MAIN SHOULD BE APPROPRIATELY IDENTIFIED.

MAINTENANCE OF FLOW

DURING CONSTRUCTION WHERE EXISTING SEWERS ARE ENCOUNTERED OR REPLACED AND ARE INTERFERED WITH, FLOW SHALL BE MAINTAINED IN THE EXISTING SEWERS. SEWAGE OR OTHER LIQUID MUST BE HANDLED BY THE CONTRACTOR EITHER BY CONNECTION INTO THE NEW SEWERS OR BY TEMPORARILY PUMPING TO A SATISFACTORY OUTLET, ALL WITH THE APPROVAL OF THE ENGINEER. SEWAGE OR OTHER LIQUID SHALL NOT BE PUMPED, BAILED OR FLUMED OVER THE STREET OR GROUND SURFACES. SEWAGE OR OTHER LIQUIDS MAY NOT BE PUMPED OR DEPOSITED INTO ANY WATERS OF THE UNITED STATES IN ACCORDANCE WITH THE CLEAN WATER ACT.

REPLACEMENTS

WHERE ANY PAVEMENTS, DRIVEWAYS, PARKING AREAS, CURBS, GUTTERS, BERM STONE, SIDEWALKS, WATERLINES, GAS LINES, SEWERS, CATCH BASINS, DRAINS, FIELD TILE, CONDUIT PIPES, DRIVEWAY CULVERT, CABLES, OR OTHER EXISTING FACILITIES ARE DAMAGED, DESTROYED OR DISTURBED IN CARRYING OUT THIS CONTRACT, BEYOND THAT WHICH IS INDICATED ON THE PLANS OR NORMAL WORK LIMITS, THEY SHALL BE REPLACED IN AS GOOD A CONDITION AS FOUND, AT THE EXPENSE OF THE CONTRACTOR, AND TO THE APPROVAL OF THE OWNER AND ENGINEER. ANY SUCH MATERIAL BROKEN OR DISTURBED TO SUCH AN EXTENT AS TO REQUIRE REPLACEMENT SHALL BE REPLACED WITH NEW MATERIAL AT THE EXPENSE OF THE CONTRACTOR. THIS INCLUDES STREETS AND OTHER ROADWAYS OR PARKING AREAS.

THOSE REPLACEMENTS NEEDED TO CONDUCT THIS WORK WITHIN THE PAYMENT LIMITS AND/OR APPROVED BY THE ENGINEER SHALL BE REPLACED WITH NEW MATERIAL EQUAL TO EXISTING CONDITIONS AND PAID FOR AS SPECIFIED IN THE BID DOCUMENTS AND/OR IN SUBSEQUENT SECTIONS OF THESE SPECIFICATIONS.

TESTING

ALL SEWERS MUST BE TESTED BY THE CONTRACTOR UNDER THE SUPERVISION OF THE ENGINEER PRIOR TO ACCEPTANCE BY THE OWNER. ALL TESTS MUST BE IN COMPLIANCE WITH THE ALLEN COUNTY SANITARY ENGINEERING DEPARMENT'S "RULES, REGULATIONS, PROCEDURES AND GENERAL SPECIFICATIONS GOVERNING SANITRAY SEWAGE AND WATER SUPPLY.

MEASUREMENT

PAYMENT FOR ITEMS INCLUDED IN THIS SECTION SHALL BE PER THE BID SCHEDULE. MEASUREMENTS SHALL BE BASED ON ACTUAL FIELD CONDITIONS. MEASUREMENT SHALL BE MADE CENTER TO CENTER OF MANHOLES AND NO DEDUCTION WILL BE MADE FOR FITTINGS.

MANHOLE MISC.: SANITARY MANHOLE, AS PER PLAN

PROPOSED SANITARY MANHOLES WILL BE INSTALLED ACCORDING TO THE DETAIL SHOWN BELOW. ANY EXISTING AND PROPOSED SANITARY CONNECTIONS WILL CONFORM TO THE ALLEN COUNTY SANITARY ENGINEERING DEPARTMENT'S "RULES, REGULATIONS, AND GENERAL SPECIFICATIONS GOVERNING SANITARY SEWAGE AND WATER SUPPLY" DOCUMENT. A COPY OF THE DOCUMENT CAN BE FOUND BY VISITING ALLEN COUNTY'S WEBSITE AT: HTTP://WWW.CO.ALLEN.OH.US/SAN/RULES.PHP

QUANTITIES FOR THIS ITEM HAVE BEEN INCLUDED IN THE ROADWAY PLAN ESTIMATED QUANTITIES AND CARRIED TO THE GENERAL SUMMARY.

Casting including frame and lid shall be heavy duty and together weigh at least 300 pounds. The lid shall be 23 3/4" in diameter and 1 1/2" thick at the outside edge. Casting and frame to be Neenah R-1668, East Jordan 1590 or equal.
Provide Solid Lids with machined bearing surface between Lid and Frame in paved areas and where noted.

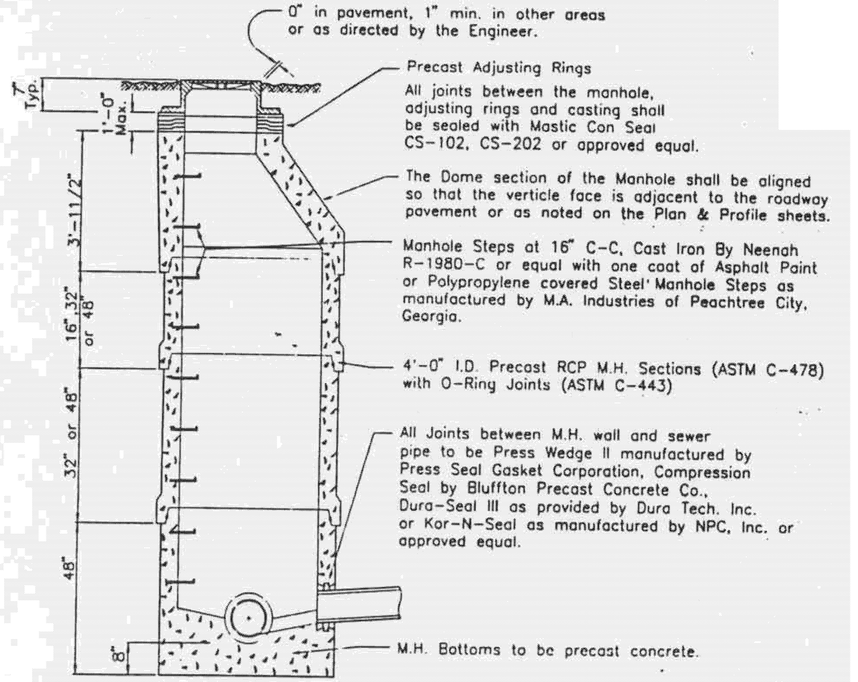

TYPE "A" MANHOLE

CALCULATED SJG CHECKED EJC

GENERAL NOTES

ALL-75-5.53

J:\Projects\ALL\76691\roadway\sheets\76691GN012.dgn 11-SEP-2012 8:48PM redden

ITEM 614, MAINTAINING TRAFFIC, AS PER PLAN

THE CONTRACTOR SHALL MAINTAIN TRAFFIC AT ALL TIMES IN ACCORDANCE WITH THE REQUIREMENTS OF ITEM 614. IT IS THE INTENTION TO PERFORM THE REQUIRED WORK WITH THE LEAST INCONVENIENCE AND THE MAXIMUM SAFETY OF, THE CONTRACTOR AND THE TRAVELING PUBLIC. ANY VARIANCES FROM THE INTENT OF THESE MAINTENANCE OF TRAFFIC NOTES MUST BE APPROVED IN ADVANCE IN WRITING BY THE ENGINEER. EXCEPT AS MODIFIED BELOW OR AS SHOWN IN THE MAINTENANCE OF TRAFFIC PLANS, THE REQUIREMENTS FOR MAINTAINING TRAFFIC AS INDICATED IN THE OHIO MANUAL OF UNIFORM TRAFFIC CONTROL DEVICES FOR STREETS AND HIGHWAYS, CURRENT EDITION, AND PERTINENT ITEMS OF THE SPECIFICATIONS AND PROPOSAL SHALL APPLY.

PAYMENT FOR ALL LABOR, EQUIPMENT, AND MATERIALS SHALL BE INCLUDED IN THE LUMP SUM CONTRACT PRICE FOR 614, MAINTAINING TRAFFIC, UNLESS SEPARATELY ITEMIZED IN THE PLAN.

LENGTH AND DURATION OF LANE CLOSURES AND RESTRICTIONS SHALL BE AT THE APPROVAL OF THE ENGINEER EXCEPT AS NOTED IN THE PLANS. IT IS THE INTENT TO MINIMIZE THE IMPACT TO THE TRAVELING PUBLIC. LANE CLOSURES OR RESTRICTIONS OVER SEGMENTS OF THE PROJECT IN WHICH NO WORK IS ANTICIPATED WITHIN A REASONABLE TIME FRAME, AS DETERMINED BY THE ENGINEER, SHALL NOT BE PERMITTED. THE LEVEL OF UTILIZATION OF MAINTENANCE OF TRAFFIC DEVICES SHALL BE COMMENSURATE WITH THE WORK IN PROGESS.

THE CONTRACTOR SHALL ADVISE THE PROJECT ENGINEER A MINIMUM OF FOURTEEN (14) DAYS PRIOR TO THE FOLLOWING: THE START OF CONSTRUCTION ACTIVITIES, LANE CLOSURES, AND ROAD CLOSURES. THE PROJECT ENGINEER WILL NOTIFY THE PROPER EMERGENCY SERVICES, SCHOOLS AND ANY IMPACTED LOCAL PUBLIC AGENCY. THE PROJECT ENGINEER WILL ALSO FORWARD THIS INFORMATION TO THE DISTRICT PUBLIC INFORMATION OFFICER (PIO) BY EMAIL. THE PIO WILL DISSEMINATE THE INFORMATION TO THE PUBLIC VIA THE LOCAL MEDIA OUTLETS. THE CONTRACTOR SHALL PROVIDE THE BELOW "NOTICE OF CLOSURE" SIGNS AND THEY SHALL BE ERECTED BY THE CONTRACTOR AT LEAST 14 DAYS IN ADVANCE OF THE SCHEDULED CLOSURE. THE SIGNS SHALL BE ERECTED ON THE RIGHT SIDE OF THE ROAD FACING TRAFFIC. THE SIGNS SHALL BE ERECTED AT THE POINT OF CLOSURE AND BE PLACED SO AS NOT TO INTERFERE WITH THE VISIBILITY OF ANY OTHER TRAFFIC CONTROL SIGNS. AFTER THE ROAD IS OPENED TO THROUGH TRAFFIC AND THE "NOTICE OF CLOSURE" SIGNS ARE NO LONGER NEEDED THE CONTRACTOR SHALL REMOVE THE SIGNS.

PAYMENT FOR THIS WORK SHALL BE INCLUDED IN THE LUMP SUM BID FOR ITEM 614 MAINTAINING TRAFFIC, AND SHALL INCLUDE FURNISHING, ERECTING, MAINTAINING AND REMOVING REMOVING THE SIGNS INCLUDING SUPPORTS.

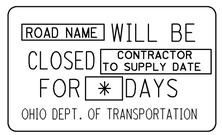

W20-H14

* INFORMATION TO BE SUPPLIED BY THE CONTRACTOR AS APPROVED BY THE ENGINEER

THE FOLLOWING ESTIMATED QUANTITIES HAVE BEEN INCLUDED IN THE M.O.T. GENERAL SUMMARY FOR USE AS DIRECTED BY THE ENGINEER FOR THE MAINTENANCE OF TRAFFIC:

410, TRAFFIC COMPACTED SURFACE, TYPE A OR B [1500] CU. YD.
614, ASPHT. CONC. FOR MAINTAINING TRAFFIC [180] CU. YD.
616, WATER [30] M. GAL.

THE CONTRACTOR SHALL PROVIDE, ERECT AND MAINTAIN STANDARD 48 X 30 INCH ROAD CLOSED SIGNS, SIGN SUPPORTS, BARRICADES AND LIGHTS, AS DETAILED IN SCD MT-101.60 AS DETAILED IN THE PLANS OR AS DIRECTED BY THE ENGINEER DURING PERIODS IN WHICH THE AFFECTED ROAD IS CLOSED TO TRAFFIC.

THE CONTRACTOR SHALL ALSO FURNISH, INSTALL, MAINTAIN AND REMOVE ALL ADDITIONAL SIGNS OR TRAFFIC CONTROL DEVICES DEEMED NECESSARY BY THE ENGINEER WITH ALL ASSOCIATED COSTS INCLUDED IN THE LUMP SUM PRICE BID ITEM 614 MAINTAINING TRAFFIC, AS PER PLAN.

JOHNNY APPLESEED BIKE/PEDESTRIAN PATH

THE CONTRACTOR SHALL MAINTAIN TRAFFIC ON THE JOHNNY APPLESEED BIKE/PEDESTRIAN PATH AT ALL TIMES. SEE PLANS FOR DETAILS AND ADDITIONAL NOTES.

ITEM 614, MAINTAINING TRAFFIC (SIGNS AND BARRICADES)

THE CONTRACTOR SHALL PROVIDE, ERECT AND MAINTAIN SIGNS AND SIGN SUPPORTS, AS DETAILED IN THE OHIO MANUAL OF UNIFORM TRAFFIC CONTROL DEVICES, AND TYPE III BARRICADES OF THE TYPE AND LOCATION AS SHOWN IN THE PLANS.

ALL WORK AND TRAFFIC CONTROL DEVICES SHALL BE IN ACCORDANCE WITH CMS 614 AND OTHER APPLICABLE PORTIONS OF THE SPECIFICATIONS, AS WELL AS THE OHIO MANUAL OF UNIFORM TRAFFIC CONTROL DEVICES AND BE NCHRP350 COMPLIANT. PAYMENT FOR ALL LABOR, EQUIPMENT AND MATERIALS SHALL BE INCLUDED IN THE LUMP SUM CONTRACT PRICE FOR ITEM 614, MAINTAINING TRAFFIC, AS PER PLAN, UNLESS SEPARATELY ITEMIZED IN THE PLAN.

WORK ZONE MARKINGS AND SIGNS

THE FOLLOWING ESTIMATED QUANTITIES HAVE BEEN CARRIED TO THE M.O.T. GENERAL SUMMARY FOR USE AT LOCATIONS IDENTIFIED BY THE ENGINEER FOR WORK ZONE PAVEMENT MARKINGS AND SIGNS PER THE REQUIREMENTS OF CMS 614.04 AND 614.11.

ITEM 614 - WORKZONE CENTER LINE	[3]	MILE
ITEM 614 - WORKZONE EDGE LINE (WHITE)	[6]	MILE
ITEM 614 - WORKZONE STOP LINE	[200]	FOOT
ITEM 614 - WORKZONE CHANNELIZING LINE (WHITE)	[2000]	FOOT
ITEM 614 - WORKZONE LANE ARROW	[6]	EACH
ITEM 614 - WORKZONE MARKING SIGN	[15]	EACH
ITEM 614 - PORTABLE CHANGEABLE MESSAGE SIGN	[356]	DAY

ITEM 614, WORK ZONE SPEED LIMIT SIGN

THE CONTRACTOR SHALL FURNISH, INSTALL, MAINTAIN, COVER DURING SUSPENSION OF WORK, AND SUBSEQUENTLY REMOVE WORK ZONE SPEED LIMIT (R2-1) (55 SPEED LIMIT) SIGNS AND SUPPORTS WITHIN THE WORK LIMITS IN ACCORDANCE WITH THE FOLLOWING REQUIREMENTS:

THE CONTRACTOR SHALL COVER OR REMOVE ANY EXISTING SPEED LIMIT SIGNS WITHIN THE REDUCED SPEED ZONE(S). THESE SIGNS SHALL BE RESTORED DURING SUSPENSION OR TERMINATION OF THE REDUCED SPEED LIMIT. THE EXPENSE OF COVERING OR REMOVAL AND RESTORATION OF EXISTING SPEED LIMIT OR MINIMUM SPEED LIMIT SIGNS SHALL BE INCLUDED IN THE PAY ITEM FOR THE WORK ZONE SPEED LIMIT SIGNS.

THE WORK ZONE SPEED LIMIT SIGNS MAY BE ERECTED OR UNCOVERED NO MORE THAN FOUR HOURS BEFORE THE ACTUAL START OF WORK THAT CAUSES THE WARRANTING CONDITION(S) TO OCCUR. THE SIGNS SHALL BE REMOVED OR COVERED NO LATER THAN FOUR HOURS FOLLOWING REMOVAL OF THE WARRANTING CONDITION(S), OR SOONER AS DIRECTED BY THE ENGINEER. TEMPORARY SIGN COVERING AND UNCOVERING DUE TO TEMPORARY REMOVAL OF WARRANTING CONDITION(S) SHALL BE GUIDED BY THE FOUR-HOUR LIMITATIONS STATED ABOVE.

CONSTRUCTION AND MATERIAL SPECIFICATIONS ITEM 614, PARAGRAPH 614.02(B), INDICATES THAT THE TWO DIRECTIONS OF A DIVIDED HIGHWAY ARE CONSIDERED SEPARATE HIGHWAY SECTIONS. THEREFORE, IF THE WORK ON A MULTI-LANE DIVIDED HIGHWAY IS LIMITED TO ONLY ONE DIRECTION, A SPEED REDUCTION IN THE DIRECTION OF THE WORK DOES NOT AUTOMATICALLY CONSTITUTE A SPEED REDUCTION IN THE OPPOSITE DIRECTION. A SPEED LIMIT REDUCTION IN THE OPPOSITE DIRECTION, IN SUCH CASE, IS APPROPRIATE ONLY IF CONDITIONS ARE EXPECTED TO HAVE AN IMPACT ON THE DIRECTIONAL TRAFFIC FLOW, AS DIRECTED BY THE ENGINEER.

THE CONTRACTOR SHALL ERECT A WORK ZONE SPEED LIMIT SIGN IN ADVANCE OF THE WARRANTING CONDITION, AS DETAILED IN THE PLANS OR AS DIRECTED BY THE ENGINEER. THE SIGN SHALL BE MOUNTED ON BOTH SIDES OF A DIRECTIONAL ROADWAY OF DIVIDED HIGHWAYS. THE FIRST WORK ZONE SPEED LIMIT SIGN SHALL BE PLACED APPROXIMATELY 500 FEET IN ADVANCE OF THE LANE REDUCTION, SHIFT TAPER, OR OTHER ROADWAY OR SHOULDER RESTRICTION THAT WARRANTED THE WORK ZONE SPEED ZONE. ON UNDIVIDED HIGHWAYS THE SIGN SHALL BE MOUNTED ON THE RIGHT SIDE, APPROXIMATELY 250 FEET IN ADVANCE OF SUCH RESTRICTIONS. THE SIGN SHALL BE REPEATED EVERY 1 MILE FOR 55 MPH ZONES AND EVERY ONE-HALF MILE FOR 50 MPH AND 45 MPH ZONES. THESE SIGNS SHALL ALSO BE ERECTED IMMEDIATELY AFTER EACH OPEN ENTRANCE RAMP WITHIN THE ZONE.

THE SPEED LIMIT REDUCTION SHALL BE LIMITED TO ONLY THE PORTION OF THE PROJECT AND THE WORK THAT WARRANTED THE WORK ZONE SPEED LIMIT REDUCTION.

SPEED REDUCTION (SPEED ZONE AHEAD SYMBOL) SIGNS (W3-5) SHALL BE ERECTED IN ADVANCE OF THE SPEED REDUCTION, APPROXIMATELY 1250 FEET ON MULTI-LANE HIGHWAYS AND 500 FEET ON TWO-LANE HIGHWAYS.

A SIGN(S) TO INDICATE THE RESUMPTION OF THE STATUTORY SPEED LIMIT SHALL BE ERECTED AT THE END OF ANY REDUCED SPEED ZONE. THE CONTRACTOR MAY USE SIGNS AND SUPPORTS IN USED, BUT GOOD CONDITION, PROVIDED THE SIGNS MEET CURRENT ODOT SPECIFICATIONS. SIGN FACES SHALL BE RETROREFLECTORIZED WITH TYPE G SHEETING COMPLYING WITH THE REQUIREMENTS OF CMS 730.19.

WORK ZONE SPEED LIMIT SIGNS SHALL BE MOUNTED ON TWO ITEM 630, GROUND MOUNTED SUPPORTS, NO. 3 POSTS, UNLESS MOUNTED ON A TEMPORARY SIGN SUPPORT PER SCD MT 105.10.

WORK ZONE SPEED LIMIT AND RELATED SIGN SIZES, PLACEMENT, SUPPORTS, ETC. SHALL BE PER THE OMUTCD, WITH TWO EXCEPTIONS: 1) EXPRESSWAY SIZE SPEED LIMIT SIGNS MAY BE USED ON FREEWAYS AND EXPRESSWAYS, IF NECESSARY; 2) THE HEIGHT OF SIGNS MOUNTED ON PORTABLE SUPPORTS SHOULD BE THE HEIGHT REQUIRED FOR GROUND-MOUNTED SIGNS BUT SHALL NOT BE MORE THAN 1 FOOT LOWER THAN THE HEIGHT REQUIRED BY THE OMUTCD, OR AS DIRECTED BY THE ENGINEER. PORTABLE SUPPORTS SHOULD NOT BE USED FOR A DURATION OF MORE THAN 3 DAYS.

WORK ZONE SPEED LIMIT SIGNS AND SUPPORTS WILL BE MEASURED AS THE NUMBER OF SIGN INSTALLATIONS, INCLUDING THE SIGNS AND NECESSARY SUPPORTS. IF A SIGN AND SUPPORT COMBINATION IS REMOVED AND REERECTED AT ANOTHER LOCATION WITHIN THE PROJECT DUE TO CHANGES IN THE SPEED ZONE AS DETAILED IN THE PLANS OR AS DIRECTED BY THE ENGINEER, IT SHALL BE CONSIDERED ANOTHER UNIT.

PAYMENT FOR ACCEPTED QUANTITIES, COMPLETE IN PLACE, WILL BE MADE AT THE CONTRACT UNIT PRICE. PAYMENT SHALL BE FULL COMPENSATION FOR ALL MATERIALS, LABOR, INCIDENTALS AND EQUIPMENT FOR FURNISHING, ERECTING, MAINTAINING, COVERING DURING SUSPENSION OF WORK, AND REMOVING THE SIGNS AND SUPPORTS. SPEED LIMIT SIGNING FOR THE POINT OF RESUMPTION OF THE STATUTORY SPEED LIMIT SHALL BE PAID FOR AS WORK ZONE SPEED LIMIT SIGNS. THE FOLLOWING ESTIMATED QUANTITY HAS BEEN CARRIED TO THE M.O.T. GENERAL SUMMARY.

ITEM 614, WORK ZONE SPEED LIMIT SIGN	[36]	EACH
ITEM 614, SPEED ZONE AHEAD SYMBOL SIGN	[8]	EACH

THE FOLLOWING TABLE PROVIDES DETAILS ON WORK ZONE SPEED ZONES APPROVED FOR USE ON THIS PROJECT:

WZSZ REVISION NUMBER	COUNTY & ROUTE	SLM FROM TO	PHASE/PART & DIRECTION	APPROVED SPEED LIMIT(MPH)	SPECIFIC WARRANTING CONDITIONS & FACTORS
WZ-10081	ALL-75	5.53-9.88	PH. I & II N.B. & S.B.	55	LANE SHIFTS & NARROWS, PCB/DROPOFFS
WZ-10082	SR 309	18.25-18.74	PH. I & II E.B. & W.B.	30	LANE SHIFTS, WIDTH, & REDUCTION, PCB/DROPOFF
WZ-10083	SR 81	18.30-19.10	PH. I & II E.B. & W.B.	35	LANE SHIFTS, WIDTH, & REDUCTION, PCB/DROPOFF

WORK ZONE INCREASED PENALTIES SIGN (R11-H5A) (I-75 ONLY)

R11-H5A-48 SIGNS SHALL BE FURNISHED, ERECTED, AND MAINTAINED IN GOOD CONDITION AND/OR REPLACED AS NECESSARY AND SUBSEQUENTLY REMOVED BY THE CONTRACTOR ON I-75. SIGNS SHALL BE MOUNTED AT THE APPROPRIATE OFFSETS AND ELEVATIONS AS PRESCRIBED BY THE OHIO MANUAL OF UNIFORM TRAFFIC CONTROL DEVICES. THEY SHALL BE MAINTAINED ON SUPPORTS MEETING CURRENT SAFETY CRITERIA.

THE SIGNS MAY BE ERECTED OR UNCOVERED NO MORE THAN FOUR HOURS BEFORE THE ACTUAL START OF WORK. THE SIGNS SHALL BE REMOVED OR COVERED NO LATER THAN FOUR HOURS FOLLOWING RESTORATION OF ALL LANES TO TRAFFIC WITH NO RESTRICTIONS, OR SOONER AS DIRECTED BY THE ENGINEER. TEMPORARY SIGN COVERING AND UNCOVERING DUE TO TEMPORARY LANE RESTORATIONS SHALL BE GUIDED BY THE FOUR HOUR LIMITATIONS STATED ABOVE. SUCH LANE RESTORATIONS SHOULD BE EXPECTED TO REMAIN IN EFFECT FOR 30 OR MORE CONSECUTIVE CALENDAR DAYS, SUCH AS DURING WINTER SHUT DOWNS.

(THE SIGNS ON THE MAINLINE SHALL BE DUAL MOUNTED UNLESS NOT PHYSICALLY POSSIBLE. THE FIRST SIGN SHALL BE PLACED BETWEEN THE ROAD WORK AHEAD (W20-1)SIGN AND THE NEXT SIGN IN THE SEQUENCE. SIGNS SHALL BE ERECTED ON EACH ENTRANCE RAMP AND EVERY 2 MILES THROUGH THE CONSTRUCTION WORK LIMITS. SIGNS ON THE MAINLINE SHALL BE R11-H5A-48. SIGNS USED ON THE RAMPS SHALL BE R11-H5A-24. R11-H5A-24 SIGNS MAY BE USED IN THE MEDIAN IN LIEU OF R11-H5A-48 SIGNS IF IT IS NOT PHYSICALLY POSSIBLE TO PROVIDE R11-H5A-48 SIGNS IN THE MEDIAN.)

THE CONTRACTOR MAY USE SIGNS AND SUPPORTS IN USED, BUT GOOD, CONDITION PROVIDED THE SIGNS MEET CURRENT ODOT SPECIFICATIONS. SIGN FACES SHALL BE RETROREFLECTORIZED WITH TYPE G SHEETING COMPLYING WITH THE REQUIREMENTS OF CMS 730.19.

WORK ZONE INCREASED PENALITIES SIGNS AND SUPPORTS WILL BE MEASURED AS THE NUMBER OF SIGN INSTALLATIONS, INCLUDING THE SIGN AND NECESSARY SUPPORTS. IF A SIGN AND SUPPORT COMBINATION IS REMOVED AND REERECTED AT ANOTHER LOCATION AS DIRECTED BY THE ENGINEER, IT SHALL BE CONSIDERED ANOTHER UNIT.

PAYMENT FOR ACCEPTED QUANTITIES, COMPLETE, IN PLACE WILL BE MADE AT THE CONTRACT UNIT PRICE. PAYMENT SHALL BE FULL COMPENSATION FOR ALL MATERIALS, LABOR, INCIDENTALS AND EQUIPMENT FOR FURNISHING, ERECTING, MAINTAINING, COVERING DURING SUSPENSION OF WORK, AND REMOVAL OF THE SIGN AND SUPPORT.

ITEM 614, WORK ZONE INCREASED PENALITIES SIGN [16] EACH

DUST CONTROL

THE CONTRACTOR SHALL FURNISH AND APPLY WATER FOR DUST CONTROL AS DIRECTED BY THE ENGINEER. THE FOLLOWING ESTIMATED QUANTITIES HAVE BEEN INCLUDED FOR DUST CONTROL PURPOSES:

ITEM 616, WATER [2400] M. GAL

CALCULATED CAC CHECKED EJC

MAINTENANCE OF TRAFFIC GENERAL NOTES

ALL-75-5.53

J:\Projects\ALL\76691\mot\sheets\76691MN001.dgn 11-SEP-2012 8:48PM reddenj

CALCULATED CAC CHECKED EJC

MAINTENANCE OF TRAFFIC GENERAL NOTES

ITEM 614, WORK ZONE IMPACT ATTENUATOR FOR 24" WIDE HAZARDS (UNIDIRECTIONAL OR BIDIRECTIONAL)

THIS ITEM SHALL CONSIST OF FURNISHING AND INSTALLING A NON-GATING IMPACT ATTENUATOR. FURNISH AN IMPACT ATTENUATOR FROM THE OFFICE OF ROADWAY ENGINEERING APPROVED LIST FOR WORK ZONE IMPACT ATTENUATORS. THE APPROVED LIST IS AVAILABLE AT THE "ROADWAY STANDARDS: PROPRIETARY ROADSIDE SAFETY DEVICES" WEB PAGE ON THE OFFICE OF ROADWAY ENGINEERING WEBSITE.

INSTALLATION SHALL BE AT THE LOCATIONS SPECIFIED IN THE PLANS IN ACCORDANCE WITH THE MANUFACTURER'S SPECIFICATIONS.

THE CONTRACTOR SHALL REPAIR OR REPLACE A DAMAGED UNIT WITHIN 24 HOURS OF A DAMAGING IMPACT.

WHEN BIDIRECTIONAL DESIGNS ARE SPECIFIED, THE CONTRACTOR SHALL SUPPLY APPROPRIATE TRANSITIONS.

WHEN GATING IMPACT ATTENUATORS ARE DESIRED, THE CONTRACTOR SHALL SUBMIT DOCUMENTATION TO THE ENGINEER FOR ACCEPTANCE.

THE COST FOR THE ADDITIONAL BARRIER REQUIRED FOR A GATING IMPACT ATTENUATOR SHALL BE INCLUDED IN THE COST OF THE GATING IMPACT ATTENUATOR.

PAYMENT FOR THE ABOVE WORK SHALL BE MADE WITH THE LUMP UNIT PRICE BID FOR ITEM 614, MAINTAINING TRAFFIC, AS PER PLAN AND SHALL INCLUDE ALL LABOR, TOOLS, EQUIPMENT AND MATERIALS NECESSARY TO CONSTRUCT AND MAINTAIN A COMPLETE AND FUNCTIONAL IMPACT ATTENUATOR SYSTEM, INCLUDING ALL RELATED BACKUPS, TRANSITIONS, LEVELING PADS, HARDWARE AND GRADING, NOT SEPARATELY SPECIFIED, AS REQUIRED BY THE MANUFACTURER.

MAINTAINING ACCESS TO ALL PROPERTIES

ACCESS TO ALL ADJACENT PROPERTIES WITHIN THE WORK LIMTS SHALL BE MAINTAINED BY THE CONTRACTOR AT ALL TIMES, AS PER 614.02(A). SEE "MAINTAINING ACCESS AT SPECIFIC DRIVES" NOTE FOR ADDITIONAL STIPULATIONS.

PARKING DISRUPTION LIMITATIONS

FOR THE BUSINESSES/PARCELS LISTED IN THE FOLLOWING TABLE, THE CONTRACTOR IS TO KEEP ANY DISRUPTION OF PARKING AND BUSINESS TRAFFIC FLOW WITHIN THE TEMPORARY RIGHT OF WAY TO A MINIMUM. PARKING/TRAFFIC FLOW DISRUPTION WILL BE ALLOWED ONLY ONCE AND WILL BE LIMITED TO THE MAXIMUM DURATION AS LISTED IN THE TABLE BELOW. THE CONTRACTOR SHALL ALSO COORDINATE THIS WORK WITH THE RESPECTIVE PROPERTY OWNER A MINIMUM OF FOURTEEN (14) DAYS PRIOR TO BEGINNING ANY WORK.

PARKING DISRUPTION LIMITATIONS		
PARCEL	OWNER	MAX. DURATION
107	BP GAS STATION	7
229	VERIZON	7
231	PLAZA-EAST SIDE	14
231	PLAZA-WEST SIDE	14
106	HUNAN GARDEN	7
232	CHASE BANK	7
188	WAFFLE HOUSE	7

MAINTAINING ACCESS AT EXISTING DRIVES

RECONSTRUCTION OF THE DRIVES AT THE BUSINESSES/PARCELS LISTED IN THE TABLE SHALL BE PERFORMED PART-WIDTH, UNLESS ACCESS IS AVAILABLE THROUGH MULTIPLE DRIVES FOR THE PARCEL FROM THE SAME ROADWAY.

VEHICLES SHALL HAVE ACCESS TO/FROM THE PROPERTY VIA A MINIMUM 15 FT. WIDE DRIVE AT EACH LOCATION AT ALL TIMES.

CONSTRUCTION OF THE NEW DRIVES SHALL BE COMPLETED WITHIN THE MAXIMUM DURATION SHOWN FOR EACH BUSINESS/PARCEL.

NO DRIVE CAN BE CLOSED DURING THE OPEN/OPERATING HOURS OF BUSINESS WITHOUT ALTERNATE ACCESS BEING PROVIDED AND AS COORDINATED WITH THE BUSINESS OWNER.

AGGREGATE DRIVES ARE PERMITTED DURING CONSTRUCTION. IT IS PERMISSIBLE TO TEMPORARILY WIDEN A DRIVE TO EITHER SIDE OR BOTH IN ORDER TO COMPLY WITH THIS STIPULATION.

THE CONTRACTOR SHALL ALSO COORDINATE THIS WORK WITH THE RESPECTIVE PROPERTY/BUSINESS OWNER A MINIMUM OF FOURTEEN (14) DAYS PRIOR TO BEGINNING ANY WORK.

MAINTAINING ACCESS AT EXISTING DRIVES		
PARCEL	OWNER	MAX. DURATION
107	BP GAS STATION	4
229	VERIZON	4
231	PLAZA-EAST SIDE	4
231	PLAZA-WEST SIDE	4
106	HUNAN GARDEN	4
232	CHASE BANK	4
188	WAFFLE HOUSE	4
187	BP/MOTEL	4
246	HOTEL	4

NOTE THAT DURING THE SHORT-TERM CLOSURE OF THE SARATOGA AVE. INTERSECTION WITH SR 309, THE CONTRACTOR SHALL PROVIDE AN OPENING IN THE PORTABLE CONCRETE BARRIER TO PROVIDE ACCESS TO THE BP GAS STATION. AT ALL OTHER TIMES DURING PHASE I, ACCESS TO THE BP GAS STATION AT SR 309/SARATOGA SHALL BE MAINTAINED VIA THE SARATOGA AVE. ENTRANCE/EXIT.

DRIVES LOCATED ON THE SERVICE ROAD #3 ALONG SR 81 SHALL ALSO BE MAINTAINED AT ALL TIMES IN A MANNER AND TO A WIDTH WHICH WILL ALLOW TRUCKS TO ENTER/EXIT EACH AFFECTED BUSINESS/PARCEL.

ALL COSTS RESULTING FROM THE ABOVE REQUIREMENTS SHALL BE CONSIDERED TO BE INCLUDED IN THE LUMP SUM PRICE BID FOR ITEM 614, MAINTAINING TRAFFIC, AS PER PLAN.

SHOULD THE CONTRACTOR FAIL TO MEET THE ABOVE TIME COMPLETION REQUIREMENTS FOR PARKING AND DRIVE ACCESS, THE CONTRACTOR SHALL BE ASSESSED LIQUIDATED DAMAGES IN ACCORDANCE WITH CMS 108.07.

ITEM 614 LONGITUDINAL CHANNELIZER

LONGITUDINAL CHANNELIZERS SHALL BE PROVIDED AS CALLED FOR IN THE PLANS. A LONGITUDINAL CHANNELIZER CONSISTS OF A COMBINATION OF VERTICAL COMPONENTS AND LONGITUDINAL BASE COMPONENTS, FIT TOGETHER TO CREATE A CONTINUOUS CHANNELIZING DEVICE, AS DETAILED IN PIS 2010180. USE OF TUBULAR MARKERS, AS IDENTIFIED IN THE OMUTCD, FIGURE 6F-7, SHALL NOT QUALIFY FOR USE AS A LONGITUDINAL CHANNELIZER.

THIS ITEM IS PROVIDE FOR USE AT LOOP STYLE ENTRANCE RAMPS OR OTHER ENTRANCE RAMPS WHERE THE ENGINEER DETERMINES THEM TO BE APPROPRIATE TO INCREASE SIGHT DISTANCE.

THE VERTICAL COMPONENT SHALL BE EQUIPPED WITH TWO 3-INCH WIDE RETROREFLECTIVE BANDS, PLACED A MAXIMUM OF 2 INCHES FROM THE TOP, WITH A MAXIMUM OF 6 INCHES BETWEEN THE BANDS. THE LONGITUDINAL BASE COMPONENTS SHALL BE EQUIPPED WITH REFLECTORS.

THE LONGITUDINAL CHANNELIZER SHALL BE NCHRP 350 COMPLIANT.

FOR INSTALLATION PROCEDURES, FOLLOW THE MANUFACTURER'S INSTRUCTIONS.

PAYMENT FOR PROVIDING, INSTALLING AND REMOVING THIS CHANNELIZER WILL BE MADE AT THE UNIT PRICE PER FOOT FOR:

ITEM 614, LONGITUDINAL CHANNELIZER [4400] FOOT

EXTRA ADVANCE WARNING SIGNS

AN EXTRA ADVANCE WARNING SIGN GROUP CONSISTS OF TWO W20-1 (ROAD WORK AHEAD) SIGNS, WITH W16-3A DISTANCE PLATES, AND TWO W3-H7 (WATCH FOR STOPPED TRAFFIC) SIGNS AND REQUIRED WARNING LIGHTS. LANE CLOSURE SIGNS WILL NOT BE NEEDED.

THE CONTRACTOR SHALL PROVIDE, ERECT, MAINTAIN AND REMOVE EXTRA ADVANCE WARNING SIGN GROUPS AS SHOWN ON SCD MT-95.50 AS DIRECTED BY THE ENGINEER.

THE DISTANCE PLATES FOR THIS GROUP SHALL BE ABLE TO BE MODIFIED IN THE FIELD TO SHOW APPROPRIATE WHOLE MILES TO THE LANE TAPER.

PAYMENT FOR PROVIDING, ERECTING, MAINTAINING AND REMOVING EXTRA ADVANCE WARNING SIGN GROUPS SHALL BE INCLUDED IN THE LUMP SUM BID FOR ITEM 614, MAINTAINING TRAFFIC, AS PER PLAN.

LIGHTING

EXISTING LIGHTING SHALL BE MAINTAINED AT RAMP TERMINI DURING CONSTRUCTION, AS DIRECTED BY THE ENGINEER.

PAYMENT FOR MAINTAINING EXISTING LIGHTING SHALL BE INCLUDED IN THE LUMP SUM PRICE BID FOR ITEM 614, MAINTAINING TRAFFIC, AS PER PLAN.

ITEM 614, PORTABLE CHANGEABLE MESSAGE SIGNS, AS PER PLAN

THE CONTRACTOR SHALL FURNISH, INSTALL, MAINTAIN AND REMOVE, WHEN NO LONGER NEEDED, 8 CHANGEABLE MESSAGE SIGNS, ON SITE, FOR THE DURATION OF THE PROJECT. THE SIGNS SHALL BE OF A TYPE SHOWN ON A LIST OF APPROVED PCMS UNITS MAINTAINED BY THE DIRECTOR (OFFICE OF MATERIALS MANAGEMENT). THE APPROVED LIST OF PORTABLE CHANGEABLE MESSAGE SIGNS CAN BE FOUND ON THE ODOT WEBSITE BY CLICKING ON THE SERVICES MENU, THEN CLICKING ON MATERIALS MANAGEMENT. THE LIST CONTAINS CLASS A AND B UNITS WITH MINIMUM LEGIBILITY DISTANCES OF 650 FT. AND 475 FT., RESPECTIVELY. CLASS A SHALL BE USED ON MAJOR ROUTES AND CLASS B ON MINOR ROUTES.

EACH SIGN SHALL BE TRAILER-MOUNTED AND EQUIPPED WITH A FUNCTIONAL DIMMING MECHANISM, TO DIM THE SIGN DURING DARKNESS, AND A TAMPER AND VANDAL PROOF ENCLOSURE. EACH SIGN SHALL BE PROVIDED WITH APPROPRIATE TRAINING AND OPERATION INSTRUCTIONS TO ENABLE ON-SITE PERSONNEL TO OPERATE AND TROUBLESHOOT THE UNIT. THE SIGNS SHALL ALSO BE CAPABLE OF BEING POWERED BY AN ELECTRICAL SERVICE DROP FROM A LOCAL UTILITY COMPANY. PCMS TRAILERS SHALL BE DELINEATED ON A PERMANENT BASIS BY AFFIXING CONSPICUITY TAPE CONFORMING TO CMS 614.03, IN A CONTINUOUS LINE ON THE FACE OF THE TRAILER AS SEEN BY ONCOMING ROAD USERS.

THE PROBABLE PCMS LOCATIONS AND WORK LIMITS FOR THOSE LOCATIONS ARE SHOWN ON THE DETOUR SHEETS OF THE PLAN. PLACEMENT, OPERATION, MAINTENANCE AND ALL ACTIVATION OF THE SIGNS BY THE CONTRACTOR SHALL BE AS DIRECTED BY THE ENGINEER. THE PCMS SHALL BE LOCATED IN A HIGHLY VISIBLE POSITION YET PROTECTED FROM TRAFFIC. THE CONTRACTOR SHALL, AT THE DIRECTION OF THE ENGINEER, RELOCATE THE PCMS TO IMPROVE VISIBILITY OR ACCOMMODATE CHANGED CONDITIONS. WHEN NOT IN USE, THE PCMS SHALL BE TURNED OFF. ADDITIONALLY, WHEN NOT IN USE FOR EXTENDED PERIODS OF TIME, THE PCMS SHALL BE TURNED, FACING AWAY FROM ALL TRAFFIC, AND SHALL DISPLAY ONE OR MORE YELLOW RETROREFLECTIVE SHEETING SURFACES OF 9-INCH BY 15-INCH MINIMUM SIZE FACING TRAFFIC.

THE ENGINEER SHALL BE PROVIDED ACCESS TO EACH SIGN UNIT AND SHALL BE PROVIDED WITH APPROPRIATE TRAINING AND OPERATION INSTRUCTIONS TO ENABLE ODOT PERSONNEL TO OPERATE AND TROUBLESHOOT THE UNIT, AND TO REVISE SIGN MESSAGES, IF NECESSARY.

ALL MESSAGES TO BE DISPLAYED ON THE SIGNS SHALL BE PROVIDED TO THE ENGINEER. A LIST OF ALL REQUIRED PREPROGRAMMED MESSAGES WILL BE GIVEN TO THE CONTRACTOR AT THE PROJECT PRECONSTRUCTION CONFERENCE. THE SIGNS SHALL HAVE THE CAPABILITY TO STORE UP TO 99 MESSAGES. MESSAGE MEMORY OR PRE-PROGRAMMED DISPLAYS SHALL NOT BE LOST AS A RESULT OF POWER FAILURES TO THE ON-BOARD COMPUTER. THE SIGN LEGEND SHALL BE CAPABLE OF BEING CHANGED IN THE FIELD. THREE-LINE PRESENTATION FORMATS WITH UP TO SIX MESSAGE PHASES SHALL BE SUPPORTED. PCMS FORMAT SHALL PERMIT THE COMPLETE MESSAGE FOR EACH PHASE TO BE READ AT LEAST TWICE.

THE PCMS SHALL CONTAIN AN ACCURATE CLOCK AND PROGRAMMING LOGIC WHICH WILL ALLOW THE SIGNS TO BE ACTIVATED, DEACTIVATED OR MESSAGES CHANGED AUTOMATICALLY AT DIFFERENT TIMES OF THE DAY FOR DIFFERENT DAYS OF THE WEEK.

THE PCMS UNITS SHALL BE MAINTAINED IN GOOD WORKING ORDER BY THE CONTRACTOR IN ACCORDANCE WITH THE PROVISIONS OF CMS 614.07. THE CONTRACTOR SHALL, PRIOR TO ACTIVATING THE UNIT, MAKE ARRANGEMENTS, WITH AN AUTHORIZED SERVICE AGENT FOR THE PCMS, TO ASSURE PROMPT SERVICE IN THE EVENT OF FAILURE. ANY FAILURE SHALL NOT RESULT IN THE SIGN BEING OUT OF SERVICE FOR MORE THAN 12 HOURS, INCLUDING WEEKENDS. FAILURE TO COMPLY MAY RESULT IN AN ORDER TO STOP WORK AND OPEN ALL TRAFFIC LANES AND/OR IN THE DEPARTMENT TAKING APPROPRIATE ACTION TO SAFELY CONTROL TRAFFIC. THE ENTIRE COST TO CONTROL TRAFFIC, ACCRUED BY THE DEPARTMENT DUE TO THE CONTRACTOR'S NONCOMPLIANCE, WILL BE DEDUCTED FROM MONEYS DUE, OR TO BECOME DUE THE CONTRACTOR ON HIS CONTRACT.

THE CONTRACTOR SHALL BE RESPONSIBLE FOR 24-HOUR-PER-DAY OPERATION AND MAINTENANCE OF THESE SIGNS ON THE PROJECT FOR THE DURATION OF THE PHASES WHEN THE PLAN, AND/OR THE ENGINEER REQUIRES THEIR USE.

PAYMENT FOR THE ABOVE DESCRIBED ITEM SHALL BE AT THE CONTRACT UNIT PRICE. PAYMENT SHALL INCLUDE ALL LABOR, MATERIALS, EQUIPMENT, FUELS, LUBRICATING OILS, SOFTWARE, HARDWARE AND INCIDENTALS TO PERFORM THE ABOVE DESCRIBED WORK. THE CONTRACTOR SHALL ONLY BE PAID FOR PCMS UNITS WHEN THEY ARE IN OPERATION ON THE PROJECT AS SPECIFIED IN THE PLANS OR BY THE ENGINEER.

ITEM 614, PORTABLE CHANGEABLE MESSAGE SIGN, AS PER PLAN [5840] DAY

EXISTING GUIDE SIGNS (OVERHEAD AND GROUND MOUNTED)

THE CONTRACTOR SHALL MAINTAIN EXISTING GUIDES SIGNS THROUGHOUT EACH PHASE OF CONSTRUCTION AS APPLICABLE. EXISTING OVERHEAD GUIDE SIGNS MAY BE REMOVED AND RE-ERECTED ON GROUND MOUNTS/POSTS. EXISTING GROUND MOUNTED GUIDE SIGN MAY ALSO BE MOVED AND RE-ERECTED AS NECESSARY AND AS APPROVED BY THE ENGINEER.

TEMPORARY SIGN OVERLAYS NOT OTHERWISE DETAILED IN THE PLANS SHALL BE DETERMINED BY THE CONTRACTOR AND APPROVED BY THE ENGINEER.

WHERE AN EXISTING GUIDE SIGN CANNOT BE USED OR RE-USED, THEN AN APPROPRIATE TEMPORARY REPLACEMENT SHALL BE CONSTRUCTED.

ALL LABOR, EQUIPMENT, AND MATERIALS NECESSARY TO COMPLETE THIS WORK SHALL BE INCLUDED IN THE LUMP SUM PRICE BID FOR ITEM 614, MAINTAINING TRAFFIC, AS PER PLAN.

MAINTENANCE

ALL-75-5.53

J:\Projects\ALL\76691\mot\sheets\76691MN002.dgn 11-SEP-2012 8:48PM reddenj

ITEM 614, BARRIER REFLECTORS AND/OR OBJECT MARKERS

BARRIER REFLECTORS AND/OR OBJECT MARKERS SHALL BE INSTALLED ON ALL PORTABLE CONCRETE BARRIER AND EXISTING MEDIAN BARRIER USED FOR TRAFFIC CONTROL. BARRIER REFLECTORS, OBJECT MARKERS AND THEIR INSTALLATION SHALL CONFORM TO CMS 626, EXCEPT THAT THE SPACING SHALL BE 50 FEET. SEE STANDARD CONSTRCUTION DRAWING MT-101.70 FOR DETAILS.

PAYMENT FOR ALL LABOR , EQUIPTMENT AND MATERIALS SHALL BE INCLUDED IN THE LUMP SUM CONTRACT PRICE FOR ITEM 614, MAINTAINING TRAFFIC, AS PER PLAN.

BARRIER DELINEATION, AS PER PLAN

INCREASED DELINEATION, AS SPECIFIED HEREIN, SHALL BE INSTALLED ON ALL PORTABLE CONCRETE OR STEEL BARRIER AND CONCRETE PERMANENT BARRIER LOCATED WITHIN 5-FEET OF THE EDGE OF THE TRAVELED LANE UNDER EITHER OF THE FOLLOWING CONDITIONS:

ALONG TAPERS AND TRANSITION AREAS

ALONG CURVES (OUTSIDE ONLY) WITH DEGREE OF CURVATURE GREATER THAN OR EQUAL TO 3 DEGREES

THE INCREASED DELINEATION SHALL CONSIST OF EITHER LINEAR DELINEATION PANELS OR THE TRIPLE STACKING OF WORK ZONE BARRIER REFLECTORS.

THE LINEAR DELINEATION PANELS SHALL CONSIST OF PANELS OF DELINEATION, APPROXIMATELY 34 INCHES LONG AND 6 INCHES WIDE AND SHALL BE "CRIMPED". PANELS SHALL BE PROVIDED AT THE RATE OF ONE PANEL EVERY 10 FEET ON PORTABLE BARRIER AND PERMANENT CONCRETE BARRIER, SPACED EVENLY ALONG THE LENGTH OF THE RUN. THE PANELS SHALL BE MOUNTED SUCH THAT THE TOPS OF THE PANELS ARE 26 INCHES ABOVE THE PAVEMENT.

TRIPLE STACKED BARRIER REFLECTORS SHALL CONSIST OF THREE BARRIER REFLECTORS STACKED VERTICALLY IN THEIR ATTACHMENT TO PORTABLE CONCRETE OR STEEL BARRIER. THERE SHALL BE NO OPEN SPACE BETWEEN THE ADJACENT BARRIER REFLECTORS. THE TOP OF THE MIDDLE BARRIER REFLECTOR SHALL BE LOCATED 26 IN ABOVE THE PAVEMENT.

PAYMENT SHALL BE FULL COMPENSATION FOR ALL MATERIAL, LABOR, INCIDENTALS AND EQUIPMENT NECESSARY FOR FURNISHING, INSTALLING, MAINTAINING AND REMOVING LINEAR DELINEATION.

PAYMENT TO BE INCLUDED IN THE LUMP SUM CONTRACT PRICE FOR ITEM 614, MAINTAINING TRAFFIC, AS PER PLAN.

ALONG RUNS OF PORTABLE CONCRETE BARRIER WHERE THIS ITEM IS PROVIDED, THE QUANTITY SHALL BE MEASURED AS THE ENTIRE LENGTH OF THE RUN BEING DELINEATED, INCLUDING THE SPACES BETWEEN THE INDIVIDUAL PANELS OR STACKS OF BARRIER REFLECTORS.

REFER TO STANDARD DRAWING MT-101.70 FOR MORE INFO.

GUARDRAIL DELINEATION

OBJECT MARKERS SHALL BE INSTALLED ON ALL GUARDRAIL LOCATED WITHIN 5 FEET OF THE EDGE OF THE ADJACENT TRAVEL LANE. GUARDRAIL-MOUNTING OF OBJECT MARKERS SHALL BE MADE BY INSTALLING THE OBJECT MARKERS ON THE EXTENSION BLOCKS RATHER THAN DIRECTLY ONTO THE GUARDRAIL ITSELF. OBJECT MARKER SPACING SHALL BE APPROXIMATELY 50 FEET.

PAYMENT SHALL BE FULL COMPENSATION FOR ALL MATERIAL, LABOR, INCIDENTALS AND EQUIPMENT NECESSARY FOR FURNISHING, INSTALLING, MAINTAINING AND REMOVING OBJECT MARKERS.

PAYMENT FOR ALL LABOR , EQUIPMENT AND MATERIALS SHALL BE INCLUDED IN THE LUMP SUM CONTRACT PRICE FOR ITEM 614, MAINTAINING TRAFFIC, AS PER PLAN.

FLOODLIGHTING

FLOODLIGHTING OF THE WORK SITE FOR OPERATIONS CONDUCTED DURING NIGHTTIME PERIODS SHALL BE ACCOMPLISHED SO THAT THE LIGHTS DO NOT CAUSE GLARE TO THE DRIVERS ON THE ROADWAY. TO ENSURE THE ADEQUACY OF THE FLOODLIGHT PLACEMENT, THE CONTRACTOR AND THE ENGINEER SHALL DRIVE THROUGH THE WORK SITE EACH NIGHT WHEN THE LIGHTING IS IN PLACE AND OPERATIVE PRIOR TO COMMENCING ANY WORK. IF GLARE IS DETECTED, THE LIGHT PLACEMENT AND SHIELDING SHALL BE ADJUSTED TO THE SATISFACTION OF THE ENGINEER BEFORE WORK PROCEEDS.

PAYMENT FOR ALL LABOR, EQUIPMENT AND MATERIALS SHALL BE INCLUDED IN THE LUMP SUM CONTRACT PRICE FOR ITEM 614, MAINTAINING TRAFFIC, AS PER PLAN (SECTION 642-2).

EARTHWORK FOR MAINTAINING TRAFFIC

THE FOLLOWING QUANTITIES HAVE BEEN INCLUDED IN THE PLAN FOR INFORMATION ONLY:

EXCAVATION FOR MAINTAINING TRAFFIC	3212	CU. YD.
EMBANKMENT FOR MAINTAINING TRAFFIC	7478	CU. YD.

WHEN UNDERCUTS ARE NECESSARY FOR MAINLINE PAVEMENT OR EMBANKMENT CONSTRUCTION, EVALUATE THE NEED FOR TEMPORARY ROAD UNDERCUTS IF WITHIN A CLOSE PROXIMITY TO THE MAINLINE UNDERCUTS. A GEOTECHNICAL EVALUATION SHOULD BE CONSIDERED TO DETERMINE IF THE EXISTING SOIL CONDITIONS ARE ADEQUATE TO SUPPORT THE TEMPORARY ROAD. ADDITIONAL SOIL BORINGS ALONG THE TEMPORARY ROAD ARE NOT NORMALLY REQUIRED.

PAYMENT FOR ALL LABOR, EQUIPMENT, AND MATERIALS SHALL BE INCLUDED IN THE LUMP SUM CONTRACT PRICE FOR 614, MAINTAINING TRAFFIC, AS PER PLAN, UNLESS SEPARATELY ITEMIZED IN THE PLAN.

PORTABLE CONCRETE BARRIER, 32"

PORTABLE CONCRETE BARRIER, 32" AS SPECIFIED IN THE PLANS OR AS DIRECTED BY THE ENGINEER, INCLUDING ALL LABOR, EQUIPTMENT AND MATERIALS SHALL BE INCLUDED WITH THE LUMP SUM BID PRICE FOR ITEM 614, MAINTAINING TRAFFIC, AS PER PLAN.

GLARE SCREEN

GLARE SCREEN, 18 INCHES HIGH SHALL BE INSTALLED ON ALL PORTABLE CONCRETE BARRIER (PCB) THAT IS PLACED BETWEEN OPPOSITE DIRECTION TRAFFIC. ALL LABOR, EQUIPMENT AND MATERIALS FOR THIS WORK SHALL BE INCLUDED WITH THE LUMP SUM BID PRICE FOR ITEM 614, MAINTAINING TRAFFIC, AS PER PLAN.

"CAUTION WHEN WET" SIGNS

CONTRACTOR SHALL PLACE "CAUTION WHEN WET" (SPECIAL-48"X48" BLK./ORG.) SIGNS ALONG I-75 OVER THE WINTER BETWEEN PHASE I & II AND DURING PHASE II AT THE APPROACH OF EACH NEWLY CONSTRUCTED BRIDGE ON I-75, OR AS DIRECTED BY THE ENGINEER.

"TRUCKS USE RIGHT LANE" SIGNS

CONTRACTOR SHALL PLACE "ALL TRUCKS USE RIGHT LANE" (W20-H10R) SIGNS ALONG I-75 DURING PHASE I PART-WIDTH CONSTRUCTION. THE SIGNS SHALL BE LOCATED AT THE BEGINNING OF THE WORK ZONE IN EACH DIRECTION AND APPROXIMATELY EVERY 2 MILES AFTER THAT, OR AS DIRECTED BY THE ENGINEER.

PROPOSED RUMBLE STRIPS

PROPOSED RUMBLE STRIPS SHALL NOT BE INSTALLED IN ANY NEWLY PAVED SHOULDERS UNTIL SUCH TIME WHEN THE SHOULDERS WILL NO LONGER BE NEEDED TO MAINTAIN TRAFFIC.

ITEM 614 - LAW ENFORCEMENT OFFICER (WITH PATROL CAR) FOR ASSISTANCE DURING CONSTRUCTION OPERATIONS

USE OF LAW ENFORCEMENT OFFICERS (LEOS) BY CONTRACTORS OTHER THAN THE USES SPECIFIED BELOW WILL NOT BE PERMITTED AT PROJECT COST. LEOS SHOULD NOT BE USED WHERE THE OMUTCD INTENDS THAT FLAGGERS BE USED.

IN ADDITION TO THE REQUIREMENTS OF CMS 614 AND THE OMUTCD, AN UNIFORMED LEO WITH AN OFFICIAL PATROL CAR (CAR WITH TOP-MOUNTED EMERGENCY FLASHING LIGHTS AND COMPLETE MARKINGS OF THE APPROPRIATE LAW ENFORCEMENT AGENCY) SHALL BE PROVIDED FOR THE FOLLOWING TRAFFIC CONTROL TASKS:

DURING THE ENTIRE ADVANCE PREPARATION AND CLOSURE SEQUENCE WHERE COMPLETE BLOCKAGE OF TRAFFIC IS REQUIRED. (BEAM ERECTION, DEMOLITION, OR AS DIRECTED BY THE ENGINEER.)

DURING A TRAFFIC SIGNAL INSTALLATION WHEN IMPACTING THE NORMAL FUNCTION OF THE SIGNAL OR THE FLOW OF TRAFFIC OR WHEN TRAFFIC NEEDS TO BE DIRECTED THROUGH AN ENERGIZED TRAFFIC SIGNAL CONTRARY TO THE SIGNAL DISPLAY (E.G., DIRECTING MOTORISTS THROUGH A RED LIGHT).

IN ADDITION TO THE REQUIREMENT OF CMS 614 AND THE OMUTCD, A UNIFORMED LEO WITH AN OFFICIAL PATROL CAR (CAR WITH TOP-MOUNTED EMERGENCY FLASHING LIGHTS AND COMPLETE MARKINGS OF THE APPROPRIATE LAW ENFORCEMENT AGENCY) SHOULD BE PROVIDED FOR THE FOLLOWING TRAFFIC CONTROL TASKS:

FOR LANE CLOSURES: DURING INITIAL SET-UP PERIODS, TEAR DOWN PERIODS, SUBSTANTIAL SHIFTS OF A CLOSURE POINT OR WHEN NEW LANE CLOSURE ARRANGEMENTS ARE INITIATED FOR LONG-TERM LANE CLOSURES/SHIFTS (FOR THE FIRST AND LAST DAY OF MAJOR CHANGES IN TRAFFIC CONTROL SETUP). IN GENERAL, LEOS SHOULD BE POSITIONED AT THE POINT OF LANE RESTRICTION OR ROAD CLOSURE AND TO MANUALLY CONTROL TRAFFIC MOVEMENTS THROUGH INTERSECTIONS IN WORK ZONES.

WHEN CONSTRUCTION VEHICLES ARE ENTERING/EXITING THE ZONE DIRECTLY FROM/INTO AN OPEN LANE OF TRAFFIC. IF A LANE HAS BEEN CLOSED TO PROVIDE AN ACCELERATION/DECELERATION LANE FOR THE VEHICLE, THE LEO WILL NOT BE REQUIRED.

LEOS SHOULD NOT FORGO THEIR TRAFFIC CONTROL RESPONSIBILITIES TO APPREHEND MOTORISTS FOR ROUTINE TRAFFIC VIOLATIONS. HOWEVER, IF A MOTORIST'S ACTIONS ARE CONSIDERED TO BE RECKLESS, THEN PURSUIT OF THE MOTORIST IS APPROPRIATE.

THE LEOS WORK AT THE DIRECTION OF THE CONTRACTOR. THE CONTRACTOR IS RESPONSIBLE FOR SECURING THE SERVICES OF THE LEOS WITH THE APPROPRIATE AGENCIES AND COMMUNICATING THE INTENTIONS OF THE PLANS WITH RESPECT TO DUTIES OF THE LEOS. THE ENGINEER SHALL HAVE FINAL CONTROL OVER THE LEOS' DUTIES AND PLACEMENT, AND WILL RESOLVE ANY ISSUES THAT MAY ARISE BETWEEN THE TWO PARTIES.

THE LEO SHALL REPORT IN TO THE CONTRACTOR PRIOR TO THE START OF THE SHIFT, IN ORDER TO RECEIVE INSTRUCTIONS REGARDING SPECIFIC WORK ASSIGNMENTS DURING HIS/HER SHIFT. THE LEO IS EXPECTED TO STAY AT THE PROJECT SITE FOR THE ENTIRE DURATION OF HIS/HER SHIFT. THE LEO SHALL REPORT TO THE CONTRACTOR AT THE END OF HIS/HER SHIFT. ONCE THE LEO HAS COMPLETED THE DUTIES DESCRIBED ABOVE AND STILL HAS TIME REMAINING ON HIS/HER SHIFT, THE LEO MAY BE ASKED TO PATROL THROUGH THE WORK ZONE (WITH FLASHING LIGHTS OFF) OR BE PLACED AT A LOCATION TO DETER MOTORISTS FROM SPEEDING. SHOULD IT BE NECESSARY TO LEAVE THE PROJECT SITE, THE LEO SHALL NOTIFY THE ENGINEER. THE CONTRACTOR SHALL PROVIDE THE LEO WITH A TWO-WAY COMMUNICATION DEVICE WHICH SHALL BE RETURNED TO THE CONTRACTOR AT THE END OF HIS/HER SHIFT.

LEOS (WITH PATROL CAR) REQUIRED BY THE TRAFFIC MAINTENANCE TASKS ABOVE SHALL BE PAID FOR ON A UNIT PRICE (HOURLY) BASIS UNDER ITEM 614, LAW ENFORCEMENT OFFICER (WITH PATROL CAR) FOR ASSISTANCE. THE FOLLOWING ESTIMATED QUANTITIES HAVE BEEN CARRIED TO THE M.O.T. GENERAL SUMMARY.

ITEM 614, LAW ENFORCEMENT OFFICER WITH PATROL CAR FOR ASSISTANCE [460] HOURS

THE HOURS PAID SHALL INCLUDE ANY MINIMUM SHOW-UP TIME REQUIRED BY THE LAW ENFORCEMENT AGENCY INVOLVED.

ANY ADDITIONAL COSTS (ADMINISTRATIVE OR OTHERWISE) INCURRED BY THE CONTRACTOR TO OBTAIN THE SERVICES OF AN LEO ARE INCLUDED WITH THE BID UNIT PRICE FOR ITEM 614, LAW ENFORCEMENT OFFICER WITH PATROL CAR FOR ASSISTANCE.

LEOS (WITH PATROL CAR) ARE REQUIRED TO BE STATE HIGHWAY PATROL FOR WORK ZONES ON INTERSTATE 75.

CONFLICTING PAVEMENT MARKINGS

THE CONTRACTOR SHALL, PRIOR TO PLACING TEMPORARY WORK ZONE PAVEMENT MARKINGS, REMOVE ALL EXISTING CONFLICTING PAVEMENT MARKINGS VISIBLE TO THE TRAVELLING PUBLIC DURING DAYLIGHT OR NIGHTTIME HOURS IN ACCORDANCE WITH 614.11. THE COST FOR REMOVAL OF CONFLICTING MARKINGS SHALL BE INCIDENTAL TO THE VARIOUS PAY ITEMS.

EXISTING SHOULDER REHAB

THE CONTRACTOR SHALL REHAB THE EXISTING INSIDE SHOULDERS IN THE EXISTING MEDIAN BARRIER SECTION AND TO REMOVE ANY RUMBLE STRIPS PRIOR TO USING THE SHOULDERS FOR MAINTAINING TRAFFIC ON I-75 IN PHASE I AS DIRECTED BY THE ENGINEER. SHOULDER AREAS REQUIRING REHAB SHALL BE DETERMINED IN COORDINATION AND WITH THE APPROVAL OF THE ENGINEER. MINIMALLY, THIS WORK SHALL INCLUDE 2 IN. PAVEMENT PLANING, TACK COAT AND PLACEMENT OF 2 IN. ITEM 446 SURFACE COURSE OR AS OTHERWISE DIRECTED BY THE ENGINEER. NOTE THAT FOR ESTIMATING PURPOSES, THE TOTAL AREA OF INSIDE SHOULDERS ALONG THE MEDIAN BARRIER IS APPROXIMATELY 10,200 SO.YDS.

ESTIMATED QUANTITIES HAVE BEEN CARRIERD TO THE M.O.T. GENERAL SUMMARY.

ITEM 254, PAVEMENT PLANING, ASHALT CONCRETE	10,200	SO. YD.
ITEM 407, TACK COAT	765	GAL.
ITEM 446, ASHPALT CONCRETE SURFACE COURSE, TYPE 1, PG64-22	566	CU. YD.

CALCULATED CAC CHECKED EJC

MAINTENANCE OF TRAFFIC GENERAL NOTES

ALL-75-5.53

\\DOTFS101\L_Drive\Pdv\76691\Final Cadd Files\Projects\ALL\76691\mot\sheets\76691MN003.dgn 11-JAN-2013 10:12AM jclark1

WINTER PAVEMENT MARKINGS & REMOVAL

THE CONTRACTOR WILL BE REQUIRED TO INSTALL TEMPORARY PAVEMENT MARKINGS PER ALL APPLICABLE STANDARDS AND PAY ITEMS ON THE NEWLY CONSTRUCTED I-75 MAINLINE PAVEMENT (EITHER ASPHALT INTERMEDIATE COURSE OR CONCRETE SURFACE) AT THE CLOSE OF THE 1st SEASON OF CONSTRUCTION (I-75 PHASE I). TRAFFIC WILL THEN BE SHIFTED ONTO THE NEW MAINLINE PAVEMENT AND NEW RAMPS FOR THE WINTER MONTHS AND PHASE II IN THE SECOND SEASON.

PERMANENT PAVEMENT MARKINGS MAY BE PLACED ON NEW RAMPS UP TO THE PHYSICAL GORE AT THE COMPLETION OF THE 1st CONSTRUCTION SEASON (I-75 PHASE I) AND SHALL BE IN ACCORDANCE WITH THE PAVEMENT MARKING PLANS.

PAVEMENT MARKING TYPE SHALL BE DETERMINED BY THE TYPE OF PAVEMENT OR AS DIRECTED BY THE ENGINEER.

PAVEMENT MARKINGS FOR PHASE II M.O.T. SHALL BE KEPT IN GOOD CONDITION AND MAY REQUIRE RE-STRIPING AT THE START OF SEASON TWO AS DIRECTED BY THE ENGINEER.

AT THE CLOSE OF THE PROJECT, TEMPORARY PAVEMENT MARKINGS ON CONCRETE SURFACES WILL NEED TO BE REMOVED PRIOR TO PLACING PERMANENT MARKINGS. THE CONTRACTOR SHALL EMPLOY NON-DESTRUCTIVE WATER BLASTING METHODS FOR THE ERADICATION OF TEMPORARY MARKINGS ON NEW CONCRETE PAVEMENT.

PAYMENT FOR THE TEMPORARY STRIPING FOR I-75 IS MEASURED AS BEING EQUAL TO THE PERMANENT STRIPING FOR I-75 AS SHOWN IN THE PAVEMENT MARKING PLANS AND SUB-SUMMARY. ALL LABOR, EQUIPMENT, AND MATERIALS NECESSARY TO PERFORM THIS WORK SHALL BE INCLUDED WITH ITEM 614, MAINTAINING TRAFFIC, AS PER PLAN.

COORDINATION WITH ADJACENT PROJECTS

THE CONTRACTOR SHALL COORDINATE WORK WITH THE ADJACENT PROJECT TO THE SOUTH, ALL-75-0.21 PID#89029, WHICH WILL BEGIN IN THE SECOND SEASON OF THIS PROJECT.

OVERNIGHT TRENCH CLOSING

THE BASE WIDENING SHALL BE COMPLETED TO A DEPTH OF NO MORE THAN 12 INCHES BELOW THE EXISTING PAVEMENT BY THE END OF EACH WORK DAY. NO TRENCH SHALL BE LEFT OPEN OVERNIGHT EXCEPT FOR A SHORT LENGTH (25 FEET OR LESS) OF A WORK SECTION AT THE END OF THE TRENCH. IN CASE WORK MUST BE SUSPENDED BECAUSE OF INCLEMENT WEATHER OR OTHER REASONS, THE TRENCH FOR THE UNCOMPLETED BASE WIDENING SHALL BE BACKFILLED AT THE DIRECTION OF THE ENGINEER.

TRENCH FOR WIDENING

TRENCH EXCAVATION FOR BASE WIDENING SHALL BE ONLY ON ONE SIDE OF THE PAVEMENT AT A TIME. THE OPEN TRENCH SHALL BE ADEQUATELY MAINTAINED AND PROTECTED WITH DRUMS OR BARRICADES AT ALL TIMES. PLACEMENT OF PROPOSED SUBBASE AND BASE MATERIAL SHALL FOLLOW AS CLOSELY AS POSSIBLE BEHIND EXCAVATION OPERATIONS. THE LENGTH OF WIDENING TRENCH WHICH IS OPEN AT ANY ONE TIME SHALL BE HELD TO A MINIMUM AND SHALL AT ALL TIMES BE SUBJECT TO APPROVAL OF THE ENGINEER.

ANCHORED PORTABLE CONCRETE BARRIER

PORTABLE CONCRETE BARRIER (PCB) SHALL BE PLACED AS DETAILED IN THESE PLANS AND AS SPECIFIED IN ALL APPLICABLE ODOT STANDARD DRAWINGS, TRAFFIC ENGINEERING MANUALS, AND PER THE OHIO MANUAL OF UNIFORM TRAFFIC CONTROL DEVICES. THE REQUIREMENTS OF THE "DROP-OFFS IN WORK ZONE" STANDARD DRAWING SHALL BE ADHERED TO UNLESS OTHERWISE DIRECTED BY THE ENGINEER. FURTHERMORE, THE CONTRACTOR SHALL APPLY THE PORTABLE CONCRETE BARRIER INSTALLATION GUIDELINES AND THE DETAILS OF STANDARD DRAWING PCB-91 FOR THE ANCHORING OF PCB FOR ANCHORING IN CONCRETE PAVEMENT OR BRIDGE DECKS.
FOR ANCHORING PCB IN ASPHALT, A MINIMUM OF FOUR (4) ANCHORS SHALL BE USED, ONE IN EACH CORNER. THE ASPHALT PAVEMENT SHALL BE AT LEAST 2 INCHES THICK. THE ANCHOR BOLTS SHALL BE 1 INCH HIGH-STRENGTH STEEL WITH NUT AND WASHER AND SHALL BE A MINIMUM OF 36 INCHES LONG. ALL LABOR, EQUIPMENT AND MATERIALS FOR THIS WORK SHALL BE INCLUDED WITH THE LUMP SUM BID PRICE FOR ITEM 614, MAINTAINING TRAFFIC, AS PER PLAN.

ANCHORED PCB ON BRIDGES (N.B. & S.B.):
EXISTING STR. ALL-75-07.03 - PHASE I = 320 FT.
EXISTING STR. ALL-75-08.13 - PHASE I = 400 FT.
EXISTING STR. ALL-75-08.32 - PHASE I = 360 FT.
EXISTING STR. ALL-75-08.75 - PHASE I = 640 FT.
PROPOSED STR. ALL-75-07.03 - PHASE II = 440 FT.
PROPOSED STR. ALL-75-08.13 - PHASE II = 440 FT.
PROPOSED STR. ALL-75-08.32 - PHASE II = 400 FT.
PROPOSED STR. ALL-75-08.75 - PHASE II = 380 FT.

ANCHORED PCB ON PAVEMENT:
THE CONTRACTOR SHALL EVALUATE THE NEED FOR ANCHORING PCB ON PAVEMENT IN AREAS OF HIGH FILL/EMBANKMENT OR ADJACENT VERTICAL DROP-OFFS NOT OTHERWISE DETAILED IN THE M.O.T. OR STRUCTURE PLANS. THIS EVALUATION AND SUBSEQUENT WORK SHALL BE COORDINATED WITH AND AS DIRECTED BY THE ENGINEER.

MAINTENANCE OF TRAFFIC CONTROL ZONES

THE CONTRACTOR SHALL BE RESPONSIBLE TO MAINTAIN THE SIGNS, DRUMS AND TEMPORARY PAVEMENT MARKINGS AT THE LOCATIONS DETAILED IN THE PLANS, SPECIFIED IN THE STANDARD DRAWINGS AND/OR THE OHIO MANUAL OF UNIFORM TRAFFIC CONTROL DEVICES. WHEN THE CONTRACTOR IS NOTIFIED OF DEFICIENCIES HE SHALL CORRECT THE DEFICIENCIES AS SOON AS POSSIBLE, PREFERABLY WITHIN 12 HOURS AND NO LATER THAN 24 HOURS. IF ANY NOTED DEFICIENCIES ARE NOT CORRECTED WITHIN THE 24 HOURS THE ENGINEER SHALL ASSESS LIQUIDATED DAMAGES AS PER CMS 108.07 FOR ITEM 614 MAINTAINING TRAFFIC, NOT AS A PENALTY BUT AS LIQUIDATED DAMAGES FOR EACH AND EVERY DAY THAT THESE PROVISIONS ARE NOT MET. ALL COSTS FOR MAINTAINING WORK ZONES AS DESCRIBED ABOVE SHALL BE INCLUDED UNDER 614 MAINTAINING TRAFFIC, A.P.P.

COVERING OF GROUND MOUNTED SIGNS-GENERAL

WHEN REQUIRED BY OTHER ITEMS OR INCIDENTALLY TO ITEM 614 MAINTAINING TRAFFIC, COVER EXISTING GROUND MOUNTED SIGNS WITH PLYWOOD OR OSB BLANKS (1/2" MINIMUM THICKNESS) COVERING 80% OF THE SIGN AREA AND ALL OF THE SIGN LEGEND. THE USE OF LOW QUALITY MATERIALS SUCH AS DUCT TAPE AND BLACK PLASTIC IS NOT PERMITTED.

CONTRACTOR'S EQUIPMENT-OPERATION AND STORAGE

VEHICLES AND EQUIPMENT SHALL ALWAYS MOVE WITH, AND NOT ACROSS OR AGAINST THE FLOW OF TRAFFIC. VEHICLES AND OTHER EQUIPMENT SHALL NOT PARK OR STOP EXCEPT WITHIN THE DESIGNATED WORK AREAS; AND SHALL NOT ENTER AND LEAVE THE WORK AREAS IN A MANNER WHICH WILL BE HAZARDOUS TO, OR INTERFERE WITH THE NORMAL TRAFFIC FLOW. PERSONAL VEHICLES WILL NOT BE PERMITTED TO PARK WITHIN THE RIGHT-OF-WAY EXCEPT IN SPECIFIC AREAS DESIGNATED BY THE ENGINEER.

EQUIPMENT, VEHICLES AND MATERIALS SHALL NOT BE STORED OR PARKED WITHIN 30 FEET OF THE TRAVELED WAY UNLESS 6 FEET BEHIND PCB OR GUARDRAIL.

ALL WORK VEHICLES AND EQUIPMENT THAT ENTERS THE WORK ZONE MORE THAN ONCE A DAY MUST BE EQUIPPED WITH AT LEAST ONE FLASHING, ROTATING, OR OSCILLATING AMBER LIGHT THAT IS VISIBLE IN ALL DIRECTIONS OR TRAFFIC FOR AT LEAST ONE QUARTER OF A MILE, DAY OR NIGHT.

ANY VEHICLES FAILING TO MEET THIS REQUIREMENT ARE PROHIBITED FROM WORKING OR PARKING ON THE PROJECT. THE ENGINEER WILL SUSPEND ITEMS OF WORK INVOLVING VEHICLES WHICH FAIL TO MEET THIS REQUIREMENT.

SUSPENSION OF WORK

IF THE CONTRACTOR FAILS TO COMPLY WITH THE PROVISIONS FOR TRAFFIC CONTROL AS SET FORTH IN THESE PLANS OR WITH PROVISIONS OF THE OMUTCD, THE ENGINEER SHALL SUSPEND WORK UNTIL THE CONTRACTOR COMPLIES WITH THE NECESSARY REQUIREMENTS.

ITEM 614, REPLACEMENT SIGN

FLATSHEET SIGNS FURNISHED BY THE CONTRACTOR IN ACCORDANCE WITH THE REQUIREMENTS OF THE PLANS, SPECIFICATIONS AND PROPOSAL WHICH BECOME DAMAGED BY TRAFFIC FOR REASONS BEYOND THE CONTROL OF THE CONTRACTOR SHALL BE REPLACED IN KIND WHEN ORDERED BY THE ENGINEER. REPLACEMENT SIGNS SHALL BE NEW. OTHER MATERIALS MAY BE IN USED, BUT GOOD, CONDITION SUBJECT TO APPROVAL BY THE ENGINEER.

PAYMENT FOR THE NEW SIGNS SHALL BE MADE AT THE CONTRACT PRICE PER EACH FOR ITEM 614, REPLACEMENT SIGN, AND SHALL INCLUDE THE COST OF REMOVING AND DISPOSING OF DAMAGED SIGNS, HARDWARE AND SUPPORTS, AND PROVIDING THE NECESSARY REPLACEMENT HARDWARE, SUPPORTS, ETC.

AN ESTIMATED QUANTITY OF [30] EACH HAS BEEN PROVIDED IN THE M.O.T. GENERAL SUMMARY.

ITEM 614, REPLACEMENT DRUM

DRUMS FURNISHED BY THE CONTRACTOR IN ACCORDANCE WITH THE REQUIREMENTS OF THE PLANS, SPECIFICATIONS AND PROPOSAL WHICH BECOME DAMAGED BY TRAFFIC FOR REASONS BEYOND THE CONTROL OF THE CONTRACTOR SHALL BE REPLACED IN KIND WHEN ORDERED BY THE ENGINEER. REPLACEMENT DRUMS SHALL BE NEW.

PAYMENT FOR THE NEW DRUMS SHALL BE MADE AT THE CONTRACT PRICE PER EACH FOR ITEM 614, REPLACEMENT DRUM, AND SHALL INCLUDE THE COST OF REMOVING AND DISPOSING OF THE DAMAGED DRUM, AND PROVIDING AND MAINTAINING THE REPLACEMENT DRUM IN ACCORDANCE WITH THE CONTRACT REQUIREMENTS FOR THE ORIGINAL DRUM.

AN ESTIMATED QUANTITY OF [100] EACH HAS BEEN PROVIDED IN THE GENERAL SUMMARY.

PERMITTED LANE CLOSURE NOTE

LANES CLOSURES MAY ONLY BE IMPLEMENTED AT THE TIMES PERMITTED BY THE DISTRICT 1, PERMITTED LANE CLOSURE TIMES WHICH IS LOCATED ON ODOT'S WEB SITE AT:

http://plcm.dot.state.oh.us

THE LATEST REVISION, 14 DAYS PRIOR TO THE BID DATE, WILL BE IN EFFECT FOR THIS JOB.

DESIGNATED DETOUR ROUTES AND HAUL ROADS

DURING THE TIME THAT TRAFFIC IS DETOURED AND THAT THE CONTRACTOR IS USING THE HAUL ROADS, THE CONTRACTOR SHALL MAINTAIN THESE ROUTES IN A CONDITION WHICH IS REASONABLY SMOOTH AND FREE FROM HOLES, RUTS, RIDGES, BUMPS, DUST AND STANDING WATER. ONCE THE DETOUR IS REMOVED AND TRAFFIC RETURNED TO ITS NORMAL PATTERN, THE DESIGNATED DETOUR ROUTES AND HAUL ROADS SHALL BE RESTORED TO A CONDITION THAT IS EQUIVALENT TO THAT WHICH EXISTED PRIOR TO ITS USE FOR THIS PURPOSE. ALL SUCH WORK SHALL BE PERFORMED WHEN AND AS DETERMINED BY THE ENGINEER.

SEE THE FOLLOWING SHEETS FOR DETOUR PLANS:
FOURTH STREET N.B. RAMPS - 90
FOURTH STREET S.B. RAMPS - 91
SR 81 S.B. ENTRANCE RAMP - 92
SR 309 S.B. ENTRANCE RAMP - 93

THE FOLLOWING ESTIMATED QUANTITIES ARE PROVIDED FOR USE AS DETERMINED BY THE ENGINEER TO MAINTAIN AND SUB- SEQUENTLY RESTORE THE DESIGNATED DETOUR ROUTES AND HAUL ROADS.

ITEM 301, ASPHALT CONCRETE BASE, PG 64-22	[50] CU. YD.
ITEM 304, AGGREGATE BASE	[70] CU. YD.
ITEM 446, ASPHALT CONCRETE SURFACE COURSE, TYPE 1, PG 64-22	[30] CU. YD.
ITEM 407, TACK COAT	[30] GAL.
ITEM 408, PRIME COAT	[30] GAL.
ITEM 614, ASPHALT CONCRETE FOR MAINTAINING TRAFFIC	[75] CU. YD.
ITEM 616, WATER	[15] M. GAL.
ITEM 617, COMPACTED AGGREGATE	[50] CU. YD.
ITEM 617, WATER	[15] M. GAL.
ITEM 642, CENTER LINE	[10] MILE

WRECKER AND EMERGENCY VEHICLE ACCESS

THE CONTRATOR SHALL MAKE PROVISIONS TO ASSIST IN THE ACCESS OF WRECKERS AND EMERGENCY VEHICLES THROUGHOUT THE WORKZONE. THIS MAY INCLUDE, BUT NOT BE LIMITED TO, PROVIDING FLAGGERS OR REMOVING SECTIONS OF PORTABLE CONCRETE BARRIER (PCB) TO ALLOW EMERGENCY VEHICLES AND WRECKERS TO MOVE THROUGH PORTIONS OF THE WORKZONE TO REACH ACCIDENTS AND/OR BREAKDOWNS. THE INTENT IS TO MINIMIZE EXTENDED DELAYS TO THE TRAVELLING PUBLIC AND TO PROVIDE QUICKER RESPONSE TIMES FOR WRECKERS AND EMERGENCY VEHICLES. ALL AGENTS AND EMPLOYEES OF THE CONTRACTOR SHALL BE MADE AWARE OF THIS PROVISION BEFORE WORK BEGINS.

ALL ACTIVITIES ASSOCIATED WITH ACCOMMODATING WRECKER SERVICE AND EMERGENCY VEHICLE ACCESS THROUGHOUT THE WORKZONE SHALL BE COORDINATED BY THE WORKSITE TRAFFIC SUPERVISOR AND THE ENGINEER.

PAYMENT FOR ALL LABOR, EQUIPMENT, AND MATERIALS SHALL BE INCLUDED IN THE LUMP SUM CONTRACT PRICE FOR ITEM 614, MAINTAINING TRAFFIC, AS PER PLAN.

CALCULATED CAC
CHECKED EJC

MAINTENANCE OF TRAFFIC GENERAL NOTES

ALL-75-5.53

J:\Projects\ALL\76691\mot\sheets\76691MN004.dgn 11-SEP-2012 8:48PM reddenj

MAINTENANCE OF TRAFFIC SIGNAL/FLASHER INSTALLATION

THE CONTRACTOR SHALL BE RESPONSBLE FOR MAINTAINING TRAFFIC SIGNAL/FLASHER INSTALLATIONS WITHIN THE PROJECT UNDER THE FOLLOWING CONDITIONS:

1. EXISTING SIGNAL/FLASHER INSTALLATIONS WHICH THE PLANS REQUIRE THE CONTRACTOR TO ADJUST, MODIFY, ADD ONTO OR REMOVE, OR WHICH THE CONTRACTOR ACTUALLY ADJUSTS, MODIFIES OR OTHERWISE DISTURBS. THE CONTRACTOR SHALL BE RESPONSIBLE FOR THE ENTIRE INSTALLATION (AT AN INTERSECTION) FROM THE TIME HIS OPERATIONS FIRST DISTURB THE INSTALLATION UNTIL THE INSTALLATION HAS BEEN SUBSEQUENTLY REMOVED OR MODIFIED AND THE WORK ACCEPTED.

2. NEW OR REUSED SIGNAL/FLASHER INSTALLATIONS OR DEVICES, INSTALLED BY THE CONTRACTOR. THE CONTRACTOR SHALL BE RESPONSBILE FOR MAINTENANCE OF THESE FROM THE TIME OF INSTALLATION UNTIL THE WORK IS ACCEPTED.

THE CONTRACTOR SHALL CORRECT AS QUICKLY AS POSSIBLE ALL OUTAGES OR MALFUNCTIONS. HE SHALL PROVIDE THE MAINTAINING AGENCY AND THE ENGINEER SUCH ADDRESSES AND PHONE NUMBERS WHERE HIS MAINTENANCE FORCES CAN BE CONTACTED. THE CONTRACTOR SHALL PROVIDE ONE OR MORE PERSONS TO RECEIVE ALL CALLS AND DISPATCH THE NECESSARY MAINTENANCE FORCES TO CORRECT OUTAGES. SUCH A PERSON OR PERSONS MAY BE USED TO PERFORM OTHER DUTIES AS LONG AS PROMPT ATTENTION IS GIVEN TO THESE CALLS AND A PERSON IS READILY AVAILABLE CONTINUOUSLY 24 HOURS A DAY, 7 DAYS A WEEK. ALL LAMP OUTAGES, CABLE OUTAGES, ELECTRICAL FAILURES, EQUIPMENT MALFUNCTIONS AND MISALIGNED SIGNAL HEADS SHALL BE CORRECTED TO THE SATISFACTION OF THE ENGINEER WITH THE SIGNAL BACK TO SERVICE WITHIN FOUR HOURS AFTER THE CONTRACTOR HAS BEEN NOTIFIED OF THE OUTAGE.

IN THE EVENT NEW SIGNALS ARE DAMAGED PRIOR TO ACCEPTANCE, ALL DAMAGED EQUIPMENT EXCEPT POLES AND CONTROL EQUIPMENT SHALL BE REPLACED BY THE CONTRACTOR TO THE SATISFACTION OF THE ENGINEER WITH THE SIGNAL BACK IN SERVICE WITHIN 8 HOURS AFTER THE CONTRACTOR'S NOTIFICATION OF THE OUTAGE. THE CONTRACTOR SHALL ARRANGE FOR FULL TRAFFIC CONTROL UNTIL THE SIGNAL IS BACK IN OPERATION.

IF POLES AND/OR CONTROL EQUIPMENT ARE DAMAGED AND MUST BE REPLACED, THE CONTRACTOR SHALL MAKE TEMPORARY REPAIRS AS NECESSARY TO BRING THE SIGNAL BACK INTO FULL OPERATION WITHIN THE ALLOWED 8-HOUR PERIOD, AND SHALL MAKE PERMANENT REPAIRS OR REPLACEMENT AS SOON THEREAFTER AS POSSIBLE.

NONE OF THE ABOVE SHALL BE CONSTRUED AS COLLECTIVE OR CONSECUTIVE OUTAGE TIME PERIODS AT ANY ONE LOCATION. THAT IS, WHERE MORE THAN ONE OUTAGE OCCURS AT ANY ONE LOCATION THEN THE ALLOTTED TIME LIMIT SHALL BE FOR THE WORST SINGLE OUTAGE.

WHERE OUTAGES ARE THE DIRECT RESULT OF A VEHICLE ACCIDENT, THE RESPONSE OF THE CONTRACTOR SHALL BE AS OUTLINED ABOVE. THE CONTRACTOR SHALL BE RESPONSIBLE FOR COLLECTION OF ANY COMPENSATION FOR THIS WORK FROM THOSE PARTIES RESPONSIBLE FOR THE DAMAGE.

WHERE THE CONTRACTOR HAS FAILED TO, OR CANNOT RESPOND TO, AN OUTAGE OR SIGNAL EQUIPMENT MALFUNCTION, AT THESE LOCATIONS WITHIN HIS RESPONSIBILITY, WITHIN PERIODS AS SPECIFIED ABOVE, THE ENGINEER MAY INVOKE THE PROVISIONS OF SECTION 105.15 AND ANY SUBSEQUENT BILLINGS TO THE STATE OR THE CITY OF LIMA FOR POLICE SERVICES AND MAINTENANCE SERVICES BY CITY FORCES SHALL BE DEDUCTED FROM MONIES DUE OR TO BECOME DUE THE CONTRACTOR IN ACCORDANCE WITH PROVISIONS OF SECTION 105.15.

THE CONTRACTOR SHALL PROVIDE THE MAINTENANCE SERVICE ENTIRELY WITH HIS FORCES OR HE MAY CHOOSE TO ENTER INTO A COOPERATIVE UNDERSTANDING WITH THE LOCAL MAINTAINING AGENCY TO PROVIDE THE MAINTENANCE. THE CONTRACTOR SHALL INFORM THE ENGINEER, IN WRITING, OF THE MAINTENANCE METHOD SELECTED.

THE CONTRACTOR SHALL BE RESPONSIBLE FOR ANY DAMAGE TO ANY TRAFFIC SIGNAL COMPONENTS REQUIRED TO BE HANDLED DURING THE RELOCATION OF POLES AND REVISIONS TO THE SIGNAL SYSTEM.

WHEN A TRAFFIC SIGNAL MUST BE TAKEN OUT OF SERVICE BY THE CONTRACTOR, DUE TO CONSTRUCTION PROCEDURES, THIS OUTAGE SHALL NOT EXCEED 3 HOURS AND SHALL NOT INCLUDE THE HOURS OF 7 AM TO 7 PM. ANY SIGNALIZED INTERSECTION, WHERE THE SIGNAL IS OUT OF SERVICE DUE TO CONSTRUCTION PROCEDURES, OR DUE TO AN OUTAGE OR MALFUNCTION OF EQUIPMENT AS DESCRIBED ABOVE, SHALL BE PROTECTED, BY THE CONTRACTOR, BY THE INSTALLATION OF TEMPORARY "STOP" SIGNS, EXCEPT FOR THE FOLLOWING INTERSECTIONS WHICH SHALL BE PROTECTED BY OFF-DUTY STATE HIGHWAY PATROL OFFICERS, OR LOCAL POLICE HIRED BY THE CONTRACTOR.

1. SR 309 / LEONARD AVE / BELLEFONTAINE AVE

2. SR 309 / I-75 S.B. RAMPS

3. SR 309 / I-75 N.B. RAMPS

ANY VEHICULAR TRAFFIC SIGNAL HEAD, EITHER NEW OR EXISTING WHICH WILL BE OUT OF OPERATION SHALL BE COVERED IN THE MANNER DESCRIBED IN 632.25.

THE CONTRACTOR SHALL MAINTAIN COMPLETE RECORDS OF MALFUNCTIONS INCLUDING:

1. TIME OF NOTIFICATION OF MALFUNCTION;
2. TIME OF WORK CREWS ARRIVAL TO CORRECT THE MALFUNCTION;
3. ACTIONS TAKEN TO CORRECT THE MALFUNCTION, INCLUDING A LIST OF PARTS REPAIRED OR REPLACED;
4. A DIAGNOSIS OF REASON FOR THE MALFUNCTION AND PROBABILITY OF REOCCURRENCE;
5. TIME OF COMPLETION OF THE REPAIR AND SYSTEM RESTORED TO FULL SERVICE.

A COPY OF THESE RECORDS SHALL BE PROVIDED TO THE ENGINEER WITHIN THREE (3) WORKING DAYS FOLLOWING COMPLETION OF EACH REPAIR.

ALL COSTS RESULTING FROM THE ABOVE REQUIREMENTS SHALL BE CONSIDERED TO BE INCLUDED IN THE LUMP SUM PRICE BID PRICE FOR ITEM 614, MAINTAINING TRAFFIC, AS PER PLAN.

MAINTENANCE OF EXISTING FIRE HYDRANTS

THE CONTRACTOR SHALL NOT REMOVE FROM SERVICE ANY EXISTING FIRE HYDRANTS WITHOUT FIRST HAVING INSTALLED A NEW OR RELOCATED HYDRANT. WORK INVOLVING FIRE HYDRANTS SHALL BE COORDINATED WITH THE LOCAL AUTHORITIES AND AS DIRECTED BY THE ENGINEER. THIS WORK SHALL BE CONSIDERED INCIDENTAL TO ITEM 614, MAINTAINING TRAFFIC, AS PER PLAN.

BEAM ERECTION

FOR BEAM ERECTION OVER ACTIVE ROADWAYS AT SR 309 AND SR 81, THE CONTRACTOR SHALL EMPLOY THE PROVISIONS REQUIRED ON PLAN INSERT SHEET 209960 EXCEPTING THAT THE HIGHWAYS ARE NOT MULTI-LANE DIVIDED. BEAM ERECTION SHALL BE COMPLETED DURING PERMITTED LANE CLOSURE TIMES TO LIMIT DISRUPTION TO TRAFFIC.

SHEETING AND EXCAVATION BRACING

DUE TO THE DIFFERENCES IN PROFILE (RISE) ALONG MAINLINE I-75 AT MOST MAINLINE BRIDGE LOCATIONS, IT WILL BE NECESSARY TO CONSTRUCT LONG RUNS OF SHEETING OR OTHER SHORING & BRACING TO SEPARATE THE WORK ZONE AND THE ACTIVE TRAVEL LANES. THE CONTRACTOR MAY PROPOSE ALTERNATE METHODS OF EXCAVATION BRACING AND SHALL BE RESPONSIBLE FOR IT'S DESIGN AND PROPER INSTALLATION. THIS WORK SHALL BE SUBJECT TO THE APPOVAL OF THE ENGINEER.

APPROXIMATE LOCATIONS WHERE LONGITUDINAL (PHASE CUT LINE) BRACING IS ANTICIPATED ARE LISTED BELOW:

I-75 - STA. 360+00 TO STA. 368+75 LT. & RT.
I-75 - STA. 371+25 TO STA. 381+00 LT. & RT.
I-75 - STA. 420+00 TO STA. 426+75 LT. & RT.
I-75 - STA. 429+40 TO STA. 436+00 LT. & RT.
I-75 - STA. 455+00 TO STA. 460+25 LT. & RT.
I-75 - STA. 463+00 TO STA. 469+00 LT. & RT.

THESE LIMITS ARE PROVIDED AS A GUIDE AND SHOULD BE VERIFIED BASED ON THE VARIOUS FIELD CONSTRAINTS AND CONSTRUCTION METHODS AND PHASES EMPLOYED BY THE CONTRACTOR.

PAYMENTS FOR ALL LABOR, EQUIPMENT, AND MATERIALS NECESSARY TO PROVIDE REQUIRED SHORING/EXCAVATION BRACING SHALL BE INCLUDED IN THE LUMP SUM FOR ITEM 614, MAINTAINING TRAFFIC, AS PER PLAN.

MAINTAINING DRAINAGE

THE CONTRACTOR SHALL MAINTAIN DRAINAGE DURING CONSTRUCTION AT ALL TIMES. THIS SHALL BE ACHIEVED BY USE OF THE EXISTING DRAINAGE PIPES, DITCHES, CULVERTS, ETC. WHEN AT ALL POSSIBLE, AS WELL AS TEMPORARY AND PROPOSED DRAINAGE ITEMS AND TEMPORARY COFFERDAMS AND EXCAVATION BRACING. SINCE THE PROJECT WILL BE CONSTRUCTED IN MULTIPLE PHASES IT WILL BE NECESSARY TO EMPLOY MULTIPLE METHODS TO CONSTRUCT THE PROPOSED DRAINAGE ITEMS WHILE MAINTAINING EXISTING DRAINAGE.

ON THE EXISTING BRIDGES, THE CONTRACTOR SHALL DRILL THREE (3) 6 IN. DIA. HOLES 6 FT. APART TO SERVE AS SCUPPERS AT BOTH ENDS OF EACH BRIDGE. HOLES SHALL BE LOCATED ON THE LOW GUTTER SIDE AT THE TOE OF THE PCB TO REDUCE THE POTENTIAL FOR PONDING IN A TRAVEL LANE. THE HOLES SHALL NOT BE LOCATED OVER AN ACTIVE ROADWAY OR WATERWAY AND SHALL BE INCLUDED WITH ITEM 614, MAINTAINING TRAFFIC, AS PER PLAN.

GENERALLY, THE EXISTING DRAINAGE DEVICES SHALL REMAIN IN PLACE AND IN OPERATION UNTIL THE PROPOSED FEATURES ARE CONSTRUCTED AND OPERATIONAL. WHEN EXISTING DEVICES ARE NO LONGER NEEDED THEY SHALL BE REMOVED IF POSSIBLE OR PROPERLY PLUGGED AND FILLED. AT PROPOSED CULVERT CROSSINGS AND/OR MEDIAN STORM DRAIN CROSSINGS, THE CONTRACTOR MAY HAVE THE OPTION OF INSTALLING TEMPORARY SHEETING OR BORING AND JACKING A PORTION OF THE PIPE UNDER THE ACTIVE LANES AT THE PHASE CUT LINE FOR THE PART-WIDTH CONSTRUCTION PHASES.

WHEN CONSTRUCTING THE TEMPORARY PAVEMENT IN THE MEDIAN FROM STA. 493+00 TO 520+00 THE CONTRACTOR SHALL REMOVE THE EXISTING CATCH BASIN AT STA. 504+11.40, 5.69' LT. TO FACILITATE DRAINAGE IN THIS AREA DURING PHASE I THE CONTRACTOR SHALL BORE OR JACK THE PROPOSED MEDIAN PIPES AT STA. 502+74 AND STA. 504+50 AND CONSTRUCT TEMPORARY INLETS AT THE EDGE OF THE MEDIAN PCB. ADDITIONAL INLETS MAY BE CONSTRUCTED IN SIMILAR FASHION IF LOW POINTS ARE PRESENT OR AS DIRECTED BY THE ENGINEER.

UNLESS SEPARATELY ITEMIZED IN THE PLANS, ALL LABOR, EQUIPMENT, AND MATERIALS REQUIRED TO MAINTAIN DRAINAGE DURING CONSTRUCTION, INCLUDING SUBSEQUENT REMOVAL OF ANY TEMPORARY ITEMS, SHALL BE INCLUDED IN THE BID PRICE FOR ITEM 614, MAINTAINING TRAFFIC, AS PER PLAN, LUMP SUM.
IN ADDITION TO ANY DRAINAGE ITEMS DETAILED IN THE M.O.T. PLANS, BELOW ARE CONTINGENCY QUANTITIES TO BE USED FOR MAINTAINING DRAINAGE AS DESCRIBED ABOVE AND AS DIRECTED BY THE ENGINEER:

ITEM 503	UNCLASSIFIED EXCAVATION	LUMP	
ITEM 503	COFFERDAMS AND EXCAVATION BRACING	LUMP	
ITEM 603	CONDUIT BORED OR JACKED, 12" TYPE B	100	FT
ITEM 603	CONDUIT BORED OR JACKED, 15" TYPE B	100	FT
ITEM 603	CONDUIT BORED OR JACKED, 18" TYPE B	100	FT
ITEM 603	CONDUIT BORED OR JACKED, 24" TYPE B	100	FT
ITEM 603	CONDUIT BORED OR JACKED, 30" TYPE B	100	FT
ITEM 604	CATCH BASIN, NO. 2-2B	6	EACH
ITEM 604	CATCH BASIN ADJUSTED TO GRADE	6	EACH
ITEM 604	CATCH BASIN RECONSTRUCTED TO GRADE	6	EACH
ITEM 604	MANHOLE, NO. 3	6	EACH
ITEM 604	MANHOLE ADJUSTED TO GRADE	6	EACH

CALCULATED CAC CHECKED EJC

MAINTENANCE OF TRAFFIC GENERAL NOTES

ALL-75-5.53

J:\Projects\ALL\76691\mot\sheets\76691MN005.dgn 11-SEP-2012 8:48PM reddenj

WORKSITE TRAFFIC SUPERVISOR

SUBJECT TO APPROVAL OF THE ENGINEER, THE CONTRACTOR SHALL EMPLOY AND IDENTIFY (SOMEONE OTHER THAN THE SUPERINTENDENT) A CERTIFIED WORKSITE TRAFFIC SUPERVISOR (WTS) BEFORE STARTING WORK IN THE FIELD. THE WTS MAY BE CERTIFIED FROM ONE OF THE FOLLOWING ORGANIZATIONS:

1. AMERICAN TRAFFIC SAFETY SERVICE ASSOCIATION (ATSSA), PHONE NUMBER 1-800-272-8772, CERTIFIED TRAFFIC CONTROL SUPERVISOR (TCS).
2. NATIONAL HIGHWAY INSTITUTE, DESIGN AND OPERATION OF WORK ZONE TRAFFIC CONTROL, PHONE NUMBER 1-703-235-0528.
3. THE OHIO CONTRACTORS ASSOCIATION, TRAFFIC CONTROL SUPERVISOR (OCA/TCS) WORK ZONE CLASS, ONLY IF TAKEN AFTER MAY 5, 2004, PHONE NUMBER 1-800-229-1388.
4. OHIO LABORERS TRAINING, TRAFFIC CONTROL SUPERVISORS CLASS, PHONE NUMBER 1-740-599-7915.

A COPY OF EACH WTSS CERTIFICATION AND 24-HOUR CONTACT INFORMATION SHALL BE PROVIDED TO THE ENGINEER AT THE PRECONSTRUCTION CONFERENCE. IF THE DESIGNATED WTS WILL NOT BE AVAILABLE FULL TIME (24/7) THE CONTRACTOR MAY DESIGNATE AN ALTERNATE WTS TO BE AVAILABLE WHEN THE PRIMARY IS OFF DUTY. EACH WTS SHALL HAVE A CURRENT WTS CERTIFICATION (WITH AN EXPIRATION DATE NO MORE THAN 5 YEARS FROM THE DATE OF ISSUE) FROM ANY OF THE APPROVED ORGANIZATIONS.

THE WTS POSITION HAS THE RESPONSIBILITY OF MONITORING TRAFFIC CONTROL DEFICIENCIES FOR THE ENTIRE WORK ZONE. THE DUTIES OF THE WTS ARE AS FOLLOWS:

1. BE AVAILABLE ON A 24-HOUR PER DAY BASIS, AND BE ABLE TO BE ON SITE FOR ALL EMERGENCY TRAFFIC CONTROL NEEDS WITHIN ONE HOUR OF NOTIFICATION BY POLICE OR PROJECT STAFF AND BE PREPARED TO EFFECT CORRECTIVE MEASURES IMMEDIATELY ON EXISTING WORK ZONE TRAFFIC CONTROL DEVICES.
2. ATTEND PRECONSTRUCTION MEETING AND ALL PROJECT MEETINGS WHERE TRAFFIC CONTROL MANAGEMENT IS DISCUSSED.
3. BE AVAILABLE FOR MEETINGS OR DISCUSSIONS WITH THE ENGINEER UPON REQUEST OR WITHIN 36 HOURS.
4. BE AWARE OF, AND COORDINATE IF NECESSARY, ALL TRAFFIC CONTROL OPERATIONS, INCLUDING THOSE OF SUBCONTRACTORS AND SUPPLIERS.
5. COORDINATE PROJECT ACTIVITIES WITH ALL LAW ENFORCEMENT OFFICERS (LEOS). A WTS SHALL ALSO BE THE MAIN CONTACT PERSON WITH THE LEOS WHILE THEY ARE ON THE PROJECT.
6. COORDINATE MEETINGS WITH ODOT PERSONNEL, LEOS AND OTHER APPLICABLE ENTITIES BEFORE EACH PLAN PHASE SWITCH TO DISCUSS WORK ZONE TRAFFIC CONTROL.
7. ENSURE COMPLIANCE WITH THE CONTRACT DOCUMENTS FOR SIGNS, BARRICADES, TEMPORARY CONCRETE BARRIER, PAVEMENT MARKINGS, PORTABLE MESSAGE SIGNS, AND OTHER TRAFFIC CONTROL DEVICES ON A DAILY BASIS; AND FACILITATE ANY CORRECTIVE ACTION NECESSARY.
8. NOTIFY THE CONTRACTOR OF THE NEED FOR CLEANING AND MAINTENANCE OF ALL TRAFFIC CONTROL DEVICES, INCLUDING THE COVERING AND REMOVAL OF INAPPLICABLE SIGNS.
9. INSPECT, EVALUATE, PROPOSE NECESSARY MODIFICATIONS TO, AND DOCUMENT THE EFFECTIVENESS OF, THE TRAFFIC CONTROL DEVICES AND/OR TRAFFIC OPERATIONS ON A DAILY BASIS (7 DAYS A WEEK). IN ADDITION, A WEEKLY NIGHT INSPECTION OF THE WORK ZONE SETUP FOR DAYTIME WORK OPERATIONS; AND ONE DAYTIME INSPECTION PER WEEK FOR NIGHTTIME PROJECTS. THIS SHALL INCLUDE (BUT NOT BE LIMITED TO) DOCUMENTATION ON THE FOLLOWING PROJECT EVENTS:
   A. INITIAL TRAFFIC CONTROL SETUP (DAY AND NIGHT REVIEW).
   B. DAILY TRAFFIC CONTROL SETUP AND REMOVAL.
   C. WHEN CONSTRUCTION STAGING CAUSES A CHANGE IN THE TRAFFIC CONTROL SETUP.
   D. CRASH OCCURRENCES WITHIN THE CONSTRUCTION AREA.
   E. REMOVAL OF TRAFFIC CONTROL DEVICES AT THE END OF A PHASE OR PROJECT.
   F. ALL OTHER EMERGENCY TRAFFIC CONTROL NEEDS.
10. COMPLETE THE DEPARTMENT APPROVED LONG TERM INSPECTION FORM (CA-D-8) AFTER EACH INSPECTION AS REQUIRED IN # 9 AND SUBMIT IT TO THE ENGINEER THE FOLLOWING WORK DAY. THESE REPORTS SHALL INCLUDE A CHECKLIST OF ALL TRAFFIC CONTROL MAINTENANCE ITEMS TO BE REVIEWED. A COPY OF THE FORM WILL BE PROVIDED AT THE PRE-CONSTRUCTION MEETING. ANY DEFICIENCIES OBSERVED SHALL BE NOTED, ALONG WITH RECOMMENDED CORRECTIVE ACTIONS AND THE DATES BY WHICH SUCH CORRECTIONS WERE, OR WILL BE, COMPLETED. A COPY OF THIS DOCUMENT CAN BE FOUND IN THE DEPARTMENT OF TRANSPORTATION CONSTRUCTION INSPECTION FORMS MANUAL DATED 10/15/06 OR CURRENT REVISION.
11. VERIFY THAT ALL FLAGGING OPERATIONS ARE BEING CONDUCTED PER THE OHIO MANUAL OF UNIFORM TRAFFIC CONTROL DEVICES.
12. HAVE COPIES OF THE ODOT TEMPORARY TRAFFIC CONTROL MANUAL AND APPLICABLE STANDARDS AND SPECIFICATIONS INCLUDED IN THE CONTRACT DOCUMENTS AVAILABLE AT ALL TIMES ON THE PROJECT.

THE DEPARTMENT WILL NOT PAY THE UNIT PRICE BID FOR THE WTS FOR ANY DAY ON WHICH THE CONTRACTOR FAILS TO PERFORM THE DUTIES SET FORTH ABOVE. SHOULD THE CONTRACTOR'S FAILURE TO PERFORM ANY OF THE DUTIES DESCRIBED ABOVE RESULT IN A MAINTENANCE OF TRAFFIC SAFETY ISSUE, THE DEPARTMENT WILL DEDUCT THE PRORATED DAILY AMOUNT FOR ITEM 614 MAINTENANCE OF TRAFFIC FROM THE CONTRACTOR'S NEXT SCHEDULED ESTIMATE.

IF THREE OR MORE FAILURES TO PERFORM THE DUTIES SET FORTH ABOVE OCCUR, THE WTS SHALL BE IMMEDIATELY REMOVED FROM THE WORK IN ACCORDANCE WITH C&MS 108.05.

THE FOLLOWING ESTIMATED QUANTITY HAS BEEN INCLUDED FOR THE WORKSITE TRAFFIC SUPERVISOR:

ITEM 614 WORKSITE TRAFFIC SUPERVISOR [22] MONTHS

ITEM 614 - WORK ZONE RAISED PAVEMENT MARKER, AS PER PLAN ON ASPHALT SURFACES

WORK ZONE RAISED PAVEMENT MARKERS, AS PER PLAN, AND THEIR INSTALLATION SHALL CONFORM TO CMS 614 OR CMS 621 AS SPECIFIED HEREIN.

RAISED PAVEMENT MARKERS IN USE DURING THE SNOW-PLOWING SEASON SHALL CONFORM TO 621.

RAISED PAVEMENT MARKERS IN USE DURING THE NON-SNOW-PLOW SEASON SHALL CONFORM TO EITHER 614 OR TO 621.

THE SNOW-PLOWING SEASON SHALL RUN FROM NOVEMBER 1 THROUGH APRIL 1.

IF PROJECT DELAYS, NOT THE FAULT OF ODOT, CAUSE THE WORK TO EXTEND INTO THE SNOW-PLOWING SEASON, THE CONTRACTOR SHALL BE RESPONSIBLE FOR REPLACING WORK ZONE RAISED PAVEMENT MARKERS (WZRPMS) CONFORMING TO CMS 614, WITH RAISED PAVEMENT MARKERS CONFORMING TO 621, AS DETERMINED BY THE ENGINEER, AT THE CONTRACTOR'S EXPENSE.

THIS ITEM SHALL INCLUDE PURCHASE, INSTALLATION AND REMOVAL OF ITEM 614 WORK ZONE RAISED PAVEMENT MARKER, AS PER PLAN, INCLUDING FILLING OF ANY DEPRESSIONS CREATED IN THE PAVEMENT AS PER CMS 621.08.

RESURFACING OF THE TRANSITION AREAS SHALL BE PERFORMED AT THE TIME THAT THE SURFACE COURSE IS BEING APPLIED TO THE ENTIRE PROJECT. PRIOR TO APPLICATION OF THE SURFACE COURSE ON THE PROJECT, THE SURFACE COURSE OF THE EXISTING PAVEMENT WITHIN THE TRANSITION AREA SHALL BE REMOVED TO A DEPTH EQUIVALENT TO THE DEPTH OF THE PROPOSED SURFACE COURSE, AS DETERMINED BY THE ENGINEER.

THE FOLLOWING BID ITEMS ARE INCLUDED IN THE PLANS:

ITEM 254 PAVEMENT PLANING, ASPHALT CONCRETE
[304] SQUARE YARDS
ITEM 614 WORK ZONE RAISED PAVEMENT MARKER, AS PER PLAN
[920] EACH

PAYMENT FOR RESURFACING WITHIN THE TRANSITION AREA SHALL BE PAID FOR UNDER THE APPROPRIATE BID ITEMS FOR THE WORK REQUIRED, AS PROVIDED FOR IN THE PLANS.

ITEM 614 - WORK ZONE RAISED PAVEMENT MARKERS ON CONCRETE SURFACES (CONCRETE PAV'T. IS AN ALT. BID ITEM)

RAISED PAVEMENT MARKERS IN WORK ZONES, INSTALLED ON CONCRETE SURFACES, SHALL BE ITEM 614 WORK ZONE RAISED PAVEMENT MARKERS. WZRPMS ARE INTENDED FOR USE ONLY DURING THE NON-SNOW-PLOWING SEASON. WZRPMS SHALL NOT BE PROVIDED DURING THE SNOW-PLOWING SEASON.

THE SNOW-PLOWING SEASON SHALL RUN FROM NOVEMBER 1 THROUGH APRIL 1.

WHERE A TEMPORARY ALIGNMENT WILL REMAIN IN USE THROUGH THE WINTER, THE WZRPMS SHALL BE REMOVED PRIOR TO THE BEGINNING OF THE SNOW-PLOWING SEASON AND REPLACED APPROXIMATELY APRIL 1, OR AS OTHERWISE DETERMINED BY THE ENGINEER.

THIS ITEM SHALL INCLUDE PURCHASE, INSTALLATION AND REMOVAL OF ITEM 614 WORK ZONE RAISED PAVEMENT MARKERS.

AN ESTIMATED QUANTITY OF [920] EACH OF ITEM 614 WORK ZONE RAISED PAVEMENT MARKER HAS BEEN PROVIDED AND CARRIED TO THE M.O.T. GENERAL SUMMARY.

ITEM 614 - BUSINESS ENTRANCE (M4-H15) SIGN, AS PER PLAN

THE BUSINESS ENTRANCE (M4-H15) SIGN SHOULD BE PROVIDED AT EACH TEMPORARILY RELOCATED COMMERCIAL DRIVEWAY FOR WHICH THE RELOCATION IS NOT OBVIOUS TO THE MOTORIST. THE PROJECT ENGINEER SHALL DETERMINE WHETHER OR NOT THE DRIVEWAY RELOCATION IS, OR IS NOT, OBVIOUS AND WHETHER OR NOT A SIGN SHOULD BE PROVIDED. ONLY ONE SIGN PER BUSINESS SHALL BE PERMITTED. THE SIGN SHALL BE 36 INCH X 48 INCH IN SIZE WITH TYPE G OR TYPE H ORANGE RETROREFLECTIVE SHEETING. THE SIGN LEGEND SHALL BE PLACED ON BOTH SIDES OF THE SIGN (BACK TO BACK). THE SIGN SHALL HAVE THE STANDARD M4-H15 LEGEND WITH THE WORD "BUSINESS" ON THE TOP LINE, EXCEPT UNDER UNUSUAL CIRCUMSTANCES WHERE IT MAY NOT BE INTUITIVE THAT A DRIVEWAY SERVES A SPECIFIC BUSINESS. IN SUCH UNUSUAL CASES, THE ACTUAL BUSINESS NAME MAY BE SUBSTITUTED FOR THE WORD "BUSINESS".

THE SIGN SHALL BE MOUNTED ON TWO NO. 3 POSTS OR ON TEMPORARY POSTS IN ACCORDANCE WITH SCD MT-105.10 AND IN ACCORDANCE WITH THE OHIO MANUAL OF UNIFORM TRAFFIC CONTROL DEVICES, LATEST EDITION. THE SIGN SHALL BE CLEARLY VISIBLE AND SHALL CLEARLY IDENTIFY THE LOCATION OF THE DRIVEWAY. THE SIGN SHOULD BE POSITIONED AT 90 DEGREES TO THE DIRECTION(S) OF TRAFFIC. THE SIGN MAY NEED TO BE MOVED FOR EACH PHASE OF THE MAINTENANCE OF TRAFFIC OPERATIONS.

PAYMENT FOR ALL COSTS ASSOCIATED WITH MANUFACTURING, MOUNTING, RELOCATING, AND REMOVING THE SIGN, INCLUDING ALL LABOR, MATERIALS AND EQUIPMENT SHALL BE INCLUDED IN THE CONTRACT PRICE PER EACH FOR ITEM 614-BUSINESS ENTRANCE SIGN.

THE FOLLOWING ESTIMATED QUANTITY HAS BEEN CARRIED TO THE M.O.T. GENERAL SUMMARY FOR THIS ITEM.

ITEM 614 BUSINESS ENTRANCE SIGN [10] EACH

ITEM 630 - SPECIFIC SERVICE AND TOURIST-ORIENTED DIRECTIONAL SIGNS REMOVAL AND REINSTALLATION

IN THE EVENT THAT THIS PROJECT NECESSITATES THE REMOVAL OF ANY SPECIFIC SERVICE (LOGO) SIGNS AND/OR TOURIST ORIENTED DIRECTIONAL SIGNS (TODS) THAT ARE NOT SPECIFICALLY DESCRIBED IN OTHER ITEMS OF WORK, THE CONTRACTOR SHALL CAREFULLY REMOVE SUCH SIGNS. REMOVED LOGO SIGNS AND TODS SHALL BE IMMEDIATELY RE-ERECTED ON APPROVED TEMPORARY SUPPORTS IN THE SAME GENERAL VICINITY ALONG THE ROADWAY TO BE VIEWED BY THE MOTORING PUBLIC. UNLESS THE ORIGINAL SUPPORTS WILL BE REUSED, THE CONTRACTOR SHALL REMOVE AND DISPOSE OF THE SUPPORTS AND FOUNDATIONS IN ACCORDANCE WITH ITEM 630.12. THE CONTRACTOR SHALL NOTIFY OHIO LOGOS, INC. AT(800) 860-5646 AT LEAST 60 DAYS PRIOR TO PROJECT COMPLETION TO ALERT THEM THAT ONE OR MORE LOGO SIGNS AND/OR TODS ARE ON TEMPORARY SUPPORTS. OHIO LOGOS, INC. WILL MAKE ARRANGEMENTS TO HAVE THE SIGNS INSTALLED ON PERMANENT SUPPORTS AT THE COMPLETION OF THE PROJECT.

THIS ITEM OF WORK INCLUDES REMOVAL AND TEMPORARY RE-ERECTION OF LOGO SIGNS AND TODS, FURNISHING AND INSTALLATION OF TEMPORARY SUPPORTS, REMOVAL AND DISPOSAL OF THE ORIGINAL SUPPORTS AND FOUNDATIONS, AND PROVIDING NOTIFICATION TO OHIO LOGOS, INC. THIS WORK WILL BE INCLUDED IN THE LUMP SUM PAYMENT FOR ITEM 614, MAINTAINING TRAFFIC, AS PER PLAN.

CALCULATED CAC CHECKED EJC

MAINTENANCE OF TRAFFIC GENERAL NOTES

ALL-75-5.53

J:\Projects\ALL\76691\mot\sheets\76691MN006.dgn 21-DEC-2012 8:20AM carmichael

GENERAL

INTERIM COMPLETION DATES

A DISINCENTIVE SHALL BE ASSESSED IN THE AMOUNT OF $10,000 FOR EACH CALENDAR DAY BEYOND OCTOBER 31, 2013 AND OCTOBER 31, 2014 THAT I-75 TRAFFIC IS NOT SHIFTED ONTO THE NEW PAVEMENT AND BRIDGES CONSTRUCTED IN I-75 PHASE 1A AND 1B AND THAT TRAFFIC REMAINS BETWEEN THE EXISTING MEDIAN BARRIER AND PCB.

A DISINCENTIVE SHALL BE ASSESSED IN THE AMOUNT OF $4,500 FOR EACH CALENDAR DAY BEYOND NOVEMBER 1, 2013 THAT ALL PROPOSED SR 309 LANES AND RAMPS ARE NOT OPEN TO TRAFFIC IN THE PERMANENT CONFIGURATION.

A DISINCENTIVE SHALL BE ASSESSED IN THE AMOUNT OF $4,500 FOR EACH CALENDAR DAY THAT THE 4TH STREET RAMPS ARE NOT COMPLETED BEYOND THE 45 DAYS ALLOWED. AND A DISINCENTIVE SHALL ALSO BE ASSESSED IN THE AMOUNT OF $4,500 FOR EACH CALANDER DAY THE RAMPS ARE CLOSED BEYOND OCTOBER 31, 2013

I-75

PHASE 1A & 1B

SEQUENCE OF CONSTRUCTION

I-75 TO BE CONSTRUCTED USING PART WIDTH CONSTRUCTION WITH THE OUTSIDE BEING CONSTRUCTED AND 2 LANES OF TRAFFIC BEING MAINTAINED IN EACH DIRECTION USING THE EXISTING PAVEMENT THROUGH THE AREAS WHERE THERE IS EXISTING MEDIAN BARRIER. THE USE OF TEMPORARY ROAD/PAVEMENT WILL BE REQUIRED AT BOTH ENDS OF THE PROJECT WHERE THERE IS NOT CONCRETE MEDIAN BARRIER. THIS TEMPORARY ROAD/PAVEMENT MUST BE IN PLACE PRIOR TO PHASE 1A.

TOOLS AND STIPULATIONS

A SPEED LIMIT OF 55 MPH SHALL BE USED.

A PORTION OF EMBANKMENT OF I-75 WILL NOT BE ABLE TO BE COMPLETED UNTIL SR 81 PHASE 1 IS COMPLETE AND TRAFFIC IS SHIFTED ONTO THE NEW PAVEMENT AND UNDER THE NEW BRIDGE. TEMPORARY MSE WALL IS PROPOSED.

AT A MIN. THE NEW PAVEMENT CONSTRUCTED IN PHASE 1A NEEDS TO BE COMPLETED FROM THE SOUTH END OF THE PROJECT TO NORTH OF THE SR 309 RAMPS. IF THE CONTRACTOR IS UNABLE TO COMPLETE ALL THE NEW OUTSIDE PAVEMENT IN PHASE 1A, THE CONTRACTOR SHALL ONLY INSTALL ENOUGH PCB TO COMPLETE THE PHASE 1A WORK. PHASE 1B IS THE COMPLETION OF THE NEW OUTSIDE PAVEMENT NOT COMPLETED IN PHASE 1A.

THE CONTRACTOR SHALL NOT MAINTAIN TRAFFIC BETWEEN THE EXISTING MEDIAN BARRIER AND PCB BETWEEN OCTOBER 31, 2013 AND MARCH 15, 2014 AND OCTOBER 31, 2014 AND MARCH 15, 2015.

TEMPORARY PAVEMENT/ROAD WILL BE NEED AT BOTH ENDS OF THE PROJECT TO MAINTAIN TRAFFIC IN THE AREAS OF THE EXISTING GRASS MEDIAN.

NO CONSECUTIVE ENTRANCE OR EXIT RAMPS ARE PERMITTED TO BE CLOSED AT THE SAME TIME.

4TH STREET

PHASE 1

SEQUENCE OF CONSTRUCTION

EXISTING RAMPS WILL BE CLOSED AND TRAFFIC DETOURED TO SR 309 OR SR 65 ON I-75 TO TURN AROUND. RAMPS TO BE CONSTRUCTED AT THE SAME TIME.

TOOLS AND STIPULATIONS

THE CONTRACTOR IS TO USE PCMS TO DIRECT TRAFFIC TO ALTERNATE ROUTE DURING RAMP CLOSERS.

TRAFFIC WILL BE MAINTAINED ALONG 4TH STREET.

PROPOSED RAMPS TO BE REOPENED WITHIN 45 DAYS OF THE CLOSURE.

ALL RAMPS SHALL NOT BE CLOSED DURING THE ALLEN COUNTY FAIR AUGUST 16 TO 24, 2013. RAMPS TO BE COMPLETED BY OCTOBER 31, 2013.

SR 309

PHASE 1

SEQUENCE OF CONSTRUCTION

SR 309 WILL BE CONSTRUCTED USING PART WIDTH CONSTRUCTION WITH THE NORTH PORTION OF PROPOSED SR 309 BEING CONSTRUCTED IN PHASE I.

PROPOSED RAMP "C" (SOUTH BOUND EXIT) TO BE CONSTRUCTED.

PROPOSED RAMP "E" (NORTH BOUND ENTRANCE) TO BE CONSTRUCTED.

A PORTION OF RAMP "A" (SOUTH BOUND ENTRANCE) TO BE CONSTRUCTED.

A PORTION OF RAMP "F" (NORTH BOUND EXIT) TO BE CONSTRUCTED.

TOOLS AND STIPULATIONS

A SPEED LIMIT OF 30 MPH SHALL BE USED.

PORTIONS OF PROPOSED SR 309 UNDER THE PROPOSED I-75 BRIDGES OVER SR 309 CANNOT BE CONSTRUCTED UNTIL AFTER THE BRIDGE IS COMPLETED (I-75 PHASE 2) DUE TO THE EXISTING PIER LOCATIONS. TEMPORARY PAVEMENT/ROAD WILL BE REQUIRED IN THESE AREAS IN ORDER TO MAINTAIN TRAFFIC IN PHASE 2.

ONE LANE OF TRAFFIC WILL BE MAINTAINED IN EACH DIRECTION USING THE EXISTING PAVEMENT ON THE SOUTH SIDE OF SR 309. TEMPORARY PAVEMENT/ROAD WILL ALSO BE REQUIRED ALONG PART OF THE SOUTH SIDE OF SR 309.

EXISTING RAMPS "A", "B", "F" AND "G" WILL BE USED FOR NORTH BOUND AND SOUTH BOUND ACCESS TO AND FROM I-75. TEMPORARY PAVEMENT/ROAD WILL BE REQUIRED TO MODIFY RAMP "F".

PORTIONS OF BOTH SIDES OF THE EXISTING BRIDGE TO BE DEMOLISHED. TRAFFIC UNDER THE BRIDGE WILL NEED TO BE REDUCED TO ONE LANE IN EACH DIRECTION AND SHIFTED OUT OF THE BRIDGE SPAN THAT IS BEING DEMOLISHED. THIS SHOULD BE DONE AT THE END OF SR 309 PHASE 1 AND BEGINNING OF SR 309 PHASE 2

SR 309 AND THE RAMPS ARE TO BE CONSTRUCTED OF CONCRETE PAVEMENT. SEE JOINT DETAILS FOR ADDITIONAL INFORMATION.

SARATOGA AVE WILL BE CLOSED FOR A SHORT DURATION (14 DAY MAXIMUM) TO COMPLETE WORK ON THE NORTH PORTION OF SR 309 WITHIN THE INTERSECTION AREA. CONTRACTOR TO SIGN EASTERN AVE. AND WILLARD AVE. AS ALTERNATE ROUTES.

THREE TEMPORARY OR RECONFIGURED SIGNALS WILL BE REQUIRED AT SARATOGA AVE. AND EXISTING RAMP "F", EXISTING RAMPS "A" AND "B" AND THE KIBBY ST. /LEONARD AVE. INTERSECTIONS.

AT LEAST ONE DRIVEWAY TO REMAIN OPEN TO EACH BUSINESS ON EACH SIDE OF THE ROAD AT ALL TIMES.

ALL RAMPS SHALL NOT BE CLOSED DURING THE ALLEN COUNTY FAIR AUGUST 16 TO 24, 2013 AND ALL RAMP MOVEMENTS SOUTH BOUND ENTRANCE & EXIT, AS WELL AS NORTH BOUND ENTRANCE AND EXIT SHALL BE ACCOMODATED. ALL RAMPS TO BE COMPLETED BY NOVEMBER 1, 2013.

PHASE 2A

SEQUENCE OF CONSTRUCTION

SR 309 WILL BE CONSTRUCTED USING PART WIDTH CONSTRUCTION WITH A PORTION OF THE SOUTH HALF OF PROPOSED SR 309 BETWEEN THE RAMPS BEING CONSTRUCTED IN PHASE IIA.

THE REMAINDER OF RAMP "A" (SOUTH BOUND ENTRANCE) TO BE CONSTRUCTED. DETOUR TRAFFIC TO SR 81 ON I-75 TO TURN AROUND.

THE REMAINDER OF RAMP "F" (NORTH BOUND EXIT) TO BE CONSTRUCTED. EXISTING RAMP "F" REMAINS OPEN.

TOOLS AND STIPULATIONS

A SPEED LIMIT OF 30 MPH SHALL BE USED.

ONE LANE OF TRAFFIC WILL BE MAINTAINED IN EACH DIRECTION USING THE PROPOSED PAVEMENT ON THE NORTH SIDE OF SR 309.

EXISTING RAMP "F" AND PROPOSED RAMPS "C" AND "E" WILL BE USED FOR NORTH BOUND AND SOUTH BOUND ACCESS TO AND FROM I-75.

SR 309 AND THE RAMPS ARE TO BE CONSTRUCTED OF CONCRETE PAVEMENT. SEE JOINT DETAILS FOR ADDITIONAL INFORMATION.

FOUR TEMPORARY OR RECONFIGURED SIGNALS WILL BE REQUIRED AT SARATOGA AVE. AND EXISTING RAMP "F", PROPOSED RAMP "E", PROPOSED RAMP "C" AND THE KIBBY ST. /LEONARD AVE. INTERSECTIONS.

PHASE 2B

SEQUENCE OF CONSTRUCTION

SR 309 WILL BE CONSTRUCTED USING PART WIDTH METHODS AND WILL REQUIRE TEMPORARY PAVEMENT/ROAD TO COMPLETE THE WORK. THE REMAINDER OF THE SOUTH HALF OF PROPOSED SR 309 WILL BE CONSTRUCTED IN PHASE IIB WITH THE EXCEPTION OF THE PORTIONS UNDER THE I-75 BRIDGES WHERE THE EXISTING PIER LOCATIONS ARE WITHIN THE PROPOSED PAVEMENT. THE PROPOSED PAVEMENT IN THE AREAS OF THE EXISTING PIERS WILL BE CONSTRUCTED AFTER I-75 TRAFFIC IS SHIFTED ONTO THE NEW PAVEMENT AND BRIDGES AND THE EXISTING BRIDGES ARE DEMOLISHED.

TOOLS AND STIPULATIONS

A SPEED LIMIT OF 30 MPH SHALL BE USED.

ONE LANE OF TRAFFIC WILL BE MAINTAINED IN EACH DIRECTION USING THE PROPOSED PAVEMENT ON THE NORTH SIDE OF SR 309.

PROPOSED RAMPS "A", "C", "E" AND "F" WILL BE USED FOR NORTH BOUND AND SOUTH BOUND ACCESS TO AND FROM I-75.

SR 309 AND THE RAMPS ARE TO BE CONSTRUCTED OF CONCRETE PAVEMENT. SEE JOINT DETAILS FOR ADDITIONAL INFORMATION.

FOUR TEMPORARY OR RECONFIGURED SIGNALS WILL BE REQUIRED AT SARATOGA AVE. AND EXISTING RAMP "F", PROPOSED RAMP "E", PROPOSED RAMP "C" AND THE KIBBY ST. /LEONARD AVE. INTERSECTIONS.

ALL RAMPS SHALL NOT BE CLOSED DURING THE ALLEN COUNTY FAIR AUGUST 16 TO 24, 2013 AND ALL RAMP MOVEMENTS SOUTH BOUND ENTRANCE & EXIT, AS WELL AS NORTH BOUND ENTRANCE AND EXIT SHALL BE ACCOMODATED. ALL RAMPS TO BE COMPLETED BY NOVEMBER 1, 2013.

BRYN MAWR AVE./LOST CREEK BLVD./DEAN AVE.

TOOLS AND STIPULATIONS

SHALL BE CONSTRUCTED ONCE ALL WORK ON SR 309 AND THE RAMPS ARE COMPLETE.

ACCESS TO RESIDENCES AND BUSINESSES ON DEAN AVE. AND LOST CREEK BLVD. SHALL BE MAINTAINED.

THE CONSTRUCTION IN THIS AREA SHALL BE COMPLETED IN 45 DAYS ONCE WORK HAS STARTED ON EITHER DEAN AVE., BRYN MAWR AVE. OR LOST CREEK BLVD.

SR 81

PHASE 1

SEQUENCE OF CONSTRUCTION

SR 81 WILL BE CONSTRUCTED WITH PART WIDTH CONSTRUCTION AT EACH END OF THE IMPROVEMENT WITH THE NORTH PORTION BEING CONSTRUCTED IN PHASE I.

THE MIDDLE PORTION OF SR 81 CAN BE CONSTRUCTED WHILE MAINTAINING TRAFFIC ON THE EAST BOUND PAVEMENT.

PROPOSED RAMP "F" (SOUTH BOUND EXIT) TO BE CONSTRUCTED.

PART OF PROPOSED RAMP "B" (NORTH BOUND ENTRANCE) TO BE CONSTRUCTED.

PART OF PROPOSED RAMP "C" (NORTH BOUND EXIT) TO BE CONSTRUCTED.

PART OF PROPOSED RAMP "D" (SOUTH BOUND ENTRANCE) TO BE CONSTRUCTED.

THE EXISTING SERVICE ROAD 3 WILL REMAIN OPEN "AS IS" DURING THIS PHASE.

DURING PHASE I, NEUBRECHT ROAD WILL BE CONSTRUCTED WITH TWO PART WIDTH CONSTRUCTION PHASES.

TOOLS AND STIPULATIONS

A SPEED LIMIT OF 35 MPH SHALL BE USED.

ONE LANE OF TRAFFIC WILL BE MAINTAINED IN EACH DIRECTION ON THE CURRENT EAST BOUND PAVEMENT.

EXISTING RAMPS "B", "D", "E" AND "F" WILL BE USED FOR NORTH BOUND AND SOUTH BOUND ACCESS TO AND FROM I-75. TEMPORARY PAVEMENT/ROAD WILL BE REQUIRED TO MODIFY RAMPS "B", "E" AND "F" ACROSS THE EXISTING GRASS MEDIAN.

A PORTION OF STATE ROUTE 81 UNDER THE PROPOSED BRIDGE CANNOT BE COMPLETED UNTIL THE I-75 PHASE 2 REMOVES THE REMAINING EXISTING BRIDGE PIER IN THE MIDDLE OF SR 81. TEMPORARY PAVEMENT/ROAD WILL BE REQUIRED UNDER THE PROPOSED BRIDGE FOR A PORTION OF THE AREA THAT CANNOT BE CONSTRUCTED IN ORDER TO MAINTAIN TRAFFIC AFTER PHASE 2.

SR 81 AND THE RAMPS ARE TO BE CONSTRUCTED OF CONCRETE PAVEMENT. SEE JOINT DETAILS FOR ADDITIONAL INFORMATION.

AT LEAST ONE DRIVEWAY TO REMAIN OPEN TO EACH BUSINESS ON EACH SIDE OF THE ROAD AT ALL TIMES.

THREE TEMPORARY SIGNALS WILL BE REQUIRED AT NEUBRECHT ROAD, EXISTING RAMPS "D" (SOUTH BOUND ENTRANCE) AND "F" (SOUTH BOUND EXIT) AND EXISTING RAMPS "B" (NORTH BOUND EXIT TO WEST BOUND SR 81) AND "E" (NORTH BOUND ENTRANCE).

BOTH SIDES OF THE EXISTING BRIDGE DECK ARE TO BE DEMOLISHED. AFTER TRAFFIC IS SHIFTED ONTO THE EXISTING EAST BOUND PAVEMENT FOR SR 81 PHASE I, THE REQUIRED PORTION OF THE DECK CAN BE REMOVED IN ALL THE EXISTING SPANS OTHER THAN THE ONE OVER THE EXISTING EAST BOUND LANES. THE REMAINING DECK DEMOILITION CAN HAPPEN AFTER THE START OF SR 81 PHASE II.

WORK ON SR 81 AND NUEBRECHT RD SHALL BE COMPLETED DURING ONE CONSTRUCTION SEASON. THE WORK ON SERVICE RD #3 IS NOT REQUIRED TO BE DONE IN THE SAME CONSTRUCTION SEASON AS SR 81, BUT ONCE WORK COMMENCES THE CONTRACTOR SHALL CONTINUE WORK UNTIL COMPLETED.

CALCULATED CAC
CHECKED EJC

MAINTENANCE OF TRAFFIC GENERAL NOTES

ALL-75-5.53

I:\pd\76691\Final Cadd Files\revised not for use\76691MN007.dgn 23-JAN-2013 11:22AM jclark1

NEUBRECHT ROAD

PHASE 1

SEQUENCE OF CONSTRUCTION

NEUBRECHT ROAD WILL BE CONSTRUCTED USING PART WIDTH CONSTRUCTION WITH THE EAST SIDE BEING CONSTRUCTED IN PHASE I.

TOOLS AND STIPULATIONS

A SPEED LIMIT OF 35 MPH SHALL BE USED.

NEUBRECHT ROAD TO REMAIN OPEN WITH ONE LANE OF TRAFFIC IN EACH DIRECTION ALONG THE WEST SIDE. TEMPORARY PAVEMENT/ROAD TO BE USED.

TEMPORARY PAVEMENT/ROAD TO BE USED IN THE EXISTING SR 81 MEDIAN.

AT LEAST ONE DRIVEWAY TO REMAIN OPEN TO EACH BUSINESS ON EACH SIDE OF THE ROAD AT ALL TIMES.

A TEMPORARY SIGNAL WILL BE REQUIRED AT SR 81.

NEUBRECHT ROAD IS TO BE CONSTRUCTED OF CONCRETE PAVEMENT. SEE JOINT DETAILS FOR ADDITIONAL INFORMATION.

NEUBRECHT ROAD

PHASE 2

SEQUENCE OF CONSTRUCTION

NEUBRECHT ROAD WILL BE CONSTRUCTED USING PART WIDTH CONSTRUCTION WITH THE WEST SIDE BEING CONSTRUCTED IN PHASE II.

TOOLS AND STIPULATIONS

NEUBRECHT ROAD TO REMAIN OPEN WITH ONE LANE OF TRAFFIC IN EACH DIRECTION ALONG THE EAST SIDE ON THE NEWLY CONSTRUCTED PROPOSED ROADWAY.

AT LEAST ONE DRIVEWAY TO REMAIN OPEN TO EACH BUSINESS ON EACH SIDE OF THE ROAD AT ALL TIMES.

A TEMPORARY SIGNAL WILL BE REQUIRED AT SR 81.

NEUBRECHT ROAD IS TO BE CONSTRUCTED OF CONCRETE PAVEMENT. SEE JOINT DETAILS FOR ADDITIONAL INFORMATION.

SR 81

PHASE 2

SEQUENCE OF CONSTRUCTION

SR 81 WILL BE CONSTRUCTED WITH PART WIDTH CONSTRUCTION AT EACH END OF THE IMPROVEMENT WITH THE SOUTH PORTION BEING CONSTRUCTED IN PHASE II.

TEMPORARY PAVEMENT/ROAD TO BE PLACED AT THE INTERSECTIONS OF THE PROPOSED PAVEMENT AND EXISTING RAMPS "B", "E" AND "F". THIS TEMPORARY PAVEMENT TO BE REPLACED DURING PHASE II WITH PART WIDTH CONSTRUCTION METHODS.

EXISTING RAMP "D" AND PROPOSED RAMP "D" ARE CLOSED. PROPOSED RAMP "D" TO BE OPEN WITHIN 14 DAYS OF THE CLOSURE. TRAFFIC IS TO DETOUR NORTH ON I-75 TO THE BLUELICK INTERCHANGE TO TURN AROUND.

PROPOSED RAMP "C" (NORTH BOUND EXIT) CAN BE OPENED WITH THE USE OF TEMPORARY PAVEMENT/ROAD AT THE INTERSECTION WITH EXISTING EAST BOUND SR 81. THE TEMPORARY PAVEMENT WILL THEN BE REPLACED WITH THE PROPOSED PAVEMENT USING PART-WIDTH CONSTRUCTION WHILE KEEPING THE RAMP OPEN.

EXISTING RAMP "B" IS CLOSED AND PROPOSED RAMP "B" IS TO BE OPENED WITHIN 14 DAYS OF THE START OF PHASE II. AT THIS TIME EXISTING RAMP "E" TO BE CLOSED.

PROPOSED RAMP "F" IS OPENED AND EXISTING RAMP "F" IS CLOSED.

SERVICE ROAD 3 WILL BE CONSTRUCTED IN 4 PHASES DURING THE SR 81 PHASE 2.

TOOLS AND STIPULATIONS

A SPEED LIMIT OF 35 MPH SHALL BE USED.

ONE LANE OF TRAFFIC WILL BE MAINTAINED IN EACH DIRECTION ON THE ON THE NEW PAVEMENT WITH SOME TURN LANES USED AT THE RAMPS, NEUBRECHT ROAD AND SERVICE ROAD 3.

AT LEAST ONE DRIVEWAY TO REMAIN OPEN TO EACH BUSINESS ON EACH SIDE OF THE ROAD AT ALL TIMES.

THREE TEMPORARY SIGNALS WILL BE REQUIRED AT NEUBRECHT ROAD, RAMP "D" AND RAMP "F", PROPOSED RAMP "B" AND RAMP "C" AND AT EXISTING RAMP "E".

SR 81 AND RAMPS ARE TO BE CONSTRUCTED OF CONCRETE PAVEMENT. SEE JOINT DETAILS FOR ADDITIONAL INFORMATION.

SERVICE ROAD 3

PHASE 1

SEQUENCE OF CONSTRUCTION

ONCE COMMENCED, THE CONTRACTOR SHALL CONTINUE WORK ON THE SERVICE ROAD UNTIL COMPLETION SO THAT ALL LANES CAN BE OPEN TO TRAFFIC AS SOON AS POSSIBLE.

A TEMPORARY CONNECTION BETWEEN THE EXISTING SERVICE ROAD AND PROPOSED SR 81 TO BE CONSTRUCTED AT THE EAST OF THE EXISTING INTERSECTION AT THE START OF THIS PHASE WHILE MAINTAINING THE EXISTING INTERSECTION WITH SR 81. THE EXISTING INTERSECTION AT SR 81 AND THE EXISTING CONNECTIONS AT EACH END OF THE SERVICE ROAD WILL BE CLOSED.

SERVICE ROAD 3 WILL BE CONSTRUCTED USING PART WIDTH CONSTRUCTION WITH THE PROPOSED INTERSECTION WITH SR 81, WEST CUL-DE-SAC AND THE NORTH HALF OF THE PROPOSED ROADWAY WEST OF THE PROPOSED SR 81 INTERSECTION BEING CONSTRUCTED IN THIS PHASE.

TOOLS AND STIPULATIONS

ONE LANE OF TRAFFIC WILL BE MAINTAINED IN EACH DIRECTION EAST OF THE EXISTING INTERSECTION WITH SR 81.

ONE LANE WILL BE USED TO MAINTAIN BOTH DIRECTIONS OF TRAFFIC WEST OF THE EXISTING INTERSECTION WITH SR 81.

TEMPORARY PAVEMENT/ROAD ALONG THE SOUTH SIDE OF THE EXISTING SERVICE ROAD WILL BE NEEDED TO MAINTAIN TRAFFIC WEST OF THE EXISTING INTERSECTION WITH SR 81. LOW VOLUMES AND SIGHT DISTANCE SHOULD MAKE THIS FEASIBLE AS WELL AS GRAVEL LOTS ALONG THE SERVICE ROAD TO ALLOW FOR PASSING.

AT LEAST ONE DRIVEWAY TO REMAIN OPEN TO EACH PROPERTY AT ALL TIMES.

MAINTAIN ACCESS TO SR 81 WITH THE PROPOSED TEMPORARY CONNECTOR BUILT AT THE BEGINNING OF THIS PHASE TO BE USED.

SERVICE ROAD 3 IS TO BE CONSTRUCTED OF CONCRETE PAVEMENT. SEE JOINT DETAILS FOR ADDITIONAL INFORMATION.

TEMPORARY PULL-OFFS ARE TO BE USED IN THE SINGLE LANE TWO-WAY TRAFFIC AREA TO ALLOW FOR 2 VEHICLES TO PASS.

SERVICE ROAD 3 PHASE 2

SEQUENCE OF CONSTRUCTION

PART WIDTH CONSTRUCTION WILL BE USED TO BUILD THE SOUTH HALF OF THE PROPOSED ROADWAY WEST OF THE PROPOSED SR 81 INTERSECTION.

TOOLS AND STIPULATIONS

ONE LANE OF TRAFFIC WILL BE MAINTAINED IN EACH DIRECTION EAST OF THE EXISTING INTERSECTION WITH SR 81.

ONE LANE WILL BE USED TO MAINTAIN BOTH DIRECTIONS OF TRAFFIC WEST OF THE EXISTING INTERSECTION WITH SR 81.

AT LEAST ONE DRIVEWAY TO REMAIN OPEN TO EACH PROPERTY AT ALL TIMES.

MAINTAIN ACCESS TO SR 81 WITH THE PROPOSED TEMPORARY CONNECTOR BUILT AT THE BEGINNING OF THIS PHASE 1 TO BE USED DURING PHASE 2.

SERVICE ROAD 3 IS TO BE CONSTRUCTED OF CONCRETE PAVEMENT. SEE JOINT DETAILS FOR ADDITIONAL INFORMATION.

TEMPORARY PULL-OFFS ARE TO BE USED IN THE SINGLE LANE TWO-WAY TRAFFIC AREA TO ALLOW FOR 2 VEHICLES TO PASS.

SERVICE ROAD 3

PHASE 3

SEQUENCE OF CONSTRUCTION

THE TEMPORARY INTERSECTION USED FOR PHASE I AND II WILL BE REMOVED AND REMAINING PORTION OF SR 81 (CURB AND GUTTER) IN THE AREA OF THE INTERSECTION WILL BE CONSTRUCTED.

PART WIDTH CONSTRUCTION WILL BE USED TO CONSTRUCT THE NORTH HALF OF THE PROPOSED ROADWAY EAST OF THE PROPOSED SR 81 INTERSECTION. THE EAST CUL-DE-SAC WILL ALSO BE CONSTRUCTED.

TOOLS AND STIPULATIONS

THE TEMPORARY CONNECTION BETWEEN THE EXISTING SERVICE ROAD AND PROPOSED SR 81 WILL BE REMOVED AND THE PROPOSED INTERSECTION WILL BE OPENED.

THE NEWLY CONSTRUCTED PROPOSED WORK WEST OF THE PROPOSED INTERSECTION WITH SR 81 WILL BE OPEN.

ONE LANE WILL BE USED TO MAINTAIN BOTH DIRECTION OF TRAFFIC EAST OF THE INTERSECTION WITH SR 81.

TEMPORARY PAVEMENT/ROAD ALONG THE SOUTH SIDE OF THE EXISTING SERVICE ROAD WILL BE NEEDED TO MAINTAIN TRAFFIC EAST OF THE INTERSECTION WITH SR 81.

AT LEAST ONE DRIVEWAY TO REMAIN OPEN TO EACH PROPERTY AT ALL TIMES.

A TEMPORARY SIGNAL TO BE USED AT THE INTERSECTION OF THE SERVICE ROAD AND SR 81/NEUBRECHT ROAD.

SERVICE ROAD 3 IS TO BE CONSTRUCTED OF CONCRETE PAVEMENT. SEE JOINT DETAILS FOR ADDITIONAL INFORMATION.

TEMPORARY PULL-OFFS ARE TO BE USED IN THE SINGLE LANE TWO-WAY TRAFFIC AREA TO ALLOW FOR 2 VEHICLES TO PASS.

SERVICE ROAD 3 PHASE 4

SEQUENCE OF CONSTRUCTION

THE SOUTH HALF OF THE PROPOSED ROADWAY EAST OF THE SR 81 INTERSECTION IS TO BE CONSTRUCTED USING PART WIDTH CONSTRUCTION.

TOOLS AND STIPULATIONS

ONE LANE WILL BE USED TO MAINTAIN BOTH DIRECTION OF TRAFFIC EAST OF THE INTERSECTION WITH SR 81.

AT LEAST ONE DRIVEWAY TO REMAIN OPEN TO EACH PROPERTY AT ALL TIMES.

A TEMPORARY SIGNAL TO BE USED AT THE INTERSECTION OF THE SERVICE ROAD AND SR 81/NEUBRECHT ROAD.

SERVICE ROAD 3 IS TO BE CONSTRUCTED OF CONCRETE PAVEMENT. SEE JOINT DETAILS FOR ADDITIONAL INFORMATION.

TEMPORARY PULL-OFFS ARE TO BE USED IN THE SINGLE LANE TWO-WAY TRAFFIC AREA TO ALLOW FOR 2 VEHICLES TO PASS.

I-75

PHASE 2

SEQUENCE OF CONSTRUCTION

PART WIDTH CONSTRUCTION WILL BE USED TO CONSTRUCT THE INSIDE PORTION OF THE PROPOSED ROADWAY AND BRIDGES.

THE EXISTING BRIDGES OVER SR 309 AND SR 81 SHOULD BE DEMOLISHED FIRST IN THIS PHASE, SO THAT REMAINDER OF THE WORK ON THESE ROADS IN THE AREA OF THE EXISTING PIERS CAN BE COMPLETED.

THE AREA ON THE SOUTH BOUND LANES WHERE THE TEMPORARY CROSSOVER IS WITHIN THE WORK AREA FOR THIS PHASE WILL HAVE TO BE CONSTRUCTED AT THE COMPLETION OF PHASE IB OF THE ALL-75-0.21 PROJECT AFTER THE CROSSOVER IS REMOVED.

TOOLS AND STIPULATIONS

A SPEED LIMIT OF 55 MPH SHALL BE USED.

CONTRACTOR TO COORDINATE WITH THE CONTRACTOR OF THE ALL-75-0.21 PROJECT. A TEMPORARY COSSOVER WILL BE REQUIRED AND INCLUDED WITH THE ALL-75-0.21 PROJECT TO TRANSITION FROM INTO THEIR CONTRA-FLOW CONSTRUCTION METHOD.

TEMPORARY PAVEMENT/ROAD WILL BE REQUIRED AT THE NORTH END TO SHIFT THE TRAFFIC ONTO THE EXISTING PAVEMENT.

DURING THE DEMOLITION OF THE REMAINDER OF THE SR 309 AND SR 81 BRIDGES, TRAFFIC TO BE SHIFTED INTO EXISTING SPANS AWAY FROM THE DEMOLITION.

CALCULATED CAC CHECKED EJC

MAINTENANCE OF TRAFFIC GENERAL NOTES

ALL-75-5.53

J:\Projects\ALL\76691\mot\sheets\76691MN008.dgn 11-SEP-2012 8:48PM reddenj

PHASE	2013 MARCH	2013 APRIL	2013 MAY	2013 JUNE	2013 JULY	2013 AUGUST	2013 SEPTEMBER	2013 OCTOBER	2013 NOVEMBER	2014 APRIL	2014 MAY	2014 JUNE	2014 JULY
I-75 PHASE 1A & 1B									(INTERIM COMPLETION DATE: I-75 TRAFFIC SHIFTED TO NEW PAV'T - OCT. 31, 2013)				
DEMO SR 309 BRIDGES FOR I-75 PHASE 1													
DEMO SR 309 BRIDGES FOR I-75 PHASE 2													
CONSTRUCT OUTSIDE OF SR 309 BRIDGES													
DEMO CF&E RR BRIDGES FOR I-75 PHASE 1													
CONSTRUCT OUTSIDE OF CF&E RR BRIDGES													
DEMO OTTAWA RIVER BRIDGES FOR I-75 PHASE 1													
CONSTRUCT OUTSIDE OF OTTAWA RIVER BRIDGES													
DEMO SR 81 BRIDGES FOR I-75 PHASE 1													
CONSTRUCT OUTSIDE OF SR 81 BRIDGES									APPROX. 90 DAYS FOR SETTLEMENT OF FILL - SEE STRUCTURE 0875 NOTES				
CONSTRUCT 4TH ST. RAMPS (PHASE 1)		45 DAY CLOSURE - SEE SHEET 55 FOR FURTHER INFORMATION											
CLOSE 4TH ST. RAMP A (NB EXIT) & C (SB ENTRANCE)					DETOUR TO SR 309 ON I-75 TO TURN AROUND								
CLOSE 4TH ST. RAMP B (NB ENTRANCE) & D (SB EXIT)					DETOUR TO SR 65 ON I-75 TO TURN AROUND								
SR 309 PHASE 1													
CLOSE SR 309 RAMP C (SB EXIT)					EX. RAMP B WILL BE OPEN FOR SB EXIT								
CLOSE SR 309 RAMP E (NB ENTRANCE)					EX. RAMP G WILL BE OPEN FOR NB ENTRANCE								
SR 309 PHASE 2													
CLOSE SR 309 RAMP A (SB ENTRANCE)						DETOUR NORTH TO SR 81 TO TURN AROUND			(INTERIM COMPLETION DATE: ALL SR 309 RAMPS OPEN - JULY 31, 2013)				
CLOSE SR 309 RAMP B (EX. SB EXIT - PERMANENT CLOSURE)					PROPOSED RAMP C NOW OPEN FOR SB EXIT								
CLOSE SR 309 RAMP G (EX. NB ENTRANCE - PERMANENT CLOSURE)					PROPOSED RAMP E NOW OPEN FOR NB ENTRANCE								
FINISH SR 309 UNDER PROPOSED BRIDGES									(INTERIM COMPLETION DATE: ALL SR 309 LANES OPEN - NOV. 15, 2013)				
LENORE STREET													
TURNER AVENUE													
SR 81 PHASE 1													
NEUBRECHT ROAD PHASE 1													
NEUBRECHT ROAD PHASE 2													
INSTALL TEMPORARY PAVEMENT FOR SR 81 PHASE 2 AT EX. RAMP F													
INSTALL TEMPORARY PAVEMENT FOR SR 81 PHASE 2 AT EX RAMPS B &E													
INSTALL TEMPORARY PAVEMENT FOR SR 81 PHASE 2 AT PROPOSED RAMP C													
CLOSE SR 81 RAMP C (NB EXIT)					EX. RAMP B WILL BE OPEN FOR NB EXIT EXCEPT FOR THE INTERMITENT NIGTHTIME CLOSURE								
CONSTRUCT SR 81 RAMP C (NB EXIT)													
CLOSE SR 81 EX. RAMP F (SB EXIT)				INTERMITENT NIGTHTIME CLOSURE									
CONSTRUCT SR 81 RAMP F (SB EXIT)													
CLOSE SR 81 EX. RAMP B (EX. NB EXIT - PERMANENT CLOSURE)				INTERMITENT NIGTHTIME CLOSURE	PROPOSED RAMP C IS NOW OPEN FOR NB EXIT AND THIS RAMP IS PERMANENTLY CLOSED								
CONSTRUCT SR 81 PROPOSED RAMP B (NB ENTRANCE)													
CLOSE SR 81 RAMP E (EX. NB ENTRANCE - PERMANENT CLOSURE)				INTERMITENT NIGTHTIME CLOSURE	PROPOSED RAMP B IS NOW OPEN FOR NB ENTRANCE								
SR 81 PHASE 2													
CLOSE SR 81 RAMP D (SB ENTRANCE)					DETOUR TO BLUELICK TO TURN AROUND								
CONSTRUCT SR 81 RAMP D													
SERVICE ROAD #3 PHASE 1													
SERVICE ROAD #3 PHASE 2													
SERVICE ROAD #3 PHASE 3													
SERVICE ROAD #3 PHASE 4													

LEGEND:

CONSTRUCTION

CLOSURE

DEMOLITION

CALCULATED CAC CHECKED EJC

MAINTENANCE OF TRAFFIC - 2013 SCHEDULE

ALL-75-5.53

I:\pdv\76691\Final Cadd Files\revised not for use\76691MM004.dgn 13-DEC-2012 11:24AM jclark1

PHASE	2014 APRIL	2014 MAY	2014 JUNE	2014 JULY	2014 AUGUST	2014 SEPTEMBER	2014 OCTOBER	2014 NOVEMBER
I-75 PHASE 2								
CLOSE BRYN MAWR AVE. /WELLESLEY DR.								
BRYN MAWR AVE. /WELLESLEY DR.								
CONSTRUCT INSIDE OF SR 309 BRIDGES								
DEMO CF&E RR BRIDGES FOR I-75 PHASE 2								
CONSTRUCT INSIDE OF CF&E RR BRIDGES								
DEMO OTTAWA RIVER BRIDGES FOR I-75 PHASE 2								
CONSTRUCT INSIDE OF OTTAWA RIVER BRIDGES								
DEMO SR 81 BRIDGES FOR I-75 PHASE 2								
CONSTRUCT INSIDE OF SR 81 BRIDGES								
FINISH SR 81 UNDER PROPOSED BRIDGES								

LEGEND:

CONSTRUCTION

CLOSURE

DEMOLITION

CALCULATED CAC

CHECKED EJC

MAINTENANCE OF TRAFFIC - 2014 SCHEDULE

ALL-75-5.53

58
1224

J:\Projects\ALL\76691\mot\sheets\76691MM005.dgn 11-SEP-2012 8:48PM redden

PHASE	ROAD	STATION FROM	STATION TO	SIDE	614 WORK ZONE LANE LINE, CLASS I	614 WORK ZONE CENTER LINE, CLASS I	614 WORK ZONE EDGE LINE, CLASS I (WHITE)	614 WORK ZONE EDGE LINE, CLASS I (YELLOW)	614 WORK ZONE CHANNELIZING LINE, CLASS I	614 WORK ZONE DOTTED LINE, CLASS I	614 WORK ZONE TRANSVERSE/DIAGONAL LINE, CLASS I	614 WORK ZONE STOP LINE, CLASS I	614 WORK ZONE CROSSWALK LINE, CLASS I	614 WORK ZONE ARROW, CLASS I
					MILE	MILE	MILE	MILE	FT	FT	FT	FT	FT	EACH
1	I-75	288+00	526+00	LT/RT	9.02		9.02	9.02						
2	I-75	292+00	523+00	LT/RT	8.75		8.75	8.75						
1	I-75	319+00	493+00	LT/RT										
1	4TH RAMP "A"	309+60	321+48	LT/RT			0.23	0.22	1120			24		
1	4TH RAMP "B"	309+58	317+98	LT/RT			0.16	0.16	1600					
1	4TH RAMP "C"	322+73	331+06	LT/RT			0.16	0.16	3240					
1	4TH RAMP "D"	318+30	329+93	LT/RT			0.22	0	1120					
1	SR 309 PROP. RAMP "A"	360+12	369+76	LT/RT			0.19	0.19	3200				97	
1	SR 309 PROP. RAMP "C"	370+24	377+44	LT/RT			0.14	0.14	1700			31	100	8
1	SR 309 PROP. RAMP "E"	370+17	378+79	LT/RT			0.17	0.17	3200				105	
1	SR 309 PROP. RAMP "F"	359+45	369+86	LT/RT			0.22	0.22	1000			21	100	8
1	SR 81 PROP. RAMP "B"	462+68	471+22	LT/RT			0.17	0.17	1660					
1	SR 81 PROP. RAMP "C"	455+05	462+52	LT/RT			0.15	0.15	1600			31		8
1	SR 81 PROP. RAMP "D"	453+90	461+37	LT/RT			0.15	0.15	2000					
1	SR 81 PROP. RAMP "F"	462+69	471+51	LT/RT			0.17	0.17	1640			31		8
1	SR 309	BEGIN WORK	END WORK	LT/RT		0.52	0.75	0.06	820	1690	240	162		17
2A	SR 309	BEGIN WORK	END WORK	LT/RT		0.45	0.80		530	1540	384	228		11
2B	SR 309	BEGIN WORK	END WORK	LT/RT		0.24	0.57		960	1120	240	120		6
3	SR 309	BEGIN WORK	END WORK	LT/RT	0.07	0.18	0.12		900		540	50.00	360	8
1	SR 81	BEGIN WORK	END WORK	LT/RT		0.68	1.52		320			182.00		6
2	SR 81	BEGIN WORK	END WORK	LT/RT		1.03	0.57		3390	720		240.00		17
3	SR 81	BEGIN WORK	END WORK	LT/RT	0.16	0.17			220		320	72.00		4
1	NEUBRECHT ROAD	BEGIN WORK	END WORK	LT/RT		0.15	0.33					12.00		
2	NEUBRECHT ROAD	BEGIN WORK	END WORK	LT/RT		0.11	0.28					12.00		
1	SERVICE ROAD #3	BEGIN WORK	END WORK	LT/RT		0.06	0.48					70		
2	SERVICE ROAD #3	BEGIN WORK	END WORK	LT/RT										
3	SERVICE ROAD #3	BEGIN WORK	END WORK	LT/RT		0.13	0.14		300			60		
4	SERVICE ROAD #3	BEGIN WORK	END WORK	LT/RT										
TOTALS CARRIED TO MOT GENERAL SUMMARY					18	3.72	25.46	19.95	30520	5070	1724	1346.00	762	101

CALCULATED CAC
CHECKED EJC

MAINTENANCE OF TRAFFIC SUBSUMMARY

ALL-75-5.53

59
1224

J:\Projects\ALL\76691\mot\sheets\76691MS001.dgn 04-OCT-2012 11:21AM phillipst

SHEET NUMBER																							03/IMS/ PV/	04/SK2/ PV/	ITEM	ITEM EXT.	GRAND TOTAL	UNIT	DESCRIPTION	SEE SHEET NO.
49	50	51	52	53	54	59	61	64	67	71	76	95-112	113-116	117	120	124	125	127	129	130	136	138								
																													MAINTENANCE OF TRAFFIC	
	10200				304																		10504		254	01000	10,504	SQ YD	PAVEMENT PLANING, ASPHALT CONCRETE	
			50																				50		301	46000	50	CU YD	ASPHALT CONCRETE BASE, PG64-22	
			70																				70		304	20000	70	CU YD	AGGREGATE BASE	
	765		30																				795		407	10000	795	GALLON	TACK COAT	
			30																				30		408	10000	30	GALLON	PRIME COAT	
1500																							1500		410	12000	1,500	CU YD	TRAFFIC COMPACTED SURFACE, TYPE A OR B	
	566		30																				596		446	47020	596	CU YD	ASPHALT CONCRETE SURFACE COURSE, TYPE 1, PG64-22	
				LUMP																			LUMP		503	11100	LUMP		COFFERDAMS AND EXCAVATION BRACING	
				LUMP																			LUMP		503	21300	LUMP		UNCLASSIFIED EXCAVATION	
				100																			50	50	603	96600	100	FT	CONDUIT, BORED OR JACKED: 12" TYPE B	
				100																			50	50	603	96600	100	FT	CONDUIT, BORED OR JACKED: 15" TYPE B	
				100																			50	50	603	96600	100	FT	CONDUIT, BORED OR JACKED: 18" TYPE B	
				100																			50	50	603	96600	100	FT	CONDUIT, BORED OR JACKED: 24" TYPE B	
				100																			50	50	603	96600	100	FT	CONDUIT, BORED OR JACKED: 30" TYPE B	
				6																			3	3	604	04500	6	EACH	CATCH BASIN, NO. 2-2B	
				6																			3	3	604	09000	6	EACH	CATCH BASIN ADJUSTED TO GRADE	
				6																			3	3	604	09500	6	EACH	CATCH BASIN RECONSTRUCTED TO GRADE	
				6																			3	3	604	31500	6	EACH	MANHOLE, NO. 3	
				6																			3	3	604	34500	6	EACH	MANHOLE ADJUSTED TO GRADE	
											1													1	606	22010	1	EACH	ANCHOR ASSEMBLY, TYPE E-98	
											1													1	606	26500	1	EACH	ANCHOR ASSEMBLY, TYPE T	
							LUMP																LUMP		SPECIAL	610E60000	LUMP	SQ FT	RETAINING WALL, MISC.: TEMPORARY MSE WALL	61-62
		460																					230	230	614	11110	460	HOUR	LAW ENFORCEMENT OFFICER WITH PATROL CAR FOR ASSISTANCE	
												18												18	614	11300	18	EACH	SPECIAL - WORK ZONE TRAFFIC SIGNAL	
					22																		22		614	11500	22	MONTH	WORKSITE TRAFFIC SUPERVISOR	
											300													300	614	12200	300	FT	SPECIAL - WORK ZONE GUARDRAIL	
8																							8		614	12410	8	EACH	SPEED ZONE AHEAD SYMBOL SIGN	
15																							15		614	12460	15	EACH	WORK ZONE MARKING SIGN	
36																							36		614	12470	36	EACH	WORK ZONE SPEED LIMIT SIGN	
16																							16		614	12484	16	EACH	WORK ZONE INCREASED PENALTIES SIGN	
			30																				15	15	614	12500	30	EACH	REPLACEMENT SIGN	
			100																				50	50	614	12600	100	EACH	REPLACEMENT DRUM	
					920																		460	460	614	12800	920	EACH	WORK ZONE RAISED PAVEMENT MARKER	
					920																		460	460	614	12801	920	EACH	WORK ZONE RAISED PAVEMENT MARKER, AS PER PLAN	54
180			75																				255		614	13000	255	CU YD	ASPHALT CONCRETE FOR MAINTAINING TRAFFIC	
356																							356		614	18400	356	DAY	PORTABLE CHANGEABLE MESSAGE SIGN	
	5840																						2920	2920	614	18401	5,840	DAY	PORTABLE CHANGEABLE MESSAGE SIGN, AS PER PLAN	50
						18.00																	17.77	0.23	614	20000	18.00	MILE	WORK ZONE LANE LINE, CLASS I	
3.00						3.72																	3.00	3.72	614	21000	6.72	MILE	WORK ZONE CENTER LINE, CLASS I	
6.00						45.41																	45.79	5.62	614	22000	51.41	MILE	WORK ZONE EDGE LINE, CLASS I	
2000						30520																	25080	7440	614	23000	32,520	FT	WORK ZONE CHANNELIZING LINE, CLASS I	
						5070																		5070	614	24000	5,070	FT	WORK ZONE DOTTED LINE, CLASS I	
						1724																		1724	614	25000	1,724	FT	WORK ZONE TRANSVERSE/DIAGONAL LINE, CLASS I	
200						1346																	338	1208	614	26000	1,546	FT	WORK ZONE STOP LINE, CLASS I	
						762																	402	360	614	27000	762	FT	WORK ZONE CROSSWALK LINE, CLASS I	
6						101																	38	69	614	30000	107	EACH	WORK ZONE ARROW, CLASS I	
	2256																						2256		614	40000	2,256	FT	LONGITUDINAL CHANNELIZER	
					10																			10	614	40050	10	EACH	BUSINESS ENTRANCE SIGN	
								LUMP	LUMP	LUMP			LUMP	LUMP	LUMP	LUMP	LUMP	LUMP	LUMP	LUMP	LUMP	LUMP	LUMP		615	10000	LUMP		ROADS FOR MAINTAINING TRAFFIC	
								11438	11084	667			1500	159	50	54	2232	1352	810	2173	421	60	23189	8811	615	20000	32,000	SQ YD	PAVEMENT FOR MAINTAINING TRAFFIC, CLASS A	
2430			15																				2445		616	10000	2,445	M GAL	WATER	
			50																				50		617	10100	50	CU YD	COMPACTED AGGREGATE	
			15																				15		617	25000	15	M GAL	WATER	
			10.00																				10.00		642	00290	10.00	MILE	CENTER LINE	
							3717																3717		840	23000	3,717	CU YD	SELECT GRANULAR BACKFILL	61

CALCULATED CAC CHECKED EJC

MAINTENANCE OF TRAFFIC GENERAL SUMMARY

ALL-75-5.53

\\DOFS01N1_Drive\Pdl\76691\Final Cadd Files\Projects\ALL\76691\mot\sheets\76691MS002.dgn 17-JAN-2013 12:20PM jclark1

CALCULATED EJC
CHECKED EBS

MAINTENANCE OF TRAFFIC - TEMPORARY WIRE FACE MSE WALLS A & B GENERAL NOTES

ALL-75-5.53

61
1224

ITEM SPECIAL - RETAINING WALL MISC.: TEMPORARY MSE WALL

THIS WORK CONSISTS OF DESIGNING THE INTERNAL STABILITY OF THE WALL; PREPARING SHOP DRAWINGS; AND FABRICATING AND CONSTRUCTING THE TEMPORARY MSE WALL. THE TEMPORARY WALL SHALL FOLLOW SUPPLEMENTAL SPECIFICATION 840, EXCEPT AS NOTED HEREIN.

1. THE CONTRACTOR MAY USE A TEMPORARY WIRE FACED MSE WALL, IN LIEU OF CONCRETE PANELS. STEEL ELEMENTS FOR THIS WALL ARE NOT REQUIRED TO BE GALVANIZED OR EPOXY COATED.

2. THE DESIGN SHALL PROVIDE A MINIMUM DESIGN LIFE OF THREE YEARS.

3. A CONCRETE LEVELING PAD IS NOT REQUIRED.

BASIS OF PAYMENT: PAYMENT WILL BE MADE AT THE CONTRACT LUMP SUM PRICE PER "ITEM SPECIAL - RETAINING WALL MISC.: TEMPORARY MSE WALL".

USE THE FOLLOWING SOIL PARAMETERS IN THE DESIGN. THESE PARAMETERS ARE NOT TO BE USED FOR MATERIAL ACCEPTANCE.

FILL ZONE	TYPE OF SOIL	DESIGN SOIL UNIT WEIGHT	FRICTION ANGLE	COHESION
REINFORCED SOIL	SELECT GRANULAR BACKFILL	120 LBS/FT	34°	0
RETAINED SOIL	ON-SITE VARYING FROM SANDY LEAN CLAY TO SILTY SAND	120 LBS/FT	30°	0
FOUNDATION	ON-SITE VARYING FROM SANDY SILT TO SILT AND CLAY	120 LBS/FT	24°	0

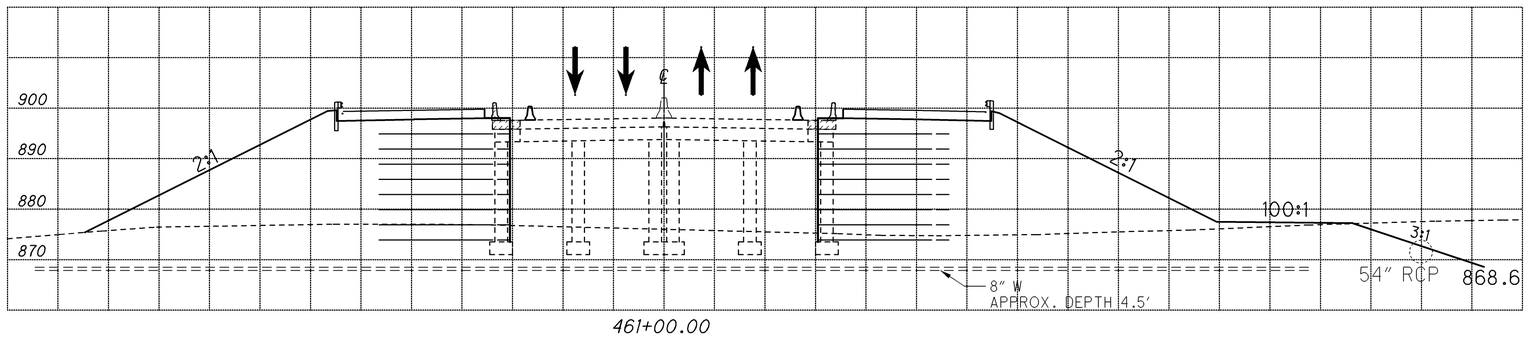

461+00.00

J:\Projects\ALL\76691\mot\sheets\76691MM009.dgn 11-SEP-2012 8:48PM reddenj

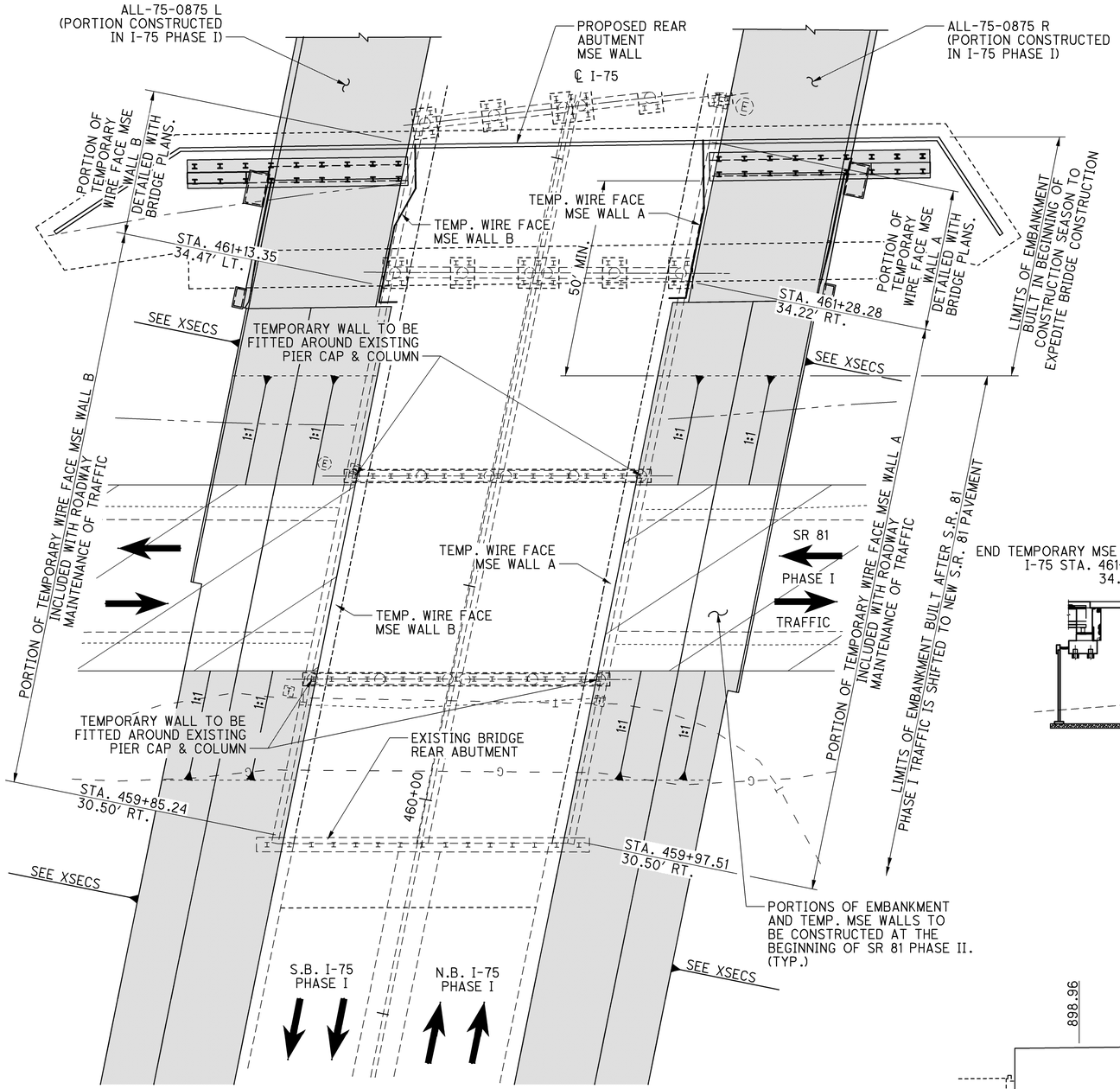

PLAN - TEMPORARY MSE WALLS A & B

NOTES:
1. FOR TEMPORARY WALL SECTION AT STA. 461+00 AND GENERAL NOTES SEE SHEET (61/1224).

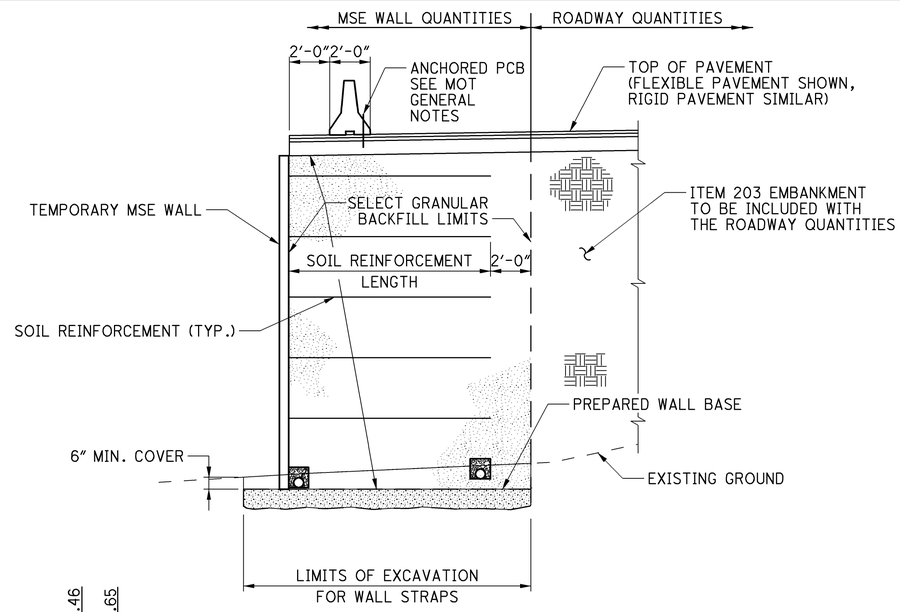

SECTION A-A

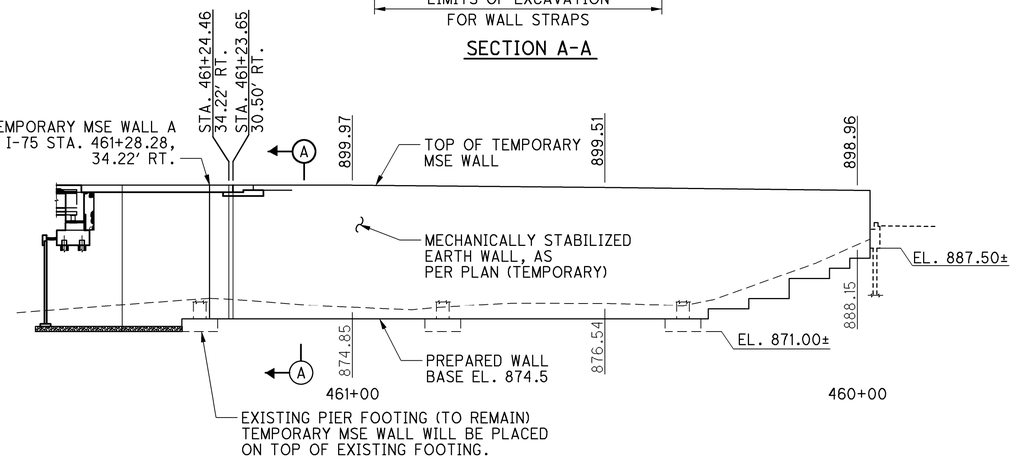

ELEVATION - TEMPORARY MSE WALL A

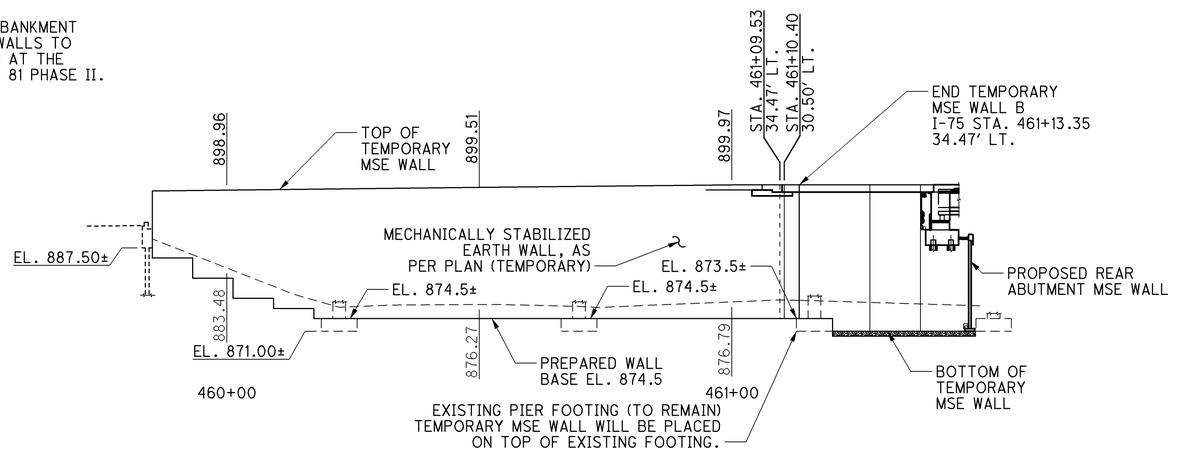

ELEVATION - TEMPORARY MSE WALL B

HORIZONTAL SCALE IN FEET
0 15 20 30

CALCULATED EJC
CHECKED EBS

MAINTENANCE OF TRAFFIC - TEMPORARY WIRE FACE MSE WALLS A & B DETAILS

ALL-75-5.53

62
1224

J:\Projects\ALL\76691\mot\sheets\76691MM010.dgn 16-JAN-2013 5:37PM phillipst

ALL-75-0.21
(SOUTH SECTION)

2014 - TEMP. BRIDGES & TEMP. PAV'T.
2014 - PHASE I (Contra-Flow)
2015 - PHASE II (Contra-Flow)

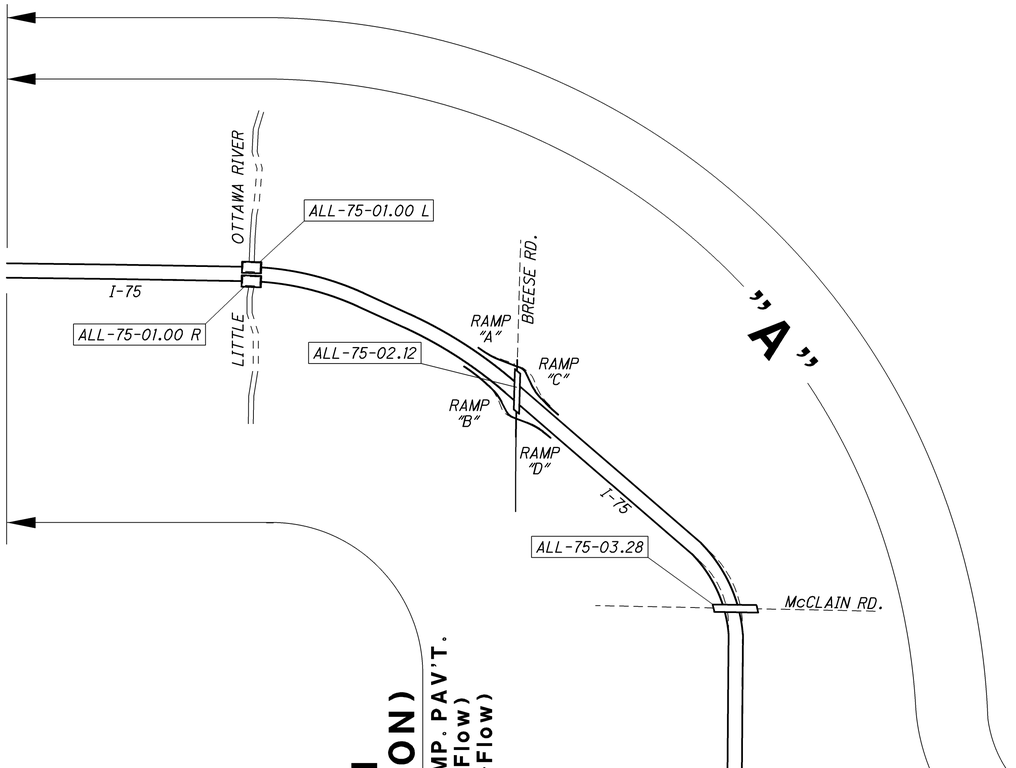

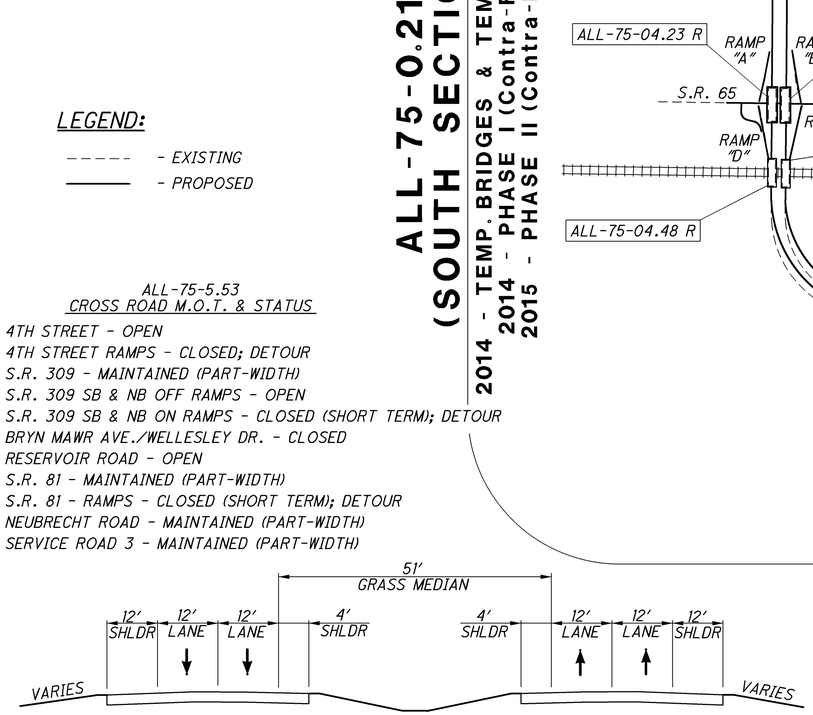

ALL-75-5.53
(NORTH SECTION)

2012 - CONSTRUCT RESERVOIR RD. & BRYN MAWR (ALL-75-6.11/7.85)
2012 - CONSTRUCT FOURTH STREET (ALL-75-6.11/7.85)
2013 - CONSTRUCT FOURTH, S.R. 309, & S.R. 81 INTERCHANGES
2013 - PHASE I (Part-Width)
2014 - PHASE II (Part-Width)

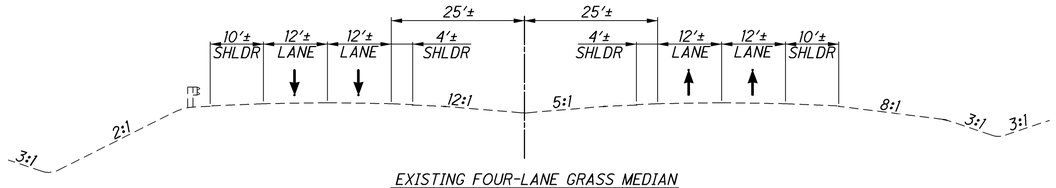

EXISTING FOUR-LANE GRASS MEDIAN

"A"

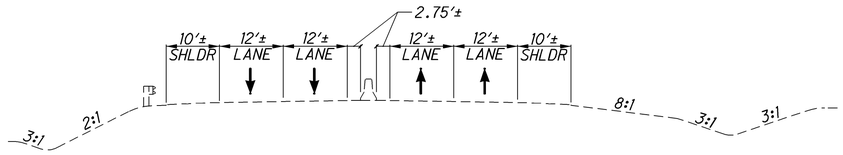

EXISTING FOUR-LANE MEDIAN BARRIER

"B"

NOTE:

CONTRACTOR TO INSTALL ADVANCED WORK ZONE WARNINIG SIGNS PER SCD MT-95.50 AS APPLICABLE.

PAYMENT FOR ALL LABOR, EQUIPMENT, MATERIALS SHALL BE INCLUDED WITH THE LUMP SUM BID FOR ITEM 614, MAINTAINING TRAFFIC, AS PER PLAN.

LEGEND:

- - - - - - - EXISTING
——— PROPOSED

ALL-75-5.53
CROSS ROAD M.O.T. & STATUS

4TH STREET - OPEN
4TH STREET RAMPS - CLOSED; DETOUR
S.R. 309 - MAINTAINED (PART-WIDTH)
S.R. 309 SB & NB OFF RAMPS - OPEN
S.R. 309 SB & NB ON RAMPS - CLOSED (SHORT TERM); DETOUR
BRYN MAWR AVE./WELLESLEY DR. - CLOSED
RESERVOIR ROAD - OPEN
S.R. 81 - MAINTAINED (PART-WIDTH)
S.R. 81 - RAMPS - CLOSED (SHORT TERM); DETOUR
NEUBRECHT ROAD - MAINTAINED (PART-WIDTH)
SERVICE ROAD 3 - MAINTAINED (PART-WIDTH)

PROPOSED FOUR-LANE GRASS MEDIAN

"C"

HORIZONTAL SCALE IN FEET
0 750 1500 3000

MAINTENANCE OF TRAFFIC SCHEMATIC PLAN

ALL-75-5.53

63
1224

J:\Projects\ALL\76691\mot\sheets\76691MB001.dgn 11-SEP-2012 8:48PM reddenj

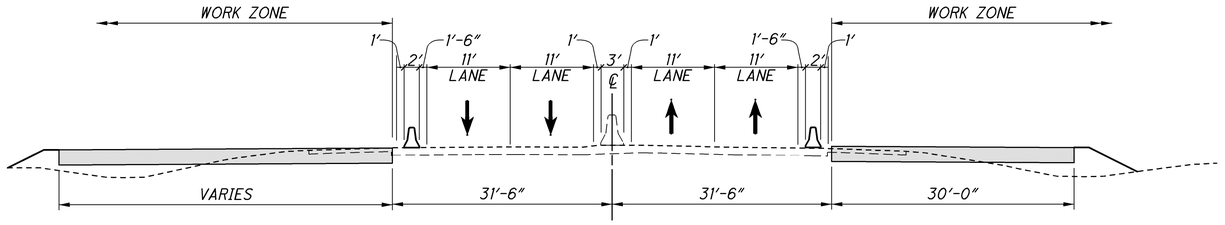

SECTION C-C
STA. 348+00±

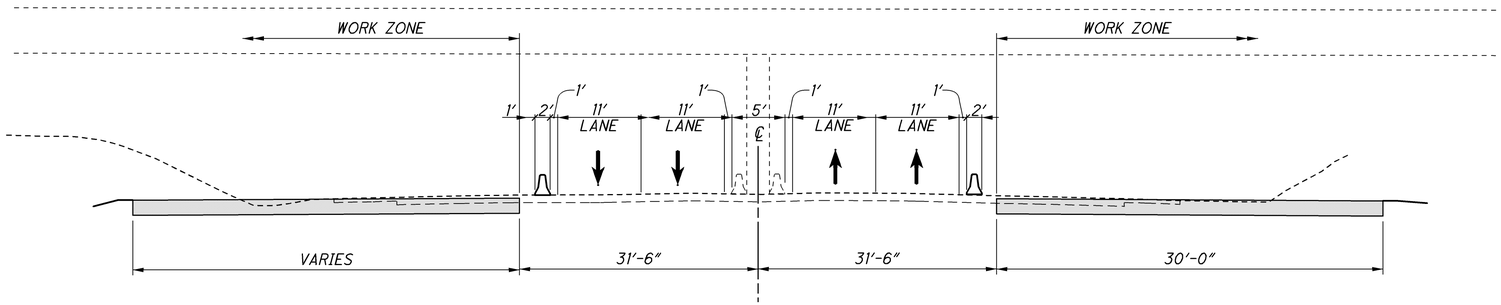

SECTION B-B
BRIDGE NO. ALL-75-06.11
STA. 322+00±

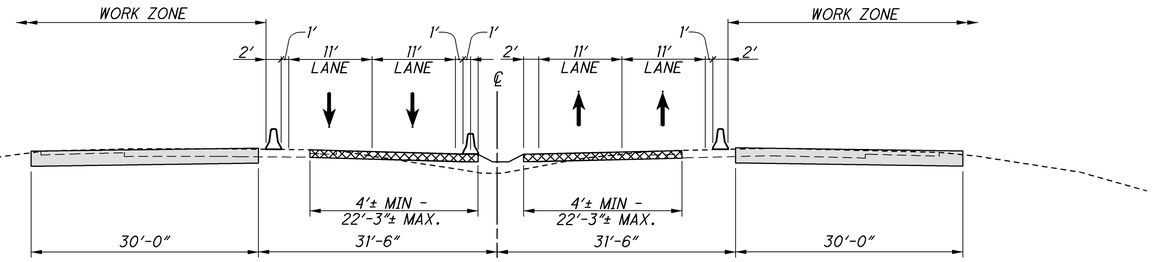

SECTION A-A
STA. 287+50± TO 319+00±
NOTE: REBUILD EXISTING SHOULDERS AND
PLACE TEMPORARY PAVEMENT TO LIMITS SHOWN.
TEMPORARY PAVEMENT NEEDED FROM BEGINNING OF SHIFT TAPERS AT APPROXIMATELY STATION 287+50 TO APPROXIMATELY STATION 319+00.

LEGEND:
- TEMPORARY PAVEMENT
- PROPOSED
- PORTABLE CONCRETE BARRIER (TO BE ANCHORED ON BRIDGES)

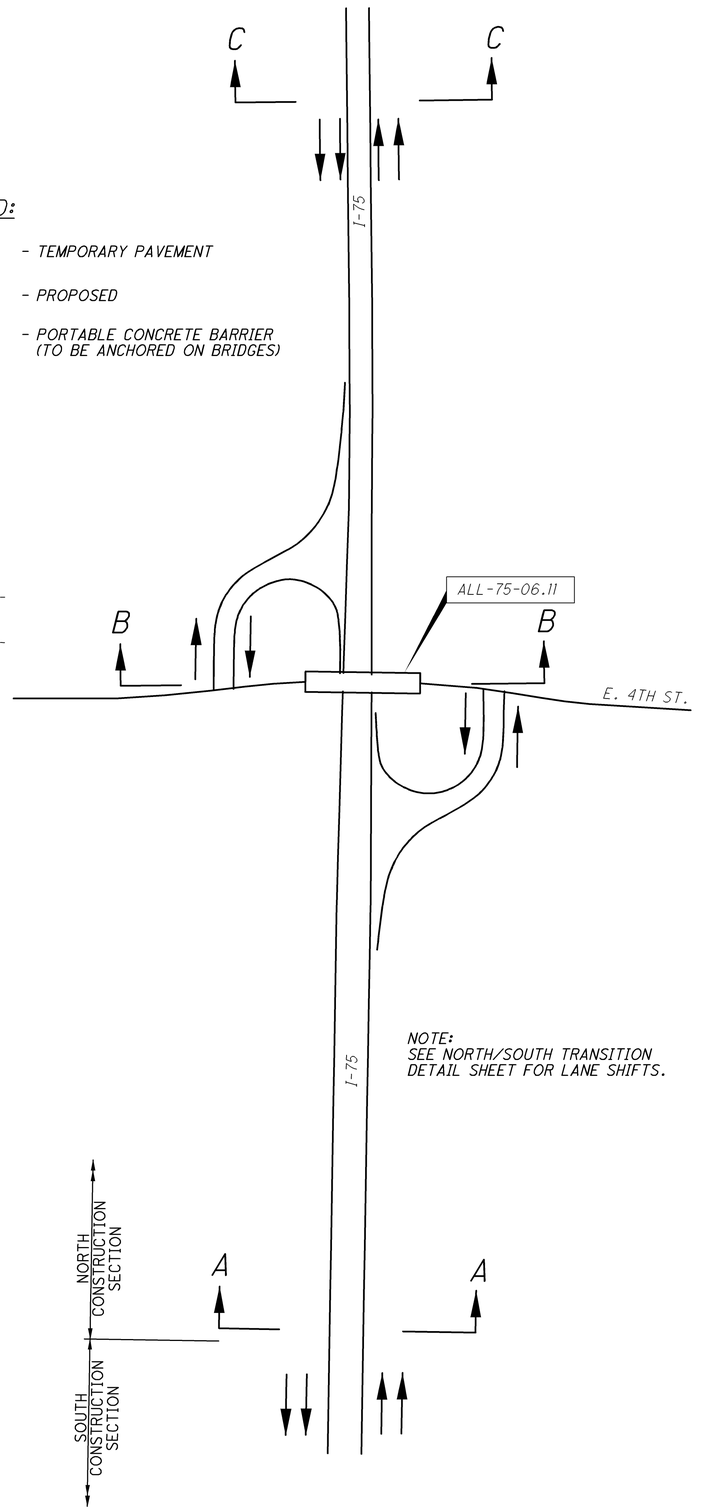

NOTE:
SEE NORTH/SOUTH TRANSITION DETAIL SHEET FOR LANE SHIFTS.

HORIZONTAL SCALE IN FEET
0 5 10 20
CALCULATED JMR
CHECKED EJC

MAINTENANCE OF TRAFFIC TYPICAL SECTIONS
PART-WIDTH, PHASE I

ALL-75-5.53

64
1224

J:\Projects\ALL\76691\mot\sheets\76691MY009.dgn 11-SEP-2012 8:48PM reddenj

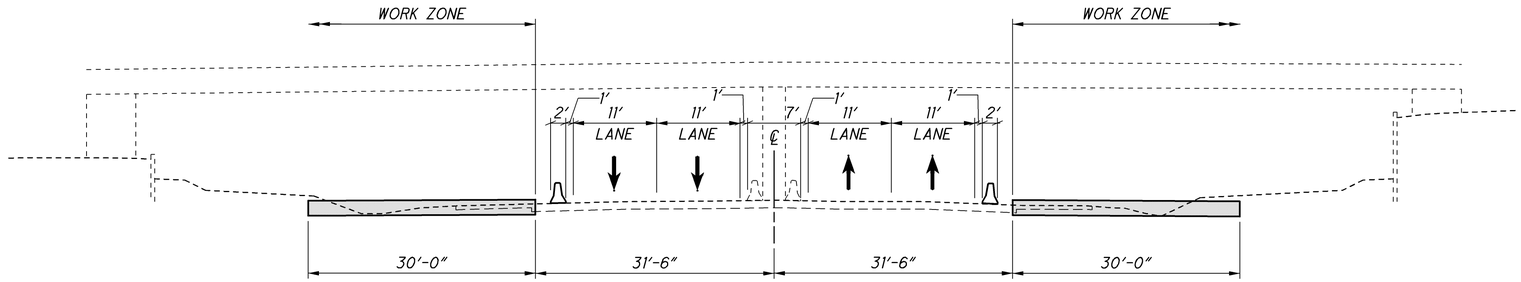

SECTION C-C

BRIDGE NO. ALL-75-07.85
STA. 415+00±

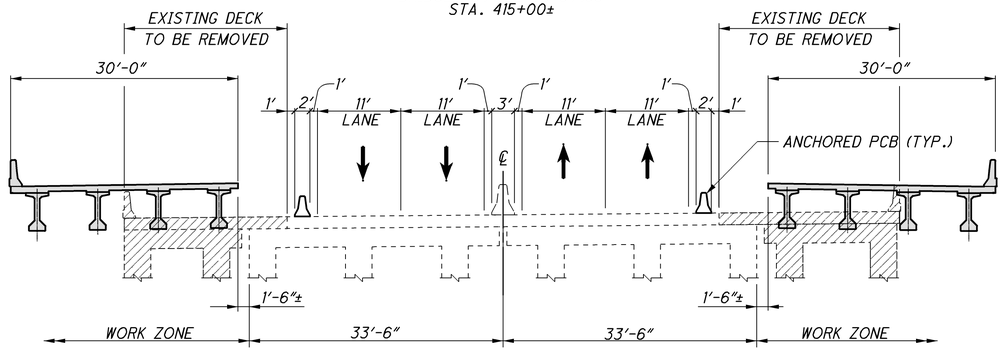

SECTION B-B

BRIDGE NO. ALL-75-07.03
STA. 372+00±

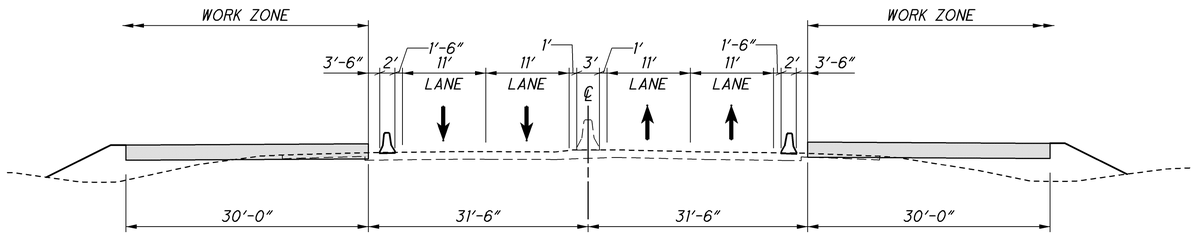

SECTION A-A

STA. 360+00±
STA. 400+00±

LEGEND:

- REMOVAL
- PROPOSED
- PORTABLE CONCRETE BARRIER (TO BE ANCHORED ON BRIDGES)

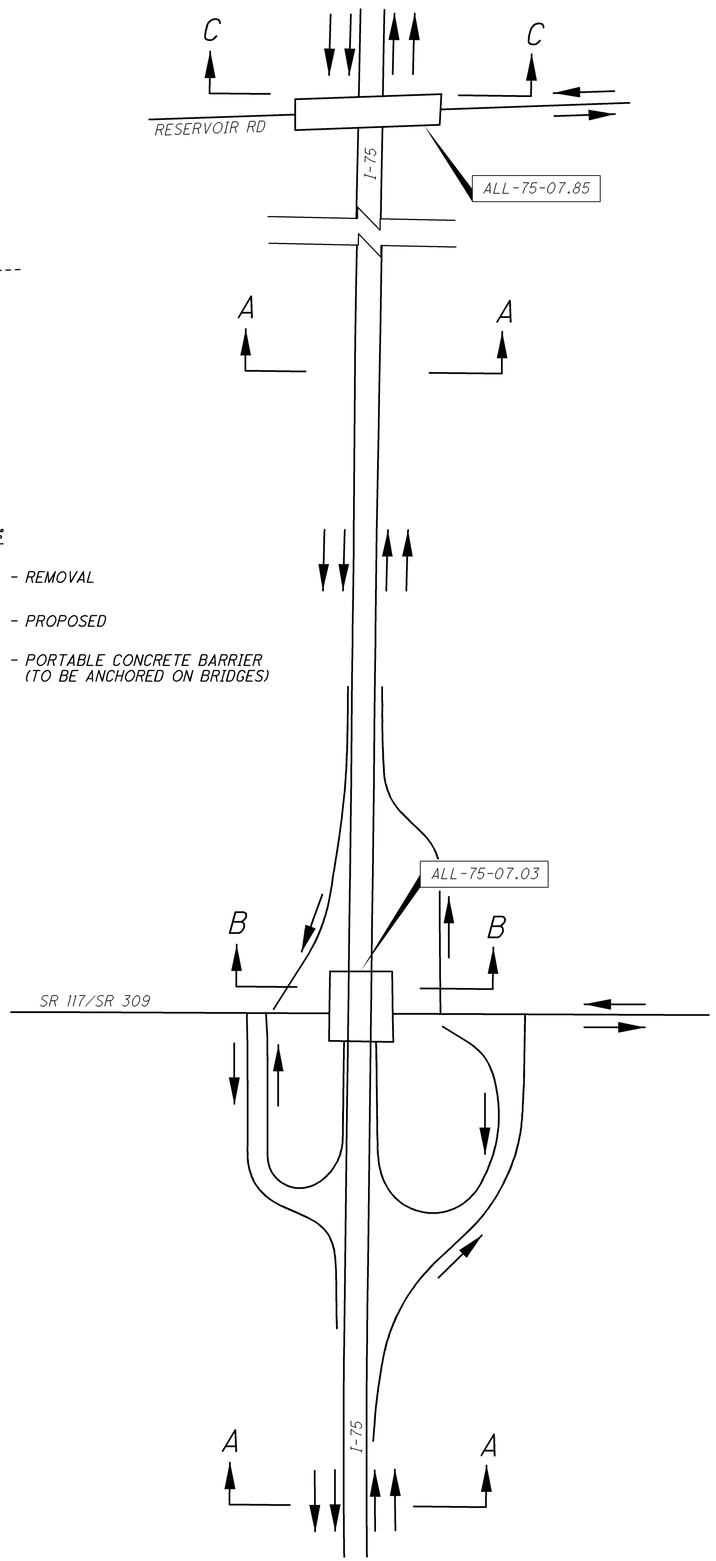

HORIZONTAL SCALE IN FEET
0 5 10 20

CALCULATED JMR
CHECKED EJC

MAINTENACE OF TRAFFIC TYPICAL SECTIONS PART-WIDTH, PHASE I

ALL-75-5.53

65
1224

J:\Projects\ALL\76691\mot\sheets\76691MY011.dgn 11-SEP-2012 8:48PM reddenj

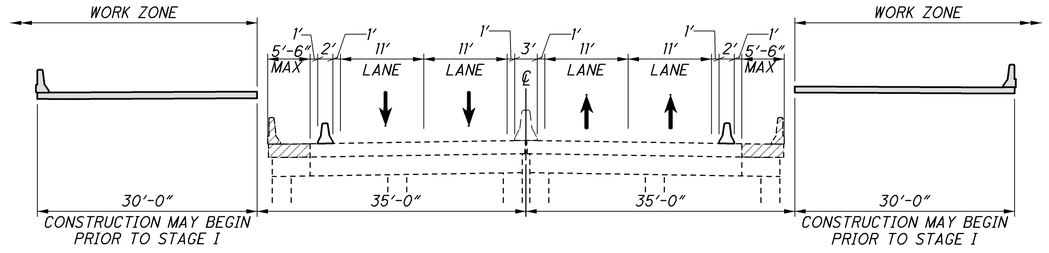

SECTION E-E

BRIDGE NO. ALL-75-08.75
STA. 463+00±

NOTE: PROPOSED BEAMS NOT SHOWN. SEE BRIDGE PLANS FOR DETAILS.

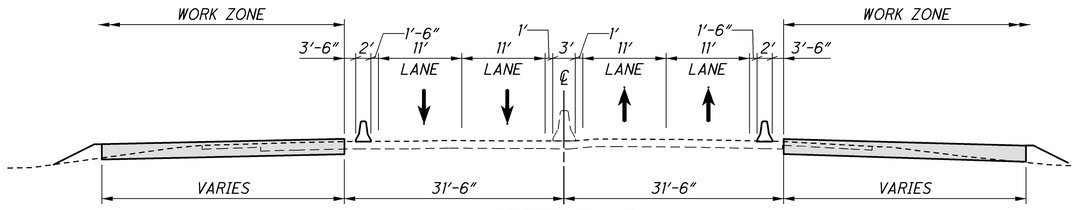

SECTION D-D

STA. 448+00±

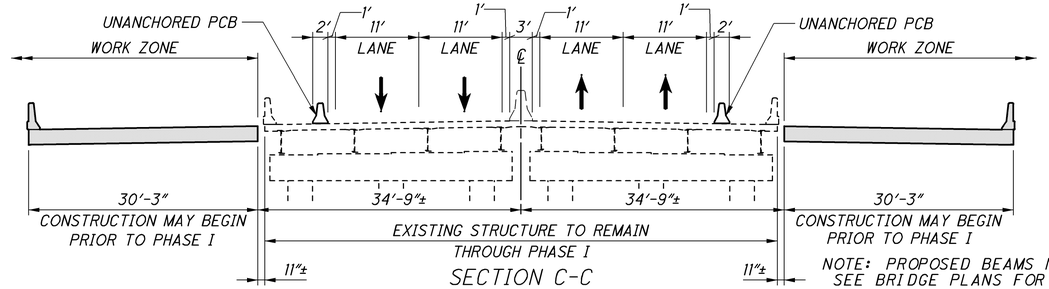

SECTION C-C

BRIDGE NO. ALL-75-08.32
STA. 440+00±

NOTE: PROPOSED BEAMS NOT SHOWN. SEE BRIDGE PLANS FOR DETAILS.

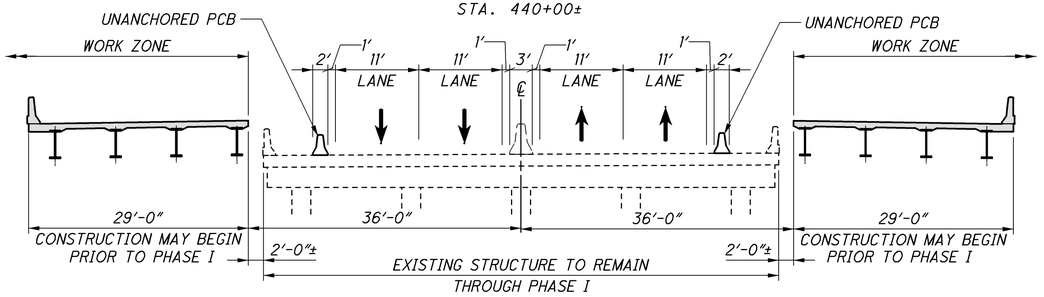

SECTION B-B

BRIDGE NO. ALL-75-08.13
STA. 430+00±

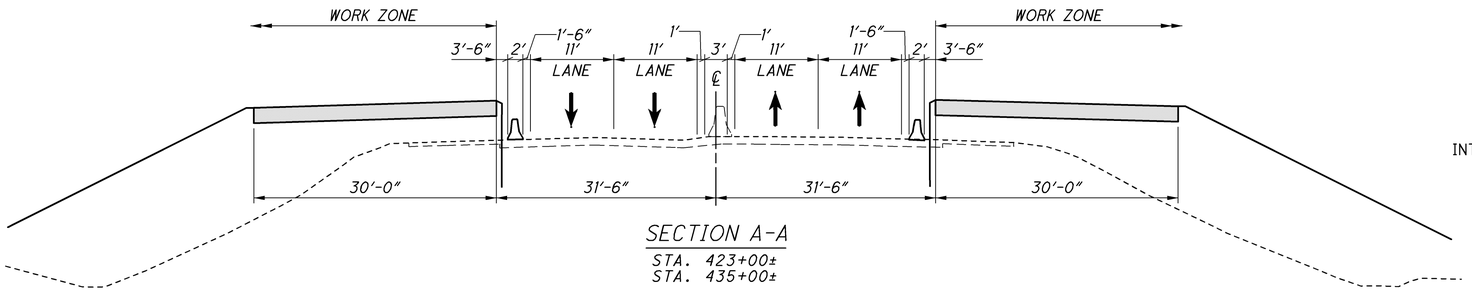

SECTION A-A

STA. 423+00±
STA. 435+00±

LEGEND:

- REMOVAL
- PROPOSED
- PORTABLE CONCRETE BARRIER (TO BE ANCHORED ON BRIDGES)

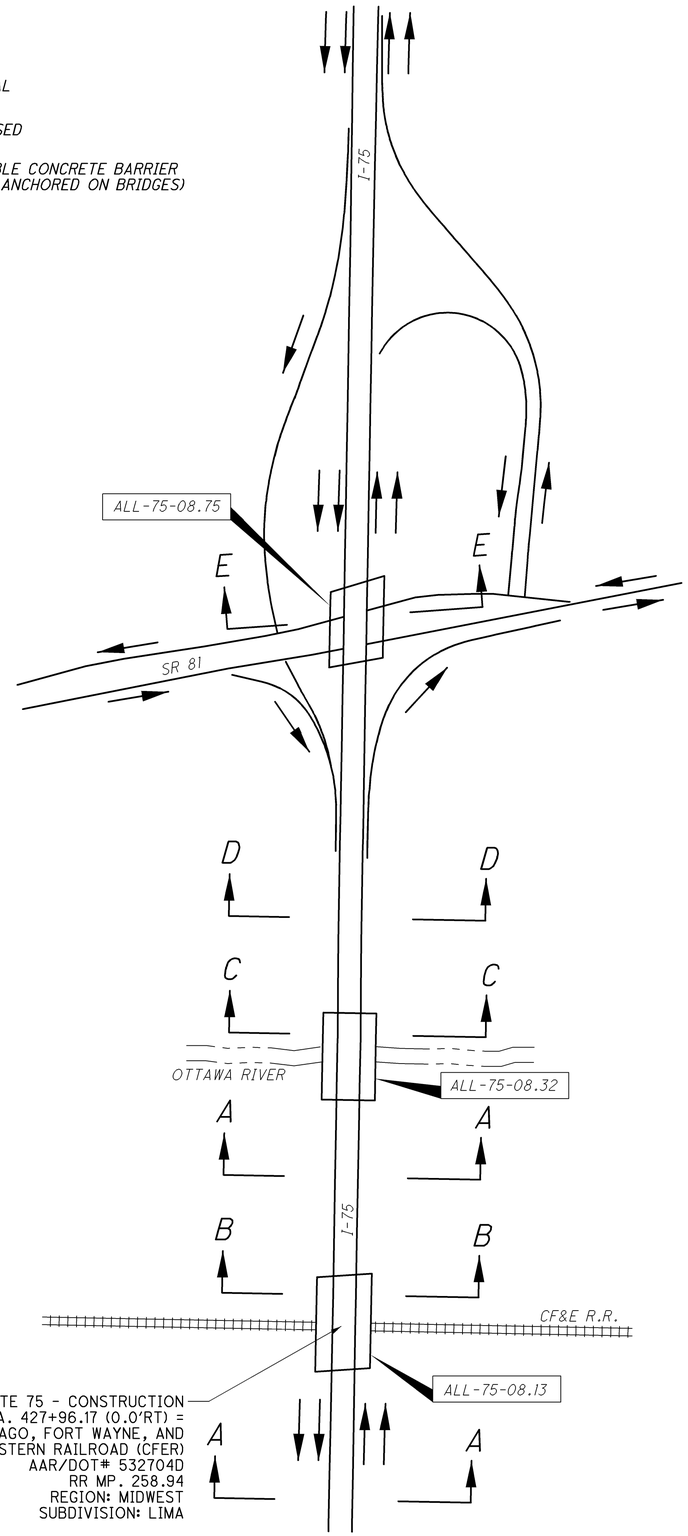

INTERSTATE ROUTE 75 - CONSTRUCTION
STA. 427+96.17 (0.0'RT) =
CHICAGO, FORT WAYNE, AND
EASTERN RAILROAD (CFER)
AAR/DOT# 532704D
RR MP. 258.94
REGION: MIDWEST
SUBDIVISION: LIMA

HORIZONTAL SCALE IN FEET
0 5 10 20

CALCULATED JMR
CHECKED EJC

MAINTENANCE OF TRAFFIC TYPICAL SECTIONS PART-WIDTH, PHASE I

ALL-75-5.53

66
1224

J:\Projects\ALL\76691\mot\sheets\76691MY013.dgn 11-SEP-2012 8:48PM reddenj



SECTION C-C
STA. 535+00±

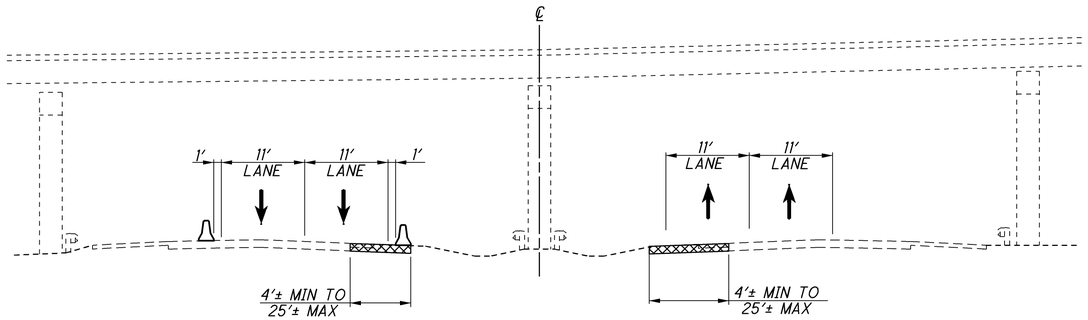

SECTION B-B
STA. 520+00± TO 526+00±
NOTE: REBUILD EXISTING SHOULDERS AND
PLACE TEMPORARY PAVEMENT TO LIMITS SHOWN.
TEMPORARY PAVEMENT NEEDED FROM BEGINNING OF SHIFT TAPERS AT APPROXIMATELY STATION 520+00 TO APPROXIMATELY STATION 526+00.

END PROJECT
STA. 520+00

LEGEND:

- TEMPORARY PAVEMENT
- PROPOSED
- PORTABLE CONCRETE BARRIER (TO BE ANCHORED ON BRIDGES)

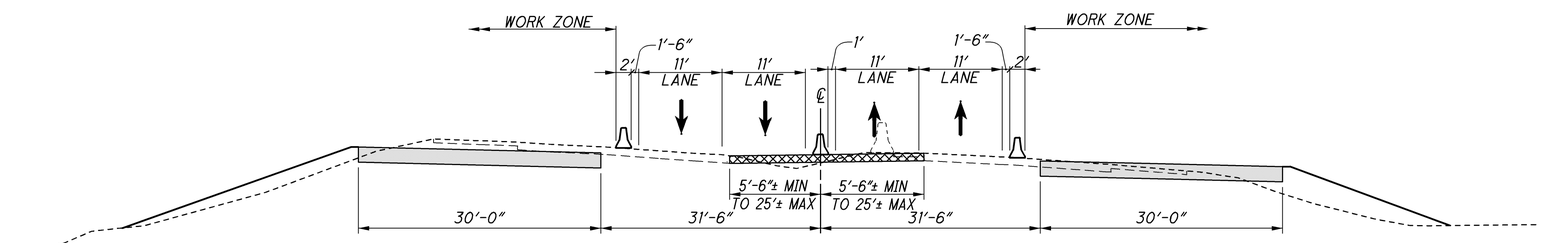

SECTION A-A
STA. 493+00± TO 520+00±
NOTE: REBUILD EXISTING SHOULDERS AND
PLACE TEMPORARY PAVEMENT TO LIMITS SHOWN.
TEMPORARY PAVEMENT NEEDED FROM APPROXIMATELY STATION 493+00 TO APPROXIMATELY STATION 520+00.

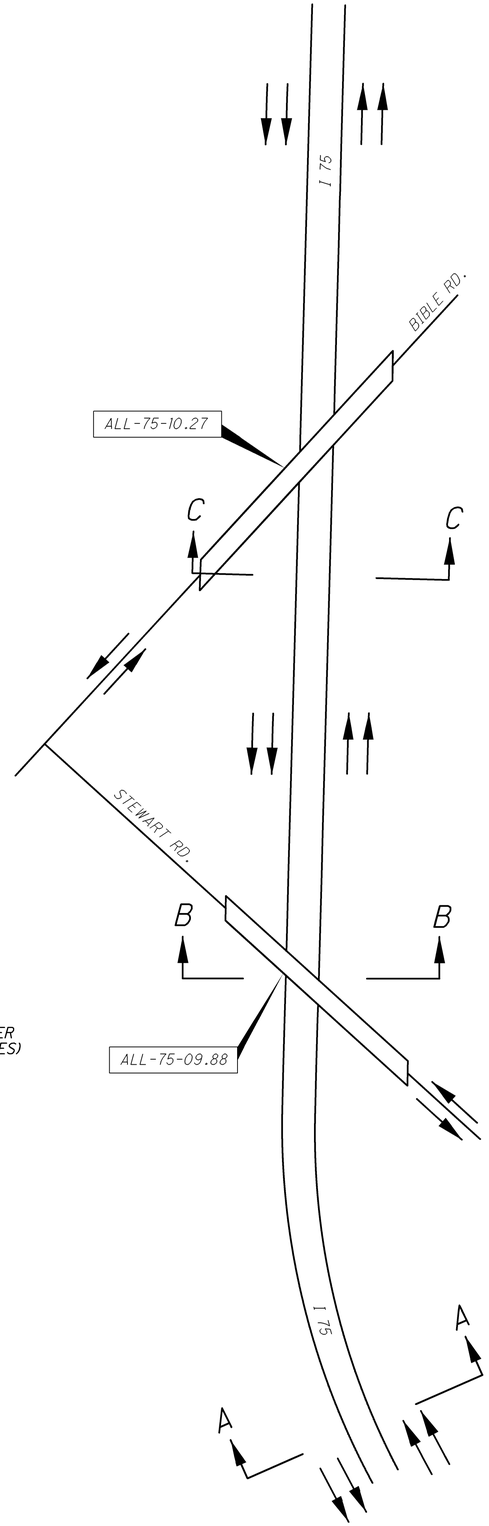

HORIZONTAL SCALE IN FEET
0 5 10 20

CALCULATED JMR
CHECKED EJC

MAINTENANCE OF TRAFFIC TYPICAL SECTIONS
PART-WIDTH, PHASE I

ALL-75-5.53

67
1224

J:\Projects\ALL\76691\mot\sheets\76691MY015.dgn 11-SEP-2012 8:48PM reddenj

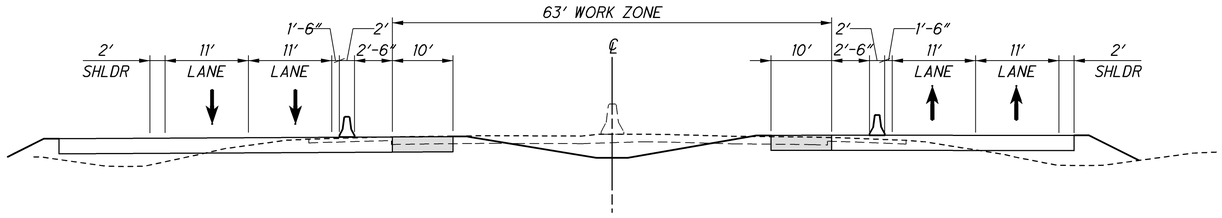

SECTION C-C
STA. 348+00±

LEGEND:

- TEMPORARY PAVEMENT
- PROPOSED
- PORTABLE CONCRETE BARRIER (TO BE ANCHORED ON BRIDGES)

SECTION B-B
BRIDGE NO. ALL-75-06.11
STA. 322+00±

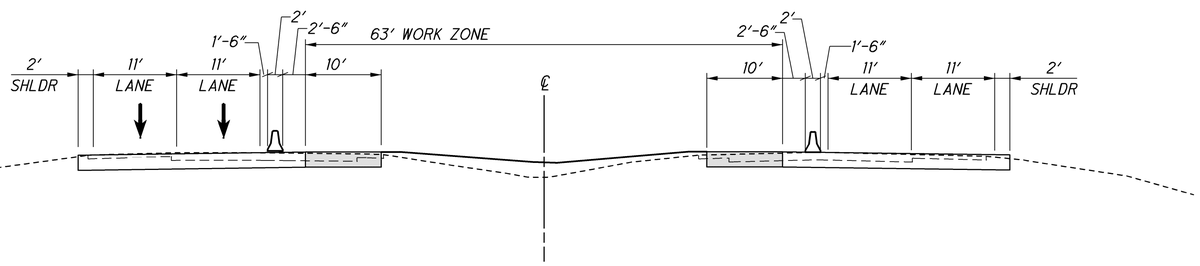

SECTION A-A
STA. 292+00±

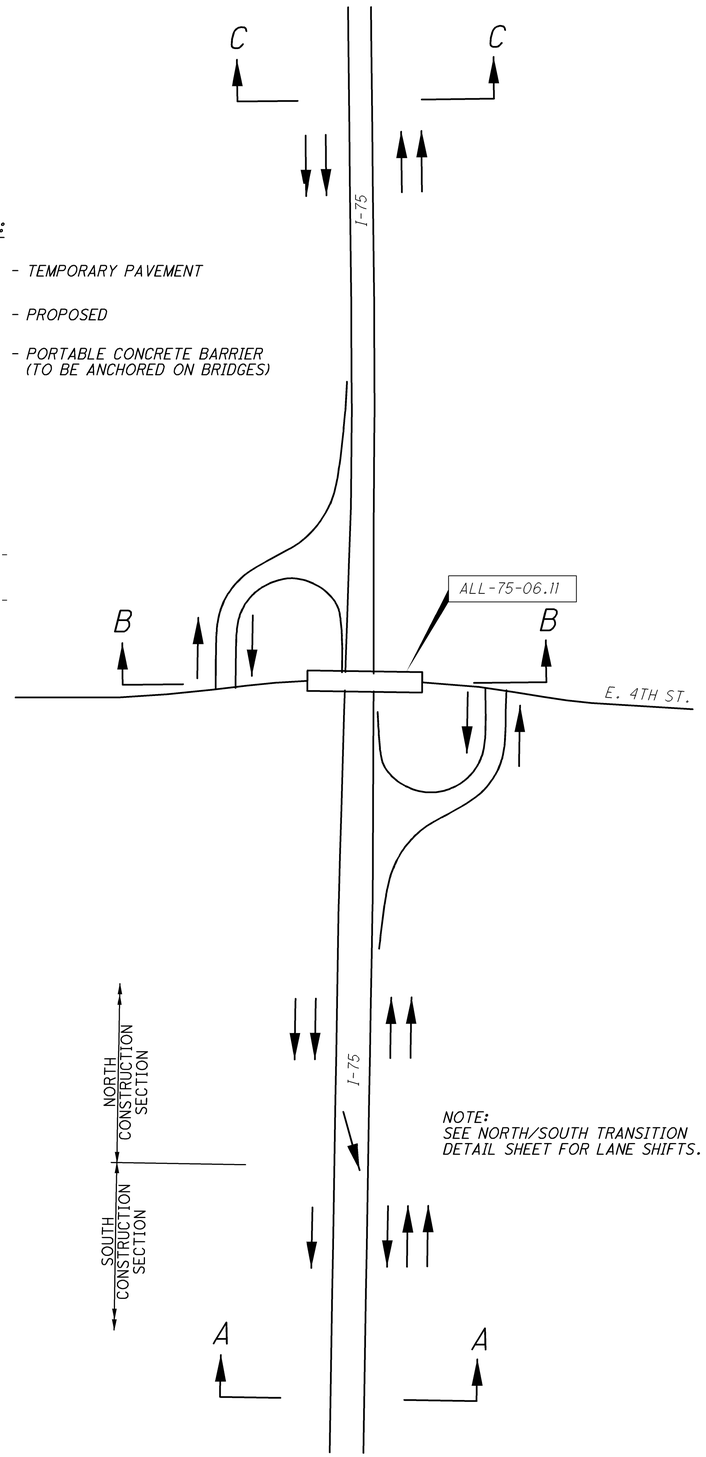

NOTE:
SEE NORTH/SOUTH TRANSITION DETAIL SHEET FOR LANE SHIFTS.

HORIZONTAL SCALE IN FEET
0 5 10 20

CALCULATED JMR
CHECKED EJC

MAINTENANCE OF TRAFFIC TYPICAL SECTIONS PART-WIDTH, PHASE II

ALL-75-5.53

68
1224

J:\Projects\ALL\76691\mot\sheets\76691MY010.dgn 11-SEP-2012 8:48PM reddenj

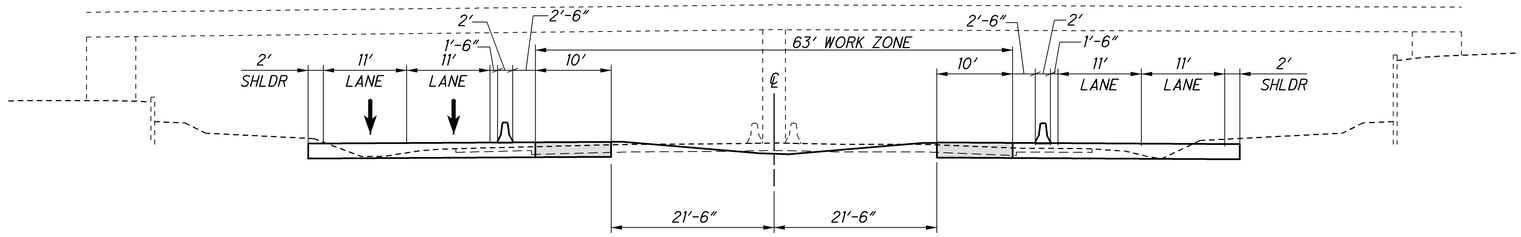

SECTION C-C

BRIDGE NO. ALL-75-07.85
STA. 415+00±

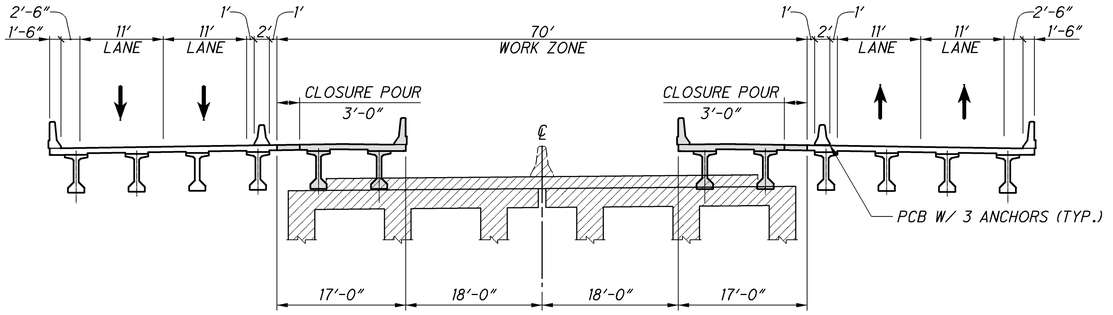

SECTION B-B

BRIDGE NO. ALL-75-07.03
STA. 372+00±

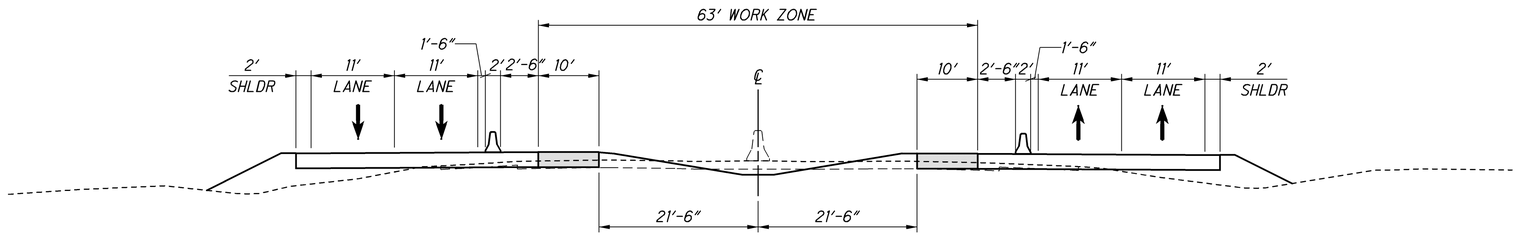

SECTION A-A

STA. 360+00±
STA. 400+00±

LEGEND:

- TEMPORARY PAVEMENT
- REMOVAL
- PROPOSED
- PORTABLE CONCRETE BARRIER (TO BE ANCHORED ON BRIDGES)

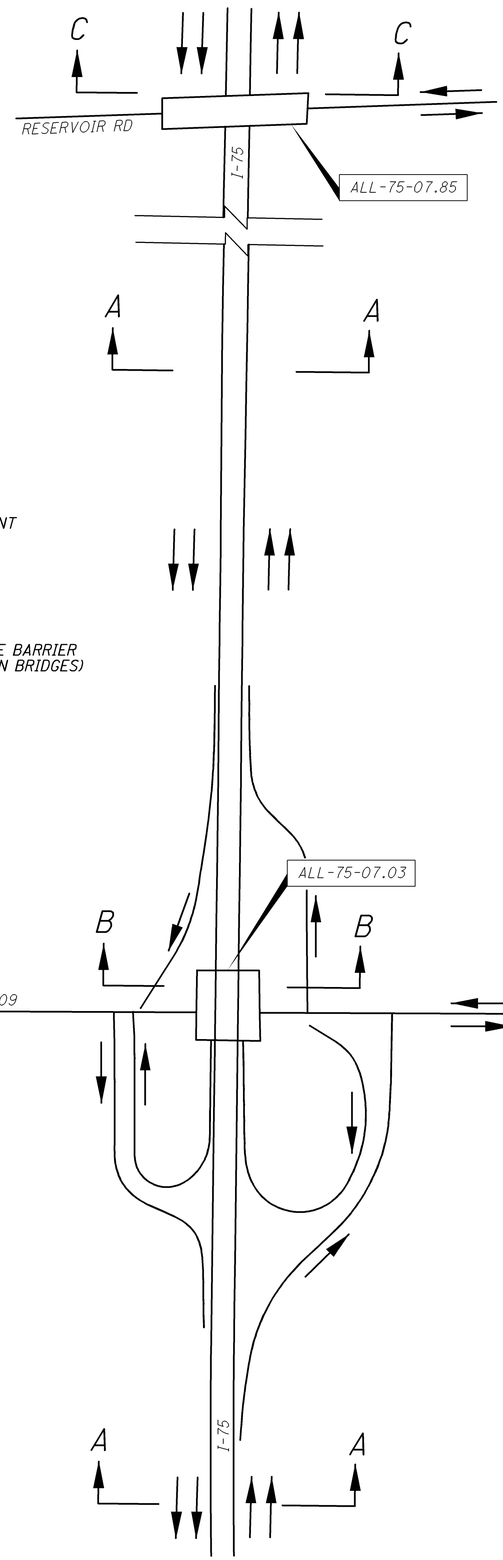

HORIZONTAL SCALE IN FEET
0 5 10 20

CALCULATED JMR
CHECKED EJC

MAINTENACE OF TRAFFIC TYPICAL SECTIONS PART-WIDTH, PHASE II

ALL-75-5.53

69
1224

J:\Projects\ALL\76691\mot\sheets\76691MY012.dgn 11-SEP-2012 8:48PM redden

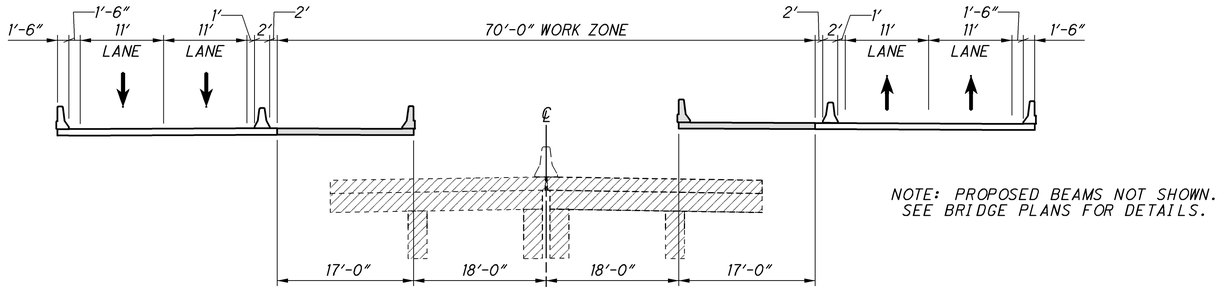

NOTE: PROPOSED BEAMS NOT SHOWN.
SEE BRIDGE PLANS FOR DETAILS.

SECTION E-E

BRIDGE NO. ALL-75-08.75
STA. 463+00±

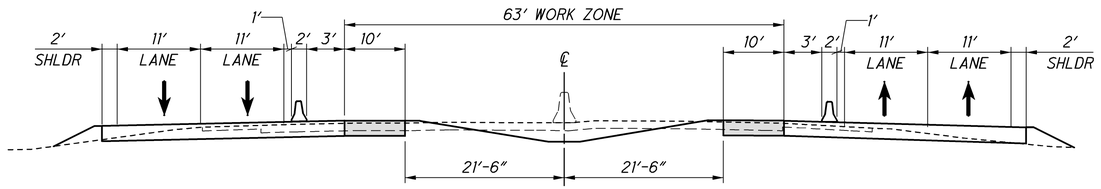

SECTION D-D

STA. 448+00±

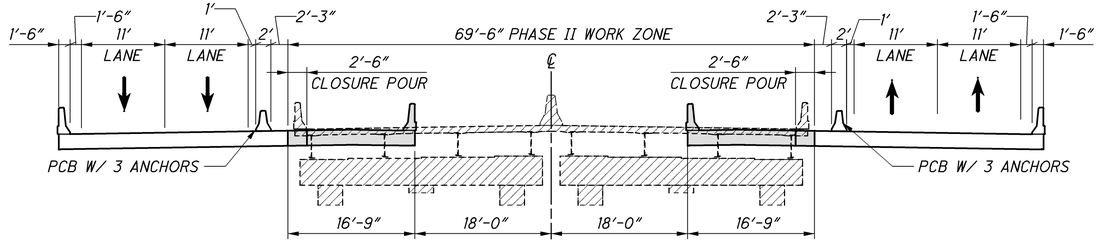

SECTION C-C

BRIDGE NO. ALL-75-08.32
STA. 440+00±

NOTE: PROPOSED BEAMS NOT SHOWN.
SEE BRIDGE PLANS FOR DETAILS.

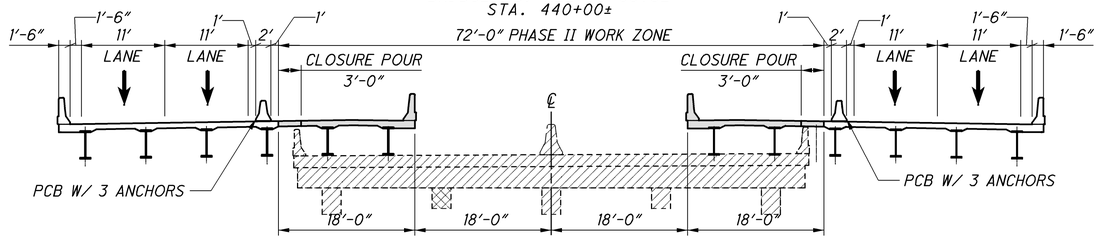

SECTION B-B

BRIDGE NO. ALL-75-08.13
STA. 430+00±

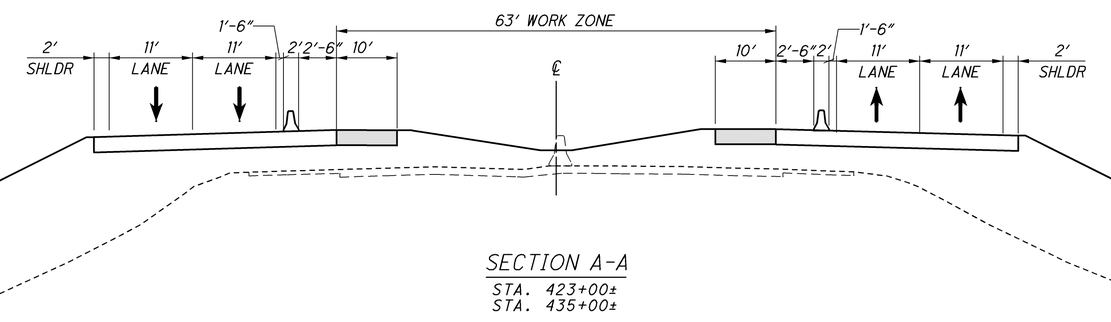

SECTION A-A

STA. 423+00±
STA. 435+00±

LEGEND:

- REMOVAL
- PROPOSED
- PORTABLE CONCRETE BARRIER (TO BE ANCHORED ON BRIDGES)

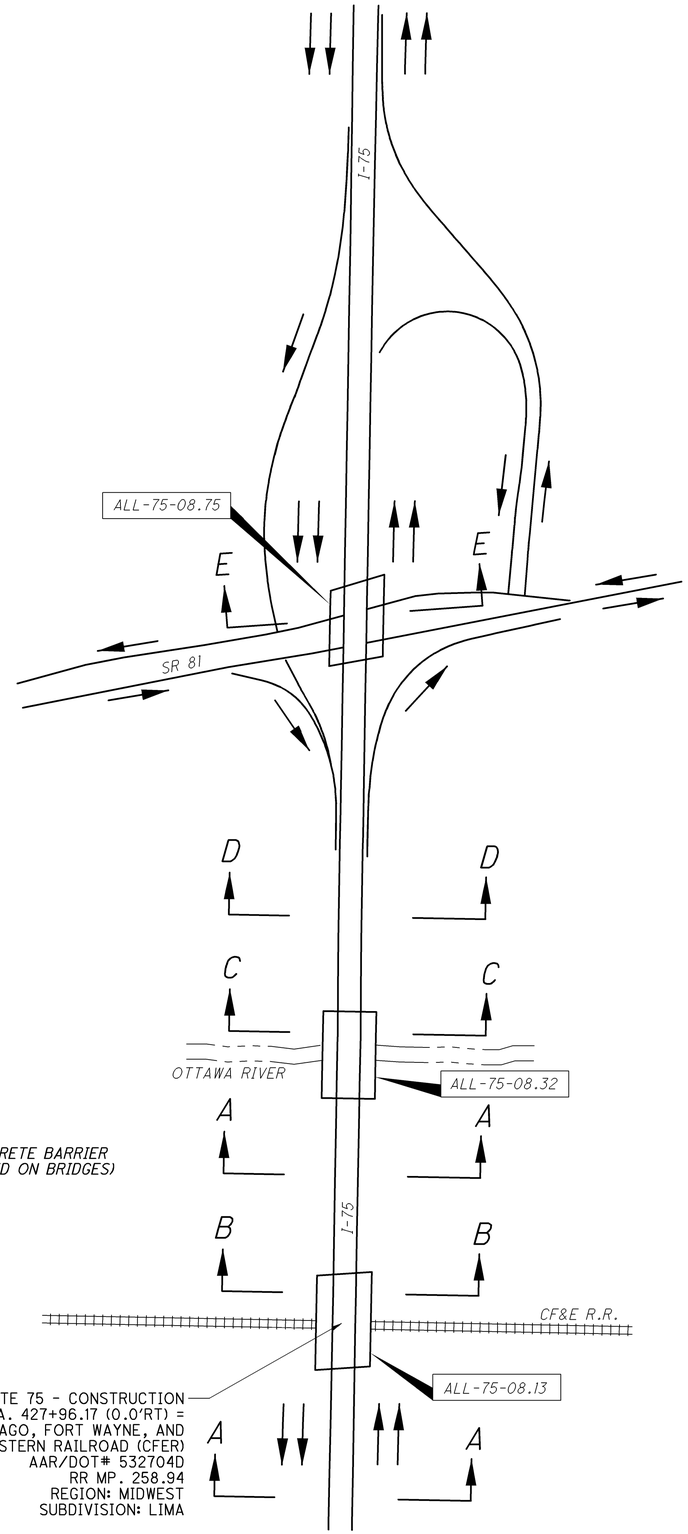

INTERSTATE ROUTE 75 - CONSTRUCTION
STA. 427+96.17 (0.0'RT) =
CHICAGO, FORT WAYNE, AND
EASTERN RAILROAD (CFER)
AAR/DOT# 532704D
RR MP. 258.94
REGION: MIDWEST
SUBDIVISION: LIMA

HORIZONTAL SCALE IN FEET
0 5 10 20

CALCULATED JMR
CHECKED EJC

MAINTENANCE OF TRAFFIC TYPICAL SECTIONS PART-WIDTH, PHASE II

ALL-75-5.53

70
1224

J:\Projects\ALL\76691\mot\sheets\76691MY014.dgn 11-SEP-2012 8:48PM reddenj



SECTION C-C
STA. 535+00

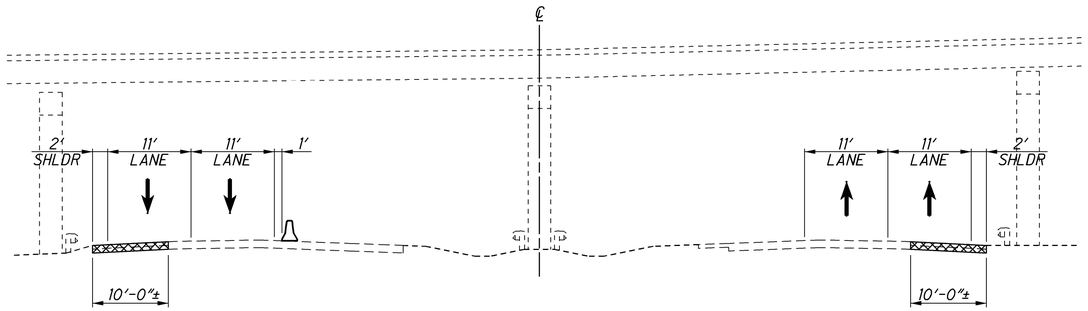

SECTION B-B
STA. 520+00± TO 523+00±
PLACE TEMPORARY PAVEMENT TO LIMITS SHOWN.
TEMPORARY PAVEMENT NEEDED FROM BEGINNING OF SHIFT TAPERS AT APPROXIMATELY STATION 520+00 TO APPROXIMATELY STATION 523+00.

END PROJECT
STA. 520+00

LEGEND:
- TEMPORARY PAVEMENT
- PROPOSED
- PORTABLE CONCRETE BARRIER (TO BE ANCHORED ON BRIDGES)

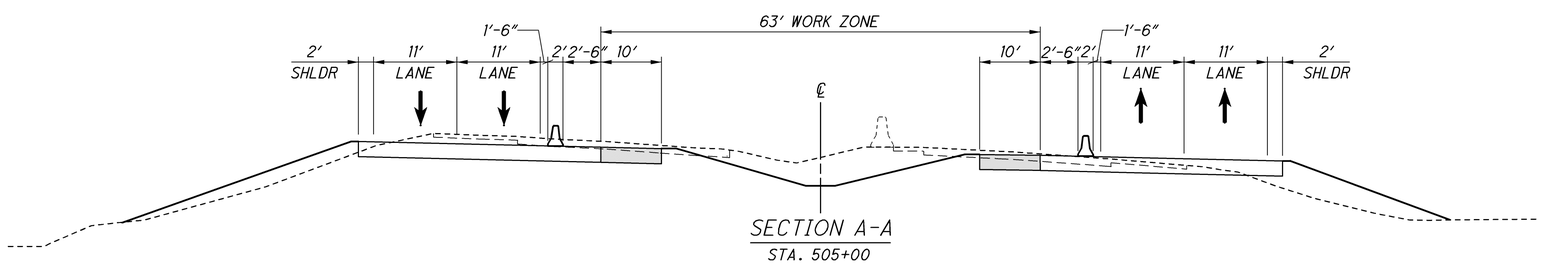

SECTION A-A
STA. 505+00

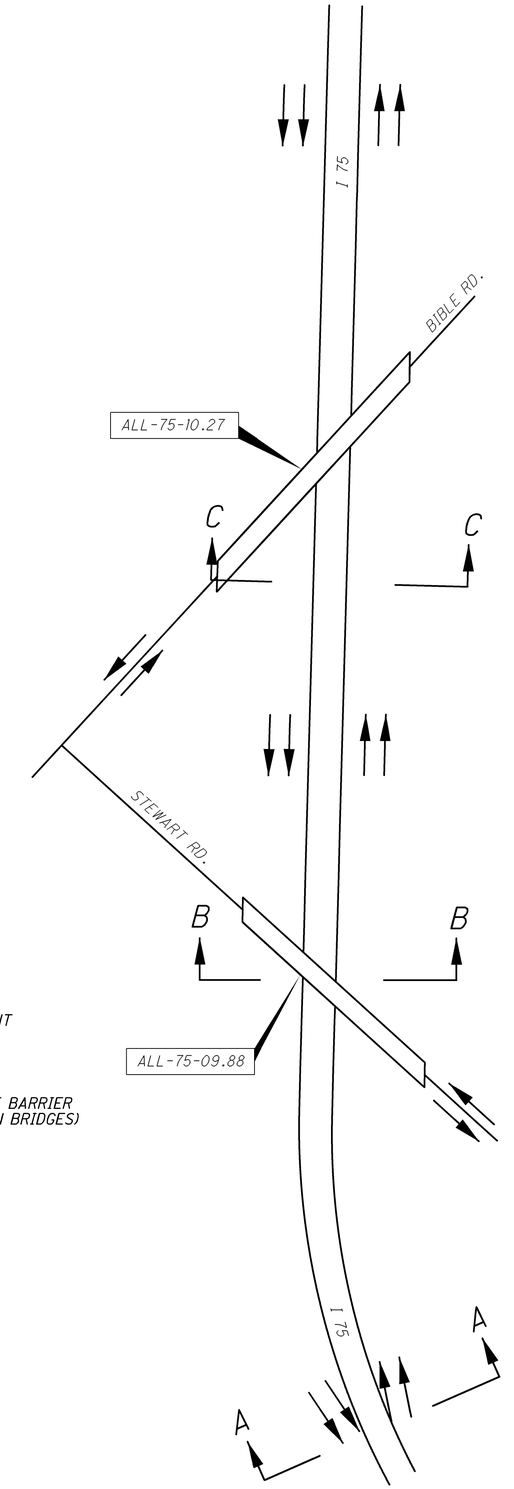

HORIZONTAL SCALE IN FEET
0 5 10 20

CALCULATED JMR
CHECKED EJC

MAINTENANCE OF TRAFFIC TYPICAL SECTIONS
PART-WIDTH, PHASE II

ALL-75-5.53

71
1224

J:\Projects\ALL\76691\mot\sheets\76691MY016.dgn 11-SEP-2012 8:48PM reddenj

LEGEND:

- TEMPORARY PAVEMENT
- PROPOSED
- PORTABLE CONCRETE BARRIER (TO BE ANCHORED ON BRIDGES)

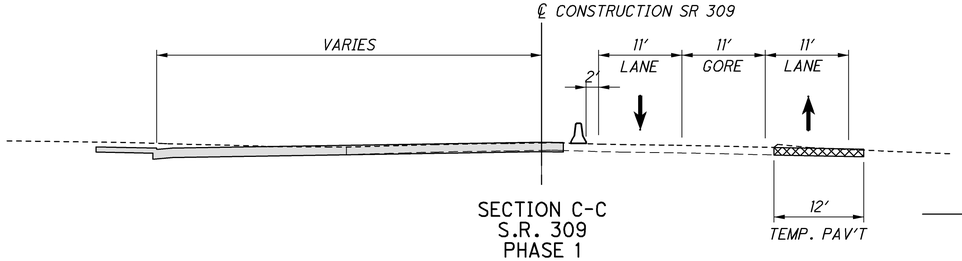

SECTION C-C
S.R. 309
PHASE 1

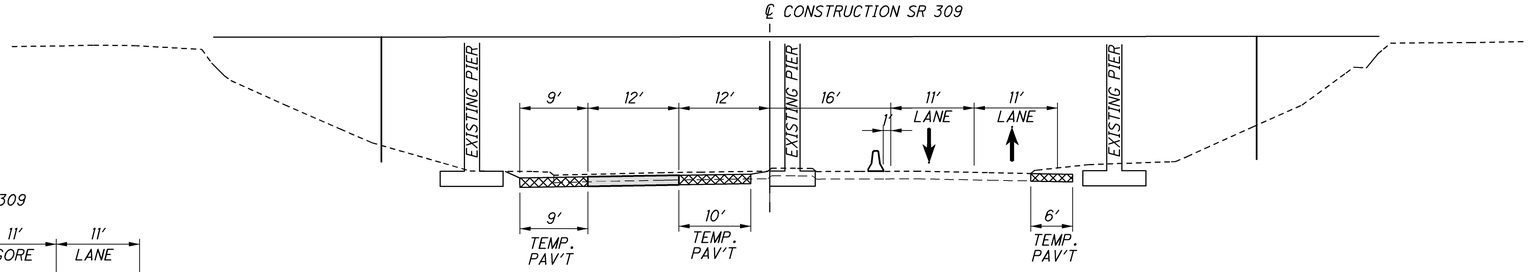

SECTION B-B
S.R. 309 UNDER I-75 BRIDGE
PHASE 1

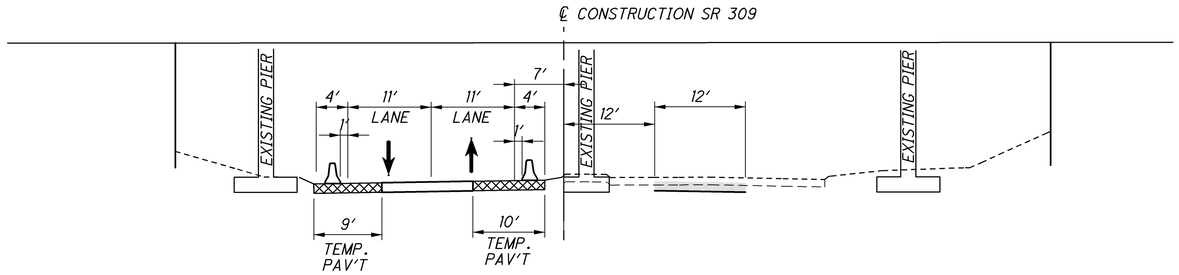

SECTION B-B
S.R. 309 UNDER I-75 BRIDGE
PHASE 2A

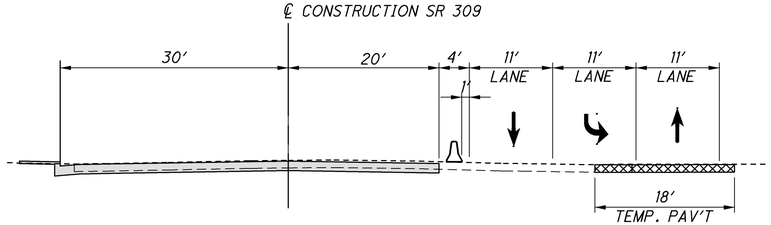

SECTION F-F
S.R. 309
PHASE 1

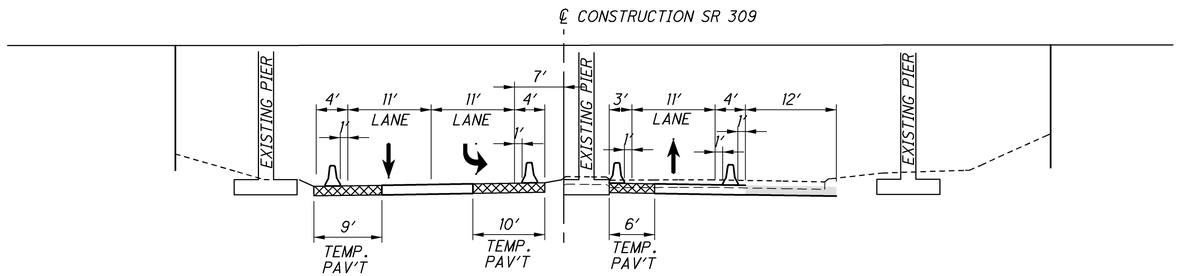

SECTION B-B
S.R. 309 UNDER I-75 BRIDGE
PHASE 2B

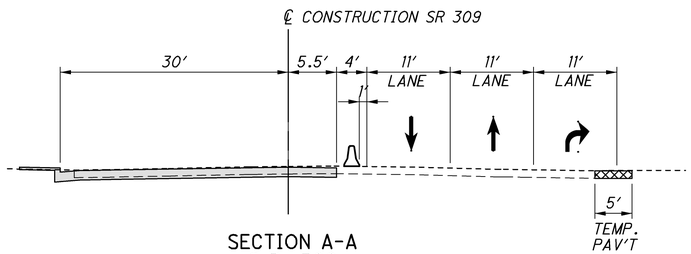

SECTION A-A
S.R. 309
PHASE 1

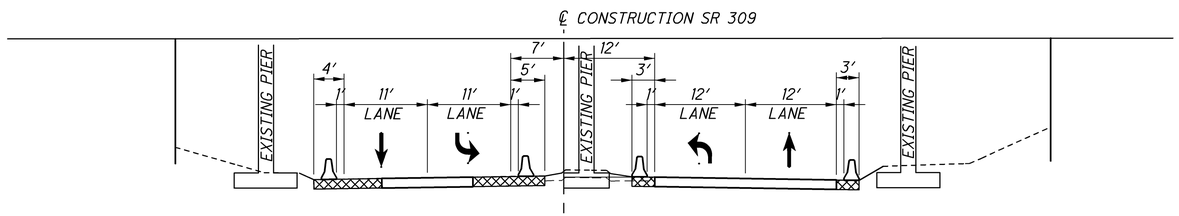

SECTION B-B
S.R. 309 UNDER I-75 BRIDGE
AFTER SR 309 PHASE 2 AND BEFORE I-75 PHASE 2

CALCULATED CAC
CHECKED EJC

MAINTENANCE OF TRAFFIC TYPICAL SECTION

ALL-75-5.53

J:\Projects\ALL\76691\mot\sheets\76691MY017.dgn 11-SEP-2012 8:49PM reddenj

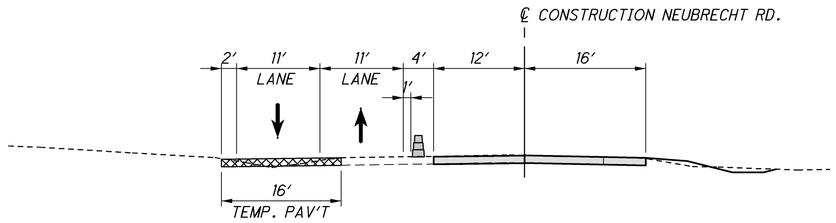

SECTION G-G
NEUBRECHT PHASE I

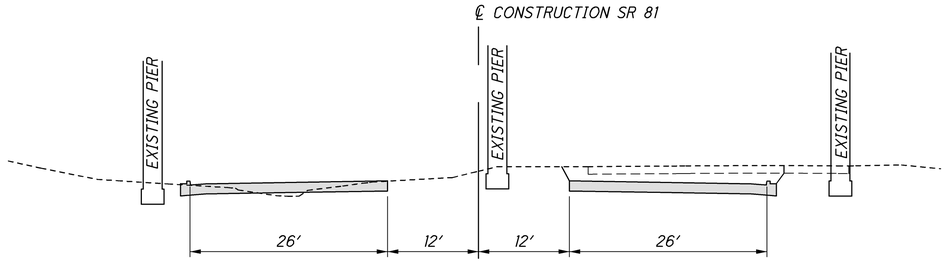

SECTION E-E
S.R. 81 UNDER I-75 BRIDGE
PHASE I

LEGEND:

- TEMPORARY PAVEMENT
- PROPOSED
- PORTABLE CONCRETE BARRIER (TO BE ANCHORED ON BRIDGES)
- DRUMS

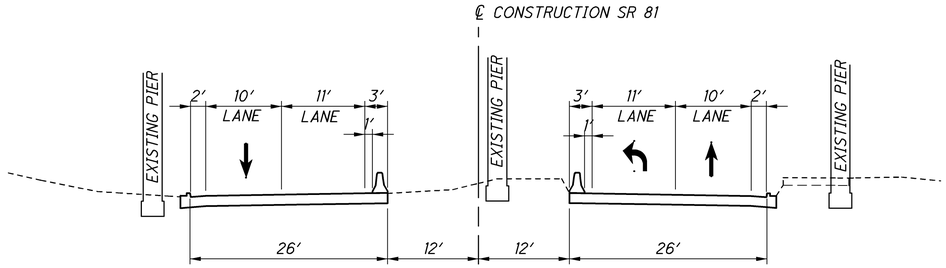

SECTION E-E
S.R. 81 UNDER I-75 BRIDGE
PHASE II

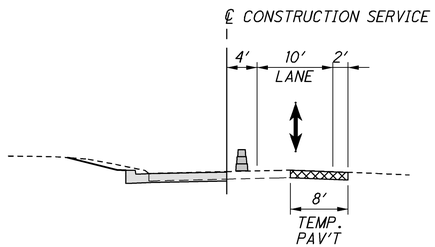

SECTION D-D
SERVICE ROAD #3 PHASE I & III

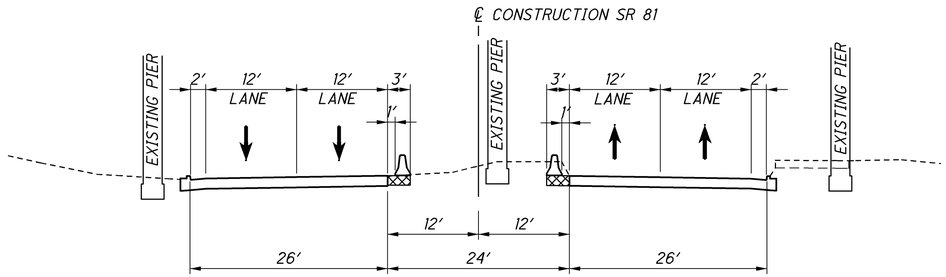

SECTION E-E
SR 81 UNDER I-75 BRIDGE
AFTER SR 81 PHASE 2 AND BEFORE I-75 PHASE 2

CALCULATED CAC
CHECKED EJC

MAINTENANCE OF TRAFFIC TYPICAL SECTION

ALL-75-5.53

J:\Projects\ALL\76691\mot\sheets\76691MY018.dgn 11-SEP-2012 8:49PM reddenj

4TH ST. RAMPS PHASE IA; I-75 PHASE I

NOTES:

1. COORDINATE RAMP CLOSURES BETWEEN ALL INTERCHANGES SO THAT CONSECUTIVE EXIT RAMPS AND ENTRANCE RAMPS ARE NOT CLOSED AT THE SAME TIME.

2. SEE M.O.T. DETAIL SHEETS 82 AND 64 FOR I-75 MAINLINE PHASING.

3. A PORTION OF RAMP 'A' CAN BE CONSTRUCTED WITHOUT THE NEED FOR THE CLOSURE AND SHOULD BE CONSTRUCTED PRIOR TO THE CLOSURE.

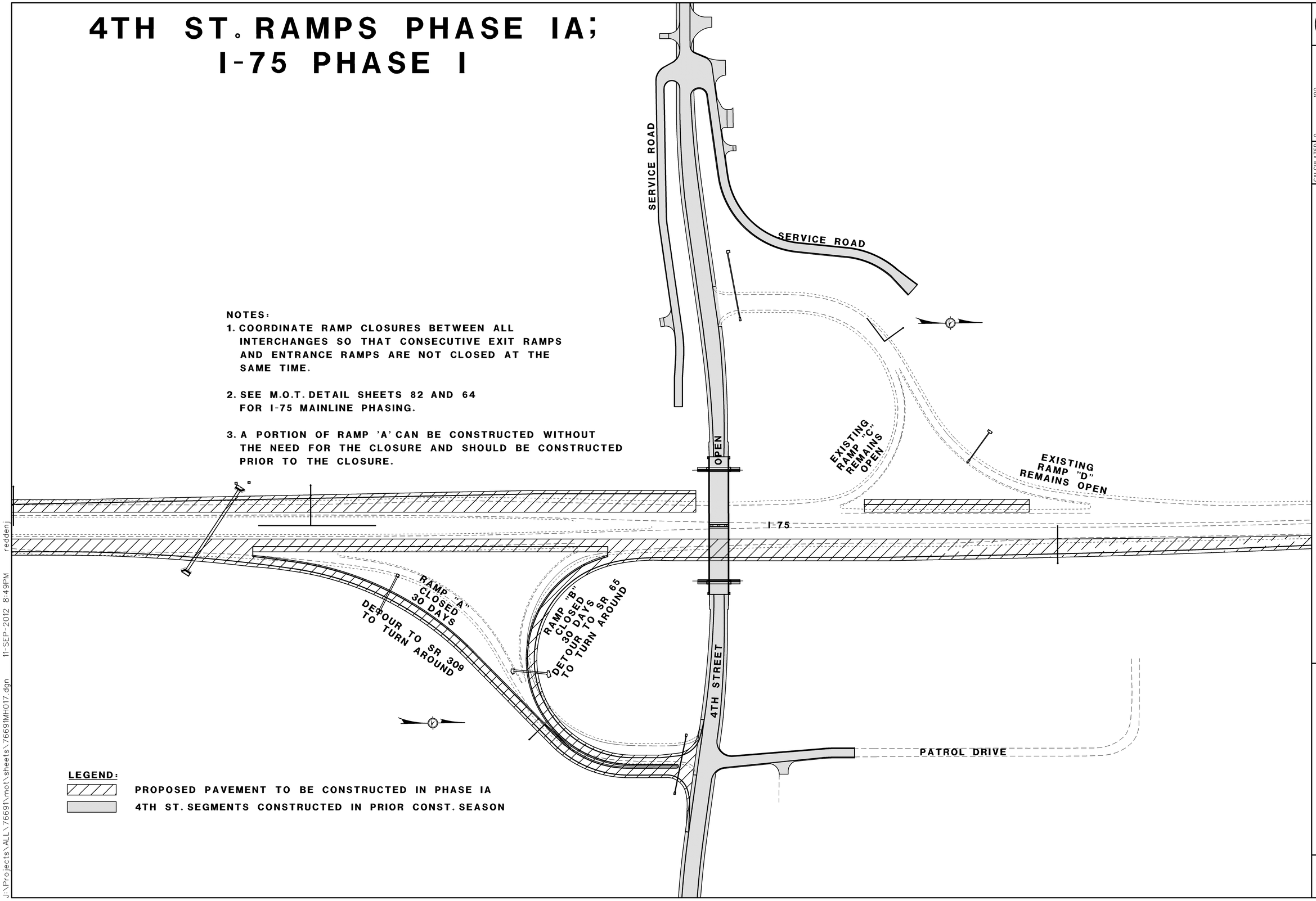

LEGEND:

PROPOSED PAVEMENT TO BE CONSTRUCTED IN PHASE IA

4TH ST. SEGMENTS CONSTRUCTED IN PRIOR CONST. SEASON

N

0 50 100 200 HORIZONTAL SCALE IN FEET

CALCULATED CAC
CHECKED EJC

I-75 MAINTENANCE OF TRAFFIC
PHASE IA, 4TH STREET RAMPS

ALL-75-5.53

74
1224

J:\Projects\ALL\76691\mot\sheets\76691MH017.dgn 11-SEP-2012 8:49PM reddenj

4TH ST. RAMPS PHASE IB; I-75 PHASE I

NOTES:

1. COORDINATE RAMP CLOSURES BETWEEN ALL INTERCHANGES SO THAT CONSECUTIVE EXIT RAMPS AND ENTRANCE RAMPS ARE NOT CLOSED AT THE SAME TIME.

2. SEE M.O.T. DETAIL SHEETS 82 AND 64 FOR I-75 MAINLINE PHASING.

3. A PORTION OF RAMP 'D' CAN BE CONSTRUCTED WITHOUT THE NEED FOR THE CLOSURE AND SHOULD BE CONSTRUCTED PRIOR TO THE CLOSURE.

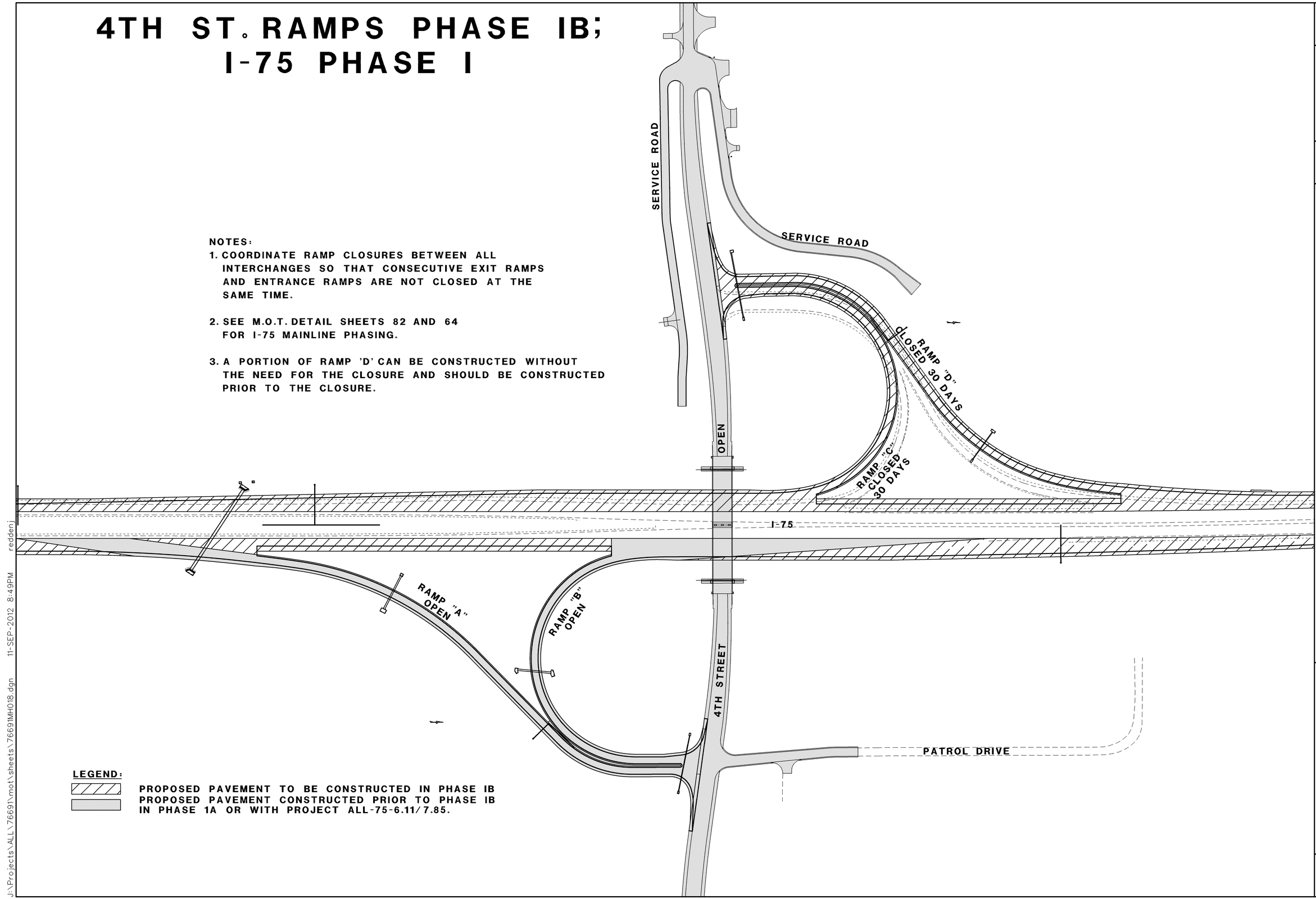

LEGEND:

PROPOSED PAVEMENT TO BE CONSTRUCTED IN PHASE IB
PROPOSED PAVEMENT CONSTRUCTED PRIOR TO PHASE IB IN PHASE 1A OR WITH PROJECT ALL-75-6.11/7.85.

N

0 50 100 200 HORIZONTAL SCALE IN FEET

CALCULATED CAC
CHECKED EJC

I-75 MAINTENANCE OF TRAFFIC
PHASE IB, 4TH STREET RAMPS

ALL-75-5.53

75
1224

J:\Projects\ALL\76691\mot\sheets\76691MH018.dgn 11-SEP-2012 8:49PM reddenj

SR 309 PHASE I;
I-75 PHASE I

LEGEND:

PROPOSED PAVEMENT TO BE CONSTRUCTED IN SR 309 PHASE I.

PAVEMENT FOR MAINTAINING TRAFFIC

NOTE:

1. COORDINATE RAMP CLOSURES BETWEEN ALL INTERCHANGES SO THAT CONSECUTIVE EXIT RAMPS AND ENTRANCE RAMPS ARE NOT CLOSED AT THE SAME TIME.

2. SR 309 PHASE I & II TO BE CONSTRUCTED ENTIRELY DURING PHASE I OF THE MAINLINE I-75 CONSTRUCTION.

EXIST. ENTRANCE RAMP "A" REMAINS OPEN

EXIST. EXIT RAMP "B" REMAINS OPEN

RAMP "A"

SR 309

RAMP "C" CLOSED 127 DAYS MAX.

I-75

RAMP "E"

EXIST. RAMP "E" CLOSED 127 DAYS MAX.

ANCHOR ASSEMBLY, TYPE T

BRYN MAWR AVE.

DEAN AVE.

INSTALL TEMPORARY GUARDRAIL FOR USE DURING 1ST SEASON OF CONSTRUCTION

ANCHOR ASSEMBLY, TYPE E-98

EXIST. ENTRANCE RAMP "G" REMAINS OPEN

EXIST. EXIT RAMP "F" REMAINS OPEN

SARATOGA AVE.

INSTALL LANE AND PERMIT W.B. S.R. 309 TRAFFIC TO ENTER N.B. LOOP RAMP WHILE RAMP "E" IS UNDER CONSTRUCTION.

WELLESLEY DR.

LOST CREEK BLVD.

HORIZONTAL SCALE IN FEET
0 50 100 200

CALCULATED CAC
CHECKED EJC

I-75 MAINTENANCE OF TRAFFIC
SR 309 PHASE I

ALL-75-5.53

76
1224

J:\Projects\ALL\76691\mot\sheets\76691MH020.dgn 11-SEP-2012 8:49PM reddenj

SR 309 PHASE IIA & IIB; I-75 PHASE I

LEGEND:

- PROPOSED PAVEMENT TO BE CONSTRUCTED IN SR 309 PHASE IIA.
- PROPOSED PAVEMENT CONSTRUCTED PRIOR TO SR 309 PHASE IIA.
- PROPOSED PAVEMENT TO BE CONSTRUCTED IN SR 309 PHASE IIB.

NOTE:

1. COORDINATE RAMP CLOSURES BETWEEN ALL INTERCHANGES SO THAT CONSECUTIVE EXIT RAMPS AND ENTRANCE RAMPS ARE NOT CLOSED AT THE SAME TIME.
2. SR 309 PHASE I & II TO BE CONSTRUCTED ENTIRELY DURING PHASE I OF THE MAINLINE I-75 CONSTRUCTION.

EXIST. ENTRANCE RAMP "A" CLOSED

EXIST. EXIT RAMP "B" CLOSED

RAMP "A" OPEN IN PHASE IIB

DETOUR TRAFFIC TO S.R. 81 INTERCHANGE TO TURN AROUND

SR 309

RAMP "C" OPEN

I-75

RAMP "F" OPEN IN PHASE IIB

CLOSED

RAMP "E" OPEN

EXIST. RAMP "E" CLOSED

DEAN AVE.

BRYN MAWR AVE.

EXIST. ENTRANCE RAMP "G" CLOSED

EXIST. EXIT RAMP "F" REMAINS OPEN DURING PHASE IIA

SARATOGA AVE.

WELLESLEY DR.

LOST CREEK BLVD.

HORIZONTAL SCALE IN FEET
0 50 100 200

CALCULATED CAC
CHECKED EJC

I-75 MAINTENANCE OF TRAFFIC SR 309 PHASE II

ALL-75-5.53

77
1224

J:\Projects\ALL\76691\mot\sheets\76691MH021.dgn 11-SEP-2012 8:49PM reddenj

I-75 PHASE II

LEGEND:

PROPOSED PAVEMENT CONSTRUCTED PRIOR TO I-75 PHASE II CONSTRUCTION

PHASE II WORK AREA

NOTE:

1. COORDINATE RAMP CLOSURES BETWEEN ALL INTERCHANGES SO THAT CONSECUTIVE EXIT RAMPS AND ENTRANCE RAMPS ARE NOT CLOSED AT THE SAME TIME.

EXIST. ENTRANCE RAMP "A" CLOSED

EXIST. EXIT RAMP "B" CLOSED

RAMP "A" OPEN

RAMP "C" OPEN

SR 309 OPEN

I-75

RAMP "F" OPEN

RAMP "E" OPEN

EXIST. RAMP "E" CLOSED

BRYN MAWR AVE.

DEAN AVE.

EXIST. ENTRANCE RAMP "G" CLOSED

EXIST. EXIT RAMP "F" CLOSED

SARATOGA AVE.

WELLESLEY DR.

LOST CREEK BLVD.

C — ROAD CLOSED TO THRU TRAFFIC — R11-4-60

D — ROAD CLOSED 0.08 MILES AHEAD LOCAL TRAFFIC ONLY — R11-3A-60

THIS SIGN IS TO BE PLACED AT THE FOLLOWING INTERSECTIONS:
LOST CREEK BLVD. AND WILLARD AVE.
BRYN MAWR AVE. AND CHEVY CHASE.

A — R11-2 ROAD CLOSED; R11-2 ROAD CLOSED

B — ROAD CLOSED LOCAL TRAFFIC ONLY — R11-3-66

SOLID ACROSS INTERSECTION
TYPE III BARRICADES PER MT-101.60

LEGEND:
- SIGN
- TYPE III BARRICADE

HORIZONTAL SCALE IN FEET: 0, 50, 100, 200

CALCULATED CAC
CHECKED EJC

I-75 MAINTENANCE OF TRAFFIC
I-75 PHASE II, SR 309 RAMPS STATUS
ALL-75-5.53

78
1224

J:\Projects\ALL\76691\mot\sheets\76691MH022.dgn 11-SEP-2012 8:49PM reddenj

S.R. 81 PHASE I;
I-75 PHASE I

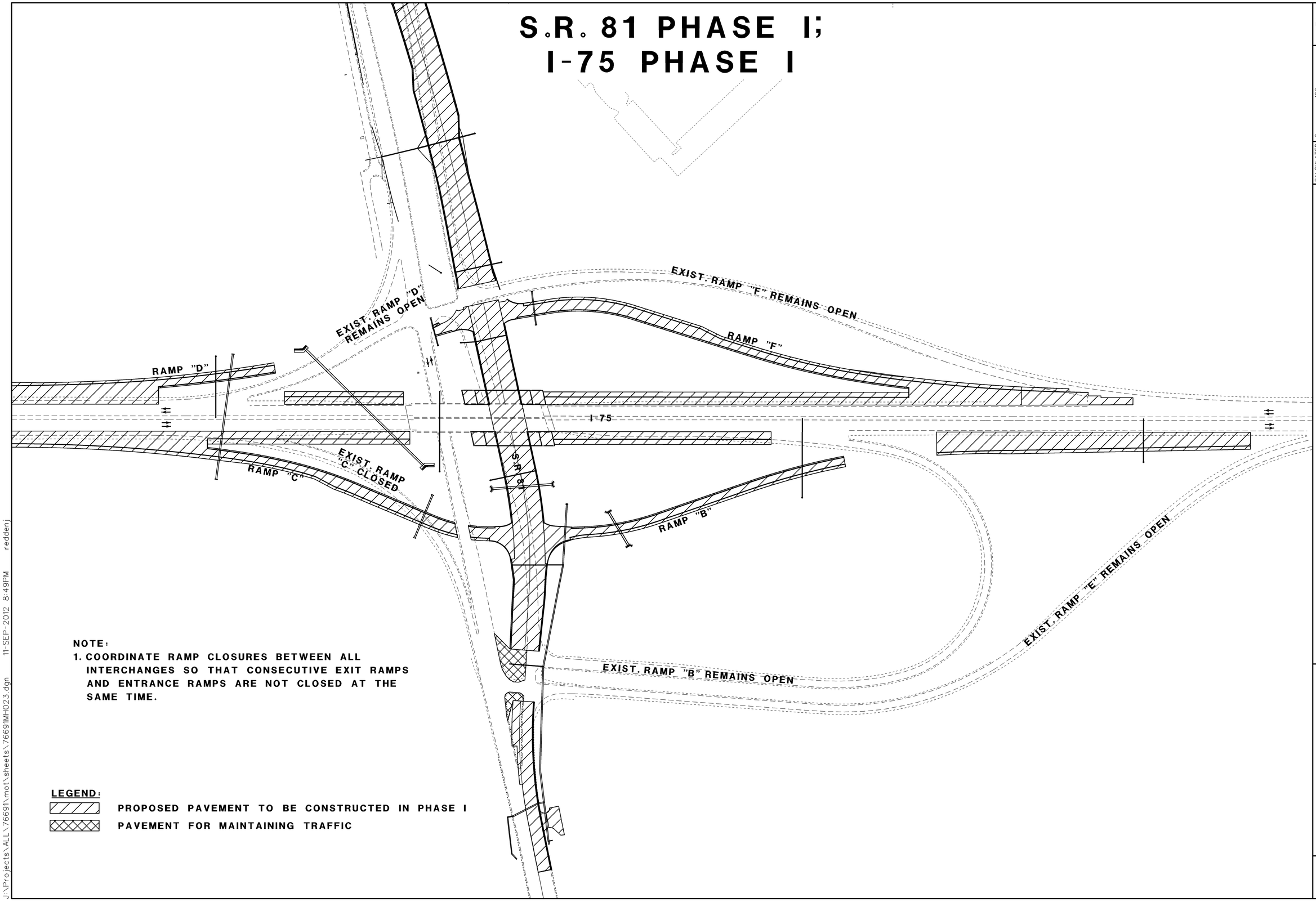

NOTE:

1. COORDINATE RAMP CLOSURES BETWEEN ALL INTERCHANGES SO THAT CONSECUTIVE EXIT RAMPS AND ENTRANCE RAMPS ARE NOT CLOSED AT THE SAME TIME.

LEGEND:

- PROPOSED PAVEMENT TO BE CONSTRUCTED IN PHASE I
- PAVEMENT FOR MAINTAINING TRAFFIC

HORIZONTAL SCALE IN FEET
0 50 100 200

CALCULATED CAC
CHECKED EJC

I-75 MAINTENANCE OF TRAFFIC
S.R. 81 PHASE I

ALL-75-5.53

79
1224

J:\Projects\ALL\76691\mot\sheets\76691MH023.dgn 11-SEP-2012 8:49PM reddenj

S.R. 81 PHASE II;
I-75 PHASE I

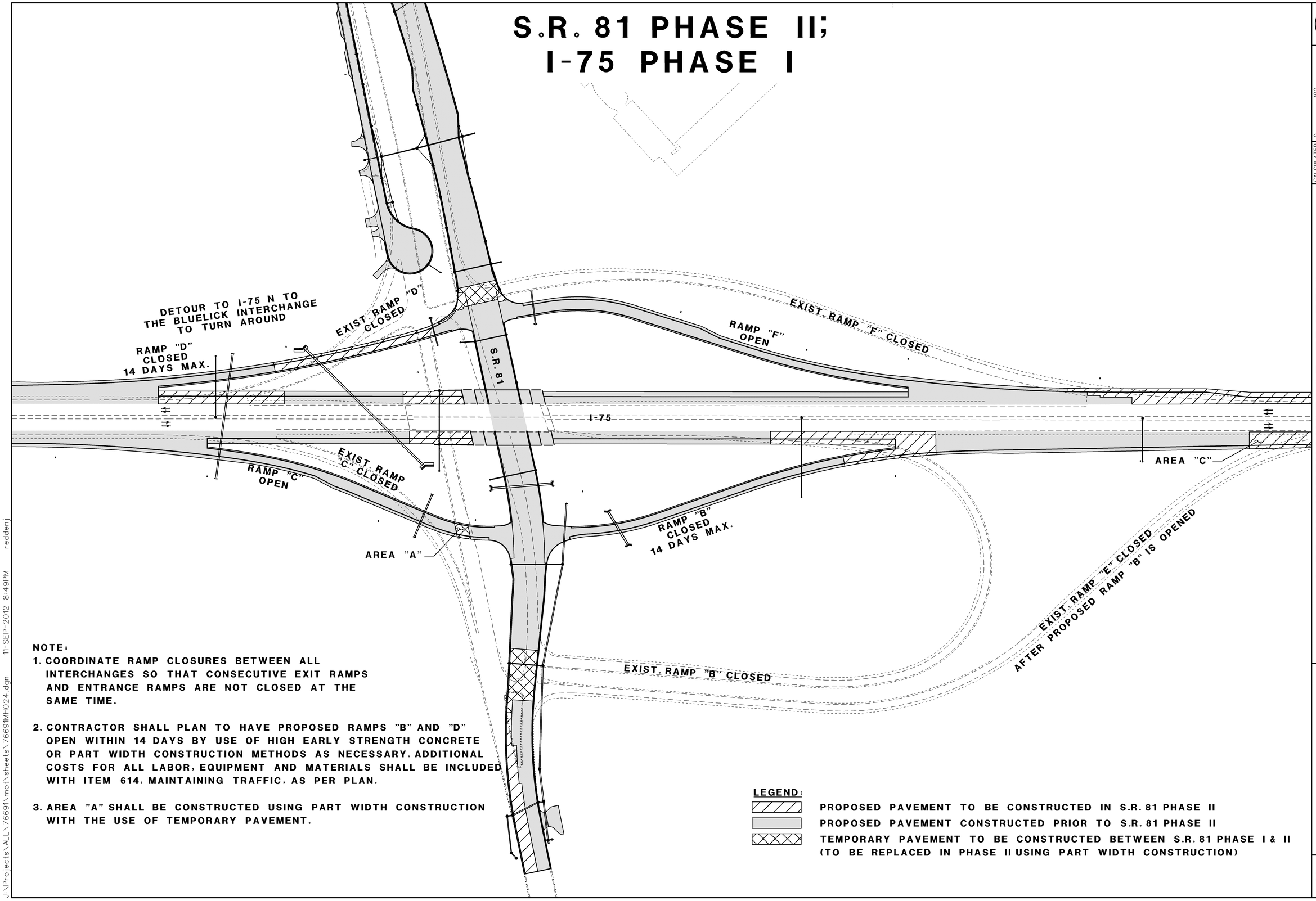

NOTE:

1. COORDINATE RAMP CLOSURES BETWEEN ALL INTERCHANGES SO THAT CONSECUTIVE EXIT RAMPS AND ENTRANCE RAMPS ARE NOT CLOSED AT THE SAME TIME.

2. CONTRACTOR SHALL PLAN TO HAVE PROPOSED RAMPS "B" AND "D" OPEN WITHIN 14 DAYS BY USE OF HIGH EARLY STRENGTH CONCRETE OR PART WIDTH CONSTRUCTION METHODS AS NECESSARY. ADDITIONAL COSTS FOR ALL LABOR, EQUIPMENT AND MATERIALS SHALL BE INCLUDED WITH ITEM 614, MAINTAINING TRAFFIC, AS PER PLAN.

3. AREA "A" SHALL BE CONSTRUCTED USING PART WIDTH CONSTRUCTION WITH THE USE OF TEMPORARY PAVEMENT.

LEGEND:

- PROPOSED PAVEMENT TO BE CONSTRUCTED IN S.R. 81 PHASE II
- PROPOSED PAVEMENT CONSTRUCTED PRIOR TO S.R. 81 PHASE II
- TEMPORARY PAVEMENT TO BE CONSTRUCTED BETWEEN S.R. 81 PHASE I & II (TO BE REPLACED IN PHASE II USING PART WIDTH CONSTRUCTION)

N

0 50 100 200 HORIZONTAL SCALE IN FEET

CALCULATED CAC | CHECKED EJC

I-75 MAINTENANCE OF TRAFFIC S.R. 81 PHASE II

ALL-75-5.53

80
1224

J:\Projects\ALL\76691\mot\sheets\76691MH024.dgn 11-SEP-2012 8:49PM reddenj

I-75 PHASE II

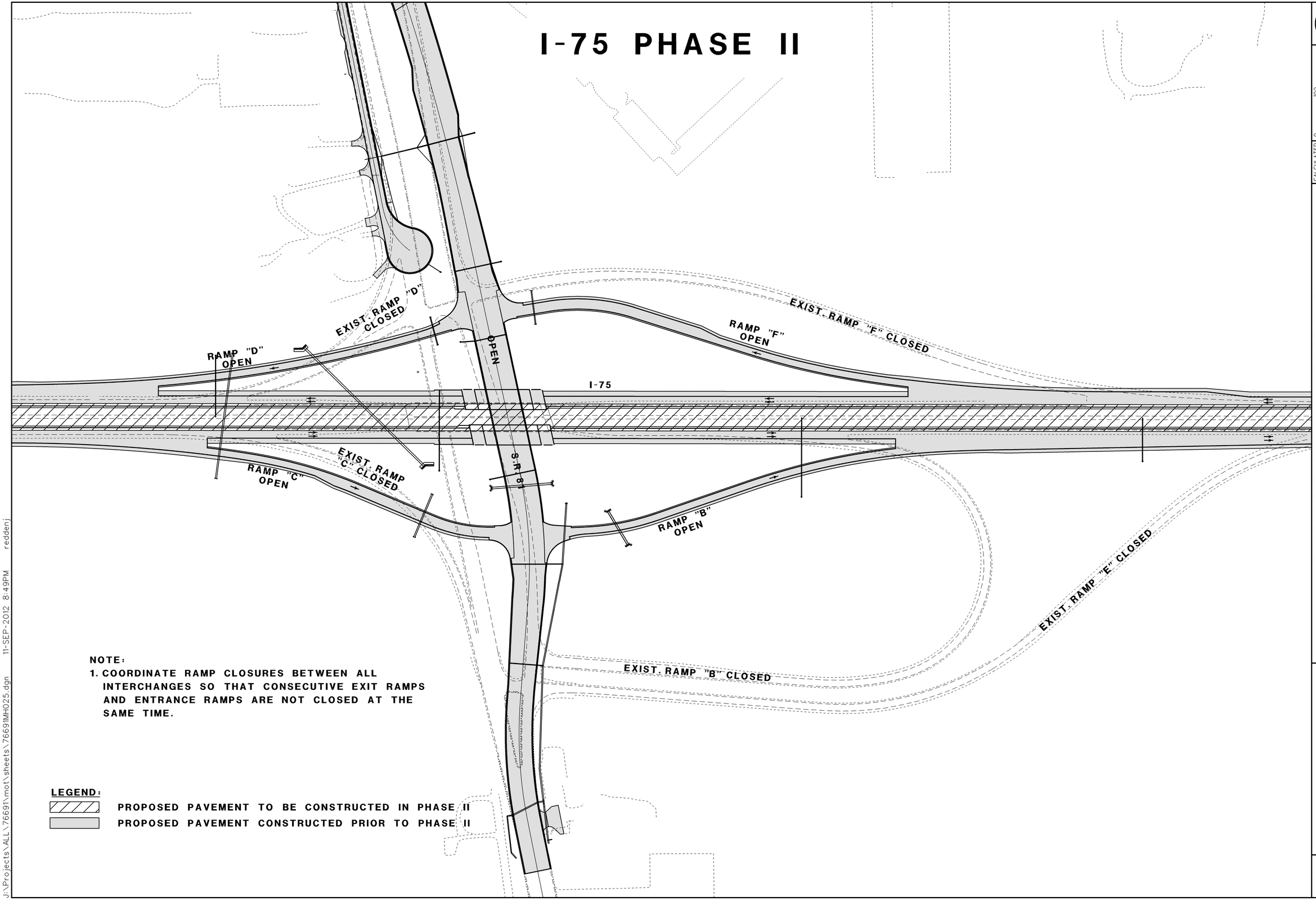

NOTE:

1. COORDINATE RAMP CLOSURES BETWEEN ALL INTERCHANGES SO THAT CONSECUTIVE EXIT RAMPS AND ENTRANCE RAMPS ARE NOT CLOSED AT THE SAME TIME.

LEGEND:

PROPOSED PAVEMENT TO BE CONSTRUCTED IN PHASE II

PROPOSED PAVEMENT CONSTRUCTED PRIOR TO PHASE II

HORIZONTAL SCALE IN FEET
0 50 100 200

CALCULATED CAC
CHECKED EJC

I-75 MAINTENANCE OF TRAFFIC
I-75 PHASE II, SR 81 RAMPS STATUS

ALL-75-5.53

81
1224

J:\Projects\ALL\76691\mot\sheets\76691MH025.dgn 11-SEP-2012 8:49PM reddenj

TRANSITION BETWEEN SOUTH & NORTH SECTIONS

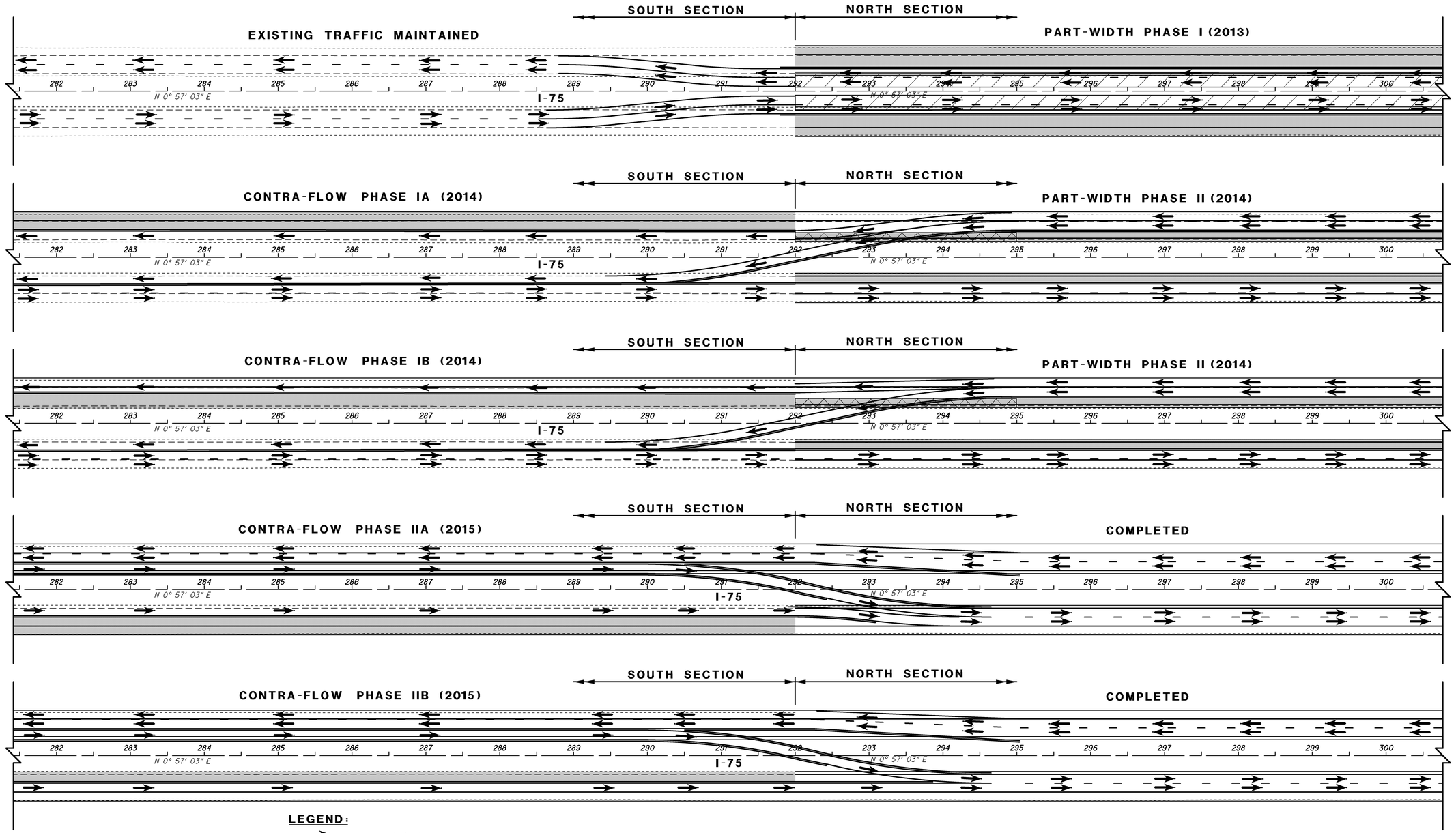

LEGEND:

- TRAVEL LANE
- LANE LINE
- PORTABLE CONCRETE BARRIER
- PROPOSED PAVEMENT TO BE CONSTRUCTED
- TEMPORARY PAVEMENT
- CONSTRUCT IN PRE-PHASE BEFORE SOUTH SECTION BEGINS SO THAT CROSSOVER DOES NOT NEED TO SLIDE DOWN STATION

N

0 35 70 140
HORIZONTAL SCALE IN FEET

CALCULATED CAC
CHECKED EJC

MAINTENANCE OF TRAFFIC
TRANSITION BETWEEN SOUTH & NORTH SECTIONS

ALL-75-5.53

82
1224

J:\Projects\ALL\76691\mot\sheets\76691MM001.dgn 11-SEP-2012 8:49PM reddenj

TRANSITION BETWEEN PART-WIDTH & EXISTING PAVEMENT

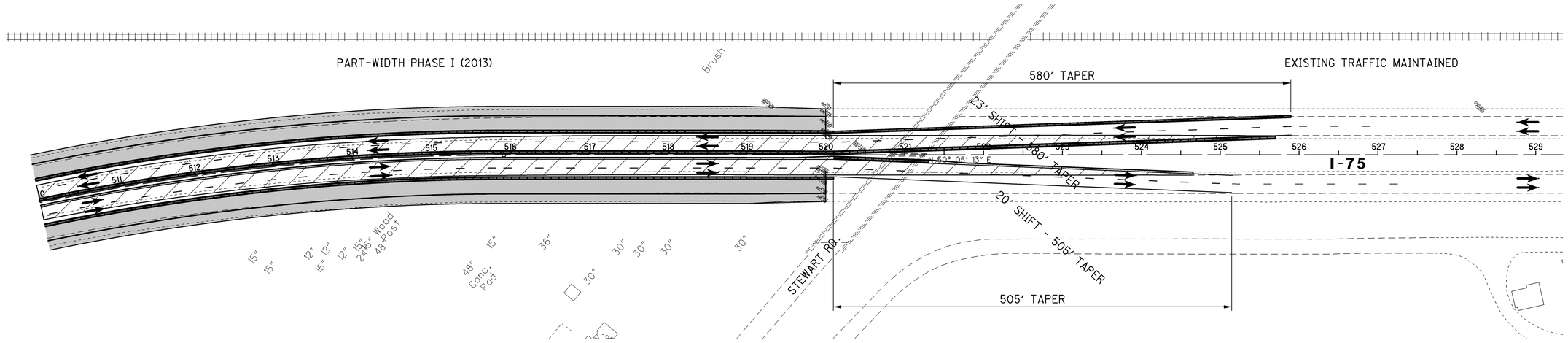

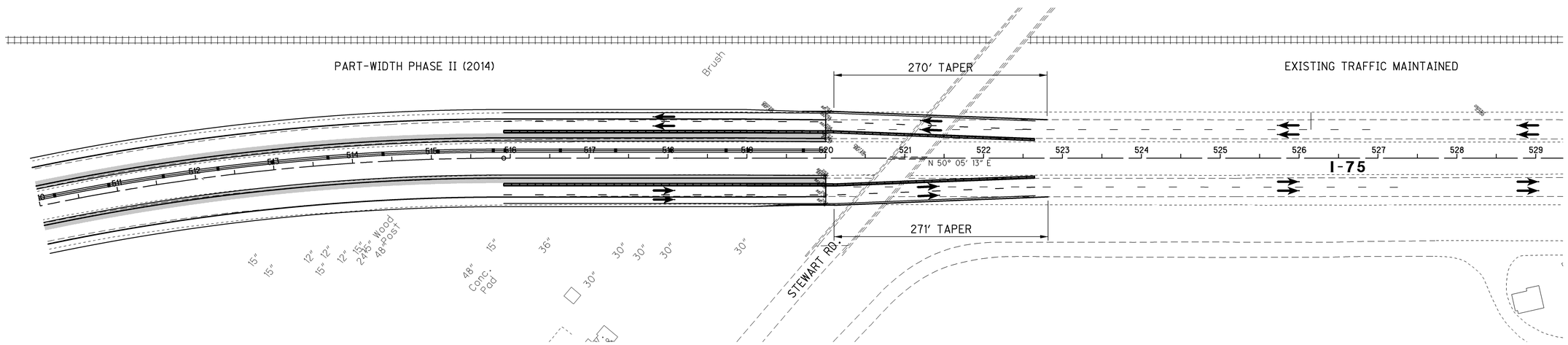

LEGEND:

- TRAVEL LANE
- LANE LINE
- PORTABLE CONCRETE BARRIER
- PROPOSED PAVEMENT TO BE CONSTRUCTED
- TEMPORARY PAVEMENT

HORIZONTAL SCALE IN FEET
0 35 70 140

CALCULATED CAC
CHECKED EJC

MAINTENANCE OF TRAFFIC
TRANSITION BETWEEN PART-WIDTH & EXISTING

ALL-75-5.53

J:\Projects\ALL\76691\mot\sheets\76691MM002.dgn 11-SEP-2012 8:49PM reddenj

CROSSOVER 1 CURVE 1
P.I. Sta. 10+66.78
Δ = 8° 00′ 00″ (LT)
Dc = 6° 00′ 00″
R = 954.93′
T = 66.78′
L = 133.33′
E = 2.33′
C = 133.23′
C.B. = N 3° 02′ 57″ W

CROSSOVER 1 CURVE 2
P.I. Sta. 15+76.71
Δ = 8° 00′ 00″ (RT)
Dc = 6° 00′ 00″
R = 954.93′
T = 66.78′
L = 133.33′
E = 2.33′
C = 133.23′
C.B. = N 3° 02′ 57″ W

END PROJECT ALL-75-0.21
PID 89029
STA. 292+00.00
BEGIN PROJECT ALL-75-5.53
PID 76691
STA. 292+00.00

NOTES:
THIS CROSSOVER IS TO BE USED BETWEEN PHASE II OF ALL-75-5.53 PROJECT AND PHASE I OF THE ALL-75-0.21 PROJECT AND IS TO BE CONSTRUCTED AS PART OF THE ALL-75-0.21 PROJECT.

SEE STD. DWG. MT-95.70 FOR ADDITIONAL CROSSOVER DETAILS AND NOTES, INCLUDING INFORMATION REGARDING USE OF 50″ PCB, AS PER PLAN.

SEE STD. DWG. MT-100.00 FOR CROSSOVER LIGHTING DETAILS.

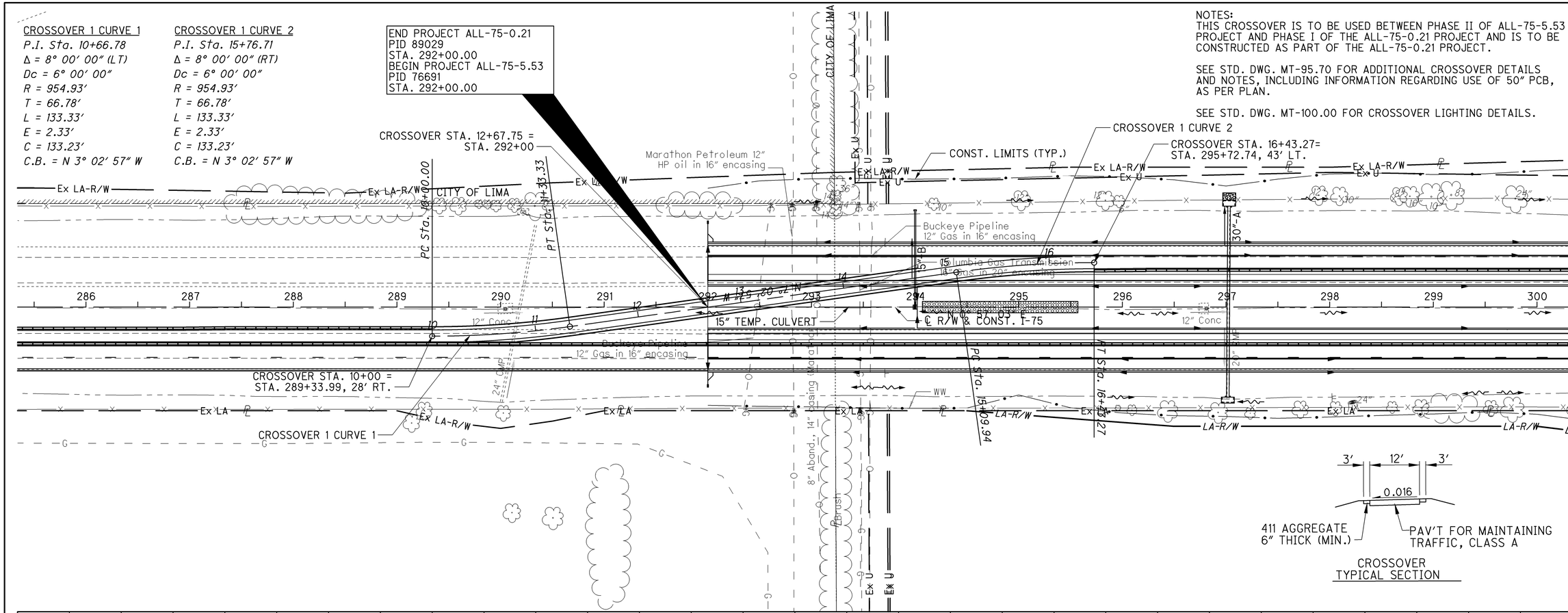

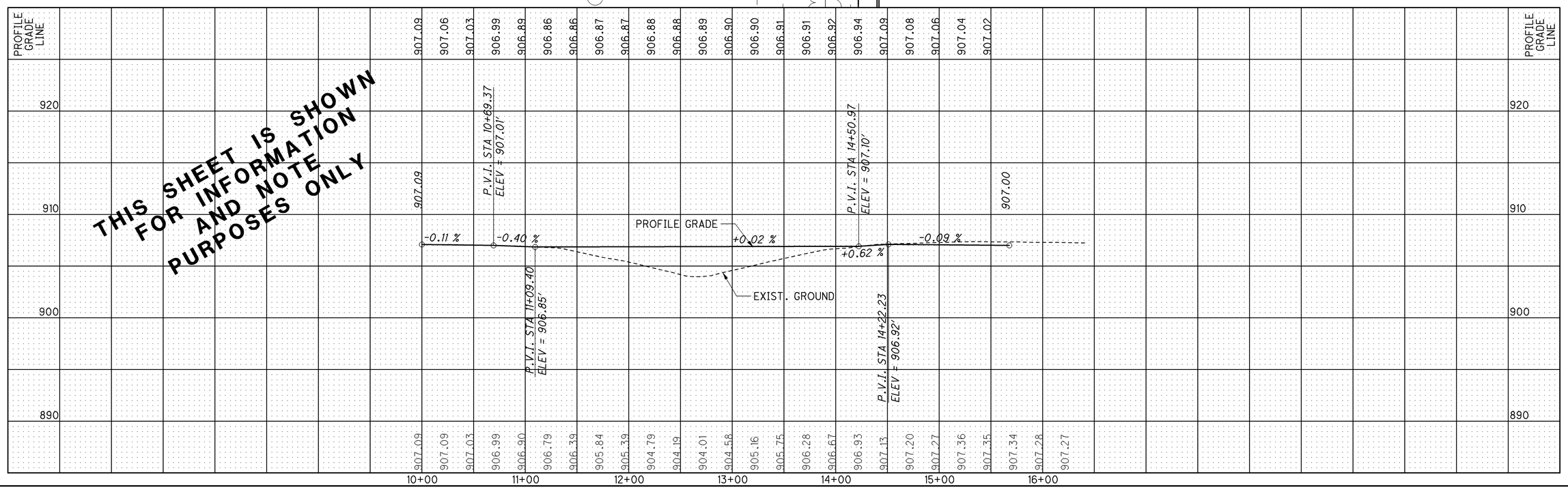

THIS SHEET IS SHOWN FOR INFORMATION AND NOTE PURPOSES ONLY

HORIZONTAL SCALE IN FEET 0 25 50 100

CALCULATED CAC
CHECKED EJC

PLAN AND PROFILE
MAINTENANCE OF TRAFFIC CROSSOVER 1

ALL-75-5.53

J:\Projects\ALL\76691\mot\sheets\76691MP100.dgn 11-SEP-2012 8:49PM reddenj

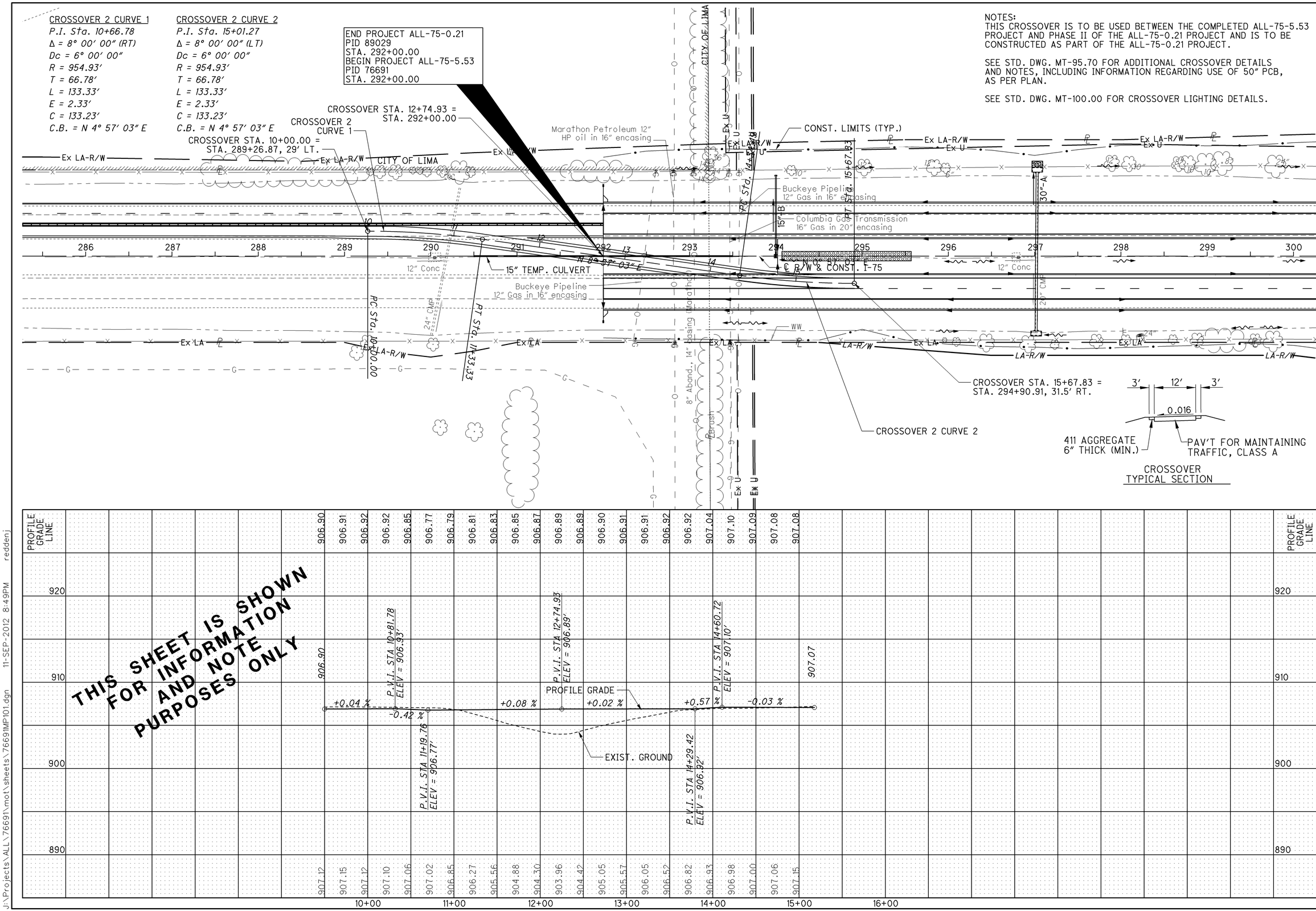

NOTES:
THIS CROSSOVER IS TO BE USED BETWEEN THE COMPLETED ALL-75-5.53 PROJECT AND PHASE II OF THE ALL-75-0.21 PROJECT AND IS TO BE CONSTRUCTED AS PART OF THE ALL-75-0.21 PROJECT.

SEE STD. DWG. MT-95.70 FOR ADDITIONAL CROSSOVER DETAILS AND NOTES, INCLUDING INFORMATION REGARDING USE OF 50″ PCB, AS PER PLAN.

SEE STD. DWG. MT-100.00 FOR CROSSOVER LIGHTING DETAILS.

HORIZONTAL SCALE IN FEET 0 25 50 100

CALCULATED CAC
CHECKED EJC

PLAN AND PROFILE
MAINTENANCE OF TRAFFIC CROSSOVER 2

ALL-75-5.53

J:\Projects\ALL\76691\mot\sheets\76691MP101.dgn 11-SEP-2012 8:49PM reddenj

SEE NOTE 3a

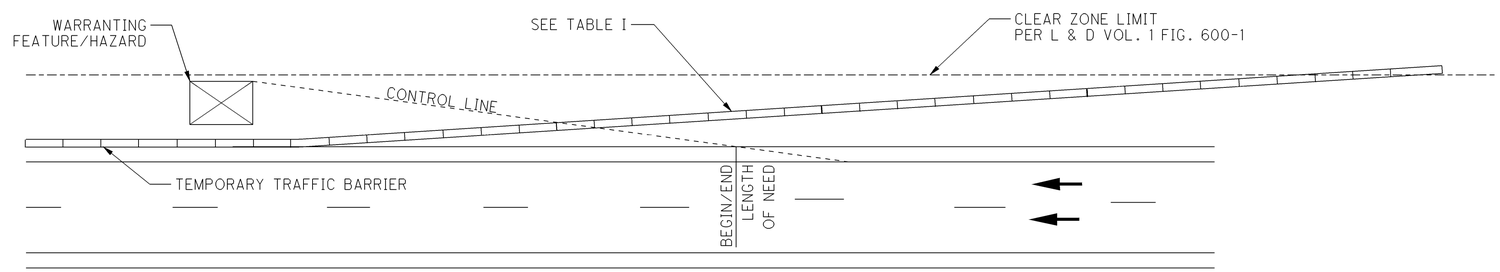

SEE NOTE 3b

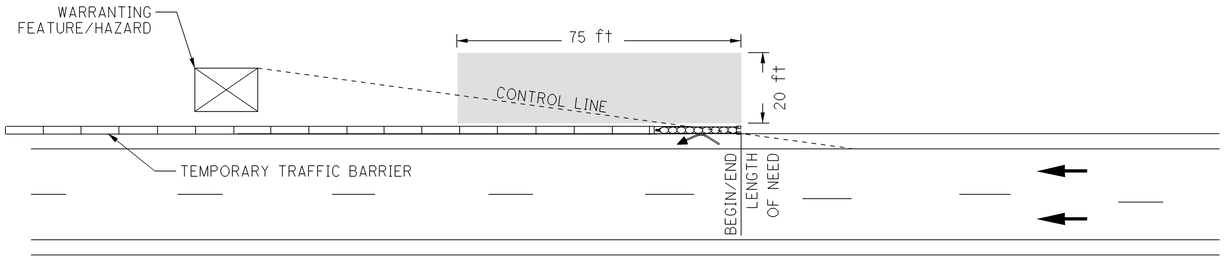

SEE NOTE 3c

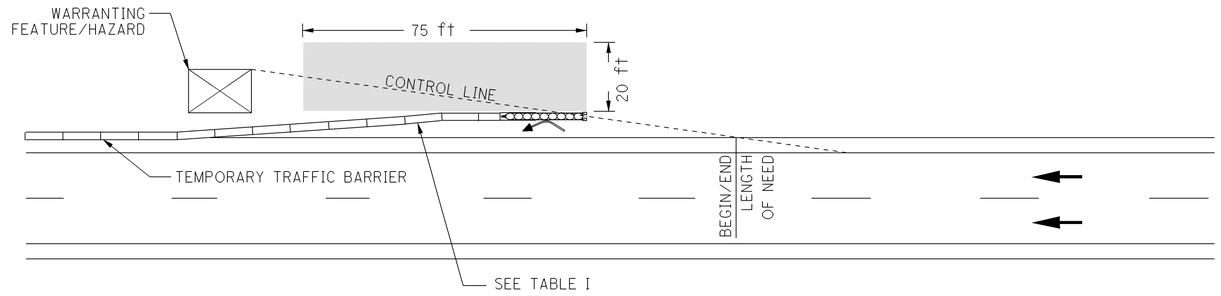

TABLE I

SPEED LIMIT (MPH)	PCB FLARE RATE MINIMUM
25	8:1
30	8:1
35	10:1
40	11:1
45	13:1
50	14:1
55	16:1
60	17:1
65	19:1

NOTES

1. Attenuators shall be installed per manufacturers' specifications.
2. Recovery area shall have slopes 3:1 or flatter and be free of workers, hazards, equipment, drop-offs, and material storage.
3. The Contractor shall select one of the three acceptable options for terminating temporary traffic barrier:
   a) Terminate flared section of temporary traffic barrier outside clear zone with tapered end only where cross slopes are 10:1 or flatter.
   b) Terminate temporary traffic barrier with an impact attenuator. A non-gating attenuator may be included in the length of need measurement.
   c) Flare a section of temporary traffic barrier to the length of need control line and terminate with an impact attenuator. A non-gating impact attenuator may be included in the flared section of temporary traffic barrier.
4. The Contractor shall submit documentation, 2 weeks prior to implementation, to the Engineer for acceptance when:
   a) Deviating from the three acceptable options for terminating temporary traffic barrier.

      Documentation shall explain any deviations and verify that the recovery area fulfills the manufacturers' specifications and note 2.

   b) Using a gating impact attenuator in lieu of a non-gating impact attenuator.

      The gating impact attenuator length shall not be included as part of the length of need or recovery area requirements. Additional temporary traffic barrier will need to be added. The additional cost for the additional barrier required for a gating impact attenuator shall be included in the cost of the gating impact attenuator.

      Documentation shall verify that the extended recovery area fulfills the manufacturers' specifications and note 2.
5. Gating impact attenuators shall not be used in gore locations or within the clear zone between bi-directional traffic.

LEGEND

RECOVERY AREA

TEMPORARY TRAFFIC BARRIER

NON-GATING IMPACT ATTENUATOR

DIRECTION OF TRAVEL

OFFICE OF TRAFFIC ENGINEERING

DESIGNED MER | REVIEWED

REVISION DATE 10/21/11 | CHECKED LAM

PIS NUMBER 2010175

PLAN INSERT SHEET

IMPACT ATTENUATOR PLACEMENT

ALL-75-5.53

J:\Projects\ALL\76691\mot\sheets\76691MM006.dgn 11-SEP-2012 8:49PM redden j

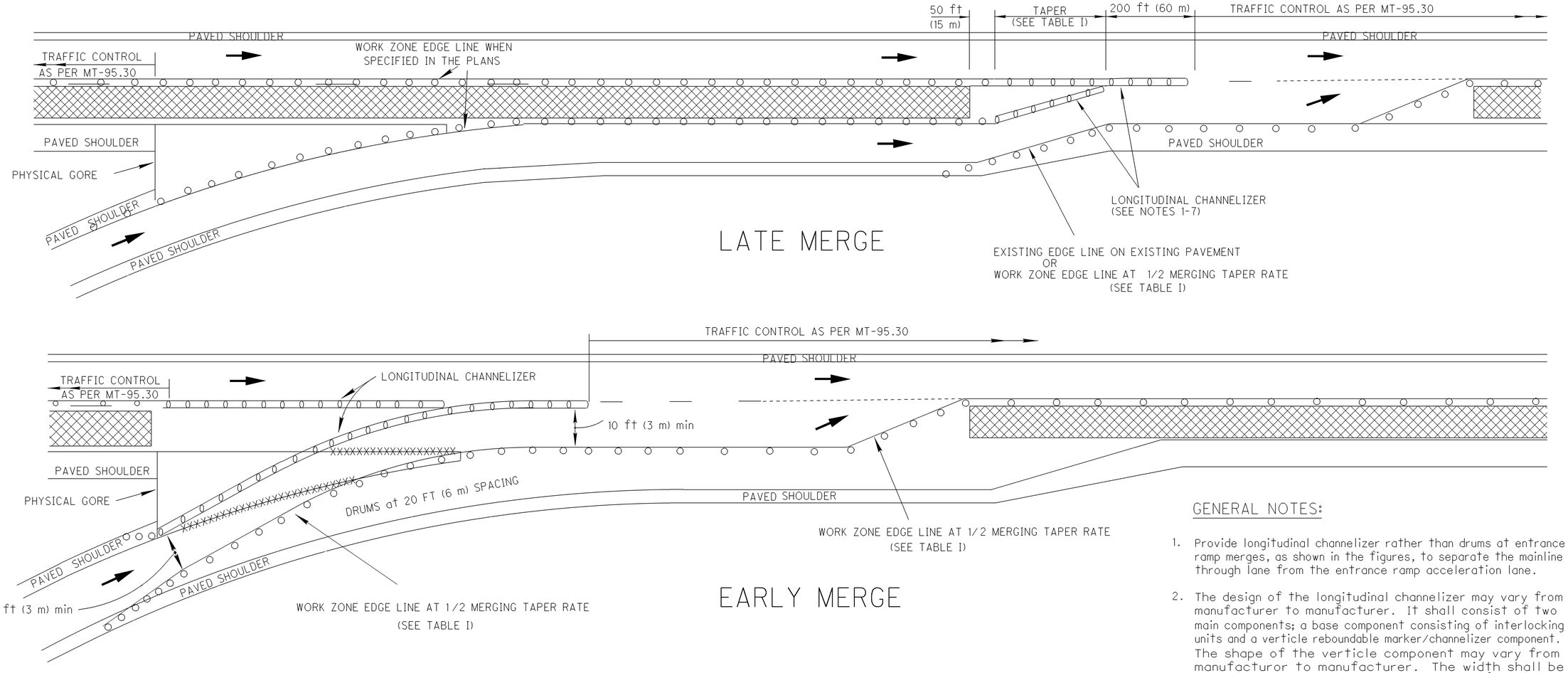

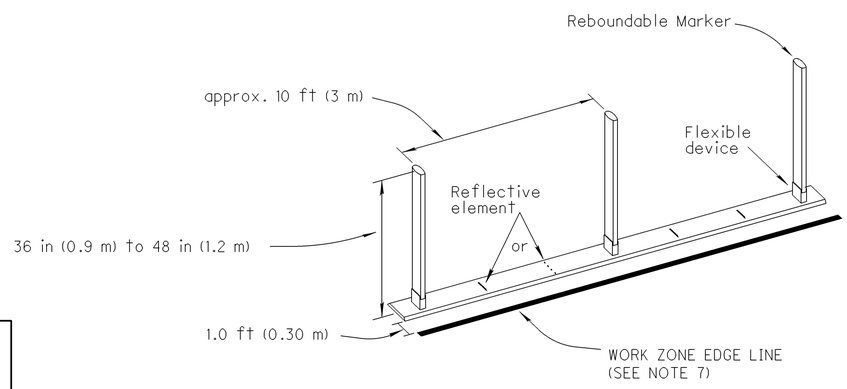

LEGEND

- WORK AREA
- DRUMS
- LONGITUDINAL CHANNELIZER
- REMOVE EXISTING MARKINGS
- DIRECTION OF TRAVEL

TABLE I

SPEED LIMIT (MPH)	MERGING TAPER RATE MINIMUM	1/2 MERGING TAPER RATE MINIMUM	SHOULDER TAPER RATE MINIMUM
25	11:1	6:1	4:1
30	15:1	8:1	5:1
35	21:1	11:1	7:1
40	27:1	14:1	9:1
45	45:1	23:1	15:1
50	50:1	25:1	17:1
55	55:1	28:1	18:1
60	60:1	30:1	20:1
65	65:1	33:1	22:1

GENERAL NOTES:

1. Provide longitudinal channelizer rather than drums at entrance ramp merges, as shown in the figures, to separate the mainline through lane from the entrance ramp acceleration lane.
2. The design of the longitudinal channelizer may vary from manufacturer to manufacturer. It shall consist of two main components; a base component consisting of interlocking units and a verticle reboundable marker/channelizer component. The shape of the verticle component may vary from manufacturor to manufacturer. The width shall be approximately 8 to 9 inches (200 to 230 mm) for eliptical designs and 4 to 6 inches (100 to 150 mm) for round (tubular) designs. The height of the vertical componant shall be within the range of 36 inches (0.9 m) minimum to 48 inches (1.2 m) maximum.
3. The longitudinal channelizer shall be NCHRP 350 compliant.
4. The vertical component shall be equipped with retro-reflective sheeting or with retro-reflective stripes. Where stripes are used, the stripes shall consist of two 3-inch wide bands placed a maximum of 2-inches from the top with a maximum of 6 inches between the bands.
5. The base component shall be equipped with reflectors.
6. The color of the base componant, including the attached reflectors, and of the retro-reflective sheeting or bands for the vertical componants shall be in conformance with the pavement marking colors established in the OMUTCD.
7. Where edge line is provided adjacent to the longitudinal channelizer, the edge line should be located 1 foot (0.30 m) from the longitudinal channelizer. The edge line should be provided if the resulting lane width would be 11 feet (3.3 m) or greater.
8. For additional information regarding traffic control at entrance ramps, see Standard Construction Drawings MT-98.10 and MT-98.11.

OFFICE OF TRAFFIC ENGINEERING

DESIGNED SHB | REVIEWED SHB

REVISION DATE 04/17/09 Corrected | CHECKED LAM

PIS NUMBER 2010180

PLAN INSERT SHEET

LONGITUDINAL CHANNELIZER DETAIL

ALL-75-5.53

87
1224

J:\Projects\ALL\76691\mot\sheets\76691MM007.dgn 11-SEP-2012 8:49PM reddenj

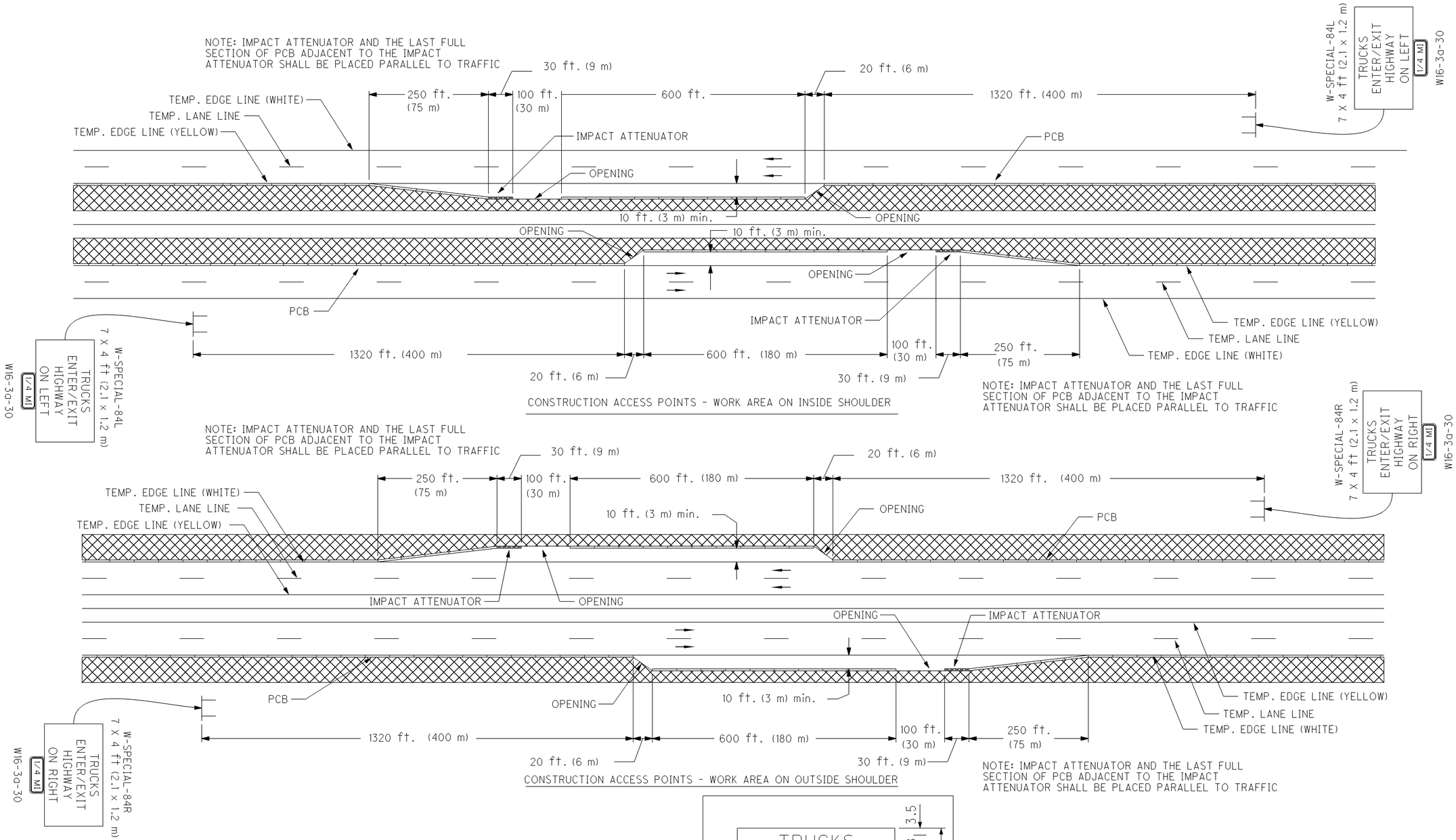

W-SPECIAL-84 (R/L)
(SIGN INFORMATION SHOWN IN ENGLISH UNITS ONLY)

TABLE OF WIDTHS AND SPACES

18.50	T 5.94	1.65	R 6.38	2.05	U 6.37	2.06	C 6.37	1.65	K 6.50	1.65	S 6.38	18.50	
6.67	E 5.94	1.65	N 6.38	1.67	T 5.94	1.65	E 5.94	1.65	R 5.94	0.55	/ 6.47	1.10	E 5.94	1.65	X 6.94	1.65	I 1.60	1.65	T 5.94	6.67
14.96	H 6.38	2.05	I 1.60	2.05	G 6.38	2.05	H 6.37	1.65	W 8.44	0.56	A 8.00	0.55	Y 8.00	14.96						
13.21	O 6.69	2.05	N 6.37	8.00	R 6.38	2.05	I 1.60	2.05	G 6.38	2.05	H 6.37	1.65	T 5.94	13.21						
15.87	O 6.69	2.05	N 6.37	8.00	L 6.38	1.65	E 5.94	1.65	F 5.94	1.65	T 5.94	15.87								

NO BORDER, BLACK ON ORANGE;E MOD FONT

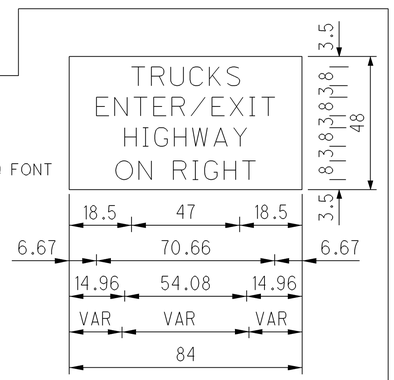

CONSTRUCTION ACCESS POINTS

Construction access point locations may be selected by the Contractor with the approval of the Engineer. The locations shall be selected for good sight distance and ease of access for entering vehicles (avoid locations just beyond crest vertical curves, on overhead structures, on upgrades, etc.). In the event that the Engineer determines that an access point does not function in a safe manner, he/she shall order it immediately closed at no cost to the State. Access points may be relocated subject to the approval of the Engineer, as necessary to accomplish construction activites.

All costs for relocation of portable concrete barrier, installation, repair, replacement and removal of impact attenuators, grading for access drives and related costs shall be included in the lump sum bid for Item 614 Maintaining Traffic.

OFFICE OF TRAFFIC ENGINEERING

DESIGNED RAS REVIEWED LAM

REVISION DATE 04/16/10 CHECKED

PIS NUMBER 209563

PLAN INSERT SHEET

CONSTRUCTION ACCESS POINTS

ALL-75-5.53

88
1224

J:\Projects\ALL\7669\mot\sheets\7669NM008.dgn 11-SEP-2012 8:49PM reddenj

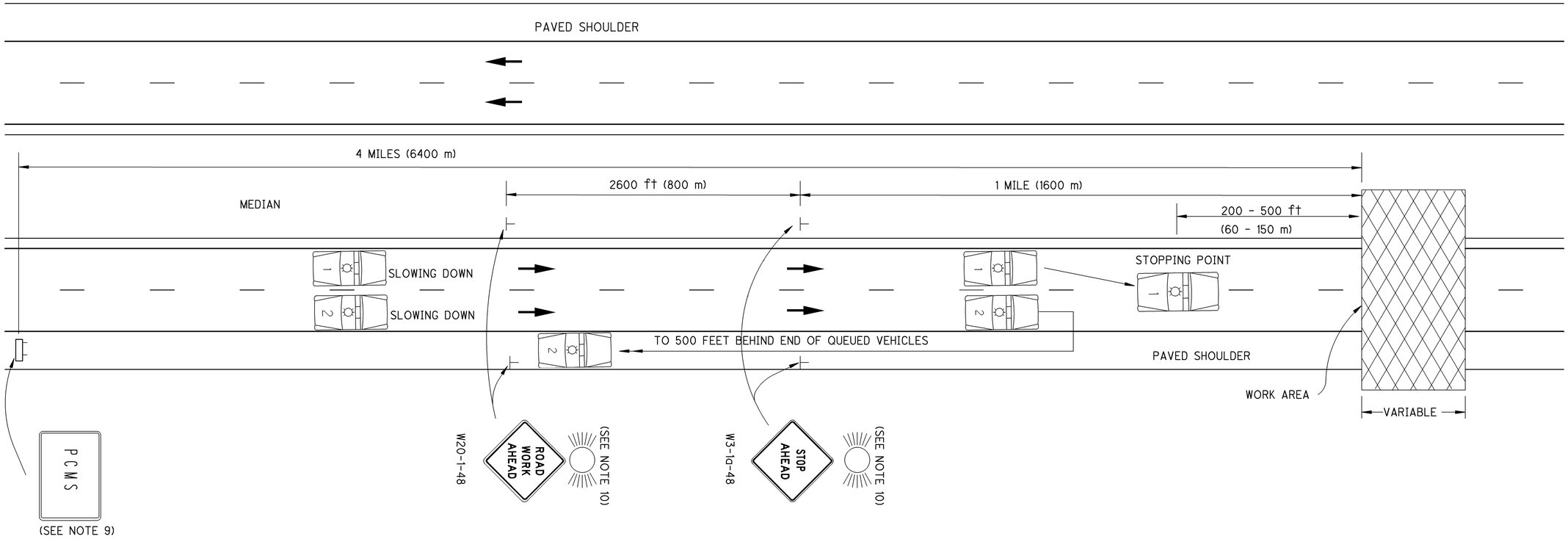

1. THIS TYPE OF HIGHWAY CLOSURE SHALL BE USED FOR ALL CONSTRUCTION, MAINTENANCE AND UTILITY OPERATIONS WHEN THE DURATION OF CLOSURE WILL NOT EXCEED 15 MINUTES.

2. A MINIMUM OF TWO LAW ENFORCEMENT OFFICERS (LEO) WITH PATROL CARS PER DIRECTION SHALL BE PROVIDED TO BLOCK TRAFFIC AND PACE MOTORISTS TO A STOP. THE NUMBER OF PATROL CARS SHALL EQUAL THE NUMBER OF LANES CLOSED ON THE HIGHWAY.

3. PATROL CARS, WITH LIGHTS FLASHING, SHOULD ENTER THE STREAM OF TRAFFIC AT APPROXIMATELY 3 MILES BEFORE THE POINT OF CLOSURE. AT APPROXIMATELY 2 MILES BEFORE THE POINT OF CLOSURE, THEY SHOULD BEGIN THE GRADUAL SLOW DOWN. TRAFFIC SHALL BE BROUGHT TO A COMPLETE STOP A SAFE DISTANCE, BETWEEN 200 AND 500 FEET (60 AND 150 M), FROM THE WORK AREA. THIS SLOWING OPERATION SHALL TAKE NO MORE THAN 10 MINUTES. AFTER TRAFFIC HAS BEEN STOPPED, ONE PATROL CAR SHALL TRAVEL ALONG THE ROADWAY SHOULDER 500 FEET (150 M) BEHIND THE END OF THE QUEUED VEHICLES.

4. THE CONTRACTOR SHALL NOT BEGIN WORK UNTIL TRAFFIC HAS BEEN BROUGHT TO A COMPLETE STOP.

5. ALL ENTRANCE RAMPS LOCATED BETWEEN THE STOPPED TRAFFIC AND THE WORK AREA SHALL BE CLOSED.

6. AFTER THE HIGHWAY HAS BEEN CLOSED AND REOPENED VIA THIS PROCEDURE, BOTH OF THE FOLLOWING REQUIREMENTS SHALL HAVE BEEN MET BEFORE IMPLEMENTATION OF ANOTHER SHORT DURATION CLOSURE, EXCEPT WITH THE APPROVAL OF THE ENGINEER:
   A. A MINIMUM PERIOD OF 15 MINUTES SHALL HAVE ELAPSED
   B. THE QUEUED TRAFFIC SHALL HAVE DISSIPATED

7. THE TIME FRAME FOR STOPPING TRAFFIC SHALL BE SPECIFIED.

8. THE PUBLIC SHALL BE GIVEN ADVANCE NOTICE OF THE UPCOMING CLOSURE BY PROVIDING PORTABLE CHANGEABLE MESSAGE SIGNS AT THE SITE IN ADVANCE OF THE SCHEDULED CLOSING. CLOSURE INFORMATION SHOULD ALSO BE PROVIDED TO THE ENGINEER.

9. AN ODOT APPROVED PORTABLE CHANGEABLE MESSAGE SIGN, CLASS A, SHALL BE PROVIDED DURING OPERATION. THE MESSAGE SIGN SHALL BE PLACED AT APPROXIMATELY 4 MILES (6400 METERS) IN ADVANCE OF THE CLOSURE OR AS DIRECTED BY THE ENGINEER. THE MESSAGE SIGN SHALL READ "ROAD CLOSED AHEAD" (2 SEC.), "PREPARE TO STOP" (2 SEC.)

10. THE CONTRACTOR SHALL ERECT AND MAINTAIN 48 INCH "ROAD WORK AHEAD" AND "STOP AHEAD" SIGNS ON EACH SIDE OF THE HIGHWAY. EACH SIGN SHALL BE EQUIPPED WITH ONE TYPE A FLASHING WARNING LIGHT AND ONE FLARE. THERE SHALL BE ONE FLARE ON THE SHOULDER AT EACH SIGN ON BOTH SIDES OF THE ROADWAY. THE FLARE SHALL BE REPLACED IF IT BURNS OUT.

J:\Projects\ALL\76691\mot\sheets\76691MM003.dgn 11-SEP-2012 8:49PM reddenj

OFFICE OF TRAFFIC ENGINEERING

DESIGNED SHB | REVIEWED LAM

REVISION DATE 10/15/10 | CHECKED

PID NUMBER 209960

PLAN INSERT SHEET

SHORT-DURATION CLOSURE OF MULTI-LANE DIVIDED HIGHWAY

ALL-75-5.53

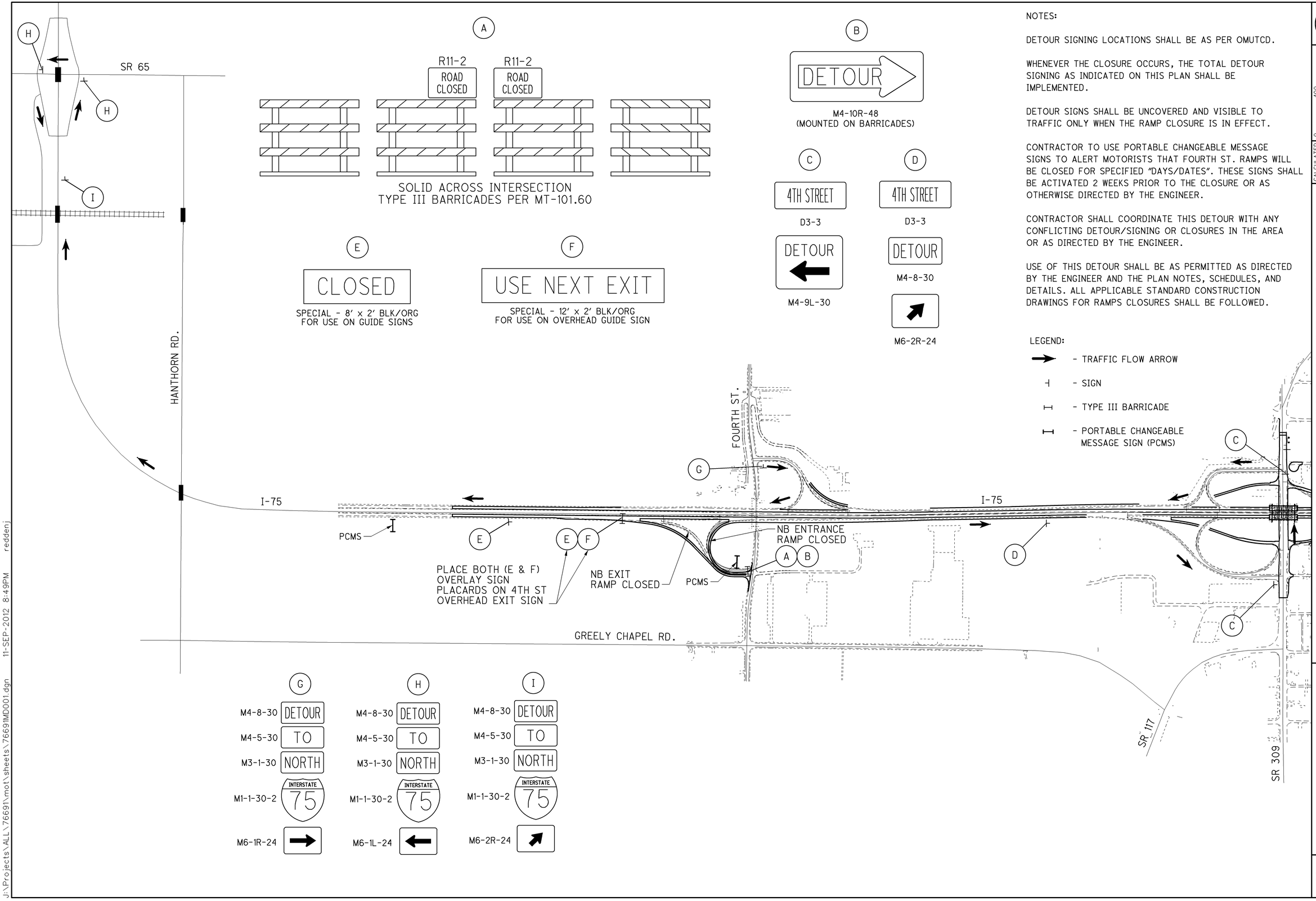

A

R11-2 ROAD CLOSED

R11-2 ROAD CLOSED

SOLID ACROSS INTERSECTION
TYPE III BARRICADES PER MT-101.60

B

DETOUR

M4-10R-48
(MOUNTED ON BARRICADES)

C

4TH STREET

D3-3

DETOUR

M4-9L-30

D

4TH STREET

D3-3

DETOUR

M4-8-30

M6-2R-24

E

CLOSED

SPECIAL - 8' x 2' BLK/ORG
FOR USE ON GUIDE SIGNS

F

USE NEXT EXIT

SPECIAL - 12' x 2' BLK/ORG
FOR USE ON OVERHEAD GUIDE SIGN

G

M4-8-30 DETOUR
M4-5-30 TO
M3-1-30 NORTH
M1-1-30-2 INTERSTATE 75
M6-1R-24

H

M4-8-30 DETOUR
M4-5-30 TO
M3-1-30 NORTH
M1-1-30-2 INTERSTATE 75
M6-1L-24

I

M4-8-30 DETOUR
M4-5-30 TO
M3-1-30 NORTH
M1-1-30-2 INTERSTATE 75
M6-2R-24

NOTES:

DETOUR SIGNING LOCATIONS SHALL BE AS PER OMUTCD.

WHENEVER THE CLOSURE OCCURS, THE TOTAL DETOUR SIGNING AS INDICATED ON THIS PLAN SHALL BE IMPLEMENTED.

DETOUR SIGNS SHALL BE UNCOVERED AND VISIBLE TO TRAFFIC ONLY WHEN THE RAMP CLOSURE IS IN EFFECT.

CONTRACTOR TO USE PORTABLE CHANGEABLE MESSAGE SIGNS TO ALERT MOTORISTS THAT FOURTH ST. RAMPS WILL BE CLOSED FOR SPECIFIED "DAYS/DATES". THESE SIGNS SHALL BE ACTIVATED 2 WEEKS PRIOR TO THE CLOSURE OR AS OTHERWISE DIRECTED BY THE ENGINEER.

CONTRACTOR SHALL COORDINATE THIS DETOUR WITH ANY CONFLICTING DETOUR/SIGNING OR CLOSURES IN THE AREA OR AS DIRECTED BY THE ENGINEER.

USE OF THIS DETOUR SHALL BE AS PERMITTED AS DIRECTED BY THE ENGINEER AND THE PLAN NOTES, SCHEDULES, AND DETAILS. ALL APPLICABLE STANDARD CONSTRUCTION DRAWINGS FOR RAMPS CLOSURES SHALL BE FOLLOWED.

LEGEND:

- → - TRAFFIC FLOW ARROW
- ⊣ - SIGN
- I - TYPE III BARRICADE
- I - PORTABLE CHANGEABLE MESSAGE SIGN (PCMS)

N

HORIZONTAL SCALE IN FEET
0 200 400 800

CALCULATED CAC
CHECKED EJC

DETOUR PLAN - FOURTH ST. RAMPS
N.B. EXIT & ENTRANCE RAMP CLOSURES

ALL-75-5.53

90
1224

J:\Projects\ALL\76691\mot\sheets\76691MD001.dgn 11-SEP-2012 8:49PM reddenj

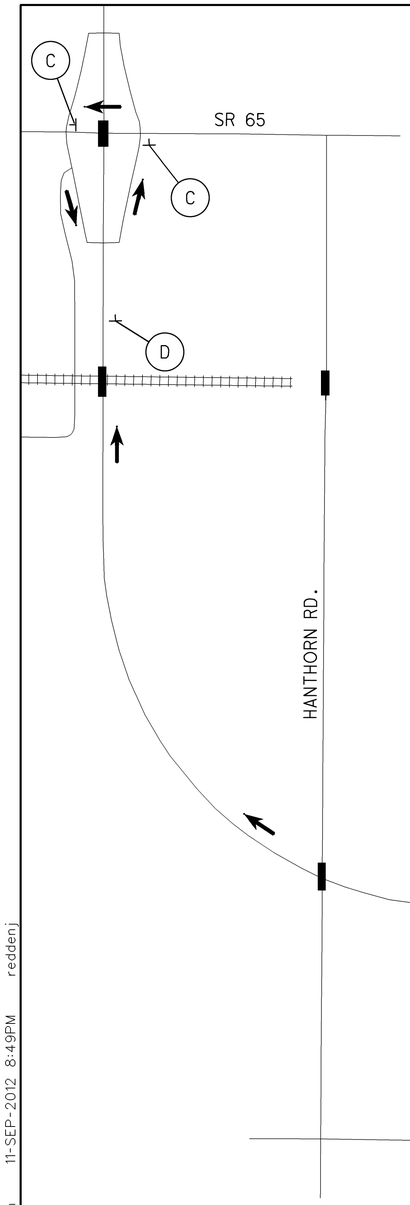

A

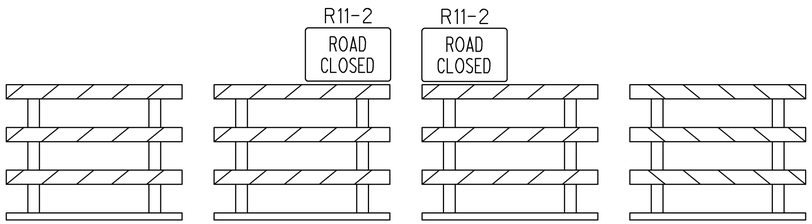

SOLID ACROSS INTERSECTION
TYPE III BARRICADES PER MT-101.60

B

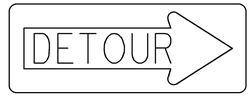

M4-10R-48
(MOUNTED ON BARRICADES)

C

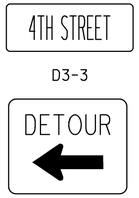

M4-9L-30

D

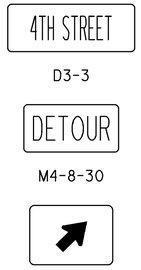

M6-2R-24

E



SPECIAL - 8' x 2' BLK/ORG
FOR USE ON GUIDE SIGNS

F



SPECIAL - 12' x 2' BLK/ORG
FOR USE ON OVERHEAD GUIDE SIGN

NOTES:

DETOUR SIGNING LOCATIONS SHALL BE AS PER OMUTCD.

WHENEVER THE CLOSURE OCCURS, THE TOTAL DETOUR SIGNING AS INDICATED ON THIS PLAN SHALL BE IMPLEMENTED.

DETOUR SIGNS SHALL BE UNCOVERED AND VISIBLE TO TRAFFIC ONLY WHEN THE RAMP CLOSURE IS IN EFFECT.

CONTRACTOR TO USE PORTABLE CHANGEABLE MESSAGE SIGNS TO ALERT MOTORISTS THAT FOURTH ST. RAMPS WILL BE CLOSED FOR SPECIFIED "DAYS/DATES". THESE SIGNS SHALL BE ACTIVATED 2 WEEKS PRIOR TO THE CLOSURE OR AS OTHERWISE DIRECTED BY THE ENGINEER.

CONTRACTOR SHALL COORDINATE THIS DETOUR WITH ANY CONFLICTING DETOUR/SIGNING OR CLOSURES IN THE AREA OR AS DIRECTED BY THE ENGINEER.

USE OF THIS DETOUR SHALL BE AS PERMITTED AS DIRECTED BY THE ENGINEER AND THE PLAN NOTES, SCHEDULES, AND DETAILS. ALL APPLICABLE STANDARD CONSTRUCTION DRAWINGS FOR RAMPS CLOSURES SHALL BE FOLLOWED.

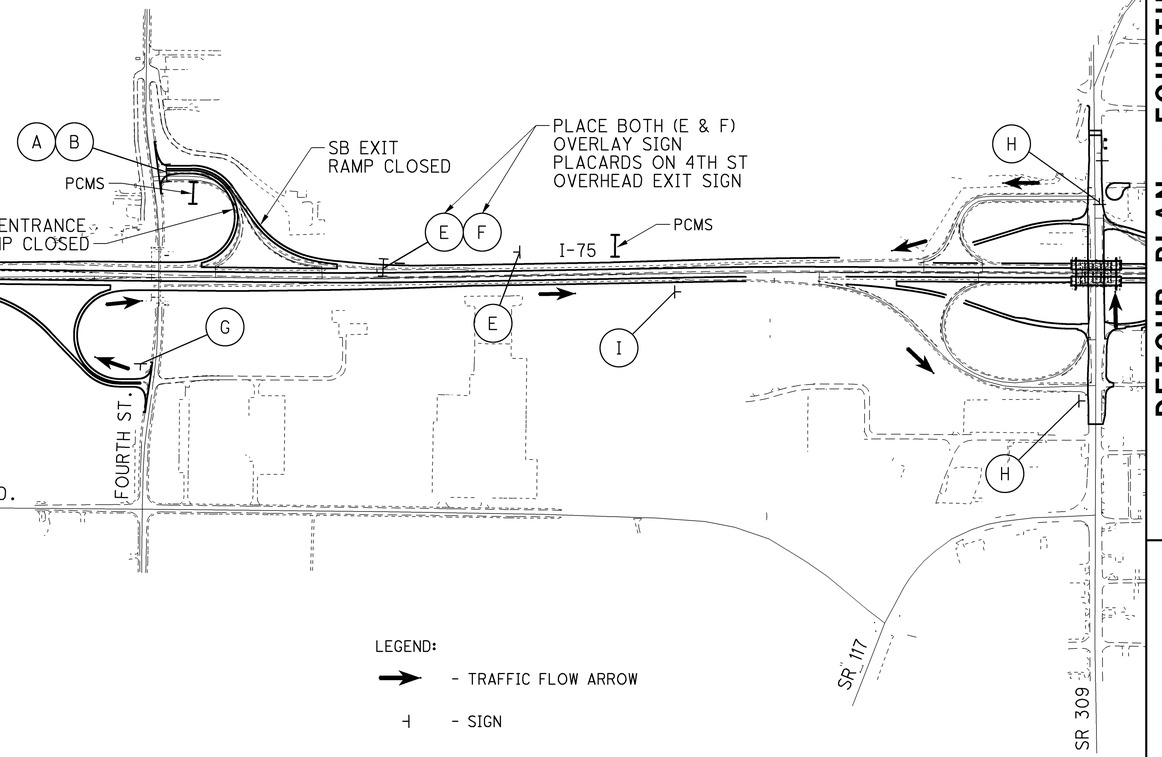

G

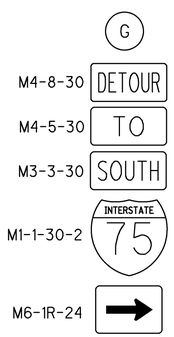

H

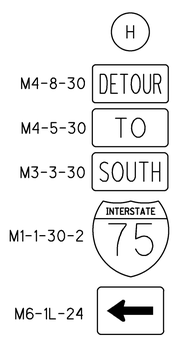

I

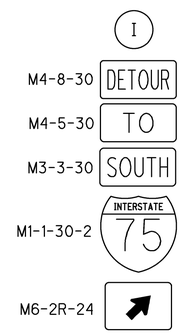

LEGEND:

- TRAFFIC FLOW ARROW
- SIGN
- TYPE III BARRICADE
- PORTABLE CHANGEABLE MESSAGE SIGN (PCMS)

N

HORIZONTAL SCALE IN FEET
0 200 400 800

CALCULATED CAC
CHECKED EJC

DETOUR PLAN - FOURTH ST. RAMPS
S.B. EXIT & ENTRANCE RAMP CLOSURES

ALL-75-5.53

91
1224

J:\Projects\ALL\76691\mot\sheets\76691MD002.dgn 11-SEP-2012 8:49PM reddenj

NOTES:

DETOUR SIGNING LOCATIONS SHALL BE AS PER OMUTCD.

SOUTHBOUND I-75 TRAFFIC DETOURED TO BLUELICK RD. TO RE-ENTER I-75 SOUTHBOUND.

WHEN THE CLOSURE OCCURS, COMPLETE DETOUR SIGNING AS INDICATED ON THIS PLAN AND PER ODOT STANDARD CONSTRUCTION DRAWINGS SHALL BE IMPLEMENTED.

DETOUR SIGNS SHALL BE UNCOVERED AND VISIBLE TO TRAFFIC ONLY WHEN THE RAMP CLOSURE IS IN EFFECT.

CONTRACTOR TO USE PORTABLE CHANGEABLE MESSAGE SIGNS TO ALERT MOTORISTS THAT THE S.B. RAMP WILL BE CLOSED FROM SPECIFIED "DAY TO DAY", AND TO USE ALTERNATE ROUTES. THESE SIGNS SHALL BE ACTIVATED 2 WEEKS PRIOR TO THE CLOSURE OR AS OTHERWISE DIRECTED BY THE ENGINEER. PLACE PCMS AS SHOWN ON THE PLANS OR AS DIRECTED BY THE ENGINEER.

CONTRACTOR SHALL COORDINATE THIS DETOUR WITH ANY CONFLICTING DETOUR/SIGNING OR CLOSURES IN THE AREA OR AS DIRECTED BY THE ENGINEER.

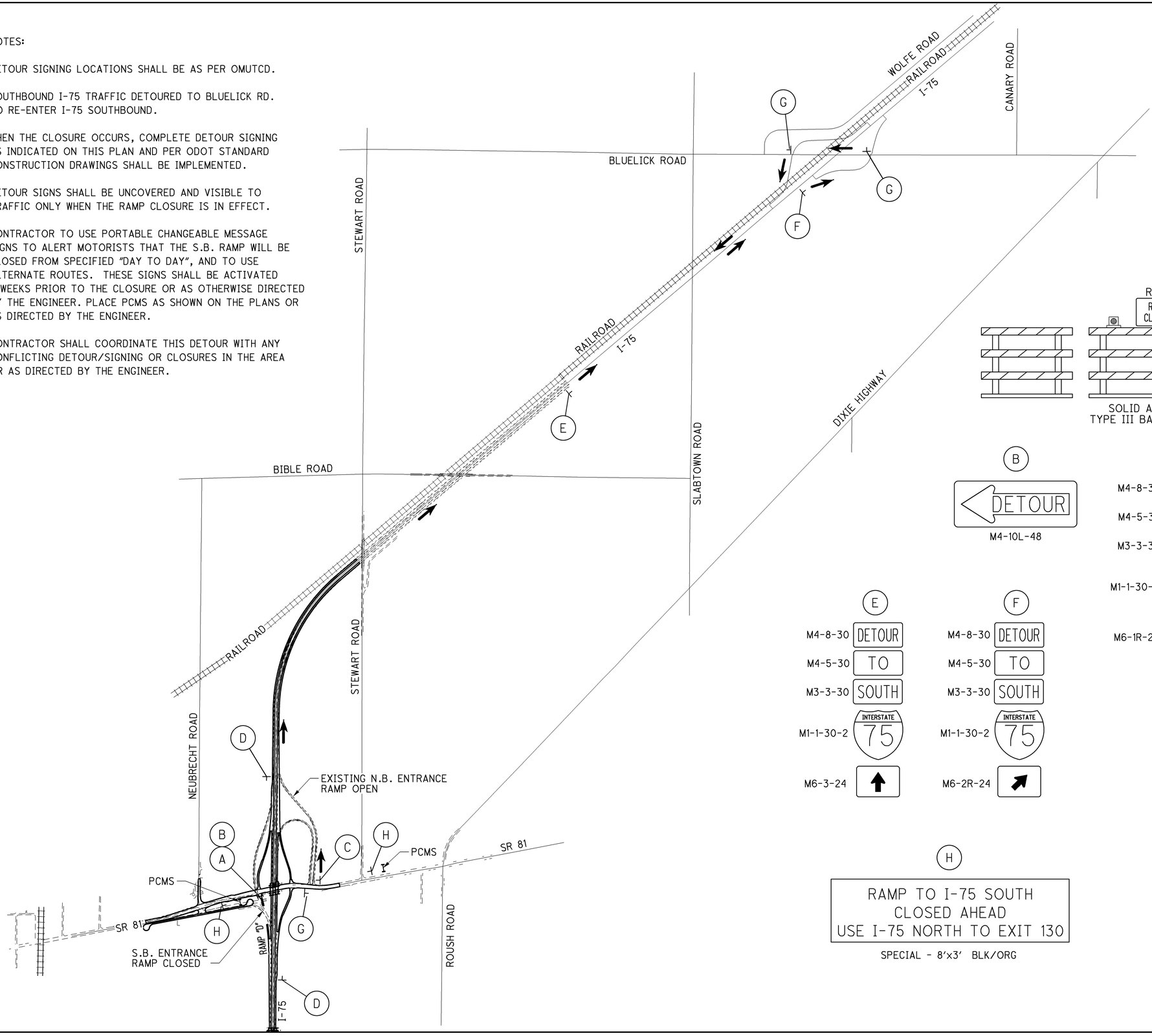

A

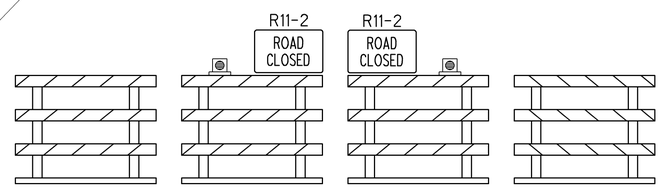

SOLID ACROSS INTERSECTION
TYPE III BARRICADES PER MT-101.60

B

M4-10L-48

C

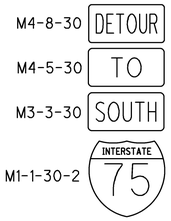

D



W13-H8-84

E

F

G

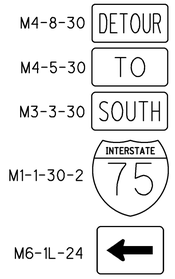

H

RAMP TO I-75 SOUTH
CLOSED AHEAD
USE I-75 NORTH TO EXIT 130

SPECIAL - 8'x3' BLK/ORG

LEGEND:

- → - TRAFFIC FLOW ARROW
- ⊣ - SIGN
- ⊢ - TYPE III BARRICADE
- I - PORTABLE CHANGEABLE MESSAGE SIGN (PCMS)

HORIZONTAL SCALE IN FEET
0 400 800 1600

CALCULATED CAC
CHECKED EJC

DETOUR PLAN
SR81 S.B. ENTRANCE RAMP CLOSURE

ALL-75-5.53

92
1224

J:\Projects\ALL\76691\mot\sheets\76691MD003.dgn 11-SEP-2012 8:49PM reddenj

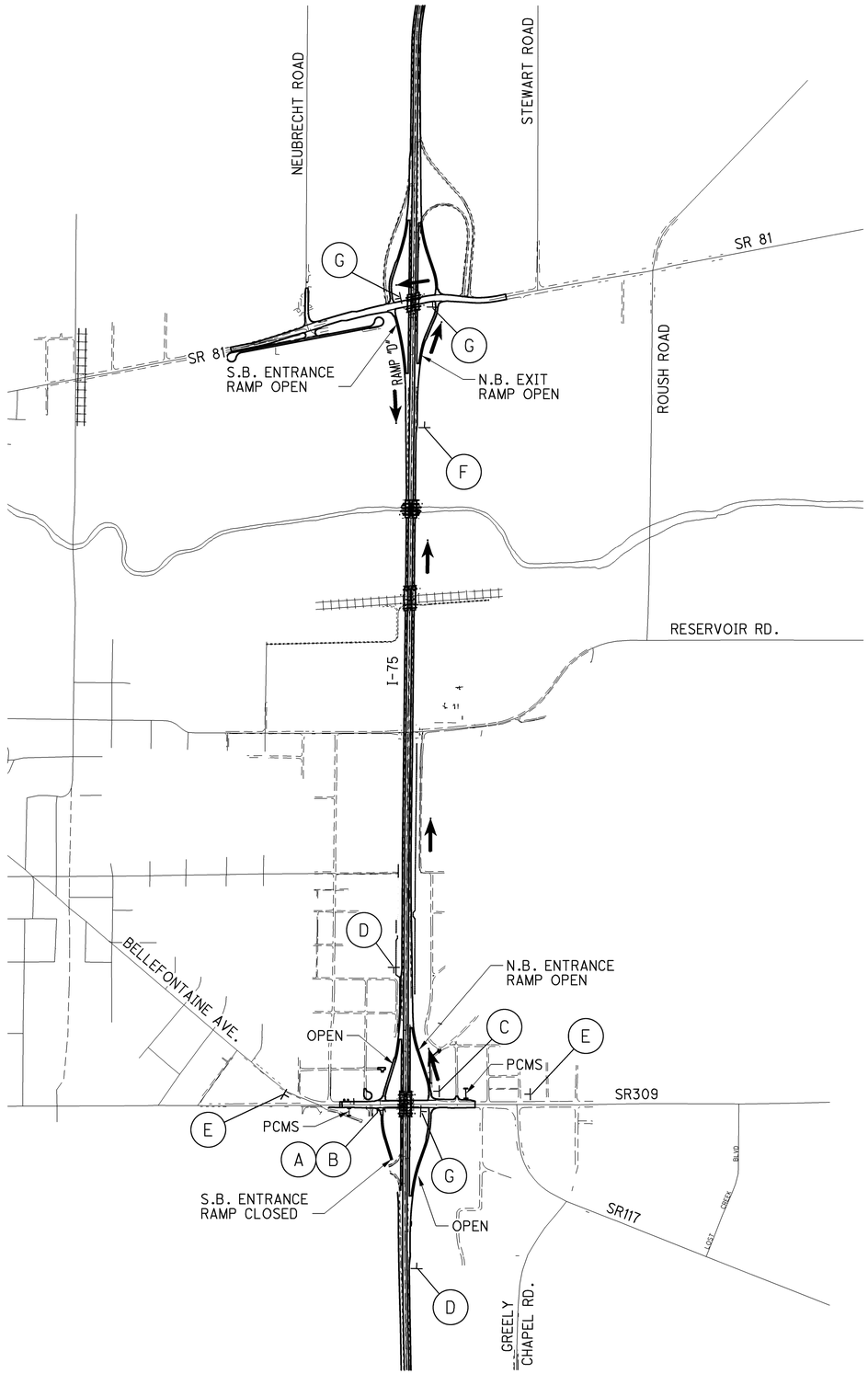

NOTES:

DETOUR SIGNING LOCATIONS SHALL BE AS PER OMUTCD.

SOUTHBOUND I-75 TRAFFIC DETOURED TO SR 81 TO RE-ENTER I-75 SOUTHBOUND.

WHEN THE CLOSURE OCCURS, COMPLETE DETOUR SIGNING AS INDICATED ON THIS PLAN AND PER ODOT STANDARD CONSTRUCTION DRAWINGS SHALL BE IMPLEMENTED.

DETOUR SIGNS SHALL BE UNCOVERED AND VISIBLE TO TRAFFIC ONLY WHEN THE RAMP CLOSURE IS IN EFFECT.

CONTRACTOR TO USE PORTABLE CHANGEABLE MESSAGE SIGNS TO ALERT MOTORISTS THAT THE S.B. RAMP WILL BE CLOSED FROM SPECIFIED "DAY TO DAY", AND TO USE ALTERNATE ROUTES. THESE SIGNS SHALL BE ACTIVATED 2 WEEKS PRIOR TO THE CLOSURE OR AS OTHERWISE DIRECTED BY THE ENGINEER. PLACE PCMS AS SHOWN ON THE PLANS OR AS DIRECTED BY THE ENGINEER.

CONTRACTOR SHALL COORDINATE THIS DETOUR WITH ANY CONFLICTING DETOUR/SIGNING OR CLOSURES IN THE AREA OR AS DIRECTED BY THE ENGINEER.

LEGEND:

- TRAFFIC FLOW ARROW
- SIGN
- TYPE III BARRICADE
- PORTABLE CHANGEABLE MESSAGE SIGN (PCMS)

(A)

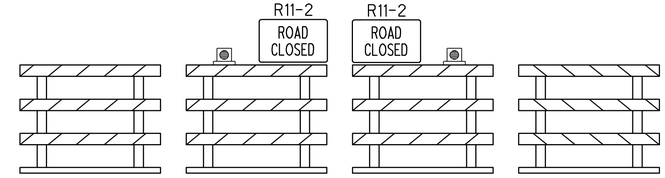

SOLID ACROSS INTERSECTION
TYPE III BARRICADES PER MT-101.60

(B)



M4-10L-48

(C)

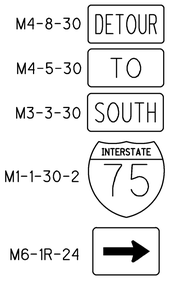

(D)



W13-H8-84

(E)

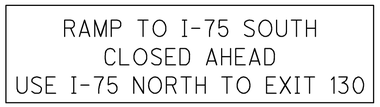

SPECIAL - 8'x3' BLK/ORG

(F)

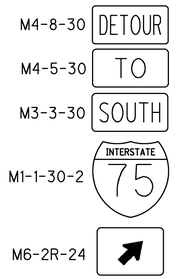

(G)

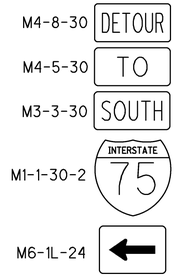

N

0 400 800 1600
HORIZONTAL SCALE IN FEET

CALCULATED CAC
CHECKED EJC

DETOUR PLAN
SR309 S.B. ENTRANCE RAMP CLOSURE

ALL-75-5.53

93
1224

J:\Projects\ALL\76691\mot\sheets\76691MD004.dgn 11-SEP-2012 8:49PM redden

NOTES:

SEE BRIDGE, RETAINING WALL, AND DRAINAGE PLANS FOR MORE DETAILS.

A MINIMUM OF 1 LANE (5 FT WIDE) SHALL BE MAINTAINED AT ALL TIMES ON THE BIKEPATH THROUGH THE CONSTRUCTION ZONE.

CONTRACTOR SHALL CONSTRUCT TEMPORARY CHAIN LINK FENCE AND OVERHEAD SCAFFOLD OR FALSEWORK TO PROTECT BIKE PATH TRAFFIC THROUGH THE CONSTRUCTION ZONE.

TRAFFIC SHALL BE MAINTAINED ON EITHER THE EXISTING PATH AND/OR A TEMPORARY RUN-AROUND PATH. IF A TEMPORARY PATH IS REQUIRED OR PREFERRED, CONTRACTOR SHALL BE CAREFUL TO STABILIZE THE TEMPORARY GRADING REQUIRED FOR SUCH AND TO NOTE THE LIMITS OF THE TEMPORARY EASEMENTS AND R/W.

WHEN TRAFFIC IS MAINTAINED ON THE EXISTING PATH, THE PATH WIDTH MAY BE REDUCED TO 5 FT AND SHIFTED TO EITHER SIDE AS NECESSARY. FENCING SHALL BE PLACED BETWEEN THE PEDESTRIANS AND THE WORK ZONE AT ALL TIMES AND IN ALL LOCATIONS THROUGHOUT THE CONST-ION ZONES.

SIGNS SHALL BE ERECTED PER THE PLAN DETAILS AND OMUTCD. ALL APPLICABLE PEDESTRIAN SAFETY STANDARDS SHALL BE ADHERED TO.

USE DRUMS, BARRICADES, ROAD CLOSED SIGNS, AND OTHER WARNING DEVICES (NOT SHOWN) AS NEEDED AND AS DIRECTED BY THE ENGINEER.

SHORT DURATION CLOSURE MAY BE PERMITTED DURING NIGHTTIME HOURS AS DIRECT BY THE ENGINEER. SHORT DURATION CLOSURES DURING ANY OTHER TIME PERIOD SHALL BE LIMITED TO 15 MINUTES AND A FLAGGER SHALL BE POSTED ON EACH SIDE OF THE CONSTRUCTION SITE TO STOP AND SUBSEQUENTLY RESTART TRAFFIC.

EXISTING PATH ELEMENTS, SUCH AS FENCING, ASPHALT, CONCRETE, GRADING, ETC. SHALL BE RESTORED TO ORIGINAL CONDITION EXCEPT AS MODIFIED BY THE PROPOSED BRIDGE AND RETAINING WALL DESIGN.

ALL LABOR, EQUIPMENT, AND MATERIALS NECESSARY FOR MAINTAINING PATH TRAFFIC AND THE SAFETY OF PEDESTRIANS SHALL BE INCLUDED IN THE LUMP SUM PRICE BID FOR ITEM 614, MAINTAINING TRAFFIC, AS PER PLAN.

(A)



W20-1-30

SIGNS A, B, & C
TO BE SPACED
APPROX. 200 FT APART

(B)



W20-4-36

(C)



R1-1-24

WALK ONLY - STAY ON PATH
BICYCLISTS PLEASE DISMOUNT
AND WALK BIKE THROUGH
CONSTRUCTION ZONE
USE CAUTION
AND OBEY WARNINGS
AT ALL TIMES

SPECIAL - 4'x5' BLK/ORG

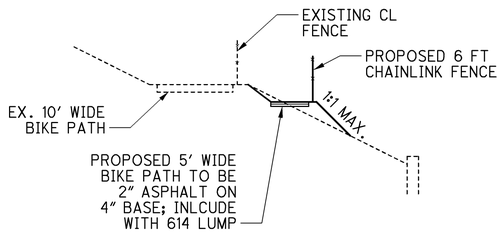

SECTION A-A

(NOT TO SCALE)

OVERHEAD PROTECTION NOT SHOWN; SEE NOTES

LEGEND:

- SIGN
- EXISTING BIKE PATH
- PROPOSED TEMPORARY PATH (SEE NOTES)

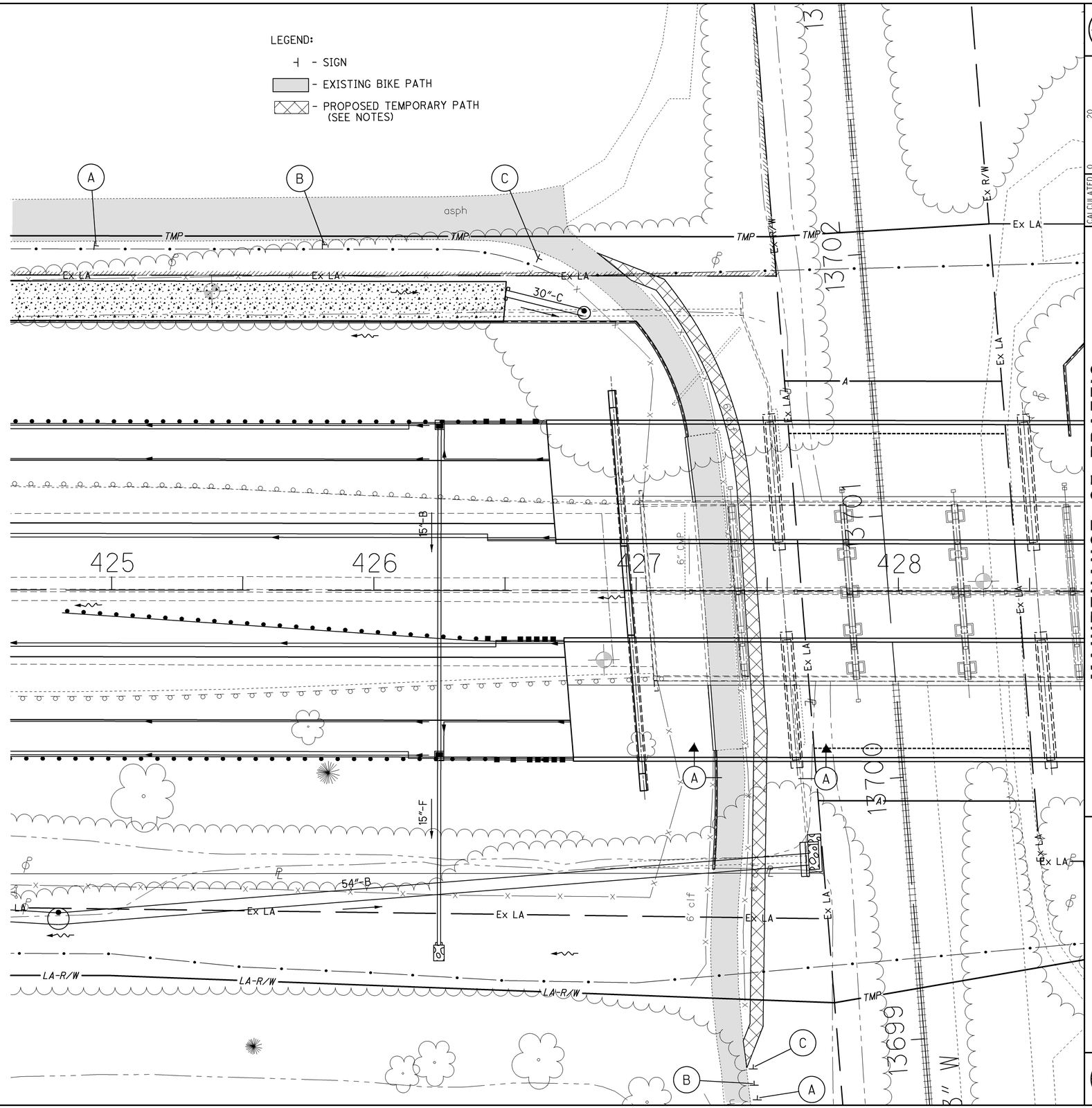

N

HORIZONTAL SCALE IN FEET
0 10 20 40

CALCULATED CAC
CHECKED EJC

MAINTENANCE OF TRAFFIC
JOHNNY APPLESEED BIKE PATH

ALL-75-5.53

94
1224

J:\Projects\ALL\76691\mot\sheets\76691MP102.dgn 11-SEP-2012 8:49PM reddenj

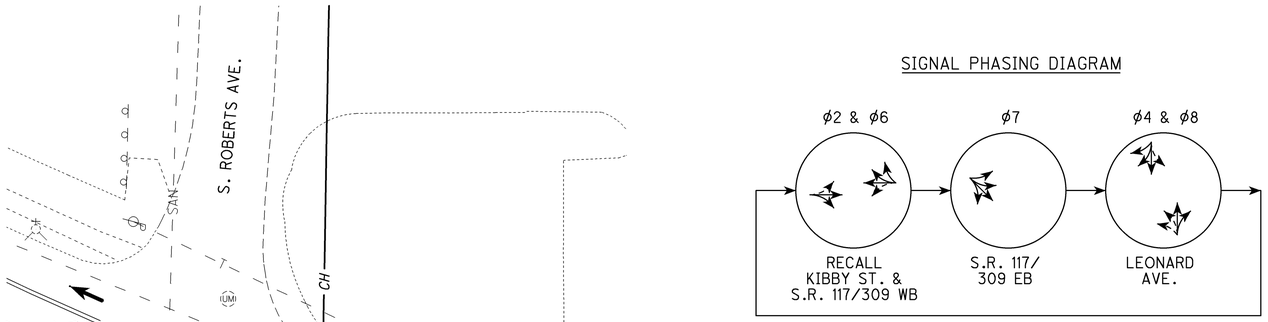

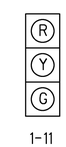

LEGEND

- VEHICULAR SIGNAL HEAD FOR SPAN WIRE (3-SECTION)
- EXISTING VEHICULAR SIGNAL FOR MAST ARM (3-SECTION)
- TEMPORARY WOOD POLE
- TEMPORARY POLE MOUNTED CONTROLLER
- SPAN WIRE
- PORTABLE CONCRETE BARRIER (PCB)
- DRUMS (10' C/C ON TAPERS; 20' C/C ON TANGENT)
- 30' X 6' VIDEO DETECTION ZONE
- PAVEMENT FOR MAINTAINING TRAFFIC

POWER SUPPLY FOR TEMPORARY SIGNAL

ELECTRICAL POWER SHALL BE OBTAINED FROM AEP. THE CONTRACTOR SHALL COORDINATE WITH AEP TO DETERMINE A SUITABLE LOCATION FOR THE POWER SOURCE. THE CONTRACTOR SHALL ESTABLISH AN ACCOUNT SET UP IN THE CONTRACTOR'S NAME. THE CONTACT INFORMATION IS AS FOLLOWS:

AEP
369 E. O'CONNOR AVENUE
LIMA, OHIO 45801
PHONE: 419-998-5103
CONTACT: MR. DAN WILSON
EMAIL: DEWILSON@AEP.COM

SIGNAL NOTES:

1. CONTRACTOR SHALL INSTALL TEMPORARY TRAFFIC SIGNAL AS PER 614.10 PRIOR TO BEGINNING S.R. 309 PHASE I MAINTENANCE OF TRAFFIC. ALL EQUIPMENT, LABOR, WORK, ETC. TO CONSTRUCT, OPERATE, MAINTAIN, AND ADJUST THE TEMPORARY SIGNAL SHALL BE INCLUDED WITH ITEM 614, WORK ZONE TRAFFIC SIGNAL.
2. PHASE NUMBERS SHOWN ON THIS PLAN CORRESPOND TO AN 8 PHASE CABINET. A 4 PHASE CABINET IS PERMITTED FOR THE TEMPORARY SIGNAL. IF A 4 PHASE CABINET IS USED, THE PHASE NUMBERS SHALL BE 1, 2 AND 3 IN THE ORDER SHOWN ON THE PHASE DIAGRAM.
3. VIDEO DETECTION SHALL BE MAINTAINED AT ALL TIMES AT THE VIDEO DETECTION ZONE LOCATIONS SHOWN ON THE PLANS.
4. THE CONTRACTOR IS TO ESTABLISH SIGNAL TIMING BASED ON ACTUAL FIELD CONDITIONS. MINIMUM SIGNAL TIMINGS TO MEET ODOT TRAFFIC ENGINEERING MANUAL STANDARDS SHALL BE MET. THE CONTRACTOR IS TO ADJUST GREEN TIMES BASED ON TRAFFIC DEMANDS AS NECESSARY OR AS DIRECTED BY THE ENGINEER.
5. MINIMUM CLEARANCE FROM THE HIGHEST (CROWN) POINT ON THE PAVEMENT TO THE BOTTOM OF THE SIGNAL HEADS SHALL BE 16 FEET.
6. SIGNAL POLES SHALL BE LOCATED BEHIND DITCHES WHERE POSSIBLE. (REFER TO STANDARD CONSTRUCTION DRAWING MT-96.11 FOR CLEAR ZONE TABLE.

HORIZONTAL SCALE IN FEET
0 10 20 40

CALCULATED JRL
CHECKED EJC

TEMPORARY SIGNAL PLAN - PHASE I
S.R. 309, LEONARD AVE., & BELLEFONTAINE AVE.

ALL-75-5.53

95
1224

J:\Projects\ALL\76691\mot\sheets\76691MM600.dgn 11-SEP-2012 8:49PM reddenj

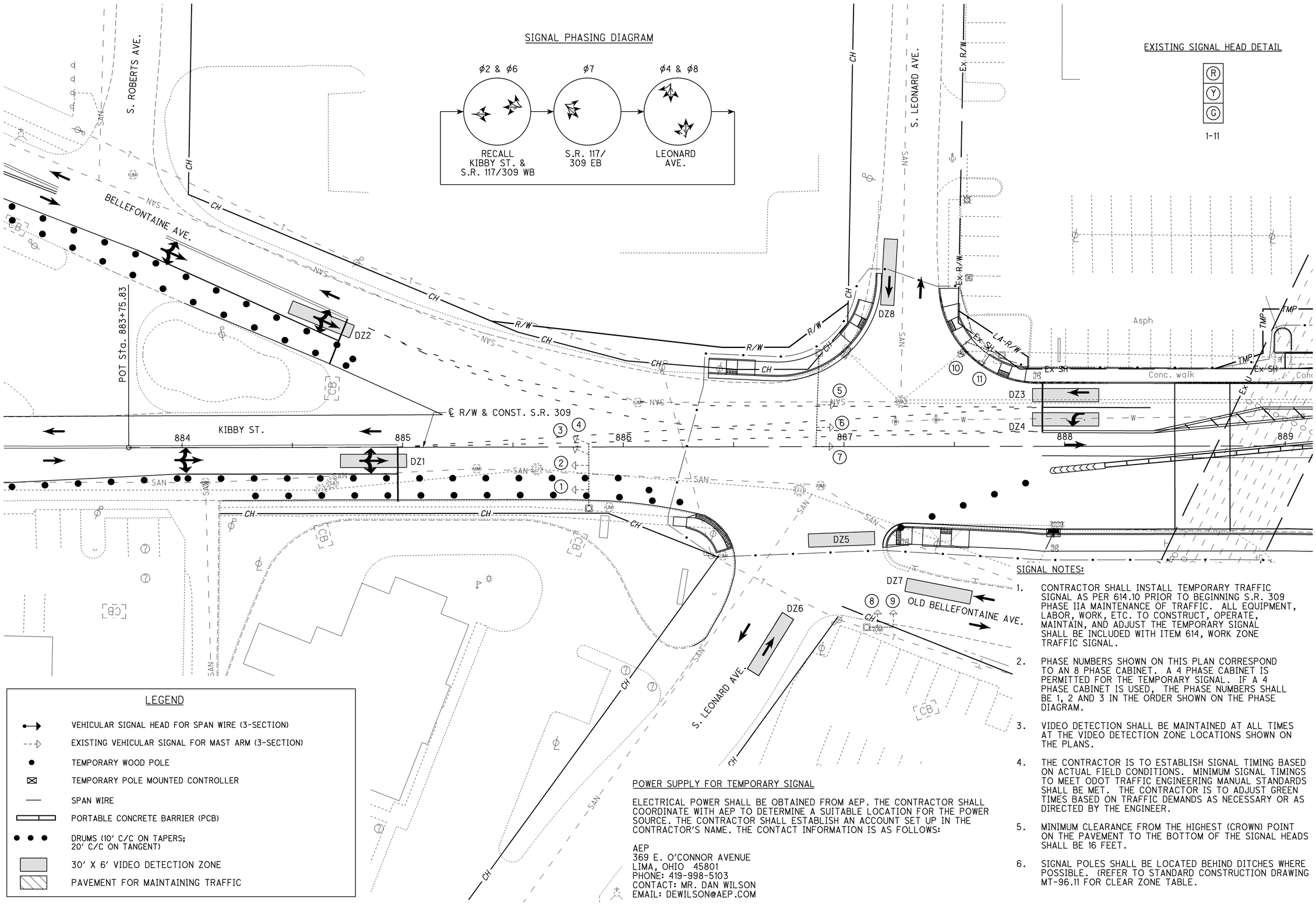

POWER SUPPLY FOR TEMPORARY SIGNAL

ELECTRICAL POWER SHALL BE OBTAINED FROM AEP. THE CONTRACTOR SHALL COORDINATE WITH AEP TO DETERMINE A SUITABLE LOCATION FOR THE POWER SOURCE. THE CONTRACTOR SHALL ESTABLISH AN ACCOUNT SET UP IN THE CONTRACTOR'S NAME. THE CONTACT INFORMATION IS AS FOLLOWS:

AEP
369 E. O'CONNOR AVENUE
LIMA, OHIO 45801
PHONE: 419-998-5103
CONTACT: MR. DAN WILSON
EMAIL: DEWILSON@AEP.COM

SIGNAL NOTES:

1. CONTRACTOR SHALL INSTALL TEMPORARY TRAFFIC SIGNAL AS PER 614.10 PRIOR TO BEGINNING S.R. 309 PHASE IIA MAINTENANCE OF TRAFFIC. ALL EQUIPMENT, LABOR, WORK, ETC. TO CONSTRUCT, OPERATE, MAINTAIN, AND ADJUST THE TEMPORARY SIGNAL SHALL BE INCLUDED WITH ITEM 614, WORK ZONE TRAFFIC SIGNAL.
2. PHASE NUMBERS SHOWN ON THIS PLAN CORRESPOND TO AN 8 PHASE CABINET. A 4 PHASE CABINET IS PERMITTED FOR THE TEMPORARY SIGNAL. IF A 4 PHASE CABINET IS USED, THE PHASE NUMBERS SHALL BE 1, 2 AND 3 IN THE ORDER SHOWN ON THE PHASE DIAGRAM.
3. VIDEO DETECTION SHALL BE MAINTAINED AT ALL TIMES AT THE VIDEO DETECTION ZONE LOCATIONS SHOWN ON THE PLANS.
4. THE CONTRACTOR IS TO ESTABLISH SIGNAL TIMING BASED ON ACTUAL FIELD CONDITIONS. MINIMUM SIGNAL TIMINGS TO MEET ODOT TRAFFIC ENGINEERING MANUAL STANDARDS SHALL BE MET. THE CONTRACTOR IS TO ADJUST GREEN TIMES BASED ON TRAFFIC DEMANDS AS NECESSARY OR AS DIRECTED BY THE ENGINEER.
5. MINIMUM CLEARANCE FROM THE HIGHEST (CROWN) POINT ON THE PAVEMENT TO THE BOTTOM OF THE SIGNAL HEADS SHALL BE 16 FEET.
6. SIGNAL POLES SHALL BE LOCATED BEHIND DITCHES WHERE POSSIBLE. (REFER TO STANDARD CONSTRUCTION DRAWING MT-96.11 FOR CLEAR ZONE TABLE.

HORIZONTAL SCALE IN FEET
0 10 20 40
CALCULATED JRL
CHECKED EJC

TEMPORARY SIGNAL PLAN - PHASE IIA & IIB
S.R. 309, LEONARD AVE., & BELLEFONTAINE AVE.

ALL-75-5.53

96
1224

J:\Projects\ALL\76691\mot\sheets\76691MM601.dgn 11-SEP-2012 8:49PM reddenj

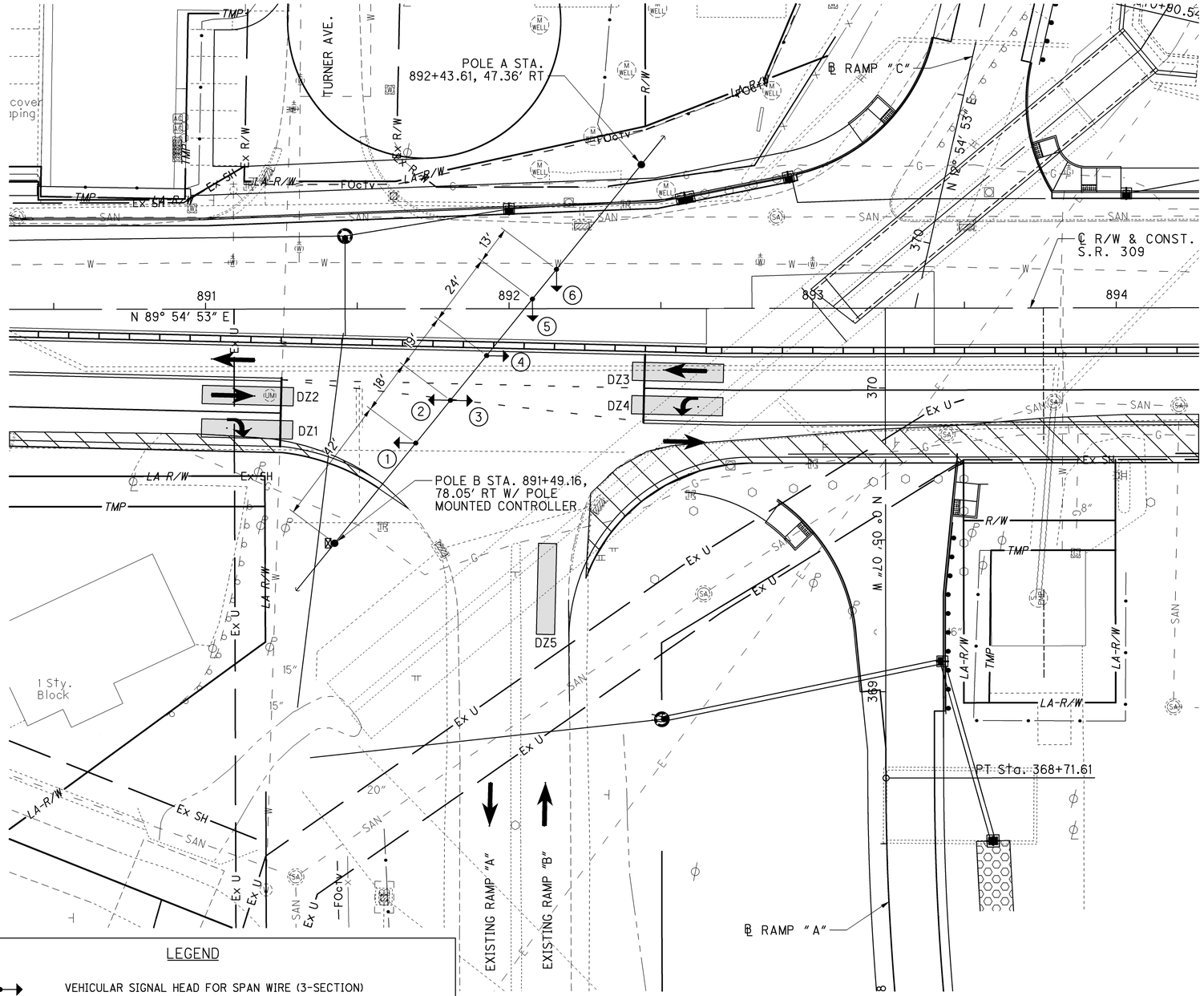

SIGNAL NOTES:

1. CONTRACTOR SHALL INSTALL TEMPORARY TRAFFIC SIGNAL AS PER 614.10 PRIOR TO BEGINNING S.R. 309 PHASE I MAINTENANCE OF TRAFFIC. ALL EQUIPMENT, LABOR, WORK, ETC. TO CONSTRUCT, OPERATE, MAINTAIN, AND ADJUST THE TEMPORARY SIGNAL SHALL BE INCLUDED WITH ITEM 614, WORK ZONE TRAFFIC SIGNAL.
2. PHASE NUMBERS SHOWN ON THIS PLAN CORRESPOND TO AN 8 PHASE CABINET. A 4 PHASE CABINET IS PERMITTED FOR THE TEMPORARY SIGNAL. IF A 4 PHASE CABINET IS USED, THE PHASE NUMBERS SHALL BE 1 AND 2 IN THE ORDER SHOWN ON THE PHASE DIAGRAM.
3. VIDEO DETECTION SHALL BE MAINTAINED AT ALL TIMES AT THE VIDEO DETECTION ZONE LOCATIONS SHOWN ON THE PLANS.
4. THE CONTRACTOR IS TO ESTABLISH SIGNAL TIMING BASED ON ACTUAL FIELD CONDITIONS. MINIMUM SIGNAL TIMINGS TO MEET ODOT TRAFFIC ENGINEERING MANUAL STANDARDS SHALL BE MET. THE CONTRACTOR IS TO ADJUST GREEN TIMES BASED ON TRAFFIC DEMANDS AS NECESSARY OR AS DIRECTED BY THE ENGINEER.
5. MINIMUM CLEARANCE FROM THE HIGHEST (CROWN) POINT ON THE PAVEMENT TO THE BOTTOM OF THE SIGNAL HEADS SHALL BE 16 FEET.
6. SIGNAL POLES SHALL BE LOCATED BEHIND DITCHES WHERE POSSIBLE. (REFER TO STANDARD CONSTRUCTION DRAWING MT-96.11 FOR CLEAR ZONE TABLE.

SIGNAL HEAD DETAIL
12" LENSES

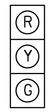

1-6

LEGEND

- VEHICULAR SIGNAL HEAD FOR SPAN WIRE (3-SECTION)
- EXISTING VEHICULAR SIGNAL FOR MAST ARM (3-SECTION)
- TEMPORARY WOOD POLE
- TEMPORARY POLE MOUNTED CONTROLLER
- SPAN WIRE
- PORTABLE CONCRETE BARRIER (PCB)
- DRUMS (10' C/C ON TAPERS; 20' C/C ON TANGENT)
- 30' X 6' VIDEO DETECTION ZONE
- PAVEMENT FOR MAINTAINING TRAFFIC

POWER SUPPLY FOR TEMPORARY SIGNAL

ELECTRICAL POWER SHALL BE OBTAINED FROM AEP. THE CONTRACTOR SHALL COORDINATE WITH AEP TO DETERMINE A SUITABLE LOCATION FOR THE POWER SOURCE. THE CONTRACTOR SHALL ESTABLISH AN ACCOUNT SET UP IN THE CONTRACTOR'S NAME. THE CONTACT INFORMATION IS AS FOLLOWS:

AEP
369 E. O'CONNOR AVENUE
LIMA, OHIO 45801
PHONE: 419-998-5103
CONTACT: MR. DAN WILSON
EMAIL: DEWILSON@AEP.COM

SIGNAL PHASING DIAGRAM

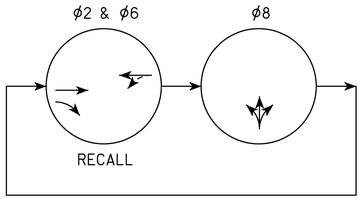

HORIZONTAL SCALE IN FEET
0 10 20 40
CALCULATED JRL
CHECKED EJC

TEMPORARY SIGNAL PLAN - PHASE I
S.R. 309, EX. RAMP "A", & EX. RAMP "B"

ALL-75-5.53

97
1224

J:\Projects\ALL\76691\mot\sheets\76691MM602.dgn 11-SEP-2012 8:50PM reddenj

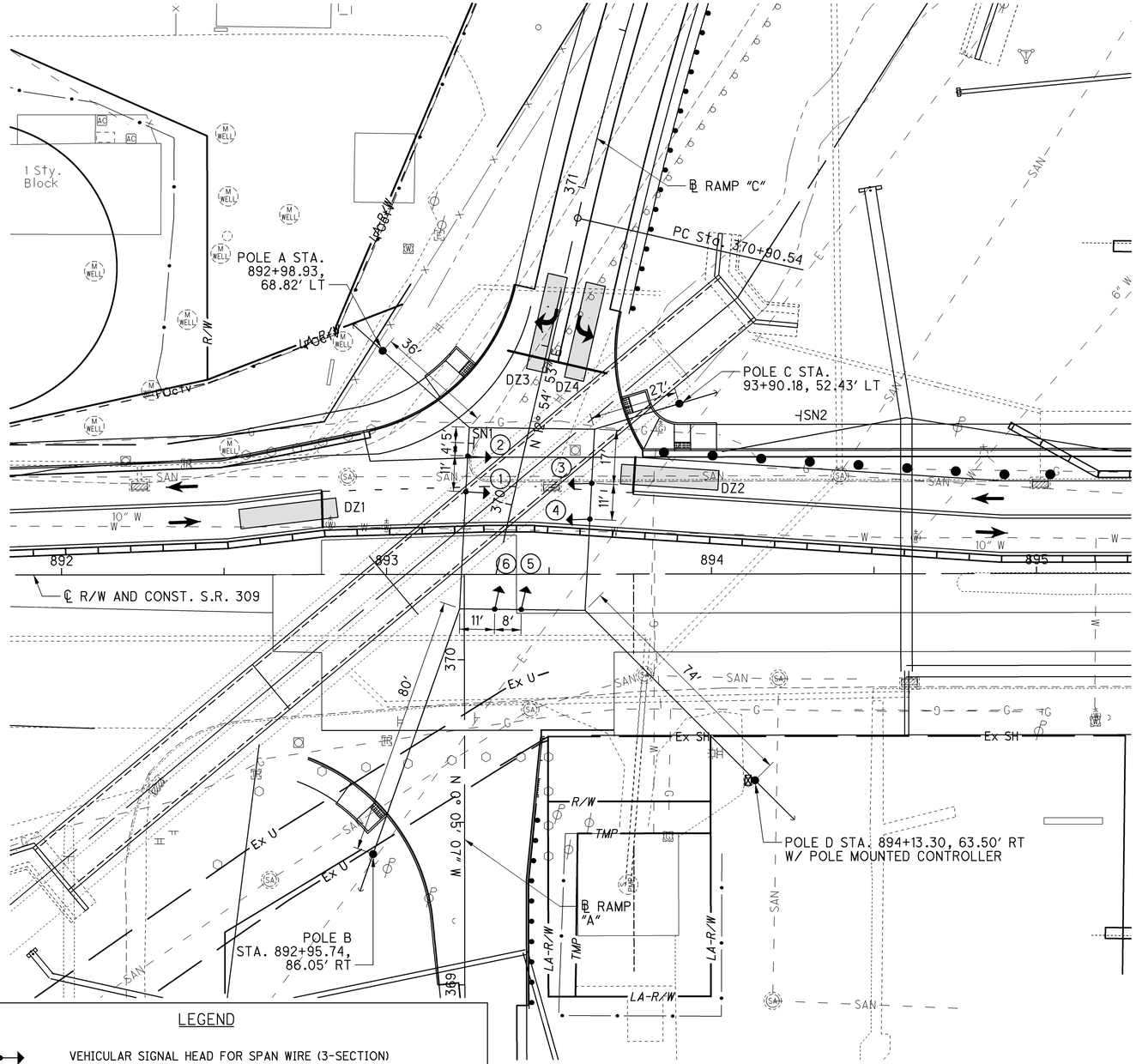

LEGEND

- VEHICULAR SIGNAL HEAD FOR SPAN WIRE (3-SECTION)
- EXISTING VEHICULAR SIGNAL FOR MAST ARM (3-SECTION)
- TEMPORARY WOOD POLE
- TEMPORARY POLE MOUNTED CONTROLLER
- SPAN WIRE
- PORTABLE CONCRETE BARRIER (PCB)
- DRUMS (10' C/C ON TAPERS; 20' C/C ON TANGENT)
- 30' X 6' VIDEO DETECTION ZONE
- PAVEMENT FOR MAINTAINING TRAFFIC

POWER SUPPLY FOR TEMPORARY SIGNAL

ELECTRICAL POWER SHALL BE OBTAINED FROM AEP. THE CONTRACTOR SHALL COORDINATE WITH AEP TO DETERMINE A SUITABLE LOCATION FOR THE POWER SOURCE. THE CONTRACTOR SHALL ESTABLISH AN ACCOUNT SET UP IN THE CONTRACTOR'S NAME. THE CONTACT INFORMATION IS AS FOLLOWS:

AEP
369 E. O'CONNOR AVENUE
LIMA, OHIO 45801
PHONE: 419-998-5103
CONTACT: MR. DAN WILSON
EMAIL: DEWILSON@AEP.COM

SIGNAL NOTES:

1. CONTRACTOR SHALL INSTALL TEMPORARY TRAFFIC SIGNAL AS PER 614.10 PRIOR TO BEGINNING S.R. 309 PHASE IIA MAINTENANCE OF TRAFFIC. ALL EQUIPMENT, LABOR, WORK, ETC. TO CONSTRUCT, OPERATE, MAINTAIN, AND ADJUST THE TEMPORARY SIGNAL SHALL BE INCLUDED WITH ITEM 614, WORK ZONE TRAFFIC SIGNAL.
2. PHASE NUMBERS SHOWN ON THIS PLAN CORRESPOND TO AN 8 PHASE CABINET. A 4 PHASE CABINET IS PERMITTED FOR THE TEMPORARY SIGNAL. IF A 4 PHASE CABINET IS USED, THE PHASE NUMBERS SHALL BE 1 AND 2 IN THE ORDER SHOWN ON THE PHASE DIAGRAM.
3. VIDEO DETECTION SHALL BE MAINTAINED AT ALL TIMES AT THE VIDEO DETECTION ZONE LOCATIONS SHOWN ON THE PLANS.
4. THE CONTRACTOR IS TO ESTABLISH SIGNAL TIMING BASED ON ACTUAL FIELD CONDITIONS. MINIMUM SIGNAL TIMINGS TO MEET ODOT TRAFFIC ENGINEERING MANUAL STANDARDS SHALL BE MET. THE CONTRACTOR IS TO ADJUST GREEN TIMES BASED ON TRAFFIC DEMANDS AS NECESSARY OR AS DIRECTED BY THE ENGINEER.
5. MINIMUM CLEARANCE FROM THE HIGHEST (CROWN) POINT ON THE PAVEMENT TO THE BOTTOM OF THE SIGNAL HEADS SHALL BE 16 FEET.
6. SIGNAL POLES SHALL BE LOCATED BEHIND DITCHES WHERE POSSIBLE. (REFER TO STANDARD CONSTRUCTION DRAWING MT-96.11 FOR CLEAR ZONE TABLE.

SIGNAL HEAD DETAIL
12" LENSES

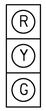

1-6



R3-1-24
SN1, SN2

SIGNAL PHASING DIAGRAM

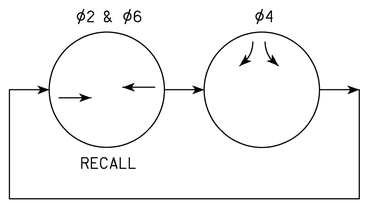

TEMPORARY SIGNAL PLAN - PHASE IIA
S.R. 309 & RAMP "C"

HORIZONTAL SCALE IN FEET
0 10 20 40

CALCULATED JRL
CHECKED EJC

ALL-75-5.53

98
1224

J:\Projects\ALL\76691\mot\sheets\76691MM603.dgn 11-SEP-2012 8:50PM reddenj

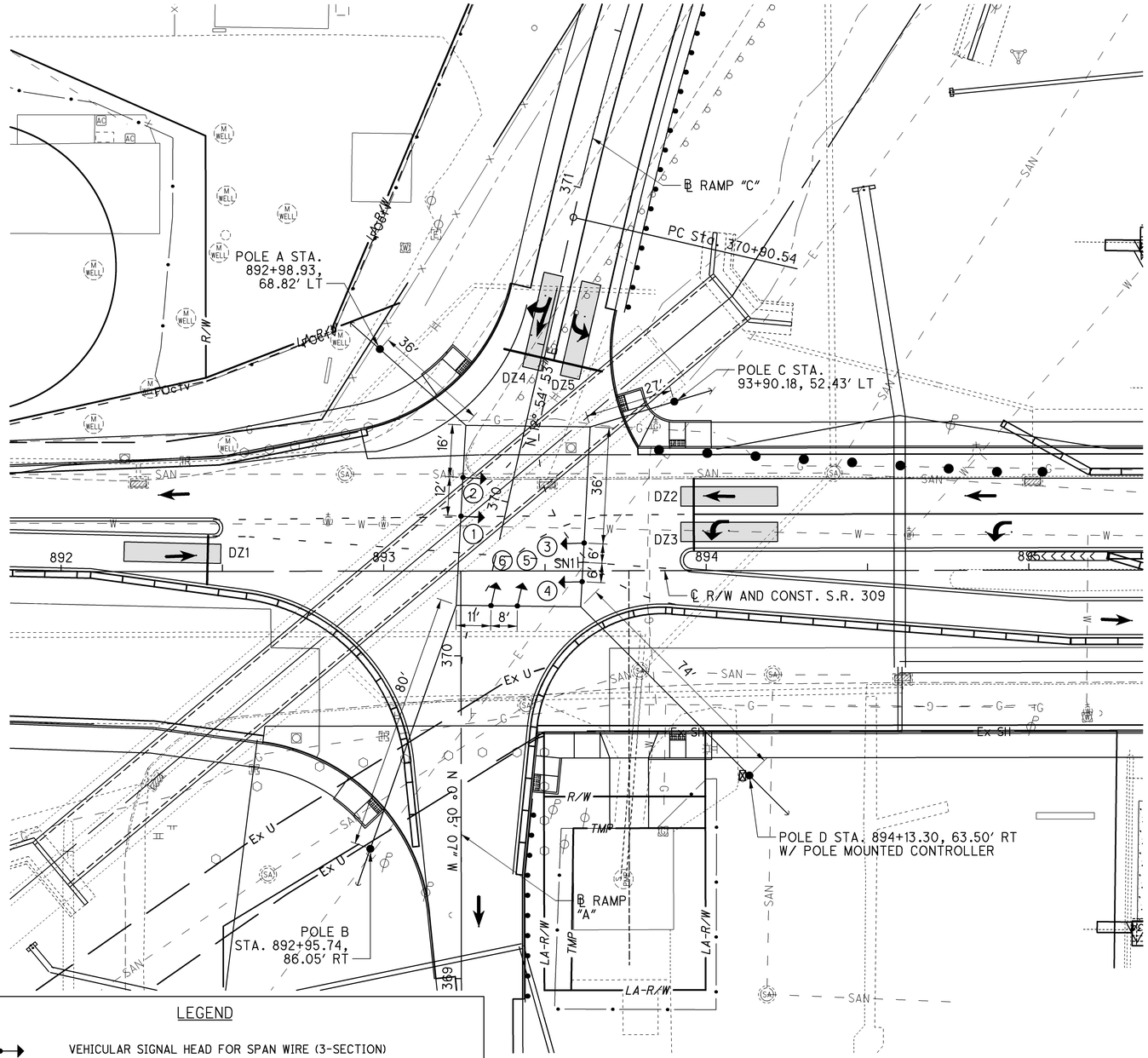

LEGEND

- VEHICULAR SIGNAL HEAD FOR SPAN WIRE (3-SECTION)
- EXISTING VEHICULAR SIGNAL FOR MAST ARM (3-SECTION)
- TEMPORARY WOOD POLE
- TEMPORARY POLE MOUNTED CONTROLLER
- SPAN WIRE
- PORTABLE CONCRETE BARRIER (PCB)
- DRUMS (10' C/C ON TAPERS; 20' C/C ON TANGENT)
- 30' X 6' VIDEO DETECTION ZONE
- PAVEMENT FOR MAINTAINING TRAFFIC

POWER SUPPLY FOR TEMPORARY SIGNAL

ELECTRICAL POWER SHALL BE OBTAINED FROM AEP. THE CONTRACTOR SHALL COORDINATE WITH AEP TO DETERMINE A SUITABLE LOCATION FOR THE POWER SOURCE. THE CONTRACTOR SHALL ESTABLISH AN ACCOUNT SET UP IN THE CONTRACTOR'S NAME. THE CONTACT INFORMATION IS AS FOLLOWS:

AEP
369 E. O'CONNOR AVENUE
LIMA, OHIO 45801
PHONE: 419-998-5103
CONTACT: MR. DAN WILSON
EMAIL: DEWILSON@AEP.COM

SIGNAL NOTES:

1. CONTRACTOR SHALL INSTALL TEMPORARY TRAFFIC SIGNAL AS PER 614.10 PRIOR TO BEGINNING S.R. 309 PHASE IIB MAINTENANCE OF TRAFFIC. ALL EQUIPMENT, LABOR, WORK, ETC. TO CONSTRUCT, OPERATE, MAINTAIN, AND ADJUST THE TEMPORARY SIGNAL SHALL BE INCLUDED WITH ITEM 614, WORK ZONE TRAFFIC SIGNAL.
2. PHASE NUMBERS SHOWN ON THIS PLAN CORRESPOND TO AN 8 PHASE CABINET. A 4 PHASE CABINET IS PERMITTED FOR THE TEMPORARY SIGNAL. IF A 4 PHASE CABINET IS USED, THE PHASE NUMBERS SHALL BE 1 AND 2 IN THE ORDER SHOWN ON THE PHASE DIAGRAM.
3. VIDEO DETECTION SHALL BE MAINTAINED AT ALL TIMES.
4. THE CONTRACTOR IS TO ESTABLISH SIGNAL TIMING BASED ON ACTUAL FIELD CONDITIONS. MINIMUM SIGNAL TIMINGS TO MEET ODOT TRAFFIC ENGINEERING MANUAL STANDARDS SHALL BE MET. THE CONTRACTOR IS TO ADJUST GREEN TIMES BASED ON TRAFFIC DEMANDS AS NECESSARY OR AS DIRECTED BY THE ENGINEER.
5. MINIMUM CLEARANCE FROM THE HIGHEST (CROWN) POINT ON THE PAVEMENT TO THE BOTTOM OF THE SIGNAL HEADS SHALL BE 16 FEET.
6. SIGNAL POLES SHALL BE LOCATED BEHIND DITCHES WHERE POSSIBLE. (REFER TO STANDARD CONSTRUCTION DRAWING MT-96.11 FOR CLEAR ZONE TABLE.

SIGNAL HEAD DETAIL
12" LENSES



R3-2-30
SN1

1-6

SIGNAL PHASING DIAGRAM

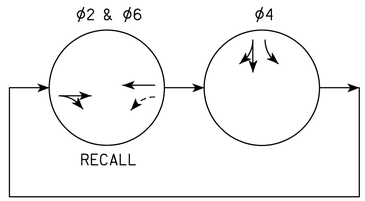

TEMPORARY SIGNAL PLAN - PHASE IIB
S.R. 309 & RAMP "C"

CALCULATED JRL
CHECKED EJC

HORIZONTAL SCALE IN FEET
0 10 20 40

ALL-75-5.53

99
1224

J:\Projects\ALL\76691\mot\sheets\76691MM606.dgn 11-SEP-2012 8:50PM reddenj

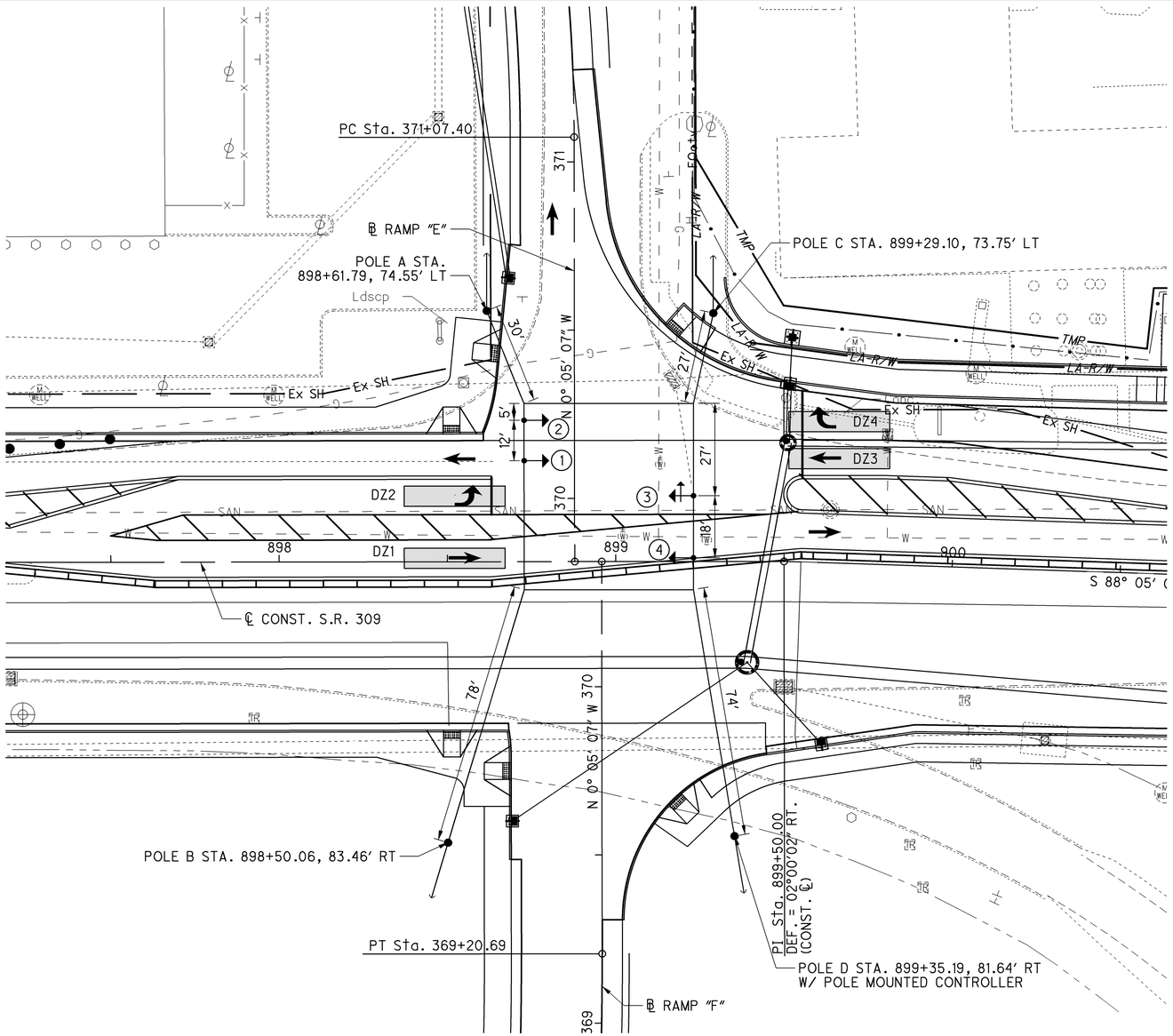

SIGNAL NOTES:

1. CONTRACTOR SHALL INSTALL TEMPORARY TRAFFIC SIGNAL AS PER 614.10 PRIOR TO BEGINNING S.R. 309 PHASE IIA MAINTENANCE OF TRAFFIC. ALL EQUIPMENT, LABOR, WORK, ETC. TO CONSTRUCT, OPERATE, MAINTAIN, AND ADJUST THE TEMPORARY SIGNAL SHALL BE INCLUDED WITH ITEM 614, WORK ZONE TRAFFIC SIGNAL.
2. PHASE NUMBERS SHOWN ON THIS PLAN CORRESPOND TO AN 8 PHASE CABINET. A 4 PHASE CABINET IS PERMITTED FOR THE TEMPORARY SIGNAL. IF A 4 PHASE CABINET IS USED, THE PHASE NUMBERS SHALL BE 1 AND 2 IN THE ORDER SHOWN ON THE PHASE DIAGRAM.
3. VIDEO DETECTION SHALL BE MAINTAINED AT ALL TIMES AT THE VIDEO DETECTION ZONE LOCATIONS SHOWN ON THE PLANS.
4. THE CONTRACTOR IS TO ESTABLISH SIGNAL TIMING BASED ON ACTUAL FIELD CONDITIONS. MINIMUM SIGNAL TIMINGS TO MEET ODOT TRAFFIC ENGINEERING MANUAL STANDARDS SHALL BE MET. THE CONTRACTOR IS TO ADJUST GREEN TIMES BASED ON TRAFFIC DEMANDS AS NECESSARY OR AS DIRECTED BY THE ENGINEER.
5. MINIMUM CLEARANCE FROM THE HIGHEST (CROWN) POINT ON THE PAVEMENT TO THE BOTTOM OF THE SIGNAL HEADS SHALL BE 16 FEET.
6. SIGNAL POLES SHALL BE LOCATED BEHIND DITCHES WHERE POSSIBLE. (REFER TO STANDARD CONSTRUCTION DRAWING MT-96.11 FOR CLEAR ZONE TABLE.

SIGNAL HEAD DETAIL
12" LENSES

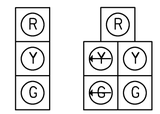

LEGEND

- VEHICULAR SIGNAL HEAD FOR SPAN WIRE (3-SECTION)
- VEHICULAR SIGNAL HEAD FOR SPAN WIRE (5-SECTION)
- EXISTING VEHICULAR SIGNAL FOR MAST ARM (3-SECTION)
- TEMPORARY WOOD POLE
- TEMPORARY POLE MOUNTED CONTROLLER
- SPAN WIRE
- PORTABLE CONCRETE BARRIER (PCB)
- DRUMS (10' C/C ON TAPERS; 20' C/C ON TANGENT)
- 30' X 6' VIDEO DETECTION ZONE
- PAVEMENT FOR MAINTAINING TRAFFIC

POWER SUPPLY FOR TEMPORARY SIGNAL

ELECTRICAL POWER SHALL BE OBTAINED FROM AEP. THE CONTRACTOR SHALL COORDINATE WITH AEP TO DETERMINE A SUITABLE LOCATION FOR THE POWER SOURCE. THE CONTRACTOR SHALL ESTABLISH AN ACCOUNT SET UP IN THE CONTRACTOR'S NAME. THE CONTACT INFORMATION IS AS FOLLOWS:

AEP
369 E. O'CONNOR AVENUE
LIMA, OHIO 45801
PHONE: 419-998-5103
CONTACT: MR. DAN WILSON
EMAIL: DEWILSON@AEP.COM

SIGNAL PHASING DIAGRAM

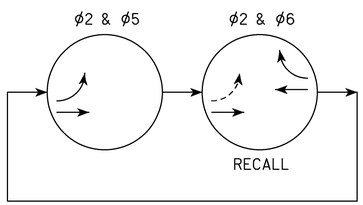

HORIZONTAL SCALE IN FEET
0 10 20 40

CALCULATED JRL
CHECKED EJC

TEMPORARY SIGNAL PLAN - PHASE IIA
S.R. 309, RAMP "E", & RAMP "F"

ALL-75-5.53

100
1224

J:\Projects\ALL\76691\mot\sheets\76691MM607.dgn 11-SEP-2012 8:50PM reddenj

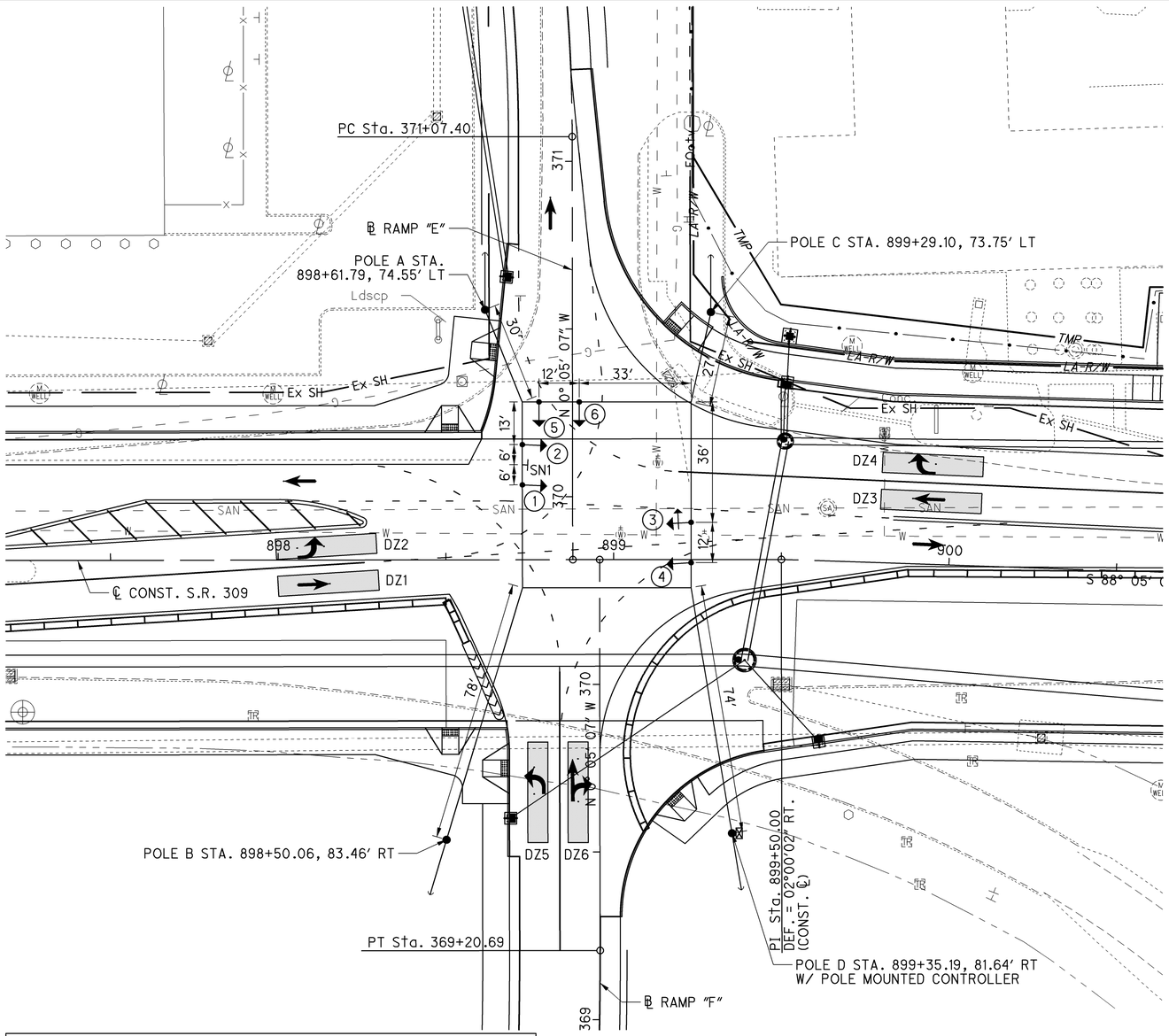

LEGEND

- VEHICULAR SIGNAL HEAD FOR SPAN WIRE (3-SECTION)
- VEHICULAR SIGNAL HEAD FOR SPAN WIRE (5-SECTION)
- EXISTING VEHICULAR SIGNAL FOR MAST ARM (3-SECTION)
- TEMPORARY WOOD POLE
- TEMPORARY POLE MOUNTED CONTROLLER
- SPAN WIRE
- PORTABLE CONCRETE BARRIER (PCB)
- DRUMS (10' C/C ON TAPERS; 20' C/C ON TANGENT)
- 30' X 6' VIDEO DETECTION ZONE
- PAVEMENT FOR MAINTAINING TRAFFIC

POWER SUPPLY FOR TEMPORARY SIGNAL

ELECTRICAL POWER SHALL BE OBTAINED FROM AEP. THE CONTRACTOR SHALL COORDINATE WITH AEP TO DETERMINE A SUITABLE LOCATION FOR THE POWER SOURCE. THE CONTRACTOR SHALL ESTABLISH AN ACCOUNT SET UP IN THE CONTRACTOR'S NAME. THE CONTACT INFORMATION IS AS FOLLOWS:

AEP
369 E. O'CONNOR AVENUE
LIMA, OHIO 45801
PHONE: 419-998-5103
CONTACT: MR. DAN WILSON
EMAIL: DEWILSON@AEP.COM

SIGNAL NOTES:

1. CONTRACTOR SHALL INSTALL TEMPORARY TRAFFIC SIGNAL AS PER 614.10 PRIOR TO BEGINNING S.R. 309 PHASE IIB MAINTENANCE OF TRAFFIC. ALL EQUIPMENT, LABOR, WORK, ETC. TO CONSTRUCT, OPERATE, MAINTAIN, AND ADJUST THE TEMPORARY SIGNAL SHALL BE INCLUDED WITH ITEM 614, WORK ZONE TRAFFIC SIGNAL.
2. PHASE NUMBERS SHOWN ON THIS PLAN CORRESPOND TO AN 8 PHASE CABINET. A 4 PHASE CABINET IS PERMITTED FOR THE TEMPORARY SIGNAL. IF A 4 PHASE CABINET IS USED, THE PHASE NUMBERS SHALL BE 1 AND 2 IN THE ORDER SHOWN ON THE PHASE DIAGRAM.
3. VIDEO DETECTION SHALL BE MAINTAINED AT ALL TIMES AT THE VIDEO DETECTION ZONE LOCATIONS SHOWN ON THE PLANS.
4. THE CONTRACTOR IS TO ESTABLISH SIGNAL TIMING BASED ON ACTUAL FIELD CONDITIONS. MINIMUM SIGNAL TIMINGS TO MEET ODOT TRAFFIC ENGINEERING MANUAL STANDARDS SHALL BE MET. THE CONTRACTOR IS TO ADJUST GREEN TIMES BASED ON TRAFFIC DEMANDS AS NECESSARY OR AS DIRECTED BY THE ENGINEER.
5. MINIMUM CLEARANCE FROM THE HIGHEST (CROWN) POINT ON THE PAVEMENT TO THE BOTTOM OF THE SIGNAL HEADS SHALL BE 16 FEET.
6. SIGNAL POLES SHALL BE LOCATED BEHIND DITCHES WHERE POSSIBLE. (REFER TO STANDARD CONSTRUCTION DRAWING MT-96.11 FOR CLEAR ZONE TABLE.

SIGNAL HEAD DETAIL
12" LENSES

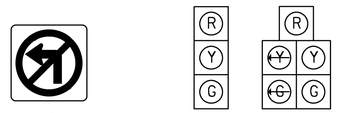

SIGNAL PHASING DIAGRAM

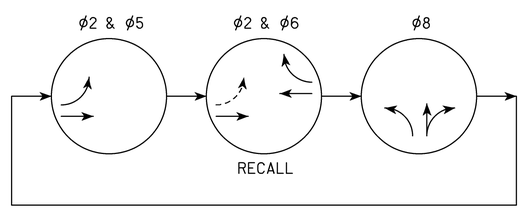

N

HORIZONTAL SCALE IN FEET
0 10 20 40

CALCULATED JRL
CHECKED EJC

TEMPORARY SIGNAL PLAN - PHASE IIB
S.R. 309, RAMP "E", & RAMP "F"

ALL-75-5.53

101
1224

J:\Projects\ALL\76691\mot\sheets\76691MM608.dgn 11-SEP-2012 8:50PM reddenj

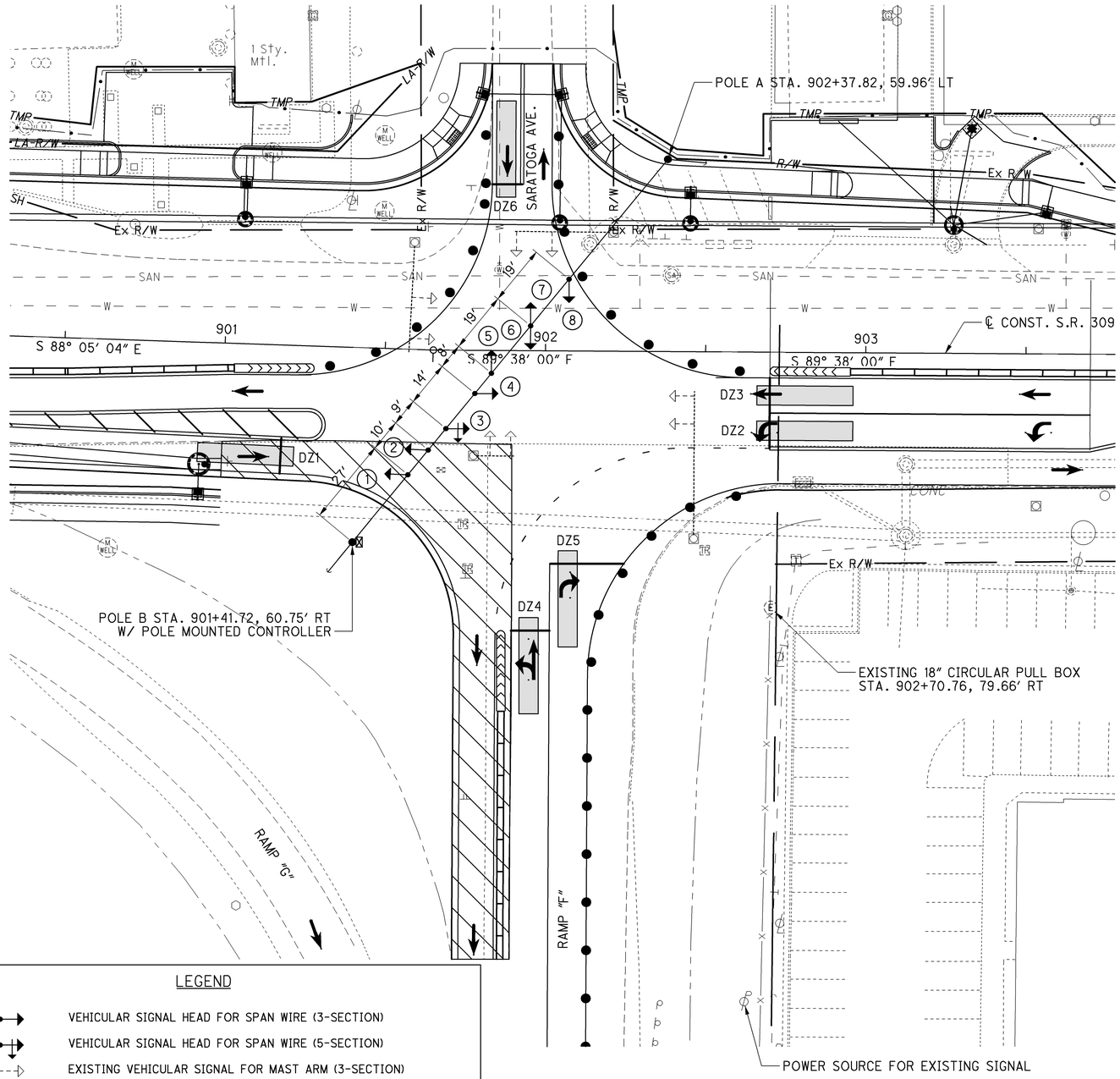

SIGNAL NOTES:

1. CONTRACTOR SHALL INSTALL TEMPORARY TRAFFIC SIGNAL AS PER 614.10 PRIOR TO BEGINNING S.R. 309 PHASE I MAINTENANCE OF TRAFFIC. ALL EQUIPMENT, LABOR, WORK, ETC. TO CONSTRUCT, OPERATE, MAINTAIN, AND ADJUST THE TEMPORARY SIGNAL SHALL BE INCLUDED WITH ITEM 614, WORK ZONE TRAFFIC SIGNAL.
2. PHASE NUMBERS SHOWN ON THIS PLAN CORRESPOND TO AN 8 PHASE CABINET. A 4 PHASE CABINET IS PERMITTED FOR THE TEMPORARY SIGNAL. IF A 4 PHASE CABINET IS USED, THE PHASE NUMBERS SHALL BE 1 AND 2 IN THE ORDER SHOWN ON THE PHASE DIAGRAM.
3. VIDEO DETECTION SHALL BE MAINTAINED AT ALL TIMES AT THE VIDEO DETECTION ZONE LOCATIONS SHOWN ON THE PLANS.
4. THE CONTRACTOR IS TO ESTABLISH SIGNAL TIMING BASED ON ACTUAL FIELD CONDITIONS. MINIMUM SIGNAL TIMINGS TO MEET ODOT TRAFFIC ENGINEERING MANUAL STANDARDS SHALL BE MET. THE CONTRACTOR IS TO ADJUST GREEN TIMES BASED ON TRAFFIC DEMANDS AS NECESSARY OR AS DIRECTED BY THE ENGINEER.
5. MINIMUM CLEARANCE FROM THE HIGHEST (CROWN) POINT ON THE PAVEMENT TO THE BOTTOM OF THE SIGNAL HEADS SHALL BE 16 FEET.
6. SIGNAL POLES SHALL BE LOCATED BEHIND DITCHES WHERE POSSIBLE. (REFER TO STANDARD CONSTRUCTION DRAWING MT-96.11 FOR CLEAR ZONE TABLE.
7. CONTRACTOR SHALL ADJUST OR COVER SIGNAL HEADS WHEN SARATOGA AVENUE IS CLOSED FOR 14 DAYS.

SIGNAL HEAD DETAIL
12" LENSES

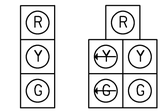

LEGEND

- VEHICULAR SIGNAL HEAD FOR SPAN WIRE (3-SECTION)
- VEHICULAR SIGNAL HEAD FOR SPAN WIRE (5-SECTION)
- EXISTING VEHICULAR SIGNAL FOR MAST ARM (3-SECTION)
- TEMPORARY WOOD POLE
- TEMPORARY POLE MOUNTED CONTROLLER
- SPAN WIRE
- PORTABLE CONCRETE BARRIER (PCB)
- DRUMS (10' C/C ON TAPERS; 20' C/C ON TANGENT)
- 30' X 6' VIDEO DETECTION ZONE
- PAVEMENT FOR MAINTAINING TRAFFIC

POWER SUPPLY FOR TEMPORARY SIGNAL

ELECTRICAL POWER SHALL BE OBTAINED FROM AEP. THE CONTRACTOR SHALL COORDINATE WITH AEP TO DETERMINE A SUITABLE LOCATION FOR THE POWER SOURCE. THE CONTRACTOR SHALL ESTABLISH AN ACCOUNT SET UP IN THE CONTRACTOR'S NAME. THE CONTACT INFORMATION IS AS FOLLOWS:

AEP
369 E. O'CONNOR AVENUE
LIMA, OHIO 45801
PHONE: 419-998-5103
CONTACT: MR. DAN WILSON
EMAIL: DEWILSON@AEP.COM

SIGNAL PHASING DIAGRAM

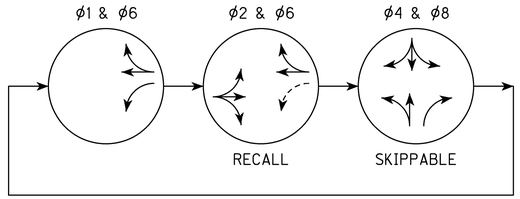

HORIZONTAL SCALE IN FEET
0 10 20 40

CALCULATED JRL
CHECKED EJC

TEMPORARY SIGNAL PLAN - PHASE I
S.R. 309 & EXISTING RAMP "F"

ALL-75-5.53

102
1224

J:\Projects\ALL\76691\mot\sheets\76691MM604.dgn 11-SEP-2012 8:50PM reddenj

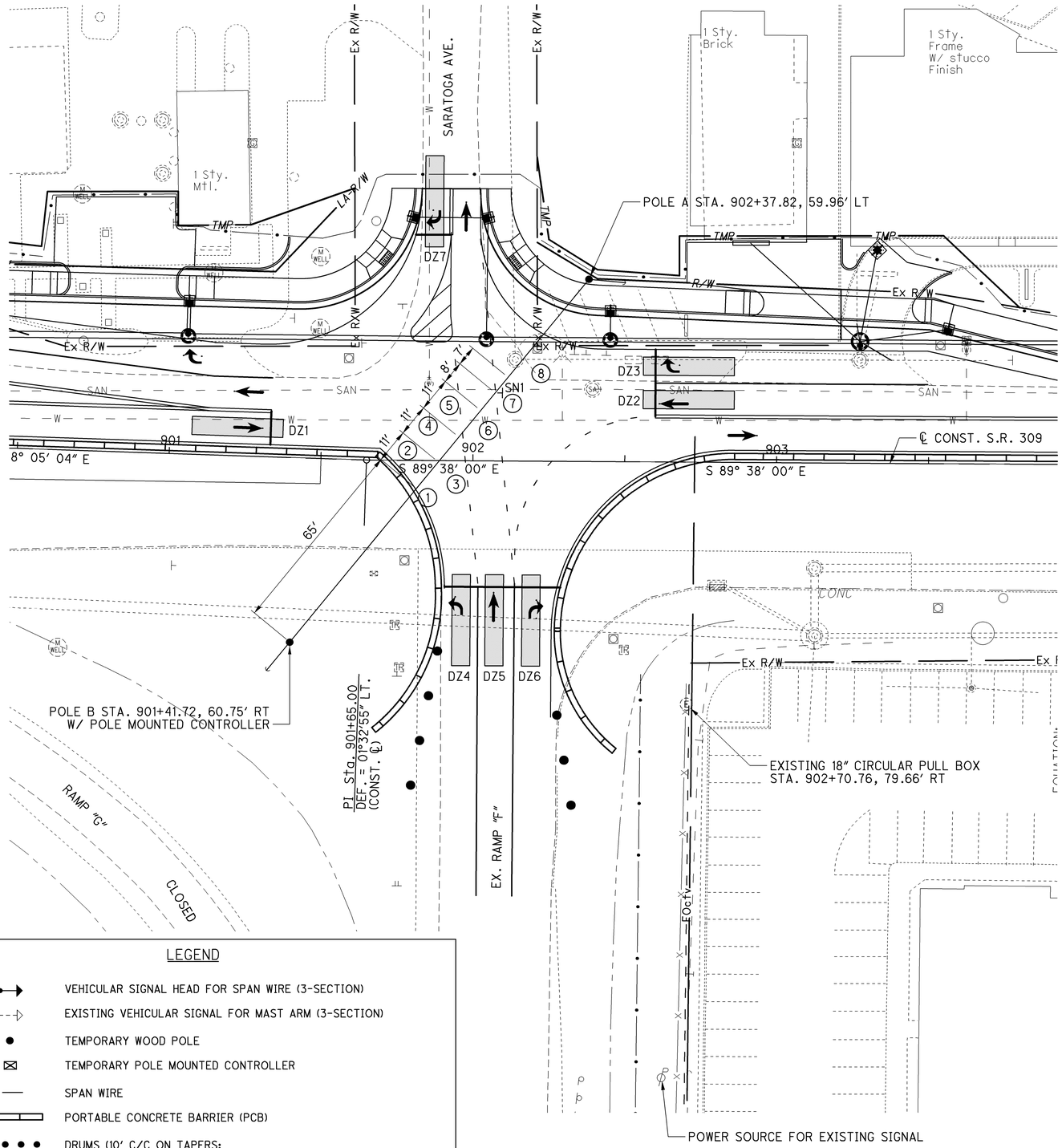

LEGEND

- VEHICULAR SIGNAL HEAD FOR SPAN WIRE (3-SECTION)
- EXISTING VEHICULAR SIGNAL FOR MAST ARM (3-SECTION)
- TEMPORARY WOOD POLE
- TEMPORARY POLE MOUNTED CONTROLLER
- SPAN WIRE
- PORTABLE CONCRETE BARRIER (PCB)
- DRUMS (10' C/C ON TAPERS; 20' C/C ON TANGENT)
- 30' X 6' VIDEO DETECTION ZONE
- PAVEMENT FOR MAINTAINING TRAFFIC

SIGNAL NOTES:

1. CONTRACTOR SHALL INSTALL TEMPORARY TRAFFIC SIGNAL AS PER 614.10 PRIOR TO BEGINNING S.R. 309 PHASE IIA MAINTENANCE OF TRAFFIC. ALL EQUIPMENT, LABOR, WORK, ETC. TO CONSTRUCT, OPERATE, MAINTAIN, AND ADJUST THE TEMPORARY SIGNAL SHALL BE INCLUDED WITH ITEM 614, WORK ZONE TRAFFIC SIGNAL.
2. PHASE NUMBERS SHOWN ON THIS PLAN CORRESPOND TO AN 8 PHASE CABINET. A 4 PHASE CABINET IS PERMITTED FOR THE TEMPORARY SIGNAL. IF A 4 PHASE CABINET IS USED, THE PHASE NUMBERS SHALL BE 1 AND 2 IN THE ORDER SHOWN ON THE PHASE DIAGRAM.
3. VIDEO DETECTION SHALL BE MAINTAINED AT ALL TIMES AT THE VIDEO DETECTION ZONE LOCATIONS SHOWN ON THE PLANS.
4. THE CONTRACTOR IS TO ESTABLISH SIGNAL TIMING BASED ON ACTUAL FIELD CONDITIONS. MINIMUM SIGNAL TIMINGS TO MEET ODOT TRAFFIC ENGINEERING MANUAL STANDARDS SHALL BE MET. THE CONTRACTOR IS TO ADJUST GREEN TIMES BASED ON TRAFFIC DEMANDS AS NECESSARY OR AS DIRECTED BY THE ENGINEER.
5. MINIMUM CLEARANCE FROM THE HIGHEST (CROWN) POINT ON THE PAVEMENT TO THE BOTTOM OF THE SIGNAL HEADS SHALL BE 16 FEET.
6. SIGNAL POLES SHALL BE LOCATED BEHIND DITCHES WHERE POSSIBLE. (REFER TO STANDARD CONSTRUCTION DRAWING MT-96.11 FOR CLEAR ZONE TABLE.

SIGNAL HEAD DETAIL
12" LENSES



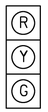

SIGNAL PHASING DIAGRAM

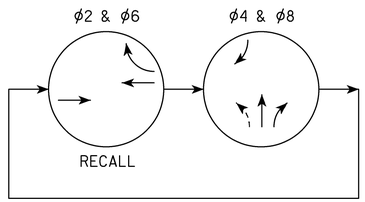

POWER SUPPLY FOR TEMPORARY SIGNAL

ELECTRICAL POWER SHALL BE OBTAINED FROM AEP. THE CONTRACTOR SHALL COORDINATE WITH AEP TO DETERMINE A SUITABLE LOCATION FOR THE POWER SOURCE. THE CONTRACTOR SHALL ESTABLISH AN ACCOUNT SET UP IN THE CONTRACTOR'S NAME. THE CONTACT INFORMATION IS AS FOLLOWS:

AEP
369 E. O'CONNOR AVENUE
LIMA, OHIO 45801
PHONE: 419-998-5103
CONTACT: MR. DAN WILSON
EMAIL: DEWILSON@AEP.COM

HORIZONTAL SCALE IN FEET
0 10 20 40

CALCULATED JRL
CHECKED EJC

TEMPORARY SIGNAL PLAN - PHASE IIA
S.R. 309, EX. RAMP "F" & SARATOGA AVE.

ALL-75-5.53

103
1224

J:\Projects\ALL\76691\mot\sheets\76691MM605.dgn 11-SEP-2012 8:50PM reddenj

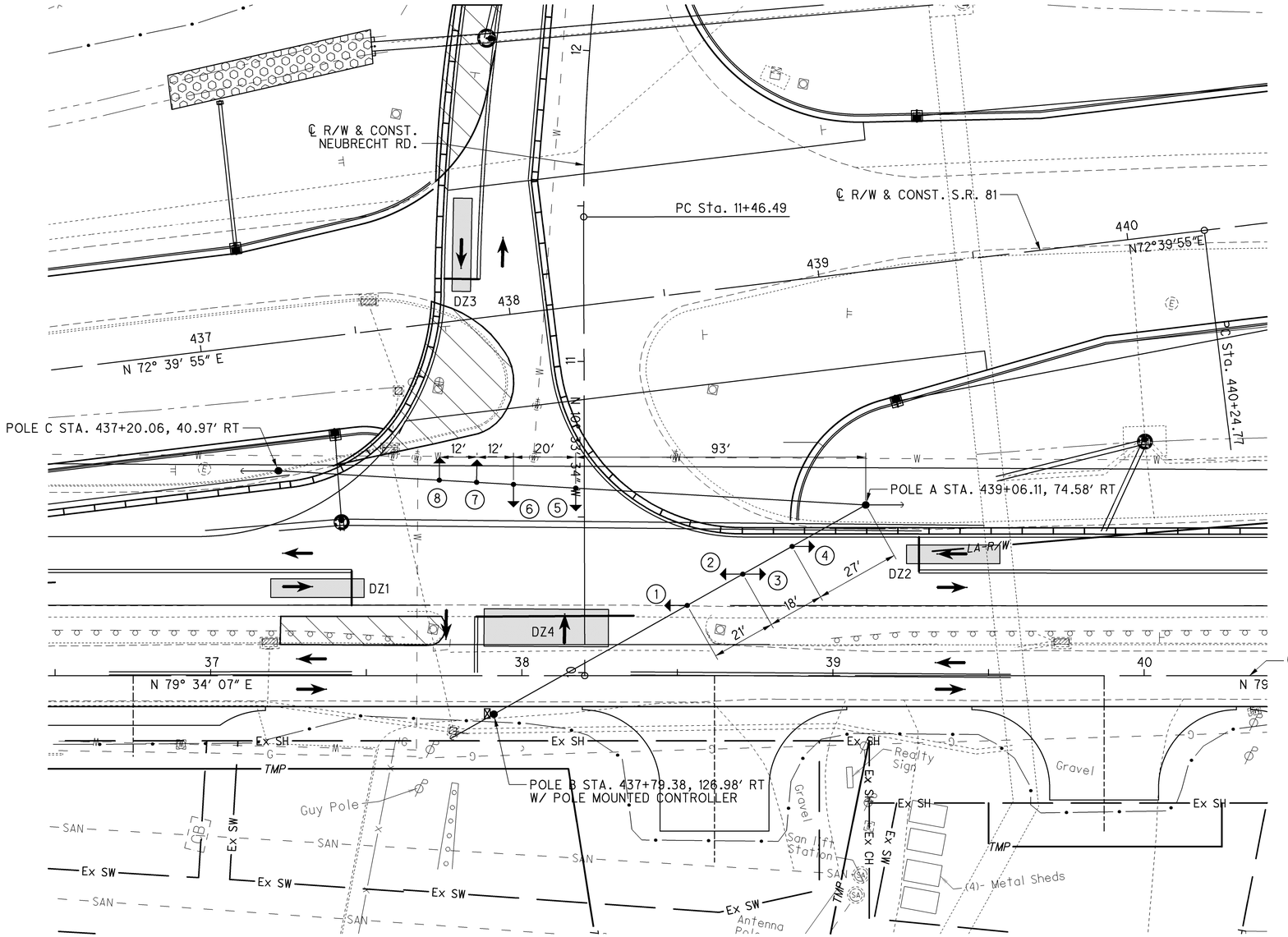

SIGNAL NOTES:

1. CONTRACTOR SHALL INSTALL TEMPORARY TRAFFIC SIGNAL AS PER 614.10 PRIOR TO BEGINNING S.R. 81 PHASE I MAINTENANCE OF TRAFFIC. ALL EQUIPMENT, LABOR, WORK, ETC. TO CONSTRUCT, OPERATE, MAINTAIN, AND ADJUST THE TEMPORARY SIGNAL SHALL BE INCLUDED WITH ITEM 614, WORK ZONE TRAFFIC SIGNAL.
2. PHASE NUMBERS SHOWN ON THIS PLAN CORRESPOND TO AN 8 PHASE CABINET. A 4 PHASE CABINET IS PERMITTED FOR THE TEMPORARY SIGNAL. IF A 4 PHASE CABINET IS USED, THE PHASE NUMBERS SHALL BE 1 AND 2 IN THE ORDER SHOWN ON THE PHASE DIAGRAM.
3. VIDEO DETECTION SHALL BE MAINTAINED AT ALL TIMES AT THE VIDEO DETECTION ZONE LOCATIONS SHOWN ON THE PLANS.
4. THE CONTRACTOR IS TO ESTABLISH SIGNAL TIMING BASED ON ACTUAL FIELD CONDITIONS. MINIMUM SIGNAL TIMINGS TO MEET ODOT TRAFFIC ENGINEERING MANUAL STANDARDS SHALL BE MET. THE CONTRACTOR IS TO ADJUST GREEN TIMES BASED ON TRAFFIC DEMANDS AS NECESSARY OR AS DIRECTED BY THE ENGINEER.
5. MINIMUM CLEARANCE FROM THE HIGHEST (CROWN) POINT ON THE PAVEMENT TO THE BOTTOM OF THE SIGNAL HEADS SHALL BE 16 FEET.
6. SIGNAL POLES SHALL BE LOCATED BEHIND DITCHES WHERE POSSIBLE. (REFER TO STANDARD CONSTRUCTION DRAWING MT-96.11 FOR CLEAR ZONE TABLE.

SIGNAL HEAD DETAIL
12" LENSES

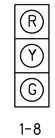

LEGEND

- VEHICULAR SIGNAL HEAD FOR SPAN WIRE (3-SECTION)
- EXISTING VEHICULAR SIGNAL FOR MAST ARM (3-SECTION)
- TEMPORARY WOOD POLE
- TEMPORARY POLE MOUNTED CONTROLLER
- SPAN WIRE
- PORTABLE CONCRETE BARRIER (PCB)
- DRUMS (10' C/C ON TAPERS; 20' C/C ON TANGENT)
- 30' X 6' VIDEO DETECTION ZONE
- PAVEMENT FOR MAINTAINING TRAFFIC

POWER SUPPLY FOR TEMPORARY SIGNAL

ELECTRICAL POWER SHALL BE OBTAINED FROM AEP. THE CONTRACTOR SHALL COORDINATE WITH AEP TO DETERMINE A SUITABLE LOCATION FOR THE POWER SOURCE. THE CONTRACTOR SHALL ESTABLISH AN ACCOUNT SET UP IN THE CONTRACTOR'S NAME. THE CONTACT INFORMATION IS AS FOLLOWS:

AEP
369 E. O'CONNOR AVENUE
LIMA, OHIO 45801
PHONE: 419-998-5103
CONTACT: MR. DAN WILSON
EMAIL: DEWILSON@AEP.COM

SIGNAL PHASING DIAGRAM

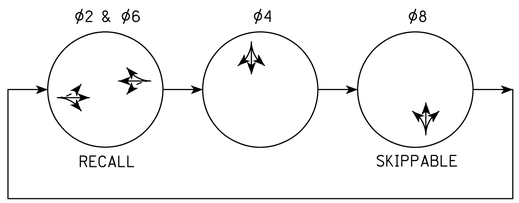

HORIZONTAL SCALE IN FEET
0 10 20 40
CALCULATED JRL
CHECKED EJC

TEMPORARY SIGNAL PLAN - PHASE I
S.R. 81 & NEUBRECHT RD.

ALL-75-5.53

104
1224

J:\Projects\ALL\76691\mot\sheets\76691MM800.dgn 11-SEP-2012 8:50PM reddenj

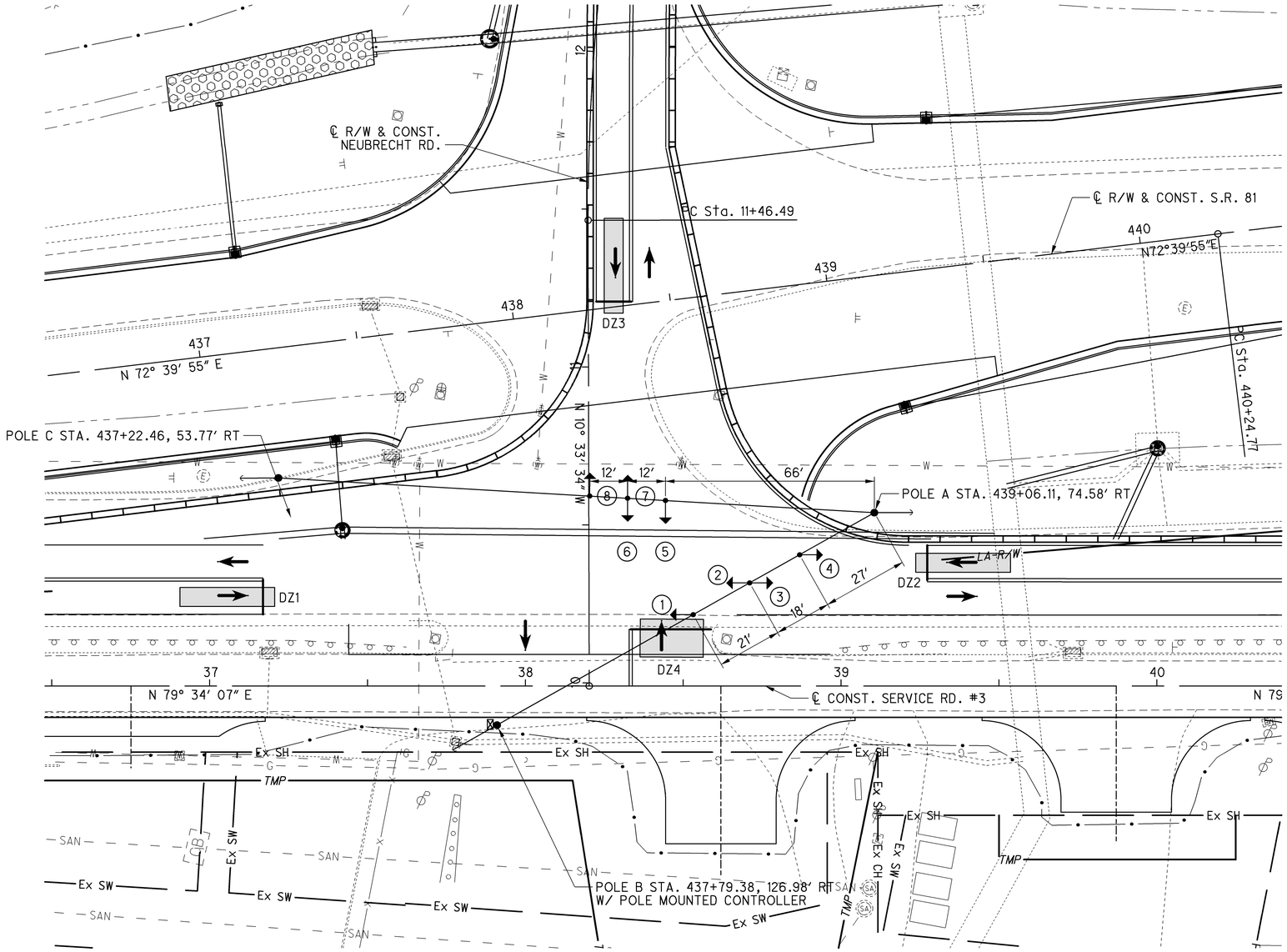

SIGNAL NOTES:

1. CONTRACTOR SHALL INSTALL TEMPORARY TRAFFIC SIGNAL AS PER 614.10 PRIOR TO BEGINNING S.R. 81 PHASE I, NEUBRECHT RD. PHASE II MAINTENANCE OF TRAFFIC. ALL EQUIPMENT, LABOR, WORK, ETC. TO CONSTRUCT, OPERATE, MAINTAIN, AND ADJUST THE TEMPORARY SIGNAL SHALL BE INCLUDED WITH ITEM 614, WORK ZONE TRAFFIC SIGNAL.
2. PHASE NUMBERS SHOWN ON THIS PLAN CORRESPOND TO AN 8 PHASE CABINET. A 4 PHASE CABINET IS PERMITTED FOR THE TEMPORARY SIGNAL. IF A 4 PHASE CABINET IS USED, THE PHASE NUMBERS SHALL BE 1 AND 2 IN THE ORDER SHOWN ON THE PHASE DIAGRAM.
3. VIDEO DETECTION SHALL BE MAINTAINED AT ALL TIMES AT THE VIDEO DETECTION ZONE LOCATIONS SHOWN ON THE PLANS.
4. THE CONTRACTOR IS TO ESTABLISH SIGNAL TIMING BASED ON ACTUAL FIELD CONDITIONS. MINIMUM SIGNAL TIMINGS TO MEET ODOT TRAFFIC ENGINEERING MANUAL STANDARDS SHALL BE MET. THE CONTRACTOR IS TO ADJUST GREEN TIMES BASED ON TRAFFIC DEMANDS AS NECESSARY OR AS DIRECTED BY THE ENGINEER.
5. MINIMUM CLEARANCE FROM THE HIGHEST (CROWN) POINT ON THE PAVEMENT TO THE BOTTOM OF THE SIGNAL HEADS SHALL BE 16 FEET.
6. SIGNAL POLES SHALL BE LOCATED BEHIND DITCHES WHERE POSSIBLE. (REFER TO STANDARD CONSTRUCTION DRAWING MT-96.11 FOR CLEAR ZONE TABLE.

SIGNAL HEAD DETAIL
12" LENSES

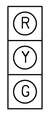

1-8

LEGEND

- VEHICULAR SIGNAL HEAD FOR SPAN WIRE (3-SECTION)
- EXISTING VEHICULAR SIGNAL FOR MAST ARM (3-SECTION)
- TEMPORARY WOOD POLE
- TEMPORARY POLE MOUNTED CONTROLLER
- SPAN WIRE
- PORTABLE CONCRETE BARRIER (PCB)
- DRUMS (10' C/C ON TAPERS; 20' C/C ON TANGENT)
- 30' X 6' VIDEO DETECTION ZONE
- PAVEMENT FOR MAINTAINING TRAFFIC

POWER SUPPLY FOR TEMPORARY SIGNAL

ELECTRICAL POWER SHALL BE OBTAINED FROM AEP. THE CONTRACTOR SHALL COORDINATE WITH AEP TO DETERMINE A SUITABLE LOCATION FOR THE POWER SOURCE. THE CONTRACTOR SHALL ESTABLISH AN ACCOUNT SET UP IN THE CONTRACTOR'S NAME. THE CONTACT INFORMATION IS AS FOLLOWS:

AEP
369 E. O'CONNOR AVENUE
LIMA, OHIO 45801
PHONE: 419-998-5103
CONTACT: MR. DAN WILSON
EMAIL: DEWILSON@AEP.COM

SIGNAL PHASING DIAGRAM

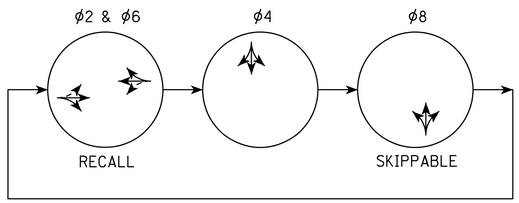

HORIZONTAL SCALE IN FEET
0 10 20 40

CALCULATED JRL
CHECKED EJC

TEMPORARY SIGNAL PLAN
S.R. 81 PHASE I & NEUBRECHT RD. PHASE II

ALL-75-5.53

105
1224

J:\Projects\ALL\76691\mot\sheets\76691MM807.dgn 11-SEP-2012 8:50PM reddenj

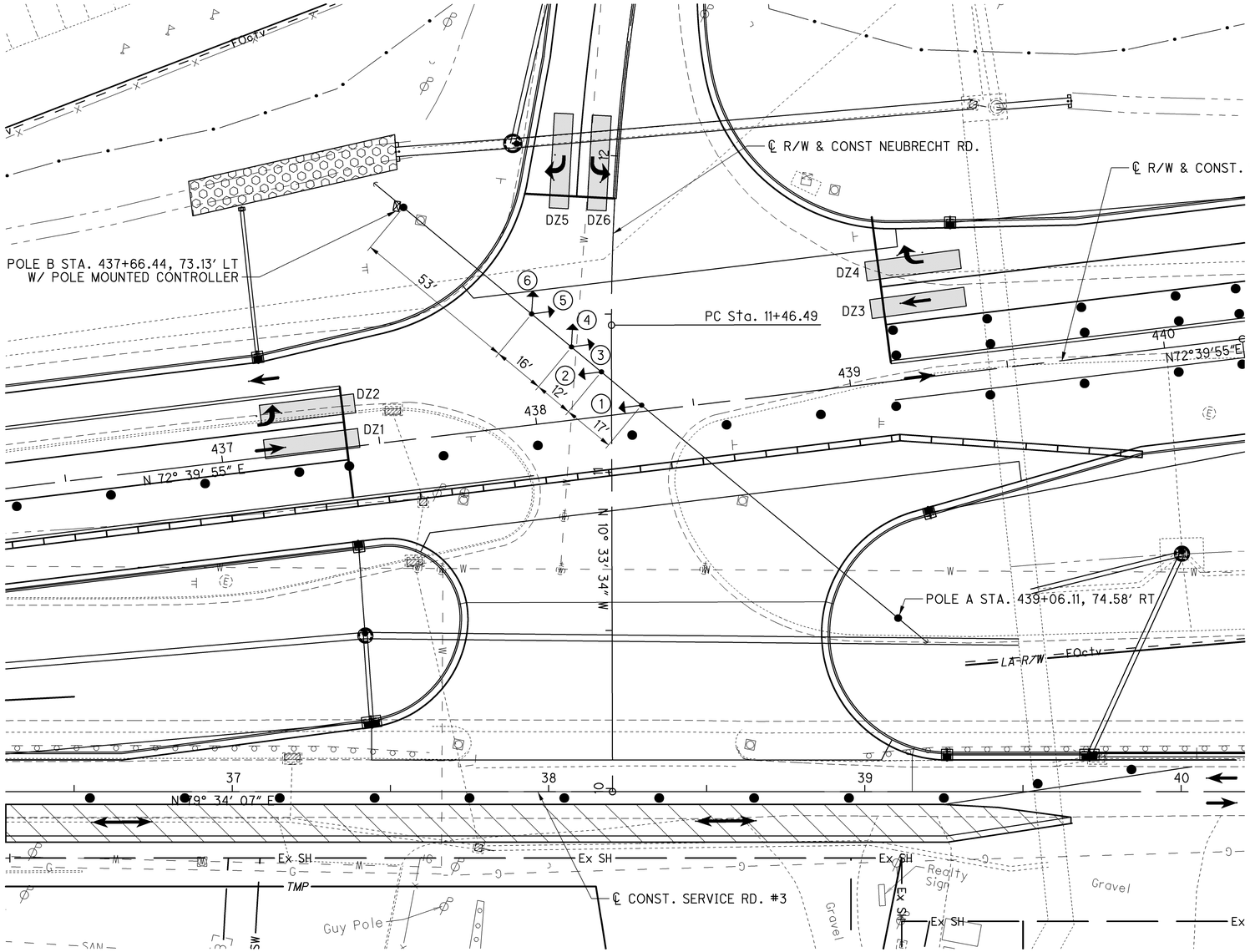

SIGNAL NOTES:

1. CONTRACTOR SHALL INSTALL TEMPORARY TRAFFIC SIGNAL AS PER 614.10 PRIOR TO BEGINNING S.R. 81 PHASE II, SERVICE RD. #3 PHASE I MAINTENANCE OF TRAFFIC. ALL EQUIPMENT, LABOR, WORK, ETC. TO CONSTRUCT, OPERATE, MAINTAIN, AND ADJUST THE TEMPORARY SIGNAL SHALL BE INCLUDED WITH ITEM 614, WORK ZONE TRAFFIC SIGNAL.
2. PHASE NUMBERS SHOWN ON THIS PLAN CORRESPOND TO AN 8 PHASE CABINET. A 4 PHASE CABINET IS PERMITTED FOR THE TEMPORARY SIGNAL. IF A 4 PHASE CABINET IS USED, THE PHASE NUMBERS SHALL BE 1 AND 2 IN THE ORDER SHOWN ON THE PHASE DIAGRAM.
3. VIDEO DETECTION SHALL BE MAINTAINED AT ALL TIMES AT THE VIDEO DETECTION ZONE LOCATIONS SHOWN ON THE PLANS.
4. THE CONTRACTOR IS TO ESTABLISH SIGNAL TIMING BASED ON ACTUAL FIELD CONDITIONS. MINIMUM SIGNAL TIMINGS TO MEET ODOT TRAFFIC ENGINEERING MANUAL STANDARDS SHALL BE MET. THE CONTRACTOR IS TO ADJUST GREEN TIMES BASED ON TRAFFIC DEMANDS AS NECESSARY OR AS DIRECTED BY THE ENGINEER.
5. MINIMUM CLEARANCE FROM THE HIGHEST (CROWN) POINT ON THE PAVEMENT TO THE BOTTOM OF THE SIGNAL HEADS SHALL BE 16 FEET.
6. SIGNAL POLES SHALL BE LOCATED BEHIND DITCHES WHERE POSSIBLE. (REFER TO STANDARD CONSTRUCTION DRAWING MT-96.11 FOR CLEAR ZONE TABLE.

SIGNAL HEAD DETAIL
12" LENSES

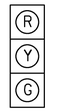

1-6

LEGEND

- VEHICULAR SIGNAL HEAD FOR SPAN WIRE (3-SECTION)
- EXISTING VEHICULAR SIGNAL FOR MAST ARM (3-SECTION)
- TEMPORARY WOOD POLE
- TEMPORARY POLE MOUNTED CONTROLLER
- SPAN WIRE
- PORTABLE CONCRETE BARRIER (PCB)
- DRUMS (10' C/C ON TAPERS; 20' C/C ON TANGENT)
- 30' X 6' VIDEO DETECTION ZONE
- PAVEMENT FOR MAINTAINING TRAFFIC

POWER SUPPLY FOR TEMPORARY SIGNAL

ELECTRICAL POWER SHALL BE OBTAINED FROM AEP. THE CONTRACTOR SHALL COORDINATE WITH AEP TO DETERMINE A SUITABLE LOCATION FOR THE POWER SOURCE. THE CONTRACTOR SHALL ESTABLISH AN ACCOUNT SET UP IN THE CONTRACTOR'S NAME. THE CONTACT INFORMATION IS AS FOLLOWS:

AEP
369 E. O'CONNOR AVENUE
LIMA, OHIO 45801
PHONE: 419-998-5103
CONTACT: MR. DAN WILSON
EMAIL: DEWILSON@AEP.COM

SIGNAL PHASING DIAGRAM

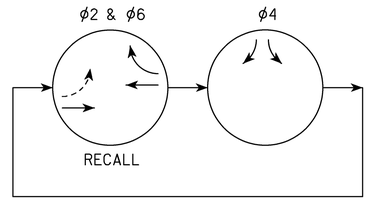

HORIZONTAL SCALE IN FEET
0 10 20 40

CALCULATED JRL
CHECKED EJC

TEMPORARY SIGNAL PLAN - NEUBRECHT RD.
S.R. 81 PHASE II, SERVICE RD. #3 PHASE I & II

ALL-75-5.53

106
1224

J:\Projects\ALL\76691\mot\sheets\76691MM803.dgn 11-SEP-2012 8:50PM reddenj

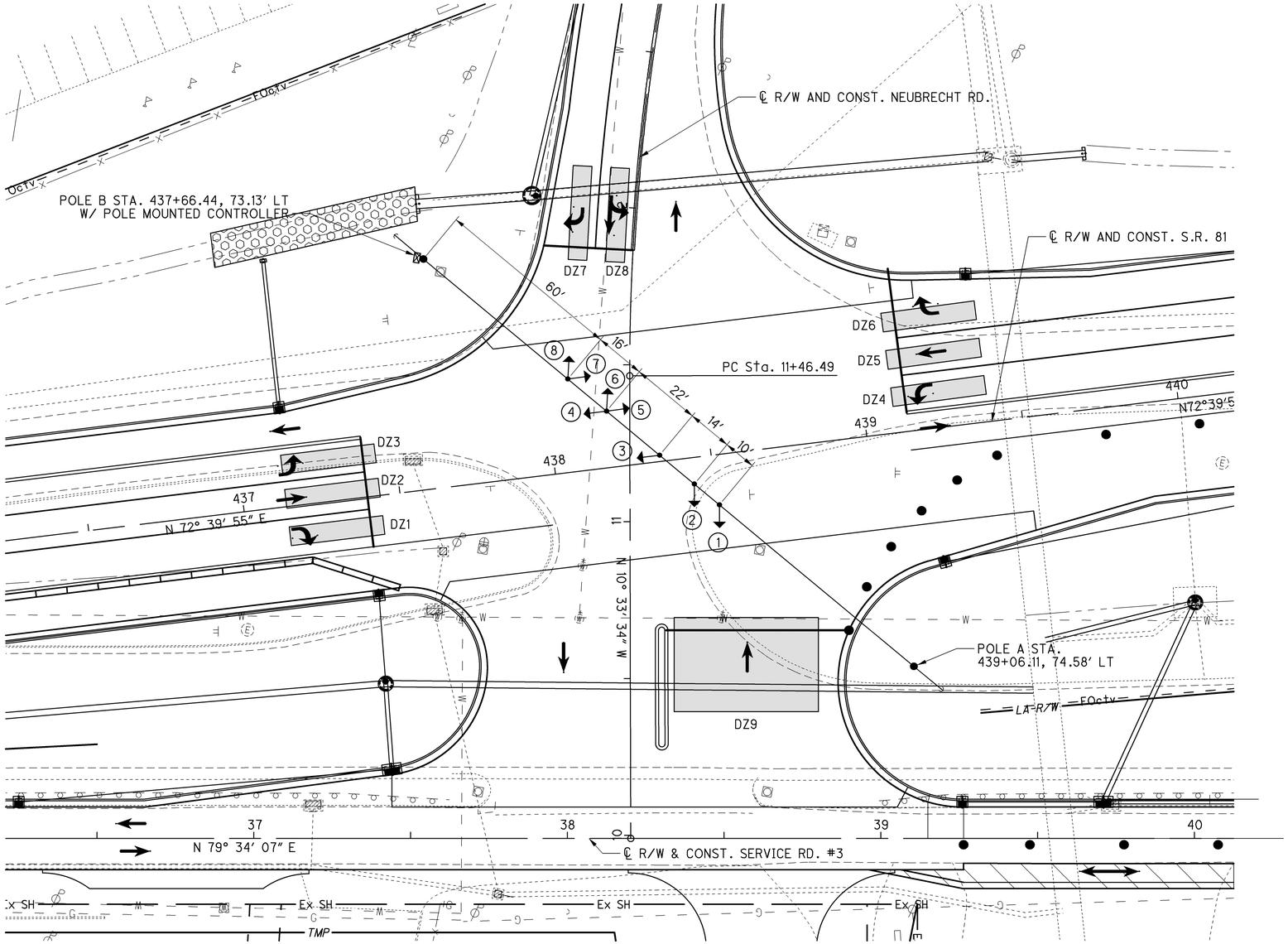

SIGNAL NOTES:

1. CONTRACTOR SHALL INSTALL TEMPORARY TRAFFIC SIGNAL AS PER 614.10 PRIOR TO BEGINNING S.R. 81 PHASE II, SERVICE RD. #3 PHASE III MAINTENANCE OF TRAFFIC. ALL EQUIPMENT, LABOR, WORK, ETC. TO CONSTRUCT, OPERATE, MAINTAIN, AND ADJUST THE TEMPORARY SIGNAL SHALL BE INCLUDED WITH ITEM 614, WORK ZONE TRAFFIC SIGNAL.
2. PHASE NUMBERS SHOWN ON THIS PLAN CORRESPOND TO AN 8 PHASE CABINET. A 4 PHASE CABINET IS PERMITTED FOR THE TEMPORARY SIGNAL. IF A 4 PHASE CABINET IS USED, THE PHASE NUMBERS SHALL BE 1 AND 2 IN THE ORDER SHOWN ON THE PHASE DIAGRAM.
3. VIDEO DETECTION SHALL BE MAINTAINED AT ALL TIMES AT THE VIDEO DETECTION ZONE LOCATIONS SHOWN ON THE PLANS.
4. THE CONTRACTOR IS TO ESTABLISH SIGNAL TIMING BASED ON ACTUAL FIELD CONDITIONS. MINIMUM SIGNAL TIMINGS TO MEET ODOT TRAFFIC ENGINEERING MANUAL STANDARDS SHALL BE MET. THE CONTRACTOR IS TO ADJUST GREEN TIMES BASED ON TRAFFIC DEMANDS AS NECESSARY OR AS DIRECTED BY THE ENGINEER.
5. MINIMUM CLEARANCE FROM THE HIGHEST (CROWN) POINT ON THE PAVEMENT TO THE BOTTOM OF THE SIGNAL HEADS SHALL BE 16 FEET.
6. SIGNAL POLES SHALL BE LOCATED BEHIND DITCHES WHERE POSSIBLE. (REFER TO STANDARD CONSTRUCTION DRAWING MT-96.11 FOR CLEAR ZONE TABLE.

SIGNAL HEAD DETAIL
12" LENSES

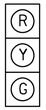

LEGEND

- VEHICULAR SIGNAL HEAD FOR SPAN WIRE (3-SECTION)
- EXISTING VEHICULAR SIGNAL FOR MAST ARM (3-SECTION)
- TEMPORARY WOOD POLE
- TEMPORARY POLE MOUNTED CONTROLLER
- SPAN WIRE
- PORTABLE CONCRETE BARRIER (PCB)
- DRUMS (10' C/C ON TAPERS; 20' C/C ON TANGENT)
- 30' X 6' VIDEO DETECTION ZONE
- PAVEMENT FOR MAINTAINING TRAFFIC

POWER SUPPLY FOR TEMPORARY SIGNAL

ELECTRICAL POWER SHALL BE OBTAINED FROM AEP. THE CONTRACTOR SHALL COORDINATE WITH AEP TO DETERMINE A SUITABLE LOCATION FOR THE POWER SOURCE. THE CONTRACTOR SHALL ESTABLISH AN ACCOUNT SET UP IN THE CONTRACTOR'S NAME. THE CONTACT INFORMATION IS AS FOLLOWS:

AEP
369 E. O'CONNOR AVENUE
LIMA, OHIO 45801
PHONE: 419-998-5103
CONTACT: MR. DAN WILSON
EMAIL: DEWILSON@AEP.COM

SIGNAL PHASING DIAGRAM

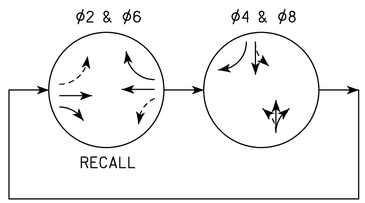

HORIZONTAL SCALE IN FEET
0 10 20 40
CALCULATED JRL
CHECKED EJC

TEMPORARY SIGNAL PLAN - NEUBRECHT RD.
S.R. 81 PHASE II, SERVICE RD. #3 PHASE III & IV

ALL-75-5.53

107
1224

J:\Projects\ALL\76691\mot\sheets\76691NM806.dgn 11-SEP-2012 8:50PM reddenj

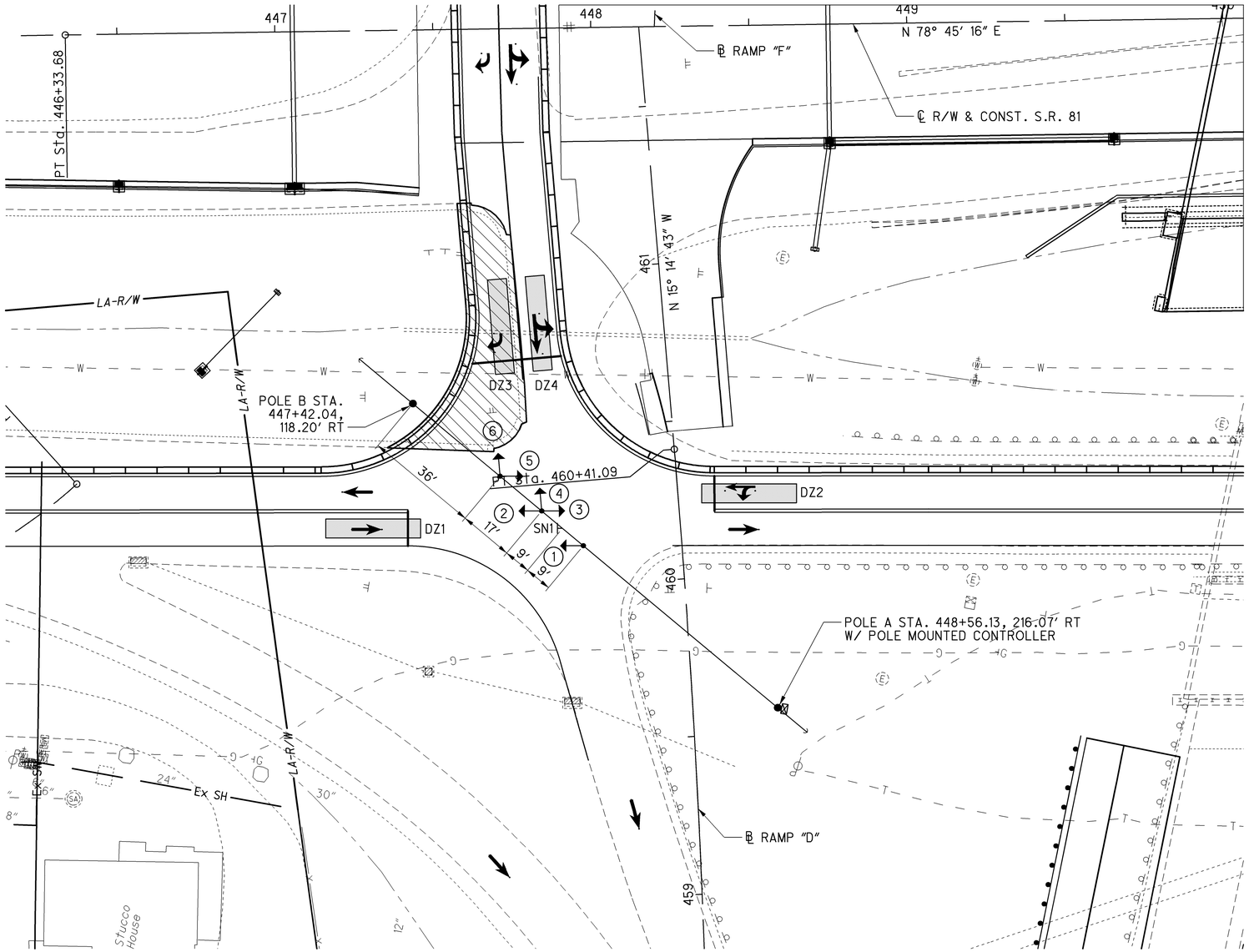

LEGEND

- VEHICULAR SIGNAL HEAD FOR SPAN WIRE (3-SECTION)
- EXISTING VEHICULAR SIGNAL FOR MAST ARM (3-SECTION)
- TEMPORARY WOOD POLE
- TEMPORARY POLE MOUNTED CONTROLLER
- SPAN WIRE
- PORTABLE CONCRETE BARRIER (PCB)
- DRUMS (10' C/C ON TAPERS; 20' C/C ON TANGENT)
- 30' X 6' VIDEO DETECTION ZONE
- PAVEMENT FOR MAINTAINING TRAFFIC

POWER SUPPLY FOR TEMPORARY SIGNAL

ELECTRICAL POWER SHALL BE OBTAINED FROM AEP. THE CONTRACTOR SHALL COORDINATE WITH AEP TO DETERMINE A SUITABLE LOCATION FOR THE POWER SOURCE. THE CONTRACTOR SHALL ESTABLISH AN ACCOUNT SET UP IN THE CONTRACTOR'S NAME. THE CONTACT INFORMATION IS AS FOLLOWS:

AEP
369 E. O'CONNOR AVENUE
LIMA, OHIO 45801
PHONE: 419-998-5103
CONTACT: MR. DAN WILSON
EMAIL: DEWILSON@AEP.COM

SIGNAL NOTES:

1. CONTRACTOR SHALL INSTALL TEMPORARY TRAFFIC SIGNAL AS PER 614.10 PRIOR TO BEGINNING S.R. 81 PHASE I MAINTENANCE OF TRAFFIC. ALL EQUIPMENT, LABOR, WORK, ETC. TO CONSTRUCT, OPERATE, MAINTAIN, AND ADJUST THE TEMPORARY SIGNAL SHALL BE INCLUDED WITH ITEM 614, WORK ZONE TRAFFIC SIGNAL.
2. PHASE NUMBERS SHOWN ON THIS PLAN CORRESPOND TO AN 8 PHASE CABINET. A 4 PHASE CABINET IS PERMITTED FOR THE TEMPORARY SIGNAL. IF A 4 PHASE CABINET IS USED, THE PHASE NUMBERS SHALL BE 1 AND 2 IN THE ORDER SHOWN ON THE PHASE DIAGRAM.
3. VIDEO DETECTION SHALL BE MAINTAINED AT ALL TIMES AT THE VIDEO DETECTION ZONE LOCATIONS SHOWN ON THE PLANS.
4. THE CONTRACTOR IS TO ESTABLISH SIGNAL TIMING BASED ON ACTUAL FIELD CONDITIONS. MINIMUM SIGNAL TIMINGS TO MEET ODOT TRAFFIC ENGINEERING MANUAL STANDARDS SHALL BE MET. THE CONTRACTOR IS TO ADJUST GREEN TIMES BASED ON TRAFFIC DEMANDS AS NECESSARY OR AS DIRECTED BY THE ENGINEER.
5. MINIMUM CLEARANCE FROM THE HIGHEST (CROWN) POINT ON THE PAVEMENT TO THE BOTTOM OF THE SIGNAL HEADS SHALL BE 16 FEET.
6. SIGNAL POLES SHALL BE LOCATED BEHIND DITCHES WHERE POSSIBLE. (REFER TO STANDARD CONSTRUCTION DRAWING MT-96.11 FOR CLEAR ZONE TABLE.

SIGNAL HEAD DETAIL
12" LENSES



R3-2-30
SN1

1-6

SIGNAL PHASING DIAGRAM

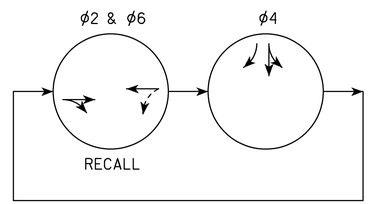

HORIZONTAL SCALE IN FEET
0 10 20 40

CALCULATED JRL
CHECKED EJC

TEMPORARY SIGNAL PLAN - PHASE I
S.R. 81, EX. RAMP "D", & EX. RAMP "F"

ALL-75-5.53

108
1224

J:\Projects\ALL\76691\mot\sheets\76691MM801.dgn 11-SEP-2012 8:50PM reddenj

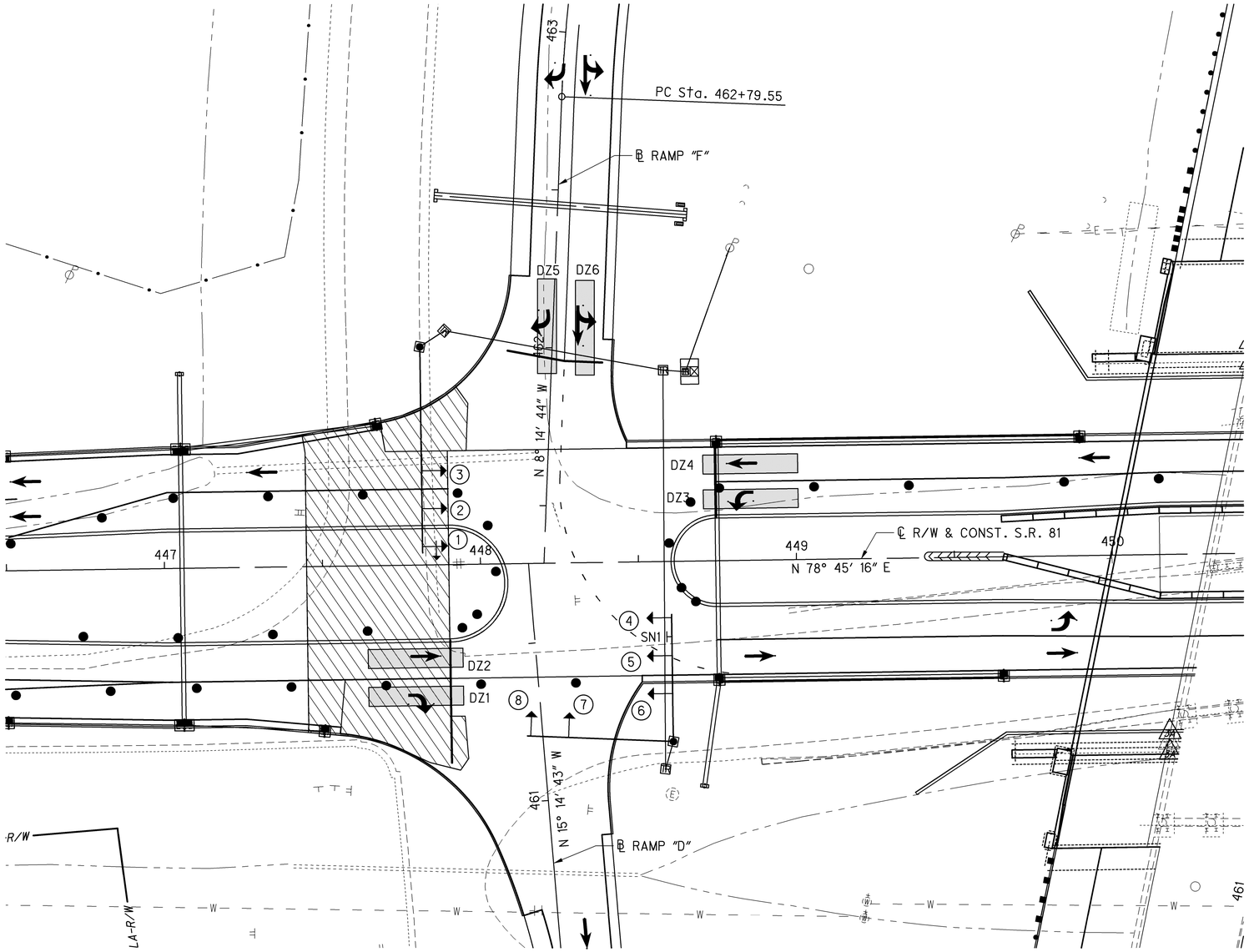

LEGEND

- VEHICULAR SIGNAL HEAD FOR SPAN WIRE (3-SECTION)
- EXISTING VEHICULAR SIGNAL FOR MAST ARM (3-SECTION)
- TEMPORARY WOOD POLE
- TEMPORARY POLE MOUNTED CONTROLLER
- SPAN WIRE
- PORTABLE CONCRETE BARRIER (PCB)
- DRUMS (10' C/C ON TAPERS; 20' C/C ON TANGENT)
- 30' X 6' VIDEO DETECTION ZONE
- PAVEMENT FOR MAINTAINING TRAFFIC

POWER SUPPLY FOR TEMPORARY SIGNAL

ELECTRICAL POWER SHALL BE OBTAINED FROM AEP. THE CONTRACTOR SHALL COORDINATE WITH AEP TO DETERMINE A SUITABLE LOCATION FOR THE POWER SOURCE. THE CONTRACTOR SHALL ESTABLISH AN ACCOUNT SET UP IN THE CONTRACTOR'S NAME. THE CONTACT INFORMATION IS AS FOLLOWS:

AEP
369 E. O'CONNOR AVENUE
LIMA, OHIO 45801
PHONE: 419-998-5103
CONTACT: MR. DAN WILSON
EMAIL: DEWILSON@AEP.COM

SIGNAL NOTES:

1. CONTRACTOR SHALL INSTALL TEMPORARY TRAFFIC SIGNAL AS PER 614.10 PRIOR TO BEGINNING S.R. 81 PHASE II MAINTENANCE OF TRAFFIC. ALL EQUIPMENT, LABOR, WORK, ETC. TO CONSTRUCT, OPERATE, MAINTAIN, AND ADJUST THE TEMPORARY SIGNAL SHALL BE INCLUDED WITH ITEM 614, WORK ZONE TRAFFIC SIGNAL.
2. PHASE NUMBERS SHOWN ON THIS PLAN CORRESPOND TO AN 8 PHASE CABINET. A 4 PHASE CABINET IS PERMITTED FOR THE TEMPORARY SIGNAL. IF A 4 PHASE CABINET IS USED, THE PHASE NUMBERS SHALL BE 1 AND 2 IN THE ORDER SHOWN ON THE PHASE DIAGRAM.
3. VIDEO DETECTION SHALL BE MAINTAINED AT ALL TIMES AT THE VIDEO DETECTION ZONE LOCATIONS SHOWN ON THE PLANS.
4. THE CONTRACTOR IS TO ESTABLISH SIGNAL TIMING BASED ON ACTUAL FIELD CONDITIONS. MINIMUM SIGNAL TIMINGS TO MEET ODOT TRAFFIC ENGINEERING MANUAL STANDARDS SHALL BE MET. THE CONTRACTOR IS TO ADJUST GREEN TIMES BASED ON TRAFFIC DEMANDS AS NECESSARY OR AS DIRECTED BY THE ENGINEER.
5. MINIMUM CLEARANCE FROM THE HIGHEST (CROWN) POINT ON THE PAVEMENT TO THE BOTTOM OF THE SIGNAL HEADS SHALL BE 16 FEET.
6. SIGNAL POLES SHALL BE LOCATED BEHIND DITCHES WHERE POSSIBLE. (REFER TO STANDARD CONSTRUCTION DRAWING MT-96.11 FOR CLEAR ZONE TABLE.
7. USE THE PERMANENT SIGNALS AT THIS INTERSECTION FOR THIS PHASE OF CONSTRUCTION. THE FIVE SECTION SIGNAL HEAD SHALL BE COVERED UNTIL RAMP "D" AND THE LEFT TURN LANE HAVE BEEN OPENED.
8. REMOVE SIGN SN1 AFTER CONSTRUCTION IS COMPLETE.

SIGNAL HEAD DETAIL
12" (LED) LENSES



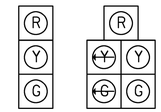

VEHICULAR SIGNAL HEADS SHALL BE RIGID MOUNTED PER TC-85-20

SIGNAL PHASING DIAGRAM

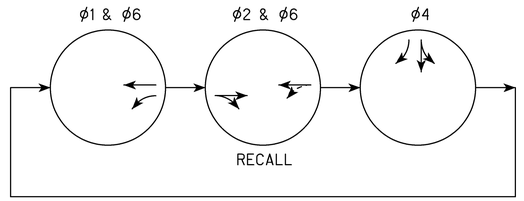

TEMPORARY SIGNAL PLAN - PHASE II
S.R. 81, RAMP "D", & RAMP "F"

HORIZONTAL SCALE IN FEET
0 10 20 40

CALCULATED JRL
CHECKED EJC

ALL-75-5.53

109
1224

J:\Projects\ALL\76691\mot\sheets\76691MM804.dgn 11-SEP-2012 8:50PM reddenj

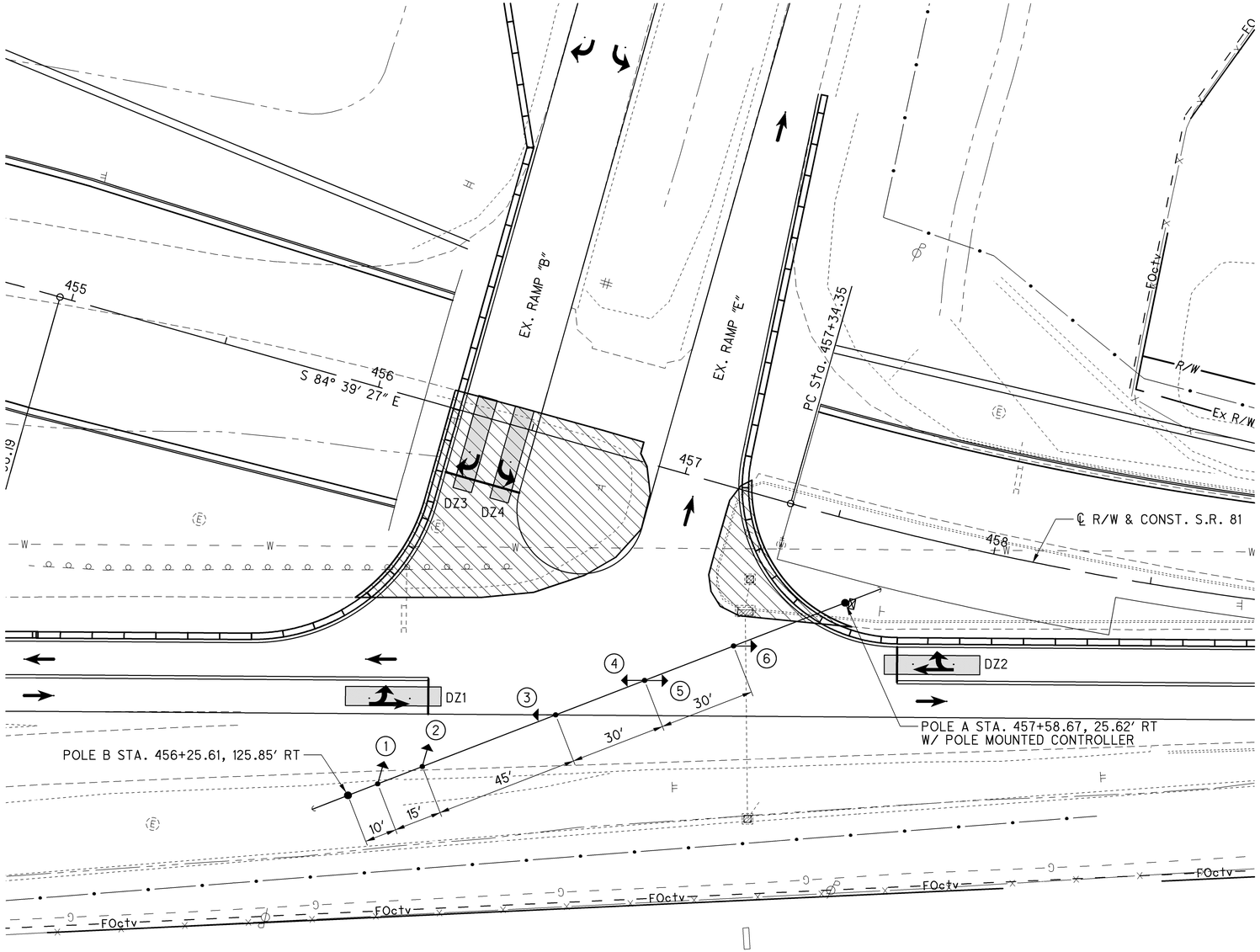

SIGNAL NOTES:

1. CONTRACTOR SHALL INSTALL TEMPORARY TRAFFIC SIGNAL AS PER 614.10 PRIOR TO BEGINNING S.R. 81 PHASE I MAINTENANCE OF TRAFFIC. ALL EQUIPMENT, LABOR, WORK, ETC. TO CONSTRUCT, OPERATE, MAINTAIN, AND ADJUST THE TEMPORARY SIGNAL SHALL BE INCLUDED WITH ITEM 614, WORK ZONE TRAFFIC SIGNAL.
2. PHASE NUMBERS SHOWN ON THIS PLAN CORRESPOND TO AN 8 PHASE CABINET. A 4 PHASE CABINET IS PERMITTED FOR THE TEMPORARY SIGNAL. IF A 4 PHASE CABINET IS USED, THE PHASE NUMBERS SHALL BE 1 AND 2 IN THE ORDER SHOWN ON THE PHASE DIAGRAM.
3. VIDEO DETECTION SHALL BE MAINTAINED AT ALL TIMES AT THE VIDEO DETECTION ZONE LOCATIONS SHOWN ON THE PLANS.
4. THE CONTRACTOR IS TO ESTABLISH SIGNAL TIMING BASED ON ACTUAL FIELD CONDITIONS. MINIMUM SIGNAL TIMINGS TO MEET ODOT TRAFFIC ENGINEERING MANUAL STANDARDS SHALL BE MET. THE CONTRACTOR IS TO ADJUST GREEN TIMES BASED ON TRAFFIC DEMANDS AS NECESSARY OR AS DIRECTED BY THE ENGINEER.
5. MINIMUM CLEARANCE FROM THE HIGHEST (CROWN) POINT ON THE PAVEMENT TO THE BOTTOM OF THE SIGNAL HEADS SHALL BE 16 FEET.
6. SIGNAL POLES SHALL BE LOCATED BEHIND DITCHES WHERE POSSIBLE. (REFER TO STANDARD CONSTRUCTION DRAWING MT-96.11 FOR CLEAR ZONE TABLE.

SIGNAL HEAD DETAIL
12" LENSES

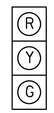

1-6

LEGEND

- VEHICULAR SIGNAL HEAD FOR SPAN WIRE (3-SECTION)
- EXISTING VEHICULAR SIGNAL FOR MAST ARM (3-SECTION)
- TEMPORARY WOOD POLE
- TEMPORARY POLE MOUNTED CONTROLLER
- SPAN WIRE
- PORTABLE CONCRETE BARRIER (PCB)
- DRUMS (10' C/C ON TAPERS; 20' C/C ON TANGENT)
- 30' X 6' VIDEO DETECTION ZONE
- PAVEMENT FOR MAINTAINING TRAFFIC

POWER SUPPLY FOR TEMPORARY SIGNAL

ELECTRICAL POWER SHALL BE OBTAINED FROM AEP. THE CONTRACTOR SHALL COORDINATE WITH AEP TO DETERMINE A SUITABLE LOCATION FOR THE POWER SOURCE. THE CONTRACTOR SHALL ESTABLISH AN ACCOUNT SET UP IN THE CONTRACTOR'S NAME. THE CONTACT INFORMATION IS AS FOLLOWS:

AEP
369 E. O'CONNOR AVENUE
LIMA, OHIO 45801
PHONE: 419-998-5103
CONTACT: MR. DAN WILSON
EMAIL: DEWILSON@AEP.COM

SIGNAL PHASING DIAGRAM

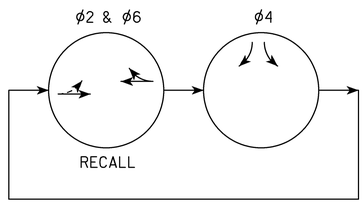

HORIZONTAL SCALE IN FEET
0 10 20 40

CALCULATED JRL
CHECKED EJC

TEMPORARY SIGNAL PLAN - PHASE I
S.R. 81, EX. RAMP "B", & EX. RAMP "E"

ALL-75-5.53

110
1224

J:\Projects\ALL\76691\mot\sheets\76691MM802.dgn 11-SEP-2012 8:50PM reddenj

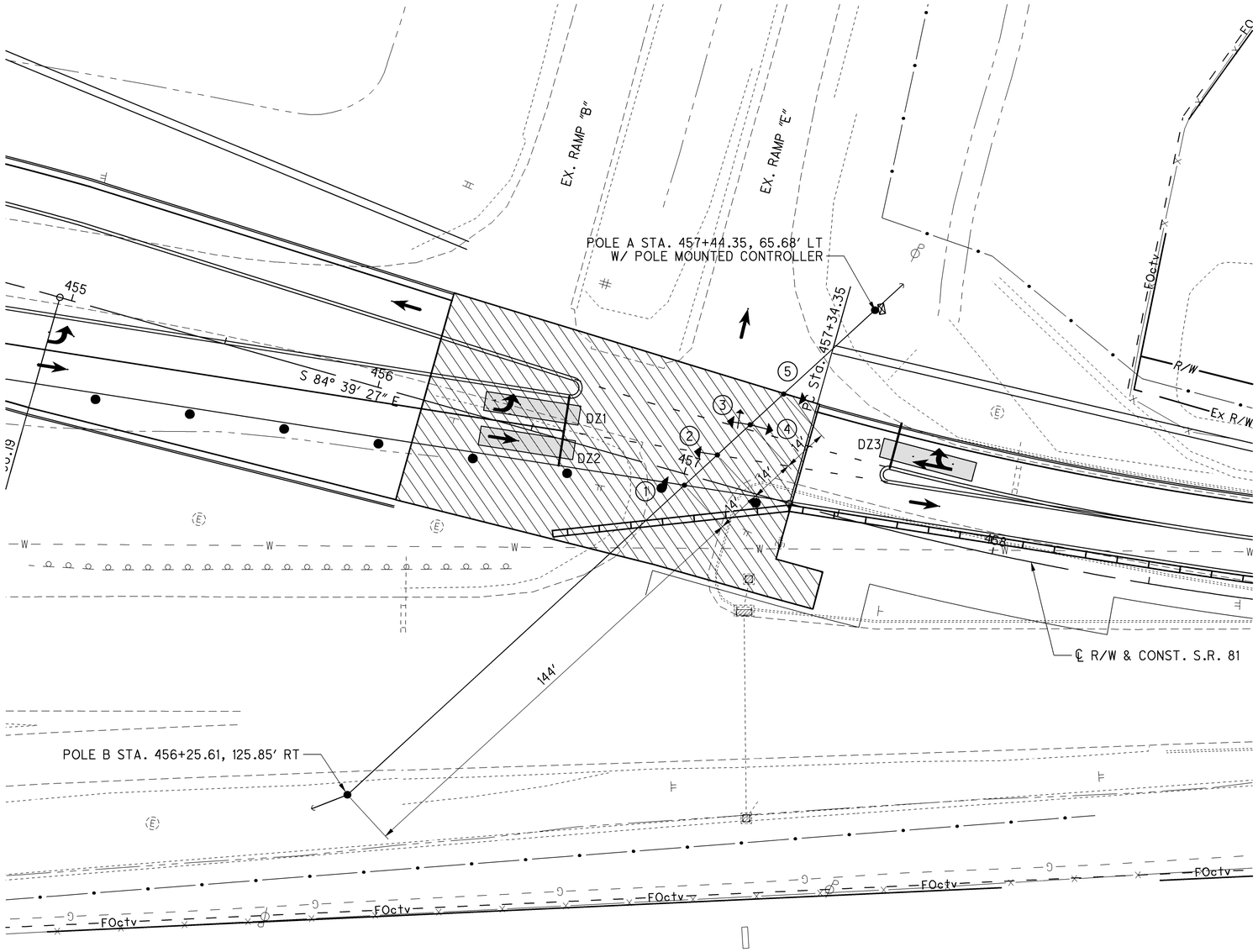

LEGEND

- VEHICULAR SIGNAL HEAD FOR SPAN WIRE (3-SECTION)
- VEHICULAR SIGNAL HEAD FOR SPAN WIRE (5-SECTION)
- EXISTING VEHICULAR SIGNAL FOR MAST ARM (3-SECTION)
- TEMPORARY WOOD POLE
- TEMPORARY POLE MOUNTED CONTROLLER
- SPAN WIRE
- PORTABLE CONCRETE BARRIER (PCB)
- DRUMS (10' C/C ON TAPERS; 20' C/C ON TANGENT)
- 30' X 6' VIDEO DETECTION ZONE
- PAVEMENT FOR MAINTAINING TRAFFIC

POWER SUPPLY FOR TEMPORARY SIGNAL

ELECTRICAL POWER SHALL BE OBTAINED FROM AEP. THE CONTRACTOR SHALL COORDINATE WITH AEP TO DETERMINE A SUITABLE LOCATION FOR THE POWER SOURCE. THE CONTRACTOR SHALL ESTABLISH AN ACCOUNT SET UP IN THE CONTRACTOR'S NAME. THE CONTACT INFORMATION IS AS FOLLOWS:

AEP
369 E. O'CONNOR AVENUE
LIMA, OHIO 45801
PHONE: 419-998-5103
CONTACT: MR. DAN WILSON
EMAIL: DEWILSON@AEP.COM

SIGNAL NOTES:

1. CONTRACTOR SHALL INSTALL TEMPORARY TRAFFIC SIGNAL AS PER 614.10 PRIOR TO BEGINNING S.R. 81 PHASE I MAINTENANCE OF TRAFFIC. ALL EQUIPMENT, LABOR, WORK, ETC. TO CONSTRUCT, OPERATE, MAINTAIN, AND ADJUST THE TEMPORARY SIGNAL SHALL BE INCLUDED WITH ITEM 614, WORK ZONE TRAFFIC SIGNAL.
2. PHASE NUMBERS SHOWN ON THIS PLAN CORRESPOND TO AN 8 PHASE CABINET. A 4 PHASE CABINET IS PERMITTED FOR THE TEMPORARY SIGNAL. IF A 4 PHASE CABINET IS USED, THE PHASE NUMBERS SHALL BE 1 AND 2 IN THE ORDER SHOWN ON THE PHASE DIAGRAM.
3. VIDEO DETECTION SHALL BE MAINTAINED AT ALL TIMES AT THE VIDEO DETECTION ZONE LOCATIONS SHOWN ON THE PLANS.
4. THE CONTRACTOR IS TO ESTABLISH SIGNAL TIMING BASED ON ACTUAL FIELD CONDITIONS. MINIMUM SIGNAL TIMINGS TO MEET ODOT TRAFFIC ENGINEERING MANUAL STANDARDS SHALL BE MET. THE CONTRACTOR IS TO ADJUST GREEN TIMES BASED ON TRAFFIC DEMANDS AS NECESSARY OR AS DIRECTED BY THE ENGINEER.
5. MINIMUM CLEARANCE FROM THE HIGHEST (CROWN) POINT ON THE PAVEMENT TO THE BOTTOM OF THE SIGNAL HEADS SHALL BE 16 FEET.
6. SIGNAL POLES SHALL BE LOCATED BEHIND DITCHES WHERE POSSIBLE. (REFER TO STANDARD CONSTRUCTION DRAWING MT-96.11 FOR CLEAR ZONE TABLE.
7. THIS TEMPORARY SIGNAL SETUP SHALL BE USED WHEN PROPOSED RAMP "B" AND EXISTING RAMP "B" ARE CLOSED DURING PHASE II AND PROPOSED RAMP "C" AND EXISTING RAMP "E" ARE OPEN.

SIGNAL HEAD DETAIL
12" LENSES

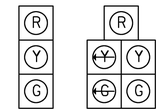

SIGNAL PHASING DIAGRAM

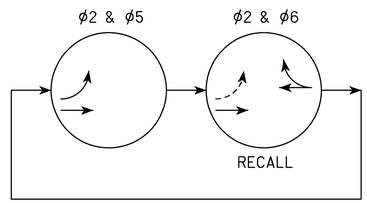

HORIZONTAL SCALE IN FEET
0 10 20 40

CALCULATED JRL
CHECKED EJC

TEMPORARY SIGNAL PLAN - PHASE II
S.R. 81, EX. RAMP "B", & EX. RAMP "E"

ALL-75-5.53

111
1224

J:\Projects\ALL\76691\mot\sheets\76691MM808.dgn 11-SEP-2012 8:50PM reddenj

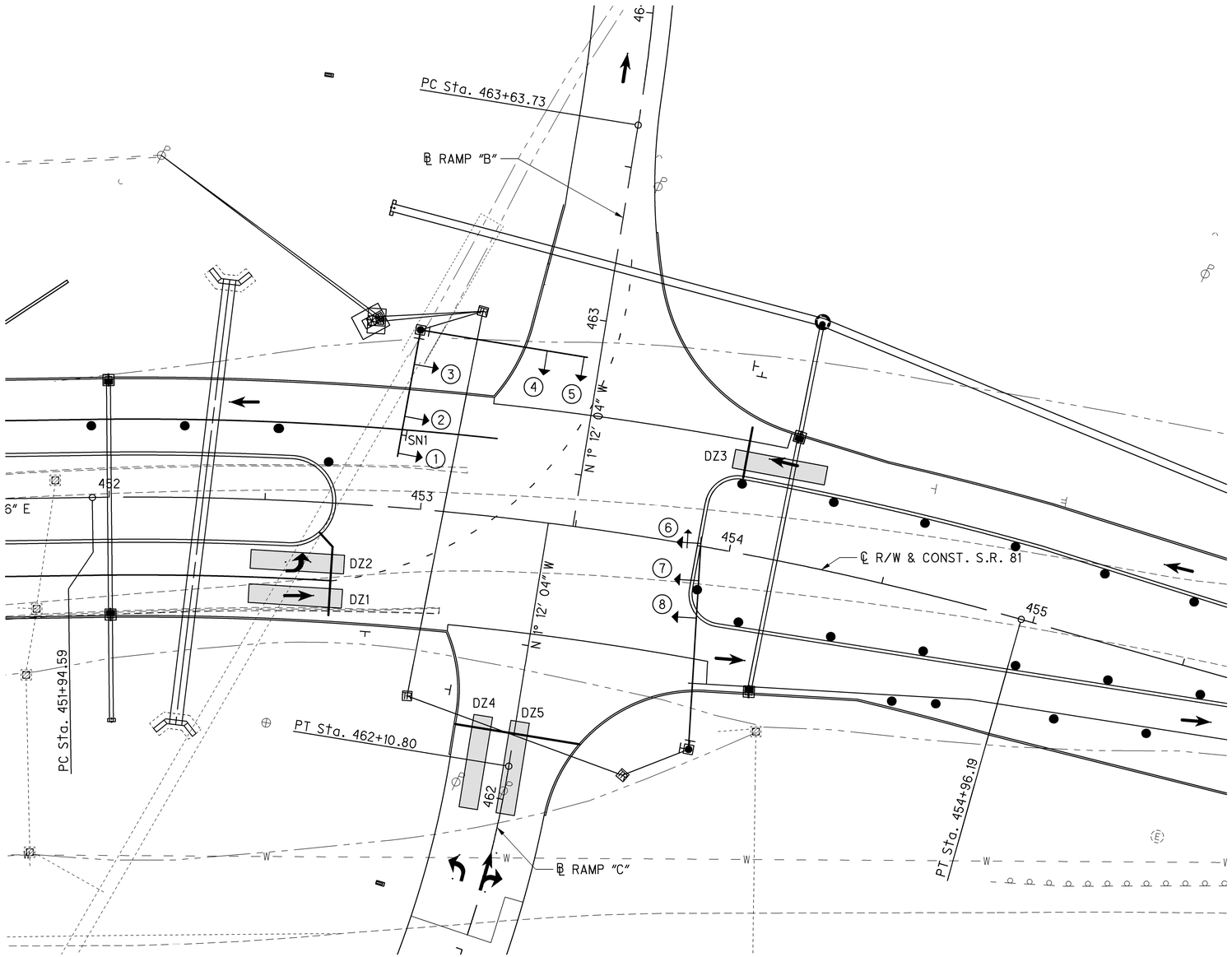

LEGEND

- VEHICULAR SIGNAL HEAD FOR SPAN WIRE (3-SECTION)
- EXISTING VEHICULAR SIGNAL FOR MAST ARM (3-SECTION)
- TEMPORARY WOOD POLE
- TEMPORARY POLE MOUNTED CONTROLLER
- SPAN WIRE
- PORTABLE CONCRETE BARRIER (PCB)
- DRUMS (10' C/C ON TAPERS; 20' C/C ON TANGENT)
- 30' X 6' VIDEO DETECTION ZONE
- PAVEMENT FOR MAINTAINING TRAFFIC

POWER SUPPLY FOR TEMPORARY SIGNAL

ELECTRICAL POWER SHALL BE OBTAINED FROM AEP. THE CONTRACTOR SHALL COORDINATE WITH AEP TO DETERMINE A SUITABLE LOCATION FOR THE POWER SOURCE. THE CONTRACTOR SHALL ESTABLISH AN ACCOUNT SET UP IN THE CONTRACTOR'S NAME. THE CONTACT INFORMATION IS AS FOLLOWS:

AEP
369 E. O'CONNOR AVENUE
LIMA, OHIO 45801
PHONE: 419-998-5103
CONTACT: MR. DAN WILSON
EMAIL: DEWILSON@AEP.COM

SIGNAL NOTES:

1. CONTRACTOR SHALL INSTALL TEMPORARY TRAFFIC SIGNAL AS PER 614.10 PRIOR TO BEGINNING S.R. 81 PHASE II MAINTENANCE OF TRAFFIC. ALL EQUIPMENT, LABOR, WORK, ETC. TO CONSTRUCT, OPERATE, MAINTAIN, AND ADJUST THE TEMPORARY SIGNAL SHALL BE INCLUDED WITH ITEM 614, WORK ZONE TRAFFIC SIGNAL.
2. PHASE NUMBERS SHOWN ON THIS PLAN CORRESPOND TO AN 8 PHASE CABINET. A 4 PHASE CABINET IS PERMITTED FOR THE TEMPORARY SIGNAL. IF A 4 PHASE CABINET IS USED, THE PHASE NUMBERS SHALL BE 1 AND 2 IN THE ORDER SHOWN ON THE PHASE DIAGRAM.
3. VIDEO DETECTION SHALL BE MAINTAINED AT ALL TIMES AT THE VIDEO DETECTION ZONE LOCATIONS SHOWN ON THE PLANS.
4. THE CONTRACTOR IS TO ESTABLISH SIGNAL TIMING BASED ON ACTUAL FIELD CONDITIONS. MINIMUM SIGNAL TIMINGS TO MEET ODOT TRAFFIC ENGINEERING MANUAL STANDARDS SHALL BE MET. THE CONTRACTOR IS TO ADJUST GREEN TIMES BASED ON TRAFFIC DEMANDS AS NECESSARY OR AS DIRECTED BY THE ENGINEER.
5. MINIMUM CLEARANCE FROM THE HIGHEST (CROWN) POINT ON THE PAVEMENT TO THE BOTTOM OF THE SIGNAL HEADS SHALL BE 16 FEET.
6. SIGNAL POLES SHALL BE LOCATED BEHIND DITCHES WHERE POSSIBLE. (REFER TO STANDARD CONSTRUCTION DRAWING MT-96.11 FOR CLEAR ZONE TABLE.
7. USE THE PERMANENT SIGNALS AT THIS INTERSECTION FOR THIS PHASE OF CONSTRUCTION. THE FIVE SECTION SIGNAL HEAD SHALL BE COVERED UNTIL RAMP "B" AND THE LEFT TURN LANE HAVE BEEN OPENED.
8. REMOVE SIGN SN1 AFTER CONSTRUCTION IS COMPLETE.

SIGNAL HEAD DETAIL 12" (LED) LENSES



R3-2-30
SN1

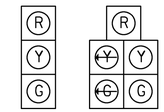

1-5, 7-8 6

VEHICULAR SIGNAL HEADS SHALL BE RIGID MOUNTED PER TC-85-20

SIGNAL PHASING DIAGRAM

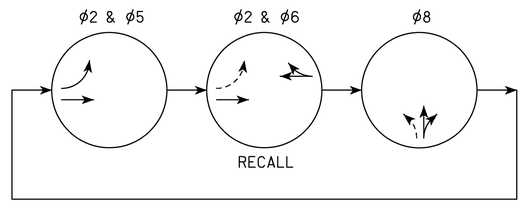

TEMPORARY SIGNAL PLAN - PHASE II S.R. 81, RAMP "B", & RAMP "C"

ALL-75-5.53

CALCULATED JRL
CHECKED EJC

HORIZONTAL SCALE IN FEET
0 10 20 40

112
1224

J:\Projects\ALL\76691\mot\sheets\76691MM805.dgn 11-SEP-2012 8:50PM reddenj

ADVANCED SIGNING TO BE PLACE AS PER SCD MT-95.32

BELLEFONTAINE AVE.

S. ROBERTS AVE.

S. LEONARD AVE.

KIBBY ST.

OLD BELLEFONTAINE AVE.

FOR TEMPORARY SIGNAL DETAILS, SEE SHEET 95.

W20-1-36 ROAD WORK AHEAD

TWCL

TDYL

TSL

TWDL

TYEL

TWEL

R3-H8A-30 ONLY

R3-H8BA-30 ONLY

POT Sta. 883+75.83

℄ R/W & CONST. S.R. 309

884 885 886 887 888 889 890

+20 +52 +73 +74 +49 +25

255' SHIFT TAPER

Japanese steak House under Construction

1 Sty Block

Asph.

Conc. walk

Ground Lands

8" PVC

6" CPP & VCP

NEW VCP

CLOSED

Canopy

30" Conc.

A

NOTE:
FOR SECTION A-A, SEE SHEET 72.

MATCHLINE STA. 890+50.00

TEMPORARY PAVEMENT

NOTE:
THE PROPOSED PAVEMENT PLANING AND REPLACEMENT FROM STATION 888+50 TO 888+75 TO BE CONSTRUCTED AFTER SR 309 PHASE IIB BY USING PART-WIDTH CONSTRUCTION METHODS.

LEGEND:

- TSL - TEMPORARY STOP LINE
- TYDL - TEMPORARY YELLOW DIAGONAL LINE
- TWDL - TEMPORARY WHITE DOTTED LINE
- TYEL - TEMPORARY YELLOW EDGE LINE
- TDYL - TEMPORARY DOUBLE YELLOW LINE
- TWEL - TEMPORARY WHITE EDGE LINE
- TWCL - TEMPORARY WHITE CHANNELIZING LINE
- PAVEMENT FOR MAINTAINING TRAFFIC
- PORTABLE CONCRETE BARRIER (PCB)
- WORK AREA (PHASE I)
- IMPACT ATTENUATOR
- DRUMS (10' C/C ON TAPERS; 20' C/C ON TANGENTS)
- LANE DIRECTION

HORIZONTAL SCALE IN FEET
0 20 40 80

CALCULATED CAC
CHECKED EJC

MAINTENANCE OF TRAFFIC - S.R. 309
PHASE I - BEGIN WORK TO STA. 890+50.00

ALL-75-5.53

113
1224

J:\Projects\ALL\76691\mot\sheets\76691MP600.dgn 11-SEP-2012 8:50PM reddenj

ROAD CLOSED
LOCAL TRAFFIC ONLY
R11-3-66

R11-3-66
ROAD CLOSED
LOCAL TRAFFIC ONLY

LEGEND:

- TSL - TEMPORARY STOP LINE
- TYDL - TEMPORARY YELLOW DIAGONAL LINE
- TWDL - TEMPORARY WHITE DOTTED LINE
- TYEL - TEMPORARY YELLOW EDGE LINE
- TDYL - TEMPORARY DOUBLE YELLOW LINE
- TWEL - TEMPORARY WHITE EDGE LINE
- TWCL - TEMPORARY WHITE CHANNELIZING LINE
- PAVEMENT FOR MAINTAINING TRAFFIC
- PORTABLE CONCRETE BARRIER (PCB)
- WORK AREA (PHASE I)
- IMPACT ATTENUATOR
- DRUMS (10' C/C ON TAPERS; 20' C/C ON TANGENT)
- LANE DIRECTION
- SHEETING AND SHORING

HORIZONTAL SCALE IN FEET
0 20 40 80

CALCULATED CAC
CHECKED EJC

MAINTENANCE OF TRAFFIC - S.R. 309
PHASE I - STA. 890+50.00 TO STA. 901+00.00

ALL-75-5.53

114
1224

J:\Projects\ALL\7669\1\mot\sheets\7669IMP601.dgn 11-SEP-2012 8:50PM redden

NOTE:
FOR SECTIONS B-B AND F-F, SEE SHEET 72.

NOTE:
1. RELOCATE EXISTING CATCH BASIN. ALL COSTS FOR LABOR, EQUIPMENT AND MATERIALS SHALL BE INCLUDED WITH ITEM 614, MAINTAINING TRAFFIC, AS PER PLAN.

TEMPORARY 12"-B PIPE TO CONNECT THE PROPOSED DRAINAGE TO LOST CREEK. ALL COSTS FOR LABOR, EQUIPMENT AND MATERIALS SHALL BE INCLUDED WITH ITEM 614, MAINTAINING TRAFFIC, AS PER PLAN.

TEMPORARY 12" PIPE. ALL COSTS FOR LABOR, EQUIPMENT AND MATERIALS SHALL BE INCLUDED WITH ITEM 614, MAINTAINING TRAFFIC, AS PER PLAN.

TEMPORARY MANHOLE AND 24"-B PIPE TO CONNECT INTO THE PROPOSED DRAINAGE AND THE EXISTING STORM SYSTEM. ALL COSTS FOR LABOR, EQUIPMENT AND MATERIALS SHALL BE INCLUDED WITH ITEM 614, MAINTAINING TRAFFIC, AS PER PLAN.

FOR TEMPORARY SIGNAL DETAILS SEE SHEET 97.

SEE NOTE 1

DRIVE CLOSED

TURNER AVE.

DEAN AVE.

RAMP "C"

RAMP "E"

RAMP "G"

RAMP "F"

EXISTING RAMP "A"

EXISTING RAMP "B"

TWIN 108" LINER PIPE

MATCHLINE STA. 890+50.00

MATCH LINE STA. 901+00.00

℄ CONST. S.R. 309

℄ R/W & CONST. S.R. 309

PC Sta. 372+69.04

PT Sta. 369+20.69

PC Sta. 371+07.40

PT Sta. 370+89.54

PT Sta. 371+80.96

PC Sta. 372+77.22

PT Sta. 368+71.61

N 17° 26' 09" E

N 17° 56' 56" W

N 0° 05' 07" W

N 88° 54' 53" E

S 88° 05' 04" E

NOTE:
CONTRACTOR CAN CLOSE SARATOGA AVE
FOR A MAXIMUM OF14 DAYS
TO COMPLETE PROPOSED WORK
IN THE INTERSECTION AREA.

DASHED SIGNS SHOWN ON THIS SHEET ARE ONLY
TO BE USED WHEN SARATOGA IS CLOSED.

R11-3-66
ROAD CLOSED
LOCAL TRAFFIC ONLY

W20-1-36
ROAD WORK AHEAD

NOTE:
FOR SECTION C-C,
SEE SHEET 72.

M SARATOGA AVE. W

EASTERN AVE.

WILLARD AVE.

R3-H8BH-36
ONLY

1 Sty. Brick

1 Sty. Frame W/ stucco Finish

IMPACT ATTENUATOR

IMPACT ATTENUATOR
℄ CONST. S.R. 309

POTI Sta. 901+65.00

POTI Sta. 904+00.00

MATCH LINE STA. 901+00.00

TDYL
TSL
TYDL
TWEL
TWDL
TWCL

SARATOGA AVE. TRAFFIC
USE EASTERN AVE.
NEXT RIGHT
SPECIAL - 3' X4' - BLK/ORG

SARATOGA AVE. TRAFFIC
USE WILLARD AVE.
LEFT AT NEXT SIGNAL
SPECIAL - 3' X4' - BLK/ORG
R3-2-36

RAMP "G"
RAMP "F"
R1-2-36
YIELD

FOR TEMPORARY
SIGNAL DETAILS,
SEE SHEET 102.

ROSCHMAN AVE.

331' SHIFT TAPER

ADVANCE WARNING SIGNS TO BE PLACED AS PER SCD MT-95.31

SR 309

SR 417

WEST BOUND SR 309
USE LEFT LANE ONLY
SPECIAL - 3' X4' - BLK/ORG

LEGEND:

- TWCL - TEMPORARY WHITE CHANNELIZING LINE
- TYDL - TEMPORARY YELLOW DIAGONAL LINE
- TWDL - TEMPORARY WHITE DOTTED LINE
- TSL - TEMPORARY STOP LINE
- TYEL - TEMPORARY YELLOW EDGE LINE
- TDYL - TEMPORARY DOUBLE YELLOW LINE
- TWEL - TEMPORARY WHITE EDGE LINE
- PAVEMENT FOR MAINTAINING TRAFFIC
- PORTABLE CONCRETE BARRIER (PCB)
- WORK AREA (PHASE I)
- IMPACT ATTENUATOR
- DRUMS (10' C/C ON TAPERS; 20' C/C ON TANGENTS)
- LANE DIRECTION

HORIZONTAL SCALE IN FEET
0 20 40 80

CALCULATED CAC
CHECKED EJC

MAINTENANCE OF TRAFFIC - S.R. 309
PHASE I - STA. 901+00.00 TO END WORK

ALL-75-5.53

115
1224

J:\Projects\ALL\76691\mot\sheets\76691MP602.dgn 11-SEP-2012 8:50PM redden

MAINTENANCE OF TRAFFIC - S.R. 309
PHASE IIA - BEGIN WORK TO STA. 890+50.00

ALL-75-5.53

116
1224

CALCULATED CAC
CHECKED EJC

HORIZONTAL SCALE IN FEET
0 20 40 80

J:\Projects\ALL\76691\mot\sheets\76691MP603.dgn 11-SEP-2012 8:50PM redden

ADVANCED WARNING SIGNS SHALL BE PLACED AS PER SCD MT-95.31

BELLEFONTAINE AVE.

S. ROBERTS AVE.

S. LEONARD AVE.

KIBBY ST.

OLD BELLEFONTAINE AVE.

POT Sta. 885+75.83

60′ SHIFT TAPER

207′ SHIFT TAPER

FOR TEMPORARY SIGNAL DETAILS, SEE SHEET 96.

W20-1-36 ROAD WORK AHEAD

R3-H8BA-30 ONLY ONLY

Japanese steak House under Construction

1 Sty Block

Ground cover Landscaping

Asph

6" VCP

18" VCP

Conc walk

Sign(4)

OPEN

CLOSED

Canopy

Air pump

Sign

Conc.

30" Conc.

Signal pole

Overhang

MATCHLINE STA. 890+50.00

884 885 886 887 888 889 890

+40 +80 +55

E 886.24 (From tin)

E 883.99 (From tin)

℄ R/W & CONST. S.R. 309

LEGEND:

- TWCL - TEMPORARY WHITE CHANNELIZING LINE
- TYDL - TEMPORARY YELLOW DIAGONAL LINE
- TWDL - TEMPORARY WHITE DOTTED LINE
- TSL - TEMPORARY STOP LINE
- TYEL - TEMPORARY YELLOW EDGE LINE
- TDYL - TEMPORARY DOUBLE YELLOW LINE
- TWEL - TEMPORARY WHITE EDGE LINE
- - PAVEMENT FOR MAINTAINING TRAFFIC
- - PORTABLE CONCRETE BARRIER (PCB)
- - WORK AREA (PHASE IIA)
- - IMPACT ATTENUATOR
- - DRUMS (10′ C/C ON TAPERS; 20′ C/C ON TANGENT)
- - LANE DIRECTION

NOTE:
THE PROPOSED PAVEMENT PLANING AND REPLACEMENT FROM STATION 888+50 TO 888+75 TO BE CONSTRUCTED AFTER SR 309 PHASE IIB BY USING PART-WIDTH CONSTRUCTION METHODS.

J:\Projects\ALL\76691\mot\sheets\76691MP604.dgn 11-SEP-2012 8:50PM reddenj

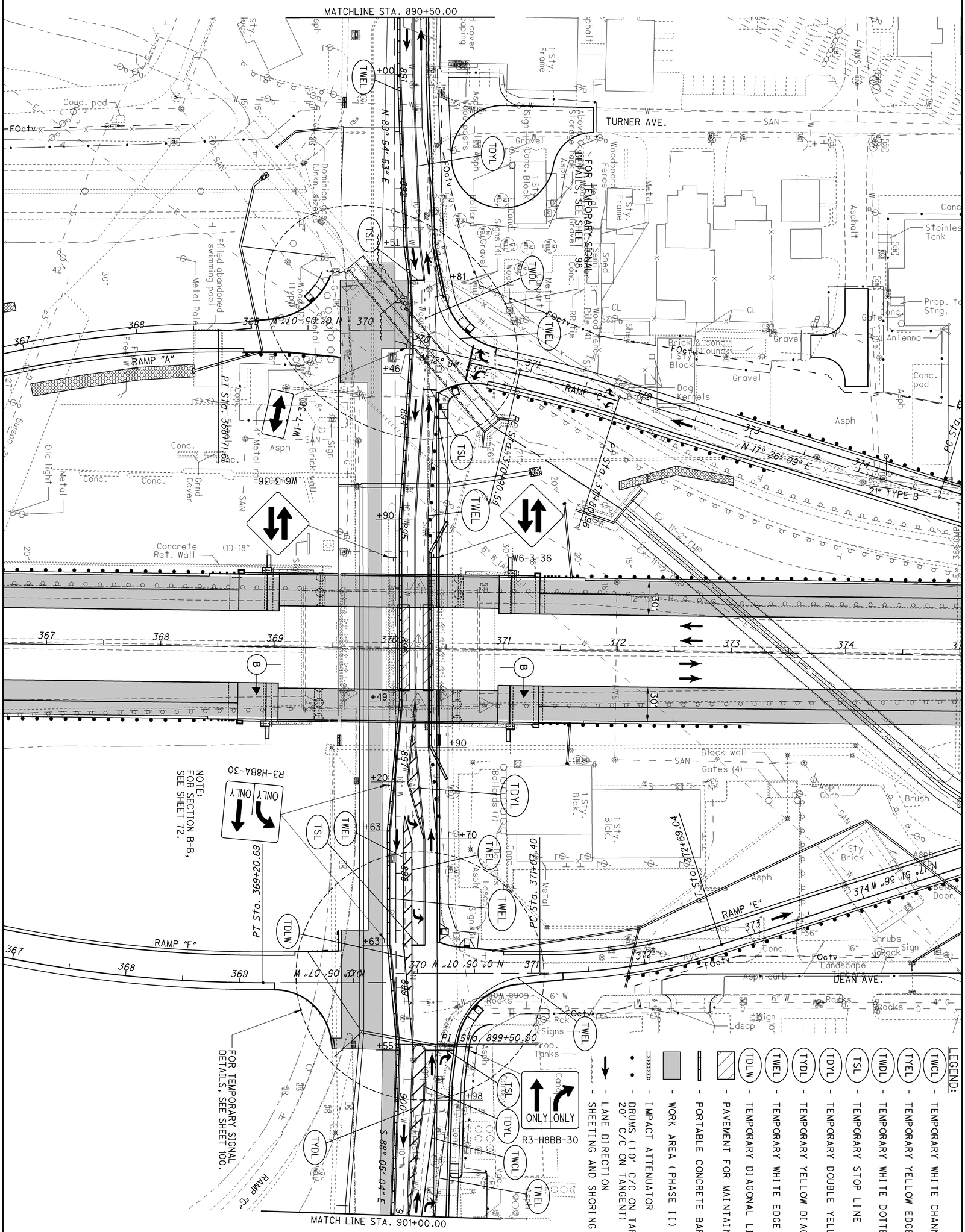
MATCHLINE STA. 890+50.00
TURNER AVE.
DEAN AVE.
RAMP "A"
RAMP "C"
RAMP "E"
RAMP "F"
RAMP "G"
PI Sta. 368+71.61
PI Sta. 369+20.69
PI Sta. 372+69.04
PC Sta. 374+10.37
PI Sta. 899+50.00
N 80° 54' 53" E
N 08° 05' 07" W
N 12° 54' 53" E
N 17° 26' 09" E
S 88° 05' 04" E
21" TYPE B
W6-3-36
R3-H8BA-30
R3-H8BB-30
ONLY
FOR TEMPORARY SIGNAL DETAILS, SEE SHEET 98
FOR TEMPORARY SIGNAL DETAILS, SEE SHEET 100.
NOTE: FOR SECTION B-B, SEE SHEET 72.
MATCH LINE STA. 901+00.00
Concrete Ret. Wall (11)-18"
Filled abandoned swimming pool
Dominion Gas (Unkn. size)
Dog Kennels
Stainless Tank
Prop. Strg.
Antenna
Block wall
Gates (4)
Bollards (7)
Prop. Tanks
Landscape Timber
Rocks
Shrubs
Brush
Asph Curb
Metal Pole
Old light
Grnd Cover
Woodboard Fence
Chain Link Fence
Wood Fence
Metal Fence
Brick & Conc. Founds
1 Sty. Brick
1 Sty. Frame
Shed
Gravel
Asphalt
Conc. pad
Conc. Block
Wood Posts
Metal Posts
Metal Rail
Wood Rail
Bollard
Above Ground Storage Tank
Ex. 11'-2" CMP
Ex. 36" CMP
6" W
4" G
SAN
FOctv
Sign
Rock
Ldscp
Asph
Conc.
Metal
Wood
Grvl
Brick
Bldg
Door
Window
Tank
Pole
Fence
Rail
Cover
Coping
Curb
Wall
Gate
Light
Frame
Shed
Kennels
Founds
Timber
Shrubs
Rocks
Brush
Tanks
Posts
Bollards
Gates
Signs
Pile
Tie
Ties
Ex.
Prop.
Strg.
Grvl
Ldscp
Sty.
Bldg
Conc.
Asph
Metal
Wood

LEGEND:

- TWCL - TEMPORARY WHITE CHANNELIZING LINE
- TWDL - TEMPORARY WHITE DOTTED LINE
- TSL - TEMPORARY STOP LINE
- TYDL - TEMPORARY YELLOW DIAGONAL LINE
- TYEL - TEMPORARY YELLOW EDGE LINE
- TDYL - TEMPORARY DOUBLE YELLOW LINE
- TWEL - TEMPORARY WHITE EDGE LINE
- - PAVEMENT FOR MAINTAINING TRAFFIC
- - PORTABLE CONCRETE BARRIER (PCB)
- - WORK AREA (PHASE IIA)
- - IMPACT ATTENUATOR
- - DRUMS (10' C/C ON TAPERS; 20' C/C ON TANGENTS)
- - LANE DIRECTION

HORIZONTAL SCALE IN FEET
0 20 40 80

CALCULATED CAC
CHECKED EJC

MAINTENANCE OF TRAFFIC - S.R. 309
PHASE IIA - STA. 901+00.00 TO END WORK

ALL-75-5.53

118
1224

W20-1-36 ROAD WORK AHEAD

R3-5R-30 ONLY

R3-H8BB-30 ONLY ONLY

R3-2-24

R3-8B-48 ONLY ONLY ONLY

SARATOGA AVE.

EASTERN AVE.

WILLARD AVE.

ROSCHMAN AVE.

SR 309

SR 117

FOR TEMPORARY SIGNAL DETAILS, SEE SHEET 103.

ADVANCED WARNING SIGNS SHALL BE PLACED AS PER SCD MT-95.32

SEE NOTE 1

RAMP "G" CLOSED

EXISTING RAMP "F"

MATCH LINE STA. 901+00.00

POT Sta. 901+85.00

POT Sta. 904+00.00

POT Sta. 908+79.96

Sta. 904+00.11 BK = Sta. 904+00.00 AH EQUATION

S 89° 38' 00" E

NOTE:

1. EXISTING RAMP 'F' TO REMAIN OPEN UNTIL CONSTRUCTION OF PROPOSED RAMP 'F' IS COMPLETED.

J:\Projects\ALL\76691\mot\sheets\76691MP605.dgn 11-SEP-2012 8:50PM reddenj

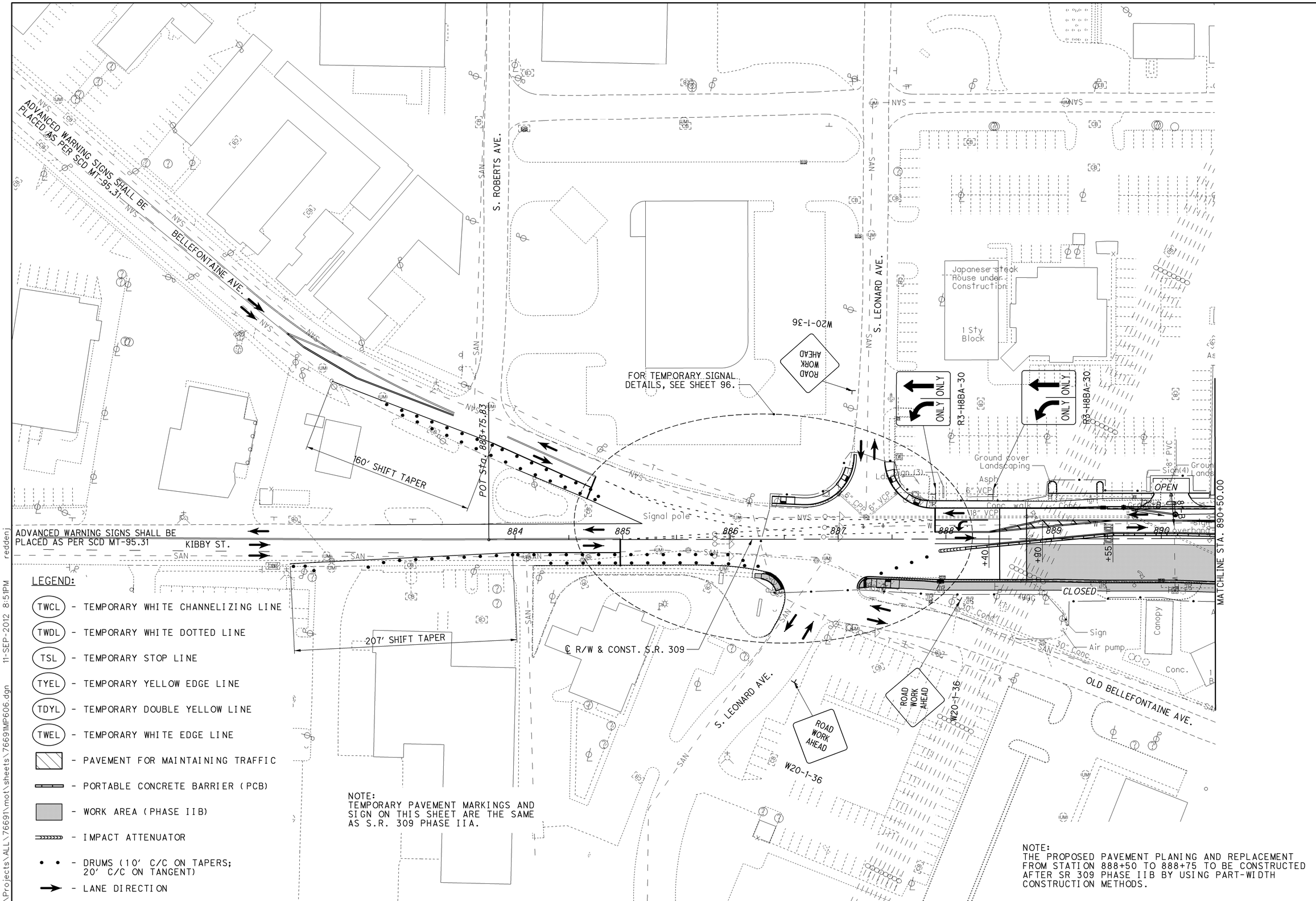

LEGEND:

- TWCL - TEMPORARY WHITE CHANNELIZING LINE
- TWDL - TEMPORARY WHITE DOTTED LINE
- TSL - TEMPORARY STOP LINE
- TYEL - TEMPORARY YELLOW EDGE LINE
- TDYL - TEMPORARY DOUBLE YELLOW LINE
- TWEL - TEMPORARY WHITE EDGE LINE
- PAVEMENT FOR MAINTAINING TRAFFIC
- PORTABLE CONCRETE BARRIER (PCB)
- WORK AREA (PHASE IIB)
- IMPACT ATTENUATOR
- DRUMS (10' C/C ON TAPERS; 20' C/C ON TANGENT)
- LANE DIRECTION

NOTE:
TEMPORARY PAVEMENT MARKINGS AND SIGN ON THIS SHEET ARE THE SAME AS S.R. 309 PHASE IIA.

NOTE:
THE PROPOSED PAVEMENT PLANING AND REPLACEMENT FROM STATION 888+50 TO 888+75 TO BE CONSTRUCTED AFTER SR 309 PHASE IIB BY USING PART-WIDTH CONSTRUCTION METHODS.

HORIZONTAL SCALE IN FEET 0 20 40 80

CALCULATED CAC
CHECKED EJC

MAINTENANCE OF TRAFFIC - S.R. 309
PHASE IIB - BEGIN WORK TO STA. 890+50.00

ALL-75-5.53

J:\Projects\ALL\76691\mot\sheets\76691MP606.dgn 11-SEP-2012 8:51PM reddenj

J:\Projects\ALL\76691\mot\sheets\76691MP607.dgn 11-SEP-2012 8:51PM reddenj

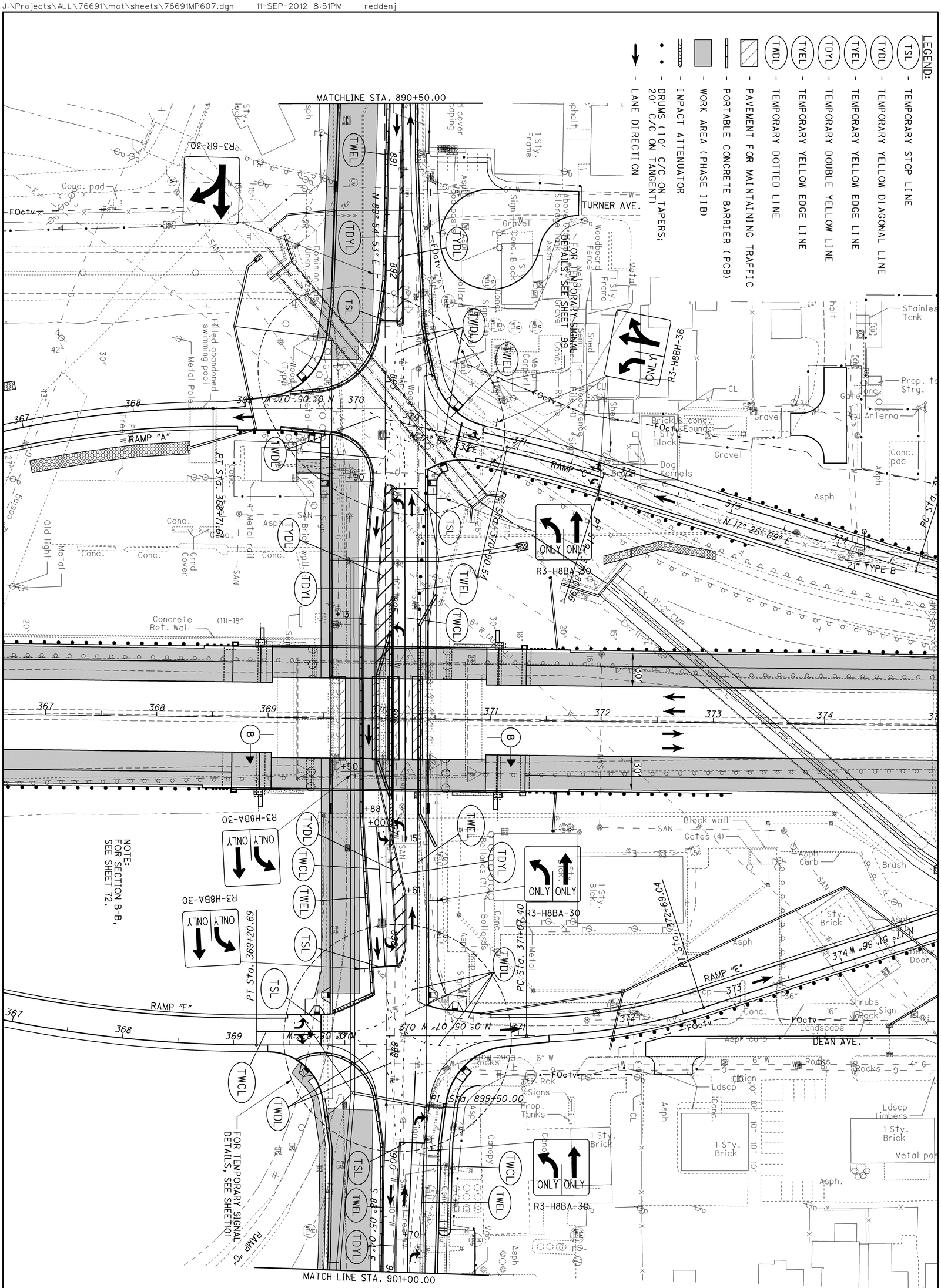

120 / 1224	ALL-75-5.53	MAINTENANCE OF TRAFFIC - S.R. 309 PHASE IIB - STA. 890+50.00 TO STA. 901+00.00	CALCULATED CAC CHECKED EJC	0 40 20 80 HORIZONTAL SCALE IN FEET

LEGEND:

- TWCL - TEMPORARY WHITE CHANNELIZING LINE
- TSL - TEMPORARY STOP LINE
- TYEL - TEMPORARY YELLOW EDGE LINE
- TDYL - TEMPORARY DOUBLE YELLOW LINE
- TWEL - TEMPORARY WHITE EDGE LINE
- PAVEMENT FOR MAINTAINING TRAFFIC
- PORTABLE CONCRETE BARRIER (PCB)
- WORK AREA (PHASE IIB)
- IMPACT ATTENUATOR
- DRUMS (10' C/C ON TAPERS; 20' C/C ON TANGENTS)
- LANE DIRECTION

NOTE:

TEMPORARY PAVEMENT MARKINGS SHOWN, BUT NOT LABELED ARE THE SAME AS S.R. 309 PHASE IIA.

ADVANCED WARNING SIGNS SHALL BE PLACED AS PER SCD MT-95.32

NOTE:

1. EXISTING RAMP 'F' TO REMAIN OPEN UNTIL CONSTRUCTION OF PROPOSED RAMP 'F' IS COMPLETED.

HORIZONTAL SCALE IN FEET: 0, 20, 40, 80

CALCULATED CAC | CHECKED EJC

MAINTENANCE OF TRAFFIC - S.R. 309
PHASE IIB - STA. 901+00.00 TO END WORK

ALL-75-5.53

121
1224

J:\Projects\ALL\76691\mot\sheets\76691MP608.dgn 11-SEP-2012 8:51PM reddenj

LEGEND:

- TSL - TEMPORARY STOP LINE
- TYDL - TEMPORARY YELLOW DIAGONAL LINE
- TWCL - TEMPORARY WHITE CHANNELIZING LINE
- TCL - TEMPORARY CROSSWALK LINE
- TLL - TEMPORARY LANELINE
- TYEL - TEMPORARY YELLOW EDGE LINE
- TDYL - TEMPORARY DOUBLE YELLOW LINE
- TWEL - TEMPORARY WHITE EDGE LINE
- - PAVEMENT FOR MAINTAINING TRAFFIC
- - PORTABLE CONCRETE BARRIER (PCB)
- - WORK AREA OF SR 309 TO BE CONSTRUCTED AFTER I-75 PHASE I TRAFFIC IS SHIFTED ONTO THE NEW PAV'T AND BRIDGES
- - IMPACT ATTENUATOR
- - DRUMS (10' C/C ON TAPERS; 20' C/C ON TANGENT)
- - LANE DIRECTION

NOTE:
THIS PLAN IS PROVIDED TO SHOW THE TEMPORARY PAVEMENT MARKINGS FOR USE AFTER THE COMPLETION OF SR 309 PHASE 2 CONSTRUCTION AND BEFORE THE SHIFTING OF I-75 TRAFFIC ONTO THE NEWLY CONSTRUCTED PHASE I PAVEMENT AND BRIDGES OVERHEAD. WHEN I-75 TRAFFIC IS SHIFTED AT THE COMPLETION OF PHASE I, THE EXISTING BRIDGE PIERS IN THE PROPOSED SR 309 PAVEMENT CAN BE REMOVED AND THE PROPOSED SR 309 PAVEMENT COMPLETED.

PERMANENT PAVEMENT MARKINGS ARE TO BE IN PLACE EAST OF RAMPS "E" AND "F" AND WEST OF RAMPS "A" AND "C" AS SHOWN ON THE TRAFFIC CONTROL PLANS. TEMPORARY MARKINGS SHOWN ARE ONLY BETWEEN RAMPS. UPON COMPLETION OF THE PAVEMENT, TEMPORARY MARKINGS SHALL BE OBLITERATED AND THE PERMANENT MARKINGS SHALL BE INSTALLED.

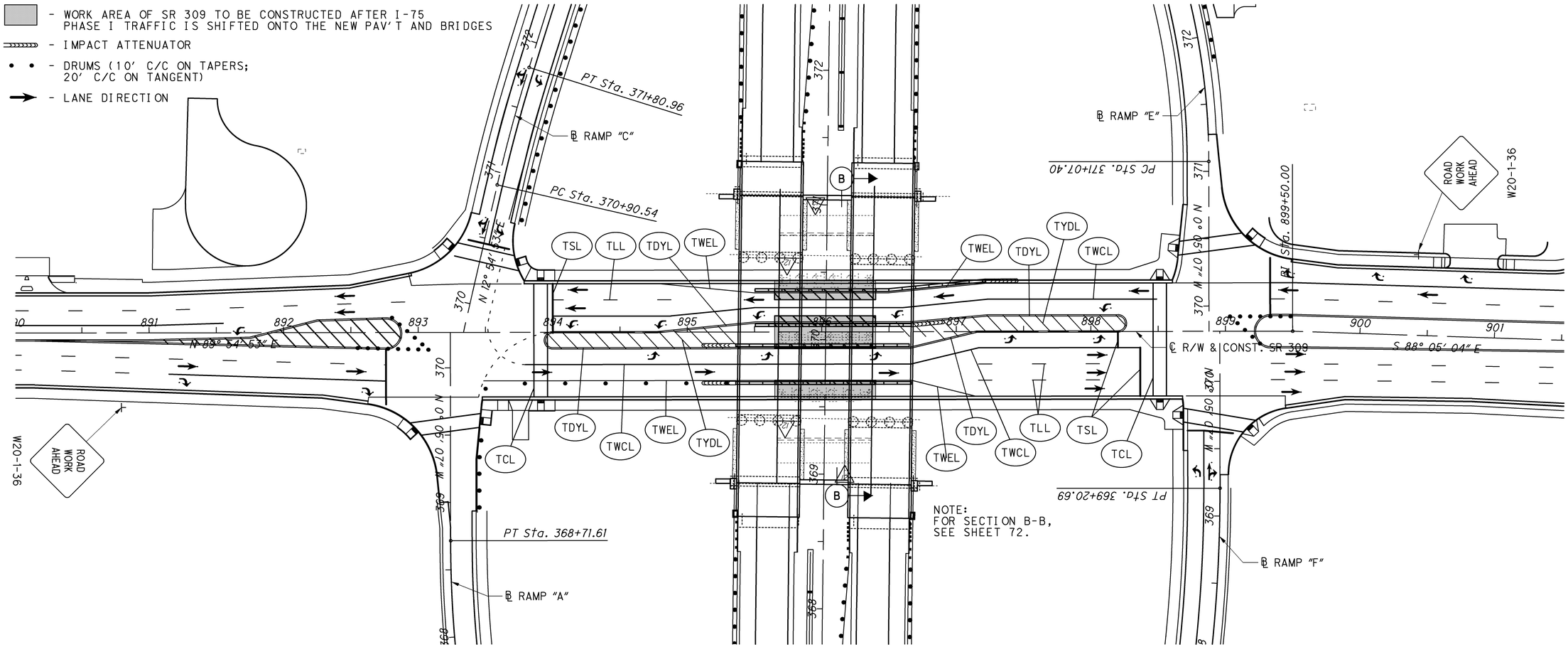

HORIZONTAL SCALE IN FEET
0 20 40 80

CALCULATED CAC
CHECKED EJC

MAINTENANCE OF TRAFFIC - S.R. 309
TEMPORARY PAVEMENT MARKING

ALL-75-5.53

122
1224

J:\Projects\ALL\76691\mot\sheets\76691MP610.dgn 11-SEP-2012 8:51PM reddenj



HORIZONTAL SCALE IN FEET
0 20 40 80

CALCULATED CAC
CHECKED EJC

MAINTENANCE OF TRAFFIC - S.R. 81
PHASE I - BEGIN WORK TO STA. 436+00.00

ALL-75-5.53

J:\Projects\ALL\76691\mot\sheets\76691MP800.dgn 11-SEP-2012 8:51PM reddenj

LEGEND:

- TSL - TEMPORARY STOP LINE
- TYEL - TEMPORARY YELLOW EDGE LINE
- TDYL - TEMPORARY DOUBLE YELLOW LINE
- TWEL - TEMPORARY WHITE EDGE LINE
- PAVEMENT FOR MAINTAINING TRAFFIC
- PORTABLE CONCRETE BARRIER (PCB)
- WORK AREA (PHASE I)
- IMPACT ATTENUATOR
- DRUMS (10' C/C ON TAPERS; 20' C/C ON TANGENTS)
- LANE DIRECTION

* - CONSTRUCTION CAN START IN THIS PHASE BUT MUST BE COVERED WITH STEEL PLATES AND FINISHED AFTER THE TEMP. CONNECTOR TO SERVICE ROAD 3 IS REMOVED (SERVICE ROAD 3 PHASE 3).

℄ R/W & CONST. NEUBRECHT RD.

℄ R/W & CONST. S.R. 81

℄ R/W & CONST SERVICE RD.

PT Sta. 12+89.62

PC Sta. 11+46.49

PC Sta. 440+74.77

PT Sta. 446+33.68

PT Sta. 45+21.23

PC Sta. 46+40.74

ADJUST EXISTING CATCH BASIN TO TEMPORARY GRADE TO PROMOTE DRAINAGE ALL COSTS FOR LABOR, EQUIPMENT AND MATERIALS SHALL BE INCLUDED WITH ITEM 614, MAINTAINING TRAFFIC, AS PER PLAN.

CURB AND GUTTER IN THIS AREA TO BE CONSTRUCTED IN SERVICE ROAD 3 PHASE 3.

THIS PIPE TO BE KEPT IN PLACE UNTIL THE REMOVAL THE THE TEMP. CONNECTOR (SERVICE ROAD 3 PHASE 3).

NOTE:
PART OF THE TEMP. CONNECTOR USED IN PHASE 2 CAN BE CONSTRUCTED IN THIS AREA DURING THIS PHASE, SEE SHEET 130 FOR DETAILS.

GUARDRAIL TERMINAL ASSEMBLY TO BE REMOVED AND A BIDIRECTIONAL IMPACT ATTENUATOR TO BE PLACED WEST OF THE TEMPORARY PAVEMENT

FOR TEMPORARY SIGNAL DETAILS, SEE SHEET 104.

MATCH LINE STA. 436+00.00

MATCH LINE STA. 447+00.00

N 72° 39' 55" E

N 79° 34' 07" E

W6-3-36

R3-2-36

TWEL

TDYL

TSL

OPEN

HORIZONTAL SCALE IN FEET
0 20 40 80

CALCULATED CAC
CHECKED EJC

MAINTENANCE OF TRAFFIC - S.R. 81
PHASE I - 436+00.00 TO STA. 447+00.00

ALL-75-5.53

124
1224

J:\Projects\ALL\76691\mot\sheets\76691MP801.dgn 11-SEP-2012 8:51PM redderj

BORE OR JACK TEMP. 24" TYPE A PIPE AND GRADE DITCH TO DRAIN. ALL COSTS FOR LABOR, EQUIPMENT AND MATERIALS SHALL BE INCLUDED WITH ITEM 614, MAINTAINING TRAFFIC, AS PER PLAN.

℄ RAMP 'F'

NOTE:
FOR SECTION E-E, SEE SHEET 73.

PC Sta. 462+79.55

R3-H8BJ-36

ONLY

TEMPORARY PAVEMENT TO BE PLACED BETWEEN PHASE I & II BY USING INTERMITTENT NIGHTTIME CLOSURE.

℄ R/W & CONST. I-75

SEE STRUCTURE 0875 PLANS FOR SHEETING & SHORING

℄ R/W & CONST. S.R. 81

PT Sta. 464+84.54

PC Sta. 463+63.73

PT Sta. 465+40.97

℄ RAMP 'B'

R3-H6A-30

EXISTING RAMP "B"

EXISTING RAMP "E"

TEMPORARY PAVEMENT TO BE PLACED BETWEEN PHASE I & II BY USING INTERMITTENT NIGHTTIME CLOSURE.

R3-6R-30

MATCH LINE STA. 447+00.00

CONC.

N 78° 45' 16" E

N 6° 12' 04" W

N 15° 14' 03" W

N 1° 12' 04" W

S 84° 39' 37" E

PC Sta. 451+94.59

PT Sta. 462+18.30

PC Sta. 457+34.35

RCP

UD

TWCL

TWEL

TDYL

TSL

FOR EXCAVATION BRACING, SEE STRUCTURE 0875 PLANS & TEMPORARY MSE DETAILS ON SHEETS 61 AND 62.

PART OF I-75 PHASE I THAT CAN NOT BE BUILT UNTIL SR 81 PHASE I UNDER I-75 IS COMPLETE

W6-3-36

PT Sta. 454+98.19

PT Sta. 460+41.09

PC Sta. 460+59.98

MATCH LINE STA. 458+00.00

Realty Sign

FOR TEMPORARY SIGNAL DETAILS, SEE SHEET 108.

R3-6L-30

W6-3-36

TEMPORARY PAVEMENT TO BE PLACED BETWEEN PHASE I & II BY USING INTERMITTENT NIGHTTIME CLOSURE.

FOR TEMPORARY SIGNAL DETAILS, SEE SHEET 110.

℄ RAMP 'C'

PT Sta. 458+65.86

FOG'N

℄ RAMP 'D'

LEGEND:

- TWCL - TEMPORARY WHITE CHANNELIZING LINE
- TSL - TEMPORARY STOP LINE
- TYEL - TEMPORARY YELLOW EDGE LINE
- TDYL - TEMPORARY DOUBLE YELLOW LINE
- TWEL - TEMPORARY WHITE EDGE LINE
- PAVEMENT FOR MAINTAINING TRAFFIC
- TEMPORARY PAVEMENT TO BE CONSTRUCTED BETWEEN S.R. 81 PHASE I AND II.
- PORTABLE CONCRETE BARRIER (PCB)
- WORK AREA (PHASE I)
- IMPACT ATTENUATOR
- DRUMS (10' C/C ON TAPERS; 20' C/C ON TANGENTS)
- LANE DIRECTION

HORIZONTAL SCALE IN FEET
0 20 40 80

CALCULATED CAC
CHECKED EJC

MAINTENANCE OF TRAFFIC - S.R. 81
PHASE I - STA. 447+00.00 TO STA. 458+00.00

ALL-75-5.53

125
1224

J:\Projects\ALL\76691\mot\sheets\76691MP802.dgn 11-SEP-2012 8:51PM redden

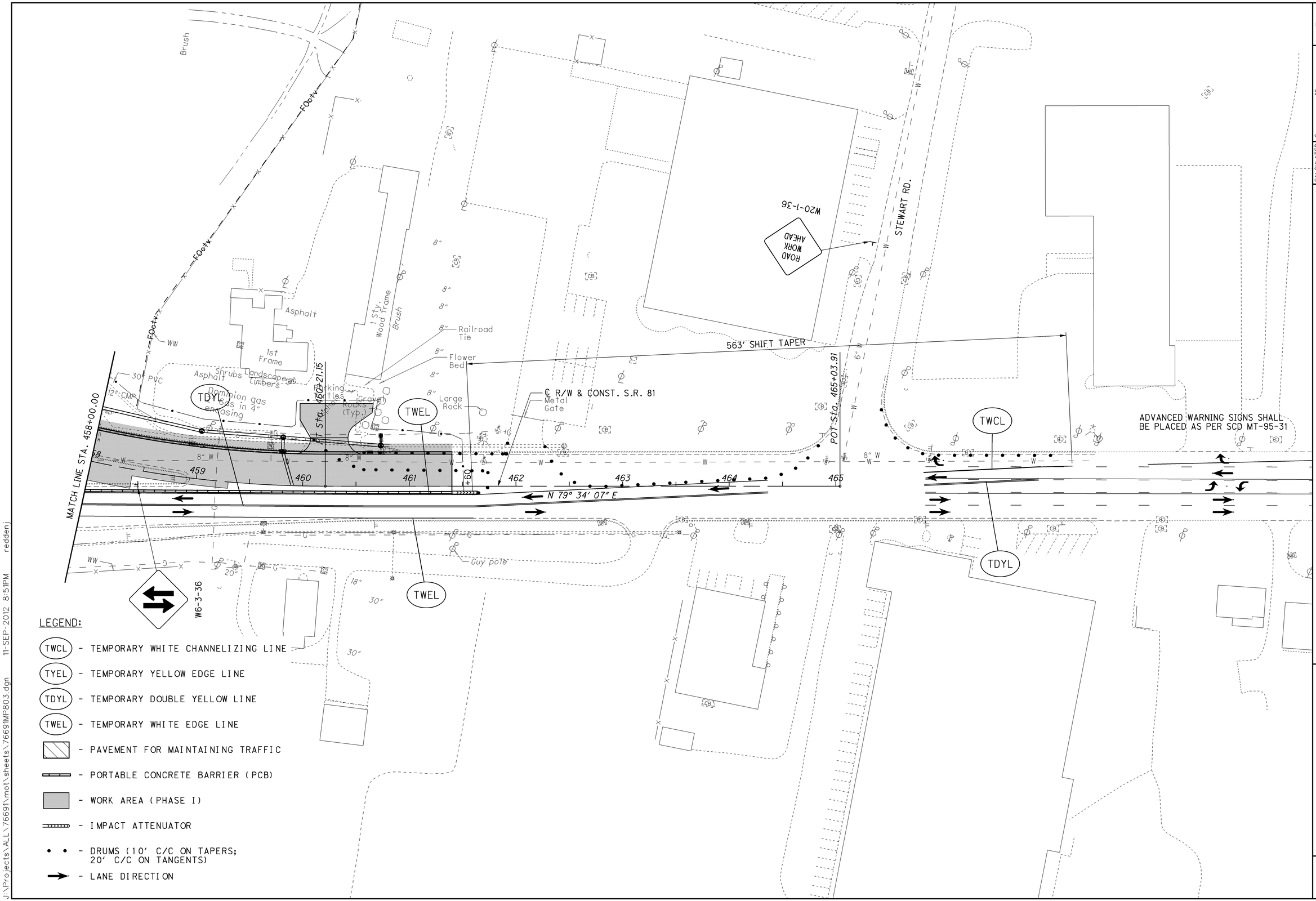

HORIZONTAL SCALE IN FEET
0 20 40 80

CALCULATED CAC
CHECKED EJC

MAINTENANCE OF TRAFFIC - S.R. 81
PHASE I - STA. 458+00.00 TO END WORK

ALL-75-5.53

126
1224

J:\Projects\ALL\76691\mot\sheets\76691MP803.dgn 11-SEP-2012 8:51PM reddenj

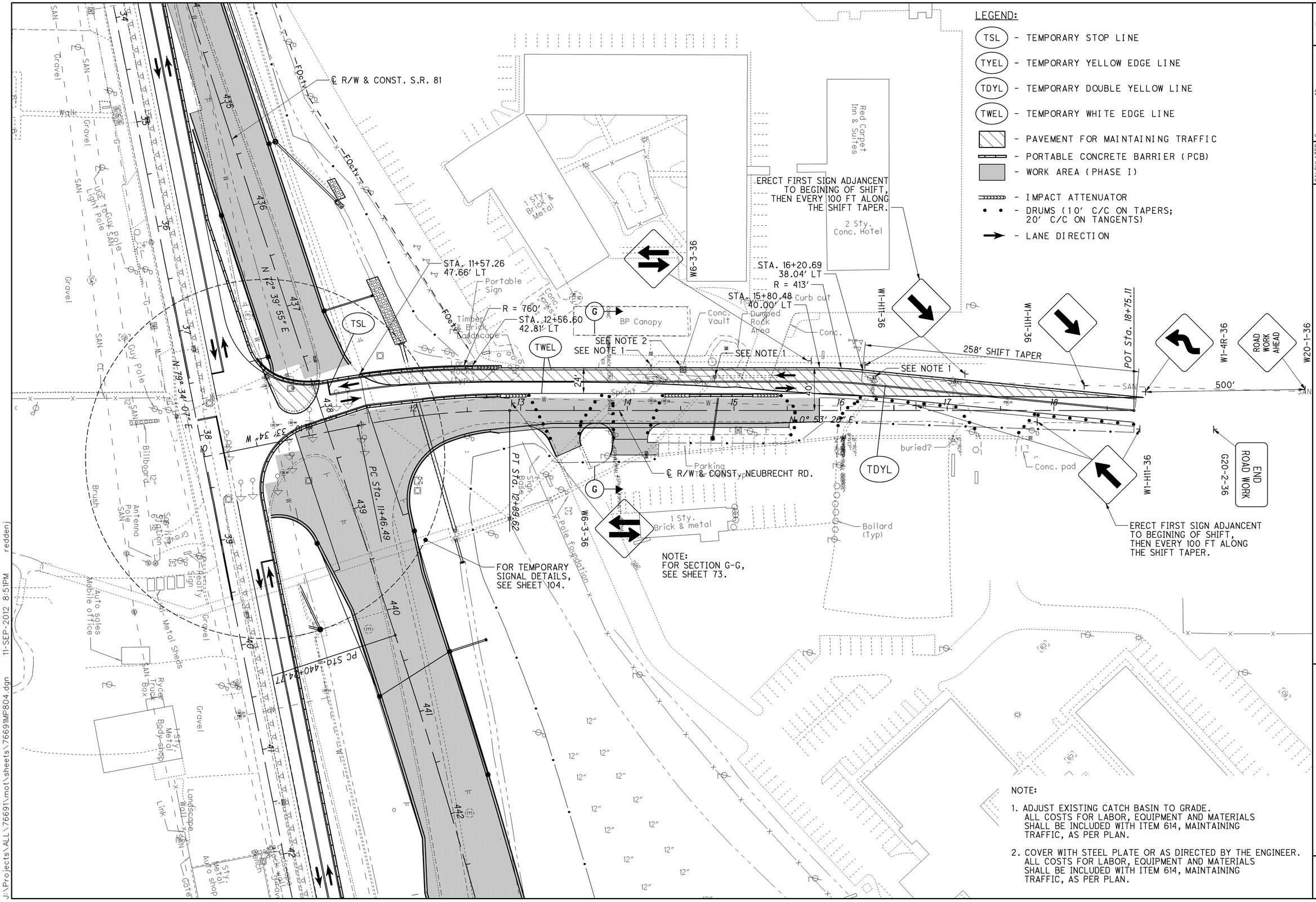

HORIZONTAL SCALE IN FEET
0 20 40 80

CALCULATED CAC
CHECKED EJC

MAINTENANCE OF TRAFFIC - NEUBRECHT RD.
PHASE I - 10+00.00 TO END WORK

ALL-75-5.53

127
1224

J:\Projects\ALL\76691\mot\sheets\76691MP804.dgn 11-SEP-2012 8:51PM redden

J:\Projects\ALL\76691\mot\sheets\76691MP809.dgn 11-SEP-2012 8:51PM reddenj

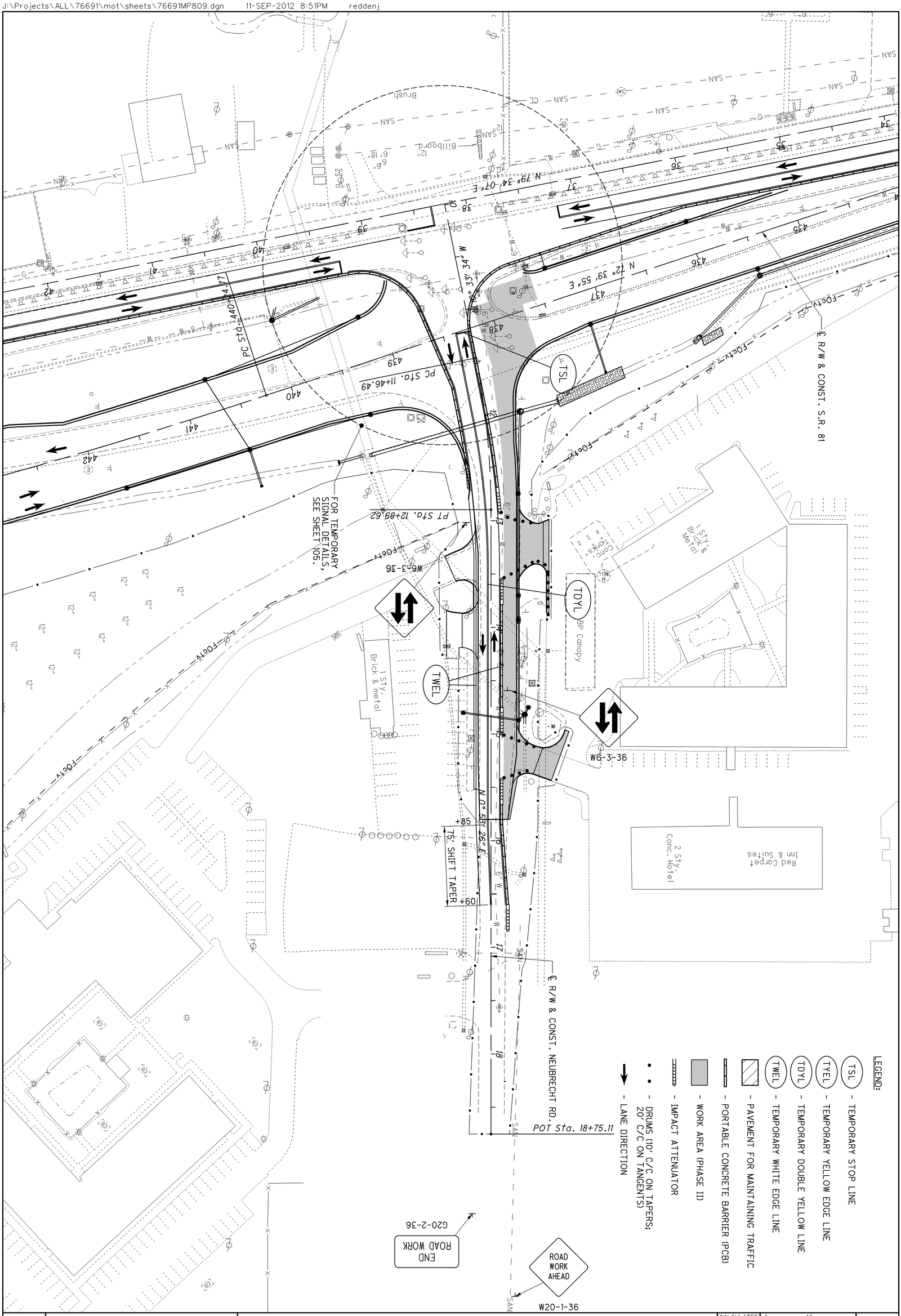

128 / 1224	ALL-75-5.53	MAINTENANCE OF TRAFFIC - NEUBRECHT RD. PHASE II - 10+00.00 TO END WORK	CALCULATED CAC / CHECKED EJC	0 20 40 80 HORIZONTAL SCALE IN FEET

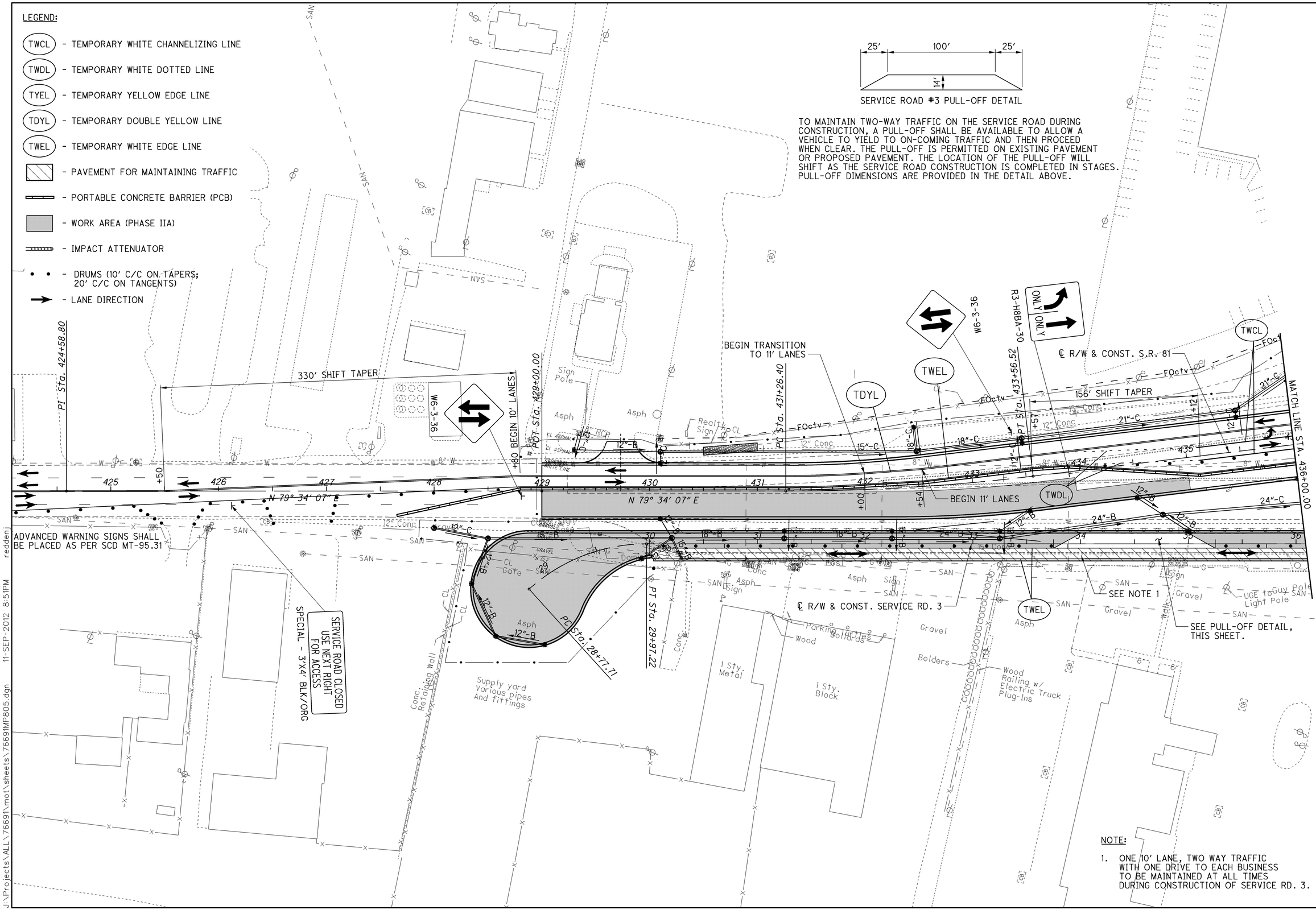

HORIZONTAL SCALE IN FEET 0 20 40 80

CALCULATED CAC
CHECKED EJC

MAINTENANCE OF TRAFFIC - S.R. 81 PHASE II
SERVICE ROAD # 3 PHASE I

ALL-75-5.53

J:\Projects\ALL\76691\mot\sheets\76691MP805.dgn 11-SEP-2012 8:51PM reddenj

LEGEND:

- TWCL - TEMPORARY WHITE CHANNELIZING LINE
- TSL - TEMPORARY STOP LINE
- TYEL - TEMPORARY YELLOW EDGE LINE
- TDYL - TEMPORARY DOUBLE YELLOW LINE
- TWEL - TEMPORARY WHITE EDGE LINE
- PAVEMENT FOR MAINTAINING TRAFFIC
- PORTABLE CONCRETE BARRIER (PCB)
- WORK AREA (PHASE IIA)
- IMPACT ATTENUATOR
- DRUMS (10' C/C ON TAPERS; 20' C/C ON TANGENTS)
- LANE DIRECTION

HORIZONTAL SCALE IN FEET: 0, 20, 40, 80

CALCULATED CAC | CHECKED EJC

MAINTENANCE OF TRAFFIC - S.R. 81 PHASE II
SERVICE RD. #3 PHASE I

ALL-75-5.53

130
1224

SERVICE ROAD CLOSED AHEAD - TURN LEFT TO USE TEMPORARY ACCESS
SPECIAL - 3'X4' BLK/ORG

℄ R/W & CONST. NEUBRECHT RD.

FOR TEMPORARY SIGNAL DETAILS, SEE SHEET 106.

PT Sta. 12+89.62

SR 81 STA. 443+55.99 = TEMP. CONNECTOR STA. 12+36.36

R3-H8BB-30 ONLY | ONLY

R3-H8BA-30 ONLY | ONLY

TURN LEFT FOR SERVICE ROAD ACCESS
SPECIAL - 3'X4' BLK/ORG

℄ R/W & CONST S.R. 81

MATCH LINE STA. 436+00.00

PC Sta. 11+46.49

STA. 442+81.20
71.43' RT.

PT Sta. 11+79.68

MATCH PROPOSED

MATCH LINE STA. 447+00.00

PT Sta. 446+33.68

N 72° 39' 55" E

N 10° 33' 34" W

STA. 442+10.12
45.45' RT.

STA. 445+25.21
44.81' RT.

STA. 444+50.29
52.35' RT.

STA. 444+58.32
130.00' RT.

TEMP. CONNECTOR CURVE
TEMP. CONNECTOR PC Sta. 10+00.00 = SERVICE ROAD #3 STA. 42+42.93

PC Sta. 44+24.77

N 79° 34' 07" E

SEE NOTE 1

STA. 444+02.15
143.15' RT.

℄ TEMP. CONNECTOR

MATCH EXISTING

ROAD CLOSED

SERVICE ROAD CLOSED USE NEXT RIGHT FOR ACCESS
SPECIAL - 3'X4' BLK/ORG

R3-H8BA-30 ONLY | ONLY

W1-7-60

℄ R/W & CONST SERVICE RD. 3

ROAD CLOSED
LOCAL TRAFFIC ONLY
R11-3-66

TWO-WAY TRAFFIC ON SINGLE LANE AHEAD
YIELD TO ONCOMING TRAFFIC - USE PULL-OFFS
SPECIAL - 42"X60" BLK/ORG

R3-H8BE-30 ONLY | ONLY

ONE LANE ROAD AHEAD
W20-4-36

TEMP. CONNECTOR CURVE
P.I. Sta. 11+17.12
Δ = 93° 35' 28" (LT)
Dc = 52° 05' 13"
R = 110.00'
T = 117.12'
L = 179.68'
E = 50.68'
C = 160.36'
C.B. = N 32° 46' 23" E

NOTE:

1. ONE 10' LANE, TWO WAY TRAFFIC WITH ONE DRIVE TO EACH BUSINESS TO BE MAINTAINED AT ALL TIMES DURING CONSTRUCTION OF SERVICE RD. 3.
2. FOR SECTIONS D-D SEE SHEET 73.

NOTE:
SEE SHEET 124, SERVICE ROAD #3 PHASE 1 DETAIL SHEET FOR DRAINGE INFORMATION FOR THE TEMPORARY CONNECTOR.

℄ CONSTRUCTION TEMP. CONNECTOR

VARIES | VARIES

0.016 | 0.016

PAV'T FOR MAINTAINING TRAFFIC CLASS A

SECTION H-H
TEMP. CONNECTOR ROAD

	10	11	12
880	868.22	869.50	871.45
	868.74	869.81	
	869.19	870.11	
		870.42	
		870.72	
		871.05	
870	868.22 MATCH EXISTING SERVICE ROAD #3 AT EDGE OF PAVEMENT P.V.I. STA 10+42.22 ELEV = 869.10'	EXIST. GROUND +1.22 % +1.22 %	871.63 +1.60 %
		PROFILE GRADE	
860	868.22	870.67	872.85
	868.76	871.00	
	869.67	870.51	
		868.76	
		870.92	
		872.96 MATCH PROPOSED SR 81 AT EDGE OF PAVEMENT P.V.I. STA 11+94.36 ELEV = 870.96'	

+2.08 %

J:\Projects\ALL\76691\mot\sheets\76691MP806.dgn 11-SEP-2012 8:51PM redden

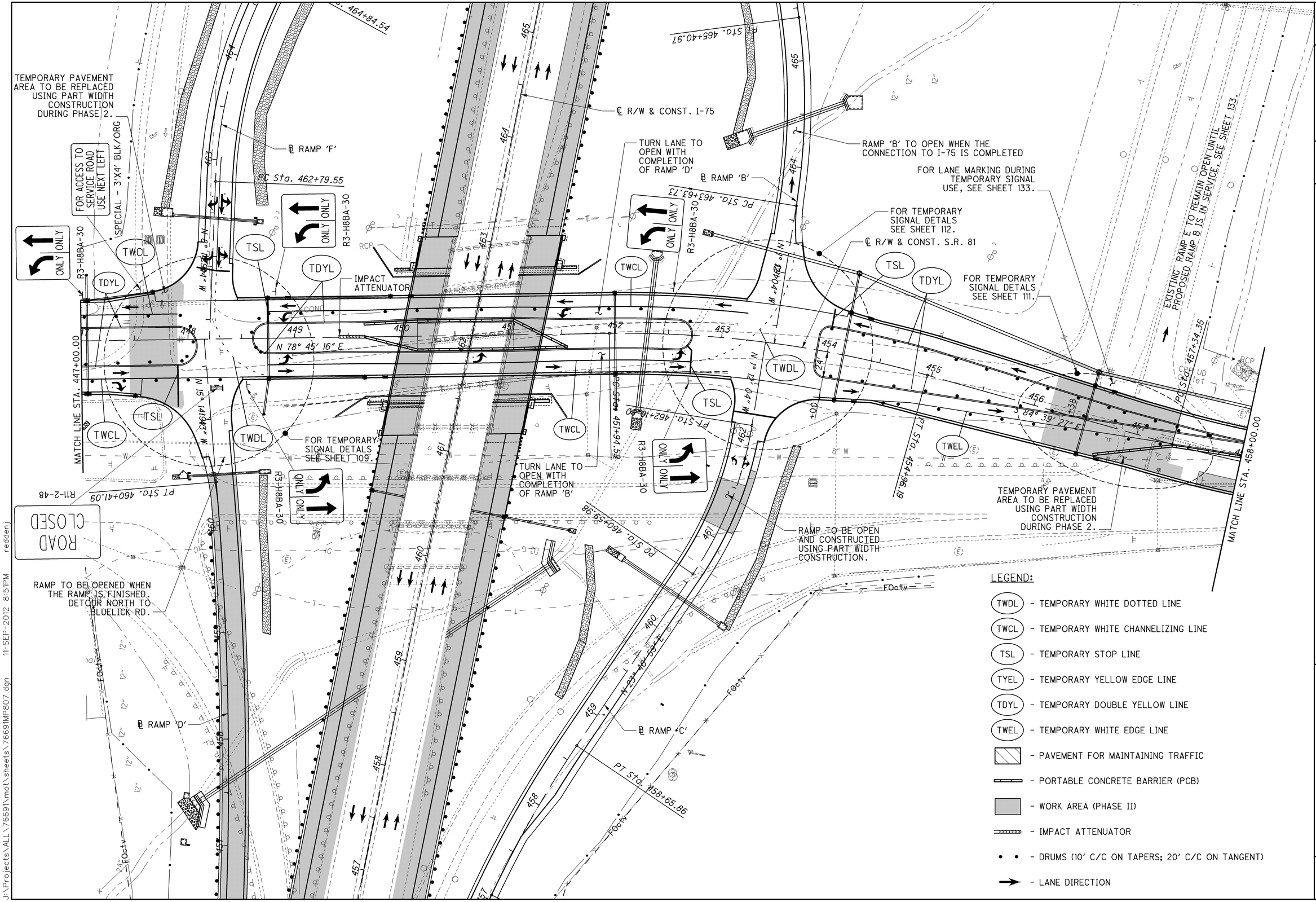

HORIZONTAL SCALE IN FEET 0 20 40 80

CALCULATED CAC
CHECKED EJC

MAINTENANCE OF TRAFFIC - S.R. 81
PHASE II - STA. 447+00.00 TO STA. 458+00.00

ALL-75-5.53

J:\Projects\ALL\76691\mot\sheets\76691MP807.dgn 11-SEP-2012 8:51PM reddenj

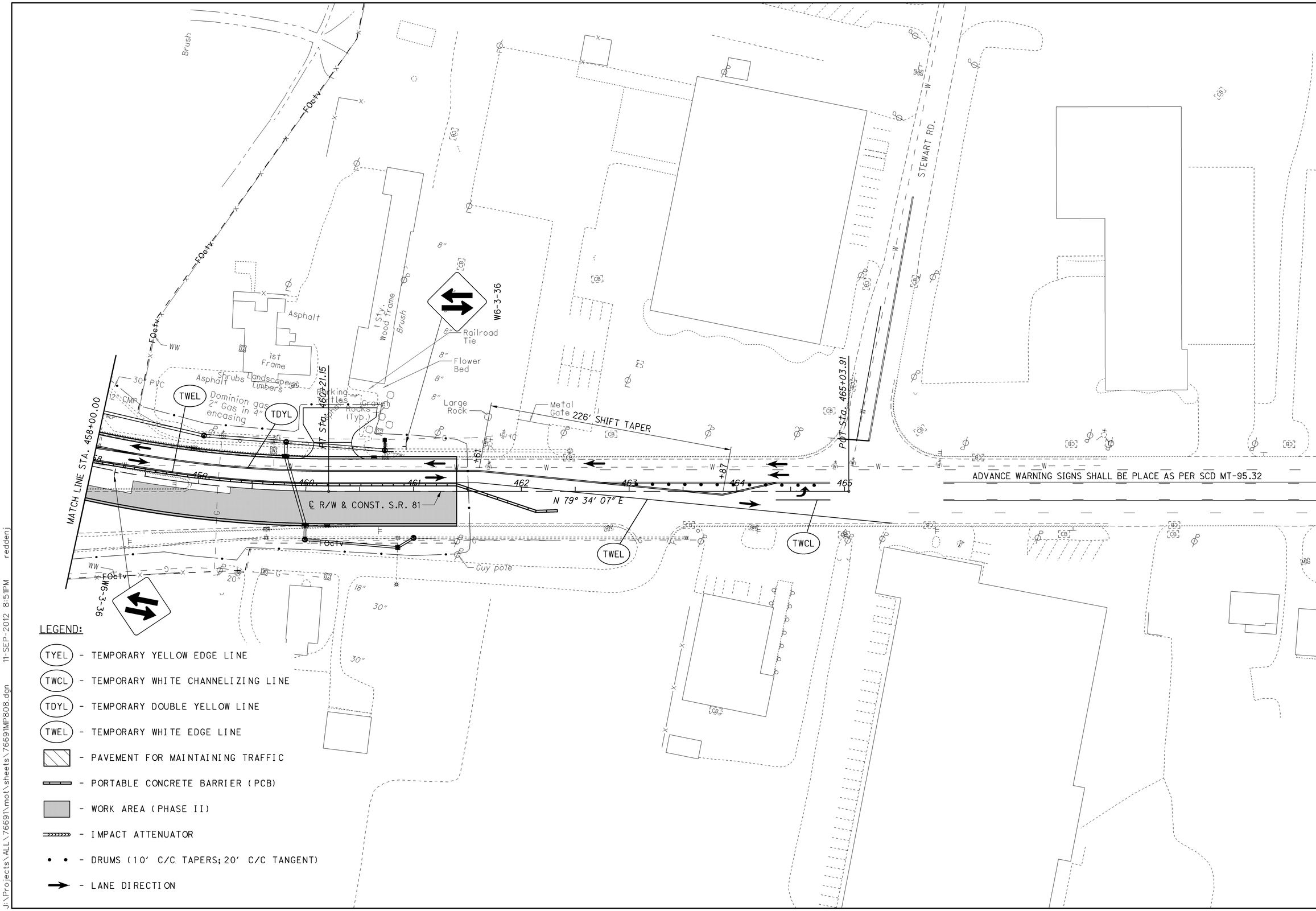

LEGEND:

- TYEL - TEMPORARY YELLOW EDGE LINE
- TWCL - TEMPORARY WHITE CHANNELIZING LINE
- TDYL - TEMPORARY DOUBLE YELLOW LINE
- TWEL - TEMPORARY WHITE EDGE LINE
- PAVEMENT FOR MAINTAINING TRAFFIC
- PORTABLE CONCRETE BARRIER (PCB)
- WORK AREA (PHASE II)
- IMPACT ATTENUATOR
- DRUMS (10' C/C TAPERS; 20' C/C TANGENT)
- LANE DIRECTION

HORIZONTAL SCALE IN FEET 0 20 40 80

CALCULATED CAC
CHECKED EJC

MAINTENANCE OF TRAFFIC - S.R. 81
PHASE II - STA. 458+00.00 TO END WORK

ALL-75-5.53

J:\Projects\ALL\76691\mot\sheets\76691MP808.dgn 11-SEP-2012 8:51PM reddenj

LEGEND:

- (TWCL) - TEMPORARY WHITE CHANNELIZING LINE
- (TWDL) - TEMPORARY WHITE DOTTED LINE
- (TSL) - TEMPORARY STOP LINE
- (TYEL) - TEMPORARY YELLOW EDGE LINE
- (TDYL) - TEMPORARY DOUBLE YELLOW LINE
- (TWEL) - TEMPORARY WHITE EDGE LINE
- - PAVEMENT FOR MAINTAINING TRAFFIC
- - TEMPORARY PAVEMENT TO BE CONSTRUCTED BETWEEN S.R. 81 PHASE I AND II.
- - PORTABLE CONCRETE BARRIER (PCB)
- - WORK AREA (PHASE I)
- - IMPACT ATTENUATOR
- - DRUMS (10' C/C ON TAPERS; 20' C/C ON TANGENTS)
- - LANE DIRECTION

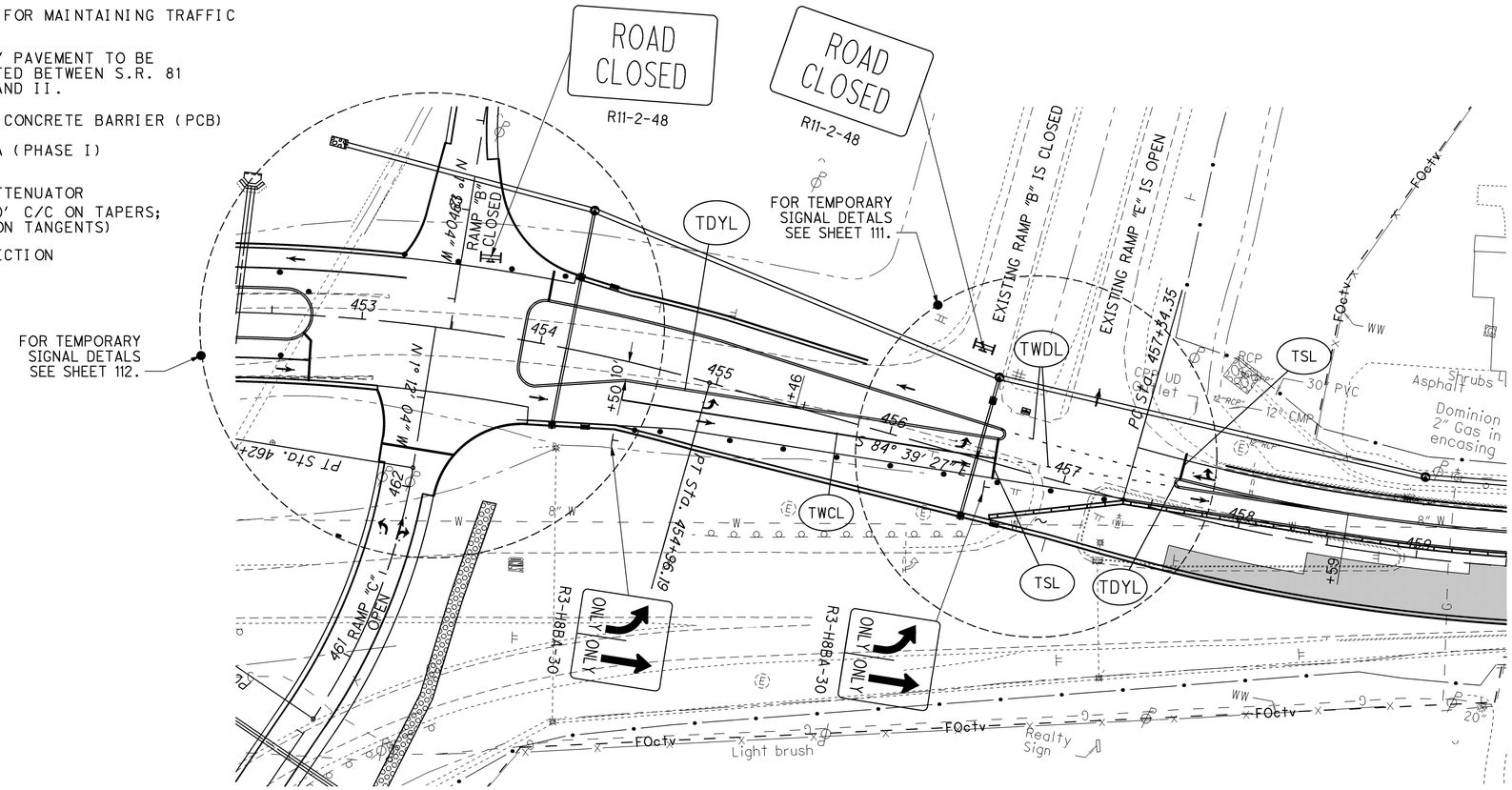

NOTE:
THESE LANE MARKINGS SHALL BE USED WHEN PROPOSED RAMP "B" AND EXISTING RAMP "B" ARE CLOSED DURING PHASE II AND PROPOSED RAMP "C" AND EXISTING RAMP "E" ARE OPEN.

HORIZONTAL SCALE IN FEET
0 20 40 80

CALCULATED CAC
CHECKED EJC

MAINTENANCE OF TRAFFIC - S.R. 81
PHASE II - INTERSECTION OF EX. RAMP "F"

ALL-75-5.53

133
1224

J:\Projects\ALL\76691\mot\sheets\76691MP815.dgn 11-SEP-2012 8:51PM reddenj

LEGEND:

- (TYEL) - TEMPORARY YELLOW EDGE LINE
- (TDYL) - TEMPORARY DOUBLE YELLOW LINE
- (TWEL) - TEMPORARY WHITE EDGE LINE
- - PAVEMENT FOR MAINTAINING TRAFFIC
- - PORTABLE CONCRETE BARRIER (PCB)
- - WORK AREA (PHASE II)
- - IMPACT ATTENUATOR
- • • - DRUMS (10′ C/C ON TAPERS; 20′ C/C ON TANGENT)
- - LANE DIRECTION

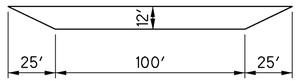

PLAN
SERVICE ROAD #3 PULL-OFF DETAIL

TO MAINTAIN TWO-WAY TRAFFIC ON THE SERVICE ROAD DURING CONSTRUCTION, A PULL-OFF SHALL BE AVAILABLE TO ALLOW A VEHICLE TO YIELD TO ON-COMING TRAFFIC AND THEN PROCEED WHEN CLEAR. THE PULL-OFF IS PERMITTED ON EXISTING PAVEMENT OR PROPOSED PAVEMENT. THE LOCATION OF THE PULL-OFF WILL SHIFT AS THE SERVICE ROAD CONSTRUCTION IS COMPLETED IN STAGES. PULL-OFF DIMENSIONS ARE PROVIDED IN THE DETAIL ABOVE.

PT Sta. 424+58.80
℄ R/W & CONST. S.R. 81
POT Sta. 429+00.00
PC Sta. 431+26.40
PT Sta. 433+66.52
MATCH LINE STA. 436+00.00
N 79° 34′ 07″ E
℄ R/W & CONST. SERVICE RD. 3
SEE NOTE 1
SEE PULL-OFF DETAIL, THIS SHEET.
PC Sta. 28+77.71
PT Sta. 29+97.22
Supply yard
Various pipes
And fittings

NOTE:

1. ONE 10′ LANE, TWO WAY TRAFFIC WITH ONE DRIVE TO EACH BUSINESS TO BE MAINTAINED AT ALL TIMES DURING CONSTRUCTION OF SERVICE RD. 3.

HORIZONTAL SCALE IN FEET
0 20 40 80

CALCULATED CAC
CHECKED EJC

MAINTENANCE OF TRAFFIC
SERVICE RD. #3 PHASE II

ALL-75-5.53

134
1224

J:\Projects\ALL\76691\mot\sheets\76691MP810.dgn 11-SEP-2012 8:51PM reddenj

LEGEND:

- TYEL - TEMPORARY YELLOW EDGE LINE
- TDYL - TEMPORARY DOUBLE YELLOW LINE
- TWEL - TEMPORARY WHITE EDGE LINE
- PAVEMENT FOR MAINTAINING TRAFFIC
- PORTABLE CONCRETE BARRIER (PCB)
- WORK AREA (PHASE II)
- IMPACT ATTENUATOR
- DRUMS (10' C/C ON TAPERS; 20' C/C ON TANGENT)
- LANE DIRECTION

HORIZONTAL SCALE IN FEET
0 20 40 80

CALCULATED CAC
CHECKED EJC

FOR TEMPORARY SIGNAL DETAILS, SEE SHEET 106.

PT Sta. 12+89.62

℄ R/W & CONST S.R. 81

PC Sta. 11+46.49

PC Sta. 440+24.77

N 72° 39' 55" E

N 10° 33' 34" W

N 79° 34' 07" E

PC Sta. 45+21.23

PT Sta. 46+33.68

PT Sta. 46+40.74

SEE NOTE 1

ROAD CLOSED
R11-2-48

TEMPORARY CONNECTOR CONSTRUCTED IN SERVICE ROAD PHASE I ALSO TO BE USED FOR THIS PHASE.

℄ R/W & CONST SERVICE RD. 3

NOTE:

1. ONE 10' LANE, TWO WAY TRAFFIC WITH ONE DRIVE TO EACH BUSINESS TO BE MAINTAINED AT ALL TIMES DURING CONSTRUCTION OF SERVICE RD. 3.
2. ALL TEMPORARY SIGNS FROM SERVICE ROAD PHASE I WILL REMAIN IN PLACE FOR SERVICE ROAD PHASE II.

MAINTENANCE OF TRAFFIC
SERVICE RD. #3 PHASE II

ALL-75-5.53

135
1224

J:\Projects\ALL\76691\mot\sheets\76691MP813.dgn 11-SEP-2012 8:51PM reddenj

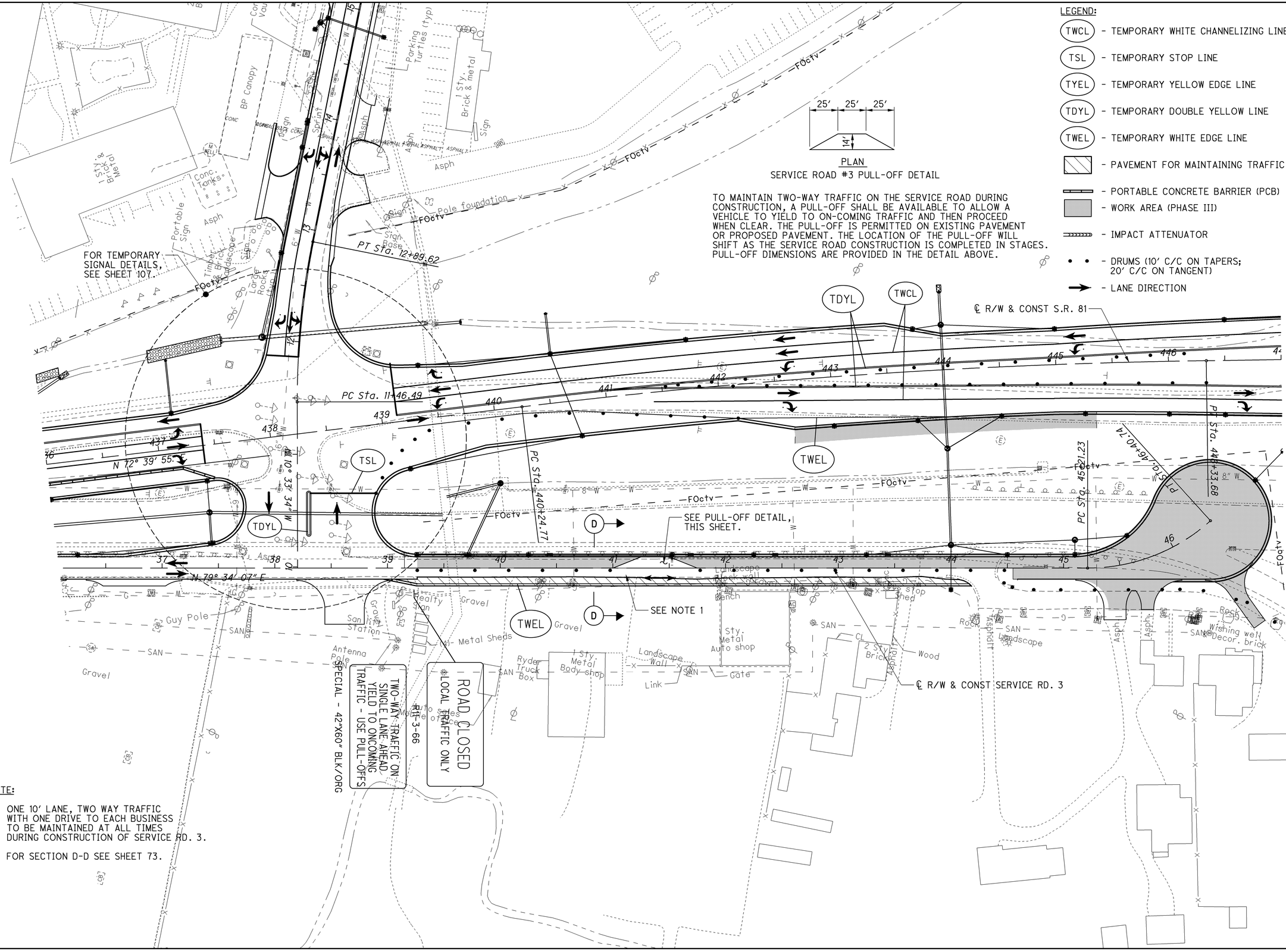

HORIZONTAL SCALE IN FEET
0 20 40 80

CALCULATED CAC
CHECKED EJC

MAINTENANCE OF TRAFFIC
SERVICE RD. #3 PHASE III

ALL-75-5.53

136
1224

J:\Projects\ALL\76691\mot\sheets\76691MP811.dgn 11-SEP-2012 8:51PM reddenj

LEGEND:

- TSL - TEMPORARY STOP LINE
- TYEL - TEMPORARY YELLOW EDGE LINE
- TDYL - TEMPORARY DOUBLE YELLOW LINE
- TWEL - TEMPORARY WHITE EDGE LINE
- PAVEMENT FOR MAINTAINING TRAFFIC
- PORTABLE CONCRETE BARRIER (PCB)
- WORK AREA (PHASE IIA)
- IMPACT ATTENUATOR
- DRUMS (10' C/C ON TAPERS; 20' C/C ON TANGENT)
- LANE DIRECTION

FOR TEMPORARY SIGNAL DETAILS, SEE SHEET 107.

℄ R/W & CONST S.R. 81

PT Sta. 12+89.62

PC Sta. 11+46.49

PC Sta. 440+24.77

PT Sta. 445+21.23

PC Sta. 446+40.74

PT Sta. 447+33.68

N 72° 39' 55" E

N 10° 33' 34" W

N 79° 34' 07" E

SEE PULL-OFF DETAIL, THIS SHEET.

SEE NOTE 1

℄ R/W & CONST SERVICE RD. 3

SPECIAL - 42"X60" BLK/ORG

TWO-WAY TRAFFIC ON SINGLE LANE AHEAD YIELD TO ONCOMING TRAFFIC - USE PULL-OFFS

ROAD CLOSED LOCAL TRAFFIC ONLY

R11-3-66

NOTE:

1. ONE 10' LANE, TWO WAY TRAFFIC WITH ONE DRIVE TO EACH BUSINESS TO BE MAINTAINED AT ALL TIMES DURING CONSTRUCTION OF SERVICE RD. 3.

SERVICE ROAD #3 PULL-OFF DETAIL

10'

25' 25' 25'

A PULL-OFF SHALL BE MAINTAINED ON THE SERVICE FOR USE WHEN THERE IS A CONFLICT WITH THE TWO WAY TRAFFIC ON THE SINGLE 10 FOOT LANE. THE PULL-OFF SHALL SHIFT ALONG THE SERVICE ROAD AS CONSTRUCTION IS COMPLETED.

HORIZONTAL SCALE IN FEET
0 20 40 80

CALCULATED CAC
CHECKED EJC

MAINTENANCE OF TRAFFIC
SERVICE RD. #3 PHASE IV

ALL-75-5.53

137
1224

J:\Projects\ALL\76691\mot\sheets\76691MP812.dgn 11-SEP-2012 8:51PM reddenj

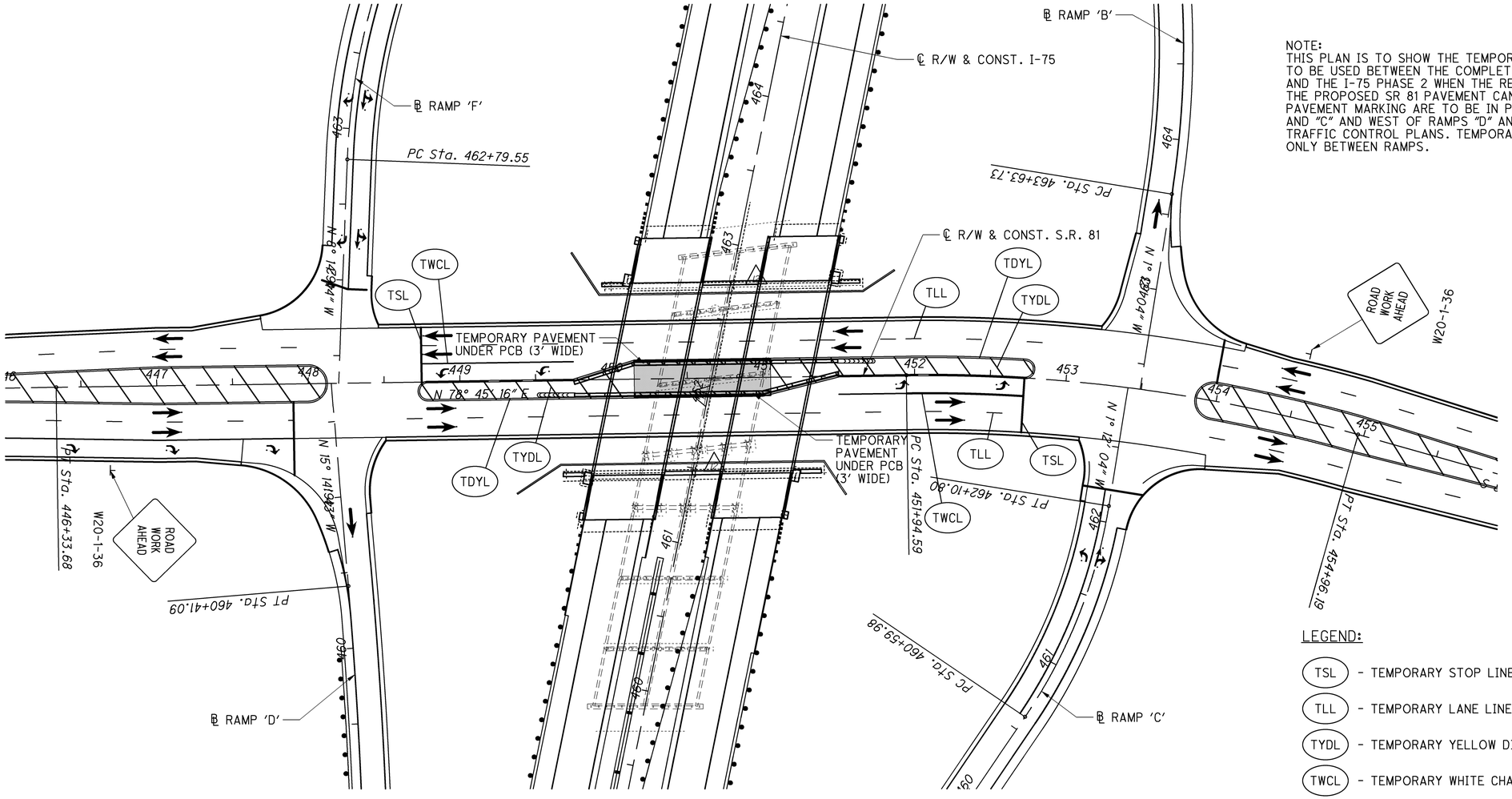

NOTE:
THIS PLAN IS TO SHOW THE TEMPORARY PAVEMENT MARKINGS TO BE USED BETWEEN THE COMPLETION OF PHASE 2 OF SR 81 AND THE I-75 PHASE 2 WHEN THE REMAINING BRIDGE PIERS IN THE PROPOSED SR 81 PAVEMENT CAN BE REMOVED. PERMANENT PAVEMENT MARKING ARE TO BE IN PLACE EAST OF RAMPS "B" AND "C" AND WEST OF RAMPS "D" AND "F" AS SHOWN ON THE TRAFFIC CONTROL PLANS. TEMPORARY MARKING SHOWN ARE ONLY BETWEEN RAMPS.

LEGEND:

- (TSL) - TEMPORARY STOP LINE
- (TLL) - TEMPORARY LANE LINE
- (TYDL) - TEMPORARY YELLOW DIAGONAL LINE
- (TWCL) - TEMPORARY WHITE CHANNELIZING LINE
- (TYEL) - TEMPORARY YELLOW EDGE LINE
- (TDYL) - TEMPORARY DOUBLE YELLOW LINE
- (TWEL) - TEMPORARY WHITE EDGE LINE
- - PAVEMENT FOR MAINTAINING TRAFFIC
- - PORTABLE CONCRETE BARRIER (PCB)
- - WORK AREA OF SR 81 TO BE CONSTRUCTED IN I-75 PHASE II
- - IMPACT ATTENUATOR
- • • - DRUMS (10' C/C ON TAPERS; 20' C/C ON TANGENT)
- → - LANE DIRECTION

N

0 20 40 80 HORIZONTAL SCALE IN FEET

CALCULATED CAC | CHECKED EJC

MAINTENANCE OF TRAFFIC - S.R. 81
TEMPORARY PAVEMENT MARKING

ALL-75-5.53

138
1224

J:\Projects\ALL\76691\mot\sheets\76691MP814.dgn 11-SEP-2012 8:51PM reddenj

GENERAL SUMMARY

CALCULATED ACF | CHECKED ABS

SHEET NUMBER																OFFICE CALCS	03/IMS/ PV/	04/S<2/ PV/	ITEM	ITEM EXT.	GRAND TOTAL	UNIT	DESCRIPTION	SEE SHEET NO.
38	148	149	1110																					
																							ROADWAY	
																	LUMP		201	11000	LUMP		CLEARING AND GRUBBING	
	11																2	9	202	20010	11	EACH	HEADWALL REMOVED	
	922															188,612	158,798	30,736	202	23000	189,534	SQ YD	PAVEMENT REMOVED	
	7,573																1749	5824	202	30000	7,573	SQ FT	WALK REMOVED	
	18,717																17877	840	202	30700	18,717	FT	CONCRETE BARRIER REMOVED	
	546																546		202	30704	546	FT	CONCRETE BARRIER REMOVED FOR STORAGE	
	775																596	179	202	30800	775	SQ YD	TRAFFIC ISLAND REMOVED	
	6,326																1248	5078	202	32000	6,326	FT	CURB REMOVED	
	5,668																	5668	202	32500	5,668	FT	CURB AND GUTTER REMOVED	
	403																184	219	202	32800	403	SQ YD	CONCRETE SLOPE PROTECTION REMOVED	
	10,110																3672	6438	202	35100	10,110	FT	PIPE REMOVED, 24" AND UNDER	
	2,996																1409	1587	202	35200	2,996	FT	PIPE REMOVED, OVER 24"	
	15,033																12725	2308	202	38000	15,033	FT	GUARDRAIL REMOVED	
	52																43	9	202	42206	52	EACH	ANCHOR ASSEMBLY REMOVED	
	15																15		202	47000	15	EACH	BRIDGE TERMINAL ASSEMBLY REMOVED	
	9																9		SPECIAL	202E52990	9	EACH	PARKING BLOCK REMOVED	
	3																3	0	202	53100	3	EACH	MAILBOX REMOVED	
	12																3	9	202	58000	12	EACH	MANHOLE REMOVED	
	91																31	60	202	58100	91	EACH	CATCH BASIN REMOVED	
	3																	3	202	58700	3	EACH	MANHOLE ABANDONED	
	1																1		202	62000	1	EACH	JUNCTION BOX REMOVED	
	4,169																2016	2153	SPECIAL	202E70000	4,169	FT	FILL AND PLUG EXISTING CONDUIT	
127																	127		SPECIAL	202E70100	127	FT	PIPE CLEANOUT	
	41,757		4,132														43886	2003	202	75000	45,889	FT	FENCE REMOVED	
	5																4	1	202	75250	5	EACH	GATE REMOVED	
	1																1		202	75600	1	EACH	METER VAULT REMOVED	
	4																4		202	98100	4	EACH	REMOVAL MISC.: MANHOLE REMOVED AND REUSE	
	2																2		202	98100	2	EACH	REMOVAL MISC.: PRIVATE LIGHT POLE	
	4																4		202	98100	4	EACH	REMOVAL MISC.: CONCRETE LIGHT POLE FOUNDATION	
	5																4	1	202	98100	5	EACH	REMOVAL MISC.: PRIVATE SIGN	
	1																1		202	98100	1	EACH	REMOVAL MISC.: CONCRETE SIGN FOUNDATION	
	10																2	8	202	98100	10	EACH	REMOVAL MISC.: PRIVATE SIGN AND FOUNDATIONS	
	14																9	5	202	98100	14	EACH	REMOVAL MISC.: METAL POSTS	
	5																4	1	202	98100	5	EACH	REMOVAL MISC.: METAL POLE	
	8																	8	202	98100	8	EACH	REMOVAL, MISC.: SIGN FOUNDATION	
	19																	19	202	98100	19	EACH	REMOVAL, MISC.: WOOD POSTS	
	2																2		202	98100	2	EACH	REMOVAL, MISC.: WOOD POLE	
	11																2	9	202	98100	11	EACH	REMOVAL, MISC.: METAL BOLLARD	
	17																8	9	202	98100	17	EACH	REMOVAL, MISC.: PRIVATE LIGHT	
	1																	1	202	98100	1	EACH	REMOVAL, MISC.: ELEVATED SIGN AND FOUNDATIONS	
		1																1	202	98100	1	EACH	REMOVAL MISC.: TRENCH DRAIN	
		2																2	202	98100	2	EACH	REMOVAL, MISC.: WOODEN BENCHES	
		2															1	1	202	98100	2	EACH	REMOVAL MISC.: FROST FREE WATER SPIGOT	
		1															1		202	98100	1	EACH	REMOVAL MISC.: SWING SET	
		1															1		202	98100	1	EACH	REMOVAL MISC.: FLAG POLE	
		4															4		202	98100	4	EACH	REMOVAL MISC.: DOG KENNELS	
		1																1	202	98100	1	EACH	REMOVAL, MISC.: ABOVE GROUND STORAGE CONTAINER	
		2																2	202	98100	2	EACH	REMOVAL, MISC.: AIR CONDITIONERS	
		4																4	202	98100	4	EACH	REMOVAL MISC.: RAILROAD TIES	
		48															48		202	98200	48	FT	REMOVAL MISC.: BRICK	
		3,950															3950		202	98200	3,950	FT	REMOVAL MISC.: TENSION CABLE RAIL SYSTEM	
	517																379	138	202	98300	517	SQ YD	REMOVAL MISC.: CONCRETE PAD	
		1,264															1264		202	98400	1,264	SQ FT	REMOVAL MISC.: SWIMMING POOL	

ALL-75-5.53

\\DOTFS101\L_Drive\Pd\76691\Final Cadd Files\Projects\ALL\76691\roadway\sheets\76691GG001.dgn 04-OCT-2012 2:13PM jclark1

SHEET NUMBER																01/CMQ/ OT/	03/IMS/ PV/	04/S<2/ PV/	ITEM	ITEM EXT.	GRAND TOTAL	UNIT	DESCRIPTION	SEE SHEET NO.
37	38	43	40	149	151	152	168	672	1110	1133					OFFICE CALCS									
																							ROADWAY	
						133,928		83									89,810	44,201	203	10000	134,011	CU YD	EXCAVATION	
						75,365		10									57,060	18,315	203	20000	75,375	CU YD	EMBANKMENT	
																							OPTON A: ASPHALT PAVEMENT	
						195,861											195,861		203	10000	195,861	CU YD	EXCAVATION	
						391,876											391,876		203	20000	391,876	CU YD	EMBANKMENT	
																							OPTION B: CONCRETE PAVEMENT	
						189,307											189,307		203	10000	189,307	CU YD	EXCAVATION	
						396,616											396,616		203	20000	396,616	CU YD	EMBANKMENT	
															3,950			3950	204	10000	3,950	SQ YD	SUBGRADE COMPACTION	
			520															520	204	13000	520	CU YD	EXCAVATION OF SUBGRADE	
															6,457			6457	204	30010	6,457	CU YD	GRANULAR MATERIAL, TYPE B	
			1												45		19	27	204	45000	46	HOUR	PROOF ROLLING	
															2,330		1,323	1007	206	10500	2,330	TON	CEMENT	
															72,095		38,190	33,905	206	11000	72,095	SQ YD	CURING COAT	
															33,905			33,905	206	15010	33,905	SQ YD	CEMENT STABILIZED SUBGRADE, 12 INCHES DEEP	
															38,190		38,190		206	15020	38,190	SQ YD	CEMENT STABILIZED SUBGRADE, 14 INCHES DEEP	
																	LUMP		206	30000	LUMP		MIXTURE DESIGN FOR CHEMICALLY STABILIZED SOILS	
500																	185	315	SPECIAL	604E50000	500	POUND	MISCELLANEOUS METAL	
					19,539												19,452	125	606	13000	19,577	FT	GUARDRAIL, TYPE 5	
					1,088												1,088		606	15500	1,088	FT	GUARDRAIL, BARRIER DESIGN, TYPE 5	
					113												113		606	17290	113	FT	GUARDRAIL, TYPE 5, LONG-SPAN	
					26												25	1	606	26100	26	EACH	ANCHOR ASSEMBLY, TYPE E	
					27												28	1	606	26500	29	EACH	ANCHOR ASSEMBLY, TYPE T	
					19												19		606	35000	19	EACH	BRIDGE TERMINAL ASSEMBLY, TYPE 1	
					9												9		606	35100	9	EACH	BRIDGE TERMINAL ASSEMBLY, TYPE 2	
					12												12		606	60012	12	EACH	IMPACT ATTENUATOR, TYPE 1 (BIDIRECTIONAL)	
					20,353												20,353		606	98000	20,353	FT	GUARDRAIL, MISC.: TENSIONED CABLE WITH CONCRETE FOUNDATIONS LINE POST (SOCKETED)	
					24												24		606	98100	24	EACH	GUARDRAIL, MISC.: TENISION CABLE ANCHOR TERMINAL	
									30,870								30,870		607	15001	30,870	FT	FENCE, TYPE 47, AS PER PLAN	37
									347								347		607	20000	347	FT	FENCE, TYPE CL	
									12,736								12,736		607	23001	12,736	FT	FENCE, TYPE CLT, AS PER PLAN	37
									404								404		607	35000	404	FT	FENCE, REMOVE AND REBUILT	
									44,640								44,640		607	70000	44,640	FT	FENCELINE SEEDING AND MULCHING	
					21,203											21,203			608	13000	21,203	SQ FT	6" CONCRETE WALK	
					2,457											2,457			608	52000	2,457	SQ FT	CURB RAMP	
						9											1	8	SPECIAL	690E65310	9	EACH	GROUND WATER MONITORING WELL RECONSTRUCTION	
						14												14	SPECIAL	690E50100	14	EACH	MAILBOX SUPPORT SYSTEM, SINGLE	
						10												10	SPECIAL	690E50350	10	EACH	MAILBOX REMOVE AND RESET	
						10												10	SPECIAL	690E65300	10	EACH	GROUND WATER MONITORING WELL ABANDONMENT	
										25								25	823	38500	25	EACH	MONUMENT ASSEMBLY	
										52							52		823	40500	52	EACH	REFERENCE MONUMENT	
		41															17	24	823	40520	41	EACH	RIGHT-OF-WAY MONUMENT	
																							EROSION CONTROL	
				310													299	11	601	11000	310	SQ YD	RIPRAP USING 6" REINFORCED COCNRETE SLAB	
				12.9													13		601	11001	13	SQ YD	RIPRAP USING 6" REINFORCED CONCRETE SLAB, AS PER PLAN	688
	12			1263			174.6										1,441	9	601	21050	1,450	SQ YD	TIED CONCRETE BLOCK MAT, TYPE 1	
				371													336	35	601	21070	371	SQ YD	TIED CONCRETE BLOCK MAT, TYPE 3	
									57.7								58		601	32100	58	CU YD	ROCK CHANNEL PROTECTION, TYPE B WITH FILTER	
	10																9	1	601	32200	10	CU YD	ROCK CHANNEL PROTECTION, TYPE C WITH FILTER	
				18													18		601	32204	18	CU YD	ROCK CHANNEL PROTECTION, TYPE C WITH FABRIC FILTER	
7																	7		659	00100	7	EACH	SOIL ANALYSIS TEST	
64925																	64,925		659	00300	64,925	CU YD	TOPSOIL	
						584912											535,449	49,463	659	10000	584,912	SQ YD	SEEDING AND MULCHING	
29246																	26,772	2,474	659	14000	29,246	SQ YD	REPAIR SEEDING AND MULCHING	
29246																	26,772	2,474	659	15000	29,246	SQ YD	INTER-SEEDING	
82																	75	7	659	20000	82	TON	COMMERCIAL FERTILIZER	
121																	111	10	659	31000	121	ACRE	LIME	
1658																	1,518	140	659	35000	1,658	M GAL	WATER	

CALCULATED ACF CHECKED ABS

GENERAL SUMMARY

ALL-75-5.53

J:\Projects\ALL\76691\roadway\sheets\76691GG002.dgn 15-JAN-2013 12:33PM fedak

SHEET NUMBER												03/IMS/ PV/	04/SK2/ PV/	ITEM	ITEM EXT.	GRAND TOTAL	UNIT	DESCRIPTION	SEE SHEET NO.
37	38	149	150	152	168	170	672												
																		EROSION CONTROL - CONTINUED	
1316												1205	111	659	40000	1,316	M SQ FT	MOWING	
				20293								20151	142	670	00710	20,293	SQ YD	DITCH EROSION PROTECTION MAT, TYPE A	
				656								656		670	00720	656	SQ YD	DITCH EROSION PROTECTION MAT, TYPE B	
				229								229		670	00730	229	SQ YD	DITCH EROSION PROTECTION MAT, TYPE C	
							LUMP					LUMP		832	15000	LUMP		STORM WATER POLLUTION PREVENTION PLAN	
							120000					78000	42000	832	30000	120,000	EACH	EROSION CONTROL	
						80						80		835	10000	80	FT	EXFILTRATION TRENCH, TYPE A	
						32						32		835	10010	32	FT	EXFILTRATION TRENCH, TYPE B	
																		DRAINAGE	
		LUMP										LUMP		503	11100	LUMP		COFFERDAMS AND EXCAVATION BRACING	
		6634										6634		509	10000	6,634	POUND	EPOXY COATED REINFORCING STEEL	
		71										71		511	46200	71	CU YD	CLASS C CONCRETE	
		71										71		512	10100	71	SQ YD	SEALING OF CONCRETE SURFACES (EPOXY-URETHANE)	
		42										42		518	21200	42	CU YD	POROUS BACKFILL WITH FILTER FABRIC	
		172										134	38	602	20000	172	CU YD	CONCRETE MASONRY	
						468						468		603	00100	468	FT	4" CONDUIT, TYPE B	
	200											180	20	603	00200	200	FT	4" CONDUIT, TYPE C	
					5107							4,956	151	603	00510	5,107	FT	6" CONDUIT, TYPE F FOR UNDERDRAIN OUTLETS	
	700				2602							2,368	934	603	00900	3,302	FT	6" CONDUIT, TYPE B	
	200											180	20	603	01100	200	FT	6" CONDUIT, TYPE C	
	1200											1,080	120	603	01400	1,200	FT	6" CONDUIT, TYPE E	
	1060											954	106	603	01500	1,060	FT	6" CONDUIT, TYPE F	
	300	12										270	42	603	01800	312	FT	8" CONDUIT, TYPE B	
		12											12	603	02000	12	FT	8" CONDUIT, TYPE C	
		6											6	603	03100	6	FT	10" CONDUIT, TYPE B	
		3306										6	3300	603	04400	3,306	FT	12" CONDUIT, TYPE B	
	200	947										239	908	603	04600	1,147	FT	12" CONDUIT, TYPE C	
		12										12		603	05700	12	FT	15" CONDUIT, TYPE A	
		134										134		603	05700	134	FT	15" CONDUIT, TYPE A, 706.02	
		6083										4714	1369	603	05900	6,083	FT	15" CONDUIT, TYPE B	
		1513										597	916	603	06100	1,513	FT	15" CONDUIT, TYPE C	
		378										378		603	06700	378	FT	15" CONDUIT, TYPE F	
		175										175		603	07200	175	FT	18" CONDUIT, TYPE A	
		1370										761	609	603	07400	1,370	FT	18" CONDUIT, TYPE B	
		519										199	320	603	07600	519	FT	18" CONDUIT, TYPE C	
			147									147		603	08700	147	FT	21" CONDUIT, TYPE A, 706.02	
			94									94		603	08900	94	FT	21" CONDUIT, TYPE B	
			566									162	404	603	09100	566	FT	21" CONDUIT, TYPE C	
			30									30		603	09700	30	FT	21" CONDUIT, TYPE F	
			216									216		603	10200	216	FT	24" CONDUIT, TYPE A	
			151									151		603	10200	151	FT	24" CONDUIT, TYPE A, 706.02	
			581										581	603	10400	581	FT	24" CONDUIT, TYPE B	
			922									622	300	603	10600	922	FT	24" CONDUIT, TYPE C	
			267									267		603	13200	267	FT	30" CONDUIT, TYPE A, 706.02	
			310										310	603	13400	310	FT	30" CONDUIT, TYPE B	
			619									31	588	603	13600	619	FT	30" CONDUIT, TYPE C	
			110									110		603	16200	110	FT	36" CONDUIT, TYPE A, 706.02, 707.01, 707.02, 707.04, 707.05, 707.07, 707.21	
			381									381		603	16200	381	FT	36" CONDUIT, TYPE A	
			541									344	197	603	16400	541	FT	36" CONDUIT, TYPE B	
			60									23	37	603	16600	60	FT	36" CONDUIT, TYPE C	
			167									167		603	19200	167	FT	42" CONDUIT, TYPE A, 706.02	
			931										931	603	19400	931	FT	42" CONDUIT, TYPE B	
			72										72	603	19600	72	FT	42" CONDUIT, TYPE C	
			318									174	144	603	20700	318	FT	48" CONDUIT, TYPE A, 706.02	
			177									177		603	20700	177	FT	48" CONDUIT, TYPE A, 706.02 2250 D-LOAD	
			77										77	603	20900	77	FT	48" CONDUIT, TYPE B	

CALCULATED ACF CHECKED ABS

GENERAL SUMMARY

ALL-75-5.53

J:\Projects\ALL\76691\roadway\sheets\76691GG003.dgn 14-JAN-2013 4:45PM fedak

SHEET NUMBER																	03/IMS/ PV/	04/SK2/ PV/	ITEM	ITEM EXT.	GRAND TOTAL	UNIT	DESCRIPTION	SEE SHEET NO.
38	150	151	152	168																				
																							DRAINAGE - CONTINUED	
	181																181		603	22200	181	FT	54" CONDUIT, TYPE A, 706.02	
	367																367		603	22400	367	FT	54" CONDUIT, TYPE B, 706.02	
	464																464		603	23600	464	FT	60" CONDUIT, TYPE A, 706.02	
	130																130		603	96600	130	FT	CONDUIT, BORED AND JACKED: 15" TYPE B	
	50																50		603	96600	50	FT	CONDUIT, BORED AND JACKED: 18" TYPE B	
	169																169		603	96600	169	FT	CONDUIT, BORED AND JACKED: 21" TYPE B	
	100																100		603	96600	100	FT	CONDUIT, BORED AND JACKED: 24" TYPE A	
	350																350		603	96600	350	FT	CONDUIT, BORED AND JACKED: 36" TYPE A	
	100																100		603	96600	100	FT	CONDUIT, BORED AND JACKED: 36" TYPE B	
	340																340		603	96600	340	FT	CONDUIT, BORED AND JACKED: 48" TYPE A	
	13																6	7	604	00400	13	EACH	CATCH BASIN, NO. 3	
	96																15	81	604	00800	96	EACH	CATCH BASIN, NO. 3A	
	1																1		604	01600	1	EACH	CATCH BASIN, NO. 5	
	1																	1	604	02400	1	EACH	CATCH BASIN, NO. 7	
	45																44	1	604	02800	45	EACH	CATCH BASIN, NO. 8	
		12															4	8	604	04500	12	EACH	CATCH BASIN, NO.2-2B	
		3															1	2	604	04900	3	EACH	CATCH BASIN, NO.2-3	
		1																1	604	09000	1	EACH	CATCH BASIN ADJUSTED TO GRADE	
		3															3		604	20530	3	EACH	INLET, NO. 3 FOR SINGLE SLOPE BARRIER, TYPE D	
		58															14	44	604	31500	58	EACH	MANHOLE, NO. 3	
		12															2	10	604	34500	12	EACH	MANHOLE ADJUSTED TO GRADE	
		12															5	7	604	35500	12	EACH	MANHOLE RECONSTRUCTED TO GRADE	
6				96													100	2	604	36600	102	EACH	PRECAST REINFORCED CONCRETE OUTLET	
				53,468													52368	1100	605	11100	53,468	FT	6" SHALLOW PIPE UNDERDRAINS	
400				6,440													6107	733	605	13300	6,840	FT	6" UNCLASSIFIED PIPE UNDERDRAINS	
				104,687													6107	98580	605	14000	104,687	FT	6" BASE PIPE UNDERDRAINS	
																							WATER	
		842																842	638	00601	842	FT	6" WATER MAIN DUCTILE IRON PIPE ANSI CLASS 52, PUSH-ON JOINTS AND FITTINGS, AS PER PLAN	44 - 47
		3381																3381	638	01201	3,381	FT	8" WATER MAIN DUCTILE IRON PIPE ANSI CLASS 52, PUSH-ON JOINTS AND FITTINGS, AS PER PLAN	44 - 47
		748																748	638	01801	748	FT	10" WATER MAIN DUCTILE IRON PIPE ANSI CLASS 52, PUSH-ON JOINTS AND FITTINGS, AS PER PLAN	44 - 47
			792															792	638	04801	792	FT	3/4" COPPER SERVICE BRANCH, AS PER PLAN	44 - 47
			947															947	638	05101	947	FT	2" COPPER SERVICE BRANCH, AS PER PLAN	44 - 47
			11															11	638	07691	11	EACH	2" GATE VALVE AND VALVE BOX, AS PER PLAN	44 - 47
			7															7	638	07801	7	EACH	6" GATE VALVE AND VALVE BOX, AS PER PLAN	44 - 47
			2															2	638	07901	2	EACH	8" GATE VALVE AND VALVE BOX, AS PER PLAN	44 - 47
			2															2	638	08001	2	EACH	10" GATE VALVE AND VALVE BOX, AS PER PLAN	44 - 47
			5															5	638	10201	5	EACH	6" FIRE HYDRANT, AS PER PLAN	44 - 47
			1															1	638	10401	1	EACH	FIRE HYDRANT ADJUSTED TO GRADE, AS PER PLAN	44 - 47
			14															14	638	10801	14	EACH	VALVE BOX ADJUSTED TO GRADE, AS PER PLAN	44 - 47
			1															1	638	11101	1	EACH	METER AND CHAMBER REMOVED AND RESET, AS PER PLAN	44 - 47
			1															1	638	11103	1	EACH	METER AND VAULT REMOVED AND RESET, AS PER PLAN	44 - 47
			2															2	638	11201	2	EACH	METER, SETTING, STOP AND CHAMBER, AS PER PLAN	44 - 47
			2															2	638	98000	2	EACH	WATER WORK, MISC.: 8" CAP AND PLUG	44 - 47
			4															4	638	98000	4	EACH	WATER WORK, MISC.: CURB METER SET ADJUSTED	44 - 47
			1															1	638	98000	1	EACH	WATER WORK, MISC.: WATER SERVICE TAP ABANDONED	44 - 47
			191														191		638	98600	191	FT	WATER WORK, MISC.: REMOVAL OF 16" DUCTILE IRON PIPE	44 - 47
																							SANITARY SEWER	
200																		200	603	00901	200	FT	6" CONDUIT, TYPE B, AS PER PLAN (SANITARY)	48
200																		200	603	01101	200	FT	6" CONDUIT, TYPE C, AS PER PLAN (SANITARY)	48
100																		100	603	01801	100	FT	8" CONDUIT, TYPE B, AS PER PLAN (SANITARY)	48
100																		100	603	02001	100	FT	8" CONDUIT, TYPE C, AS PER PLAN (SANITARY)	48
	309																309		603	08901	309	FT	21" CONDUIT, TYPE B, AS PER PLAN (SANITARY)	48
		2															2		604	32500	2	EACH	MANHOLE MISC.: AS PER PLAN (SANITARY)	48

CALCULATED ACF
CHECKED ABS

GENERAL SUMMARY

ALL-75-5.53

142
1224

J:\Projects\ALL\76691\roadway\sheets\76691GG004.dgn 14-JAN-2013 4:36PM fedak

SHEET NUMBER																	03/IMS/ PV/	04/S<2/ PV/	ITEM	ITEM EXT.	GRAND TOTAL	UNIT	DESCRIPTION	SEE SHEET NO.
22	36	41	149	151	672	936	974	1011	1040							OFFICE CALCS								
																							PAVEMENT	
			1,288		1,477											1,462	751	3476	252	01500	4,227	FT	FULL DEPTH PAVEMENT SAWING	
																184		184	254	01000	184	SQ YD	PAVEMENT PLANING, ASPHALT CONCRETE	
																406		406	301	46000	406	CU YD	ASPHALT CONCRETE BASE, PG64-22	
					369											15,649	6222	9796	304	20000	16,018	CU YD	AGGREGATE BASE	
																14		14	407	10000	14	GALLON	TACK COAT	
					52											178		230	407	14000	230	GALLON	TACK COAT FOR INTERMEDIATE COURSE	
					712													712	408	10000	712	GALLON	PRIME COAT	
5																	5		448	46021	5	CU YD	ASPHALT CONCRETE INTERMEDIATE COURSE, TYPE 1, PG64-22, AS PER PLAN	22
					63													63	448	46024	63	CU YD	ASPHALT CONCRETE INTERMEDIATE COURSE, TYPE 2, PG64-22 (DRIVEWAYS)	
																173		173	448	46050	173	CU YD	ASPHALT CONCRETE INTERMEDIATE COURSE, TYPE 2, PG64-22	
																134		134	448	47020	134	CU YD	ASPHALT CONCRETE SURFACE COURSE, TYPE 1, PG64-22	
					72													72	448	48020	72	CU YD	ASPHALT CONCRETE SURFACE COURSE, TYPE 1, PG64-22 (DRIVEWAYS)	
					2,199											9,303		11,502	452	12000	11,502	SQ YD	8" NON-REINFORCED CONCRETE PAVEMENT	
																14,398		14398	452	13000	14,398	SQ YD	9" NON-REINFORCED CONCRETE PAVEMENT	
																24,202		24202	452	14000	24,202	SQ YD	10" NON-REINFORCED CONCRETE PAVEMENT	
				2,987														2987	609	12000	2,987	FT	COMBINATION CURB AND GUTTER, TYPE 2	
				8,693														8693	609	12001	8,693	FT	COMBINATION CURB AND GUTTER, TYPE 2, AS PER PLAN	33
				278														278	609	24500	278	FT	CURB TYPE 4-B	
				2,120													2120		609	24510	2,120	FT	CURB TYPE 4-C	
				1,602														1602	609	26000	1,602	FT	CURB TYPE 6	
					3													3	609	50000	3	SQ YD	4" CONCRETE TRAFFIC ISLAND	
				314													314		609	54000	314	SQ YD	6" CONCRETE TRAFFIC ISLAND	
	2090																2090		617	10100	2,090	CU YD	COMPACTED AGGREGATE (3.25" THICK)	
				509													509		622	10160	509	FT	CONCRETE BARRIER, SINGLE SLOPE, TYPE D	
				4													4		622	25000	4	EACH	CONCRETE BARRIER END SECTION, TYPE D	
				8													8		622	25050	8	EACH	CONCRETE BARRIER, END ANCHORAGE, REINFORCED, TYPE D	
		1878															1,878		SPECIAL	690E12020	1,878	SQ YD	GEOGRID, TYPE P1	
		1347															1,347		SPECIAL	690E98700	1,347	CU YD	MISC.: REINFORCED EMBANKMENT	
																19,370	19370		861	10000	19,370	SQ YD	GEOGRID FOR SUBGRADE STABILIZATION	
																34,675	34675		896	10300	34,675	SQ YD	14" PORTLAND CEMENT CONCRETE PAVEMENT (7 YEAR WARRANTY)	
																							OPTION A: ASPHALT PAVEMENT	
																117	117		204	45000	117	HOUR	PROOF ROLLING	
																8,082	8,082		206	10500	8,082	TON	CEMENT	
																233,230	233,230		206	11000	233,230	SQ YD	CURING COAT	
																233,230	233,230		206	15020	233,230	SQ YD	CEMENT STABILIZED SUBGRADE, 14 INCHES DEEP	
																39,417	39,417		304	20000	39,417	CU YD	AGGREGATE BASE	
																94,276	94,276		618	40100	94,276	FT	RUMBLE STRIPS (ASPHALT CONCRETE)	
																97,122	97,122		880	15000	97,122	CU YD	15.75" ASPHALT CONCRETE (7 YEAR WARRANTY)	
																							OPTION B: CONCRETE PAVEMENT	
																117	117		204	45000	117	HOUR	PROOF ROLLING	
																8,079	8,079		206	10500	8,079	TON	CEMENT	
																233,152	233,152		206	11000	233,152	SQ YD	CURING COAT	
																233,152	233,152		206	15020	233,152	SQ YD	CEMENT STABILIZED SUBGRADE, 14 INCHES DEEP	
																38,433	38,433		304	20000	38,433	CU YD	AGGREGATE BASE	
						176	176	176	176								704		SPECIAL	451E30000	704	FT	PRESSURE RELIEF JOINT, TYPE A	
																94,276	94,276		618	40200	94,276	FT	RUMBLE STRIPS (CONCRETE)	
																385	385		880	15000	385	CU YD	15.75" ASPHALT CONCRETE (7 YEAR WARRANTY)	
																216,152	216,152		896	10300	216,152	SQ YD	14" PORTLAND CEMENT CONCRETE PAVEMENT (7 YEAR WARRANTY)	
																							OPTION C: ASPHALT CONCRETE MOW STRIP	
																749	749		203	10000	749	CU YD	EXCAVATION	
																749	749		301	46000	749	CU YD	ASPHALT CONCRETE BASE, PG64-22	
																749	749		304	20000	749	CU YD	AGGREGATE BASE	
																							OPTION D: CONCRETE MOW STRIP	
																749	749		203	10000	749	CU YD	EXCAVATION	
																8,988	8,988		SPECIAL	690E98300	8,988	SQ YD	MISC.: MOW STRIP	39
																							LIGHTING PLANS	866

CALCULATED ACF CHECKED ABS

GENERAL SUMMARY

ALL-75-5.53

143 / 1224

J:\Projects\ALL\76691\roadway\sheets\76691GG005.dgn 04-JAN-2013 1:06PM fedak

SHEET NUMBER											03/IMS/ PV/	04/S<2/ PV/	05/ENH/ OT/	ITEM	ITEM EXT.	GRAND TOTAL	UNIT	DESCRIPTION	SEE SHEET NO.
773	783	794	795	796	841	767													
																		LANDSCAPING	900
																		TRAFFIC CONTROL	
				343							343			620	00500	343	EACH	DELINEATOR, POST MOUNTED	
				9							9			620	11000	9	EACH	DELINEATOR, BRACKET MOUNTED	
	102											102		621	10000	102	EACH	RPM, LOW PROFILE, YELLOW/YELLOW	
	538										484	54		621	10010	538	EACH	RPM, LOW PROFILE, WHITE	
	331										213	118		621	10020	331	EACH	RPM, LOW PROFILE, WHITE/RED	
	244										168	76		621	10030	244	EACH	RPM, LOW PROFILE, YELLOW/RED	
		12									7	5		625	32000	12	EACH	GROUND ROD	
						333					333			626	00100	333	EACH	BARRIER REFLECTOR	
		2041.4			52.0						1240.5	852.9		630	03100	2093.4	FT	GROUND MOUNTED SUPPORT, NO. 3 POST	
		236.3									236.3			630	04100	236.3	FT	GROUND MOUNTED SUPPORT, NO. 4 POST	
		203.4									70.6	132.8		630	06400	203.4	FT	GROUND MOUNTED STRUCTURAL BEAM SUPPORT, S4X7.7	
		365.5									333.7	31.8		630	06500	365.5	FT	GROUND MOUNTED STRUCTURAL BEAM SUPPORT, W6X9	
		186.7									186.7			630	07000	186.7	FT	GROUND MOUNTED STRUCTURAL BEAM SUPPORT, W8X18	
		444.6									444.6			630	07500	444.6	FT	GROUND MOUNTED STRUCTURAL BEAM SUPPORT, W10X22	
		322.4									322.4			630	07600	322.4	FT	GROUND MOUNTED STRUCTURAL BEAM SUPPORT, W10X12	
		185.9									185.9			630	08000	185.9	FT	GROUND MOUNTED STRUCTURAL BEAM SUPPORT, W12X30	
		318.1									288.1	30		630	08100	318.1	FT	ONE WAY SUPPORT, NO. 4 POST	
		90									77	13		630	08600	90	EACH	SIGN POST REFLECTOR	
		66									56	10		630	09000	66	EACH	BREAKAWAY STRUCTURAL BEAM CONNECTION	
			1									1		630	11102	1	EACH	OVERHEAD SIGN SUPPORT, TYPE TC-16.21, DESIGN 11	
			2									2		630	20301	2	EACH	OVERHEAD SIGN SUPPORT, TYPE TC-12.30, DESIGN 3, AS PER PLAN	767
			2									2		630	20401	2	EACH	OVERHEAD SIGN SUPPORT, TYPE TC-12.30, DESIGN 4, AS PER PLAN	767
			2								2			630	20600	2	EACH	OVERHEAD SIGN SUPPORT, TYPE TC-12.30, DESIGN 6	
			1								1			630	20800	1	EACH	OVERHEAD SIGN SUPPORT, TYPE TC-12.30, DESIGN 8	
			2								2			630	45500	2	EACH	OVERHEAD SIGN SUPPORT, TYPE TC-7.65, DESIGN 8	
			1									1		630	75001	1	EACH	SIGN ATTACHMENT ASSEMBLY, AS PER PLAN	767
			2									2		630	77000	2	EACH	OVERPASS STRUCTURE MOUNTED SIGN SUPPORT, TYPE TC-18.24	
			2									2		630	77200	2	EACH	OVERPASS STRUCTURE MOUNTED SIGN SUPPORT, TYPE TC-18.26, DESIGN 2	
			1523		88.25						983	629		630	80100	1612	SQ FT	SIGN, FLAT SHEET	
			2712								2568	144		630	80200	2712	SQ FT	SIGN, GROUND MOUNTED EXTRUSHEET	
			1639								956	683		630	80224	1639	SQ FT	SIGN, OVERHEAD EXTRUSHEET	
			82								68	14		630	84500	82	EACH	GROUND MOUNTED STRUCTURAL BEAM SUPPORT FOUNDATION	
			12								7	5		630	84510	12	EACH	RIGID OVERHEAD SIGN SUPPORT FOUNDATION	
237											105	132		630	84900	237	EACH	REMOVAL OF GROUND MOUNTED SIGN AND DISPOSAL	
48											36	12		630	85400	48	EACH	REMOVAL OF GROUND MOUNTED MAJOR SIGN AND DISPOSAL	
229											118	111		630	86002	229	EACH	REMOVAL OF GROUND MOUNTED POST SUPPORT AND DISPOSAL	
84											66	18		630	86102	84	EACH	REMOVAL OF GROUND MOUNTED STRUCTURAL BEAM SUPPORT AND DISPOSAL	
3												3		630	86310	3	EACH	REMOVAL OF STRUCTURE MOUNTED SIGN AND DISPOSAL	
37											20	17		630	87400	37	EACH	REMOVAL OF OVERHEAD MOUNTED SIGN AND DISPOSAL	
9											2	7		630	89706	9	EACH	REMOVAL OF OVERHEAD SIGN SUPPORT AND DISPOSAL, TYPE TC-12.30	
4											3	1		630	89802	4	EACH	REMOVAL OF OVERHEAD SIGN SUPPORT AND DISPOSAL, TYPE TC-7.65	
1											1			630	89804	1	EACH	REMOVAL OF OVERHEAD SIGN SUPPORT AND DISPOSAL, TYPE TC-15.115	
3												3		630	89806	3	EACH	REMOVAL OF OVERHEAD SIGN SUPPORT AND DISPOSAL, TYPE TC-18.24	
1												1		630	89810	1	EACH	REMOVAL OF OVERHEAD SIGN SUPPORT AND DISPOSAL, TYPE TC-17.10	
31											16	15		631	94200	31	EACH	REMOVAL OF LUMINAIRE AND DISPOSAL	
19											8	11		631	94408	19	EACH	REMOVAL OF SIGN WIRING AND DISPOSAL	
19											8	11		631	94412	19	EACH	REMOVAL OF SIGN SERVICE AND DISPOSAL	
																		TRAFFIC CONTROL - PAVEMENT MARKING	
	0.95											0.95		642	00090	0.95	MILE	EDGE LINE, 4"	
	0.48											0.48		642	00290	0.48	MILE	CENTER LINE	
	332											332		642	00390	332	FT	CHANNELIZING LINE, 8"	
	12											12		642	00690	12	FT	TRANSVERSE/DIAGONAL LINE	
	2.12											2.12		646	10000	2.12	MILE	EDGE LINE, 4"	
	21.41										21.41			646	10010	21.41	MILE	EDGE LINE, 6"	
	1.79											1.79		646	10100	1.79	MILE	LANE LINE, 4"	
	8.64										8.64			646	10110	8.64	MILE	LANE LINE, 6"	
	1.05											1.05		646	10200	1.05	MILE	CENTER LINE	

CALCULATED ACF CHECKED ABS

GENERAL SUMMARY

ALL-75-5.53

144 / 1224

J:\Projects\ALL\76691\roadway\sheets\76691GG006.dgn 20-DEC-2012 4:41PM wrightj

SHEET NUMBER																03/IMS/ PV/	04/S<2/ PV/	05/ENH/ OT/	ITEM	ITEM EXT.	GRAND TOTAL	UNIT	DESCRIPTION	SEE SHEET NO.
151	773	783	795	841	842	843	845	1110																
																							TRAFFIC CONTROL - PAVEMENT MARKING - CONTINUED	
		4329															4329		646	10300	4329	FT	CHANNELIZING LINE, 8"	
		13361														13361			646	10310	13361	FT	CHANNELIZING LINE, 12"	
		1236															1236		646	10500	1236	FT	CROSSWALK LINE	
		570															570		646	10600	570	FT	TRANSVERSE/DIAGONAL LINE	
		8543														8280	263		646	20500	8543	FT	DOTTED LINE, 6"	
		1550														1550			646	20510	1550	FT	DOTTED LINE, 12"	
		826															826		647	18052	826	FT	STOP LINE, TYPE A125	
		88															88		647	20602	88	FT	LANE ARROW, TYPE A125	
		1															1		647	20702	1	FT	WORD ON PAVEMENT, 72", TYPE A125	
																							TRAFFIC SIGNAL	
				480												480			603	00400	480	FT	4" CONDUIT, TYPE E	840
							87									87			625	25307	87	FT	CONDUIT, 1-1/2", 725.052, AS PER PLAN	838
				1281												1281			625	25411	1281	FT	CONDUIT, 2", 725.052, AS PER PLAN	838
				1419												1419			625	25500	1419	FT	CONDUIT, 3", 725.04	
				16			151									167			625	25507	167	FT	CONDUIT, 3", 725.052, AS PER PLAN	838
				421			384									805			625	25902	805	FT	CONDUIT, JACKED OR DRILLED, 725.04, 3"	
				2295			219									2514			625	29002	2514	FT	TRENCH, 24" DEEP	
				24			5									29			625	30706	29	EACH	PULL BOX, 725.08, 24"	
2																1	1		625	31510	2	EACH	PULL BOX REMOVED	
				29			10	24								63			625	32000	63	EACH	GROUND ROD	
			4	24														28	630	09102	28	EACH	SURFACE PREPARATION, NEW SUPPORT SECTION	840A
			4	24														28	630	09106	28	EACH	COATING, EPOXY INTERMEDIATE COAT, SUPPORT SECTION	840A
			4	24														28	630	09108	28	EACH	COATING URETHANE TOP COAT, SUPPORT SECTION	840A
			4	24														28	630	09120	28	EACH	COATING, ORGANIC ZINC PRIME COAT, SUPPORT SECTION	840A
				5												5			630	79101	5	EACH	SIGN HANGER ASSEMBLY, MAST ARM, AS PER PLAN	839
				28												28			630	79500	28	EACH	SIGN SUPPORT ASSEMBLY, POLE MOUNTED	
				37			11									48			632	05007	48	EACH	VEHICULAR SIGNAL HEAD, (LED), BLACK, 3-SECTION, 12" LENS, 1-WAY, POLYCARBONATE, WITH BACKPLATE, AS PER PLAN	838
					7											7			632	05087	7	EACH	VEHICULAR SIGNAL HEAD, (LED), BLACK, 5-SECTION, 12" LENS, 1-WAY, POLYCARBONATE, WITH BACKPLATE, AS PER PLAN	838

CALCULATED ACF
CHECKED ABS

GENERAL SUMMARY

ALL-75-5.53

\\D01FS101N_Drive\Pd\76691\Final Cadd Files\Projects\ALL\76691\roadway\sheets\76691GG007.dgn 27-SEP-2012 11:13AM jclark1

SHEET NUMBER																03/IMS/ PV/	04/S<2/ PV/	05/ENH/ OT/	ITEM	ITEM EXT.	GRAND TOTAL	UNIT	DESCRIPTION	SEE SHEET NO.
						701	842	843	845															
																							TRAFFIC SIGNAL - CONTINUED	
							12		8							20			632	20731	20	EACH	PEDESTRIAN SIGNAL HEAD (LED), (COUNTDOWN), TYPE D2, AS PER PLAN	839
							44		11							55			632	25000	55	EACH	COVERING OF VEHICULAR SIGNAL HEAD	
							12		8							20			632	25010	20	EACH	COVERING OF PEDESTRIAN SIGNAL HEAD	
							12		8							20			632	26001	20	EACH	PEDESTRIAN PUSHBUTTON, AS PER PLAN	839
							2202		1003							3205			632	40200	3,205	FT	SIGNAL CABLE, 2 CONDUCTOR, NO. 14 AWG	
							2250		1180							3430			632	40500	3,430	FT	SIGNAL CABLE, 5 CONDUCTOR, NO. 14 AWG	
							4010		1921							5931			632	40700	5,931	FT	SIGNAL CABLE, 7 CONDUCTOR, NO. 14 AWG	
							12		4							16			632	64010	16	EACH	SIGNAL SUPPORT FOUNDATION	
							12		5							17			632	64020	17	EACH	PEDESTAL FOUNDATION	
							1180									1180			632	68200	1,180	FT	POWER CABLE, 2 CONDUCTOR, NO. 6 AWG	
									25								25		632	69300	25	FT	POWER CABLE, 3 CONDUCTOR, NO. 4 AWG	
							5		1								6		632	70001	6	EACH	POWER SERVICE, AS PER PLAN	838
							5										5		632	70200	5	EACH	CONDUIT RISER, 1" DIAMETER	
							2										2		632	75173	2	EACH	SIGNAL SUPPORT, TYPE TC-12.30 DESIGN 6 POLE, WITH MAST ARMS TC-81.21 DESIGN 11 AND DESIGN 11, AS PER PLAN	839
							1										1		632	75193	1	EACH	SIGNAL SUPPORT, TYPE TC-12.30 DESIGN 6 POLE, WITH MAST ARMS TC-81.21 DESIGN 12 AND DESIGN 11, AS PER PLAN	839
							1										1		632	75411	1	EACH	SIGNAL SUPPORT, TYPE TC-12.30 DESIGN 8 POLE, WITH MAST ARMS TC-81.21 DESIGN 13 AND DESIGN 11, AS PER PLAN	839
									2								2		632	80203	2	EACH	SIGNAL SUPPORT, TYPE TC-81.21, DESIGN 2, AS PER PLAN	839
									1								1		632	80503	1	EACH	SIGNAL SUPPORT, TYPE TC-81.21, DESIGN 11, AS PER PLAN	839
							3										3		632	80621	3	EACH	SIGNAL SUPPORT, TYPE TC-81.21, DESIGN 13, AS PER PLAN	839
							5		1								6		632	80629	6	EACH	SIGNAL SUPPORT, TYPE TC-81.21, DESIGN 14, AS PER PLAN	839
								9									9		632	80700	9	EACH	SIGNAL SUPPORT, MISC.: MECHANICAL DAMPER	
									1								1		632	89807	1	EACH	PEDESTAL, 6', TRANSFORMER BASE, AS PER PLAN	839
								12	4								16		632	89901	16	EACH	PEDESTAL, 8', TRANSFORMER BASE, AS PER PLAN	839
								2	1								3		632	90101	3	EACH	REMOVAL OF TRAFFIC SIGNAL INSTALLATION, AS PER PLAN	838
								5	1								6		633	01681	6	EACH	CONTROLLER UNIT, TYPE 2070L, WITH CABINET, TYPE 332, AS PER PLAN	840
								5	1								6		633	01681	6	EACH	CONTROLLER UNIT, TYPE 2070L, WITH CABINET, TYPE 332, AS PER PLAN (EAGLE) ALTERNATE BID	840
								5	1								6		633	67000	6	EACH	CABINET RISER	
								5	1								6		633	67001	6	EACH	CABINET RISER, AS PER PLAN	840
								5	1								6		633	67100	6	EACH	CABINET FOUNDATION	
								5	1								6		633	67200	6	EACH	CONTROLLER WORK PAD	
								2	1								3		633	67501	3	EACH	UNINTERRUPTIBLE POWER SUPPLY (UPS), BATTERY REPLACEMENT, AS PER PLAN	840
								3									3		633	74001	3	EACH	UNINTERRUPTIBLE POWER SUPPLY (UPS), AS PER PLAN	840
								2	1								3		633	99000	3	EACH	CONTROLLER ITEM, MISC.: REUSE OF UNINTERRUPTIBLE POWER SUPPLY (UPS)	840
								2	1								3		633	99000	3	EACH	CONTROLLER ITEM, MISC.: UNINTERRUPTIBLE POWER SUPPLY (UPS), STATUS INDIC. LAMPS	840
								5	1								6		816	30000	6	EACH	VIDEO DETECTION SYSTEM	
								5	1								6		816	30000	6	EACH	VIDEO DETECTION SYSTEM (ITERIS) - ALTERNATE BID	840
								5	1								6		816	30000	6	EACH	VIDEO DETECTION SYSTEM (TRAVIS) - ALTERNATE BID	840
																							RETAINING WALLS	
																							WALL 9	746
																							WALL 10 AND WALL 11	754
																							WALL 13A	762
																							WALL 13B	763
																							WALL 13C AND ENERGY DISSIPATOR	766
																							NOISE BARRIER	
						24589										24,589			509	10000	24,589	POUND	EPOXY COATED REINFORCING STEEL	
						48										48			511	34500	48	CU YD	CLASS C CONCRETE, BEAMS AND DIAPHRAGMS	
						143										143			512	10100	143	SQ YD	SEALING OF CONCRETE SURFACES (EPOXY-URETHANE)	
						178										178			524	94600	178	FT	DRILLED SHAFTS, 30" DIAMETER	
						320										320			SPECIAL	606E10200	320	SQ FT	NOISE BARRIER (REFLECTIVE), 10' HEIGHT AND UNDER	
						1140										1,140			SPECIAL	606E10210	1,140	SQ FT	NOISE BARRIER (REFLECTIVE), OVER 10' TO 14' HEIGHT	
						79537										79,047		490	SPECIAL	606E10220	79,537	SQ FT	NOISE BARRIER (REFLECTIVE), OVER 14' TO 20' HEIGHT	

CALCULATED ACF CHECKED ABS

GENERAL SUMMARY

ALL-75-5.53

27-SEP-2012 11:03AM jclark1
\\D01FS101\N_Drive\Pd\76691\Final Cadd Files\Projects\ALL\76691\roadway\sheets\76691GG008.dgn

SHEET NUMBER												03/IMS/ PV/	04/S<2/ PV/	ITEM	ITEM EXT.	GRAND TOTAL	UNIT	DESCRIPTION	SEE SHEET NO.
37	42	194	404	408	436	438	574												
																		BUILDING DEMOLITION	
		1										1		202	56100	1	EACH	BUILDING DEMOLISHED - PARCEL 121-WL1, 602 BRYN MAWR AVE., 1 STORY FRAME HOUSE	
		1										1		202	56100	1	EACH	BUILDING DEMOLISHED - PARCEL 121-WL2, 600 BRYN MAWR AVE., I STORY FRAME HOUSE	
			1									1		202	56100	1	EACH	BUILDING DEMOLISHED - PARCEL 105-WDV, 1601 HARDING HWY., 1 STORY BLOCK COMMERCIAL BUILDING	
				1								1		202	56100	1	EACH	BUILDING DEMOLISHED - PARCEL 113-WL, 708-716 HARDING HWY., 1 STORY BLOCK COMMERCIAL BUILDING	
					1							1		202	56100	1	EACH	BUILDING DEMOLISHED - PARCEL 117-T, 1908 LENORE ST., 1 STORY BLOCK COMMERCIAL BUILDING	
					1							1		202	56100	1	EACH	BUILDING DEMOLISHED - PARCEL 118-T, 1925 LENORE ST., 1 STORY METAL/BLOCK INDUSTRIAL BUILDING	
					1							1		202	56100	1	EACH	BUILDING DEMOLISHED - PARCEL 118-T, 1925 LENORE ST., 1 STORY GARAGE	
					1							1		202	56100	1	EACH	BUILDING DEMOLISHED - PARCEL 119-T, 608 ALTON AVE., 1 STORY FRAME HOUSE	
						1						1		202	56100	1	EACH	BUILDING DEMOLISHED - PARCEL 115-WL, 704 DEAN AVE., 1 STORY BRICK COMMERCIAL BUILDING	
							1					1		202	56100	1	EACH	BUILDING DEMOLISHED - PARCEL 181-T, 1601 FINDLAY RD., SHED	
																		STRUCTURES (OVER 20')	
																		ALL-75-0703 L/R	940 & 941
																		ALL-75-0813 L/R	978 & 979
																		ALL-75-0832 L/R	1014 & 1015
																		ALL-75-0875 L/R	1046 & 1047
																		STRUCTURES (UNDER 20')	
																		ALL-75-0652	907
																		ALL-117-1844	913
																		BTH-TR509-0.01	930
																		ALL-75-0711	922
																		MAINTENANCE OF TRAFFIC	60

SHEET NO.	202 HEADWALL REMOVED EACH	202 PAVEMENT REMOVED SQ YD	202 WALK REMOVED SQ FT	202 CONCRETE BARRIER REMOVED FT	202 CONCRETE BARRIER REMOVED FOR STORAGE FT	202 TRAFFIC ISLAND REMOVED SQ YD	202 CURB REMOVED FT	202 CURB AND GUTTER REMOVED FT	202 CONCRETE SLOPE PROTECTION REMOVED SQ YD	202 PIPE REMOVED, 24" AND UNDER FT	202 PIPE REMOVED, OVER 24" FT	202 GUARDRAIL REMOVED FT	202 ANCHOR ASSEMBLY REMOVED EACH	202 BRIDGE TERMINAL ASSEMBLY REMOVED EACH	202 SPECIAL - PARKING BLOCK REMOVED EACH	202 MAILBOX REMOVED EACH	202 BUILDING DEMOLISHED EACH	202 MANHOLE REMOVED EACH	202 CATCH BASIN REMOVED EACH	202 MANHOLE ABANDONED EACH	202 JUNCTION BOX REMOVED EACH	202 SPECIAL - FILL AND PLUG EXISTING CONDUIT FT	202 FENCE REMOVED FT	202 GATE REMOVED EACH	202 METER VAULT REMOVED EACH	202 REMOVAL MISC.: CONCRETE PAD SQ YD	202 REMOVAL MISC.: MANHOLE REMOVED AND REUSE EACH	202 REMOVAL MISC.: PRIVATE LIGHT POLE EACH	202 REMOVAL MISC.: CONCRETE LIGHT POLE FOUNDATION EACH	202 REMOVAL MISC.: PRIVATE SIGN EACH	202 REMOVAL MISC.: CONCRETE SIGN FOUNDATION EACH	202 REMOVAL MISC.: PRIVATE SIGN AND FOUNDATIONS EACH	202 REMOVAL MISC.: METAL POSTS EACH	202 REMOVAL MISC.: METAL POLE EACH	202 REMOVAL, MISC.: SIGN FOUNDATION EACH	202 REMOVAL, MISC.: WOOD POSTS EACH	202 REMOVAL, MISC.: WOOD POLE EACH	202 REMOVAL, MISC.: METAL BOLLARD EACH	202 REMOVAL, MISC.: PRIVATE LIGHT EACH	202 REMOVAL, MISC.: ELEVATED SIGN AND FOUNDATIONS EACH
177										198									1				1602																
179										328	472	387.5	4						3				2521			112													
181				712	200					188		325	4						2				1722																
183				1250								125	2										2031					2		2			4					
185				1250						60	107								2				2606					4			1							
187	1			1250						302		137.5	2									10	2090						2									
190	2		886.5	1096			510			349	326	1850	2	4					5		1	388											2					
194			45	1250						61		1313	5				2	1	4			758	2488			5.4							5					
198				2465	74												0						4657			2.2												
200				1175	152					11		1163	2										2149															
203				1046							117	2106	2	4									561															
207				1082								250	2	2									2426															
210				988								550	2	2								402	2010			132												
212				1202								725	2	2												41.2												
214				1250						139									2			186	2654															
216	1			1250					4.91	21	143	212.5	1										2543															
218				611						124	103	737.5	1						2			75	2617															
220										129		120	2						1			147	1489															
370	2					162				340													1311			22.2	2											
374	2				120	173				339		345		1					1				731				2											
401			1280				385	183		5									2			221								1				1				
404		429.1	276				327	74		979							1		9													2	1		5	18		1	1	
408			4077			178.5	1994			882	214						1		7	3		41	92			16.2						4			1			8	7	1
412		66	191				1136			417	487							6	4			121				113						1		1				1	
416							50																															
433						261.3				24									1				906			9.49							2					
436		348.7	108							170		1013	2		9	2	4	2					640			11.3						1				2		4	
438			709.1				738			527		150	4			1	1		5					4	1	44						1					2	4	
442										50												50																
469	2									372	76							1	2				104									1	4					
479		78.1					241																															
486								590		954		457	1						3			314	467															
489								975		297		367	2						4			460	423															
492								991				479	2						1			482																
495				217				1113	194.3	204		483	3						1																			
498				623						303	330	370							8			101																
503								1026	24.9	887	302	152	1					1	9				686																
535	1								179	312	141	1217	4						2																			
561							125	69		9	178								1																			
569							326			586									1				197	1														
571							494			50								1	3			345																
574								647		493							1		5			68	34			8.11												
CARRIED TO GENERAL SUMMARY	11	921.9	7573	18717	546	774.8	6326	5668	403.1	10110	2996	15033	52	15	9	3	10	12	91	3	1	4169	41757	5	1	516	4	2	4	5	1	10	14	5	8	19	2	11	17	1

CALCULATED ACF
CHECKED ABS

ROADWAY SUBSUMMARY

ALL-75-5.53

148
1224

J:\Projects\ALL\76691\roadway\sheets\76691GS001.dgn 11-SEP-2012 8:51PM reddenj

SHEET NO.	202 REMOVAL MISC.: TRENCH DRAIN EACH	202 REMOVAL, MISC.: WOODEN BENCHES EACH	202 REMOVAL MISC.: FROST FREE WATER SPIGOT EACH	202 REMOVAL MISC.: SWIMMING POOL SQ FT	202 REMOVAL MISC.: SWING SET EACH	202 REMOVAL MISC.: FLAG POLE EACH	202 REMOVAL MISC.: DOG KENNELS EACH	202 REMOVAL MISC.: BRICK FT	202 REMOVAL MISC.: TENSION CABLE RAIL SYSTEM FT	202 REMOVAL, MISC.: ABOVE GROUND STORAGE CONTAINER EACH	202 REMOVAL, MISC.: AIR CONDITIONERS EACH	202 REMOVAL MISC.: RAILROAD TIES EACH	252 FULL DEPTH PAVEMENT SAWING FT	503 COFFERDAMS AND EXCAVATION BRACING LUMP	509 EPOXY COATED REINFORCING STEEL POUND	511 CLASS C CONCRETE CU YD	512 SEALING OF CONCRETE CURFACES, (EPOXY-URETHANE) SQ YD	518 POROUS BACKFILL WITH FILTER FABRIC CU YD	601 RIPRAP USING 6" REINFORCED COCNRETE SLAB SQ YD	601 RIPRAP USING 6" REINFORCED COCNRETE SLAB, AS PER PLAN SQ YD	601 TIED CONCRETE BLOCK MAT, TYPE 1 SQ YD	601 TIED CONCRETE BLOCK MAT, TYPE 3 SQ YD	601 ROCK CHANNEL PROTECTION, TYPE C WITH FABRIC FILTER CU YD	602 CONCRETE MASONRY CU YD	603 8" CONDUIT, TYPE B FT	603 8" CONDUIT, TYPE C FT	603 10" CONDUIT, TYPE B FT	603 12" CONDUIT, TYPE B FT	603 12" CONDUIT, TYPE C FT	603 15" CONDUIT, TYPE A FT	603 15" CONDUIT, TYPE A, 706.02 FT	603 15" CONDUIT, TYPE B FT	603 15" CONDUIT, TYPE C FT	603 15" CONDUIT, TYPE F FT	603 18" CONDUIT, TYPE A FT	603 18" CONDUIT, TYPE B FT	603 18" CONDUIT, TYPE C FT
177									800					LUMP						16.0			9.7		1.4								94					
179									1250											6.3			5.3		0.5								462					
181									500																													
183																									0.5								164					
185																						1	31.3		0.8								272					
187																									0.5								205					
191														LUMP						18.2		213.2	16.2		1.6								143		102			
194					1								69																									
195														LUMP						5.1			3.1		2.9								287	29	53	175	175	54
198																				18.4			14.2		2.2								243					
200																						550	55.6		0.6								180		51		83	
204														LUMP								355.8		3.6	1.2								1053		75		92	
207														LUMP										14.4	0.8								188	138				
210																				12.7			10.3		1.9								238		97			
212																							2.7		0.3								106					
214																									0.5								102				83	
216																				6.2			2.7		0.5								202					
218									650														6.2		0.8								382				98	
220									750																0.3								84					
370																									0.3								134					
374														LUMP						8.3			3.1		1.1								122					
401													79																									
404										1	2		115																									
405																									0.3		12		559	84				64			
408																																						
409																						7			0.8				463				20					
412	1	2	1										185																									
413																										12		6	415	46			212				22	12
416																													30									
433			1	1264																		13.44	2.7		0.4												94	61
436						1	4															31.79																
438													37																									
439																						2.67			1.0				6				53	430			136	84
442																							11.8															
469								48				4											9.3		16.4				87				237	255				38
479													520																									
486																													309	82			171	238				121
489																							4.0		1.0				413	82								49
492																							3.0		0.6				273	218				37			110	30
495																							3.5		0.7				342	35			367	58				
498																							4.4		0.9								158	72				
503													139																	9				79				
535																						88															
561													144												0.7				75	16							173	
569																													48				22				304	
571																													155					27				
574																													123	336			182	86				70
679														LUMP						27.9			36.3		40.1													
680																				17.1					1.7													
681																				20.1			7.0		1.7													
682														LUMP						5.1					0.5											134			
683																				9.8			7.4		0.7													
684														LUMP						7.5			6.2		0.9													
685																				19.4					1.1													
686														LUMP						4.0					10.0													
687																				18.5			12.4		1.4													
691														LUMP	6634	70.4	70.9	41.3			12.9		32.5															
692																				9.7			2.6		0.7													
693																				34.6			16.1		18.0													
694																				10.6			10.6		16.4													
695																				11.5			6.2		0.9													
696														LUMP						12.0			16.1		20.6													
697														LUMP						10.7			17.7		16.4													
CARRIED TO GEN. SUM.	1	2	2	1264	1	1	4	48	3950	1	2	4	1288	LUMP	6634	70.4	70.9	42	309.6	12.9	1263	370.2	18	172.0	12	12	6	3306	947	12	134	6083	1513	378	175	1370	519

CALCULATED ACF
CHECKED ABS

ROADWAY SUBSUMMARY

ALL-75-5.53

149
1224

J:\Projects\ALL\76691\roadway\sheets\76691GS002.dgn 15-JAN-2013 12:25PM fedak

SHEET NO.	603 21" CONDUIT, TYPE A, 706.02 FT	603 21" CONDUIT, TYPE B FT	603 21" CONDUIT, TYPE C FT	603 21" CONDUIT, TYPE F FT	603 21" CONDUIT, TYPE B, AS PER PLAN (SANITARY) FT	603 24" CONDUIT, TYPE A FT	603 24" CONDUIT, TYPE A, 706.02 FT	603 24" CONDUIT, TYPE B FT	603 24" CONDUIT, TYPE C FT	603 30" CONDUIT, TYPE A, 706.02 FT	603 30" CONDUIT, TYPE B FT	603 30" CONDUIT, TYPE C FT	603 36" CONDUIT, TYPE A, 706.02, 707.01, 707.02, 707.04, 707.05, 707.07, 707.21 FT	603 36" CONDUIT, TYPE A FT	603 36" CONDUIT, TYPE B FT	603 36" CONDUIT, TYPE C FT	603 42" CONDUIT, TYPE A, 706.02 FT	603 42" CONDUIT, TYPE B FT	603 42" CONDUIT, TYPE C FT	603 48" CONDUIT, TYPE A, 706.02 FT	603 48" CONDUIT, TYPE A, 706.02 2250 D-LOAD FT	603 48" CONDUIT, TYPE B FT	603 54" CONDUIT, TYPE A, 706.02 FT	603 54" CONDUIT, TYPE B, 706.02 FT	603 60" CONDUIT, TYPE A, 706.02 FT	603 15" CONDUIT, TYPE B, BORED AND JACKED FT	603 18" CONDUIT, TYPE B, BORED AND JACKED FT	603 21" CONDUIT, TYPE B, BORED AND JACKED FT	603 24" CONDUIT, TYPE A, BORED AND JACKED FT	603 36" CONDUIT, TYPE A, BORED AND JACKED FT	603 36" CONDUIT, TYPE B, BORED AND JACKED FT	603 48" CONDUIT, TYPE A, BORED AND JACKED FT	604 CATCH BASIN, NO. 3 EACH	604 CATCH BASIN, NO. 3A EACH	604 CATCH BASIN, NO. 5 EACH	604 CATCH BASIN, NO. 7 EACH	604 CATCH BASIN, NO. 8 EACH
177										184																									
179																																			
183																																			
185																																			
187																																			
191														254																					
195									622						176														169			100				
198						61																													
200																																			
204			97	30								31															50	50					6	5	
207																																			
210														127																170				2	
212																											80								
214																																			
216																																			
218																																			
220																																			
370																																		2	
374						155																												2	
401																																	1		
405																																	1	6	
409																		78	72															6	
413								221			10							853																10	
416																																		1	
433		94	65																														1	1	
436					309																														
438																																			
439															168	23																	1		2
469															51							77												1	
486			200						267																								8		
489			80					207	24																								6		
492																																	8		
495																																	2	11	
498											143																							4	
503			124								157	583																						4		1
561									9			5			146	37																	1	3	
569																																		3	
571								153																									1	3	
574																																	1	8	
679																												464							
680																	88																		
681																	79																		
683	79																																		
684								71																							100				
685										83																									
686																									367										
687													110																						
691																					177											220			
692	68																																		
693																				94															
694																				144															
695							80																												
696																							181												
697																				80												120			
CARRIED TO GENERAL SUMMARY	147	94	566	30	309	216	151	581	922	267	310	619	110	381	541	60	167	931	72	318	177	77	181	367	464	130	50	169	100	350	100	340	13	96	1	1	45

CALCULATED ACF
CHECKED ABS

ROADWAY SUBSUMMARY

ALL-75-5.53

150
1224

J:\Projects\ALL\76691\roadway\sheets\76691GS003.dgn 14-JAN-2013 3:45PM fedak

SHEET NO.	604 CATCH BASIN, NO.2-2B EACH	604 CATCH BASIN, NO.2-3 EACH	604 CATCH BASIN ADJUSTED TO GRADE EACH	604 INLET, NO. 3 FOR SINGLE SLOPE BARRIER, TYPE D EACH	604 MANHOLE, NO. 3 EACH	604 MANHOLE ADJUSTED TO GRADE EACH	604 MANHOLE RECONSTRUCTED TO GRADE EACH	604 MANHOLE MISC.: AS PER PLAN (SANITARY) EACH	606 GUARDRAIL, TYPE 5 FT	606 GUARDRAIL, BARRIER DESIGN, TYPE 5 FT	606 GUARDRAIL, TYPE 5, LONG-SPAN FT	606 ANCHOR ASSEMBLY, TYPE E EACH	606 ANCHOR ASSEMBLY, TYPE T EACH	606 BRIDGE TERMINAL ASSEMBLY, TYPE 1 EACH	606 BRIDGE TERMINAL ASSEMBLY, TYPE 2 EACH	606 IMPACT ATTENUATOR, TYPE 1 (BIDIRECTIONAL) EACH	606 GUARDRAIL, MISC.: TENSIONED CABLE WITH CONCRETE FOUNDATIONS LINE POST (SOCKETED) FT	606 GUARDRAIL, MISC.: TENSION CABLE ANCHOR TERMINAL EACH	608 6" CONCRETE WALK SQ FT	608 CURB RAMP SQ FT	609 COMBINATION CURB AND GUTTER, TYPE 2 FT	609 COMBINATION CURB AND GUTTER, TYPE 2, AS PER PLAN FT	609 CURB TYPE 4-B FT	609 CURB TYPE 4-C FT	609 CURB TYPE 6 FT	609 6" CONCRETE TRAFFIC ISLAND SQ YD	622 CONCRETE BARRIER, TYPE D FT	622 CONCRETE BARRIER END SECTION, TYPE D EACH	622 CONCRETE BARRIER, END ANCHORAGE, REINFORCED, TYPE D EACH	625 PULL BOX REMOVED EACH	638 6" WATER MAIN DUCTILE IRON PIPE ANSI CLASS 52, PUSH-ON JOINTS AND FITTINGS, AS PER PLAN FT	638 8" WATER MAIN DUCTILE IRON PIPE ANSI CLASS 52, PUSH-ON JOINTS AND FITTINGS, AS PER PLAN FT	638 10" WATER MAIN DUCTILE IRON PIPE ANSI CLASS 52, PUSH-ON JOINTS AND FITTINGS, AS PER PLAN FT		
177																	800	3																	
179									1300.0		112.5	3	4				1250																		
181									812.5	87.5		1	2			2	1046	2																	
183									1050.0	37.5		2	1	1			1250												20	1	1				
185									1525.0	62.5		1	1				1250	2														1			
187									512.5			2		1			1250												20	1	1				
190									1775.0	75.0		1	2	4	2	2	885	2						236											
191							3																												
194									1675.0			4	2	1			1250												469	2	6				
195	3	1		3	2		1																											
198						1			2137.5	37.5		1	1			1	2407	3																	
200						1			1575.0	75.0		1	3			2	1174	1																	
203									2251.6	75.0				6	3	2	553	3						1884											
204					6																														
207									462.5	37.5		1	1	2	1	1	813	1																	
210									1075.0	37.5		1	1	2	1	1	1036	1																	
212									925.0	37.5		1	1	2	1	1	939	1																	
214																	1250	2																	
216																	1250																		
218																	1250	2																	
220									375.0			1	1				700	1																	
370									75.0				1																	146.8					
374									125			1	1																	166.7					
401			1																2253.5	941.1	293				140										
404																			5976.4	781.03	833				497							1			
405					3	4	1																											201		
408																			6915		900														
409					2	2																											45		450	
412																			5375	735	860				442										
413		2			9	2	4																										129		97	
416																			683		101														
433					2				425			1	3																						
436								2	700			1	2		1																				
438									675			1																							
439	1				3		1																												
469	2				4	2	2		125			1	1																				152			
486	2				6																	1200										611		
489					3																	768										168	603		
492					2																	1004										120	494		
495																						825			238.1								518		
498					1																	820			263								507		
503	1				6																	1280											648		
535										525		1	1																						
561	2				2																	610	278		22							228			
569					3																	731													
571					1																	495													
574	1				2																	960													
686					1																														
CARRIED TO GENERAL SUMMARY	12	3	1	3	58	12	12	2	19577	1087.5	112.5	26	29	19	9	12	20353	24	21203	2457.1	2987	8693	278	2120	1602.1	313.5	509	4	8	2	842	3381	748		

CALCULATED ACF
CHECKED ABS

ROADWAY SUBSUMMARY

ALL-75-5.53

151
1224

J:\Projects\ALL\76691\roadway\sheets\76691GS004.dgn 11-SEP-2012 8:51PM redden

SHEET NO.	638	638	638	638	638	638	638	638	638	638	638	638	638	638	638	638	659	670			690					203		203		203			
	3/4" COPPER SERVICE BRANCH	2" COPPER SERVICE BRANCH	2" GATE VALVE AND VALVE BOX	6" GATE VALVE AND VALVE BOX	8" GATE VALVE AND VALVE BOX	10" GATE VALVE AND VALVE BOX	6" FIRE HYDRANT	FIRE HYDRANT ADJUSTED TO GRADE	VALVE BOX ADJUSTED TO GRADE	METER, SETTING, STOP AND CHAMBER	METER AND CHAMBER REMOVED AND RESET	METER AND VAULT REMOVED AND RESET	WATER WORK, MISC.: CURB METER SET ADJUSTED	WATER WORK, MISC.: WATER SERVICE TAP ABANDONED	WATER WORK, MISC.: REMOVAL OF 16" DUCTILE IRON PIPE	WATER WORK, MISC.: 8" CAP AND PLUG	SEEDING AND MULCHING	DITCH EROSION PROTECTION MAT, TYPE A	DITCH EROSION PROTECTION MAT, TYPE B	DITCH EROSION PROTECTION MAT, TYPE C	SPECIAL - MAILBOX SUPPORT SYSTEM, SINGLE	SPECIAL - MAILBOX REMOVE AND RESET	SPECIAL - GROUND WATER MONITORING WELL ABANDONMENT	SPECIAL - GROUND WATER MONITORING WELL RECONSTRUCTION		EXCAVATION	EMBANKMENT	OPTION A: ASPHALT PAVEMENT EXCAVATION	OPTION A: ASPHALT PAVEMENT EMBANKMENT	OPTION B: CONCRETE PAVEMENT EXCAVATION	OPTION B: CONCRETE PAVEMENT EMBANKMENT		
	FT	FT	EACH	EACH	EACH	EACH	EACH	EACH	EACH	EACH	EACH	EACH	EACH	EACH	FT	EACH	SQ YD	SQ YD	SQ YD	SQ YD	EACH	EACH	EACH	EACH		CU YD	CU YD	CU YD	CU YD	CU YD	CU YD		
177																		183.3															
179																		1,804.0		228.8													
181																		183.3	80.6														
183																		366.6															
185																		620.2	146.7														
187																		549.9															
191																		125.0															
195																		1,325.8															
198															191			2,376.4															
200																		2,172.0															
204																		374.2															
207																		675.0															
210																		424.2															
212																		125.0															
214																		549.9															
216																		3,222.2	427.8														
218																		2,712.8															
220																		335.1															
374																		63.3															
404																							6										
405	84							1	4				3																				
408																								2									
409				2			1							1																			
412																							4	6									
413		61	2			2	1		2	1																							
416									1				1																				
433																		242.5															
436																		187.5															
438																								1									
439																		41.7															
442																		122.2															
469									3																								
479									1																								
486		417	4		1											2		41.7															
489		168	1	2			1											100.0															
492	255	270	3	2			1																										
495	453																																
503		31	1		1					1																							
535																		1,369.4															
561				1			1		3		1	1																					
569																					1	0											
571																					6	3											
574																					7	7											
366																	412,758											195,861	393,966	189307	398706			
383																	11,252									16,155	1,432						
387																	3,987									2,472	465						
390																	2,492									939	355						
398																	12,973									17,485	4,185						
431																	4,799									15,692	841						
448																	12,738									3,654	4,472						
453																	5,972									1,960	10,473						
459																	7,102									4,587	6,825						
466																	18,287									9,994	5,186						
476																	3,723									2,453	605						
481																	673									284	48						
529																	34,477									22,678	15,436						
541																	22,896									4,370	12,387						
546																	6,858									3,342	5,470						
551																	6,570									7,476	4,429						
558																	11,564									17,376	1,381						
567																	995									2,067	130						
590																	4,796									944	1,245						
CARRIED TO GEN. SUM.	792	947	11	7	2	2	5	1	14	2	1	1	4	1	191	2	584,912	20,293	655	229	14	10	10	9		133,928	75,365	195,861	393,966	189,307	398,706		

CALCULATED ACF CHECKED ABS

ROADWAY SUBSUMMARY

ALL-75-5.53

152
1224

J:\Projects\ALL\76691\roadway\sheets\76691GS005.dgn 11-SEP-2012 8:52PM reddenj

SHEET NUMBER	REFERENCE NUMBER	STATIONING		OUTLETS TO DITCHES				OUTLETS TO CB'S OR INLETS						601	603	603	604	605	605	605	BENDS & BRANCHES (for information only)						REMARKS
		FROM	TO	STATION	SIDE	OFFSET AT DITCH	UNDERDRAIN INVERT ELEV. AT DITCH	STATION	SIDE	OFFSET	TYPE	DRAINAGE STRUCTURE BOTTOM ELEV.	UNDERDRAIN INVERT ELEV.	TIED CONCRETE BLOCK MAT, TYPE 1	6" CONDUIT, TYPE F FOR UNDERDRAIN OUTLETS	6" CONDUIT, TYPE B FOR UNDERDRAIN OUTLETS	PRECAST REINFORCED CONCRETE OUTLET	6" SHALLOW PIPE UNDERDRAINS	6" BASE PIPE UNDERDRAINS	6" UNCLASSIFIED PIPE UNDERDRAINS	CAP	TEE	45° WYE	90° BEND	45° BEND		
						FT	FT			FT		FT	FT	SQ YD	FT	FT	EA	FT	FT	FT	EA	EA	EA	EA	EA		
176	U1	292+00	296+23	292+00	LT	81	901.94							1.8	19	12	1	423			1			1			HIGH POINT STA. 296+23
176	U2	292+00	296+23												10				423		1		1	1	1		HIGH POINT STA. 296+23; TIE TO U1 STA. 292+00
176	U3	294+00	296+23					294+00	CL	0	CB-8	900.25	903.27		20				223		1			1			HIGH POINT STA. 296+23
176	U4	292+00	297+00	292+00	RT	75	903.25							1.8	13	12	1			500	1			1			HIGH POINT STA. 296+23; STA. 297+00 EL. 903.28, STA. 292+00 EL. 903.28 (SLOPE=0.0%)
176	U5	292+00	297+00												10					500	1		1		1		HIGH POINT STA. 296+23; TIE TO U4 STA. 297+00
176	U6	294+00	296+23					294+00	CL	0	CB-8	900.25	903.27		20				223		1			1			HIGH POINT STA. 296+23
178	U1	296+23	304+00	304+00	LT	83	898.43							1.8	21	12	1	777						1			HIGH POINT STA. 296+23
178	U2	296+23	304+00												10				777		1		1	1	1		HIGH POINT STA. 296+23; TIE TO U1 STA. 304+00
178	U3	296+23	304+00					304+00	CL	0	CB-8	898.22	899.74		20				777		1			1			HIGH POINT STA. 296+23
178	U4	304+00	309+10	309+10	LT	90	891.38							1.8	27	8	1	510			1			1			
178	U5	304+00	309+10												10				510		1		1	1	1		TIE TO U4 STA. 309+10
178	U6	304+00	309+75					309+75	CL	0	CB-8	893.53	895.36		20				575		1			1			
178	U7	309+25	310+97	310+97	LT	94	891.04							1.8	22	8	1	175			1	1					LOW POINT STA. 310+97
178	U8	309+25	310+97												10				175		1	1	1		1		LOW POINT STA. 310+97; TIE TO U7 STA. 310+97
178	U9	309+75	310+97					310+97	CL	0	CB-8	892.75	894.90		20				122		1	1					LOW POINT STA. 310+97
178	U10	310+97	316+00															500			1						LOW POINT STA. 310+97; TIE TO U7 STA. 310+97
178	U11	310+97	316+00																500		1						LOW POINT STA. 310+97; TIE TO U8 STA. 310+97
178	U12	310+97	312+50																153		1						LOW POINT STA. 310+97; TIE TO U9 STA. 310+97
178	U13	297+00	301+00	301+00	RT	76	901.63							1.8	14	12	1	300		100	1			1			HIGH POINT STA. 296+23; STA 300+00 EL. 901.63, STA 301+00 EL. 901.63 (SLOPE=0.0%)
178	U14	297+00	301+00												10				300		1		1	1	1		HIGH POINT STA. 296+23; TIE TO U13 STA. 301+00
178	U15	296+23	304+00					304+00	CL	0	CB-8	898.22	899.74		20				777		1			1			HIGH POINT STA. 296+23
178	U16	301+00	307+90	307+90	RT	100	894.32							1.8	27	8	1	690			1	1					
178	U17	301+00	307+90												10				690		1	1	1		1		TIE TO U16 STA. 307+90
178	U18	307+90	308+20																	30	1						TIE TO U16 STA. 307+90; STA. 308+20, EL. 894.82, STA. 307+90 EL. 894.82 (SLOPE=0.0%)
178	U19	307+90	308+15																	25	1						TIE TO U16 STA. 307+90
178	U20	304+00	309+75					309+75	CL	0	CB-8	893.53	895.36		20				575		1			1			
178	U21	309+62	312+50	312+50	RT	79	894.03							1.8	18	12	1			288	1	1					STA. 309+62 EL. 894.04, STA. 312+50 EL. 894.04 (SLOPE = 0.00%).
178	U22	309+62	312+50												10					288	1	1	1		1		TIE TO U21 STA. 312+50; STA. 309+62 EL. 894.56, STA. 312+50 EL. 894.56 (SLOPE = 0.00%).
178	U23	309+75	310+97					310+97	CL	0	CB-8	892.75	894.90		20				122		1	1					
178	U24	310+97	312+50																153		1						TIE TO U23 STA. 310+97
180	U1	316+00	321+17	316+00	LT	95	893.25							1.8	16	8	1	482		35	1			1			HIGH POINT STA. 320+82; STA. 321+17 EL. 894.89, STA. 320+82 EL. 894.89 (SLOPE = 0.00%).
180	U2	316+00	321+17												10				482	35	1		1	1	1		HIGH POINT STA. 320+82; TIE TO U1 STA. 316+00; STA. 321+17 EL. 895.57, STA. 320+82 EL. 895.57 (SLOPE = 0.00%).
180	U3	312+50	320+82					312+50	CL	0	CB-8	893.55	895.11		20				832		1			1			HIGH POINT STA. 320+82
180	U4	312+50	317+94	312+50	RT	79	894.03							1.8	18	12	1	544			1						
180	U5	312+50	317+94																544		1						TIE TO U4 STA. 312+50
180	U6	312+50	320+82					312+50	CL	0	CB-8	893.55	895.11		20				832		1			1			HIGH POINT STA. 320+82
180	U7	319+53	324+50	324+50	RT	103	894.30							1.8	24	8	1	368		129	1			1			HIGH POINT STA. 320+82; STA. 319+53 EL. 894.89, STA. 320+82 EL. 894.89 (SLOPE = 0.00%).
180	U8	319+53	324+50												10				368	129	1		1	1	1		HIGH POINT STA. 320+82; TIE TO U7 STA. 324+50; STA. 319+53 EL. 894.57, STA. 320+82 EL. 894.57 (SLOPE = 0.00%).
TOTALS CARRIED TO UNDERDRAIN SUB-SUMMARY SHEET 168														19.8	519	112	11	4,769	10,133	2,059	37	8	10	21	10		

CALCULATED SJG CHECKED ACF

UNDERDRAIN SUB-SUMMARY - I-75

ALL-75-5.53

153
1224

J:\Projects\ALL\76691\drainage\sheets\76691DS001.dgn 11-SEP-2012 8:52PM redderj

SHEET NUMBER	REFERENCE NUMBER	STATIONING		OUTLETS TO DITCHES				OUTLETS TO CB'S OR INLETS						601	603	603	604	605	605	605	BENDS & BRANCHES (for information only)						REMARKS
		FROM	TO	STATION	SIDE	OFFSET AT DITCH	UNDERDRAIN INVERT ELEV. AT DITCH	STATION	SIDE	OFFSET	TYPE	DRAINAGE STRUCTURE BOTTOM ELEV.	UNDERDRAIN INVERT ELEV.	TIED CONCRETE BLOCK MAT, TYPE 1	6" CONDUIT, TYPE F FOR UNDERDRAIN OUTLETS	6" CONDUIT, TYPE B FOR UNDERDRAIN OUTLETS	PRECAST REINFORCED CONCRETE OUTLET	6" SHALLOW PIPE UNDERDRAINS	6" BASE PIPE UNDERDRAINS	6" UNCLASSIFIED PIPE UNDERDRAINS	CAP	TEE	45° WYE	90° BEND	45° BEND	CROSS	
						FT	FT			FT		FT	FT	SQ YD	FT	FT	EA	FT	FT	FT	EA	EA	EA	EA	EA	EA	
182	U1	322+76	329+92	329+92	LT	119	890.10							1.8	22	47	1	716			1			1			
182	U2	322+76	329+92												10				474		1	1	1		1		TIE TO U1 STA. 329+92
182	U3	320+82	328+50					328+50	CL	0	CB-8	892.10	893.63		20				768		1	1					
182	U4	329+92	334+50	334+50	LT	92	886.48							1.8	20	20	1	458			1	2		1		1	
182	U5	328+50	335+50					335+50	CL	0	CB-8	886.78	887.28		20				700		1	1		1			USE CONSTANT DEPTH OF 15" INSTEAD OF 18"
182	U6	324+50	328+50	328+50	RT	86	891.80							1.8	11	8	1	400			1	1					
182	U7	324+50	328+50												10				400		1	1	1		1		TIE TO U6 STA. 328+50
182	U8	320+82	328+50					328+50	CL	0	CB-8	892.10	893.63		20				768		1	1					
182	U9	328+50	335+50	335+50	RT	73	886.42							1.8	10	8	1	660		40	1	1					
																											STA. 335+10 EL. 886.42, STA. 335+50 EL. 886.42 (SLOPE=0.00%)
182	U10	328+50	335+50												10				660	40	1	1	1		1		TIE TO U9 STA. 335+50
182	U11	328+50	335+50					335+50	CL	0	CB-8	886.78	887.28		20				700		1	1					USE CONSTANT DEPTH OF 15" INSTEAD OF 18"
182	U12	329+92	334+50	334+50	LT	92	886.48											458			1					1	TIE TO U4 STA 334+50
182	U13	329+92	334+50												10				458		1	1	1		1		TIE TO U12 STA. 334+50
184	U1	334+50	339+50	339+50	LT	88	882.90							1.8	19	20	1	500			1	2				1	
184	U2	334+50	339+50												10				500		1	1	1		1		TIE TO U1 STA. 339+50
184	U3	334+50	339+50															500			1						TIE TO U1 STA. 339+50
184	U4	335+50	343+00					343+00	CL	0	CB-8	879.50	883.84		20				750		1			1			
184	U5	339+50	348+96	348+96	LT	87	879.60							1.8	17	8	1	946			1	2				1	
184	U6	339+50	348+96												10				946		1	1	1		1		TIE TO U5 STA. 348+96
184	U7	339+50	348+96													14		946			1						TIE TO U5 STA. 348+96
184	U8	343+00	348+00					348+00	CL	0	CB-8	880.89	882.43		20				500		1	1					
184	U9	348+96	349+90	349+90	LT	88	880.10							1.8	11	9		94			1	2				1	LOW POINT STA. 349+93
184	U10	348+96	349+90												10		1	94	94		1	1	1		1		LOW POINT STA. 349+93; TIE TO U9 STA. 349+90
184	U11	348+96	349+90													18		94			1	1		1			LOW POINT STA. 349+93; TIE TO U9 STA. 349+90
184	U12	335+50	339+50	339+50	RT	80	883.63							1.8	19	12	1	400			1			1			
184	U13	335+50	339+50												10				400		1		1	1	1		TIE TO U12 STA. 339+50
184	U14	335+50	343+00					343+00	CL	0	CB-8	879.50	883.84		20				750		1			1			
184	U15	339+50	345+96	345+96	RT	77	881.00							1.8	16	12	1	646			1	1					
184	U16	339+50	345+96												10				646		1	1	1		1		TIE TO U15 STA. 345+96
184	U17	343+00	348+00					348+00	CL	0	CB-8	880.69	882.43		20				500			1					
184	U18	348+00	349+93					349+93	CL	0	CB-8	880.66	882.21		20				193			1					LOW POINT STA. 349+93
184	U19	348+00	349+93					349+93	CL	0	CB-8	880.66	882.21		20				193			1					LOW POINT STA. 349+93
TOTALS CARRIED TO UNDERDRAIN SUB-SUMMARY SHEET 168														16.2	435	176	9	6,818	10,400	80	29	28	9	8	9	5	

CALCULATED SJG CHECKED ACF

UNDERDRAIN SUB-SUMMARY - I-75

ALL-75-5.53

154
1224

J:\Projects\ALL\76691\drainage\sheets\76691DS002.dgn 11-SEP-2012 8:52PM reddenj

SHEET NUMBER	REFERENCE NUMBER	STATIONING		OUTLETS TO DITCHES				OUTLETS TO CB'S OR INLETS						601	603	603	604	605	605	605	BENDS & BRANCHES (for information only)						REMARKS
		FROM	TO	STATION	SIDE	OFFSET AT DITCH	UNDERDRAIN INVERT ELEV. AT DITCH	STATION	SIDE	OFFSET	TYPE	DRAINAGE STRUCTURE BOTTOM ELEV.	UNDERDRAIN INVERT ELEV.	TIED CONCRETE BLOCK MAT, TYPE 1	6" CONDUIT, TYPE F FOR UNDERDRAIN OUTLETS	6" CONDUIT, TYPE B FOR UNDERDRAIN OUTLETS	PRECAST REINFORCED CONCRETE OUTLET	6" SHALLOW PIPE UNDERDRAINS	6" BASE PIPE UNDERDRAINS	6" UNCLASSIFIED PIPE UNDERDRAINS	CAP	TEE	45° WYE	90° BEND	45° BEND		
						FT	FT			FT		FT	FT	SQ YD	FT	FT	EA	FT	FT	FT	EA	EA	EA	EA	EA		
186	U1	349+93	351+75					349+93	CL	0	CB-8	880.66	882.21						182		1						LOW POINT STA. 349+93; TIE TO U18 AT STA. 349+93
186	U2	349+95	351+73	349+95	LT	88	880.10								11	9		178			1						LOW POINT STA. 349+93
186	U3	349+95	351+73												10				178		1						LOW POINT STA. 349+93; TIE TO U2 STA. 349+95
186	U4	349+95	351+73													18		178				1					TIE TO U2 STA. 349+95
186	U5	351+78	356+50	351+78	LT	94	880.10							1.8	35		1	472			1					1	
186	U6	351+78	356+50												10				472		1	1	1		1		TIE TO U5 STA. 351+78
186	U7	351+78	356+50													20			472		1						TIE TO U5 STA. 351+78
186	U8	356+53	360+13	356+58	LT	106	881.81							1.8	23	9	1	360			1	1					
186	U9	356+53	356+88												10				35		1		1	1	1		TIE TO U8 STA. 356+58
186	U10	356+53	360+13													25		360			1			1			TIE TO U8 STA. 356+58
186	U11	360+13	364+50	360+13	LT	114	886.05							1.8		64	1	437				1					
186	U12	360+13	364+50												10				437			1	1		1		TIE TO U11 STA. 360+13
186	U13	351+75	356+50					351+75	CL	0	CB-8	880.86	882.11		20				475		1			1			
186	U14	356+50	364+00					356+50	CL	0	CB-8	882.28	883.53		20				750		1			1			
186	U15	351+75	356+50					351+75	CL	0	CB-8	880.86	882.11		20				475		1	1		1			
186	U16	364+00	356+50					356+50	CL	0	CB-8	882.28	883.53		20				750		1			1			
186	U17	345+96	354+75	345+96	RT	77	881.00											582		297	1						LOW POINT STA. 349+93; STA 349+93 EL. 881.26, STA. 345+96 EL. 881.26 (SLOPE=0.00%)
186	U18	345+96	354+75																879		1						TIE TO U17 STA. 345+96
186	U19	349+93	351+75					349+93	CL	0	CB-8	880.66	882.21						182		1						LOW POINT STA. 349+93
186	U20	354+75	357+50	357+50	RT	31	882.53							1.8	22	8	1	275			1	1					
186	U21	354+75	357+50												10				275		1	1	1		1		TIE TO U20 STA. 357+50
186	U22	357+50	359+46															196			1						TIE TO U20 STA. 357+50; STA. 354+75 EL. 882.71, STA. 357+50 EL. 882.71 (SLOPE=0.00%)
186	U23	357+50	359+46																196		1						TIE TO U20 STA. 357+50
186	U24	359+46	364+50	359+46	RT	123	882.40							1.8	27	46	1	504			1	2		1			
186	U25	359+46	364+50																504		1						TIE TO U24 STA 359+46
186	U26	359+46	360+36																90				1		1		HIGH POINT RAMP 'F' STA. 360+36; TIE TO U24 STA. 359+46
188	U1	364+00	368+68					364+00	CL	0	CB-8	889.60	895.85		20				468		1			1			
188	U2	364+50	368+68	364+50	LT	100	887.73							1.8	39	12	1	418			1			1			
188	U3	364+50	368+68												10				418		1		1	1	1		TIE TO U2 STA. 364+50
188	U4	364+00	368+68					364+00	CL	0	CB-8	889.60	895.85		20				468		1			1			
188	U5	364+50	368+68	364+50	RT	121	885.20							1.8	62	12	1	418			1			1			
188	U6	364+50	368+68												10				418		1		1	1	1		TIE TO U5 STA. 364+50
188	U7	371+31	375+00	375+00	LT	95	891.64								34	12		369			1			1			
188	U8	371+31	371+57					371+57	LT	63.5	CB-3A	899.75	901.38						26		1						
188	U9	371+57	375+00												10				343		1		1	1	1		TIE TO U7 STA. 375+00
188	U10	371+31	371+57					371+57	RT	63.5	CB-3A	899.75	901.38						26		1						
TOTALS CARRIED TO UNDERDRAIN SUB-SUMMARY SHEET 168														12.6	453	235	7	4,747	8,519	297	32	10	8	15	8		

CALCULATED SJG
CHECKED ACF

UNDERDRAIN SUB-SUMMARY - I-75

ALL-75-5.53

155
1224

J:\Projects\ALL\76691\drainage\sheets\76691DS003.dgn 11-SEP-2012 8:52PM reddenj

SHEET NUMBER	REFERENCE NUMBER	STATIONING		OUTLETS TO DITCHES				OUTLETS TO CB'S OR INLETS						601	603	603	604	605	605	605	BENDS & BRANCHES (for information only)						REMARKS
		FROM	TO	STATION	SIDE	OFFSET AT DITCH	UNDERDRAIN INVERT ELEV. AT DITCH	STATION	SIDE	OFFSET	TYPE	DRAINAGE STRUCTURE BOTTOM ELEV.	UNDERDRAIN INVERT ELEV.	TIED CONCRETE BLOCK MAT, TYPE 1	6" CONDUIT, TYPE F FOR UNDERDRAIN OUTLETS	6" CONDUIT, TYPE B FOR UNDERDRAIN OUTLETS	PRECAST REINFORCED CONCRETE OUTLET	6" SHALLOW PIPE UNDERDRAINS	6" BASE PIPE UNDERDRAINS	6" UNCLASSIFIED PIPE UNDERDRAINS	CAP	TEE	45° WYE	90° BEND	45° BEND		
						FT	FT			FT		FT	FT	SQ YD	FT	FT	EA	FT	FT	FT	EA	EA	EA	EA	EA		
192	U1	375+00	377+42	377+42	LT	143	876.22							1.8	46	50	1	242			1	1		1			
192	U2	375+00	377+42												10				242		1		1		1		TIE TO U1 STA. 377+42
192	U3	371+31	377+75					377+75	CL	0	CB-8	885.00	889.90		20				644		1			1			
192	U4	377+43	382+25					382+25	LT	70.25	I-3-D	881.59	881.82			88		482			1			1			
192	U5	377+43	382+25					382+25	LT	70.25	I-3-D	881.59	882.50						482		1						
192	U6	377+75	382+25					382+25	CL	0	CB-8	881.43	882.43		20				450		1			1			
192	U7	382+29	383+04					383+04	LT	70.25	I-3-D	881.07	881.57			8		75			1	1					LOW POINT STA. 383+04
192	U8	382+29	383+04					383+04	LT	70.25	I-3-D	881.07	882.28						75		1	1					LOW POINT STA. 383+04
192	U9	382+25	383+04					383+04	CL	0	CB-8	880.71	882.78		20				79		1	1					LOW POINT STA. 383+04
192	U10	383+04	383+96															92			1						LOW POINT STA. 383+04; TIE TO U7 STA. 383+04
192	U11	383+04	383+96					383+04	LT	70.25	I-3-D	881.07	882.28						92		1						LOW POINT STA. 383+04
192	U12	383+04	384+00																96		1						LOW POINT STA. 383+04; TIE TO U9 STA. 383+04
192	U13	384+00	393+22					384+00	LT	70.25	I-3-D	881.67	882.08			8		922			1			1			HIGH POINT STA. 393+22
192	U14	384+00	393+22					384+00	LT	70.25	I-3-D	881.67	882.53						922		1						HIGH POINT STA. 393+22
192	U15	384+00	393+22					384+00	CL	0	CB-8	881.27	883.05		20				922		1			1			HIGH POINT STA. 393+22
192	U16	371+31	375+50	375+50	RT	110	887.55								50	12		419			1			1			
192	U17	371+57	375+50												10				393		1		1		1		TIE TO U16 STA. 375+50
192	U18	371+31	377+75					377+75	CL	0	CB-8	885.00	889.90		20				644		1			1			
192	U19	375+50	378+76	378+76	RT	126	874.00							1.8	31	48	1			326	1			1			
192	U20	375+50	378+76												10					326	1		1		1		TIE TO U19 STA. 378+76
192	U21	377+75	382+25					382+25	CL	0	CB-8	881.43	882.43		20				450		1			1			
192	U22	381+25	382+25												10				100		1						TIE TO U23 STA. 382+25
192	U23	381+25	382+25	382+25	RT	93.17	880.40								11	8		100			1			1			
192	U24	382+25	393+22										882.04		10				1018	79	1	1					TIE TO U25 STA. 382+25; STA. 383+04 EL. 882.04, STA. 382+25 EL.882.04 (SLOPE=0.00%)
192	U25	382+25	393+22	382+25	RT	93.17	880.40						881.41		11	8		1018		79	1	1					STA. 383+04 EL. 881.41, STA. 382+25 EL. 881.41 (SLOPE=0.00%)
192	U26	382+25	383+04																79		1						LOW POINT STA. 383+04
192	U27	383+04	384+00					383+04	CL	0	CB-8	880.71	882.78		20				96		1	1					LOW POINT STA. 383+04; TIE TO U26 STA. 383+04
192	U28	384+00	393+22					384+00	CL	0	CB-8	881.27	883.05		20				922		1			1			HIGH POINT STA. 393+22
TOTALS CARRIED TO UNDERDRAIN SUB-SUMMARY SHEET 168														3.6	359	230	2	3,350	7,706	810	28	7	3	12	3		

CALCULATED SJG
CHECKED ACF

UNDERDRAIN SUB-SUMMARY - I-75

ALL-75-5.53

156
1224

J:\Projects\ALL\76691\drainage\sheets\76691DS004.dgn 11-SEP-2012 8:52PM reddenj

SHEET NUMBER	REFERENCE NUMBER	STATIONING		OUTLETS TO DITCHES				OUTLETS TO CB'S OR INLETS						601	603	603	604	605	605	605	BENDS & BRANCHES (for information only)						REMARKS
		FROM	TO	STATION	SIDE	OFFSET AT DITCH	UNDERDRAIN INVERT ELEV. AT DITCH	STATION	SIDE	OFFSET	TYPE	DRAINAGE STRUCTURE BOTTOM ELEV.	UNDERDRAIN INVERT ELEV.	TIED CONCRETE BLOCK MAT, TYPE 1	6" CONDUIT, TYPE F FOR UNDERDRAIN OUTLETS	6" CONDUIT, TYPE B FOR UNDERDRAIN OUTLETS	PRECAST REINFORCED CONCRETE OUTLET	6" SHALLOW PIPE UNDERDRAINS	6" BASE PIPE UNDERDRAINS	6" UNCLASSIFIED PIPE UNDERDRAINS	CAP	TEE	45° WYE	90° BEND	45° BEND		
						FT	FT			FT		FT	FT	SQ YD	FT	FT	EA	FT	FT	FT	EA	EA	EA	EA	EA		
196	U1	393+22	399+00	399+00	LT	81	883.35							1.8	19	12	1	578			1			1			HIGH POINT STA. 393+22
196	U2	393+22	399+00												10				578		1	1	1		1		HIGH POINT STA. 393+22; TIE TO U1 STA. 398+25
196	U3	393+22	399+00					399+00	CL	0	CB-8	883.18	884.70		20				578		1			1			HIGH POINT STA. 393+22
196	U4	393+22	400+50	400+50	RT	74	882.03							1.8	13	12	1	728			1	1		1			HIGH POINT STA. 393+22
196	U5	393+22	400+50												10				728		1	1	1		1		HIGH POINT STA. 393+22; TIE TO U1 STA. 398+25
196	U6	393+22	399+00					399+00	CL	0	CB-8	883.18	884.70		20				578		1			1			HIGH POINT STA. 393+22
197	U1	399+00	402+50	402+50	LT	81	880.26							1.8	20	12	1	350			1	1					
197	U2	399+00	402+50												10				350		1	1	1		1		TIE TO U1 STA. 402+50
197	U3	399+00	404+50					404+50	CL	0	CB-8	878.06	879.00		20				550		1			1			
197	U4	402+50	406+75	406+75	LT	83	875.88							1.8	34	12	1	425			1			1			
197	U5	402+50	406+75												10				425		1		1	1	1		TIE TO U4 STA. 406+75
197	U6	404+50	410+50					410+50	CL	0	CB-8	872.31	873.56		20				600		1	1					
197	U7	406+75	411+00	411+00	LT	84	871.12							1.8	35	12	1	425			1			1			
197	U8	406+75	411+00												10				425		1		1	1	1		TIE TO U7 STA. 411+00
197	U9	400+50	402+50	402+50	RT	75	879.09							1.8	13	12	1	200			1			1			
197	U10	400+50	402+50												10				200		1	1	1		1		TIE TO U9 STA. 402+50
197	U11	399+00	404+50					404+50	CL	0	CB-8	878.06	879.00		20				550		1			1			
197	U12	402+50	406+75	406+75	RT	78	874.50							1.8	17	12	1	425			1			1			
197	U13	402+50	406+75												10				425		1	1	1		1		TIE TO U12 STA. 406+75
197	U14	404+50	410+50					410+50	CL	0.00	CB-8	872.31	873.56		20				600		1			1			
197	U15	406+75	411+00	411+00	RT	79	868.65							1.8	18	12	1	425			1			1			
197	U16	406+75	411+00												10				425		1		1	1	1		TIE TO U15 STA. 411+00
199	U1	411+00	415+05	415+05	LT	76	869.29							1.8	14	12	1	220		185	1	1					LOW POINT STA. 415+05; STA. 413+20 EL. 869.53, STA. 415+05 EL. 869.53 (SLOPE=0.00%)
199	U2	411+00	415+05												10				220	185	1	1	1		1		LOW POINT STA. 415+05; TIE TO U1 STA. 415+05
199	U3	410+50	415+05					415+05	CL	0	CB-8	867.94	869.73		20				455		1	1					LOW POINT STA. 415+05
199	U4	415+05	419+00															210		185	1						LOW POINT STA. 415+05; TIE TO U1 STA. 415+05; STA. 415+05 EL. 869.53, STA, 416+90 EL. 869.53 (SLOPE=0.00%)
199	U5	415+05	419+00															210	185		1						LOW POINT STA. 415+05; TIE TO U4 STA. 415+05
199	U6	415+05	416+00															95			1						LOW POINT STA. 415+05; TIE TO U3 STA. 415+05
199	U7	419+00	426+21	419+00	LT	108	865.35							1.8	48	12	1	721			1			1			
199	U8	419+00	426+21												10				721		1		1	1	1		TIE TO U7 STA. 419+00
199	U9	420+00	426+69					420+00	CL	0	CB-8	874.34	875.46		20				669		1			1			
199	U10	411+00	415+02	415+03	RT	81	867.69							1.8	20	12	1	402			1	1					LOW POINT STA. 415+05
199	U11	411+00	415+02												10				402		1	1	1		1		LOW POINT STA. 415+05; TIE TO U10 STA. 415+02
199	U12	410+50	415+05					415+05	CL	0	CB-8	867.94	869.73		20				455		1	1					
199	U13	415+08	419+00	415+08	RT	81	867.69							1.8	20	12	1	392			1			1			LOW POINT STA. 415+05
199	U14	415+08	419+00												10				392		1		1	1	1		LOW POINT STA. 415+05
199	U15	415+05	416+00															95			1						LOW POINT STA. 415+05; TIE TO U12 STA. 415+05
199	U16	419+00	421+00	419+00	RT	88	864.75							1.8	28	12	1	200			1			1			
199	U17	419+00	421+00												10				200		1		1	1	1		TIE TO U16 STA. 419+00
199	U18	420+00	426+73					420+00	CL	0	CB-8	874.34	875.46		20				673		1			1			
199	U19	423+00	426+21	423+00	RT	118	857.08							1.8	62	12	1	321			1			1			
199	U20	423+00	426+21												10				321		1		1	1	1		TIE TO U19 STA. 423+00
199	U21	416+00	420+00					416+00	CL	0.00	CB-8	868.55	869.95		20				400		1			1			
199	U22	416+00	420+00					416+00	CL	0.00	CB-8	868.55	869.95		20				400		1			1			
TOTALS CARRIED TO UNDERDRAIN SUB-SUMMARY SHEET 168														25.2	741	168	14	6,022	12,720	740	44	14	14	27	14		

CALCULATED SJG CHECKED ACF

UNDERDRAIN SUB-SUMMARY - I-75

ALL-75-5.53

157
1224

J:\Projects\ALL\76691\drainage\sheets\76691DS005.dgn 11-SEP-2012 8:52PM reddenj

SHEET NUMBER	REFERENCE NUMBER	STATIONING		OUTLETS TO DITCHES				OUTLETS TO CB'S OR INLETS						601	603	603	604	605	605	605	BENDS & BRANCHES (for information only)						REMARKS
		FROM	TO	STATION	SIDE	OFFSET AT DITCH	UNDERDRAIN INVERT ELEV. AT DITCH	STATION	SIDE	OFFSET	TYPE	DRAINAGE STRUCTURE BOTTOM ELEV.	UNDERDRAIN INVERT ELEV.	TIED CONCRETE BLOCK MAT, TYPE 1	6" CONDUIT, TYPE F FOR UNDERDRAIN OUTLETS	6" CONDUIT, TYPE B FOR UNDERDRAIN OUTLETS	PRECAST REINFORCED CONCRETE OUTLET	6" SHALLOW PIPE UNDERDRAINS	6" BASE PIPE UNDERDRAINS	6" UNCLASSIFIED PIPE UNDERDRAINS	CAP	TEE	45° WYE	90° BEND	45° BEND		
						FT	FT			FT		FT	FT	SQ YD	FT	FT	EA	FT	FT	FT	EA	EA	EA	EA	EA		
201	U1	426+27	426+66					426+25	LT	63.50	CB-3A	881.90	884.40						37		1						
201	U2	426+27	426+67					426+25	LT	63.50	CB-3A	881.90	883.76			14			40		1			1			
201	U3	429+34	431+50					431+50	LT	63.50	CB-3	879.47	881.96			14		216			1			1			
201	U4	429+33	431+50					431+50	LT	63.50	CB-3	879.47	882.49						217		1						
201	U5	429+36	433+25					433+25	LT	7.50	MH-3	877.32	880.90		12				389		1			1			
201	U6	431+53	436+00					436+00	LT	63.50	CB-3	872.86	875.80			14		447			1			1			
201	U7	431+53	436+00					436+00	LT	63.50	CB-3	872.86	876.38						447		1						
201	U8	433+25	436+00					436+00	CL	7.50	MH-3	872.14	876.98		12				275		1			1			
201	U9	436+00	436+85					436+85	LT	63.50	CB-3	868.40	875.63			14		85			1	1					LOW POINT STA. 436+85
201	U10	436+00	436+85					436+85	LT	63.50	CB-3	868.40	876.21						85		1						LOW POINT STA. 436+85
201	U11	436+85	437+35															50			1						LOW POINT STA. 436+85; TIE TO U9 STA. 436+85
201	U12	436+85	437+30					436+85	LT	63.50	CB-3	871.55	875.63						45		1						LOW POINT STA. 436+85
201	U13	436+85	437+35					436+85	CL	7.50	MH-3	870.50	876.85		12				50		1	1					LOW POINT STA. 436+85
201	U14	436+00	436+85																85		1						LOW POINT STA. 436+85; TIE TO U13 STA. 436+85
201	U15	426+25	426+76					426+25	RT	63.50	CB-3A	880.70	884.52						51		1						
201	U16	426+25	426+75					426+25	RT	63.50	CB-3A	880.70	884.07			14		50			1			1			
201	U17	429+42	431+50					431+50	RT	63.50	CB-3	879.47	881.96			14		208			1			1			
201	U18	429+43	431+50					431+50	RT	63.50	CB-3	879.47	882.49						207		1						
201	U19	429+40	433+25					433+25	RT	0.00	CB-8	877.65	880.09		20				385		1			1			
201	U20	431+50	436+00					436+00	RT	63.50	CB-3	872.86	875.80			14		450			1			1			
201	U21	431+50	436+00					436+00	RT	63.50	CB-3	872.86	876.33						450		1						
201	U22	433+25	436+00					436+00	CL	0	CB-8	872.45	876.50		20				275		1			1			
201	U23	436+00	436+85					436+85	RT	63.50	CB-3	871.55	875.63			14		85			1	1					LOW POINT STA. 436+85
201	U24	436+00	436+85					436+85	RT	63.50	CB-3	871.55	876.21						85		1						LOW POINT STA. 436+85
201	U25	436+85	437+35															50			1						LOW POINT STA. 436+85; TIE TO U23 STA. 436+85
201	U26	436+85	437+30					436+85	RT	63.50	CB-3	871.55	875.63						45		1						LOW POINT STA. 436+85
201	U27	436+85	437+35					436+85	CL	0	CB-8	870.95	876.77		20				50		1	1					LOW POINT STA. 436+85;
201	U28	436+00	436+85																85		1						LOW POINT STA. 436+85; TIE TO U27 STA 436+85
205	U1	439+27	439+50					439+50	CL	0	CB-8	875.55	876.80		20					23	1	1					STA. 439+37 EL. 877.29, STA. 439+50 EL. 877.29 (SLOPE = 0.00%)
205	U2	439+50	447+50																800		1						TIE TO U1 STA. 439+50
205	U3	439+27	439+50					439+50	LT	85.74	CB-8	863.22	872.95		20	12				23	1	1					STA. 439+37 EL. 876.09, STA. 439+50 EL. 876.09 (SLOPE = 0.00%)
205	U4	439+27	439+50												10					23	1	1	1		1		TIE TO U3 STA. 439+50
205	U5	439+50	444+00															450			1						TIE TO U3 STA. 439+50
205	U6	439+50	444+00																450		1						TIE TO U4 STA. 439+50
205	U7	444+00	447+48	444+00	LT	91	876.62							1.8	18	12	1	348			1			1			
205	U8	444+00	447+48												10				348		1		1	1	1		TIE TO U7 STA. 444+00
205	U9	447+50	455+25					447+50	CL	0	CB-8	878.18	879.37		20				775		1			1			
205	U10	447+48	453+91	447+48	LT	100	877.50							1.8	20	12	1	619		24	1			1			HIGH POINT ON S.R. 309 RAMP 'D' STA. 453+68; STA. 453+91 EL. 880.27, STA. 453+68 EL. 880.27 (SLOPE=0.00%)
205	U11	447+48	450+67												10				319		1		1	1	1		TIE TO U10 STA. 447+48
205	U12	439+27	439+50					439+50	CL	0	CB-8	875.55	876.80		20					23	1	1					STA. 439+27 EL. 877.29, STA. 439+50 EL. 877.29 (SLOPE = 0.00%)
205	U13	439+27	439+50					439+50	RT	95.41	CB=8	863.42	872.40		34	12				23	1	1					STA. 439+27 EL. 876.14, STA. 439+50 EL. 876.14 (SLOPE = 0.00%)
205	U14	439+27	439+50												10					23	1	1	1		1		TIE TO U13 STA. 439+50
205	U15	439+50	447+50																800		1						TIE TO U12 STA. 439+50
205	U16	439+50	449+50															1000			1						TIE TO U13 STA. 439+50
205	U17	439+50	449+50																1000		1						TIE TO U14 STA. 439+50
205	U18	447+50	455+25					447+50	CL	0	CB-8	878.18	879.37		20				775		1			1			

SHEET NUMBER	REFERENCE NUMBER	STATIONING		OUTLETS TO DITCHES				OUTLETS TO CB'S OR INLETS						601	603	603	604	605	605	605	BENDS & BRANCHES (for information only)						REMARKS
		FROM	TO	STATION	SIDE	OFFSET AT DITCH	UNDERDRAIN INVERT ELEV. AT DITCH	STATION	SIDE	OFFSET	TYPE	DRAINAGE STRUCTURE BOTTOM ELEV.	UNDERDRAIN INVERT ELEV.	TIED CONCRETE BLOCK MAT, TYPE 1	6" CONDUIT, TYPE F FOR UNDERDRAIN OUTLETS	6" CONDUIT, TYPE B FOR UNDERDRAIN OUTLETS	PRECAST REINFORCED CONCRETE OUTLET	6" SHALLOW PIPE UNDERDRAINS	6" BASE PIPE UNDERDRAINS	6" UNCLASSIFIED PIPE UNDERDRAINS	CAP	TEE	45° WYE	90° BEND	45° BEND		
						FT	FT			FT		FT	FT	SQ YD	FT	FT	EA	FT	FT	FT	EA	EA	EA	EA	EA		
208	U1	449+50	451+50	451+50	RT	94	879.07							1.8	23	8	1			200	1	1					
																											STA. 449+50 EL. 879.47, STA. 451+50 EL. 879.47 (SLOPE=0.00%)
208	U2	449+50	451+50																	200	1	1	1		1		TIE TO U1 STA. 451+50
208	U3	453+91	460+46	453+91	LT	141	871.03							1.8	47	45	1	655			1	1		1			
208	U4	453+91	460+46												10				655		1		1	1	1		TIE TO U3 STA. 453+91
208	U5	455+25	461+12					455+25	CL	0	CB-8	881.50	885.46		20				587		1			1			
208	U6	460+50	461+05					460+50	LT	63.50	CB-3A	891.65	894.68			14		55			1			1			
208	U7	460+50	461+02					460+50	LT	63.50	CB-3A	891.65	895.35						52		1						
208	U8	455+25	461+20					455+25	CL	0	CB-8	881.50	885.46		20				595		1			1			
208	U9	455+05	460+46	455+05	RT	138	874.83							1.8	43	47		541			1	1		1			
208	U10	455+05	460+46												10				541		1		1	1	1		TIE TO U9 STA. 455+05
208	U11	460+50	461+27					460+50	RT	63.50	CB-3A	890.75	894.68			14		77			1			1			
208	U12	460+50	461+30					460+50	RT	63.50	CB-3A	890.75	895.25						80		1						
208	U13	451+50	455+05															355			1						TIE TIE U1 STA. 451+50
208	U14	451+50	455+05																355		1						TIE TIE U2 STA. 451+50
208	U15	455+05	456+31															126			1						HIGH POINT STA. 456+31; TIE TO U9 STA. 455+05
211	U1	462+95	471+50	471+50	LT	138	883.34							1.8	42	47	1	832		23	1	1		1			HIGH POINT STA. 463+18; STA. 462+95 EL. 896.16. STA. 463+18 EL. 896.16 (SLOPE=0.00%)
211	U2	462+92	471+45												10				832	26	1		1	1	1		HIGH POINT STA. 463+18; TIE TO U1 STA. 471+50
211	U3	463+01	469+00					469+00	CL	0	CB-8	887.00	892.53		20				599		1			1			HIGH POINT STA. 463+18
211	U4	463+16	471+20	471+20	RT	136	883.26							1.8	41	45	1	802		2	1			1			HIGH POINT STA. 463+16; STA. 462+95 EL. 896.16. STA. 463+18 EL. 896.16 (SLOPE=0.00%)
211	U5	463+19	471+20												10				801		1		1	1	1		HIGH POINT STA. 463+18; TIE TO U4 STA. 471+20
211	U6	463+10	469+00					469+00	CL	0	CB-8	891.28	892.53		20				620		1			1			HIGH POINT STA. 463+18
211	U7	471+50	471+98																48		1						TIE TO U1 STA. 471+50
211	U8	471+50	471+98																48		1		1	1	1		TIE TO U1 STA. 471+50
213	U1	471+98	476+00	476+00	LT	93	885.85							1.8	23	8	1	402			1			1			HIGH POINT S.R. 81 'F' STA. 471+98
213	U2	471+98	476+00												10				402		1		1	1	1		TIE TO U1 STA. 476+00
213	U3	469+00	477+00					477+00	CL	0	CB-8	885.68	886.80		20				800		1			1			
213	U4	476+00	481+00	481+00	LT	80	882.68							1.8	20	12	1	500			1			1			
213	U5	476+00	481+00												10				500		1		1	1	1		TIE TO U4 STA. 481+00
213	U6	477+00	485+00					485+00	CL	0	CB-8	879.92	881.10		20				800		1			1			
213	U7	481+00	484+95	484+95	LT	82	879.25							1.8	23	12	1	395			1			1			
213	U8	481+00	484+95												10				395		1		1	1	1		TIE TO U7 STA. 484+95
213	U9	471+20	476+95	476+95	RT	100	885.00							1.8	12	12	1	575			1			1			HIGH POINT S.R. 81 'B' STA. 471+09
213	U10	473+83	476+95												10				312		1		1	1	1		TIE TO U9 STA. 476+00
213	U11	469+00	477+00					477+00	CL	0	CB-8	885.68	886.80		20				800		1			1			
213	U12	477+03	485+00					485+00	CL	0	CB-8	879.92	880.03		20	33		797			1	1					
213	U13	477+03	485+00													10			797		1	1	1		1		TIE TO U12 STA. 485+00
213	U14	477+00	485+00					485+00	CL	0	CB-8	879.92	880.03						800		1	1					TIE TO U12 STA. 485+00
TOTALS CARRIED TO UNDERDRAIN SUB-SUMMARY SHEET 168														16.2	514	307	8	6,112	11,419	451	37	8	11	26	11		

CALCULATED SJG CHECKED ACF

UNDERDRAIN SUB-SUMMARY - I-75

ALL-75-5.53

159
1224

J:\Projects\ALL\76691\drainage\sheets\76691DS007.dgn 11-SEP-2012 8:52PM reddenj

SHEET NUMBER	REFERENCE NUMBER	STATIONING		OUTLETS TO DITCHES				OUTLETS TO CB'S OR INLETS						601	603	603	604	605	605	605	BENDS & BRANCHES (for information only)						REMARKS
		FROM	TO	STATION	SIDE	OFFSET AT DITCH	UNDERDRAIN INVERT ELEV. AT DITCH	STATION	SIDE	OFFSET	TYPE	DRAINAGE STRUCTURE BOTTOM ELEV.	UNDERDRAIN INVERT ELEV.	TIED CONCRETE BLOCK MAT, TYPE 1	6" CONDUIT, TYPE F FOR UNDERDRAIN OUTLETS	6" CONDUIT, TYPE B FOR UNDERDRAIN OUTLETS	PRECAST REINFORCED CONCRETE OUTLET	6" SHALLOW PIPE UNDERDRAINS	6" BASE PIPE UNDERDRAINS	6" UNCLASSIFIED PIPE UNDERDRAINS	CAP	TEE	45° WYE	90° BEND	45° BEND	CROSS	
						FT	FT			FT		FT	FT	SQ YD	FT	FT	EA	FT	FT	FT	EA	EA	EA	EA	EA	EA	
215	U1	485+00	491+00	491+00	LT	87	875.35							1.8	25	12	1	600			1			1			
215	U2	485+00	491+00												10				600		1		1	1	1		TIE TO U1 STA. 491+00
215	U3	485+00	491+50					491+50	CL	0	CB-8	875.03	876.63		20				650		1			1			
215	U4	491+00	496+00	496+00	LT	92	870.30							1.8	31	12	1	500			1			1			
215	U5	491+00	496+00												10				500		1		1	1	1		TIE TO U4 STA. 496+00
215	U6	491+50	498+00					498+00	CL	0	CB-8	868.25	869.91		20				650		1			1			
215	U7	485+00	492+50	492+50	RT	73	873.91							1.8	12	12	1	675		75	1			1			STA. 491+75 EL. 873.91, STA. 492+50 EL. 873.91 (SLOPE=0.00%)
215	U8	485+00	492+50												10				675	75	1		1	1	1		TIE TO U7 STA. 492+50
215	U9	485+00	491+50					491+50	CL	0	CB-8	875.03	875.79		20				650		1			1			
215	U10	492+50	496+00	496+00	RT	80	869.95							1.8	19	12	1	350			1			1			
215	U11	492+50	496+00												10				350		1		1	1	1		TIE TO U10 STA. 496+00
215	U12	491+50	498+00					498+00	CL	0	CB-8	869.63	869.91		20				650		1			1			
215	U13	496+00	499+50	499+50	LT	107	865.40							1.8	46	12	1	350			1			1			
215	U14	496+00	499+50												10				350		1		1	1	1		TIE TO U13 STA. 499+50
215	U15	496+00	498+40	498+40	RT	92	865.64							1.8	31	12	1	240			1			1			
215	U16	496+00	498+40												10				240		1		1	1	1		TIE TO U15 STA. 498+40
217	U1	498+00	501+25					501+25	CL	0	CB-8	867.75	869.25		20				325		1			1			
217	U2	499+50	502+74	502+74	LT	114	862.69							1.8	54	12	1	324			1	1					LOW POINT STA 502+74
217	U3	499+50	502+74												10				324		1	1	1		1		LOW POINT STA 502+74; TIE TO U2 STA. 502+74
217	U4	501+25	502+74					502+74	CL	0	CB-8	866.75	868.82		20				149		1	1					LOW POINT STA 502+74
217	U5	502+74	504+50																176		1						LOW POINT STA 502+74; TIE TO U4 STA. 502+74
217	U6	502+74	507+50															476			1						LOW POINT STA 502+74; TIE TO U2 STA. 502+74
217	U7	502+74	507+50																476		1						LOW POINT STA 502+74; TIE TO U3 STA. 502+74
217	U8	504+50	510+00					504+50	CL	0	CB-8	867.00	869.31		20				550		1			1			
217	U9	507+50	512+00	507+50	LT	101	867.76							1.8	40	12	1	450			1			1			
217	U10	507+50	512+00												10				450		1	1	1		1		TIE TO U9 STA. 507+50
217	U11	510+00	518+00					510+00	CL	0	CB-8	872.00	873.18		20				800		1			1			
217	U12	512+00	520+00	512+00	LT	84	875.82							1.8	23	12	1	800			1			1			
217	U13	512+00	520+00												10				800		1		1	1	1		TIE TO U12 STA. 512+00
217	U14	498+00	501+25					501+25	CL	0	CB-8	867.75	869.25		20				325		1			1			
217	U15	498+40	502+74	502+74	RT	80	866.67							1.8	19	12	1	434			1	1					LOW POINT STA 502+74
217	U16	498+40	502+74												10				434		1	1	1		1		LOW POINT STA 502+74; TIE TO U15 STA. 502+74
217	U17	501+25	502+74					502+74	CL	0	CB-8	866.75	868.82		20				149		1	1					LOW POINT STA 502+74
217	U18	502+74	504+50																176		1						LOW POINT STA 502+74; TIE TO U18 STA. 502+74
217	U19	502+74	512+50															976			1						LOW POINT STA 502+74; TIE TO U15 STA. 502+74
217	U20	502+74	512+50																976		1						LOW POINT STA 502+74; TIE TO U16 STA. 502+74
217	U21	504+50	510+00					504+50	CL	0	CB-8	867.00	869.31		20				550		1			1			
217	U22	510+00	518+00					510+00	CL	0	CB-8	872.00	873.18		20				800		1			1			
219	U1	512+50	516+00	516+00	RT	74	873.93							1.8	12	12	1	250		100	1			1			STA. 512+50 EL. 873.93, STA. 513+50 EL. 873.93 (SLOPE=0.00%)
219	U2	512+50	516+00												10				250	100	1		1	1	1		TIE TO U1 STA. 516+00
219	U3	518+00	520+00					518+00	CL	0	CB-8	877.14	878.21		20				200		1			1			
219	U4	516+00	520+00	516+00	RT	80	875.75							1.8	33	12	1	400			1			1			
219	U5	516+00	520+00												10				400		1		1	1	1		TIE TO U4 STA. 516+00
219	U6	518+00	520+00					518+00	CL	0	CB-8	877.14	878.21		20				200		1			1			
TOTALS CARRIED TO UNDERDRAIN SUB-SUMMARY SHEET 168														22	745	144	12	6,825	13,825	350	44	7	12	31	12	0	

CALCULATED SJG CHECKED ACF

UNDERDRAIN SUB-SUMMARY - I-75

ALL-75-5.53

160
1224

J:\Projects\ALL\76691\drainage\sheets\76691DS008.dgn 11-SEP-2012 8:52PM reddenj

SHEET NUMBER	REFERENCE NUMBER	STATIONING		OUTLETS TO DITCHES				OUTLETS TO CB'S OR INLETS						601	603	603	604	605	605	605	BENDS & BRANCHES (for information only)						REMARKS
		FROM	TO	STATION	SIDE	OFFSET AT DITCH	UNDERDRAIN INVERT ELEV. AT DITCH	STATION	SIDE	OFFSET	TYPE	DRAINAGE STRUCTURE BOTTOM ELEV.	UNDERDRAIN INVERT ELEV.	TIED CONCRETE BLOCK MAT, TYPE 1	6" CONDUIT, TYPE F FOR UNDERDRAIN OUTLETS	6" CONDUIT, TYPE B FOR UNDERDRAIN OUTLETS	PRECAST REINFORCED CONCRETE OUTLET	6" SHALLOW PIPE UNDERDRAINS	6" BASE PIPE UNDERDRAINS	6" UNCLASSIFIED PIPE UNDERDRAINS	CAP	TEE	45° WYE	90° BEND	45° BEND		
						FT	FT			FT		FT	FT	SQ YD	FT	FT	EA	FT	FT	FT	EA	EA	EA	EA	EA		
FOURTH STREET RAMP A																											
367	U1	308+31	310+02	310+02	RT	28	891.78							1.8	20	8	1	171			1	1					
367	U2	308+26	310+02												10				176		1		1	1	1		TIE TO U1 STA. 310+02
367	U3	310+02	312+83															281									TIE TO U1 STA. 310+02
367	U4	313+00	317+23	313+00	RT	31	892.53							1.8	25	6	1	423			1			1			
367	U5	317+23	317+65					317+65	LT	19.00	CB-3A	895.76	897.79							42	1						STA. 317+23 EL. 897.79, STA. 317+65 EL. 897.79 (SLOPE=0.00%)
367	U6	317+65	318+46					317+65	LT	19.00	CB-3A	895.76	897.79					81			1						
367	U7	318+50	321+21					318+50	LT	19.00	CB-3A	896.88	897.82					271			1						
367	U8	321+00	321+44	321+00	RT	29	901.25							1.8	16		1		104		1			1			HIGH POINT STA. 321+45; STA. 321+45 EL. 901.70, STA. 321+00 EL. 901.21 (SLOPE= 0.98%)
FOURTH STREET RAMP B																											
369	U1	309+67	310+18	310+18	RT	13	901.98							1.8	13		1		102		1			1			
369	U2	310+18	314+40	314+40	RT	23	895.50							1.8	17	6	1	422			1			1			
369	U3	314+40	317+61	317+61	RT	17	895.39							1.8	11	6	1		321		1	1					
369	U4	317+61	319+53																192		1						TIE TO U3 STA. 317+61
FOURTH STREET RAMP C																											
371	U1	321+17	326+50	326+50	LT	19	894.83							1.8	13	6	1	58		475	1	1					STA. 321+75 EL. 894.83, STA. 326+50 EL. 894.83 (SLOPE = 0.00%).
371	U2	326+50	330+52															247		155	1						TIE TO U1 STA. 326+50; STA. 328+05 EL. 894.83, STA. 326+50 EL. 894.83 (SLOPE=0.00%)
371	U3	330+51	331+00	330+51	LT	42	893.58							1.8	36		1		80		1			1			
FOURTH STREET RAMP D																											
372	U1	318+49	319+00	319+00	LT	49	892.04							1.8	43		1			92	1			1			
372	U2	318+97	322+50					322+50	RT	19.00	CB-3A	893.57	895.87					353			1			1			STA. 318+45 EL. 901.09, STA. 319+00 EL. 900.96 (SLOPE=0.25%)
372	U3	322+50	323+20					323+20	RT	19.00	CB-3A	892.89	895.75					66			1						
372	U4	323+24	325+50	325+50	RT	38	895.05							1.8	23	3	1	226			1			1			
372	U5	323+88	326+25	326+25	LT	22	893.39							1.8	16	6	1	237			1			1			
372	U6	326+25	329+92	329+92	LT	30	890.10											368			1						TIE TO U1 STA. 329+92 FROM I-75.
TOTALS CARRIED TO UNDERDRAIN SUB-SUMMARY SHEET 168														19.8	243	41	11	3,204	975	764	20	3	1	10	1		

CALCULATED SJG CHECKED ACF

UNDERDRAIN SUB-SUMMARY - FOURTH ST RAMPS

ALL-75-5.53

161
1224

J:\Projects\ALL\76691\drainage\sheets\76691DS009.dgn 11-SEP-2012 8:52PM reddenj

UNDERDRAIN SUB-SUMMARY - SR 309

CALCULATED SJG CHECKED ACF

SHEET NUMBER	REFERENCE NUMBER	STATIONING		OUTLETS TO DITCHES				OUTLETS TO CB'S OR INLETS						601	603	603	604	605	605		BENDS & BRANCHES (for information only)						REMARKS
		FROM	TO	STATION	SIDE	OFFSET AT DITCH	UNDERDRAIN INVERT ELEV. AT DITCH	STATION	SIDE	OFFSET	TYPE	DRAINAGE STRUCTURE BOTTOM ELEV.	UNDERDRAIN INVERT ELEV.	TIED CONCRETE BLOCK MAT, TYPE 1	6" CONDUIT, TYPE F FOR UNDERDRAIN OUTLETS	6" CONDUIT, TYPE B FOR UNDERDRAIN OUTLETS	PRECAST REINFORCED CONCRETE OUTLET	6" BASE PIPE UNDERDRAINS	6" UNCLASSIFIED PIPE UNDERDRAINS		CAP	TEE		90° BEND	45° BEND		
						FT	FT			FT		FT	FT	SQ YD	FT	FT	EA	FT	FT		EA	EA		EA	EA		
399	U1	887+20	887+95					887+95	RT	39.50	CB-3	879.95	882.65					80			1						
402	U1	887+44	889+65					889+65	LT	29.50	CB-3A	878.00	880.36					221			1						
402	U2	889+65	892+00					892+00	LT	33.21	CB-3A	875.37	877.17					235			1						
402	U3	892+00	892+58					892+58	LT	36.76	CB-3	876.07	876.90					58			1						
402	U4	892+58	892+92					892+58	LT	36.76	CB-3	876.07	876.90					34			1						
402	U5	887+98	891+46					891+46	RT	45.28	CB-3A	874.50	877.57					347			1						
402	U6	891+46	892+10					892+10	RT	47.63	CB-3A	876.27	876.87					64			1						
402	U7	892+10	892+61					892+61	RT	52.71	CB-3A	875.75	877.14						51		1						USE CONSTANT DEPTH OF 12"
402	U8	371+00	894+03	371+00	LT	38.00								1.8	22	3	1	48	50		1	1					USE CONSTANT DEPTH OF 12"
402	U9	369+10	893+63					369+10	RT	19.00	CB-3A	871.20	876.22					74			1						
402	U10	889+00	892+58					892+58	LT	36.76	CB-3	876.07	876.90			27		358			1	1					
402	U11	889+00	892+10					892+10	RT	47.63	CB-3A	876.27	876.87			30		310			1	1					
402	U12	892+58	893+02															44			1						TIE INTO U10 AT STA. 892+58
402	U13	892+96	896+62					892+61	RT	52.71	CB-3A	875.75	876.64			45		366			1				1		
402	U14	892+10	892+63					892+10	RT	47.63	CB-3A	876.27	876.87			25		53			1						TIE INTO U11 AT STA. 892+10
402	U15	893+36	894+03					894+03	LT	38.00	CB-3A	876.35	876.85			25			67		1	1					STA. 893+36, EL 877.64, STA. 894+03, EL. 876.85 (SLOPE=2.9%)
406	U1	894+03	895+25					894+03	LT	38.00	CB-3A	876.35	876.85					122			1						
406	U2	895+25	896+62					895+25	LT	38.00	CB-3A	877.02	877.52					137			1						
406	U3	896+62	898+60					896+62	LT	38.00	CB-3A	877.78	878.26					198			1						
406	U4	893+63	894+60					893+63	RT	50.00	CB-3A	876.43	877.00					97			1						
406	U5	894+60	895+25					894+60	RT	50.00	CB-3A	874.27	877.17					65			1						
406	U6	895+25	896+62					895+25	RT	50.00	CB-3A	876.83	877.33					137			1						
406	U7	896+62	898+68					896+62	RT	50.00	CB-3A	877.59	878.26					206			1						
406	U8	896+62	899+37					896+62	LT	38.00	CB-3A	877.78	878.26			26		275			1			1			
406	U9	896+62	900+93					896+62	RT	50.00	CB-3A	877.59	878.26			26		431			1			1			
406	U10	894+03	896+62					894+03	LT	38.00	CB-3A	876.35	876.85					259			1						TIE INTO U15 AT STA. 894+03
410	U1	898+60	370+66					370+66	LT	19.98	CB-3A	879.20	882.39					44			1						
410	U2	899+50	901+05					899+50	LT	53.15	CB-3A	881.93	884.66					155			1						
410	U3	901+05	901+80					901+05	LT	50.72	CB-3A	885.34	886.43					95			1						
410	U4	371+80	889+50					371+80	RT	17.88	CB-2-2B	880.74	882.43			10		172			1			1			
410	U5	902+05	905+45					902+05	LT	80.01	CB-3A	885.57	887.53					57			1						
410	U6	902+45	904+00					902+45	LT	49.91	CB-3A	885.63	886.82					155			1						
410	U7	899+63	900+93					899+63	RT	54.25	CB-3A	884.40	884.90					130			1						
410	U8	900+93	902+23					900+93	RT	47.64	CB-3A	885.94	886.44					130			1						
410	U9	902+23	903+23					902+23	RT	49.00	CB-3A	886.30	886.80					100			1						
410	U10	903+23	904+00					903+29	RT	46.00	CB-3A	886.51	887.01					77			1						
410	U11	899+50	901+05					899+50	LT	35.30	MH-3	879.87	885.12			16		144			1				1		
410	U12	900+93	904+00					900+93	RT	47.64	MH-3	878.64	886.77			17		307			1			1			
410	U13	901+05	902+25					901+05	LT	38.84	MH-3	880.35	886.43			14		120			1			1			
410	U14	902+45	904+00					902+45	LT	40.00	MH-3	882.18	887.16			16		155			1			1			
414	U1	903+56	904+00					903+56	LT	44.59	CB-3A	886.53	887.45					44			1						
TOTALS CARRIED TO UNDERDRAIN SUB-SUMMARY SHEET 168														2	22	280	1	6,104	168		41	4		6	2		

ALL-75-5.53

J:\Projects\ALL\7669\drainage\sheets\76691DS010.dgn 11-SEP-2012 8:52PM reddenj

SHEET NUMBER	REFERENCE NUMBER	STATIONING		OUTLETS TO DITCHES				OUTLETS TO CB'S OR INLETS						601	603	603	604	605	605	605	BENDS & BRANCHES (for information only)						REMARKS
		FROM	TO	STATION	SIDE	OFFSET AT DITCH	UNDERDRAIN INVERT ELEV. AT DITCH	STATION	SIDE	OFFSET	TYPE	DRAINAGE STRUCTURE BOTTOM ELEV.	UNDERDRAIN INVERT ELEV.	TIED CONCRETE BLOCK MAT, TYPE 1	6" CONDUIT, TYPE F FOR UNDERDRAIN OUTLETS	6" CONDUIT, TYPE B FOR UNDERDRAIN OUTLETS	PRECAST REINFORCED CONCRETE OUTLET	6" SHALLOW PIPE UNDERDRAINS	6" BASE PIPE UNDERDRAINS	6" UNCLASSIFIED PIPE UNDERDRAINS	CAP	TEE	45° WYE	90° BEND	45° BEND	30° BEND	
						FT	FT			FT		FT	FT	SQ YD	FT	FT	EA	FT	FT	FT	EA	EA	EA	EA	EA		
S.R. 309 RAMP A																											
432	U1	369+10	369+75					369+10	RT	19.00	CB-3A	871.20	874.77						74		1						
432	U2	365+59	369+75					369+10	RT	19.00	CB-3A	871.20	874.77					416			1						
432	U3	361+64	365+59	365+59	LT	36	878.53							1.8	30	6	1	395			1			1			HIGH POINT STA. 361+64
432	U4	360+13	361+64	360+13	LT	25	886.05											151			1	1					TIE TO U11 FROM MAINLINE STA. 360+13
S.R. 309 RAMP C																											
434	U1	370+26	371+00	371+00	RT	37	872.77							1.8	19	3	1		74		1	1					
434	U2	371+00	372+37															137			1						TIE TO U1 STA. 371+00
434	U3	372+37	376+62	372+37	LT	33	878.00							1.8	19	6	1	425			1			1			HIGH POINT STA. 376+62
434	U4	376+62	377+42	377+42	LT	53	876.22												80		1						HIGH POINT STA. 376+62; TIE TO U1 FROM MAINLINE STA. 377+20
S.R. 309 RAMP E																											
437	U1	370+20	370+65					370+65	LT	19.98	CB-3A	879.20	882.14						45		1						
437	U2	370+65	374+44					370+65	LT	19.98	CB-3A	879.20	879.95					315		64	1						LOW POINT STA. 371+29; STA. 371+29 EL. 880.26, STA. 370+65 EL. 879.95 (SLOPE = 0.48%)
437	U3	374+42	376+56	374+42	RT	26	880.69							1.8	20	6	1	414			1			1			HIGH POINT STA. 376+56
437	U4	376+56	378+76	378+76	RT	37	874.00											220			1			1			HIGH POINT STA. 376+56; TIE TO U19 FROM MAINLINE STA. 378+76
437	U5	378+76	381+25	381+25	RT	102	878.50							1.8	94	8	1	249			1			1			
S.R. 309 RAMP F																											
441	U1	360+35	364+34	364+34	RT	32	881.05							1.8	26	6	1	399			1			1			HIGH POINT STA. 360+35
441	U2	364+34	395+95	365+95	LT	45	880.05							1.8	24	3	1	161			1			1			
441	U3	366+05	369+60	366+05	LT	45	880.05							1.8	24	3	1	45		320	1			1			LOW POINT STA. 367+99; STA. 369+25 EL. 880.75, STA. 366+05 EL. 880.75 (SLOPE = 0.00%)
TOTALS CARRIED TO UNDERDRAIN SUB-SUMMARY SHEET 168														14.4	256	41	8	3,327	273	384	16	2	0	8	0	0	

CALCULATED SJG CHECKED ACF

UNDERDRAIN SUB-SUMMARY - SR 309 RAMPS

ALL-75-5.53

163
1224

J:\Projects\ALL\76691\drainage\sheets\76691DS011.dgn 11-SEP-2012 8:52PM reddenj

SHEET NUMBER	REFERENCE NUMBER	STATIONING		OUTLETS TO DITCHES				OUTLETS TO CB'S OR INLETS						601	603	603	604	605	605		BENDS & BRANCHES (for information only)						REMARKS
		FROM	TO	STATION	SIDE	OFFSET AT DITCH	UNDERDRAIN INVERT ELEV. AT DITCH	STATION	SIDE	OFFSET	TYPE	DRAINAGE STRUCTURE BOTTOM ELEV.	UNDERDRAIN INVERT ELEV.	TIED CONCRETE BLOCK MAT, TYPE 1	6" CONDUIT, TYPE F FOR UNDERDRAIN OUTLETS	6" CONDUIT, TYPE B FOR UNDERDRAIN OUTLETS	PRECAST REINFORCED CONCRETE OUTLET	6" SHALLOW PIPE UNDERDRAINS	6" BASE PIPE UNDERDRAINS		CAP	TEE	45° WYE	90° BEND	45° BEND	30° BEND	
						FT	FT			FT		FT	FT	SQ YD	FT	FT	EA	FT	FT		EA	EA	EA	EA	EA		
467	U1	7+00	10+12															312			1						TIE INTO U3 AT STA. 7+00
467	U2	7+00	10+12															312			1						TIE INTO U3 AT STA. 7+00
467	U3	7+00	7+00					7+00	LT	24.00	CB-2-2B	870.04	871.29		7	32						1		1			
468	U4	10+12	12+50															238			1						TIE INTO U3 AT STA. 10+12
468	U5	10+12	12+50					10+00	LT	23.31	MH-3	870.10	877.58		7	34		238			1		1	1			TIE INTO U3 AT STA. 10+12
477	U1	50+25	51+78																153		1						TIE INTO U3 AT STA. 50+25
477	U2	50+25	51+78																153		1						TIE INTO U3 AT STA. 50+25
477	U3	50+25	50+25					50+22	RT	23.18	CB-2-2B	882.42	883.25		10	28						1		1			
TOTALS CARRIED TO UNDERDRAIN SUB-SUMMARY SHEET 168															24	94		1,100	306		6	2	1	3			

CALCULATED SJG
CHECKED ACF

UNDERDRAIN SUB-SUMMARY - BRYN MAWR AVE. & WELLSELEY DR. & LOST CREEK BLVD.

ALL-75-5.53

164
1224

J:\Projects\ALL\76691\drainage\sheets\76691DS012.dgn 11-SEP-2012 8:52PM reddenj

SHEET NUMBER	REFERENCE NUMBER	STATIONING		OUTLETS TO DITCHES				OUTLETS TO CB'S OR INLETS						601	603	604	605	605	605		BENDS & BRANCHES (for information only)						REMARKS
		FROM	TO	STATION	SIDE	OFFSET AT DITCH	UNDERDRAIN INVERT ELEV. AT DITCH	STATION	SIDE	OFFSET	TYPE	DRAINAGE STRUCTURE BOTTOM ELEV.	UNDERDRAIN INVERT ELEV.	TIED CONCRETE BLOCK MAT, TYPE 1	6" CONDUIT, TYPE B FOR UNDERDRAIN OUTLETS	PRECAST REINFORCED CONCRETE OUTLET	6" SHALLOW PIPE UNDERDRAINS	6" BASE PIPE UNDERDRAINS	6" UNCLASSIFIED PIPE UNDERDRAINS		CAP	TEE	45° WYE	90° BEND	45° BEND	CROSS	
						FT	FT			FT		FT	FT	SQ YD	FT	EA	FT	FT	FT		EA	EA	EA	EA	EA	EA	
482	U1	29+05	428+34					428+34	RT	86.00	CB-3A	875.60	876.95					77			1						
482	U2	428+34	428+57					428+57	RT	135.00	CB-3A	875.85	876.75					55			1						
482	U3	428+57	429+03					429+03	RT	143.00	CB-3A	876.12	876.62					47			1						
482	U4	429+03	29+92					29+92	RT	14.22	CB-3A	875.06	875.56					125			1						
482	U5	29+05	31+25					31+25	LT	12.00	CB-3A	870.77	871.77					220			1						
482	U6	429+00	430+10					430+10	LT	26.00	CB-3A	873.86	875.45					110			1						
484	U1	430+10	433+50					433+50	LT	32.00	CB-3A	866.94	868.63					340			1						
484	U2	433+50	435+50					435+50	LT	32.00	CB-3A	866.57	867.44					200			1						
484	U3	429+00	430+10					430+10	RT	26.00	CB-3A	874.10	874.60					110			1						
484	U4	430+10	433+50					433+50	RT	32.00	CB-3A	868.13	868.63					340			1						
484	U5	433+50	434+50					434+50	RT	32.00	CB-3A	867.49	867.99					100			1						
484	U6	434+50	436+00					436+00	RT	32.00	CB-3A	866.17	867.16					150			1						
484	U7	31+25	32+25					32+25	LT	12.00	CB-3A	868.97	869.97					100			1						
484	U8	32+25	33+25					33+25	LT	12.00	CB-3A	867.93	868.92					100			1						
484	U9	33+25	35+00					35+00	LT	12.00	CB-3A	866.62	867.62					175			1						
484	U10	431+35	433+50					433+50	LT	32.00	CB-3A	866.94	868.63		25			215			1				2		
484	U11	433+56	434+50					434+50	RT	32.00	CB-3A	867.49	867.99		25			94			1				2		
484	U12	433+50	435+50					435+50	LT	32.00	CB-3A	866.57	867.44		25			200			1				2		
484	U13	434+50	436+00					436+00	RT	32.00	CB-3A	866.17	867.16		25			150			1				2		
487	U1	435+50	437+15					437+15	LT	32.00	CB-3A	863.78	866.53					165			1						
487	U2	439+38	442+75					439+38	LT	47.96	CB-3A	866.10	866.34		29			337			1					2	HIGH POINT STA. 442+75.85
487	U3	439+38	440+55					439+38	LT	47.96	CB-3A	866.10	866.34					118			1						
487	U4	436+00	437+40					437+40	RT	32.00	CB-3A	864.30	866.40					140			1						
487	U5	439+20	442+75					439+20	RT	43.00	CB-3A	866.07	866.31		23			355			1					2	HIGH POINT STA. 442+75.85
487	U6	439+20	440+75					439+20	RT	43.00	CB-3A	866.07	866.31					155			1						
487	U7	35+00	36+25					36+25	LT	12.00	CB-3A	866.09	866.59					125			1						
487	U8	36+25	37+44					37+44	LT	22.40	CB-3	864.35	865.10					119			1						
487	U9	437+39	37+44					37+44	LT	22.40	CB-3	864.35	865.10					77			1						
487	U10	439+20	39+26					39+26	LT	12.00	CB-3A	862.14	862.39					103			1						
487	U11	39+26	39+71					39+71	LT	12.00	CB-3	861.41	862.16					45			1						
487	U12	37+91	40+25					39+71	LT	12.00	CB-3	861.41	862.16					234			1						
487	U13	435+50	437+15					437+15	LT	32.00	CB-3A	863.78	866.53		25			165			1					2	
487	U14	436+00	437+40					437+40	RT	32.00	CB-3A	864.30	866.40		25			140			1					2	
487	U15	437+15	439+38					437+15	LT	32.00	CB-3A	863.78	866.53		12			223			1					2	
487	U16	437+40	439+20					437+40	RT	32.00	CB-3A	864.30	866.40		13			180			1					2	
490	U1	440+55	441+75					440+55	LT	44.00	CB-3A	861.85	867.09					120			1						
490	U2	441+75	442+86					441+75	LT	44.00	CB-3A	867.54	867.78					111			1						HIGH POINT STA. 442+75.85
490	U3	442+76	443+75					443+75	LT	38.00	CB-3A	867.66	868.00					99			1						
490	U4	443+75	445+00					445+00	LT	32.00	CB-3A	867.32	867.56					125			1						
490	U5	440+75	442+25					440+75	RT	32.00	CB-3A	864.91	867.40					150			1						HIGH POINT STA. 442+25
490	U6	442+25	443+00					443+00	RT	44.00	CB-3A	867.77	868.00					75			1						
490	U7	443+00	443+75					443+75	RT	44.00	CB-3A	866.77	867.80					75			1						
490	U8	443+75	444+50					444+50	RT	44.00	CB-3A	866.47	867.54					75			1						
490	U9	444+50	445+25					445+25	RT	44.82	CB-3A	867.03	867.27					75			1						
490	U10	40+25	41+52					40+25	LT	12.00	CB-3A	861.88	862.38					127			1						
490	U11	41+52	42+25					41+52	LT	12.00	CB-3A	862.39	862.89					73			1						
490	U12	42+25	43+25					42+25	LT	12.00	CB-3A	864.36	864.61					100			1						
490	U13	43+25	44+50					43+25	LT	12.00	CB-3A	866.76	867.01					125			1						
490	U14	44+50	45+10					44+50	LT	12.00	CB-3A	869.63	869.89					60			1						
490	U15	442+75	447+06					447+06	LT	37.97	CB-3	865.07	866.81		13			431			1					2	
490	U16	442+75	447+06					447+06	RT	50.00	CB-3	865.75	866.62		25			431			1					2	
TOTALS CARRIED TO UNDERDRAIN SUB-SUMMARY SHEET 168														0	265	0	0	7,840	0		51	0	0	0	8	16	

CALCULATED SJG CHECKED ACF

UNDERDRAIN SUB-SUMMARY - SR 81

ALL-75-5.53

J:\Projects\ALL\76691\drainage\sheets\76691DS013.dgn 11-SEP-2012 8:52PM redderj

SHEET NUMBER	REFERENCE NUMBER	STATIONING		OUTLETS TO DITCHES				OUTLETS TO CB'S OR INLETS						601	603	604	605	605	605		BENDS & BRANCHES (for information only)						REMARKS
		FROM	TO	STATION	SIDE	OFFSET AT DITCH	UNDERDRAIN INVERT ELEV. AT DITCH	STATION	SIDE	OFFSET	TYPE	DRAINAGE STRUCTURE BOTTOM ELEV.	UNDERDRAIN INVERT ELEV.	TIED CONCRETE BLOCK MAT, TYPE 1	6" CONDUIT, TYPE B FOR UNDERDRAIN OUTLETS	PRECAST REINFORCED CONCRETE OUTLET	6" SHALLOW PIPE UNDERDRAINS	6" BASE PIPE UNDERDRAINS	6" UNCLASSIFIED PIPE UNDERDRAINS		CAP	TEE	45° WYE	90° BEND	45° BEND		
						FT	FT			FT		FT	FT	SQ YD	FT	EA	FT	FT	FT		EA	EA	EA	EA	EA		
493	U1	445+00	446+50					446+50	LT	36.52	CB-3A	866.73	866.97					150			1						
493	U2	446+50	447+06					447+06	LT	37.97	CB-3	865.07	866.81					56			1						LOW POINT STA. 447+05.74
493	U3	447+06	447+75					447+06	LT	37.97	CB-3	865.07	866.81					69			1						
493	U4	448+47	448+75					448+75	LT	38.00	CB-3A	866.28	868.09						28		1						STA. 448+51 EL. 868.09, STA. 448+75 EL. 868.09 (SLOPE=0.00%)
493	U5	445+25	446+00					446+00	RT	47.04	CB-3A	866.73	866.98					75			1						
493	U6	446+00	446+50					446+50	RT	48.52	CB-3A	866.33	866.98					50			1						
493	U7	446+50	447+06					447+06	RT	50.00	CB-3	865.75	866.62					56			1						LOW POINT STA. 447+05.74
493	U8	447+06	447+50					447+06	RT	50.00	CB-3	865.75	866.62					44			1						
493	U9	448+51	448+75					448+75	RT	38.00	CB-3A	865.98	868.09						24		1						STA. 448+51 EL. 868.09, STA. 448+75 EL. 868.09 (SLOPE=0.00%)
493	U10	45+10	46+53					45+10	LT	12.00	CB-3A	870.17	870.54					143			1						
493	U11	45+36	46+40					45+63	LT	24.50	CB-3A	870.66	870.91					153			1						
493	U12	46+40	46+40					46+40	LT	54.00	CB-3A	870.89	871.14					91			1						
493	U13	448+75	449+86					448+75	LT	38.00	CB-3A	866.28	868.54					111			1						
493	U14	449+90	451+96					449+90	LT	38.00	CB-3A	868.48	870.72					206			1						
493	U15	448+75	449+61					448+75	RT	38.00	CB-3A	865.98	868.54					86			1						
493	U16	449+65	451+96					449+65	RT	38.00	CB-3A	868.04	870.25					231			1						
493	U17	447+06	448+76					447+06	LT	37.97	CB-3	865.07	866.81		13			170			1				2		
493	U18	447+06	448+76					447+06	RT	50.00	CB-3	865.75	866.62		25			170			1				2		
493	U19	448+76	452+00					448+75	LT	38.00	CB-3A	866.28	868.54		25			324			1				2		
493	U20	448+76	452+00					448+75	RT	38.00	CB-3A	865.98	868.54		25			324			1				2		
493	U21	447+68	448+10					447+67	LT	45.00	CB-3A	866.71	866.95					42			1						
496	U1	452+00	453+25					452+00	LT	38.00	CB-3A	872.50	874.76					125			1						
496	U2	454+15	456+46					454+15	LT	40.60	CB-3A	876.05	878.71					231			1						
496	U3	452+00	453+11					452+00	RT	38.00	CB-3A	872.03	874.76					111			1						
496	U4	454+15	456+46					454+15	RT	43.40	CB-3A	876.53	878.61					231			1						
496	U5	452+00	454+15					452+00	LT	38.00	CB-3A	872.50	874.76		25			215			1				2		
496	U6	452+00	454+15					452+00	RT	38.00	CB-3A	872.03	874.76		25			215			1				2		
496	U7	454+15	456+50					454+15	LT	40.60	CB-3A	876.05	878.71		27			235			1				2		
496	U8	454+15	456+50					454+15	RT	43.40	CB-3A	876.53	878.61		30			235			1				2		
499	U1	456+50	459+76					456+50	LT	33.47	CB-3A	880.84	883.46					326			1						
499	U2	459+80	461+40					459+80	LT	45.00	CB-3	884.87	889.40					160			1						
499	U3	456+50	459+96					456+50	RT	33.44	CB-3A	881.19	883.46					346			1						
499	U4	456+50	459+80					456+50	LT	33.47	CB-3A	880.84	883.46		25			330			1				2		
499	U5	456+50	460+00					456+50	RT	33.44	CB-3A	881.19	883.46		25			350			1				2		
499	U6	459+80	461+40					459+80	LT	45.00	CB-3	884.87	889.40		25			160			1				2		
501	U1	460+00	461+40					460+00	RT	32.00	CB-3	884.96	890.20					140			1						
501	U2	460+00	461+40					460+00	RT	32.00	CB-3	884.96	890.20		25			140			1				2		
TOTALS CARRIED TO UNDERDRAIN SUB-SUMMARY SHEET 168															295			5,214			25	0	0	0	24	0	

CALCULATED SJG CHECKED ACF

UNDERDRAIN SUB-SUMMARY - SR 81

ALL-75-5.53

166
1224

J:\Projects\ALL\76691\drainage\sheets\76691DS014.dgn 11-SEP-2012 8:52PM redden

SHEET NUMBER	REFERENCE NUMBER	STATIONING		OUTLETS TO DITCHES				OUTLETS TO CB'S OR INLETS						601	603	603	604	605	605	605	BENDS & BRANCHES (for information only)						REMARKS
		FROM	TO	STATION	SIDE	OFFSET AT DITCH	UNDERDRAIN INVERT ELEV. AT DITCH	STATION	SIDE	OFFSET	TYPE	DRAINAGE STRUCTURE BOTTOM ELEV.	UNDERDRAIN INVERT ELEV.	TIED CONCRETE BLOCK MAT, TYPE 1	6" CONDUIT, TYPE F FOR UNDERDRAIN OUTLETS	6" CONDUIT, TYPE B FOR UNDERDRAIN OUTLETS	PRECAST REINFORCED CONCRETE OUTLET	6" SHALLOW PIPE UNDERDRAINS	6" BASE PIPE UNDERDRAINS	6" UNCLASSIFIED PIPE UNDERDRAINS	CAP	TEE	45° WYE	90° BEND	45° BEND		
						FT	FT			FT		FT	FT	SQ YD	FT	FT	EA	FT	FT	FT	EA	EA	EA	EA	EA		
S.R. 81 RAMP B																											
530	U1	462+82	463+64	463+64	LT	100	873.20							1.8	81	3	1	82			1	1					LOW POINT STA. 463+64
530	U2	463+64	466+08															244			1						LOW POINT STA. 463+64; TIE TO U1 STA. 463+64
530	U3	466+08	471+19	466+08	RT	47	875.21							1.8	41	6	1	501		10	1			1			HIGH POINT STA. 471+09; ST.A 471+07 EL. 888.32, STA. 471+19 EL. 888.32 (SLOPE=0.00%)
S.R. 81 RAMP C																											
531	U1	456+31	459+43	459+43	RT	46	874.63							1.8	33	6	1	312			1			1			HIGH POINT STA. 456+31
531	U2	459+43	461+63	461+63	LT	95	869.80							1.8	76	3	1	220			1	1					LOW POINT STA. 461+63
531	U3	461+63	462+49															86			1						TIE TO U4 STA. 461+63
S.R. 81 RAMP D																											
532	U1	453+91	457+00	457+00	LT	36	866.02							1.8	32	6	1	309			1			1			HIGH POINT STA. 453+68
532	U2	457+00	460+46	460+46	LT	24	865.68							1.8	16	6	1	346			1			1			
532	U3	460+51	461+25	460+51	LT	24	865.68							1.8	16	6	1	97			1			1			
S.R. 81 RAMP F																											
533	U1	462+08	462+42	462+42	RT	38	865.20							1.8	19	3	1	40			1			1			LOW POINT STA. 462+60.45
533	U2	462+48	465+90	462+48	RT	38	865.20							1.8	19	3	1	342			1			1			LOW POINT STA. 462+60.45; STA. 462+48 EL. 865.39, STA. 463+30 EL. 885.39 (SLOPE=0.00%)
533	U3	465+90	469+00	465+90	LT	31	874.91							1.8	17	6	1	310			1			1			USE 24" CONSTANT DEPTH
534	U4	469+00	471+47	469+00	LT	39	881.67							1.8	33	6	1	247			1			1			HIGH POINT STA. 471+98
TOTALS CARRIED TO UNDERDRAIN SUB-SUMMARY SHEET 168														19.8	383	54	11	3,136		10	13	2		9			

CALCULATED SJG CHECKED ACF

UNDERDRAIN SUB-SUMMARY - SR 81 RAMPS

ALL-75-5.53

167
1224

J:\Projects\ALL\76691\drainage\sheets\76691DS015.dgn 11-SEP-2012 8:52PM reddenj

SHEET NUMBER	REFERENCE NUMBER	STATIONING		OUTLETS TO DITCHES				OUTLETS TO CB'S OR INLETS						601	603	603	604	605	605	605	BENDS & BRANCHES (for information only)						REMARKS
		FROM	TO	STATION	SIDE	OFFSET AT DITCH	UNDERDRAIN INVERT ELEV. AT DITCH	STATION	SIDE	OFFSET	TYPE	DRAINAGE STRUCTURE BOTTOM ELEV.	UNDERDRAIN INVERT ELEV.	TIED CONCRETE BLOCK MAT, TYPE 1	6" CONDUIT, TYPE F FOR UNDERDRAIN OUTLETS	6" CONDUIT, TYPE B FOR UNDERDRAIN OUTLETS	PRECAST REINFORCED CONCRETE OUTLET	6" SHALLOW PIPE UNDERDRAINS	6" BASE PIPE UNDERDRAINS	6" UNCLASSIFIED PIPE UNDERDRAINS	CAP	TEE	45° WYE	90° BEND	45° BEND	CROSS	
						FT	FT			FT		FT	FT	SQ YD	FT	FT	EA	FT	FT	FT	EA	EA	EA	EA	EA	EA	
559	U1	11+46	12+75					12+75	LT	26.00	CB-3A	861.04	863.73						154		1						
559	U2	12+75	13+70					13+70	LT	26.00	CB-3A	861.50	862.60						95		1						
559	U3	13+70	13+93					13+93	LT	26.00	CB-3	862.12	862.58						23		1						LOW POINT STA. 13+93
559	U4	13+93	14+58					13+93	LT	26.00	CB-3	862.12	862.58						65		1						LOW POINT STA. 13+93
559	U5	11+86	13+93					13+93	LT	26.00	CB-3	862.12	863.00		38				259		1				4		LOW POINT STA. 13+93
559	U6	13+93	14+00					13+93	LT	26.00	CB-3	862.12	863.00		38				7		1				2		LOW POINT STA. 13+93
560	U1	14+58	14+87					14+87	LT	26.00	CB-3A	861.19	862.68		29						1						HIGH POINT STA. 14+58
560	U2	14+87	15+80					14+87	LT	26.00	CB-3A	861.19	862.68							93	1						HIGH POINT STA. 14+58; STA. 14+87 EL. 862.68, STA. 15+80 EL. 862.68 (SLOPE = 0.00%).
560	U3	14+00	14+58																58		1						HIGH POINT STA. 14+58; STA. 14+87 EL. 862.68, STA. 15+80 EL. 862.68 (SLOPE = 0.00%).
560	U4	14+58	14+80					14+80	RT	26.00	CB 2-2B	858.87	863.17						22		1				2		
560	U5	14+80	15+52					14+80	RT	26.00	CB 2-2B	858.87	862.89							72	1				2		STA. 15+52 EL. 862.89, STA. 14+80 EL. 862.89 (SLOPE = 0.00%).
SUB-TOTALS THIS SHEET															105				683	165	11				10		
SUB-TOTALS FROM SHEET 153														19.8	519	112	11	4769	10133	2059	37	8	10	21	10	0	
SUB-TOTALS FROM SHEET 154														16.2	435	176	9	6818	10400	80	29	28	9	8	9	5	
SUB-TOTALS FROM SHEET 155														12.6	453	235	7	4747	8519	297	32	10	8	15	8	0	
SUB-TOTALS FROM SHEET 156														3.6	359	230	2	3350	7706	810	28	7	3	12	3	0	
SUB-TOTALS FROM SHEET 157														25.2	741	168	14	6022	12720	740	44	14	14	27	14	0	
SUB-TOTALS FROM SHEET 158														3.6	308	160	2	4058	8570	162	46	10	4	16	4	0	
SUB-TOTALS FROM SHEET 159														16.2	514	307	8	6112	11419	451	37	8	11	26	11	0	
SUB-TOTALS FROM SHEET 160														22	745	144	12	6,825	13,825	350	44	7	12	31	12	0	
SUB-TOTALS FROM SHEET 161														19.8	243	41	11	3204	975	764	20	3	1	10	1	0	
SUB-TOTALS FROM SHEET 162														2	22	280	1	0	6,104	168	41	4	0	6	2	0	
SUB-TOTALS FROM SHEET 163														14.4	256	41	8	3327	273	384	16	2	0	8	0	0	
SUB-TOTALS FROM SHEET 164														0	24	94	0	1100	306	0	6	2	1	3	0	0	
SUB-TOTALS FROM SHEET 165														0	0	265	0	0	7,840	0	51	0	0	0	8	16	
SUB-TOTALS FROM SHEET 166														0	0	295	0	0	5,214	0	25	0	0	0	24	0	
SUB-TOTALS FROM SHEET 167														19.8	383	54	11	3136	0	10	13	2	0	9	0	0	
TOTALS CARRIED TO GENERAL SUMMARY														174.6	5107	2602	96	53468	104687	6440	480	105	73	192	116	21	

CALCULATED SJG CHECKED ACF

UNDERDRAIN SUB-SUMMARY - NEUBRECHT RD

ALL-75-5.53

168
1224

J:\Projects\ALL\76691\drainage\sheets\76691DS016.dgn 11-SEP-2012 8:52PM reddenj

VEGETATED BIOFILTERS						
REF. NO.	OUTLET STATION	LENGTH	OFFSET	MINIMUM BOTTOM WIDTH REQUIRED	DEPTH (10 YR)	PROTECTIVE LINING
		FT		FT	FT	FT
VBF01	297+00	335	90′ RT	4.08	0.43	659
VBF02	297+00	258	90′ RT	4.08	0.52	659
VBF03	308+11	853	125′ RT	4.08	0.34	670 TYPE A
VBF04	308+11	1189	125′ RT	4.08	1.42	670 TYPE A
VBF05	309+42	1902	101′ LT	5.50	1.01	836 TYPE 1
VBF06	309+42	1108	101′ LT	4.08	0.081	659
VBF07	342+18	2163	95′ RT	4.08	0.58	836 TYPE 1
VBF08	342+18	262	95′ RT	4.92	0.18	659
VBF09	342+43	2143	102′ LT	4.08	0.47	836 TYPE 1
VBF10	342+43	1857	101′ LT	4.92	0.86	659
VBF11	346+00	120	83′ RT	4.08	0.11	659
VBF12	346+00	650	83′ RT	4.92	0.3	659
VBF13	366+00	1350	38′ RT	4.00	0.89	659
VBF14	366+00	438	38′ RT	4.00	0.27	659
VBF15	367+00	800	36′ LT	4.00	0.86	670 TYPE A
VBF16	375+00	205	48′ LT	4.00	0.31	659
VBF17	375+30	430	182′ LT	4.00	0.31	659
VBF18	375+30	935	182′ LT	4.00	0.86	670 TYPE A
VBF19	375+00	1534	166′ RT	4.00	0.53	670 TYPE A
VBF20	385+00	1050	84′ LT	4.08	0.87	659
VBF21	411+82	1631	97′ LT	5.53	0.98	670 TYPE A
VBF22	410+12	1362	84′ RT	4.08	2.1	659
VBF23	411+71	159	84′ RT	7.50	0.98	670 TYPE A
VBF24	423+00	1000	120′ RT	3.00	0.93	670 TYPE C
VBF25	424+00	100	120′ RT	7.50	0.29	670 TYPE A
VBF26	429+00	1622	111′ LT	4.92	1.09	670 TYPE A
VBF27	438+30	1190	85′ LT	4.08	0.36	670 TYPE C
VBF28	438+30	1120	95′ RT	4.08	0.48	670 TYPE A
VBF29	455+21	571	60′ RT	4.08	0.64	670 TYPE A

VEGETATED BIOFILTERS						
REF. NO.	OUTLET STATION	LENGTH	OFFSET	MINIMUM BOTTOM WIDTH REQUIRED	DEPTH (10 YR)	PROTECTIVE LINING
		FT		FT	FT	FT
VBF30	455+21.00	200	60′ RT	4.00	0.21	659
VBF31	455+61.00	541	46′ LT	4.92	0.35	670 TYPE A
VBF32	457+30.00	290	187′ LT	2.00	0.87	659
VBF33	460+50.00	350	54′ RT	4.00	0.33	659
VBF34	460+35.00	1120	54′ RT	2.00	0.5	670 TYPE A
VBF35	460+47.00	650	48′ RT	4.00	0.41	670 TYPE A
VBF36	437+71.00	160	90′ LT	4.00	0.36	659
VBF37	439+80.00	2200	81′ LT	4.00	1.2	659
VBF38	464+55.00	670	204′ RT	4.00	0.43	670 TYPE A
VBF39	464+65.00	750	46′ RT	2.00	0.79	659
VBF40	464+65.00	750	46′ RT	2.00	0.38	659
VBF41	498+50.00	1950	100′ RT	2.00	1.22	670 TYPE A
VBF42	498+50.00	200	100′ RT	2.00	0.26	670 TYPE A
VBF43	498+50.00	2250	121′ LT	2.00	2.26	670 TYPE A
VBF44	504+10.00	560	128′ LT	2.00	2.26	670 TYPE A
VBF45	504+10.00	1275	128′ LT	2.00	0.79	670 TYPE A
VBF46	503+85.00	335	103′ RT	2.00	0.35	659
VBF47	506+85.00	1615	103′ RT	2.00	0.76	836 TYPE 1

CALCULATED SJG
CHECKED ACF

POST CONSTRUCTION BMP SUMMARY
VEGETATED BIOFILTERS

ALL-75-5.53

169
1224

J:\Projects\ALL\76691\drainage\sheets\76691DS101.dgn 11-SEP-2012 8:52PM reddenj

EXFILTRATION TRENCHES						
REF. NO.	STATION	OFFSET	603 4" CONDUIT, TYPE B	835 EXFILTRATION TRENCH, TYPE A	835 EXFILTRATION TRENCH, TYPE B	835 EXFILTRATION TRENCH, TYPE C
		FT	FT	FT	FT	FT
EXT01	891+22.18	45	15	8		
EXT02	896+81.10	50	15	8		
EXT03	899+45.92	30	15	4		
EXT04	896+81.08	38	15	8		
EXT05	381+97.67	83	15		8	
EXT07	431+29.63	64	15		4	
EXT08	431+29.63	64	15		4	
EXT09	435+79.63	64	15		8	
EXT10	435+79.63	64	15		8	
EXT11	460+63.18	31	82	4		
EXT12	40+44.08	12	15	4		
EXT13	41+69.08	12	15	4		
EXT14	42+44.08	12	15	4		
EXT15	43+44.08	12	15	4		
EXT16	448+94.18	37	15	4		
EXT17	450+09.18	37	15	4		
EXT18	449+84.18	37	15	4		
EXT19	454+33.80	40	15	4		
EXT20	454+33.32	38	15	4		
EXT21	456+69.14	32	15	4		
EXT22	456+69.14	32	15	4		
EXT23	460+19.86	31	86	4		
TOTALS CARRIED TO THE GENERAL SUMMARY			468	80	32	0

EXFILTRATION TRENCHES						
REF. NO.	STATION	OFFSET	603 4" CONDUIT, TYPE B	835 EXFILTRATION TRENCH, TYPE A	835 EXFILTRATION TRENCH, TYPE B	835 EXFILTRATION TRENCH, TYPE C
		FT	FT	FT	FT	FT

CALCULATED ACF
CHECKED JRL

POST CONSTRUCTION BMP SUMMARY
EXFILTRATION TRENCHES

ALL-75-5.53

170
1224

J:\Projects\ALL\76691\drainage\sheets\76691DS102.dgn 11-SEP-2012 8:52PM reddenj

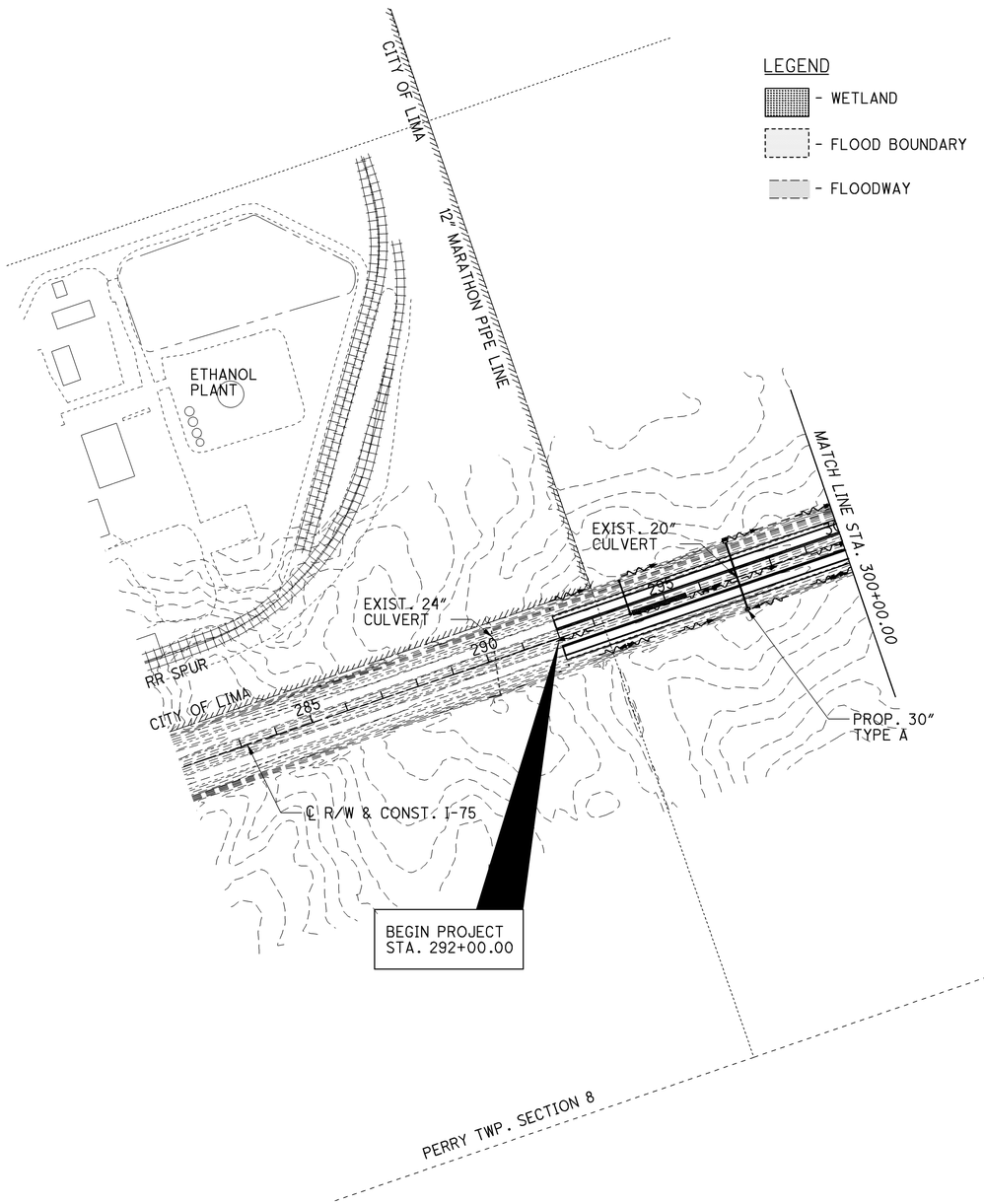

ITEM 832 LUMP STORM WATER POLLUTION PREVENTION PLAN

ITEM 832 120,000 EROSION CONTROL

INTERSECTION EQUATIONS:
STA. 102+54.27 (HANTHORN RD.) =
STA. 266+05.69 (℄ R/W & CONST. I-75)

STA. 102+81.41 (HANTHORN RD.) =
STA. 266+42.21 (℄ PROP. NORTH I-75)

STA. 104+00.00 (HANTHORN RD.) =
STA. 268+26.04 (℄ EXIST. I-75)

PROJECT SITE PLAN

ALL-75-5.53

171
1224

J:\Projects\ALL\76691\drainage\sheets\76691DE006.dgn 11-SEP-2012 8:52PM reddenj

INTERSECTION EQUATIONS:
STA. 99+83.99 (FOURTH ST.) =
STA. 10+00.00 (SERVICE RD. 1) =
STA. 10+00.00 (SERVICE RD. 2)

STA. 320+55.04 (I-75) = STA. 110+50.00 (4TH ST.)
STA. 105+07.45 (4TH ST.) = STA. 331+36.34 (RAMP 'C')
STA. 104+66.14 (4TH ST.) = STA. 318+27.70 (RAMP 'D')

STA. 115+95.23 (FOURTH ST.) =
STA. 309+52.32 (RAMP 'B'

STA. 116+11.26 (FOURTH ST.) =
STA. 10+00.00 (PATROL DR.)

STA. 116+36.65 (FOURTH ST.) =
STA. 321+85.94 (RAMP 'A')

LEGEND

- WETLAND
- FLOOD BOUNDARY
- FLOODWAY

CITY OF LIMA
CITY OF LIMA
EXIST. 15" CULVERT
PROP. 24" TYPE A
PROP. 72" TYPE A
EXIST. 20" CULVERT
PROP. 30" TYPE A
EXIST. 2-60" CULVERTS
VBF05
VBF06
EXIST. 24" CULVERT
EX. 15" CULVERT
PROP. 21" TYPE A
℄ RAMP 'D'
EXIST. 10'x5' BOX CULVERT
PROP. 24" TYPE A
VBF09
VBF10
EXIST. 30" CULVERT
MATCH LINE STA. 350+00.00
℄ RAMP 'B'
VBF01
VBF02
VBF03
VBF04
EX. 18" CULVERT
STRUCTURE NO. ALL-75-0611
℄ R/W & CONST. I-75
EXIST. 15" CULVERT
VBF07
VBF11
VBF12
VBF08
CITY OF LIMA
PROP. 10'x5' CULVERT EXTENSIONS
PROP. 42" TYPE A
℄ RAMP 'A'
PROP. 15" TYPE A
EX. 15" CULVERT
PROP. 42" TYPE A
PERRY TWP. SECTION 8
GREELY CHAPEL RD.
CITY OF LIMA
PERRY TWP. SECTION 5
PERRY TWP. SECTION 4

PROJECT DESCRIPTION:

PROJECT CONSISTS OF 4.32 MILES OF 4-LANE INTERSTATE HIGHWAY RECONSTRUCTION INCLUDING THREE INTERCHANGES AT FOURTH STREET, SR 309, AND SR 81. ALSO INCLUDED ARE VARIOUS SIDE ROAD IMPROVEMENTS. THE PROJECT UPGRADES PAVEMENT, ALIGNMENT, AND VARIOUS OTHER DEFICIENCIES.

USGS QUADRANT NO.

LONGITUDE:40°43'02"
LATITUDE:84°04'30"

* LONGITUDE AND LATITUDE TO APPROX. CENTER OF PROJECT

PROJECT DATA	
TOTAL AREA (RIGHT-OF-WAY) _____241.76 AC	RUNOFF COEFFICIENT FOR PRE- CONSTRUCTION SITE _____0.61
PROJECT EARTH DISTURBED AREA _____170.09 AC	RUNOFF COEFFICIENT FOR POST CONSTRUCTION SITE _____0.61
ESTIMATED CONTRACTOR EARTH DISTURBED AREA _____51.07 AC	SOIL AND WATER CONSERVATION MAP
NOTICE OF INTENT EARTH DISTURBED AREA _____221.16 AC	IMMEDIATE RECEIVING WATERS _____OTTAWA RIVER
IMPERVIOUS (PAVED) AREA FOR PRE- CONSTRUCTION SITE _____69.34 AC	SUBSEQUENT RECEIVING WATER _____MAUMEE RIVER
IMPERVIOUS (PAVED) AREA FOR POST CONSTRUCTION SITE _____67.61 AC	

HORIZONTAL SCALE IN FEET
0 100 200 400

PROJECT SITE PLAN

ALL-75-5.53

172
1224

J:\Projects\ALL\76691\drainage\sheets\76691DE007.dgn 11-SEP-2012 8:52PM reddenj

J:\Projects\ALL\76691\drainage\sheets\76691DE008.dgn 11-SEP-2012 8:52PM reddenj

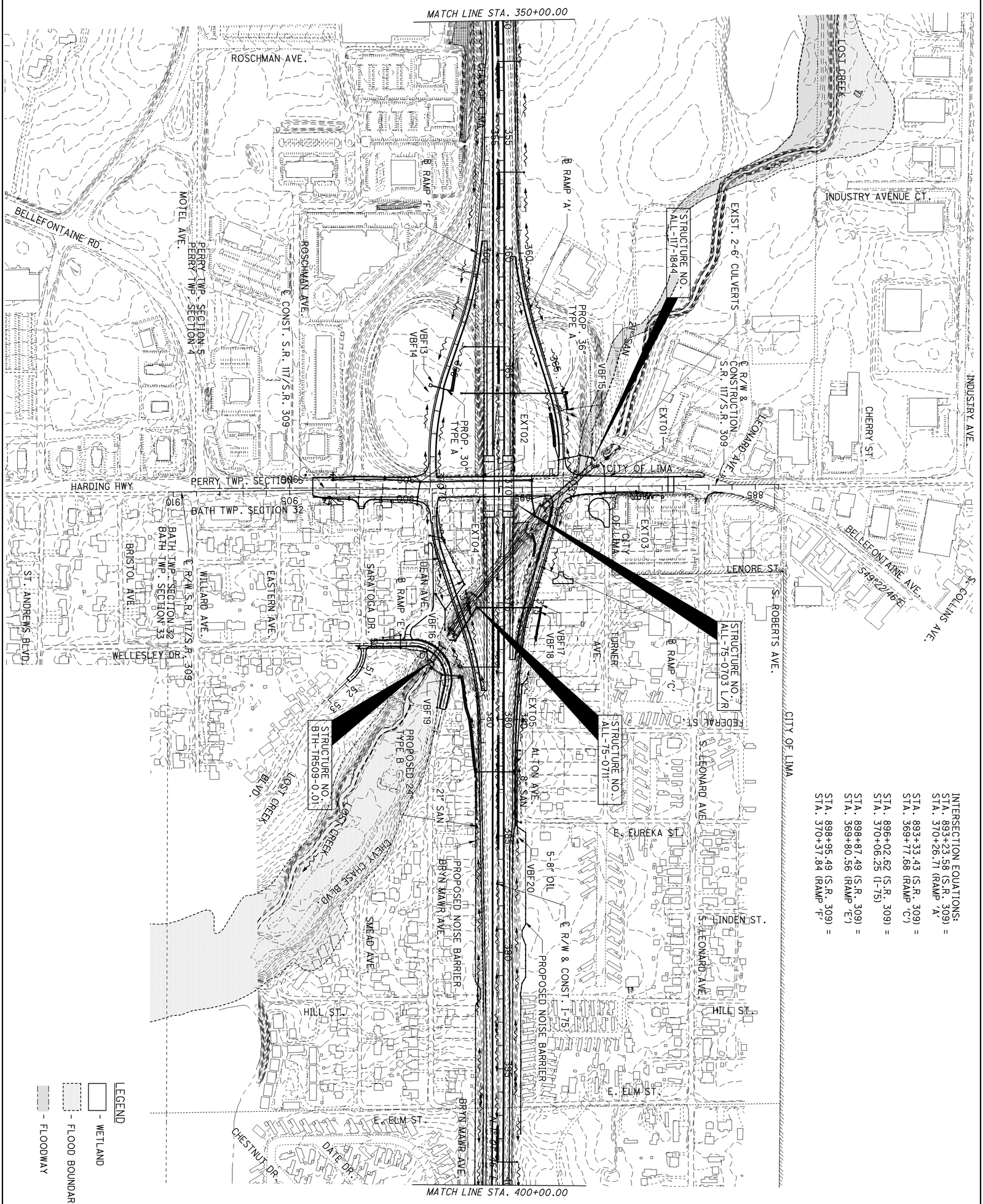

173 / 1224	ALL-75-5.53	PROJECT SITE PLAN	0 100 200 400 HORIZONTAL SCALE IN FEET

PROJECT SITE PLAN

ALL-75-5.53

174
1224

HORIZONTAL SCALE IN FEET
0 100 200 400

LEGEND
- WETLAND
- FLOOD BOUNDARY
- FLOODWAY

N. COLLINS AVE.
E. HIGH ST.
RESERVOIR RD.
CITY OF LIMA
N. ROBERTS AVE.
E. MARKET ST.
S. LEONARD AVE.
N. LEONARD AVE.
CITY OF LIMA
CITY OF LIMA
CHICAGO, FT. WAYNE & EASTERN RAILROAD (CFER)
OTTAWA RIVER

STRUCTURE NO. ALL-75-0785
STA. 104+01.20 (RESERVOIR RD.) = STA. 412+78.54 (I-75)
EXIST. 42" CULVERT
℄ BRYN MAWR AVE.
VBF21
EXIST. 60" CULVERT
PROPOSED RETAINING WALL
VBF26
PROP. 24" TYPE B
STRUCTURE NO. ALL-75-0813 L/R
PROPOSED RETAINING WALL
EXT07
EXT09
STRUCTURE NO. ALL-75-0832 L/R
℄ R/W & CONST. I-75
VBF27
EXT10
EXT08
PROPOSED RETAINING WALL
VBF28
BRYN MAWR AVE.
VBF22
8" SAN
VBF23
PROPOSED NOISE BARRIER
VBF25
VBF24
PROP. 54" TYPE B
STA. 427+96.17 (I-75) = STA. 13700+71.22 (RR) (SEE NOTE 1)
STA. 438+30±
MATCH LINE STA. 400+00.00
MATCH LINE STA. 455+00.00
DATE DR.
CHESTNUT DR.
BUTTERNUT DR.
ASPEN DR.
ESTATE CIR.
BATH TWP. SECTION 29
BATH TWP. SECTION 32
BATH TWP. SECTION 32
BATH TWP. SECTION 33
RESERVOIR RD.
BATH TWP. SECTION 29
BATH TWP. SECTION 28

NOTE:
1. INTERSTATE ROUTE 75 - CONSTRUCTION STA. 427+96.17 (0.0'RT) = CHICAGO, FORT WAYNE, AND EASTERN RAILROAD (CFER) AAR/DOT# 532704D RR MP. 258.94 REGION: MIDWEST SUBDIVISION: LIMA

J:\Projects\ALL\76691\drainage\sheets\76691DE009.dgn 11-SEP-2012 8:52PM reddenj

LEGEND

- WETLAND
- FLOOD BOUNDARY
- FLOODWAY

INTERSECTION EQUATIONS:

STA. 448+15.09 (S.R. 81) =
STA. 461+75.24 (RAMP 'D')

STA. 448+20.01 (S.R. 81) =
STA. 461+36.53 (RAMP 'F')

STA. 450+65.98 (S.R 81) =
STA. 462+10.70 (I-75)

STA. 453+41.11 (S.R. 81) =
STA. 462+89.83 (RAMP 'C')

STA. 453+49.11 (S.R. 81) =
STA. 462+33.32 (RAMP 'B')

FINDLAY RD.
MARILEE ESTATES MOBILE HOME PARK
STA. 438+23.81 (S.R. 81) =
STA. 11+18.04 (NEUBRECHT RD.)
VBF36
NEUBRECHT RD.
℄ R/W EXIST. S.R. 81
℄ R/W & CONST. PROP. NEUBRECHT RD.
VBF37
℄ R/W & CONST. PROP. S.R. 81
STRUCTURE NO. ALL-75-08.75 L/R
EXIST 24" CULVERT
PROP. 24" TYPE A
EXIST 12" CULVERT
PROP. 36" TYPE A
EXIST. 30" CULVERT
PROP. 21" TYPE A
℄ RAMP 'D'
VBF31
VBF32
VBF35
MATCH LINE STA. 455+00.00
VBF29
VBF30
℄ RAMP 'C'
EXT12
EXT13
EXT14
EXT15
EXT16
EXT17
EXT18
VBF38
VBF40
PROP. 48" TYPE A
VBF39
℄ RAMP 'B'
EXT120
VBF34
EXT19
PROP. 48" TYPE A
EXIST. 60" CULVERT
EXIST. 24" CULVERT
VBF33
EXT21
EXT22
PROP. 36" TYPE A
EXT23
EXT11
FINDLAY RD.
STEWART RD.
BATH TWP. SECTION 29
BATH TWP. SECTION 28
BATH TWP. SECTION 20
BATH TWP. SECTION 29
℄ RAMP 'F'
℄ R/W & CONST. I-75
BATH TWP. SECTION 20
BATH TWP. SECTION 21
PROP. 54" TYPE A
VBF43
VBF44
PROP. 42" TYPE A
VBF45
EXIST. 42" CULVERT
VBF41
VBF42
EXIST. 36" CULVERT
VBF46
VBF47
NORFOLK SOUTHERN
MATCH LINE STA. 510+00.00
END PROJECT STA. 520+00.00
STEWART RD.
BATH TWP. SECTION 20
BATH TWP. SECTION 21
STEWART RD.

N

HORIZONTAL SCALE IN FEET
0 100 200 400

PROJECT SITE PLAN

ALL-75-5.53

175
1224

J:\Projects\ALL\76691\drainage sheets\76691DE010.dgn 11-SEP-2012 8:52PM reddenj

END PROJECT ALL-75-0.21
PID 89029
STA. 292+00.00
BEGIN PROJECT ALL-75-5.53
PID 76691
STA. 292+00.00

BEGIN WORK
STA. 286+00

PIPE LINE TO BE
RELOCATED BY OTHERS

PIPE LINE TO BE
RELOCATED BY OTHERS

CAUTION

CAUTION

CONST. LIMITS (TYP.)

Marathon Petroleum 12"
HP oil in 16" encasing

Buckeye Pipeline
12" Gas in 16" encasing

Columbia Gas Transmission
16" Gas in 20" encasing

Buckeye Pipeline
12" Gas in 16" encasing

EROSION PROTECTION
MAT, TYPE A, 150' X 11'

PROP. ℄ R/W & CONST. I-75

MATCH LINE STA. 300+00 I-75

CITY OF LIMA

Ex LA-R/W

Ex U

12" Conc

24" CMP

8" Abond., 14" Casing (Marathon)

Brush

WW

20" CMP

12" Conc

24"

286 288 289 290 291 292 293 294 295 296 297 298 299 300

U1 U2 U3 U4 U5 U6 U13 U14 U15
RM1 RM2 RM3 RM4 RM5
GR1 GR2
D1 D2
E1

24' 12' 15"B 24' 12' 30"-A

N 01° 57' 05" E

CROSS REFERENCES

SHEET NO.	DESCRIPTION	SHEET NO.	DESCRIPTION
222	CROSS SECTIONS	153	UNDERDRAIN SUMMARY
223	DRAINAGE DETAILS	177	ESTIMATED QUANTITIES
225	CULVERT DETAIL		

HORIZONTAL SCALE IN FEET
0 25 50 100

CALCULATED ACF
CHECKED EJC

PLAN AND PROFILE - I-75
STA. 287+50 TO STA. 300+00

ALL-75-5.53

176
1224

PROFILE GRADE LINE
CROWN LINE

288+00	289+00	290+00	291+00	292+00	293+00	294+00	295+00	296+00	297+00	298+00	299+00	300+00
906.90	906.79	906.76	906.74	906.73	906.74	906.76	906.79	906.82	906.85	906.88	906.91	906.94
907.09	906.99	906.95	906.93	906.93	906.93	906.95	906.98	907.01	907.04	907.07	907.10	907.13
904.14	904.16	904.14	904.04	903.88	903.96	903.95	903.95	904.02	904.03	904.05	904.03	904.04

297+00	298+00	299+00	300+00
906.97	906.90	906.79	906.72
907.17	907.09	906.98	906.91
904.27	904.03	903.89	903.85

299+00	300+00
906.64	906.56
906.84	906.75
903.79	903.69

299+00	300+00
906.47	906.37
906.66	906.57
903.54	903.39

300+00
906.27
906.46
903.27

300+00
906.15
906.35
903.18

P.V.I. STA 300+00.00 ELEV = 907.28'
SSD = 1443'
K = 802
850.00' VC

PROJECT ALL-75-0.21
PID 89029

PROFILE GRADE

+0.06 %

+0.06 %

STA 294+00.00, ℄
CB-8, GRATE ELEV 904.34
6" (E) 903.27
6" (W) 903.27
15" (W) 900.25

STA 296+81.01, 1.25' RT
EX. CB, GRATE ELEV 904.97
EX. 12" (N) 902.97
TO BE REMOVED

EX. 24" CMP

EX. 12" CONC

EX. 16" GAS IN
20" ENCASING

EX. 12" GAS IN
16" ENCASING

EX. 12" HP GAS IN
16" ENCASING

EXIST. GROUND

EX. 12" CONC
TO BE REMOVED

EX. 20" CMP
TO BE REMOVED

PROP. 30" TYPE A

MATCH LINE STA. 300+00 I-75

920 910 900 890

J:\Projects\ALL\76691\roadway\sheets\76691GP024.dgn 11-SEP-2012 8:52PM reddenj

REF. NO.	SHEET NO.	STATION FROM	STATION TO	SIDE	202 PIPE REMOVED, 24" AND UNDER	202 CATCH BASIN REMOVED	202 FENCE REMOVED	202 REMOVAL MISC.: TENSION CABLE RAIL SYSTEM	503 COFFERDAMS AND EXCAVATION BRACING	601 RIPRAP USING 6" REINFORCED COCNRETE SLAB	601 TIED CONCRETE BLOCK MAT, TYPE 3	602 CONCRETE MASONRY	603 15" CONDUIT, TYPE B	603 30" CONDUIT, TYPE A	604 CATCH BASIN, NO. 8	606 GUARDRAIL, MISC.: TENSIONED CABLE WITH CONCRETE FOUNDATIONS LINE POST (SOCKETED)	606 GUARDRAIL, MISC.: TENSION CABLE ANCHOR TERMINAL	670 DITCH EROSION PROTECTION MAT, TYPE A
					FT	EACH	FT	FT	LUMP	SQ YD	SQ YD	CU YD	FT	FT	EACH	FT	EACH	SQ YD
RM1	176	296+81	297+02	C	19	1												
RM2	176	297+03		LT/RT	179													
RM3	176	292+00	300+00	LT			801											
RM4	176	292+00	300+00	RT			801											
RM5	176	292+00	300+00	C				800										
GR1	176	292+00	293+00	RT												100	2	
GR2	176	293+00	300+00	RT												700	1	
D1	176	294+00		LT								0.25	94		1			
D2	176	297+03		LT/RT					1	16	9.7	1.12		184				
E1	176	294+07	295+57	C														183.3
TOTALS CARRIED TO ROADWAY SUBSUMMARY					198	1	1602	800	1	16	9.7	1.37	94	184	1	800	3	183.3

CALCULATED ACF
CHECKED ABS

ESTIMATED QUANTITIES

ALL-75-5.53

177
1224

J:\Projects\ALL\76691\roadway\sheets\76691GQ024.dgn 11-SEP-2012 8:52PM redden j

CROSS REFERENCES			
SHEET NO.	DESCRIPTION	SHEET NO.	DESCRIPTION
226	CROSS SECTIONS	888	LIGHTING PLAN
227	DRAINAGE DETAILS	607	GRADING PLAN
653	PAVEMENT DETAIL	153	UNDERDRAIN SUMMARY
679	CULVERT DETAIL	179	ESTIMATED QUANTITIES
367	RAMP 'A' PLAN & PROFILE		

USE OF LONG-SPAN GUARDRAIL IS REQUIRED TO AVOID A CONFLICT BETWEEN GUARDRAIL POST AND CONDUIT. THE LOCATION OF LONG-SPAN GUARDRAIL INCLUDES:

-STA. 308+04.74, 83.13' RT. TO STA. 308+42.11, 86.25' RT.
-STA. 308+73.00, 19.50' LT. TO STA. 309+10.50, 19.50' LT.
-STA. 309+03.12, 70.22' LT. TO STA. 309+40.61, 70.97' LT.

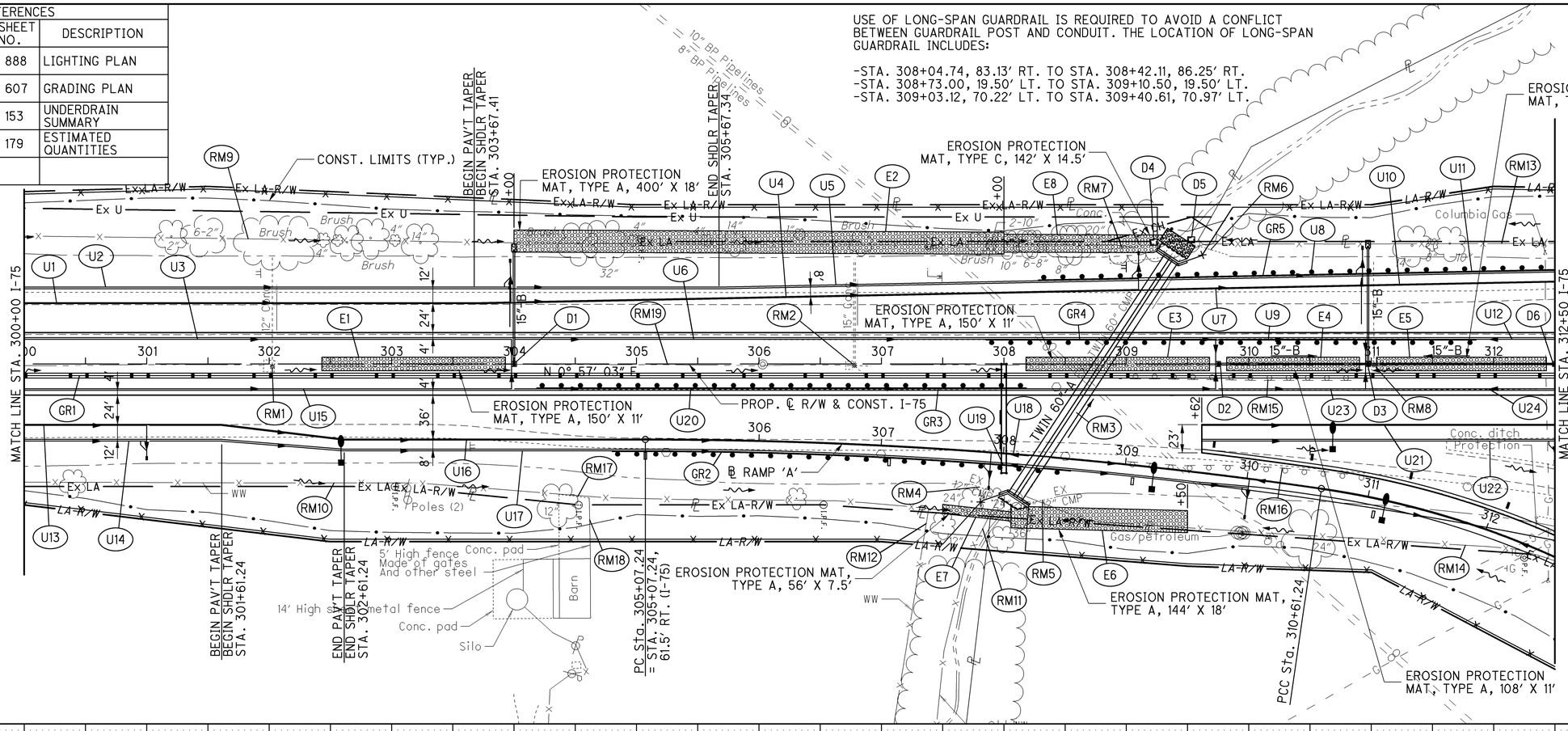

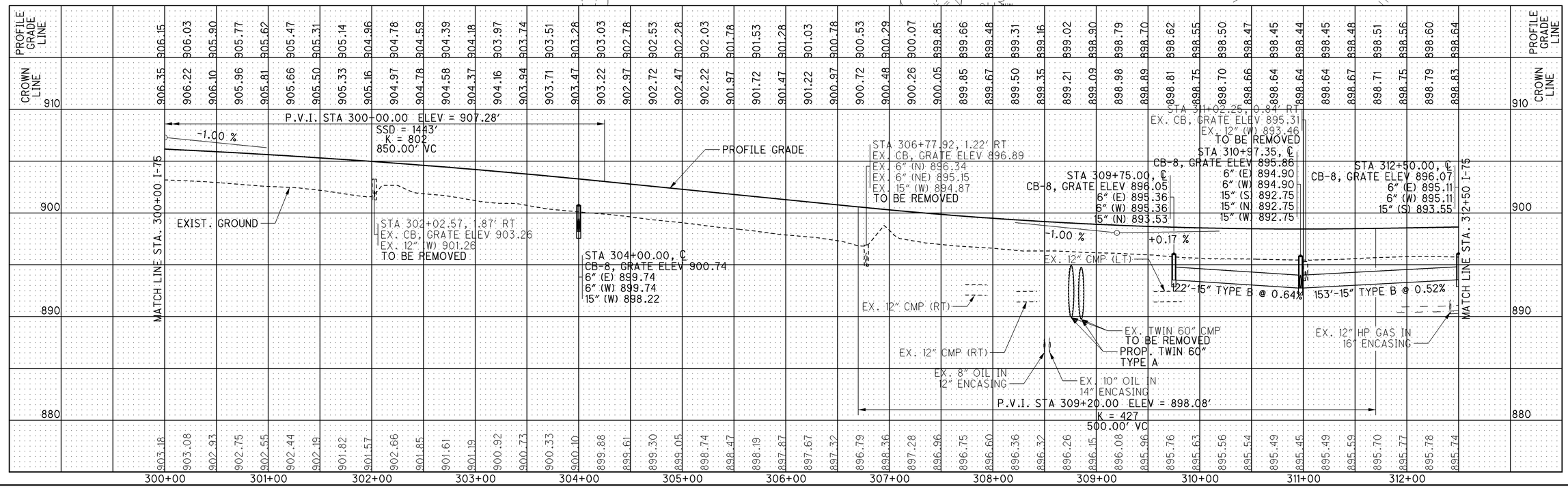

HORIZONTAL SCALE IN FEET
0 25 50 100

CALCULATED ACF
CHECKED EJC

PLAN AND PROFILE - I-75
STA. 300+00 TO STA. 312+50

ALL-75-5.53

178
1224

J:\Projects\ALL\76691\roadway\sheets\76691GP025.dgn 14-JAN-2013 2:54PM fedak

REF. NO.	SHEET NO.	STATION FROM	STATION TO	SIDE	202 PIPE REMOVED, 24" AND UNDER	202 PIPE REMOVED, OVER 24"	202 GUARDRAIL REMOVED	202 ANCHOR ASSEMBLY REMOVED	202 CATCH BASIN REMOVED	202 FENCE REMOVED	202 REMOVAL MISC.: CONCRETE PAD	202 REMOVAL MISC.: TENSION CABLE RAIL SYSTEM	601 RIPRAP USING 6" REINFORCED COCNRETE SLAB	601 TIED CONCRETE BLOCK MAT, TYPE 3	602 CONCRETE MASONRY	603 15" CONDUIT, TYPE B	604 CATCH BASIN, NO. 8	606 GUARDRAIL, TYPE 5	606 GUARDRAIL, TYPE 5, LONG-SPAN	606 ANCHOR ASSEMBLY, TYPE E	606 ANCHOR ASSEMBLY, TYPE T	606 GUARDRAIL, MISC.: TENSIONED CABLE WITH CONCRETE FOUNDATIONS LINE POST (SOCKETED)	670 DITCH EROSION PROTECTION MAT, TYPE A	670 DITCH EROSION PROTECTION MAT, TYPE C
					FT	FT	FT	EACH	EACH	FT	SQ YD	FT	SQ YD	SQ YD	CU YD	FT	EACH	FT	FT	EACH	EACH	FT	SQ YD	SQ YD
RM1	178	302+03		LT	89				1															
RM2	178	306+78		LT	86				1															
RM3	178	308+80		LT/RT		472																		
RM4	178	307+74	307+94	RT	21																			
RM5	178	308+23	308+43	RT	20																			
RM6	178	309+56	309+82	LT	28																			
RM7	178	308+86	309+33	LT							9.08													
RM8	178	311+02		LT	84				1															
RM9	178	300+00	309+08	LT						908														
RM10	178	300+00	307+57	RT						758														
RM11	178	307+75	307+97	RT						48														
RM12	178	307+39		RT						28														
RM13	178	309+47	312+50	LT						305														
RM14	178	308+18	312+50	RT						438														
RM15	178	308+94	310+84	RT			187.5	2																
RM16	178	309+00	311+03	RT			200	2																
RM17	178	304+37	304+61	RT							103													
RM18	178	304+61		RT						36														
RM19	178	300+00	312+50	C								1250												
GR1	178	300+00.00	312+50.00	C																		1250		
GR2	178	304+80.05	308+54.56	RT														275	37.5	1	1			
GR3	178	304+18.44	308+18.44	RT														337.5		1	1			
GR4	178	307+85.50	311+85.50	LT														300	37.5	1	1			
GR5	178	308+28.13	312+50.00	LT														387.5	37.5		1			
D1	178	304+00		LT										2.67	0.25	92	1							
D2	178	309+75	310+97	C												122	1							
D3	178	310+97		LT										2.67	0.25	95	1							
D4	178	309+22		LT									3.13											
D5	178	309+50		LT									3.14											
D6	178	312+50	310+97	C												153	1							
E1	178	302+43	303+93	C																			183.3	
E2	178	304+00	308+00	LT																			800	
E3	178	308+18	309+68	C																			183.3	
E4	178	309+82	310+90	C																			132.4	
E5	178	311+04	312+43	C																			169.9	
E6	178	308+06	309+50	RT																			288.7	
E7	178	307+50	308+06	RT																			46.38	
E8	178	308+00	309+26	LT																				228.8
TOTALS CARRIED TO ROADWAY SUBSUMMARY					328	472	387.5	4	3	2521	112.08	1250	6.27	5.34	0.50	462	4	1300	112.5	3	4	1250	1804	228.8

CALCULATED ACF
CHECKED ABS

ESTIMATED QUANTITIES

ALL-75-5.53

179
1224

J:\Projects\ALL\76691\roadway\sheets\76691G0025.dgn 11-SEP-2012 8:52PM reddenj

CROSS REFERENCES			
SHEET NO.	DESCRIPTION	SHEET NO.	DESCRIPTION
234	CROSS SECTIONS	889	LIGHTING PLAN
235	DRAINAGE DETAILS	153	UNDERDRAIN SUMMARY
653	PAVEMANT DETAIL	181	ESTIMATED QUANTITIES
607	GRADING PLANS		

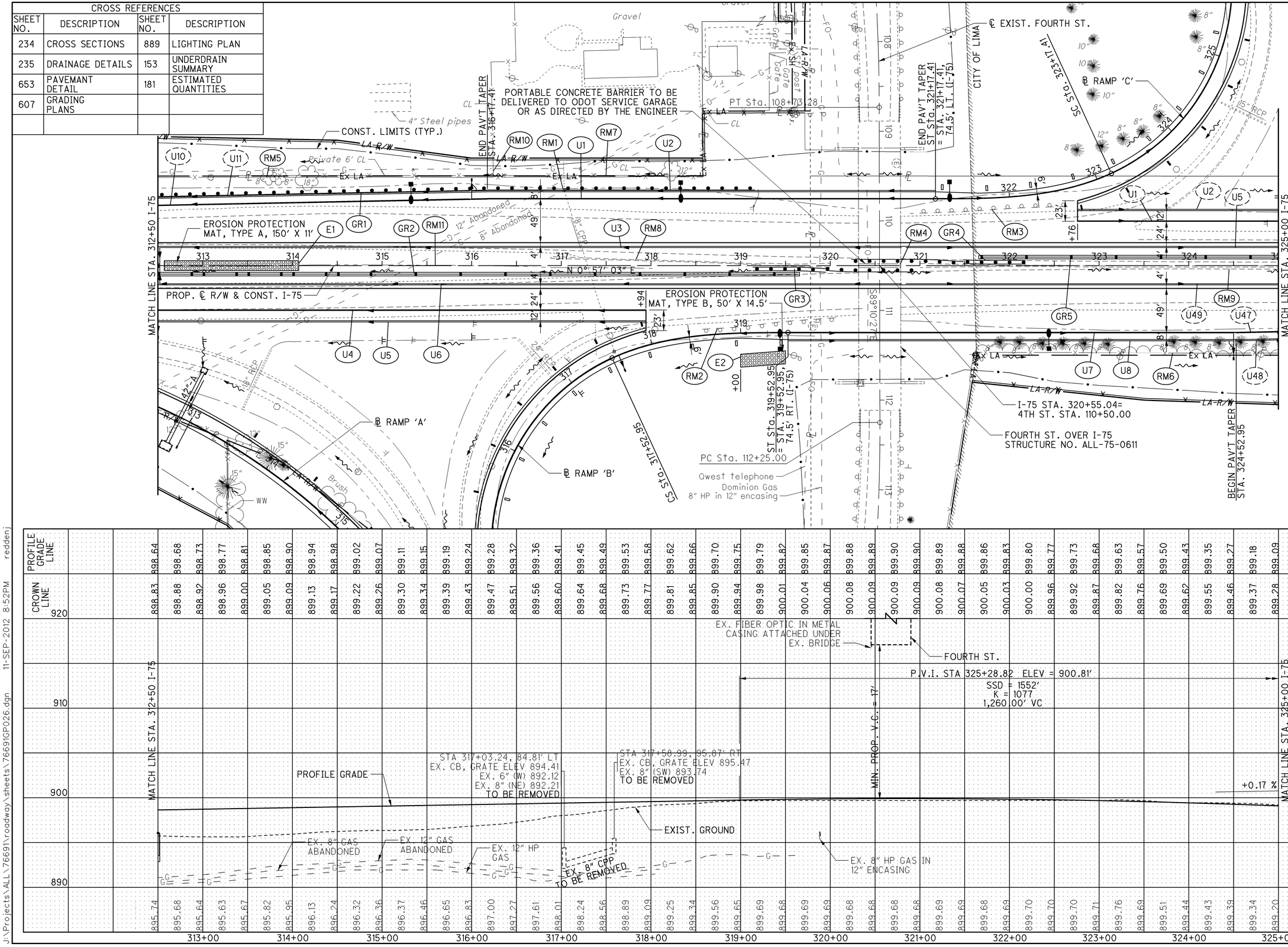

CALCULATED ACF CHECKED EJC

HORIZONTAL SCALE IN FEET

PLAN AND PROFILE - I-75 STA. 312+50 TO STA. 325+00

ALL-75-5.53

180
1224

J:\Projects\ALL\76691\roadway\sheets\76691GP026.dgn 11-SEP-2012 8:52PM reddenj

REF. NO.	SHEET NO.	STATION FROM	STATION TO	SIDE	202 CONCRETE BARRIER REMOVED FT	202 CONCRETE BARRIER REMOVED FOR STORAGE FT	202 PIPE REMOVED, 24" AND UNDER FT	202 GUARDRAIL REMOVED FT	202 ANCHOR ASSEMBLY REMOVED EACH	202 CATCH BASIN REMOVED EACH	202 FENCE REMOVED FT	202 REMOVAL MISC.: TENSION CABLE RAIL SYSTEM FT	606 GUARDRAIL, TYPE 5 FT	606 GUARDRAIL, BARRIER DESIGN, TYPE 5 FT	606 ANCHOR ASSEMBLY, TYPE E EACH	606 ANCHOR ASSEMBLY, TYPE T EACH	606 GUARDRAIL, MISC.: TENSIONED CABLE WITH CONCRETE FOUNDATIONS LINE POST (SOCKETED) FT	606 GUARDRAIL, MISC.: TENSION CABLE ANCHOR TERMINAL EACH	606 IMPACT ATTENUATOR, TYPE 1 (BIDIRECTIONAL) EACH	670 DITCH EROSION PROTECTION MAT, TYPE A SQ YD	670 DITCH EROSION PROTECTION MAT, TYPE B SQ YD
RM1	180	317+03	317+59	LT/RT			188			2											
RM2	180	318+57	320+08	RT				150	2												
RM3	180	320+89	322+65	LT				175	2												
RM4	180	320+00	321+00	C		200															
RM5	180	312+50	319+72	LT							794										
RM6	180	321+55	325+00	RT							373										
RM7	180	313+39	318+57	LT							537										
RM8	180	316+88	320+00	C	312																
RM9	180	321+00	325+00	C	400																
RM10	180	316+24		LT							18										
RM11	180	312+50	317+50	C								500									
GR1	180	312+50.00	319+15.51	LT									612.5		1						
GR2	180	312+50.00	319+62.13	LT/RT													664	1			
GR3	180	319+13.78	320+95.20	RT									87.5	50		1			1		
GR4	180	320+23.77	322+17.69	LT									112.5	37.5		1			1		
GR5	180	321+48.07	325+00.00	LT/RT													382	1			
E1	180	312+57	314+07	C																183.3	
E2	180	319+00	319+50	RT																	80.6
TOTALS CARRIED TO ROADWAY SUBSUMMARY					712	200	188	325	4	2	1722	500	812.5	87.5	1	2	1046	2	2	183.3	80.6

CALCULATED ACF
CHECKED ABS

ESTIMATED QUANTITIES

ALL-75-5.53

181
1224

J:\Projects\ALL\76691\roadway\sheets\76691G0026.dgn 11-SEP-2012 8:53PM reddenj

CURVE I75-5
P.I.= Sta. 331+37.88
D = 1° 34′ 11″ (LT)
Dc = 0° 12′ 00″
R = 28,647.89′
T = 392.44′
L = 784.83′
E = 2.69′
C = 784.81′
C.B. = N 0° 09′ 58″ E
e_d = NC

CROSS REFERENCES			
SHEET NO.	DESCRIPTION	SHEET NO.	DESCRIPTION
243	CROSS SECTIONS	890	LIGHTING PLAN
245	DRAINAGE DETAILS	624	JOINT DETAILS
658	PAVEMENT DETAIL	154	UNDERDRAIN SUMMARY
608	GRADING PLANS	183	ESTIMATED QUANTITIES

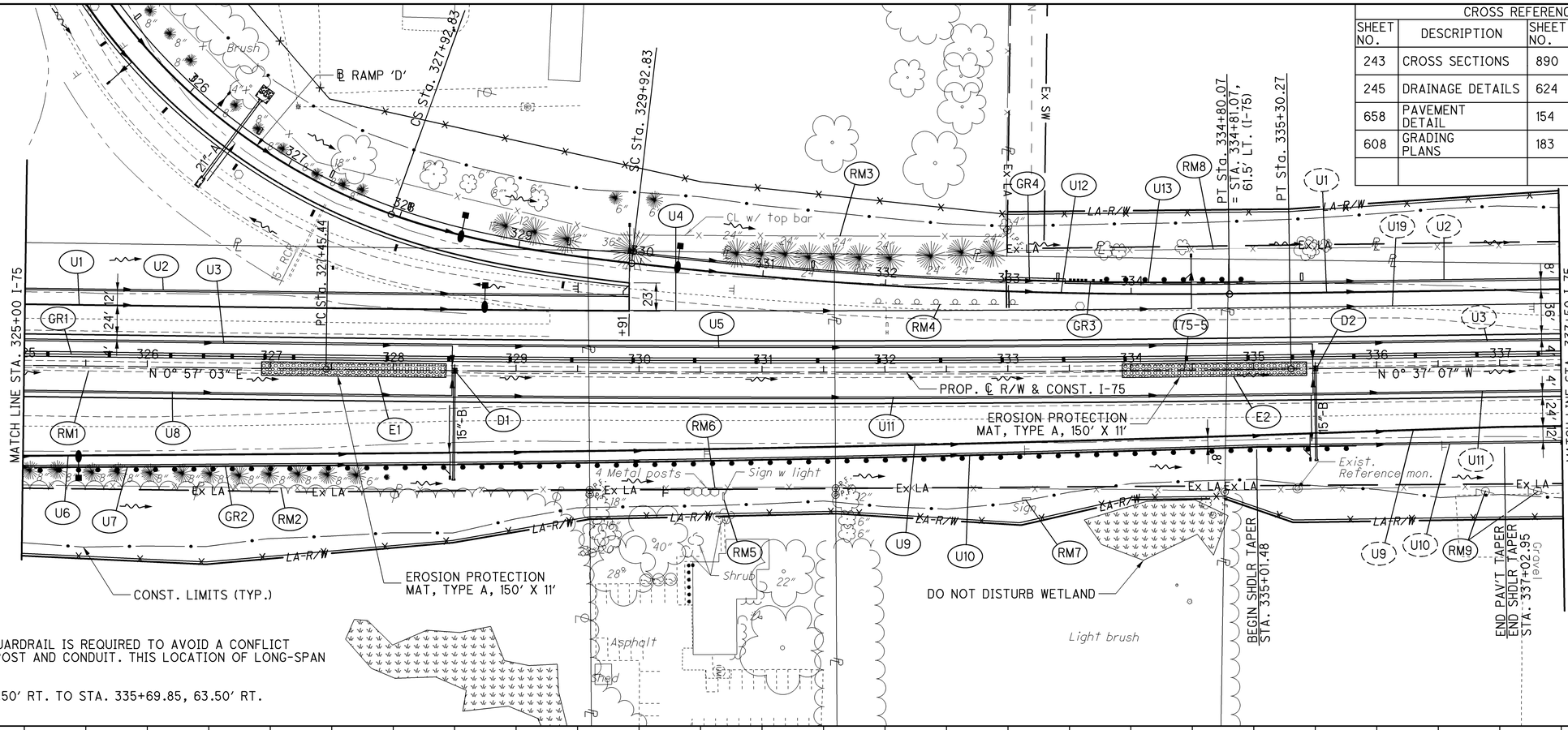

USE OF LONG-SPAN GUARDRAIL IS REQUIRED TO AVOID A CONFLICT BETWEEN GUARDRAIL POST AND CONDUIT. THIS LOCATION OF LONG-SPAN GUARDRAIL INCLUDES:

-STA. 335+32.35, 63.50′ RT. TO STA. 335+69.85, 63.50′ RT.

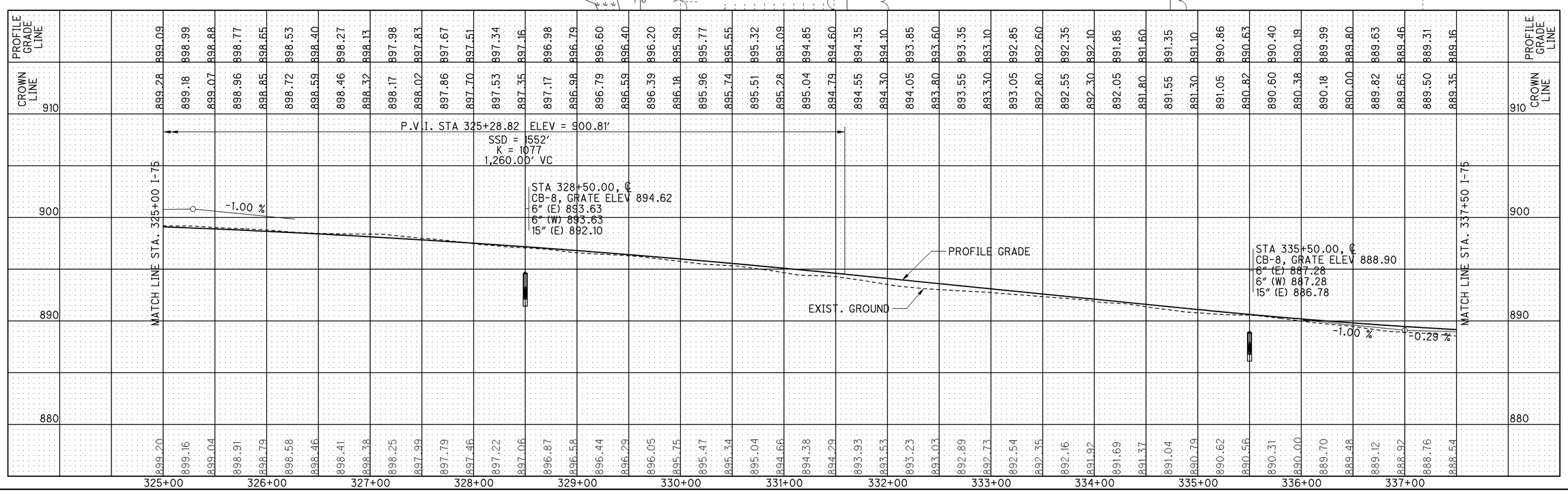

HORIZONTAL SCALE IN FEET

CALCULATED ACF
CHECKED EJC

PLAN AND PROFILE - I-75
STA. 325+00 TO STA. 337+50

ALL-75-5.53

J:\Projects\ALL\76691\roadway\sheets\76691GP027.dgn 11-SEP-2012 8:53PM reddenj

REF. NO.	SHEET NO.	STATION FROM	STATION TO	SIDE	202 CONCRETE BARRIER REMOVED FT	202 GUARDRAIL REMOVED FT	202 ANCHOR ASSEMBLY REMOVED EACH	202 FENCE REMOVED FT	202 REMOVAL MISC.: PRIVATE LIGHT POLE EACH	202 REMOVAL MISC.: PRIVATE SIGN EACH	202 REMOVAL MISC.: METAL POSTS EACH	602 CONCRETE MASONRY CU YD	603 15" CONDUIT, TYPE B FT	604 CATCH BASIN, NO. 8 EACH	606 GUARDRAIL, TYPE 5 FT	606 GUARDRAIL, TYPE 5, LONG-SPAN FT	606 ANCHOR ASSEMBLY, TYPE E EACH	606 ANCHOR ASSEMBLY, TYPE T EACH	606 BRIDGE TERMINAL ASSEMBLY, TYPE 1 EACH	606 GUARDRAIL, MISC.: TENSIONED CABLE WITH CONCRETE FOUNDATIONS LINE POST (SOCKETED) FT	622 CONCRETE BARRIER, TYPE D FT	622 CONCRETE BARRIER END SECTION, TYPE D EACH	622 CONCRETE BARRIER, END ANCHORAGE, REINFORCED, TYPE D EACH	670 DITCH EROSION PROTECTION MAT, TYPE A SQ YD
RM1	182	325+00	337+50	C	1250																			
RM2	182	325+00	337+50	RT				1253																
RM3	182	329+83	332+99	LT				332																
RM4	182	331+80	333+09	LT		125	2																	
RM5	182	330+69		RT						1														
RM6	182	330+40	330+62	RT							4													
RM7	182	333+14		RT						1														
RM8	182	333+04	337+50	LT				446																
RM9	182	336+87	337+29	RT					2															
GR1	182	325+00.00	337+50.00	C																1250				
GR2	182	325+09.49	335+82.35	RT											975	37.5	1	1						
GR3	182	333+45.07	335+01.69	LT											75		1		1					
GR4	182	332+98.12	333+47.21	LT																	20	1	1	
D1	182	328+50		RT								0.25	89	1										
D2	182	335+50		RT								0.25	75	1										
E1	182	326+93	328+43	C																				183.3
E2	182	333+93	335+43	C																				183.3
TOTALS CARRIED TO ROADWAY SUBSUMMARY					1250	125	2	2031	2	2	4	0.5	164	2	1050.0	37.5	2	1	1	1250	20	1	1	366.6

CALCULATED ACF
CHECKED ABS

ESTIMATED QUANTITIES

ALL-75-5.53

183
1224

J:\Projects\ALL\76691\roadway\sheets\76691GQ027.dgn 11-SEP-2012 8:53PM redderj

USE OF LONG-SPAN GUARDRAIL IS REQUIRED TO AVOID A CONFLICT BETWEEN GUARDRAIL POST AND CONDUIT. THIS LOCATION OF LONG-SPAN GUARDRAIL INCLUDES:

-STA. 345+88.83, 63.50' RT. TO STA. 345+13.83, 63.50' RT.
-STA. 349+72.73, 77.06' LT. TO STA. 350+10.14, 77.45' LT.

CURVE I75-6
P.I.= Sta. 352+62.60
D = 1° 17' 46" (RT)
Dc = 0° 10' 00"
R = 34,377.47'
T = 388.85'
L = 777.67'
E = 2.20'
C = 777.65'
C.B. = N 0° 01' 46" E
e_d = NC

CAUTION
PIPELINE TO BE RELOCATED BY OTHERS
EROSION PROTECTION TIED CONCRETE BLOCK MAT, TYPE 1, 38' X 7.5'
EROSION PROTECTION MAT, TYPE A, 50' X 11'
BEGIN PAV'T TAPER STA. 344+38.32
CONST. LIMITS (TYP.)
EROSION PROTECTION MAT, TYPE A, 150' X 11'
EROSION PROTECTION MAT, TYPE A, 150' X 7.5'
EROSION PROTECTION MAT, TYPE B, 120' X 11'
10'W x 5'H Box culvert
STRUCTURE NO. ALL-75-0652
PROP. ℄ R/W & CONST. I-75
N0°37'07"W
Mid Valley pipeline 22" dia. in 26" encasing
CITY OF LIMA
WETLAND - DO NOT DISTURB
MATCH LINE STA. 337+50 I-75
MATCH LINE STA. 350+00 I-75

CROSS REFERENCES			
SHEET NO.	DESCRIPTION	SHEET NO.	DESCRIPTION
251	CROSS SECTIONS	890	LIGHTING PLAN
255	DRAINAGE DETAILS	154	UNDERDRAIN SUMMARY
684	CULVERT DETAIL	185	ESTIMATED QUANTITIES
906	ALL-075-0652 PLAN & PROFILE		

STA 341+81.60, 69.26' RT.
EX. CB, GRATE ELEV 880.21
EX. 18" (N) 877.29
TO BE REMOVED

STA 341+71.46, 116.08' RT.
EX. SAN MH, GRATE ELEV 887.75
EX. 8" PVC N 874.82
EX. 12" (E) 874.50
EX. 12" (W) 874.41

STA 342+02.20, 68.67' LT.
EX. CB, GRATE ELEV 880.29
EX. 18" (N) 879.69
TO BE REMOVED

STA 342+05.13, 112.52' LT.
EX. SAN MH, GRATE ELEV 884.69
EX. 12" (E) 873.68
EX. 12" (W) 873.59

STA 343+00.00, ℄
CB-8, GRATE ELEV 884.82
6" (E) 883.84
6" (W) 883.84
15" (W) 879.50

STA 348+00.00, ℄
CB-8, GRATE ELEV 883.41
6" (E) 882.43
6" (W) 882.43
15" (W) 880.89

STA 349+92.56, ℄
CB-8, GRATE ELEV 883.18
6" (E) 882.21
6" (W) 882.21
15" (W) 880.66

PROFILE GRADE
EXIST. GROUND
-0.29 %
P.V.I. STA 337+00.00
ELEV = 889.10'
K = 560
400.00' VC
P.V.I. STA 350+00.00
ELEV = 885.39'
K = 849
500.00' VC
EX. 22" OIL IN 26" ENCASING
EX. 18" CMP (RT) TO BE REMOVED
EX. 12" STEEL
EX. 10'X5' BOX CULVERT STA. 342+30.20
EX. 18" CONC (LT) TO BE REMOVED
PROP. 24" TYPE A
EX. 24" CMP (DAMAGED) STA 346+50.74 TO BE REMOVED

PROFILE GRADE LINE: 889.16 889.03 888.91 888.80 888.70 888.61 888.53 888.46 888.39 888.32 888.25 888.17 888.10 888.03 887.96 887.89 887.82 887.75 887.68 887.60 887.53 887.46 887.39 887.32 887.25 887.18 887.10 887.03 886.96 886.89 886.82 886.75 886.68 886.60 886.53 886.46 886.39 886.32 886.25 886.18 886.10 886.04 885.98 885.92 885.88 885.84 885.81 885.78 885.77 885.76 885.76
CROWN LINE: 889.35 889.22 889.10 888.99 888.89 888.80 888.72 888.65 888.58 888.51 888.44 888.37 888.30 888.22 888.15 888.08 888.01 887.94 887.87 887.80 887.72 887.65 887.58 887.51 887.44 887.37 887.30 887.22 887.15 887.08 887.01 886.94 886.87 886.80 886.72 886.65 886.58 886.51 886.44 886.37 886.30 886.23 886.17 886.11 886.07 886.03 886.00 885.98 885.96 885.95 885.95
888.54 888.32 888.16 887.99 887.77 887.37 887.13 886.87 886.56 886.22 885.94 885.85 885.75 885.67 885.48 884.80 884.85 884.84 884.80 884.72 884.61 884.48 884.34 884.25 884.33 884.53 884.76 884.89 884.99 884.99 885.06 885.13 885.25 885.38 885.51 885.58 885.62 885.65 885.67 885.69 885.78 885.87 885.92 885.96 886.06 886.18 886.30 886.34 886.37 886.47 886.58

338+00 339+00 340+00 341+00 342+00 343+00 344+00 345+00 346+00 347+00 348+00 349+00 350+00

HORIZONTAL SCALE IN FEET: 0 25 50 100
CALCULATED ACF CHECKED EJC

PLAN AND PROFILE - I-75
STA. 337+50 TO STA. 350+00

ALL-75-5.53

184
1224

J:\Projects\ALL\76691\roadway\sheets\76691GP028.dgn 11-SEP-2012 8:53PM reddenj

REF. NO.	SHEET NO.	STATION FROM	STATION TO	SIDE	202 CONCRETE BARRIER REMOVED FT	202 PIPE REMOVED, 24" AND UNDER FT	202 PIPE REMOVED, OVER 24" FT	202 CATCH BASIN REMOVED EACH	202 FENCE REMOVED FT	202 REMOVAL MISC.: CONCRETE LIGHT POLE FOUNDATION EACH	202 REMOVAL MISC.: CONCRETE SIGN FOUNDATION EACH	601 TIED CONCRETE BLOCK MAT, TYPE 1 SQ YD	601 TIED CONCRETE BLOCK MAT, TYPE 3 SQ YD	602 CONCRETE MASONRY CU YD	603 15" CONDUIT, TYPE B FT	604 CATCH BASIN, NO. 8 EACH	606 GUARDRAIL, TYPE 5 FT	606 GUARDRAIL, TYPE 5, LONG-SPAN FT	606 ANCHOR ASSEMBLY, TYPE E EACH	606 ANCHOR ASSEMBLY, TYPE T EACH	606 GUARDRAIL, MISC.: TENSIONED CABLE WITH CONCRETE FOUNDATIONS LINE POST (SOCKETED) FT	606 GUARDRAIL, MISC.: TENSION CABLE ANCHOR TERMINAL EACH	625 PULL BOX REMOVED EACH	670 DITCH EROSION PROTECTION MAT, TYPE A SQ YD	670 DITCH EROSION PROTECTION MAT, TYPE B SQ YD
RM1	184	342+03	342+32	LT		30		1																	
RM2	184	341+82	342+12	RT		30		1																	
RM3	184	346+51		LT/RT			107																		
RM4	184	337+95		RT							1														
RM5	184	337+72	339+00	RT						4													1		
RM6	184	337+50	350+00	RT					1296																
RM7	184	337+50	350+00	LT					1310																
RM8	184	337+50	350+00	C	1250																				
GR1	184	337+50.00	345+16.50	C																	717	1			
GR2	184	339+85.58	350+00.00	LT													962.5	37.5		1					
GR3	184	343+38.83	349+89.04	RT													562.5	25	1						
GR4	184	344+16.50	350+00.00	C																	533	1			
D1	184	343+00		LT									3.11	0.25	94	1									
D2	184	348+00		LT									2.67	0.25	88	1									
D3	184	349+93		LT										0.25	90	1									
E1	184	341+00	342+20	RT																					146.67
E2	184	341+43	342+93	C																				183.3	
E3	184	342+05	342+43	LT								31.25													
E4	184	342+43	343+00	LT																				70.28	
E5	184	346+43	347+93	C																				183.3	
E6	184	348+36	349+86	C																				183.3	
TOTALS CARRIED TO ROADWAY SUBSUMMARY					1250	60	107	2	2606	4	1	31.25	5.78	0.75	272	3	1525.0	62.5	1	1	1250	2	1	620.2	146.7

CALCULATED ACF
CHECKED ABS

ESTIMATED QUANTITIES

ALL-75-5.53

185
1224

J:\Projects\ALL\76691\roadway\sheets\76691G0028.dgn 11-SEP-2012 8:53PM reddenj

CROSS REFERENCES			
SHEET NO.	DESCRIPTION	SHEET NO.	DESCRIPTION
260	CROSS SECTIONS	891	LIGHTING PLAN
261	DRAINAGE DETAILS	155	UNDERDRAIN SUMMARY
664	PAVEMENT DETAILS	187	ESTIMATED QUANTITIES

CURVE I75-6
P.I.= Sta. 352+62.60
D = 1° 17′ 46″ (RT)
Dc = 0° 10′ 00″
R = 34,377.47′
T = 388.85′
L = 777.67′
E = 2.20′
C = 777.65′
C.B. = N 0° 01′ 46″ E
e_d = NC

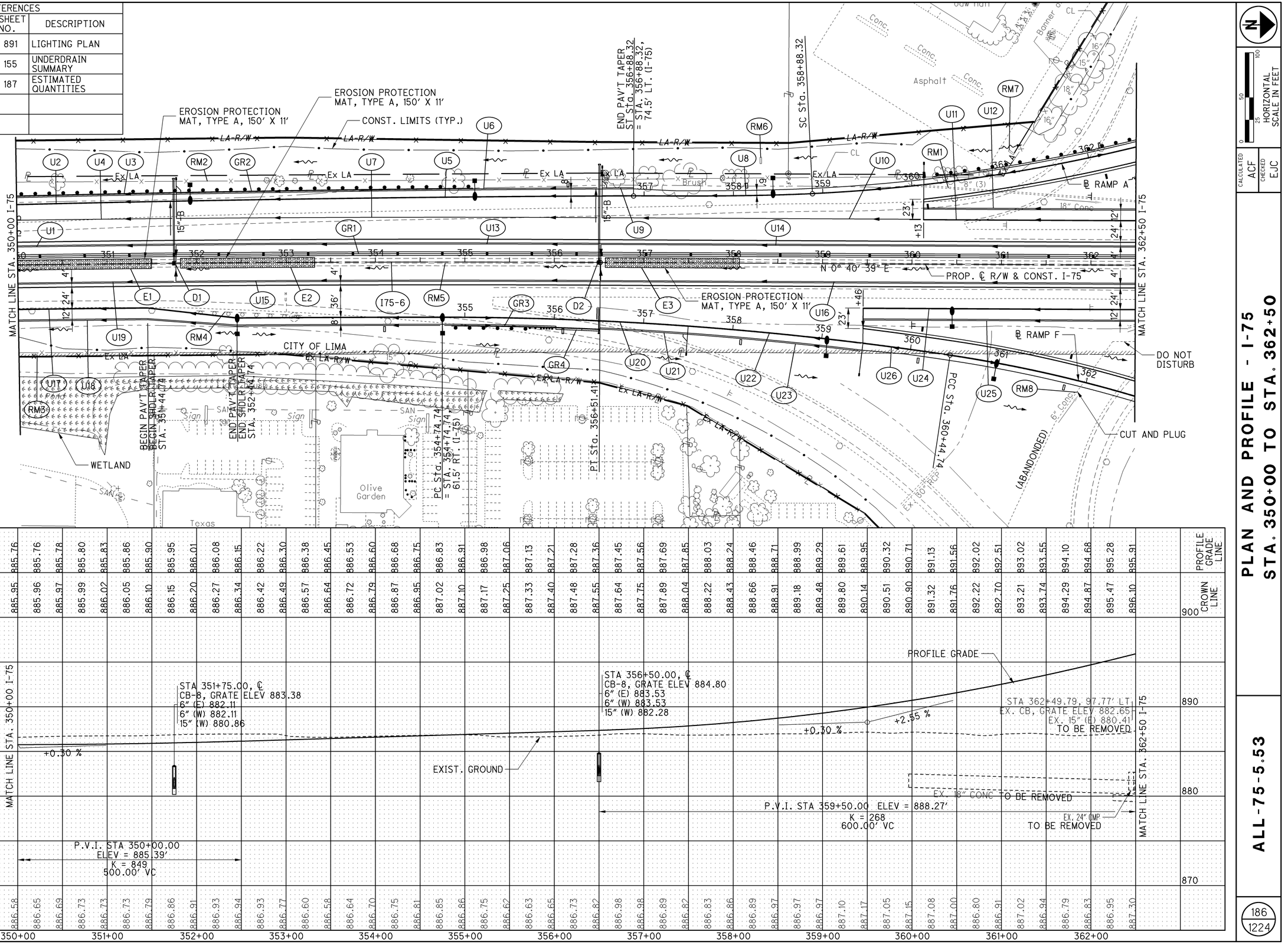

HORIZONTAL SCALE IN FEET
0 25 50 100

CALCULATED ACF
CHECKED EJC

PLAN AND PROFILE - I-75
STA. 350+00 TO STA. 362+50

ALL-75-5.53

186
1224

J:\Projects\ALL\76691\roadway\sheets\76691GP029.dgn 11-SEP-2012 8:53PM redden

REF. NO.	SHEET NO.	STATION FROM	STATION TO	SIDE	202 HEADWALL REMOVED EACH	202 CONCRETE BARRIER REMOVED FT	202 PIPE REMOVED, 24" AND UNDER FT	202 GUARDRAIL REMOVED FT	202 ANCHOR ASSEMBLY REMOVED EACH	202 SPECIAL - FILL AND PLUG EXISTING CONDUIT FT	202 FENCE REMOVED FT	202 REMOVAL MISC.: PRIVATE SIGN EACH	602 CONCRETE MASONRY CU YD	603 15" CONDUIT, TYPE B FT	604 CATCH BASIN, NO. 8 EACH	606 GUARDRAIL, TYPE 5 FT	606 ANCHOR ASSEMBLY, TYPE E EACH	606 BRIDGE TERMINAL ASSEMBLY, TYPE 1 EACH	606 GUARDRAIL, MISC.: TENSIONED CABLE WITH CONCRETE FOUNDATIONS LINE POST (SOCKETED) FT	622 CONCRETE BARRIER, TYPE D FT	622 CONCRETE BARRIER END SECTION, TYPE D EACH	622 CONCRETE BARRIER, END ANCHORAGE, REINFORCED, TYPE D EACH	670 DITCH EROSION PROTECTION MAT, TYPE A SQ YD
RM1	186	359+96	362+50	LT	1		254																
RM2	186	350+00	361+02	LT							1104												
RM3	186	350+00	359+49	RT							986												
RM4	186	352+00	353+28	RT				137.5	2														
RM5	186	350+00	362+50	C		1250																	
RM6	186	358+29		LT								1											
RM7	186	361+13		LT								1											
RM8	186	361+84	361+58	RT			48			10													
GR1	186	350+00.00	362+50.00	C															1250				
GR2	186	350+00.00	355+08.95	LT												462.5	1						
GR3	186	354+85.20	356+04.18	RT												50	1	1					
GR4	186	356+02.04	356+51.12	RT																20	1	1	
D1	186	351+75		LT									0.25	95	1								
D2	186	356+50		LT									0.25	110	1								
E1	186	350+00	351+73	C																			183.3
E2	186	351+82	353+32	C																			183.3
E3	186	356+57	358+07	C																			183.3
TOTALS CARRIED TO ROADWAY SUBSUMMARY					1	1250	302	137.5	2	10	2090	2	0.5	205	2	512.5	2	1	1250	20	1	1	549.9

CALCULATED ACF
CHECKED ABS

ESTIMATED QUANTITIES

ALL-75-5.53

187
1224

J:\Projects\ALL\76691\roadway\sheets\76691G0029.dgn 11-SEP-2012 8:53PM reddenj

** NOTE:
CONTRACTOR TO FIELD VERIFY DEPTH OF 8" CONC. PIPE TO DETERMINE IF PIPE CONFLICT EXISTS.

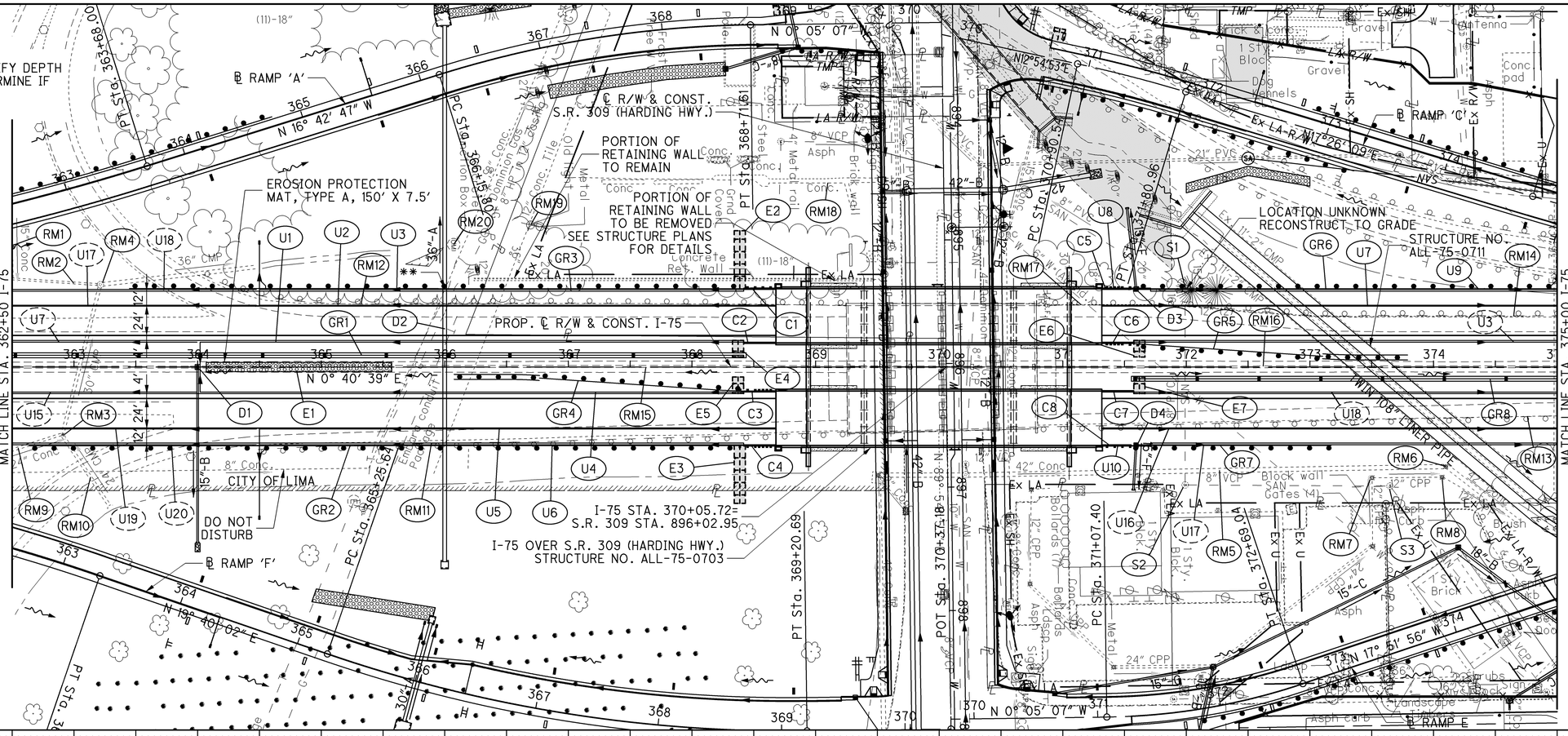

CROSS REFERENCES			
SHEET NO.	DESCRIPTION	SHEET NO.	DESCRIPTION
268	CROSS SECTIONS	155	UNDERDRAIN SUMMARY
269	DRAINAGE DETAILS	936	STRUCTURE NO. ALL-75-0703
271	CULVERT DETAILS	921	STRUCTURE NO. ALL-75-0711
406	S.R. 309 PLAN & PROFILE	609	GRADING PLANS
650	PAVEMENT DETAILS	611	ESTIMATED QUANTITIES
902	LANDSCAPING PLANS		
892	LIGHTING PLAN		

HORIZONTAL SCALE IN FEET
0 25 50 100

CALCULATED ACF
CHECKED EJC

PLAN AND PROFILE - I-75
STA. 362+50 TO STA. 375+00

ALL-75-5.53

188
1224

J:\Projects\ALL\76691\roadway\sheets\76691GP030.dgn 11-SEP-2012 8:53PM redden

PROFILE - I-75
STA. 362+50 TO STA. 375+00

CALCULATED ACF
CHECKED EJC

PROFILE GRADE LINE: 896.54 897.18 897.82 898.43 899.03 899.59 900.14 900.66 901.16 901.63 902.08 902.50 902.90 903.28 903.63 903.96 904.26 904.54 904.79 905.02 905.23 905.41 905.57 905.71 905.82 905.90 905.97 906.00 906.02 906.01 905.97 905.91 905.83 905.73 905.59 905.44 905.26 905.06 904.83 904.58 904.30 904.00 903.68 903.33 902.96 902.56 902.14 901.70 901.23 900.73

CROWN LINE: 896.74 897.37 898.01 898.62 899.22 899.79 900.33 900.85 901.35 901.82 902.27 902.69 903.09 903.47 903.82 904.15 904.45 904.73 904.99 905.22 905.42 905.61 905.76 905.90 906.01 906.10 906.16 906.20 906.21 906.20 906.17 906.11 906.02 905.92 905.79 905.63 905.45 905.25 905.02 904.77 904.49 904.19 903.87 903.52 903.15 902.75 902.33 901.89 901.42 900.93

P.V.I. STA 370+00.00 ELEV = 915.00'
SSD = 747'
K = 259
1,365.00' VC

STA 362+91.05, 54.50' RT
EX. CB, GRATE ELEV 885.44
EX. 24" (S) 880.66
EX. 24" (NE) 880.57
EX. 30" (NW) 880.47
TO BE REMOVED

STA 363+21.26, 66.70' LT
EX. MH, GRATE ELEV 884.90
EX. 18" (S) 880.06
EX. 30" (SE) 880.03
EX. 36" (N) 880.07
TO BE REMOVED

STA 364+00.00, ℄
CB-8, GRATE ELEV 897.13
6" (E) 895.85
6" (W) 895.85
15" (E) 889.60

PROFILE GRADE

EXIST. GROUND

MATCH LINE STA. 362+50 I-75

EX. 30" CMP TO BE REMOVED
EX. 24" CONC TO BE REMOVED
EX. 24" CMP TO BE REMOVED
EX. 36" CMP TO BE REMOVED
EX. 8" CONC.
EX. EMBARQ CONDUIT
EX. 8" GAS
PROP. 36" TYPE A
EX. 6" CONC.
EX. EMBARQ CONDUIT

STA 369+50.79, 87.52' RT
EX. CB, GRATE ELEV 882.66
EX. 42" (E) 874.38
EX. 42" (N) 874.36
EX. 12" (NE) 878.67

STA 370+21.50, 87.39' RT
EX. MH, GRATE ELEV 883.04
EX. 42" (S) 873.67
EX. 42" (N) 873.67

+2.95 %
-2.72 %

REQ'D MIN. PROP. V.C. = 17'
ACTUAL MIN. PROP. V.C. = 17.16'

EX. 42" CONC
EX. 4" GAS
EX. 10" W
EX. 15" STORM STA. 370+58.25±
EX. 8" PVC SAN STA. 370+25.18

STA 371+57.22, 63.51' RT
CB-3A, GRATE ELEV 904.46
6" (S) 901.38
15" (E) 899.75

STA 371+57.22, 63.50' LT
CB-3A, GRATE ELEV 904.46
6" (S) 901.38
15" (W) 899.75

RECONSTRUCT TO GRADE
STA 371+99.01, 95.33' RT
EX. SAN MH, GRATE ELEV 886.25
EX. 8" (N) 867.10
EX. 8" (W) 867.06

STA 371+99.01, 60.74'± LT
EX. SAN MH, GRATE ELEV UNKNOWN
EX. 8" (SW) UNKNOWN
EX. 8" (E) UNKNOWN

EX. 6" W
EL. UNKNOWN
ABANDONED

EX. 42" CONC
EX. 8" PVC
EX. 11' CMP STA. 377+39.08
102"X314' CMP STA 373+50.36
102"X314' CMP STA 373+50.36
EX. 11' CMP STA. 377+61.67

STA 373+50.20, 89.55' RT
EX. CB, GRATE ELEV 884.84
EX. 12" (N) 879.53
EX. 12" (E) 879.44

RECONSTRUCT TO GRADE
STA 373+64.75, 96.24' RT
EX. SAN MH, GRATE ELEV 887.07
EX. 8" (NE) 867.97
EX. 8" (S) 867.94

EX. 12" CPP
EX. 12" CPP
EX. 42" CONC

STA 374+06.86, 89.08' RT
EX. CB, GRATE ELEV 882.50
EX. 12" (S) 879.00
EX. 12" (NE) 878.90

STA 374+09.82, 80.45' RT
EX. CB, GRATE ELEV 882.65
EX. 42" (N) 870.88
EX. 42" (S) 870.95

EX. 36" CMP STA. 374+98.98 TO BE REMOVED

MATCH LINE STA. 375+00 I-75

920 910 900 890 880 870

887.75 887.94 888.16 888.51 889.10 889.59 890.12 890.81 891.58 892.39 893.13 893.83 894.35 894.86 895.43 896.01 896.48 896.77 897.22 897.52 898.01 898.31 898.51 898.66 898.94 899.36 899.47 899.46 899.44 899.42 899.41 899.39 899.38 899.24 899.05 898.55 898.29 897.96 897.63 897.39 897.07 896.58 896.06 895.59 895.21 894.77 894.23 893.62 893.09 892.39

363+00 364+00 365+00 366+00 367+00 368+00 369+00 370+00 371+00 372+00 373+00 374+00 375+00

ALL-75-5.53

189
1224

J:\Projects\ALL\76691\roadway\sheets\76691GF030.dgn 11-SEP-2012 8:53PM reddenj

REF. NO.	SHEET NO.	STATION FROM	STATION TO	SIDE	202														606									609				
					HEADWALL REMOVED	MANHOLE REMOVED	WALK REMOVED	CONCRETE BARRIER REMOVED	CURB REMOVED	PIPE REMOVED, 24" AND UNDER	PIPE REMOVED, OVER 24"	GUARDRAIL REMOVED	ANCHOR ASSEMBLY REMOVED	BRIDGE TERMINAL ASSEMBLY REMOVED	CATCH BASIN REMOVED	JUNCTION BOX REMOVED	SPECIAL - FILL AND PLUG EXISTING CONDUIT	REMOVAL MISC.: METAL POLES	GUARDRAIL, TYPE 5	GUARDRAIL, BARRIER DESIGN, TYPE 5	ANCHOR ASSEMBLY, TYPE E	ANCHOR ASSEMBLY, TYPE T	BRIDGE TERMINAL ASSEMBLY, TYPE 1	BRIDGE TERMINAL ASSEMBLY, TYPE 2	GUARDRAIL, MISC.: TENSIONED CABLE WITH CONCRETE FOUNDATIONS LINE POST (SOCKETED)	GUARDRAIL, MISC.: TENSION CABLE ANCHOR TERMINAL	IMPACT ATTENUATOR, TYPE 1 (BIDIRECTIONAL)	CURB, TYPE 4-C				
					EACH	EACH	SQ FT	FT	FT	FT	FT	FT	EACH	EACH	EACH	EACH	FT	EACH	FT	FT	EACH	EACH	EACH	EACH	FT	EACH	EACH	FT				
RM1	188	362+50		LT						25					1																
RM2	188	362+50	363+21	LT						71																					
RM3	188	362+91	363+21	LT/RT							125				1																
RM4	188	363+21	364+48	LT		1					127																				
RM5	188	370+22	374+10	RT													388														
RM6	188	374+10	371+69	RT							74				1																
RM7	188	373+50	374+07	RT						57					1																
RM8	188	374+07	374+58	RT						59					1																
RM9	188	362+42	362+91	RT	1					50																					
RM10	188	363+29	362+91	RT	1					67																					
RM11	188	364+49	369+27	RT								475	1	1																	
RM12	188	364+00	369+25	LT								525	1	1																	
RM13	188	370+80	375+00	RT								425		1																	
RM14	188	370+78	375+00	LT								425		1																	
RM15	188	362+50	369+25	C				675																							
RM16	188	370+79	375+00	C				421																							
RM17	188	370+79	374+78	LT					399																						
RM18	188	367+27	369+65	LT			886.5		111																						
RM19	188	366+69	366+77	LT														2													
RM20	188	366+07		LT						20						1															
C1	188	368+42	368+68	LT																								26			
C2	188	368+42	368+68	LT																								26			
C3	188	368+42	368+68	RT																								26			
C4	188	368+42	368+68	RT																								26			
C5	188	371+32	371+71	LT																								40			
C6	188	371+32	371+58	LT																								26			
C7	188	371+32	371+58	RT																								26			
C8	188	371+32	371+71	RT																								40			
GR1	188	362+50.00	366+91.21	C																					542	1					
GR2	188	362+63.74	368+69.99	RT															525		1		1								
GR3	188	363+44.88	368+69.88	LT															487.5			1		1							
GR4	188	366+07.61	368+69.99	RT															162.5	37.5			1				1				
GR5	188	371+29.45	373+78.99	LT															150	37.5			1				1				
GR6	188	371+29.45	375+00.00	LT															337.5				1								
GR7	188	371+29.55	373+17.05	RT															112.5			1		1							
GR8	188	373+08.29	375+00.00	C																					343	1					
TOTALS CARRIED TO ROADWAY SUBSUMMARY					2	1	886.5	1096	510	349	326	1850	2	4	5	1	388	2	1775	75	1	2	4	2	885	2	2	236				

CALCULATED ACF
CHECKED ABS

ESTIMATED QUANTITIES

ALL-75-5.53

190
1224

J:\Projects\ALL\76691\roadway\sheets\76691GQ030.dgn 11-SEP-2012 8:53PM reddenj

REF. NO.	SHEET NO.	STATION FROM	STATION TO	SIDE	503 COFFERDAMS AND EXCAVATION BRACING LUMP	601 RIPRAP USING 6" REINFORCED COCNRETE SLAB SQ YD	601 TIED CONCRETE BLOCK MAT, TYPE 1 SQ YD	601 TIED CONCRETE BLOCK MAT, TYPE 3 SQ YD	602 CONCRETE MASONRY CU YD	603 15" CONDUIT, TYPE B FT	603 15" CONDUIT, TYPE F FT	603 36" CONDUIT, TYPE A FT	603 36" CONDUIT, TYPE A BORED AND JACKED FT	604 CATCH BASIN, NO. 3A EACH	604 CATCH BASIN, NO. 8 EACH	604 MANHOLE RECONSTRUCTED TO GRADE EACH	670 DITCH EROSION PROTECTION MAT, TYPE A SQ YD
S1	188	371+99		LT												1	
S2	188	371+99		RT												1	
S3	188	373+65		RT												1	
D1	188	364+00		RT				3.11	0.25	143					1		
D2	188	366+00		LT/RT	1	18.17		13.1	1.38			254	180				
D3	188	371+59	371+52	LT							66			1			
D4	188	371+59	371+57	RT							36			1			
E1	188	364+07	365+57	C													125
E2	188	368+39		LT			46.59										
E3	188	368+39		RT			46.59										
E4	188	368+39		LT			13.44										
E5	188	368+39		RT			13.44										
E6	188	371+62		LT			46.59										
E7	188	371+62		RT			46.59										
TOTALS CARRIED TO ROADWAY SUBSUMMARY					1	18.2	213.2	16.2	1.6	143	102	254	180	2	1	3	125

CALCULATED ACF
CHECKED ABS

ESTIMATED QUANTITIES

ALL-75-5.53

191
1224

J:\Projects\ALL\76691\roadway\sheets\76691G0030A.dgn 11-SEP-2012 8:53PM reddenj

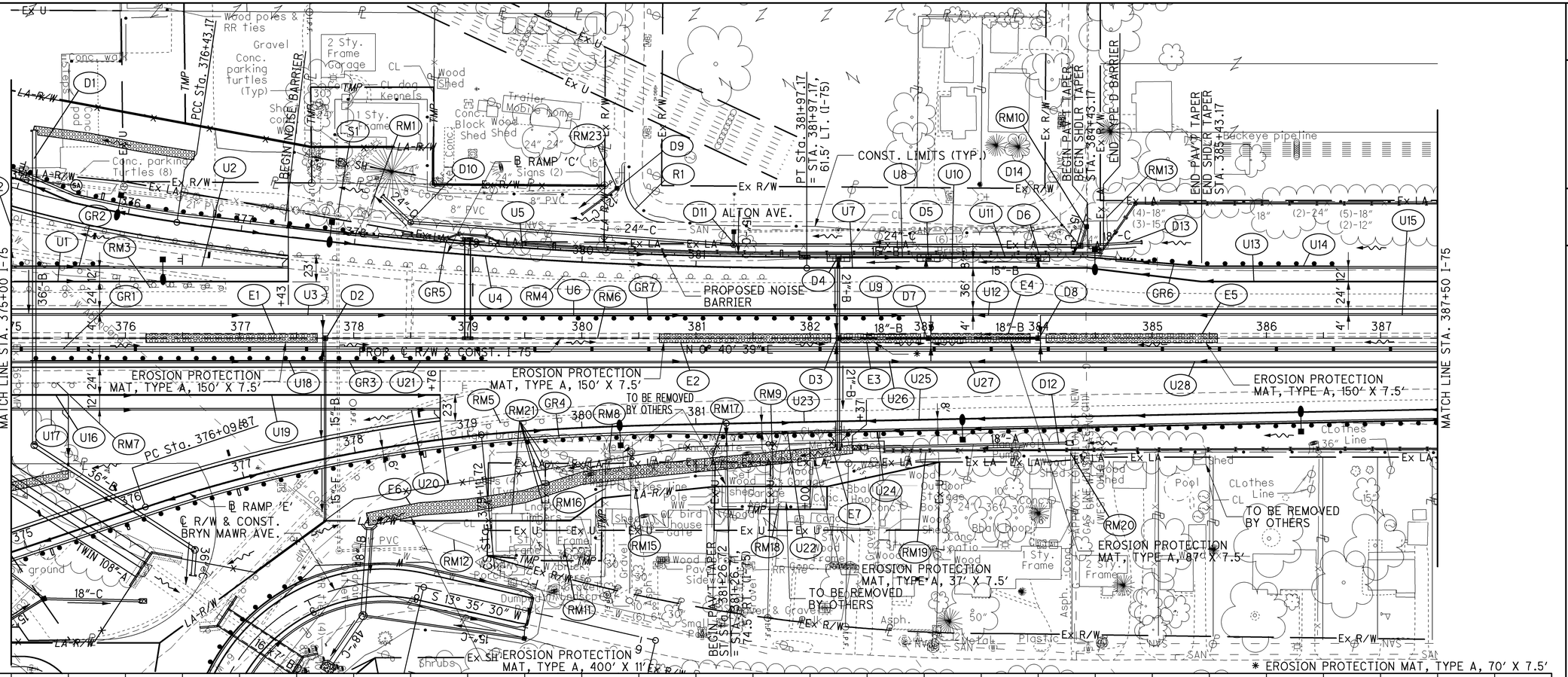

CROSS REFERENCES			
SHEET NO.	DESCRIPTION	SHEET NO.	DESCRIPTION
279	CROSS SECTIONS	893	LIGHTING PLAN
281	DRAINAGE DETAILS	156	UNDERDRAIN SUMMARY
279	CULVERT DETAILS	610	GRADING PLANS
650	PAVEMENT DETAILS	194	ESTIMATED QUANTITIES
903	LANDSCAPING PLAN		
702	NOISE BARRIER		

FOR PROFILE SEE SHEET 193

HORIZONTAL SCALE IN FEET
0 25 50 100

CALCULATED ACF
CHECKED EJC

PLAN AND PROFILE - I-75
STA. 375+00 TO STA. 387+50

ALL-75-5.53

192
1224

J:\Projects\ALL\76691\roadway\sheets\76691GP031.dgn 11-SEP-2012 8:53PM reddenj

PROFILE - I-75
STA. 375+00 TO STA. 387+50

CALCULATED ACF
CHECKED EJC

PROFILE GRADE LINE
CROWN LINE

	375+00	376+00	377+00	378+00	379+00	380+00	381+00	382+00	383+00	384+00	385+00	386+00	387+00
PROFILE GRADE LINE	900.22	899.68	899.11	898.52	897.91	897.27	896.61	895.93	895.25	894.57	893.88	893.20	892.54	891.91	891.31	890.75	890.22	889.73	889.26	888.84	888.44	888.08	887.76	887.46	887.20	886.98	886.79	886.63	886.51	886.42	886.36	886.34	886.35	886.40	886.48	886.59	886.72	886.85	886.98	887.11	887.24	887.37	887.50	887.63	887.76	887.89	888.02	888.15	888.28	888.41
CROWN LINE	891.59	890.82	890.20	889.48	888.83	888.25	887.75	887.13	886.64	886.26	885.99	885.85	885.47	885.18	885.00	884.81	884.65	884.67	884.67	884.68	884.68	884.73	884.91	885.15	885.31	885.49	885.53	885.53	885.53	885.71	885.92	886.11	886.27	886.37	886.51	886.65	886.82	887.01	887.20	887.34	887.51	887.71	887.88	888.00	888.09	888.29	888.36	888.41	888.54	888.70

EX-1 STA 380+31.54, 95.67' LT
EX. SAN MH, GRATE ELEV 882.16
EX. 8" (N) 867.16
EX. 8" (S) 867.11

EX-2 STA 381+33.20, 93.34' LT
EX. CB, GRATE ELEV 881.62
EX. 14" (N) 879.77
EX. 14" (W) 879.62

EX-3 STA 382+25.08, 94.91' LT
EX. SAN MH, GRATE ELEV 883.83
EX. 8" (N) 868.24
EX. 8" (S) 868.22

EX-4 STA 384+19.19, 93.33' LT
EX. SAN MH, GRATE ELEV 886.84
EX. 8" (SW) 868.81
EX. 8" (SW) 868.73

EX-5 STA 384+42.42, 97.86' LT
EX. CB, GRATE ELEV 887.07
EX. 14" (W) 880.21
EX. 14" (S) 880.21

MATCH LINE STA. 375+00 I-76

P.V.I. STA 370+00.00
ELEV = 915.00'
SSD = 747'
K = 259
1,365.00' VC

STA 375+20.12, 93.68' RT
MH-3, RIM ELEV 893.52
36" (W) 870.13
36" (NE) 870.13

PROFILE GRADE

EXIST. GROUND

EX. 6" W
ABANDONED

STA 377+75.00, ℄
CB-8, GRATE ELEV 891.17
6" (E) 889.90
6" (W) 889.90
15" (E) 885.00

RECONSTRUCT TO GRADE
STA 380+31.54, 95.67' LT
EX. SAN MH, GRATE ELEV 882.16
EX. 8" (N) 867.16
EX. 8" (S) 867.11

STA 378+50.00, 101.60' LT
MH-3, RIM ELEV 885.45
24" (SW) 875.95
24" (N) 875.95

STA 380+30.89, 131.47' LT
CB-2-2B, GRATE ELEV 882.70
2" (SE) 879.69

PROP. HW-2.2 (OR 2.1)
STA 380+00.00, 108.50' LT.
12" (NW) =879.20'

PROP. HW-2.2 (OR 2.1)
STA 378+25.00, 125.00' LT.
24 (NE) = 875.77'

284'-24" TYPE C @ 1.08%

38'-12" TYPE C @ 1.27%

34'-24" TYPE C @ 0.53%

EX. 21" SAN.
STA. 377+86.51

EX. 8" PVC

EX. 8" PVC

P.V.I. STA 381+00.00 ELEV = 885.03'
K = 185
600.00' VC

STA 381+33.00, 82.00' LT
MH-3, RIM ELEV 884.05
24" (S) 879.00
24" (N) 879.00
15" (W) 879.00

STA 381+33.20, 93.34' LT
CB-2-2B, GRATE ELEV 881.62
15" (E) 879.12

-2.72 %

-0.52 %

304'-24" TYPE C @ 0.39%

79'-15" TYPE B @ 0.58% (LT)

79'-18" TYPE B @ 0.48% (℄)

EX. 14" PVC

175'-18" TYPE A @ 1.51%

EX. 8" PVC

STA 382+25.00, ℄
CB-8, GRATE ELEV 883.95
6" (E) 882.43
6" (W) 882.43
18" (N) 880.25
21" (W) 880.21
21" (E) 880.21

STA 382+25.00, 70.25' LT
I-3-D, GRATE ELEV 885.59
6" (E) 881.82
6" (S) 882.50
15" (N) 880.61
21" (E) 880.61

STA 383+03.88, ℄
CB-8, GRATE ELEV 883.76
6" (E) 882.78
6" (W) 882.78
18" (N) 880.63
18" (S) 880.63

STA 383+03.88, 70.25' LT
I-3-D, GRATE ELEV 885.42
6" (N) 882.28
6" (S) 882.28
6" (E) 881.57
15" (N) 881.07
15" (S) 881.07

PROP. HW-2.2 (OR HW-2.1)
STA. 382+50, 95.60' RT
18" (N) = 880.28

EX-5

EX-4

EX-2

EX-3

EX-1

STA 384+00.00, 70.25' LT
I-3-D, GRATE ELEV 885.67
6" (N) 882.53
6" (E) 882.08
15" (S) 881.67

STA 384+00.00, ℄
CB-8, GRATE ELEV 884.04
6" (E) 883.05
6" (W) 883.05
18" (S) 881.27

PROP. HW-2.2 (OR HW-2.1)
STA. 384+24.99, 91.74' RT
18" (S) = 882.92

STA 384+36.95, 81.01' LT
CB-2-3, GRATE ELEV 884.80
15" (W) 880.18
18" (N) 881.61
24" (S) 880.18

STA 384+42.42, 97.86' LT
CB-2-2B, GRATE ELEV 887.07
15" (E) 880.21

PROP. HW-2.2 (OR HW-2.1)
STA. 384+91.00, 84.20' LT.
18" (S) = 883.86'

54'-18" TYPE C @ 4.16%

EX. 2" GAS IN 4" ENCASING

APPROX. LOCATION OF
NEW GAS LINE (INSTALLED 2011)

96'-15" TYPE B @ 0.62% (LT)

96'-18" TYPE B @ 0.67% (℄)

MATCH LINE STA. 387+50 I-75

ALL-75-5.53

193
1224

J:\Projects\ALL\76691\roadway\sheets\76691GF031.dgn 11-SEP-2012 8:53PM reddenj

REF. NO.	SHEET NO.	STATION FROM	STATION TO	SIDE	202 WALK REMOVED SQ FT	202 CONCRETE BARRIER REMOVED FT	202 PIPE REMOVED, 24" AND UNDER FT	202 GUARDRAIL REMOVED FT	202 ANCHOR ASSEMBLY REMOVED EACH	202 BUILDING DEMOLISHED EACH	202 CATCH BASIN REMOVED EACH	202 SPECIAL - FILL AND PLUG EXISTING CONDUIT FT	202 FENCE REMOVED FT	202 REMOVAL MISC.: METAL POSTS EACH	202 REMOVAL MISC.: SWING SET EACH	202 REMOVAL MISC.: CONCRETE PAD SQ YD	252 FULL DEPTH PAVEMENT SAWING FT	606 GUARDRAIL, TYPE 5 FT	606 ANCHOR ASSEMBLY, TYPE E EACH	606 ANCHOR ASSEMBLY, TYPE T EACH	606 BRIDGE TERMINAL ASSEMBLY, TYPE 1 EACH	606 GUARDRAIL, MISC.: TENSIONED CABLE WITH CONCRETE FOUNDATIONS LINE POST (SOCKETED) FT	622 CONCRETE BARRIER, SINGLE SLOPE, TYPE D FT	622 CONCRETE BARRIER END SECTION, TYPE D EACH	622 CONCRETE BARRIER, END ANCHORAGE, REINFORCED, TYPE D EACH
RM1	192	378+10	378+19	LT			49				1														
RM2	192	375+00		LT/RT								234													
RM3	192	375+00	376+86	LT				187.5	1																
RM4	192	375+00	381+62	LT				662.5	1																
RM5	192	376+68	380+01	RT				400	2																
RM6	192	375+00	387+50	C		1250																			
RM7	192	375+00	375+60	RT				62.5	1																
RM8	192	380+24	380+36	RT										1											
RM9	192	381+15	381+61	RT			12								1										
RM10	192	381+33	384+24	LT							1	307													
RM11	192	379+78	380+08	RT	45.4					1															
RM12	192	378+25	387+50	RT									1020												
RM13	192	375+00	387+50	LT									1296												
RM15	192	380+47		RT												5.4									
RM16	192	380+21		RT									41												
RM17	192	381+15		RT									31												
RM18	192	381+61		RT									10												
RM19	192	382+61	383+13	RT									82												
RM20	192	384+28		RT									8												
RM21	192	379+24	399+55	RT						1				4											
RM23	192	380+00	380+31	LT							2	217													
	192																								
	192																								
R1		380+37	380+72	LT													69								
GR1	192	375+00.00	387+50.00	C																		1250			
GR2		375+00.00	375+85.70	LT														37.5	1						
GR3	192	375+17.04	379+17.04	C														337.5	1	1					
GR4	192	379+06.78	387+50.00	RT														850							
GR5	192	378+21.88	384+68.23	LT																			469	2	6
GR6	192	384+66.04	386+59.39	LT														112.5	1		1				
GR7	192	378+82.96	382+82.96	LT														337.5	1	1					
	192																								
	192																								
TOTALS CARRIED TO ROADWAY SUBSUMMARY					45	1250	61	1313	5	2	4	758	2488	5	1	5.4	69	1675	4	2	1	1250	469	2	6

CALCULATED ACF
CHECKED ABS

ESTIMATED QUANTITIES

ALL-75-5.53

194
1224

J:\Projects\ALL\76691\roadway\sheets\76691GQ031.dgn 11-SEP-2012 8:53PM reddenj

REF. NO.	SHEET NO.	STATION FROM	STATION TO	SIDE	503	601		602	603											604						670						
					COFFERDAMS AND EXCAVATION BRACING	RIPRAP USING 6" REINFORCED COCNRETE SLAB	TIED CONCRETE BLOCK MAT, TYPE 3	CONCRETE MASONRY	12" CONDUIT, TYPE C	15" CONDUIT, TYPE B	15" CONDUIT, TYPE C	15" CONDUIT, TYPE F	18" CONDUIT, TYPE A	18" CONDUIT, TYPE B	18" CONDUIT, TYPE C	24" CONDUIT, TYPE C	36" CONDUIT, TYPE B	21" CONDUIT, TYPE B BORED AND JACKED	36" CONDUIT, TYPE B BORED AND JACKED	CATCH BASIN, NO. 8	CATCH BASIN, NO.2-2B	CATCH BASIN, NO.2-3	MANHOLE, NO. 3	INLET, NO. 3 FOR SINGLE SLOPE BARRIER, TYPE D	MANHOLE RECONSTRUCTED TO GRADE	DITCH EROSION PROTECTION MAT, TYPE A						
					LUMP	SQ YD	SQ YD	CU YD	FT	FT	FT	FT	FT	FT	FT	FT	FT	FT	FT	EACH	EACH	EACH	EACH	EACH	EACH	SQ YD						
S1	192	377+86		LT																					1						
D1	192	375+20		LT/RT	1			0.69									176		100												
D2	192	377+75		RT				0.25		112		53								1											
D3	192	382+25		RT				0.37										98		1											
D4	192	382+25	383+04	LT														71						1							
D5	192	382+25	383+04	LT						79														1							
D6	192	384+00	383+04	LT						96														1							
D7	192	382+25	383+04	C										79						1											
D8	192	384+00	383+04	C										96						1											
D9	192	380+00	380+31	LT				0.20	39.00												1										
D10	192	378+25	378+50	LT				0.43								34							1								
D11	192	378+50	381+33	LT							11					284					1		1								
D12	192	384+49	385+05	RT		5.11	3.11	0.62					175																		
D13	192	384+24	384+91	LT				0.31							54																
D14	192	381+33	384+24	LT							18					304					1	1									
E1	192	376+18	377+68	C																							125				
E2	192	380+68	382+18	C																							125				
E3	192	382+27	382+97	C																							58.33				
E4	192	383+06	383+93	C																							72.5				
E5	192	384+07	385+57	C																							125				
E6	192	378+00	382+00	RT																							788.89				
E7	192	382+00	382+37	RT																							31.1				
TOTALS CARRIED TO ROADWAY SUBSUMMARY					1	5.11	3.11	2.87	39	287	29	53	175	175	54	622	176	169	100	4	3	1	2	3	1	1325.8						

CALCULATED ACF
CHECKED ABS

ESTIMATED QUANTITIES

ALL-75-5.53

195
1224

J:\Projects\ALL\76691\roadway\sheets\76691G0031A.dgn 11-SEP-2012 8:53PM reddenj

PROPOSED NOISE BARRIER

MATCH LINE STA. 387+50 I-75

MATCH LINE STA. 400+00 I-75

E. ELM ST.

Ex R/W

Conc. Pad

EROSION PROTECTION MAT, TYPE A, 150' X 7.5'

CONST. LIMITS (TYP.)

PI Sta. 396+67.24
DEFLECTION = 0°06' RT

(5)-18"
(1)-12"
(7)-18"
(4)-18"
(6)-18"

RM1 RM2 RM3

GR1 GR2 GR3 GR4

U1 U2 U3 U4 U5 U6 U11 U13 U14 U15 U28

D1 D2 D3

E1

Ex LA

Buckeye pipeline
(5) 8" Gas in
12" Encasing

Buckeye pipeline
(2) 8" Gas in
16" Encasing

Buckeye pipeline
12" Gas in 16" encasing

Buckeye Pipeline
(3) 10" gas in 16" encasing

PROPOSED NOISE BARRIER

TO BE REMOVED BY OTHERS

City of Iima
6" Water

Embarq
1200 Pair communications
12" Steel encasement

Dominion gas
2" Gas in 4" encasing

PROP. ℄ R/W & CONST. I-75

N 6° 40' 38" E

N 1° 01' 45" E

388 389 390 391 392 393 394 395 396 397 398 399 400

Garage Shed Brush Large Trees Clothes Lines Bollards

BEGIN SHDLR TAPER STA. 391+76.79

END PAV'T TAPER
END SHDLR TAPER
STA. 393+76.70

BYRN MAWR AVE.

Ex SH

SAN

CROSS REFERENCES			
SHEET NO.	DESCRIPTION	SHEET NO.	DESCRIPTION
287	CROSS SECTIONS	894	LIGHTING PLAN
289	DRAINAGE DETAILS	157	UNDERDRAIN SUMMARY
703	NOISE BARRIER	198	ESTIMATED QUANTITIES
661	PAVEMENT DETAILS		

PROFILE GRADE LINE

CROWN LINE

900 890 880 870

| | | |

CROSS REFERENCES			
SHEET NO.	DESCRIPTION	SHEET NO.	DESCRIPTION
293	CROSS SECTIONS	157	UNDERDRAIN SUMMARY
296	DRAINAGE DETAILS	198	ESTIMATED QUANTITIES
710	NOISE BARRIER		

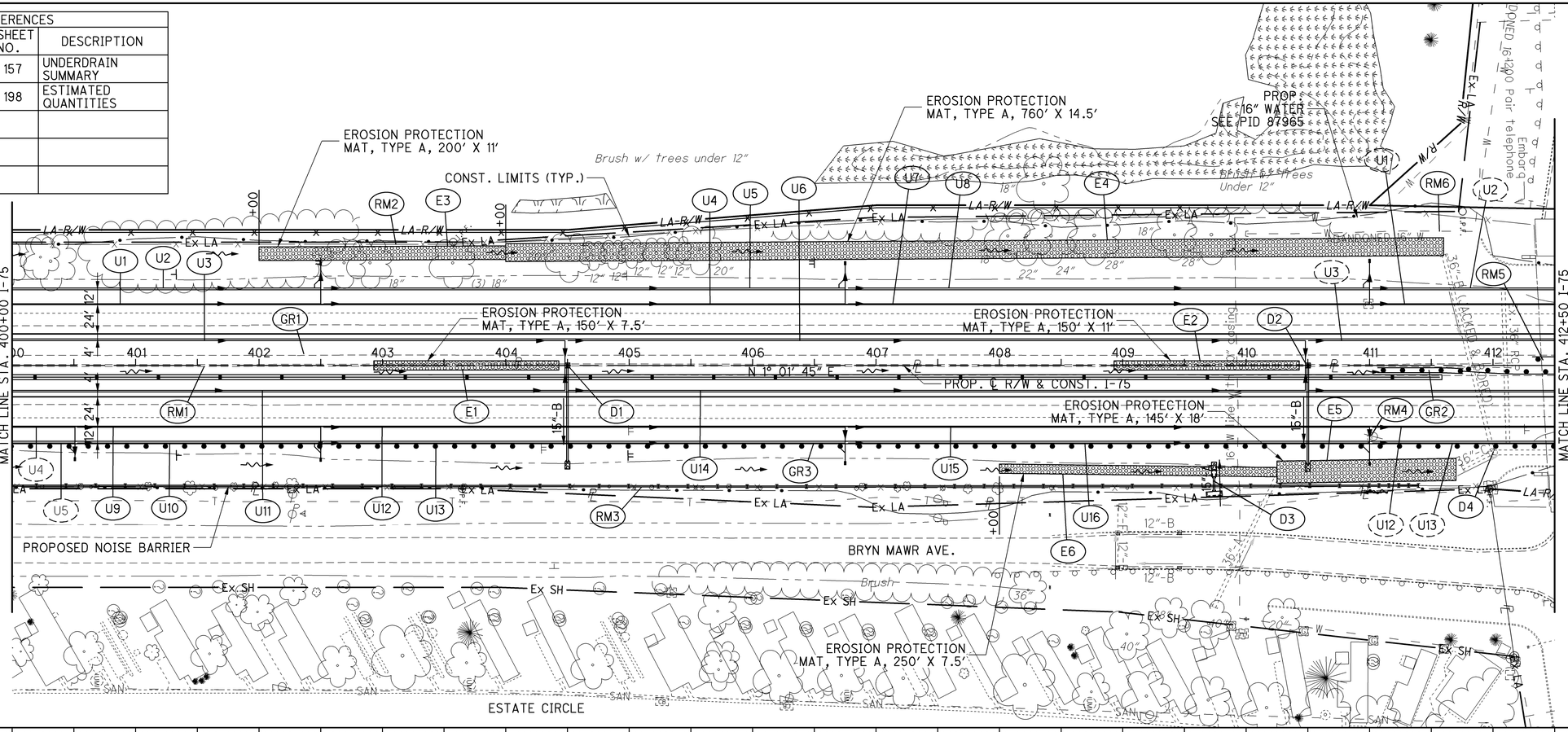

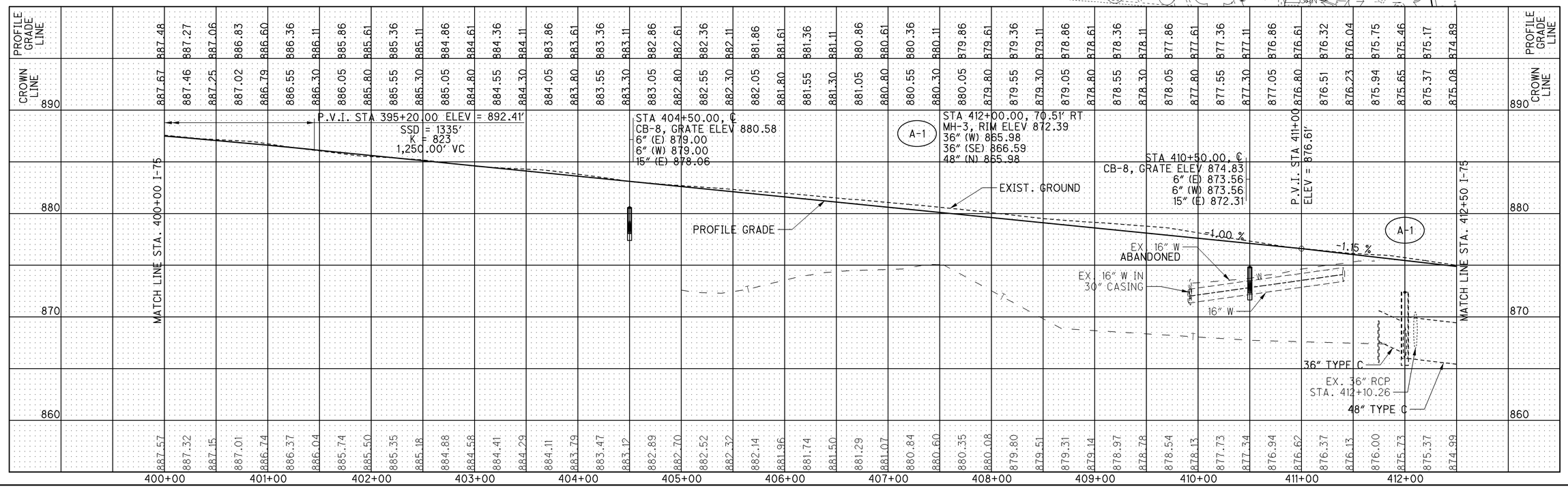

N

HORIZONTAL SCALE IN FEET
0 25 50 100

CALCULATED ACF
CHECKED EJC

PLAN AND PROFILE - I-75
STA. 400+00 TO STA. 412+50

ALL-75-5.53

197
1224

J:\Projects\ALL\76691\roadway\sheets\76691GP033.dgn 11-SEP-2012 8:53PM reddenj

ESTIMATED QUANTITIES

CALCULATED ACF | CHECKED ABS

REF. NO.	SHEET NO.	STATION FROM	STATION TO	SIDE	202 CONCRETE BARRIER REMOVED FT	202 CONCRETE BARRIER REMOVED FOR STORAGE FT	202 BUILDING DEMOLISHED EACH	202 FENCE REMOVED FT	202 REMOVAL MISC.: CONCRETE PAD SQ YD	601 RIPRAP USING 6" REINFORCED COCNRETE SLAB SQ YD	601 TIED CONCRETE BLOCK MAT, TYPE 3 SQ YD	602 CONCRETE MASONRY CU YD	603 15" CONDUIT, TYPE A FT	603 15" CONDUIT, TYPE B FT	603 24" CONDUIT, TYPE A FT	604 CATCH BASIN, NO. 8 EACH	604 MANHOLE ADJUSTED TO GRADE EACH	606 GUARDRAIL, TYPE 5 FT	606 GUARDRAIL, BARRIER DESIGN, TYPE 5 FT	606 ANCHOR ASSEMBLY, TYPE E EACH	606 ANCHOR ASSEMBLY, TYPE T EACH	606 GUARDRAIL, MISC.: TENSIONED CABLE WITH CONCRETE FOUNDATIONS LINE POST (SOCKETED) FT	606 GUARDRAIL, MISC.: TENSION CABLE ANCHOR TERMINAL EACH	606 IMPACT ATTENUATOR, TYPE 1 (BIDIRECTIONAL) EACH	638 WATER WORK, MISC.: REMOVAL OF 16" DUCTILE IRON PIPE FT	670 DITCH EROSION PROTECTION MAT, TYPE A SQ YD
RM1	196	387+50	400+00	C	1250																						
RM2	196	387+50	400+00	LT				1270																			
RM3	196	387+50	400+00	RT				1250																			
	196																										
GR1	196	387+50.00	392+35.00	C																		435	1				
GR2	196	391+35.00	400+00.00	C																		815	1				
GR3		387+50.00	392+56.59	RT														487.5			1						
GR4	196	397+60.31	400+00.00	RT														325		1							
	196																										
D1	196	399+00		LT								0.25		85		1											
D2	196	391+24	391+61	RT						5.11	3.11	0.48			37												
D3		392+03	392+28	RT						5.11	3.11	0.48			24												
	196																										
E1	196	397+43	398+93	C																							125
	196																										
	196																										
RM1		400+00	412+15	C	1215																						
RM2		400+00	409+82	LT				997																			
RM3		400+00	408+00	RT				1140																			
RM4	197	410+98	411+02	RT					2.2																		
RM5	197	412+15	412+50	C		74																					
RM6	197	410+00	411+83	LT																						191	
	197																										
GR1	197	400+00.00	411+70.57	C																		1157	1				
GR2	197	411+06.61	412+50.00	C														75	37.5					1			
GR3		400+00.00	412+50.00	RT														1250									
	197																										
D1	197	404+50		RT							2.67	0.25		78		1											
D2	197	410+50		RT							2.67	0.25		80		1											
D3		409+74		RT						8.21	2.67	0.50	12														
D4	197	412+00	413+50	RT													1										
	197																										
E1	197	402+93	404+43	C																							125
E2	197	408+93	410+43	C																							183.3
E3		402+00	404+00	LT																							244.4
E4	197	404+00	411+60	LT																							1224
E5	197	410+25	411+70	RT																							290
E6	197	408+00	410+25	RT																							184.2
	197																										
	197																										
	197																										
TOTALS CARRIED TO ROADWAY SUBSUMMARY					2465	74	0	4657	2.2	18.43	14.23	2.21	12	243	61	3	1	2137.5	37.5	1	1	2407	3	1	191	2376

ALL-75-5.53

198
1224

J:\Projects\ALL\76691\roadway\sheets\76691GQ033.dgn 11-SEP-2012 8:53PM redderj

USE OF LONG-SPAN GUARDRAIL IS REQUIRED TO AVOID A CONFLICT BETWEEN GUARDRAIL POST AND CONDUIT. THIS LOCATION OF LONG-SPAN GUARDRAIL INCLUDES:

-STA. 419+86.35, 63.50' RT. TO STA. 420+11.35, 63.50' RT.

CROSS REFERENCES			
SHEET NO.	DESCRIPTION	SHEET NO.	DESCRIPTION
302	CROSS SECTIONS	157	UNDERDRAIN SUMMARY
304	DRAINAGE DETAILS	200	ESTIMATED QUANTITIES
746	RETAINING WALL DETAILS		

HORIZONTAL SCALE IN FEET
0 25 50 100

CALCULATED ACF CHECKED EJC

I-75 STA. 412+78.54
RESERVOIR RD.
STA. 104+01.20

MATCH LINE STA. 412+50 I-75

MATCH LINE STA. 425+00 I-75

RESERVOIR RD.

EROSION PROTECTION MAT, TYPE A, 150' X 7.5'

EROSION PROTECTION MAT, TYPE A, 19' X 7.5'

CONST. LIMITS (TYP.)

EROSION PROTECTION TIED CONCRETE BLOCK MAT, TYPE 1 430' X 15'

20'X25' TIED CONCRETE BLOCK MAT, TYPE 3 RIP RAP BASIN

EROSION PROTECTION MAT, TYPE A, 700' X 11'

CITY OF LIMA

2-Lines in casing Bolted To bridge

EROSION PROTECTION MAT, TYPE A, 150' X 7.5'

EROSION PROTECTION MAT, TYPE A, 150' X 7.5'

PROPOSED RETAINING WALL 9

N 1° 01' 45" E
PROP. ℄ R/W & CONST. I-75

GEOGRID AREA

EROSION PROTECTION MAT, TYPE A, 86' X 7.5'

EROSION PROTECTION MAT, TYPE A, 300' X 7.5'

EROSION PROTECTION MAT, TYPE A, 150' X 7.5'

EROSION PROTECTION MAT, TYPE A, 50' X 7.5'

DO NOT DISTURB WETLAND OUTSIDE R/W FENCE

Steel bollards

EROSION PROTECTION MAT, TYPE A, 100' X 11'

EROSION PROTECTION MAT, TYPE A, 150' X 14.5'

RESERVOIR RD.
EX. EMBARQ 200 PAIR TELE. ATTACHED UNDER EX. BRIDGE

MIN. PROP. V.C. = 17'
ACTUAL PROP. V.C. = 17.12'

RECONSTRUCT TO GRADE
STA 413+50.00, 70.51' RT
MH-3, EX. RIM ELEV 870.80
PROP. RIM ELEV. 871.80
48" (S) 864.29
48" (NE) 864.29

STA 414+77.00, ℄
CB-8, GRATE ELEV 870.82
15" (N) 868.30

STA 415+05.01, ℄
CB-8, GRATE ELEV 870.70
6" (E) 869.73
6" (W) 869.73
15" (S) 868.19
15" (N) 868.19
18" (E) 867.94

STA 416+00.00, ℄
CB-8, GRATE ELEV 871.07
6" (E) 869.95
6" (W) 869.95
15" (S) 868.55

STA 105+25.00, 95.34' LT
MH-3, RIM ELEV 869.99
48" (SW) 863.81
48" (NE) 863.81
21" (SE) 863.81

STA 420+00.00, ℄
CB-8, GRATE ELEV 876.61
6" (E) 875.46
6" (W) 875.46
15" (E) 874.09

P.V.I. STA 428+00.00
ELEV = 893.80'
SSD = 755'
K = 264
1,000.00' VC

PROFILE GRADE

EXIST. GROUND

STA 424+79.86, 125.36' RT
MH-3, RIM ELEV 862.83
54" (S) 853.63
54" (N) 853.63

PROP. HW-1.1
I-75 STA. 424+00.00, 120.62' RT
54" = 854.53

EX. 36" W IN 60" ENCASING EL. UNKNOWN

80'-54" TYPE C @ 1.12%

-1.15 %

+1.85 %

48" TYPE B

95'-15" TYPE B @ 0.38%

28'-15" TYPE B @ 0.39%

48" TYPE C

48" TYPE C

P.V.I. STA 415+75.00 ELEV = 871.15'
K = 200
600.00' VC

PROFILE GRADE LINE: 874.89 874.60 874.33 874.09 873.88 873.70 873.55 873.44 873.35 873.30 873.28 873.29 873.33 873.40 873.50 873.64 873.80 874.00 874.23 874.49 874.78 875.10 875.45 875.83 876.25 876.70 877.16 877.62 878.08 878.55 879.01 879.47 879.93 880.39 880.86 881.32 881.78 882.24 882.71 883.17 883.63 884.09 884.56 885.01 885.43 885.84 886.21 886.57 886.90 887.21 887.50

CROWN LINE: 875.08 874.79 874.52 874.28 874.07 873.89 873.74 873.63 873.54 873.49 873.47 873.48 873.52 873.59 873.69 873.83 873.99 874.19 874.42 874.68 874.97 875.29 875.64 876.03 876.44 876.89 877.35 877.81 878.28 878.74 879.20 879.66 880.12 880.59 881.05 881.51 881.97 882.44 882.90 883.36 883.82 884.28 884.75 885.20 885.62 886.03 886.41 886.76 887.10 887.40 887.69

874.99 874.81 874.73 874.52 874.24 873.95 873.69 873.53 873.39 873.24 873.25 873.24 873.16 873.21 873.30 873.39 873.48 873.67 873.72 873.77 873.87 874.00 874.13 874.18 874.43 874.56 874.78 875.14 875.53 876.14 876.47 876.79 877.14 877.51 877.75 878.04 878.34 878.64 879.03 879.36 879.43 879.67 880.18 880.45 880.91 881.26 881.55 881.91 882.40 882.78 883.00

413+00 414+00 415+00 416+00 417+00 418+00 419+00 420+00 421+00 422+00 423+00 424+00 425+00

J:\Projects\ALL\76691\roadway\sheets\76691GP034.dgn 11-SEP-2012 8:54PM reddenj

PLAN AND PROFILE - I-75
STA. 412+50 TO STA. 425+00

ALL-75-5.53

199
1224

REF. NO.	SHEET NO.	STATION FROM	STATION TO	SIDE	202 CONCRETE BARRIER REMOVED FT	202 CONCRETE BARRIER REMOVED FOR STORAGE FT	202 PIPE REMOVED, 24" AND UNDER FT	202 GUARDRAIL REMOVED FT	202 ANCHOR ASSEMBLY REMOVED EACH	202 FENCE REMOVED FT	601 TIED CONCRETE BLOCK MAT, TYPE 3 SQ YD	601 TIED CONCRETE BLOCK MAT, TYPE 1 SQ YD	602 CONCRETE MASONRY CU YD	603 15" CONDUIT, TYPE B FT	603 15" CONDUIT, TYPE F FT	603 18" CONDUIT, TYPE B FT	604 CATCH BASIN, NO. 8 EACH	604 MANHOLE ADJUSTED TO GRADE EACH	606 GUARDRAIL, TYPE 5 FT	606 GUARDRAIL, BARRIER DESIGN, TYPE 5 FT	606 ANCHOR ASSEMBLY, TYPE E EACH	606 ANCHOR ASSEMBLY, TYPE T EACH	606 GUARDRAIL, MISC.: TENSIONED CABLE WITH CONCRETE FOUNDATIONS LINE POST (SOCKETED) FT	606 GUARDRAIL, MISC.: TENSION CABLE ANCHOR TERMINAL EACH	606 IMPACT ATTENUATOR, TYPE 1 (BIDIRECTIONAL) EACH	670 DITCH EROSION PROTECTION MAT, TYPE A SQ YD
RM1	199	413+25	425+00	C	1175																					
RM2	199	412+50	413+25	C		152																				
RM3	199	419+40	425+00	LT				562.5	1																	
RM4	199	419+02	425+00	RT				600	1																	
RM5	199	415+00	425+00	RT						1012																
RM6	199	413+90	425+00	LT						1137																
RM7	199	422+97		RT			11																			
GR1	199	412+50.00	413+13.05	C															50			1				
GR2	199	412+32.03	414+25.94	C															112.5	37.5					1	
GR3	199	413+77.94	424+71.36	C																			1174	1		
GR4	199	417+46.99	425+00.00	RT															700		1					
GR5	199	419+30.25	425+00.00	LT															562.5			1				
GR6	199	424+12.26	425+00.00	C															12.5	37.5					1	
GR7	199	412+50.00	413+97.81	RT															137.5			1				
D1	199	414+77	415+05	C										28			1									
D2	199	415+05		RT									0.31			83	1									
D3	199	415+05	416+00	C										95			1									
D4	199	420+00		RT									0.25	57	51		1									
D5	199	413+50		RT														1								
E1	199	413+20	414+70	RT																						125
E2	199	414+79	414+98	C																						15.83
E3	199	415+12	415+98	C																						71.67
E4	199	416+07	417+57	C																						125
E5	199	420+07	421+57	C																						125
E6	199	418+50	420+50	RT																						250
E7	199	420+50	422+00	RT																						122.22
E8	199	422+00	423+92	RT																						241.67
E9	199	423+92	424+50	RT																						41.67
E10	199	418+00	421+50	LT																						928.89
E11	199	421+50	421+70	LT							55.6															
E12	199	421+70	425+00	LT								550														
E13	199	413+20	414+70	LT																						125
TOTALS CARRIED TO ROADWAY SUBSUMMARY					1175	152	11	1162.5	2	2149	55.6	550	0.56	180	51	83	4	1	1575	75	1	3	1174	1	2	2172

CALCULATED ACF
CHECKED ABS

ESTIMATED QUANTITIES

ALL-75-5.53

200
1224

J:\Projects\ALL\76691\roadway\sheets\76691GQ034.dgn 15-JAN-2013 12:10PM fedak

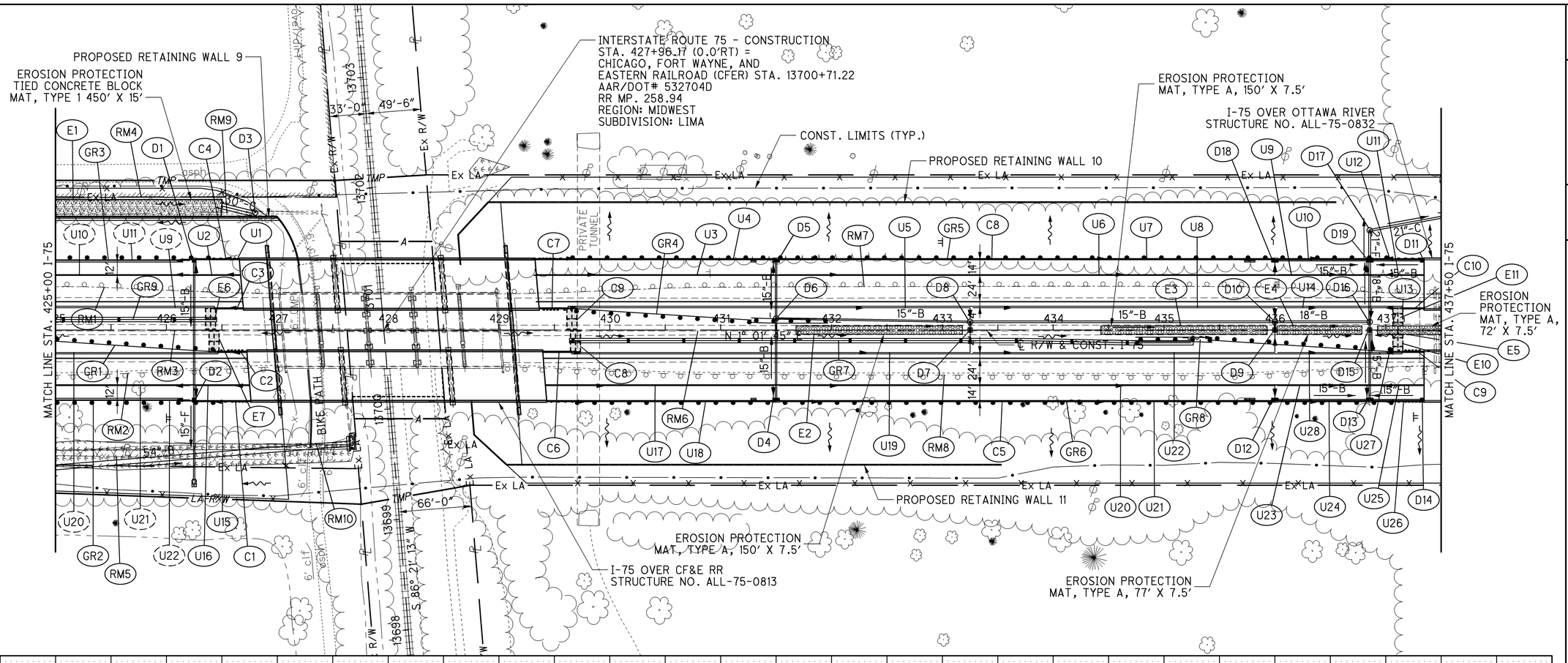

CROSS REFERENCES			
SHEET NO.	DESCRIPTION	SHEET NO.	DESCRIPTION
310	CROSS SECTIONS	1011	STRUCTURE NO. ALL-75-0832
311	DRAINAGE DETAILS	158	UNDERDRAIN SUMMARY
651	PAVEMENT DETAILS	203	ESTIMATED QUANTITIES
746	RETAINING WALL DETAILS		
974	STRUCTURE NO. ALL-75-0813		

FOR PROFILE SEE SHEET 202

HORIZONTAL SCALE IN FEET
0 25 50 100

CALCULATED ACF
CHECKED EJC

PLAN AND PROFILE - I-75
STA. 425+00 TO STA. 437+50

ALL-75-5.53

201
1224

J:\Projects\ALL\76691\roadway\sheets\76691GP035.dgn 11-SEP-2012 8:54PM redden

PROFILE - I-75
STA. 425+00 TO STA. 437+50

CALCULATED ACF
CHECKED EJC

ALL-75-5.53

J:\Projects\ALL\76691\roadway\sheets\76691GF035.dgn 11-SEP-2012 8:54PM reddenj

PROFILE GRADE LINE: 887.76 888.00 888.21 888.40 888.57 888.71 888.83 888.93 889.00 889.05 889.07 889.07 889.05 889.00 888.93 888.84 888.72 888.58 888.42 888.23 888.02 887.78 887.53 887.24 886.94 886.61 886.25 885.88 885.48 885.05 884.60 884.13 883.65 883.20 882.78 882.39 882.03 881.71 881.42 881.16 880.93 880.74 880.58 880.45 880.36 880.29 880.26 880.27 880.30 880.34

CROWN LINE: 887.95 888.19 888.40 888.59 888.76 888.90 889.02 889.12 889.19 889.24 889.26 889.26 889.24 889.20 889.13 889.03 888.92 888.78 888.61 888.42 888.21 887.98 887.72 887.44 887.13 886.80 886.45 886.07 885.67 885.24 884.80 884.33 883.84 883.39 882.97 882.58 882.22 881.90 881.61 881.35 881.13 880.93 880.77 880.64 880.55 880.49 880.46 880.46 880.49 880.53

920 910 900 890 880 870 860 850

P.V.I. STA 428+00.00 ELEV = 893.80′
SSD = 755′
K = 264
1,000.00′ VC

STA 426+25.00, 63.50′ RT
CB-3A, GRATE ELEV 887.99
6″ (N) 884.52
6″ (W) 884.07
15″ (W) 880.70
15″ (E) 880.70

STA 426+25.00, 63.50′ LT
CB-3A, GRATE ELEV 887.99
6″ (N) 884.40
6″ (E) 883.76
15″ (E) 881.90

+1.85 %
-1.93 %

STA 431+50.00, 10.50′ LT
MH-3, RIM ELEV 885.24
15″ (W) 879.22
15″ (E) 879.22
15″ (N) 879.22

STA 431+50.00, 63.50′ LT
CB-3, GRATE ELEV 885.69
6″ (S) 882.49
6″ (E) 881.96
15″ (E) 879.47

STA 431+50.00, 63.50′ RT
CB-3, GRATE ELEV 885.69
6″ (S) 882.49
6″ (W) 881.96
15″ (W) 879.47

PROFILE GRADE

STA 433+25.00, 7.50′ LT
MH-3, RIM ELEV 882.03
6″ (W) 880.90
15″ (S) 877.57
15″ (E) 877.57
18″ (N) 877.32

STA 433+25.00, ℄
CB-8, GRATE ELEV 881.18
6″ (S) 880.09
15″ (W) 877.65

EXIST. GROUND

175′-15″ TYPE B @ 0.95%

STA 436+00.00, 63.50′ RT
CB-3, GRATE ELEV 879.53
6″ (S) 876.33
6″ (W) 875.80
15″ (N) 872.86

STA 436+00.00, 7.50′ LT
MH-3, RIM ELEV 878.82
6″ (W) 876.98
18″ (S) 872.14
18″ (N) 872.14
15″ (E) 872.39

STA 436+00.00, ℄
CB-8, GRATE ELEV 877.92
6″ (E) 876.50
15″ (W) 872.45

-1.93 %
+0.15 %

275′-18″ TYPE B @ 1.88%

STA 436+85.54, 7.50′ LT
MH-3, RIM ELEV 878.64
6″ (W) 876.85
15″ (E) 870.75
18″ (S) 870.50
18″ (W) 870.50

STA 436+85.54, 63.50′ RT
CB-3, GRATE ELEV 879.50
6″ (N) 875.63
6″ (S) 875.63
6″ (W) 876.21
15″ (S) 871.55
15″ (W) 871.55
15″ (N) 871.55

STA 436+85.54, ℄
CB-8, GRATE ELEV 877.68
6″ (E) 876.77
15″ (E) 870.95
15″ (W) 870.95

STA 436+85.54, 63.50′ LT
CB-3, GRATE ELEV 879.50
6″ (N) 875.63
6″ (S) 875.63
6″ (E) 876.21
18″ (E) 868.65
15″ (N) 871.70
15″ (S) 868.90
21″ (W) 868.40

STA 436+85.54, 90.00′ LT
MH-3, RIM ELEV 867.45
21″ (E) 863.24
21″ (N) 863.24

STA 437+32.85, 63.50′ LT
CB-3A, GRATE ELEV 879.39
15″ (S) 872.64

STA 437+32.85, 63.50′ RT
CB-3A, GRATE ELEV 879.39
15″ (S) 872.64

86′-15″ TYPE B @ 1.53%, RT.
86′-15″ TYPE B @ 4.63%, LT.
86′-18″ TYPE B @ 1.92%
47′-15″ TYPE B @ 1.99%, LT.
47′-15″ TYPE B @ 2.3%, RT.
97′-21″ TYPE C @ 2.25%

P.V.I. STA 435+15.00 ELEV = 879.98′
K = 192
400.00′ VC

MATCH LINE STA. 425+00 I-75

MATCH LINE STA. 437+50 I-75

BIKE PATH

PROP. RETAINING WALL
I-75 STA. 427+65.90, 102.27′ RT
54″ = 850.37

STA 426+80.00, 105.91′ LT
MH-3, RIM ELEV 859.26
30″ (S) 851.40
EX. 30″ (N) 851.40

℄ TRACK

EX R/W

33′

49.5′

EX R/W

MIN. PROP. V.C. = 23.5′
ACTUAL PROP. V.C. = 23.69′

INTERSTATE ROUTE 75 - CONSTRUCTION
STA. 427+96.17 (0.0′RT) =
CHICAGO, FORT WAYNE, AND
EASTERN RAILROAD (CFER)
AAR/DOT# 532704D
RR MP. 258.94
REGION: MIDWEST
SUBDIVISION: LIMA

EX. 30″ @ 0.28%
TO BE REMOVED

287′-54″ TYPE C @ 1.14%

31′-30″ TYPE C @ 0.23%

PROP. HW-2.2
I-75 STA. 426+50.11, 113.28′ LT
30″ (N) = 851.47

EXIST. HEADWALL
I-75 STA. 427+40+83, 106.23′ LT
EX 30″ (S) = 851.23

883.30 883.36 883.48 883.81 883.97 884.15 884.32 884.42 884.44 884.45 884.46 884.47 884.48 884.49 884.50 884.51 884.24 884.18 883.89 883.55 883.24 882.89 882.75 882.39 882.05 881.73 881.50 881.31 880.91 880.49 880.41 880.28 879.94 879.64 879.61 879.39 879.12 879.02 879.01 878.80 878.65 878.56 878.53 878.49 878.66 878.69 878.78 878.98 879.21 879.35

425+00 426+00 427+00 428+00 429+00 430+00 431+00 432+00 433+00 434+00 435+00 436+00 437+00

REF. NO.	SHEET NO.	STATION FROM	STATION TO	SIDE	202 CONCRETE BARRIER REMOVED FT	202 PIPE REMOVED, OVER 24" FT	202 GUARDRAIL REMOVED FT	202 ANCHOR ASSEMBLY REMOVED EACH	202 BRIDGE TERMINAL ASSEMBLY REMOVED EACH	202 FENCE REMOVED FT	606 GUARDRAIL, TYPE 5 FT	606 GUARDRAIL, BARRIER DESIGN, TYPE 5 FT	606 BRIDGE TERMINAL ASSEMBLY, TYPE 1 EACH	606 BRIDGE TERMINAL ASSEMBLY, TYPE 2 EACH	606 GUARDRAIL, MISC.: TENSIONED CABLE WITH CONCRETE FOUNDATIONS LINE POST (SOCKETED) FT	606 GUARDRAIL, MISC.: TENSION CABLE ANCHOR TERMINAL EACH	606 IMPACT ATTENUATOR, TYPE 1 (BIDIRECTIONAL) EACH	609 CURB, TYPE 4-C FT
RM1	201	425+00	427+02	LT			200		1									
RM2	201	425+00	427+11	RT			212.5		1									
RM3	201	425+00	427+04	C	204													
RM4	201	425+00	427+03	LT						271								
RM5	201	425+00	427+08	RT						290								
RM6	201	429+01	437+43	C	842													
RM7	201	428+98	437+46	LT			848	1	1									
RM8	201	429+03	437+48	RT			845	1	1									
RM9	201	426+31	426+80	LT		49												
RM10	201	426+98	427+66	RT		68												
GR1	201	425+00.00	426+74.64	C							150		1					
GR2	201	425+00.00	426+78.24	RT							150		1					
GR3	201	425+00.00	426+67.75	LT							137.5			1				
GR4	201	429+34.25	431+96.66	LT							162.5	37.5	1				1	
GR5	201	429+30.65	437+36.64	LT							749.8		1	1				
GR6	201	429+41.14	437+36.75	RT							739.4		1	1				
GR7	201	431+46.66	435+27.65	C											460	2		
GR8	201	434+74.34	437+36.75	RT							162.5	37.5	1				1	
GR9	201	425+00.00	426+43.35	LT											93	1		
C1	201	426+13	426+76	RT														63
C2	201	426+47	426+73	RT														26
C3	201	426+43	426+69	LT														26
C4	201	426+13	426+66	LT														53
C5	201	429+43	437+65	RT														822
C6	201	429+40	429+66	RT														26
C7	201	429+36	429+62	LT														26
C8	201	429+33	437+35	LT														802
C9	201	437+15	437+35	RT														20
C10	201	437+15	437+35	LT														20
TOTALS CARRIED TO ROADWAY SUBSUMMARY					1046	117	2106	2	4	561	2251.6	75	6	3	553	3	2	1884

CALCULATED ACF
CHECKED ABS

ESTIMATED QUANTITIES

ALL-75-5.53

203
1224

J:\Projects\ALL\76691\roadway\sheets\76691G0035.dgn 11-SEP-2012 8:54PM reddenj

REF. NO.	SHEET NO.	STATION FROM	STATION TO	SIDE	503 COFFERDAMS AND EXCAVATION BRACING LUMP	601 TIED CONCRETE BLOCK MAT, TYPE 1 SQ YD	601 ROCK CHANNEL PROTECTION, TYPE C WITH FABRIC FILTER CU YD	602 CONCRETE MASONRY CU YD	603 15" CONDUIT, TYPE B FT	603 15" CONDUIT, TYPE F FT	603 18" CONDUIT, TYPE B FT	603 21" CONDUIT, TYPE C FT	603 21" CONDUIT, TYPE F FT	603 30" CONDUIT, TYPE C FT	603 15" CONDUIT, TYPE B BORED AND JACKED FT	603 18" CONDUIT, TYPE B BORED AND JACKED FT	604 CATCH BASIN, NO. 3 EACH	604 CATCH BASIN, NO. 3A EACH	604 CATCH BASIN, NO. 8 EACH	604 MANHOLE, NO. 3 EACH	670 DITCH EROSION PROTECTION MAT, TYPE A SQ YD
D1	201	426+25		LT/RT					126									1			
D2	201	426+25		RT				0.25		75								1			
D3	201	426+50	426+80	LT				0.56						31						1	
D4	201	431+50		RT					74								1				
D5	201	431+50		LT					53								1				
D6	201	431+50	433+25	LT					175											1	
D7	201	433+25		LT					8										1		
D8	201	433+25	436+00	LT					275											1	
D9	201	436+00		LT					8										1		
D10	201	436+00	436+86	LT							86									1	
D11	201	436+86	437+33	LT					47									1			
D12	201	436+00	436+86	RT					86								1				
D13	201	436+86		RT	1				13						50		1				
D14	201	436+86	437+33	RT					47									1			
D15	201	436+86		LT					8										1		
D16	201	436+86		LT	1						6					50				1	
D17	201	436+86	437+81	LT			3.6	0.37				97								1	
D18	201	436+00	436+86	LT					86								1				
D19	201	436+86		LT									30				1				
D20	201	436+86	437+33	LT					47									1			
E1	201	425+00	426+50	LT		250															
E2	201	431+68	433+18	C																	125
E3	201	434+43	435+93	C																	125
E4	201	436+02	436+97	C																	64.17
E5	201	436+93	437+64	C																	60
E6	201	426+40		LT		18.6															
E7	201	426+43		RT		18.6															
E8	201	429+69		RT		18.6															
E9	201	429+66		LT		18.6															
E10	201	437+11		RT		15.7															
E11	201	437+11		LT		15.7															
TOTALS CARRIED TO ROADWAY SUBSUMMARY					2	355.8	3.6	1.18	1053	75	92	97	30	31	50	50	6	5	3	6	374.17

CALCULATED ACF
CHECKED ABS

ESTIMATED QUANTITIES

ALL-75-5.53

204
1224

J:\Projects\ALL\76691\roadway\sheets\76691GQ035A.dgn 14-JAN-2013 6:23PM fedak

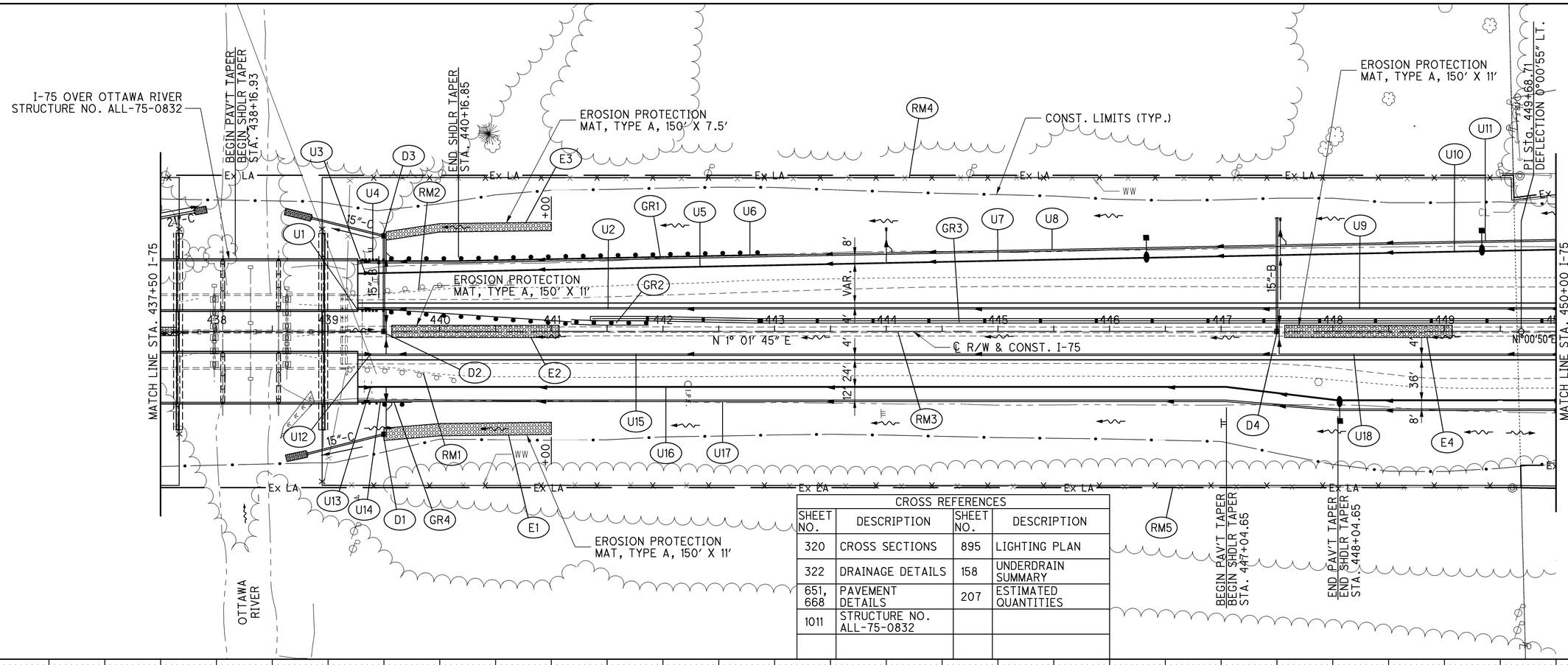

CROSS REFERENCES			
SHEET NO.	DESCRIPTION	SHEET NO.	DESCRIPTION
320	CROSS SECTIONS	895	LIGHTING PLAN
322	DRAINAGE DETAILS	158	UNDERDRAIN SUMMARY
651, 668	PAVEMENT DETAILS	207	ESTIMATED QUANTITIES
1011	STRUCTURE NO. ALL-75-0832		

FOR PROFILE SEE SHEET 206

HORIZONTAL SCALE IN FEET
0 25 50 100

CALCULATED ACF
CHECKED EJC

PLAN AND PROFILE - I-75
STA. 437+00 TO STA. 450+00

ALL-75-5.53

205
1224

J:\Projects\ALL\76691\roadway\sheets\76691GP036.dgn 11-SEP-2012 8:54PM reddenj

J:\Projects\ALL\76691\roadway\sheets\76691GF036.dgn 11-SEP-2012 8:54PM reddenj

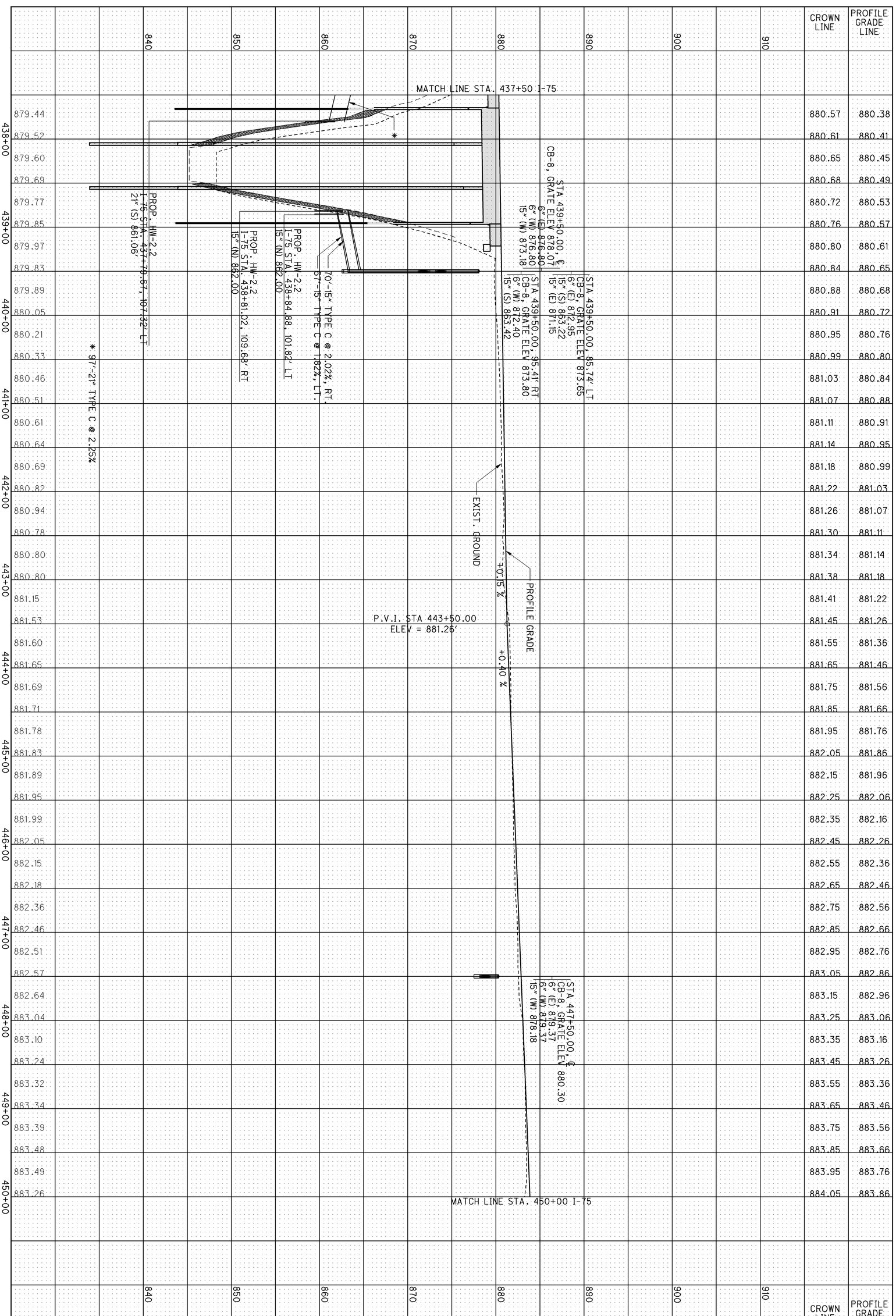

840	850	860	870	880	890	900	910	CROWN LINE	PROFILE GRADE LINE
879.44								880.57	880.38
879.52								880.61	880.41
879.60								880.65	880.45
879.69								880.68	880.49
879.77								880.72	880.53
879.85								880.76	880.57
879.97								880.80	880.61
879.83								880.84	880.65
879.89								880.88	880.68
880.05								880.91	880.72
880.21								880.95	880.76
880.33								880.99	880.80
880.46								881.03	880.84
880.51								881.07	880.88
880.61								881.11	880.91
880.64								881.14	880.95
880.69								881.18	880.99
880.82								881.22	881.03
880.94								881.26	881.07
880.78								881.30	881.11
880.80								881.34	881.14
880.80								881.38	881.18
881.15								881.41	881.22
881.53								881.45	881.26
881.60								881.55	881.36
881.65								881.65	881.46
881.69								881.75	881.56
881.71								881.85	881.66
881.78								881.95	881.76
881.83								882.05	881.86
881.89								882.15	881.96
881.95								882.25	882.06
881.99								882.35	882.16
882.05								882.45	882.26
882.15								882.55	882.36
882.18								882.65	882.46
882.36								882.75	882.56
882.46								882.85	882.66
882.51								882.95	882.76
882.57								883.05	882.86
882.64								883.15	882.96
883.04								883.25	883.06
883.10								883.35	883.16
883.24								883.45	883.26
883.32								883.55	883.36
883.34								883.65	883.46
883.39								883.75	883.56
883.48								883.85	883.66
883.49								883.95	883.76
883.26								884.05	883.86
840	850	860	870	880	890	900	910	CROWN LINE	PROFILE GRADE LINE

438+00 439+00 440+00 441+00 442+00 443+00 444+00 445+00 446+00 447+00 448+00 449+00 450+00

206
1224

ALL-75-5.53

PROFILE - I-75
STA. 437+50 TO STA. 450+00

CALCULATED ACF
CHECKED EJC

REF. NO.	SHEET NO.	STATION FROM	STATION TO	SIDE	202 CONCRETE BARRIER REMOVED FT	202 GUARDRAIL REMOVED FT	202 ANCHOR ASSEMBLY REMOVED EACH	202 BRIDGE TERMINAL ASSEMBLY REMOVED EACH	202 FENCE REMOVED FT	503 COFFERDAMS AND EXCAVATION BRACING LUMP	601 ROCK CHANNEL PROTECTION, TYPE C WITH FABRIC FILTER CU YD	602 CONCRETE MASONRY CU YD	603 15" CONDUIT, TYPE B FT	603 15" CONDUIT, TYPE C FT	604 CATCH BASIN, NO. 8 EACH	606 GUARDRAIL, TYPE 5 FT	606 GUARDRAIL, BARRIER DESIGN, TYPE 5 FT	606 ANCHOR ASSEMBLY, TYPE E EACH	606 ANCHOR ASSEMBLY, TYPE T EACH	606 BRIDGE TERMINAL ASSEMBLY, TYPE 1 EACH	606 BRIDGE TERMINAL ASSEMBLY, TYPE 2 EACH	606 GUARDRAIL, MISC.: TENSIONED CABLE WITH CONCRETE FOUNDATIONS LINE POST (SOCKETED) FT	606 GUARDRAIL, MISC.: TENSION CABLE ANCHOR TERMINAL EACH	606 IMPACT ATTENUATOR, TYPE 1 (BIDIRECTIONAL) EACH	670 DITCH EROSION PROTECTION MAT, TYPE A SQ YD
RM1	205	439+15	440+13	RT		100	1	1																	
RM2	205	439+16	440+67	LT		150	1	1																	
RM3	205	439+18	450+00	C	1082																				
RM4	205	439+17	450+00	LT					1200																
RM5	205	439+15	450+00	RT					1226																
GR1	205	439+24.54	442+93.20	LT												287.5		1		1					
GR2	205	439+24.54	441+86.94	C												162.5	37.5			1				1	
GR3	205	441+33.63	450+00.00	C																		813	1		
GR4	205	439+24.64	439+74.64	RT												12.5			1		1				
D1	205	438+81	439+50	RT							6.3	0.25		71	1										
D2	205	439+50		LT						1			86		1										
D3	205	438+85	439+50	LT							8.1	0.25		67	1										
D4	205	447+50		LT								0.25	102		1										
E1	205	439+50	441+00	RT																					183.3
E2	205	439+57	441+07	C																					183.3
E3	205	439+50	441+00	LT																					125
E4	205	447+57	449+07	C																					183.3
TOTALS CARRIED TO ROADWAY SUBSUMMARY					1082	250	2	2	2426	1	14.4	0.75	188	138	4	463	38	1	1	2	1	813	1	1	675

CALCULATED ACF
CHECKED ABS

ESTIMATED QUANTITIES

ALL-75-5.53

207
1224

J:\Projects\ALL\76691\roadway\sheets\76691GQ036.dgn 14-JAN-2013 6:23PM fedak

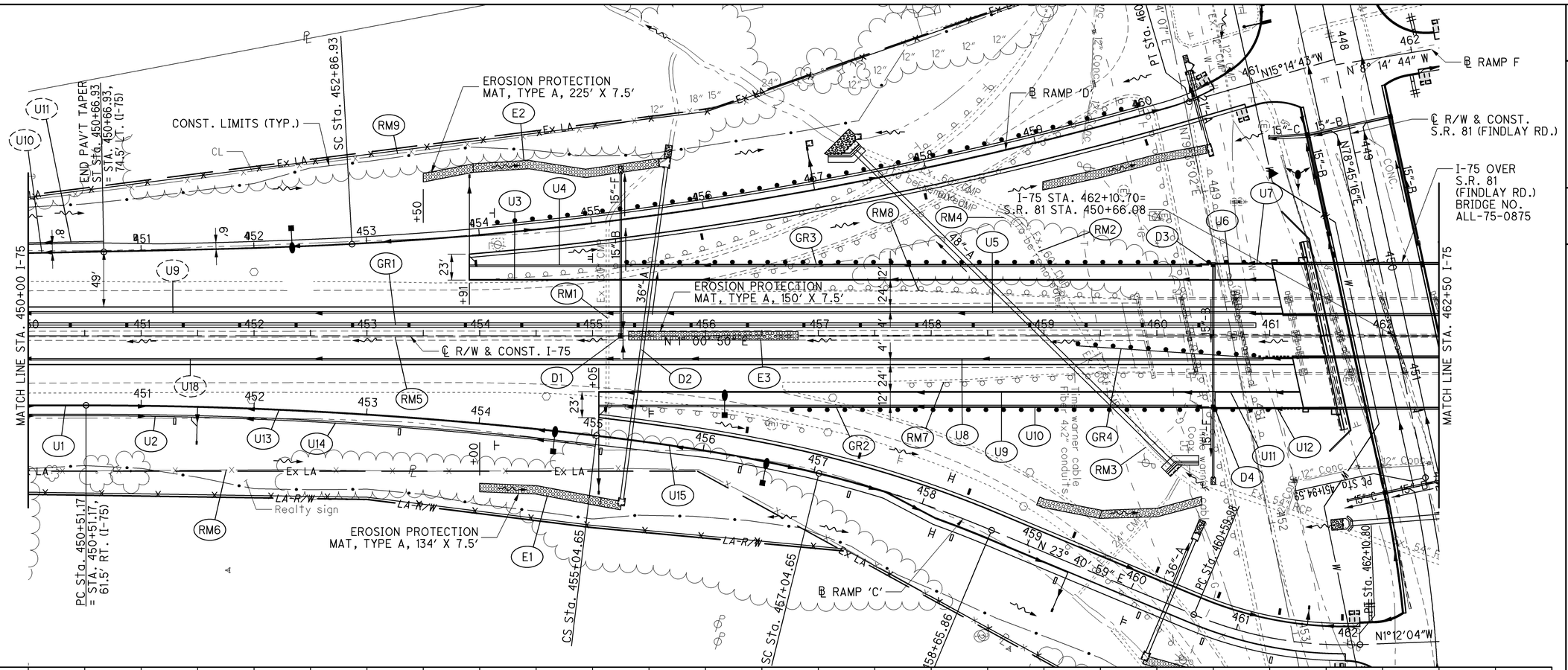

CROSS REFERENCES			
SHEET NO.	DESCRIPTION	SHEET NO.	DESCRIPTION
327	CROSS SECTIONS	895	LIGHTING PLAN
330	DRAINAGE DETAILS	611	GRADING PLANS
688	CULVERT DETAILS	159	UNDERDRAIN SUMMARY
493	S.R. 81 PLAN & PROFILE	210	ESTIMATED QUANTITIES
667, 668	PAVEMENT DETAILS		
904	LANDSCAPING PLAN		
1040	STRUCTURE NO. ALL-75-0875		

FOR PROFILE SEE SHEET 209

HORIZONTAL SCALE IN FEET
0 25 50 100

CALCULATED ACF CHECKED EJC

PLAN AND PROFILE - I-75 STA. 450+00 TO STA. 462+50

ALL-75-5.53

J:\Projects\ALL\76691\roadway\sheets\76691GP037.dgn 11-SEP-2012 8:54PM reddenj

J:\Projects\ALL\76691\roadway\sheets\76691GF037.dgn 11-SEP-2012 8:54PM reddenj

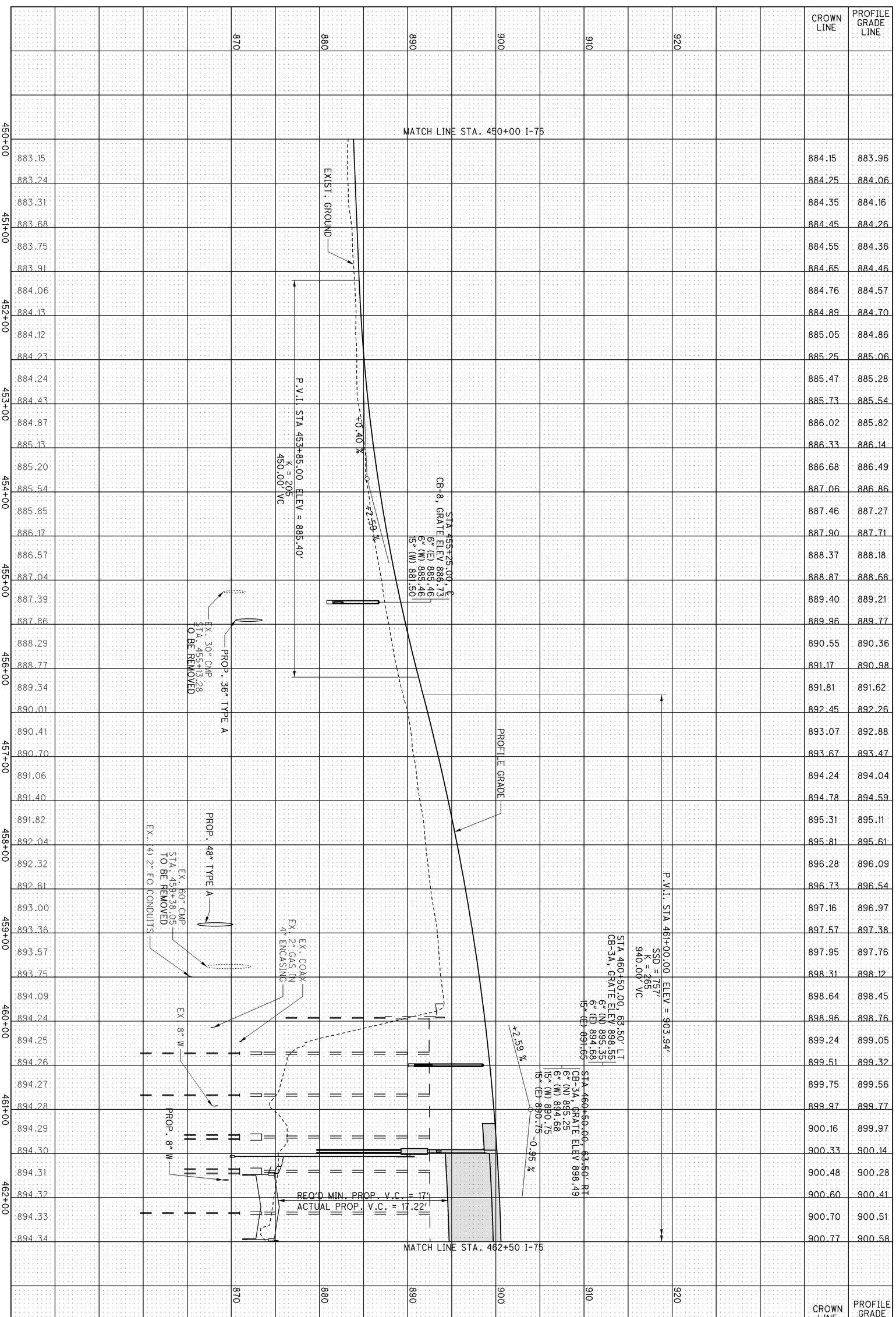

209
1224

ALL-75-5.53

PROFILE - I-75
STA. 450+00 TO STA. 462+50

CALCULATED ACF
CHECKED EJC

REF. NO.	SHEET NO.	STATION FROM	STATION TO	SIDE	202 CONCRETE BARRIER REMOVED FT	202 GUARDRAIL REMOVED FT	202 ANCHOR ASSEMBLY REMOVED EACH	202 BRIDGE TERMINAL ASSEMBLY REMOVED EACH	202 SPECIAL - FILL AND PLUG EXISTING CONDUIT FT	202 FENCE REMOVED FT	202 REMOVAL MISC.: CONCRETE PAD SQ YD	601 RIPRAP USING 6" REINFORCED COCNRETE SLAB SQ YD	601 TIED CONCRETE BLOCK MAT, TYPE 3 SQ YD	602 CONCRETE MASONRY CU YD	603 15" CONDUIT, TYPE B FT	603 15" CONDUIT, TYPE F FT	603 36" CONDUIT, TYPE A BORED AND JACKED FT	603 36" CONDUIT, TYPE A BORED AND JACKED FT	604 CATCH BASIN, NO. 3A EACH	604 CATCH BASIN, NO. 8 EACH	606 GUARDRAIL, TYPE 5 FT	606 GUARDRAIL, BARRIER DESIGN, TYPE 5 FT	606 ANCHOR ASSEMBLY, TYPE E EACH	606 ANCHOR ASSEMBLY, TYPE T EACH	606 BRIDGE TERMINAL ASSEMBLY, TYPE 1 EACH	606 BRIDGE TERMINAL ASSEMBLY, TYPE 2 EACH	606 GUARDRAIL, MISC.: TENSIONED CABLE WITH CONCRETE FOUNDATIONS LINE POST (SOCKETED) FT	606 GUARDRAIL, MISC.: TENSION CABLE ANCHOR TERMINAL EACH	606 IMPACT ATTENUATOR, TYPE 1 (BIDIRECTIONAL) EACH	670 DITCH EROSION PROTECTION MAT, TYPE A SQ YD	
RM1	208	455+13		LT/RT					193																						
RM2	208	459+38		LT/RT					209																						
RM3	208	459+88	460+37	RT							94.9																				
RM4	208	458+60	458+94	LT							36.7																				
RM5	208	450+00	459+88	C	988																										
RM6	208	450+00	460+39	RT						1100																					
RM7	208	457+78	459+97	RT		225	1	1																							
RM8	208	456+61	459+83	LT		325	1	1																							
RM9	208	450+00	458+88	LT						910																					
GR1	208	450+00.00	459+08.00	C																									1036	1	
GR2	208	456+75.65	461+31.90	RT																	375		1		1						
GR3	208	455+29.20	461+04.20	LT																	537.5			1		1					
GR4	208	458+59.96	461+22.34	RT																	162.5	37.5			1				1		
D1	208	455+25		LT									2.67	0.25	112	33				1											
D2	208	455+26	455+65	LT/RT								12.7	7.6	1.38			127	170													
D3	208	460+50		LT/RT											126				1												
D4	208	460+50		RT										0.25		64			1												
E1	208	454+00	455+25	RT																											111.7
E2	208	453+50	455+65	LT																											187.5
E3	208	455+32	456+82	C																											125
TOTALS CARRIED TO ROADWAY SUBSUMMARY					988	550	2	2	402	2010	131.6	12.7	10.27	1.88	238	97	127	170	2	1	1075	37.5	1	1	2	1	1036	1	1	424.2	

CALCULATED ACF
CHECKED ABS

ESTIMATED QUANTITIES

ALL-75-5.53

210
1224

J:\Projects\ALL\76691\roadway\sheets\76691GQ037.dgn 11-SEP-2012 8:54PM reddenj

CROSS REFERENCES			
SHEET NO.	DESCRIPTION	SHEET NO.	DESCRIPTION
334	CROSS SECTIONS	896	LIGHTING PLAN
339	DRAINAGE DETAILS	1040	STRUCTURE NO. ALL-75-0875
493	S.R. 81 PLAN & PROFILE	159	UNDERDRAIN SUMMARY
651, 665, 670	PAVEMENT DETAILS	212	ESTIMATED QUANTITIES
905	LANDSCAPING PLAN		
612	GRADING PLANS		

HORIZONTAL SCALE IN FEET
0 25 50 100

CALCULATED ACF CHECKED EJC

PLAN AND PROFILE - I-75
STA. 462+50 TO STA. 475+00

ALL-75-5.53

211
1224

J:\Projects\ALL\76691\roadway\sheets\76691GP038.dgn 11-SEP-2012 8:54PM reddenj

REF. NO.	SHEET NO.	STATION FROM	STATION TO	SIDE	202 CONCRETE BARRIER REMOVED FT	202 SPECIAL - FILL AND PLUG EXISTING CONDUIT FT	202 GUARDRAIL REMOVED FT	202 ANCHOR ASSEMBLY REMOVED EACH	202 BRIDGE TERMINAL ASSEMBLY REMOVED EACH	202 REMOVAL MISC.: CONCRETE PAD SQ YD	601 TIED CONCRETE BLOCK MAT, TYPE 3 SQ YD	602 CONCRETE MASONRY CU YD	603 CONDUIT, TYPE B 15" FT	603 CONDUIT, TYPE B 15" BORED AND JACKED FT	604 CATCH BASIN, NO. 8 EACH	606 GUARDRAIL, TYPE 5 FT	606 GUARDRAIL, BARRIER DESIGN, TYPE 5 FT	606 ANCHOR ASSEMBLY, TYPE E EACH	606 ANCHOR ASSEMBLY, TYPE T EACH	606 BRIDGE TERMINAL ASSEMBLY, TYPE 1 EACH	606 BRIDGE TERMINAL ASSEMBLY, TYPE 2 EACH	606 GUARDRAIL, MISC.: TENSIONED CABLE WITH CONCRETE FOUNDATIONS LINE POST (SOCKETED) FT	606 GUARDRAIL, MISC.: TENSION CABLE ANCHOR TERMINAL EACH	606 IMPACT ATTENUATOR, TYPE 1 (BIDIRECTIONAL) EACH	670 DITCH EROSION PROTECTION MAT, TYPE A SQ YD
RM1	211	462+67	463+08	LT						41.2															
RM2	211	469+39		LT/RT		186																			
RM3	211	462+98	475+00	C	1202																				
RM4	211	463+07	467+61	RT			462.5	1	1																
RM5	211	462+85	465+47	LT/RT			262.5	1	1																
GR1	211	462+89.51	467+70.76	LT												400		1		1					
GR2	211	462+99.07	465+61.47	LT												162.5	37.5			1				1	
GR3	211	465+13.41	475+00.00	C																		939	1		
GR4	211	463+17.21	467+17.21	RT												362.5			1		1				
D1	211	469+00		RT							2.67	0.25	106	80	1										
E1	211	467+43	468+93	C																					125
TOTALS CARRIED TO ROADWAY SUBSUMMARY					1202	186	725	2	2	41.2	2.67	0.25	106	80	1	925	37.5	1	1	2	1	939	1	1	125

CALCULATED ACF
CHECKED ABS

ESTIMATED QUANTITIES

ALL-75-5.53

212
1224

J:\Projects\ALL\76691\roadway\sheets\76691GQ038.dgn 11-SEP-2012 8:54PM redden j

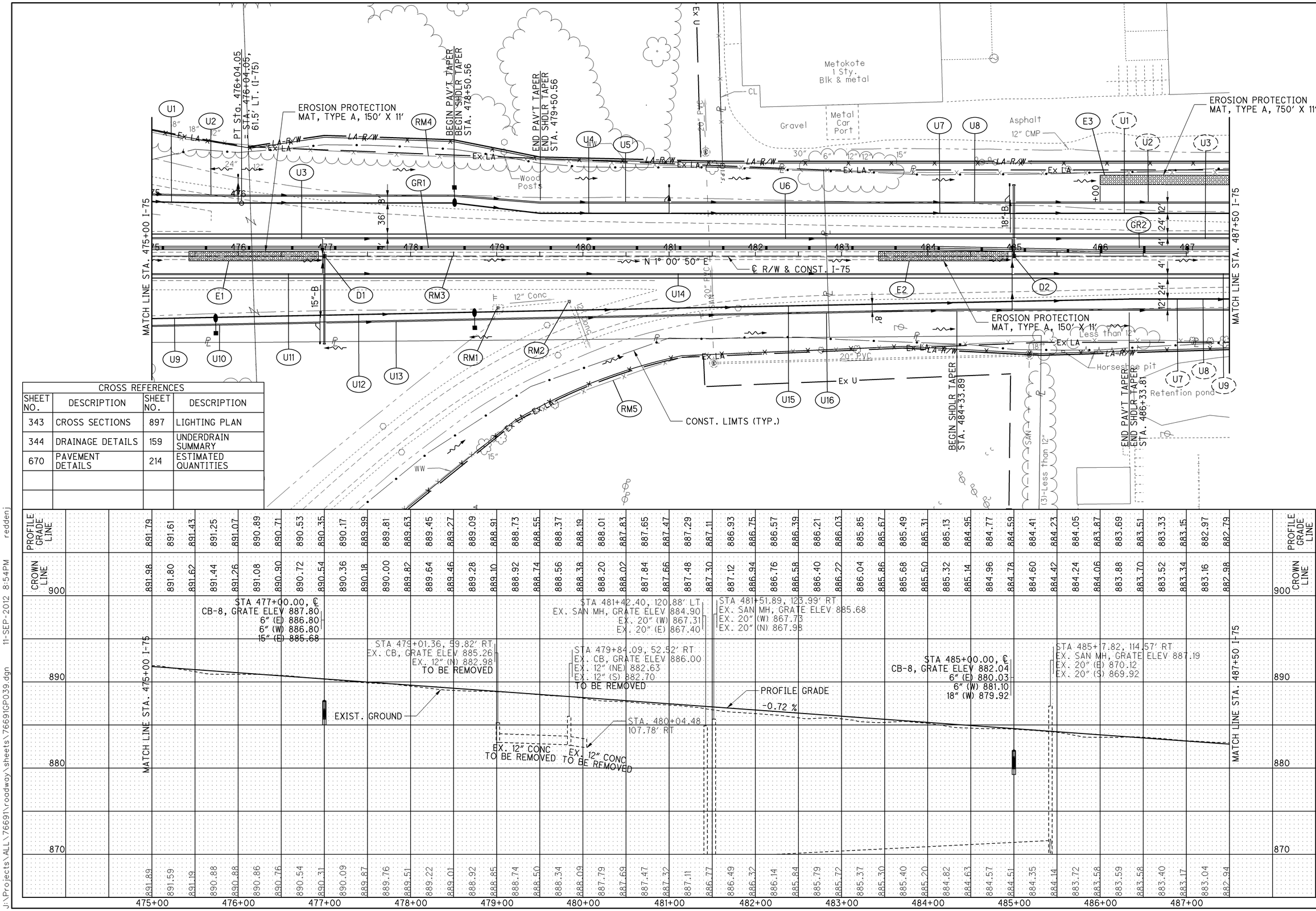

CROSS REFERENCES			
SHEET NO.	DESCRIPTION	SHEET NO.	DESCRIPTION
343	CROSS SECTIONS	897	LIGHTING PLAN
344	DRAINAGE DETAILS	159	UNDERDRAIN SUMMARY
670	PAVEMENT DETAILS	214	ESTIMATED QUANTITIES

HORIZONTAL SCALE IN FEET 0 25 50 100

CALCULATED ACF
CHECKED EJC

PLAN AND PROFILE - I-75
STA. 475+00 TO STA. 487+50

ALL-75-5.53

J:\Projects\ALL\76691\roadway\sheets\76691GP039.dgn 11-SEP-2012 8:54PM reddenj

REF. NO.	SHEET NO.	STATION FROM	STATION TO	SIDE	202 CONCRETE BARRIER REMOVED FT	202 PIPE REMOVED, 24" AND UNDER FT	202 CATCH BASIN REMOVED EACH	202 FENCE REMOVED FT	602 CONCRETE MASONRY CU YD	603 15" CONDUIT, TYPE B FT	603 18" CONDUIT, TYPE B FT	604 CATCH BASIN, NO. 8 EACH	606 GUARDRAIL, MISC.: TENSIONED CABLE WITH CONCRETE FOUNDATIONS LINE POST (SOCKETED) FT	606 GUARDRAIL, MISC.: TENSION CABLE ANCHOR TERMINAL EACH	670 DITCH EROSION PROTECTION MAT, TYPE A SQ YD
RM1	213	479+02	479+83	RT		81	1								
RM2	213	479+83	480+04	RT		58	1								
RM3	213	475+00	487+50	C	1250										
RM4	213	475+00	487+50	LT				1252							
RM5	213	475+00	487+50	RT				1402							
GR1	213	475+00.00	487+00.00	C									1150	1	
GR2	213	486+00.00	487+50.00	C									100	1	
D1	213	477+00		RT					0.25	102		1			
D2	213	485+00		LT					0.25		83	1			
E1	213	475+43	476+93	C											183.3
E2	213	483+43	484+93	C											183.3
E3	213	486+00	487+50	LT											183.3
TOTALS CARRIED TO ROADWAY SUBSUMMARY					1250	139	2	2654	0.50	102	83	2	1250	2	549.9

CALCULATED ACF
CHECKED ABS

ESTIMATED QUANTITIES

ALL-75-5.53

J:\Projects\ALL\76691\roadway\sheets\76691G0039.dgn 11-SEP-2012 8:54PM reddenj

EROSION PROTECTION MAT, TYPE A, 150′ X 11′

EROSION PROTECTION MAT, TYPE A, 750′ X 11′

EROSION PROTECTION MAT, TYPE A, 150′ X 14.5′

EROSION PROTECTION MAT, TYPE B, 350′ X 11′

EROSION PROTECTION MAT, TYPE A, 600′ X 18′

CONST. LIMITS (TYP.)

EROSION PROTECTION MAT, TYPE A, 1050′ X 14.5′

EROSION PROTECTION MAT, TYPE A, 150′ X 11′

EROSION PROTECTION MAT, TYPE A, 150′ X 11′

MATCH LINE STA. 487+50 I-75

MATCH LINE STA. 500+00 I-75

℄ R/W & CONST. I-75

N 1° 00′ 50″ E

PC Sta. 491+17.53

1 Sty. Blk & metal Warehouse Type bldg.

Asphalt

Gravel

Grass

Brush

Field

Old fence (No posts)

Retention pond

Rock channel

Ex LA

LA-R/W

CL

RCP

WW

CROSS REFERENCES			
SHEET NO.	DESCRIPTION	SHEET NO.	DESCRIPTION
349	CROSS SECTIONS	160	UNDERDRAIN SUMMARY
351	DRAINAGE DETAILS	216	ESTIMATED QUANTITIES
696	CULVERT DETAILS		

CURVE I75-7
P.I.= Sta. 504+36.28
D = 49° 04′ 23″ (RT)
Dc = 1° 59′ 00″
R = 2,888.86′
T = 1,318.76′
L = 2,474.27′
E = 286.77′
C = 2,399.34′
C.B. = N 25° 33′ 02″ E
e_d = 0.055

STA 491+50.00, ℄
CB-8, GRATE ELEV 877.55
6″ (E) 875.79
6″ (W) 876.63
15″ (W) 875.03

EXIST. GROUND

PROFILE GRADE

-0.72 %

STA. 488+74.12
66.77′ RT

STA 485+17.82, 114.51′ RT
EX. CB, GRATE ELEV 882.89
EX. 6″ (SE) 880.19
EX. 12″ (NW) 880.14

STA 498+00.00, ℄
CB-8, GRATE ELEV 871.90
6″ (E) 869.91
6″ (W) 869.91
15″ (W) 868.25

P.V.I. STA 503+30.00
ELEV = 871.41′
K = 617
1,000.00′ VC

EX. 42″ RCP
STA. 498+52.18

PROP. 54″ TYPE A

	PROFILE GRADE LINE	SOUTH BOUND CROWN LINE 890	NORTH BOUND CROWN LINE
MATCH LINE STA. 487+50 I-75	882.79	882.98	
	882.61	882.80	882.44
	882.43	882.62	882.25
	882.25	882.44	882.07
	882.07	882.26	881.89
	881.89	882.08	881.97
	881.71	881.90	881.69
	881.53	881.72	881.41
	881.35	881.55	881.15
	881.17	881.40	880.94
	880.99	881.26	880.72
	880.81	881.11	880.51
	880.63	880.96	880.30
	880.45	880.82	880.08
	880.27	880.67	879.87
	880.09	880.52	879.66
	879.91	880.38	879.44
	879.73	880.23	879.23
	879.55	880.08	879.02
	879.37	879.94	878.80
	879.19	879.79	878.59
	879.01	879.64	878.38
	878.83	879.49	878.17
	878.65	879.31	877.99
	878.47	879.13	877.81
	878.29	878.95	877.63
	878.11	878.77	877.45
	877.93	878.59	877.27
	877.75	878.41	877.09
	877.57	878.23	876.91
	877.39	878.05	876.73
	877.21	877.87	876.55
	877.03	877.69	876.37
	876.85	877.51	876.19
	876.67	877.33	876.01
	876.49	877.15	875.83
	876.31	876.97	875.65
	876.13	876.79	875.47
	875.95	876.61	875.29
	875.77	876.43	875.11
	875.59	876.25	874.93
	875.41	876.07	874.75
	875.23	875.89	874.57
	875.05	875.71	874.39
	874.87	875.53	874.21
	874.70	875.36	874.04
	874.55	875.21	873.89
	874.40	875.06	873.74
	874.26	874.92	873.60
	874.14	874.80	873.48
MATCH LINE STA. 500+00 I-75	874.02	874.68	873.36

| | | |

REF. NO.	SHEET NO.	STATION FROM	STATION TO	SIDE	202 CONCRETE BARRIER REMOVED FT	202 HEADWALL REMOVED EACH	202 CONCRETE SLOPE PROTECTION REMOVED SQ YD	202 PIPE REMOVED, 24" AND UNDER FT	202 PIPE REMOVED, OVER 24" FT	202 GUARDRAIL REMOVED FT	202 ANCHOR ASSEMBLY REMOVED EACH	202 FENCE REMOVED FT	601 RIPRAP USING 6" REINFORCED COCNRETE SLAB SQ YD	601 TIED CONCRETE BLOCK MAT, TYPE 3 SQ YD	602 CONCRETE MASONRY CU YD	603 15" CONDUIT, TYPE B FT	604 CATCH BASIN, NO. 8 EACH	606 GUARDRAIL, MISC.: TENSIONED CABLE WITH CONCRETE FOUNDATIONS LINE POST (SOCKETED) FT	670 DITCH EROSION PROTECTION MAT, TYPE A SQ YD	670 DITCH EROSION PROTECTION MAT, TYPE B SQ YD
RM1	215	488+64	488+78	RT		1	4.91	21												
RM2	215	498+52		LT/RT					143											
RM3	215	487+50	500+00	C	1250															
RM4	215	487+50	500+00	RT								1220								
RM5	215	487+50	500+00	LT								1284								
RM6	215	497+87	500+00	LT						212.5	1									
RM7	215	493+40		RT								19								
RM8	215	494+71		RT								20								
GR1	215	487+50.00	492+85.00	C														1250		
D1	215	491+50		LT											0.25	92	1			
D2	215	498+00		LT										2.67	0.25	110	1			
D3	215	498+42	498+58	LT									6.22							
E1	215	487+50	493+00	LT															672.22	
E2	215	493+00	495+00	LT															241.67	
E3	215	488+00	498+50	RT															1611.1	
E4	215	489+93	191+43	C															183.3	
E5	215	495+00	498+50	LT																427.8
E6	215	498+50	500+00	LT															300	
E7	215	496+43	497+93	C															183.3	
E8	215	499+75	500+00	C															30.6	
TOTALS CARRIED TO ROADWAY SUBSUMMARY					1250	1	4.91	21	143	212.5	1	2543	6.22	2.67	0.50	202	2	1250	3222.2	427.8

CALCULATED ACF
CHECKED ABS

ESTIMATED QUANTITIES

ALL-75-5.53

J:\Projects\ALL\76691\roadway\sheets\76691G0040.dgn 11-SEP-2012 8:55PM reddenj

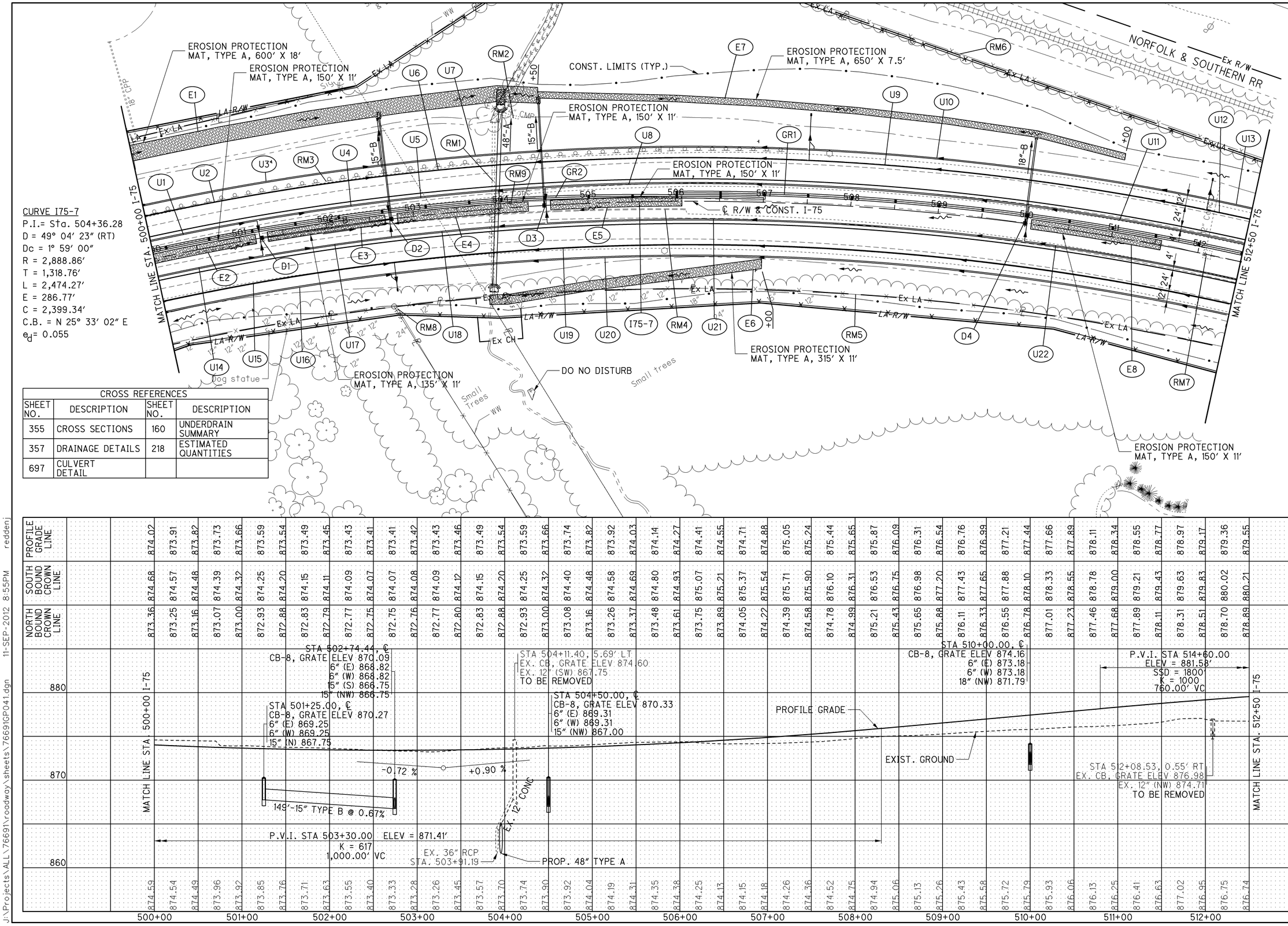

CROSS REFERENCES			
SHEET NO.	DESCRIPTION	SHEET NO.	DESCRIPTION
355	CROSS SECTIONS	160	UNDERDRAIN SUMMARY
357	DRAINAGE DETAILS	218	ESTIMATED QUANTITIES
697	CULVERT DETAIL		

HORIZONTAL SCALE IN FEET
0 25 50 100

CALCULATED ACF
CHECKED EJC

PLAN AND PROFILE - I-75
STA. 500+00 TO STA. 512+50

ALL-75-5.53

217
1224

J:\Projects\ALL\76691\roadway\sheets\76691GP041.dgn 11-SEP-2012 8:55PM redden

REF. NO.	SHEET NO.	STATION FROM	STATION TO	SIDE	202 CONCRETE BARRIER REMOVED FT	202 PIPE REMOVED, 24" AND UNDER FT	202 PIPE REMOVED, OVER 24" FT	202 GUARDRAIL REMOVED FT	202 ANCHOR ASSEMBLY REMOVED EACH	202 CATCH BASIN REMOVED EACH	202 SPECIAL - FILL AND PLUG EXISTING CONDUIT FT	202 FENCE REMOVED FT	202 REMOVAL MISC.: TENSION CABLE RAIL SYSTEM FT	601 TIED CONCRETE BLOCK MAT, TYPE 3 SQ YD	602 CONCRETE MASONRY CU YD	603 15" CONDUIT, TYPE B FT	603 18" CONDUIT, TYPE B FT	604 CATCH BASIN, NO. 8 EACH	606 GUARDRAIL, MISC.: TENSIONED CABLE WITH CONCRETE FOUNDATIONS LINE POST (SOCKETED) FT	606 GUARDRAIL, MISC.: TENSION CABLE ANCHOR TERMINAL EACH	670 DITCH EROSION PROTECTION MAT, TYPE A SQ YD
RM1	217	503+91		LT/RT			103				75										
RM2	217	504+04	504+27	LT		25															
RM3	217	500+00	507+22	LT				737.5	1												
RM4	217	500+00	506+11	C	611																
RM5	217	500+00	512+50	RT								1207									
RM6	217	500+00	512+50	LT								1401									
RM7	217	512+09		LT		82				1											
RM8	217	502+68		RT								9									
RM9	217	504+11		C		17				1											
RM10	217	506+00	512+50	C									650								
GR1	217	506+00.00	512+50.00	C															600	1	
GR2	217	500+00.00	507+00.00	C															650	1	
D1	217	501+25	502+74	C												149		1			
D2	217	502+74		LT										3.11	0.25	116		1			
D3	217	504+50		LT										3.11	0.25	117		1			
D4	217	510+00		LT											0.25		98	1			
E1	217	500+00	504+50	LT																	900
E2	217	500+00	501+18	C																	144.2
E3	217	501+32	502+67	C																	171.1
E4	217	502+81	504+31	C																	204.1
E5	217	504+57	506+07	C																	183.3
E6	217	503+85	507+00	RT																	385
E7	217	504+50	511+00	LT																	541.7
E8	217	510+07	511+57	C																	183.3
TOTALS CARRIED TO ROADWAY SUBSUMMARY					611	124	103	737.5	1	2	75	2617	650	6.22	0.75	382	98	4	1250	2	2713

CALCULATED ACF
CHECKED ABS

ESTIMATED QUANTITIES

ALL-75-5.53

J:\Projects\ALL\76691\roadway\sheets\76691GQ041.dgn 11-SEP-2012 8:55PM reddenj

CURVE I75-7
P.I.= Sta. 504+36.28
D = 49° 04′ 23″ (RT)
Dc = 1° 59′ 00″
R = 2,888.86′
T = 1,318.76′
L = 2,474.27′
E = 286.77′
C = 2,399.34′
C.B. = N 25° 33′ 02″ E
e_d = 0.055

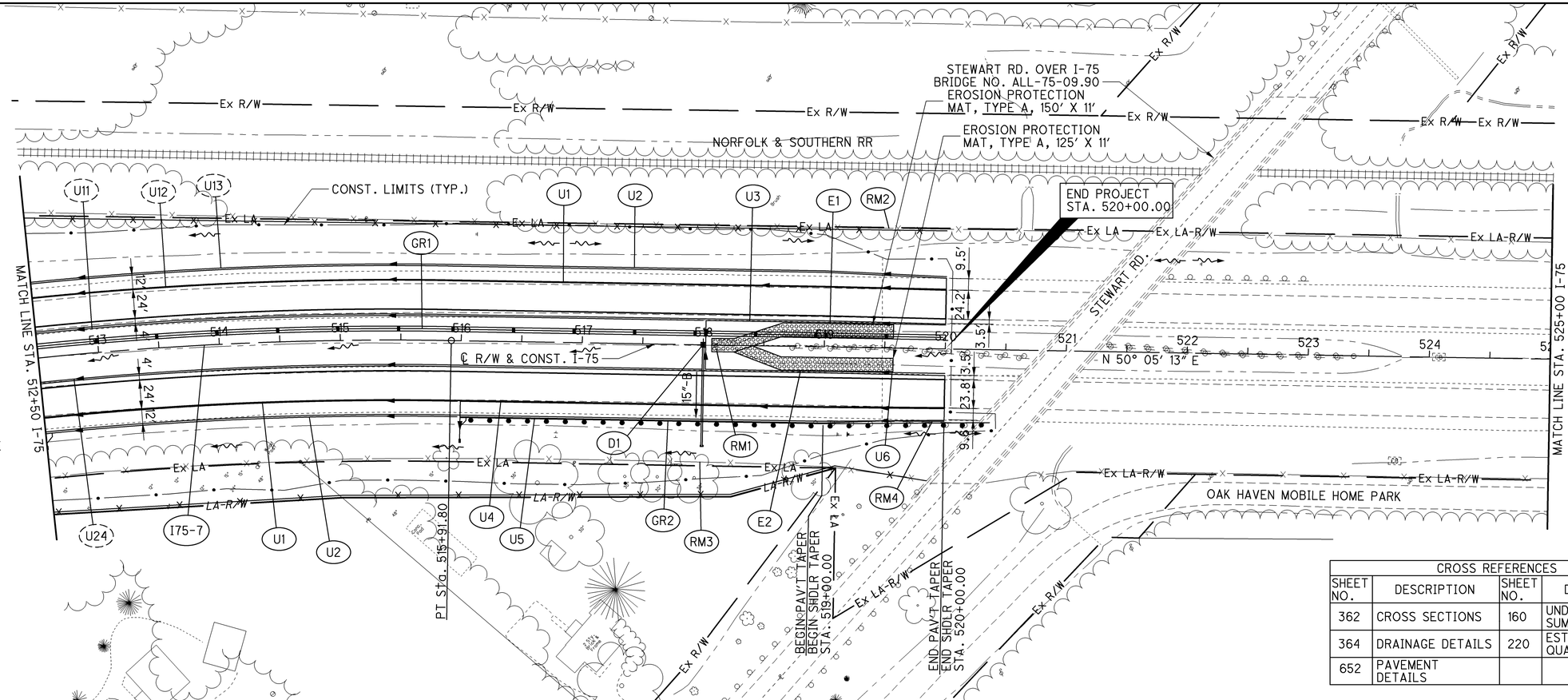

CROSS REFERENCES			
SHEET NO.	DESCRIPTION	SHEET NO.	DESCRIPTION
362	CROSS SECTIONS	160	UNDERDRAIN SUMMARY
364	DRAINAGE DETAILS	220	ESTIMATED QUANTITIES
652	PAVEMENT DETAILS		

	513+00	514+00	515+00	516+00	517+00	518+00	519+00	520+00	521+00	522+00	523+00	524+00	525+00
PROFILE GRADE LINE		879.55	879.72	879.90	880.06	880.23	880.38	880.53	880.67	880.81	880.93	881.06	881.17
SOUTH BOUND CROWN LINE		880.21	880.38	880.56	880.72	880.89	881.04	881.19	881.32	881.42	881.51	881.61	881.68
NORTH BOUND CROWN LINE		878.89	879.06	879.24	879.40	879.57	879.72	879.87	880.02	880.20	880.35	880.51	880.66
890													
	MATCH LINE STA. 512+50 I-75												
880													
870													
		876.74	876.80	877.01	877.18	877.36	877.56	877.85	878.15	878.39	878.51	878.58	878.90
	EXIST. GROUND @ ℄												

	518+00	519+00	520+00	521+00	522+00	523+00	524+00	525+00
PROFILE GRADE LINE	881.29	881.39	881.49	881.58	881.67	881.74	881.82	881.88
SOUTH BOUND CROWN LINE	881.77	881.84	881.90	881.96	882.02	882.05	882.10	882.13
NORTH BOUND CROWN LINE	880.81	880.94	881.08	881.20	881.32	881.43	881.54	881.63
890								
	STA 518+10.53, 0.30′ RT EX. CB, GRATE ELEV 879.62 EX. 12″ (N) 878.10± TO BE REMOVED					EXIST. EDGE OF PAVEMENT (25′ LT)		MATCH LINE STA. 525+00 I-75
880	P.V.I. STA 514+60.00 ELEV = 881.58′ SSD = 1800′ K = 1000 760.00′ VC +0.90 % +0.14 % PROFILE GRADE							
870	EXIST. GROUND @ ℄ STA 518+00.00, ℄ CB-8, GRATE ELEV 879.26 6″ (E) 878.21 6″ (W) 878.21 15″ (SE) 877.14 EX. 12″ CONC. EX. 12″ CONC.							
	879.62	880.12	881.67	881.91	882.09	882.06	882.22	882.19
EXIST. EDGE OF PAVEMENT (25′ LT)	882.26	882.50	882.52	882.41	882.63	882.54	882.82	882.56

HORIZONTAL SCALE IN FEET
0 25 50 100
CALCULATED
CHECKED

PLAN AND PROFILE - I-75
STA 512+50 TO STA. 525+00

ALL-75-5.53

219
1224

J:\Projects\ALL\76691\roadway\sheets\76691GP042.dgn 11-SEP-2012 8:55PM redden

REF. NO.	SHEET NO.	STATION FROM	STATION TO	SIDE	202 PIPE REMOVED, 24" AND UNDER (FT)	202 GUARDRAIL REMOVED (FT)	202 ANCHOR ASSEMBLY REMOVED (EACH)	202 CATCH BASIN REMOVED (EACH)	202 FENCE REMOVED (FT)	202 SPECIAL - FILL AND PLUG EXISTING CONDUIT (FT)	202 REMOVAL MISC.: TENSION CABLE RAIL SYSTEM (FT)	602 CONCRETE MASONRY (CU YD)	603 15" CONDUIT, TYPE B (FT)	604 CATCH BASIN, NO. 8 (EACH)	606 GUARDRAIL, TYPE 5 (FT)	606 ANCHOR ASSEMBLY, TYPE E (EACH)	606 ANCHOR ASSEMBLY, TYPE T (EACH)	606 GUARDRAIL, MISC.: TENSIONED CABLE WITH CONCRETE FOUNDATIONS LINE POST (SOCKETED) (FT)	606 GUARDRAIL, MISC.: TENSION CABLE ANCHOR TERMINAL (EACH)	670 DITCH EROSION PROTECTION MAT, TYPE A (SQ YD)
RM1	219	518+11	519+50	C	129			1		147										
RM2	219	512+50	520+00	LT					764											
RM3	219	512+50	519+86	RT					725											
RM4	219	519+03	520+23	RT		120	2													
RM5	219	512+50	520+00	C							750									
GR1	219	512+50.00	520+00.00	C														700	1	
GR2	219	516+00.07	520+37.50	RT											375	1	1			
D1	219	518+00		RT								0.25	84	1						
E1	219	518+07	519+57	LT																183.3
E2	219	518+25	519+57	RT																151.8
TOTALS CARRIED TO ROADWAY SUBSUMMARY					129	120	2	1	1489	147	750	0.25	84	1	375	1	1	700	1	335.1

CALCULATED ACF
CHECKED ABS

ESTIMATED QUANTITIES

ALL-75-5.53

220
1224

J:\Projects\ALL\76691\roadway\sheets\76691G0042.dgn 11-SEP-2012 8:55PM reddenj

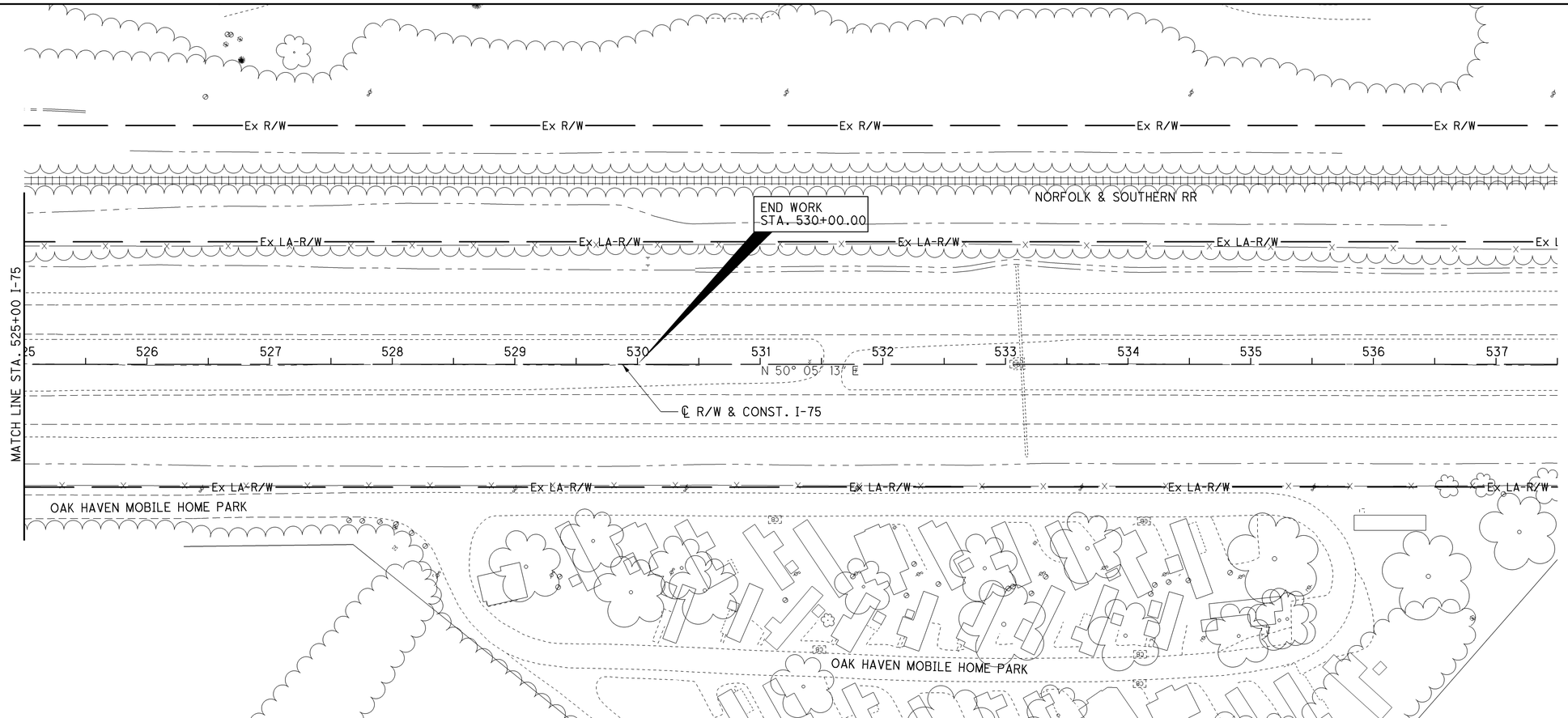

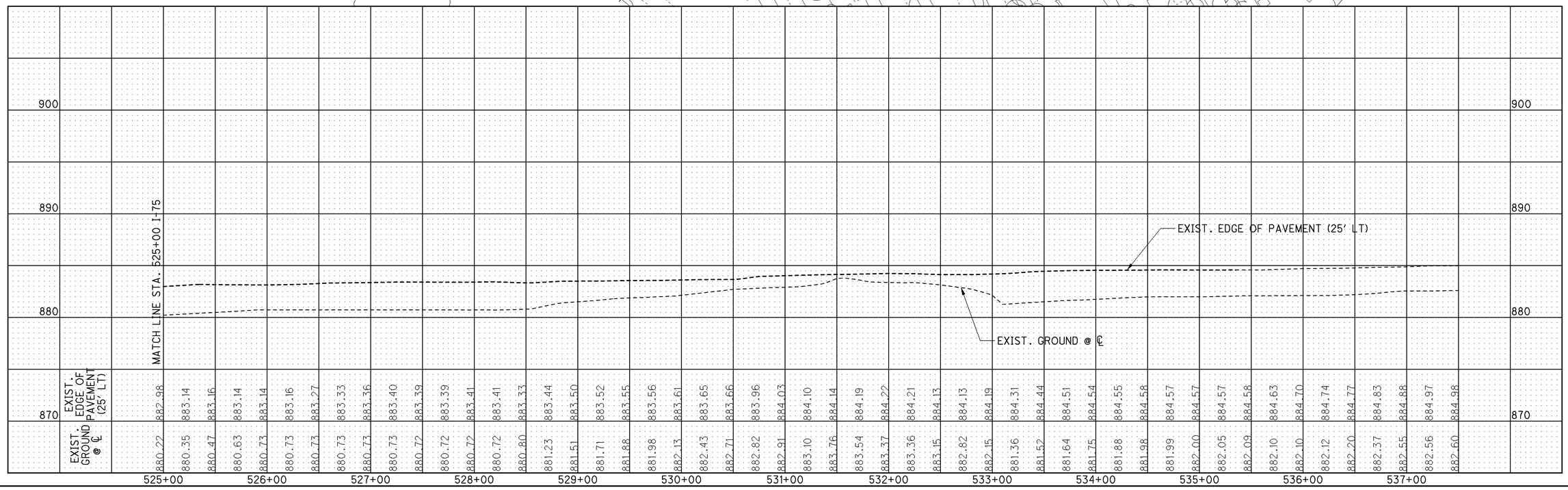

J:\Projects\ALL\76691\roadway\sheets\76691GP043.dgn 11-SEP-2012 8:55PM reddenj

HORIZONTAL SCALE IN FEET
0 25 50 100

CALCULATED ACF
CHECKED EJC

PLAN AND PROFILE - I-75
STA. 525+00 TO END WORK

ALL-75-5.53

221
1224

SEEDING		END AREA		VOLUME	
END WIDTH	SQ. YDS.	CUT	FILL	CUT	FILL
157	867	304	17	558	29
154	833	299	15	534	26
145	1700	277	14	1092	55

CALCULATED JMR
CHECKED ACF

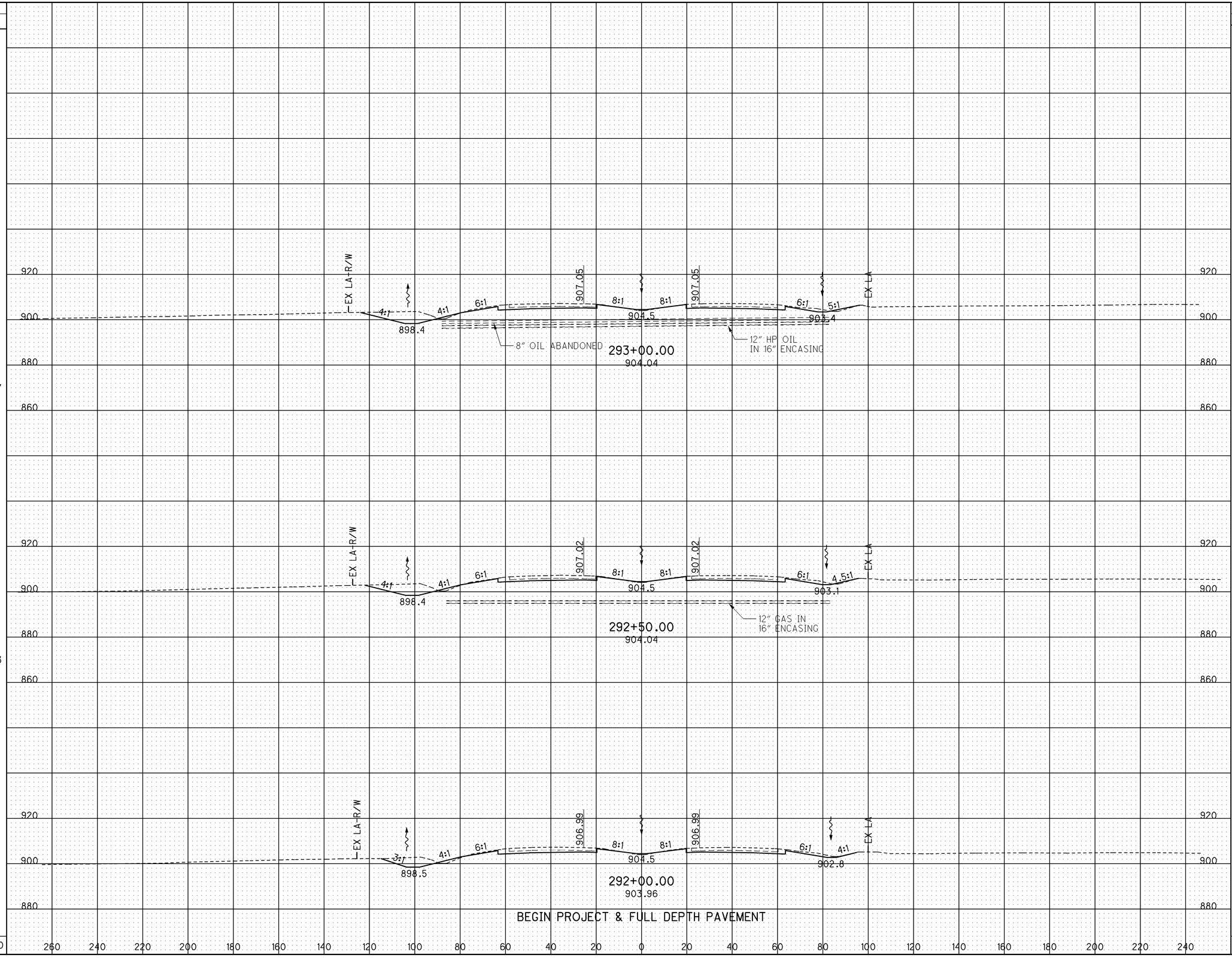

CROSS SECTIONS - I-75
STA. 292+00.00 TO STA. 293+00.00

ALL-75-5.53

222
1224

J:\Projects\ALL\76691\roadway\sheets\76691XS1000.dgn 11-SEP-2012 8:55PM reddenj

SEEDING	
END WIDTH	SQ. YDS.
156	873
157	878
158	878
	2629

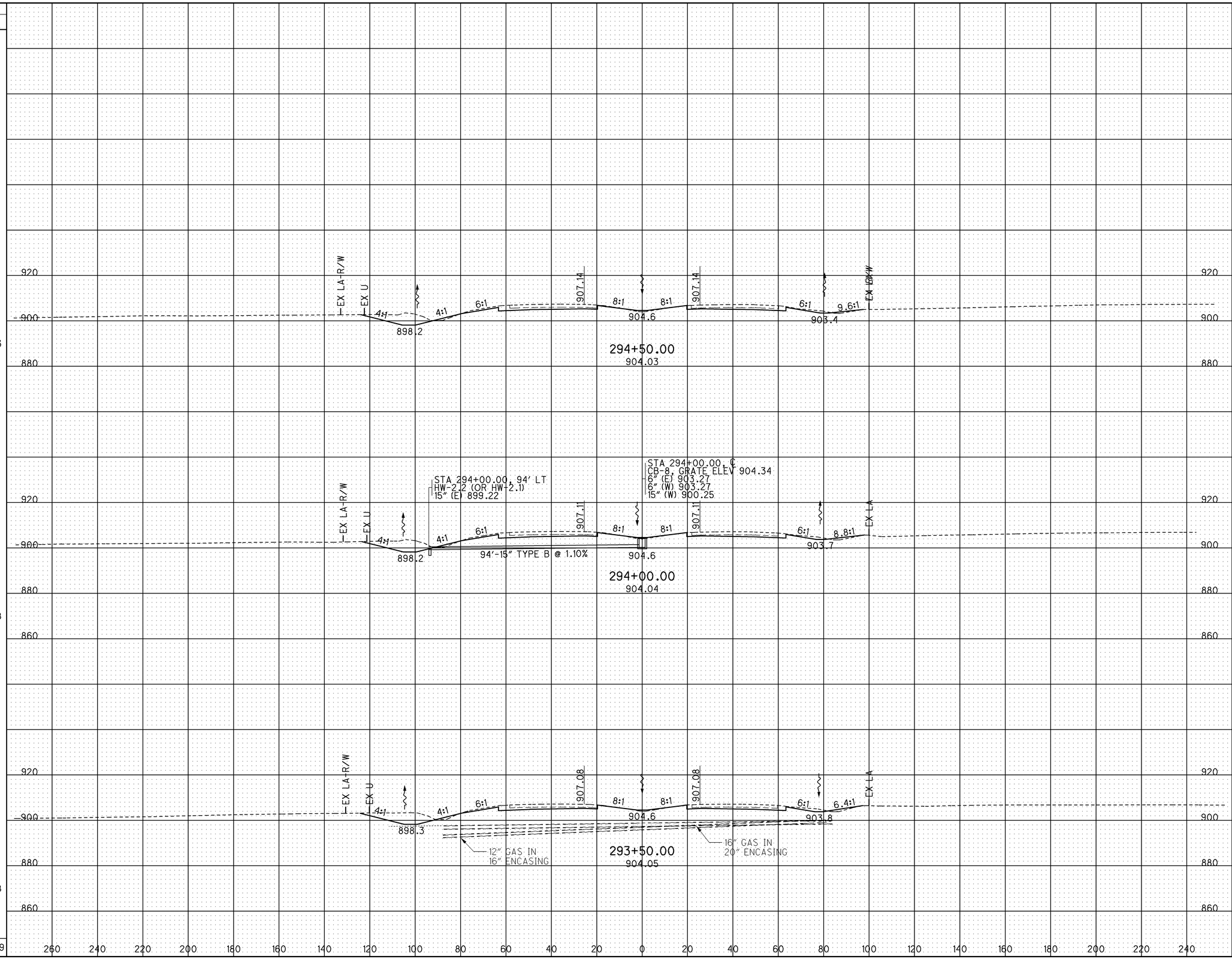

END AREA		VOLUME	
CUT	FILL	CUT	FILL
289	18	536	36
289	21	543	38
297	20	556	34
		1635	108

CALCULATED JMR
CHECKED ACF

CROSS SECTIONS - I-75
STA. 293+50.00 TO STA. 294+50.00

ALL-75-5.53

223
1224

J:\Projects\ALL\76691\roadway\sheets\76691XS1001.dgn 11-SEP-2012 8:55PM reddenj

SEEDING		END AREA		VOLUME	
END WIDTH	SQ. YDS.	CUT	FILL	CUT	FILL
165	922	299	21	564	35
165	911	310	16	571	29
161	850	306	15	558	26
144	833	297	13	542	29
	3516			2235	119

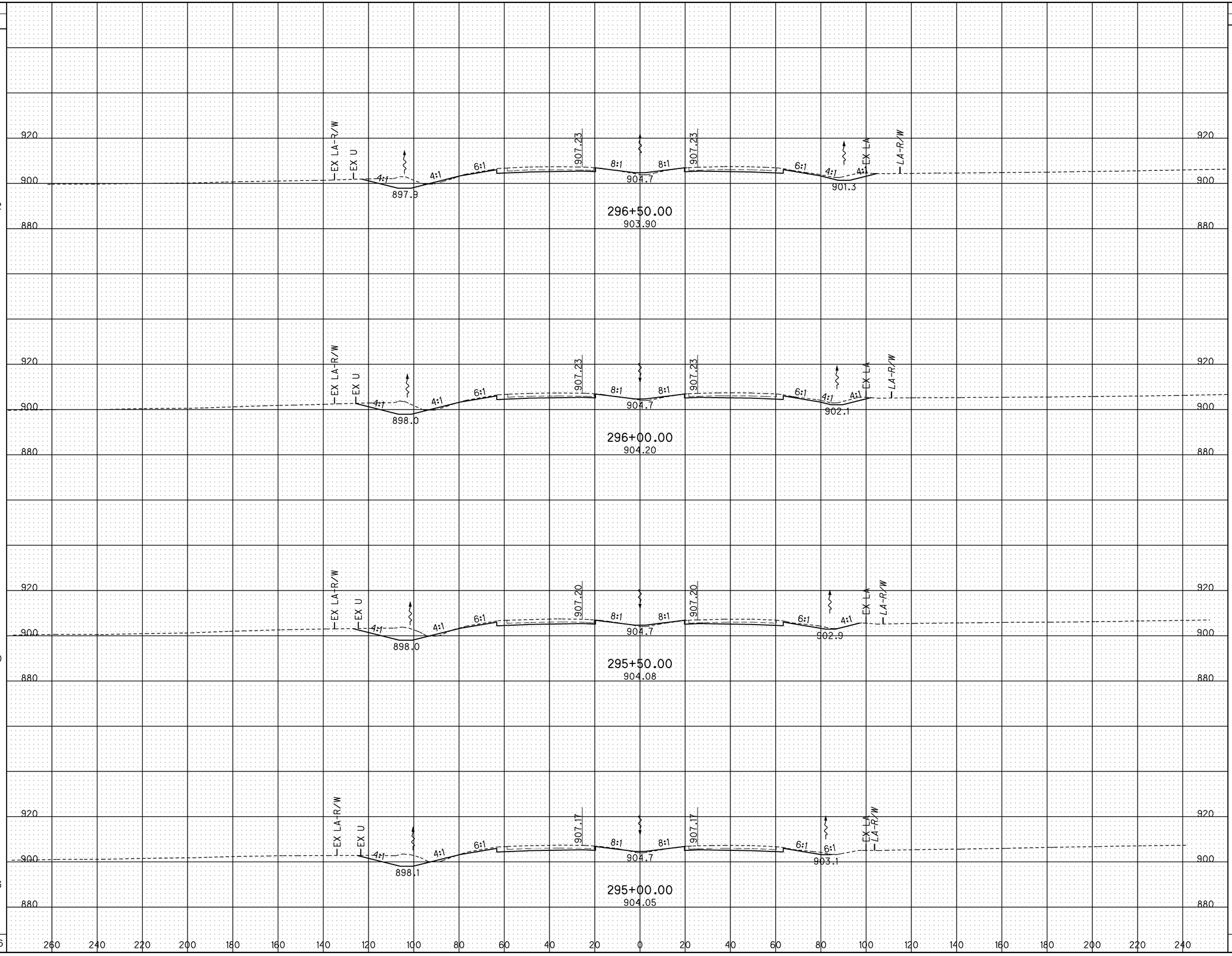

CALCULATED JMR
CHECKED ACF

CROSS SECTIONS - I-75
STA. 295+00.00 TO STA. 296+50.00

ALL-75-5.53

224
1224

J:\Projects\ALL\76691\roadway\sheets\76691XS1002.dgn 11-SEP-2012 8:55PM reddenj

SEEDING END WIDTH	SEEDING SQ. YDS.	END AREA CUT	END AREA FILL	VOLUME CUT	VOLUME FILL
172	961	335	14	619	25
172	950	334	13	587	27
169	911	300	17	520	27
158	900	262	12	519	30
	3722			2245	109

CALCULATED JMR
CHECKED ACF

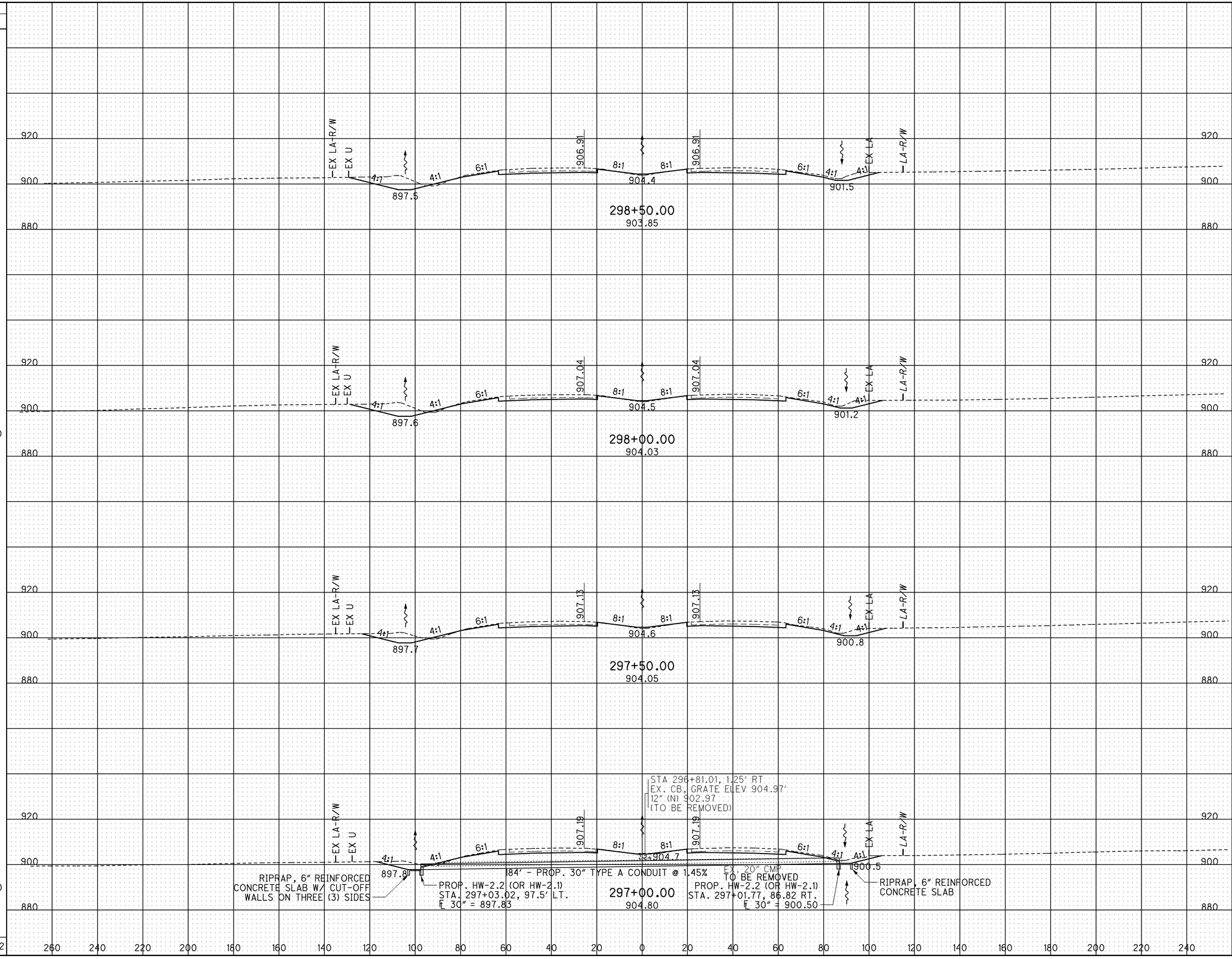

CROSS SECTIONS - I-75
STA. 297+00.00 TO STA. 298+50.00

ALL-75-5.53

225
1224

J:\Projects\ALL\76691\roadway\sheets\76691XS1003.dgn 11-SEP-2012 8:55PM reddenj

SEEDING END WIDTH	SEEDING SQ. YDS.	END AREA CUT	END AREA FILL	VOLUME CUT	VOLUME FILL
182	989	420	22	723	42
173	928	361	23	619	43
159	916	307	23	582	35
170	956	322	15	608	27
	3789			2532	147

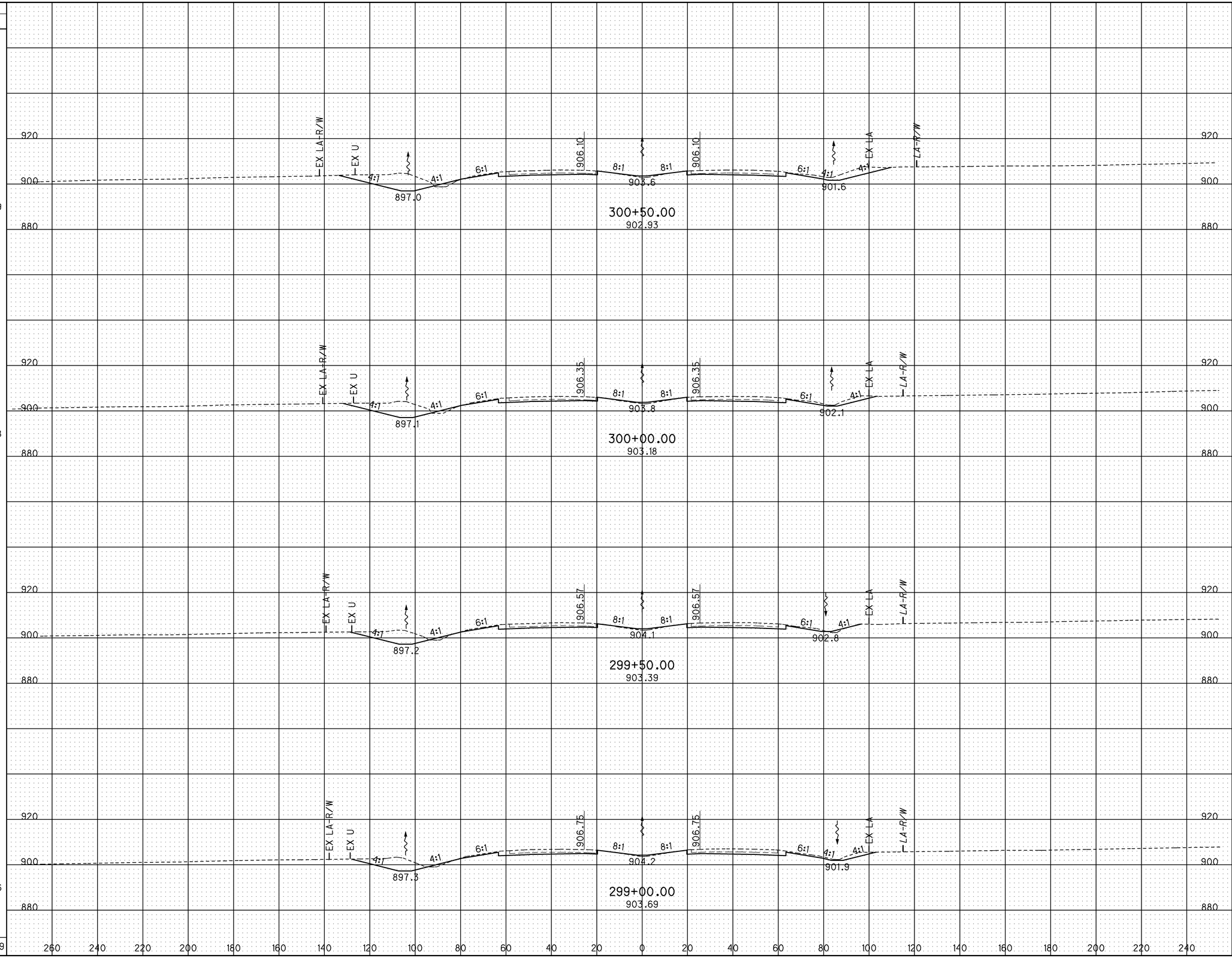

CALCULATED JMR
CHECKED ACF

CROSS SECTIONS - I-75
STA. 299+00.00 TO STA. 300+50.00

ALL-75-5.53

226
1224

J:\Projects\ALL\76691\roadway\sheets\76691XS1004.dgn 11-SEP-2012 8:55PM reddenj

SEEDING		END AREA		VOLUME	
END WIDTH	SQ. YDS.	CUT	FILL	CUT	FILL
198	1100	548	33	1002	63
197	1095	534	35	974	55
196	1083	518	25	946	45
193	1045	503	24	854	42
	4323			3776	205

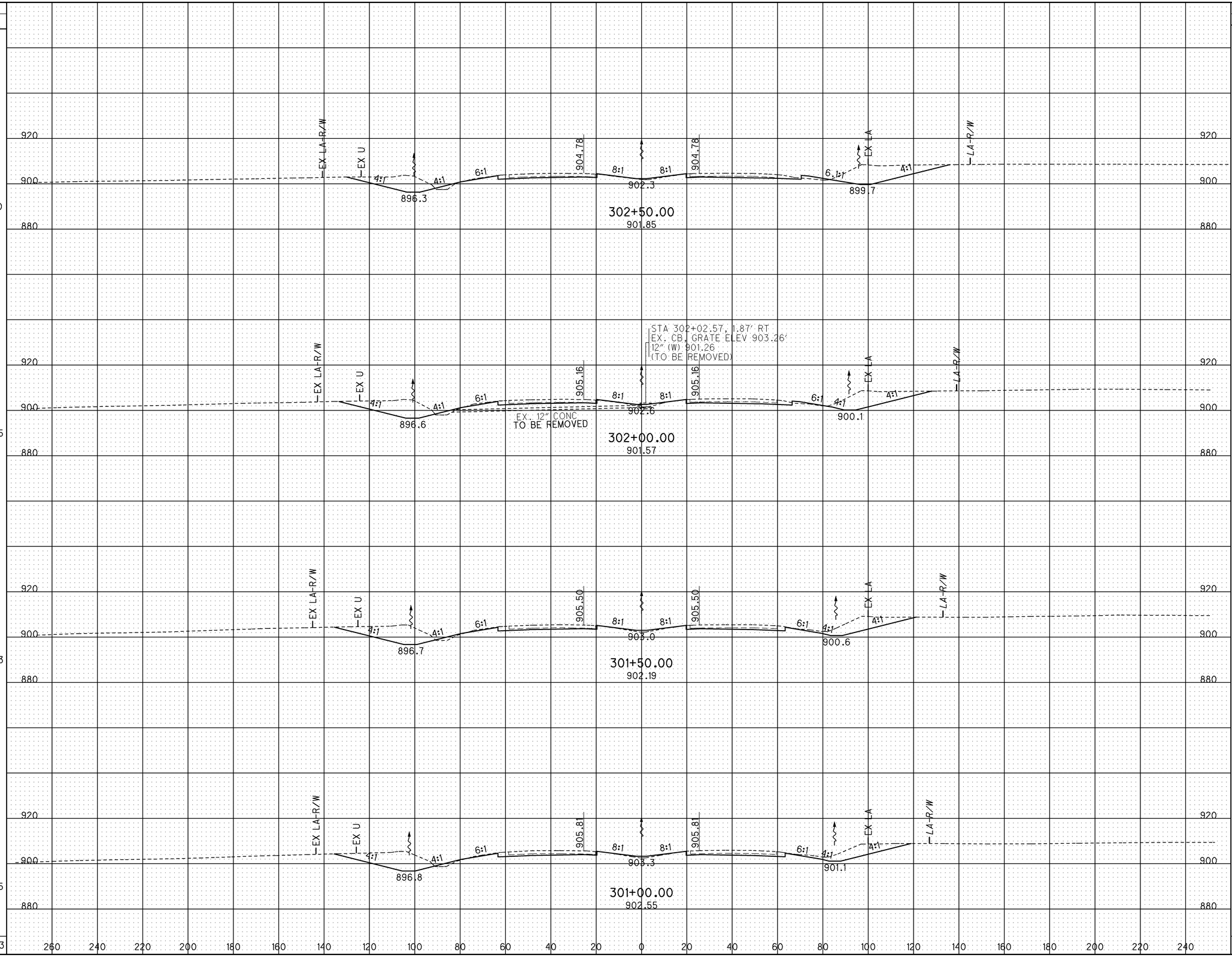

CALCULATED JMR
CHECKED ACF

CROSS SECTIONS - I-75
STA. 301+00.00 TO STA. 302+50.00

ALL-75-5.53

227
1224

J:\Projects\ALL\76691\roadway\sheets\76691XS1005.dgn 11-SEP-2012 8:55PM reddenj

SEEDING		END AREA		VOLUME	
END WIDTH	SQ. YDS.	CUT	FILL	CUT	FILL
193	1078	524	48	997	75
193	1078	553	33	1014	65
195	1094	542	37	1010	65
	3250			3021	205

CALCULATED JMR
CHECKED ACF

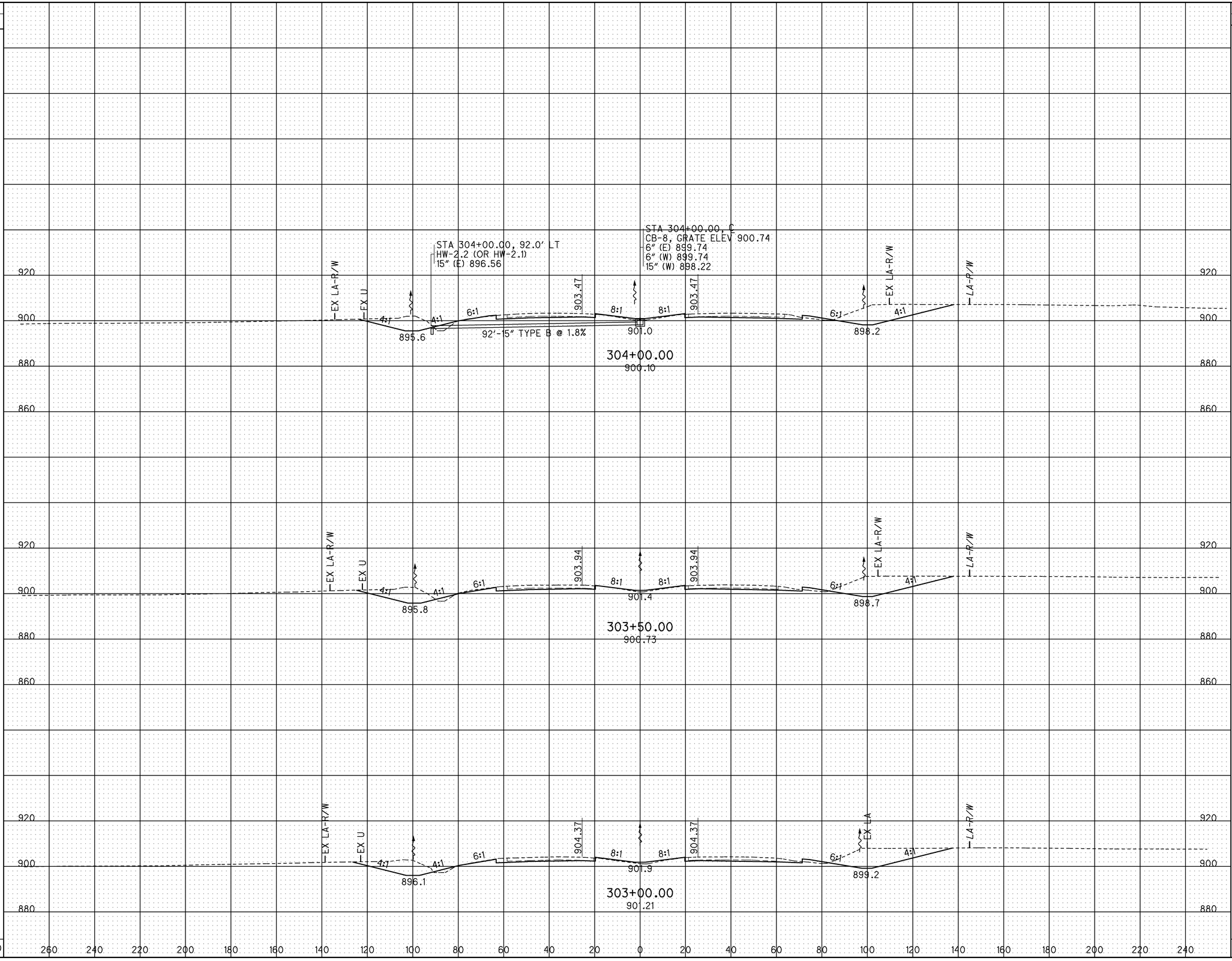

CROSS SECTIONS - I-75
STA. 303+00.00 TO STA. 304+00.00

ALL-75-5.53

228
1224

J:\Projects\ALL\76691\roadway\sheets\76691XS1006.dgn 11-SEP-2012 8:55PM redden

SEEDING		END AREA		VOLUME		CALCULATED	CHECKED
END WIDTH	SQ. YDS.	CUT	FILL	CUT	FILL	JMR	ACF
175	972	347	36	643	69		
174	1006	348	38	738	72		
186	1055	449	39	901	81		
	3033			2282	222		

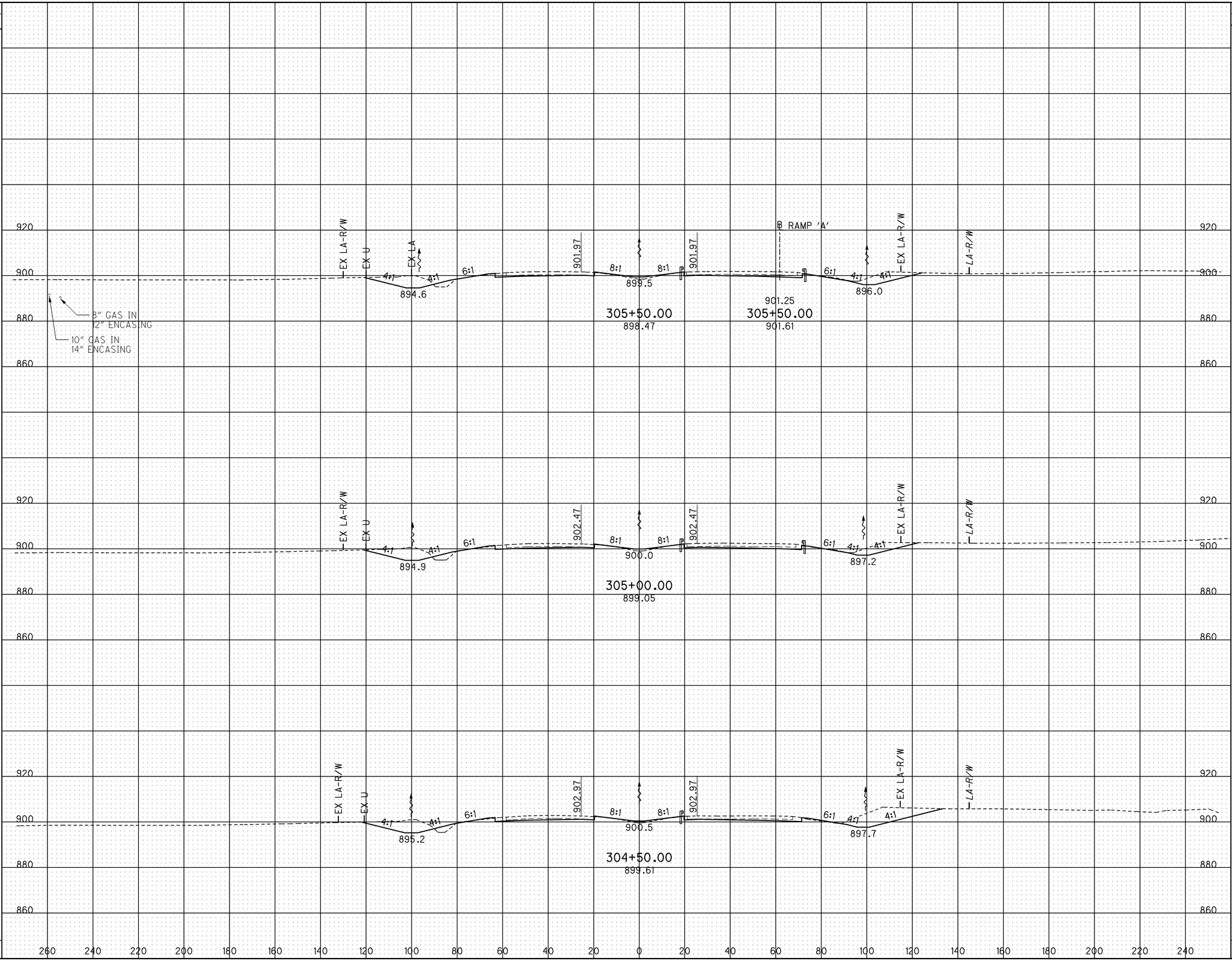

CROSS SECTIONS - I-75
STA. 304+50.00 TO STA. 305+50.00

ALL-75-5.53

J:\Projects\ALL\76691\roadway\sheets\76691XS1007.dgn 11-SEP-2012 8:55PM redden

SEEDING END WIDTH	SEEDING SQ. YDS.	END AREA CUT	END AREA FILL	VOLUME CUT	VOLUME FILL
165	934	326	35	609	78
169	950	332	49	611	83
172	966	329	41	626	72
	2850			1846	233

CALCULATED JMR
CHECKED ACF

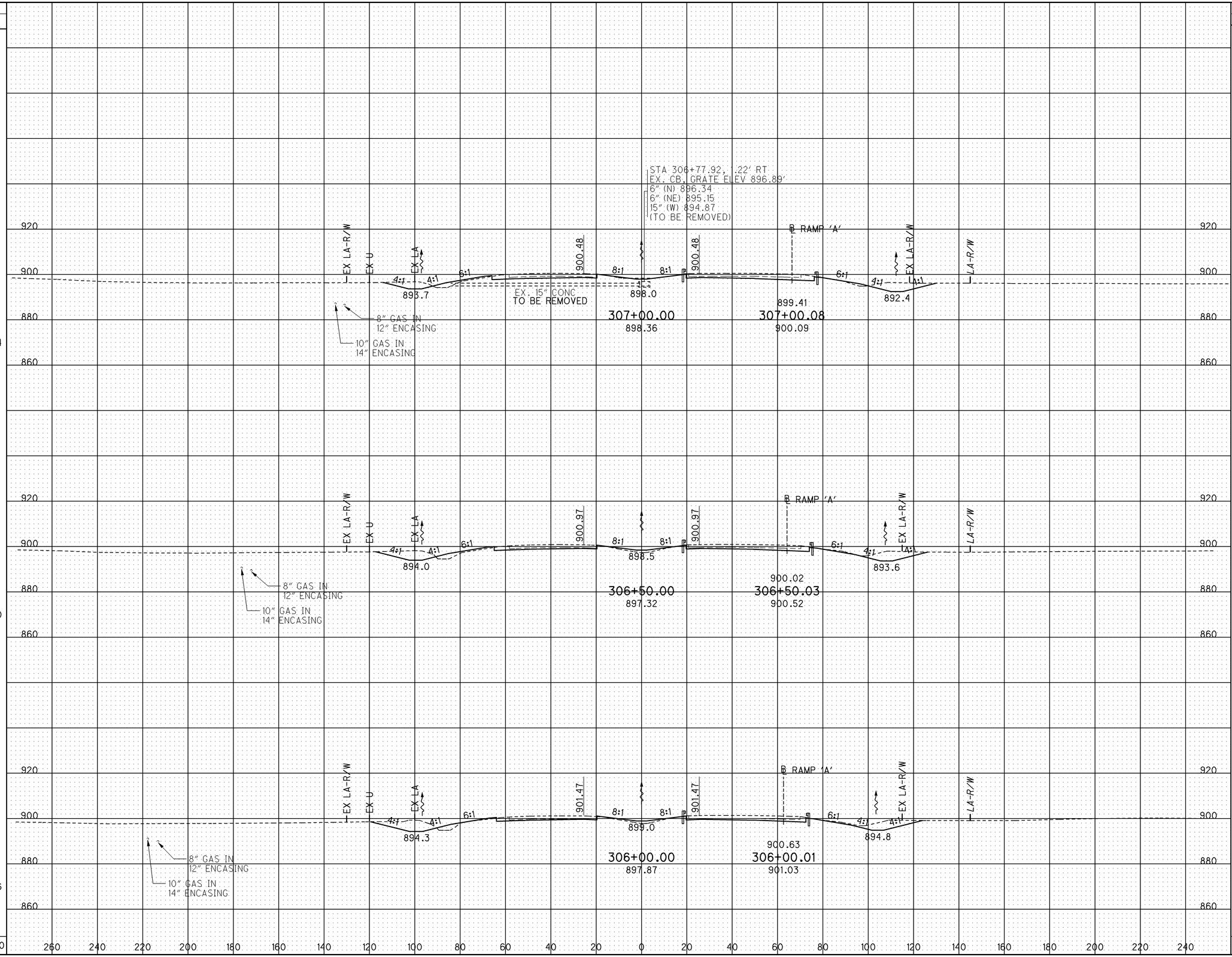

CROSS SECTIONS - I-75
STA. 306+00.00 TO STA. 307+00.00

ALL-75-5.53

230
1224

J:\Projects\ALL\76691\roadway\sheets\76691XS1008.dgn 11-SEP-2012 8:55PM reddenj

SEEDING END WIDTH	SEEDING SQ. YDS.
167	911
161	912
166	922
	2745

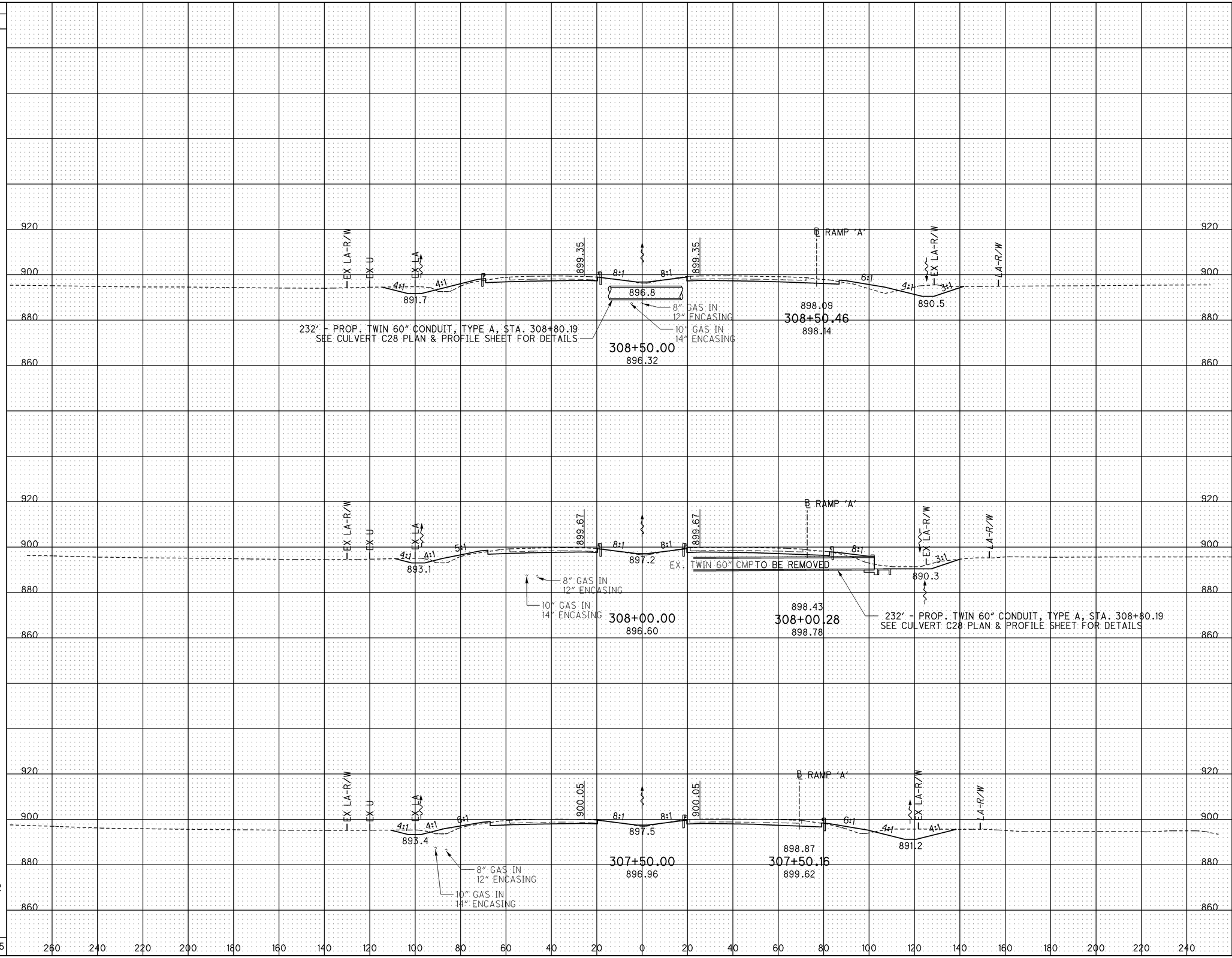

END AREA CUT	END AREA FILL	VOLUME CUT	VOLUME FILL
371	72	627	139
306	78	598	127
340	59	616	87
		1841	353

CALCULATED JMR
CHECKED ACF

CROSS SECTIONS - I-75
STA. 307+50.00 TO STA. 308+50.00

ALL-75-5.53

231
1224

J:\Projects\ALL\76691\roadway\sheets\76691XS1009.dgn 14-JAN-2013 5:55PM fedak

SEEDING	
END WIDTH	SQ. YDS.
122	
178	
	914
151	
	889
169	
	933
	2736

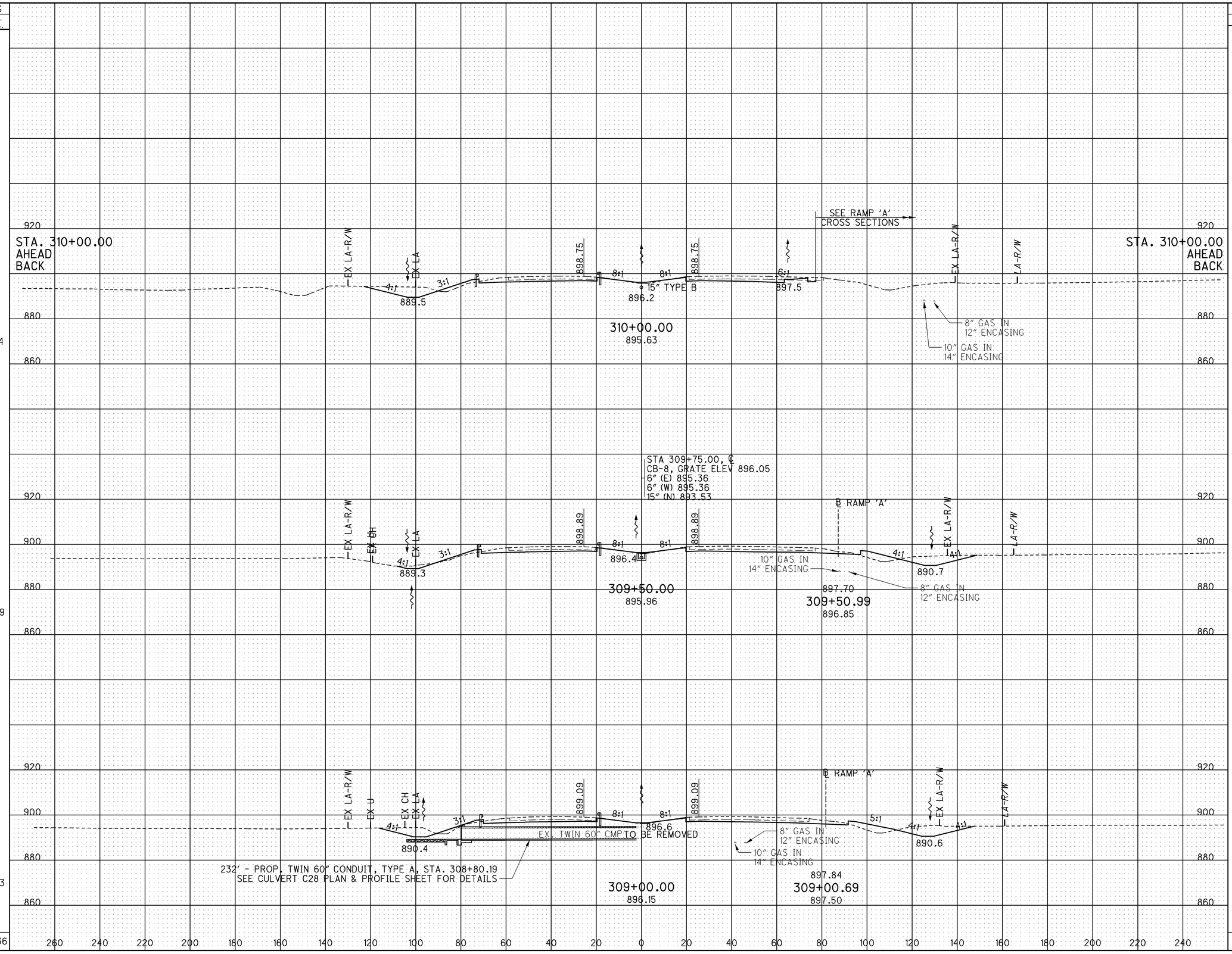

END AREA	
CUT	FILL
302	31
435	79
346	61
399	70

VOLUME	
CUT	FILL
723	130
690	121
713	131
2126	382

CALCULATED JMR
CHECKED ACF

CROSS SECTIONS - I-75
STA. 309+00.00 TO STA. 310+00.00

ALL-75-5.53

232
1224

J:\Projects\ALL\76691\roadway\sheets\76691XS1010.dgn 14-JAN-2013 5:55PM fedak

SEEDING	
END WIDTH	SQ. YDS.
153	794
133	722
125	689
	2205

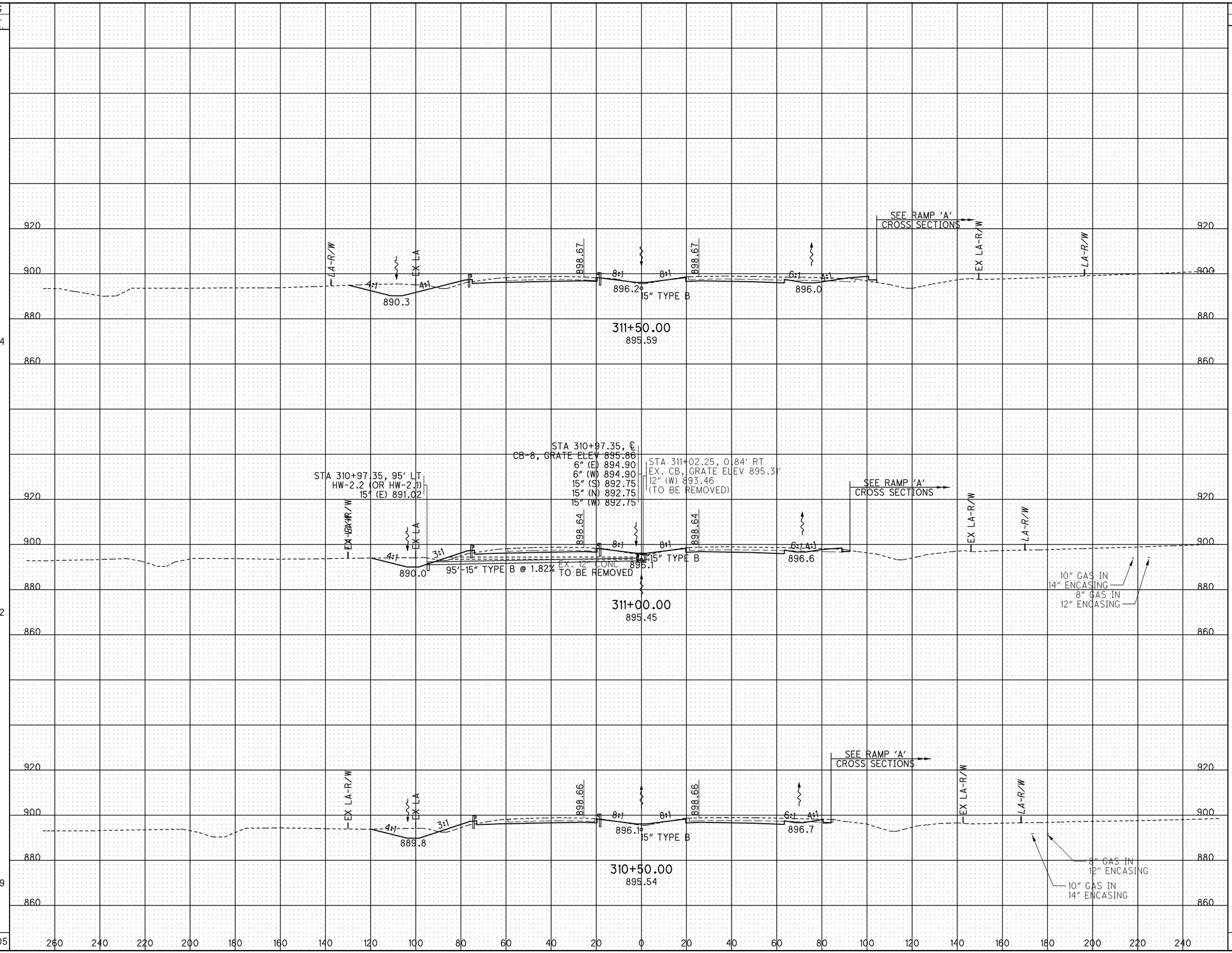

END AREA		VOLUME	
CUT	FILL	CUT	FILL
372	53	635	89
315	43	575	68
306	31	563	57
		1773	214

CALCULATED JMR
CHECKED ACF

CROSS SECTIONS - I-75
STA. 310+50.00 TO STA. 311+50.00

ALL-75-5.53

233
1224

J:\Projects\ALL\76691\roadway\sheets\76691XS1011.dgn 11-SEP-2012 8:55PM reddenj

SEEDING	
END WIDTH	SQ. YDS.
173	1022
194	1028
175	911
	2961

END AREA	
CUT	FILL
525	27
482	114
417	71

VOLUME	
CUT	FILL
932	131
832	171
730	115
2494	417

CALCULATED JMR
CHECKED ACF

940
920
900
880
860

LA-R/W
EX LA
4:1
4:1
6:1
898.92
8:1
8:1
898.92
6:1
EX LA-R/W
891.0
12" HP GAS
896.4
893.8
892.1
SEE RAMP 'A' CROSS SECTIONS
12" GAS ABANDONED
8" GAS ABANDONED
313+00.00
895.64

STA 312+50.00, ℄
CB-8, GRATE ELEV 896.07
6" (E) 895.11
6" (W) 895.11
15" (S) 893.55

LA-R/W
EX LA
4:1
4:1
6:1
898.83
8:1
8:1
898.83
6:1
6:1
EX LA-R/W
LA-R/W
890.8
12" HP GAS
15" TYPE B
896.3
893.6
8" GAS ABANDONED
12" GAS ABANDONED
12" HP GAS IN 16" ENCASING
312+50.00
895.74

SEE RAMP 'A' CROSS SECTIONS

LA-R/W
EX LA
4:1
4:1
6:1
898.75
8:1
8:1
898.75
6:1
4:1
6:1
EX LA-R/W
LA-R/W
890.5
896.2
15" TYPE B
894.8
8" GAS ABANDONED
12" GAS ABANDONED
312+00.00
895.77

260 240 220 200 180 160 140 120 100 80 60 40 20 0 20 40 60 80 100 120 140 160 180 200 220 240

CROSS SECTIONS - I-75
STA. 312+00.00 TO STA. 313+00.00

ALL-75-5.53

234
1224

J:\Projects\ALL\76691\roadway\sheets\76691XS1012.dgn 11-SEP-2012 8:56PM reddenj

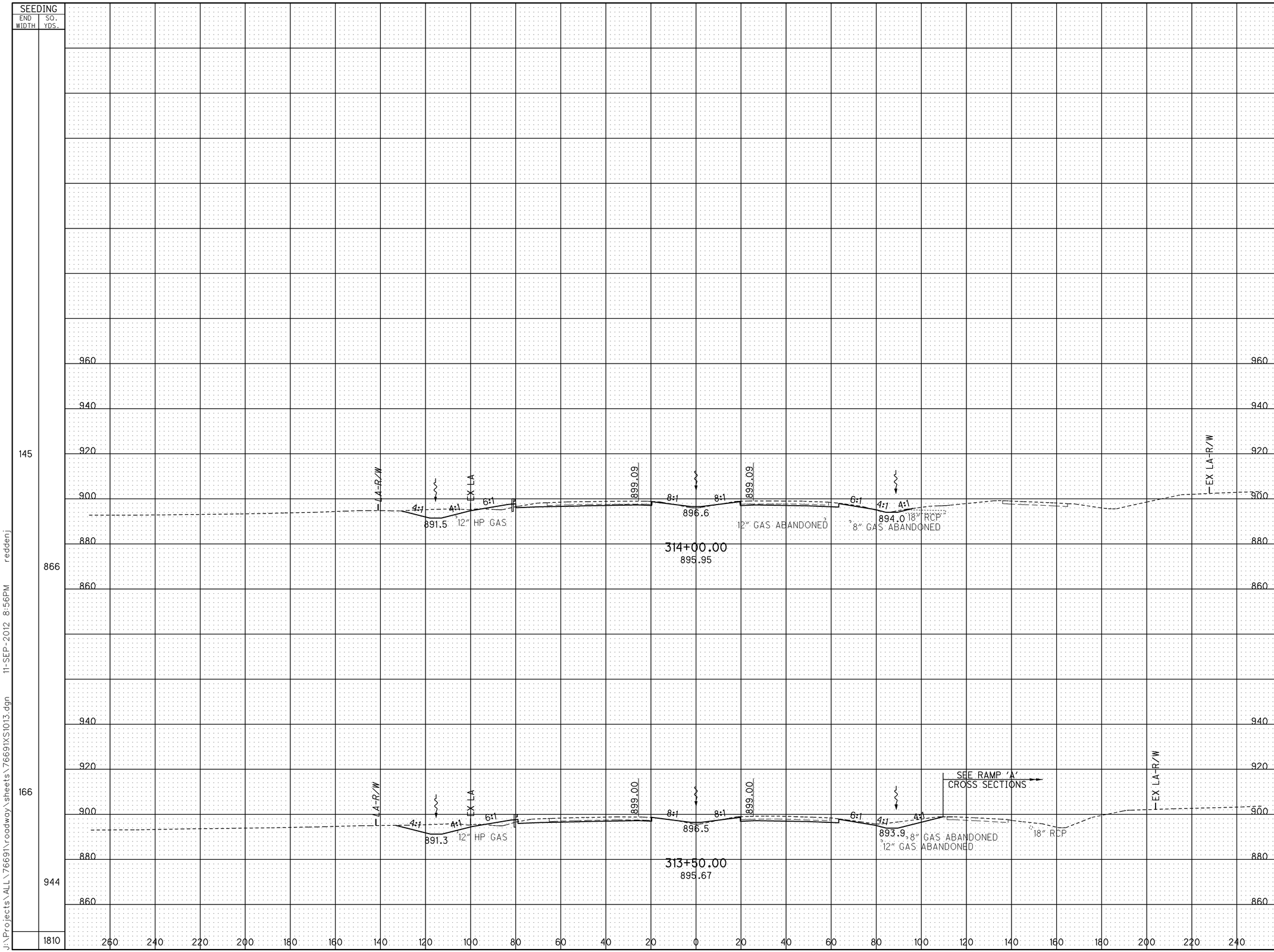

END AREA CUT	END AREA FILL	VOLUME CUT	VOLUME FILL
270	27		
		561	52
336	29		
		797	52
		1358	104

CALCULATED JMR
CHECKED ACF

CROSS SECTIONS - I-75
STA. 313+50.00 TO STA. 314+00.00

ALL-75-5.53

J:\Projects\ALL\76691\roadway\sheets\76691XS1013.dgn 11-SEP-2012 8:56PM reddenj

SEEDING	
END WIDTH	SQ. YDS.
139	800
148	839
154	834
	2473

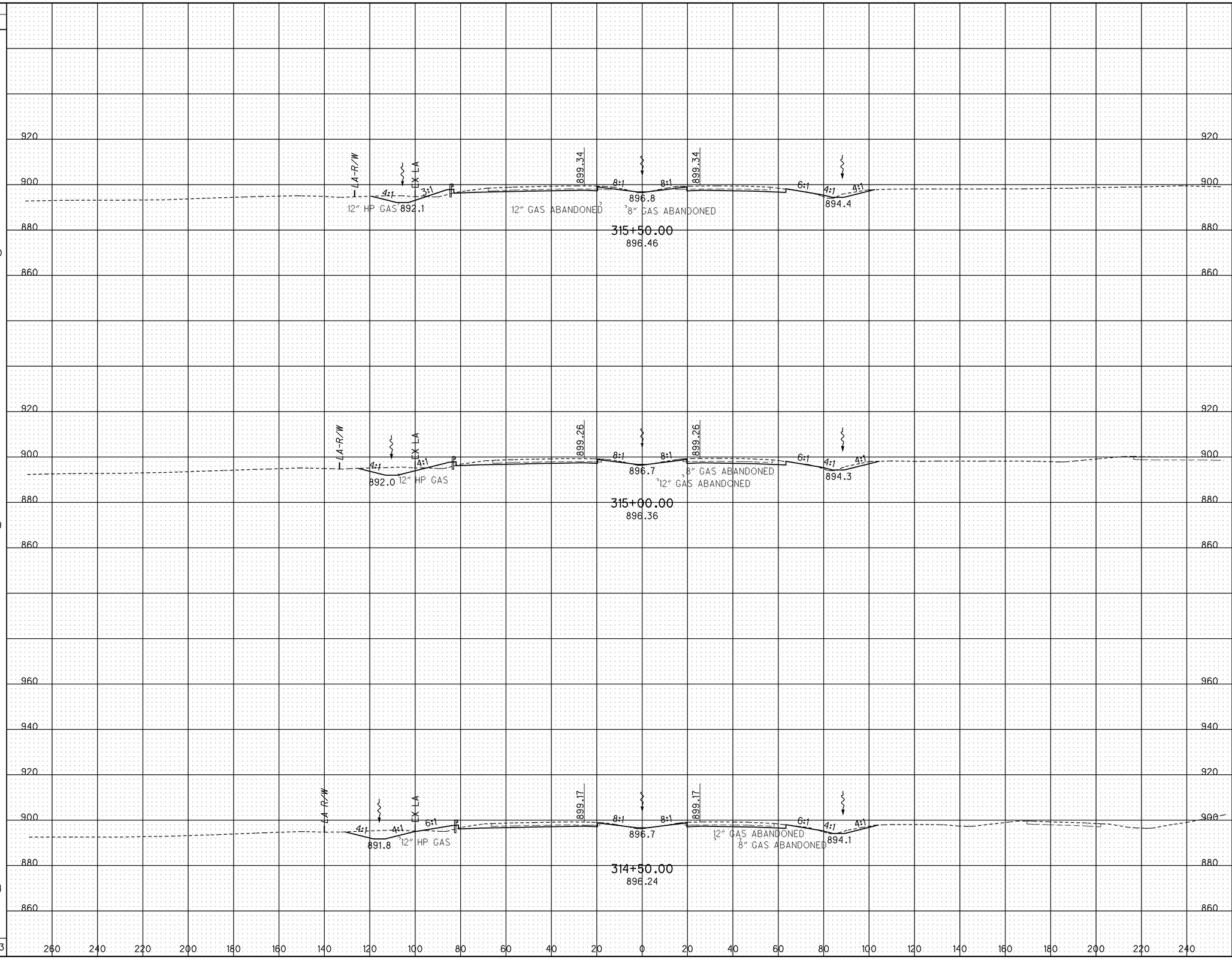

END AREA	
CUT	FILL
271	35
285	30
281	29

VOLUME	
CUT	FILL
515	60
524	54
510	52
1549	166

CALCULATED JMR
CHECKED ACF

CROSS SECTIONS - I-75
STA. 314+50.00 TO STA. 315+50.00

ALL-75-5.53

236
1224

J:\Projects\ALL\76691\roadway\sheets\76691XS1014.dgn 11-SEP-2012 8:56PM reddenj

SEEDING	
END WIDTH	SQ. YDS.
135	739
131	716
126	739
	2194

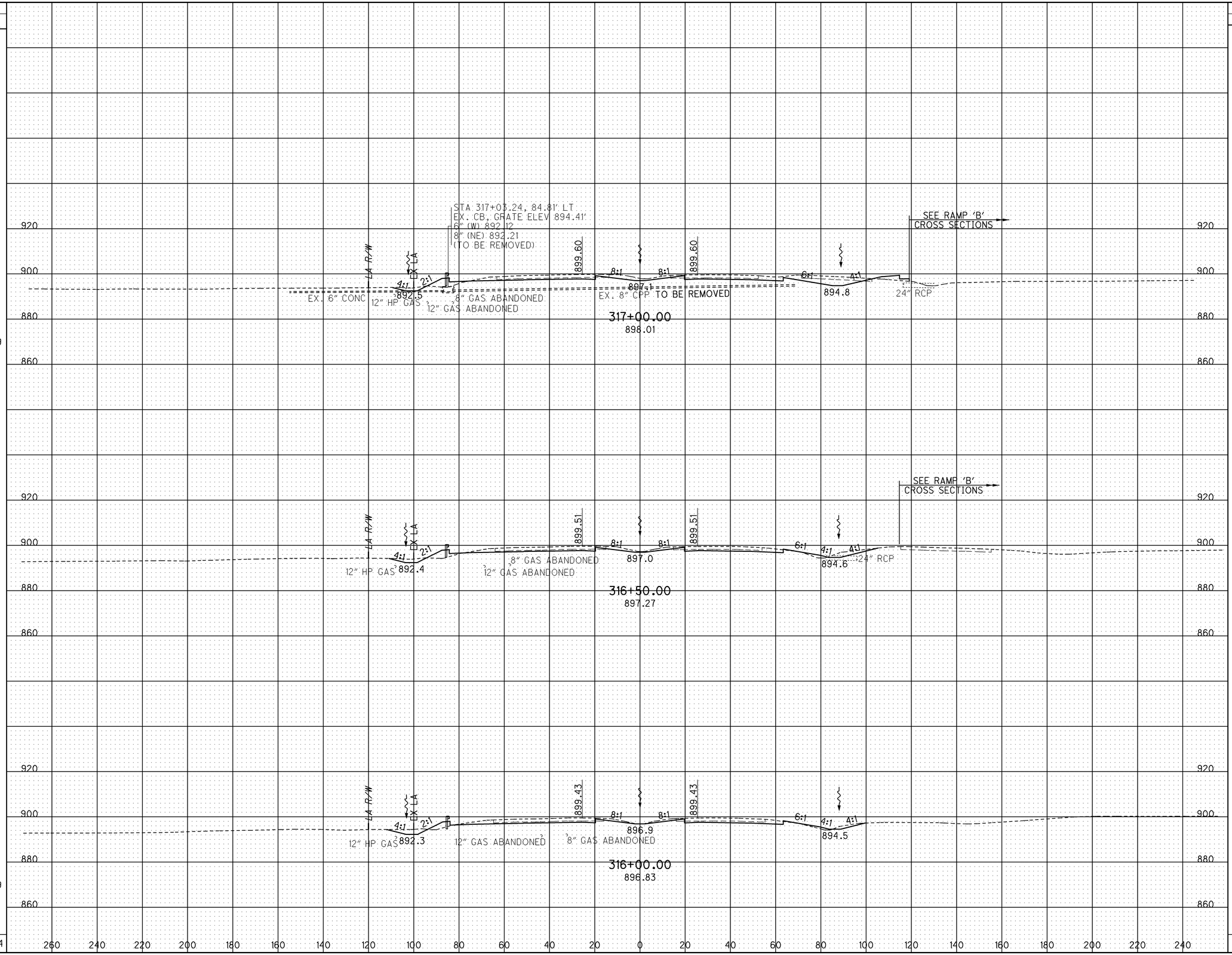

END AREA	
CUT	FILL
337	61
255	45
246	

VOLUME	
CUT	FILL
548	98
464	73
479	65
1491	236

CALCULATED JMR
CHECKED ACF

CROSS SECTIONS - I-75
STA. 316+00.00 TO STA. 317+00.00

ALL-75-5.53

237
1224

J:\Projects\ALL\76691\roadway\sheets\76691XS1015.dgn 11-SEP-2012 8:56PM reddenj

SEEDING	
END WIDTH	SQ. YDS.
117	650
115	622
109	683
	1955

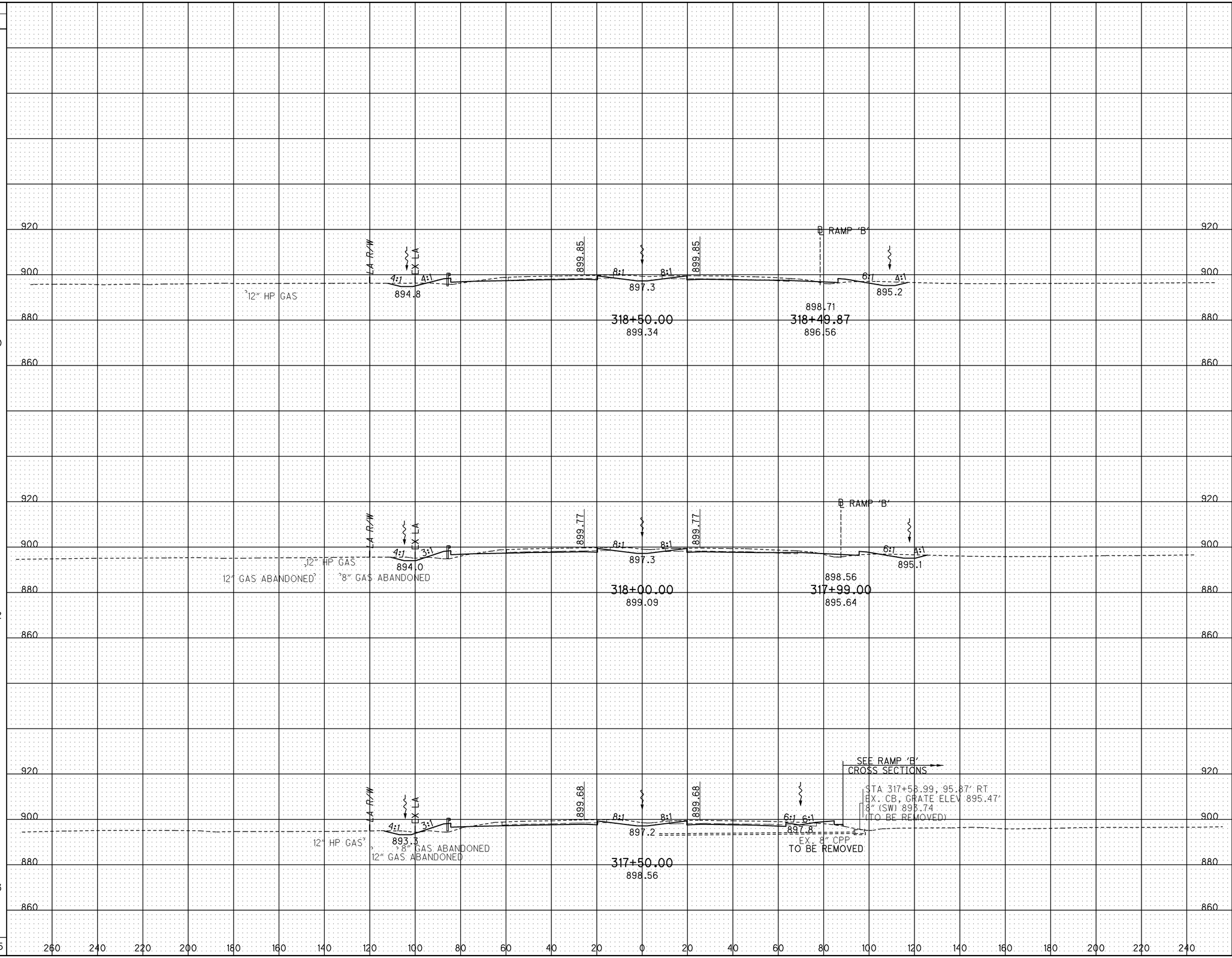

END AREA	
CUT	FILL
248	50
251	65
252	65

VOLUME	
CUT	FILL
462	107
466	120
545	117
1473	344

CALCULATED JMR
CHECKED ACF

CROSS SECTIONS - I-75
STA. 317+50.00 TO STA. 318+50.00

ALL-75-5.53

238
1224

J:\Projects\ALL\76691\roadway\sheets\76691XS1016.dgn 11-SEP-2012 8:56PM redderj

SEEDING		END AREA		VOLUME		CALCULATED	CHECKED
END WIDTH	SQ. YDS.	CUT	FILL	CUT	FILL	JMR	ACF
96	589	221	29	415	52		
115	661	227	28	436	60		
122	667	244	37	455	81		
	1917			1306	193		

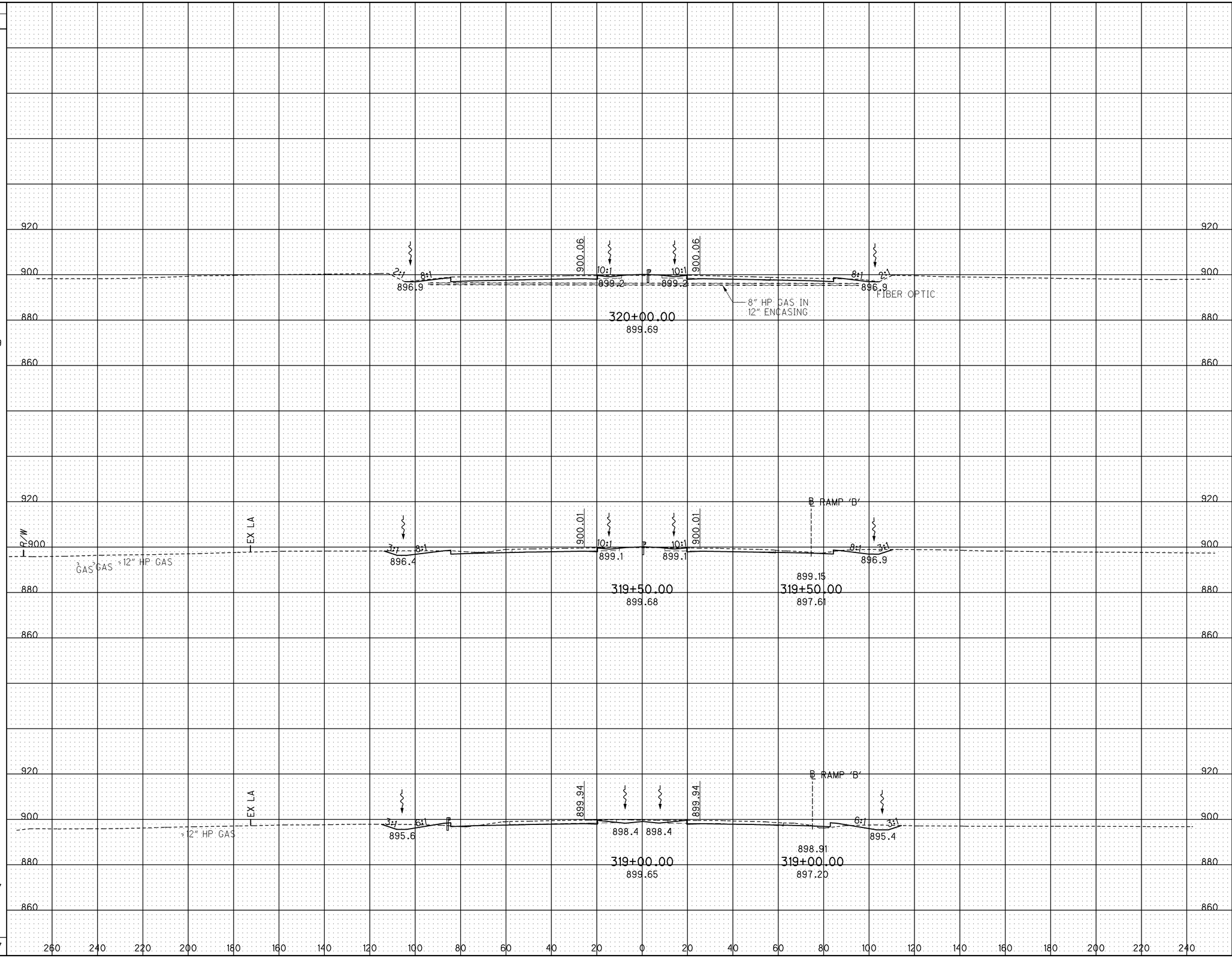

CROSS SECTIONS - I-75
STA. 319+00.00 TO STA. 320+00.00

ALL-75-5.53

239
1224

J:\Projects\ALL\76691\roadway\sheets\76691XS1017.dgn 11-SEP-2012 8:56PM reddenj

SEEDING		END AREA		VOLUME	
END WIDTH	SQ. YDS.	CUT	FILL	CUT	FILL
131	639	376	40	567	67
98	544	236	33	414	62
98	544	211	35	400	59
	1727			1381	188

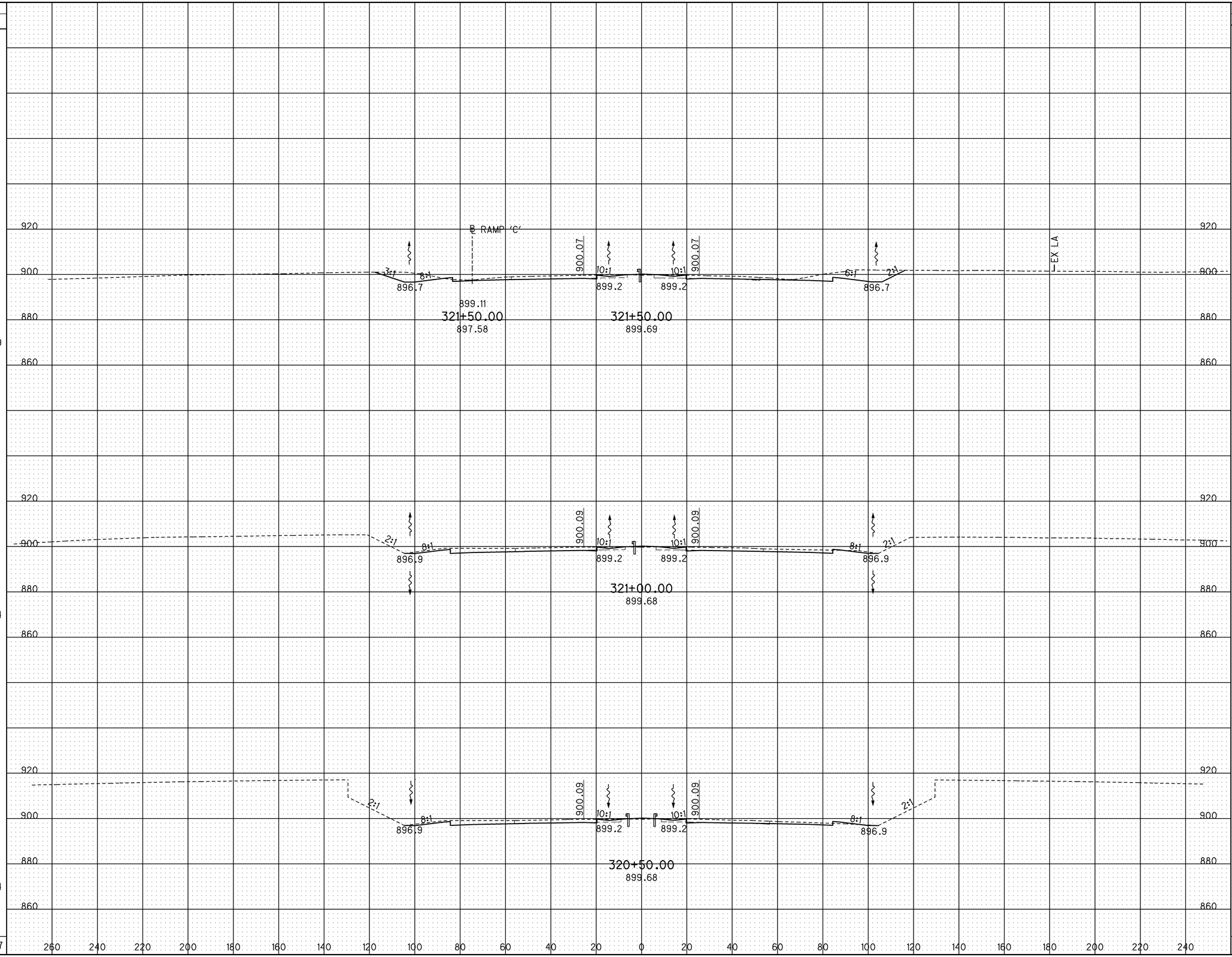

CALCULATED JMR
CHECKED ACF

CROSS SECTIONS - I-75
STA. 320+50.00 TO STA. 321+50.00

ALL-75-5.53

240
1224

J:\Projects\ALL\76691\roadway\sheets\76691XS1018.dgn 11-SEP-2012 8:56PM reddenj

SEEDING	
END WIDTH	SQ. YDS.
123	
155	
	819
140	
	761
133	
	734
	2314

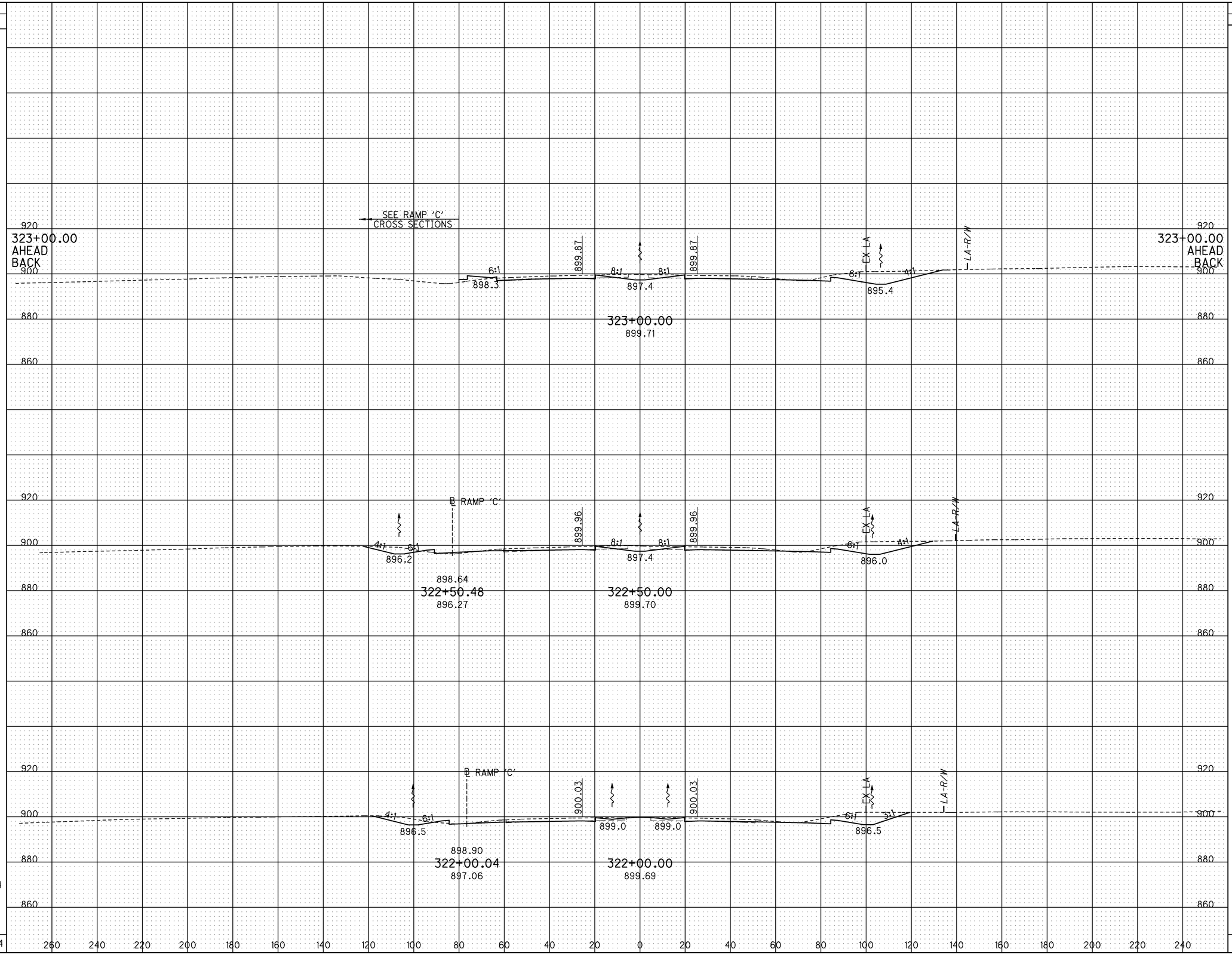

END AREA		VOLUME	
CUT	FILL	CUT	FILL
345	41		
383	61		
		702	94
375	40		
		653	76
331	42		
		655	76
		2010	246

CALCULATED JMR
CHECKED ACF

CROSS SECTIONS - I-75
STA. 322+00.00 TO STA. 323+00.00

ALL-75-5.53

241
1224

J:\Projects\ALL\76691\roadway\sheets\76691XS1019.dgn 11-SEP-2012 8:56PM reddenj

SEEDING		END AREA		VOLUME		
END WIDTH	SQ. YDS.	CUT	FILL	CUT	FILL	
						CALCULATED JMR
						CHECKED ACF
174	900	373	95	747	127	
149	833	433	43	750	101	
150	761	376	66	668	99	
	2494			2165	327	

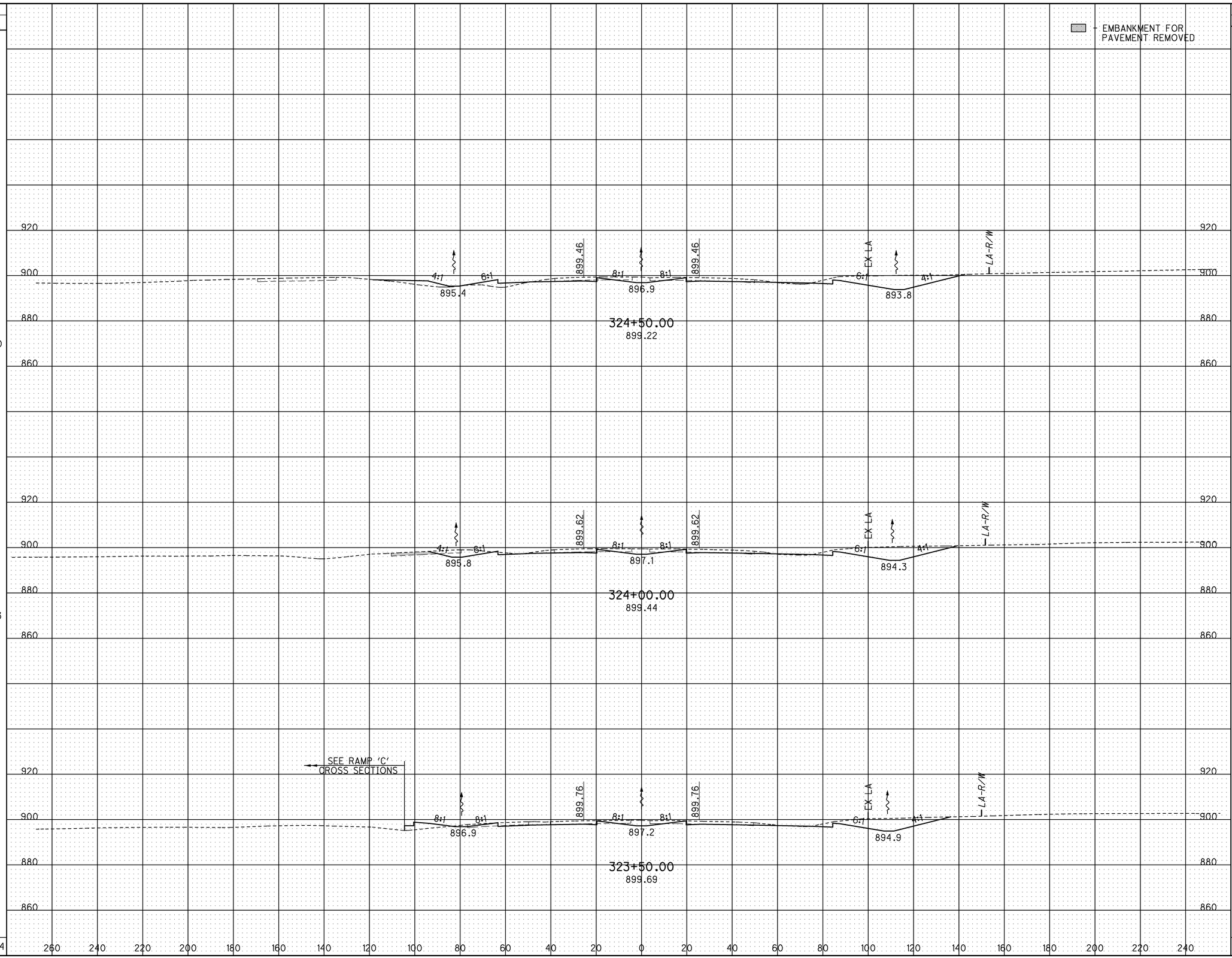

CROSS SECTIONS - I-75
STA. 323+50.00 TO STA. 324+50.00

ALL-75-5.53

242
1224

J:\Projects\ALL\76691\roadway\sheets\76691XS1020.dgn 11-SEP-2012 8:56PM reddenj

SEEDING		END AREA		VOLUME	
END WIDTH	SQ. YDS.	CUT	FILL	CUT	FILL
172	945	500	47	919	85
168	922	493	45	871	88
162	939	448	50	760	134
	2806			2550	307

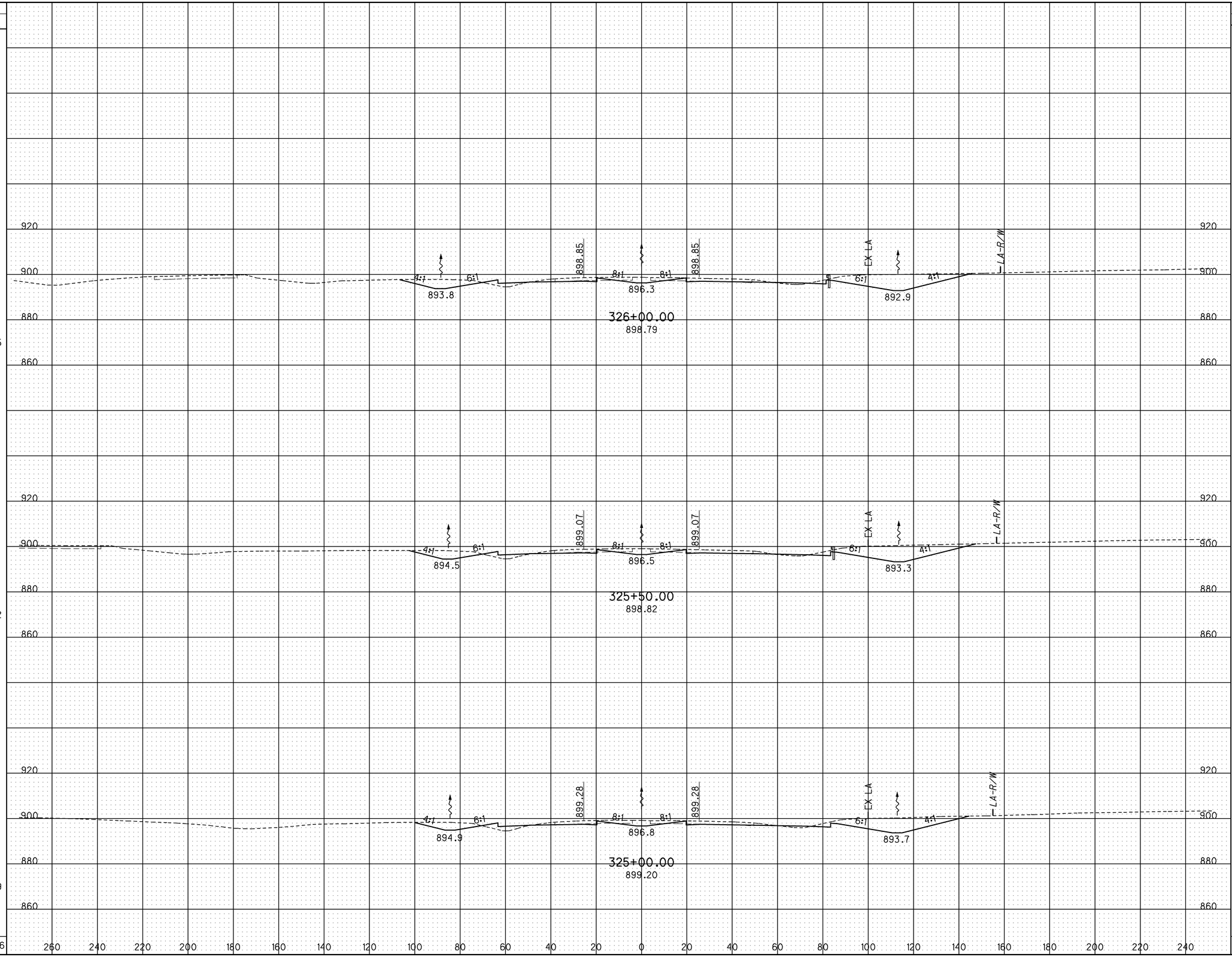

CALCULATED JMR
CHECKED ACF

CROSS SECTIONS - I-75
STA. 325+00.00 TO STA. 326+00.00

ALL-75-5.53

243
1224

J:\Projects\ALL\76691\roadway\sheets\76691XS1021.dgn 11-SEP-2012 8:56PM reddenj

SEEDING	
END WIDTH	SQ. YDS.
181	1083
208	922
166	
166	944
	2949

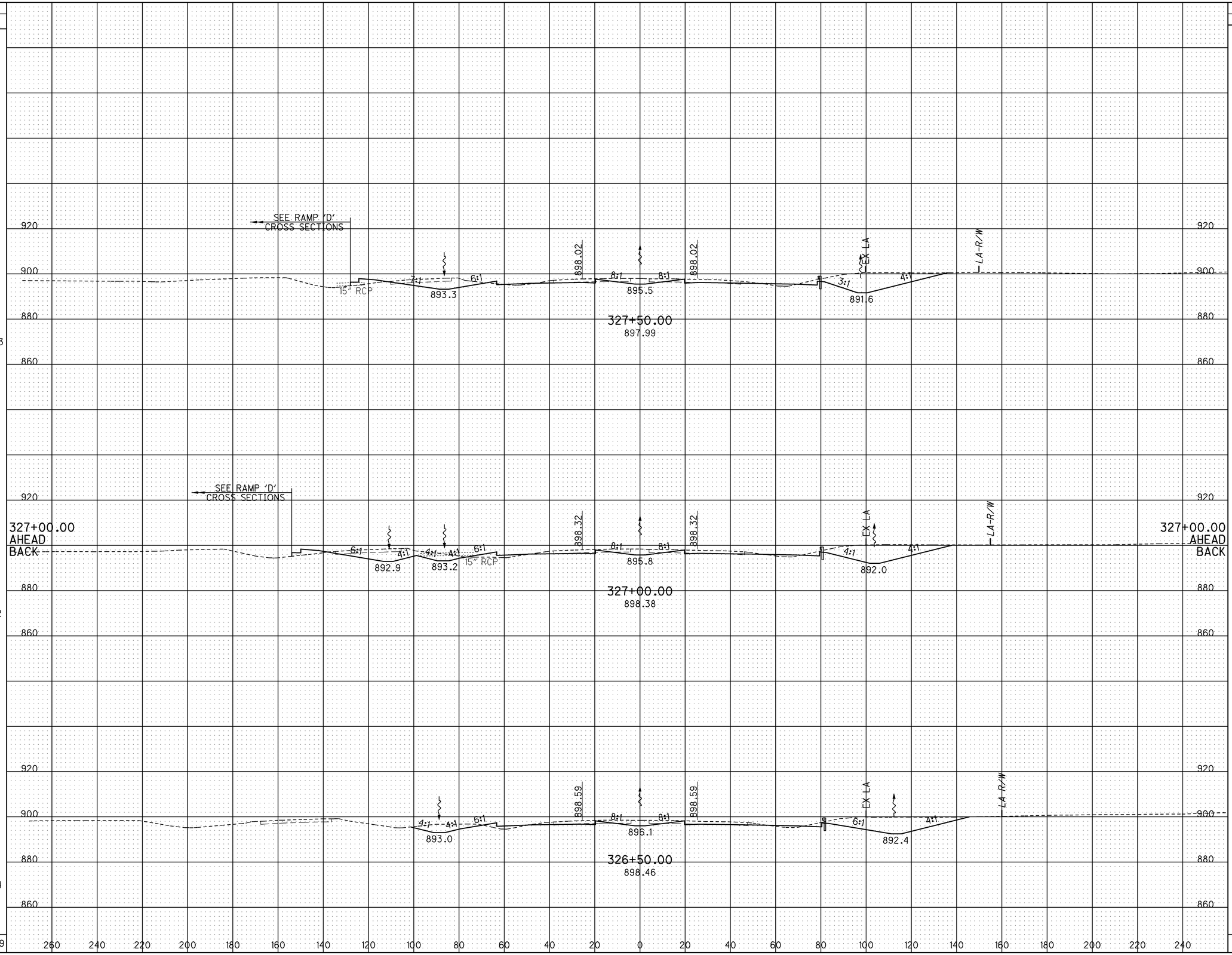

END AREA	
CUT	FILL
541	59
606	74
483	51
494	45

VOLUME	
CUT	FILL
1063	123
905	89
920	85
2888	297

CALCULATED JMR
CHECKED ACF

CROSS SECTIONS - I-75
STA. 326+50.00 TO STA. 327+50.00

ALL-75-5.53

244
1224

J:\Projects\ALL\76691\roadway\sheets\76691XS1022.dgn 11-SEP-2012 8:56PM reddenj

SEEDING		END AREA		VOLUME	
END WIDTH	SQ. YDS.	CUT	FILL	CUT	FILL
125	755	411	49	822	95
146	850	477	54	903	98
159	944	498	52	963	102
	2549			2688	295

CALCULATED JMR
CHECKED ACF

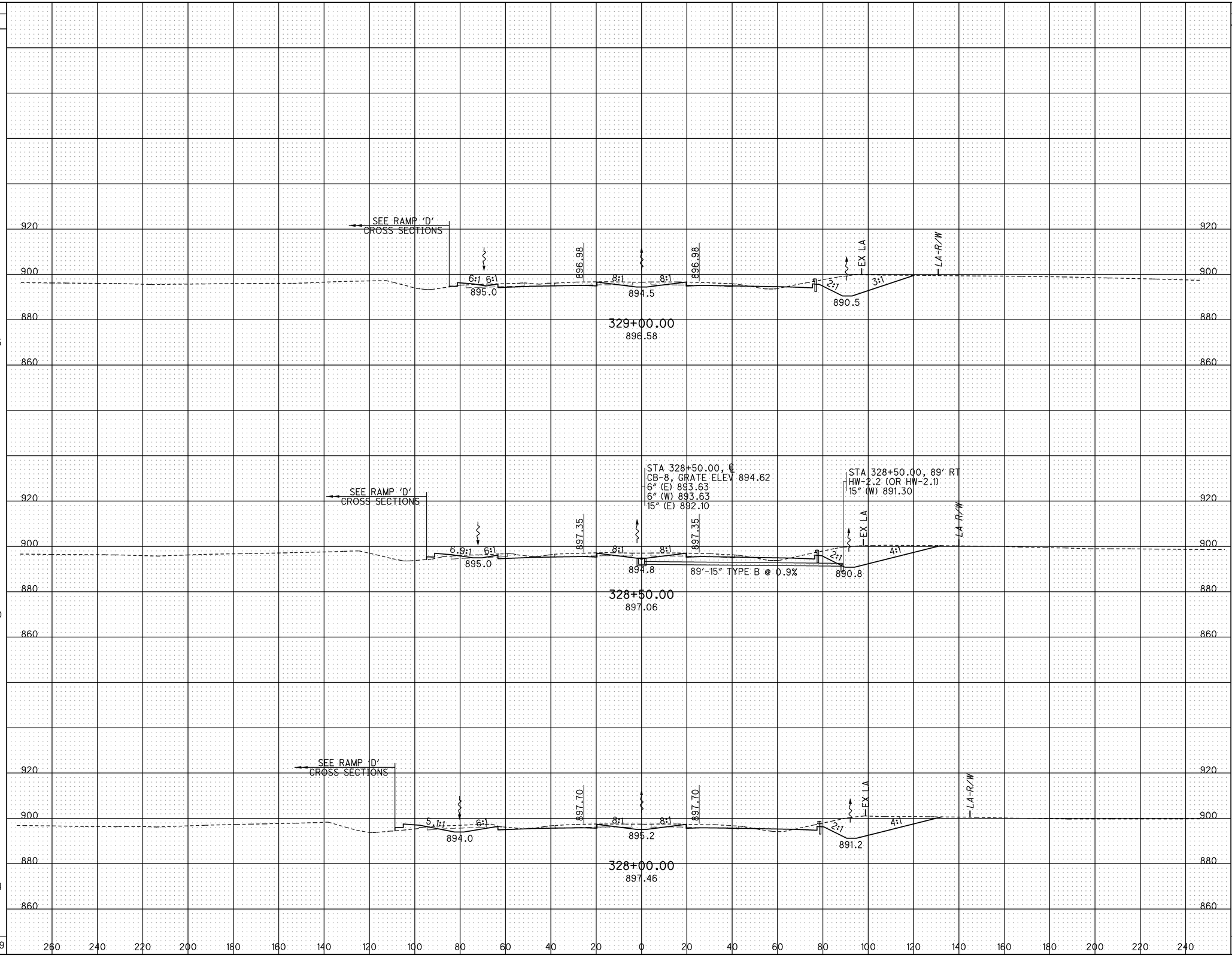

CROSS SECTIONS - I-75
STA. 328+00.00 TO STA. 329+00.00

ALL-75-5.53

245
1224

J:\Projects\ALL\76691\roadway\sheets\76691XS1023.dgn 11-SEP-2012 8:56PM reddenj

SEEDING		END AREA		VOLUME	
END WIDTH	SQ. YDS.	CUT	FILL	CUT	FILL
154	850	495	37	944	64
152	867	524	32	957	81
160 110	656	509 358	55 41	713	83
	2373			2614	228

CALCULATED JMR
CHECKED ACF

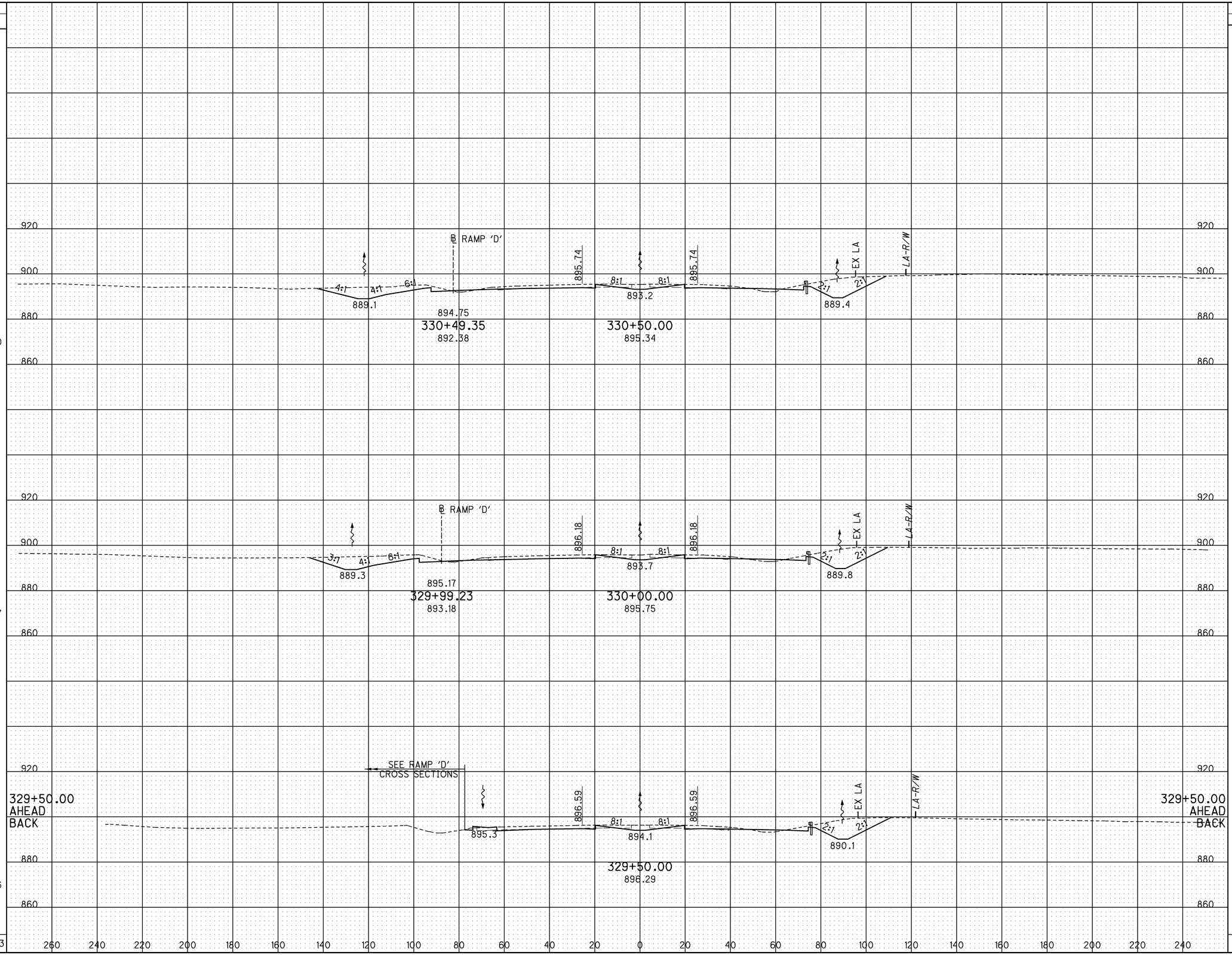

CROSS SECTIONS - I-75
STA. 329+50.00 TO STA. 330+50.00

ALL-75-5.53

246
1224

J:\Projects\ALL\76691\roadway\sheets\76691XS1024.dgn 11-SEP-2012 8:56PM reddenj

SEEDING	
END WIDTH	SQ. YDS.
151	833
148	833
151	850
	2516

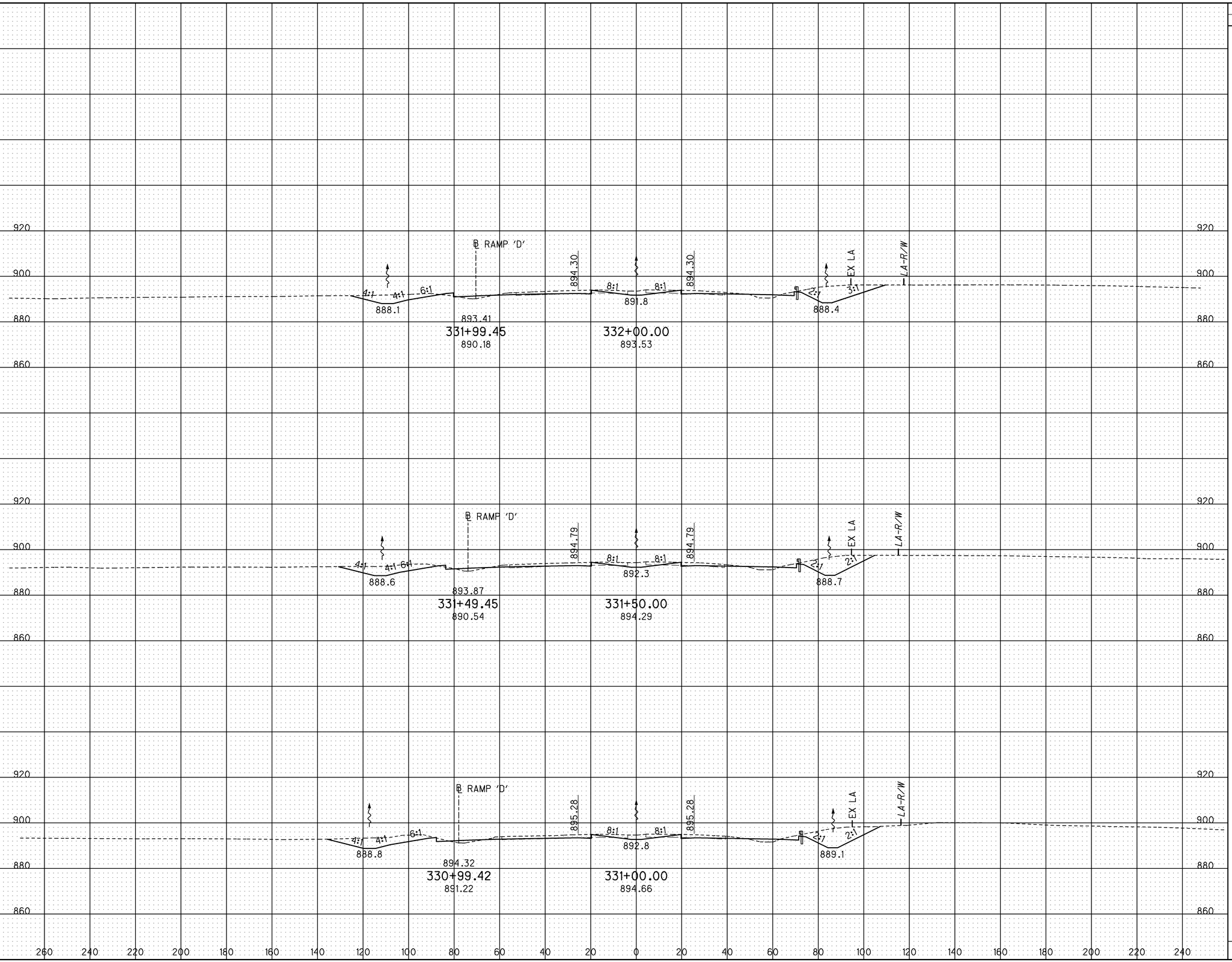

END AREA	
CUT	FILL
383	57
411	51
458	46

VOLUME	
CUT	FILL
734	100
805	90
883	77
2422	267

CALCULATED JMR
CHECKED ACF

CROSS SECTIONS - I-75
STA. 331+00.00 TO STA. 332+00.00

ALL-75-5.53

247
1224

J:\Projects\ALL\76691\roadway\sheets\76691XS1025.dgn 11-SEP-2012 8:56PM reddenj

SEEDING		END AREA		VOLUME	
END WIDTH	SQ. YDS.	CUT	FILL	CUT	FILL
143	811	294	69	561	125
148	834	312	66	612	124
151	844	349	69	677	117
	2489			1850	366

CALCULATED JMR
CHECKED ACF

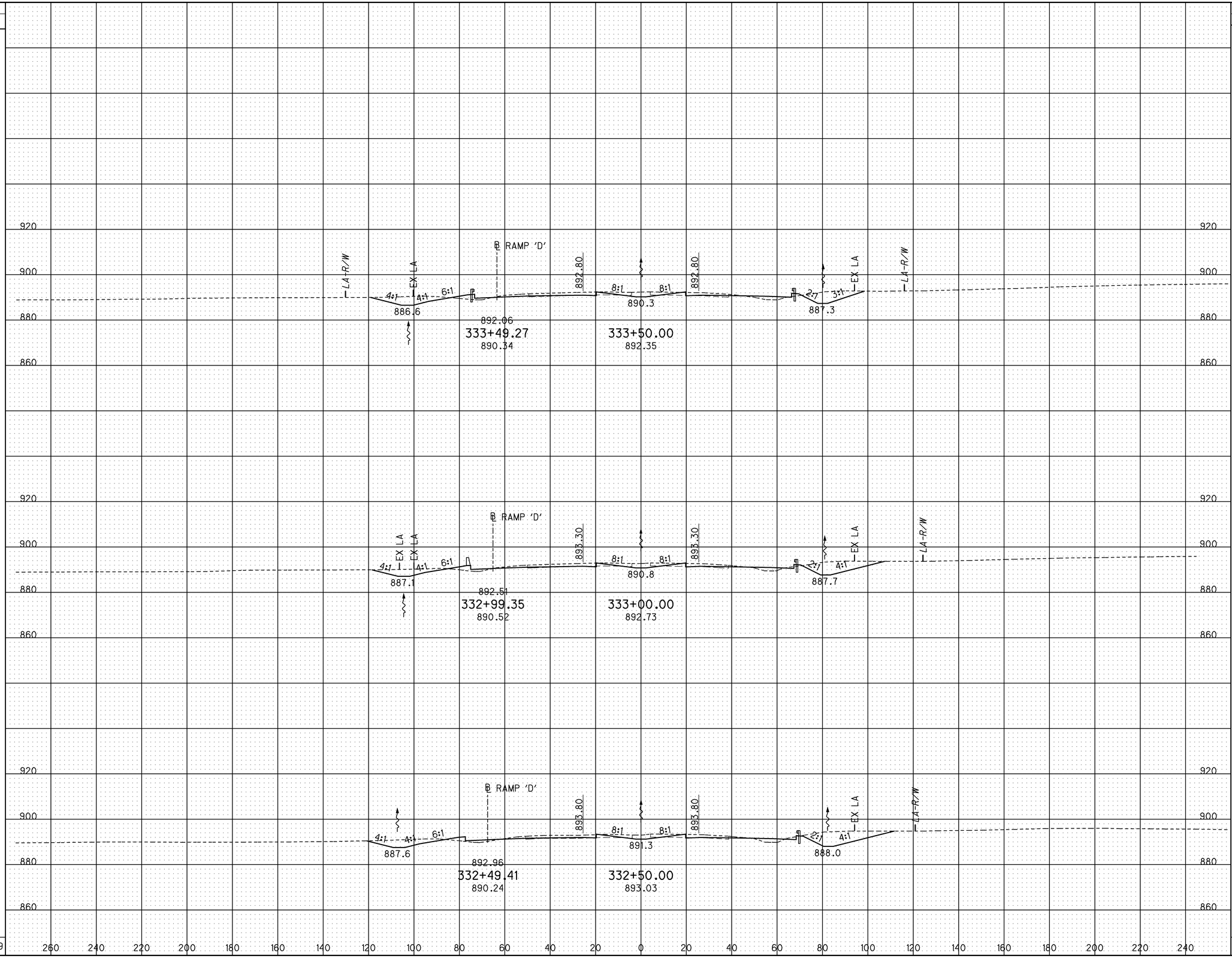

CROSS SECTIONS - I-75
STA. 332+50.00 TO STA. 333+50.00

ALL-75-5.53

248
1224

J:\Projects\ALL\76691\roadway\sheets\76691XS1026.dgn 11-SEP-2012 8:56PM reddenj

SEEDING END WIDTH	SEEDING SQ. YDS.	END AREA CUT	END AREA FILL	VOLUME CUT	VOLUME FILL
140	777	265	77	495	143
140	777	270	77	512	135
140	789	283	69	534	128
	2343			1541	406

CALCULATED JMR
CHECKED ACF

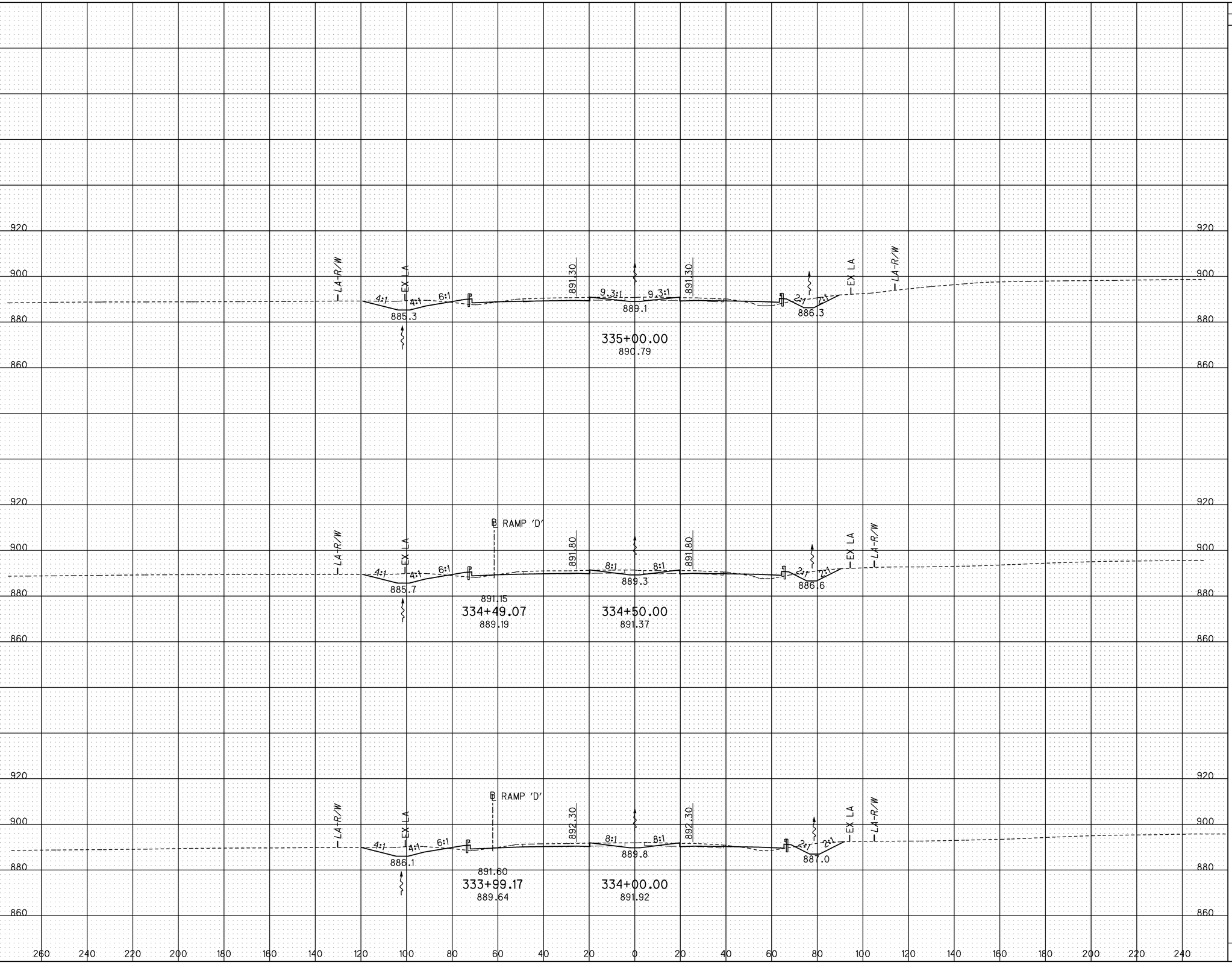

CROSS SECTIONS - I-75
STA. 334+00.00 TO STA. 335+00.00

ALL-75-5.53

249
1224

J:\Projects\ALL\76691\roadway\sheets\76691XS1027.dgn 11-SEP-2012 8:56PM reddenj

SEEDING		END AREA		VOLUME	
END WIDTH	SQ. YDS.	CUT	FILL	CUT	FILL
162	873	385	73	669	126
152	834	337	63	586	122
147	800	295	69	519	135
	2507			1774	383

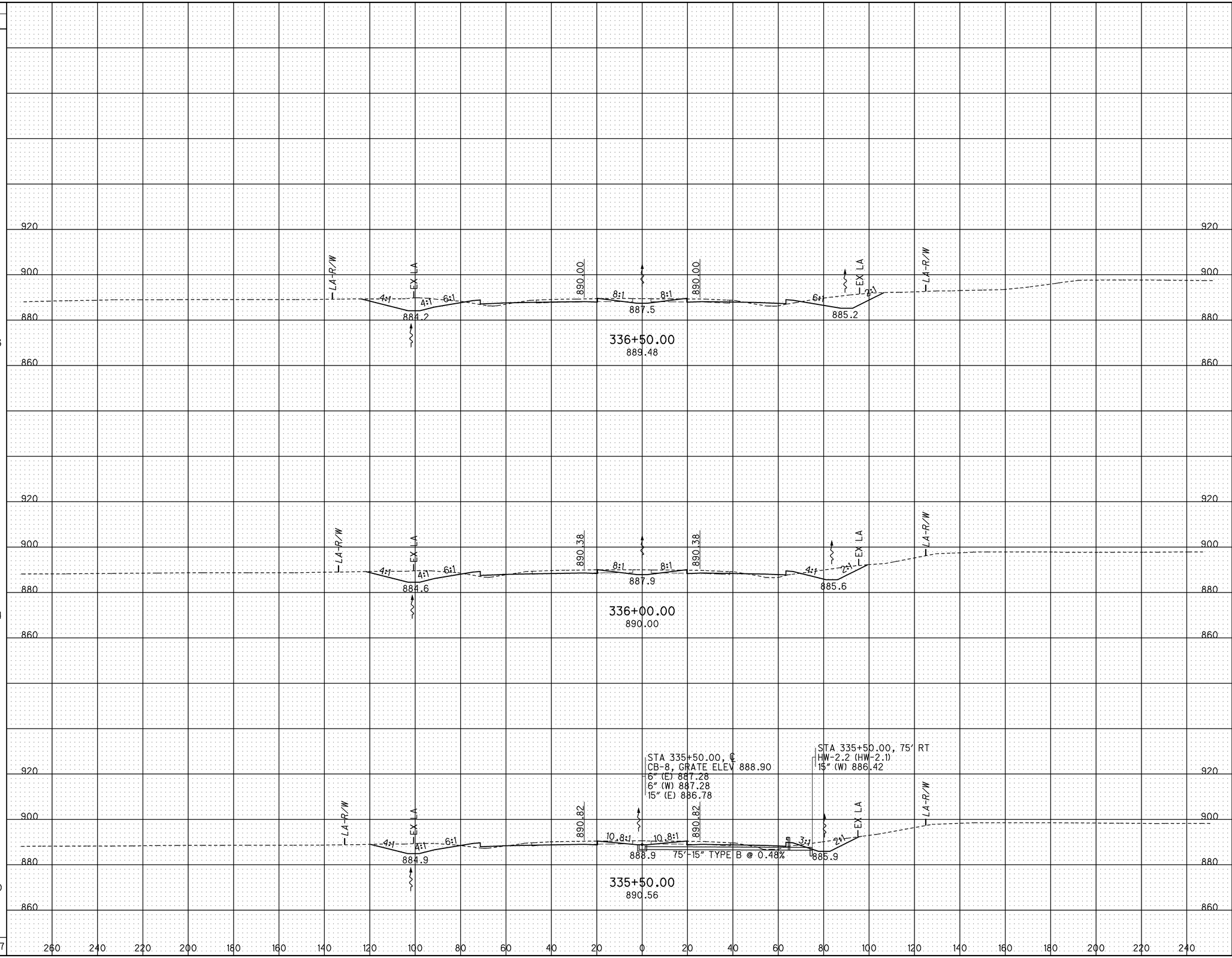

CALCULATED JMR
CHECKED ACF

CROSS SECTIONS - I-75
STA. 335+50.00 TO STA. 336+50.00

ALL-75-5.53

250
1224

J:\Projects\ALL\76691\roadway\sheets\76691XS1028.dgn 11-SEP-2012 8:56PM reddenj

SEEDING		END AREA		VOLUME		
END WIDTH	SQ. YDS.	CUT	FILL	CUT	FILL	
164	906	333	134	633	225	338+00.00
161	900	351	109	677	180	337+50.00
161	900	380	86	708	146	337+00.00
	2706			2018	551	

EMBANKMENT FOR PAVEMENT REMOVED

338+00.00
888.16

337+50.00
888.54

337+00.00
888.92

CALCULATED JMR
CHECKED ACF

CROSS SECTIONS - I-75
STA. 337+00.00 TO STA. 338+00.00

ALL-75-5.53

251
1224

J:\Projects\ALL\76691\roadway\sheets\76691XS1029.dgn 11-SEP-2012 8:56PM reddenj

SEEDING	
END WIDTH	SQ. YDS.
149	861
159	889
160	900
	2650

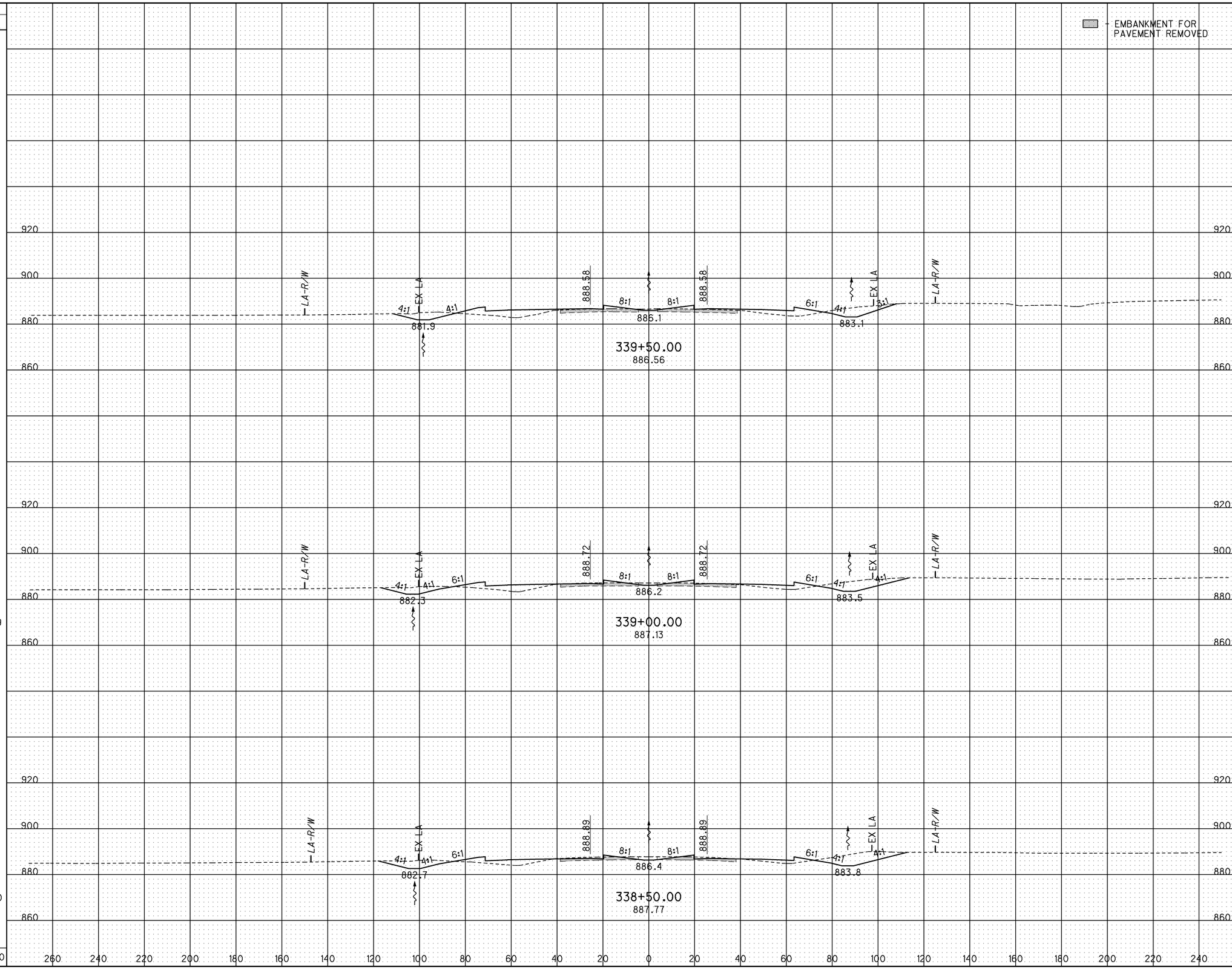

END AREA	
CUT	FILL
226	294
256	228
285	173

VOLUME	
CUT	FILL
446	483
500	371
571	284
1517	1138

CALCULATED JMR
CHECKED ACF

CROSS SECTIONS - I-75
STA. 338+50.00 TO STA. 339+50.00

ALL-75-5.53

252
1224

J:\Projects\ALL\76691\roadway\sheets\76691XS1030.dgn 11-SEP-2012 8:56PM reddenj

SEEDING	
END WIDTH	SQ. YDS.
145	805
143	806
145	816
	2427

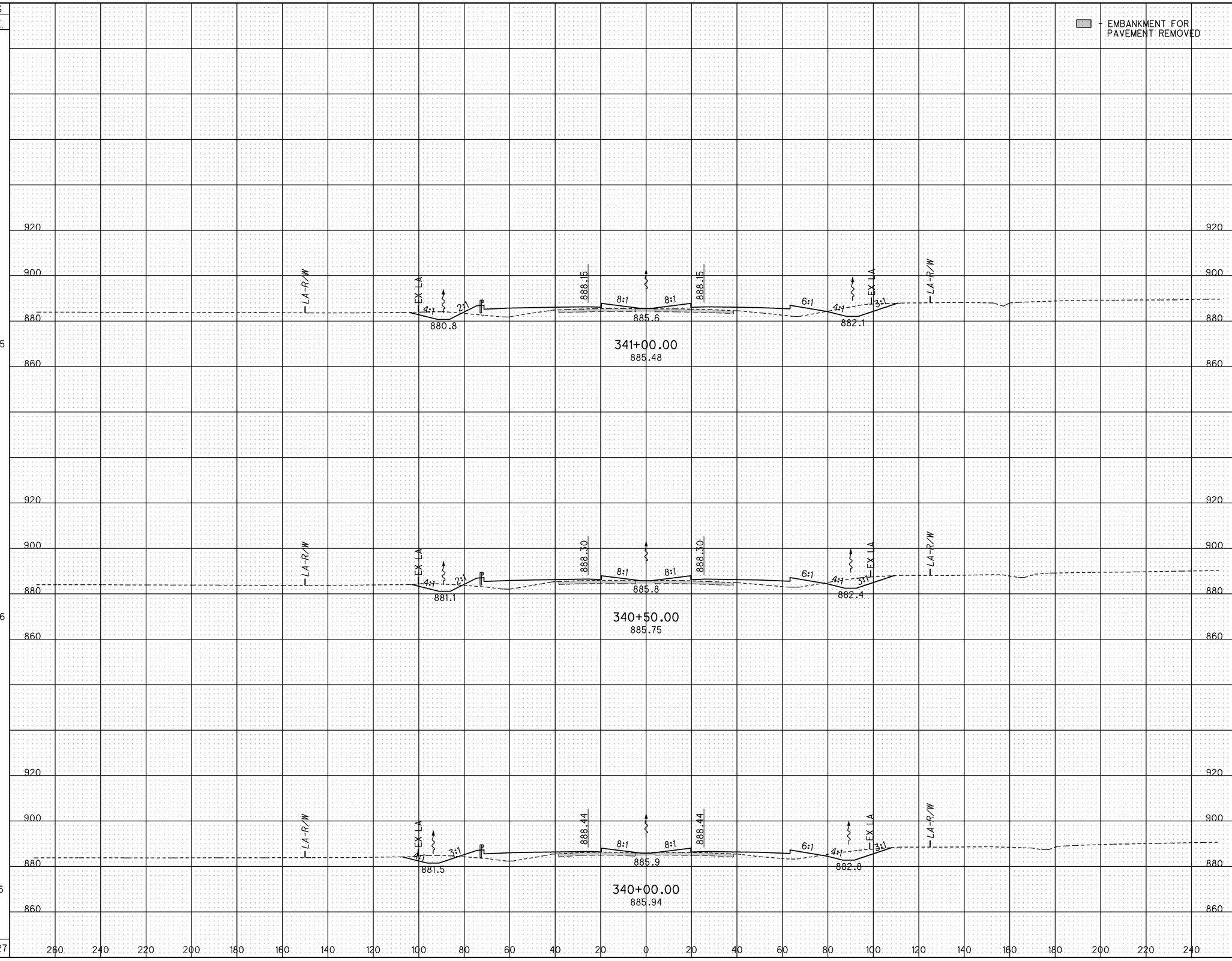

END AREA	
CUT	FILL
234	409
221	365
220	334
1242	1945

VOLUME	
CUT	FILL
421	717
408	647
413	581

CALCULATED	CHECKED
JMR	ACF

CROSS SECTIONS - I-75
STA. 340+00.00 TO STA. 341+00.00

ALL-75-5.53

253
1224

J:\Projects\ALL\76691\roadway\sheets\76691XS1031.dgn 11-SEP-2012 8:56PM reddenj

SEEDING	
END WIDTH	SQ. YDS.
166	452
160	856
147	817
	2125

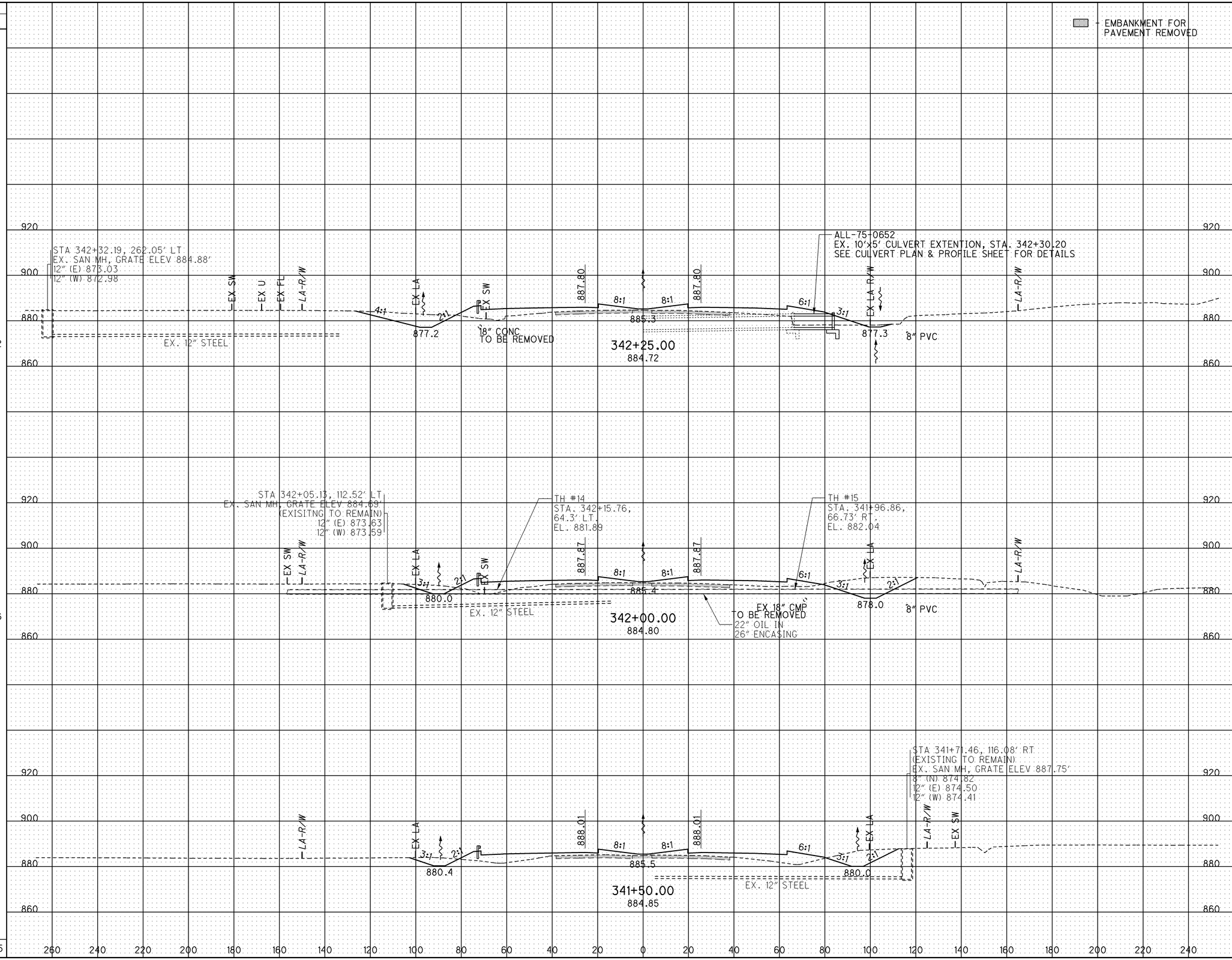

END AREA	
CUT	FILL
251	599
368	461
272	459

VOLUME	
CUT	FILL
287	491
593	852
468	804
1348	2147

CALCULATED JMR
CHECKED ACF

CROSS SECTIONS - I-75
STA. 341+50.00 TO STA. 342+25.00

ALL-75-5.53

254
1224

J:\Projects\ALL\76691\roadway\sheets\76691XS1032.dgn 11-SEP-2012 8:57PM redden

SEEDING	
END WIDTH	SQ. YDS.
200	1250
249	1428
265	600
	3278

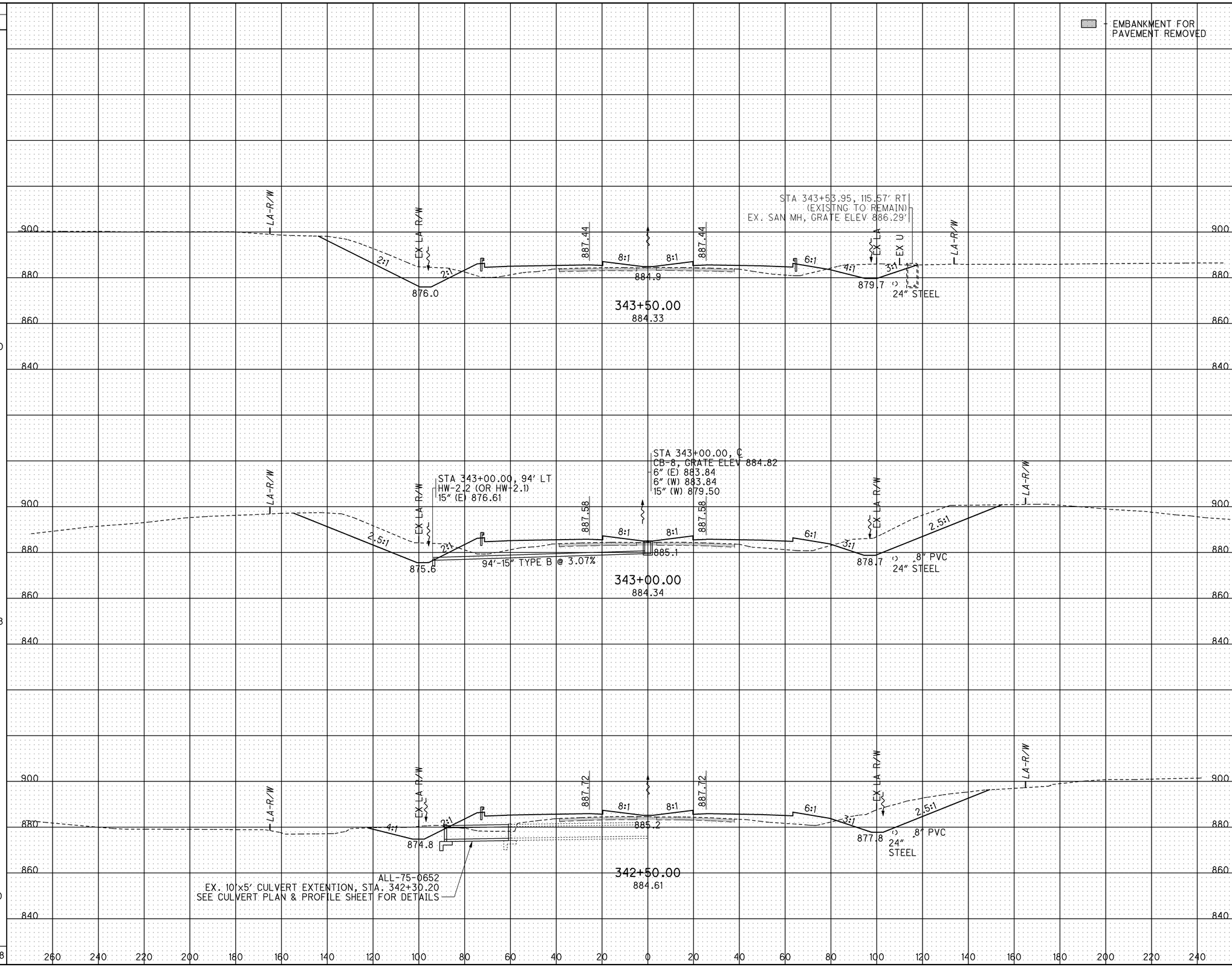

END AREA	
CUT	FILL
606	472
1044	534
619	596

VOLUME	
CUT	FILL
1528	931
1540	1046
403	553
3471	2530

CALCULATED JMR
CHECKED ACF

CROSS SECTIONS - I-75
STA. 342+50.00 TO STA. 343+50.00

ALL-75-5.53

255
1224

J:\Projects\ALL\76691\roadway\sheets\76691XS1033.dgn 11-SEP-2012 8:57PM reddenj

SEEDING		END AREA		VOLUME		
END WIDTH	SQ. YDS.	CUT	FILL	CUT	FILL	
						CALCULATED JMR
						CHECKED ACF
143	823	244	294	484	575	
152	878	279	327	578	658	
163	1011	346	384	881	792	
	2712			1943	2025	

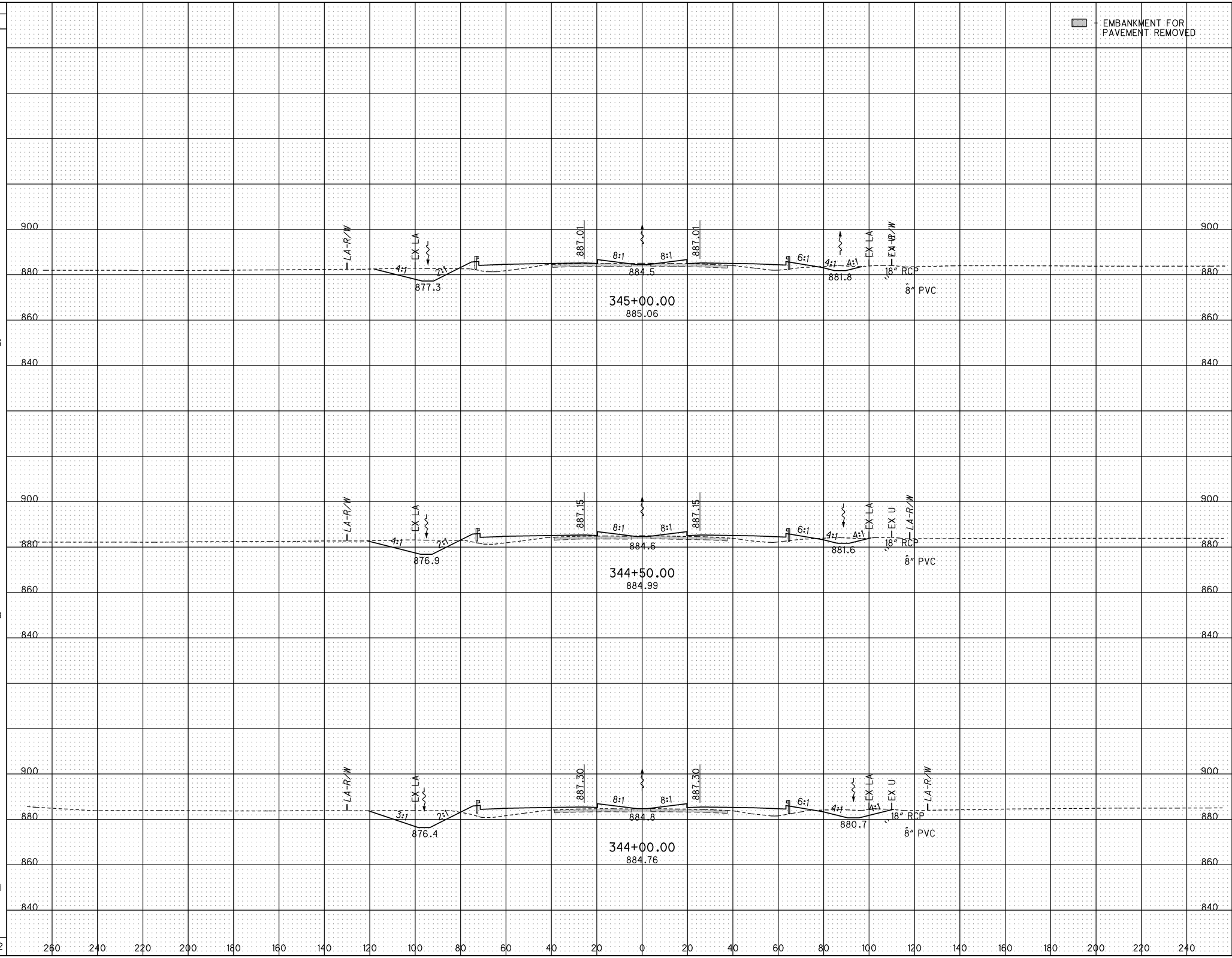

CROSS SECTIONS - I-75
STA. 344+00.00 TO STA. 345+00.00

ALL-75-5.53

256
1224

J:\Projects\ALL\76691\roadway\sheets\76691XS1034.dgn 11-SEP-2012 8:57PM reddenj

SEEDING		END AREA		VOLUME		
END WIDTH	SQ. YDS.	CUT	FILL	CUT	FILL	
138	773	232	199	434	395	346+50.00
140	795	236	228	443	460	346+00.00
145	806	242	269	450	521	345+50.00
	2374			1327	1376	

CALCULATED JMR
CHECKED ACF

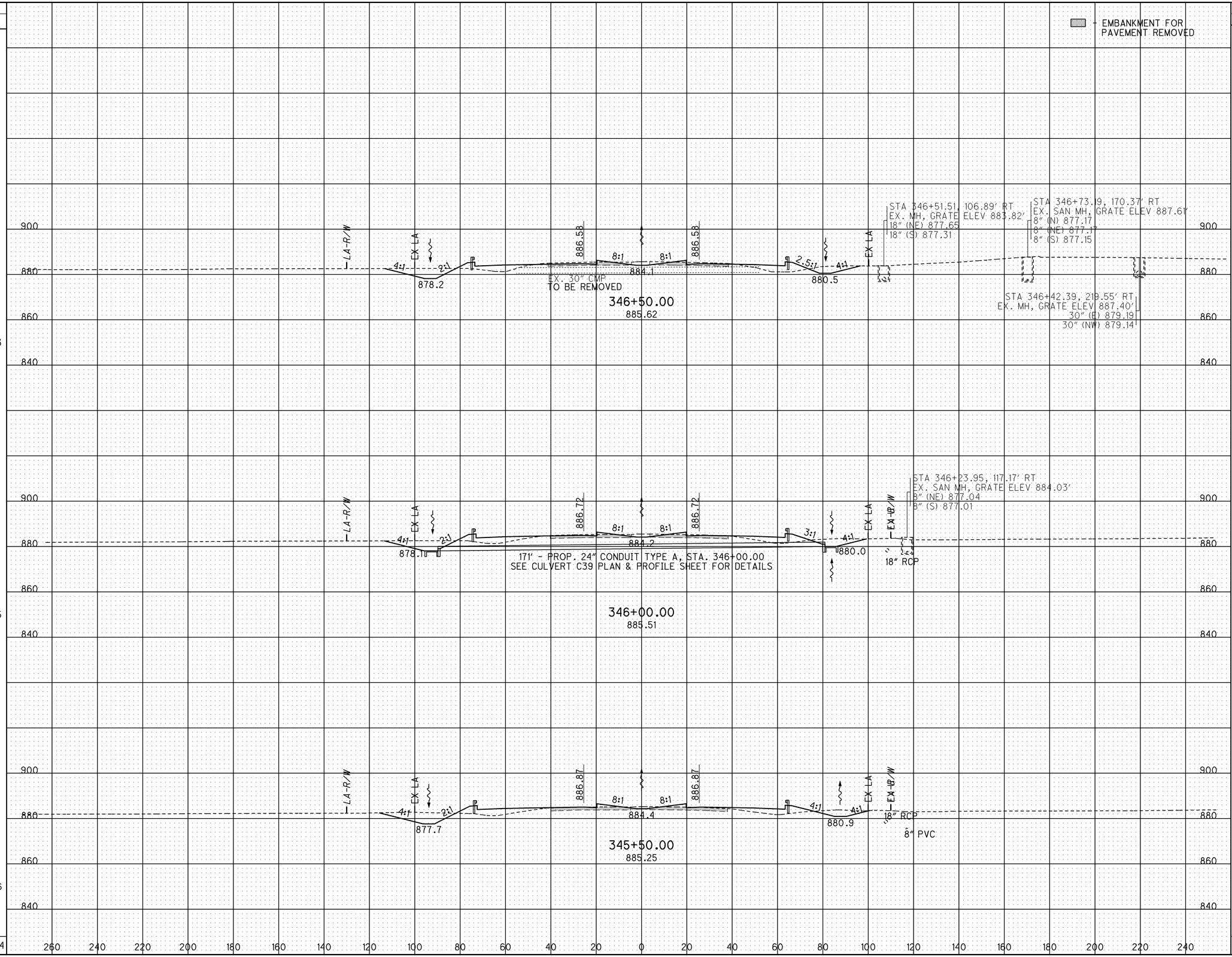

CROSS SECTIONS - I-75
STA. 345+50.00 TO STA. 346+50.00

ALL-75-5.53

257
1224

J:\Projects\ALL\76691\roadway\sheets\76691XS1035.dgn 11-SEP-2012 8:57PM redden

SEEDING	
END WIDTH	SQ. YDS.
135	739
131	734
133	755
	2228

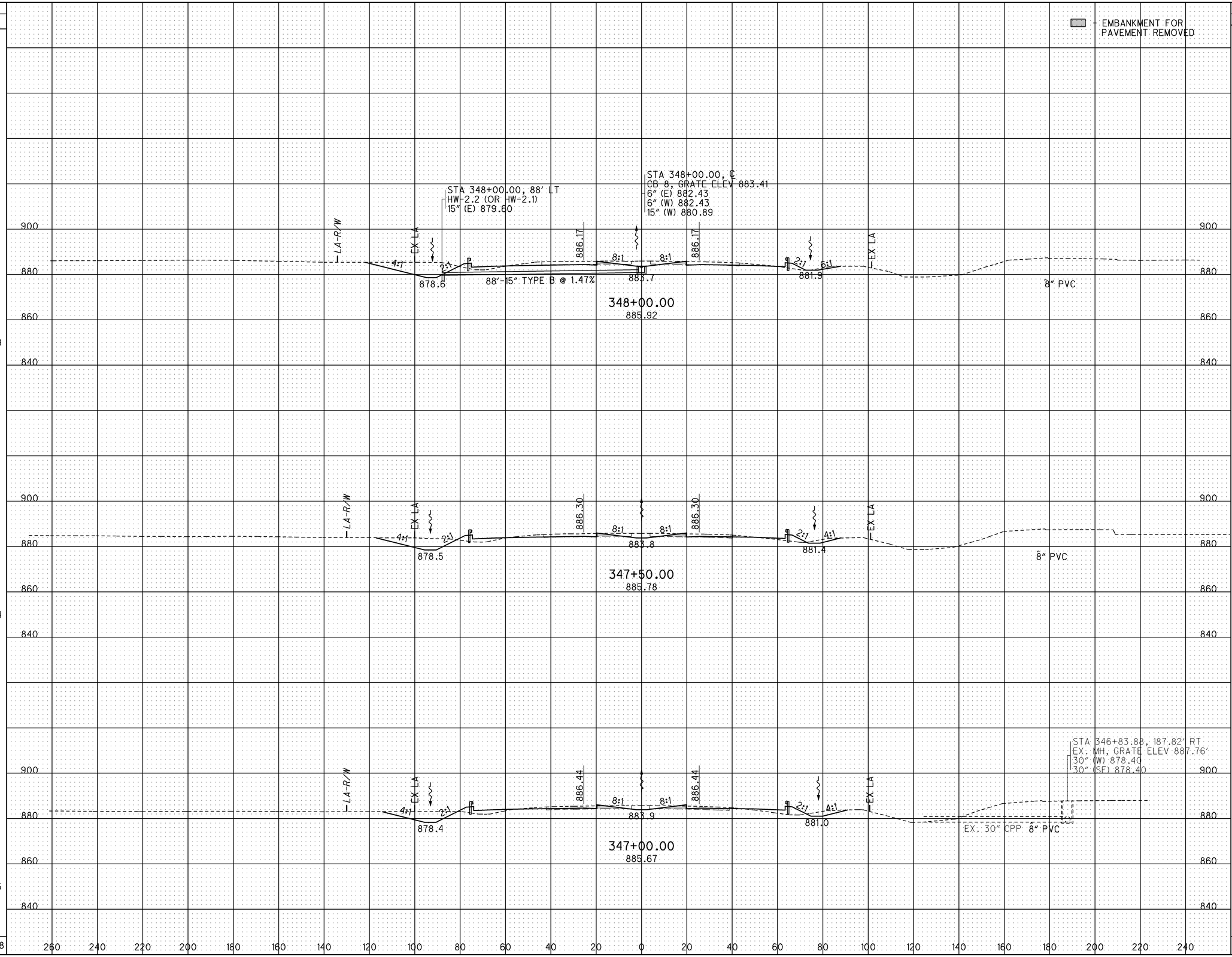

END AREA	
CUT	FILL
311	58
249	85
229	125

VOLUME	
CUT	FILL
519	132
443	194
427	299
1389	625

CALCULATED JMR
CHECKED ACF

CROSS SECTIONS - I-75
STA. 347+00.00 TO STA. 348+00.00

ALL-75-5.53

258
1224

J:\Projects\ALL\76691\roadway\sheets\76691XS1036.dgn 11-SEP-2012 8:57PM reddenj

SEEDING		END AREA		VOLUME	
END WIDTH	SQ. YDS.	CUT	FILL	CUT	FILL
136	772	505	20	912	45
142	772	480	28	811	61
136	755	396	38	654	89
	2299			2377	195

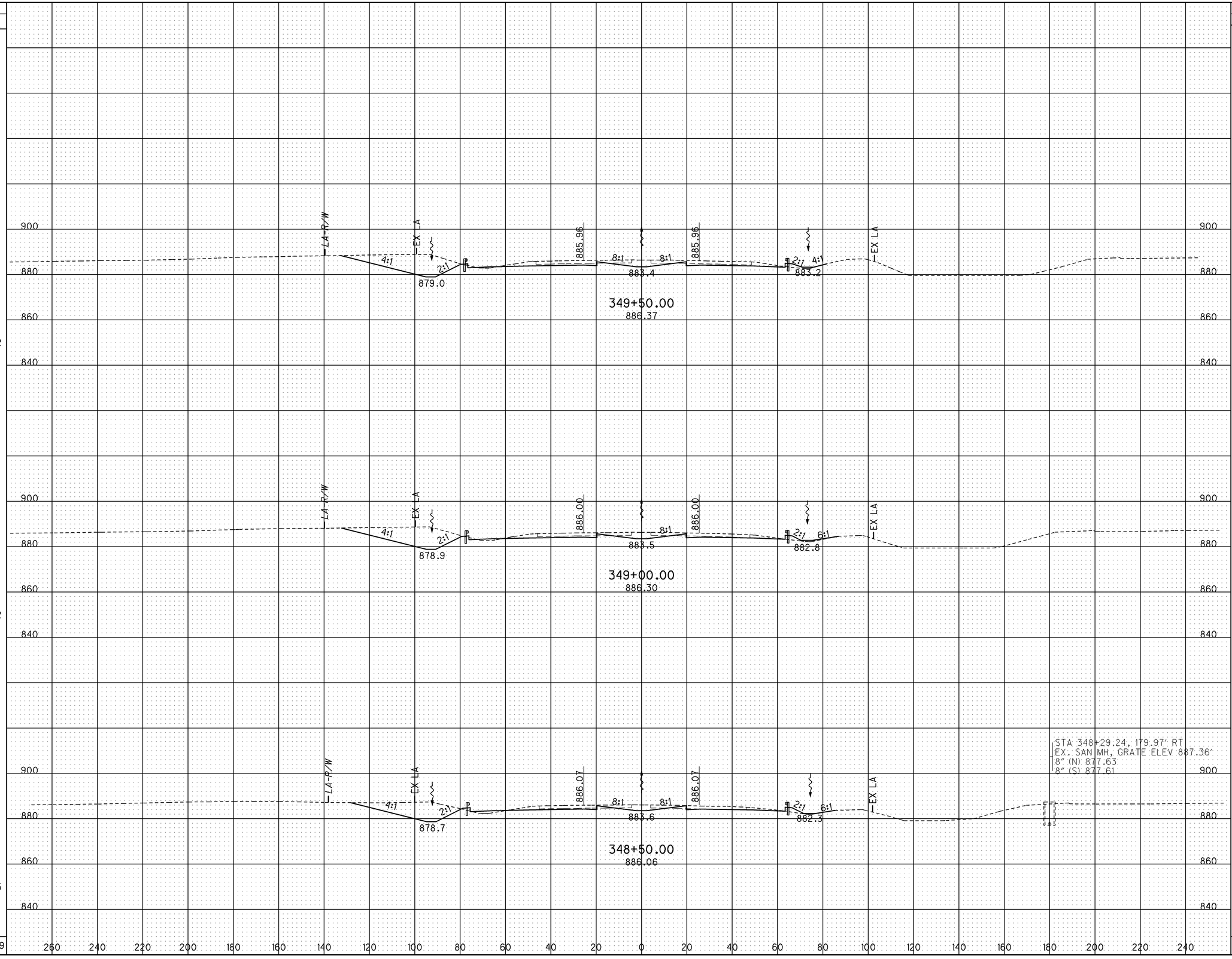

CALCULATED JMR
CHECKED ACF

CROSS SECTIONS - I-75
STA. 348+50.00 TO STA. 349+50.00

ALL-75-5.53

259
1224

J:\Projects\ALL\76691\roadway\sheets\76691XS1037.dgn 11-SEP-2012 8:57PM reddenj

SEEDING	
END WIDTH	SQ. YDS.
147	817
147	784
134	755
	2356

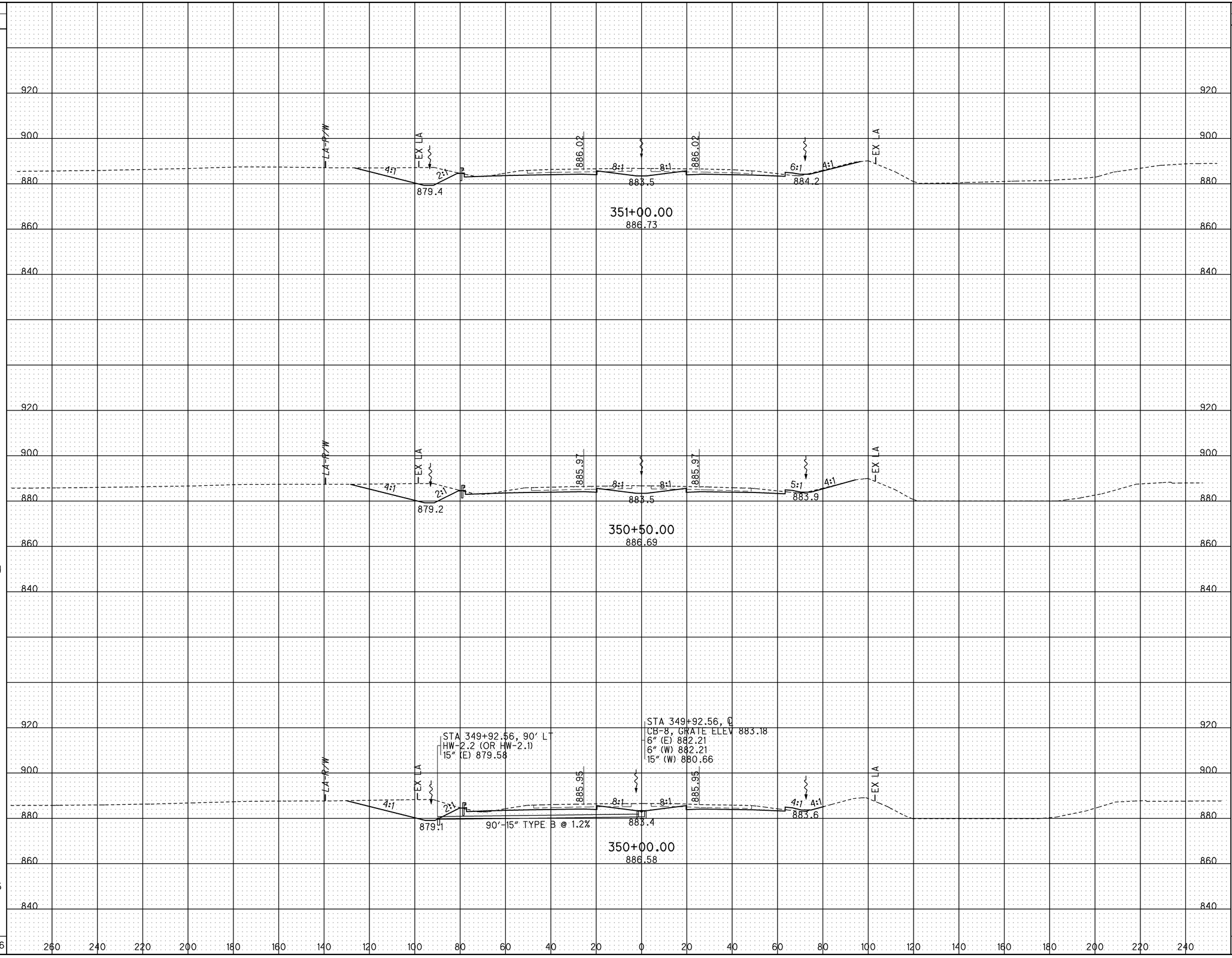

END AREA	
CUT	FILL
466	10
482	10
492	16

VOLUME	
CUT	FILL
878	19
901	24
923	33
2702	76

CALCULATED JMR
CHECKED ACF

CROSS SECTIONS - I-75
STA. 350+00.00 TO STA. 351+00.00

ALL-75-5.53

260
1224

J:\Projects\ALL\76691\roadway\sheets\76691XS1038.dgn 11-SEP-2012 8:57PM reddenj

SEEDING			END AREA		VOLUME	
STA	END WIDTH	SQ. YDS.	CUT	FILL	CUT	FILL
352+50.00	140	777	398	9	771	15
352+00.00	139	778	435	8	807	15
351+50.00	141	806	437	9	837	17
		2361			2415	47

CALCULATED JMR
CHECKED ACF

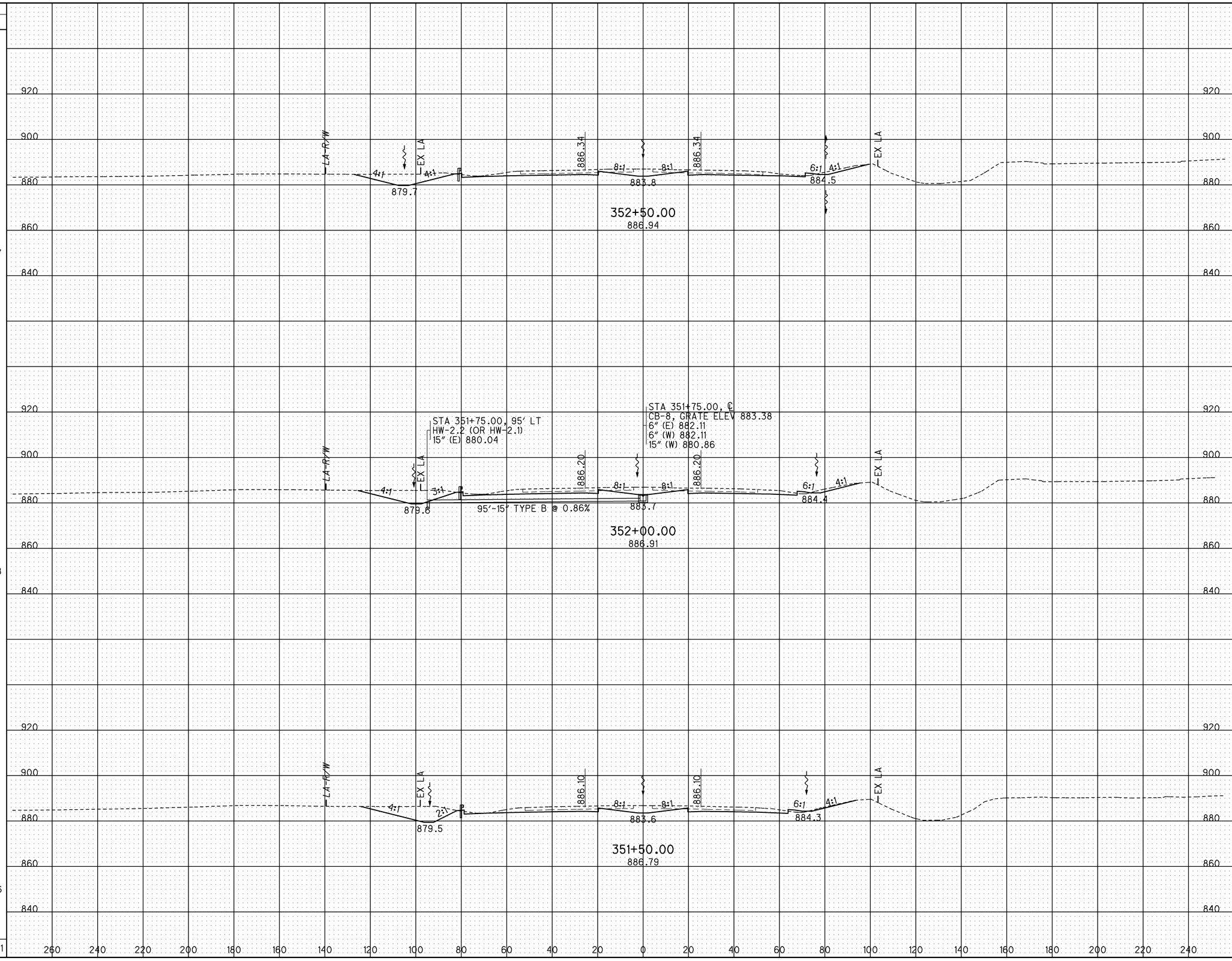

CROSS SECTIONS - I-75
STA. 351+50.00 TO STA. 352+50.00

ALL-75-5.53

261
1224

J:\Projects\ALL\76691\roadway\sheets\76691XS1039.dgn 11-SEP-2012 8:57PM reddenj

SEEDING END WIDTH	SEEDING SQ. YDS.	END AREA CUT	END AREA FILL	VOLUME CUT	VOLUME FILL
144	817	275	29	532	46
149	816	299	21	604	31
145	794	353	13	696	20
	2427			1832	97

CALCULATED JMR
CHECKED ACF

CROSS SECTIONS - I-75
STA. 353+00.00 TO STA. 354+00.00

ALL-75-5.53

262
1224

J:\Projects\ALL\76691\roadway\sheets\76691XS1040.dgn 11-SEP-2012 8:57PM reddenj

SEEDING		END AREA		VOLUME	
END WIDTH	SQ. YDS.	CUT	FILL	CUT	FILL
143	789	220	76	422	118
140	739	236	51	450	79
124	750	251	34	487	59
	2278			1359	256

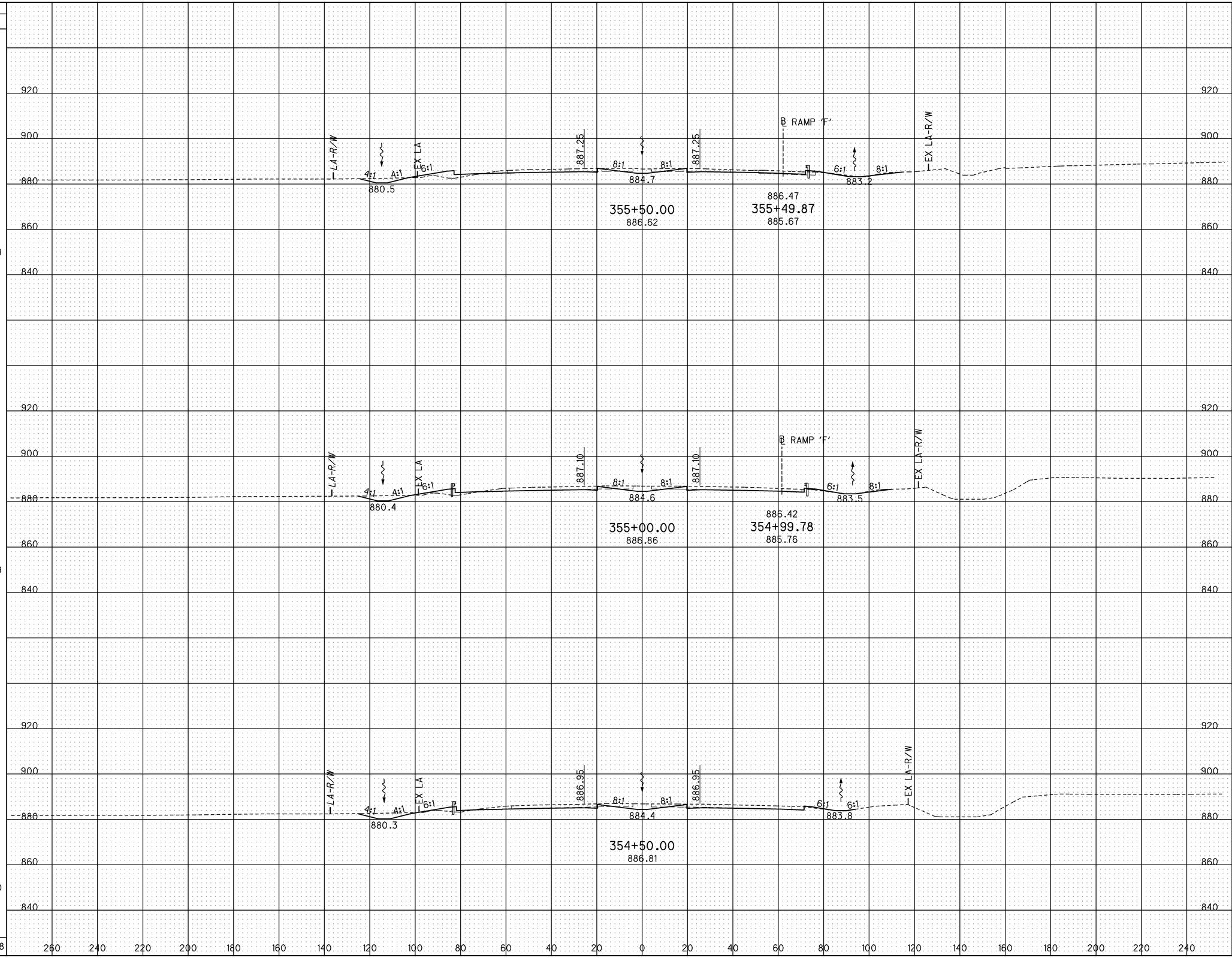

J:\Projects\ALL\76691\roadway\sheets\76691XS1041.dgn 11-SEP-2012 8:57PM redden j

CALCULATED JMR
CHECKED ACF

CROSS SECTIONS - I-75
STA. 354+50.00 TO STA. 355+50.00

ALL-75-5.53

263
1224

SEEDING END WIDTH	SEEDING SQ. YDS.	END AREA CUT	END AREA FILL	VOLUME CUT	VOLUME FILL
137		235	137		
	789			430	236
147		229	119		
	817			422	205
146		227	102		
	806			414	165
	2412			1266	606

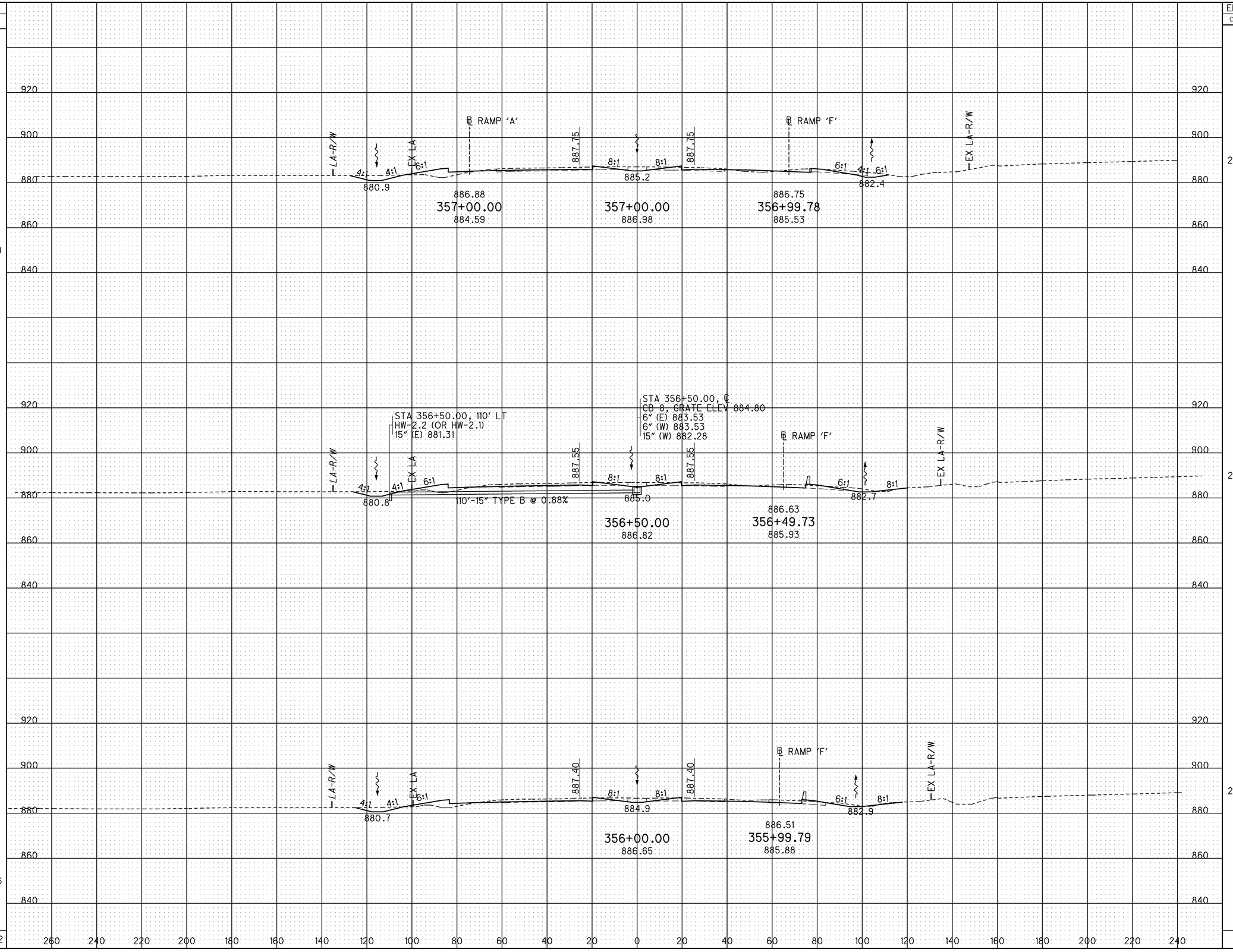

CALCULATED JMR
CHECKED ACF

CROSS SECTIONS - I-75
STA. 356+00.00 TO STA. 357+00.00

ALL-75-5.53

264
1224

J:\Projects\ALL\76691\roadway\sheets\76691XS1042.dgn 11-SEP-2012 8:57PM reddenj

SEEDING END WIDTH	SEEDING SQ. YDS.	END AREA CUT	END AREA FILL	VOLUME CUT	VOLUME FILL
158		274	479		
	866			499	739
153		265	320		
	834			466	469
146		238	186		
	789			438	299
	2489			1403	1507

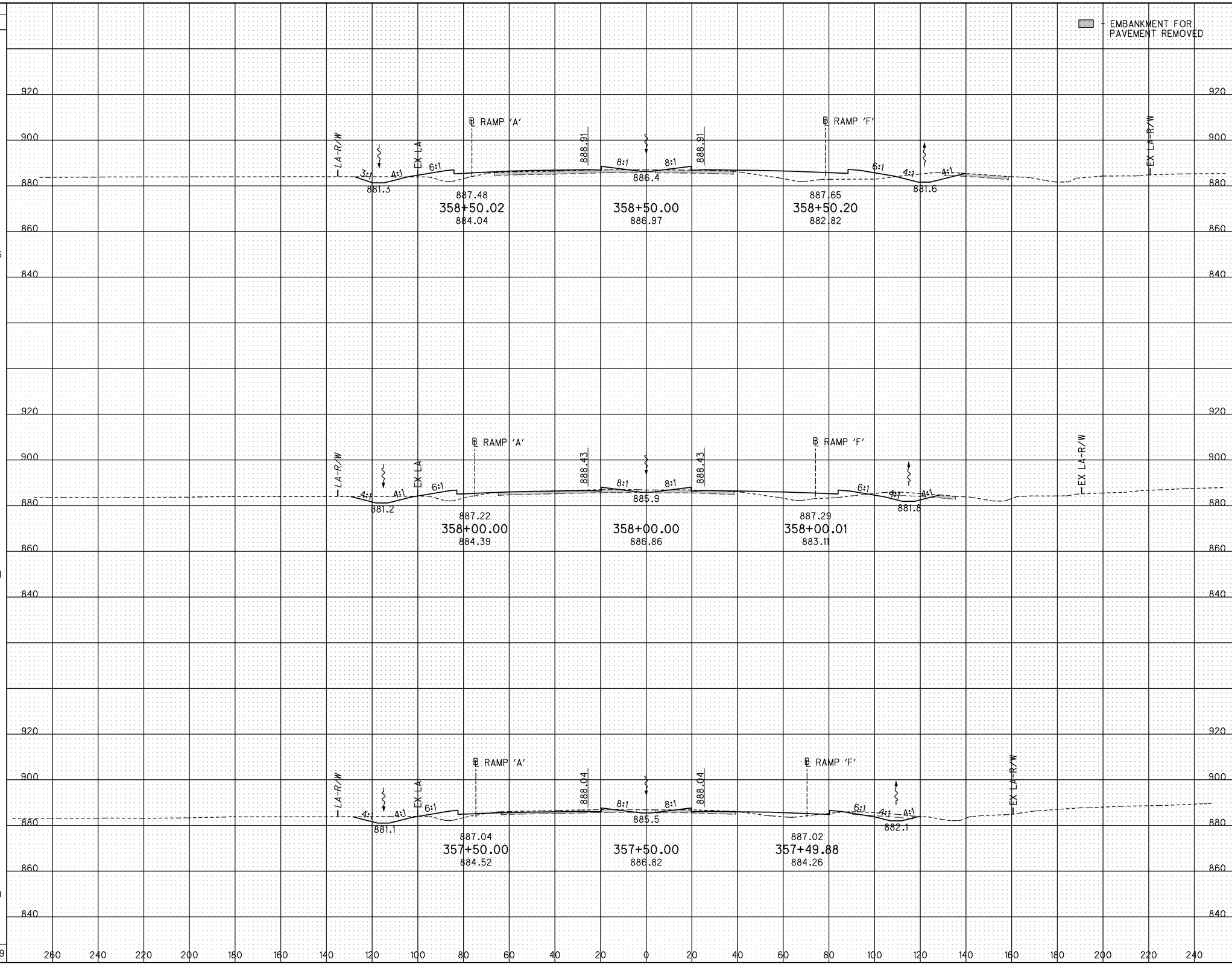

CALCULATED JMR
CHECKED ACF

CROSS SECTIONS - I-75
STA. 357+50.00 TO STA. 358+50.00

ALL-75-5.53

J:\Projects\ALL\76691\roadway\sheets\76691XS1043.dgn 11-SEP-2012 8:57PM reddenj

SEEDING		END AREA		VOLUME	
END WIDTH	SQ. YDS.	CUT	FILL	CUT	FILL
109	611	159	752	304	1237
110		169	584		
170		200	758		
207	1047	249	623	416	1279
	1017			484	1020
	2675			1204	3536

CALCULATED JMR
CHECKED ACF

EMBANKMENT FOR PAVEMENT REMOVED

SEE RAMP 'F' CROSS SECTIONS

℄ RAMP 'A'

℄ RAMP 'F'

℄ LA-R/W

EX LA

EX 18" CONC TO BE REMOVED

360+00.45
882.99

360+00.00
887.15

359+50.00 AHEAD
359+50.00 BACK

359+50.20
882.27

359+50.00
887.17

359+00.07
883.52

359+00.00
886.97

359+00.45
882.90

CROSS SECTIONS - I-75
STA. 359+00.00 TO STA. 360+00.00

ALL-75-5.53

266
1224

J:\Projects\ALL\76691\roadway\sheets\76691XS1044.dgn 11-SEP-2012 8:57PM reddenj

SEEDING	
END WIDTH	SQ. YDS.
121	622
102	522
86 / 131	667
	1811

EMBANKMENT FOR PAVEMENT REMOVED

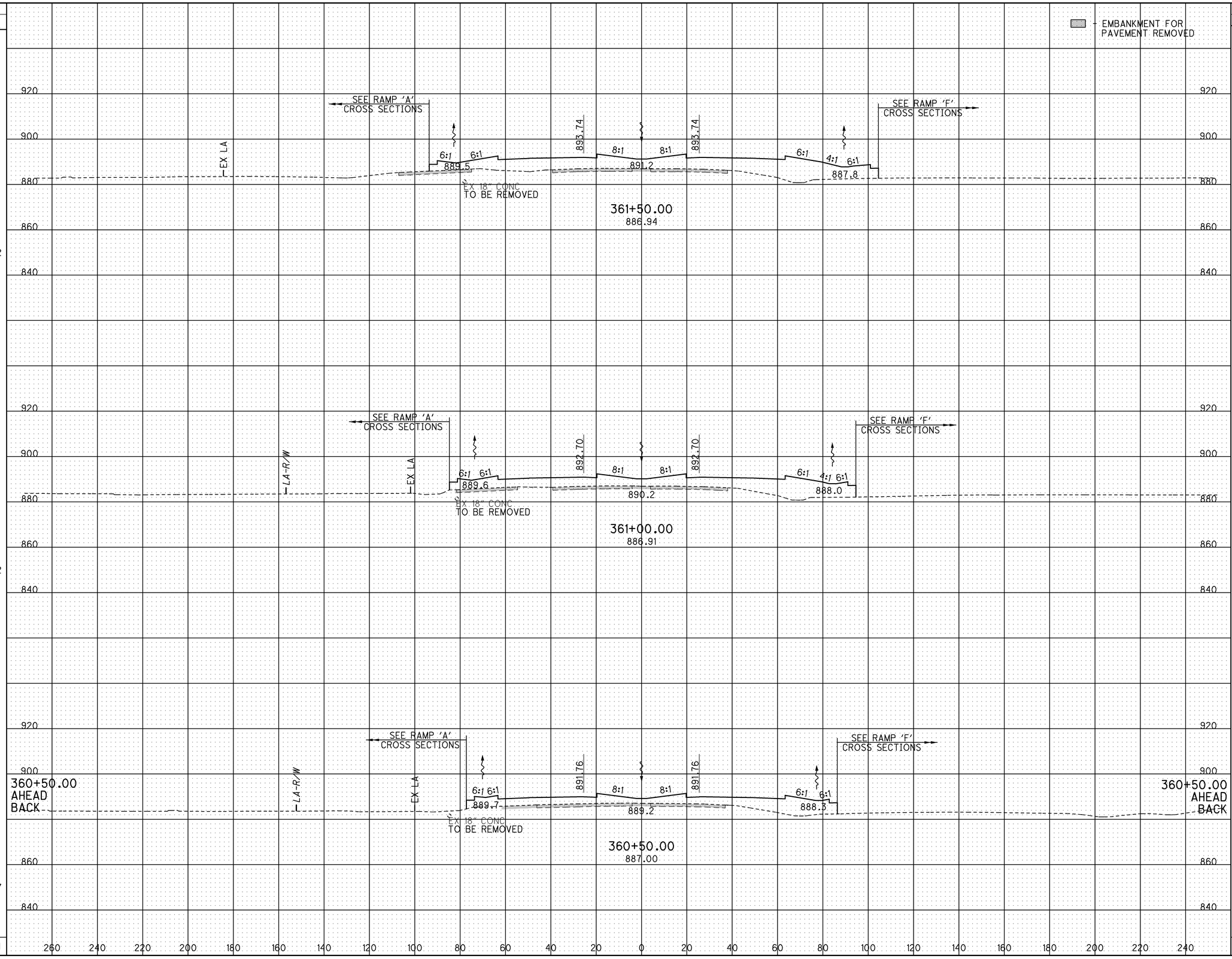

END AREA		VOLUME	
CUT	FILL	CUT	FILL
146	1277		
		264	2141
139	1035		
		250	1697
131 / 140	798 / 995		
		277	1618
		791	5456

CALCULATED JMR
CHECKED ACF

CROSS SECTIONS - I-75
STA. 360+50.00 TO STA. 361+50.00

ALL-75-5.53

267
1224

J:\Projects\ALL\76691\roadway\sheets\76691XS1045.dgn 11-SEP-2012 8:57PM reddenj

SEEDING		END AREA		VOLUME	
END WIDTH	SQ. YDS.	CUT	FILL	CUT	FILL
198	1023	198	2000	343	3569
169	866	172	1855	255	3224
143	733	103	1627	190	2650
	2622			788	9443

CALCULATED JMR
CHECKED ACF

EMBANKMENT FOR PAVEMENT REMOVED

STA 363+21.26, 66.70' LT
EX. MH, GRATE ELEV 884.90'
18" (S) 880.06
30" (SE) 880.03
36" (N) 880.07
(TO BE REMOVED)

STA 362+9 .05, 54.50' RT
EX. CB, GRATE ELEV 885.44'
24" (S) 880.66
24" (NE) 880.57
30" (NW) 880.47
(TO BE REMOVED)

SEE RAMP 'A' CROSS SECTIONS

SEE RAMP 'F' CROSS SECTIONS

887.6 894.9 884.8

EX. 30" CMP TO BE REMOVED

EX. 24" CMP TO BE REMOVED

363+00.00
887.94

STA 362+49.79, 87.77' LT
EX. CB, GRATE ELEV 882.65'
15" (E) 880.41
(TO BE REMOVED)

888.7 893.6 886.2

EX. 15" CONC EX 18" CONC TO BE REMOVED

24" CONC TO BE REMOVED

362+50.00
887.31

889.5 892.4 887.2

EX LA

EX 18" CONC TO BE REMOVED

362+00.00
886.83

260 240 220 200 180 160 140 120 100 80 60 40 20 0 20 40 60 80 100 120 140 160 180 200 220 240

CROSS SECTIONS - I-75
STA. 362+00.00 TO STA. 363+00.00

ALL-75-5.53

268
1224

J:\Projects\ALL\76691\roadway\sheets\76691XS1046.dgn 11-SEP-2012 8:57PM reddenj

SEEDING		END AREA		VOLUME	
END WIDTH	SQ. YDS.	CUT	FILL	CUT	FILL
231	1373	158	2409	319	4451
263	1377	187	2398	345	4173
231	1194	186	2109	356	3805
	3944			1020	12429

CALCULATED JMR
CHECKED ACF

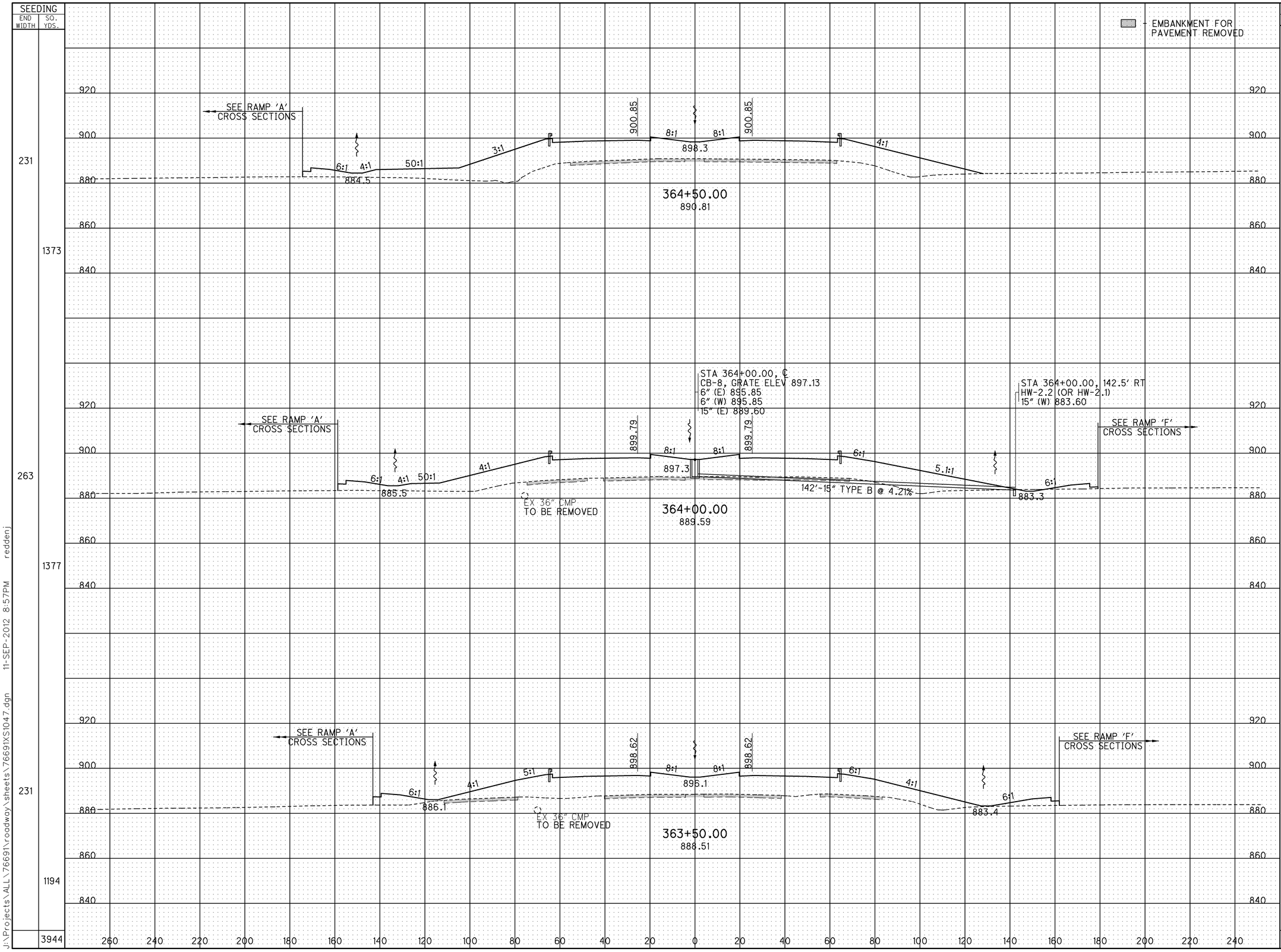

CROSS SECTIONS - I-75
STA. 363+50.00 TO STA. 364+50.00

ALL-75-5.53

269
1224

J:\Projects\ALL\76691\roadway\sheets\76691XS1047.dgn 11-SEP-2012 8:57PM reddenj

SEEDING		END AREA		VOLUME		CALCULATED	CHECKED
END WIDTH	SQ. YDS.	CUT	FILL	CUT	FILL	JMR	ACF
335	1756	148	2442				
297	1467	151	2305	277	4395		
	3223			286	4365		
				563	8760		

EMBANKMENT FOR PAVEMENT REMOVED

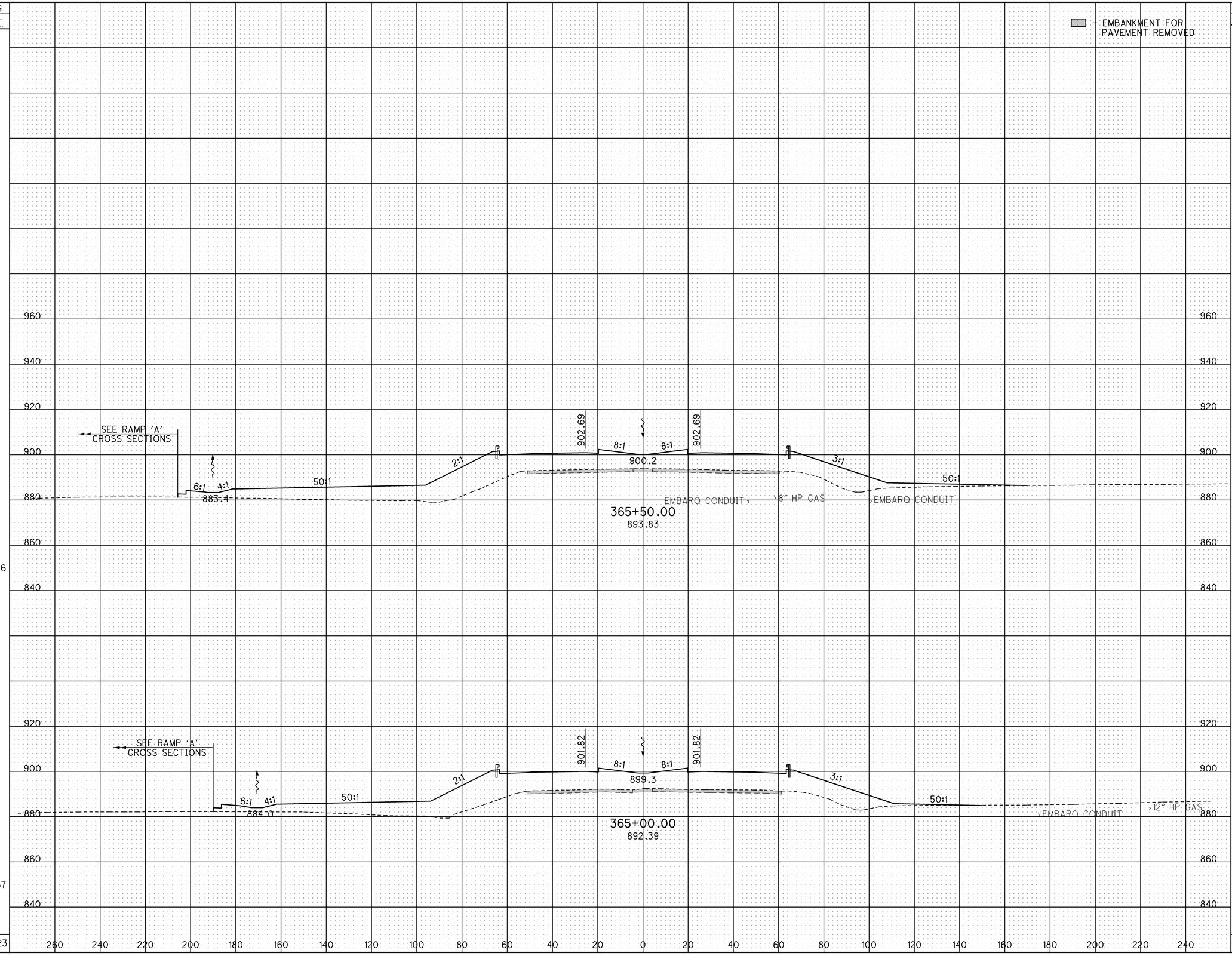

CROSS SECTIONS - I-75
STA. 365+00.00 TO STA. 365+50.00

ALL-75-5.53

270
1224

J:\Projects\ALL\76691\roadway\sheets\76691XS1048.dgn 11-SEP-2012 8:57PM reddenj

SEEDING	
END WIDTH	SQ. YDS.
324	
	271
	285
	1447
	1718

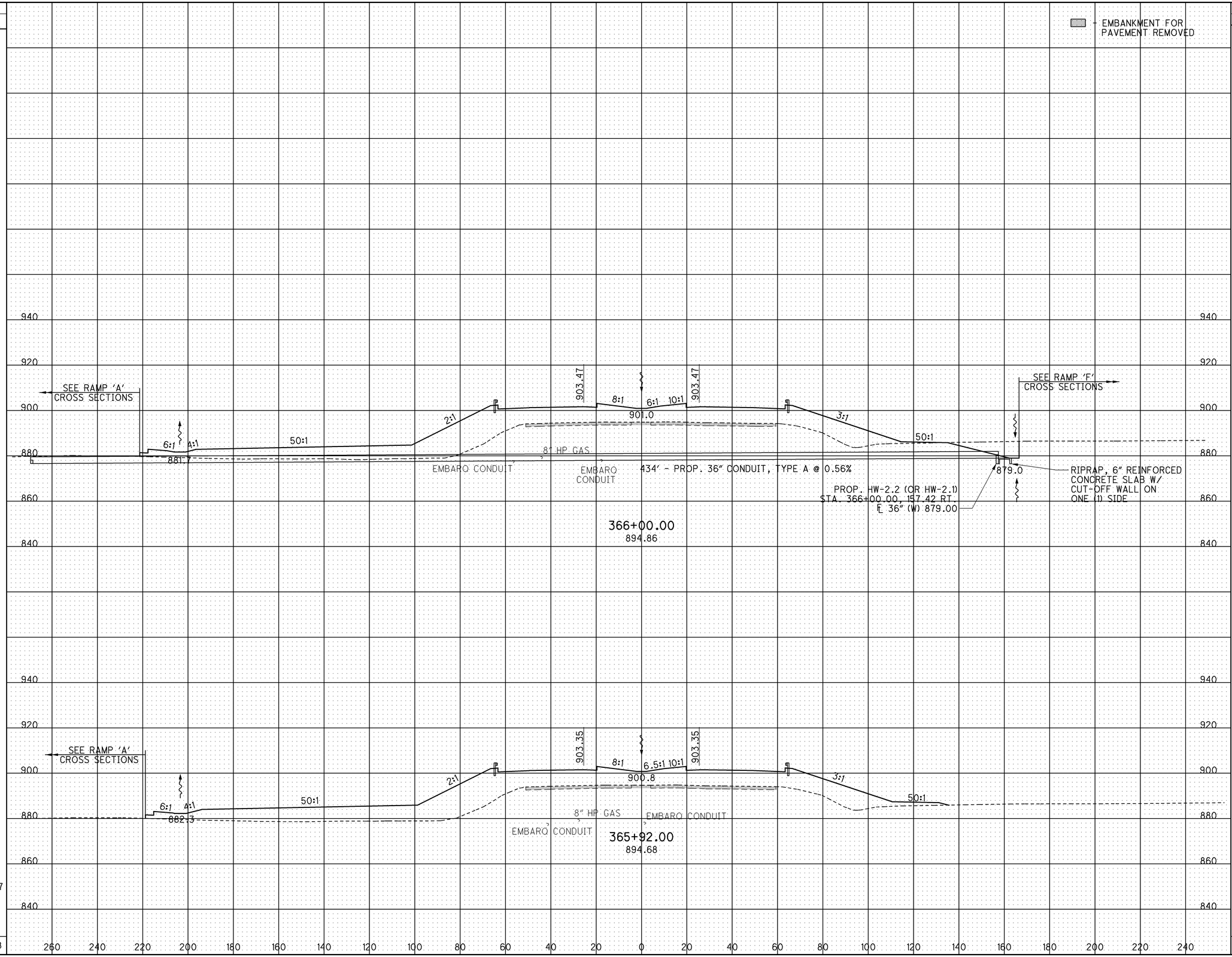

END AREA		VOLUME	
CUT	FILL	CUT	FILL
277	2461		
		63	744
147	2563		
		230	3893
		293	4637

CALCULATED JMR
CHECKED ACF

CROSS SECTIONS - I-75
STA. 365+92.00 TO STA. 366+00.00

ALL-75-5.53

271
1224

J:\Projects\ALL\76691\roadway\sheets\76691XS1049.dgn 11-SEP-2012 8:57PM reddenj

SEEDING	
END WIDTH	SQ. YDS.
389	2072
355	1889
	3961

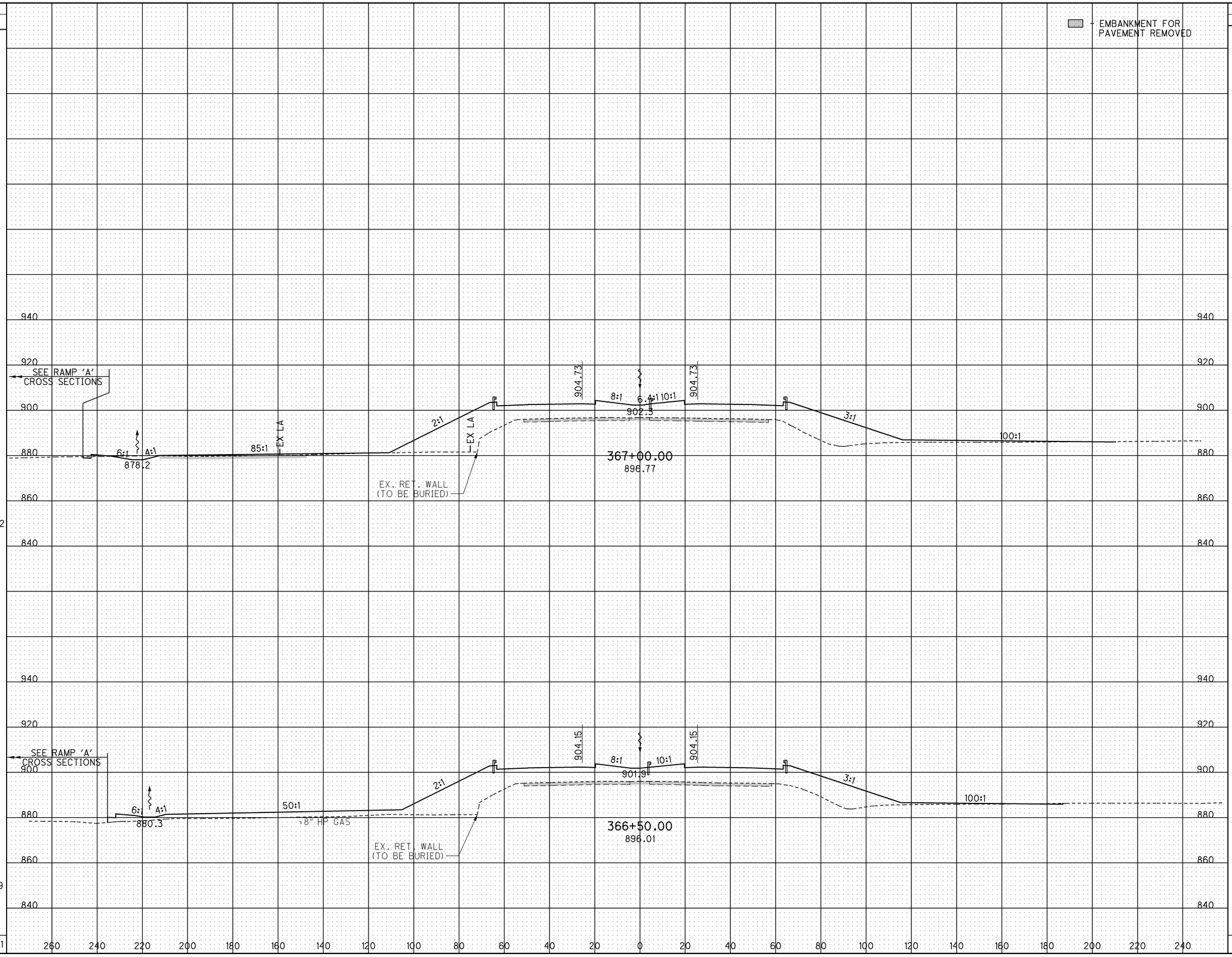

END AREA		VOLUME	
CUT	FILL	CUT	FILL
250	2107	370	3986
149	2198	394	4314
		764	8300

CALCULATED JMR
CHECKED ACF

CROSS SECTIONS - I-75
STA. 366+50.00 TO STA. 367+00.00

ALL-75-5.53

272
1224

J:\Projects\ALL\76691\roadway\sheets\76691XS1050.dgn 11-SEP-2012 8:57PM reddenj

SEEDING	
END WIDTH	SQ. YDS.
386	2108
373	2117
	4225

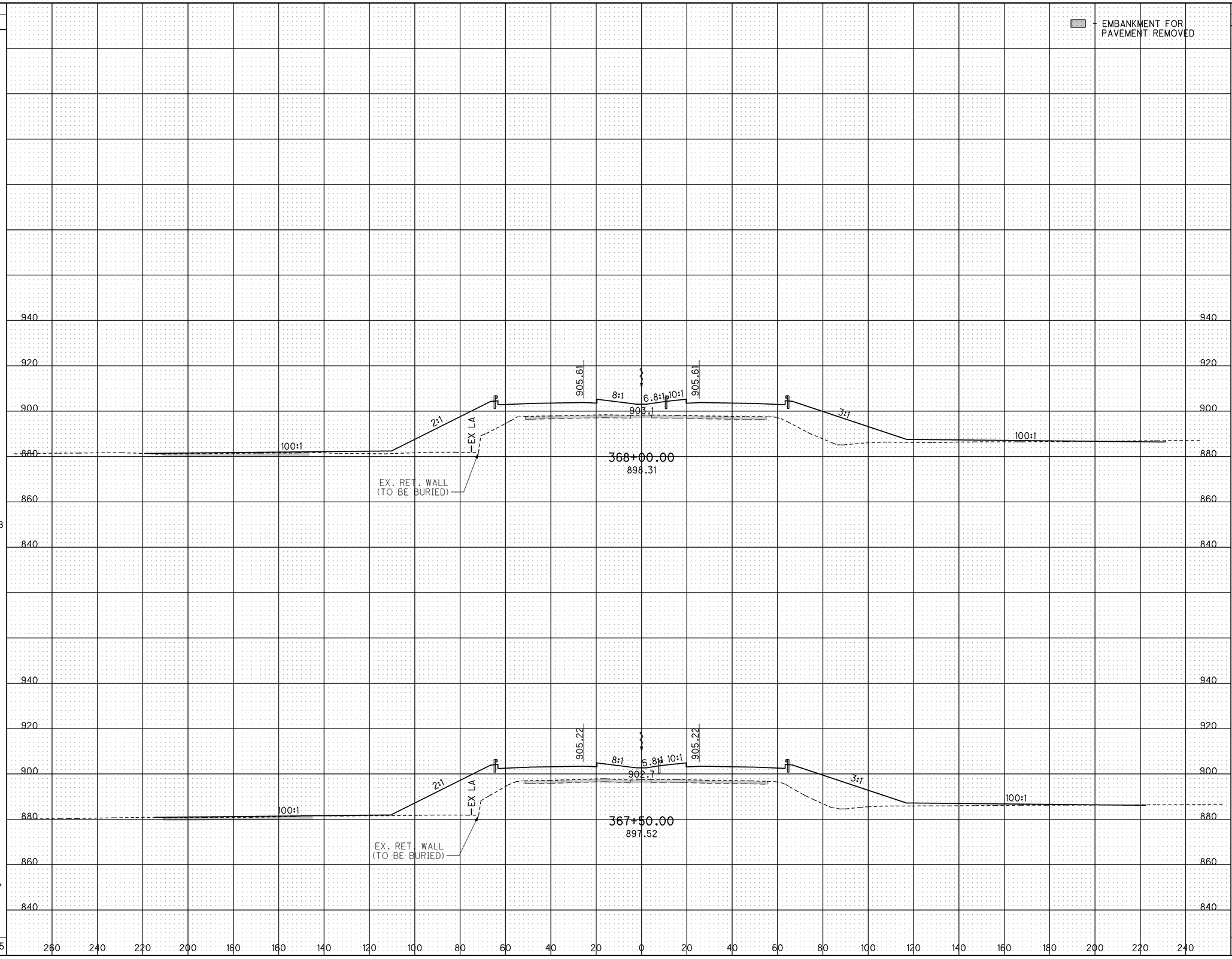

END AREA		VOLUME	
CUT	FILL	CUT	FILL
232	2063	430	3828
232	2071	446	3869
		876	7697

CALCULATED JMR
CHECKED ACF

CROSS SECTIONS - I-75
STA. 367+50.00 TO STA. 368+00.00

ALL-75-5.53

273
1224

J:\Projects\ALL\76691\roadway\sheets\76691XS1051.dgn 11-SEP-2012 8:57PM redden j

SEEDING	
END WIDTH	SQ. YDS.
	1579
0	
357	
	1794
396	
	2172
	5545

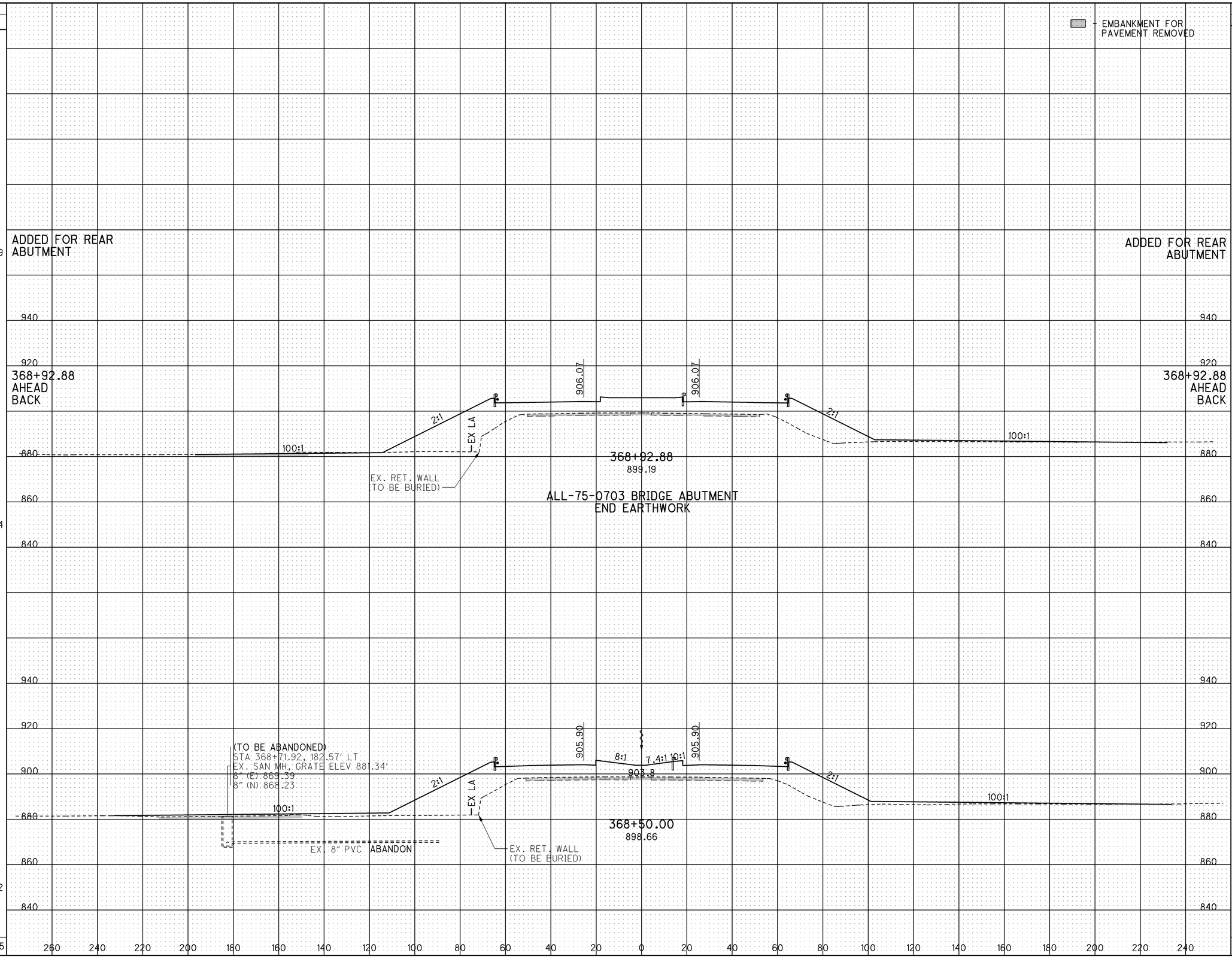

END AREA		VOLUME	
CUT	FILL	CUT	FILL
		1616	957
0	0		
181	1866		
		321	3083
223	2016		
		421	3777
		2358	7817

CALCULATED JMR
CHECKED ACF

CROSS SECTIONS - I-75
STA. 368+50.00 TO STA. 368+92.88

ALL-75-5.53

J:\Projects\ALL\76691\roadway\sheets\76691XS1052.dgn 11-SEP-2012 8:57PM reddenj

SEEDING	
END WIDTH	SQ. YDS.
277	
0	
	1344

END AREA	
CUT	FILL
257	1909
0	0

VOLUME	
CUT	FILL
1072	942

CALCULATED JMR
CHECKED ACF

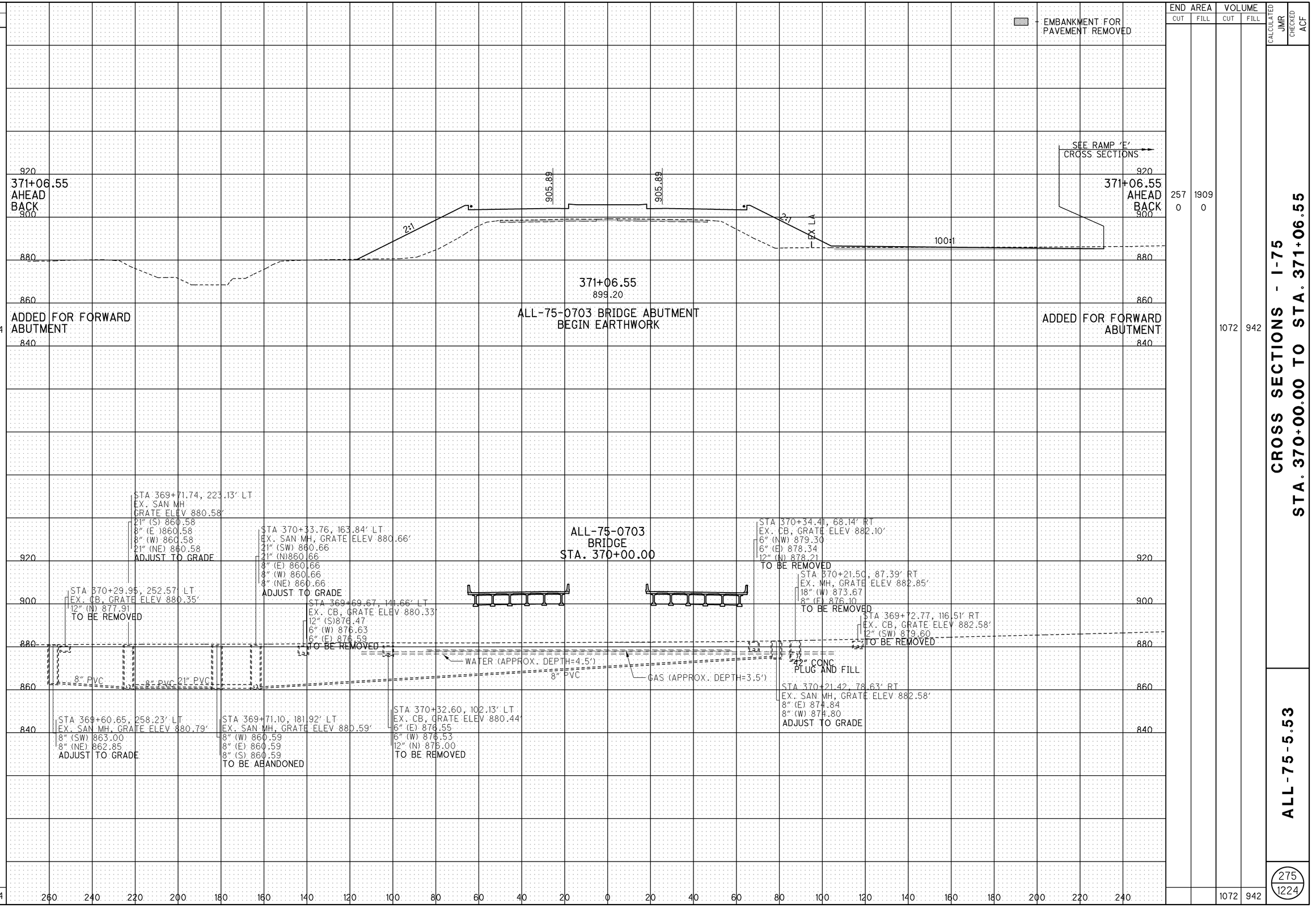

CROSS SECTIONS - I-75
STA. 370+00.00 TO STA. 371+06.55

ALL-75-5.53

J:\Projects\ALL\76691\roadway\sheets\76691XS1053.dgn 11-SEP-2012 8:57PM reddenj

SEEDING	
END WIDTH	SQ. YDS.
314	
	1739
312	
	1422
	3161

- EMBANKMENT FOR PAVEMENT REMOVED

END AREA	
CUT	FILL
382	2357
275	2066
428	3198
1036	7293

VOLUME	
CUT	FILL
608	4095

CALCULATED JMR
CHECKED ACF

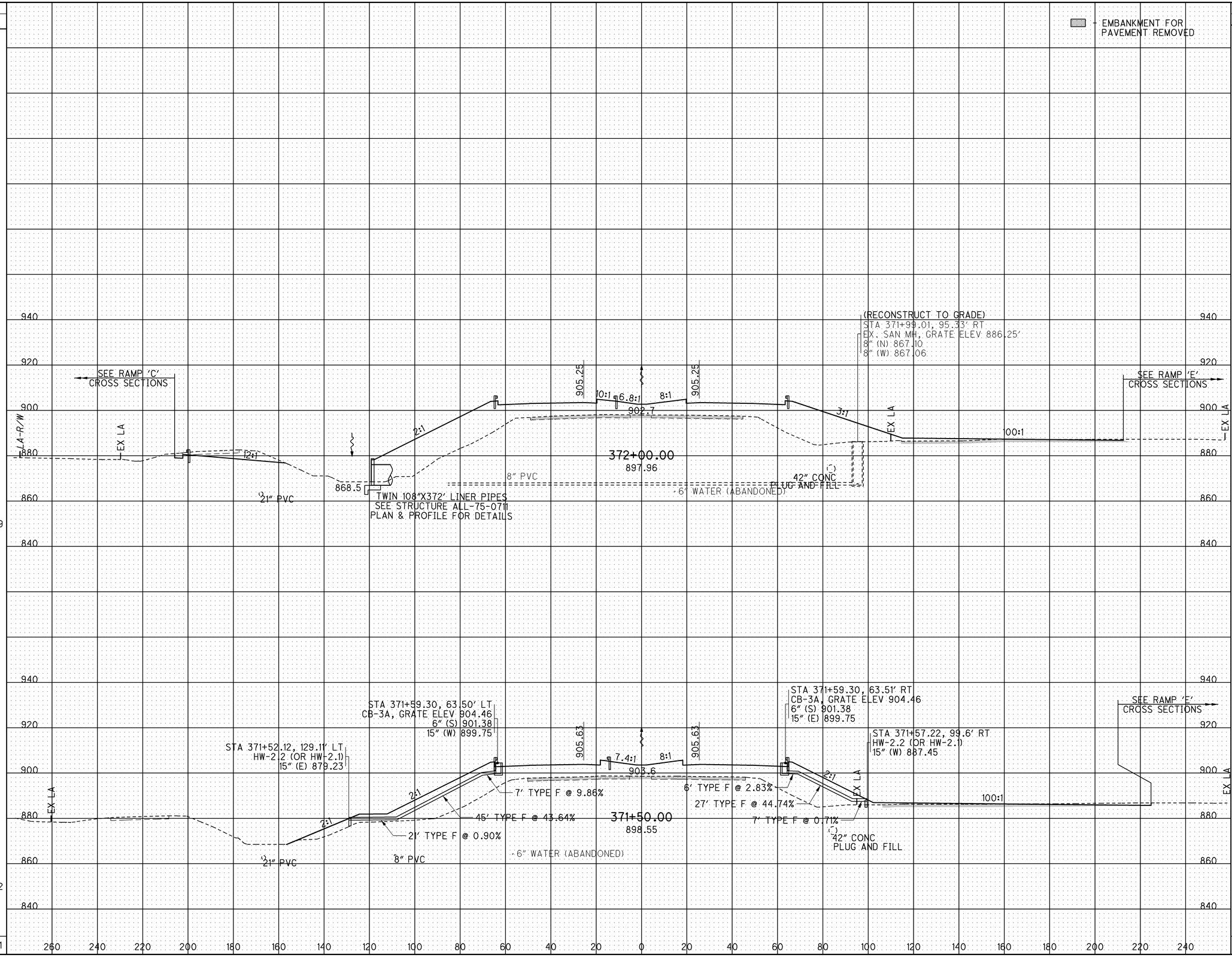

CROSS SECTIONS - I-75
STA. 371+50.00 TO STA. 372+00.00

ALL-75-5.53

276
1224

J:\Projects\ALL\76691\roadway\sheets\76691XS1054.dgn 11-SEP-2012 8:57PM reddenj

SEEDING		END AREA		VOLUME		CALCULATED	CHECKED
END WIDTH	SQ. YDS.	CUT	FILL	CUT	FILL	JMR	ACF
288	1689	243	2359	541	4497		
319	1761	341	2498	669	4495		
	3450			1103	8886		

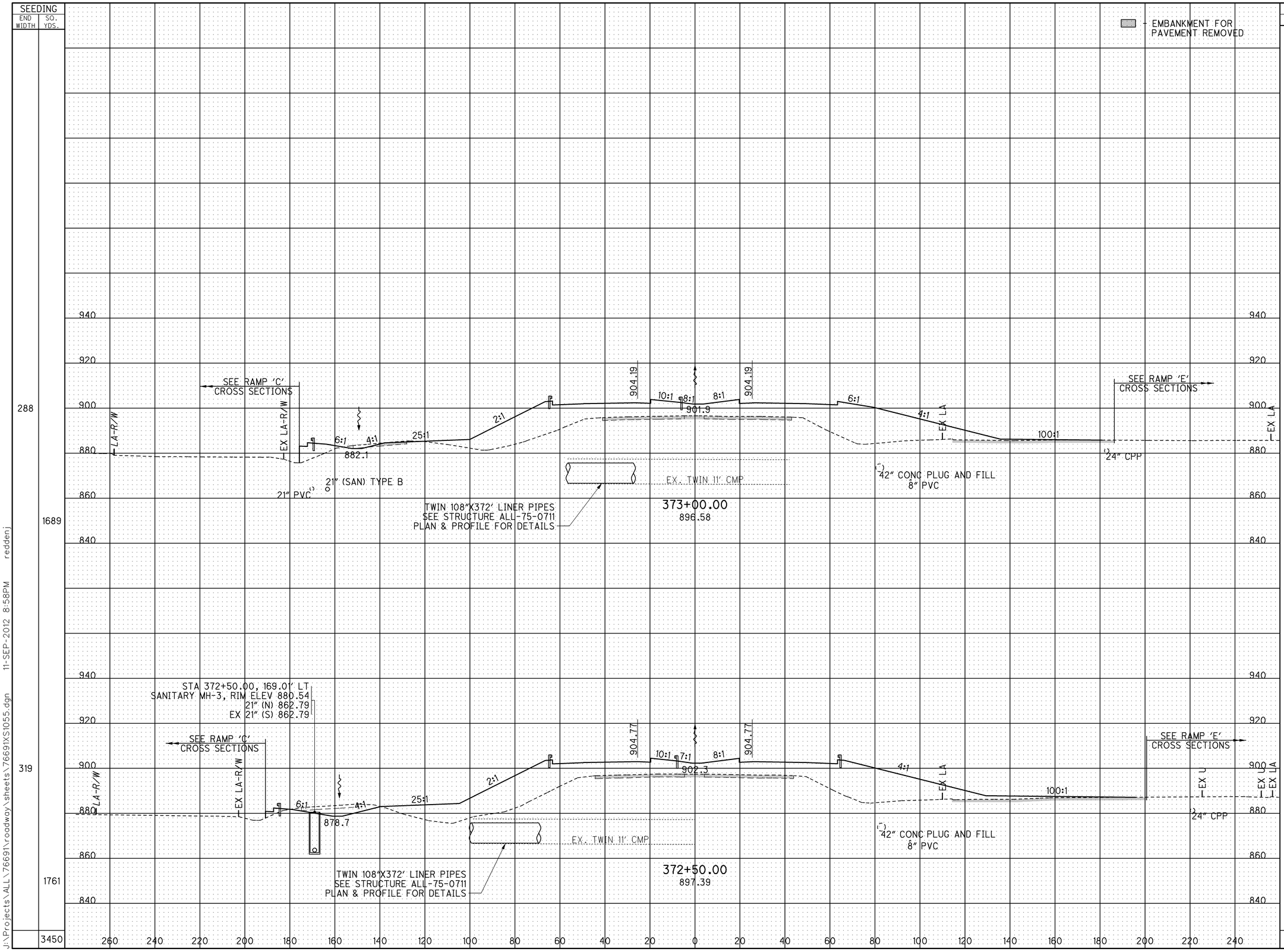

CROSS SECTIONS - I-75
STA. 372+50.00 TO STA. 373+00.00

ALL-75-5.53

277
1224

J:\Projects\ALL\76691\roadway\sheets\76691XS1055.dgn 11-SEP-2012 8:58PM reddenj

SEEDING	
END WIDTH	SQ. YDS.

SEEDING	
END WIDTH	SQ. YDS.
181	1094
211	1267
245	1461
	3822

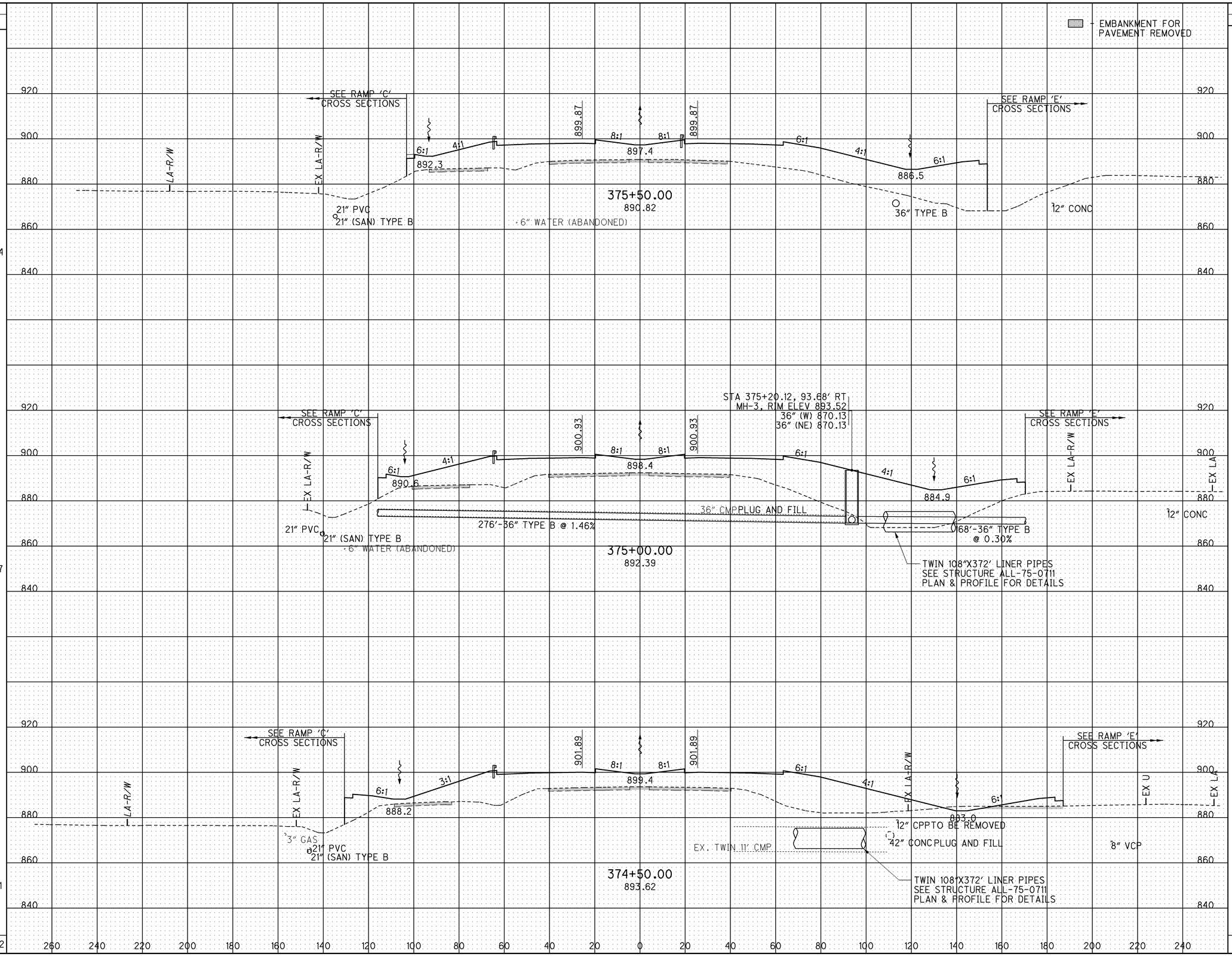

END AREA	
CUT	FILL
140	2780
140	3306
210	2464

VOLUME	
CUT	FILL
259	5635
324	5343
447	4384
1030	15362

CALCULATED JMR
CHECKED ACF

CROSS SECTIONS - I-75
STA. 374+50.00 TO STA. 375+50.00

ALL-75-5.53

279
1224

J:\Projects\ALL\76691\roadway\sheets\76691XS1057.dgn 11-SEP-2012 8:58PM reddenj

SEEDING		END AREA		VOLUME	
END WIDTH	SQ. YDS.	CUT	FILL	CUT	FILL
107	661	150	1639	269	3227
129	789	140	1846	259	3665
154	933	140	2112	227	4498
	2383			755	11390

CALCULATED JMR
CHECKED ACF

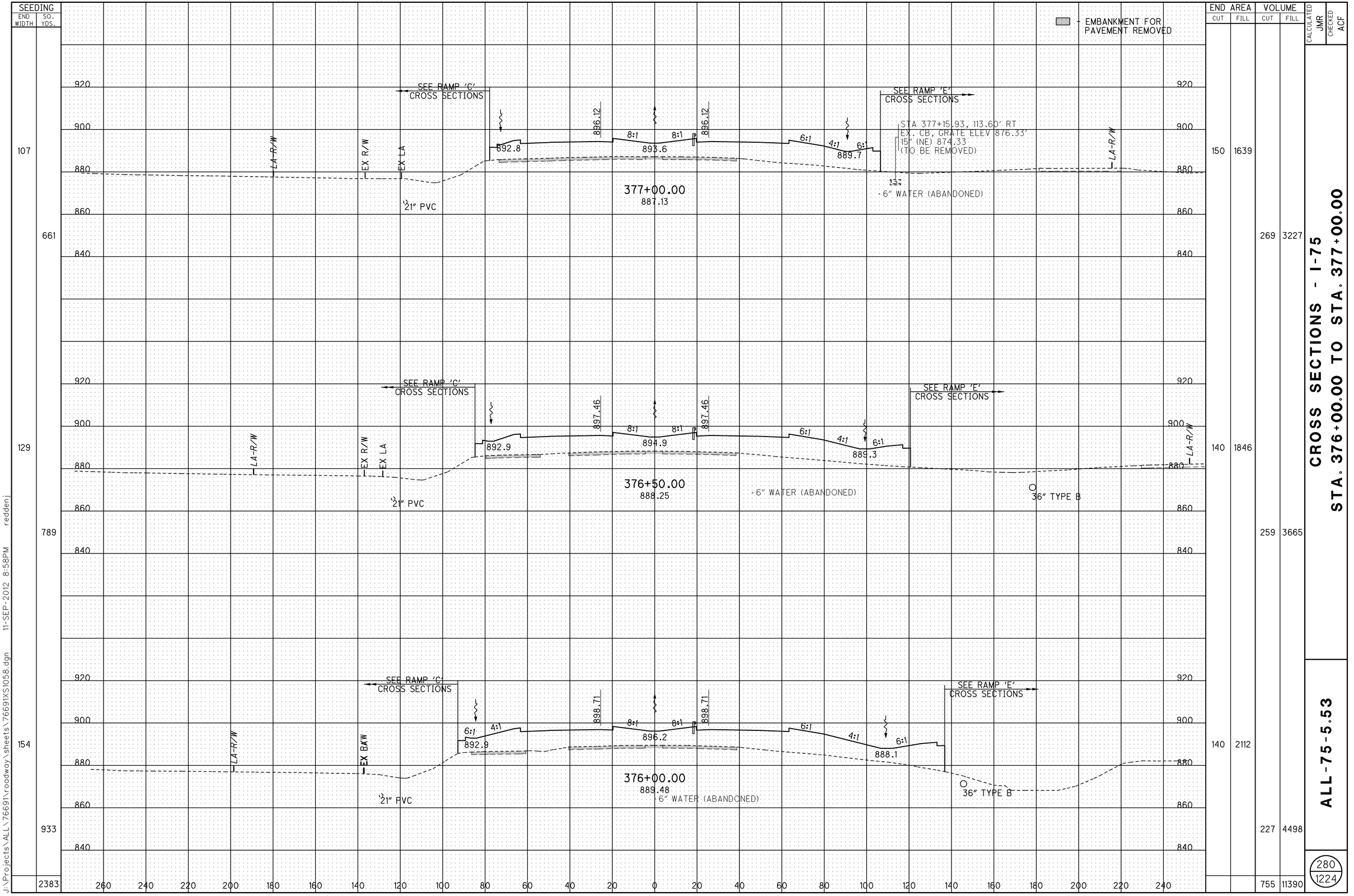

J:\Projects\ALL\76691\roadway\sheets\76691XS1058.dgn 11-SEP-2012 8:58PM reddenj

CROSS SECTIONS - I-75
STA. 376+00.00 TO STA. 377+00.00

ALL-75-5.53

280
1224

SEEDING END WIDTH	SEEDING SQ. YDS.
174	700
120	
130	789
153	722
	2211

EMBANKMENT FOR PAVEMENT REMOVED

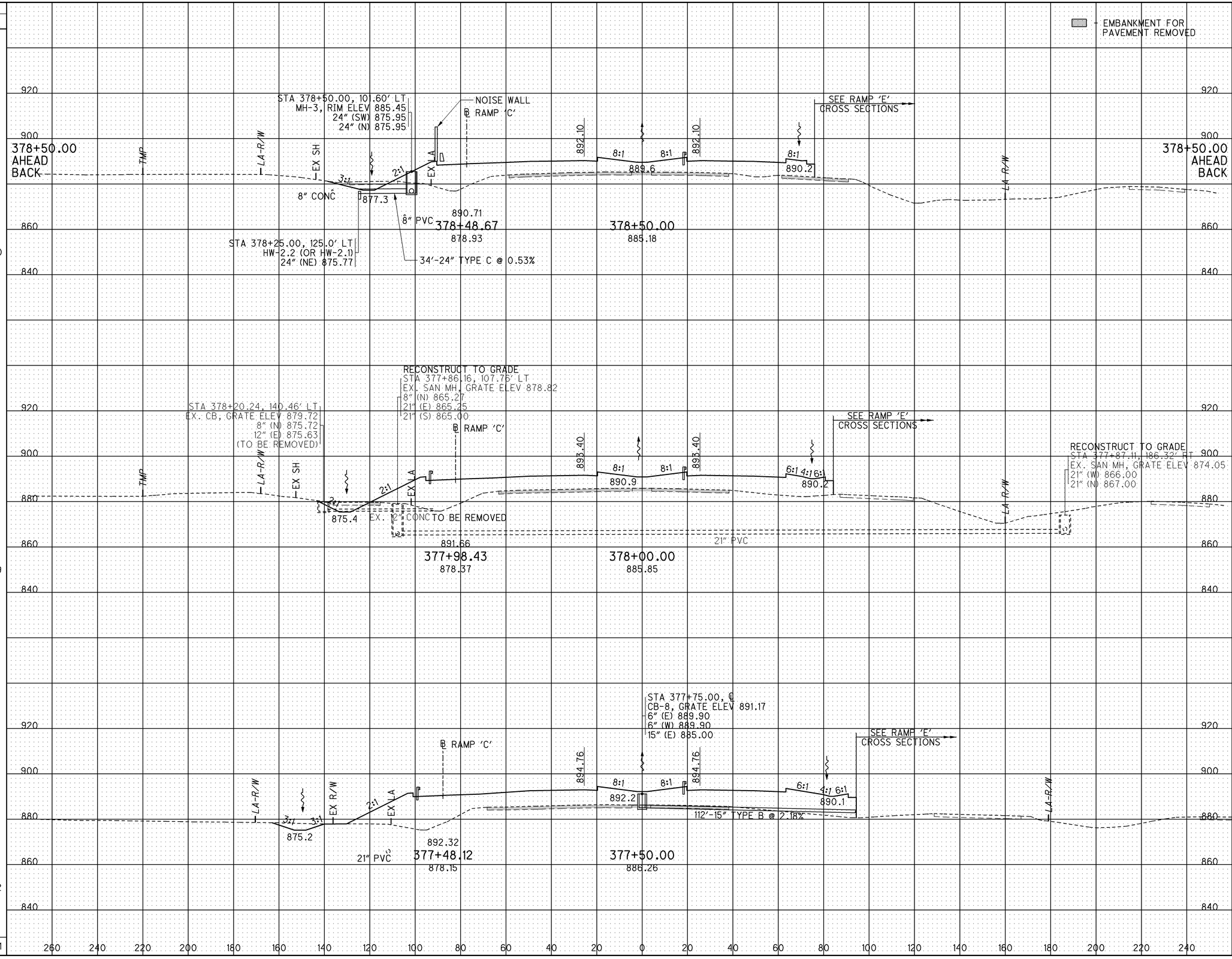

END AREA CUT	END AREA FILL	VOLUME CUT	VOLUME FILL
238	1738		
227	1311		
		397	2702
203	1607		
		356	3280
182	1936		
		308	3310
		1061	9292

CALCULATED JMR
CHECKED ACF

CROSS SECTIONS - I-75
STA. 377+50.00 TO STA. 378+50.00

ALL-75-5.53

281
1224

J:\Projects\ALL\76691\roadway\sheets\76691XS1059.dgn 11-SEP-2012 8:58PM reddenj

SEEDING END WIDTH	SEEDING SQ. YDS.
157	906
168	939
169	806
	2651

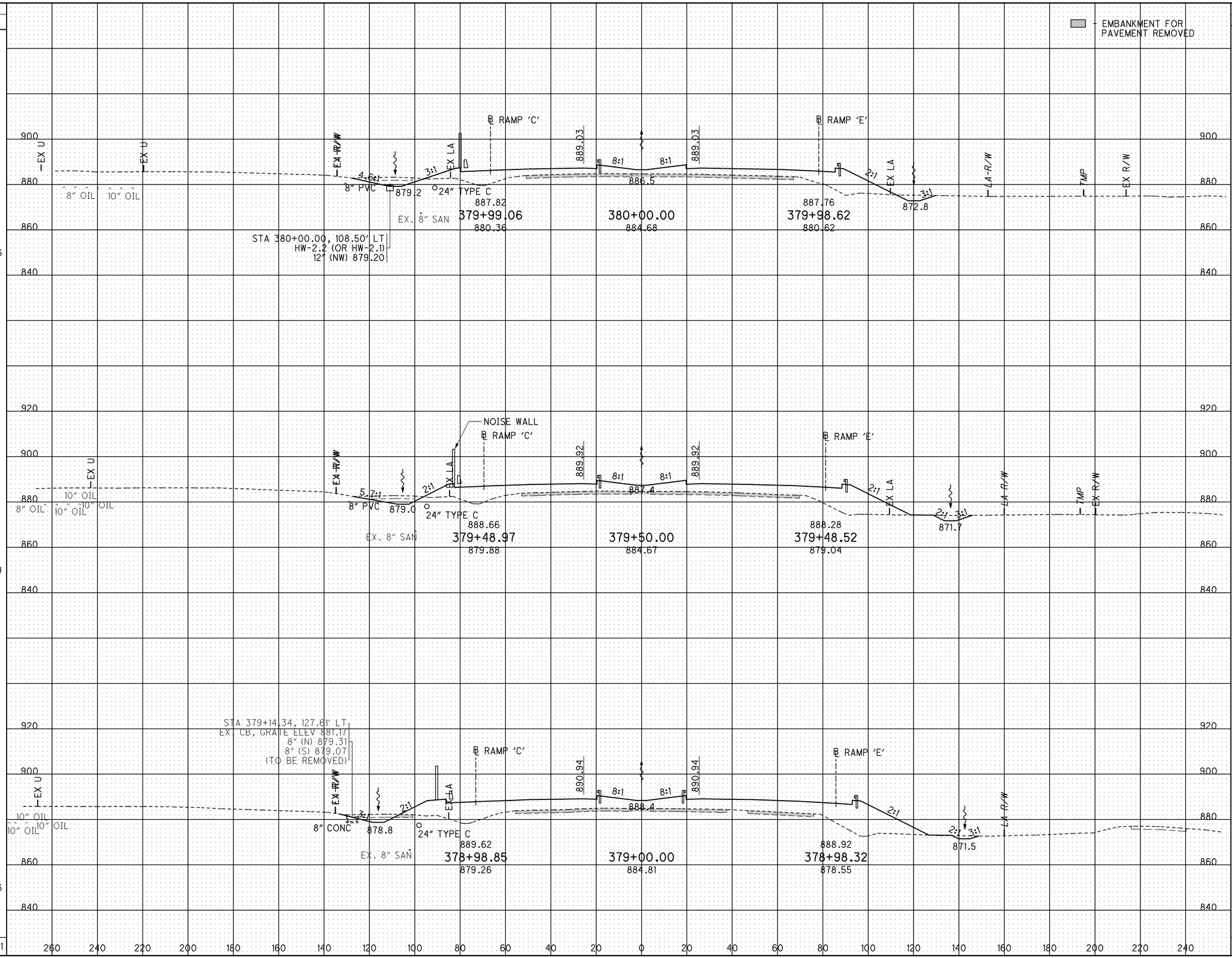

END AREA CUT	END AREA FILL	VOLUME CUT	VOLUME FILL
256	917	475	1943
256	1182	411	2457
235	1520	438	3017
		1324	7417

CALCULATED JMR
CHECKED ACF

CROSS SECTIONS - I-75
STA. 379+00.00 TO STA. 380+00.00

ALL-75-5.53

282
1224

J:\Projects\ALL\76691\roadway\sheets\76691XS1060.dgn 11-SEP-2012 8:58PM redden

SEEDING END WIDTH	SEEDING SQ. YDS.
113	628
113	672
128	794
	2094

END AREA CUT	END AREA FILL	VOLUME CUT	VOLUME FILL
182	370	329	832
174	529	334	1156
187	720	410	1516
		1073	3504

CALCULATED JMR
CHECKED ACF

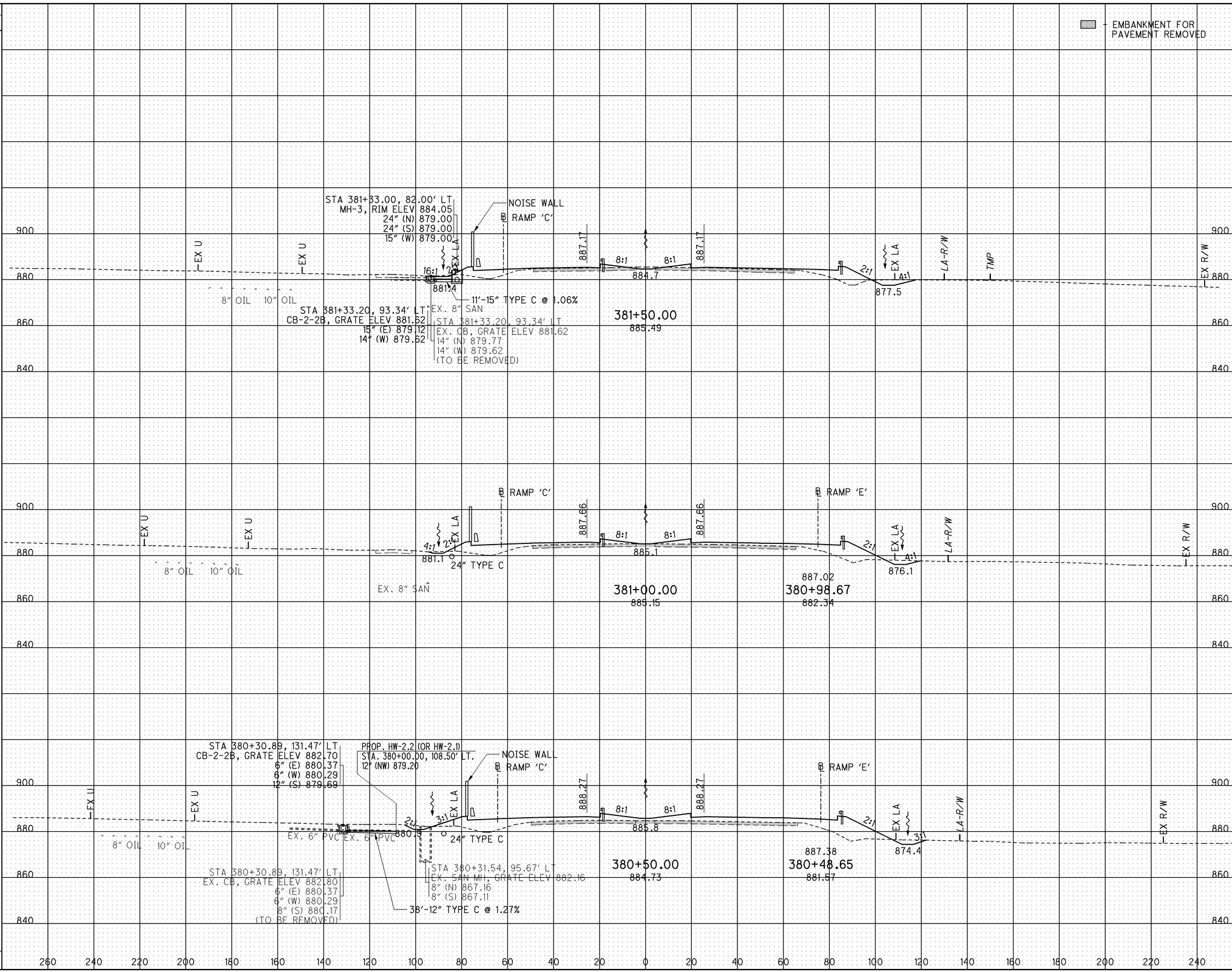

CROSS SECTIONS - I-75
STA. 380+50.00 TO STA. 381+50.00

ALL-75-5.53

283
1224

J:\Projects\ALL\76691\roadway\sheets\76691XS1061.dgn 11-SEP-2012 8:58PM reddenj

SEEDING END WIDTH	SEEDING SQ. YDS.
100	583
108	623
115	639
	1845

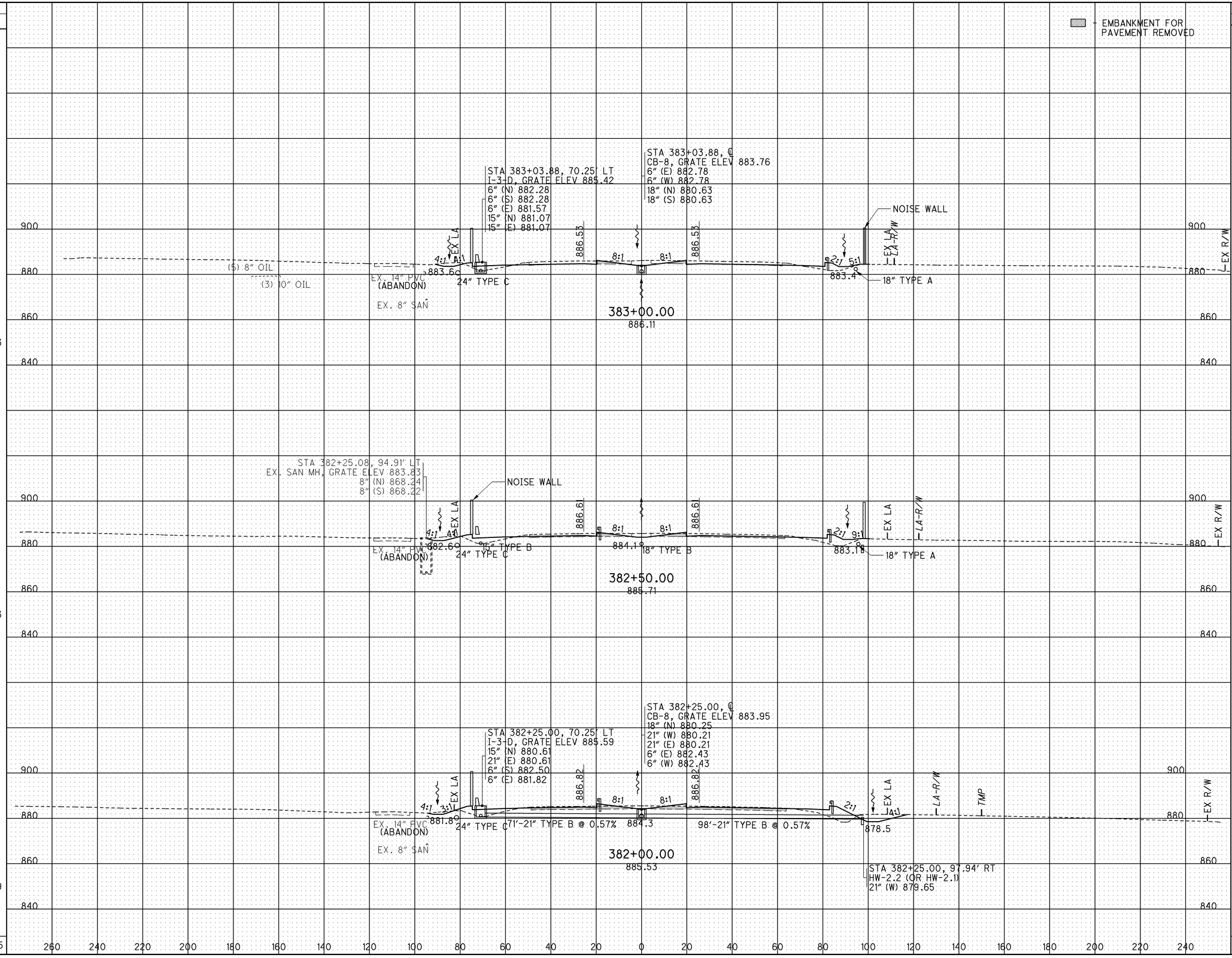

END AREA CUT	END AREA FILL	VOLUME CUT	VOLUME FILL
177	91	321	233
170	161	346	378
204	247	357	572
		1024	1183

CALCULATED JMR
CHECKED ACF

CROSS SECTIONS - I-75
STA. 382+00.00 TO STA. 383+00.00

ALL-75-5.53

284
1224

J:\Projects\ALL\76691\roadway\sheets\76691XS1062.dgn 11-SEP-2012 8:58PM reddenj

SEEDING	
END WIDTH	SQ. YDS.
103	572
102	567
100	562
	1701

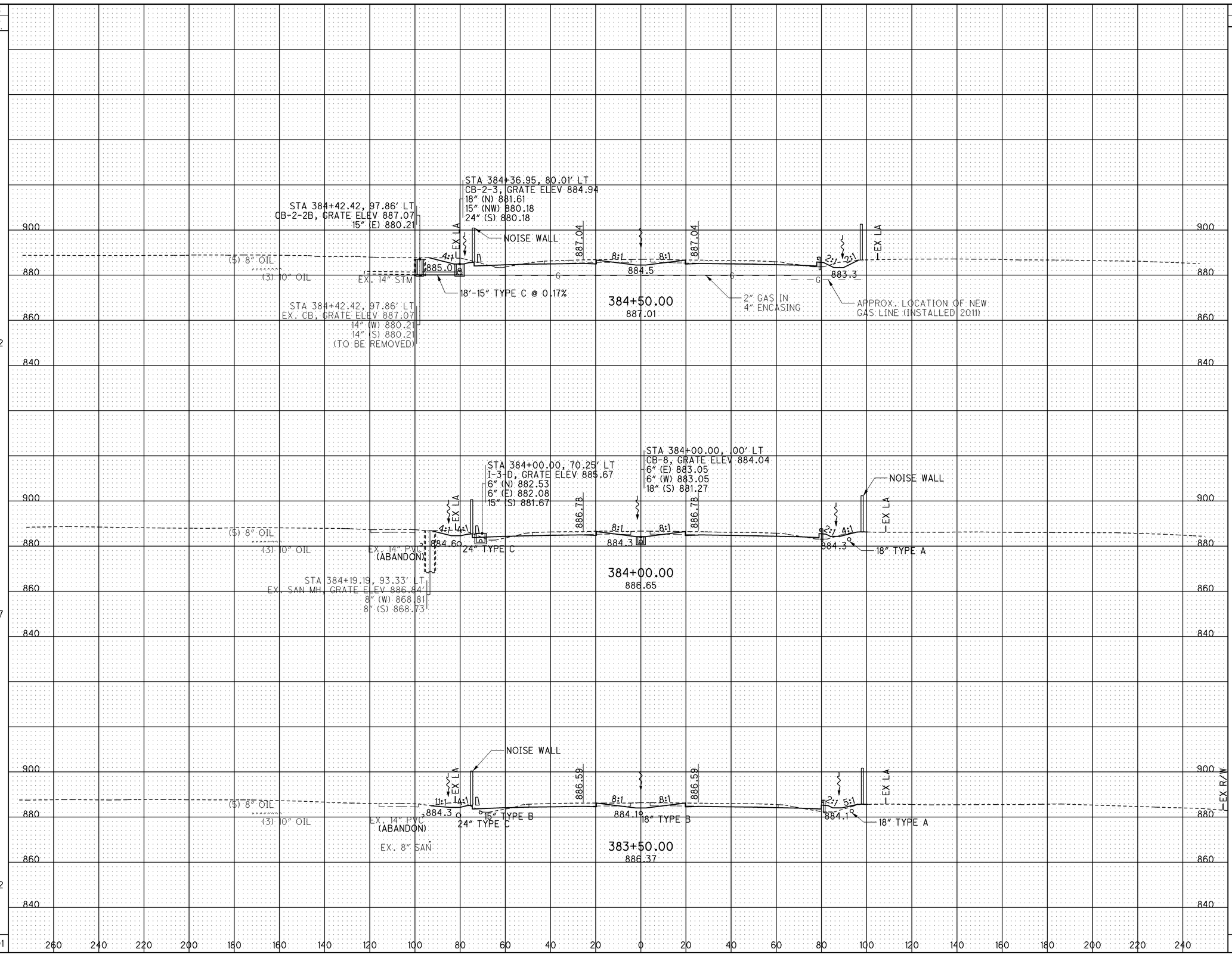

END AREA		VOLUME	
CUT	FILL	CUT	FILL
231	32		
216	41		
203	61		
		414	68
		388	94
		352	141
		1154	303

CALCULATED JMR
CHECKED ACF

CROSS SECTIONS - I-75
STA. 383+50.00 TO STA. 384+50.00

ALL-75-5.53

285
1224

J:\Projects\ALL\76691\roadway\sheets\76691XS1063.dgn 11-SEP-2012 8:58PM reddenj

SEEDING		END AREA		VOLUME	
END WIDTH	SQ. YDS.	CUT	FILL	CUT	FILL
135	744	249	34	457	67
133	755	245	39	453	73
139	756	244	39	462	66
132	655	255	33	450	60
	2910			1822	266

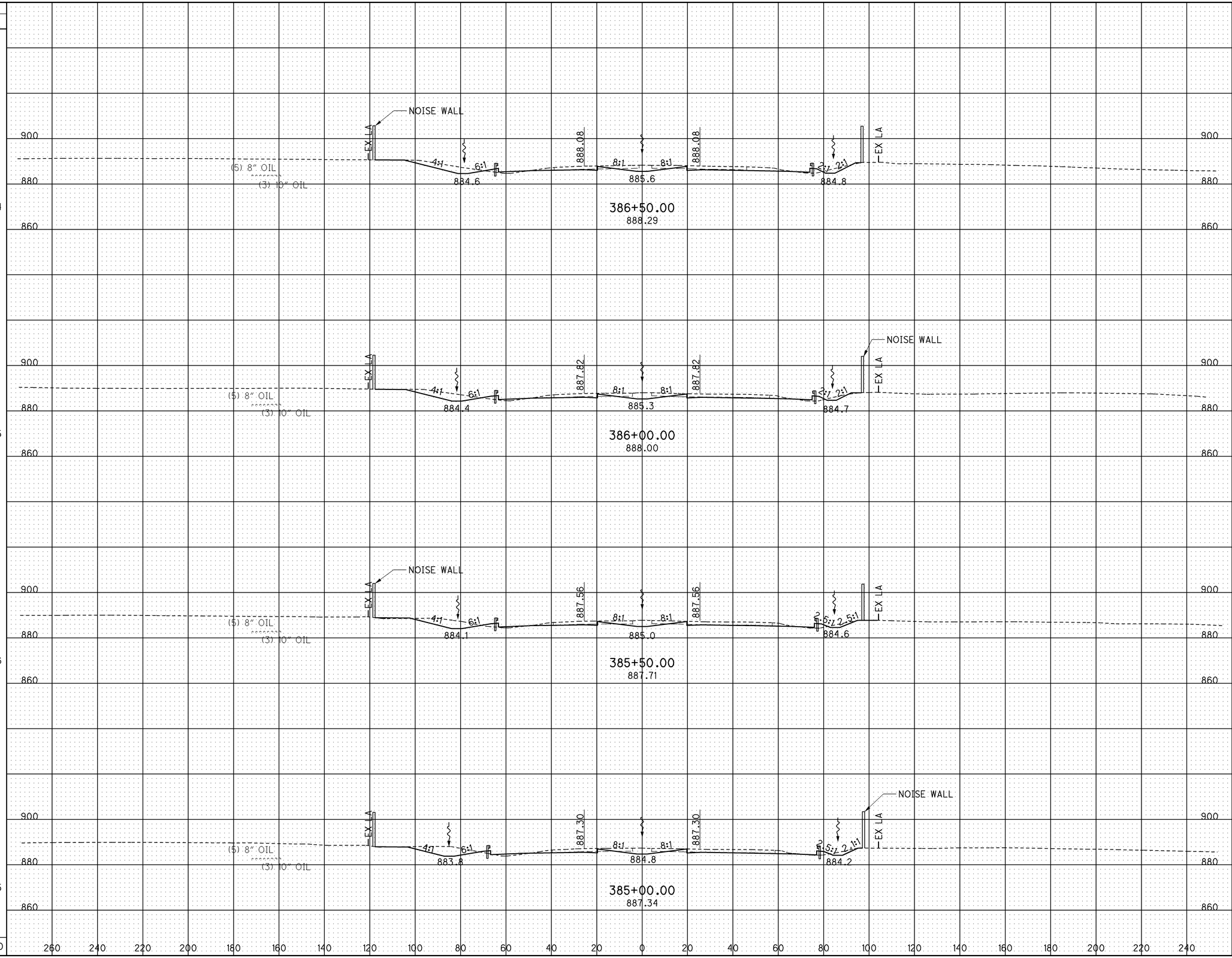

CALCULATED JMR
CHECKED ACF

CROSS SECTIONS - I-75
STA. 385+00.00 TO STA. 386+50.00

ALL-75-5.53

286
1224

J:\Projects\ALL\76691\roadway\sheets\76691XS1064.dgn 11-SEP-2012 8:58PM reddenj

SEEDING END WIDTH	SEEDING SQ. YDS.	END AREA CUT	END AREA FILL	VOLUME CUT	VOLUME FILL
138	783	237	38	469	65
143	778	270	33	499	63
137	761	269	35	482	67
136	755	252	37	463	66
	3077			1913	261

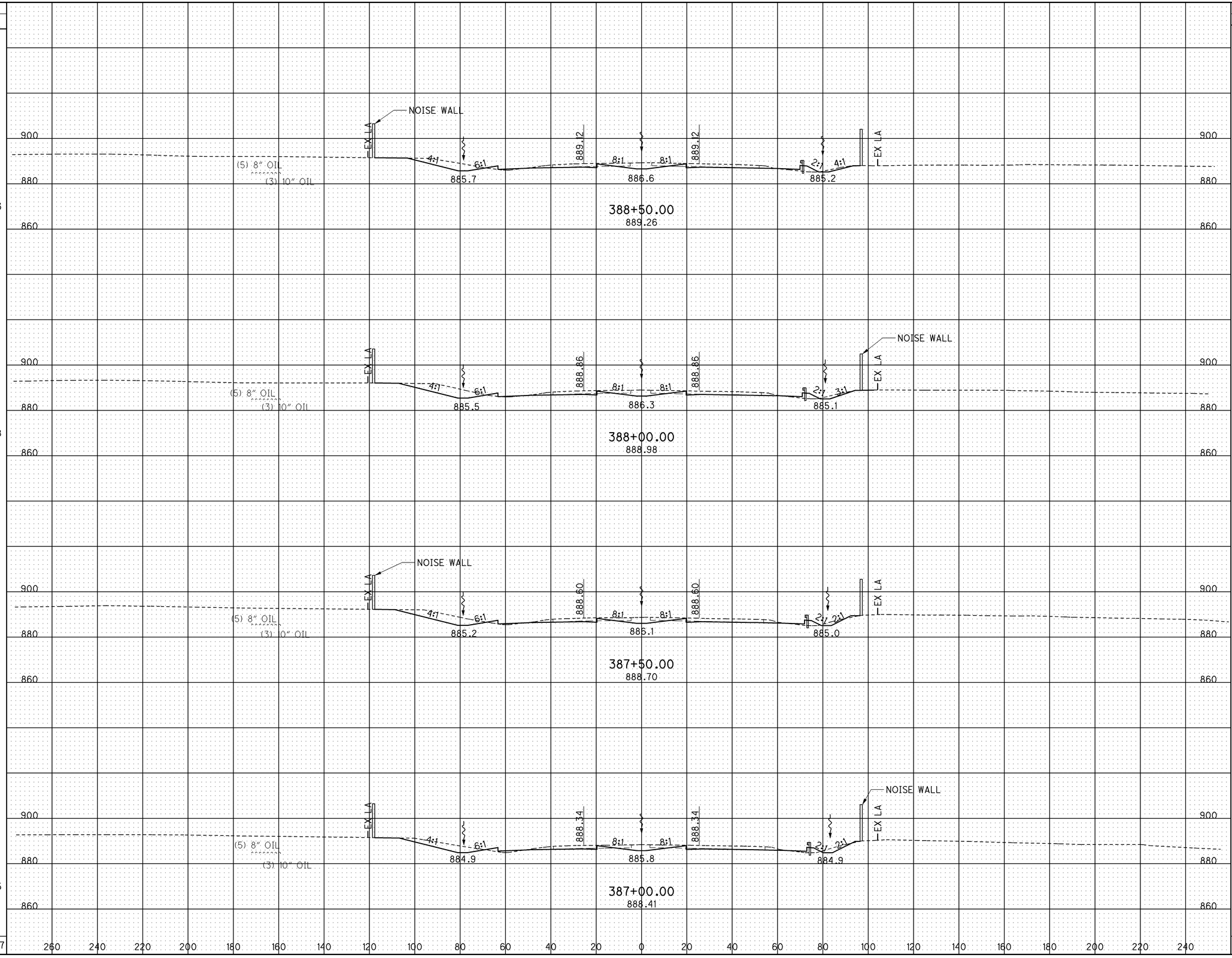

CALCULATED JMR
CHECKED ACF

CROSS SECTIONS - I-75
STA. 387+00.00 TO STA. 388+50.00

ALL-75-5.53

287
1224

J:\Projects\ALL\76691\roadway\sheets\76691XS1065.dgn 11-SEP-2012 8:58PM redden j

SEEDING	
END WIDTH	SQ. YDS.
143	789
141	766
133	728
129	744
	3027

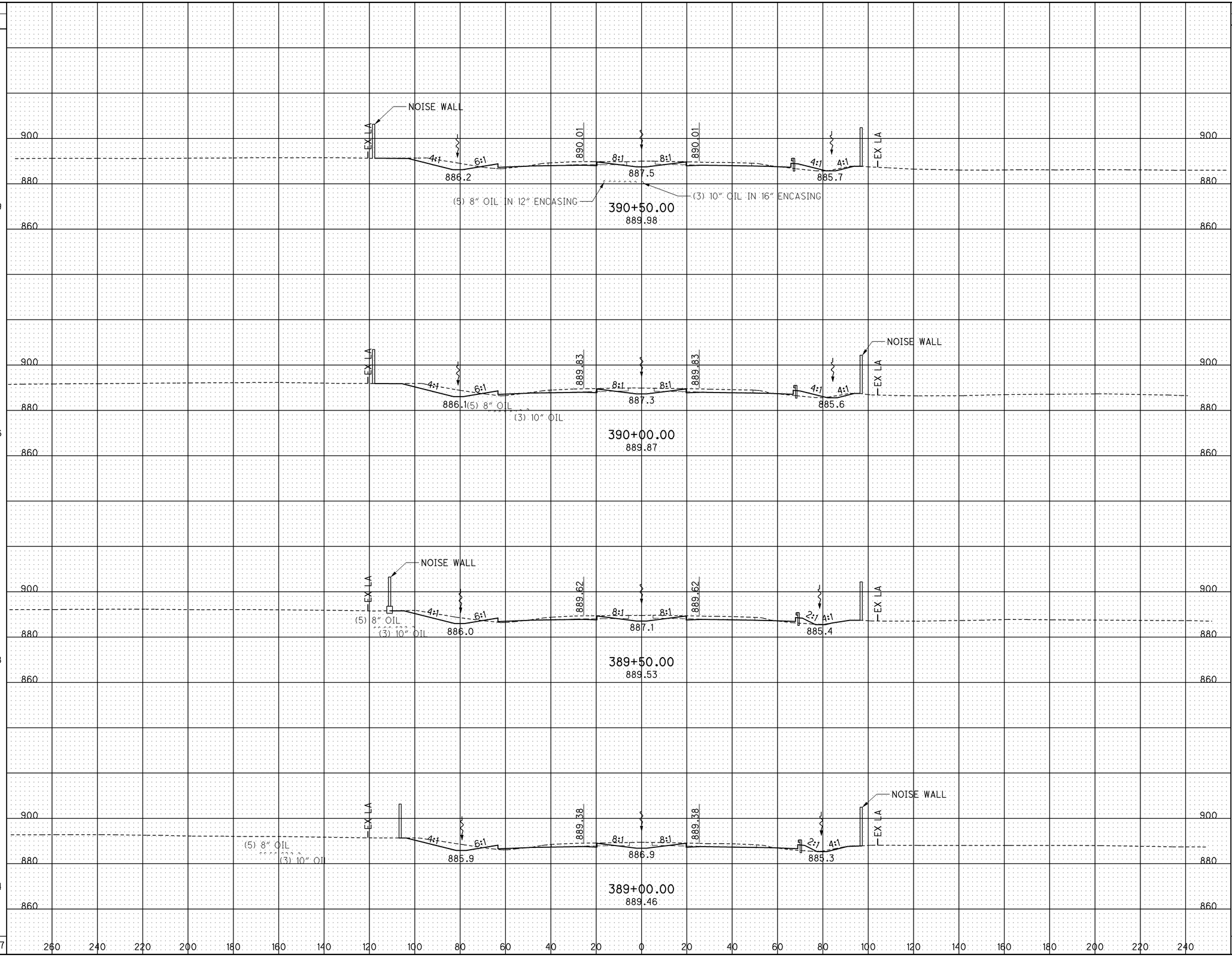

END AREA	
CUT	FILL
221	51
233	48
217	40
217	42

VOLUME	
CUT	FILL
420	92
416	81
402	75
420	74
1658	322

CALCULATED JMR
CHECKED ACF

CROSS SECTIONS - I-75
STA. 389+00.00 TO STA. 390+50.00

ALL-75-5.53

288
1224

J:\Projects\ALL\76691\roadway\sheets\76691XS1066.dgn 11-SEP-2012 8:58PM redden j

SEEDING		END AREA		VOLUME	
END WIDTH	SQ. YDS.	CUT	FILL	CUT	FILL
126	689	192	55	354	120
121	689	190	75	348	166
127	750	186	104	355	150
143	794	198	57	388	100
	2922			1445	536

CALCULATED JMR
CHECKED ACF

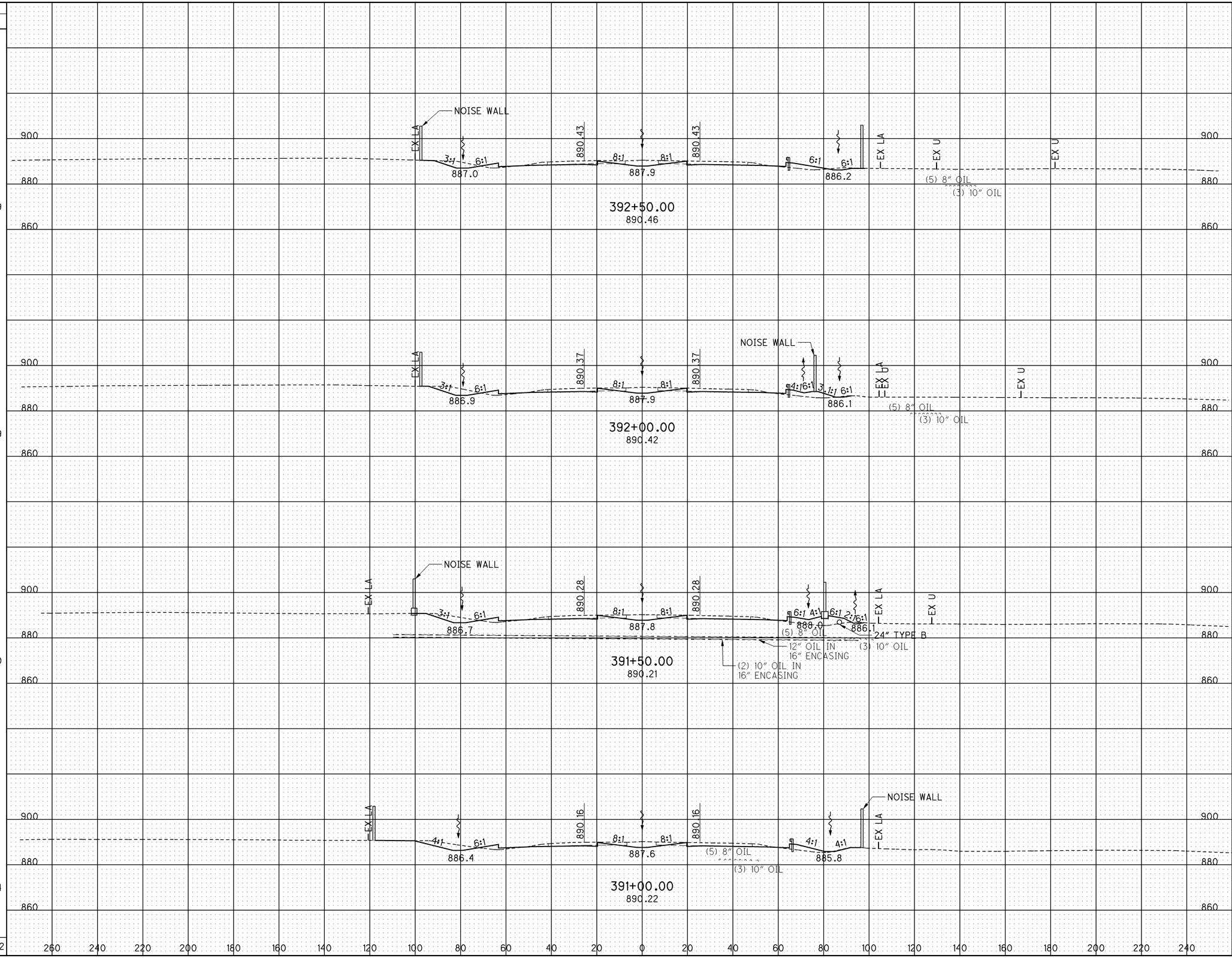

CROSS SECTIONS - I-75
STA. 391+00.00 TO STA. 392+50.00

ALL-75-5.53

289
1224

J:\Projects\ALL\76691\roadway\sheets\76691XS1067.dgn 11-SEP-2012 8:58PM reddenj

SEEDING END WIDTH	SEEDING SQ. YDS.	END AREA CUT	END AREA FILL	VOLUME CUT	VOLUME FILL
124	688	226	31	413	62
124	694	220	36	398	71
125	694	210	41	380	77
125	700	200	42	363	90
	2776			1554	300

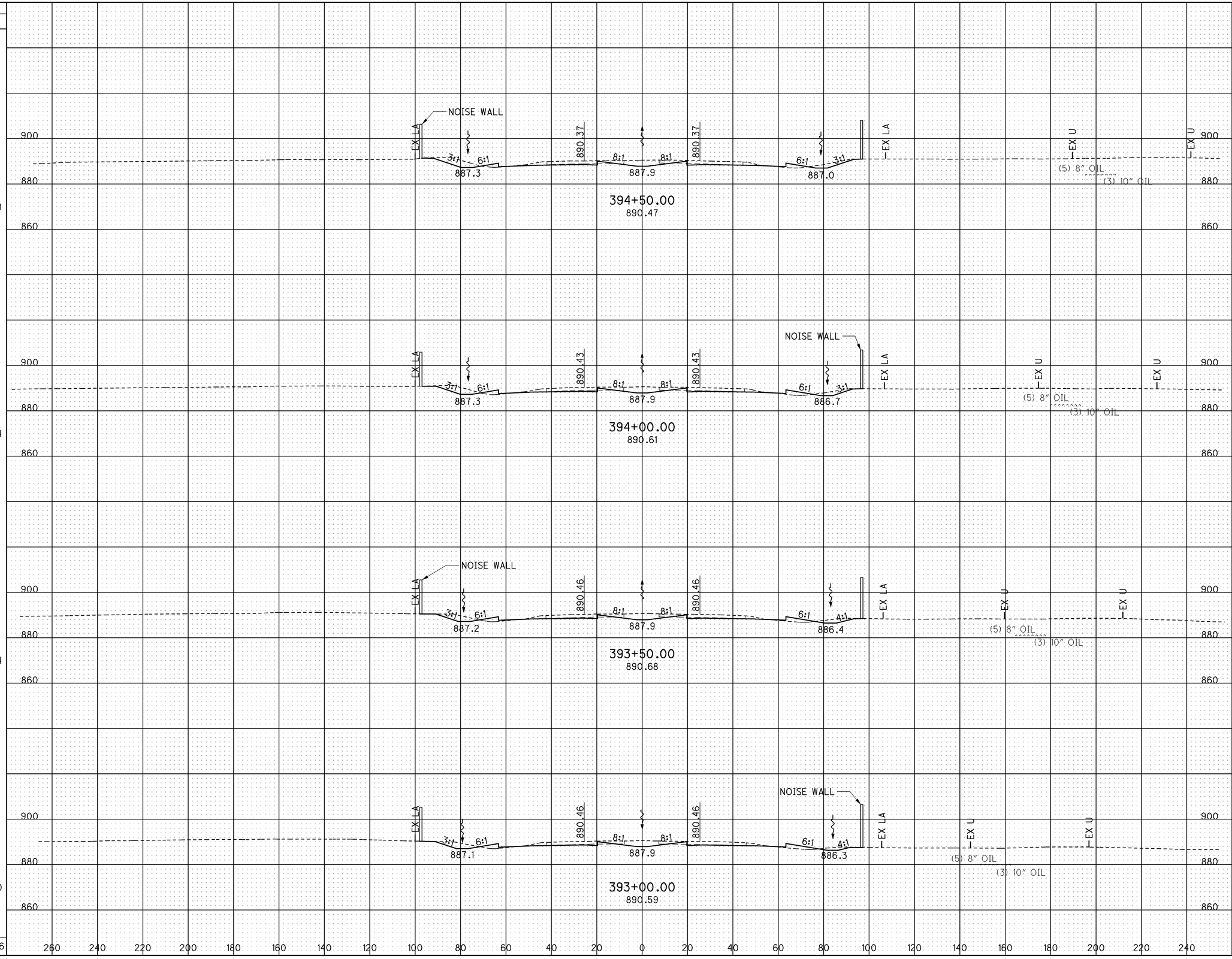

CALCULATED JMR
CHECKED ACF

CROSS SECTIONS - I-75
STA. 393+00.00 TO STA. 394+50.00

ALL-75-5.53

290
1224

J:\Projects\ALL\76691\roadway\sheets\76691XS1068.dgn 11-SEP-2012 8:58PM reddenj

SEEDING	
END WIDTH	SQ. YDS.
124	688
124	688
124	688
124	688
	2752

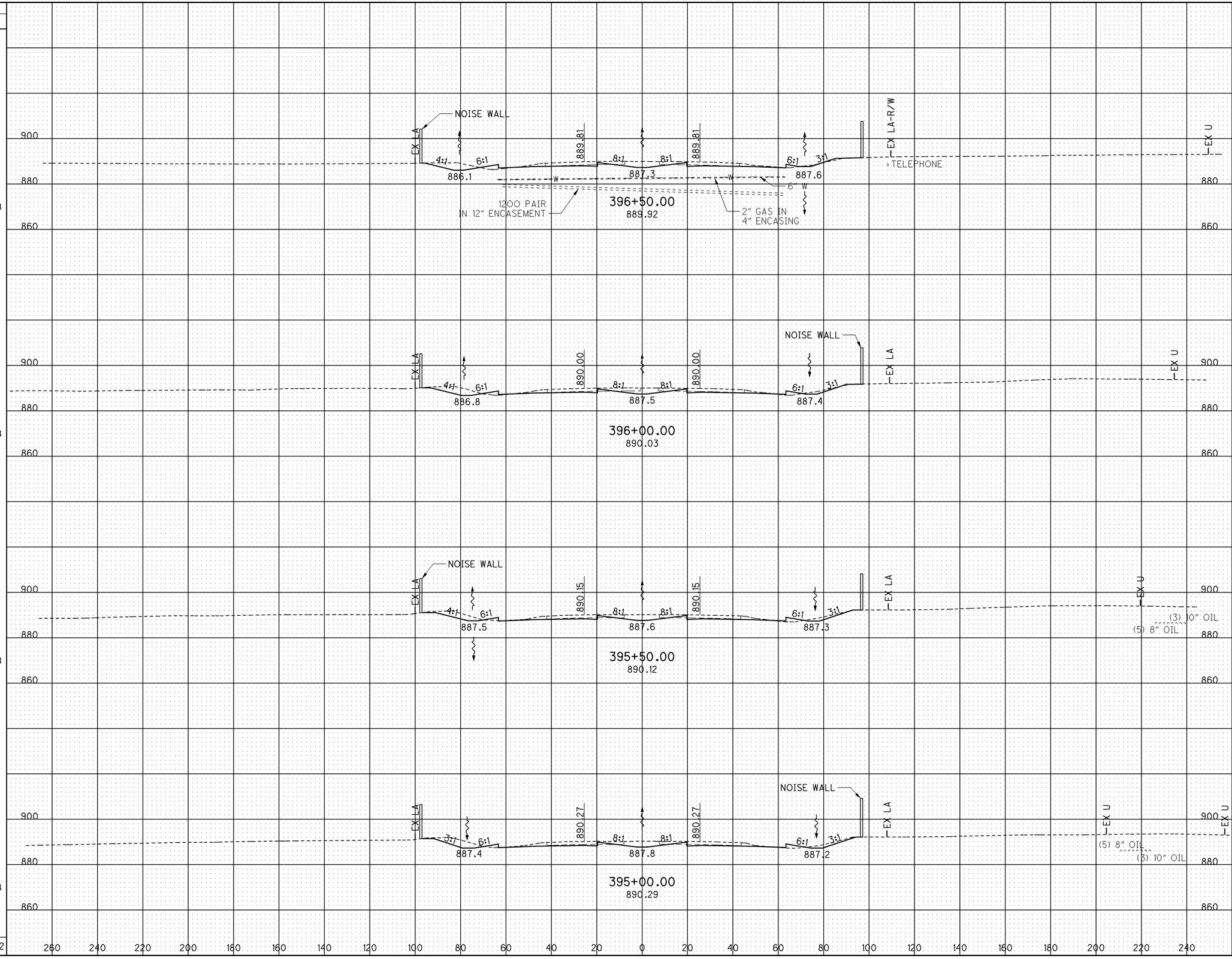

END AREA		VOLUME	
CUT	FILL	CUT	FILL
212	29	401	53
221	28	406	49
218	25	414	46
229	25	422	52
		1643	200

CALCULATED JMR
CHECKED ACF

CROSS SECTIONS - I-75
STA. 395+00.00 TO STA. 396+50.00

ALL-75-5.53

291
1224

J:\Projects\ALL\76691\roadway\sheets\76691XS1069.dgn 11-SEP-2012 8:58PM redden j

SEEDING		END AREA		VOLUME	
END WIDTH	SQ. YDS.	CUT	FILL	CUT	FILL
124	688	197	61	363	108
123	688	195	56	377	96
124	688	212	48	408	75
123	688	229	34	408	58
	2752			1556	337

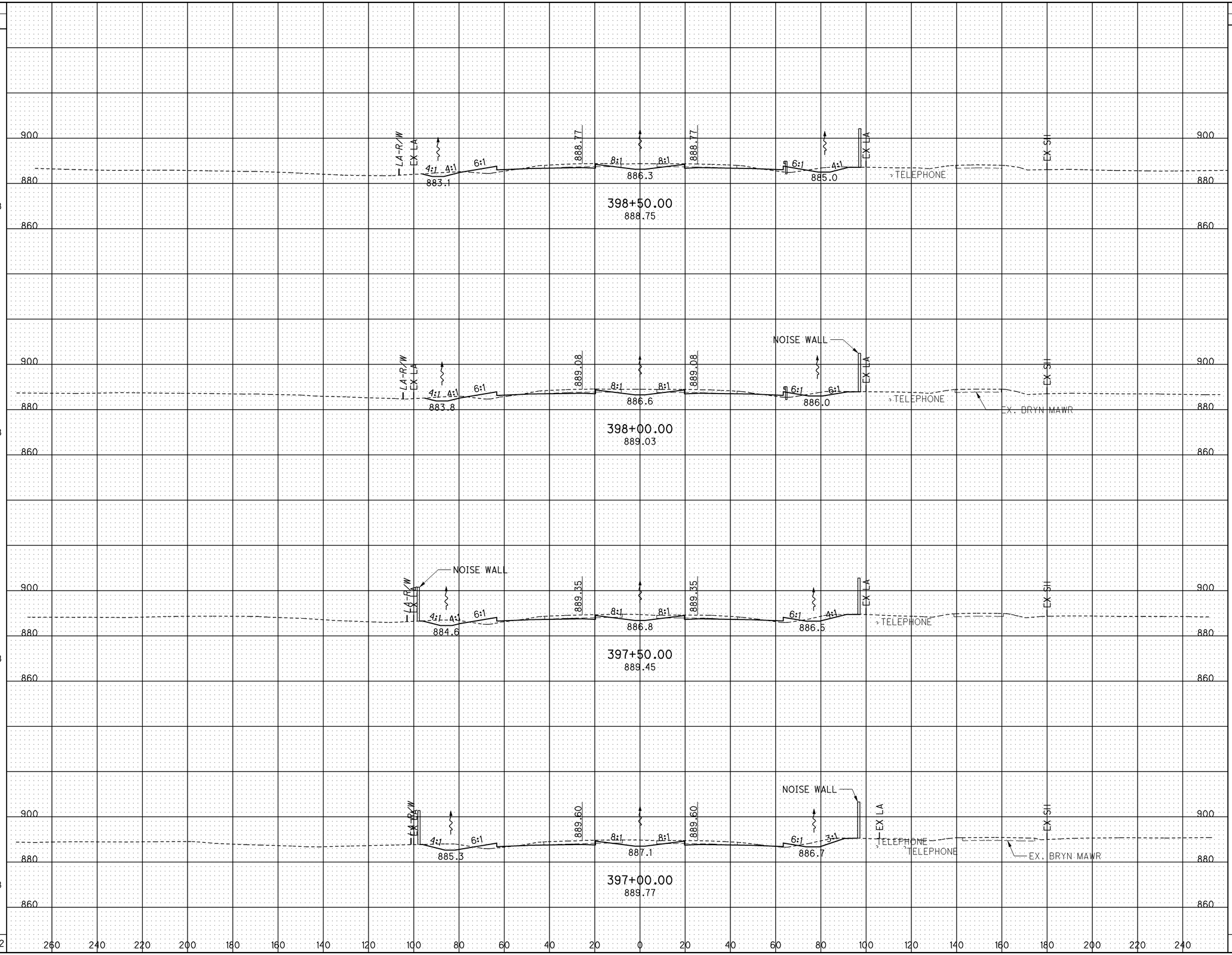

J:\Projects\ALL\76691\roadway\sheets\76691XS1070.dgn 11-SEP-2012 8:58PM reddenj

CALCULATED JMR
CHECKED ACF

CROSS SECTIONS - I-75
STA. 397+00.00 TO STA. 398+50.00

ALL-75-5.53

292
1224

SEEDING END WIDTH	SEEDING SQ. YDS.	END AREA CUT	END AREA FILL	VOLUME CUT	VOLUME FILL
129	717	197	99	372	182
128	711	205	97	374	173
128	711	199	90	375	150
127	700	206	72	373	122
	2839			1494	627

CALCULATED JMR
CHECKED ACF

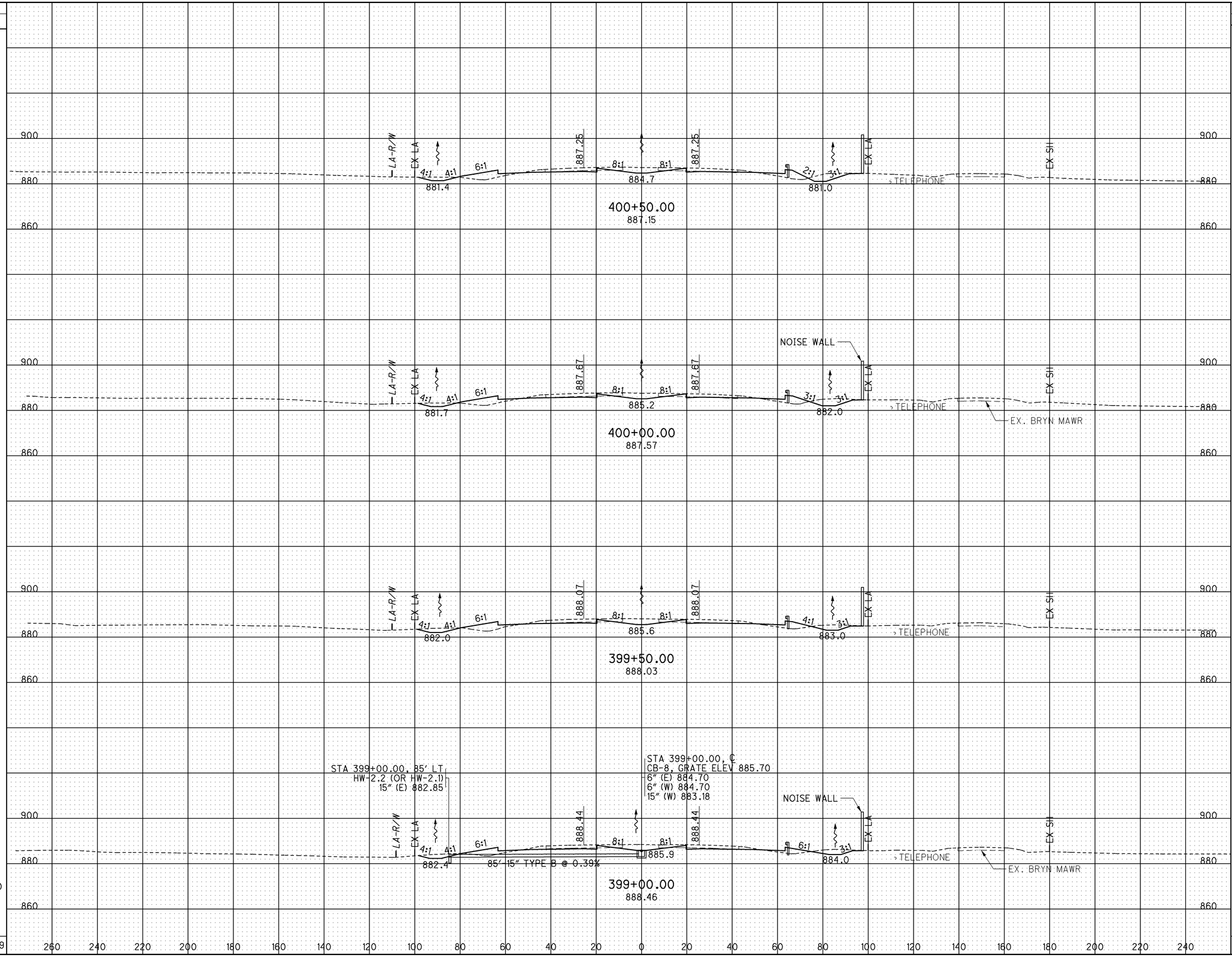

CROSS SECTIONS - I-75
STA. 399+00.00 TO STA. 400+50.00

ALL-75-5.53

293
1224

J:\Projects\ALL\76691\roadway\sheets\76691XS1071.dgn 11-SEP-2012 8:58PM reddenj

SEEDING			END AREA		VOLUME	
	END WIDTH	SQ. YDS.	CUT	FILL	CUT	FILL
402+50.00	131	734	170	140	339	248
402+00.00	132	745	196	128	386	212
401+50.00	136	750	221	101	401	183
401+00.00	134	734	212	97	379	181
		2963			1505	824

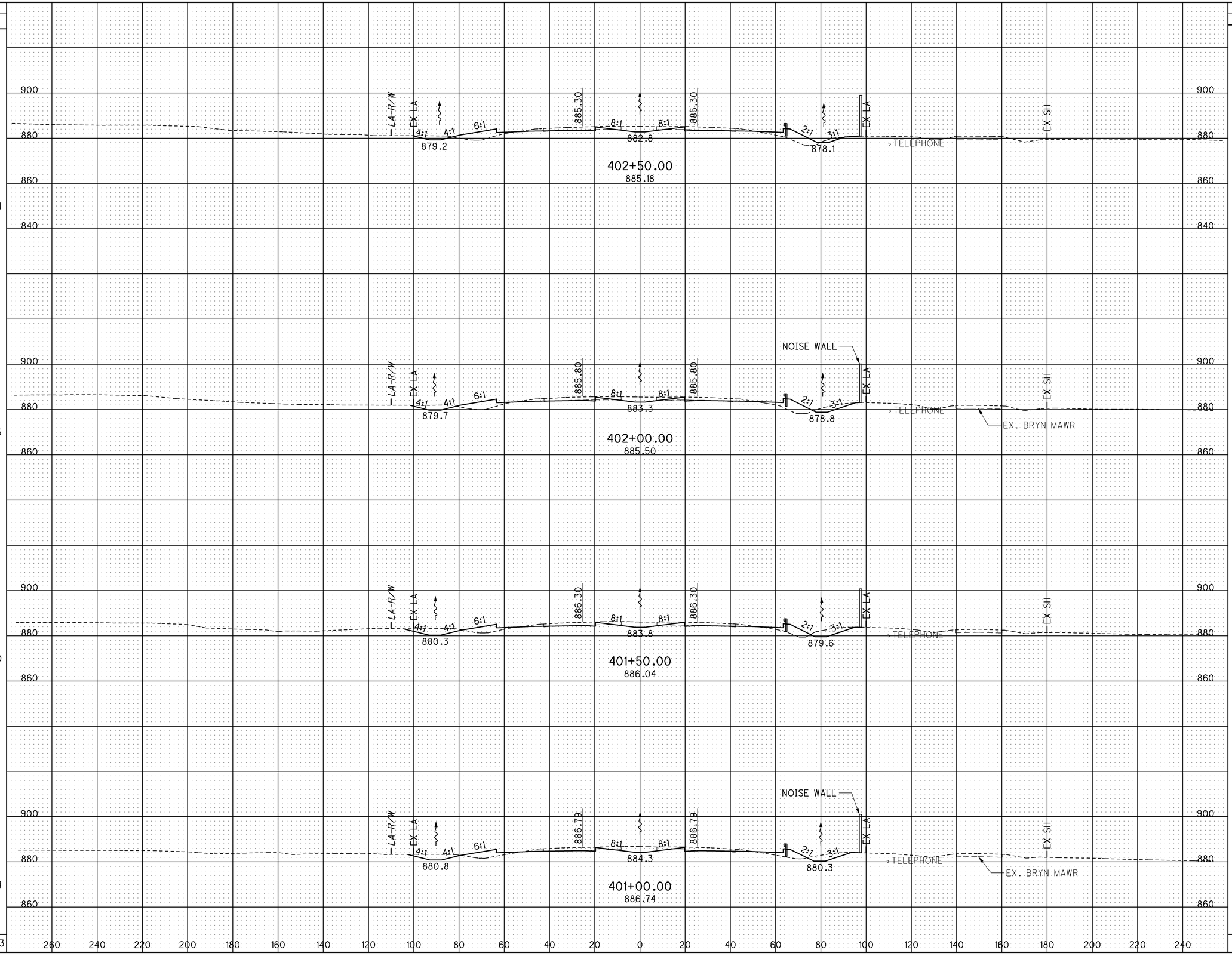

CALCULATED JMR
CHECKED ACF

CROSS SECTIONS - I-75
STA. 401+00.00 TO STA. 402+50.00

ALL-75-5.53

294
1224

J:\Projects\ALL\76691\roadway\sheets\76691XS1072.dgn 11-SEP-2012 8:58PM reddenj

SEEDING		END AREA		VOLUME		
END WIDTH	SQ. YDS.	CUT	FILL	CUT	FILL	
131	728	170	122	314	232	404+00.00
131	734	170	129	313	247	403+50.00
132	734	168	138	313	257	403+00.00
	2196			940	736	

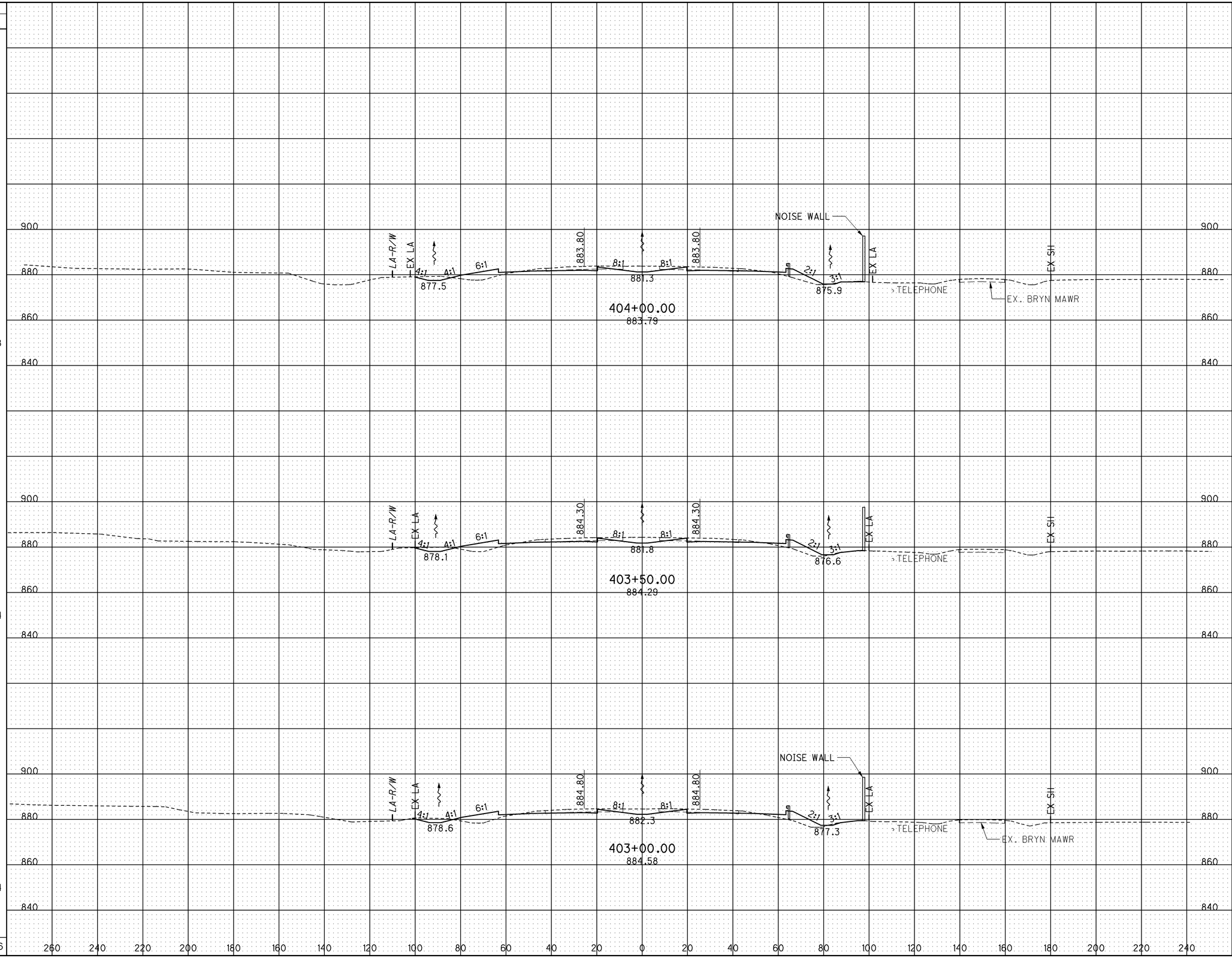

CALCULATED JMR
CHECKED ACF

CROSS SECTIONS - I-75
STA. 403+00.00 TO STA. 404+00.00

ALL-75-5.53

295
1224

J:\Projects\ALL\76691\roadway\sheets\76691XS1073.dgn 11-SEP-2012 8:58PM reddenj

SEEDING	
END WIDTH	SQ. YDS.
143	778
136	744
132	734
	2256

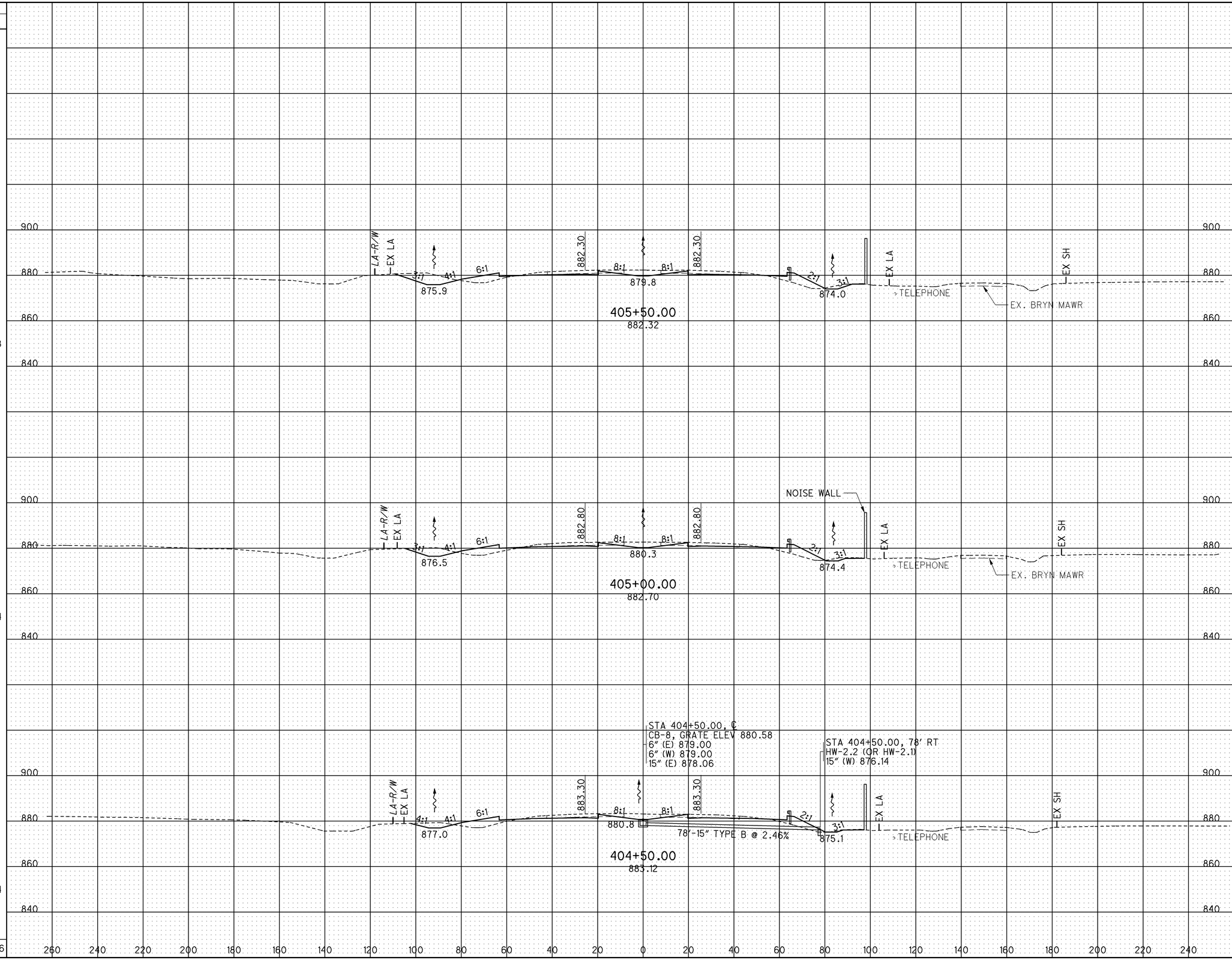

END AREA	
CUT	FILL
241	117
203	128
177	122

VOLUME	
CUT	FILL
411	227
351	231
320	225
1082	683

CALCULATED JMR
CHECKED ACF

CROSS SECTIONS - I-75
STA. 404+50.00 TO STA. 405+50.00

ALL-75-5.53

296
1224

J:\Projects\ALL\76691\roadway\sheets\76691XS1074.dgn 11-SEP-2012 8:58PM reddenj

SEEDING	
END WIDTH	SQ. YDS.
153	844
150	833
148	811
	2488

END AREA	
CUT	FILL
321	100
314	108
275	117

VOLUME	
CUT	FILL
588	193
545	209
478	217
1611	619

CALCULATED JMR
CHECKED ACF

CROSS SECTIONS - I-75
STA. 406+00.00 TO STA. 407+00.00

ALL-75-5.53

297
1224

J:\Projects\ALL\76691\roadway\sheets\76691XS1075.dgn 11-SEP-2012 8:58PM reddenj

SEEDING END WIDTH	SEEDING SQ. YDS.	END AREA CUT	END AREA FILL	VOLUME CUT	VOLUME FILL
146	828	293	88	555	169
152	905	306	95	619	178
173	905	362	98	633	184
	2638			1807	531

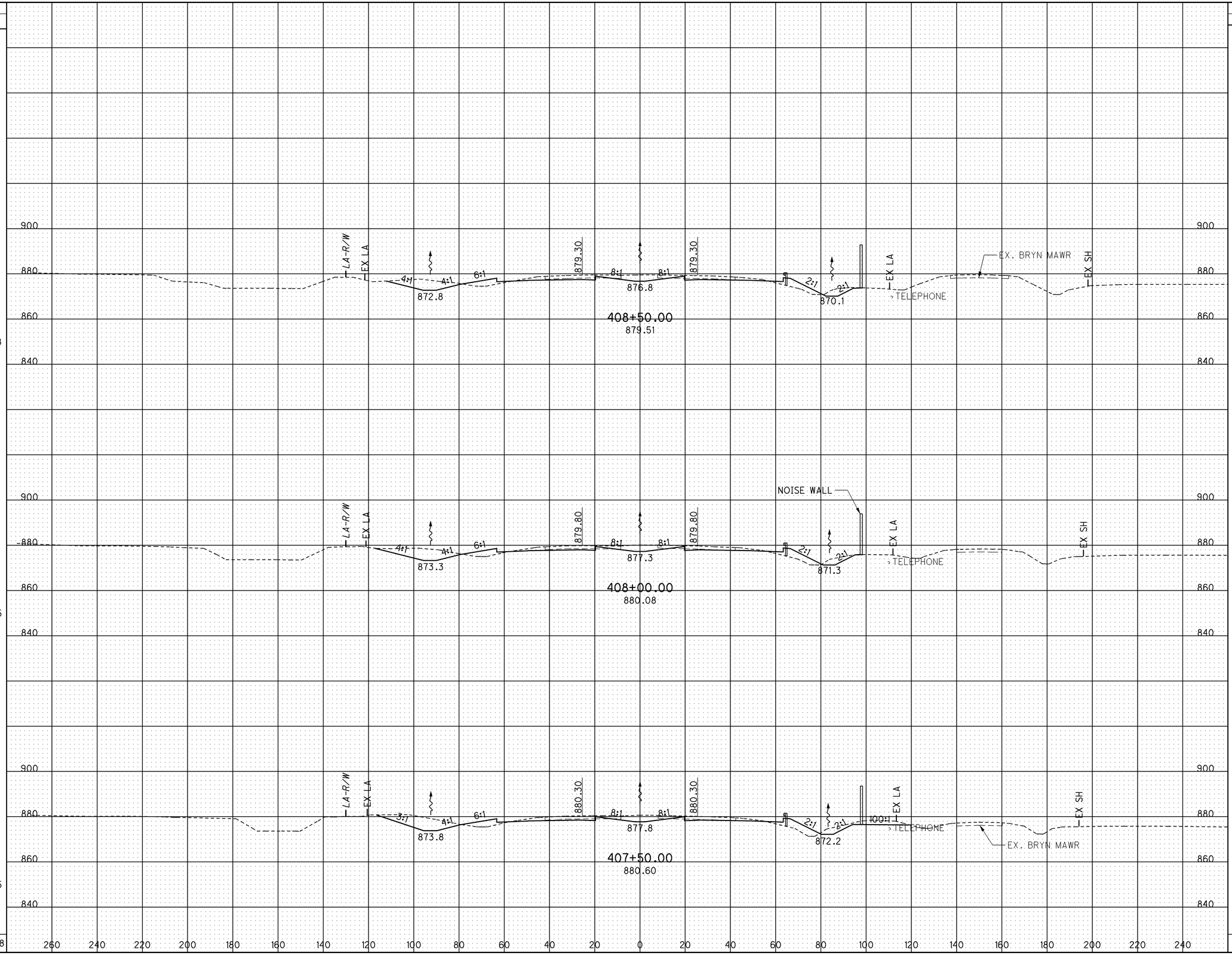

CALCULATED JMR
CHECKED ACF

CROSS SECTIONS - I-75
STA. 407+50.00 TO STA. 408+50.00

ALL-75-5.53

298
1224

J:\Projects\ALL\76691\roadway\sheets\76691XS1076.dgn 11-SEP-2012 8:58PM reddenj

SEEDING	
END WIDTH	SQ. YDS.
148	845
154	845
149	822
	2512

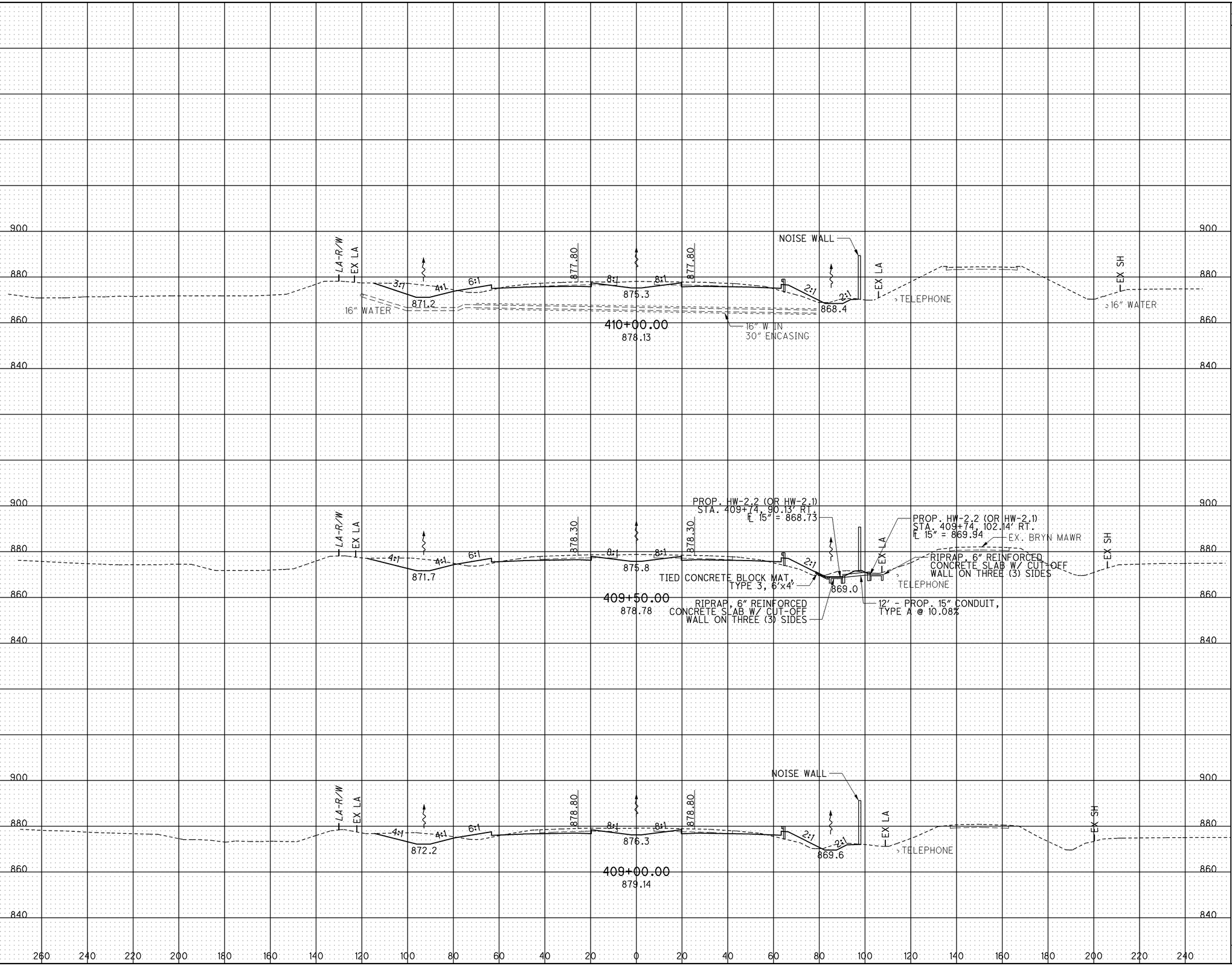

END AREA	
CUT	FILL
310	76
328	80
303	80

VOLUME	
CUT	FILL
590	145
584	148
552	155
1726	448

CALCULATED JMR
CHECKED ACF

CROSS SECTIONS - I-75
STA. 409+00.00 TO STA. 410+00.00

ALL-75-5.53

299
1224

J:\Projects\ALL\76691\roadway\sheets\76691XS1077.dgn 11-SEP-2012 8:58PM reddenj

SEEDING END WIDTH	SEEDING SQ. YDS.
157	861
152	411
143	405
	1677

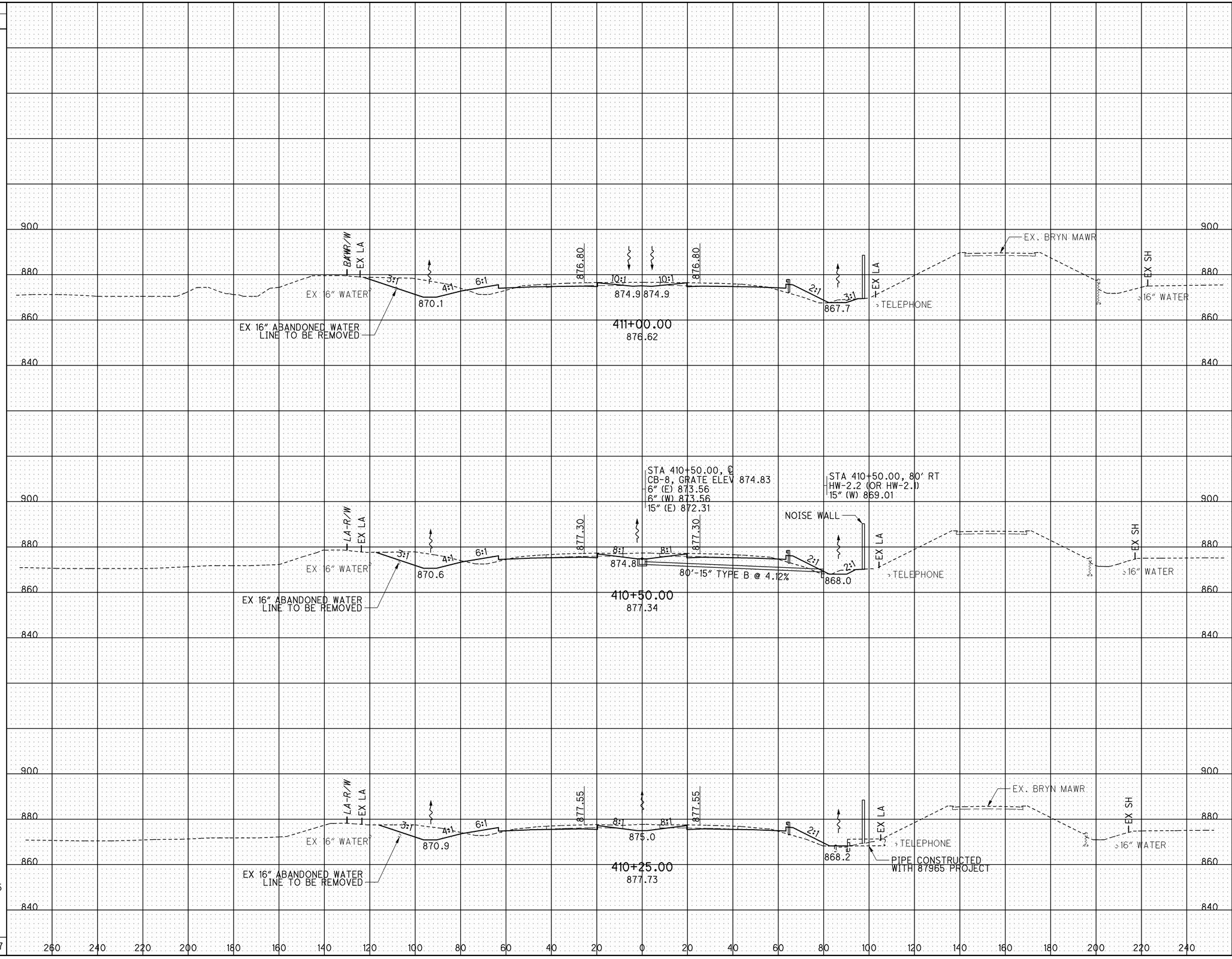

END AREA CUT	END AREA FILL	VOLUME CUT	VOLUME FILL
340	122	613	194
322	87	289	79
303	85	284	75
		1186	348

CALCULATED JMR
CHECKED ACF

CROSS SECTIONS - I-75
STA. 410+25.00 TO STA. 411+00.00

ALL-75-5.53

300
1224

J:\Projects\ALL\76691\roadway\sheets\76691XS1078.dgn 11-SEP-2012 8:59PM reddenj

SEEDING	
END WIDTH	SQ. YDS.
131	118
126	487
166	900
	1505

END AREA	
CUT	FILL
161	142
372	205
435	153

VOLUME	
CUT	FILL
81	53
448	199
718	255
1247	507

CALCULATED JMR
CHECKED ACF

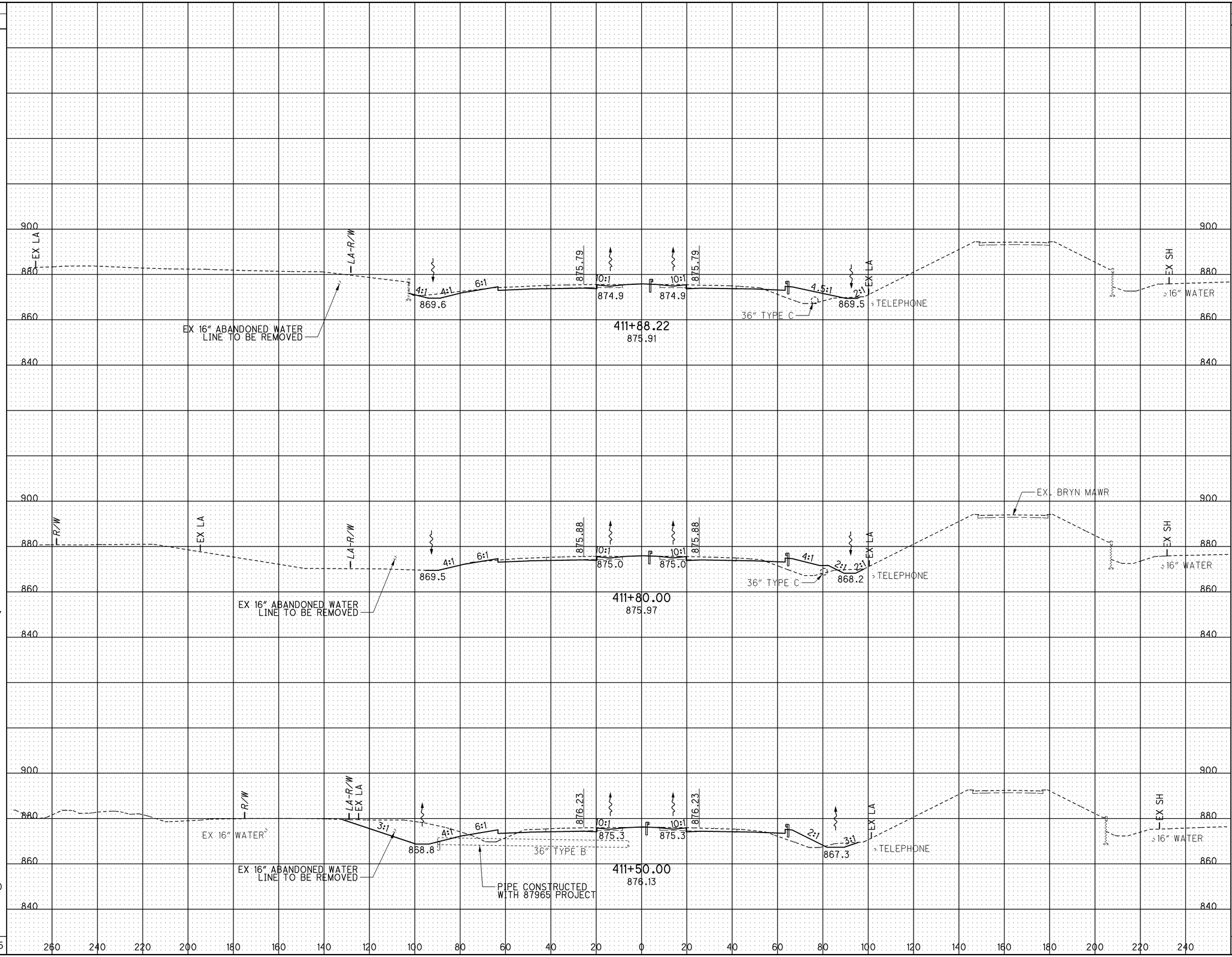

CROSS SECTIONS - I-75
STA. 411+50.00 TO STA. 411+88.22

ALL-75-5.53

301
1224

J:\Projects\ALL\76691\roadway\sheets\76691XS1079.dgn 11-SEP-2012 8:59PM reddenj

SEEDING		END AREA		VOLUME	
END WIDTH	SQ. YDS.	CUT	FILL	CUT	FILL
93	523	188	16	344	36
94	555	184	23	300	56
105	154	140	38	66	39
	1232			710	131

CALCULATED JMR
CHECKED ACF

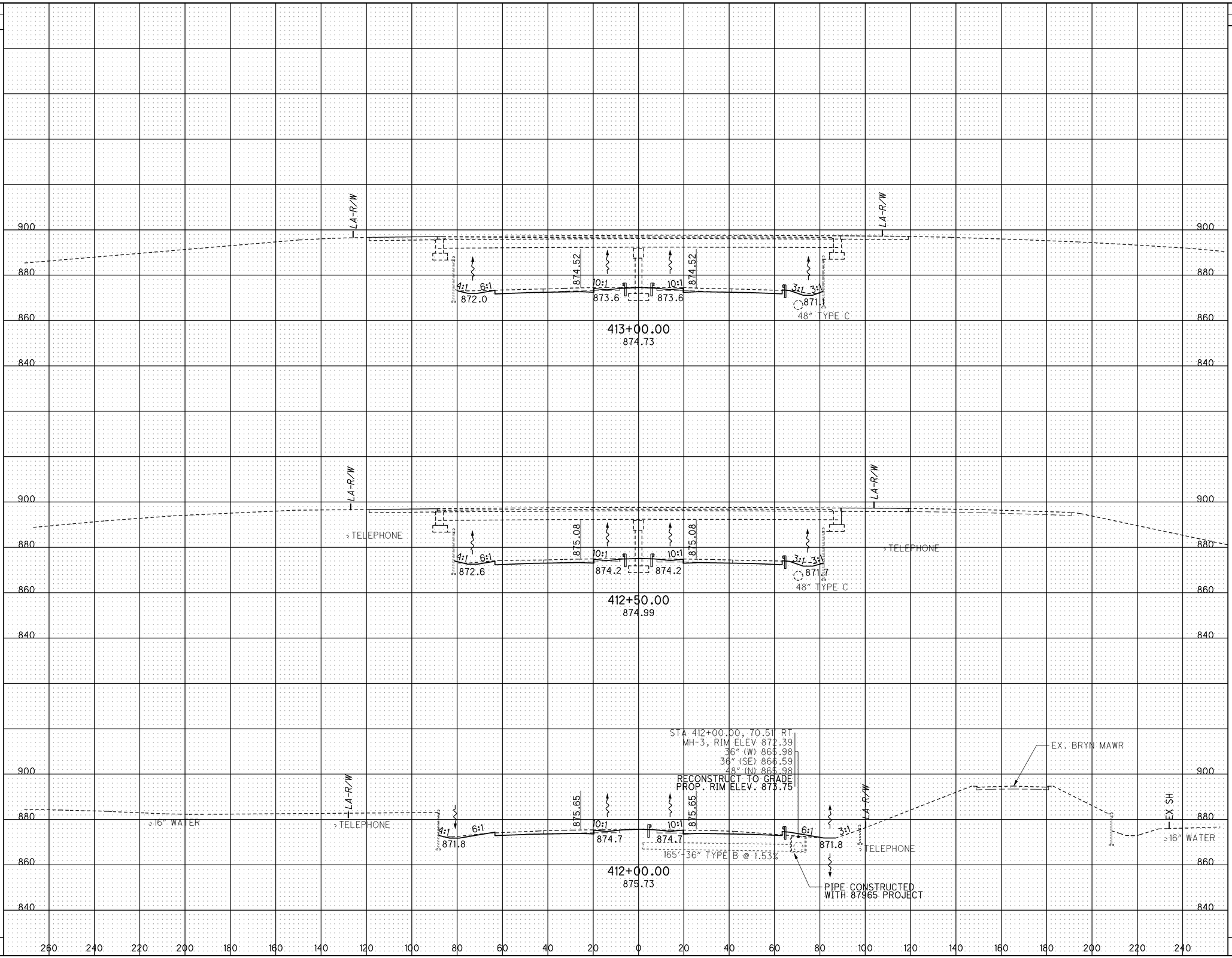

CROSS SECTIONS - I-75
STA. 412+00.00 TO STA. 413+00.00

ALL-75-5.53

302
1224

J:\Projects\ALL\76691\roadway\sheets\76691XS1080.dgn 11-SEP-2012 8:59PM reddenj

SEEDING	
END WIDTH	SQ. YDS.
148	806
142	723
121	600
	2129

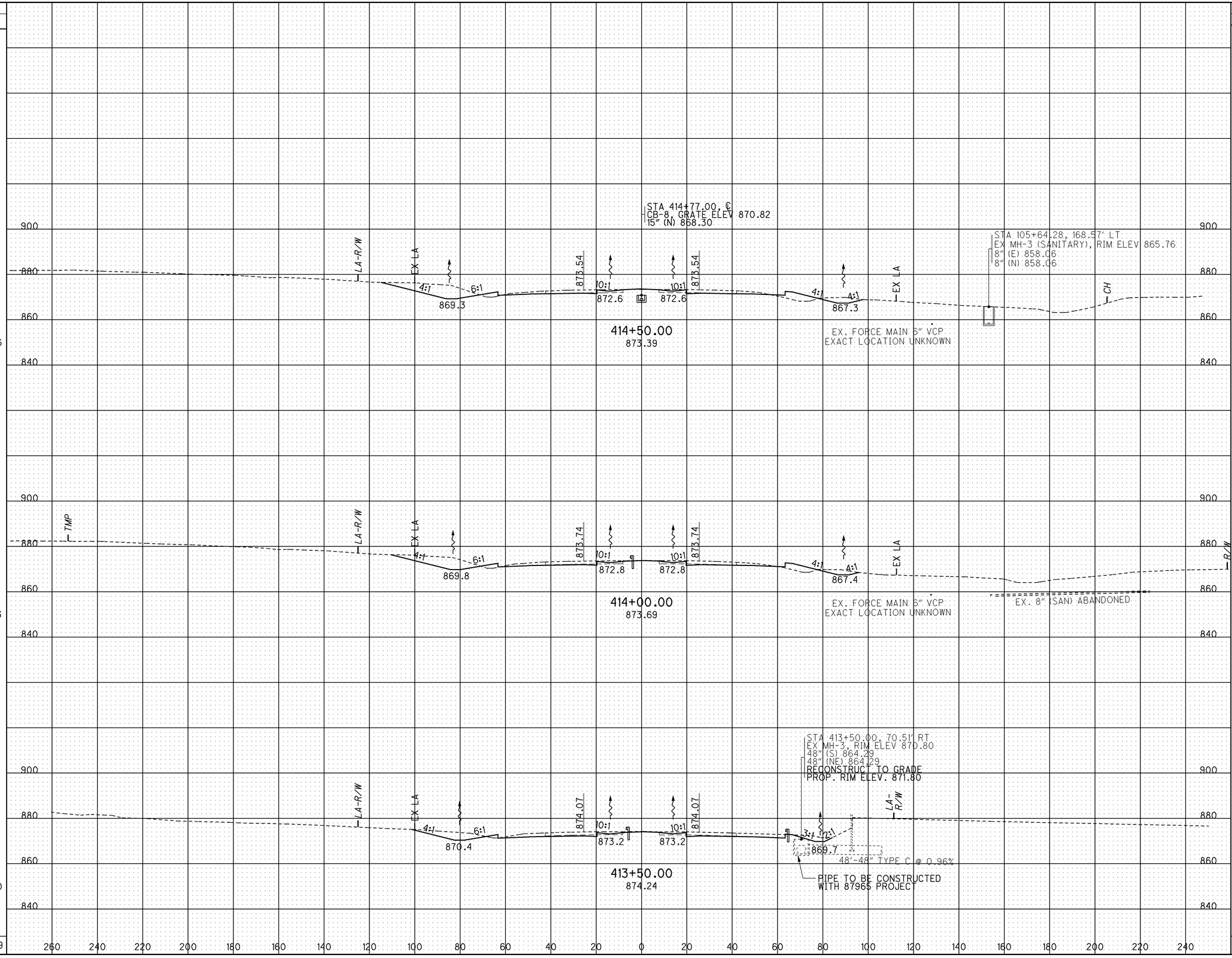

END AREA	
CUT	FILL
293	77
273	62
214	22

VOLUME	
CUT	FILL
524	128
451	78
372	35
1347	241

CALCULATED JMR
CHECKED ACF

CROSS SECTIONS - I-75
STA. 413+50.00 TO STA. 414+50.00

ALL-75-5.53

303
1224

J:\Projects\ALL\76691\roadway\sheets\76691XS1081.dgn 11-SEP-2012 8:59PM reddenj

SEEDING END WIDTH	SEEDING SQ. YDS.	END AREA CUT	END AREA FILL	VOLUME CUT	VOLUME FILL
159	585	346	93	406	110
150	265	299	82	177	47
148	822	299	76	548	142
	1672			1131	299

CALCULATED JMR
CHECKED ACF

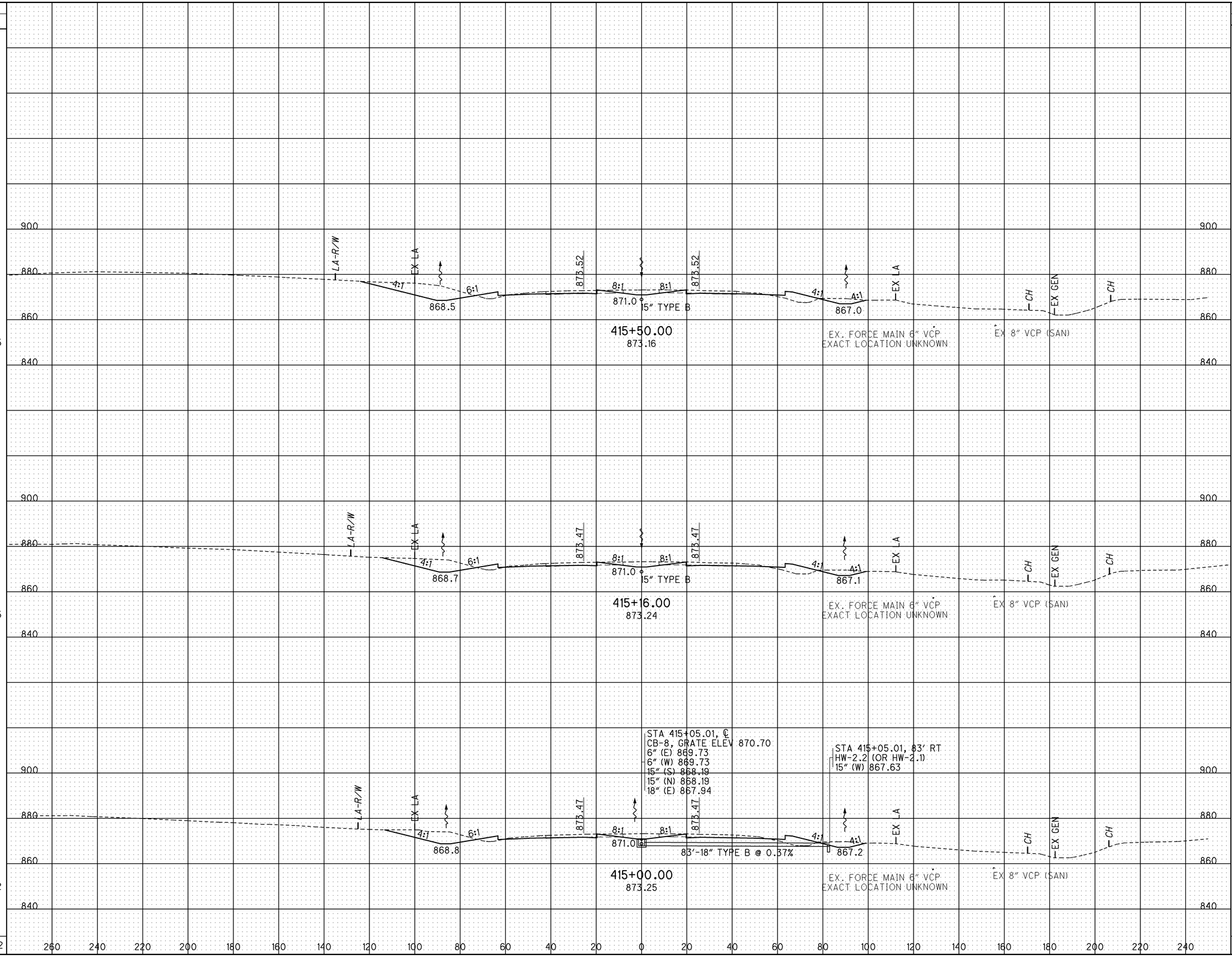

CROSS SECTIONS - I-75
STA. 415+00.00 TO STA. 415+50.00

ALL-75-5.53

304
1224

J:\Projects\ALL\76691\roadway\sheets\76691XS1082.dgn 11-SEP-2012 8:59PM reddenj

SEEDING		END AREA		VOLUME		CALCULATED	CHECKED
END WIDTH	SQ. YDS.	CUT	FILL	CUT	FILL	JMR	ACF
181	1006	421	206	831	324		
180	978	476	144	855	230		
171	917	447	105	734	183		
	2901			2420	737		

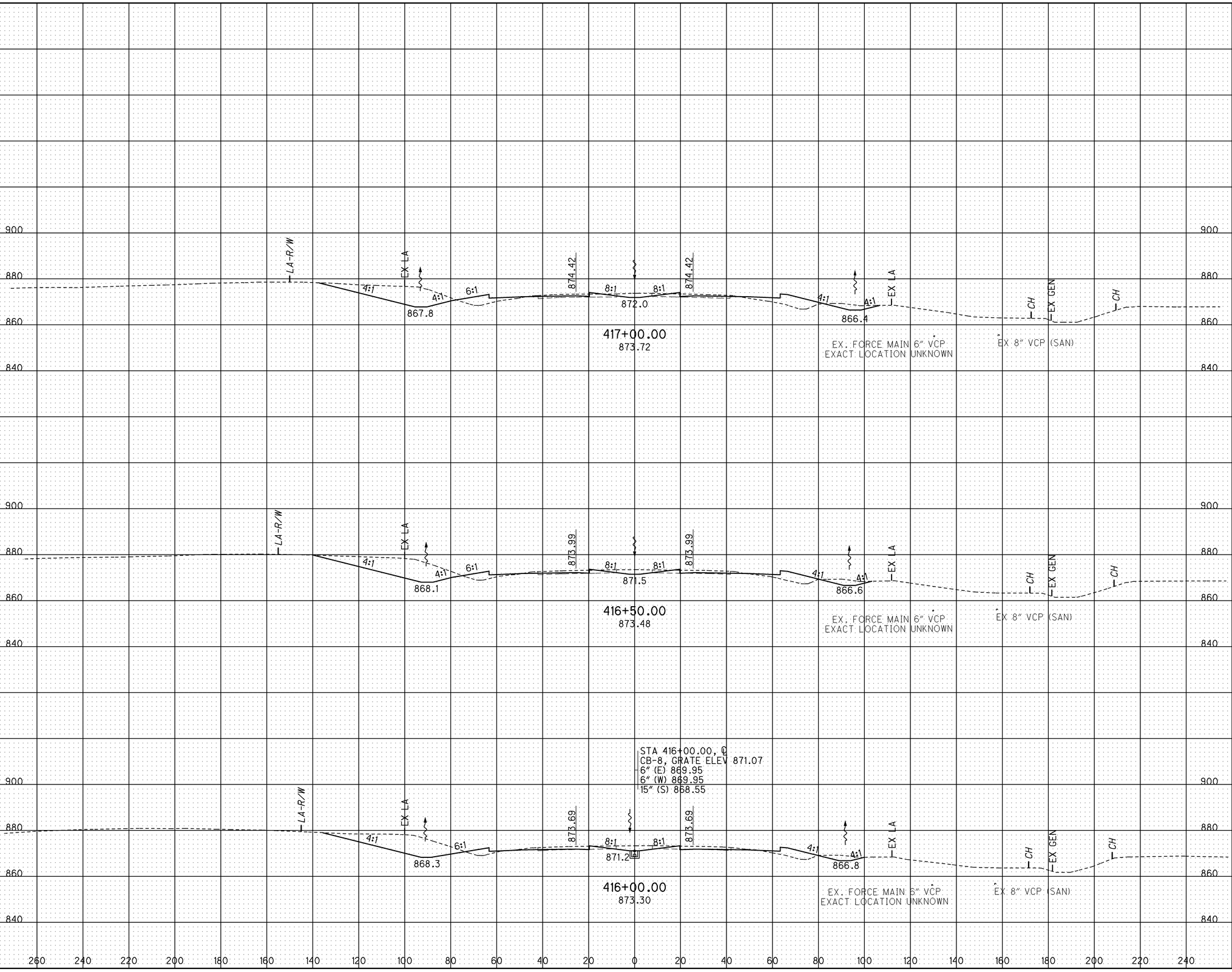

CROSS SECTIONS - I-75
STA. 416+00.00 TO STA. 417+00.00

ALL-75-5.53

305
1224

J:\Projects\ALL\76691\roadway\sheets\76691XS1083.dgn 11-SEP-2012 8:59PM reddenj

SEEDING		END AREA		VOLUME	
END WIDTH	SQ. YDS.	CUT	FILL	CUT	FILL
169	961	223	460	503	759
176	995	320	360	666	590
182	1011	399	277	759	447
	2967			1928	1796

CALCULATED JMR
CHECKED ACF

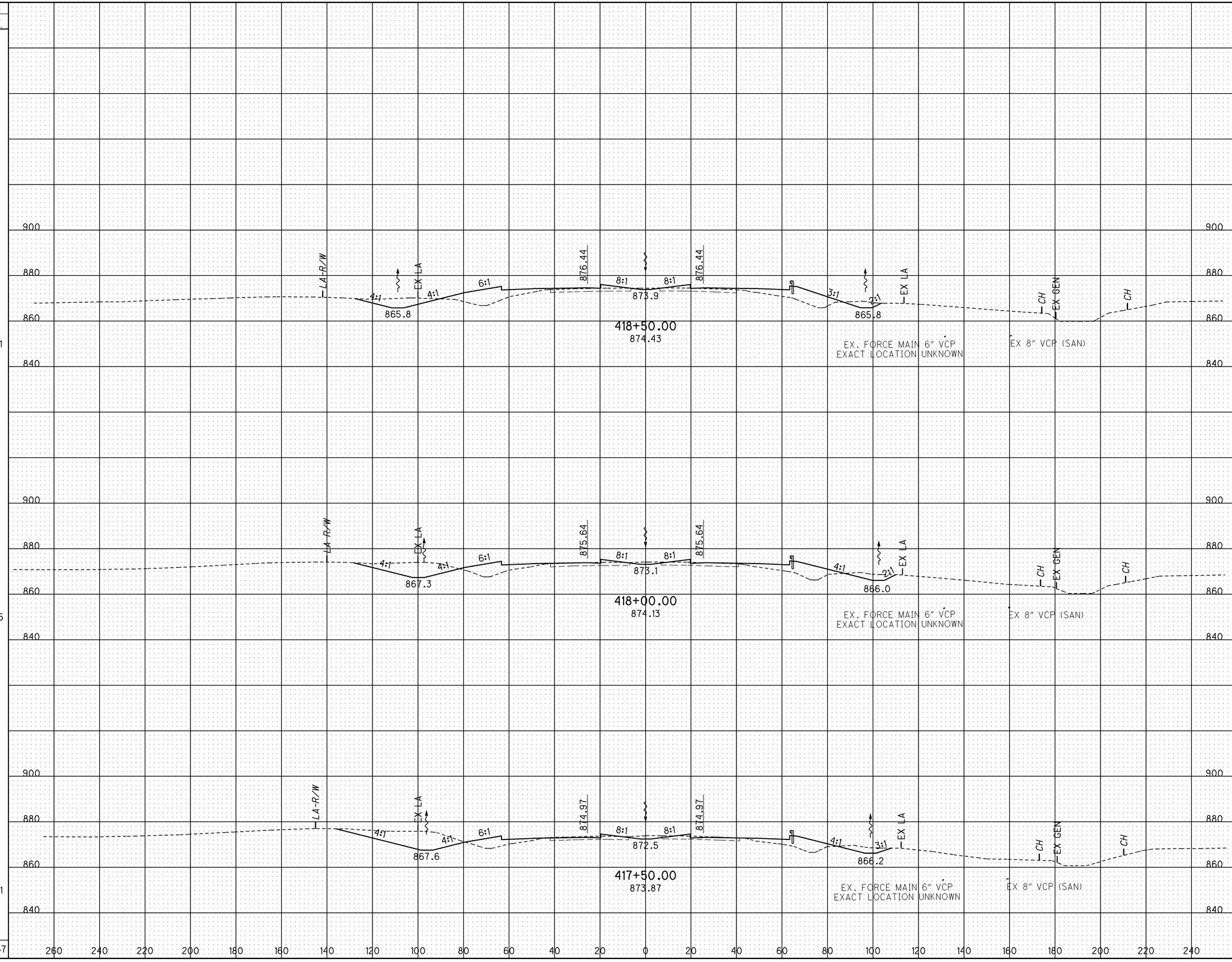

CROSS SECTIONS - I-75
STA. 417+50.00 TO STA. 418+50.00

ALL-75-5.53

306
1224

J:\Projects\ALL\76691\roadway\sheets\76691XS1084.dgn 11-SEP-2012 8:59PM reddenj

SEEDING		END AREA		VOLUME	
END WIDTH	SQ. YDS.	CUT	FILL	CUT	FILL
175	983	128	1049	259	1752
179	972	152	843	305	1355
171	950	177	621	370	1001
	2905			934	4108

CALCULATED JMR
CHECKED ACF

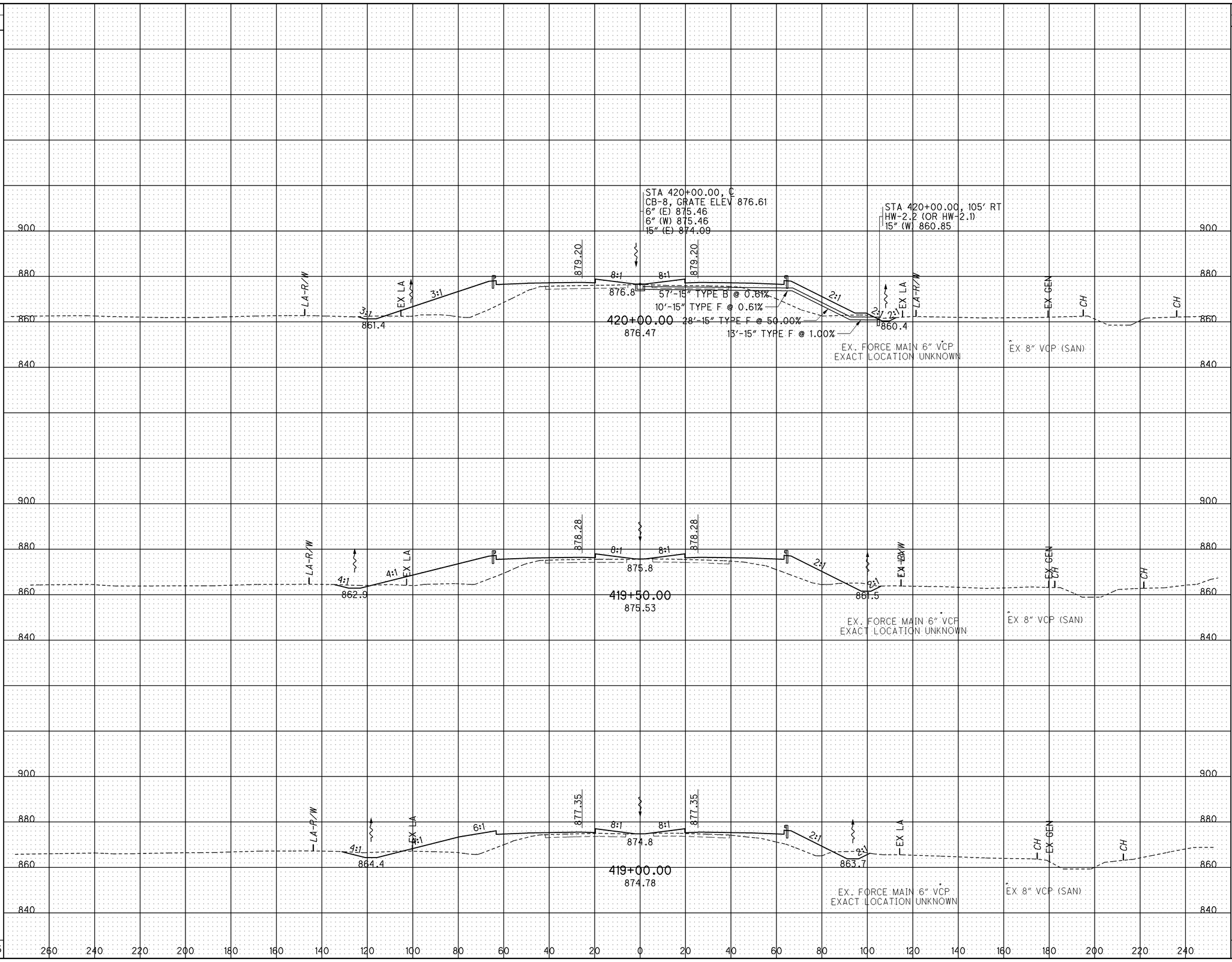

CROSS SECTIONS - I-75
STA. 419+00.00 TO STA. 420+00.00

ALL-75-5.53

307
1224

J:\Projects\ALL\76691\roadway\sheets\76691XS1085.dgn 11-SEP-2012 8:59PM reddenj

SEEDING END WIDTH	SEEDING SQ. YDS.
211	1139
199	1094
194	1056
184	997
	4286

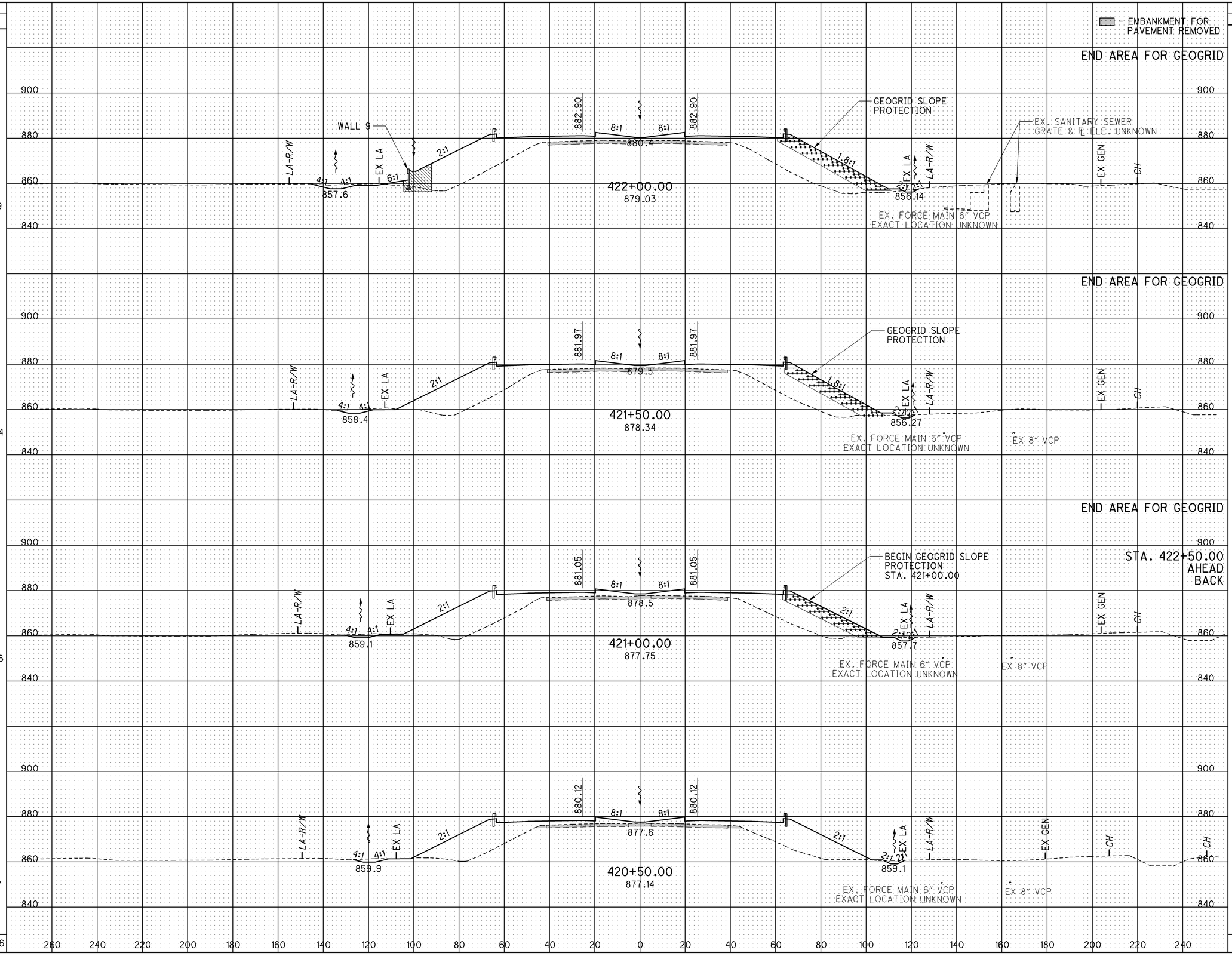

END AREA CUT	END AREA FILL	VOLUME CUT	VOLUME FILL
(0)	(263)		
140	1369	257	2500
(0)	(226)		
138	1331	252	2334
(0)	(203)		
134	1190		
134	1393	254	2377
141	1174	249	2058
		1012	9269

CALCULATED JMR
CHECKED ACF

CROSS SECTIONS - I-75
STA. 420+50.00 TO STA. 422+00.00

ALL-75.5.53

308
1224

J:\Projects\ALL\76691\roadway\sheets\76691XS1086.dgn 11-SEP-2012 8:59PM redden

SEEDING END WIDTH	SEEDING SQ. YDS.
199	1083
190	1067
192	1100
203	1156
	4406

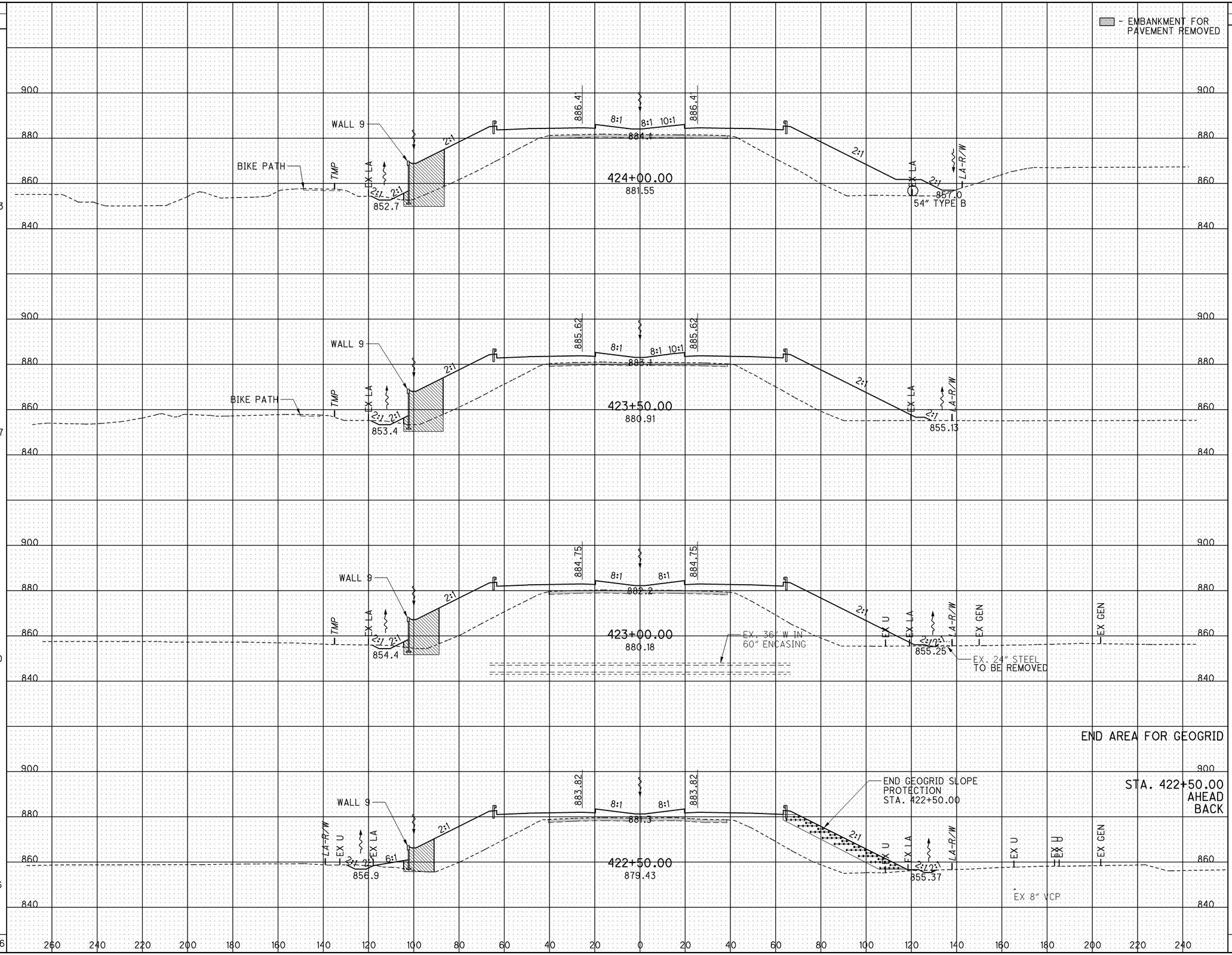

END AREA CUT	END AREA FILL	VOLUME CUT	VOLUME FILL
118	2060	219	3697
119	1933	220	3534
119	1884	227	3439
(0)	(274)		
126	1830	246	2708
126	1556		
		912	13378

END AREA FOR GEOGRID

STA. 422+50.00 AHEAD BACK

CALCULATED JMR CHECKED ACF

CROSS SECTIONS - I-75
STA. 422+50.00 TO STA. 424+00.00

ALL-75.5.53

309
1224

J:\Projects\ALL\76691\roadway\sheets\76691XS1087.dgn 11-SEP-2012 8:59PM reddenj

SEEDING	
END WIDTH	SQ. YDS.
206	1145
205	1139
205	1145
205	1128
	4557

- EMBANKMENT FOR PAVEMENT REMOVED

426+00.00
883.81
WALL 9
BIKE PATH
TMP
EX LA
2:1
8:1
7.2:1
10:1
888.59
886.1
126"-15" TYPE B @ 0.95%
851.6
54" TYPE C
4:1
2.5:1
LA-R/W
861.3

425+50.00
883.36
888.19
885.7
851.7
861.1

425+00.00
883.00
887.69
885.3
852.1
7:1
3:1
861.0

STA 424+79.86, 125.36' RT
MH-3, RIM ELEV 862.83
54" (N) 853.63
54" (S) 853.63

424+50.00
882.40
887.10
884.8
852.4
860.4

END AREA	
CUT	FILL
103	2163
115	2111
119	2107
122	2085

VOLUME	
CUT	FILL
201	3957
217	3905
223	3881
222	3838
863	15581

CALCULATED JMR
CHECKED ACF

CROSS SECTIONS - I-75
STA. 424+50.00 TO STA. 426+00.00

ALL-75.5.53

310
1224

J:\Projects\ALL\76691\roadway\sheets\76691XS1088.dgn 11-SEP-2012 8:59PM reddenj

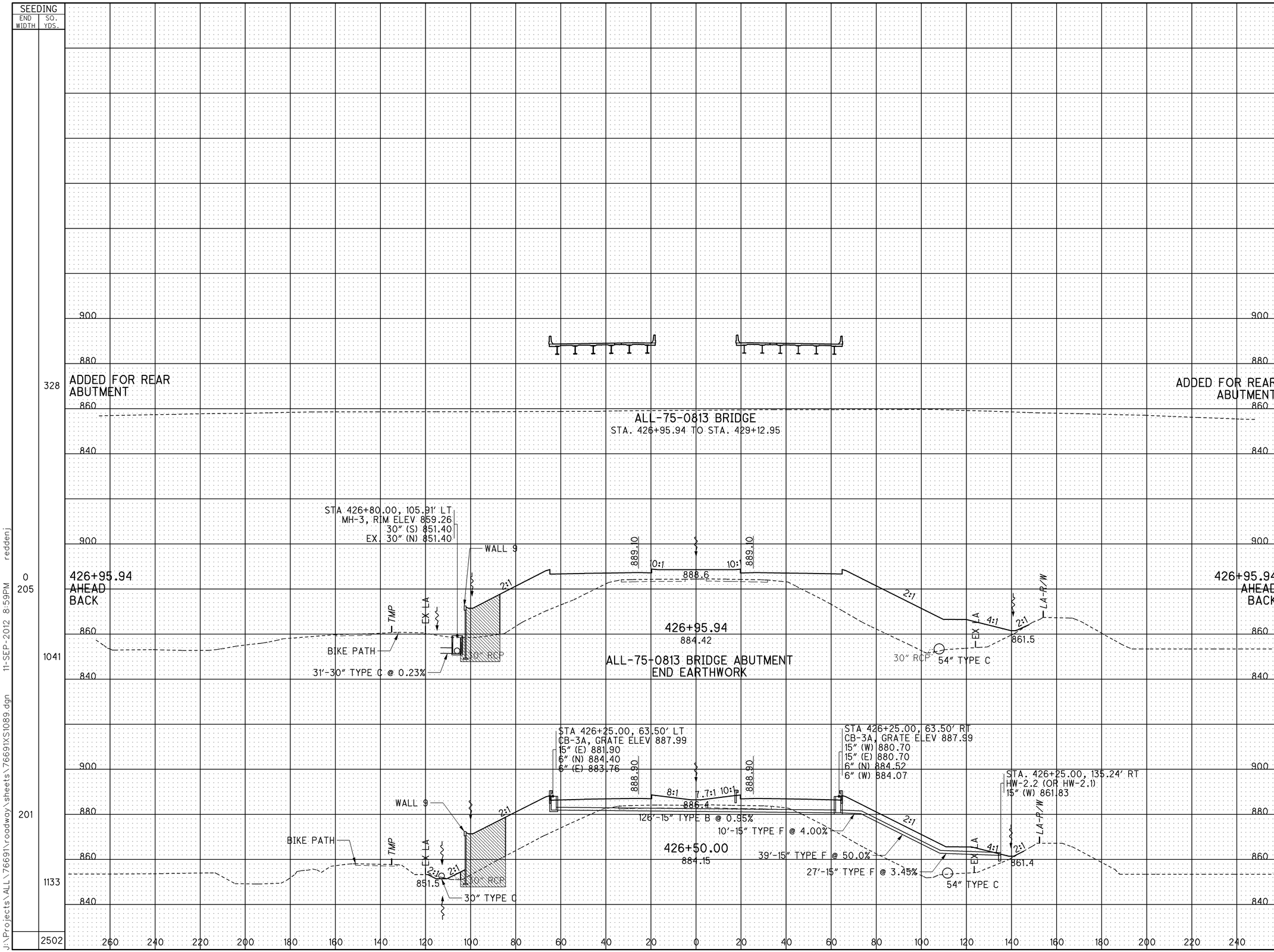

END AREA CUT	END AREA FILL	VOLUME CUT	VOLUME FILL
		413	1162
0	0		
67	2435		
		138	3975
96	2238		
		184	4075
		735	9212

CALCULATED JMR
CHECKED ACF

CROSS SECTIONS - I-75
STA. 426+50.00 TO STA. 428+00.00

ALL-75.5.53

311
1224

J:\Projects\ALL\76691\roadway\sheets\76691XS1089.dgn 11-SEP-2012 8:59PM reddenj

SEEDING	
END WIDTH	SQ. YDS.
186	
	765
185 0	
	794
	1559

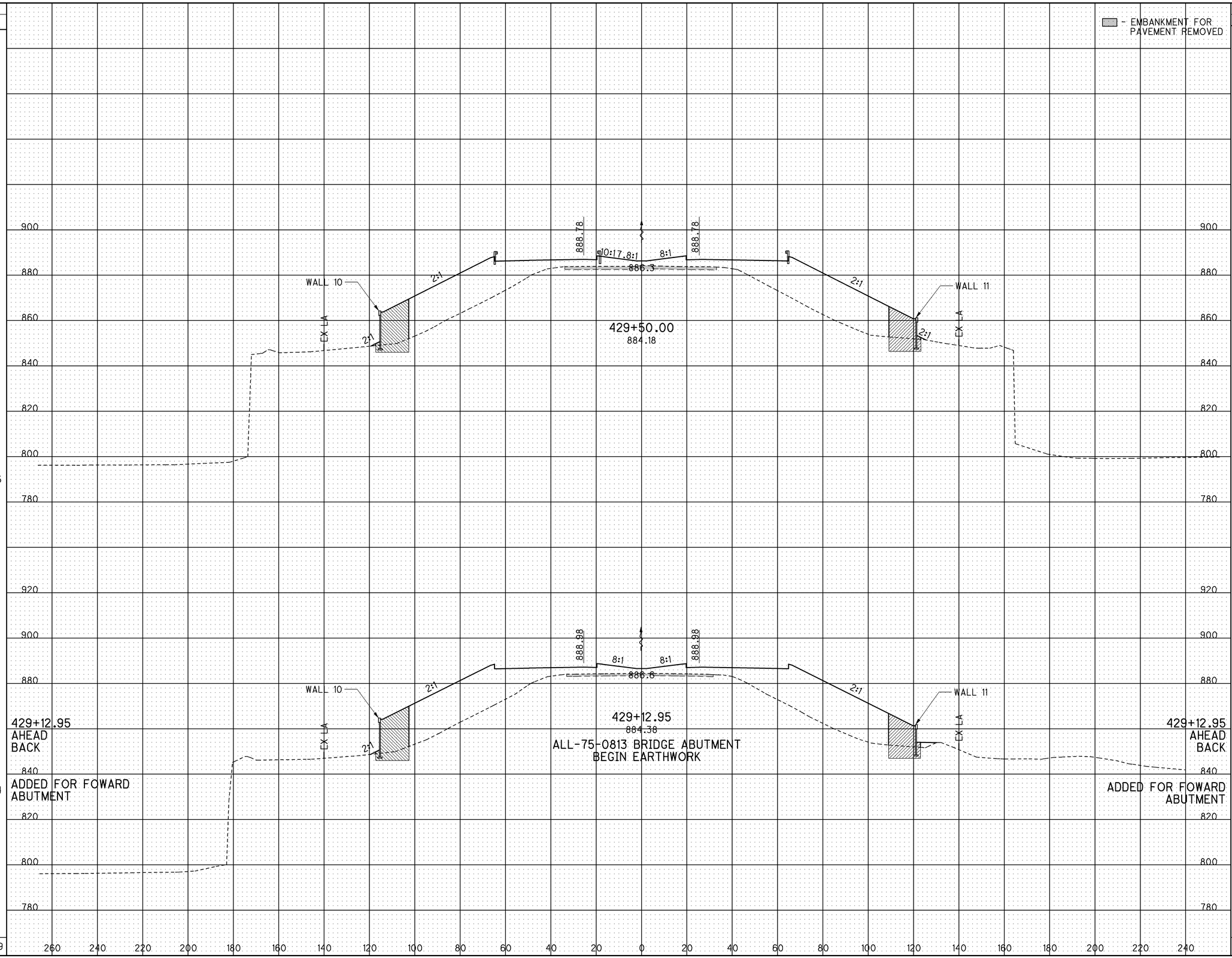

END AREA	
CUT	FILL
91	2263
66 0	2299 0

VOLUME	
CUT	FILL
108	3130
498	2052
606	5182

CALCULATED JMR
CHECKED ACF

CROSS SECTIONS - I-75
STA. 429+12.95 TO STA. 429+50.00

ALL-75.5.53

312
1224

J:\Projects\ALL\76691\roadway\sheets\76691XS1090.dgn 11-SEP-2012 8:59PM reddenj

SEEDING		END AREA		VOLUME	
END WIDTH	SQ. YDS.	CUT	FILL	CUT	FILL
181	1005	101	2179	184	4061
181	1022	97	2207	175	4138
	2027			359	8199

CALCULATED JMR
CHECKED ACF

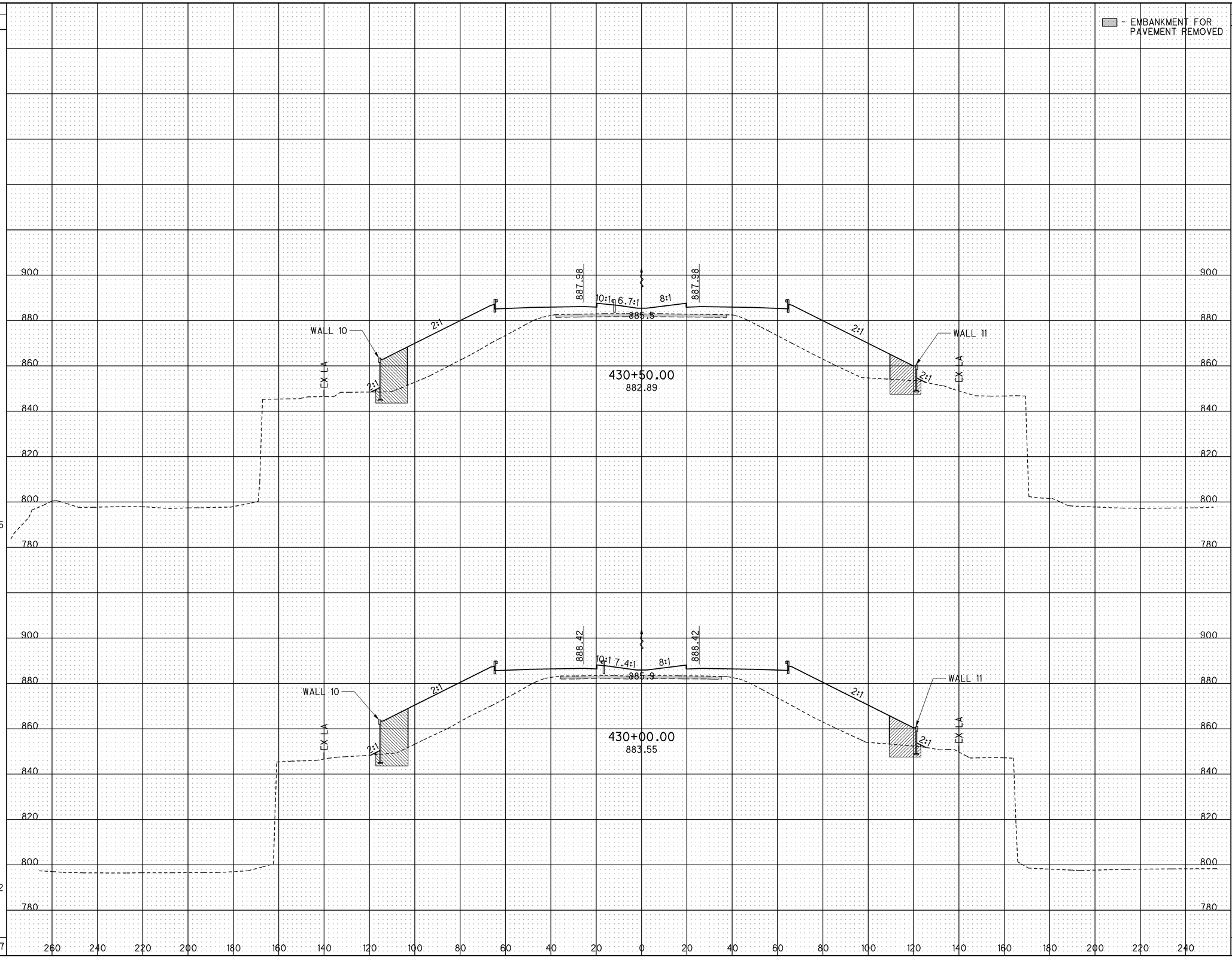

CROSS SECTIONS - I-75
STA. 430+00.00 TO STA. 430+50.00

ALL-75.5.53

313
1224

J:\Projects\ALL\76691\roadway\sheets\76691XS1091.dgn 11-SEP-2012 8:59PM reddenj

SEEDING	
END WIDTH	SQ. YDS.
181	1005
181	1005
	2010

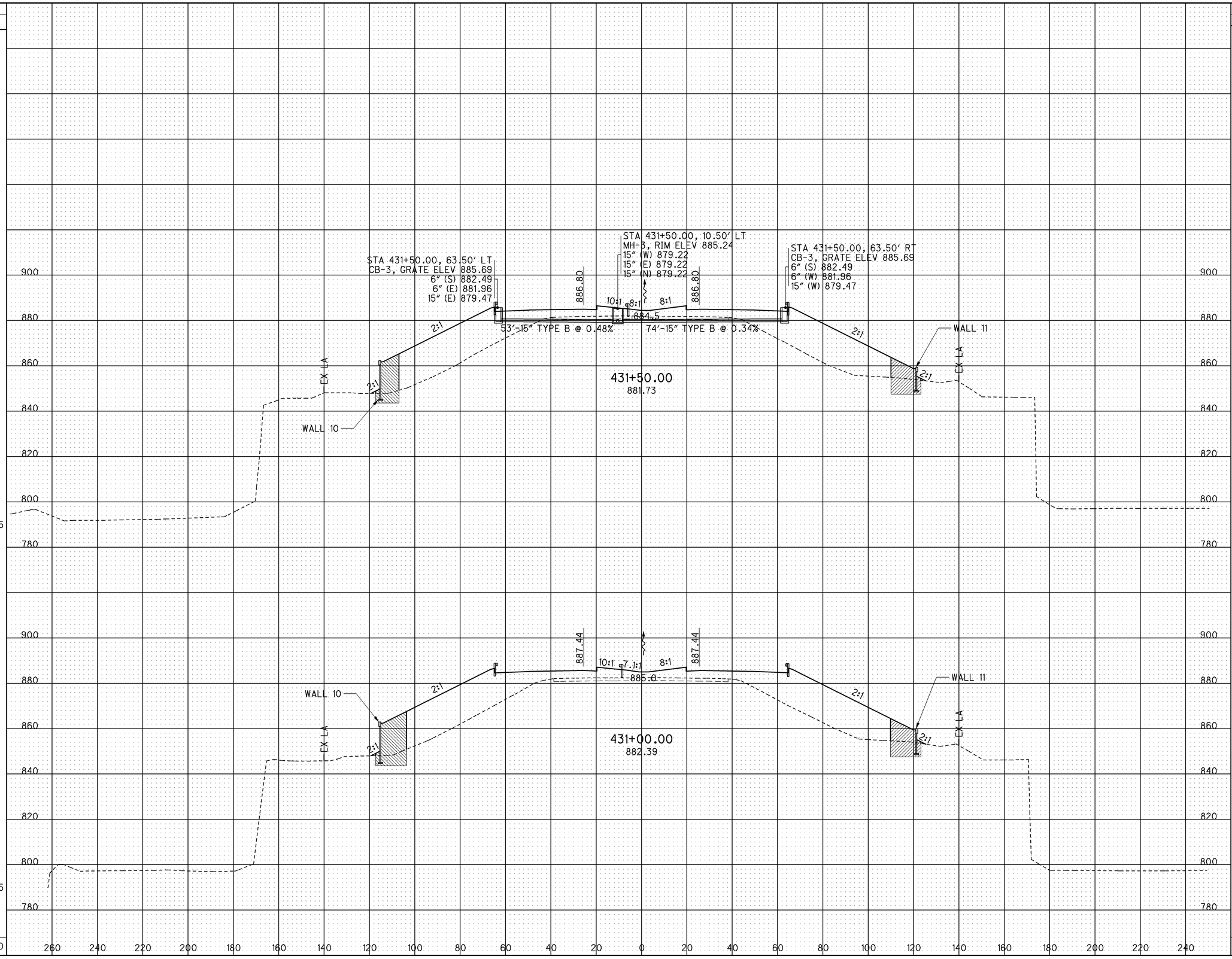

END AREA		VOLUME	
CUT	FILL	CUT	FILL
104	2222		
102	2168		
191	4065		
188	4025		
379	8090		

CALCULATED JMR
CHECKED ACF

CROSS SECTIONS - I-75
STA. 431+00.00 TO STA. 431+50.00

ALL-75.5.53

314
1224

J:\Projects\ALL\76691\roadway\sheets\76691XS1092.dgn 11-SEP-2012 8:59PM reddenj

SEEDING		END AREA		VOLUME		CALCULATED	CHECKED
END WIDTH	SQ. YDS.	CUT	FILL	CUT	FILL	JMR	ACF
175	972	106	2055	194	3935		
175	989	104	2194	192	4089		
	1961			386	8024		

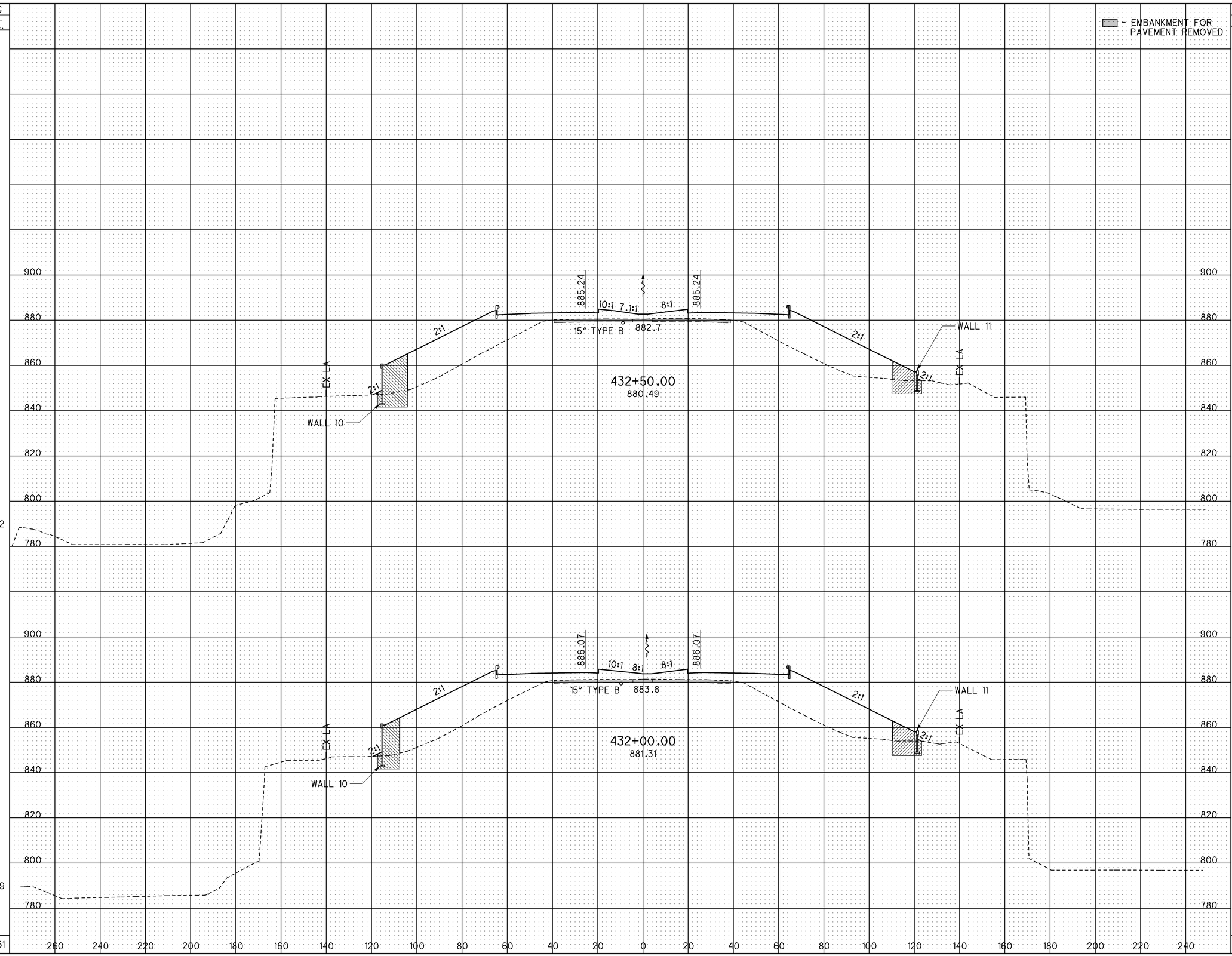

CROSS SECTIONS - I-75
STA. 432+00.00 TO STA. 432+50.00

ALL-75.5.53

315
1224

J:\Projects\ALL\76691\roadway\sheets\76691XS1093.dgn 11-SEP-2012 8:59PM reddenj

SEEDING	
END WIDTH	SQ. YDS.
175	983
179	983
	1966

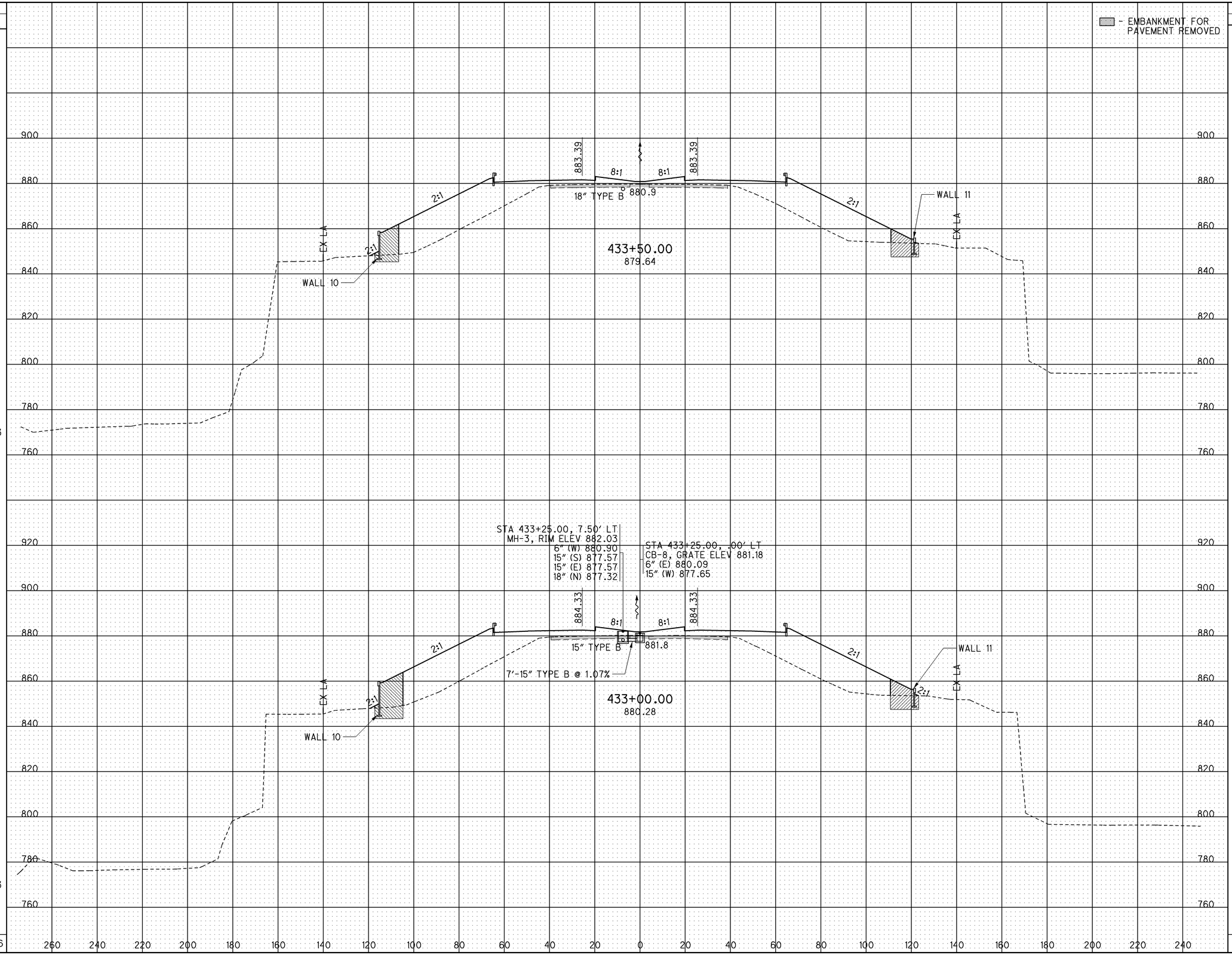

END AREA	
CUT	FILL
104	1867
104	1948

VOLUME	
CUT	FILL
192	3533
194	3707
386	7240

CALCULATED JMR
CHECKED ACF

CROSS SECTIONS - I-75
STA. 433+00.00 TO STA. 433+50.00

ALL-75.5.53

316
1224

J:\Projects\ALL\76691\roadway\sheets\76691XS1094.dgn 11-SEP-2012 8:59PM reddenj

SEEDING		END AREA		VOLUME		CALCULATED	CHECKED
END WIDTH	SQ. YDS.	CUT	FILL	CUT	FILL	JMR	ACF
177	989	105	1697	195	3231		
179	983	105	1792	194	3388		
	1972			389	6619		

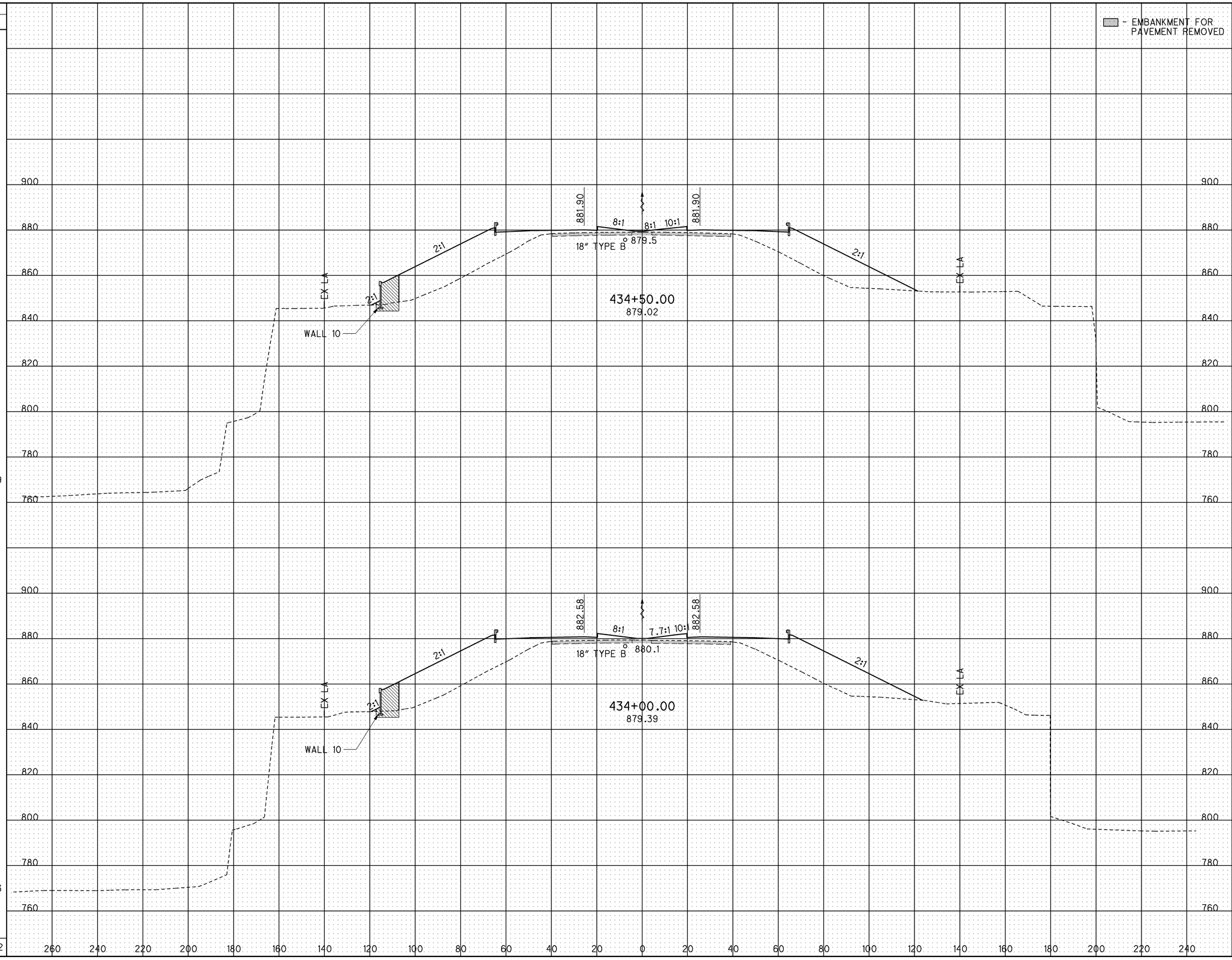

J:\Projects\ALL\76691\roadway\sheets\76691XS1095.dgn 11-SEP-2012 8:59PM reddenj

CROSS SECTIONS - I-75
STA. 434+00.00 TO STA. 434+50.00

ALL-75.5.53

SEEDING	
END WIDTH	SQ. YDS.
174	977
177	983
	1960

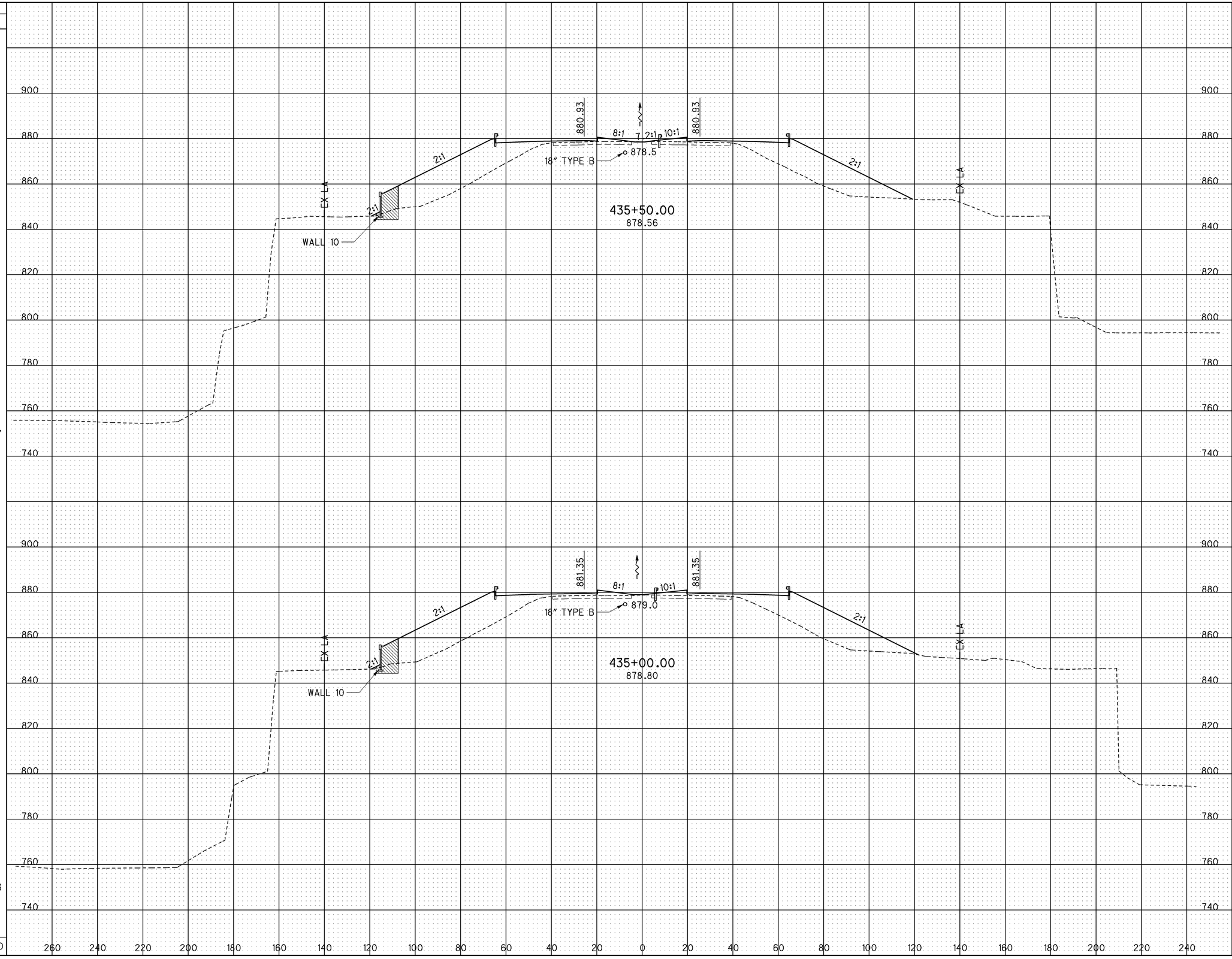

END AREA	
CUT	FILL
105	1581
108	1636

VOLUME	
CUT	FILL
198	2979
198	3086
396	6065

CALCULATED	CHECKED
JMR	ACF

CROSS SECTIONS - I-75
STA. 435+00.00 TO STA. 435+50.00

ALL-75.5.53

318
1224

J:\Projects\ALL\76691\roadway\sheets\76691XS1096.dgn 11-SEP-2012 8:59PM reddenj

SEEDING	
END WIDTH	SQ. YDS.
177	983
175	972
	1955

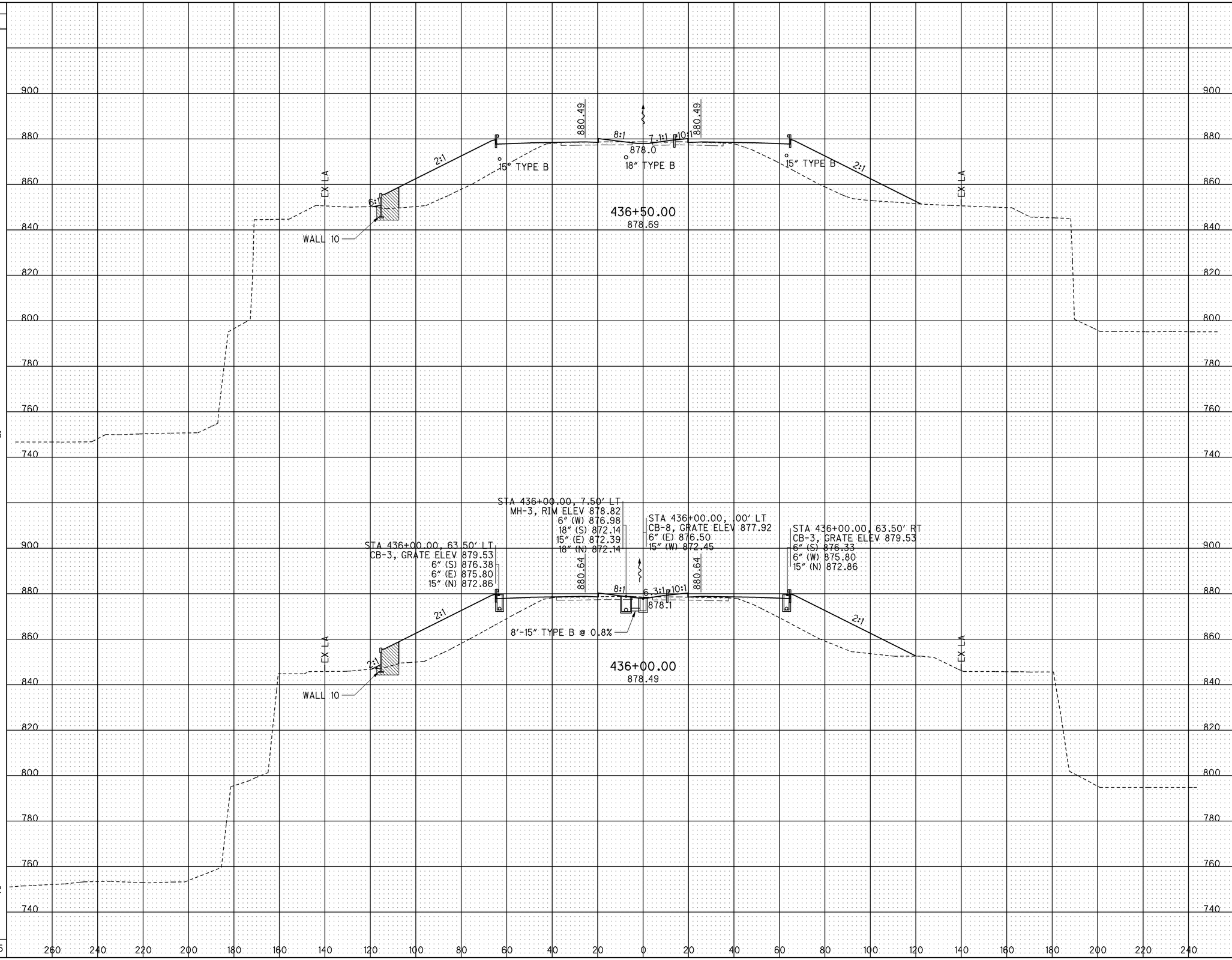

END AREA	
CUT	FILL
94	1525
99	1520

VOLUME	
CUT	FILL
179	2819
189	2871
368	5690

CALCULATED JMR
CHECKED ACF

CROSS SECTIONS - I-75
STA. 436+00.00 TO STA. 436+50.00

ALL-75.5.53

319
1224

J:\Projects\ALL\76691\roadway\sheets\76691XS1097.dgn 11-SEP-2012 8:59PM reddenj

SEEDING		END AREA		VOLUME		CALCULATED	CHECKED
END WIDTH	SQ. YDS.	CUT	FILL	CUT	FILL	JMR	ACF
174	671	88	1618	114	2054		
177	983	91	1614	172	2907		
	1654			286	4961		

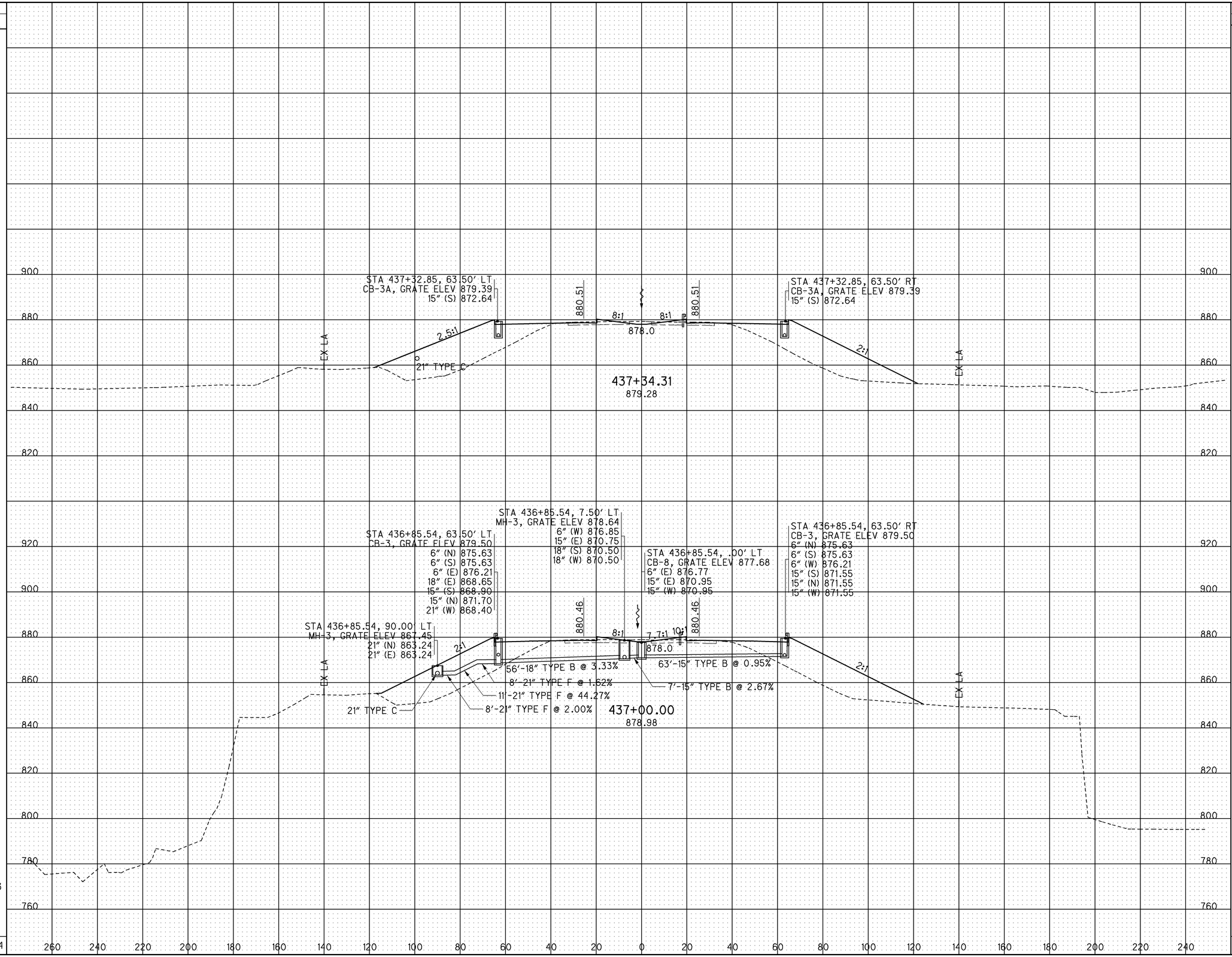

CROSS SECTIONS - I-75
STA. 437+00.00 TO STA. 437+34.31

ALL-75.5.53

320
1224

J:\Projects\ALL\76691\roadway\sheets\76691XS1098.dgn 11-SEP-2012 8:59PM redden

SEEDING END WIDTH	SEEDING SQ. YDS.	END AREA CUT	END AREA FILL	VOLUME CUT	VOLUME FILL
153		0	2065		
0		0	0		
	274			269	354
	245			357	0
0		0	0		
112		0	1827		
	485			50	1935
	1004			676	2289

CALCULATED JMR
CHECKED ACF

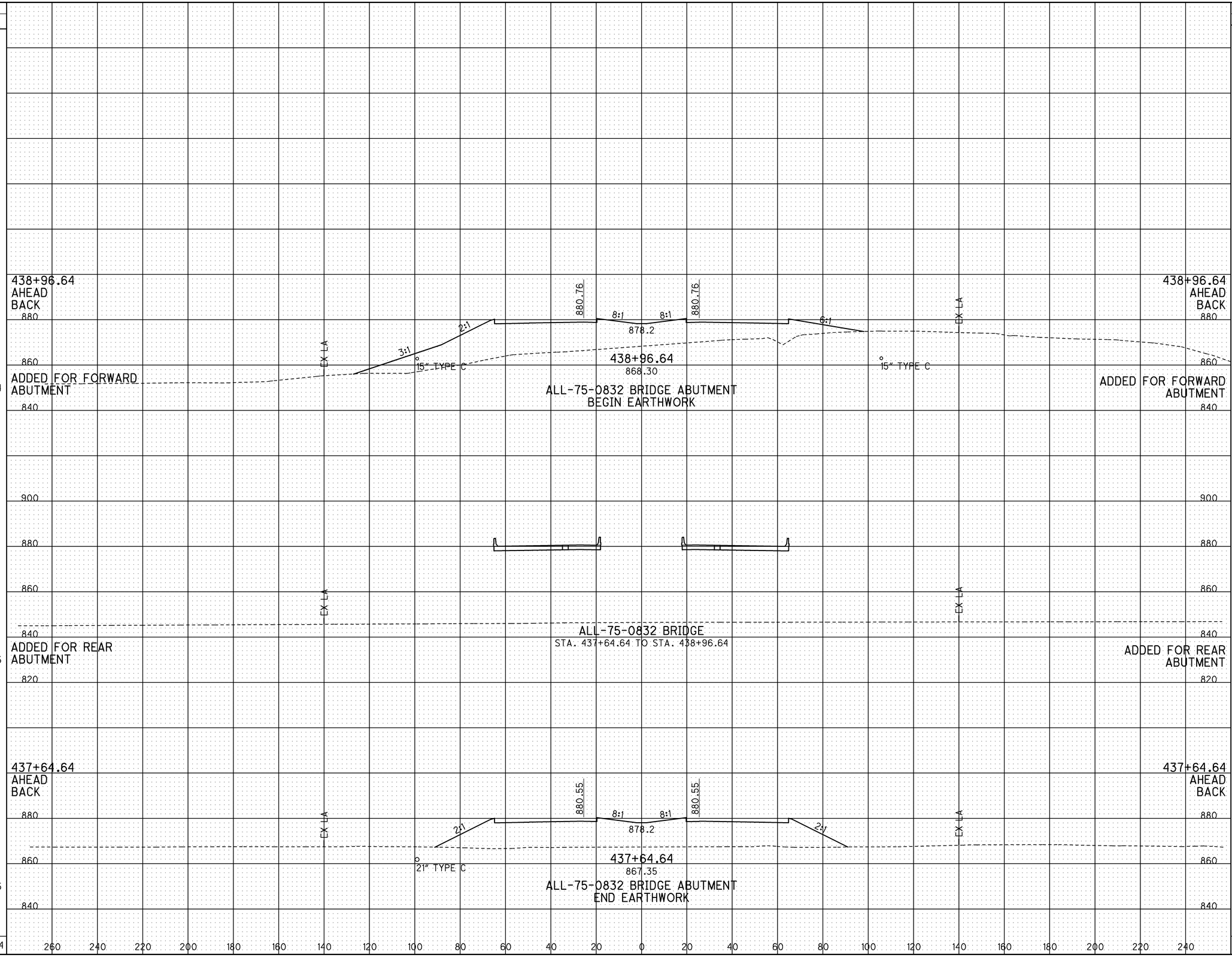

CROSS SECTIONS - I-75
STA. 437+64.64 TO STA. 438+96.64

ALL-75.5.53

321
1224

J:\Projects\ALL\76691\roadway\sheets\76691XS1099.dgn 11-SEP-2012 9:00PM reddenj

SEEDING	
END WIDTH	SQ. YDS.
147	783
135	340
130	478
	1601

END AREA	
CUT	FILL
213	155
157	225
92	418

VOLUME	
CUT	FILL
342	352
106	274
52	1394
500	2020

CALCULATED JMR
CHECKED ACF

CROSS SECTIONS - I-75
STA. 439+26.96 TO STA. 440+00.00

ALL-75.5.53

322
1224

J:\Projects\ALL\76691\roadway\sheets\76691XS1100.dgn 11-SEP-2012 9:00PM reddenj

SEEDING		END AREA		VOLUME	
END WIDTH	SQ. YDS.	CUT	FILL	CUT	FILL
155	872	279	71	515	139
158	878	277	79	505	154
158	873	268	87	482	191
155	845	253	119	431	254
	3468			1933	738

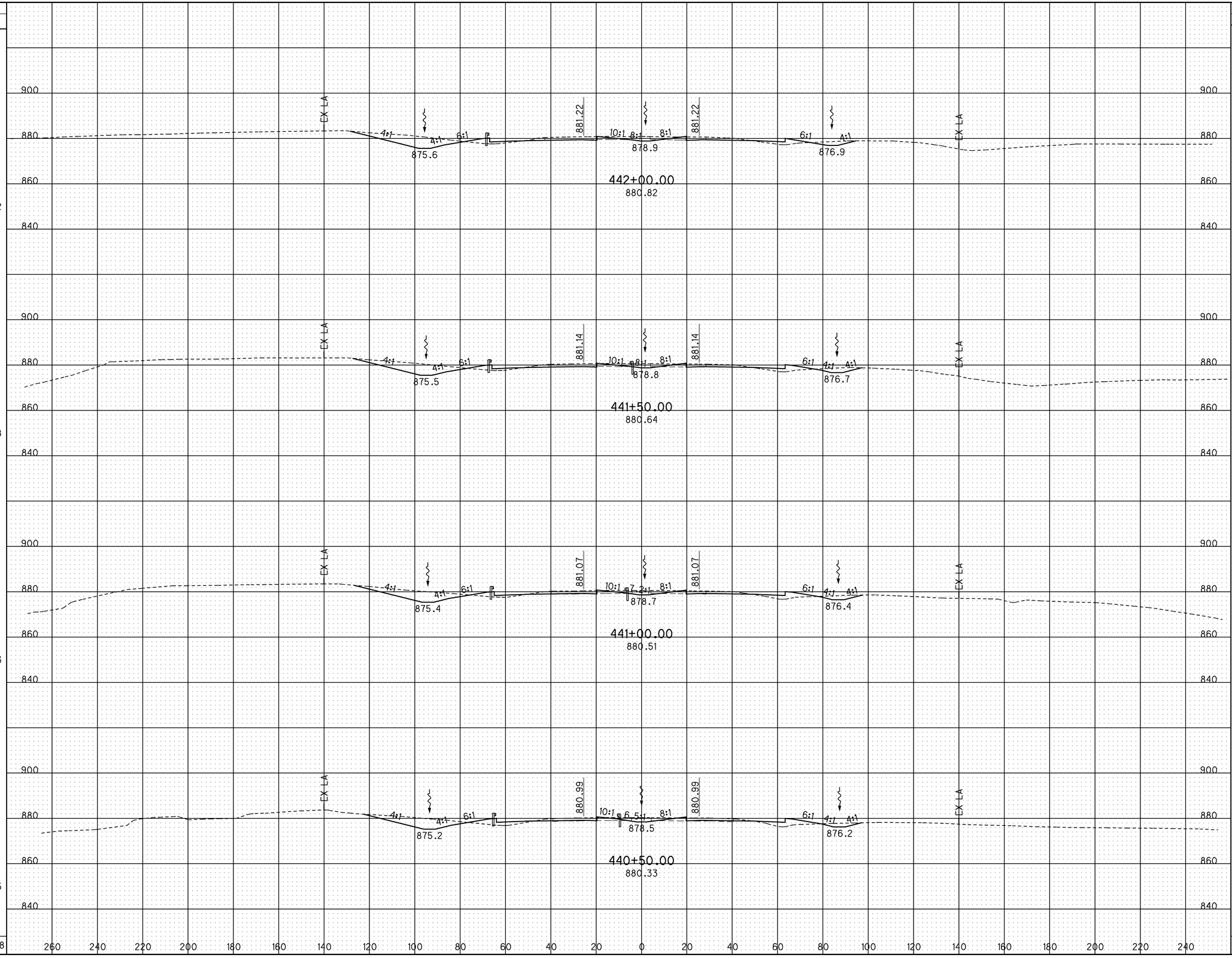

CALCULATED JMR
CHECKED ACF

CROSS SECTIONS - I-75
STA. 440+50.00 TO STA. 442+00.00

ALL-75.5.53

323
1224

J:\Projects\ALL\76691\roadway\sheets\76691XS1101.dgn 11-SEP-2012 9:00PM reddenj

SEEDING		END AREA		VOLUME	
END WIDTH	SQ. YDS.	CUT	FILL	CUT	FILL
147	827	282	46	528	87
149	839	288	48	528	96
152	855	283	56	523	108
154	861	282	61	520	123
	3382			2099	414

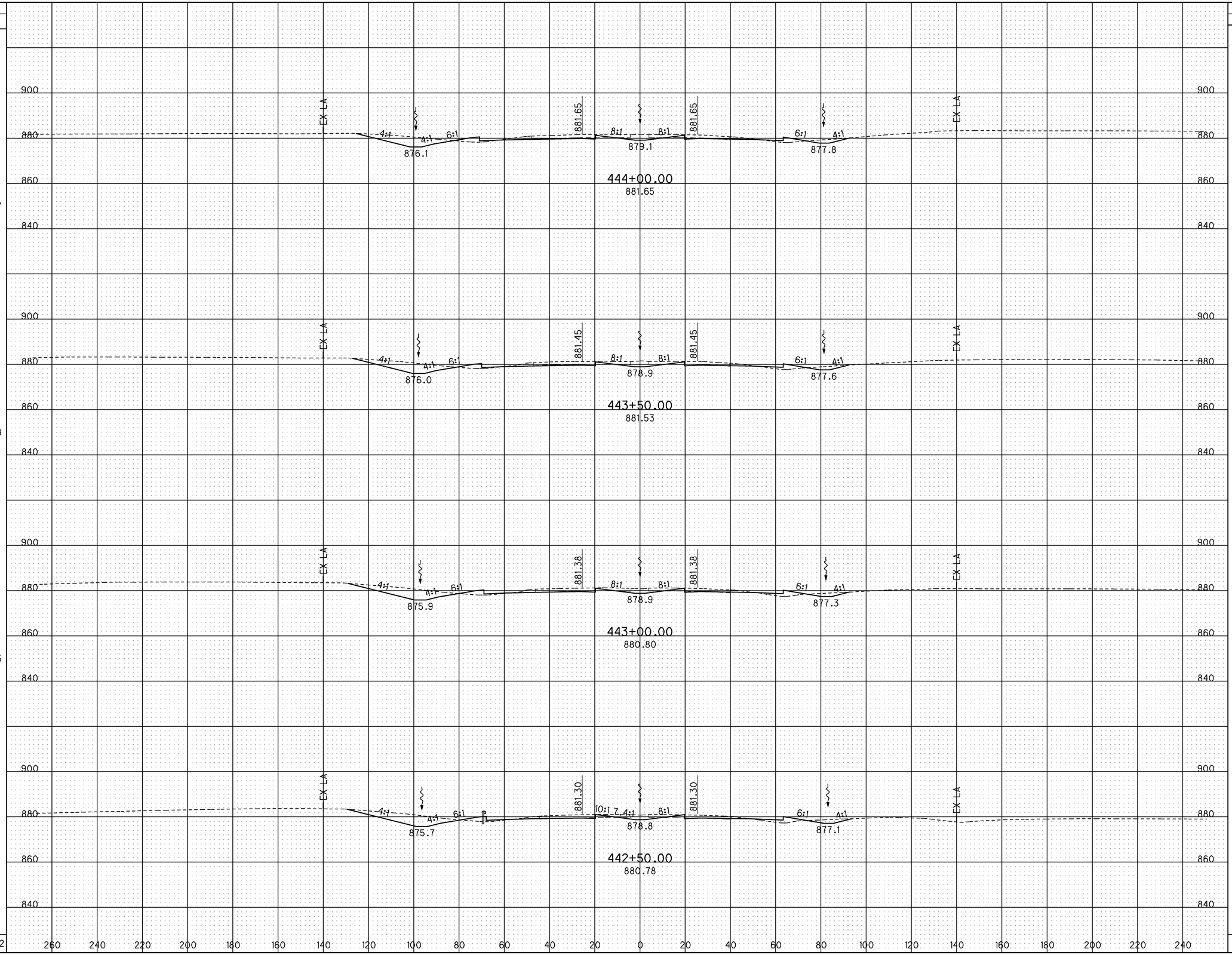

CALCULATED JMR
CHECKED ACF

CROSS SECTIONS - I-75
STA. 442+50.00 TO STA. 444+00.00

ALL-75.5.53

J:\Projects\ALL\76691\roadway\sheets\76691XS1102.dgn 11-SEP-2012 9:00PM reddenj

SEEDING		END AREA		VOLUME	
END WIDTH	SQ. YDS.	CUT	FILL	CUT	FILL
139	789	214	65	416	116
144	806	235	59	450	108
145	805	251	57	483	100
145	817	270	51	511	90
	3217			1860	414

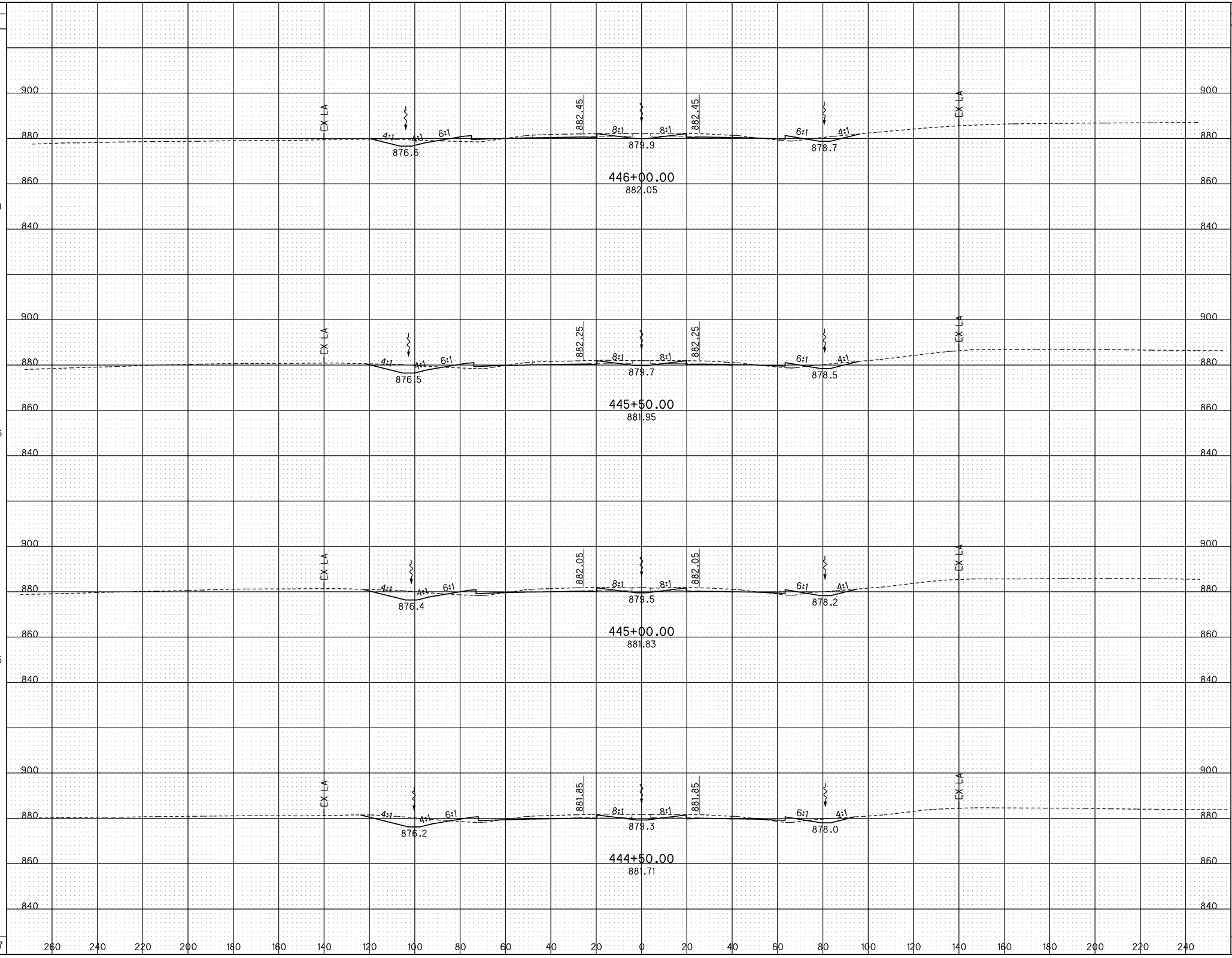

CALCULATED JMR
CHECKED ACF

CROSS SECTIONS - I-75
STA. 444+50.00 TO STA. 446+00.00

ALL-75.5.53

325
1224

J:\Projects\ALL\76691\roadway\sheets\76691XS1103.dgn 11-SEP-2012 9:00PM reddenj

SEEDING		END AREA		VOLUME	
END WIDTH	SQ. YDS.	CUT	FILL	CUT	FILL
152	833	261	81	461	154
147	794	237	86	407	152
138	772	204	79	378	140
138	772	205	72	388	127
	3171			1634	573

CALCULATED JMR
CHECKED ACF

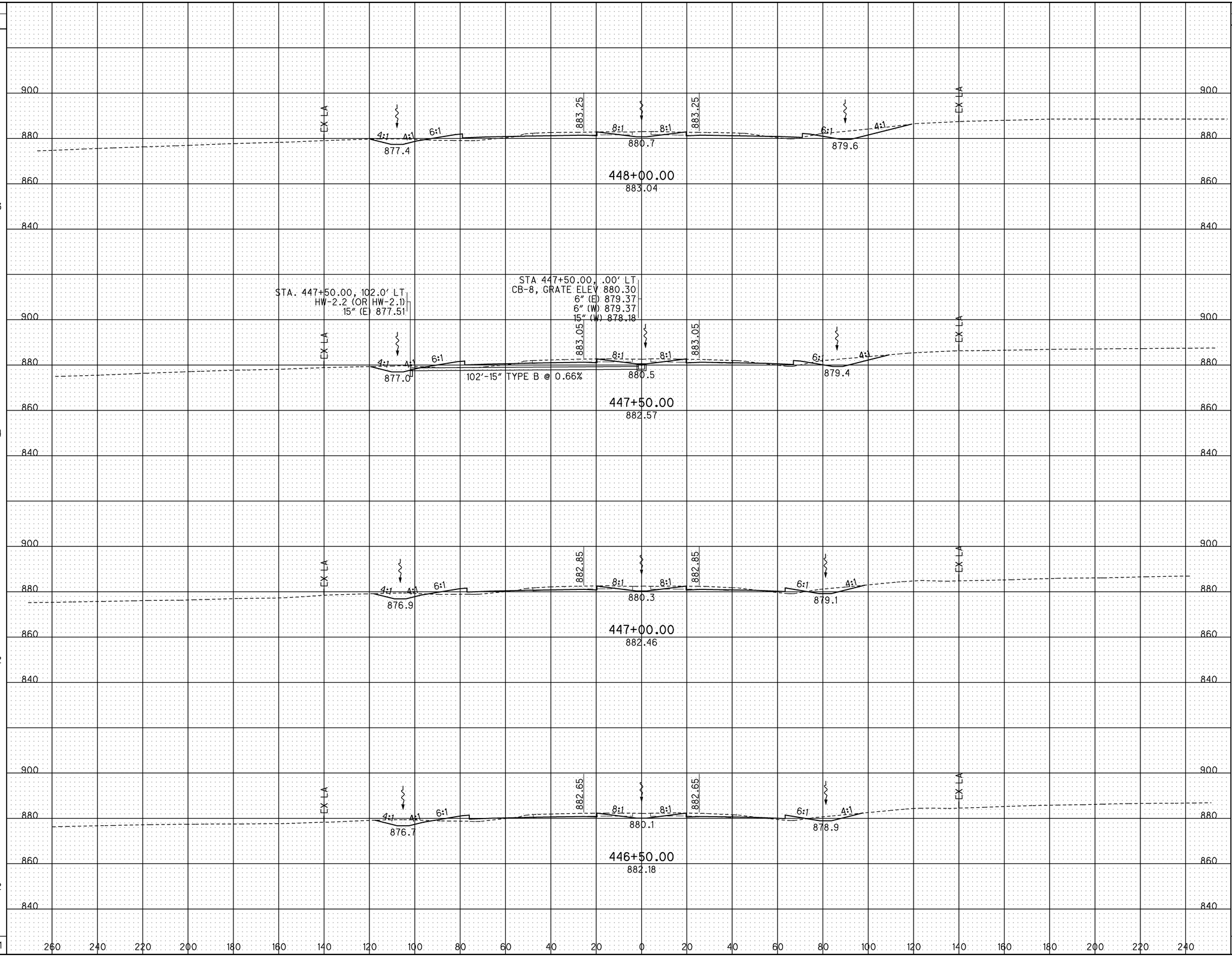

CROSS SECTIONS - I-75
STA. 446+50.00 TO STA. 448+00.00

ALL-75.5.53

J:\Projects\ALL\76691\roadway\sheets\76691XS1104.dgn 11-SEP-2012 9:00PM reddenj

SEEDING		END AREA		VOLUME	
END WIDTH	SQ. YDS.	CUT	FILL	CUT	FILL
140	806	218	87	426	165
148	834	242	92	456	168
151	844	250	90	477	159
152	845	266	81	487	150
	3329			1864	642

CALCULATED JMR
CHECKED ACF

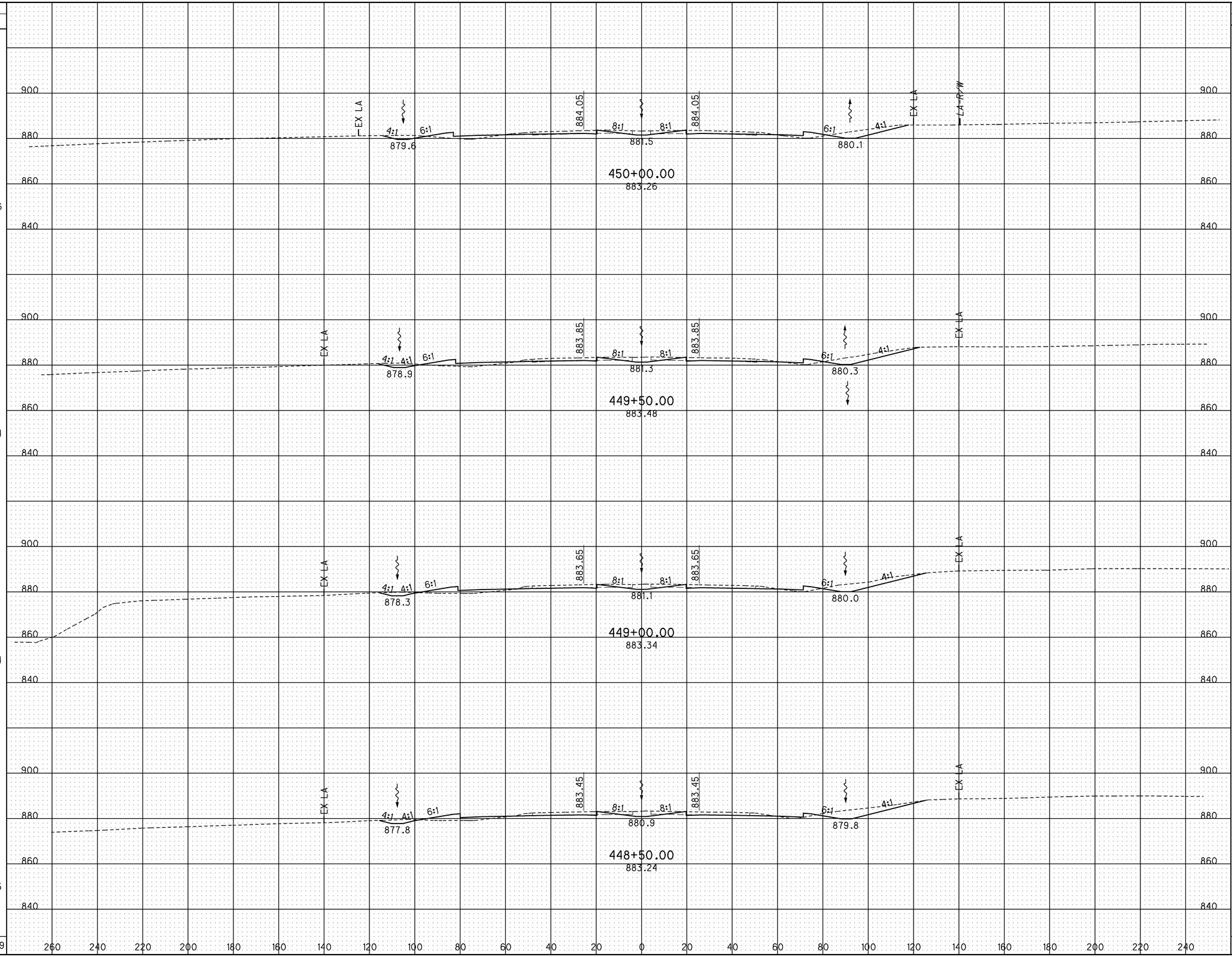

CROSS SECTIONS - I-75
STA. 448+50.00 TO STA. 450+00.00

ALL-75.5.53

J:\Projects\ALL\76691\roadway\sheets\76691XS1105.dgn 11-SEP-2012 9:00PM reddenj

SEEDING	
END WIDTH	SQ. YDS.
173	922
158	845
145	789
138	777
	3333

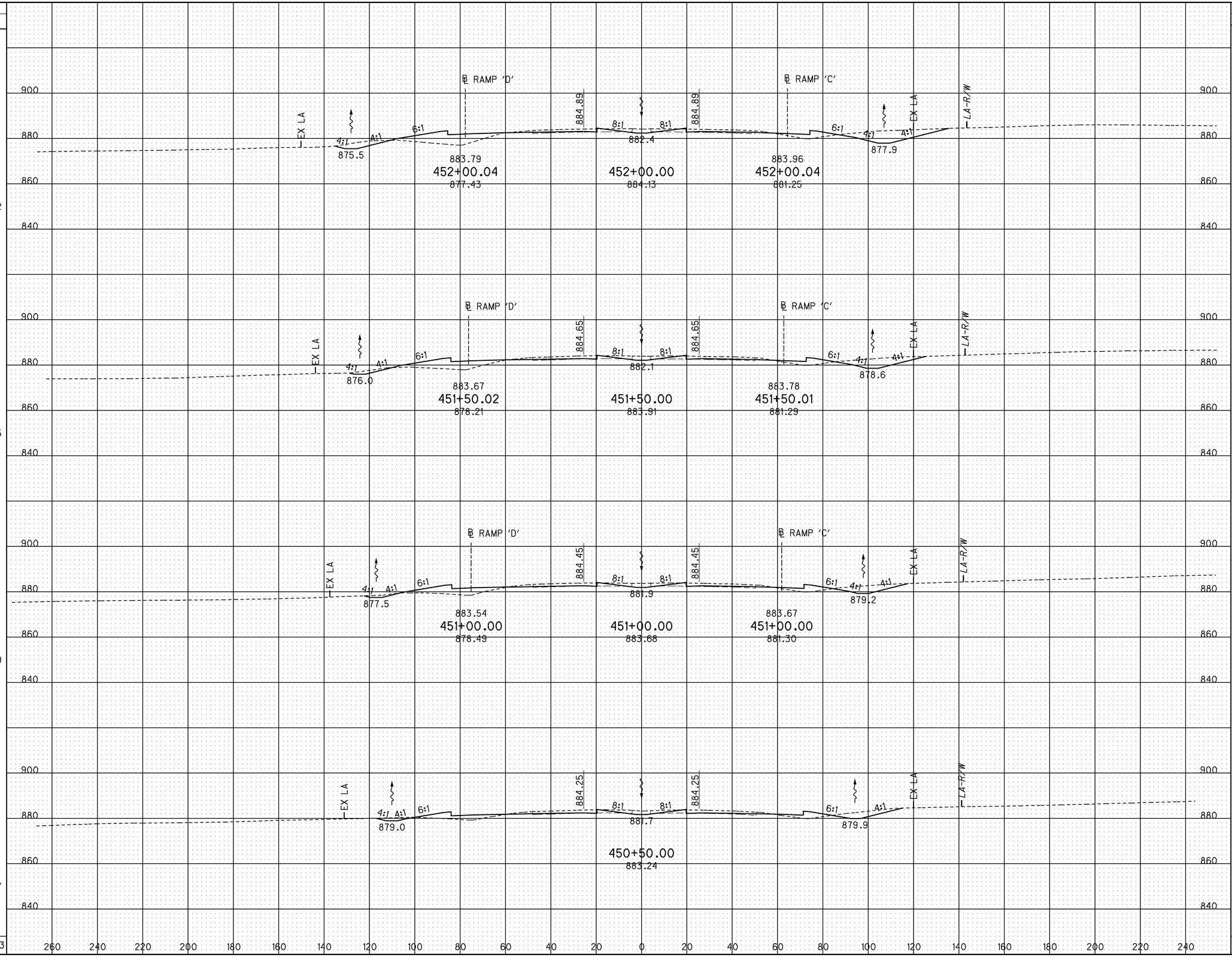

END AREA	
CUT	FILL
324	242
253	202
201	157
191	118

VOLUME	
CUT	FILL
535	411
421	332
363	254
379	190
1698	1187

CALCULATED JMR
CHECKED ACF

CROSS SECTIONS - I-75
STA. 450+50.00 TO STA. 452+00.00

ALL-75.5.53

328
1224

J:\Projects\ALL\76691\roadway\sheets\76691XS1106.dgn 11-SEP-2012 9:00PM reddenj

SEEDING END WIDTH	SEEDING SQ. YDS.	END AREA CUT	END AREA FILL	VOLUME CUT	VOLUME FILL
131		218	381		
203	1122	376	680	761	1065
201	1106	446	470	815	766
195	1067	434	357	759	600
187	1005	386	291	657	493
	4300			2992	2924

CALCULATED JMR
CHECKED ACF

- EMBANKMENT FOR PAVEMENT REMOVED

SEE RAMP 'D' CROSS SECTIONS

℄ RAMP 'C'

454+00.00 AHEAD BACK

EX LA — 4:1 — 884.7 — 887.06 — 8:1 — 8:1 — 884.5 — 887.06 — 4.5:1 — EX LA — 4:1 — 3:1 — LA-R/W — 875.2

454+00.00 885.54

454+00.49 885.89 878.20

℄ RAMP 'D'

℄ RAMP 'C'

EX LA — 2:1 — 3:1 — 4.5:1 — 872.3 — 884.59 — 886.33 — 8:1 — 8:1 — 883.8 — 886.33 — 5:1 — EX LA — 4:1 — 3:1 — LA-R/W — 875.9

453+50.24 875.16

453+50.00 885.13

453+50.31 885.22 879.81

℄ RAMP 'D'

℄ RAMP 'C'

EX LA — 3:1 — 3:1 — 5:1 — 874.5 — 884.40 — 885.73 — 8:1 — 8:1 — 883.2 — 885.73 — 5.5:1 — EX LA — 4:1 — 3:1 — LA-R/W — 876.5

453+00.13 876.67

453+00.00 884.43

453+00.18 884.68 880.55

℄ RAMP 'D'

℄ RAMP 'C'

EX LA — 4:1 — 4:1 — 6:1 — 875.0 — 884.04 — 885.25 — 8:1 — 8:1 — 882.7 — 885.25 — 6:1 — EX LA — 4:1 — 3:1 — LA-R/W — 877.2

452+50.07 877.21

452+50.00 884.23

452+50.09 884.26 880.87

900 / 880 / 860 / 840

260 240 220 200 180 160 140 120 100 80 60 40 20 0 20 40 60 80 100 120 140 160 180 200 220 240

J:\Projects\ALL\76691\roadway\sheets\76691XS1107.dgn 11-SEP-2012 9:00PM reddenj

CROSS SECTIONS - I-75
STA. 452+50.00 TO STA. 454+00.00

ALL-75.5.53

329
1224

SEEDING		END AREA		VOLUME		CALCULATED	CHECKED
END WIDTH	SQ. YDS.	CUT	FILL	CUT	FILL	JMR	ACF
89		157	394				
153		185	892				
	689			293	1414		
132		179	862				
	728			325	1332		
129		172	576				
	728			361	886		
	2145			979	3632		

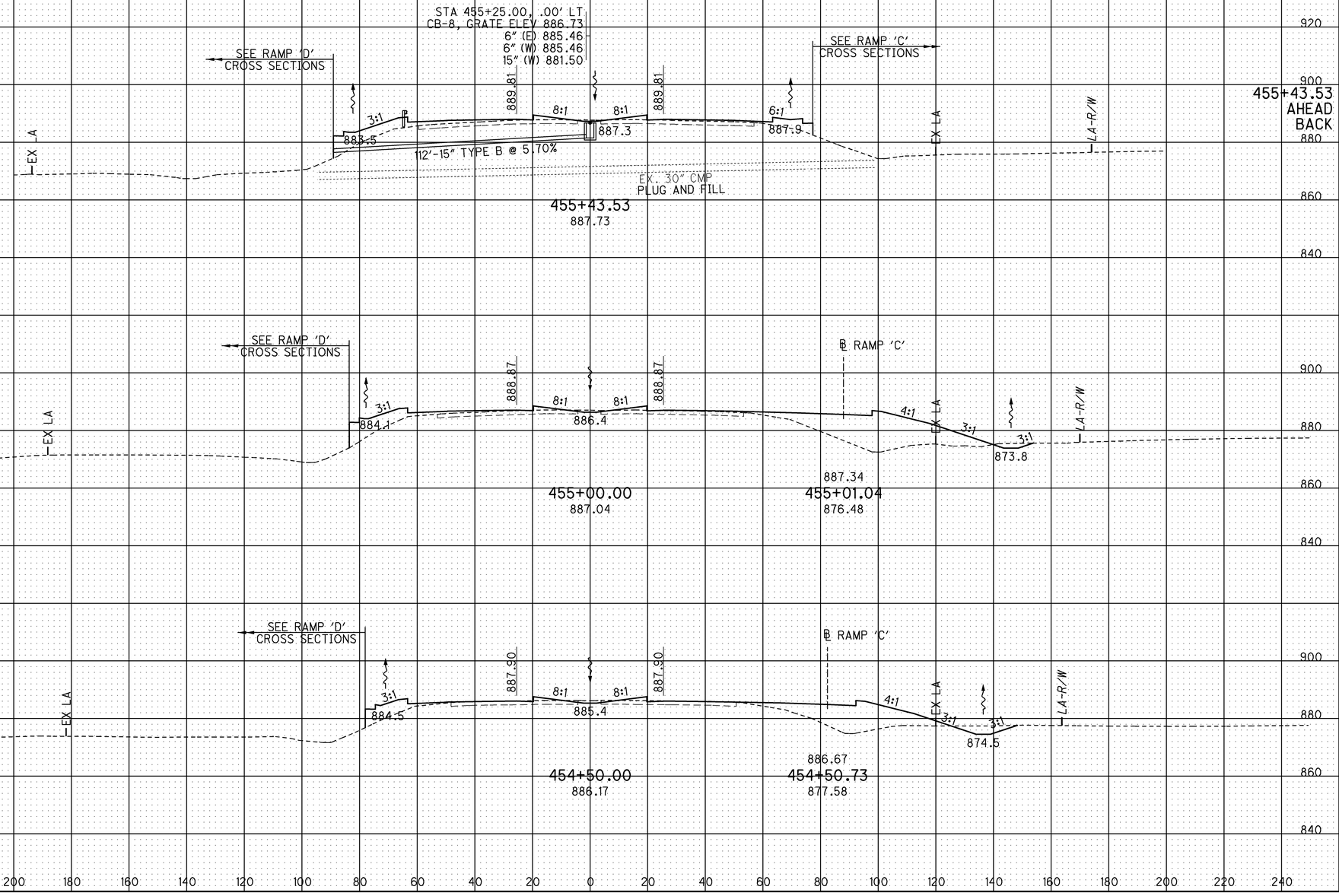

CROSS SECTIONS - I-75
STA. 454+50.00 TO STA. 455+43.53

ALL-75.5.53

330
1224

J:\Projects\ALL\76691\roadway\sheets\76691XS1108.dgn 11-SEP-2012 9:00PM reddenj

SEEDING END WIDTH	SEEDING SQ. YDS.
145	755
125	650
107	550
91	65
	2020

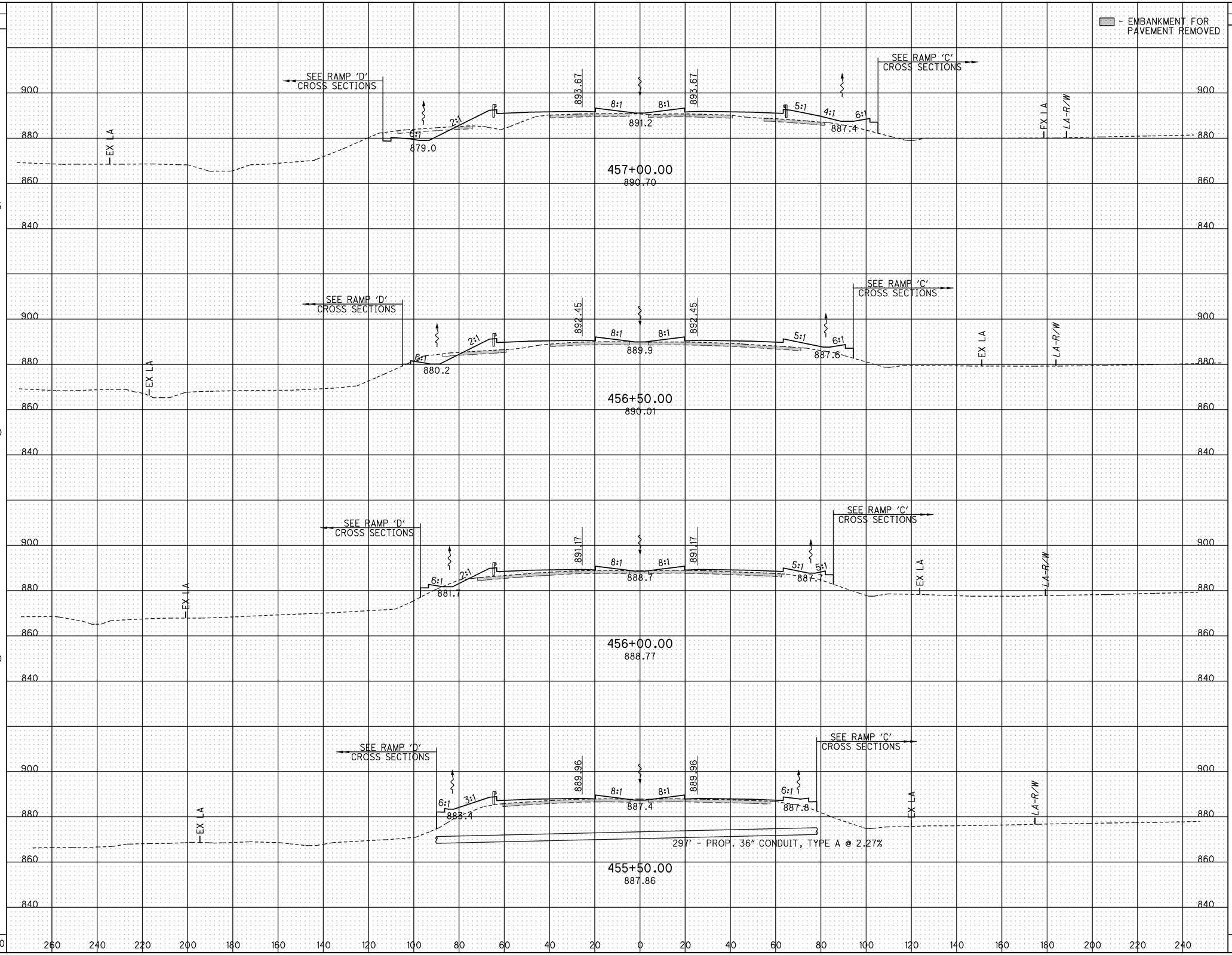

END AREA CUT	END AREA FILL	VOLUME CUT	VOLUME FILL
250	597	453	1008
239	492	400	834
193	409	326	747
159	398	38	95
		1217	2684

CALCULATED JMR
CHECKED ACF

CROSS SECTIONS - I-75
STA. 455+50.00 TO STA. 457+00.00

ALL-75.5.53

331
1224

J:\Projects\ALL\76691\roadway\sheets\76691XS1109.dgn 11-SEP-2012 9:00PM reddenj

SEEDING END WIDTH	SEEDING SQ. YDS.
260	1356
227	1177
196	1016
168	872
	4421

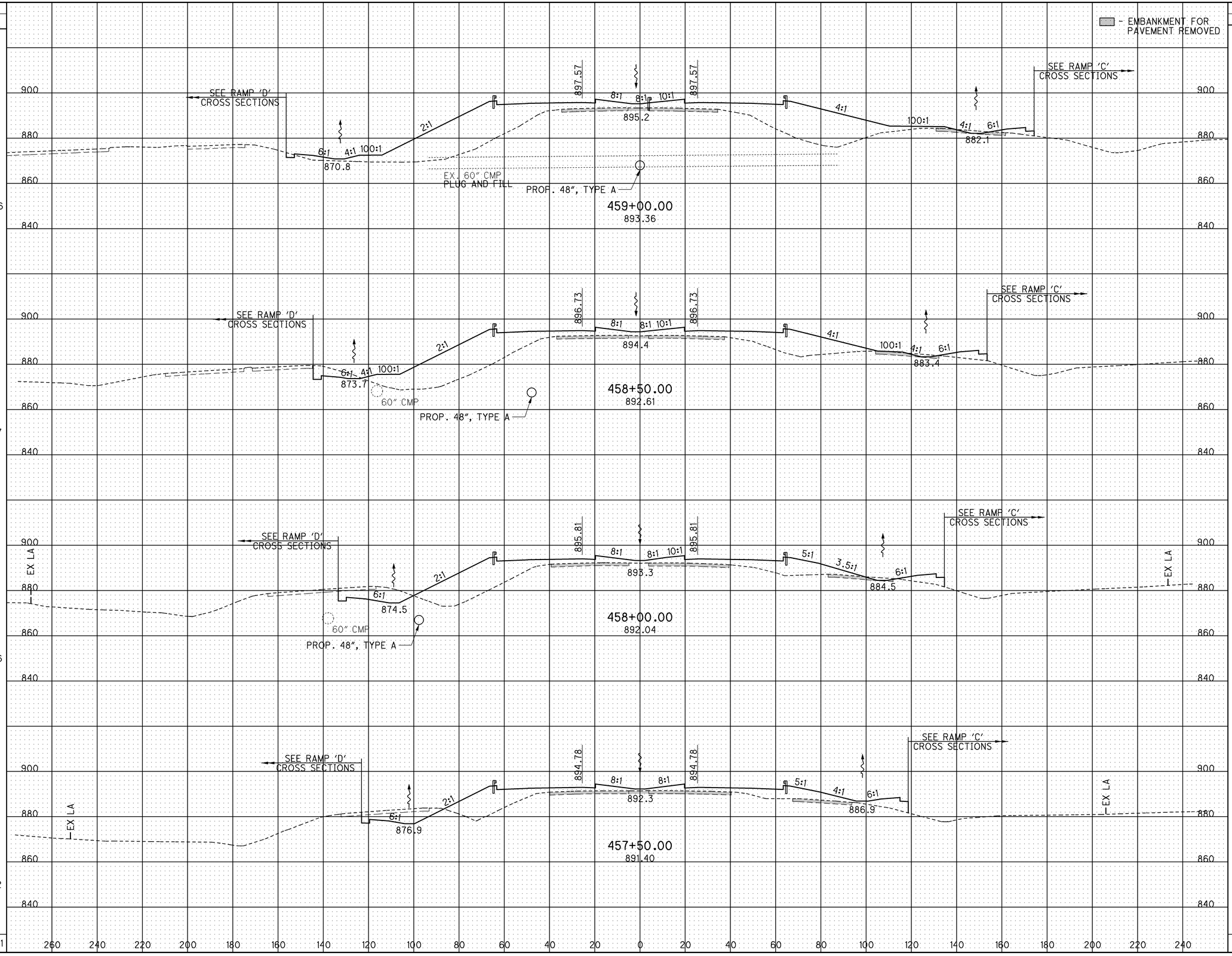

END AREA CUT	END AREA FILL	VOLUME CUT	VOLUME FILL
139	2097	319	3407
205	1583	467	2509
300	1127	566	1842
311	862	519	1351
		1871	9109

CALCULATED JMR
CHECKED ACF

CROSS SECTIONS - I-75
STA. 457+50.00 TO STA. 459+00.00

ALL-75.5.53

332
1224

J:\Projects\ALL\76691\roadway\sheets\76691XS1110.dgn 11-SEP-2012 9:00PM reddenj

SEEDING	
END WIDTH	SQ. YDS.
268	1678
334	1756
296	1544
	4978

- EMBANKMENT FOR PAVEMENT REMOVED

STA 460+50.00, 63.50' LT
CB-3A, GRATE ELEV 898.55
6" (N) 895.35
6" (E) 894.68
15" (E) 891.65

STA 460+50.00, 63.50' RT
CB-3A, GRATE ELEV 898.49
6" (N) 895.25
6" (W) 894.68
15" (W) 890.75
15" (E) 890.75

STA 460+50.00, 125.69' RT
HW-2.2 (OR HW-2.1)
15" (W) 871.40

SEE RAMP 'D' CROSS SECTIONS

SEE RAMP 'C' CROSS SECTIONS

899.51 — 8:1 — 7.3:1 — 10:1 — 899.51

897.0

126'-15" TYPE B @ 0.71%

10'-15" TYPE F @ 7.87%

38'-15" TYPE F @ 50.00%

16'-15" TYPE F @ 5.75%

2:1 — 4:1 — 4:1 — 100:1 — 2:1 — 100:1 — 2:1

885.2

54" RCP

68' - PROP. 21" CONDUIT, TYPE A, STA.460+47.99
SEE CULVERT C55 PLAN & PROFILE SHEET FOR DETAILS

460+50.00
876.40

898.96 — 8:1 — 7.1:1 — 10:1 — 898.96

896.5

SEE RAMP 'D' CROSS SECTIONS

SEE RAMP 'C' CROSS SECTIONS

2:1 — 4:1 — 4:1 — 100:1 — 2:1 — 100:1 — 6:1 — 4.2:1

868.1

870.8

397' - PROP. 48" CONDUIT, TYPE A, STA. 458+98.72
SEE CULVERT C54 PLAN & PROFILE SHEET FOR DETAILS

460+00.00
885.98

898.31 — 8:1 — 8:1 — 10:1 — 898.31

895.9

SEE RAMP 'D' CROSS SECTIONS

SEE RAMP 'C' CROSS SECTIONS

2:1 — 6:1 — 4:1 — 100:1 — 3:1 — 100:1 — 6:1 — 6:1

869.1

879.4

TIME WARNER COAX

459+50.00
893.75

(4) 2" FIBER CONDUITS

2" GAS IN 4" ENCASING
PROP. 48", TYPE A

260 240 220 200 180 160 140 120 100 80 60 40 20 0 20 40 60 80 100 120 140 160 180 200 220 240

END AREA		VOLUME	
CUT	FILL	CUT	FILL
555	3819		
		955	6386
476	3078		
		649	5109
225	2440		
		337	4201
		1941	15696

CALCULATED JMR
CHECKED ACF

CROSS SECTIONS - I-75
STA. 459+50.00 TO STA. 460+50.00

ALL-75.5.53

333
1224

J:\Projects\ALL\76691\roadway\sheets\76691XS1111.dgn 11-SEP-2012 9:00PM reddenj

SEEDING	
END WIDTH	SQ. YDS.
	806
	0
	213
	1339
	2145

END AREA	
CUT	FILL

VOLUME	
CUT	FILL
216	2458
0	0
118	4046
624	7283
840	9741

CALCULATED JMR
CHECKED ACF

STA 461+99.43, 115.14' RT
EX. CB, GRATE ELEV 875.85'
4" PVC W 872.73
12" (N) 871.86
12" (S) 871.86
(TO BE REMOVED)

STA 461+78.01, 116.05' RT
EX. CB, GRATE ELEV 874.38'
12" (N) 871.78
12" (SE) 871.49
(TO BE REMOVED)

STA 462+41.04, 112.81' RT
EX. CB, GRATE ELEV 877.75'
12" (S) 872.31
(TO BE REMOVED)

ALL-75-0875 BRIDGE
STA. 461+46.00 TO STA. 462+75.41

ADD FOR SEEDING BETWEEN
STA. 461+00.00 AND STA. 461+46.00
(ABUTMENT)

ADD FOR EARTHWORK BETWEEN
STA. 461+00.00 AND STA. 461+46.00
(ABUTMENT)

461+00.00
AHEAD
BACK

461+32.00
876.73

461+00.00
875.98
END EARTHWORK

900.21
8:1
897.69
2:1
100:1
SEE RAMP 'C'
CROSS SECTIONS

899.97
8:1
7.8:1
10:1
897.5
3:1
54" RCP
868.6
8" W
APPROX. DEPTH 4.5'

940
920
900
880
860
840
260 240 220 200 180 160 140 120 100 80 60 40 20 0 20 40 60 80 100 120 140 160 180 200 220 240

CROSS SECTIONS - I-75
STA. 461+00.00 TO STA. 462+00.00

ALL-75.5.53

334
1224

J:\Projects\ALL\76691\roadway\sheets\76691XS1112.dgn 11-SEP-2012 9:00PM redden

SEEDING END WIDTH	SEEDING SQ. YDS.
273	1428
239 0	
	778
	2206

- EMBANKMENT FOR PAVEMENT REMOVED

SEE RAMP 'F' CROSS SECTIONS

900.84 10:1 7:1 8:1 900.84

898.3

2:1 100:1

463+50.00
894.19

SEE RAMP 'B' CROSS SECTIONS

2:1 100:1

463+00.00 AHEAD BACK

SEE RAMP 'F' CROSS SECTIONS

900.85 10:1 7.8:1 8:1 900.85

898.3

2:1 100:1

SEE S.R. 81 CROSS SECTIONS

EMBARQ CONDUIT

463+00.00
894.34
BEGIN EARTHWORK

463+00.00 AHEAD BACK

ADD FOR SEEDING BETWEEN STA. 462+75.41 (ABUTMENT) AND STA. 463+00.00

SEE RAMP 'F' CROSS SECTIONS

900.85 8:1 8:1 900.85

898.33

2:1 2:1 100:1

462+89.41
890.04

ADD FOR EARTHWORK BETWEEN STA. 462+75.41 (ABUTMENT) AND STA. 463+00.00

940 920 900 880 860 840

260 240 220 200 180 160 140 120 100 80 60 40 20 0 20 40 60 80 100 120 140 160 180 200 220 240

END AREA CUT	END AREA FILL	VOLUME CUT	VOLUME FILL
1150	1579	1910	3250
913 0	1930 0	272	-32
		2182	3218

CALCULATED JMR
CHECKED ACF

CROSS SECTIONS - I-75
STA. 462+89.41 TO STA. 463+50.00

ALL-75.5.53

335
1224

J:\Projects\ALL\76691\roadway\sheets\76691XS1113.dgn 11-SEP-2012 9:00PM redden

SEEDING	
END WIDTH	SQ. YDS.
347	
	1847
318	
291	
	1573
	3240

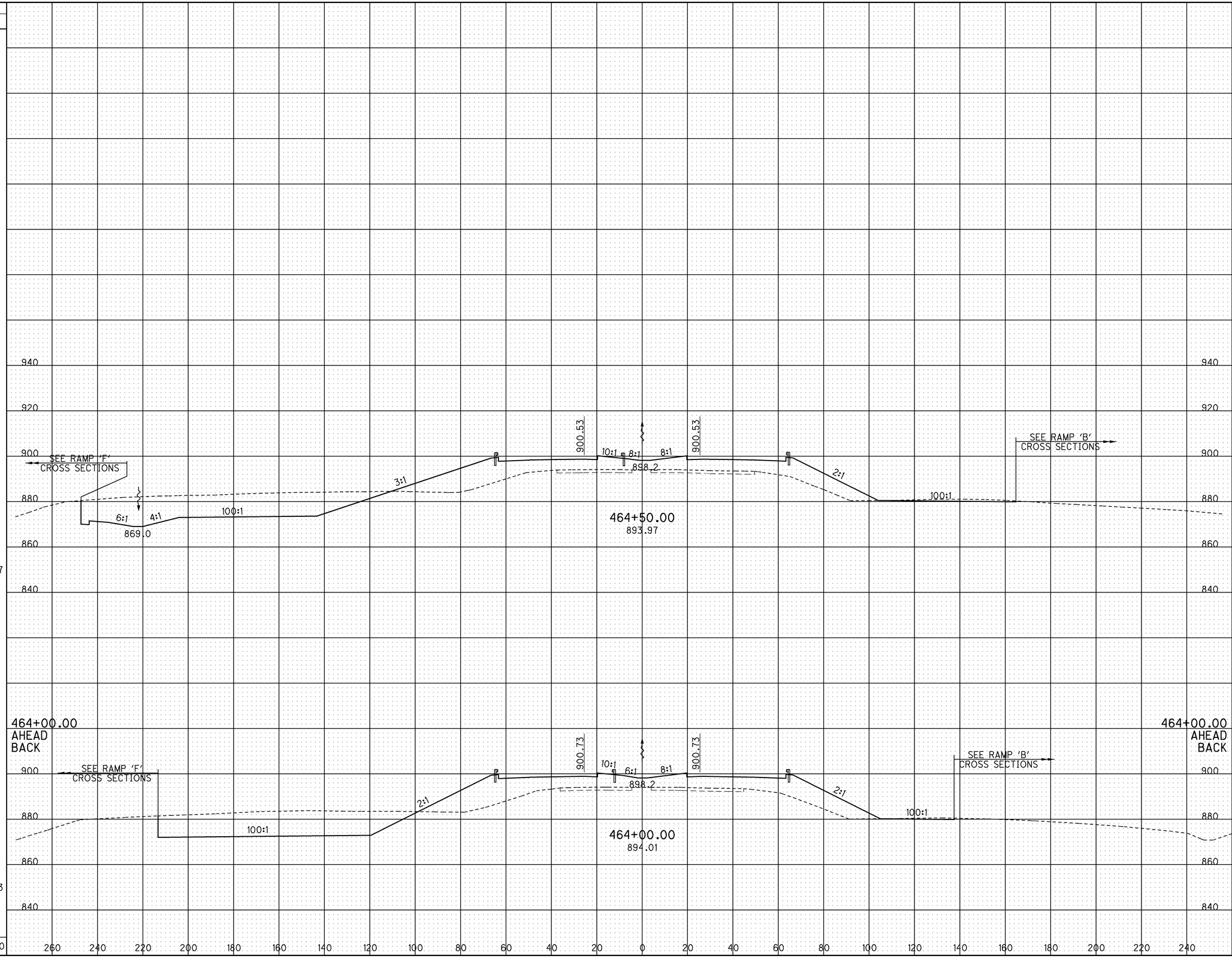

END AREA		VOLUME	
CUT	FILL	CUT	FILL
1424	1384		
			-
2760	2590		
1557	1414		
1215	1414		
2190	2771		
4950	5361		

CALCULATED JMR
CHECKED ACF

CROSS SECTIONS - I-75
STA. 464+00.00 TO STA. 464+50.00

ALL-75.5.53

336
1224

J:\Projects\ALL\76691\roadway\sheets\76691XS1114.dgn 11-SEP-2012 9:00PM reddenj

SEEDING	
END WIDTH	SQ. YDS.
345	2011
378	2189
409	2106
	6306

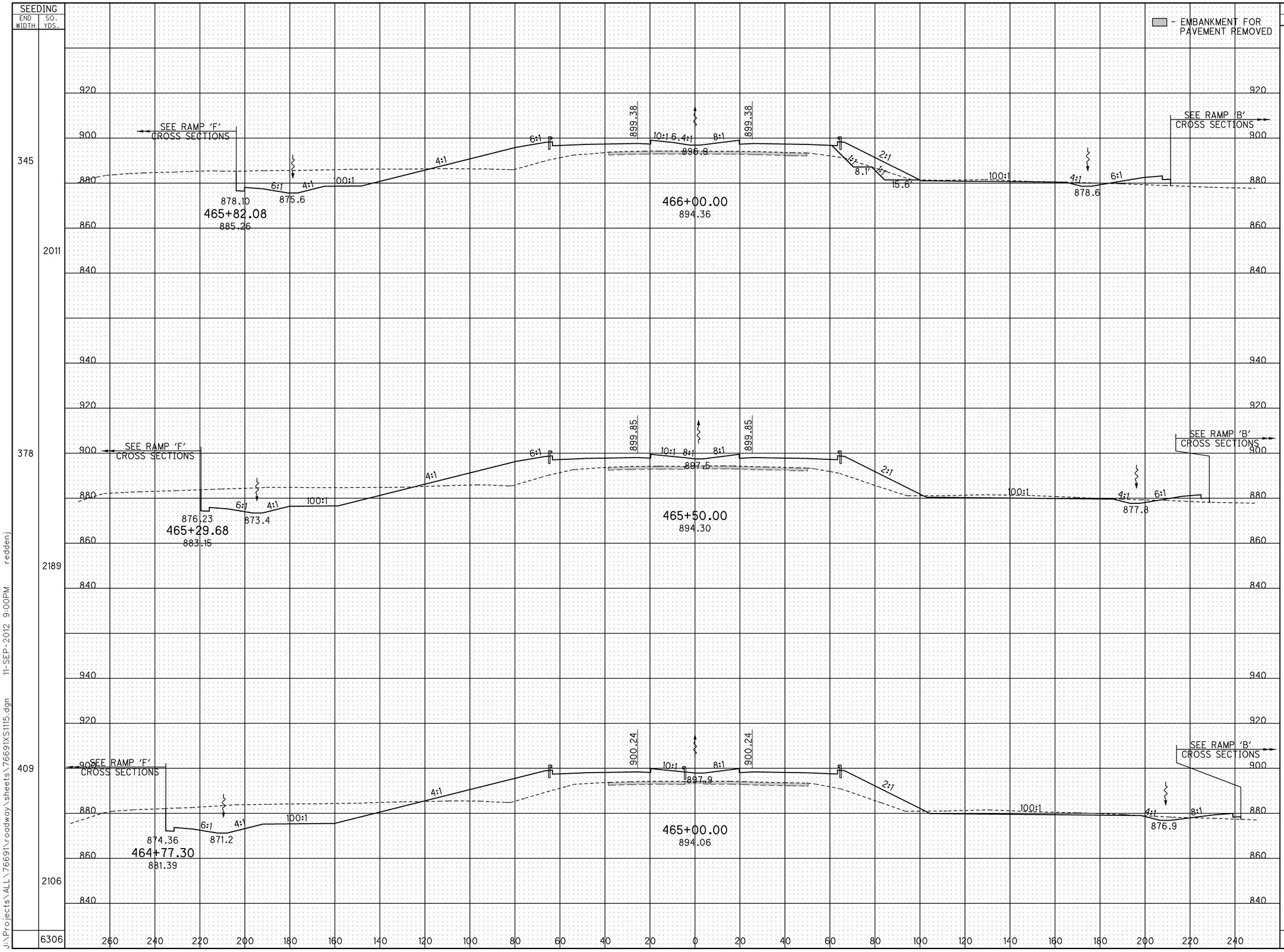

END AREA	
CUT	FILL
785	1219
901	1298
1140	1351

VOLUME	
CUT	FILL
1560	2331
1889	2453
2374	2532
5823	7316

CALCULATED JMR
CHECKED ACF

CROSS SECTIONS - I-75
STA. 465+00.00 TO STA. 466+00.00

ALL-75.5.53

337
1224

J:\Projects\ALL\76691\roadway\sheets\76691XS1115.dgn 11-SEP-2012 9:00PM reddenj

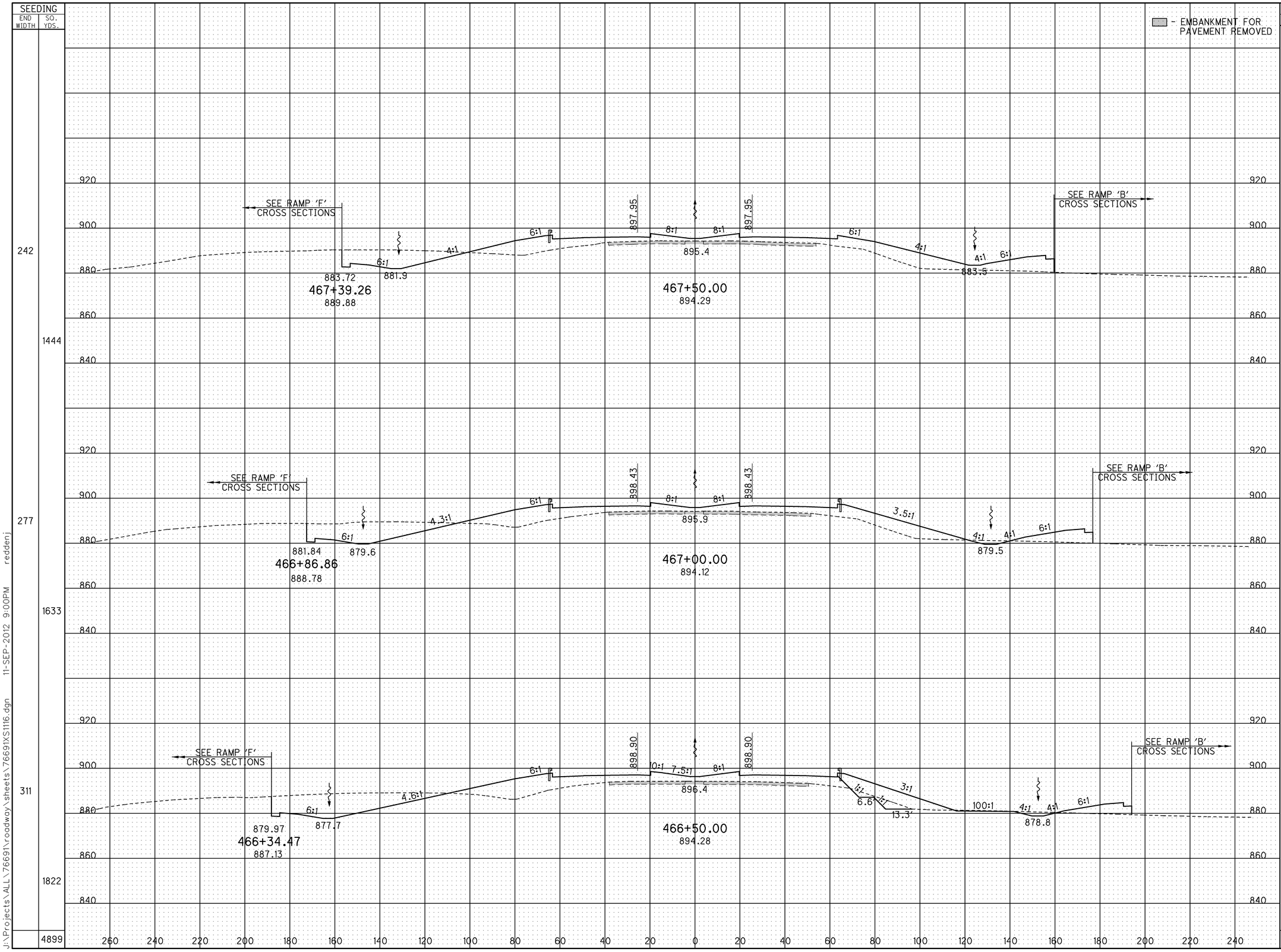

SEEDING END WIDTH	SEEDING SQ. YDS.	END AREA CUT	END AREA FILL	VOLUME CUT	VOLUME FILL
242	1444	438	1100	922	2045
277	1633	558	1108	1200	2146
311	1822	738	1210	1410	2249
	4899			3532	6440

CALCULATED JMR
CHECKED ACF

CROSS SECTIONS - I-75
STA. 466+50.00 TO STA. 467+50.00

ALL-75.5.53

338
1224

J:\Projects\ALL\76691\roadway\sheets\76691XS1116.dgn 11-SEP-2012 9:00PM reddenj

SEEDING		END AREA		VOLUME	
END WIDTH	SQ. YDS.	CUT	FILL	CUT	FILL
152	923	143	640	327	1297
179	1078	210	761	502	1564
209	1255	332	928	713	1878
	3256			1542	4739

CALCULATED JMR
CHECKED ACF

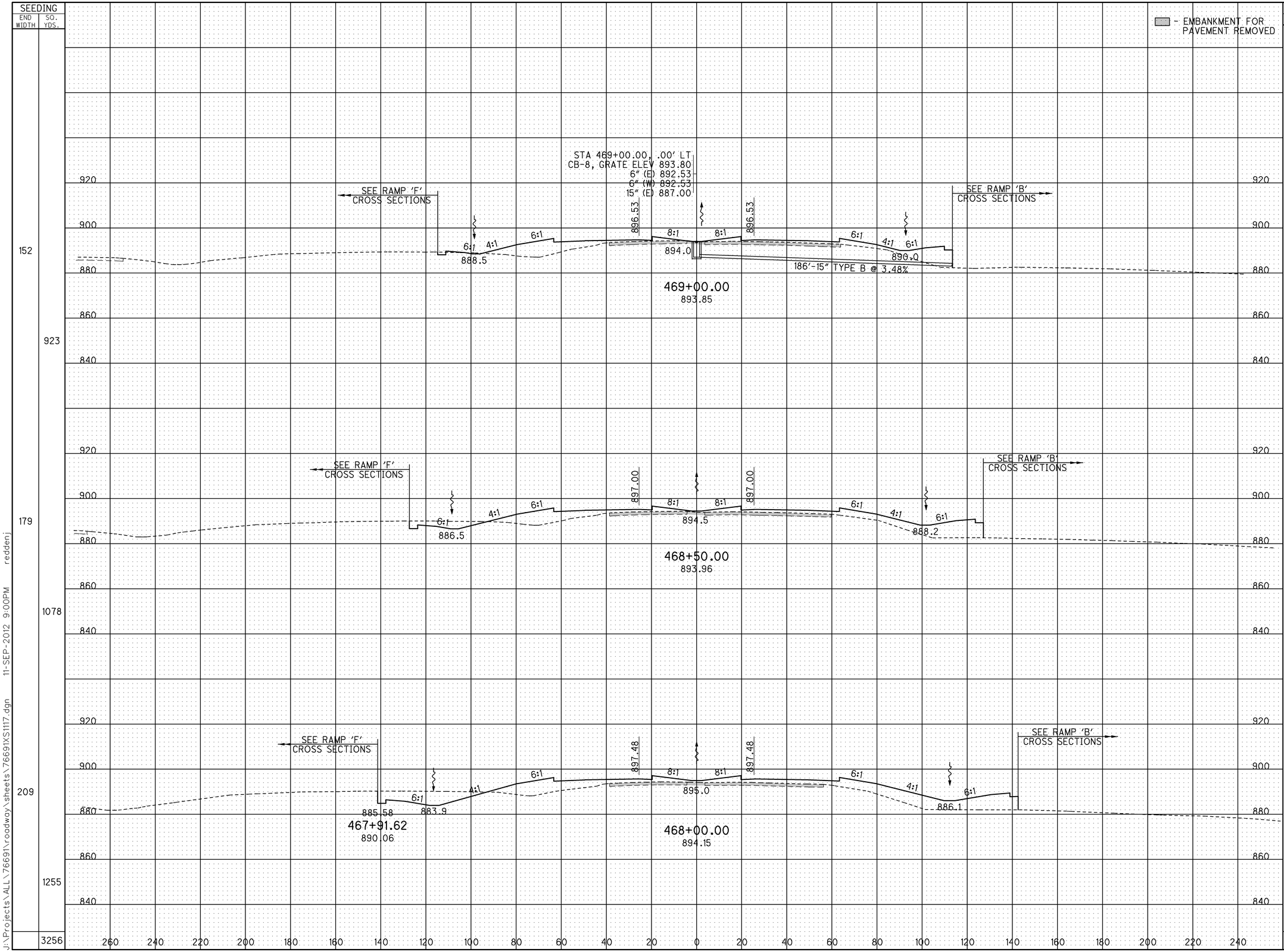

J:\Projects\ALL\76691\roadway\sheets\76691XS1117.dgn 11-SEP-2012 9:00PM redden

CROSS SECTIONS - I-75
STA. 468+00.00 TO STA. 469+00.00

ALL-75.5.53

339
1224

SEEDING		END AREA		VOLUME	
END WIDTH	SQ. YDS.	CUT	FILL	CUT	FILL
90	556	138	348	265	728
108	661	149	439	272	930
128	777	145	566	266	1117
	1994			803	2775

CALCULATED JMR
CHECKED ACF

- EMBANKMENT FOR PAVEMENT REMOVED

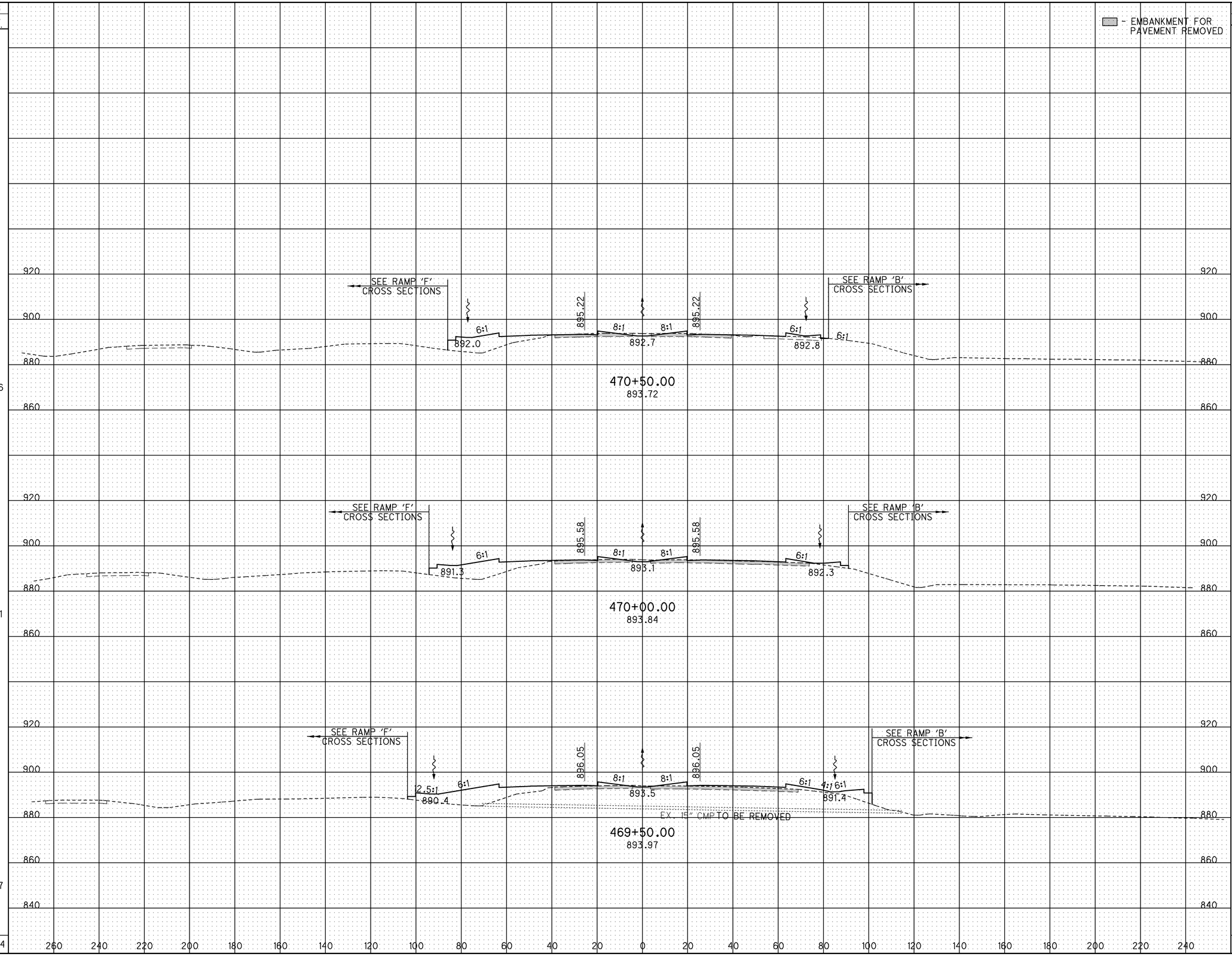

CROSS SECTIONS - I-75
STA. 469+50.00 TO STA. 470+50.00

ALL-75.5.53

340
1224

J:\Projects\ALL\76691\roadway\sheets\76691XS1118.dgn 11-SEP-2012 9:00PM reddenj

SEEDING END WIDTH	SEEDING SQ. YDS.
262	1444
258	1250
192	667
110	
130	466
76	
	3827

- EMBANKMENT FOR PAVEMENT REMOVED

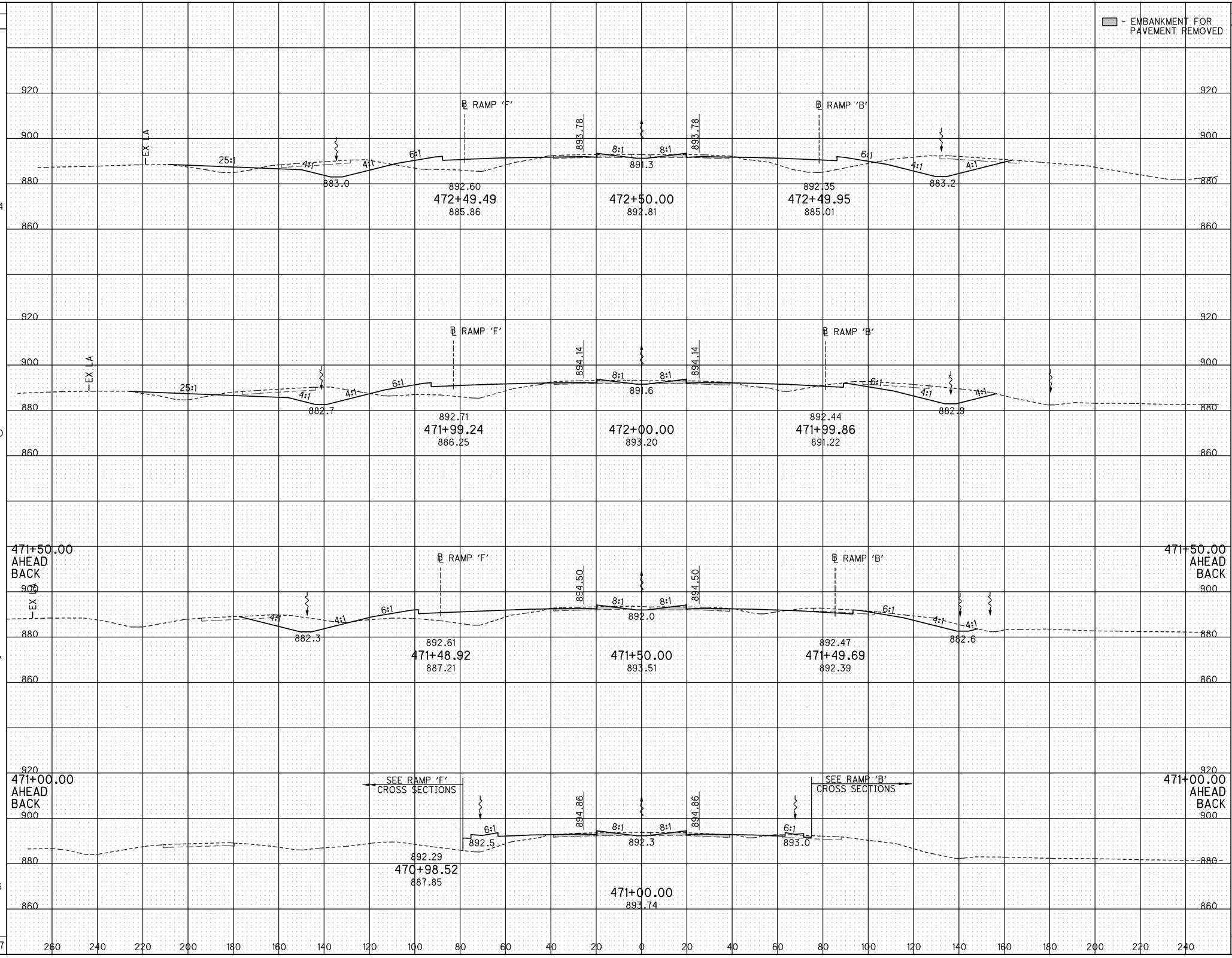

END AREA CUT	END AREA FILL	VOLUME CUT	VOLUME FILL
644	544		
641	445	1190	916
425	424		
249	257	987	805
145	351		
137	270	365	563
255	572		
2797	2856		

CALCULATED JMR
CHECKED ACF

CROSS SECTIONS - I-75
STA. 471+00.00 TO STA. 472+50.00

ALL-75.5.53

341
1224

J:\Projects\ALL\76691\roadway\sheets\76691XS1119.dgn 11-SEP-2012 9:00PM reddenj

SEEDING END WIDTH	SEEDING SQ. YDS.	END AREA CUT	END AREA FILL	VOLUME CUT	VOLUME FILL
199	1127	301	251	555	557
206	1167	298	350	580	724
214	1272	328	431	625	939
243	1403	347	583	918	1044
	4969			2678	3264

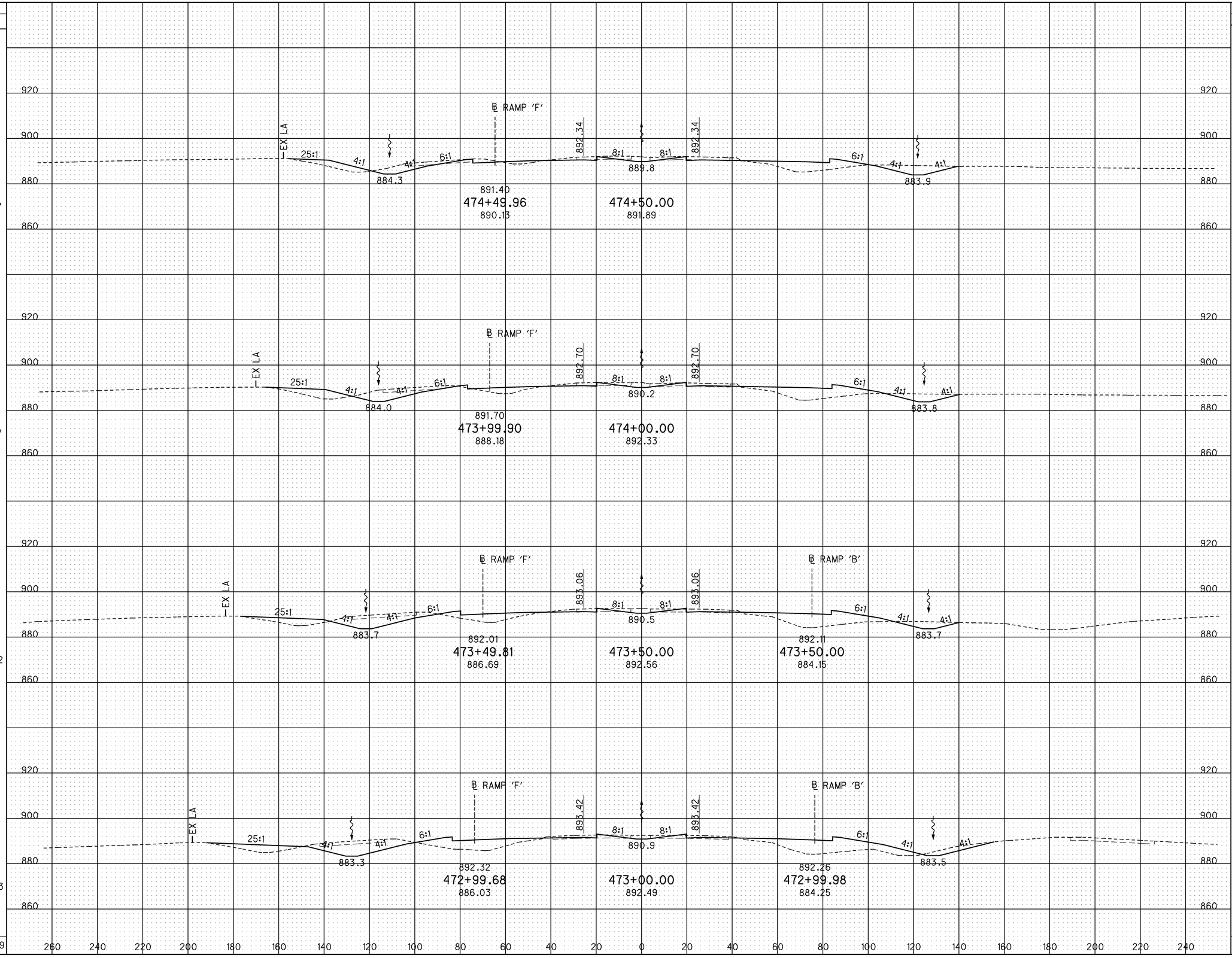

CALCULATED JMR
CHECKED ACF

CROSS SECTIONS - I-75
STA. 473+00.00 TO STA. 474+50.00

ALL-75.5.53

342
1224

J:\Projects\ALL\76691\roadway\sheets\76691XS1120.dgn 11-SEP-2012 9:00PM reddenj

SEEDING END WIDTH	SEEDING SQ. YDS.
172	950
169	950
173	1016
191	1083
	3999

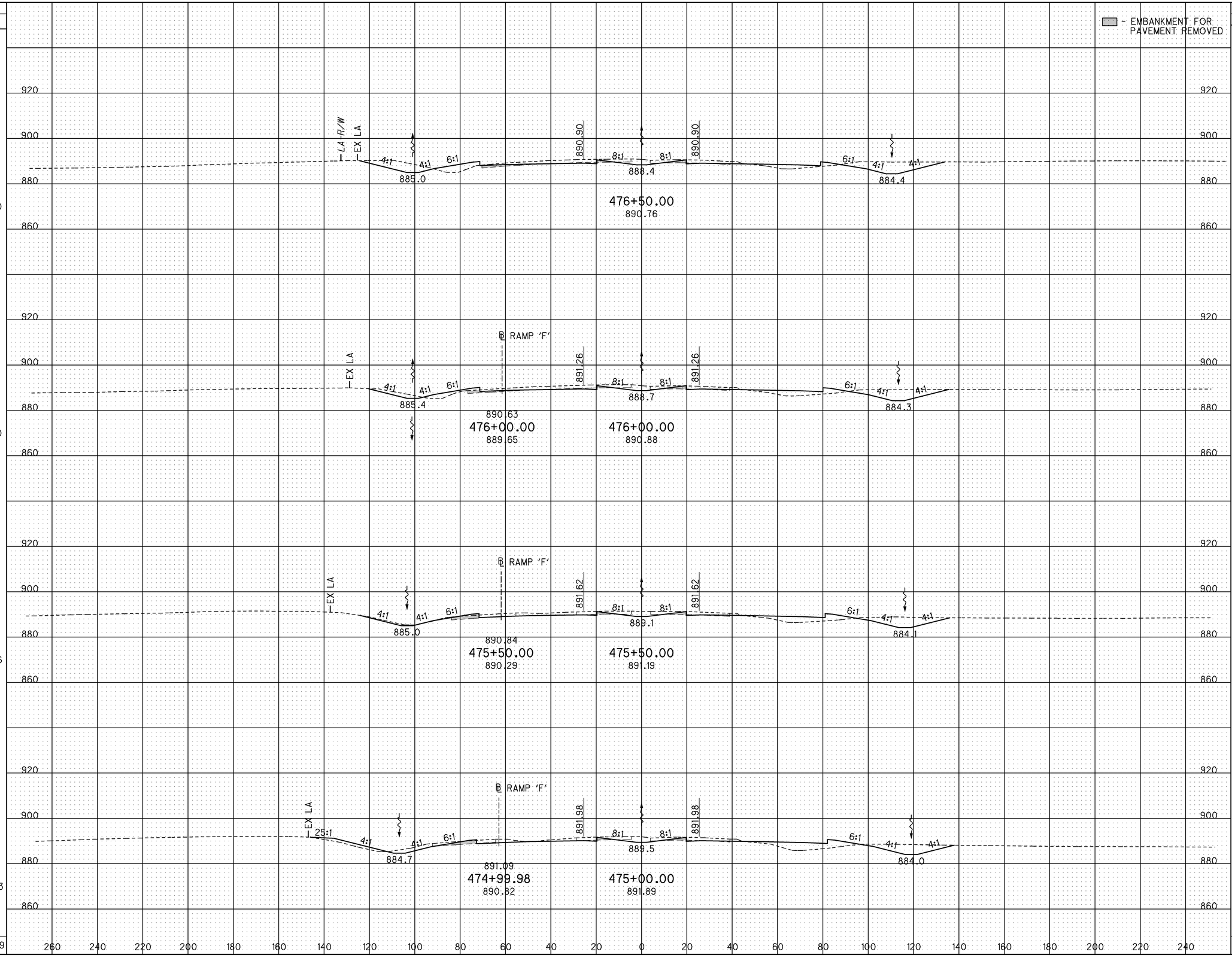

END AREA CUT	END AREA FILL	VOLUME CUT	VOLUME FILL
386	124	652	235
318	129	566	233
293	123	548	272
300	172	556	391
		2322	1131

CALCULATED JMR
CHECKED ACF

CROSS SECTIONS - I-75
STA. 475+00.00 TO STA. 476+50.00

ALL-75.5.53

343
1224

J:\Projects\ALL\76691\roadway\sheets\76691XS1121.dgn 11-SEP-2012 9:00PM reddenj

SEEDING END WIDTH	SEEDING SQ. YDS.	END AREA CUT	END AREA FILL	VOLUME CUT	VOLUME FILL
144	855	278	138	591	256
163	933	361	138	726	238
173	973	423	119	792	219
176	967	432	117	757	224
	3728			2866	937

- EMBANKMENT FOR PAVEMENT REMOVED

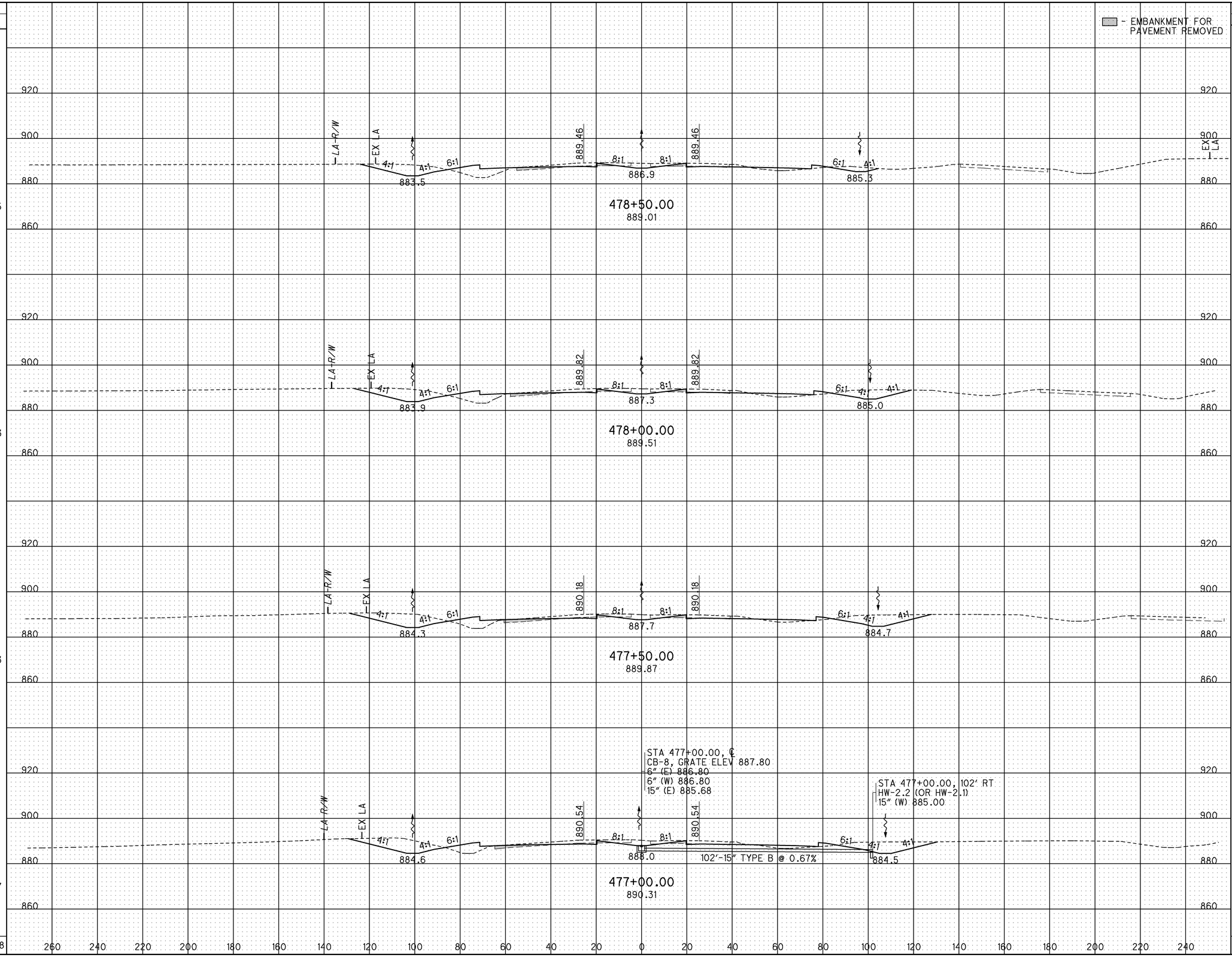

CALCULATED JMR
CHECKED ACF

CROSS SECTIONS - I-75
STA. 477+00.00 TO STA. 478+50.00

ALL-75.5.53

344
1224

J:\Projects\ALL\76691\roadway\sheets\76691XS1122.dgn 11-SEP-2012 9:00PM reddenj

SEEDING END WIDTH	SEEDING SQ. YDS.	END AREA CUT	END AREA FILL	VOLUME CUT	VOLUME FILL
139	733	223	176	424	278
123	772	235	125	448	253
154	945	249	148	481	336
186	923	271	215	508	327
	3373			1861	1194

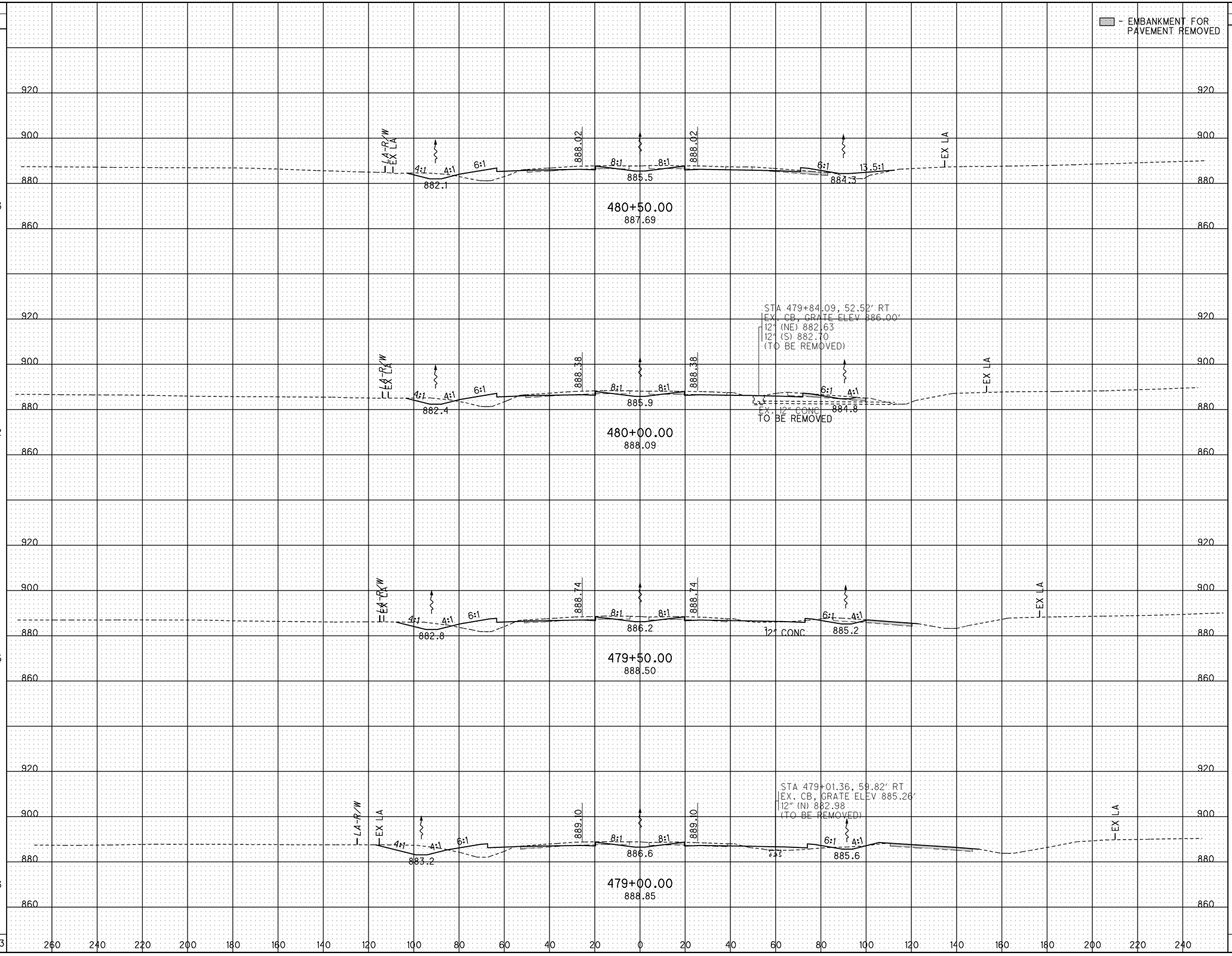

J:\Projects\ALL\76691\roadway\sheets\76691XS1123.dgn 11-SEP-2012 9:01PM reddenj

CALCULATED JMR

CHECKED ACF

CROSS SECTIONS - I-75
STA. 479+00.00 TO STA. 480+50.00

ALL-75.5.53

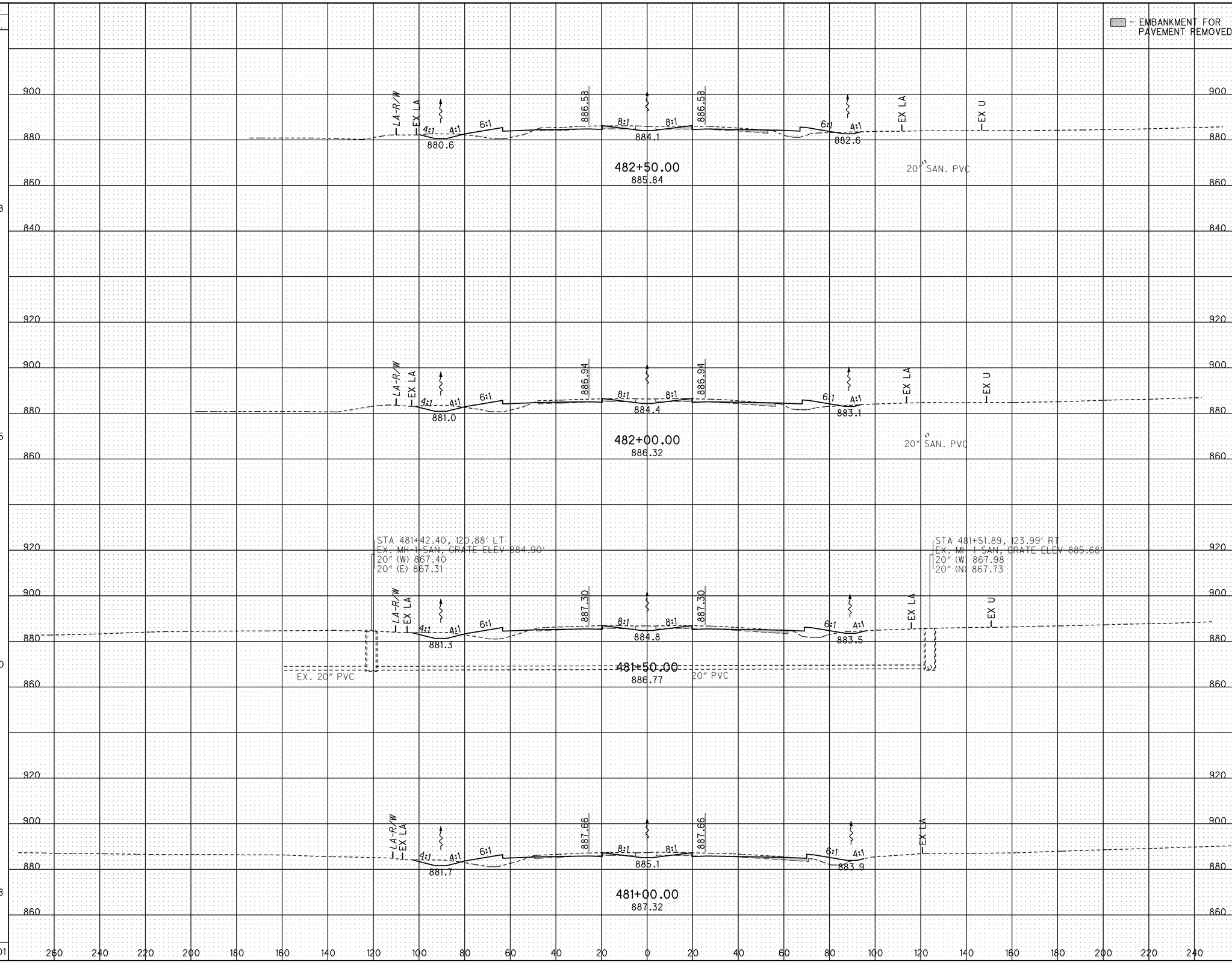

SEEDING END WIDTH	SEEDING SQ. YDS.	END AREA CUT	END AREA FILL	VOLUME CUT	VOLUME FILL
122		171	179		
	678			328	338
122		184	186		
	695			354	331
127		199	172		
	700			375	319
123		207	173		
	728			398	323
	2801			1455	1311

CALCULATED JMR
CHECKED ACF

CROSS SECTIONS - I-75
STA. 481+00.00 TO STA. 482+50.00

ALL-75.5.53

J:\Projects\ALL\76691\roadway\sheets\76691XS1124.dgn 11-SEP-2012 9:01PM reddenj

SEEDING			END AREA		VOLUME	
END WIDTH	SQ. YDS.		CUT	FILL	CUT	FILL
133	728	484+50.00	219	109	402	210
128	706	484+00.00	215	118	380	226
126	694	483+50.00	196	126	343	257
124	683	483+00.00	175	152	320	307
	2811				1445	1000

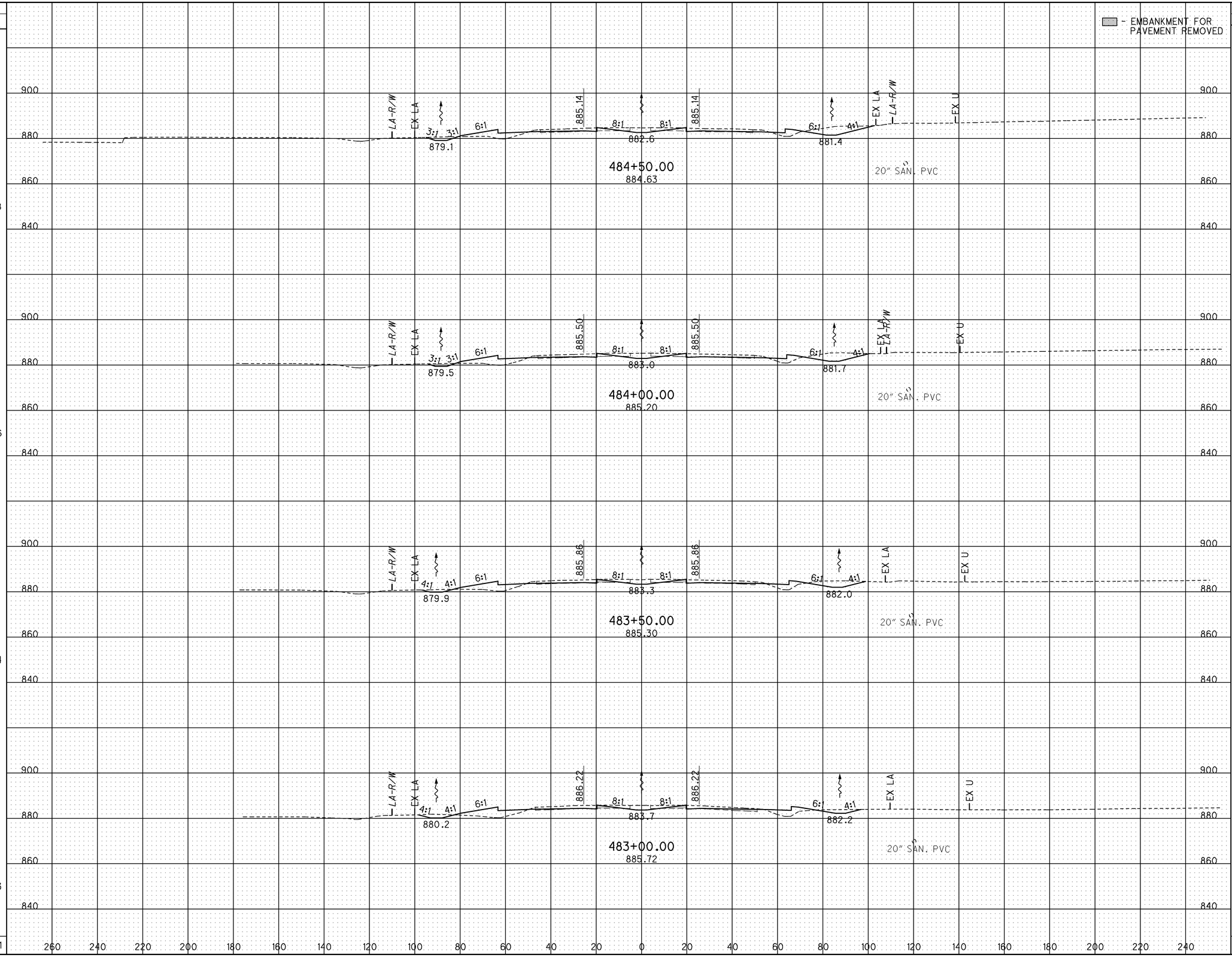

CALCULATED JMR
CHECKED ACF

CROSS SECTIONS - I-75
STA. 483+00.00 TO STA. 484+50.00

ALL-75.5.53

347
1224

J:\Projects\ALL\76691\roadway\sheets\76691XS1125.dgn 11-SEP-2012 9:01PM reddenj

SEEDING	
END WIDTH	SQ. YDS.
142	
	783
140	
	777
138	
	756
	2316

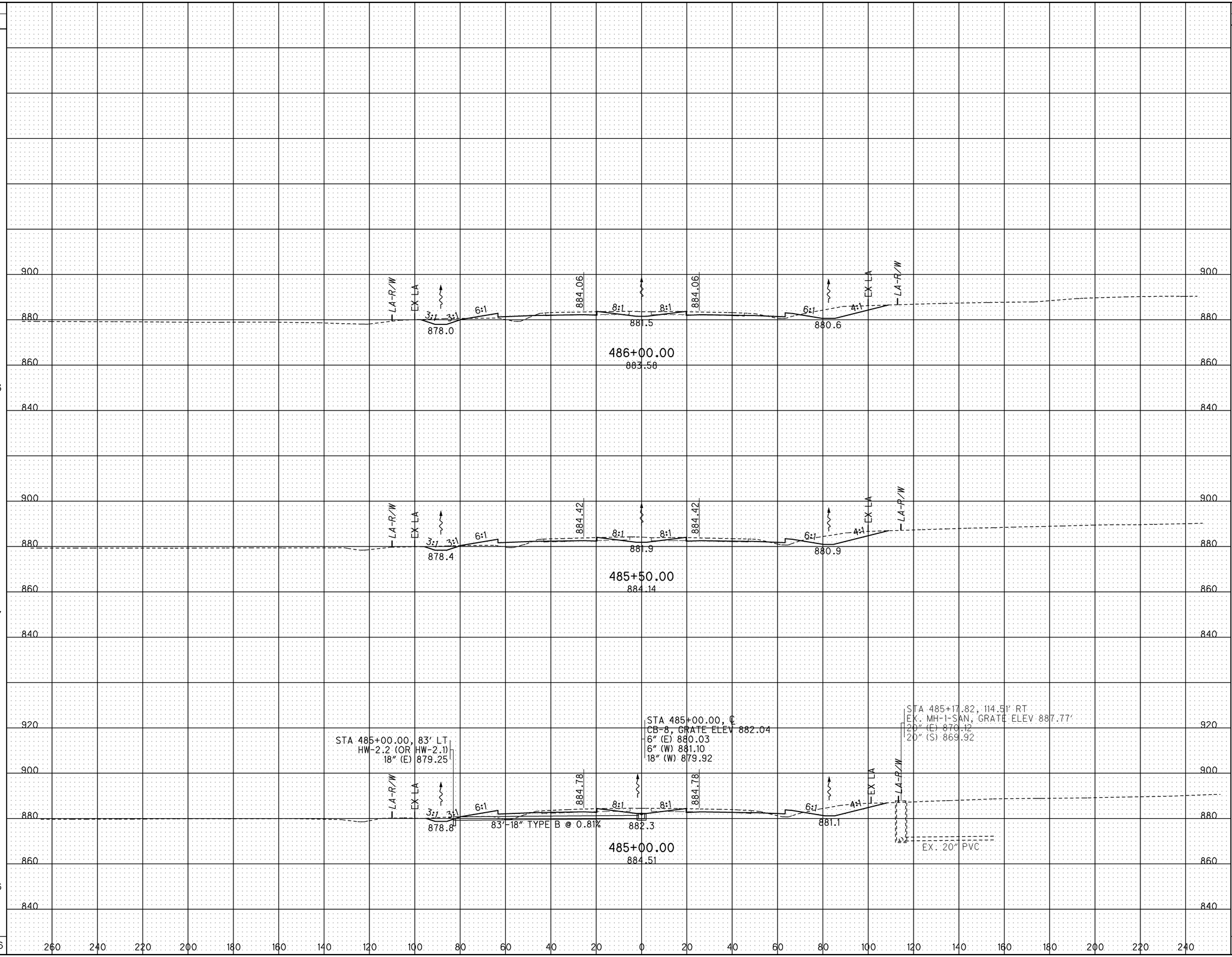

END AREA	
CUT	FILL
267	76
252	92
246	95

VOLUME	
CUT	FILL
480	156
460	174
430	189
1370	519

CALCULATED JMR
CHECKED ACF

CROSS SECTIONS - I-75
STA. 485+00.00 TO STA. 486+00.00

ALL-75.5.53

348
1224

J:\Projects\ALL\76691\roadway\sheets\76691XS1126.dgn 11-SEP-2012 9:01PM reddenj

SEEDING		END AREA		VOLUME	
END WIDTH	SQ. YDS.	CUT	FILL	CUT	FILL
135	766	283	47	581	79
141	788	345	38	624	71
142	789	330	39	572	86
141	789	288	54	514	120
	3132			2291	356

CALCULATED JMR
CHECKED ACF

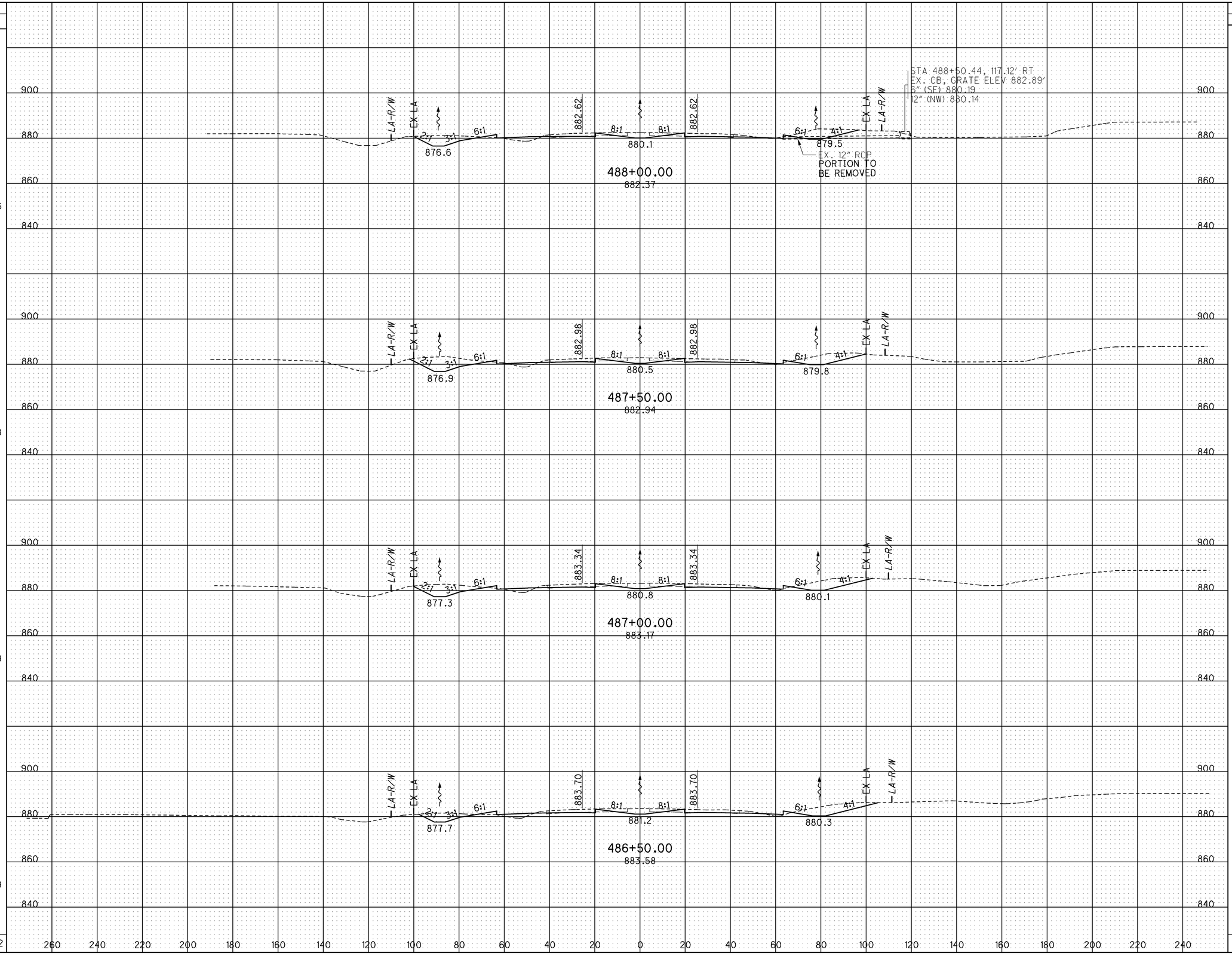

CROSS SECTIONS - I-75
STA. 486+50.00 TO STA. 488+00.00

ALL-75.5.53

349
1224

J:\Projects\ALL\76691\roadway\sheets\76691XS1127.dgn 11-SEP-2012 9:01PM reddenj

SEEDING	
END WIDTH	SQ. YDS.
137	761
137	755
135	745
131	739
	3000

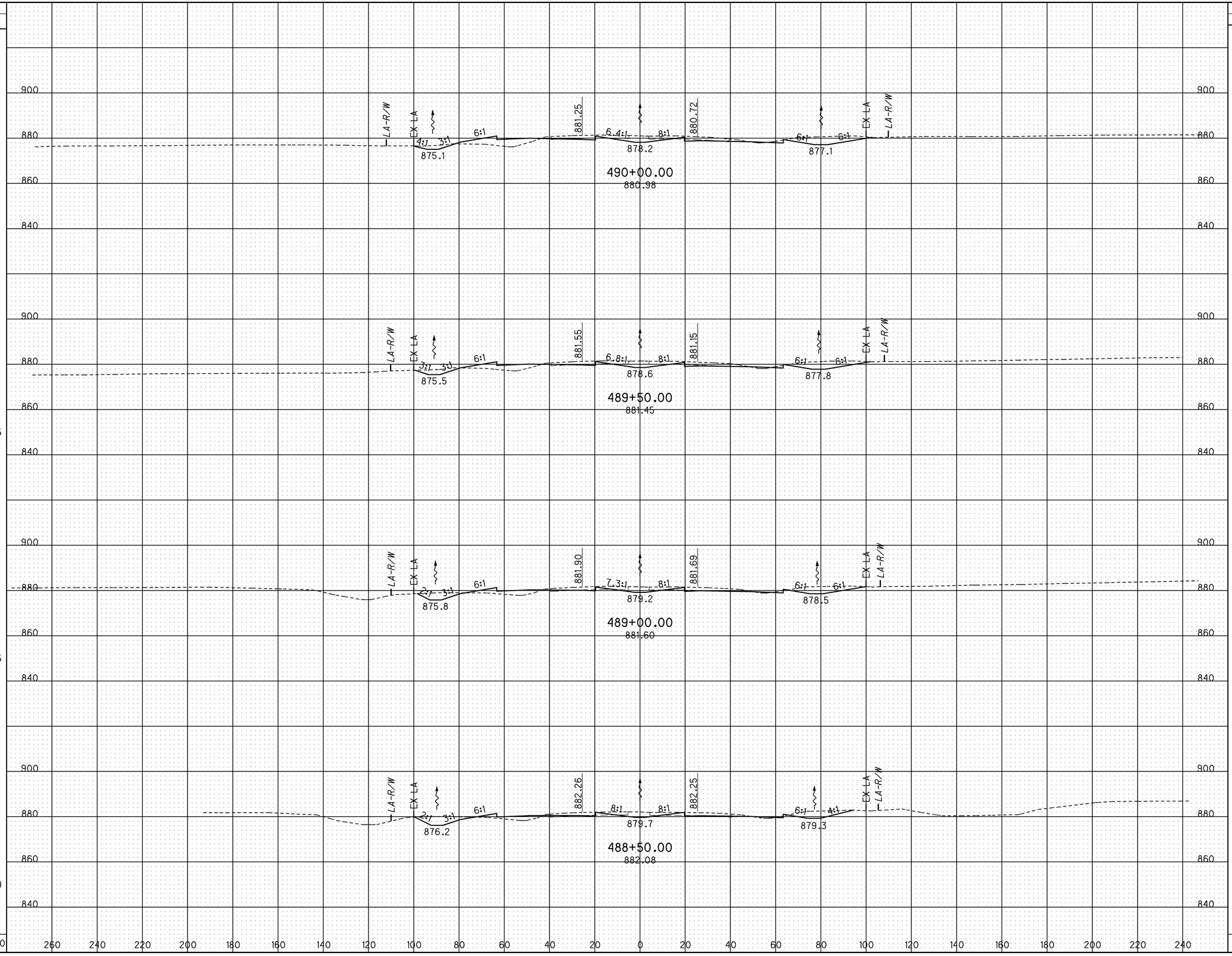

END AREA	
CUT	FILL
255	97
250	81
241	69
239	63

VOLUME	
CUT	FILL
468	164
454	138
444	122
483	102
1849	526

CALCULATED JMR
CHECKED ACF

CROSS SECTIONS - I-75
STA. 488+50.00 TO STA. 490+00.00

ALL-75.5.53

350
1224

J:\Projects\ALL\76691\roadway\sheets\76691XS1128.dgn 11-SEP-2012 9:01PM reddenj

SEEDING		END AREA		VOLUME	
END WIDTH	SQ. YDS.	CUT	FILL	CUT	FILL
157	866	294	145	517	263
153	845	264	139	483	242
149	817	258	123	475	219
145	788	255	114	473	195
	3316			1948	919

CALCULATED JMR
CHECKED ACF

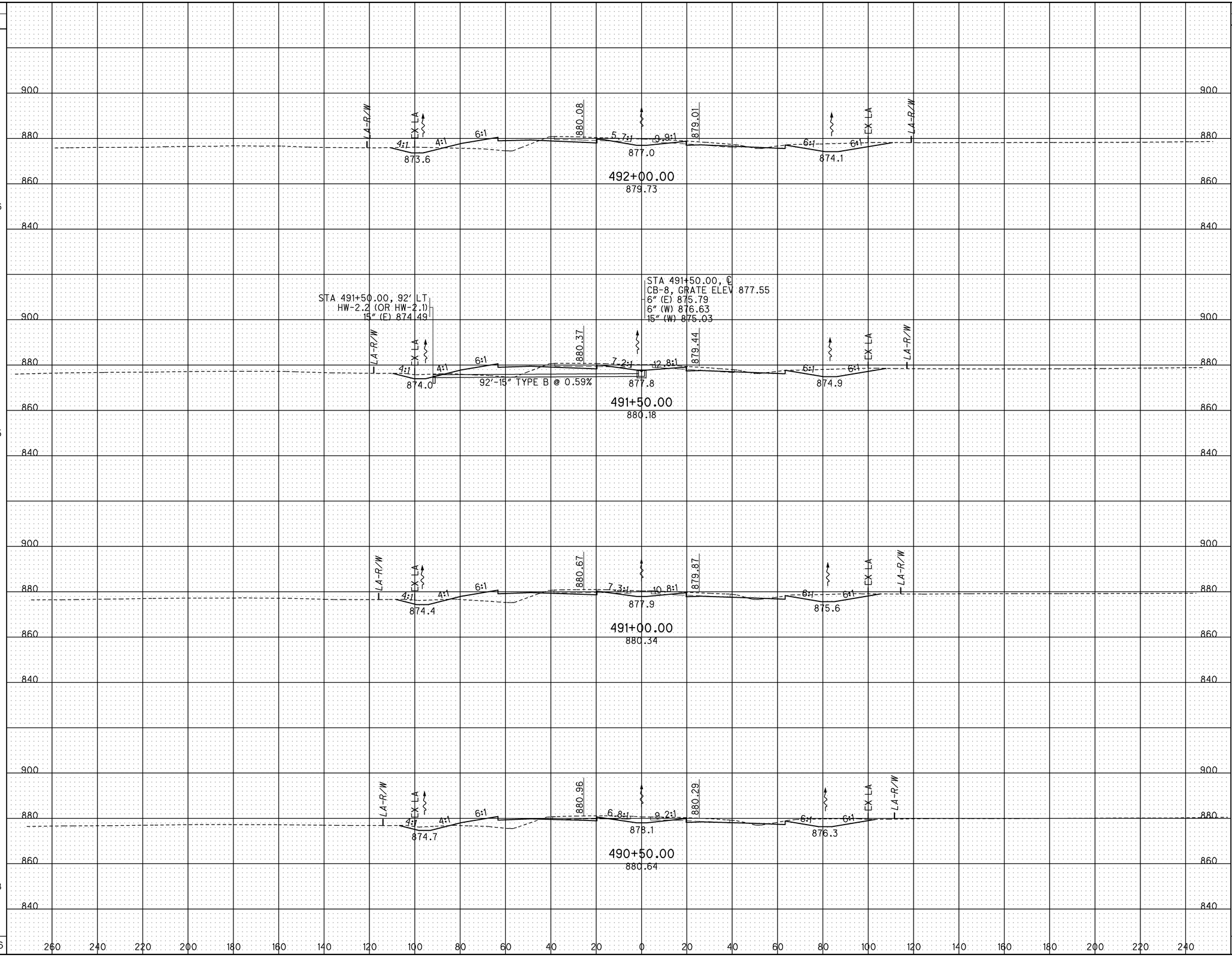

J:\Projects\ALL\76691\roadway\sheets\76691XS1129.dgn 11-SEP-2012 9:01PM reddenj

CROSS SECTIONS - I-75
STA. 490+50.00 TO STA. 492+00.00

ALL-75.5.53

351
1224

SEEDING END WIDTH	SEEDING SQ. YDS.
165	923
166	905
159	900
164	894
	3622

END AREA CUT	END AREA FILL	VOLUME CUT	VOLUME FILL
428	119	765	225
398	125	703	245
361	140	644	265
335	146	583	270
		2695	1005

CALCULATED JMR
CHECKED ACF

CROSS SECTIONS - I-75
STA. 492+50.00 TO STA. 494+00.00

ALL-75.5.53

352
1224

J:\Projects\ALL\76691\roadway\sheets\76691XS1130.dgn 11-SEP-2012 9:01PM reddenj

SEEDING END WIDTH	SEEDING SQ. YDS.	END AREA CUT	END AREA FILL	VOLUME CUT	VOLUME FILL
174	961	555	118	974	211
170	939	498	109	889	202
168	923	462	109	836	205
164	917	441	113	804	214
	3740			3503	832

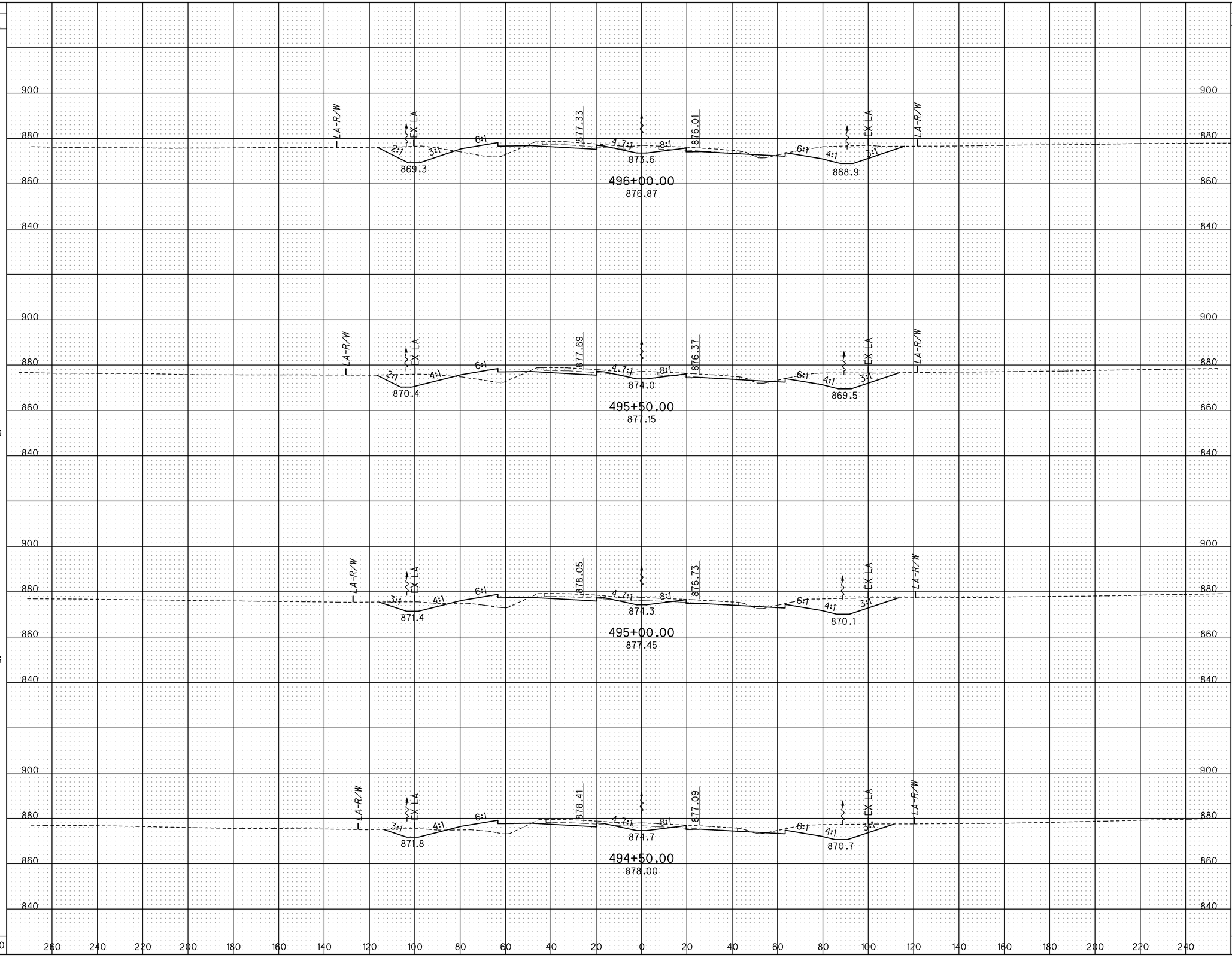

CALCULATED JMR
CHECKED ACF

CROSS SECTIONS - I-75
STA. 494+50.00 TO STA. 496+00.00

ALL-75.5.53

353
1224

J:\Projects\ALL\76691\roadway\sheets\76691XS1131.dgn 11-SEP-2012 9:01PM reddenj

SEEDING END WIDTH	SEEDING SQ. YDS.	END AREA CUT	END AREA FILL	VOLUME CUT	VOLUME FILL
187		348	239		
	1039			684	398
185		392	191		
	1022			797	323
182		469	158		
	989			930	265
173		535	128		
	967			1009	228
	4017			3420	1214

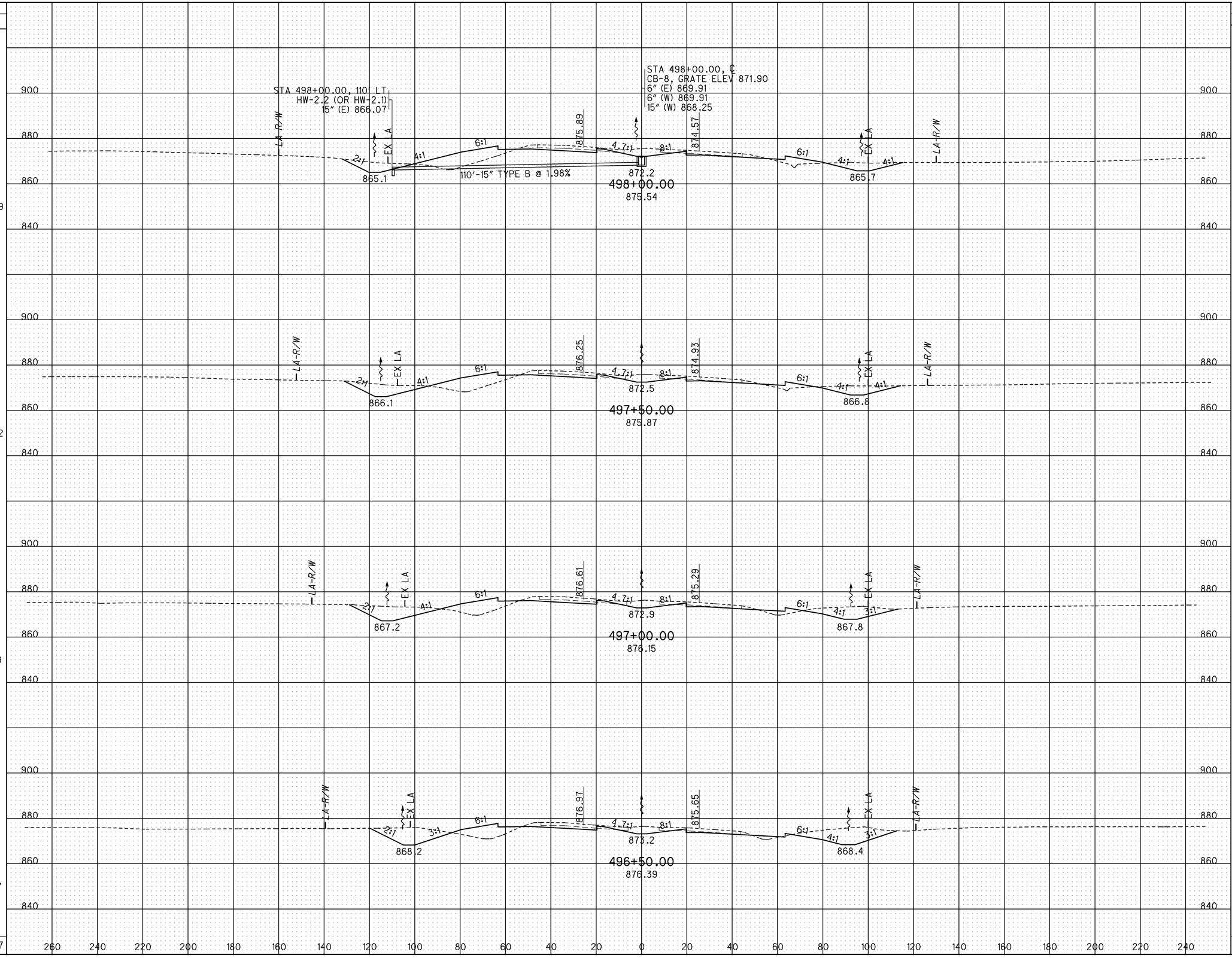

CALCULATED JMR
CHECKED ACF

CROSS SECTIONS - I-75
STA. 496+50.00 TO STA. 498+00.00

ALL-75.5.53

354
1224

J:\Projects\ALL\76691\roadway\sheets\76691XS1132.dgn 11-SEP-2012 9:01PM reddenj

SEEDING END WIDTH	SEEDING SQ. YDS.
154	939
183	1016
182	1072
202	1083
	4110

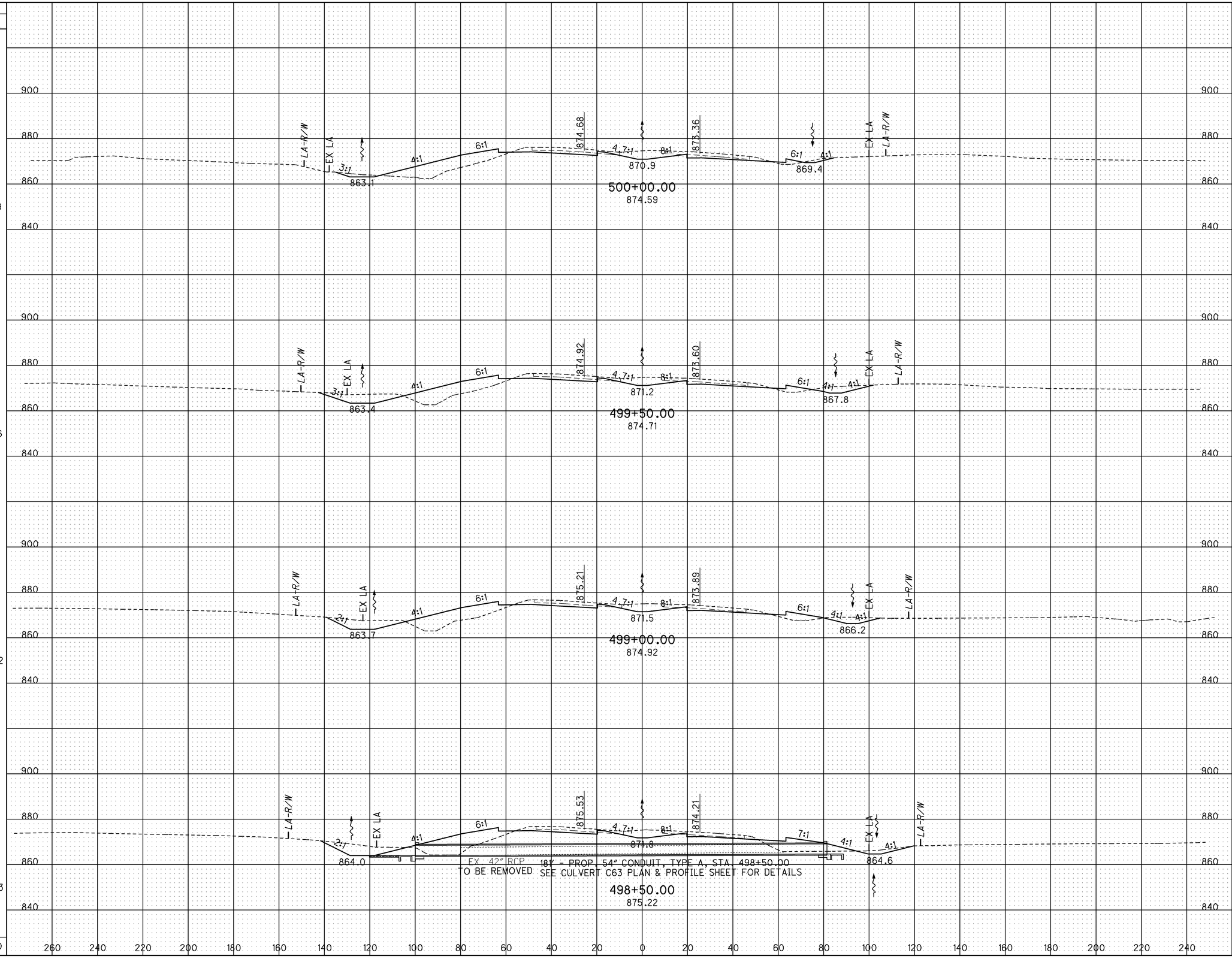

END AREA CUT	END AREA FILL	VOLUME CUT	VOLUME FILL
269	260		
		596	473
375	251		
		679	484
358	273		
		643	612
337	388		
		634	580
		2552	2149

CALCULATED JMR
CHECKED ACF

CROSS SECTIONS - I-75
STA. 498+50.00 TO STA. 500+00.00

ALL-75.5.53

355
1224

J:\Projects\ALL\76691\roadway\sheets\76691XS1133.dgn 11-SEP-2012 9:01PM reddenj

SEEDING END WIDTH	SEEDING SQ. YDS.	END AREA CUT	END AREA FILL	VOLUME CUT	VOLUME FILL
182	972	394	269	706	489
167	912	369	259	666	478
160	866	351	257	629	464
152	855	328	243	553	466
	3605			2554	1897

CALCULATED JMR
CHECKED ACF

CROSS SECTIONS - I-75
STA. 500+50.00 TO STA. 502+00.00

ALL-75.5.53

356
1224

J:\Projects\ALL\76691\roadway\sheets\76691XS1134.dgn 11-SEP-2012 9:01PM reddenj

SEEDING END WIDTH	SEEDING SQ. YDS.
206	1105
191	1050
186	1017
179	1006
	4178

END AREA CUT	END AREA FILL	VOLUME CUT	VOLUME FILL
473	226	804	439
396	248	716	471
378	262	698	486
376	263	713	493
		2931	1889

CALCULATED JMR
CHECKED ACF

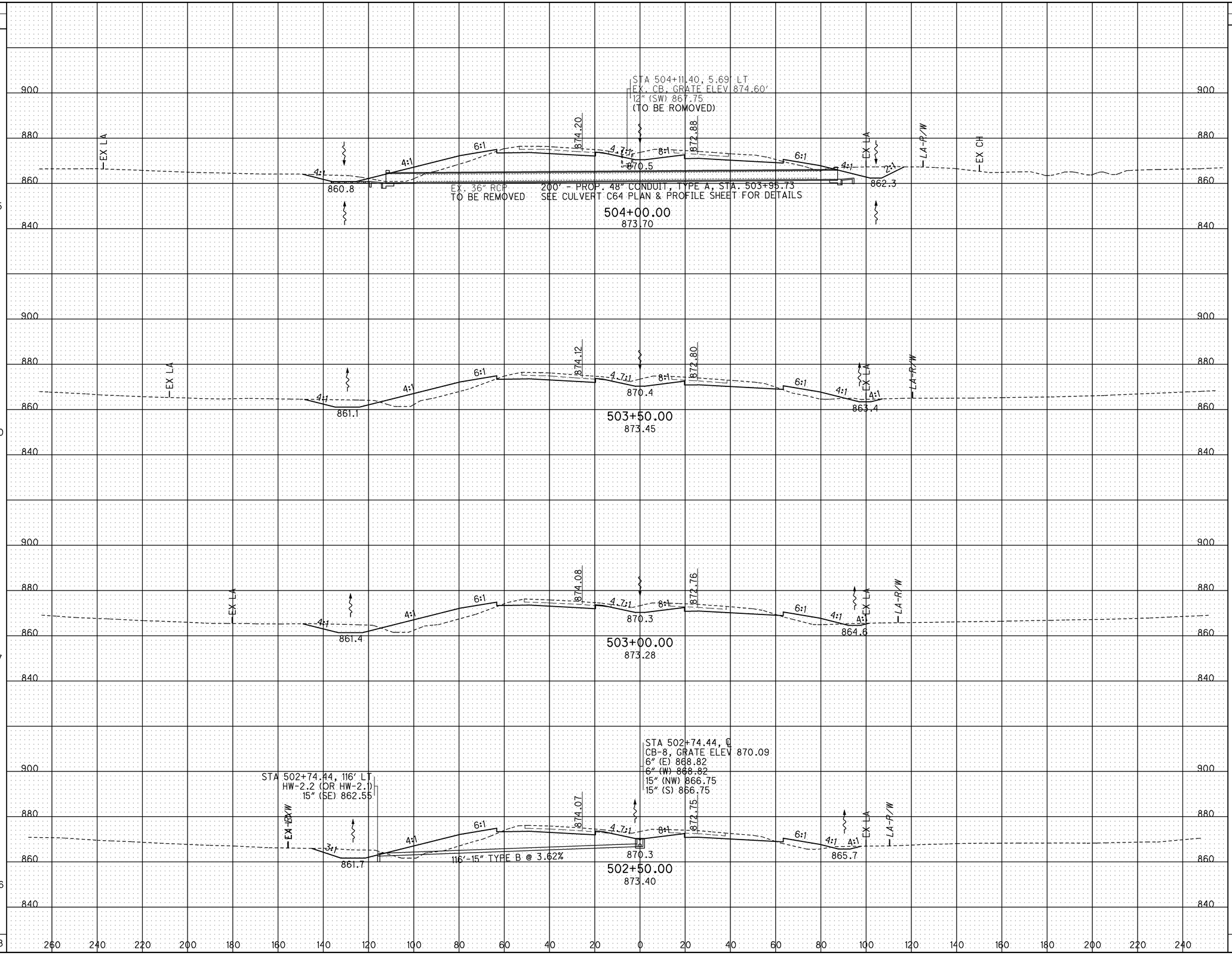

CROSS SECTIONS - I-75
STA. 502+50.00 TO STA. 504+00.00

ALL-75.5.53

357
1224

J:\Projects\ALL\76691\roadway\sheets\76691XS1135.dgn 11-SEP-2012 9:01PM reddenj

SEEDING END WIDTH	SEEDING SQ. YDS.	END AREA CUT	END AREA FILL	VOLUME CUT	VOLUME FILL
193	1073	630	102	1128	219
192	1061	589	134	1043	276
188	1056	537	164	969	331
191	1106	510	194	910	389
	4296			4050	1215

CALCULATED JMR
CHECKED ACF

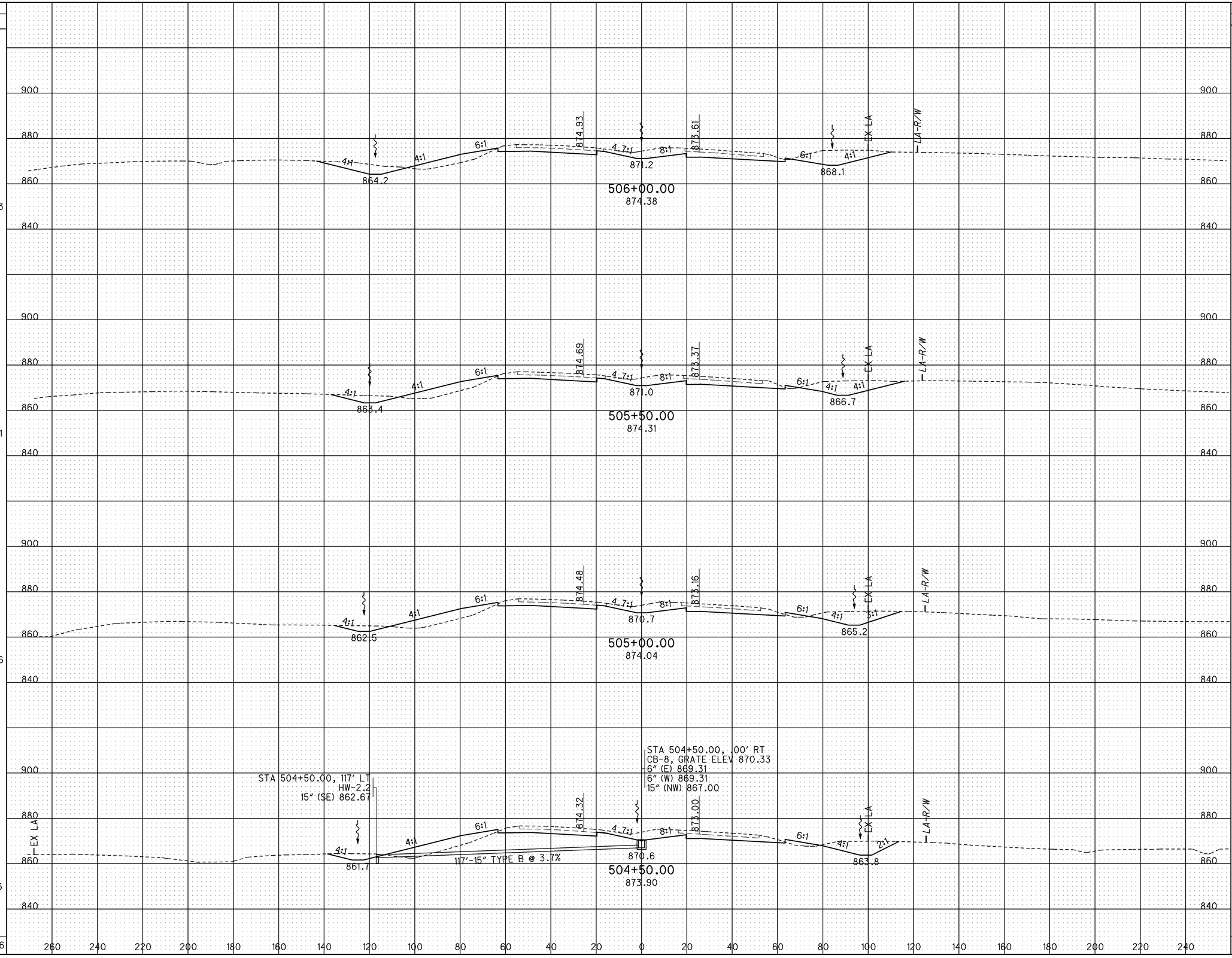

CROSS SECTIONS - I-75
STA. 504+50.00 TO STA. 506+00.00

ALL-75.5.53

358
1224

J:\Projects\ALL\76691\roadway\sheets\76691XS1136.dgn 11-SEP-2012 9:01PM reddenj

SEEDING END WIDTH	SEEDING SQ. YDS.	END AREA CUT	END AREA FILL	VOLUME CUT	VOLUME FILL
196	1088	725	9	1321	18
195	1078	701	11	1245	22
192	1061	643	13	1175	52
190	1066	626	43	1163	135
	4293			4904	227

CALCULATED JMR
CHECKED ACF

CROSS SECTIONS - I-75
STA. 506+50.00 TO STA. 508+00.00

ALL-75.5.53

359
1224

J:\Projects\ALL\76691\roadway\sheets\76691XS1137.dgn 11-SEP-2012 9:01PM reddenj

508+00.00
874.75
867.6
872.6
871.7
876.31
874.99

507+50.00
874.36
866.8
872.2
871.4
875.90
874.58

507+00.00
874.18
865.9
871.8
871.0
875.54
874.22

506+50.00
874.13
865.1
871.5
869.6
875.21
873.89

EX LA
LA-R/W
4:1
6:1
4.7:1
8:1
900
880
860
840
260 240 220 200 180 160 140 120 100 80 60 40 20 0 20 40 60 80 100 120 140 160 180 200 220 240

SEEDING	
END WIDTH	SQ. YDS.
173	1000
185	1055
194	1083
196	1094
	4232

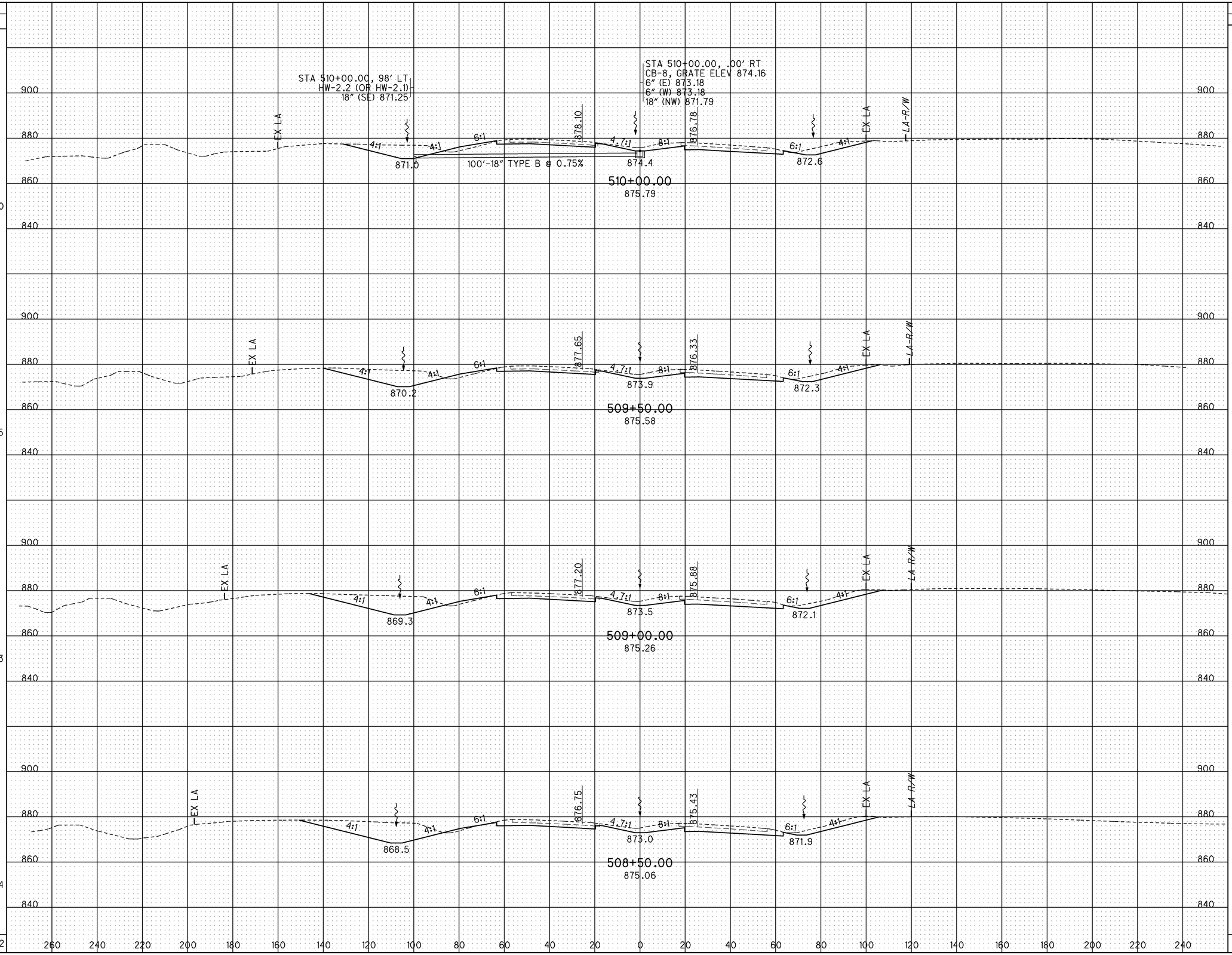

END AREA	
CUT	FILL
480	28
579	22
662	17
716	10

VOLUME	
CUT	FILL
981	46
1149	36
1276	25
1335	18
4741	125

CALCULATED JMR
CHECKED ACF

CROSS SECTIONS - I-75
STA. 508+50.00 TO STA. 510+00.00

ALL-75.5.53

360
1224

J:\Projects\ALL\76691\roadway\sheets\76691XS1138.dgn 11-SEP-2012 9:01PM reddenj

SEEDING	
END WIDTH	SQ. YDS.
158	856
149	822
145	839
156	917
	3434

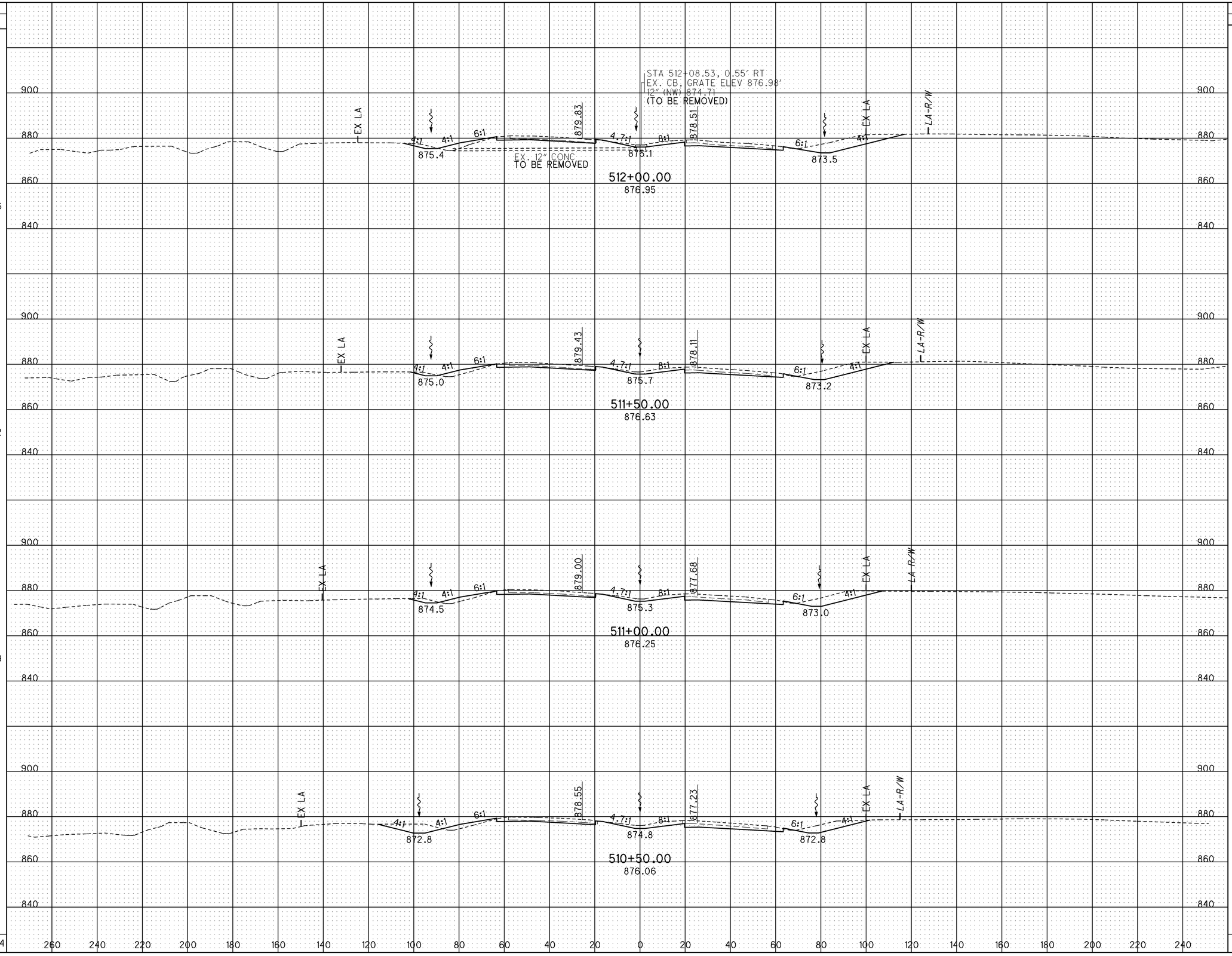

END AREA	
CUT	FILL
352	38
333	35
333	33
367	33

VOLUME	
CUT	FILL
634	67
617	63
648	61
785	56
2684	247

CALCULATED JMR
CHECKED ACF

CROSS SECTIONS - I-75
STA. 510+50.00 TO STA. 512+00.00

ALL-75.5.53

361
1224

J:\Projects\ALL\76691\roadway\sheets\76691XS1139.dgn 11-SEP-2012 9:01PM reddenj

SEEDING END WIDTH	SEEDING SQ. YDS.	END AREA CUT	END AREA FILL	VOLUME CUT	VOLUME FILL
154	861	349	45	637	86
155	867	339	47	628	85
155	872	340	44	640	75
159	883	352	37	651	69
	3483			2556	315

514+00.00
877.85

513+50.00
877.36

513+00.00
877.01

512+50.00
876.74

CALCULATED JMR
CHECKED ACF

CROSS SECTIONS - I-75
STA. 512+50.00 TO STA. 514+00.00

ALL-75.5.53

362
1224

J:\Projects\ALL\76691\roadway\sheets\76691XS1140.dgn 11-SEP-2012 9:01PM reddenj

SEEDING		END AREA		VOLUME	
END WIDTH	SQ. YDS.	CUT	FILL	CUT	FILL
151	834	387	17	699	41
148	822	367	27	680	59
147	838	367	36	696	72
155	862	385	41	680	80
	3356			2755	252

CALCULATED JMR
CHECKED ACF

CROSS SECTIONS - I-75
STA. 514+50.00 TO STA. 516+00.00

ALL-75.5.53

363
1224

J:\Projects\ALL\76691\roadway\sheets\76691XS1141.dgn 11-SEP-2012 9:01PM reddenj

SEEDING END WIDTH	SEEDING SQ. YDS.	END AREA CUT	END AREA FILL	VOLUME CUT	VOLUME FILL
144	822	322	21	648	36
150	845	378	18	724	28
153	856	404	12	756	24
154	850	413	13	741	28
	3373			2869	116

CALCULATED JMR
CHECKED ACF

STA 518+00.00, .00' RT
CB-8, GRATE ELEV 879.26
6" (N) 878.21
6" (S) 878.21
15" (SE) 877.14

STA 518+10.53, 0.30' RT
EX. CB, GRATE ELEV 879.62
12" (N) 877.65±
(TO BE REMOVED)

STA 518+00.00, 84' RT
HW-2.2 (OR HW-2.1)
15" (NW) 876.65

518+00.00
879.62

517+50.00
879.59

517+00.00
879.60

516+50.00
879.22

EX LA
LA-R/W
EX R/W
84'-15" TYPE B @ 0.58%

CROSS SECTIONS - I-75
STA. 516+50.00 TO STA. 518+00.00

ALL-75.5.53

364
1224

J:\Projects\ALL\76691\roadway\sheets\76691XS1142.dgn 11-SEP-2012 9:01PM reddenj

SEEDING		END AREA		VOLUME	
END WIDTH	SQ. YDS.	CUT	FILL	CUT	FILL
72	484	165	10	325	35
102	655	186	28	406	53
133	772	252	29	531	47
	1911			1262	135

CALCULATED JMR
CHECKED ACF

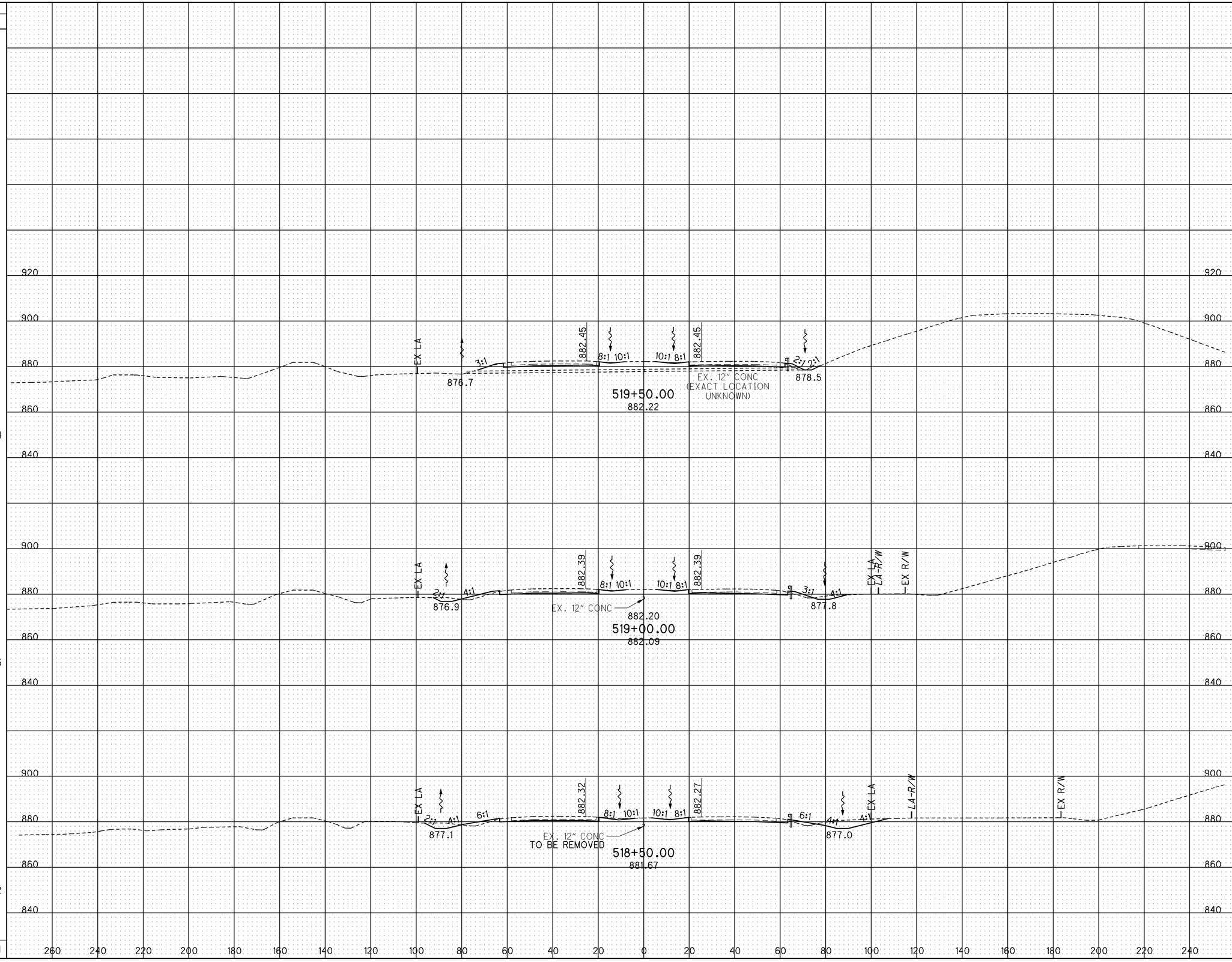

CROSS SECTIONS - I-75
STA. 518+50.00 TO STA. 519+50.00

ALL-75.5.53

365
1224

J:\Projects\ALL\76691\roadway\sheets\76691XS1143.dgn 11-SEP-2012 9:01PM reddenj

SEEDING	
END WIDTH	SQ. YDS.
	316
	316

GRAND TOTAL SEEDING & MULCHING I-75
412,758 SQ. YD.
(QUANTITY CARRIED TO ROADWAY SUB-SUMMARY)

GRAND TOTAL EARTHWORK I-75
OPTION A: ASPHALT PAVEMENT
EXCAVATION = 195,861 CU. YD.
EMBANKMENT = 393,966 CU. YD.
OPTION B: CONCRETE PAVEMENT
EXCAVATION= 189,307 CU. YD.
EMBANKMENT= 398,706 CU. YD.
(QUANTITY CARRIED TO ROADWAY SUB-SUMMARY)

NOTE:
DEDUCTED 58,115 CU. YD. FROM EXCAVATION QUANTITY FOR PAVEMENT REMOVAL.

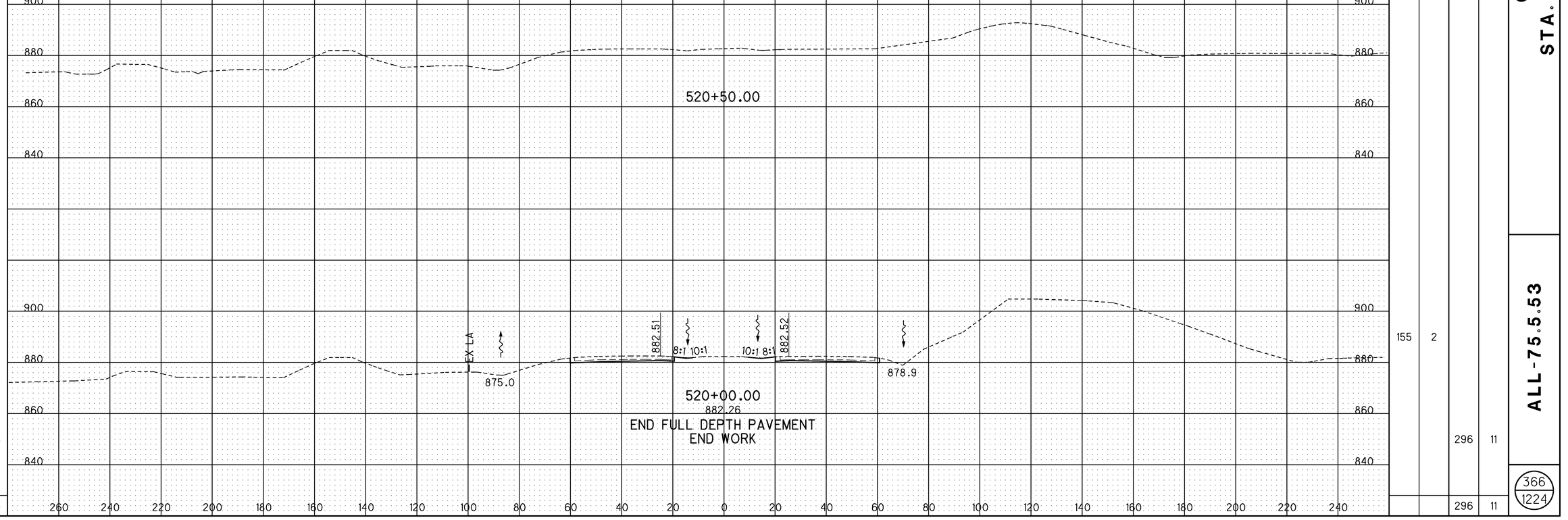

END AREA		VOLUME	
CUT	FILL	CUT	FILL
41			
		155	2
		296	11
		296	11

CALCULATED JMR
CHECKED ACF

CROSS SECTIONS - I-75
STA. 520+00.00 TO STA. 521+00.00

ALL-75.5.53

366
1224

J:\Projects\ALL\76691\roadway\sheets\76691XS1144.dgn 11-SEP-2012 9:01PM reddenj

CROSS REFERENCES			
SHEET NO.	DESCRIPTION	SHEET NO.	DESCRIPTION
375	CROSS SECTIONS	888	LIGHTING PLAN
376	DRAINAGE DETAILS	620	JOINT DETAILS
680	CULVERT DETAIL	161	UNDERDRAIN SUMMARY
178	I-75 PLAN & PROFILE	370	ESTIMATED QUANTITIES
653	PAVEMENT DETAILS	607	GRADING PLAN

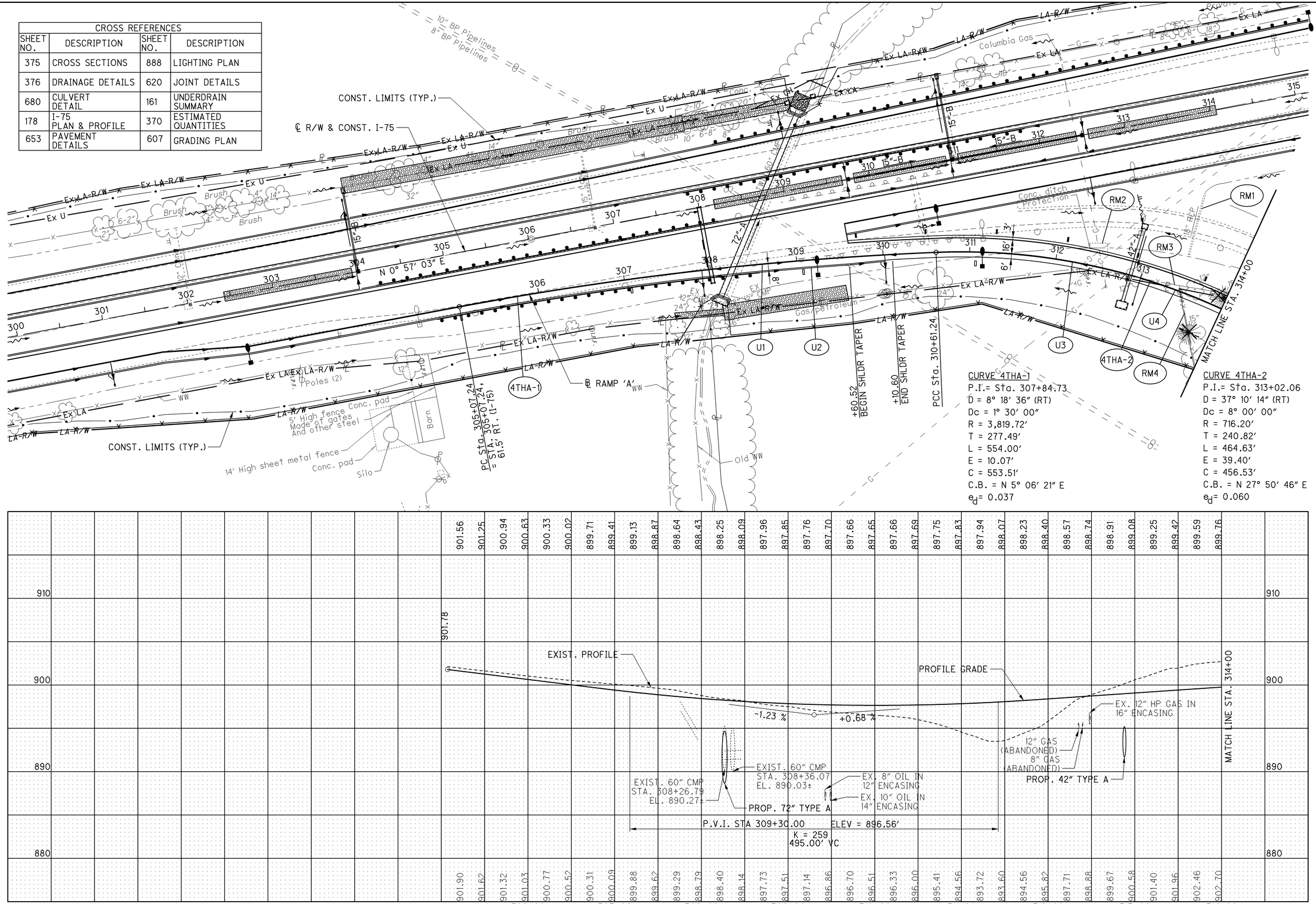

J:\Projects\ALL\76691\roadway\sheets\76691GP505.dgn 11-SEP-2012 9:02PM reddenj

PLAN AND PROFILE - 4TH STREET RAMP 'A'
BEGIN WORK TO STA. 314+00.00

ALL-75-5.53

367
1224

CURVE 4THA-2
P.I.= Sta. 313+02.06
D = 37° 10′ 14″ (RT)
Dc = 8° 00′ 00″
R = 716.20′
T = 240.82′
L = 464.63′
E = 39.40′
C = 456.53′
C.B. = N 27° 50′ 46″ E
e_d= 0.060

CURVE 4THA-3
P.I.= Sta. 319+15.92
D = 45° 46′ 20″ (LT)
Dc = 23° 00′ 00″
R = 249.11′
T = 105.16′
L = 199.01′
E = 21.29′
C = 193.76′
C.B. = N 23° 32′ 43″ E
e_d= 0.060

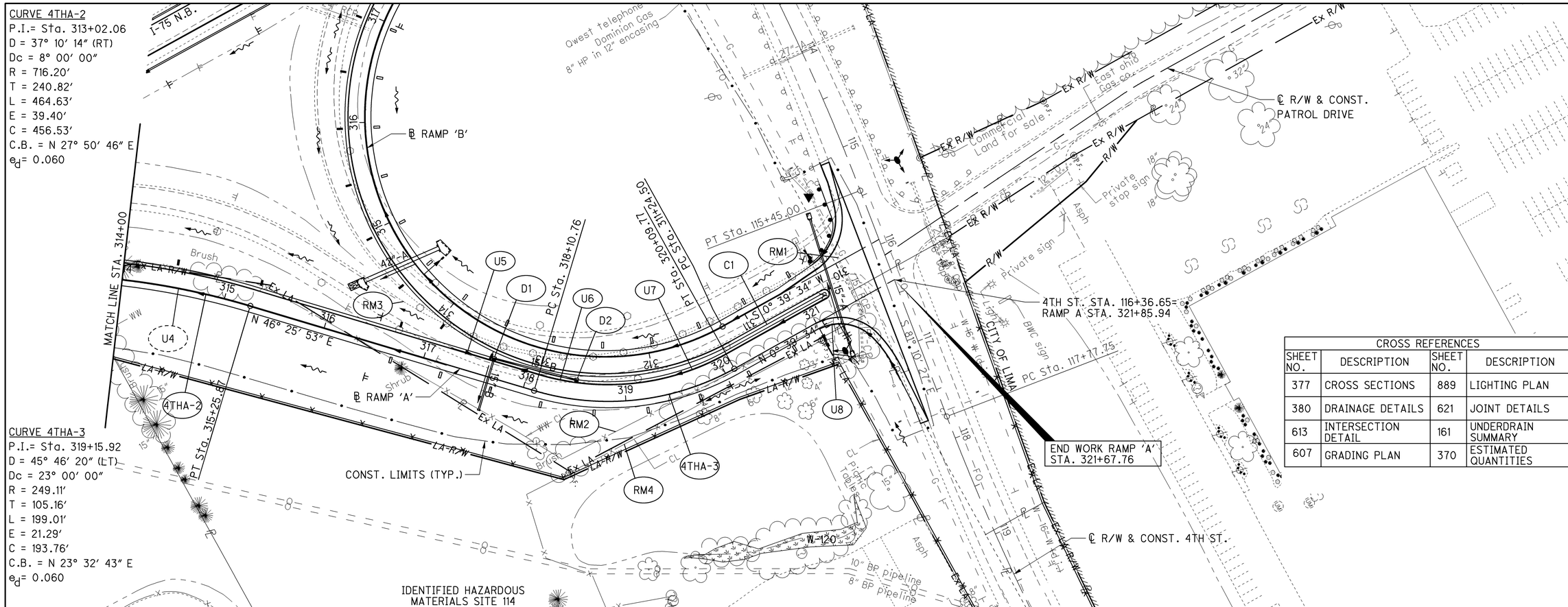

CROSS REFERENCES			
SHEET NO.	DESCRIPTION	SHEET NO.	DESCRIPTION
377	CROSS SECTIONS	889	LIGHTING PLAN
380	DRAINAGE DETAILS	621	JOINT DETAILS
613	INTERSECTION DETAIL	161	UNDERDRAIN SUMMARY
607	GRADING PLAN	370	ESTIMATED QUANTITIES

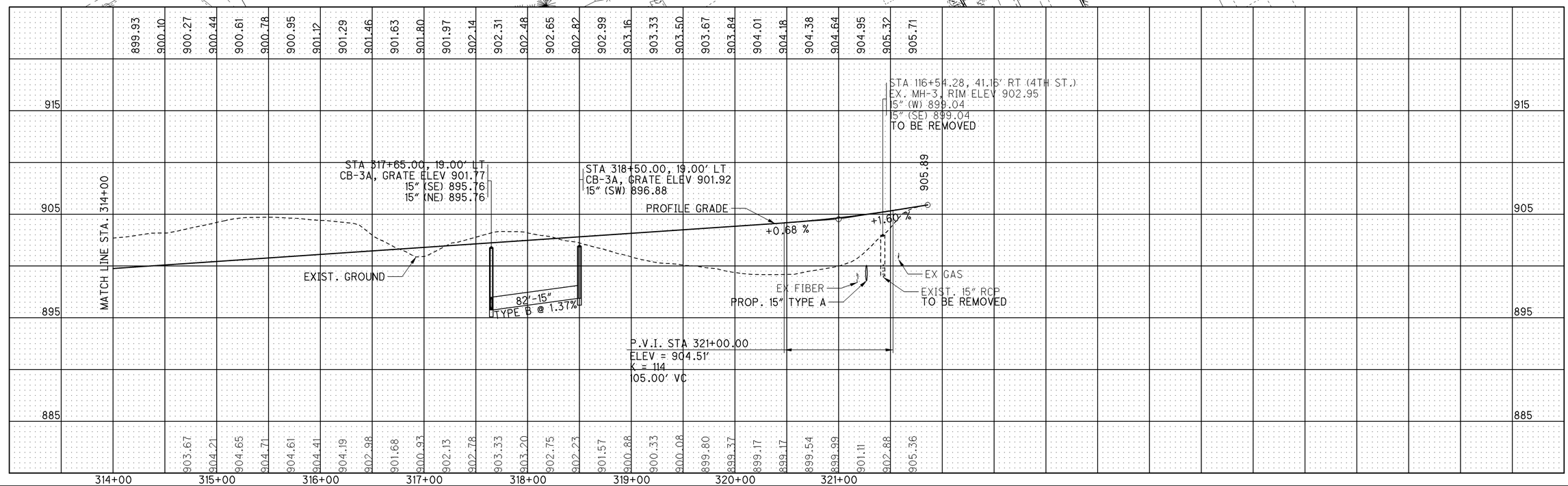

HORIZONTAL SCALE IN FEET
0 25 50 100

CALCULATED ACF
CHECKED EJC

PLAN AND PROFILE - 4TH STREET RAMP 'A'
STA. 314+00.00 TO STA. 321+85.94

ALL-75-5.53

J:\Projects\ALL\76691\roadway\sheets\76691GP506.dgn 11-SEP-2012 9:02PM reddenj

CURVE 4THB-1	CURVE 4THB-2
P.I.= Sta. 321+92.59	P.I. STA. 318+20.83
D = 155° 32′ 30″ (RT)	Ls = 200.00′
Dc = 24° 45′ 00″	θs = 24° 45′ 00″
R = 231.50′	LT = 134.66′
T = 1,068.08′	ST = 67.87′
L = 628.45′	x = 196.30′
E = 861.39′	y = 28.42′
C = 452.49′	k = 99.38′
C.B. = S 78° 25′ 49″ W	p = 7.15′
e_d = 0.060	

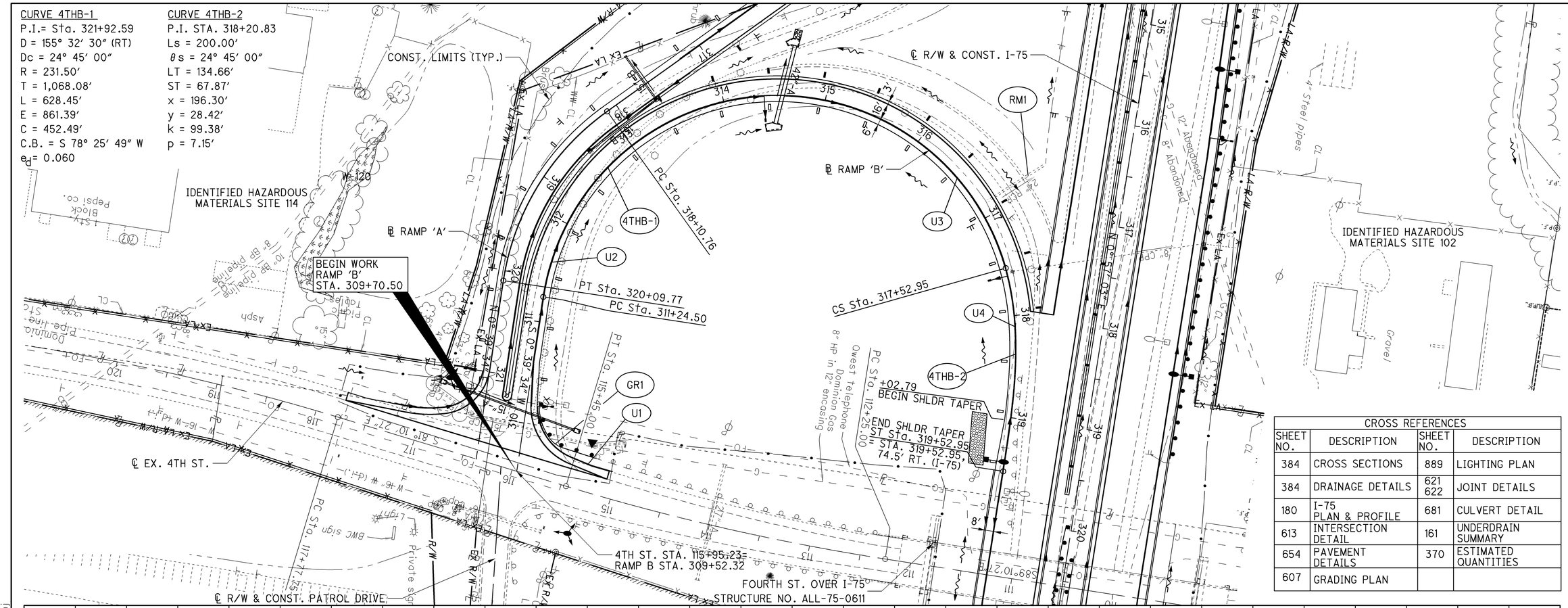

CROSS REFERENCES			
SHEET NO.	DESCRIPTION	SHEET NO.	DESCRIPTION
384	CROSS SECTIONS	889	LIGHTING PLAN
384	DRAINAGE DETAILS	621 622	JOINT DETAILS
180	I-75 PLAN & PROFILE	681	CULVERT DETAIL
613	INTERSECTION DETAIL	161	UNDERDRAIN SUMMARY
654	PAVEMENT DETAILS	370	ESTIMATED QUANTITIES
607	GRADING PLAN		

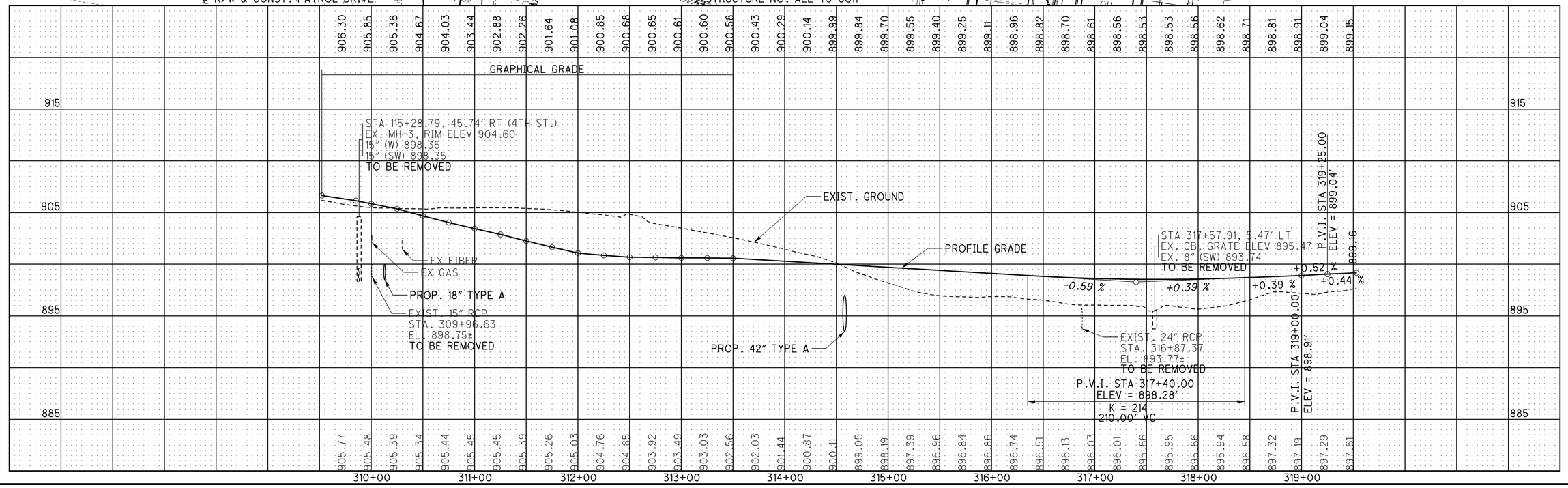

HORIZONTAL SCALE IN FEET
0 25 50 100

CALCULATED ACF
CHECKED ABS

PLAN AND PROFILE - 4TH STREET RAMP 'B'
STA. 309+70.50 TO STA. 319+52.95

ALL-75-5.53

369
1224

J:\Projects\ALL\76691\roadway\sheets\76691GP507.dgn 11-SEP-2012 9:02PM reddenj

REF. NO.	SHEET NO.	STATION FROM	STATION TO	SIDE	202 HEADWALL REMOVED	202 TRAFFIC ISLAND REMOVED	202 PIPE REMOVED, 24" AND UNDER	202 FENCE REMOVED	202 REMOVAL MISC.: MANHOLE REMOVED AND REUSE	202 REMOVAL MISC.: CONCRETE PAD	602 CONCRETE MASONRY	603 15" CONDUIT, TYPE B	604 CATCH BASIN, NO. 3A	606 GUARDRAIL, TYPE 5	606 ANCHOR ASSEMBLY, TYPE T	609 6" CONCRETE TRAFFIC ISLAND
		FROM	TO		EACH	SQ YD	FT	FT	EACH	SQ YD	CU YD	FT	EACH	FT	EACH	SQ YD
		4TH ST RAMP A														
RM1	367	312+67	312+56	LT						22.19						
RM2	367	313+40		LT			72									
RM3	367	312+62	314+00	RT				141								
RM4	367	313+45	314+00	RT				97								
RM1	368	321+44		LT/RT	2		204		2							
RM2	368	314+00	321+15	RT				761								
RM3	368	316+58	321+36	LT		162										
RM4	368	318+48	320+98	RT				312								
C1	368	317+62	321+22	LT												146.8
D1	368	317+65		LT/RT							0.25	52	1			
D2	368	317+65	318+50	LT/RT								82	1			
		4TH ST RAMP B														
RM1	369	316+87		LT			64									
GR1	369	309+76.50	310+21.01	RT										75	1	
TOTALS CARRIED TO ROADWAY SUBSUMMARY					2	162	340	1311	2	22.19	0.25	134	2	75	1	146.8

CALCULATED ACF
CHECKED ABS

ESTIMATED QUANTITIES

ALL-75-5.53

370
1224

J:\Projects\ALL\76691\roadway\sheets\76691G0507.dgn 11-SEP-2012 9:02PM reddenj

℄ EX. 4TH ST.

4TH ST. OVER I-75
STRUCTURE NO. ALL-75-0611

END WORK
RAMP 'C'
STA. 331+18.20

℄ R/W & CONST. SERVICE RD #1

END SHLDR TAPER
ST Sta. 321+17.41
= STA. 321+17.41,
74.5' LT. (I-75)

4TH ST. STA. 105+07.45=
RAMP C STA. 331+36.34

STA. 321+32.42
BEGIN SHLDR TAPER

CITY OF LIMA

EROSION PROTECTION MAT,
TYPE A, 76' X 7.5'

PT Sta. 329+49.14
PC Sta. 320+26.25

SC Sta. 323+17.41

ST Sta. 322+30.30

℄ RAMP 'C'

℄ RAMP 'D'

℄ R/W & CONST. I-75

℄ R/W & CONST. SERVICE RD. #2

CONST. LIMITS (TYP.)

IDENTIFIED HAZARDOUS
MATERIALS SITE 112

U1 U2 U3 RM1 RM2 RM3 GR1 E1 D1 4THC-1 4THC-2

CURVE 4THC-1
P.I. STA. 322+52.07
Ls = 200.00'
θs = 24° 45' 00"
LT = 134.66'
ST = 67.87'
x = 196.30'
y = 28.42'
k = 99.38'
p = 7.15'

CURVE 4THC-2
P.I. STA. 334+23.30
D = 156° 21' 13" (LT)
Dc = 24° 45' 00"
R = 231.50'
T = 1,105.89'
L = 631.73'
E = 898.36'
e_d = 0.060

CROSS REFERENCES

SHEET NO.	DESCRIPTION	SHEET NO.	DESCRIPTION
388	CROSS SECTIONS	889	LIGHTING PLAN
391	CULVERT DETAILS	623	JOINT DETAILS
180	I-75 PLAN & PROFILE	161	UNDERDRAIN SUMMARY
614	INTERSECTION DETAIL	374	ESTIMATED QUANTITIES
656 657	PAVEMENT DETAILS	608	GRADING PLAN

GRAPHICAL GRADE

P.V.I. STA 322+30.00 ELEV = 898.84'
K = 647 SSD = 3284'
220.00' VC

899.23

PROFILE GRADE

-0.35 % -0.69 % -0.69 % +0.65 %

EXIST. GROUND

P.V.I. STA 324+70.00 ELEV = 897.18'
K = 186 250.00' VC

PROP. 24" TYPE A

EX. 15" CONC.
TO BE REMOVED

899.21 899.11 899.01 898.90 898.77 898.64 898.50 898.34 898.18 898.01 897.86 897.75 897.67 897.62 897.60 897.62 897.68 897.76 897.88 898.04 898.20 898.36 898.53 898.69 898.72 898.75 898.78 898.97 899.19 899.41 899.63 900.08 900.74 901.45 902.13 902.86 903.65 904.45 905.29 906.27 906.12

897.89 897.58 897.45 897.06 896.70 896.28 896.18 896.60 896.81 896.87 896.73 896.57 896.46 896.27 896.20 896.16 895.54 896.06 897.59 899.11 900.48 901.49 902.20 902.87 903.53 904.16 905.42 905.56 905.97 906.46 906.75 906.93 907.02 907.06 907.12 907.23 907.29 907.20 907.16 907.07 906.69

915 905 895 885

322+00 323+00 324+00 325+00 326+00 327+00 328+00 329+00 330+00 331+00

HORIZONTAL SCALE IN FEET
0 25 50 100

CALCULATED ACF CHECKED EJC

PLAN AND PROFILE - 4TH STREET RAMP 'C'
STA. 321+17.41 TO STA. 331+36.34

ALL-75-5.53

371
1224

J:\Projects\ALL\76691\roadway\sheets\76691GP508.dgn 11-SEP-2012 9:02PM reddenj

CURVE 4THD-1
P.I.= Sta. 321+62.60
D = 55° 15′ 58″ (RT)
Dc = 22° 00′ 00″
R = 260.44′
T = 136.34′
L = 251.21′
E = 33.53′
C = 241.58′
C.B. = N 27° 28′ 49″ E
e_d = 0.059

CURVE 4THD-2
P.I.= Sta. 326+48.41
D = 35° 04′ 30″ (LT)
Dc = 11° 45′ 00″
R = 487.62′
T = 154.10′
L = 298.51′
E = 23.77′
C = 293.87′
C.B. = N 37° 34′ 33″ E
e_d = 0.060

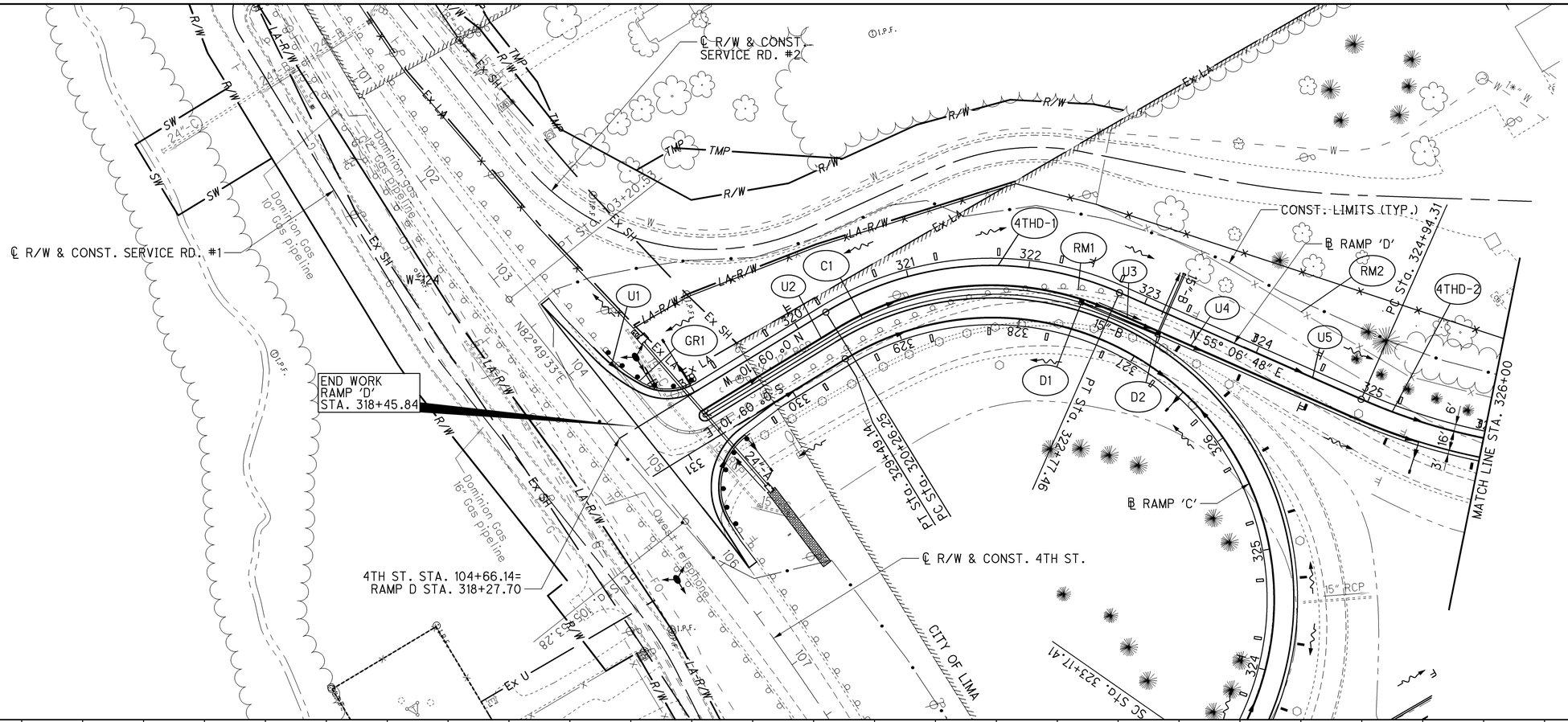

CROSS REFERENCES			
SHEET NO.	DESCRIPTION	SHEET NO.	DESCRIPTION
391	CROSS SECTIONS	889	LIGHTING PLAN
394	DRAINAGE DETAILS	623-625	JOINT DETAILS
391	CULVERT DETAIL	161	UNDERDRAIN SUMMARY
614	INTERSECTION DETAIL	374	ESTIMATED QUANTITIES
608	GRADING PLANS		

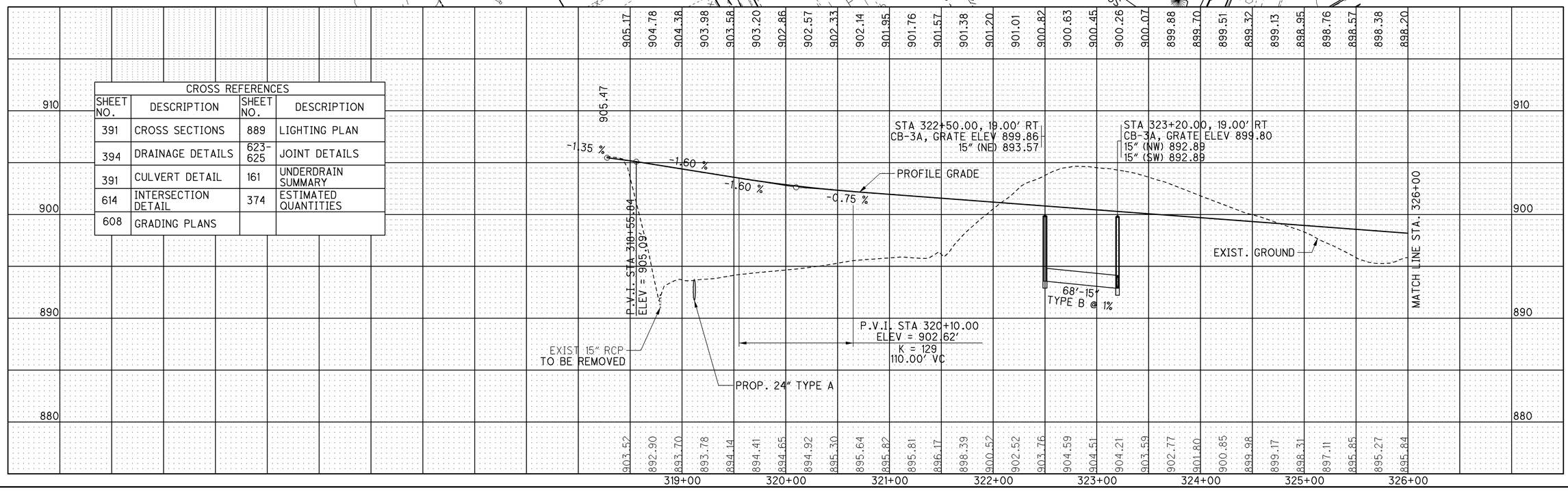

HORIZONTAL SCALE IN FEET
0 25 50 100

CALCULATED ACF
CHECKED EJC

PLAN AND PROFILE - 4TH STREET RAMP 'D'
STA. 318+27.70 TO STA. 326+00.00

ALL-75-5.53

372
1224

J:\Projects\ALL\76691\roadway\sheets\76691GP509.dgn 11-SEP-2012 9:02PM reddenj

CURVE 4THD-2
P.I.= Sta. 326+48.41
D = 35° 04′ 30″ (LT)
Dc = 11° 45′ 00″
R = 487.62′
T = 154.10′
L = 298.51′
E = 23.77′
C = 293.87′
C.B. = N 37° 34′ 33″ E
e_d = 0.060

CURVE 4THD-3
P.I. STA. 328+67.42
Ls = 200.00′
θs = 13° 15′ 00″
LT = 126.20′
ST = 74.59′
x = 198.80′
y = 17.10′
k = 99.82′
p = 2.98′

CURVE 4THD-4
P.I.= Sta. 332+36.78
D = 7° 18′ 31″ (LT)
Dc = 1° 30′ 00″
R = 3,819.72′
T = 243.95′
L = 487.25′
E = 7.78′
C = 486.92′
C.B. = N 3° 08′ 02″ E
e_d = 0.037

CROSS REFERENCES			
SHEET NO.	DESCRIPTION	SHEET NO.	DESCRIPTION
396	CROSS SECTIONS	890	LIGHTING PLAN
396	DRAINAGE DETAILS	623 - 625	JOINT DETAILS
182	I-75 PLAN & PROFILE	161	UNDERDRAIN SUMMARY
608	GRADING PLAN	374	ESTIMATED QUANTITIES
658	PAVEMENT DETAILS	683	CULVERT DETAIL

HORIZONTAL SCALE IN FEET
0 25 50 100

CALCULATED ACF
CHECKED EJC

PLAN AND PROFILE - 4TH STREET RAMP 'D'
STA. 326+00.00 TO STA. 334+80.07

ALL-75-5.53

373
1224

J:\Projects\ALL\76691\roadway\sheets\76691GP510.dgn 11-SEP-2012 9:02PM reddenj

CONST. LIMITS (TYP.)
℄ RAMP 'D'
℄ R/W & CONST. I-75
MATCH LINE STA. 326+00
PC Sta. 327+45.44
CS Sta. 327+92.83
STA. 329+42.68 BEGIN SHLDR TAPER
SC Sta. 329+92.83 END SHLDR TAPER
PT Sta. 334+80.07 = STA. 334+81.07, LT. (I-75)
PT Sta. 335+30.27
RM1
RM2
RM3
U6
4THD-2
4THD-3
4THD-4
Ex LA
LA-R/W
Ex SW
SAN
Exist. Reference mon.
Sign
Elec. Meter Box
Gravel
Sign w/ light
4 Metal posts
W-134
DO NOT DISTURB WETLAND
N 0° 57′ 03″ E
N 0° 37′ 07″ W
CL w/ top bar
Brush

PROFILE GRADE
EXIST. GROUND
EX. 15″ CONC.± TO BE REMOVED
PROP. 21″ TYPE A
MATCH LINE STA. 326+00
P.V.I. STA 328+00.00 ELEV = 896.69′
P.V.I. STA 330+00.00 ELEV = 894.76′
P.V.I. STA 331+00.00 ELEV = 894.06′
P.V.I. STA 332+00.00 ELEV = 893.22′
P.V.I. STA 333+00.00 ELEV = 892.33′
P.V.I. STA 334+00.00 ELEV = 891.44′
-0.75 %
-0.97 %
-0.70 %
-0.84 %
-0.89 %
-0.89 %
-0.71 %
890.87

| | | |

ESTIMATED QUANTITIES

CALCULATED ACF
CHECKED ABS

REF. NO.	SHEET NO.	STATION FROM	STATION TO	SIDE	202 HEADWALL REMOVED EACH	202 CONCRETE BARRIER REMOVED FOR STORAGE FT	202 TRAFFIC ISLAND REMOVED SQ YD	202 PIPE REMOVED, 24" AND UNDER FT	202 GUARDRAIL REMOVED FT	202 BRIDGE TERMINAL ASSEMBLY REMOVED EACH	202 CATCH BASIN REMOVED EACH	202 FENCE REMOVED FT	202 REMOVAL MISC.: MANHOLE REMOVED AND REUSE EACH	503 COFFERDAMS AND EXCAVATION BRACING LUMP	601 RIPRAP USING 6" REINFORCED COCNRETE SLAB SQ YD	601 TIED CONCRETE BLOCK MAT, TYPE 3 SQ YD	602 CONCRETE MASONRY CU YD	603 15" CONDUIT, TYPE B FT	603 24" CONDUIT, TYPE A FT	604 CATCH BASIN, NO. 3A EACH	606 GUARDRAIL, TYPE 5 FT	606 ANCHOR ASSEMBLY, TYPE E EACH	606 ANCHOR ASSEMBLY, TYPE T EACH	609 6" CONCRETE TRAFFIC ISLAND SQ YD	670 DITCH EROSION PROTECTION MAT, TYPE A SQ YD
		4TH ST RAMP C																							
RM1	371	324+60		RT				58																	
RM2	371	330+84		LT/RT	2			207					2												
RM3	371	326+19	330+61	LT			173																		
GR1	371	330+47.96	330+97.80	LT																87.5		1			
D1	371	330+67		LT/RT										1	8.31	3.11	0.86		155						
E1	371	105+74	106+50	LT																					63.333
		4TH ST RAMP D																							
RM1	372	318+53	322+83	LT		120			345	1															
RM2	372	322+39	326+00	LT								364													
GR1	372	318+53.73	319+05.08	LT																37.5	1				
C1	372	318+96	323+22	RT																			166.7		
D1	372	322+50	323+20	LT														68	1						
D2	372	323+20		LT/RT													0.25	54	1						
RM1	373	327+41		RT				68																	
RM2	373	326+00	329+80	LT								367													
RM3	373	326+81		LT				6			1														
TOTALS CARRIED TO ROADWAY SUBSUMMARY					2	120	173	339	345	1	1	731	2	1	8.31	3.11	1.11	122	155	2	125	1	1	166.7	63.3

ALL-75-5.53

374
1224

J:\Projects\ALL\76691\roadway\sheets\76691GQ510.dgn 11-SEP-2012 9:02PM reddenj

SEEDING		END AREA		VOLUME		CALCULATED	CHECKED
END WIDTH	SQ. YDS.	CUT	FILL	CUT	FILL	JMR	ACF
54	294	114	51	208	88		
52	305	110	44	208	79		
57		114	42				
	599			416	167		

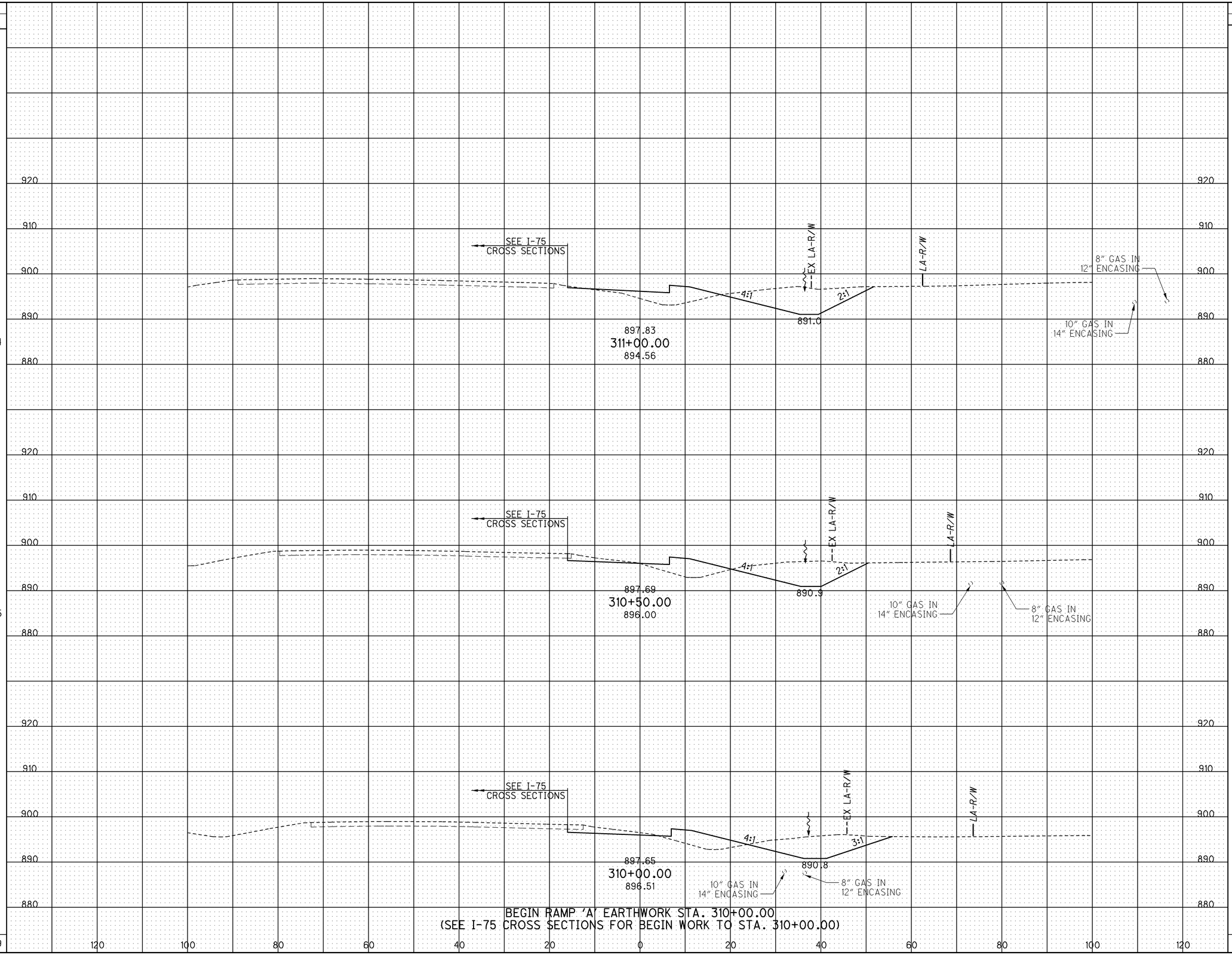

J:\Projects\ALL\76691\roadway\sheets\76691XS1145.dgn 11-SEP-2012 9:02PM reddenj

CROSS SECTIONS - RAMP A (FOURTH ST.)
STA. 310+00.00 TO STA. 311+00.00

ALL-75-5.53

SEEDING		END AREA		VOLUME	
END WIDTH	SQ. YDS.	CUT	FILL	CUT	FILL
60	328	242	12	390	55
58	316	179	48	295	100
55	305	140	60	235	103
	949			920	258

CALCULATED JMR
CHECKED ACF

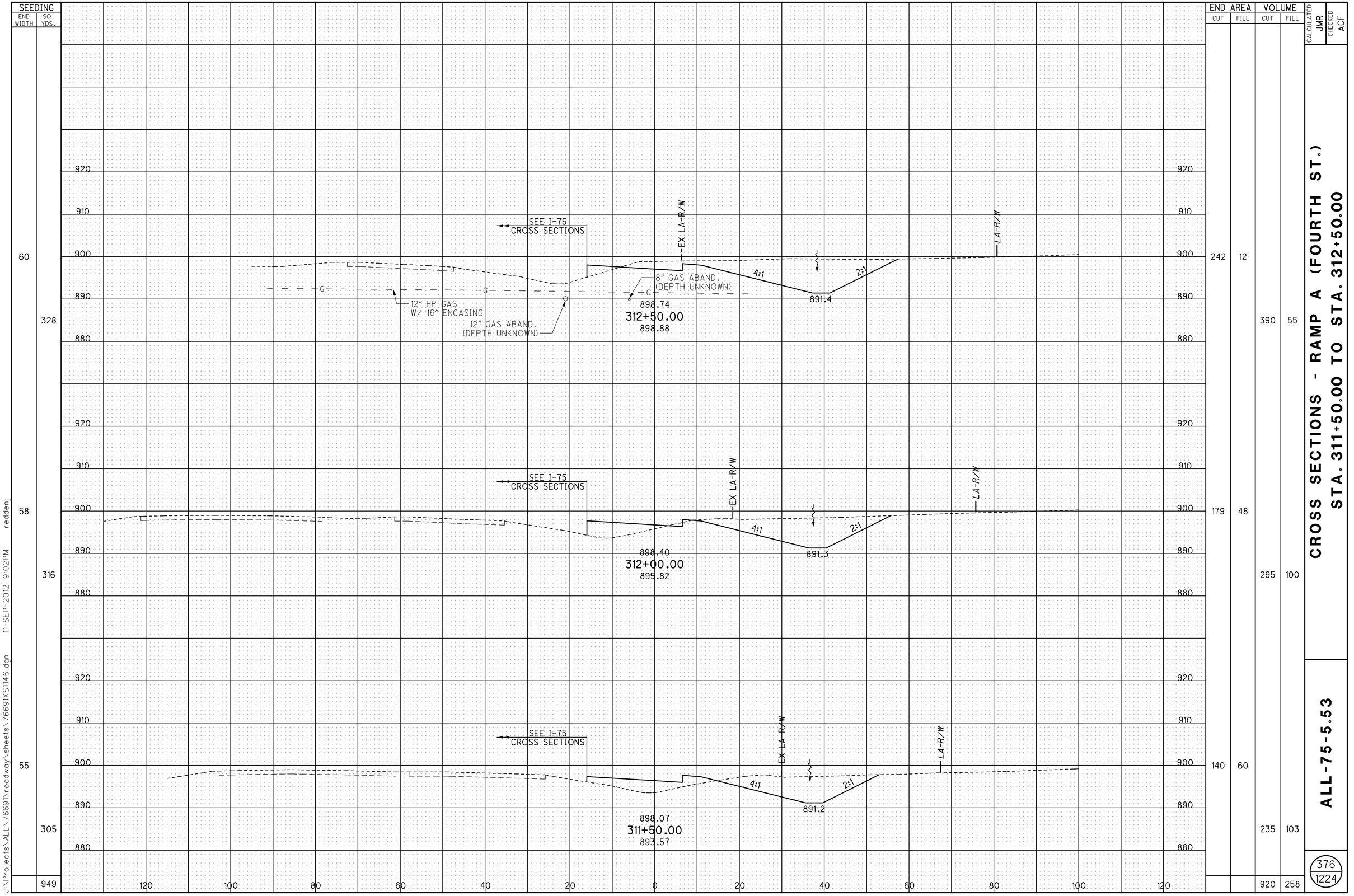

CROSS SECTIONS - RAMP A (FOURTH ST.)
STA. 311+50.00 TO STA. 312+50.00

ALL-75-5.53

376
1224

J:\Projects\ALL\76691\roadway\sheets\76691XS1146.dgn 11-SEP-2012 9:02PM reddenj

SEEDING		END AREA		VOLUME	
END WIDTH	SQ. YDS.	CUT	FILL	CUT	FILL
144	789	673	0	1175	36
139	694	596	39	971	108
109	472	453	78	643	83
	1955			2789	227

CALCULATED JMR
CHECKED ACF

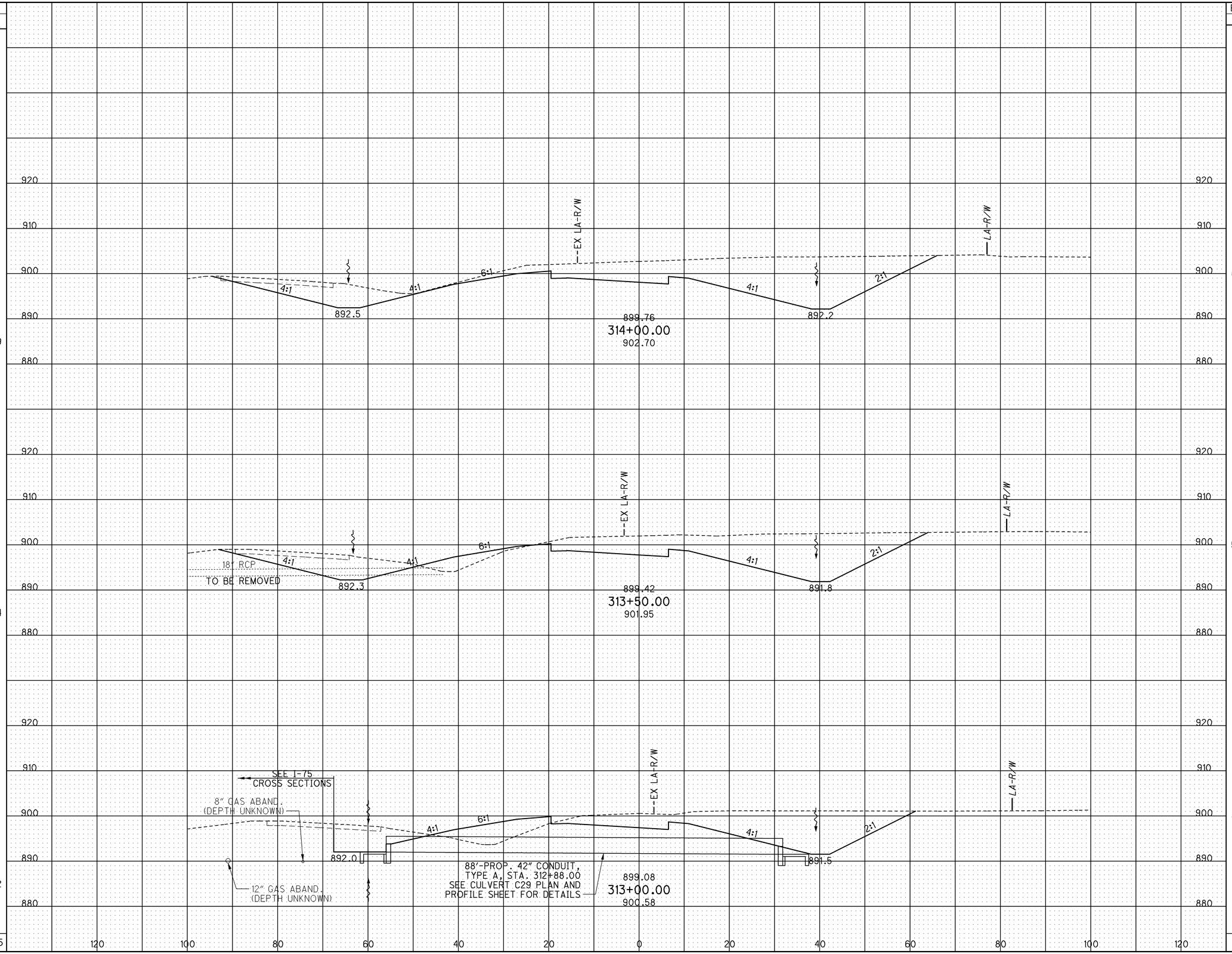

CROSS SECTIONS - RAMP A (FOURTH ST.)
STA. 313+00.00 TO STA. 314+00.00

ALL-75-5.53

377
1224

J:\Projects\ALL\76691\roadway\sheets\76691XS1147.dgn 11-SEP-2012 9:02PM reddenj

SEEDING		END AREA		VOLUME	
END WIDTH	SQ. YDS.	CUT	FILL	CUT	FILL
139	783	836	0	1517	0
142	794	803	0	1389	0
143	800	697	0	1268	0
	2377			4174	0

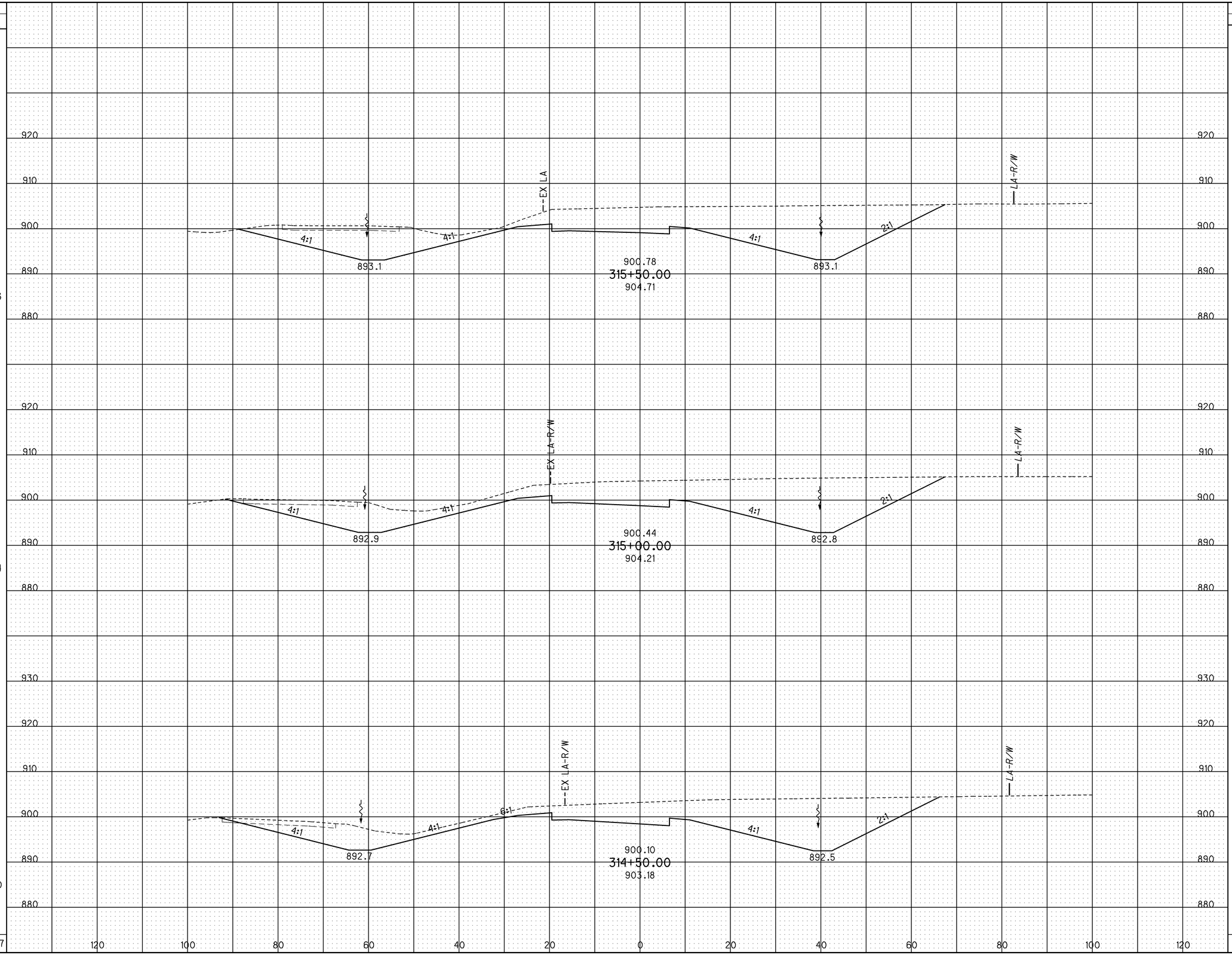

CALCULATED JMR
CHECKED ACF

CROSS SECTIONS - RAMP A (FOURTH ST.)
STA. 314+50.00 TO STA. 315+50.00

ALL-75-5.53

378
1224

J:\Projects\ALL\76691\roadway\sheets\76691XS1148.dgn 11-SEP-2012 9:02PM reddenj

SEEDING		END AREA		VOLUME	
END WIDTH	SQ. YDS.	CUT	FILL	CUT	FILL
81	489	434	0	880	0
94	589	516	0	1157	9
117	711	734	9	1453	9
	1789			3490	18

CALCULATED JMR
CHECKED ACF

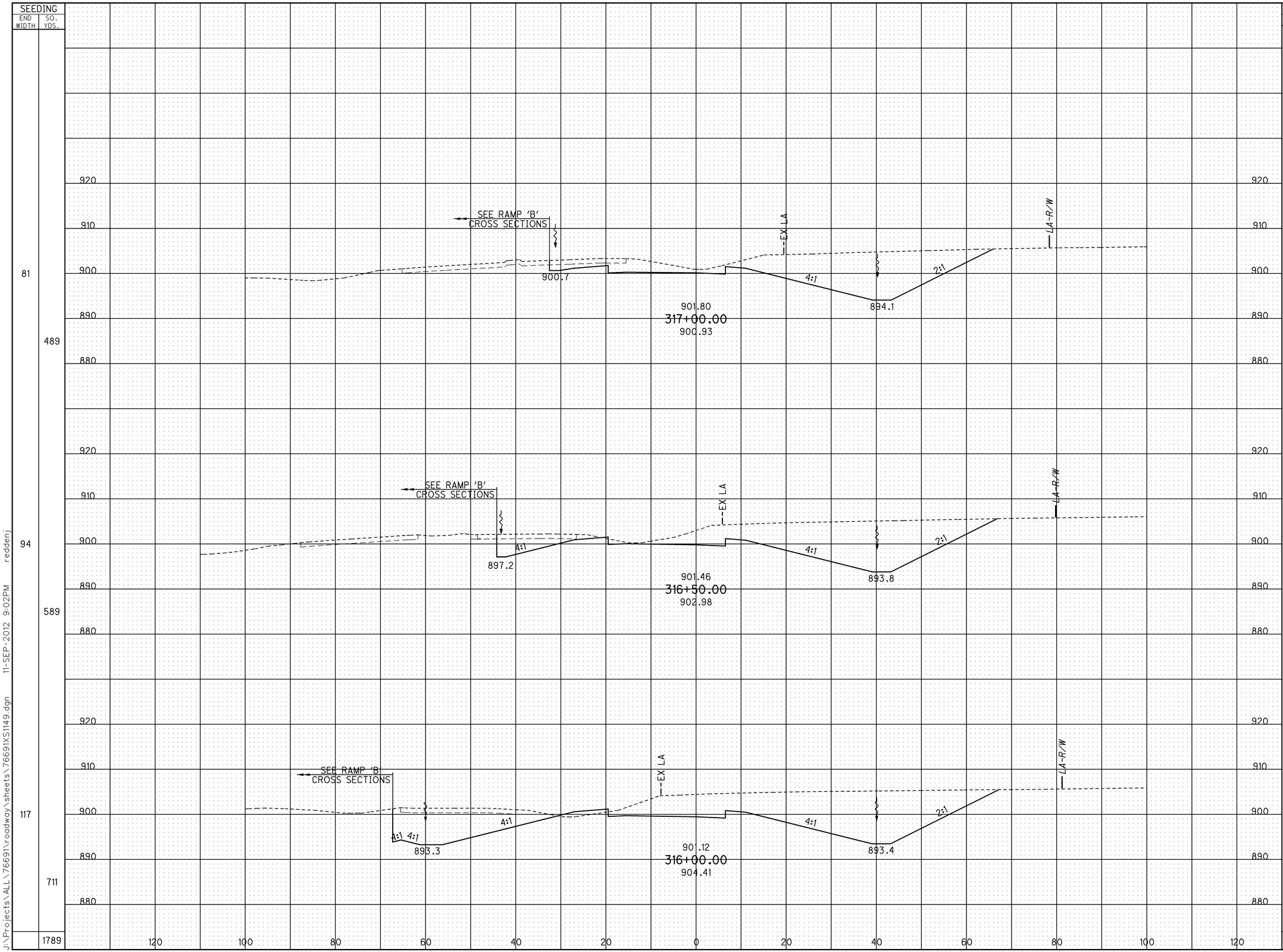

CROSS SECTIONS - RAMP A (FOURTH ST.)
STA. 316+00.00 TO STA. 317+00.00

ALL-75-5.53

379
1224

J:\Projects\ALL\76691\roadway\sheets\76691XS1149.dgn 11-SEP-2012 9:02PM reddenj

SEEDING END WIDTH	SEEDING SQ. YDS.	END AREA CUT	END AREA FILL	VOLUME CUT	VOLUME FILL
76	466	356	24	737	27
90	569	440	5	893	7
115		524	3		
76	439	368	3	743	2
	1474			2373	36

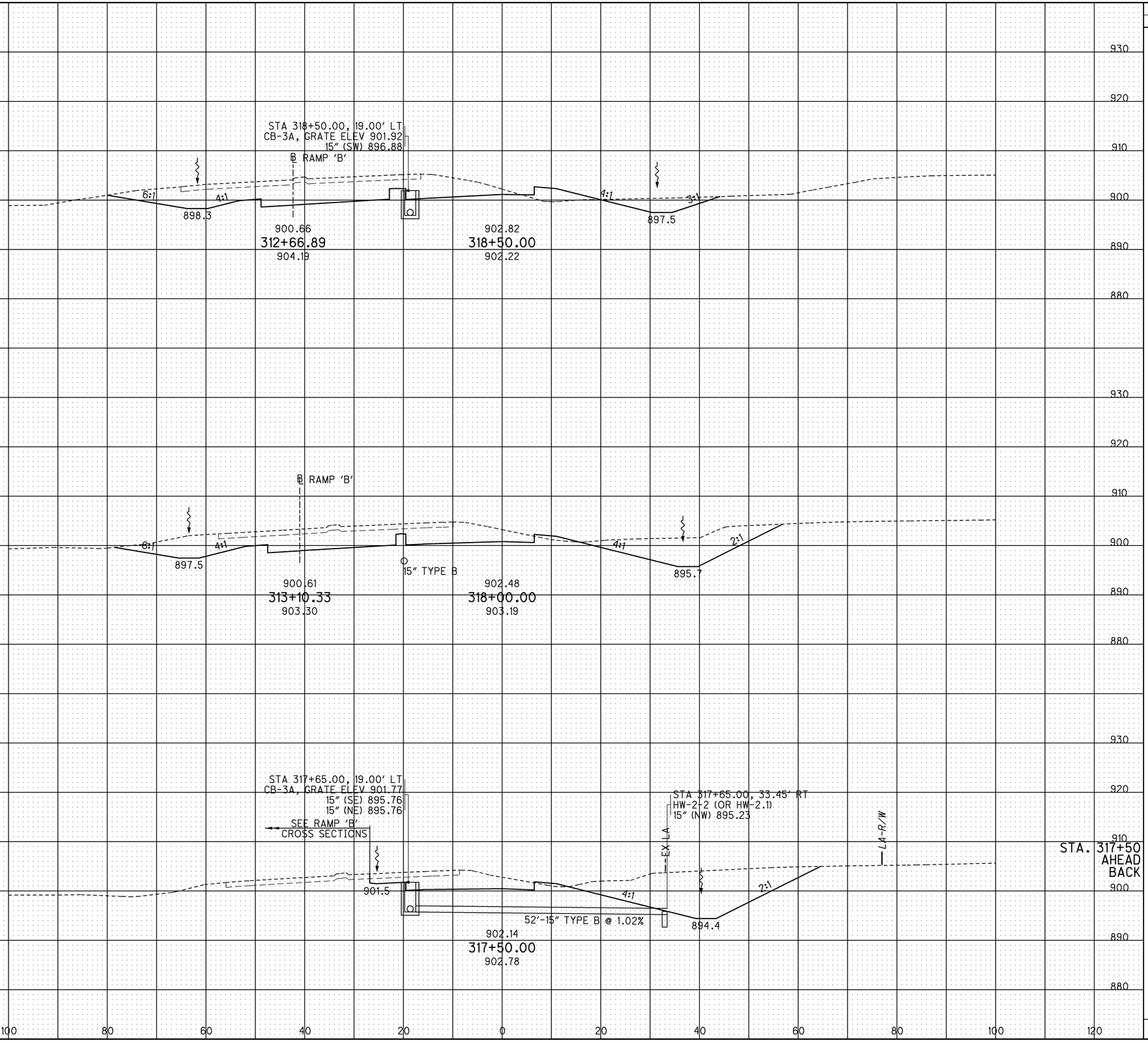

CROSS SECTIONS - RAMP A (FOURTH ST.)
STA. 317+50.00 TO STA. 318+50.00

CALCULATED JMR
CHECKED ACF

ALL-75-5.53

380
1224

J:\Projects\ALL\76691\roadway\sheets\76691XS1150.dgn 11-SEP-2012 9:02PM reddenj

SEEDING END WIDTH	SEEDING SQ. YDS.	END AREA CUT	END AREA FILL	VOLUME CUT	VOLUME FILL
47	278	215	61	440	107
51	317	261	54	517	91
62	389	297	44	605	63
	984			1562	261

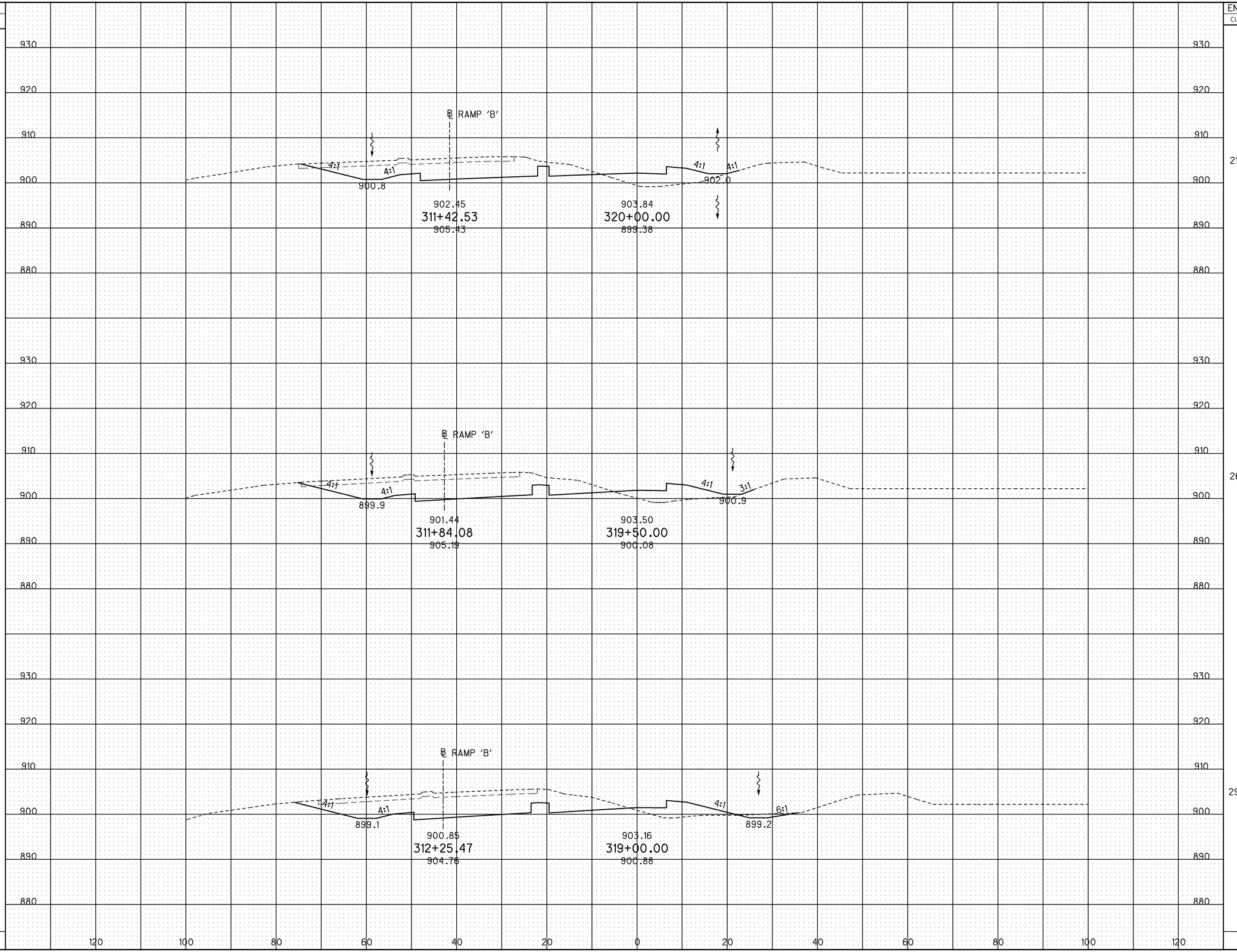

CALCULATED JMR
CHECKED ACF

CROSS SECTIONS - RAMP A (FOURTH ST.)
STA. 319+00.00 TO STA. 320+00.00

ALL-75-5.53

381
1224

J:\Projects\ALL\76691\roadway\sheets\76691XS1151.dgn 11-SEP-2012 9:02PM reddenj

SEEDING		END AREA		VOLUME	
END WIDTH	SQ. YDS.	CUT	FILL	CUT	FILL
95	240	204	136	171	114
65	328	138	93	286	161
53	284	171	81	357	132
	852			814	407

CALCULATED JMR
CHECKED ACF

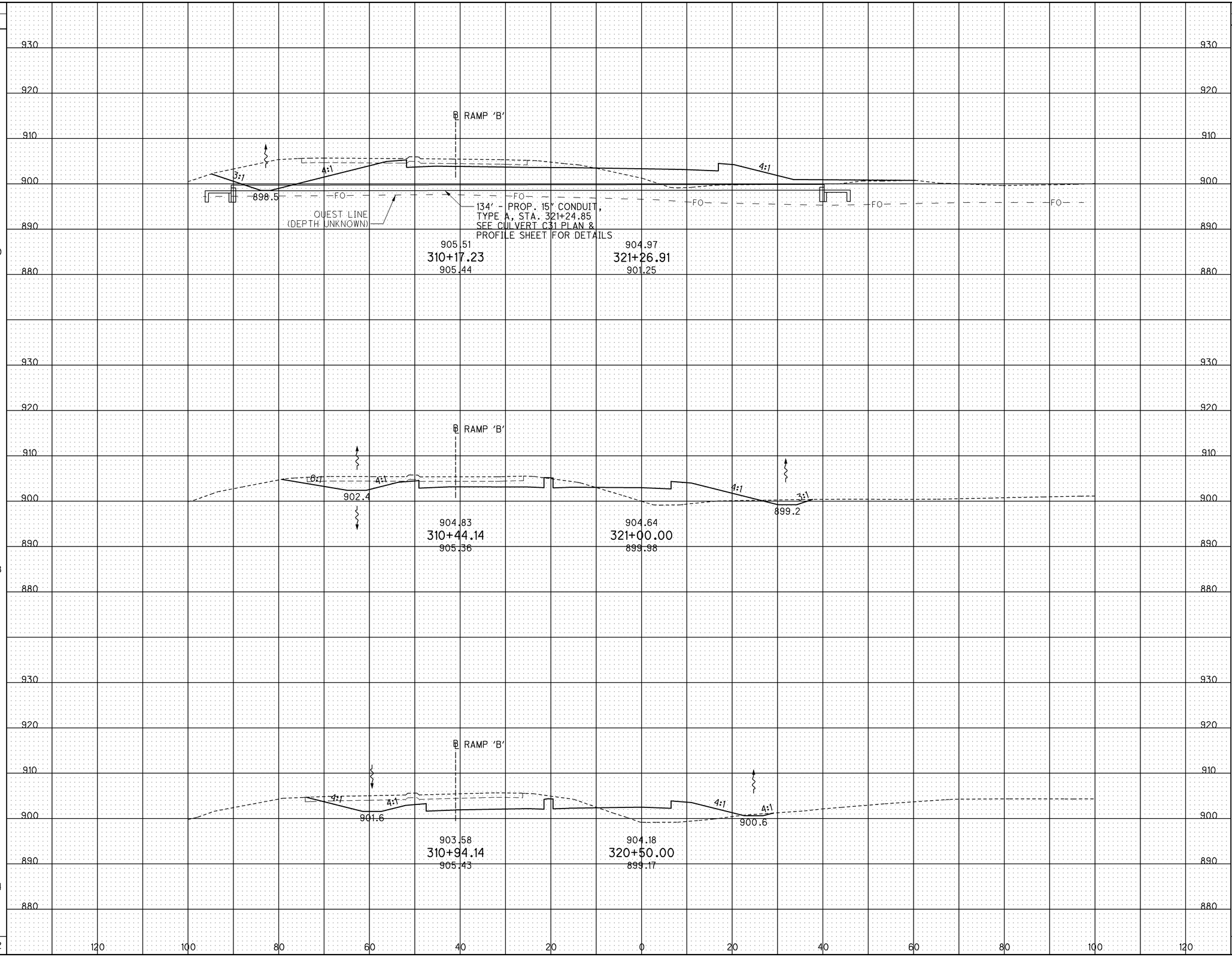

CROSS SECTIONS - RAMP A (FOURTH ST.)
STA. 320+50.00 TO STA. 321+26.91

ALL-75-5.53

382
1224

J:\Projects\ALL\76691\roadway\sheets\76691XS1152.dgn 11-SEP-2012 9:02PM reddenj

SEEDING	
END WIDTH	SQ. YDS.
0	0
65	
66	
208	
	273

GRAND TOTAL SEEDING & MULCHING RAMP 'A'
11,252 SQ. YD.
(QUANTITY CARRIED TO ROADWAY SUBSUMMARY)

GRAND TOTAL EARTHWORK RAMP 'A'
EXCAVATION: 16,155 CU. YD.
EMBANKMENT: 1,432 CU. YD.
(QUANTITY CARRIED TO ROADWAY SUBSUMMARY)

NOTE:
DEDUCTED 830 CU. YD. FROM EXCAVATION QUANTITY FOR PAVEMENT REMOVAL

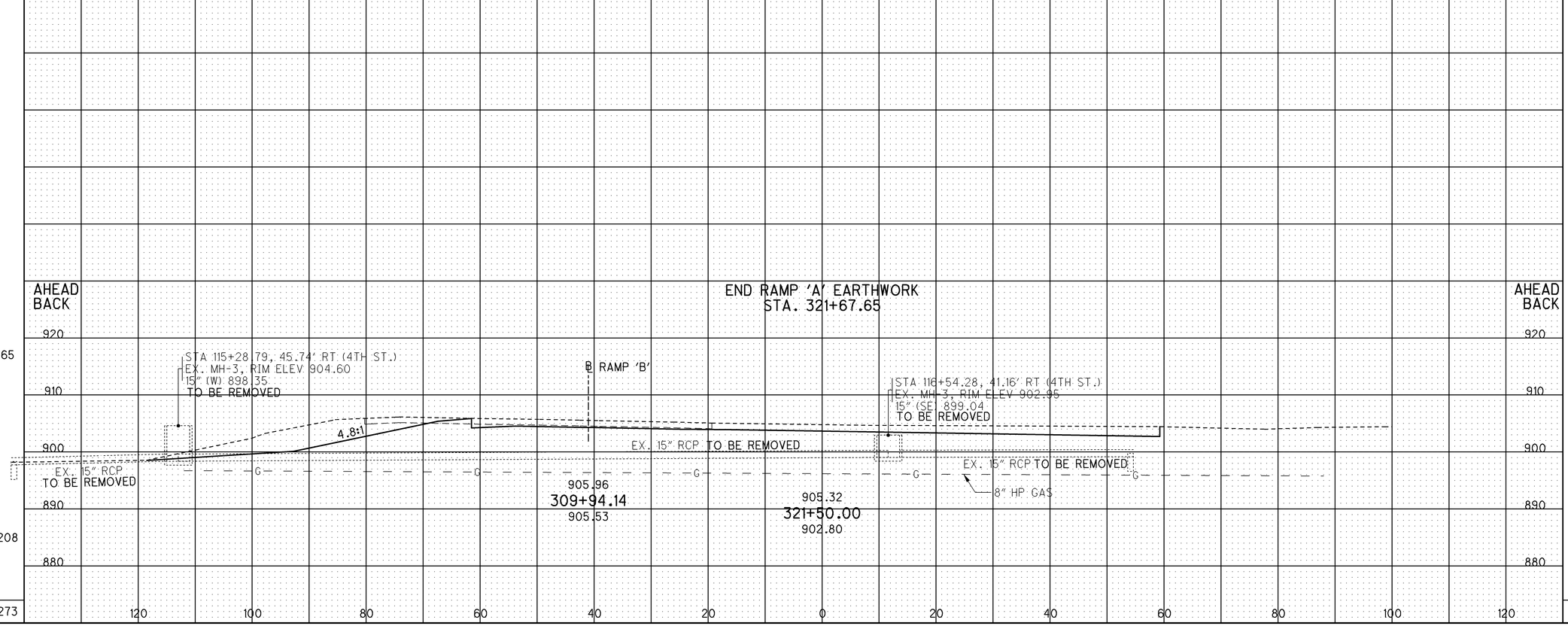

END AREA		VOLUME	
CUT	FILL	CUT	FILL
0	0		
442	0		
284	0		
		238	0
		209	58
		447	58

CALCULATED JMR
CHECKED ACF

CROSS SECTIONS - RAMP A (FOURTH ST.)
STA. 321+50.00

ALL-75-5.53

383
1224

J:\Projects\ALL\76691\roadway\sheets\76691XS1153.dgn 11-SEP-2012 9:02PM reddenj

SEEDING		END AREA		VOLUME	
END WIDTH	SQ. YDS.	CUT	FILL	CUT	FILL
91	439	235	5	380	5
66	333	175	0	333	0
53		185	0		
	772			713	5

CALCULATED JMR
CHECKED ACF

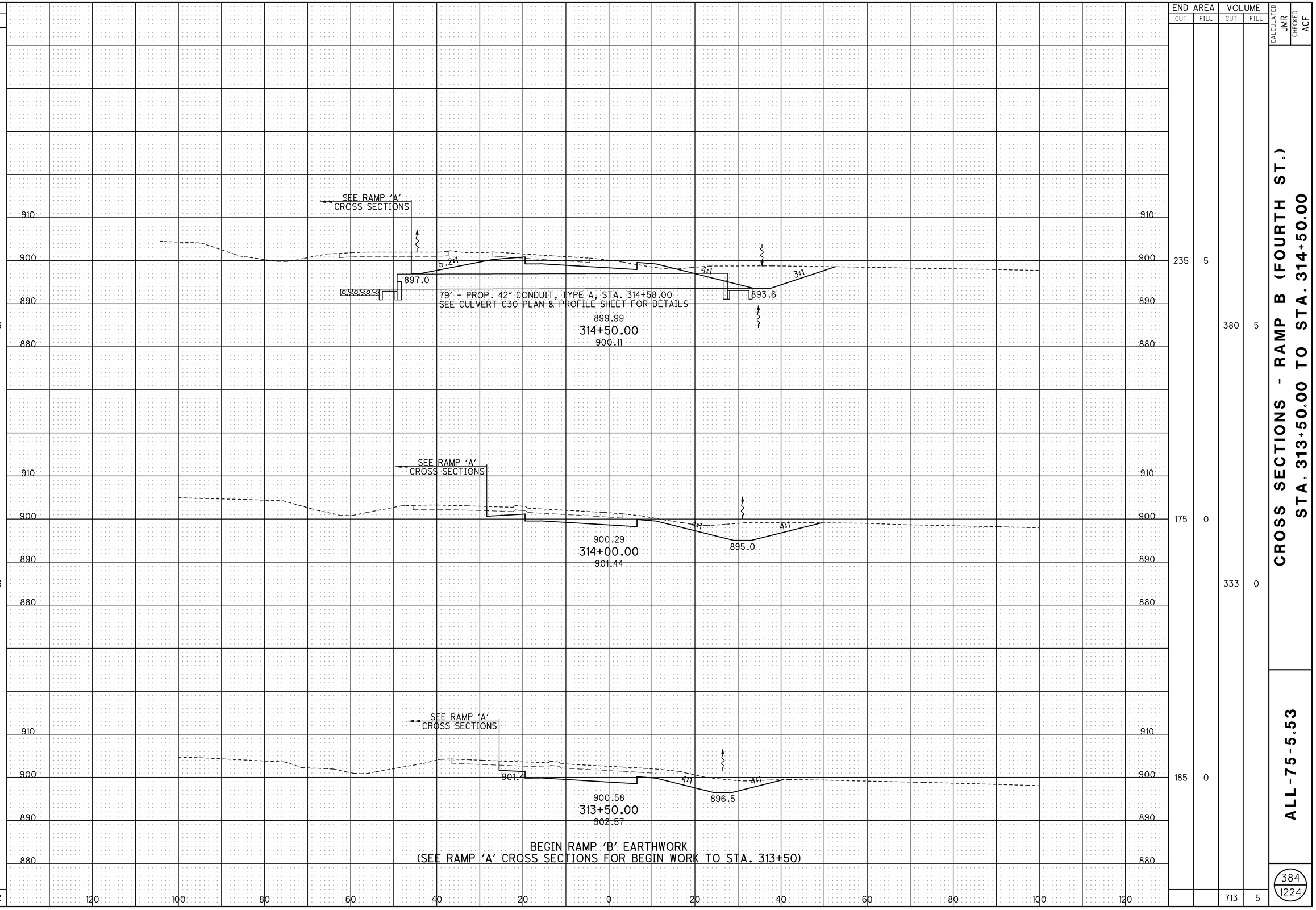

CROSS SECTIONS - RAMP B (FOURTH ST.)
STA. 313+50.00 TO STA. 314+50.00

ALL-75-5.53

384
1224

J:\Projects\ALL\76691\roadway\sheets\76691XS1154.dgn 11-SEP-2012 9:02PM reddenj

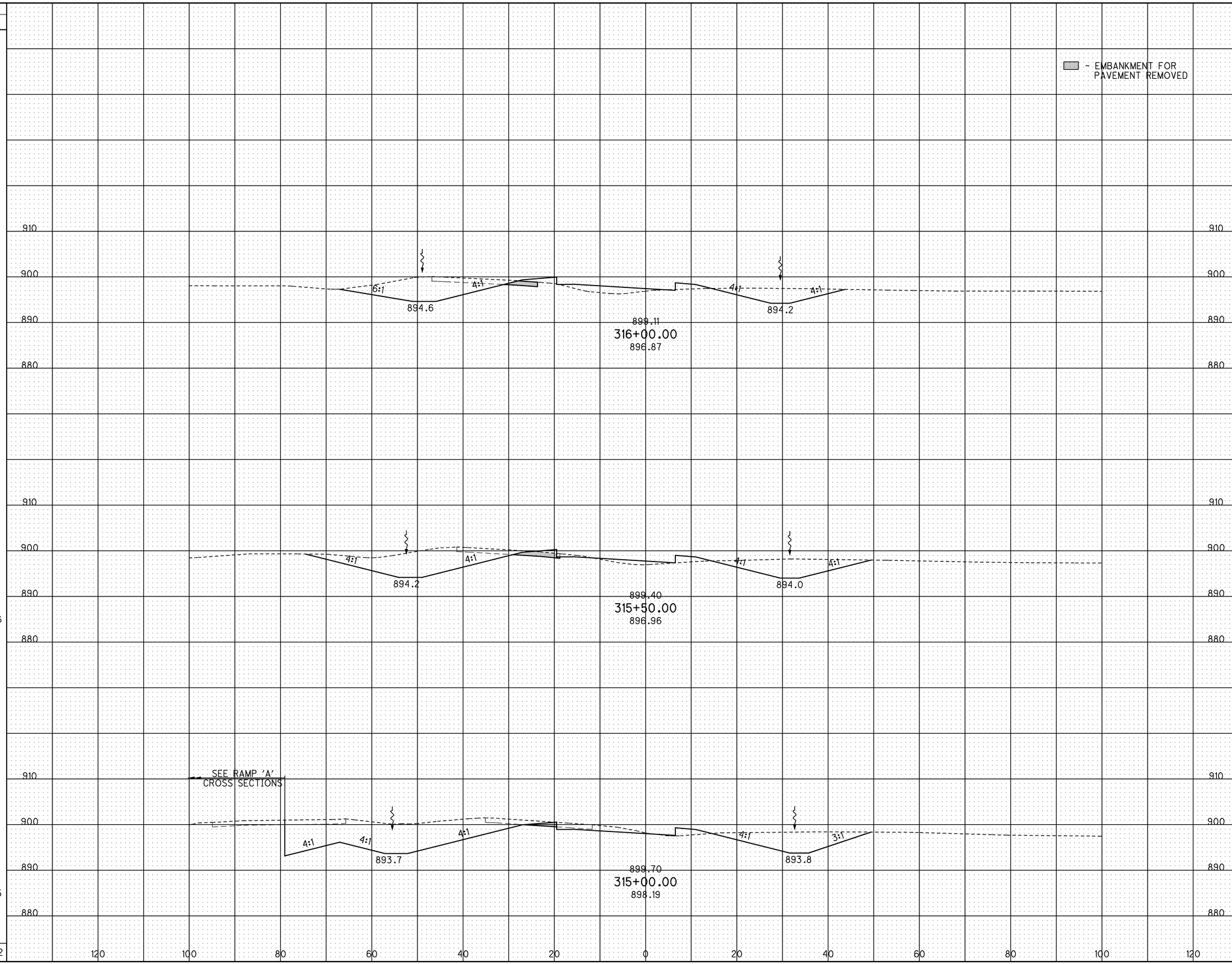

SEEDING END WIDTH	SEEDING SQ. YDS.	END AREA CUT	END AREA FILL	VOLUME CUT	VOLUME FILL
101		175	42		
	611			386	65
118		242	27		
	666			585	38
122		390	13		
	595			578	17
	1872			1549	120

CALCULATED JMR
CHECKED ACF

CROSS SECTIONS - RAMP B (FOURTH ST.)
STA. 315+00.00 TO STA. 316+00.00

ALL-75-5.53

J:\Projects\ALL\76691\roadway\sheets\76691XS1155.dgn 11-SEP-2012 9:02PM reddenj

SEEDING		END AREA		VOLUME	
END WIDTH	SQ. YDS.	CUT	FILL	CUT	FILL
38	222	13	46	33	85
41	372	24	46	118	97
91	533	104	60	258	94
	1127			409	276

CALCULATED JMR
CHECKED ACF

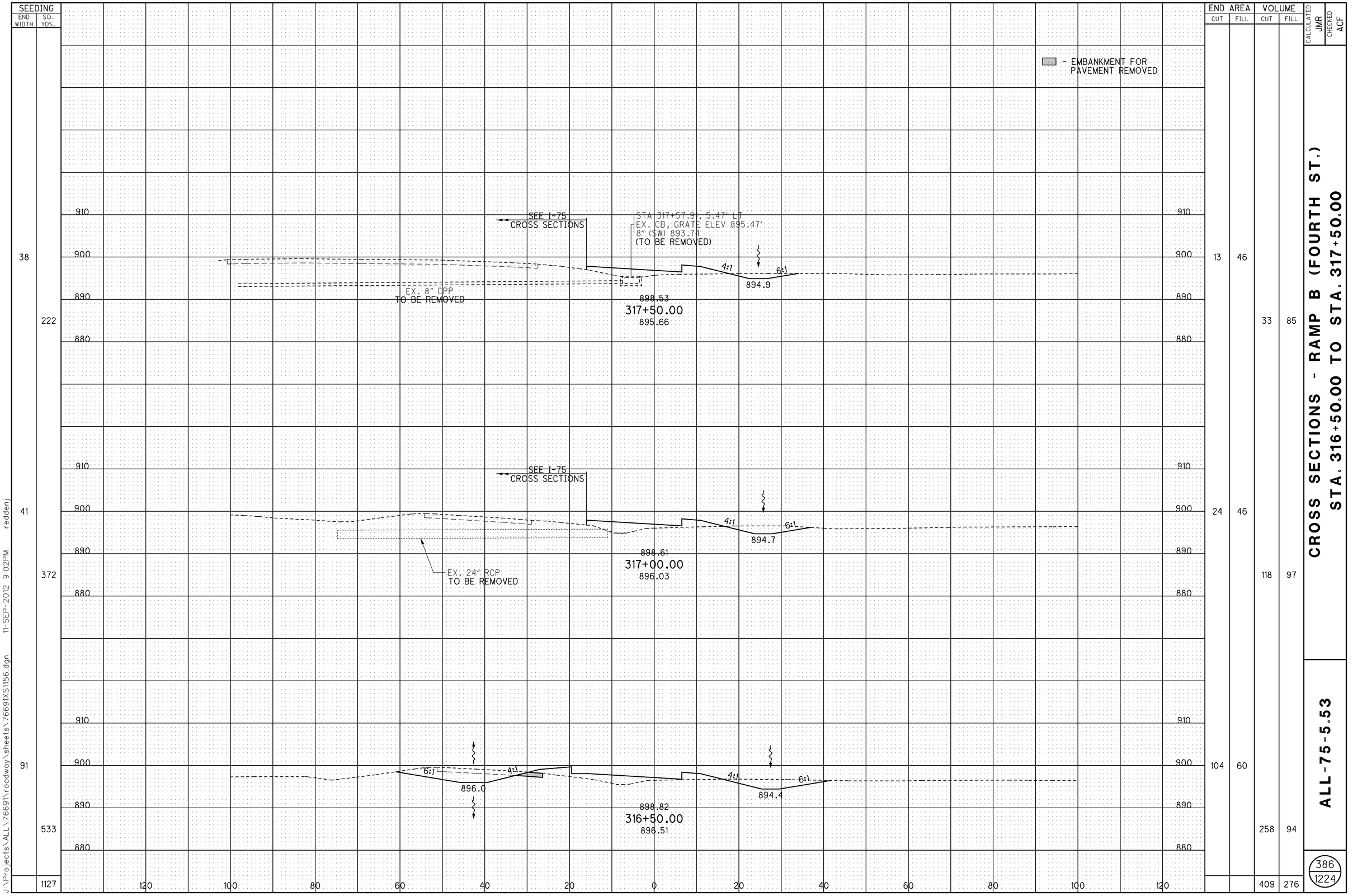

CROSS SECTIONS - RAMP B (FOURTH ST.)
STA. 316+50.00 TO STA. 317+50.00

ALL-75-5.53

386
1224

J:\Projects\ALL\76691\roadway\sheets\76691XS1156.dgn 11-SEP-2012 9:02PM reddenj

SEEDING	
END WIDTH	SQ. YDS.
40	216
	216

GRAND TOTAL SEEDING & MULCHING RAMP 'B'
3,987 SQ. YD.
(QUANTITY CARRIED TO ROADWAY SUBSUMMARY)

GRAND TOTAL EARTHWORK RAMP 'B'
EXCAVATION: 2,472 CU. YD.
EMBANKMENT: 465 CU. YD.
(QUANTITY CARRIED TO ROADWAY SUBSUMMARY)

NOTE:
DEDUCTED 233 CU. YD. FROM EXCAVATION QUANTITY FOR PAVEMENT REMOVAL

END AREA		VOLUME	
CUT	FILL	CUT	FILL
24	23	34	64
		34	64

CALCULATED JMR
CHECKED ACF

END RAMP 'B' EARTHWORK STA. 318+00.00
(SEE I-75 CROSS SECTIONS FOR STA 318+00 TO END)

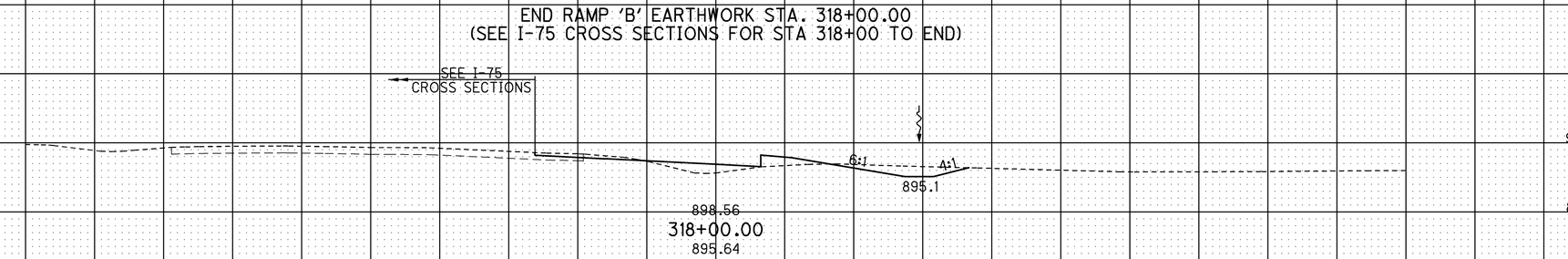

CROSS SECTIONS - RAMP B (FOURTH ST.)
STA. 318+00.00

ALL-75-5.53

387
1224

J:\Projects\ALL\76691\roadway\sheets\76691XS1157.dgn 11-SEP-2012 9:02PM reddenj

SEEDING END WIDTH	SEEDING SQ. YDS.	END AREA CUT	END AREA FILL	VOLUME CUT	VOLUME FILL
82	333	53	63	79	71
36	216	32	14	65	30
42		38	19		
	549			144	101

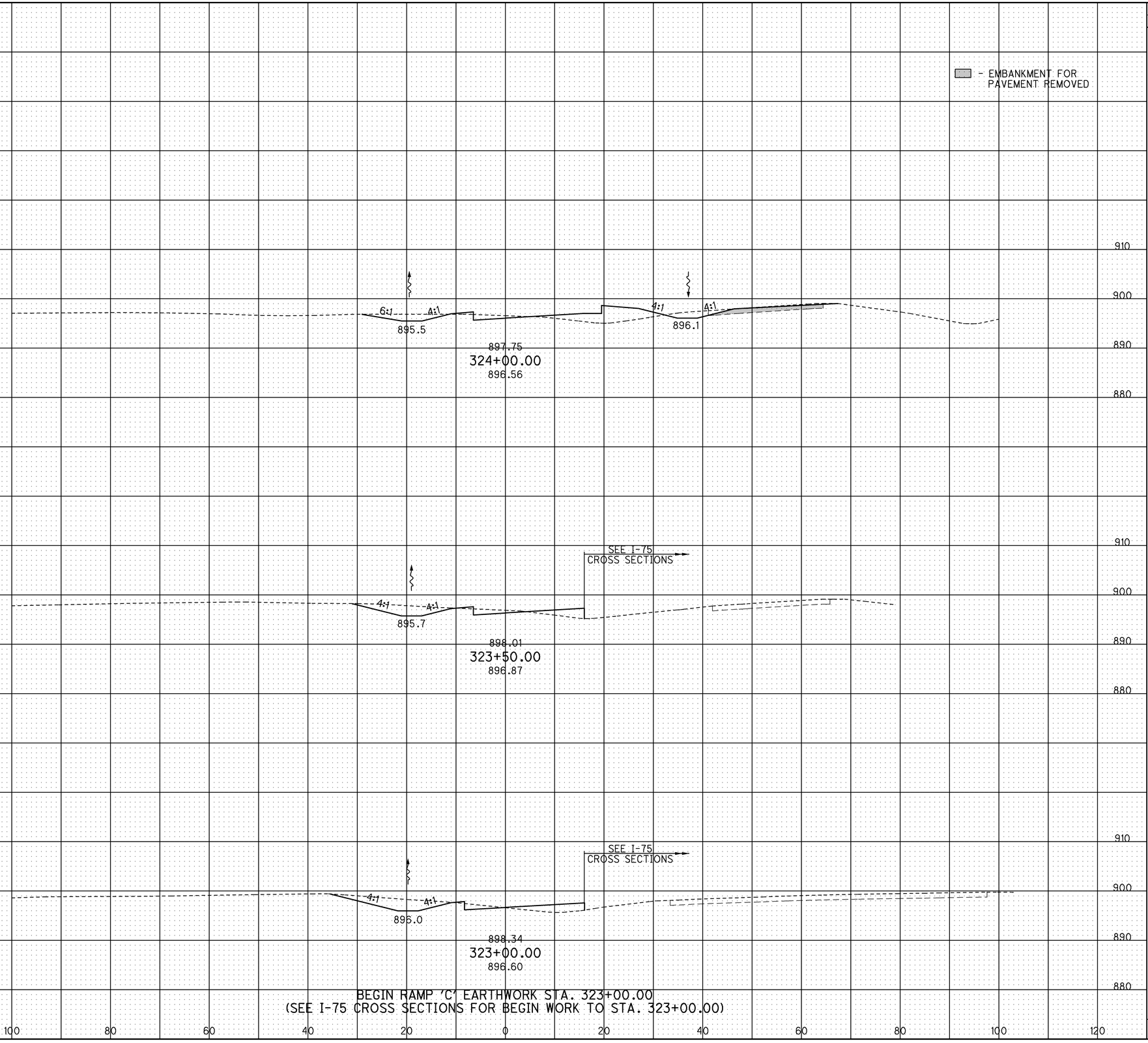

BEGIN RAMP 'C' EARTHWORK STA. 323+00.00
(SEE I-75 CROSS SECTIONS FOR BEGIN WORK TO STA. 323+00.00)

CALCULATED JMR
CHECKED ACF

CROSS SECTIONS - RAMP C (FOURTH ST.) STA. 323+00.00 TO STA. 324+00.00

ALL-75-5.53

388
1224

J:\Projects\ALL\76691\roadway\sheets\76691XS1158.dgn 11-SEP-2012 9:02PM reddenj

SEEDING END WIDTH	SEEDING SQ. YDS.	END AREA CUT	END AREA FILL	VOLUME CUT	VOLUME FILL
76	411	128	9	170	34
71	400	55	27	87	81
72	433	39	60	85	114
	1244			342	229

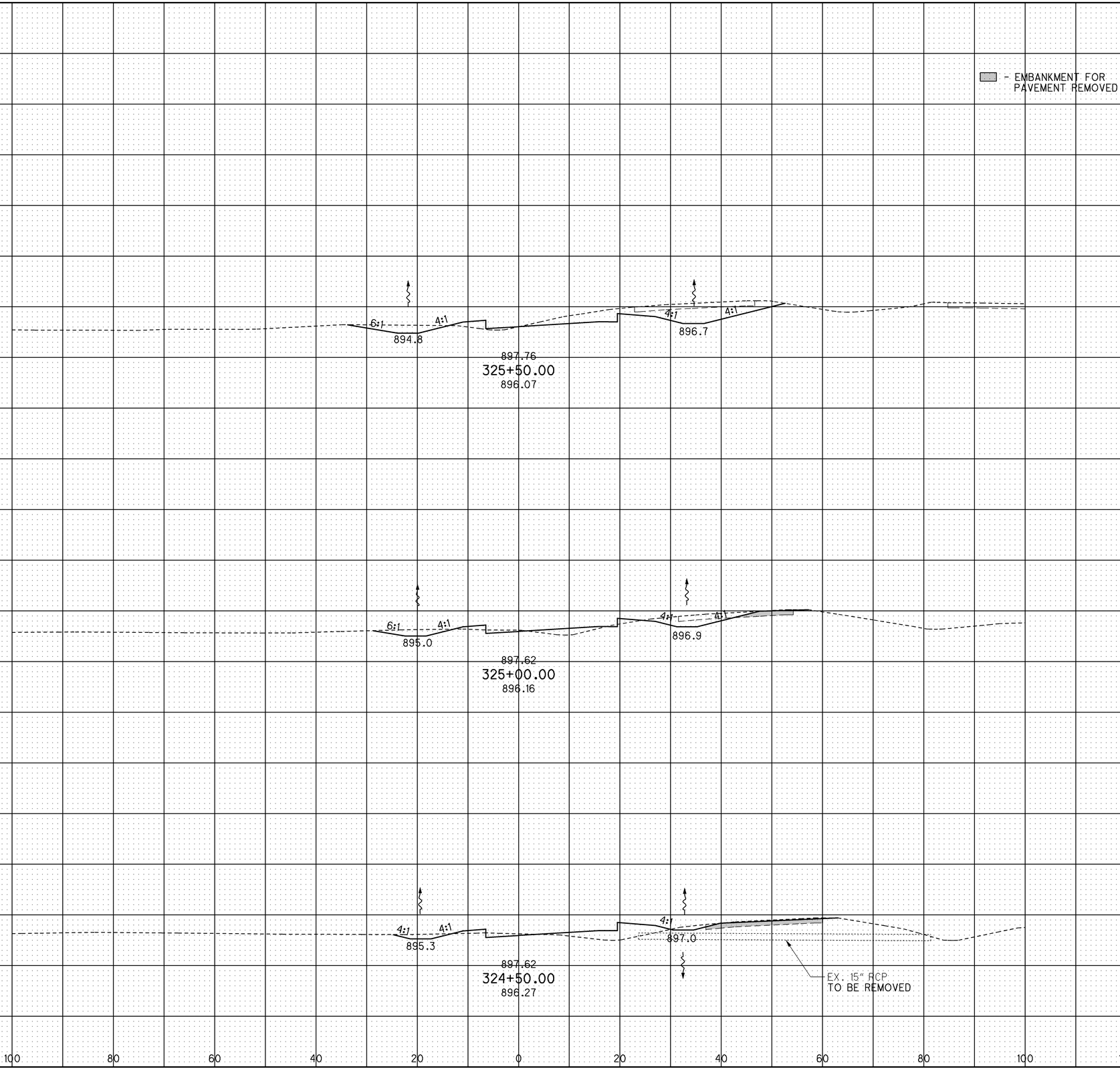

CALCULATED JMR
CHECKED ACF

CROSS SECTIONS - RAMP C (FOURTH ST.)
STA. 324+50.00 TO STA. 325+50.00

ALL-75-5.53

389
1224

J:\Projects\ALL\76691\roadway\sheets\76691XS1159.dgn 11-SEP-2012 9:02PM reddenj

SEEDING	
END WIDTH	SQ. YDS.
52	316
61	383
	699

GRAND TOTAL SEEDING & MULCHING RAMP 'C'
2,492 SQ. YD.
(QUANTITY CARRIED TO ROADWAY SUBSUMMARY)

GRAND TOTAL EARTHWORK RAMP 'C'
EXCAVATION: 939 CU. YD.
EMBANKMENT: 355 CU. YD.
(QUANTITY CARRIED TO ROADWAY SUBSUMMARY)

NOTE:
DEDUCTED 175 CU. YD. FROM EXCAVATION QUANTITY FOR PAVEMENT REMOVAL

END RAMP 'C' EARTHWORK STA. 326+50.00
(SEE RAMP 'D' CROSS SECTIONS FOR STA. 326+50 TO END)

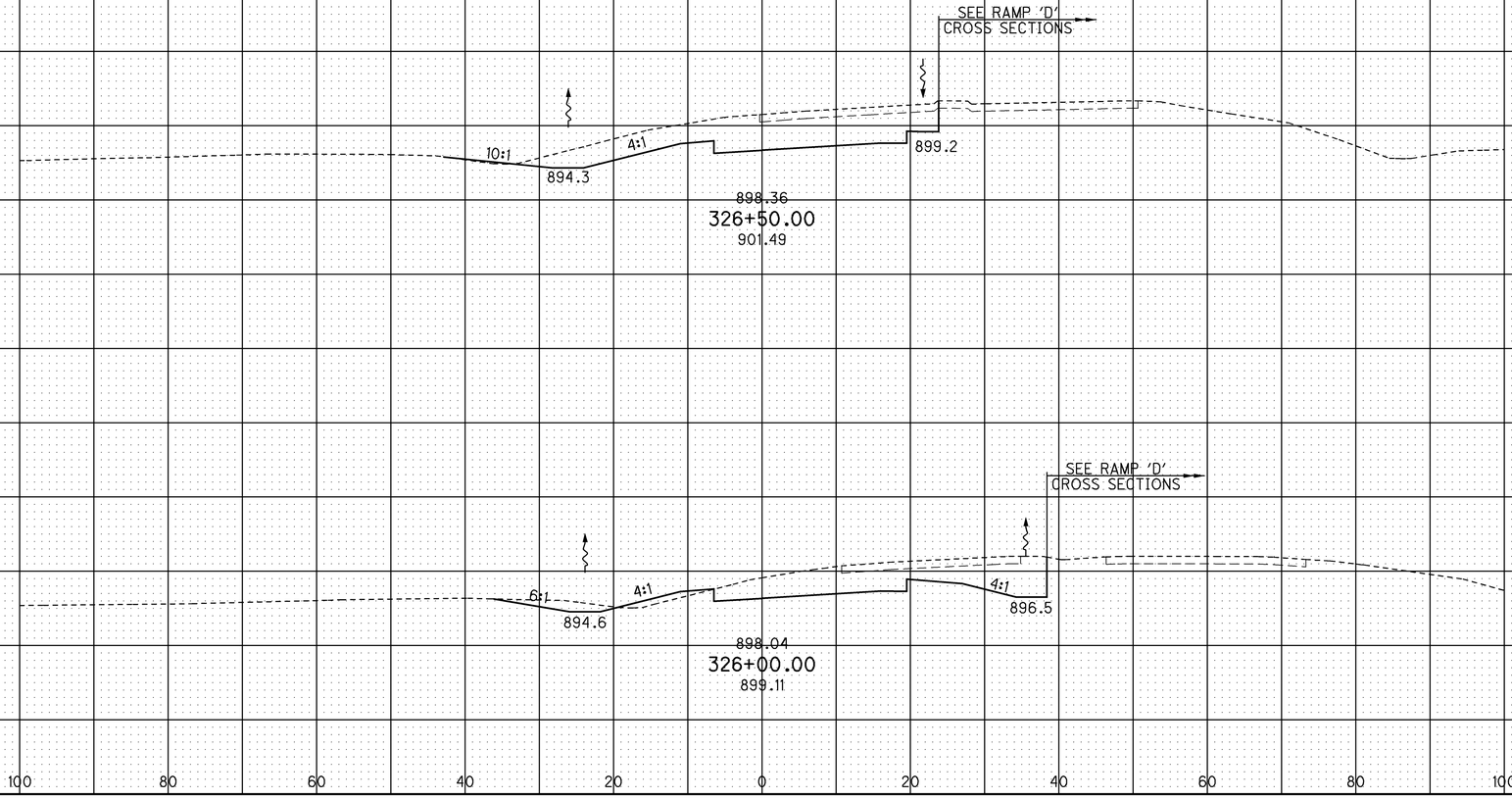

END AREA		VOLUME	
CUT	FILL	CUT	FILL
205	1	350	9
173	8	278	16
		628	25

CALCULATED JMR
CHECKED ACF

CROSS SECTIONS - RAMP C (FOURTH ST.)
STA. 326+00.00 TO STA. 326+50.00

ALL-75-5.53

390
1224

J:\Projects\ALL\76691\roadway\sheets\76691XS1160.dgn 11-SEP-2012 9:03PM reddenj

SEEDING END WIDTH	SEEDING SQ. YDS.
150	245
127	271
0	0
	516

END AREA CUT	END AREA FILL	VOLUME CUT	VOLUME FILL
682	445	287	283
296	520	210	369
296	0	0	0
		497	652

CALCULATED JMR
CHECKED ACF

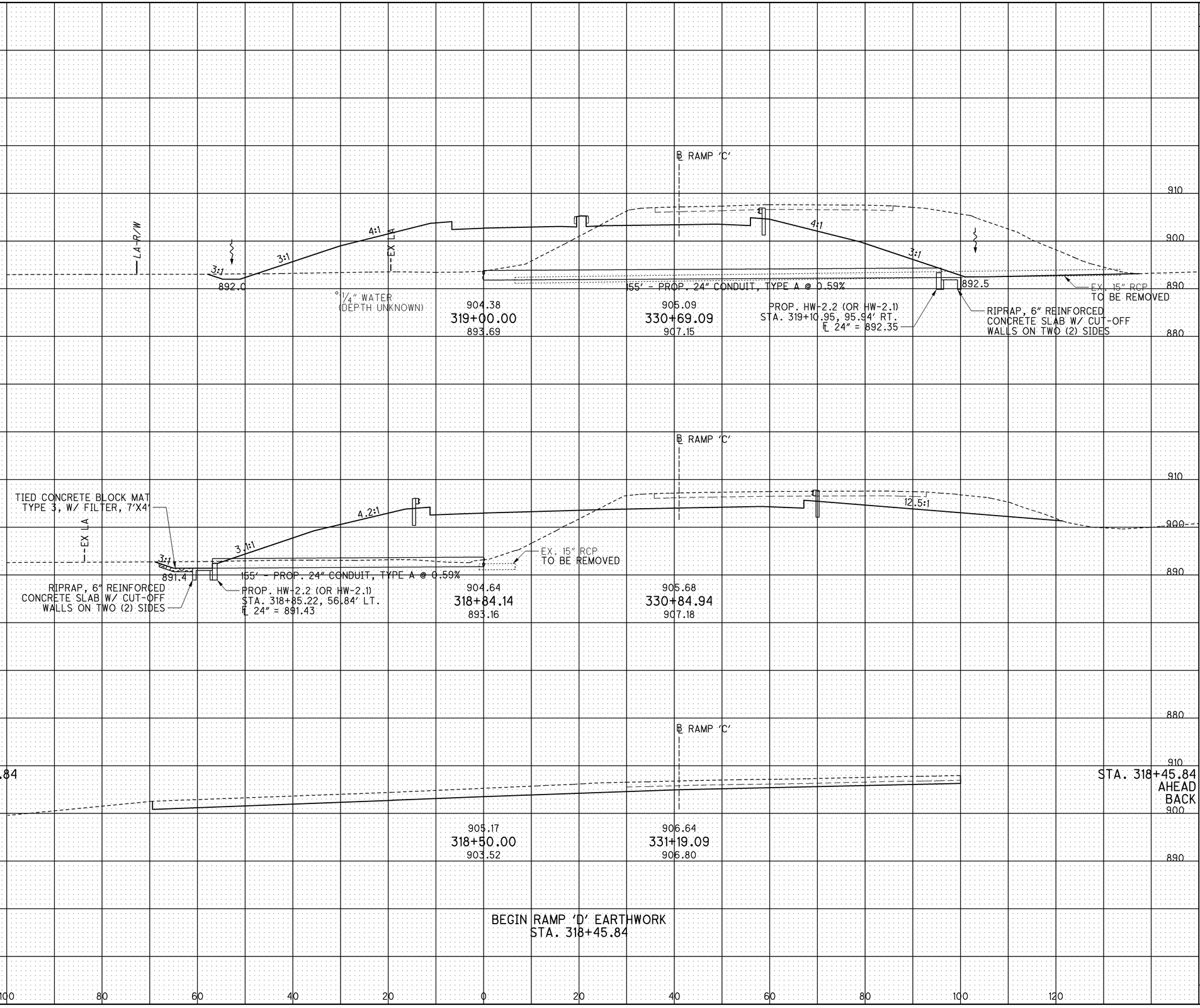

CROSS SECTIONS - RAMP D (FOURTH ST.)
STA. 318+50.00 TO STA. 319+00.00

ALL-75-5.53

391
1224

J:\Projects\ALL\76691\roadway\sheets\76691XS1161.dgn 11-SEP-2012 9:03PM reddenj

SEEDING END WIDTH	SEEDING SQ. YDS.
130	750
140	850
164	872
	2472

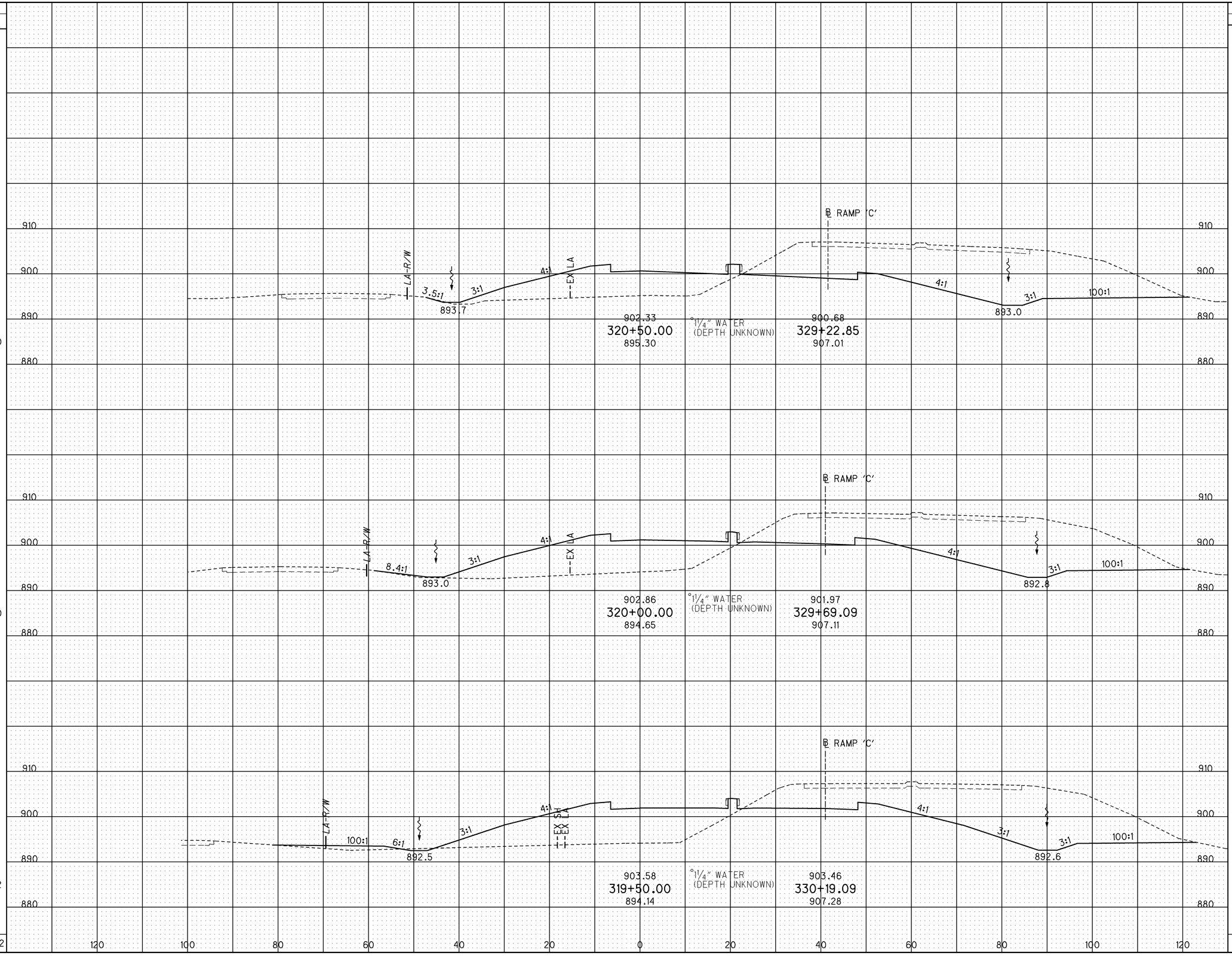

END AREA CUT	END AREA FILL	VOLUME CUT	VOLUME FILL
760	272		
		1384	590
735	365		
		1340	711
713	403		
		1291	785
		4015	2086

CALCULATED JMR
CHECKED ACF

CROSS SECTIONS - RAMP D (FOURTH ST.)
STA. 319+50.00 TO STA. 320+50.00

ALL-75-5.53

392
1224

J:\Projects\ALL\76691\roadway\sheets\76691XS1162.dgn 11-SEP-2012 9:03PM reddenj

SEEDING END WIDTH	SEEDING SQ. YDS.	END AREA CUT	END AREA FILL	VOLUME CUT	VOLUME FILL
120	616	733	75	1361	179
101	639	737	119	1387	301
128	716	762	206	1408	443
	1971			4156	923

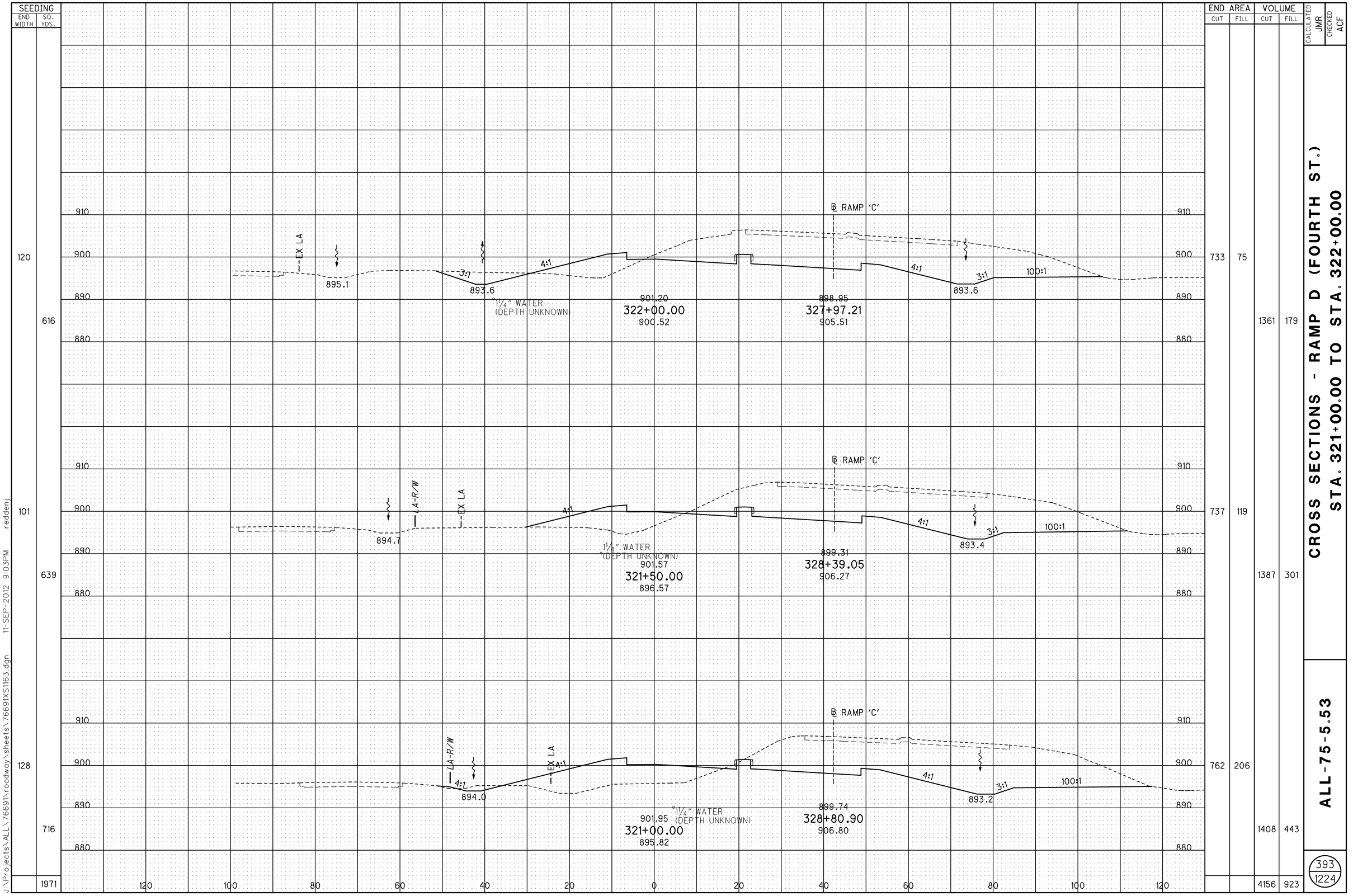

CALCULATED JMR
CHECKED ACF

CROSS SECTIONS - RAMP D (FOURTH ST.)
STA. 321+00.00 TO STA. 322+00.00

ALL-75-5.53

393
1224

J:\Projects\ALL\76691\roadway\sheets\76691XS1163.dgn 11-SEP-2012 9:03PM reddenj

SEEDING END WIDTH	SEEDING SQ. YDS.
99	
145	
	706
109	
	628
116	
	656
	1990

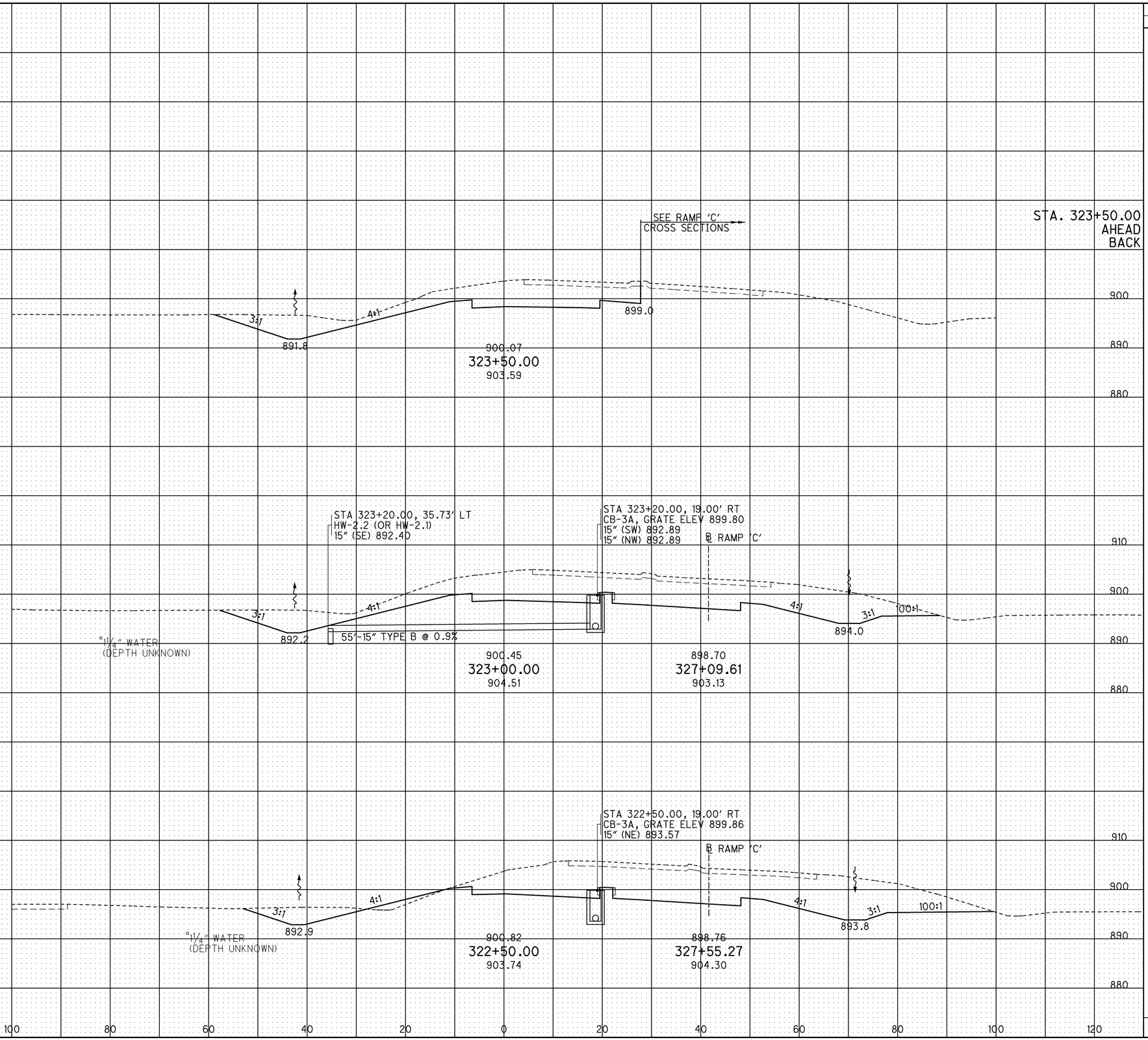

END AREA CUT	END AREA FILL	VOLUME CUT	VOLUME FILL
300	0		
523	0		
		1076	0
639	0		
		1237	11
697	12		
		1323	81
		3636	92

CALCULATED JMR
CHECKED ACF

CROSS SECTIONS - RAMP D (FOURTH ST.)
STA. 322+50.00 TO STA. 323+50.00

ALL-75-5.53

394
1224

J:\Projects\ALL\76691\roadway\sheets\76691XS1164.dgn 11-SEP-2012 9:03PM reddenj

SEEDING	
END WIDTH	SQ. YDS.
111	550
87	533
104	567
	1650

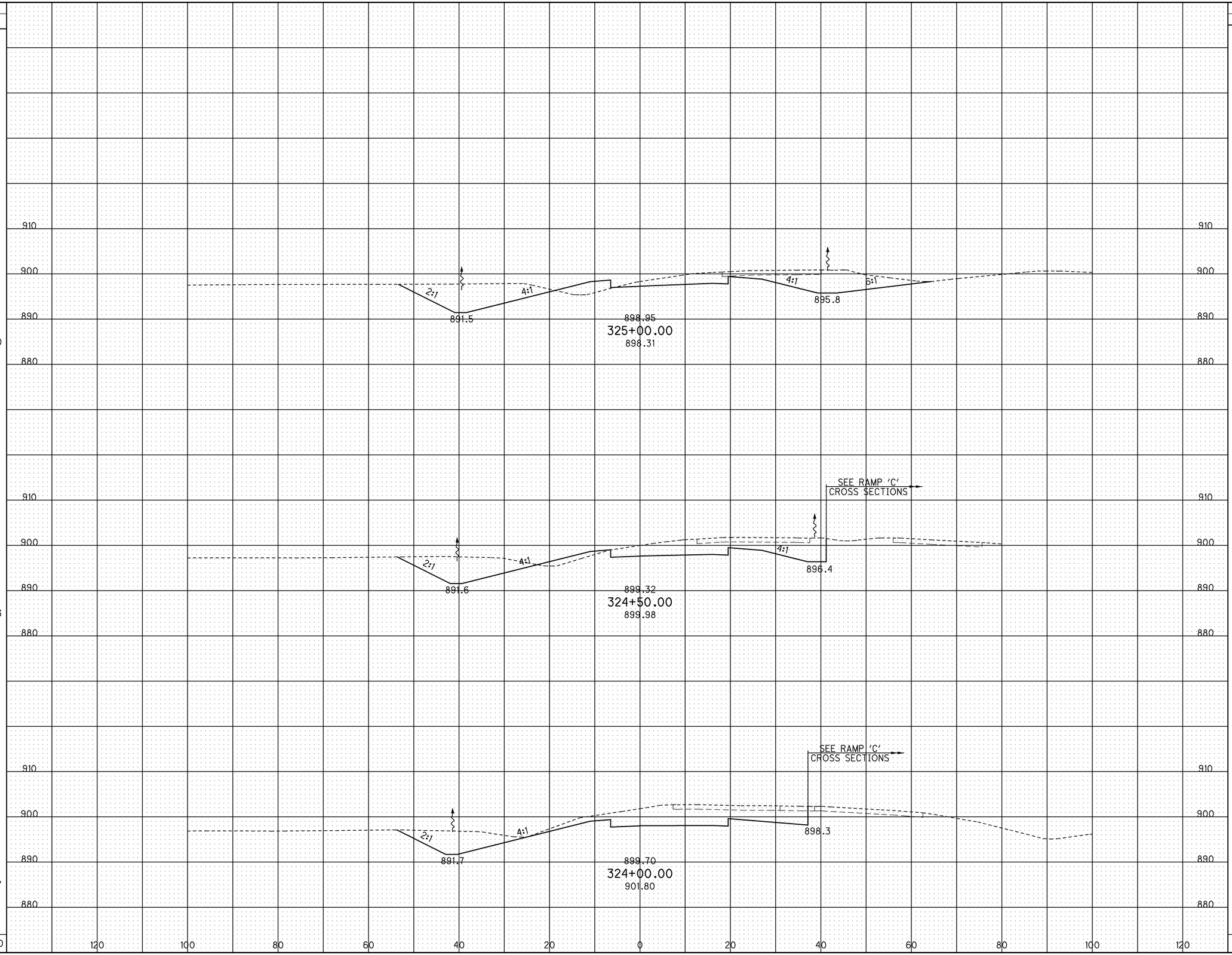

END AREA	
CUT	FILL
294	24
261	15
269	0

VOLUME	
CUT	FILL
514	35
490	13
526	0
1530	48

CALCULATED JMR
CHECKED ACF

CROSS SECTIONS - RAMP D (FOURTH ST.)
STA. 324+00.00 TO STA. 325+00.00

ALL-75-5.53

395
1224

J:\Projects\ALL\76691\roadway\sheets\76691XS1165.dgn 11-SEP-2012 9:03PM reddenj

SEEDING	
END WIDTH	SQ. YDS.
121	673
119	644
112	622
	1939

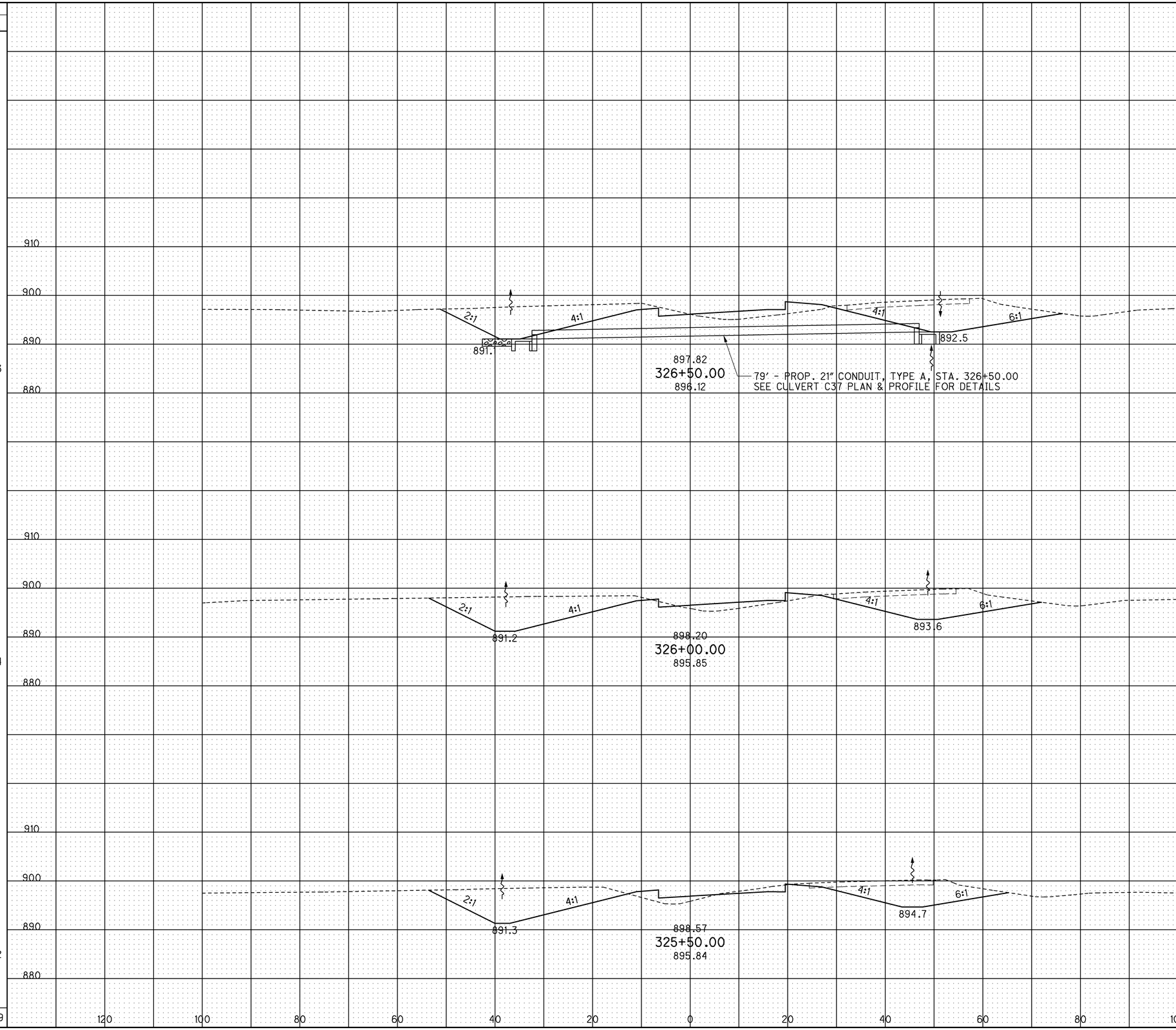

END AREA	
CUT	FILL
350	37
339	28
309	20

VOLUME	
CUT	FILL
638	60
600	44
559	40
1797	144

CALCULATED JMR
CHECKED ACF

CROSS SECTIONS - RAMP D (FOURTH ST.)
STA. 325+50.00 TO STA. 326+50.00

ALL-75-5.53

396
1224

J:\Projects\ALL\76691\roadway\sheets\76691XS1166.dgn 11-SEP-2012 9:03PM reddenj

SEEDING END WIDTH	SEEDING SQ. YDS.	END AREA CUT	END AREA FILL	VOLUME CUT	VOLUME FILL
64	350	234	22	421	43
62	339	221	25	378	44
60	120	188	23		
		328	44		
	669			628	75
	1358			1427	162

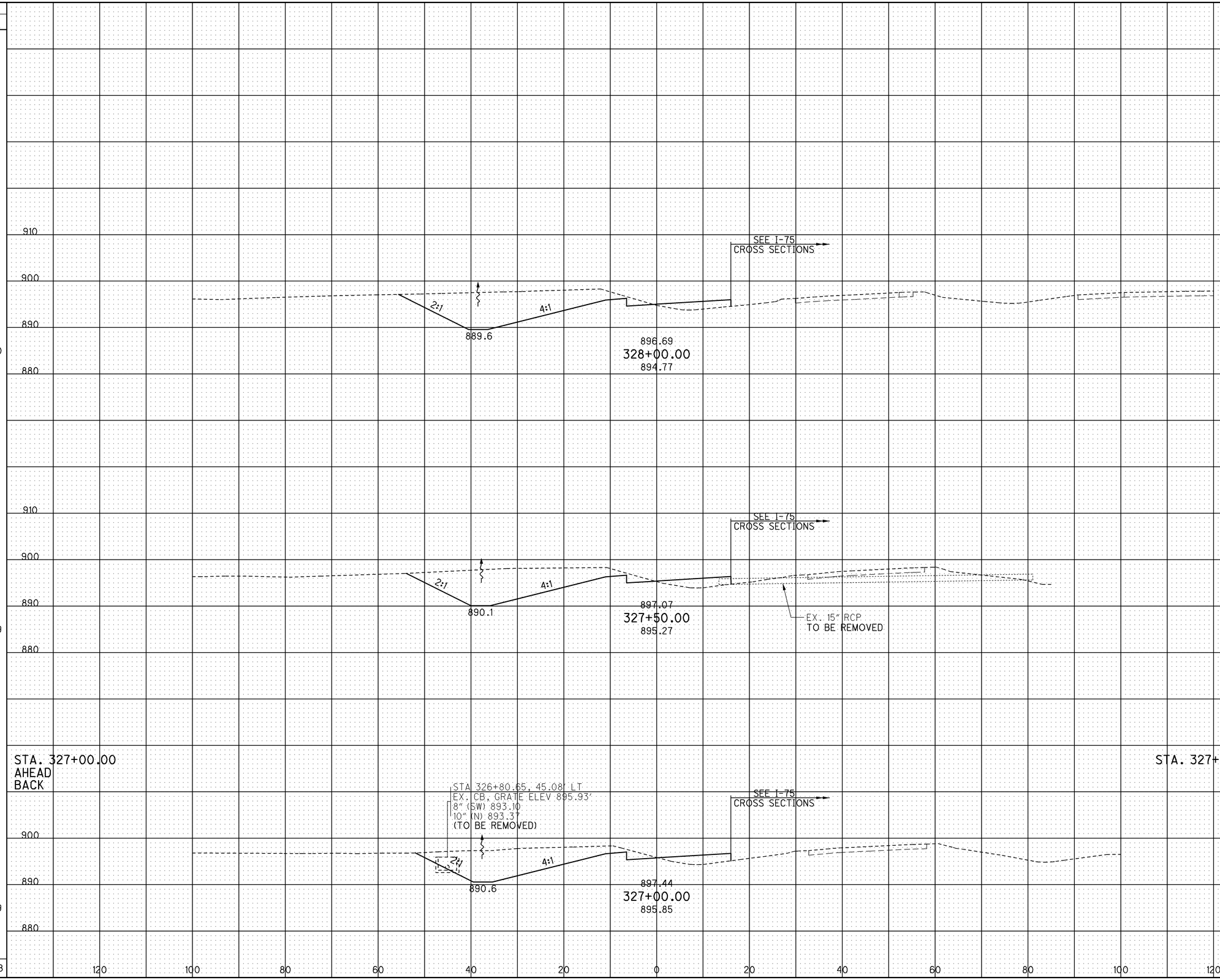

J:\Projects\ALL\76691\roadway\sheets\76691XS1167.dgn 11-SEP-2012 9:03PM reddenj

CALCULATED JMR
CHECKED ACF

CROSS SECTIONS - RAMP D (FOURTH ST.)
STA. 327+00.00 TO STA. 328+00.00

ALL-75-5.53

GRAND TOTAL SEEDING & MULCHING RAMP 'D'
12,973 SQ. YD.
(QUANTITY CARRIED TO ROADWAY SUBSUMMARY)

GRAND TOTAL EARTHWORK RAMP 'D'
EXCAVATION: 17,485 CU. YD.
EMBANKMENT: 4,185 CU. YD.
(QUANTITY CARRIED TO ROADWAY SUBSUMMARY)

NOTE:
DEDUCTED 865 CU. YD. FROM EXCAVATION QUANTITY FOR PAVEMENT REMOVAL

END RAMP 'D' EARTHWORK
STA. 329+50
(SEE I-75 CROSS SECTIONS FOR STA. 329+50.00 TO END)



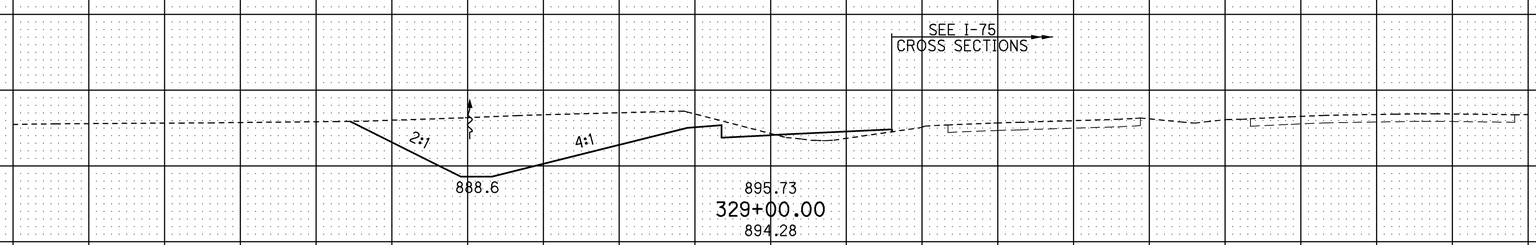

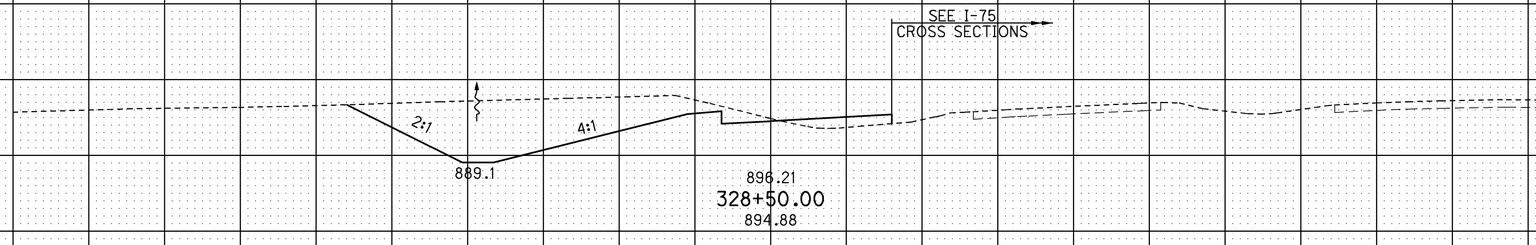

SEEDING END WIDTH	SEEDING SQ. YDS.	END AREA CUT	END AREA FILL	VOLUME CUT	VOLUME FILL
63	355	205	8	405	18
64	361	233	11	443	25
65	361	245	16	444	35
	1077			1292	78

CALCULATED JMR
CHECKED ACF

CROSS SECTIONS - RAMP D (FOURTH ST.)
STA. 328+50.00 TO STA. 329+50.00

ALL-75-5.53

398
1224

J:\Projects\ALL\76691\roadway\sheets\76691XS1168.dgn 11-SEP-2012 9:03PM reddenj

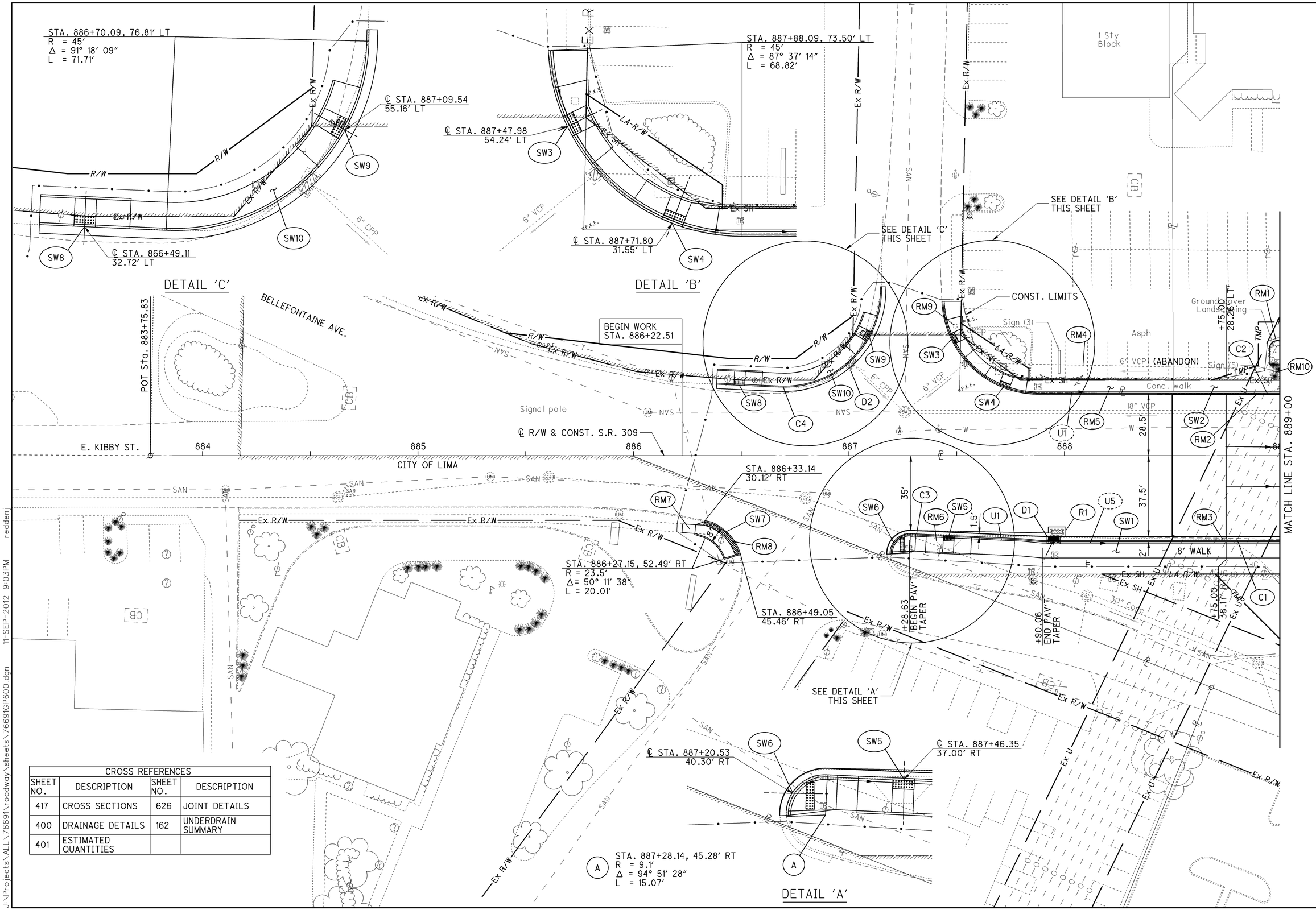

CROSS REFERENCES			
SHEET NO.	DESCRIPTION	SHEET NO.	DESCRIPTION
417	CROSS SECTIONS	626	JOINT DETAILS
400	DRAINAGE DETAILS	162	UNDERDRAIN SUMMARY
401	ESTIMATED QUANTITIES		

HORIZONTAL SCALE IN FEET 0 10 20 40

CALCULATED ACF
CHECKED EJC

PLAN - S.R. 309
BEGIN WORK TO STA. 889+00.00

ALL-75-5.53

J:\Projects\ALL\76691\roadway\sheets\76691GP600.dgn 11-SEP-2012 9:03PM reddenj

J:\Projects\ALL\76691\roadway\sheets\76691GF600.dgn 11-SEP-2012 9:03PM reddenj

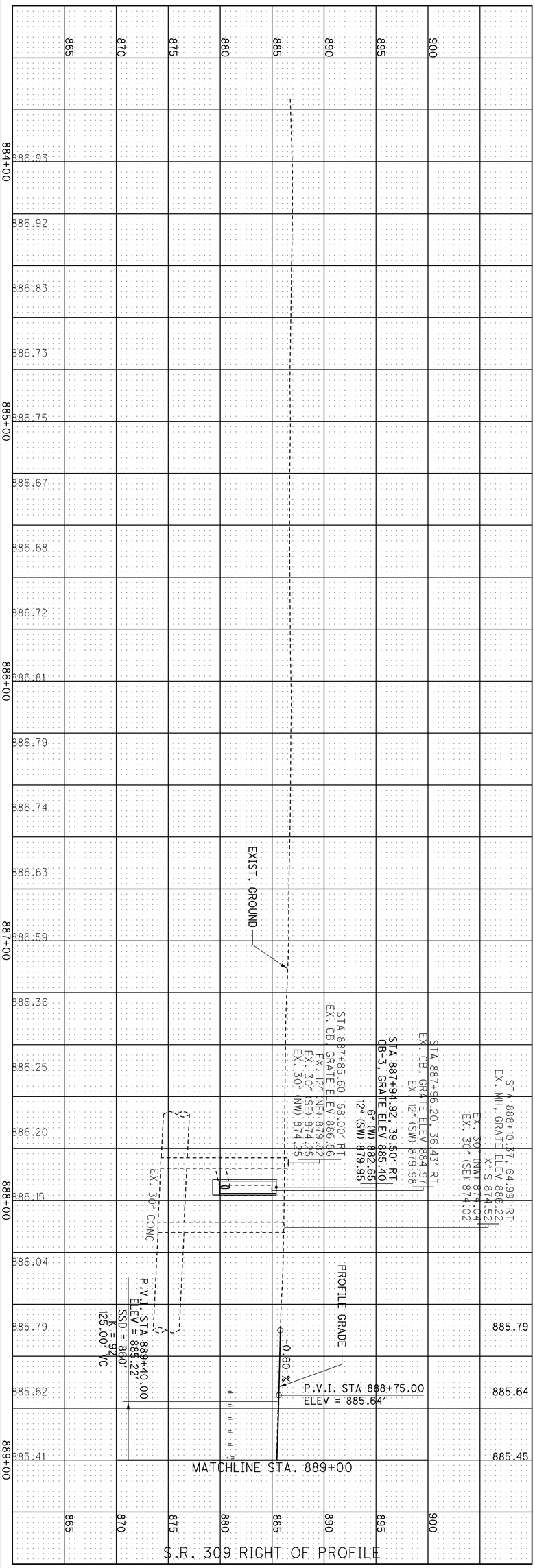

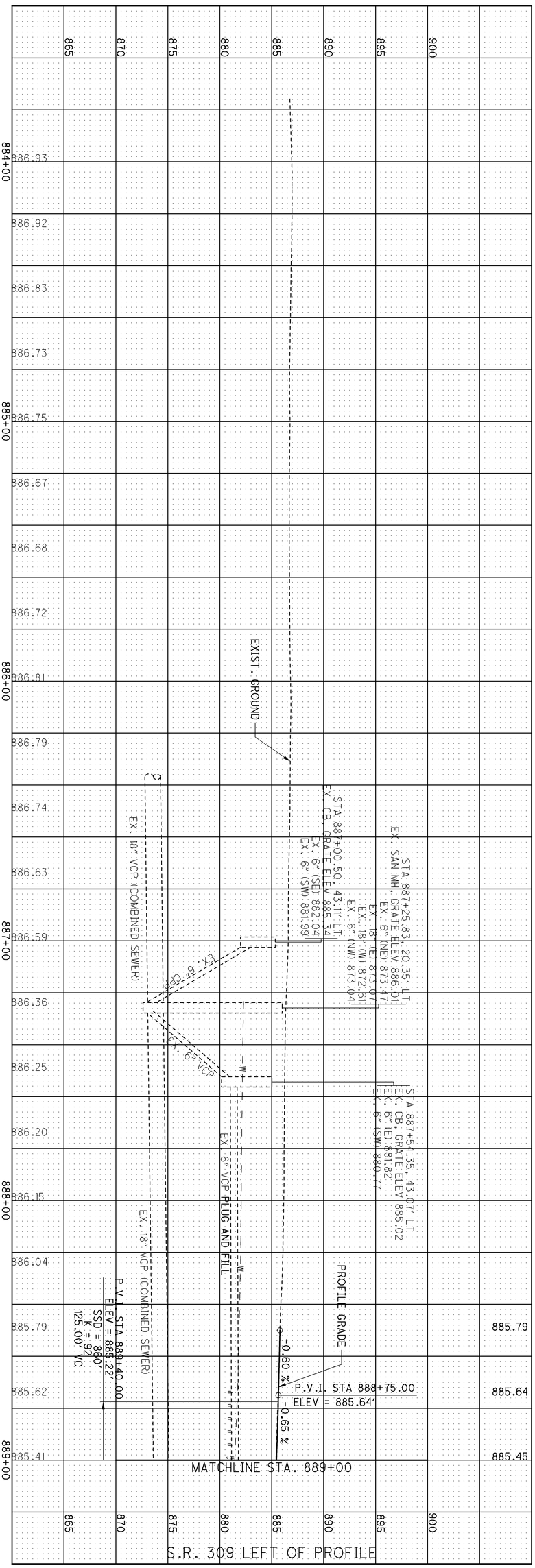

400
1224

ALL-75-5.53

PROFILE - S.R. 309
BEGIN WORK TO STA. 889+00.00

CALCULATED ACF
CHECKED EJC

REF. NO.	SHEET NO.	STATION FROM	STATION TO	SIDE	202 WALK REMOVED	202 CURB REMOVED	202 CURB AND GUTTER REMOVED	202 PIPE REMOVED, 24" AND UNDER	202 CATCH BASIN REMOVED	202 SPECIAL - FILL AND PLUG EXISTING CONDUIT	202 REMOVAL, MISC.: PRIVATE SIGN	202 REMOVAL, MISC.: SIGN FOUNDATION	252 FULL DEPTH PAVEMENT SAWING	603 12" CONDUIT, TYPE B	604 CATCH BASIN, NO. 3	604 CATCH BASIN ADJUSTED TO GRADE	608 6" CONCRETE WALK	608 CURB RAMP	609 CURB TYPE 6	609 COMBINATION CURB AND GUTTER, TYPE 2	625 PULL BOX REMOVED AND REPLACED
					SQ FT	FT	FT	FT	EACH	FT	EACH	EACH	FT	FT	EACH	EACH	SQ FT	SQ FT	FT	FT	EACH
		SR 309																			
RM1	399	888+95	889+03	LT		27															
RM2	399	887+43	889+91	LT		172															
RM3	399	887+97	888+76	RT		76															
RM4	399	887+54	889+75	LT					1	221											
RM5	399	887+44	889+03	LT	1139																
RM6	399	887+39	887+54	RT	57																
RM7	399	886+23	886+44	RT	84																
RM8	399	886+33	886+50	RT		24															
RM9	399	887+47		LT								1									
RM10	399	888+98		LT							1										
C1	399	887+90	889+00	RT		86														110	
C2	399	887+43	889+00	LT															140		
C3	399	887+18	887+90	RT			79													79	
C4	399	886+39	887+15	LT			104													104	
R1	399	887+29	888+01	RT									79								
SW1	399	887+18	889+00	RT													1112				
SW2	399	887+44	889+00	LT													847				
SW3	399	887+44	887+53	LT														127			
SW4	399	887+63	887+82	LT														129			
SW5	399	887+36	887+57	RT														168			
SW6	399	887+20	887+31	RT														77			
SW7	399	886+23	886+50	RT													25	178			
SW8	399	886+39	886+60	LT														137			
SW9	399	887+03	887+13	LT														125			
SW10	399	886+60	887+03	LT													270				
D1	399	887+95		RT				5	1					8	1						
D2	399	887+01		LT												1					
TOTALS CARRIED TO ROADWAY SUBSUMMARY					1280	385	183	5	2	221	1	1	79	8	1	1	2253.5	941.1	140	293	

CALCULATED ACF
CHECKED ABS

ESTIMATED QUANTITIES

ALL-75-5.53

401
1224

J:\Projects\ALL\76691\roadway\sheets\76691G0600.dgn 11-SEP-2012 9:03PM reddenj

CROSS REFERENCES			
SHEET NO.	DESCRIPTION	SHEET NO.	DESCRIPTION
418	CROSS SECTIONS	893	LIGHTING PLAN
420	DRAINAGE DETAILS	626	JOINT DETAILS
673	DRIVE DETAILS	162	UNDERDRAIN SUMMARY
615	INTERSECTION DETAIL	404 405	ESTIMATED QUANTITIES
671	PAVEMENT DETAILS	912	STRUCTURE NO. ALL-117-1844
850	SIGNAL PLANS		

* S.R. 309 STA. 893+33.67= RAMP C STA. 369+78.11

** S.R. 309 STA. 893+23.92= RAMP A STA. 370+26.30

HORIZONTAL SCALE IN FEET

CALCULATED ACF CHECKED EJC

PLAN - S.R. 309 STA. 889+00.00 TO STA. 894+00.00

ALL-75-5.53

402
1224

J:\Projects\ALL\76691\roadway\sheets\76691GP601.dgn 11-SEP-2012 9:03PM redden j

CALCULATED ACF
CHECKED EJC

PROFILE - S.R. 309
STA. 889+00 TO STA. 894+00.00

S.R. 309 LEFT OF PROFILE

MATCHLINE STA. 889+00

MATCHLINE STA. 894+00

STA 889+75.40, 20.32' LT
EX. SAN MH, GRATE ELEV 884.08
EX. 16" CAST IRON SE 874.33
EX. 18" (W) 873.83
ADJUST TO GRADE
PROP. GRATE ELEV. 884.15

STA 889+75.07, 28.15' LT
EX. CB, GRATE ELEV 883.45
EX. 6" (E) 879.59
EX. 6" (E) 879.59
EX. 6" (W) 879.50
TO BE REMOVED

STA 889+75.06, 38.70' LT
EX. CB, GRATE ELEV 883.45
EX. 6" (W) 881.19
TO BE REMOVED

STA 889+65.00, 29.50' LT
CB-3A, GRATE ELEV 883.99
6" (E) 880.36
12" (E) 878.00

STA 890+12.22, 33.01' LT
EX. CB, GRATE ELEV 882.69
EX. 8" (N) 878.59
EX. 12" (E) 879.17
EX. 12" (W) 878.28
TO BE REMOVED

STA 890+13.00, 22.50' LT
MH-3, RIM ELEV 883.39
12" (W) 876.90
8" (N) 878.54
12" (E) 876.90

STA 891+61.97, 37.14' LT
EX. CB, GRATE ELEV 880.25
EX. 15" (SW) 876.15
TO BE REMOVED

STA 891+46.00, 24.00' LT
MH-3, RIM ELEV 880.84
12" (E) 874.90
12" (S) 874.15
12" (W) 874.90

STA 891+19.55, 44.23' LT
EX. CB, GRATE ELEV 880.55
EX. 12" (S) 876.67
TO BE REMOVED

EX-1
STA 892+23.97, 27.99' LT
EX. CB, GRATE ELEV 880.11
EX. 15" (N) 875.89
TO BE REMOVED

STA 892+00.00, 33.21' LT
CB-3A, GRATE ELEV 879.92
6" (W) 877.17
12" (E) 875.37
12" (W) 875.37

STA 892+58.00, 36.76' LT
CB-3, GRATE ELEV 879.65
6" (S) 876.90
6" (E) 876.90
6" (W) 876.90
12" (E) 875.07
12" (W) 876.07

EX-2
STA 893+50.73, 27.59' LT
EX. CB, GRATE ELEV 880.35
EX. 12" (N) 877.91
TO BE REMOVED

STA 892+88.02, 30.06' LT
EX. SAN MH, GRATE ELEV 880.31
EX. 8" (E) 861.12
EX. 8" (W) 861.12
ADJUST TO GRADE
PROP. GRATE ELEV. 879.98

STA 892+92.00, 43.51' LT
CB-3A, GRATE ELEV 879.60
12" (W) 876.41

EX. X" GAS

PROP. 16'X7' BOX

-0.65 %
-2.00 %
2.00 %
+0.25 %

EXIST. GROUND
PROFILE GRADE

EX. 6" VCP
PLUG AND FILL

BUCKEYE PIPELINE
(2) 10" GAS

EX. 12" CONC TO BE REMOVED

48'-12" TYPE B
@ 2.27%

133'-12" TYPE B @ 1.52%

55'-12" TYPE B @ 0.86%

58'-12"
TYPE B @ 1.2%

35'-12" TYPE B @ 0.98%

EX. 15" CONC TO BE REMOVED

+05
CONN. TO
EX. 10" W.
EL. 876.9±

+10
EL. 876.9

+15
EL. 874.9

+72.4
EL. 874.9

+39.4
EL. 874.9

+82.4
EL. 866.0

+29.4
EL. 866.0

℄ PROP. 10" WL

EX. 15" CMP TO BE REMOVED

EX. 76" CMP
TO BE
REMOVED

EX. 18" VCP (COMBINED SEWER)

EX. 16" CAST IRON (FORCE MAIN)

P.V.I. STA 889+40.00 ELEV = 885.22'
SSD = 860'
K = 92
125.00' VC

STA 890+37.98, 30.35' LT
EX. SAN MH, GRATE ELEV 882.70
EX. 8" (E) 874.20
RECONSTRUCT TO GRADE
PROP. GRATE ELEV. 883.18±

P.V.I. STA 891+90.00
ELEV = 880.22'
K = 78
175.00' VC

EX. 8" VCP

STA. 894+48

889+00 890+00 891+00 892+00 893+00 894+00

885.19 884.87 884.48 884.02 883.52 883.02 882.52 882.02 881.55 881.16 880.86 880.63 880.48 880.42 880.43 880.49 880.56 880.62 880.68 880.74

885.12 884.77 884.35 883.97 883.56 883.09 882.67 882.29 881.97 881.63 881.40 881.13 881.06 880.94 880.80 880.77 880.88 881.02 881.12 881.16

900 895 890 885 880 875 870 865

STA 892+63.95, 93.96' RT
EX. SAN MH, GRATE ELEV 880.00
EX. 21" (SW) 863.87
EX. 21" (NE) 863.70

EX-3

STA 892+10.00, 47.63' RT
CB-3A, GRATE ELEV 879.62
6" (W) 876.87
6" (N) 876.87
12" (W) 876.27

S.R 309 RAMP A
STA 893+79.39, 31.00' RT
EX. SAN MH, GRATE ELEV 880.58
EX. 24" (S) 860.58
EX. 12" (E) 860.58
EX. 21" (W) 860.58
EX. 21" (NE) 860.58
ADJUST TO GRADE

P.V.I. STA 889+40.00 ELEV = 885.22'
SSD = 860'
K = 92
125.00' VC

EX-4
STA 893+44.14, 41.63' RT
EX. SAN MH, GRATE ELEV 880.79
EX. 21" RCP SW 863.00
EX. 21" PVC NE 862.85
ADJUST TO GRADE
PROP. GRATE ELEV. 879.95

STA 891+76.94, 79.61' RT
EX. CB, GRATE ELEV 879.57
EX. 4" (NW) 875.43
EX. 12" (NE) 875.83
EX. 12" (SW) 875.38
TO BE REMOVED

S.R 309 RAMP A
STA 892+28.75, 64.61' RT
EX. CB, GRATE ELEV 879.57
EX. 12" (SW) 876.98
TO BE REMOVED

STA 889+99.82, 39.29' RT
EX. CB, GRATE ELEV 883.13
EX. 6" (S) 880.58
EX. 12" (E) 880.58
TO BE REMOVED

STA 891+49.79, 86.86' RT
MH-3, RIM ELEV 880.00
15" (N) 873.25
15" (SE) 873.25

STA 368+91.06, 73.80' LT
MH-3, RIM ELEV 878.95
12" (N) 873.26
18" (E) 870.88
21" (W) 870.70

STA 891+46.00, 45.28' RT
CB-3A, GRATE ELEV 880.32
6" (W) 877.57
12" (N) 873.75
12" (E) 875.25
15" (S) 873.50

STA 892+60.72, 52.71' RT
CB-3A, GRATE ELEV 879.39
6" (NE) 876.64
6" (W) 877.14
12" (S) 875.75

S.R 309 RAMP A
STA 369+10.00, 19.00' RT
CB-3A, GRATE ELEV 878.97
6" (N) 876.22
18" (W) 871.45
18" (S) 871.45

STA 893+63.00, 50.00' RT
CB-3A, GRATE ELEV 879.68
6" (E) 877.00
12" (E) 876.43

STA 368+50.00, 35.00' RT
CB-5, GRATE ELEV 876.40
18" (N) 871.69

-0.65 %
-2.00 %
-2.00 %
+0.25 %

EXIST. GROUND
PROFILE GRADE

BUCKEYE PIPELINE
(2) 10" GAS

EX. 12" CONC TO BE REMOVED

EX. 4" GAS

64'-12" TYPE B
@ 1.59%

22'-15" TYPE C
@ 0.6%

55'-21" TYPE C
@ 0.33%

84'-12"
TYPE C
@ 2.98%

10'-21" TYPE C @ 1.50%

97'-12" TYPE B
@ 0.9%

61'-18" TYPE C
@ 0.39%

94'-18" TYPE B @ 0.60%

EX. 12" CONC TO BE REMOVED

EX. 21" CONC TO BE REMOVED

EX. GAS
(UNKNOWN SIZE)

EX. 76" CMP
TO BE REMOVED

EX. 21" PVC

PROP. 16'X7' BOX

HW-1 PROP. HW-2.2 STA. 891+63.64,
103.50' RT. 15" (NW) ELEV =873.12'

HW-2 PROP. HW-2.2 STA. 891+90.40,
@ 115.87' RT. 15" ℄ =870.30'

EX. 16" CAST IRON (FORCE MAIN)

P.V.I. STA 891+90.00
ELEV = 880.22'
K = 78 175.00' VC

889+00 890+00 891+00 892+00 893+00 894+00

885.19 884.87 884.48 884.02 883.52 883.02 882.52 882.02 881.55 881.16 880.86 880.63 880.48 880.42 880.43 880.49 880.56 880.62 880.68 880.74

885.12 884.77 884.35 883.97 883.56 883.09 882.67 882.29 881.97 881.63 881.40 881.13 881.06 880.94 880.80 880.77 880.88 881.02 881.12 881.16

900 895 890 885 880 875 870 865

J:\Projects\ALL\76691\roadway\sheets\76691GF601.dgn 11-SEP-2012 9:03PM reddenj

ALL-75-5.53

403
1224

REF. NO.	SHEET NO.	STATION FROM	STATION TO	SIDE	202 WALK REMOVED SQ FT	202 PAVEMENT REMOVED SQ YD	202 CURB REMOVED FT	202 CURB AND GUTTER REMOVED FT	202 PIPE REMOVED, 24" AND UNDER FT	202 BUILDING DEMOLISHED EACH	202 CATCH BASIN REMOVED EACH	202 REMOVAL, MISC.: WOOD POSTS EACH	202 REMOVAL, MISC.: METAL POSTS EACH	202 REMOVAL, MISC.: METAL BOLLARD EACH	202 REMOVAL, MISC.: PRIVATE LIGHT EACH	202 REMOVAL, MISC.: ABOVE GROUND STORAGE CONTAINER EACH	202 REMOVAL, MISC.: AIR CONDITIONERS EACH	202 REMOVAL, MISC.: PRIVATE SIGN AND FOUNDATIONS EACH	202 REMOVAL, MISC.: SIGN FOUNDATION EACH	252 FULL DEPTH PAVEMENT SAWING FT	608 6" CONCRETE WALK SQ FT	608 CURB RAMP SQ FT	609 CURB TYPE 6 FT	609 COMBINATION CURB AND GUTTER, TYPE 2 FT	625 PULL BOX REMOVED EACH	690 SPECIAL - GROUND WATER MONITORING WELL ABANDONMENT EACH
RM1	402	891+76	892+31	LT						1						1	2								
RM2	402	889+40	890+08	LT			171																		
RM3	402	889+00		LT															1						
RM4	402	889+75	890+12	LT					39		1														
RM5	402	890+12	891+20	LT					108		1														
RM6	402	891+20	891+62	LT				34	52		1														
RM7	402	891+62	892+24	LT				40	65		1														
RM8	402	890+00	892+38	RT					245		1														
RM9	402	889+34	890+37	RT			156																		
RM10	402	888+92	889+46	LT		361																			
RM11	402	891+77	891+36	RT					62		1														
RM12	402	891+36	892+29	RT					53		1														
RM13	402	892+24	893+84	LT					187		1														
RM14	402	893+51	893+70	LT					52		1														
RM15	402	892+89	894+00	RT					116																
RM16	402	890+05		LT															3						
RM17	402	892+56	892+97	LT								6													
RM18	402	892+47	893+51	RT								12													
RM19	402	892+83		LT														1							
RM20	402	893+00		RT																				1	
RM21	402	892+10	892+87	LT																					6
RM22	402	891+67	891+70	LT									1						1						
RM23	402	891+64	892+36	LT		55																			
RM24	402	892+13	892+37	LT		13.1																			
RM25	402	891+66	891+81	LT										1	1			1							
C1	402	888+96	889+93	LT																			102		
C2	402	889+00	892+95	LT																			50	396	
C3	402	889+00	892+63	RT																			50	363	
C4	402	892+95	893+40	LT																			67		
C5	402	893+72	893+79	LT																			45		
C6	402	892+63	893+16	RT																			100		
C7	402	893+43	893+48	RT																			83		
C8	402	893+79	894+00	LT																				21	
C9	402	893+48	894+00	RT																				53	
SW1	402	890+27	893+17	LT	276																2275.2				
SW2	402	889+00	892+89	RT																	2921.3				
SW3	402	893+17	893+28	LT																		121.2			
SW4	402	893+72	894+02	LT																		301.63			
SW5	402	892+89	893+00	RT																		113.7			
SW6	402	893+46	893+55	RT																		89.8			
SW7	402	893+48	894+02	RT																	155.5	154.7			
SW8	402	889+00	889+91	LT																	624.4				
R1	402	889+13	889+49	RT																58					
R2	402	890+18	890+75	RT																57					
TOTALS CARRIED TO ROADWAY SUBSUMMARY					276	429.1	327	74	979	1	9	18	1	1	1	1	2	2	5	115	5976.4	781.03	497	833	1	6

CALCULATED ACF
CHECKED ABS

ESTIMATED QUANTITIES

ALL-75-5.53

404
1224

J:\Projects\ALL\76691\roadway\sheets\76691CQ601.dgn 11-SEP-2012 9:03PM reddenj

ESTIMATED QUANTITIES

CALCULATED ACF
CHECKED ABS

REF. NO.	SHEET NO.	STATION FROM	STATION TO	SIDE	602 CONCRETE MASONRY CU YD	603 8" CONDUIT, TYPE B FT	603 12" CONDUIT, TYPE B FT	603 12" CONDUIT, TYPE C FT	603 15" CONDUIT, TYPE C FT	604 CATCH BASIN, NO. 3 EACH	604 CATCH BASIN, NO. 3A EACH	604 MANHOLE, NO. 3 EACH	604 MANHOLE ADJUSTED TO GRADE EACH	604 MANHOLE RECONSTRUCTED TO GRADE EACH	638 3/4" COPPER SERVICE BRANCH FT	638 10" WATER MAIN DUCTILE IRON PIPE ANSI CLASS 52, PUSH-ON JOINTS AND FITTINGS, AS PER PLAN FT	638 FIRE HYDRANT ADJUSTED TO GRADE EACH	638 VALVE BOX ADJUSTED TO GRADE EACH	638 WATER WORK, MISC.: CURB METER SET ADJUSTED EACH
S1	402	889+75		LT									1						
S2	402	890+38		LT										1					
S3	402	892+88		LT									1						
S4	402	893+44		RT									1						
S5	402	893+79		RT									1						
D1	402	893+63	894+60	RT			97				1								
D2	402	889+65	890+13	LT			48				1								
D3	402	890+13	891+46	LT		12	133					1							
D4	402	891+46	891+46	LT/RT			69					1							
D5	402	892+00	891+46	LT			55				1								
D6	402	892+58	892+00	LT			58			1									
D7	402	892+92	892+58	LT			35				1								
D12	402	892+61	892+50	RT				84											
D9	402	891+46	891+48	RT					42		1								
D10	402	891+48	891+64	RT	0.3				22			1							
D11	402	892+10	891+46	RT			64				1								
W1	402	890+96		LT															1
W2	402	891+09		LT													1		
W3	402	891+09		LT														1	
W4	402	891+29	891+31	LT														2	
W5	402	890+13		RT															1
W6	402	891+31		LT														1	
W7	402	892+05	894+00	LT												201			
W8	402	891+61		LT															1
W9	402	893+84		RT											84				
TOTALS CARRIED TO ROADWAY SUBSUMMARY					0.25	12	559	84	64	1	6	3	4	1	84	201	1	4	3

ALL-75-5.53

405
1224

J:\Projects\ALL\76691\roadway\sheets\76691CQ0601A.dgn 11-SEP-2012 9:03PM reddenj

NOTE A:

TO REMAIN. VOID SHALL BE FILLED DURING PHASE II OF M.O.T. CONSTRUCTION, FILL WITH LOW STRENGTH MORTOR

SANITARY PIPE EXPOSED IN STORM SEWER MANHOLE

CROSS REFERENCES			
SHEET NO.	DESCRIPTION	SHEET NO.	DESCRIPTION
422	CROSS SECTIONS	893	LIGHTING PLAN
422	DRAINAGE DETAILS	626	JOINT DETAILS
936	STRUCTURE NO. ALL-75-0703	162	UNDERDRAIN SUMMARY
616	INTERSECTION DETAIL	408 409	ESTIMATED QUANTITIES
912	STRUCTURE NO. ALL-117-1844		

N

HORIZONTAL SCALE IN FEET
0 10 20 40

CALCULATED ACF
CHECKED EJC

PLAN - S.R. 309
STA. 894+00.00 TO STA. 898+50.00

ALL-75-5.53

406
1224

J:\Projects\ALL\76691\roadway\sheets\76691GP602.dgn 11-SEP-2012 9:03PM reddenj

CALCULATED ACF
CHECKED EJC

PROFILE - S.R. 309
STA. 894+00.00 TO STA. 898+50.00

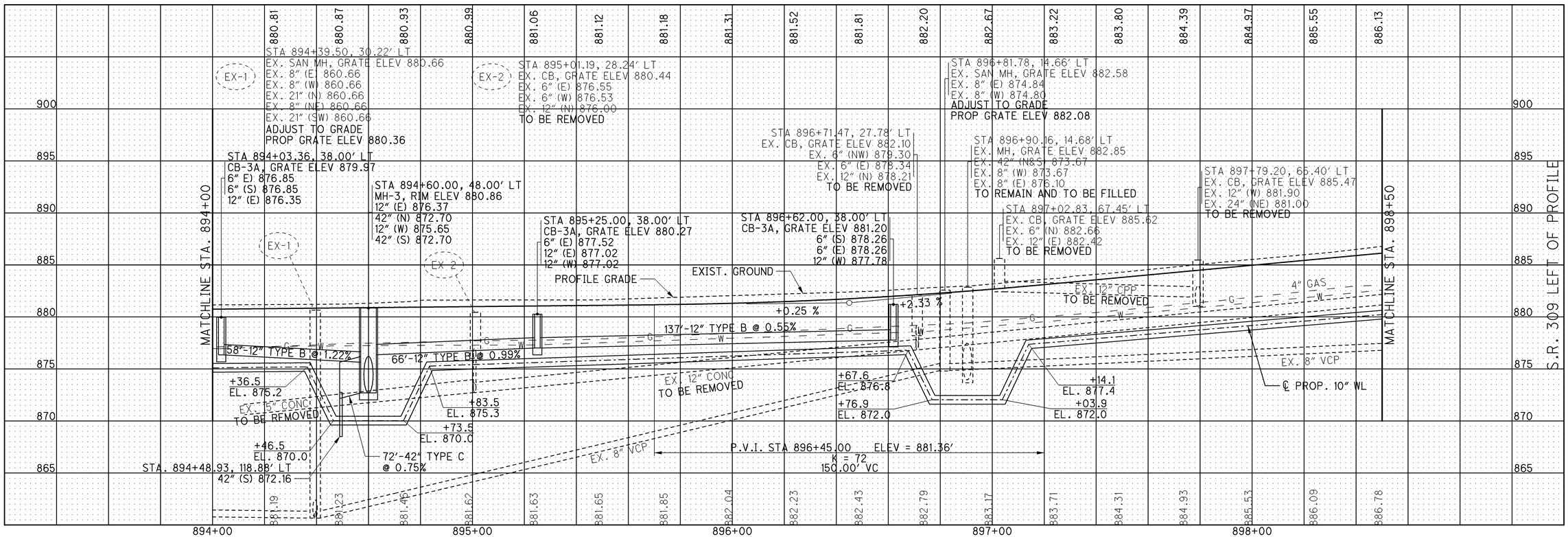

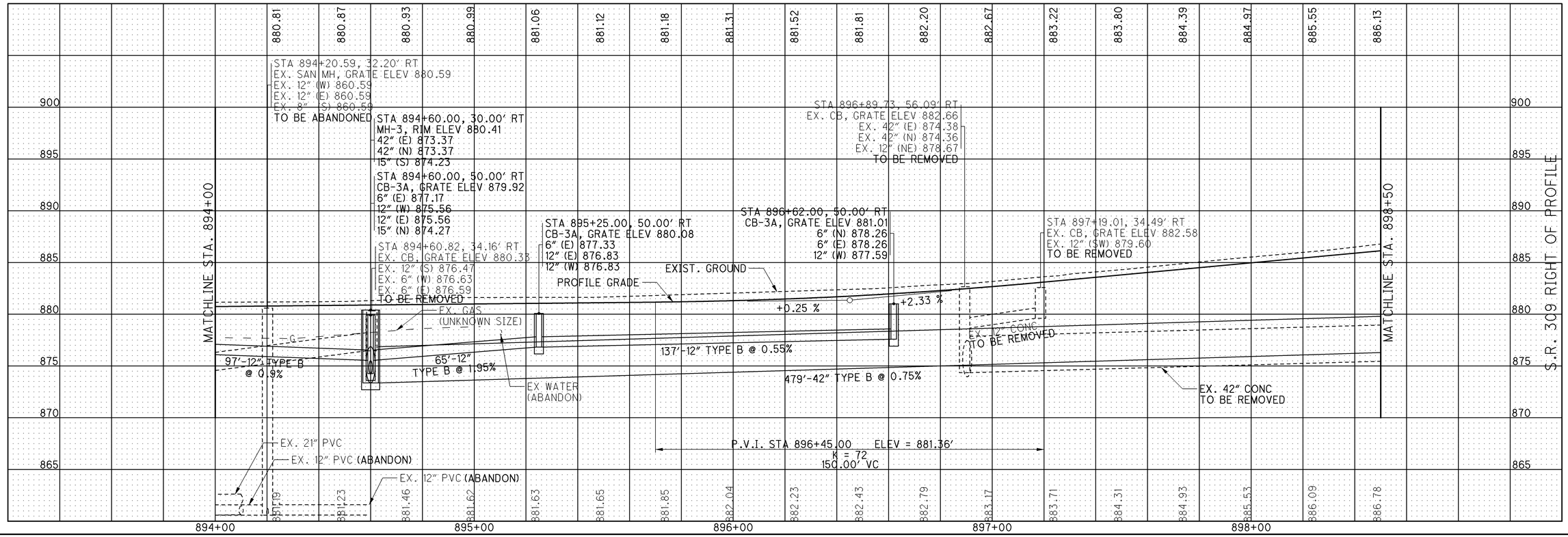

ALL-75-5.53

407
1224

J:\Projects\ALL\76691\roadway\sheets\76691GF602.dgn 11-SEP-2012 9:03PM reddenj

REF. NO.	SHEET NO.	STATION FROM	STATION TO	SIDE	202 TRAFFIC ISLAND REMOVED	202 WALK REMOVED	202 CURB REMOVED	202 PIPE REMOVED, 24" AND UNDER	202 PIPE REMOVED, OVER 24"	202 BUILDING DEMOLISHED	202 CATCH BASIN REMOVED	202 MANHOLE ABANDONED	202 SPECIAL - FILL AND PLUG EXSITING CONDUIT	202 FENCE REMOVED	202 REMOVAL, MISC.: CONCRETE PAD	202 REMOVAL, MISC.: METAL BOLLARD	202 REMOVAL, MISC.: PRIVATE LIGHT	202 REMOVAL, MISC.: ELEVATED SIGN AND FOUNDATIONS	202 REMOVAL, MISC.: SIGN FOUNDATION	202 REMOVAL, MISC.: PRIVATE SIGN AND FOUNDATIONS	608 6" CONCRETE WALK	609 COMBINATION CURB AND GUTTER, TYPE 2	690 SPECIAL - GROUND WATER MONITORING WELL RECONSTRUCTION
					SQ YD	SQ FT	FT	FT	FT	EACH	EACH	EACH	FT	FT	SQ YD	EACH	EACH	EACH	EACH	EACH	SQ FT	FT	EACH
RM1	406	894+12	895+01	LT				113			1												
RM2	406	892+89	894+61	RT				180			1												
RM3	406	893+79	894+48	RT								1	41										
RM4	406	896+91	897+19	RT				34			1												
RM5	406	896+90		RT					55		1												
RM6	406	896+90		LT								1											
RM7	406	897+04	897+79	LT				91			1												
RM8	406	897+79	898+47	LT				94			1												
RM9	406	895+01	896+71	LT				191			1												
RM10	406	896+71	898+50	LT				179															
RM11	406	896+90	898+50	RT					159														
RM12	406	894+76	897+28	C	178.5																		
RM13	406	898+48		LT																1			
RM14	406	897+06	898+16	LT						1										2			
RM15	406	897+29		LT																		1	
RM16	406	897+99		LT																		1	
RM17	406	894+00	898+50	LT			451																
RM18	406	894+50	898+50	RT			401																
RM19	406	894+35		RT											9.3								
RM20	406	895+02	895+20	RT														1					
RM21	406	895+08	895+17	RT															1				
RM22	406	894+11		RT			10									1							
RM23	406	894+02		RT											6.9		1			1			
RM24	406	894+19		RT								1											
RM25	406	897+06	897+64	LT												7							
RM26	406	89+03	897+66	LT		4077																	
RM27	406	897+09	898+16	LT			1132																
RM28	406	897+66	897+90	LT										92									
RM29	406	897+85	898+13	LT													5						
RM30	406	897+65		LT													1						
C1	406	894+00	898+50	LT																		450	
C2	406	894+00	898+50	RT																		450	
SW1	406	894+02	898+50	LT																	3519		
SW2	406	894+02	898+50	RT																	3396		
TOTALS CARRIED TO ROADWAY SUBSUMMARY					178.5	4077	1994	882	214	1	7	3	41	92	16.2	8	7	1	1	4	6915	900	2

CALCULATED ACF
CHECKED ABS

ESTIMATED QUANTITIES

ALL-75-5.53

408
1224

J:\Projects\ALL\76691\roadway\sheets\76691GQ602.dgn 11-SEP-2012 9:03PM reddenj

REF. NO.	SHEET NO.	STATION FROM	STATION TO	SIDE	601 TIED CONCRETE BLOCK MAT, TYPE 3 SQ YD	602 CONCRETE MASONRY CU YD	603 12" CONDUIT, TYPE B FT	603 15" CONDUIT, TYPE B FT	603 42" CONDUIT, TYPE B FT	603 42" CONDUIT, TYPE C FT	604 CATCH BASIN, NO. 3A EACH	604 MANHOLE, NO. 3 EACH	604 MANHOLE ADJUSTED TO GRADE EACH	638 6" WATER MAIN DUCTILE IRON PIPE ANSI CLASS 52, PUSH-ON JOINTS AND FITTINGS, AS PER PLAN FT	638 10" WATER MAIN DUCTILE IRON PIPE ANSI CLASS 52, PUSH-ON JOINTS AND FITTINGS, AS PER PLAN FT	638 6" GATE VALVE AND VALVE BOX EACH	638 6" FIRE HYDRANT EACH	638 WATER WORK, MISC.: WATER SERVICE TAP ABANDONED EACH
S1	406	894+40		LT									1					
S2	406	896+82		LT									1					
D1	406	894+03	894+60	LT			58				1							
D2	406	894+60	894+49	LT	7	0.8				72		1						
D3	406	895+25	894+60	LT			66				1							
D4	406	896+62	895+25	LT			137				1							
D5	406	896+62	894+60	RT			137				1							
D6	406	894+60	894+60	LT/RT					78			1						
D7	406	894+60	894+60	RT				20			1							
D8	406	895+25	894+60	RT			65				1							
W1	406	894+80	894+84	LT										45		2	1	
W2	406	894+00	898+50	LT											450			
W3	406	897+06	897+66	LT														1
TOTALS CARRIED TO ROADWAY SUBSUMMARY					7	0.84	463	20	78	72	6	2	2	45	450	2	1	1

CALCULATED ACF
CHECKED ABS

ESTIMATED QUANTITIES

ALL-75-5.53

409
1224

J:\Projects\ALL\76691\roadway\sheets\76691GQ602A.dgn 11-SEP-2012 9:04PM reddenj

NOTE:
MONITOR WELLS MW-10, MW-17, MW-11 AND MW-12 ARE TO BE ABANDONED AND MONITOR WELLS MW-8, MW-2, MW-15 AND MW-13 ARE TO REMAIN AND BE RECONSTRUCTED TO GRADE.

℄ RAMP E
℄ RAMP F
℄ R/W & CONST. S.R. 309
℄ CONST. S.R. 309
CONST. LIMITS
CONN. TO EX. 6" W. STA. 370+75 25.2' RT.
PROP. 6" WL
STA. 370+70 25.2' RT.
STA. 370+65 20.0' RT.
CONN. TO EX. 10" W. STA. 899+45 7.2' LT.
PROP. 10" WL
STA. 899+40 7.2' LT.
STA. 899+35 3.0' LT.
10"X6" TEE +7.8, 3' LT.
STA. 902+29, 64' LT. PROP. HYDRANT
SARATOGA AVE.
MATCH LINE STA. 898+50
MATCH LINE STA. 903+50
PI Sta. 899+50.00 DEF. = 02°00'02" RT. (CONST. ℄)
PI Sta. 901+65.00 DEF. = 01°32'55" LT. (CONST. ℄)
SECTION 32
SECTION 5
S 88° 05' 04" E
S 89° 38' 00" E
N 0° 05' 07" W
9+20.69
* S.R. 309 STA. 898+87.84= RAMP E STA. 369+81.23
** S.R. 309 STA. 898+95.84= RAMP F STA. 370+37.18

CROSS REFERENCES			
SHEET NO.	DESCRIPTION	SHEET NO.	DESCRIPTION
425	CROSS SECTIONS	893	LIGHTING PLAN
411	DRAINAGE DETAILS	627	JOINT DETAILS
676	DRIVE DETAILS	162	UNDERDRAIN SUMMARY
616	INTERSECTION DETAIL	412 413	ESTIMATED QUANTITIES
616	PAVEMENT DETAILS	853	SIGNAL PLANS

HORIZONTAL SCALE IN FEET
0 10 20 40
CALCULATED ACF
CHECKED EJC

PLAN - S.R. 309
STA. 898+50.00 TO STA. 903+50.00

ALL-75-5.53

410
1224

J:\Projects\ALL\76691\roadway\sheets\76691GP603.dgn 11-SEP-2012 9:04PM reddenj

CALCULATED ACF
CHECKED EJC

PROFILE - S.R. 309
STA. 898+50.00 TO 903+50.00

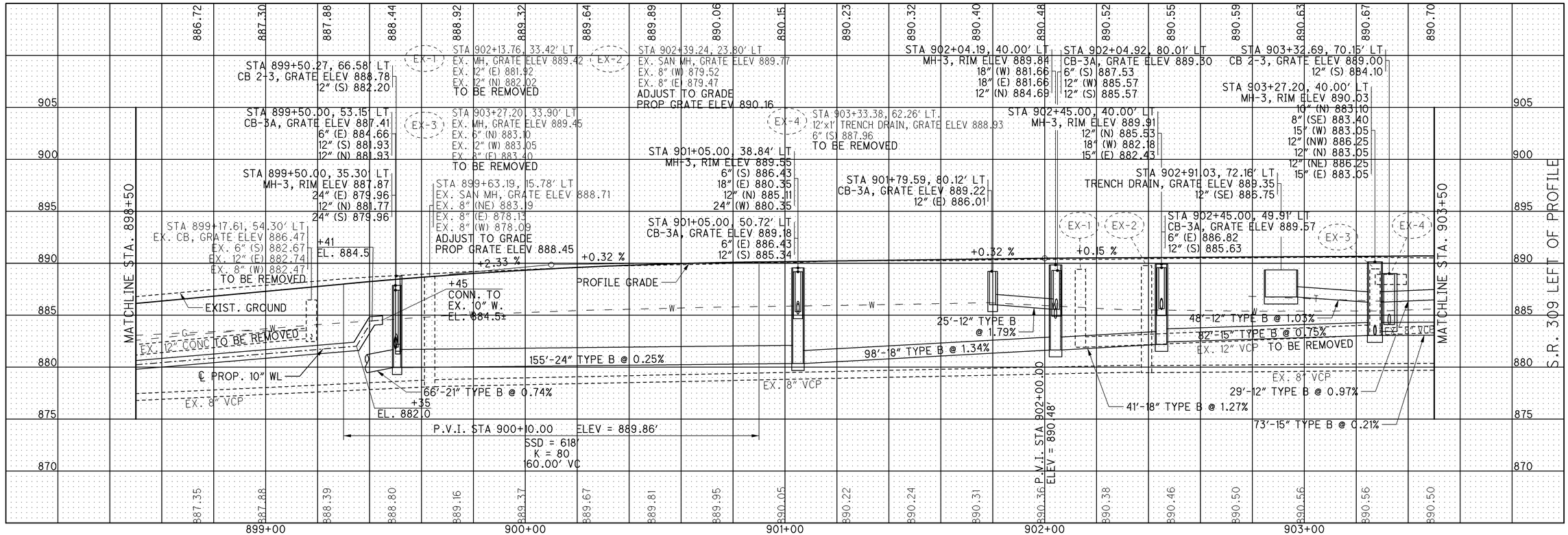

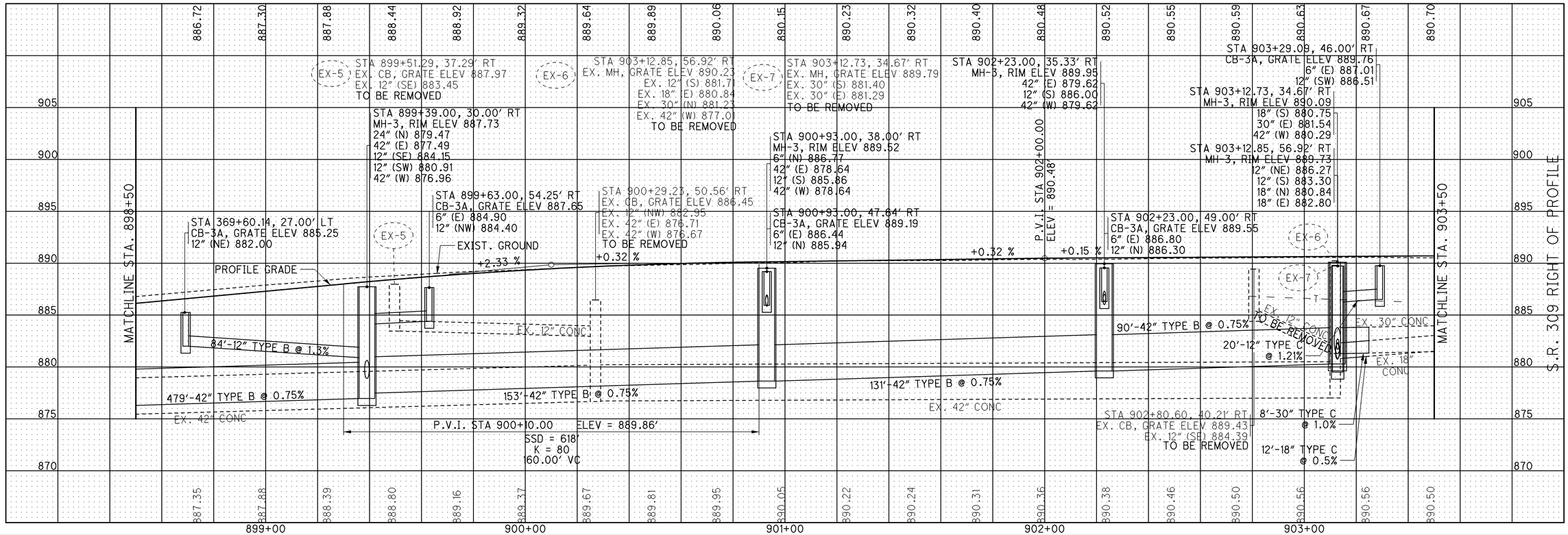

J:\Projects\ALL\76691\roadway\sheets\76691GF603.dgn 11-SEP-2012 9:04PM reddenj

ALL-75-5.53

REF. NO.	SHEET NO.	STATION FROM	STATION TO	SIDE	202 PAVEMENT REMOVED	202 WALK REMOVED	202 CURB REMOVED	202 PIPE REMOVED, 24" AND UNDER	202 PIPE REMOVED, OVER 24"	202 MANHOLE REMOVED	202 CATCH BASIN REMOVED	202 SPECIAL - FILL AND PLUG EXISTING CONDUIT	202 REMOVAL MISC.: TRENCH DRAIN	202 REMOVAL MISC.: CONCRETE PAD	202 REMOVAL MISC.: FROST FREE WATER SPIGOT	202 REMOVAL MISC.: PRIVATE LIGHT	202 REMOVAL MISC.: METAL POLE	202 REMOVAL, MISC.: PRIVATE SIGN AND FOUNDATIONS	202 REMOVAL, MISC.: WOODEN BENCHES	252 FULL DEPTH PAVEMENT SAWING	608 6" CONCRETE WALK	608 CURB RAMP	609 CURB TYPE 6	609 COMBINATION CURB AND GUTTER, TYPE 2	690 SPECIAL - GROUND WATER MONITORING WELL ABANDONMENT	690 SPECIAL - GROUND WATER MONITORING WELL RECONSTRUCTION					
					SQ YD	SQ FT	FT	FT	FT	EACH	EACH	FT	EACH	SQ YD	EACH	EACH	EACH	EACH	EACH	FT	SQ FT	SQ FT	FT	FT	EACH	EACH					
RM1	410	898+50	899+47	LT				130			1																				
RM2	410	899+51	900+29	RT				76			1																				
RM3	410	898+50	900+29	RT					176		1																				
RM4	410	898+50	900+31	RT			188																								
RM5	410	902+27	903+50	RT			200																								
RM6	410	902+81	903+13	RT				32			1																				
RM7	410	902+14	903+38	LT				156		1			1																		
RM8	410	902+14		LT						1		121																			
RM9	410	899+69	900+05	LT																							2				
RM10	410	899+52	900+32	LT			65							4	1	1		1													
RM11	410	901+55		LT													1														
RM12	410	902+81	903+51	LT	66		96																								
RM13	410	900+65		RT																							1				
RM14	410	899+40	901+82	RT			353																								
RM15	410	903+13	903+13.00	RT				23	282	1																					
RM16	410	903+13	902+23	RT					29	1																					
RM17	410	902+50	902+64	LT															2												
RM18	410	900+65	901+37	LT			75							3.6																	
RM19	410	900+69	900+80	LT						2																					
RM20	410	900+03	901+32	LT										102																	
RM21	410	899+33	901+37	LT										4						185											
RM22	410	900+27	900+80	LT																					3						
RM23	410	901+48		LT																					1						
RM24	410	900+68		LT																							1				
RM25	410	901+13	901+48	LT																							2				
RM26	410	899+17	899+50	LT		88																									
RM27	410	899+08	899+50	LT			159																								
RM28	410	899+08		LT		103																									
SW1	410	898+50	898+67	LT																	323	160									
SW2	410	898+50	898+69	RT																	248	160									
SW3	410	899+11	903+50	RT																	2455	80									
SW4	410	899+29	900+65	LT																	1057	109									
SW5	410	901+01	901+80	LT																	592	113									
SW6	410	902+05	902+95	LT																	700	113									
C1	410	899+33	900+63	LT																			156								
C2	410	898+50	900+63	LT																			57	11							
C3	410	898+50	898+69	RT																			38	18							
C4	410	899+02	903+50	RT																			71	405							
C5	410	898+93	901+81	LT																			120	253							
C6	410	902+04	903+50	LT																				173							
TOTALS CARRIED TO ROADWAY SUBSUMMARY					66	191	1136	417	487	6	4	121	1	113.0	1	1	1	1	2	185	5375	735	442	860	4	6					

CALCULATED ACF
CHECKED ABS

ESTIMATED QUANTITIES

ALL-75-5.53

412
1224

J:\Projects\ALL\76691\roadway\sheets\76691GQ603.dgn 11-SEP-2012 9:04PM redden

REF. NO.	SHEET NO.	STATION FROM	STATION TO	SIDE	603										604					638											
					8" CONDUIT, TYPE B	10" CONDUIT, TYPE B	12" CONDUIT, TYPE B	12" CONDUIT, TYPE C	15" CONDUIT, TYPE B	18" CONDUIT, TYPE B	18" CONDUIT, TYPE C	24" CONDUIT, TYPE B	30" CONDUIT, TYPE B	42" CONDUIT, TYPE B	CATCH BASIN, NO. 3A	CATCH BASIN, NO. 2-3	MANHOLE, NO. 3	MANHOLE ADJUSTED TO GRADE	MANHOLE RECONSTRUCTED TO GRADE	2" COPPER SERVICE BRANCH	6" WATER MAIN DUCTILE IRON PIPE ANSI CLASS 52, PUSH-ON JOINTS AND FITTINGS, AS PER PLAN	10" WATER MAIN DUCTILE IRON PIPE ANSI CLASS 52, PUSH-ON JOINTS AND FITTINGS, AS PER PLAN	2" GATE VALVE AND VALVE BOX	6" GATE VALVE AND VALVE BOX	10" GATE VALVE AND VALVE BOX	6" FIRE HYDRANT	VALVE BOX ADJUSTED TO GRADE	METER, SETTING, STOP AND CHAMBER			
		FROM	TO		FT	FT	FT	FT	FT	FT	FT	FT	FT	FT	EACH	EACH	EACH	EACH	EACH	FT	FT	FT	EACH	EACH	EACH	EACH	EACH	EACH			
S1	410	899+63		LT														1												
S2	410	902+39		LT														1												
S3	410	900+61	900+80	LT															4											
D1	410	899+50	889+50	LT				14								1														
D2	410	899+50	889+50	LT			17								1															
D3	410	899+50	899+39	LT/RT								66																		
D4	410	901+05	901+05	LT			12								1															
D5	410	901+05	899+50	LT								155					1													
D6	410	901+80	902+05	LT			25								1															
D7	410	902+05	902+04	LT			40								1															
D8	410	902+45	902+45	LT			10								1															
D9	410	902+05	901+05	LT					98								1													
D10	410	902+45	902+05	LT					41								1													
D11	410	902+91	903+27	LT			53																							
D12	410	903+33	903+27	LT			37									1														
D13	410	903+27	902+45	LT	12	6	82		73								1													
D14	410	898+69	899+39	RT			84								1															
D15	410	899+39	894+60	RT										479			1													
D16	410	899+63	899+39	RT			33								1															
D17	410	900+93	900+93	RT			9								1															
D18	410	900+93	899+63	RT										153			1													
D19	410	902+23	902+23	RT			13								1															
D20	410	902+23.00	900+93.00	RT										131			1													
D21	410	903+13	903+13.00	RT				12		22	12						1													
D22	410	903+13	902+23	RT									10	90			1													
D23	410	903+29	903+13	RT				20							1															
W1	410	898+50	899+45	LT																		97			2					
W2	410	899+08		LT																	93			1						
W3	410	899+78		LT																61			1					1		
W4	410	901+85		LT																							1			
W5	410	902+29		LT																	36			1		1	1			
TOTALS CARRIED TO ROADWAY SUBSUMMARY					12	6	415	46	212	22	12	221	10	853	10	2	9	2	4	61	129	97	1	2	2	1	2	1			

CALCULATED ACF
CHECKED ABS

ESTIMATED QUANTITIES

ALL-75-5.53

413
1224

J:\Projects\ALL\76691\roadway\sheets\76691GQ603A.dgn 11-SEP-2012 9:04PM reddenj

J:\Projects\ALL\76691\roadway\sheets\76691GP604.dgn 11-SEP-2012 9:04PM reddenj

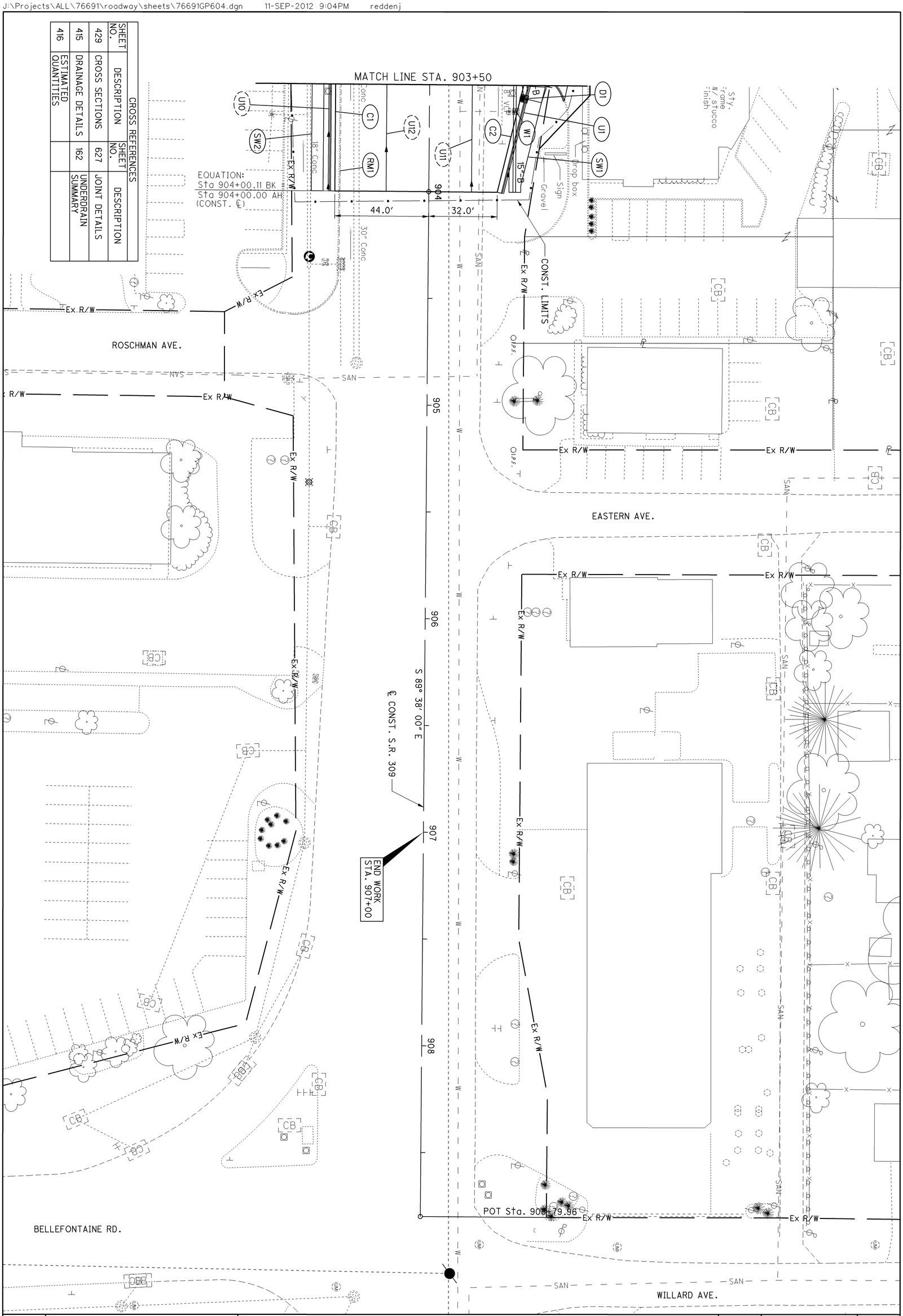

CROSS REFERENCES

SHEET NO.	DESCRIPTION	SHEET NO.	DESCRIPTION
429	CROSS SECTIONS	627	JOINT DETAILS
415	DRAINAGE DETAILS	162	UNDERDRAIN SUMMARY
416	ESTIMATED QUANTITIES		

414
1224

ALL-75-5.53

PLAN - S.R. 309
STA. 903+50 TO END WORK

CALCULATED ACF
CHECKED EJC

0 10 20 40
HORIZONTAL SCALE IN FEET

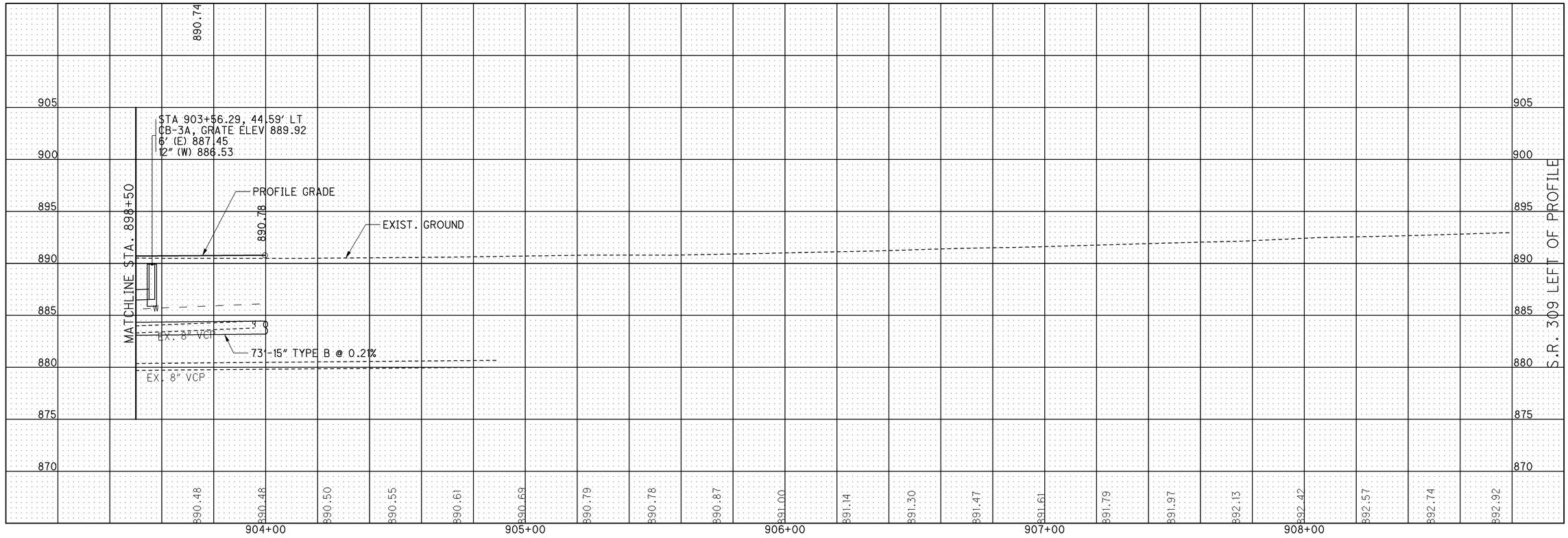

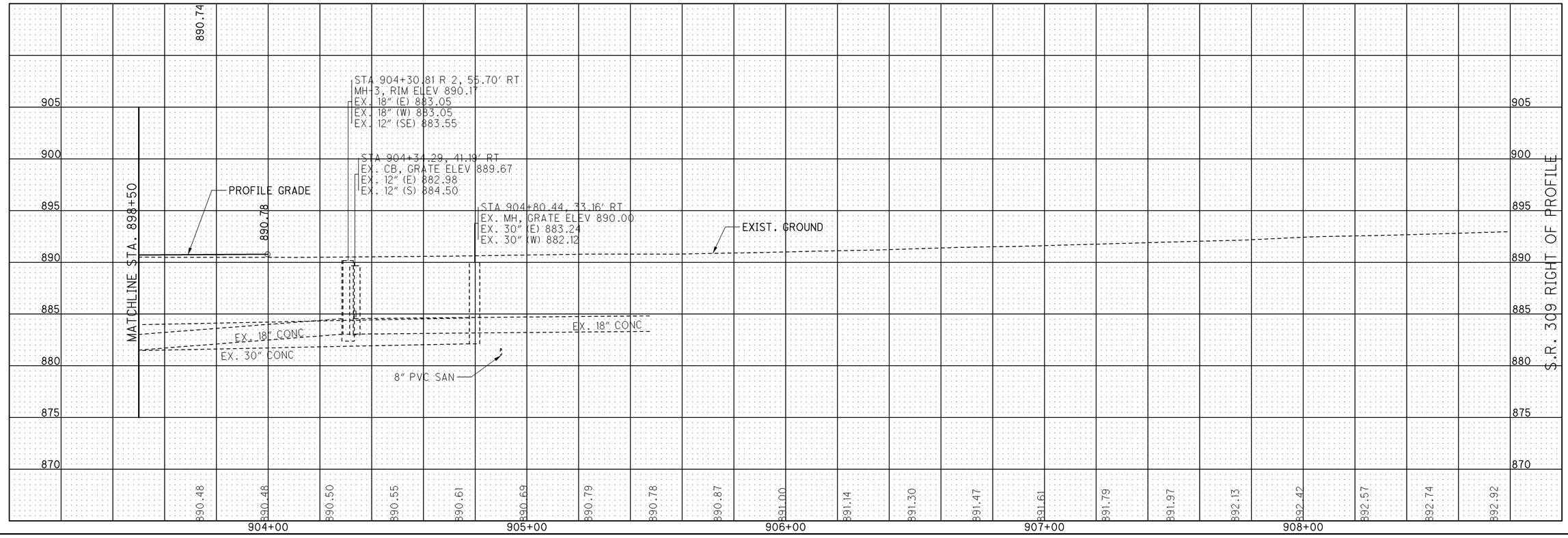

CALCULATED ACF
CHECKED EJC

PROFILE - S.R. 309
STA. 903+50.00 TO END WORK

ALL-75-5.53

415
1224

J:\Projects\ALL\76691\roadway\sheets\76691GF604.dgn 11-SEP-2012 9:04PM reddenj

REF. NO.	SHEET NO.	STATION FROM	STATION TO	SIDE	202 CURB REMOVED FT	603 12" CONDUIT, TYPE B FT	604 CATCH BASIN, NO. 3A EACH	608 6" CONCRETE WALK SQ FT	609 COMBINATION CURB AND GUTTER, TYPE 2 FT	638 VALVE BOX ADJUSTED TO GRADE EACH	638 WATER WORK, MISC.: CURB METER SET ADJUSTED EACH
RM1	414	903+50	904+00	RT	50						
C1	414	903+50	904+00	RT					50		
C2	414	903+50	904+00	LT					51		
SW1	414	903+45	904+00	LT				407			
SW2	414	903+50	904+00	RT				276			
D1	414	903+56	903+27	LT		30	1				
W1	414	903+62		LT						1	1
TOTALS CARRIED TO ROADWAY SUBSUMMARY					50	30	1	683	101	1	1

CALCULATED ACF
CHECKED ABS

ESTIMATED QUANTITIES

ALL-75-5.53

416
1224

J:\Projects\ALL\76691\roadway\sheets\76691G0604.dgn 11-SEP-2012 9:04PM reddenj

NOTE:
GAS AND WATER LINE DEPTHS UNKNOWN ALONG SR 309. ASSUMED 4' DEPTH FOR WATER LINES AND 3' DEPTH FOR GAS LINES.

▨ - UNDERCUT FOR SUBGRADE STABILIZATION

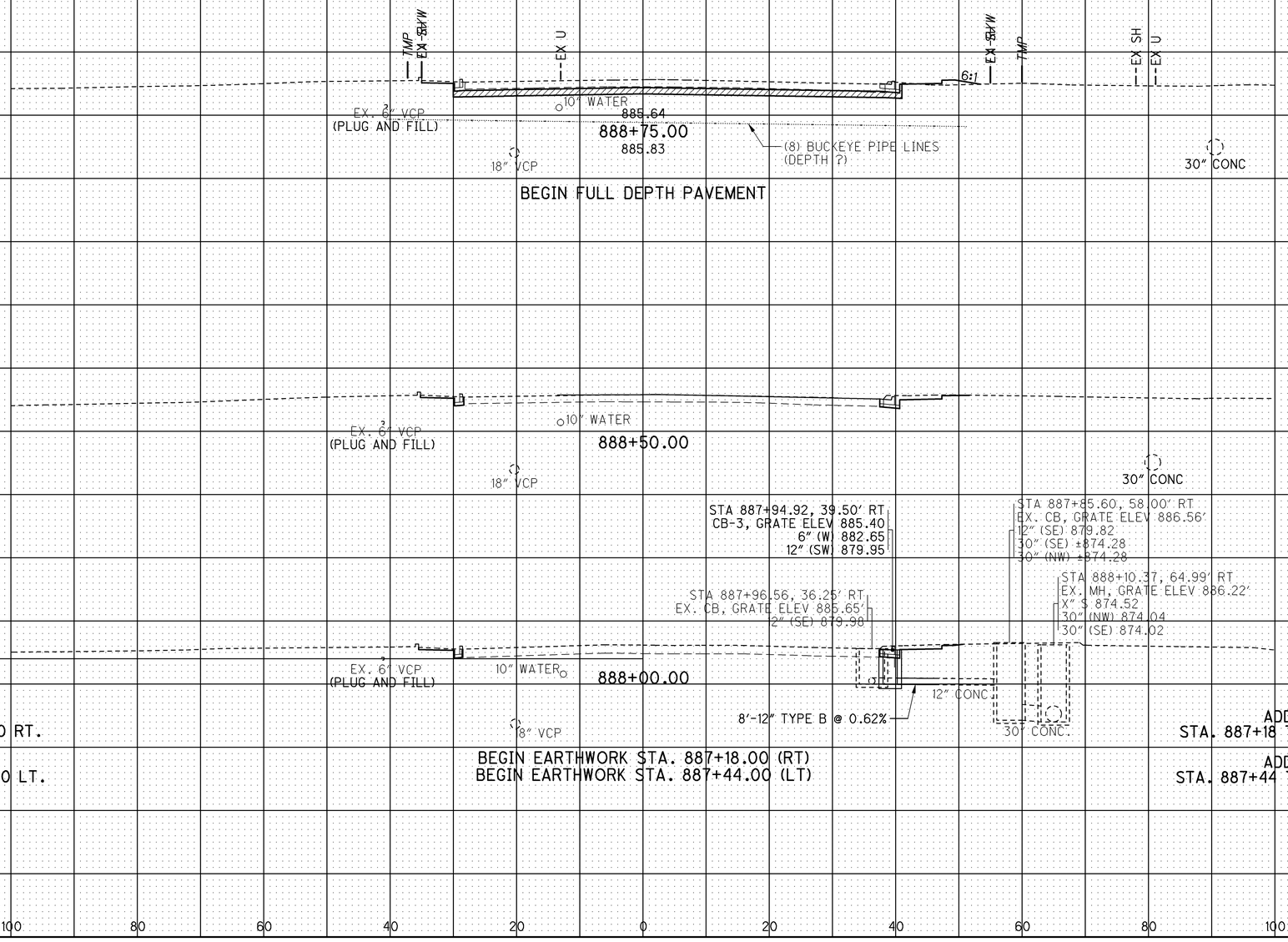

ADD FOR AREA BETWEEN STA. 887+18 TO STA. 888+00 RT.

ADD FOR AREA BETWEEN STA. 887+44 TO STA. 888+00 LT.

BEGIN EARTHWORK STA. 887+18.00 (RT)
BEGIN EARTHWORK STA. 887+44.00 (LT)

SEEDING END WIDTH	SEEDING SQ. YDS.	END AREA CUT	END AREA FILL	VOLUME CUT	VOLUME FILL
14					
14		161	4		
		8	4		
	36			10	2
12					
	66	14	0	25	0
11					
		13	0		
	133			32	0
	0			5	0
	235			72	2

CALCULATED JMR
CHECKED ACF

CROSS SECTIONS - SR 309
STA. 888+50.00 TO STA. 888+75.00

ALL-75-5.53

417
1224

J:\Projects\ALL\76691\roadway\sheets\76691XS1169.dgn 11-SEP-2012 9:04PM reddenj

NOTE:
GAS AND WATER LINE DEPTHS UNKNOWN ALONG SR 309. ASSUMED 4' DEPTH FOR WATER LINES AND 3' DEPTH FOR GAS LINES.

EMBANKMENT FOR PAVEMENT REMOVED

UNDERCUT FOR SUBGRADE STABILIZATION

STA 889+65.00, 29.50' LT
CB-3A, GRATE ELEV 883.99
6" (W) 880.36
12" (E) 878.00

EX. 6" VCP (PLUG AND FILL)

10" WATER

18" VCP

884.87
889+50.00
884.95

EX. 6" VCP (PLUG AND FILL)

10" WATER

885.45
889+00.00
885.58

18" VCP

(8) BUCKEYE PIPE LINES (DEPTH ?)

STA 888+89.74, 96.39' RT
EX. MH, GRATE ELEV 884.44'
30" (SE) 873.74
30" (NW) 873.64

SEEDING END WIDTH	SEEDING SQ. YDS.	END AREA CUT	END AREA FILL	VOLUME CUT	VOLUME FILL
19	117	171	8	322	22
22	53	177	16	156	9
	170			478	31

CALCULATED JMR
CHECKED ACF

CROSS SECTIONS - SR 309
STA. 889+00.00 TO STA. 889+50.00

ALL-75-5.53

418
1224

J:\Projects\ALL\76691\roadway\sheets\76691XS1170.dgn 11-SEP-2012 9:04PM reddenj

SEEDING	
END WIDTH	SQ. YDS.
15	72
10	83
	155

NOTE:
GAS AND WATER LINE DEPTHS UNKNOWN ALONG SR 309. ASSUMED 4' DEPTH FOR WATER LINES AND 3' DEPTH FOR GAS LINES.

- EMBANKMENT FOR PAVEMENT REMOVED
- UNDERCUT FOR SUBGRADE STABILIZATION

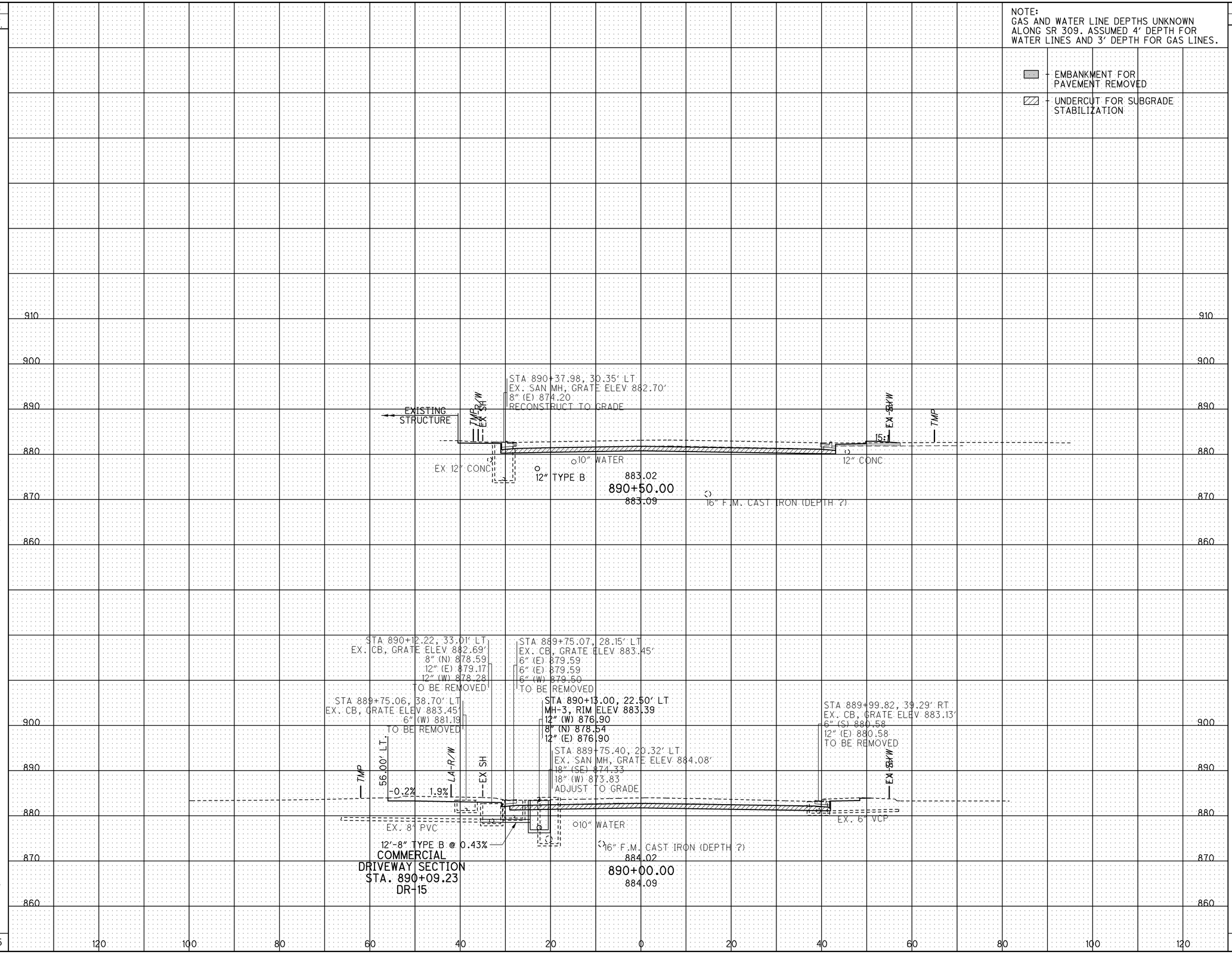

END AREA		VOLUME	
CUT	FILL	CUT	FILL
191	10	347	9
184	0	329	7
		676	16

CALCULATED JMR
CHECKED ACF

CROSS SECTIONS - SR 309
STA. 890+00.00 TO STA. 890+50.00

ALL-75-5.53

419
1224

J:\Projects\ALL\76691\roadway\sheets\76691XS1171.dgn 11-SEP-2012 9:04PM reddenj

NOTE:
GAS AND WATER LINE DEPTHS UNKNOWN ALONG SR 309. ASSUMED 4' DEPTH FOR WATER LINES AND 3' DEPTH FOR GAS LINES.

- EMBANKMENT FOR PAVEMENT REMOVED
- UNDERCUT FOR SUBGRADE STABILIZATION

SEEDING END WIDTH	SEEDING SQ. YDS.	END AREA CUT	END AREA FILL	VOLUME CUT	VOLUME FILL
19	111	251	0	464	27
	503			423	257
20	133	250	29	434	27
27	117	219	0	380	9
	864			1701	320

STA 892+00.00, 33.21' LT
CB-3A, GRATE ELEV 879.92
6" (W) 877.17
12" (W) 875.37
12" (E) 875.37

STA 892+23.97, 27.99' LT
EX. CB, GRATE ELEV 880.11'
15" (N) 875.89
TO BE REMOVED

STA 892+10.00, 47.63' RT
CB-3A, GRATE ELEV 879.62
6" (W) 876.87
6" (N) 876.87
12" (W) 876.27

STA 891+76.94, 79.61' RT
EX. CB, GRATE ELEV 879.57'
4" (NW) 875.43
12" (NE) 875.83
12" (SW) 875.38
TO BE REMOVED

TURNER AVE.
LA-R/W
EX R/W
11:1
4" GAS
15" CONC
TO BE REMOVED
10" WATER
PROP. 10" WL
12" CONC
TO BE REMOVED
X" GAS
880.63
892+00.00
881.12
8" VCP
16" F.M. CAST IRON (DEPTH ?)

ADD FOR TURNER AVE.
CUL-DE-SAC

ADD FOR TURNER AVE.
CUL-DE-SAC

STA 891+61.97, 37.14' LT
EX. CB, GRATE ELEV 880.25'
15" (SW) 876.15
TO BE REMOVED

STA 891+46.00, 24.00' LT
MH-1, RIM ELEV 880.84
12" (W) 874.90
12" (S) 874.15
12" (E) 874.90

STA 891+46.00, 45.28' RT
CB-3A, GRATE ELEV 880.32
6" (W) 877.57
12" (N) 873.75
15" (S) 873.50
12" (E) 875.25

STA 891+49.79, 86.86' RT
MH-3, RIM ELEV 880.00
15" (N) 873.25
15" (SE) 873.25

TURNER AVE.
LA-R/W
7:1
10" WATER
12" CONC
TO BE REMOVED
X" GAS
SEE PROFILE
69'-12" TYPE B @ 0.58%
42'-15" TYPE C @ 0.59%
22'-15" TYPE C @ 0.6%
881.16
891+50.00
881.63
8" VCP
16" F.M. CAST IRON (DEPTH ?)

STA 891+19.55, 44.23' LT
EX. CB, GRATE ELEV 880.55'
12" (S) 876.67
TO BE REMOVED

TURNER AVE.
TMP
EX R/W
12:1
29:1
10" WATER
12" TYPE B
EX. 12" CONC
TO BE REMOVED
EX. 12" CONC
TO BE REMOVED
8" VCP
882.02
891+00.00
882.29
12" CONC
TO BE REMOVED
X" GAS
16" F.M. CAST IRON (DEPTH ?)

CALCULATED JMR
CHECKED ACF

CROSS SECTIONS - SR 309
STA. 891+00.00 TO STA. 892+00.00

ALL-75-5.53

420
1224

J:\Projects\ALL\76691\roadway\sheets\76691XS1172.dgn reddenj 11-SEP-2012 9:04PM

SEEDING	
END WIDTH	SQ. YDS.
12	117
29	144
22	117
	378

NOTE:
GAS AND WATER LINE DEPTHS UNKNOWN ALONG SR 309. ASSUMED 4' DEPTH FOR WATER LINES AND 3' DEPTH FOR GAS LINES.

UNDERCUT FOR SUBGRADE STABILIZATION

SEE S.R. 309 RAMP 'C' CROSS SECTIONS

STA 893+50.73, 27.59' LT
EX. CB, GRATE ELEV 880.35'
12" (N) 877.91
TO BE REMOVED

STA 893+44.14, 41.63' RT
EX. SAN MH, GRATE ELEV 880.79
21" (SW) 863.00
21" (NE) 862.85
RECONSTRUCT TO GRADE

STA 893+63.00, 50.00' RT
CB-3A, GRATE ELEV 879.68
6" (E) 877.00
12" (E) 876.43

EX SW
R/W
22:1
EX 21" CONC
4" GAS
10" WATER
PROP. 10" WL
X" GAS
21" CONC
15" CONC
880.62
893+50.00
881.02
EX. 10.5 X 6.8' SECTIONAL CORRUGATED PLATE PIPE ARCH WITH 6.4' TYPE A CONDUIT INSERTS TO BE REMOVED
8" VCP
PROP. 16'X7' BOX CULVERT SEE ALL-117-1844 PLAN & PROFILE DETAIL SHEET
15" F.M. CAST IRON (DEPTH ?)

STA 892+92.00, 43.51' LT
CB-3A, GRATE ELEV 879.60
12" (W) 876.41

STA 892+88.02, 30.06' LT
EX. SAN MH, GRATE ELEV 880.31'
8" (E) 861.12
8" (W) 861.12
ADJUST TO GRADE

SEE S.R. 309 RAMP 'A' CROSS SECTIONS

EX LA
EX U
EX LA
6:1
6:1
879.00
4" GAS
10" WATER
X" GAS
15" CONC
TO BE REMOVED
21" CONC
PROP. 10" WL
EX. 10.5 X 6.8' SECTIONAL CORRUGATED PLATE PIPE ARCH WITH 6.4' TYPE A CONDUIT INSERTS TO BE REMOVED
21" RCP
880.49
893+00.00
880.76
15" F.M. CAST IRON (DEPTH ?)
PROP. 16'X7' BOX CULVERT SEE ALL-117-1844 PLAN & PROFILE DETAIL SHEET

STA 892+28.75, 64.61' RT
EX. CB, GRATE ELEV 879.57'
12" (SW) 876.98
TO BE REMOVED

STA 892+58.00, 36.76' LT
CB-3 GRATE ELEV 879.65
6" (S) 876.90
6" (E) 876.90
6" (W) 876.90
12" (W) 876.07
12" (E) 876.07

STA 892+60.72, 52.71' RT
CB-3A, GRATE ELEV 879.39
6" (NE) 876.64
6" (W) 877.14
12" (S) 875.75

STA 892+63.95, 93.96' RT
EX. SAN MH, GRATE ELEV 880.00'
21" (SW) 863.87
21" (NE) 863.70

LA-R/W
EX LA
EX U
6:1
9.9:1
4" GAS
10" WATER
15" CONC
TO BE REMOVED
PROP. 10" WL
X" GAS
84'-12" TYPE C @ 2.98%
880.42
892+50.00
880.94
8" VCP
16" F.M. CAST IRON (DEPTH ?)
EX. 10.5 X 6.8' SECTIONAL CORRUGATED PLATE PIPE ARCH WITH 6.4' TYPE A CONDUIT INSERTS TO BE REMOVED
PROP. 16'X7' BOX CULVERT SEE ALL-117-1844 PLAN & PROFILE DETAIL SHEET

END AREA		VOLUME	
CUT	FILL	CUT	FILL
316	0		
		580	3
310	3		
		531	4
264	1		
		477	1
		1588	8

CALCULATED JMR
CHECKED ACF

CROSS SECTIONS - SR 309
STA. 892+50.00 TO STA. 893+50.00

ALL-75-5.53

421
1224

J:\Projects\ALL\76691\roadway\sheets\76691XS1173.dgn 11-SEP-2012 9:04PM reddenj

SEEDING	
END WIDTH	SQ. YDS.
25	150
28	168
18	

NOTE:
GAS AND WATER LINE DEPTHS UNKNOWN ALONG SR 309. ASSUMED 4' DEPTH FOR WATER LINES AND 3' DEPTH FOR GAS LINES.

▨ - UNDERCUT FOR SUBGRADE STABILIZATION

STA 894+60.82, 34.16' RT
EX. CB, GRATE ELEV 880.33'
12" (S) 876.47
6" (W) 876.63
6" (E) 876.59
TO BE REMOVED

STA 894+39.50, 30.22' LT
EX. SAN MH, GRATE ELEV 880.66'
8" (E) 860.66
8" (W) 860.66
21" (N) 860.66
8" (NE) 860.66
21" (SW) 860.66
ADJUST TO GRADE

STA 894+60.00, 48.00' LT
MH-3, RIM ELEV 880.86
12" (W) 875.65
42" (N) 872.70
42" (S) 872.70
12" (E) 876.37

STA 894+60.00, 30.00' RT
MH-3, RIM ELEV 880.41
42" (N) 873.37
42" (E) 873.37
15" (S) 874.07

STA 894+60.00, 50.00' RT
CB-3A, GRATE ELEV 879.92
6" (E) 877.17
12" (W) 875.56
15" (N) 874.27
12" (E) 875.56

EX SH

25:1

4:1

6" WATER

4" GAS

10" WATER

EX. 6" VCP TO BE REMOVED

72'-42" TYPE C @ 0.75%

15" CONC TO BE REMOVED

PROP. 10" WL

78'-42" TYPE B @ 0.86%

21" CONC

20'-15" TYPE B @ 1.0%

880.87
894+50.00
881.23

8" VCP

900 890 880 870 860

END AREA	
CUT	FILL
275	1
272	61
544	56
506	57
1050	113

VOLUME	
CUT	FILL

CALCULATED JMR
CHECKED ACF

STA 893+79.39, 31.00' RT
EX. SAN MH, GRATE ELEV 880.58'
24" (S) 860.58
12" (E) 860.58
21" (W) 860.58
21" (NE) 860.58
ADJUST TO GRADE

STA 894+20.59, 32.20' RT
EX. SAN MH, GRATE ELEV 880.59'
12" (W) 860.59
12" (E) 860.59
8" (S) 860.59
TO BE ABANDONED

SEE S.R. 309 RAMP 'C' CROSS SECTIONS

STA 894+03.36, 38.00' LT
CB-3A, GRATE ELEV 879.97
6" (E) 876.85
6" (S) 876.85
12" (E) 876.35

EX SH

6:1

8:1

4" GAS

58'-12" TYPE B @ 1.22%

10" WATER

PROP. 10" WL

880.74
894+00.00
881.16

X" GAS

21" CONC

12" TYPE B

PROP. 16'X7' BOX CULVERT
SEE ALL-117-1844 PLAN & PROFILE DETAIL SHEET

8" VCP

21" PVC

EX. 8" VCP ABANDON

890 880 870 860

EX SH

58.0' RT.

R/W

74.8' RT.

TWP

79.8' RT.
MATCH EXIST.

2.0%

6.2%

1.0%

PROP. 10" WL

COMMERCIAL DRIVEWAY SECTION
STA. 893+76.00
DR-18

120 100 80 60 40 20 0 20 40 60 80 100 120

CROSS SECTIONS - SR 309
STA. 893+76.00 TO STA. 894+50.00

ALL-75-5.53

422
1224

J:\Projects\ALL\76691\roadway\sheets\76691XS1174.dgn 11-SEP-2012 9:04PM reddenj

SEEDING	
END WIDTH	SQ. YDS.
26	145
26	139
22	134
	418

NOTE:
GAS AND WATER LINE DEPTHS UNKNOWN ALONG SR 309. ASSUMED 4' DEPTH FOR WATER LINES AND 3' DEPTH FOR GAS LINES.

▨ - UNDERCUT FOR SUBGRADE STABILIZATION

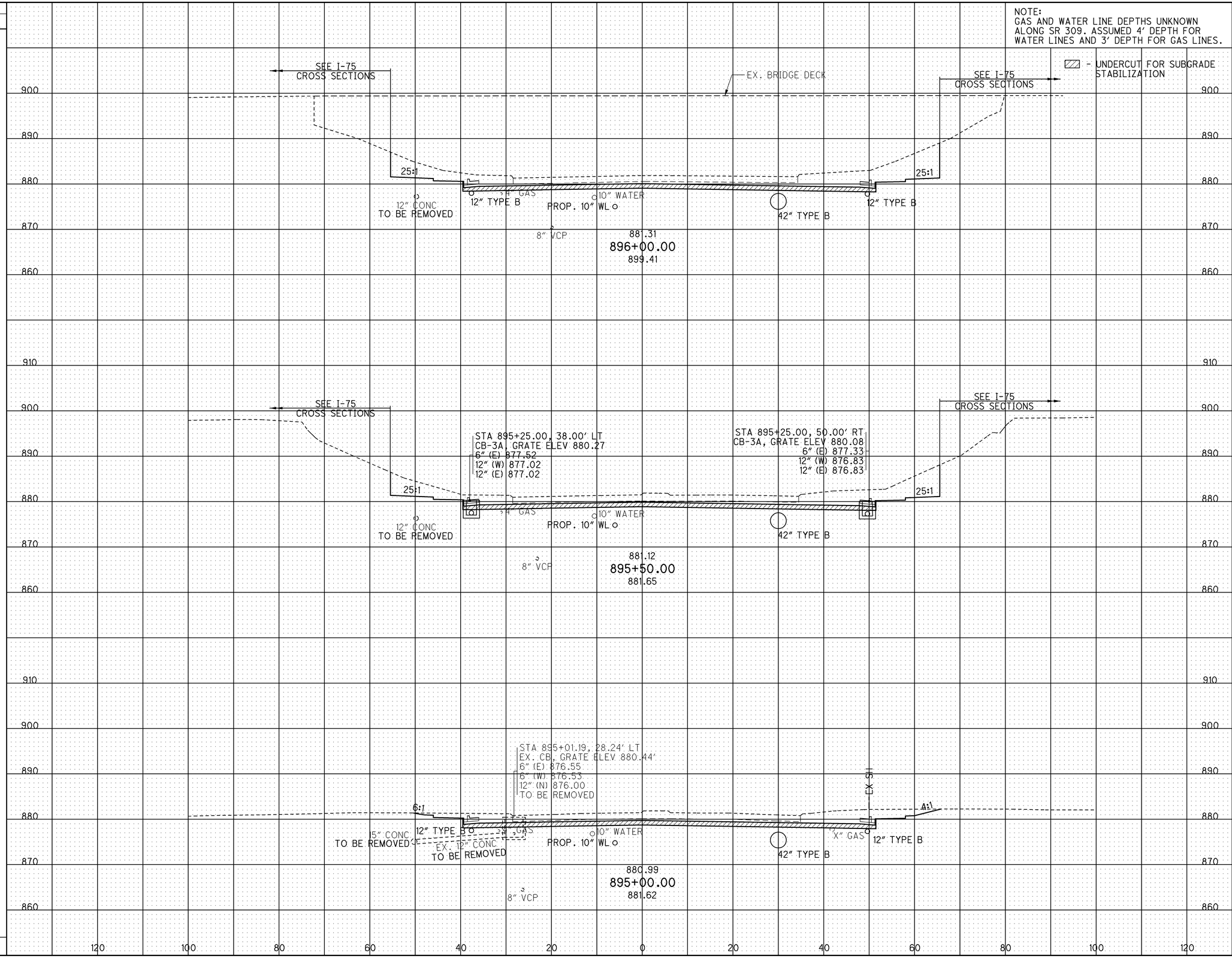

END AREA		VOLUME	
CUT	FILL	CUT	FILL
414	0		
383	0		
		738	0
		631	0
298	0		
		531	1
		1900	1

CALCULATED JMR
CHECKED ACF

CROSS SECTIONS - SR 309
STA. 895+00.00 TO STA. 896+00.00

ALL-75-5.53

423
1224

J:\Projects\ALL\76691\roadway\sheets\76691XS1175.dgn 11-SEP-2012 9:04PM reddenj

SEEDING	
END WIDTH	SQ. YDS.
32	161
26	144
	305

NOTE:
GAS AND WATER LINE DEPTHS UNKNOWN ALONG SR 309. ASSUMED 4' DEPTH FOR WATER LINES AND 3' DEPTH FOR GAS LINES.

▨ - UNDERCUT FOR SUBGRADE STABILIZATION

END AREA	
CUT	FILL
298	0
441	0
684	0
792	0
1476	0

VOLUME	
CUT	FILL

CALCULATED JMR
CHECKED ACF

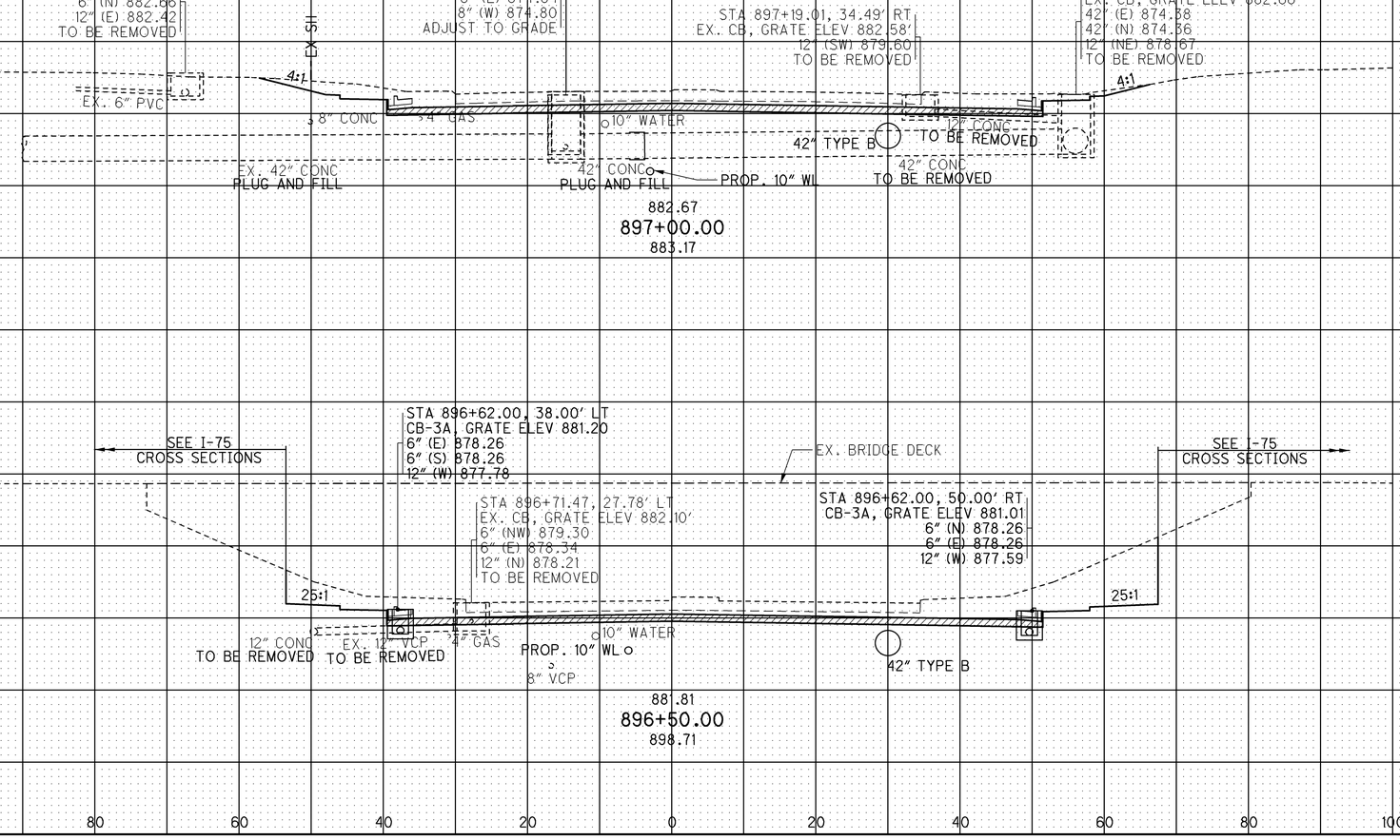

CROSS SECTIONS - SR 309
STA. 896+50.00 TO STA. 897+00.00

ALL-75-5.53

424
1224

J:\Projects\ALL\76691\roadway\sheets\76691XS1176.dgn 11-SEP-2012 9:04PM reddenj

NOTE:
GAS AND WATER LINE DEPTHS UNKNOWN ALONG SR 309. ASSUMED 4' DEPTH FOR WATER LINES AND 3' DEPTH FOR GAS LINES.

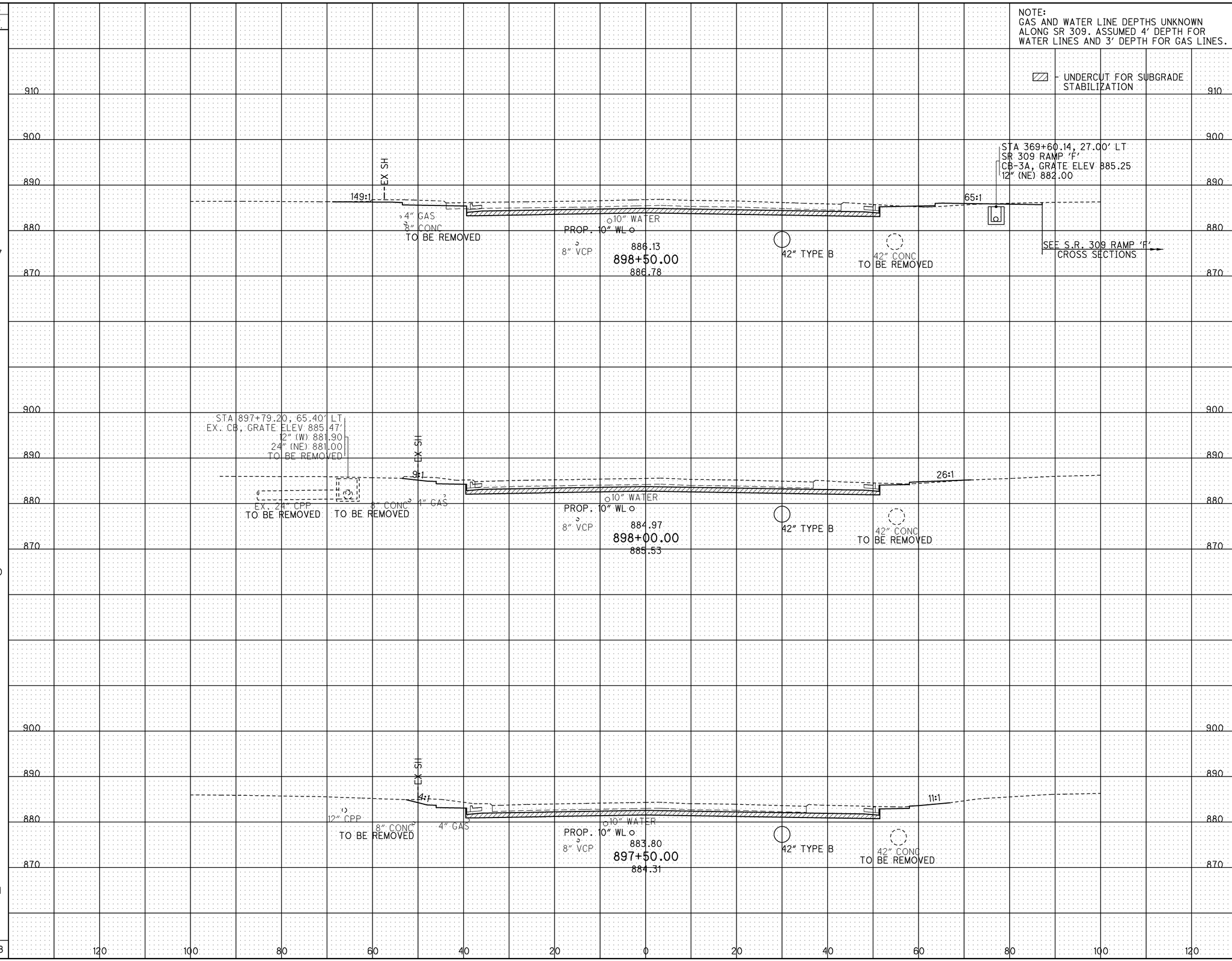

SEEDING END WIDTH	SEEDING SQ. YDS.	END AREA CUT	END AREA FILL	VOLUME CUT	VOLUME FILL
47		278	6		
	217			504	8
29		266	3		
	150			493	3
25		266	0		
	161			522	0
	528			1519	11

CALCULATED JMR
CHECKED ACF

CROSS SECTIONS - SR 309
STA. 897+50.00 TO STA. 898+50.00

ALL-75-5.53

J:\Projects\ALL\76691\roadway\sheets\76691XS1177.dgn 11-SEP-2012 9:04PM reddenj

NOTE:
GAS AND WATER LINE DEPTHS UNKNOWN ALONG SR 309. ASSUMED 4' DEPTH FOR WATER LINES AND 3' DEPTH FOR GAS LINES.

- EMBANKMENT FOR PAVEMENT REMOVED
- UNDERCUT FOR SUBGRADE STABILIZATION

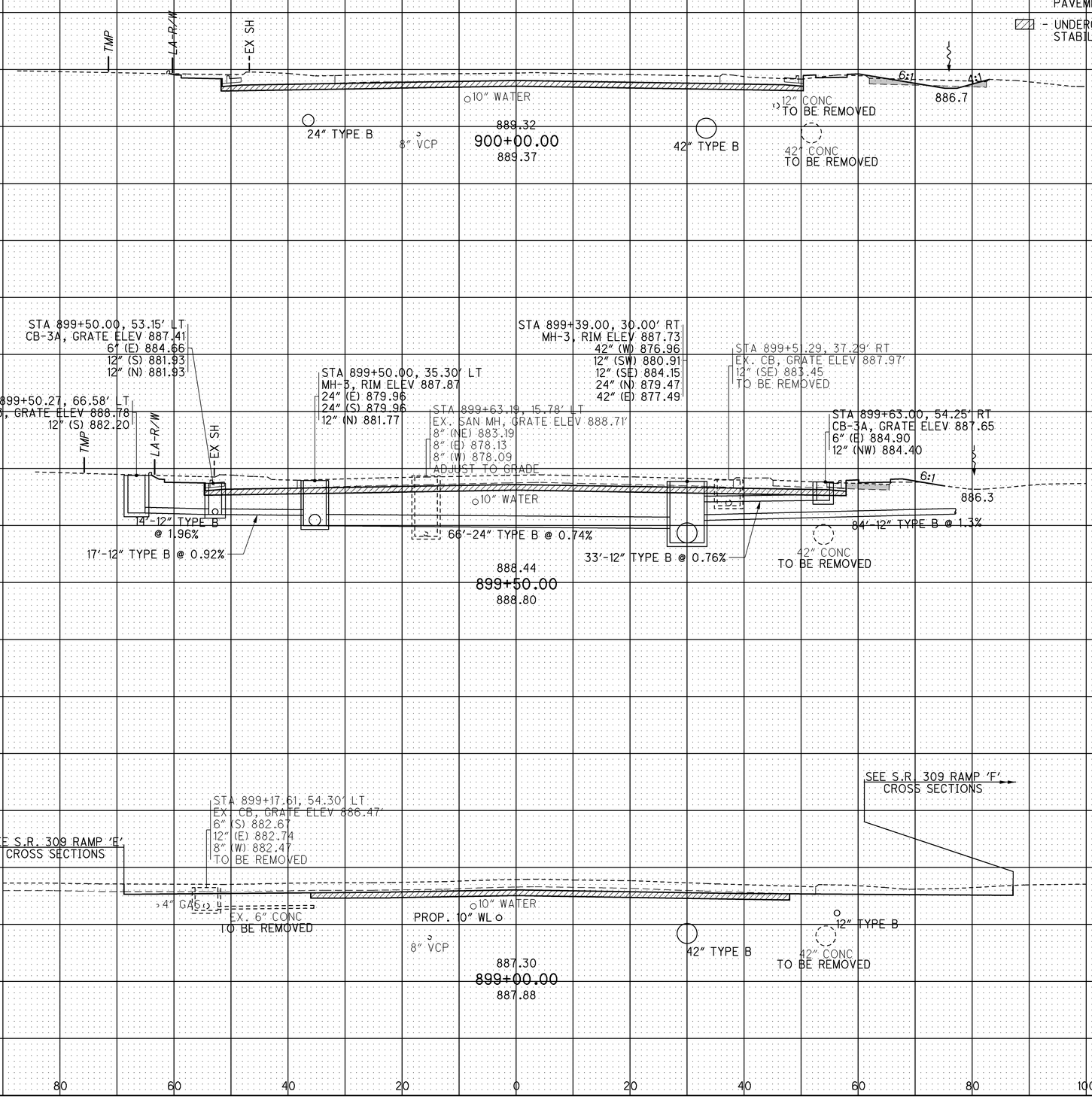

SEEDING END WIDTH	SEEDING SQ. YDS.	END AREA CUT	END AREA FILL	VOLUME CUT	VOLUME FILL
41	183	277	12	546	23
24	72	313	13	600	12
0	134	335	0	568	6
	389			1714	41

CALCULATED JMR
CHECKED ACF

CROSS SECTIONS - SR 309
STA. 899+00.00 TO STA. 900+00.00

ALL-75-5.53

426
1224

J:\Projects\ALL\76691\roadway\sheets\76691XS1178.dgn 11-SEP-2012 9:04PM redden j

SEEDING	
END WIDTH	SQ. YDS.
26	
	88
46	
	245
	333

NOTE:
GAS AND WATER LINE DEPTHS UNKNOWN ALONG SR 309. ASSUMED 4' DEPTH FOR WATER LINES AND 3' DEPTH FOR GAS LINES.

▨ - UNDERCUT FOR SUBGRADE STABILIZATION

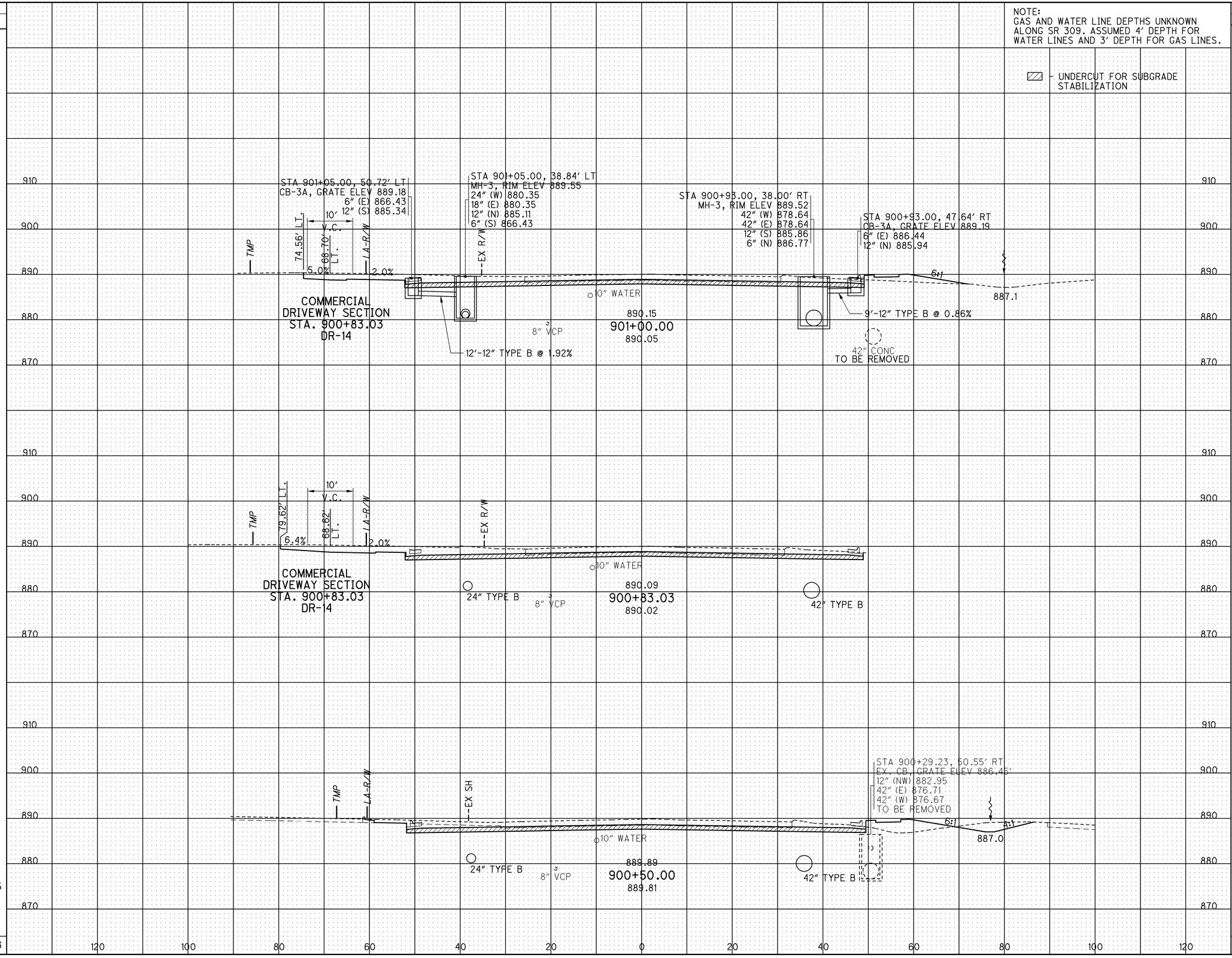

END AREA	
CUT	FILL
249	22
243	37

VOLUME	
CUT	FILL
456	55
481	45
937	100

CALCULATED JMR
CHECKED ACF

CROSS SECTIONS - SR 309
STA. 900+50.00 TO STA. 901+00.00

ALL-75-5.53

427
1224

J:\Projects\ALL\76691\roadway\sheets\76691XS1179.dgn 11-SEP-2012 9:04PM reddenj

SEEDING	
END WIDTH	SQ. YDS.
18	104
	42
	194
	298

NOTE:
GAS AND WATER LINE DEPTHS UNKNOWN ALONG SR 309. ASSUMED 4' DEPTH FOR WATER LINES AND 3' DEPTH FOR GAS LINES.

▨ - UNDERCUT FOR SUBGRADE STABILIZATION

MEET EXISTING PAV'T (SARATOGA AVE.) 89.52' LT.

STA 902+04.19, 40.00' LT
MH-3, RIM ELEV 889.84
18" (W) 881.66
18" (E) 881.66
12" (N) 884.69

STA 902+04.92, 80.01' LT
CB-3A, GRATE ELEV 889.30
6" (S) 887.53
12" (W) 885.57
12" (S) 885.57

STA 902+13.76, 33.42' LT
EX. MH, GRATE ELEV 889.42'
12" (E) 881.92
12" (N) 882.02
TO BE REMOVED

STA 902+23.00, 35.33' RT
MH-3, RIM ELEV 889.95
42" (W) 879.62
42" (E) 879.62
12" (S) 886.00

STA 902+23.00, 49.00' RT
CB-3A, GRATE ELEV 889.55
6" (E) 886.80
12" (N) 886.30

6:1

40'-12" TYPE B @ 2.2%

EX. 12" CONC TO BE REMOVED

10" WATER

8" VCP

890.48
902+00.00
890.36

131'-12" TYPE B @ 2.26%

42" CONC TO BE REMOVED

MEET EXISTING PAV'T (SARATOGA AVE.) 89.52' LT.

STA 901+79.59, 80.12' LT
CB-3A, GRATE ELEV 889.22
12" (E) 886.01

10" WATER

18" TYPE B

8" VCP

890.45
901+92.42
890.36

42" TYPE B

TMP

LA-R/W

EX R/W

26:1

6:1

6:1

887.9

10" WATER

18" TYPE B

8" VCP

890.32
901+50.00
890.24

42" TYPE B

42" CONC TO BE REMOVED

END AREA	
CUT	FILL
313	5
246	15
458	34
976	53

VOLUME	
CUT	FILL
518	19

CALCULATED JMR
CHECKED ACF

CROSS SECTIONS - SR 309
STA. 901+50.00 TO STA. 902+00.00

ALL-75-5.53

428
1224

J:\Projects\ALL\76691\roadway\sheets\76691XS1180.dgn 11-SEP-2012 9:04PM reddenj

NOTE:
GAS AND WATER LINE DEPTHS UNKNOWN ALONG SR 309. ASSUMED 4' DEPTH FOR WATER LINES AND 3' DEPTH FOR GAS LINES.

- EMBANKMENT FOR PAVEMENT REMOVED
- UNDERCUT FOR SUBGRADE STABILIZATION

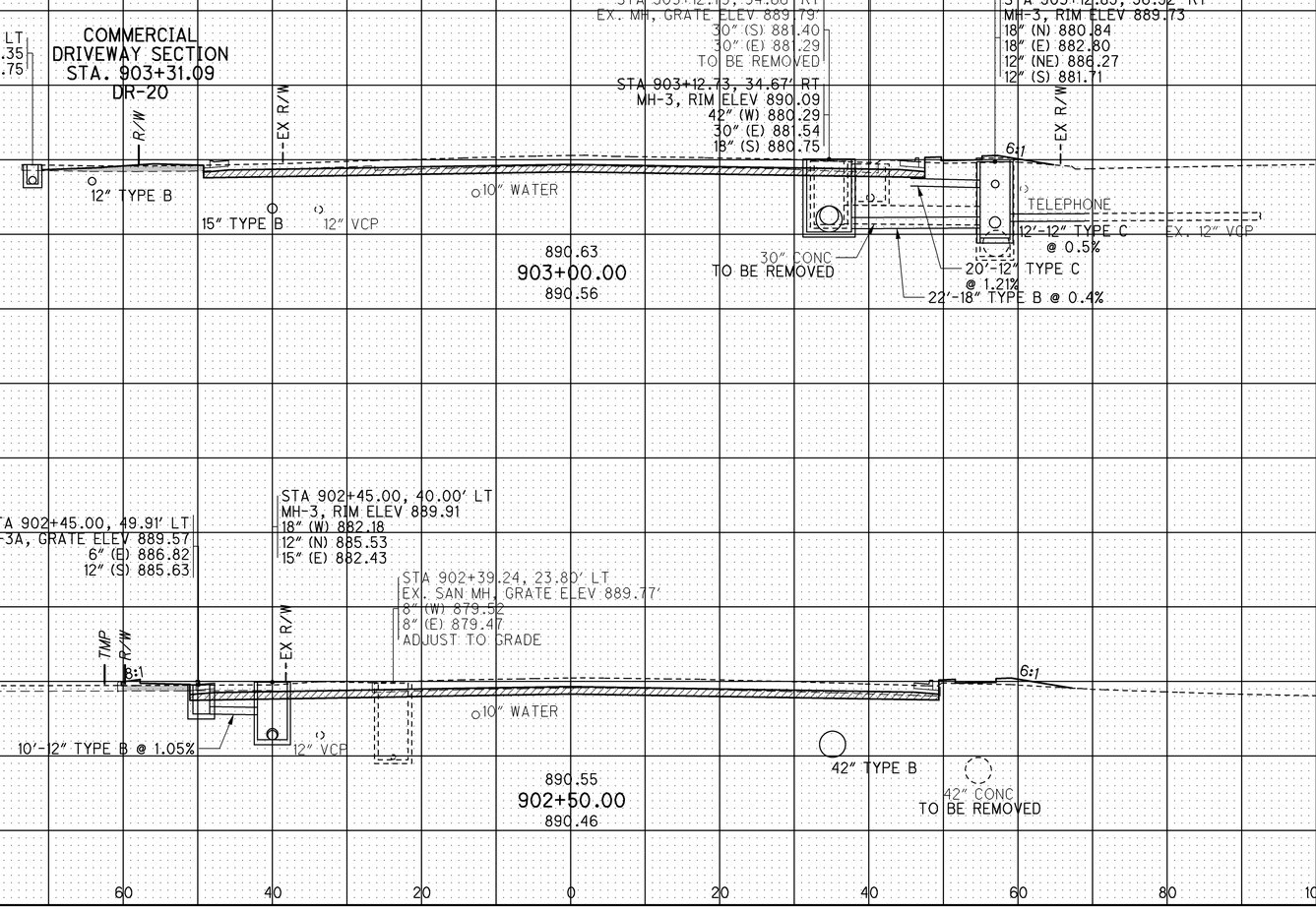

SEEDING END WIDTH	SEEDING SQ. YDS.	END AREA CUT	END AREA FILL	VOLUME CUT	VOLUME FILL
21	127	212	23	397	37
24	122	217	17	491	20
	249			888	57

CALCULATED JMR
CHECKED ACF

CROSS SECTIONS - SR 309
STA. 902+50.00 TO STA. 903+00.00

ALL-75-5.53

429
1224

J:\Projects\ALL\76691\roadway\sheets\76691XS1181.dgn 11-SEP-2012 9:04PM reddenj

NOTE:
GAS AND WATER LINE DEPTHS UNKNOWN ALONG SR 309. ASSUMED 4' DEPTH FOR WATER LINES AND 3' DEPTH FOR GAS LINES.

- EMBANKMENT FOR PAVEMENT REMOVED
- UNDERCUT FOR SUBGRADE STABILIZATION

STA 903+56.29, 44.59' LT
CB-3A, GRATE ELEV 889.82
6" (E) 887.45
12" (W) 886.53

STA 903+29.09, 46.00' RT
CB-3A, GRATE ELEV 889.76
6" (E) 887.01
12" (SW) 886.51

STA 903+64.56, 73.78' RT
EX. CB, GRATE ELEV 887.45'
6" (E) 885.02
10" (W) 884.95

STA 903+33.38, 62.26' LT.
12'x1' TRENCH DRAIN, GRATE ELEV 888.93
6" (S) 887.96
TO BE REMOVED

STA 903+32.69, 70.15' LT
CB 2-3, GRATE ELEV 889.00
12" (S) 884.10

STA 903+27.20, 40.00' LT
MH-3, RIM ELEV 890.03
15" (W) 883.05
15" (E) 883.05
12" (N) 883.05
12" (NW) 886.25
12" (NE) 886.25
10" (N) 883.10
8" (SE) 883.40

STA 903+27.20, 33.90' LT
EX. MH, GRATE ELEV 889.45'
6" (N) 883.10
12" (W) 883.05
8" (E) 883.40
TO BE REMOVED

SEEDING END WIDTH	SEEDING SQ. YDS.	END AREA CUT	END AREA FILL	VOLUME CUT	VOLUME FILL
34	178	163	26	333	43
29	45	196	20	112	13
23	86	208	26	272	32
	309			717	88

CALCULATED JMR
CHECKED ACF

CROSS SECTIONS - SR 309
STA. 903+35.00 TO STA. 904+00.00

ALL-75-5.53

430
1224

J:\Projects\ALL\76691\roadway\sheets\76691XS1182.dgn 11-SEP-2012 9:04PM reddenj

SEEDING	
END WIDTH	SQ. YDS.
	0

GRAND TOTAL SEEDING & MULCHING S.R. 309
4,799 SQ. YD.
(QUANTITY CARRIED TO ROADWAY SUBSUMMARY)

NOTE:
GAS AND WATER LINE DEPTHS UNKNOWN ALONG SR 309. ASSUMED 4' DEPTH FOR WATER LINES AND 3' DEPTH FOR GAS LINES.

GRAND TOTAL EARTHWORK S.R. 309
EXCAVATION: 15,692 CU. YD.
EMBANKMENT: 841 CU. YD.
(QUANTITY CARRIED TO ROADWAY SUBSUMMARY)

END AREA	
CUT	FILL

VOLUME	
CUT	FILL
0	0

CALCULATED JMR
CHECKED ACF

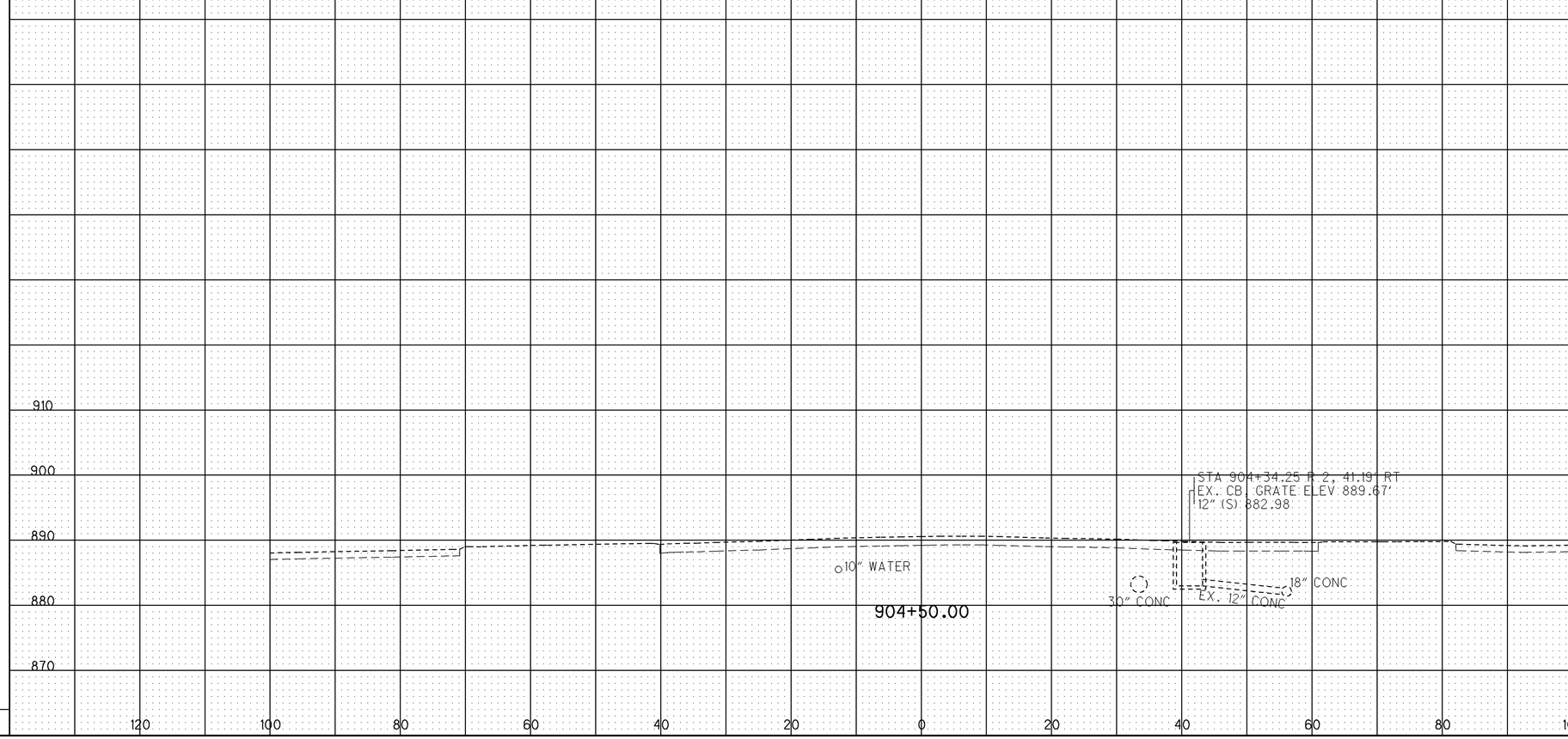

CROSS SECTIONS - SR 309
STA. 904+50.00

ALL-75-5.53

J:\Projects\ALL\76691\roadway\sheets\76691XS1183.dgn 11-SEP-2012 9:04PM reddenj

CURVE 309A-1
P.I. STA. 358+21.67
Ls = 200.00′
θs = 3° 00′ 00″
LT = 133.35′
ST = 66.68′
x = 199.95′
y = 3.49′
k = 99.99′
p = 0.87′

CURVE 309A-2
P.I.= Sta. 360+77.61
D = 17° 23′ 25″ (LT)
Dc = 3° 00′ 00″
R = 1,909.86′
D c = 14° 23′ 25″ (LT)
Lc = 479.68′
Es = 22.65′
C = 478.42′
C.B.1 = N 0° 19′ 21″ W
C.B. = N 9° 31′ 04″ W
e_d = 0.055

CURVE 309A-3
P.I.= Sta. 367+44.61
D = 16° 37′ 40″ (RT)
Dc = 6° 30′ 00″
R = 881.47′
T = 128.81′
L = 255.81′
E = 9.36′
C = 254.92′
C.B. = N 8° 23′ 57″ W
e_d = 0.044

ST Sta. 356+88.32 = STA. 356+88.32, 74.5′ LT. (I-75) BEGIN SHLDR TAPER

STA. 357+38.33 END SHLDR TAPER

SC Sta. 358+88.32

CONST. LIMITS (TYP.)

℄ R/W & CONST. S.R. 309

LOST CREEK

S.R. 309 STA. 893+23.92 = RAMP A STA. 370+26.30

EROSION PROTECTION MAT, TYPE A, 7′ X 7.5′

PT Sta. 363+68.00

℄ RAMP A

N 16° 42′ 47″ W

PC Sta. 366+15.80

EROSION PROTECTION MAT, TYPE A 150′ X 11′

℄ R/W & CONST. I-75

℄ RAMP 'C'

I-75 OVER S.R.309 (HARDING HWY.) STRUCTURE NO. ALL-75-0703

N 0° 40′ 39″ E

℄ RAMP F

PCC Sta. 360+77.61

N 0° 05′ 07″ E

N 0° 40′ 39″ E

CROSS REFERENCES			
SHEET NO.	DESCRIPTION	SHEET NO.	DESCRIPTION
443	CROSS SECTIONS	891-893	LIGHTING PLAN
448	DRAINAGE DETAILS	628-629	JOINT DETAILS
186	I-75 PLAN & PROFILE	163	UNDERDRAIN SUMMARY
615	INTERSECTION DETAIL	433	ESTIMATED QUANTITIES
659-660	PAVEMENT DETAILS	446	CULVERT DETAIL
902	LANDSCAPING PLAN	609	GRADING PLAN

P.V.I. STA 362+40.00 ELEV = 891.43′
K = 152
485.00′ VC

STA 363+05.81, 81.32′ RT
EX. MH, GRATE ELEV 884.90
EX. 18″ (S) 880.06
EX. 30″ (SE) 880.03
EX. 36″ (N) 880.07
TO BE REMOVED

+1.09 %
-2.10 %
+0.32 %
+1.09 %

PROFILE GRADE

STA 369+10.00, 19.00′ RT
CB-3A, GRATE ELEV 878.97
6″ (N) 876.22
18″ (S) 871.45
18″ (W) 871.45

STA 368+50.00, 35.00′ RT
CB-5, GRATE ELEV 876.40
18″ (N) 871.69

P.V.I. STA 358+75.00
ELEV = 887.44′
K = 271
210.00′ VC

EX. 18″ CONC. TO BE REMOVED

EXIST. GROUND

STA 369+32.34, 59.97′ LT
EX. SAN MH, GRATE ELEV 880.00
EX. 21″ (SW) 863.87
EX. 21″ (NE) 863.70

STA 369+84.67, 20.22′ RT
EX. SAN MH, GRATE ELEV 880.79
EX. 21″ (SW) 863.00
EX. 21″ (NE) 862.85
ADJUST TO GRADE

STA 369+95.30, 55.46′ RT
EX. SAN MH, GRATE ELEV 880.58
EX. 24″ (S) 860.58
EX. 12″ (E) 860.58
EX. 21″ (W) 860.58
EX. 21″ (NE) 860.58
ADJUST TO GRADE

18″ HP GAS

EX. 8″ CONC.

PROP. 36″ TYPE A

6′-18″ TYPE C @ 0.39%

P.V.I. STA 368+75.00
ELEV = 878.12′
K = 50
85.00′ VC

EX. 21″ CONC.

EX. 21″ CONC.

HORIZONTAL SCALE IN FEET

CALCULATED ACF CHECKED ABS

PLAN AND PROFILE - S.R. 309 RAMP 'A' STA. 356+88.32 TO STA. 370+26.30

ALL-75-5.53

432
1224

J:\Projects\ALL\76691\roadway\sheets\76691GP605.dgn 11-SEP-2012 9:05PM reddenj

REF. NO.	SHEET NO.	STATION FROM	STATION TO	SIDE	202 TRAFFIC ISLAND REMOVED SQ YD	202 PIPE REMOVED, 24" AND UNDER FT	202 CATCH BASIN REMOVED EACH	202 FENCE REMOVED FT	202 REMOVAL MISC.: METAL POLE EACH	202 REMOVAL MISC.: CONCRETE PAD SQ YD	202 REMOVAL MISC.: SWIMMING POOL SQ FT	202 REMOVAL MISC.: FROST FREE WATER SPIGOT EACH	601 TIED CONCRETE BLOCK MAT, TYPE 1 SQ YD	601 TIED CONCRETE BLOCK MAT, TYPE 3 SQ YD	602 CONCRETE MASONRY CU YD	603 18" CONDUIT, TYPE B FT	603 18" CONDUIT, TYPE C FT	603 21" CONDUIT, TYPE C FT	604 CATCH BASIN, NO. 3A EACH	604 CATCH BASIN, NO. 5 EACH	604 MANHOLE, NO. 3 EACH	606 GUARDRAIL, TYPE 5 FT	606 ANCHOR ASSEMBLY, TYPE E EACH	606 ANCHOR ASSEMBLY, TYPE T EACH	670 DITCH EROSION PROTECTION MAT, TYPE A SQ YD
		SR 309 RAMP A																								
RM1	432	366+16		LT		24	1																			
RM2	432	363+13	369+49	LT	261.3																					
RM3	432	368+50	368+90	RT					1	9.5	1264															
RM4	432	368+43		LT					1																	
RM5	432	361+03	368+50	LT				906																		
RM6	432	367+80		RT								1														
GR1	432	360+24.81	364+76.24	LT																		387.5	1	1		
GR2	432	368+92.72	369+55.63	RT																		37.5		2		
D1	432	368+50	369+10	RT													61			1						
D2	432	369+10	368+91	LT/RT												94			1							
D3	432	368+91	369+03	LT														55			1					
D4	432	369+03	369+10	LT										3	0.4			10			1					
E1	432	366+29	367+00	LT																						59.2
E2	432	367+00	368+50	RT																						183.3
E3	432	368+96		LT									13.44													
TOTALS CARRIED TO ROADWAY SUBSUMMARY					261.3	24	1	906	2	9.5	1264	1	13.44	2.67	0.37	94	61	65	1	1	2	425	1	3	243		

CALCULATED ACF
CHECKED ABS

ESTIMATED QUANTITIES

ALL-75-5.53

433
1224

J:\Projects\ALL\76691\roadway\sheets\7669IGQ605.dgn 11-SEP-2012 9:05PM reddenj

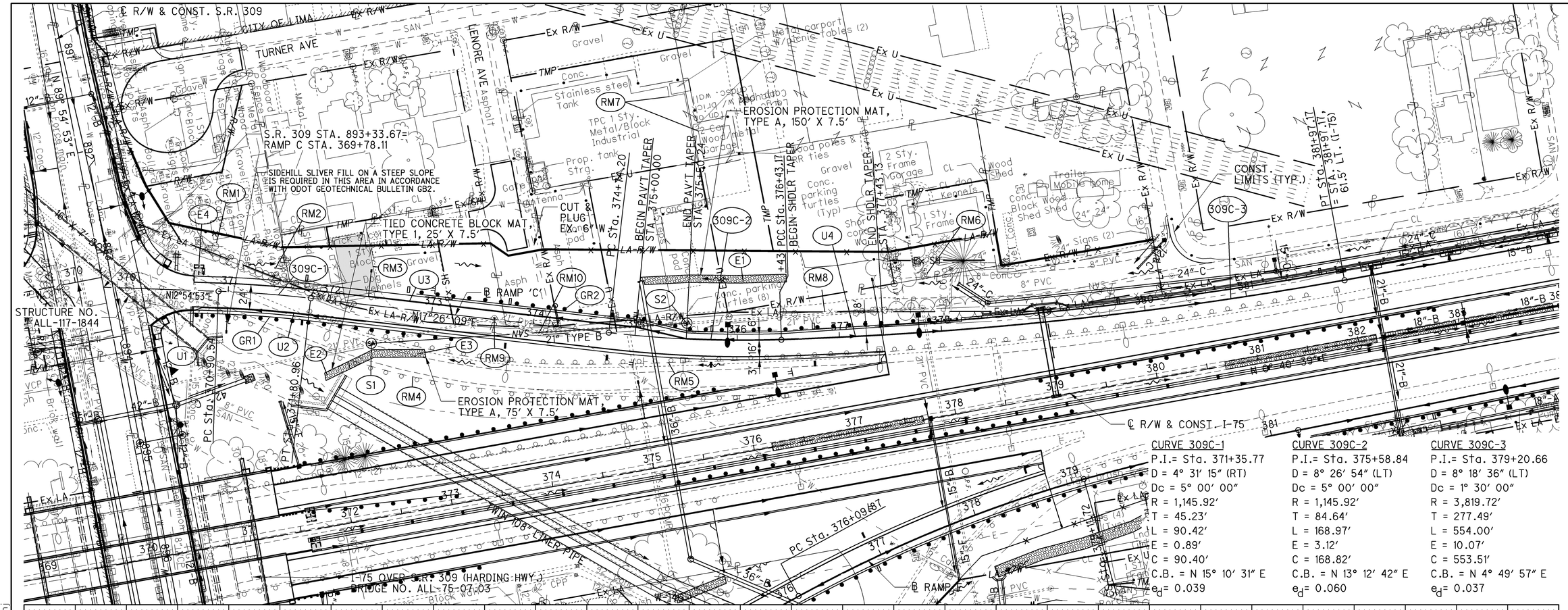

CURVE 309C-1	CURVE 309C-2	CURVE 309C-3
P.I.= Sta. 371+35.77	P.I.= Sta. 375+58.84	P.I.= Sta. 379+20.66
D = 4° 31′ 15″ (RT)	D = 8° 26′ 54″ (LT)	D = 8° 18′ 36″ (LT)
Dc = 5° 00′ 00″	Dc = 5° 00′ 00″	Dc = 1° 30′ 00″
R = 1,145.92′	R = 1,145.92′	R = 3,819.72′
T = 45.23′	T = 84.64′	T = 277.49′
L = 90.42′	L = 168.97′	L = 554.00′
E = 0.89′	E = 3.12′	E = 10.07′
C = 90.40′	C = 168.82′	C = 553.51′
C.B. = N 15° 10′ 31″ E	C.B. = N 13° 12′ 42″ E	C.B. = N 4° 49′ 57″ E
e_d= 0.039	e_d= 0.060	e_d= 0.037

CROSS REFERENCES			
SHEET NO.	DESCRIPTION	SHEET NO.	DESCRIPTION
449	CROSS SECTIONS	893-894	LIGHTING PLAN
452	DRAINAGE DETAILS	630-631	JOINT DETAILS
192	I-75 PLAN & PROFILE	163	UNDERDRAIN SUMMARY
615	INTERSECTION DETAIL	436	ESTIMATED QUANTITIES
671	PAVEMENT DETAILS	912	STRUCTURE NO. ALL-75-1844
702-703	NOISE BARRIER	903	LANDSCAPING PLAN
		610	GRADING PLAN

FOR PROFILE SEE SHEET 435

HORIZONTAL SCALE IN FEET
0 25 50 100

CALCULATED ACF
CHECKED ABS

PLAN AND PROFILE - S.R. 309 RAMP 'C' STA. 369+78.11 TO STA. 381+97.17

ALL-75-5.53

J:\Projects\ALL\76691\roadway\sheets\76691GP606.dgn 11-SEP-2012 9:05PM reddenj

CALCULATED ACF
CHECKED EJC

PROFILE - S.R. 309 RAMP 'C'
STA. 369+78.11 TO STA. 381+97.17

ALL-75-5.53

435
1224

880.58 880.25 879.86 879.71 879.68 879.77 879.98 880.33 880.80 881.39 882.11 882.96 883.93 885.00 886.03 886.99 887.87 888.69 889.42 890.09 890.68 891.19 891.63 892.00 892.30 892.52 892.67 892.74 892.74 892.67 892.52 892.30 892.00 891.63 891.19 890.68 890.17 889.66 889.23 888.79 888.41 888.03 887.69 887.34 887.06 886.78 886.59 886.40 886.30

910 900 890 880 870 860

EX-1 STA 370+07.97, 10.42' RT
EX. CB, GRATE ELEV 880.35
EX. 12" (N) 877.91
TO BE REMOVED

P.V.I. STA 375+70.00 ELEV = 896.71'
K = 85
550.00' VC
SSD = 428'

GRAPHIC GRADE

STA 373+60.59, 1.24' LT
EX. SAN MH, GRATE ELEV 876.54
EX. 21" (S) 864.00
EX. 21" (N) 864.00
TO BE REMOVED

STA 378+50.00, 101.60' LT (I-75)
MH-3, RIM ELEV 885.45
24" (SW) 875.95
24" (N) 875.95

STA 380+27.05, 66.29' LT
EX. CB, GRATE ELEV 882.80
EX. 6" (E) 880.37
EX. 6" (W) 880.29
EX. 8" (S) 880.17

STA 380+29.30, 30.55' LT
EX. SAN MH, GRATE ELEV 882.16
EX X" (N) 867.16
EX X" (S) 867.11

STA 381+33.20, 93.34' LT
CB-2-2B, GRATE ELEV 881.62
15" (E) 879.12

886.22

EX-1 STA 372+50.00, 169.01' LT (I-75)
SANITARY MH-3, RIM ELEV 880.54
21" (N) 862.79

PROFILE GRADE

+4.34 %
-2.15 %

STA 375+50.00, 15.53' LT
SANITARY MH-3, RIM ELEV 889.64
21" (S) 864.91

STA 379+09.05, 55.47' LT
EX. CB, GRATE ELEV 881.17
EX. 8" (N) 879.31
EX. 8" (S) 879.07

P.V.I. STA 370+14.70
ELEV = 880.02'
P.V.I. STA 370+25.00
ELEV = 879.86'

STA 378+12.73, 60.02' LT
EX. CB, GRATE ELEV 879.72
EX. 8" CONC N 875.72
EX. 12" CONC E 875.63

STA 380+30.89, 131.47' LT
CB-2-2B, GRATE ELEV 882.70
12" (SE) 879.69

STA 374+05.72, 7.72' RT
EX. SAN MH,
GRATE ELEV 875.06
EX. 21" (S) 864.86
EX. 21" (N) 864.86
TO BE REMOVED

STA 377+81.90, 23.94' LT
EX. SAN MH, GRATE ELEV 878.82
EX. 8" (N) 865.27
EX. 21" (E) 865.25
EX. 21" (S) 865.00
RECONSTRUCT TO GRADE

-1.52 %
-1.60 %
-0.69 %
+4.34 %

EX. 12" CONC
TO BE REMOVED

EXIST. GROUND

PROP. 36" TYPE B
EXIST. 36" CMP
STA. 374+93.38
EL. 871.80±

EX. 8" CONC

EX. 8" PVC

283'-24" TYPE C @ 1.08%
34'-24" TYPE C @ 0.53%
38'-12" TYPE C @ 1.27%
304'-24" TYPE C @ 0.39%

PROP. HW-2.2 (OR HW-2.1)
STA. 378+25.00, 125' LT (I-75)
24" (NE) 875.77

PROP. HW-2.2
STA. 380+00.00, 108.5' LT (I-75)
12" (NW) 879.20

STA 381+33.00, 82.00' LT (I-75)
MH-3, RIM ELEV 884.05
24" (S) 879.00
24" (N) 879.00
15" (W) 879.00

EXIST. 15" CMP

PROP. 16'X7' BOX

EX. 21" PVC

EX. 21" PVC

8" PVC SAN

EX. 8" SAN

309'-21" TYPE B @ 0.69% (SANITARY)

P.V.I. STA 371+60.00
ELEV = 878.93'
K = 50
250.00' VC

880.72 880.52 880.09 879.98 880.03 880.14 879.37 877.76 878.17 878.69 878.22 878.46 878.01 877.47 876.77 876.33 875.89 875.69 874.69 872.70 873.81 875.24 876.00 876.27 876.80 877.17 877.37 877.56 877.71 877.89 878.16 878.41 878.36 878.68 878.93 879.11 879.26 879.59 879.88 880.24 880.36 880.42 880.70 880.88 881.23 881.53 881.93 882.46

370+00 371+00 372+00 373+00 374+00 375+00 376+00 377+00 378+00 379+00 380+00 381+00

J:\Projects\ALL\76691\roadway\sheets\76691GF606.dgn 11-SEP-2012 9:05PM reddenj

REF. NO.	SHEET NO.	STATION FROM	STATION TO	SIDE	202 PAVEMENT REMOVED SQ YD	202 WALK REMOVED SQ FT	202 PIPE REMOVED, 24" AND UNDER FT	202 GUARDRAIL REMOVED FT	202 ANCHOR ASSEMBLY REMOVED EACH	202 SPECIAL - PARKING BLOCK REMOVED EACH	202 MAILBOX REMOVED EACH	202 BUILDING DEMOLISHED EACH	202 MANHOLE REMOVED EACH	202 FENCE REMOVED FT	202 REMOVAL, MISC.: PRIVATE SIGN AND FOUNDATIONS EACH	202 REMOVAL MISC.: WOOD POLE EACH	202 REMOVAL MISC.: CONCRETE PAD SQ YD	202 REMOVAL MISC.: PRIVATE LIGHTS EACH	202 REMOVAL MISC.: FLAG POLE EACH	202 REMOVAL MISC.: DOG KENNELS EACH	601 TIED CONCRETE BLOCK MAT, TYPE 1 SQ YD	603 21" CONDUIT, TYPE B, AS PER PLAN (SANITARY) FT	604 MANHOLE MISC.: AS PER PLAN (SANITARY) EACH	606 GUARDRAIL, TYPE 5 FT	606 ANCHOR ASSEMBLY, TYPE E EACH	606 ANCHOR ASSEMBLY, TYPE T EACH	606 BRIDGE TERMINAL ASSEMBLY, TYPE 2 EACH	670 DITCH EROSION PROTECTION MAT, TYPE A SQ YD
		SR 309 RAMP C																									
RM1	434	370+79	370+86	LT												2											
RM2	434	371+44		LT											1												
RM3	434	371+57	372+46	LT							1	1		149			11.333			4							
RM4	434	370+31	376+91	RT				675	1																		
RM5	434	370+31	375+02	RT				337.5	1																		
RM6	434	377+62	378+15	LT	20	108					1	1						4	1								
RM7	434	373+79	377+47	LT	328.7					9		2															
RM8	434	370+13	374+91	LT										491													
RM9	434	373+61		LT			25						1														
RM10	434	374+07		RT			145						1														
GR1	434	370+65.44	373+29.60	RT																				200	1	1	
GR2	434	372+83.49	378+22.18	LT																				500		1	1
S1	434	372+45	375+50	RT																		309	1				
S2	434	375+50		RT																			1				
E1	434	375+00	376+50	LT																							125
E2	434	372+00	372+25	RT																	20.83						
E3	434	372+25	373+00	RT																							62.5
E4	434	370+71		LT																	10.96						
TOTALS CARRIED TO ROADWAY SUBSUMMARY					348.7	108	170	1012.5	2	9	2	4	2	640	1	2	11.3	4	1	4	31.79	309	2	700	1	2	1	188

CALCULATED ACF CHECKED ABS

ESTIMATED QUANTITIES

ALL-75-5.53

436
1224

J:\Projects\ALL\76691\roadway\sheets\7669IGQ606.dgn 11-SEP-2012 9:05PM reddenj

CROSS REFERENCES			
SHEET NO.	DESCRIPTION	SHEET NO.	DESCRIPTION
454	CROSS SECTIONS	893-894	LIGHTING PLAN
455	DRAINAGE DETAILS	632-633	JOINT DETAILS
192	I-75 PLAN & PROFILE	163	UNDERDRAIN SUMMARY
616	INTERSECTION DETAIL	438-439	ESTIMATED QUANTITIES
662-663	PAVEMENT DETAILS	921	STRUCTURE NO. ALL-75-0711
610	GRADING PLAN	903	LANSCAPING PLAN

SIDEHILL SLIVER FILL ON A STEEP SLOPE IS REQUIRED IN THIS AREA IN ACCORDANCE WITH ODOT GEOTECHNICAL BULLETIN GB2.

BUILDINGS DEMOLISHED

CURVE 309E-1	CURVE 309E-2	CURVE 309E-3
P.I.= Sta. 371+88.87	P.I.= Sta. 377+61.43	P.I. STA. 379+83.43
D = 17° 46′ 49″ (LT)	D = 12° 49′ 42″ (RT)	Ls = 215.00′
Dc = 11° 00′ 00″	Dc = 4° 15′ 00″	θs = 4° 34′ 08″
R = 520.87′	R = 1,348.14′	LT = 143.38′
T = 81.47′	T = 151.56′	ST = 71.71′
L = 161.64′	L = 301.84′	x = 214.86′
E = 6.33′	E = 8.49′	y = 5.71′
C = 160.99′	C = 301.21′	k = 107.48′
C.B. = N 8° 58′ 31″ W	C.B. = N 11° 27′ 05″ W	p = 1.43′
e_d = 0.055	e_d = 0.060	

HORIZONTAL SCALE IN FEET 0 25 50 100

CALCULATED ACF CHECKED ABS

PLAN AND PROFILE - S.R. 309 RAMP 'E' STA. 369+81.23 TO STA. 381+26.72

ALL-75-5.53

437
1224

J:\Projects\ALL\76691\roadway\sheets\76691GP607.dgn 11-SEP-2012 9:05PM reddenj

REF. NO.	SHEET NO.	STATION FROM	STATION TO	SIDE	202 WALK REMOVED SQ FT	202 CURB REMOVED FT	202 PIPE REMOVED, 24" AND UNDER FT	202 GUARDRAIL REMOVED FT	202 ANCHOR ASSEMBLY REMOVED EACH	202 MAILBOX REMOVED EACH	202 BULDING DEMOLISHED EACH	202 CATCH BASIN REMOVED EACH	202 GATE REMOVED EACH	202 METER VAULT REMOVED EACH	202 REMOVAL, MISC.: CONCRETE PAD SQ YD	202 REMOVAL, MISC.: METAL BOLLARD EACH	202 REMOVAL, MISC.: PRIVATE LIGHT EACH	202 REMOVAL, MISC.: PRIVATE SIGN AND FOUNDATIONS EACH	252 FULL DEPTH PAVEMENT SAWING FT	606 GUARDRAIL, TYPE 5 FT	606 ANCHOR ASSEMBLY, TYPE E EACH	690 SPECIAL - GROUND WATER MONITORING WELL RECONSTRUCTION EACH
		SR 309 RAMP E																				
RM1	437	371+14	372+00	LT			79					1										
RM2	437	372+00	373+57	LT			160					1										
RM3	437	373+57		LT			53					1										
RM4	437	374+23	375+50	RT			149					1										
RM5	437	377+15	377+71	RT			86					1										
RM6	437	370+25	373+06	LT		301																
RM7	437	373+36	374+50	LT	709.1	437		150	4	1	1							1				
RM8	437	371+90		RT																		1
RM9	437	373+48	373+72	LT									4	1	43.7	2						
RM10	437	373+06		LT																		
RM11	437	372+23	372+61	LT													2					
RM12	437	373+76	373+61	LT													2					
GR1	437	371+80.62	379+05.62	RT																675	1	
R1	437	371+14	371+49	RT															37			
TOTALS CARRIED TO ROADWAY SUBSUMMARY					709.1	738.0	527.0	150.0	4	1	1	5	4	1	44	2	4	1	37	675	1	1

CALCULATED ACF
CHECKED ABS

ESTIMATED QUANTITIES

ALL-75-5.53

438
1224

J:\Projects\ALL\76691\roadway\sheets\76691G0607.dgn 11-SEP-2012 9:05PM reddenj

REF. NO.	SHEET NO.	STATION FROM	STATION TO	SIDE	601 TIED CONCRETE BLOCK MAT, TYPE 1 SQ YD	602 CONCRETE MASONRY CU YD	603 12" CONDUIT, TYPE B FT	603 15" CONDUIT, TYPE B FT	603 15" CONDUIT, TYPE C FT	603 18" CONDUIT, TYPE B FT	603 18" CONDUIT, TYPE C FT	603 36" CONDUIT, TYPE B FT	603 36" CONDUIT, TYPE C FT	604 CATCH BASIN, NO. 3A EACH	604 CATCH BASIN, NO. 2-2B EACH	604 CATCH BASIN, NO. 8 EACH	604 MANHOLE, NO. 3 EACH	604 MANHOLE RECONSTRUCTED TO GRADE EACH	670 DITCH EROSION PROTECTION MAT, TYPE A SQ YD
		SR 309 RAMP E																	
S1	437	371+63		LT														1	
D1	437	370+66	372+00	LT					130					1					
D2	437	371+80	372+00	RT/LT				53							1				
D3	437	372+00	374+23	LT					221										
D4	437	372+23	375+00	LT/RT						136						1			
D5	437	374+23	375+00	RT			6		79								1		
D6	437	375+00	375+79	RT	2.7	0.3					84					1			
D7	437	375+35	376+40	LT/RT								168					1		
D8	437	376+40	376+31	RT		0.7							23				1		
E1	437	375+00	375+50	LT															41.7
TOTALS CARRIED TO ROADWAY SUBSUMMARY					2.7	1.0	6	53	430	136	84	168	23	1	1	2	3	1	42

CALCULATED ACF
CHECKED ABS

ESTIMATED QUANTITIES

ALL-75-5.53

439
1224

J:\Projects\ALL\76691\roadway\sheets\76691G0607A.dgn 11-SEP-2012 9:05PM redden j

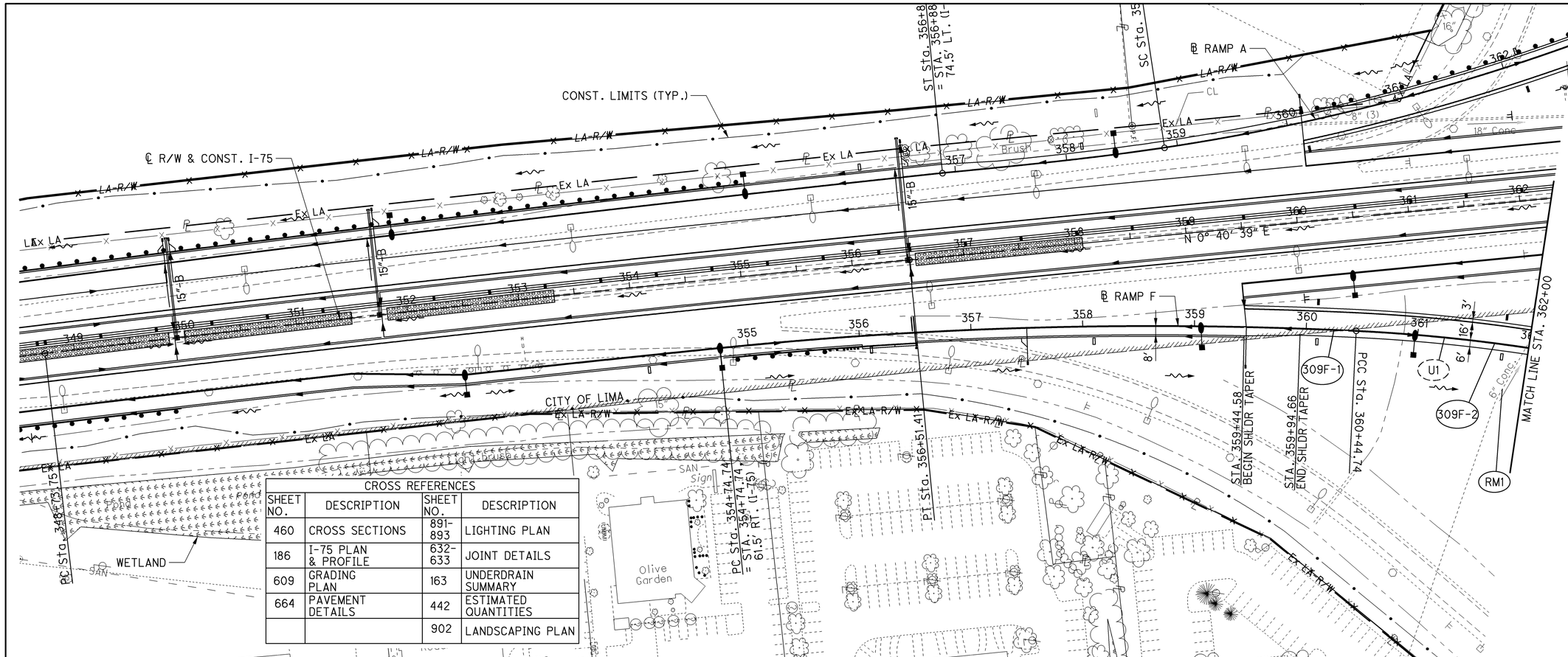

CROSS REFERENCES			
SHEET NO.	DESCRIPTION	SHEET NO.	DESCRIPTION
460	CROSS SECTIONS	891-893	LIGHTING PLAN
186	I-75 PLAN & PROFILE	632-633	JOINT DETAILS
609	GRADING PLAN	163	UNDERDRAIN SUMMARY
664	PAVEMENT DETAILS	442	ESTIMATED QUANTITIES
		902	LANDSCAPING PLAN

CURVE 309F-1
P.I.= Sta. 357+60.13
D = 8° 33' 00" (RT)
Dc = 1° 30' 00"
R = 3,819.72'
T = 285.53'
L = 570.00'
E = 10.66'
C = 569.47'
C.B. = N 4° 39' 28" E
e_d= 0.037

CURVE 309F-2
P.I.= Sta. 361+88.14
D = 10° 44' 03" (RT)
Dc = 3° 45' 00"
R = 1,527.89'
T = 143.54'
L = 286.25'
E = 6.73'
C = 285.83'
C.B. = N 14° 18' 00" E
e_d= 0.050

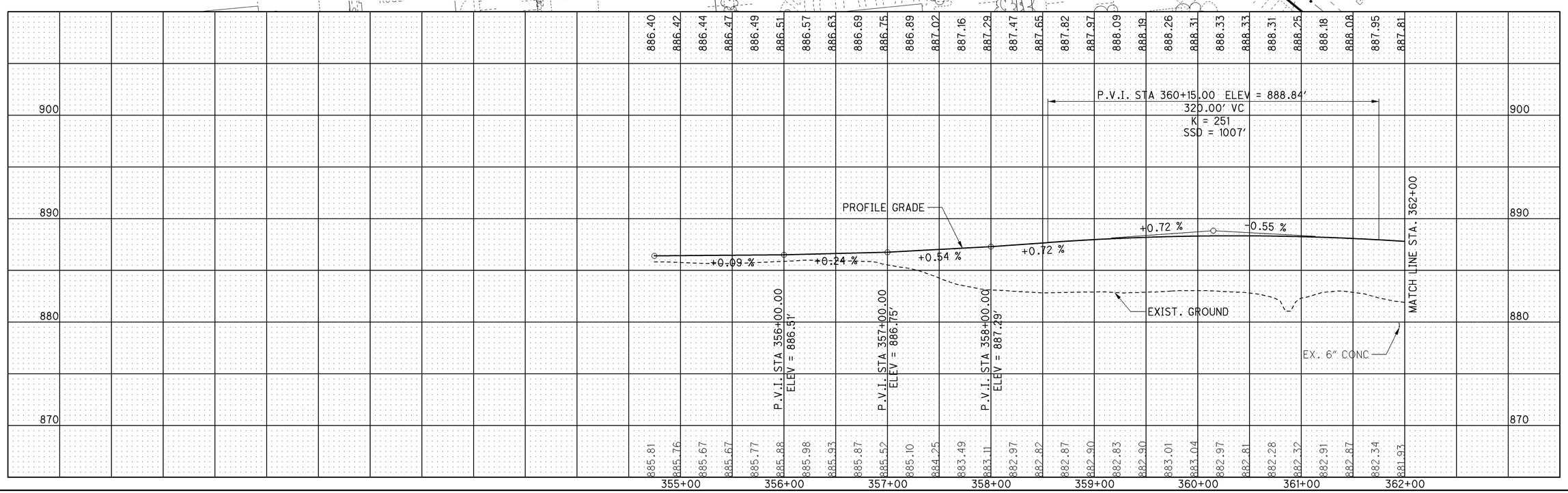

HORIZONTAL SCALE IN FEET 0 25 50 100

CALCULATED ACF
CHECKED ABS

PLAN AND PROFILE - S.R. 309 RAMP 'F'
STA. 354+74.74 TO STA. 362+00.00

ALL-75-5.53

J:\Projects\ALL\76691\roadway\sheets\76691GP608.dgn 11-SEP-2012 9:05PM reddenj

℄ R/W & CONST. I-75

MATCH LINE STA. 362+00

CITY OF LIMA

I-75 OVER S.R. 309 (HARDING HWY.)
STRUCTURE NO. ALL-75-0703

DO NOT DISTURB

EROSION PROTECTION MAT, TYPE A, 100'X11'

END PAV'T TAPER STA. 366+41.64

BEGIN PAV'T TAPER STA. 365+91.86

℄ RAMP F

℄ R/W & CONST. S.R. 309

PC Sta. 365+25.64

PT Sta. 369+20.69

POT Sta. 370+37.18

PC Sta. 371+07.40

PT Sta. 363+30.96

N 0° 40' 39" E

N 19° 40' 02" E

N 0° 05' 07" W 371.70

S 88° 05' 04" E 900.00

S.R. 309 STA. 898+95.84
RAMP F STA. 370+37.18

℄ R/W S.R. 309

℄ CONST. S.R. 309

℄ RAMP E

PC Sta. 899+50.00

PT Sta. 901+65.00

N 17° 51' 56" W 373.74

EX R/W

CROSS REFERENCES			
SHEET NO.	DESCRIPTION	SHEET NO.	DESCRIPTION
462	CROSS SECTIONS	892-893	LIGHTING PLAN
464	DRAINAGE DETAILS	633	JOINT DETAILS
685	CULVERT DETAIL	163	UNDERDRAIN SUMMARY
616	INTERSECTION DETAIL	442	ESTIMATED QUANTITIES
664	PAVEMENT DETAILS	902	LANDSCAPING PLAN
		609	GRADING PLAN

CURVE 309F-2
P.I.= Sta. 361+88.14
D = 10° 44' 03" (RT)
Dc = 3° 45' 00"
R = 1,527.89'
T = 143.54'
L = 286.25'
E = 6.73'
C = 285.83'
C.B. = N 14° 18' 00" E
e_d = 0.050

CURVE 309F-3
P.I.= Sta. 367+25.00
D = 19° 45' 08" (LT)
Dc = 5° 00' 00"
R = 1,145.92'
T = 199.50'
L = 395.05'
E = 17.24'
C = 393.09'
C.B. = N 9° 47' 28" E
e_d = 0.039

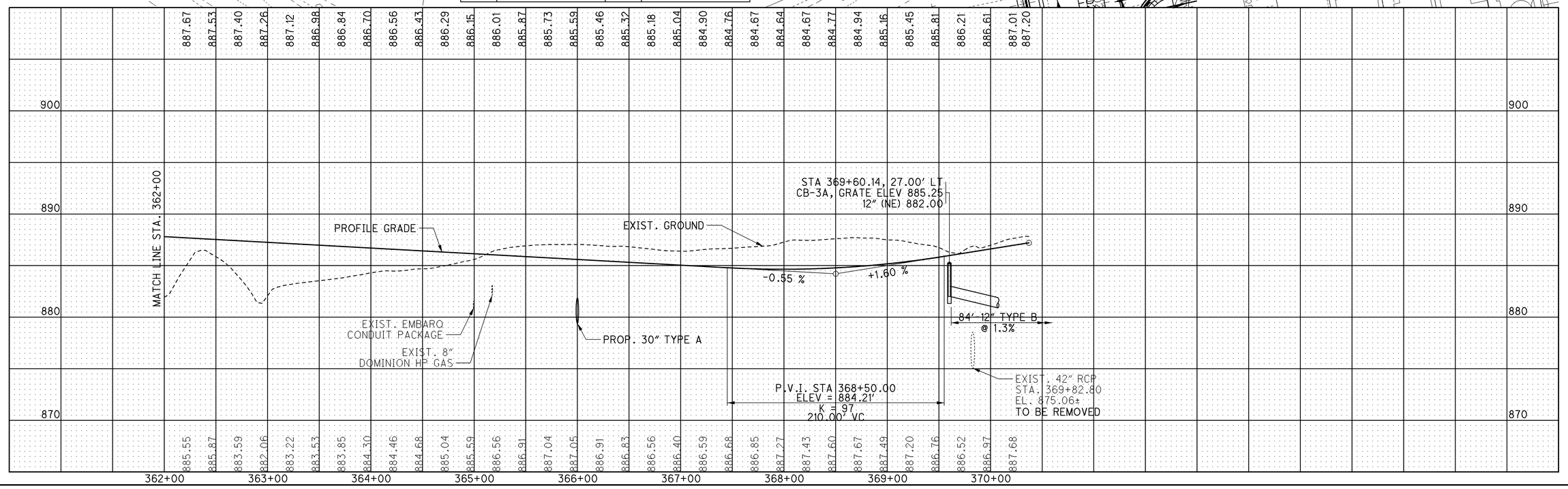

HORIZONTAL SCALE IN FEET
0 25 50 100

CALCULATED ACF
CHECKED ABS

PLAN AND PROFILE - S.R. 309 RAMP 'F' STA. 362+00.00 TO STA. 370+37.18

ALL-75-5.53

441
1224

J:\Projects\ALL\76691\roadway\sheets\76691GP609.dgn 11-SEP-2012 9:05PM redden

REF. NO.	SHEET NO.	STATION FROM	STATION TO	SIDE	202 PIPE REMOVED, 24" AND UNDER (FT)	202 SPECIAL - FILL AND PLUG EXISTING CONDUIT (FT)	601 TIED CONCRETE BLOCK MAT, TYPE 3 (SQ YD)	670 DITCH EROSION PROTECTION MAT, TYPE A (SQ YD)
		SR 309 RAMP F						
RM1	441	361+88	362+00	LT/RT	50	50		
E1	441	365+00	366+00	LT				122.2
E2	441	369+27		RT			11.78	
TOTALS CARRIED TO ROADWAY SUBSUMMARY					50.0	50.0	11.8	122

CALCULATED ACF
CHECKED ABS

ESTIMATED QUANTITIES

ALL-75-5.53

442
1224

J:\Projects\ALL\76691\roadway\sheets\76691GQ609.dgn 11-SEP-2012 9:05PM reddenj

SEEDING		END AREA		VOLUME	
END WIDTH	SQ. YDS.	CUT	FILL	CUT	FILL
42	228	16	156	29	283
40	239	15	150	28	287
46		15	160		
	467			57	570

CALCULATED JMR
CHECKED ACF

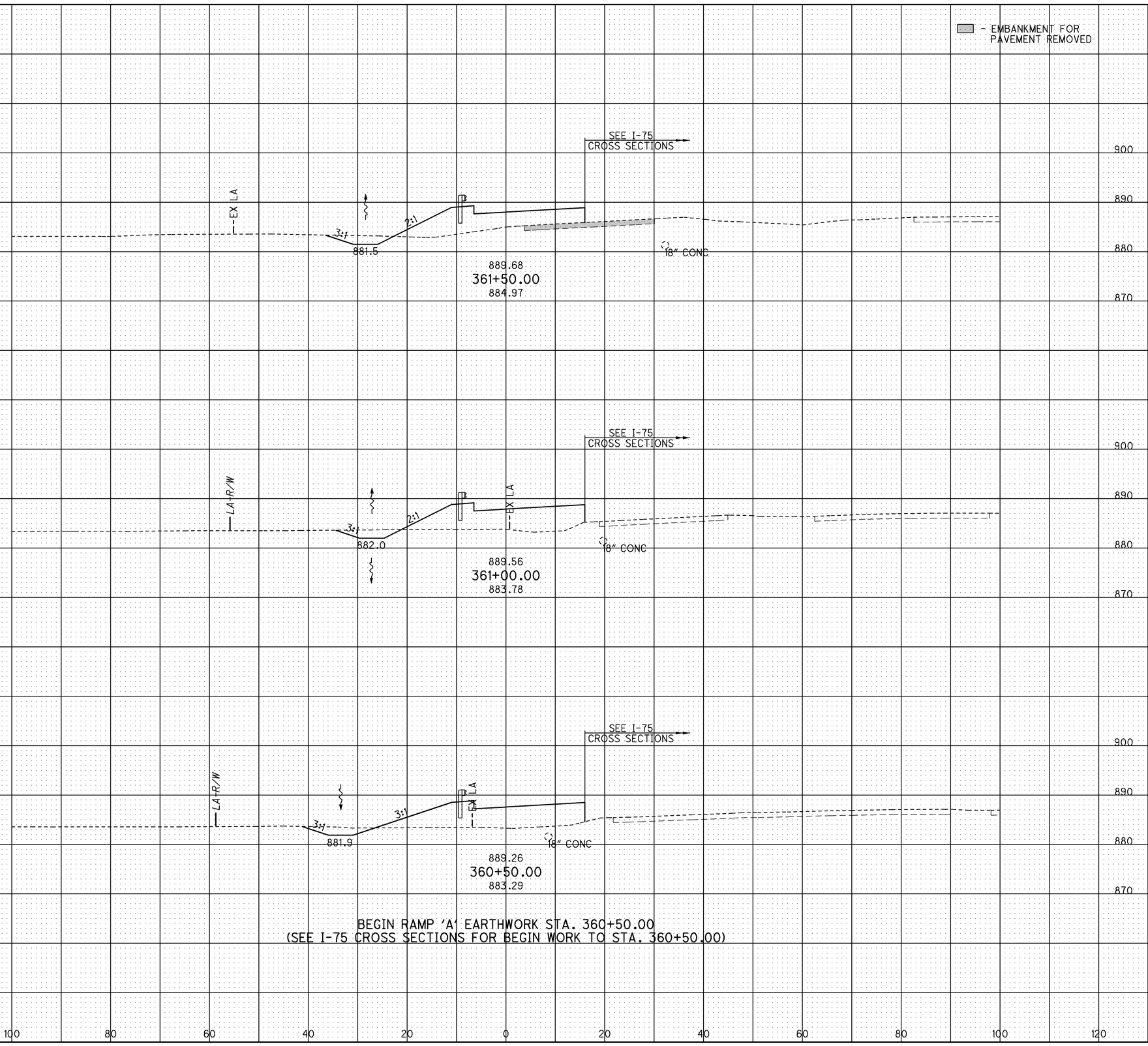

BEGIN RAMP 'A' EARTHWORK STA. 360+50.00
(SEE I-75 CROSS SECTIONS FOR BEGIN WORK TO STA. 360+50.00)

CROSS SECTIONS - RAMP A (S.R. 309) STA. 360+50.00 TO STA. 361+50.00

ALL-75-5.53

443
1224

J:\Projects\ALL\76691\roadway\sheets\76691XS1184.dgn 11-SEP-2012 9:05PM reddenj

SEEDING		END AREA		VOLUME	
END WIDTH	SQ. YDS.	CUT	FILL	CUT	FILL
74	389	132	59	209	231
65	339	94	191	139	261
56	272	56	91	67	229
	1000			415	721

CALCULATED JMR
CHECKED ACF

- EMBANKMENT FOR PAVEMENT REMOVED

SEE I-75 CROSS SECTIONS

STA 363+05.81, 31.32' RT
EX. MH, GRATE ELEV 884.90'
18" (S) 880.06
30" (SE) 880.03
36" (N) 880.07

EX. 30" CMP

880.0
889.08
363+00.00
886.11

SEE I-75 CROSS SECTIONS

STA 362+46.29, 33.20' RT
EX. CB, GRATE ELEV 882.65'
15" (E) 880.41

EX. 15" CONC

18" CONC

880.5
889.45
362+50.00
883.47

SEE I-75 CROSS SECTIONS

18" CONC

881.0
889.65
362+00.00
886.54

900 890 880 870

120 100 80 60 40 20 0 20 40 60 80 100 120

CROSS SECTIONS - RAMP A (S.R. 309)
STA. 362+00.00 TO STA. 363+00.00

ALL-75-5.53

444
1224

J:\Projects\ALL\76691\roadway\sheets\76691XS1185.dgn 11-SEP-2012 9:05PM reddenj

SEEDING END WIDTH	SEEDING SQ. YDS.	END AREA CUT	END AREA FILL	VOLUME CUT	VOLUME FILL
71	400	70	92	133	185
73	394	73	107	113	226
69	383	49	137	83	281
68	394	41	166	160	208
	1571			489	900

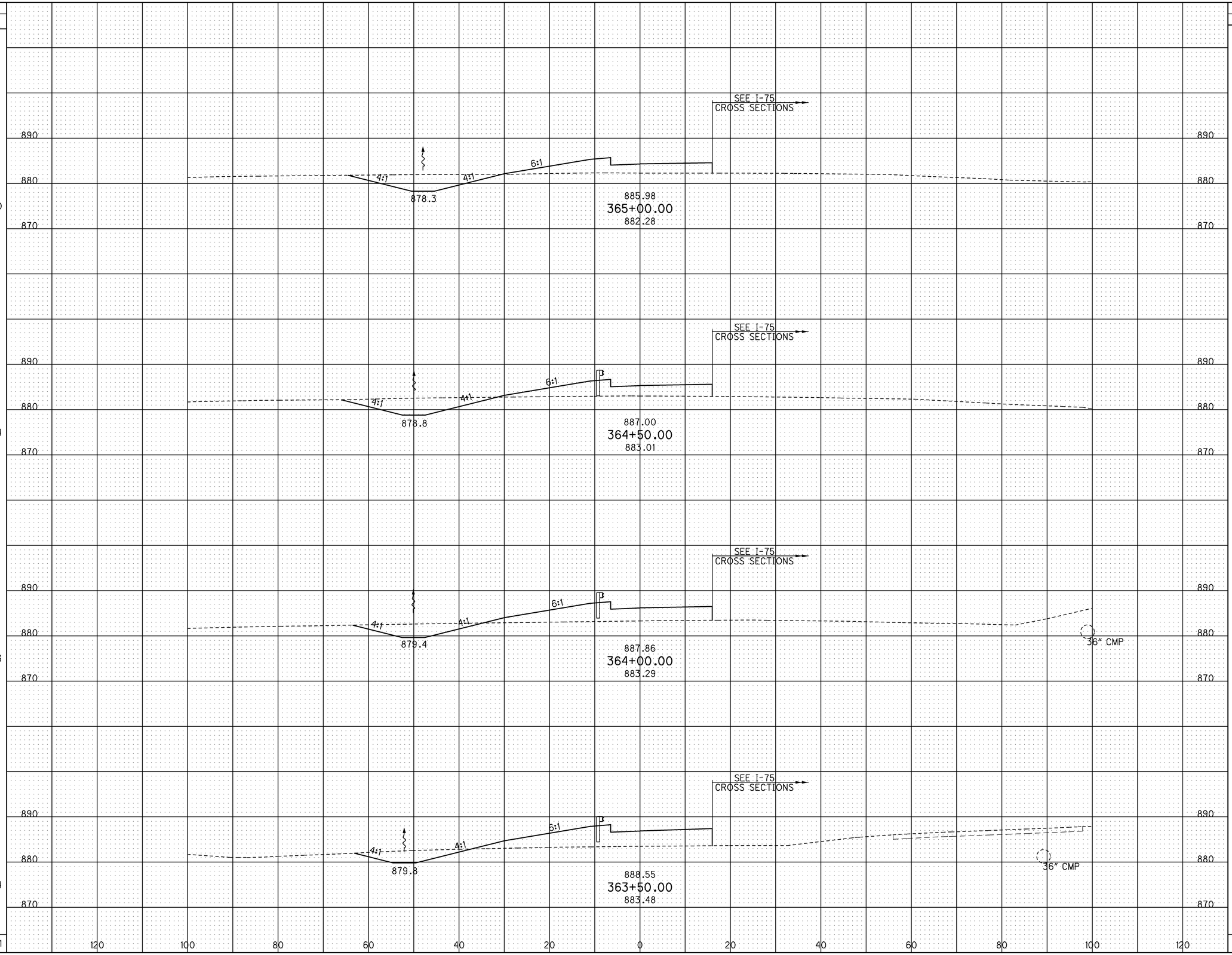

CALCULATED JMR
CHECKED ACF

CROSS SECTIONS - RAMP A (S.R. 309)
STA. 363+50.00 TO STA. 365+00.00

ALL-75-5.53

445
1224

J:\Projects\ALL\76691\roadway\sheets\76691XS1186.dgn 11-SEP-2012 9:05PM reddenj

SEEDING	
END WIDTH	SQ. YDS.
60	355
68	383
70	394
	1132

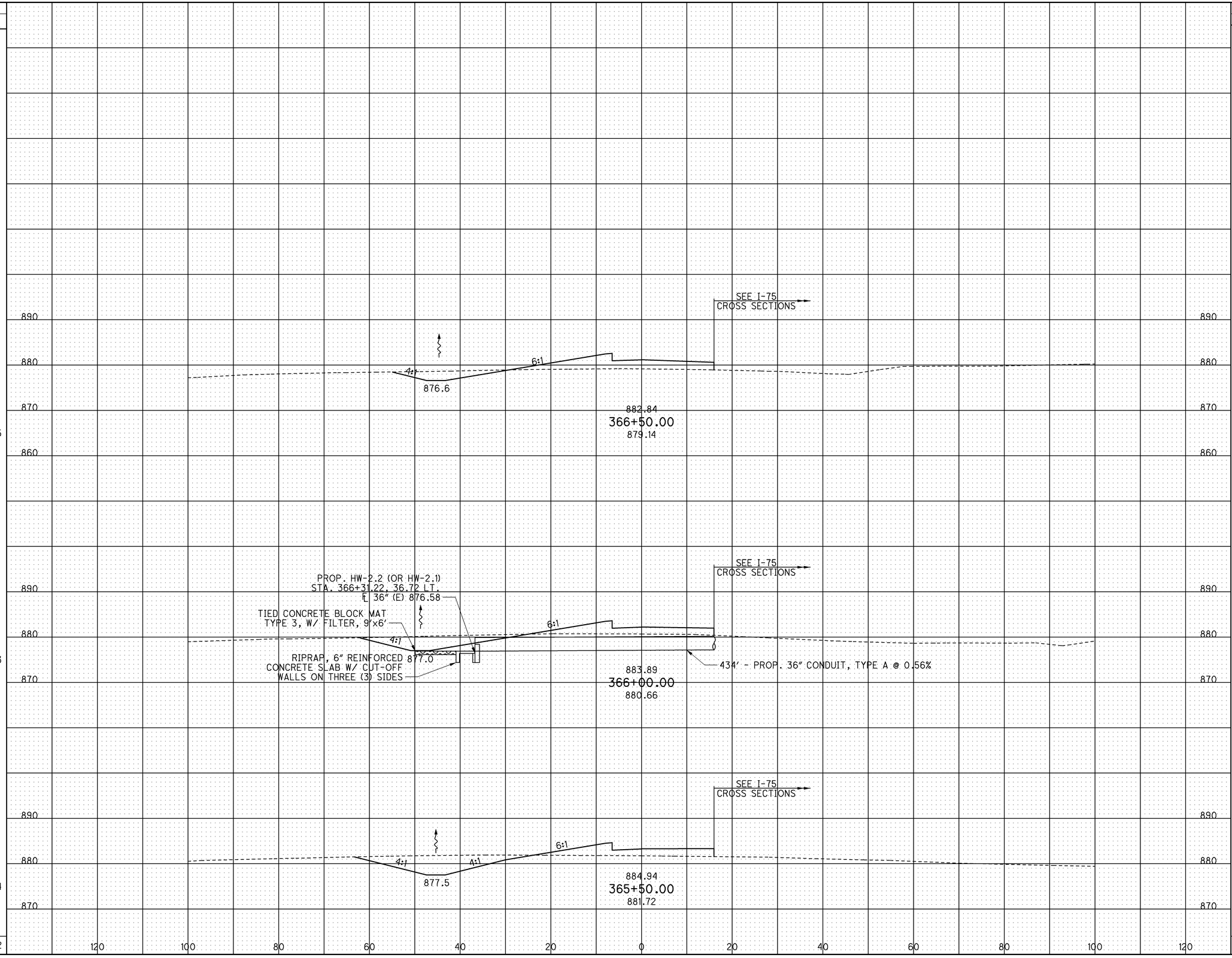

END AREA		VOLUME	
CUT	FILL	CUT	FILL
30	82	87	133
64	61	143	114
90	62	148	143
		378	390

CALCULATED JMR
CHECKED ACF

CROSS SECTIONS - RAMP A (S.R. 309)
STA. 365+50.00 TO STA. 366+50.00

ALL-75-5.53

446
1224

J:\Projects\ALL\76691\roadway\sheets\76691XS1187.dgn 11-SEP-2012 9:05PM reddenj

SEEDING		END AREA		VOLUME	
END WIDTH	SQ. YDS.	CUT	FILL	CUT	FILL
83	478	232	0	338	3
88	461	134	3	138	100
76	42	15	105		
		4	94		
	283			32	163
	1222			508	266

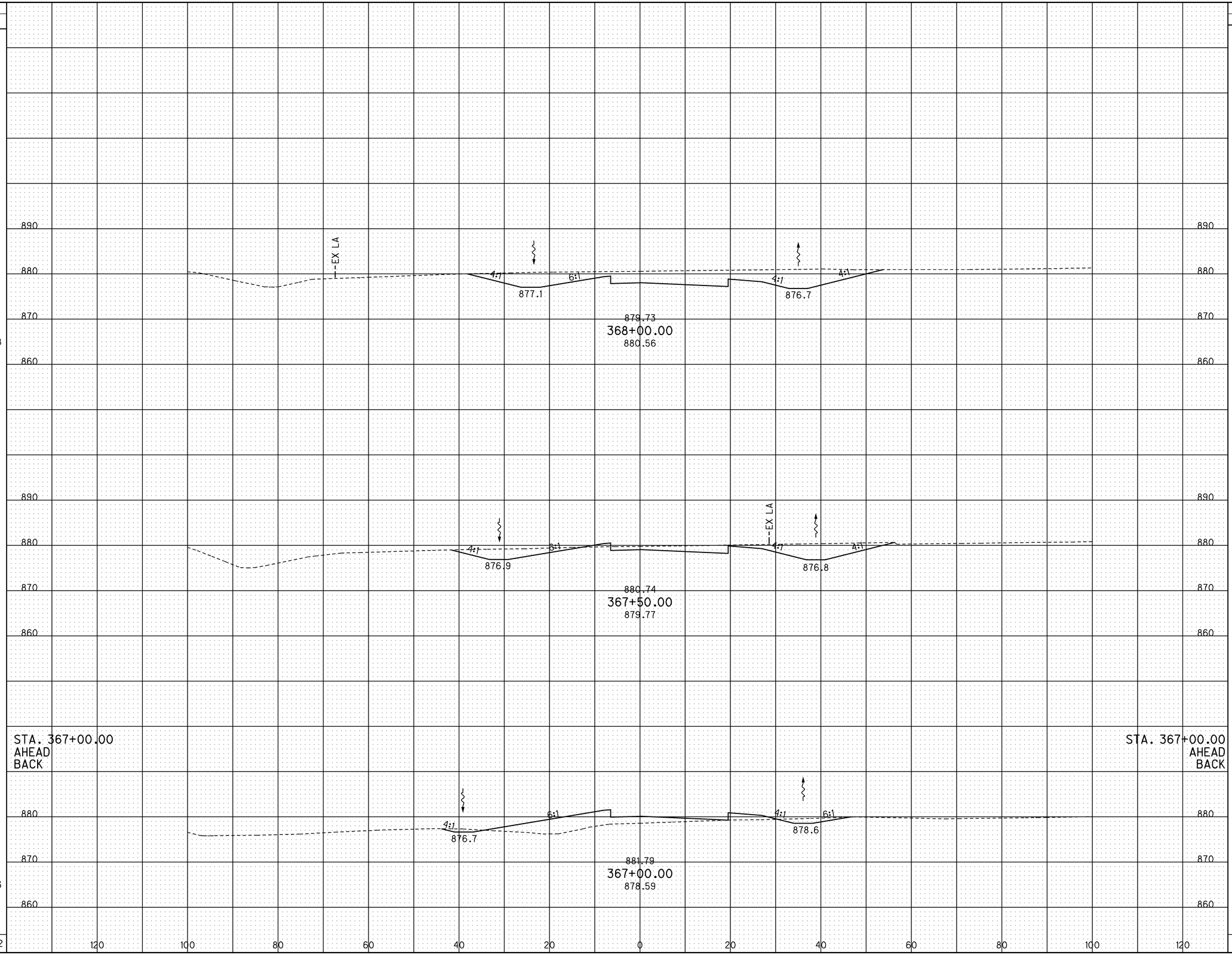

CALCULATED JMR
CHECKED ACF

CROSS SECTIONS - RAMP A (S.R. 309)
STA. 367+00.00 TO STA. 368+00.00

ALL-75-5.53

447
1224

J:\Projects\ALL\76691\roadway\sheets\76691XS1188.dgn 11-SEP-2012 9:05PM reddenj

SEEDING END WIDTH	SEEDING SQ. YDS.
17	6279
	205
55	395
85	467
	7346

GRAND TOTAL SEEDING & MULCHING RAMP 'A'
12,738 SQ. YD.
(QUANTITY CARRIED TO ROADWAY SUBSUMMARY)

NOTE:
DEDUCTED 112 CU. YD. FROM EXCAVATION QUANTITY FOR CONC. PAVEMENT REMOVAL

GRAND TOTAL EARTHWORK RAMP 'A'
EXCAVATION: 3,654 CU. YD.
EMBANKMENT: 4,472 CU. YD.
(QUANTITY CARRIED TO ROADWAY SUBSUMMARY)

ADD FOR REMOVAL OF EXISTING RAMP OUTSIDE CROSS SECTIONS

ADD FOR REMOVAL OF EXISTING RAMP OUTSIDE CROSS SECTIONS

STA 369+32.34, 59.97' LT.
EX. SAN MH, GRATE ELEV 880.00'
21" (SW) 863.87
21" (NE) 863.70

EX U
EX LA
EX U
LA-R/W
R/W
LA-R/W
12" TYPE C
21" CONC.
879.35
369+50.00
880.43
END RAMP 'A' EARTHWORK
24" PVC
12" PVC

STA 369+10.00, 19.00' RT
CB-3A, GRATE ELEV 878.97
18" (W) 871.45
18" (S) 871.45

STA 368+91.06, 73.80' LT
MH-3, RIM ELEV 878.95
18" (E) 870.88
12" (N) 873.26
21" (W) 870.70

STA 369+10.00, 19.00' RT
CB-3A, GRATE ELEV 878.97
6" (N) 876.22
18" (S) 871.45
18" (W) 871.45

STA 368+94.95, 94.70' RT
EX. SAN MH, GRATE ELEV 881.34'
21" (E) 869.39
21" (N) 868.23

EX U
EX LA
LA-R/W
TMP
LA-R/W
4:1
6:1
877.5
55'-21" TYPE C @ 0.46%
94'-18" TYPE B @ 0.60%
61'-18" TYPE C @ 0.39%
878.98
369+00.00
881.49
SEE S.R. 309 PLAN & PROFILE

STA 368+50.00, 35.00' RT
CB-5, GRATE ELEV 876.40
21" (N) 871.44
STA 368+50.00, 35.00' RT
CB-5, GRATE ELEV 876.40
18" (N) 871.69

EX LA
4:1
6:1
4:1
4:1
877.2
876.4
879.10
368+50.00
881.66
61'-18" TYPE C @ 0.39%

END AREA CUT	END AREA FILL	VOLUME CUT	VOLUME FILL
		600	1625
128	0		
		311	0
208	0		
		493	0
325	0		
		515	0
		1919	1625

CALCULATED JMR
CHECKED ACF

CROSS SECTIONS - RAMP A (S.R. 309)
STA. 368+50.00 TO STA. 369+50.00

ALL-75-5.53

448
1224

J:\Projects\ALL\76691\roadway\sheets\76691XS1189.dgn 11-SEP-2012 9:05PM reddenj

SEEDING END WIDTH	SEEDING SQ. YDS.	END AREA CUT	END AREA FILL	VOLUME CUT	VOLUME FILL
81	433	162	22	286	101
73	439	146	87	228	288
85	872	100	224	514	389

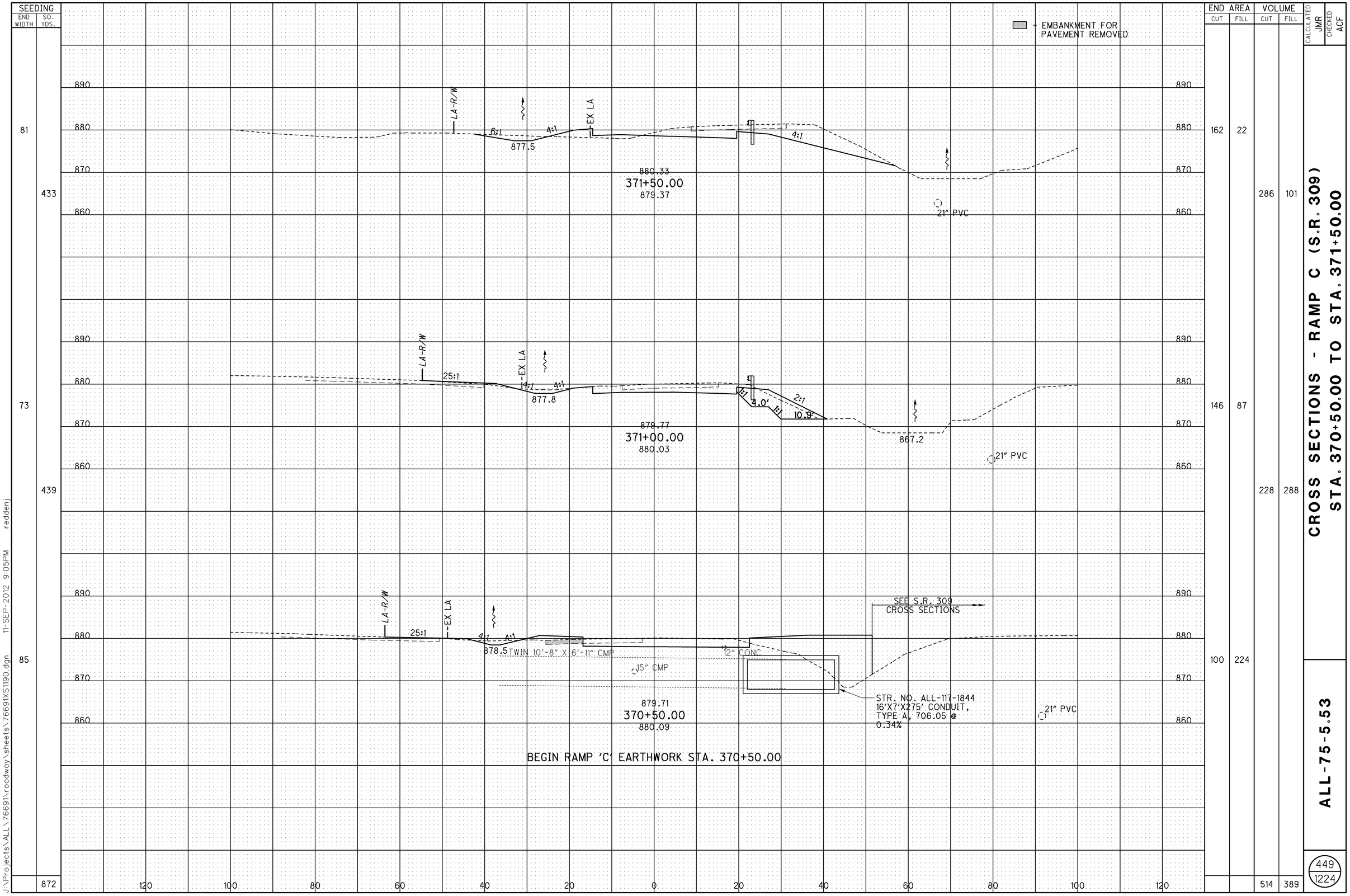

BEGIN RAMP 'C' EARTHWORK STA. 370+50.00

CALCULATED JMR
CHECKED ACF

CROSS SECTIONS - RAMP C (S.R. 309)
STA. 370+50.00 TO STA. 371+50.00

ALL-75-5.53

449
1224

J:\Projects\ALL\76691\roadway\sheets\76691XS1190.dgn 11-SEP-2012 9:05PM reddenj

SEEDING END WIDTH	SEEDING SQ. YDS.
	324
63	
	328
55	
	266
40	
86	
	464
	1382

ADD FOR LENORE ST. TURN AROUND

LENORE ST.

LA-R/W

EX SH

25:1

3:1

4:1

876.8

EX LA R/W

SEE I-75 CROSS SECTIONS

885.00

373+00.00

878.01

21" PVC 21" TYPE B

→ EMBANKMENT FOR PAVEMENT REMOVED

ADD FOR LENORE ST. TURN AROUND

890

880

870

860

LA-R/W

25:1

3:1

4:1

877.0

EX LA-R/W

SEE I-75 CROSS SECTIONS

882.96

372+50.00

878.16

STA. 372+00.00 AHEAD BACK

TMP-R/W

LA-R/W

4:1

4:1

877.2

EX LA

SEE I-75 CROSS SECTIONS

881.39

372+00.00

878.17

21" PVC

STA. 372+00.00 AHEAD BACK

120 100 80 60 40 20 0 20 40 60 80 100 120

END AREA CUT	END AREA FILL	VOLUME CUT	VOLUME FILL
		99	36
66	327		
		104	469
47	180		
		60	221
18	59		
124	59		
		265	75
		528	801

CALCULATED JMR

CHECKED ACF

CROSS SECTIONS - RAMP C (S.R. 309)
STA. 372+00.00 TO STA. 373+00.00

ALL-75-5.53

450
1224

J:\Projects\ALL\76691\roadway\sheets\76691XS1191.dgn 11-SEP-2012 9:05PM reddenj

SEEDING		END AREA		VOLUME	
END WIDTH	SQ. YDS.	CUT	FILL	CUT	FILL
79	417	77	673	137	1219
71	392	71	643	132	1058
70	369	72	500	128	766
	1178			397	3043

CALCULATED JMR
CHECKED ACF

▭ → EMBANKMENT FOR PAVEMENT REMOVED

SEE I-75 CROSS SECTIONS

LA-R/W
2:1
3:1
874.8
X" GAS (DEPTH UNKNOWN)
21" PVC
21" TYPE B
890.09
374+50.00
874.72
6" WATER ABANDONED (DEPTH UNKNOWN)

STA 374+05.72, 7.72' RT
EX. SAN MH, GRATE ELEV 875.06'
21" (S) 864.86
21" (N) 864.86

SEE I-75 CROSS SECTIONS

LENORE ST.
EX R/W
LA-R/W
3:1
875.2
6" WATER
X" GAS (DEPTH UNKNOWN)
EX LA-R/W
888.69
374+00.00
875.89
21" TYPE B

STA 373+60.59, 1.24' LT
EX. SAN MH, GRATE ELEV 876.54'
21" (S) 864.00
21" (N) 864.00

SEE I-75 CROSS SECTIONS

LENORE ST.
LA-R/W
3:1
876.5
EX LA-R/W
886.99
373+50.00
876.77
21" TYPE B

120 100 80 60 40 20 0 20 40 60 80 100 120

CROSS SECTIONS - RAMP C (S.R. 309)
STA. 373+50.00 TO STA. 374+50.00

ALL-75-5.53

451
1224

J:\Projects\ALL\76691\roadway\sheets\76691XS1192.dgn 11-SEP-2012 9:06PM redden

SEEDING	
END WIDTH	SQ. YDS.
96	503
	456
85	
	959

→ EMBANKMENT FOR PAVEMENT REMOVED

STA 375+50.00, 15.53' LT
SANITARY MH-3, RIM ELEV 889.64
21" (S) 864.91

SEE I-75 CROSS SECTIONS

LA-R/W

3:1

3:1

874.4

2:1

EX LA-R/W

892.00
375+50.00
876.00

21" PVC

6" WATER ABANDONED (DEPTH UNKNOWN)

SEE I-75 CROSS SECTIONS

LA-R/W

3:1

874.2

2:1

276'-36" TYPE B @ 1.46%

EX. 36" CMP

21" PVC

21" TYPE B

891.19
375+00.00
873.81

STA. 375+00.86, 53.36' LT
PROP. HW-2.2 (OR HW-2.1)
36" (E) 874.16

6" WATER ABANDONED (DEPTH UNKNOWN)

900 890 880 870 860 850

120 100 80 60 40 20 0 20 40 60 80 100 120

END AREA		VOLUME	
CUT	FILL	CUT	FILL
61	653		
		122	1294
71	744		
		137	1312
		259	2606

CALCULATED JMR
CHECKED ACF

CROSS SECTIONS - RAMP C (S.R. 309)
STA. 375+00.00 TO STA. 375+50.00

ALL-75-5.53

452
1224

J:\Projects\ALL\76691\roadway\sheets\76691XS1193.dgn 11-SEP-2012 9:06PM reddenj

SEEDING END WIDTH	SEEDING SQ. YDS.
91	519
95	531
96	533
	1581

GRAND TOTAL SEEDING & MULCHING RAMP 'C'
5,972 SQ. YD.
(QUANTITY CARRIED TO ROADWAY SUBSUMMARY)

NOTE:
DEDUCTED 92 CU. YD. FROM EXCAVATION QUANTITY FOR PAVEMENT REMOVAL

GRAND TOTAL EARTHWORK RAMP 'C'
EXCAVATION: 1,960 CU. YD.
EMBANKMENT: 10,473 CU. YD.
(QUANTITY CARRIED TO ROADWAY SUBSUMMARY)

▭ - EMBANKMENT FOR PAVEMENT REMOVED

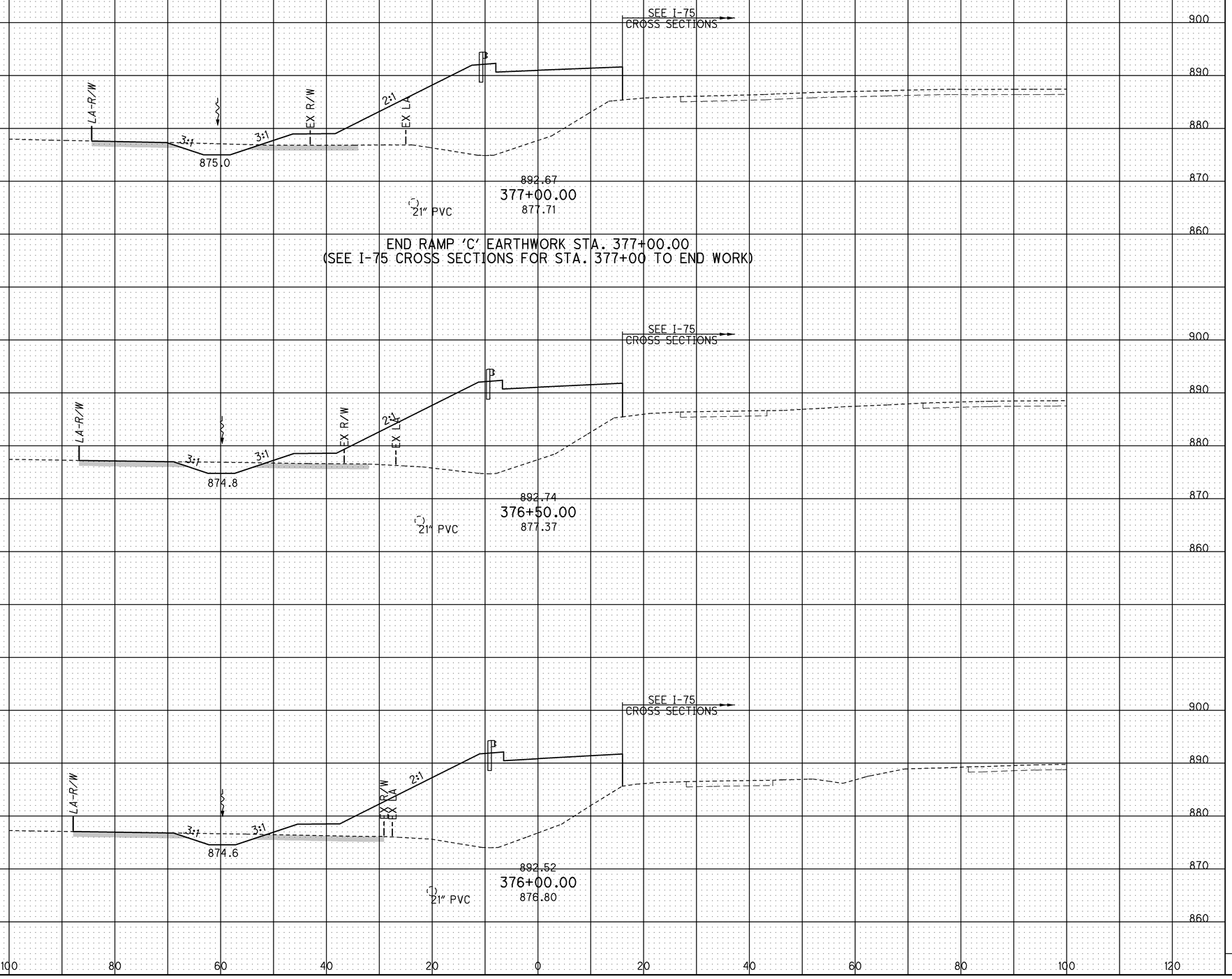

END AREA CUT	END AREA FILL	VOLUME CUT	VOLUME FILL
60	638		
		114	1193
63	650		
		121	1219
68	667		
		119	1222
		354	3634

CALCULATED JMR
CHECKED ACF

CROSS SECTIONS - RAMP C (S.R. 309)
STA. 376+00.00 TO STA. 377+00.00

ALL-75-5.53

453
1224

J:\Projects\ALL\76691\roadway\sheets\76691XS1194.dgn 11-SEP-2012 9:06PM reddenj

SEEDING END WIDTH	SEEDING SQ. YDS.	END AREA CUT	END AREA FILL	VOLUME CUT	VOLUME FILL
80	439	255	0	449	0
77	306	230	0	389	0
32	745	190	0	838	0

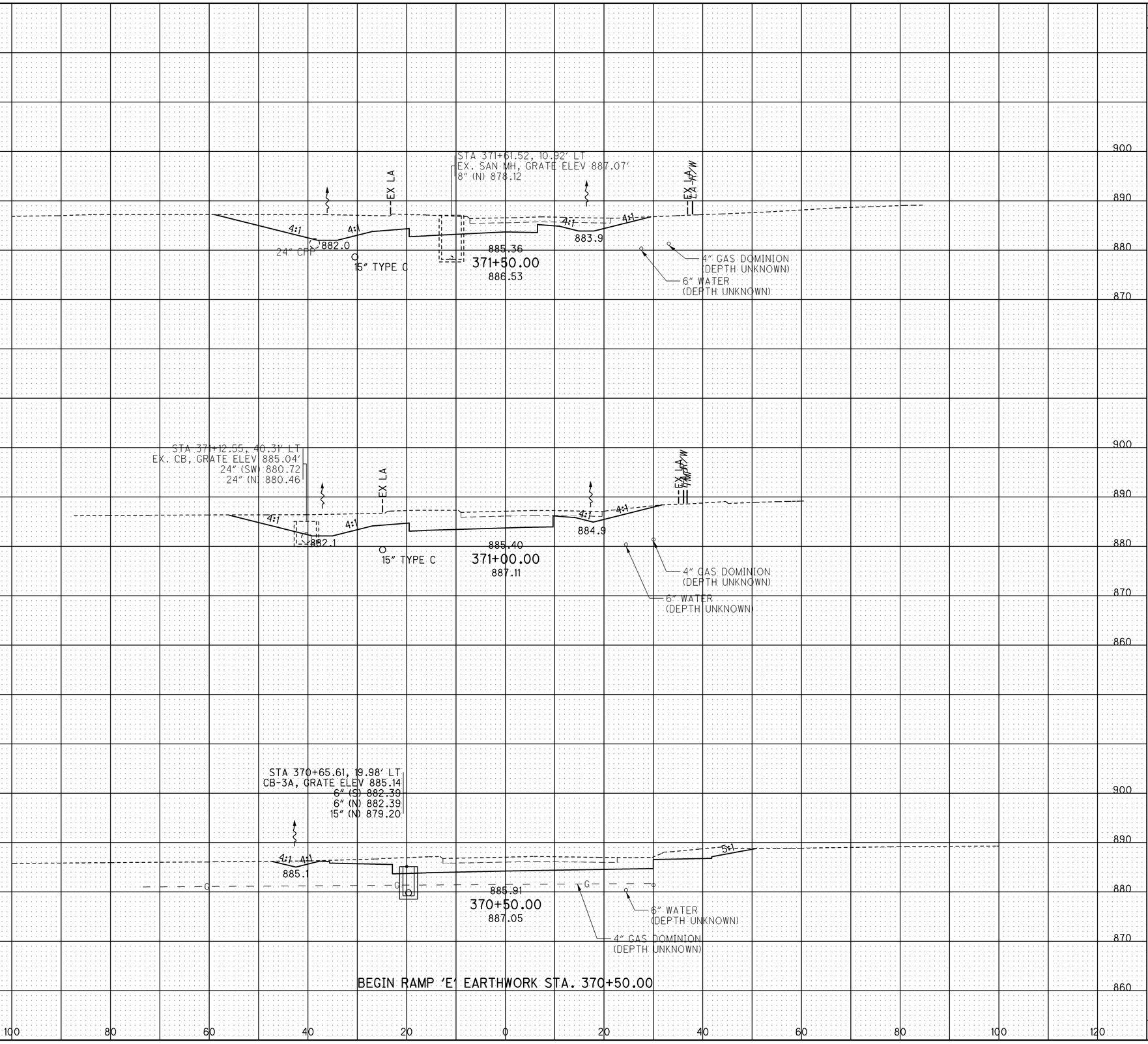

CALCULATED JMR
CHECKED ACF

CROSS SECTIONS - RAMP E (S.R. 309)
STA. 370+50.00 TO STA. 371+50.00

ALL-75-5.53

454
1224

J:\Projects\ALL\76691\roadway\sheets\76691XS1195.dgn 11-SEP-2012 9:06PM reddenj

SEEDING		END AREA		VOLUME		
END WIDTH	SQ. YDS.	CUT	FILL	CUT	FILL	
91	467	97	31	287	38	
76	433	213	10	421	20	
79	444	242	12	460	11	
	1344			1168	69	

CALCULATED JMR
CHECKED ACF

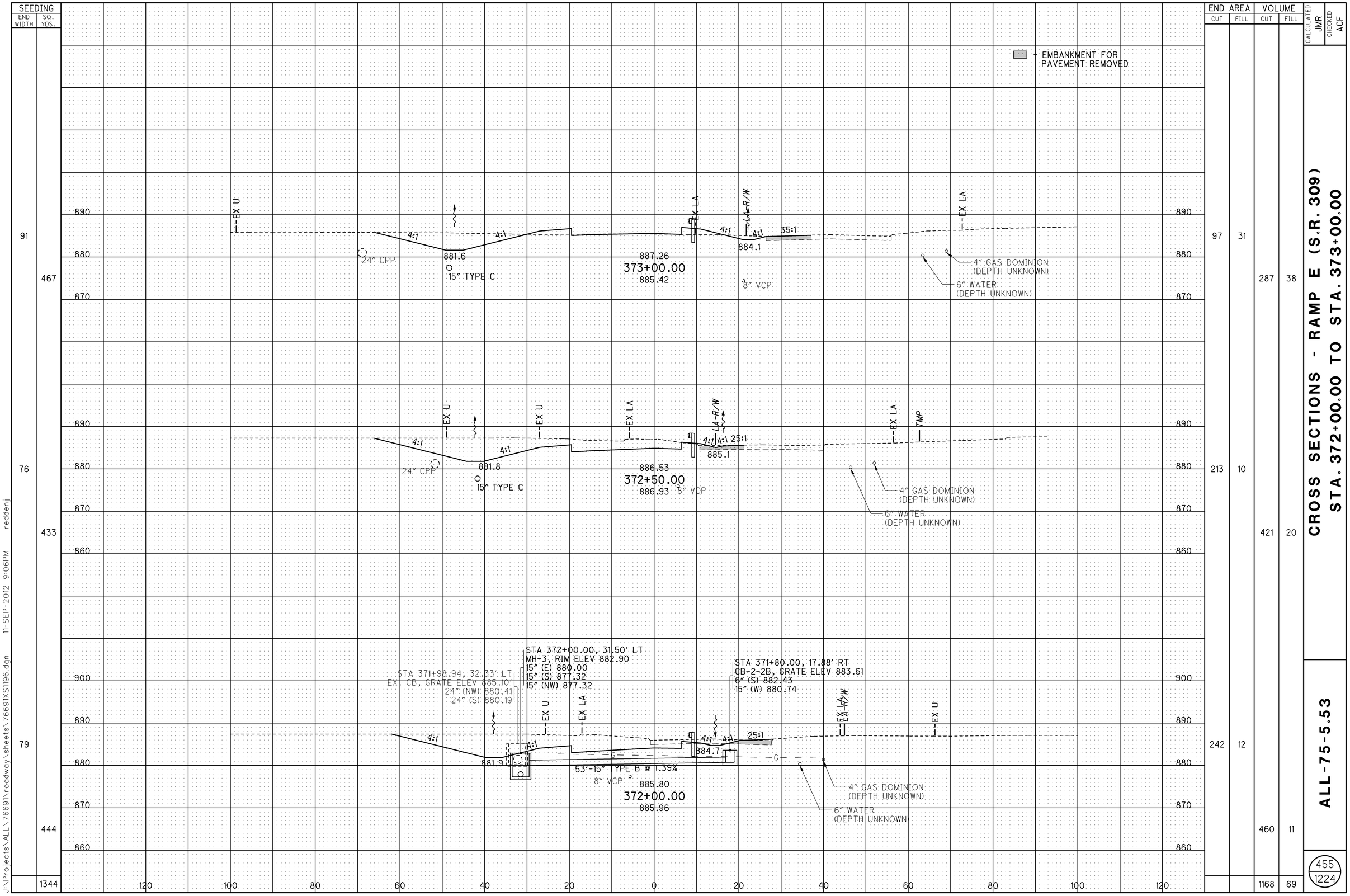

CROSS SECTIONS - RAMP E (S.R. 309)
STA. 372+00.00 TO STA. 373+00.00

ALL-75-5.53

455
1224

J:\Projects\ALL\76691\roadway\sheets\76691XS196.dgn 11-SEP-2012 9:06PM redderj

SEEDING	
END WIDTH	SQ. YDS.
90	455
73	361
56	544
105	
	1360

END AREA	
CUT	FILL
121	111
105	50
35	48
112	73

VOLUME	
CUT	FILL
210	149
130	91
194	96
534	336

CALCULATED JMR
CHECKED ACF

EMBANKMENT FOR PAVEMENT REMOVED

SEE I-75 CROSS SECTIONS

STA 374+52.17, 68.96' RT
EX. SAN MH, GRATE ELEV 883.88'
12" (NE) 869.53
8" (SW) 869.50
8" (SE) 869.48

EX LA
LA-R/W
2:1
3:1
50:1
879.7
889.38
374+50.00
884.83
136'-18" TYPE B @ 1.10%
EX. 8" VCP
6" WATER (ABANDONED)
12" CONC
15" TYPE C
12" CP

STA 374+23.05, 66.14' RT
MH-3, RIM ELEV 883.70
15" (NW) 878.83
12" (E) 879.00

STA 374+13.68, 91.84' RT
EX. CB, GRATE ELEV 883.63'
12" (W) 879.35

STA 374+21.72, 56.14' RT
EX. CB, GRATE ELEV 883.70'
12" (E) 879.00
12" (NW) 878.83

EX U
3:1
3:1
50:1
881.6
888.71
374+00.00
886.02
8" VCP
15" TYPE C
6" WATER (ABANDONED)
12" CONC
6" WATER (DEPTH UNKNOWN)

STA. 373+50 AHEAD BACK

STA 373+56.59, 87.50' LT
EX. CB, GRATE ELEV 884.27'
12" (W) 879.65
24" (SE) 879.75

SEE I-75 CROSS SECTIONS

EX LA
LA-R/W
4:1
4:1
50:1
883.6
887.99
373+50.00
885.37
8" VCP
15" TYPE C
6" WATER (ABANDONED)
4" GAS DOMINION (DEPTH UNKNOWN)
6" WATER (DEPTH UNKNOWN)

STA. 373+50 AHEAD BACK

900 890 880 870 860

120 100 80 60 40 20 0 20 40 60 80 100 120

CROSS SECTIONS - RAMP E (S.R. 309)
STA. 373+50.00 TO STA. 374+50.00

ALL-75-5.53

456
1224

J:\Projects\ALL\76691\roadway\sheets\76691XS1197.dgn 11-SEP-2012 9:06PM reddenj

SEEDING	
END WIDTH	SQ. YDS.
112	511
71	411
76	461
	1383

END AREA	
CUT	FILL
385	763
48	806
141	185

VOLUME	
CUT	FILL
400	1453
175	917
242	274
817	2644

CALCULATED JMR
CHECKED ACF

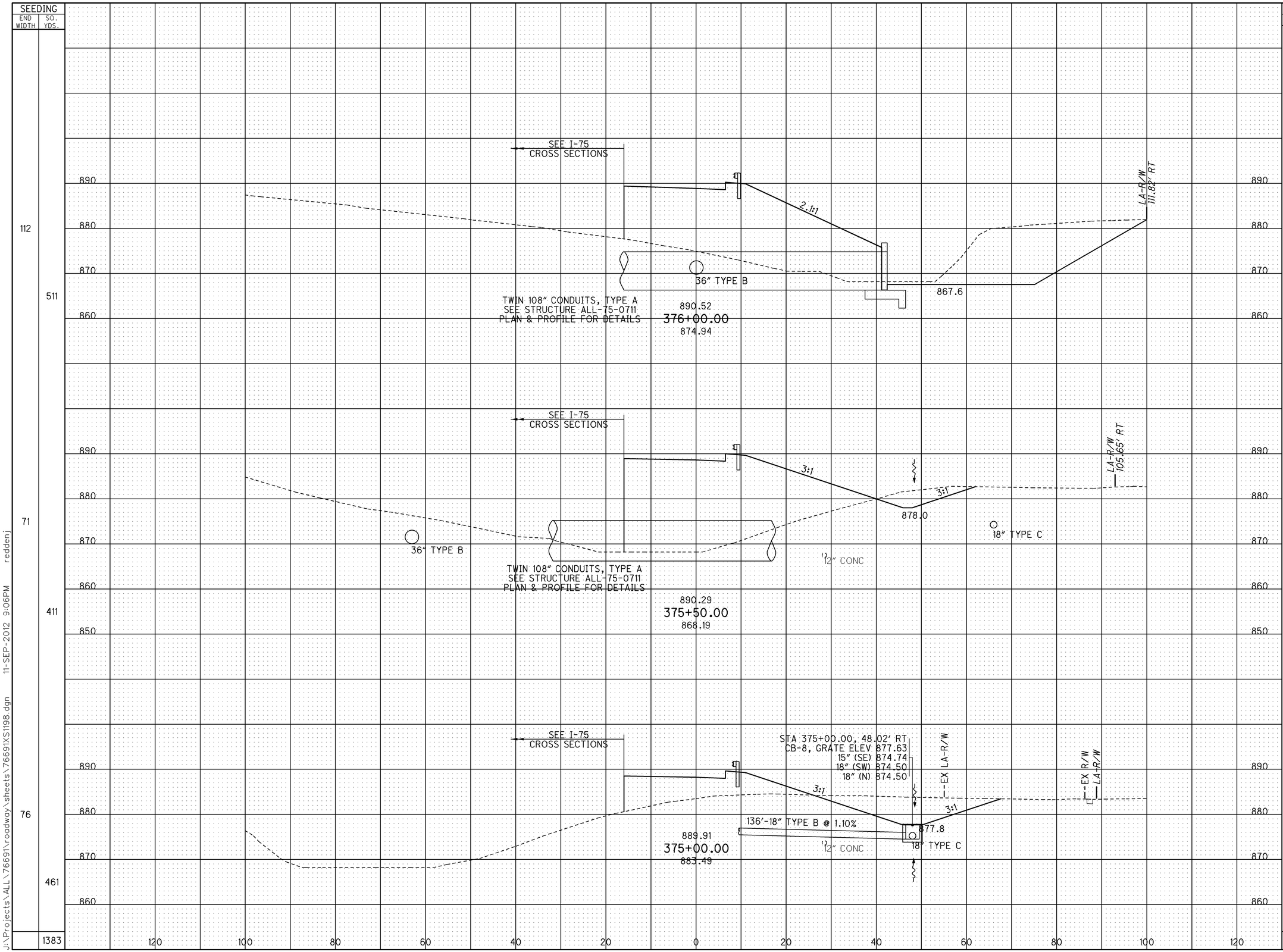

CROSS SECTIONS - RAMP E (S.R. 309)
STA. 375+00.00 TO STA. 376+00.00

ALL-75-5.53

J:\Projects\ALL\76691\roadway\sheets\76691XS1198.dgn 11-SEP-2012 9:06PM reddenj

SEEDING	
END WIDTH	SQ. YDS.
69	408
78	406
68	500
	1314

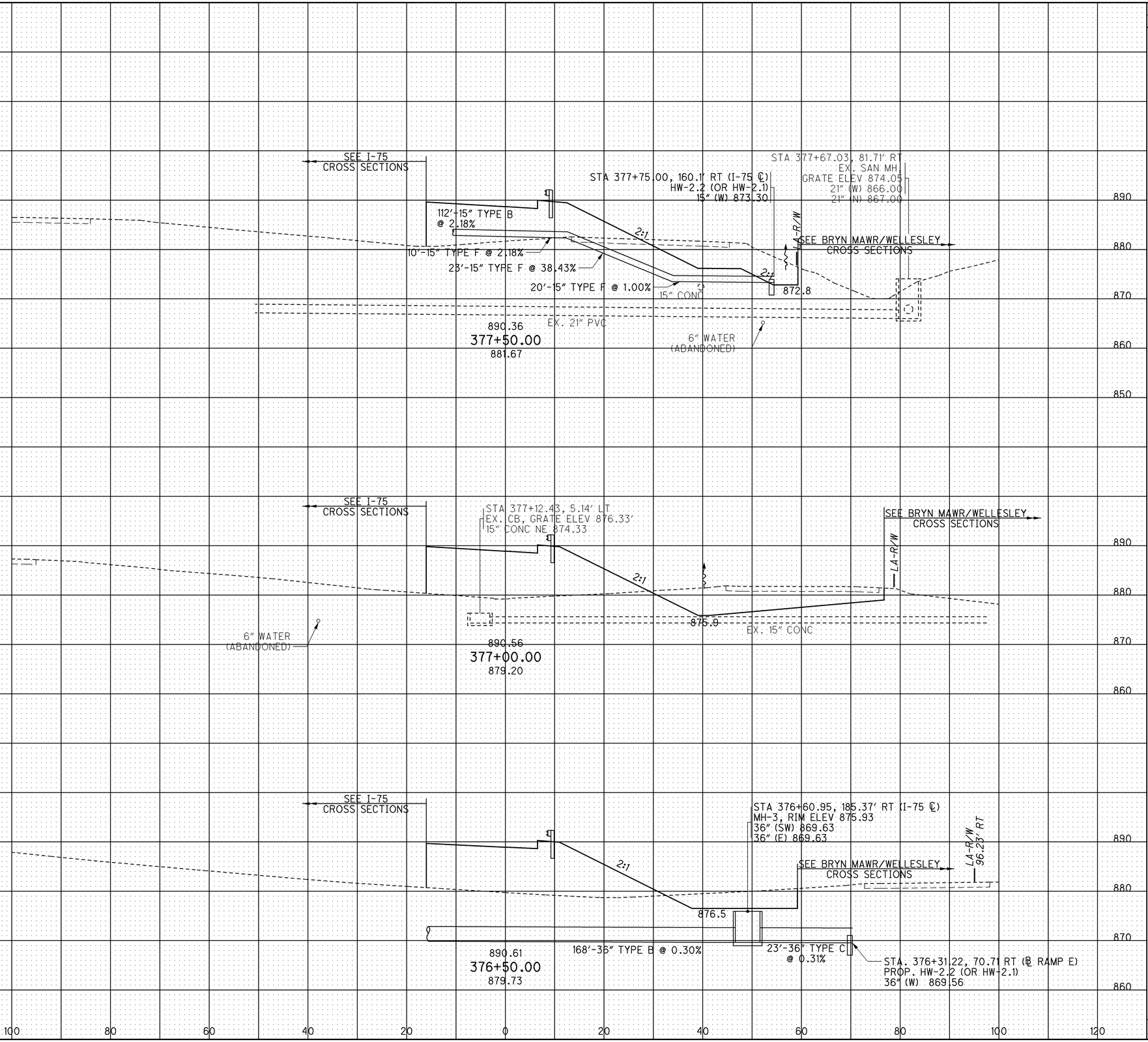

END AREA		VOLUME	
CUT	FILL	CUT	FILL
153	284	319	589
191	352	252	675
81	377	431	1055
		1002	2319

CALCULATED JMR
CHECKED ACF

CROSS SECTIONS - RAMP E (S.R. 309)
STA. 376+50.00 TO STA. 377+50.00

ALL-75-5.53

458
1224

J:\Projects\ALL\76691\roadway\sheets\76691XS1199.dgn 11-SEP-2012 9:06PM reddenj

SEEDING	
END WIDTH	SQ. YDS.
69	
	478
103	
	478
	956

GRAND TOTAL SEEDING & MULCHING RAMP 'E'
7,102 SQ. YD.
(QUANTITY CARRIED TO ROADWAY SUBSUMMARY)

GRAND TOTAL EARTHWORK RAMP 'E'
EXCAVATION: 4,587 CU. YD.
EMBANKMENT: 6,825 CU. YD.
(QUANTITY CARRIED TO ROADWAY SUBSUMMARY)

NOTE:
DEDUCTED 135 CU. YD. FROM EXCAVATION QUANTITY FOR PAVEMENT REMOVAL

END RAMP 'E' EARTHWORK STA. 378+50.00
(SEE I-75 CROSS SECTIONS FOR STA. 378+50.00 TO END WORK)

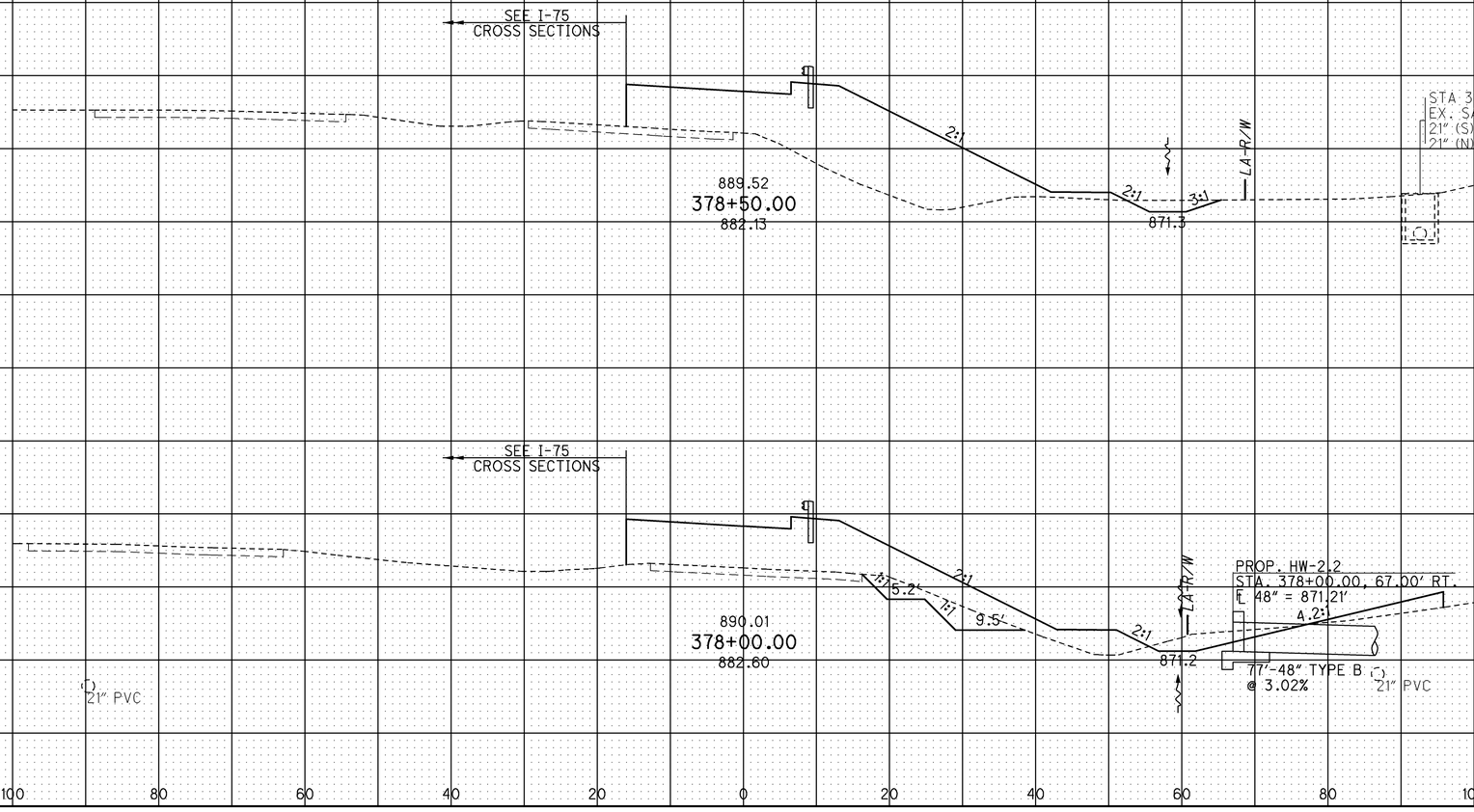

END AREA		VOLUME	
CUT	FILL	CUT	FILL
42	473		
		130	816
98	408		
		233	641
		363	1457

CALCULATED JMR
CHECKED ACF

CROSS SECTIONS - RAMP E (S.R. 309)
STA. 378+00.00 TO STA. 378+50.00

ALL-75-5.53

459
1224

J:\Projects\ALL\76691\roadway\sheets\76691XS1200.dgn 11-SEP-2012 9:06PM reddenj

SEEDING		END AREA		VOLUME	
END WIDTH	SQ. YDS.	CUT	FILL	CUT	FILL
61	339	29	171	55	308
61	322	31	162	44	304
55		17	167		
	661			99	612

CALCULATED JMR
CHECKED ACF

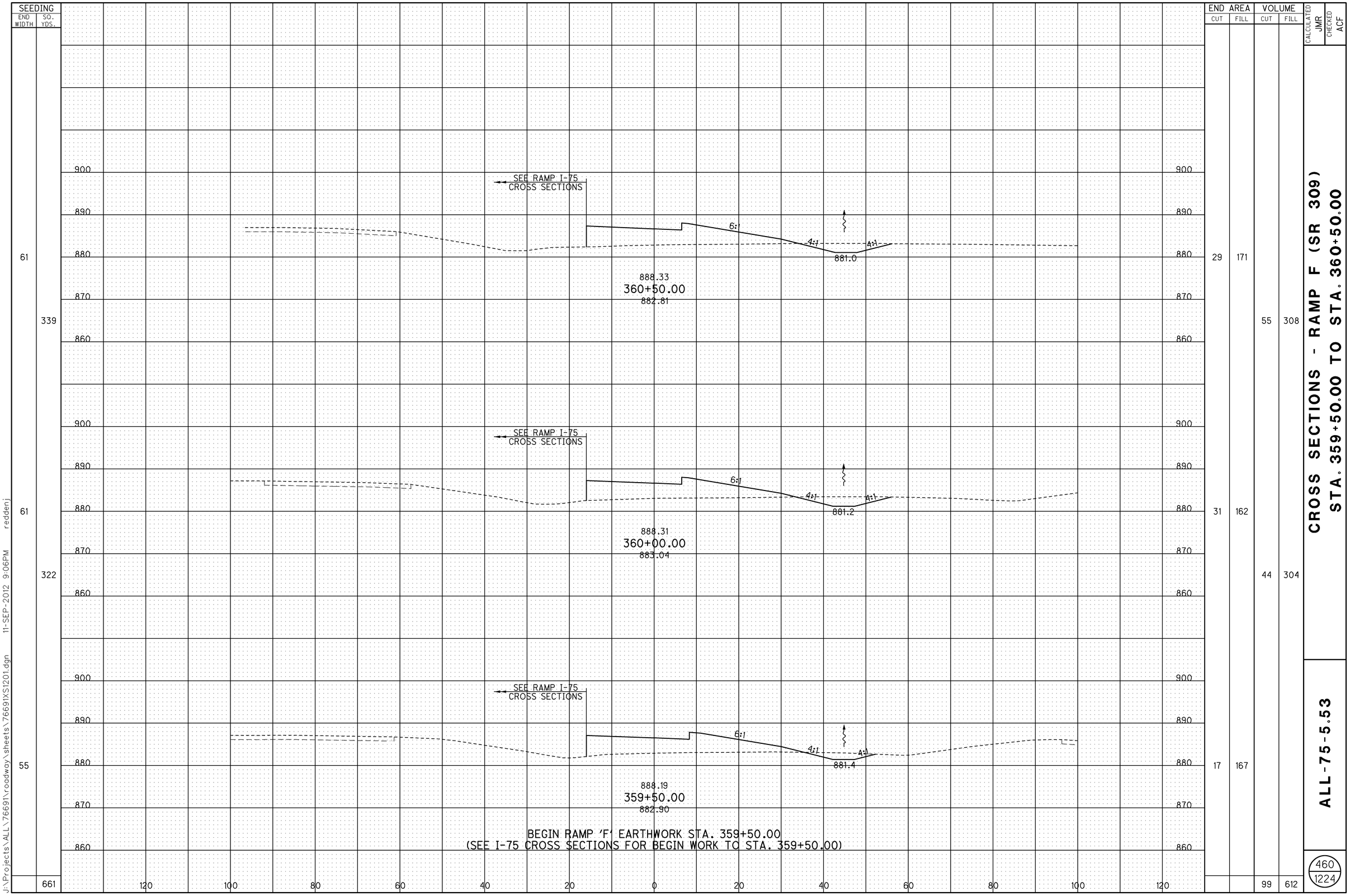

CROSS SECTIONS - RAMP F (SR 309)
STA. 359+50.00 TO STA. 360+50.00

ALL-75-5.53

460
1224

J:\Projects\ALL\76691\roadway\sheets\76691XS1201.dgn 11-SEP-2012 9:06PM reddenj

SEEDING END WIDTH	SEEDING SQ. YDS.	END AREA CUT	END AREA FILL	VOLUME CUT	VOLUME FILL
66	355	46	178	72	309
62	339	32	156	49	323
60	339	21	193	46	337
	1033			167	969

CALCULATED JMR
CHECKED ACF

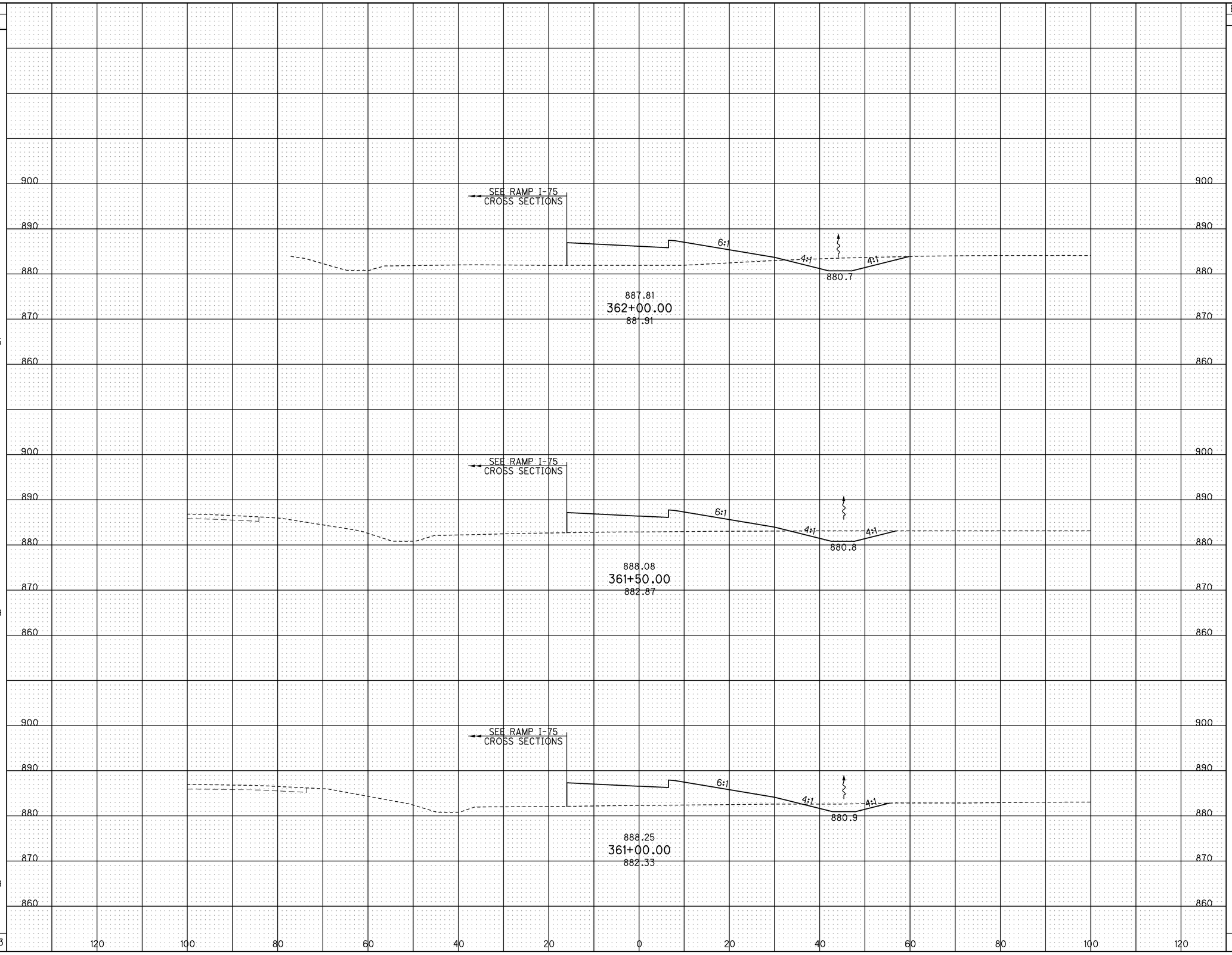

CROSS SECTIONS - RAMP F (SR 309)
STA. 361+00.00 TO STA. 362+00.00

ALL-75-5.53

461
1224

J:\Projects\ALL\76691\roadway\sheets\76691XS1202.dgn 11-SEP-2012 9:06PM redden j

SEEDING END WIDTH	SEEDING SQ. YDS.	END AREA CUT	END AREA FILL	VOLUME CUT	VOLUME FILL
63	350	56	74	89	205
62	355	40	148	104	148
65	366	73	12	109	177
	1071			302	530

CALCULATED JMR
CHECKED ACF

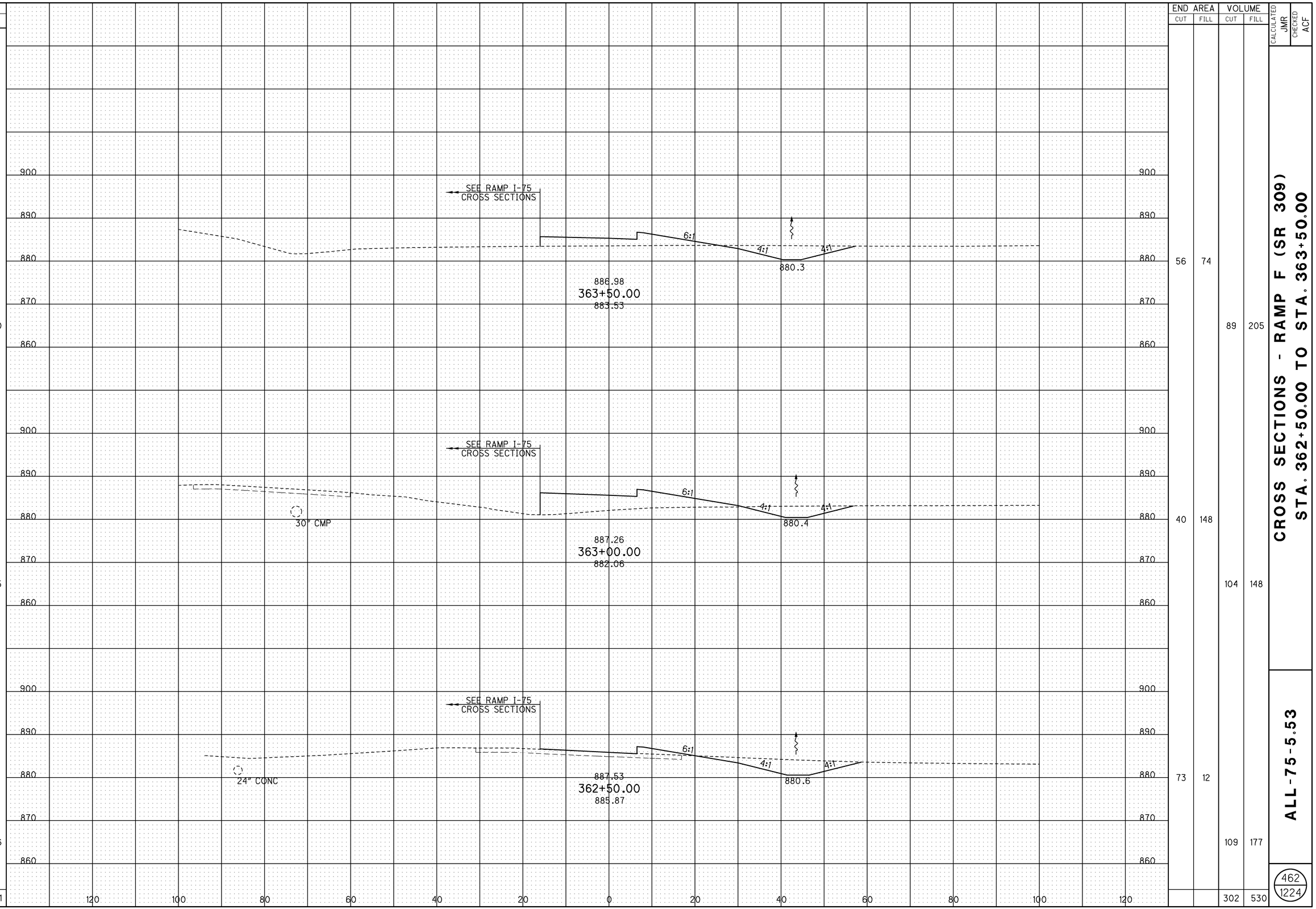

CROSS SECTIONS - RAMP F (SR 309)
STA. 362+50.00 TO STA. 363+50.00

ALL-75-5.53

462
1224

J:\Projects\ALL\76691\roadway\sheets\76691XS1203.dgn 11-SEP-2012 9:06PM redden j

SEEDING		END AREA		VOLUME		CALCULATED JMR / CHECKED ACF
END WIDTH	SQ. YDS.	CUT	FILL	CUT	FILL	
116	622	266	1	374	20	
107	281	139	21	107	39	
95 / 67	186	91 / 85	63 / 33	79	31	
67	361	85	33	130	99	
	1450			690	189	

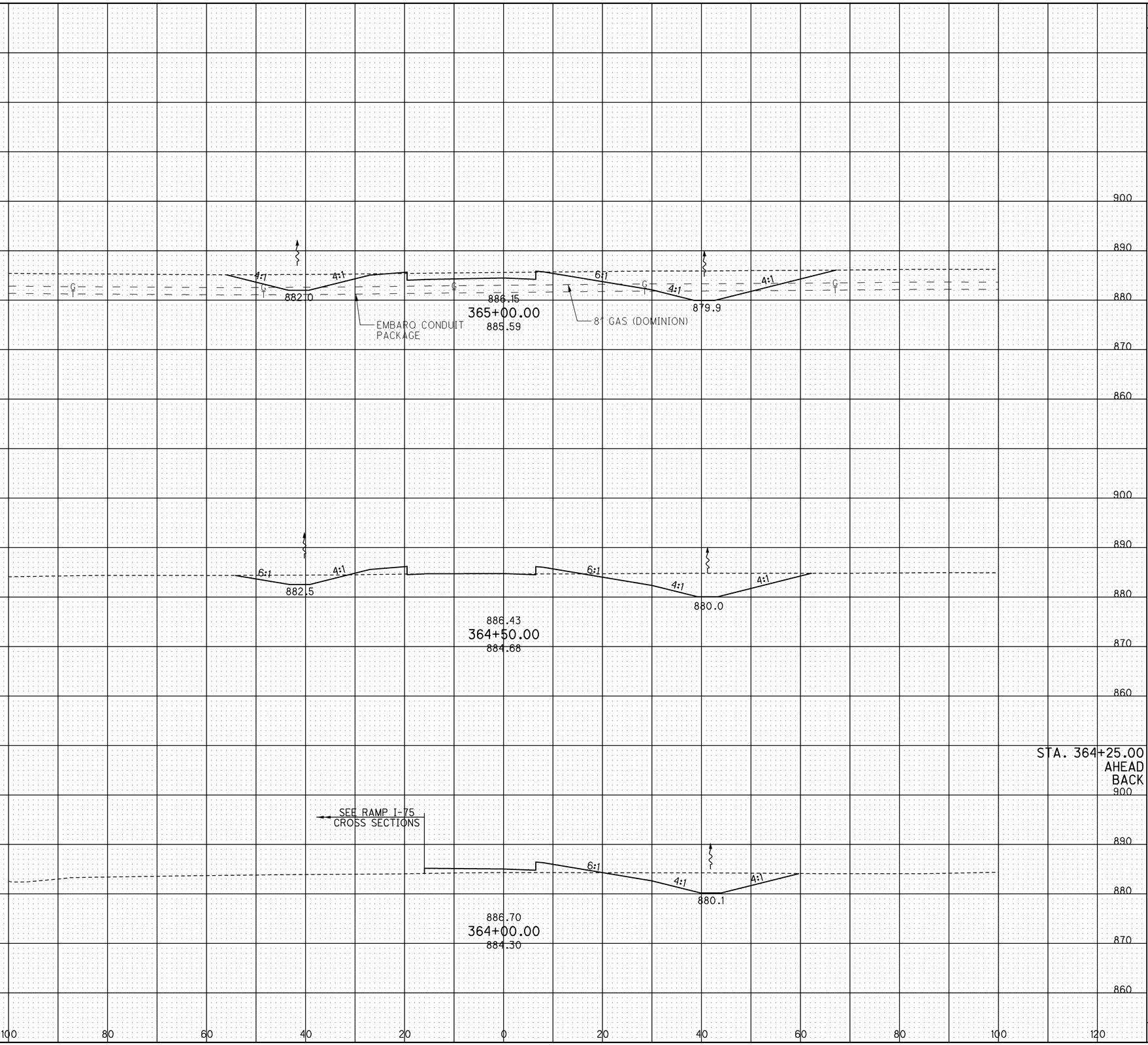

CROSS SECTIONS - RAMP F (SR 309)
STA. 364+00.00 TO STA. 365+00.00

ALL-75-5.53

463
1224

J:\Projects\ALL\76691\roadway\sheets\76691XS1204.dgn 11-SEP-2012 9:06PM redden j

SEEDING		END AREA		VOLUME		
END WIDTH	SQ. YDS.	CUT	FILL	CUT	FILL	
136	800	580	0	1283	0	
152	805	806	0	1228	0	
137	705	520	0	727	1	
	2310			3238	1	

CALCULATED JMR
CHECKED ACF

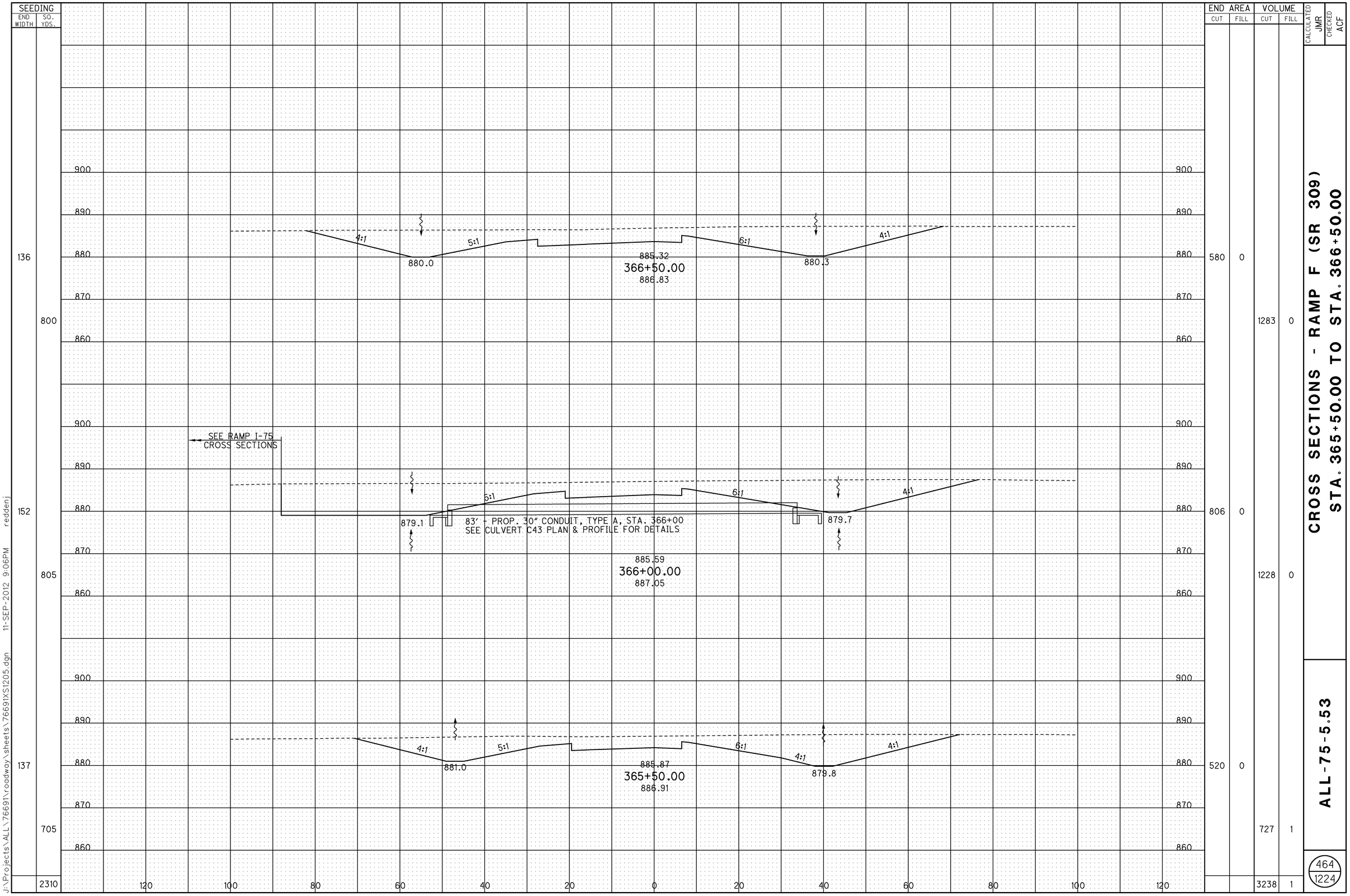

J:\Projects\ALL\76691\roadway\sheets\76691XS1205.dgn 11-SEP-2012 9:06PM reddenj

CROSS SECTIONS - RAMP F (SR 309)
STA. 365+50.00 TO STA. 366+50.00

ALL-75-5.53

464
1224

SEEDING		END AREA		VOLUME	
END WIDTH	SQ. YDS.	CUT	FILL	CUT	FILL
93	555	411	0	779	0
105	611	431	0	809	0
113	695	443	0	947	0
	1861			2535	0

CALCULATED JMR
CHECKED ACF

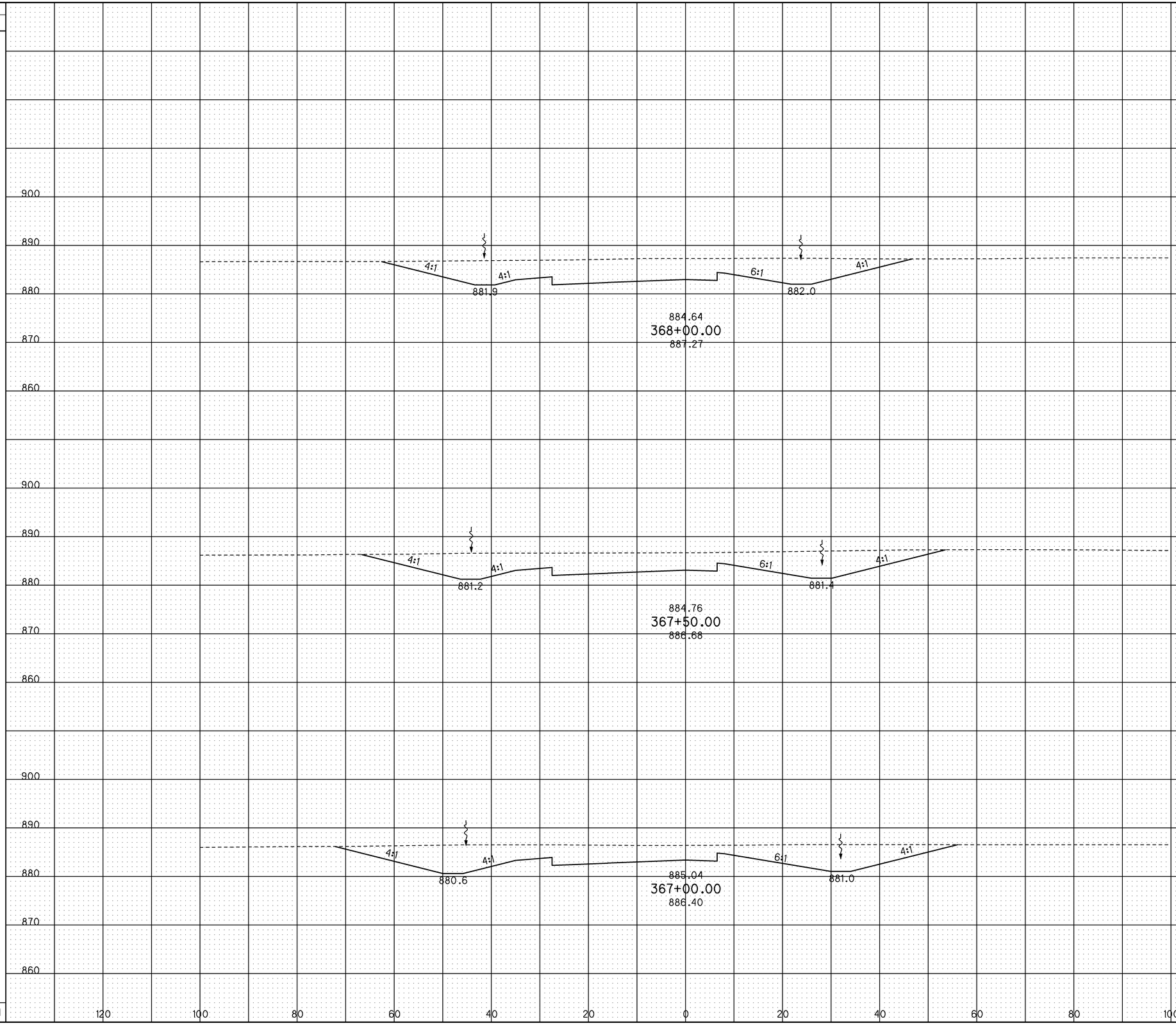

CROSS SECTIONS - RAMP F (SR 309)
STA. 367+00.00 TO STA. 368+00.00

ALL-75-5.53

465
1224

J:\Projects\ALL\76691\roadway\sheets\76691XS1206.dgn 11-SEP-2012 9:06PM reddenj

SEEDING END WIDTH	SEEDING SQ. YDS.	END AREA CUT	END AREA FILL	VOLUME CUT	VOLUME FILL
	8484			1098	2885
77		177	0		
	439			457	0
81		317	0		
	472			660	0
88		397	0		
	506			748	0
	9901			2963	2885

GRAND TOTAL SEEDING & MULCHING RAMP 'F'
18,287 SQ. YD.
(QUANTITY CARRIED TO ROADWAY SUBSUMMARY)

ADDED FOR REMOVAL OF EXISTING RAMP OUTSIDE OF CROSS SECTIONS

GRAND TOTAL EARTHWORK RAMP 'F'
EXCAVATION: 9,994 CU. YD.
EMBANKMENT: 5,186 CU. YD.
(QUANTITY CARRIED TO ROADWAY SUBSUMMARY)

ADDED FOR REMOVAL OF EXISTING RAMP OUTSIDE OF CROSS SECTIONS

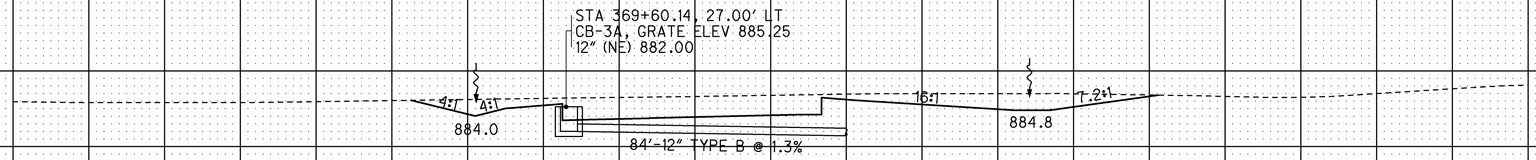

END RAMP 'F' EARTHWORK

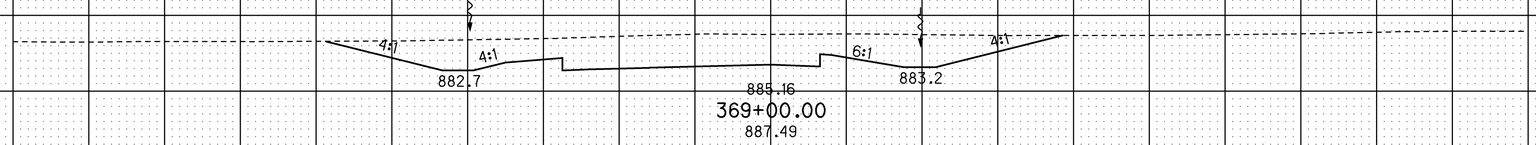

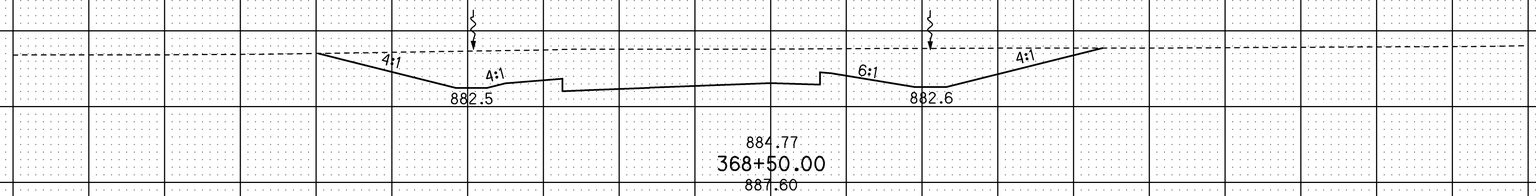

CALCULATED JMR
CHECKED ACF

CROSS SECTIONS - RAMP F (SR 309)
STA. 368+50.00 TO STA. 369+50.00

ALL-75-5.53

466
1224

J:\Projects\ALL\76691\roadway\sheets\76691XS1207.dgn 11-SEP-2012 9:06PM reddenj

CROSS REFERENCES			
SHEET NO.	DESCRIPTION	SHEET NO.	DESCRIPTION
470	CROSS SECTIONS	164	UNDERDRAIN SUMMARY
471	DRAINAGE DETAILS	469	ESTIMATED QUANTITIES
929	STRUCTURE NO. BTH-TR509-0.01		
610	GRADING PLAN		

CURVE WELL-1
P.I.= Sta. 9+92.21
D = 103° 28′ 28″ (LT)
Dc = 37° 00′ 00″
R = 154.85′
T = 196.34′
L = 279.66′
E = 95.21′
C = 243.18′
C.B. = S 38° 08′ 44″ E
e_D = NC

BEGIN WORK STA. 6+50.00
POT Sta. 5+87.48
+00 BEGIN TAPER
+8.44 END TAPER
CONST. LIMITS
MATCH EXIST.
℄ R/W & CONST. BRYN MAWR AVE.
S 13° 35′ 30″ W
PC STA. 7+95.87
LOST CREEK
Ex CH
Ex SH
MATCH LINE STA. 10+25.00
BRYN MAWR AVE / STA. 10+00.00= WELLESLEY DR. STA. 10+00.00
STRUCTURE NO. BTH-TR509-0.01
CONN. TO EX. 6″ W STA. 9+25 10.8′ RT.
CONN. TO EX. 6″ W STA. 7+92 22.0′ RT.
STA. 7+98 22.3′ RT.
PROP. 6″ WL.
STA. 8+83 25.7′ RT.
℄ S.R. 309 RAMP E
U1 U2 U3 U4 U5 GR1 D1 D2 D3 RM1 RM2 W1 WELL-1 S1 S2

HW-2 PROP HW-1.1 STA. 9+10, 58.6′ LT 48″ (NW) 868.50
HW-1 PROP HW-1.1 STA. 8+40.90, 48.56′ RT 48″ (E) 871.21

P.V.I. STA 8+40.00 ELEV = 879.58′
110.00′ VC SSD = 703′
K = 66

STA 8+02.22, 33.34′ RT
EX. SAN MH, GRATE ELEV 873.84
EX. 21″ (S) 867.50
EX. 21″ (N) 867.50
RECONSTRUCT TO GRADE
PROP. GRATE ELEV.

STA 8+53.47, 27.44′ LT
MH-3, RIM ELEV 876.75
15″ (N) 868.88
48″ (W) 868.88
48″ (SE) 868.88

STA 8+63.97, 32.20′ RT
EX. SAN MH, GRATE ELEV 874.05
EX. 21″ (W) 866.00
EX. 21″ (N) 867.00
PROP. GRATE ELEV.

STA 9+63.82, 50.08′ LT
PROP. HW-1.1
18″ (S) 869.82′

STA 10+00.00, 23.31′ LT
MH-3, RIM ELEV 880.98
15″ (E) 874.25
18″ (N) 870.10
6″ (S) 877.58

STA 7+00.00, 24.00′ LT
CB-2-2B, GRATE ELEV 873.46
15″ (S) 870.04
6″ (W) 871.29

STA 8+92.28, 27.62′ RT
EX. CB, GRATE ELEV 876.03
EX. 36″ (N) 869.49
EX. 36″ (S) 869.49
TO BE REMOVED

EXIST. GROUND
PROFILE GRADE
+3.15 %
+1.49 %
143′-15″ TYPE C @ 0.81%
EX. 21″ PVC
+30 EL. 874.3 45° BEND
77′-48″ TYPE B @ 3.02%
+38 EL.867.00 45° BEND
51′-48″ TYPE C @ 0.75%
EX. 36″ CMP TO BE REMOVED
+25, CONNEC TO EX. 6″ W
PROP. 6″ W.
38′-18″ TYPE C @ 0.73%
PROP. 16′ X 7′ BOX CULVERT
MATCH LINE STA. 10+25.00

875.17 875.96 876.75 877.53 878.30 878.99 879.58 880.07 880.47 880.85 881.22 881.59 881.96
875.20 875.09 874.99 874.94 875.17 875.92 876.67 877.54 878.54 879.20 879.66 880.15 880.67 880.85 880.87 881.58 881.99
900 895 890 885 880 875 870 865
6+00 7+00 8+00 9+00 10+00

CALCULATED ACF CHECKED ABS
HORIZONTAL SCALE IN FEET 0 10 20 40

PLAN AND PROFILE - BRYN MAWR AVE.
STA. 7+00.00 TO STA. 10+25.00

ALL-75-5.53

467
1224

J:\Projects\ALL\76691\roadway\sheets\76691GP611.dgn 11-SEP-2012 9:06PM reddenj

CROSS REFERENCES			
SHEET NO.	DESCRIPTION	SHEET NO.	DESCRIPTION
473	CROSS SECTIONS	164	UNDERDRAIN SUMMARY
475	DRAINAGE DETAILS	469	ESTIMATED QUANTITIES
671	INTERSECTION DETAILS	673-480	DRIVEWAY DETAILS
610	GRADING PLAN	477	LOST CREEK BLVD. PLAN & PROFILE

CURVE WELL-1
P.I.= Sta. 9+92.21
D = 103° 28′ 28″ (LT)
Dc = 37° 00′ 00″
R = 154.85′
T = 196.34′
L = 279.66′
E = 95.21′
C = 243.18′
C.B. = S 38° 08′ 44″ E
e$_d$ = NC

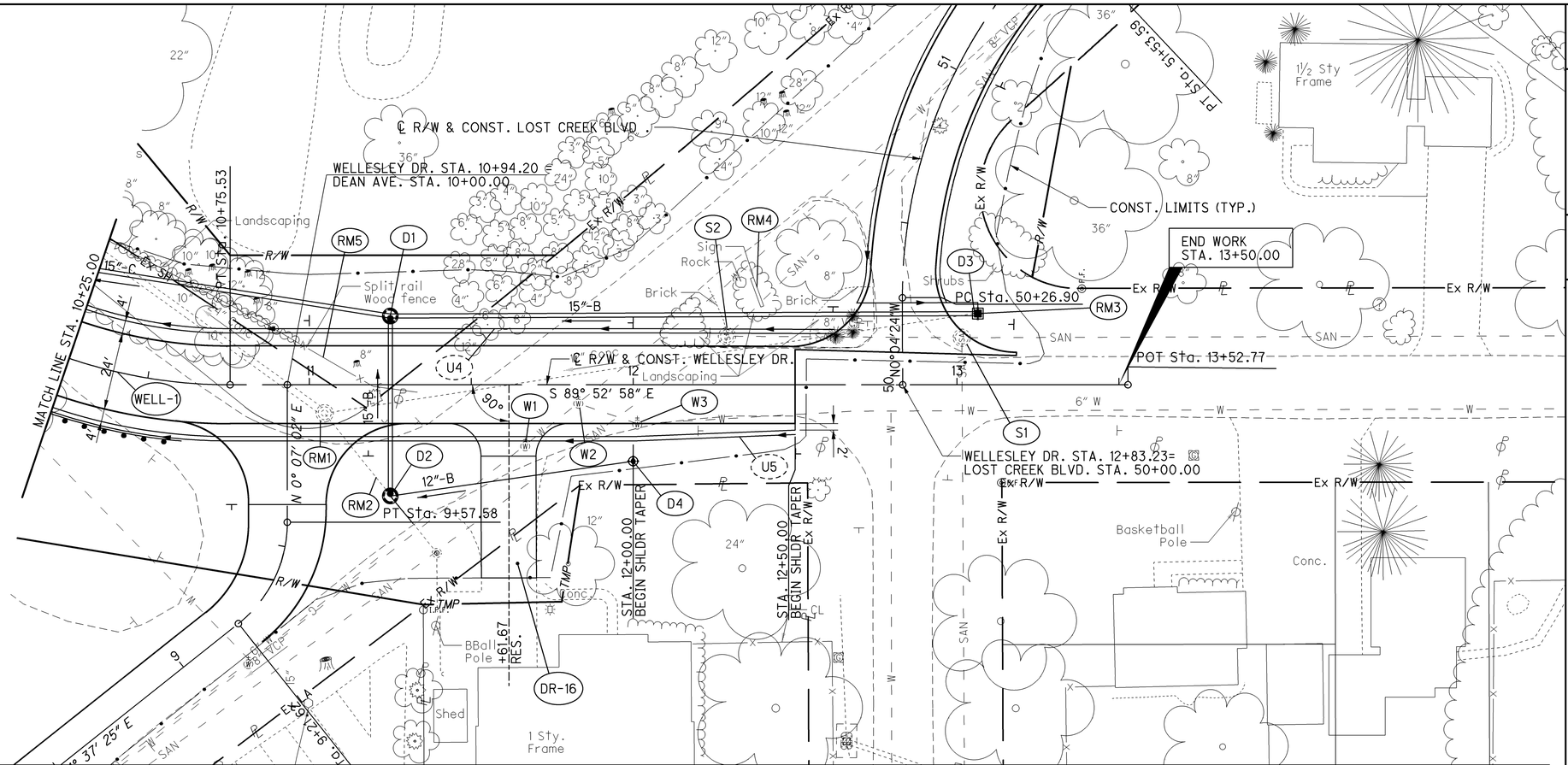

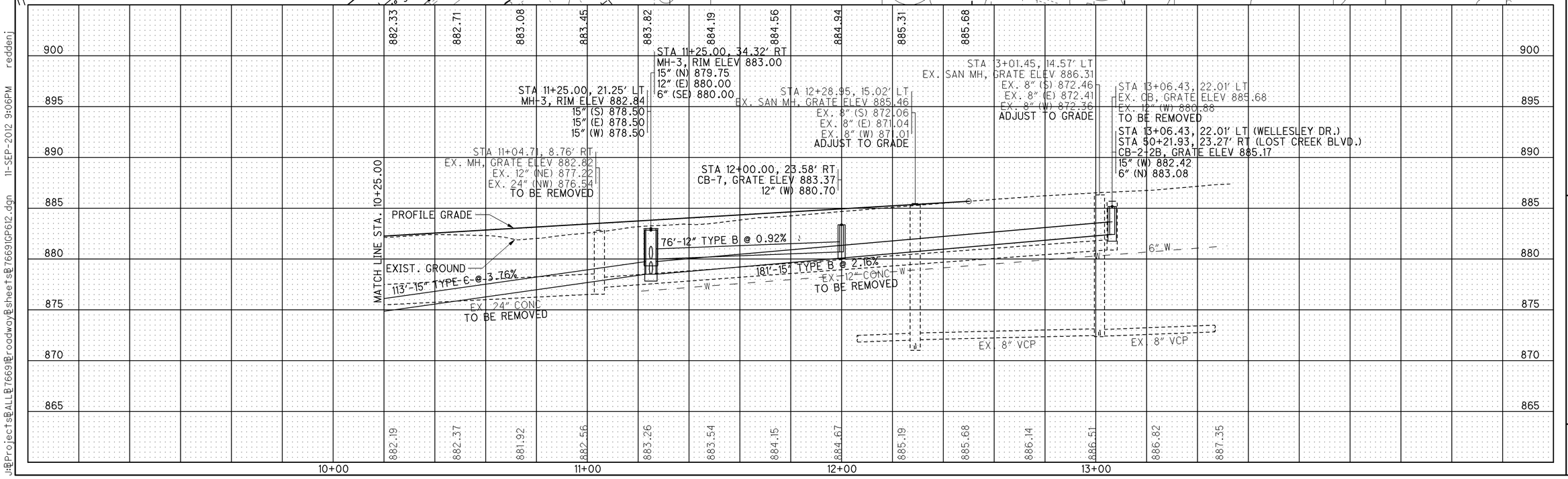

PLAN AND PROFILE - WELLESLEY DR.
STA. 10+25.00 TO END WORK

ALL-75-5.53

HORIZONTAL SCALE IN FEET
0 10 20 40

CALCULATED ACF CHECKED EJC

468
1224

J:\Projects\ALL\76691\Roadway\sheets\76691GP612.dgn 11-SEP-2012 9:06PM reddenj

REF. NO.	SHEET NO.	STATION FROM	STATION TO	SIDE	202 HEADWALL REMOVED EACH	202 PIPE REMOVED, 24" AND UNDER FT	202 PIPE REMOVED, OVER 24" FT	202 CATCH BASIN REMOVED EACH	202 MANHOLE REMOVED EACH	202 FENCE REMOVED FT	202 REMOVAL MISC.: BRICK FT	202 REMOVAL MISC.: SIGN AND FOUNDATIONS EACH	202 REMOVAL MISC.: METAL POSTS EACH	202 REMOVAL MISC.: RAILROAD TIES EACH	601 TIED CONCRETE BLOCK MAT, TYPE 3 SQ YD	602 CONCRETE MASONRY CU YD	603 12" CONDUIT, TYPE B FT	603 15" CONDUIT, TYPE B FT	603 15" CONDUIT, TYPE C FT	603 18" CONDUIT, TYPE C FT	603 48" CONDUIT, TYPE B FT	603 36" CONDUIT, TYPE B FT	604 CATCH BASIN, NO. 2-2B EACH	604 CATCH BASIN, NO. 7 EACH	604 MANHOLE, NO. 3 EACH	604 MANHOLE ADJUSTED TO GRADE EACH	604 MANHOLE RECONSTRUCTED TO GRADE EACH	606 GUARDRAIL, TYPE 5 FT	606 ANCHOR ASSEMBLY, TYPE E EACH	606 ANCHOR ASSEMBLY, TYPE T EACH	638 6" WATER MAIN DUCTILE IRON PIPE ANSI CLASS 52, PUSH-ON JOINTS AND FITTINGS, AS PER PLAN FT	638 VALVE BOX ADJUSTED TO GRADE EACH
		BRYN MAWR & WELLESLEY																														
RM1	467	8+93	9+44	RT	1		76	1																								
RM2	467	9+03	9+71	LT	1								4	4																		
S1	467	8+02		RT																							1					
S2	467	8+64		RT																							1					
GR1	467	8+93.99	10+62.00	RT																								125	1	1		
D1	467	7+00	8+53	LT															143				1									
D2	467	8+53	9+10	LT/RT											9.3	16.4					77	51			1							
D3	467	10+00	9+64	LT																38					1							
W1	467	7+92	9+25	RT																											152	
RM1	468	9+66	11+05	LT/RT		127			1																							
RM2	468	11+05	11+25	RT		44																										
RM3	468	11+05	13+05	LT/RT		201		1																								
RM4	468	12+37	12+40	LT							48	1																				
RM5	468	10+29	11+33	LT						104																						
S1	468	13+01		LT																						1						
S2	468	12+29		LT																						1						
D1	468	11+25	10+00	LT															112						1							
D2	468	11+25	11+25	RT/LT													11.0	56							1							
D3	468	13+06	11+25	LT														181					1									
D4	468	12+00	11+25	RT													76							1								
W1	468	11+67		RT																												1
W2	468	11+83		RT																												1
W3	468	12+01		RT																												1
TOTALS CARRIED TO ROADWAY SUBSUMMARY					2	372	76	2	1	104	48	1	4	4	9.3	16.4	87	237	255	38	77	51	2	1	4	2	2	125	1	1	152	3

CALCULATED ACF
CHECKED ABS

ESTIMATED QUANTITIES

ALL-75-5.53

469
1224

J:\Projects\ALL\76691\roadway\sheets\76691GQ612.dgn 11-SEP-2012 9:06PM reddenj

SEEDING		END AREA		VOLUME	
END WIDTH	SQ. YDS.	CUT	FILL	CUT	FILL
30	145	33	13	58	15
21	23	30	3	0	2
21		0	3		
0		0	0		
	168			58	17

CALCULATED JMR
CHECKED ACF

CROSS SECTIONS - BRYN MAWR AVE & WELLESLEY RD
STA. 6+50.00 TO STA. 7+50.00

ALL-75-5.53

470
1224

STA. 7+00.00
AHEAD
BACK

STA. 7+00.00
AHEAD
BACK

EX SH
EX SH
EX R/W
TMP
EX LA
LA-R/W, 70.2' RT

4:1
4:1
4.3:1

STA 7+00.00, 24.00' LT
CB-2-2B, GRATE ELEV 873.46
15" (S) 870.04
6" (W) 871.29

15" TYPE C

876.75
7+50.00
876.67

6" WATER
2" PVC

875.17
7+00.00
875.17

6" WATER
21" PVC

BEGIN FULL DEPTH PAVEMENT

BEGIN EARTHWORK
STA. 6+80.00

6" WATER
21" PVC

6+50.00

885
880
875
870
865

60 50 40 30 20 10 0 10 20 30 40 50 60

J:\Projects\ALL\76691\roadway\sheets\76691XS1208.dgn 11-SEP-2012 9:06PM reddenj

SEEDING	
END WIDTH	SQ. YDS.
84	394
56	245
	639

END AREA	
CUT	FILL
60	50
48	29

VOLUME	
CUT	FILL
99	73
74	38
173	111

CALCULATED JMR
CHECKED ACF

CROSS SECTIONS - BRYN MAWR AVE & WELLESLEY DR
STA. 8+00.00 TO STA. 8+50.00

ALL-75-5.53

471
1224

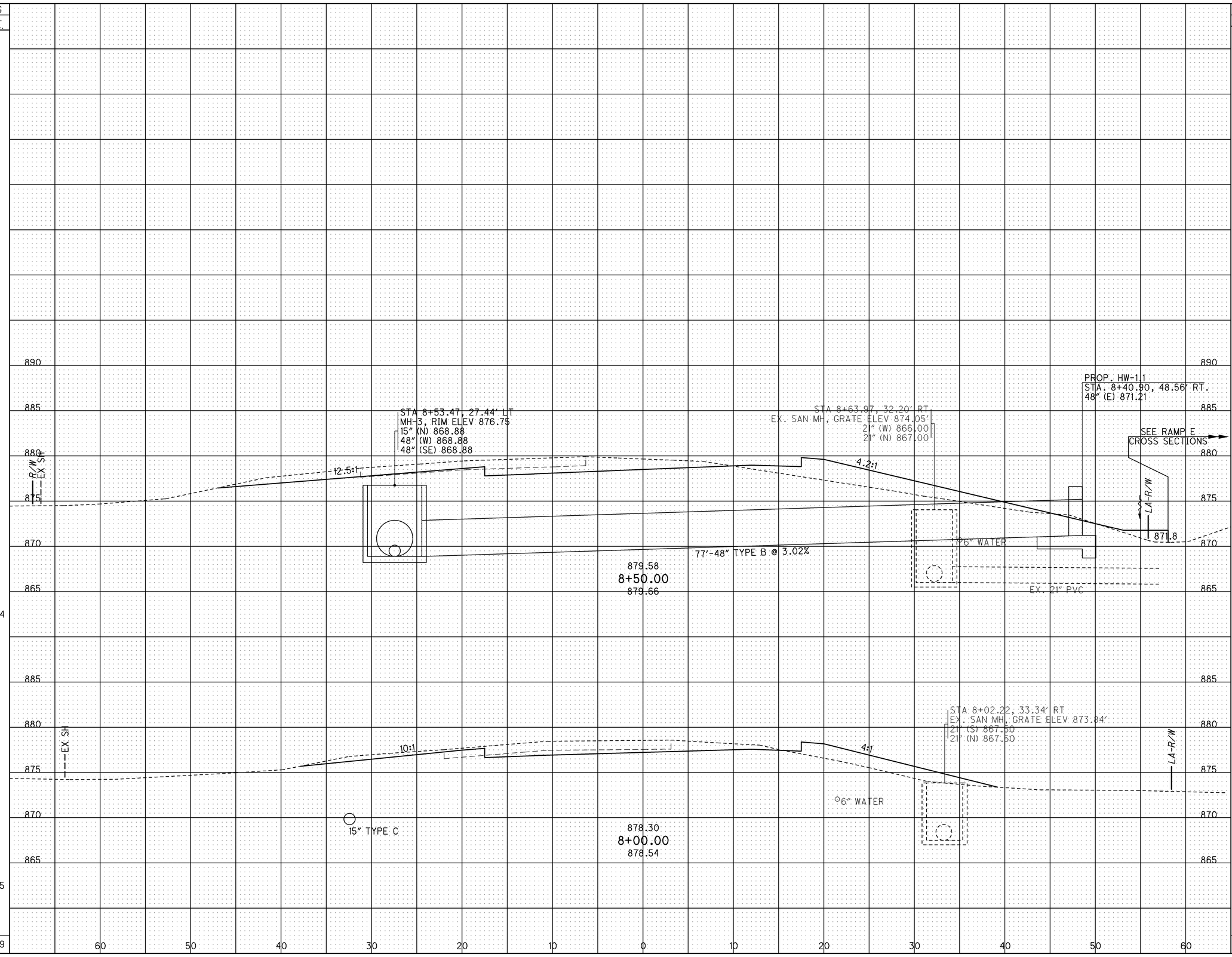

J:\Projects\ALL\76691\roadway\sheets\76691XS1209.dgn 11-SEP-2012 9:06PM reddenj

SEEDING	
END WIDTH	SQ. YDS.
132	628
	92
	495
	1123

END AREA	
CUT	FILL
690	22
785	90
158	76
202	116
987	206

VOLUME	
CUT	FILL

CALCULATED JMR
CHECKED ACF

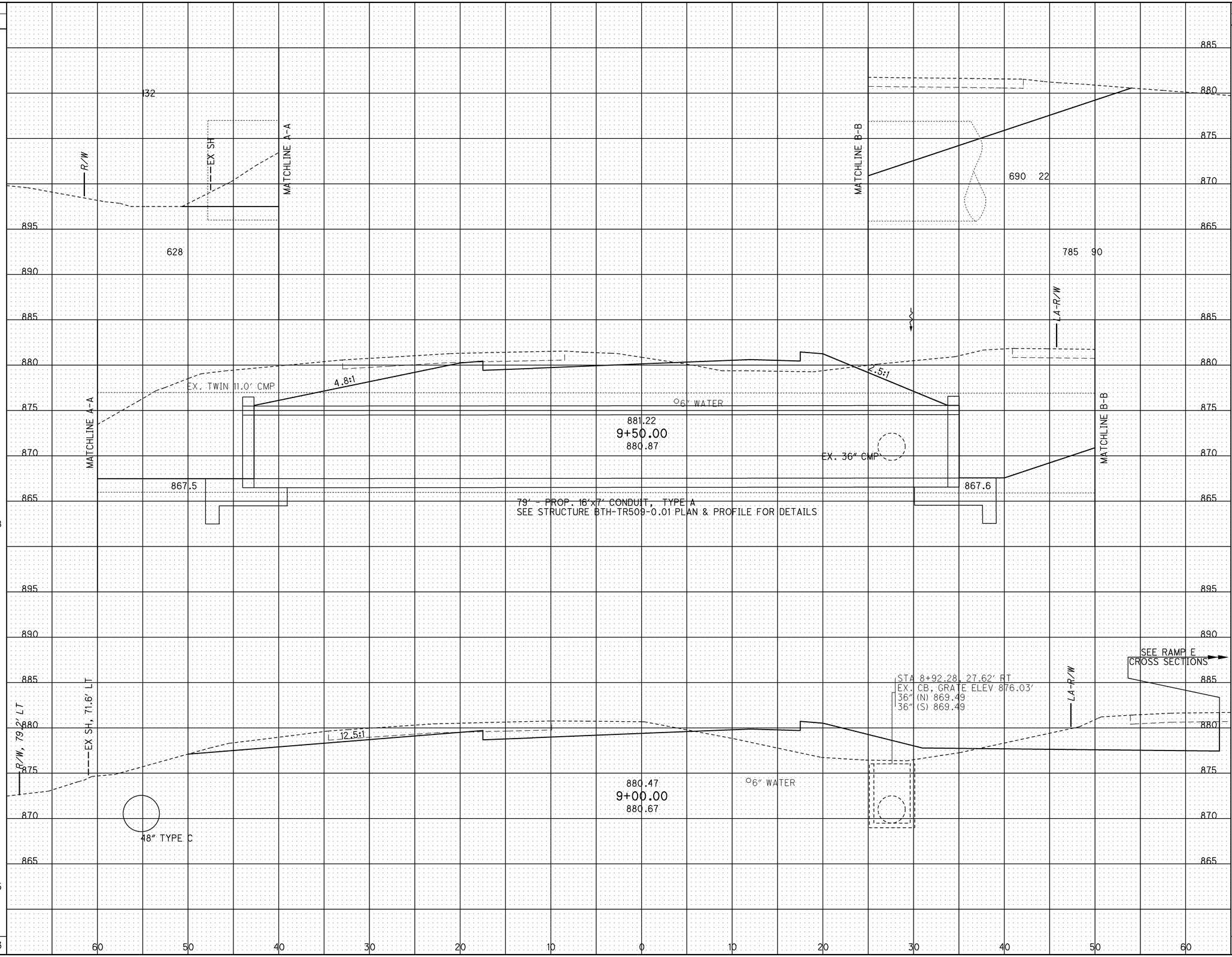

CROSS SECTIONS - BRYN MAWR AVE & WELLESLEY DR STA. 9+00.00 TO STA. 9+50.00

ALL-75-5.53

472
1224

J:\Projects\ALL\76691\roadway\sheets\76691XS1210.dgn 11-SEP-2012 9:06PM reddenj

SEEDING	
END WIDTH	SQ. YDS.
27	345
96	633
	978

END AREA	
CUT	FILL
32	14
154	40

VOLUME	
CUT	FILL
172	50
781	57
953	107

CALCULATED JMR
CHECKED ACF

CROSS SECTIONS - BRYN MAWR AVE & WELLESLEY DR
STA. 10+00.00 TO STA. 10+50.00

ALL-75-5.53

473
1224

J:\Projects\ALL\76691\roadway\sheets\76691XS1211.dgn 11-SEP-2012 9:06PM reddenj

J:\Projects\ALL\76691\roadway\sheets\76691XS1212.dgn 11-SEP-2012 9:06PM reddenj

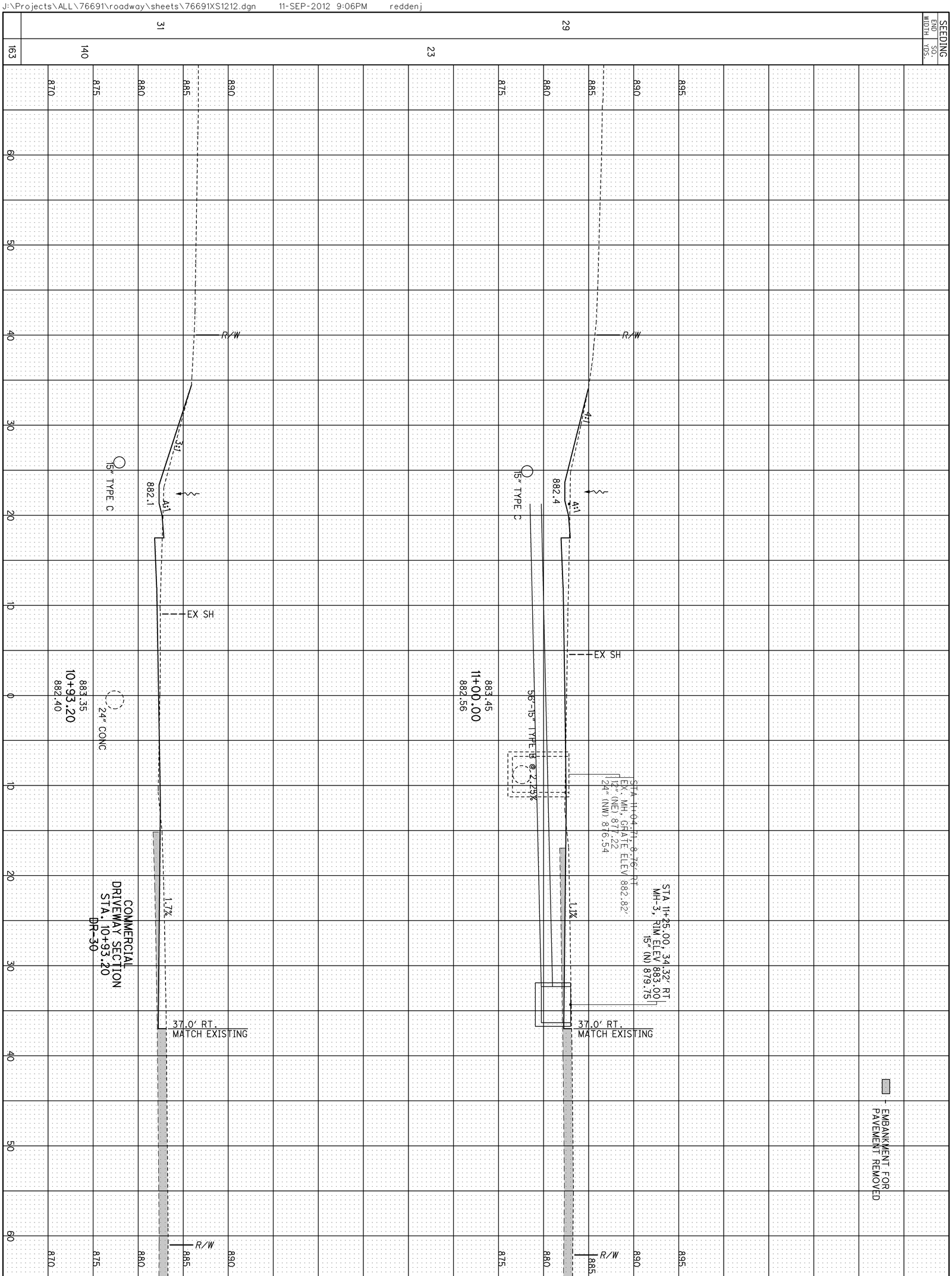

474 / 1224	ALL-75-5.53

CROSS SECTIONS - BRYN MAWR AVE & WELLESLEY DR
STA. 10+93.20 TO STA. 11+00.00

CALCULATED JMR
CHECKED ACF

SEEDING	
END WIDTH	SQ. YDS.
35	140
30	46
39	194
	380

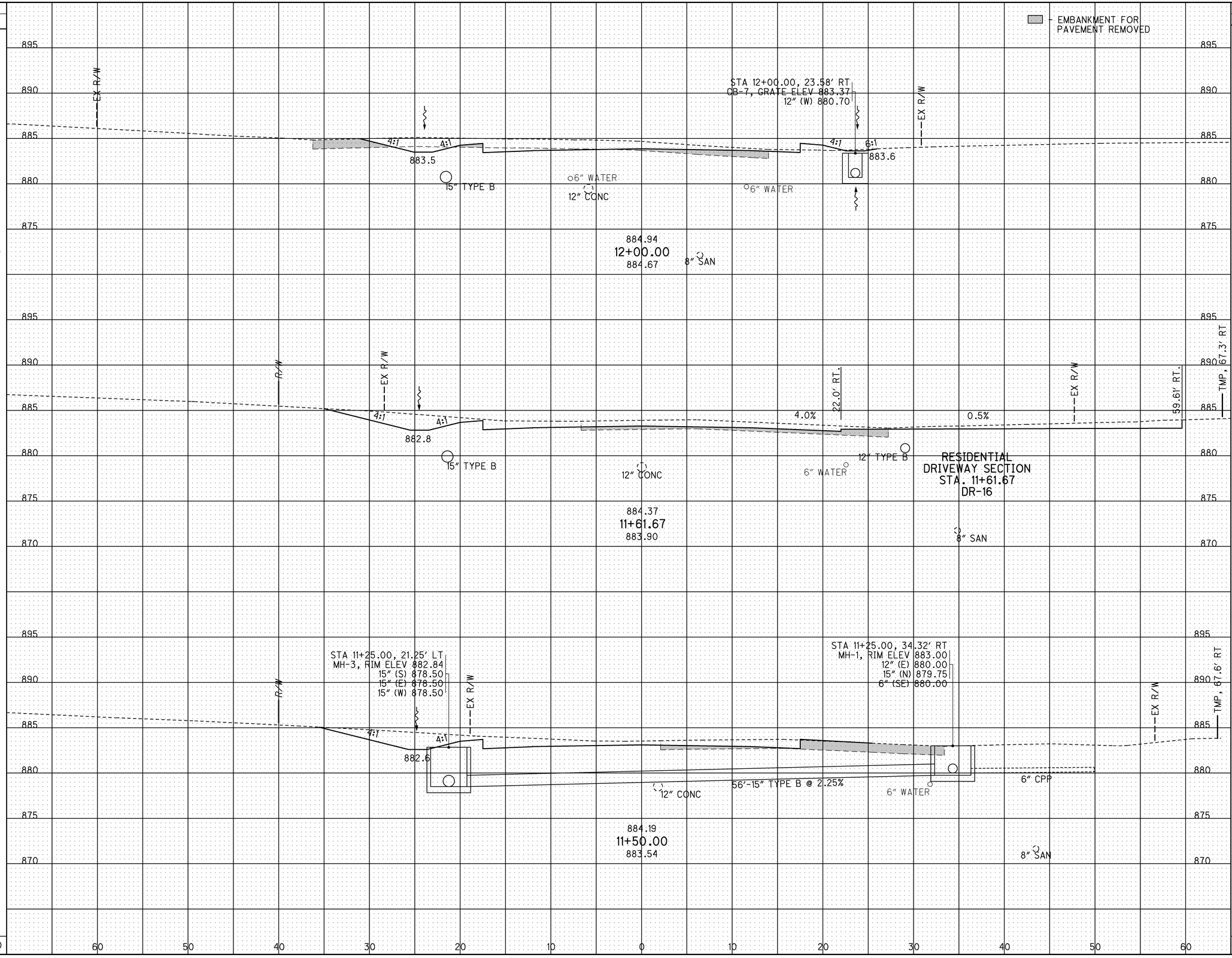

END AREA		VOLUME	
CUT	FILL	CUT	FILL
57	18	94	23
75	14		
65	20		
30	7		
120	56		
		244	86

CALCULATED JMR
CHECKED ACF

CROSS SECTIONS - BRYN MAWR AVE & WELLESLEY DR
STA. 11+50.00 TO STA. 12+00.00

ALL-75-5.53

475
1224

J:\Projects\ALL\76691\roadway\sheets\76691XS1213.dgn 11-SEP-2012 9:06PM reddenj

SEEDING END WIDTH	SEEDING SQ. YDS.
0	
	20
20	
	19
0	
	50
27	
31	
	183
	272

GRAND TOTAL SEEDING & MULCHING BRYN MAWR
3,723 SQ. YD.
(QUANTITY CARRIED TO ROADWAY SUBSUMMARY)

GRAND TOTAL EARTHWORK BRYN MAWR
EXCAVATION: 2,453 CU. YD.
EMBANKMENT: 605 CU. YD.
(QUANTITY CARRIED TO ROADWAY SUBSUMMARY)

NOTE:
DEDUCTED 216 CU. YD. FROM EXCAVATION QUANTITY FOR CONC. PAVEMENT REMOVAL

END WORK
STA. 13+18.38

STA 13+06.43, 22.01' LT
EX. CB, GRATE ELEV 885.68'
12" (W) 880.88
(TO BE REMOVED)

STA 13+06.43, 22.01' LT (WELLESLEY DR.)
STA 50+21.93, 23.27' RT (LOST CREEK BLVD.)
CB-2+2B, GRATE ELEV 885.17'
15" (W) 882.42
6" (N) 883.08

STA 13+01.45, 14.57' LT
EX. SAN MH, GRATE ELEV 886.31'
8" (S) 872.46
8" (E) 872.41
8" (W) 872.36
(ADJUST TO GRADE)

SEE LOST CREEK BLVD. CROSS SECTIONS

13+00.00
886.51

6" WATER

EX. 8" VCP

SEE LOST CREEK BLVD. CROSS SECTIONS

15" TYPE B
12" CONC

12+83.23
886.27

6" WATER

8" VCP

MATCHLINE C-C

EMBANKMENT FOR PAVEMENT REMOVED

STA 12+28.95, 15.02' LT
EX. SAN MH, GRATE ELEV 885.46'
8" (S) 872.06
8" (E) 871.04
8" (W) 871.01

MATCHLINE C-C

4:1

4:1

884.3

EX R/W

6" WATER

15" TYPE B
12" CONC

6" WATER

STA. 12+50.00
AHEAD
BACK

885.68
12+50.00
885.68

STA. 12+50.00
AHEAD
BACK

END FULL DEPTH PAVEMENT

8" VCP

END AREA CUT	END AREA FILL	VOLUME CUT	VOLUME FILL
0	0		
		4	1
10	1		
		10	0
22	0		
		33	0
32	0		
58	0		
		107	17
		154	18

CALCULATED JMR
CHECKED ACF

CROSS SECTIONS - BRYN MAWR AVE & WELLESLEY DR
STA. 12+50.00 TO STA. 13+18.38

ALL-75-5.53

476
1224

J:\Projects\ALL\76691\roadway\sheets\76691XS1214.dgn 11-SEP-2012 9:07PM reddenj

CURVE LOST-1
P.I.= Sta. 50+94.03
D = 46° 52′ 33″ (RT)
Dc = 37° 00′ 00″
R = 154.85′
T = 67.13′
L = 126.69′
E = 13.93′
C = 123.19′
C.B. = N 23° 21′ 53″ E
e_d= NC

CROSS REFERENCES			
SHEET NO.	DESCRIPTION	SHEET NO.	DESCRIPTION
480	CROSS SECTIONS	164	UNDERDRAIN SUMMARY
468	WELLESLY RD. PLAN & PROFILE	479	ESTIMATED QUANTITIES
		671	INTERSECTION DETAIL

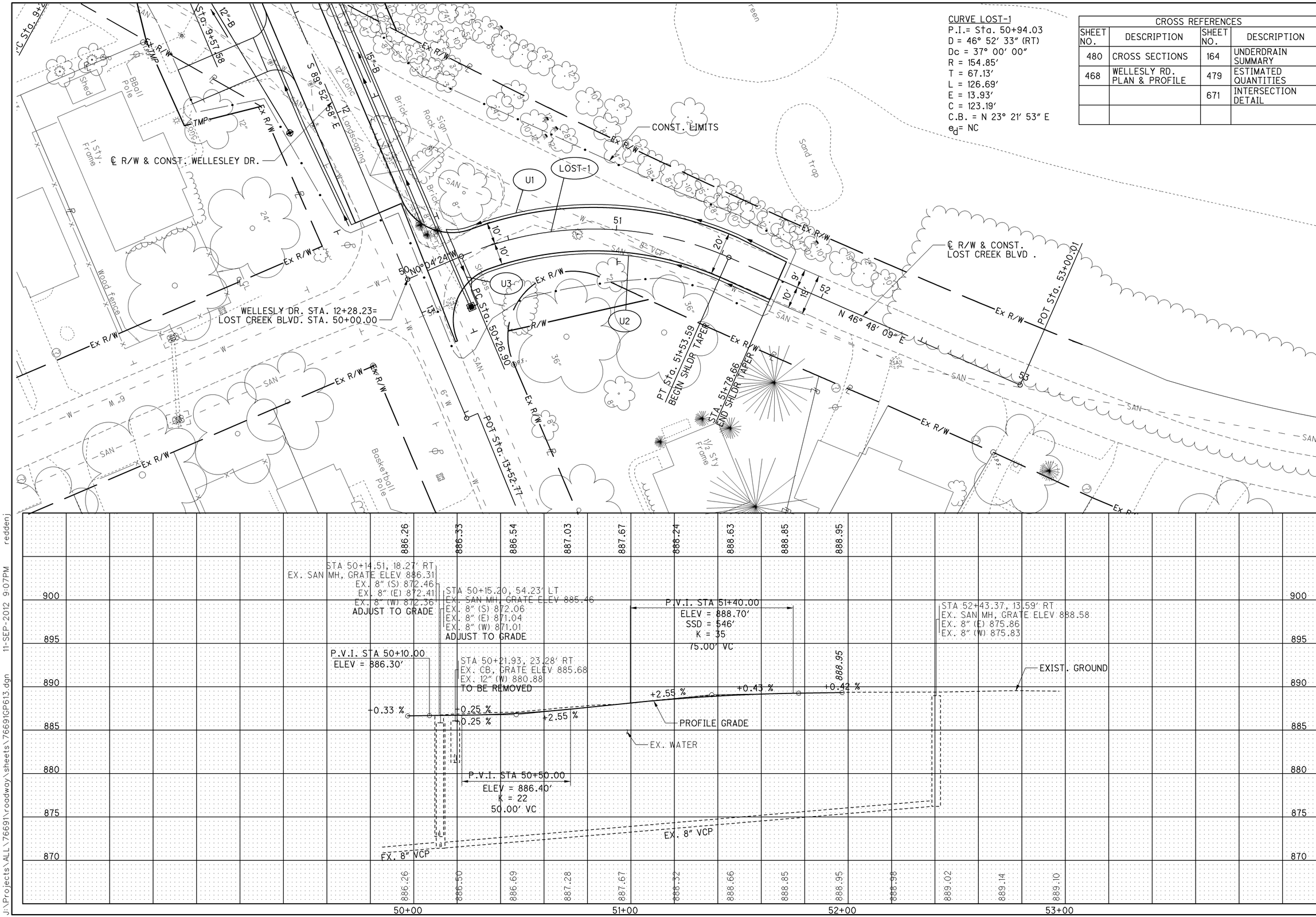

HORIZONTAL SCALE IN FEET 0 10 20 40

CALCULATED
CHECKED

PLAN AND PROFILE - LOST CREEK BLVD .
STA. 50+00.00 TO END WORK

ALL-75-5.53

J:\Projects\ALL\76691\roadway\sheets\76691GP613.dgn 11-SEP-2012 9:07PM reddenj

PLAN - DEAN AVENUE
BEGIN WORK TO END WORK

HORIZONTAL SCALE IN FEET
0 10 20 40

CALCULATED ACF
CHECKED EJC

ALL-75-5.53

478
1224

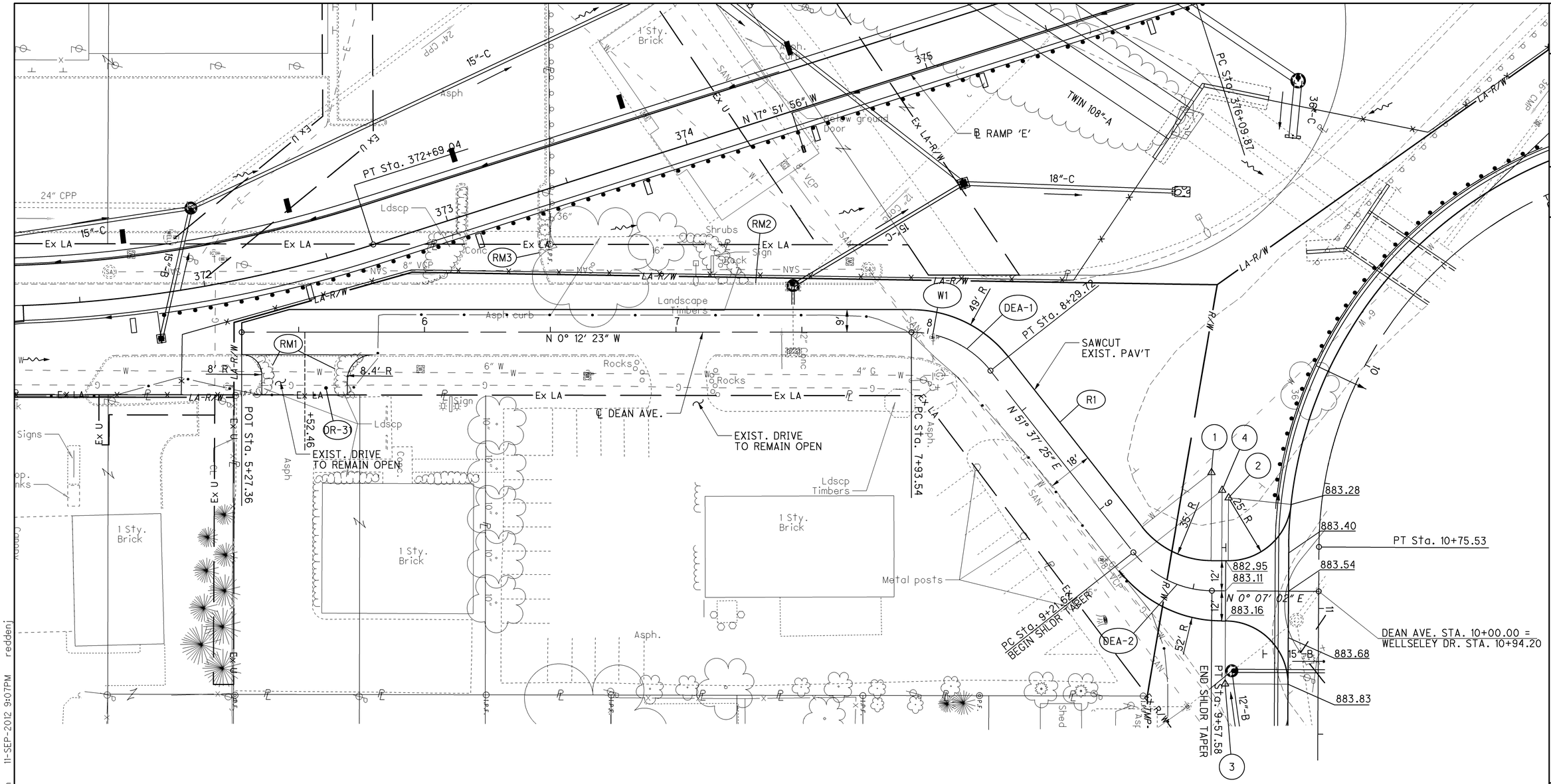

CURVE DEA-1
P.I. Sta. 8+12.98
Δ = 51° 49′ 48″ (RT)
Dc = 143° 14′ 22″
R = 40.00′
T = 19.44′
L = 36.18′
E = 4.47′
C = 34.96′
C.B. = N 25° 42′ 31″ E

CURVE DEA-2
P.I. Sta. 9+40.92
Δ = 51° 30′ 23″ (LT)
Dc = 143° 14′ 22″
R = 40.00′
T = 19.30′
L = 35.96′
E = 4.41′
C = 34.76′
C.B. = N 25° 52′ 13″ E

CROSS REFERENCES			
SHEET NO.	DESCRIPTION	SHEET NO.	DESCRIPTION
673	DRIVE DETAILS		
481	ESTIMATED QUANTITIES		
468	WELLESLY RD. PLAN & PROFILE		

(1) STA. 9+15.86, 44.00′ LT. DEAN AVE.
STA. 10+52.73, 45.05′ RT. WELLESLEY
Δ = 51° 30′ 23″
R = 35′
L = 31.46′

(2) STA. 9+63.98, 37.00′ LT. DEAN AVE.
STA. 10+59.90, 37.00′ RT. WELLESLEY
Δ = 84° 13′ 14″
R = 25′
L = 36.74′

(3) STA. 9+63.00, 37.00′ RT. DEAN AVE.
STA. 11+30.20, 37.00′ RT. WELLESLEY
Δ = 90° 00′ 00″
R = 25′
L = 39.27′

(4) STA. 9+61.41, 40.00′ LT. DEAN AVE.
STA. 10+57.74, 39.88′ RT. WELLESLEY
Δ = 51° 30′ 23″
R = 52′
L = 46.75′

J:\Projects\ALL\76691\Broadway\sheets\76691GP614.dgn 11-SEP-2012 9:07PM reddenj

REF. NO.	SHEET NO.	STATION FROM	STATION TO	SIDE	202 CURB REMOVED FT	202 PAVEMENT REMOVED SQ YD	252 FULL DEPTH PAVEMENT SAWING FT	638 VALVE BOX ADJUSTED TO GRADE EACH
		DEAN AVE.						
RM1	480	5+27	5+78	RT	81			
RM2	480	6+46	77+81	LT	160			
RM3	480	5+97	6+50	LT		78.1		
R1	480	5+27	9+63	LT/RT			520	
W1	480	8+03		RT				1
TOTALS CARRIED TO ROADWAY SUBSUMMARY					241	78.1	520.0	1.0

CALCULATED ACF
CHECKED ABS

ESTIMATED QUANTITIES

ALL-75-5.53

479
1224

J:\Projects\ALL\76691\roadway\sheets\76691GQ614.dgn 11-SEP-2012 9:07PM reddenj

SEEDING END WIDTH	SEEDING SQ. YDS.	END AREA CUT	END AREA FILL	VOLUME CUT	VOLUME FILL
36	122	45	2	55	7
52	170	73	13	76	18
68	148	91	26	64	20
65	148	82	28		
	440			195	45

CALCULATED JMR
CHECKED ACF

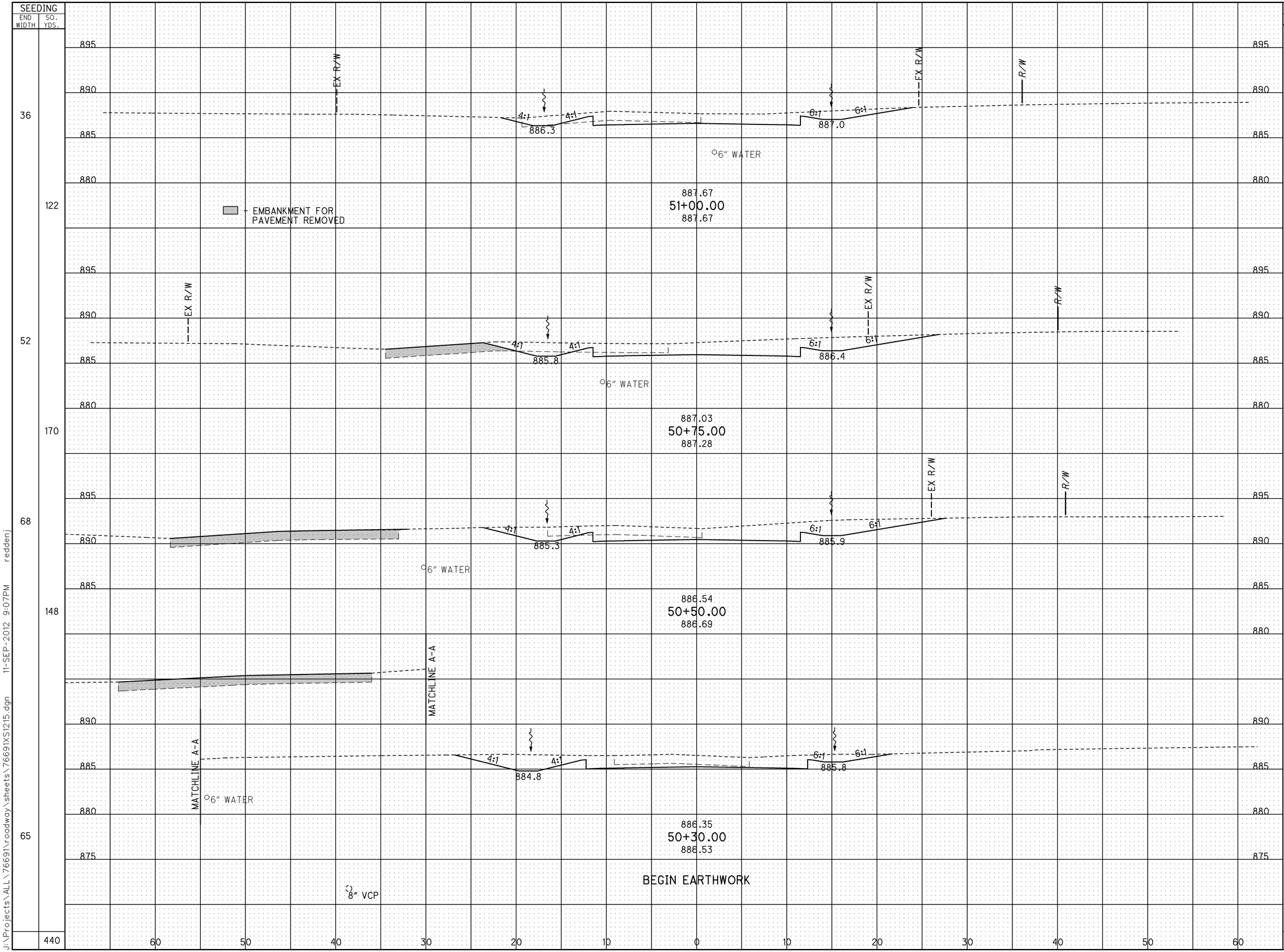

CROSS SECTIONS - LOST CREEK BLVD.
STA. 50+30.00 TO STA. 51+00.00

ALL-75-5.53

480
1224

J:\Projects\ALL\76691\roadway\sheets\76691XS1215.dgn 11-SEP-2012 9:07PM reddenj

GRAND TOTAL SEEDING & MULCHING LOST CREEK BLVD.
673 SQ. YD.
(QUANTITY CARRIED TO ROADWAY SUBSUMMARY)

GRAND TOTAL EARTHWORK LOST CREEK BLVD.
EXCAVATION: 284 CU. YD.
EMBANKMENT: 48 CU. YD.
(QUANTITY CARRIED TO ROADWAY SUBSUMMARY)

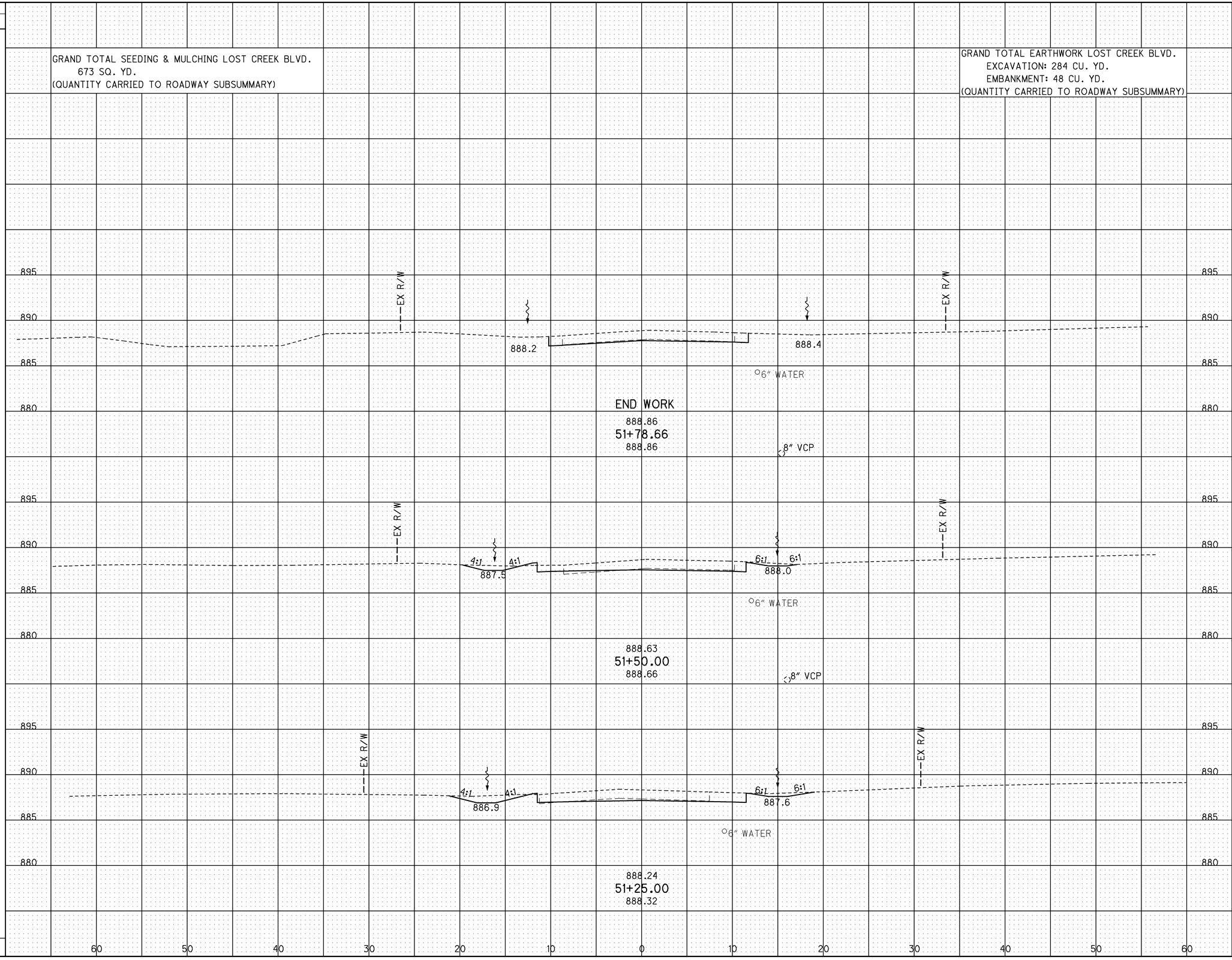

SEEDING END WIDTH	SEEDING SQ. YDS.	END AREA CUT	END AREA FILL	VOLUME CUT	VOLUME FILL
12	61	24	0	27	1
25	78	27	2	27	1
30	94	31	0	35	1
	233			89	3

CALCULATED JMR
CHECKED ACF

CROSS SECTIONS - LOST CREEK BLVD.
STA. 51+25.00 TO STA. 52+00.00

ALL-75-5.53

481
1224

J:\Projects\ALL\76691\roadway\sheets\76691XS1216.dgn 11-SEP-2012 9:07PM reddenj

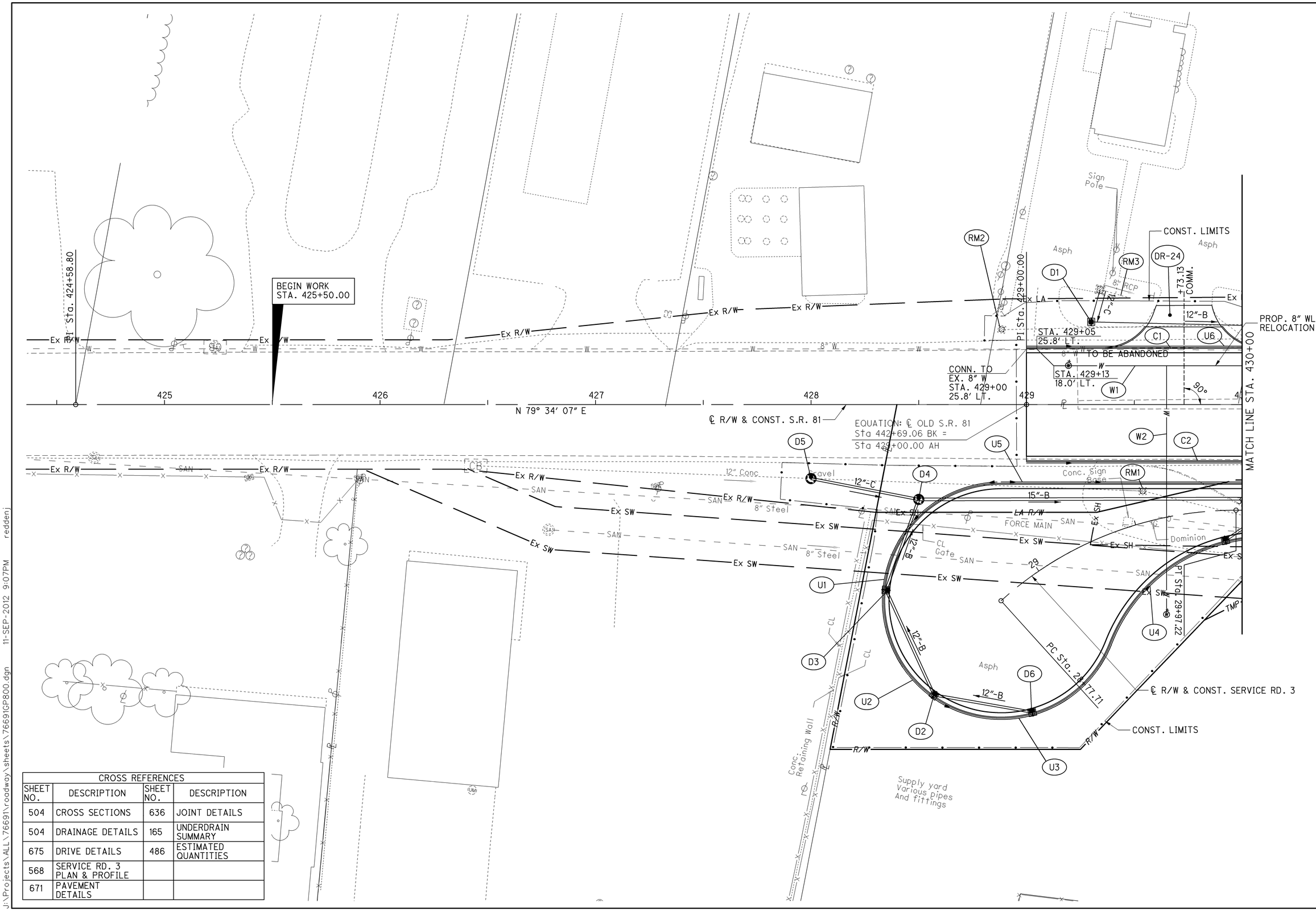

CROSS REFERENCES			
SHEET NO.	DESCRIPTION	SHEET NO.	DESCRIPTION
504	CROSS SECTIONS	636	JOINT DETAILS
504	DRAINAGE DETAILS	165	UNDERDRAIN SUMMARY
675	DRIVE DETAILS	486	ESTIMATED QUANTITIES
568	SERVICE RD. 3 PLAN & PROFILE		
671	PAVEMENT DETAILS		

HORIZONTAL SCALE IN FEET
0 10 20 40

CALCULATED ACF
CHECKED ABS

PLAN - S.R. 81
BEGIN WORK TO STA. 430+00.00

ALL-75-5.53

J:\Projects\ALL\76691\roadway\sheets\76691GP800.dgn 11-SEP-2012 9:07PM reddenj

J:\Projects\ALL\76691\roadway\sheets\76691GF800.dgn 11-SEP-2012 9:07PM reddenj

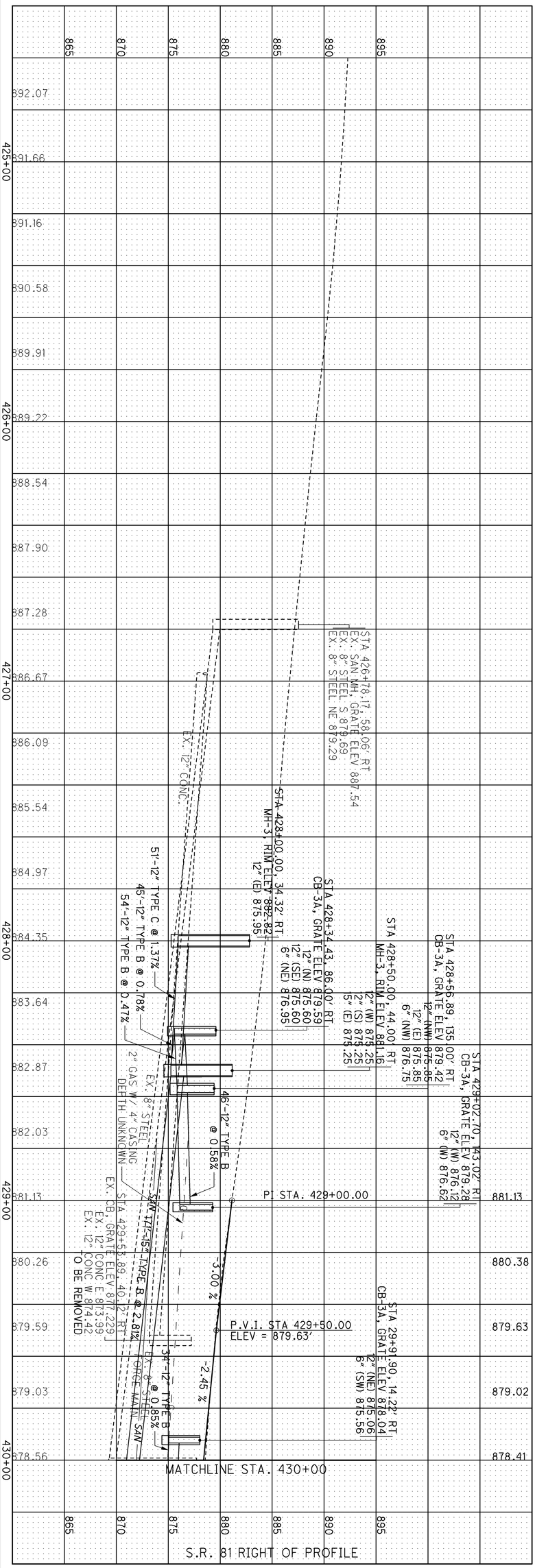

483 / 1224	**ALL-75-5.53**	**PROFILE - S.R. 81** **BEGIN WORK TO STA. 430+00.00**	CALCULATED ACF CHECKED ABS

CURVE SR81-1
P.I.= Sta. 432+41.60
D = 6° 54′ 12″ (LT)
Dc = 3° 00′ 00″
R = 1,909.86′
T = 115.20′
L = 230.11′
E = 3.47′
C = 229.97′
C.B. = N 76° 07′ 01″ E
e_d = NC

CROSS REFERENCES			
SHEET NO.	DESCRIPTION	SHEET NO.	DESCRIPTION
506	CROSS SECTIONS	636	
506	DRAINAGE DETAILS	165	UNDERDRAIN SUMMARY
568	SERVICE RD. 3 PLAN & PROFILE	486	ESTIMATED QUANTITIES

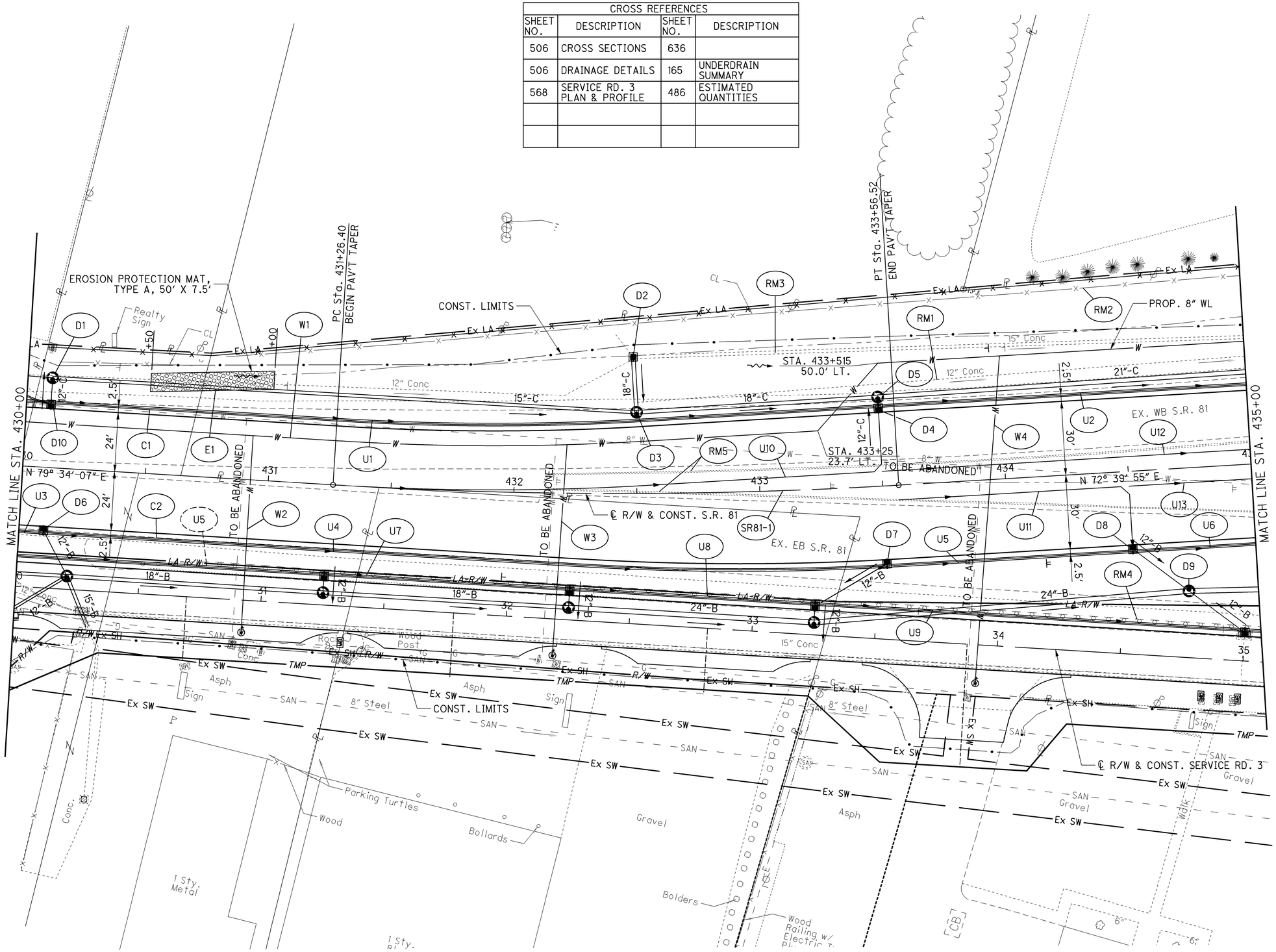

HORIZONTAL SCALE IN FEET
0 10 20 40

CALCULATED ACF
CHECKED ABS

PLAN - S.R. 81
STA. 430+00.00 TO STA. 435+00.00

ALL-75-5.53

484
1224

J:\Projects\ALL\76691\roadway\sheets\76691GP801.dgn 11-SEP-2012 9:07PM reddenj

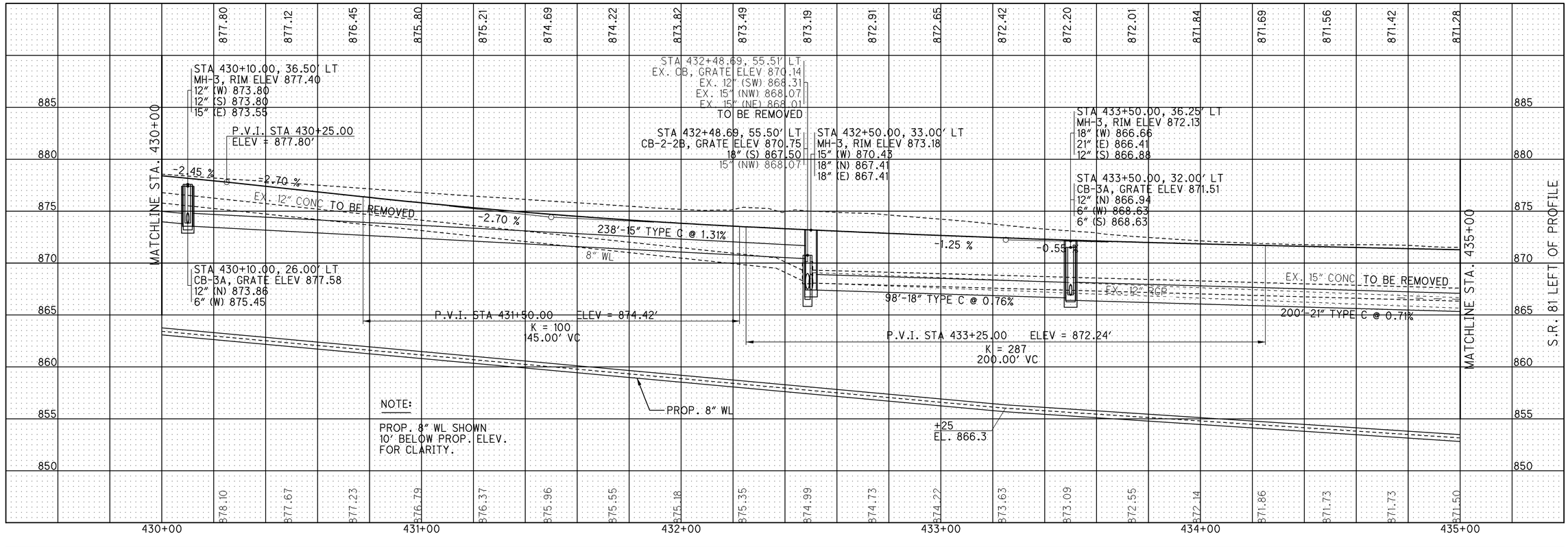

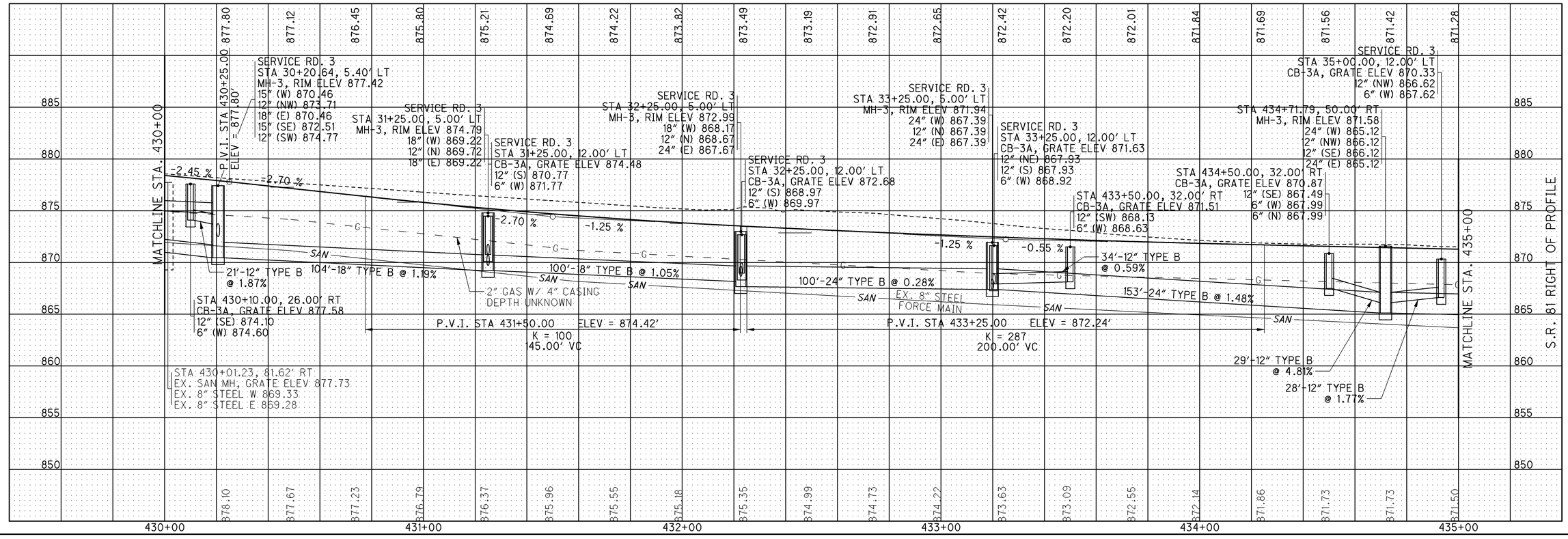

PROFILE - S.R. 81
STA. 430+00.00 TO STA. 435+00.00

CALCULATED ACF
CHECKED ABS

ALL-75-5.53

485
1224

J:\Projects\ALL\76691\roadway\sheets\76691GF801.dgn 11-SEP-2012 9:07PM redden

REF. NO.	SHEET NO.	STATION FROM	STATION TO	SIDE	202 CURB AND GUTTER REMOVED FT	202 PIPE REMOVED, 24" AND UNDER FT	202 GUARDRAIL REMOVED FT	202 ANCHOR ASSEMBLY REMOVED EACH	202 CATCH BASIN REMOVED EACH	202 FENCE REMOVED FT	202 SPECIAL - FILL AND PLUG EXISTING CONDUIT FT	603 12" CONDUIT, TYPE B FT	603 12" CONDUIT, TYPE C FT	603 15" CONDUIT, TYPE B FT	603 15" CONDUIT, TYPE C FT	603 18" CONDUIT, TYPE C FT	603 21" CONDUIT, TYPE C FT	603 24" CONDUIT, TYPE C FT	604 CATCH BASIN, NO. 3A EACH	604 MANHOLE, NO. 3 EACH	604 CATCH BASIN, NO. 2-2B EACH	609 COMBINATION CURB AND GUTTER, TYPE 2, AS PER PLAN FT	638 8" WATER MAIN DUCTILE IRON PIPE ANSI CLASS 52, PUSH-ON JOINTS AND FITTINGS, AS PER PLAN FT	638 2" COPPER SERVICE BRANCH FT	638 2" GATE VALVE AND VALVE BOX EACH	638 8" GATE VALVE AND VALVE BOX EACH	638 WATER WORK, MISC.: 8" CAP AND PLUG EACH	670 DITCH EROSION PROTECTION MAT, TYPE A SQ YD
		SR 81																										
RM1	482	428+00	430+27	RT		230			1																			
RM2	482	428+88	432+49	LT		361			1																			
RM3	482	429+34	429+49	LT							16																	
C1	482	429+00	430+00	LT																		100						
C2	482	429+00	430+00	RT																		100						
D1	482	429+30	430+10	LT								80	15								1							
D2	482	428+57	428+35	RT								54							1									
D3	482	428+35	428+50	RT								45							1									
D4	482	428+50	429+75	RT										171						1								
D5	482	428+00	428+50	RT									51							1								
D6	482	429+03	428+57	RT								46							1									
W1	482	429+00	430+00	LT																			103			1	1	
W2	482	429+65		LT/RT																				116	1			
RM1	484	432+49	435+00	LT							298																	
RM2	484	430+48	435+00	LT						467																		
RM3	484	432+49	436+08	LT		363			1																			
RM4	484	430+49	435+00	RT			457	1																				
RM5	484	432+12	435+00	LT/RT	590																							
C1	484	430+00	435+00	LT																		500						
C2	484	430+00	435+00	RT																		500						
D1	484	430+10	432+50	LT											238						1							
D2	484	432+49	432+50	LT												23						1						
D3	484	432+50	433+50	LT												98					1							
D4	484	433+50	433+50	LT									5						1									
D5	484	433+50	435+50	LT													200				1							
D6	484	430+10	429+75	RT								21							1									
D7	484	433+50	433+21	RT								34							1									
D8	484	434+50	434+72	RT								29							1									
D9	484	434+72	437+38	RT														267			1							
D10	484	430+10	430+10	LT									11						1									
E1	484	430+50	431+00	LT																								42
W1	484	430+00	435+00	LT																			508			1		
W2	484	430+93		LT/RT																				81	1			
W3	484	432+20		LT/RT																				87	1			
W4	484	433+94		LT/RT																				133	1			
TOTALS CARRIED TO ROADWAY SUBSUMMARY					590	954	457	1	3	467	314	309	82	171	238	121	200	267	8	6	2	1200	611	417	4	1	2	42

CALCULATED SJG
CHECKED ACF

ESTIMATED QUANTITIES

ALL-75-5.53

486
1224

J:\Projects\ALL\76691\roadway\sheets\76691GQ801.dgn 11-SEP-2012 9:07PM reddenj

EROSION PROTECTION MAT, TYPE A, 21' X 7.5'

EROSION PROTECTION MAT, TYPE A, 67' X 11'

CONST. LIMITS

PROP. 8" WL

PROP. 6" WL

℄ R/W & CONST. S.R. 81

℄ R/W & CONST. SERVICE RD. 3

℄ R/W & CONST. NEUBRECHT RD.

PROP. HYDRANT +16.80, 111.8' RT.

S.R. 81 STA. 438+23.91= NEUBRECHT RD. STA. 11+18.04

NEUBRECHT RD. STA. 9+99.01= SERVICE RD. 3 STA. 38+20.23

PT Sta. 12+89.62

PC Sta. 11+46.49

STA. 438+58 50.0' LT.

STA. 438+74 33.2' LT.

STA. 438+74 53.7' RT.

STA. 438+98 76.9' RT.

N 72° 39' 55" E

N 79° 34' 07" E

N 10° 33' 34" W

TO BE ABANDONED

EX. W.B. S.R. 81

EX. E.B. S.R. 81

EX. SERVICE ROAD

MATCH LINE STA. 435+00

MATCH LINE STA. 440+00

CROSS REFERENCES			
SHEET NO.	DESCRIPTION	SHEET NO.	DESCRIPTION
509	CROSS SECTIONS	572	SERVICE RD. 3 PLAN & PROFILE
510	DRAINAGE DETAILS	636	JOINT DETAILS
856	SIGNAL PLAN	165	UNDERDRAIN SUMMARY
617	INTERSECTION DETAIL	489	ESTIMATED QUANTITIES
559	NEUBRECHT RD. PLAN & PROFILE		

HORIZONTAL SCALE IN FEET

CALCULATED ACF CHECKED ABS

PLAN - S.R. 81

STA. 435+00.00 TO STA. 440+00.00

ALL-75-5.53

487
1224

J:\Projects\ALL\76691\roadway\sheets\76691GP802.dgn 11-SEP-2012 9:07PM reddenj

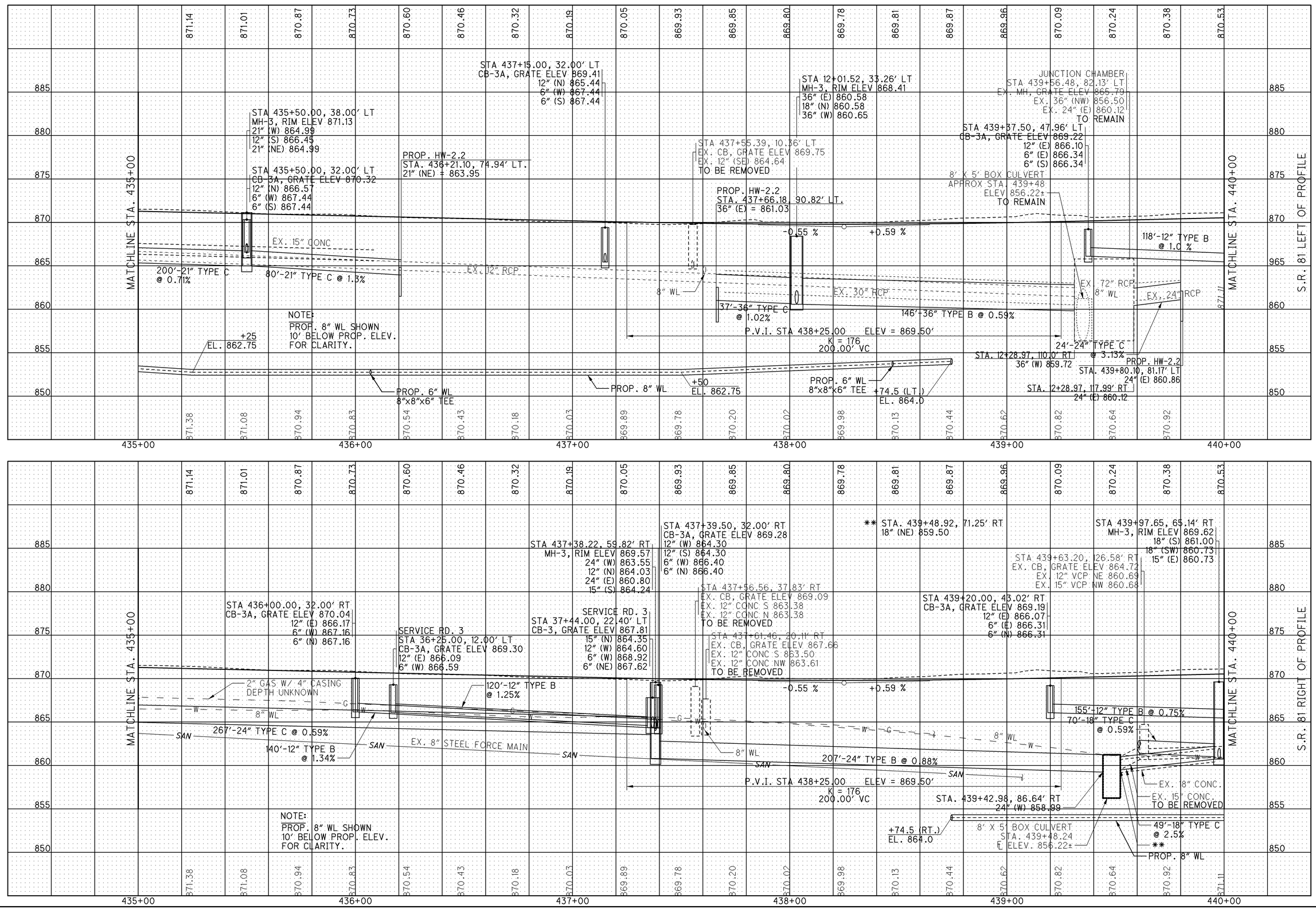

PROFILE - S.R. 81 STA. 435+00.00 TO STA. 440+00.00

CALCULATED ACF
CHECKED ABS

ALL-75-5.53

488
1224

J:\Projects\ALL\76691\roadway\sheets\76691GF802.dgn 11-SEP-2012 9:07PM reddenj

REF. NO.	SHEET NO.	STATION FROM	STATION TO	SIDE	202 CURB AND GUTTER REMOVED FT	202 PIPE REMOVED, 24" AND UNDER FT	202 GUARDRAIL REMOVED FT	202 ANCHOR ASSEMBLY REMOVED EACH	202 CATCH BASIN REMOVED EACH	202 FENCE REMOVED FT	202 SPECIAL - FILL AND PLUG EXISTING CONDUIT FT	601 TIED CONCRETE BLOCK MAT, TYPE 3 SQ YD	602 CONCRETE MASONRY CU YD	603 12" CONDUIT, TYPE B FT	603 12" CONDUIT, TYPE C FT	603 18" CONDUIT, TYPE C FT	603 21" CONDUIT, TYPE C FT	603 24" CONDUIT, TYPE B FT	603 24" CONDUIT, TYPE C FT	604 CATCH BASIN, NO. 3A EACH	604 MANHOLE, NO. 3 EACH	609 COMBINATION CURB AND GUTTER, TYPE 2, AS PER PLAN FT	638 6" WATER MAIN DUCTILE IRON PIPE ANSI CLASS 52, PUSH-ON JOINTS AND FITTINGS, AS PER PLAN FT	638 8" WATER MAIN DUCTILE IRON PIPE ANSI CLASS 52, PUSH-ON JOINTS AND FITTINGS, AS PER PLAN FT	638 2" COPPER SERVICE BRANCH FT	638 2" GATE VALVE AND VALVE BOX EACH	638 6" GATE VALVE AND VALVE BOX EACH	638 6" FIRE HYDRANT EACH	670 DITCH EROSION PROTECTION MAT, TYPE A SQ YD
		SR 81																											
RM1	487	435+00	438+02	LT						312																			
RM2	487	438+90	440+00	RT			111	1																					
RM3	487	435+00	437+97	RT/LT	616																								
RM4	487	438+39	440+00	RT/LT	359																								
RM5	487	435+00	437+54	RT			256	1																					
RM6	487	435+00	439+50	LT		20					460																		
RM7	487	437+55	437+61	LT		31			1																				
RM8	487	437+61	437+57	RT		18			1																				
RM9	487	437+57	437+66	RT		93			1																				
RM10	487	440+00		LT/RT		61																							
RM11	487	438+89	440+00	LT						111																			
RM12	487	439+49	439+98	RT		50			1																				
C1	487	435+00	437+71	RT																		289							
C2	487	435+00	437+56	LT																		256							
C3	487	439+20	440+00	LT																		80							
C4	487	438+81	440+00	RT																		143							
D1	487	435+50	435+50	LT											6						1								
D2	487	435+50	436+21	LT								4	0.4				80					1							
D3	487	437+15	437+15	LT									0.2		48						1								
D4	487	436+00	437+40	RT										140							1								
D5	487	437+40	437+38	RT											28						1								
D6	487	437+38	439+43	RT														207				1							
D7	487	439+20	440+75	RT										155							1								
D8	487	439+37	440+55	LT										118							1								
D9	487	439+80	439+56	LT		24							0.4						24										
D10	487	439+49	439+98	RT												49						1							
E1	487	436+00	436+20	LT																									18
E2	487	437+00	437+66	LT																									82
W1	487	435+00	440+00	LT/RT																			603						
W2	487	436+07		LT/RT																			168			2	1		
W3	487	436+90		LT/RT																				168	1				
TOTALS CARRIED TO ROADWAY SUBSUMMARY					975	297	367	2	4	423	460	4	1.0	413	82	49	80	207	24	6	3	768	168	603	168	1	2	1	100

CALCULATED SJG
CHECKED ACF

ESTIMATED QUANTITIES

ALL-75-5.53

489
1224

J:\Projects\ALL\76691\roadway\sheets\76691GQ802.dgn 11-SEP-2012 9:07PM reddenj

CROSS REFERENCES			
SHEET NO.	DESCRIPTION	SHEET NO.	DESCRIPTION
513	CROSS SECTIONS	637	JOINT DETAILS
513	DRAINAGE DETAILS	165	UNDERDRAIN SUMMARY
572	SERVICE RD. 3 PLAN & PROFILE	492	ESTIMATED QUANTITIES

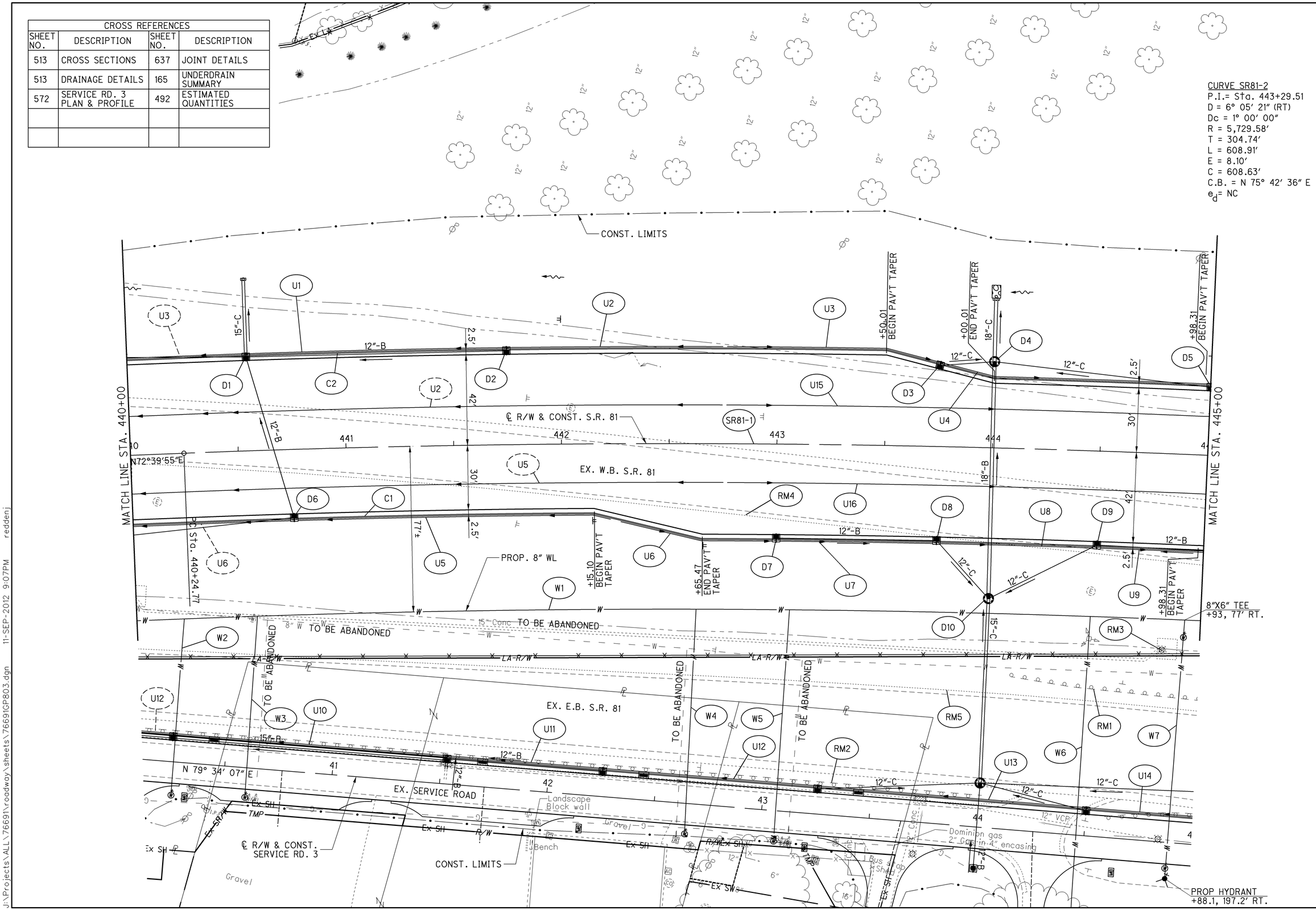

HORIZONTAL SCALE IN FEET 0 10 20 40

CALCULATED ACF
CHECKED ABS

PLAN - S.R. 81
STA. 440+00.00 TO STA. 445+00.00

ALL-75-5.53

J:\Projects\ALL\76691\roadway\sheets\76691GP803.dgn 11-SEP-2012 9:07PM reddenj

J:\Projects\ALL\76691\roadway\sheets\76691GF803.dgn 11-SEP-2012 9:07PM reddenj

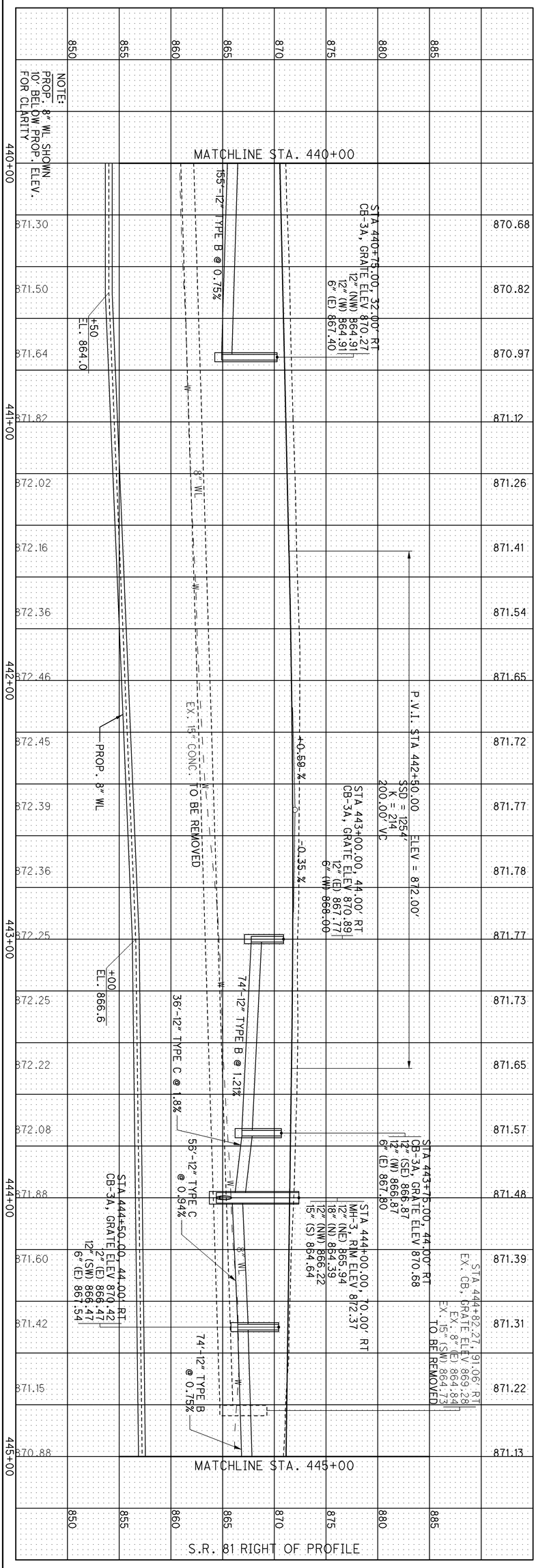

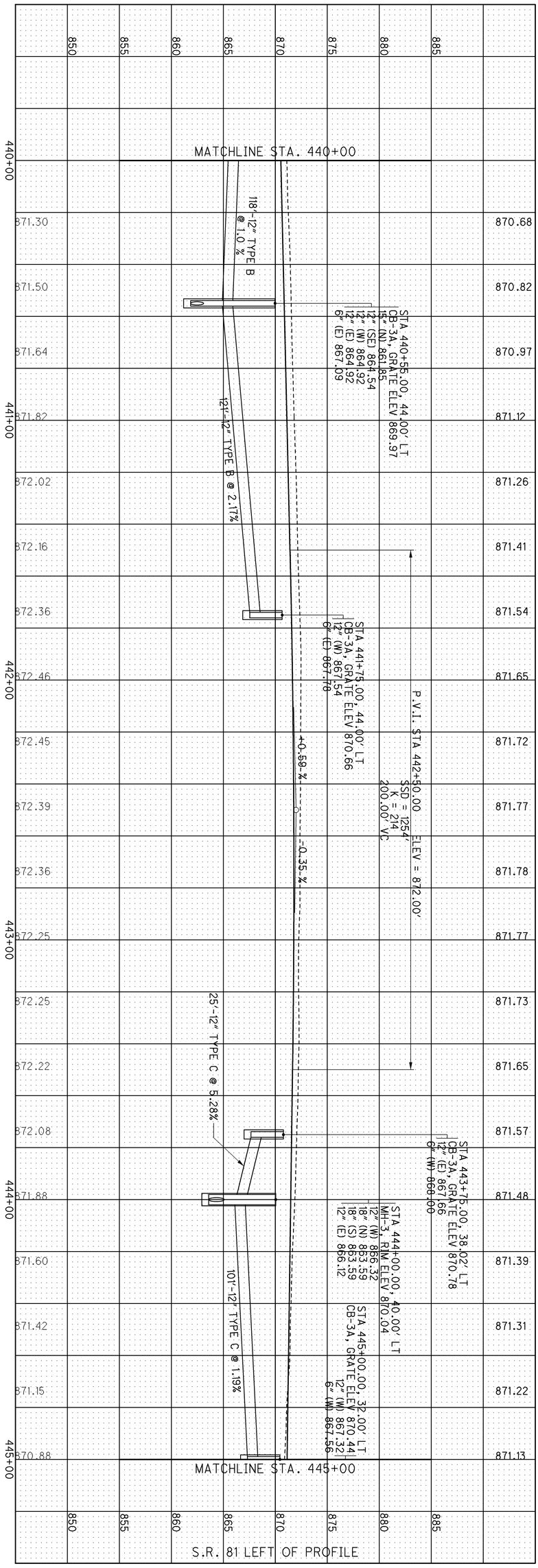

491 / 1224	ALL-75-5.53	PROFILE - S.R. 81 STA. 440+00.00 TO STA. 445+00.00	CALCULATED ACF CHECKED ABS

REF. NO.	SHEET NO.	STATION FROM	STATION TO	SIDE	202 CURB AND GUTTER REMOVED	202 GUARDRAIL REMOVED	202 ANCHOR ASSEMBLY REMOVED	202 CATCH BASIN REMOVED	202 SPECIAL - FILL AND PLUG EXISTING CONDUIT	601 TIED CONCRETE BLOCK MAT, TYPE 3	602 CONCRETE MASONRY	603 12" CONDUIT, TYPE B	603 12" CONDUIT, TYPE C	603 15" CONDUIT, TYPE C	603 18" CONDUIT, TYPE B	603 18" CONDUIT, TYPE C	604 CATCH BASIN, NO. 3A	604 MANHOLE, NO. 3	609 COMBINATION CURB AND GUTTER, TYPE 2, AS PER PLAN	638 6" WATER MAIN DUCTILE IRON PIPE ANSI CLASS 52, PUSH-ON JOINTS AND FITTINGS, AS PER PLAN	638 8" WATER MAIN DUCTILE IRON PIPE ANSI CLASS 52, PUSH-ON JOINTS AND FITTINGS, AS PER PLAN	638 3/4" COPPER SERVICE BRANCH	638 2" COPPER SERVICE BRANCH	638 2" GATE VALVE AND VALVE BOX	638 6" GATE VALVE AND VALVE BOX	638 6" FIRE HYDRANT				
					FT	FT	EACH	EACH	FT	SQ YD	CU YD	FT	FT	FT	FT	FT	EACH	EACH	FT	FT	FT	FT	FT	EACH	EACH	EACH				
		SR 81																												
RM1	490	444+11	445+79	RT		87	1																							
RM2	490	440+00	443+99	RT		392	1																							
RM3	490	439+99	444+82	RT				1	482																					
RM4	490	440+00	445+00	RT	500																									
RM5	490	440+00	445+00	RT	491																									
C1	490	440+00	445+00	RT															499											
C2	490	440+00	445+00	LT															505											
D1	490	440+55	440+55	LT							0.3			37			1													
D2	490	441+75	440+55	LT								121					1													
D3	490	443+75	444+00	LT									25				1													
D4	490	444+00	444+00	LT						3	0.3					30		1												
D5	490	445+00	444+00	LT									101				1													
D6	490	440+75	440+00	RT								78					1													
D7	490	443+00	443+75	RT								74					1													
D8	490	443+75	444+00	RT									36				1													
D9	490	444+50	444+00	RT									56				1													
D10	490	444+00	444+00	RT											110			1												
W1	490	440+00	445+00	RT																	494									
W2	490	440+22	440+12	RT																			82	1						
W3	490	440+56	440+47	RT																			84	1						
W4	490	442+63	442+57	RT																			104	1						
W5	490	443+07	443+00	RT																		108								
W6	490	448+48	444+43	RT																		147								
W7	490	444+93	444+88	RT																120					2	1				
TOTALS CARRIED TO ROADWAY SUBSUMMARY					991	479	2	1	482	3	0.6	273	218	37	110	30	8	2	1004	120	494	255	270	3	2	1				

CALCULATED SJG
CHECKED ACF

ESTIMATED QUANTITIES

ALL-75-5.53

492
1224

J:\Projects\ALL\76691\roadway\sheets\76691GQ803.dgn 11-SEP-2012 9:07PM reddenj

CURVE SR81-2
P.I.= Sta. 443+29.51
D = 6° 05′ 21″ (RT)
Dc = 1° 00′ 00″
R = 5,729.58′
T = 304.74′
L = 608.91′
E = 8.10′
C = 608.63′
C.B. = N 75° 42′ 36″ E
e_d = NC

CROSS REFERENCES			
SHEET NO.	DESCRIPTION	SHEET NO.	DESCRIPTION
516	CROSS SECTIONS	637	JOINT DETAILS
518	DRAINAGE DETAILS	611	GRADING PLANS
859	SIGNAL PLANS	904-905	LANDSCAPING PLANS
618	INTERSECTION DETAIL	166	UNDERDRAIN SUMMARY
573	SERVICE RD. 3 PLAN & PROFILE	495	ESTIMATED QUANTITIES
896	LIGHTING PLAN		

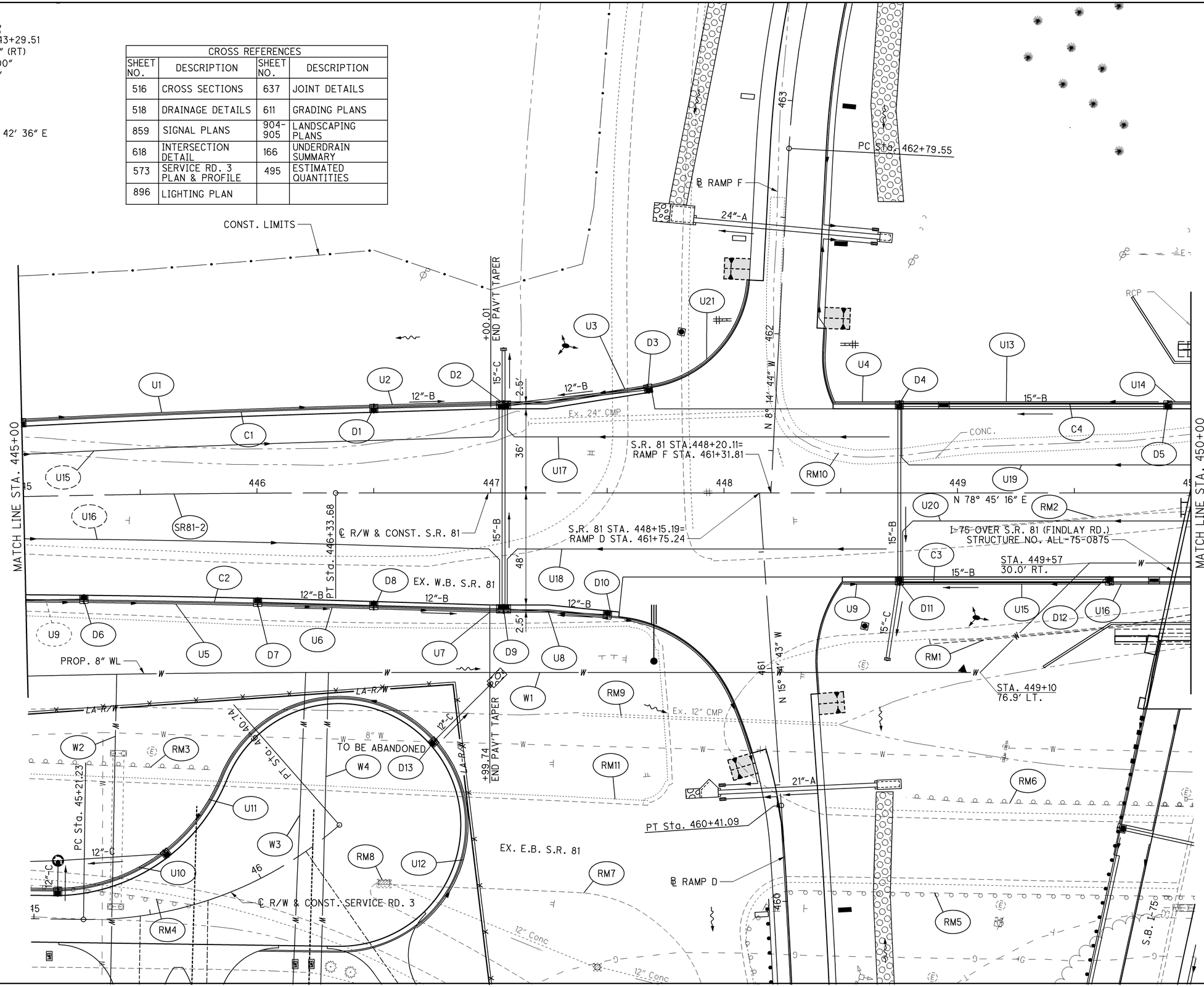

J:\Projects\ALL\76691\roadway\sheets\76691GP804.dgn 11-SEP-2012 9:07PM redderj

N

0 10 20 40 HORIZONTAL SCALE IN FEET

CALCULATED ACF CHECKED ABS

PLAN - S.R. 81
STA. 445+00.00 TO STA. 450+00.00

ALL-75-5.53

493
1224

PROFILE - S.R. 81

STA. 445+00.00 TO STA. 450+00.00

CALCULATED ACF
CHECKED ABS

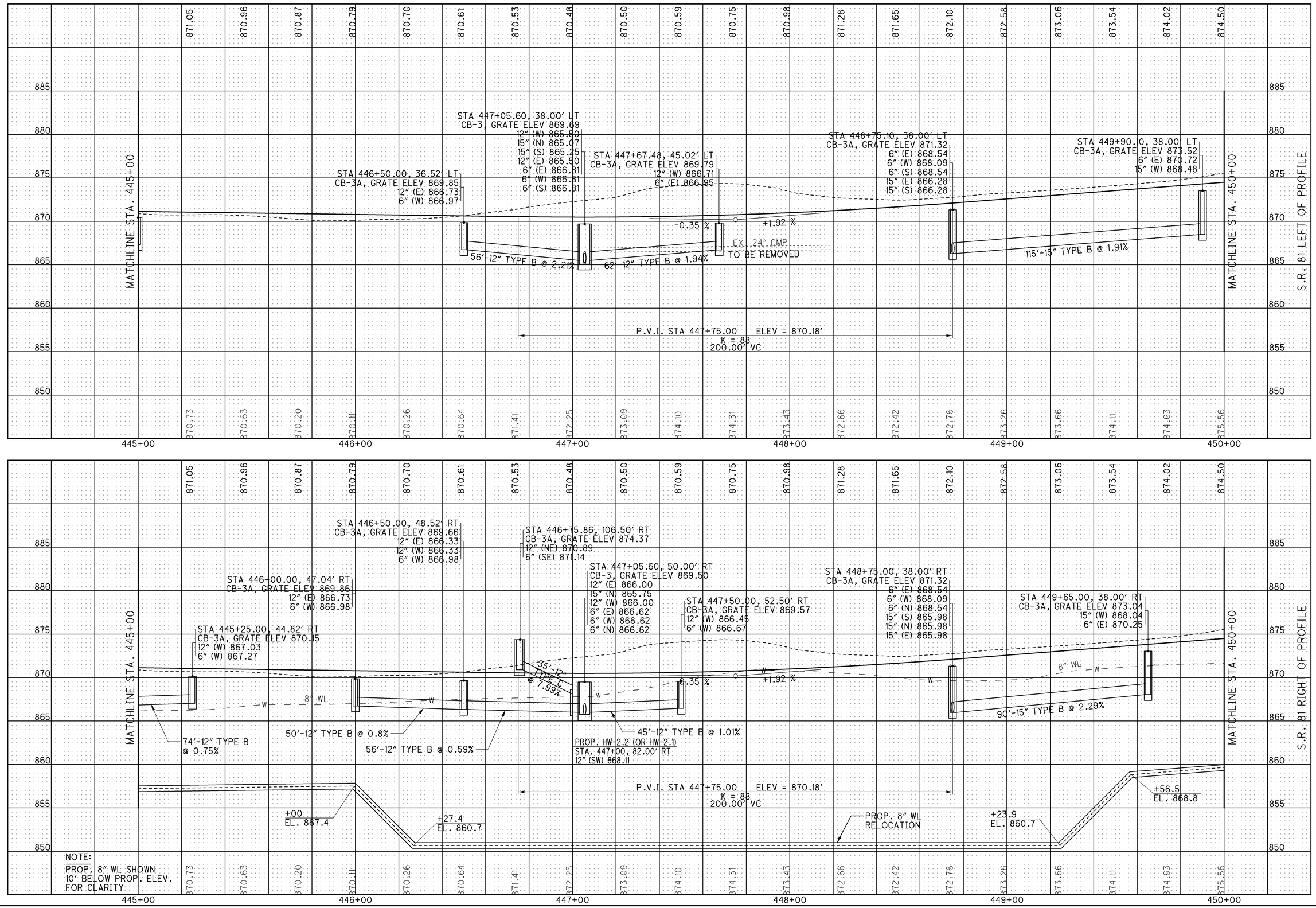

ALL-75-5.53

494
1224

J:\Projects\ALL\76691\roadway\sheets\76691GF804.dgn 11-SEP-2012 9:07PM reddenj

REF. NO.	SHEET NO.	STATION FROM	STATION TO	SIDE	202 CONCRETE BARRIER REMOVED FT	202 CURB AND GUTTER REMOVED FT	202 CONCRETE SLOPE PROTECTION REMOVED SQ YD	202 PIPE REMOVED, 24" AND UNDER FT	202 CATCH BASIN REMOVED EACH	202 GUARDRAIL REMOVED FT	202 ANCHOR ASSEMBLY REMOVED EACH	601 TIED CONCRETE BLOCK MAT, TYPE 3 SQ YD	602 CONCRETE MASONRY CU YD	603 12" CONDUIT, TYPE B FT	603 12" CONDUIT, TYPE C FT	603 15" CONDUIT, TYPE B FT	603 15" CONDUIT, TYPE C FT	604 CATCH BASIN, NO. 3 EACH	604 CATCH BASIN, NO. 3A EACH	609 COMBINATION CURB AND GUTTER, TYPE 2, AS PER PLAN FT	609 CURB, TYPE 6 FT	638 8" WATER MAIN DUCTILE IRON PIPE ANSI CLASS 52, PUSH-ON JOINTS AND FITTINGS, AS PER PLAN FT	638 3/4" COPPER SERVICE BRANCH FT
		SR 81																					
RM1	493	448+88	450+00	RT	112																		
RM2	493	448+97	450+00	RT	105																		
RM3	493	445+00	445+79	RT						79	1												
RM4	493	445+00	445+74	RT						73	1												
RM5	493	448+09	450+00	RT						209													
RM6	493	448+78	450+00	RT						122	1												
RM7	493	446+49	447+78	RT		503																	
RM8	493	446+54	447+46	RT				95	1														
RM9	493	447+40	448+49	RT				109															
RM10	493	448+20	450+15	LT			194.3																
RM11	493	445+00	447+78	RT		610																	
C1	493	445+00	448+11	LT																270	67		
C2	493	445+00	448+14	RT																252	88		
C3	493	448+40	450+00	RT																150	50		
C4	493	448+43	450+00	LT																153	33.1		
D1	493	446+50	447+06	LT										56					1				
D2	493	447+06	447+06	LT									0.3				24	1					
D3	493	447+68	447+06	LT										62					1				
D4	493	448+75	448+75	LT												75			1				
D5	493	449+90	448+75	LT												115			1				
D6	493	445+25	444+50	RT										74					1				
D7	493	446+00	446+50	RT										49					1				
D8	493	446+50	447+06	RT										56					1				
D9	493	447+06	447+06	RT												87		1					
D10	493	447+50	447+06	RT										45					1				
D11	493	448+75	448+70	RT									0.3				34		1				
D12	493	449+65	448+75	RT												90			1				
D13	493	446+76	447+00	RT								4	0.2		35				1				
W1	493	445+00	450+00	RT																		518	
W2	493	445+39		RT																			149
W3	493	446+21		RT																			152
W4	493	446+31		RT																			152
TOTALS CARRIED TO ROADWAY SUBSUMMARY					217	1113	194.3	204	1	483	3	4	0.7	342	35	367	58	2	11	825	238.1	518	453

CALCULATED SJG
CHECKED ACF

ESTIMATED QUANTITIES

ALL-75-5.53

495
1224

J:\Projects\ALL\76691\roadway\sheets\76691G0804.dgn 11-SEP-2012 9:08PM reddenj

CURVE SR81-3
P.I.= Sta. 453+46.45
D = 16° 35′ 17″ (RT)
Dc = 5° 30′ 00″
R = 1,041.74′
T = 151.86′
L = 301.60′
E = 11.01′
C = 300.55′
C.B. = N 87° 02′ 54″ E
e_d= NC

CROSS REFERENCES			
SHEET NO.	DESCRIPTION	SHEET NO.	DESCRIPTION
519	CROSS SECTIONS	896	LIGHTING PLAN
521	DRAINAGE DETAILS	638	JOINT DETAILS
694	CULVERT DETAIL	166	UNDERDRAIN SUMMARY
619	INTERSECTION DETAIL	498	ESTIMATED QUANTITIES
611	GRADING PLAN	862	SIGNAL DETAILS
904-905	LANDSCAPE PLAN		

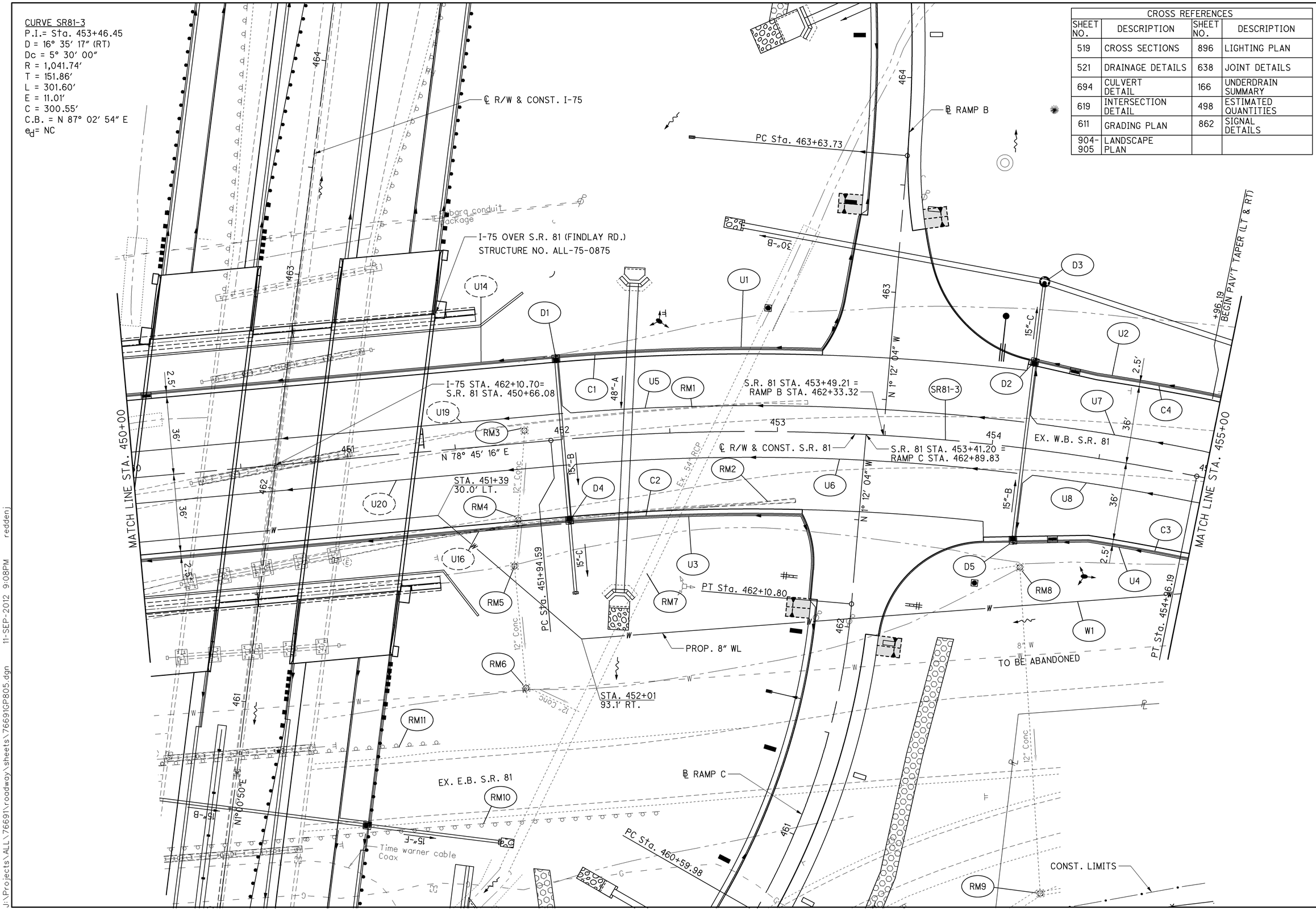

HORIZONTAL SCALE IN FEET
0 10 20 40

CALCULATED ACF
CHECKED ABS

PLAN - S.R. 81
STA. 450+00.00 TO STA. 455+00.00

ALL-75-5.53

J:\Projects\ALL\76691\roadway\sheets\76691GP805.dgn 11-SEP-2012 9:08PM reddenj

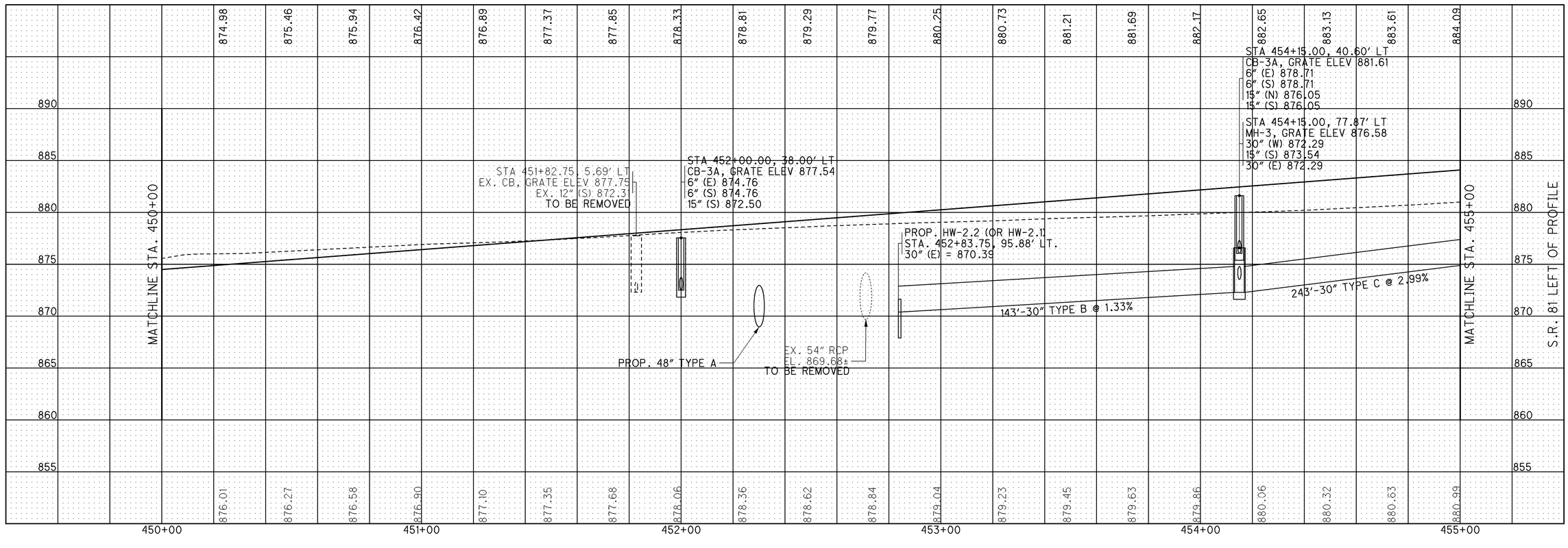

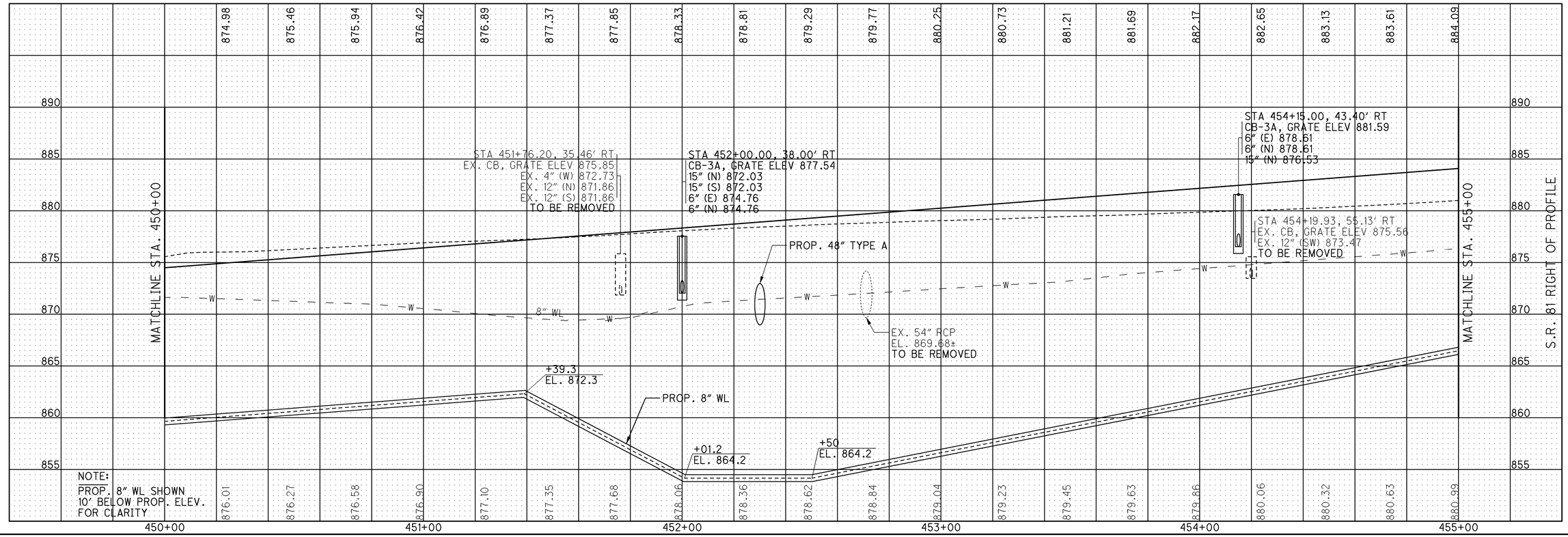

CALCULATED ACF
CHECKED ABS

PROFILE - S.R. 81

STA. 450+00.00 TO STA. 455+00.00

ALL-75-5.53

497
1224

J:\Projects\ALL\76691\roadway\sheets\76691GF805.dgn 11-SEP-2012 9:08PM reddenj

REF. NO.	SHEET NO.	STATION FROM	STATION TO	SIDE	202 CONCRETE BARRIER REMOVED FT	202 PIPE REMOVED, 24" AND UNDER FT	202 PIPE REMOVED, OVER 24" FT	202 GUARDRAIL REMOVED FT	202 CATCH BASIN REMOVED EACH	202 SPECIAL - FILL AND PLUG EXISTING CONDUIT FT	601 TIED CONCRETE BLOCK MAT, TYPE 3 SQ YD	602 CONCRETE MASONRY CU YD	603 15" CONDUIT, TYPE B FT	603 15" CONDUIT, TYPE C FT	603 30" CONDUIT, TYPE B FT	604 CATCH BASIN, NO. 3A EACH	604 MANHOLE, NO. 3 EACH	609 COMBINATION CURB AND GUTTER, TYPE 2, AS PER PLAN FT	609 CURB, TYPE 6 FT	638 8" WATER MAIN DUCTILE IRON PIPE ANSI CLASS 52, PUSH-ON JOINTS AND FITTINGS, AS PER PLAN FT
		SR 81																		
RM1	496	450+00	453+14	LT	314															
RM2	496	450+00	453+09	RT	309															
RM3	496	451+83	451+76	LT/RT		40			1											
RM4	496	451+76	451+73	RT		20			1											
RM5	496	451+73	451+73	RT		55			1											
RM6	496	451+73	451+97	RT		26			1											
RM7	496	452+94	451+55	LT/RT			179			101										
RM8	496	454+20	454+55	RT		162			1											
RM9	496	454+55	452+96	RT			151		1											
RM10	496	450+00	452+39	RT				239	1											
RM11	496	450+00	451+31	RT				131	1											
C1	496	450+00	453+34	LT														324	67	
C2	496	450+00	453+18	RT														308	40	
C3	496	453+53	455+00	RT														91	72	
C4	496	453+61	455+00	LT														97	84	
D1	496	452+00	452+00	LT									75			1				
D2	496	454+15	454+15	LT										38		1				
D3	496	454+15	452+84	LT							4	0.5			143		1			
D4	496	452+00	452+00	RT								0.4		34		1				
D5	496	454+15	454+14	RT									83			1				
W1	496	450+00	455+00	RT																507
TOTALS CARRIED TO ROADWAY SUBSUMMARY					623	303	330	370	8	101	4	0.9	158	72	143	4	1	820	263	507

CALCULATED SJG
CHECKED ACF

ESTIMATED QUANTITIES

ALL-75-5.53

498
1224

J:\Projects\ALL\76691\roadway\sheets\76691G0805.dgn 11-SEP-2012 9:08PM reddenj

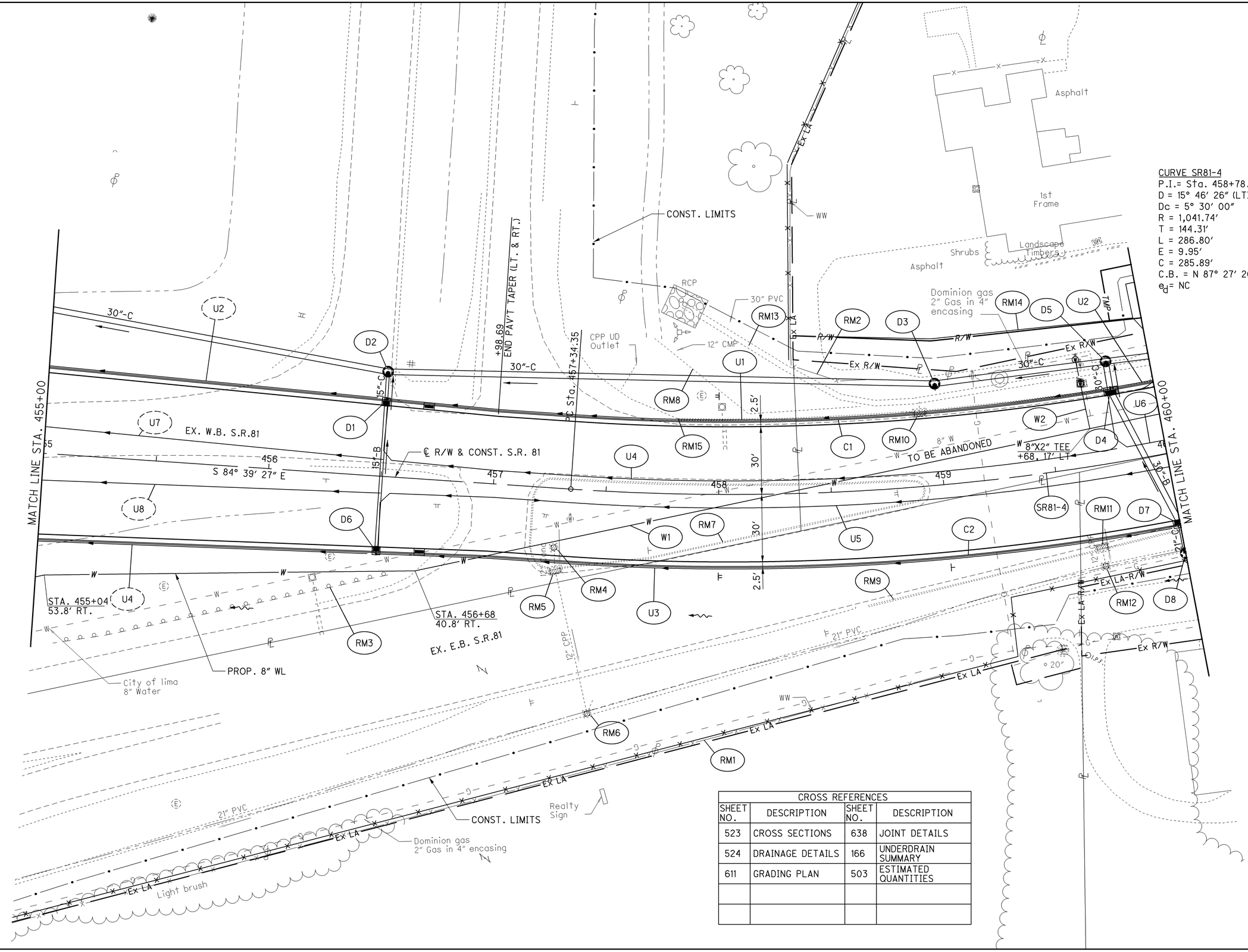

CURVE SR81-4
P.I.= Sta. 458+78.67
D = 15° 46′ 26″ (LT)
Dc = 5° 30′ 00″
R = 1,041.74′
T = 144.31′
L = 286.80′
E = 9.95′
C = 285.89′
C.B. = N 87° 27′ 20″ E
e_d = NC

CROSS REFERENCES			
SHEET NO.	DESCRIPTION	SHEET NO.	DESCRIPTION
523	CROSS SECTIONS	638	JOINT DETAILS
524	DRAINAGE DETAILS	166	UNDERDRAIN SUMMARY
611	GRADING PLAN	503	ESTIMATED QUANTITIES

HORIZONTAL SCALE IN FEET
0 10 20 40

CALCULATED ACF
CHECKED ABS

PLAN - S.R. 81
STA. 455+00.00 TO STA. 460+00.00

ALL-75-5.53

499
1224

J:\Projects\ALL\76691\roadway\sheets\76691GP806.dgn 18-DEC-2012 1:20PM coffield

J:\Projects\ALL\76691\roadway\sheets\76691GF806.dgn 11-SEP-2012 9:08PM reddenj

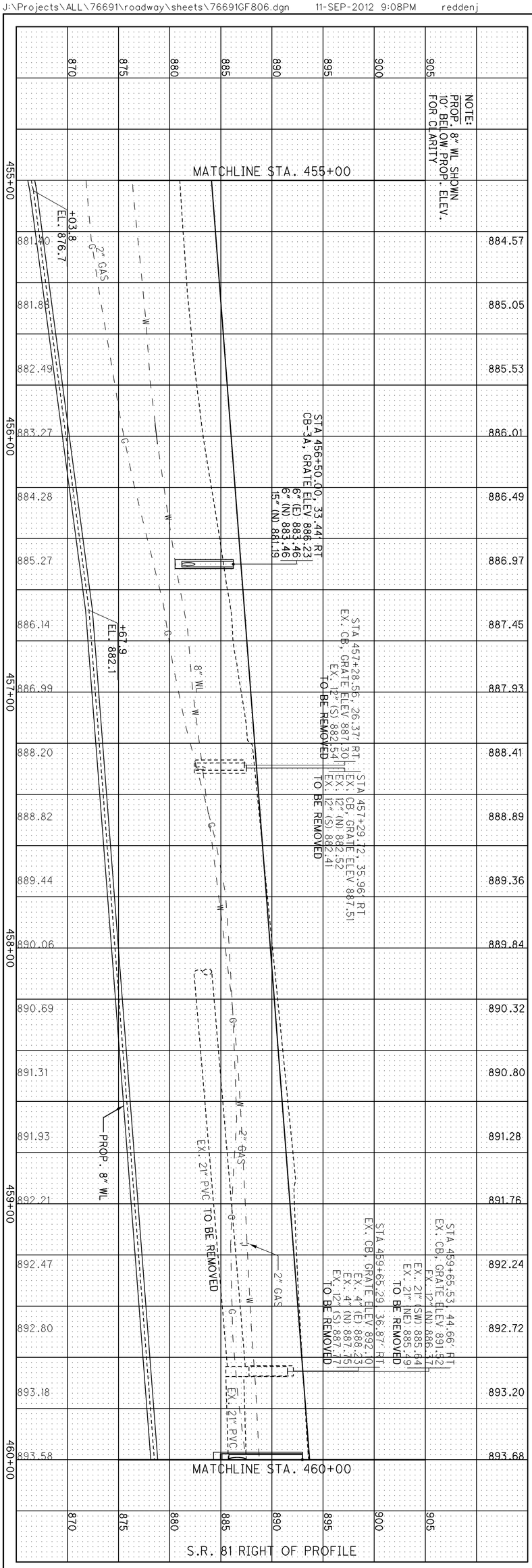

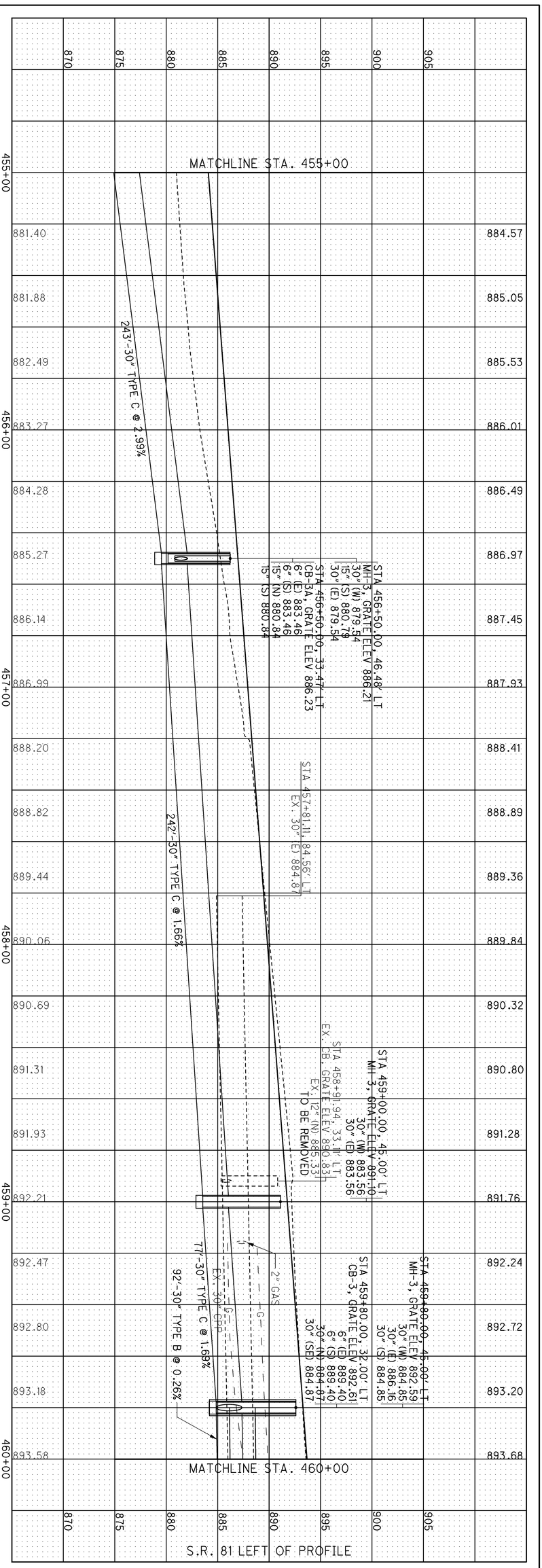

500 / 1224	ALL-75-5.53	PROFILE - S.R. 81 STA. 455+00.00 TO STA. 460+00.00	CALCULATED ACF CHECKED ABS

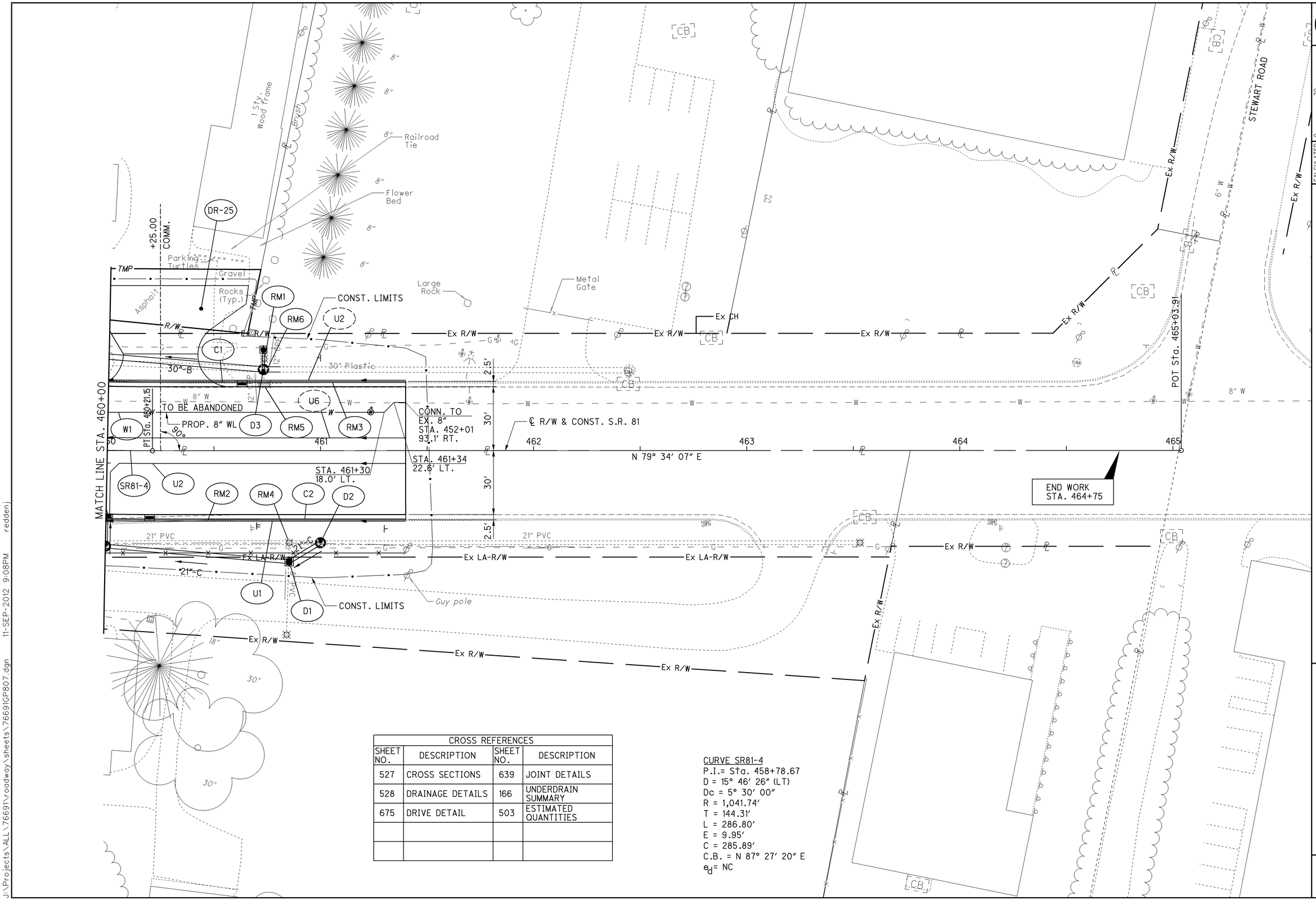

CROSS REFERENCES			
SHEET NO.	DESCRIPTION	SHEET NO.	DESCRIPTION
527	CROSS SECTIONS	639	JOINT DETAILS
528	DRAINAGE DETAILS	166	UNDERDRAIN SUMMARY
675	DRIVE DETAIL	503	ESTIMATED QUANTITIES

CURVE SR81-4
P.I.= Sta. 458+78.67
D = 15° 46' 26" (LT)
Dc = 5° 30' 00"
R = 1,041.74'
T = 144.31'
L = 286.80'
E = 9.95'
C = 285.89'
C.B. = N 87° 27' 20" E
e_d= NC

HORIZONTAL SCALE IN FEET
0 10 20 40

CALCULATED ACF
CHECKED ABS

PLAN - S.R. 81
STA. 460+00.00 TO END WORK

ALL-75-5.53

J:\Projects\ALL\76691\roadway\sheets\76691GP807.dgn 11-SEP-2012 9:08PM reddenj

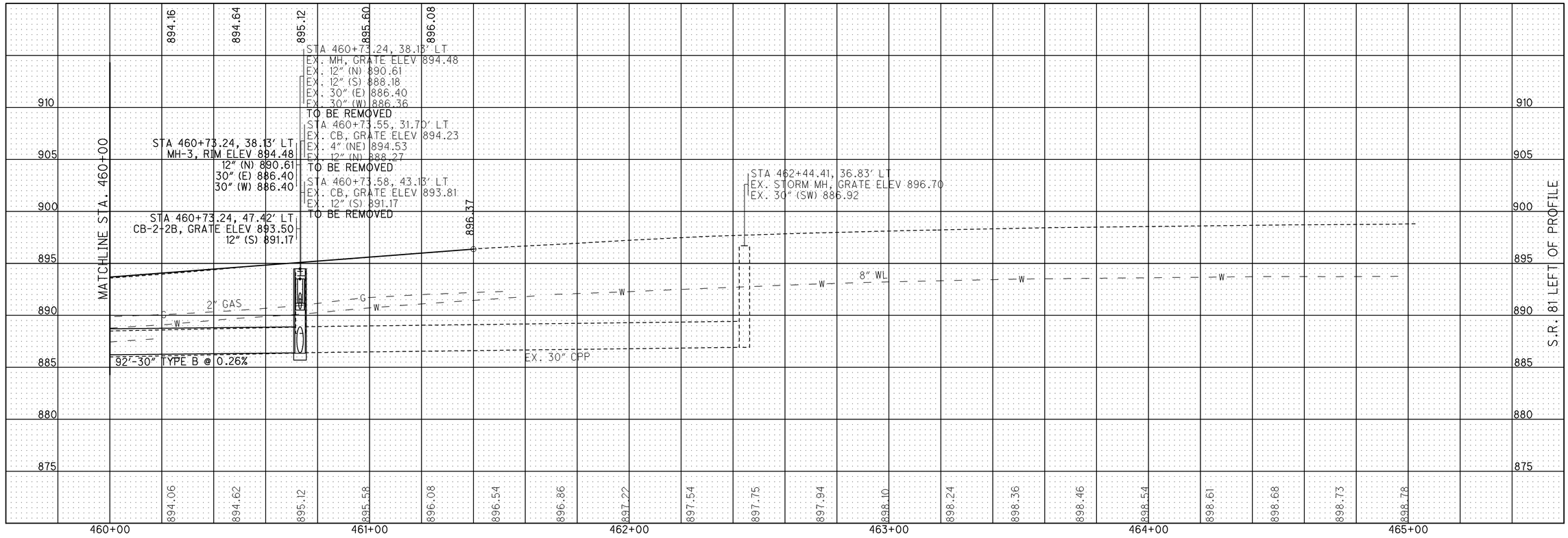

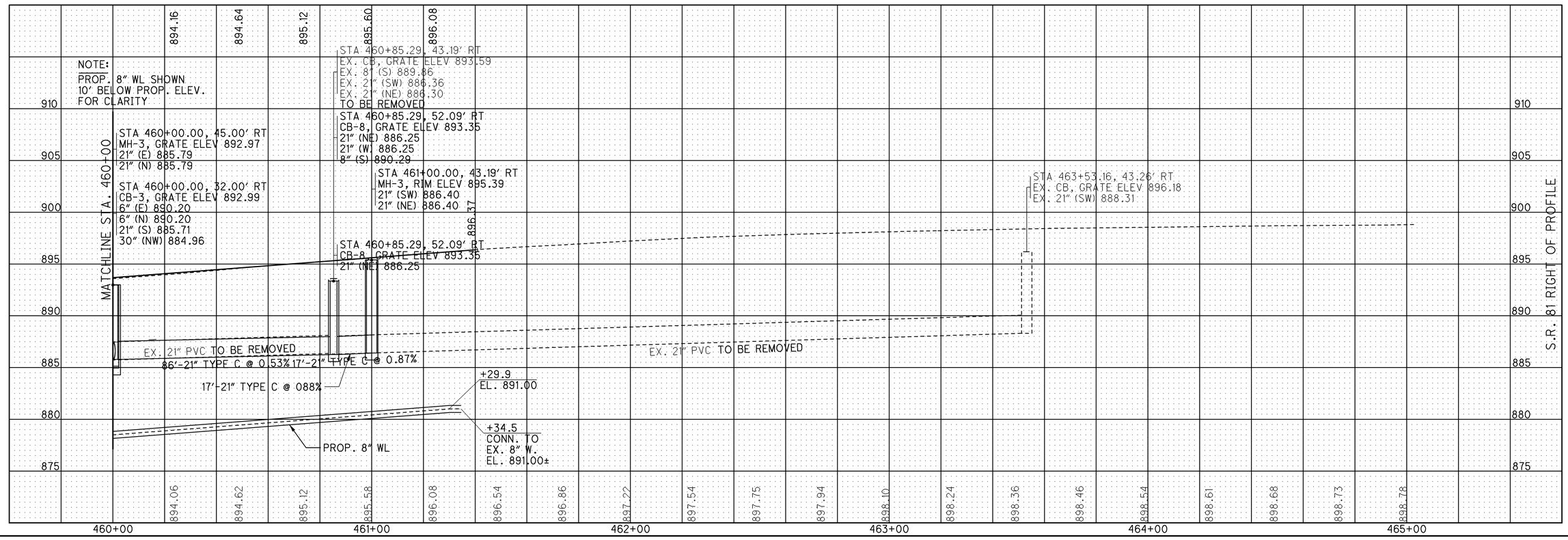

CALCULATED ACF
CHECKED abs

PROFILE - S.R. 81

STA. 460+00.00 TO END WORK

ALL-75-5.53

502
1224

J:\Projects\ALL\76691\roadway\sheets\76691GF807.dgn 11-SEP-2012 9:08PM reddenj

REF. NO.	SHEET NO.	STATION FROM	STATION TO	SIDE	202 CURB AND GUTTER REMOVED FT	202 CONCRETE SLOPE PROTECTION REMOVED SQ YD	202 PIPE REMOVED, 24" AND UNDER FT	202 PIPE REMOVED, OVER 24" FT	202 GUARDRAIL REMOVED FT	202 ANCHOR ASSEMBLY REMOVED EACH	202 MANHOLE REMOVED EACH	202 CATCH BASIN REMOVED EACH	202 FENCE REMOVED FT	252 FULL DEPTH PAVEMENT SAWING FT	603 12" CONDUIT, TYPE C FT	603 15" CONDUIT, TYPE C FT	603 21" CONDUIT, TYPE C FT	603 30" CONDUIT, TYPE B FT	603 30" CONDUIT, TYPE C FT	604 CATCH BASIN, NO. 3A EACH	604 CATCH BASIN, NO. 8 EACH	604 CATCH BASIN, NO. 2-2B EACH	604 MANHOLE, NO. 3 EACH	609 COMBINATION CURB AND GUTTER, TYPE 2, AS PER PLAN FT	638 8" WATER MAIN DUCTILE IRON PIPE ANSI CLASS 52, PUSH-ON JOINTS AND FITTINGS, AS PER PLAN FT	638 2" COPPER SERVICE BRANCH FT	638 2" GATE VALVE AND VALVE BOX EACH	638 8" GATE VALVE AND VALVE BOX EACH	638 METER, SETTING, STOP AND CHAMBER EACH
		SR 81																											
RM1	499	455+00	458+96	RT									488																
RM2	499	458+88	458+69	LT									198																
RM3	499	455+10	456+56	LT					152	1																			
RM4	499	457+28	457+30	RT			8					1																	
RM5	499	457+30	457+40	RT			63					1																	
RM6	499	457+40	454+55	RT			302					1																	
RM7	499	457+18	458+92	LT/RT	391																								
RM8	499	457+69	458+65	LT			103																						
RM9	499	458+64	460+00	RT	143																								
RM10	499	458+92	458+92	LT			10					1																	
RM11	499	459+65	459+66	RT			6					1																	
RM12	499	459+66	457+47	RT			237					1																	
RM13	499	457+81	460+00	LT		24.9		221																					
RM14	499	458+48	459+96	LT										139															
RM15	499	457+81	460+00	LT	212																								
C1	499	455+00	460+00	LT																					500				
C2	499	455+00	460+00	RT																					500				
D1	499	456+50	456+50	LT												13				1									
D2	499	456+50	454+15	LT															243				1						
D3	499	459+00	456+50	LT															242				1						
D4	499	459+80	458+80	LT															13	1									
D5	499	459+80	459+00	LT															77				1						
D6	499	456+50	456+50	RT												66				1									
D7	499	460+00	459+80	RT														66		1									
D8	499	460+00	460+00	RT													13						1						
W1	499	455+00	460+00	LT/RT																						506			
W2	499	459+68		LT																							31	1		1
RM1	501	460+74	460+73	LT			4					1																	
RM2	501	460+00	461+40	RT	140																								
RM3	501	460+00	461+40	LT	140																								
RM4	501	461+02	459+66	RT			150					1																	
RM5	501	460+74	460+73	LT			4					1																	
RM6	501	460+00	460+73	LT				81			1																		
C1	501	460+00	461+40	LT																					140				
C2	501	460+00	461+40	RT																					140				
D1	501	460+85	460+00	RT													86					1							
D2	501	461+00	460+85	RT													25						1						
D3	501	460+63	460+73	LT											9			91	8			1	1						
W1	501	460+00	461+40	LT																						142			
TOTALS CARRIED TO ROADWAY SUBSUMMARY					1026	24.9	887	302	152	1	1	9	686	139	9	79	124	157	583	4	1	1	6	1280	648	31	1	1	1

CALCULATED SJG
CHECKED ACF

ESTIMATED QUANTITIES

ALL-75-5.53

503
1224

J:\Projects\ALL\76691\roadway\sheets\76691GQ807.dgn 11-SEP-2012 9:08PM reddenj

SEEDING	
END WIDTH	SQ. YDS.
45	129
110	0
	129

NOTE:
GAS AND WATER LINE DEPTHS UNKNOWN ALONG SR 81. ASSUMED 4' DEPTH FOR WATER LINES AND 3' DEPTH FOR GAS LINES.

STA 428+50.00, 44.00' RT
MH-3, RIM ELEV 881.16
12" (S) 875.25
12" (W) 875.25
15" (E) 875.25

STA 428+34.43, 86.00' RT
CB-3A, GRATE ELEV 879.59
12" (SE) 875.60
12" (N) 875.60
6" (N) 879.95

STA 428+56.89, 135.00' RT
CB-3A, GRATE ELEV 879.42
12" (E) 875.85
12" (NW) 875.85
6" (NW) 876.75

STA 428+00.00, 34.32' RT
MH-3, RIM ELEV 882.82
12" (E) 875.95

BEGIN WORK
STA. 428+20.00

STA. 428+20.00 AHEAD
STA. 428+20.00 BACK

428+50.00
428+00.00
427+50.00

EX R/W
EX SW
R/W
8" WATER
8" STEEL SAN.
45'-12" TYPE B @ 0.78%
54'-12" TYPE B @ 0.47%
0.11%

890
880
870
860
900

80 60 40 20 0 20 40 60 80 100 120 140 160

END AREA	
CUT	FILL
144	30
110	110
0	0

VOLUME	
CUT	FILL
141	78
141	78

CALCULATED JMR
CHECKED ACF

CROSS SECTIONS - SR 81
STA. 427+50.00 TO STA. 428+50.00

ALL-75-5.53

504
1224

J:\Projects\ALL\76691\roadway\sheets\76691XS1217.dgn 11-SEP-2012 9:08PM redden

NOTE:
GAS AND WATER LINE DEPTHS UNKNOWN ALONG SR 81. ASSUMED 4' DEPTH FOR WATER LINES AND 3' DEPTH FOR GAS LINES.

SEEDING		END AREA		VOLUME		
END WIDTH	SQ. YDS.	CUT	FILL	CUT	FILL	
						CALCULATED JMR
						CHECKED ACF
	35					
	80					
	110			362	94	
	39					
	14					
	164			274	42	
	274			636	136	

46.0' LT.
31.5' LT.
3.0%
2.0%
PROP. 8"W
COMMERCIAL DRIVEWAY SECTION
STA. 429+73.13
DR-24
879.07
429+73.13
879.07

STA 429+30.00, 38.37' LT
CB-2-2B, GRATE ELEV 879.44
12" (N) 875.58
12" (E) 875.58

STA 429+34.08, 53.24' LT
EX. CB, GRATE ELEV 879.26'
12" (SW) 876.43

SEE SERVICE RD 3 CROSS SECTIONS
STA 429+53.89, 40.13' RT
EX. CB, GRATE ELEV 877.22'
12" (W) 874.42
12" (E) 873.99

EX LA
30:1
15'-12" TYPE @ 1.42%
12" CONC. TO BE REMOVED
8" WATER
PROP. 8" WL
879.63
429+50.00
879.59
50:1
LA-R/W
EX SW
EX SW
50:1
R/W
15" TYPE B
8" STEEL SAN.
STA. 429+50.00 AHEAD BACK

STA. 429+50.00 AHEAD BACK

8" STEEL SAN.

STA 429+02.70, 143.02' RT
CB-3A, GRATE ELEV 879.28
12" (W) 876.12
6" (W) 876.62

EX LA
4:1
6:1
879.7'
12" CONC. TO BE REMOVED
8" WATER
PROP. 8" WL
881.13
429+00.00
881.13
50:1
EX SW
EX SW
EX SW
100:1
R/W
15" TYPE B
15" TYPE B
8" STEEL SAN.
STA. 429+00.00 AHEAD BACK

BEGIN FULL DEPTH PAVEMENT S.R. 81

STA. 429+00.00 AHEAD BACK

8" STEEL SAN.

80 153 14 75
238 152 26 15

80 60 40 20 0 20 40 60 80 100 120 140 160

CROSS SECTIONS - SR 81
STA. 429+00.00 TO STA. 429+73.13

ALL-75-5.53

505
1224

J:\Projects\ALL\76691\roadway\sheets\76691XS1218.dgn 11-SEP-2012 9:08PM reddenj

SEEDING	
END WIDTH	SQ. YDS.
34	200
37	200
	400

NOTE:
GAS AND WATER LINE DEPTHS UNKNOWN ALONG SR 81. ASSUMED 4' DEPTH FOR WATER LINES AND 3' DEPTH FOR GAS LINES.

▭ - EMBANKMENT FOR PAVEMENT REMOVED

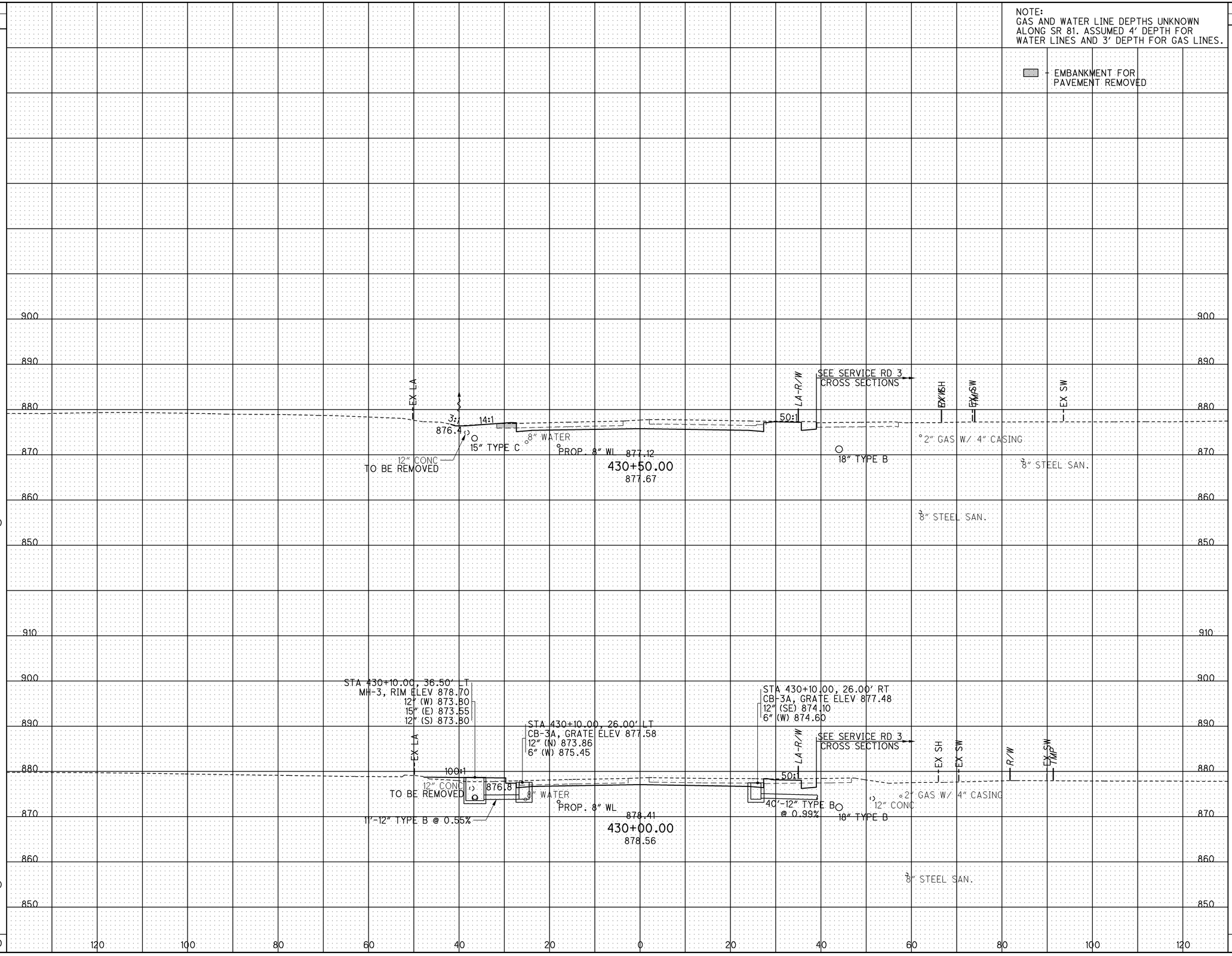

END AREA		VOLUME	
CUT	FILL	CUT	FILL
115	5	205	30
107	27	173	38
		378	68

CALCULATED JMR
CHECKED ACF

CROSS SECTIONS - SR 81
STA. 430+00.00 TO STA. 430+50.00

ALL-75-5.53

506
1224

J:\Projects\ALL\76691\roadway\sheets\76691XS1219.dgn 11-SEP-2012 9:08PM reddenj

SEEDING		END AREA		VOLUME		CALCULATED	CHECKED
END WIDTH	SQ. YDS.	CUT	FILL	CUT	FILL	JMR	ACF
42	228	181	10	322	15		
39	195	166	7	289	10		
30	178	146	4	241	9		
	601			852	34		

NOTE:
GAS AND WATER LINE DEPTHS UNKNOWN ALONG SR 81. ASSUMED 4' DEPTH FOR WATER LINES AND 3' DEPTH FOR GAS LINES.

- EMBANKMENT FOR PAVEMENT REMOVED

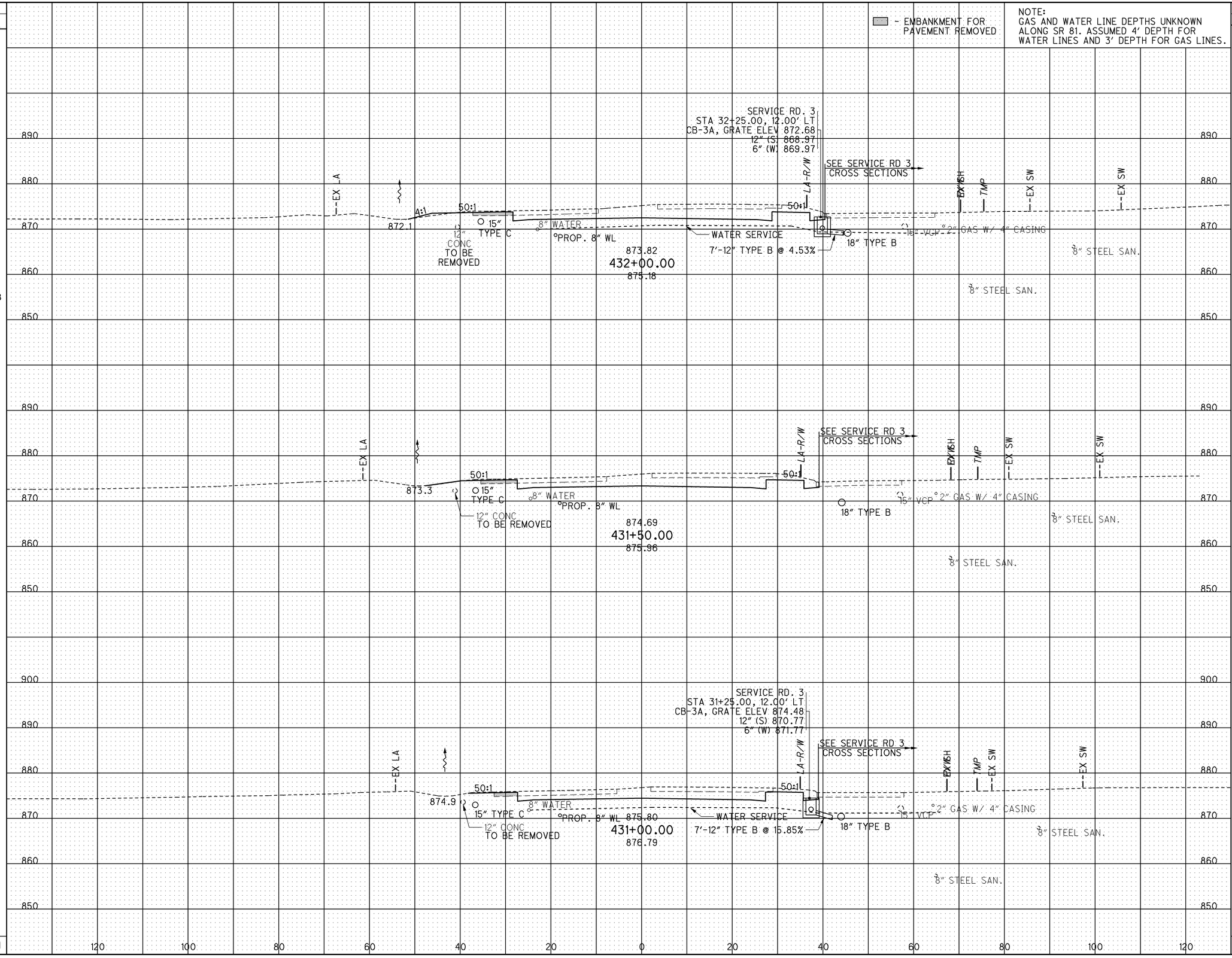

CROSS SECTIONS - SR 81
STA. 431+00.00 TO STA. 432+00.00

ALL-75-5.53

507
1224

J:\Projects\ALL\76691\roadway\sheets\76691XS1220.dgn 11-SEP-2012 9:08PM reddenj

SEEDING	
END WIDTH	SQ. YDS.
51	272
46	250
43	239
	761

- EMBANKMENT FOR PAVEMENT REMOVED

NOTE:
GAS AND WATER LINE DEPTHS UNKNOWN ALONG SR 81. ASSUMED 4' DEPTH FOR WATER LINES AND 3' DEPTH FOR GAS LINES.

STA 433+50.00, 36.25' LT
MH-3, RIM ELEV 872.13
18" (W) 866.66
21" (E) 866.41
12" (S) 866.88

STA 433+50.00, 32.00' LT
CB-3A, GRATE ELEV 871.51
12" (N) 866.94
6" (W) 868.63
6" (S) 868.63

STA 433+50.00, 32.00' RT
CB-3A, GRATE ELEV 871.51
12" (SW) 868.13
6" (W) 868.63

SEE SERVICE RD 3 CROSS SECTIONS

EX LA
4:1
50:1
869.9
15" CONC TO BE REMOVED
PROP. 8" WL
12" RCP TO BE REMOVED
5'-12" TYPE C @ 1.3%
8" WATER
872.20
433+50.00
873.09
LA-R/W
34'-12" TYPE B @ 0.59%
24" TYPE B
15" VCP
2" GAS W/ 4" CASING
EX SH
EX SW
TMP
8" STEEL SAN.

SERVICE RD. 3
STA 33+25.00, 12.00' LT
CB-3A, GRATE ELEV 871.63
12" (S) 867.93
12" (NE) 867.93
6" (W) 868.92

STA 433+14.41, 110.83' RT
EX. SAN MH, GRATE ELEV 870.81'
8" (E) 863.71
8" (W) 863.71

870.2
15" CONC TO BE REMOVED
18" TYPE C
PROP. 8" WL
872.65
433+00.00
874.22
7' 12" TYPE B @ 8.15%

STA 432+48.69, 55.50' LT
CB-2-2B, GRATE ELEV 870.75
18" (S) 867.50
15" (NW) 868.07

STA 432+48.69, 55.51' LT
EX. CB, GRATE ELEV 870.14'
12" (SW) 868.31
15" (NW) 868.07
15" (NE) 868.01
TO BE REMOVED

STA 432+50.00, 33.00' LT
MH-3, RIM ELEV 873.18
15" (W) 870.43
18" (N) 867.41
18" (E) 867.41

870.7
873.19
432+50.00
874.98
23'-18" TYPE C @ 0.4%

END AREA		VOLUME	
CUT	FILL	CUT	FILL
203	13	376	23
203	12	373	23
200	12	353	20
		1102	66

CALCULATED JMR
CHECKED ACF

CROSS SECTIONS - SR 81
STA. 432+50.00 TO STA. 433+50.00

ALL-75-5.53

508
1224

J:\Projects\ALL\76691\roadway\sheets\76691XS1221.dgn 11-SEP-2012 9:08PM reddenj

SEEDING	
END WIDTH	SQ. YDS.
70	367
62	328
56	300
	995

NOTE:
GAS AND WATER LINE DEPTHS UNKNOWN ALONG SR 81. ASSUMED 4' DEPTH FOR WATER LINES AND 3' DEPTH FOR GAS LINES.

END AREA	
CUT	FILL
205	8
204	6
200	11

VOLUME	
CUT	FILL
379	13
374	16
373	22
1126	51

CALCULATED JMR
CHECKED ACF

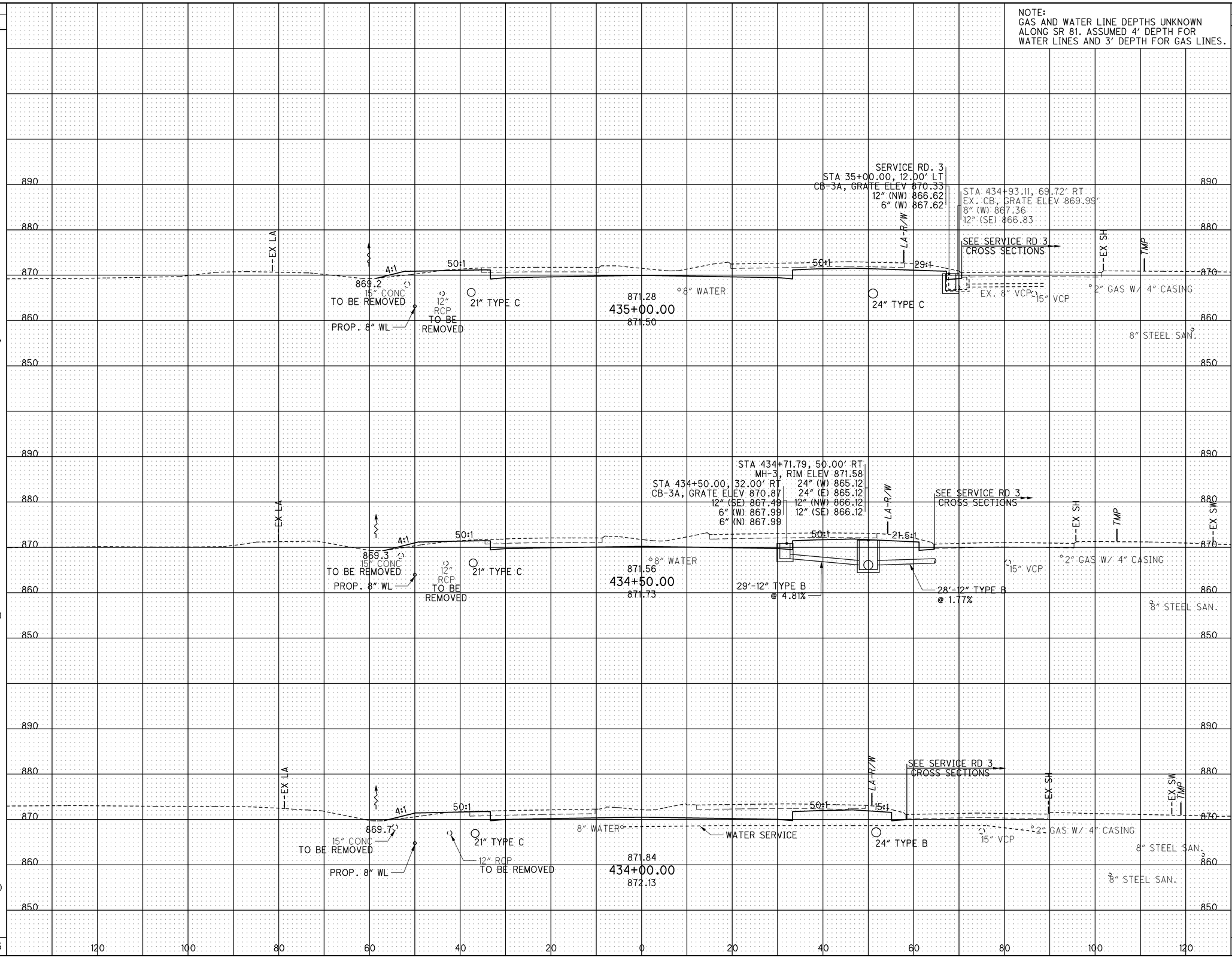

CROSS SECTIONS - SR 81
STA. 434+00.00 TO STA. 435+00.00

ALL-75-5.53

509
1224

J:\Projects\ALL\76691\roadway\sheets\76691XS1222.dgn 11-SEP-2012 9:08PM redden

NOTE:
GAS AND WATER LINE DEPTHS UNKNOWN ALONG SR 81. ASSUMED 4' DEPTH FOR WATER LINES AND 3' DEPTH FOR GAS LINES.

SEEDING END WIDTH	SEEDING SQ. YDS.	END AREA CUT	END AREA FILL	VOLUME CUT	VOLUME FILL
141	645	233	6	398	10
90	466	197	4	368	12
77	411	201	8	376	15
	1522			1142	37

CALCULATED JMR
CHECKED ACF

CROSS SECTIONS - SR 81
STA. 435+50.00 TO STA. 436+50.00

ALL-75-5.53

510
1224

J:\Projects\ALL\76691\roadway\sheets\76691XS1223.dgn 11-SEP-2012 9:08PM reddenj

SEEDING END WIDTH	SEEDING SQ. YDS.
29	489
146	817
146	800
	2106

END AREA CUT	END AREA FILL	VOLUME CUT	VOLUME FILL
423	0		
		649	28
278	30		
		446	31
204	4		
		405	9
		1500	68

CALCULATED JMR
CHECKED ACF

NOTE:
GAS AND WATER LINE DEPTHS UNKNOWN ALONG SR 81. ASSUMED 4' DEPTH FOR WATER LINES AND 3' DEPTH FOR GAS LINES.

▭ - EMBANKMENT FOR PAVEMENT REMOVED

SEE NEUBRECHT RD CROSS SECTIONS

STA 12+01.52, 33.26' LT
MH-3, RIM ELEV 868.41
36" (W) 860.65
18" (N) 860.58
36" (E) 860.58

18:1
30" CONC
PROP. 8" WL
12" RCP TO BE REMOVED
NEUBRECHT RD. GEOGRID FOR SUBGRADE STABILIZATION
869.80
438+00.00
870.02
6" WATER
8" WATER
24" TYPE B
SEE SERVICE RD 3 CROSS SECTIONS

STA 437+39.50, 32.00' RT
CB-3A, GRATE ELEV 869.28
12" (S) 864.30
6" (E) 866.40
6" (N) 866.40

STA 437+56.56, 37.83' RT
EX. CB, GRATE ELEV 869.09'
12" (S) 863.38
12" (N) 863.38
TO BE REMOVED

STA 437+38.22, 59.82' RT
MH-3, RIM ELEV 869.57
24" (W) 863.55
12" (N) 864.03
24" (E) 860.80
15" (S) 864.24

SEE SERVICE RD 3 CROSS SECTIONS
SERVICE RD. 3
STA 37+44.00, 22.40' LT
CB-3, GRATE ELEV 867.81
12" (W) 864.60
15" (N) 864.35
6" (W) 868.92
6" (NE) 867.62

STA 437+61.46, 20.11' RT
EX. CB, GRATE ELEV 867.66'
12" (S) 863.50
12" (NW) 863.61
TO BE REMOVED

STA 437+55.39, 10.36' LT
EX. CB, GRATE ELEV 869.75'
12" (SE) 864.64
TO BE REMOVED

EX LA
50:1
3:1
4:1
863.1
12" RCP TO BE REMOVED
PROP. 8" WL
12" CONC TO BE REMOVED
869.93
437+50.00
869.78
28'-12" TYPE C @ 0.96%
8" WATER
18:1
12" CONC TO BE REMOVED
27'-15" TYPE C @ 0.4%
WATER SERVICE

STA 437+15.00, 32.00' LT
CB-3A, GRATE ELEV 869.41
12" (N) 865.44
6" (W) 867.44
6" (S) 867.44

STA 437+15.62, 79.27' LT
PROP HW-2.2 (OR HW-2.1)
12" (S) 864.40

SEE SERVICE RD 3 CROSS SECTIONS
EX SH
24:1
863.4
48'-12" TYPE C @ 2.18%
12" RCP TO BE REMOVED
PROP. 8" WL
870.19
437+00.00
870.03
12" TYPE B
8" WATER
24" TYPE C
12" TYPE B
X" WATER
15" VCP

120 100 80 60 40 20 0 20 40 60 80 100 120

J:\Projects\ALL\76691\roadway\sheets\76691XS1224.dgn 11-SEP-2012 9:08PM redden

CROSS SECTIONS - SR 81
STA. 437+00.00 TO STA. 438+00.00

ALL-75-5.53

511
1224

SEEDING	
END WIDTH	SQ. YDS.
71	358
58	211
76	
0	83
	652

- EMBANKMENT FOR PAVEMENT REMOVED

NOTE:
GAS AND WATER LINE DEPTHS UNKNOWN ALONG SR 81. ASSUMED 4' DEPTH FOR WATER LINES AND 3' DEPTH FOR GAS LINES.

JUNCTION CHAMBER
STA 439+49.19, 83.86' LT
EX. CB, GRATE ELEV 865.79'
8'x5' BOX (SE) 856.36
72" (NW) 856.36
36" (W) 859.72

STA 439+54.59, 135.91' LT
EX. CB, GRATE ELEV 860.93'
12" (SW) 857.36
36" (NW) 856.86
36" (SE) 856.33

JUNCTION CHAMBER
STA 439+96.48, 82.13' LT
EX. MH, GRATE ELEV 865.79'
36" (NW) 856.50
24" (E) 860.12

STA 439+37.50, 47.96' LT
CB-3A, GRATE ELEV 869.22
12" (E) 866.10
6" (E) 866.34
6" (S) 866.34

5.21

870.24
439+50.00
870.64

36" CONC
EX. 72" CONC
36" TYPE B
EX. 8'x5' BOX
12" TYPE B
50:1
14:1
LA-R/W
SEE SERVICE RD 3 CROSS SECTIONS
PROP. 8" WL
8" WATER
18" TYPE C 18" CONC
24" TYPE B
15" VCP

STA. 439+00.00
AHEAD
BACK

SEE NEUBRECHT RD CROSS SECTIONS
30" CONC
36" TYPE B
12" RCP TO BE REMOVED
NEUBRECHT RD. GEOGRID FOR SUBGRADE STABILIZATION

869.96
439+00.00
870.62

STA 439+20.00, 43.02' RT
CB-3A, GRATE ELEV 869.19
12" (E) 866.07
6" (E) 866.31
6" (N) 866.31

50:1
10:1
PROP. 8" WL
8" WATER
24" TYPE B

SEE SERVICE RD 3 CROSS SECTIONS
STA. 439+00.00
AHEAD
BACK

SEE NEUBRECHT RD CROSS SECTIONS
30" CONC
36" TYPE B
12" RCP TO BE REMOVED
PROP. 8" WL
NEUBRECHT RD. GEOGRID FOR SUBGRADE STABILIZATION

869.81
438+50.00
870.13

8" WATER
24" TYPE B
SEE SERVICE RD 3 CROSS SECTIONS

120 100 80 60 40 20 0 20 40 60 80 100 120

END AREA	
CUT	FILL
130	159
182	95
249	118
436	0

VOLUME	
CUT	FILL
289	235
634	109
795	0
1718	344

CALCULATED JMR
CHECKED ACF

CROSS SECTIONS - SR 81
STA. 438+50.00 TO STA. 439+50.00

ALL-75-5.53

512
1224

J:\Projects\ALL\76691\roadway\sheets\76691XS1225.dgn 11-SEP-2012 9:08PM reddenj

SEEDING	
END WIDTH	SQ. YDS.
155	828
142	761
131	561
	2150

NOTE:
GAS AND WATER LINE DEPTHS UNKNOWN ALONG SR 81. ASSUMED 4' DEPTH FOR WATER LINES AND 3' DEPTH FOR GAS LINES.

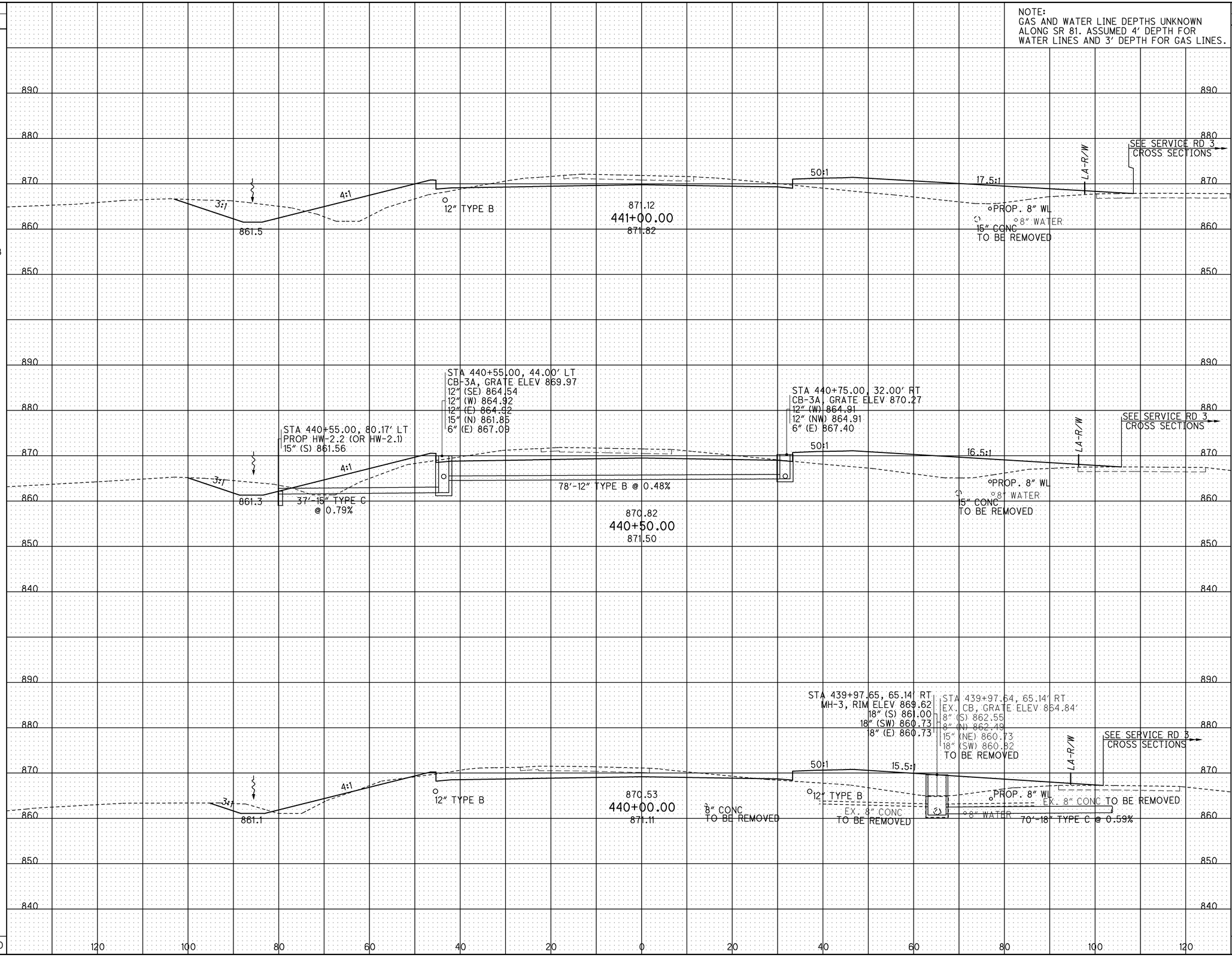

END AREA		VOLUME	
CUT	FILL	CUT	FILL
193	297		
		335	525
170	271		
		297	446
151	211		
		260	342
		892	1313

CALCULATED JMR
CHECKED ACF

CROSS SECTIONS - SR 81
STA. 440+00.00 TO STA. 441+00.00

ALL-75-5.53

513
1224

J:\Projects\ALL\76691\roadway\sheets\76691XS1226.dgn 11-SEP-2012 9:08PM reddenj

NOTE:
GAS AND WATER LINE DEPTHS UNKNOWN ALONG SR 81. ASSUMED 4' DEPTH FOR WATER LINES AND 3' DEPTH FOR GAS LINES.

SEEDING END WIDTH	SEEDING SQ. YDS.	END AREA CUT	END AREA FILL	VOLUME CUT	VOLUME FILL
161	906	260	321	456	606
164	900	233	334	416	603
160	878	217	317	379	568
	2684			1251	1777

CALCULATED JMR
CHECKED ACF

890
880
870
860
850

3:1
862.2
4:1
871.77
442+50.00
872.39
50:1
30:1
L/A-R/W
SEE SERVICE RD 3 CROSS SECTIONS
PROP. 8" WL
15" CONC TO BE REMOVED
8" WATER

STA 441+75.00, 44.00' LT
CB-3A, GRATE ELEV 870.66
12" (W) 867.54
6" (E) 867.78

3:1
862.0
4:1
871.65
442+00.00
872.46
50:1
23:1
L/A-R/W
SEE SERVICE RD 3 CROSS SECTIONS
PROP. 8" WL
15" CONC TO BE REMOVED
8" WATER

3:1
861.8
4:1
12" TYPE B
871.41
441+50.00
872.16
50:1
19:1
L/A-R/W
SEE SERVICE RD 3 CROSS SECTIONS
PROP. 8" WL
15" CONC TO BE REMOVED
8" WATER

120 100 80 60 40 20 0 20 40 60 80 100 120

J:\Projects\ALL\76691\roadway\sheets\76691XS1227.dgn 11-SEP-2012 9:08PM reddenj

CROSS SECTIONS - SR 81
STA. 441+50.00 TO STA. 442+50.00

ALL-75-5.53

514
1224

NOTE:
GAS AND WATER LINE DEPTHS UNKNOWN ALONG SR 81. ASSUMED 4' DEPTH FOR WATER LINES AND 3' DEPTH FOR GAS LINES.

SEEDING END WIDTH	SEEDING SQ. YDS.	END AREA CUT	END AREA FILL	VOLUME CUT	VOLUME FILL
156	861	362	256	651	504
154	877	341	288	581	532
161	895	287	287	506	563
	2633			1738	1599

CALCULATED JMR
CHECKED ACF

STA 444+00.00, 64.5' LT
PROP HW-2.2 (OR HW-2.1)
18" (S) 863.40

STA 444+00.00, 40.00' LT
MH-3, RIM ELEV 870.04
18" (N) 863.59
18" (S) 863.59
12" (W) 866.32
12" (E) 866.12

STA 443+75.00, 38.02' LT
CB-3A, GRATE ELEV 870.78
12" (E) 867.66
6" (W) 868.00

STA 443+75.00, 44.00' RT
CB-3A, GRATE ELEV 870.68
12" (SE) 866.87
12" (W) 866.67
6" (W) 867.80

STA 444+00.00, 70.00' RT
MH-3, RIM ELEV 872.37
15" (S) 864.64
12" (NE) 865.94
12" (NW) 866.22
18" (N) 864.39

SEE SERVICE RD 3 CROSS SECTIONS

3:1
4:1
862.9
29'-18" TYPE C @ 0.64%
110'-18" TYPE B @ 0.73%
871.48
444+00.00
871.88
50:1
12:1
50:1
LA-R/W
36'-12" TYPE C @ 1.8%
°PROP. 8" WL
°8" WATER
15" CONC TO BE REMOVED
86'-15" TYPE C @ 0.71%

3:1
4:1
862.7
871.65
443+50.00
872.22
50:1
12:1
50:1
LA-R/W
12" TYPE B
°PROP. 8" WL
°8" WATER
15' CONC TO BE REMOVED

STA 443+00.00, 44.00' RT
CB-3A, GRATE ELEV 870.89
12" (E) 867.77
6" (W) 868.00

3:1
4:1
862.5
871.77
443+00.00
872.25
50:1
50:1
LA-R/W
°PROP. 8" WL
°8" WATER
15" CONC TO BE REMOVED

120 100 80 60 40 20 0 20 40 60 80 100 120

J:\Projects\ALL\76691\roadway\sheets\76691XS1228.dgn 11-SEP-2012 9:09PM redden

CROSS SECTIONS - SR 81
STA. 443+00.00 TO STA. 444+00.00

ALL-75-5.53

515
1224

NOTE:
GAS AND WATER LINE DEPTHS UNKNOWN ALONG SR 81. ASSUMED 4' DEPTH FOR WATER LINES AND 3' DEPTH FOR GAS LINES.

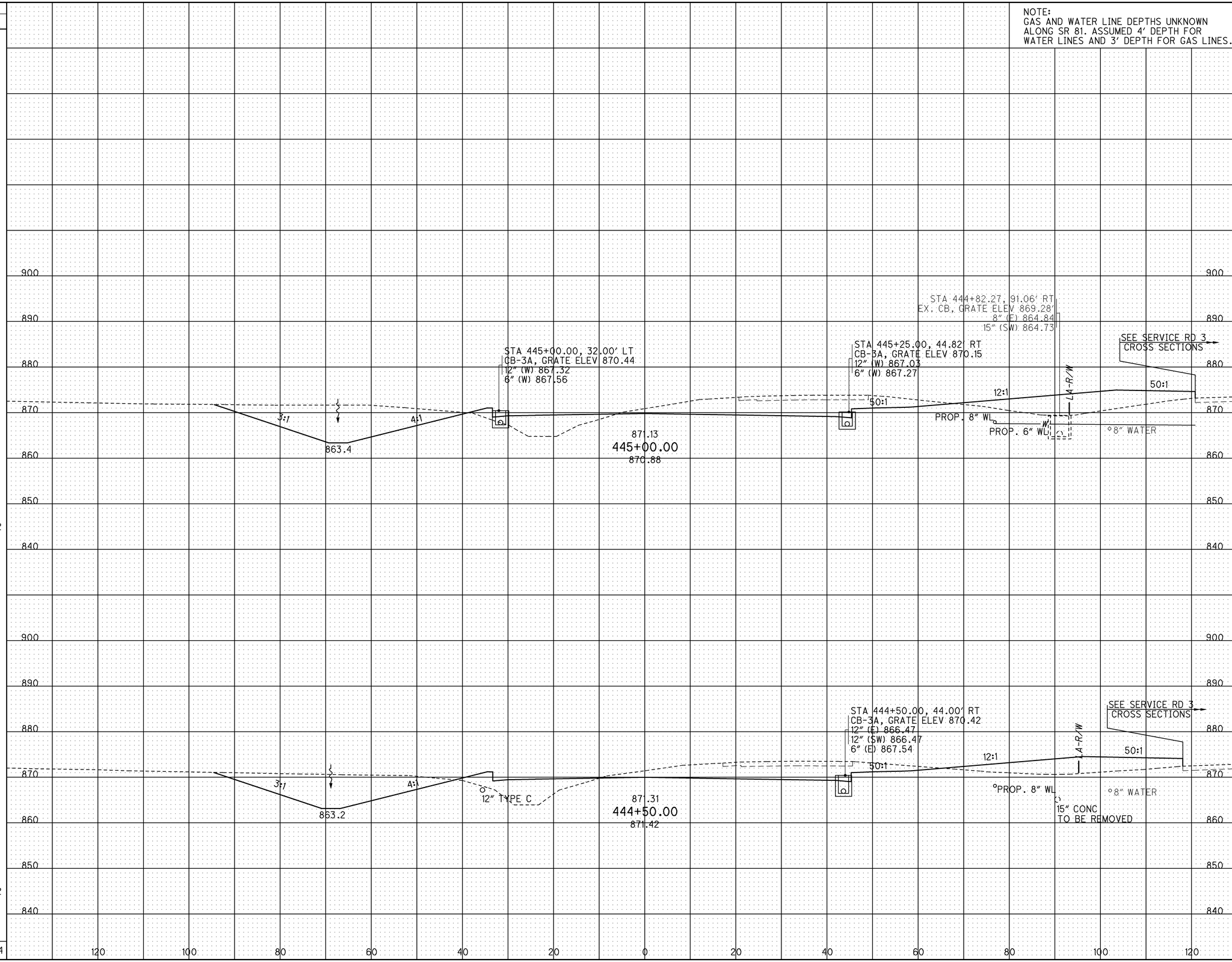

SEEDING END WIDTH	SEEDING SQ. YDS.	END AREA CUT	END AREA FILL	VOLUME CUT	VOLUME FILL
158		460	241		
	872			805	428
156		409	221		
	872			714	442
	1744			1519	870

CALCULATED JMR
CHECKED ACF

CROSS SECTIONS - SR 81
STA. 444+50.00 TO STA. 445+00.00

ALL-75-5.53

J:\Projects\ALL\76691\roadway\sheets\76691XS1229.dgn 11-SEP-2012 9:09PM reddenj

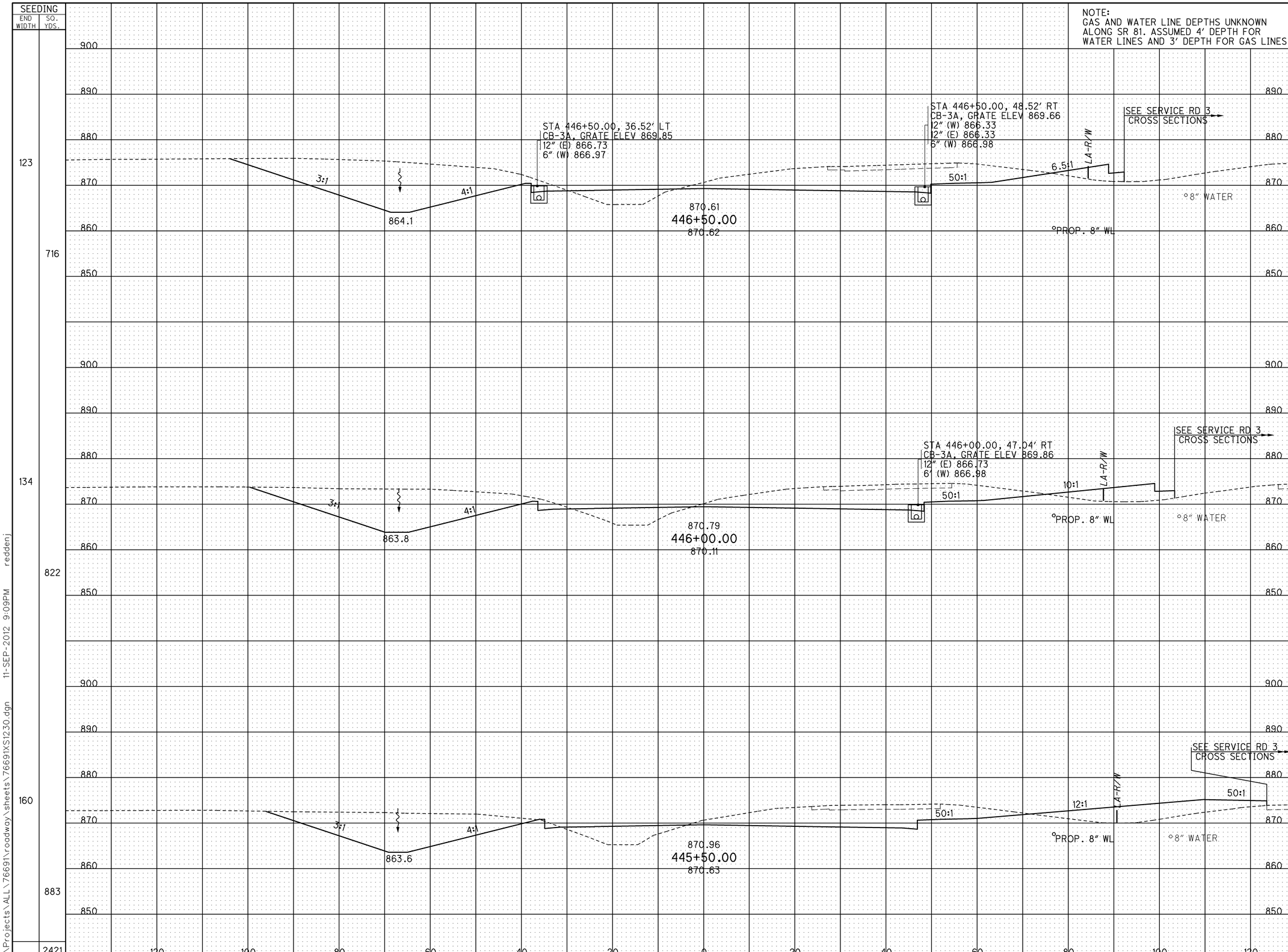

SEEDING END WIDTH	SEEDING SQ. YDS.	END AREA CUT	END AREA FILL	VOLUME CUT	VOLUME FILL
123		747	81		
	716			1266	190
134		621	125		
	822			1061	296
160		525	195		
	883			913	403
	2421			3240	889

CALCULATED JMR
CHECKED ACF

CROSS SECTIONS - SR 81
STA. 445+50.00 TO STA. 446+50.00

ALL-75-5.53

J:\Projects\ALL\76691\roadway\sheets\76691XS1230.dgn 11-SEP-2012 9:09PM reddenj

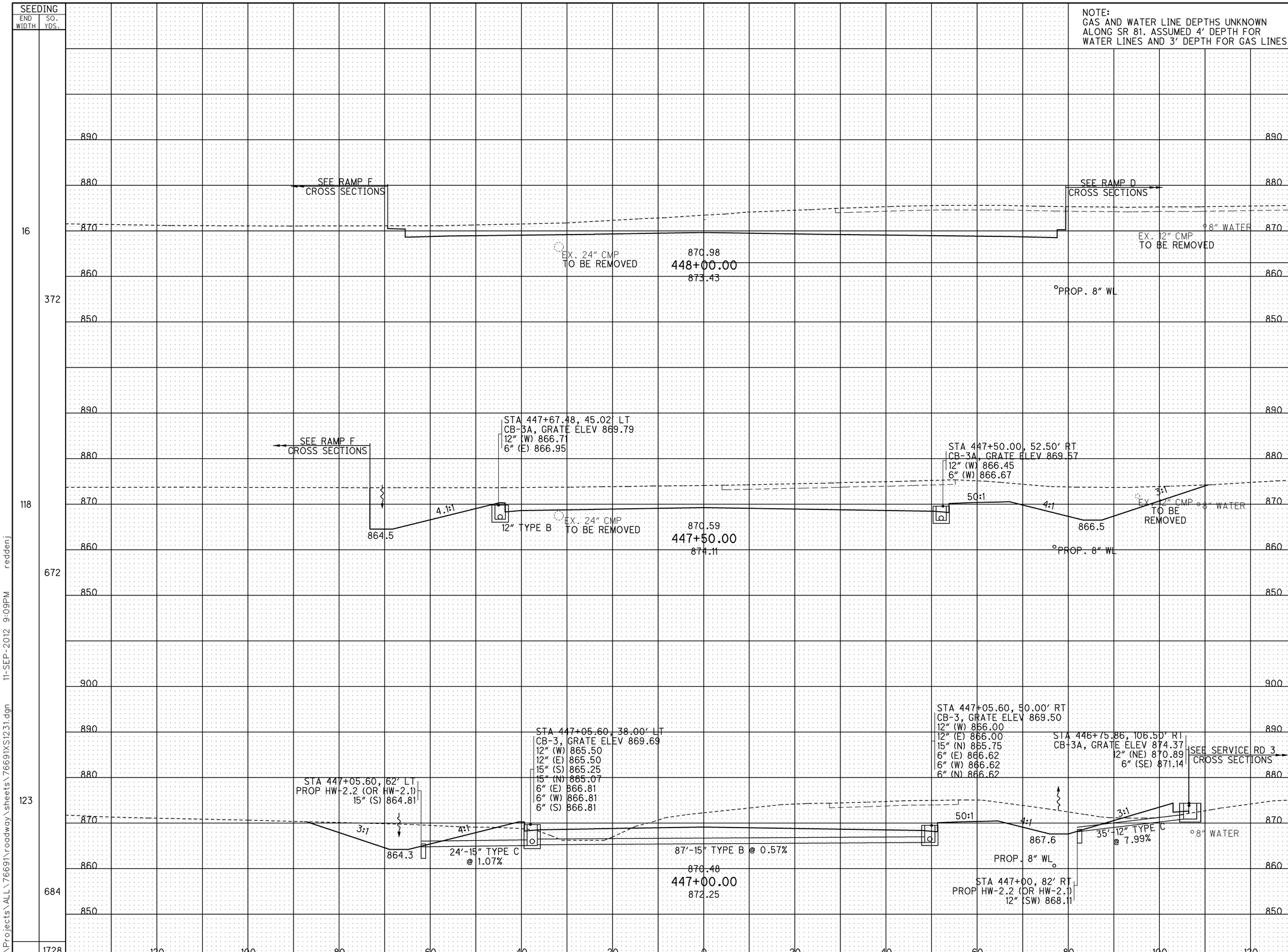

END AREA CUT	END AREA FILL	VOLUME CUT	VOLUME FILL
648	0		
		1513	0
986	0		
		1465	58
596	63		
		1243	133
		4221	191

CALCULATED JMR
CHECKED ACF

CROSS SECTIONS - SR 81
STA. 447+00.00 TO STA. 448+00.00

ALL-75-5.53

J:\Projects\ALL\76691\roadway\sheets\76691XS1231.dgn 11-SEP-2012 9:09PM reddenj

NOTE:
GAS AND WATER LINE DEPTHS UNKNOWN ALONG SR 81. ASSUMED 4' DEPTH FOR WATER LINES AND 3' DEPTH FOR GAS LINES.

ALL-75-0875
PROP. RETAINING WALL

STA 449+65.10, 38.00' RT
CB-3A, GRATE ELEV 873.04
15" (W) 868.04
6" (E) 870.25

4:1
50:1
6:1
50:1
15" TYPE B
873.54
449+50.00
874.11
PROP. 8" WL
8" WATER

STA 448+75.10, 38.00' LT
CB-3A, GRATE ELEV 871.32
15" (E) 866.28
15" (S) 866.28
6" (E) 868.54
6" (W) 868.09

STA 448+75.10, 38.00' RT
CB-3A, GRATE ELEV 871.32
15" (N) 865.98
15" (S) 865.98
15" (E) 865.98
6" (E) 868.54
6" (W) 868.09

STA 448+69.87, 71.65' RT
PROP HW-2.2 (OR HW-2.1)
15" (S) 865.80

SEE RAMP F
CROSS SECTIONS

SEE RAMP D
CROSS SECTIONS

50:1
4:1
4:1
50:1
869.8
75'-15" TYPE B @ 0.4%
872.58
449+00.00
873.26
34'-15" TYPE C @ 0.52%
PROP. 8" WL
8" WATER

SEE RAMP F
CROSS SECTIONS

SEE RAMP D
CROSS SECTIONS

50:1
50:1
871.65
448+50.00
872.40
PROP. 8" WL
EX. 12" CMP
8" WATER

SEEDING END WIDTH	SEEDING SQ. YDS.	END AREA CUT	END AREA FILL	VOLUME CUT	VOLUME FILL
92	483	254	21	642	45
80	417	439	28	785	50
69	239	408	26	978	24
	1139			2405	119

CALCULATED JMR
CHECKED ACF

CROSS SECTIONS - SR 81
STA. 448+50.00 TO STA. 449+50.00

ALL-75-5.53

519
1224

J:\Projects\ALL\76691\roadway\sheets\76691XS1232.dgn 11-SEP-2012 9:09PM redderj

NOTE:
GAS AND WATER LINE DEPTHS UNKNOWN ALONG SR 81. ASSUMED 4' DEPTH FOR WATER LINES AND 3' DEPTH FOR GAS LINES.

SEEDING	
END WIDTH	SQ. YDS.
44	244
43	378
	622

END AREA	
CUT	FILL
143	2
194	7
415	26
727	35

VOLUME	
CUT	FILL
312	9

CALCULATED JMR
CHECKED ACF

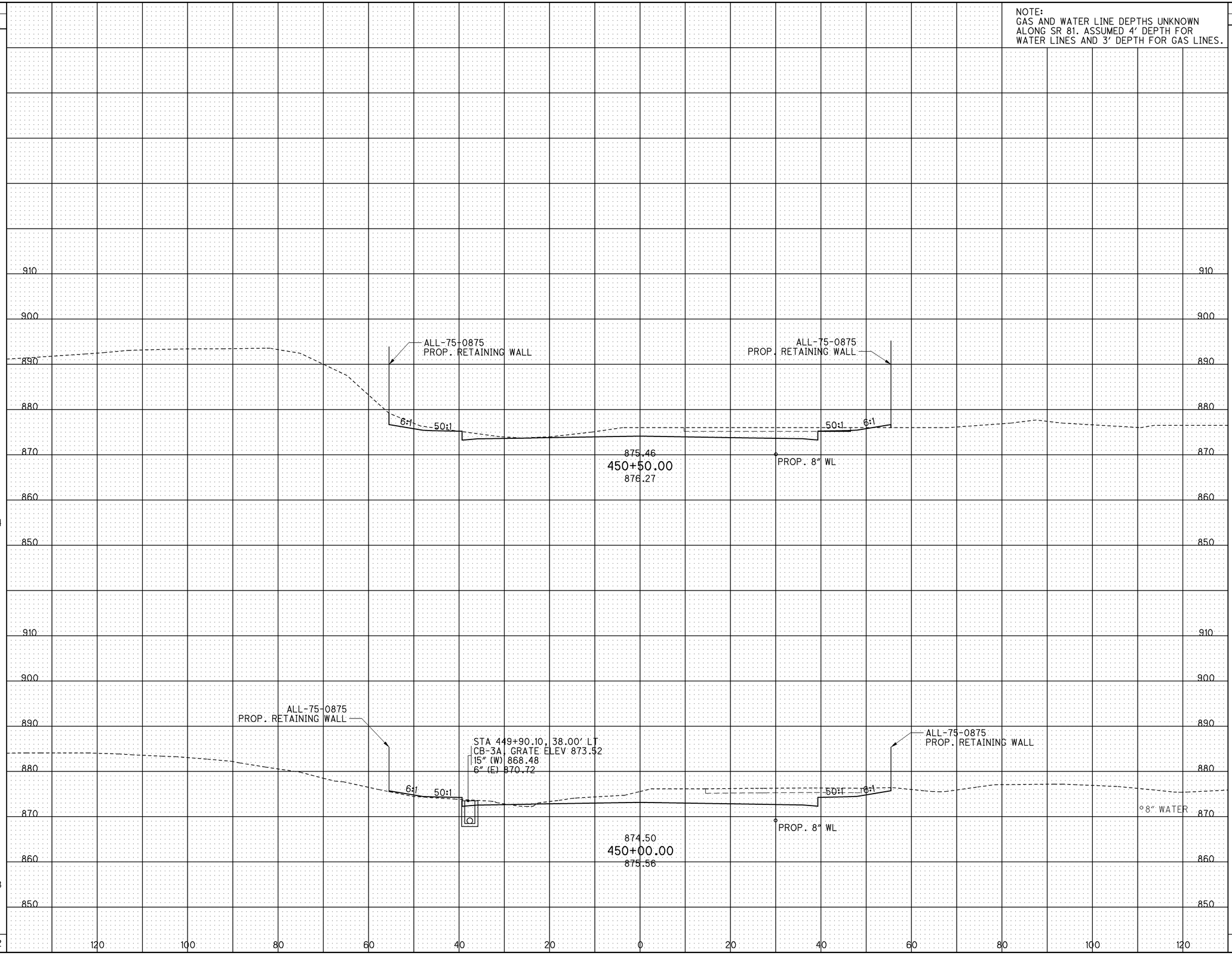

CROSS SECTIONS - SR 81
STA. 450+00.00 TO STA. 450+50.00

ALL-75-5.53

520
1224

J:\Projects\ALL\76691\roadway\sheets\76691XS1233.dgn 11-SEP-2012 9:09PM reddenj

NOTE:
GAS AND WATER LINE DEPTHS UNKNOWN ALONG SR 81. ASSUMED 4' DEPTH FOR WATER LINES AND 3' DEPTH FOR GAS LINES.

SEEDING END WIDTH	SEEDING SQ. YDS.
99	422
52	266
42	244
	932

END AREA CUT	END AREA FILL	VOLUME CUT	VOLUME FILL
197	115	256	133
79	29	153	59
86	34	212	34
		621	226

CALCULATED JMR
CHECKED ACF

STA 452+00.00, 38.00' LT
CB-3A, GRATE ELEV 877.54
15" (S) 872.50
6" (E) 874.76
6" (S) 874.76

STA 451+76.20, 35.46' RT
EX. CB, GRATE ELEV 875.85'
4" (W) 872.73
12" (N) 871.86
12" (S) 871.86
TO BE REMOVED

STA 452+00.10, 38.00' RT
CB-3A, GRATE ELEV 877.54
15" (N) 872.03
15" (S) 872.03
6" (E) 874.76
6" (N) 874.76

STA 451+82.75, 5.69' LT
EX. CB, GRATE ELEV 877.75'
12" (S) 872.31
TO BE REMOVED

STA 452+00.00, 72' RT
PROP HW-2.2 (OR HW-2.1)
15" (N) 871.90

875.2
3:1
4:1
50:1
12" CPP TO BE REMOVED
75'-15" TYPE B @ 0.62%
878.33
452+00.00
878.06
EX. 12" CPP TO BE REMOVED
34'-15" TYPE C @ 0.38%
871.4
4:1
3:1
°8" WATER
°PROP. 8" WL

ALL-75-0875
PROP. RETAINING WALL

6:1
50:1
877.37
451+50.00
877.35

ALL-75-0875
PROP. RETAINING WALL

STA 451+72.54, 56.58' RT
EX. CB, GRATE ELEV 874.38'
12" (N) 871.78
12" (SE) 871.49
TO BE REMOVED

50:1
4:1
4:1
874.9
PROP. 8" WL
EX. 12" CONC
TO BE REMOVED

STA 451+72.86, 113.49' RT
EX. CB, GRATE ELEV 873.58'
8" (S) 871.82
8" (E) 871.21
12" (NW) 871.19
TO BE REMOVED

12" CONC TO BE REMOVED
EX. 8" CONC
8" WATER

ALL-75-0875
PROP. RETAINING WALL

6:1
50:1
876.42
451+00.00
878.14

ALL-75-0875
PROP. RETAINING WALL

50:1
6:1
°PROP. 8" WL
°8" WATER

910 900 890 880 870 860 850

120 100 80 60 40 20 0 20 40 60 80 100 120

CROSS SECTIONS - SR 81
STA. 451+00.00 TO STA. 452+00.00

ALL-75-5.53

521
1224

J:\Projects\ALL\76691\roadway\sheets\76691XS1234.dgn 11-SEP-2012 9:09PM reddenj

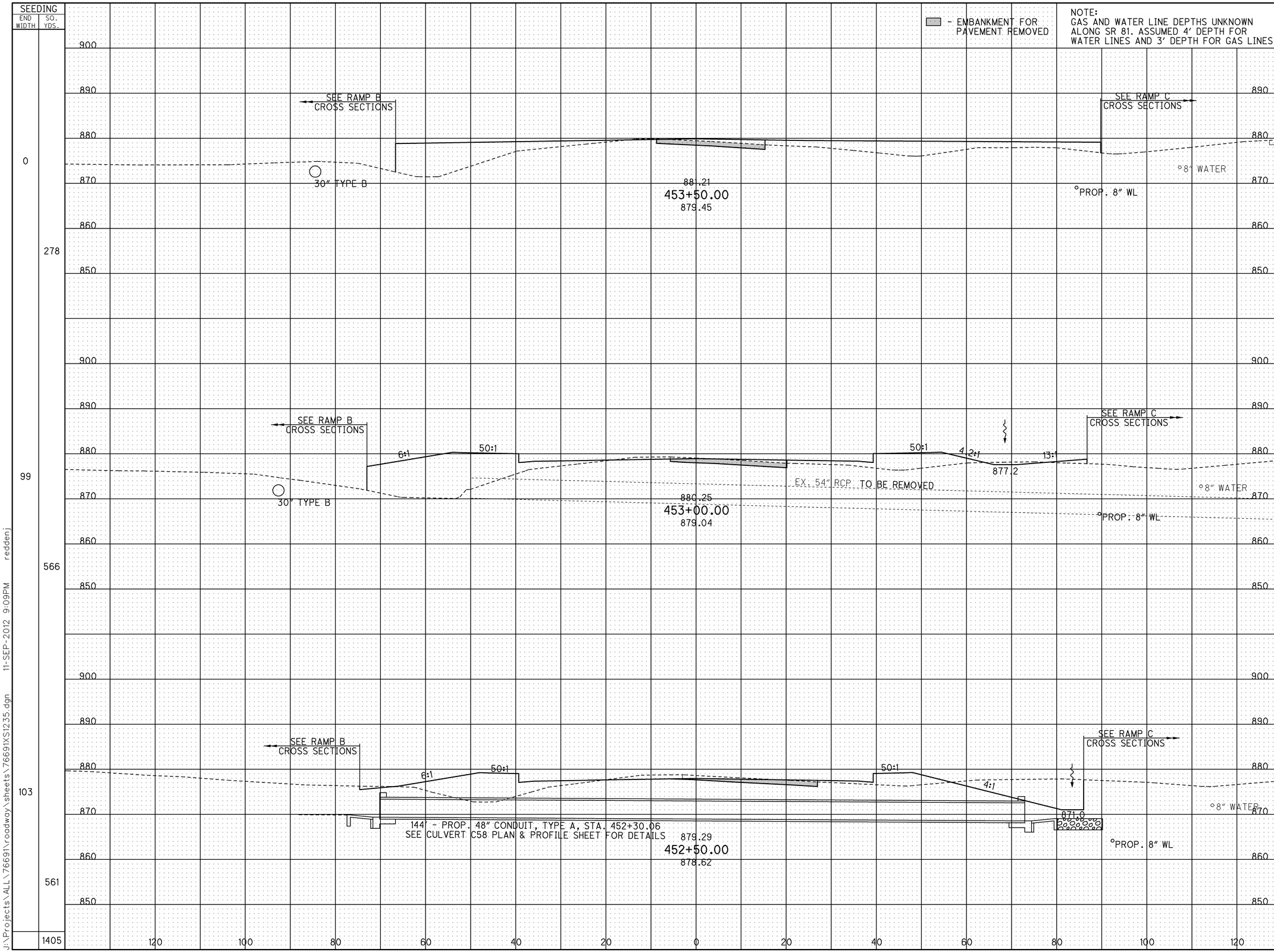

END AREA CUT	END AREA FILL	VOLUME CUT	VOLUME FILL
25	355		
		57	699
37	399		
		188	555
166	200		
		336	291
		581	1545

CALCULATED JMR
CHECKED ACF

CROSS SECTIONS - SR 81
STA. 452+50.00 TO STA. 453+50.00

ALL-75-5.53

J:\Projects\ALL\76691\roadway\sheets\76691XS1235.dgn 11-SEP-2012 9:09PM reddenj

SEEDING END WIDTH	SEEDING SQ. YDS.	END AREA CUT	END AREA FILL	VOLUME CUT	VOLUME FILL
189	1128	122	451	237	877
216	1033	134	497	201	920
156	439	83	497	100	789
	2600			538	2586

NOTE:
GAS AND WATER LINE DEPTHS UNKNOWN ALONG SR 81. ASSUMED 4' DEPTH FOR WATER LINES AND 3' DEPTH FOR GAS LINES.

- EMBANKMENT FOR PAVEMENT REMOVED

900 890 880 870 860

3:1 873.9 4:1 50:1 30" TYPE C 884.09 455+00.00 880.99 50:1 4:1 3:1 879.1 PROP. 8" WL 8" WATER 20:1

3:1 872.7 4:1 50:1 30" TYPE C 883.13 454+50.00 880.32 50:1 4.1:1 3:1 877.5 PROP. 8" WL 8" WATER 20:1

SEE RAMP B CROSS SECTIONS

STA 454+15.00, 77.87' LT
MH-3, RIM ELEV 876.58
15" (S) 873.54
30" (W) 872.29
30" (E) 872.29

4.6:1 50:1 38'-15" TYPE C @ 6.67%

STA 454+15.00, 40.61' LT
CB-3A, GRATE ELEV 881.63
15" (S) 876.05
15" (N) 876.05
6" (E) 878.71
6" (S) 878.71

83'-15" TYPE B @ 0.58%

882.17 454+00.00 879.86

STA 454+15.00, 43.41' RT
CB-3A, GRATE ELEV 881.59
15" (N) 876.53
6" (E) 878.61
6" (N) 878.61

STA 454+19.93, 55.13' RT
EX. CB, GRATE ELEV 875.56'
12" (SW) 873.47

50:1 4.2:1 3.2:1 875.9 EX. 12" CONC PROP. 8" WL 8" WATER 20:1

100 80 60 40 20 0 20 40 60 80 100 120 140

CALCULATED JMR CHECKED ACF

CROSS SECTIONS - SR 81
STA. 454+00.00 TO STA. 455+00.00

ALL-75-5.53

523
1224

J:\Projects\ALL\76691\roadway\sheets\76691XS1236.dgn 11-SEP-2012 9:09PM reddenj

SEEDING	
END WIDTH	SQ. YDS.
153	872
161	927
172	1005
	2804

- EMBANKMENT FOR PAVEMENT REMOVED

NOTE:
GAS AND WATER LINE DEPTHS UNKNOWN ALONG SR 81. ASSUMED 4' DEPTH FOR WATER LINES AND 3' DEPTH FOR GAS LINES.

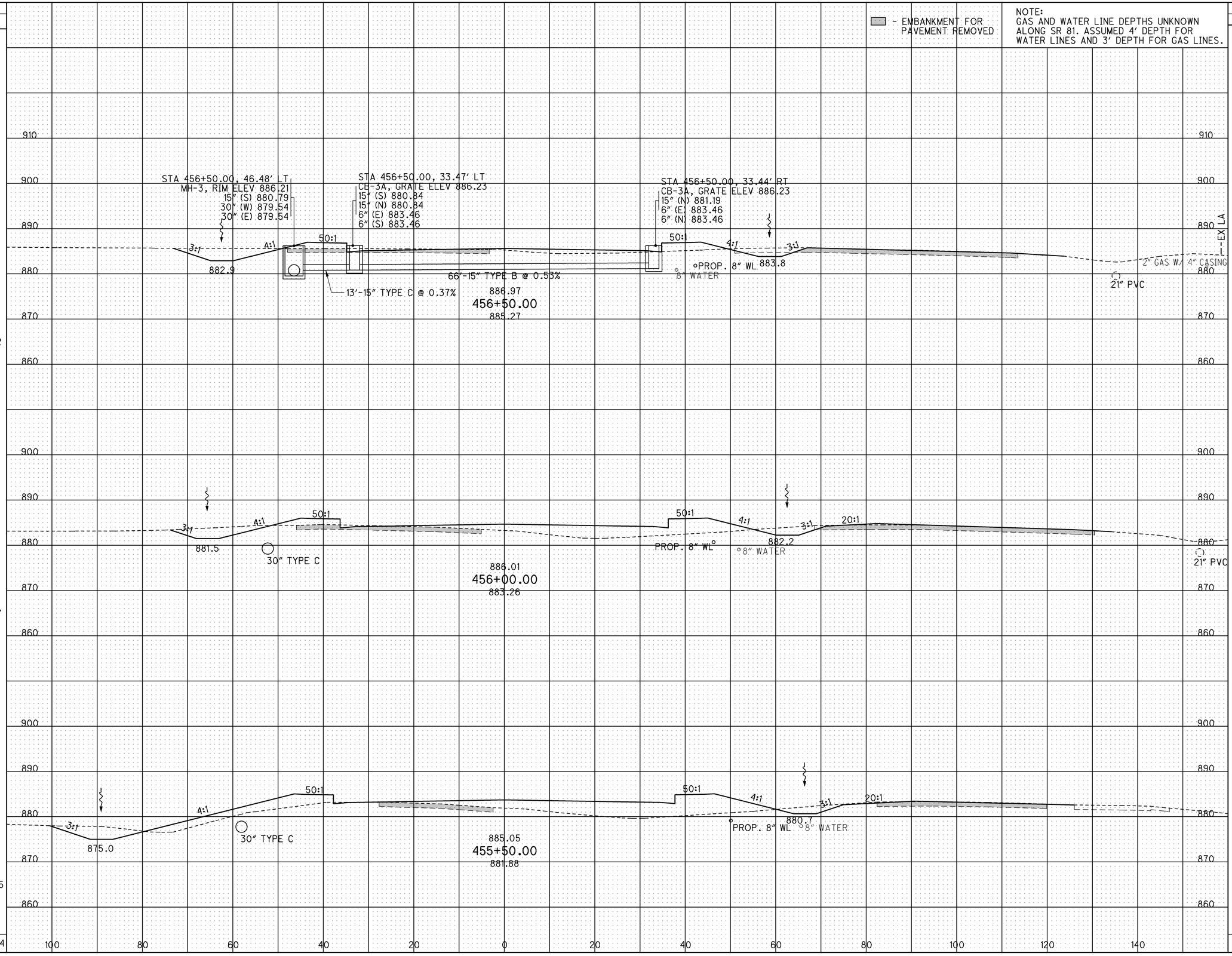

END AREA		VOLUME	
CUT	FILL	CUT	FILL
147	139		
153	263		
116			
		277	373
		248	556
		220	730
		745	1659

CALCULATED JMR
CHECKED ACF

CROSS SECTIONS - SR 81
STA. 455+50.00 TO STA. 456+50.00

ALL-75-5.53

524
1224

J:\Projects\ALL\76691\roadway\sheets\76691XS1237.dgn 11-SEP-2012 9:09PM reddenj

SEEDING END WIDTH	SEEDING SQ. YDS.	END AREA CUT	END AREA FILL	VOLUME CUT	VOLUME FILL
81	484	154	31	275	81
91	594	143	57	286	143
122	767	165	97	289	219
	1845			850	443

CALCULATED JMR

CHECKED ACF

NOTE:
GAS AND WATER LINE DEPTHS UNKNOWN ALONG SR 81. ASSUMED 4' DEPTH FOR WATER LINES AND 3' DEPTH FOR GAS LINES.

- EMBANKMENT FOR PAVEMENT REMOVED

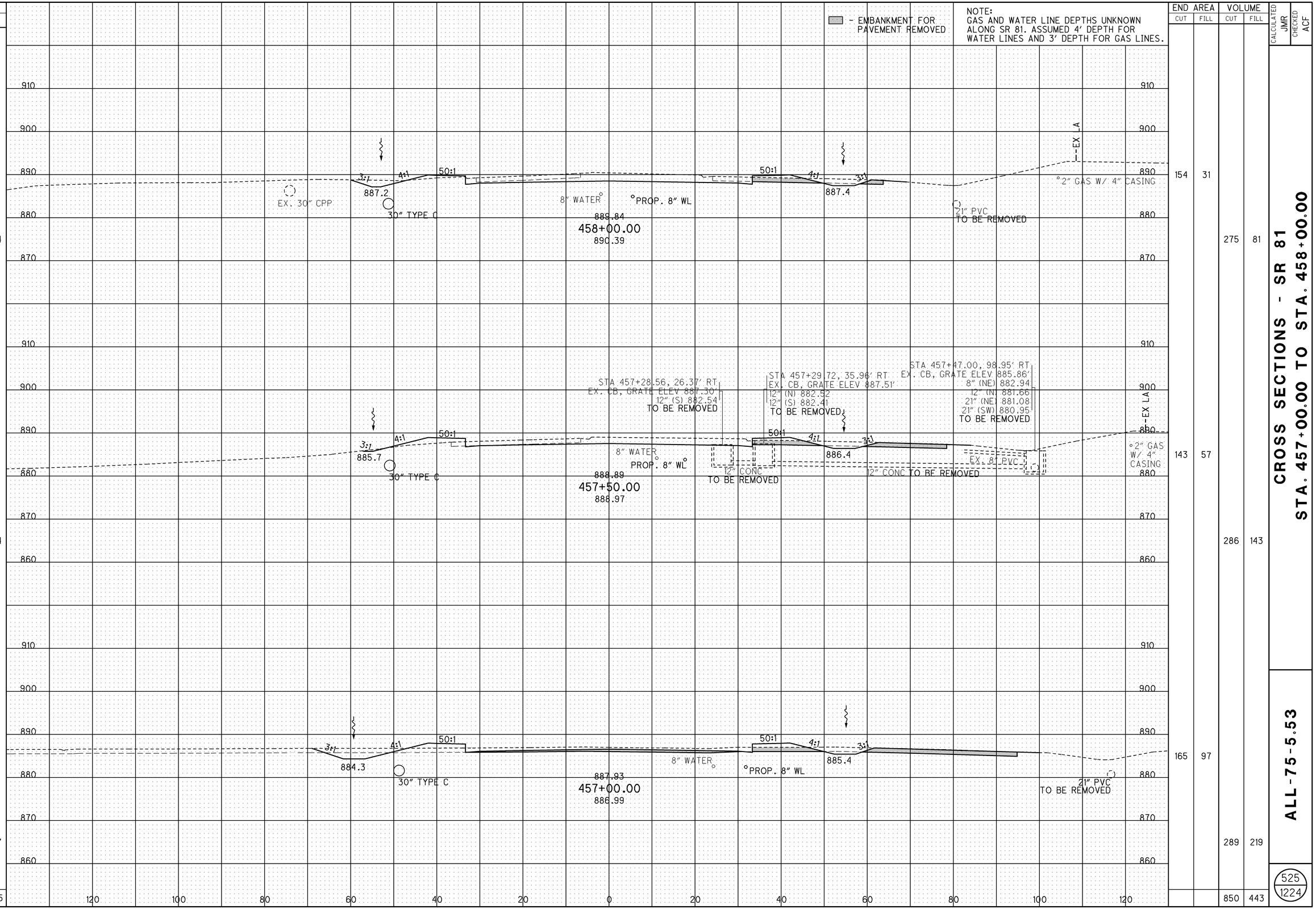

CROSS SECTIONS - SR 81
STA. 457+00.00 TO STA. 458+00.00

ALL-75-5.53

525
1224

J:\Projects\ALL\76691\roadway\sheets\76691XS1238.dgn 11-SEP-2012 9:09PM reddenj

SEEDING	
END WIDTH	SQ. YDS.
51	367
79	427
74	433
	1227

- EMBANKMENT FOR PAVEMENT REMOVED

NOTE:
GAS AND WATER LINE DEPTHS UNKNOWN ALONG SR 81. ASSUMED 4' DEPTH FOR WATER LINES AND 3' DEPTH FOR GAS LINES.

STA 459+65.29, 36.87' RT
EX. CB, GRATE ELEV 892.10'
4" (E) 888.23
4" (N) 887.75
12" (S) 887.77
TO BE REMOVED

STA 459+65.53, 44.66' RT
EX. CB, GRATE ELEV 891.52'
12" (N) 886.37
21" (SW) 885.64
21" (NE) 885.49
TO BE REMOVED

R/W
EX R/W
EX LA
3:1
4:1
50:1
891.4
2" GAS W/ 4" CASING
TO BE RELOCATED BY OTHERS
EX. 30" CPP
30" TYPE C
8" WATER
PROP. 8" WL
892.72
459+50.00
892.80
24" CPP
TO BE REMOVED
2" GAS W/ 4" CASING

STA 459+00.00, 45.00' LT
MH-3, RIM ELEV 891.10
30" (W) 883.56
30" (E) 883.56

STA 458+91.94, 33.11' LT
EX. CB, GRATE ELEV 890.83'
12" (N) 885.33
TO BE REMOVED

890.0
EX. 12" CPP
TO BE REMOVED
EX. 30" CPP
8" WATER
PROP. 8" WL
891.76
459+00.00
892.21
889.4
21" PVC
TO BE REMOVED
2" GAS W/ 4" CASING

888.6
EX. 30" CPP
30" TYPE C
8" WATER
PROP. 8" WL
890.80
458+50.00
891.47
888.4
21" PVC
TO BE REMOVED
2" GAS W/ 4" CASING

END AREA		VOLUME	
CUT	FILL	CUT	FILL
101	17		
151	16		
165	21		
		232	30
		292	34
		295	47
		819	111

CALCULATED JMR
CHECKED ACF

CROSS SECTIONS - SR 81
STA. 458+50.00 TO STA. 459+50.00

ALL-75-5.53

526
1224

J:\Projects\ALL\76691\roadway\sheets\76691XS1239.dgn 11-SEP-2012 9:09PM reddenj

SEEDING	
END WIDTH	SQ. YDS.
42	261
	261

NOTE:
GAS AND WATER LINE DEPTHS UNKNOWN ALONG SR 81. ASSUMED 4' DEPTH FOR WATER LINES AND 3' DEPTH FOR GAS LINES.

END AREA	
CUT	FILL
87	19
174	34

VOLUME	
CUT	FILL
174	34

CALCULATED JMR
CHECKED ACF

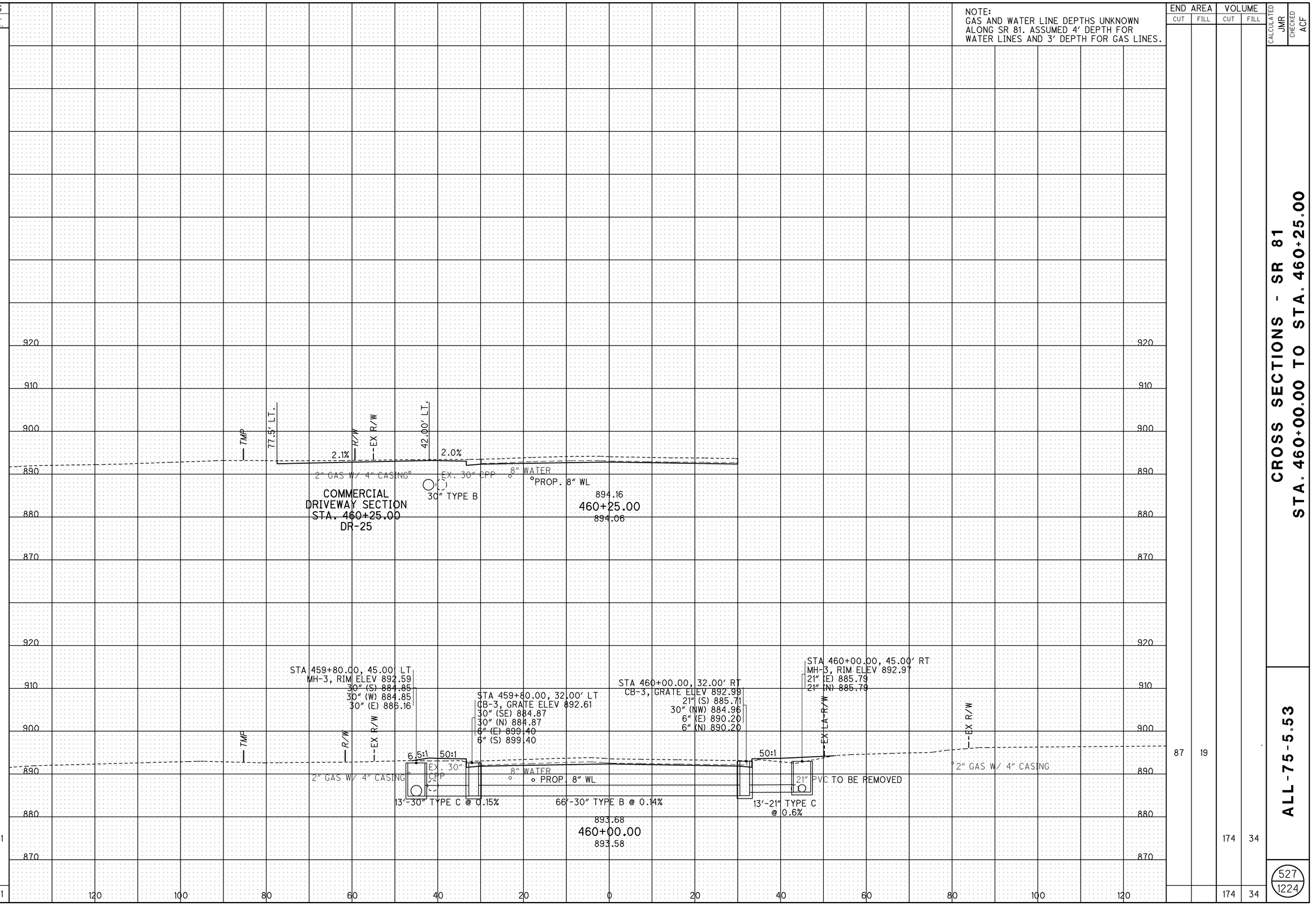

CROSS SECTIONS - SR 81
STA. 460+00.00 TO STA. 460+25.00

ALL-75-5.53

527
1224

J:\Projects\ALL\76691\roadway\sheets\76691XS1240.dgn 11-SEP-2012 9:09PM redden

NOTE:
GAS AND WATER LINE DEPTHS UNKNOWN ALONG SR 81. ASSUMED 4' DEPTH FOR WATER LINES AND 3' DEPTH FOR GAS LINES.

SEEDING END WIDTH	SEEDING SQ. YDS.	END AREA CUT	END AREA FILL	VOLUME CUT	VOLUME FILL
59	311	101	22	173	47
51	259	86	29	160	45
	570			333	92

CALCULATED JMR
CHECKED ACF

CROSS SECTIONS - SR 81
STA. 460+50.00 TO STA. 461+00.00

ALL-75-5.53

528
1224

J:\Projects\ALL\76691\roadway\sheets\76691XS1241.dgn 11-SEP-2012 9:09PM reddenj

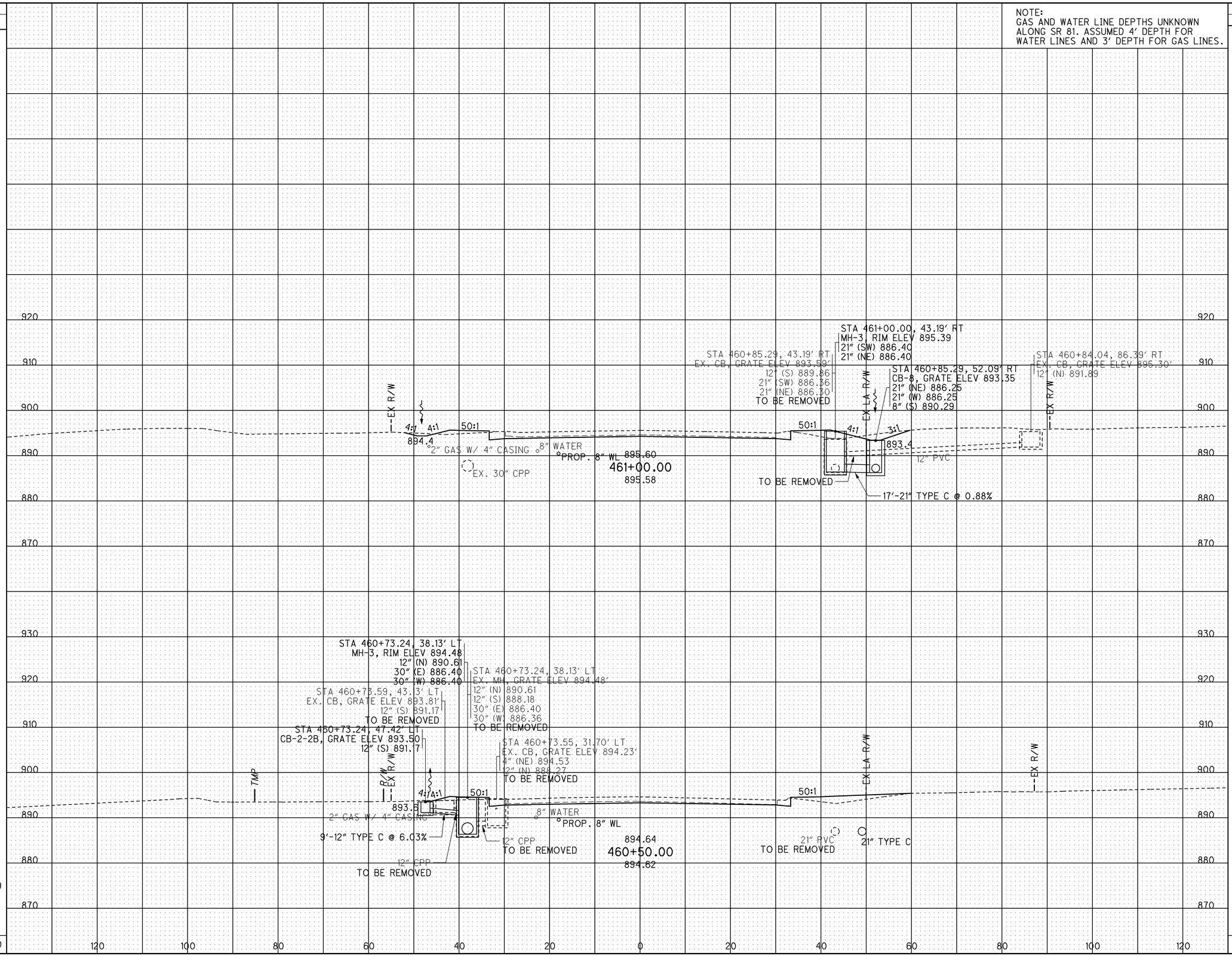

SEEDING	
END WIDTH	SQ. YDS.
0	28
50	244
	272

GRAND TOTAL SEEDING & MULCHING S.R. 81
34,477 SQ. YD.
(QUANTITY CARRIED TO ROADWAY SUBSUMMARY)

NOTE:
GAS AND WATER LINE DEPTHS UNKNOWN ALONG SR 81. ASSUMED 4' DEPTH FOR WATER LINES AND 3' DEPTH FOR GAS LINES.

GRAND TOTAL EARTHWORK S.R. 81
EXCAVATION: 22,678 CU. YD.
EMBANKMENT: 15,436 CU. YD.
(QUANTITY CARRIED TO ROADWAY SUBSUMMARY)

NOTE:
DEDUCTED 6,725 CU. YD. FROM EXCAVATION QUANTITY FOR PAVEMENT REMOVAL

ADDED FOR REMOVAL OF EXISTING S.R. 81 PAVEMENT

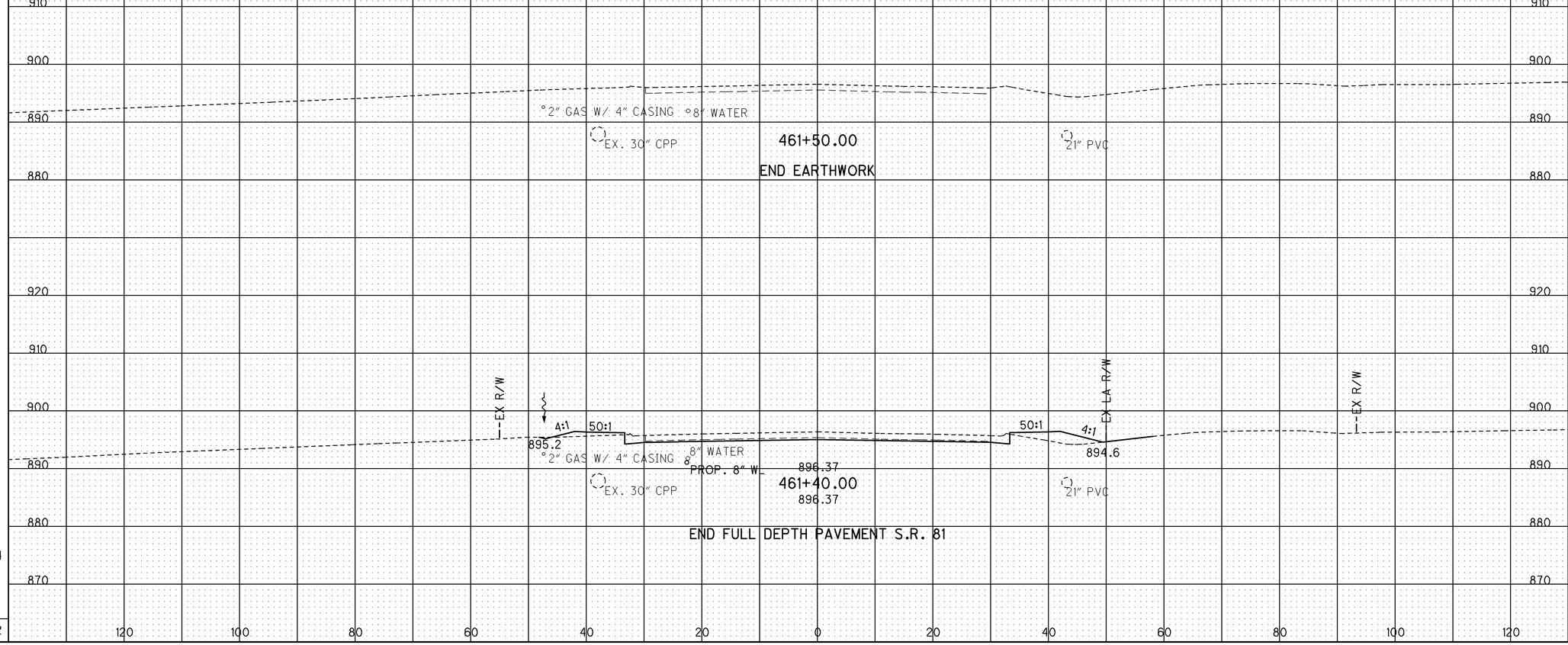

END AREA		VOLUME	
CUT	FILL	CUT	FILL
			1025
0	0		
85	26		
		16	5
		138	35
		154	1065

CALCULATED JMR
CHECKED ACF

CROSS SECTIONS - SR 81
STA. 461+40.00 TO STA. 461+50.00

ALL-75-5.53

529
1224

J:\Projects\ALL\76691\roadway\sheets\76691XS1242.dgn 11-SEP-2012 9:09PM reddenj

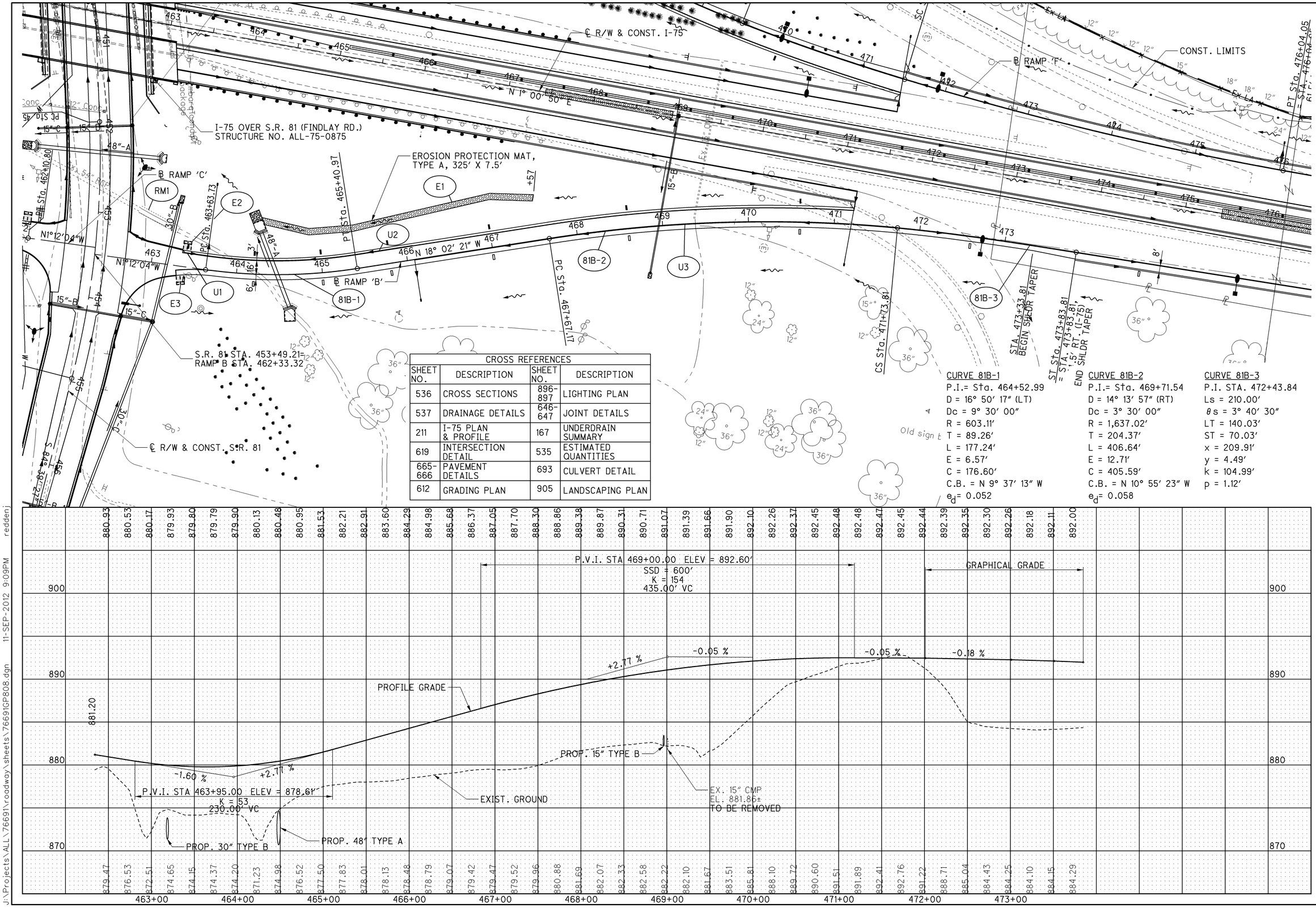

CROSS REFERENCES			
SHEET NO.	DESCRIPTION	SHEET NO.	DESCRIPTION
536	CROSS SECTIONS	896-897	LIGHTING PLAN
537	DRAINAGE DETAILS	646-647	JOINT DETAILS
211	I-75 PLAN & PROFILE	167	UNDERDRAIN SUMMARY
619	INTERSECTION DETAIL	535	ESTIMATED QUANTITIES
665-666	PAVEMENT DETAILS	693	CULVERT DETAIL
612	GRADING PLAN	905	LANDSCAPING PLAN

CURVE 81B-1
P.I.= Sta. 464+52.99
D = 16° 50′ 17″ (LT)
Dc = 9° 30′ 00″
R = 603.11′
T = 89.26′
L = 177.24′
E = 6.57′
C = 176.60′
C.B. = N 9° 37′ 13″ W
e_d = 0.052

CURVE 81B-2
P.I.= Sta. 469+71.54
D = 14° 13′ 57″ (RT)
Dc = 3° 30′ 00″
R = 1,637.02′
T = 204.37′
L = 406.64′
E = 12.71′
C = 405.59′
C.B. = N 10° 55′ 23″ W
e_d = 0.058

CURVE 81B-3
P.I. STA. 472+43.84
Ls = 210.00′
θs = 3° 40′ 30″
LT = 140.03′
ST = 70.03′
x = 209.91′
y = 4.49′
k = 104.99′
p = 1.12′

HORIZONTAL SCALE IN FEET
0 25 50 100

CALCULATED ACF
CHECKED EJC

PLAN AND PROFILE - S.R. 81 RAMP 'B' STA. 462+33.32 TO STA. 473+83.81

ALL-75-5.53

530
1224

J:\Projects\ALL\76691\roadway\sheets\76691GP808.dgn 11-SEP-2012 9:09PM reddenj

CROSS REFERENCES			
SHEET NO.	DESCRIPTION	SHEET NO.	DESCRIPTION
542	CROSS SECTIONS	895-896	LIGHTING PLAN
545	DRAINAGE DETAILS	645-646	JOINT DETAILS
208	I-75 PLAN & PROFILE	167	UNDERDRAIN SUMMARY
619	INTERSECTION DETAIL	535	ESTIMATED QUANTITIES
667	PAVEMENT DETAILS	904	LANDSCAPING PLAN
611	GRADING PLAN	687	CULVERT DETAIL

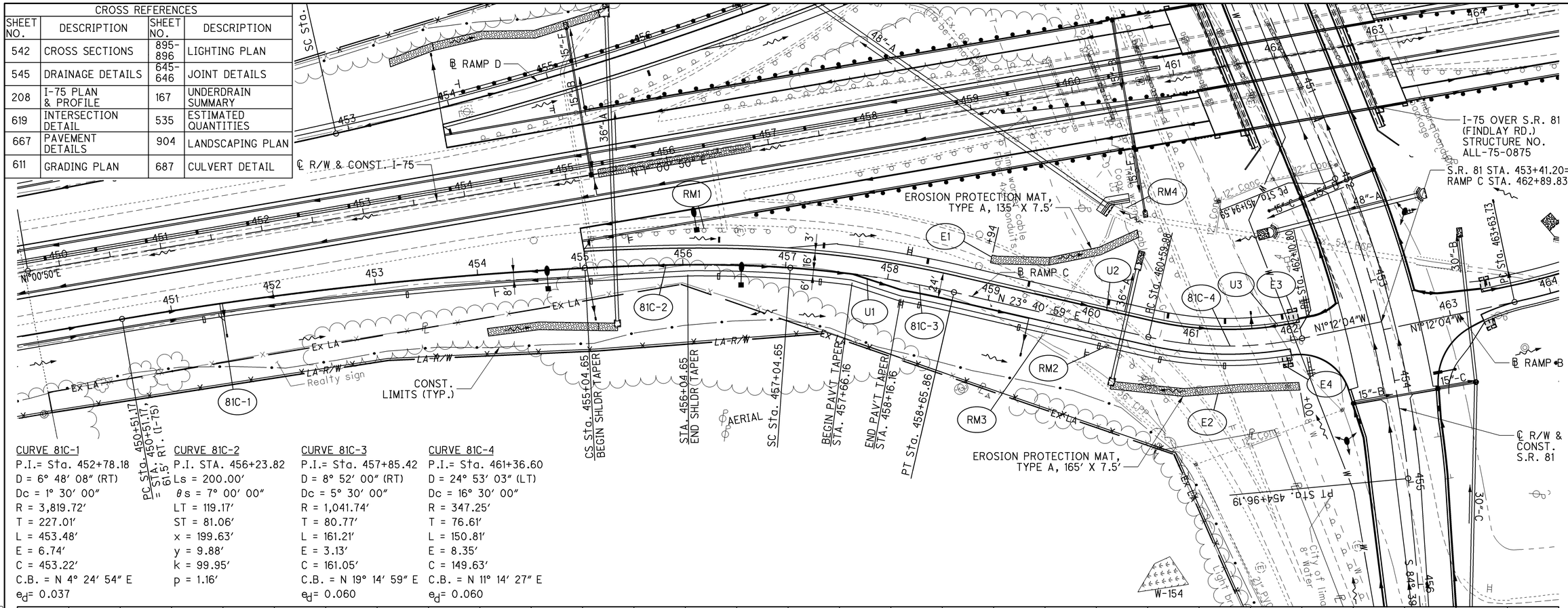
SC Sta.
℄ RAMP D
℄ R/W & CONST. I-75
N1°00'50"E
RM1
81C-1
81C-2
81C-3
81C-4
U1
U2
U3
E1
E2
E3
E4
RM2
RM3
RM4
CONST. LIMITS (TYP.)
CS Sta. 455+04.65 BEGIN SHLDR TAPER
STA. 456+04.65 END SHLDR TAPER
AERIAL
SC Sta. 457+04.65
BEGIN PAV'T TAPER STA. 457+66.16
END PAV'T TAPER STA. 458+16.16
PT Sta. 458+65.86
EROSION PROTECTION MAT, TYPE A, 135' X 7.5'
EROSION PROTECTION MAT, TYPE A, 165' X 7.5'
℄ RAMP C
N 23° 40' 59" E
PC Sta. 460+58.98
PT Sta. 460+80.80
PC Sta. 463+63.73
℄ RAMP B
N1°12'04"W
PC Sta. 454+94.59
PT Sta. 454+96.19
I-75 OVER S.R. 81 (FINDLAY RD.) STRUCTURE NO. ALL-75-0875
S.R. 81 STA. 453+41.20= RAMP C STA. 462+89.83
℄ R/W & CONST. S.R. 81
W-154
Realty sign
Ex LA
LA-R/W
City of Lima 8" Water
Light bases
Cable conduits
Ex Conc
Ex Curb
Ex Edge of Pavement
Ex Guardrail
Ex Fence
Ex Trees
Ex Bushes
Ex Bldg
Ex Sign
Ex Utility Pole
Ex Light Pole
Ex Fire Hydrant
Ex Water Valve
Ex Gas Valve
Ex Manhole
Ex Catch Basin
Ex Inlet
Ex Mailbox
Ex Flood Light
Ex Power Pole
Ex Guy Anchor
Ex Power Line
Ex Telephone Line
Ex Gas Line
Ex Water Line
Ex Storm Sewer
Ex Sanitary Sewer
Ex Underground Telephone Line
Ex Underground Power Line
Ex Underground Gas Line
Ex Underground Water Line
Ex Underground Storm Sewer
Ex Underground Sanitary Sewer
Ex Underground Cable TV Line
Ex Underground Fiber Optic Line
Ex Underground Electric

CURVE 81D-1
P.I. STA. 452+13.61
Ls = 220.00'
θs = 1° 55' 30"
LT = 146.68'
ST = 73.34'
x = 219.98'
y = 2.46'
k = 110.00'
p = 0.62'

CURVE 81D-2
P.I.= Sta. 456+09.25
D = 15° 07' 22" (LT)
Dc = 1° 45' 00"
R = 3,274.04'
D c = 13° 11' 52" (LT)
Lc = 754.16'
Es = 29.03'
C = 752.49'
C.B.1 = N 0° 45' 52" W
C.B. = N 8° 38' 48" W
e_d = 0.041

CROSS REFERENCES			
SHEET NO.	DESCRIPTION	SHEET NO.	DESCRIPTION
547	CROSS SECTIONS	895-896	LIGHTING PLAN
548	DRAINAGE DETAILS	641-642	JOINT DETAILS
208	I-75 PLAN & PROFILE	167	UNDERDRAIN SUMMARY
618	INTERSECTION DETAIL	535	ESTIMATED QUANTITIES
668-669	PAVEMENT DETAILS	904	LANDSCAPING PLAN
611	GRADING PLAN	692	CULVERT DETAIL

GRAPHIC GRADE
P.V.I. STA 455+65.00 ELEV = 886.44'
SSD = 498'
K = 115
570.00' VC
P.V.I. STA 459+75.00 ELEV = 869.26'
K = 50
240.00' VC
PROFILE GRADE
EXIST. GROUND
+0.76 %
-4.19 %
+0.65 %
+1.60 %
+1.51 %
PROP. 15" TYPE B
PROP. 36" TYPE A
PROP. 48" TYPE A
PROP. 21" TYPE A
PROP 6" WATE
EX. 30" CMP EL. 867.06± TO BE REMOVED
EX. 60" CMP EL. 865.11± TO BE REMOVED
EX. 12" CMP EL. 871.83± TO BE REMOVED
EX. 12" CONC
EX. 2" GAS
STA 459+62.59, 38.01' LT
EX. CB, GRATE ELEV 875.26
EX. 12" (W) 870.91
EX. 12" (E) 870.83
TO BE REMOVED
P.V.I. STA 461+10.00 ELEV = 870.14'
P.V.I. STA 461+39.15 ELEV = 870.60'
PC Sta. 462+79.55

883.49 883.54 883.61 883.67 883.73 883.79 883.92 884.04 884.23 884.40 884.52 884.59 884.60 884.56 884.46 884.31 884.10 883.84 883.53 883.16 882.74 882.26 881.73 881.14 880.50 879.81 879.06 878.26 877.40 876.49 875.52 874.50 873.49 872.61 871.85 871.22 870.71 870.33 870.08 869.95 869.95 870.07 870.38 870.77 871.15

878.87 878.49 878.16 878.21 877.84 877.43 877.43 877.21 876.98 876.65 875.82 875.17 874.53 873.89 872.85 871.84 870.71 869.09 869.24 870.28 871.08 871.55 871.10 872.00 873.40 875.55 878.25 879.98 880.17 879.84 879.43 878.99 878.29 877.46 875.96 873.94 873.82 875.43 875.85 875.34 874.73 875.28 875.62 874.91 872.90

PLAN AND PROFILE - S.R. 81 RAMP 'D'
STA. 450+66.93 TO STA. 461+75.24

ALL-75-5.53

CALCULATED ACF CHECKED EJC

HORIZONTAL SCALE IN FEET 0 25 50 100

J:\Projects\ALL\76691\roadway\sheets\76691GP810.dgn 11-SEP-2012 9:09PM reddenj

532
1224

CROSS REFERENCES			
SHEET NO.	DESCRIPTION	SHEET NO.	DESCRIPTION
552	CROSS SECTIONS	896	LIGHTING PLAN
552	DRAINAGE DETAILS	643	JOINT DETAILS
618	INTERSECTION DETAIL	167	UNDERDRAIN SUMMARY
670	PAVEMENT DETAILS	535	ESTIMATED QUANTITIES
905	LANDSCAPING PLAN	612	GRADING PLAN

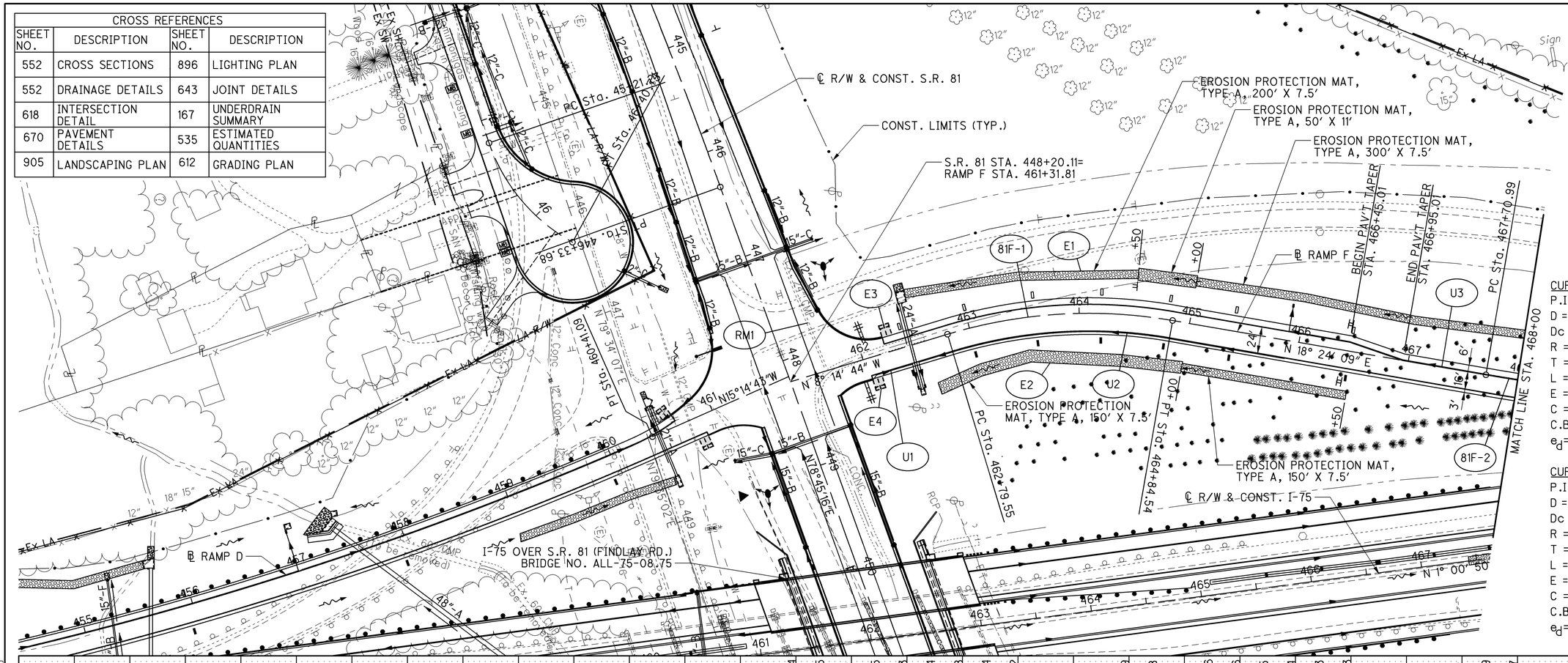

CURVE 81F-2
P.I.= Sta. 468+60.86
D = 5° 50' 11" (LT)
Dc = 3° 15' 00"
R = 1,762.95'
T = 89.87'
L = 179.58'
E = 2.29'
C = 179.50'
C.B. = N 15° 29' 04" E
e_d = 0.058

CURVE 81F-1
P.I.= Sta. 463+83.93
D = 26° 38' 53" (RT)
Dc = 13° 00' 00"
R = 440.74'
T = 104.38'
L = 204.99'
E = 12.19'
C = 203.14'
C.B. = N 5° 04' 43" E
e_d = 0.058

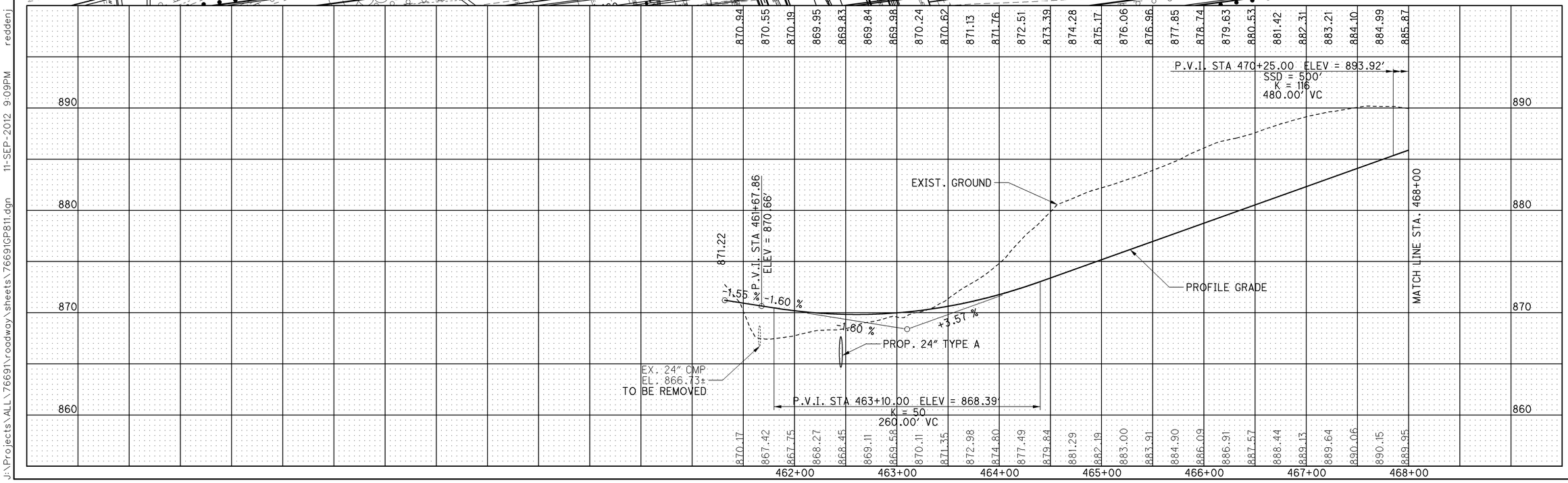

HORIZONTAL SCALE IN FEET
0 25 50 100

CALCULATED ACF
CHECKED EJC

PLAN AND PROFILE - S.R. 81 RAMP 'F'
STA. 461+31.81 TO STA. 468+00.00

ALL-75-5.53

533
1224

J:\Projects\ALL\76691\roadway\sheets\76691GP811.dgn 11-SEP-2012 9:09PM reddenj

CROSS REFERENCES			
SHEET NO.	DESCRIPTION	SHEET NO.	DESCRIPTION
556	CROSS SECTIONS	897	LIGHTING PLAN
211	I-75 PLAN & PROFILE	644	JOINT DETAILS
612	GRADING PLAN	167	UNDERDRAIN SUMMARY
670	PAVEMENT DETAILS	535	ESTIMATED QUANTITIES
		905	LANDSCAPING PLAN

CURVE 81F-2
P.I.= Sta. 468+60.86
D = 5° 50′ 11″ (LT)
Dc = 3° 15′ 00″
R = 1,762.95′
T = 89.87′
L = 179.58′
E = 2.29′
C = 179.50′
C.B. = N 15° 29′ 04″ E
e_d = 0.058

CURVE 81F-3
P.I. STA. 470+38.34
Ls = 200.00′
θs = 4° 45′ 00″
LT = 112.34′
ST = 87.77′
x = 199.81′
y = 7.27′
k = 99.98′
p = 0.51′

CURVE 81F-4
P.I.= Sta. 473+77.58
D = 6° 48′ 08″ (LT)
Dc = 1° 30′ 00″
R = 3,819.72′
T = 227.01′
L = 453.48′
E = 6.74′
C = 453.22′
C.B. = N 4° 24′ 54″ E
e_d = 0.037

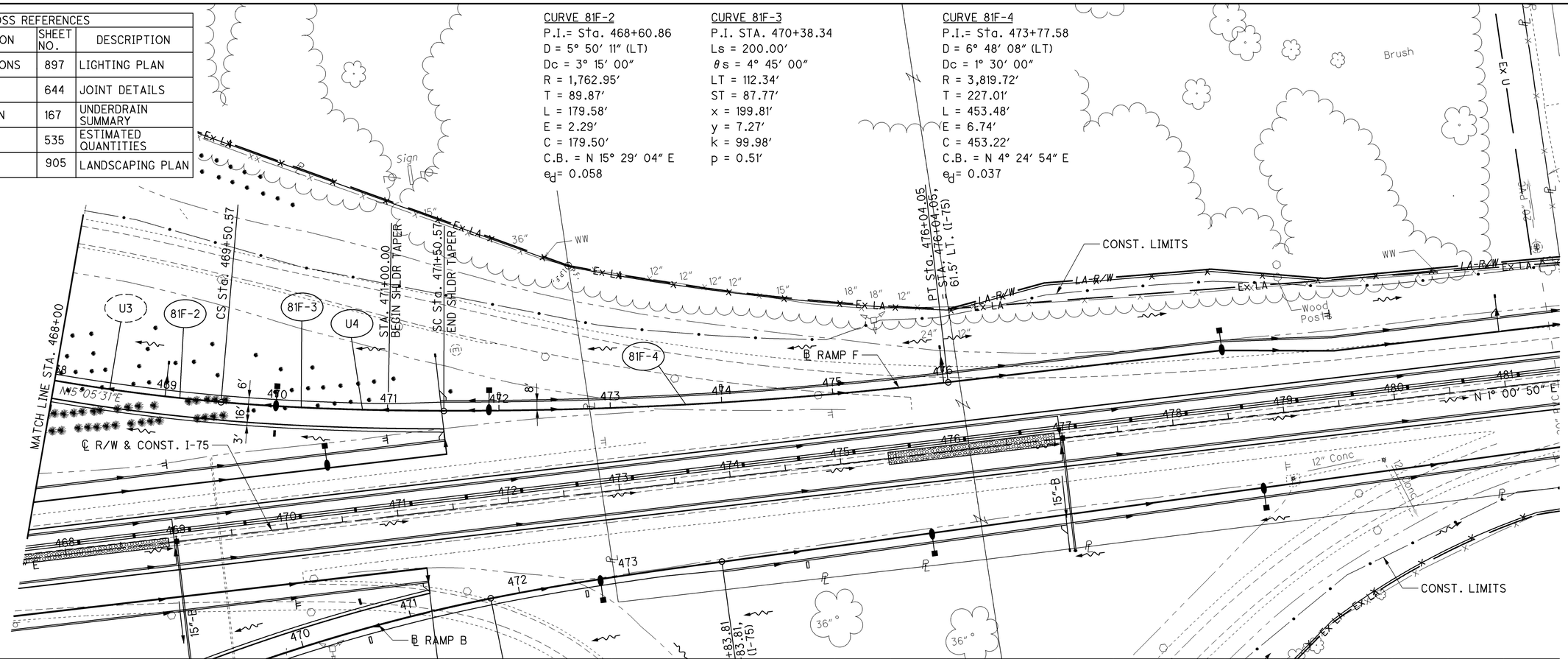

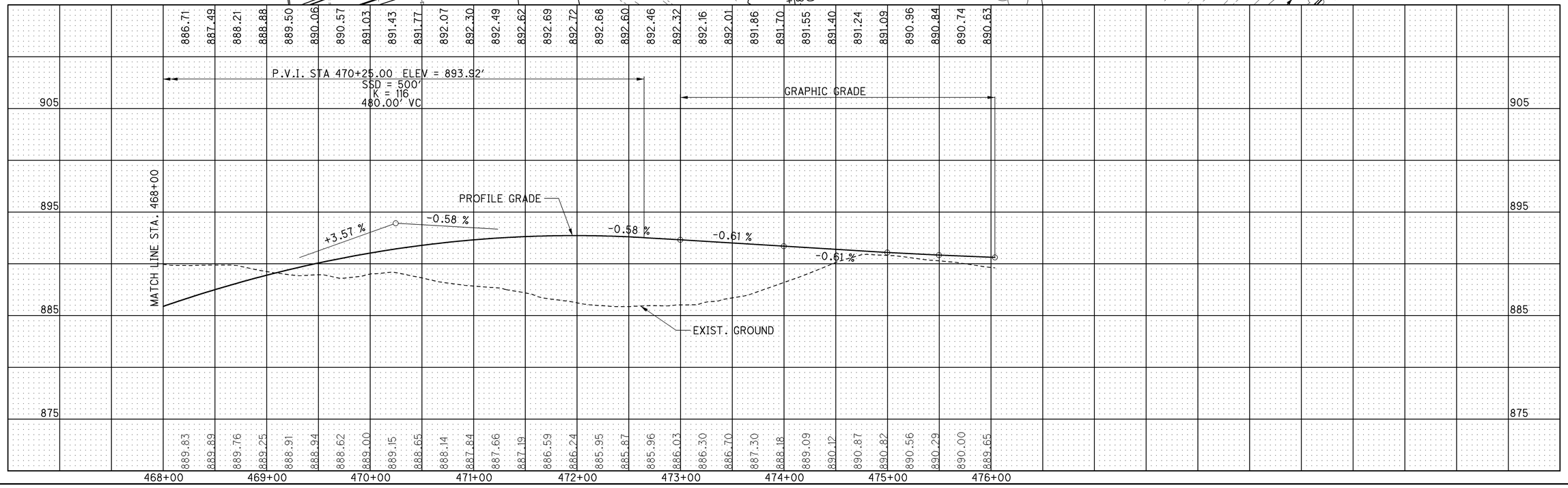

HORIZONTAL SCALE IN FEET
0 25 50 100
CALCULATED ACF
CHECKED EJC

PLAN AND PROFILE - S.R. 81 RAMP 'F' STA. 468+00.00 TO STA. 476+04.05

ALL-75-5.53

534
1224

J:\Projects\ALL\76691\roadway\sheets\76691GP812.dgn 11-SEP-2012 9:09PM reddenj

REF. NO.	SHEET NO.	STATION FROM	STATION TO	SIDE	202 CONCRETE SLOPE PROTECTION REMOVED	202 HEADWALL REMOVED	202 PIPE REMOVED, 24" AND UNDER	202 PIPE REMOVED, OVER 24"	202 GUARDRAIL REMOVED	202 ANCHOR ASSEMBLY REMOVED	202 CATCH BASIN REMOVED	601 TIED CONCRETE BLOCK MAT, TYPE 1	606 GUARDRAIL, TYPE 5	606 ANCHOR ASSEMBLY, TYPE T	606 ANCHOR ASSEMBLY, TYPE E	670 DITCH EROSION PROTECTION MAT, TYPE A
					SQ YD	EACH	FT	FT	FT	EACH	EACH	SQ YD	FT	FT	FT	SQ YD
		SR 81 RAMP B														
RM1	530	462+79	463+26	LT	47											
E1	530	464+25	467+50	LT												271
E2	530	463+39		LT								11				
E3	530	463+35		RT								11				
		SR 81 RAMP C														
RM1	531	455+08	456+82	LT					177	2						
RM2	531	459+30	460+94	RT					186	2						
RM3	531	459+98	459+59	LT/RT			114									
RM4	531	459+56	460+21	LT	95											
E1	531	460+29.04	462+33.00	LT												113
E2	531	460+35.00	462+00.00	RT												138
E3	531	462+07		LT								11				
E4	531	461+93		RT								11				
		SR 81 RAMP D														
RM1	532	454+11	458+78	RT/LT					488							
RM2	532	456+32	459+83	RT/LT					366							
RM3	532	458+55	457+40	RT/LT	37	1		141								
RM4	532	459+76	459+63	LT			43				1					
RM5	532	459+63	459+40.00	LT/RT			53				1					
GR1	532	454+12.50	460+15.50	LT									525	1	1	
E1	532	459+00	460+45	RT												121
E2	532	460+58		LT								11				
E3	532	460+83		RT								11				
		SR 81 RAMP F														
RM1	533	461+57	461+66	LT			102									
E1	533	462+53	468+00	LT												478
E2	533	462+60	466+50	RT												250
E3	533	461+75		LT								11				
E4	533	461+75		RT								11				
TOTALS CARRIED TO ROADWAY SUBSUMMARY					179	1	312	141	1217	4	2	88	525	1	1	1369

CALCULATED SJG
CHECKED ACF

ESTIMATED QUANTITIES

ALL-75-5.53

535
1224

J:\Projects\ALL\76691\roadway\sheets\76691GQ811.dgn 11-SEP-2012 9:09PM reddenj

SEEDING	
END WIDTH	SQ. YDS.
191	1128
213	1083
175	
	2211

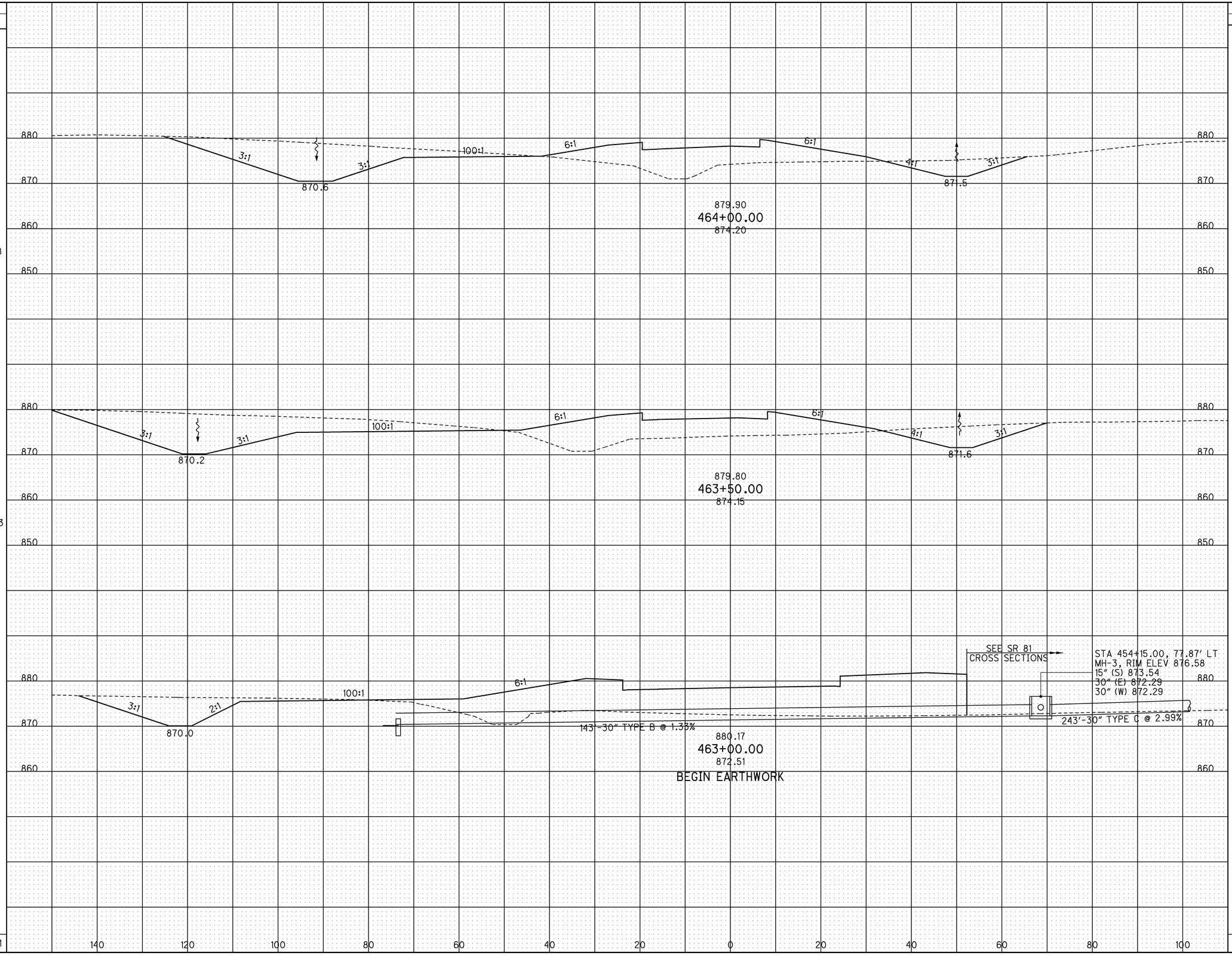

END AREA	
CUT	FILL
370	274
486	329
143	795

VOLUME	
CUT	FILL
792	558
583	1041
1375	1599

CALCULATED JMR
CHECKED ACF

CROSS SECTIONS - RAMP B (S.R. 81) STA. 463+00.00 TO STA. 464+00.00

ALL-75-5.53

536
1224

J:\Projects\ALL\76691\roadway\sheets\76691XS1243.dgn 11-SEP-2012 9:09PM reddenj

SEEDING		END AREA		VOLUME		
END WIDTH	SQ. YDS.	CUT	FILL	CUT	FILL	
69	405	28	149	55	292	SEE I-75 CROSS SECTIONS 6:1 4:1 3:1 882.91 465+50.00 878.00 872.7
76 120	758	32 49	166 203	291	445	AHEAD BACK 881.53 465+00.00 877.52 872.3
153	956	265	278	587	511	94' - PROP. 48" CONDUIT, TYPE A, STA. 464+47.25 SEE CULVERT C56 PLAN & PROFILE SHEET FOR DETAILS 880.48 464+50.00 874.98 871.6 871.5
	2119			933	1248	

120 100 80 60 40 20 0 20 40 60 80 100 120

CALCULATED JMR
CHECKED ACF

CROSS SECTIONS - RAMP B (S.R. 81)
STA. 464+50.00 TO STA. 465+50.00

ALL-75-5.53

537
1224

J:\Projects\ALL\76691\roadway\sheets\76691XS1244.dgn 11-SEP-2012 9:09PM reddenj

SEEDING END WIDTH	SEEDING SQ. YDS.	END AREA CUT	END AREA FILL	VOLUME CUT	VOLUME FILL
79	444	29	304	66	504
80	439	43	241	82	404
78	411	46	196	69	320
	1294			217	1228

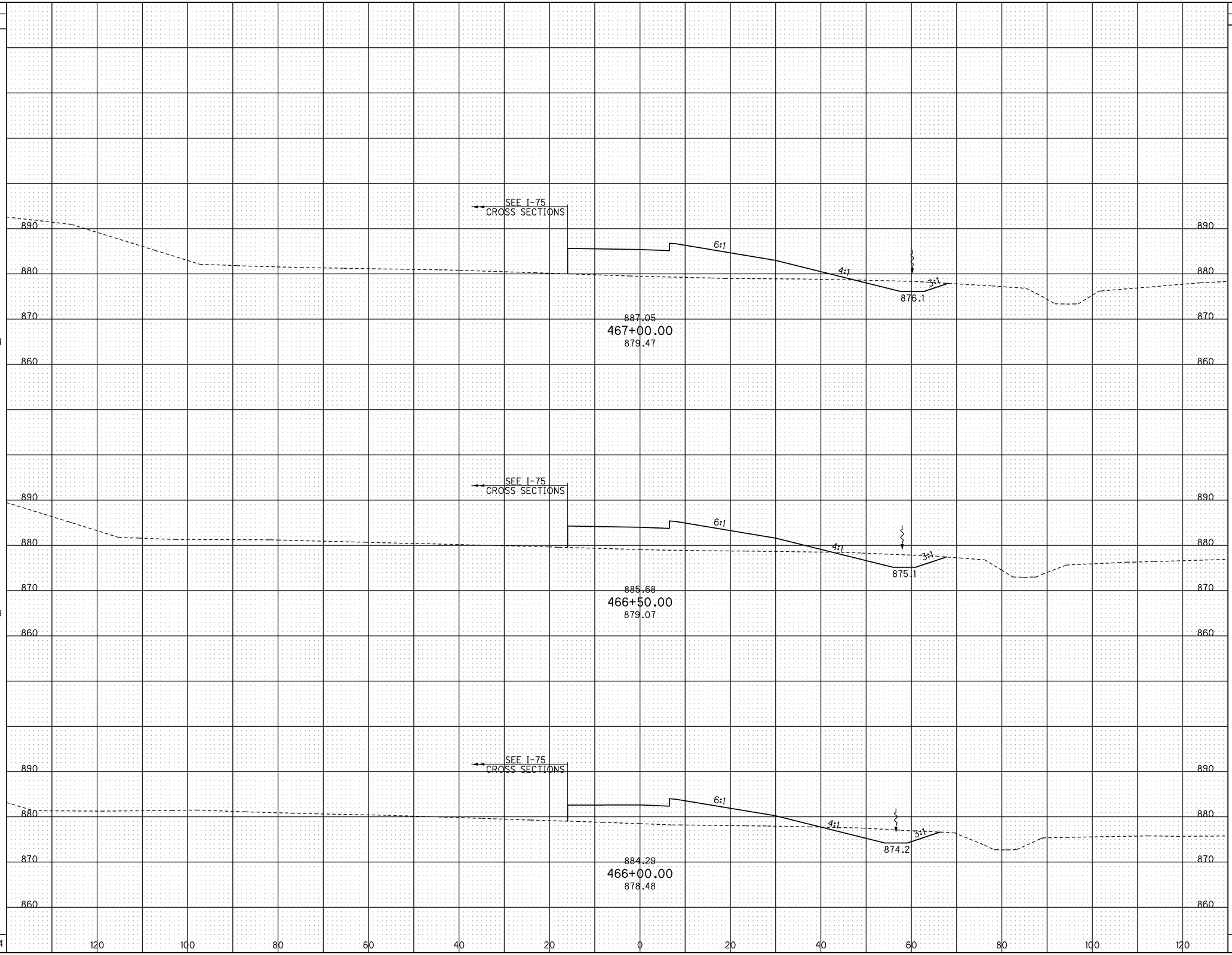

CALCULATED JMR
CHECKED ACF

CROSS SECTIONS - RAMP B (S.R. 81)
STA. 466+00.00 TO STA. 467+00.00

ALL-75-5.53

538
1224

J:\Projects\ALL\76691\roadway\sheets\76691XS1245.dgn 11-SEP-2012 9:09PM reddenj

SEEDING		END AREA		VOLUME	
END WIDTH	SQ. YDS.	CUT	FILL	CUT	FILL
81	450	25	330	46	608
81	444	25	327	38	635
78	439	16	359	42	614
	1333			126	1857

CALCULATED JMR
CHECKED ACF

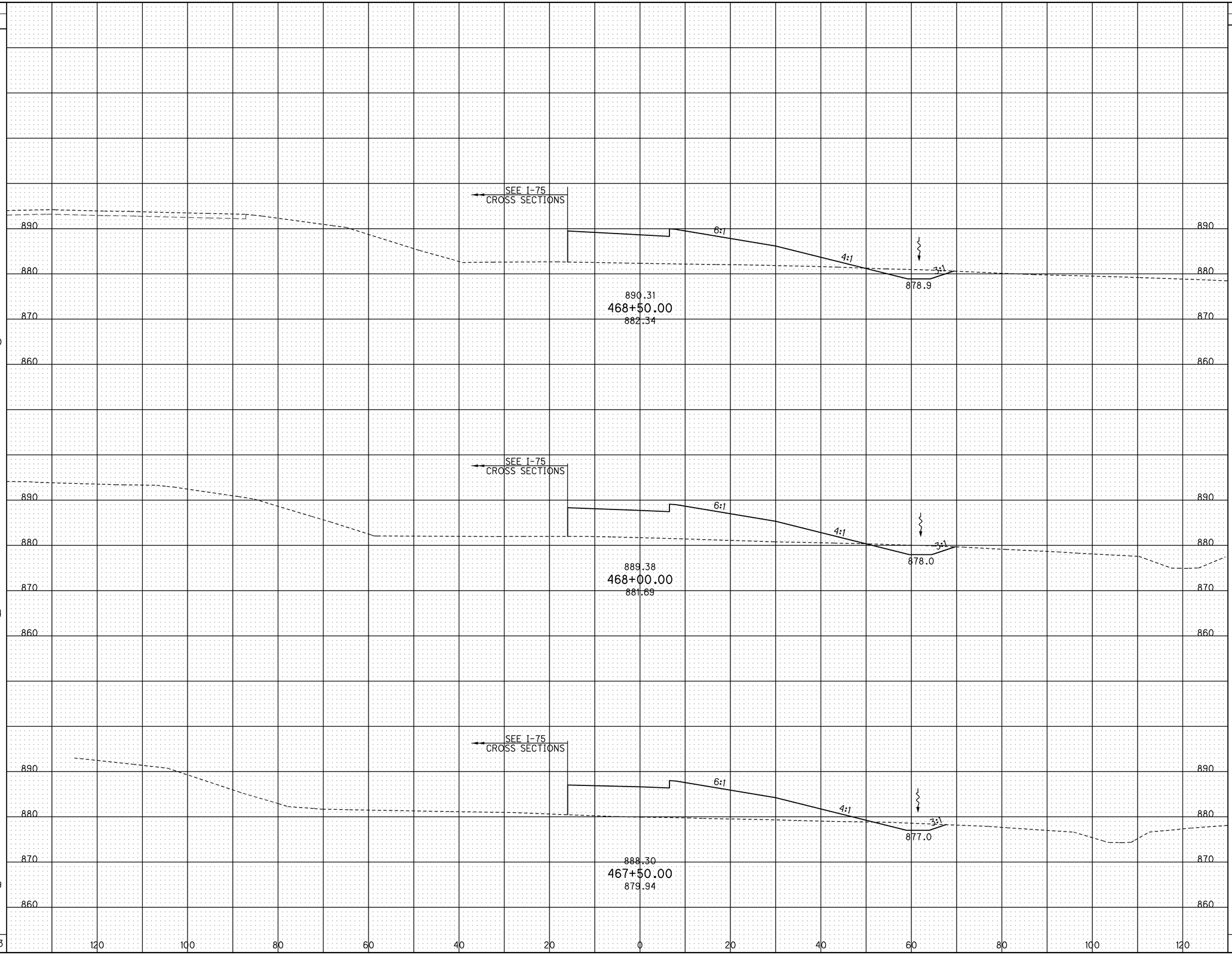

CROSS SECTIONS - RAMP B (S.R. 81)
STA. 467+50.00 TO STA. 468+50.00

ALL-75-5.53

539
1224

J:\Projects\ALL\76691\roadway\sheets\76691XS1246.dgn 11-SEP-2012 9:10PM reddenj

SEEDING		END AREA		VOLUME	
END WIDTH	SQ. YDS.	CUT	FILL	CUT	FILL
74	400	10	301	12	673
70	416	2	426	25	727
80	450	25	359	46	637
	1266			83	2037

CALCULATED JMR
CHECKED ACF

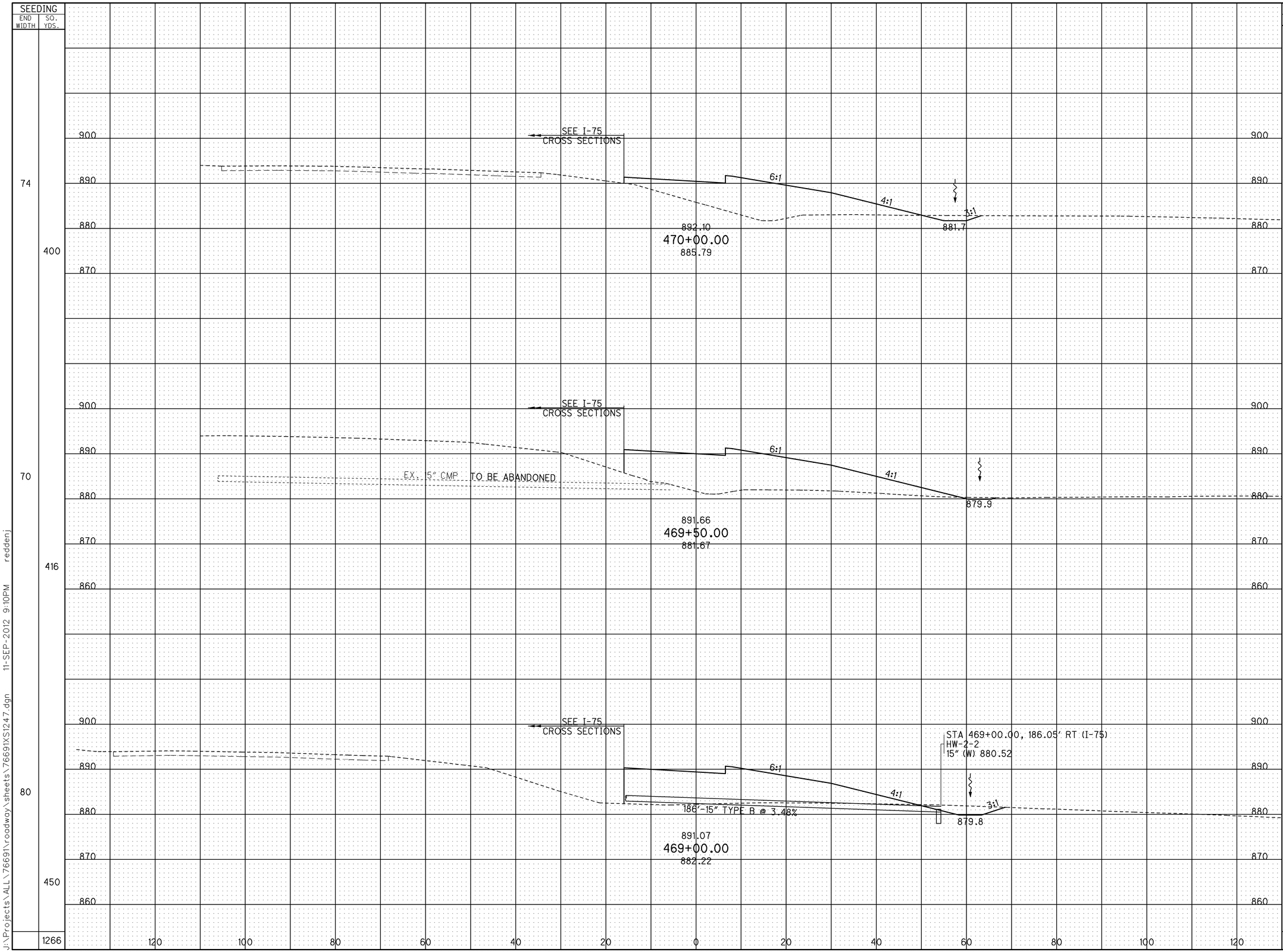

CROSS SECTIONS - RAMP B (S.R. 81)
STA. 469+00.00 TO STA. 470+00.00

ALL-75-5.53

540
1224

J:\Projects\ALL\76691\roadway\sheets\76691XS1247.dgn 11-SEP-2012 9:10PM reddenj

SEEDING END WIDTH	SEEDING SQ. YDS.	
		GRAND TOTAL SEEDING & MULCHING S.R. 81 RAMP 'B' 22,896 SQ. YD. (QUANTITY CARRIED TO ROADWAY SUBSUMMARY)
	13844	ADDED FOR REMOVAL OF EXISTING RAMPS
71	389	
69	400	
	14673	

END AREA CUT	END AREA FILL	VOLUME CUT	VOLUME FILL	
				GRAND TOTAL EARTHWORK S.R. 81 RAMP 'B' EXCAVATION: 4,370 CU. YD. EMBANKMENT: 12,387 CU. YD. (QUANTITY CARRIED TO ROADWAY SUBSUMMARY)
		1604	3733	ADDED FOR REMOVAL OF EXISTING RAMPS
18	58			
3	191			
		19	230	
		12	455	
		1636	4418	

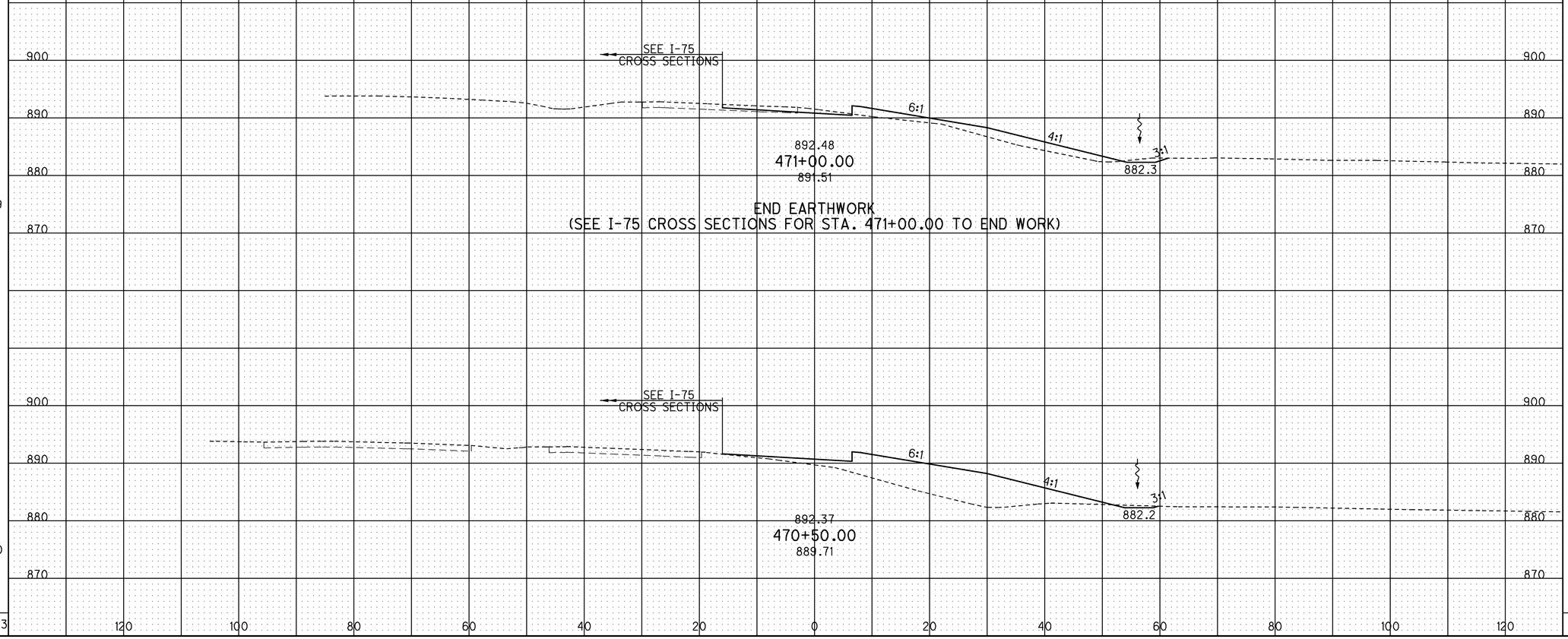

CALCULATED JMR
CHECKED ACF

CROSS SECTIONS - RAMP B (S.R. 81) STA. 470+50.00 TO STA. 471+00.00

ALL-75-5.53

541
1224

J:\Projects\ALL\76691\roadway\sheets\76691XS1248.dgn 11-SEP-2012 9:10PM reddenj

SEEDING END WIDTH	SEEDING SQ. YDS.	END AREA CUT	END AREA FILL	VOLUME CUT	VOLUME FILL
66	361	14	310	24	636
64	372	12	377	26	799
70	733	16	486	50	1435

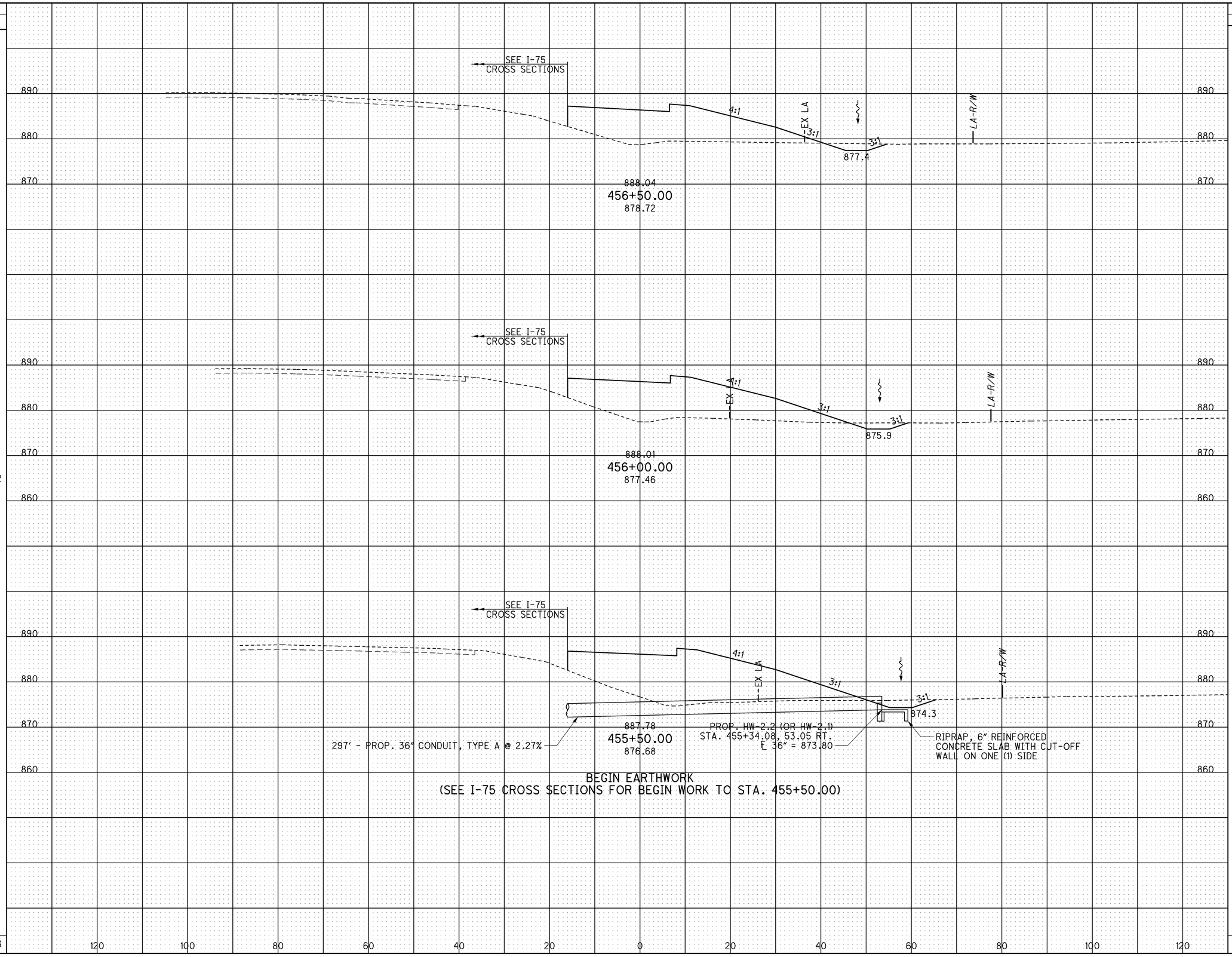

CALCULATED JMR
CHECKED ACF

CROSS SECTIONS - RAMP C (S.R. 81)
STA. 455+50.00 TO STA. 456+50.00

ALL-75-5.53

542
1224

J:\Projects\ALL\76691\roadway\sheets\76691XS1249.dgn 11-SEP-2012 9:10PM redden j

SEEDING		END AREA		VOLUME	
END WIDTH	SQ. YDS.	CUT	FILL	CUT	FILL
75	394	64	295	91	518
67	350	35	265	37	503
58	344	6	279	18	545
	1088			146	1566

CALCULATED JMR
CHECKED ACF

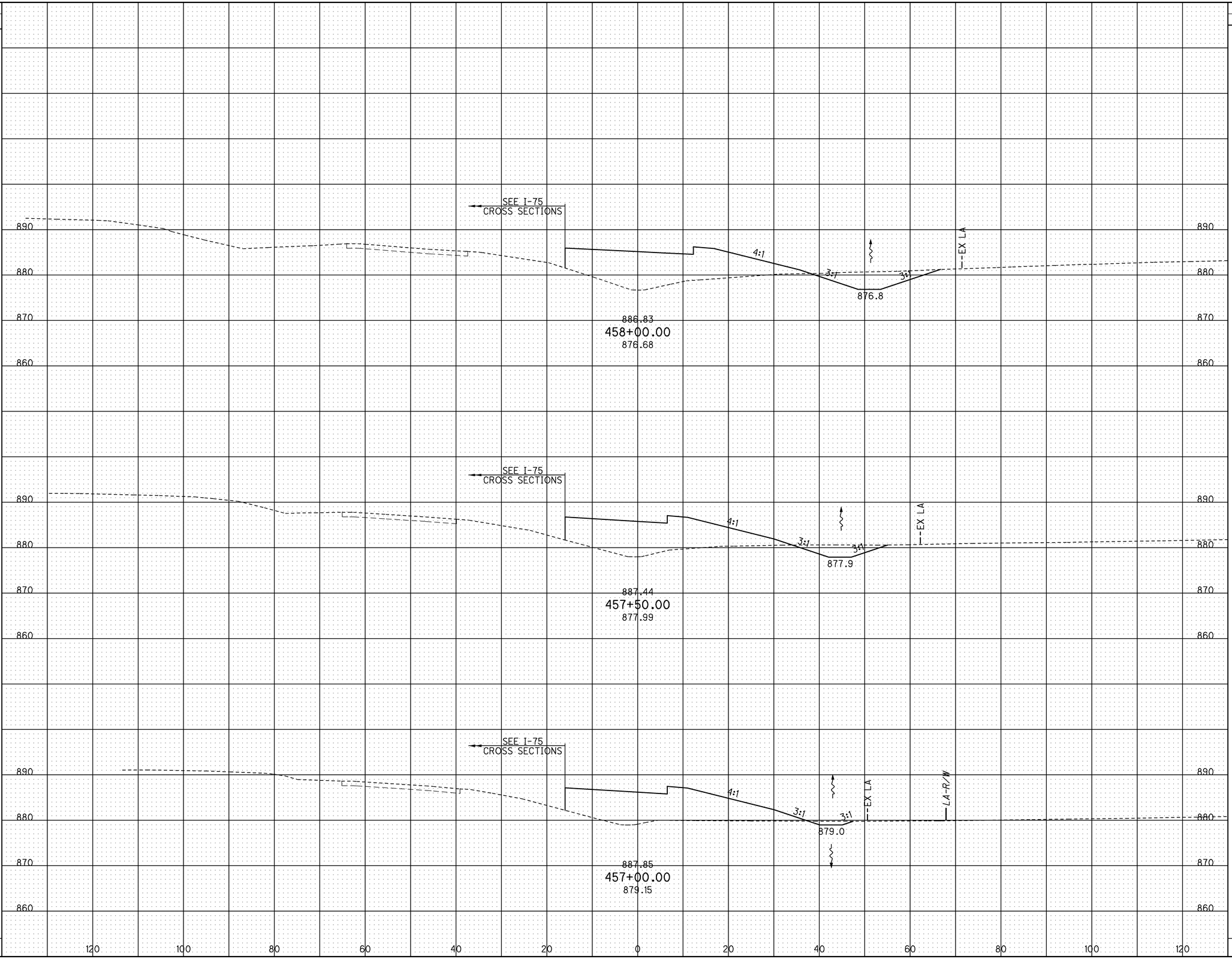

J:\Projects\ALL\76691\roadway\sheets\76691XS1250.dgn 11-SEP-2012 9:10PM reddenj

CROSS SECTIONS - RAMP C (S.R. 81)
STA. 457+00.00 TO STA. 458+00.00

ALL-75-5.53

543
1224

SEEDING		END AREA		VOLUME	
END WIDTH	SQ. YDS.	CUT	FILL	CUT	FILL
75	422	82	252	169	506
77	422	100	294	173	554
75	416	87	304	140	555
	1260			482	1615

CALCULATED JMR
CHECKED ACF

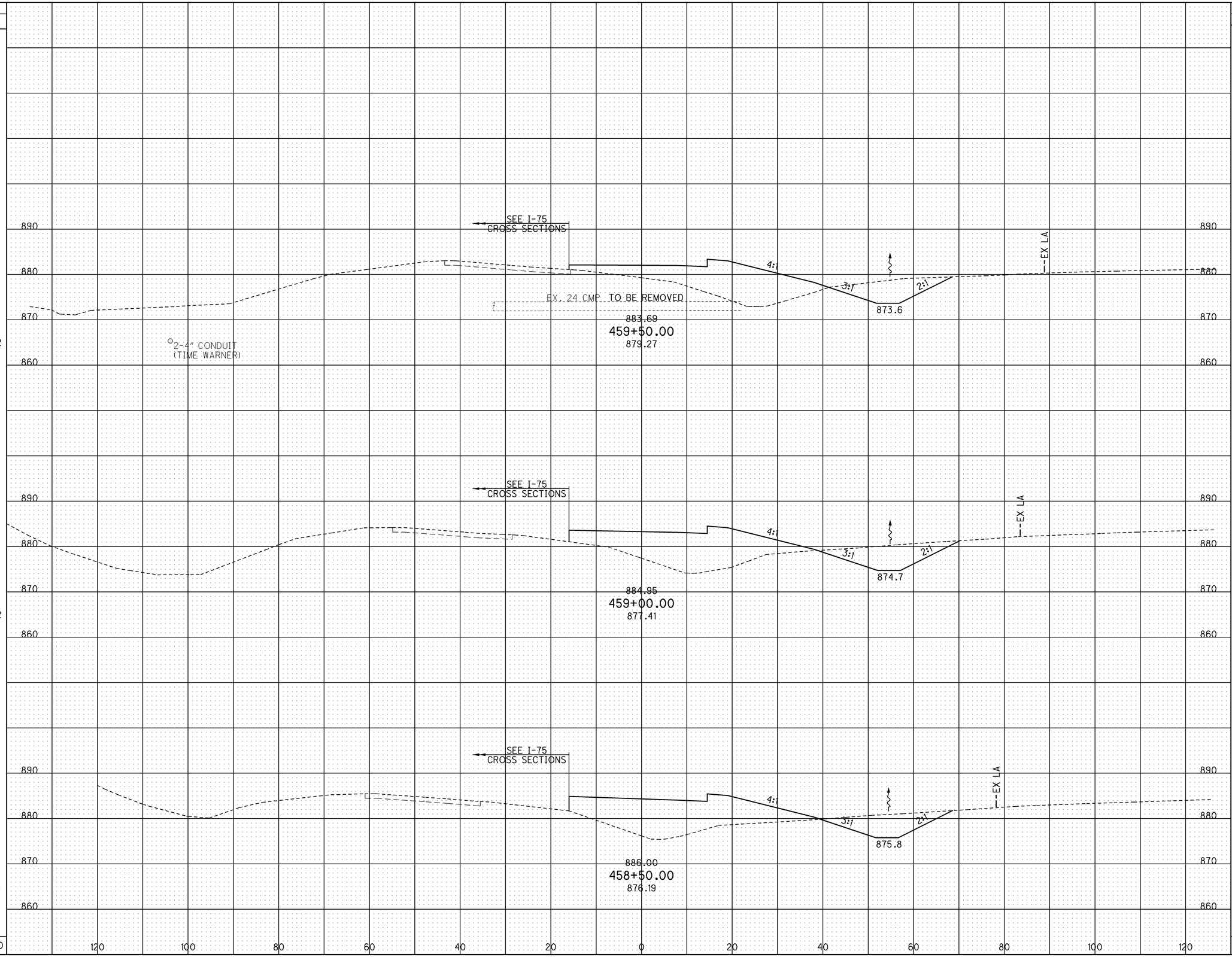

CROSS SECTIONS - RAMP C (S.R. 81)
STA. 458+50.00 TO STA. 459+50.00

ALL-75-5.53

544
1224

J:\Projects\ALL\76691\roadway\sheets\76691XS1251.dgn 11-SEP-2012 9:10PM reddenj

SEEDING	
END WIDTH	SQ. YDS.
158	883
159	650
74	416
	1949

END AREA	
CUT	FILL
424	21
290	99
90	132

VOLUME	
CUT	FILL
661	111
352	213
159	356
1172	680

CALCULATED JMR
CHECKED ACF

SEE I-75 CROSS SECTIONS

868.6

3:1

100:1

4:1

880.03
461+00.00
877.98

4:1

873.4

2:1

STA 461+14.89, 116.42' RT
EX. CB, GRATE ELEV 877.27
21" PVC NE 875.38
12" CONC NE 872.39
36" CPP SW 872.93
TO BE REMOVED

EX LA

2" GAS W/ 4" CASING

SEE I-75 CROSS SECTIONS

868.2

3:1

100:1

4:1

870.1

2" GAS W/ 4" CASING

110' - PROP. 36" CONDUIT, TYPE A, STA. 460+35
SEE CULVERT C53 PLAN & PROFILE SHEET FOR DETAILS

2-4" CONDUIT (TIME WARNER)

4:1

3:1

872.2

2:1

36" CPP
TO BE REMOVED

EX LA

880.91
460+50.00
880.77

SEE I-75 CROSS SECTIONS

2" GAS W/ 4" CASING

EX. 24 CMP TO BE REMOVED

2-4" CONDUIT (TIME WARNER)

882.26
460+00.00
880.13

4:1

3:1

872.6

2:1

36" CPP
TO BE REMOVED

EX LA

890
880
870
860
850

120 100 80 60 40 20 0 20 40 60 80 100 120

CROSS SECTIONS - RAMP C (S.R. 81)
STA. 460+00.00 TO STA. 461+00.00

ALL-75-5.53

545
1224

J:\Projects\ALL\76691\roadway\sheets\76691XS1252.dgn 11-SEP-2012 9:10PM redden

SEEDING	
END WIDTH	SQ. YDS.
145	895
177	933
	1828

GRAND TOTAL SEEDING & MULCHING S.R. 81 RAMP 'C'
6,858 SQ. YD.
(QUANTITY CARRIED TO ROADWAY SUBSUMMARY)

GRAND TOTAL EARTHWORK S.R. 81 RAMP 'C'
EXCAVATION: 3,342 CU. YD.
EMBANKMENT: 5,470 CU. YD.
(QUANTITY CARRIED TO ROADWAY SUBSUMMARY)

NOTE:
DEDUCTED 149 CU. YD. FROM EXCAVATION QUANTITY FOR PAVEMENT REMOVAL

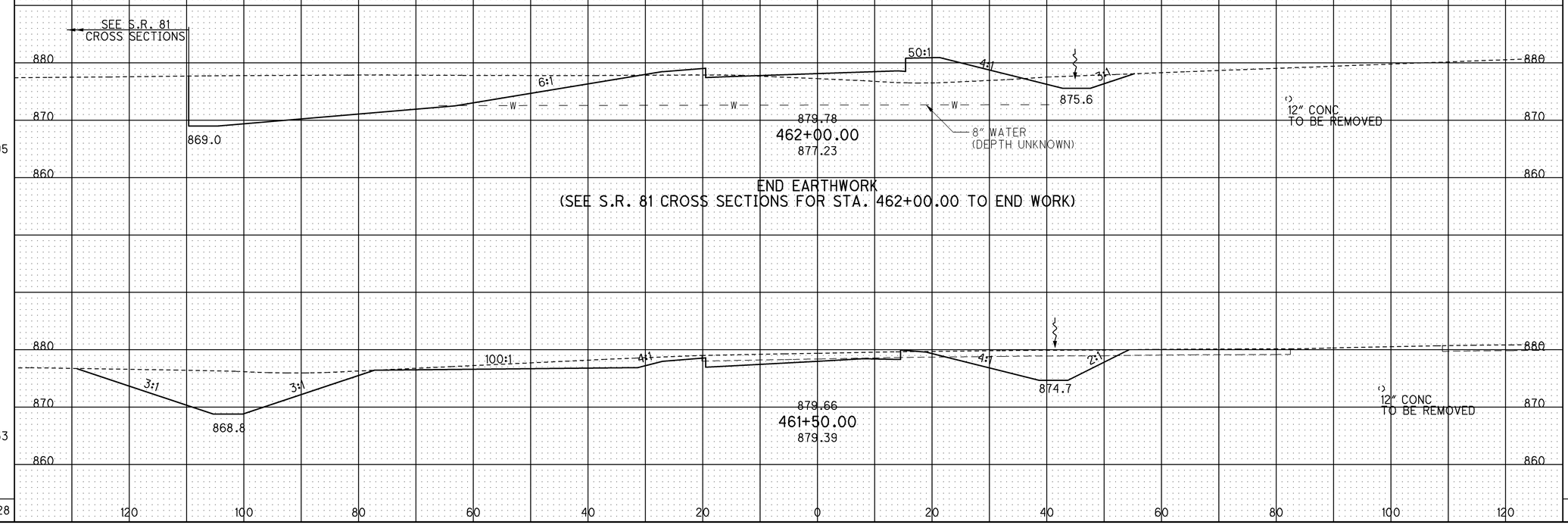

END AREA		VOLUME	
CUT	FILL	CUT	FILL
449	95		
450	36		
		832	121
		809	53
		1641	174

CALCULATED JMR
CHECKED ACF

CROSS SECTIONS - RAMP C (S.R. 81)
STA. 461+50.00 TO STA. 462+00.00

ALL-75-5.53

546
1224

J:\Projects\ALL\76691\roadway\sheets\76691XS1253.dgn 11-SEP-2012 9:10PM reddenj

SEEDING END WIDTH	SEEDING SQ. YDS.	END AREA CUT	END AREA FILL	VOLUME CUT	VOLUME FILL
71	422	67	479	146	829
81	472	91	417	233	683
88	894	160	321	379	1512

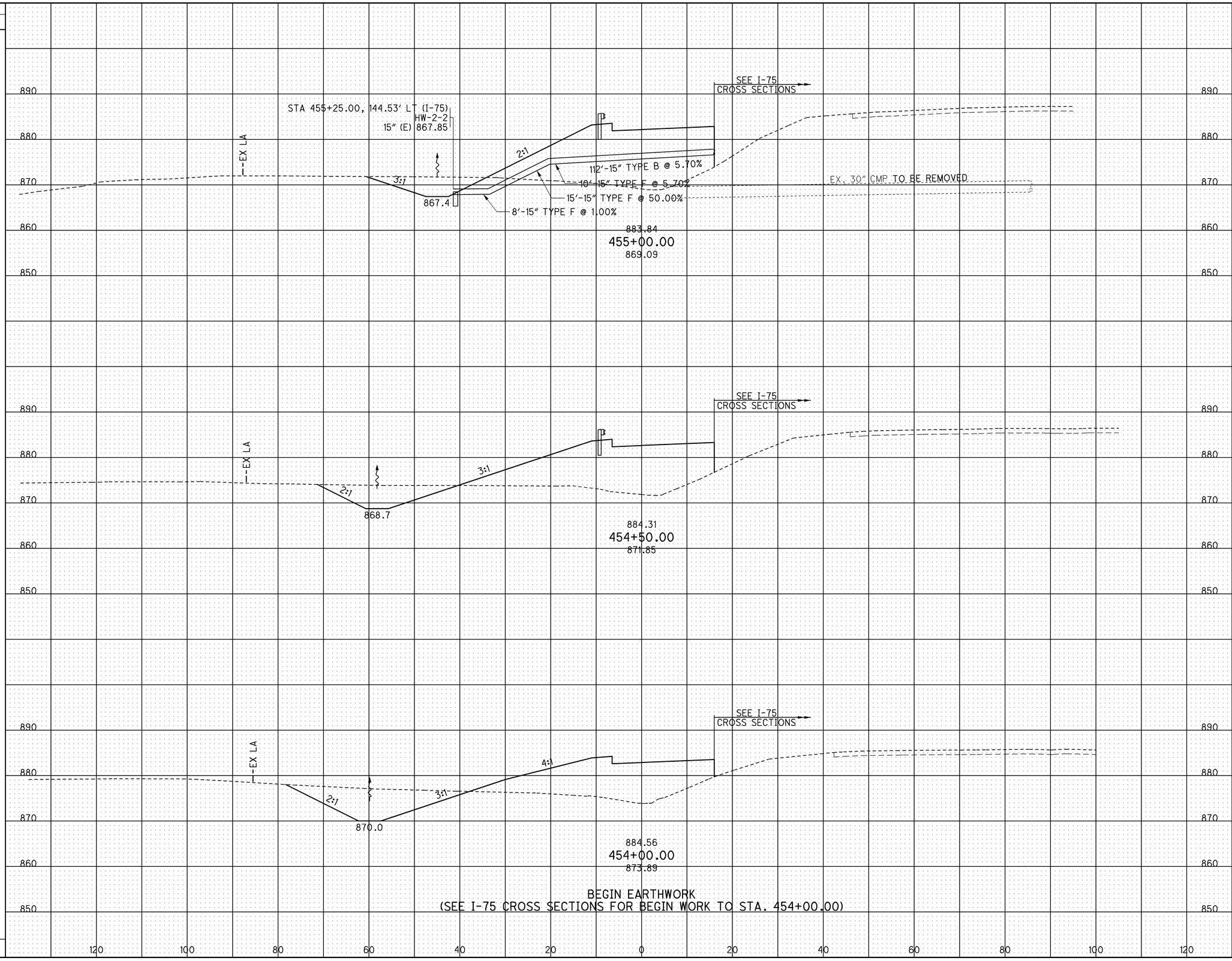

CALCULATED JMR
CHECKED ACF

CROSS SECTIONS - RAMP D (S.R. 81)
STA. 454+00.00 TO STA. 455+00.00

ALL-75-5.53

547
1224

J:\Projects\ALL\76691\roadway\sheets\76691XS1254.dgn 11-SEP-2012 9:10PM redden

SEEDING	
END WIDTH	SQ. YDS.
63	350
63	350
63	372
	1072

END AREA	
CUT	FILL
37	300
38	354
20	489
80	896

VOLUME	
CUT	FILL
69	606
54	781
203	2283

CALCULATED JMR
CHECKED ACF

CROSS SECTIONS - RAMP D (S.R. 81)
STA. 455+50.00 TO STA. 456+50.00

ALL-75-5.53

548
1224

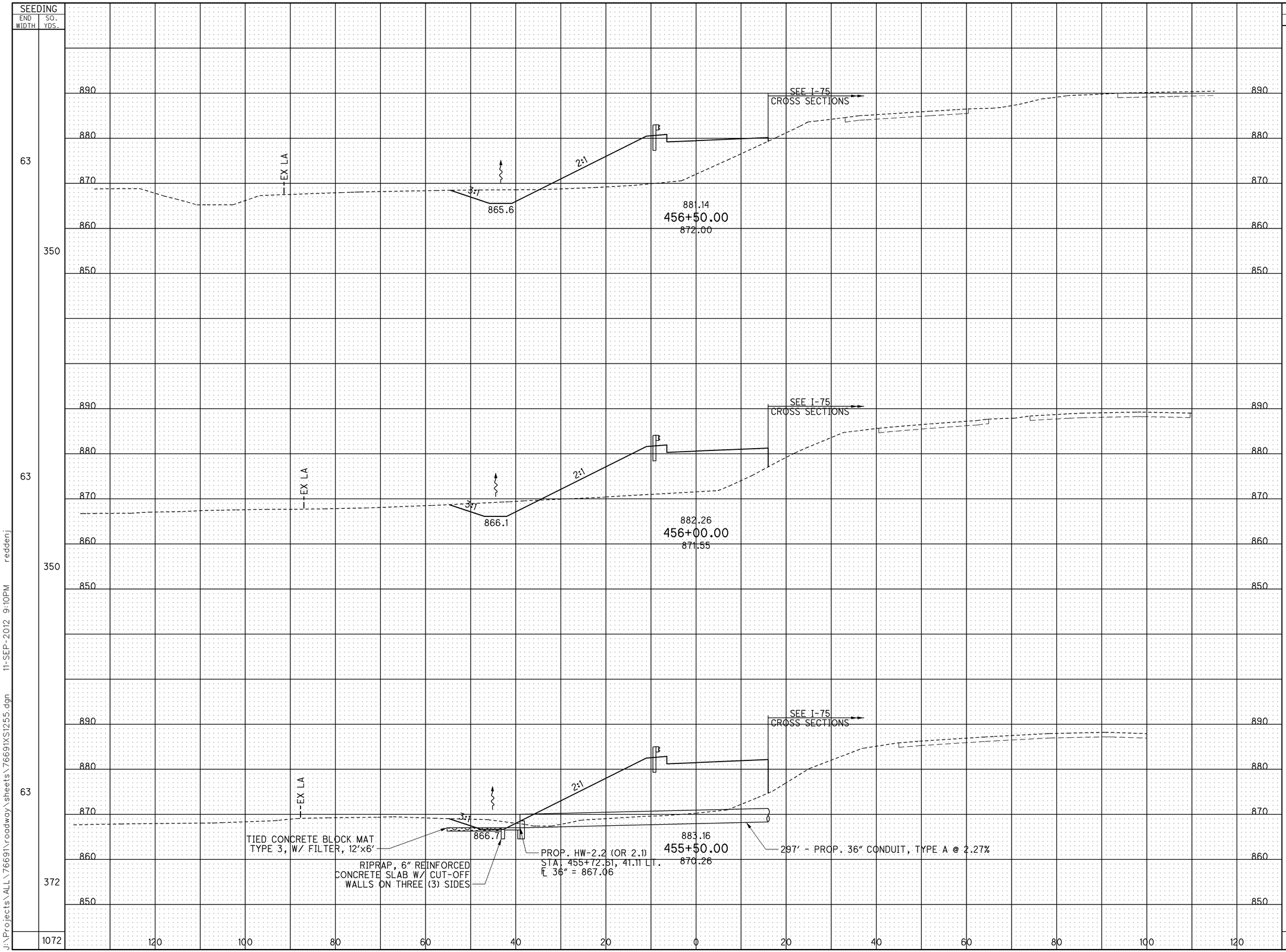

J:\Projects\ALL\76691\roadway\sheets\76691XS1255.dgn 11-SEP-2012 9:10PM reddenj

SEEDING		END AREA		VOLUME		CALCULATED	CHECKED
END WIDTH	SQ. YDS.	CUT	FILL	CUT	FILL	JMR	ACF
59	339	290	0	380	22		
63	350	121	24	171	168		
62	350	64	158	93	424		
	1039			644	614		

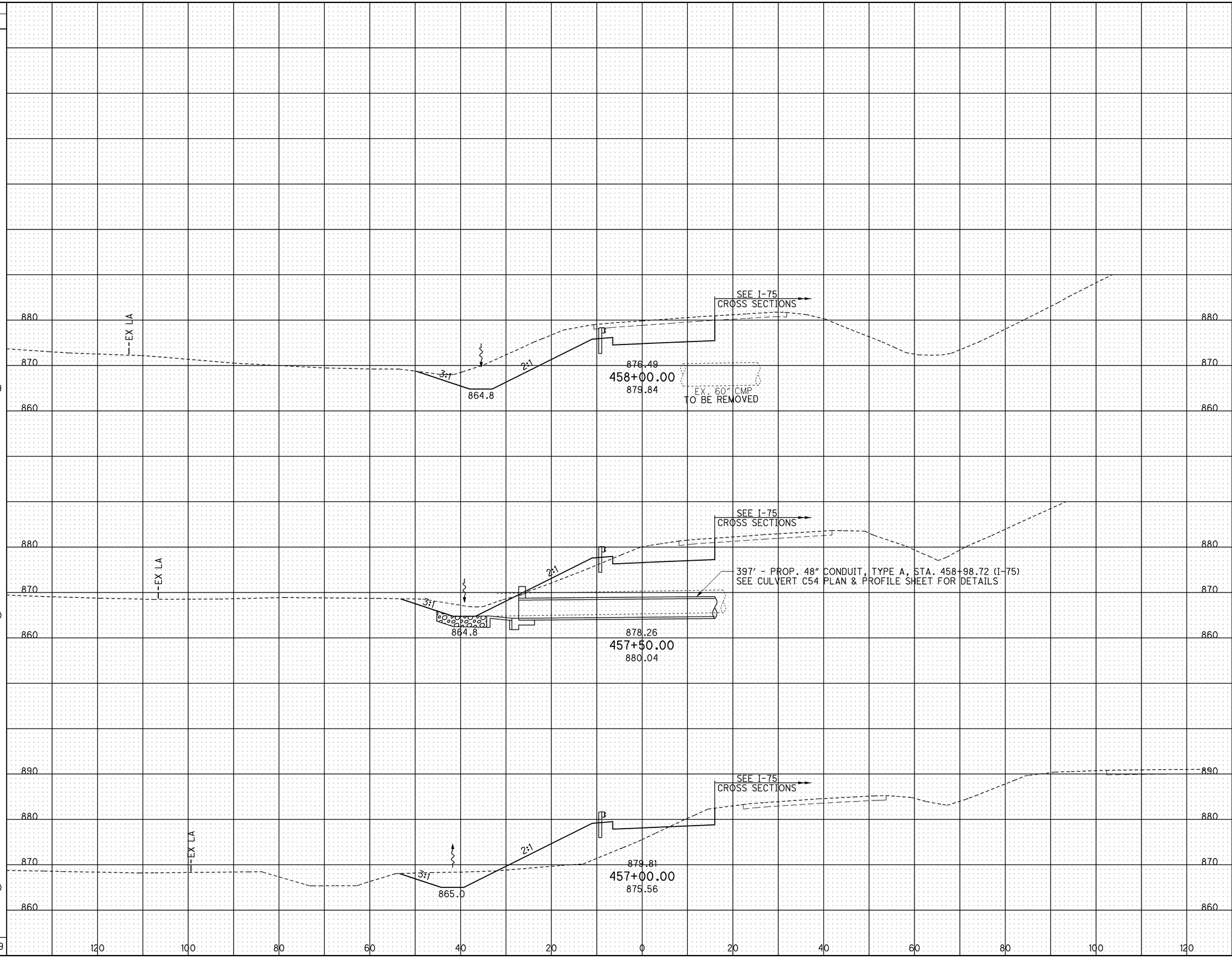

CROSS SECTIONS - RAMP D (S.R. 81) STA. 457+00.00 TO STA. 458+00.00

ALL-75-5.53

549
1224

J:\Projects\ALL\76691\roadway\sheets\76691XS1256.dgn 11-SEP-2012 9:10PM reddenj

SEEDING END WIDTH	SEEDING SQ. YDS.
142	700
109	522
79	383
	1605

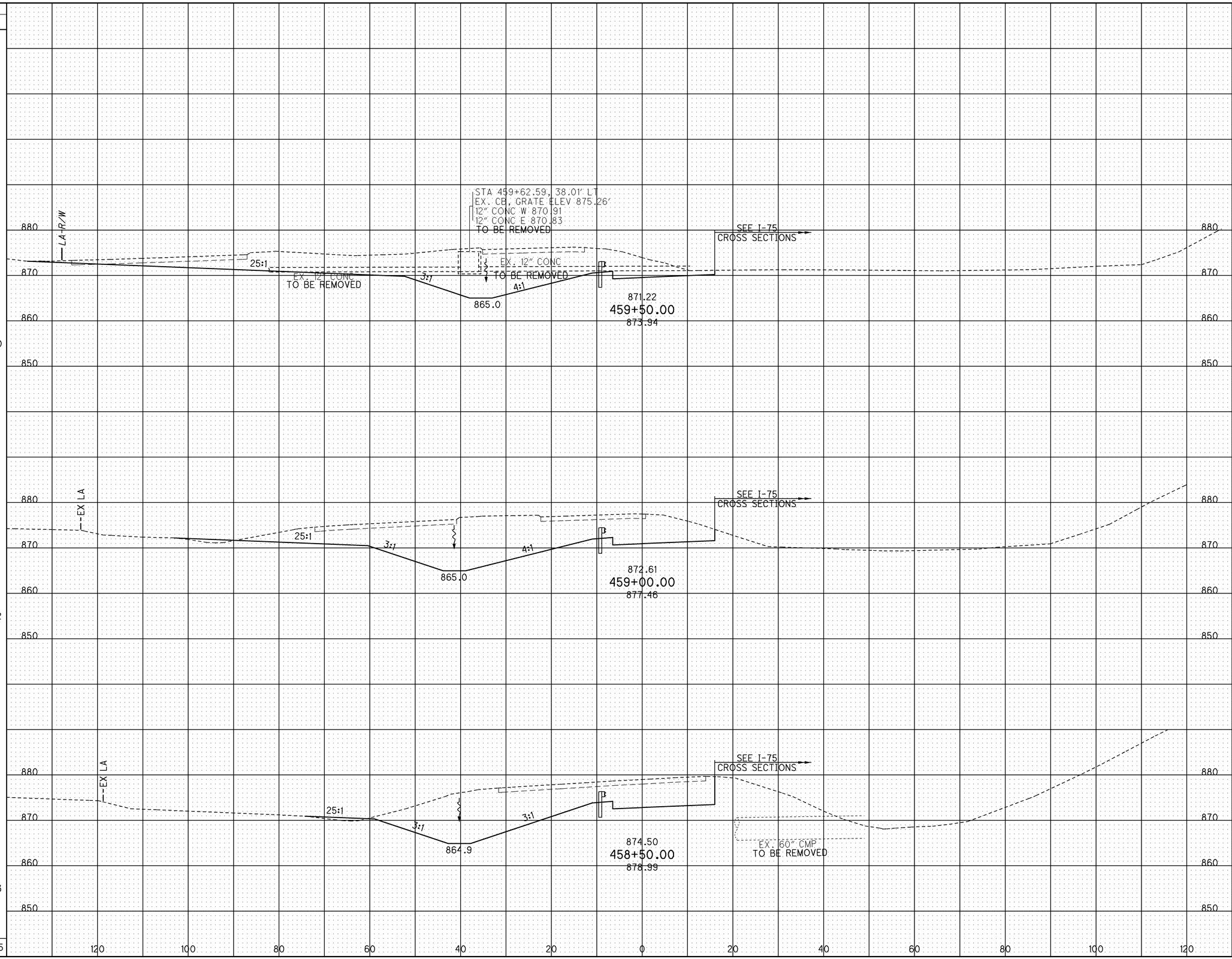

END AREA CUT	END AREA FILL	VOLUME CUT	VOLUME FILL
669	0	1227	5
656	6	1090	10
521	5	751	5
		3068	20

CALCULATED JMR
CHECKED ACF

CROSS SECTIONS - RAMP D (S.R. 81)
STA. 458+50.00 TO STA. 459+50.00

ALL-75-5.53

550
1224

J:\Projects\ALL\76691\roadway\sheets\76691XS1257.dgn 11-SEP-2012 9:10PM reddenj

SEEDING END WIDTH	SEEDING SQ. YDS.
48	500
131	716
126	744
	1960

GRAND TOTAL SEEDING & MULCHING S.R. 81 RAMP 'D'
6,570 SQ. YD.
(QUANTITY CARRIED TO ROADWAY SUBSUMMARY)

GRAND TOTAL EARTHWORK S.R. 81 RAMP 'D'
EXCAVATION: 7,476 CU. YD.
EMBANKMENT: 4,429 CU. YD.
(QUANTITY CARRIED TO ROADWAY SUBSUMMARY)

NOTE:
DEDUCTED 365 CU. YD. FROM EXCAVATION QUANTITY FOR PAVEMENT REMOVAL

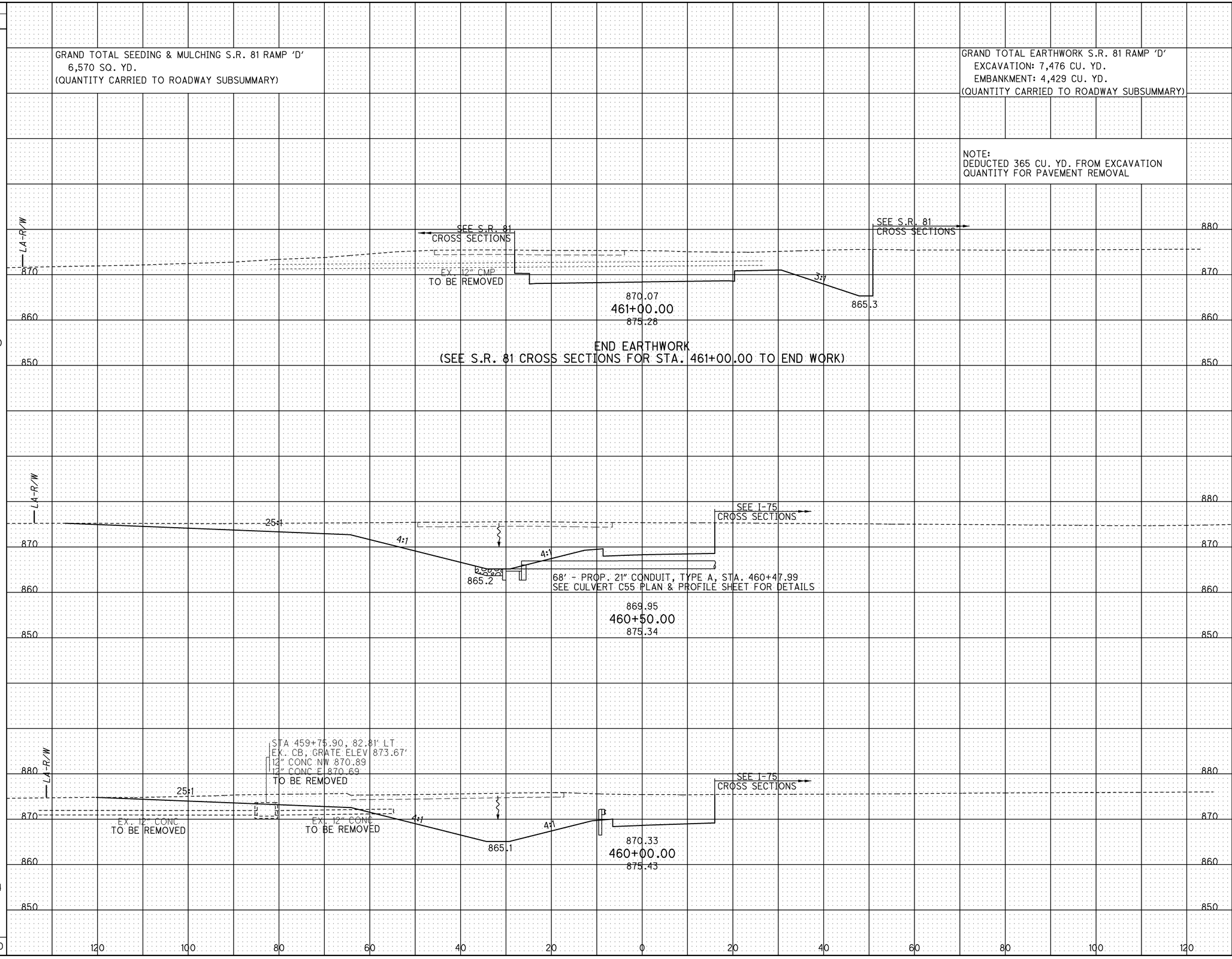

END AREA CUT	END AREA FILL	VOLUME CUT	VOLUME FILL
522	0	1092	0
657	0	1222	0
663	0	1233	0
		3547	0

CALCULATED JMR
CHECKED ACF

CROSS SECTIONS - RAMP D (S.R. 81) STA. 460+00.00 TO STA. 461+00.00

ALL-75-5.53

551
1224

J:\Projects\ALL\76691\roadway\sheets\76691XS1258.dgn 11-SEP-2012 9:10PM redden

SEEDING END WIDTH	SEEDING SQ. YDS.
127	761
146	733
116	1494

SEE I-75 CROSS SECTIONS

880 / 870 / 860 / 850

4:1 6:1 4:1 4:1

866.0 866.2

869.98
463+00.00
869.64

SEE I-75 CROSS SECTIONS

880 / 870 / 860 / 850

4:1 6:1 4:1 4:1

864.6 864.7

80' - PROP. 24" CONDUIT, TYPE A, STA. 462+45.29
SEE CULVERT C59 PLAN & PROFILE SHEET FOR DETAILS

869.83
462+50.00
868.45

SEE S.R. 81 CROSS SECTIONS

SEE S.R. 81 CROSS SECTIONS

870 / 860 / 850

4:1 4:1 4:1

864.5 868.9

870.19
462+00.00
867.74

BEGIN EARTHWORK
(SEE S.R. 81 CROSS SECTIONS FOR BEGIN WORK TO STA. 462+00.00)

120 100 80 60 40 20 0 20 40 60 80 100 120

END AREA CUT	END AREA FILL	VOLUME CUT	VOLUME FILL
874	1	1900	2
1178	1	1684	6
641	6		
		3584	8

CALCULATED JMR
CHECKED ACF

CROSS SECTIONS - RAMP F (S.R. 81)
STA. 462+00.00 TO STA. 463+00.00

ALL-75-5.53

552
1224

J:\Projects\ALL\76691\roadway\sheets\76691XS1259.dgn 11-SEP-2012 9:10PM reddenj

SEEDING		END AREA		VOLUME		
END WIDTH	SQ. YDS.	CUT	FILL	CUT	FILL	
						CALCULATED JMR
						CHECKED ACF
93	500	355	30	610	49	
87	695	304	23	1370	30	
126		761	23			
123	700	719	10	1474	10	
	1895			3454	89	

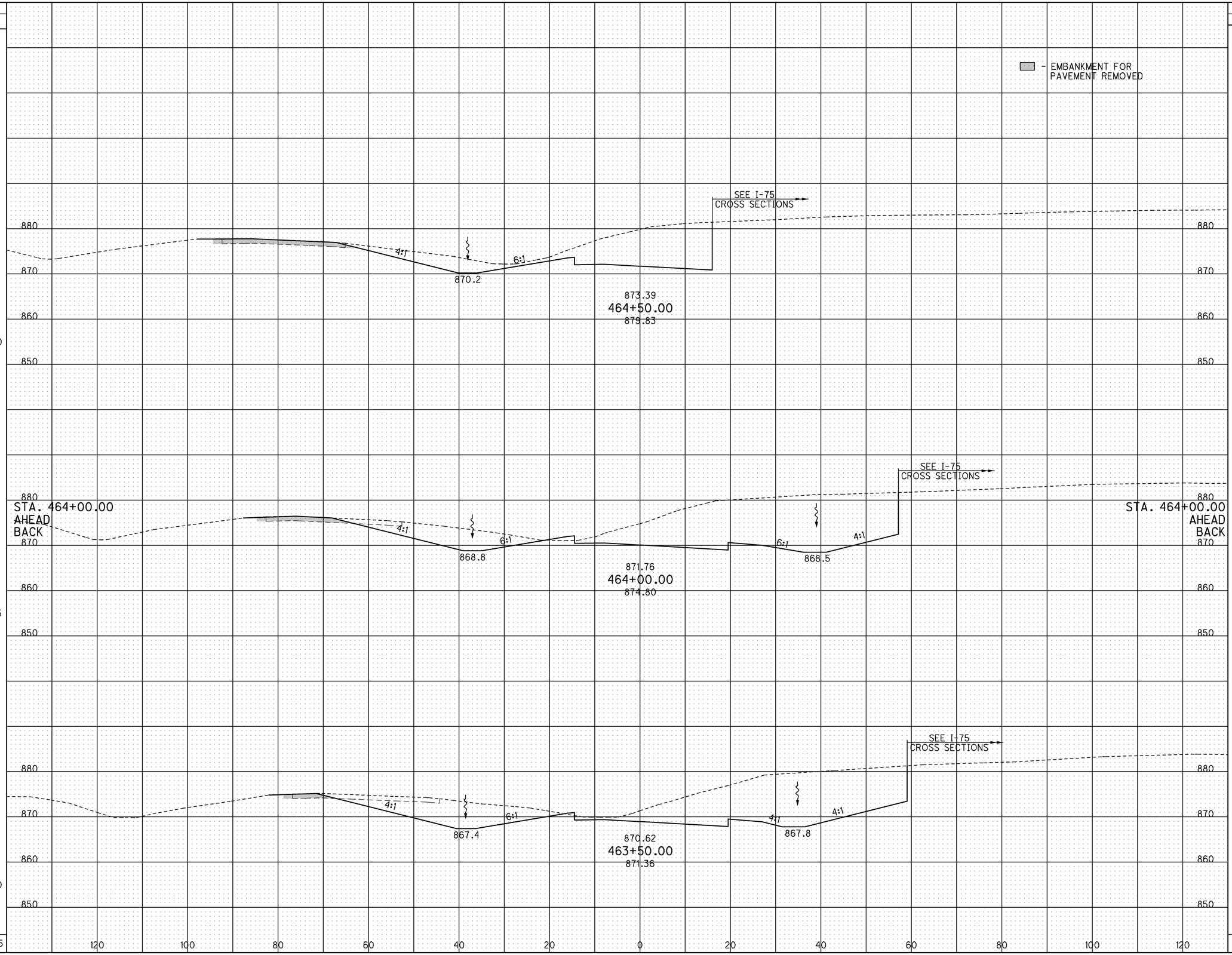

CROSS SECTIONS - RAMP F (S.R. 81) STA. 463+50.00 TO STA. 464+50.00

ALL-75-5.53

553
1224

J:\Projects\ALL\76691\roadway\sheets\76691XS1260.dgn 11-SEP-2012 9:10PM reddenj

SEEDING		END AREA		VOLUME		CALCULATED	CHECKED
END WIDTH	SQ. YDS.	CUT	FILL	CUT	FILL	JMR	ACF
96	511	653	30	1141	56		
88	483	580	30	961	56		
86	500	458	30	752	56		
	1494			2854	168		

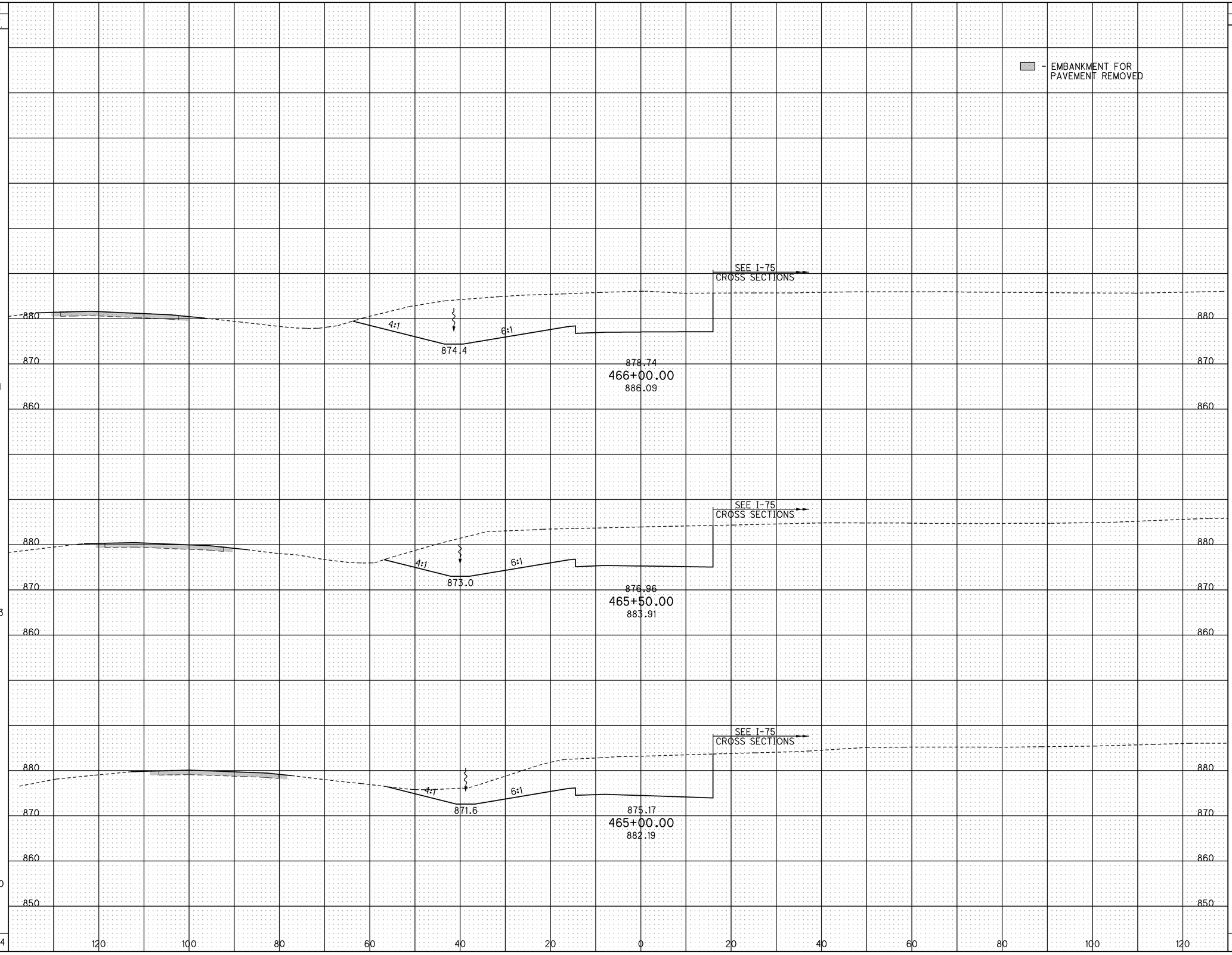

CROSS SECTIONS - RAMP F (S.R. 81) STA. 465+00.00 TO STA. 466+00.00

ALL-75-5.53

554
1224

J:\Projects\ALL\76691\roadway\sheets\76691XS1261.dgn 11-SEP-2012 9:10PM reddenj

SEEDING		END AREA		VOLUME	
END WIDTH	SQ. YDS.	CUT	FILL	CUT	FILL
97	555	614	27	1174	52
103	561	653	30	1218	55
98	539	662	30	1217	55
	1655			3609	162

CALCULATED JMR
CHECKED ACF

- EMBANKMENT FOR PAVEMENT REMOVED

SEE I-75 CROSS SECTIONS

890
880
870
860

4:1
6:1

878.6

884.10
467+50.00
890.06

SEE I-75 CROSS SECTIONS

877.2

882.31
467+00.00
889.13

SEE I-75 CROSS SECTIONS

875.8

880.53
466+50.00
887.56

140 120 100 80 60 40 20 0 20 40 60 80 100

CROSS SECTIONS - RAMP F (S.R. 81)
STA. 466+50.00 TO STA. 467+50.00

ALL-75-5.53

555
1224

J:\Projects\ALL\76691\roadway\sheets\76691XS1262.dgn 11-SEP-2012 9:10PM reddenj

SEEDING		END AREA		VOLUME	
END WIDTH	SQ. YDS.	CUT	FILL	CUT	FILL
113	633	234	36	530	60
115	622	338	29	721	54
108	589	441	29	884	49
103	555	514	24	1044	47
	2399			3179	210

CALCULATED JMR
CHECKED ACF

- EMBANKMENT FOR PAVEMENT REMOVED

SEE I-75 CROSS SECTIONS

15" CMP

4:1 4:1 6:1

881.0
890.06
469+50.00
888.95

880.7
888.88
469+00.00
889.25

880.3
887.49
468+50.00
889.89

880.0
885.87
468+00.00
889.95

900 890 880 870

140 120 100 80 60 40 20 0 20 40 60 80 100

CROSS SECTIONS - RAMP F (S.R. 81)
STA. 468+00.00 TO STA. 469+50.00

ALL-75-5.53

556
1224

J:\Projects\ALL\76691\roadway\sheets\76691XS1263.dgn 11-SEP-2012 9:10PM reddenj

SEEDING	
END WIDTH	SQ. YDS.
126	700
125	644
106	611
	1955

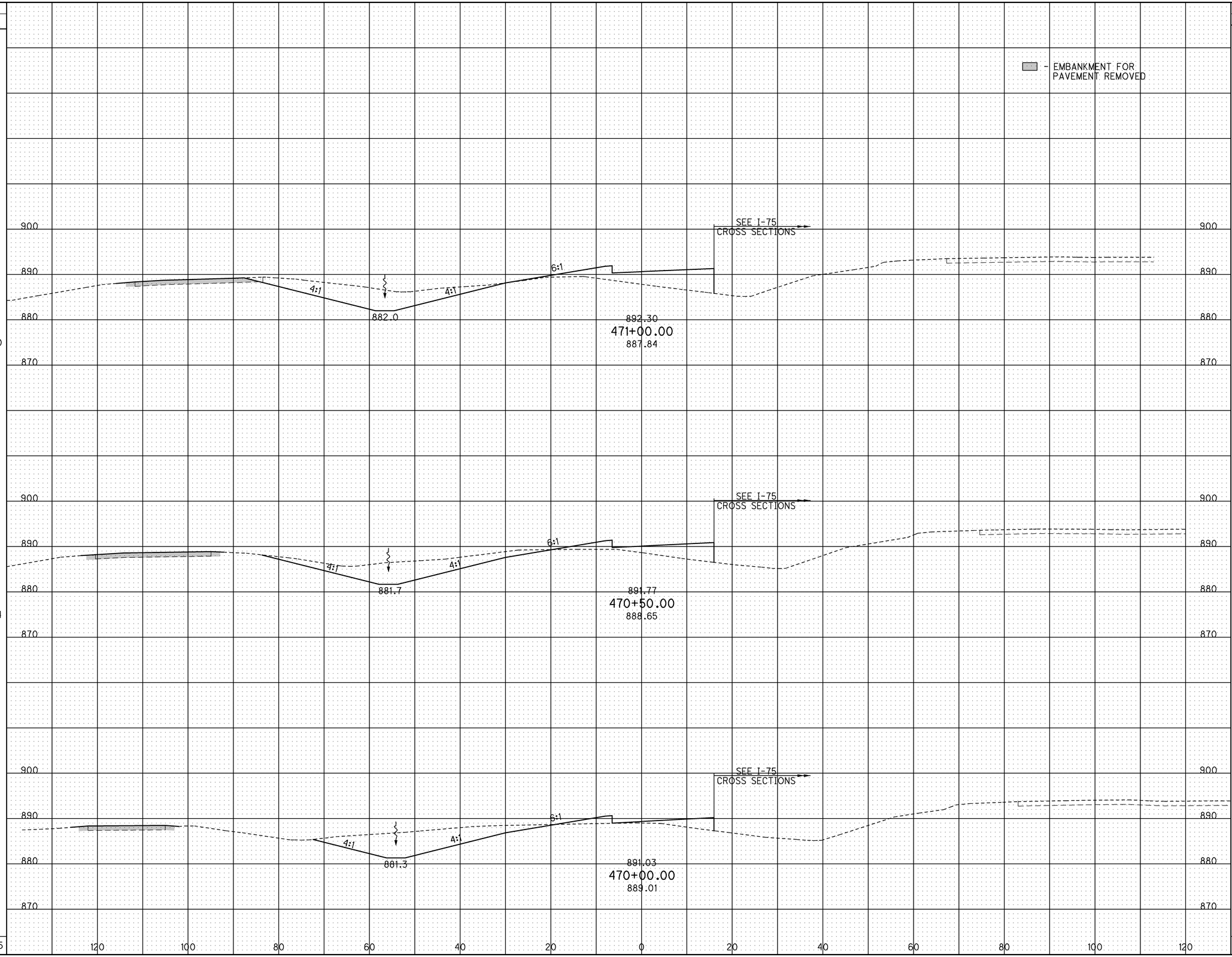

END AREA	
CUT	FILL
176	132
172	100
180	57

VOLUME	
CUT	FILL
322	215
326	145
383	86
1031	446

CALCULATED JMR
CHECKED ACF

CROSS SECTIONS - RAMP F (S.R. 81) STA. 470+00.00 TO STA. 471+00.00

ALL-75-5.53

557
1224

J:\Projects\ALL\76691\roadway\sheets\76691XS1264.dgn 11-SEP-2012 9:10PM reddenj

SEEDING	
END WIDTH	SQ. YDS.
116	672
	672

GRAND TOTAL SEEDING & MULCHING S.R. 81 RAMP 'F'
11,564 SQ. YD.
(QUANTITY CARRIED TO ROADWAY SUBSUMMARY)

GRAND TOTAL EARTHWORK S.R. 81 RAMP 'F'
EXCAVATION: 17,376 CU. YD.
EMBANKMENT: 1,381 CU. YD.
(QUANTITY CARRIED TO ROADWAY SUBSUMMARY)

NOTE:
DEDUCTED 680 CU. YD. FROM EXCAVATION QUANTITY FOR PAVEMENT REMOVAL

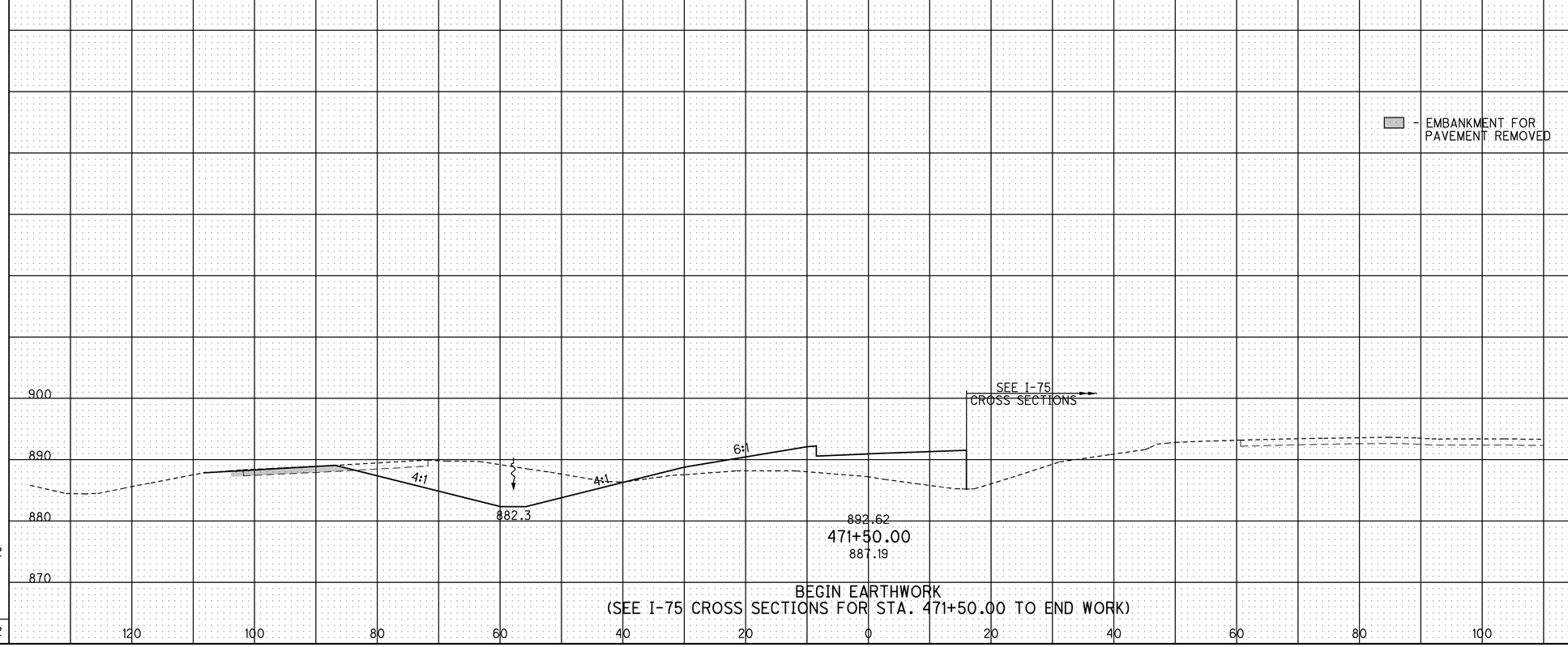

END AREA		VOLUME	
CUT	FILL	CUT	FILL
196	189	345	298
		345	298

CALCULATED JMR
CHECKED ACF

CROSS SECTIONS - RAMP F (S.R. 81)
STA. 471+50.00

ALL-75-5.53

558
1224

J:\Projects\ALL\76691\roadway\sheets\76691XS1265.dgn 11-SEP-2012 9:10PM reddenj

CURVE NEU-1
P.I.= Sta. 12+18.30
D = 11° 27′ 00″ (RT)
Dc = 8° 00′ 00″
R = 716.20′
T = 71.80′
L = 143.13′
E = 3.59′
C = 142.89′
C.B. = N 4° 50′ 04″ W
e_D = NC

CROSS REFERENCES			
SHEET NO.	DESCRIPTION	SHEET NO.	DESCRIPTION
562	CROSS SECTIONS	640	JOINT DETAILS
562	DRAINAGE DETAILS	856	SIGNAL PLAN
675	DRIVE DETAILS	168	UNDERDRAIN SUMMARY
617	INTERSECTION DETAIL	561	ESTIMATED QUANTITIES
572	SERVICE ROAD 3 PLAN & PROFILE		

HORIZONTAL SCALE IN FEET
0 10 20 40

CALCULATED ACF
CHECKED EJC

PLAN AND PROFILE - NEUBRECHT RD.
BEGIN WORK TO STA. 14+00.00

ALL-75-5.53

559
1224

J:\Projects\ALL\76691\roadway\sheets\76691GP813.dgn 11-SEP-2012 9:10PM reddenj

J:\Projects\ALL\76691\roadway\sheets\76691GP814.dgn 11-SEP-2012 9:11PM reddenj

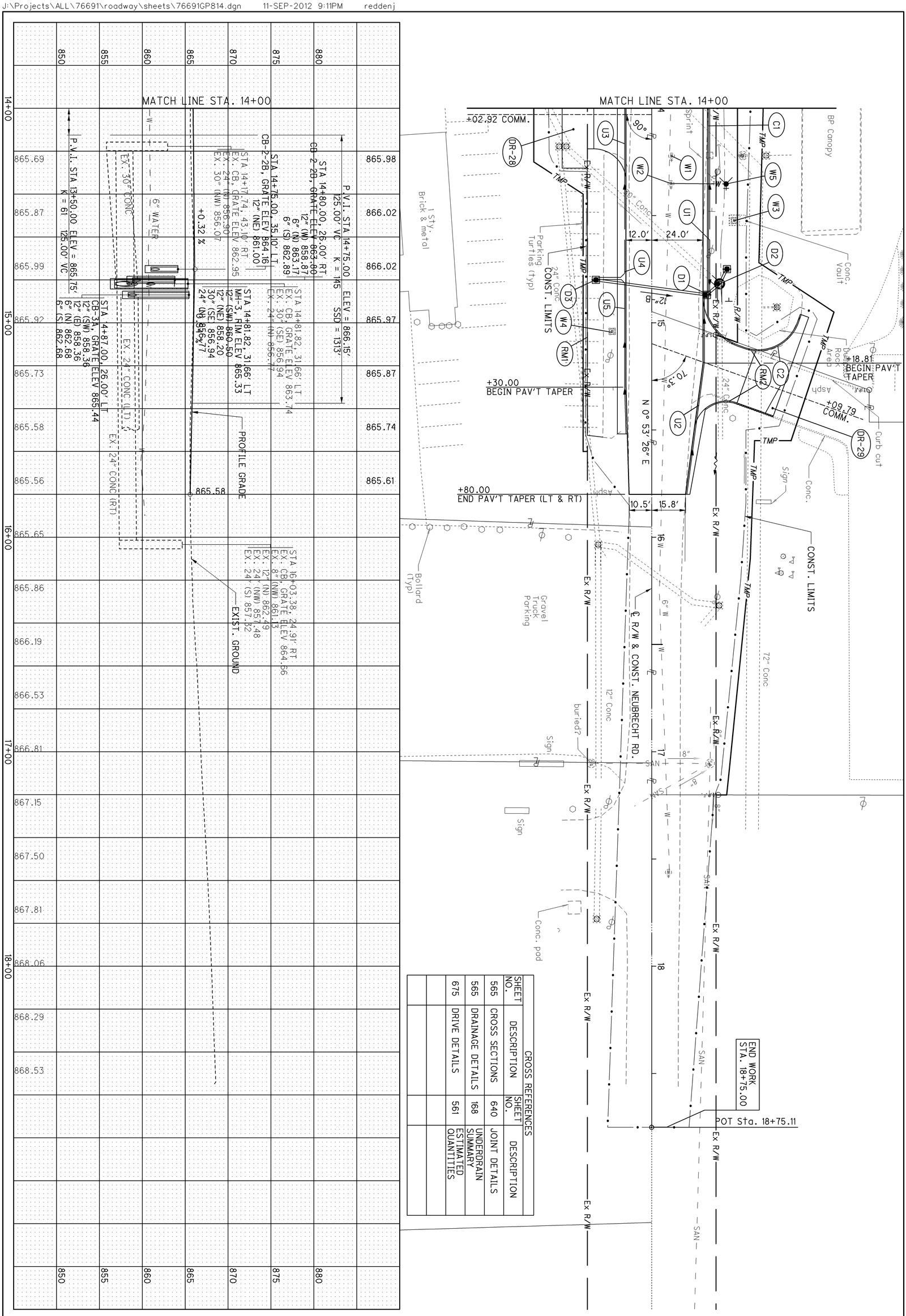

CROSS REFERENCES

SHEET NO.	DESCRIPTION	SHEET NO.	DESCRIPTION
565	CROSS SECTIONS	640	JOINT DETAILS
565	DRAINAGE DETAILS	168	UNDERDRAIN SUMMARY
675	DRIVE DETAILS	561	ESTIMATED QUANTITIES

560
1224

ALL-75-5.53

PLAN AND PROFILE - NEUBRECHT RD.
STA. 14+00.00 TO END WORK

CALCULATED ACF
CHECKED EJC

0 10 20 40
HORIZONTAL SCALE IN FEET

N

REF. NO.	SHEET NO.	STATION FROM	STATION TO	SIDE	202 CURB AND GUTTER REMOVED FT	202 CURB REMOVED FT	202 PIPE REMOVED, 24" AND UNDER FT	202 PIPE REMOVED, OVER 24" FT	202 CATCH BASIN REMOVED EACH	252 FULL DEPTH PAVEMENT SAWING FT	602 CONCRETE MASONRY CU YD	603 12" CONDUIT, TYPE B FT	603 12" CONDUIT, TYPE C FT	603 18" CONDUIT, TYPE B FT	603 24" CONDUIT, TYPE C FT	603 30" CONDUIT, TYPE C FT	603 36" CONDUIT, TYPE B FT	603 36" CONDUIT, TYPE C FT	604 CATCH BASIN, NO. 3 EACH	604 CATCH BASIN, NO. 3A EACH	604 CATCH BASIN, NO. 2-2B EACH	604 MANHOLE, NO. 3 EACH	609 COMBINATION CURB AND GUTTER, TYPE 2, AS PER PLAN FT	609 CURB TYPE 4-B FT	609 CURB, TYPE 6 FT	638 6" WATER MAIN DUCTILE IRON PIPE ANSI CLASS 52, PUSH-ON JOINTS AND FITTINGS, AS PER PLAN FT	638 6" GATE VALVE AND VALVE BOX EACH	638 6" FIRE HYDRANT EACH	638 VALVE BOX ADJUSTED TO GRADE EACH	638 METER AND CHAMBER REMOVED AND RESET EACH	638 METER AND VAULT REMOVED AND RESET EACH	
		NEUBRECHT ROAD																													
RM1	559	13+05	13+84	RT	69	57																									
RM2	559	11+97	12+28	LT/RT				174																							
C1	559	11+44	14+00	LT																			258								
C2	559	11+81	14+00	RT																			144								
C3	559	12+89	13+86	LT																				108							
C4	559	13+17	13+60	RT																				51							
C5	559	13+82	13+84	RT																				27							
C6	559	13+60	13+82	r†																					22						
D1	559	11+97	12+29	LT/RT							0.7						146	37				1									
D2	559	12+75	12+02	LT										77						1											
D3	559	13+70	12+75	LT										96						1											
D4	559	13+93	13+70	LT								23							1												
W1	559	11+74	13+68	LT/RT																						202	1				
RM1	560	14+28	15+53.00	RT						144																					
RM2	560	14+97	15+40	LT																											
C1	560	14+00	14+97	LT																			208								
C2	560	14+97	15+40	LT		68																		92							
D1	560	14+87	14+86	LT									8							1											
D2	560	14+75	14+90	LT			9	4	1				8		9	5					1	1									
D3	560	14+80	14+87	RT/LT								52									1										
W1	560	14+22		LT																								1			
W2	560	14+35		LT																								1			
W3	560	14+53		LT																										1	
W4	560	15+04		RT																									1		
W5	560	14+35		LT																						26		1	1		
TOTALS CARRIED TO ROADWAY SUBSUMMARY					69	125	9	178	1	144	0.7	75	16	173	9	5	146	37	1	3	2	2	610	278	22	228	1	1	3	1	1	0

CALCULATED SJG
CHECKED ACF

ESTIMATED QUANTITIES

ALL-75-5.53

561
1224

J:\Projects\ALL\76691\roadway\sheets\76691G0814.dgn 11-SEP-2012 9:11PM reddenj

SEEDING	
END WIDTH	SQ. YDS.
41	306
68	
	306

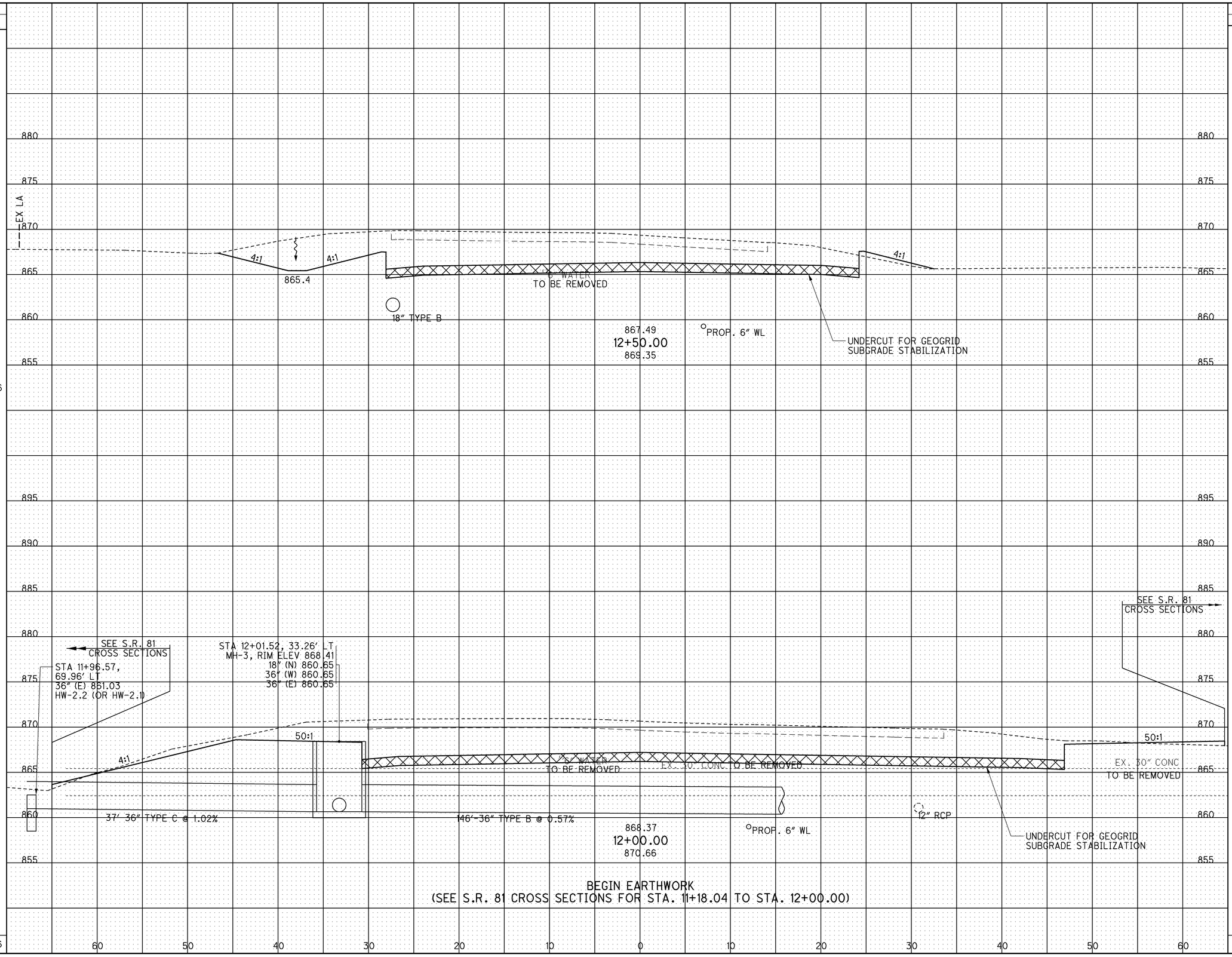

END AREA	
CUT	FILL
260	3
374	4

VOLUME	
CUT	FILL
587	6
587	6

CALCULATED JMR
CHECKED ABS

CROSS SECTIONS - NEUBRECHT ROAD
STA. 12+00.00 TO STA. 12+50.00

ALL-75-5.53

562
1224

J:\Projects\ALL\76691\roadway\sheets\76691XS1266.dgn 11-SEP-2012 9:11PM redden

SEEDING END WIDTH	SEEDING SQ. YDS.	END AREA CUT	END AREA FILL	VOLUME CUT	VOLUME FILL
38	97	150	16	152	11
32	103	178	8	203	5
	200			355	16

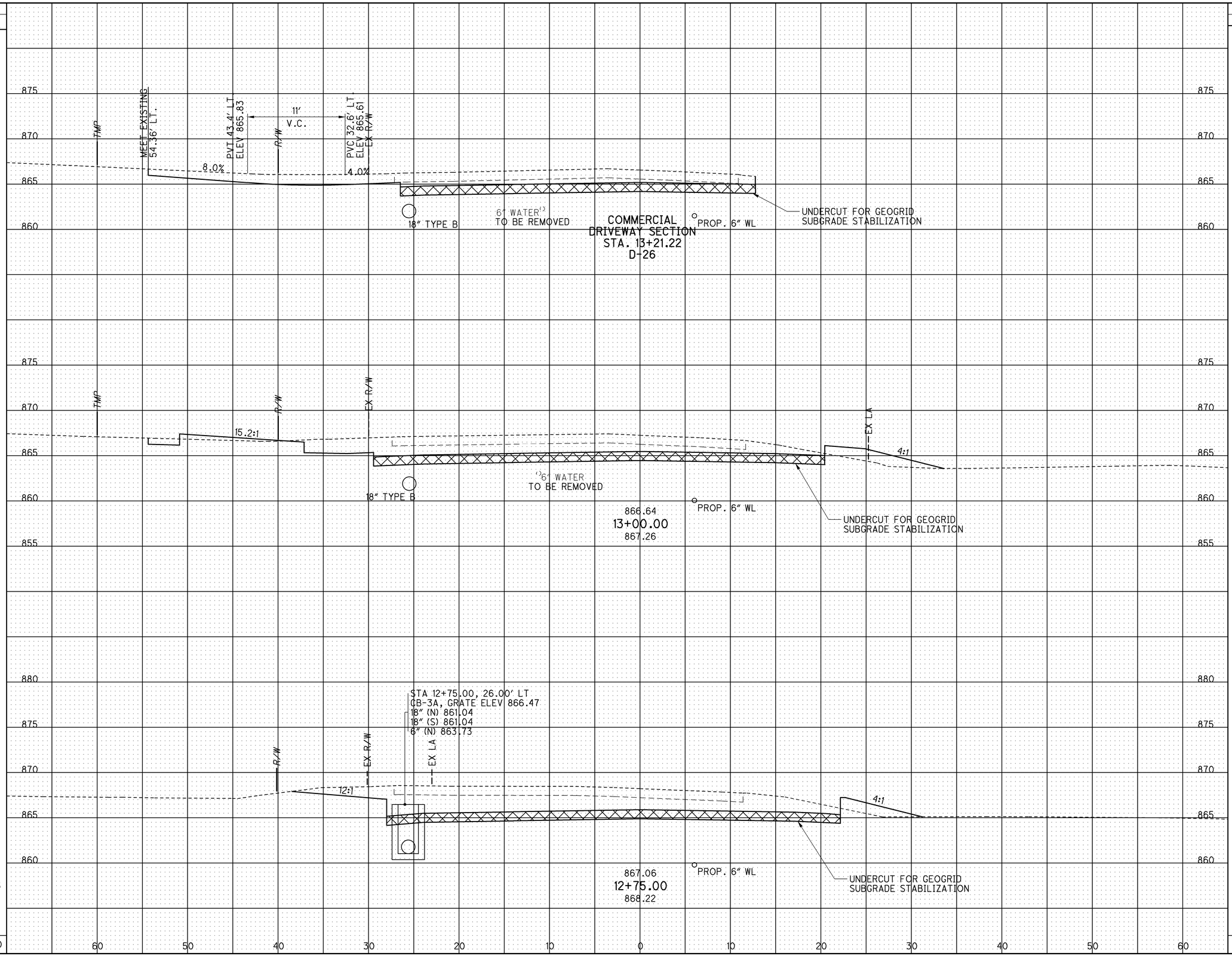

CALCULATED JMR
CHECKED ABS

CROSS SECTIONS - NEUBRECHT ROAD
STA. 12+75.00 TO STA. 13+21.22

ALL-75-5.53

563
1224

J:\Projects\ALL\76691\roadway\sheets\76691XS1267.dgn 11-SEP-2012 9:11PM reddenj

SEEDING END WIDTH	SEEDING SQ. YDS.
18	139
31	48
	187

END AREA CUT	END AREA FILL	VOLUME CUT	VOLUME FILL
97	1	215	22
135	23	264	36
		479	58

CALCULATED JMR
CHECKED ABS

- EMBANKMENT FOR PAVEMENT REMOVED

STA 13+93.12, 26.00' LT
CB-3, GRATE ELEV 865.33
12" (S) 862.12
6" (N) 862.58
6" (S) 862.58
6" (E) 863.00

TMP
R/W
EX R/W
4:1
865.1
22.00' RT.
865.33
4.0%
6.5%
MEET EXISTING
42.00' RT.
6" WATER
865.92
14+00.00
865.60
72" CONC
COMMERCIAL
DRIVEWAY SECTION
STA. 14+02.92
D-28
36" CONC
UNDERCUT FOR GEOGRID
SUBGRADE STABILIZATION

STA 13+70.00, 26.00' LT
CB-3A, GRATE ELEV 865.37
12" (N) 862.00
18" (S) 861.50
6" (N) 862.60

11:1
865.6
22.00' RT.
865.58
EX GEN
4.0%
0.97%
MEET EXISTING
36.00' RT.
6" WATER
PROP. 6" WL
866.07
13+50.00
865.94
72" CONC
COMMERCIAL
DRIVEWAY SECTION
STA. 13+28.31
D-27
UNDERCUT FOR GEOGRID
SUBGRADE STABILIZATION

20.00' RT.
865.58
4.0%
0.91%
MEET EXISTING
40.00' RT.
18" TYPE B
6" WATER
TO BE REMOVED
PROP. 6" WL
COMMERCIAL
DRIVEWAY SECTION
STA. 13+28.31
D-27
72" CONC
UNDERCUT FOR GEOGRID
SUBGRADE STABILIZATION

60 50 40 30 20 10 0 10 20 30 40 50 60

CROSS SECTIONS - NEUBRECHT ROAD STA. 13+28.31 TO STA. 14+00.00

ALL-75-5.53

564
1224

J:\Projects\ALL\76691\roadway\sheets\76691XS1268.dgn 11-SEP-2012 9:11PM reddenj

SEEDING END WIDTH	SEEDING SQ. YDS.
30	189
38	3
	192

STA 14+81.82, 31.66' LT
MH-3, RIM ELEV 865.33
12" (SW) 860.50
24" (N) 857.50
30" (SE) 856.94
12" (NE) 858.20

STA 14+81.82, 31.66' LT
EX. CB, GRATE ELEV 863.74'
30" (SE) 856.94
24" (N) 857.5
6" (E) 862.13
TO BE REMOVED

STA 14+75.00, 35.10' LT
CB-2-2B, GRATE ELEV 864.16
12" (NE) 861.00

STA 14+92.73, 58.36' LT
EX. CB, GRATE ELEV 864.51'
6" (SE) 861.51

STA 14+87.00, 26.00' LT
CB-3A, GRATE ELEV 865.44
6" (N) 862.68
6" (S) 862.68
12" (SW) 858.36
12" (E) 858.36

STA 14+80.00, 26.00' RT
CB-2-2B, GRATE ELEV 863.80
12" (W) 858.87
6" (N) 863.17
6" (S) 862.89

EX. 6" CPP

72" CONC

8'-12" TYPE C @ 6.55%

9'-24" TYPE C @ 1.18%

52'-12" TYPE B @ 0.98%

6" WATER

865.2

865.97

15+00.00

865.92

864.2

EX. 24" STM

UNDERCUT FOR GEOGRID SUBGRADE STABILIZATION

R/W

EX R/W

TMP

4:1

STA 14+75.00, 35.10' LT
CB-2-2B, GRATE ELEV 864.16
12" (NE) 861.00

864.4

72" CONC

6" WATER

866.02

14+50.00

865.87

30" CONC

864.0

UNDERCUT FOR GEOGRID SUBGRADE STABILIZATION

EX. 24" STM

STA 14+17.74, 39.77' RT
EX. CB, GRATE ELEV 862.96'
30" (NW) 856.07
24" (N) 856.66
36" (S) 856.56
ADJUST TO GRADE

STA 14+17.74, 43.10' RT
EX. CB, GRATE ELEV 862.95'
24" (N) 856.90

22.00' RT.
865.33

MEET EXISTING
42.00' RT.

4.0%

6.5%

6" WATER

COMMERCIAL
DRIVEWAY SECTION
STA. 14+02.92
D-28

72" CONC

UNDERCUT FOR GEOGRID SUBGRADE STABILIZATION

END AREA CUT	END AREA FILL	VOLUME CUT	VOLUME FILL
105	8		
		191	19
101	13		
		183	13
		374	32

CALCULATED JMR
CHECKED ABS

CROSS SECTIONS - NEUBRECHT ROAD
STA. 14+02.92 TO STA. 15+00.00

ALL-75-5.53

565
1224

J:\Projects\ALL\76691\roadway\sheets\76691XS1269.dgn 11-SEP-2012 9:11PM redden j

SEEDING END WIDTH	SEEDING SQ. YDS.	END AREA CUT	END AREA FILL	VOLUME CUT	VOLUME FILL
16	93	68	0	89	4
39		93	7		
17		183	14		
	110	272	18		

CALCULATED JMR
CHECKED ABS

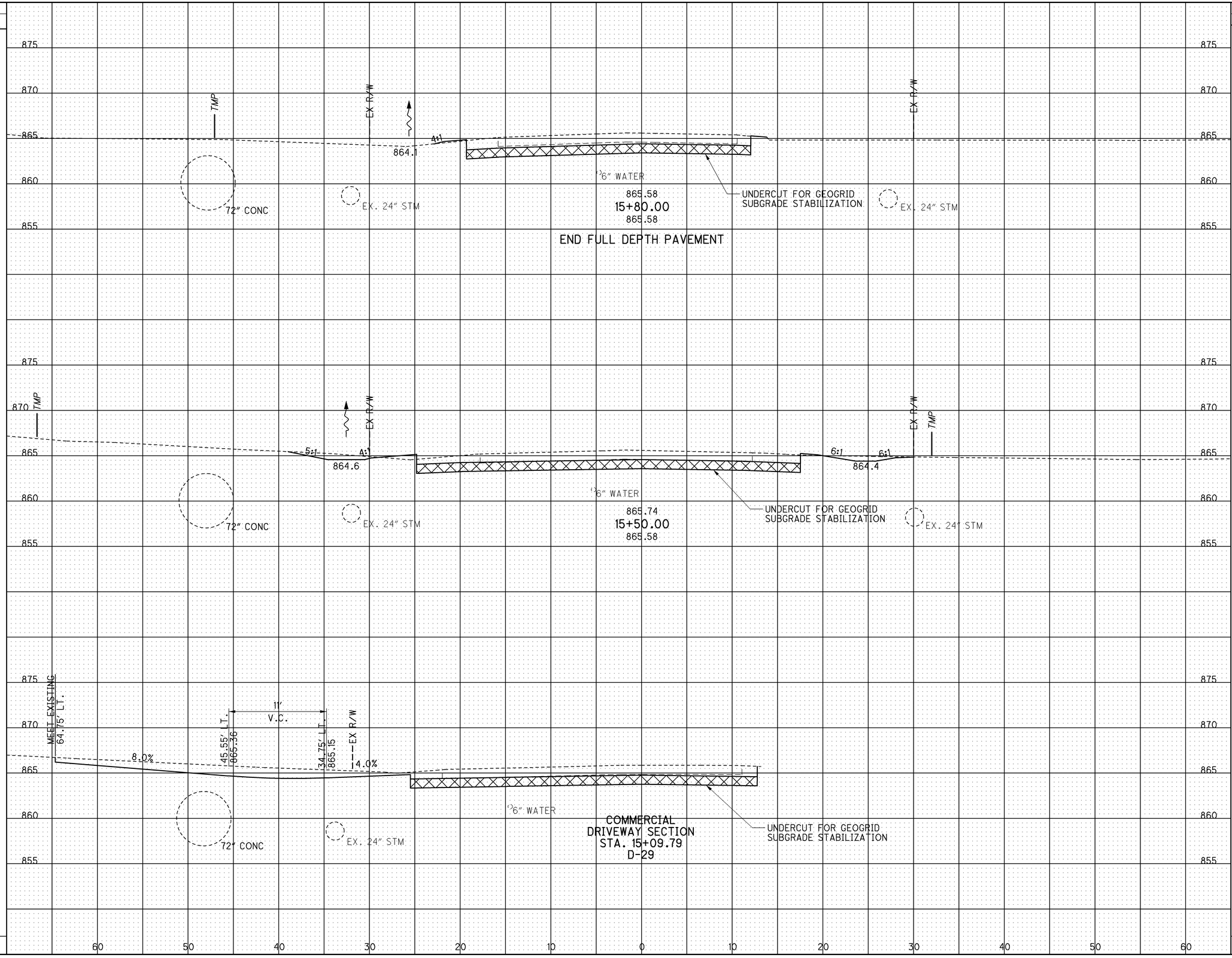

J:\Projects\ALL\76691\roadway\sheets\76691XS1270.dgn 11-SEP-2012 9:11PM reddenj

CROSS SECTIONS - NEUBRECHT ROAD
STA. 15+09.79 TO STA. 15+80.00

ALL-75-5.53

566
1224

SEEDING	
END WIDTH	SQ. YDS.

GRAND TOTAL SEEDING & MULCHING NEUBRECHT RD.
995 SQ. YD.
(QUANTITY CARRIED TO ROADWAY SUBSUMMARY)

GRAND TOTAL EARTHWORK NEUBRECHT RD.
EXCAVATION: 2,067 CU. YD.
EMBANKMENT: 130 CU. YD.
(QUANTITY CARRIED TO ROADWAY SUBSUMMARY)

END AREA		VOLUME	
CUT	FILL	CUT	FILL

CALCULATED JMR
CHECKED ABS

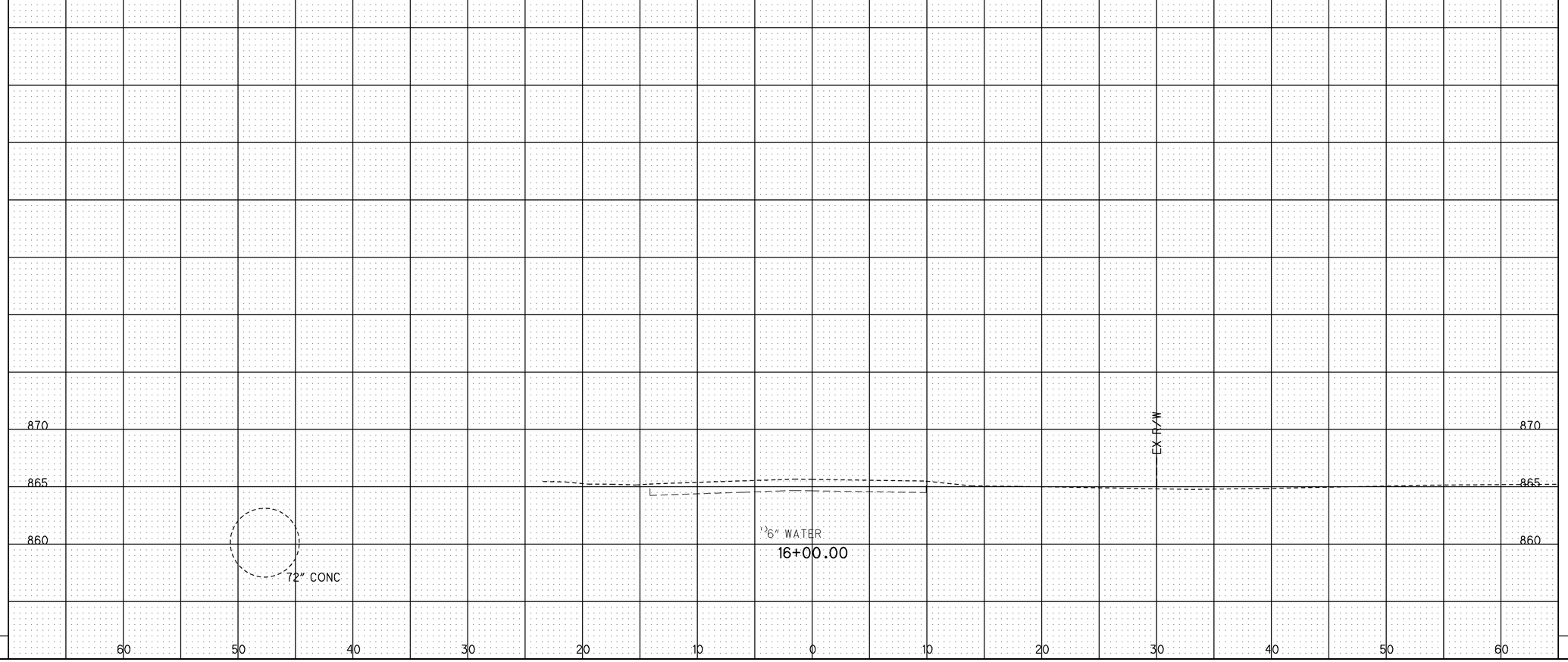

CROSS SECTIONS - NEUBRECHT ROAD STA. 16+00.00

ALL-75-5.53

567
1224

J:\Projects\ALL\76691\roadway\sheets\76691XS1271.dgn 11-SEP-2012 9:11PM reddenj

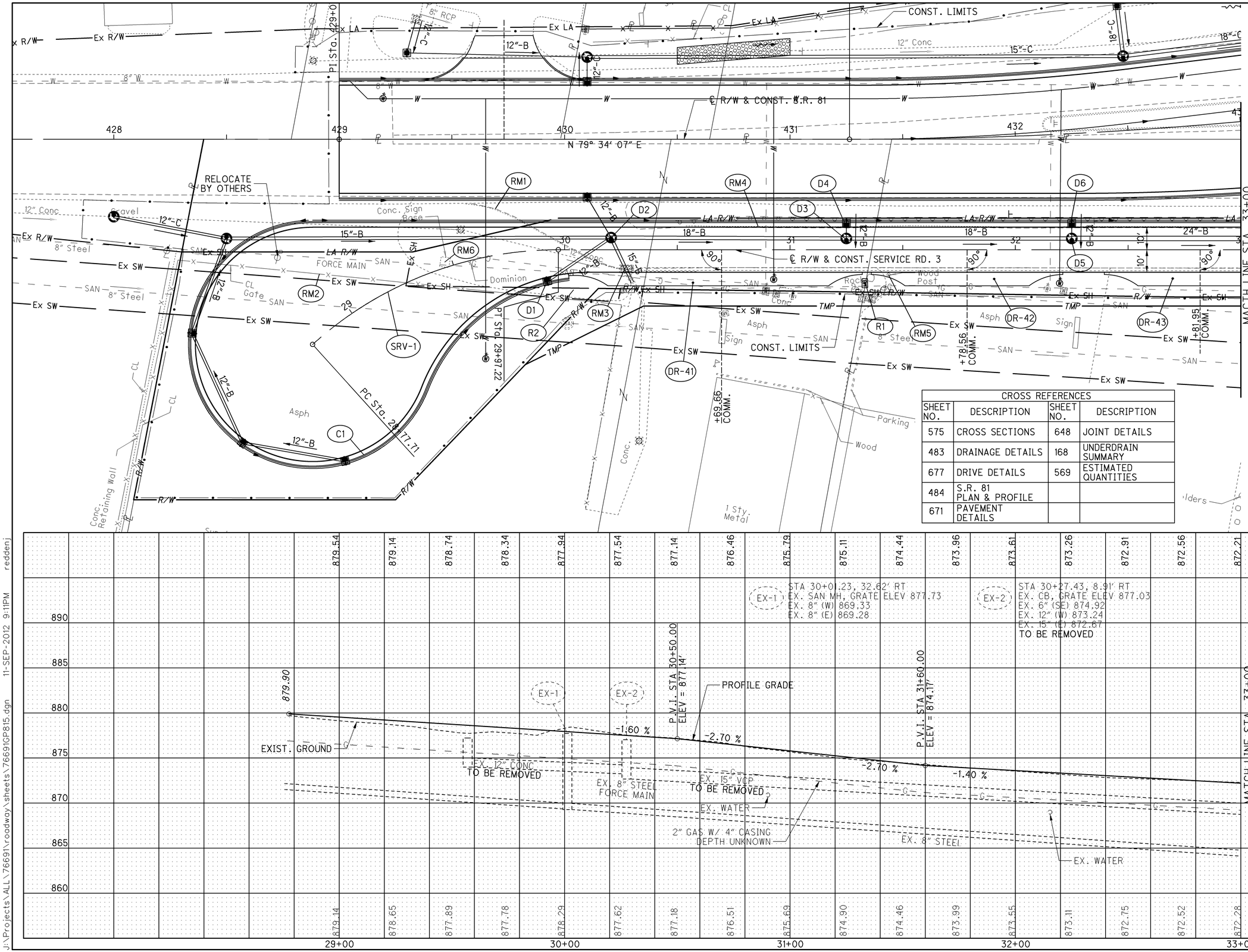

CROSS REFERENCES			
SHEET NO.	DESCRIPTION	SHEET NO.	DESCRIPTION
575	CROSS SECTIONS	648	JOINT DETAILS
483	DRAINAGE DETAILS	168	UNDERDRAIN SUMMARY
677	DRIVE DETAILS	569	ESTIMATED QUANTITIES
484	S.R. 81 PLAN & PROFILE		
671	PAVEMENT DETAILS		

HORIZONTAL SCALE IN FEET
0 10 20 40

CALCULATED ACF
CHECKED EJC

PLAN AND PROFILE - SERVICE RD. 3
BEGIN WORK TO STA. 33+00

ALL-75-5.53

568
1224

J:\Projects\ALL\76691\roadway\sheets\76691GP815.dgn 11-SEP-2012 9:11PM redden

REF. NO.	SHEET NO.	STATION FROM	STATION TO	SIDE	202 CURB REMOVED	202 PIPE REMOVED, 24" AND UNDER	202 CATCH BASIN REMOVED	202 FENCE REMOVED	202 GATE REMOVED	202 REMOVAL MISC.: SIGN FOUNDATION	202 REMOVAL MISC.: WOOD POST	603 12" CONDUIT, TYPE B	603 15" CONDUIT, TYPE B	603 18" CONDUIT, TYPE B	604 CATCH BASIN, NO. 3A	604 MANHOLE, NO. 3	609 COMBINATION CURB AND GUTTER, TYPE 2, AS PER PLAN	690 SPECIAL - MAILBOX SUPPORT SYSTEM, SINGLE	690 SPECIAL - MAILBOX REMOVE AND RESET
					FT	FT	EACH	FT	FT	EACH	EACH	FT	FT	FT	EACH	EACH	FT	EACH	EACH
		SERVICE ROAD 3																	
RM1	568	29+61	30+27	LT/RT	79														
RM2	568	428+28	30+24	LT/RT				197	1										
RM3	568	30+27	36+13	RT		586	1												
RM4	568	30+53	33+00	LT	247														
RM5	568	31+44		RT							1								
RM6	568	29+47		LT						1									
R1	568	31+33		RT														1	
C1	568	428+34	33+00	LT/RT													731		
D1	568	29+92	30+21	RT								34			1				
D2	568	30+21	31+25	LT									22	104		1			
D3	568	31+25	32+25	LT										100		1			
D4	568	31+25	31+25	LT								7			1				
D5	568	32+25	33+25	LT										100		1			
D6	568	32+25	32+25	LT								7			1				
TOTALS CARRIED TO ROADWAY SUBSUMMARY					326	586	1	197	1	1	1	48	22	304	3	3	731	1	0

CALCULATED SJG
CHECKED ACF

ESTIMATED QUANTITIES

ALL-75-5.53

569
1224

J:\Projects\ALL\76691\roadway\sheets\76691GQ815.dgn 11-SEP-2012 9:11PM reddenj

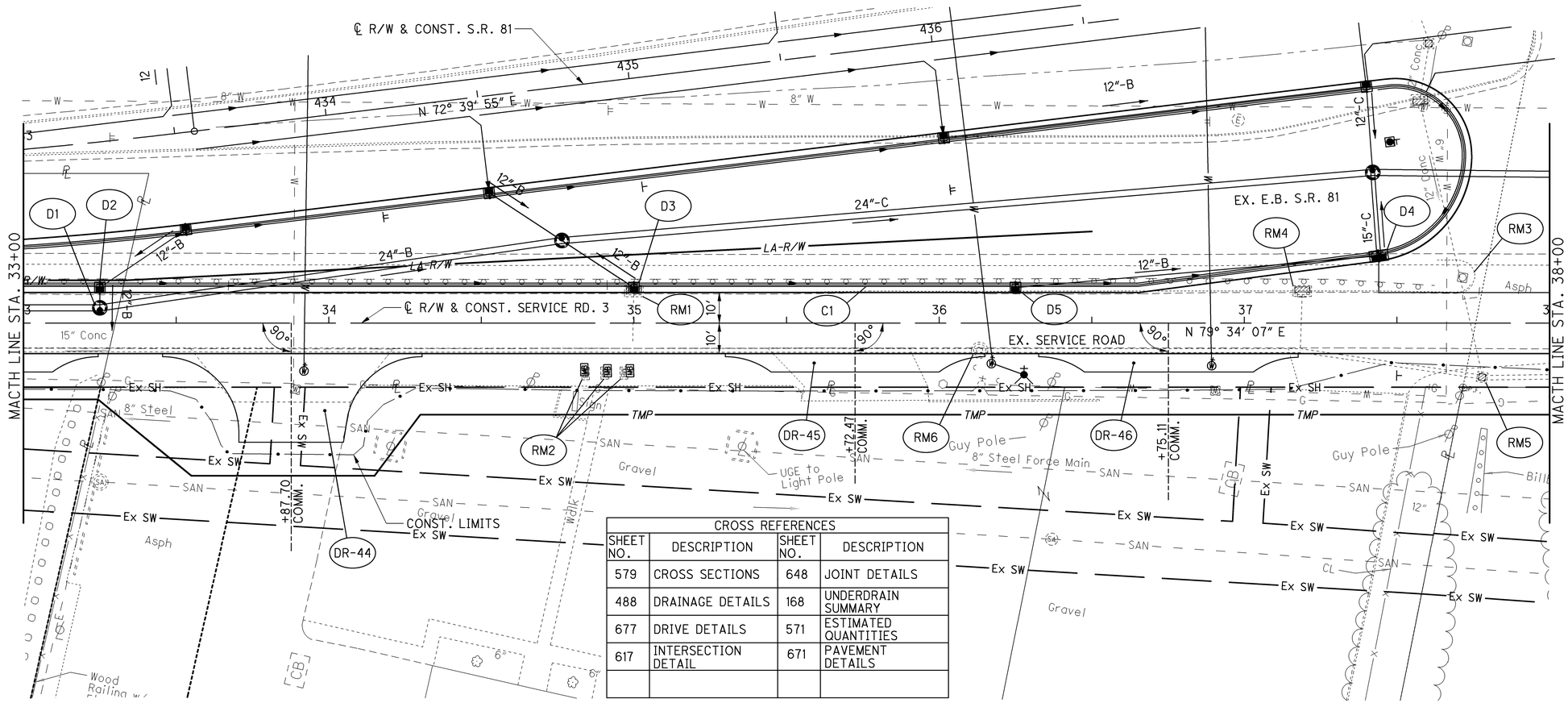

CROSS REFERENCES			
SHEET NO.	DESCRIPTION	SHEET NO.	DESCRIPTION
579	CROSS SECTIONS	648	JOINT DETAILS
488	DRAINAGE DETAILS	168	UNDERDRAIN SUMMARY
677	DRIVE DETAILS	571	ESTIMATED QUANTITIES
617	INTERSECTION DETAIL	671	PAVEMENT DETAILS

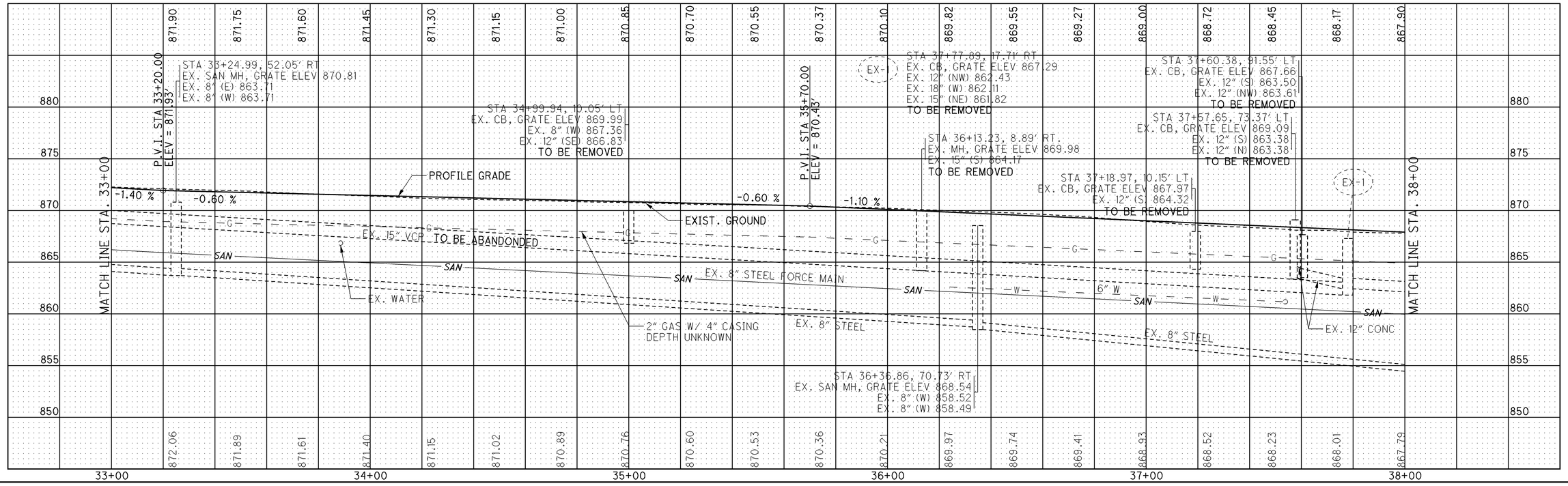

HORIZONTAL SCALE IN FEET
0 10 20 40

CALCULATED ACF
CHECKED EJC

PLAN AND PROFILE - SERVICE RD. 3
STA. 33+00 TO STA. 38+00

ALL-75-5.53

570
1224

J:\Projects\ALL\76691\roadway\sheets\76691GP816.dgn 11-SEP-2012 9:11PM reddenj

REF. NO.	SHEET NO.	STATION FROM	STATION TO	SIDE	202 CURB REMOVED	202 PIPE REMOVED, 24" AND UNDER	202 MANHOLE REMOVED	202 CATCH BASIN REMOVED	202 SPECIAL - FILL AND PLUG EXISTING CONDUIT	603 12" CONDUIT, TYPE B	603 15" CONDUIT, TYPE C	603 24" CONDUIT, TYPE B	604 CATCH BASIN, NO. 3	604 CATCH BASIN, NO. 3A	604 MANHOLE, NO. 3	609 COMBINATION CURB AND GUTTER, TYPE 2, AS PER PLAN	690 SPECIAL - MAILBOX SUPPORT SYSTEM, SINGLE	690 SPECIAL - MAILBOX REMOVE AND RESET
					FT	FT	EACH	EACH	FT	FT	FT	FT	EACH	EACH	EACH	FT	EACH	EACH
		SERVICE ROAD 3																
RM1	570	35+00		LT/RT		32		1										
RM2	570	34+84	34+97	RT													3	3
RM3	570	33+00	37+75	LT	494													
RM4	570	37+19		LT		18		1										
RM5	570	37+78	39+58	RT				1	180									
RM6	570	36+13	37+78	RT			1		165									
R1	570	34+84	34+99	RT													3	
C1	570	33+00	37+75.00	LT												495		
D1	570	33+25	34+76	LT								153			1			
D2	570	33+25	33+25	LT						7				1				
D3	570	35+00	34+76	LT						28				1				
D4	570	37+44	37+42	LT							27		1					
D5	570	36+25	37+44	LT						120				1				
TOTALS CARRIED TO ROADWAY SUBSUMMARY					494	50	1	3	345	155	27	153	1	3	1	495	6	3

CALCULATED SJG
CHECKED ACF

ESTIMATED QUANTITIES

ALL-75-5.53

571
1224

J:\Projects\ALL\76691\roadway\sheets\76691GQ816.dgn 11-SEP-2012 9:11PM reddenj

J:\Projects\ALL\76691\roadway\sheets\76691GP817.dgn 11-SEP-2012 9:11PM reddenj

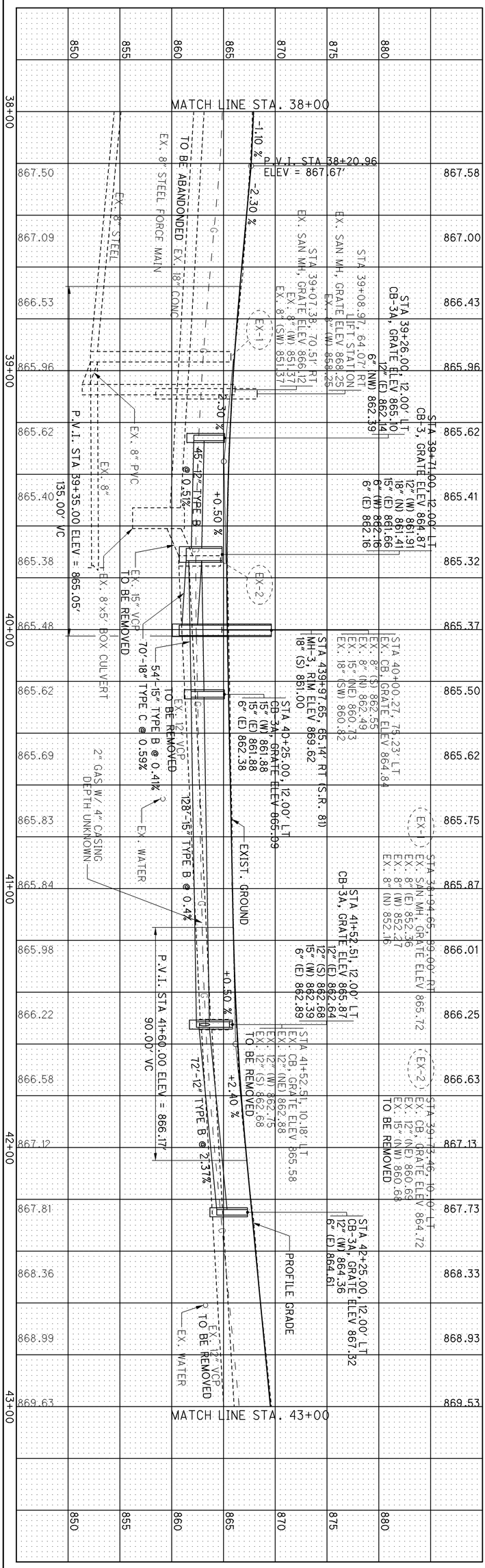

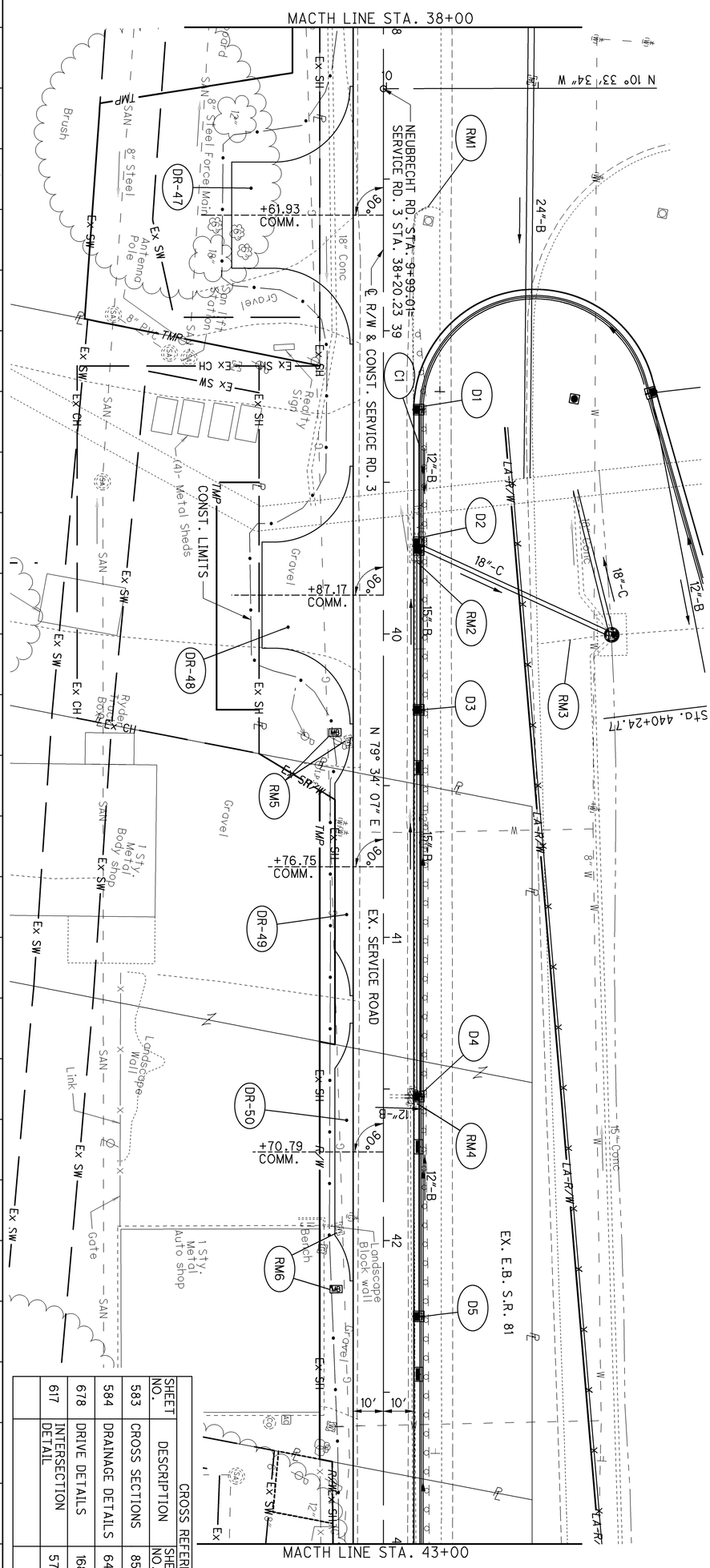

CROSS REFERENCES

SHEET NO.	DESCRIPTION	SHEET NO.	DESCRIPTION
583	CROSS SECTIONS	856	SIGNAL PLANS
584	DRAINAGE DETAILS	649	JOINT DETAILS
678	DRIVE DETAILS	168	UNDERDRAIN SUMMARY
617	INTERSECTION DETAIL	574	ESTIMATED QUANTITIES

572
1224

ALL-75-5.53

PLAN AND PROFILE - SERVICE RD. 3
STA. 38+00 TO STA. 43+00

CALCULATED ACF
CHECKED EJC

0 10 20 40
HORIZONTAL SCALE IN FEET

CROSS REFERENCES			
SHEET NO.	DESCRIPTION	SHEET NO.	DESCRIPTION
587	CROSS SECTIONS	649	JOINT DETAILS
588	DRAINAGE DETAILS	168	UNDERDRAIN SUMMARY
678	DRIVE DETAILS	574	ESTIMATED QUANTITIES
671	PAVEMENT DETAILS		

CURVE SRV-2
P.I. Sta. 45+83.83
Δ = 42° 08′ 15″ (LT)
Dc = 35° 15′ 32″
R = 162.50′
T = 62.60′
L = 119.51′
E = 11.64′
C = 116.83′
C.B. = N 58° 30′ 00″ E

HORIZONTAL SCALE IN FEET
0 10 20 40

CALCULATED ACF
CHECKED EJC

PROFILE - SERVICE RD. 3
STA. 43+00 TO END WORK

ALL-75-5.53

573
1224

J:\Projects\ALL\76691\roadway\sheets\76691GP818.dgn 11-SEP-2012 9:11PM redden

ESTIMATED QUANTITIES

CALCULATED SJG CHECKED ACF

REF. NO.	SHEET NO.	STATION FROM	STATION TO	SIDE	202 CURB AND GUTTER REMOVED FT	202 PIPE REMOVED, 24" AND UNDER FT	202 CATCH BASIN REMOVED EACH	202 FENCE REMOVED FT	202 SPECIAL - FILL AND PLUG EXISTING CONDUIT FT	202 BUILDING DEMOLISHED EACH	202 REMOVAL MISC.: CONCRETE PAD SQ YD	603 12" CONDUIT, TYPE B FT	603 12" CONDUIT, TYPE C FT	603 15" CONDUIT, TYPE B FT	603 15" CONDUIT, TYPE C FT	603 18" CONDUIT, TYPE C FT	604 CATCH BASIN, NO. 3 EACH	604 CATCH BASIN, NO. 3A EACH	604 CATCH BASIN, NO. 2-2B EACH	604 MANHOLE, NO. 3 EACH	609 COMBINATION CURB AND GUTTER, TYPE 2, AS PER PLAN FT	690 SPECIAL - MAILBOX SUPPORT SYSTEM, SINGLE EACH	690 SPECIAL - MAILBOX REMOVE AND RESET EACH
RM1	572	38+59	43+00	LT	445																		
RM2	572	39+73	39+59	LT			1		13														
RM3	572	40+00		LT					15														
RM4	572	41+53	39+73	LT		180	1																
RM5	572	40+35	40+32	RT																		1	1
RM6	572	41+96	42+16	RT																		1	1
C1	572	38+87.00	43+00	LT																	431		
D1	572	39+26	39+71	LT								45						1					
D2	572	39+71	40+00	LT												70	1						
D3	572	40+25	40+00	LT										54				1					
D4	572	41+50	40+00	LT								5		128				1					
D5	572	42+25.00	41+50	LT								73						1					
RM1	573	43+40	43+54	RT				34		1	8.1												
RM2	573	43+71	43+73	RT/LT		23	1																
RM3	573	43+73	41+53	LT		220	1																
RM4	573	44+84	43+73	LT		70	1		40														
RM5	573	43+00	44+23	LT	124																		
RM6	573	43+96	44+26	RT	41																		
RM7	573	44+39	44+60	RT/LT	37																		
RM8	573	43+35	43+21	RT																		1	1
RM9	573	44+64	44+64	RT																		1	1
RM10	573	45+07	45+21	RT																		1	1
RM11	573	45+73	45+97	RT																		1	1
RM12	573	45+95	46+02	RT																		1	1
C1	573	43+00	END	LT/RT																	494		
C2	573	45+88	46+14	RT																	35		
D1	573	43+25	44+00	LT									76					1					
D2	573	44+00		LT/RT									40						1				
D3	573	44+00	44+00	LT											86					1			
D4	573	44+50	44+00	LT									51					1					
D5	573	45+10	45+10	LT									13					1					
D6	573	45+10	44+00	LT									110							1			
D7	573	45+63	45+10	LT									46					1					
TOTALS CARRIED TO ROADWAY SUBSUMMARY					647	493	5	34	68	1	8.1	123	336	182	86	70	1	8	1	2	960	7	7

ALL-75-5.53

574
1224

J:\Projects\ALL\76691\roadway\sheets\76691GQ818.dgn 11-SEP-2012 9:11PM reddenj

SEEDING	
END WIDTH	SQ. YDS.
42	
0	

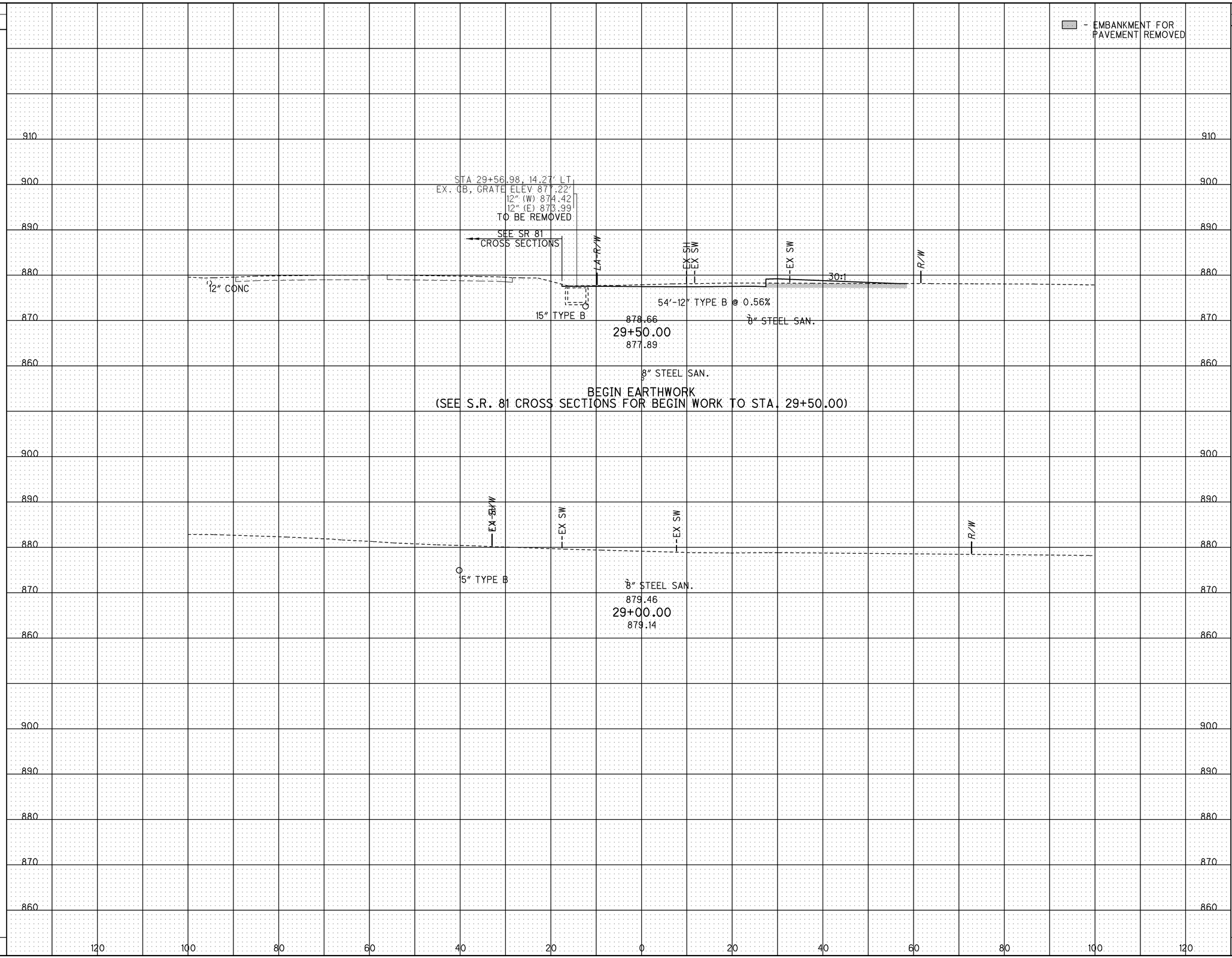

END AREA		VOLUME	
CUT	FILL	CUT	FILL
55	43		
		0	0

CALCULATED	CHECKED
JMR	ACF

CROSS SECTIONS - SERVICE RD 3
STA. 28+77.71 TO STA. 29+50.00

ALL-75-5.53

575
1224

J:\Projects\ALL\76691\roadway\sheets\76691XS1272.dgn 11-SEP-2012 9:11PM reddenj

SEEDING	
END WIDTH	SQ. YDS.
0	0
0	105
0	222
0	327

END AREA	
CUT	FILL
29	0
29	0
58	39
104	76

VOLUME	
CUT	FILL
53	0
80	36
237	112

CALCULATED JMR
CHECKED ACF

- EMBANKMENT FOR PAVEMENT REMOVED

SEE SR 81 CROSS SECTIONS

COMMERCIAL DRIVEWAY SECTION
STA. 30+69.66
DR-41

LA-R/W
16.0' RT.
EX SH
TMP
EX SW
EX SW

0.2%

12" CONC
18" TYPE B
875.61
31+00.00
875.69
15" VCP TO BE REMOVED
2" GAS W/ 4" CASING
8" STEEL SAN.

STA 30+27.43, 8.91' RT
EX. CB, GRATE ELEV 877.03'
6" (SE) 874.92
12" (W) 873.24
15" (E) 872.67
TO BE REMOVED

COMMERCIAL DRIVEWAY SECTION
STA. 30+69.66
DR-41

EX LA
LA-R/W
6.0' RT.
EX SH
TMP
EX SW
EX SW

2.8%

12" CONC
18" TYPE B
877.06
30+50.00
877.18
EX 6" PVC TO BE ABANDONED
2" GAS W/ 4" CASING
8" STEEL SAN.

SEE SR 81 CROSS SECTIONS

STA 30+20.64, 5.40' LT
MH-3, RIM ELEV 877.42
12" (SW) 874.77
15" (W) 870.46
12" (NW) 873.71
18" (E) 870.46
15" (SE) 872.51

STA 30+01.23, 32.62' RT
EX. SAN MH, GRATE ELEV 877.73'
8" (W) 869.33
8" (E) 869.28

SEE SR 81 CROSS SECTIONS

EX LA
LA-R/W
EX SH
EX SW
R/W
EX SW
TMP
48:1

12" CONC
2" GAS W/ 4" CASING
22'-15" TYPE B
@ 1%
12" CONC TO BE REMOVED
877.86
30+00.00
878.28
34'-12" TYPE B
@ 0.85%
STA 29+91.90, 14.22' RT
CB-3A, GRATE ELEV 878.04
12" (NE) 875.06
6" (SW) 875.56

120 100 80 60 40 20 0 20 40 60 80 100 120

CROSS SECTIONS - SERVICE RD 3
STA. 30+00.00 TO STA. 31+00.00

ALL-75-5.53

576
1224

J:\Projects\ALL\76691\roadway\sheets\76691XS1273.dgn 11-SEP-2012 9:11PM reddenj

SEEDING	
END WIDTH	SQ. YDS.
0	0
0	0
0	0
0	0

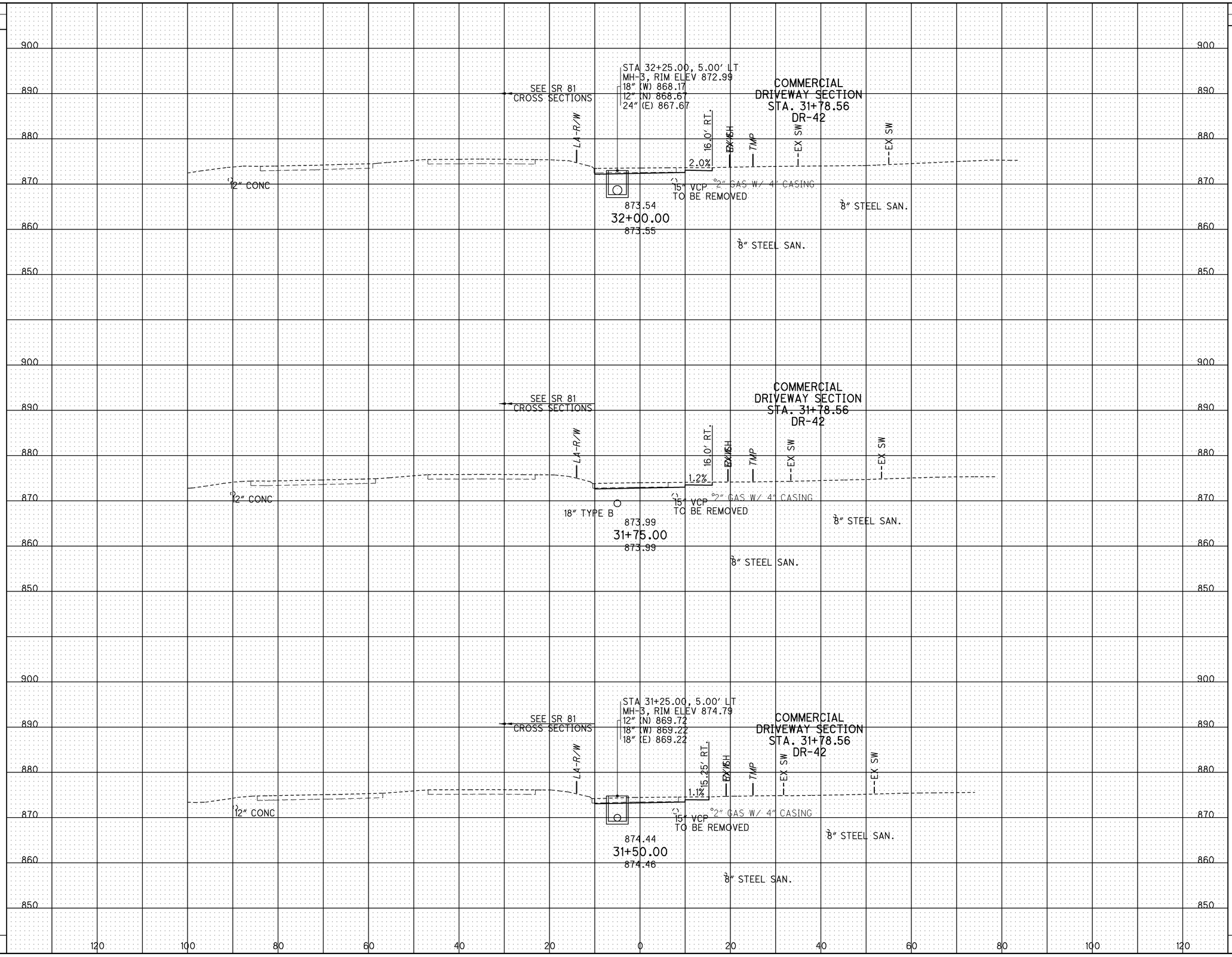

END AREA		VOLUME	
CUT	FILL	CUT	FILL
27	0		
27	0		
26	0		
		25	0
		51	0
		101	0

CALCULATED JMR
CHECKED ACF

CROSS SECTIONS - SERVICE RD 3
STA. 31+50.00 TO STA. 32+00.00

ALL-75-5.53

577
1224

J:\Projects\ALL\76691\roadway\sheets\76691XS1274.dgn 11-SEP-2012 9:11PM reddenj

SEEDING	
END WIDTH	SQ. YDS.
0	0
0	0
0	0
0	0

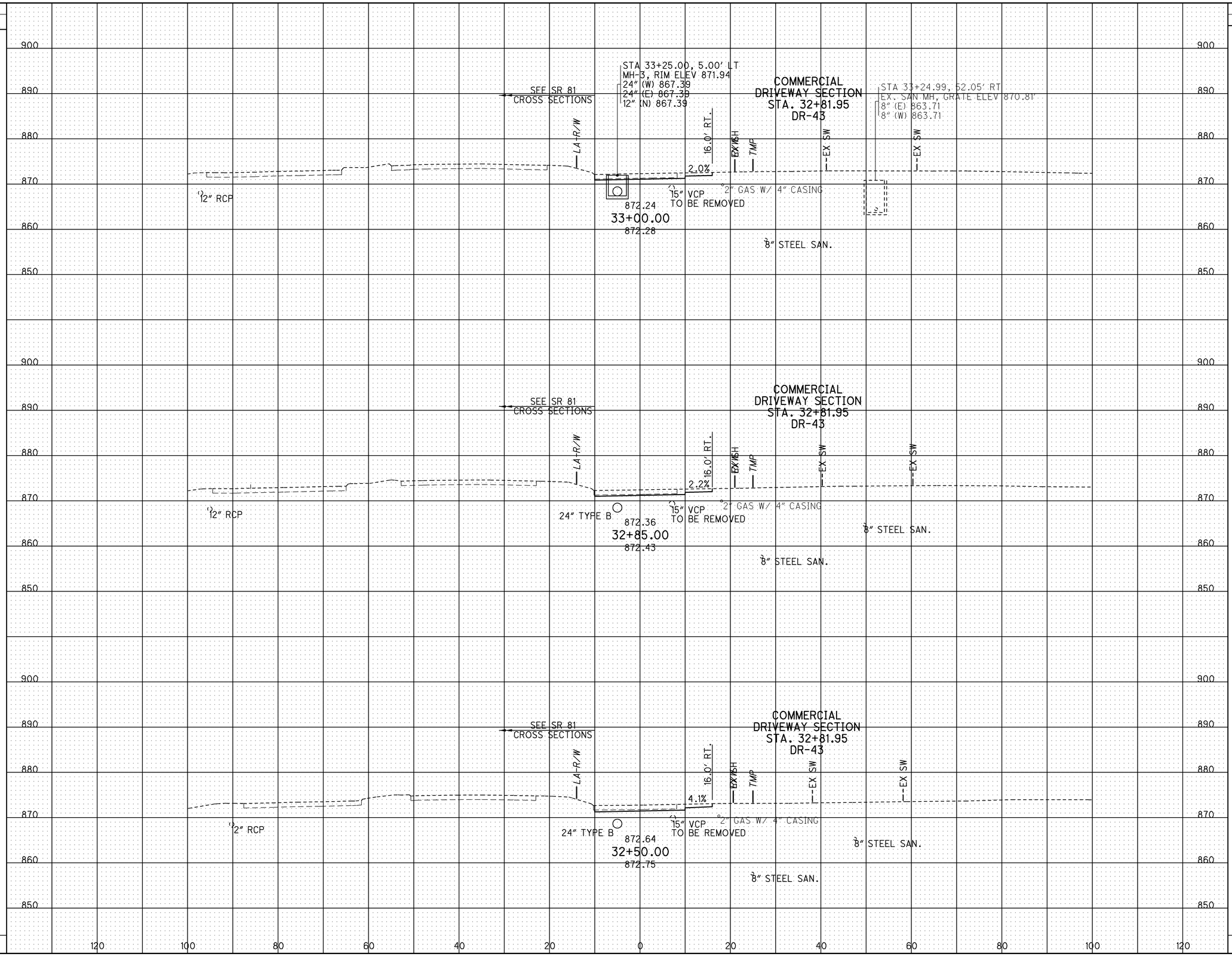

END AREA		VOLUME	
CUT	FILL	CUT	FILL
28	0	16	0
29	0	38	0
30	0	53	0
		107	0

CALCULATED JMR
CHECKED ACF

CROSS SECTIONS - SERVICE RD 3
STA. 32+50.00 TO STA. 33+00.00

ALL-75-5.53

578
1224

J:\Projects\ALL\76691\roadway\sheets\76691XS1275.dgn 11-SEP-2012 9:11PM reddenj

SEEDING		END AREA		VOLUME	
END WIDTH	SQ. YDS.	CUT	FILL	CUT	FILL
0	0	22	0	55	0
0	0	37	0	56	0
0	0	23	1	48	0
				159	0

CALCULATED JMR
CHECKED ACF

SEE SR 81 CROSS SECTIONS
LA-R/W
EX SH
THP
EX SW
EX SW
24" TYPE B
871.04
34+50.00
871.02
15" VCP TO BE REMOVED
2" GAS W/ 4" CASING
8" STEEL SAN.
8" STEEL SAN.

SEE SR 81 CROSS SECTIONS
COMMERCIAL DRIVEWAY SECTION
STA. 33+87.70
DR-44
LA-R/W
EX SH
30.0' RT.
39.0' RT.
3.0%
4.8%
EX SW
THP
EX SW
24" TYPE B 871.44
34+00.00
871.40
15" VCP TO BE REMOVED
2" GAS W/ 4" CASING
8" STEEL SAN.
8" STEEL SAN.

SEE SR 81 CROSS SECTIONS
STA 33+25.00, 5.00' LT
MH-3, RIM ELEV 871.94
24" (W) 867.39
24" (E) 867.38
12" (N) 867.39
LA-R/W
EX SH
EX SW
THP
EX SW
1'-12" TYPE B @ 8.15%
153'-24" TYPE B @ 1.48%
24" TYPE B
871.84
33+50.00
871.89
15" VCP TO BE REMOVED
2" GAS W/ 4" CASING
8" STEEL SAN.
8" STEEL SAN.

900 890 880 870 860 850

120 100 80 60 40 20 0 20 40 60 80 100 120

CROSS SECTIONS - SERVICE RD 3
STA. 33+50.00 TO STA. 34+50.00

ALL-75-5.53

579
1224

J:\Projects\ALL\76691\roadway\sheets\76691XS1276.dgn 11-SEP-2012 9:11PM reddenj

SEEDING	
END WIDTH	SQ. YDS.
0	0
0	0
0	0
0	0

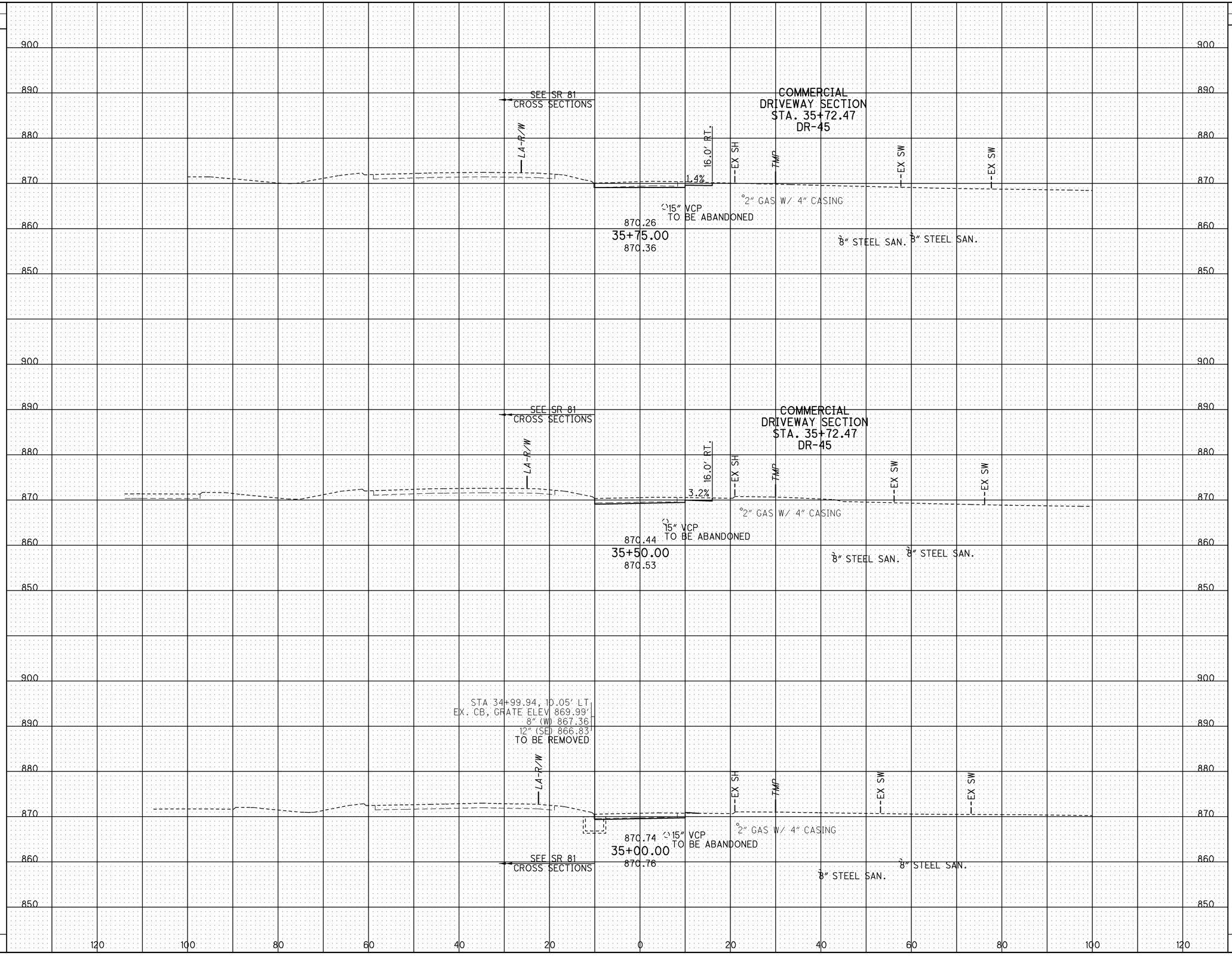

END AREA		VOLUME	
CUT	FILL	CUT	FILL
28	0		
		26	0
28	0		
		48	0
23	0		
		42	1
		116	1

CALCULATED JMR
CHECKED ACF

CROSS SECTIONS - SERVICE RD 3
STA. 35+00.00 TO STA. 35+75.00

ALL-75-5.53

580
1224

J:\Projects\ALL\76691\roadway\sheets\76691XS1277.dgn 11-SEP-2012 9:11PM reddenj

SEEDING	
END WIDTH	SQ. YDS.
0	0
0	0
0	0
0	0
0	0

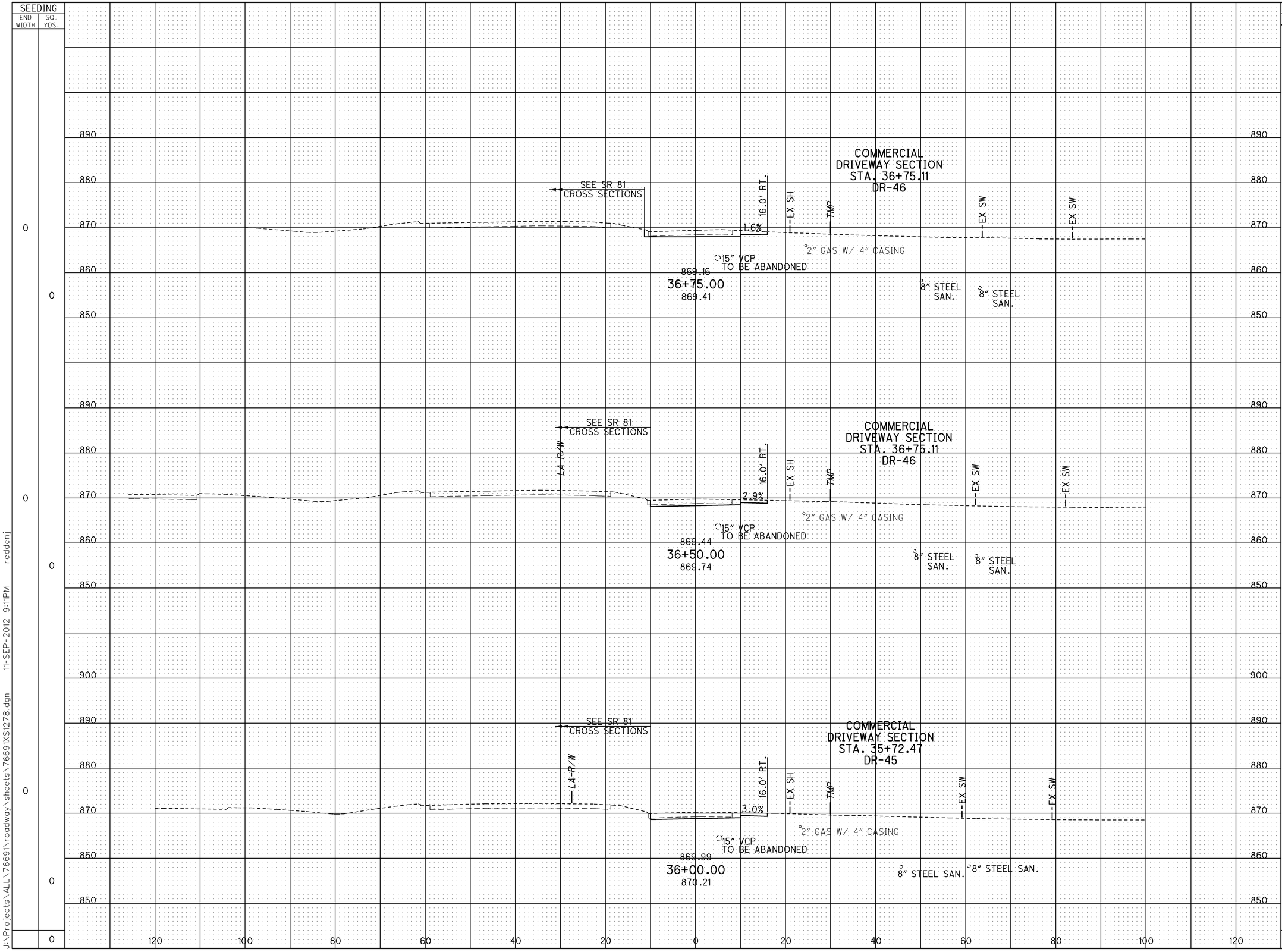

END AREA		VOLUME	
CUT	FILL	CUT	FILL
34	0		
		30	0
31	0		
		56	0
30	0		
		27	0
		113	0

CALCULATED JMR
CHECKED ACF

CROSS SECTIONS - SERVICE RD 3
STA. 36+00.00 TO STA. 36+75.00

ALL-75-5.53

581
1224

J:\Projects\ALL\76691\roadway\sheets\76691XS1278.dgn 11-SEP-2012 9:11PM reddenj

SEEDING	
END WIDTH	SQ. YDS.
11	61
10	28
0	0
	89

END AREA	
CUT	FILL
24	0
50	0
37	0

VOLUME	
CUT	FILL
68	0
80	0
33	0
181	0

CALCULATED JMR
CHECKED ACF

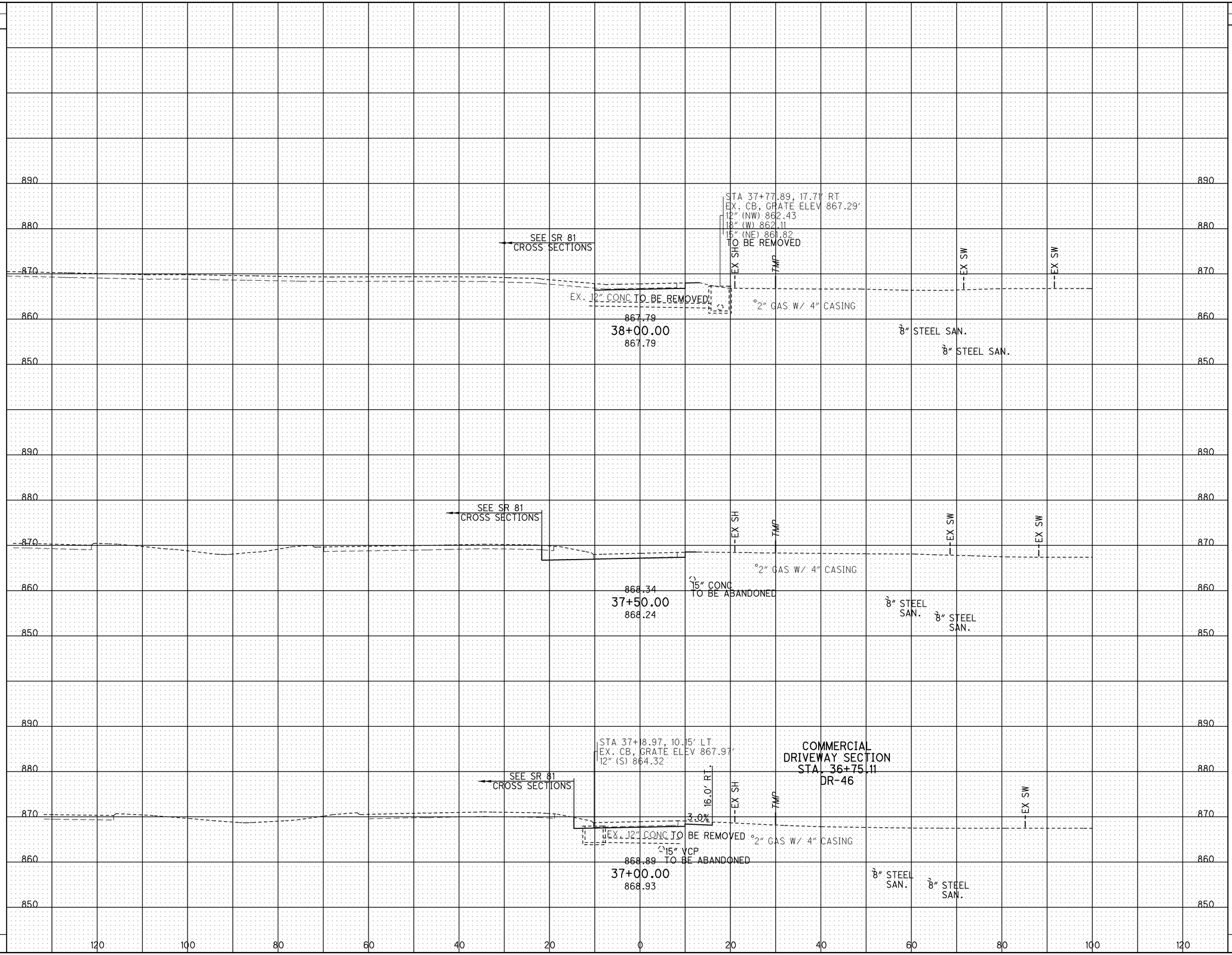

CROSS SECTIONS - SERVICE RD 3
STA. 37+00.00 TO STA. 38+00.00

ALL-75-5.53

582
1224

J:\Projects\ALL\76691\roadway\sheets\76691XS1279.dgn 11-SEP-2012 9:11PM reddenj

SEEDING	
END WIDTH	SQ. YDS.
43	
0	
	0
0	
	33
	33

STA. 39+00.00
AHEAD
BACK

SEE SR 81
CROSS SECTIONS

865.88
39+00.00
865.96

STA 38+94.65, 89.00' RT
EX. SAN MH, GRATE ELEV 865.72'
8" (E) 852.36
8" (W) 852.27
8" (N) 852.16

STA 39+07.38, 70.51' RT
EX. SAN MH, GRATE ELEV 866.12'
8" (W) 851.37
8" (SW) 851.37

STA 39+08.97, 64.07' RT
EX. SAN MH, GRATE ELEV 868.25'
8" (W) 858.25

EX SH
EX SW
TMP
2" GAS W/ 4" CASING
8" PVC

SEE SR 81
CROSS SECTIONS

866.92
38+50.00
867.10

3.0%
3.9%
30.0' RT.
36.0' RT.
APPRON LIMITS
50.0' RT.

COMMERCIAL
DRIVEWAY SECTION
STA. 38+61.93
DR-47

8" STEEL SAN.
8" STEEL SAN.

END AREA		VOLUME	
CUT	FILL	CUT	FILL
74	6		
41	0		
		71	2
35	2		
		55	2
		126	4

CALCULATED JMR
CHECKED ACF

CROSS SECTIONS - SERVICE RD 3
STA. 38+50.00 TO STA. 39+00.00

ALL-75-5.53

583
1224

J:\Projects\ALL\76691\roadway\sheets\76691XS1280.dgn 11-SEP-2012 9:11PM reddenj

SEEDING	
END WIDTH	SQ. YDS.
37	200
35	244
	267
53	
	711

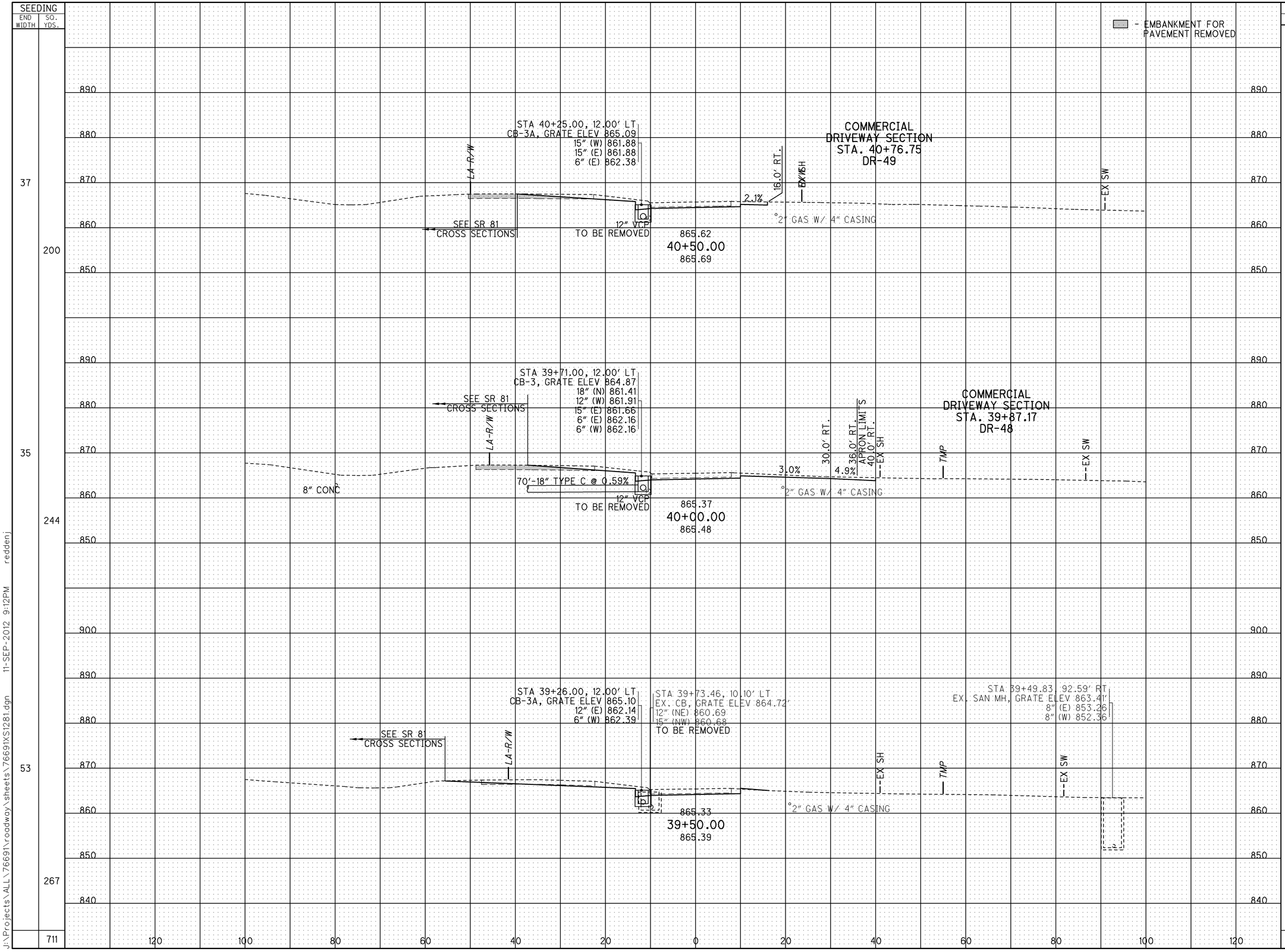

END AREA	
CUT	FILL
69	20
79	20
68	3

VOLUME	
CUT	FILL
138	37
136	21
132	9
406	67

CALCULATED JMR
CHECKED ACF

CROSS SECTIONS - SERVICE RD 3
STA. 39+50.00 TO STA. 40+50.00

ALL-75-5.53

584
1224

J:\Projects\ALL\76691\roadway\sheets\76691XS1281.dgn 11-SEP-2012 9:12PM reddenj

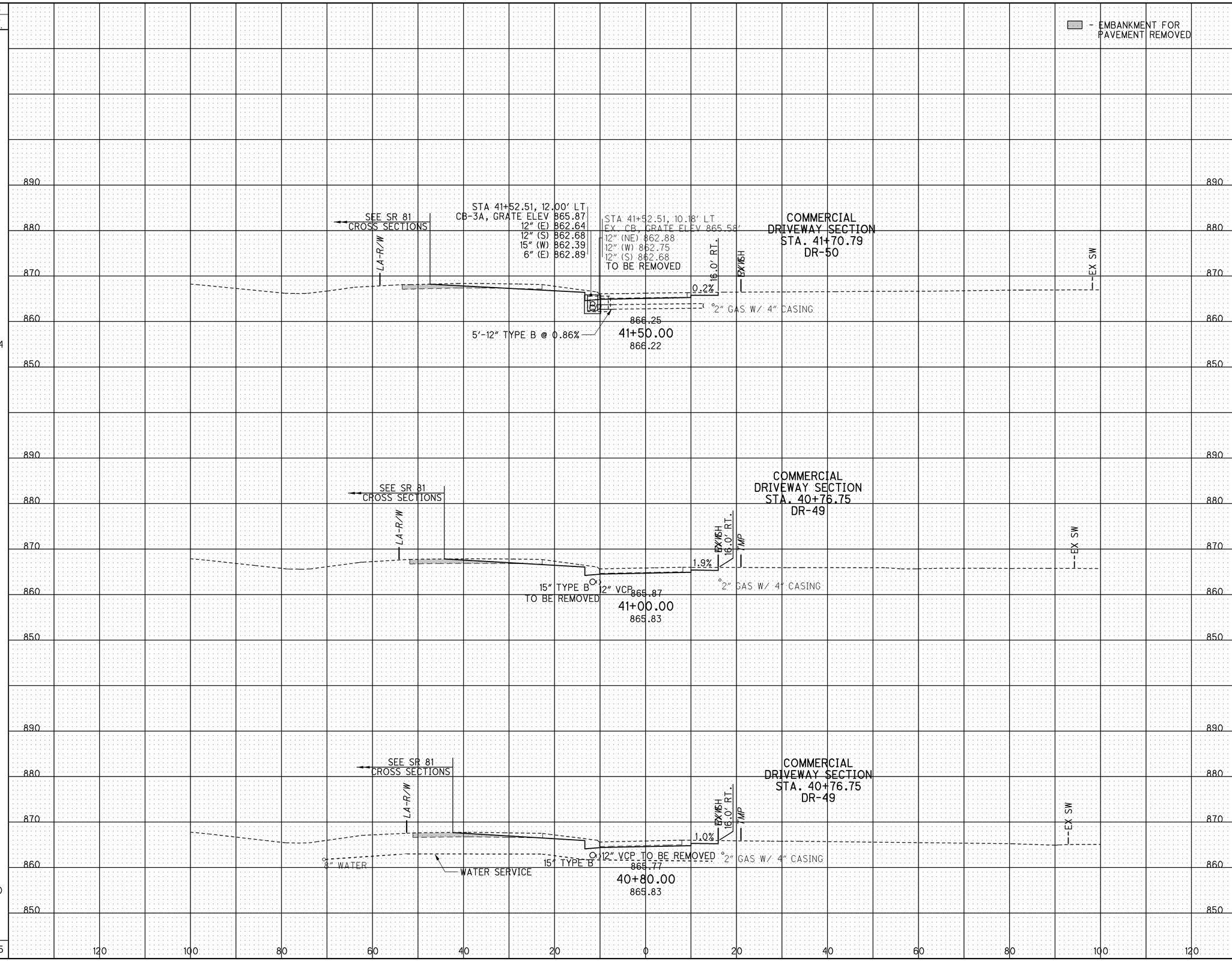

SEEDING END WIDTH	SEEDING SQ. YDS.	END AREA CUT	END AREA FILL	VOLUME CUT	VOLUME FILL
45		72	14		
	244			130	28
42		69	17		
	91			51	13
40		70	18		
	130			77	21
	465			258	62

CALCULATED JMR
CHECKED ACF

CROSS SECTIONS - SERVICE RD 3
STA. 40+80.00 TO STA. 41+50.00

ALL-75-5.53

J:\Projects\ALL\76691\roadway\sheets\76691XS1282.dgn 11-SEP-2012 9:12PM reddenj

SEEDING	
END WIDTH	SQ. YDS.
48	272
49	167
49	105
	544

END AREA	
CUT	FILL
70	22
70	16
73	11

VOLUME	
CUT	FILL
129	35
79	15
54	9
262	59

CALCULATED JMR
CHECKED ACF

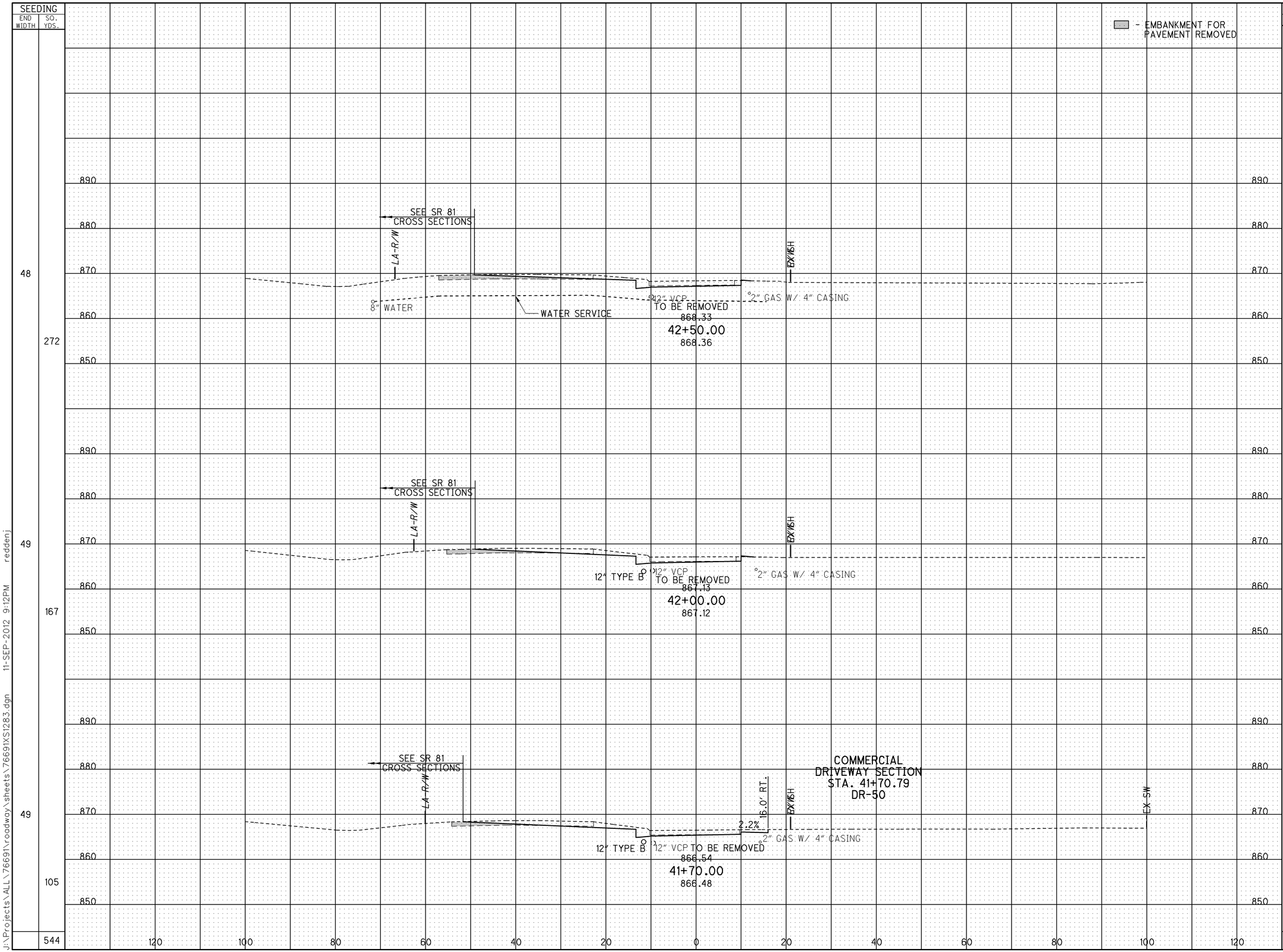

CROSS SECTIONS - SERVICE RD 3
STA. 41+70.00 TO STA. 42+50.00

ALL-75-5.53

586
1224

J:\Projects\ALL\76691\roadway\sheets\76691XS1283.dgn 11-SEP-2012 9:12PM reddenj

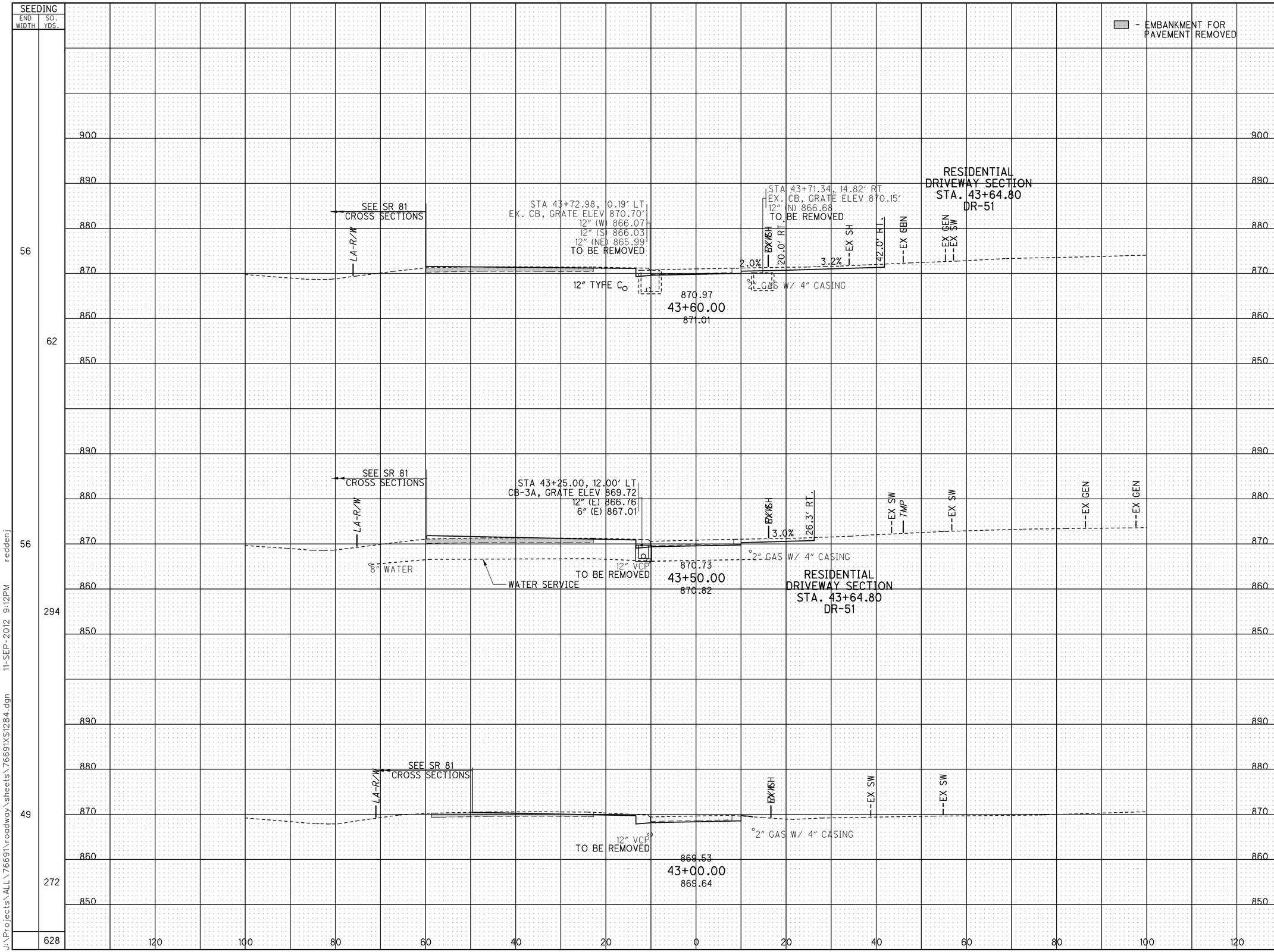

END AREA CUT	END AREA FILL	VOLUME CUT	VOLUME FILL
88	37		
		31	15
81	45		
		140	66
71	27		
		130	45
		301	126

CALCULATED JMR
CHECKED ACF

CROSS SECTIONS - SERVICE RD 3
STA. 43+00.00 TO STA. 43+60.00

ALL-75-5.53

J:\Projects\ALL\76691\roadway\sheets\76691XS1284.dgn 11-SEP-2012 9:12PM reddenj

SEEDING END WIDTH	SEEDING SQ. YDS.
83	155
56	193
59	258
	606

- EMBANKMENT FOR PAVEMENT REMOVED

SEE SR 81 CROSS SECTIONS

LA-R/W

STA 44+50.00, 12.00' LT
CB-3A, GRATE ELEV 872.59
12" (W) 867.26
6" (E) 869.89

42:1

12" TYPE C

12" VCP TO BE REMOVED
873.00
44+50.00
872.99

EX SH

EX SW

2" GAS W/ 4" CASING

SEE SR 81 CROSS SECTIONS

LA-R/W

RESIDENTIAL DRIVEWAY SECTION
STA. 44+26.17
DR-52

37.5' RT.

2.2%

12" TYPE C

12" TYPE C

12" VCP TO BE REMOVED
872.65
44+30.00
872.44

EX SH

EX SW

2" GAS W/ 4" CASING

SEE SR 81 CROSS SECTIONS

LA-R/W

STA 44+00.00, 20.50' LT
MH-3, RIM ELEV 872.23
12" (W) 865.50
12" (S) 868.38
12" (E) 866.76
12" (E) 869.20
15" (N) 865.25

STA 44+00.00, 19.19' RT
CB-2-2B, GRATE ELEV 871.28
12" (N) 868.78

25:1

86'-15" TYPE C @ 0.71%

40'-12" TYPE B @ 1.01%

12" VCP TO BE REMOVED
871.93
44+00.00
871.83

EX SH

EX SW

2" GAS W/ 4" CASING

END AREA CUT	END AREA FILL	VOLUME CUT	VOLUME FILL
92	95	66	62
87	72	86	69
67	52	115	66
		267	197

CALCULATED JMR
CHECKED ACF

CROSS SECTIONS - SERVICE RD 3
STA. 44+00.00 TO STA. 44+50.00

ALL-75-5.53

588
1224

J:\Projects\ALL\76691\roadway\sheets\76691XS1285.dgn 11-SEP-2012 9:12PM reddenj

SEEDING	
END WIDTH	SQ. YDS.
59	403
86	472
	875

END AREA	
CUT	FILL
76	79
61	115
142	194
269	374

VOLUME	
CUT	FILL
127	180

CALCULATED JMR
CHECKED ACF

- EMBANKMENT FOR PAVEMENT REMOVED

RESIDENTIAL DRIVEWAY SECTION
STA. 45+75.46
DR-54

874.25
45+63.63
873.16

3.6%

43.8' RT.

RESIDENTIAL DRIVEWAY SECTION
STA. 45+45.66
DR-53

STA 45+62.50, 24.56' LT
CB-3A, GRATE ELEV 873.60
2" (W) 870.66
6" (E) 870.91

SEE SR 81
CROSS SECTIONS

LA-R/W

4.2%

33.5' RT.

EX SH

EX SW

EX GEN

2" GAS W/ 4" CASING

874.10
45+50.00
871.66

RESIDENTIAL DRIVEWAY SECTION
STA. 45+45.66
DR-53

2.7%

47.4' RT.

873.99
45+40.12
871.01

STA 45+10.00, 12.05' LT
CB-3A, GRATE ELEV 873.25
12" (N) 870.29
6" (E) 870.64

STA 45+10.00, 25.00' LT
MH-3, RIM ELEV 873.93
12" (W) 870.17
12" (S) 870.17
12" (E) 870.29

SEE SR 81
CROSS SECTIONS

LA-R/W

STA 44+84.24, 1.24' LT
EX. CB, GRATE ELEV 870.00'
12" (W) 867.54
TO BE REMOVED

EX SH

EX SW

2" GAS W/ 4" CASING

13'-12" TYPE C @ 0.9%

873.55
45+00.00
870.47

890
880
870
860

120 100 80 60 40 20 0 20 40 60 80 100 120

CROSS SECTIONS - SERVICE RD 3
STA. 45+00.00 TO STA. 45+63.63

ALL-75-5.53

589
1224

J:\Projects\ALL\76691\roadway\sheets\76691XS1286.dgn 11-SEP-2012 9:12PM reddenj

SEEDING END WIDTH	SEEDING SQ. YDS.
86	110
38	40
	11
	108
45	289
	518

GRAND TOTAL SEEDING & MULCHING SERVICE RD. 3
4,796 SQ. YD.
(QUANTITY CARRIED TO ROADWAY SUBSUMMARY)

- EMBANKMENT FOR PAVEMENT REMOVED

GRAND TOTAL EARTHWORK SERVICE RD. 3
EXCAVATION: 944 CU. YD.
EMBANKMENT: 1,245 CU. YD.
(QUANTITY CARRIED TO ROADWAY SUBSUMMARY)

NOTE:
DEDUCTED 2,305 CU. YD. FROM EXCAVATION QUANTITY FOR PAVEMENT REMOVAL

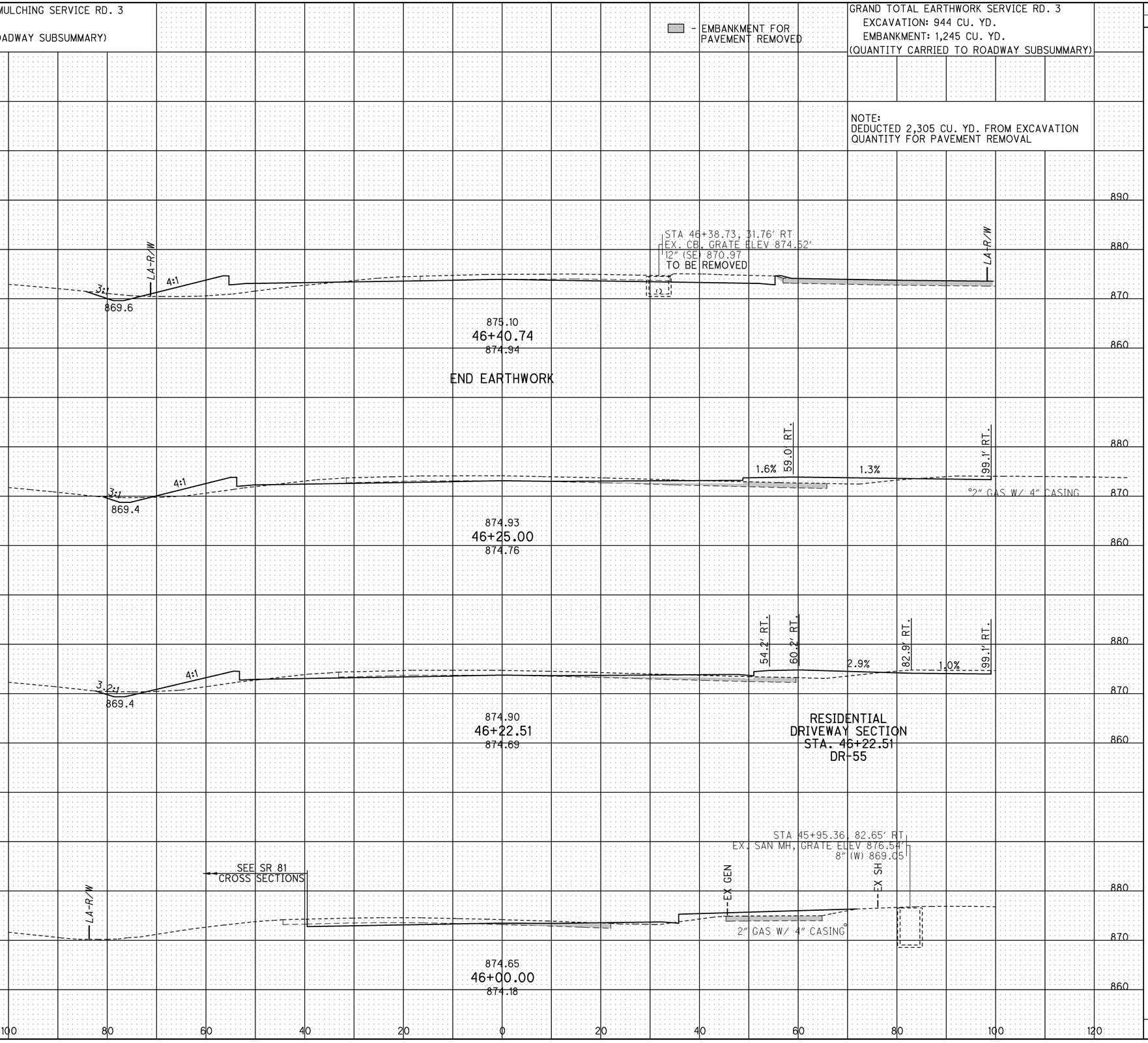

END AREA CUT	END AREA FILL	VOLUME CUT	VOLUME FILL
154	105	81	52
125	74		
132	76	12	7
		94	56
95	59		
		159	128
		346	243

CALCULATED JMR
CHECKED ACF

CROSS SECTIONS - SERVICE RD 3
STA. 46+00.00 TO STA. 46+40.74

ALL-75-5.53

590
1224

J:\Projects\ALL\76691\roadway\sheets\76691XS1287.dgn 11-SEP-2012 9:12PM reddenj

SUPERELEVATION TABLE

P.I. STA. 504+36.28 | Dc = 1° 59′ 00″ RT.

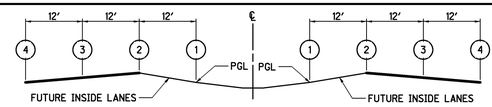

CALCULATED NAH | CHECKED ABS

REMARKS	STATION	(1) PROFILE GRADE (FUTURE INSIDE E/P)		(2) INSIDE EDGE OF INSIDE LANE					(3) OUTSIDE EDGE OF OUTSIDE LANE					(4) OUTSIDE EDGE OF OUTSIDE LANE					ACCEL/DECEL EDGE				
		OFFSET	ELEVATION	WIDTH	TRANSITION RATE	CROSS SLOPE	ELEVATION CORRECTION	ELEVATION	WIDTH	TRANSITION RATE	CROSS SLOPE	ELEVATION CORRECTION	ELEVATION	WIDTH	TRANSITION RATE	CROSS SLOPE	ELEVATION CORRECTION	ELEVATION	WIDTH	TRANSITION RATE	CROSS SLOPE	ELEVATION CORRECTION	ELEVATION
	487+50	25.5	882.79	12.00		0.016	0.192	882.98	12.00		-0.016	-0.192	882.79	12.00		-0.016	-0.192	882.59					
	487+75	25.5	882.61	12.00		0.016	0.192	882.80	12.00		-0.016	-0.192	882.61	12.00		-0.016	-0.192	882.41					
	488+00	25.5	882.43	12.00		0.016	0.192	882.62	12.00		-0.016	-0.192	882.43	12.00		-0.016	-0.192	882.23					
	488+25	25.5	882.25	12.00		0.016	0.192	882.44	12.00		-0.016	-0.192	882.25	12.00		-0.016	-0.192	882.05					
	488+47.53	25.5	882.08	12.00		0.016	0.192	882.28	12.00		-0.016	-0.192	882.08	12.00		-0.016	-0.192	881.89					
	488+50	25.5	882.07	12.00		0.015	0.182	882.25	12.00		-0.016	-0.192	882.06	12.00		-0.016	-0.192	881.86					
	488+75	25.5	881.89	12.00		0.007	0.082	881.97	12.00		-0.016	-0.192	881.78	12.00		-0.016	-0.192	881.58					
	489+00	25.5	881.71	12.00		-0.001	-0.018	881.69	12.00		-0.016	-0.192	881.50	12.00		-0.016	-0.192	881.30					
	489+25	25.5	881.53	12.00		-0.010	-0.118	881.41	12.00		-0.016	-0.192	881.22	12.00		-0.016	-0.192	881.02					
	489+43.53	25.5	881.39	12.00		-0.016	-0.192	881.20	12.00		-0.016	-0.192	881.01	12.00	250:1	-0.016	-0.192	880.82					
	489+50	25.5	881.35	12.00		-0.017	-0.201	881.15	12.00		-0.017	-0.201	880.94	12.00	250:1	-0.017	-0.201	880.74					
	489+75	25.5	881.17	12.00		-0.019	-0.234	880.93	12.00		-0.019	-0.234	880.70	12.00	250:1	-0.019	-0.234	880.46					
	490+00	25.5	880.99	12.00		-0.022	-0.267	880.72	12.00		-0.022	-0.267	880.45	12.00	250:1	-0.022	-0.267	880.18					
	490+25	25.5	880.81	12.00		-0.025	-0.301	880.51	12.00		-0.025	-0.301	880.20	12.00	250:1	-0.025	-0.301	879.90					
	490+50	25.5	880.63	12.00		-0.028	-0.334	880.29	12.00		-0.028	-0.334	879.96	12.00	250:1	-0.028	-0.334	879.62					
	490+75	25.5	880.45	12.00		-0.031	-0.367	880.08	12.00		-0.031	-0.367	879.71	12.00	250:1	-0.031	-0.367	879.34					
	491+00	25.5	880.27	12.00		-0.033	-0.401	879.87	12.00		-0.033	-0.401	879.46	12.00	250:1	-0.033	-0.401	879.06					
PC	491+17.53	25.5	880.14	12.00		-0.035	-0.424	879.72	12.00		-0.035	-0.424	879.29	12.00	250:1	-0.035	-0.424	878.87					
	491+25	25.5	880.09	12.00		-0.036	-0.434	879.65	12.00		-0.036	-0.434	879.22	12.00	250:1	-0.036	-0.434	878.78					
	491+50	25.5	879.91	12.00		-0.039	-0.467	879.44	12.00		-0.039	-0.467	878.97	12.00	250:1	-0.039	-0.467	878.50					
	491+75	25.5	879.73	12.00		-0.042	-0.501	879.23	12.00		-0.042	-0.501	878.72	12.00	250:1	-0.042	-0.501	878.22					
	492+00	25.5	879.55	12.00		-0.044	-0.534	879.01	12.00		-0.044	-0.534	878.48	12.00	250:1	-0.044	-0.534	877.94					
	492+25	25.5	879.37	12.00		-0.047	-0.567	878.80	12.00		-0.047	-0.567	878.23	12.00	250:1	-0.047	-0.567	877.66					
	492+50	25.5	879.19	12.00		-0.050	-0.601	878.59	12.00		-0.050	-0.601	877.98	12.00	250:1	-0.050	-0.601	877.38					
	492+75	25.5	879.01	12.00		-0.053	-0.634	878.37	12.00		-0.053	-0.634	877.74	12.00	250:1	-0.053	-0.634	877.10					
	492+94.53	25.5	878.87	12.00		-0.055	-0.660	878.21	12.00		-0.055	-0.660	877.55	12.00	250:1	-0.055	-0.660	876.89					
	493+00	25.5	878.83	12.00		-0.055	-0.660	878.17	12.00		-0.055	-0.660	877.51	12.00		-0.055	-0.660	876.85					
	493+25	25.5	878.65	12.00		-0.055	-0.660	877.99	12.00		-0.055	-0.660	877.33	12.00		-0.055	-0.660	876.67					
	493+50	25.5	878.47	12.00		-0.055	-0.660	877.81	12.00		-0.055	-0.660	877.15	12.00		-0.055	-0.660	876.49					
	513+50	25.5	880.23	12.00		-0.055	-0.660	879.57	12.00		-0.055	-0.660	878.91	12.00		-0.055	-0.660	878.25					
	513+75	25.5	880.38	12.00		-0.055	-0.660	879.72	12.00		-0.055	-0.660	879.06	12.00		-0.055	-0.660	878.40					
	514+00	25.5	880.53	12.00		-0.055	-0.660	879.87	12.00		-0.055	-0.660	879.21	12.00		-0.055	-0.660	878.55					
	514+14.80	25.5	880.61	12.00		-0.055	-0.660	879.95	12.00		-0.055	-0.660	879.29	12.00	250:1	-0.055	-0.660	878.63					
	514+25	25.5	880.67	12.00		-0.054	-0.646	880.02	12.00		-0.054	-0.646	879.38	12.00	250:1	-0.054	-0.646	878.73					
	514+50	25.5	880.81	12.00		-0.051	-0.613	880.19	12.00		-0.051	-0.613	879.58	12.00	250:1	-0.051	-0.613	878.97					
	514+75	25.5	880.93	12.00		-0.048	-0.580	880.36	12.00		-0.048	-0.580	879.78	12.00	250:1	-0.048	-0.580	879.20					
	515+00	25.5	881.06	12.00		-0.046	-0.546	880.51	12.00		-0.046	-0.546	879.97	12.00	250:1	-0.046	-0.546	879.42					
	515+25	25.5	881.17	12.00		-0.043	-0.513	880.66	12.00		-0.043	-0.513	880.15	12.00	250:1	-0.043	-0.513	879.64					
	515+50	25.5	881.29	12.00		-0.040	-0.480	880.81	12.00		-0.040	-0.480	880.33	12.00	250:1	-0.040	-0.480	879.85					
	515+75	25.5	881.39	12.00		-0.037	-0.446	880.94	12.00		-0.037	-0.446	880.50	12.00	250:1	-0.037	-0.446	880.05					
PT	515+91.80	25.5	881.46	12.00		-0.035	-0.424	881.03	12.00		-0.035	-0.424	880.61	12.00	250:1	-0.035	-0.424	880.18					
	516+00	25.5	881.49	12.00		-0.034	-0.413	881.07	12.00		-0.034	-0.413	880.66	12.00	250:1	-0.034	-0.413	880.25					
	516+25	25.5	881.58	12.00		-0.032	-0.380	881.20	12.00		-0.032	-0.380	880.82	12.00	250:1	-0.032	-0.380	880.44					
	516+50	25.5	881.67	12.00		-0.029	-0.346	881.32	12.00		-0.029	-0.346	880.97	12.00	250:1	-0.029	-0.346	880.63					
	516+75	25.5	881.74	12.00		-0.026	-0.313	881.43	12.00		-0.026	-0.313	881.12	12.00	250:1	-0.026	-0.313	880.81					
	517+00	25.5	881.82	12.00		-0.023	-0.280	881.54	12.00		-0.023	-0.280	881.26	12.00	250:1	-0.023	-0.280	880.98					
	517+25	25.5	881.88	12.00		-0.021	-0.246	881.64	12.00		-0.021	-0.246	881.39	12.00	250:1	-0.021	-0.246	881.15					
	517+50	25.5	881.95	12.00		-0.018	-0.213	881.73	12.00		-0.018	-0.213	881.52	12.00	250:1	-0.018	-0.213	881.31					
	517+65.80	25.5	881.98	12.00		-0.016	-0.192	881.79	12.00		-0.016	-0.192	881.60	12.00	250:1	-0.016	-0.192	881.40					
	517+75	25.5	882.00	12.00		-0.013	-0.155	881.84	12.00		-0.016	-0.192	881.65	12.00		-0.016	-0.192	881.46					

SUPERELEVATION TABLE (I-75 NB)

ALL-75-5.53

591
1224

J:\Projects\ALL\76691\roadway\sheets\76691GE011.dgn 11-SEP-2012 9:12PM reddenj

SUPERELEVATION TABLE

P.I. STA. 504+36.28 | Dc = 1° 59′ 00″ RT.

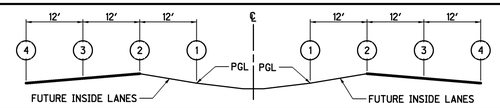

CALCULATED NAH | CHECKED ABS

ACCEL/DECEL EDGE					④ OUTSIDE EDGE OF OUTSIDE LANE					③ OUTSIDE EDGE OF OUTSIDE LANE					② INSIDE EDGE OF INSIDE LANE					① PROFILE GRADE (FUTURE INSIDE E/P)		STATION	REMARKS
ELEVATION	ELEVATION CORRECTION	CROSS SLOPE	TRANSITION RATE	WIDTH	ELEVATION	ELEVATION CORRECTION	CROSS SLOPE	TRANSITION RATE	WIDTH	ELEVATION	ELEVATION CORRECTION	CROSS SLOPE	TRANSITION RATE	WIDTH	ELEVATION	ELEVATION CORRECTION	CROSS SLOPE	TRANSITION RATE	WIDTH	ELEVATION	OFFSET		
					882.95	-0.192	-0.016		12.00	883.15	-0.192	-0.016		12.00	883.34	0.192	0.016		12.00	883.15	25.5	487+00	
					882.77	-0.192	-0.016		12.00	882.97	-0.192	-0.016		12.00	883.16	0.192	0.016		12.00	882.97	25.5	487+25	
					882.59	-0.192	-0.016		12.00	882.79	-0.192	-0.016		12.00	882.98	0.192	0.016		12.00	882.79	25.5	487+50	
					882.58	-0.192	-0.016	250:1	12.00	882.77	-0.192	-0.016		12.00	882.97	0.192	0.016		12.00	882.77	25.5	487+51.53	
					882.51	-0.145	-0.012	250:1	12.00	882.65	-0.145	-0.012		12.00	882.80	0.192	0.016		12.00	882.61	25.5	487+75	
					882.43	-0.095	-0.008	250:1	12.00	882.52	-0.095	-0.008		12.00	882.62	0.192	0.016		12.00	882.43	25.5	488+00	
					882.35	-0.045	-0.004	250:1	12.00	882.39	-0.045	-0.004		12.00	882.44	0.192	0.016		12.00	882.25	25.5	488+25	
					882.27	0.005	0.000	250:1	12.00	882.26	0.005	0.000		12.00	882.26	0.192	0.016		12.00	882.07	25.5	488+50	
					882.19	0.055	0.005	250:1	12.00	882.13	0.055	0.005		12.00	882.08	0.192	0.016		12.00	881.89	25.5	488+75	
					882.11	0.105	0.009	250:1	12.00	882.00	0.105	0.009		12.00	881.90	0.192	0.016		12.00	881.71	25.5	489+00	
					882.03	0.155	0.013	250:1	12.00	881.87	0.155	0.013		12.00	881.72	0.192	0.016		12.00	881.53	25.5	489+25	
					881.97	0.192	0.016	250:1	12.00	881.78	0.192	0.016		12.00	881.58	0.192	0.016		12.00	881.39	25.5	489+43.53	
					881.95	0.201	0.017	250:1	12.00	881.75	0.201	0.017		12.00	881.55	0.201	0.017		12.00	881.35	25.5	489+50	
					881.87	0.234	0.019	250:1	12.00	881.63	0.234	0.019		12.00	881.40	0.234	0.019		12.00	881.17	25.5	489+75	
					881.79	0.267	0.022	250:1	12.00	881.52	0.267	0.022		12.00	881.25	0.267	0.022		12.00	880.99	25.5	490+00	
					881.71	0.301	0.025	250:1	12.00	881.41	0.301	0.025		12.00	881.11	0.301	0.025		12.00	880.81	25.5	490+25	
					881.63	0.334	0.028	250:1	12.00	881.29	0.334	0.028		12.00	880.96	0.334	0.028		12.00	880.63	25.5	490+50	
					881.55	0.367	0.031	250:1	12.00	881.18	0.367	0.031		12.00	880.81	0.367	0.031		12.00	880.45	25.5	490+75	
					881.47	0.401	0.033	250:1	12.00	881.07	0.401	0.033		12.00	880.67	0.401	0.033		12.00	880.27	25.5	491+00	
					881.41	0.424	0.035	250:1	12.00	880.99	0.424	0.035		12.00	880.56	0.424	0.035		12.00	880.14	25.5	491+17.53	PC
					881.39	0.434	0.036	250:1	12.00	880.95	0.434	0.036		12.00	880.52	0.434	0.036		12.00	880.09	25.5	491+25	
					881.31	0.467	0.039	250:1	12.00	880.84	0.467	0.039		12.00	880.37	0.467	0.039		12.00	879.91	25.5	491+50	
					881.23	0.501	0.042	250:1	12.00	880.73	0.501	0.042		12.00	880.23	0.501	0.042		12.00	879.73	25.5	491+75	
					881.15	0.534	0.044	250:1	12.00	880.61	0.534	0.044		12.00	880.08	0.534	0.044		12.00	879.55	25.5	492+00	
					881.07	0.567	0.047	250:1	12.00	880.50	0.567	0.047		12.00	879.93	0.567	0.047		12.00	879.37	25.5	492+25	
					880.99	0.601	0.050	250:1	12.00	880.39	0.601	0.050		12.00	879.79	0.601	0.050		12.00	879.19	25.5	492+50	
					880.91	0.634	0.053	250:1	12.00	880.27	0.634	0.053		12.00	879.64	0.634	0.053		12.00	879.01	25.5	492+75	
					880.85	0.660	0.055	250:1	12.00	880.19	0.660	0.055		12.00	879.53	0.660	0.055		12.00	878.87	25.5	492+94.53	
					880.81	0.660	0.055		12.00	880.15	0.660	0.055		12.00	879.49	0.660	0.055		12.00	878.83	25.5	493+00	
					880.63	0.660	0.055		12.00	879.97	0.660	0.055		12.00	879.31	0.660	0.055		12.00	878.65	25.5	493+25	
					880.45	0.660	0.055		12.00	879.79	0.660	0.055		12.00	879.13	0.660	0.055		12.00	878.47	25.5	493+50	
					882.21	0.660	0.055		12.00	881.55	0.660	0.055		12.00	880.89	0.660	0.055		12.00	880.23	25.5	513+50	
					882.36	0.660	0.055		12.00	881.70	0.660	0.055		12.00	881.04	0.660	0.055		12.00	880.38	25.5	513+75	
					882.51	0.660	0.055		12.00	881.85	0.660	0.055		12.00	881.19	0.660	0.055		12.00	880.53	25.5	514+00	
					882.59	0.660	0.055	250:1	12.00	881.93	0.660	0.055		12.00	881.27	0.660	0.055		12.00	880.61	25.5	514+14.80	
					882.61	0.646	0.054	250:1	12.00	881.96	0.646	0.054		12.00	881.32	0.646	0.054		12.00	880.67	25.5	514+25	
					882.64	0.613	0.051	250:1	12.00	882.03	0.613	0.051		12.00	881.42	0.613	0.051		12.00	880.81	25.5	514+50	
					882.67	0.580	0.048	250:1	12.00	882.09	0.580	0.048		12.00	881.51	0.580	0.048		12.00	880.93	25.5	514+75	
					882.70	0.546	0.046	250:1	12.00	882.15	0.546	0.046		12.00	881.60	0.546	0.046		12.00	881.06	25.5	515+00	
					882.71	0.513	0.043	250:1	12.00	882.20	0.513	0.043		12.00	881.69	0.513	0.043		12.00	881.17	25.5	515+25	
					882.72	0.480	0.040	250:1	12.00	882.24	0.480	0.040		12.00	881.77	0.480	0.040		12.00	881.29	25.5	515+50	
					882.73	0.446	0.037	250:1	12.00	882.28	0.446	0.037		12.00	881.84	0.446	0.037		12.00	881.39	25.5	515+75	
					882.73	0.424	0.035	250:1	12.00	882.30	0.424	0.035		12.00	881.88	0.424	0.035		12.00	881.46	25.5	515+91.80	PT
					882.73	0.413	0.034	250:1	12.00	882.31	0.413	0.034		12.00	881.90	0.413	0.034		12.00	881.49	25.5	516+00	
					882.72	0.380	0.032	250:1	12.00	882.34	0.380	0.032		12.00	881.96	0.380	0.032		12.00	881.58	25.5	516+25	
					882.70	0.346	0.029	250:1	12.00	882.36	0.346	0.029		12.00	882.01	0.346	0.029		12.00	881.67	25.5	516+50	
					882.68	0.313	0.026	250:1	12.00	882.37	0.313	0.026		12.00	882.06	0.313	0.026		12.00	881.74	25.5	516+75	
					882.66	0.280	0.023	250:1	12.00	882.38	0.280	0.023		12.00	882.10	0.280	0.023		12.00	881.82	25.5	517+00	
					882.62	0.246	0.021	250:1	12.00	882.38	0.246	0.021		12.00	882.13	0.246	0.021		12.00	881.88	25.5	517+25	
					882.58	0.213	0.018	250:1	12.00	882.37	0.213	0.018		12.00	882.16	0.213	0.018		12.00	881.95	25.5	517+50	
					882.56	0.192	0.016	250:1	12.00	882.36	0.192	0.016		12.00	882.17	0.192	0.016		12.00	881.98	25.5	517+65.80	
					882.54	0.174	0.014	250:1	12.00	882.37	0.174	0.014		12.00	882.19	0.192	0.016		12.00	882.00	25.5	517+75	

SUPERELEVATION TABLE (I-75 SB)

ALL-75-5.53

J:\Projects\ALL\76691\roadway\sheets\76691CE012.dgn 11-SEP-2012 9:12PM reddenj

SUPERELEVATION TABLE

P.I. STA. 504+36.28	Dc = 1° 59′ 00″ RT.

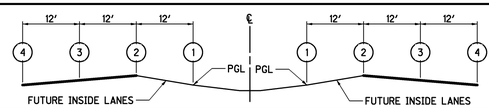

CALCULATED NAH
CHECKED ABS

REMARKS	STATION	① PROFILE GRADE (FUTURE INSIDE E/P)		② INSIDE EDGE OF INSIDE LANE					③ OUTSIDE EDGE OF OUTSIDE LANE					④ OUTSIDE EDGE OF OUTSIDE LANE					ACCEL/DECEL EDGE				
		OFFSET	ELEVATION	WIDTH	TRANSITION RATE	CROSS SLOPE	ELEVATION CORRECTION	ELEVATION	WIDTH	TRANSITION RATE	CROSS SLOPE	ELEVATION CORRECTION	ELEVATION	WIDTH	TRANSITION RATE	CROSS SLOPE	ELEVATION CORRECTION	ELEVATION	WIDTH	TRANSITION RATE	CROSS SLOPE	ELEVATION CORRECTION	ELEVATION
	517+85.00	25.5	882.02	12.00		-0.010	-0.115	881.90	12.00		-0.016	-0.192	881.71	12.00		-0.016	-0.192	881.52					
	518+00	25.5	882.05	12.00		-0.005	-0.055	881.99	12.00		-0.016	-0.192	881.80	12.00		-0.016	-0.192	881.61					
	518+25	25.5	882.09	12.00		0.004	0.045	882.13	12.00		-0.016	-0.192	881.94	12.00		-0.016	-0.192	881.75					
	518+40.00	25.5	882.11	12.00		0.009	0.105	882.22	12.00		-0.016	-0.192	882.02	12.00		-0.016	-0.192	881.83					
	518+50	25.5	882.13	12.00		0.012	0.145	882.27	12.00		-0.016	-0.192	882.08	12.00		-0.016	-0.192	881.89					
	518+61.80	25.5	882.14	12.00		0.016	0.192	882.33	12.00		-0.016	-0.192	882.14	12.00		-0.016	-0.192	881.95					
	518+75	25.5	882.16	12.00		0.016	0.192	882.35	12.00		-0.016	-0.192	882.16	12.00		-0.016	-0.192	881.97					
	519+00	25.5	882.20	12.00		0.016	0.192	882.39	12.00		-0.016	-0.192	882.20	12.00		-0.016	-0.192	882.00					

SUPERELEVATION TABLE (I-75 NB)

ALL-75-5.53

593
1224

J:\Projects\ALL\76691\roadway\sheets\76691CE013.dgn 11-SEP-2012 9:12PM reddenj

SUPERELEVATION TABLE

P.I. STA. 504+36.28	Dc = 1° 59′ 00″ RT.

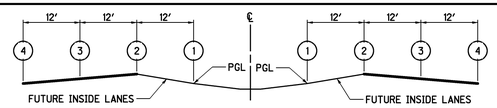

ACCEL/DECEL EDGE					(4) OUTSIDE EDGE OF OUTSIDE LANE					(3) OUTSIDE EDGE OF OUTSIDE LANE					(2) INSIDE EDGE OF INSIDE LANE					(1) PROFILE GRADE (FUTURE INSIDE E/P)		STATION	REMARKS
ELEVATION	ELEVATION CORRECTION	CROSS SLOPE	TRANSITION RATE	WIDTH	ELEVATION	ELEVATION CORRECTION	CROSS SLOPE	TRANSITION RATE	WIDTH	ELEVATION	ELEVATION CORRECTION	CROSS SLOPE	TRANSITION RATE	WIDTH	ELEVATION	ELEVATION CORRECTION	CROSS SLOPE	TRANSITION RATE	WIDTH	ELEVATION	OFFSET		
					882.49	0.124	0.010	250:1	12.00	882.36	0.124	0.010		12.00	882.24	0.192	0.016		12.00	882.05	25.5	518+00	
					882.43	0.074	0.006	250:1	12.00	882.36	0.074	0.006		12.00	882.28	0.192	0.016		12.00	882.09	25.5	518+25	
					882.39	0.044	0.004	250:1	12.00	882.35	0.044	0.004		12.00	882.30	0.192	0.016		12.00	882.11	25.5	518+40.00	
					882.37	0.024	0.002	250:1	12.00	882.34	0.024	0.002		12.00	882.32	0.192	0.016		12.00	882.13	25.5	518+50	
					882.30	-0.026	-0.002	250:1	12.00	882.33	-0.026	-0.002		12.00	882.35	0.192	0.016		12.00	882.16	25.5	518+75	
					882.24	-0.076	-0.006	250:1	12.00	882.31	-0.076	-0.006		12.00	882.39	0.192	0.016		12.00	882.20	25.5	519+00	

CALCULATED NAH
CHECKED ABS

SUPERELEVATION TABLE (I-75 SB)

ALL-75-5.53

594
1224

J:\Projects\ALL\76691\roadway\sheets\76691CE014.dgn 11-SEP-2012 9:12PM reddenj

SUPERELEVATION TABLE

P.I. STA. 307+84.73 | Dc = 1° 30′ 00″

LEFT SIDE					CENTERLINE CONTROL		RIGHT SIDE					REMARKS
EDGE ELEVATION	TRANSITION RATE	ELEVATION CORRECTION	CROSS SLOPE	WIDTH	STATION	PROFILE GRADE	WIDTH	CROSS SLOPE	ELEVATION CORRECTION	TRANSITION RATE	EDGE ELEVATION	
902.02		0.240	0.0200	12.00	305+07.24	901.78						PC
901.95	223:1	0.240	0.0200	12.00	305+12.59	901.71						
901.85	223:1	0.284	0.0235	12.12	305+25	901.56						
901.63	223:1	0.377	0.0305	12.35	305+50	901.25						
901.43	223:1	0.465	0.0370	12.57	305+73.24	900.97						
901.41		0.467	0.0370	12.62	305+75	900.94						
901.13		0.495	0.0370	13.39	306+00	900.63						
900.85		0.524	0.0370	14.16	306+25	900.33						
900.57		0.552	0.0370	14.93	306+50	900.02						
900.29		0.581	0.0370	15.69	306+75	899.71						
900.21		0.589	0.0370	15.92	306+82.50	899.62						
900.18		0.592	0.0370	16.00	306+85.00	899.59						
900.00		0.592	0.0370	16.0	307+00	899.41						
899.72		0.592	0.0370	16.0	307+25	899.13						
899.46		0.592	0.0370	16.0	307+50	898.87						
899.23		0.592	0.0370	16.0	307+75	898.64						
899.02		0.592	0.0370	16.0	308+00	898.43						
898.84		0.592	0.0370	16.0	308+25	898.25						
898.68		0.592	0.0370	16.0	308+50	898.09						
898.55		0.592	0.0370	16.0	308+75	897.96						
898.44		0.592	0.0370	16.0	309+00	897.85						
898.35		0.592	0.0370	16.0	309+25	897.76						
898.29		0.592	0.0370	16.0	309+50	897.70						
898.25		0.592	0.0370	16.0	309+75	897.66						
898.24		0.592	0.0370	16.0	310+00	897.65						
898.25		0.592	0.0370	16.0	310+25	897.66						
898.26	303:1	0.592	0.0370	16.0	310+38.63	897.67						
898.32	303:1	0.629	0.0393	16.0	310+50	897.69						
898.38	303:1	0.667	0.0417	16.0	310+61.24	897.71						PCC

P.I. STA. 313+02.06 | Dc = 8° 00′ 00″

898.38	303:1	0.667	0.0417	16.0	310+61.24	897.71						PCC
898.46	303:1	0.712	0.0445	16.0	310+75	897.75						
898.63	303:1	0.794	0.0496	16.0	311+00	897.83						
898.82	303:1	0.877	0.0548	16.0	311+25	897.94						
899.03	303:1	0.959	0.0600	16.0	311+50.00	898.07						
899.03		0.960	0.0600	16.0	311+50	898.07						
899.20		0.960	0.0600	16.0	311+77.50	898.24						
899.19		0.960	0.0600	16.0	311+75	898.23						
900.89		0.960	0.0600	16.0	314+25	899.93						
901.06		0.960	0.0600	16.0	314+50	900.10						
901.09	185:1	0.960	0.0600	16.0	314+54.67	900.13						
901.12	185:1	0.850	0.0531	16.0	314+75	900.27						
901.15	185:1	0.716	0.0447	16.0	315+00	900.44						
901.19	185:1	0.581	0.0363	16.0	315+25	900.61						
901.19	185:1	0.576	0.0360	16.0	315+25.87	900.61						PT
901.22	185:1	0.446	0.0279	16.0	315+50	900.78						
901.26	185:1	0.311	0.0194	16.0	315+75	900.95						
901.27	185:1	0.256	0.0160	16.0	315+85.20	901.01						
901.37		0.256	0.0160	16.0	316+00	901.12						
901.54		0.256	0.0160	16.0	316+25	901.29						
901.71		0.256	0.0160	16.0	316+50	901.46						
901.88		0.256	0.0160	16.0	316+75	901.63						
901.94		0.256	0.0160	16.0	316+84.23	901.69						

SUPERELEVATION TABLE

P.I. STA. 319+15.92 | Dc = 23° 00′ 00″

LEFT SIDE					CENTERLINE CONTROL		RIGHT SIDE					REMARKS
EDGE ELEVATION	TRANSITION RATE	ELEVATION CORRECTION	CROSS SLOPE	WIDTH	STATION	PROFILE GRADE	WIDTH	CROSS SLOPE	ELEVATION CORRECTION	TRANSITION RATE	EDGE ELEVATION	
901.94	152:1	0.256	0.0160	16.0	316+84.23	901.69						
901.95	152:1	0.152	0.0095	16.0	317+00	901.80						
901.95	152:1	-0.012	-0.0008	16.0	317+25	901.97						
901.96	152:1	-0.176	-0.0110	16.0	317+50	902.14						
901.96	152:1	-0.341	-0.0213	16.0	317+75	902.31						
901.97	152:1	-0.505	-0.0316	16.0	318+00	902.48						
901.97	152:1	-0.576	-0.0360	16.0	318+10.76	902.55						PC
901.98	152:1	-0.670	-0.0419	16.0	318+25	902.65						
901.98	152:1	-0.834	-0.0521	16.0	318+50	902.82						
901.99	152:1	-0.960	-0.0600	16.0	318+69.16	902.95						
902.03		-0.960	-0.0600	16.0	318+75	902.99						
902.20		-0.960	-0.0600	16.0	319+00	903.16						
902.37		-0.960	-0.0600	16.0	319+25	903.33						
902.45	152:1	-0.960	-0.0600	16.0	319+36.77	903.41						
902.62	152:1	-0.873	-0.0546	16.0	319+50	903.50						
902.96	152:1	-0.709	-0.0443	16.0	319+75	903.67						
903.29	152:1	-0.544	-0.0340	16.0	320+00	903.84						
903.42	152:1	-0.480	-0.0300	16.0	320+09.77	903.90						PT
903.93	152:1	-0.232	-0.0145	16.0	320+47.50	904.16						
903.65	152:1	-0.380	-0.0237	16.0	320+25	904.03						
903.96	152:1	-0.215	-0.0135	16.0	320+50	904.18						
904.33	152:1	-0.051	-0.0032	16.0	320+75	904.38						
904.45	152:1	0.000	0.0000	16.0	320+82.77	904.45						
904.75	152:1	0.113	0.0071	16.0	321+00	904.64						
905.16	152:1	0.256	0.0160	16.0	321+21.70	904.90						
905.20		0.256	0.0160	16.0	321+25	904.95						
905.57		0.256	0.0160	16.0	321+50	905.32						
905.61		0.256	0.0160	16.0	321+52.50	905.35						
905.89		0.256	0.0160	16.0	321+70.00	905.63						

CALCULATED ACF
CHECKED ABS

SUPERELEVATION TABLE (4TH ST. RAMP A)

ALL-75-5.53

595
1224

J:\Projects\ALL\76691\roadway\sheets\76691GE500.dgn 11-SEP-2012 9:12PM reddenj

SUPERELEVATION TABLE

P.I. STA. 321+92.59 (RAMP B) | Dc = 24° 45′ 00″

LEFT SIDE					CENTERLINE CONTROL		RIGHT SIDE					
EDGE ELEVATION	TRANSITION RATE	ELEVATION CORRECTION	CROSS SLOPE	WIDTH	STATION	PROFILE GRADE	WIDTH	CROSS SLOPE	ELEVATION CORRECTION	TRANSITION RATE	EDGE ELEVATION	REMARKS
905.98		-0.320	-0.0200	16.0	309+75	906.30						
905.82		-0.320	-0.0200	16.0	309+85.00	906.14						
905.53		-0.320	-0.0200	16.0	310+00	905.85						
905.47	152:1	-0.320	-0.0200	16.0	310+02.83	905.79						
905.19	152:1	-0.174	-0.0109	16.0	310+25	905.36						
904.66	152:1	-0.010	-0.0006	16.0	310+50	904.67						
904.63	152:1	0.000	0.0000	16.0	310+51.50	904.63						
904.18	152:1	0.155	0.0097	16.0	310+75	904.03						
903.76	152:1	0.319	0.0199	16.0	311+00	903.44						
903.37	152:1	0.480	0.0300	16.0	311+24.50	902.89						PC
903.36	152:1	0.483	0.0302	16.0	311+25	902.88						
902.91	152:1	0.648	0.0405	16.0	311+50	902.26						
902.45	152:1	0.812	0.0508	16.0	311+75	901.64						
902.10	152:1	0.960	0.0600	16.0	311+97.50	901.14						
902.04		0.960	0.0600	16.0	312+00	901.08						
901.81		0.960	0.0600	16.0	312+25	900.85						
901.64		0.960	0.0600	16.0	312+50	900.68						
901.61		0.960	0.0600	16.0	312+75	900.65						
901.57		0.960	0.0600	16.0	313+00	900.61						
901.56		0.960	0.0600	16.0	313+25	900.60						
901.54		0.960	0.0600	16.0	313+50	900.58						
901.39		0.960	0.0600	16.0	313+75	900.43						
901.25		0.960	0.0600	16.0	314+00	900.29						
901.10		0.960	0.0600	16.0	314+25	900.14						
900.95		0.960	0.0600	16.0	314+50	899.99						
900.80		0.960	0.0600	16.0	314+75	899.84						
900.66		0.960	0.0600	16.0	315+00	899.70						
900.51		0.960	0.0600	16.0	315+25	899.55						
900.36		0.960	0.0600	16.0	315+50	899.40						
900.21		0.960	0.0600	16.0	315+75	899.25						
900.07		0.960	0.0600	16.0	316+00	899.11						
899.92		0.960	0.0600	16.0	316+25	898.96						
899.86		0.960	0.0600	16.0	316+35.00	898.90						
899.78		0.960	0.0600	16.0	316+50	898.82						
899.66		0.960	0.0600	16.0	316+75	898.70						
899.57		0.960	0.0600	16.0	317+00	898.61						
899.52		0.960	0.0600	16.0	317+25	898.56						
899.49		0.960	0.0600	16.0	317+50	898.53						
899.49	312:1	0.960	0.0600	16.0	317+52.95	898.53						PT
899.42	312:1	0.889	0.0556	16.0	317+75	898.53						
899.37	312:1	0.809	0.0506	16.0	318+00	898.56						
899.35	312:1	0.729	0.0456	16.0	318+25	898.62						
899.36	312:1	0.665	0.0416	16.0	318+45.00	898.69						
899.36	312:1	0.649	0.0406	16.0	318+50	898.71						
899.38	312:1	0.569	0.0356	16.0	318+75	898.81						
899.40	312:1	0.489	0.0306	16.0	319+00	898.91						
899.48	312:1	0.409	0.0256	16.0	319+25	899.07						
899.48	312:1	0.329	0.0206	16.0	319+50	899.15						
899.48	312:1	0.320	0.0200	16.0	319+52.95	899.16						

SUPERELEVATION TABLE

P.I. STA. 334+23.30 (RAMP C) | Dc = 24° 45′ 00″

LEFT SIDE					CENTERLINE CONTROL		RIGHT SIDE					
EDGE ELEVATION	TRANSITION RATE	ELEVATION CORRECTION	CROSS SLOPE	WIDTH	STATION	PROFILE GRADE	WIDTH	CROSS SLOPE	ELEVATION CORRECTION	TRANSITION RATE	EDGE ELEVATION	REMARKS
					321+17.41	899.23	16.0	0.020	0.320	312:1	899.55	TS
					321+20.00	899.22	16.0	0.021	0.328	312:1	899.55	
					321+25	899.21	16.0	0.022	0.344	312:1	899.55	
					321+50	899.11	16.0	0.027	0.424	312:1	899.54	
					321+75	899.01	16.0	0.032	0.504	312:1	899.51	
					322+00	898.90	16.0	0.037	0.584	312:1	899.48	
					322+25	898.77	16.0	0.042	0.664	312:1	899.44	
					322+50	898.64	16.0	0.047	0.744	312:1	899.38	
					322+75	898.50	16.0	0.052	0.824	312:1	899.32	
					323+00	898.34	16.0	0.057	0.904	312:1	899.25	
					323+17.41	898.23	16.0	0.060	0.960	312:1	899.19	SC
					323+25	898.18	16.0	0.060	0.960		899.14	
					323+40.00	898.08	16.0	0.060	0.960		899.04	
					323+45.00	898.05	16.0	0.060	0.960		899.01	
					323+50	898.01	16.0	0.060	0.960		898.97	
					323+75	897.86	16.0	0.060	0.960		898.82	
					324+00	897.75	16.0	0.060	0.960		898.71	
					324+25	897.67	16.0	0.060	0.960		898.63	
					324+50	897.62	16.0	0.060	0.960		898.58	
					324+75	897.60	16.0	0.060	0.960		898.56	
					325+00	897.62	16.0	0.060	0.960		898.58	
					325+25	897.68	16.0	0.060	0.960		898.64	
					325+50	897.76	16.0	0.060	0.960		898.72	
					325+75	897.88	16.0	0.060	0.960		898.84	
					325+95.00	898.00	16.0	0.060	0.960		898.96	
					326+00	898.04	16.0	0.060	0.960		899.00	
					326+25	898.20	16.0	0.060	0.960		899.16	
					326+50	898.36	16.0	0.060	0.960		899.32	
					326+75	898.53	16.0	0.060	0.960		899.49	
					327+00	898.69	16.0	0.060	0.960		899.65	
					327+25	898.72	16.0	0.060	0.960		899.68	
					327+50	898.75	16.0	0.060	0.960		899.71	
					327+75	898.78	16.0	0.060	0.960		899.74	
					328+00	898.97	16.0	0.060	0.960		899.93	
					328+25	899.19	16.0	0.060	0.960		900.15	
					328+50	899.41	16.0	0.060	0.960		900.37	
					328+75	899.63	16.0	0.060	0.960		900.59	
					328+90.74	899.91	16.0	0.060	0.960	152:1	900.87	
					329+00	900.08	16.0	0.056	0.899	152:1	900.98	
					329+25	900.74	16.0	0.046	0.735	152:1	901.47	
					329+49.14	901.43	16.0	0.036	0.576	152:1	902.00	PT
					329+50	901.45	16.0	0.036	0.570	152:1	902.02	
					329+75	902.13	16.0	0.025	0.406	152:1	902.54	
					330+00	902.86	16.0	0.015	0.242	152:1	903.10	
					330+12.56	903.26	16.0	0.010	0.159	152:1	903.42	
					330+25	903.65	16.0	0.005	0.077	152:1	903.73	
					330+36.74	904.03	16.0	0.000	0.000	152:1	904.03	
					330+50	904.45	16.0	-0.005	-0.087	152:1	904.36	
					330+52.57	904.54	16.0	-0.007	-0.104	152:1	904.43	
					330+71.78	905.18	16.0	-0.014	-0.230	152:1	904.95	
					330+75	905.29	16.0	-0.016	-0.252	152:1	905.04	
					331+00	906.27	16.0	-0.026	-0.416	152:1	905.85	
					331+08.20	906.49	16.0	-0.029	-0.470	152:1	906.02	
					331+09.74	906.51	16.0	-0.030	-0.480	152:1	906.03	

CALCULATED ACF | CHECKED ABS

SUPERELEVATION TABLE (4TH ST. RAMP B & C)

ALL-75-5.53

596
1224

J:\Projects\ALL\76691\roadway\sheets\76691CE501.dgn 11-SEP-2012 9:12PM reddenj

SUPERELEVATION TABLE

P.I. STA. 321+62.60 | Dc = 22° 00′ 00″

LEFT SIDE					CENTERLINE CONTROL		RIGHT SIDE					REMARKS
EDGE ELEVATION	TRANSITION RATE	ELEVATION CORRECTION	CROSS SLOPE	WIDTH	STATION	PROFILE GRADE	WIDTH	CROSS SLOPE	ELEVATION CORRECTION	TRANSITION RATE	EDGE ELEVATION	
					318+75	904.78	16.0	0.0300	0.480		905.26	
					318+81.03	904.69	16.0	0.0300	0.480	152:1	905.17	
					318+97.37	904.43	16.0	0.0233	0.373	152:1	904.80	
					319+00	904.38	16.0	0.0222	0.356	152:1	904.74	
					319+25	903.98	16.0	0.0120	0.192	152:1	904.18	
					319+50	903.58	16.0	0.0017	0.028	152:1	903.61	
					319+54.25	903.52	16.0	0.0000	0.000	152:1	903.52	
					319+55.00	903.50	16.0	-0.0003	-0.005	152:1	903.50	
					319+75	903.20	16.0	-0.0085	-0.136	152:1	903.06	
					320+00	902.86	16.0	-0.0187	-0.300	152:1	902.56	
					320+25	902.57	16.0	-0.0290	-0.464	152:1	902.11	
					320+26.25	902.56	16.0	-0.0295	-0.472	152:1	902.09	PC
					320+50	902.33	16.0	-0.0392	-0.628	152:1	901.70	
					320+65.00	902.21	16.0	-0.0454	-0.726	152:1	901.48	
					320+75	902.14	16.0	-0.0495	-0.792	152:1	901.34	
					320+98.25	901.96	16.0	-0.0590	-0.944	152:1	901.02	
					321+00	901.95	16.0	-0.0590	-0.944		901.00	
					321+25	901.76	16.0	-0.0590	-0.944		900.82	
					321+50	901.57	16.0	-0.0590	-0.944		900.63	
					321+75	901.38	16.0	-0.0590	-0.944		900.44	
					322+00	901.20	16.0	-0.0590	-0.944		900.25	
					322+19.86	901.05	16.0	-0.0590	-0.944	179:1	900.10	
					322+25	901.01	16.0	-0.0572	-0.915	179:1	900.09	
					322+50	900.82	16.0	-0.0485	-0.776	179:1	900.05	
					322+75	900.63	16.0	-0.0397	-0.636	179:1	900.00	
					322+77.46	900.62	16.0	-0.0389	-0.622	179:1	899.99	PT
					323+00	900.45	16.0	-0.0310	-0.496	179:1	899.95	
					323+25	900.26	16.0	-0.0223	-0.357	179:1	899.90	
					323+50	900.07	16.0	-0.0136	-0.217	179:1	899.85	
					323+75	899.88	16.0	-0.0048	-0.077	179:1	899.81	
					323+88.85	899.78	16.0	0.0000	0.000	179:1	899.78	

P.I. STA. 326+48.41 | Dc = 11° 45′ 00″

					323+88.85	899.78	16.0	0.0000	0.000	179:1	899.78	
					324+00	899.70	16.0	0.0039	0.062	179:1	899.76	
					324+25	899.51	16.0	0.0126	0.202	179:1	899.71	
					324+50	899.32	16.0	0.0213	0.342	179:1	899.66	
					324+75	899.13	16.0	0.0301	0.481	179:1	899.61	
					324+94.31	898.99	16.0	0.0368	0.589	179:1	899.58	PC
					325+00	898.95	16.0	0.0388	0.621	179:1	899.57	
					325+25	898.76	16.0	0.0475	0.761	179:1	899.52	
					325+50	898.57	16.0	0.0563	0.900	179:1	899.47	
					325+60.71	898.49	16.0	0.0600	0.960	179:1	899.45	
					325+75	898.38	16.0	0.0600	0.960		899.34	
					326+00	898.20	16.0	0.0600	0.960		899.16	
					327+50	897.07	16.0	0.0600	0.960		898.03	
					327+75	896.88	16.0	0.0600	0.960		897.84	
					327+92.83	896.75	16.0	0.0600	0.960	543:1	897.71	PT
					328+00	896.69	16.0	0.0592	0.947	543:1	897.64	
					328+25	896.45	16.0	0.0563	0.901	543:1	897.35	
					328+50	896.21	16.0	0.0534	0.855	543:1	897.07	

SUPERELEVATION TABLE

P.I. STA. 332+36.78 | Dc = 1° 30′ 00″

LEFT SIDE					CENTERLINE CONTROL		RIGHT SIDE					REMARKS
EDGE ELEVATION	TRANSITION RATE	ELEVATION CORRECTION	CROSS SLOPE	WIDTH	STATION	PROFILE GRADE	WIDTH	CROSS SLOPE	ELEVATION CORRECTION	TRANSITION RATE	EDGE ELEVATION	
					328+50	896.21	16.0	0.0534	0.855	543:1	897.07	
					328+75	895.97	16.0	0.0506	0.809	543:1	896.78	
					329+00	895.73	16.0	0.0477	0.763	543:1	896.49	
					329+25	895.49	16.0	0.0448	0.717	543:1	896.20	
					329+50	895.24	16.0	0.0419	0.671	543:1	895.91	
					329+75	895.00	16.0	0.0391	0.625	543:1	895.63	
					329+92.83	894.83	16.0	0.0370	0.592	543:1	895.42	PC
					330+00	894.76	16.0	0.0370	0.592	543:1	895.35	
					330+25	894.59	16.0	0.0370	0.592		895.18	
					330+50	894.41	16.0	0.0370	0.592		895.00	
					330+75	894.24	16.0	0.0370	0.592		894.83	
					331+00	894.06	16.0	0.0370	0.592		894.65	
					331+25	893.85	16.0	0.0370	0.592		894.44	
					331+50	893.64	16.0	0.0370	0.592		894.23	
					331+75	893.43	16.0	0.0370	0.592		894.02	
					332+00	893.22	16.0	0.0370	0.592		893.81	
					332+25	893.00	16.0	0.0370	0.592		893.59	
					332+50	892.77	16.0	0.0370	0.592		893.37	
					332+75	892.55	16.0	0.0370	0.592		893.14	
					332+90.00	892.42	16.0	0.0370	0.592		893.01	
					333+00	892.33	15.7	0.0370	0.582		892.91	
					333+25	892.11	15.0	0.0370	0.555		892.66	
					333+50	891.88	14.3	0.0370	0.529		892.41	
					333+75	891.66	13.6	0.0370	0.503		892.16	
					334+00	891.44	12.9	0.0370	0.477		891.91	
					334+14.07	891.34	12.5	0.0370	0.463		891.80	
					334+25	891.26	12.4	0.0339	0.421		891.68	
					334+50	891.08	12.2	0.0269	0.329	223:1	891.41	
					334+74.72	890.91	12.0	0.0200	0.240	223:1	891.15	
					334+75	890.90	12.0	0.0200	0.240	223:1	891.14	
					334+80.07	890.87	12.0	0.0200	0.240	223:1	891.11	PT

CALCULATED ACF | CHECKED ABS

SUPERELEVATION TABLE (4TH ST. RAMP D)

ALL-75-5.53

597
1224

J:\Projects\ALL\76691\roadway\sheets\76691GE502.dgn 11-SEP-2012 9:12PM reddenj

SUPERELEVATION TABLE

P.I. STA. 360+77.61 | Dc = 3° 00′ 00″

LEFT SIDE					CENTERLINE CONTROL		RIGHT SIDE					REMARKS
EDGE ELEVATION	TRANSITION RATE	ELEVATION CORRECTION	CROSS SLOPE	WIDTH	STATION	PROFILE GRADE	WIDTH	CROSS SLOPE	ELEVATION CORRECTION	TRANSITION RATE	EDGE ELEVATION	
					356+88.32	886.84	16.0	0.020	0.320	357:1	887.16	TS
					357+00	886.88	16.0	0.022	0.353	357:1	887.23	
					357+25	886.96	16.0	0.026	0.423	357:1	887.38	
					357+50	887.04	16.0	0.031	0.493	357:1	887.53	
					357+70	887.11	16.0	0.034	0.549	357:1	887.65	
					357+75	887.12	16.0	0.035	0.563	357:1	887.68	
					358+00	887.22	16.0	0.040	0.633	357:1	887.85	
					358+25	887.34	16.0	0.044	0.703	357:1	888.04	
					358+50	887.48	16.0	0.048	0.773	357:1	888.25	
					358+75	887.64	16.0	0.053	0.843	357:1	888.49	
					358+88.32	887.74	16.0	0.055	0.880	357:1	888.62	SC
					359+00	887.83	16.0	0.055	0.880		888.71	
					359+25	888.04	16.0	0.055	0.880		888.92	
					359+50	888.28	16.0	0.055	0.880		889.16	
					359+75	888.54	16.0	0.055	0.880		889.42	
					359+80.00	888.59	16.0	0.055	0.880		889.47	
					359+97.50	888.78	16.0	0.055	0.880		889.66	
					360+00	888.81	16.0	0.055	0.880		889.69	
					360+25	889.06	16.0	0.055	0.880		889.94	
					360+50	889.26	16.0	0.055	0.880		890.14	
					360+75	889.43	16.0	0.055	0.880		890.31	
					361+00	889.56	16.0	0.055	0.880		890.44	
					361+25	889.64	16.0	0.055	0.880		890.52	
					361+50	889.68	16.0	0.055	0.880		890.56	
					361+75	889.69	16.0	0.055	0.880		890.57	
					362+00	889.65	16.0	0.055	0.880		890.53	
					362+25	889.57	16.0	0.055	0.880		890.45	
					362+50	889.45	16.0	0.055	0.880	223:1	890.33	
					362+70.00	889.32	16.0	0.055	0.880	223:1	890.20	
					362+75	889.29	16.0	0.054	0.858	223:1	890.14	
					363+00	889.08	16.0	0.047	0.745	223:1	889.83	
					363+25	888.84	16.0	0.040	0.633	223:1	889.47	
					363+50	888.55	16.0	0.033	0.521	223:1	889.07	
					363+68.00	888.32	16.0	0.027	0.440	223:1	888.76	PT
					363+75	888.23	16.0	0.026	0.409	223:1	888.63	
					364+00	887.86	16.0	0.019	0.296	223:1	888.15	
					364+08.98	887.72	16.0	0.016	0.256	223:1	887.97	
					364+25	887.45	16.0	0.016	0.256		887.71	
					364+50	887.00	16.0	0.016	0.256		887.26	
					364+75	886.51	16.0	0.016	0.256		886.76	
					364+82.50	886.35	16.0	0.016	0.256		886.61	

SUPERELEVATION TABLE

P.I. STA. 367+44.61 | Dc = 6° 30′ 00″

LEFT SIDE					CENTERLINE CONTROL		RIGHT SIDE					REMARKS
EDGE ELEVATION	TRANSITION RATE	ELEVATION CORRECTION	CROSS SLOPE	WIDTH	STATION	PROFILE GRADE	WIDTH	CROSS SLOPE	ELEVATION CORRECTION	TRANSITION RATE	EDGE ELEVATION	
					364+82.50	886.35	16.0	0.016	0.256		886.61	
					365+00	885.99	16.0	0.016	0.256		886.24	
					365+17.35	885.62	16.0	0.016	0.256	162:1	885.88	
					365+25	885.46	16.0	0.013	0.209	162:1	885.67	
					365+50	884.94	16.0	0.003	0.054	162:1	884.99	
					365+75	884.42	16.0	-0.006	-0.100	162:1	884.32	
					366+00	883.89	16.0	-0.016	-0.254	162:1	883.64	
					366+15.80	883.56	16.0	-0.022	-0.352	162:1	883.21	PC
					366+25	883.37	16.0	-0.026	-0.409	162:1	882.96	
					366+50	882.84	16.0	-0.035	-0.563	162:1	882.28	
					366+72.80	882.37	16.0	-0.044	-0.704	162:1	881.66	
					366+75	882.32	16.0	-0.044	-0.704		881.62	
					367+00	881.80	16.0	-0.044	-0.704		881.09	
					367+25	881.27	16.0	-0.044	-0.704		880.57	
					367+50	880.75	16.0	-0.044	-0.704		880.04	
					367+75	880.22	16.0	-0.044	-0.704		879.52	
					367+82.50	880.07	16.0	-0.044	-0.704		879.36	
					368+00	879.73	16.0	-0.044	-0.704		879.03	
					368+14.61	879.50	16.0	-0.044	-0.704	162:1	878.79	
					368+25	879.36	16.0	-0.040	-0.640	162:1	878.72	
					368+50	879.11	16.0	-0.030	-0.485	162:1	878.62	
					368+71.61	878.99	16.0	-0.022	-0.352	162:1	878.64	PT
					368+75	878.98	16.0	-0.021	-0.331	162:1	878.65	
					369+00	878.98	16.0	-0.011	-0.177	162:1	878.81	
					369+25	879.11	16.0	-0.001	-0.022	162:1	879.09	
					369+28.61	879.14	16.0	0.000	0.000	162:1	879.14	
					369+35.09	879.20	16.0	0.003	0.040	162:1	879.24	
					369+50	879.36	16.0	0.003	0.040	162:1	879.40	
					369+68	879.61						
					369+75	879.73						
					370+00	880.13						
					370+25	880.53						
					370+26.30	880.55						

CALCULATED ACF | CHECKED ABS

SUPERELEVATION TABLE (S.R. 309 RAMP A)

ALL-75-5.53

598
1224

J:\Projects\ALL\76691\roadway\sheets\76691CE600.dgn 11-SEP-2012 9:12PM redden

SUPERELEVATION TABLE

P.I. STA. 371+35.77 | Dc = 5° 00′ 00″

LEFT SIDE					CENTERLINE CONTROL		RIGHT SIDE					REMARKS
EDGE ELEVATION	TRANSITION RATE	ELEVATION CORRECTION	CROSS SLOPE	WIDTH	STATION	PROFILE GRADE	WIDTH	CROSS SLOPE	ELEVATION CORRECTION	TRANSITION RATE	EDGE ELEVATION	
					369+78.11	880.58						
					370+00	880.25						
					370+14.70	880.02						
					370+22.00	879.91	0.0	0.003	0.000	170:1	0.00	
					370+25	879.86	0.0	0.001	0.000	170:1	0.00	
					370+28.80	879.83	0.0	0.000	0.000	170:1	0.00	
					370+35.00	879.79	0.0	-0.002	0.000	170:1	0.00	
					370+50	879.71	0.0	-0.008	0.000	170:1	0.00	
0.00	170:1	0.000	0.000	0.0	370+75	879.68	0.0	-0.017	0.000	170:1	0.00	
0.00	170:1	0.000	0.000	0.0	370+90.54	879.72	0.0	-0.023	0.000	170:1	0.00	PC
0.00	170:1	0.000	0.000	0.0	371+00	879.77	0.0	-0.026	0.000	170:1	0.00	
0.00	170:1	0.000	0.000	0.0	371+25	879.98	0.0	-0.035	0.000	170:1	0.00	
0.00	170:1	0.000	0.000	0.0	371+34.88	880.11	16.0	-0.039	-0.624	170:1	879.48	
880.59	162:1	0.266	0.033	8.0	371+50	880.33	16.0	-0.033	-0.531	162:1	879.80	
880.99	162:1	0.189	0.024	8.0	371+75	880.80	16.0	-0.024	-0.378	162:1	880.42	
881.10	162:1	0.171	0.021	8.0	371+80.96	880.93	16.0	-0.021	-0.342	162:1	880.58	PT
881.50	162:1	0.113	0.014	8.0	372+00	881.39	16.0	-0.014	-0.225	162:1	881.17	
882.15	162:1	0.036	0.004	8.0	372+25	882.11	16.0	-0.004	-0.072	162:1	882.04	
882.49	162:1	0.000	0.000	8.0	372+36.75	882.49	16.0	0.000	0.000	162:1	882.49	
882.91	162:1	-0.041	-0.005	8.0	372+50	882.96	16.0	0.005	0.082	162:1	883.04	
883.81	162:1	-0.118	-0.015	8.0	372+75	883.93	16.0	0.015	0.236	162:1	884.16	
883.93	162:1	-0.128	-0.016	8.0	372+78.19	884.06	16.0	0.016	0.256	162:1	884.32	
884.22		-0.128	-0.016	8.0	372+85.00	884.35	16.0	0.016	0.256		884.61	
884.66		-0.128	-0.016	8.0	372+95.00	884.78	16.0	0.016	0.256		885.04	
884.87		-0.128	-0.016	8.0	373+00	885.00	16.0	0.016	0.256		885.25	

P.I. STA. 375+58.84 | Dc = 5° 00′ 00″

884.87		-0.128	-0.016	8.0	373+00	885.00	16.0	0.016	0.256		885.25	
885.90		-0.128	-0.016	8.0	373+25	886.03	16.0	0.016	0.256		886.29	
886.86		-0.128	-0.016	8.0	373+50	886.99	16.0	0.016	0.256		887.25	
887.75		-0.128	-0.016	8.0	373+75	887.87	16.0	0.016	0.256		888.13	
888.31	214:1	-0.128	-0.016	8.0	373+92.20	888.44	16.0	0.016	0.256	214:1	888.70	
888.54	214:1	-0.146	-0.018	8.0	374+00	888.69	16.0	0.018	0.293	214:1	888.98	
889.22	214:1	-0.205	-0.026	8.0	374+25	889.42	16.0	0.026	0.410	214:1	889.83	
889.82	214:1	-0.263	-0.033	8.0	374+50	890.09	16.0	0.033	0.527	214:1	890.61	
890.34	214:1	-0.320	-0.040	8.0	374+74.20	890.66	16.0	0.040	0.640	214:1	891.30	PC
890.35	214:1	-0.322	-0.040	8.0	374+75	890.68	16.0	0.040	0.644	214:1	891.32	
890.82	214:1	-0.375	-0.048	7.9	375+00	891.19	16.0	0.048	0.761	214:1	891.95	
891.41	214:1	-0.228	-0.055	4.2	375+25	891.63	16.0	0.055	0.878	214:1	892.51	
891.90	214:1	0.000	-0.060	0.0	375+42.53	891.90	16.0	0.060	0.960	214:1	892.86	
					375+50	892.00	16.0	0.060	0.960		892.96	
					375+74.84	892.30	16.0	0.060	0.960		893.26	
					375+75	892.30	16.0	0.060	0.960	365:1	893.26	
					376+00	892.52	16.0	0.056	0.891	365:1	893.41	
					376+25	892.67	16.0	0.051	0.823	365:1	893.49	
					376+43.17	892.73	16.0	0.048	0.773	365:1	893.50	PCC

SUPERELEVATION TABLE

P.I. STA. 379+20.66 | Dc = 1° 30′ 00″

LEFT SIDE					CENTERLINE CONTROL		RIGHT SIDE					REMARKS
EDGE ELEVATION	TRANSITION RATE	ELEVATION CORRECTION	CROSS SLOPE	WIDTH	STATION	PROFILE GRADE	WIDTH	CROSS SLOPE	ELEVATION CORRECTION	TRANSITION RATE	EDGE ELEVATION	
					376+43.17	892.73	16.0	0.048	0.773	365:1	893.50	PCC
					376+50	892.74	16.0	0.047	0.754	365:1	893.49	
					376+75	892.74	16.0	0.043	0.686	365:1	893.43	
					377+00	892.67	16.0	0.039	0.617	365:1	893.28	
					377+09	892.62	16.0	0.037	0.592	365:1	893.21	
					377+25	892.52	16.0	0.037	0.592		893.11	
					377+50	892.30	16.0	0.037	0.592		892.89	
					377+75	892.00	16.0	0.037	0.592		892.59	
					378+00	891.63	16.0	0.037	0.592		892.23	
					378+25	891.19	16.0	0.037	0.592		891.78	
					378+45	890.78	16.0	0.037	0.592		891.38	
					378+50	890.68	16.0	0.037	0.592		891.27	
					378+75	890.17	16.0	0.037	0.592		890.76	
					379+00	889.66	16.0	0.037	0.592		890.25	
					379+25	889.17	16.0	0.037	0.592		889.76	
					379+50	888.79	16.0	0.037	0.592		889.38	
					379+75	888.41	16.0	0.037	0.592		889.00	
					380+00	888.03	16.0	0.037	0.592		888.62	
					380+25	887.69	15.9	0.037	0.587		888.27	
					380+50	887.34	14.8	0.037	0.548		887.89	
					380+75	887.06	13.9	0.037	0.515		887.58	
					381+00	886.78	13.2	0.037	0.489		887.27	
					381+25	886.59	12.7	0.037	0.469		887.06	
					381+31	886.54	12.4	0.037	0.459		887.00	
					381+50	886.40	12.3	0.032	0.390	223:1	886.79	
					381+75	886.30	12.1	0.025	0.298	223:1	886.60	
					381+92	886.24	12.0	0.020	0.240	223:1	886.48	
					381+97	886.22	12.0	0.020	0.240	223:1	886.46	PT

CALCULATED ACF | CHECKED ABS

SUPERELEVATION TABLE (S.R. 309 RAMP C)

ALL-75-5.53

599
1224

J:\Projects\ALL\76691\roadway\sheets\76691CE601.dgn 11-SEP-2012 9:12PM reddenj

SUPERELEVATION TABLE

P.I. STA. 371+88.87	Dc = 11° 00′ 00″

LEFT SIDE					CENTERLINE CONTROL		RIGHT SIDE					
EDGE ELEVATION	TRANSITION RATE	ELEVATION CORRECTION	CROSS SLOPE	WIDTH	STATION	PROFILE GRADE	WIDTH	CROSS SLOPE	ELEVATION CORRECTION	TRANSITION RATE	EDGE ELEVATION	REMARKS
					369+81.23	887.01						
					370+00	886.71						
					370+25	886.31						
885.70		-0.373	-0.023	16.0	370+40.00	886.07						
885.62		-0.373	-0.023	16.0	370+45.00	885.99						
885.54		-0.373	-0.023	16.0	370+50	885.91						
885.22		-0.373	-0.023	16.0	370+75	885.60						
885.15	161:1	-0.373	-0.023	16.0	370+82.36	885.53						
884.92	161:1	-0.482	-0.030	16.0	371+00	885.40						
884.84	161:1	-0.528	-0.033	16.0	371+07.40	885.36						PC
884.68	161:1	-0.637	-0.040	16.0	371+25	885.32						
884.57	161:1	-0.792	-0.049	16.0	371+50	885.36						
884.56	161:1	-0.880	-0.055	16.0	371+64.20	885.44						
884.64		-0.880	-0.055	16.0	371+75	885.52						
884.92		-0.880	-0.055	16.0	372+00	885.80						
884.99		-0.880	-0.055	16.0	372+05.00	885.87						
885.10	161:1	-0.880	-0.055	16.0	372+12.24	885.98						
885.36	161:1	-0.801	-0.050	16.0	372+25	886.17						
885.88	161:1	-0.646	-0.040	16.0	372+50	886.53						
886.28	161:1	-0.528	-0.033	16.0	372+69.04	886.81						PT
886.40	161:1	-0.491	-0.031	16.0	372+75	886.89						
886.92	161:1	-0.336	-0.021	16.0	373+00	887.26						
887.44	161:1	-0.181	-0.011	16.0	373+25	887.62						
887.96	161:1	-0.026	-0.002	16.0	373+50	887.99						
888.48	161:1	0.129	0.008	16.0	373+75	888.35						
888.91	161:1	0.256	0.016	16.0	373+95.55	888.65						
888.97		0.256	0.016	16.0	374+00	888.71						
889.04		0.256	0.016	16.0	374+05.00	888.79						
889.32		0.256	0.016	16.0	374+25	889.07						
889.54		0.256	0.016	16.0	374+42.21	889.29						

SUPERELEVATION TABLE

P.I. STA. 377+61.43	Dc = 4° 15′ 00″

LEFT SIDE					CENTERLINE CONTROL		RIGHT SIDE					
EDGE ELEVATION	TRANSITION RATE	ELEVATION CORRECTION	CROSS SLOPE	WIDTH	STATION	PROFILE GRADE	WIDTH	CROSS SLOPE	ELEVATION CORRECTION	TRANSITION RATE	EDGE ELEVATION	REMARKS
889.54		0.256	0.016	16.0	374+42.21	889.29						
889.64		0.256	0.016	16.0	374+50	889.38						
889.92		0.256	0.016	16.0	374+75	889.66						
890.16		0.256	0.016	16.0	375+00	889.91						
890.37		0.256	0.016	16.0	375+25	890.12						
890.47	224:1	0.256	0.016	16.0	375+38.20	890.21						
890.60	224:1	0.309	0.019	16.0	375+50	890.29						
890.84	224:1	0.420	0.026	16.0	375+75	890.42						
891.05	224:1	0.532	0.033	16.0	376+00	890.52						
891.13	224:1	0.576	0.036	16.0	376+09.87	890.55						PC
891.23	224:1	0.644	0.040	16.0	376+25	890.59						
891.37	224:1	0.755	0.047	16.0	376+50	890.61						
891.47	224:1	0.867	0.054	16.0	376+75	890.60						
891.53	224:1	0.960	0.060	16.0	376+95.87	890.57						
891.52		0.960	0.060	16.0	377+00	890.56						
891.43		0.960	0.060	16.0	377+25	890.47						
891.32		0.960	0.060	16.0	377+50	890.36						
891.16		0.960	0.060	16.0	377+75	890.20						
890.97		0.960	0.060	16.0	378+00	890.01						
890.74		0.960	0.060	16.0	378+25	889.78						
890.48		0.960	0.060	16.0	378+50	889.52						
890.18		0.960	0.060	16.0	378+75	889.22						
889.86		0.960	0.060	16.0	379+00	888.90						
889.72	335:1	0.960	0.060	16.0	379+11.72	888.76						CS
889.52	335:1	0.920	0.058	16.0	379+25	888.60						
889.15	335:1	0.846	0.053	16.0	379+50	888.30						
888.77	335:1	0.772	0.048	16.0	379+75	888.00						
888.40	335:1	0.697	0.044	16.0	380+00	887.70						
888.09	335:1	0.623	0.039	16.0	380+25	887.46						
887.77	335:1	0.548	0.034	16.0	380+50	887.22						
887.46	335:1	0.474	0.030	16.0	380+75	886.99						
887.15	335:1	0.400	0.025	16.0	381+00	886.75						
886.84	335:1	0.325	0.020	16.0	381+25	886.51						
886.82	335:1	0.320	0.020	16.0	381+26.72	886.50						ST

CALCULATED ACF
CHECKED ABS

SUPERELEVATION TABLE (S.R. 309 RAMP E)

ALL-75-5.53

600
1224

J:\Projects\ALL\76691\roadway\sheets\76691CE602.dgn 11-SEP-2012 9:12PM redden

SUPERELEVATION TABLE

P.I. STA. 357+60.27 | Dc = 1° 30′ 00″

LEFT SIDE					CENTERLINE CONTROL		RIGHT SIDE					REMARKS
EDGE ELEVATION	TRANSITION RATE	ELEVATION CORRECTION	CROSS SLOPE	WIDTH	STATION	PROFILE GRADE	WIDTH	CROSS SLOPE	ELEVATION CORRECTION	TRANSITION RATE	EDGE ELEVATION	
886.64		0.240	0.020	12.0	354+74.74	886.40						PC
886.64		0.240	0.020	12.00	354+75	886.40						
886.64	223:1	0.240	0.020	12.01	354+80.09	886.40						
886.73	223:1	0.309	0.026	12.07	355+00	886.42						
886.84	223:1	0.401	0.033	12.29	355+25	886.44						
886.92	223:1	0.463	0.037	12.51	355+40.74	886.46						
886.93		0.468	0.037	12.66	355+50	886.47						
886.98		0.487	0.037	13.17	355+75	886.49						
887.02		0.512	0.037	13.83	356+00	886.51						
886.89		0.541	0.037	14.63	356+25	886.35						
887.06		0.576	0.037	15.58	356+50	886.48						
887.21		0.591	0.037	16.0	356+75	886.62						
887.34		0.592	0.037	16.0	357+00	886.75						
887.48		0.592	0.037	16.0	357+25	886.89						
887.61		0.592	0.037	16.0	357+50	887.02						
887.75		0.592	0.037	16.0	357+75	887.16						
887.88		0.592	0.037	16.0	358+00	887.29						
888.06		0.592	0.037	16.0	358+25	887.47						
888.24		0.592	0.037	16.0	358+50	887.65						
888.28		0.592	0.037	16.0	358+55.00	887.69						
888.41		0.592	0.037	16.0	358+75	887.82						
888.56		0.592	0.037	16.0	359+00	887.97						
888.68		0.592	0.037	16.0	359+25	888.09						
888.78		0.592	0.037	16.0	359+50	888.19						
888.86		0.592	0.037	16.0	359+75	888.26						
888.86	701:1	0.592	0.037	16.0	359+78.75	888.27						
888.93	701:1	0.622	0.039	16.0	360+00	888.31						
888.99	701:1	0.658	0.041	16.0	360+25	888.33						
889.02	701:1	0.686	0.043	16.0	360+44.74	888.34						PCC

P.I. STA. 361+88.28 | Dc = 3° 45′ 00″

889.02	701:1	0.686	0.043	16.0	360+44.74	888.34						PCC
889.03	701:1	0.694	0.043	16.0	360+50	888.33						
889.04	701:1	0.729	0.046	16.0	360+75	888.31						
889.02	701:1	0.765	0.048	16.0	361+00	888.25						
888.98	701:1	0.800	0.050	16.0	361+24.74	888.18						
888.98		0.800	0.050	16.0	361+25	888.18						
888.88		0.800	0.050	16.0	361+50	888.08						
888.75		0.800	0.050	16.0	361+75	887.95						
888.61		0.800	0.050	16.0	362+00	887.81						
888.47		0.800	0.050	16.0	362+25	887.67						
888.33		0.800	0.050	16.0	362+50	887.53						
888.33	228:1	0.800	0.050	16.0	362+50.99	887.53						
888.09	228:1	0.695	0.043	16.0	362+75	887.40						
887.84	228:1	0.585	0.037	16.0	363+00	887.26						
887.59	228:1	0.476	0.030	16.0	363+25	887.12						
887.54	228:1	0.450	0.028	16.0	363+30.99	887.09						PT
887.35	228:1	0.366	0.023	16.0	363+50	886.98						
887.10	228:1	0.257	0.016	16.0	363+75	886.84						
886.85	228:1	0.147	0.009	16.0	364+00	886.70						
886.60	228:1	0.038	0.002	16.0	364+25	886.56						
886.52	228:1	0.000	0.000	16.0	364+33.66	886.52						

SUPERELEVATION TABLE

P.I. STA. 367+25.14 | Dc = 5° 00′ 00″

LEFT SIDE					CENTERLINE CONTROL		RIGHT SIDE					REMARKS
EDGE ELEVATION	TRANSITION RATE	ELEVATION CORRECTION	CROSS SLOPE	WIDTH	STATION	PROFILE GRADE	WIDTH	CROSS SLOPE	ELEVATION CORRECTION	TRANSITION RATE	EDGE ELEVATION	
886.52	228:1	0.000	0.000	16.0	364+33.66	886.52						
886.35	228:1	-0.072	-0.004	16.0	364+50	886.43						
886.11	228:1	-0.181	-0.011	16.0	364+75	886.29						
885.86	228:1	-0.291	-0.018	16.0	365+00	886.15						
885.61	228:1	-0.400	-0.025	16.0	365+25	886.01						
885.60	228:1	-0.403	-0.025	16.0	365+25.64	886.01						PC
885.36	228:1	-0.510	-0.032	16.0	365+50	885.87						
885.11	228:1	-0.619	-0.039	16.0	365+75	885.73						
885.10		-0.624	-0.039	16.0	365+76.14	885.73						
884.97		-0.624	-0.039	16.0	366+00	885.59						
884.83		-0.624	-0.039	16.0	366+25	885.46						
884.69		-0.624	-0.039	16.0	366+50	885.32						
884.55		-0.624	-0.039	16.0	366+75	885.18						
884.42		-0.624	-0.039	16.0	367+00	885.04						
884.28		-0.624	-0.039	16.0	367+25	884.90						
884.17		-0.624	-0.039	16.0	367+45.00	884.79						
884.14		-0.624	-0.039	16.0	367+50	884.76						
884.05		-0.624	-0.039	16.0	367+75	884.67						
884.02		-0.624	-0.039	16.0	368+00	884.64						
884.05		-0.624	-0.039	16.0	368+25	884.67						
884.12	242:1	-0.624	-0.039	16.0	368+45.19	884.75						
884.15	242:1	-0.624	-0.039	16.0	368+50.00	884.77						
884.43	242:1	-0.501	-0.031	16.0	368+75	884.94						
884.77	242:1	-0.398	-0.025	16.0	369+00	885.16						
884.85	242:1	-0.373	-0.023	16.0	369+05.98	885.23						
885.02		-0.373	-0.023	16.0	369+20.55	885.40						PT
885.08		-0.373	-0.023	16.0	369+25	885.45						
885.44		-0.373	-0.023	16.0	369+50	885.81						
885.51		-0.373	-0.023	16.0	369+55.00	885.89						
885.83		-0.373	-0.023	16.0	369+75	886.21						
886.23		-0.373	-0.023	16.0	370+00	886.61						
886.63		-0.373	-0.023	16.0	370+25	887.01						
886.83		-0.373	-0.023	16.0	370+37.18	887.20						

CALCULATED ACF
CHECKED ABS

SUPERELEVATION TABLE (S.R. 309 RAMP F)

ALL-75-5.53

601
1224

J:\Projects\ALL\76691\roadway\sheets\76691CE603.dgn 11-SEP-2012 9:12PM redden

SUPERELEVATION TABLE

P.I. STA. 9+92.21	Dc = 37° 00′ 00″

LEFT SIDE					CENTERLINE CONTROL		RIGHT SIDE					REMARKS
EDGE ELEVATION	TRANSITION RATE	ELEVATION CORRECTION	CROSS SLOPE	WIDTH	STATION	PROFILE GRADE	WIDTH	CROSS SLOPE	ELEVATION CORRECTION	TRANSITION RATE	EDGE ELEVATION	
874.98		-0.192	-0.016	12.0	7+00.00	875.17	12.0	-0.016	-0.192		874.98	
875.68		-0.192	-0.016	12.0	7+22.27	875.87	12.0	-0.016	-0.192	144:1	875.68	
875.77		-0.192	-0.016	12.0	7+25.00	875.96	12.0	-0.014	-0.173	144:1	875.79	
876.55		-0.192	-0.016	12.0	7+49.87	876.74	12.0	0.000	0.000	144:1	876.74	
876.55		-0.192	-0.016	12.0	7+50.00	876.75	12.0	0.000	0.001	144:1	876.75	
877.34		-0.192	-0.016	12.0	7+75.00	877.53	12.0	0.015	0.175	144:1	877.71	
877.42	144:1	-0.192	-0.016	12.0	7+77.47	877.61	12.0	0.016	0.192	144:1	877.80	
877.86	144:1	-0.320	-0.027	12.0	7+95.87	878.18	12.0	0.027	0.320	144:1	878.50	PC
877.96	144:1	-0.349	-0.029	12.0	8+00.00	878.30	12.0	0.029	0.349	144:1	878.65	
878.35	144:1	-0.480	-0.040	12.0	8+18.87	878.83	12.0	0.040	0.480	144:1	879.31	
878.51		-0.480	-0.040	12.0	8+25.00	878.99	12.0	0.040	0.480		879.47	
879.10		-0.480	-0.040	12.0	8+50.00	879.58	12.0	0.040	0.480		880.06	
879.59		-0.480	-0.040	12.0	8+75.00	880.07	12.0	0.040	0.480		880.55	
879.99		-0.480	-0.040	12.0	9+00.00	880.47	12.0	0.040	0.480		880.95	
880.37		-0.480	-0.040	12.0	9+25.00	880.85	12.0	0.040	0.480		881.33	
880.74		-0.480	-0.040	12.0	9+50.00	881.22	12.0	0.040	0.480		881.70	
881.11		-0.480	-0.040	12.0	9+75.00	881.59	12.0	0.040	0.480		882.07	
881.48		-0.480	-0.040	12.0	10+00.00	881.96	12.0	0.040	0.480		882.44	
881.85		-0.480	-0.040	12.0	10+25.00	882.33	12.0	0.040	0.480		882.81	
882.23		-0.480	-0.040	12.0	10+50.00	882.71	12.0	0.040	0.480		883.19	
882.26	144:1	-0.480	-0.040	12.0	10+52.53	882.74	12.0	0.040	0.480	144:1	883.22	
882.75	144:1	-0.324	-0.027	12.0	10+75.00	883.08	12.0	0.027	0.324	144:1	883.40	
882.76	144:1	-0.320	-0.027	12.0	10+75.53	883.08	12.0	0.027	0.320	144:1	883.40	PT
883.17	144:1	-0.192	-0.016	12.0	10+93.93	883.36	12.0	0.016	0.192	144:1	883.55	
883.26		-0.192	-0.016	12.0	11+00.00	883.45	12.0	0.012	0.150	144:1	883.60	
883.58		-0.192	-0.016	12.0	11+21.53	883.77	12.0	0.000	0.000	144:1	883.77	
883.63		-0.192	-0.016	12.0	11+25.00	883.82	12.0	-0.002	-0.024	144:1	883.80	
883.99		-0.192	-0.016	12.0	11+49.13	884.18	12.0	-0.016	-0.192	144:1	883.99	
884.00		-0.192	-0.016	12.0	11+50.00	884.19	12.0	-0.016	-0.192		884.00	
884.37		-0.192	-0.016	12.0	11+75.00	884.56	12.0	-0.016	-0.192		884.37	
884.74		-0.192	-0.016	12.0	12+00.00	884.94	12.0	-0.016	-0.192		884.74	
885.12		-0.192	-0.016	12.0	12+25.00	885.31	12.0	-0.016	-0.192		885.12	
885.49		-0.192	-0.016	12.0	12+50.00	885.68	12.0	-0.016	-0.192		885.49	

SUPERELEVATION TABLE

LEFT SIDE					CENTERLINE CONTROL		RIGHT SIDE					REMARKS
EDGE ELEVATION	TRANSITION RATE	ELEVATION CORRECTION	CROSS SLOPE	WIDTH	STATION	PROFILE GRADE	WIDTH	CROSS SLOPE	ELEVATION CORRECTION	TRANSITION RATE	EDGE ELEVATION	

CALCULATED ACF CHECKED ABS

SUPERELEVATION TABLE (BRYN MAWR & WELLESLEY)

ALL-75-5.53

602
1224

J:\Projects\ALL\76691\roadway\sheets\76691GE604.dgn 11-SEP-2012 9:12PM reddenj

SUPERELEVATION TABLE

P.I. STA. 464+52.99 | Dc = 9° 30′ 00″

LEFT SIDE					CENTERLINE CONTROL		RIGHT SIDE					
EDGE ELEVATION	TRANSITION RATE	ELEVATION CORRECTION	CROSS SLOPE	WIDTH	STATION	PROFILE GRADE	WIDTH	CROSS SLOPE	ELEVATION CORRECTION	TRANSITION RATE	EDGE ELEVATION	REMARKS
					462+33.32	881.20						
					462+50	880.93						
880.23		-0.306	-0.0191	16.0	462+75	880.53						
880.15		-0.306	-0.0191	16.0	462+80.00	880.45						
879.87		-0.306	-0.0191	16.0	463+00	880.17						
879.62		-0.306	-0.0191	16.0	463+25	879.93						
879.51	162:1	-0.306	-0.0191	16.0	463+45.82	879.81						
879.47	162:1	-0.331	-0.0207	16.0	463+50	879.80						
879.36	162:1	-0.416	-0.0260	16.0	463+63.73	879.78						PC
879.31	162:1	-0.485	-0.0303	16.0	463+75	879.79						
879.26	162:1	-0.640	-0.0400	16.0	464+00	879.90						
879.34	162:1	-0.794	-0.0496	16.0	464+25	880.13						
879.37	162:1	-0.832	-0.0520	16.0	464+31.23	880.21						
879.65		-0.832	-0.0520	16.0	464+50	880.48						
880.08	162:1	-0.832	-0.0520	16.0	464+73.47	880.91						
880.12	162:1	-0.823	-0.0514	16.0	464+75	880.95						
880.86	162:1	-0.668	-0.0418	16.0	465+00	881.53						
881.19	162:1	-0.607	-0.0379	16.0	465+10.00	881.80						
881.70	162:1	-0.514	-0.0322	16.0	465+25	882.21						
882.24	162:1	-0.416	-0.0260	16.0	465+40.97	882.66						PT
882.55	162:1	-0.360	-0.0225	16.0	465+50	882.91						
883.39	162:1	-0.206	-0.0129	16.0	465+75	883.60						
884.24	162:1	-0.052	-0.0033	16.0	466+00	884.29						
884.53	162:1	0.000	0.0000	16.0	466+08.47	884.98						

SUPERELEVATION TABLE

P.I. STA. 469+71.54 | Dc = 3° 30′ 00″

LEFT SIDE					CENTERLINE CONTROL		RIGHT SIDE					
EDGE ELEVATION	TRANSITION RATE	ELEVATION CORRECTION	CROSS SLOPE	WIDTH	STATION	PROFILE GRADE	WIDTH	CROSS SLOPE	ELEVATION CORRECTION	TRANSITION RATE	EDGE ELEVATION	REMARKS
884.53	162:1	0.000	0.0000	16.0	466+08.47	884.53						
885.09	162:1	0.102	0.0064	16.0	466+25	884.98						
885.93	162:1	0.256	0.0160	16.0	466+50	885.68						
885.93	162:1	0.256	0.0160	16.0	466+50.01	885.68						
886.63		0.256	0.0160	16.0	466+75	886.37						
886.83		0.256	0.0160	16.0	466+82.50	886.58						
887.31		0.256	0.0160	16.0	467+00	887.05						
887.85	223:1	0.256	0.0160	16.0	467+20.78	887.59						
887.97	223:1	0.275	0.0172	16.0	467+25	887.70						
888.69	223:1	0.387	0.0242	16.0	467+50	888.30						
889.15	223:1	0.464	0.0290	16.0	467+67.18	888.69						PC
889.36	223:1	0.499	0.0312	16.0	467+75	888.86						
889.99	223:1	0.611	0.0382	16.0	468+00	889.38						
890.59	223:1	0.723	0.0452	16.0	468+25	889.87						
891.14	223:1	0.835	0.0522	16.0	468+50	890.31						
891.57	223:1	0.928	0.0580	16.0	468+70.68	890.64						
891.63		0.928	0.0580	16.0	468+75	890.71						
891.99		0.928	0.0580	16.0	469+00	891.07						
892.31		0.928	0.0580	16.0	469+25	891.39						
892.59		0.928	0.0580	16.0	469+50	891.66						
892.83		0.928	0.0580	16.0	469+75	891.90						
893.03		0.928	0.0580	16.0	470+00	892.10						
893.18		0.928	0.0580	16.0	470+25	892.26						
893.30		0.928	0.0580	16.0	470+50	892.37						
893.38		0.928	0.0580	16.0	470+75	892.45						
893.41		0.928	0.0580	16.0	471+00	892.48						
893.41	345:1	0.928	0.0580	16.0	471+17.50	892.48						
893.41	345:1	0.928	0.0580	16.0	471+25	892.48						
893.39	345:1	0.928	0.0580	16.0	471+50	892.47						
893.38	345:1	0.928	0.0580	16.0	471+73.81	892.45						CS
893.38	345:1	0.925	0.0578	16.0	471+75	892.45						
893.29	345:1	0.852	0.0533	16.0	472+00	892.44						
893.17	345:1	0.780	0.0487	16.0	472+25	892.39						
893.06	345:1	0.707	0.0442	16.0	472+50	892.35						
892.94	345:1	0.635	0.0397	16.0	472+75	892.30						
892.82	345:1	0.563	0.0352	16.0	473+00	892.26						
892.67	345:1	0.490	0.0306	16.0	473+25	892.18						
892.52	345:1	0.418	0.0261	16.0	473+50	892.11						
892.35	345:1	0.346	0.0216	16.0	473+75	892.00						
892.28	345:1	0.320	0.0200	16.0	473+83.81	891.96						ST

CALCULATED ACF
CHECKED ABS

SUPERELEVATION TABLE (S.R. 81 RAMP B)

ALL-75-5.53

603
1224

J:\Projects\ALL\76691\roadway\sheets\76691CE800.dgn 11-SEP-2012 9:12PM redden

SUPERELEVATION TABLE

P.I. STA. 452+78.18 | Dc = 1° 30′ 00″

LEFT SIDE					CENTERLINE CONTROL		RIGHT SIDE					REMARKS
EDGE ELEVATION	TRANSITION RATE	ELEVATION CORRECTION	CROSS SLOPE	WIDTH	STATION	PROFILE GRADE	WIDTH	CROSS SLOPE	ELEVATION CORRECTION	TRANSITION RATE	EDGE ELEVATION	
883.87		0.240	0.0200	12.0	450+51.17	883.63						PC
883.87	223:1	0.241	0.0200	12.05	450+56.52	883.63						
883.95	223:1	0.305	0.0252	12.10	450+75	883.65						
884.06	223:1	0.396	0.0322	12.30	451+00	883.67						
884.17	223:1	0.465	0.0370	12.57	451+17.17	883.71						
884.19		0.470	0.0370	12.70	451+25	883.72						
884.27		0.491	0.0370	13.28	451+50	883.78						
884.39		0.518	0.0370	14.01	451+75	883.87						
884.51		0.552	0.0370	14.91	452+00	883.96						
884.69		0.591	0.0370	16.0	452+25	884.10						
884.75		0.592	0.0370	16.0	452+35.00	884.16						
884.85		0.592	0.0370	16.0	452+50	884.26						
885.04		0.592	0.0370	16.0	452+75	884.45						
885.27		0.592	0.0370	16.0	453+00	884.68						
885.52		0.592	0.0370	16.0	453+25	884.93						
885.81		0.592	0.0370	16.0	453+50	885.21						
886.12		0.592	0.0370	16.0	453+75	885.53						
886.47		0.592	0.0370	16.0	454+00	885.88						
886.85		0.592	0.0370	16.0	454+25	886.26						
887.01		0.592	0.0370	16.0	454+35.00	886.42						
887.09		0.592	0.0370	16.0	454+40.00	886.50						
887.25		0.592	0.0370	16.0	454+50	886.66						
887.61		0.592	0.0370	16.0	454+75	887.02						
887.92		0.592	0.0370	16.0	455+00	887.32						
887.97	543:1	0.592	0.0370	16.0	455+04.65	887.38						CS
888.21	543:1	0.629	0.0393	16.0	455+25	887.58						
888.45	543:1	0.675	0.0422	16.0	455+50	887.78						
888.64	543:1	0.721	0.0451	16.0	455+75	887.92						
888.78	543:1	0.767	0.0480	16.0	456+00	888.01						

P.I. STA. 457+85.42 | Dc = 5° 30′ 00″

888.78	543:1	0.767	0.0480	16.0	456+00	888.01						
888.87	543:1	0.813	0.0508	16.0	456+25	888.05						
888.90	543:1	0.859	0.0537	16.0	456+50	888.04						
888.88	543:1	0.905	0.0566	16.0	456+75	887.97						
888.80	543:1	0.951	0.0595	16.0	457+00	887.85						
888.78	543:1	0.960	0.0600	16.0	457+04.65	887.82						SC
888.63		0.960	0.0600	16.0	457+25	887.67						
888.40		0.960	0.0600	16.0	457+50	887.44						
888.26	213:1	0.960	0.0600	16.0	457+63.37	887.30						
888.07	213:1	0.906	0.0566	16.0	457+75	887.16	1.60	-0.057	-0.091	213:1	887.07	
887.62	213:1	0.788	0.0493	16.0	458+00	886.83	5.69	-0.049	-0.280	213:1	886.55	
887.11	213:1	0.671	0.0420	16.0	458+25	886.44	8.00	-0.042	-0.336	213:1	886.10	
886.55	213:1	0.554	0.0346	16.0	458+50	886.00	8.00	-0.035	-0.277	213:1	885.72	
886.17	213:1	0.480	0.0300	16.0	458+65.86	885.69	8.00	-0.030	-0.240	213:1	885.45	PT
885.94	213:1	0.437	0.0273	16.0	458+75	885.50	8.00	-0.027	-0.219	213:1	885.28	
885.27	213:1	0.320	0.0200	16.0	459+00	884.95	8.00	-0.020	-0.160	213:1	884.79	
884.55	213:1	0.203	0.0127	16.0	459+25	884.35	8.00	-0.013	-0.102	213:1	884.25	
883.78	213:1	0.086	0.0054	16.0	459+50	883.69	8.00	-0.005	-0.043	213:1	883.65	
883.17	213:1	0.000	0.0000	16.0	459+68.37	883.17	8.00	0.000	0.000	213:1	883.17	

SUPERELEVATION TABLE

P.I. STA. 461+36.60 | Dc = 16° 30′ 00″

LEFT SIDE					CENTERLINE CONTROL		RIGHT SIDE					REMARKS
EDGE ELEVATION	TRANSITION RATE	ELEVATION CORRECTION	CROSS SLOPE	WIDTH	STATION	PROFILE GRADE	WIDTH	CROSS SLOPE	ELEVATION CORRECTION	TRANSITION RATE	EDGE ELEVATION	
883.17	161:1	0.000	0.0000	16.0	459+68.37	883.17	8.0	0.0000	0.000	161:1	883.17	
883.12	161:1	-0.010	-0.0006	16.0	459+70.00	883.13	8.0	0.0006	0.005	161:1	883.13	
882.94	161:1	-0.041	-0.0026	16.0	459+75	882.98	8.0	0.0026	0.021	161:1	883.00	
882.06	161:1	-0.196	-0.0122	16.0	460+00	882.26	8.0	0.0122	0.098	161:1	882.35	
881.44	161:1	-0.304	-0.0190	16.0	460+17.50	881.75	8.0	0.0190	0.152	161:1	881.90	
881.19	161:1	-0.351	-0.0219	16.0	460+25	881.54	8.0	0.0219	0.175	161:1	881.71	
880.41	161:1	-0.506	-0.0316	16.0	460+50	880.91	8.0	0.0316	0.253	161:1	881.16	
880.13	161:1	-0.567	-0.0355	16.0	460+59.98	880.70	8.0	0.0355	0.284	161:1	880.98	PC
879.75	161:1	-0.660	-0.0413	16.0	460+75	880.41	8.0	0.0413	0.330	161:1	880.74	
879.22	161:1	-0.815	-0.0510	16.0	461+00	880.03	8.0	0.0510	0.408	161:1	880.44	
878.84	161:1	-0.960	-0.0600	16.0	461+23.37	879.80	8.0	0.0600	0.480	161:1	880.28	
878.82		-0.960	-0.0600	16.0	461+25	879.78	8.0	0.0600	0.480		880.26	
878.77	161:1	-0.960	-0.0600	16.0	461+33.30	879.73	8.0	0.0600	0.480	161:1	880.21	
878.80	161:1	-0.857	-0.0535	16.0	461+50	879.66	8.0	0.0535	0.428	161:1	880.09	
878.96	161:1	-0.702	-0.0439	16.0	461+75	879.66	8.0	0.0439	0.351	161:1	880.01	
879.24	161:1	-0.547	-0.0342	16.0	462+00	879.78	8.0	0.0342	0.273	161:1	880.06	
879.40	161:1	-0.480	-0.0300	16.0	462+10.80	879.88	8.0	0.0300	0.240	161:1	880.12	PT
879.64	161:1	-0.392	-0.0245	16.0	462+25	880.03						
879.92	161:1	-0.306	-0.0191	16.0	462+38.96	880.23						
					462+42.50	880.28						
					462+50	880.40						
					462+75	880.80						
					462+89.83	881.04						

CALCULATED ACF
CHECKED ABS

SUPERELEVATION TABLE (S.R. 81 RAMP C)

ALL-75-5.53

604
1224

J:\Projects\ALL\76691\roadway\sheets\76691CE801.dgn 11-SEP-2012 9:12PM reddenj

SUPERELEVATION TABLE

P.I. STA. 456+09.25 | Dc = 1° 45′ 00″

LEFT SIDE					CENTERLINE CONTROL		RIGHT SIDE					REMARKS
EDGE ELEVATION	TRANSITION RATE	ELEVATION CORRECTION	CROSS SLOPE	WIDTH	STATION	PROFILE GRADE	WIDTH	CROSS SLOPE	ELEVATION CORRECTION	TRANSITION RATE	EDGE ELEVATION	
					450+66.93	883.47	16.0	0.0200	0.320	654:1	883.79	TS
					450+75	883.49	16.0	0.0208	0.332	654:1	883.82	
					451+00	883.54	16.0	0.0232	0.371	654:1	883.91	
					451+25	883.61	16.0	0.0255	0.409	654:1	884.01	
					451+50	883.67	16.0	0.0279	0.447	654:1	884.12	
					451+75	883.73	16.0	0.0303	0.485	654:1	884.22	
					452+00	883.79	16.0	0.0327	0.523	654:1	884.31	
					452+25	883.92	16.0	0.0351	0.561	654:1	884.48	
					452+50	884.04	16.0	0.0375	0.600	654:1	884.64	
					452+75	884.23	16.0	0.0399	0.638	654:1	884.87	
					452+80.00	884.27	16.0	0.0403	0.645	654:1	884.91	
					452+86.93	884.32	16.0	0.0410	0.656	654:1	884.98	SC
					453+00	884.40	16.0	0.0410	0.656		885.06	
					453+25	884.52	16.0	0.0410	0.656		885.18	
					453+50	884.59	16.0	0.0410	0.656		885.25	
					453+75	884.60	16.0	0.0410	0.656		885.26	
					454+00	884.56	16.0	0.0410	0.656		885.21	
					454+25	884.46	16.0	0.0410	0.656		885.12	
					454+50	884.31	16.0	0.0410	0.656		884.97	
					454+75	884.10	16.0	0.0410	0.656		884.76	
					455+00	883.84	16.0	0.0410	0.656		884.50	
					455+25	883.53	16.0	0.0410	0.656		884.19	
					455+50	883.16	16.0	0.0410	0.656		883.82	
					455+75	882.74	16.0	0.0410	0.656		883.39	
					456+00	882.26	16.0	0.0410	0.656		882.92	
					456+25	881.73	16.0	0.0410	0.656		882.39	
					456+50	881.14	16.0	0.0410	0.656		881.80	
					456+75	880.50	16.0	0.0410	0.656		881.16	
					457+00	879.81	16.0	0.0410	0.656		880.46	
					457+25	879.06	16.0	0.0410	0.656		879.72	
					457+50	878.26	16.0	0.0410	0.656		878.91	
					457+75	877.40	16.0	0.0410	0.656		878.05	
					458+00	876.49	16.0	0.0410	0.656		877.14	
					458+25	875.52	16.0	0.0410	0.656		876.18	
					458+50	874.50	16.0	0.0410	0.656		875.16	
					458+55.00	874.29	16.0	0.0410	0.656		874.95	
					458+75	873.49	16.0	0.0410	0.656		874.15	
					459+00	872.61	16.0	0.0410	0.656		873.26	
					459+25	871.85	16.0	0.0410	0.656		872.51	
					459+50	871.22	16.0	0.0410	0.656		871.87	
					459+68.09	870.84	16.0	0.0410	0.656	222:1	871.50	
					459+75	870.71	16.0	0.0391	0.625	222:1	871.34	
					460+00	870.33	16.0	0.0320	0.513	222:1	870.85	
					460+25	870.08	16.0	0.0250	0.400	222:1	870.48	
					460+41.09	869.98	16.0	0.0205	0.328	222:1	870.31	PT
					460+50	869.95	16.0	0.0180	0.288	222:1	870.24	
					460+66.74	869.94	16.0	0.0133	0.213	222:1	870.15	
					460+75	869.95	16.0	0.0133	0.213		870.16	
					460+95.00	870.04	16.0	0.0133	0.213		870.25	
					461+00	870.07	16.0	0.0133	0.213		870.29	
					461+10.00	870.14	16.0	0.0133	0.213		870.35	
					461+25	870.38	16.0	0.0133	0.213		870.59	
					461+39.15	870.60	16.0	0.0133	0.213		870.82	
					461+50	870.77	16.0	0.0133	0.213		870.98	
					461+75	871.15	16.0	0.0133	0.213		871.36	
					461+75.24	871.15	16.0	0.0133	0.213		871.36	

SUPERELEVATION TABLE

LEFT SIDE					CENTERLINE CONTROL		RIGHT SIDE					REMARKS
EDGE ELEVATION	TRANSITION RATE	ELEVATION CORRECTION	CROSS SLOPE	WIDTH	STATION	PROFILE GRADE	WIDTH	CROSS SLOPE	ELEVATION CORRECTION	TRANSITION RATE	EDGE ELEVATION	

CALCULATED ACF
CHECKED ABS

SUPERELEVATION TABLE (S.R. 81 RAMP D)

ALL-75-5.53

605
1224

J:\Projects\ALL\76691\roadway\sheets\76691CE802.dgn 11-SEP-2012 9:12PM reddenj

SUPERELEVATION TABLE

P.I. STA. 463+83.93 | Dc = 13° 00′ 00″

LEFT SIDE					CENTERLINE CONTROL		RIGHT SIDE					REMARKS
EDGE ELEVATION	TRANSITION RATE	ELEVATION CORRECTION	CROSS SLOPE	WIDTH	STATION	PROFILE GRADE	WIDTH	CROSS SLOPE	ELEVATION CORRECTION	TRANSITION RATE	EDGE ELEVATION	
					461+31.81	871.22						
					461+50.00	870.94						
					461+67.86	870.66						
					461+69.00	870.64	16.0	0.0138	0.221	162:1	870.86	
					461+75.00	870.55	16.0	0.0115	0.184	162:1	870.73	
					461+80.00	870.47	16.0	0.0095	0.153	162:1	870.62	
					462+00.00	870.19	16.0	0.0018	0.029	162:1	870.21	
					462+04.66	870.13	16.0	0.0000	0.000	162:1	870.13	
870.01		0.063	0.008	8.0	462+25.00	869.95	16.0	-0.0079	-0.126	162:1	869.82	
869.97		0.140	0.018	8.0	462+50.00	869.83	16.0	-0.0175	-0.281	162:1	869.55	
870.06		0.218	0.027	8.0	462+75.00	869.84	16.0	-0.0272	-0.435	162:1	869.41	
870.09		0.233	0.029	8.0	462+79.82	869.86	16.0	-0.0291	-0.465	162:1	869.39	PC
870.27		0.295	0.037	8.0	463+00.00	869.98	16.0	-0.0369	-0.590	162:1	869.39	
870.61		0.373	0.047	8.0	463+25.00	870.24	16.0	-0.0466	-0.745	162:1	869.49	
871.07		0.450	0.056	8.0	463+50.00	870.62	16.0	-0.0562	-0.900	162:1	869.72	
871.17		0.464	0.058	8.0	463+54.55	870.70	16.0	-0.0580	-0.928	162:1	869.77	
871.59		0.464	0.058	8.0	463+75.00	871.13	16.0	-0.0580	-0.928		870.20	
872.22		0.464	0.058	8.0	464+00.00	871.76	16.0	-0.0580	-0.928		870.83	
872.98		0.464	0.058	8.0	464+25.00	872.51	16.0	-0.0580	-0.928		871.59	
873.48		0.464	0.058	8.0	464+39.54	873.01	16.0	-0.0580	-0.928	162:1	872.08	
873.49		0.463	0.058	8.0	464+40.00	873.03	16.0	-0.0578	-0.925	162:1	872.10	
873.83		0.432	0.054	8.0	464+50.00	873.40	16.0	-0.0540	-0.863	162:1	872.53	
874.75		0.354	0.044	8.0	464+75.00	874.40	16.0	-0.0443	-0.709	162:1	873.69	
875.14		0.325	0.041	8.0	464+84.54	874.82	16.0	-0.0406	-0.650	162:1	874.17	PT
875.45		0.277	0.035	8.0	465+00.00	875.17	16.0	-0.0346	-0.554	162:1	874.62	
876.26		0.200	0.025	8.0	465+25.00	876.06	16.0	-0.0250	-0.399	162:1	875.66	
877.08		0.122	0.015	8.0	465+50.00	876.96	16.0	-0.0153	-0.245	162:1	876.71	
877.89		0.045	0.006	8.0	465+75.00	877.85	16.0	-0.0056	-0.090	162:1	877.76	
878.37		0.000	0.000	8.0	465+89.54	878.37	16.0	0.0000	0.000	162:1	878.37	
878.71		-0.032	-0.004	8.0	466+00.00	878.74	16.0	0.0040	0.065	162:1	878.81	
879.53		-0.110	-0.014	8.0	466+25.00	879.63	16.0	0.0137	0.219	162:1	879.85	
879.72		-0.128	-0.016	8.0	466+30.92	879.85	16.0	0.0160	0.256	162:1	880.10	
880.41		-0.115	-0.016	7.2	466+50.00	880.53	16.0	0.0160	0.256	162:1	880.78	
881.37		-0.051	-0.016	3.2	466+75.00	881.42	16.0	0.0160	0.256		881.68	

P.I. STA. 468+60.86 | Dc = 3° 15′ 00″

881.37		-0.051	-0.016	3.2	466+75.00	881.42	16.0	0.0160	0.256		881.68	
881.71		0.000	-0.016	0.0	466+83.19	881.71	16.0	0.0160	0.256	223:1	881.97	
					467+00.00	882.31	16.0	0.0207	0.331	223:1	882.64	
					467+25.00	883.21	16.0	0.0277	0.443	223:1	883.65	
					467+50.00	884.10	16.0	0.0347	0.556	223:1	884.65	
					467+70.99	884.85	16.0	0.0406	0.650	223:1	885.50	PC
					467+75.00	884.99	16.0	0.0417	0.668	223:1	885.66	
					467+85.00	885.35	16.0	0.0445	0.712	223:1	886.06	
					468+00.00	885.87	16.0	0.0487	0.780	223:1	886.65	
					468+25.00	886.71	16.0	0.0557	0.892	223:1	887.60	
					468+33.09	886.97	16.0	0.0580	0.928	223:1	887.89	
					468+50.00	887.49	16.0	0.0580	0.928		888.41	
					468+72.85	888.15	16.0	0.0580	0.928		889.08	
					468+75.00	888.21	16.0	0.0580	0.928		889.14	
					469+00.00	888.88	16.0	0.0580	0.928		889.81	
					469+25.00	889.50	16.0	0.0580	0.928		890.43	
					469+34.95	889.73	16.0	0.0580	0.928		890.66	
					469+50.00	890.06	16.0	0.0580	0.928		890.99	
					469+50.57	890.08	16.0	0.0580	0.928	595:1	891.00	CS

SUPERELEVATION TABLE

P.I. STA. 473+77.58 | Dc = 1° 30′ 00″

LEFT SIDE					CENTERLINE CONTROL		RIGHT SIDE					REMARKS
EDGE ELEVATION	TRANSITION RATE	ELEVATION CORRECTION	CROSS SLOPE	WIDTH	STATION	PROFILE GRADE	WIDTH	CROSS SLOPE	ELEVATION CORRECTION	TRANSITION RATE	EDGE ELEVATION	
					469+50.57	890.08	16.0	0.0580	0.928	595:1	891.00	CS
					469+75	890.57	16.0	0.0554	0.887	595:1	891.46	
					470+00	891.03	16.0	0.0528	0.845	595:1	891.87	
					470+25	891.43	16.0	0.0502	0.803	595:1	892.23	
					470+50	891.77	16.0	0.0476	0.761	595:1	892.53	
					470+75	892.07	16.0	0.0449	0.719	595:1	892.78	
					471+00	892.30	16.0	0.0423	0.677	595:1	892.98	
					471+25	892.49	16.0	0.0397	0.635	595:1	893.12	
					471+50	892.62	16.0	0.0371	0.593	595:1	893.21	
					471+50.57	892.62	16.0	0.0370	0.592	595:1	893.21	SC
					471+75	892.69	16.0	0.0370	0.592		893.29	
					472+00	892.72	16.0	0.0370	0.592		893.31	
					472+25	892.68	16.0	0.0370	0.592		893.28	
					472+50	892.60	16.0	0.0370	0.592		893.19	
					472+65.00	892.52	16.0	0.0370	0.592		893.11	
					472+75	892.46	16.0	0.0370	0.592		893.05	
					473+00	892.32	16.0	0.0370	0.592		892.91	
					473+25	892.16	16.0	0.0370	0.592		892.76	
					473+50	892.01	16.0	0.0370	0.592		892.60	
					473+75	891.86	16.0	0.0370	0.592		892.45	
					474+00	891.70	16.0	0.0370	0.592		892.30	
					474+25	891.55	16.0	0.0370	0.592		892.14	
					474+50	891.40	15.1	0.0370	0.559		891.96	
					474+75	891.24	14.2	0.0370	0.525		891.77	
					475+00	891.09	13.4	0.0370	0.497		891.59	
					475+25	890.96	12.8	0.0370	0.474		891.44	
					475+38.05	890.90	12.6	0.0370	0.465	223:1	891.36	
					475+50	890.84	12.4	0.0337	0.417	223:1	891.26	
					475+75	890.74	12.1	0.0266	0.323	223:1	891.06	
					475+98.70	890.64	12.1	0.0200	0.241	223:1	890.88	
					476+00	890.63	12.0	0.0200	0.240		890.87	
					476+04.05	890.62	12.0	0.0200	0.240		890.86	PT

CALCULATED ACF | CHECKED ABS

SUPERELEVATION TABLE (S.R. 81 RAMP F)

ALL-75-5.53

606
1224

J:\Projects\ALL\76691\roadway\sheets\76691CE803.dgn 11-SEP-2012 9:12PM redden

J:\Projects\ALL\76691\roadway\sheets\76691XG500.dgn 14-JAN-2013 4:26PM fedak

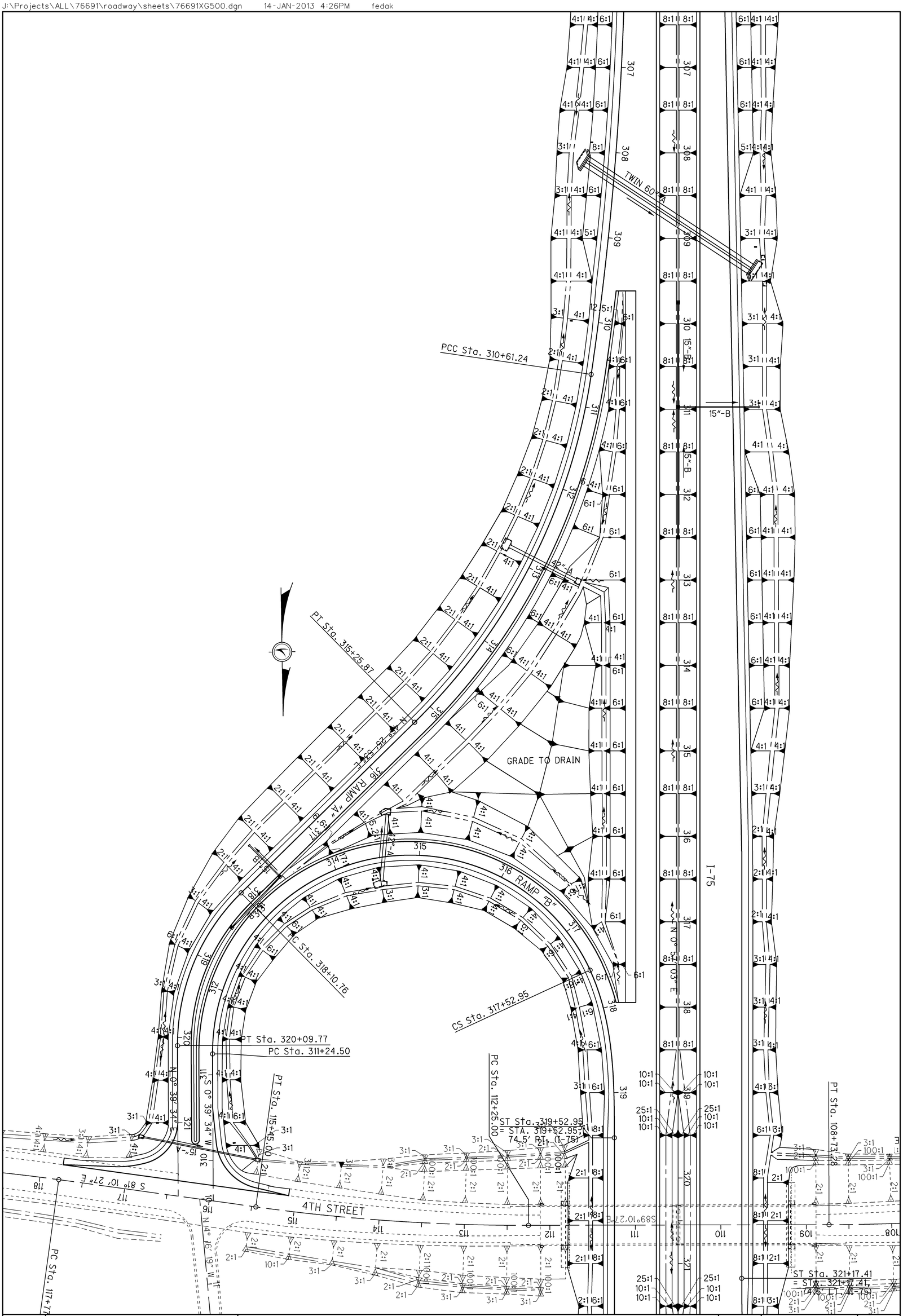

607 / 1224	ALL-75-5.53	GRADING DETAILS 4TH ST. INTERCHANGE	CALCULATED ACF CHECKED ABS	0 50 25 100 HORIZONTAL SCALE IN FEET

J:\Projects\ALL\76691\roadway\sheets\76691XG501.dgn 11-SEP-2012 9:12PM reddenj

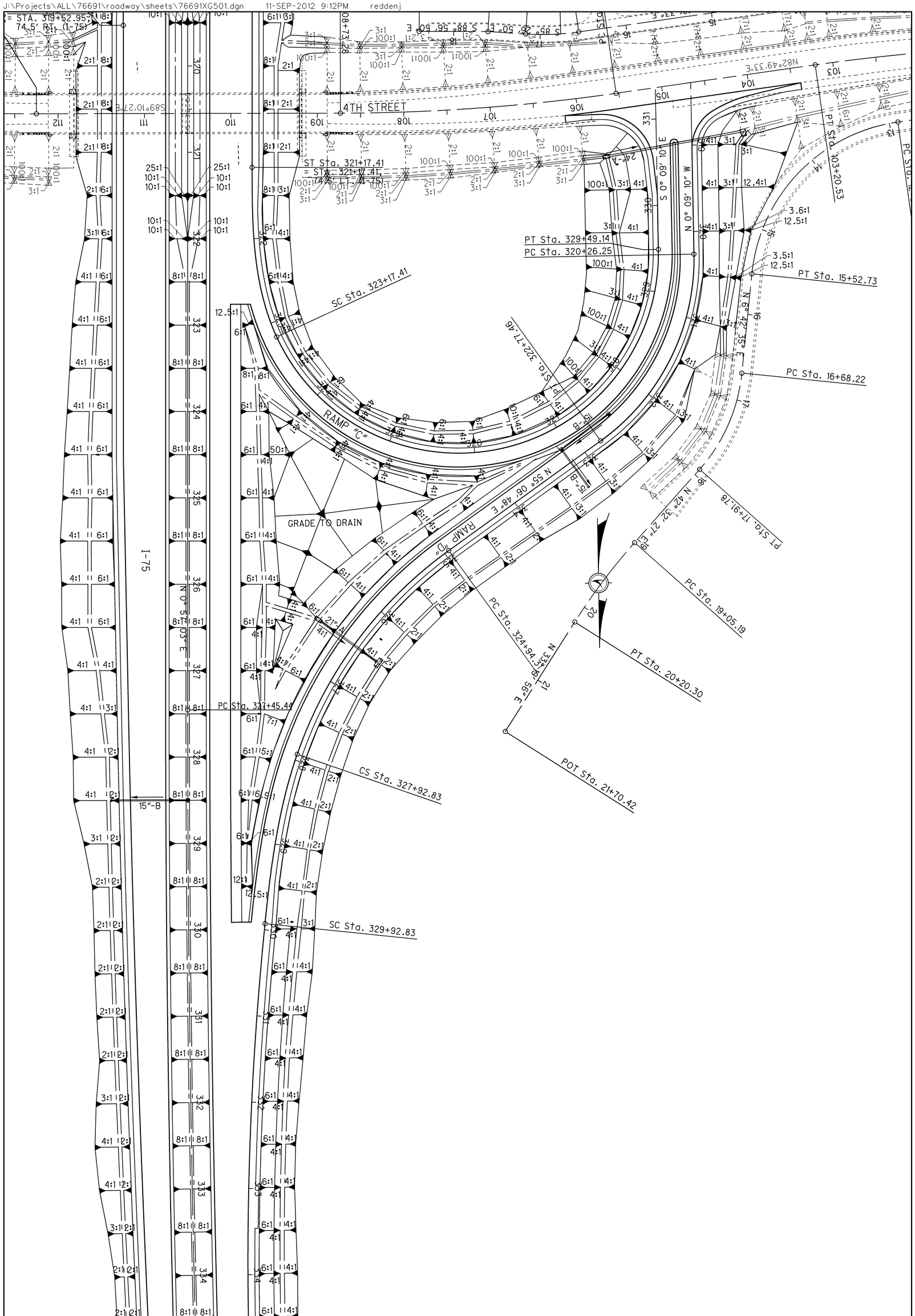

608 / 1224	**ALL-75-5.53**	**GRADING DETAILS** **4TH ST. INTERCHANGE**	CALCULATED ACF CHECKED ABS	0 50 25 100 HORIZONTAL SCALE IN FEET

J:\Projects\ALL\76691\roadway\sheets\76691XG600.dgn 11-SEP-2012 9:12PM reddenj

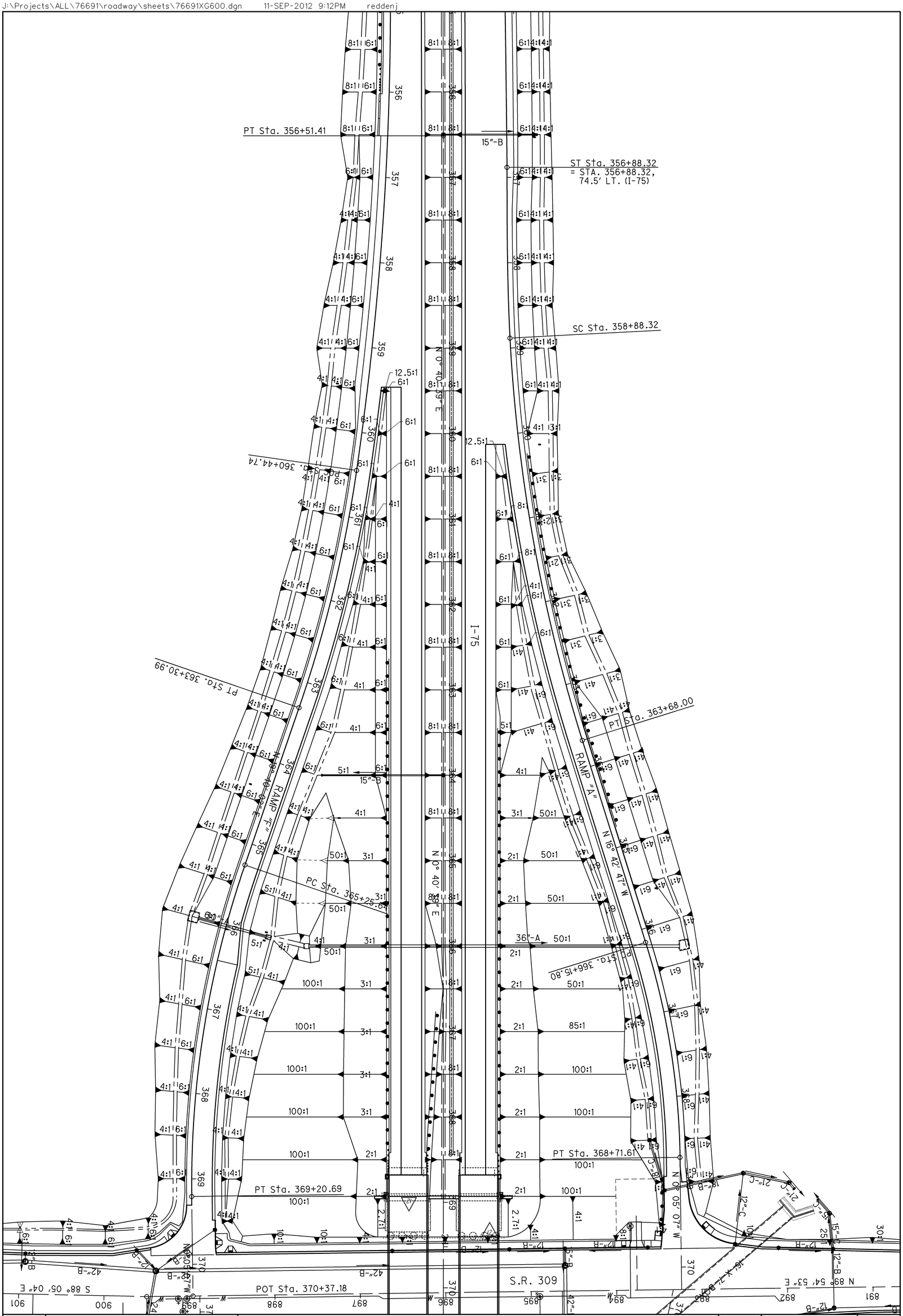

609 / 1224

ALL-75-5.53

GRADING DETAILS
S.R. 309 INTERCHANGE

CALCULATED ACF
CHECKED ABS

0 50
25 100
HORIZONTAL SCALE IN FEET

N

J:\Projects\ALL\76691\roadway\sheets\76691XG601.dgn 11-SEP-2012 9:12PM reddenj

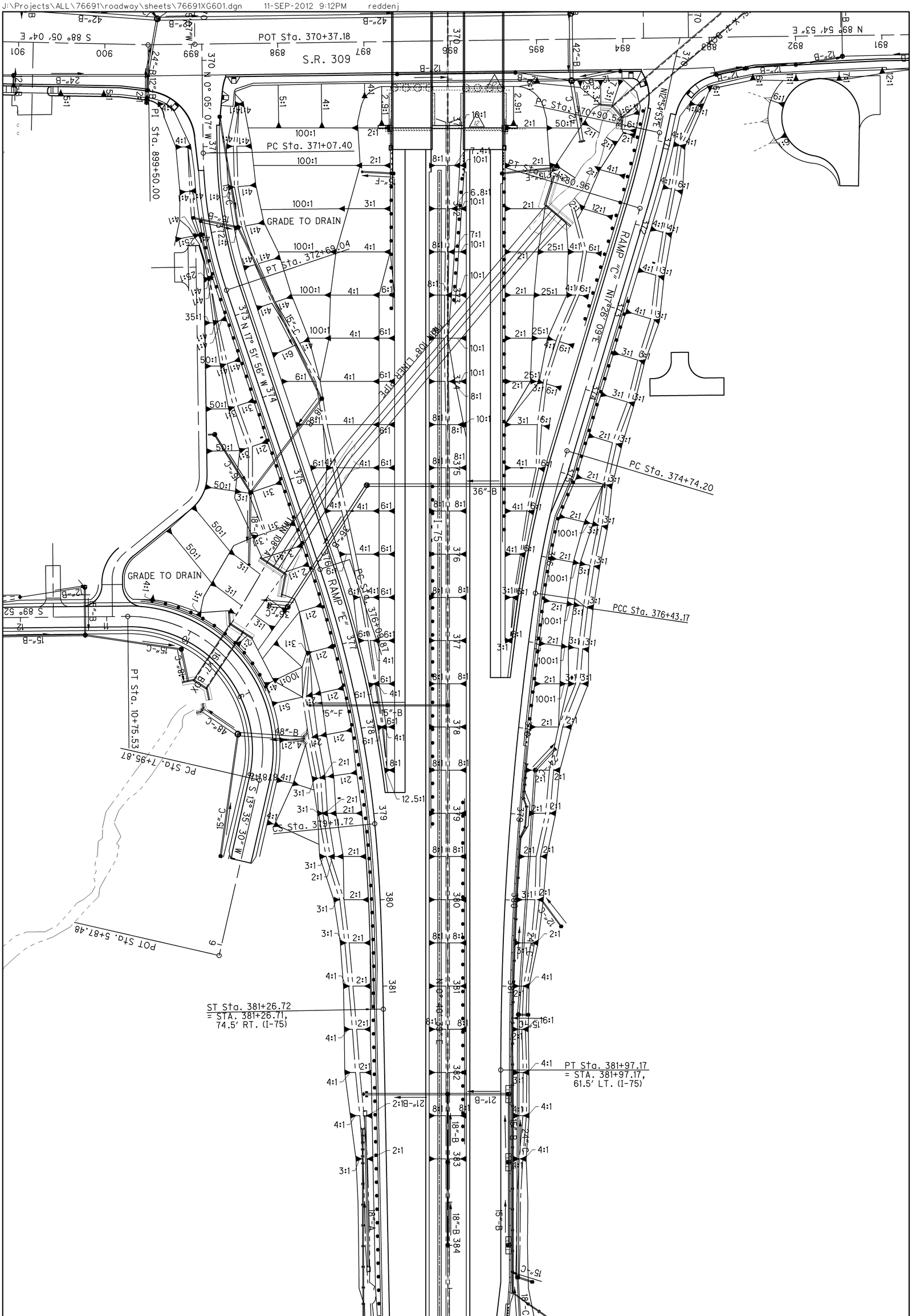

610 1224

ALL-75-5.53

GRADING DETAILS
S.R. 309 INTERCHANGE

CALCULATED ACF
CHECKED ABS

0 50
25 100
HORIZONTAL SCALE IN FEET

N

J:\Projects\ALL\76691\roadway\sheets\76691XG800.dgn 11-SEP-2012 9:12PM reddenj

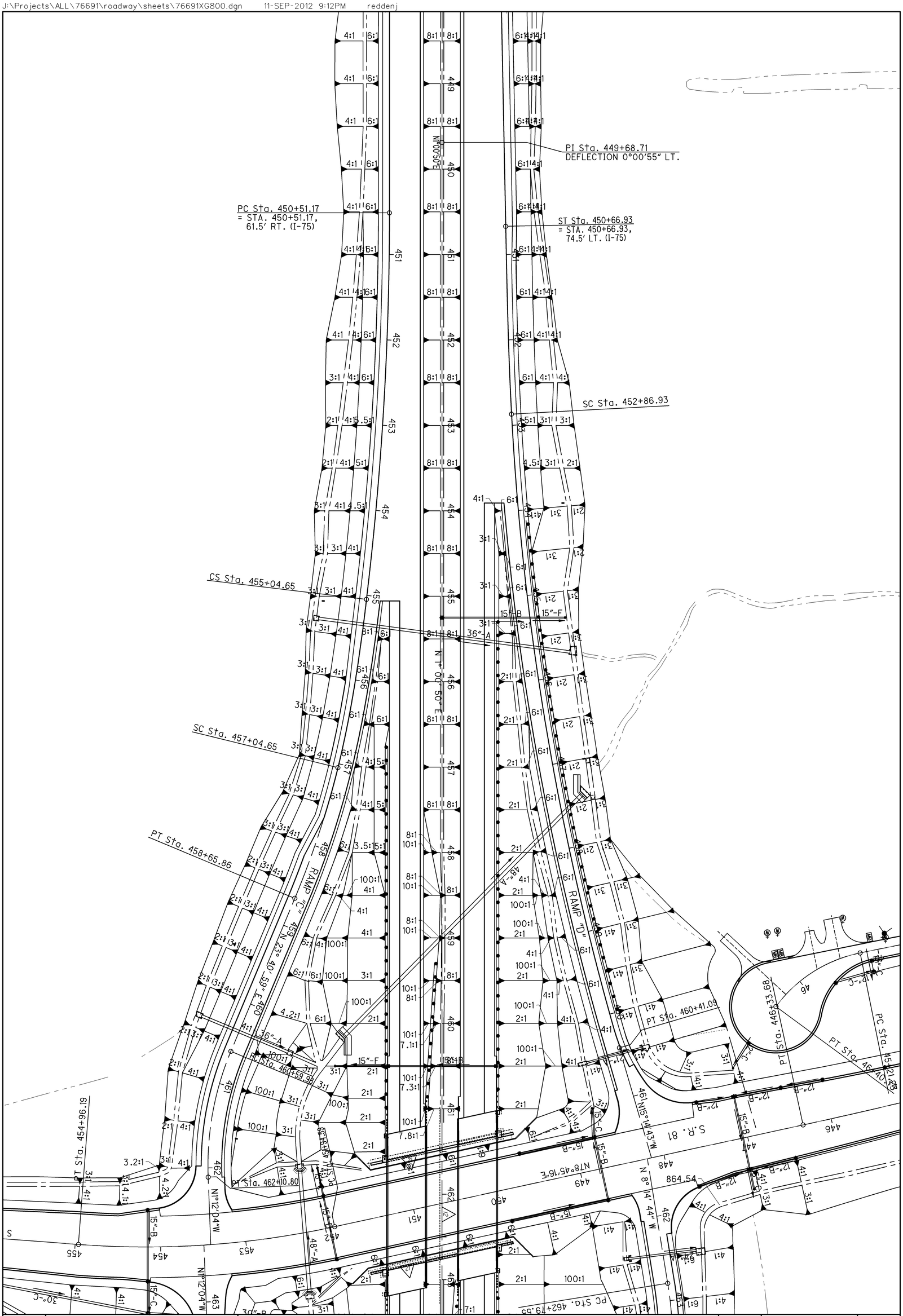

611 / 1224	**ALL-75-5.53**	**GRADING DETAILS** **S.R. 81 INTERCHANGE**	CALCULATED ACF CHECKED ABS 0 50 25 100 HORIZONTAL SCALE IN FEET

J:\Projects\ALL\76691\roadway\sheets\76691XG801.dgn 11-SEP-2012 9:12PM reddenj

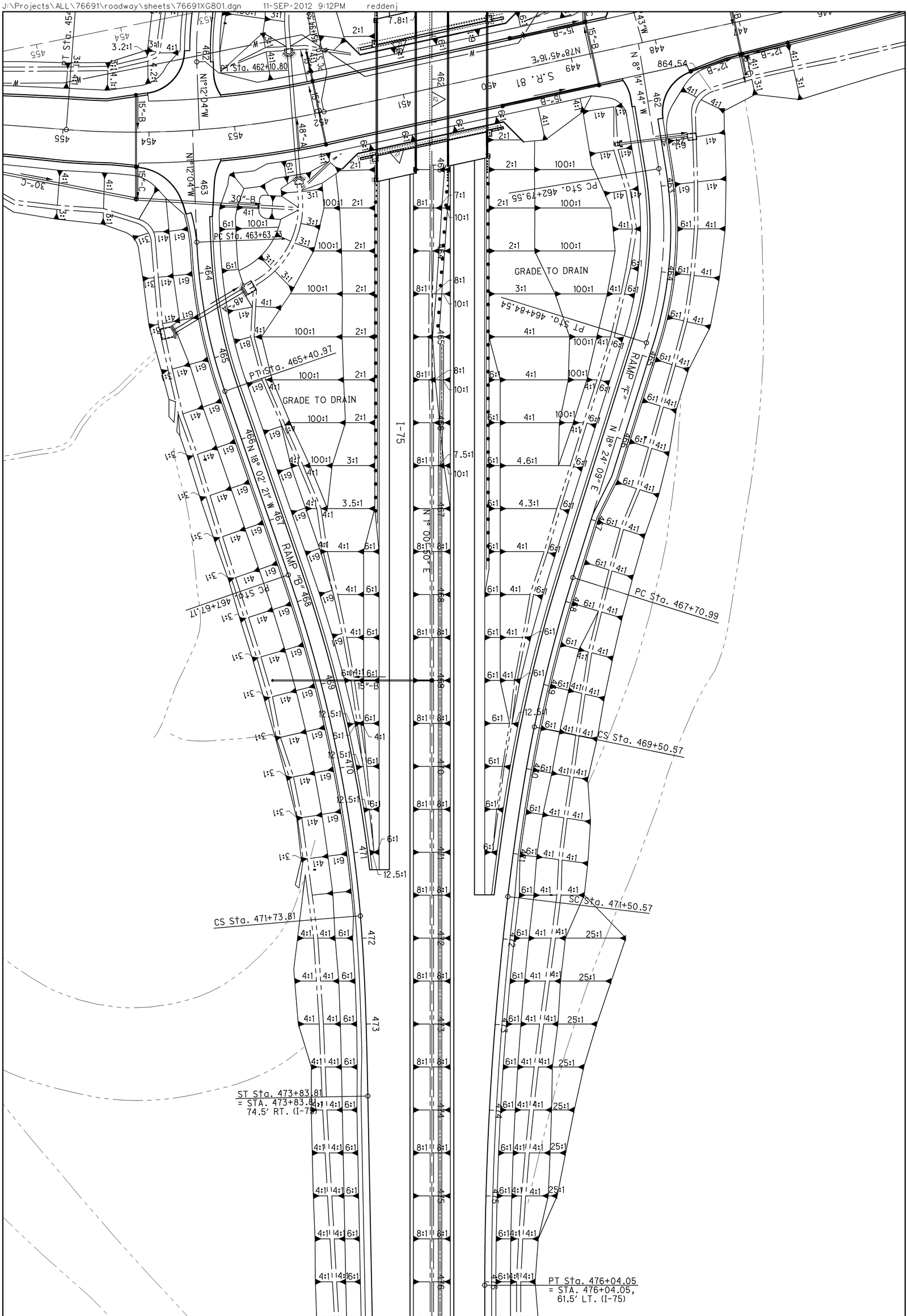

612 / 1224	ALL-75-5.53	GRADING DETAILS S.R. 81 INTERCHANGE	CALCULATED ACF CHECKED ABS	0 50 25 100 HORIZONTAL SCALE IN FEET

(A) STA. 116+25.64, 67.60′ RT. EX. ℄ R/W & CONST. FOURTH ST.
STA. 310+23.55, 20.50′ LT ℄ RAMP 'B'
STA. 321+20.60, 20.50′ LT ℄ RAMP 'A'
Δ = 180°
R = 4.50′
L = 14.14′

(B) STA. 116+98.57, 79.50′ RT. FOURTH ST.
STA. 320+98.46, 50′ RT. ℄ RAMP 'A'
Δ = 74° 42′ 38″
R = 50′
L = 65.2′

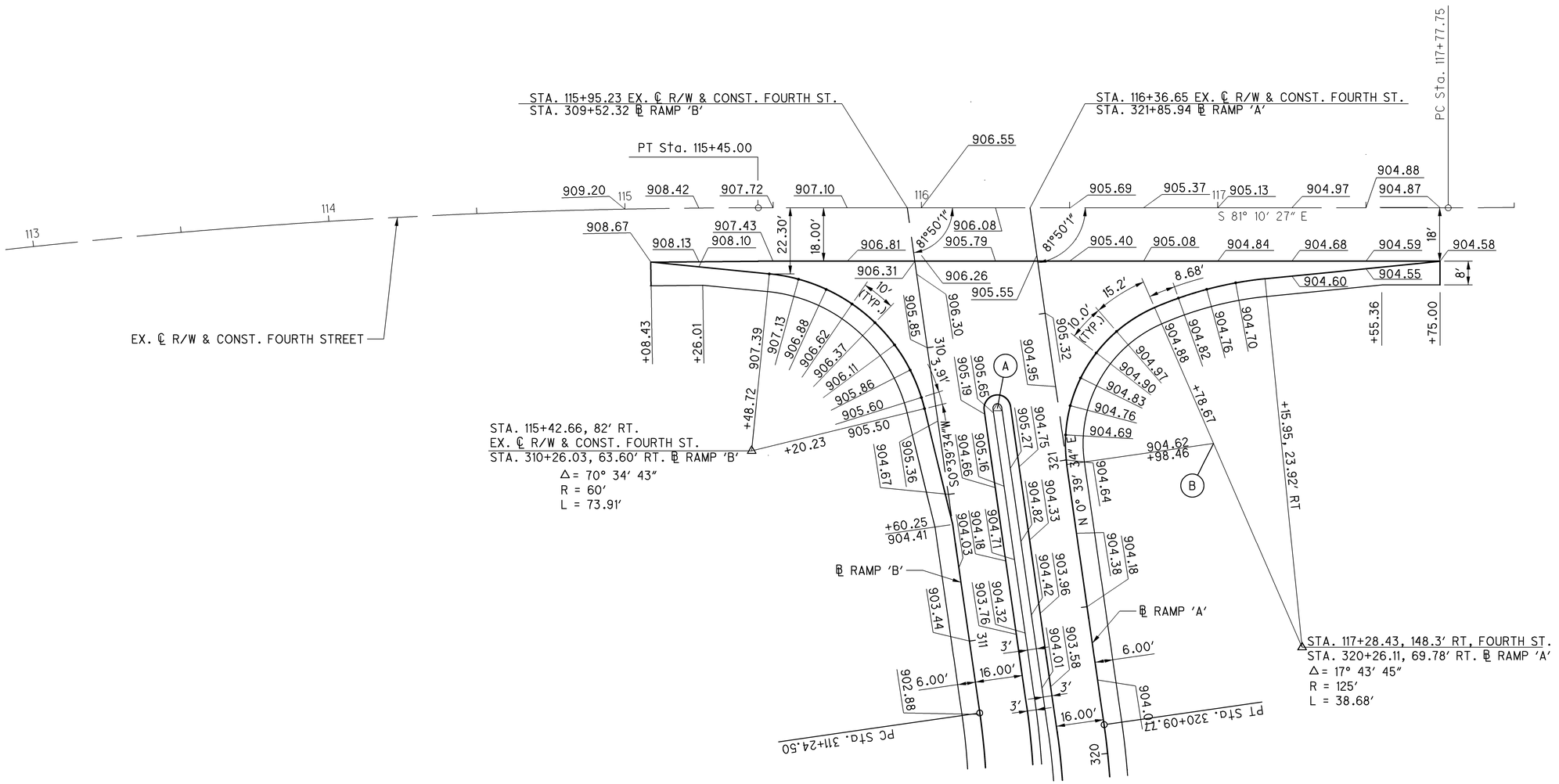

NOTES:
ALL ELEVATIONS ALONG THE CURB/ RAISED MEDIAN ARE TOP OF CURB ELEVATIONS. DEDUCT 6″ IN AREAS OF CURB/ RAISED MEDIAN TO OBTAIN ELEVATIONS AT FACE OF CURB.

SEE SCHEMATIC PLAN FOR CURVE DATA.

FOURTH STREET AND PATROL DRIVE WILL BE CONSTRUCTED UNDER PROJECT ALL-75-6.11/7.85 PID 87965.

HORIZONTAL SCALE IN FEET
0 10 20 40

CALCULATED SJG
CHECKED ABS

INTERSECTION DETAIL
FOURTH STREET, RAMP 'A' AND RAMP 'B'

ALL-75-5.53

613
1224

J:\Projects\ALL\76691\roadway\sheets\76691GI009.dgn 11-SEP-2012 9:12PM redden j

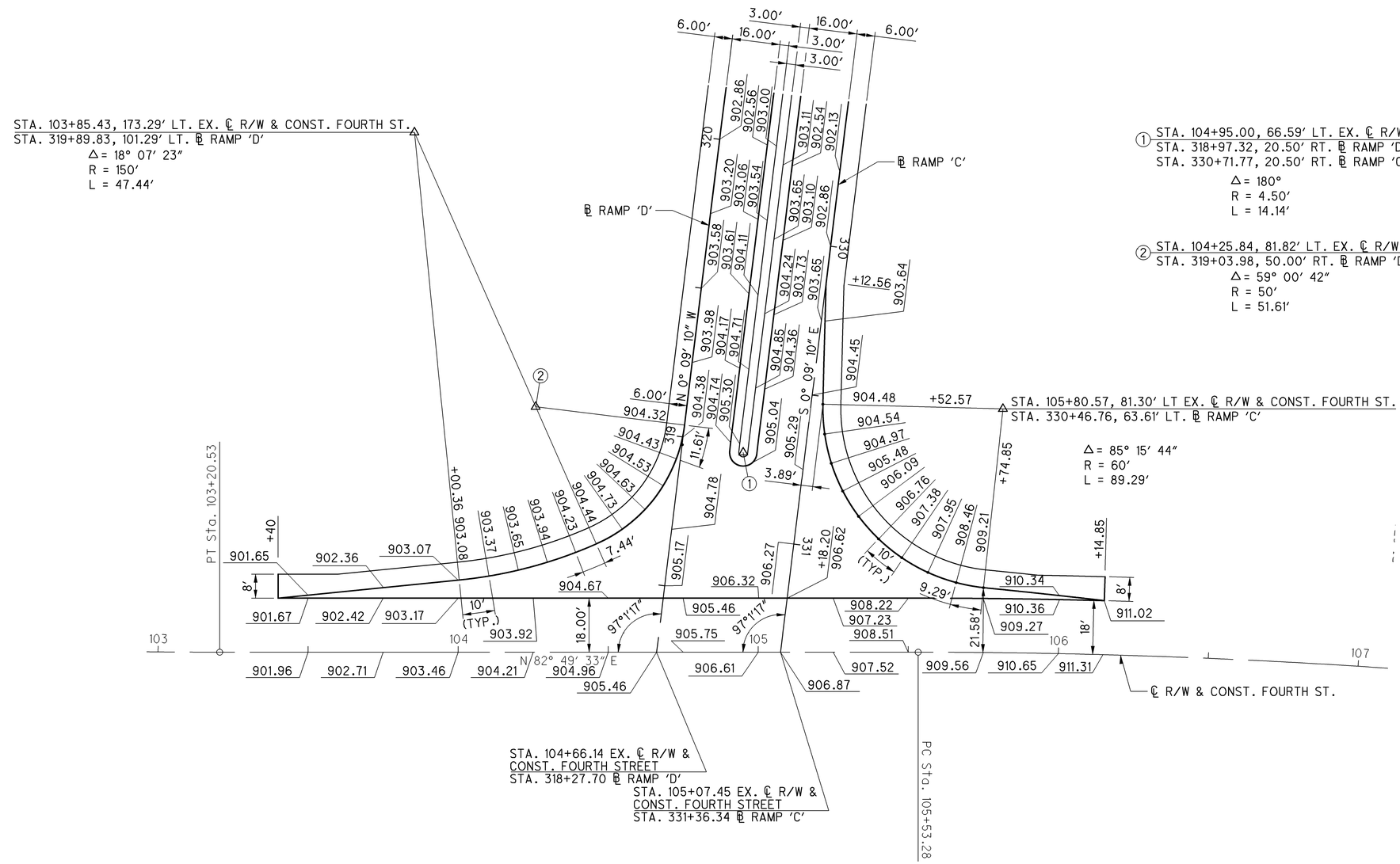

NOTES:
ALL ELEVATIONS ALONG THE CURB/ RAISED MEDIAN ARE TOP OF CURB ELEVATIONS. DEDUCT 6" IN AREAS OF CURB/ RAISED MEDIAN TO OBTAIN ELEVATIONS AT FACE OF CURB.

SCHEMATIC PLAN FOR CURVE DATA.

FOURTH STREET WILL BE CONSTRUCTED UNDER PROJECT ALL-75-6.11/7.85 PID 87965.

HORIZONTAL SCALE IN FEET
0 10 20 40

CALCULATED SJG
CHECKED ABS

INTERSECTION DETAIL FOURTH STREET, RAMP 'C' AND RAMP 'D'

ALL-75-5.53

614
1224

J:\Projects\ALL\76691\roadway\sheets\76691GI008.dgn 11-SEP-2012 9:12PM reddenj

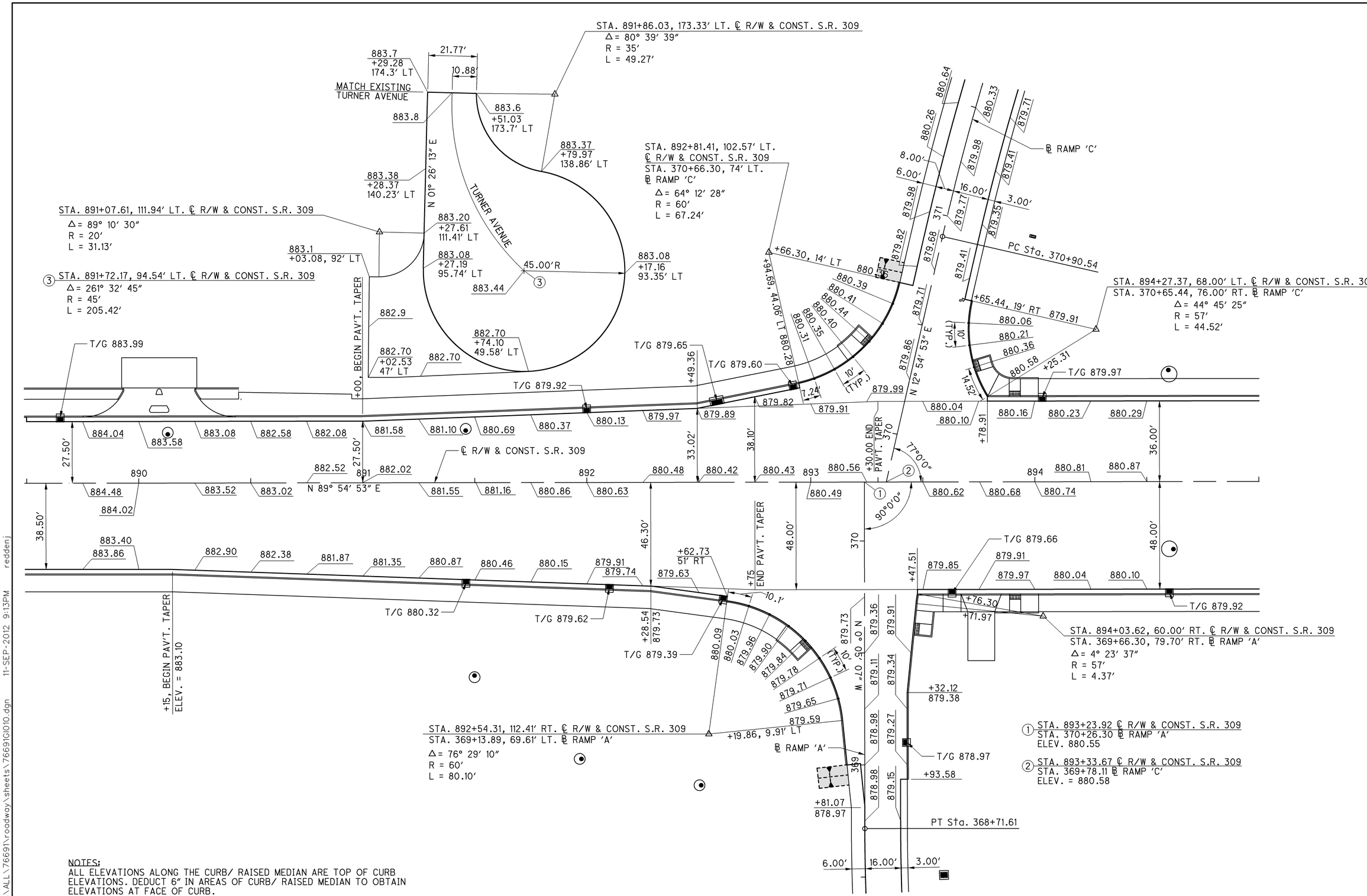

NOTES:
ALL ELEVATIONS ALONG THE CURB/ RAISED MEDIAN ARE TOP OF CURB ELEVATIONS. DEDUCT 6" IN AREAS OF CURB/ RAISED MEDIAN TO OBTAIN ELEVATIONS AT FACE OF CURB.

SEE SCHEMATIC PLAN FOR CURVE DATA.

HORIZONTAL SCALE IN FEET 0 10 20 40

CALCULATED SJG
CHECKED ABS

INTERSECTION DETAIL
S.R. 309, RAMP 'A' AND RAMP 'C'

ALL-75-5.53

J:\Projects\ALL\76691\roadway\sheets\76691GI010.dgn 11-SEP-2012 9:13PM reddenj

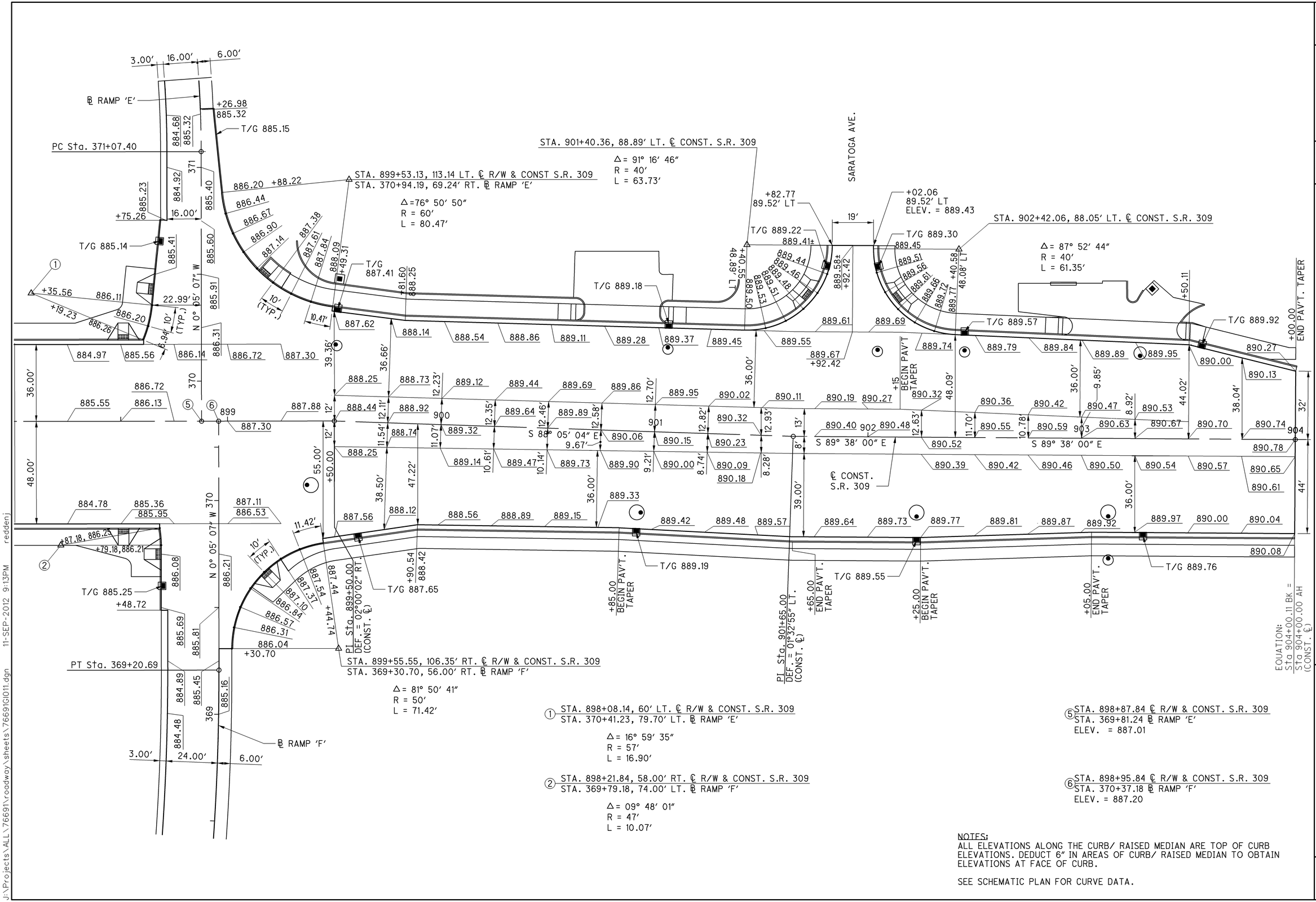
℄ RAMP 'E'
PC Sta. 371+07.40
T/G 885.15
STA. 899+53.13, 113.14 LT. ℄ R/W & CONST S.R. 309
STA. 370+94.19, 69.24' RT. ℄ RAMP 'E'
Δ =76° 50' 50"
R = 60'
L = 80.47'
STA. 901+40.36, 88.89' LT. ℄ CONST. S.R. 309
Δ = 91° 16' 46"
R = 40'
L = 63.73'
SARATOGA AVE.
+82.77
89.52' LT
+02.06
89.52' LT
ELEV. = 889.43
STA. 902+42.06, 88.05' LT. ℄ CONST. S.R. 309
Δ = 87° 52' 44"
R = 40'
L = 61.35'
T/G 889.22
T/G 889.30
T/G 889.18
T/G 887.41
T/G 889.57
T/G 889.92
T/G 885.14
T/G 885.25
T/G 887.65
T/G 889.19
T/G 889.55
T/G 889.76
℄ RAMP 'F'
℄ CONST. S.R. 309
PT Sta. 369+20.69
PI Sta. 899+50.00
DEF. = 02°00'02" RT
(CONST. ℄)
STA. 899+55.55, 106.35' RT. ℄ R/W & CONST. S.R. 309
STA. 369+30.70, 56.00' RT. ℄ RAMP 'F'
Δ = 81° 50' 41"
R = 50'
L = 71.42'
PI Sta. 901+65.00
DEF. = 01°32'55" LT.
(CONST. ℄)
BEGIN PAV'T. TAPER
END PAV'T. TAPER
EQUATION:
Sta 904+00.11 Bk =
Sta 904+00.00 AH
(CONST. ℄)
① STA. 898+08.14, 60' LT. ℄ R/W & CONST. S.R. 309
STA. 370+41.23, 79.70' LT. ℄ RAMP 'E'
Δ = 16° 59' 35"
R = 57'
L = 16.90'
② STA. 898+21.84, 58.00' RT. ℄ R/W & CONST. S.R. 309
STA. 369+79.18, 74.00' LT. ℄ RAMP 'F'
Δ = 09° 48' 01"
R = 47'
L = 10.07'
⑤ STA. 898+87.84 ℄ R/W & CONST. S.R. 309
STA. 369+81.24 ℄ RAMP 'E'
ELEV. = 887.01
⑥ STA. 898+95.84 ℄ R/W & CONST. S.R. 309
STA. 370+37.18 ℄ RAMP 'F'
ELEV. = 887.20
NOTES:
ALL ELEVATIONS ALONG THE CURB/ RAISED MEDIAN ARE TOP OF CURB ELEVATIONS. DEDUCT 6" IN AREAS OF CURB/ RAISED MEDIAN TO OBTAIN ELEVATIONS AT FACE OF CURB.
SEE SCHEMATIC PLAN FOR CURVE DATA.
HORIZONTAL SCALE IN FEET
CALCULATED SJG
CHECKED ABS
INTERSECTION DETAIL
S.R. 309, RAMP 'E' AND RAMP 'F'
ALL-75-5.53
616
1224
J:\Projects\ALL\76691\roadway\sheets\76691GI011.dgn 11-SEP-2012 9:13PM reddenj

① STA. 437+46.28, 55′ RT. ℄ R/W & CONST. S.R. 81
STA. 10+54.26, 70.60′ LT. ℄ R/W & CONST. NEUBRECHT RD.
Δ = 96° 54′ 17″
R = 25′
L = 42.28′

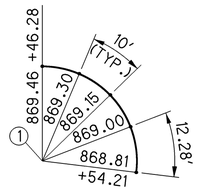

② STA. 37+39.49, 55.09′ LT. ℄ R/W & CONST. SERVICE RD. 3
STA. 10+54.29, 80.62′ LT. ℄ R/W & CONST. NEUBRECHT RD.
Δ = 82° 29′ 40″
R = 35′
L = 50.40′

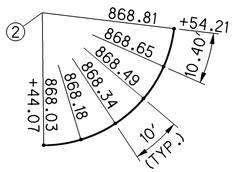

③ STA. 439+25.94, 107.40′ LT. ℄ R/W & CONST. S.R. 81
STA. 12+48.78, 82.19′ RT. ℄ R/W & CONST. NEUBRECHT RD.
Δ = 81° 04′ 42″
R = 150′
L = 84.90′

④ STA. 438+23.91 ℄ R/W & CONST. S.R. 81
STA. 11+18.04 ℄ R/W & CONST. NEUBRECHT RD.

STA. 437+48.98, 94.06′ LT. ℄ R/W & CONST. S.R. 81
STA. 11+96.53, 87.47′ LT. ℄ R/W & CONST. NEUBRECHT RD.
Δ = 66° 20′ 48″
R = 60′
L = 69.48′

STA. 440+15.80, 112.45′ LT.
℄ R/W & CONST. S.R. 81
STA. 12+85.39, 166.99′ RT.
℄ R/W & CONST. NEUBRECHT RD.
Δ = 15°43′33″
R = 60′
L = 41.17′

STA. 439+21.27, 81.32′ RT. ℄ R/W & CONST. S.R. 81
STA. 10+48.78, 106.27′ RT. ℄ R/W & CONST. NEUBRECHT RD.
STA. 39+26.39, 50.00′ LT. SERVICE RD. 3
Δ = 164°00′23″
R = 40′
L = 114.50′

NOTES:
ALL ELEVATIONS ALONG THE CURB/ RAISED MEDIAN ARE TOP OF CURB ELEVATIONS. DEDUCT 6″ IN AREAS OF CURB/ RAISED MEDIAN TO OBTAIN ELEVATIONS AT FACE OF CURB.

SEE SCHEMATIC PLAN FOR CURVE DATA.

HORIZONTAL SCALE IN FEET
0 10 20 40

CALCULATED SJG
CHECKED ABS

INTERSECTION DETAIL
S.R. 81, NEUBRECHT RD., AND SERVICE RD. 3

ALL-75-5.53

617
1224

J:\Projects\ALL\76691\roadway\sheets\76691GI013.dgn 11-SEP-2012 9:13PM reddenj

INTERSECTION DETAIL
S.R. 81, RAMP 'D' AND RAMP 'F'

CALCULATED SJG | CHECKED ABS

HORIZONTAL SCALE IN FEET
0 10 20 40

ALL-75-5.53

618
1224

① STA. 448+15.19 ℄ R/W & CONST. S.R. 81
STA. 461+75.24 ℄ RAMP 'D'

② STA. 448+20.11 ℄ R/W & CONST. S.R. 81
STA. 461+31.81 ℄ RAMP 'F'

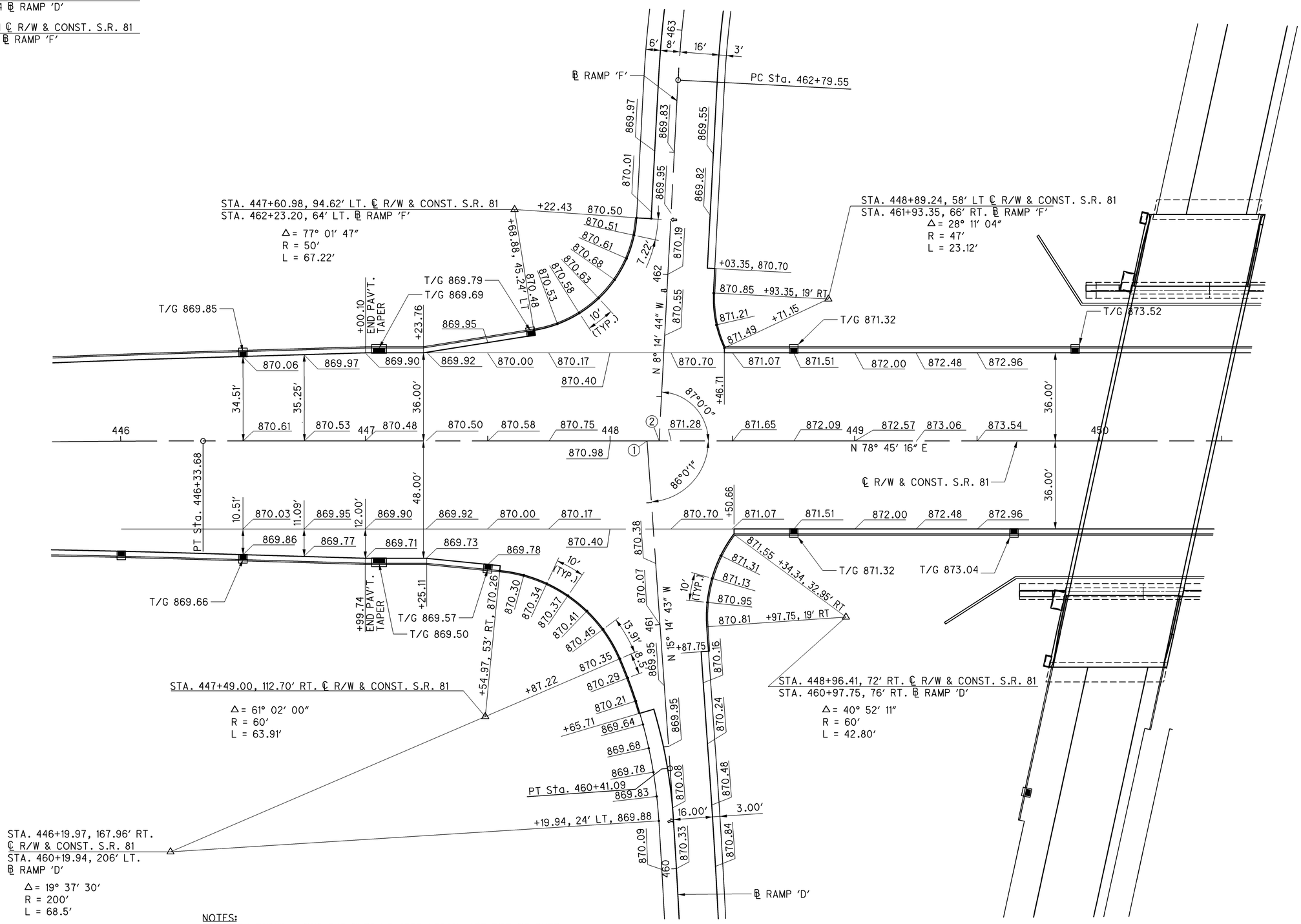

NOTES:
ALL ELEVATIONS ALONG THE CURB/ RAISED MEDIAN ARE TOP OF CURB ELEVATIONS. DEDUCT 6" IN AREAS OF CURB/ RAISED MEDIAN TO OBTAIN ELEVATIONS AT FACE OF CURB.

SEE SCHEMATIC PLAN FOR CURVE DATA.

J:\Projects\ALL\76691\roadway\sheets\76691GI014.dgn 11-SEP-2012 9:13PM reddenj

① STA. 453+41.20 ℄ R/W & CONST. S.R. 81
STA. 462+89.83 ℄ RAMP 'C'

② STA. 453+49.21 ℄ R/W & CONST. S.R. 81
STA. 462+33.32 ℄ RAMP 'B'

③ STA. 454+18.06, 100.58' LT ℄ R/W & CONST. S.R. 81
STA. 463+33.40, 72.78' RT ℄ RAMP 'B'
Δ = 64° 05' 04"
R = 60'
L = 67.11'

④ STA. 462+11.48, 19' LT
ELEV. = 879.81

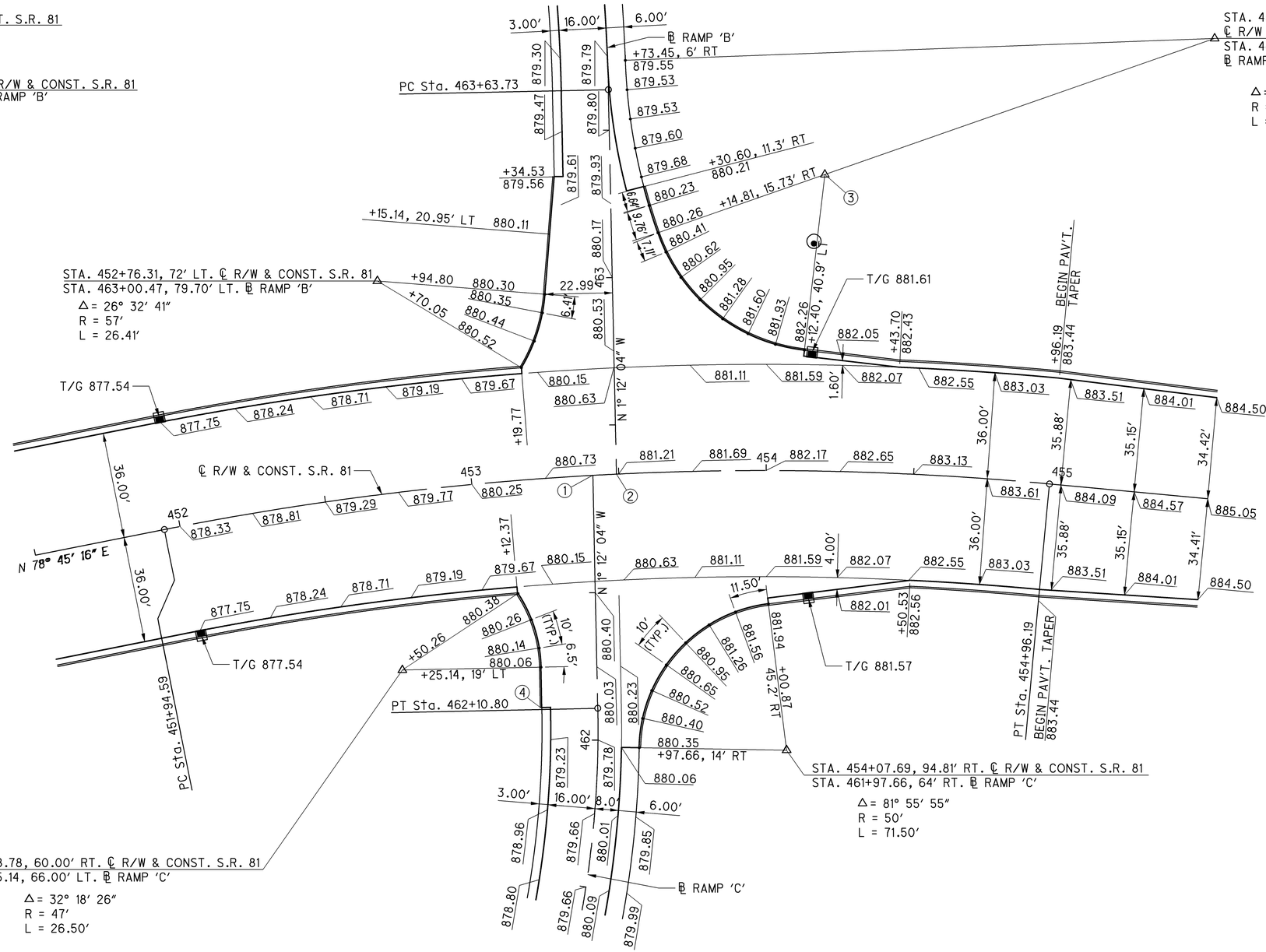

NOTES:
ALL ELEVATIONS ALONG THE CURB/ RAISED MEDIAN ARE TOP OF CURB ELEVATIONS. DEDUCT 6" IN AREAS OF CURB/ RAISED MEDIAN TO OBTAIN ELEVATIONS AT FACE OF CURB.

SEE SCHEMATIC PLAN FOR CURVE DATA.

HORIZONTAL SCALE IN FEET
0 10 20 40
CALCULATED SJG
CHECKED ABS

INTERSECTION DETAIL
S.R. 81, RAMP 'B' AND RAMP 'C'

ALL-75-5.53

619
1224

J:\Projects\ALL\76691\roadway\sheets\76691GI0115.dgn 11-SEP-2012 9:13PM redden

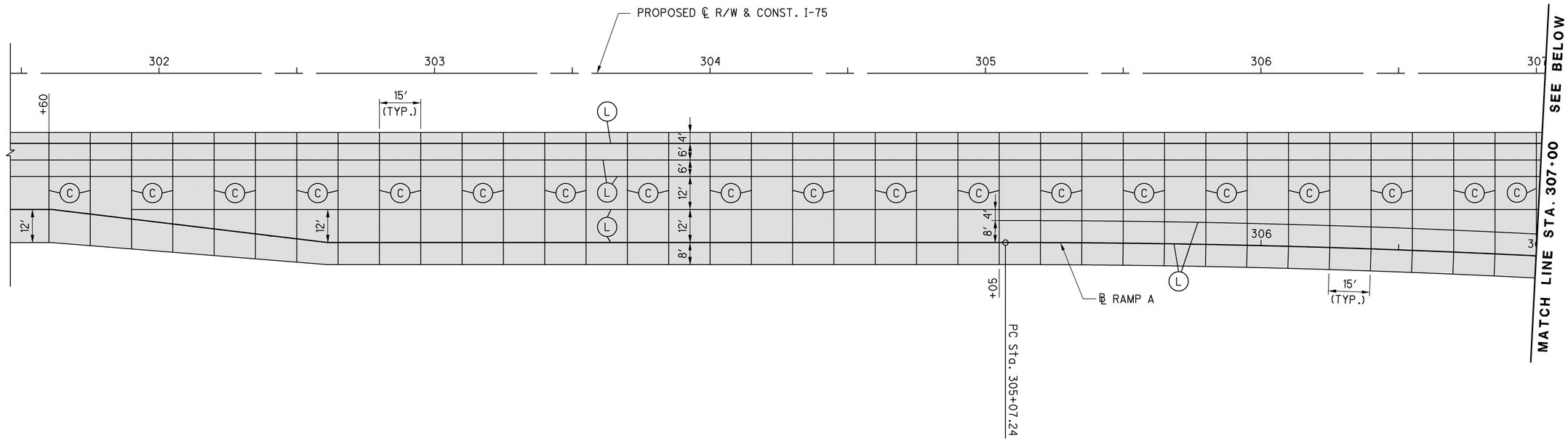

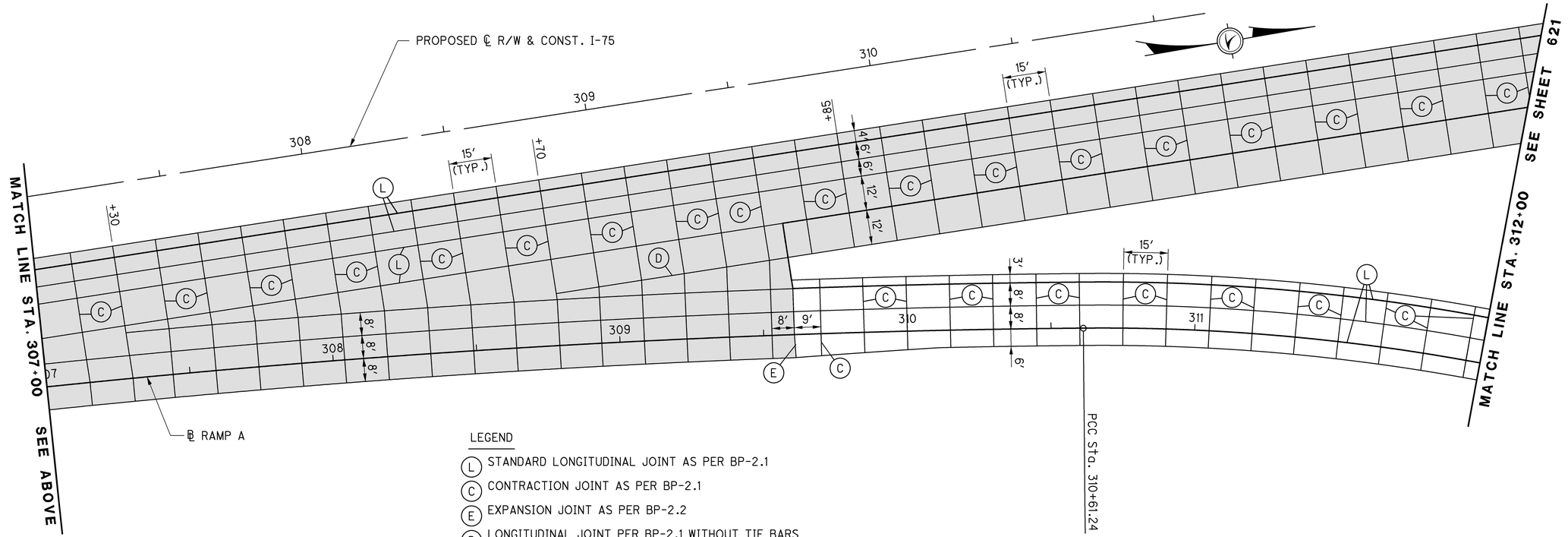

HORIZONTAL SCALE IN FEET
0 10 20 40

CALCULATED APV
CHECKED SJG

JOINT DETAILS
FOURTH STREET RAMP A

ALL-75-5.53

620
1224

J:\Projects\ALL\76691\roadway\sheets\76691GA511.dgn 11-SEP-2012 9:13PM reddenj

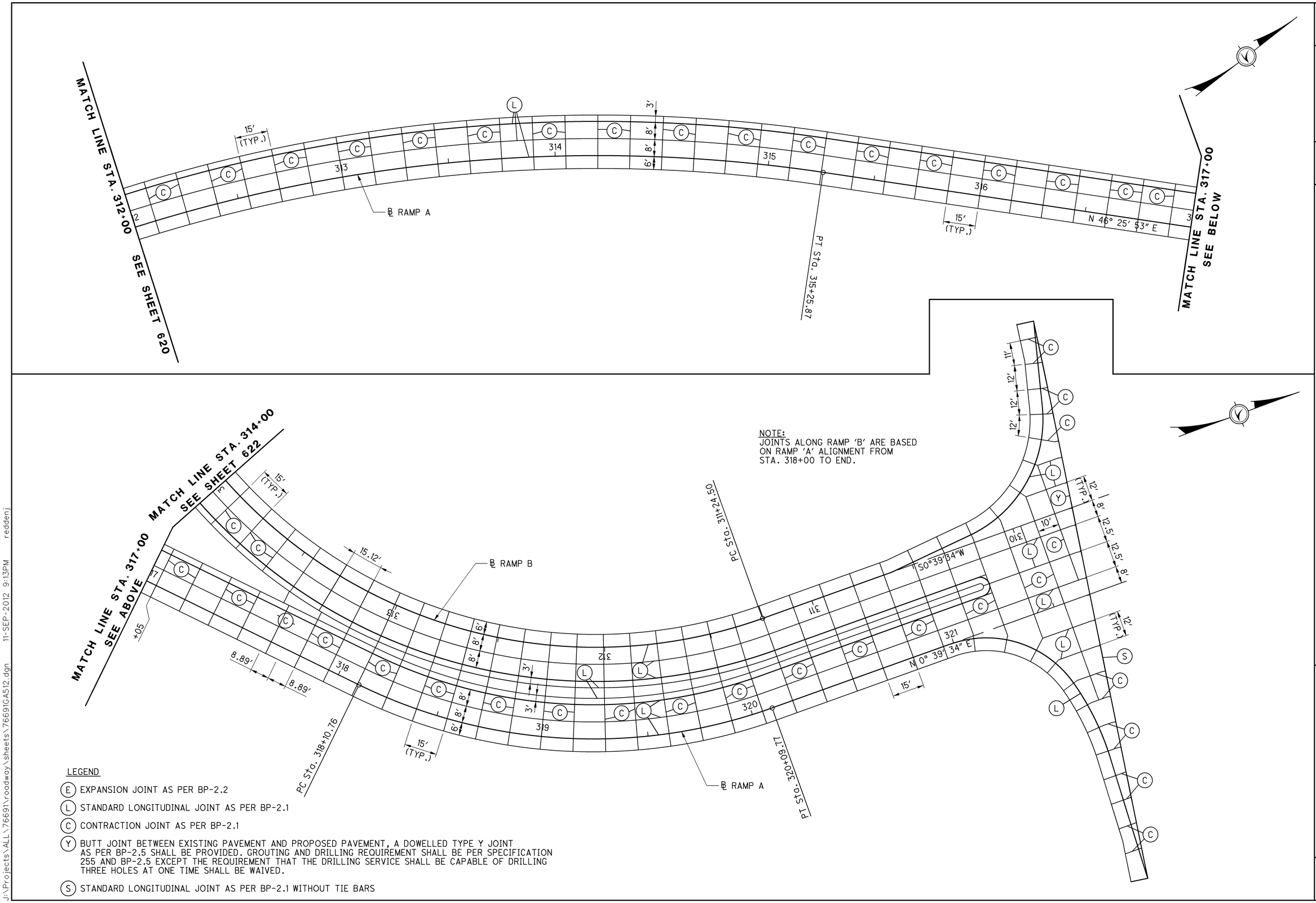

NOTE:
JOINTS ALONG RAMP 'B' ARE BASED ON RAMP 'A' ALIGNMENT FROM STA. 318+00 TO END.

LEGEND

(E) EXPANSION JOINT AS PER BP-2.2

(L) STANDARD LONGITUDINAL JOINT AS PER BP-2.1

(C) CONTRACTION JOINT AS PER BP-2.1

(Y) BUTT JOINT BETWEEN EXISTING PAVEMENT AND PROPOSED PAVEMENT, A DOWELLED TYPE Y JOINT AS PER BP-2.5 SHALL BE PROVIDED. GROUTING AND DRILLING REQUIREMENT SHALL BE PER SPECIFICATION 255 AND BP-2.5 EXCEPT THE REQUIREMENT THAT THE DRILLING SERVICE SHALL BE CAPABLE OF DRILLING THREE HOLES AT ONE TIME SHALL BE WAIVED.

(S) STANDARD LONGITUDINAL JOINT AS PER BP-2.1 WITHOUT TIE BARS

HORIZONTAL SCALE IN FEET
0 10 20 40

CALCULATED APV
CHECKED SJG

JOINT DETAILS
FOURTH STREET RAMPS A & B

ALL-75-5.53

621
1224

J:\Projects\ALL\76691\roadway\sheets\76691GA512.dgn 11-SEP-2012 9:13PM reddenj

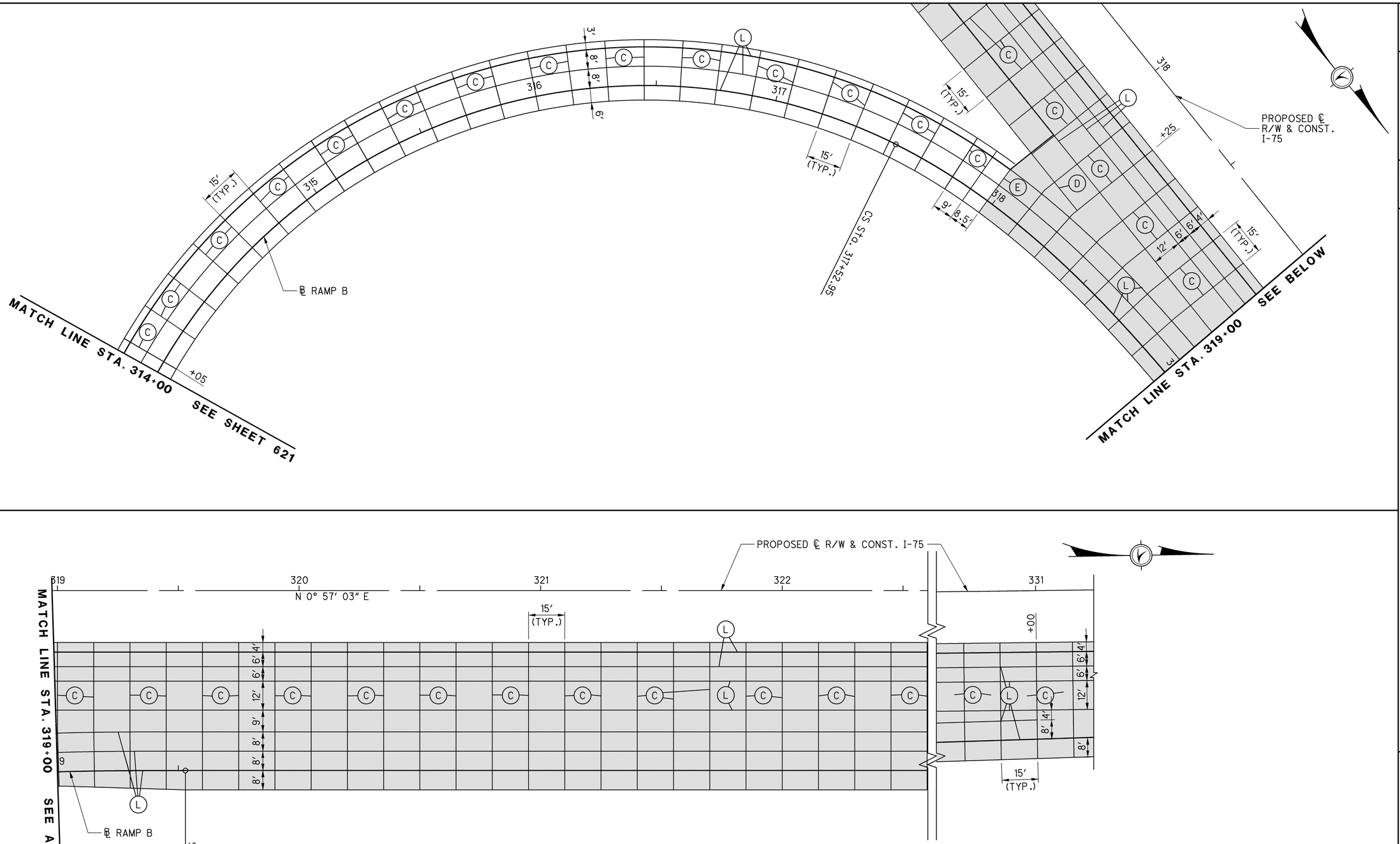

HORIZONTAL SCALE IN FEET

CALCULATED APV CHECKED SJG

JOINT DETAILS
FOURTH STREET RAMP B

ALL-75-5.53

622
1224

J:\Projects\ALL\76691\roadway\sheets\76691GA513.dgn 11-SEP-2012 9:13PM reddenj

ST Sta. 321+17.41

MATCH LINE STA. 326+00
SEE BELOW

SC Sta. 323+17.41

℄ RAMP C

PROPOSED ℄ R/W
& CONST. I-75

PROPOSED ℄ R/W
& CONST. I-75

MATCH LINE STA. 324+00
SEE SHEET 624

MATCH LINE STA.
SEE ABOVE

PT Sta. 322+77.46

PC Sta. 329+49.25

PT Sta. 320+26.14

PC Sta. 105+53.28

℄ RAMP D

℄ EX. FOURTH STREET

N 55° 06' 48" E

S 60° 09' 10" E

N 60° 09' 10" W

N 82° 49' 33" E

LEGEND

(E) EXPANSION JOINT AS PER BP-2.2

(L) STANDARD LONGITUDINAL JOINT AS PER BP-2.1

(C) CONTRACTION JOINT AS PER BP-2.1

(Y) BUTT JOINT BETWEEN EXISTING PAVEMENT AND PROPOSED PAVEMENT, A DOWELLED TYPE Y JOINT AS PER BP-2.5 SHALL BE PROVIDED. GROUTING AND DRILLING REQUIREMENT SHALL BE PER SPECIFICATION 255 AND BP-2.5 EXCEPT THE REQUIREMENT THAT THE DRILLING DEVICE SHALL BE CAPABLE OF DRILLING THREE HOLES AT ONE TIME SHALL BE WAIVED.

(D) LONGITUDINAL JOINT PER BP-2.1 WITHOUT TIE BARS

(S) STANDARD LONGITUDINAL JOINT PER BP-2.1 WITHOUT TIE BARS

SHADED AREA REPRESENTS I-75 CONCRETE PAVEMENT (OPTION 2 WITH JOINTS SHOWN); I-75 ASPHALT PAVEMENT (OPTION 1 WITHOUT JOINTS) COULD BE SELECTED

NOTE:
JOINTS ALONG RAMP 'C' ARE BASED ON RAMP 'D' ALIGNMENT FROM STA. 318+50 TO STA. 322+75.

HORIZONTAL SCALE IN FEET
0 10 20 40

CALCULATED APV
CHECKED SJG

JOINT DETAILS
FOURTH STREET RAMPS C & D

ALL-75-5.53

623
1224

J:\Projects\ALL\76691\roadway\sheets\76691GA514.dgn 11-SEP-2012 9:13PM reddenj

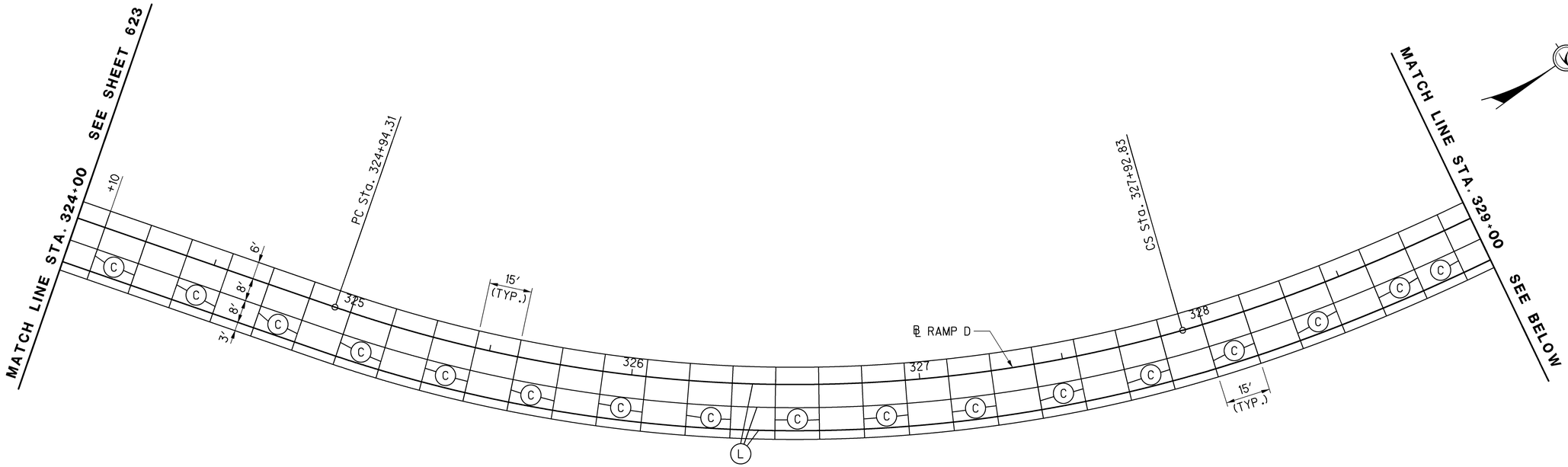

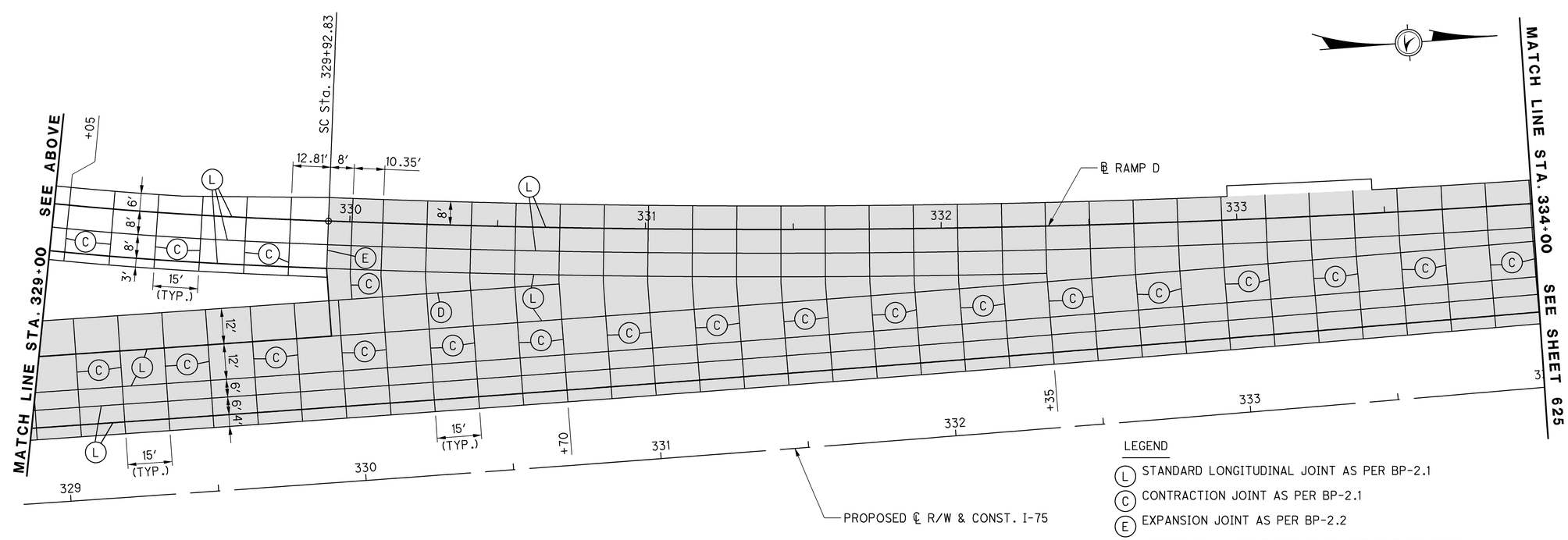

0 10 20 40
HORIZONTAL SCALE IN FEET

CALCULATED APV
CHECKED SJG

JOINT DETAILS
FOURTH STREET RAMP D

ALL-75-5.53

624
1224

J:\Projects\ALL\76691\roadway\sheets\76691GA515.dgn 11-SEP-2012 9:13PM reddenj

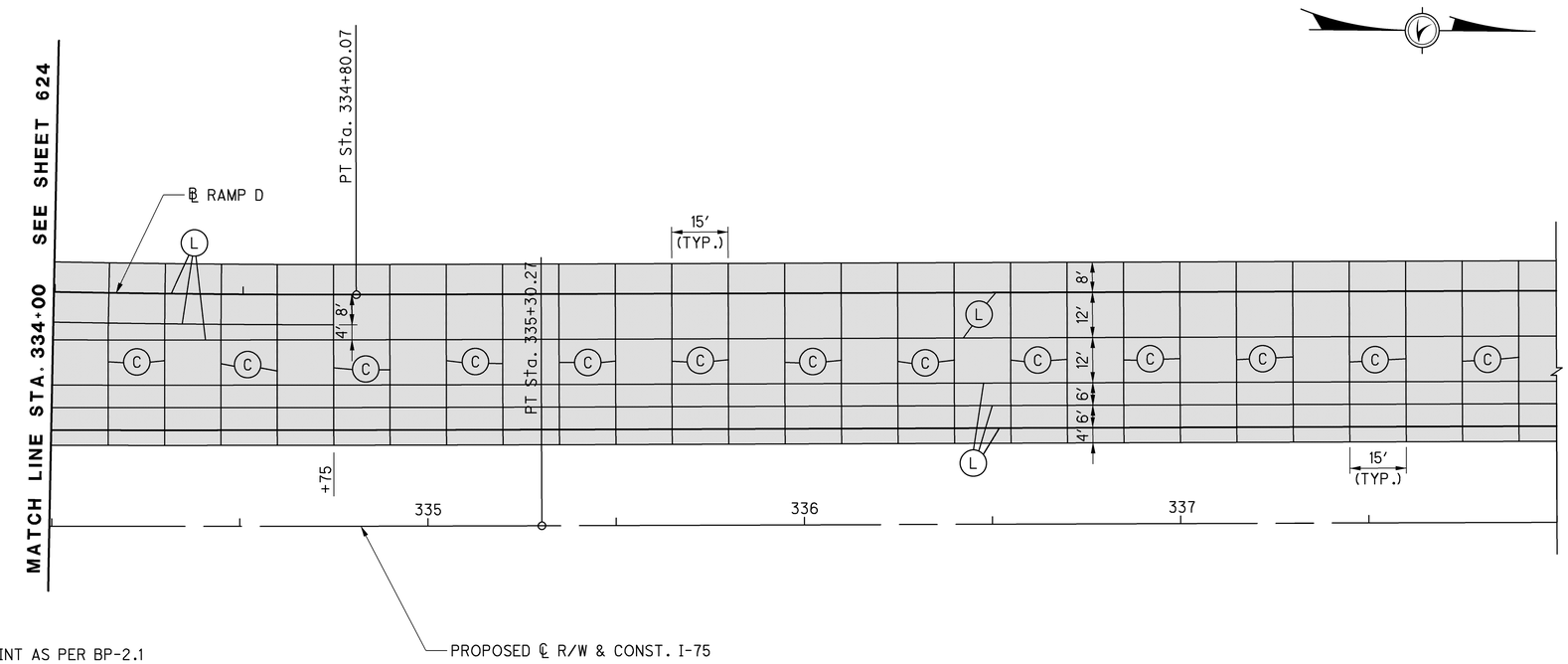

LEGEND

(L) STANDARD LONGITUDINAL JOINT AS PER BP-2.1

(C) CONTRACTION JOINT AS PER BP-2.1

SHADED AREA REPRESENTS I-75 CONCRETE PAVEMENT (OPTION 2 WITH JOINTS SHOWN);
I-75 ASPHALT PAVEMENT (OPTION 1 WITHOUT JOINTS) COULD BE SELECTED

HORIZONTAL SCALE IN FEET
0 10 20 40

CALCULATED APV
CHECKED SJG

JOINT DETAILS
FOURTH STREET RAMP D

ALL-75-5.53

625
1224

J:\Projects\ALL\76691\roadway\sheets\76691GA516.dgn 11-SEP-2012 9:13PM reddenj

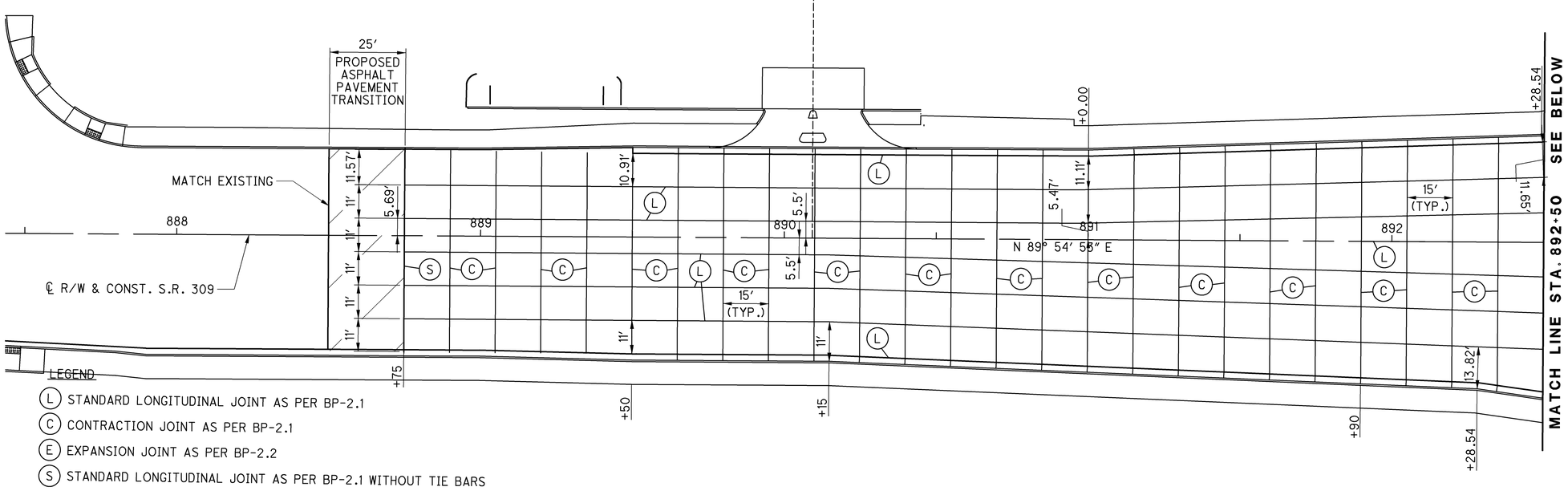

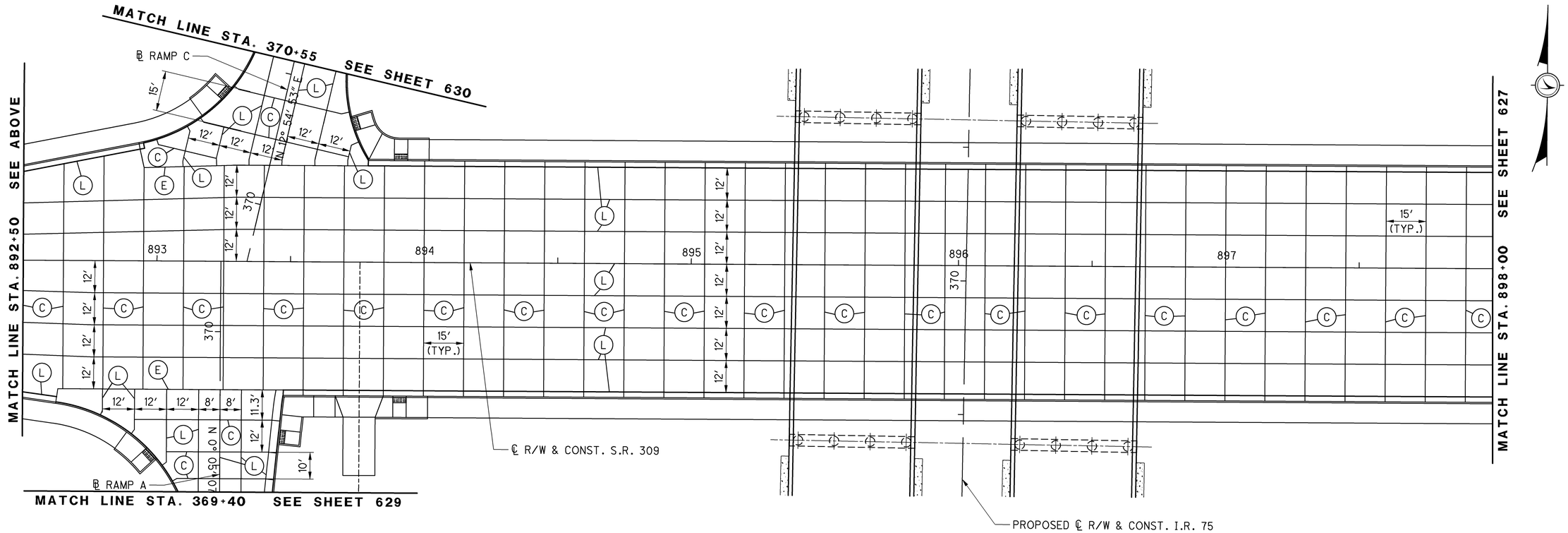

HORIZONTAL SCALE IN FEET
0 10 20 40

CALCULATED APV
CHECKED SJG

JOINT DETAILS
S.R. 309, S.R. 309 RAMP A, S.R. 309 RAMP C

ALL-75-5.53

626
1224

J:\Projects\ALL\76691\roadway\sheets\76691GA610.dgn 11-SEP-2012 9:13PM reddenj

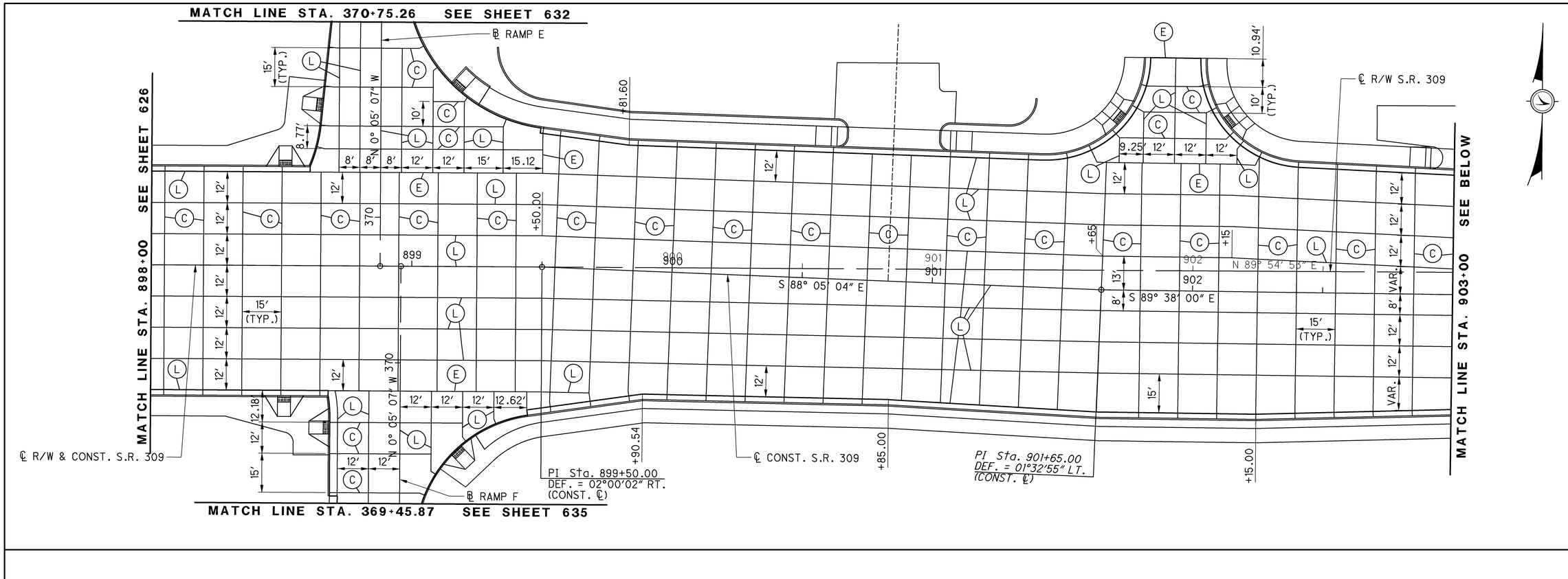

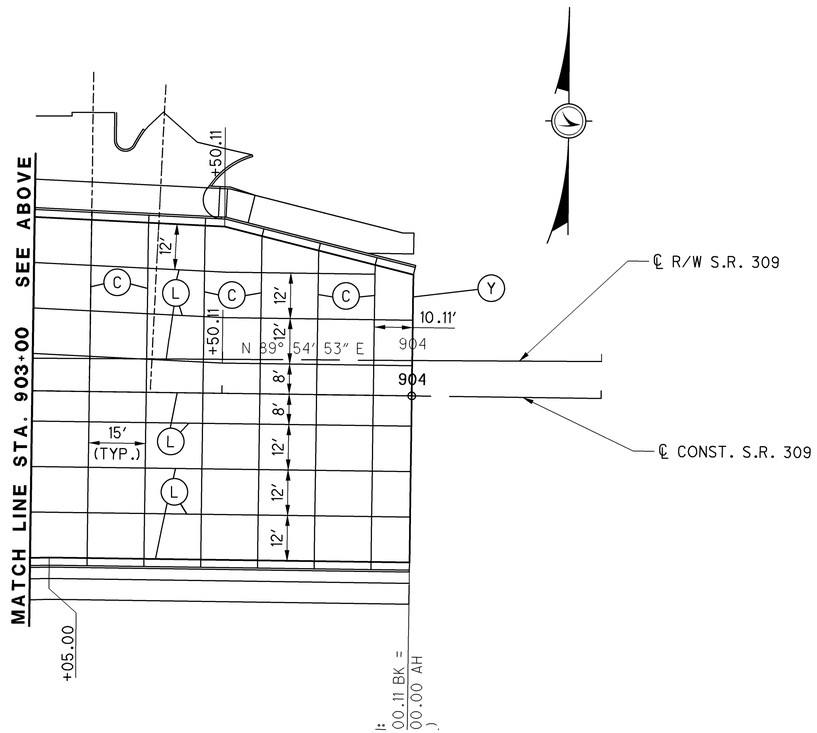

LEGEND

(E) EXPANSION JOINT AS PER BP-2.2

(L) STANDARD LONGITUDINAL JOINT AS PER BP-2.1

(C) CONTRACTION JOINT AS PER BP-2.1

(Y) BUTT JOINT BETWEEN EXISTING PAVEMENT AND PROPOSED PAVEMENT, A DOWELLED TYPE Y JOINT AS PER BP-2.5 SHALL BE PROVIDED. GROUTING AND DRILLING REQUIREMENT SHALL BE PER SPECIFICATION 255 AND BP-2.5 EXCEPT THE REQUIREMENT THAT THE DRILLING SERVICE SHALL BE CAPABLE OF DRILLING THREE HOLES AT ONE TIME SHALL BE WAIVED.

HORIZONTAL SCALE IN FEET
0 10 20 40

CALCULATED APV CHECKED SJG

JOINT DETAILS
S.R. 309, S.R. 309 RAMP E, S.R. 309 RAMP F

ALL-75-5.53

627
1224

J:\Projects\ALL\76691\roadway\sheets\76691GA611.dgn 11-SEP-2012 9:13PM reddenj

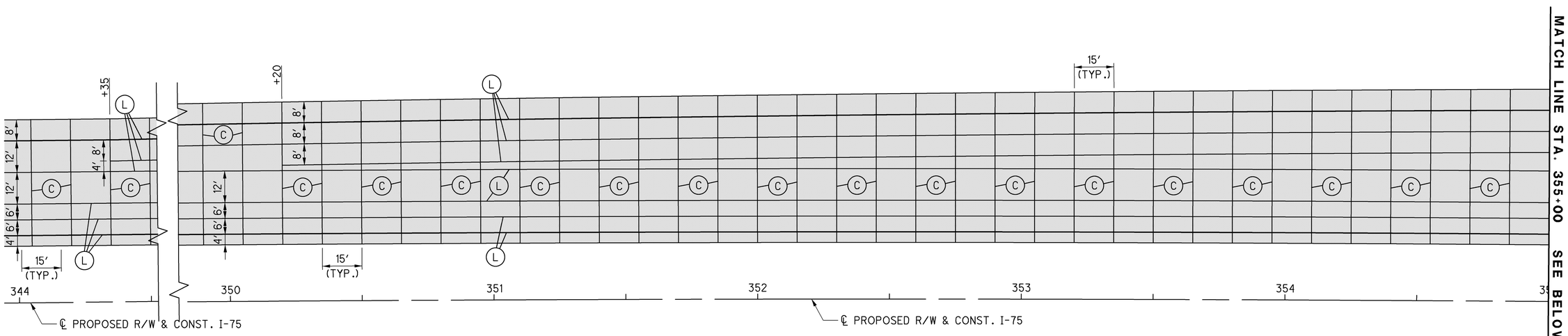

LEGEND

- (L) STANDARD LONGITUDINAL JOINT AS PER BP-2.1
- (C) CONTRACTION JOINT AS PER BP-2.1
- (E) EXPANSION JOINT AS PER BP-2.2
- (D) LONGITUDINAL JOINT PER BP-2.1 WITHOUT TIE BARS
- SHADED AREA REPRESENTS I-75 CONCRETE PAVEMENT (OPTION 2 WITH JOINTS SHOWN); I-75 ASPHALT PAVEMENT (OPTION 1 WITHOUT JOINTS) COULD BE SELECTED

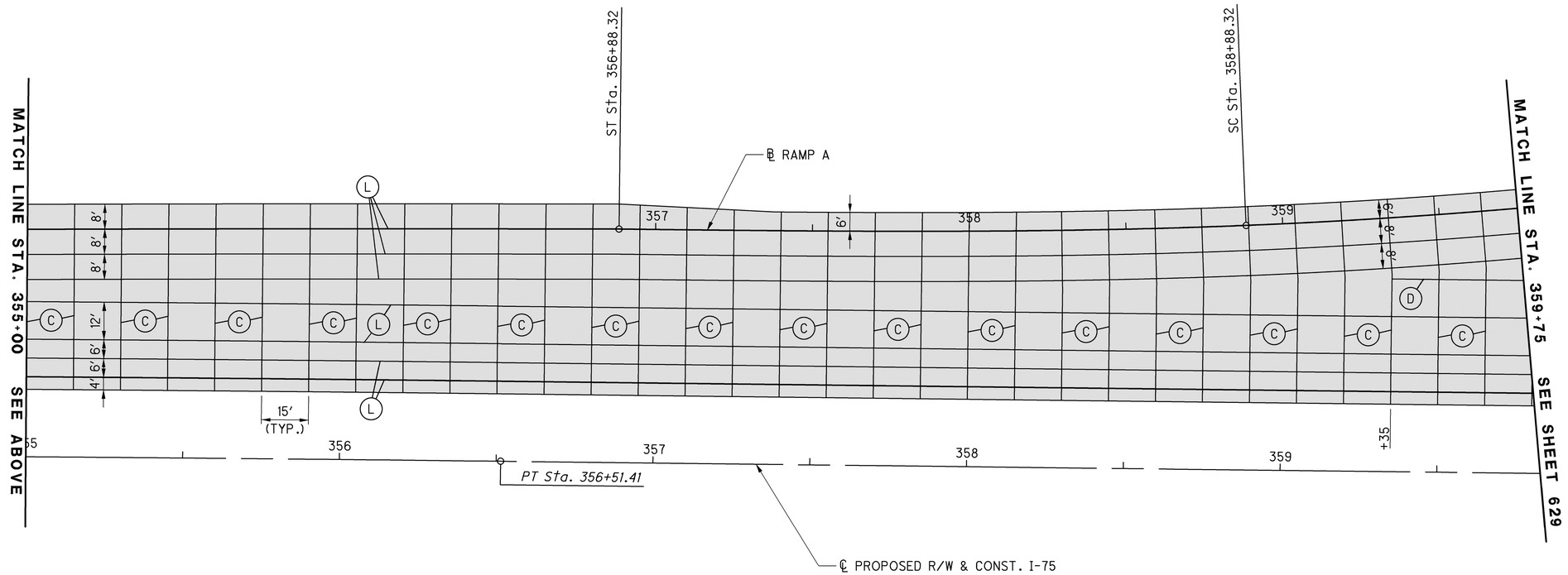

HORIZONTAL SCALE IN FEET
0 10 20 40

CALCULATED APV
CHECKED SJG

JOINT DETAILS
S.R. 309 RAMP A

ALL-75-5.53

628
1224

J:\Projects\ALL\76691\roadway\sheets\76691GA612.dgn 11-SEP-2012 9:13PM reddenj

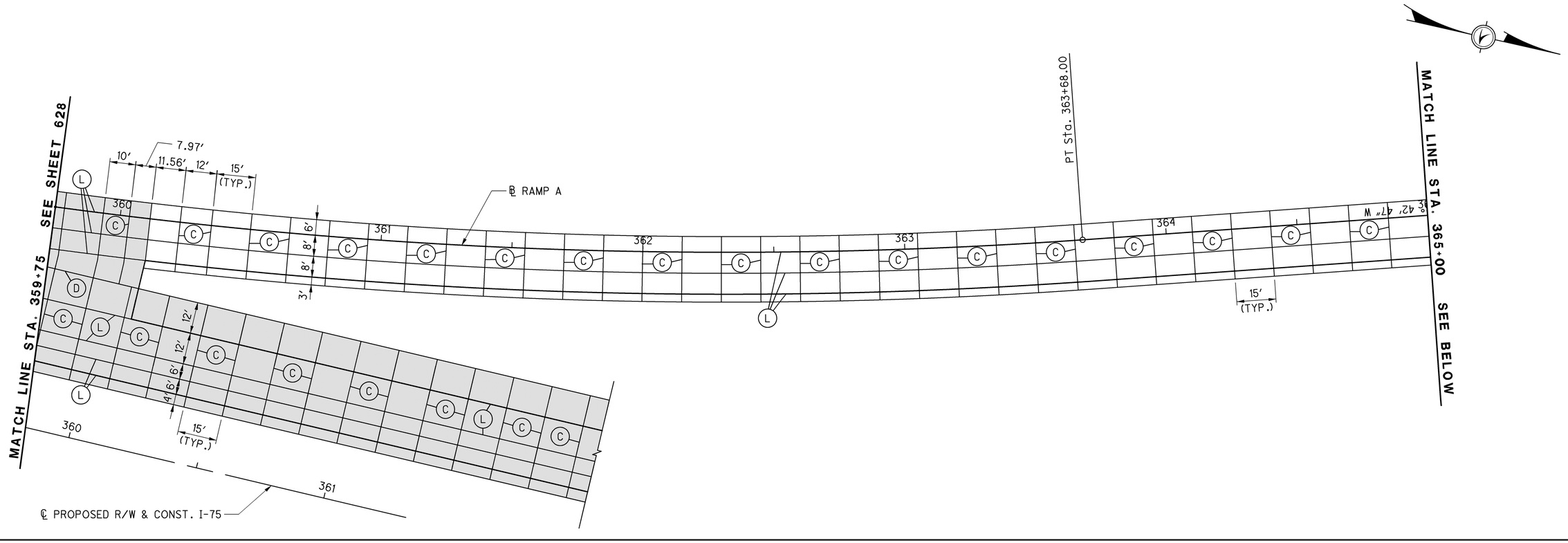

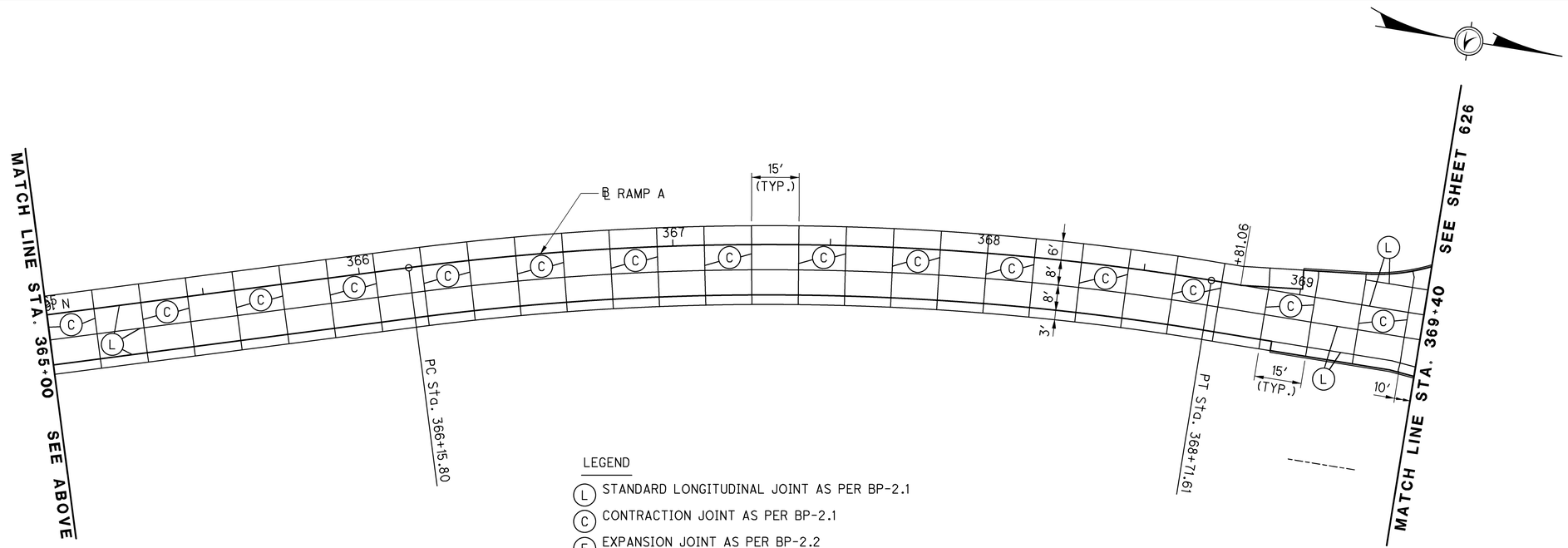

LEGEND

(L) STANDARD LONGITUDINAL JOINT AS PER BP-2.1

(C) CONTRACTION JOINT AS PER BP-2.1

(E) EXPANSION JOINT AS PER BP-2.2

(D) LONGITUDINAL JOINT PER BP-2.1 WITHOUT TIE BARS

SHADED AREA REPRESENTS I-75 CONCRETE PAVEMENT (OPTION 2 WITH JOINTS SHOWN);
I-75 ASPHALT PAVEMENT (OPTION 1 WITHOUT JOINTS) COULD BE SELECTED

HORIZONTAL SCALE IN FEET
0 10 20 40

CALCULATED APV
CHECKED SJG

JOINT DETAILS
S.R. 309 RAMP A

ALL-75-5.53

629
1224

J:\Projects\ALL\76691\roadway\sheets\76691GA613.dgn 11-SEP-2012 9:13PM reddenj

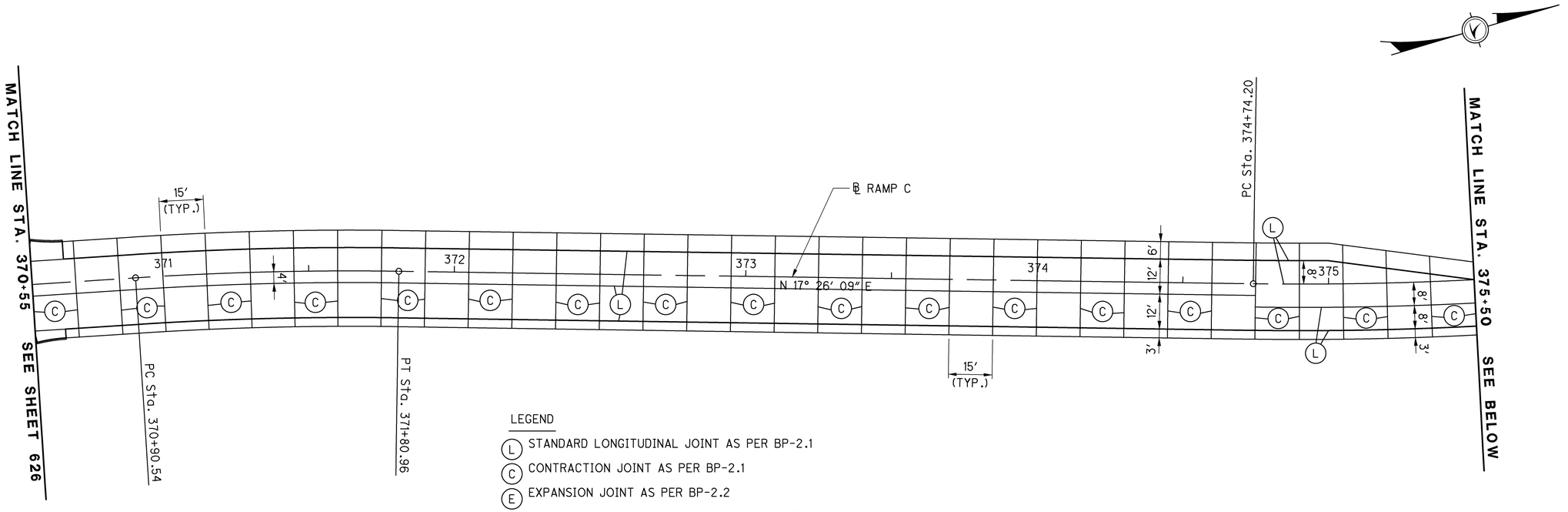

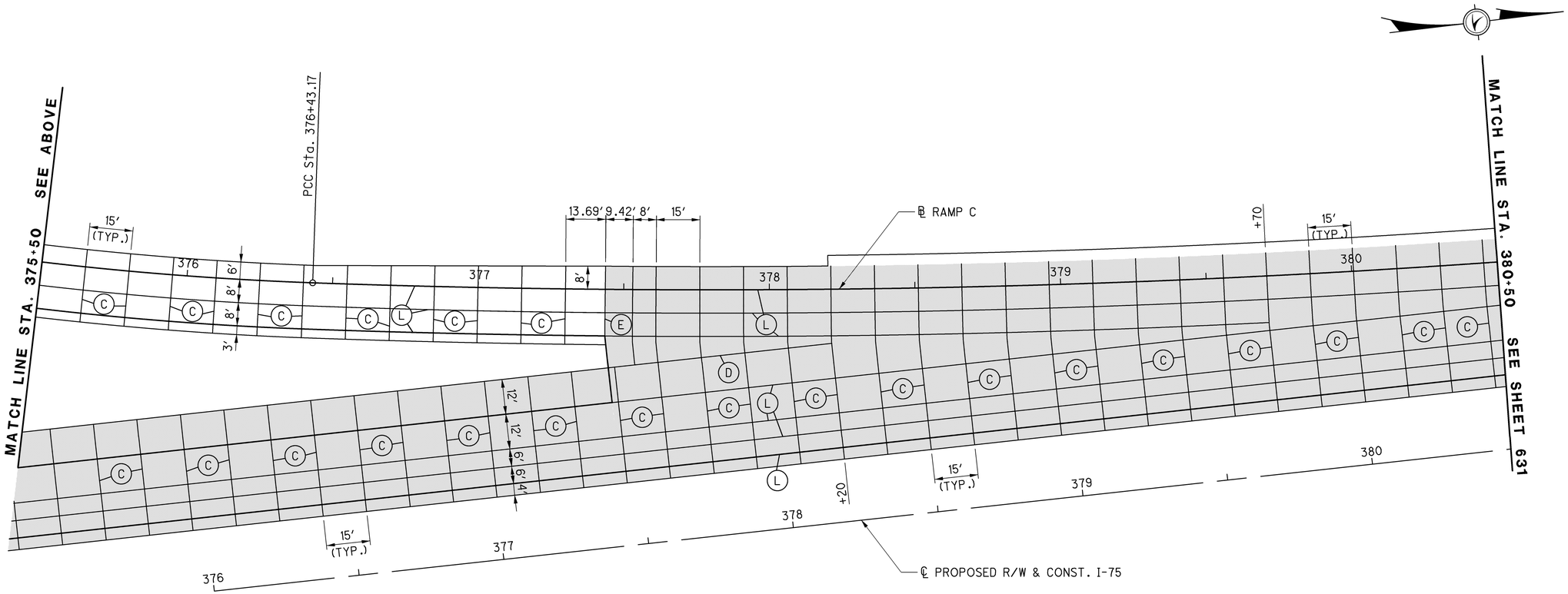

HORIZONTAL SCALE IN FEET
0 10 20 40

CALCULATED APV
CHECKED SJG

JOINT DETAILS
S.R. 309 RAMP C

ALL-75-5.53

630
1224

J:\Projects\ALL\76691\roadway\sheets\76691GA614.dgn 11-SEP-2012 9:13PM reddenj

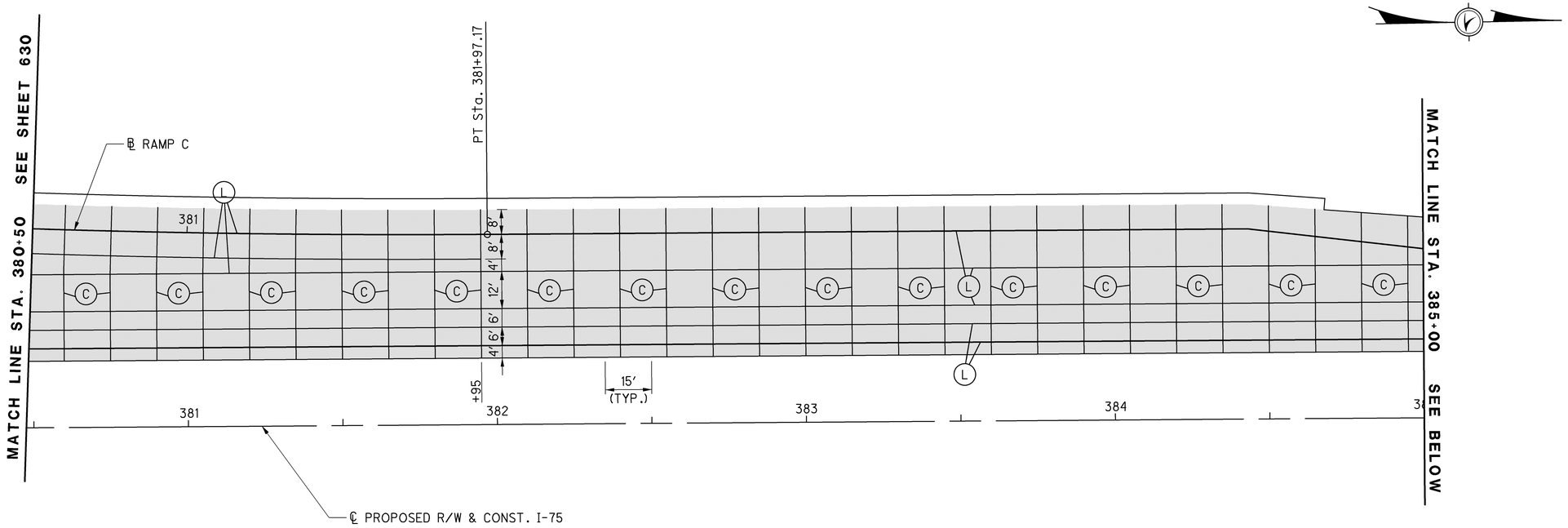

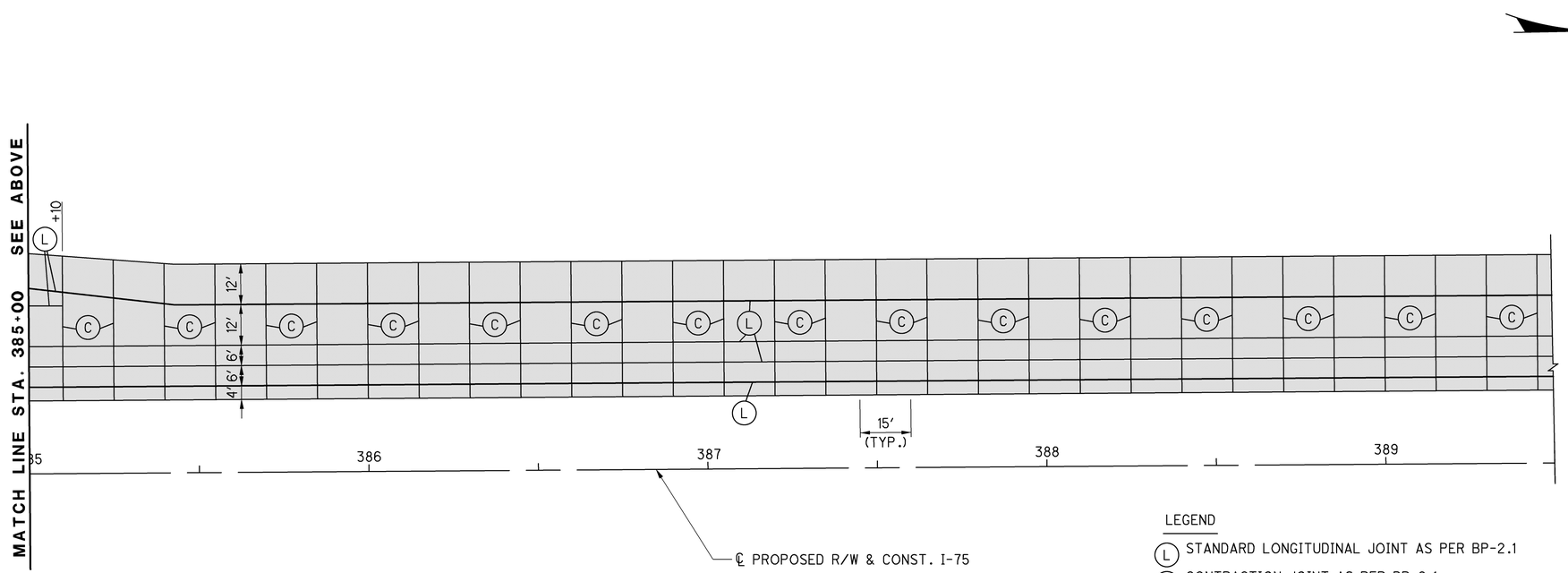

LEGEND

(L) STANDARD LONGITUDINAL JOINT AS PER BP-2.1

(C) CONTRACTION JOINT AS PER BP-2.1

SHADED AREA REPRESENTS I-75 CONCRETE PAVEMENT (OPTION 2 WITH JOINTS SHOWN); I-75 ASPHALT PAVEMENT (OPTION 1 WITHOUT JOINTS) COULD BE SELECTED

HORIZONTAL SCALE IN FEET
0 10 20 40

CALCULATED APV
CHECKED SJG

JOINT DETAILS
S.R. 309 RAMP C

ALL-75-5.53

631
1224

J:\Projects\ALL\76691\roadway\sheets\76691GA615.dgn 11-SEP-2012 9:13PM reddenj

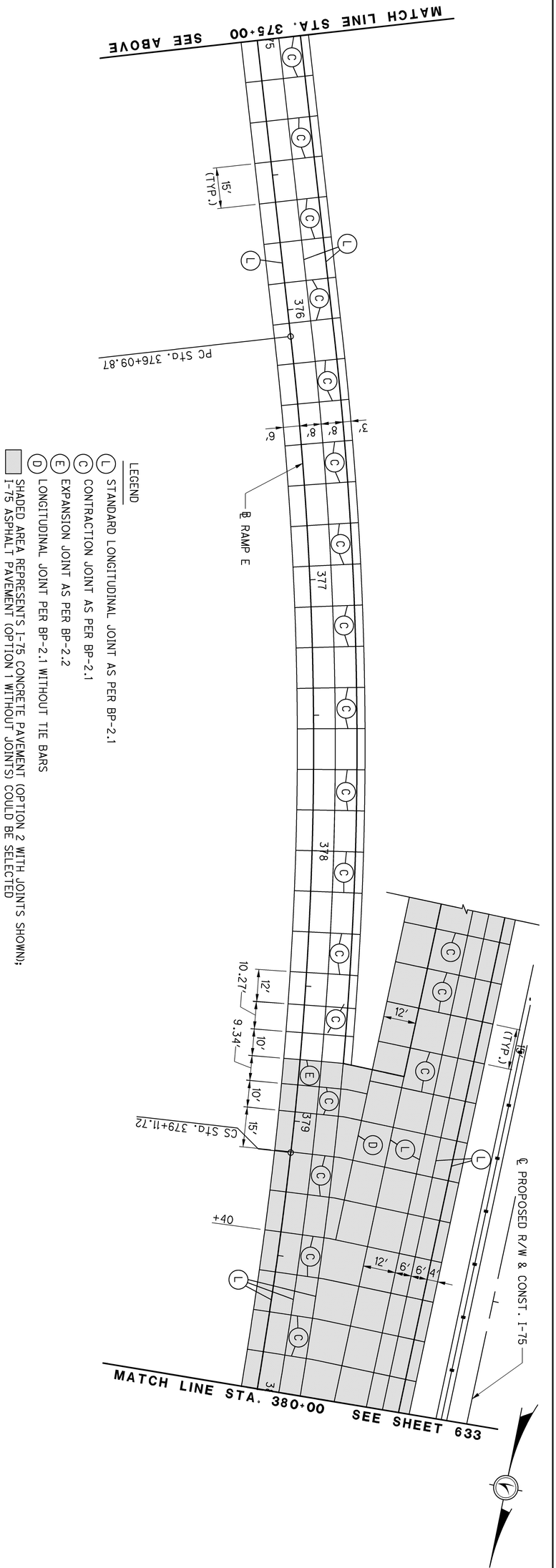

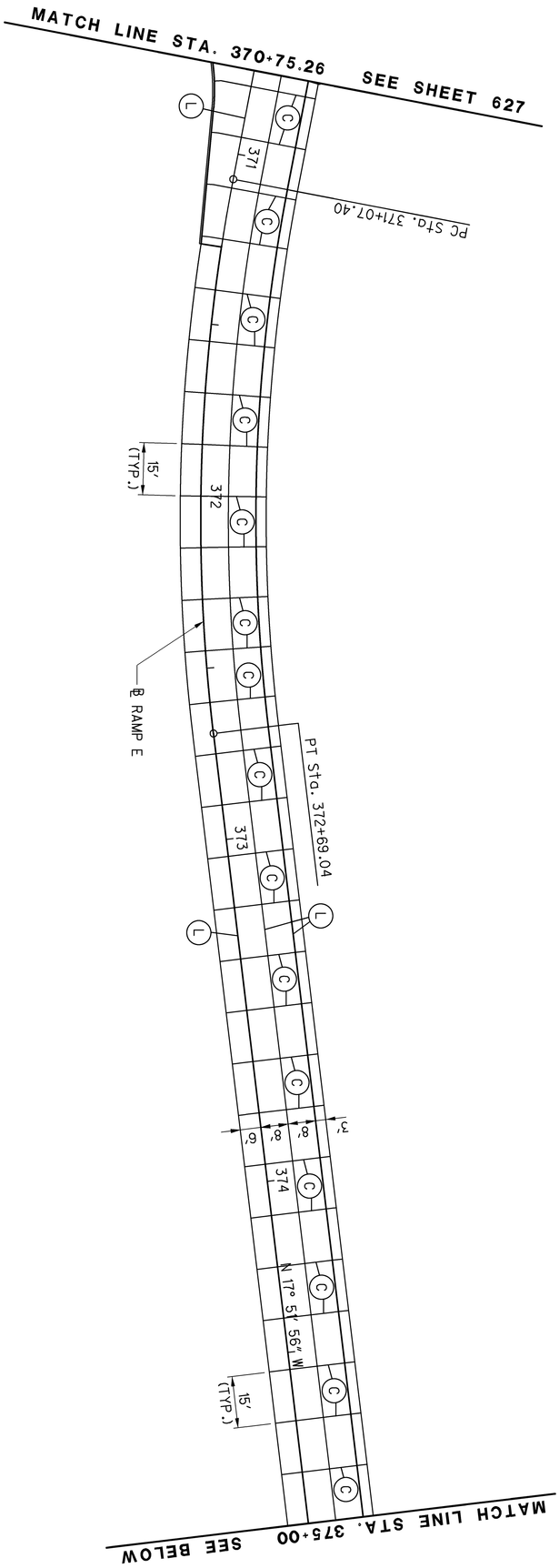

632 / 1224	ALL-75-5.53	JOINT DETAILS S.R. 309 RAMP E	CALCULATED APV CHECKED SJG	0 20 10 40 HORIZONTAL SCALE IN FEET

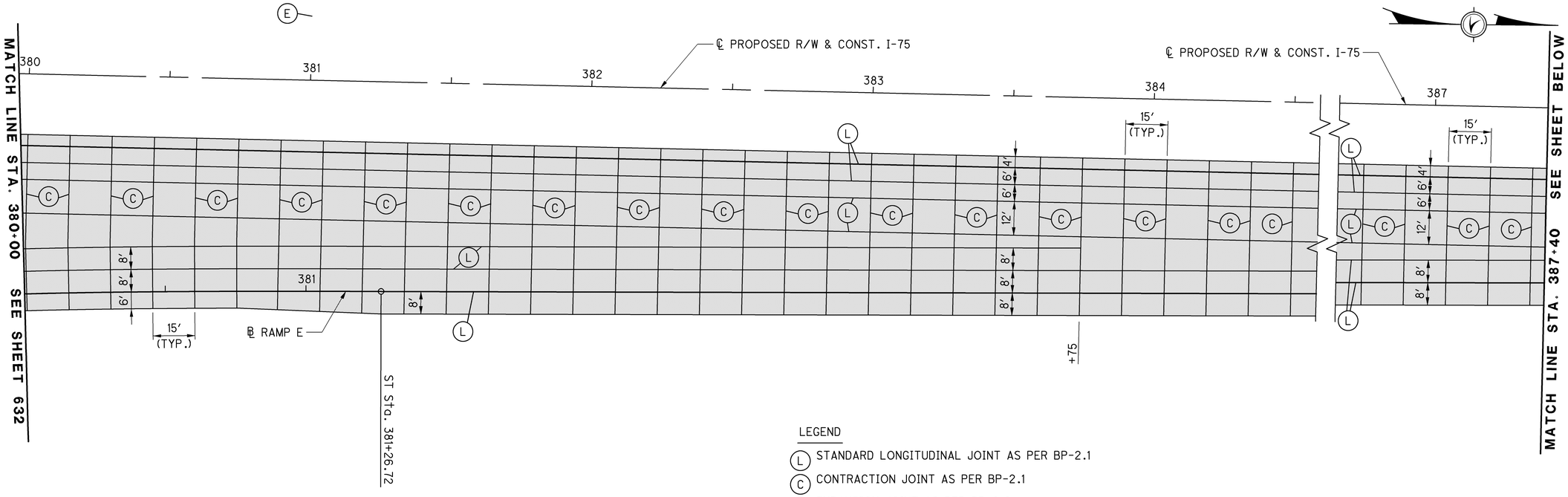

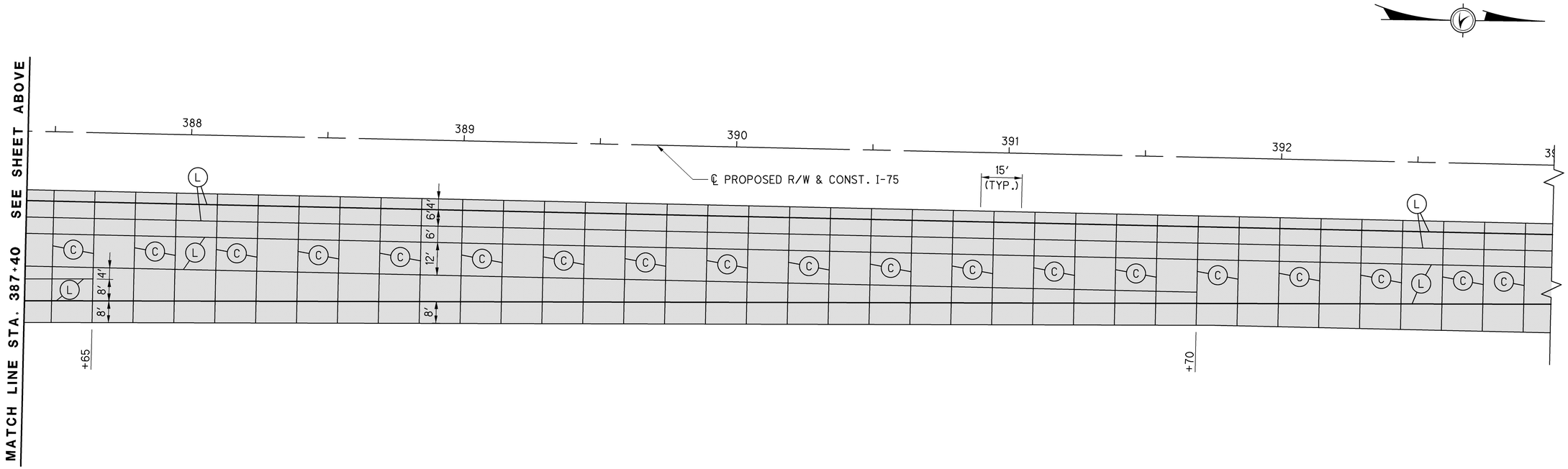

HORIZONTAL SCALE IN FEET
0 10 20 40

CALCULATED APV
CHECKED SJG

JOINT DETAILS
S.R. 309 RAMP E

ALL-75-5.53

633
1224

J:\Projects\ALL\76691\roadway\sheets\76691GA617.dgn 11-SEP-2012 9:13PM reddenj

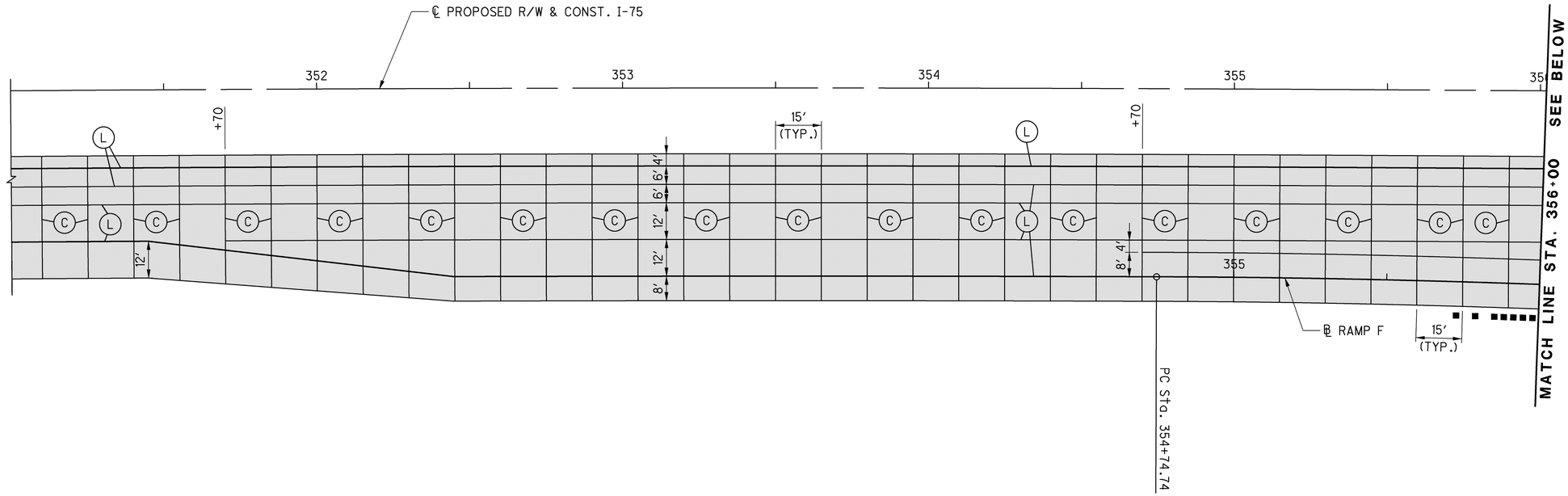

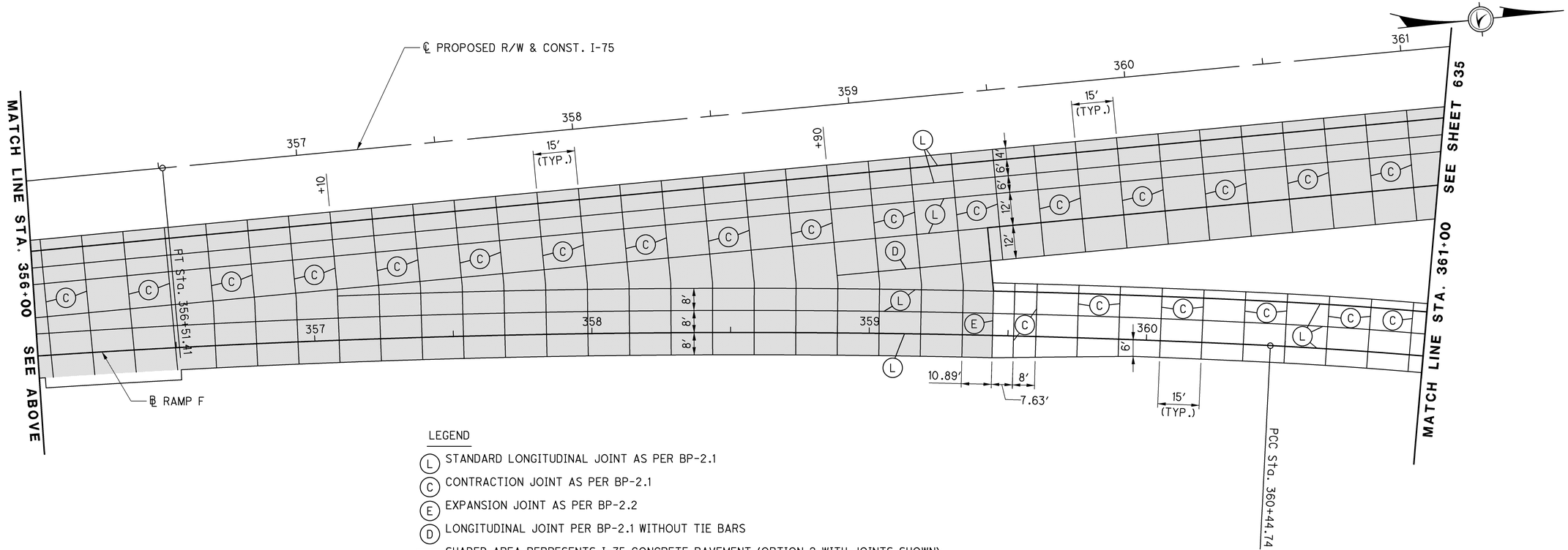

LEGEND

- (L) STANDARD LONGITUDINAL JOINT AS PER BP-2.1
- (C) CONTRACTION JOINT AS PER BP-2.1
- (E) EXPANSION JOINT AS PER BP-2.2
- (D) LONGITUDINAL JOINT PER BP-2.1 WITHOUT TIE BARS
- SHADED AREA REPRESENTS I-75 CONCRETE PAVEMENT (OPTION 2 WITH JOINTS SHOWN); I-75 ASPHALT PAVEMENT (OPTION 1 WITHOUT JOINTS) COULD BE SELECTED

HORIZONTAL SCALE IN FEET
0 10 20 40

CALCULATED APV
CHECKED SJG

JOINT DETAILS
S.R. 309 RAMP F

ALL-75-5.53

634
1224

J:\Projects\ALL\76691\roadway\sheets\76691GA618.dgn 11-SEP-2012 9:13PM reddenj

LEGEND

(L) STANDARD LONGITUDINAL JOINT AS PER BP-2.1

(C) CONTRACTION JOINT AS PER BP-2.1

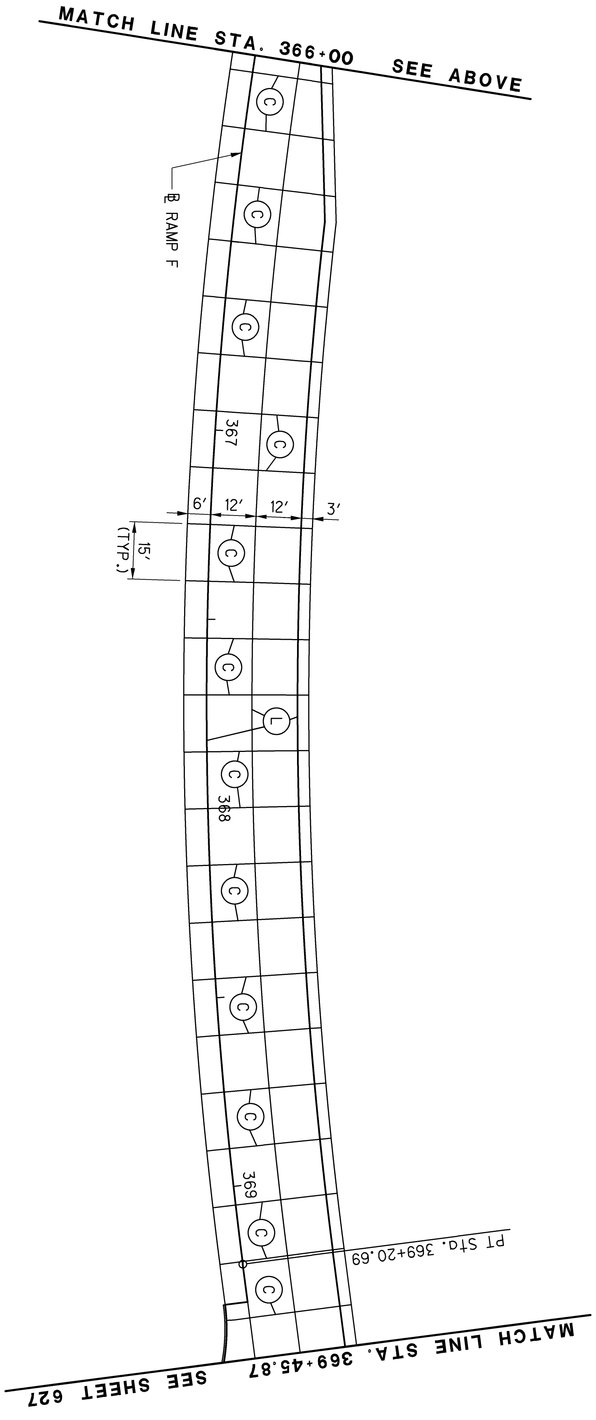

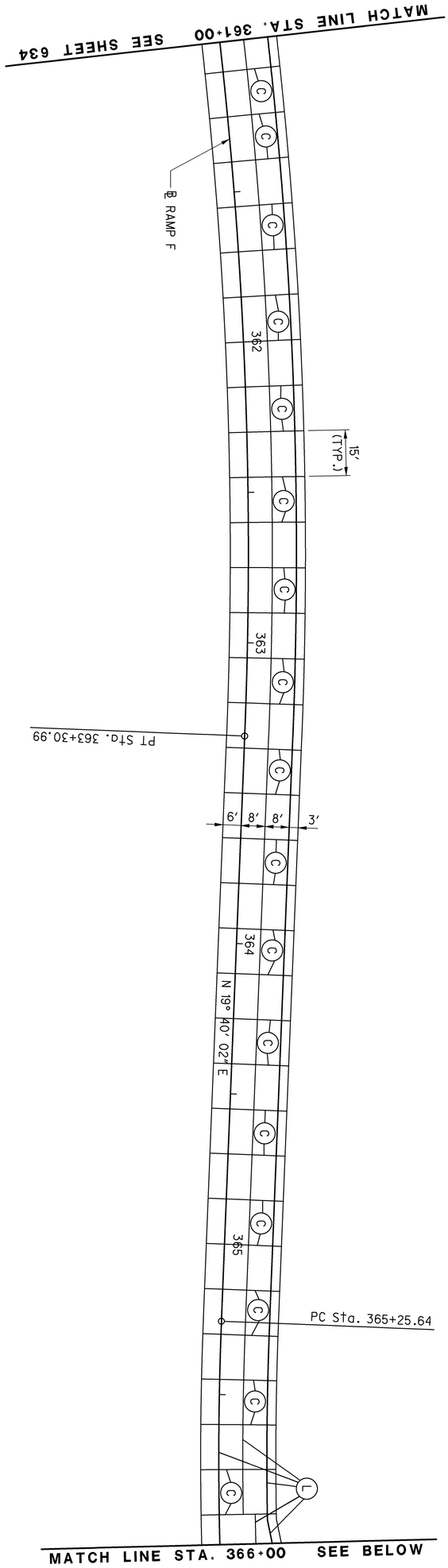

635 / 1224	ALL-75-5.53	JOINT DETAILS S.R. 309 RAMP F	CALCULATED APV CHECKED SJG	0 10 20 40 HORIZONTAL SCALE IN FEET

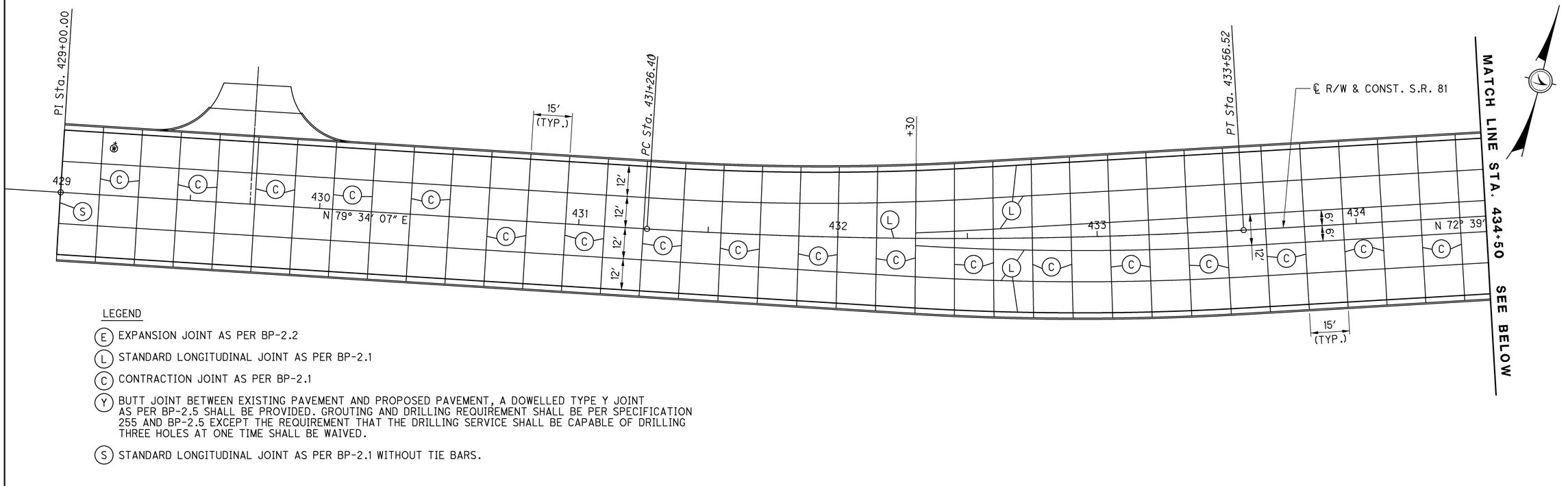

LEGEND

(E) EXPANSION JOINT AS PER BP-2.2

(L) STANDARD LONGITUDINAL JOINT AS PER BP-2.1

(C) CONTRACTION JOINT AS PER BP-2.1

(Y) BUTT JOINT BETWEEN EXISTING PAVEMENT AND PROPOSED PAVEMENT, A DOWELLED TYPE Y JOINT AS PER BP-2.5 SHALL BE PROVIDED. GROUTING AND DRILLING REQUIREMENT SHALL BE PER SPECIFICATION 255 AND BP-2.5 EXCEPT THE REQUIREMENT THAT THE DRILLING SERVICE SHALL BE CAPABLE OF DRILLING THREE HOLES AT ONE TIME SHALL BE WAIVED.

(S) STANDARD LONGITUDINAL JOINT AS PER BP-2.1 WITHOUT TIE BARS.

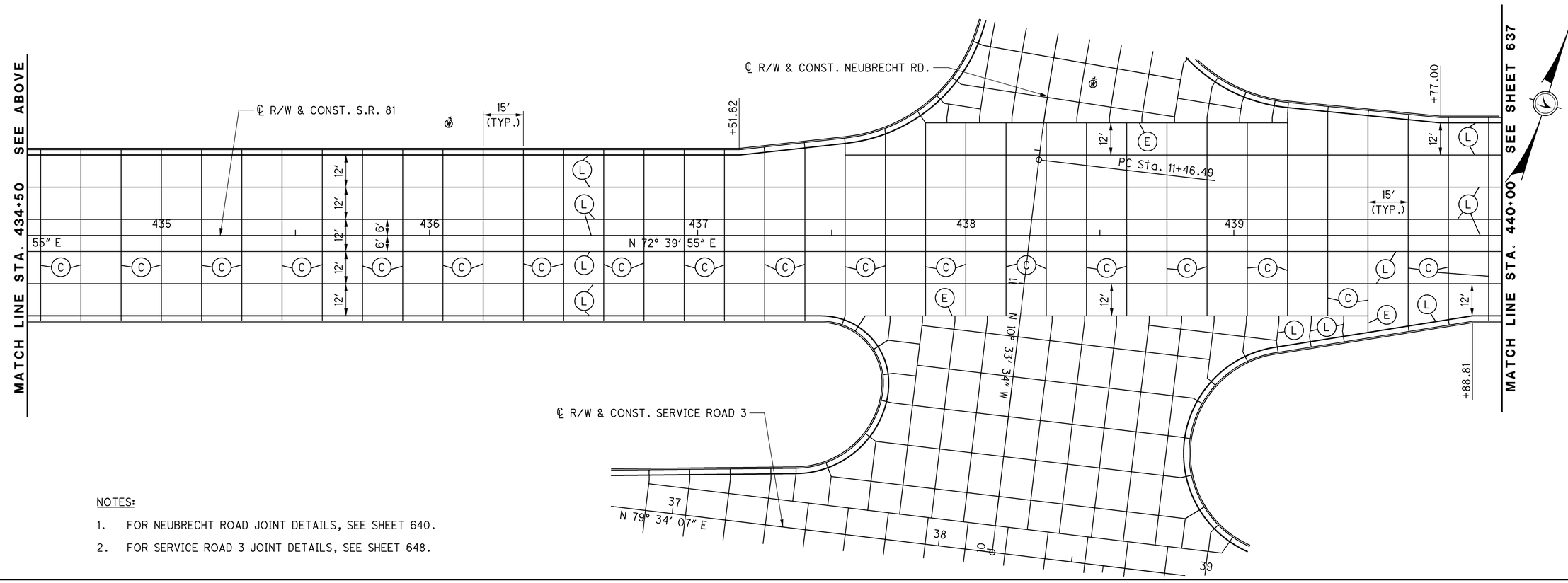

NOTES:

1. FOR NEUBRECHT ROAD JOINT DETAILS, SEE SHEET 640.
2. FOR SERVICE ROAD 3 JOINT DETAILS, SEE SHEET 648.

HORIZONTAL SCALE IN FEET
0 10 20 40

CALCULATED APV CHECKED SJG

JOINT DETAILS S.R. 81

ALL-75-5.53

636
1224

J:\Projects\ALL\76691\roadway\sheets\76691GA810.dgn 11-SEP-2012 9:13PM redden

J:\Projects\ALL\76691\roadway\sheets\76691GA811.dgn 11-SEP-2012 9:13PM reddenj

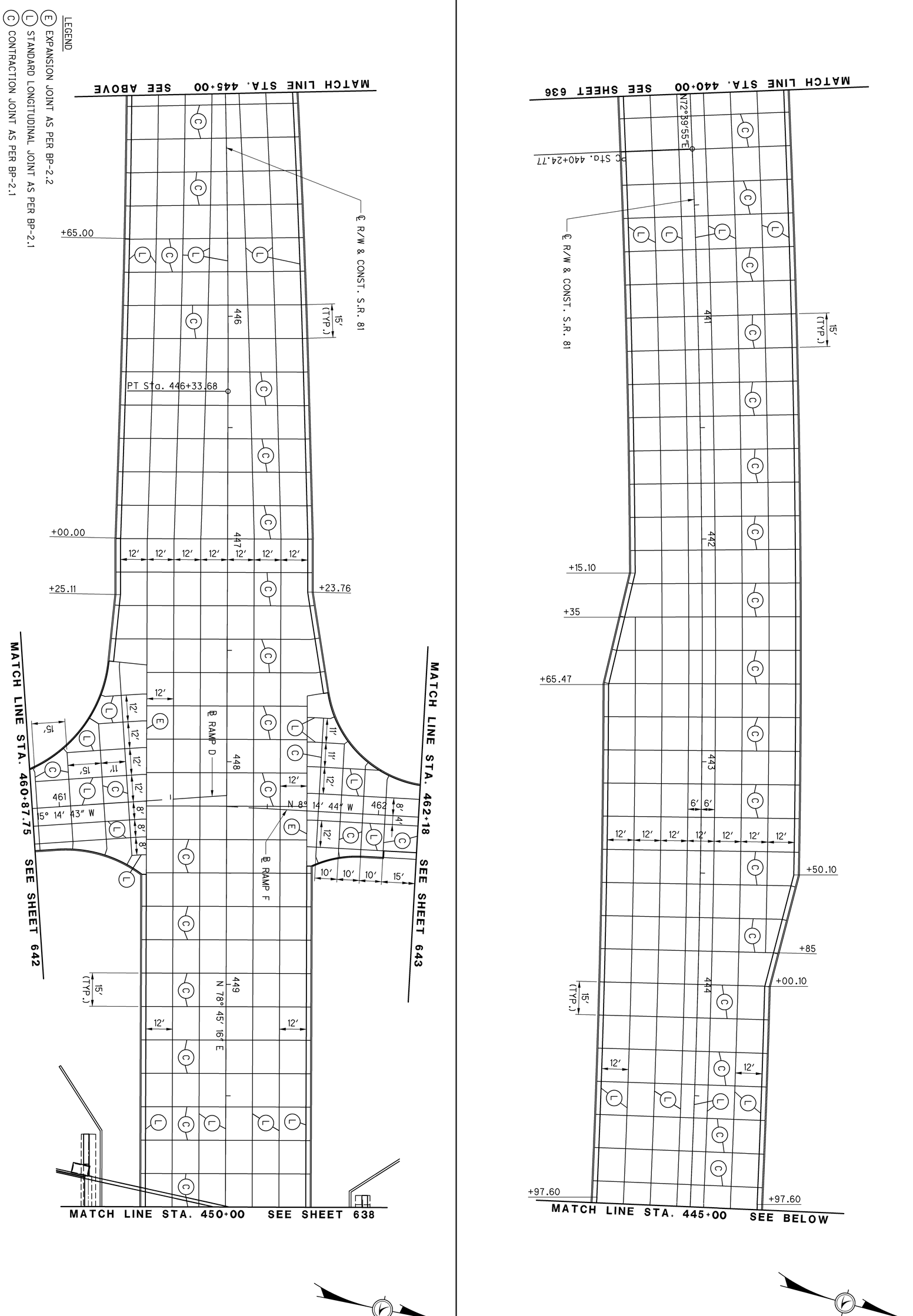

637 / 1224	ALL-75-5.53	JOINT DETAILS S.R. 81, S.R 81 RAMP D, S.R. 81 RAMP F	CALCULATED APV CHECKED SJG	0 10 20 40 HORIZONTAL SCALE IN FEET

LEGEND

(E) EXPANSION JOINT AS PER BP-2.2

(L) STANDARD LONGITUDINAL JOINT AS PER BP-2.1

(C) CONTRACTION JOINT AS PER BP-2.1

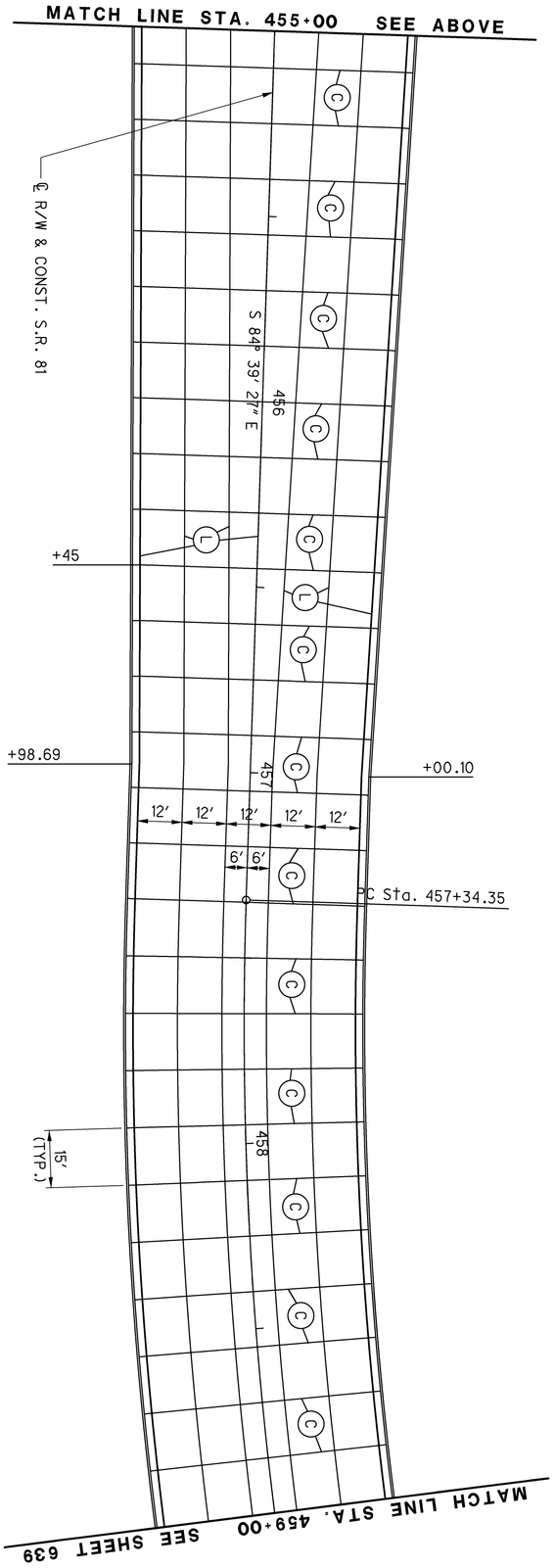

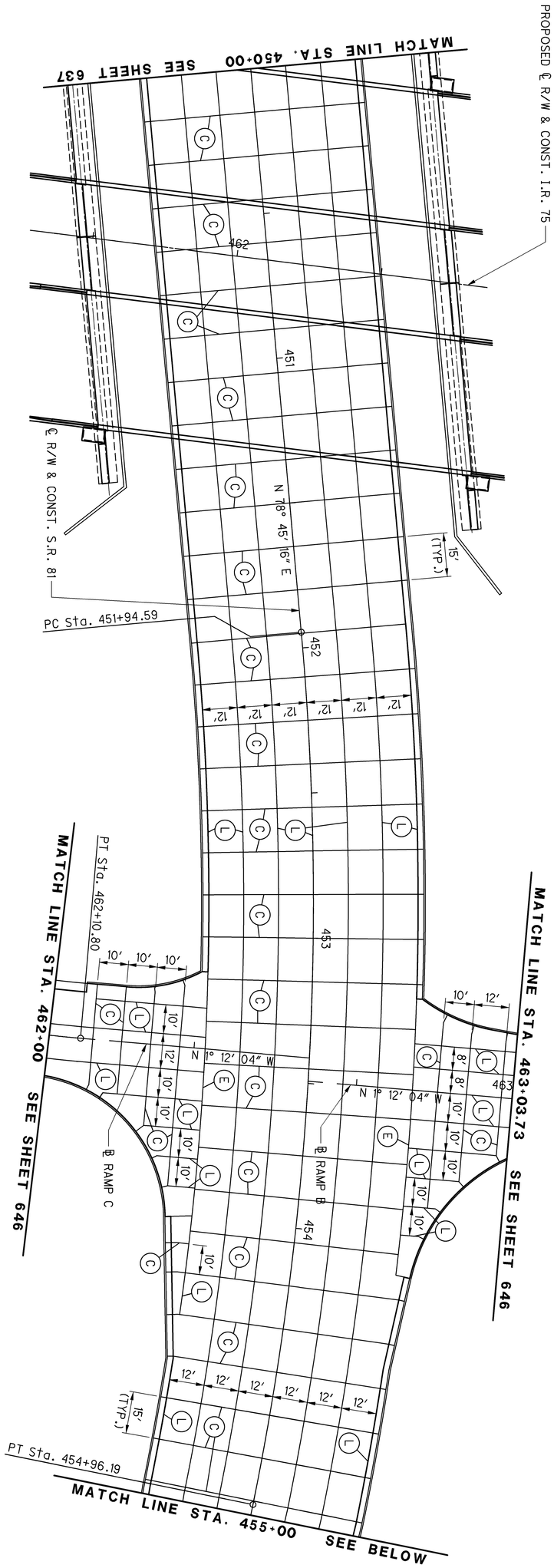

638 / 1224	ALL-75-5.53	JOINT DETAILS S.R. 81, S.R. 81 RAMP B, S.R. 81 RAMP C	CALCULATED APV CHECKED SJG	0 20 10 40 HORIZONTAL SCALE IN FEET

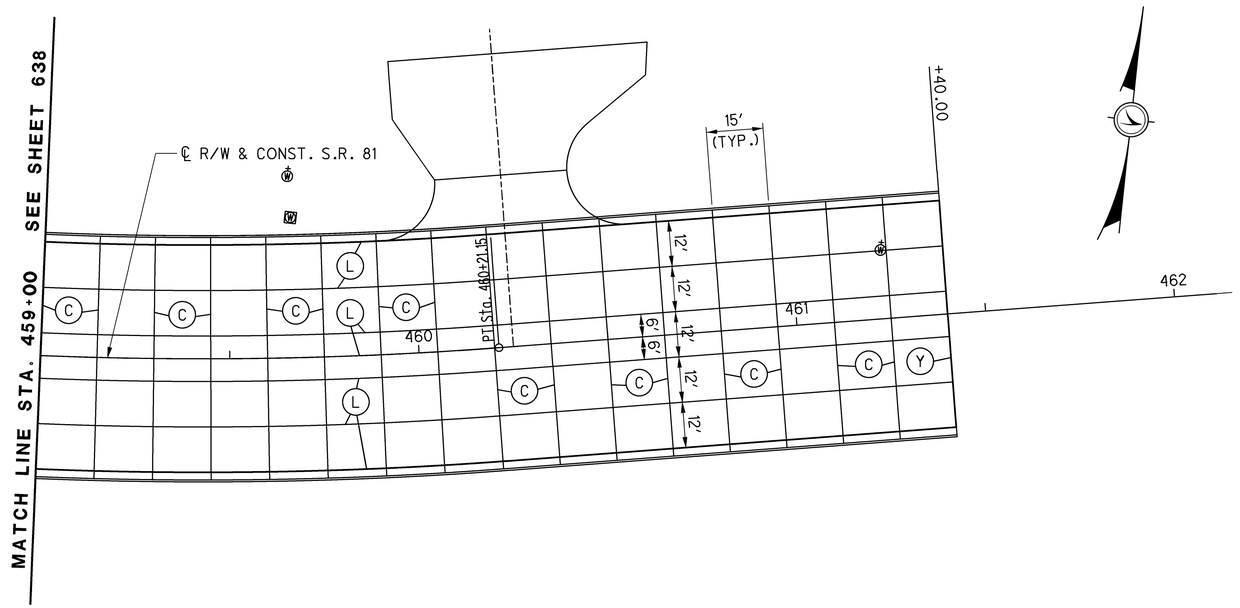

LEGEND

(L) STANDARD LONGITUDINAL JOINT AS PER BP-2.1

(C) CONTRACTION JOINT AS PER BP-2.1

(Y) BUTT JOINT BETWEEN EXISTING PAVEMENT AND PROPOSED PAVEMENT, A DOWELLED TYPE Y JOINT AS PER BP-2.5 SHALL BE PROVIDED. GROUTING AND DRILLING REQUIREMENT SHALL BE PER SPECIFICATION 255 AND BP-2.5 EXCEPT THE REQUIREMENT THAT THE DRILLING SERVICE SHALL BE CAPABLE OF DRILLING THREE HOLES AT ONE TIME SHALL BE WAIVED.

HORIZONTAL SCALE IN FEET
0 10 20 40

CALCULATED APV
CHECKED SJG

JOINT DETAILS S.R. 81

ALL-75-5.53

639
1224

J:\Projects\ALL\76691\roadway\sheets\76691GA813.dgn 11-SEP-2012 9:13PM reddenj

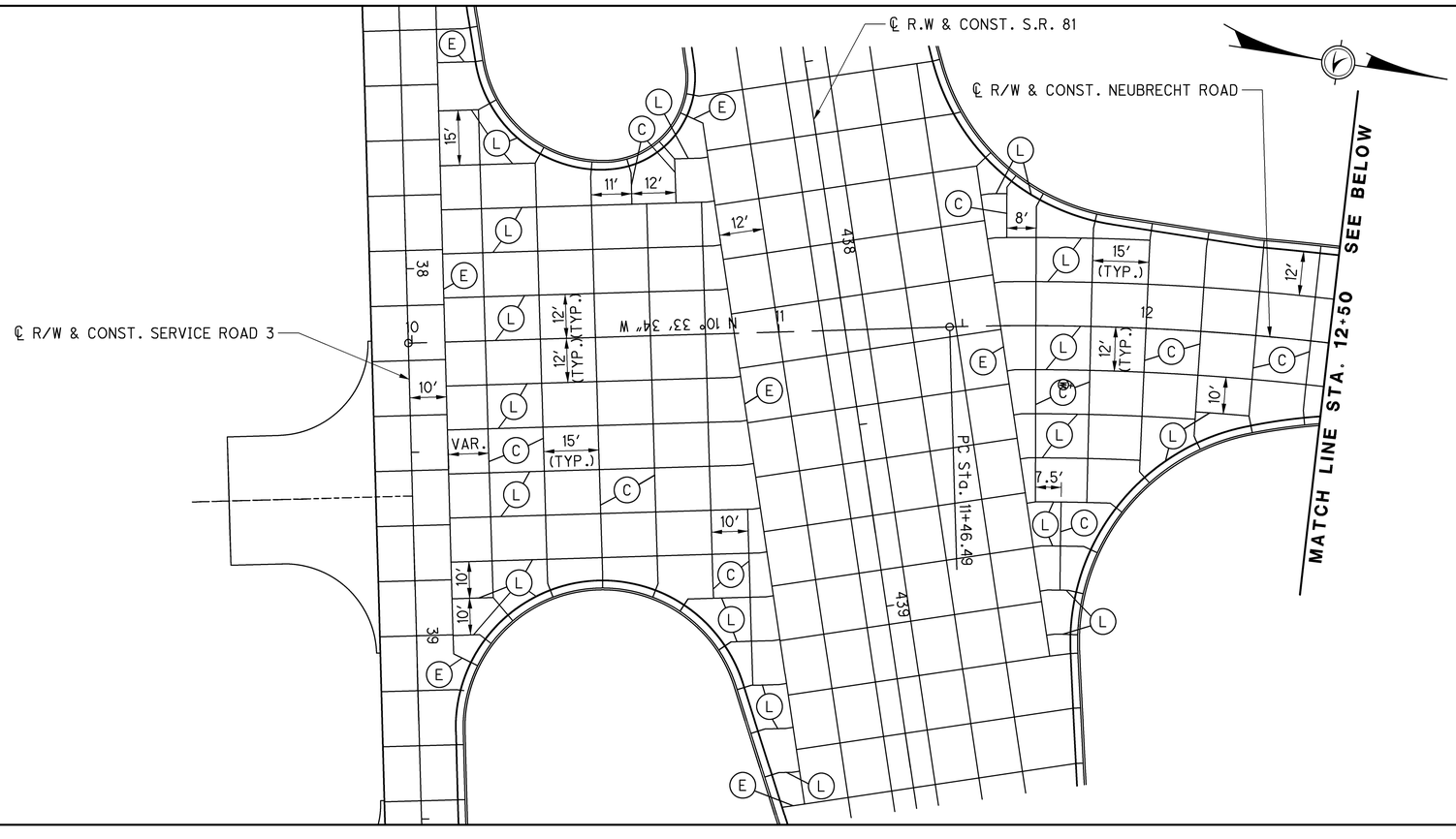

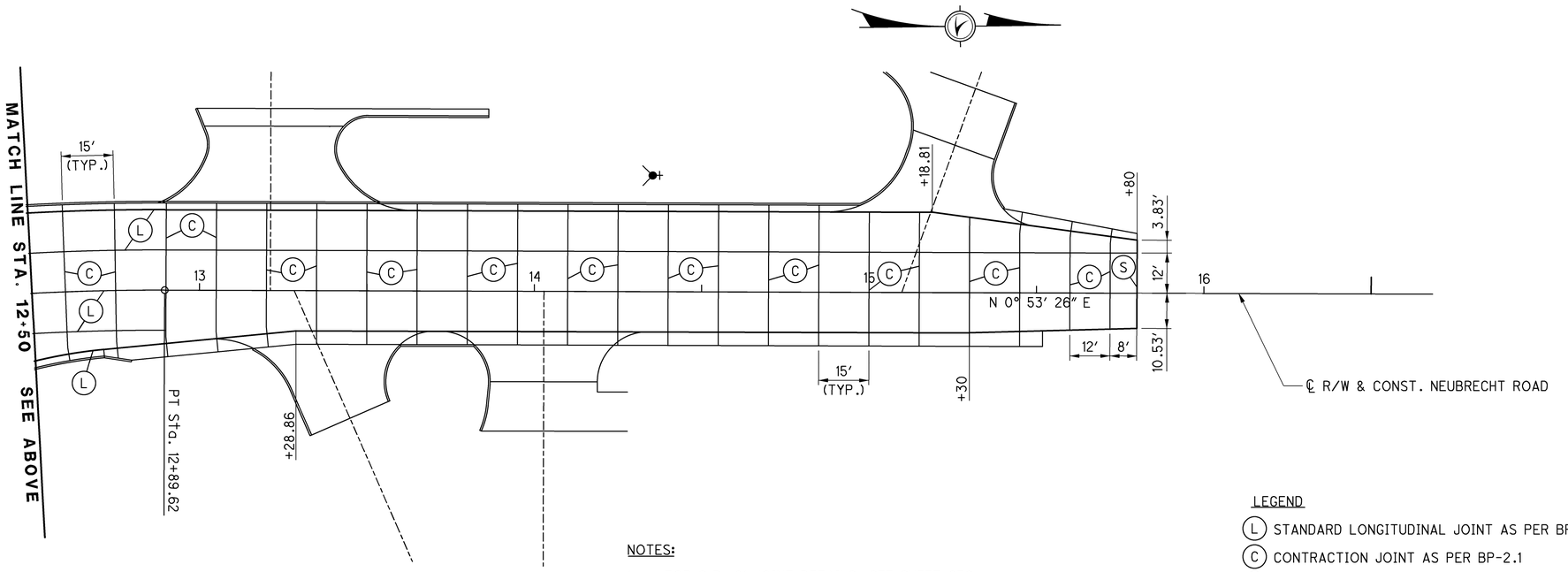

NOTES:

1. FOR S.R. 81 JOINT DETAILS, SEE SHEET 636.
2. FOR SERVICE ROAD 3 JOINT DETAILS, SEE SHEET 648.

LEGEND

- (L) STANDARD LONGITUDINAL JOINT AS PER BP-2.1
- (C) CONTRACTION JOINT AS PER BP-2.1
- (E) EXPANSION JOINT AS PER BP-2.2
- (S) STANDARD LONGITUDINAL JOINT AS PER BP-2.1 WITHOUT TIE BARS

HORIZONTAL SCALE IN FEET
0 10 20 40

CALCULATED APV
CHECKED SJG

JOINT DETAILS
NEUBRECHT ROAD

ALL-75-5.53

640
1224

J:\Projects\ALL\76691\roadway\sheets\76691GA814.dgn 11-SEP-2012 9:13PM reddenj

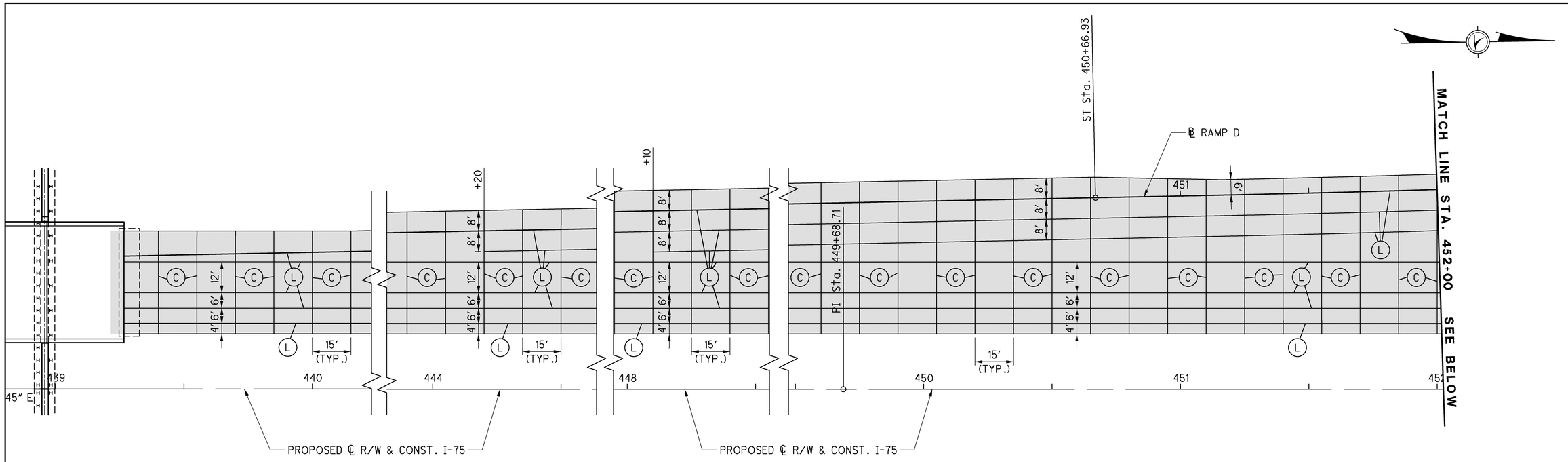

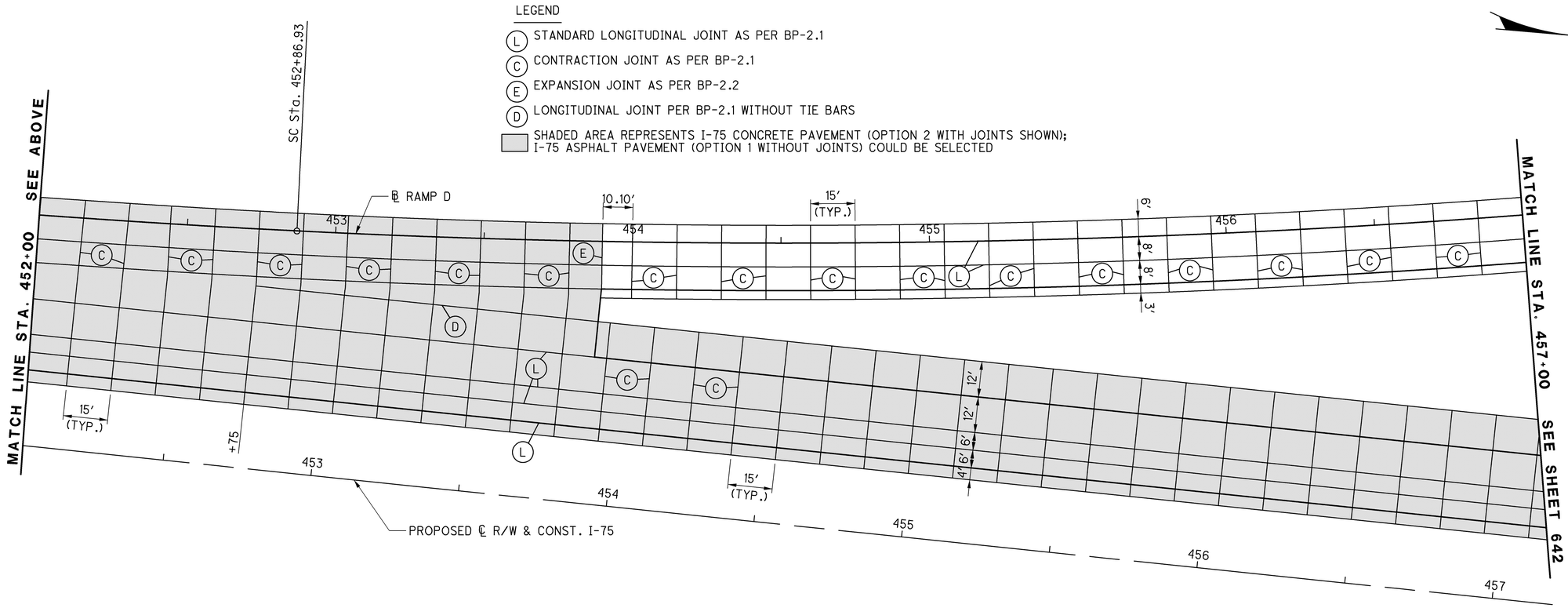

HORIZONTAL SCALE IN FEET
0 10 20 40

CALCULATED APV
CHECKED SJG

JOINT DETAILS
S.R. 81 RAMP D

ALL-75-5.53

641
1224

J:\Projects\ALL\76691\roadway\sheets\76691GA815.dgn 11-SEP-2012 9:13PM reddenj

LEGEND

(L) STANDARD LONGITUDINAL JOINT AS PER BP-2.1

(C) CONTRACTION JOINT AS PER BP-2.1

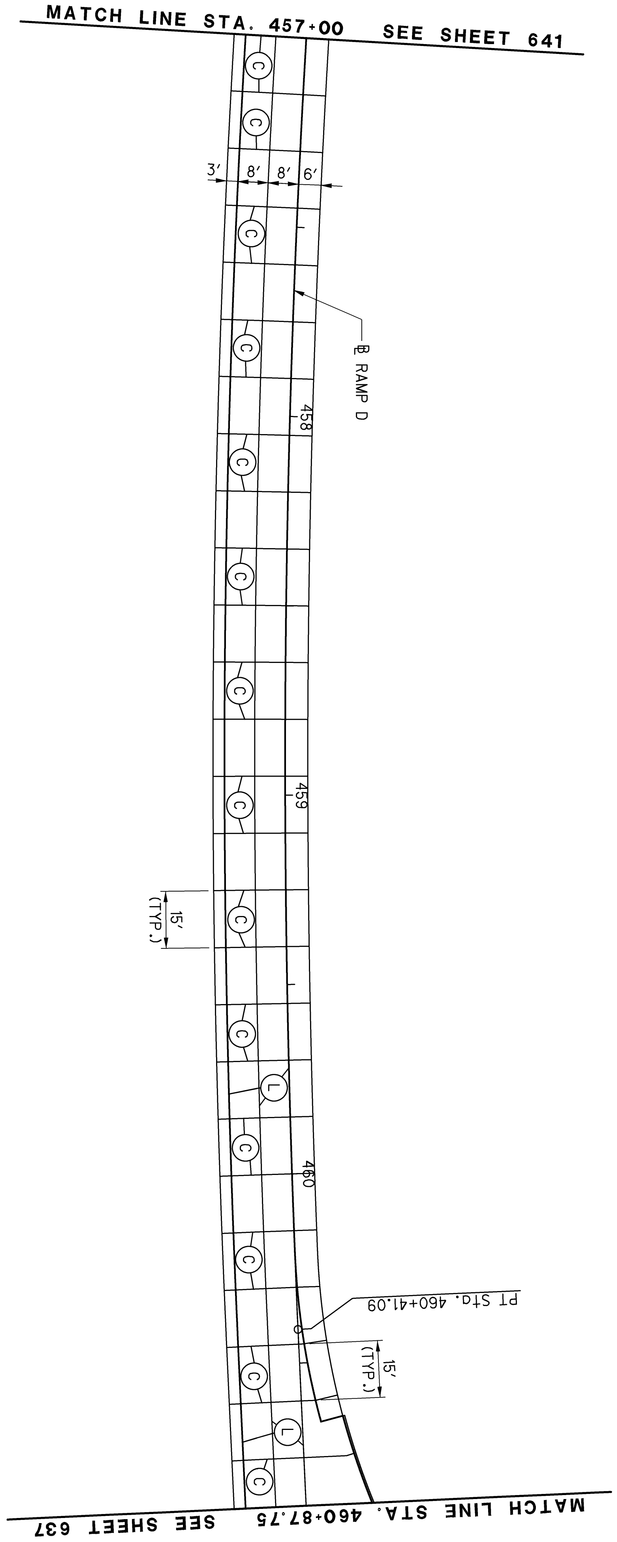

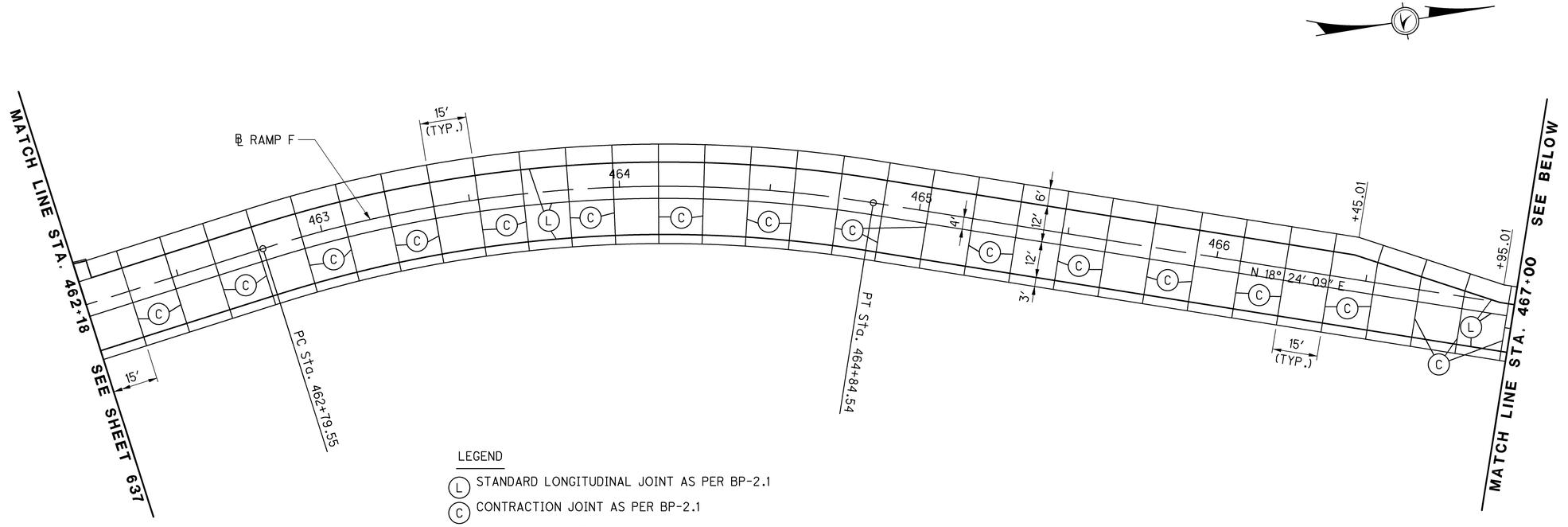

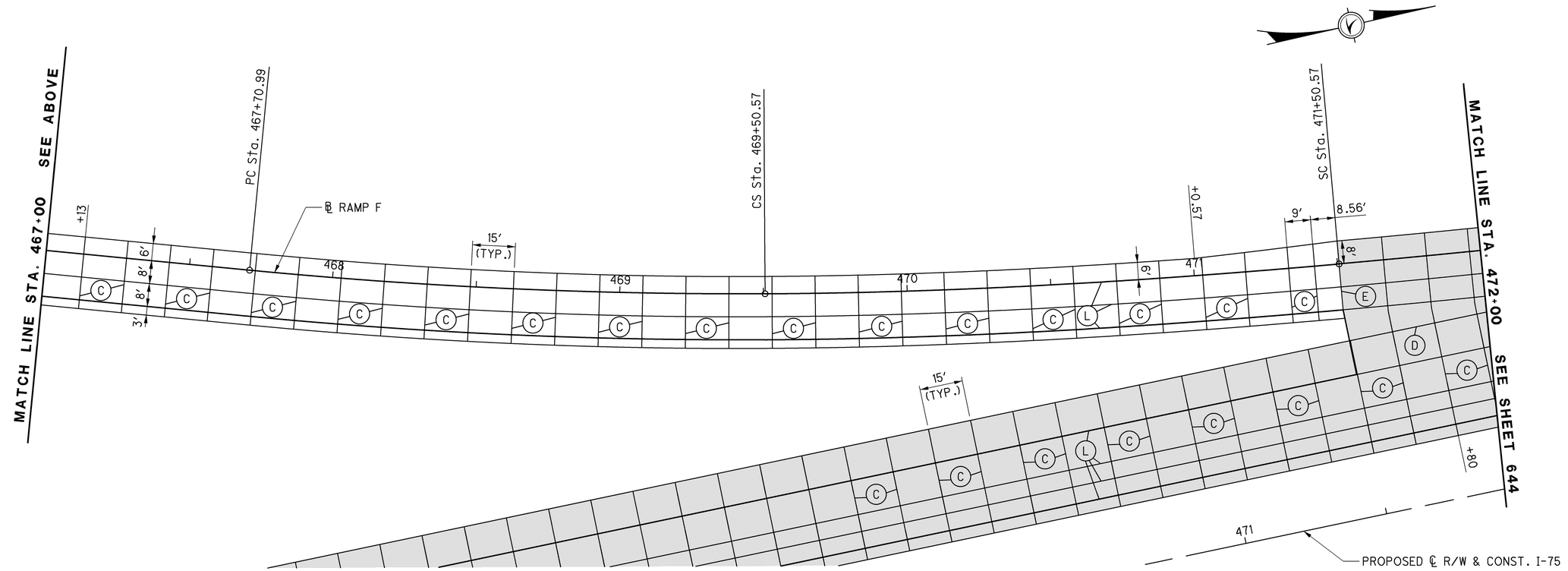

HORIZONTAL SCALE IN FEET
0 10 20 40

CALCULATED APV
CHECKED SJG

JOINT DETAILS
S.R. 81 RAMP F

ALL-75-5.53

643
1224

J:\Projects\ALL\76691\roadway\sheets\76691GA817.dgn 11-SEP-2012 9:13PM reddenj

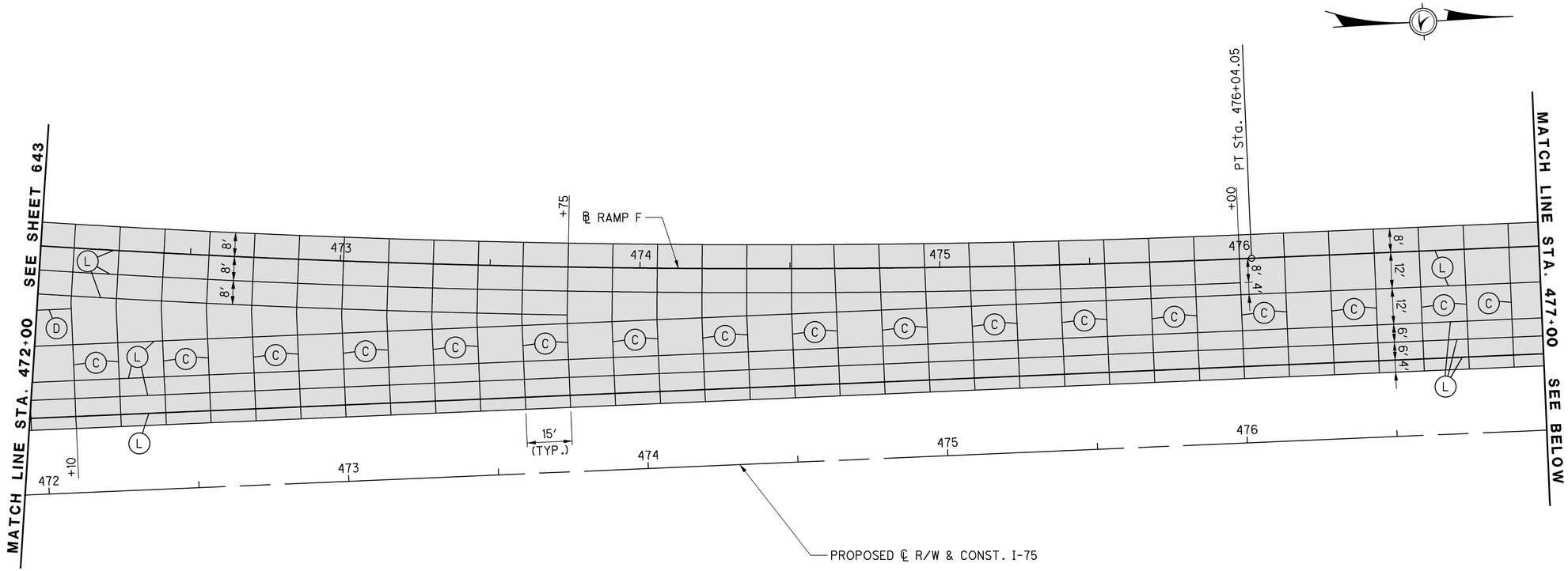

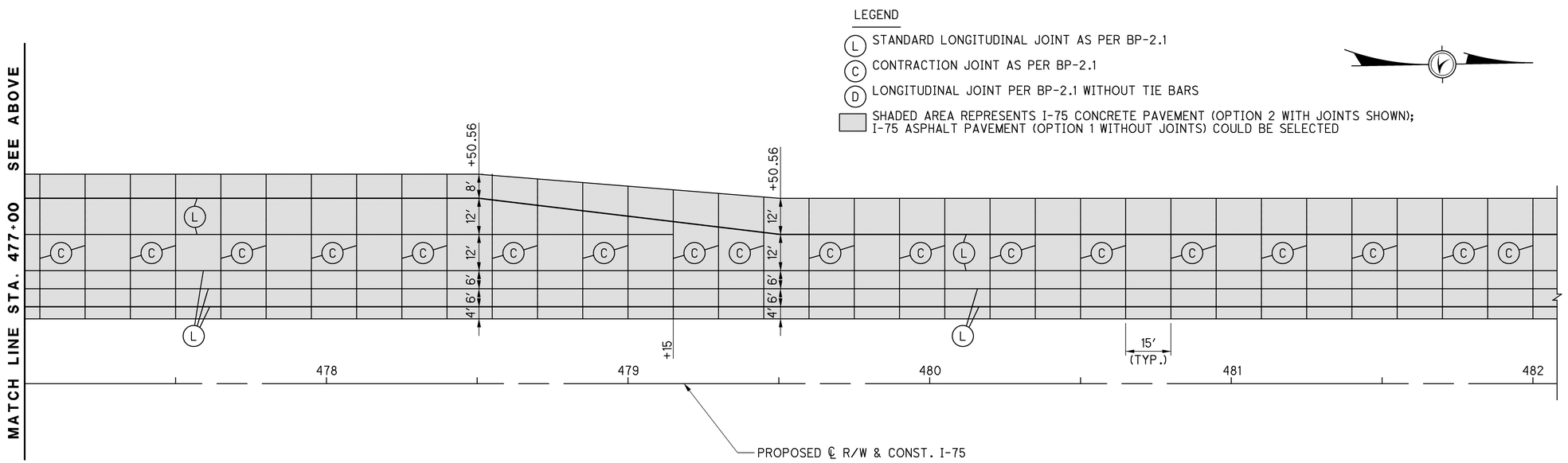

HORIZONTAL SCALE IN FEET
0 10 20 40

CALCULATED APV
CHECKED SJG

JOINT DETAILS
S.R. 81 RAMP F

ALL-75-5.53

644
1224

J:\Projects\ALL\76691\roadway\sheets\76691GA818.dgn 11-SEP-2012 9:13PM reddenj

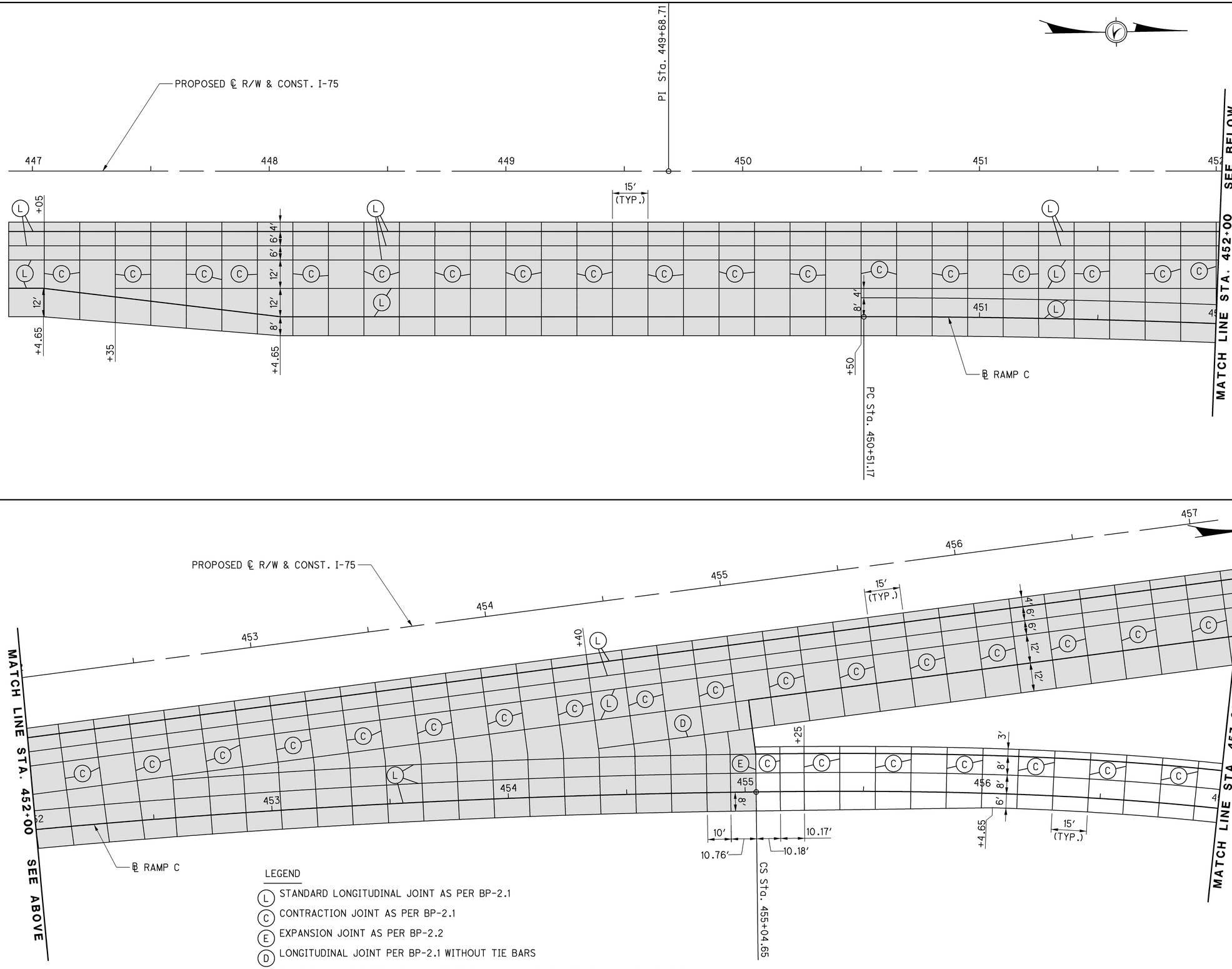

HORIZONTAL SCALE IN FEET
0 10 20 40

CALCULATED APV
CHECKED SJG

JOINT DETAILS
S.R. 81 RAMP C

ALL-75-5.53

645
1224

J:\Projects\ALL\76691\roadway\sheets\76691GA819.dgn 11-SEP-2012 9:13PM reddenj

LEGEND

(L) STANDARD LONGITUDINAL JOINT AS PER BP-2.1

(C) CONTRACTION JOINT AS PER BP-2.1

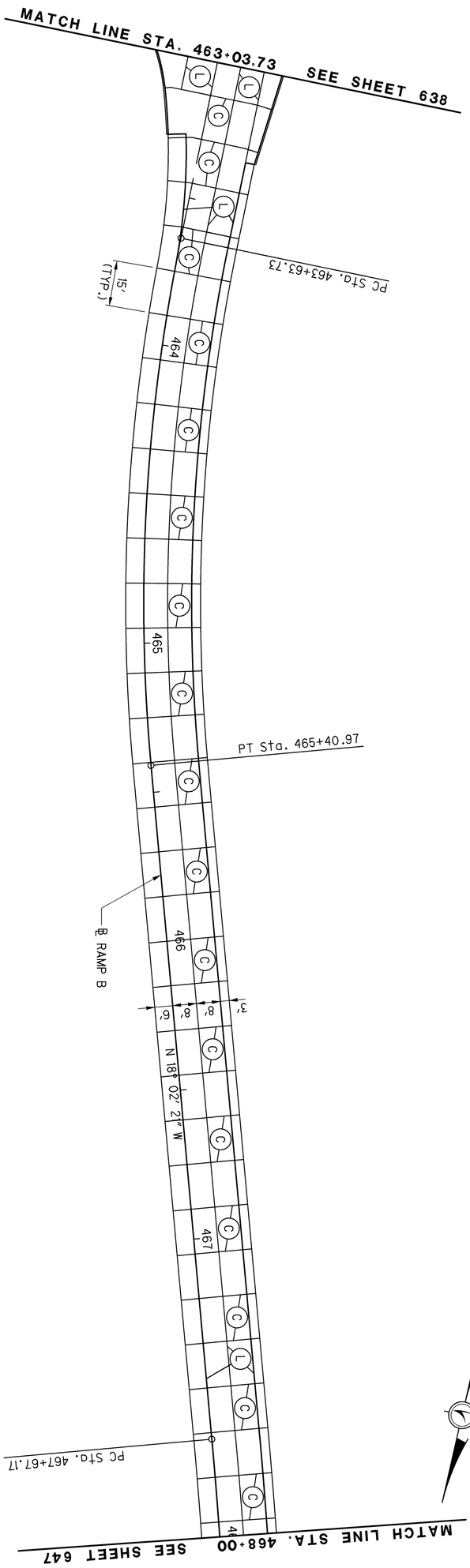

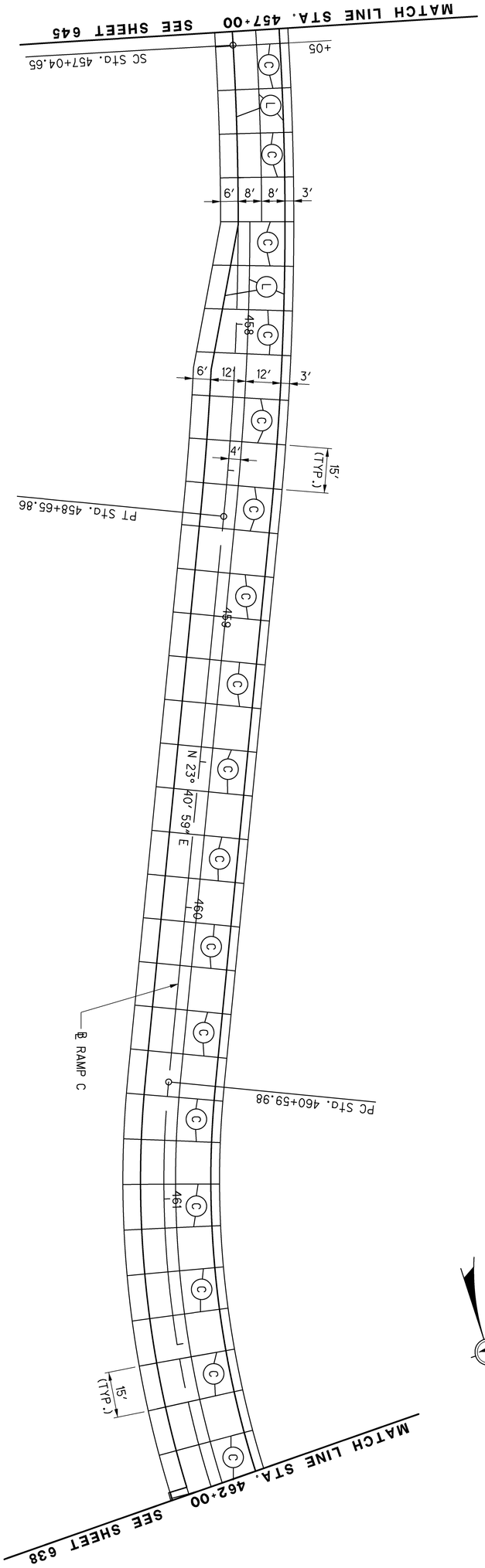

646 / 1224	ALL-75-5.53	JOINT DETAILS S.R. 81 RAMP C & S.R. 81 RAMP B	CALCULATED APV CHECKED SJG	0 20 10 40 HORIZONTAL SCALE IN FEET

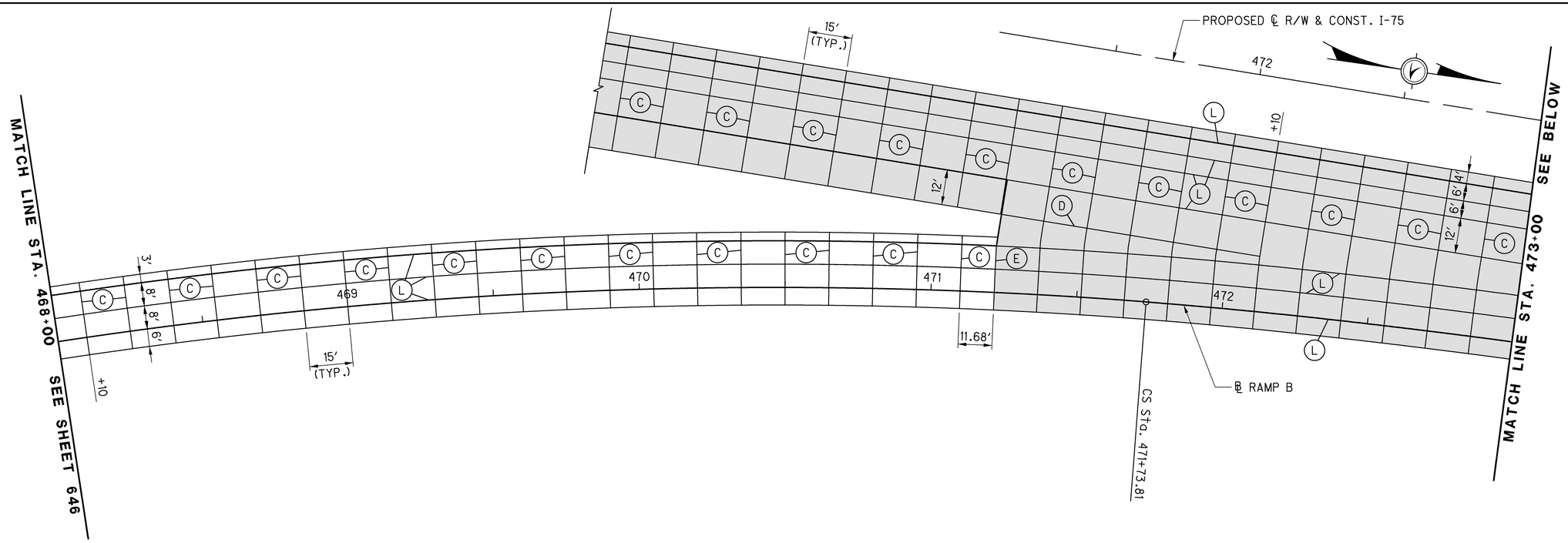

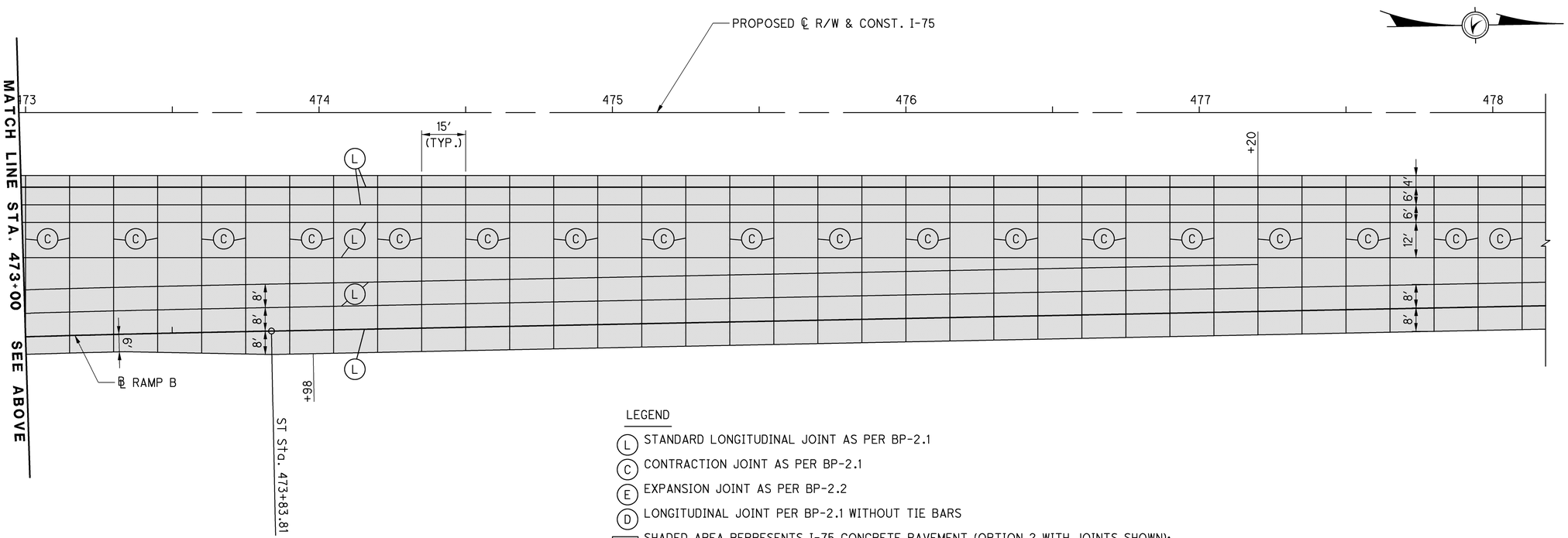

LEGEND

- (L) STANDARD LONGITUDINAL JOINT AS PER BP-2.1
- (C) CONTRACTION JOINT AS PER BP-2.1
- (E) EXPANSION JOINT AS PER BP-2.2
- (D) LONGITUDINAL JOINT PER BP-2.1 WITHOUT TIE BARS
- SHADED AREA REPRESENTS I-75 CONCRETE PAVEMENT (OPTION 2 WITH JOINTS SHOWN); I-75 ASPHALT PAVEMENT (OPTION 1 WITHOUT JOINTS) COULD BE SELECTED

HORIZONTAL SCALE IN FEET
0 10 20 40

CALCULATED APV
CHECKED SJG

JOINT DETAILS
S.R. 81 RAMP B

ALL-75-5.53

647
1224

J:\Projects\ALL\76691\roadway\sheets\76691GA821.dgn 11-SEP-2012 9:13PM reddenj

LEGEND

(E) EXPANSION JOINT AS PER BP-2.2

(L) STANDARD LONGITUDINAL JOINT AS PER BP-2.1

(C) CONTRACTION JOINT AS PER BP-2.1

HORIZONTAL SCALE IN FEET
0 10 20 40

CALCULATED APV
CHECKED SJG

JOINT DETAILS - SERVICE ROAD 3
STA. 28+77.71 TO STA. 38+25.00

ALL-75-5.53

648
1224

J:\Projects\ALL\76691\roadway\sheets\76691GA822.dgn 11-SEP-2012 9:13PM redden

MATCH LINE STA. 43+25 SEE ABOVE

LEGEND

(E) EXPANSION JOINT AS PER BP-2.2

(L) STANDARD LONGITUDINAL JOINT AS PER BP-2.1

(C) CONTRACTION JOINT AS PER BP-2.1

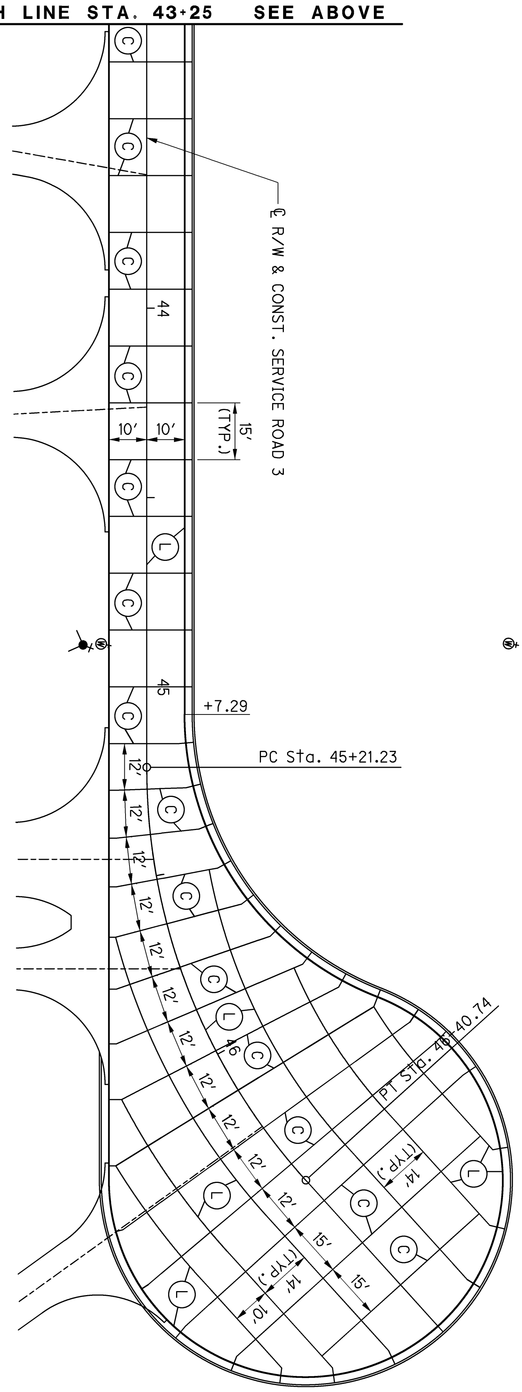

MATCH LINE STA. 38+25 SEE SHEET 648

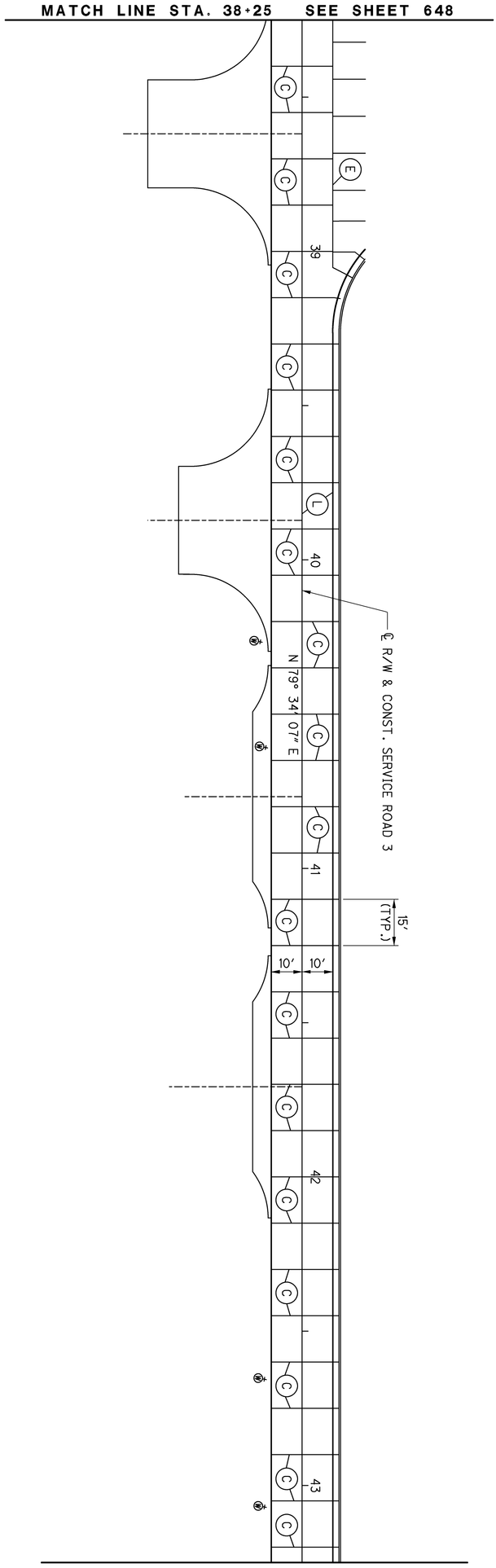

MATCH LINE STA. 43+25 SEE BELOW

649 / 1224	ALL-75-5.53	JOINT DETAILS - SERVICE ROAD 3 STA. 38+25.00 TO STA. 46+40.74	CALCULATED APV CHECKED SJG	0 20 10 40 HORIZONTAL SCALE IN FEET

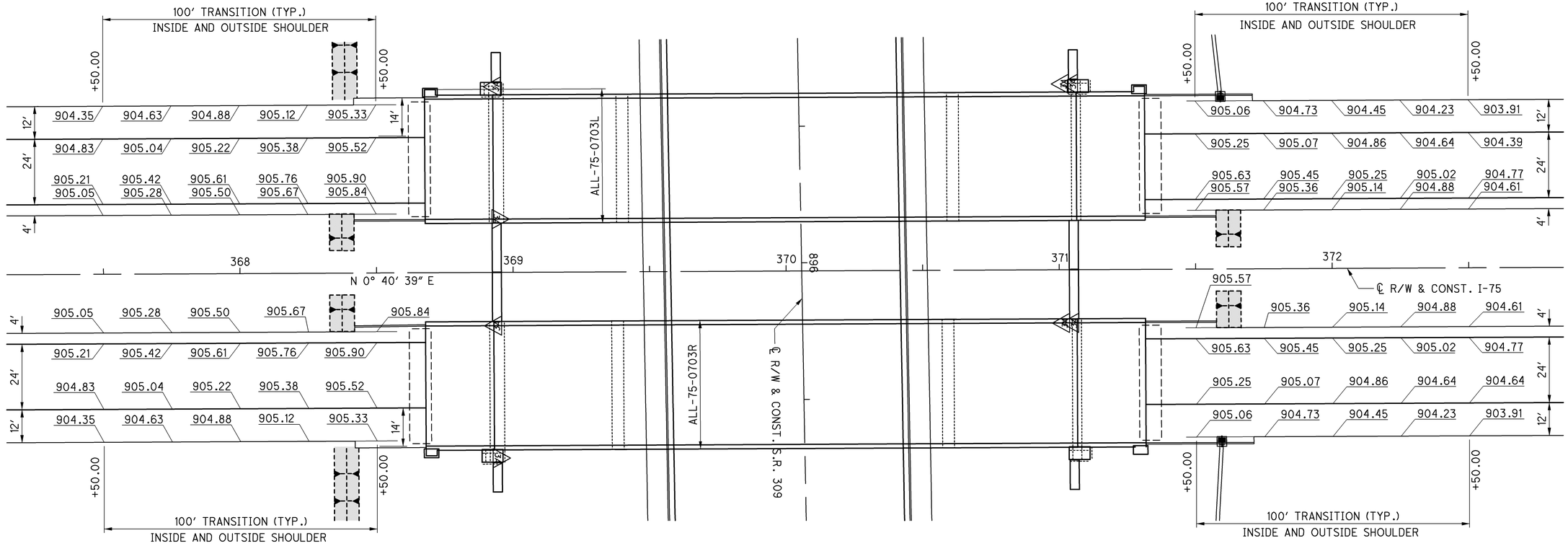

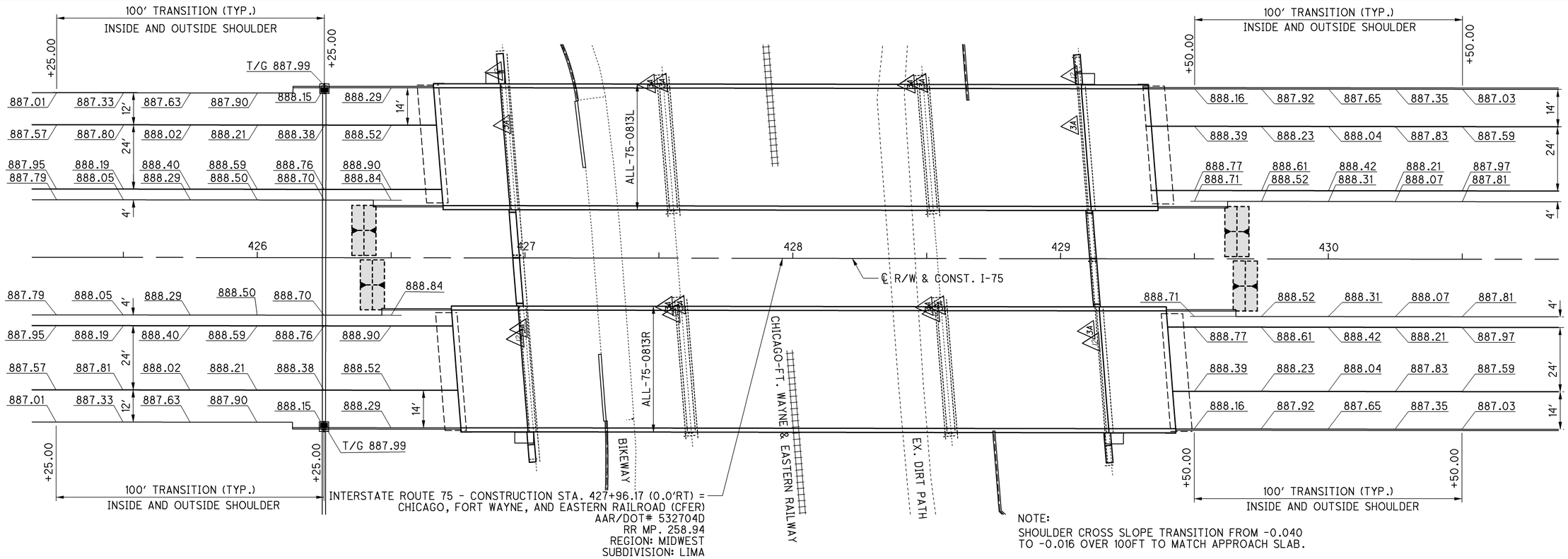

HORIZONTAL SCALE IN FEET
0 10 20 40

CALCULATED APV
CHECKED SJG

PAVEMENT DETAILS I-75

ALL-75-5.53

650
1224

J:\Projects\ALL\76691\roadway\sheets\76691GA001.dgn 11-SEP-2012 9:13PM reddenj

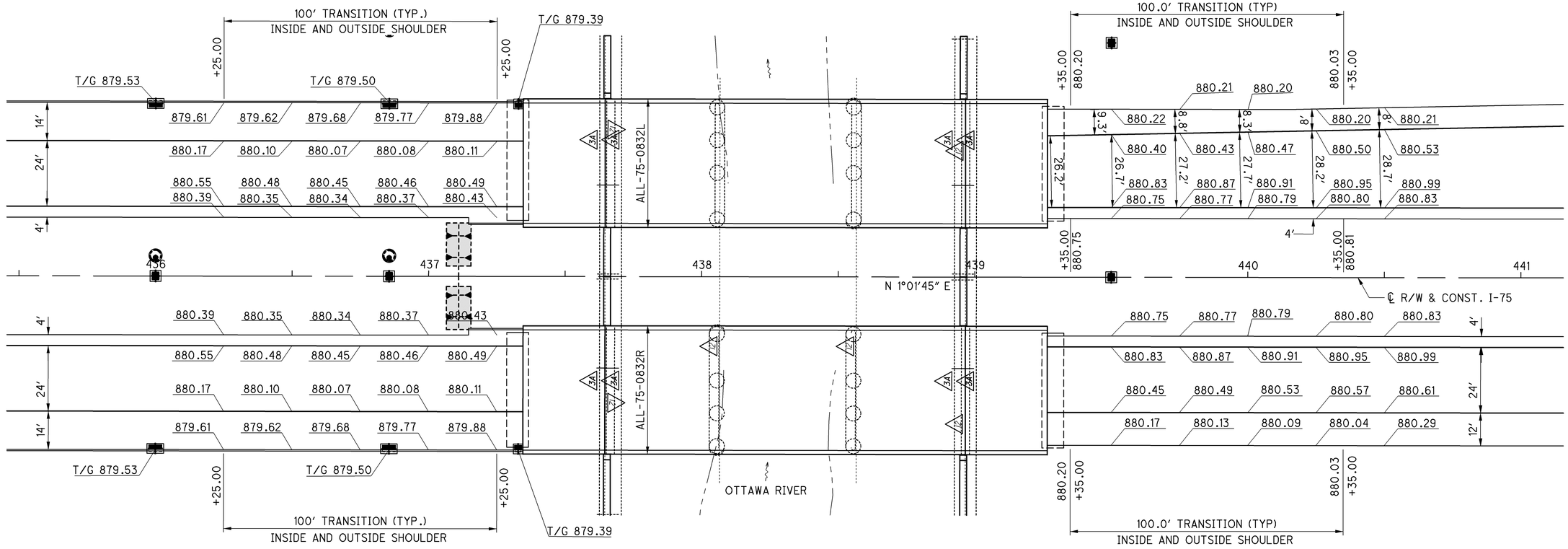

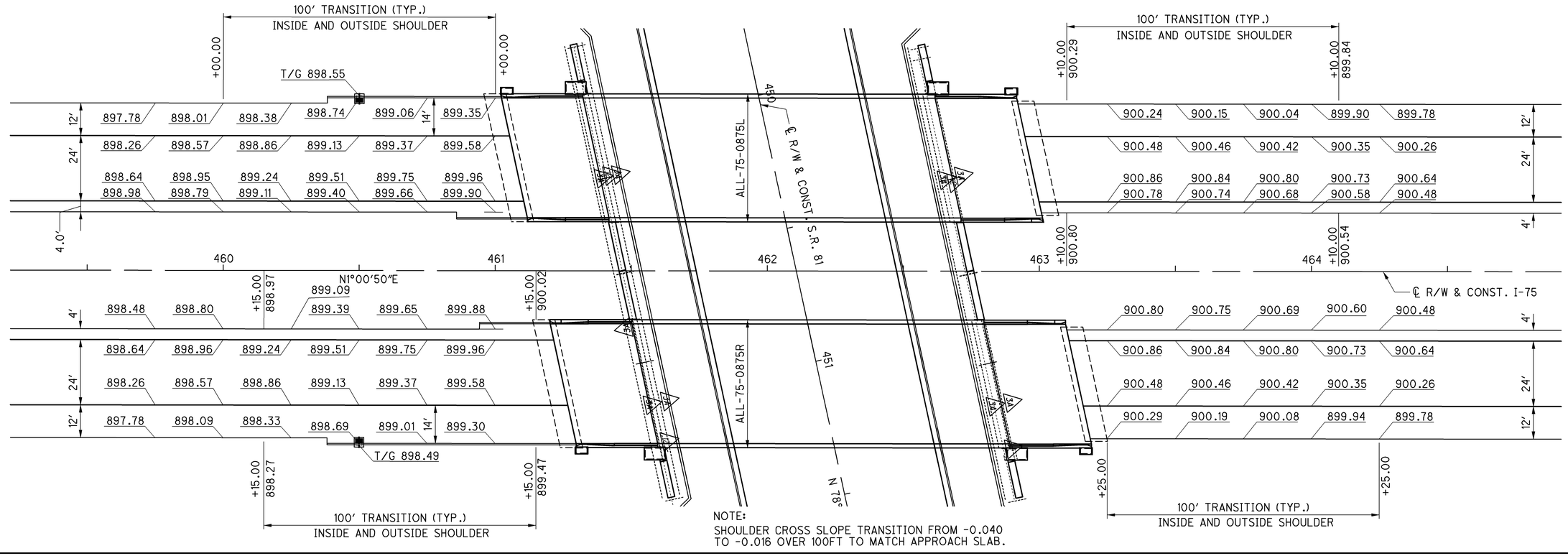

NOTE:
SHOULDER CROSS SLOPE TRANSITION FROM -0.040
TO -0.016 OVER 100FT TO MATCH APPROACH SLAB.

HORIZONTAL SCALE IN FEET
0 10 20 40

CALCULATED APV
CHECKED SJG

PAVEMENT DETAILS
I-75
ALL-75-5.53

651
1224

J:\Projects\ALL\76691\roadway\sheets\76691GA002.dgn 11-SEP-2012 9:14PM redden

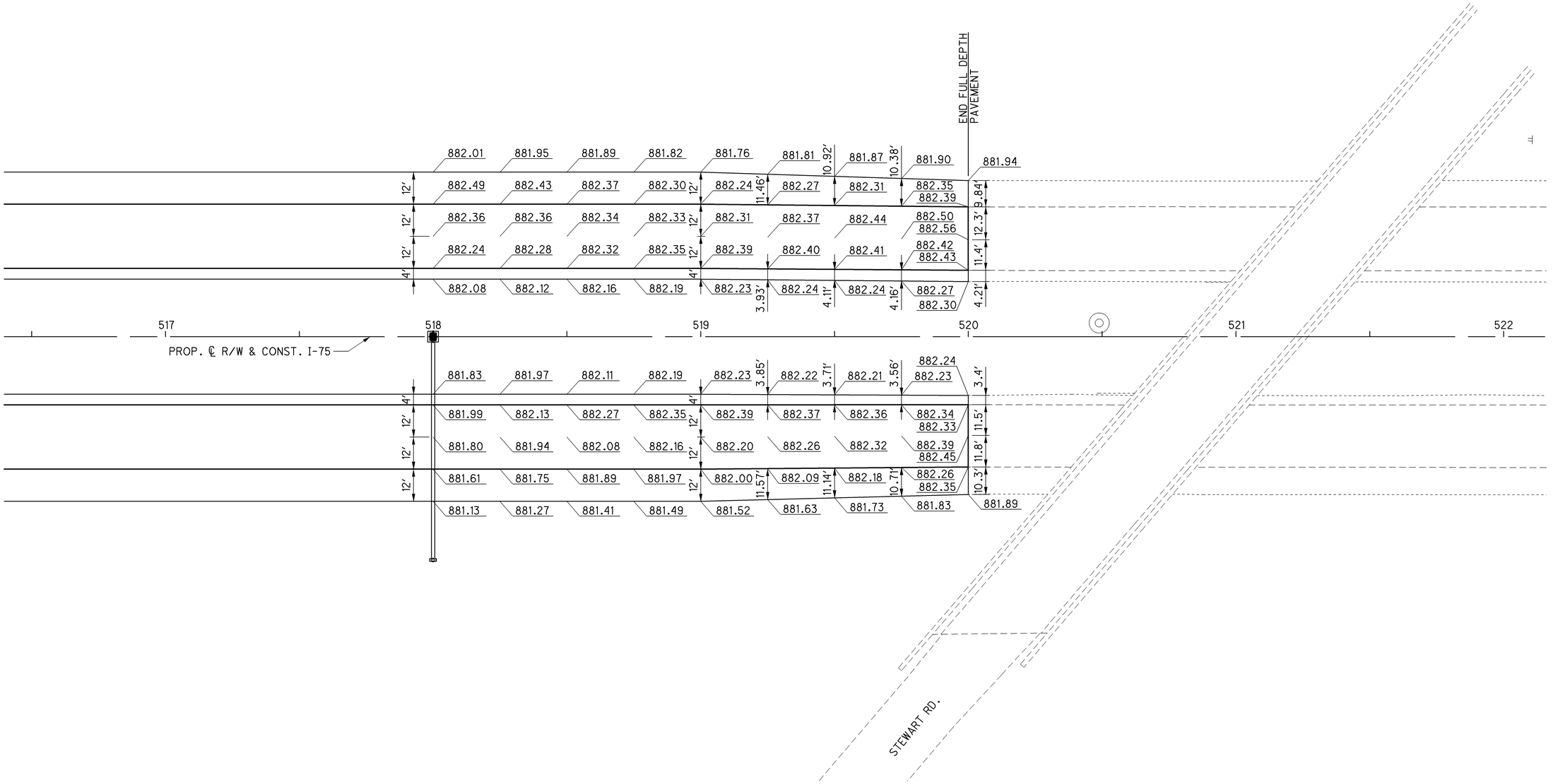

HORIZONTAL SCALE IN FEET
0

CALCULATED ABS
CHECKED NAH

PAVEMENT DETAIL - I-75
STA. 518+50.00 TO STA. 520+00.00

ALL-75-5.53

652
1224

J:\Projects\ALL\76691\roadway\sheets\76691GA003.dgn 11-SEP-2012 9:14PM reddenj

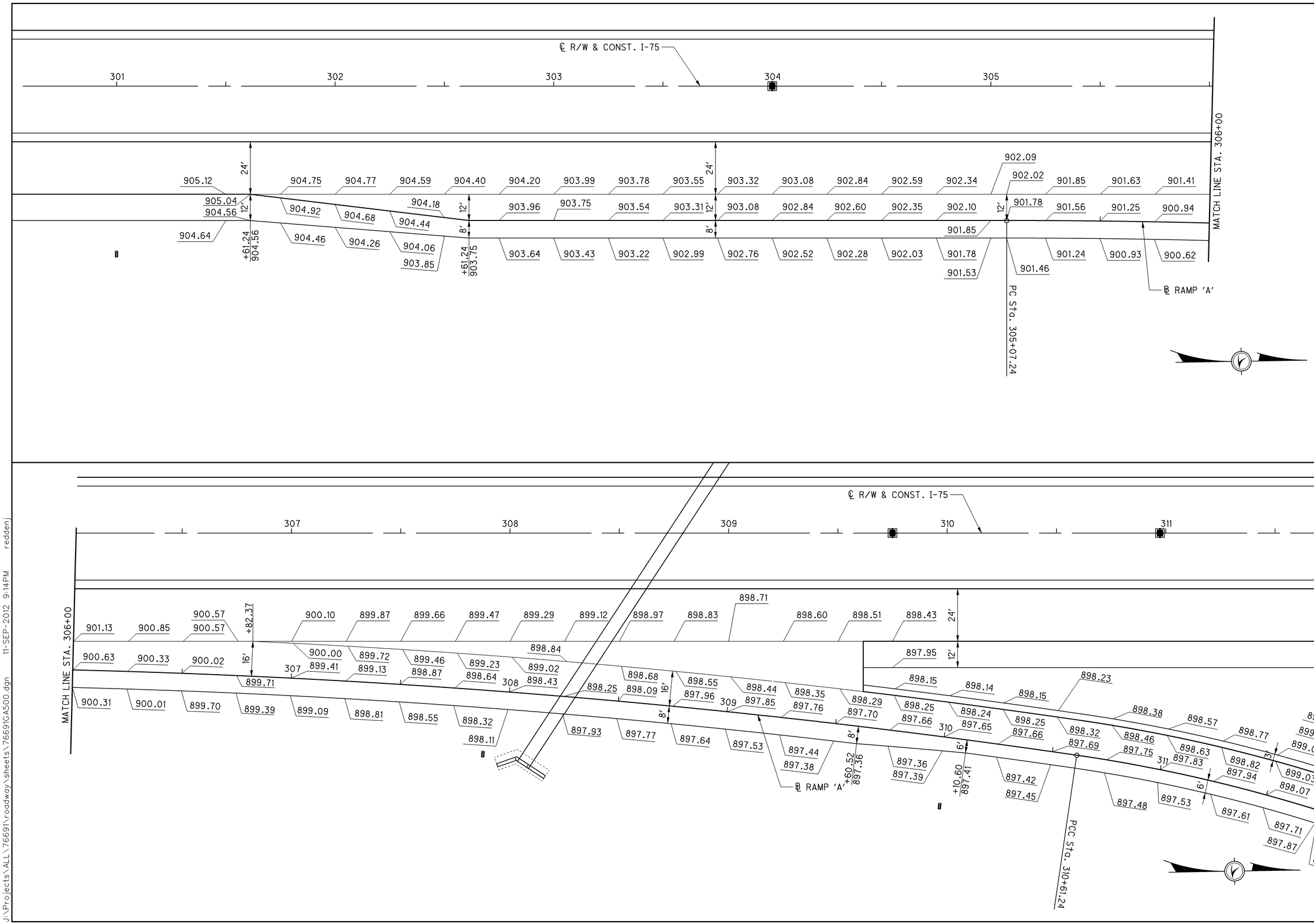

PAVEMENT DETAILS
4TH ST. - RAMP 'A'

ALL-75-5.53

653
1224

J:\Projects\ALL\76691\roadway\sheets\76691GA500.dgn 11-SEP-2012 9:14PM redden j

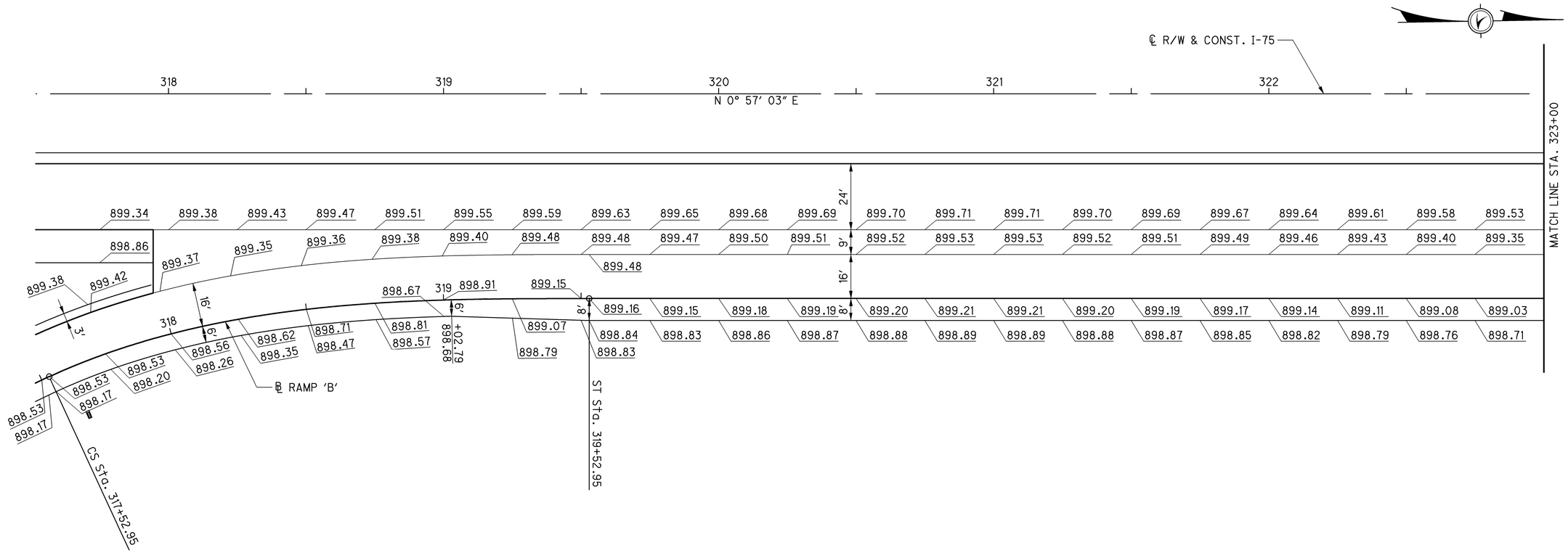

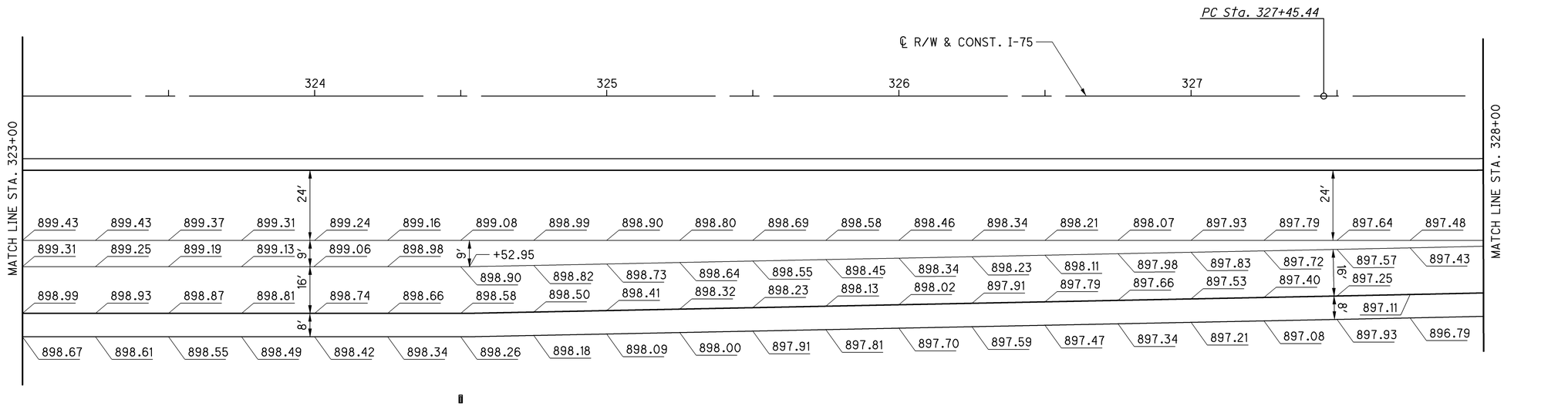

HORIZONTAL SCALE IN FEET
0 10 20 40

CALCULATED APV
CHECKED SJG

PAVEMENT DETAILS
4TH ST. - RAMP 'B'

ALL-75-5.53

654
1224

J:\Projects\ALL\76691\roadway\sheets\76691GA501.dgn 11-SEP-2012 9:14PM reddenj

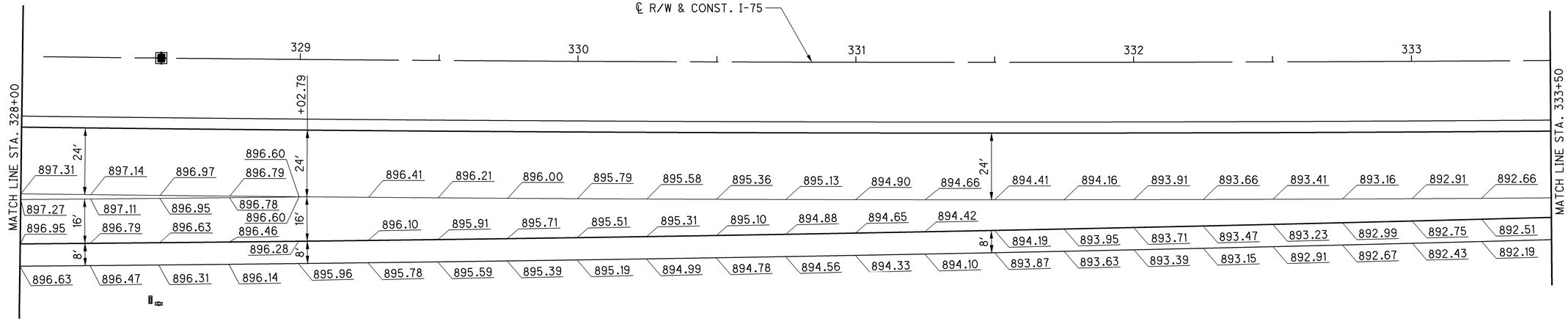

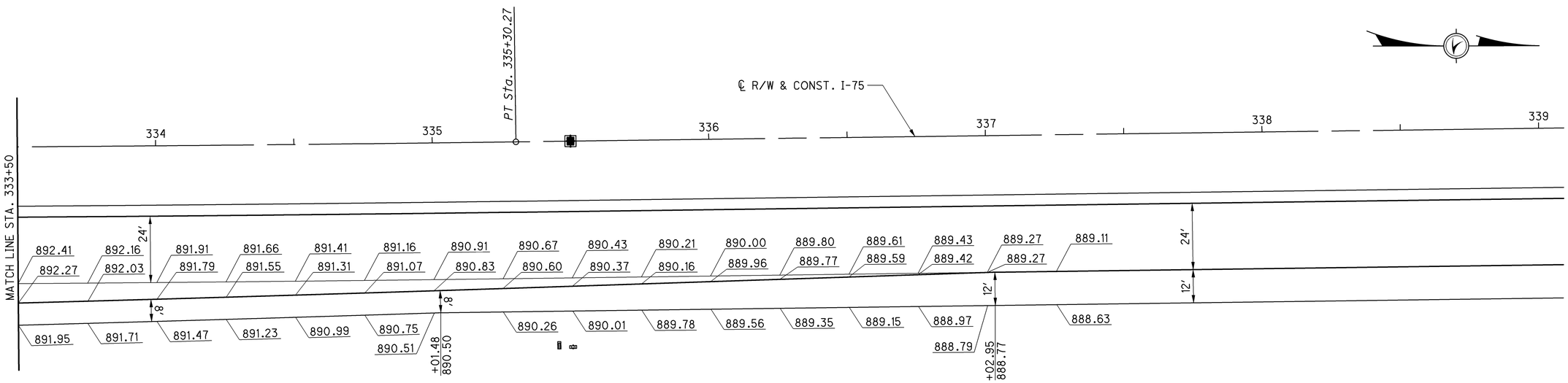

HORIZONTAL SCALE IN FEET
0 10 20 40

CALCULATED APV
CHECKED SJG

PAVEMENT DETAILS
4TH ST. - RAMP 'B'

ALL-75-5.53

655
1224

J:\Projects\ALL\76691\roadway\sheets\76691GA502.dgn 11-SEP-2012 9:14PM reddenj

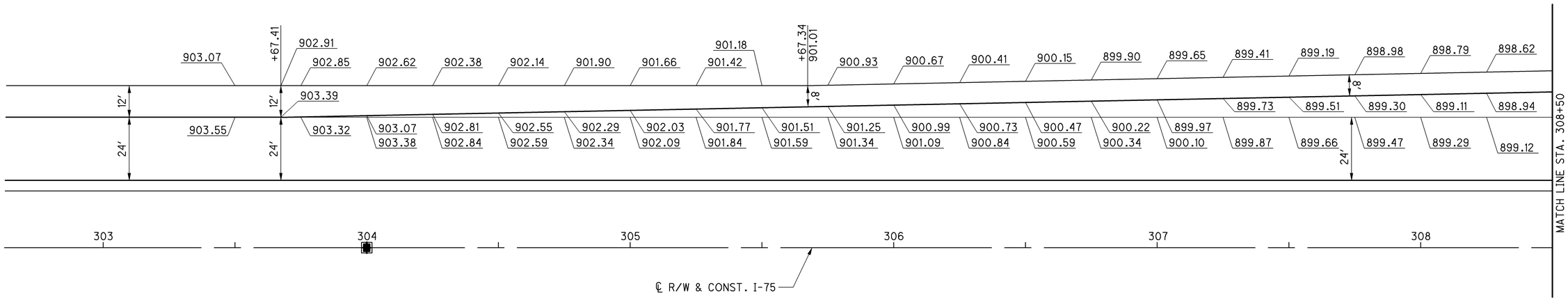

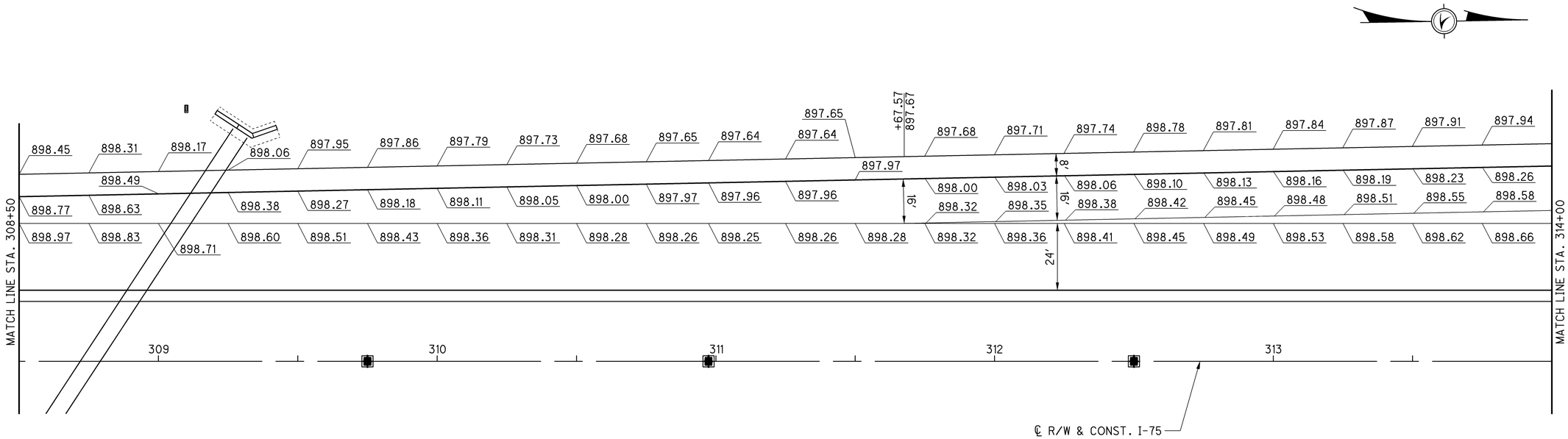

HORIZONTAL SCALE IN FEET
0 10 20 40

CALCULATED APV
CHECKED SJG

PAVEMENT DETAILS
4TH ST. - RAMP 'C'

ALL-75-5.53

656
1224

J:\Projects\ALL\76691\roadway\sheets\76691GA503.dgn 11-SEP-2012 9:14PM reddenj

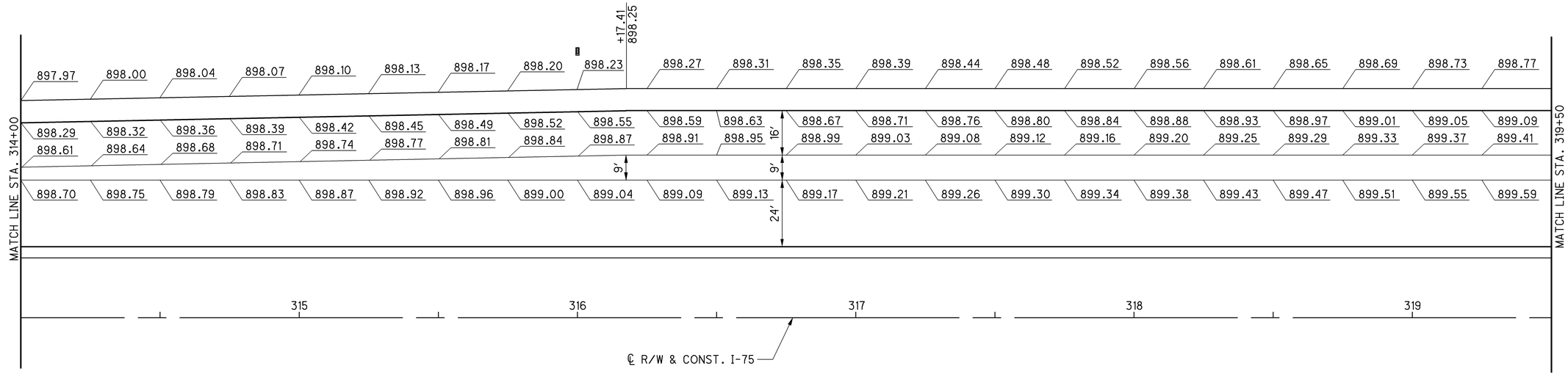

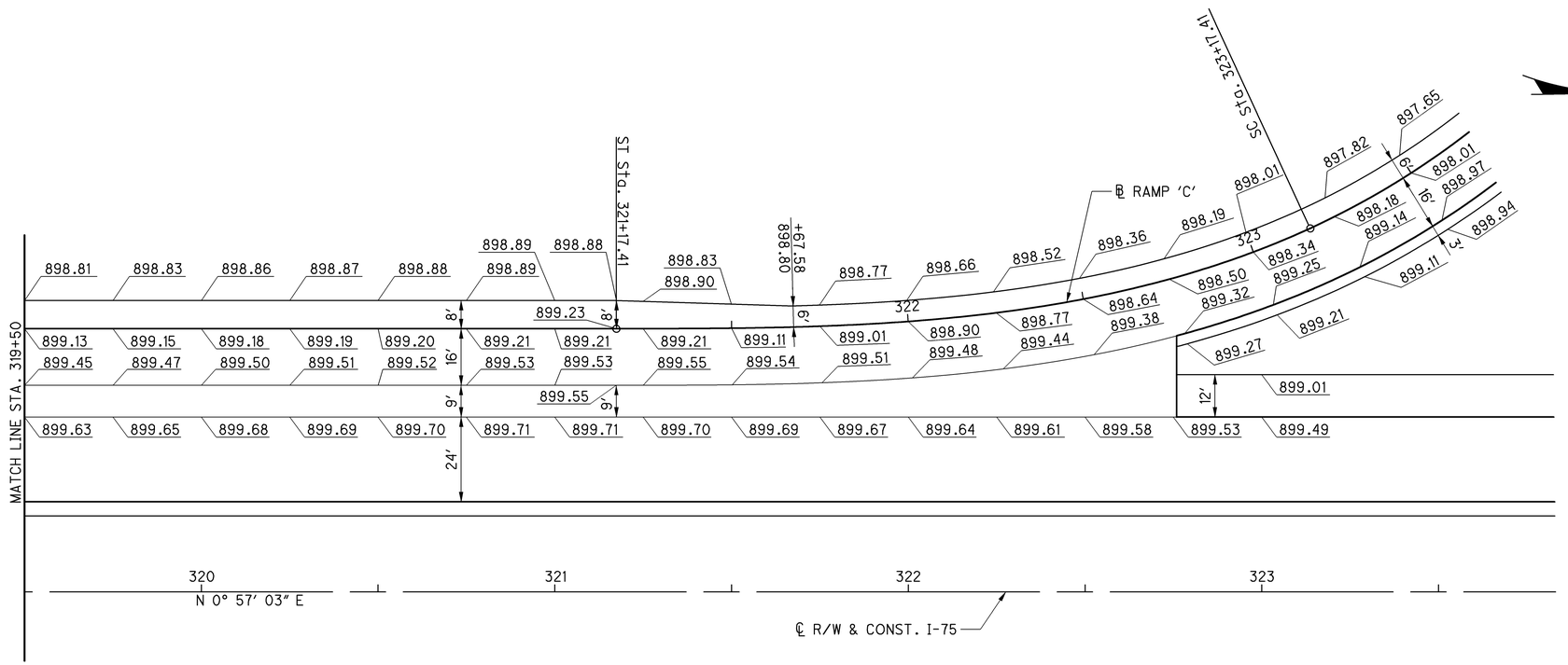

HORIZONTAL SCALE IN FEET
0 10 20 40

CALCULATED APV
CHECKED SJG

PAVEMENT DETAILS
4TH ST. - RAMP 'C'

ALL-75-5.53

657
1224

J:\Projects\ALL\76691\roadway\sheets\76691GA504.dgn 11-SEP-2012 9:14PM redden

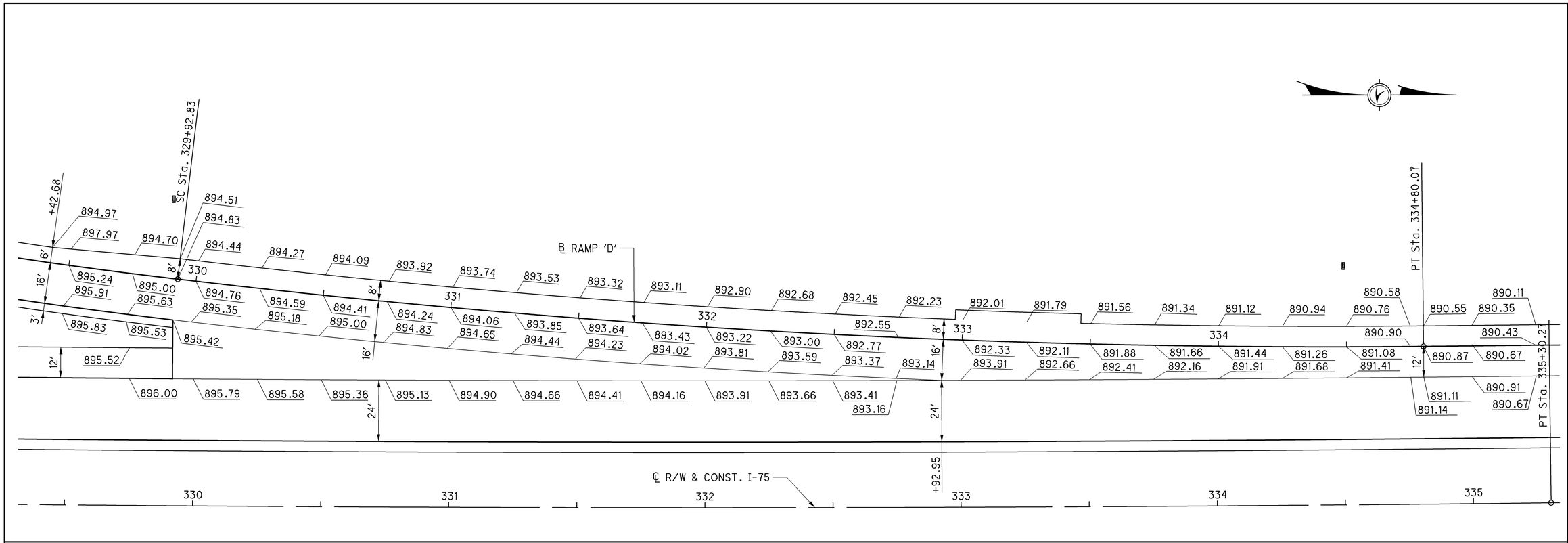

HORIZONTAL SCALE IN FEET
0 10 20 40

CALCULATED APV
CHECKED SJG

PAVEMENT DETAILS
4TH ST. - RAMP 'D'

ALL-75-5.53

658
1224

J:\Projects\ALL\76691\roadway\sheets\76691GA505.dgn 11-SEP-2012 9:14PM reddenj

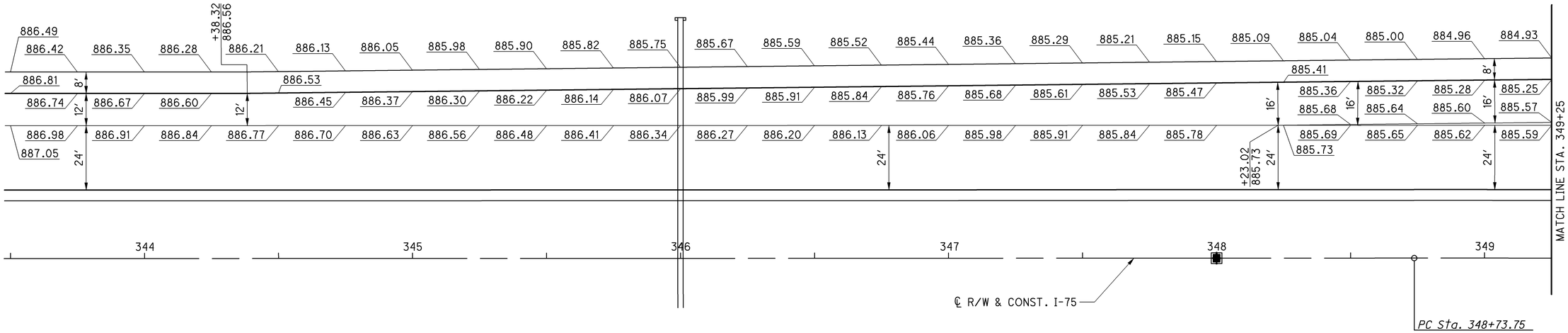

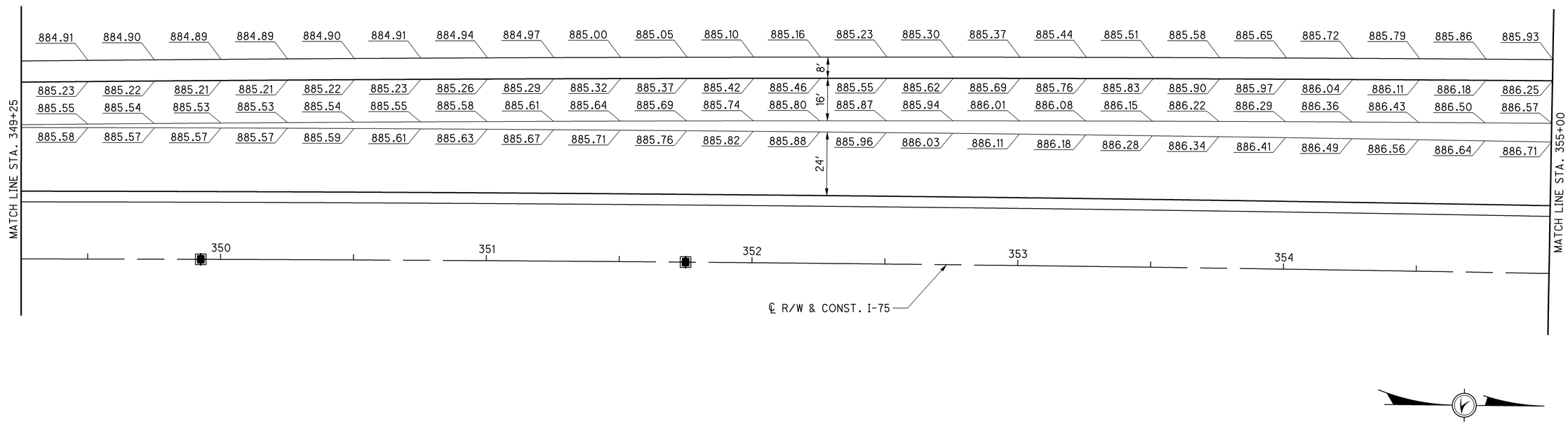

HORIZONTAL SCALE IN FEET
0 10 20 40

CALCULATED APV
CHECKED SJG

PAVEMENT DETAILS
S.R. 309

ALL-75-5.53

659
1224

J:\Projects\ALL\76691\roadway\sheets\76691GA600.dgn 11-SEP-2012 9:14PM reddenj

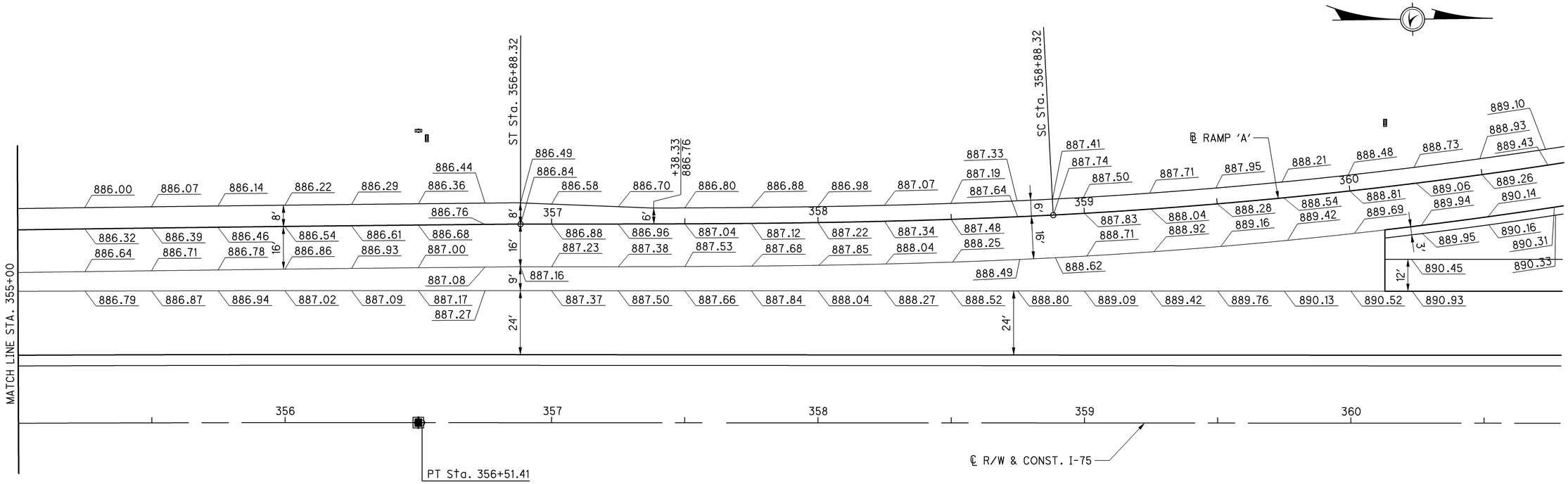

J:\Projects\ALL\76691\roadway\sheets\76691GA601.dgn 11-SEP-2012 9:14PM reddenj

HORIZONTAL SCALE IN FEET
0 10 20 40

CALCULATED APV
CHECKED SJG

PAVEMENT DETAILS
S.R. 309 - RAMP 'A'

ALL-75-5.53

660
1224

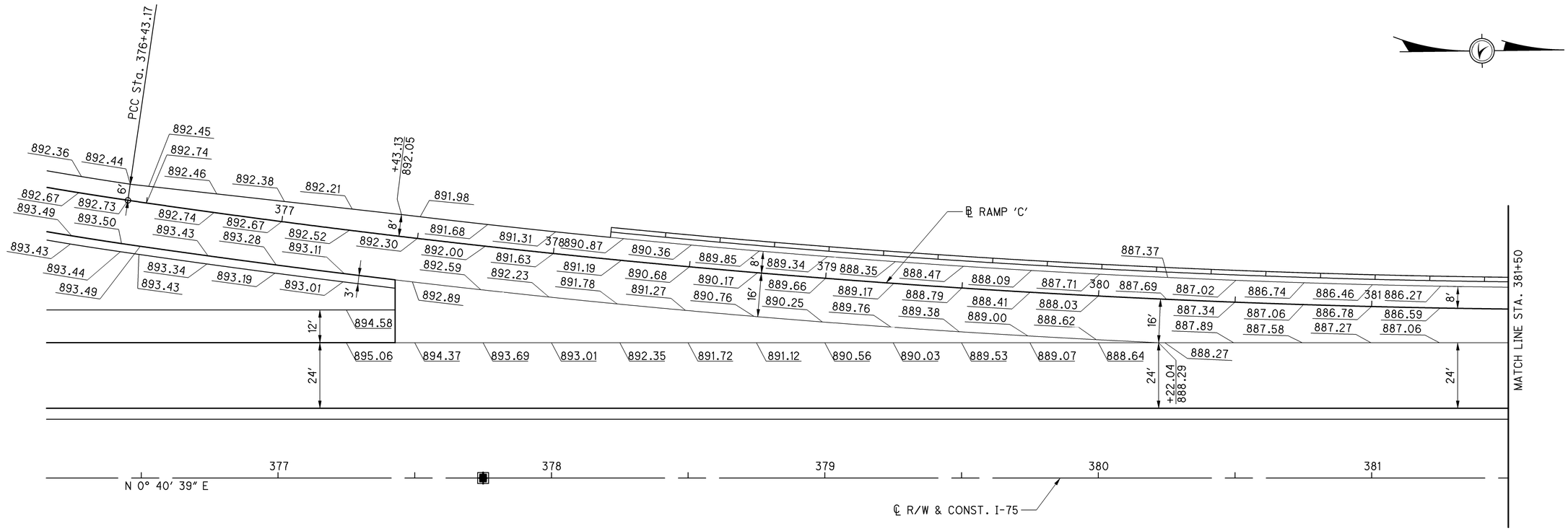

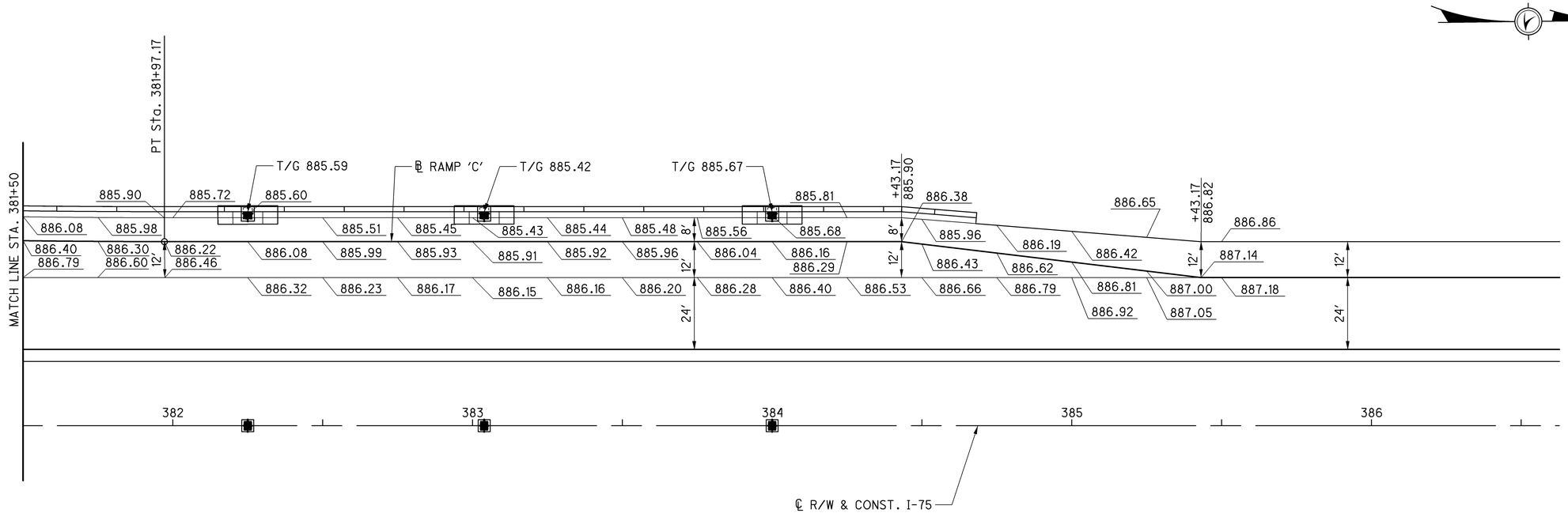

PAVEMENT DETAILS
S.R. 309 - RAMP 'C'

HORIZONTAL SCALE IN FEET
0 10 20 40

CALCULATED APV
CHECKED SJG

ALL-75-5.53

661
1224

J:\Projects\ALL\76691\roadway\sheets\76691GA602.dgn 11-SEP-2012 9:14PM reddenj

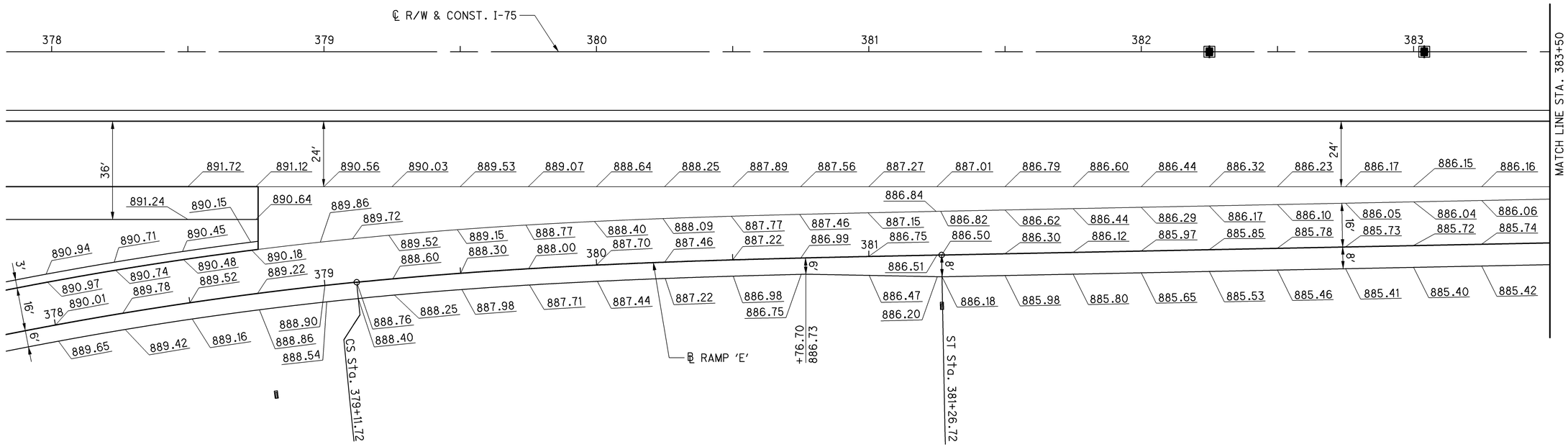

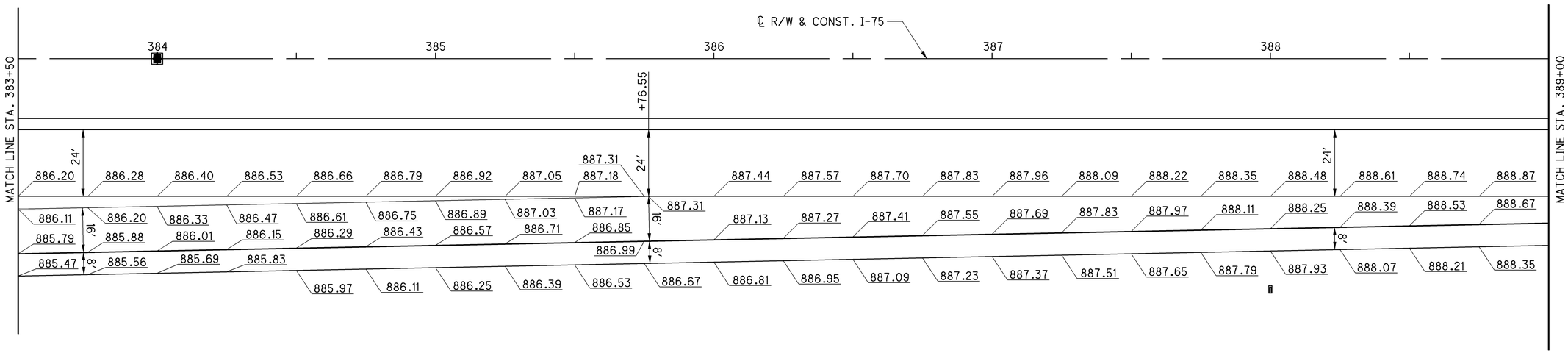

HORIZONTAL SCALE IN FEET
0 10 20 40

CALCULATED APV
CHECKED SJG

PAVEMENT DETAILS
S.R. 309

ALL-75-5.53

662
1224

J:\Projects\ALL\76691\roadway\sheets\76691GA603.dgn 11-SEP-2012 9:14PM reddenj

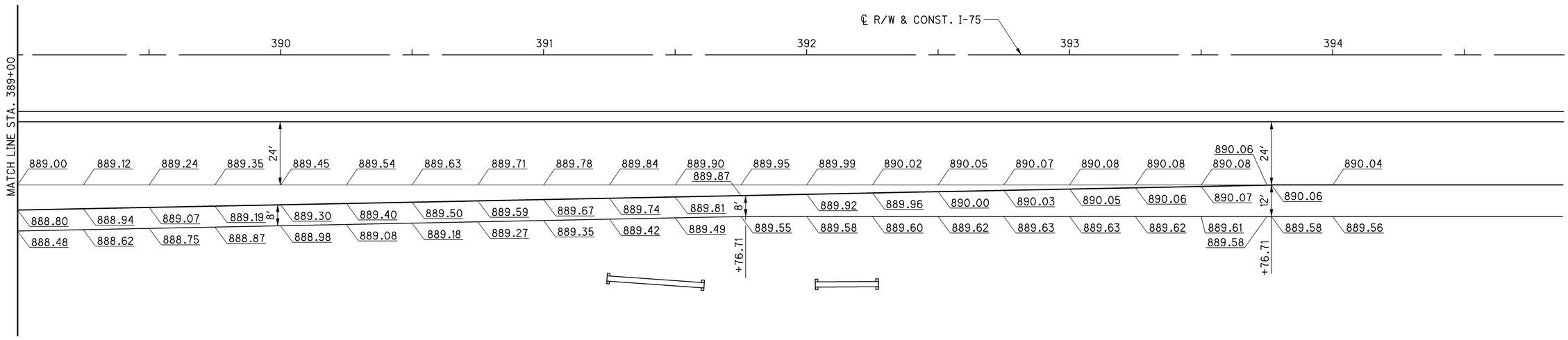

HORIZONTAL SCALE IN FEET
0 10 20 40

CALCULATED APV
CHECKED SJG

PAVEMENT DETAILS
S.R. 309 - RAMP 'E'

ALL-75-5.53

663
1224

J:\Projects\ALL\76691\roadway\sheets\76691GA604.dgn 11-SEP-2012 9:14PM reddenj

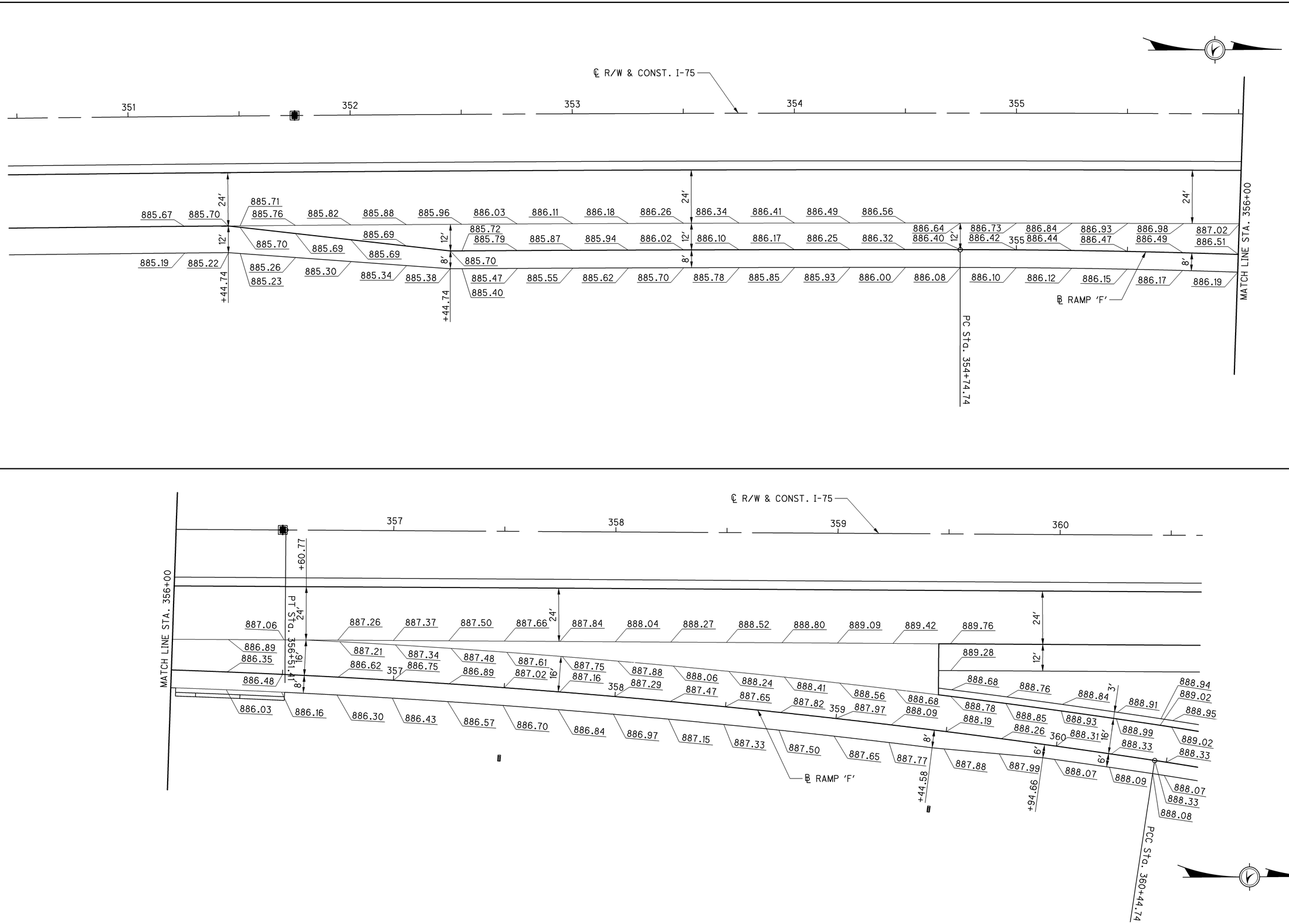

J:\Projects\ALL\76691\roadway\sheets\76691GA605.dgn 11-SEP-2012 9:14PM reddenj

HORIZONTAL SCALE IN FEET
0 10 20 40

CALCULATED APV
CHECKED SJG

PAVEMENT DETAILS
S.R. 309 - RAMP 'F'

ALL-75-5.53

664
1224

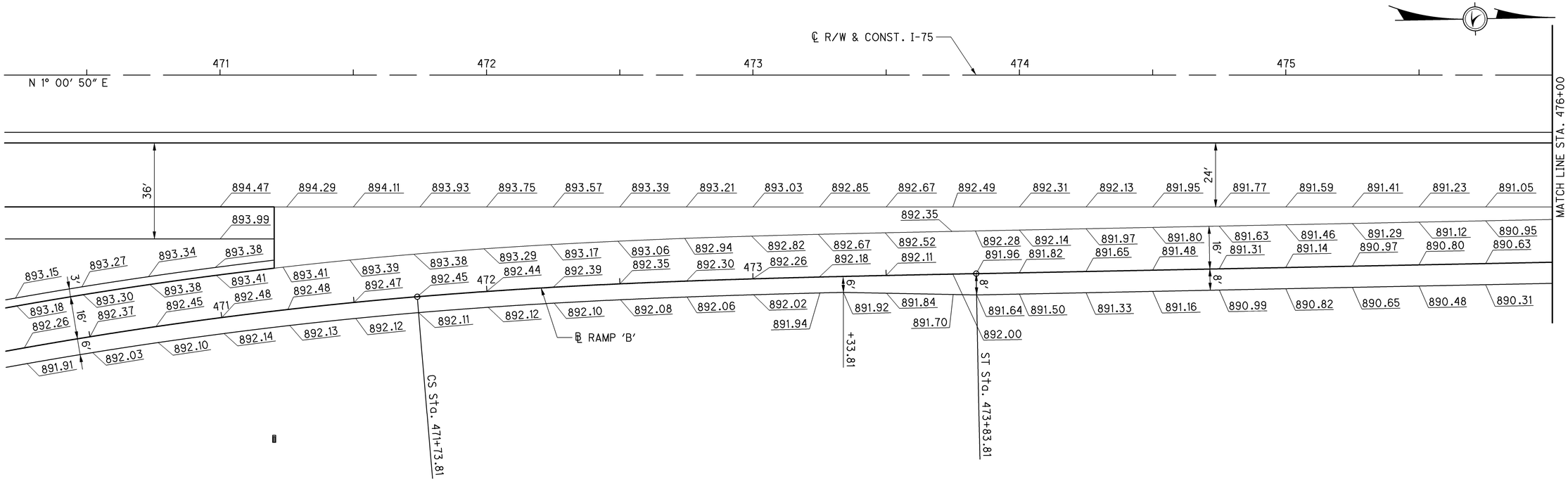

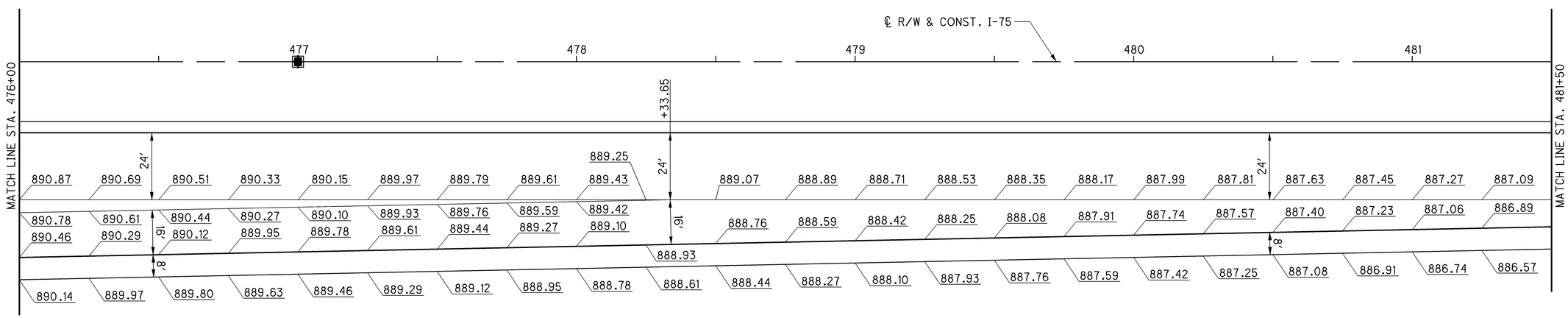

J:\Projects\ALL\76691\roadway\sheets\76691GA800.dgn 11-SEP-2012 9:14PM redden j

HORIZONTAL SCALE IN FEET
0 10 20 40

CALCULATED APV
CHECKED SJG

PAVEMENT DETAILS
S.R. 81 - RAMP 'B'

ALL-75-5.53

665
1224

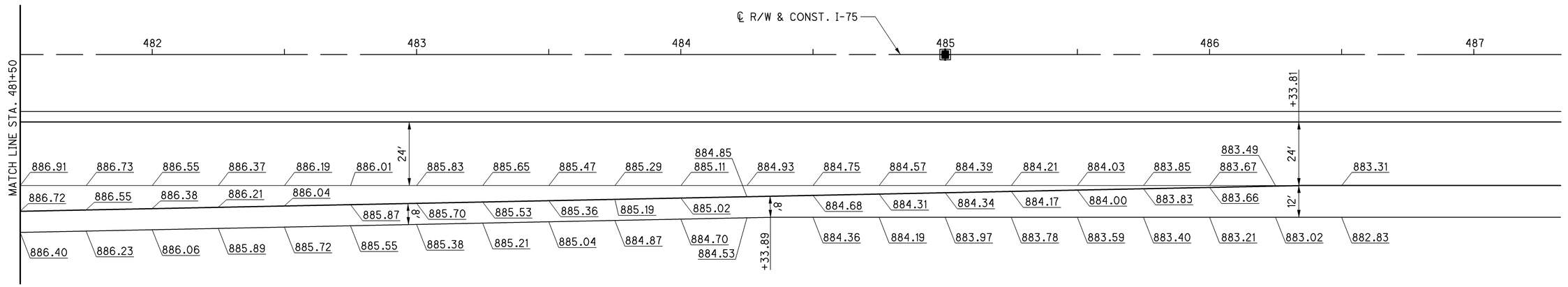

HORIZONTAL SCALE IN FEET
0 10 20 40

CALCULATED APV
CHECKED SJG

PAVEMENT DETAILS
S.R. 81 - RAMP 'B'

ALL-75-5.53

666
1224

J:\Projects\ALL\76691\roadway\sheets\76691GA801.dgn 11-SEP-2012 9:14PM reddenj

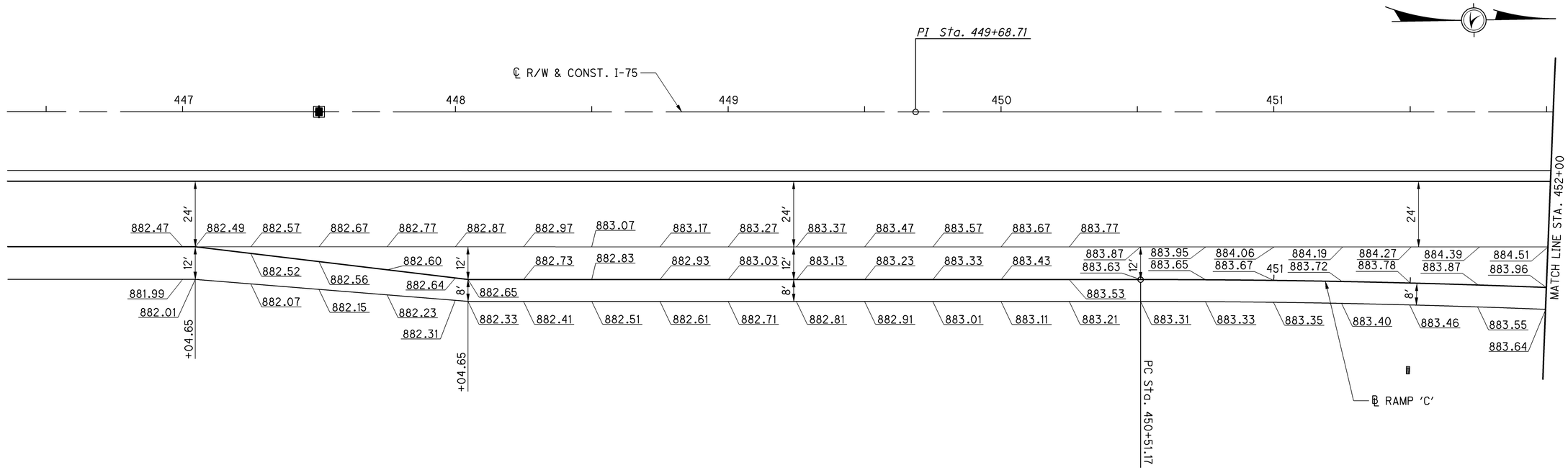

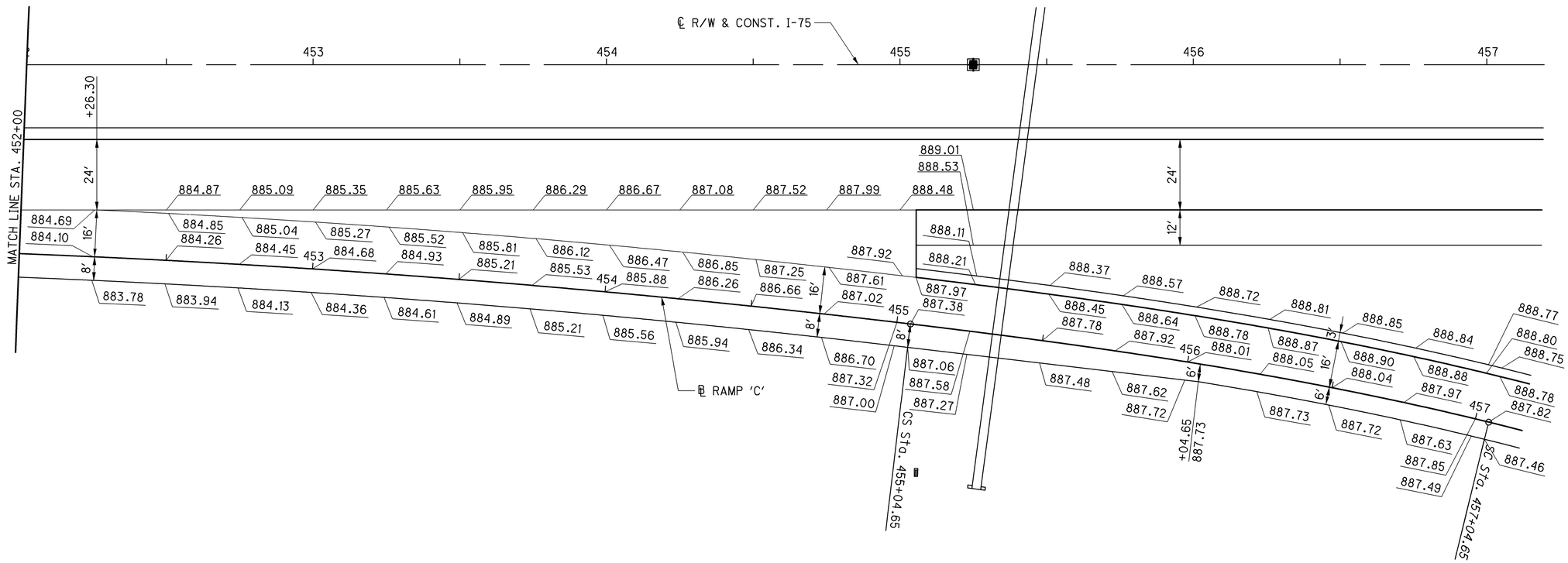

HORIZONTAL SCALE IN FEET
0 10 20 40

CALCULATED APV
CHECKED SJG

PAVEMENT DETAILS
S.R. 81 - RAMP 'C'

ALL-75-5.53

667
1224

J:\Projects\ALL\76691\roadway\sheets\76691GA802.dgn 11-SEP-2012 9:14PM redden

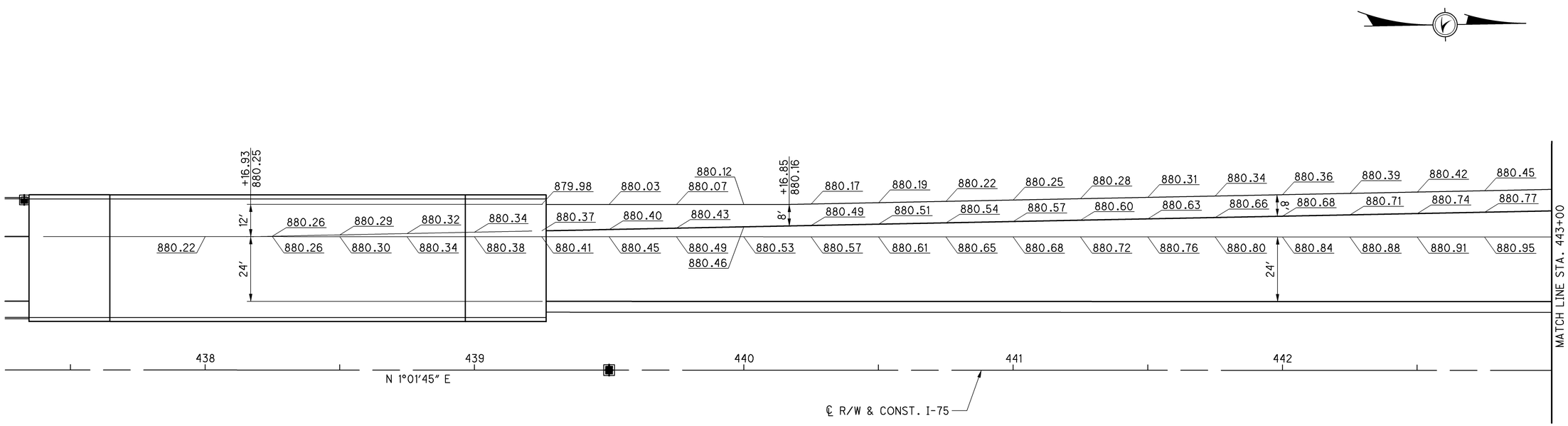

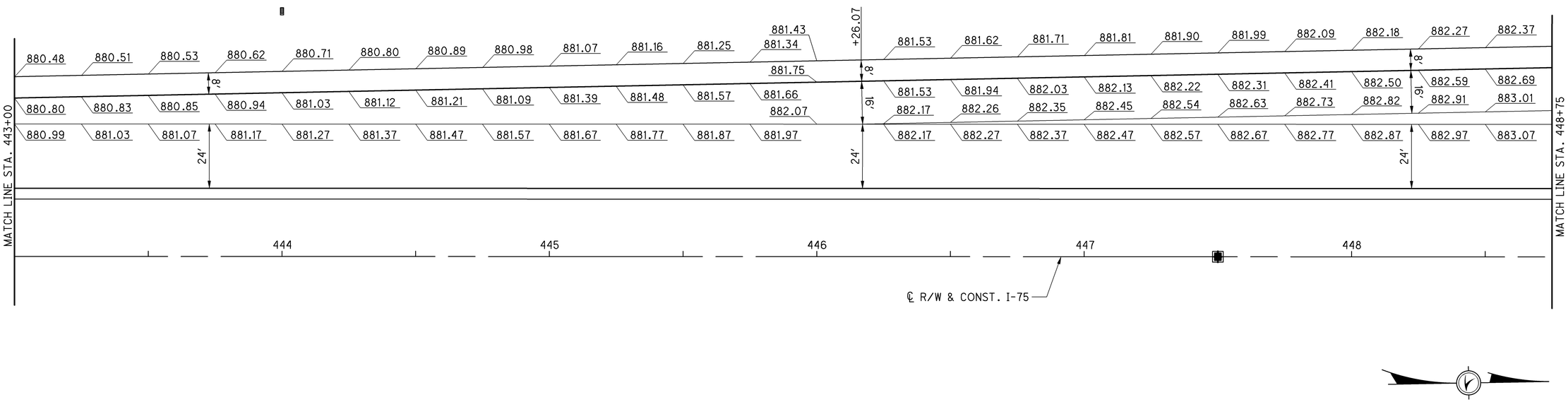

PAVEMENT DETAILS
S.R. 81 - RAMP 'D'

ALL-75-5.53

668
1224

HORIZONTAL SCALE IN FEET
0 10 20 40

CALCULATED APV
CHECKED SJG

J:\Projects\ALL\76691\roadway\sheets\76691GA803.dgn 11-SEP-2012 9:14PM reddenj

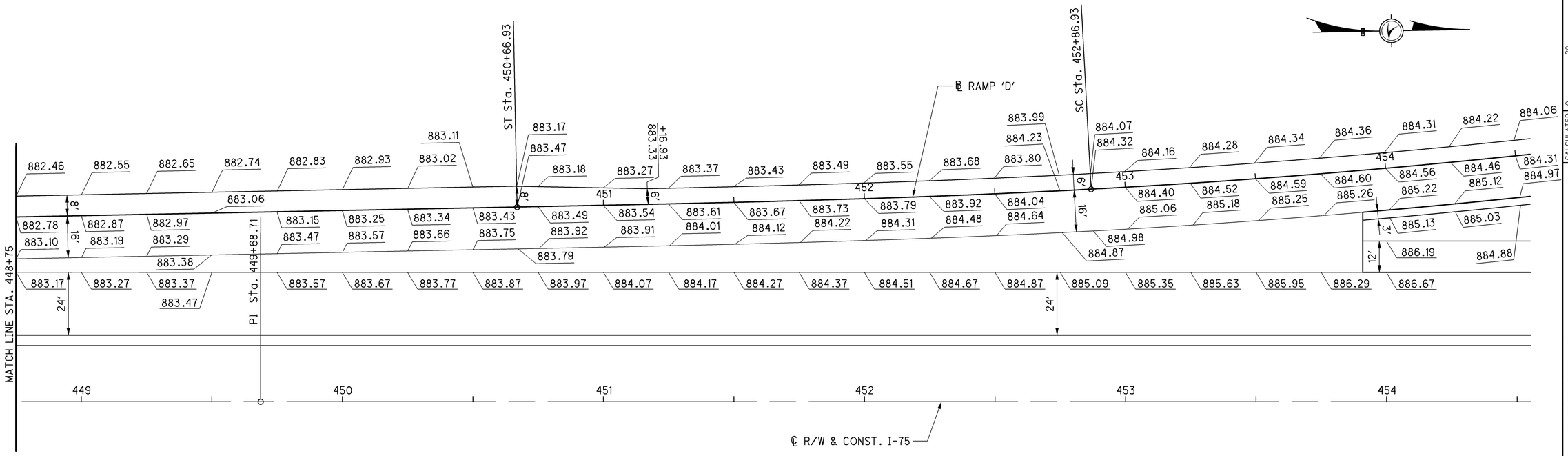

HORIZONTAL SCALE IN FEET
0 10 20 40

CALCULATED APV
CHECKED SJG

PAVEMENT DETAILS
S.R. 81 - RAMP 'D'

ALL-75-5.53

669
1224

J:\Projects\ALL\76691\roadway\sheets\76691GA804.dgn 11-SEP-2012 9:14PM reddenj

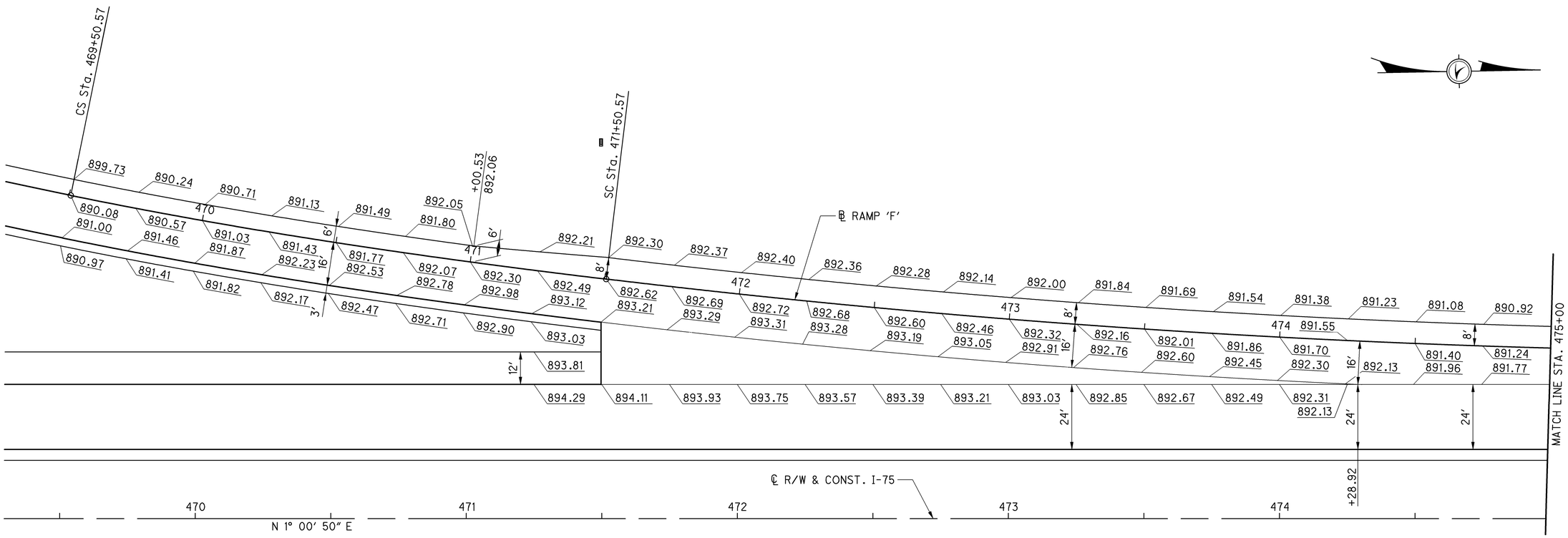

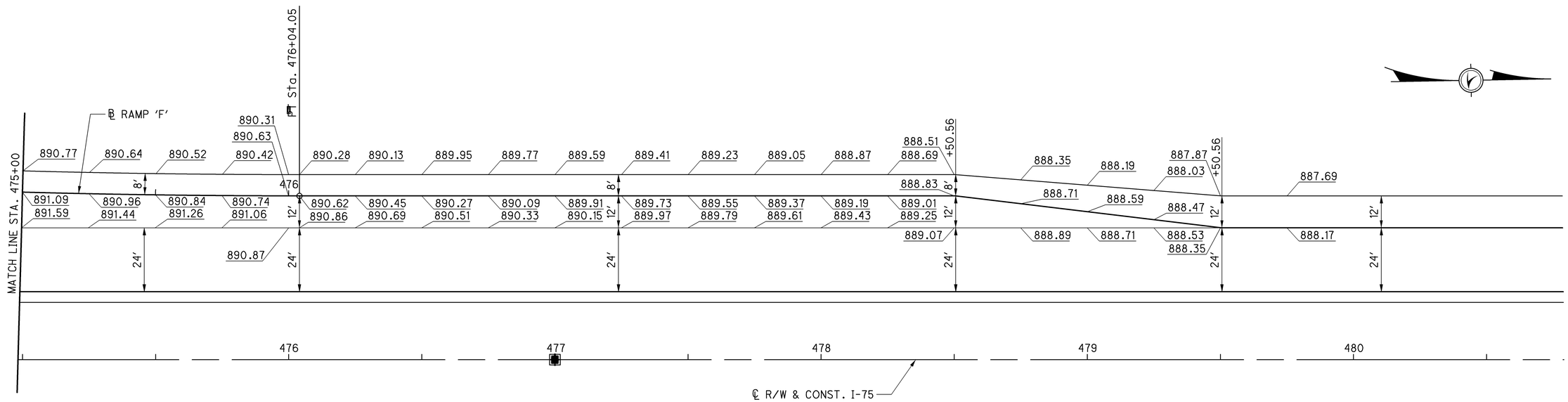

J:\Projects\ALL\76691\roadway\sheets\76691GA805.dgn 11-SEP-2012 9:14PM reddenj

HORIZONTAL SCALE IN FEET
0 10 20 40

CALCULATED APV
CHECKED SJG

PAVEMENT DETAILS
S.R. 81 - RAMP 'F'

ALL-75-5.53

670
1224

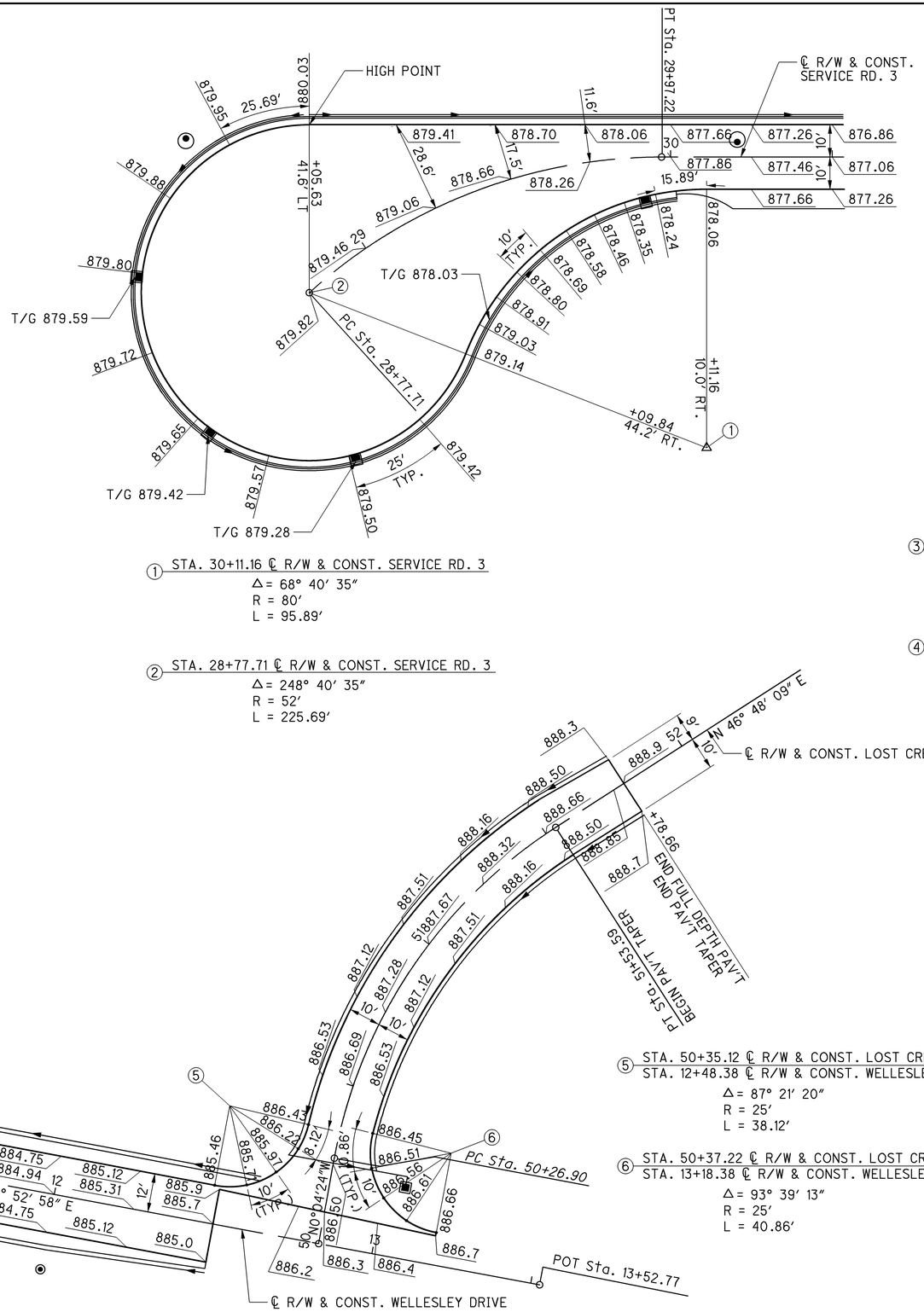

① STA. 30+11.16 ℄ R/W & CONST. SERVICE RD. 3
△ = 68° 40′ 35″
R = 80′
L = 95.89′

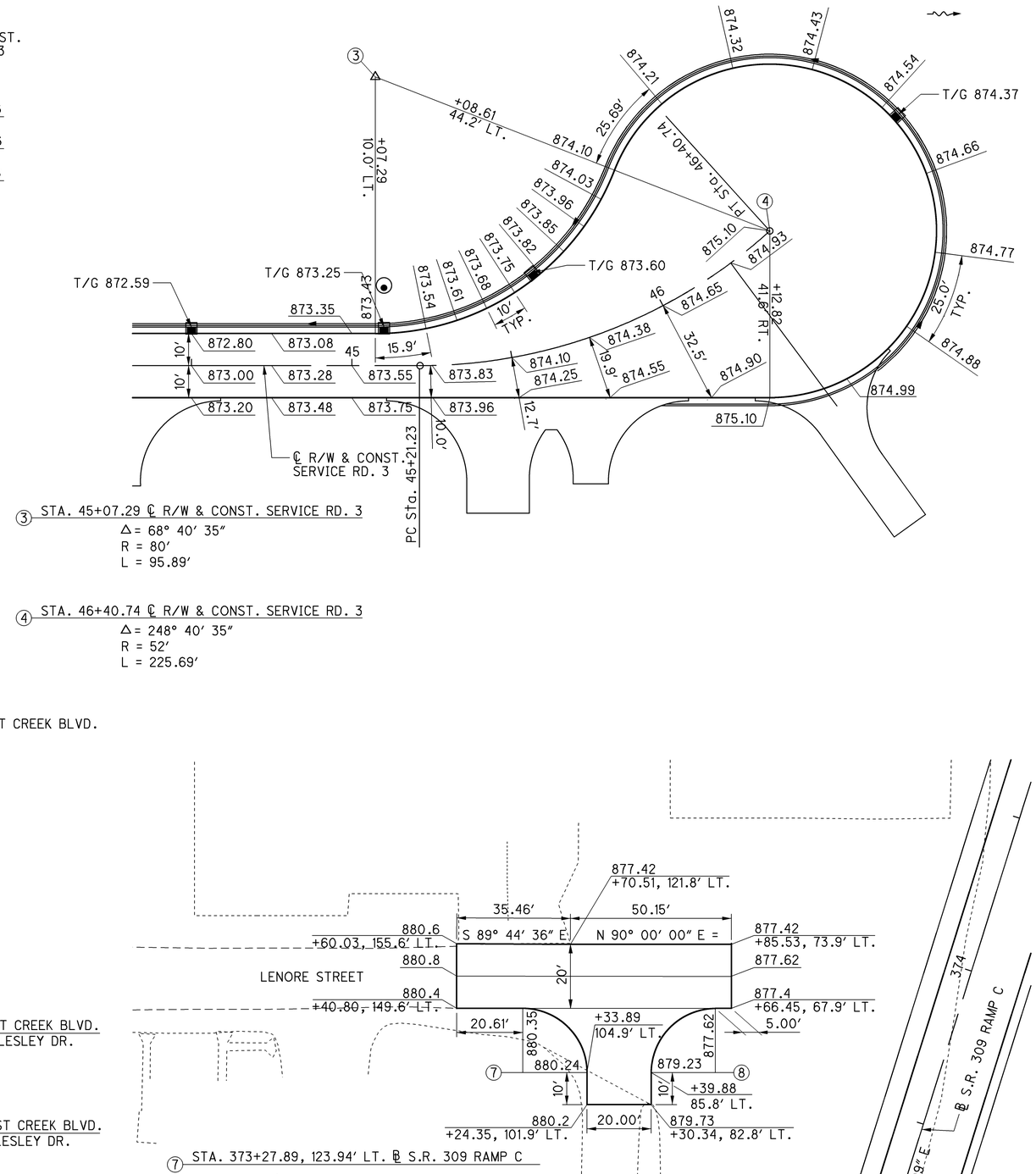

③ STA. 45+07.29 ℄ R/W & CONST. SERVICE RD. 3
△ = 68° 40′ 35″
R = 80′
L = 95.89′

④ STA. 46+40.74 ℄ R/W & CONST. SERVICE RD. 3
△ = 248° 40′ 35″
R = 52′
L = 225.69′

② STA. 28+77.71 ℄ R/W & CONST. SERVICE RD. 3
△ = 248° 40′ 35″
R = 52′
L = 225.69′

⑤ STA. 50+35.12 ℄ R/W & CONST. LOST CREEK BLVD.
STA. 12+48.38 ℄ R/W & CONST. WELLESLEY DR.
△ = 87° 21′ 20″
R = 25′
L = 38.12′

⑥ STA. 50+37.22 ℄ R/W & CONST. LOST CREEK BLVD.
STA. 13+18.38 ℄ R/W & CONST. WELLESLEY DR.
△ = 93° 39′ 13″
R = 25′
L = 40.86′

⑦ STA. 373+27.89, 123.94′ LT. ℄ S.R. 309 RAMP C
△ = 90° 00′ 00″
R = 20′
L = 31.42′

⑧ STA. 373+45.87, 66.69′ LT. ℄ S.R. 309 RAMP C
△ = 90° 00′ 00″
R = 20′
L = 31.42′

J:\Projects\ALL\76691\roadway\sheets\76691GI016.dgn 11-SEP-2012 9:14PM reddenj

N

0 10 20 40 HORIZONTAL SCALE IN FEET

CALCULATED | CHECKED

PAVEMENT DETAIL - SERVICE RD. 3, LOST CREEK BLVD & WELLESLEY DR.

ALL-75-5.53

671
1224

SHEET NO.	REFERENCE NO.	STATION	SIDE	DRIVE TYPE	DRIVE ANGLE	APRON LENGTH "L1"	DRIVEWAY LENGTH "L2"	CADD GENERATED SURFACE AREA "A1"	CADD GENERATED SURFACE AREA "A2"	WIDTH "W"	R1 (LEFT SIDE RADII OF DRIVE LOOKING FROM CL)	R2 (RIGHT SIDE RADII OF DRIVE LOOKING FROM CL)	203 EXCAVATION	203 EMBANKMENT	252 FULL DEPTH PAVEMENT SAWING	304 AGGREGATE BASE (10 INCH)	304 AGGREGATE BASE (8 INCH)	304 AGGREGATE BASE (6 INCH)	407 TACK COAT FOR INTERMEDIATE COURSE (0.04 GAL / SQ YD)	408 PRIME COAT (0.4 GAL / SQ YD)	448 ASPHALT CONCRETE SURFACE COURSE, TYPE 1, PG64-22 (1.25 INCH)	448 ASPHALT CONCRETE SURFACE COURSE, TYPE 1, PG64-22 (2.00 INCH)	448 ASPHALT CONCRETE INTERMEDIATE COURSE, TYPE 2, PG64-22 (1.75 INCH)	452 NON-REINFORCED CONCRETE PAVEMENT (8 INCH)	609 4" CONCRETE TRAFFIC ISLAND, AS PER PLAN
					DEG	FT	FT	SQ FT	SQ FT	FT	FT	FT	CU YD	CU YD	FT	CU YD	CU YD	CU YD	GAL	GAL	CU YD	CU YD	CU YD	SQ YD	SQ YD
S.R. 309																									
673	DR-14	900+83.03	LT	COMM, ASPH	90	7.50		267.50																	
							25.31		1071.09	VAR	4.25	4.25			89.50		33.05		5.95	59.49	5.16		7.23	148.73	
673	DR-15	890+09.23	LT	COMM, ASPH	90	13.00	13.50	530.90	453.00	31.53	20.00	20.00	5.00		61.00		24.29		4.37	43.73	3.80		5.31	109.32	3.26
		888+95.00	LT					219.62		VAR					84.00		5.42		0.98	9.76	0.85		1.19	24.40	
		889+92.00	LT																						
676	DR-18	893+76.00	RT	COMM, ASPH	90	7.50		111.09					14.00											41.43	
							21.81		261.74	12.00	3.00	3.00					9.21		1.66	16.57	1.44		2.01		
674	DR-19	903+15.00	LT	COMM, ASPH	90	7.50		212.33		VAR	4.25	N/A			65.00		26.02		4.68	46.83	4.07		5.69	117.08	
							VAR		841.35																
674	DR-20	903+31.09	LT	COMM, ASPH	87.88	7.50		164.05		VAR	N/A	5.00			25.00		13.09		2.36	23.57	2.05		2.86	58.92	
							VAR		366.23																
WELLESLEY DRIVE																									
673	DR-16	11+61.67	RT	RES, ASPH	90	5.96	37.53	109.65	639.29	17.00	10.00	10.00			17.00			13.87		33.29		4.62			
TURNER AVENUE																									
673	DR-17	N/A	N/A	COMM, ASPH	N/A	24.00		1652.16		45.00	2.59	20.00	5.00	5.00	80.50		40.79		7.34	73.43	6.37		8.92		
DEAN AVENUE																									
675	DR-31	5+52.22	RT	COMM, CONC.	90	16.01		579.73		VAR	10.00	8.00			34.00									64.41	
S.R. 81																									
675	DR-24	429+73.13	LT	COMM, CONC	90	19.53		735.14		25.81	25.00	25.00			27.00									81.68	
675	DR-25	460+25.00	LT	COMM, ASPH	90	12.91		502.86		VAR	15.00	15.00												250.39	
							32.11		1750.65						84.00		55.64		10.02	100.16	8.69		12.17		
NEUBRECHT ROAD																									
675	DR-26	13+21.22	LT	COMM, ASPH	90	22.57		991.47		VAR	25.00	25.00	32.00											137.72	
							5.29		248.01						53.00		30.60		5.51	55.09	4.78		6.69		
675	DR-27	13+28.31	RT	COMM, CONC	66	15.38	8.74	684.18	218.58	25.00	15.00	25.00	21.00	1.00	26.00									100.31	
675	DR-28	14+02.92	RT	COMM, ASPH	90	11.00		384.60		VAR	15.00	15.00												96.51	
							14.73		484.00						47.00		21.45		3.86	38.60	3.35		4.69		
	DR-29	15+09.79	LT	COMM, ASPH	70	17.98		554.57		VAR	25.00	15.00	6.00											130.68	
							19.18		621.54					4.00	53.50		29.04		5.23	52.27	4.54		6.35		
SERVICE ROAD 3																									
677	DR-41	30+69.66	RT	COMM, CONC	90	6.00		669.61		97.79	25.00	25.00			133.00									74.40	
677	DR-42	31+78.56	RT	COMM, CONC	90	6.00		407.81		55.00	25.00	25.00			89.00									45.31	
677	DR-43	32+81.95	RT	COMM, CONC	90	6.00		407.81		55.00	25.00	25.00			89.00									45.31	
677	DR-44	33+87.70	RT	COMM, CONC	90	23.15	5.85	1125.11	206.64	34.26	25.00	25.00			53.50									147.97	
677	DR-45	35+72.47	RT	COMM, CONC	90	6.00		407.81		55.00	25.00	25.00			43.00									45.31	
677	DR-46	36+75.11	RT	COMM, CONC	90	6.00		411.29		55.32	25.00	25.00												45.70	
678	DR-47	38+61.93	RT	COMM, CONC	90	26.06	13.94	1230.30	487.95	35.00	25.00	25.00												190.92	
678	DR-48	39+87.17	RT	COMM, CONC	90	25.94	4.06	1226.19	142.01	35.00	25.00	25.00			79.50									152.02	
678	DR-49	40+76.75	RT	COMM, CONC	90	6.00		407.81		55.00	25.00	25.00			89.00									45.31	
678	DR-50	41+70.79	RT	COMM, CONC	90	6.00		407.81		55.00	25.00	25.00			89.00									45.31	
678	DR-51	43+64.80	RT	RES, ASPH	90	26.40	6.09	655.12	73.11	12.00	25.00	25.00			11.00			13.49		32.37		4.50			
678	DR-52	44+26.17	RT	RES, ASPH	87	27.54		650.49		12.00	25.00	25.00			11.00			12.05		28.91		4.02			
676	DR-53	45+45.66	RT	RES, ASPH	81.39	25.50	10.50	748.90	204.95	19.52	25.00	25.00			19.50			17.66		42.39		5.89			
676	DR-54	45+75.46	RT	RES, ASPH	70.88	25.50	1.33	531.31	14.67	11.00	25.00	25.00			11.00			10.11		24.27		3.37			
676	DR-55	46+22.51	RT	RES, ASPH	90	17.45	31.28	320.76	375.30	12.00	25.00	25.00			13.00			12.89		30.94		4.30			
TOTALS CARRIED TO GENERAL SUMMARY													83	10	1477		369		52	712		72	63	2,199	3

TYPE 1 DRIVEWAY PLAN VIEW (TYPICAL)

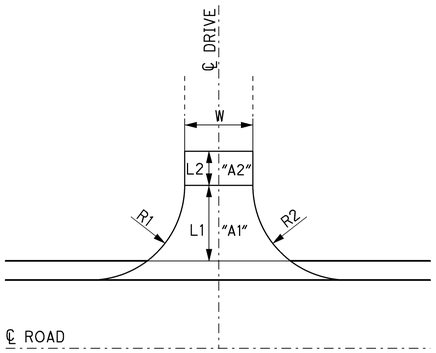

TYPE 2 DRIVEWAY PLAN VIEW (TYPICAL)

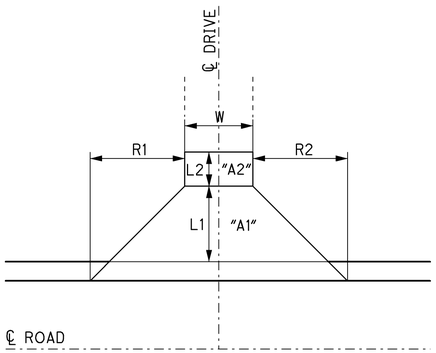

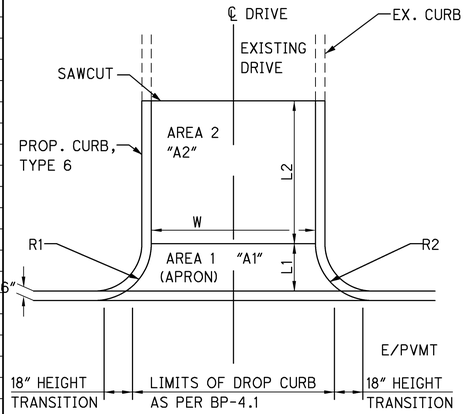

DRIVE DETAIL - TYPE 1 (CURBED)

N.T.S.

CALCULATED JRL CHECKED JRW

DRIVEWAY SUBSUMMARY

ALL-75-5.53

672
1224

J:\Projects\ALL\76691\roadway\sheets\76691GD001.dgn 11-SEP-2012 9:14PM reddenj

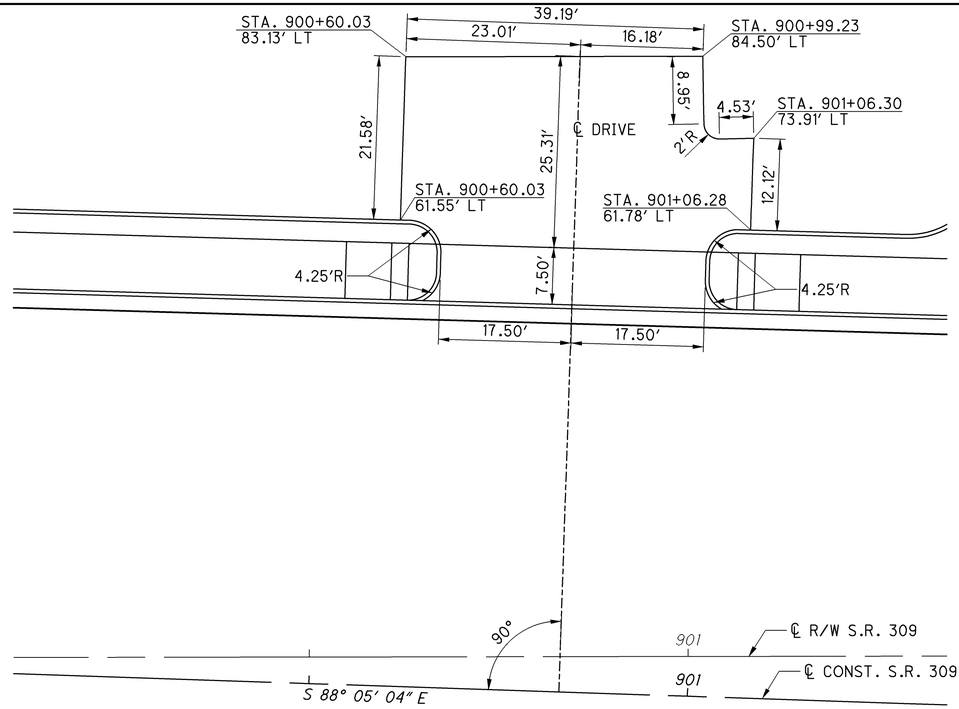

DRIVE DR-14
STA. 900+83.03

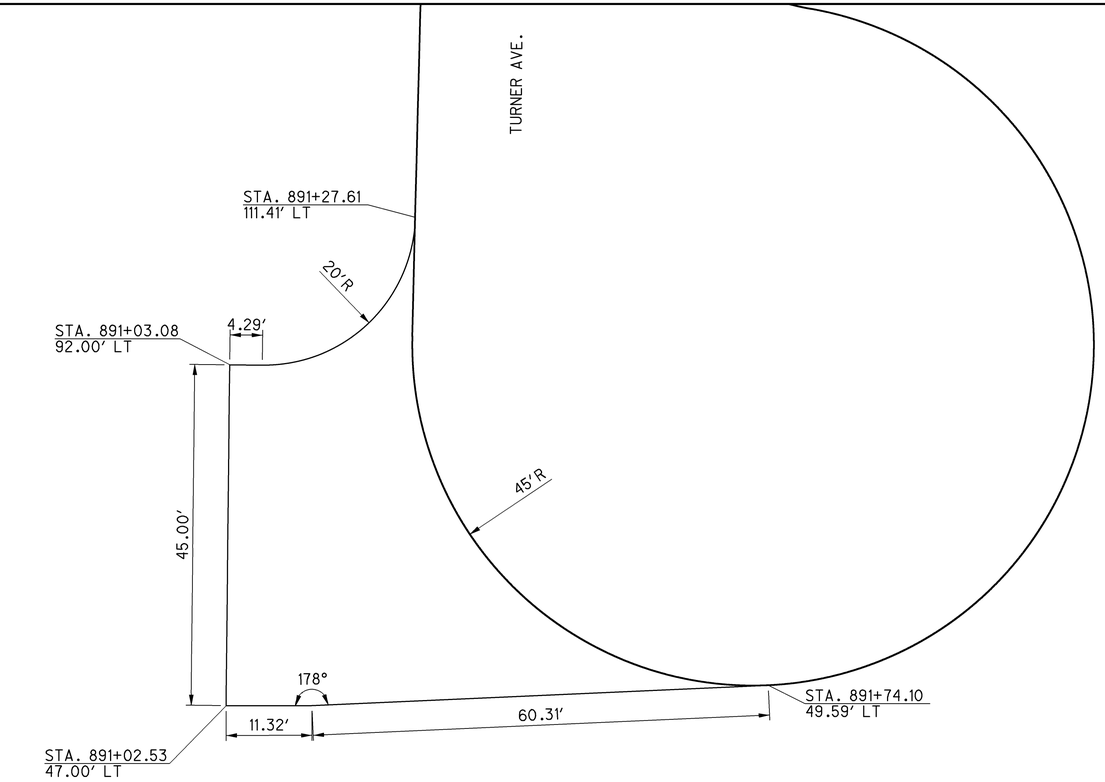

DRIVE DR-17
FOR PAVEMENT ELEVATIONS
SEE PAVEMENT DETAILS ON SHEET 615.

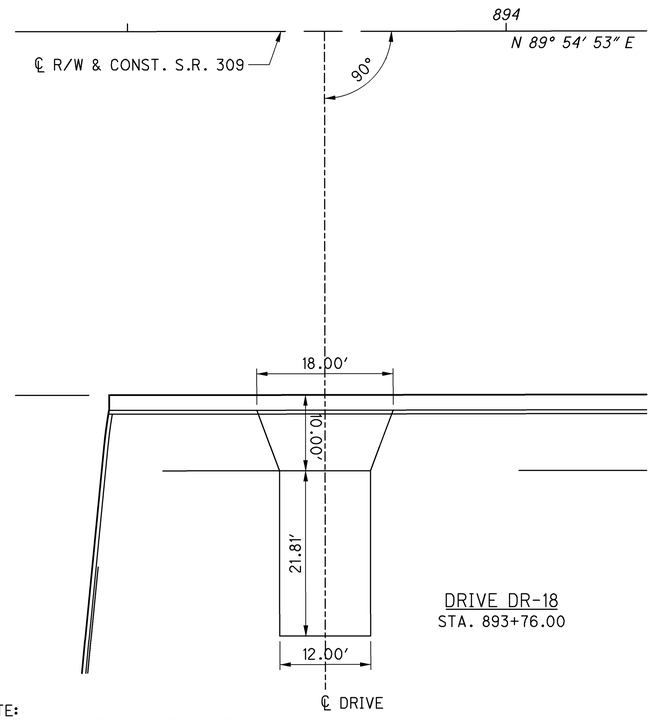

DRIVE DR-18
STA. 893+76.00

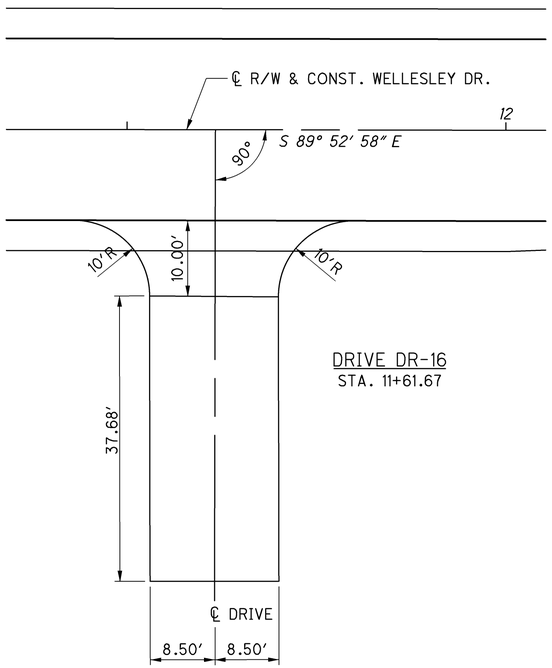

DRIVE DR-16
STA. 11+61.67

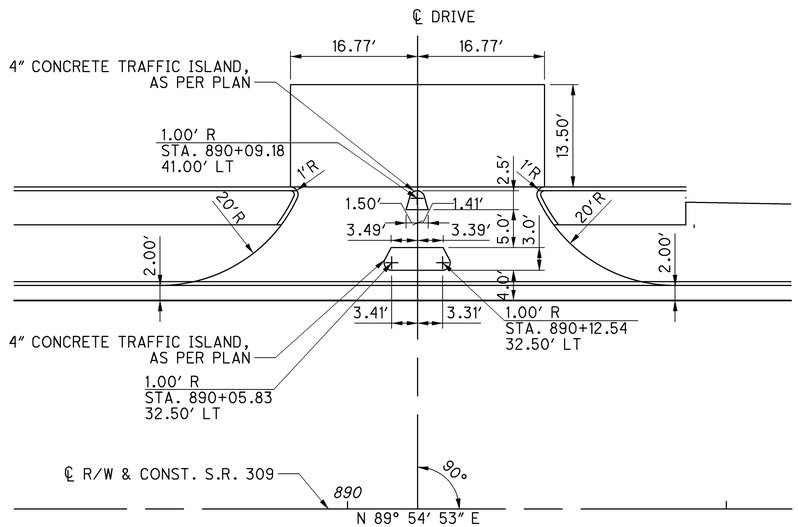

DRIVE DR-15
STA. 890+09.23

NOTE:
SEE CROSS SECTIONS FOR DRIVEWAY
PROFILES UNLESS OTHERWISE NOTED.

CALCULATED SJG
CHECKED CAC

DRIVEWAY DETAILS

ALL-75-5.53

J:\Projects\ALL\76691\roadway\sheets\76691GD005.dgn 11-SEP-2012 9:14PM reddenj

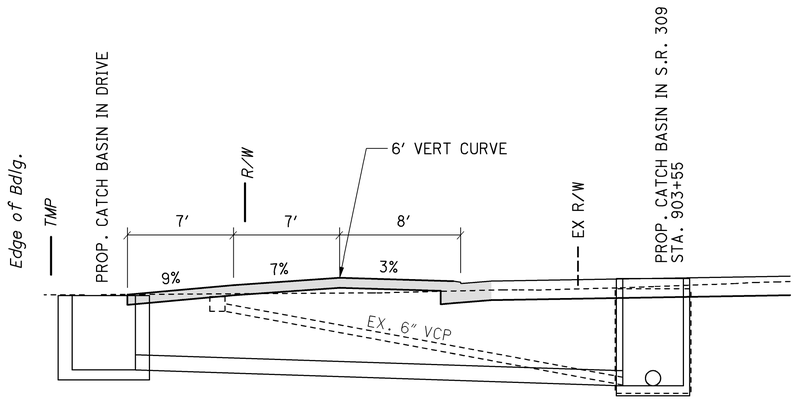

PROFILE DRIVE DR-20
STA. 903+31.09

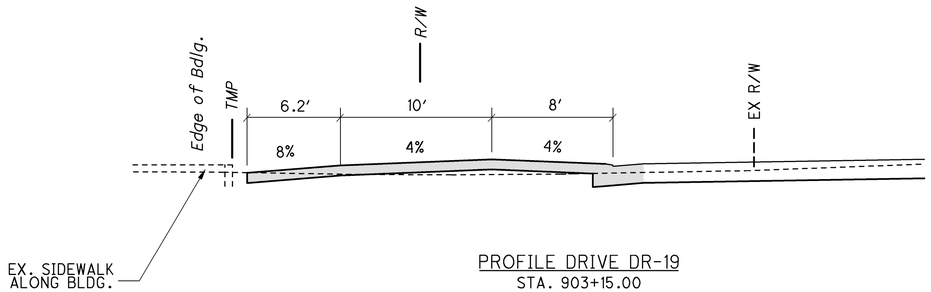

PROFILE DRIVE DR-19
STA. 903+15.00

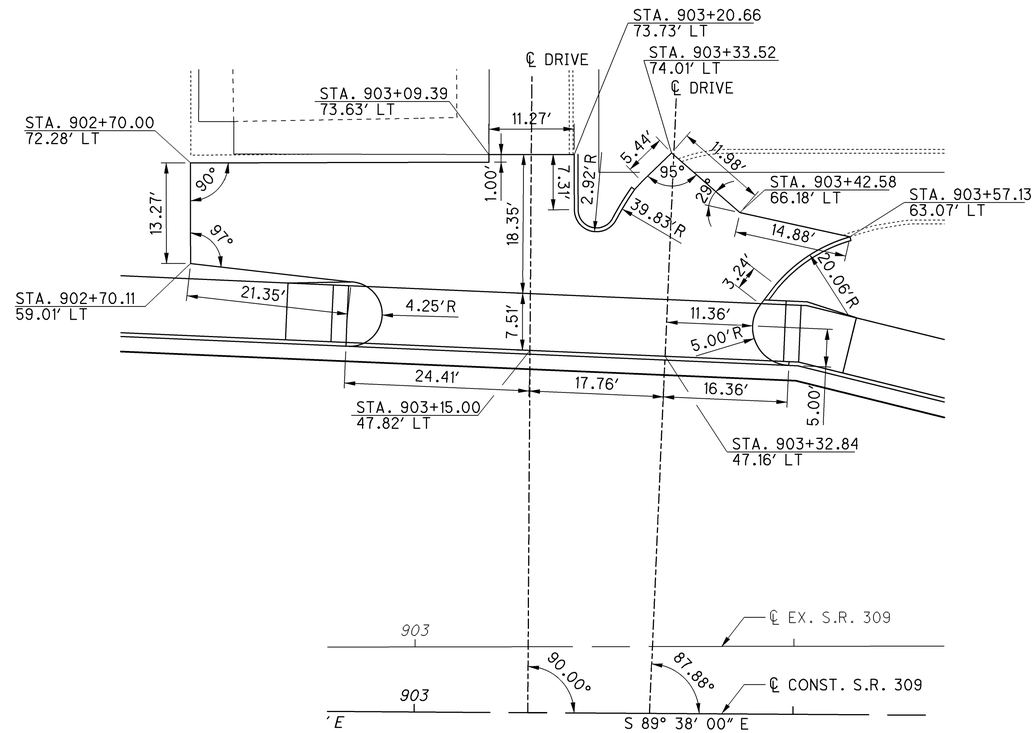

DRIVE DR-19 DRIVE DR-20
STA. 903+15.00 STA. 903+31.09
FOR PROFILES SEE DETAILS ON THIS SHEET

CALCULATED SJG
CHECKED CAC

DRIVEWAY DETAILS

ALL-75-5.53

674
1224

J:\Projects\ALL\76691\roadway\sheets\76691GD006.dgn 11-SEP-2012 9:14PM reddenj

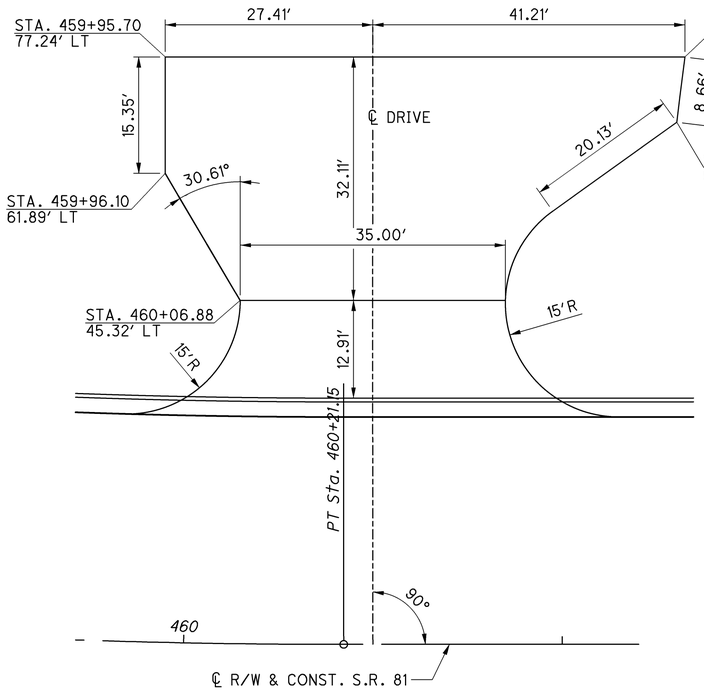

DRIVE DR-25
STA. 460+25.00

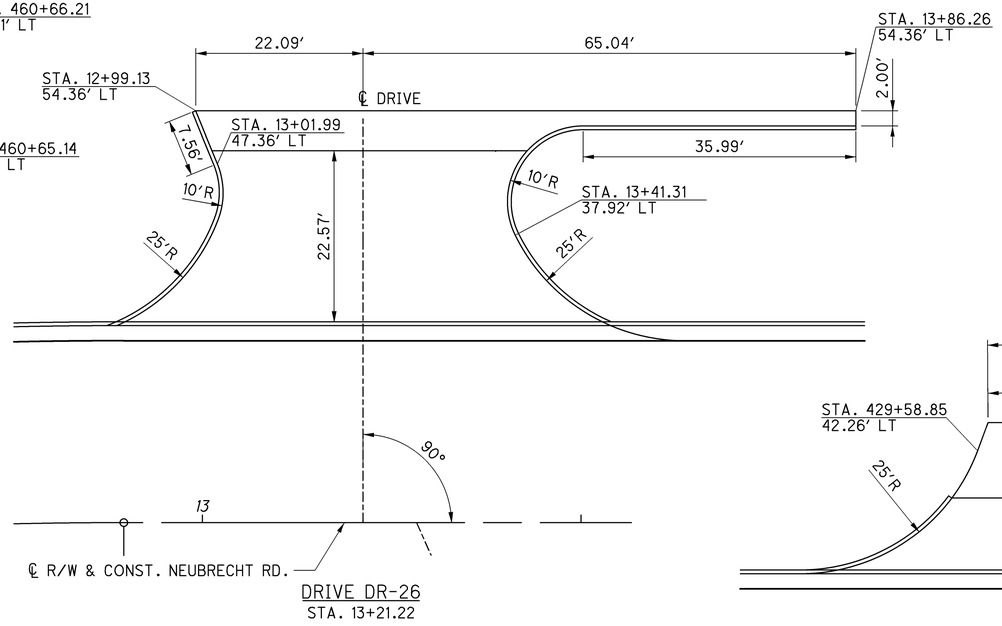

DRIVE DR-26
STA. 13+21.22

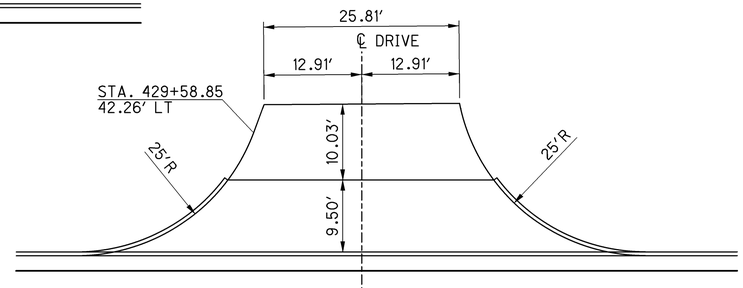

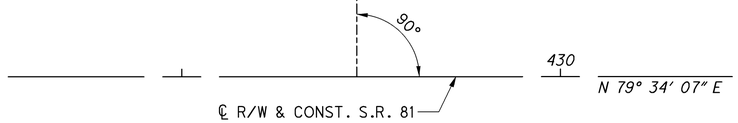

DRIVE DR-24
STA. 429+73.13

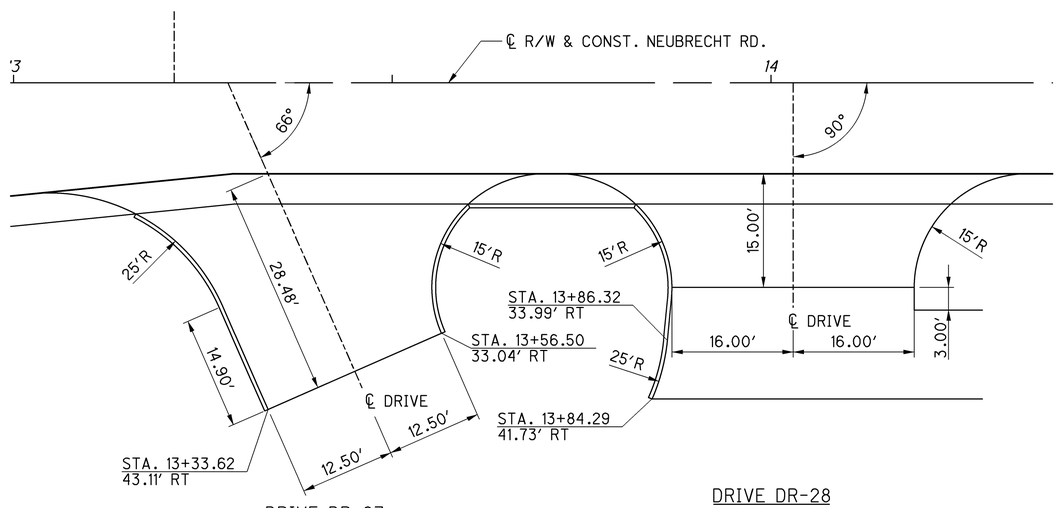

DRIVE DR-27
STA. 13+28.31

DRIVE DR-28
STA. 14+02.92

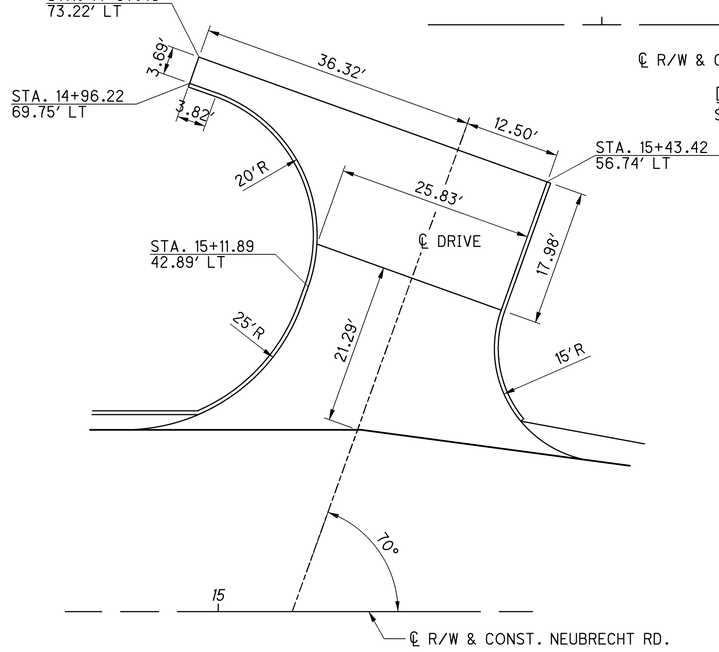

DRIVE DR-29
STA. 15+09.79

NOTE:
SEE CROSS SECTIONS FOR DRIVEWAY PROFILES UNLESS OTHERWISE NOTED.

CALCULATED SJG
CHECKED CAC

DRIVEWAY DETAILS

ALL-75-5.53

675
1224

J:\Projects\ALL\76691\roadway\sheets\76691GD007.dgn 11-SEP-2012 9:14PM redderj

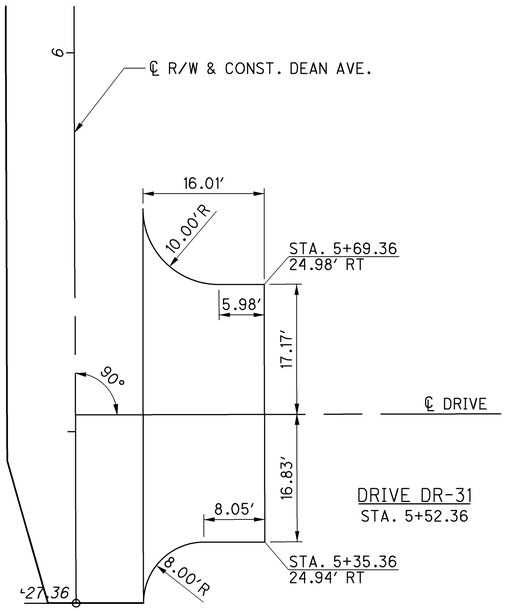

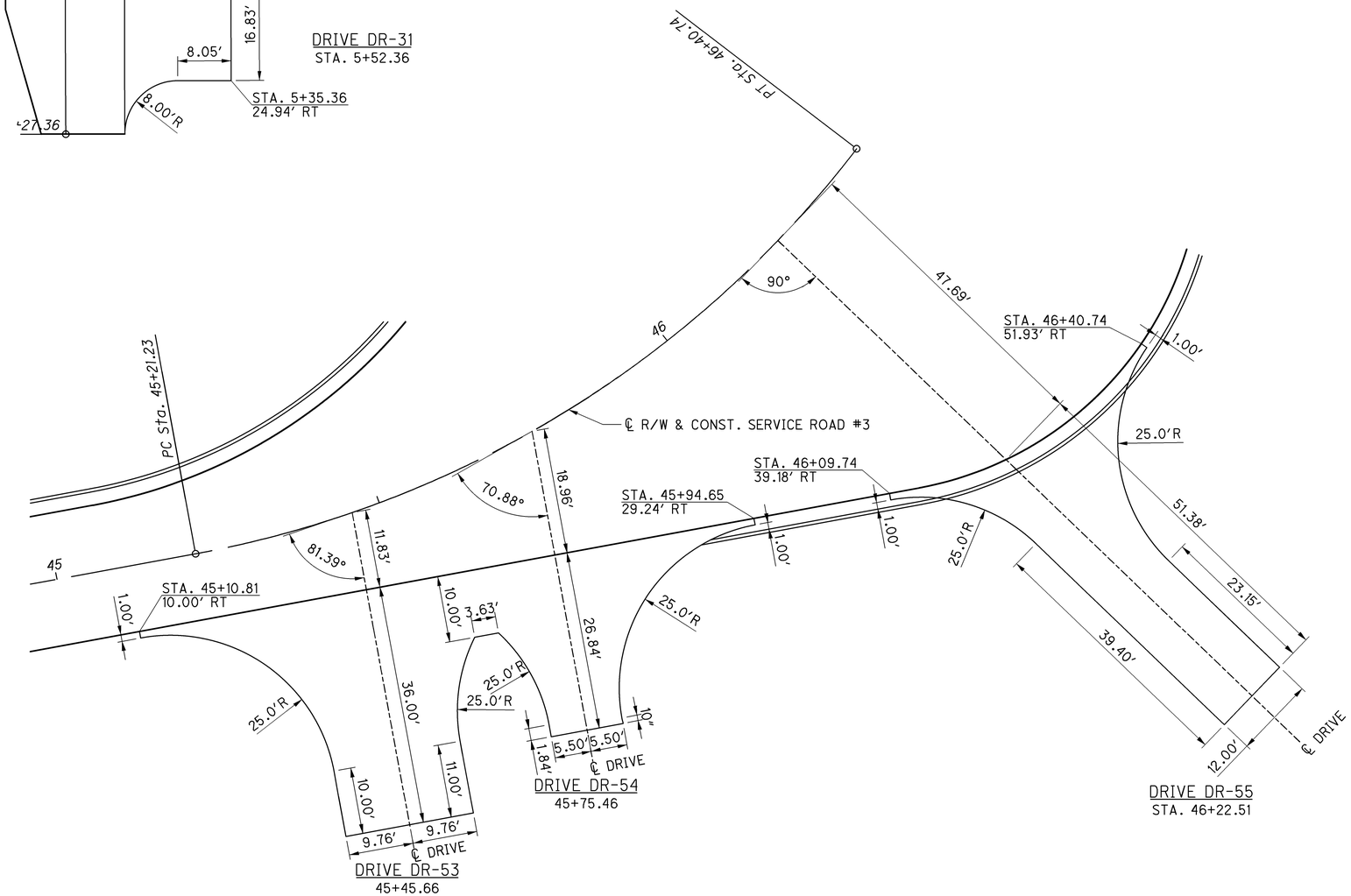

NOTE:
SEE CROSS SECTIONS FOR DRIVEWAY PROFILES UNLESS OTHERWISE NOTED.

J:\Projects\ALL\76691\roadway\sheets\76691GD008.dgn 11-SEP-2012 9:14PM reddenj

CALCULATED SJG
CHECKED CAC

DRIVEWAY DETAILS

ALL-75-5.53

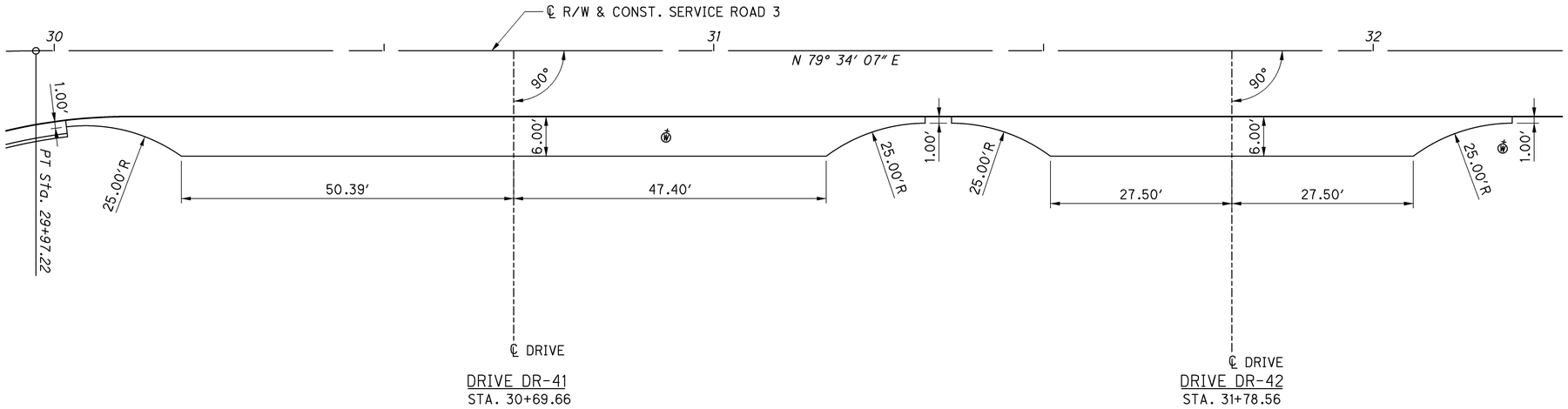

DRIVE DR-41
STA. 30+69.66

DRIVE DR-42
STA. 31+78.56

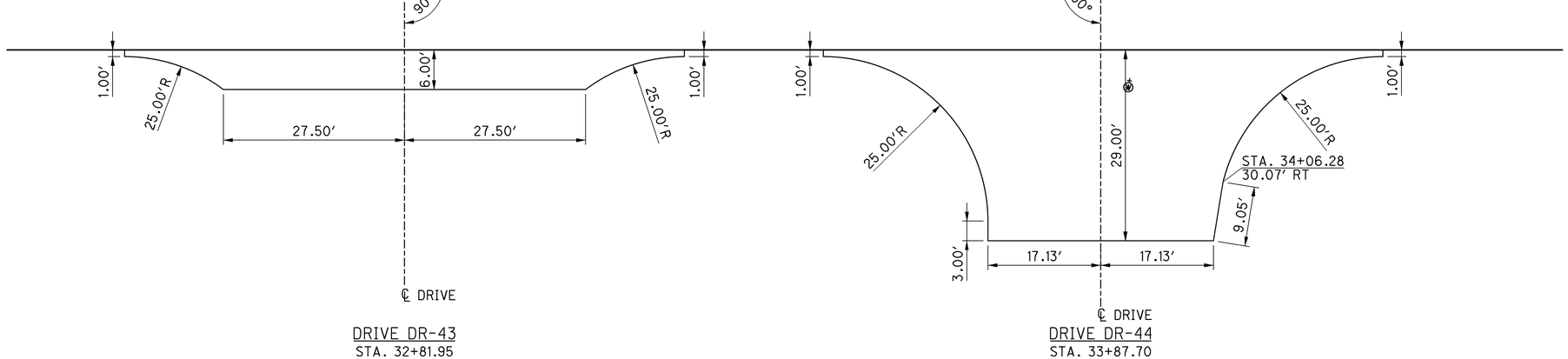

DRIVE DR-43
STA. 32+81.95

DRIVE DR-44
STA. 33+87.70

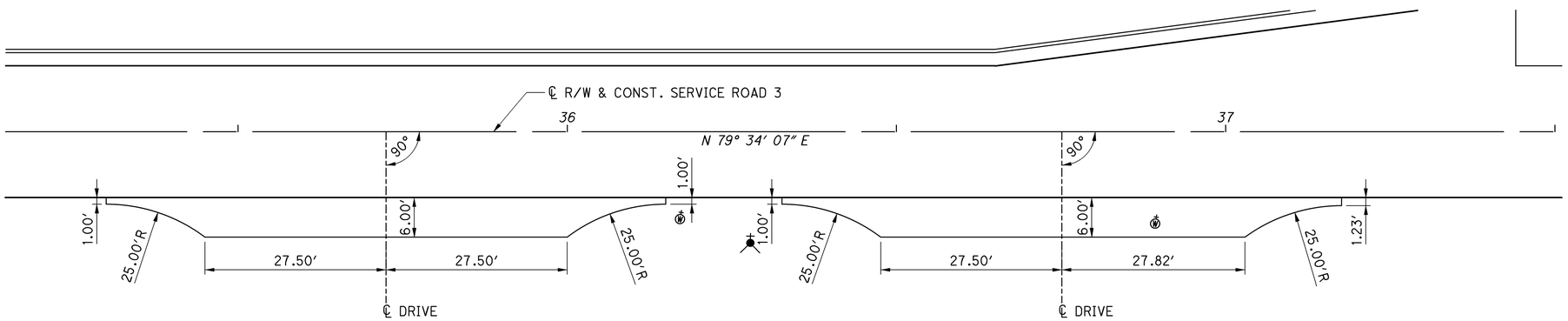

DRIVE DR-45
STA. 35+72.47

DRIVE DR-46
STA. 36+75.11

NOTE:
SEE CROSS SECTIONS FOR DRIVEWAY PROFILES UNLESS OTHERWISE NOTED.

J:\Projects\ALL\76691\roadway\sheets\7669IGD009.dgn 11-SEP-2012 9:14PM reddenj

CALCULATED SJG
CHECKED CAC

DRIVEWAY DETAILS

ALL-75-5.53

677
1224

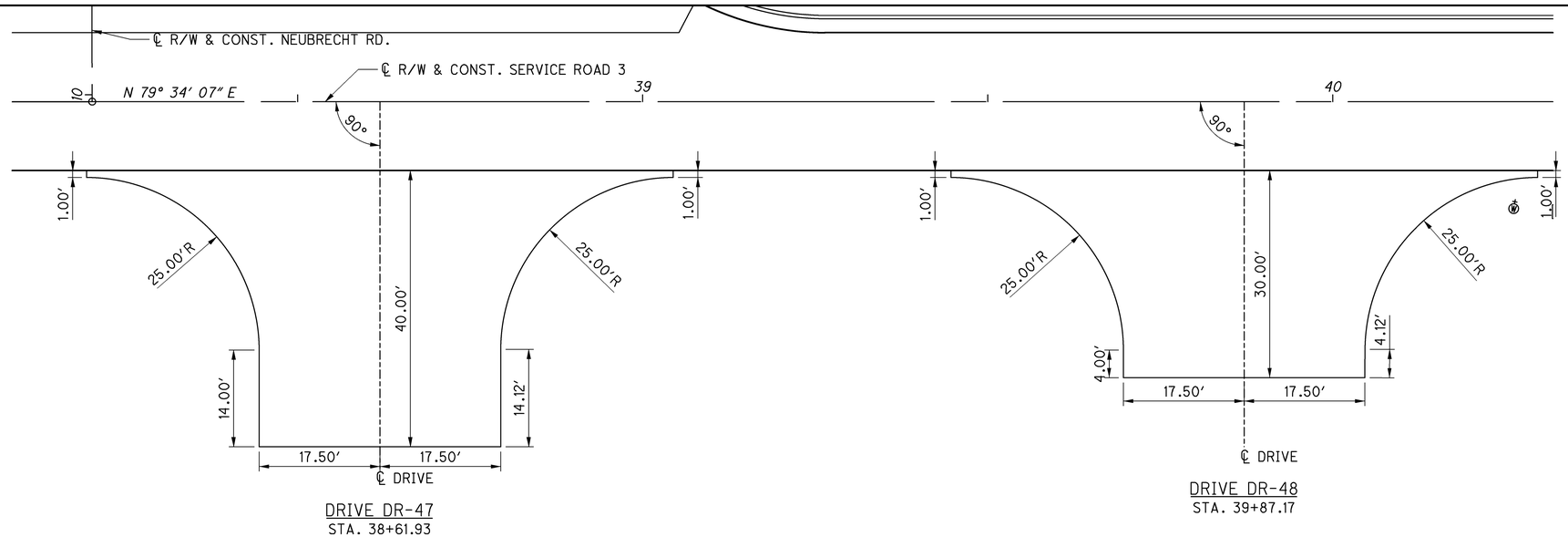

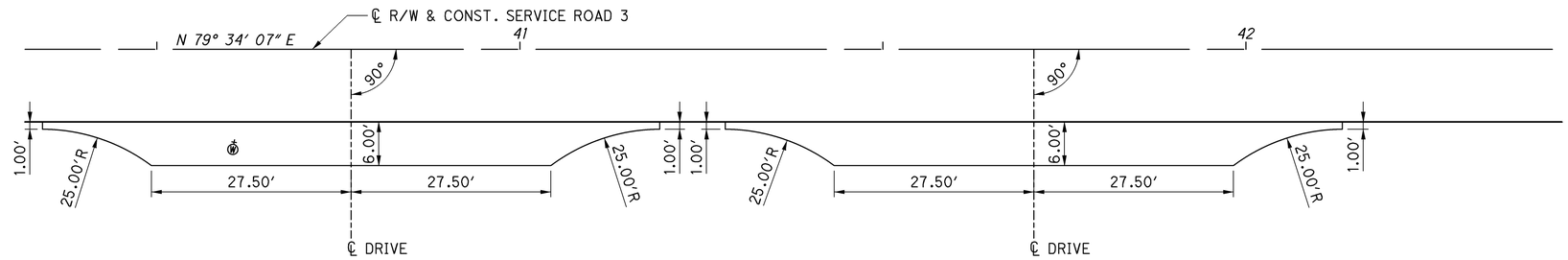

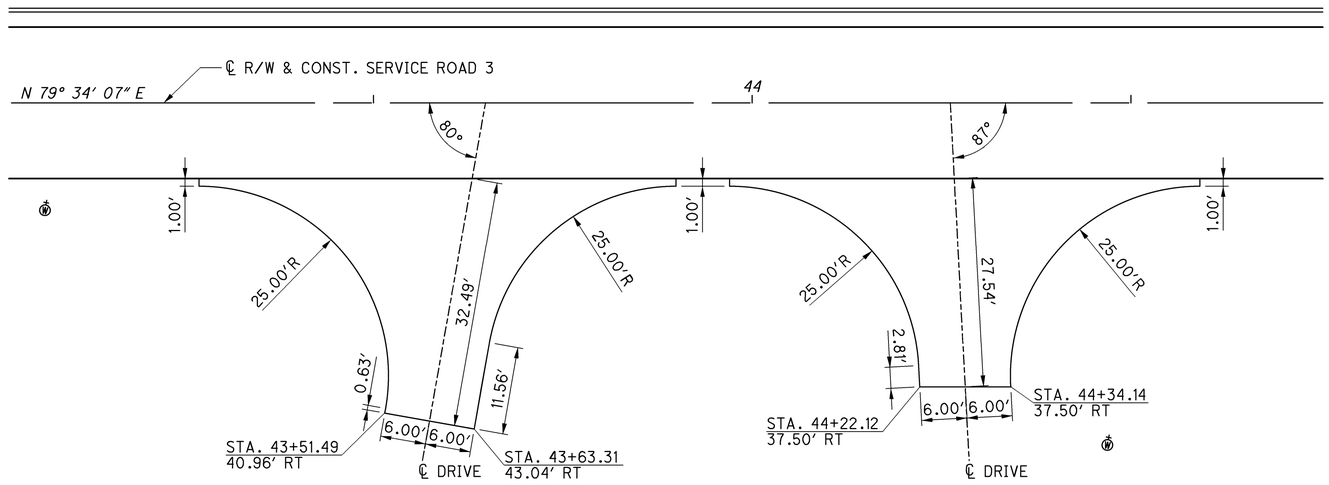

NOTE:
SEE CROSS SECTIONS FOR DRIVEWAY PROFILES UNLESS OTHERWISE NOTED.

CALCULATED SJG
CHECKED CAC

DRIVEWAY DETAILS

ALL-75-5.53

678
1224

J:\Projects\ALL\76691\roadway\sheets\76691GD010.dgn 11-SEP-2012 9:14PM redden

ESTIMATED QUANTITIES

503	COFFERDAMS AND EXCAVATION BRACING	= 1 LUMP
601	TIED CONCRETE BLOCK MAT, TYPE 3	= 36.3 S.Y.
601	RIPRAP USING 6" REINFORCED CONCRETE SLAB	= 27.87 S.Y.
602	CONCRETE MASONRY	= 40.1 C.Y.
603	60" TWIN CONDUIT, TYPE A, 706.02, 707.01, 707.02, 707.04 (1.0"), 707.05, 707.07,707.22 (0.060)	= 464 FT.

CARRIED TO ROAD SUBSUMMARY SHEET 149 & 150.

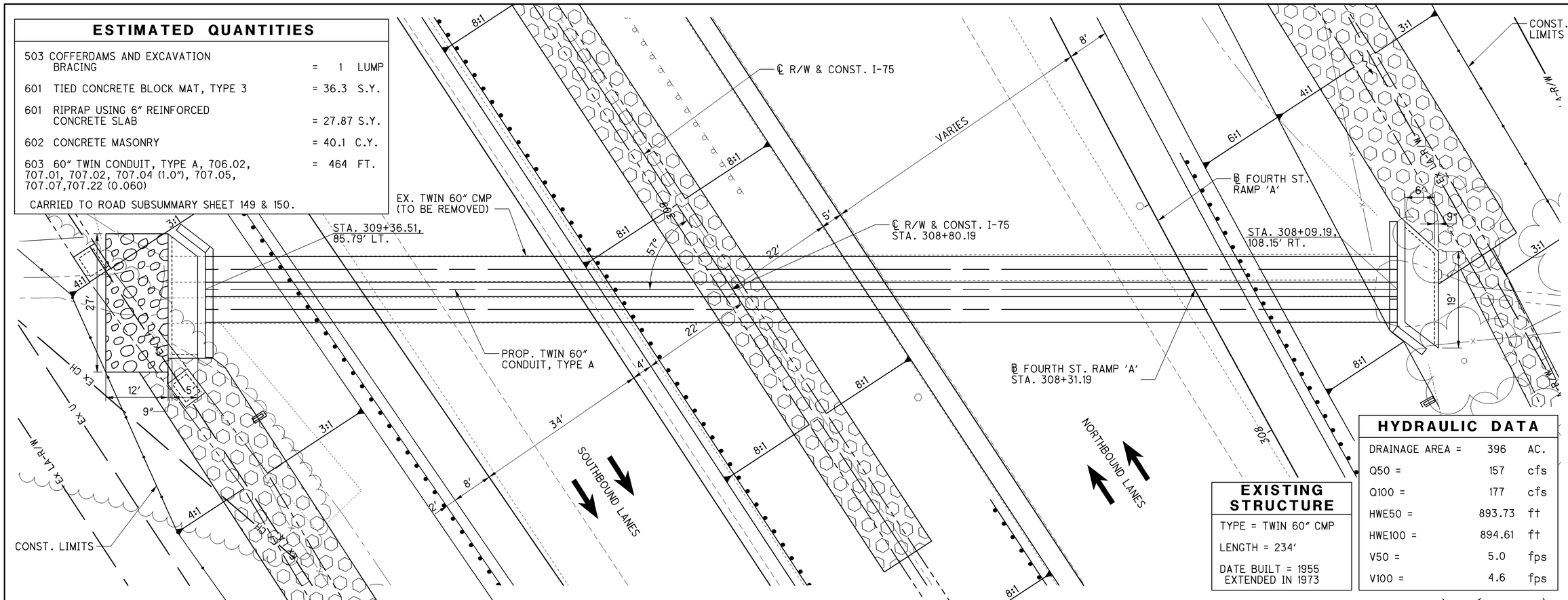

EXISTING STRUCTURE

TYPE = TWIN 60" CMP

LENGTH = 234'

DATE BUILT = 1955
EXTENDED IN 1973

HYDRAULIC DATA

DRAINAGE AREA =	396	AC.
Q50 =	157	cfs
Q100 =	177	cfs
HWE50 =	893.73	ft
HWE100 =	894.61	ft
V50 =	5.0	fps
V100 =	4.6	fps

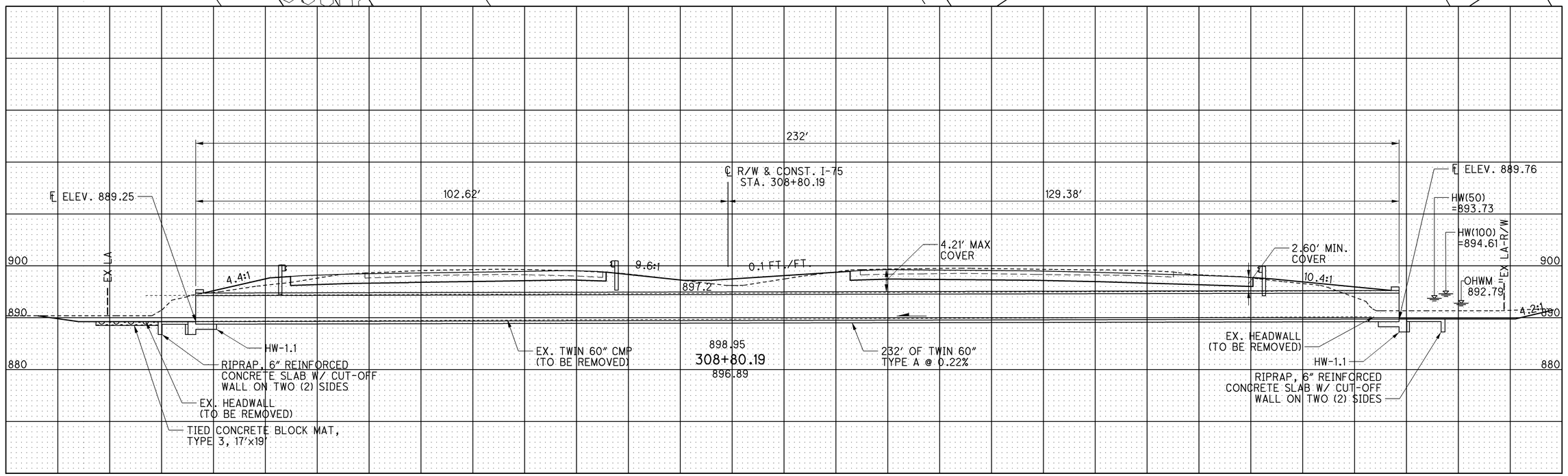

HORIZONTAL SCALE IN FEET
0 5 10 20

CALCULATED ACF CHECKED JRL

CULVERT DETAIL FOR No. C28
I-75 AT STA. 308+75.52

ALL-75-5.53

679
1224

J:\Projects\ALL\76691\drainage\sheets\76691DC017.dgn 14-JAN-2013 5:52PM fedak

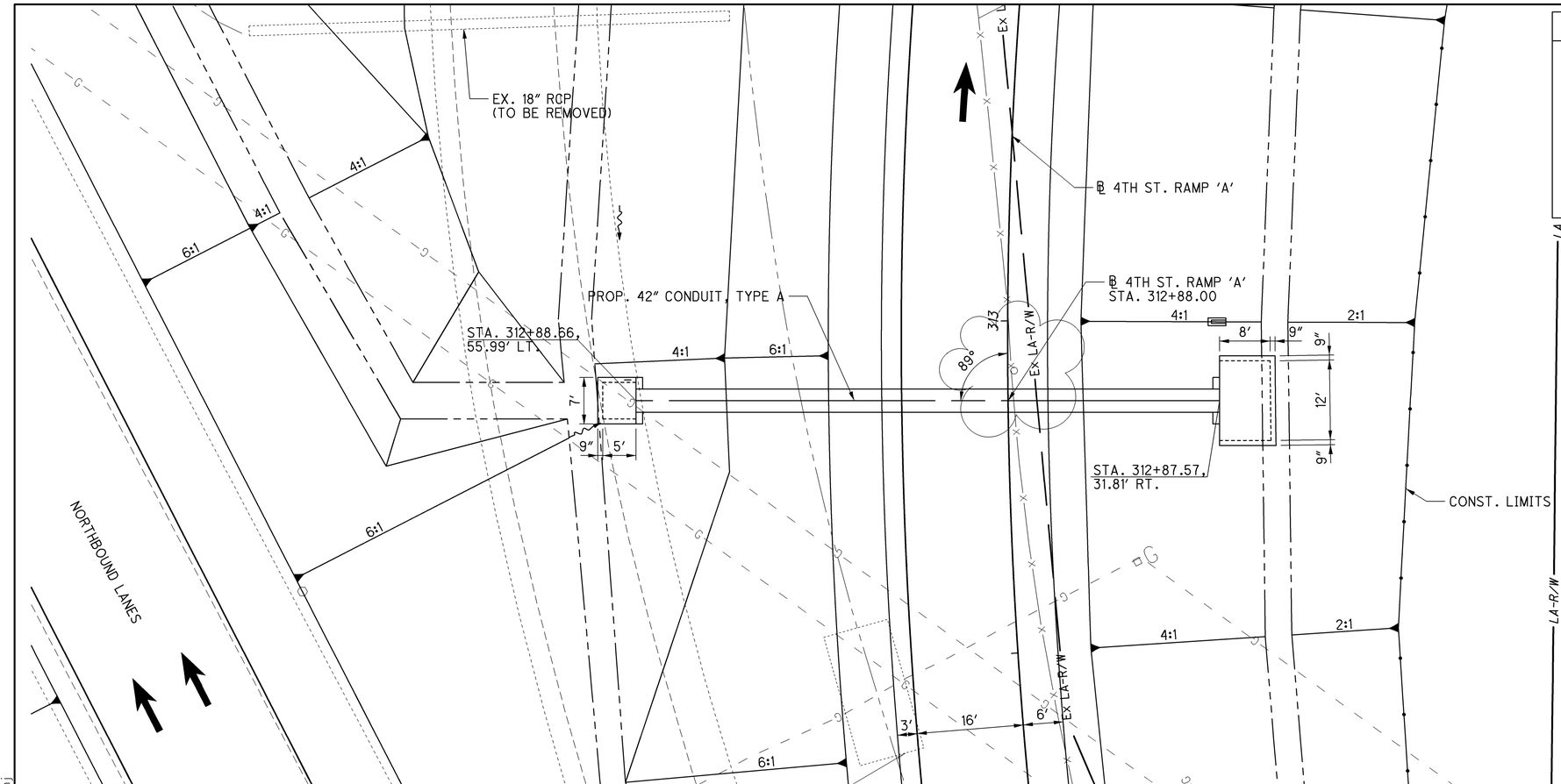

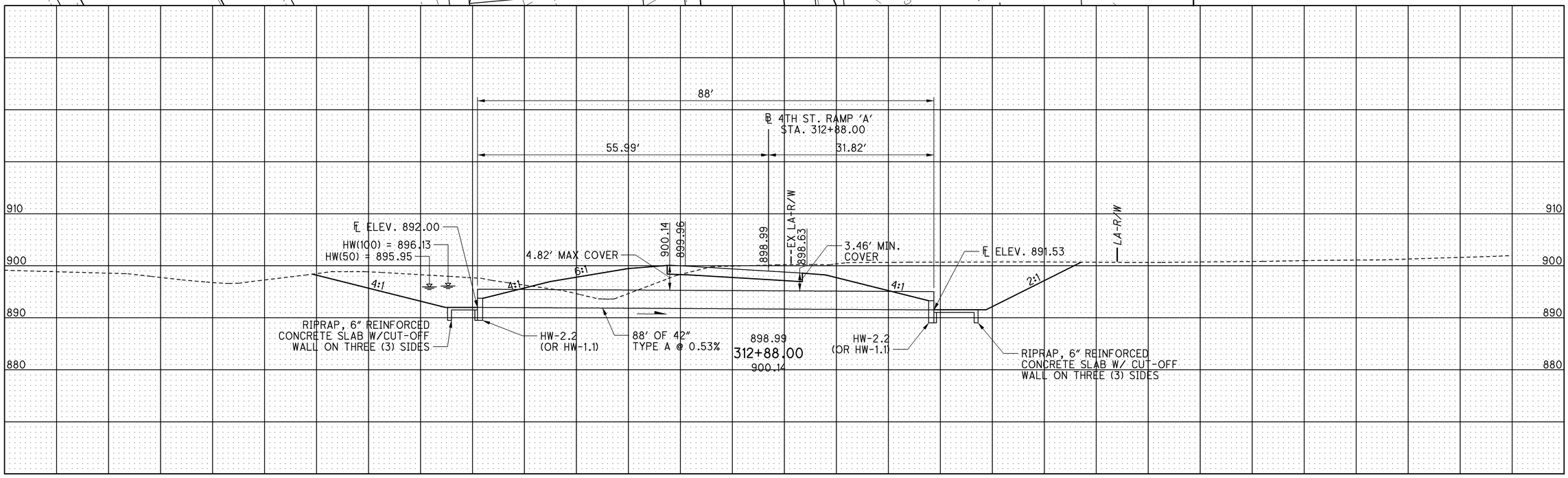

ESTIMATED QUANTITIES

601	TIED CONCRETE BLOCK MAT, TYPE 3	= 0.00 S.Y.
601	RIPRAP USING 6" REINFORCED CONCRETE SLAB	= 17.11 S.Y.
602	CONCRETE MASONRY	= 1.68 C.Y.
603	42" CONDUIT, TYPE A, 706.02 OR 48" 707.01, 707.02, 707.04 (0.5") 707.05, 707.07, 707.21 (0.105)	= 88 FT.

CARRIED TO ROAD SUBSUMMARY SHEET 149 & 150.

EXISTING STRUCTURE

TYPE = 18" RCP

LENGTH = 72'

DATE BUILT = 1957

HYDRAULIC DATA

DRAINAGE AREA =	17	AC.
Q50 =	43	cfs
Q100 =	50	cfs
HWE50 =	895.95	ft
HWE100 =	896.13	ft
V50 =	4.4	fps
V100 =	5.2	fps

HORIZONTAL SCALE IN FEET
0 5 10 20

CALCULATED ACF CHECKED JRL

CULVERT DETAIL FOR No. C29
4TH ST. RAMP 'A' AT STA. 312+88.00

ALL-75-5.53

680
1224

J:\Projects\ALL\76691\drainage\sheets\76691DC029.dgn 13-SEP-2012 11:55AM redderj

ESTIMATED QUANTITIES

601	TIED CONCRETE BLOCK MAT, TYPE 3	= 7.0 S.Y.
601	RIPRAP USING 6" REINFORCED CONCRETE SLAB	= 20.05 S.Y.
602	CONCRETE MASONRY	= 1.68 C.Y.
603	42" CONDUIT, TYPE A, 706.02	= 79 FT.

CARRIED TO ROAD SUBSUMMARY SHEET 149 & 150.

EXISTING STRUCTURE

TYPE = 24" RCP

LENGTH = 64'

DATE BUILT = 1957

HYDRAULIC DATA

DRAINAGE AREA =	14	AC.
Q50 =	43	cfs
Q100 =	49	cfs
HWE50 =	896.75	ft
HWE100 =	896.96	ft
V50 =	5.4	fps
V100 =	6.3	fps

HORIZONTAL SCALE IN FEET (0, 5, 10, 20)

CALCULATED ACF CHECKED JRL

CULVERT DETAIL FOR No. C30
4TH ST. RAMP 'B' AT STA. 314+58.00

ALL-75-5.53

681
1224

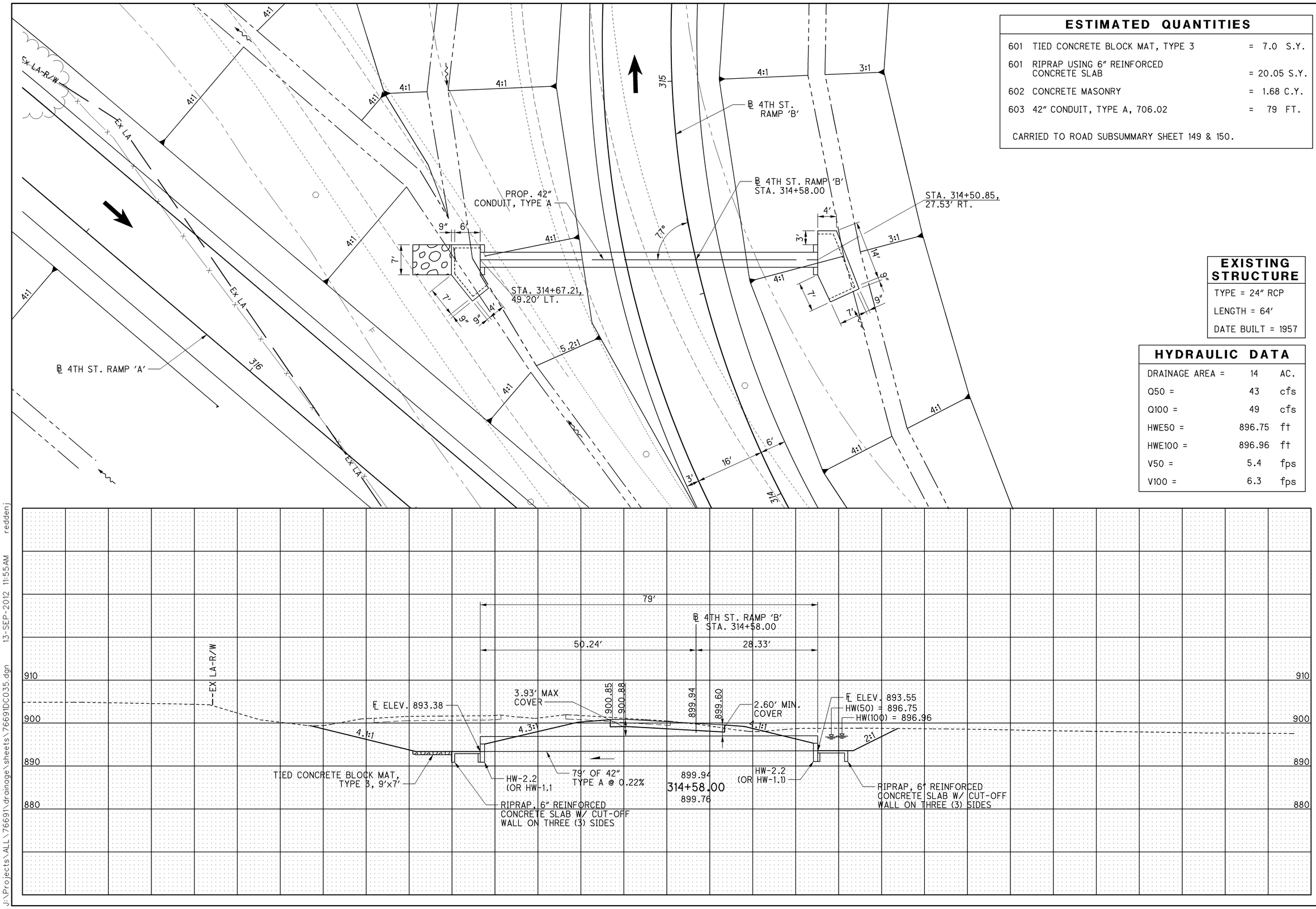

J:\Projects\ALL\76691\drainage\sheets\76691DC035.dgn 13-SEP-2012 11:55AM reddenj

EXISTING STRUCTURE

TYPE = 15" RCP

LENGTH = 116'

DATE BUILT = 1957
EXTENDED IN 1973

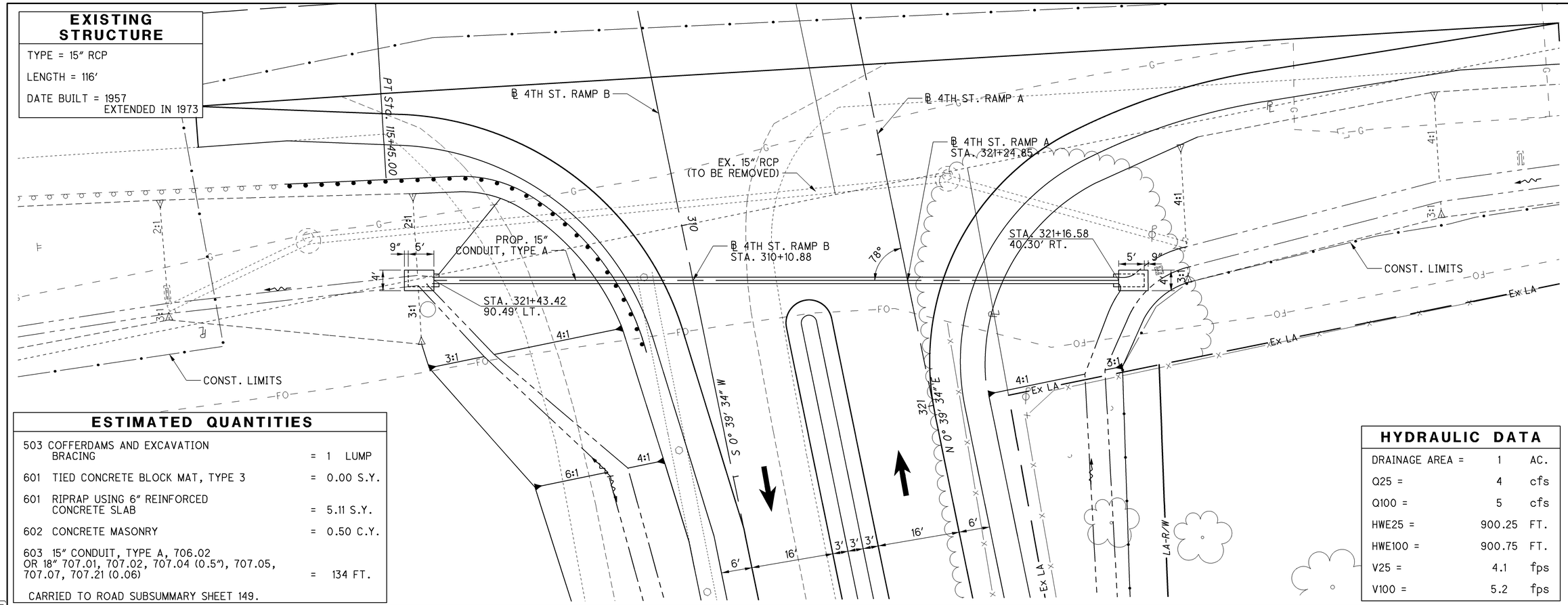

ESTIMATED QUANTITIES

503	COFFERDAMS AND EXCAVATION BRACING	= 1 LUMP
601	TIED CONCRETE BLOCK MAT, TYPE 3	= 0.00 S.Y.
601	RIPRAP USING 6" REINFORCED CONCRETE SLAB	= 5.11 S.Y.
602	CONCRETE MASONRY	= 0.50 C.Y.
603	15" CONDUIT, TYPE A, 706.02 OR 18" 707.01, 707.02, 707.04 (0.5"), 707.05, 707.07, 707.21 (0.06)	= 134 FT.

CARRIED TO ROAD SUBSUMMARY SHEET 149.

HYDRAULIC DATA

DRAINAGE AREA =	1	AC.
Q25 =	4	cfs
Q100 =	5	cfs
HWE25 =	900.25	FT.
HWE100 =	900.75	FT.
V25 =	4.1	fps
V100 =	5.2	fps

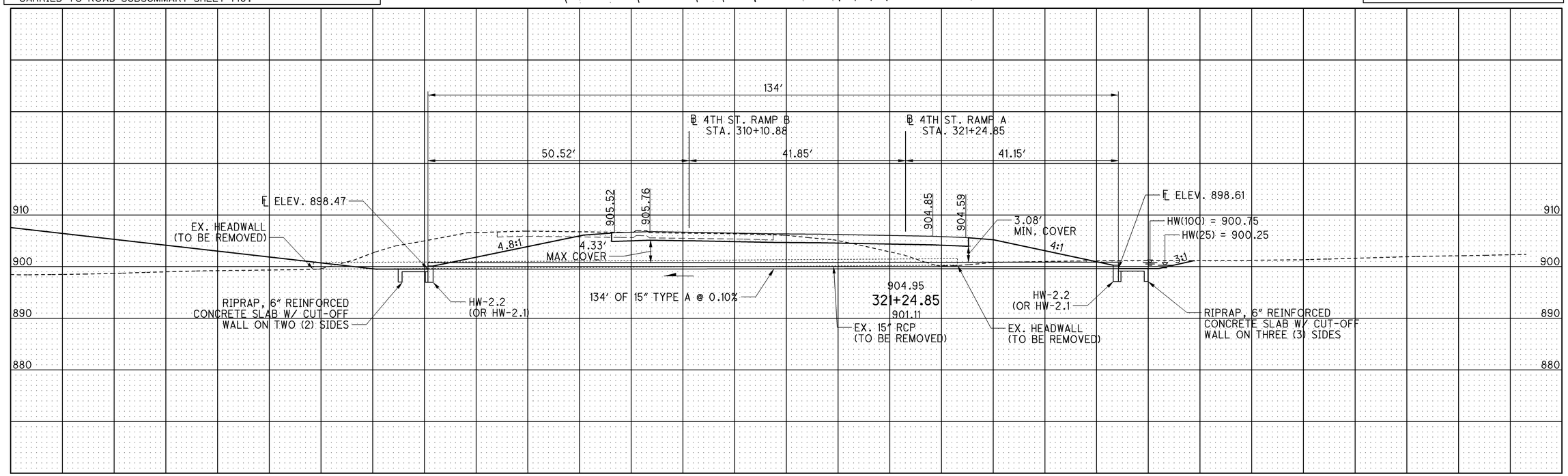

HORIZONTAL SCALE IN FEET
0 5 10 20

CALCULATED ACF
CHECKED JRL

CULVERT DETAIL FOR No. C31
4TH ST. RAMP A AT STA. 321+24.85

ALL-75-5.53

682
1224

J:\Projects\ALL\76691\drainage\sheets\76691DC040.dgn 13-SEP-2012 11:55AM reddenj

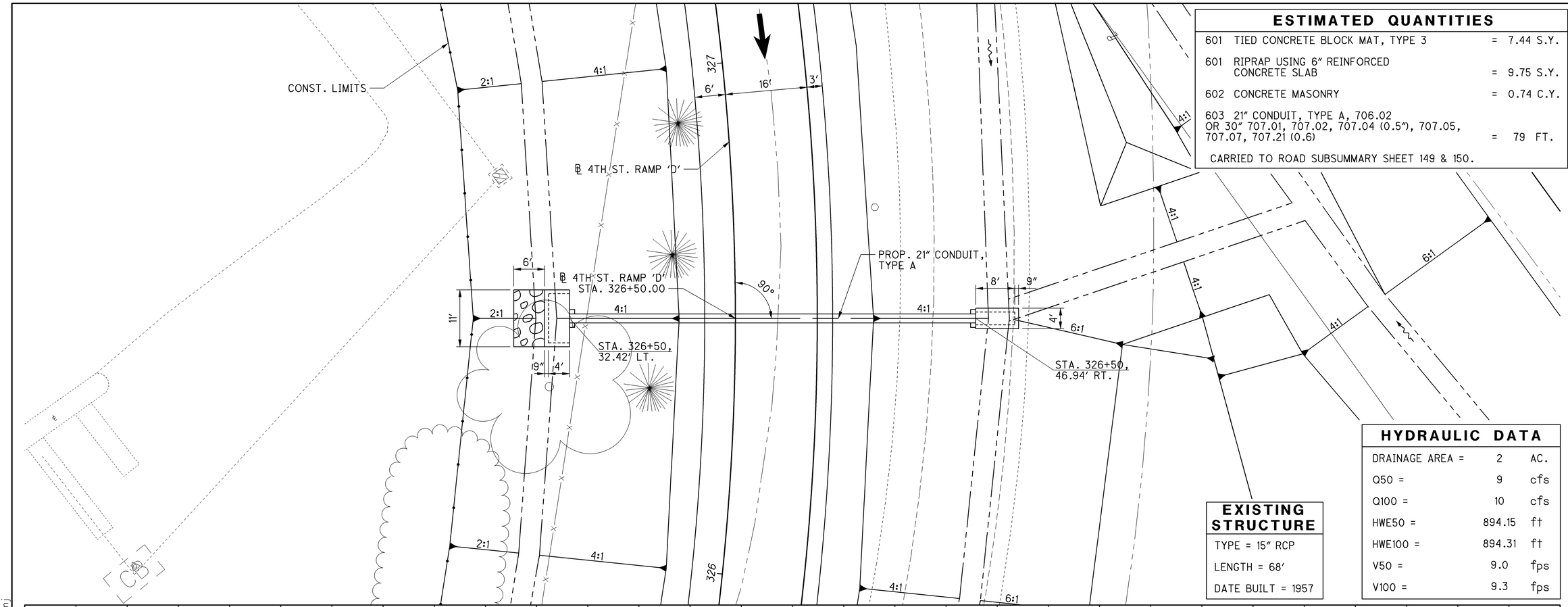

ESTIMATED QUANTITIES

601	TIED CONCRETE BLOCK MAT, TYPE 3	= 7.44 S.Y.
601	RIPRAP USING 6" REINFORCED CONCRETE SLAB	= 9.75 S.Y.
602	CONCRETE MASONRY	= 0.74 C.Y.
603	21" CONDUIT, TYPE A, 706.02 OR 30" 707.01, 707.02, 707.04 (0.5"), 707.05, 707.07, 707.21 (0.6)	= 79 FT.

CARRIED TO ROAD SUBSUMMARY SHEET 149 & 150.

HORIZONTAL SCALE IN FEET
0 5 10 20

CALCULATED ACF
CHECKED JRL

EXISTING STRUCTURE

- TYPE = 15" RCP
- LENGTH = 68'
- DATE BUILT = 1957

HYDRAULIC DATA

DRAINAGE AREA =	2	AC.
Q50 =	9	cfs
Q100 =	10	cfs
HWE50 =	894.15	ft
HWE100 =	894.31	ft
V50 =	9.0	fps
V100 =	9.3	fps

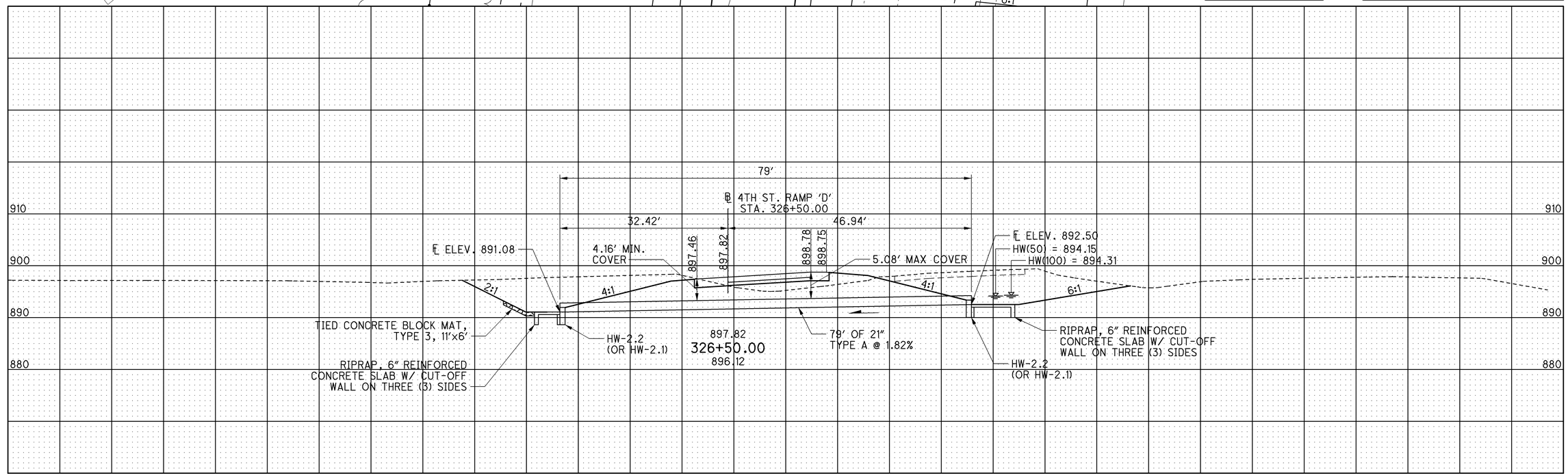

CULVERT DETAIL FOR No. C37
4TH ST. RAMP 'D' AT STA. 326+50.00

ALL-75-5.53

683
1224

J:\Projects\ALL\76691\drainage\sheets\76691DC037.dgn 13-SEP-2012 11:55AM reddenj

EXISTING STRUCTURE

TYPE = 30″ CMP

LENGTH = 110′

DATE BUILT = 1955
EXTENDED IN 1973

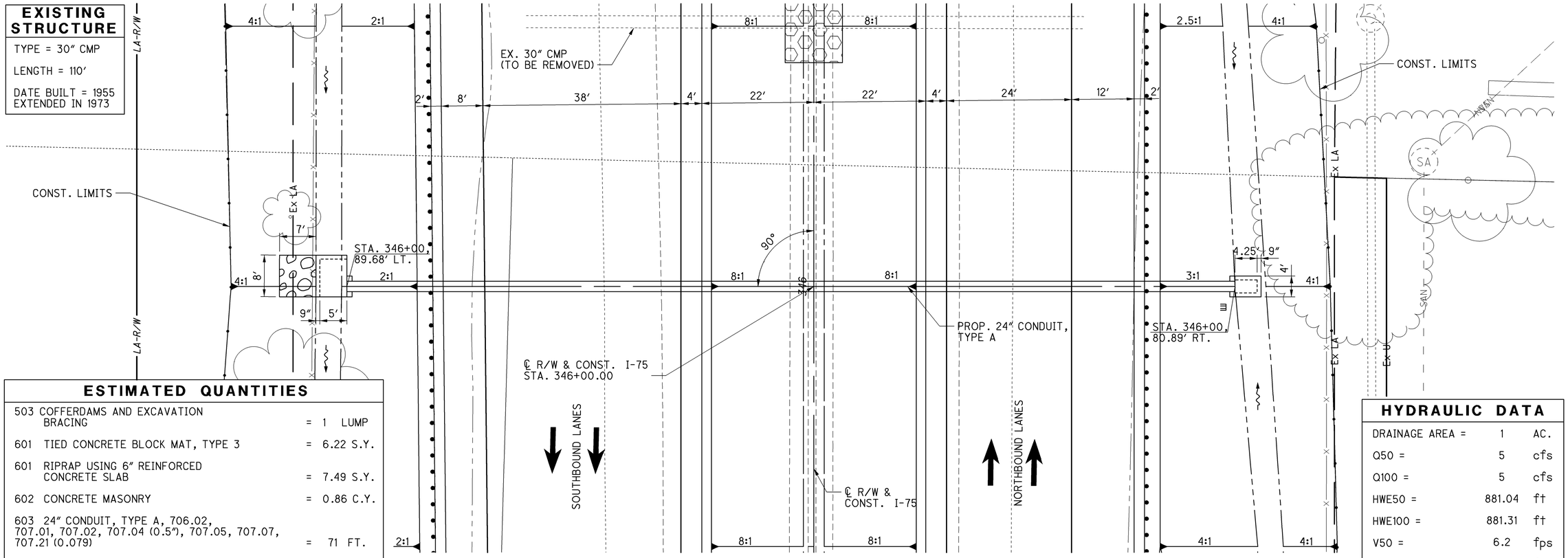

ESTIMATED QUANTITIES

503 COFFERDAMS AND EXCAVATION BRACING	= 1 LUMP
601 TIED CONCRETE BLOCK MAT, TYPE 3	= 6.22 S.Y.
601 RIPRAP USING 6″ REINFORCED CONCRETE SLAB	= 7.49 S.Y.
602 CONCRETE MASONRY	= 0.86 C.Y.
603 24″ CONDUIT, TYPE A, 706.02, 707.01, 707.02, 707.04 (0.5″), 707.05, 707.07, 707.21 (0.079)	= 71 FT.
603 24″ CONDUIT, BORED AND JACKED	= 100 FT.

CARRIED TO ROAD SUBSUMMARY SHEET 149 & 150.

HYDRAULIC DATA

DRAINAGE AREA =	1	AC.
Q50 =	5	cfs
Q100 =	5	cfs
HWE50 =	881.04	ft
HWE100 =	881.31	ft
V50 =	6.2	fps
V100 =	1.7	fps

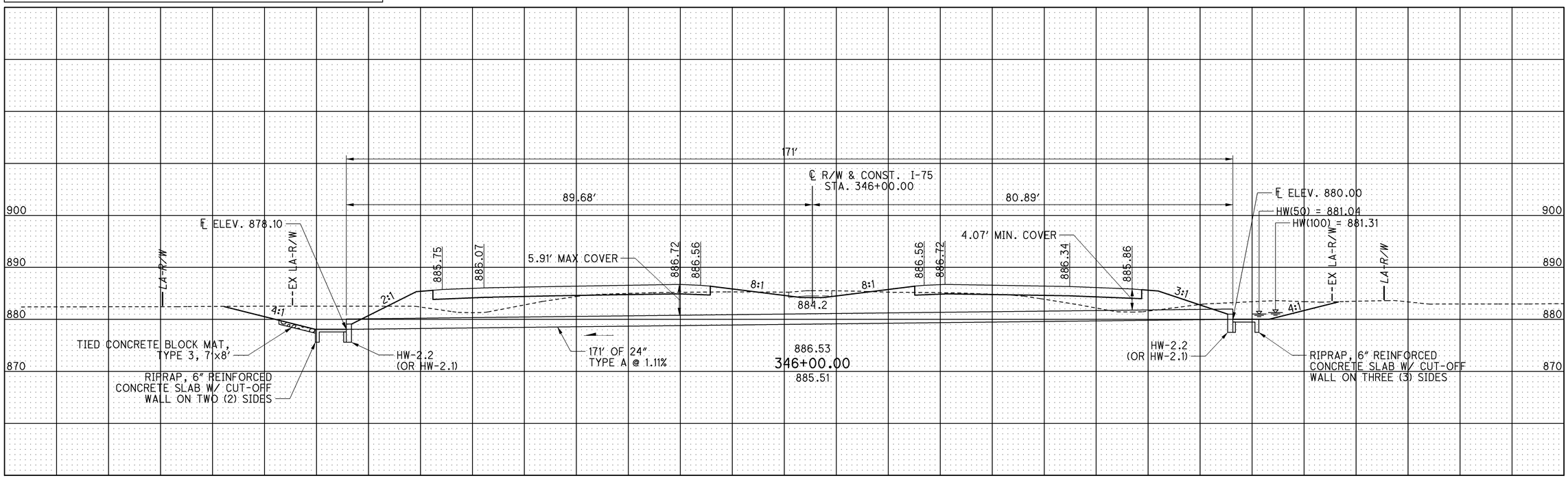

HORIZONTAL SCALE IN FEET
0 5 10 20

CALCULATED ACF
CHECKED JRL

CULVERT DETAIL FOR No. C39
I-75 AT STA. 346+00.00

ALL-75-5.53

684
1224

J:\Projects\ALL\76691\drainage\sheets\76691DC019.dgn 13-SEP-2012 11:55AM reddenj

ESTIMATED QUANTITIES

601	TIED CONCRETE BLOCK MAT, TYPE 3	= 0.00 S.Y.
601	RIPRAP USING 6" REINFORCED CONCRETE SLAB	= 19.36 S.Y.
602	CONCRETE MASONRY	= 1.12 C.Y.
603	30" CONDUIT, TYPE A, 706.02 OR 30" 707.01, 707.02, 707.04 (0.5"), 707.05, 707.07, 707.21 (0.075)	= 83 FT.

CARRIED TO ROAD SUBSUMMARY SHEET 149 & 150.

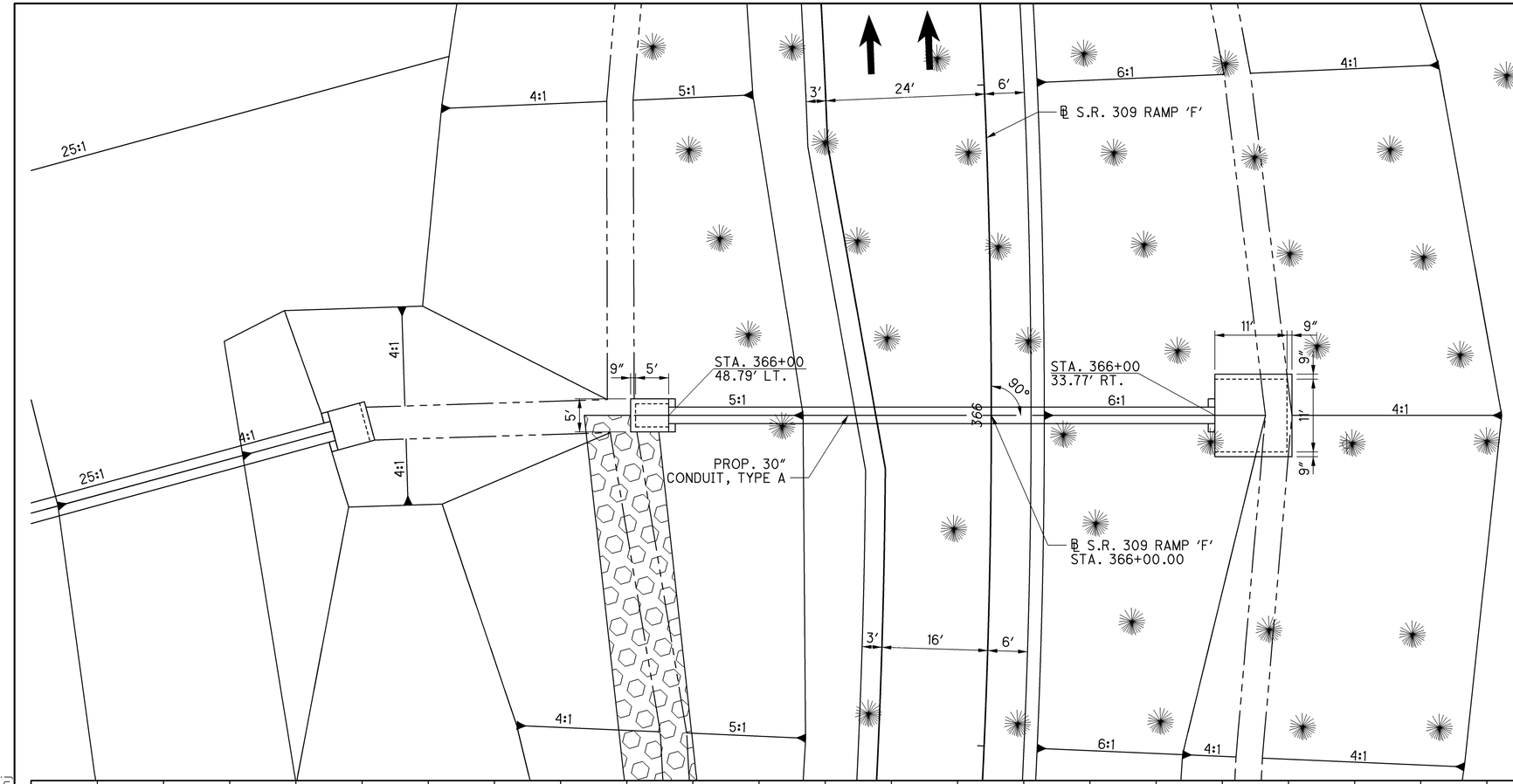

HYDRAULIC DATA

DRAINAGE AREA =	11	AC.
Q50 =	24	cfs
Q100 =	28	cfs
HWE50 =	882.43	FT.
HWE100 =	882.66	FT.
V50 =	4.9	fps
V100 =	5.6	fps

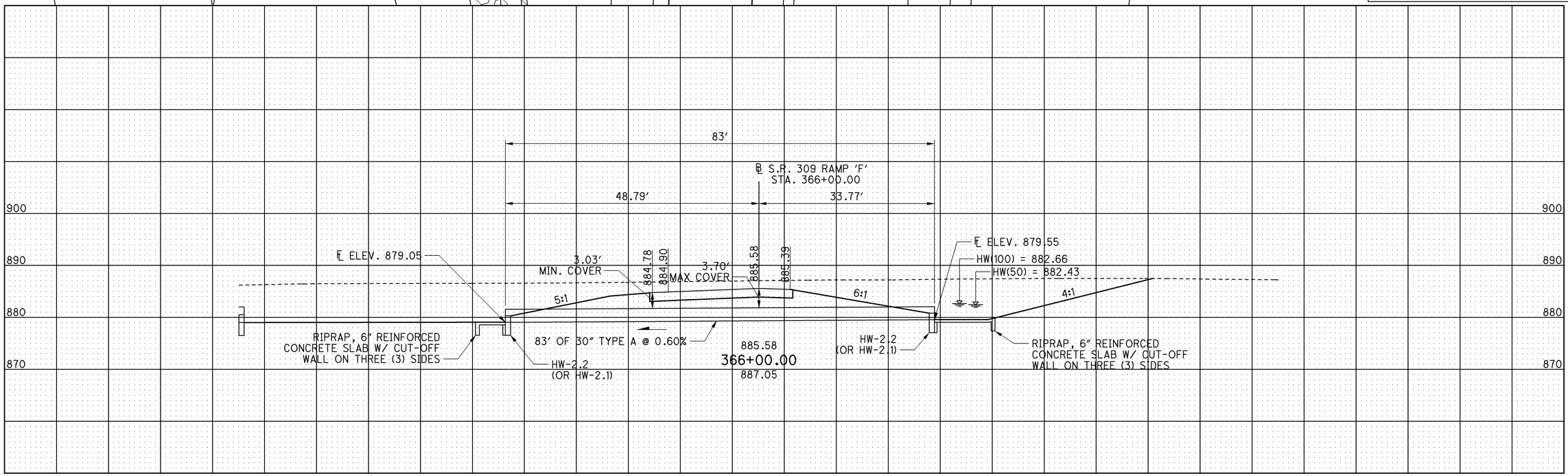

HORIZONTAL SCALE IN FEET
0 5 10 20

CALCULATED ACF
CHECKED JRL

CULVERT DETAIL FOR No. C43
S.R. 309 RAMP 'F' AT STA. 366+00.00

ALL-75-5.53

685
1224

J:\Projects\ALL\76691\drainage\sheets\76691DC041.dgn 13-SEP-2012 11:55AM redden j

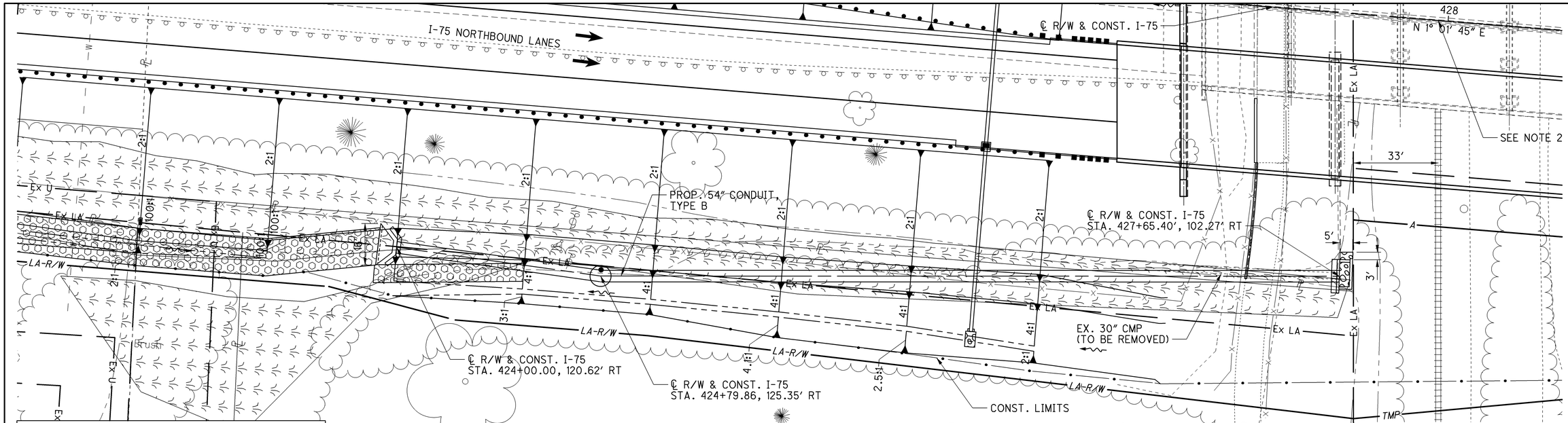

ESTIMATED QUANTITIES

503	COFFERDAMS AND EXCAVATION BRACING	= 1 LUMP
601	RIPRAP USING 6" REINFORCED CONCRETE SLAB	= 7.0 S.Y.
602	CONCRETE MASONRY	= 10.0 C.Y.
603	54" CONDUIT, TYPE B, 706.02	= 367 FT.
604	MANHOLE, NO. 3	= 1 EACH

CARRIED TO ROAD SUBSUMMARY SHEET 149 & 150.

NOTES:

1. FOR RETAINING WALL AND CULVERT OUTLET DETAILS SEE SHEETS 689, 688, AND 687.
2. INTERSTATE ROUTE 75 - CONSTRUCTION STA. 427+96.17 (0.0'RT) =
   CHICAGO, FORT WAYNE, AND EASTERN RAILROAD (CFER)
   AAR/DOT# 532704D
   RR MP. 258.94
   REGION: MIDWEST
   SUBDIVISION: LIMA

EXISTING STRUCTURE

TYPE = 30" CMP

LENGTH = 66'

DATE BUILT = 2009

HYDRAULIC DATA

DRAINAGE AREA =	82	AC.
Q50 =	150	cfs
Q100 =	174	cfs
HW50 =	859.52	FT.
HW100 =	861.11	FT.
V50 =	15.5	fps
V100 =	15.9	fps

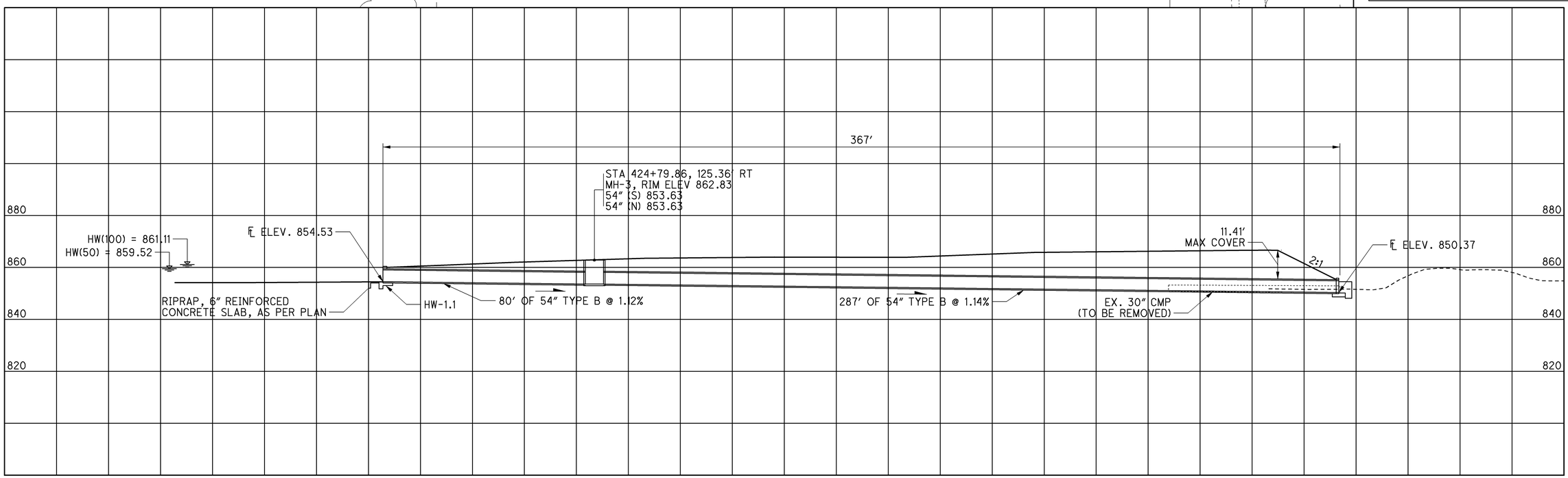

HORIZONTAL SCALE IN FEET
0 10 20 40

CALCULATED ACF CHECKED JRL

CULVERT DETAIL FOR No. C51R
I-75 AT STA. 424+00.00 TO STA. 427+65.90

ALL-75-5.53

686
1224

J:\Projects\ALL\76691\drainage\sheets\76691DC021.dgn 13-SEP-2012 11:55AM reddenj

ESTIMATED QUANTITIES

601	TIED CONCRETE BLOCK MAT, TYPE 3	= 12.42 S.Y.
601	RIPRAP USING 6" REINFORCED CONCRETE SLAB	= 18.52 S.Y.
602	CONCRETE MASONRY	= 1.38 C.Y.
603	36" CONDUIT, TYPE A, 706.02, 707.01, 707.02, 707.04 (0.5"), 707.05, 707.07, 707.21 (0.075)	= 110 FT.

CARRIED TO ROAD SUBSUMMARY SHEET 149 & 150.

EXISTING STRUCTURE

TYPE = 24" CMP

LENGTH = 96'

DATE BUILT = 1955

HYDRAULIC DATA

DRAINAGE AREA =	17	AC.
Q50 =	53	cfs
Q100 =	61	cfs
HWE50 =	875.64	ft
HWE100 =	876.19	ft
V50 =	13.5	fps
V100 =	14.0	fps

HORIZONTAL SCALE IN FEET (0, 5, 10, 20)

CALCULATED ACF CHECKED JRL

CULVERT DETAIL FOR No. C53
S.R. 81 RAMP 'C' AT STA. 460+35.00

ALL-75-5.53

687
1224

J:\Projects\ALL\76691\drainage\sheets\76691DC031.dgn 13-SEP-2012 11:55AM reddenj

HYDRAULIC DATA

DRAINAGE AREA =	102	AC.
Q50 =	65	cfs
Q100 =	74	cfs
HW50 =	871.47	ft
HW100 =	871.76	ft
V50 =	10.9	fps
V100 =	11.3	fps

EXISTING STRUCTURE

TYPE = 60" CMP
60" CMP

LENGTH = 208'
141'

DATE BUILT = 1955
1955

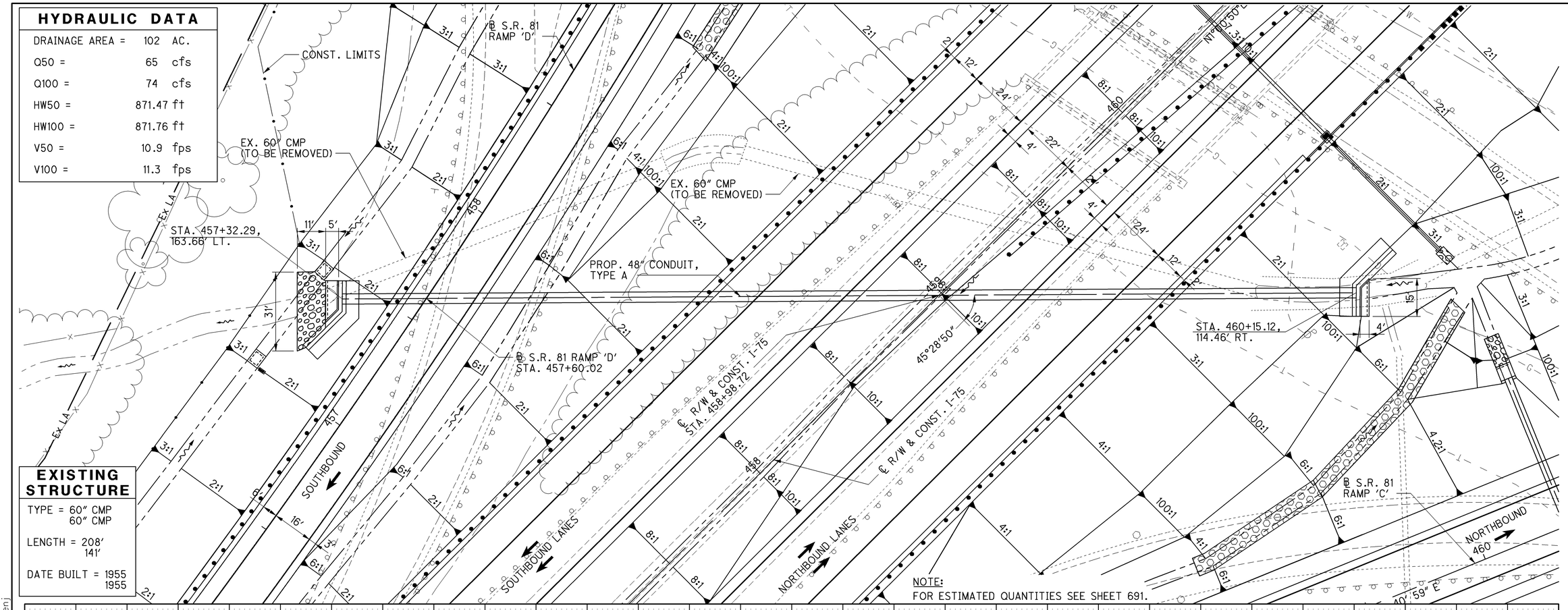

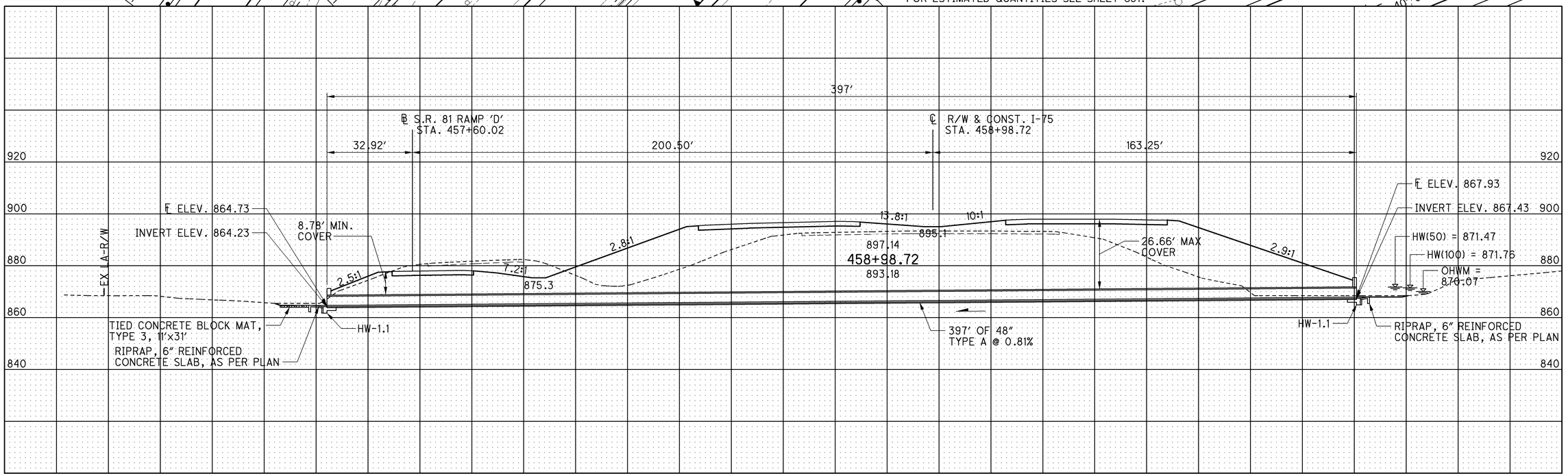

HORIZONTAL SCALE IN FEET
0 10 20 40

CALCULATED ACF
CHECKED JRL

CULVERT DETAIL FOR No. C54
I-75 AT STA. 458+98.72

ALL-75-5.53

688
1224

J:\Projects\ALL\76691\drainage\sheets\76691DC022.dgn 13-SEP-2012 11:55AM redden

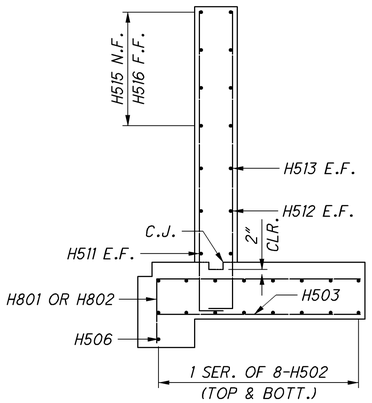

SECTION A-A

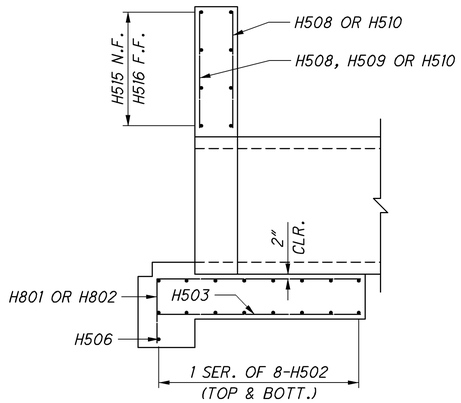

SECTION B-B

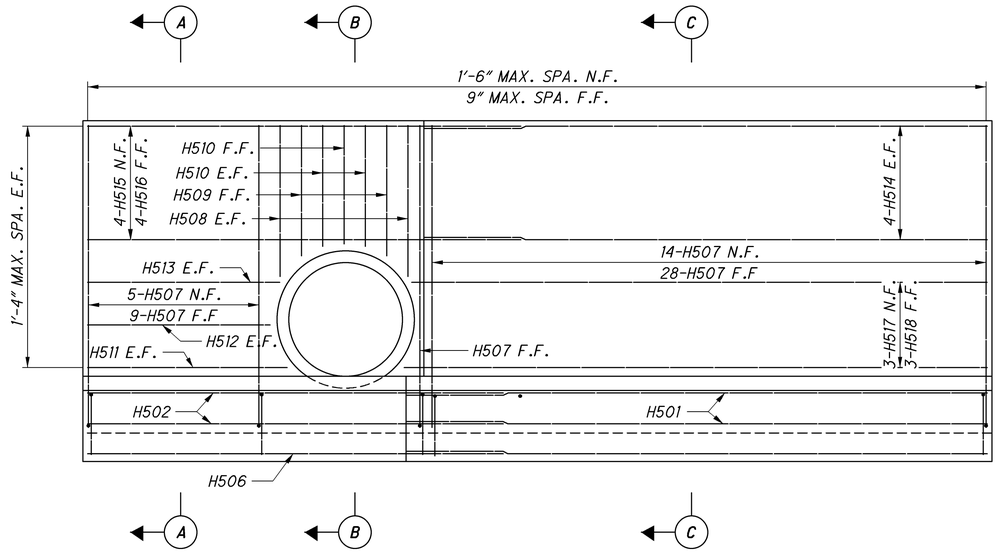

DEVELOPED ELEVATION

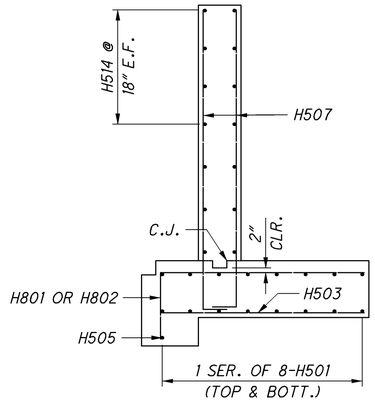

SECTION C-C

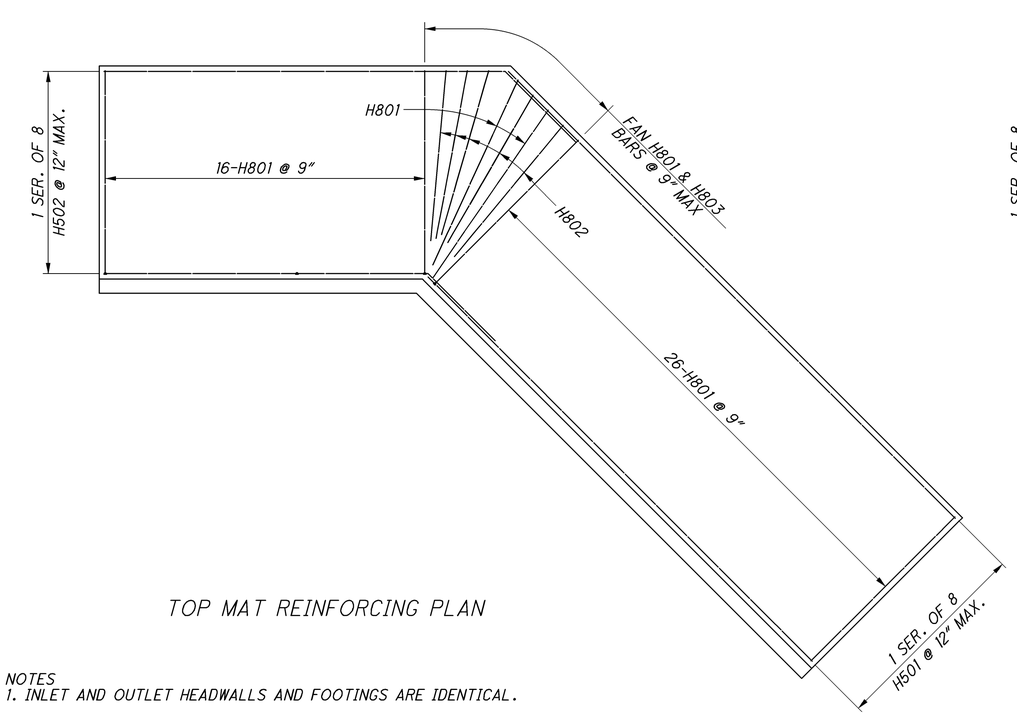

TOP MAT REINFORCING PLAN

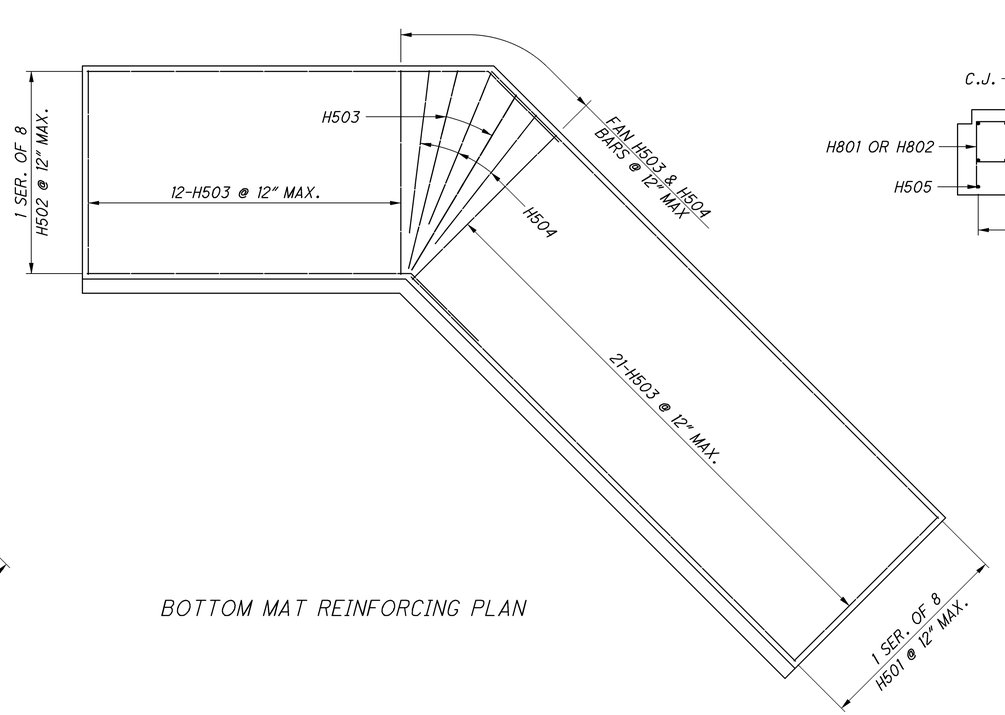

BOTTOM MAT REINFORCING PLAN

NOTES
1. INLET AND OUTLET HEADWALLS AND FOOTINGS ARE IDENTICAL.
2. ALL LAPS OF HORIZONTAL BARS SHALL BE A MINIMUM OF 3'-5".
3. FOR HEADWALL AND FOOTING DIMENSIONS SEE SHEET XX OF XX.

CALCULATED BKJ
CHECKED PJL

CULVERT DETAILS (CULVERT C54, HEADWALLS)

ALL-75-5.53

J:\Projects\ALL\7669\drainage\sheets\76691DM101.dgn 11-SEP-2012 9:15PM reddenj

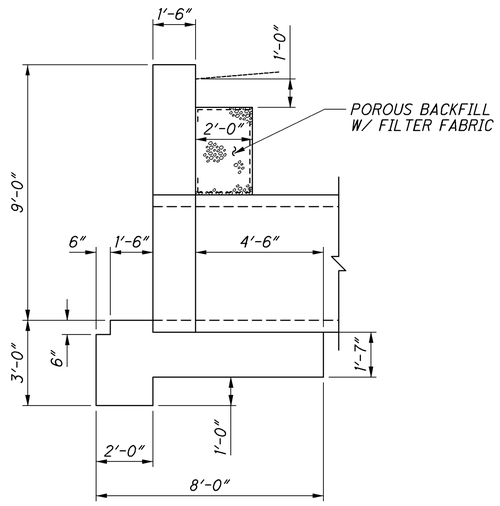

SECTION B-B

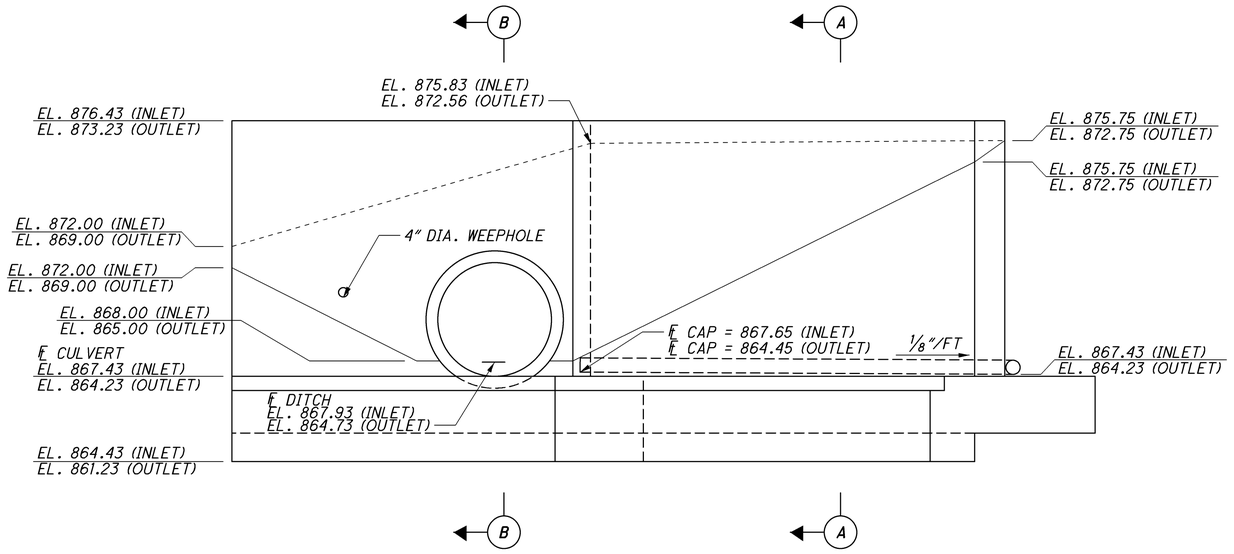

ELEVATION

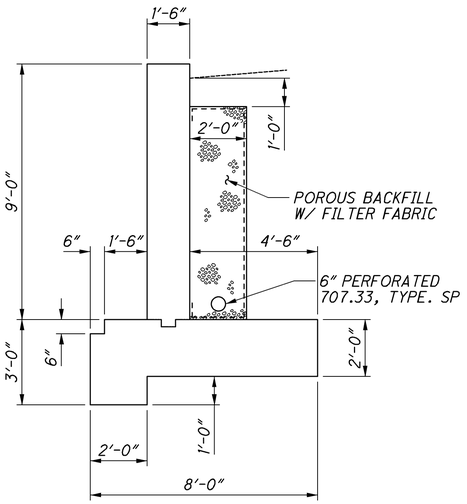

SECTION A-A

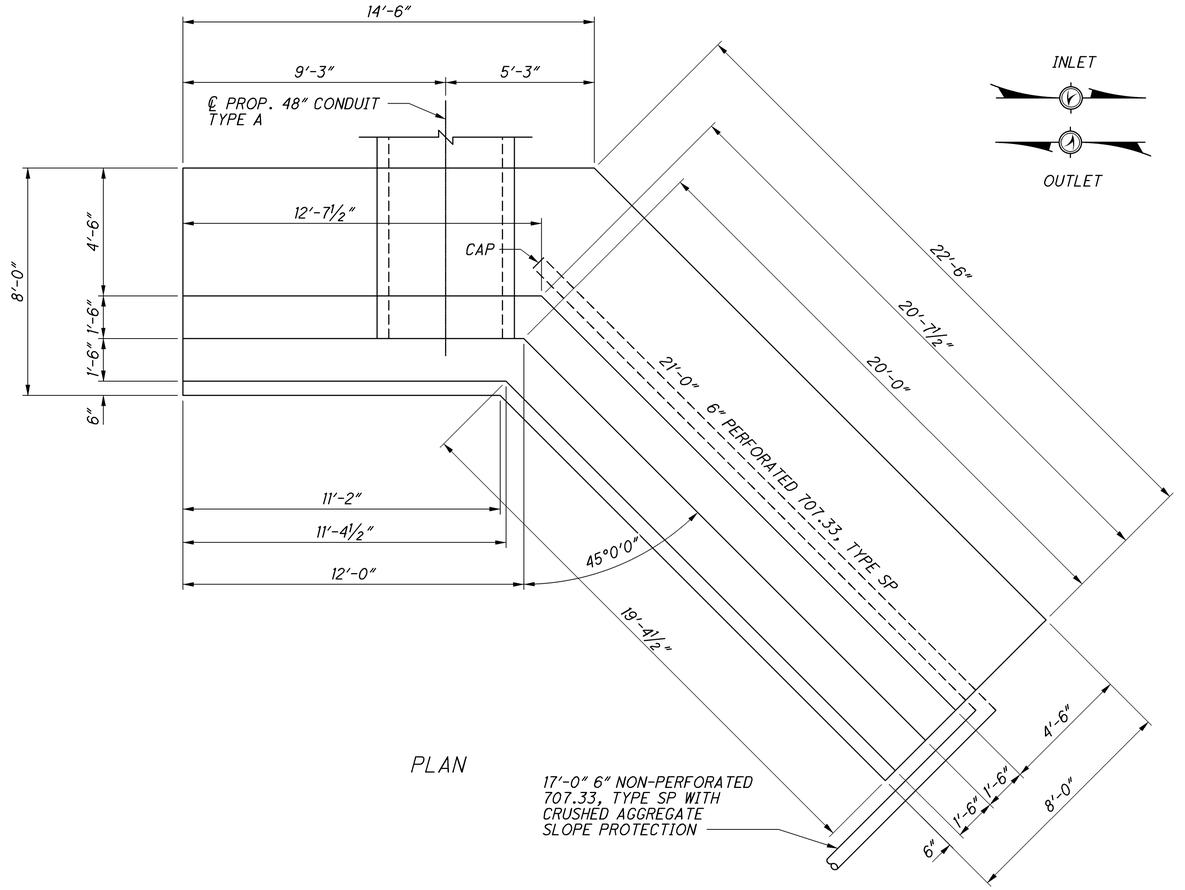

PLAN

NOTES
1. INLET AND OUTLET HEADWALLS AND FOOTINGS ARE IDENTICAL.
2. FOR HEADWALL AND FOOTING REINFORCING DETAILS SEE SHEET 689.
3. PLACE THE BELL END OF THE CONCRETE PIPE AT THE INLET.
4. CRUSHED AGGREGATE SLOPE PROTECTION SHALL BE AS PER 601.06. PROVIDE 4'-0" DIA. BY 1'-0" DEEP AND INCLUDE WITH NON-PERFORATED PIPE FOR PAYMENT.

CALCULATED BKJ
CHECKED PJL

CULVERT DETAILS

ALL-75-5.53

690
1224

J:\Projects\ALL\76691\drainage\sheets\76691DM100.dgn 11-SEP-2012 9:15PM reddenj

GENERAL NOTES

DESIGN SPECIFICATIONS: THIS STANDARD DRAWING CONFORMS TO "STANDARD SPECIFICATIONS FOR HIGHWAY BRIDGES" ADOPTED BY THE AMERICAN ASSOCIATION OF STATE HIGHWAY AND TRANSPORTATION OFFICIALS, 2010 AND THE ODOT BRIDGE DESIGN MANUAL.

DESIGN DATA: THE FOLLOWING DESIGN DATA IS ASSUMED:

INTERNAL ANGLE OF FRICTION (ϕ) = 28 DEGREES
UNIT WEIGHT OF SOIL = 120 PCF
UNIT WEIGHT OF CONCRETE = 150 PCF
SLOPE OF BACKFILL = 2:1

CONCRETE CLASS C - COMPRESSIVE STRENGTH 4000 PSI

REINFORCING STEEL - ASTM A615, A616, OR A617
GRADE 60 MINIMUM YIELD STRENGTH
60,000 PSI (ALL REINFORCING SHALL BE EPOXY COATED)

POROUS BACKFILL WITH FILTER FABRIC 2'-0" THICK SHALL BE PLACED BEHIND THE WINGWALLS ONLY AND SHALL EXTEND TO 12" BELOW THE EMBANKMENT SURFACE. GEOTEXTILE FABRIC SHALL BE PLACED BETWEEN THE POROUS BACKFILL AND REPLACED EXCAVATION ADJACENT TO THE STRUCTURE. IT SHALL TURN UNDER THE BOTTOM OF THE POROUS BACKFILL AND RETURN 6" ABOVE THE TOP ELEVATION OF THE WEEPHOLE. WEEPHOLES SHALL BE PLACED 6" TO 12" ABOVE THE NORMAL WATER ELEVATION OR GROUND LINE AND SHALL HAVE A MAXIMUM SPACING OF 10'-0". A MINIMUM OF ONE WEEPHOLE SHALL BE PROVIDED PER WINGWALL.

SEALING OF FORESLOPE WALL AND WINGWALLS: ALL EXPOSED FORESLOPE WALL AND WINGWALL CONCRETE SHALL BE SEALED WITH EPOXY-URETHANE SEALER AND COLOR OF THE URETHANE TOP COAT SHALL BE FEDERAL COLOR NO. 595B-27722 (BUFF SEMI-GLOSS). THE LIMITS SHALL BE AS SHOWN IN THE DIAGRAMS BELOW. PAYMENT FOR THE EPOXY-URETHANE SEALER SHALL BE PER ITEM 512 - SEALING OF CONCRETE SURFACES.

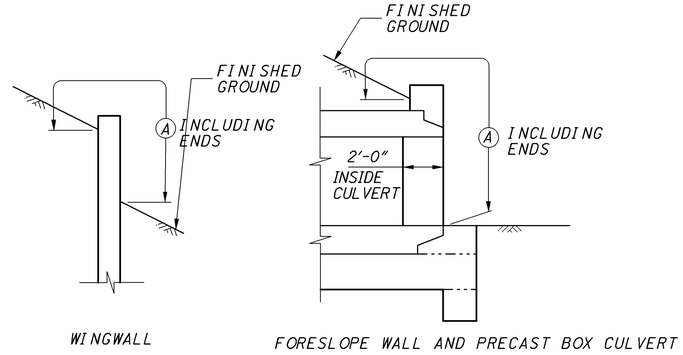

WINGWALL

FORESLOPE WALL AND PRECAST BOX CULVERT

LIMITS OF ITEM 512-SEALING CONCRETE SURFACES

(A) - SEAL ENTIRE CONCRETE SURFACE AREA

FOUNDATION BEARING RESISTANCE:
CULVERT FOOTINGS, AS DESIGNED, PRODUCE A MAXIMUM SERVICE LOAD PRESSURE OF 1.91 KIPS PER SQUARE FOOT AND A MAXIMUM STRENGTH LOAD PRESSURE OF 2.65 KIPS PER SQUARE FOOT. THE FACTORED BEARING RESISTANCE IS 9.4 KIPS PER SQUARE FOOT.

ITEM	EXTENSION	TOTAL	UNIT	ESTIMATED QUANTITIES DESCRIPTION
503	11100	1	LUMP	COFFERDAMS AND EXCAVATION BRACING
509	10000	6,634	POUND	EPOXY COATED REINFORCING STEEL
511	46000	70.4	CU YD	CLASS C CONCRETE
512	10100	70.9	SQ YD	SEALING OF CONCRETE SURFACES, (EPOXY-URETHANE)
518	21200	41.3	CU YD	POROUS BACKFILL WITH FILTER FABRIC
601	11001	12.9	SQ YD	RIPRAP USING 6" REINFORCED CONCRETE SLAB, AS PER PLAN
601	21070	32.5	SQ YD	TIED CONCRETE BLOCK MAT, TYPE 3
603	22400	177	FT	48" CONDUIT, TYPE A, 706.02 2250 D-LOAD; OR 66", 707.02 (0.138) ALUMINUM COATED, 707.22 (0.105)
603	96600	220	FT	48" CONDUIT, TYPE A, BORED AND JACKED
CARRIED TO ROAD SUBSUMMARY SHEET 149 & 150.				

ABBREVIATIONS:

APPRX. = APPROXIMATE
(B) = BOTTOM
BM = BENCH MARK
C.J. = CONSTRUCTION JOINT
CLR. = CLEAR
CONST. = CONSTRUCTION
C/C = CENTER ON CENTER
DIA. = DIAMETER
E.B. = EASTBOUND
E.F. = EACH FACE
EL. = ELEVATION
EX. = EXISTING
ELEV. = ELEVATION
F.F. = FAR FACE
INC. = INCREMENT
LF. = LEFT
MAX. = MAXIMUN
MIN. = MINIMUM
M.O.T. = MAINTENACE OF TRAFFIC
N.F. = NEAR FACE
P.E.J.F. = PREFORMED EXPANSION JOINT FILLER
PROP. = PROPOSED
P.V.I. = POINT OF VERTICAL INTERSECTION
RT. = RIGHT
SHLDR = SHOULDER
SER. = SERIES
S.R. = STATE ROUTE
STA. = STATION
STR. = STRAIGHT
STM = STORM
(T) = TOP
T&B = TOP AND BOTTOM
TYP. = TYPICAL
VC = VERTICAL CURVE
W.B. = WESTBOUND
YR. = YEAR

REINFORCING SCHEDULE

MARK	NUMBER TOTAL	LENGTH	WEIGHT	TYPE	DIMENSIONS A	B	C	D	E	R	INC
SUPERSTRUCTURE											
	4	19'- 03''									
S501	SER. OF	TO	693	STR.							5 1/8"
	8	22'- 03''									
	4	14'- 08''			11'-3"						
S502	SER. OF	TO	540	19	TO	2'-5"	2'-5"				5 1/8"
	8	17'- 08''			14'-3"						
S503	70	7'- 02''	524	STR.							
S504	6	5'- 09''	36	STR.							
S505	2	19'- 03''	41	STR.							
S506	2	14'- 08''	31	19	11'-3"	2'-5"	2'-5"				
S507	114	11'- 03''	1,338	1	10"	10'-6"					
S508	8	5'- 04''	45	STR.							
S509	4	4'- 07''	20	STR.							
S510	10	4'- 03''	45	STR.							
S511	4	7'- 00''	30	STR.							
S512	4	6'- 05''	27	STR.							
S513	4	6'- 09''	29	STR.							
S514	16	20'- 04''	340	STR.							
S515	8	15'- 04''	128	19	11'-11"	2'-5"	2'-5"				
S516	8	15'- 10''	133	19	12'-5"	2'-5"	2'-5"				
S517	6	19'- 10''	125	STR.							
S518	6	21'- 01''	132	19	20'-6"	5"	5"				
S801	88	9'- 02''	2,154	1	2'-3"	7'-1"					
S802	10	8'- 04''	223	1	2'-3"	6'-3"					
SUPERSTRUCTURE TOTAL			6,634								

NOTES:

1. THE BAR SIZE NUMBER IS SPECIFIED ON THE PLANS IN THE BAR MARK COLUMN. THE FIRST DIGIT WHERE THREE DIGITS ARE USED, AND THE FIRST TWO DIGITS WHERE FOUR ARE USED, INDICATES THE BAR SIZE NUMBER. FOR EXAMPLE, P601 IS A NO. 6 BAR. BAR DIMENSIONS SHOWN ARE OUT TO OUT UNLESS OTHERWISE INDICATED. R INDICATES INSIDE RADIUS, UNLESS OTHERWISE NOTED. "STD." WRITTEN IN PLACE OF A DIMENSION INDICATES A STANDARD BEND AT THE END OF THE BAR.
2. ALL REINFORCEMENT IS TO BE EPOXY COATED.

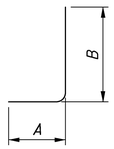

TYPE-1

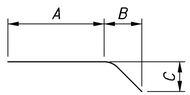

TYPE-19

CALCULATED BKJ CHECKED PJL

CULVERT DETAILS (CULVERT C54)

ALL-75-5.53

691
1224

J:\Projects\ALL\76691\drainage\sheets\76691DM102.dgn 11-SEP-2012 9:15PM reddenj

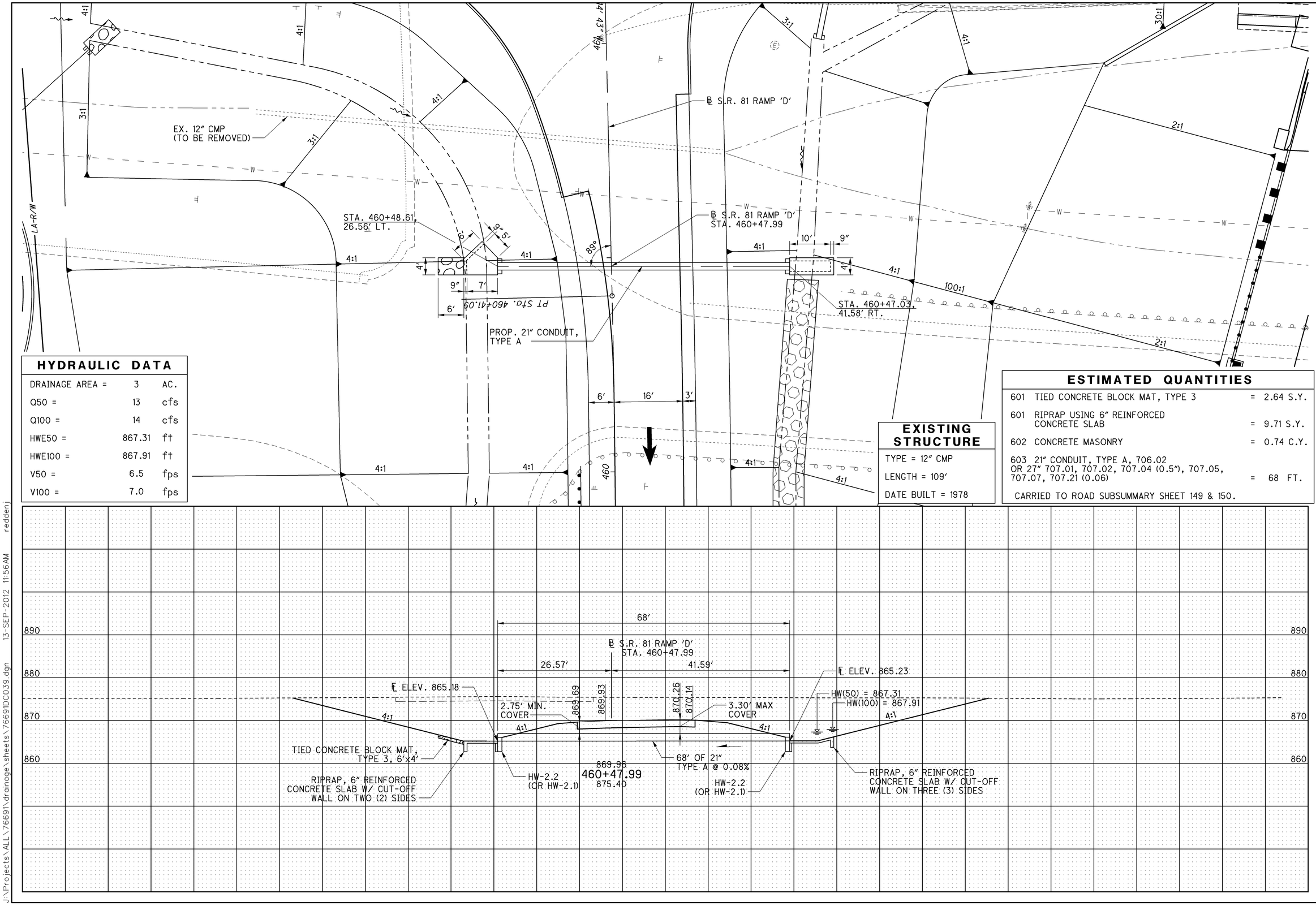

HORIZONTAL SCALE IN FEET
0 5 10 20

CALCULATED ACF
CHECKED JRL

CULVERT DETAIL FOR No. C55
S.R. 81 RAMP 'D' AT STA. 460+47.99

ALL-75-5.53

692
1224

J:\Projects\ALL\76691\drainage\sheets\76691DC039.dgn 13-SEP-2012 11:56AM reddenj

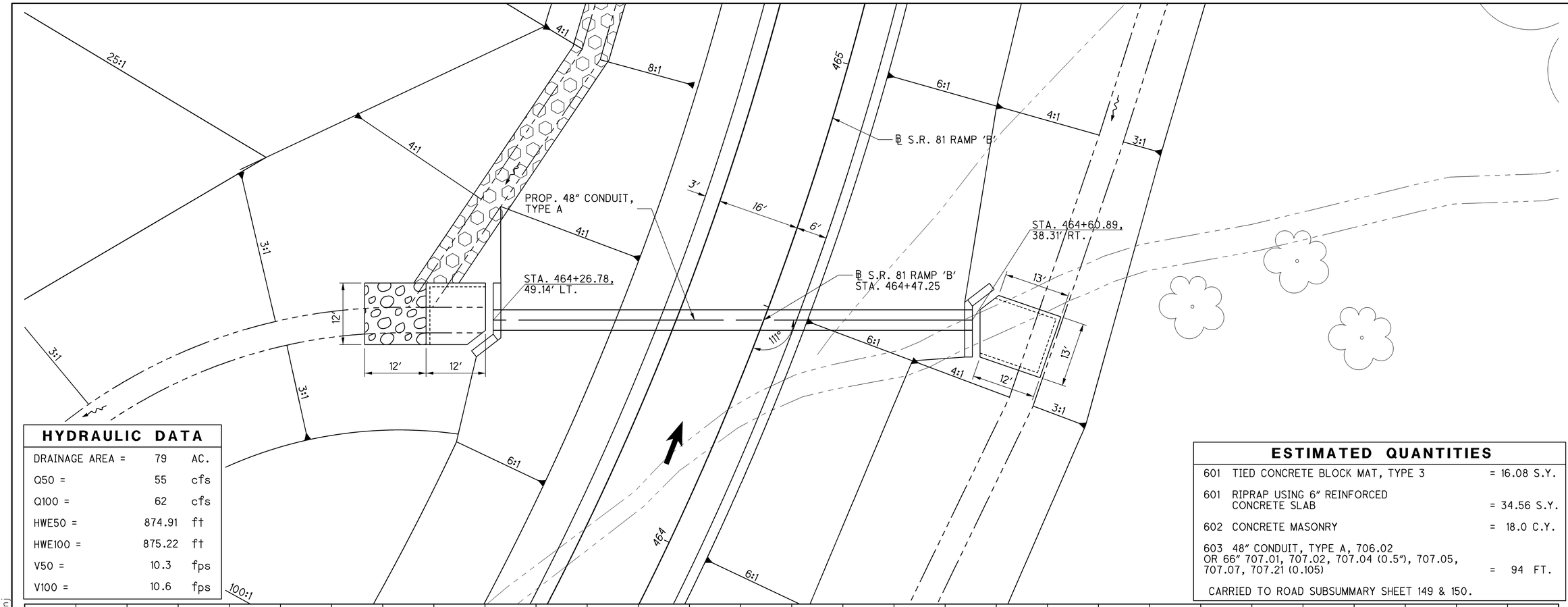

HYDRAULIC DATA

DRAINAGE AREA =	79	AC.
Q50 =	55	cfs
Q100 =	62	cfs
HWE50 =	874.91	ft
HWE100 =	875.22	ft
V50 =	10.3	fps
V100 =	10.6	fps

ESTIMATED QUANTITIES

601 TIED CONCRETE BLOCK MAT, TYPE 3	= 16.08 S.Y.
601 RIPRAP USING 6" REINFORCED CONCRETE SLAB	= 34.56 S.Y.
602 CONCRETE MASONRY	= 18.0 C.Y.
603 48" CONDUIT, TYPE A, 706.02 OR 66" 707.01, 707.02, 707.04 (0.5"), 707.05, 707.07, 707.21 (0.105)	= 94 FT.

CARRIED TO ROAD SUBSUMMARY SHEET 149 & 150.

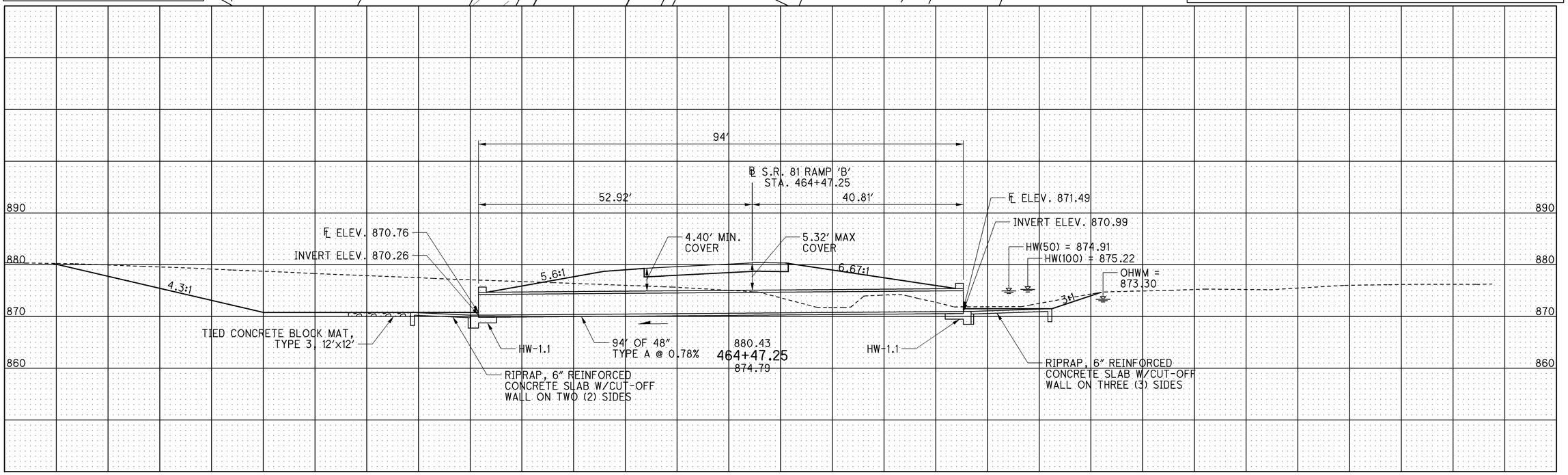

HORIZONTAL SCALE IN FEET
0 5 10 20

CALCULATED ACF CHECKED JRL

CULVERT DETAIL FOR No. C56
S.R. 81 RAMP 'B' AT STA. 464+47.25

ALL-75-5.53

693
1224

J:\Projects\ALL\76691\drainage\sheets\76691DC023.dgn 13-SEP-2012 11:56AM redden

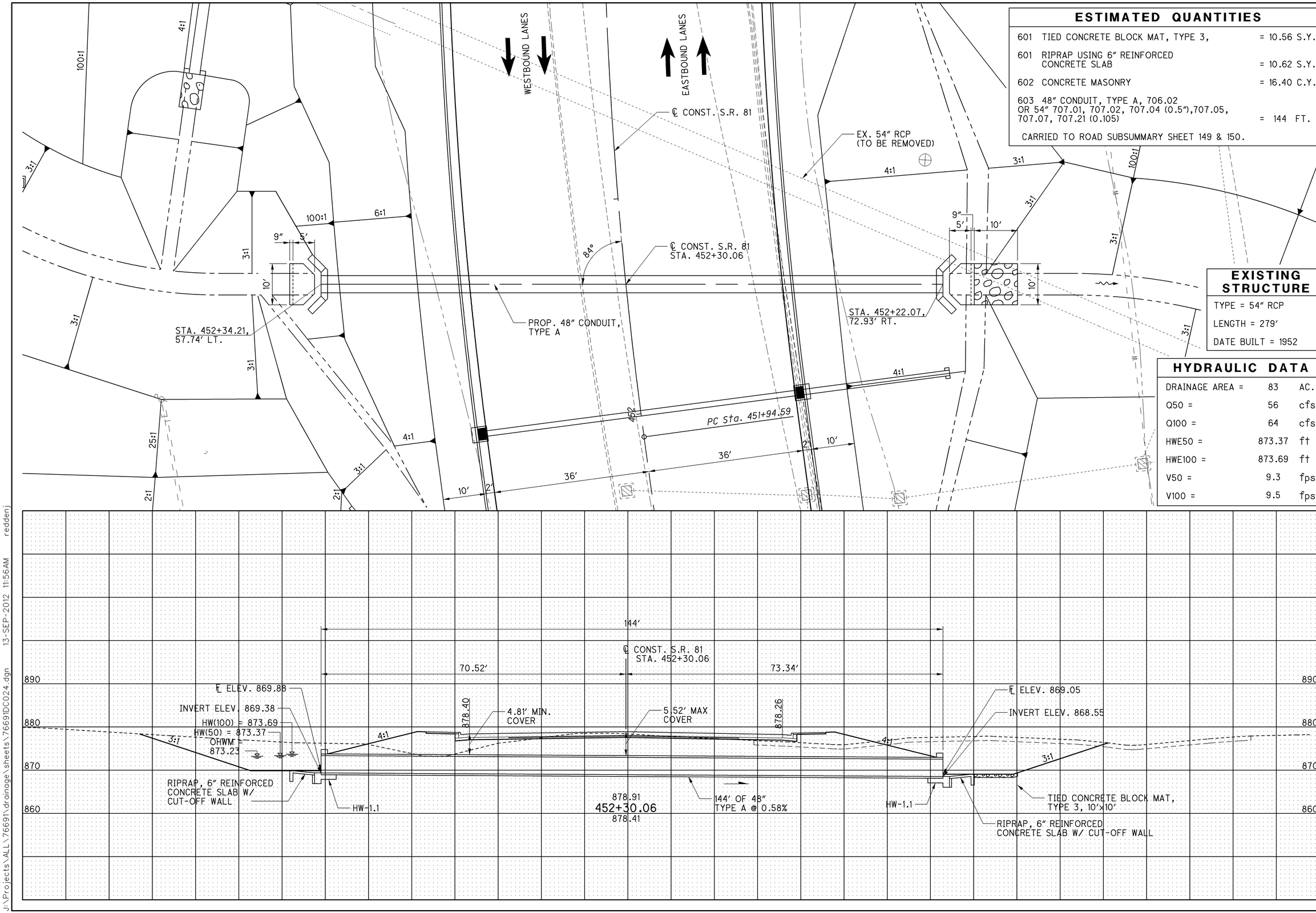

ESTIMATED QUANTITIES

601	TIED CONCRETE BLOCK MAT, TYPE 3,	= 10.56 S.Y.
601	RIPRAP USING 6" REINFORCED CONCRETE SLAB	= 10.62 S.Y.
602	CONCRETE MASONRY	= 16.40 C.Y.
603	48" CONDUIT, TYPE A, 706.02 OR 54" 707.01, 707.02, 707.04 (0.5"),707.05, 707.07, 707.21 (0.105)	= 144 FT.

CARRIED TO ROAD SUBSUMMARY SHEET 149 & 150.

EXISTING STRUCTURE

TYPE = 54" RCP

LENGTH = 279'

DATE BUILT = 1952

HYDRAULIC DATA

DRAINAGE AREA =	83	AC.
Q50 =	56	cfs
Q100 =	64	cfs
HWE50 =	873.37	ft
HWE100 =	873.69	ft
V50 =	9.3	fps
V100 =	9.5	fps

HORIZONTAL SCALE IN FEET 0 5 10 20

CALCULATED ACF CHECKED JRL

CULVERT DETAIL FOR No. C58
S.R. 81 AT STA. 452+30.06

ALL-75-5.53

J:\Projects\ALL\76691\drainage\sheets\76691DC024.dgn 13-SEP-2012 11:56AM reddenj

EXISTING STRUCTURE

TYPE = 24" CMP

LENGTH = 102'

DATE BUILT = 1978

ESTIMATED QUANTITIES

601	TIED CONCRETE BLOCK MAT, TYPE 3	= 6.22 S.Y.
601	RIPRAP USING 6" REINFORCED CONCRETE SLAB	= 11.51 S.Y.
602	CONCRETE MASONRY	= 0.86 C.Y.
603	24" CONDUIT, TYPE A, 706.02	= 80 FT.

CARRIED TO ROAD SUBSUMMARY SHEET 149 & 150.

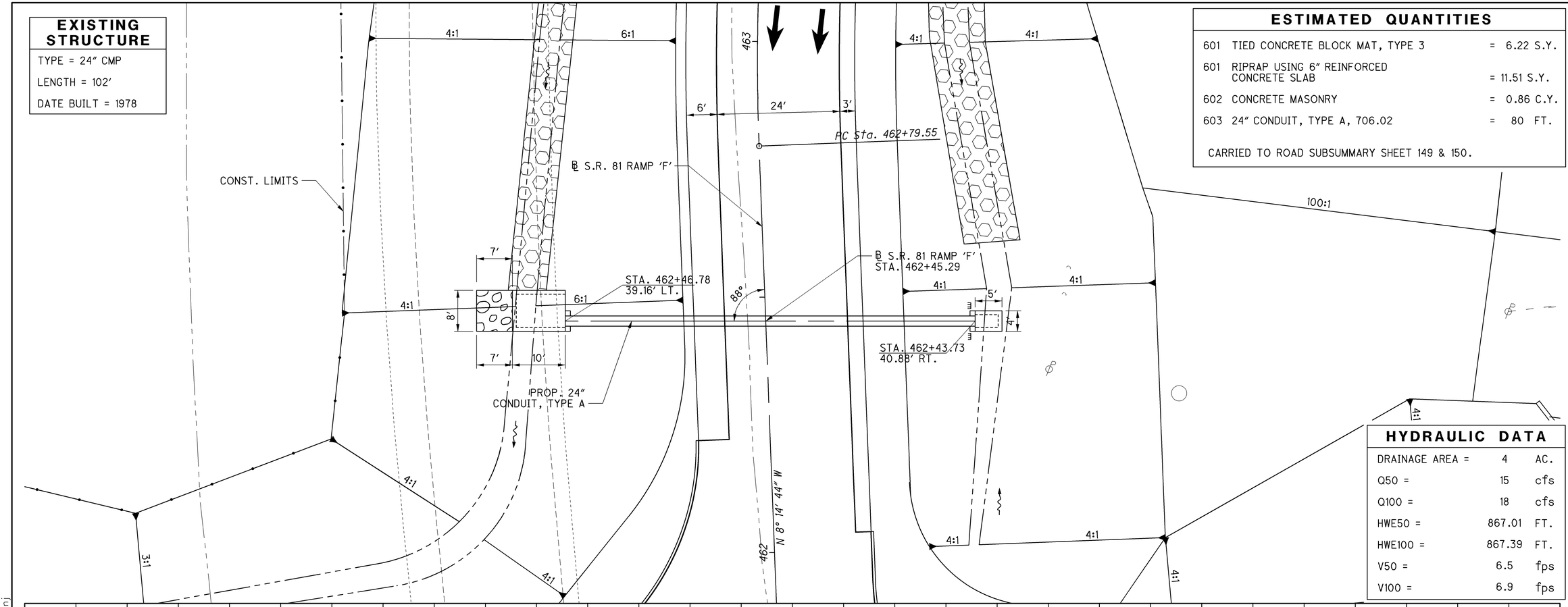

HYDRAULIC DATA

DRAINAGE AREA =	4	AC.
Q50 =	15	cfs
Q100 =	18	cfs
HWE50 =	867.01	FT.
HWE100 =	867.39	FT.
V50 =	6.5	fps
V100 =	6.9	fps

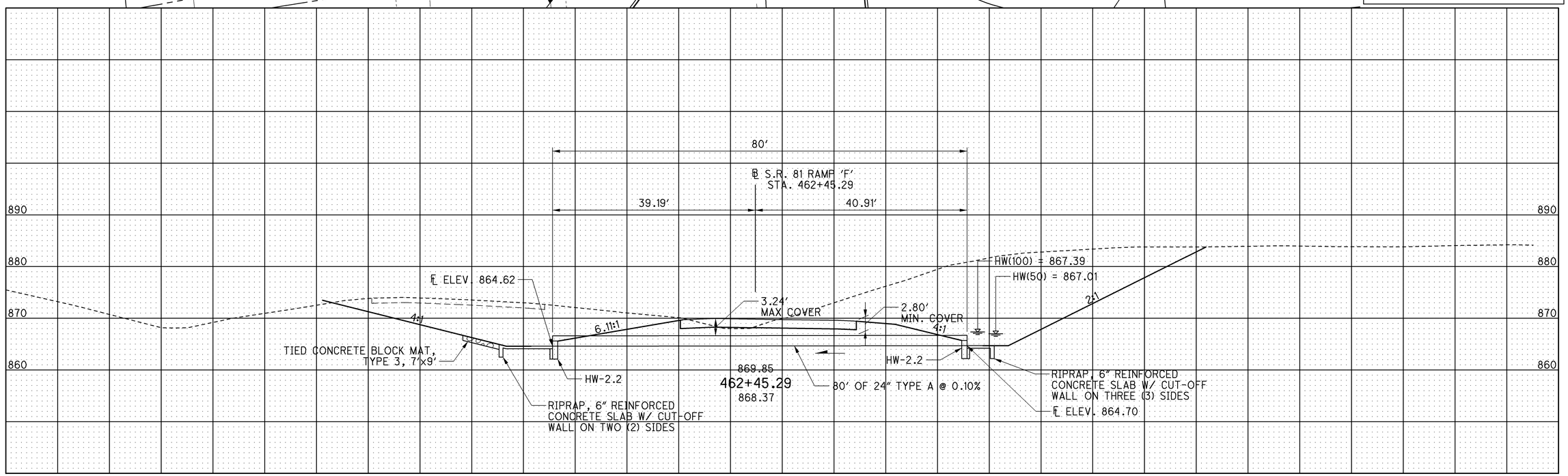

HORIZONTAL SCALE IN FEET

CALCULATED ACF CHECKED JRL

CULVERT DETAIL FOR No. C59
S.R. 81 RAMP 'F' AT STA. 462+45.29

ALL-75-5.53

695
1224

J:\Projects\ALL\76691\drainage\sheets\76691DC032.dgn 13-SEP-2012 11:56AM reddenj

ESTIMATED QUANTITIES

503	COFFERDAMS AND EXCAVATION BRACING	= 1 LUMP
601	TIED CONCRETE BLOCK MAT, TYPE 3	= 16.13 S.Y.
601	RIPRAP USING 6" REINFORCED CONCRETE SLAB	= 12.00 S.Y.
602	CONCRETE MASONRY	= 20.6 C.Y.
603	54" CONDUIT, TYPE A, 706.02 OR 60" 707.01, 707.02, 707.04 (1.0"), 707.05, 707.07, 707.21 (0.105)	= 181 FT.

CARRIED TO ROAD SUBSUMMARY SHEET 149 & 150.

EXISTING STRUCTURE

TYPE = 42" RCP

LENGTH = 142'

DATE BUILT = 1953

HYDRAULIC DATA

DRAINAGE AREA =	166	AC.
Q50 =	83	cfs
Q100 =	94	cfs
HWE50 =	868.64	ft
HWE100 =	868.93	ft
V50 =	8.5	fps
V100 =	8.9	fps

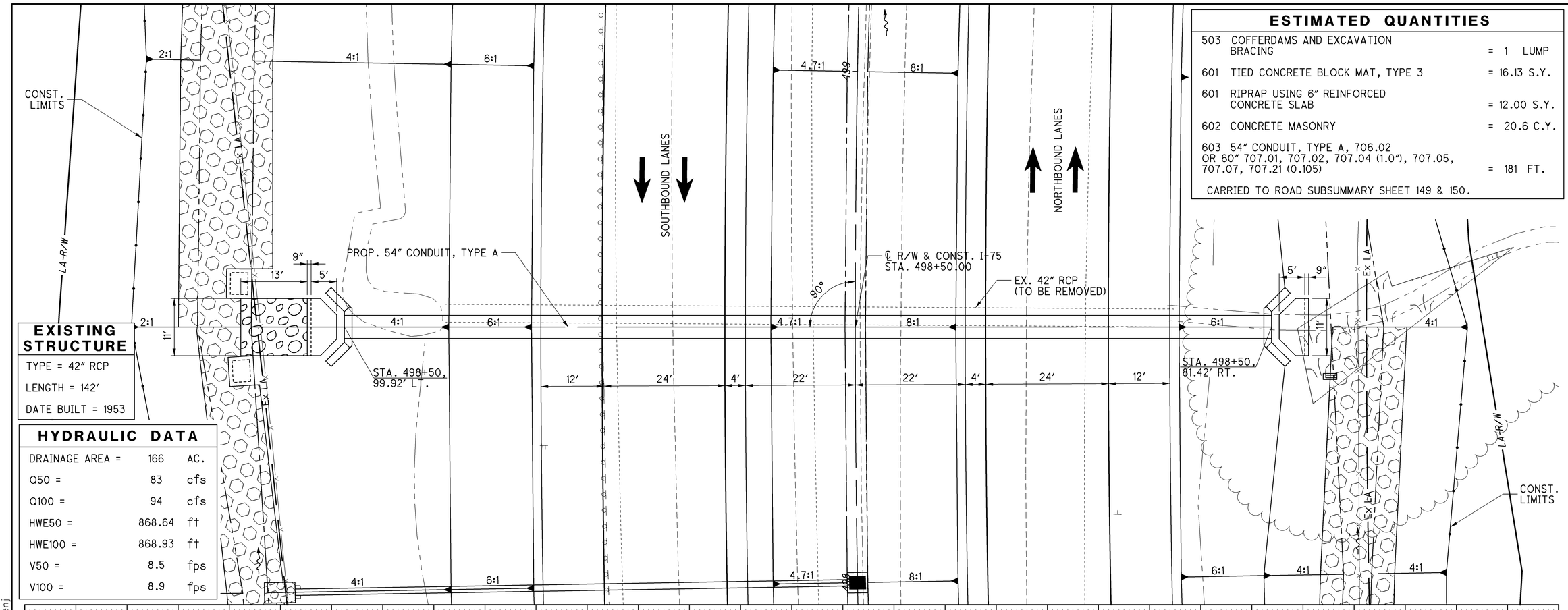

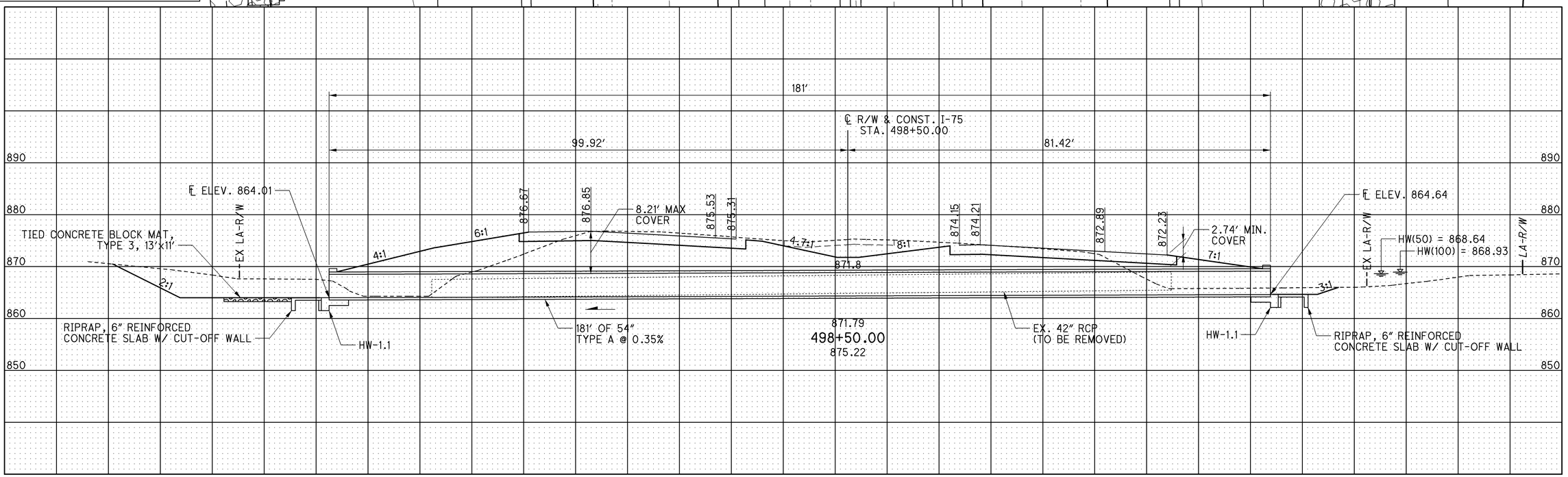

HORIZONTAL SCALE IN FEET
0 5 10 20

CALCULATED ACF
CHECKED JRL

CULVERT DETAIL FOR No. C63
I-75 AT STA. 498+50.00

ALL-75-5.53

696
1224

J:\Projects\ALL\76691\drainage\sheets\76691DC025.dgn 13-SEP-2012 11:56AM reddenj

ESTIMATED QUANTITIES

503	COFFERDAMS AND EXCAVATION BRACING	= 1 LUMP
601	TIED CONCRETE BLOCK MAT, TYPE 3	= 17.71 S.Y.
601	RIPRAP USING 6" REINFORCED CONCRETE SLAB	= 10.65 S.Y.
602	CONCRETE MASONRY	= 16.4 C.Y.
603	48" CONDUIT, TYPE A, 706.02 OR 54" 707.01, 707.02, 707.04 (0.5"), 707.05, 707.07, 707.21 (0.105)	= 80 FT.
603	48" CONDUIT, BORED AND JACKED	= 120 FT.

CARRIED TO ROAD SUBSUMMARY SHEET 149 & 150.

HYDRAULIC DATA

DRAINAGE AREA =	96	AC.
Q50 =	60	cfs
Q100 =	68	cfs
HWE50 =	865.95	ft
HWE100 =	866.29	ft
V50 =	10.4	fps
V100 =	10.6	fps

EXISTING STRUCTURE

TYPE = 36" RCP

LENGTH = 178'

DATE BUILT = 1953

CONST. LIMITS

EX. 24" CMP (TO BE REMOVED)

PROP. 48" CONDUIT, TYPE A

PORTION OF EX. 36" RCP (TO BE REMOVED)

STA. 504+07.76, 111.09' LT.

PORTION OF EX. 36" RCP (TO BE PLUG AND FILLED)

SOUTHBOUND LANES

NORTHBOUND LANES

℄ R/W & CONST. I-75 STA. 503+95.73

℄ R/W & CONST. I-75

STA. 503+85.59, 87.40' RT.

PORTION OF EX. 36" RCP (TO BE REMOVED)

CONST. LIMITS

Ex CH

Ex LA

LA-R/W

84°

17.0'

5.8'

9.5'

9"

22'

24'

12'

4'

4:1

6:1

8:1

4.7:1

2:1

200'

111.76'

87.97'

℄ R/W & CONST. I-75 STA. 503+95.73

℄ ELEV. 862.31

INVERT ELEV. 861.81

HW(50) = 865.95

HW(100) = 866.29

OHWM = 863.95

℄ ELEV. 860.82

INVERT ELEV. 860.32

10.32' MAX COVER

4.84' MIN. COVER

875.34

875.52

874.19

873.97

872.80

872.86

871.54

870.88

870.4

873.53

503+95.73

873.68

HW-1.1

EX. HEADWALL (TO BE REMOVED)

RIPRAP, 6" REINFORCED CONCRETE SLAB W/ CUT-OFF WALL

TIED CONCRETE BLOCKMAT, TYPE 3, 9.5'x17'

200' OF 48" TYPE A @ 0.74%

EX. 36" RCP (TO BE REMOVED)

EX. HEADWALL (TO BE REMOVED)

HW-1.1

RIPRAP, 6" REINFORCED CONCRETE SLAB W/ CUT-OFF WALL

890

880

870

860

850

HORIZONTAL SCALE IN FEET

0 5 10 20

CALCULATED ACF

CHECKED JRL

CULVERT DETAIL FOR No. C64
I-75 AT STA. 503+95.73

ALL-75-5.53

697
1224

J:\Projects\ALL\76691\drainage\sheets\76691DC026.dgn 13-SEP-2012 11:56AM redden

J:\Projects\ALL\76691\drainage\sheets\76691DM001.dgn 11-SEP-2012 9:15PM reddenj

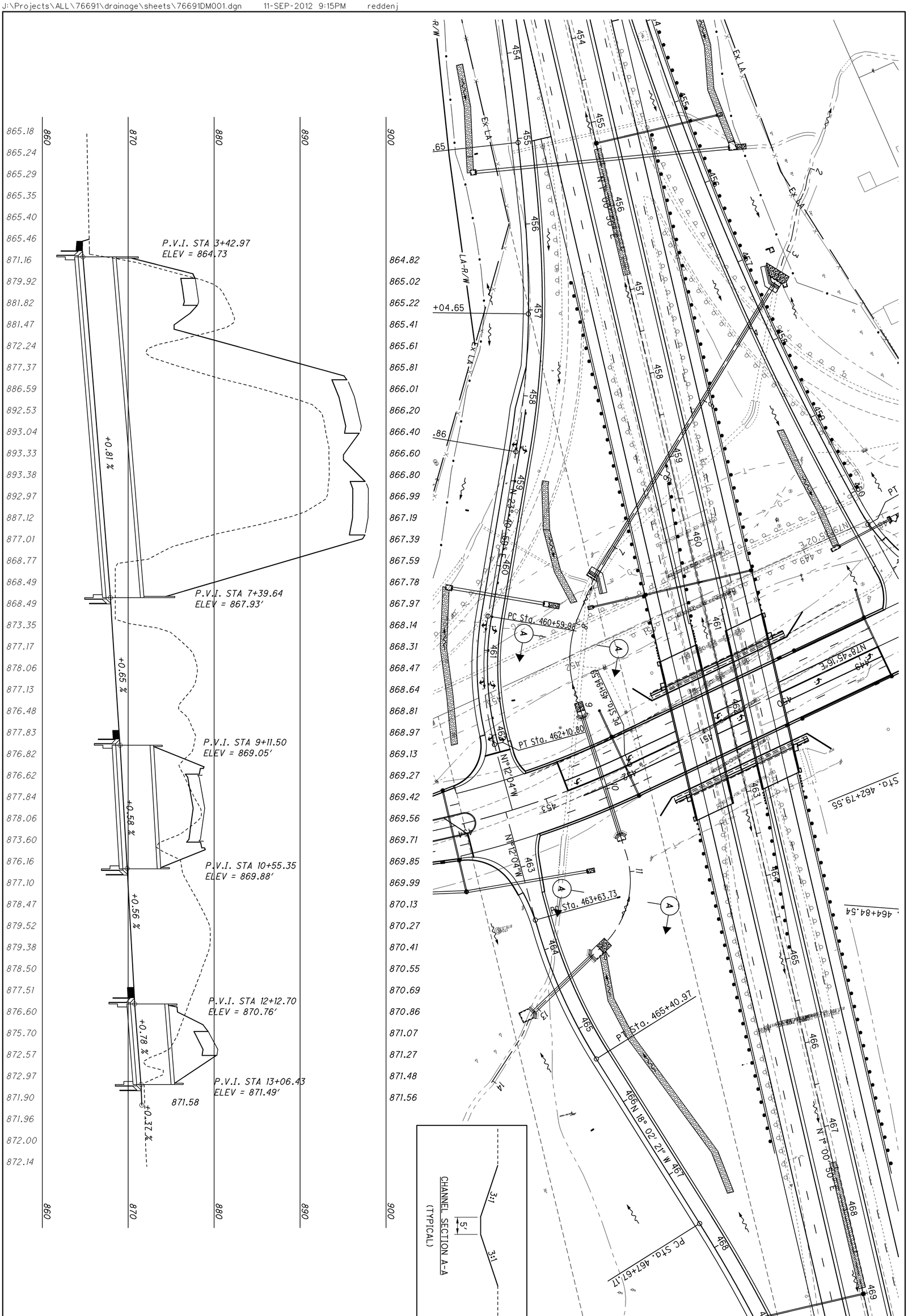

698 / 1224	ALL-75-5.53	CHANNEL RELOCATION - S.R. 81 RAMP 'B' STA. 462+34.24 TO STA. 473+83.81	CALCULATED CHECKED	0 50 25 100 HORIZONTAL SCALE IN FEET

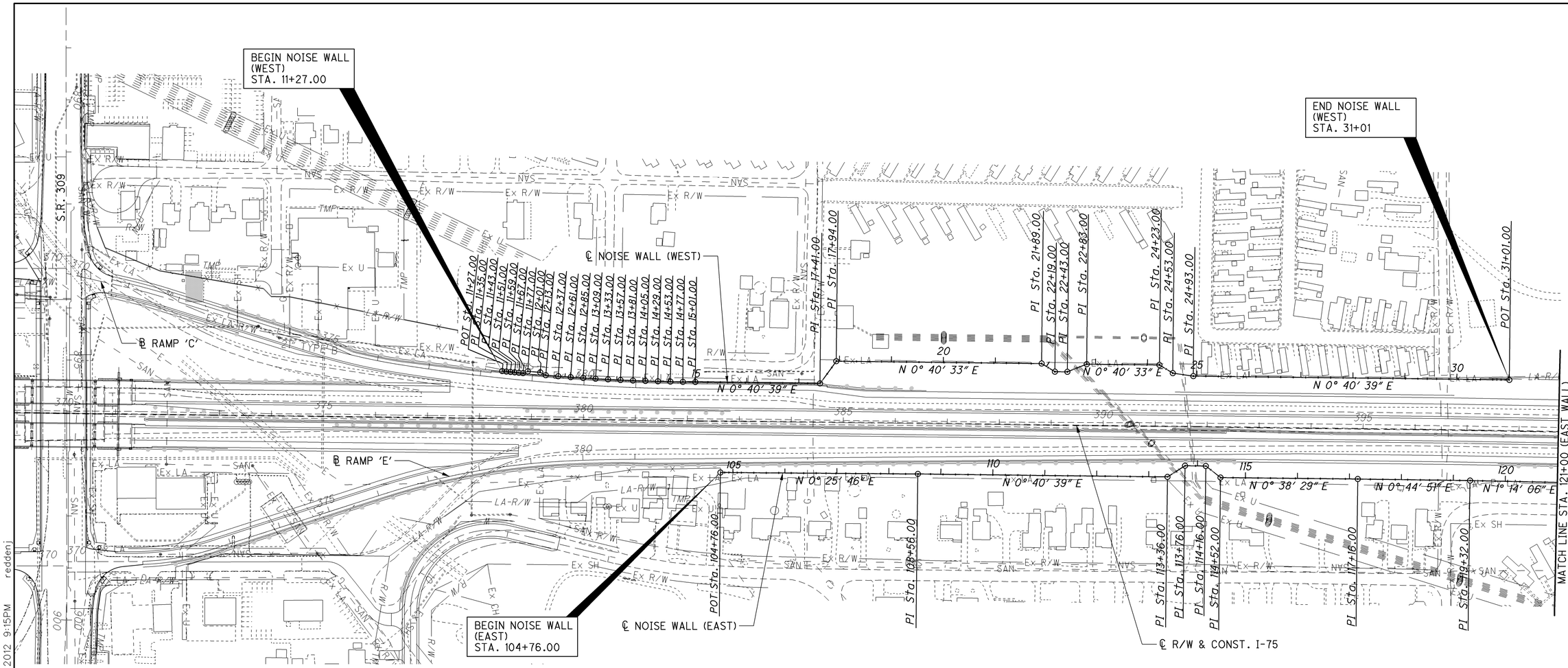

NOTE: FOR EAST WALL CENTERLINE GEOMETRY TABLE, SEE NEXT SHEET.

NOISE WALL (WEST) CENTERLINE GEOMETRY

P.I. NO.	NOISE BARRIER STATION	NORTHING	EASTING	BEARING
1	Sta. 11+27.00	392,447.2462	1,531,934.0913	N 5° 57′ 25.15″ E
2	Sta. 11+35.00	392,455.2030	1,531,934.9216	N 5°50′ 11.63″ E
3	Sta. 11+43.00	392,463.1615	1,531,935.7351	N 5°42′ 58.11″ E
4	Sta. 11+51.00	392,471.1217	1,531,936.5319	N 5° 35′ 44.58″ E
5	Sta. 11+59.00	392,479.0836	1,531,937.3120	N 5°28′ 31.06″ E
6	Sta. 11+67.00	392,487.0471	1,531,938.0753	N 20°14′ 39.75″ W
7	Sta. 11+77.00	392,496.4294	1,531,934.6151	N 4°34′ 10.68″ E
8	Sta. 12+01.00	392,520.3531	1,531,936.5272	N 27°04′ 10.68″ E
9	Sta. 12+13.00	392,531.0385	1,531,941.9880	N 4° 34′ 10.68″ E
10	Sta. 12+37.00	392,554.9622	1,531,943.9001	N 4° 12′ 30.11″ E
11	Sta. 12+61.00	392,578.8975	1,531,945.6613	N 3°50′ 49.54″ E

P.I. NO.	NOISE BARRIER STATION	NORTHING	EASTING	BEARING
12	Sta. 12+85.00	392,602.8435	1,531,947.2716	N 3°29′ 08.97″ E
13	Sta. 13+09.00	392,626.7991	1,531,948.7308	N 3°07′ 28.40″ E
14	Sta. 13+33.00	392,650.7634	1,531,950.0390	N 2°45′ 47.83″ E
15	Sta. 13+57.00	392,674.7355	1,531,951.1960	N 2° 24′ 07.26″ E
16	Sta. 13+81.00	392,698.7144	1,531,952.2019	N 2°02′ 26.69″ E
17	Sta. 14+05.00	392,722.6992	1,531,953.0565	N 1°40′ 46.12″ E
18	Sta. 14+29.00	392,746.6889	1,531,953.7599	N 1° 19′ 05.55″ E
19	Sta. 14+53.00	392,770.6825	1,531,954.3121	N 0°57′ 24.98″ E
20	Sta. 14+77.00	392,794.6792	1,531,954.7129	N 0°41′ 27.31″ E
21	Sta. 15+01.00	392,818.6774	1,531,955.0023	N 0°40′ 38.55″ E
22	Sta. 17+41.00	393,058.6606	1,531,957.8396	N 53°57′ 51.87″ W

P.I. NO.	NOISE BARRIER STATION	NORTHING	EASTING	BEARING
23	Sta. 17+94.00	393,089.8399	1,531,914.9811	N 0°40′ 32.85″ E
24	Sta. 21+89.00	393,484.8124	1,531,919.6399	N 31°21′ 21.29″ E
25	Sta. 22+19.00	393,510.4310	1,531,935.2505	N 0°40′ 32.85″ E
26	Sta. 22+43.00	393,534.4293	1,531,935.5335	N 21°49′ 27.15″ W
27	Sta. 22+83.00	393,571.5624	1,531,920.6631	N 0°40′ 32.85″ E
28	Sta. 24+23.00	393,711.5527	1,531,922.3144	N 31°38′ 45.08″ E
29	Sta. 24+53.00	393,737.0919	1,531,938.0544	N 8° 10′ 38.55″ E
30	Sta. 24+93.00	393,776.6852	1,531,943.7439	N 0°40′ 38.55″ E
31	Sta. 31+01.00	394,384.6427	1,531,950.9318	

HORIZONTAL SCALE IN FEET
0 100 100 200

NOISE WALL (EAST & WEST) SCHEMATIC PLAN

ALL-75-5.53

699
1224

J:\Projects\ALL\76691\structures\NoiseBarrier\sheets\76691NB001.dgn 11-SEP-2012 9:15PM reddenj

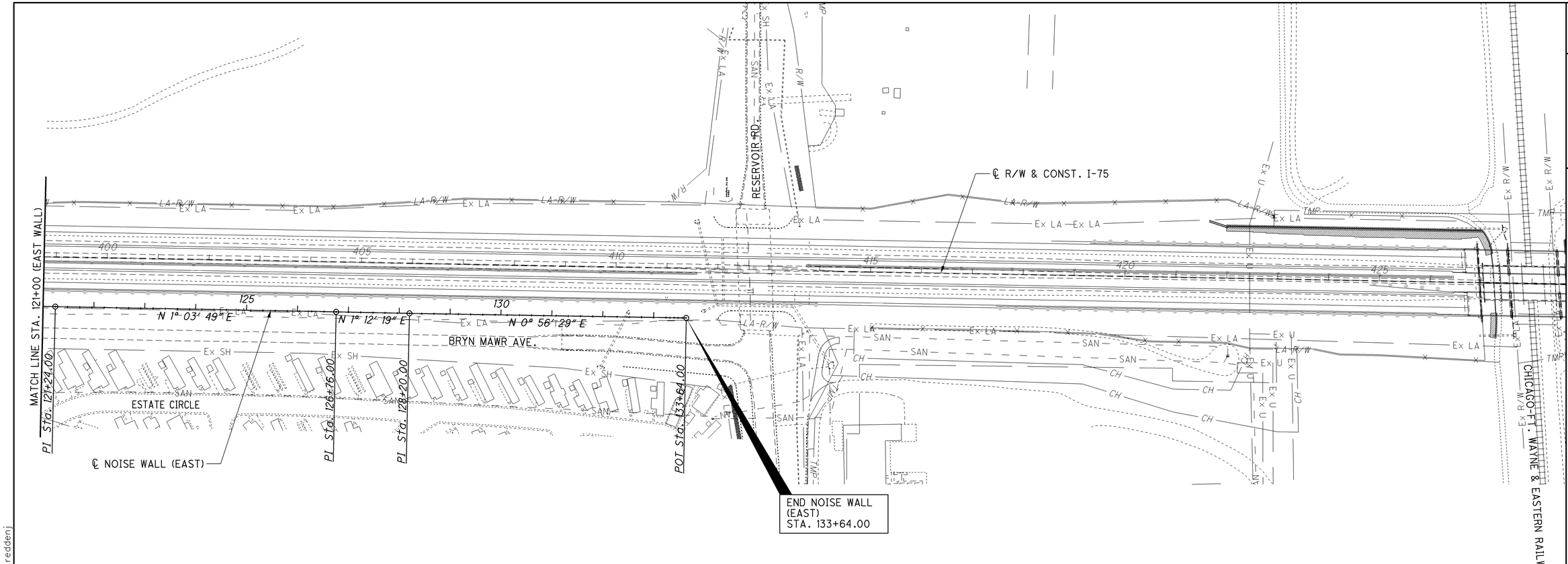

NOISE WALL (EAST) CENTERLINE GEOMETRY

P.I. NO.	NOISE BARRIER STATION	NORTHING	EASTING	BEARING
1	Sta. 104+76.00	392,867.0181	1,532,129.0479	N 0° 25′ 45.50″
2	Sta. 108+56.00	393,247.0075	1,532,131.8951	N 0° 40′ 38.55″ E
3	Sta. 113+36.00	393,726.9739	1,532,137.5698	N 32° 31′ 05.86″ W
4	Sta. 113+76.00	393,760.7027	1,532,116.0670	N 0° 40′ 38.55″ E
5	Sta. 114+16.00	393,800.6999	1,532,116.5399	N 38° 02′ 57.53″ E
6	Sta. 114+52.00	393,829.0492	1,532,138.7281	N 0° 38′ 28.80″ E
7	Sta. 117+16.00	394,093.0327	1,532,141.6831	N 0° 44′ 50.73″ E
8	Sta. 119+32.00	394,309.0143	1,532,144.5008	N 1° 14′ 05.90″ E
9	Sta. 121+24.00	394,500.9697	1,532,148.6389	N 1° 03′ 48.66″ E
10	Sta. 126+76.00	395,052.8746	1,532,158.8844	N 1° 12′ 19.28″ E
11	Sta. 128+20.00	395,196.8428	1,532,161.9136	N 0° 56′ 28.91″ E
12	Sta. 133+64.00	395,740.7693	1,532,170.8511	

NOISE WALL (EAST) SCHEMATIC PLAN

ALL-75-5.53

700
1224

J:\Projects\ALL\76691\structures\NoiseBarrier\sheets\76691NB002.dgn 11-SEP-2012 9:15PM reddenj

CALCULATED CAC
CHECKED EJC

GENERAL NOTES AND SUBSUMMARY

NOISE BARRIER

NOTES:

FOR TYPICAL GRADING AND DRAINAGE DETAILS, REFER TO STANDARD CONSTRUCTION DRAWING NBS-1-09 SHEET 13 OF 13. ALL MINOR GRADING AND DRAINAGE PER THE STANDARD DRAWING SHALL BE CONSIDERED INCIDENTAL TO THE NOISE BARRIER CONSTRUCTION AND PAYMENT FOR ALL LABOR, MATERIALS, AND EQUIPMENT SHALL BE INCLUDED WITH THE BID PRICE FOR ITEM 606, SPECIAL-NOISE BARRIER.

IN CASES WHERE NOISE BARRIER BOTTOM PANELS ARE FABRICATED WITH OPENINGS FOR PROPOSED OR EXISTING CULVERTS TO PASS THROUGH, ALL LABOR, EQUIPMENT AND MATERIALS NECESSARY TO PROVIDE EMBANKMENT AND GRADING TO CLOSE ANY GAPS TO THE SATISFACTION OF THE ENGINEER SHALL BE CONSIDERED INCIDENTAL TO THE NOISE BARRIER CONSTRUCTION AND PAYMENT SHALL BE INCLUDED WITH THE BID PRICE FOR ITEM 606, SPECIAL-NOISE BARRIER.

REF NO.	SHEET NO.	STATION FROM	STATION TO	SIDE	606 SPECIAL-NOISE BARRIER (REFLECTIVE), 10' HEIGHT AND UNDER SQ. FT.	606 SPECIAL-NOISE BARRIER (REFLECTIVE), OVER 10' TO 14' HEIGHT SQ. FT.	606 SPECIAL-NOISE BARRIER (REFLECTIVE), OVER 14' TO 20' HEIGHT SQ. FT.	509 EPOXY COATED REINFORCING STEEL POUND	511 CLASS C CONCRETE, BEAMS AND DIAPHRAGMS CU. YD.	512 SEALING OF CONCRETE SURFACES (EPOXY-URETHANE) SQ. YD.	524 DRILLED SHAFTS, 30" DIAMETER FT.
	702	11+27	13+00	WEST	112	444	2028				
	703	13+00	18+00	WEST			8578				
	704	18+00	23+00	WEST			7927				
	705	23+00	28+00	WEST			7840				
	706	28+00	31+01	WEST	80	200	4164				
	707	104+76	108+00	EAST	128	304	4672				
	708	108+00	113+00	EAST			8352				
	709	113+00	118+00	EAST			8312				
	710	118+00	123+00	EAST			7992				
	711	123+00	128+00	EAST			9432				
	712	128+00	133+00	EAST			9384				
	713	133+00	133+64	EAST		192	856				
	740							24,589	48	143	178
TOTALS CARRIED TO GENERAL SUMMARY					320	1140	79,537	24,589	48	143	178

ALL-75-5.53

701
1224

J:\Projects\ALL\76691\structures\NoiseBarrier\sheets\76691NN001.dgn 11-SEP-2012 9:15PM reddenj

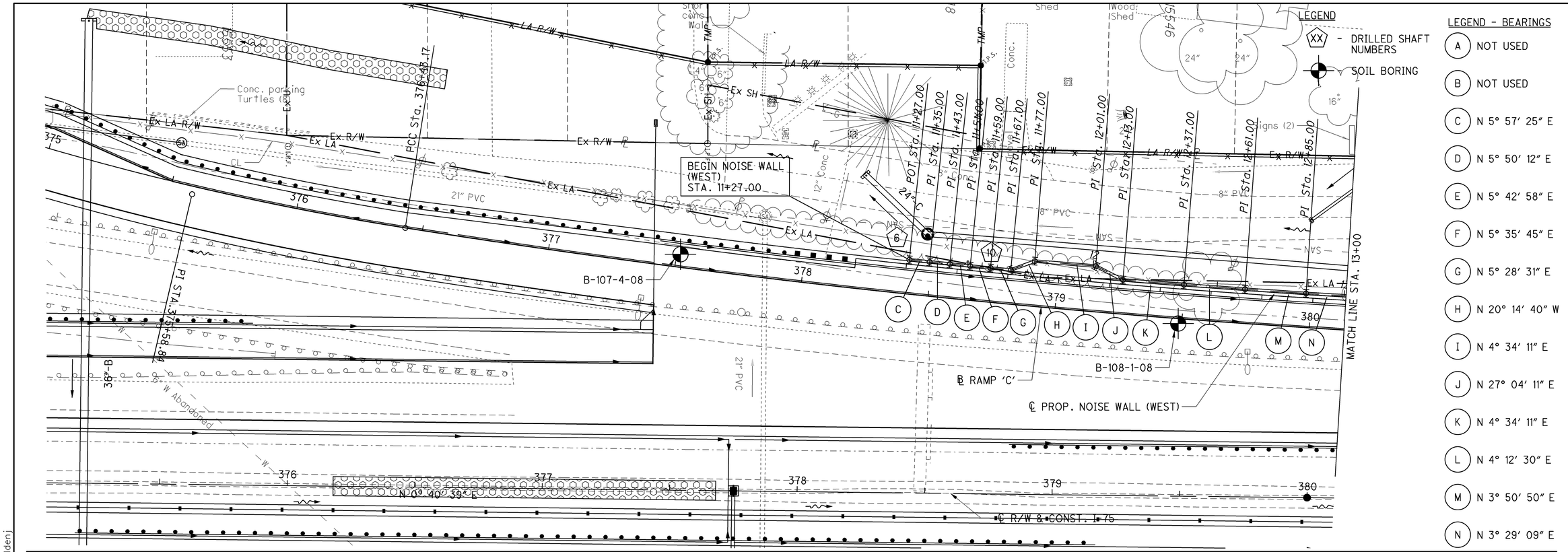
LEGEND
XX - DRILLED SHAFT NUMBERS
SOIL BORING
LEGEND - BEARINGS
A NOT USED
B NOT USED
C N 5° 57′ 25″ E
D N 5° 50′ 12″ E
E N 5° 42′ 58″ E
F N 5° 35′ 45″ E
G N 5° 28′ 31″ E
H N 20° 14′ 40″ W
I N 4° 34′ 11″ E
J N 27° 04′ 11″ E
K N 4° 34′ 11″ E
L N 4° 12′ 30″ E
M N 3° 50′ 50″ E
N N 3° 29′ 09″ E
BEGIN NOISE WALL (WEST) STA. 11+27.00
MATCH LINE STA. 13+00
℄ PROP. NOISE WALL (WEST)
℄ RAMP 'C'
℄ R/W & CONST. I-75
B-107-4-08
B-108-1-08
N 0° 40′ 39″ E
TOP OF WALL
ACOUSTIC PROFILE LINE
BOTTOM OF WALL
PROPOSED GRADE LINE
EX. GROUND
MATCH LINE STA. 13+00 SEE SHEET
HORIZONTAL SCALE IN FEET
CALCULATED EJC
CHECKED NAH

| | | |

LEGEND - BEARINGS

A	N 3° 29′ 09″ E
B	N 3° 07′ 28″ E
C	N 2° 45′ 48″ E
D	N 2° 24′ 07″ E
E	N 2° 02′ 27″ E
F	N 1° 40′ 46″ E
G	N 1° 19′ 06″ E
H	N 0° 57′ 25″ E
I	N 0° 41′ 27″ E
J	N 0° 40′ 39″ E
K	N 53° 57′ 52″ W
L	N 0° 40′ 33″ E

LEGEND

- XX - DRILLED SHAFT NUMBERS
- SOIL BORING

	13	14	15	16	17	18
TOP OF WALL ELEV.	902.00	902.00	902.00	902.00	902.00	902.50
ACOUSTIC PROFILE ELEV.	900.99	900.68	900.39	900.12	899.88	899.66	899.52	899.45	899.36	899.26	899.18	899.14	899.13	899.15	899.23	899.41	899.58	899.71	900.90	901.35	901.74	901.93
BOTTOM OF WALL ELEV.	886.00	885.00	885.00	885.00	885.00	885.00	885.00	885.00	884.00	884.00	884.00	884.00	884.00	884.00	884.00	885.00	885.00	885.00	885.00	887.00	887.00	887.50
PANEL NO.	18	19	20	21	22	23	24	25	26	27	28	29	30	31	32	33	34	35	36	37	38	39
PROPOSED GRADE ELEV.	887.24	886.97	886.72	886.49	886.26	886.06	885.88	885.73	885.67	885.61	885.53	885.45	885.37	885.34	885.31	885.31	885.33	885.38	885.52	885.67	885.79	885.91
EX. GROUND ELEV.	881.67	881.47	881.19	880.98	880.95	881.21	881.30	881.60	881.64	881.78	882.23	882.56	882.99	883.79	884.64	885.16	885.64	886.06	887.76	887.83	888.00	

HORIZONTAL SCALE IN FEET
0 10 20 40

CALCULATED EJC
CHECKED NAH

PLAN AND PROFILE - NOISE WALL (WEST)
STA. 13+00 TO STA. 18+00

ALL-75-5.53

703
1224

J:\Projects\ALL\7669\structures\NoiseBarrier\sheets\7669NP002.dgn 11-SEP-2012 9:15PM reddenj

LEGEND - BEARINGS

A	N 0° 40' 33" E
B	N 31° 21' 21" E
C	N 0° 40' 33" E
D	N 21° 49' 27" W
E	N 0° 40' 33" E

HORIZONTAL SCALE IN FEET
0 10 20 40

CALCULATED EJC
CHECKED NAH

LEGEND

XX - DRILLED SHAFT NUMBERS

- SOIL BORING

| | | |

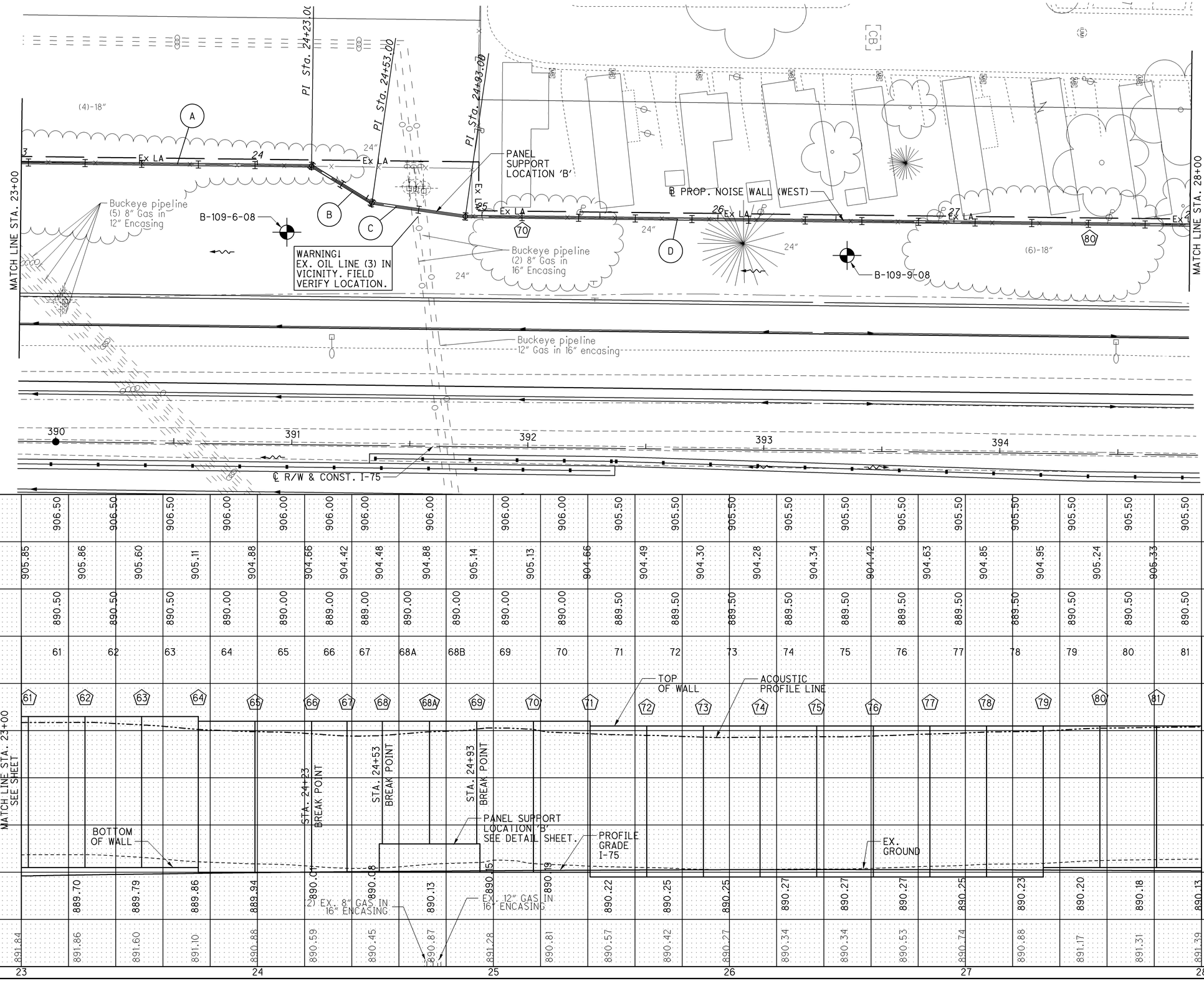

HORIZONTAL SCALE IN FEET
0 10 20 40

CALCULATED EJC
CHECKED NAH

PLAN AND PROFILE - NOISE WALL (WEST)
STA. 23+00 TO STA. 28+00

ALL-75-5.53

705
1224

J:\Projects\ALL\7669\structures\NoiseBarrier\sheets\76691NP004.dgn 11-SEP-2012 9:16PM redden

LEGEND - BEARINGS

(A) N 0° 40′ 39″ E

LEGEND

(XX) - DRILLED SHAFT NUMBERS

- SOIL BORING

HORIZONTAL SCALE IN FEET

0 10 20 40

CALCULATED EJC

CHECKED NAH

WARNING! EX. GAS MAIN IN VICINITY. FIELD VERIFY LOCATION.

WARNING! EX. TELEPHONE IN VICINITY. FIELD VERIFY LOCATION.

WARNING! EX. WATER MAIN IN VICINITY. FIELD VERIFY LOCATION.

END NOISE WALL (WEST) STA. 31+01

POT Sta. 31+01.00

℄ PROP. NOISE WALL (WEST)

MATCH LINE STA. 28+00

B-110-2-08

B-110-4-08

City of lima 6" Water

(8)-18"

Ex LA

LA R/W

Ex R/W

℄ R/W & CONST. I-75

PI Sta. 396+67.24

Embarq 1200 Pair communications 12" Steel encasement

30 - 18"-24"

15"-B

395 396 397 398 399

	82	83	84	85	86	87	88	89	90	91	92	93	94	95	96	97	910
TOP OF WALL ELEV.	905.50	905.50	905.50	905.00	904.50	904.00	904.00	903.50	903.50	903.00	902.50	902.00	901.00	899.00	897.00	895.00	
ACOUSTIC PROFILE ELEV.	905.41	905.37	905.13	904.94	904.41	903.94	903.72	903.40	902.96	902.33	901.77	901.22	900.55	886.00	886.00	885.00	
BOTTOM OF WALL ELEV.	890.50	890.50	890.50	890.00	889.50	889.00	889.00	888.50	887.50	887.00	886.50	886.00	886.00			885.00	
PROPOSED GRADE ELEV.	890.07	890.01	899.95	899.87	899.79	899.70	899.61	899.50	899.39	899.27	899.14	899.00					
EX. GROUND ELEV.	891.39	891.39	891.15	890.94	890.55	890.03	889.54	889.07	888.27	887.67	887.12	886.44	885.76				

28 29 30 31

MATCH LINE STA. 28+00 SEE SHEET

ACOUSTIC PROFILE LINE

TOP OF WALL

BOTTOM OF WALL

PROFILE GRADE I-75

EX. GROUND

EX. 6" W

EX. 2" GAS IN 4" ENCASING

EX. EMBARQ FIBER 1200 PAIR COMM. IN 12" STEEL ENCSMT.

905 900 895 890 885

PLAN AND PROFILE - NOISE WALL (WEST)
STA. 28+00 TO STA. 31+09

ALL-75-5.53

706
1224

J:\Projects\ALL\76691\structures\NoiseBarrier\sheets\76691NP005.dgn 11-SEP-2012 9:16PM redden

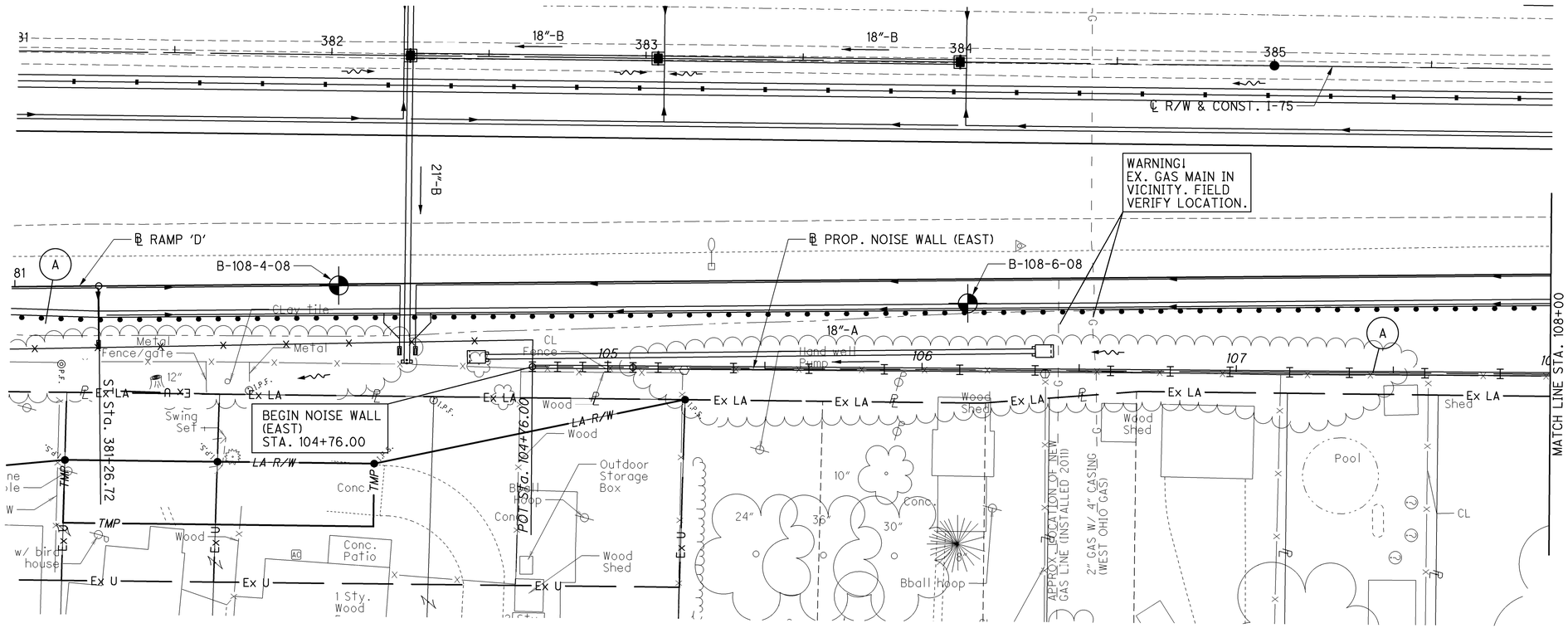

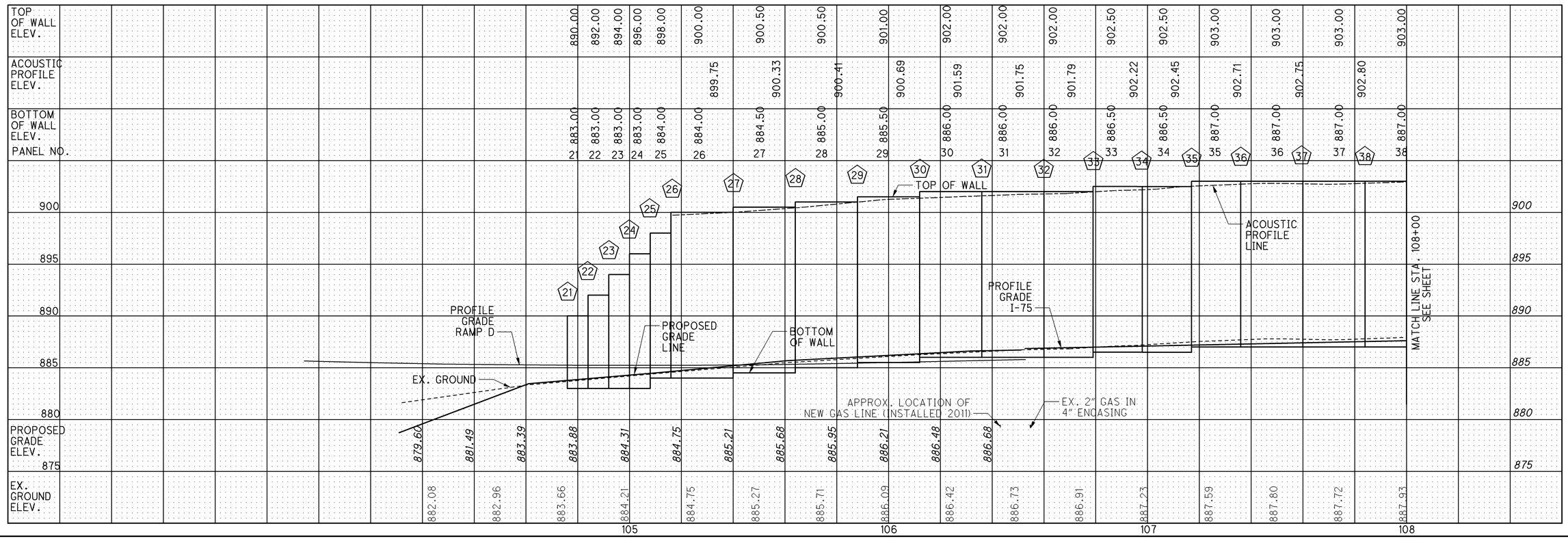

HORIZONTAL SCALE IN FEET
0 10 20 40

CALCULATED EJC
CHECKED CAC

PLAN AND PROFILE - NOISE WALL (EAST)
STA. 104+76 TO STA. 108+00

ALL-75-5.53

707
1224

J:\Projects\ALL\76691\structures\NoiseBarrier\sheets\76691NP201.dgn 11-SEP-2012 9:16PM reddenj

LEGEND - BEARINGS

A N 0° 25' 46" E

B N 0° 40' 39" E

LEGEND

XX - DRILLED SHAFT NUMBERS

- SOIL BORING

HORIZONTAL SCALE IN FEET
0 10 20 40

CALCULATED EJC
CHECKED CAC

PLAN AND PROFILE - NOISE WALL (EAST)
STA. 108+00 TO STA. 113+00

ALL-75-5.53

708
1224

J:\Projects\ALL\76691\structures\NoiseBarrier\sheets\76691NP202.dgn 11-SEP-2012 9:16PM reddenj

PLAN AND PROFILE - NOISE WALL (EAST)
STA. 113+00 TO STA. 118+00

ALL-75-5.53

709
1224

CALCULATED EJC
CHECKED CAC

HORIZONTAL SCALE IN FEET
0 10 20 40

J:\Projects\ALL\76691\structures\NoiseBarrier\sheets\76691NP203.dgn 11-SEP-2012 9:16PM reddenj

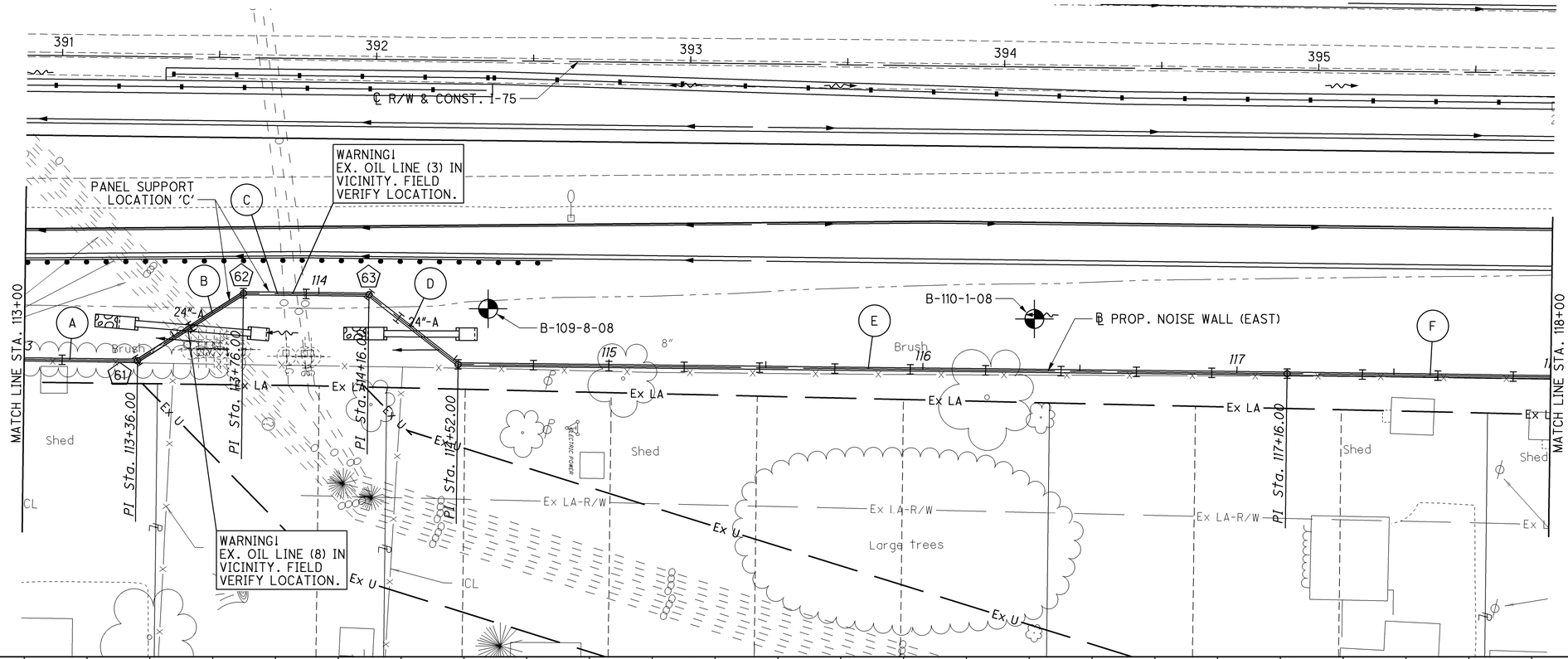

LEGEND - BEARINGS

A	N 0° 40′ 39″ E
B	N 32° 31′ 06″ W
C	N 0° 40′ 39″ E
D	N 38° 02′ 58″ E
E	N 0° 38′ 29″ E
F	N 0° 44′ 51″ E

LEGEND

- XX - DRILLED SHAFT NUMBERS
- SOIL BORING

| | | |

396 397 398 399 400

Dominion gas
2" Gas in 4" encasing

℄ R/W & CONST. I-75

WARNING!
EX. GAS MAIN IN VICINITY. FIELD VERIFY LOCATION.

WARNING!
EX. TELEPHONE IN VICINITY. FIELD VERIFY LOCATION.

WARNING!
EX. WATER MAIN IN VICINITY. FIELD VERIFY LOCATION.

B-110-3-08 B-110-5-08 B-110-6-08

℄ PROP. NOISE WALL (EAST)

MATCH LINE STA. 118+00

MATCH LINE STA. 123+00

Ex LA

Shed

Bollards

A-R/W

Clothes lines

Ex R/W

E.W. ℄ SEC. 32

PI Sta. 119+32.00

PI Sta. 121+24.00

BRYN MAWR AVE.

Ex SH

LEGEND - BEARINGS

A N 0° 44′ 51″ E

B N 1° 14′ 06″ E

C N 1° 03′ 49″ E

LEGEND

XX - DRILLED SHAFT NUMBERS

- SOIL BORING

| | | |

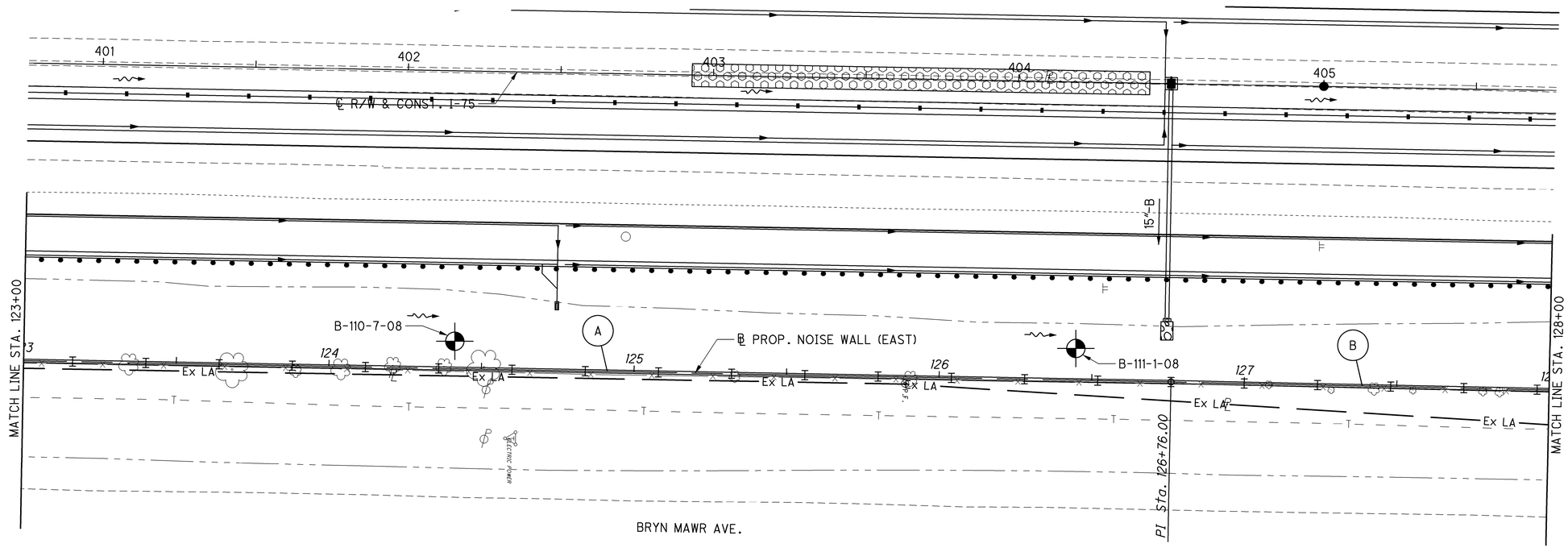

LEGEND - BEARINGS

(A) N 1° 03′ 49″ E

(B) N 1° 12′ 19″ E

LEGEND

(XX) - DRILLED SHAFT NUMBERS

- SOIL BORING

| | | |

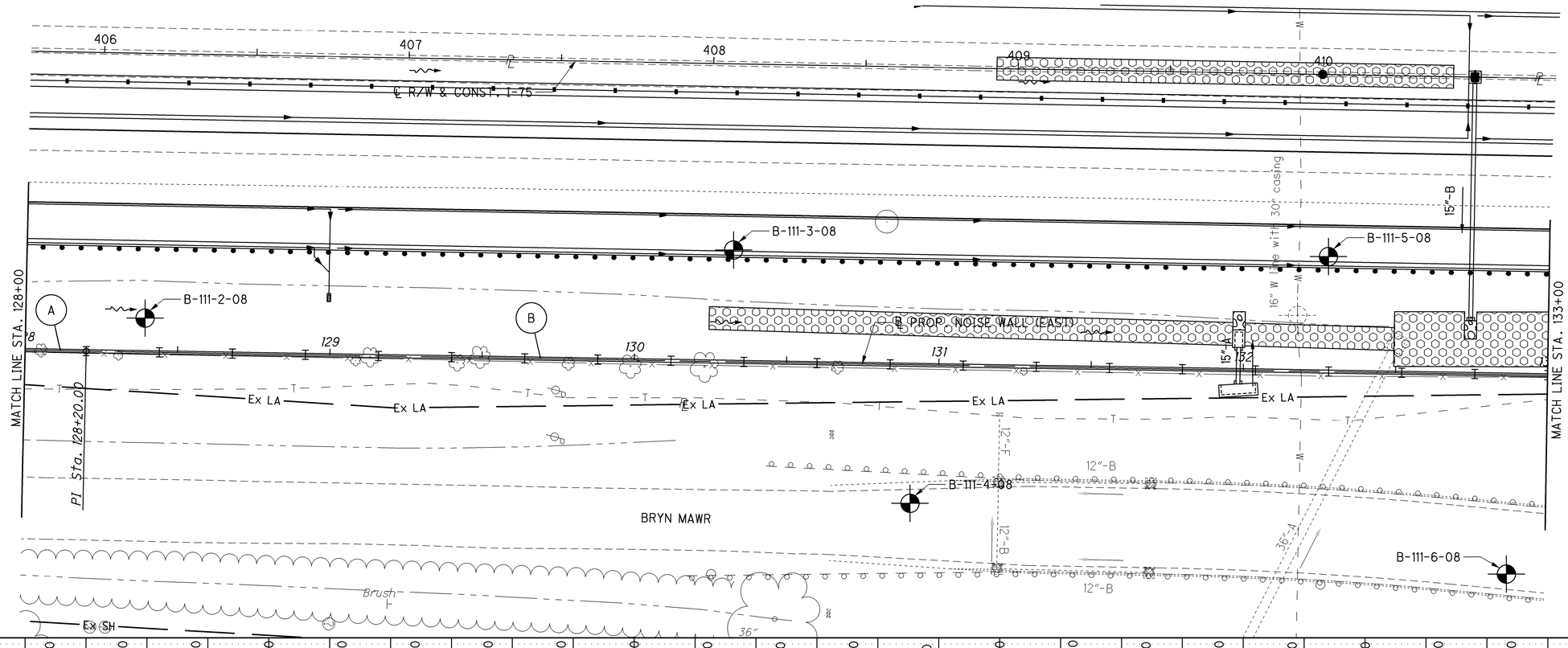

HORIZONTAL SCALE IN FEET
0 10 20 40

CALCULATED EJC
CHECKED CAC

PLAN AND PROFILE - NOISE WALL (EAST)
STA. 128+00 TO STA. 133+00

ALL-75-5.53

712
1224

J:\Projects\ALL\76691\structures\NoiseBarrier\sheets\76691NP206.dgn 11-SEP-2012 9:16PM redderj

411 412 413 414 415

℄ R/W & CONST. I-75

15"-B 15"-B

18"-B

36"-C 48"-C 48"-C

MATCH LINE STA. 128+00

Ex LA LA R/W LA R/W Ex LA Ex LA

A

POT Sta. 133+64.00

END NOISE WALL
(EAST)
STA. 133+64.00

℄ PROP. NOISE WALL (EAST)

BRYN MAWR AVE.

B-111-8-08

12"-B 12"-F 48"-B 21"-C

RESERVOIR ROAD

SAN SAN SAN SAN SAN SAN SAN SAN

H3

CH

Brush

Grave

LEGEND - BEARINGS

A N 0° 56′ 29″ E

LEGEND

XX - DRILLED SHAFT NUMBERS

- SOIL BORING

HORIZONTAL SCALE IN FEET
0 10 20 40

CALCULATED EJC
CHECKED CAC

| | | |

SEEDING	
END WIDTH	SQ. YDS.

END AREA		VOLUME	
CUT	FILL	CUT	FILL

CALCULATED JMR
CHECKED ACF

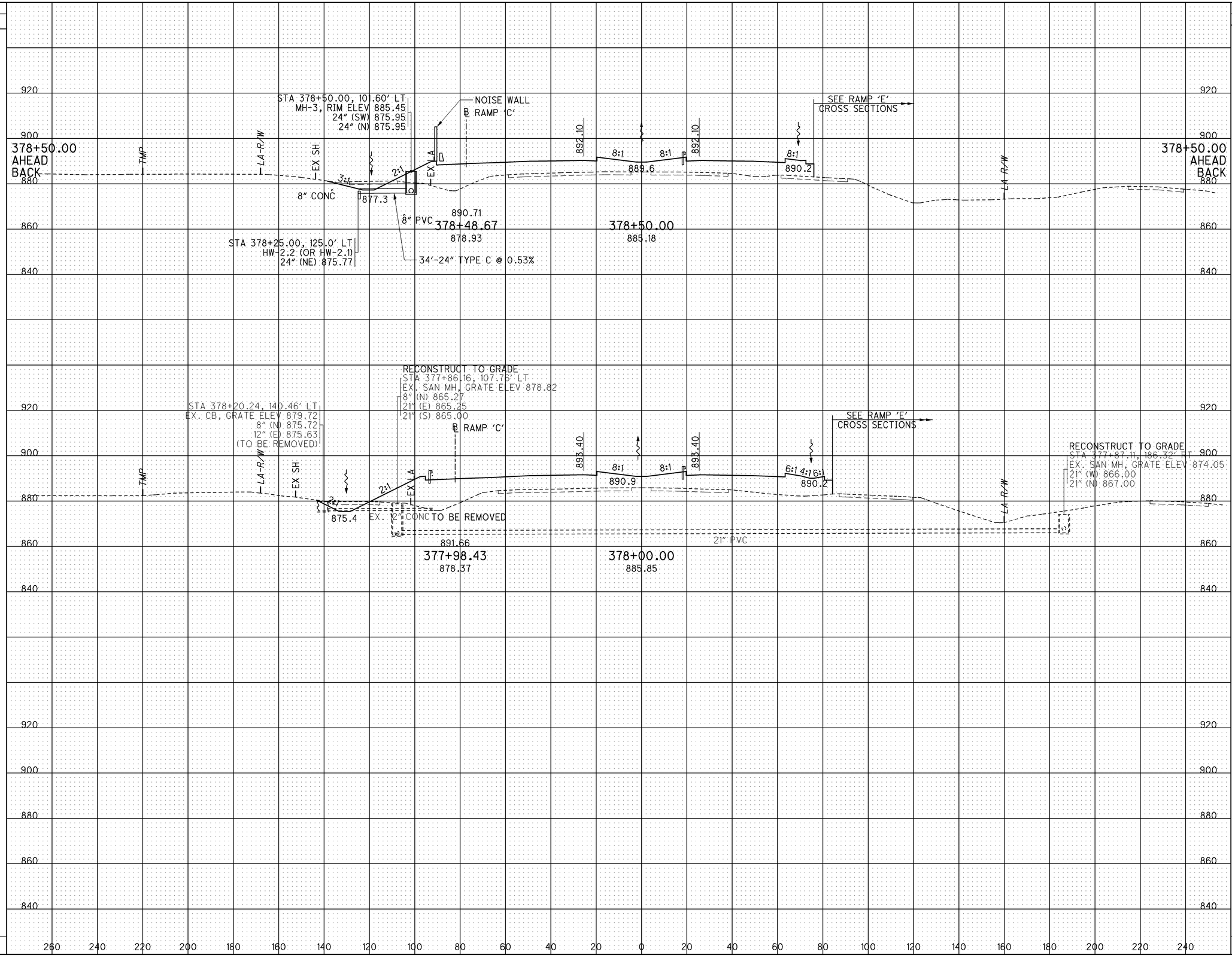

CROSS SECTIONS - I-75
STA. 377+50.00 TO STA. 378+50.00

ALL-75-5.53

714
1224

J:\Projects\ALL\76691\structures\NoiseBarrier\sheets\76691NX100.dgn 11-SEP-2012 9:16PM reddenj

SEEDING	
END WIDTH	SQ. YDS.

END AREA		VOLUME	
CUT	FILL	CUT	FILL

CALCULATED JMR
CHECKED ACF

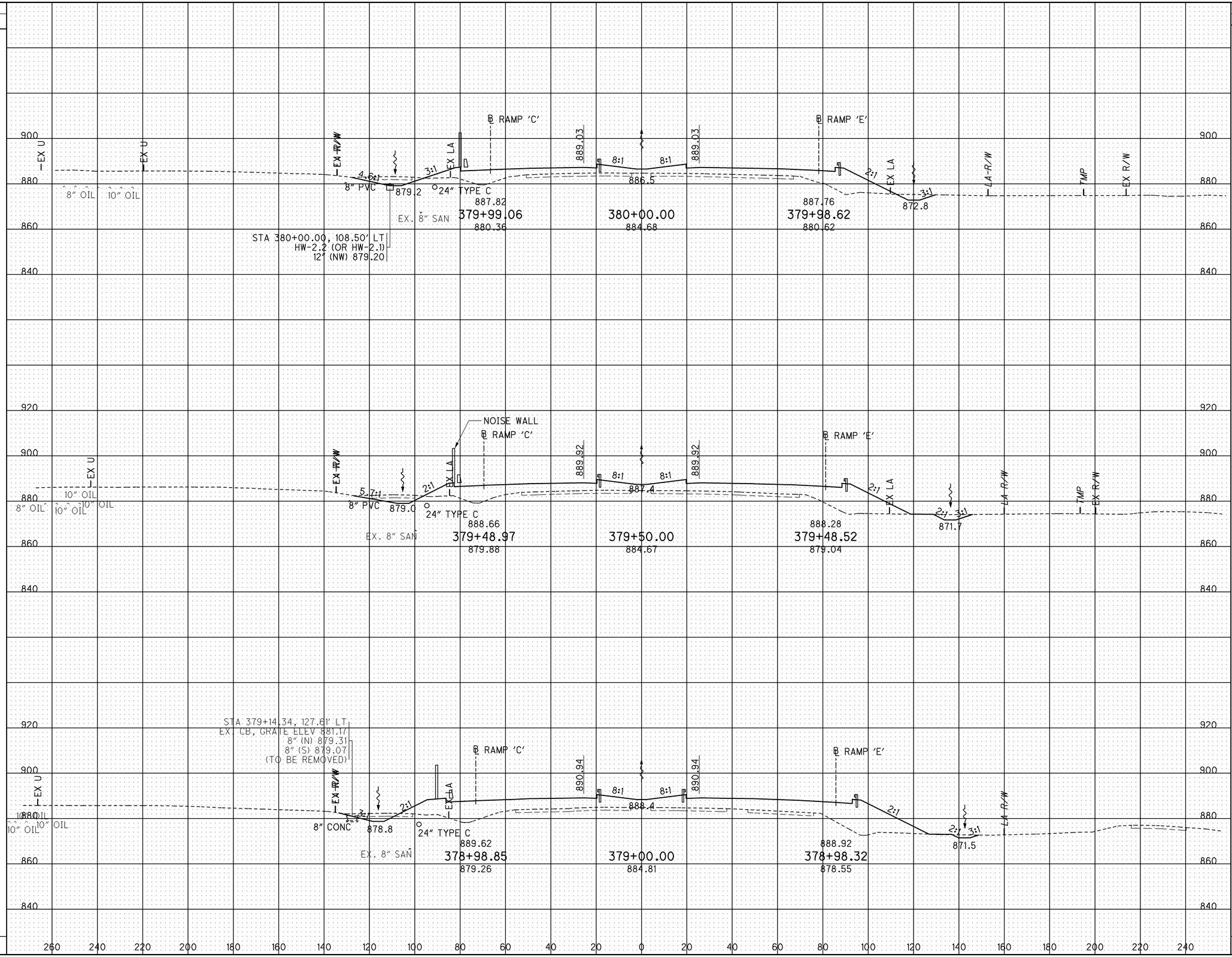

CROSS SECTIONS - I-75
STA. 379+00.00 TO STA. 380+00.00

ALL-75-5.53

J:\Projects\ALL\76691\structures\NoiseBarrier\sheets\76691NX101.dgn 11-SEP-2012 9:16PM reddenj

SEEDING	
END WIDTH	SQ. YDS.

END AREA		VOLUME	
CUT	FILL	CUT	FILL

CALCULATED JMR
CHECKED ACF

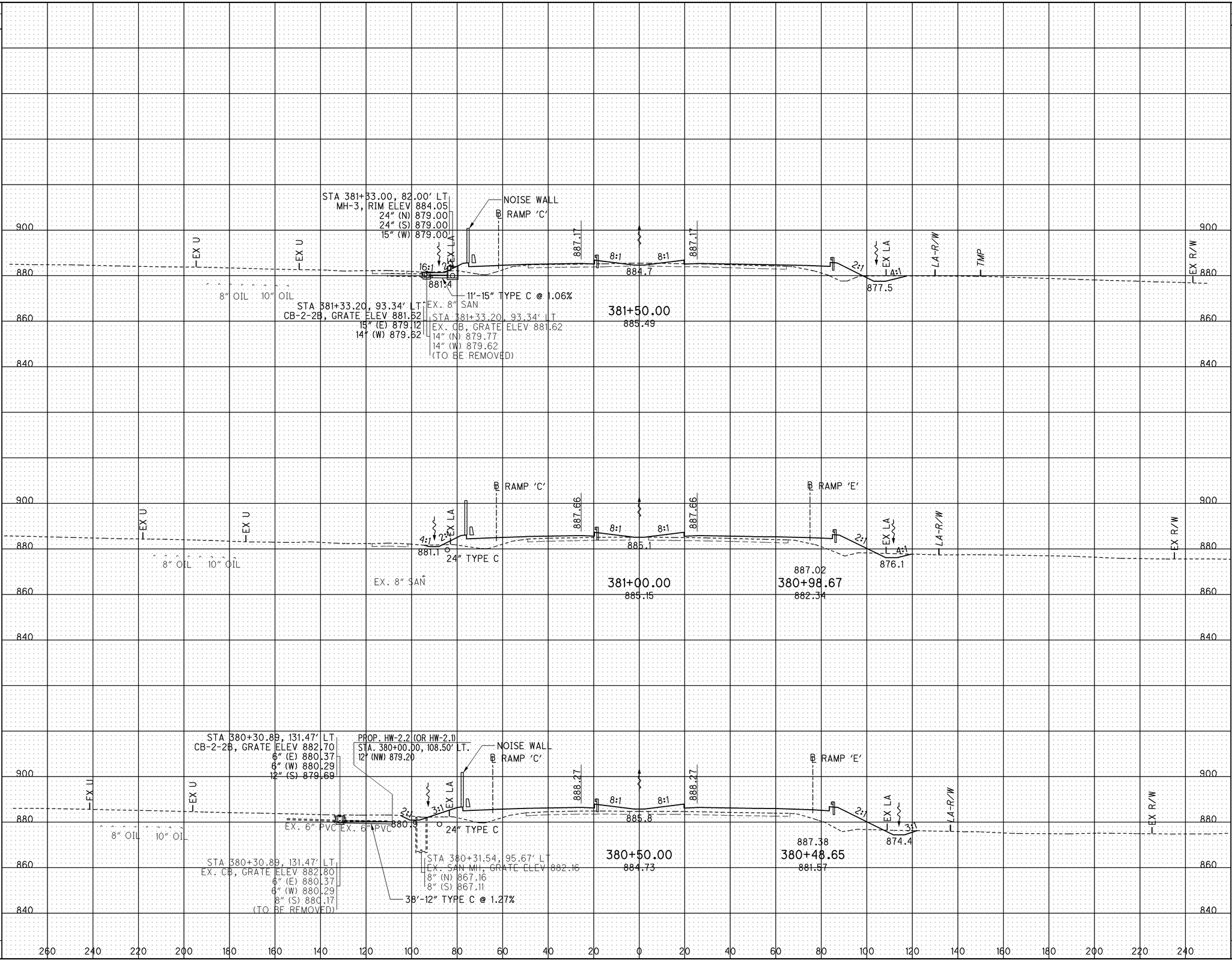

CROSS SECTIONS - I-75
STA. 380+50.00 TO STA. 381+50.00

ALL-75-5.53

716
1224

J:\Projects\ALL\76691\structures\NoiseBarrier\sheets\76691NX102.dgn 11-SEP-2012 9:16PM reddenj

SEEDING	
END WIDTH	SQ. YDS.

END AREA		VOLUME	
CUT	FILL	CUT	FILL

CALCULATED JMR
CHECKED ACF

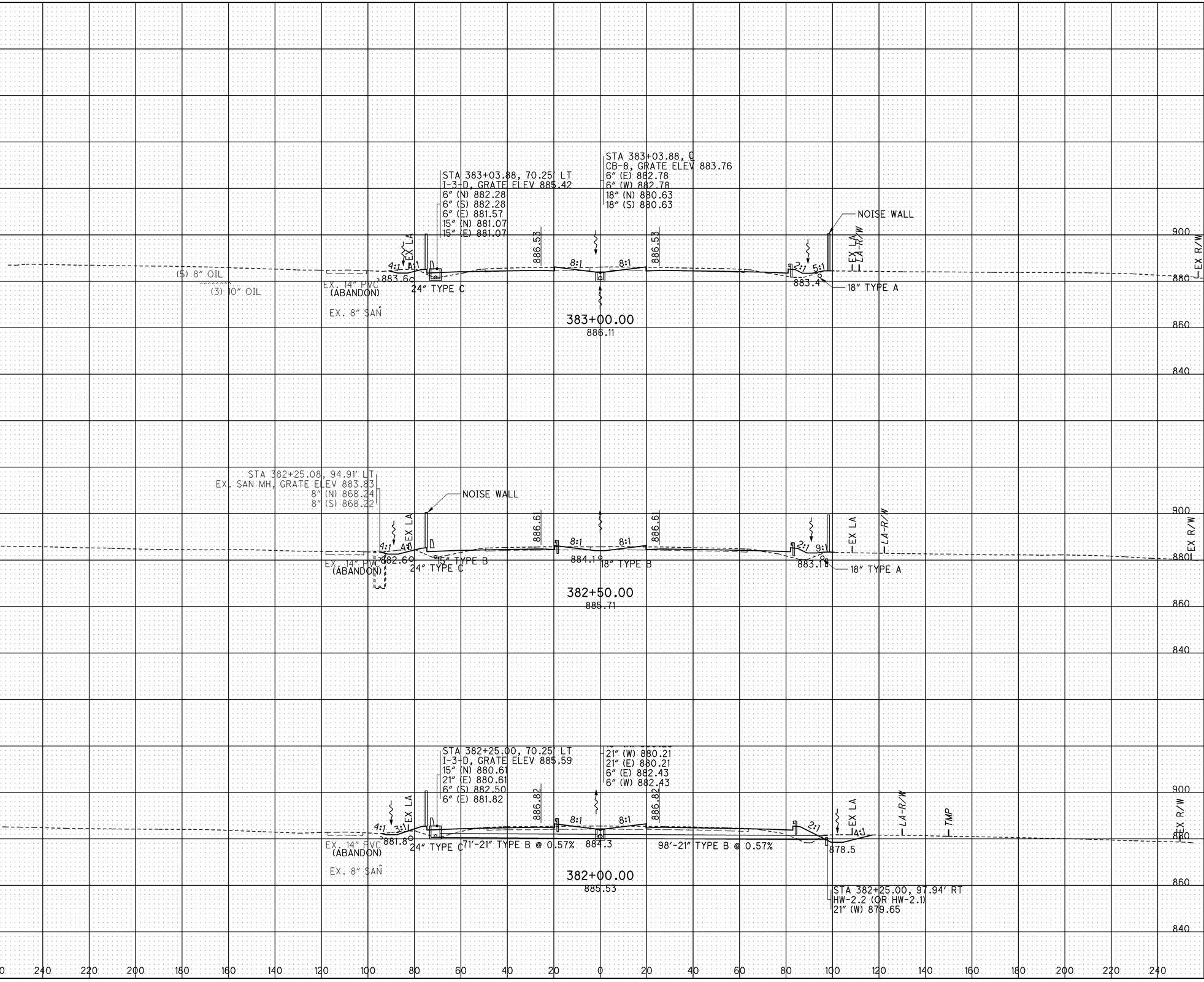

CROSS SECTIONS - I-75
STA. 382+00.00 TO STA. 383+00.00

ALL-75-5.53

J:\Projects\ALL\76691\structures\NoiseBarrier\sheets\76691NX103.dgn 11-SEP-2012 9:16PM reddenj

SEEDING	
END WIDTH	SQ. YDS.

END AREA		VOLUME	
CUT	FILL	CUT	FILL

CALCULATED JMR
CHECKED ACF

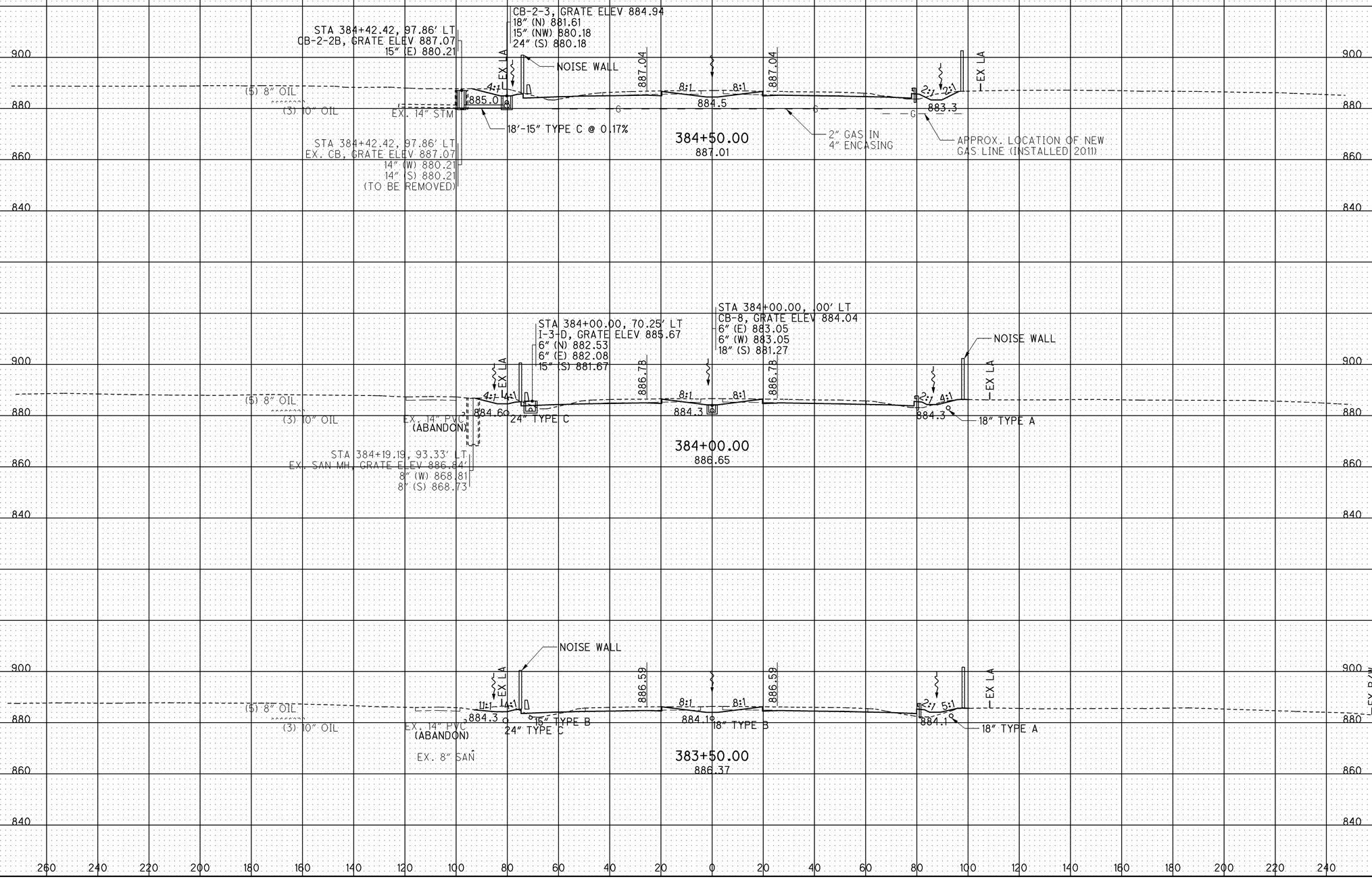

CROSS SECTIONS - I-75
STA. 383+50.00 TO STA. 384+50.00

ALL-75-5.53

718
1224

J:\Projects\ALL\76691\structures\NoiseBarrier\sheets\76691NX104.dgn 11-SEP-2012 9:16PM reddenj

SEEDING	
END WIDTH	SQ. YDS.

END AREA		VOLUME	
CUT	FILL	CUT	FILL

CALCULATED JMR
CHECKED ACF

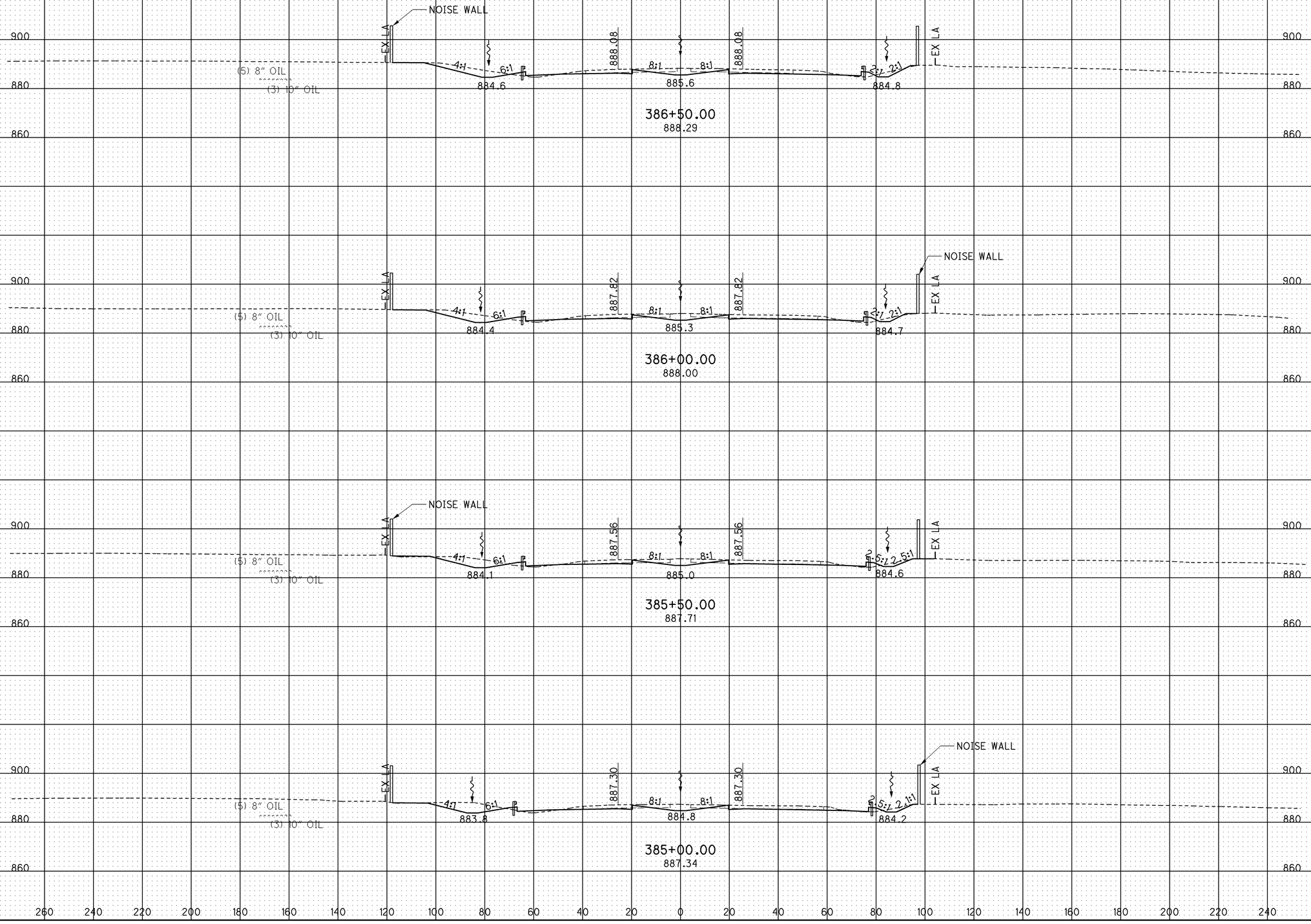

CROSS SECTIONS - I-75
STA. 385+00.00 TO STA. 386+50.00

ALL-75-5.53

719
1224

J:\Projects\ALL\76691\structures\NoiseBarrier\sheets\76691NX105.dgn 11-SEP-2012 9:16PM reddenj

SEEDING	
END WIDTH	SQ. YDS.

END AREA		VOLUME	
CUT	FILL	CUT	FILL

CALCULATED JMR
CHECKED ACF

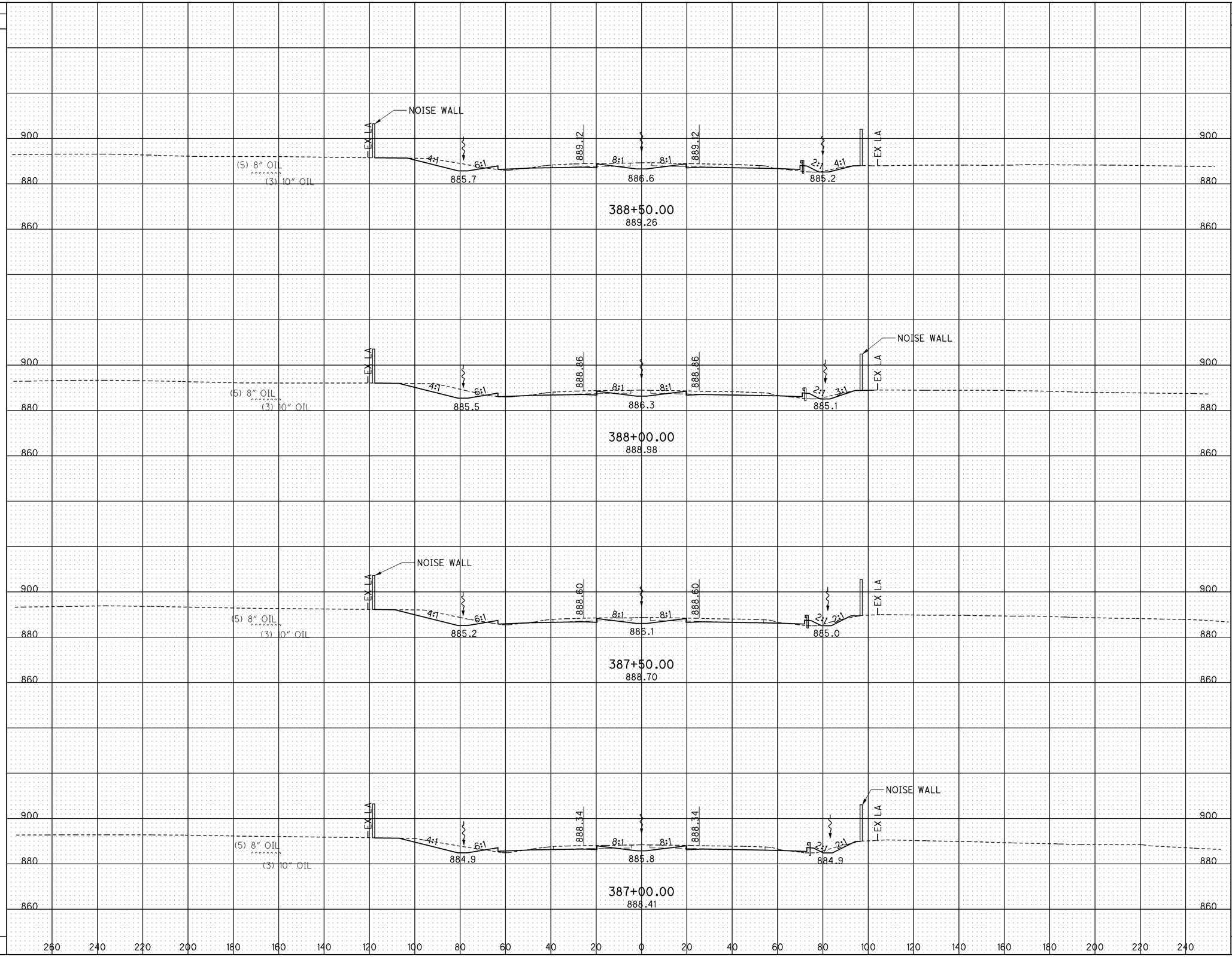

CROSS SECTIONS - I-75
STA. 387+00.00 TO STA. 388+50.00

ALL-75-5.53

720
1224

J:\Projects\ALL\76691\structures\NoiseBarrier\sheets\76691NX106.dgn 11-SEP-2012 9:16PM reddenj

SEEDING	
END WIDTH	SQ. YDS.

END AREA		VOLUME	
CUT	FILL	CUT	FILL

CALCULATED JMR
CHECKED ACF

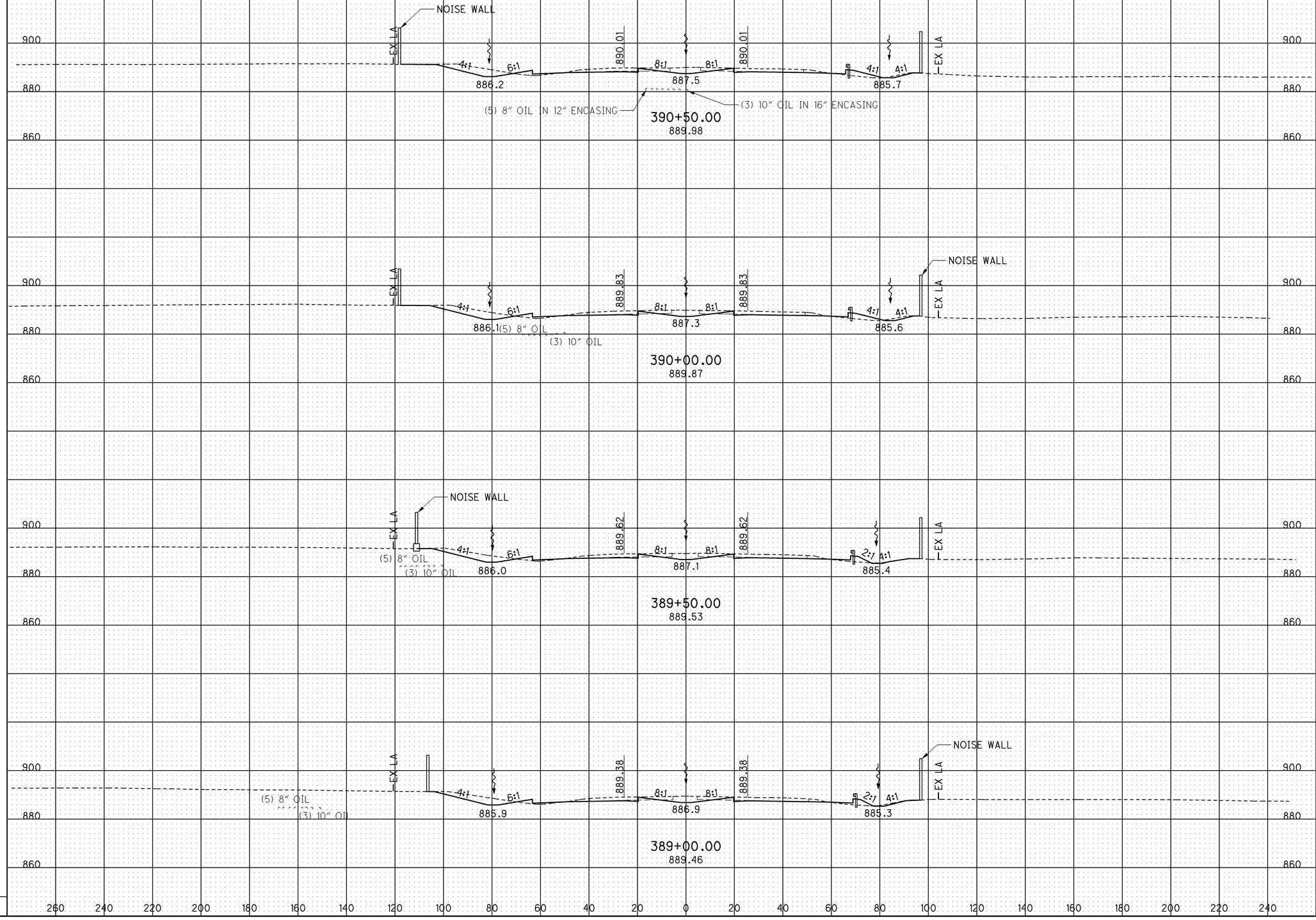

CROSS SECTIONS - I-75
STA. 389+00.00 TO STA. 390+50.00

ALL-75-5.53

721
1224

J:\Projects\ALL\76691\structures\NoiseBarrier\sheets\76691NX107.dgn 11-SEP-2012 9:16PM reddenj

SEEDING	
END WIDTH	SQ. YDS.

END AREA		VOLUME	
CUT	FILL	CUT	FILL

CALCULATED JMR
CHECKED ACF

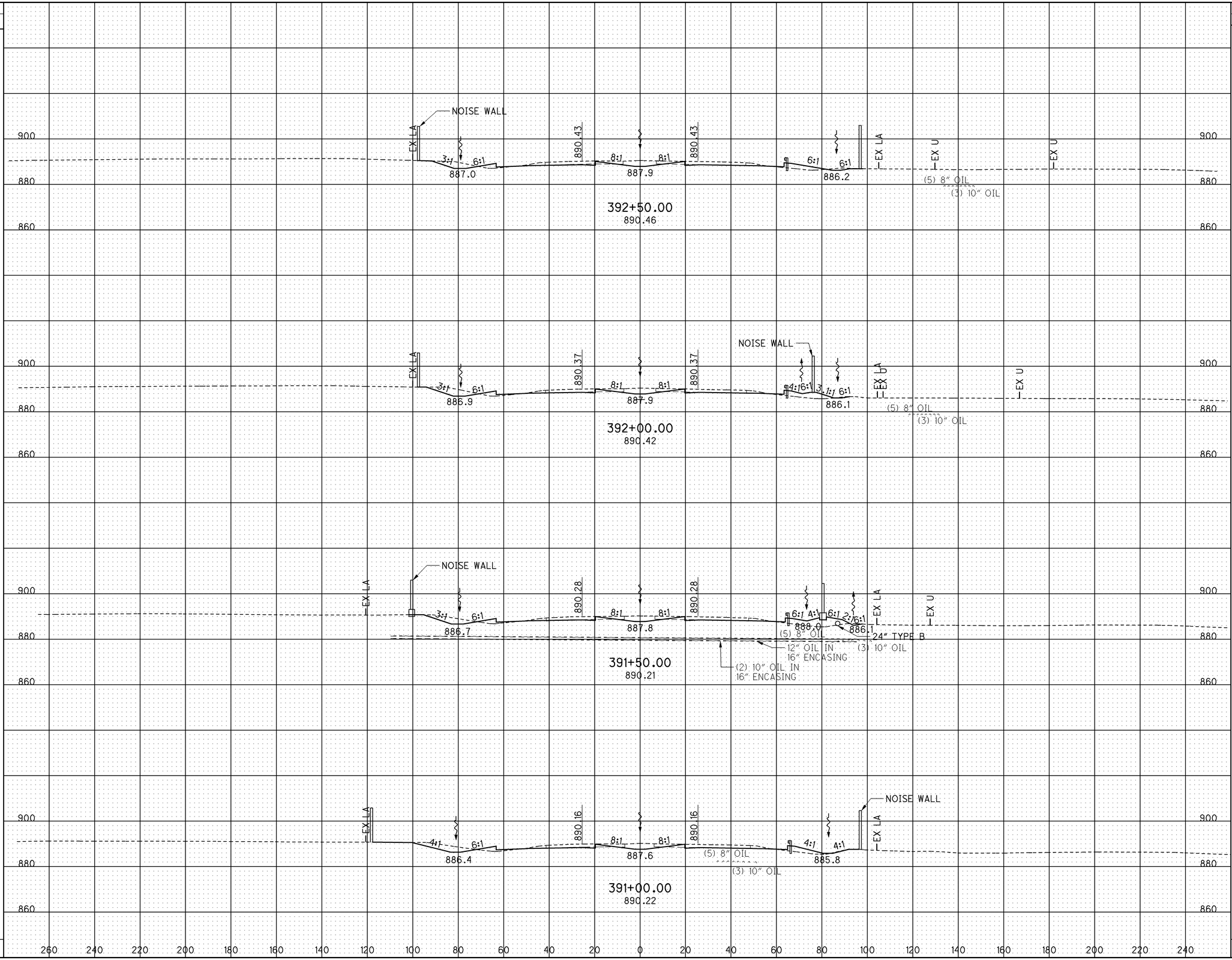

CROSS SECTIONS - I-75
STA. 391+00.00 TO STA. 392+50.00

ALL-75-5.53

722
1224

J:\Projects\ALL\76691\structures\NoiseBarrier\sheets\76691NX108.dgn 11-SEP-2012 9:16PM reddenj

SEEDING	
END WIDTH	SQ. YDS.

END AREA		VOLUME	
CUT	FILL	CUT	FILL

CALCULATED JMR
CHECKED ACF

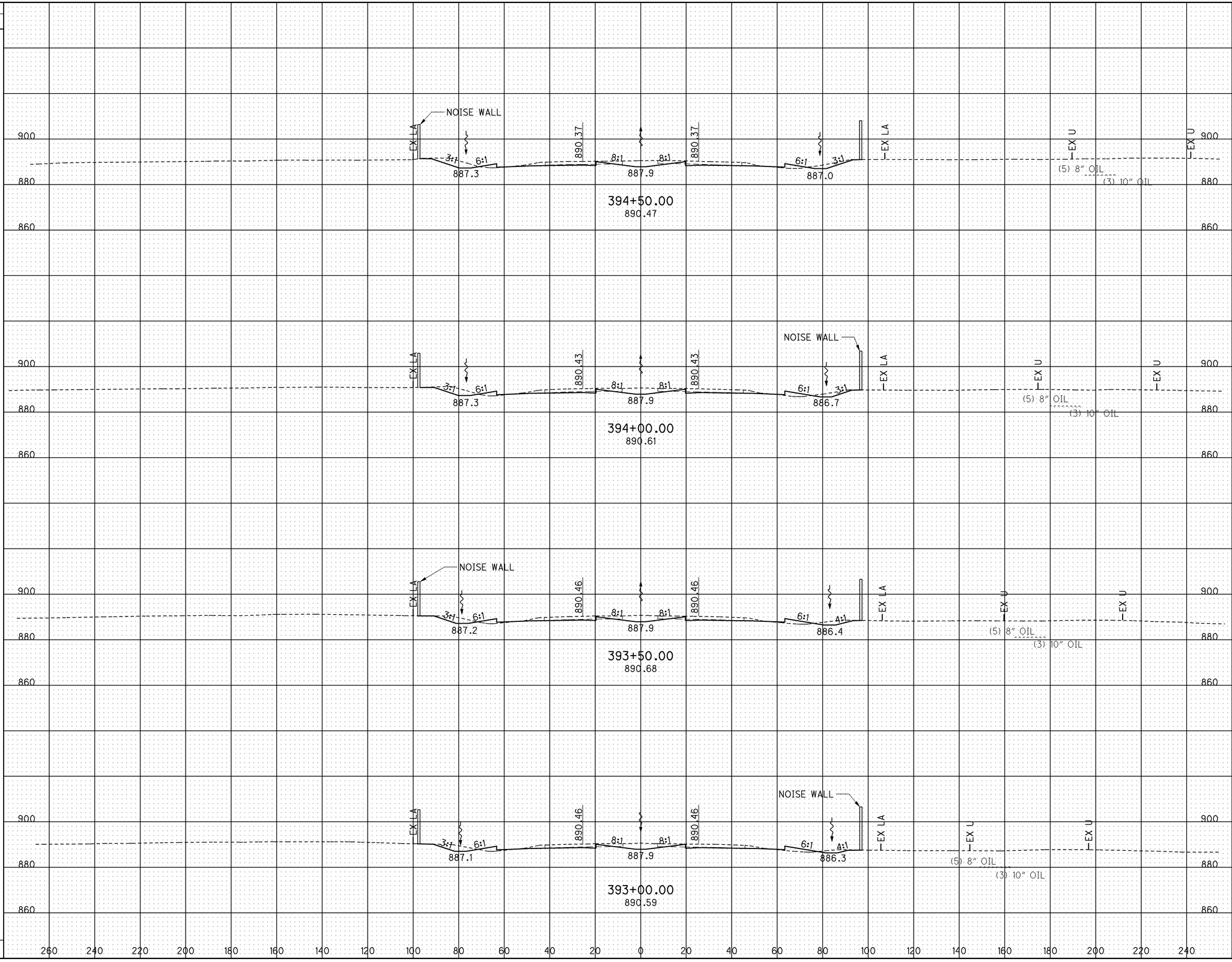

CROSS SECTIONS - I-75
STA. 393+00.00 TO STA. 394+50.00

ALL-75-5.53

723
1224

J:\Projects\ALL\76691\structures\NoiseBarrier\sheets\76691NX109.dgn 11-SEP-2012 9:16PM reddenj

SEEDING	
END WIDTH	SQ. YDS.

END AREA		VOLUME	
CUT	FILL	CUT	FILL

CALCULATED JMR
CHECKED ACF

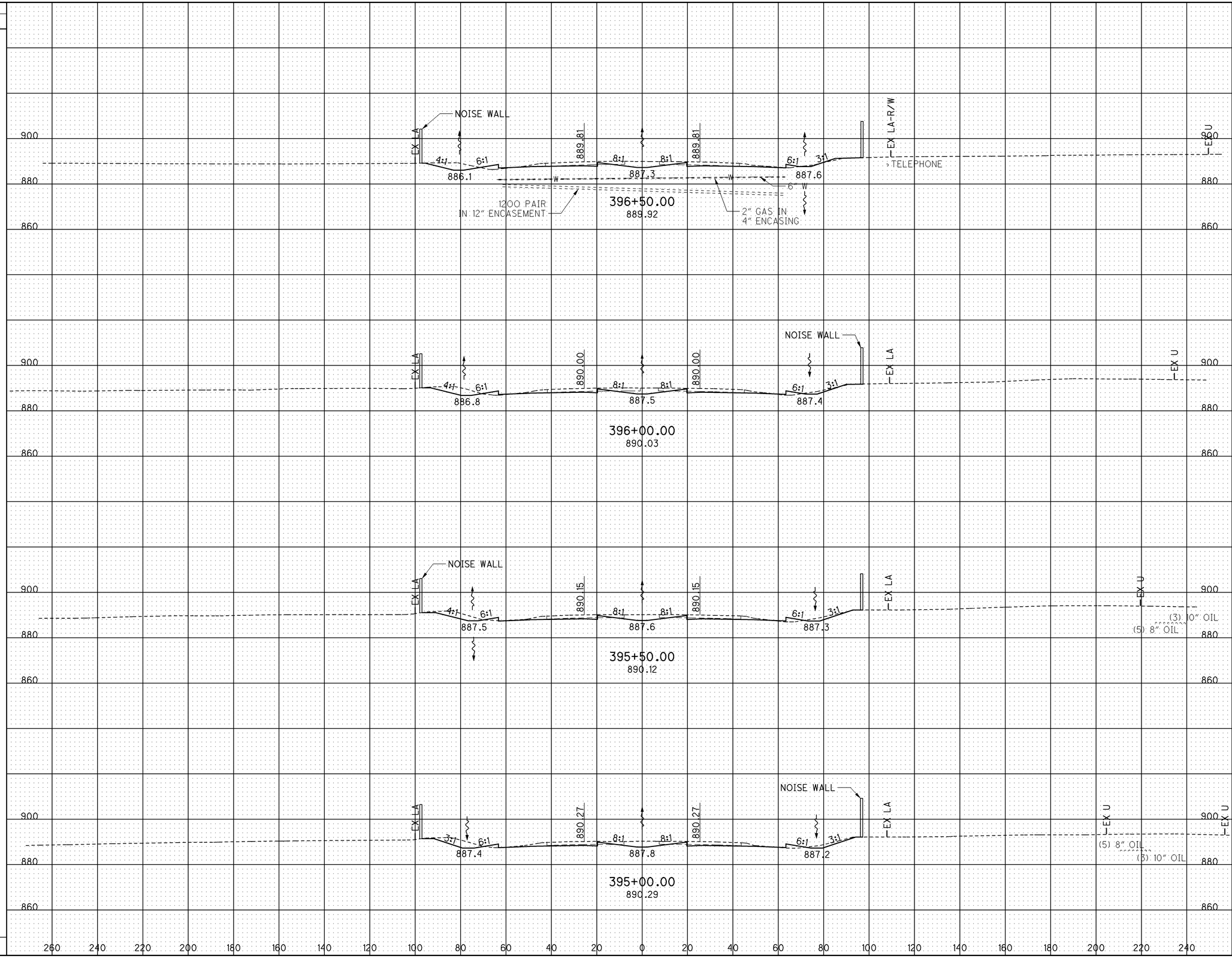

CROSS SECTIONS - I-75
STA. 395+00.00 TO STA. 396+50.00

ALL-75-5.53

724
1224

J:\Projects\ALL\76691\structures\NoiseBarrier\sheets\76691NX110.dgn 11-SEP-2012 9:16PM redden

SEEDING	
END WIDTH	SQ. YDS.

END AREA	
CUT	FILL

VOLUME	
CUT	FILL

CALCULATED JMR
CHECKED ACF

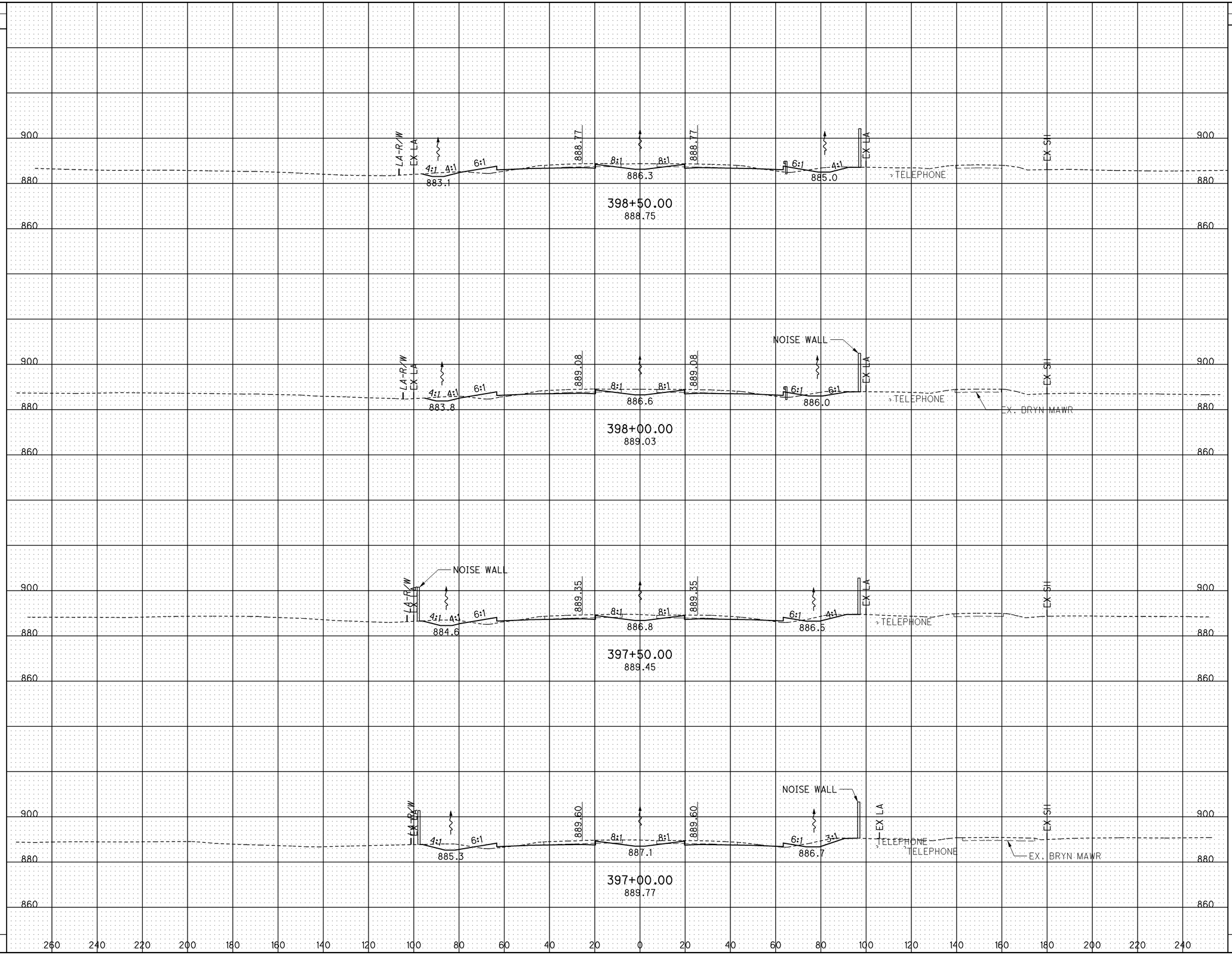

CROSS SECTIONS - I-75
STA. 397+00.00 TO STA. 398+50.00

ALL-75-5.53

725
1224

J:\Projects\ALL\76691\structures\NoiseBarrier\sheets\76691NX111.dgn 11-SEP-2012 9:16PM reddenj

SEEDING	
END WIDTH	SQ. YDS.

END AREA		VOLUME	
CUT	FILL	CUT	FILL

CALCULATED JMR
CHECKED ACF

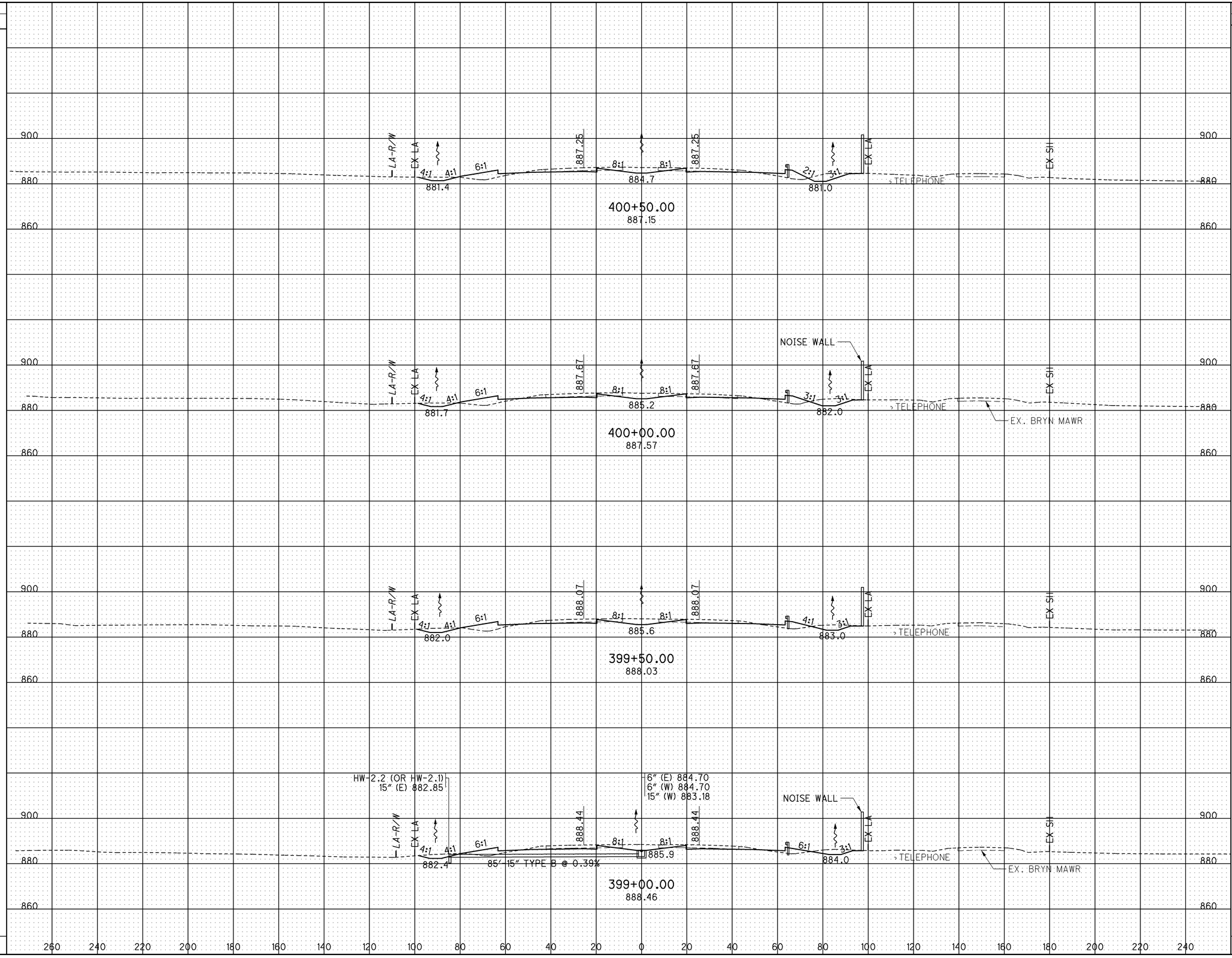

CROSS SECTIONS - I-75
STA. 399+00.00 TO STA. 400+50.00

ALL-75-5.53

726
1224

J:\Projects\ALL\76691\structures\NoiseBarrier\sheets\76691NX112.dgn 11-SEP-2012 9:16PM redden

SEEDING	
END WIDTH	SQ. YDS.

END AREA	
CUT	FILL

VOLUME	
CUT	FILL

CALCULATED JMR

CHECKED ACF

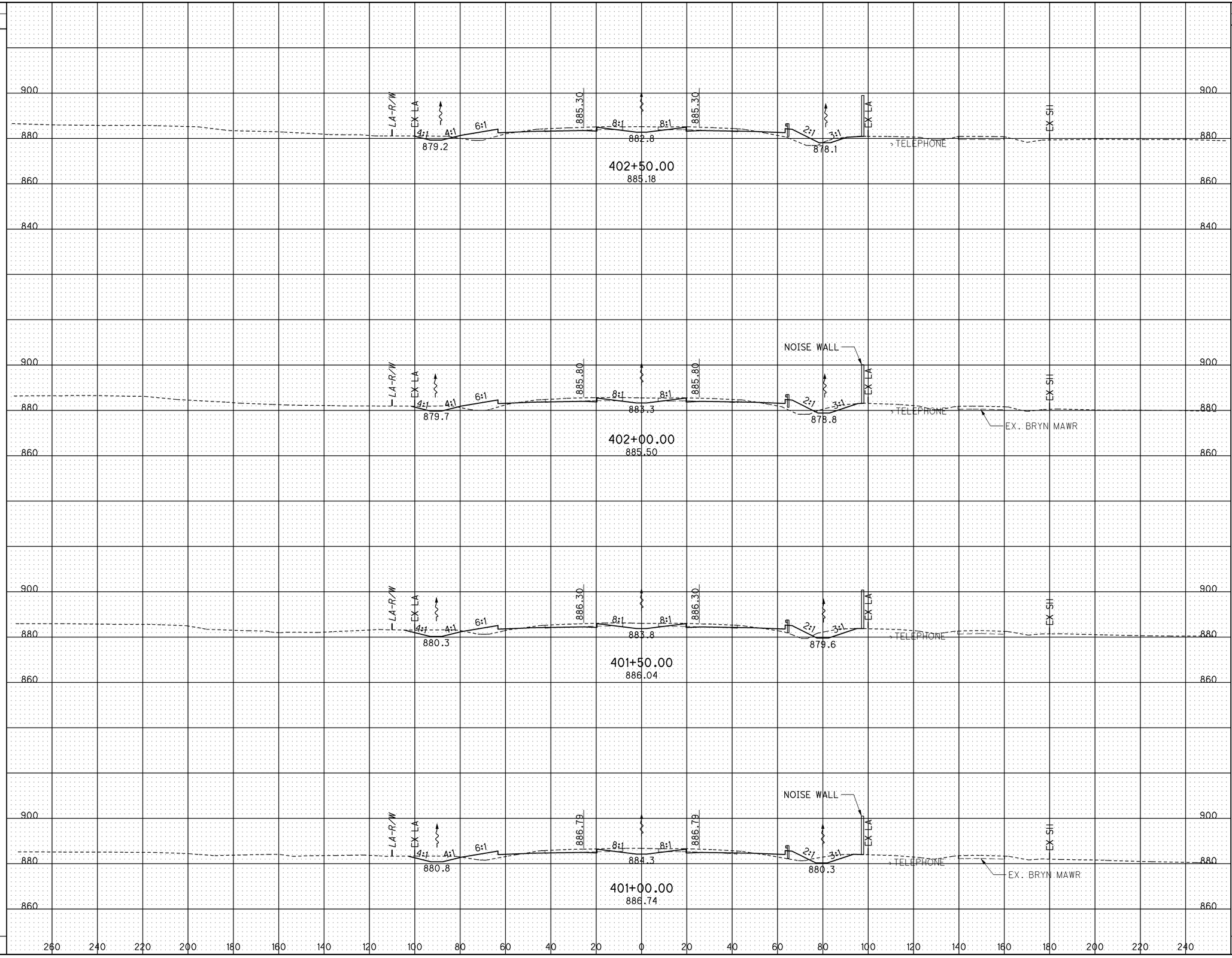

J:\Projects\ALL\76691\structures\NoiseBarrier\sheets\76691NX113.dgn 11-SEP-2012 9:16PM redden

CROSS SECTIONS - I-75
STA. 401+00.00 TO STA. 402+50.00

ALL-75-5.53

727
1224

SEEDING	
END WIDTH	SQ. YDS.

END AREA		VOLUME	
CUT	FILL	CUT	FILL

CALCULATED JMR

CHECKED ACF

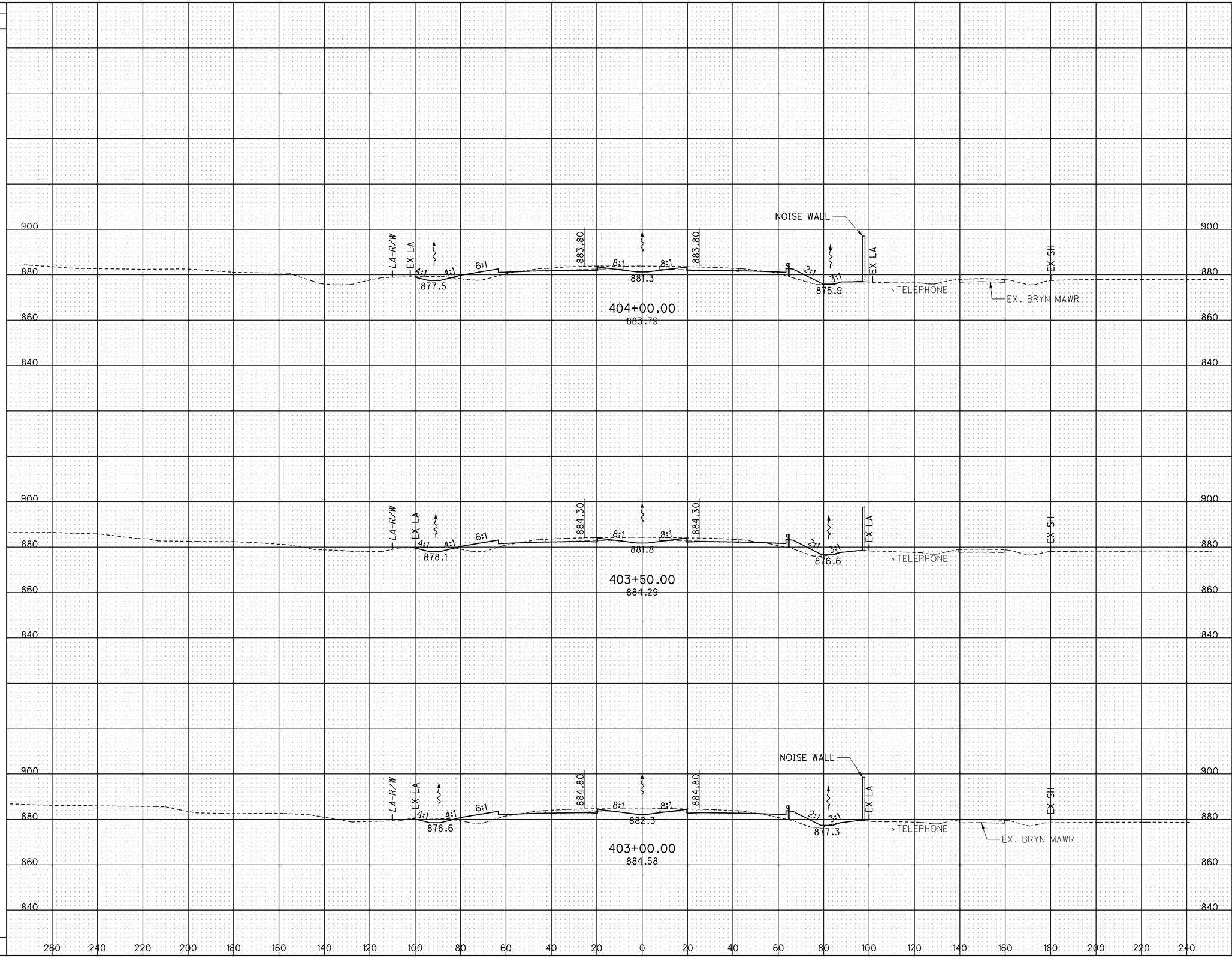

CROSS SECTIONS - I-75

STA. 403+00.00 TO STA. 404+00.00

ALL-75-5.53

728
1224

J:\Projects\ALL\76691\structures\NoiseBarrier\sheets\76691NX114.dgn 11-SEP-2012 9:16PM reddenj

SEEDING	
END WIDTH	SQ. YDS.

END AREA		VOLUME	
CUT	FILL	CUT	FILL

CALCULATED JMR
CHECKED ACF

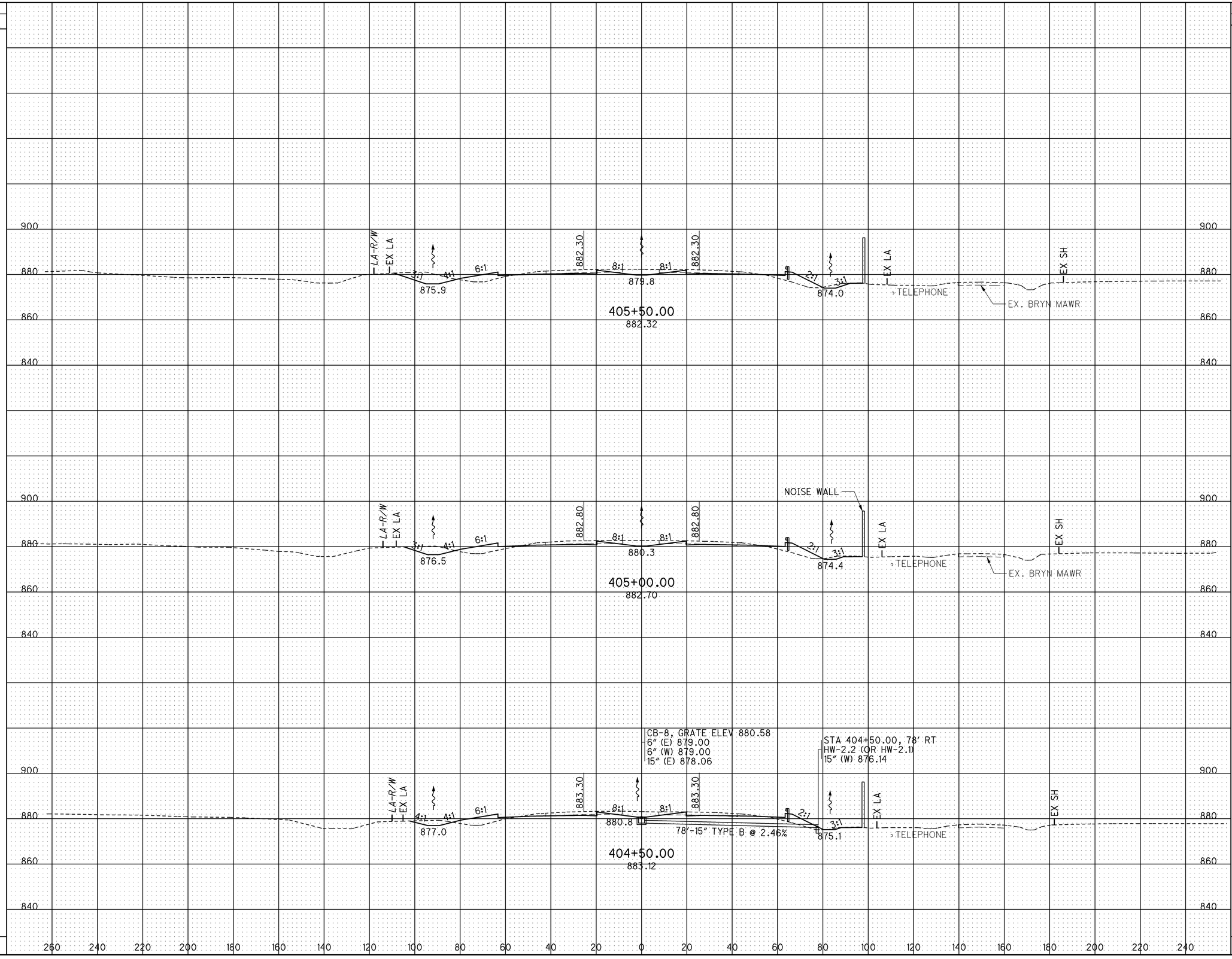

CROSS SECTIONS - I-75
STA. 404+50.00 TO STA. 405+50.00

ALL-75-5.53

729
1224

J:\Projects\ALL\76691\structures\NoiseBarrier\sheets\76691NX115.dgn 11-SEP-2012 9:16PM reddenj

SEEDING	
END WIDTH	SQ. YDS.

END AREA		VOLUME	
CUT	FILL	CUT	FILL

CALCULATED JMR
CHECKED ACF

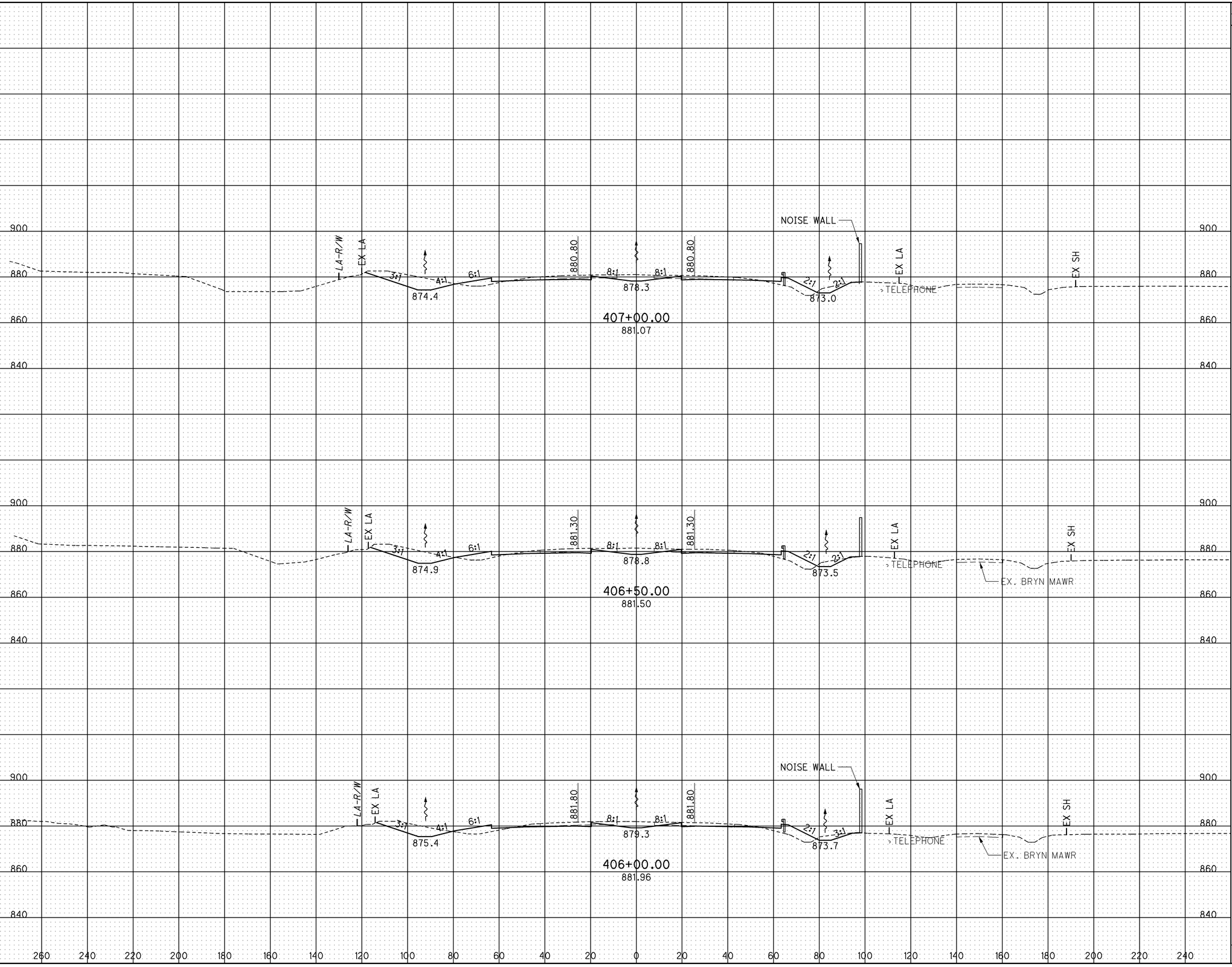

CROSS SECTIONS - I-75
STA. 406+00.00 TO STA. 407+00.00

ALL-75-5.53

730
1224

J:\Projects\ALL\76691\structures\NoiseBarrier\sheets\76691NX116.dgn 11-SEP-2012 9:16PM redden

SEEDING	
END WIDTH	SQ. YDS.

END AREA		VOLUME	
CUT	FILL	CUT	FILL

CALCULATED JMR
CHECKED ACF

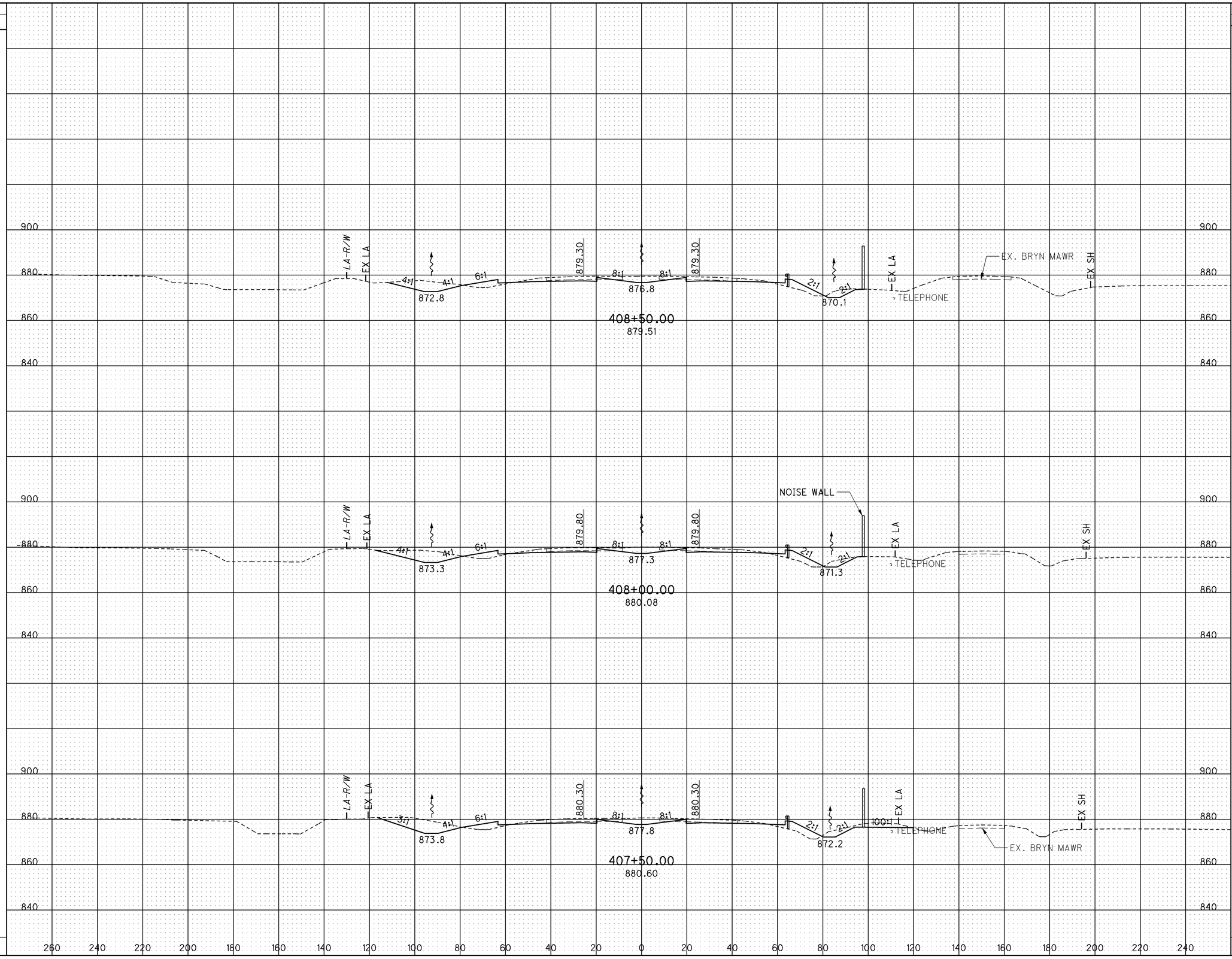

CROSS SECTIONS - I-75
STA. 407+50.00 TO STA. 408+50.00

ALL-75-5.53

731
1224

J:\Projects\ALL\76691\structures\NoiseBarrier\sheets\76691NX117.dgn 11-SEP-2012 9:17PM reddenj

SEEDING	
END WIDTH	SQ. YDS.

END AREA	
CUT	FILL

VOLUME	
CUT	FILL

CALCULATED JMR
CHECKED ACF

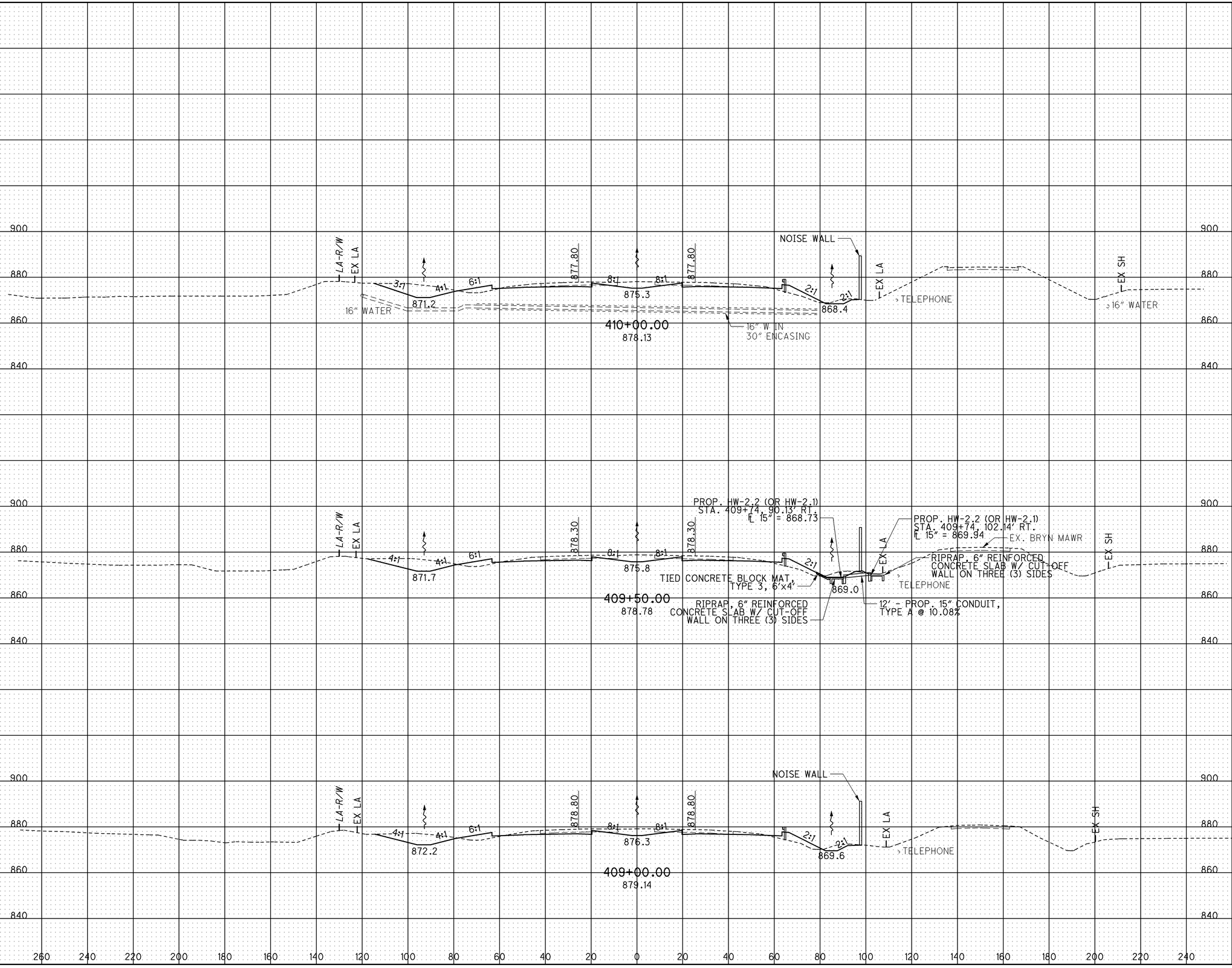

CROSS SECTIONS - I-75
STA. 409+00.00 TO STA. 410+00.00

ALL-75-5.53

732
1224

J:\Projects\ALL\76691\structures\NoiseBarrier\sheets\76691NX118.dgn 11-SEP-2012 9:17PM reddenj

SEEDING	
END WIDTH	SQ. YDS.

END AREA		VOLUME	
CUT	FILL	CUT	FILL

CALCULATED JMR
CHECKED ACF

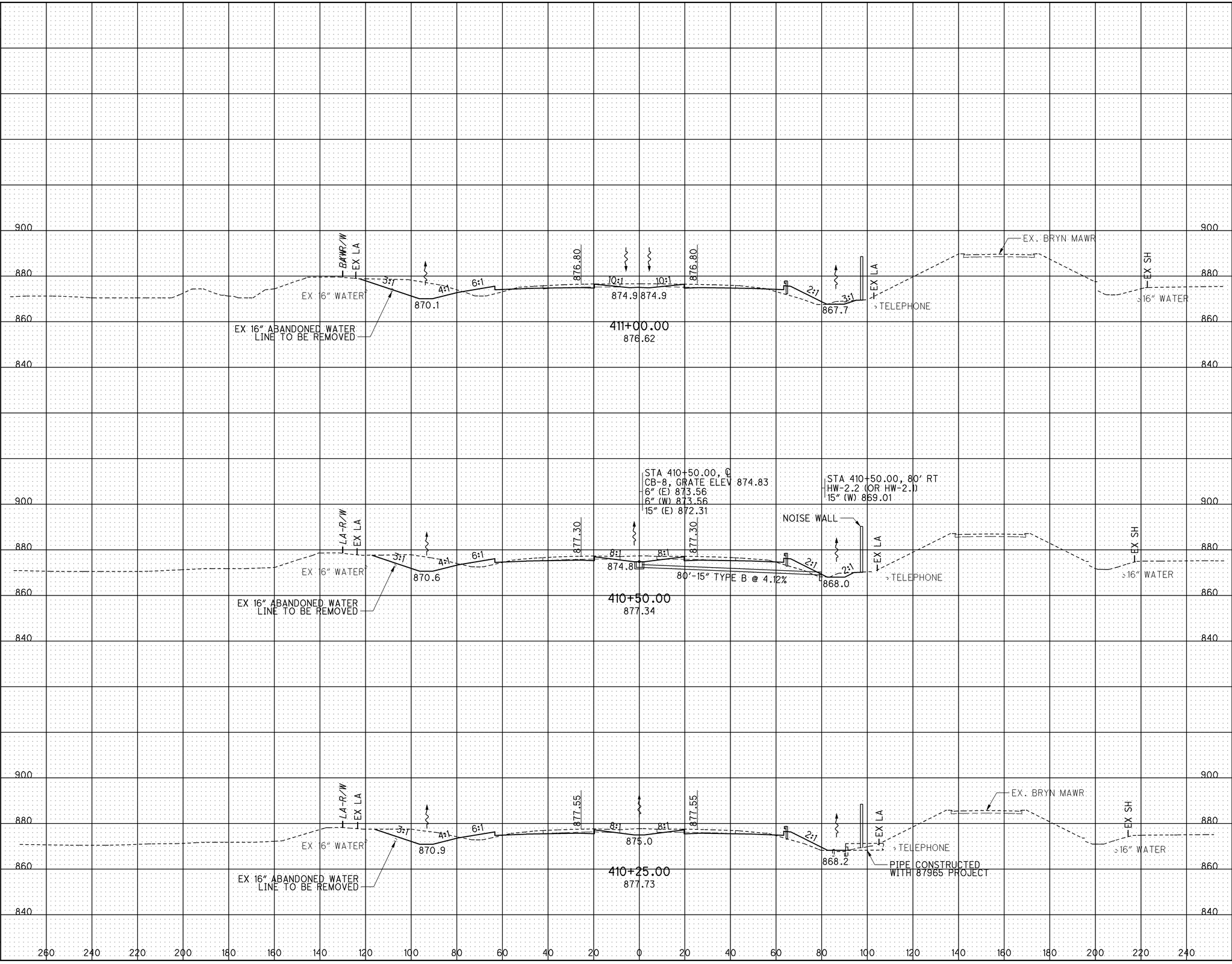

CROSS SECTIONS - I-75
STA. 410+25.00 TO STA. 411+00.00

ALL-75-5.53

733
1224

J:\Projects\ALL\76691\structures\NoiseBarrier\sheets\76691NX119.dgn 11-SEP-2012 9:17PM reddenj

NOISE WALL (WEST)

DRILLED SHAFT NO.	WORKPOINT STATION	LOWEST BOTTOM OF PANEL ELEV. @ SHAFT	TOP OF DRILLED SHAFT ELEVATION	SHAFT LENGTH (FEET)
1	Not Used			
2	Not Used			
3	Not Used			
4	Not Used			
5	Not Used			
6	11+27.00	889.5	889.29	18.0
7	11+35.00	889.5	889.22	18.0
8	11+43.00	888.5	888.22	18.0
9	11+51.00	888.5	888.22	18.0
10	11+59.00	888	887.72	18.0
11	11+67.00	888	887.71	24.0
12	11+77.00	887	886.71	24.0
13	12+01.00	887	886.71	24.0
14	12+13.00	887	886.71	24.0
15	12+37.00	887	886.69	15.0
16	12+61.00	886	885.69	15.0
17	12+85.00	886	885.69	15.0
18	13+09.00	886	885.69	15.0
19	13+33.00	885	884.69	15.0
20	13+57.00	885	884.69	15.0
21	13+81.00	885	884.69	15.0
22	14+05.00	885	884.69	15.0
23	14+29.00	885	884.69	15.0
24	14+53.00	885	884.69	15.0
25	14+77.00	885	884.69	15.0
26	15+01.00	884	883.69	15.0
27	15+25.00	884	883.69	10.0
28	15+49.00	884	883.69	10.0
29	15+73.00	884	883.69	10.0
30	15+97.00	884	883.69	10.0
31	16+21.00	884	883.69	10.0
32	16+45.00	884	883.69	10.0
33	16+69.00	885	884.69	10.0
34	16+93.00	885	884.69	10.0
35	17+17.00	885	884.69	10.0
36	17+41.00	885	884.69	10.0
37	17+64.00	885	884.69	10.0
38	17+79.00	887	886.69	10.0
39	17+94.00	887.5	887.19	10.0
40	18+09.00	887.5	887.19	10.0
41	18+33.00	887.5	887.19	10.0
42	18+57.00	887.5	887.19	10.0
43	18+81.00	888	887.69	10.0
44	19+05.00	888.5	888.19	9.0
45	19+29.00	889	888.69	9.0
46	19+53.00	889.5	889.19	9.0
47	19+77.00	889.5	889.19	9.0
48	20+01.00	890	889.69	9.0
49	20+25.00	890.5	890.19	9.0
50	20+49.00	890.5	890.19	9.0
51	20+73.00	891.5	891.19	9.0
52	20+97.00	890.5	890.19	9.0
53	21+21.00	890.5	890.19	9.0
54	21+45.00	890.5	890.19	9.0
55	21+69.00	890.5	890.19	9.0
56	21+89.00	890.5	890.19	9.0
57	22+04.00	890.5	890.19	9.0
58	22+19.00	890.5	890.19	9.0
59	22+43.00	893.50*	*Grade Beam	25.0
60	22+83.00	893.50*	*Grade Beam	25.0
61	23+03.00	890.5	890.19	9.0
62	23+27.00	890.5	890.19	9.0
63	23+51.00	890.5	890.19	9.0
64	23+75.00	890	889.69	9.0
65	23+99.00	890	889.69	9.0
66	24+23.00	890	889.69	9.0
67	24+38.00	890	889.69	9.0
68	24+53.00	893.0*	*Grade Beam	25.0
69	24+93.00	893.0*	*Grade Beam	25.0
70	25+17.00	890	889.69	9.0
71	25+41.00	889.5	889.19	9.0
72	25+65.00	889.5	889.19	9.0
73	25+89.00	889.5	889.19	9.0
74	26+13.00	889.5	889.19	9.0
75	26+37.00	889.5	889.19	9.0
76	26+61.00	889.5	889.19	9.0
77	26+85.00	889.5	889.19	9.0
78	27+09.00	889.5	889.19	9.0
79	27+33.00	889.5	889.19	9.0
80	27+57.00	890.5	890.19	9.0
81	27+81.00	890.5	890.19	9.0
82	28+05.00	890.5	890.19	9.0
83	28+29.00	890.5	890.19	9.0
84	28+53.00	890.5	890.19	9.0
85	28+77.00	890	889.69	9.0
86	29+01.00	889.5	889.19	9.0
87	29+25.00	889	888.69	9.0
88	29+43.00	889	888.69	9.0
89	29+61.00	888.5	888.19	9.0
90	29+85.00	887.5	887.19	8.0
91	30+03.00	887	886.69	9.0
92	30+21.00	886.5	886.19	9.0
93	30+45.00	886	885.69	9.0
94	30+69.00	886	885.69	9.0
95	30+77.00	886	885.72	6.0
96	30+85.00	885	884.72	6.0
97	30+93.00	885	884.72	6.0
98	31+01.00	885	884.77	6.0

* See Grade Beam Details

CALCULATED EJC CHECKED CAC

NOISE BARRIER DATA TABLES

ALL-75-5.53

734
1224

J:\Projects\ALL\76691\structures\NoiseBarrier\sheets\76691NJ001.dgn 11-SEP-2012 9:17PM reddenj

NOISE WALL (EAST)

DRILLED SHAFT NO.	WORKPOINT STATION	LOWEST BOTTOM OF PANEL ELEV. @ SHAFT	TOP OF DRILLED SHAFT ELEVATION	SHAFT LENGTH (FEET)
1	Not Used			
2	Not Used			
3	Not Used			
4	Not Used			
5	Not Used			
6	Not Used			
7	Not Used			
8	Not Used			
9	Not Used			
10	Not Used			
11	Not Used			
12	Not Used			
13	Not Used			
14	Not Used			
15	Not Used			
16	Not Used			
17	Not Used			
18	Not Used			
19	Not Used			
20	Not Used			
21	104+76.00	883	882.72	8.0
22	104+84.00	883	882.69	8.0
23	104+92.00	883	882.69	8.0
24	105+00.00	883	882.69	8.0
25	105+08.00	883	882.69	8.0
26	105+16.00	884	883.69	15.0
27	105+40.00	884	883.69	15.0
28	105+64.00	884.5	884.19	15.0
29	105+88.00	885	884.69	15.0
30	106+12.00	885.5	885.19	15.0
31	106+36.00	886	885.69	15.0
32	106+60.00	886	885.69	15.0
33	106+79.00	886	885.69	15.0
34	106+98.00	886.5	886.19	15.0
35	107+17.00	886.5	886.19	15.0
36	107+36.00	887	886.69	15.0
37	107+60.00	887	886.69	15.0
38	107+84.00	887	886.69	15.0
39	108+08.00	887	886.69	15.0
40	108+32.00	887.5	887.19	15.0
41	108+56.00	888	887.69	15.0
42	108+80.00	888	887.69	15.0
43	109+04.00	889	888.69	15.0
44	109+28.00	889	888.69	15.0
45	109+52.00	888	887.69	15.0
46	109+76.00	888	887.69	15.0
47	110+00.00	888	887.69	15.0
48	110+24.00	887	886.69	15.0
49	110+48.00	887	886.69	15.0
50	110+72.00	887	886.69	15.0
51	110+96.00	887	886.55	15.0
52	111+20.00	887	886.55	15.0
53	111+44.00	887	886.55	10.0
54	111+68.00	887	886.55	10.0
55	111+92.00	887	886.55	10.0
56	112+16.00	887	886.55	10.0
57	112+40.00	887	886.55	10.0
58	112+64.00	887	886.55	10.0
59	112+88.00	887	886.55	10.0
60	113+12.00	887	886.55	10.0
61	113+36.00	888.5*	*Grade Beam	21.0
62	113+76.00	888.5*	*Grade Beam	36.0
63	114+16.00	888.5*	*Grade Beam	21.0
64	114+28.00	886.5	886.19	10.0
65	114+52.00	886	885.57	10.0

DRILLED SHAFT NO.	WORKPOINT STATION	LOWEST BOTTOM OF PANEL ELEV. @ SHAFT	TOP OF DRILLED SHAFT ELEVATION	SHAFT LENGTH (FEET)
66	114+76.00	886	885.55	10.0
67	115+00.00	886	885.55	10.0
68	115+24.00	886	885.55	10.0
69	115+48.00	887	886.55	10.0
70	115+72.00	887	886.55	10.0
71	115+96.00	888	887.55	10.0
72	116+20.00	888	887.55	10.0
73	116+44.00	888.5	888.05	10.0
74	116+68.00	889	888.55	10.0
75	116+92.00	889.5	889.05	10.0
76	117+16.00	890	889.55	10.0
77	117+40.00	891	890.69	9.5
78	117+64.00	891	890.69	9.5
79	117+88.00	891	890.69	9.5
80	118+12.00	891	890.69	9.5
81	118+36.00	891	890.69	9.5
82	118+54.00	891	890.69	9.5
83	118+70.00	891	890.69	9.5
84	118+94.00	890.5	890.19	8.0
85	119+12.00	890	889.69	9.5
86	119+32.00	889.5	889.19	9.5
87	119+56.00	888.5	888.19	9.5
88	119+80.00	887.5	887.05	9.5
89	120+04.00	887	886.55	9.5
90	120+28.00	886.5	886.05	9.5
91	120+52.00	886.5	886.05	9.5
92	120+76.00	886	885.55	9.5
93	121+00.00	885	884.55	9.5
94	121+24.00	884	883.55	9.5
95	121+48.00	884	883.55	9.5
96	121+72.00	884	883.55	9.5
97	121+96.00	884	883.55	9.5
98	122+20.00	884	883.55	9.5
99	122+44.00	883.5	883.05	9.5
100	122+68.00	883.5	883.05	9.5
101	122+92.00	883.5	883.05	9.5
102	123+16.00	883	882.55	9.5
103	123+40.00	883	882.55	9.5
104	123+64.00	883	882.55	9.5
105	123+88.00	882.5	882.05	9.5
106	124+12.00	882	881.55	9.5
107	124+36.00	880.5	880.05	9.5
108	124+60.00	880	879.55	9.5
109	124+84.00	879	878.55	9.5
110	125+08.00	878.5	878.05	9.5
111	125+32.00	878	877.55	9.5
112	125+56.00	877.5	877.05	15.0
113	125+80.00	876.5	876.05	15.0
114	126+04.00	876	875.55	15.0
115	126+28.00	876	875.55	15.0
116	126+52.00	875.5	875.05	15.0
117	126+76.00	875	874.55	15.0
118	127+00.00	875	874.55	15.0
119	127+24.00	875	874.55	15.0
120	127+48.00	875	874.55	15.0
121	127+72.00	875	874.55	15.0
122	127+96.00	875.5	875.05	9.5
123	128+20.00	875.5	875.05	9.5
124	128+44.00	876	875.55	9.5
125	128+68.00	876	875.55	9.5
126	128+92.00	876	875.55	9.5
127	129+16.00	876	875.55	9.5
128	129+40.00	876	875.55	9.5
129	129+64.00	876	875.55	9.5
130	129+88.00	876	875.55	9.5

DRILLED SHAFT NO.	WORKPOINT STATION	LOWEST BOTTOM OF PANEL ELEV. @ SHAFT	TOP OF DRILLED SHAFT ELEVATION	SHAFT LENGTH (FEET)
131	130+12.00	874.5	874.05	15.0
132	130+36.00	873.5	873.05	15.0
133	130+60.00	873	872.55	15.0
134	130+84.00	872	871.55	15.0
135	131+08.00	871.5	871.05	15.0
136	131+32.00	871	870.55	15.0
137	131+56.00	870.5	870.05	15.0
138	131+80.00	870	869.55	15.0
139	132+04.00	869.5	869.05	15.0
140	132+28.00	869.5	869.05	9.5
141	132+52.00	869	868.55	9.5
142	132+76.00	869	868.55	9.5
143	133+00.00	869	868.55	9.5
144	133+24.00	869	868.55	9.5
145	133+32.00	869	868.58	7.0
146	133+40.00	869	868.58	7.0
147	133+48.00	869	868.72	6.0
148	133+56.00	869	868.72	6.0
149	133+64.00	869	868.77	6.0

* See Grade Beam Details

CALCULATED EJC CHECKED CAC

NOISE BARRIER DATA TABLES

ALL-75-5.53

735
1224

J:\Projects\ALL\7669I\structures\NoiseBarrier\sheets\7669INJ002.dgn 11-SEP-2012 9:17PM reddenj

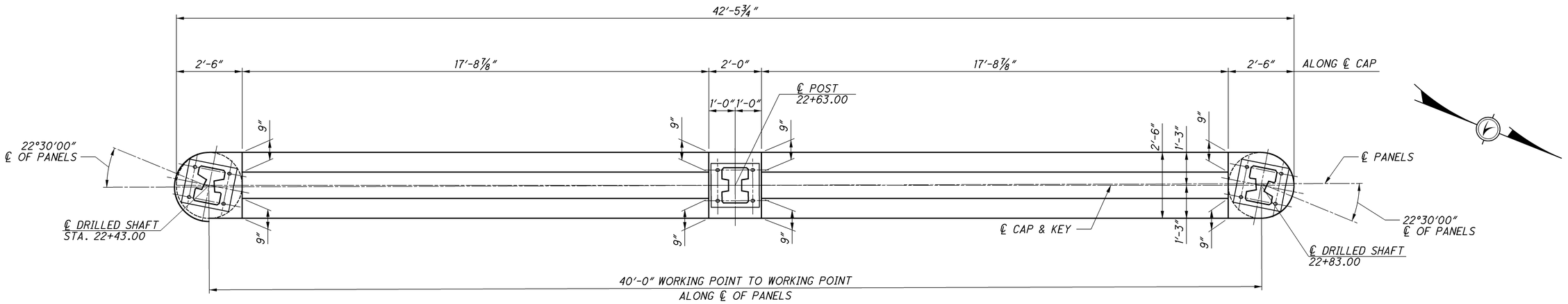

NOISE WALL SUPPORT PLAN

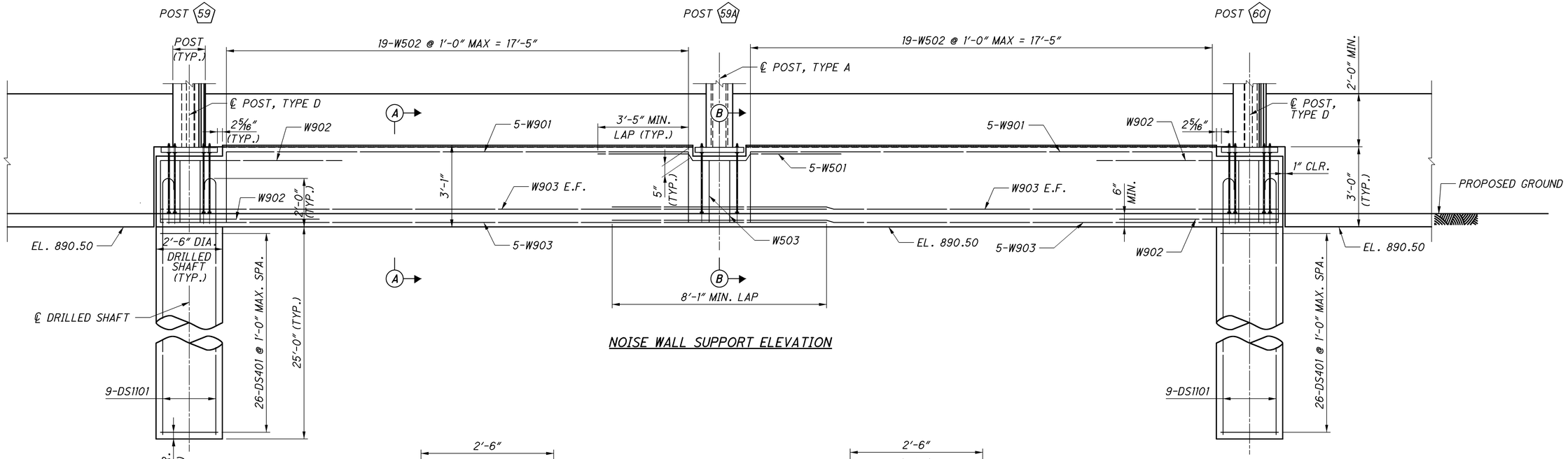

NOISE WALL SUPPORT ELEVATION

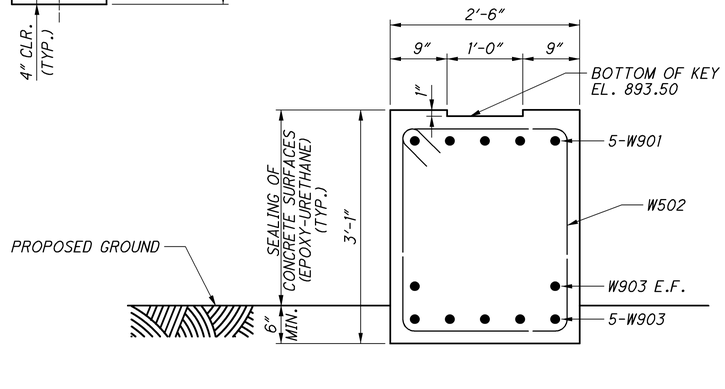

SECTION A-A

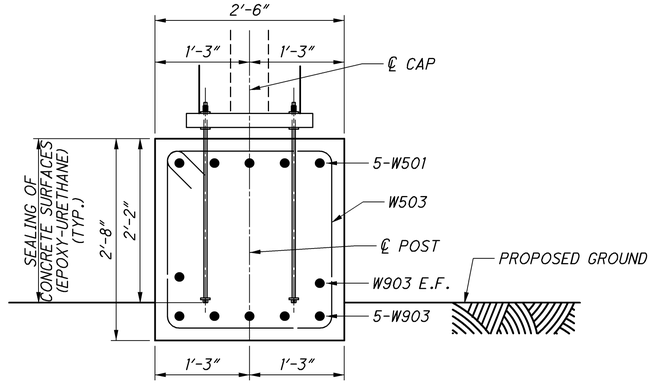

SECTION B-B

NOTES:

1. SEE NBS-1-09 FOR ADDITIONAL NOTES AND DETAILS.
2. DESIGN SPECIFICATIONS SHALL INCLUDE AASHTO LRFD BRIDGE DESIGN SPECIFICATIONS, 5TH EDITION, 2010 AND SHALL SUPERSEDE ALL PREVIOUS EDITIONS.
3. MATERIAL SPECIFICATIONS SHALL INCLUDE CONCRETE, CLASS C = 4,000 PSI (GRADE BEAMS).
4. SEE NOISE WALL PLANS FOR ADDITIONAL DETAILS.

CALCULATED PJL
CHECKED EBS

PANEL SUPPORT DETAILS - LOCATION 'A' (WEST WALL)

ALL-75-5.53

736
1224

J:\Projects\ALL\76691\structures\NoiseBarrier\sheets\76691IND002.dgn 11-SEP-2012 9:17PM reddenj

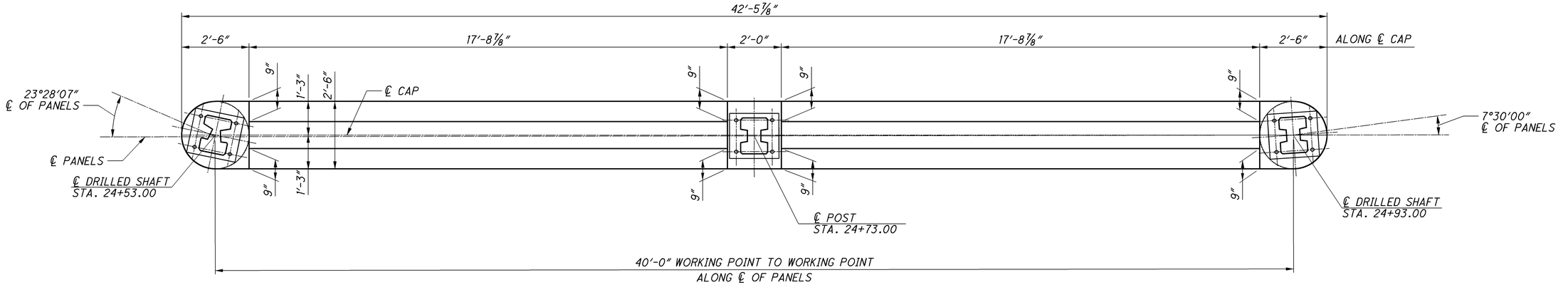

NOISE WALL SUPPORT PLAN

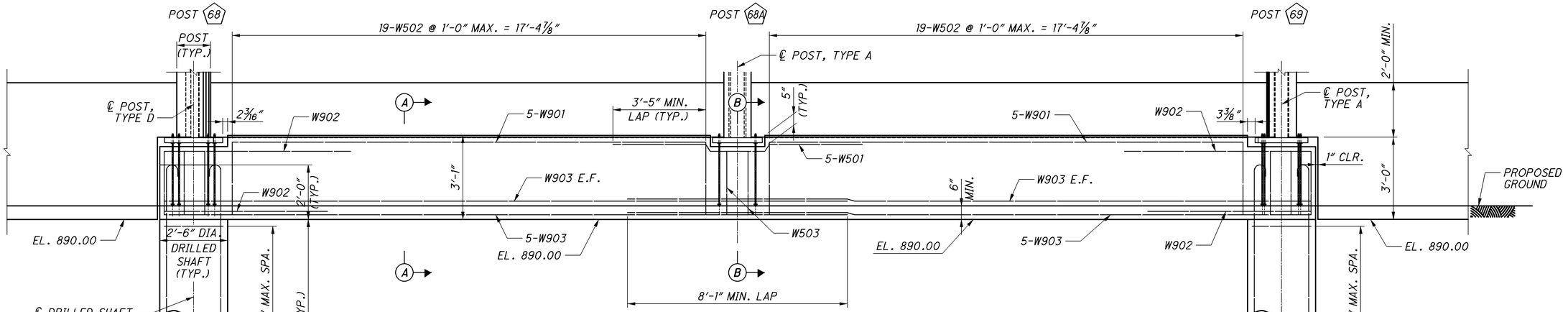

NOISE WALL SUPPORT ELEVATION

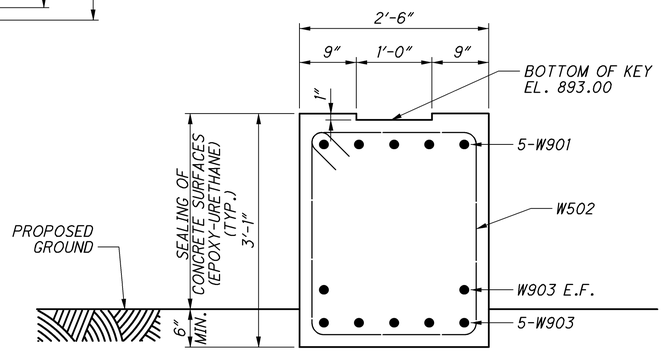

SECTION A-A

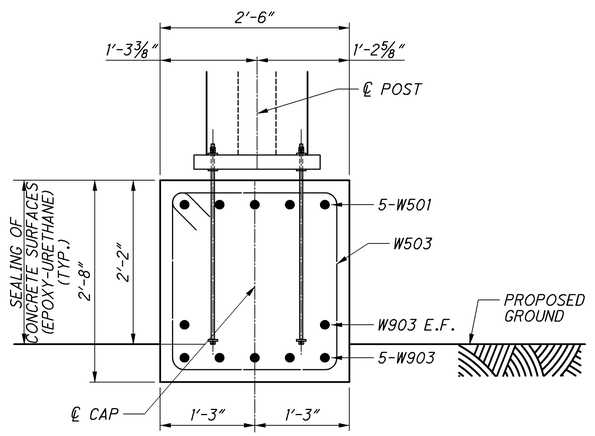

SECTION B-B

NOTES:
1. SEE NBS-1-09 FOR ADDITIONAL NOTES AND DETAILS.
2. DESIGN SPECIFICATIONS SHALL INCLUDE AASHTO LRFD BRIDGE DESIGN SPECIFICATIONS, 5TH EDITION, 2010 AND SHALL SUPERSEDE ALL PREVIOUS EDITIONS.
3. MATERIAL SPECIFICATIONS SHALL INCLUDE CONCRETE, CLASS C = 4,000 PSI (GRADE BEAMS).
4. SEE NOISE WALL PLANS FOR ADDITIONAL DETAILS.

CALCULATED PJL
CHECKED EBS

PANEL SUPPORT DETAILS - LOCATION 'B' (WEST WALL)

ALL-75-5.53

737
1224

J:\Projects\ALL\76691\structures\NoiseBarrier\sheets\76691ND003.dgn 11-SEP-2012 9:17PM reddenj

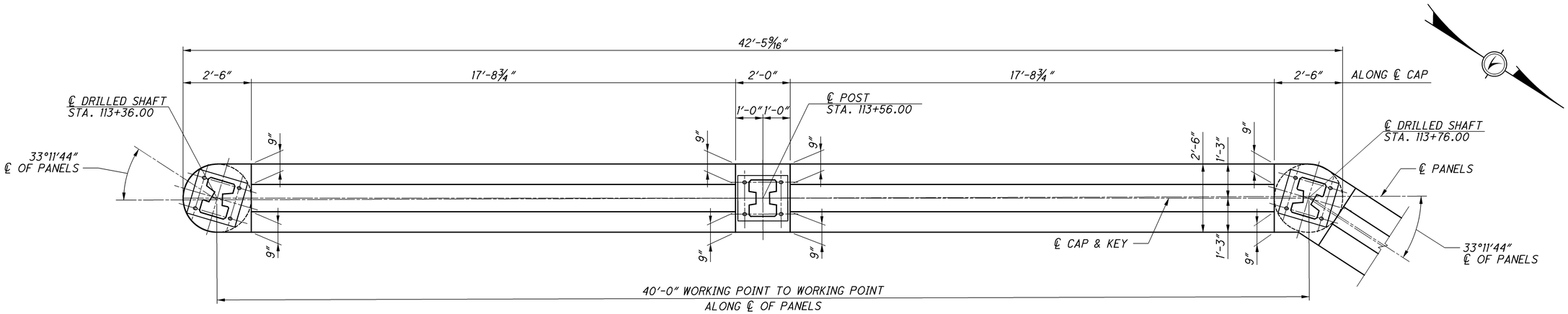

NOISE WALL SUPPORT PLAN

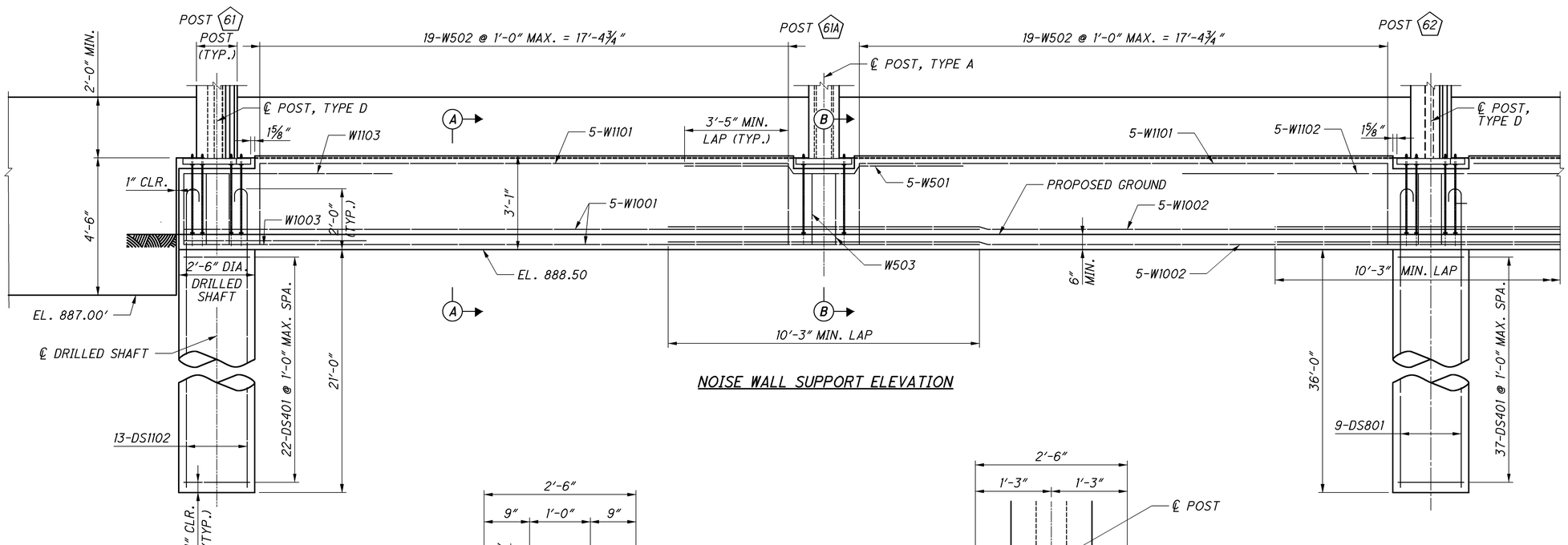

NOISE WALL SUPPORT ELEVATION

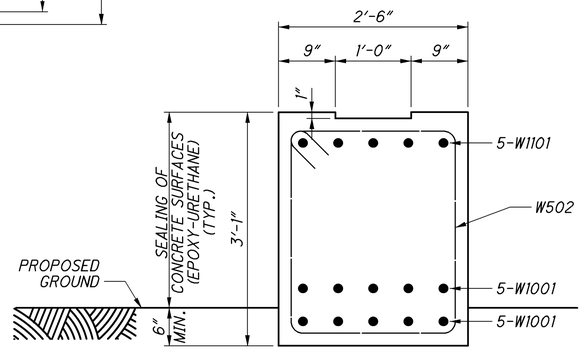

SECTION A-A

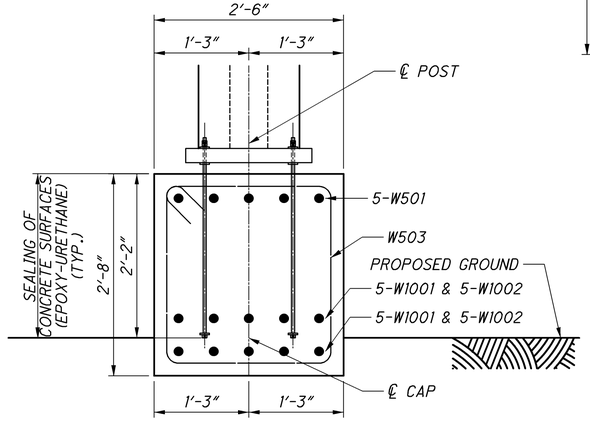

SECTION B-B

NOTES:
1. SEE NBS-1-09 FOR ADDITIONAL NOTES AND DETAILS.
2. DESIGN SPECIFICATIONS SHALL INCLUDE AASHTO LRFD BRIDGE DESIGN SPECIFICATIONS, 5TH EDITION, 2010 AND SHALL SUPERSEDE ALL PREVIOUS EDITIONS.
3. MATERIAL SPECIFICATIONS SHALL INCLUDE CONCRETE, CLASS C = 4,000 PSI (GRADE BEAMS).
4. SEE NOISE WALL PLANS FOR ADDITIONAL DETAILS.

739

CALCULATED PJL
CHECKED EBS

PANEL SUPPORT DETAILS - LOCATION 'C'
(EAST WALL) SHEET 1 OF 2

ALL-75-5.53

738
1224

J:\Projects\ALL\76691\structures\NoiseBarrier\sheets\76691ND004.dgn 11-SEP-2012 9:17PM reddenj

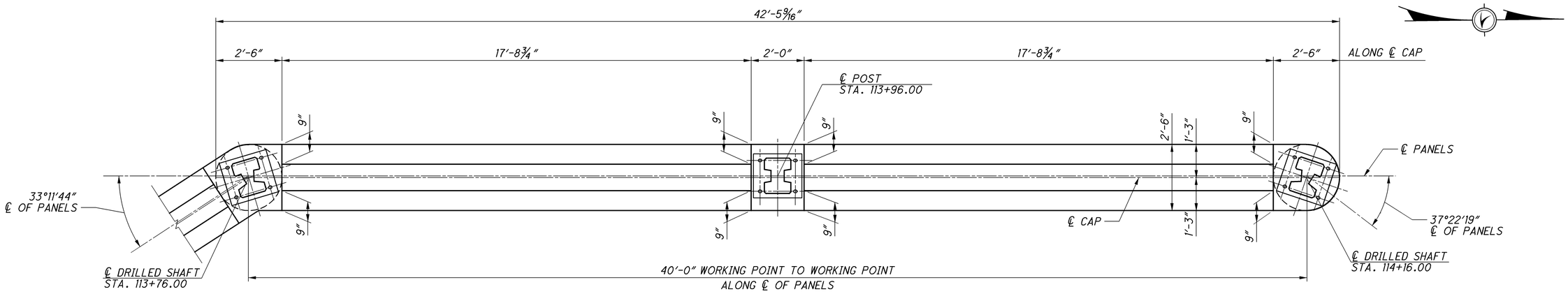

NOISE WALL SUPPORT PLAN

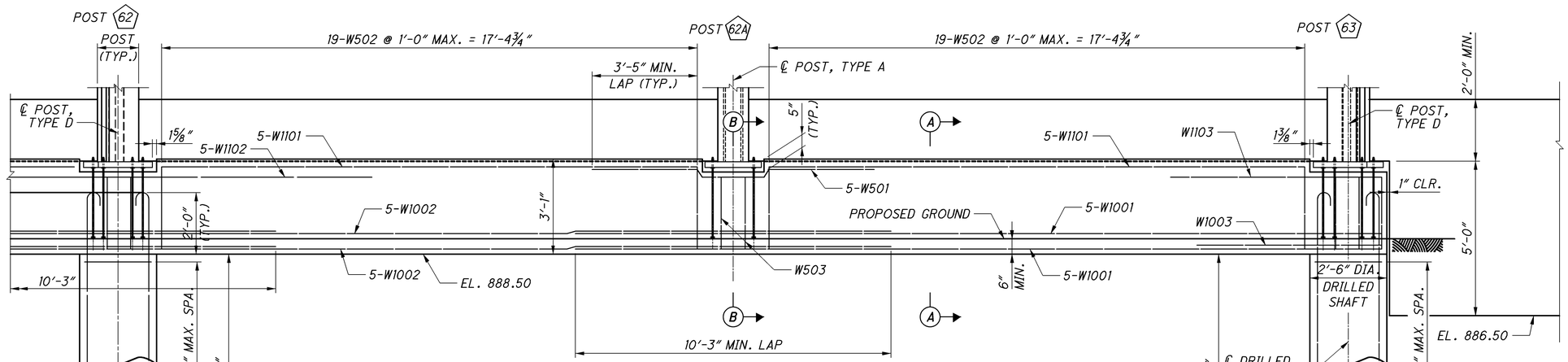

NOISE WALL SUPPORT ELEVATION

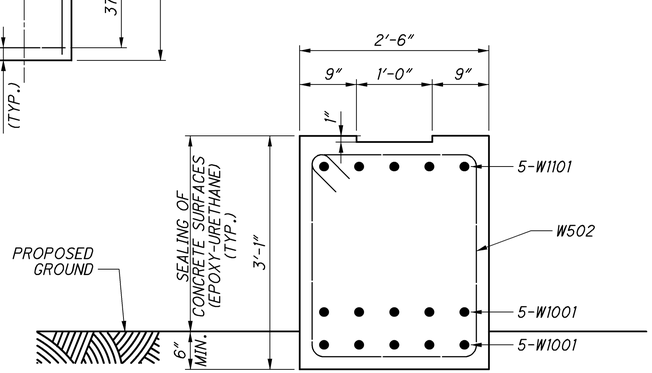

SECTION A-A

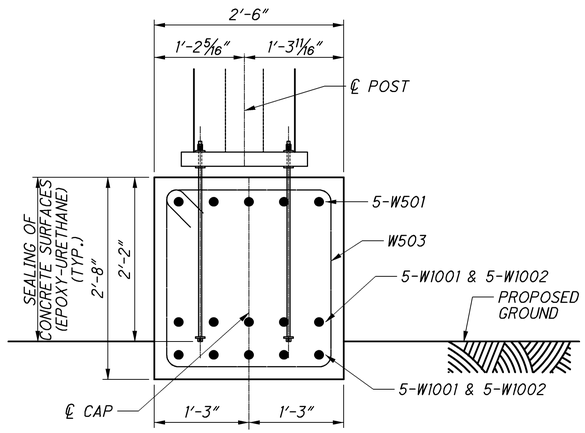

SECTION B-B

NOTES:
1. SEE NBS-1-09 FOR ADDITIONAL NOTES AND DETAILS.
2. DESIGN SPECIFICATIONS SHALL INCLUDE AASHTO LRFD BRIDGE DESIGN SPECIFICATIONS, 5TH EDITION, 2010 AND SHALL SUPERSEDE ALL PREVIOUS EDITIONS.
3. MATERIAL SPECIFICATIONS SHALL INCLUDE CONCRETE, CLASS C = 4,000 PSI (GRADE BEAMS).
4. SEE NOISE WALL PLANS FOR ADDITIONAL DETAILS.

CALCULATED PJL
CHECKED EBS

PANEL SUPPORT DETAILS - LOCATION 'C' (EAST WALL) SHEET 2 OF 2

ALL-75-5.53

739
1224

J:\Projects\ALL\76691\structures\NoiseBarrier\sheets\76691ND005.dgn 11-SEP-2012 9:17PM reddenj

ITEM	EXTENSION	TOTAL	UNIT	ESTIMATED QUANTITIES DESCRIPTION	PANEL SUPPORT LOCATION 'A'	 LOCATION 'B'	 LOCATION 'C'	SEE SHEET NO.
509	10000	24,589	POUND	EPOXY COATED REINFORCING STEEL	5,396	5,396	13,797	
511	34500	48	CU.YD.	CLASS C CONCRETE, BEAMS AND DIAPHRAGMS	12	12	24	
512	10100	143	SQ.YD.	SEALING OF CONCRETE SURFACES (EPOXY-URETHANE)	36	36	71	
524	94600	178	FT.	DRILLED SHAFTS, 30" DIAMETER	50	50	78	

MARK	NUMBER				LENGTH	WEIGHT	TYPE	DIMENSIONS						
	LOCATION 'A'	LOCATION 'B'	LOCATION 'C'	TOTAL				A	B	C	D	E	R	INC
PANEL SUPPORT														
W501	5	5	10	20	9'- 02''	192	STR.							
W502	38	38	76	152	10'- 03''	1,625	3	2'-2"	2'-8"					
W503	2	2	4	8	9'- 07''	80	3	2'-2"	2'-4"					
W901	10	10	0	20	17'- 04''	1,179	STR.							
W902	2	2	0	4	22'- 01''	301	24	2'-2"	9'-4"				1'-1"	
W903	14	14	0	28	24'- 01''	2,293	STR.							
W1001	0	0	20	20	25'- 02''	2,166	STR.							
W1002	0	0	20	20	30'- 08''	2,640	19	25'-6"	4'-4"	2'-10"				
W1003	0	0	2	2	27'- 08''	239	24	2'-2"	11'-8"				1'-1"	
W1101	0	0	20	20	17'- 04''	1,842	STR.							
W1102	0	0	5	5	30'- 06''	811	19	15'-3"	12'-9 7/16"	8'-3 3/4"				
W1103	0	0	2	2	33'- 03''	354	24	2'-2"	14'-11"				1'-1"	
PANEL SUPPORT TOTAL						13,722								

MARK	NUMBER				LENGTH	WEIGHT	TYPE	DIMENSIONS						
	LOCATION 'A'	LOCATION 'B'	LOCATION 'C'	TOTAL				A	B	C	D	E	R	INC
PANEL SUPPORT														
DS401	52	52	81	185	9'- 07''	1,185	30	4 1/2"	2'-6"				1'-0"	
DS801	0	0	9	9	38'- 07''	928	16	37'-8"						
DS1101	18	18	0	36	28'- 03''	5,404	16	26'-8"						
DS1102	0	0	26	26	24'- 03''	3,350	16	22'-8"						
PANEL SUPPORT TOTAL						10,867								

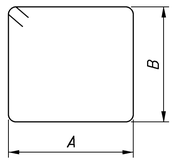

TYPE-3

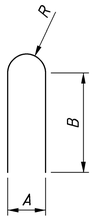

TYPE-24

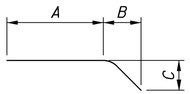

TYPE-19

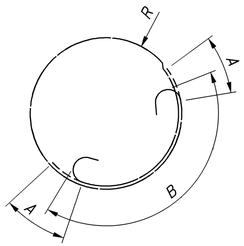

TYPE-30

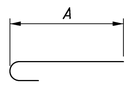

TYPE-16

NOTES:

1. THE BAR SIZE NUMBER IS SPECIFIED ON THE PLANS IN THE BAR MARK COLUMN. THE FIRST DIGIT WHERE THREE DIGITS ARE USED, AND THE FIRST TWO DIGITS WHERE FOUR ARE USED, INDICATES THE BAR SIZE NUMBER. FOR EXAMPLE, P601 IS A NO. 6 BAR. BAR DIMENSIONS SHOWN ARE OUT TO OUT UNLESS OTHERWISE INDICATED. R INDICATES INSIDE RADIUS, UNLESS OTHERWISE NOTED.

2. ALL REINFORCEMENT IS TO BE EPOXY COATED.

CALCULATED PJL
CHECKED EBS

REINFORCING STEEL LIST

ALL-75-5.53

J:\Projects\ALL\76691\structures\NoiseBarrier\sheets\76691NC002.dgn 11-SEP-2012 9:17PM reddenj

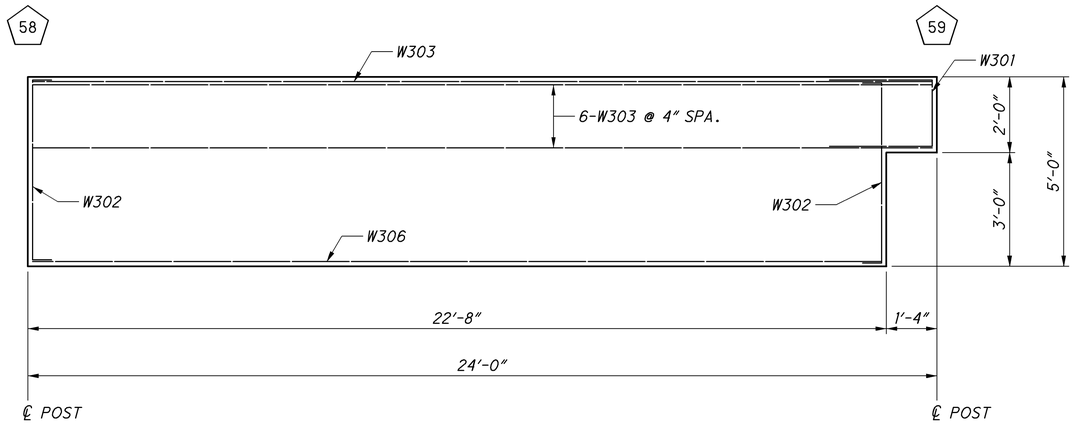

PANEL 58
(WEST WALL)

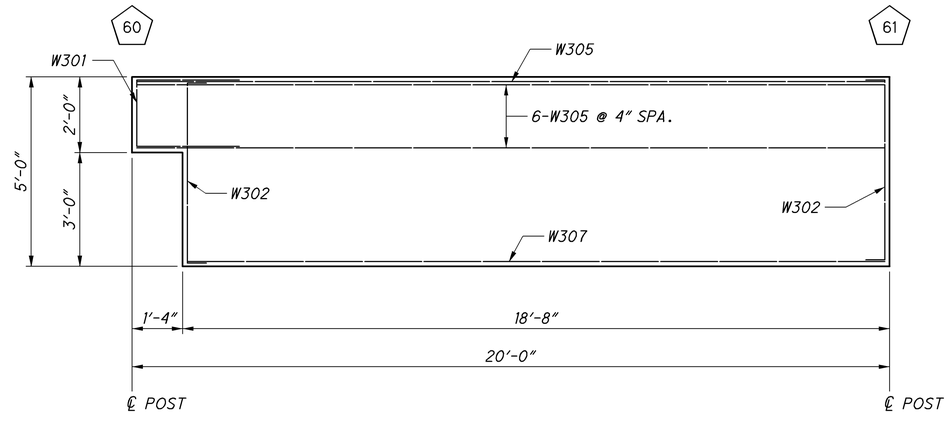

PANEL 60
(WEST WALL)

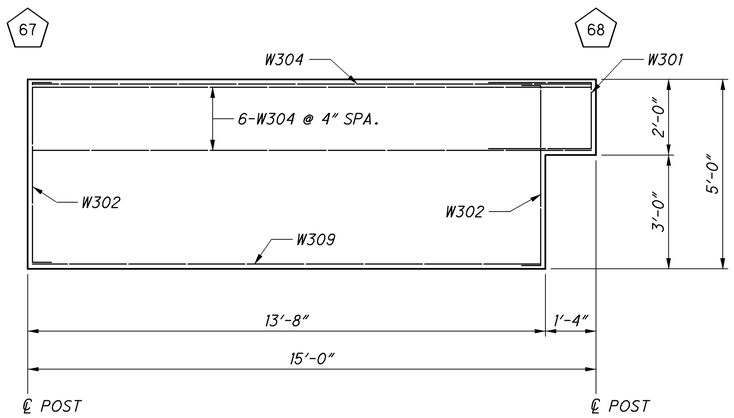

PANEL 67
(WEST WALL)

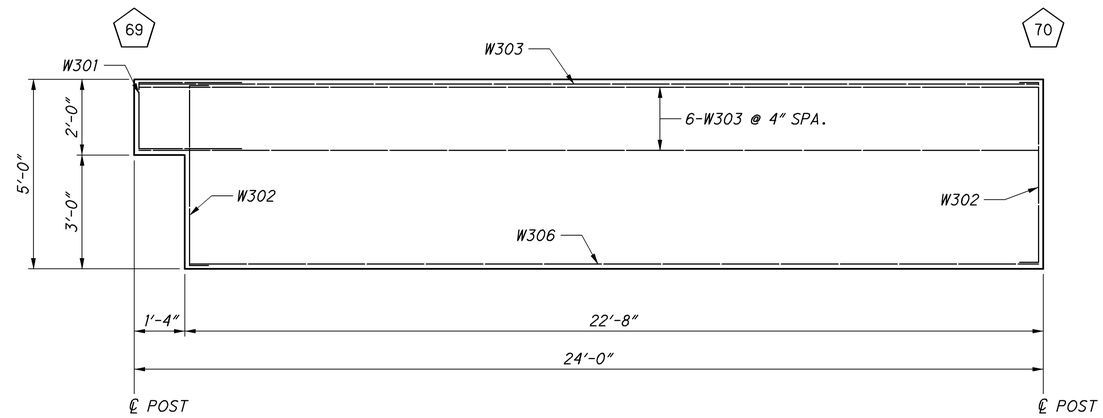

PANEL 69
(WEST WALL)

NOTES:
1. SEE NBS-1-09 FOR ADDITIONAL NOTES AND DETAILS.
2. DESIGN SPECIFICATIONS SHALL INCLUDE AASHTO LRFD BRIDGE DESIGN SPECIFICATIONS, 5TH EDITION, 2010 AND SHALL SUPERSEDE ALL PREVIOUS EDITIONS.
3. MATERIAL SPECIFICATIONS SHALL INCLUDE CONCRETE, CLASS C = 4,000 PSI (GRADE BEAMS).
4. SEE NOISE WALL PLANS FOR ADDITIONAL DETAILS.
5. THE CONTRACTOR SHALL HAVE THE OPTION TO ADJUST THE PLAN DIMENSIONS AFTER PERFORMING FIELD MEASUREMENTS OF THE AS-BUILT POST LOCATIONS.
6. REINFORCEMENT QUANTITIES ARE FOR THE PERIMETER AND SUPPLEMENTAL #3 BARS AND ARE FOR INFORMATION ONLY. THE FABRICATOR SHALL SELECT THE WELDED WIRE FABRIC BASED ON THE LARGEST PANEL HEIGHT DIMENSION.
7. PROVIDE FOUR LIFTING INSERTS AS PER NBS-1-09 FOR ALL PANELS SHOWN ON THIS DRAWING.

CALCULATED PJL
CHECKED EBS

PANEL DETAILS - WEST WALL

ALL-75-5.53

742
1224

J:\Projects\ALL\76691\structures\NoiseBarrier\sheets\76691ND006.dgn 11-SEP-2012 9:17PM redden

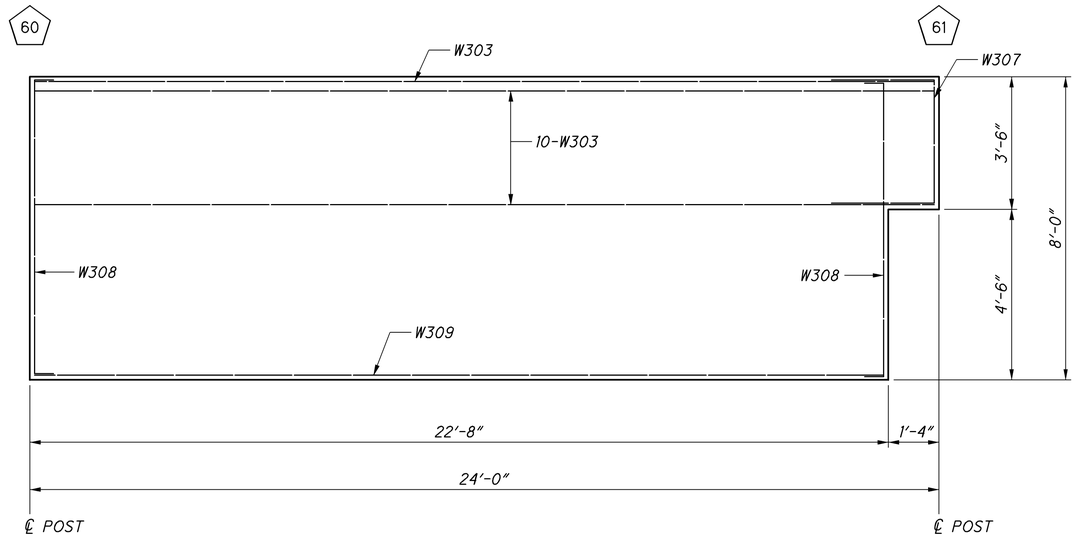

PANEL 60
(EAST WALL)

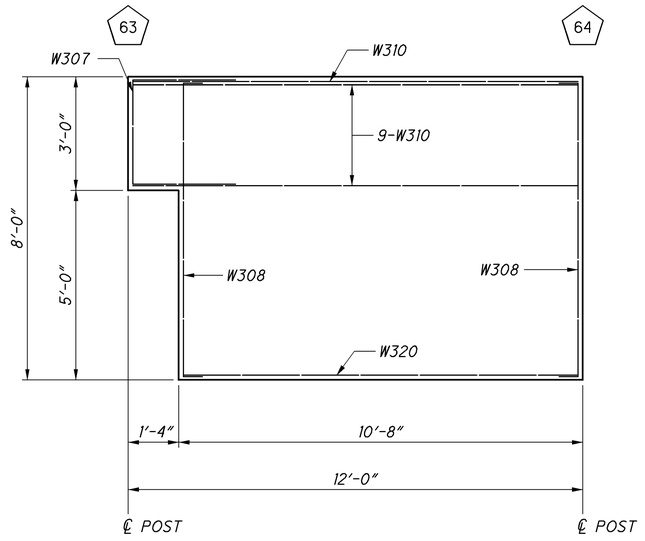

PANEL 63
(EAST WALL)

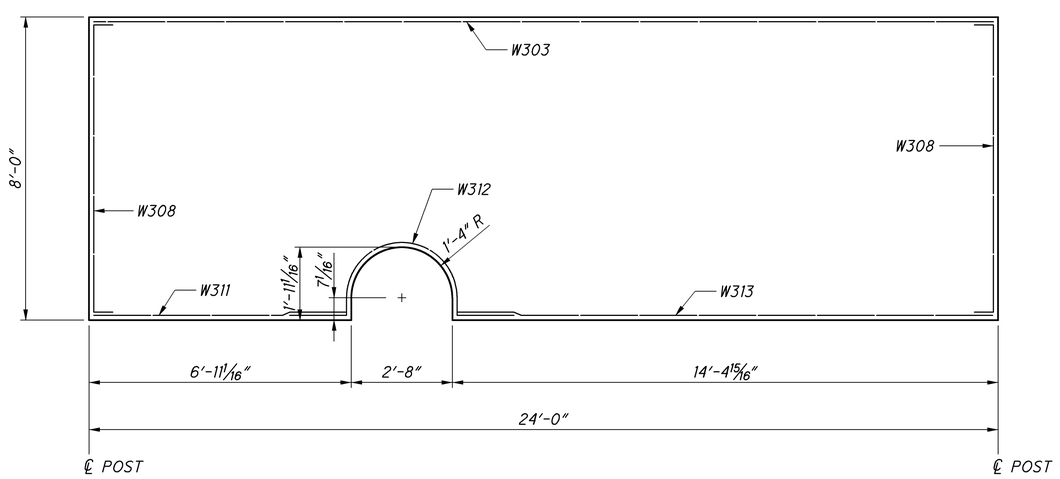

PANEL 64
(EAST WALL)

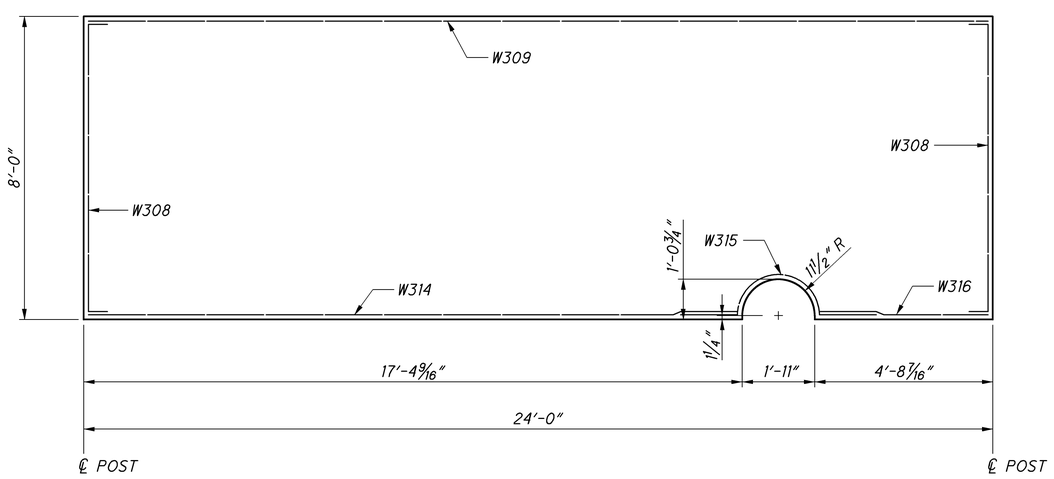

PANEL 138
(EAST WALL)

NOTES:
1. SEE NBS-1-09 FOR ADDITIONAL NOTES AND DETAILS.
2. DESIGN SPECIFICATIONS SHALL INCLUDE AASHTO LRFD BRIDGE DESIGN SPECIFICATIONS, 5TH EDITION, 2010 AND SHALL SUPERSEDE ALL PREVIOUS EDITIONS.
3. MATERIAL SPECIFICATIONS SHALL INCLUDE CONCRETE, CLASS C = 4,000 PSI (GRADE BEAMS).
4. SEE NOISE WALL PLANS FOR ADDITIONAL DETAILS.
5. THE CONTRACTOR SHALL HAVE THE OPTION TO ADJUST THE PLAN DIMENSIONS AFTER PERFORMING FIELD MEASUREMENTS OF THE AS-BUILT POST LOCATIONS.
6. REINFORCEMENT QUANTITIES ARE FOR THE PERIMETER AND SUPPLEMENTAL #3 BARS AND ARE FOR INFORMATION ONLY. THE FABRICATOR SHALL SELECT THE WELDED WIRE FABRIC BASED ON THE LARGEST PANEL HEIGHT DIMENSION.
7. PROVIDE FOUR LIFTING INSERTS AS PER NBS-1-09 FOR ALL PANELS SHOWN ON THIS DRAWING.

CALCULATED PJL
CHECKED EBS

PANEL DETAILS - EAST WALL

ALL-75-5.53

743
1224

J:\Projects\ALL\76691\structures\NoiseBarrier\sheets\76691ND007.dgn 11-SEP-2012 9:17PM reddenj

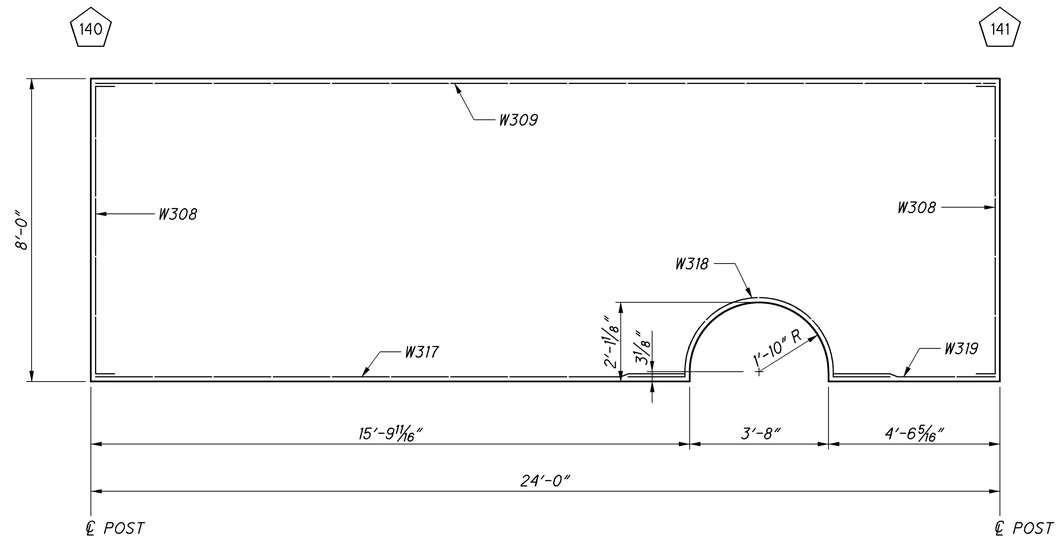

PANEL 140
(EAST WALL)

NOTES:
1. SEE NBS-1-09 FOR ADDITIONAL NOTES AND DETAILS.
2. DESIGN SPECIFICATIONS SHALL INCLUDE AASHTO LRFD BRIDGE DESIGN SPECIFICATIONS, 5TH EDITION, 2010 AND SHALL SUPERSEDE ALL PREVIOUS EDITIONS.
3. MATERIAL SPECIFICATIONS SHALL INCLUDE CONCRETE, CLASS C = 4,000 PSI (GRADE BEAMS).
4. SEE NOISE WALL PLANS FOR ADDITIONAL DETAILS.
5. THE CONTRACTOR SHALL HAVE THE OPTION TO ADJUST THE PLAN DIMENSIONS AFTER PERFORMING FIELD MEASUREMENTS OF THE AS-BUILT POST LOCATIONS.
6. REINFORCEMENT QUANTITIES ARE FOR THE PERIMETER AND SUPPLEMENTAL #3 BARS AND ARE FOR INFORMATION ONLY. THE FABRICATOR SHALL SELECT THE WELDED WIRE FABRIC BASED ON THE LARGEST PANEL HEIGHT DIMENSION.
7. PROVIDE FOUR LIFTING INSERTS AS PER NBS-1-09 FOR ALL PANELS SHOWN ON THIS DRAWING.

MARK	TOTAL	LENGTH	WEIGHT	TYPE	DIMENSIONS						
					A	B	C	D	E	R	INC
ABUTMENTS											
W301	4	7'- 01"	11	2	2'-9"	1'-9"	2'-9"				
W302	8	5'- 07"	17	2	6"	4'-9"	6"				
W303	27	23'- 09"	242	STR							
W304	7	14'- 09"	39	STR							
W305	7	19'- 09"	9	STR							
W306	3	22'- 05"	26	STR							
W307	1	18'- 05"	7	STR							
W308	10	8'- 06"	32	2	6"	7'-9"	6"				
W309	1	13'- 05"	6	STR							
W310	10	11'- 09"	45	STR							
W311	1	6'- 08"	3	STR							
W312	1	8'- 07"	4	35	1'-6"	2'-11"	1'-6"			1'-5 1/2"	
W313	1	14'- 02"	6	STR							
W314	1	17'- 02"	7	STR							
W315	1	6'- 05"	3	35	1'-6"	2'-2"	1'-6"			1'-1"	
W316	1	4'- 06"	2	STR							
W317	1	15'- 07"	6	STR							
W318	1	9'- 06"	4	35	1'-6"	3'-11"	1'-6"			1'-11 1/2"	
W319	1	4'- 03"	2	STR							
W320	1	10'- 05"	4	STR							
TOTAL			471								
FOR INFORMATION ONLY. NOT INCLUDED WITH ITEM 509.											

CALCULATED PJL
CHECKED EBS

PANEL DETAILS - EAST WALL

ALL-75-5.53

744
1224

J:\Projects\ALL\76691\structures\NoiseBarrier\sheets\7669ND008.dgn 11-SEP-2012 9:17PM reddenj

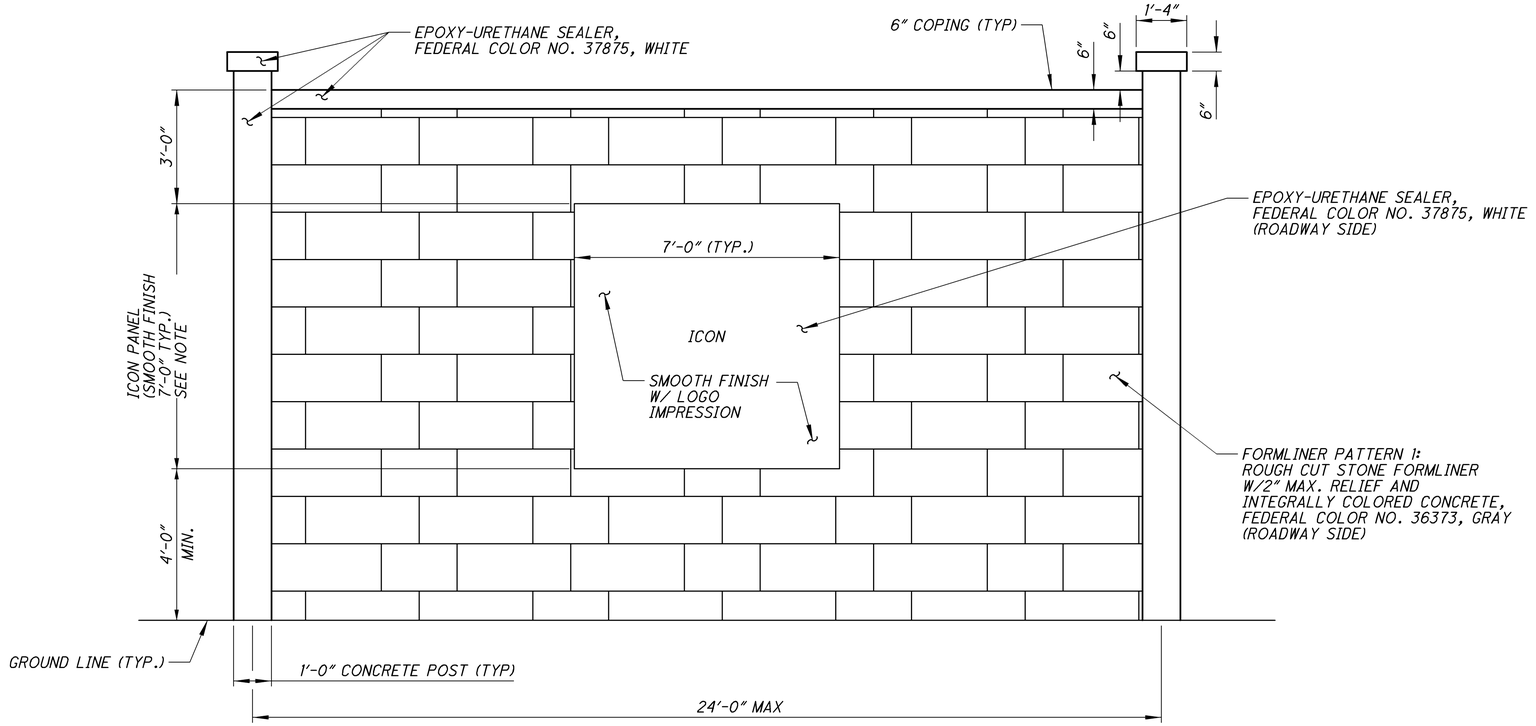

NOISE BARRIER ELEVATION

(ROADWAY SIDE)

NOTES:

1. SEE STANDARDS DRAWING NBS-1-09 FOR ADDITIONAL DETAILS.

2. FOR THE COLOR AND TEXTURE ON RESIDENTIAL SIDE OF THE WALLS USE ASHLAR STONE PATTERN AND BEIGE FEDERAL COLOR NUMBER 30372.

3. AESTHETIC TREATMENTS SHALL BE CONSIDERED INCIDENTAL AND INCLUDED WITH ITEM 606 - SPECIAL, NOISE BARRIER QUANTITIES.

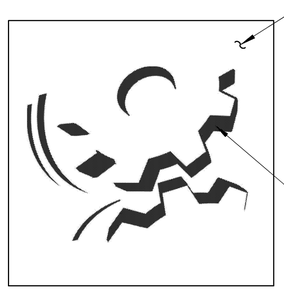

ICON

NOTE:
ICONS SHALL BE PLACED EVERY 500' ALONG THE WALL.

PAYMENT FOR ALL LABOR, EQUIPMENT, AND MATERIALS FOR AESTHETIC TREATMENTS AND ICONS SHALL BE INCLUDED WITH THE PRICE BID FOR ITEM 606, SPECIAL - NOISE BARRIER.

CALCULATED | CHECKED

NOISE BARRIER DETAILS

ALL-75-5.53

745
1224

J:\Projects\ALL\7669\structures\NoiseBarrier\sheets\7669IND001.dgn 11-SEP-2012 9:17PM reddenj

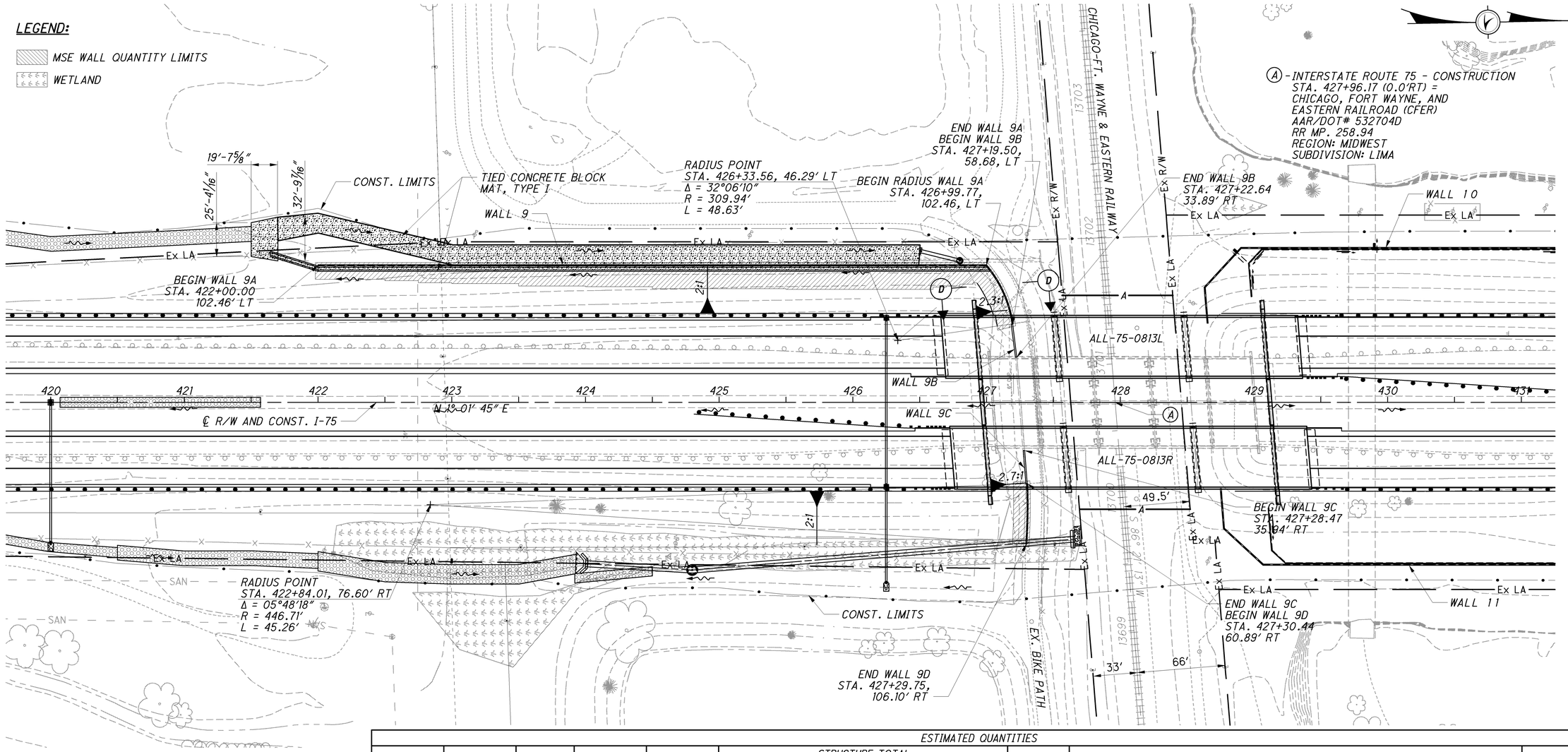

NOTES:

1. ALL WALL STATIONS AND OFFSETS MEASURED TO ℄ OF WALL.
2. FOR SECTION D-D SEE SHEET 4/8.
3. FOR WALL STATIONS, OFFSETS, AND MINIMUM REINFORCEMENTS SEE SHEET 3/8.
4. FOR DRAINAGE PLAN SEE SHEET 5/8.

BORE LOG LOCATIONS

BORE LOG	STA., OFFSET	TOP OF ROCK EL.
B-114-0-08	426+88, 26.4' RT	844.7
B-116-0-08	428+32, 3.8' LT	846.0
B-117-0-08	429+30, 28.7' LT	845.5
B-148-0-08	423+17, 114.0' LT	846.5
B-150-0-08	424+27, 114.0' LT	844.4
B-152-0-08	425+38, 114.0' LT	843.5
B-156-0-08	428+93, 140.8' LT	844.6
B-157-0-08	429+17, 106.0' RT	846.4
B-158-0-08	430+71, 117.3' LT	845.4
B-159-0-08	430+65, 103.4' RT	845.8

ESTIMATED QUANTITIES

03/IMS/PV/	05/ENH/OT/	ITEM	EXTENSION	GRAND TOTAL	STRUCTURE TOTAL				UNIT	DESCRIPTION	SEE SHEET
					WALL 9A	WALL 9B	WALL 9C	WALL 9D			
LUMP		202	11200	LUMP		LUMP	LUMP		LUMP	PORTIONS OF STRUCTURE REMOVED	
738		203	20000	738	716			22	CU YD	EMBANKMENT	
LUMP		503	11100	LUMP	LUMP			LUMP	LUMP	COFFERDAMS AND EXCAVATION BRACING	
2249		509	10000	2249		1132	1117		POUND	EPOXY COATED REINFORCING STEEL	
17		510	10000	17		9	8		EACH	DOWEL HOLES WITH NONSHRINK, NONMETALLIC GROUT	
17		511	46000	17		9	8		CU YD	CLASS C CONCRETE	
990		512	10050	990	958			32	SQ YD	SEALING OF CONCRETE SURFACES (NON-EPOXY)	
52		512	10100	52		26	26		SQ YD	SEALING OF CONCRETE SURFACES (EPOXY-URETHANE)	
6		512	33000	6		3	3		SQ YD	TYPE 2 WATERPROOFING	
28		518	21200	28		14	14		CU YD	POROUS BACKFILL WITH FILTER FABRIC	
11		518	40011	11	11				FT	6" NON-PERFORATED CORRUGATED PLASTIC PIPE, INCLUDING SPECIALS, AS PER PLAN	4/8
9953		840	20001	9953	9590			363	SQ FT	MECHANICALLY STABILIZED EARTH WALL, AS PER PLAN	4/8
3822		840	21000	3822	3664			158	CU YD	WALL EXCAVATION	
1067		840	22001	1067	1001			66	SQ YD	FOUNDATION PREPARATION, AS PER PLAN	4/8
4926		840	23000	4926	4828			98	CU YD	SELECT GRANULAR BACKFILL	
698		840	23050	698	657			41	CU YD	NATURAL SOIL	
1192		840	25010	1192	1085			107	FT	6" DRAINAGE PIPE, PERFORATED	
598		840	26000	598	549			49	FT	CONCRETE COPING	
	9898	840	26050	9898	9535			363	SQ FT	AESTHETIC SURFACE TREATMENT	
10		840	27000	10	5			5	DAY	ON-SITE ASSISTANCE	
LUMP		840	28000	LUMP	LUMP			LUMP	LUMP	SGB INSPECTION AND COMPACTION TESTING	

DESIGN AGENCY
PARSONS BRINCKERHOFF
2945 FARMERS DRIVE
SUITE 350
COLUMBUS, OHIO 43235

DATE 05/24/12
REVIEWED EBS
DRAWN LEL
DESIGNED SAP
CHECKED PJL
STRUCTURE FILE NUMBER
REVISED

WALLS 9 SITE PLAN

ALL-75-5.53
PID No. 76691

J:\Projects\ALL\76691\structures\WALL_009\sheets\76691_009wp001.dgn 15-JAN-2013 10:11AM lint

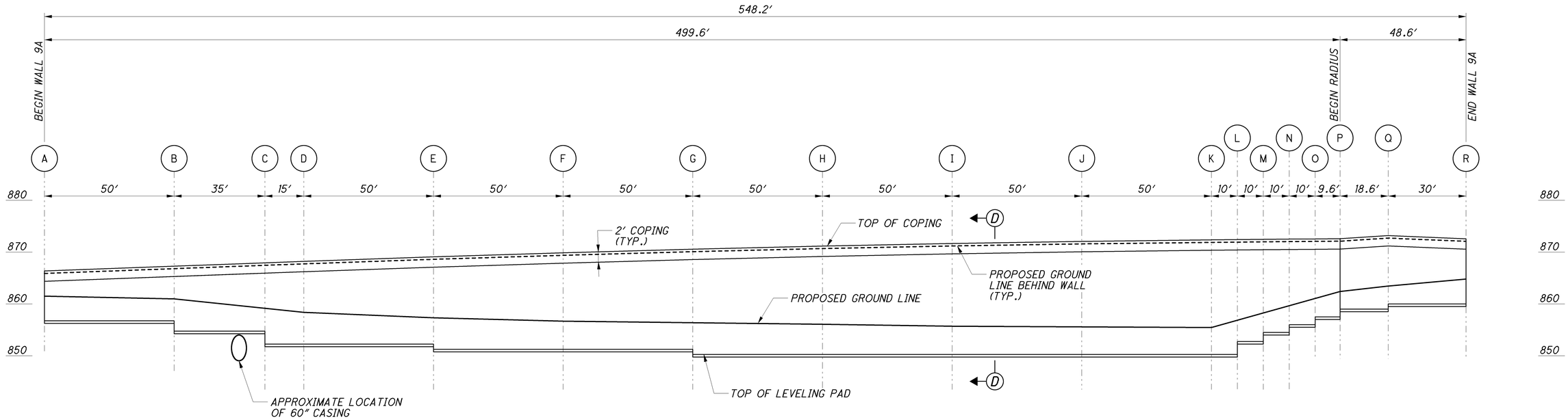

WALL 9A ELEVATION

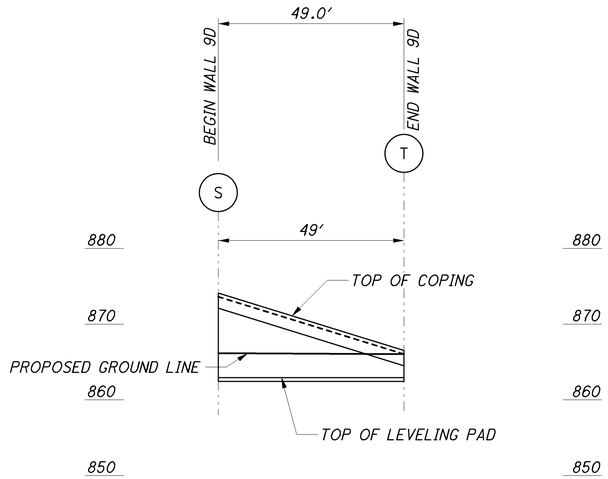

WALL 9D ELEVATION

NOTES:

1. FOR WALL DATA SEE SHEET 3/8
2. FOR SECTION D-D SEE SHEET 4/8
3. FOR WALL DRAINAGE SEE SHEET 5/8

DESIGN AGENCY
PARSONS BRINCKERHOFF
2545 FARMERS DRIVE
SUITE 350
COLUMBUS, OHIO 43235

DESIGNED	DRAWN	REVIEWED	DATE
SAP	LEL	EBS	09/09/11
CHECKED	REVISED	STRUCTURE FILE NUMBER	
PJL			

WALL 9A AND 9D ELEVATIONS

ALL-75-5.53
PID No. 76691

J:\Projects\ALL\76691\structures\WALL_009\sheets\76691_009WE001.dgn 15-JAN-2013 10:37AM lint

WALL 9A								
LOCATION	STATION (I-75)	OFFSET (FT)	ELEVATION BEHIND WALL	TOP OF COPING ELEVATION	ELEVATION IN FRONT OF WALL	TOP OF LEVELING PAD	ESTIMATED STRAP LENGTH (FT)	WALL HEIGHT (FT)
A	422+00.00	102.46' LT.	865.89	866.39	861.50	856.75	8.0	9.6
B	422+50.00	102.46' LT.	866.81	867.31	860.98	856.75	8.0	10.6
						854.25	9.3	13.1
C	422+85.00	102.46' LT.	867.46	867.96	859.15	854.25	9.7	13.7
						852.25	11.2	15.7
D	423+00.00	102.46' LT.	867.74	868.24	858.37	852.25	11.3	16.0
E	423+50.00	102.46' LT.	868.61	869.11	857.34	852.25	11.3	16.0
						851.25	12.0	16.9
F	424+00.00	102.46' LT.	869.39	869.89	856.68	851.25	13.2	18.6
G	424+50.00	102.46' LT.	870.08	870.58	856.37	851.25	13.7	19.3
						850.25	14.4	20.3
H	425+00.00	102.46' LT.	870.68	871.18	856.09	850.25	14.9	20.9
I	425+50.00	102.46' LT.	871.18	871.68	855.71	850.25	15.2	21.4
J	426+00.00	102.46' LT.	871.58	872.08	855.58	850.25	15.5	21.8
K	426+50.00	102.46' LT.	871.89	872.39	855.46	850.25	15.7	22.1
L	426+60.00	102.46' LT.	871.94	872.44	856.86	850.25	15.8	22.2
						852.75	14.0	19.7
M	426+70.00	102.46' LT.	871.99	872.49	858.26	852.75	14.0	19.7
						854.50	12.8	18.0
N	426+80.00	102.46' LT.	872.03	872.53	859.66	854.50	12.8	18.0
						856.00	11.7	16.5
O	426+90.00	102.46' LT.	872.07	872.57	861.06	856.00	11.8	16.6
						857.50	10.7	15.1
P	426+99.58	102.46' LT.	872.10	872.60	862.40	857.50	10.7	15.1
						859.00	9.7	13.6
Q	427+10.22	87.06' LT.	872.71	873.21	863.45	859.00	9.9	14.2
						860.00	9.2	13.2
R	427+19.50	58.68' LT.	872.08	872.58	864.81	860.00	8.8	12.6

WALL 9D								
S	427+30.44	60.89' RT.	873.19	873.69	865.72	862.50	8.0	11.2
T	427+29.75	109.79' RT.	865.59	866.09	865.60	862.50	8.0	3.6

ITEM 840-MECHANICALLY STABILIZED EARTH WALL, AS PER PLAN

THIS ITEM 840 SHALL CONTAIN INTEGRALLY COLORED CONCRETE USING CHROMIX ADMIXTURES AS PROVIDED BY L. M. SCOFIELD COMPANY, DOUGLASVILLE, GEORGIA (800) 800-9000 OR AN APPROVED EQUAL. USE FEDERAL COLOR NUMBER 36373.

DESCRIPTION;
CONCRETE FORMLINERS SHALL BE USED ON THE MSE WALL PANELS ACCORDING TO THE DETAILS IN THE PLANS:

THE FORMLINER USED SHALL MEET THE DETAILS SHOWN IN THE PLANS FOR STAGGERED (INTERLOCKING) PATTERNS, INCLUDING DEPTH OF RELIEF AND SIZE OF STONE PATTERN. HORIZONTAL JOINTS IN THE STONE PATTERN SHALL BE ALIGNED AND AT THE SAME ELEVATION. THE FINISHED TEXTURE OF THE ROUGH CUT STONE SHALL BE SIMILAR TO THAT OF RUBBED CONCRETE.

FORMLINERS FOR PATTERN 1 SHALL MATCH THE DIMENSIONAL SPECIFICATIONS OF THE FOLLOWING MANUFACTURER OR APPROVED EQUAL:

PATTERN #1104-R2 (RANDOM CUT STONE)
CUSTOM ROCK
2020 WEST 7TH STREET
ST. PAUL, MN 55116
651-699-1345
WWW.CUSTOM-ROCK.COM

THE FORMLINER MANUFACTURER SHALL SUBMIT EVIDENCE OF AT LEAST TWO SIMILAR ARCHITECTURAL CONCRETE CONSTRUCTION PROJECTS WITHIN THE PAST FIVE YEARS FOR A REVIEW AND APPROVAL BY THE ENGINEER. COMPLETE SHOP DRAWINGS DETAILING THE STONE PATTERNS SHALL BE SUBMITTED IN ACCORDANCE WITH 501.04 FOR APPROVAL PRIOR TO PLACING ANY CONCRETE WHERE THE FORMLINERS WILL BE USED. SHOP DRAWINGS SHALL INCLUDE FORMLINER INSTALLATION AND CASTING INSTRUCTIONS, AND INDICATE FORMLINER BACKUP, REVEAL, AND CHAMFER STRIP LOCATIONS. THE CONTRACTOR SHALL COORDINATE WITH THE FORMLINER MANUFACTURER TO ASSURE UNDERSTANDING OF FORMLINER USE, TEST PANEL MOCK-UP REQUIREMENTS, AND FINAL CONSTRUCTION PROCEDURES.

MATERIALS:
THE FORMLINER SHALL BE FABRICATED WITH SHAPES THAT ALLOW REMOVAL OF THE FORMS WITHOUT DAMAGE OR VISUAL IMPAIRMENT OF THE CONCRETE, AND SHALL HAVE 1/8" MINIMUM RADII WITH NO SHARP EDGES. THE FORMLINER SHALL BE CAPABLE OF WITHSTANDING APPLIED CONCRETE POUR PRESSURE WITHOUT LEAKAGE, PHYSICAL DEFECT, OR VISUAL IMPAIRMENT.

CONSTRUCTION REQUIREMENTS:
FORMLINERS SHALL BE CLEANED BEFORE EACH USE. DAMAGED FORMLINERS WHOSE CONTINUED USE OR REPAIR WOULD NEGATIVELY IMPACT THE AESTHETICS OF THE FINISHED CONCRETE SHALL BE REPLACED. FORMLINER JOINTS SHALL BE SEALED TO PREVENT CEMENT PASTE FROM BLEEDING. FORMLINERS SHALL BE INSTALLED IN ACCORDANCE WITH THE APPROVED SHOP DRAWINGS. CHAMFERED CORNERS SHALL FORM SMOOTH, SOLID UNBROKEN CONTINUOUS SURFACES WHICH ARE UNIFORMLY STRAIGHT. AN APPROVED COMPATIBLE FORMLINER RELEASE AGENT SHALL BE APPLIED AT A RATE RECOMMENDED BY THE MANUFACTURER.

BASIS OF PAYMENT:
ITEM 840-MECHANICALLY STABILIZED EARTH WALL, AS PER PLAN, WILL BE PAID FOR AT THE CONTRACT SQ. FT. PRICE.
THE WORK SHALL INCLUDE ALL LABOR AND MATERIALS NECESSARY FOR INTEGRALLY COLORING THE CONCRETE IN THE MSE WALL PANELS AND THE CONCRETE COPING.

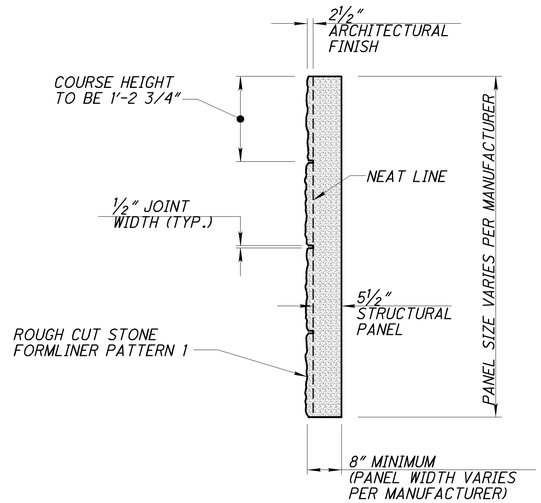

MSE PANEL SECTION

DESIGN AGENCY
PB AMERICAS, INC.
312 ELM STREET
SUITE 2500
CINCINNATI, OHIO 45202

DESIGNED SAP | DRAWN LEL | REVIEWED EBS | DATE 09/09/11 | CHECKED PJL | REVISED | STRUCTURE FILE NUMBER

WALL 9A AND 9D DATA

ALL-75-5.53
PID No. 76691

J:\Projects\ALL\76691\structures\WALL_009\sheets\76691_009WE002.dgn 14-JAN-2013 2:25PM lint

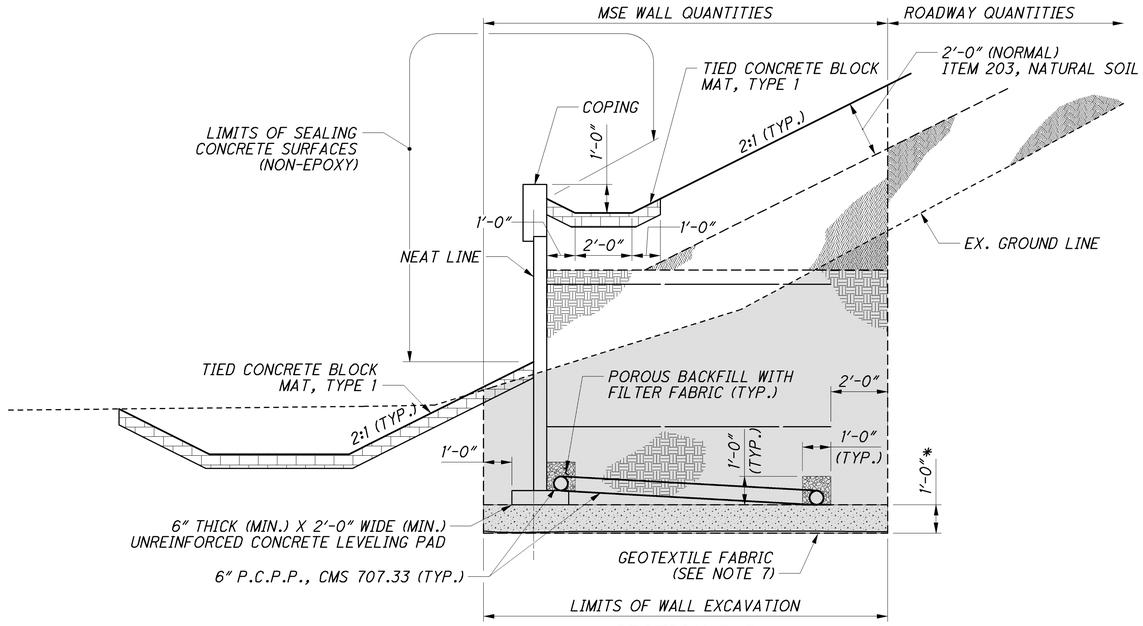

SECTION D-D

* VARY HEIGHT TO CREAT LEVEL SURFACE (SEE NOTE 6)
AESTHETICS NOT SHOWN FOR CLARITY

WALL 9A & 9D SECTION NOTES:

1. THE LINE WHICH DEFINES THE LIMIT OF THE SELECT GRANULAR BACKFILL IS NOT AN ALLOWABLE SLOPE FOR EXCAVATION. CUT THE SIDES OF ALL EXCAVATIONS TO PREVENT CAVING, OR PROTECT THE EXCAVATION FROM CAVING.
2. DESIGN THE INTERNAL STABILITY OF A MECHANICALLY STABILIZED EARTH (MSE) WALL IN ACCORDANCE WITH SUPPLEMENTAL SPECIFICATION 840. FOR WALLS 9A & 9D, THE ALLOWABLE BEARING PRESSURE AT THE BASE OF THE REINFORCED SOIL MASS IS 8.4 KSF CONTACT THE ENGINEER IF THE ACTUAL BEARING PRESSURE WILL EXCEED THE ALLOWABLE BEARING PRESSURE.
3. SOIL REINFORCEMENT LENGTH TO BE DETERMINED BY WALL SUPPLIER. THIS DESIGN ASSUMES THE SOIL REINFORCEMENT LENGTH IS EQUAL TO 71% OF WALL HEIGHT FOR WALLS 9A & 9D. FOR ESTIMATED SOIL REINFORCEMENT LENGTHS SEE SHEET 3/8 .
4. THICKNESS OF MSE WALL PANELS IS ASSUMED. ACTUAL THICKNESS DEPENDS ON THE APPROVED WALL SYSTEM.
5. STATIONS AND OFFSETS PROVIDED FOR THE MSE WALLS ARE MEASURED TO THE NEAT LINE. FOR WALL STATIONS AND OFFSETS SEE SHEET 3/8 .
6. REMOVE SOIL WITHIN LIMITS OF WALL EXCAVATION TO TOP OF ROCK AND REPLACE WITH ITEM 203 - GRANULAR EMBANKMENT, TYPE C, FROM LOCATION "D" TO LOCATION "M" ON WALL 9. FOR WALL LOCATIONS SEE SHEET 3/8 .
7. GEOTEXTILE FABRIC IS NOT TO BE USED ON ROCK SURFACES OR WHERE ITEM 203, GRANULAR EMBANKMENT, TYPE C, IS PLACED TO ROCK SURFACE.
8. TO SATISFY SLIDING STABILITY CRITERIA, EITHER STRIP TYPE REINFORCEMENT, OR SHEET TYPE REINFORCEMENT WITH A MINIMUM SOIL INTERFACE FRICTION ANGLE OF 29 DEGREES IS REQUIRED.

ITEM 518 - 6" NON-PERFORATED CORRUGATED PLASTIC PIPE, INCLUDING SPECIALS, AS PER PLAN

ANIMAL GUARDS SHALL BE PROVIDED AT THE OUTLET OF THE DRAINAGE PIPES WHEN TERMINATING WITHIN CRUSHED AGGREGATE SLOPE PROTECTION STEEL BOLTS OR RODS FOR THE ANIMAL GUARDS SHALL BE GALVANIZED PER CMS 711.02. SEE STD DWG. DM 1.1 FOR ADDITIONAL DETAILS AND NOTES. THE ANIMAL GUARDS AND CRUSHED AGGREGATE SLOPE PROTECTION ARE INCIDENTAL TO ITEM 518 - 6" NON-PERFORATED CORRUGATED PLASTIC PIPE, INCLUDING SPECIALS, AS PER PLAN.

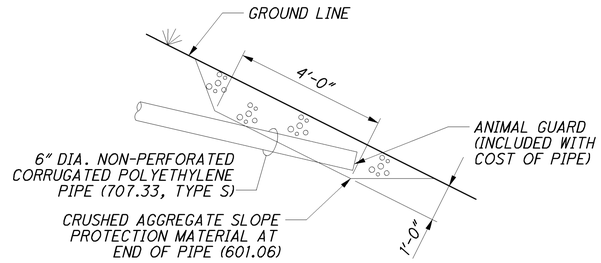

TERMINATION OF 6" NON-PERFORATED CORRUGATED PLASTIC PIPE (NPCPP)

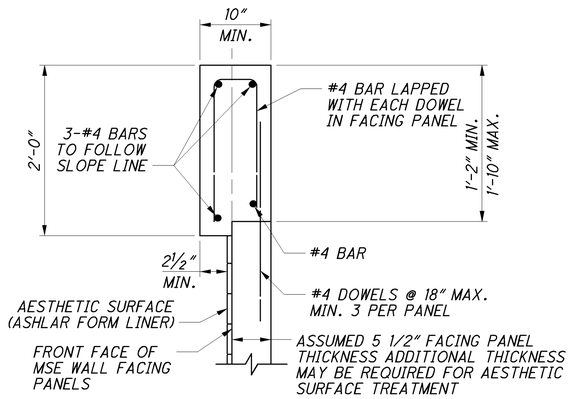

MSE WALL COPING

ALL REINFORCING TO BE EPOXY COATED

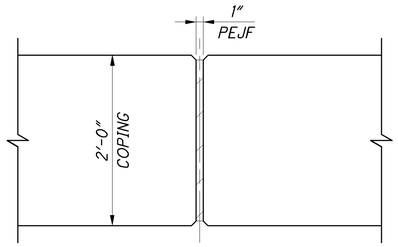

COPING EXPANSION JOINT

MSE RETAINING WALL GENERAL NOTES

SUPPLEMENTAL SPECIFICATIONS:

REFER TO THE FOLLOWING SUPPLEMENTAL SPECIFICATION:
SS 840 DATE: OCTOBER 15, 2011

DESIGN DATA:

CONCRETE CLASS C - COMPRESSIVE STRENGTH 4,000 PSI
REINFORCING STEEL - ASTM A614 OR 1996 GRADE 60, MINIMUM YIELD STRENGTH 60 KSI

ITEM 840 MECHANICALLY STABILIZED EARTH WALL:

CONSTRUCTION AND PAYMENT FOR THE MSE WALL SHALL BE IN ACCORDANCE WITH SUPPLEMENTAL SPECIFICATION 840.

LEGEND:

- ITEM 840 SELECT GRANULAR BACKFILL (SGB)
- ITEM 840 WALL EXCAVATION
- ITEM 203 EMBANKMENT TO BE INCLUDED WITH ROADWAY QUANTITIES
- ITEM 203 GRANULAR MATERIAL, TYPE C
- ITEM 203 EMBANKMENT TO BE INCLUDED WITH WALL QUANTITIES

P.C.P.P. - PERFORATED CORRUGATED PLASTIC PIPE WITH FILTER FABRIC, CMS 707.33 (TYP.)

N.P.C.P.P. - NON PERFORATED CORRUGATED PLASTIC PIPE WITH FILTER FABRIC, CMS 707.33 (TYP.)

DESIGN AGENCY
PB AMERICAS, INC.
312 ELM STREET
SUITE 2500
CINCINNATI, OHIO 45202

DESIGNED SAP | DRAWN LEL | REVIEWED EBS | DATE 09/09/11 | CHECKED PJL | REVISED | STRUCTURE FILE NUMBER

WALL 9A AND 9D DETAILS & GENERAL NOTES

ALL-75-5.53
PID No. 76691

J:\Projects\ALL\76691\structures\WALL_009\sheets\76691_009wy001.dgn 15-JAN-2013 8:45AM jint

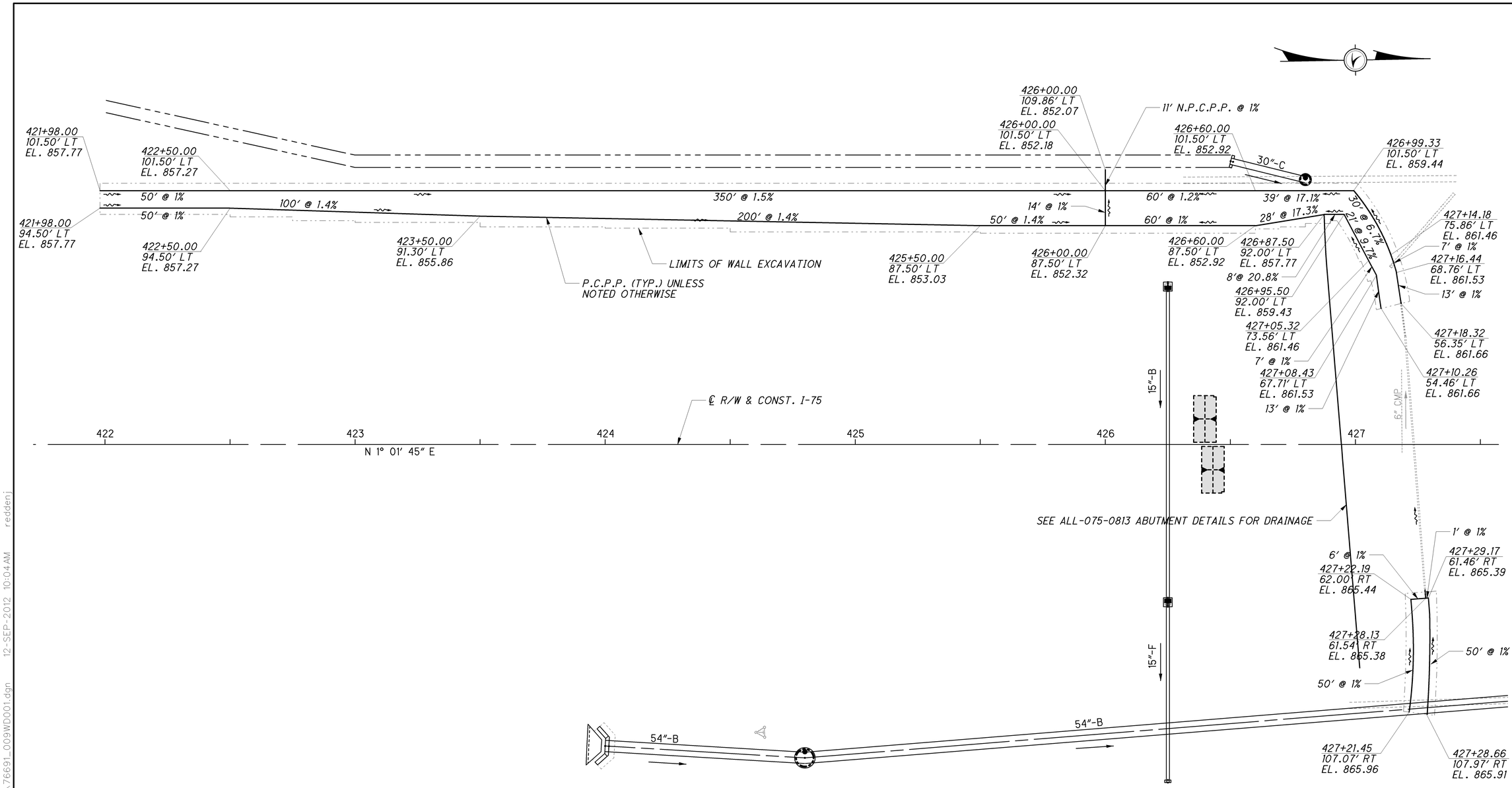

J:\Projects\ALL\76691\structures\WALL_009\sheets\76691_009WD001.dgn 12-SEP-2012 10:04AM reddenj

DESIGN AGENCY
PARSONS BRINCKERHOFF
2545 FARMERS DRIVE
SUITE 350
COLUMBUS, OHIO 43235

DESIGNED	DRAWN	REVIEWED	DATE
SAP	LEL	EBS	09/09/11
CHECKED	REVISED	STRUCTURE FILE NUMBER	
PJL			

WALL 9A AND 9D DRAINAGE SCHEMATIC PLAN

ALL-75-5.53
PID No. 76691

5 / 8

750
1224

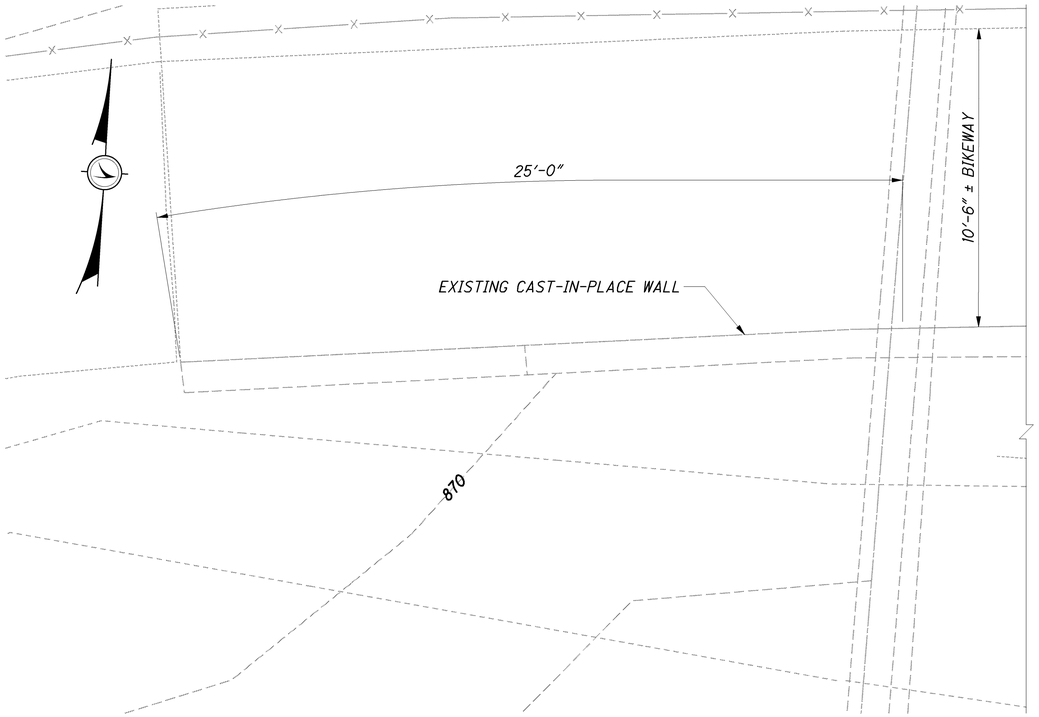

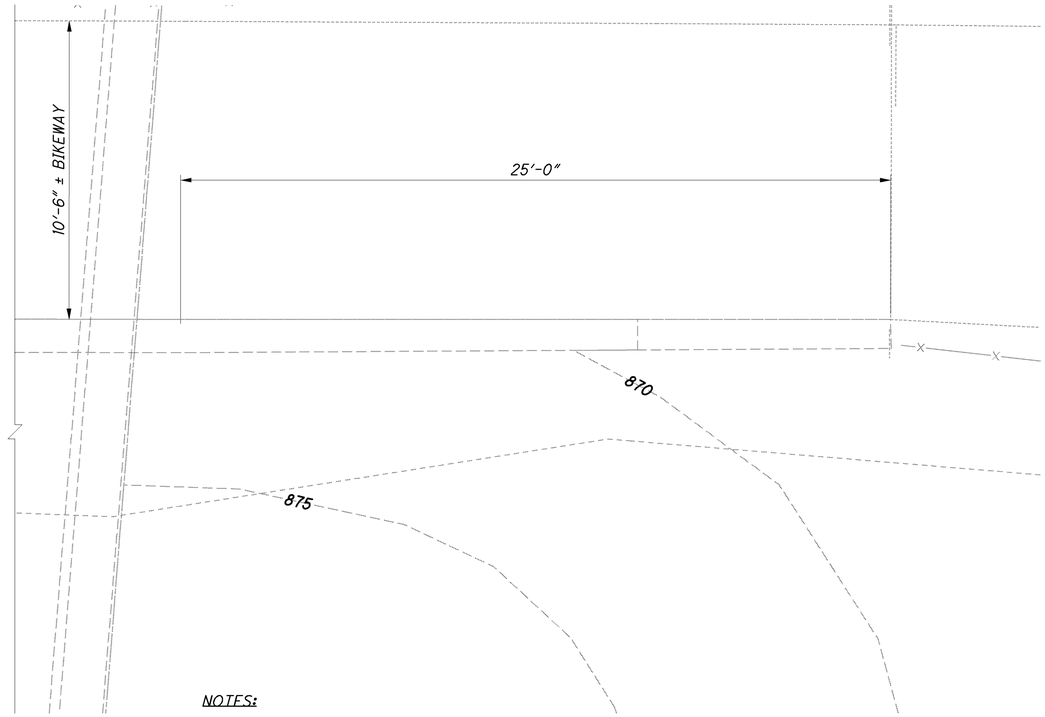

PLAN

NOTES:

1. LIMITS OF EXISTING HORIZONTAL REINFORCING TO REMAIN.
2. LIMITS OF EXISTING VERTICAL REINFORCING IN FOOTING TO REMAIN.
3. LIMITS OF EXISTING VERTICAL REINFORCING TO BE REMOVED.
4. FOR SECTION A-A, SEE SHEET 8/ 8

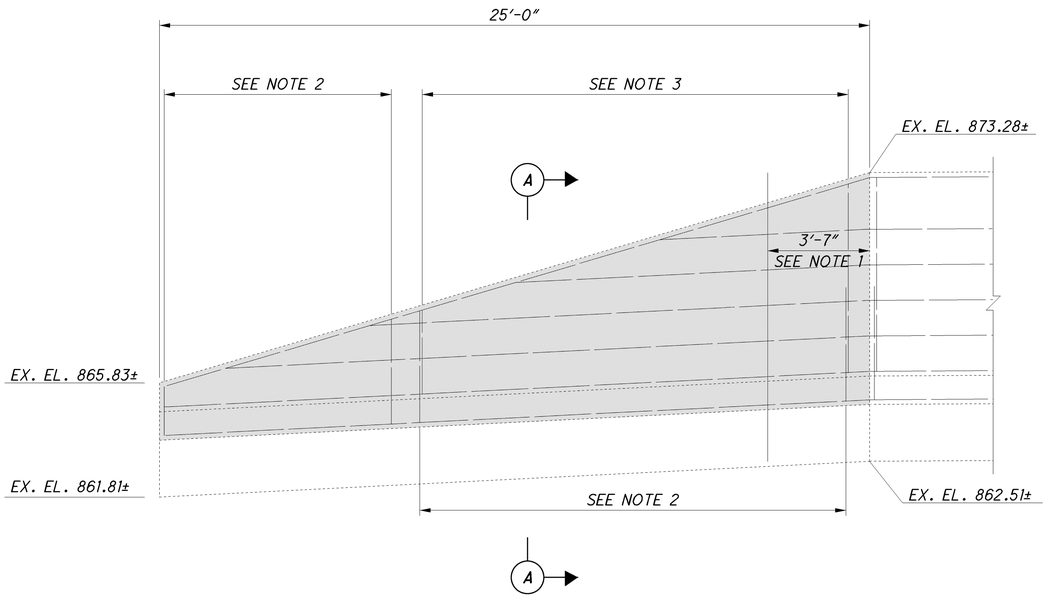

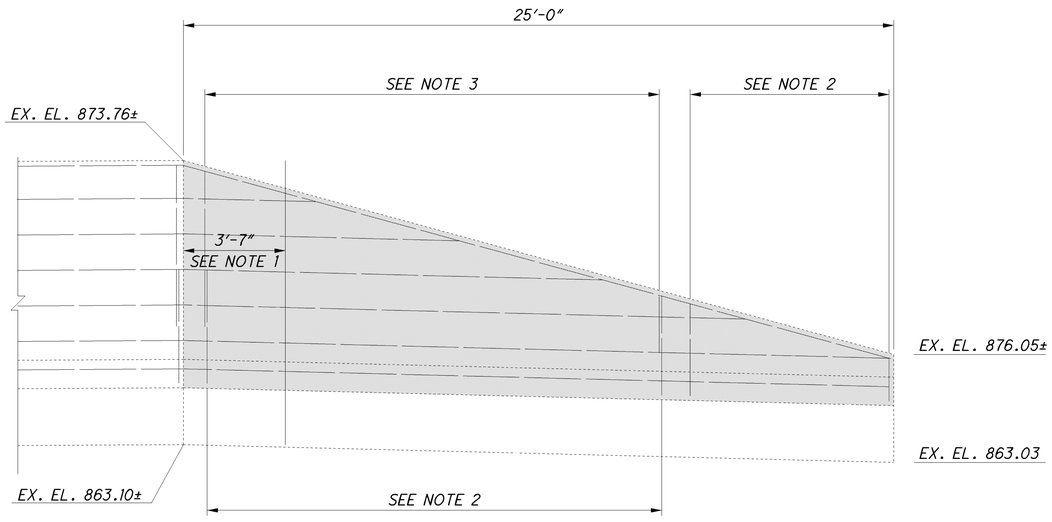

ELEVATION

LEGEND:

- AREA TO REMOVE

DESIGN AGENCY
PARSONS BRINCKERHOFF
2545 FARMERS DRIVE
SUITE 350
COLUMBUS, OHIO 43235

DESIGNED	DRAWN	REVIEWED	DATE
SAP	LEL	EBS	09/09/11
CHECKED	REVISED	STRUCTURE FILE NUMBER	
PJL			

EXISTING WALL 9B AND 9C PLAN & ELEVATION

ALL-75-5.53
PID No. 76691

6 / 8

751
1224

reddenj
J:\Projects\ALL\76691\structures\WALL_009\sheets\76691_009wp002.dgn 12-SEP-2012 10:04AM

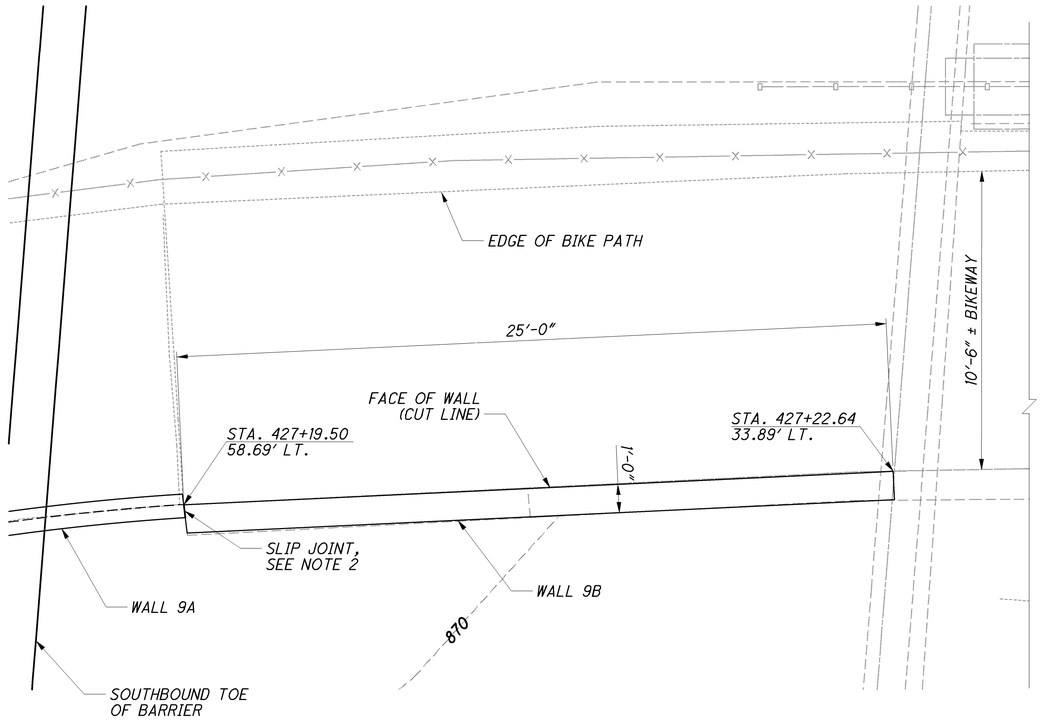

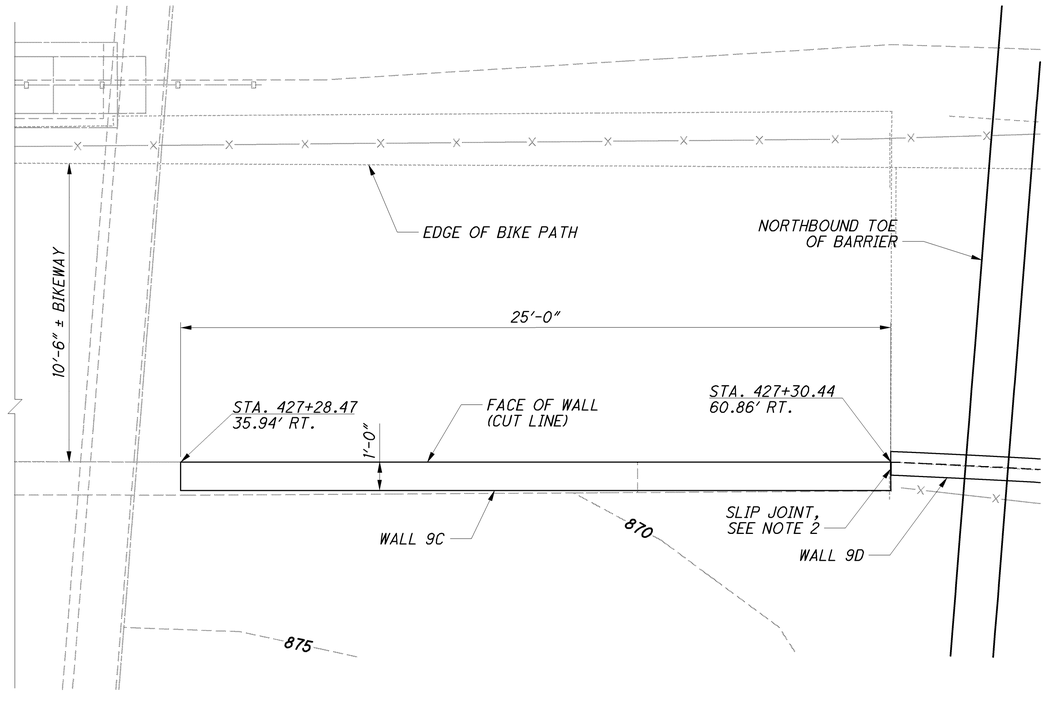

PLAN

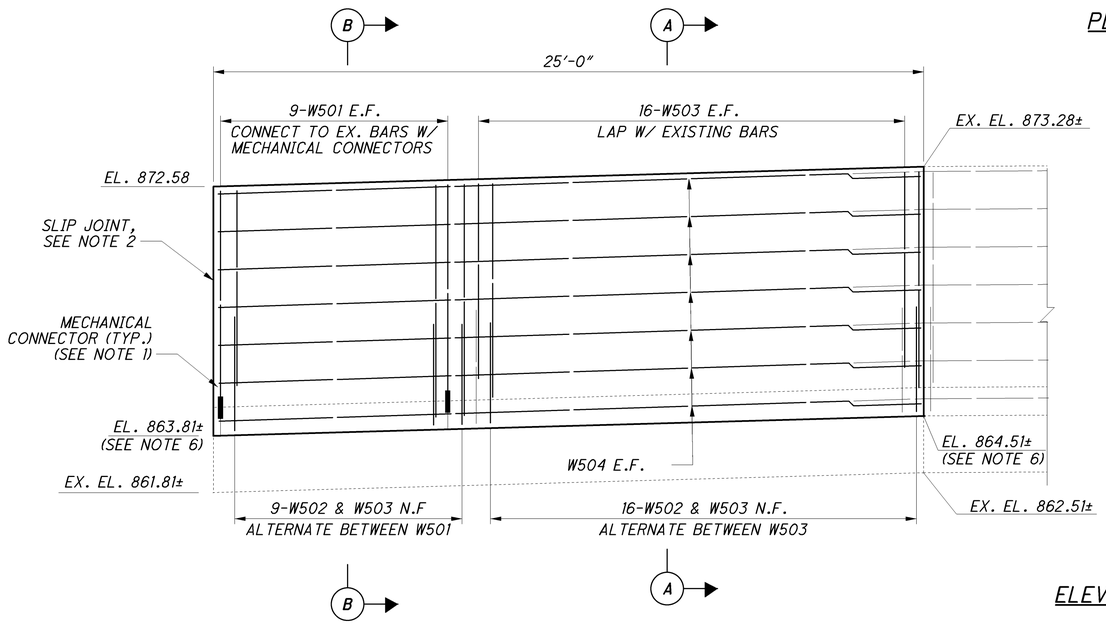

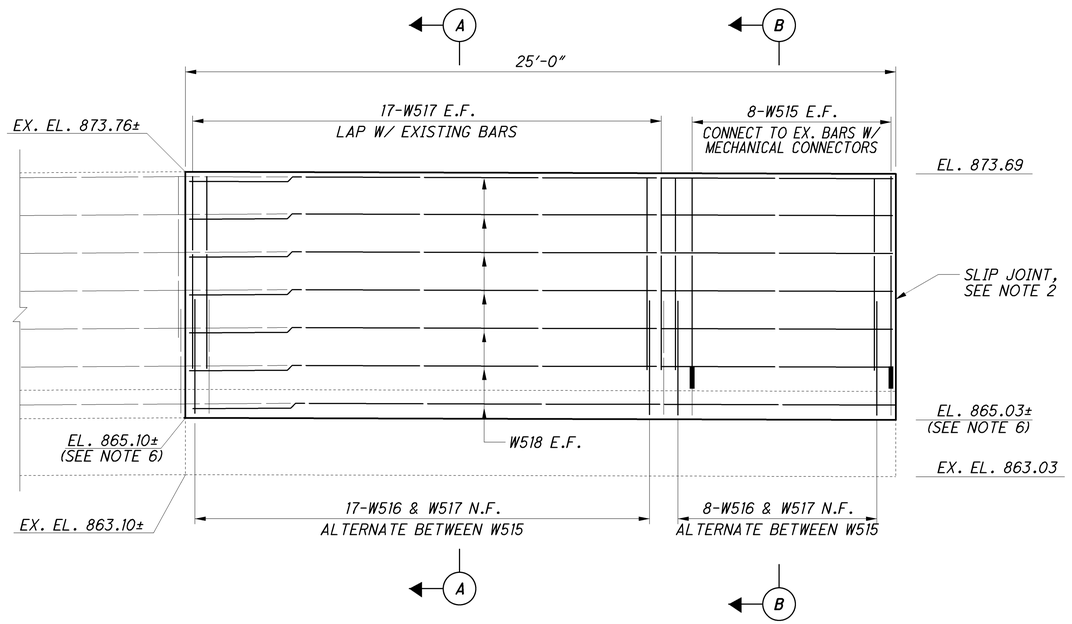

ELEVATION

NOTES:

1. ALL W501 AND W515 BARS SHALL BE CONNECTED TO EXISTING VERTICAL REINFORCEMENT USING MECHANICAL CONNECTORS.

   THE VERTICAL LOCATION OF THE MECHANICAL CONNECTORS SHALL BE ESTABLISHED BY THE CONTRACTOR TO ACCOMMODATE THE GIVEN LENGTH OF THE W501 BARS.

   THE CONTRACTOR SHALL MAKE ANY NECESSARY ADJUSTMENTS TO THE BAR LENGTHS BASED ON THE SELECTED MECHANICAL CONNECTOR AND EXISTING CONDITIONS.

2. THE SLIP JOINTS SHALL BE PLACED SO THAT SMOOTH TRANSITIONS ARE PROVIDED BETWEEN THE CAST-IN-PLACE AND MSE WALLS.

3. FOR SECTION A-A AND B-B, SEE SHEET 8/8
4. FOR REINFORCING SCHEDULE, SEE SHEET 8/8
5. FOR QUANTITIES, SEE SHEET 1/8
6. ELEVATIONS SHOULD BE ADJUSTED TO BE THE SAME AS THE EXISTING BOTTOM OF PATH ELEVATIONS.

DESIGN AGENCY
PARSONS BRINCKERHOFF
2545 FARMERS DRIVE
SUITE 350
COLUMBUS, OHIO 43235

DESIGNED	DRAWN	REVIEWED	DATE
SAP	LEL	EBS	09/09/11
CHECKED	REVISED	STRUCTURE FILE NUMBER	
PJL			

WALL 9B AND 9C PLAN & ELEVATION

ALL-75-5.53
PID No. 76691

752
1224

J:\Projects\ALL\76691\structures\WALL_009\sheets\76691_009wp003.dgn 12-SEP-2012 10:04:04 AM reddenj

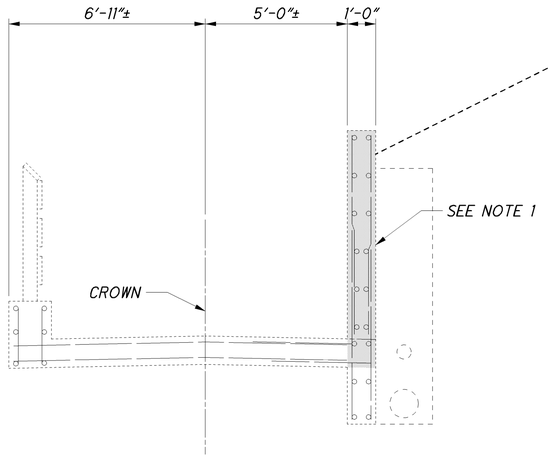

EXISTING SECTION A-A

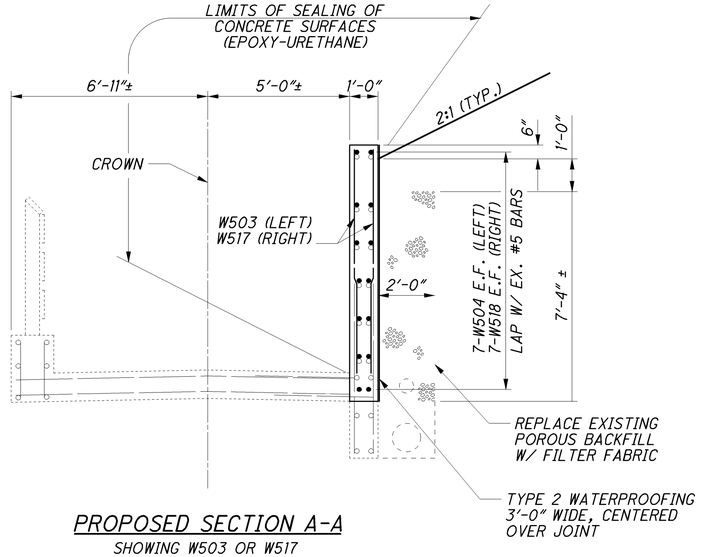

PROPOSED SECTION A-A

SHOWING W503 OR W517

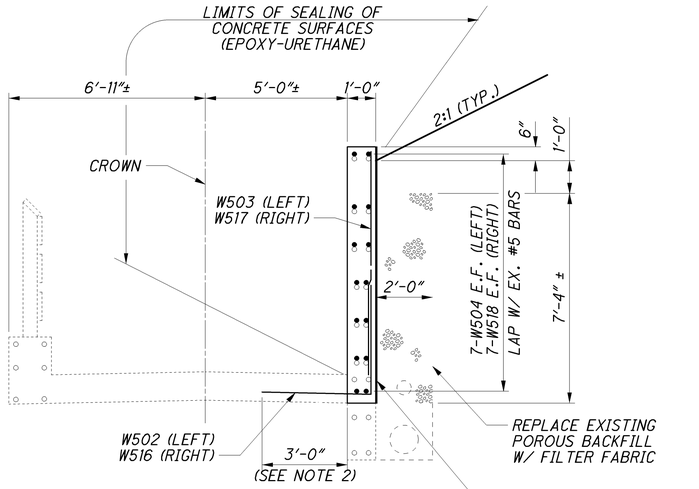

PROPOSED SECTION A-A

SHOWING W502 & W503 (LEFT)
W516 & W517 (RIGHT)

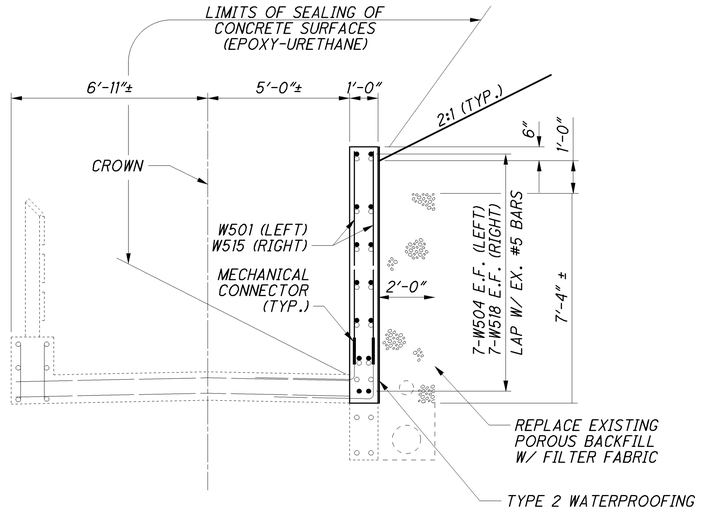

PROPOSED SECTION B-B

NOTES:

1. SEE ELEVATION VIEW FOR EXISTING REINFORCEMENT TO BE REMOVED. SEE SHEET 6/8
2. DRILL AND GROUT PROPOSED REINFORCEMENT INTO EXISTING FOOTING.

LEGEND:

- AREA TO REMOVE

WALL 9B - REINFORCING SCHEDULE

MARK	NUMBER TOTAL	LENGTH	WEIGHT	TYPE	DIMENSIONS A	B	C	INCR.
W501	18	8'-7"	162	STR				
W502	25	7'-7"	198	1	3'-9"	4'-0"		
W503	57	6'-11"	411	STR				
W504	14	24'-8"	361	STR				
	GRAND TOTAL		1,132 LBS.					

WALL 9C - REINFORCING SCHEDULE

MARK	NUMBER TOTAL	LENGTH	WEIGHT	TYPE	DIMENSIONS A	B	C	INCR.
W515	16	8'-6"	142	STR				
W516	25	7'-7"	198	1	3'-9"	4'-0"		
W517	59	6'-9"	416	STR				
W518	14	24'-8"	361	STR				
	GRAND TOTAL		1,117 LBS.					

DESIGN AGENCY
PB AMERICAS, INC.
312 ELM STREET
SUITE 2500
CINCINNATI, OHIO 45202

DESIGNED SAP | DRAWN LEL | REVIEWED EBS | DATE 09/09/11
CHECKED PJL | REVISED | STRUCTURE FILE NUMBER

WALL 9B AND 9C SECTION DETAILS

ALL-75-5.53
PID No. 76691

8 / 8

753
1224

J:\Projects\ALL\76691\structures\WALL_009\sheets\76691_009wy002.dgn 12-SEP-2012 10:04AM reddenj

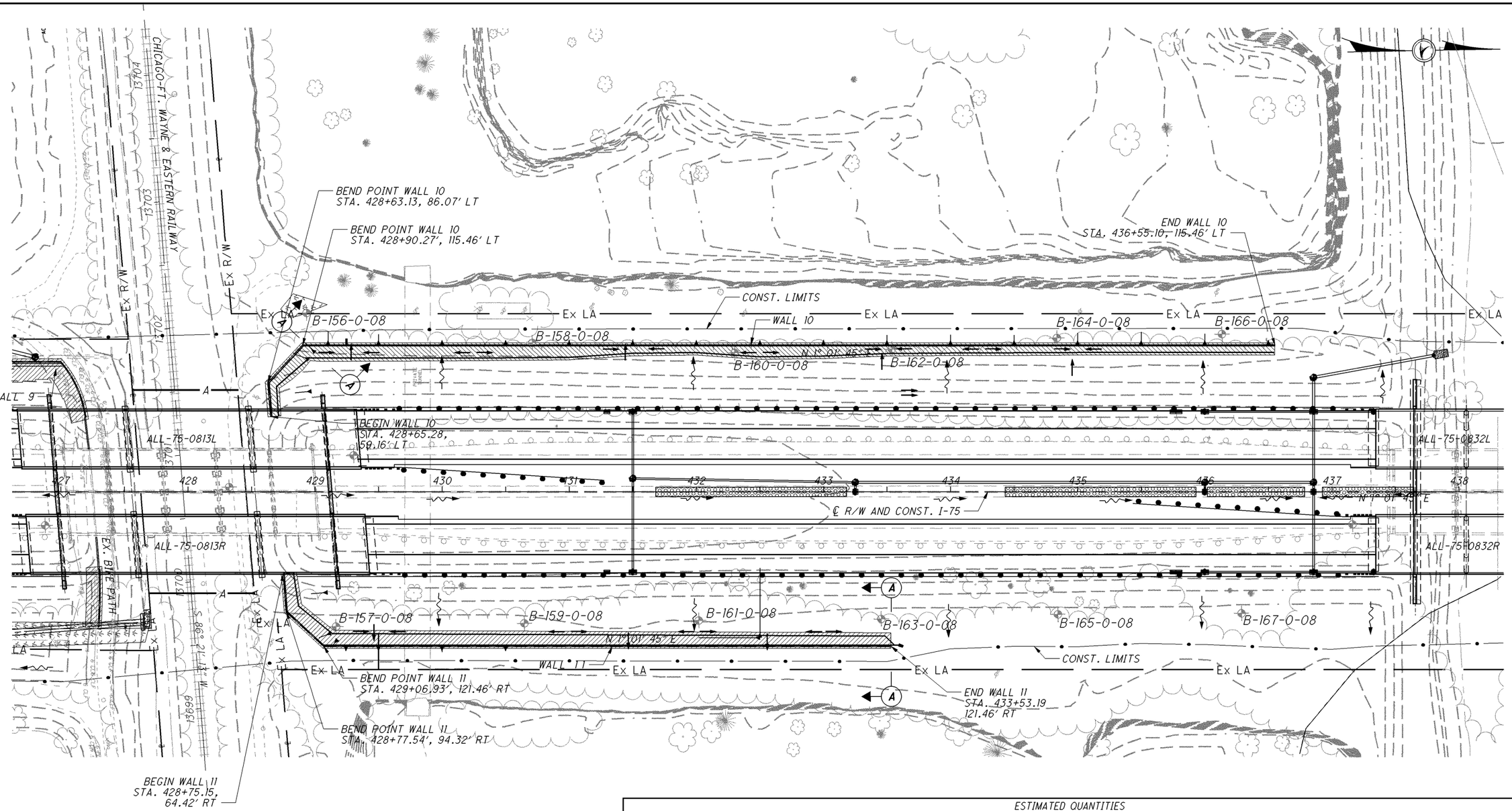

BORE LOG LOCATIONS

BORE LOG	STA., OFFSET	TOP OF ROCK EL.
B-156-0-08	428+93, 140.8' LT	844.6
B-157-0-08	429+17, 106.0' RT	846.4
B-158-0-08	430+71, 117.3' LT	845.4
B-159-0-08	430+65, 103.4' RT	845.8
B-160-0-08	432+30, 109.5' LT	842.1
B-161-0-08	432+02, 101.2' RT	845.6
B-162-0-08	433+54, 112.3' LT	845.8
B-163-0-08	433+45, 100.0' RT	844.8
B-164-0-08	434+84, 121.1' LT	844.8
B-165-0-08	434+84, 96.3' RT	845.3
B-166-0-08	436+13, 124.1' LT	844.8
B-167-0-08	436+29, 95.5' RT	845.1

NOTES:

1. ALL WALL STATIONS AND OFFSETS, MEASURED TO ℄ OF WALL.
2. FOR SECTION A-A SEE SHEET 6/7.
3. FOR WALL STATIONS, OFFSETS AND MINIMUM REINFORCEMENTS SEE SHEET 4/7.
4. FOR DRAINAGE PLAN SEE SHEET 7/7.

LEGEND:

- MSE WALL PAYMENT LIMITS
- TIED CONCRETE BLOCK MAT
- WETLAND

ESTIMATED QUANTITIES

03/IMS/PV/	05/ENH/OT/	ITEM	EXTENSION	STRUCTURE TOTAL WALL 10	STRUCTURE TOTAL WALL 11	UNIT	DESCRIPTION	SEE SHEET
2962		203	20000	2090	872	CU YD	EMBANKMENT	
2		503	11100	1	1	LUMP	COFFERDAMS AND EXCAVATION BRACING	
1685		512	10050	1203	482	SQ YD	SEALING OF CONCRETE SURFACES (NON-EPOXY)	
35		518	40011	20	15	FT	6" NON-PERFORATED CORRUGATED PLASTIC PIPE, INCLUDING SPECIALS, AS PER PLAN	5/7
17483		840	20001	12293	5190	SQ FT	MECHANICALLY STABILIZED EARTH WALL, AS PER PLAN	5/7
4690		840	21000	2980	1710	CU YD	WALL EXCAVATION	
2054		840	22001	1336	718	SQ YD	FOUNDATION PREPARATION, AS PER PLAN	5/7
6776		840	23000	5116	1660	CU YD	SELECT GRANULAR BACKFILL	
1308		840	23050	858	450	CU YD	NATURAL SOIL	
2189		840	25010	1689	500	FT	6" DRAINAGE PIPE, PERFORATED	
1331		840	26000	814	517	FT	CONCRETE COPING	
	17483	840	26050	12293	5190	SQ FT	AESTHETIC SURFACE TREATMENT	
10		840	27000	5	5	DAY	ON-SITE ASSISTANCE	
2		840	28000	1	1	LUMP	SGB INSPECTION AND COMPACTION TESTING	

DESIGN AGENCY
PARSONS BRINCKERHOFF
2545 FARMERS DRIVE
SUITE 350
COLUMBUS, OHIO 43235

DESIGNED	DRAWN	REVIEWED	DATE
SJG	LEL	EBS	09/09/11
CHECKED	REVISED	STRUCTURE FILE NUMBER	

WALLS 10 AND 11 SITE PLAN

ALL-75-5.53
PID No. 76691

1/7

754
1224

\\DOTFS101\N_Drive\Pdt\76691\Final Cadd Files\Projects\ALL\76691\structures\WALL_010 & 011\sheets\76691_010wp001.dgn 22-OCT-2012 2:06PM jclark1

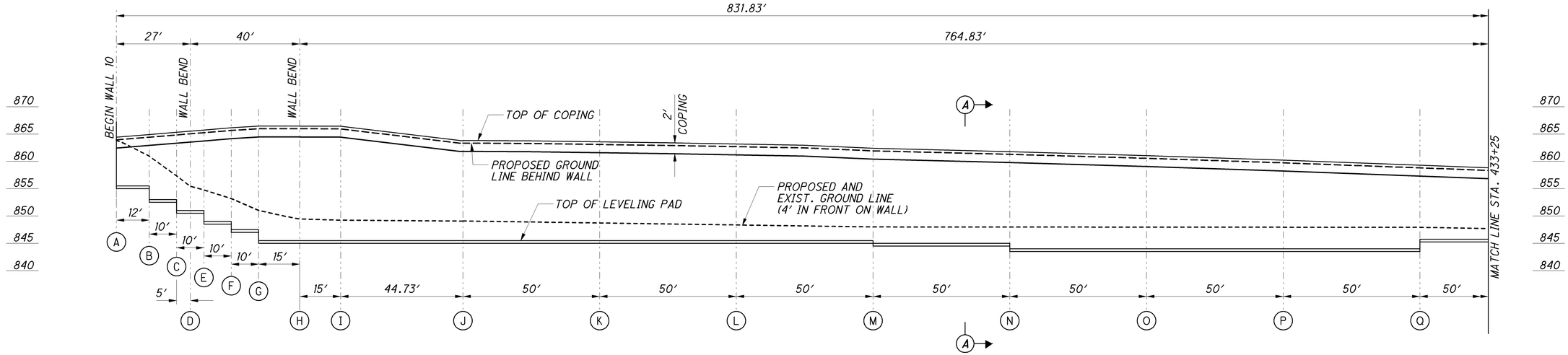

ELEVATION - WALL 10

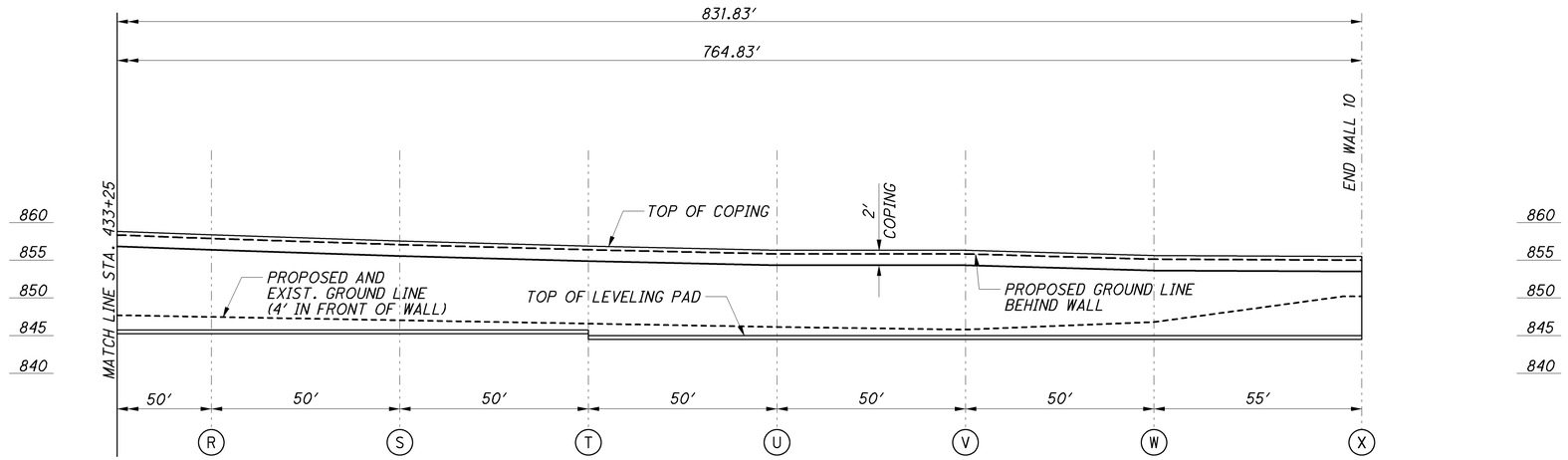

ELEVATION - WALL 10

NOTES:

1. FOR WALL DATA, SEE SHEET 4/7 .
2. FOR DRAINAGE PLAN SEE SHEET 7/7.
3. FOR SECTION A-A SEE SHEET 6/7 .

J:\Projects\ALL\76691\structures\WALL_010 & 011\sheets\76691_010WE001.dgn 12-SEP-2012 10:04AM reddenj

DESIGN AGENCY
PARSONS BRINCKERHOFF
2945 FARMERS DRIVE
SUITE 350
COLUMBUS, OHIO 43235

DESIGNED	DRAWN	REVIEWED	DATE
SJG	LEL	EBS	09/09/11
CHECKED	REVISED	STRUCTURE FILE NUMBER	

WALL 10 ELEVATION

ALL-75-5.53
PID No. 76691

2 / 7

755
1224

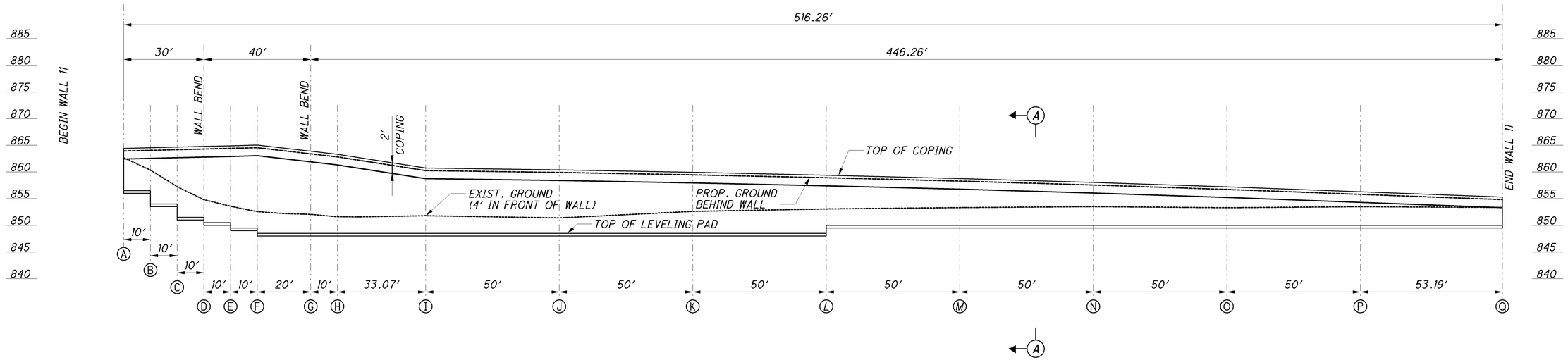

ELEVATION - WALL 11

NOTES:

1. FOR WALL DATA, SEE SHEET 4/7 .
2. FOR DRAINAGE PLAN SEE SHEET 7/7 .
3. FOR SECTION A-A SEE SHEET 6/7 .

DESIGN AGENCY
PARSONS BRINCKERHOFF
2545 FARMERS DRIVE
SUITE 350
COLUMBUS, OHIO 43235

DESIGNED	DRAWN	REVIEWED	DATE
SJG	LEL	EBS	09/09/11
CHECKED	REVISED	STRUCTURE FILE NUMBER	

WALL 11 ELEVATION

ALL-75-5.53
PID No. 76691

756
1224

J:\Projects\ALL\76691\structures\WALL_010 & 011\sheets\76691_011WE001.dgn 12-SEP-2012 10:04 AM reddenj

WALL 10

LOCATION	STATION (I-75)	OFFSET LT. (FT)	ELEVATION BEHIND WALL	TOP OF COPING ELEVATION	MINIMUM PROPOSED EL. IN FRONT OF WALL	TOP OF LEVELING PAD	ESTIMATED TOP OF ROCK	ESTIMATED STRAP LENGTH (FT)	WALL HEIGHT (FT)
A	428+65.28	59.16	863.93	864.43	863.93	855.50	844.6	8.0	8.9
B	428+64.33	71.12	864.42	864.92	860.98	855.50	844.6	8.0	9.4
						853.00	844.6	8.3	11.9
C	428+63.53	81.09	864.83	865.33	857.38	853.00	844.6	8.6	12.3
						851.00	844.6	10.0	14.3
D	428+63.13	86.07	865.04	865.54	855.48	851.00	844.6	10.2	14.5
E	428+63.13	89.74	865.24	865.74	854.80	851.00	844.6	10.3	14.7
						849.00	844.6	11.7	16.7
F*	428+66.52	97.09	865.66	866.16	853.22	849.00	844.6	12.0	17.2
						847.50	844.6	13.1	18.7
G*	428+73.31	104.44	866.00	866.50	851.07	847.50	844.6	13.3	19.0
						845.50	844.6	14.7	21.0
H*	428+80.09	115.43	865.97	866.47	849.48	845.50	844.6	14.7	21.0
I*	428+90.27	115.46	865.94	866.44	849.26	845.50	844.6	14.7	20.9
J*	429+50.00	115.46	863.26	863.76	849.09	845.50	844.9	12.8	18.3
K*	430+00.00	115.46	862.91	863.41	848.68	845.50	845.1	12.5	17.9
L*	430+50.00	115.46	862.46	862.96	848.71	845.50	845.3	12.2	17.5
M*	431+00.00	115.46	861.92	862.42	848.50	845.50	844.8	11.8	16.9
						845.20	844.8	12.1	17.2
N*	431+50.00	115.46	861.29	861.79	848.20	845.20	843.8	11.6	16.6
						844.20	843.8	12.3	17.6
O*	432+00.00	115.46	860.56	861.06	847.42	844.20	842.7	11.8	16.9
P*	432+50.00	115.46	859.73	860.23	847.27	844.20	842.7	11.2	16.0
Q*	433+00.00	115.46	858.81	859.31	848.75	844.20	844.2	10.6	15.1
						845.75	844.2	9.5	13.6
R*	433+50.00	115.46	857.88	858.38	848.75	845.75	845.7	8.8	12.6
S*	434+00.00	115.46	857.07	857.57	848.75	845.75	845.4	8.3	11.8
T*	434+50.00	115.46	856.39	856.89	848.75	845.75	845.1	8.0	11.1
						845.00	845.1	8.3	11.9
U*	435+00.00	115.46	855.84	856.34	848.00	845.00	844.8	8.0	11.3
V*	435+50.00	115.46	855.42	855.92	848.00	845.00	844.8	8.0	10.9
W*	436+00.00	115.46	855.13	855.63	848.00	845.00	844.8	8.0	10.6
X*	436+55.10	115.46	854.97	855.47	850.96	845.00	844.8	8.0	10.5

LOCATION	STATION (I-75)	OFFSET LT. (FT)	ELEVATION BEHIND WALL	TOP OF COPING ELEVATION	MINIMUM PROPOSED EL. IN FRONT OF WALL	TOP OF LEVELING PAD	ESTIMATED TOP OF ROCK	ESTIMATED STRAP LENGTH (FT)	WALL HEIGHT (FT)
A	428+75.15	64.42	863.9	864.43	863.93	856.50	846.4	8.0	7.9
B	428+75.95	74.39	864.1	864.55	861.32	856.50	846.4	8.0	8.1
						854.00	846.4	8.0	10.6
C	428+76.74	84.35	864.2	864.68	857.85	854.00	846.4	8.0	10.7
						851.50	846.4	9.4	13.2
D	428+77.54	94.32	864.3	864.80	855.25	851.50	846.4	9.4	13.3
						850.50	846.4	10.2	14.3
E	428+84.89	101.11	864.4	864.92	853.96	850.50	846.4	10.2	14.4
						849.50	846.4	10.9	15.4
F*	428+92.23	107.89	864.5	865.05	853.12	849.50	846.4	11.0	15.5
						848.50	846.4	11.7	16.5
G*	429+06.93	121.46	863.4	863.90	852.31	848.50	846.4	10.9	15.4
H*	429+16.93	121.46	862.8	863.33	851.88	848.50	846.4	10.5	14.8
I*	429+50.00	121.46	860.3	860.76	851.80	848.50	846.3	8.7	12.3
J*	430+00.00	121.46	859.9	860.41	852.21	848.50	846.1	8.5	11.9
K*	430+50.00	121.46	859.5	859.96	853.39	848.50	845.9	8.1	11.5
L*	431+00.00	121.46	858.9	859.42	853.66	848.50	845.7	8.0	10.9
						850.00	845.7	8.0	9.4
M	431+50.00	121.46	858.3	858.79	853.77	850.00	845.7	8.0	8.8
N	432+00.00	121.46	857.6	858.06	853.91	850.00	845.6	8.0	8.1
O	432+50.00	121.46	856.7	857.23	853.55	850.00	845.3	8.0	7.2
P	433+00.00	121.46	855.8	856.31	853.74	850.00	845.1	8.0	6.3
Q	433+53.19	121.46	854.8	855.32	853.61	850.00	844.8	8.0	5.3

DESIGN AGENCY
PARSONS BRINCKERHOFF
2945 FARMERS DRIVE
SUITE 350
COLUMBUS, OHIO 43235

DESIGNED SJG | DRAWN BKJ | REVIEWED EBS | DATE 09/09/11

CHECKED | REVISED | STRUCTURE FILE NUMBER

WALL 10 AND 11 DATA

ALL-75-5.53
PID No. 76691

J:\Projects\ALL\76691\structures\WALL_010 & 011\sheets\76691_010WE002.dgn 12-SEP-2012 10:04AM reddenj

ITEM 840-MECHANICALLY STABILIZED EARTH WALL, AS PER PLAN

THIS ITEM 840 SHALL CONTAIN INTEGRALLY COLORED CONCRETE USING CHROMIX ADMIXTURES AS PROVIDED BY L. M. SCOFIELD COMPANY, DOUGLASVILLE, GEORGIA (800) 800-9000 OR AN APPROVED EQUAL. USE FEDERAL COLOR NUMBER 36373.

DESCRIPTION;
CONCRETE FORMLINERS SHALL BE USED ON THE MSE WALL PANELS ACCORDING TO THE DETAILS IN THE PLANS:

THE FORMLINER USED SHALL MEET THE DETAILS SHOWN IN THE PLANS FOR STAGGERED (INTERLOCKING) PATTERNS, INCLUDING DEPTH OF RELIEF AND SIZE OF STONE PATTERN. HORIZONTAL JOINTS IN THE STONE PATTERN SHALL BE ALIGNED AND AT THE SAME ELEVATION. THE FINISHED TEXTURE OF THE ROUGH CUT STONE SHALL BE SIMILAR TO THAT OF RUBBED CONCRETE.

FORMLINERS FOR PATTERN 1 SHALL MATCH THE DIMENSIONAL SPECIFICATIONS OF THE FOLLOWING MANUFACTURER OR APPROVED EQUAL:

PATTERN #1104-R2 (RANDOM CUT STONE)
CUSTOM ROCK
2020 WEST 7TH STREET
ST. PAUL, MN 55116
651-699-1345
WWW.CUSTOM-ROCK.COM

THE FORMLINER MANUFACTURER SHALL SUBMIT EVIDENCE OF AT LEAST TWO SIMILAR ARCHITECTURAL CONCRETE CONSTRUCTION PROJECTS WITHIN THE PAST FIVE YEARS FOR A REVIEW AND APPROVAL BY THE ENGINEER. COMPLETE SHOP DRAWINGS DETAILING THE STONE PATTERNS SHALL BE SUBMITTED IN ACCORDANCE WITH 501.04 FOR APPROVAL PRIOR TO PLACING ANY CONCRETE WHERE THE FORMLINERS WILL BE USED. SHOP DRAWINGS SHALL INCLUDE FORMLINER INSTALLATION AND CASTING INSTRUCTIONS, AND INDICATE FORMLINER BACKUP, REVEAL, AND CHAMFER STRIP LOCATIONS. THE CONTRACTOR SHALL COORDINATE WITH THE FORMLINER MANUFACTURER TO ASSURE UNDERSTANDING OF FORMLINER USE, TEST PANEL MOCK-UP REQUIREMENTS, AND FINAL CONSTRUCTION PROCEDURES.

MATERIALS:
THE FORMLINER SHALL BE FABRICATED WITH SHAPES THAT ALLOW REMOVAL OF THE FORMS WITHOUT DAMAGE OR VISUAL IMPAIRMENT OF THE CONCRETE, AND SHALL HAVE 1/8" MINIMUM RADII WITH NO SHARP EDGES. THE FORMLINER SHALL BE CAPABLE OF WITHSTANDING APPLIED CONCRETE POUR PRESSURE WITHOUT LEAKAGE, PHYSICAL DEFECT, OR VISUAL IMPAIRMENT.

CONSTRUCTION REQUIREMENTS:
FORMLINERS SHALL BE CLEANED BEFORE EACH USE. DAMAGED FORMLINERS WHOSE CONTINUED USE OR REPAIR WOULD NEGATIVELY IMPACT THE AESTHETICS OF THE FINISHED CONCRETE SHALL BE REPLACED. FORMLINER JOINTS SHALL BE SEALED TO PREVENT CEMENT PASTE FROM BLEEDING. FORMLINERS SHALL BE INSTALLED IN ACCORDANCE WITH THE APPROVED SHOP DRAWINGS. CHAMFERED CORNERS SHALL FORM SMOOTH, SOLID UNBROKEN CONTINUOUS SURFACES WHICH ARE UNIFORMLY STRAIGHT. AN APPROVED COMPATIBLE FORMLINER RELEASE AGENT SHALL BE APPLIED AT A RATE RECOMMENDED BY THE MANUFACTURER.

BASIS OF PAYMENT:
ITEM 840-MECHANICALLY STABILIZED EARTH WALL, AS PER PLAN, WILL BE PAID FOR AT THE CONTRACT SQ. FT. PRICE.
THE WORK SHALL INCLUDE ALL LABOR AND MATERIALS NECESSARY FOR INTEGRALLY COLORING THE CONCRETE IN THE MSE WALL PANELS AND THE CONCRETE COPING.

SUPPLEMENTAL SPECIFICATIONS:

REFER TO THE FOLLOWING SUPPLEMENTAL SPECIFICATION:
SS 840 DATE: OCTOBER 15, 2011

DESIGN DATA:

CONCRETE CLASS C - COMPRESSIVE STRENGTH 4,000 PSI
REINFORCING STEEL - ASTM A614 OR 1996 GRADE 60, MINIMUM YIELD STRENGTH 60 KSI

ITEM 840 MECHANICALLY STABILIZED EARTH WALL, AS PER PLAN:

CONSTRUCTION AND PAYMENT FOR THE MSE WALL SHALL BE IN ACCORDANCE WITH SUPPLEMENTAL SPECIFICATION 840, EXCEPT AS MODIFIED BELOW.

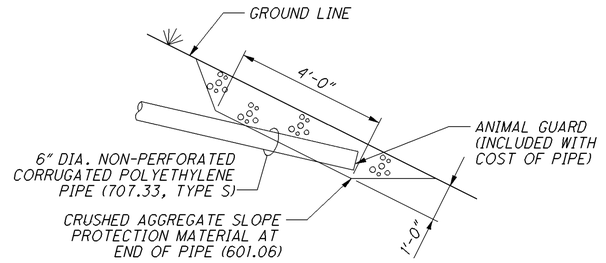

TERMINATION OF 6" NON-PERFORATED CORRUGATED PLASTIC PIPE (NPCPP)

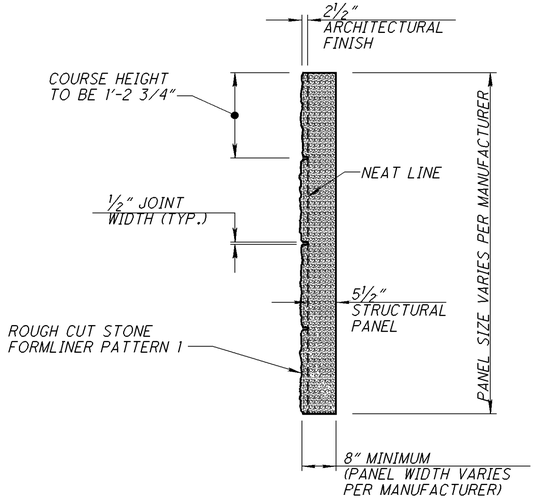

MSE PANEL SECTION

\\D01FS101\NL_Drive\Pd\76691\Final Cadd Files\Projects\ALL\76691\structures\WALL_010 & 011\sheets\76691_010wy002.dgn 21-DEC-2012 8:10AM jclark1

DESIGN AGENCY
PARSONS BRINCKERHOFF
2545 FARMERS DRIVE
SUITE 350
COLUMBUS, OHIO 43235

DESIGNED	DRAWN	REVIEWED	DATE
SJG	LEL	EBS	09/09/11
CHECKED	REVISED	STRUCTURE FILE NUMBER	

WALL 10 & 11 GENERAL NOTES

ALL-75-5.53
PID No. 76691

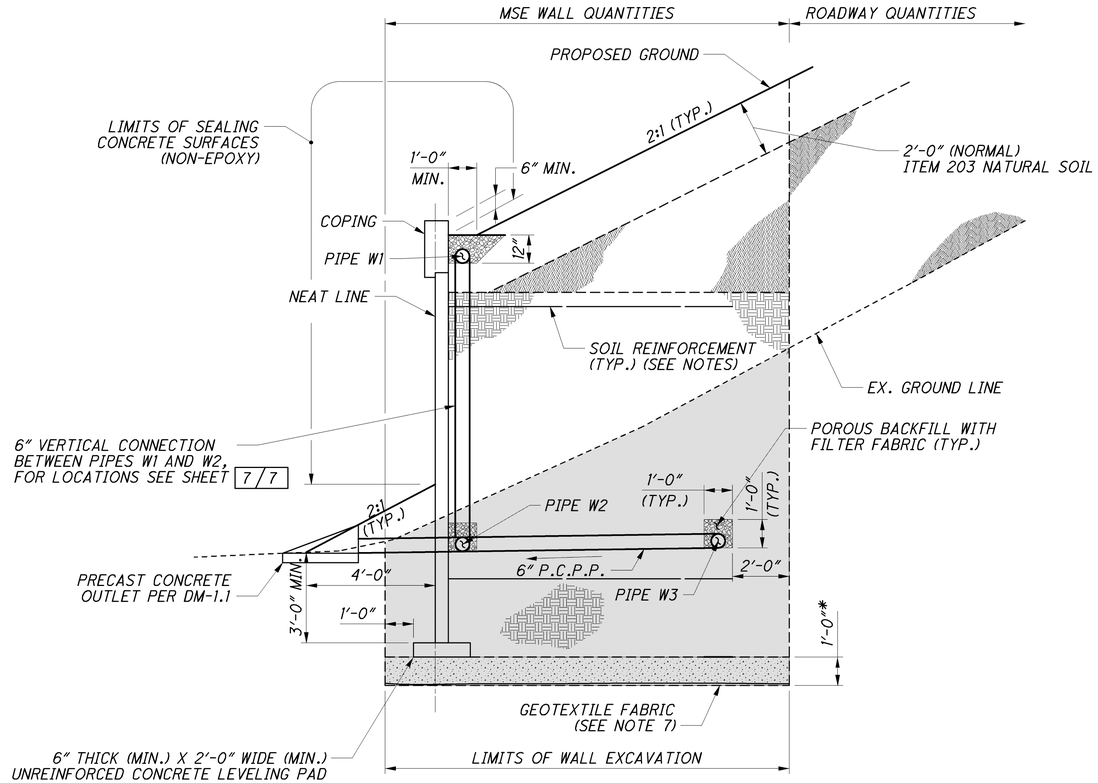

SECTION A-A

(AESTHETICS NOT SHOWN FOR CLARITY)

* VARY HEIGHT TO CREATE LEVEL SURFACE (SEE NOTE 6)

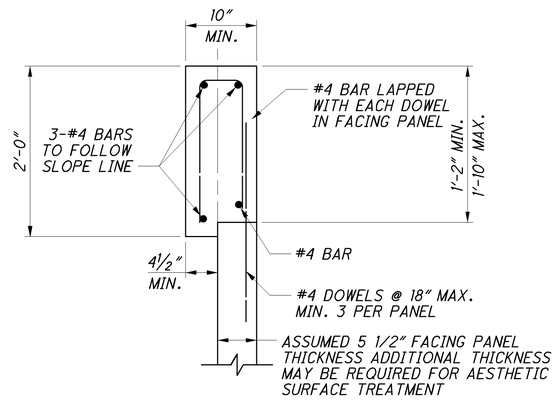

MSE WALL COPING

ALL REINFORCING TO BE EPOXY COATED

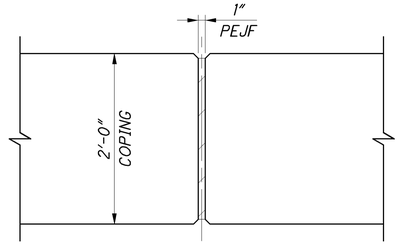

COPING EXPANSION JOINT

WALL 10 & 11 SECTION NOTES:

1. THE LINE WHICH DEFINES THE LIMIT OF THE SELECT GRANULAR BACKFILL IS NOT AN ALLOWABLE SLOPE FOR EXCAVATION. CUT THE SIDES OF ALL EXCAVATIONS TO PREVENT CAVING, OR PROTECT THE EXCAVATION FROM CAVING.
2. DESIGN THE INTERNAL STABILITY OF A MECHANICALLY STABILIZED EARTH (MSE) WALL IN ACCORDANCE WITH SUPPLEMENTAL SPECIFICATION 840. FOR WALLS 10 & 11, THE ALLOWABLE BEARING PRESSURE AT THE BASE OF THE REINFORCED SOIL MASS IS 9.0 K/FT. CONTACT THE ENGINEER IF THE ACTUAL BEARING PRESSURE WILL EXCEED THE ALLOWABLE BEARING PRESSURE.
3. SOIL REINFORCEMENT LENGTH TO BE DETERMINED BY WALL SUPPLIER. THIS DESIGN ASSUMES THE SOIL REINFORCEMENT LENGTH IS EQUAL TO 70% OF WALL HEIGHT FOR WALL 10 AND 71% OF WALL HEIGHT FOR WALL 11. FOR ESTIMATED SOIL REINFORCEMENT LENGTHS SEE SHEET 4/7 .
4. THICKNESS OF MSE WALL PANELS IS ASSUMED. ACTUAL THICKNESS DEPENDS ON THE APPROVED WALL SYSTEM.
5. STATIONS AND OFFSETS PROVIDED FOR THE MSE WALLS ARE MEASURED TO THE NEAT LINE. FOR WALL STATIONS AND OFFSETS SEE SHEET 4/7 .
6. REMOVE SOIL WITHIN LIMITS OF WALL EXCAVATION TO TOP OF ROCK AND REPLACE WITH ITEM 203 - GRANULAR EMBANKMENT, TYPE C, FROM LOCATION "G" TO LOCATION "X" ON WALL 10 AND FROM LOCATION "F" TO LOCATION "L" ON WALL 11. THE INTENT IS TO PLACE THE LEVELING PAD ALONG THE TOP OF ROCK. ITEM 203 OR A THICKER LEVELING PAD MAY BE NECESSARY TO PROVIDE A LEVEL SURFACE. FOR WALL LOCATIONS AND ESTIMATED ROCK ELEVATIONS SEE SHEET 4/7 .
7. GEOTEXTILE FABRIC IS NOT TO BE USED ON ROCK SURFACES OR WHERE ITEM 203, GRANULAR EMBANKMENT, TYPE C, IS PLACED TO ROCK SURFACE.
8. TO SATISFY SLIDING STABILITY CRITERIA, EITHER STRIP TYPE REINFORCEMENT, OR SHEET TYPE REINFORCEMENT WITH A MINIMUM SOIL INTERFACE FRICTION ANGLE OF 29 DEGREES IS REQUIRED.

LEGEND:

- ITEM 840 SELECT GRANULAR BACKFILL (SGB)
- ITEM 840 WALL EXCAVATION
- ITEM 203 EMBANKMENT TO BE INCLUDED WITH ROADWAY QUANTITIES
- ITEM 203 GRANULAR MATERIAL, TYPE C
- ITEM 203 EMBANKMENT TO BE INCLUDED WITH WALL QUANTITIES

P.C.P.P - PERFORATED CORRUGATED PLASTIC PIPE WITH FILTER FABRIC, CMS 707.33 (TYP.)

N.P.C.P.P. - NON-PERFORATED CORRUGATED PLASTIC PIPE WITH FILTER FABRIC, CMS 707.33 (TYP.)

DESIGN AGENCY
PARSONS BRINCKERHOFF
2545 FARMERS DRIVE
SUITE 350
COLUMBUS, OHIO 43235

DESIGNED	DRAWN	REVIEWED	DATE
SJG	LEL	EBS	09/09/11
CHECKED	REVISED	STRUCTURE FILE NUMBER	

WALL 10 & 11 DETAILS

ALL-75-5.53
PID No. 76691

6 / 7

759
1224

J:\Projects\ALL\76691\structures\WALL_010 & 011\sheets\76691_010wy001.dgn 12-SEP-2012 10:05AM reddenj

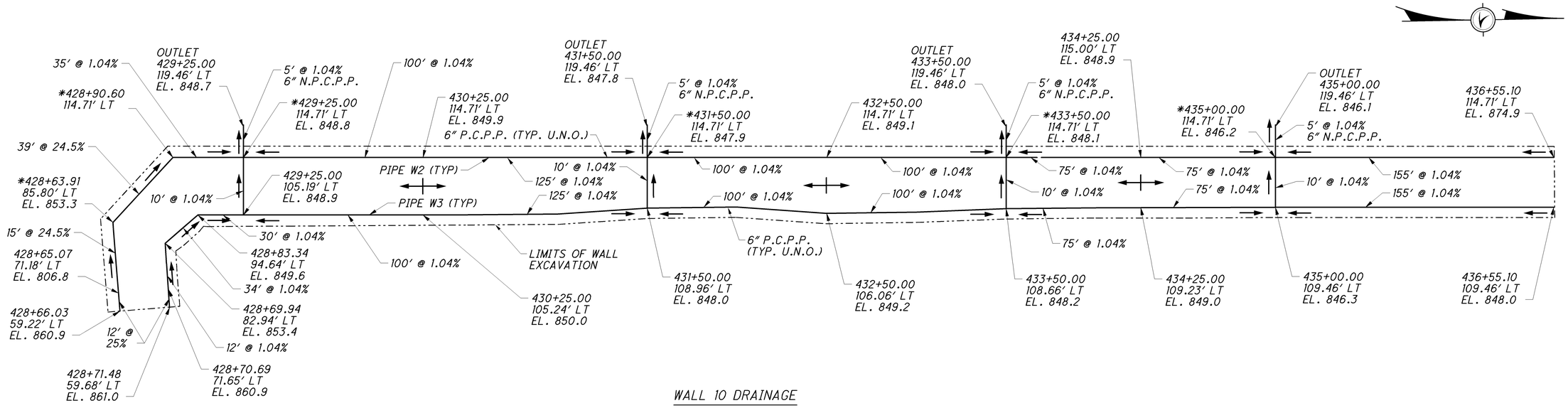

WALL 10 DRAINAGE



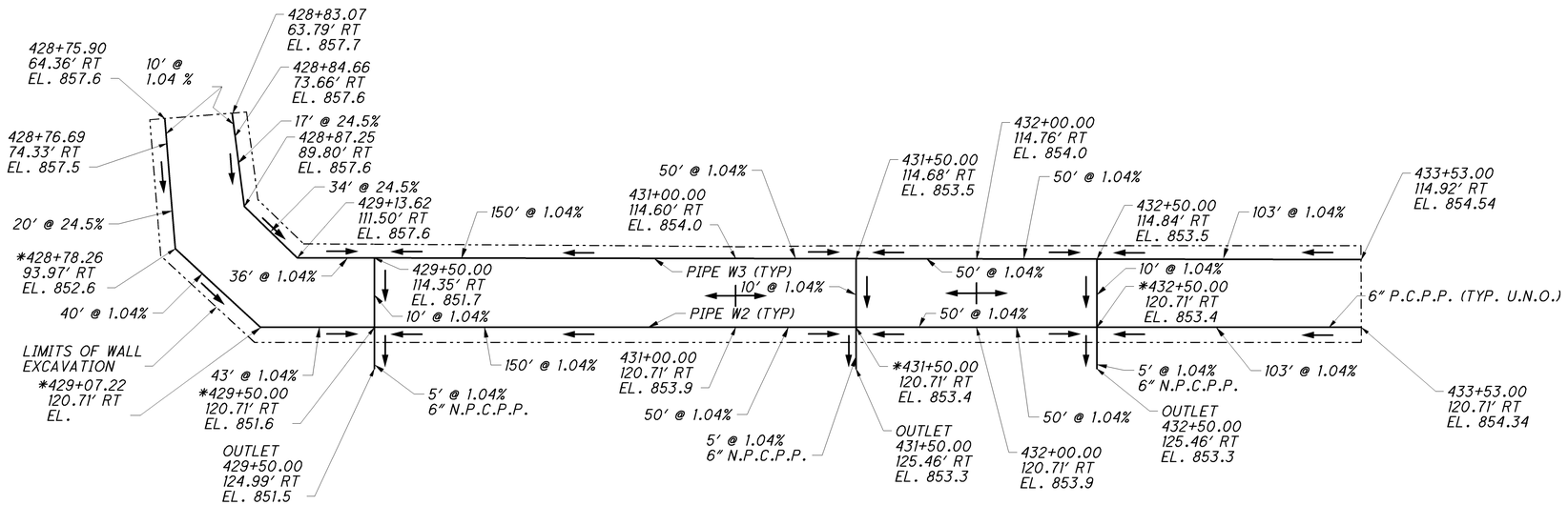

WALL 11 DRAINAGE

NOTES:
1. PIPE W1 WILL CONNECT TO PIPE W2 WITH VERTICAL CONNECTIONS AT THE LOCATIONS MARKED "*".
2. FOR LOCATIONS OF PIPES W1, W2 & W3 SEE SHEET 6/7
3. PIPE W1 NOT SHOW ON THIS SHEET FOR CLARITY.
4. FOR GENERAL NOTES AND DETAILS SEE SHEET 6/7 .

P.C.P.P. = PERFORATED CORRUGATED PLASTIC PIPE

N.P.C.P.P. = NON-PERFORATED CORRUGATED PLASTIC PIPE

DESIGN AGENCY
PARSONS BRINCKERHOFF
2945 FARMERS DRIVE
SUITE 350
COLUMBUS, OHIO 43235

DESIGNED	DRAWN	REVIEWED	DATE
SJG	LEL	EBS	
CHECKED	REVISED	STRUCTURE FILE NUMBER	

WALLS 10 AND 11 DRAINAGE SCHEMATIC PLAN

ALL-75-5.53
PID No. 76691

7 / 7

760
1224

J:\Projects\ALL\76691\structures\WALL_010 & 011\sheets\76691_010wp002.dgn 12-SEP-2012 10:05AM reddenj

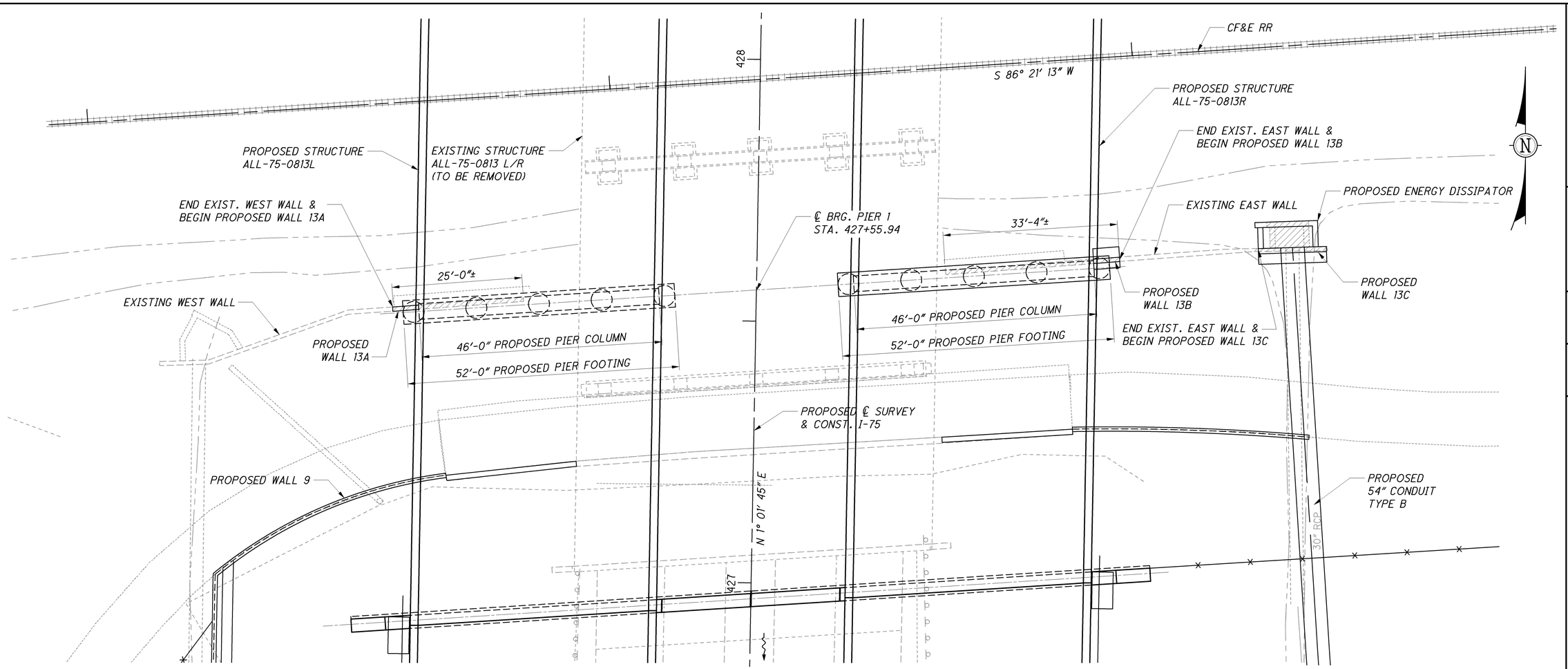

GENERAL PLAN

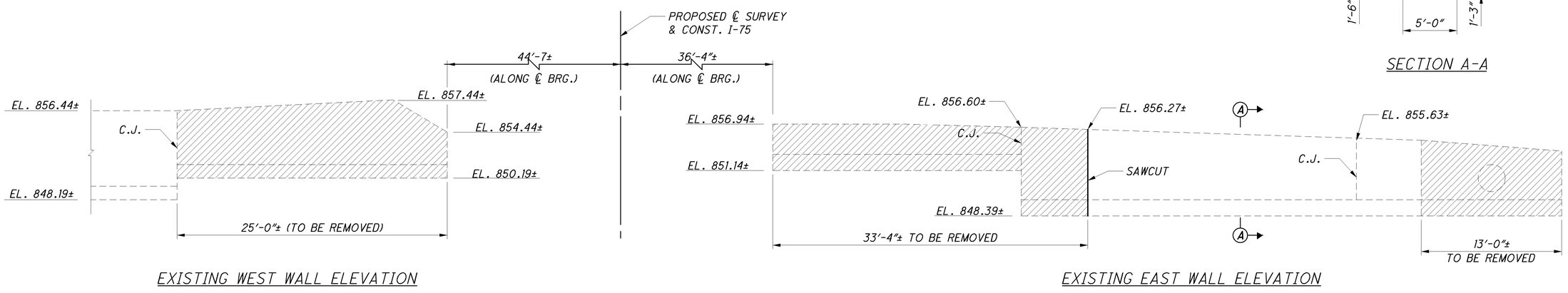

EXISTING WEST WALL ELEVATION

EXISTING EAST WALL ELEVATION

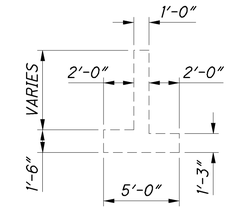

SECTION A-A

WALL 13 SITE PLAN

ALL-75-0.21
PID No. 76691

1 / 6

761
1224

DESIGN AGENCY
PARSONS BRINCKERHOFF
2545 FARMERS DRIVE
SUITE 350
COLUMBUS, OHIO 43235

DESIGNED	DRAWN	REVIEWED	DATE
SAP	BKJ	EBS	09/09/11
CHECKED	REVISED	STRUCTURE FILE NUMBER	
PJL			

I:\Projects\ALL\76691\structures\WALL_0813 Pier Walls\075_0813CWP001.dgn 12-SEP-2012 10:05AM reddenj

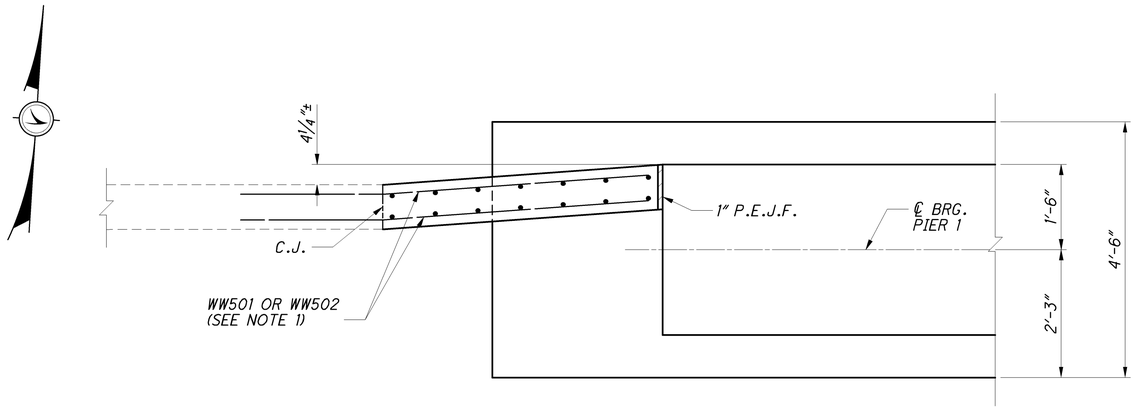

PLAN

03/IMS/PV/		ITEM	EXTENSION	TOTAL	UNIT	WALL 13A ESTIMATED QUANTITIES DESCRIPTION	SEE SHEET NO.
LUMP		202	11200	LUMP	LUMP	PORTIONS OF STRUCTURE REMOVED	
152		509	10000	152	POUND	EPOXY COATED REINFORCING STEEL	
14		510	10000	14	EACH	DOWEL HOLES WITH NONSHRINK, NONMETALLIC GROUT	
1		511	46000	1	CU YD	CLASS C CONCRETE	
3		512	10100	3	SQ YD	SEALING OF CONCRETE SURFACES, (EPOXY-URETHANE)	
3		512	33000	3	SQ YD	TYPE 2 WATERPROOFING	
2		518	21200	2	CU YD	POROUS BACKFILL WITH FILTER FABRIC	

NOTES:
1. DRILL AND GROUT 2'-6" INTO EXISTING CONCRETE FOR BAR PLACEMENT. SPACE 5" CLEAR OF EXISTING REINFORCING STEEL. FIELD BENDING MAY BE REQUIRED. ALL LABOR AND MATERIALS NECESSARY TO PERFORM THIS WORK SHALL BE PAID FOR WITH ITEM 510 FOR PAYMENT.

2. FOR GENERAL NOTES AND DETAILS SEE SHEET 6/6

WALL 13A REINFORCING SCHEDULE

MARK	NUMBER TOTAL	LENGTH	WEIGHT	TYPE	DIMENSIONS A	B	C	INCR.
WW501	6	4'-3"	27	STR				
WW502	8	7'-3"	61	STR				
WW503	6	6'-10"	38	STR				
WW504	8	3'-1"	26	STR				
	GRAND TOTAL		152					

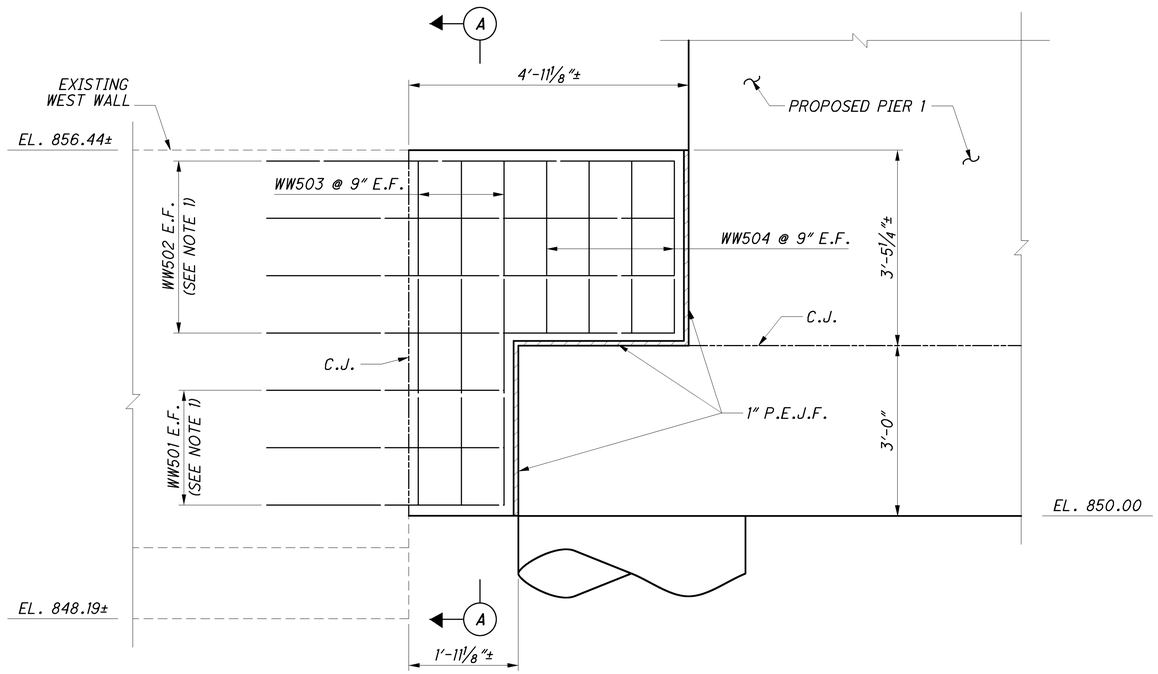

ELEVATION

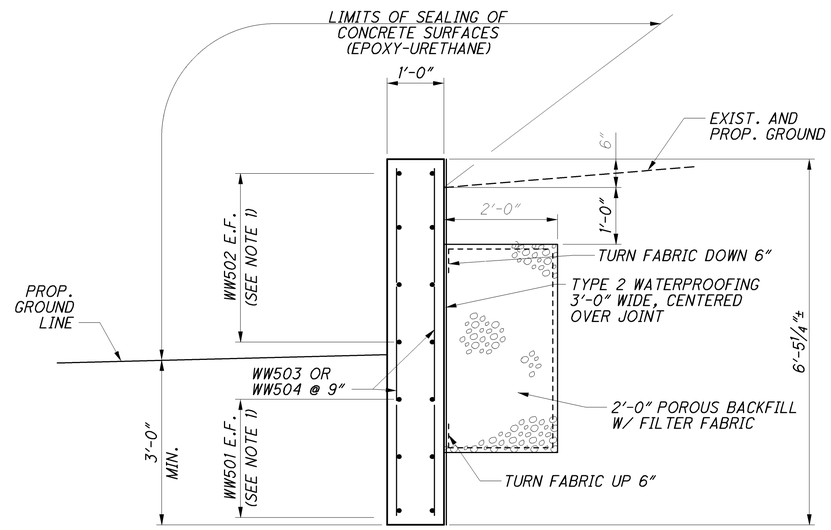

SECTION A-A

DESIGN AGENCY
PARSONS BRINCKERHOFF
2545 FARMERS DRIVE
SUITE 350
COLUMBUS, OHIO 43235

DESIGNED	DRAWN	REVIEWED	DATE
BKJ	BKJ	EBS	09/09/11
CHECKED	REVISED	STRUCTURE FILE NUMBER	
SAP			

WALL 13A WALL DETAILS

ALL-75-0.21
PID No. 76691

2 / 6

762
1224

J:\Projects\ALL\76691\structures\WALL_0813 Pier Walls\075_0813CWD001.dgn 03-OCT-2012 6:12PM phillipst

03/IMS/PV/		ITEM	EXTENSION	TOTAL	UNIT	WALL 13B ESTIMATED QUANTITIES DESCRIPTION	SEE SHEET NO.
LUMP		202	11200	LUMP	LUMP	PORTIONS OF STRUCTURE REMOVED	
279		509	10000	279	POUND	EPOXY COATED REINFORCING STEEL	
28		510	10000	28	EACH	DOWEL HOLES WITH NONSHRINK, NONMETALLIC GROUT	
2		511	46000	2	CU YD	CLASS C CONCRETE	
3		512	10100	3	SQ YD	SEALING OF CONCRETE SURFACES, (EPOXY-URETHANE)	
3		512	33000	3	SQ YD	TYPE 2 WATERPROOFING	
2		518	21200	2	CU YD	POROUS BACKFILL WITH FILTER FABRIC	

WALL 13B REINFORCING SCHEDULE								
MARK	NUMBER TOTAL	LENGTH	WEIGHT	TYPE	DIMENSIONS A	B	C	INCR.
EW501	8	4'-4"	38	STR				
EW502	8	7'-4"	62	STR				
EW503	3	11'-10"	38	3	4'-8"	11"		
EW504	6	8'-2"	52	1	8"	7'-6"		
EW505	8	2'-11"	25	STR				
EW506	14	4'-4"	64	STR				
	GRAND TOTAL		279					

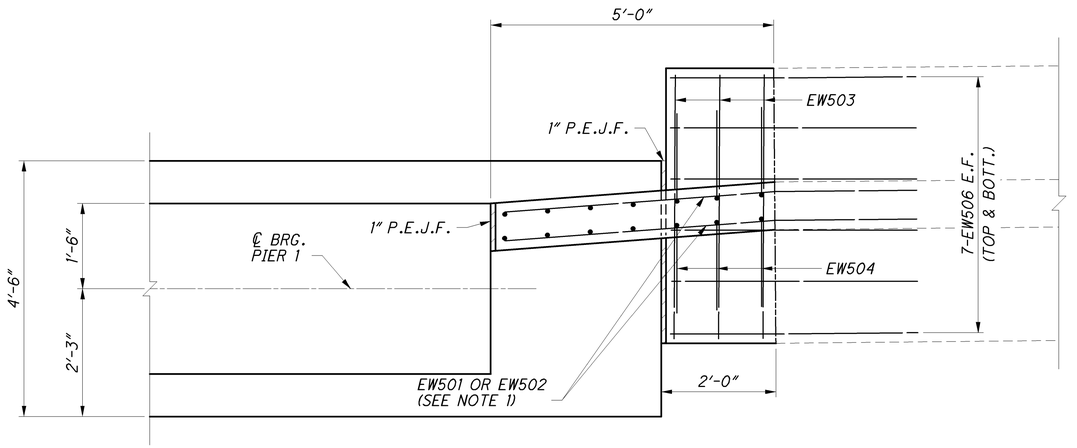

PLAN

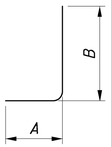

TYPE-1

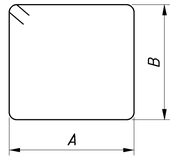

TYPE-3

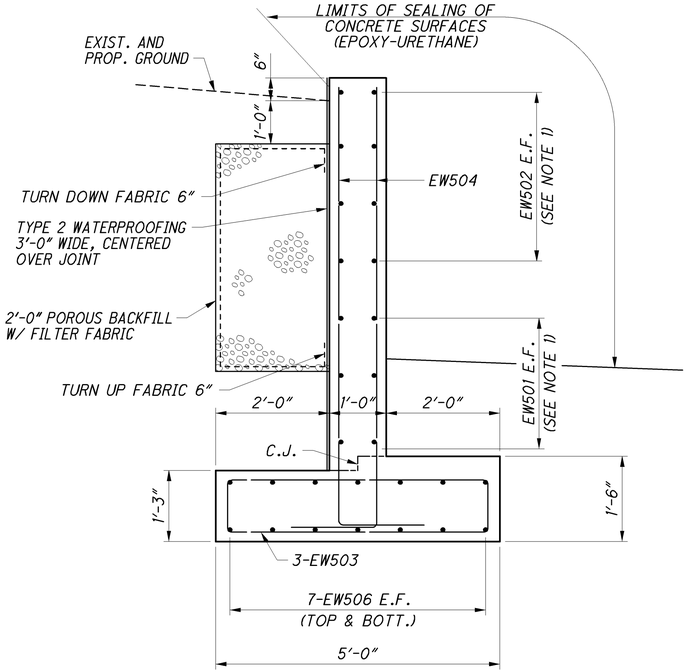

SECTION A-A

NOTES:
1. DRILL AND GROUT 2'-6" INTO EXISTING CONCRETE FOR BAR PLACEMENT. SPACE 5" CLEAR OF EXISTING REINFORCING STEEL. FIELD BENDING MAY BE REQUIRED. ALL LABOR AND MATERIALS NECESSARY TO PERFORM THIS WORK SHALL BE PAID FOR WITH ITEM 510 FOR PAYMENT.

2. FOR GENERAL NOTES AND DETAILS SEE SHEET 6/6

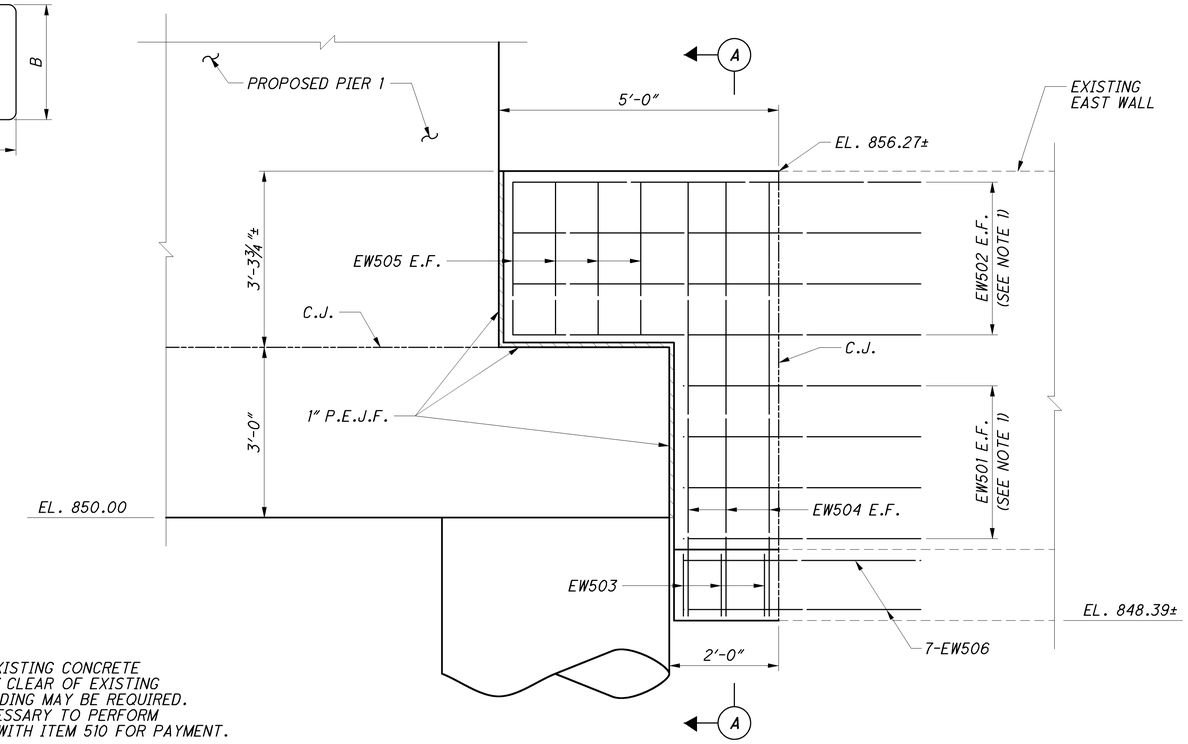

ELEVATION

DESIGN AGENCY
PARSONS BRINCKERHOFF
2945 FARMERS DRIVE
SUITE 350
COLUMBUS, OHIO 43235

DESIGNED	DRAWN	REVIEWED	DATE
BKJ	BKJ	EBS	09/09/11
CHECKED	REVISED	STRUCTURE FILE NUMBER	
SAP			

WALL 13B DETAILS

ALL-75-0.21
PID No. 76691

763
1224

J:\Projects\ALL\76691\structures\WALL_0813 Pier Walls\075_0813CWD002.dgn 03-OCT-2012 6:12PM phillipst

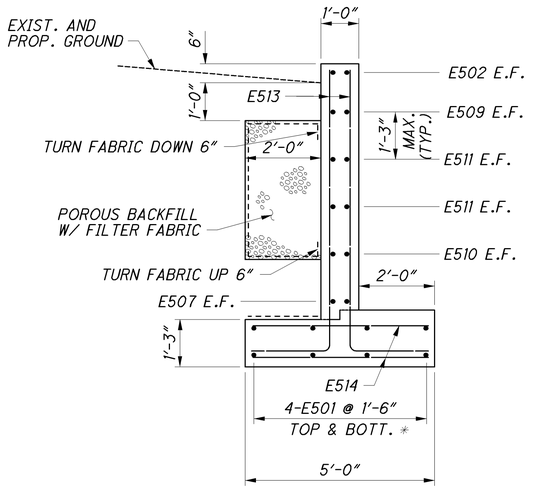

SECTION A-A

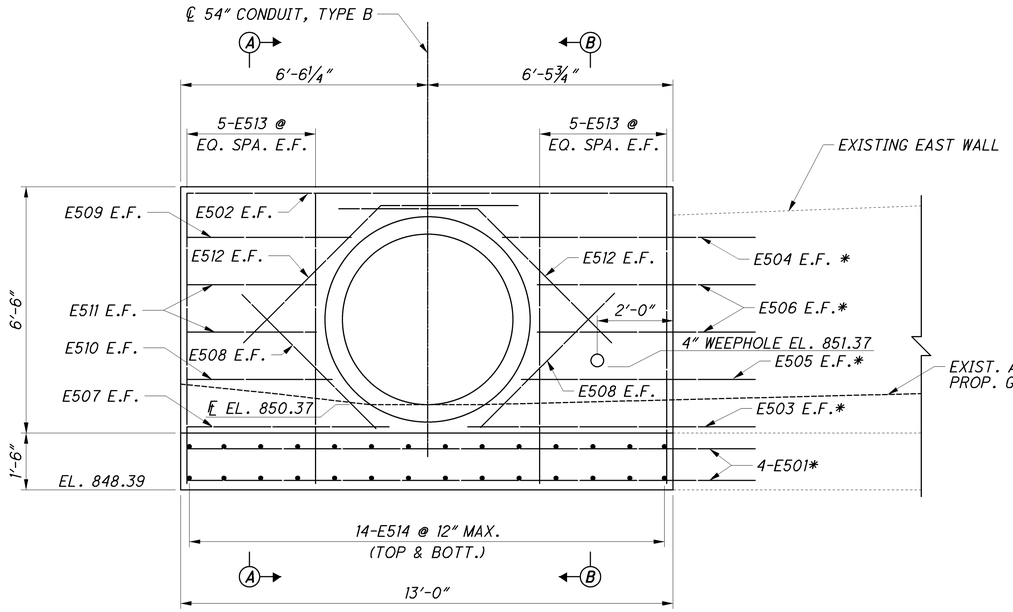

ELEVATION
(LOOKING SOUTH AT PROPOSED PIPE OUTLET)

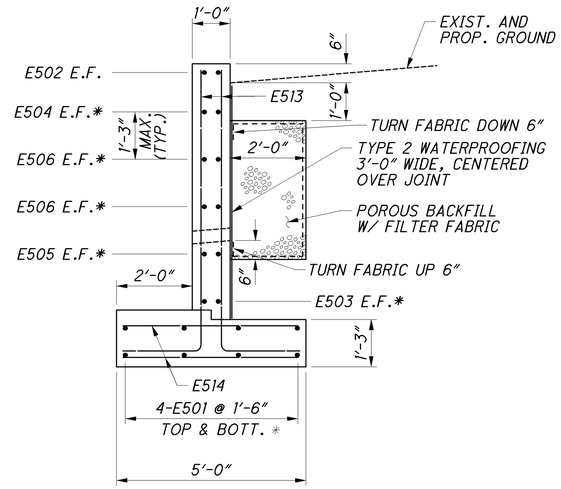

SECTION B-B

*DRILL AND GROUT 2'-6" INTO EXISTING CONCRETE FOR BAR PLACEMENT. ALL LABOR AND MATERIALS NECESSARY TO PERFORM THIS WORK SHALL BE INCLUDED WITH ITEM 510 FOR PAYMENT.

NOTES:
1. FOR QUANTITIES AND REINFORCING SCHEDULE SEE SHEET 6/6
2. FOR GENERAL NOTES AND DETAILS SEE SHEET 6/6

DESIGN AGENCY
PARSONS BRINCKERHOFF
2545 FARMERS DRIVE
SUITE 350
COLUMBUS, OHIO 43235

DESIGNED	DRAWN	REVIEWED	DATE
BKJ	BKJ	EBS	09/09/11
CHECKED	REVISED	STRUCTURE FILE NUMBER	
SAP			

WALL 13C DETAILS - EAST

WALL B - EAST

ALL-75-5.53
PID No. 76691

4/6

764
1224

J:\Projects\ALL\76691\drainage\sheets\76691DM200.dgn 12-SEP-2012 10:05AM reddenj

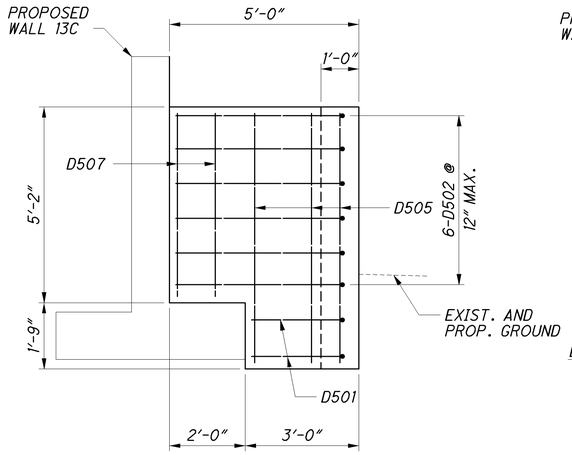

SECTION B-B

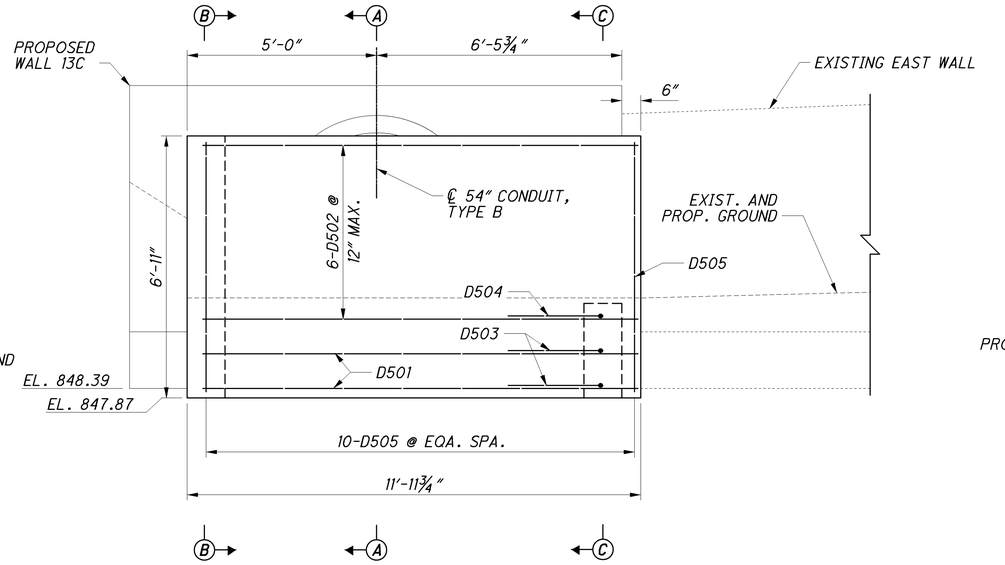

ELEVATION

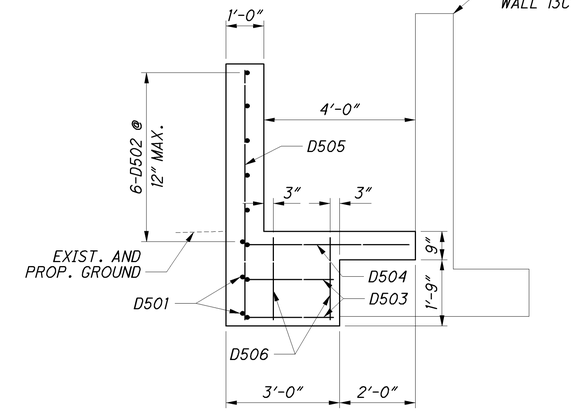

SECTION C-C

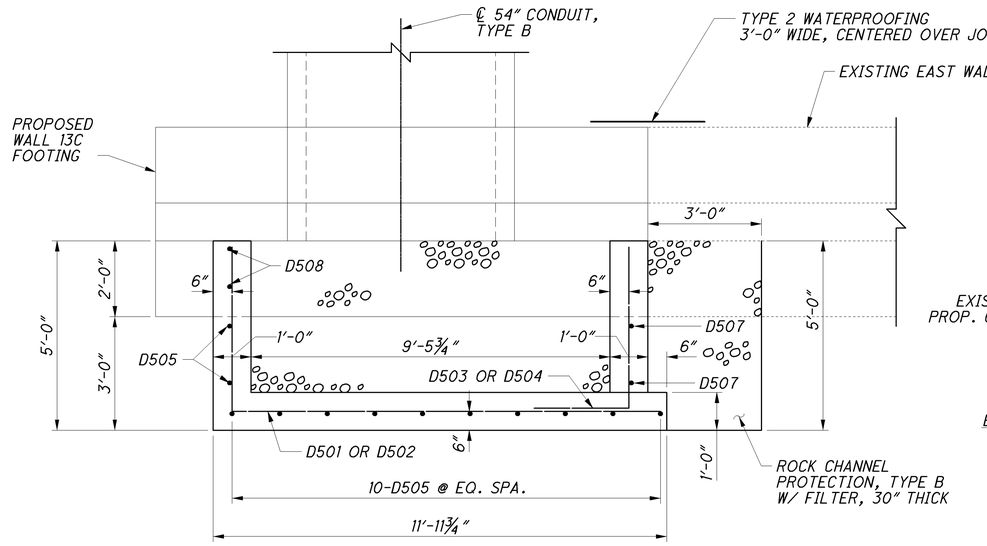

PLAN

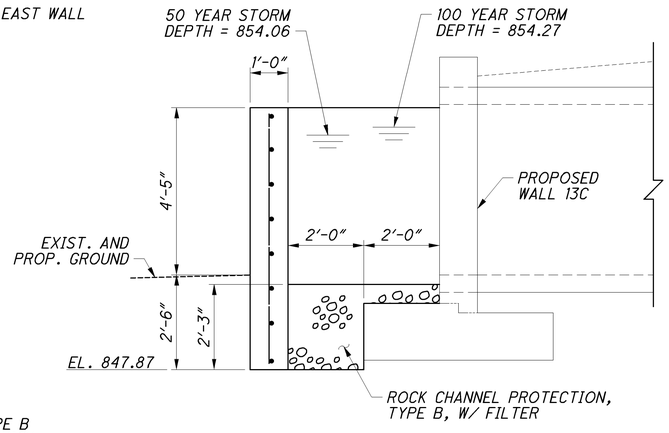

SECTION A-A

NOTES:
1. FOR PROP. CONC. HEADWALL/FOOTING DETAILS SEE SHEET 4/6
2. SEE ODOT STANDARD CONSTRUCTION DRAWING HW-1.1 FOR INLET HEADWALL DETAILS.
3. FOR QUANTITIES AND REINFORCING SCHEDULE SEE SHEET 6/6
4. FOR GENERAL NOTES AND DETAILS SEE SHEET 6/6

J:\Projects\ALL\76691\drainage\sheets\76691DM300.dgn 12-SEP-2012 10:05AM reddenj

DESIGN AGENCY
PARSONS BRINCKERHOFF
2945 FARMERS DRIVE
SUITE 350
COLUMBUS, OHIO 43235

DESIGNED	DRAWN	REVIEWED	DATE
BKJ	BKJ	EBS	09/09/11
CHECKED	REVISED	STRUCTURE FILE NUMBER	
SAP			

ENERGY DISSIPATOR DETAILS

ALL-75-5.53
PID No. 76691

5/6

765
1224

WALL 13 GENERAL NOTES

DESIGN SPECIFICATIONS: THIS STANDARD DRAWING CONFORMS TO "STANDARD SPECIFICATIONS FOR HIGHWAY BRIDGES" ADOPTED BY THE AMERICAN ASSOCIATION OF STATE HIGHWAY AND TRANSPORTATION OFFICIALS, 2010 AND THE ODOT BRIDGE DESIGN MANUAL.

DESIGN DATA: THE FOLLOWING DESIGN DATA IS ASSUMED:

INTERNAL ANGLE OF FRICTION = 30 DEGREES
COEFFICIENT OF FRICTION = 0.30
UNIT WEIGHT OF SOIL = 120 PCF
UNIT WEIGHT OF CONCRETE = 150 PCF
SLOPE OF BACKFILL = 2:1 (TYPE A & B HEADWALLS ONLY)
MAXIMUM FOUNDATION BEARING PRESSURE = 2600 P.S.F.

CONCRETE CLASS C - COMPRESSIVE STRENGTH 4000 PSI

REINFORCING STEEL - ASTM A615, A616, OR A617 GRADE 60 MINIMUM YIELD STRENGTH 60,000 PSI (ALL REINFORCING SHALL BE EPOXY COATED)

POROUS BACKFILL WITH FILTER FABRIC 2'-0" THICK SHALL BE PLACED BEHIND THE WINGWALLS ONLY AND SHALL EXTEND TO 12" BELOW THE EMBANKMENT SURFACE. GEOTEXTILE FABRIC SHALL BE PLACED BETWEEN THE POROUS BACKFILL AND REPLACED EXCAVATION ADJACENT TO THE STRUCTURE. IT SHALL TURN UNDER THE BOTTOM OF THE POROUS BACKFILL AND RETURN 6" ABOVE THE TOP ELEVATION OF THE WEEPHOLE. WEEPHOLES SHALL BE PLACED 6" TO 12" ABOVE THE NORMAL WATER ELEVATION OR GROUND LINE AND SHALL HAVE A MAXIMUM SPACING OF 10'-0". A MINIMUM OF ONE WEEPHOLE SHALL BE PROVIDED PER WINGWALL.

SEALING OF FORESLOPE WALL AND WINGWALLS: ALL EXPOSED FORESLOPE WALL AND WINGWALL CONCRETE SHALL BE SEALED WITH EPOXY-URETHANE SEALER. THE LIMITS SHALL BE AS SHOWN IN THE DIAGRAMS BELOW. PAYMENT FOR THE EPOXY-URETHANE SEALER SHALL BE PER ITEM 512 - SEALING OF CONCRETE SURFACES.

REINFORCING STEEL: THE BAR SIZE NUMBER IS SPECIFIED ON THE PLANS IN THE BAR MARK COLUMN. THE FIRST DIGIT WHERE THREE DIGITS ARE USED, AND THE FIRST TWO DIGITS WHERE FOUR ARE USED, INDICATES THE BAR SIZE NUMBER. FOR EXAMPLE, P601 IS A NO. 6 BAR. BAR DIMENSIONS SHOWN ARE OUT TO OUT UNLESS OTHERWISE INDICATED. R INDICATES INSIDE RADIUS, UNLESS OTHERWISE NOTED. "STD." WRITTEN IN PLACE OF A DIMENSION INDICATES A STANDARD BEND AT THE END OF THE BAR. ALL REINFORCEMENT IS TO BE EPOXY COATED.

EXISTING EAST AND WEST WALL: WALL LOCATIONS SHOWN IN PLAN VIEW ARE BASED ON SURVEY. WALL ELEVATIONS SHOWN IN ELEVATION VIEW ARE BASED ON THE EXISTING PLANS.

03/IMS/PV/		ITEM	EXTENSION	TOTAL	UNIT	WALL 13C AND ENERGY DISSIPATOR ESTIMATED QUANTITIES DESCRIPTION	WALL 13C	ENERGY DISSIPATOR	SEE SHEET NO.
LUMP		202	11200	LUMP	LUMP	PORTIONS OF STRUCTURE REMOVED	1	1	
880		509	10000	880	POUND	EPOXY COATED REINFORCING STEEL	647	233	
20		510	10000	20	EACH	DOWEL HOLES WITH NONSHRINK, NONMETALLIC GROUT	18		
11		511	46000	11	CU YD	CLASS C CONCRETE	6	5	
29		512	10100	29	SQ YD	SEALING OF CONCRETE SURFACES, (EPOXY-URETHANE)	10	19	
3		512	33000	3	SQ YD	TYPE 2 WATERPROOFING	3		
3		518	21200	3	CU YD	POROUS BACKFILL WITH FILTER FABRIC	3		
4		601	32104	4	CU YD	ROCK CHANNEL PROTECTION , TYPE B WITH FABRIC FILTER		4	

WALL 13C AND ENERGY DISSIPATOR REINFORCING SCHEDULE

MARK	NUMBER TOTAL	LENGTH	WEIGHT	TYPE	DIMENSIONS A	B	C
WALL 13C							
E501	8	15'-0"	126	STR.			
E502	2	12'-8"	27	STR.			
E503	2	7'-7"	16	STR.			
E504	2	6'-8"	14	STR.			
E505	2	6'-2"	13	STR.			
E506	4	5'-9"	24	STR.			
E507	2	5'-4"	12	STR.			
E508	2	5'-0"	11	STR.			
E509	2	4'-4"	10	STR.			
E510	2	3'-10"	8	STR.			
E511	4	3'-5"	15	STR.			
E512	4	8'-9"	37	19	3'-8"	3'-7"	3'-7"
E513	20	9'-5"	197	1	2'-2"	7'-4"	
E514	28	4'-8"	137	STR.			
TOTAL			647				
ENERGY DISSIPATOR							
D501	2	13'-7"	29	1			
D502	6	15'-7"	98	1			
D503	2	4'-9"	10	1			
D504	1	6'-9"	7	1			
D505	12	6'-7"	83	STR.			
D506	2	2'-2"	5	STR.			
D507	2	4'-10"	11	STR.			
TOTAL			233				
GRAND TOTAL 880 LBS.							

ABBREVIATIONS:
BOTT. = BOTTOM
C.J. = CONSTRUCTION JOINT
CLR. = CLEAR
CONC. = CONCRETE
CONST. = CONSTRUCTION
E.F. = EACH FACE
EL. = ELEVATION
EXIST. = EXISTING
MIN. = MINIMUM
P.E.J.F. = PREFORMED EXPANSION JOINT FILLER
STA. = STATION
TYP. = TYPICAL

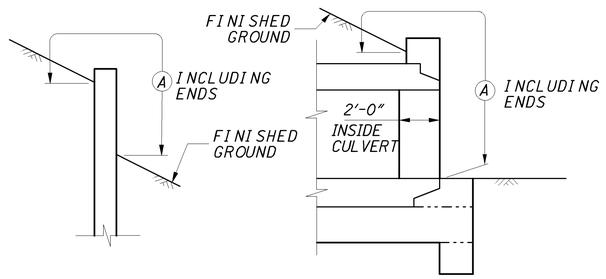

LIMITS OF ITEM 512-SEALING CONCRETE SURFACES
(A) - SEAL ENTIRE CONCRETE SURFACE AREA

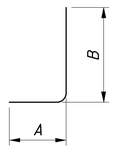

TYPE-1

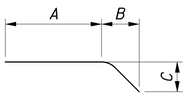

TYPE-19

DESIGN AGENCY
PARSONS BRINCKERHOFF
2545 FARMERS DRIVE
SUITE 350
COLUMBUS, OHIO 43235

DESIGNED BKJ
DRAWN BKJ
CHECKED SAP
REVIEWED EBS
DATE 09/09/11
REVISED
STRUCTURE FILE NUMBER

GENERAL NOTES AND DETAILS

ALL-75-0.21
PID No. 76691

6 / 6

766
1224

J:\Projects\ALL\76691\drainage\sheets\76691DM301.dgn 03-OCT-2012 6:12PM phillipst

ITEM 626 BARRIER REFLECTOR

SHEET	LOCATION	STATION FROM	STATION TO	SIDE	LENGTH	626 BARRIER REFLECTOR, TYPE A2	626 BARRIER REFLECTOR, TYPE B2
					FT	EACH	EACH
178	I-75	304+80.50	308+54.56	RT	374	5	
	I-75	304+18.44	308+18.44	RT	400	5	
	I-75	307+85.50	311+85.50	LT	400	5	
	I-75	308+28.13	312+50.00	LT	422	5	
180	I-75	312+50.00	319+15.51	LT	666	8	
	I-75	319+13.78	320+95.20	RT	181	3	
	I-75	320+23.77	322+17.69	LT	194	3	
182	I-75	325+09.49	335+82.35	RT	1073	13	
	I-75	333+45.07	335+01.69	LT	157	3	
	I-75	332+98.12	333+47.21	LT	49		2
184	I-75	339+85.58	350+00.00	LT	1014	12	
	I-75	343+38.83	349+89.04	RT	650	8	
185	I-75	350+00.00	362+50.00	LT	1250	14	
	I-75	354+85.20	356+04.18	RT	119	3	
	I-75	356+02.04	356+51.12	RT	49		2
188	I-75	362+63.74	368+69.99	RT	606	8	
	I-75	363+44.88	368+69.88	LT	525	7	
	I-75	366+07.61	368+69.99	RT	262	4	
	I-75	371+29.45	373+78.99	LT	250	4	
	I-75	371+29.45	375+00.00	LT	371	5	
	I-75	371+29.55	373+17.05	RT	188	3	
192	I-75	375+00.00	375+85.70	LT	86	2	
	I-75	375+17.04	379+17.04	RT	400	5	
	I-75	379+06.78	387+50.00	RT	843	10	
	I-75	378+21.88	384+68.23	LT	646		8
	I-75	384+66.04	386+59.39	LT	193	3	
	I-75	378+82.96	382+82.96	LT	400	5	
196	I-75	387+50.00	392+56.59	RT	507	6	
	I-75	397+60.31	400+00.00	RT	240	4	
197	I-75	411+06.61	412+50.00	RT	143	3	
	I-75	400+00.00	412+50.00	RT	1250	14	
199	I-75	412+50.00	413+13.05	RT	63	2	
	I-75	412+32.03	414+25.94	LT	194	3	
	I-75	417+46.99	425+00.00	RT	753	8	
	I-75	419+30.25	425+00.00	LT	570	6	
	I-75	424+12.26	425+00.00	RT	88	2	
	I-75	412+50.00	413+97.81	RT	148	3	
201	I-75	425+00.00	426+74.64	CL	175	3	
	I-75	425+00.00	426+78.24	RT	178	3	
	I-75	425+00.00	426+67.75	LT	168	3	
	I-75	429+34.25	431+96.66	LT	262	4	
	I-75	429+30.65	437+36.64	LT	806	9	
	I-75	429+41.14	437+36.75	RT	796	9	
	I-75	434+74.34	437+36.75	RT	262	4	
205	I-75	439+24.54	442+93.20	LT	369	5	
	I-75	439+24.54	441+86.94	CL	262	3	
	I-75	439+24.64	439+74.64	RT	50	2	
208	I-75	456+75.65	461+31.90	RT	456	5	
	I-75	455+29.20	461+04.20	LT	575	6	
	I-75	458+59.96	461+22.34	RT	262	4	

CONTINUED AT RIGHT

SHEET	LOCATION	STATION FROM	STATION TO	SIDE	LENGTH	626 BARRIER REFLECTOR, TYPE A2	626 BARRIER REFLECTOR, TYPE B2
					FT	EACH	EACH
211	I-75	462+89.51	467+70.76	LT	481	6	
	I-75	462+99.07	465+61.47	LT	262	4	
	I-75	463+17.21	467+17.21	RT	400	5	
219	I-75	516+00.07	520+37.50	RT	437	5	
369	4TH ST RAMP B	309+76.50	310+21.01	RT	45	3	
371	4TH ST RAMP C	330+47.96	330+97.80	LT	100	3	
372	4TH ST RAMP D	318+53.73	318+05.08	LT	88	3	
432	SR309 RAMP A	360+24.81	364+76.24	LT	450	6	
	SR309 RAMP A	368+92.72	369+55.63	RT	63	3	
434	SR309 RAMP C	370+65.44	373+29.60	RT	268	4	
	SR309 RAMP C	372+83.49	378+22.18	LT	538	7	
437	SR309 RAMP E	371+80.62	379+05.62	RT	725	8	
467	BRYN MAWR	8+93.99	10+62.00	RT	168	3	
532	SR81 RAMP D	454+12.50	460+15.50	LT	603	7	
				SUBTOTAL		321	12
TOTALS CARRIED TO GENERAL SUMMARY						333	

621, RAISED PAVEMENT MARKERS
ITEM 621 RAISED PAVEMENT MARKERS SHALL BE INSTALLED IN ACCORDANCE WITH THE STANDARD CONSTRUCTION DRAWINGS TC-65.10 AND TC-65.11

630, SPECIFIC SERVICE AND TOURIST-ORIENTED DIRECTIONAL SIGNS REMOVAL AND REINSTALLATION
FOR THE REQUIREMENTS OF REMOVING AND REINSTALLING SPECIFIC SERVICE AND TOURIST-ORIENTED DIRECTIONAL SIGNS, SEE ITEM 630 - SPECIFIC SERVICE AND TOURIST-ORIENTED DIRECTIONAL SIGNS REMOVAL AND REINSTALLATION NOTE ON SHEET 54.

630, OVERHEAD SIGN SUPPORT, TYPE TC-12.30 DESIGN 3 OR 4, AS PER PLAN
IN ADDITION TO THE REQUIREMENTS OF CMS 630 AND STANDARD CONSTRUCTION DRAWING TC-12.30, THE FOLLOWING REQUIREMENTS SHALL ALSO APPLY:

ALL NEW POLES, MAST ARMS AND ATTACHMENTS SHALL BE FACTORY PAINTED GLOSSY BLACK, IN ACCORDANCE WITH PLAN INSERT SHEET 202310 INCLUDED IN THESE PLANS AS SHEET 840A.

631, REMOVAL OF SIGN SERVICE AND DISPOSAL
ANY PULLBOXES, CONDUIT OR CIRCUITRY ENCOUNTERED IN THE REMOVAL OF THE EXISTING OVERHEAD SIGN LIGHTING SHALL BE CONSIDERED INCIDENTAL TO ITEM 631 REMOVAL OF SIGN SERVICE AND DISPOSAL. THIS INCLUDES ALL ITEMS TO ENSURE THE SAFE DISCONNECTION OF THE POWER SERVICE TO THE SATISFACTION OF THE ENGINEER.

630, SIGN ATTACHMENT ASSEMBLY, AS PER PLAN
THIS ITEM OF WORK SHALL BE IN ACCORDANCE WITH CMS 630 AND SHALL HAVE A RIGID MOUNT HANGER ASSEMBLY IN ACCORDANCE WITH THE DETAIL "SIGN SUPPORT ASSEMBLY, POLE MOUNTED" ON STANDARD CONSTRUCTION DRAWING TC-41.40.

CALCULATED JRW CHECKED JRL

TRAFFIC CONTROL GENERAL NOTES AND DETAILS

ALL-75-5.53

J:\Projects\ALL\76691\traffic\sheets\76691TN001.dgn 20-DEC-2012 4:29PM wrightj

SHEET NO.	REFERENCE NO.	LOCATION	STATION	SIDE	CODE	SIZE (INCHES)		630 REMOVAL OF GROUND MOUNTED SIGN AND DISPOSAL EACH	630 REMOVAL OF GROUND MOUNTED MAJOR SIGN AND DISPOSAL EACH	630 REMOVAL OF GROUND MOUNTED POST SUPPORT AND DISPOSAL EACH	630 REMOVAL OF GROUND MOUNTED STRUCTURAL BEAM SUPPORT AND DISPOSAL EACH	630 REMOVAL OF STRUCTURE MOUNTED SIGN AND DISPOSAL EACH	630 REMOVAL OF OVERHEAD MOUNTED SIGN AND DISPOSAL EACH	630 REMOVAL OF OVERHEAD SIGN SUPPORT AND DISPOSAL, TYPE TC-12.30 EACH	630 REMOVAL OF OVERHEAD SIGN SUPPORT AND DISPOSAL, TYPE TC-7.65 EACH	630 REMOVAL OF OVERHEAD SIGN SUPPORT AND DISPOSAL, TYPE TC-15.115 EACH	630 REMOVAL OF OVERHEAD SIGN SUPPORT AND DISPOSAL, TYPE TC-17.10 EACH	630 REMOVAL OF OVERHEAD SIGN SUPPORT AND DISPOSAL, TYPE TC-18.24 EACH	631 REMOVAL OF LUMINAIRE AND DISPOSAL EACH	631 REMOVAL OF SIGN WIRING AND DISPOSAL EACH	631 REMOVAL OF SIGN SERVICE AND DISPOSAL EACH
31 / 71	R-1	I-75	293+70	LT.				1		1												
31 / 71	R-2	I-75	293+70	RT.				1		1												
31 / 71	R-3	I-75	298+00	RT.					1		2											
31 / 71	R-4	I-75	301+95	LT.				1		2												
31 / 71	R-5	I-75	303+60	RT.				1		2												
32 / 71	R-6	I-75	307+45	LT.				2		2												
32 / 71	R-7	I-75	310+50	RT.									2		1							
32 / 71	R-8	I-75	310+50	RT.									2							2	1	1
32 / 71	R-9	I-75	315+35	RT.					1		2											
32 / 71	R-10	I-75	316+00	RT.				1		2												
32 / 71	R-11	FOURTH ST RAMP 'B'	317+10	LT.				1		2												
33 / 71	R-12	I-75	319+15	LT.				1		2												
33 / 71	R-13	I-75	324+90	LT.				1		2												
34 / 71	R-14	NOT USED																				
34 / 71	R-15	FOURTH ST RAMP 'D'	318+75	RT.				4		2												
34 / 71	R-16	FOURTH ST RAMP 'C'	330+50	LT.				1		1												
34 / 71	R-17	FOURTH ST RAMP 'C'	329+50	LT.				1		1												
34 / 71	R-18	FOURTH ST RAMP 'D'	323+40	LT.					1		2											
34 / 71	R-19	FOURTH ST RAMP 'D'	325+40	L/R				2		4												
35 / 71	R-20	NOT USED																				
35 / 71	R-21	FOURTH ST RAMP 'B'	310+20	RT.				1		1												
35 / 71	R-22	FOURTH ST RAMP 'B'	311+20	RT.				1		1												
35 / 71	R-23	FOURTH ST RAMP 'A'	321+30	RT.				2		2												
35 / 71	R-24	FOURTH ST RAMP 'A'	317+15	RT.					1		2											
35 / 71	R-25	FOURTH ST RAMP 'A'	314+80	LT.				1		2												
35 / 71	R-26	FOURTH ST RAMP 'A'	314+80	LT.				1		2												
35 / 71	R-27	FOURTH ST RAMP 'A'	316+10	LT.				1		2												
36 / 71	R-28	I-75	330+80	LT.				1		2												
36 / 71	R-29	I-75	332+00	LT.									2	1						2	1	1
36 / 71	R-30	I-75	339+05	LT.					1		2											
36 / 71	R-31	I-75	330+50	RT.					1		2											
36 / 71	R-32	I-75	333+10	RT.					1		2											
36 / 71	R-33	I-75	336+50	RT.					1		2											
36 / 71	R-34	I-75	340+45	RT,					1		2											
37 / 71	R-35	I-75	343+80	LT.					1		2											
37 / 71	R-36	I-75	347+70	LT.				1		1												
37 / 71	R-37	I-75	342+60	RT.					1		2											
37 / 71	R-38	I-75	347+70	RT.				1		1												
37 / 71	R-39	I-75	353+00	RT.									2	1								
TOTALS CARRIED TO SIGN REMOVAL SUB-SUMMARY SHEET 6								28	11	38	22	0	8	2	1	0	0	0	4	2	2	

CALCULATED JRW CHECKED JRL

TRAFFIC CONTROL SIGN REMOVAL SUB-SUMMARY SHEET 1

ALL-75-5.53

2 / 71

768 / 1224

J:\Projects\ALL\7669\traffic\sheets\76691TS001.dgn 10-SEP-2012 1:05PM wrightj

SHEET NO.	REFERENCE NO.	LOCATION	STATION	SIDE	CODE	SIZE (INCHES)		630 REMOVAL OF GROUND MOUNTED SIGN AND DISPOSAL EACH	630 REMOVAL OF GROUND MOUNTED MAJOR SIGN AND DISPOSAL EACH	630 REMOVAL OF GROUND MOUNTED POST SUPPORT AND DISPOSAL EACH	630 REMOVAL OF GROUND MOUNTED STRUCTURAL BEAM SUPPORT AND DISPOSAL EACH	630 REMOVAL OF STRUCTURE MOUNTED SIGN AND DISPOSAL EACH	630 REMOVAL OF OVERHEAD MOUNTED SIGN AND DISPOSAL EACH	630 REMOVAL OF OVERHEAD SIGN SUPPORT AND DISPOSAL, TYPE TC-12.30 EACH	630 REMOVAL OF OVERHEAD SIGN SUPPORT AND DISPOSAL, TYPE TC-7.65 EACH	630 REMOVAL OF OVERHEAD SIGN SUPPORT AND DISPOSAL, TYPE TC-15.115 EACH	630 REMOVAL OF OVERHEAD SIGN SUPPORT AND DISPOSAL, TYPE TC-17.10 EACH	630 REMOVAL OF OVERHEAD SIGN SUPPORT AND DISPOSAL, TYPE TC-18.24 EACH	631 REMOVAL OF LUMINAIRE AND DISPOSAL EACH	631 REMOVAL OF SIGN WIRING AND DISPOSAL EACH	631 REMOVAL OF SIGN SERVICE AND DISPOSAL EACH
38 / 71	R-40	I-75	365+00	LT.									2			1				2	1	1
38 / 71	R-41	I-75	365+00	LT.									2							2	1	1
38 / 71	R-42	I-75	361+05	LT.				1		2												
38 / 71	R-43	EX. SR 309 SB ON RAMP						1		1												
38 / 71	R-44	EX. SR 309 SB ON RAMP						1		1												
38 / 71	R-45	EX. SR 309 SB ON RAMP						1		1												
38 / 71	R-46	EX. SR 309 SB ON RAMP						1		1												
38 / 71	R-47	EX. SR 309 SB ON RAMP						2		1												
38 / 71	R-48	EX. SR 309 SB ON RAMP							1		2											
38 / 71	R-49	EX. SR 309 SB ON RAMP						1		2												
38 / 71	R-50	I-75	365+40	LT.				1		2												
38 / 71	R-51	I-75	362+00	RT.				1		2												
38 / 71	R-52	EX. SR 309 NB OFF RAMP						1		2												
38 / 71	R-53	EX. SR 309 NB OFF RAMP						2		2												
39 / 71	R-54	S.R. 309	889+00	LT.									3	1						2	1	1
39 / 71	R-55	EX. SR 309						1		1												
39 / 71	R-56	S.R. 309	892+20	LT.				6		2												
39 / 71	R-57	S.R. 309 RAMP 'C'	370+50	LT.				4		2												
39 / 71	R-58	S.R. 309	890+00	RT.				1		1												
39 / 71	R-59	S.R. 309	888+45	RT.				1		1												
39 / 71	R-60	S.R. 309	889+50	RT.					1		2											
39 / 71	R-61	S.R. 309	891+50	RT.									2	1						2	1	1
39 / 71	R-62	EX. SR 309 SB ON RAMP						1		1												
39 / 71	R-63	EX. SR 309 SB ON RAMP						1		1												
39 / 71	R-64	EX. SR 309 SB ON RAMP						4		2												
39 / 71	R-65	EX. SR 309 SB ON RAMP						6	2		2											
39 / 71	R-66	S.R. 309	893+80	RT.				1		1												
39 / 71	R-67	S.R. 309	893+00	RT.				4		2												
40 / 71	R-68	S.R. 309 RAMP 'C'	370+50	RT.				4		2												
40 / 71	R-69	S.R. 309	896+50	LT.								1						1	1	1	1	
40 / 71	R-70	S.R. 309	896+80	LT.				4		2												
40 / 71	R-71	S.R. 309	898+60	LT.									1	1						1	1	1
40 / 71	R-72	S.R. 309	895+40	RT.					1		2											
40 / 71	R-73	S.R. 309	895+50	RT.								1						1	1	1	1	
41 / 71	R-74	S.R. 309	898+60	LT.				1		1												
41 / 71	R-75	S.R. 309 RAMP 'C'	371+00	RT.				3		1												
41 / 71	R-76	S.R. 309	901+70	LT.				5	2		2											
41 / 71	R-77	S.R. 309	900+00	RT.					1		2											
41 / 71	R-78	EX. SR 309 NB ON RAMP						1		2												
41 / 71	R-79	S.R. 309	900+80	RT.				1		1												
41 / 71	R-80	S.R. 309	901+80	RT.				1		1												
41 / 71	R-81	EX. SR 309 NB OFF RAMP						1		2												
41 / 71	R-82	EX. SR 309 NB OFF RAMP						3		2										3	1	1
41 / 71	R-83	EX. SR 309 NB OFF RAMP											3	1								
41 / 71	R-84	S.R. 309	902+50	RT.				2		1												
41 / 71	R-85	S.R. 309	903+10	RT.									4				1					
TOTALS CARRIED TO SIGN REMOVAL SUB-SUMMARY SHEET 6								69	8	46	12	2	17	4	0	1	1	2	14	8	8	

CALCULATED JRW CHECKED JRL

TRAFFIC CONTROL SIGN REMOVAL SUB-SUMMARY SHEET 2

ALL-75-5.53

3 / 71

769 / 1224

J:\Projects\ALL\76691\traffic\sheets\76691TS002.dgn 10-SEP-2012 1:05PM wrightj

SHEET NO.	REFERENCE NO.	LOCATION	STATION	SIDE	CODE	SIZE (INCHES)		630 REMOVAL OF GROUND MOUNTED SIGN AND DISPOSAL EACH	630 REMOVAL OF GROUND MOUNTED MAJOR SIGN AND DISPOSAL EACH	630 REMOVAL OF GROUND MOUNTED POST SUPPORT AND DISPOSAL EACH	630 REMOVAL OF GROUND MOUNTED STRUCTURAL BEAM SUPPORT AND DISPOSAL EACH	630 REMOVAL OF STRUCTURE MOUNTED SIGN AND DISPOSAL EACH	630 REMOVAL OF OVERHEAD MOUNTED SIGN AND DISPOSAL EACH	630 REMOVAL OF OVERHEAD SIGN SUPPORT AND DISPOSAL, TYPE TC-12.30 EACH	630 REMOVAL OF OVERHEAD SIGN SUPPORT AND DISPOSAL, TYPE TC-7.65 EACH	630 REMOVAL OF OVERHEAD SIGN SUPPORT AND DISPOSAL, TYPE TC-15.115 EACH	630 REMOVAL OF OVERHEAD SIGN SUPPORT AND DISPOSAL, TYPE TC-17.10 EACH	630 REMOVAL OF OVERHEAD SIGN SUPPORT AND DISPOSAL, TYPE TC-18.24 EACH	631 REMOVAL OF LUMINAIRE AND DISPOSAL EACH	631 REMOVAL OF SIGN WIRING AND DISPOSAL EACH	631 REMOVAL OF SIGN SERVICE AND DISPOSAL EACH
42 / 71	R-86	EX. SR 309 NB ON RAMP		RT.				1		1												
42 / 71	R-87	BRYN MAWR	10+60	RT.				1		1												
42 / 71	R-88	EX. SR 309 NB ON RAMP		RT.				3		1												
42 / 71	R-89	EX. LOST CREEK		RT.				1		1												
42 / 71	R-90	EX. LOST CREEK		LT.				1		1												
42 / 71	R-91	BRYN MAWR	9+60	LT.				1		1												
42 / 71	R-92	BRYN MAWR	10+70	LT.				1		1												
42 / 71	R-93	BRYN MAWR	11+40	RT.				1		1												
42 / 71	R-94	BRYN MAWR	12+25	LT.				1		1												
42 / 71	R-95	BRYN MAWR	12+20	RT.				1		1												
42 / 71	R-96	EX. LOST CREEK		RT.				1		1												
42 / 71	R-97	EX. SARATOGA AVE		LT.				1		1												
42 / 71	R-98	EX. SARATOGA AVE		LT.				1		1												
43 / 71	R-99	SR 309 RAMP 'C'	373+10	RT.				6	1		2											
43 / 71	R-100	SR 309 RAMP 'C'	374+00	RT.				1		1												
43 / 71	R-101	SR 309 RAMP 'C'	374+00	RT.				1		2												
43 / 71	R-102	SR 309 RAMP 'C'	375+00	RT.				1		2												
43 / 71	R-103	I-75	376+00	LT.					1		2											
43 / 71	R-104	I-75	378+50	LT.									2		1					2	1	1
43 / 71	R-105	I-75	378+50	LT.									2							2	1	1
43 / 71	R-106	I-75	379+00	RT.				1		2												
44 / 71	R-107	I-75	385+00	LT.					1		2											
44 / 71	R-108	I-75	389+50	LT.					1		2											
44 / 71	R-109	I-75	392+25	LT.					1		2											
44 / 71	R-110	I-75	395+00	LT.					1		2											
44 / 71	R-111	I-75	398+00	LT.				1		1												
44 / 71	R-112	I-75	398+00	RT.				1		1												
44 / 71	R-113	I-75	399+40	LT.					1		2											
44 / 71	R-114	I-75	399+80	RT.				2		2												
44 / 71	R-115	I-75	405+00	RT.				1		2												
45 / 71	R-116	I-75	405+00	LT.					1		2											
45 / 71	R-117	I-75	412+20	RT.					1		2											
45 / 71	R-118	I-75	421+00	LT.					1		2											
45 / 71	R-119	I-75	418+50	RT.				1		2												
45 / 71	R-120	I-75	422+00	RT.					1		2											
46 / 71	R-121	I-75	436+00	LT.				2		2												
46 / 71	R-122	I-75	437+25	RT.					1		2											
46 / 71	R-123	I-75	439+50	LT.					1		2											
46 / 71	R-124	I-75	442+00	LT.				1		2												
46 / 71	R-125	I-75	443+90	RT.					1		2											
46 / 71	R-126	I-75	449+10	LT.				1		1												
46 / 71	R-127	I-75	449+10	RT.				1		1												
TOTALS CARRIED TO SIGN REMOVAL SUB-SUMMARY SHEET 6								36	14	34	28	0	4	0	1	0	0	0	4	2	2	

CALCULATED JRW CHECKED JRL

TRAFFIC CONTROL SIGN REMOVAL SUB-SUMMARY SHEET 3

ALL-75-5.53

4 / 71

770 1224

J:\Projects\ALL\76691\traffic\sheets\76691TS003.dgn 10-SEP-2012 1:05PM wrightj

SHEET NO.	REFERENCE NO.	LOCATION	STATION	SIDE	CODE	SIZE (INCHES)		630 REMOVAL OF GROUND MOUNTED SIGN AND DISPOSAL EACH	630 REMOVAL OF GROUND MOUNTED MAJOR SIGN AND DISPOSAL EACH	630 REMOVAL OF GROUND MOUNTED POST SUPPORT AND DISPOSAL EACH	630 REMOVAL OF GROUND MOUNTED STRUCTURAL BEAM SUPPORT AND DISPOSAL EACH	630 REMOVAL OF STRUCTURE MOUNTED SIGN AND DISPOSAL EACH	630 REMOVAL OF OVERHEAD MOUNTED SIGN AND DISPOSAL EACH	630 REMOVAL OF OVERHEAD SIGN SUPPORT AND DISPOSAL, TYPE TC-12.30 EACH	630 REMOVAL OF OVERHEAD SIGN SUPPORT AND DISPOSAL, TYPE TC-7.65 EACH	630 REMOVAL OF OVERHEAD SIGN SUPPORT AND DISPOSAL, TYPE TC-15.115 EACH	630 REMOVAL OF OVERHEAD SIGN SUPPORT AND DISPOSAL, TYPE TC-17.10 EACH	630 REMOVAL OF OVERHEAD SIGN SUPPORT AND DISPOSAL, TYPE TC-18.24 EACH	631 REMOVAL OF LUMINAIRE AND DISPOSAL EACH	631 REMOVAL OF SIGN WIRING AND DISPOSAL EACH	631 REMOVAL OF SIGN SERVICE AND DISPOSAL EACH
47 / 71	R-128	SR 81 RAMP 'D'	458+00	LT.				1		1												
47 / 71	R-129	SR 81 RAMP 'D'	460+00	LT.				6	2		2											
47 / 71	R-130	SR 81 RAMP 'D'	458+80	LT.				1		2												
47 / 71	R-131	I-75	458+70	LT.				1		2												
47 / 71	R-132	SR 81 RAMP 'F'	463+75	LT.				2		2												
47 / 71	R-133	SR 81 RAMP 'F'	464+50	LT.				2		4												
47 / 71	R-134	SR 81 RAMP 'F'	463+75	LT.				1		2												
47 / 71	R-135	SR 81 RAMP 'C'	457+75	LT.				1		2												
47 / 71	R-136	I-75	456+30	RT.									2		1					2	1	1
47 / 71	R-137	I-75	456+30	RT.									2							2	1	1
47 / 71	R-138	I-75	456+70	RT.					1		2											
47 / 71	R-139	SR 81 RAMP 'C'	460+60	RT.				1		1												
47 / 71	R-140	SR 81 RAMP 'C'	460+90	RT.				2		2												
48 / 71	R-141	SR 81	431+00	LT.				2		1												
49 / 71	R-142	SR 81	432+25	LT.				1		2												
49 / 71	R-143	SR 81	432+35	RT.				2		1												
49 / 71	R-144	SR 81	433+35	LT.				1		2												
49 / 71	R-145	SR 81	433+60	RT.				1		1												
49 / 71	R-146	SR 81	434+10	LT.				2		1												
49 / 71	R-147	SR 81	434+95	RT.				1		2												
49 / 71	R-148	SR 81	434+80	RT.				1		1												
49 / 71	R-149	SR 81	436+80	RT.				1		2												
50 / 71	R-150	SR 81	437+00	RT.				3		1												
50 / 71	R-151	NEUBRECHT RD	11+95	LT.				1		1												
50 / 71	R-152	SR 81	437+80	RT.				1		1												
50 / 71	R-153	SR 81	439+05	LT.				1		2												
50 / 71	R-154	SR 81	439+05	RT.				1		2												
50 / 71	R-155	SR 81	441+90	LT.				1		2												
50 / 71	R-156	SR 81	441+90	LT.				1		1												
50 / 71	R-157	SR 81	438+75	RT.				1		1												
50 / 71	R-158	SR 81	438+55	RT.				1		1												
50 / 71	R-159	SR 81	441+85	RT.				1		2												
50 / 71	R-160	SERVICE RD 3	38+90	LT.				1		1												
50 / 71	R-161	SERVICE RD 3	40+05	RT.					1					1								
51 / 71	R-162	SR 81	442+95	LT.				1		2												
51 / 71	R-163	SR 81	445+45	RT.				2		1												
51 / 71	R-164	SR 81	447+70	RT.				1		1												
51 / 71	R-165	SR 81	447+75	RT.				3		1												
51 / 71	R-166	SR 81	442+70	RT.				1		2												
51 / 71	R-167	SERVICE RD 3	442+75	LT.				1		2												
51 / 71	R-168	SERVICE RD 3	44+60	LT.				1		1												
51 / 71	R-169	SERVICE RD 3	44+50	LT.				1		1												
51 / 71	R-170	SERVICE RD 3	44+50	RT.				1		1												
51 / 71	R-171	SERVICE RD 3	45+40	LT.									1		1					1	1	1
51 / 71	R-172	SERVICE RD 3	45+40	LT.									1							1	1	1
TOTALS CARRIED TO SIGN REMOVAL SUB-SUMMARY SHEET 6								55	4	58	4	0	6	1	2	0	0	0	6	4	4	

TRAFFIC CONTROL SIGN REMOVAL SUB-SUMMARY SHEET 4

CALCULATED JRW CHECKED JRL

ALL-75-5.53

J:\Projects\ALL\76691\traffic\sheets\76691TS004.dgn 10-SEP-2012 1:05PM wrightj

SHEET NO.	REFERENCE NO.	LOCATION	STATION	SIDE	CODE	SIZE (INCHES)		630 REMOVAL OF GROUND MOUNTED SIGN AND DISPOSAL EACH	630 REMOVAL OF GROUND MOUNTED MAJOR SIGN AND DISPOSAL EACH	630 REMOVAL OF GROUND MOUNTED POST SUPPORT AND DISPOSAL EACH	630 REMOVAL OF GROUND MOUNTED STRUCTURAL BEAM SUPPORT AND DISPOSAL EACH	630 REMOVAL OF STRUCTURE MOUNTED SIGN AND DISPOSAL EACH	630 REMOVAL OF OVERHEAD MOUNTED SIGN AND DISPOSAL EACH	630 REMOVAL OF OVERHEAD SIGN SUPPORT AND DISPOSAL, TYPE TC-12.30 EACH	630 REMOVAL OF OVERHEAD SIGN SUPPORT AND DISPOSAL, TYPE TC-7.65 EACH	630 REMOVAL OF OVERHEAD SIGN SUPPORT AND DISPOSAL, TYPE TC-15.115 EACH	630 REMOVAL OF OVERHEAD SIGN SUPPORT AND DISPOSAL, TYPE TC-17.10 EACH	630 REMOVAL OF OVERHEAD SIGN SUPPORT AND DISPOSAL, TYPE TC-18.24 EACH	631 REMOVAL OF LUMINAIRE AND DISPOSAL EACH	631 REMOVAL OF SIGN WIRING AND DISPOSAL EACH	631 REMOVAL OF SIGN SERVICE AND DISPOSAL EACH
52 / 71	R-173	SR 81	447+45	LT.				2		2												
52 / 71	R-174	SR 81	447+92	L/R				4		2												
52 / 71	R-175	EX SR 81						1		2												
52 / 71	R-176	EX SR 81						1		2												
52 / 71	R-177	EX SR 81						2		2												
52 / 71	R-178	SR 81	448+25	RT.				1		2												
52 / 71	R-179	SR 81	448+25	RT.				1		2												
52 / 71	R-180	SR 81	449+75	RT.								1							1	1	1	1
52 / 71	R-181	EX SR 81						1		2												
52 / 71	R-182	EX SR 81						1		2												
52 / 71	R-183	SR 81	451+40	RT.					1		2											
53 / 71	R-184	SR 81	454+60	LT.				2		1												
53 / 71	R-185	SR 81	455+00	LT.					1		2											
53 / 71	R-186	SR 81	456+10	LT.				2		2												
53 / 71	R-187	SR 81	456+60	LT.				4		2												
53 / 71	R-188	SR 81	456+30	RT.				1		1												
53 / 71	R-189	EX SR 81						1		2												
53 / 71	R-190	EX SR 81											1	1					1	1	1	
53 / 71	R-191	SR 81	456+75	RT.				4		2												
53 / 71	R-192	EX SR 81						1		2												
54 / 71	R-193	SR 81 NB ON RAMP						1		1												
54 / 71	R-194	SR 81	458+00	LT.									1	1					1	1	1	
54 / 71	R-195	SR 81	458+80	RT.				1		1												
54 / 71	R-196	SR 81	461+00	LT.					1		2											
54 / 71	R-197	EX SR 81							1		2											
54 / 71	R-198	SR 81	457+25	RT.				2		2												
54 / 71	R-199	SR 81	457+70	RT.				1		1												
54 / 71	R-200	EX SR 81						2		2												
54 / 71	R-201	SR 81	461+65	RT.				1		2												
55 / 71	R-202	NEUBRECHT RD	13+90	LT.				1		1												
56 / 71	R-203	EX SR 81 SB OFF RAMP						2	2		2											
56 / 71	R-204	I-75	472+95	LT.				1		2												
56 / 71	R-205	I-75	475+00	LT.					1		2											
56 / 71	R-206	I-75	479+00	RT.				1		2												
56 / 71	R-207	I-75	481+40	RT.				1		2												
56 / 71	R-208	I-75	488+40	LT.					2		2											
TOTALS CARRIED TO SIGN REMOVAL SUB-SUMMARY SHEET 6								43	9	46	14	1	2	2	0	0	0	1	3	3	3	

CALCULATED JRW CHECKED JRL

TRAFFIC CONTROL SIGN REMOVAL SUB-SUMMARY SHEET 5

ALL-75-5.53

6 / 71

772 1224

J:\Projects\ALL\76691\traffic\sheets\76691TS005.dgn 10-SEP-2012 1:05PM wrightj

SHEET NO.	REFERENCE NO.	LOCATION	STATION	SIDE	CODE	SIZE (INCHES)		630 REMOVAL OF GROUND MOUNTED SIGN AND DISPOSAL EACH	630 REMOVAL OF GROUND MOUNTED MAJOR SIGN AND DISPOSAL EACH	630 REMOVAL OF GROUND MOUNTED POST SUPPORT AND DISPOSAL EACH	630 REMOVAL OF GROUND MOUNTED STRUCTURAL BEAM SUPPORT AND DISPOSAL EACH	630 REMOVAL OF STRUCTURE MOUNTED SIGN AND DISPOSAL EACH	630 REMOVAL OF OVERHEAD MOUNTED SIGN AND DISPOSAL EACH	630 REMOVAL OF OVERHEAD SIGN SUPPORT AND DISPOSAL, TYPE TC-12.30 EACH	630 REMOVAL OF OVERHEAD SIGN SUPPORT AND DISPOSAL, TYPE TC-7.65 EACH	630 REMOVAL OF OVERHEAD SIGN SUPPORT AND DISPOSAL, TYPE TC-15.115 EACH	630 REMOVAL OF OVERHEAD SIGN SUPPORT AND DISPOSAL, TYPE TC-17.10 EACH	630 REMOVAL OF OVERHEAD SIGN SUPPORT AND DISPOSAL, TYPE TC-18.24 EACH	631 REMOVAL OF LUMINAIRE AND DISPOSAL EACH	631 REMOVAL OF SIGN WIRING AND DISPOSAL EACH	631 REMOVAL OF SIGN SERVICE AND DISPOSAL EACH
57 / 71	R-209	I-75	494+00	RT.				2		2												
57 / 71	R-210	I-75	498+10	RT.				1		1												
57 / 71	R-211	I-75	505+95	LT.				1		1												
57 / 71	R-212	I-75	505+95	RT.				1		1												
57 / 71	R-213	I-75	516+00	LT.					1		2											
57 / 71	R-214	I-75	516+80	RT.				1		2												
58 / 71	R-215	I-75	519+00	RT.					1		2											
SUBTOTAL THIS SHEET								6	2	7	4	0	0	0	0	0	0	0	0	0	0	0
SIGN REMOVAL SUB-SUMMARY - SHEET 1								28	11	38	22	0	8	2	1	0	0	0	4	2	2	
SIGN REMOVAL SUB-SUMMARY - SHEET 2								69	8	46	12	2	17	4	0	1	1	2	14	8	8	
SIGN REMOVAL SUB-SUMMARY - SHEET 3								36	14	34	28	0	4	0	1	0	0	0	4	2	2	
SIGN REMOVAL SUB-SUMMARY - SHEET 4								55	4	58	4	0	6	1	2	0	0	0	6	4	4	
SIGN REMOVAL SUB-SUMMARY - SHEET 5								43	9	46	14	1	2	2	0	0	0	1	3	3	3	
TOTALS CARRIED TO GENERAL SUMMARY								237	48	229	84	3	37	9	4	1	1	3	31	19	19	

CALCULATED JRW CHECKED JRL

TRAFFIC CONTROL SIGN REMOVAL SUB-SUMMARY SHEET 6

ALL-75-5.53

7 / 71

773 / 1224

J:\Projects\ALL\76691\traffic\sheets\76691TS006.dgn 10-SEP-2012 1:05PM wrightj

TRAFFIC CONTROL PAVEMENT MARKING SUB-SUMMARY-1

CALCULATED JRW
CHECKED ACF

SHEET NO.	REFERENCE NO.	LOCATION	STATION FROM	STATION TO	SIDE	621 RPM 2-WAY (YELLOW/YELLOW) EACH	621 RPM 2-WAY (WHITE/RED) EACH	621 RPM 2-WAY (YELLOW/RED) EACH	621 RPM 1-WAY (WHITE) EACH	642 EDGE LINE, 4" (WHITE) FT	642 CENTER LINE 4" DOUBLE-SOLID FT	642 CHANNELIZING LINE, 8" FT	642 TRANSVERSE/DIAGONAL LINE (YELLOW) FT	646 EDGE LINE, 4" (WHITE) FT	646 EDGE LINE, 6" (WHITE) FT	646 EDGE LINE, 4" (YELLOW) FT	646 EDGE LINE, 6" (YELLOW) FT	646 LANE LINE, 4" FT	646 LANE LINE, 6" FT	646 CENTER LINE 4" DOUBLE-SOLID FT	646 CHANNELIZING LINE, 8" FT	646 CHANNELIZING LINE, 12" FT	646 CROSSWALK LINE FT	646 TRANSVERSE/DIAGONAL LINE (YELLOW) FT	646 DOTTED LINE, 6" FT	646 DOTTED LINE, 12" FT	647 STOP LINE, TYPE A125 FT	647 LANE ARROW, TYPE A125 EACH	647 WORD ON PAVEMENT, 72", TYPE A125 EACH
31 / 71	WL1	I-75	292+00	305+00	LT										1300															
31 / 71	WL2	I-75	292+00	305+00	RT										1300															
31 / 71	YL1	I-75	292+00	305+00	LT												1300													
31 / 71	YL2	I-75	292+00	305+00	RT												1300													
31 / 71	LL1	I-75	292+00	305+00	LT				17										1300											
31 / 71	LL2	I-75	292+00	305+00	RT				17										1300											
31 / 71	BL1	I-75	303+67	305+00	LT																					133				
31 / 71	BL2	I-75	301+61	305+00	RT																					339				
32 / 71	WL1	I-75	305+00	317+50	LT										1250															
32 / 71	WL2	I-75	305+00	309+60	RT										460															
32 / 71	WL3	I-75	309+60	317+50	RT										790															
32 / 71	WL4	I-75/RAMP A	309+60	314+00	RT										440															
32 / 71	WL5	I-75/RAMP B	316+00	317+50	RT										150															
32 / 71	YL1	I-75	305+00	317+50	LT												1250													
32 / 71	YL2	I-75	305+00	317+50	RT												1250													
32 / 71	YL3	I-75/RAMP A	309+60	314+00	RT			6									440													
32 / 71	YL4	I-75/RAMP B	316+00	317+50	RT			2									150													
32 / 71	LL1	I-75	305+00	317+50	LT				16										1250											
32 / 71	LL2	I-75	305+00	317+50	RT				16										1250											
32 / 71	CL1	I-75	314+67	317+50	LT		4															283								
32 / 71	CL2	I-75	314+68	317+50	LT																	282								
32 / 71	CL3	I-75	306+82	309+62	RT		4															280								
32 / 71	CL4	I-75	306+82	309+62	RT		4															280								
32 / 71	BL1	I-75	305+00	314+68	LT																					968				
32 / 71	BL2	I-75	305+00	306+82	RT																					182				
33 / 71	WL1	I-75/RAMP C	317+50	322+73	LT										523															
33 / 71	WL2	I-75	322+76	330+00	LT										724															
33 / 71	WL3	I-75/RAMP C	322+73	324+00	LT										127															
33 / 71	WL4	I-75/RAMP D	327+00	329+93	LT										293															
33 / 71	WL5	I-75/RAMP B	317+50	317+98	RT										48															
33 / 71	WL6	I-75	317+50	317+94	RT										44															
33 / 71	WL7	I-75/RAMP B	317+98	330+00	RT										1202															
33 / 71	YL1	I-75/RAMP C	322+73	324+00	LT												127													
33 / 71	YL2	I-75	317+50	330+00	LT												1250													
33 / 71	YL3	I-75/RAMP D	327+00	329+93	LT												293													
33 / 71	YL4	I-75/RAMP B	317+50	318+00	RT												50													
33 / 71	YL5	I-75	317+50	330+00	RT												1250													
33 / 71	LL1	I-75	317+50	330+00	LT				16										1250											
33 / 71	LL2	I-75	317+50	330+00	RT				16										1250											
33 / 71	CL1	I-75	317+50	322+76	LT																	526								
33 / 71	CL2	I-75	317+50	322+76	LT																	526								
33 / 71	CL3	I-75	317+94	326+03	RT																	809								
33 / 71	CL4	I-75/RAMP B	317+94	326+03	LT																	809								
33 / 71	BL1	I-75	326+03	330+00	RT																					397				
34 / 71	WL1	I-75/RAMP C	324+00	331+06	LT										783															
34 / 71	WL2	I-75/RAMP D	318+30	327+00	RT										955															
34 / 71	YL1	I-75/RAMP C	324+00	330+76	LT			9									676													
34 / 71	YL2	I-75/RAMP D	318+92	327+00	RT			11									808													
34 / 71	SL1	I-75/RAMP D	318+75		L/R																							24		
34 / 71	LA1	I-75/RAMP D	319+00		RT																								1	
34 / 71	LA2	I-75/RAMP C	330+60		RT																								1	
35 / 71	WL1	I-75/RAMP A	314+00	321+48	RT										863															
35 / 71	WL2	I-75/RAMP B	309+58	316+00	LT										955															
35 / 71	YL1	I-75/RAMP A	314+00	321+25	LT			10									725													
35 / 71	YL2	I-75/RAMP B	310+20	316+00	RT			8									580													
35 / 71	SL1	I-75/RAMP A	321+25		L/R																							24		
TOTALS CARRIED TO SUB-SUMMARY SHEET 10						0	12	46	98	0	0	0	0	0	12207	0	11449	0	7600	0	0	3795	0	0	2019	0			48	2	0

ALL QUANTITIES FOR EDGE LINE, LANE LINE, AND CENTER LINE ARE CALCULATED IN FEET, THEN CONVERTED TO MILES PRIOR TO BEING CARRIED TO GENERAL SUMMARY

ALL-75-5.53

8 / 71

774
1224

J:\Projects\ALL\76691\traffic\sheets\76691TS007.dgn 10-SEP-2012 4:49PM wrightj

SHEET NO.	REFERENCE NO.	LOCATION	STATION FROM	STATION TO	SIDE	621 RPM 2-WAY (YELLOW/YELLOW) EACH	621 RPM 2-WAY (WHITE/RED) EACH	621 RPM 2-WAY (YELLOW/RED) EACH	621 RPM 1-WAY (WHITE) EACH	642 EDGE LINE, 4" (WHITE) FT	642 CENTER LINE 4" DOUBLE-SOLID FT	642 CHANNELIZING LINE, 8" FT	642 TRANSVERSE/DIAGONAL LINE (YELLOW) FT	646 EDGE LINE, 4" (WHITE) FT	646 EDGE LINE, 6" (WHITE) FT	646 EDGE LINE, 4" (YELLOW) FT	646 EDGE LINE, 6" (YELLOW) FT	646 LANE LINE, 4" FT	646 LANE LINE, 6" FT	646 CENTER LINE 4" DOUBLE-SOLID FT	646 CHANNELIZING LINE, 8" FT	646 CHANNELIZING LINE, 12" FT	646 CROSSWALK LINE FT	646 TRANSVERSE/DIAGONAL LINE (YELLOW) FT	646 DOTTED LINE, 6" FT	646 DOTTED LINE, 12" FT	647 STOP LINE, TYPE A125 FT	647 LANE ARROW, TYPE A125 EACH	647 WORD ON PAVEMENT, 72", TYPE A125 EACH
35 / 71	LA1	I-75/RAMP B	310+44		LT																								1	
35 / 71	LA2	I-75/RAMP A	321+10		LT																								1	
36 / 71	WL1	I-75	330+00	342+50	LT										1250															
36 / 71	WL2	I-75	330+00	342+50	RT										1250															
36 / 71	YL1	I-75	330+00	342+50	LT												1250													
36 / 71	YL2	I-75	330+00	342+50	RT												1250													
36 / 71	LL1	I-75	330+00	342+50	LT				16										1250											
36 / 71	LL2	I-75	330+00	342+50	RT				16										1250											
36 / 71	CL1	I-75	330+00	333+00	LT		8															300								
36 / 71	CL2	I-75	330+00	333+00	LT		8															300								
36 / 71	BL1	I-75	333+00	342+50	LT																						950			
36 / 71	BL2	I-75	330+00	337+03	RT																					703				
37 / 71	WL1	I-75	342+50	355+00	LT										1250															
37 / 71	WL2	I-75	342+50	355+00	RT										1250															
37 / 71	YL1	I-75	342+50	355+00	LT												1250													
37 / 71	YL2	I-75	342+50	355+00	RT												1250													
37 / 71	LL1	I-75	342+50	355+00	LT				16										1250											
37 / 71	LL2	I-75	342+50	355+00	RT				16										1250											
37 / 71	CL1	I-75	348+50	355+00	LT		17															650								
37 / 71	CL2	I-75	348+50	355+00	LT		17															650								
37 / 71	BL1	I-75	342+50	348+50	LT																						600			
37 / 71	BL2	I-75	351+45	355+00	RT																					355				
38 / 71	WL1	I-75/RAMP A	355+00	360+11	LT										511															
38 / 71	WL2	S.R. 309 RAMP A	360+11	368+50	LT										839															
38 / 71	WL3	I-75	360+12	367+50	LT										738															
38 / 71	WL4	I-75	355+00	359+45	RT										445															
38 / 71	WL5	I-75/S.R. 309 RAMP F	359+45	368+50	RT										905															
38 / 71	WL6	I-75	359+45	367+50	RT										805															
38 / 71	YL1	I-75	355+00	367+50	LT												1250													
38 / 71	YL2	I-75	355+00	367+50	RT												1250													
38 / 71	YL3	I-75/RAMP A	360+12	368+50	RT			11									838													
38 / 71	YL4	I-75/RAMP F	359+45	368+50	LT			12									905													
38 / 71	LL1	I-75	355+00	367+50	LT				16										1250											
38 / 71	LL2	I-75	355+00	367+50	RT				16										1250											
38 / 71	CL1	I-75	355+00	360+12	LT		13															512								
38 / 71	CL2	I-75	355+00	360+12	LT		13															512								
38 / 71	CL3	I-75	356+60	359+45	RT		8															285								
38 / 71	CL4	I-75	356+60	359+45	RT		8															285								
38 / 71	CL5	RAMP F	366+40	368+50	LT																	210								
38 / 71	LA1	RAMP F	366+68		LT																								1	
38 / 71	LA2	RAMP F	366+68		LT																								1	
38 / 71	LA3	RAMP F	367+74		LT																								1	
38 / 71	LA4	RAMP F	367+74		LT																								1	
38 / 71	BL1	I-75/RAMP A	355+00	356+60	RT																					160				
39 / 71	WL1	SR 309 RAMP C	370+66	371+50	LT										84															
39 / 71	WL2	SR 309 RAMP A	368+50	369+01	LT										51															
39 / 71	WL3	NOT USED																												
39 / 71	WL4	SR 309	888+25	370+66	LT									544																
39 / 71	WL5	SR 309	893+77	894+00	LT									23																
39 / 71	WL6	NOT USED																												
39 / 71	WL7	SR 309	888+25	369+01	RT									545																
39 / 71	WL8	SR 309	893+45	894+00	RT									55																
39 / 71	YL1	SR 309 RAMP C	370+23	371+50	RT			2									120													
39 / 71	YL2	SR 309 RAMP A	368+50	369+78	RT			2									116													
39 / 71	LL1	SR 309	891+55	892+76	LT				1									121												
39 / 71	LL2	SR 309	888+25	892+76	RT				5									451												
39 / 71	LL3	SR 309	888+25	892+76	RT				5									451												
TOTALS CARRIED TO SUB-SUMMARY SHEET 10						0	92	27	107	0	0	0	0	1167	9378	0	9479	1023	7500	0	0	3704	0	0	1218	1550			0	6	0

CALCULATED JRW
CHECKED ACF

TRAFFIC CONTROL PAVEMENT MARKING SUB-SUMMARY-2

ALL-75-5.53

775
1224

J:\Projects\ALL\7669\traffic\sheets\7669ITS008.dgn 10-SEP-2012 4:49PM wrightj

SHEET NO.	REFERENCE NO.	LOCATION	STATION FROM	STATION TO	SIDE	621 RPM 2-WAY (YELLOW/YELLOW) EACH	621 RPM 2-WAY (WHITE/RED) EACH	621 RPM 2-WAY (YELLOW/RED) EACH	621 RPM 1-WAY (WHITE) EACH				642 EDGE LINE, 4" (WHITE) FT	642 CENTER LINE 4" DOUBLE-SOLID FT	642 CHANNELIZING LINE, 8" FT	642 TRANSVERSE/DIAGONAL LINE (YELLOW) FT						646 EDGE LINE, 4" (WHITE) FT	646 EDGE LINE, 6" (WHITE) FT	646 EDGE LINE, 4" (YELLOW) FT	646 EDGE LINE, 6" (YELLOW) FT	646 LANE LINE, 4" FT	646 LANE LINE, 6" FT	646 CENTER LINE 4" DOUBLE-SOLID FT	646 CHANNELIZING LINE, 8" FT	646 CHANNELIZING LINE, 12" FT	646 CROSSWALK LINE FT	646 TRANSVERSE/DIAGONAL LINE (YELLOW) FT	646 DOTTED LINE, 6" FT	646 DOTTED LINE, 12" FT			647 STOP LINE, TYPE A125 FT	647 LANE ARROW, TYPE A125 EACH	647 WORD ON PAVEMENT, 72", TYPE A125 EACH
39 / 71	LL4	NOT USED																																					
39 / 71	LL5	NOT USED																																					
39 / 71	DL1	SR 309	888+25	892+87	L/R	6																						462										
39 / 71	DL2	SR 309	890+15	892+87	RT	4																						272										
39 / 71	DL3	NOT USED																																					
39 / 71	CL1	SR 309 RAMP C	370+46	371+50	RT																									104								
39 / 71	CL2	SR 309	888+25	891+55	LT		9																						330									
39 / 71	CL3	SR 309	888+25	891+55	LT		9																						330									
39 / 71	CL4	NOT USED																																					
39 / 71	CL5	NOT USED																																					
39 / 71	SL1	SR 309/RAMP C	370+46		L/R																																	31	
39 / 71	SL2	SR 309	892+76		RT																																	40	
39 / 71	XL1	SR 309/RAMP C	370+32		L/R																											55						
39 / 71	XL2	SR 309/RAMP C	370+42		L/R																											43						
39 / 71	XL3	SR 309	893+86		L/R																											84						
39 / 71	XL4	SR 309	893+96		L/R																											84						
39 / 71	XL5	SR 309/RAMP A	369+53		L/R																											44						
39 / 71	XL6	SR 309/RAMP A	369+63		L/R																											53						
39 / 71	YT1	SR 309	890+15	892+76	L/R																												59					
39 / 71	LA1	SR 309/RAMP C	370+56		LT																																	1	
39 / 71	LA2	SR 309/RAMP C	370+56		RT																																	1	
39 / 71	LA3	SR 309/RAMP C	371+22		RT																																	1	
39 / 71	LA4	SR 309/RAMP C	371+22		LT																																	1	
39 / 71	LA5	SR 309	888+66		LT																																	1	
39 / 71	LA6	SR 309	888+66		LT																																	1	
39 / 71	LA7	SR 309	888+66		LT																																	1	
39 / 71	LA8	SR 309	889+32		LT																																	1	
39 / 71	LA9	SR 309	889+32		LT																																	1	
39 / 71	LA10	SR 309	889+32		LT																																	1	
39 / 71	LA11	SR 309	891+15		LT																																	1	
39 / 71	LA12	SR 309	891+15		LT																																	1	
39 / 71	LA13	SR 309	891+15		LT																																	1	
39 / 71	BL1	SR 309	893+42		L/R																																		130		
39 / 71	BL2	SR 309	893+42		L/R																																		78		
40 / 71	WL1	SR 309	894+00	898+50	LT																			450																
40 / 71	WL2	SR 309	894+00	898+50	RT																			450																
40 / 71	LL1	SR 309	894+00	898+50	LT				6																															
40 / 71	LL2	SR 309	894+00	898+37	LT				6																															
40 / 71	LL3	SR 309	894+00	898+37	LT				6																															
40 / 71	DL1	SR 309	894+00	898+20	CL	6																																	
40 / 71	CL1	SR 309	894+00	897+65	RT				9																															
40 / 71	CL2	SR 309	894+37	898+37	LT				9																															
40 / 71	SL1	SR 309	897+20		RT																																	12		
40 / 71	SL2	SR 309	897+37		RT																																	36		
40 / 71	SL3	SR 309	894+00		LT																																	36		
40 / 71	XL1	SR 309	898+46		L/R																											84						
40 / 71	LA1	SR 309	894+10		LT																																	1	
40 / 71	LA2	SR 309	894+76		LT																																	1	
40 / 71	LA3	SR 309	895+10		RT																																	1	
40 / 71	LA4	SR 309	895+42		LT																																	1	
40 / 71	LA5	SR 309	896+78		RT																																	1	
40 / 71	LA6	SR 309	897+05		LT																																	1	
40 / 71	LA7	SR 309	897+44		LT																																	1	
40 / 71	LA8	SR 309	898+10		RT																																	1	
40 / 71	BL1	SR 309	897+65	898+20	LT																																		55		
41 / 71	WL1	SR 309 RAMP E	371+27	371+50	RT																				23														
41 / 71	WL2	SR 309 RAMP F	368+50	369+31	RT																				81														
41 / 71	WL3	SR 309	898+50	898+63	LT																			13																
41 / 71	WL4	SR 309	371+27	901+83	LT																			384																
TOTALS CARRIED TO SUB-SUMMARY SHEET 10						16	18	0	36				0	0	0	0							1297	104	0	0	1324	0	1154	1425	104	447	59	263	0			155	21	0

CALCULATED JRW
CHECKED ACF

TRAFFIC CONTROL PAVEMENT MARKING SUB-SUMMARY-3

ALL-75-5.53

10 / 71

776
1224

wrightj
10-SEP-2012 4:49PM
J:\Projects\ALL\76691\traffic\sheets\76691TS009.dgn

SHEET NO.	REFERENCE NO.	LOCATION	STATION FROM	STATION TO	SIDE	621 RPM 2-WAY (YELLOW/YELLOW) EACH	621 RPM 2-WAY (WHITE/RED) EACH	621 RPM 2-WAY (YELLOW/RED) EACH	621 RPM 1-WAY (WHITE) EACH				642 EDGE LINE, 4" (WHITE) FT	642 CENTER LINE 4" DOUBLE-SOLID FT	642 CHANNELIZING LINE, 8" FT	642 TRANSVERSE/DIAGONAL LINE (YELLOW) FT						646 EDGE LINE, 4" (WHITE) FT	646 EDGE LINE, 6" (WHITE) FT	646 EDGE LINE, 4" (YELLOW) FT	646 EDGE LINE, 6" (YELLOW) FT	646 LANE LINE, 4" FT	646 LANE LINE, 6" FT	646 CENTER LINE 4" DOUBLE-SOLID FT	646 CHANNELIZING LINE, 8" FT	646 CHANNELIZING LINE, 12" FT	646 CROSSWALK LINE FT	646 TRANSVERSE/DIAGONAL LINE (YELLOW) FT	646 DOTTED LINE, 6" FT	646 DOTTED LINE, 12" FT			647 STOP LINE, TYPE A125 FT	647 LANE ARROW, TYPE A125 EACH	647 WORD ON PAVEMENT, 72", TYPE A125 EACH
41 / 71	WL5	SR 309	902+02	904+00	LT																	225																
41 / 71	WL6	SR 309	898+50	898+71	RT																	21																
41 / 71	WL7	SR 309	369+31	904+00	RT																	535																
41 / 71	YL1	SR 309 RAMP E	370+17	371+50	LT			2																	133												
41 / 71	YL2	SR 309 RAMP F	368+50	369+88	LT			2																	138												
41 / 71	YL3	SR 309	899+23	903+50	LT																			427												
41 / 71	YL4	SR 309	899+23	903+50	L/R																			427												
41 / 71	YL5	SR 309	902+16	904+00	RT																			184												
41 / 71	YL6	SR 309	902+16	904+00	RT																			184												
41 / 71	LL1	SR 309	899+34	904+00	LT		6																			466										
41 / 71	LL2	SR 309	899+34	904+00	RT		6																			466										
41 / 71	LL3	SR 309	899+34	904+00	RT		6																			466										
41 / 71	CL1	SR 309 RAMP F	368+50	369+63	LT		2																							113						
41 / 71	CL2	SR 309	899+34	903+50	LT			10																					416							
41 / 71	CL3	SR 309	903+50	904+00	LT																								50							
41 / 71	SL1	SR 309	899+34		LT																													43		
41 / 71	SL2	SR 309 RAMP F	369+63		L/R																													34		
41 / 71	XL1	SR 309 RAMP E	370+48	370+54	L/R																											47				
41 / 71	XL2	SR 309 RAMP E	370+38	370+45	L/R																											58				
41 / 71	XL3	SR 309	898+56		L/R																											84				
41 / 71	XL4	SR 309 RAMP F	369+62	369+68	L/R																											45				
41 / 71	XL5	SR 309 RAMP F	369+71	369+79	L/R																											54				
41 / 71	LA1	SR 309	899+44		LT																														1	
41 / 71	LA2	SR 309	900+10		LT																														1	
41 / 71	LA3	SR 309	900+76		LT																														1	
41 / 71	LA4	SR 309	903+20		LT																														1	
41 / 71	LA5	SR 309	902+55		LT																														1	
41 / 71	LA6	SR 309 RAMP F	369+53		LT																														1	
41 / 71	LA7	SR 309 RAMP F	369+53		LT																														1	
41 / 71	LA8	SR 309 RAMP F	368+87		LT																														1	
41 / 71	LA9	SR 309 RAMP F	368+87		LT																														1	
41 / 71	LA10	SARATOGA			L/R																														1	
41 / 71	W1	SR 309	903+50		LT																															1
42 / 71	WL1	BRYN MAWR	7+00	12+50	LT								550																								
42 / 71	WL2	BRYN MAWR	7+00	12+50	RT								550																								
42 / 71	WL3	LOST CREEK	50+25	51+80	LT								155																								
42 / 71	WL4	LOST CREEK	50+25	51+80	RT								155																								
42 / 71	DL1	BRYN MAWR	7+00	12+50	L/R									550																							
42 / 71	DL2	LOST CREEK	50+25	51+80										155																							
42 / 71	SL1	BRYN MAWR	12+50		RT																													12		
42 / 71	SL2	LOST CREEK	50+25		LT																													13		
43 / 71	WL1	I-75	367+50	377+43	LT																		993														
43 / 71	WL2	I-75	367+50	378+76	RT																		1126														
43 / 71	WL3	I-75/RAMP C	371+50	377+44	LT																		594														
43 / 71	WL4	I-75/RAMP C	377+44	380+00	LT																		256														
43 / 71	WL5	I-75/RAMP E	371+50	378+77	RT																		727														
43 / 71	WL6	I-75/RAMP E	378+77	380+00	RT																		123														
43 / 71	YL1	I-75	367+50	380+00	LT																				1250												
43 / 71	YL2	I-75	367+50	380+00	RT																				1250												
43 / 71	YL3	I-75/RAMP C	371+50	377+44	RT			8																	594												
43 / 71	YL4	I-75/RAMP E	371+50	378+77	LT			10																	727												
43 / 71	LL1	I-75	367+50	380+00	LT		6																				1250										
43 / 71	LL2	I-75	367+50	380+00	RT		6																				1250										
43 / 71	CL1	I-75/RAMP C	371+50	375+00	RT			9																						350							
43 / 71	CL2	I-75/RAMP C	377+43	380+00	LT			7																						257							
43 / 71	CL3	I-75/RAMP C	377+43	380+00	LT			7																						257							
43 / 71	CL4	I-75/RAMP E	378+77	380+00	LT			4																						123							
TOTALS CARRIED TO SUB-SUMMARY SHEET 10						0	32	59	0				1410	705	0	0						781	3819	1222	4092	1398	2500	0	466	1100	288	0	0	0			102	10	1

TRAFFIC CONTROL PAVEMENT MARKING SUB-SUMMARY-4

CALCULATED JRW
CHECKED ACF

ALL-75-5.53

11 / 71

777 / 1224

wrightj
10-SEP-2012 4:49PM
J:\Projects\ALL\7669\traffic\sheets\7669ITS010.dgn

SHEET NO.	REFERENCE NO.	LOCATION	STATION FROM	STATION TO	SIDE	621 RPM 2-WAY (YELLOW/YELLOW) EACH	621 RPM 2-WAY (WHITE/RED) EACH	621 RPM 2-WAY (YELLOW/RED) EACH	621 RPM 1-WAY (WHITE) EACH				642 EDGE LINE, 4" (WHITE) FT	642 CENTER LINE 4" DOUBLE-SOLID FT	642 CHANNELIZING LINE, 8" FT	642 TRANSVERSE/DIAGONAL LINE (YELLOW) FT						646 EDGE LINE, 4" (WHITE) FT	646 EDGE LINE, 6" (WHITE) FT	646 EDGE LINE, 4" (YELLOW) FT	646 EDGE LINE, 6" (YELLOW) FT	646 LANE LINE, 4" FT	646 LANE LINE, 6" FT	646 CENTER LINE 4" DOUBLE-SOLID FT	646 CHANNELIZING LINE, 8" FT	646 CHANNELIZING LINE, 12" FT	646 CROSSWALK LINE FT	646 TRANSVERSE/DIAGONAL LINE (YELLOW) FT	646 DOTTED LINE, 6" FT	646 DOTTED LINE, 12" FT			647 STOP LINE, TYPE A125 FT	647 LANE ARROW, TYPE A125 EACH	647 WORD ON PAVEMENT, 72", TYPE A125 EACH
43 / 71	CL5	I-75	378+76	380+00	RT			4																						124								
43 / 71	LA1	I-75/RAMP C	371+88		RT																																1	
43 / 71	LA2	I-75/RAMP C	371+88		LT																																1	
43 / 71	LA3	I-75/RAMP C	374+55		RT																																1	
43 / 71	LA4	I-75/RAMP C	374+55		LT																																1	
44 / 71	WL1	I-75	380+00	392+50	LT																			1250													
44 / 71	WL2	I-75	380+00	392+50	RT																			1250													
44 / 71	WL3	I-75	392+50	405+00	LT																			1250													
44 / 71	WL4	I-75	392+50	405+00	RT																			1250													
44 / 71	YL1	I-75	380+00	392+50	LT																					1250											
44 / 71	YL2	I-75	380+00	392+50	RT																					1250											
44 / 71	YL3	I-75	392+50	405+00	LT																					1250											
44 / 71	YL4	I-75	392+50	405+00	RT																					1250											
44 / 71	LL1	I-75	380+00	392+50	LT				11																				1250								
44 / 71	LL2	I-75	380+00	392+50	RT				11																				1250								
44 / 71	LL3	I-75	392+50	405+00	LT				11																				1250								
44 / 71	LL4	I-75	392+50	405+00	RT				11																				1250								
44 / 71	CL1	I-75/RAMP C	380+00	380+22	LT																									22							
44 / 71	CL2	I-75/RAMP C	380+00	380+22	LT																									22							
44 / 71	CL3	I-75	380+00	382+77	RT																									277							
44 / 71	CL4	I-75/RAMP E	380+00	382+77	LT																									277							
44 / 71	BL1	I-75	380+22	385+38	LT																												516				
44 / 71	BL2	I-75	382+77	392+50	RT																												973				
44 / 71	BL3	I-75	392+50	393+77	RT																												127				
45 / 71	WL1	I-75	405+00	417+50	LT																			1250													
45 / 71	WL2	I-75	405+00	417+50	RT																			1250													
45 / 71	WL3	I-75	417+50	430+00	LT																			1250													
45 / 71	WL4	I-75	417+50	430+00	RT																			1250													
45 / 71	YL1	I-75	405+00	417+50	LT																					1250											
45 / 71	YL2	I-75	405+00	417+50	RT																					1250											
45 / 71	YL3	I-75	417+50	430+00	LT																					1250											
45 / 71	YL4	I-75	417+50	430+00	RT																					1250											
45 / 71	LL1	I-75	405+00	417+50	LT				11																				1250								
45 / 71	LL2	I-75	405+00	417+50	RT				11																				1250								
45 / 71	LL3	I-75	417+50	430+00	LT				11																				1250								
45 / 71	LL4	I-75	417+50	430+00	RT				11																				1250								
46 / 71	WL1	I-75	430+00	442+50	LT																			1250													
46 / 71	WL2	I-75	430+00	442+50	RT																			1250													
46 / 71	WL3	I-75	442+50	453+90	LT																			1250													
46 / 71	WL4	I-75	442+50	455+00	RT																			1250													
46 / 71	WL5	I-75	453+90	455+00	LT																			110													
46 / 71	WL6	I-75	453+90	455+00	LT																			110													
46 / 71	YL1	I-75	430+00	442+50	LT																					1250											
46 / 71	YL2	I-75	430+00	442+50	RT																					1250											
46 / 71	YL3	I-75	442+50	455+00	LT																					1250											
46 / 71	YL4	I-75	442+50	455+00	RT																					1250											
46 / 71	YL5	I-75	453+90	455+00	LT																					110											
46 / 71	LL1	I-75	430+00	442+50	LT				11																				1250								
46 / 71	LL2	I-75	430+00	442+50	RT				11																				1250								
46 / 71	LL3	I-75	442+50	455+00	LT				11																				1250								
46 / 71	LL4	I-75	442+50	455+00	RT				11																				1250								
46 / 71	CL1	I-75	448+17	453+90	LT		15																							573							
46 / 71	CL2	I-75	448+17	453+90	RT		15																							573							
46 / 71	CL3	I-75	452+25	455+00	RT		7																							275							
46 / 71	CL4	I-75	452+25	455+00	RT		7																							275							
TOTALS CARRIED TO SUB-SUMMARY SHEET 10						0	44	4	132				0	0	0	0						0	15220	0	15110	0	15000	0	0	2418	0	0	1616	0			0	4	0

CALCULATED JRW
CHECKED ACF

TRAFFIC CONTROL PAVEMENT MARKING SUB-SUMMARY-5

ALL-75-5.53

12 / 71

778
1224

J:\Projects\ALL\76691\traffic\sheets\76691TS011.dgn 10-SEP-2012 4:49PM wrightj

TRAFFIC CONTROL PAVEMENT MARKING SUB-SUMMARY-6

CALCULATED JRW
CHECKED ACF

SHEET NO.	REFERENCE NO.	LOCATION	STATION FROM	STATION TO	SIDE	621 RPM 2-WAY (YELLOW/YELLOW) EACH	621 RPM 2-WAY (WHITE/RED) EACH	621 RPM 2-WAY (YELLOW/RED) EACH	621 RPM 1-WAY (WHITE) EACH	642 EDGE LINE, 4" (WHITE) FT	642 CENTER LINE 4" DOUBLE-SOLID FT	642 CHANNELIZING LINE, 8" FT	642 TRANSVERSE/DIAGONAL LINE (YELLOW) FT	646 EDGE LINE, 4" (WHITE) FT	646 EDGE LINE, 6" (WHITE) FT	646 EDGE LINE, 4" (YELLOW) FT	646 EDGE LINE, 6" (YELLOW) FT	646 LANE LINE, 4" FT	646 LANE LINE, 6" FT	646 CENTER LINE 4" DOUBLE-SOLID FT	646 CHANNELIZING LINE, 8" FT	646 CHANNELIZING LINE, 12" FT	646 CROSSWALK LINE FT	646 TRANSVERSE/DIAGONAL LINE (YELLOW) FT	646 DOTTED LINE, 6" FT	646 DOTTED LINE, 12" FT	647 STOP LINE, TYPE A125 FT	647 LANE ARROW, TYPE A125 EACH	647 WORD ON PAVEMENT, 72", TYPE A125 EACH
46 / 71	BL1	I-75	438+17	442+50	LT																				433				
46 / 71	BL2	I-75	442+50	448+17	LT																				567				
46 / 71	BL3	I-75	447+05	452+26	RT																				521				
47 / 71	WL1	I-75	455+00	467+50	LT										1250														
47 / 71	WL2	I-75	455+00	467+50	RT										1250														
47 / 71	WL3	I-75/RAMP D	455+00	460+00	LT										500														
47 / 71	WL4	I-75/RAMP F	463+00	467+50	LT										450														
47 / 71	WL5	I-75/RAMP C	455+00	461+00	RT										600														
47 / 71	WL6	I-75/RAMP B	464+00	467+50	RT										350														
47 / 71	YL1	I-75	455+00	467+50	LT												1250												
47 / 71	YL2	I-75	455+00	467+50	RT												1250												
47 / 71	YL3	I-75/RAMP D	455+00	460+00	LT			7									500												
47 / 71	YL4	I-75/RAMP F	463+00	467+50	LT			6									450												
47 / 71	YL5	I-75/RAMP C	455+00	461+00	RT			8									600												
47 / 71	YL6	I-75/RAMP B	464+00	467+50	RT			5									350												
47 / 71	LL1	I-75	455+00	467+50	LT				11										1250										
47 / 71	LL2	I-75	455+00	467+50	RT				11										1250										
47 / 71	CL1	I-75/RAMP F	463+00	466+45	RT		9															345							
47 / 71	CL2	I-75/RAMP C	458+15	461+00	LT		8															285							
47 / 71	LA1	I-75/RAMP F	463+38		RT																							1	
47 / 71	LA2	I-75/RAMP F	463+38		LT																							1	
47 / 71	LA3	I-75/RAMP F	465+95		RT																							1	
47 / 71	LA4	I-75/RAMP F	465+95		LT																							1	
47 / 71	LA5	I-75/RAMP C	458+65		RT																							1	
47 / 71	LA6	I-75/RAMP C	458+65		LT																							1	
47 / 71	LA7	I-75/RAMP C	460+79		RT																							1	
47 / 71	LA8	I-75/RAMP C	460+79		LT																							1	
48 / 71	WL1	SERVICE RD. 3	30+00	32+00	RT					200																			
48 / 71	WL2	SR 81	429+00	432+00	LT									300															
48 / 71	WL3	SR 81	429+00	432+00	RT									300															
48 / 71	WL4	SERVICE RD. 3	30+00	32+00	LT					200																			
48 / 71	LL1	SR 81	429+00	432+00	LT		4											300											
48 / 71	LL2	SR 81	429+00	432+00	RT		4											300											
48 / 71	DL1	SR 81	429+00	432+00	LT	4														300									
48 / 71	DL2	SR 81	431+50	432+00	L/R	1														50									
48 / 71	DL3	SERVICE RD. 3	30+00	32+00	L/R	3					200																		
48 / 71	YT1	SR 81	431+50	432+00	L/R																			2					
49 / 71	WL1	SERVICE RD. 3	32+00	37+00	RT					500																			
49 / 71	WL2	SR 81	432+00	437+00	LT									500															
49 / 71	WL3	SR 81	432+00	437+00	RT									500															
49 / 71	WL4	SERVICE RD. 3	32+00	37+00	LT					500																			
49 / 71	LL1	SR 81	432+00	437+00	LT		6											500											
49 / 71	LL2	SR 81	432+00	437+00	RT		6											500											
49 / 71	CL1	SR 81	434+24	437+00	RT			7														276							
49 / 71	DL1	SR 81	432+00	437+00	LT	6														500									
49 / 71	DL2	SR 81	432+00	434+14	L/R	3														214									
49 / 71	DL3	SERVICE RD. 3	32+00	37+00	L/R	6					500																		
49 / 71	LA1	SR 81	435+97		L/R																							1	
49 / 71	LA2	SR 81	436+63		L/R																							1	
49 / 71	YT1	SR 81	432+00	434+14	L/R																			83					
50 / 71	WL1	SERVICE RD. 3	37+00	42+00	RT					500																			
50 / 71	WL2	SR 81	437+00	12+50	LT									188															
50 / 71	WL3	SR 81	12+50	442+00	LT									389															
50 / 71	WL4	SR 81	437+00	37+50	RT									134															
50 / 71	WL5	SR 81	39+20	442+00	RT									395															
TOTALS CARRIED TO SUB-SUMMARY SHEET 10						23	37	33	22	1900	700	0	0	2706	4400	0	4400	1600	2500	1064	276	630	0	85	1521	0			0	10	0

ALL-75-5.53

13 / 71

779
1224

J:\Projects\ALL\76691\traffic\sheets\76691TS012.dgn 10-SEP-2012 4:49PM wrightj

TRAFFIC CONTROL PAVEMENT MARKING SUB-SUMMARY-7

CALCULATED JRW
CHECKED ACF

SHEET NO.	REFERENCE NO.	LOCATION	STATION FROM	STATION TO	SIDE	621 RPM 2-WAY (YELLOW/YELLOW) EACH	621 RPM 2-WAY (WHITE/RED) EACH	621 RPM 2-WAY (YELLOW/RED) EACH	621 RPM 1-WAY (WHITE) EACH				642 EDGE LINE, 4" (WHITE) FT	642 CENTER LINE 4" DOUBLE-SOLID FT	642 CHANNELIZING LINE, 8" FT	642 TRANSVERSE/DIAGONAL LINE (YELLOW) FT						646 EDGE LINE, 4" (WHITE) FT	646 EDGE LINE, 6" (WHITE) FT	646 EDGE LINE, 4" (YELLOW) FT	646 EDGE LINE, 6" (YELLOW) FT	646 LANE LINE, 4" FT	646 LANE LINE, 6" FT	646 CENTER LINE 4" DOUBLE-SOLID FT	646 CHANNELIZING LINE, 8" FT	646 CHANNELIZING LINE, 12" FT	646 CROSSWALK LINE FT	646 TRANSVERSE/DIAGONAL LINE (YELLOW) FT	646 DOTTED LINE, 6" FT	646 DOTTED LINE, 12" FT			647 STOP LINE, TYPE A125 FT	647 LANE ARROW, TYPE A125 EACH	647 WORD ON PAVEMENT, 72", TYPE A125 EACH
50 / 71	WL6	SERVICE RD. 3	37+00	37+50	LT								51																									
50 / 71	WL7	SERVICE RD. 3	39+20	42+00	LT								280																									
50 / 71	LL1	SR 81	437+00	437+39	LT		1																			39											
50 / 71	LL2	SR 81	437+00	437+39	RT		1																			39											
50 / 71	LL3	SR 81	439+14	442+00	LT		4																			286											
50 / 71	LL4	SR 81	439+14	442+00	RT		4																			286											
50 / 71	DL1	SR 81	432+00	432+39	LT	1																						39									
50 / 71	DL2	SR 81	439+14	442+00	RT	4																						286									
50 / 71	DL3	SERVICE RD. 3	37+00	37+50	L/R	1								50																							
50 / 71	DL4	SERVICE RD. 3	39+20	42+00	L/R	4								280																							
50 / 71	DL5	NEUBRECHT RD	10+25	10+72	RT	2								96																							
50 / 71	DL6	NEUBRECHT RD	11+87	12+50	L/R	1								63																							
50 / 71	CL1	SR 81	437+00	437+39	RT			1																						39							
50 / 71	CL2	SR 81	439+14	442+00	LT			8																						286							
50 / 71	CL3	NEUBRECHT RD	11+87	12+50	LT			2							63															63							
50 / 71	SL1	SR 81	437+39		RT																															36		
50 / 71	SL2	SR 81	439+14		LT																															55		
50 / 71	SL3	SERVICE RD. 3	32+50		RT																															11		
50 / 71	SL4	SERVICE RD. 3	39+20		LT																															11		
50 / 71	SL5	NEUBRECHT RD	11+87		LT																															29		
50 / 71	SL6	NEUBRECHT RD	10+72		RT																															70		
50 / 71	YT1	NEUBRECHT RD	10+25	10+72	RT											12																						
50 / 71	LA1	SR 81	437+29		L/R																																1	
50 / 71	LA2	SR 81	439+24		L/R																																1	
50 / 71	LA3	SR 81	439+90		L/R																																1	
50 / 71	LA4	SR 81	440+56		L/R																																1	
50 / 71	LA5	NEUBRECHT RD	11+97		LT																																1	
50 / 71	LA6	NEUBRECHT RD	11+97		LT																																1	
50 / 71	LA7	SR 81	439+24		LT																																1	
50 / 71	LA8	SR 81	439+90		LT																																1	
50 / 71	LA9	SR 81	440+56		LT																																1	
51 / 71	WL1	SERVICE RD. 3	42+00	45+95	RT								395																									
51 / 71	WL2	SR 81	442+00	447+00	LT																																	
51 / 71	WL3	SR 81	442+00	447+00	RT																																	
51 / 71	WL4	SERVICE RD. 3	42+00	45+22	LT								319																									
51 / 71	LL1	SR 81	442+00	447+00	LT		7																			500											
51 / 71	LL2	SR 81	442+00	447+00	RT		7																			500											
51 / 71	DL1	SR 81	442+00	447+00	RT	7																						500									
51 / 71	DL2	SR 81	444+75	447+00	L/R	3																						225									
51 / 71	DL3	SERVICE RD. 3	42+00	45+22	L/R	5								322																							
51 / 71	CL1	SR 81	442+00	443+40	LT			4																						140							
51 / 71	CL2	SR 81	442+00	444+50	LT			7																						250							
51 / 71	CL3	SR 81	442+75	447+00	RT			11																						425							
51 / 71	YT1	SR 81	444+75	447+00	L/R																													98				
51 / 71	LA1	SR 81	444+20		L/R																																1	
51 / 71	LA2	SR 81	446+50		RT																																1	
51 / 71	LA3	SR 81	443+10		LT																																1	
52 / 71	WL1	SR 81 RAMP F	462+22	463+00	LT																						78											
52 / 71	WL2	SR 81 RAMP D	460+00	460+66	RT																						67											
52 / 71	WL3	SR 81	447+00	462+22	LT																					144											
52 / 71	WL4	SR 81	448+44	452+00	LT																					355											
52 / 71	WL5	SR 81	447+00	460+66	RT																					149											
52 / 71	WL6	SR 81	448+49	452+00	RT																					352											
52 / 71	YL1	SR 81 RAMP F	461+69	463+00	RT																								132								
52 / 71	YL2	SR 81 RAMP D	460+00	461+37	LT																								142								
52 / 71	LL1	SR 81	447+00	447+90	LT		2																			90											
52 / 71	LL2	SR 81	447+00	447+90	RT		2																			90											
52 / 71	LL3	SR 81	448+75	452+00	LT		5																			325											
TOTALS CARRIED TO SUB-SUMMARY SHEET 10						28	33	33	0				1045	811	63	12						2000	145	0	274	2155	0	1050	1203	0	0	98	0	0			212	12	0

ALL-75-5.53

14 / 71

780
1224

10-SEP-2012 4:49PM wrightj

J:\Projects\ALL\76691\traffic\sheets\76691TS013.dgn

SHEET NO.	REFERENCE NO.	LOCATION	STATION FROM	STATION TO	SIDE	621 RPM 2-WAY (YELLOW/YELLOW) EACH	621 RPM 2-WAY (WHITE/RED) EACH	621 RPM 2-WAY (YELLOW/RED) EACH	621 RPM 1-WAY (WHITE) EACH	642 EDGE LINE, 4" (WHITE) FT	642 CENTER LINE 4" DOUBLE-SOLID FT	642 CHANNELIZING LINE, 8" FT	642 TRANSVERSE/DIAGONAL LINE (YELLOW) FT	646 EDGE LINE, 4" (WHITE) FT	646 EDGE LINE, 6" (WHITE) FT	646 EDGE LINE, 4" (YELLOW) FT	646 EDGE LINE, 6" (YELLOW) FT	646 LANE LINE, 4" FT	646 LANE LINE, 6" FT	646 CENTER LINE 4" DOUBLE-SOLID FT	646 CHANNELIZING LINE, 8" FT	646 CHANNELIZING LINE, 12" FT	646 CROSSWALK LINE FT	646 TRANSVERSE/DIAGONAL LINE (YELLOW) FT	646 DOTTED LINE, 6" FT	646 DOTTED LINE, 12" FT	647 STOP LINE, TYPE A125 FT	647 LANE ARROW, TYPE A125 EACH	647 WORD ON PAVEMENT, 72", TYPE A125 EACH
52 / 71	LL4	SR 81	448+75	452+00	RT		5											325												
52 / 71	DL1	SR 81	447+00	448+12	LT	2														112										
52 / 71	DL2	SR 81	447+00	448+12	RT	2														112										
52 / 71	DL3	SR 81	448+75	452+00	RT	5														325										
52 / 71	CL1	SR 81	448+75	452+00	L/R			9													325									
52 / 71	CL2	SR 81 RAMP F	461+96	463+00	RT			3														104								
52 / 71	CL3	SR 81	448+75	452+00	LT			9													325									
52 / 71	CL4	SR 81	447+00	447+90	RT			3													90									
52 / 71	SL1	SR 81	447+90		RT																							50		
52 / 71	SL2	SR 81	448+75		LT																							36		
52 / 71	SL3	SR 81 RAMP D	461+96		L/R																							30		
52 / 71	YT1	SR 81	447+00	448+12	L/R																				75					
52 / 71	LA1	SR 81	447+14		RT																								1	
52 / 71	LA2	SR 81	448+85		LT																								1	
52 / 71	LA3	SR 81	449+50		LT																								1	
52 / 71	LA4	SR 81	450+50		LT																								1	
52 / 71	LA5	SR 81	450+81		RT																								1	
52 / 71	LA6	SR 81	451+96		RT																								1	
52 / 71	LA7	SR 81 RAMP F	462+06		LT																								1	
52 / 71	LA8	SR 81 RAMP F	462+06		RT																								1	
52 / 71	LA9	SR 81 RAMP F	462+72		LT																								1	
52 / 71	LA10	SR 81 RAMP F	462+72		RT																								1	
52 / 71	LA11	SR 81	477+80		RT																								1	
53 / 71	WL1	SR 81 RAMP B	463+29	464+00	RT										72															
53 / 71	WL2	SR 81 RAMP C	461+00	461+98	RT										100															
53 / 71	WL3	SR 81	452+00	453+22	LT									126																
53 / 71	WL4	SR 81	463+29	457+00	LT									381																
53 / 71	WL5	SR 81	452+00	453+14	RT									111																
53 / 71	WL6	SR 81	461+98	457+00	RT									376																
53 / 71	YL1	SR 81 RAMP B	462+68	464+00	LT												132													
53 / 71	YL2	SR 81 RAMP C	461+00	462+52	LT												152													
53 / 71	LL1	SR 81	452+00	452+72	LT		1											72												
53 / 71	LL2	SR 81	452+00	452+72	RT		1											72												
53 / 71	LL3	SR 81	453+98	457+00	LT		4											302												
53 / 71	LL4	SR 81	453+98	457+00	RT		4											302												
53 / 71	DL1	SR 81	452+00	452+72	L/R	1														72										
53 / 71	DL2	SR 81	453+86	457+00	LT	4														314										
53 / 71	DL3	SR 81	453+86	457+00	RT	4														314										
53 / 71	CL1	SR 81	452+00	452+57	LT			2													57									
53 / 71	CL2	SR 81	452+00	452+72	RT			2													72									
53 / 71	CL3	SR 81 RAMP C	461+00	462+20	LT			3														120								
53 / 71	SL1	SR 81	452+72		RT																							36		
53 / 71	SL2	SR 81	453+98		LT																							30		
53 / 71	SL3	SR 81 RAMP C	462+20		L/R																							29		
53 / 71	YT1	SR 81	453+86	457+00	L/R																				136					
53 / 71	LA1	SR 81	452+62		RT																								1	
53 / 71	LA2	SR 81 RAMP C	462+10		LT																								1	
53 / 71	LA3	SR 81 RAMP C	462+10		L/R																								1	
53 / 71	LA4	SR 81 RAMP C	461+45		LT																								1	
53 / 71	LA5	SR 81 RAMP C	461+45		L/R																								1	
54 / 71	WL1	SR 81	457+00	461+40	LT									440																
54 / 71	WL2	SR 81	457+00	461+40	RT									440																
54 / 71	LL1	SR 81	457+00	461+40	LT		6											440												
54 / 71	LL2	SR 81	457+00	461+40	RT		6											440												
54 / 71	DL1	SR 81	457+00	461+40	LT	6														440										
54 / 71	DL2	SR 81	457+00	461+20	RT	6														420										
54 / 71	CL1	SR 81	461+20	461+40	RT			1													20									
54 / 71	YT1	SR 81	457+00	461+20	L/R																				117					
TOTALS CARRIED TO SUB-SUMMARY SHEET 10						30	27	32	0	0	0	0	0	1874	172	0	284	1953	0	2109	889	224	0	328	0	0			211	16	0

CALCULATED JRW
CHECKED ACF

TRAFFIC CONTROL PAVEMENT MARKING SUB-SUMMARY-8

ALL-75-5.53

15 / 71

781
1224

J:\Projects\ALL\76691\traffic\sheets\76691TS014.dgn 10-SEP-2012 4:49PM wrightj

SHEET NO.	REFERENCE NO.	LOCATION	STATION FROM	STATION TO	SIDE	621 RPM 2-WAY (YELLOW/YELLOW) EACH	621 RPM 2-WAY (WHITE/RED) EACH	621 RPM 2-WAY (YELLOW/RED) EACH	621 RPM 1-WAY (WHITE) EACH	642 EDGE LINE, 4" (WHITE) FT	642 CENTER LINE 4" DOUBLE-SOLID FT	642 CHANNELIZING LINE, 8" FT	642 TRANSVERSE/DIAGONAL LINE (YELLOW) FT	646 EDGE LINE, 4" (WHITE) FT	646 EDGE LINE, 6" (WHITE) FT	646 EDGE LINE, 4" (YELLOW) FT	646 EDGE LINE, 6" (YELLOW) FT	646 LANE LINE, 4" FT	646 LANE LINE, 6" FT	646 CENTER LINE 4" DOUBLE-SOLID FT	646 CHANNELIZING LINE, 8" FT	646 CHANNELIZING LINE, 12" FT	646 CROSSWALK LINE FT	646 TRANSVERSE/DIAGONAL LINE (YELLOW) FT	646 DOTTED LINE, 6" FT	646 DOTTED LINE, 12" FT	647 STOP LINE, TYPE A125 FT	647 LANE ARROW, TYPE A125 EACH	647 WORD ON PAVEMENT, 72", TYPE A125 EACH
55 / 71	WL1	NEUBRECHT RD	12+50	15+80	LT					330																			
55 / 71	WL2	NEUBRECHT RD	12+50	15+80	RT					330																			
55 / 71	DL1	NEUBRECHT RD	12+50	15+80	L/R	5					330																		
55 / 71	CL1	NEUBRECHT RD	12+50	15+19	LT				7			269																	
55 / 71	LA1	NEUBRECHT RD	12+63		LT																							1	
55 / 71	LA2	NEUBRECHT RD	12+63		LT																							1	
55 / 71	LA3	NEUBRECHT RD	13+29		LT																							1	
55 / 71	LA4	NEUBRECHT RD	13+29		LT																							1	
56 / 71	WL1	I-75	467+50	471+50	LT										400														
56 / 71	WL2	I-75/SR 81 RAMP 'F'	471+50	480+00	LT										850														
56 / 71	WL3	I-75	467+50	471+20	RT										370														
56 / 71	WL4	I-75/SR 81 RAMP 'B'	471+20	480+00	RT										880														
56 / 71	WL5	I-75	480+00	492+50	LT										1250														
56 / 71	WL6	I-75	480+00	492+50	RT										1250														
56 / 71	WL7	SR 81 RAMP 'F'	467+50	471+50	LT										400														
56 / 71	WL8	SR 81 RAMP 'B'	467+50	471+20	RT										370														
56 / 71	YL1	I-75	467+50	480+00	LT												1250												
56 / 71	YL2	I-75	467+50	480+00	RT												1250												
56 / 71	YL3	I-75	480+00	492+50	LT												1250												
56 / 71	YL4	I-75	480+00	492+50	RT												1250												
56 / 71	YL5	SR 81 RAMP 'F'	467+50	471+50	LT			5									400												
56 / 71	YL6	SR 81 RAMP 'B'	467+50	471+20	RT			5									370												
56 / 71	LL1	I-75	467+50	480+00	LT				16										1250										
56 / 71	LL2	I-75	467+50	480+00	RT				16										1250										
56 / 71	LL3	I-75	480+00	492+50	LT				16										1250										
56 / 71	LL4	I-75	480+00	492+50	RT				16										1250										
56 / 71	CL1	I-75	471+50	474+29	LT		7															279							
56 / 71	CL2	I-75	471+50	474+29	LT		7															279							
56 / 71	CL3	I-75	471+20	475+34	RT		11															414							
56 / 71	CL4	I-75	471+20	475+34	RT		11															414							
56 / 71	BL1	I-75	474+29	479+51	LT																				522				
56 / 71	BL2	I-75	475+34	480+00	RT																				466				
56 / 71	BL3	I-75	480+00	486+34	RT																				634				
57 / 71	WL1	I-75	492+50	505+00	LT										1250														
57 / 71	WL2	I-75	492+50	505+00	RT										1250														
57 / 71	WL3	I-75	505+00	517+50	LT										1250														
57 / 71	WL4	I-75	505+00	517+50	RT										1250														
57 / 71	YL1	I-75	492+50	505+00	LT												1250												
57 / 71	YL2	I-75	492+50	505+00	RT												1250												
57 / 71	YL3	I-75	505+00	517+50	LT												1250												
57 / 71	YL4	I-75	505+00	517+50	RT												1250												
57 / 71	LL1	I-75	492+50	505+00	LT				16										1250										
57 / 71	LL2	I-75	492+50	505+00	RT				16										1250										
57 / 71	LL3	I-75	505+00	517+50	LT				16										1250										
57 / 71	LL4	I-75	505+00	517+50	RT				16										1250										
58 / 71	WL1	I-75	517+50	520+00	LT										250														
58 / 71	WL2	I-75	517+50	520+00	RT										250														
58 / 71	YL1	I-75	517+50	520+00	LT												250												
58 / 71	YL2	I-75	517+50	520+00	RT												250												
58 / 71	LL1	I-75	517+50	520+00	LT				4										250										
58 / 71	LL2	I-75	517+50	520+00	RT				4										250										
TOTALS CARRIED TO SUB-SUMMARY SHEET 10						5	36	10	143	660	330	269	0	0	11270	0	11270	0	10500	0	0	1386	0	0	1622	0	0	0	4	0

TRAFFIC CONTROL PAVEMENT MARKING SUB-SUMMARY-9

CALCULATED JRW
CHECKED ACF

ALL-75-5.53

16 / 71

782 / 1224

J:\Projects\ALL\76691\traffic\sheets\76691TS015.dgn 10-SEP-2012 4:49PM wrightj

TRAFFIC CONTROL PAVEMENT MARKING SUB-SUMMARY-10

CALCULATED JRW
CHECKED ACF

SHEET NO.	REFERENCE NO.	LOCATION	STATION FROM	STATION TO	SIDE	621 RPM 2-WAY (YELLOW/YELLOW) EACH	621 RPM 2-WAY (WHITE/RED) EACH	621 RPM 2-WAY (YELLOW/RED) EACH	621 RPM 1-WAY (WHITE) EACH				642 EDGE LINE, 4" (WHITE) FT	642 CENTER LINE 4" DOUBLE-SOLID FT	642 CHANNELIZING LINE, 8" FT	642 TRANSVERSE/DIAGONAL LINE (YELLOW) FT						646 EDGE LINE, 4" (WHITE) FT	646 EDGE LINE, 6" (WHITE) FT	646 EDGE LINE, 4" (YELLOW) FT	646 EDGE LINE, 6" (YELLOW) FT	646 LANE LINE, 4" FT	646 LANE LINE, 6" FT	646 CENTER LINE 4" DOUBLE-SOLID FT	646 CHANNELIZING LINE, 8" FT	646 CHANNELIZING LINE, 12" FT	646 CROSSWALK LINE FT	646 TRANSVERSE/DIAGONAL LINE (YELLOW) FT	646 DOTTED LINE, 6" FT	646 DOTTED LINE, 12" FT			647 STOP LINE, TYPE A125 FT	647 LANE ARROW, TYPE A125 EACH	647 WORD ON PAVEMENT, 72", TYPE A125 EACH
59 / 71	WL1	SR 309	887+90	888+25																		33																
59 / 71	WL2	SR 309	887+17	888+25																		115																
59 / 71	DL1	SR 309/117			L/R																							40										
59 / 71	DL2	S. LEONARD			L/R																							100										
59 / 71	DL3	SR 309	887+90	888+25	RT.																							35										
59 / 71	CL1	SR 309	887+90	888+25	LT.																								35									
59 / 71	CL2	SR 309	887+90	888+25	LT.																								35									
59 / 71	SL1	SR 309/117			L/R																															22		
59 / 71	SL2	S. LEONARD			L/R																															16		
59 / 71	SL3	SR 309	887+90		L/R																															36		
59 / 71	SL4	S. LEONARD			L/R																															24		
59 / 71	XL1	S. LEONARD			L/R																												46					
59 / 71	XL2	S. LEONARD			L/R																												36					
59 / 71	XL3	S. LEONARD			L/R																												80					
59 / 71	XL4	S. LEONARD			L/R																												68					
59 / 71	XL5	SR 309	886+33	886+44	L/R																												62					
59 / 71	XL6	SR 309	886+43	886+54	L/R																												66					
59 / 71	XL7	SR 309	887+41	887+67	L/R																												73					
59 / 71	XL8	SR 309	887+52	887+77	L/R																												70					
59 / 71	LA1	SR 309	888+00		LT.																																1	
59 / 71	LA2	SR 309	888+00		LT.																																1	
59 / 71	LA3	SR 309	888+00		L/R																																1	
59 / 71	BL1	SR 309	885+06	887+90	L/R																														284			
SUB-TOTAL - THIS SHEET						0	0	0	0				0	0	0	0						148	0	0	0	0	0	175	70	0	501	0	284	0			98	3	0
SUB-TOTAL - PAVEMENT MARKING SUB-SUMMARY - SHEET 1						0	12	46	98				0	0	0	0						0	12207	0	11449	0	7600	0	0	3795	0	0	2019	0			48	2	0
SUB-TOTAL - PAVEMENT MARKING SUB-SUMMARY - SHEET 2						0	92	27	107				0	0	0	0						1167	9378	0	9479	1023	7500	0	0	3704	0	0	1218	1550			0	6	0
SUB-TOTAL - PAVEMENT MARKING SUB-SUMMARY - SHEET 3						16	18	0	36				0	0	0	0						1297	104	0	0	1324	0	1154	1425	104	447	59	263	0			155	21	0
SUB-TOTAL - PAVEMENT MARKING SUB-SUMMARY - SHEET 4						0	32	59	0				1410	705	0	0						781	3819	1222	4092	1398	2500	0	466	1100	288	0	0	0			102	10	1
SUB-TOTAL - PAVEMENT MARKING SUB-SUMMARY - SHEET 5						0	44	4	132				0	0	0	0						0	15220	0	15110	0	15000	0	0	2418	0	0	1616	0			0	4	0
SUB-TOTAL - PAVEMENT MARKING SUB-SUMMARY - SHEET 6						23	37	33	22				1900	700	0	0						2706	4400	0	4400	1600	2500	1064	276	630	0	85	1521	0			0	10	0
SUB-TOTAL - PAVEMENT MARKING SUB-SUMMARY - SHEET 7						28	33	33	0				1045	811	63	12						2000	145	0	274	2155	0	1050	1203	0	0	98	0	0			212	12	0
SUB-TOTAL - PAVEMENT MARKING SUB-SUMMARY - SHEET 8						30	27	32	0				0	0	0	0						1874	172	0	284	1953	0	2109	889	224	0	328	0	0			211	16	0
SUB-TOTAL - PAVEMENT MARKING SUB-SUMMARY - SHEET 9						5	36	10	143				660	330	269	0						0	11270	0	11270	0	10500	0	0	1386	0	0	1622	0			0	4	0
TOTALS CARRIED TO GENERAL SUMMARY						102	331	244	538				0.95 MI	0.48 MI	332	12						1.89 MI	10.74 MI	0.23 MI	10.67 MI	1.79 MI	08.64 MI	1.05 MI	4329	13361	1236	570	8543	1550			826	88	1

ALL-75-5.53

783
1224

J:\Projects\ALL\76691\traffic\sheets\76691TS016.dgn 10-SEP-2012 4:49PM wrightj

SHEET NO.	REFERENCE NO.	LOCATION	STATION	SIDE	CODE	SIZE	625 GROUND ROD EACH			630 GROUND MOUNTED SUPPORT, NO. 3 POST FT		630 GROUND MOUNTED SUPPORT, NO. 4 POST FT		630 GROUND MOUNTED STRUCTURAL BEAM SUPPORT, S4X7.7 FT		630 GROUND MOUNTED STRUCTURAL BEAM SUPPORT, W6X9 FT		630 GROUND MOUNTED STRUCTURAL BEAM SUPPORT, W8X18 FT		630 GROUND MOUNTED STRUCTURAL BEAM SUPPORT, W10X22 FT		630 GROUND MOUNTED STRUCTURAL BEAM SUPPORT, W10X12 FT		630 GROUND MOUNTED STRUCTURAL BEAM SUPPORT, W12X30 FT		630 ONE WAY SUPPORT, NO. 4 POST FT		630 SIGN POST REFLECTOR EACH	630 BREAKAWAY STRUCTURAL BEAM CONNECTION EACH
31 / 71	1	SIGN NOT USED																											
31 / 71	2	I-75	295+73	LT.	D10-3-12	12″ X 48″				15.8																			
31 / 71	3	I-75	295+73	RT.	D10-3-12	12″ X 48″				15.8																			
31 / 71	4	I-75	298+00	LT.	R2-1-48	48″ X 60″								18.3	17.7													2	
32 / 71	5	I-75	308+00	RT.		12′ X 12′	2																						
				RT.	E1-H5P-96	8′ X 2.5′				6.3	6.3																		
32 / 71	6	I-75	308+00	RT.		14′ X 6′																							
				RT.	E1-H5P-96	8′ X 2.5′				6.3	6.3																		
32 / 71	7	I-75	309+00	LT.	M3-3-36	36″ X 36″				17.8	17.1																		
					M1-1-36-2	36″ X 18″																							
32 / 71	8	I-75	310+50	RT.	E5-H1A-96	8′ X 5′										18.5	18.3											2	
32 / 71	9	I-75	315+00	RT.		20′ X 7′												24.3	46.6									3	
32 / 71	10	I-75	313+00	RT.		12′ X 6′																22.8	23.8					2	
32 / 71	11	I-75	316+00	RT.	W4-1R-48	48″ X 48″				16.3	16.8																	2	
32 / 71	12	FOURTH ST. RAMP B	317+00	RT.	R1-2-60	60″ X 60″				17.1	17.8																	2	
33 / 71	13	I-75	325+00	LT.	W4-1R-48	48″ X 48″				16.8	16.3																	2	
33 / 71	14	I-75	329+50	LT.	E5-H1A-96	8′ X 5′										17.6	17.8											2	
34 / 71	15	FOURTH ST. RAMP D	320+00	LT.	R5-1A-42	42″ X 30″				15.6	15.1																	2	
34 / 71	16	FOURTH ST. RAMP D	318+75	LT.	R1-1-48	48″ X 48″																				18.5	16.2	2	
					R5-1-48	48″ X 48″																						2	
					R6-1R-54	54″ X 18″																							
					R6-1L-54	54″ X 18″																							
34 / 71	17	FOURTH ST. RAMP C	330+70	LT.	M3-3-24	24″ X 12″				13.6																			
					M1-1-24	24″ X 24″																							
					M6-2AR-21	21″ X 15″																							
34 / 71	18	FOURTH ST. RAMP C	330+70	RT.	M3-3-24	24″ X 12″				15.7																			
					M1-1-24	24″ X 24″																							
					M6-2AL-21	21″ X 15″																							
34 / 71	19	FOURTH ST. RAMP D	322+50	LT.	D1-H6A-84	7′ X 4′										18.3	17.0											2	
34 / 71	19A	FOURTH ST. RAMP D	324+50	LT.	W3-1-48	48″ X 48″				17.8	17.2																	2	
				LT.	R5-1A-42	42″ X 30″																						2	
34 / 71	20	FOURTH ST. RAMP D	324+50	RT.	R5-1A-42	42″ X 30″				15.2	15.7																	2	
34 / 71	21	FOURTH ST. RAMP C	324+00	LT.	R1-2-60	60″ X 60″				17.0	17.0																	2	
35 / 71	22	FOURTH ST. RAMP B	310+25	RT.	M3-3-24	24″ X 12″				15.7																			
					M1-1-24	24″ X 24″																							
					M6-2AL-21	21″ X 15″																							
35 / 71	23	FOURTH ST. RAMP A	321+25	RT.	R1-1-48	48″ X 48″																				16.4	18.7	2	
					R5-1-48	48″ X 48″																						2	
					R6-1R-54	54″ X 18″																							
					R6-1L-54	54″ X 18″																							
35 / 71	24	FOURTH ST. RAMP B	310+25	LT.	M3-3-24	24″ X 12″				13.6																			
					M1-1-24	24″ X 24″																							
					M6-2AR-21	21″ X 15″																							
35 / 71	25	FOURTH ST. RAMP A	318+50	RT.	D1-H6A-84	7′ X 4′										17.0	18.2											2	
35 / 71	25A	FOURTH ST. RAMP A	316+50	RT.	W3-1-48	48″ X 48″				17.2	17.8																	2	
					R5-1A-42	42″ X 30″																						2	
35 / 71	26	FOURTH ST. RAMP A	316+50	LT.	R5-1A-42	42″ X 30″				15.7	15.2																	2	
35 / 71	27	FOURTH ST. RAMP A	320+00	RT.	R5-1A-42	42″ X 30″				14.8	14.8																	2	
36 / 71	28	I-75	330+20	RT.		12′ X 12′																				31.9	32.1		
					E1-H5P-96	8′ X 2.5′				6.3	6.3																		
36 / 71	29	I-75	333+00	LT.	E11-1D	15′ X 7′	1																						
					E1-H5P-96	8′ X 2.5′				6.3	6.3																		
36 / 71	30	I-75	340+50	LT.	D12-H16-108	108″ X 48″										22.0	18.5											
36 / 71	31	I-75	338+00	RT.	D5-H8A-144	144″ X 72″																19.3	19.1					2	
37 / 71	32	I-75	345+20	LT.	E11-1	15′ X 7′	1																						
					E1-H5P-96	8′ X 2.5′				6.3	6.3																		
37 / 71	33	I-75	345+75	RT.		10′ X 10′																25.5	27.5					2	
37 / 71	34	I-75	348+53	LT.	D10-3-12	12″ X 48″				17.0																			
37 / 71	35	I-75	348+53	RT.	D10-3-12	12″ X 48″				17.2																			
38 / 71	36	I-75	356+50	RT.		15′ X 10′	1																						
					E1-H5P-96	8′ X 2.5′				6.3	6.3																		
TOTALS CARRIED TO SUB-SUMMARY SHEET 11							5			343.5	218.6	0	0	18.3	17.7	93.4	89.8	24.3	46.6	25.5	27.5	42.1	42.9	31.9	32.1	34.9	34.9	32	19

CALCULATED JRW
CHECKED JRL

TRAFFIC CONTROL SIGN SUB-SUMMARY-1

ALL-75-5.53

18 / 71

784
1224

J:\Projects\ALL\7669\traffic\sheets\7669ITS017.dgn 10-SEP-2012 1:05PM wrightj

SHEET NO.	REFERENCE NO.	LOCATION	STATION	SIDE	CODE	SIZE	630 SURFACE PREPARATION, NEW SUPPORT SECTION EACH	630 COATING, EPOXY INTERMEDIATE COAT, SUPPORT SECTION EACH	630 COATING, URETHANE TOP COAT, SUPPORT SECTION EACH	630 COATING, ORGANIC ZINC PRIME COAT, SUPPORT SECTION EACH	630 OVERHEAD SIGN SUPPORT, TYPE TC-16.21 DESIGN 11 EACH	630 OVERHEAD SIGN SUPPORT, TYPE TC-12.30, DESIGN 3, AS PER PLAN EACH	630 OVERHEAD SIGN SUPPORT, TYPE TC-12.30, DESIGN 4, AS PER PLAN EACH	630 OVERHEAD SIGN SUPPORT, TYPE TC-12.30, DESIGN 6 EACH	630 OVERHEAD SIGN SUPPORT, TYPE TC-12.30, DESIGN 8 EACH	630 OVERHEAD SIGN SUPPORT, TYPE TC-7.65, DESIGN 8 EACH	630 SIGN ATTACHMENT ASSEMBLY, AS PER PLAN EACH	630 OVERPASS STRUCTURE MOUNTED SIGN SUPPORT, TYPE TC-18.24 EACH	630 OVERPASS STRUCTURE MOUNTED SIGN SUPPORT, TYPE TC-18.26, DESIGN 2 EACH	630 SIGN, FLAT SHEET SF	630 SIGN, GROUND MOUNTED EXTRUSHEET SF	630 SIGN, OVERHEAD EXTRUSHEET SF	630 GROUND MOUNTED STRUCTURAL BEAM SUPPORT FOUNDATION EACH	630 RIGID OVERHEAD SIGN FOUNDATION EACH
31 / 71	1	SIGN NOT USED																							
31 / 71	2	I-75	295+73	LT.	D10-3-12	12″ X 48″														4					
31 / 71	3	I-75	295+73	RT.	D10-3-12	12″ X 48″														4					
31 / 71	4	I-75	298+00	LT.	R2-1-48	48″ X 60″														20			2		
32 / 71	5	I-75	308+00	RT.		12′ X 12′										1						144		2	
				RT.	E1-H5P-96	8′ X 2.5′																20			
32 / 71	6	I-75	308+00	RT.		14′ X 6′																84			
				RT.	E1-H5P-96	8′ X 2.5′																20			
32 / 71	7	I-75	309+00	LT.	M3-3-36	36″ X 36″														9					
					M1-1-36-2	36″ X 18″														4.5					
32 / 71	8	I-75	310+50	RT.	E5-H1A-96	8′ X 5′															40		2		
32 / 71	9	I-75	315+00	RT.		20′ X 7′															140		3		
32 / 71	10	I-75	313+00	RT.		12′ X 6′															72		2		
32 / 71	11	I-75	316+00	RT.	W4-1R-48	48″ X 48″														16					
32 / 71	12	FOURTH ST. RAMP B	317+00	RT.	R1-2-60	60″ X 60″														10.83					
33 / 71	13	I-75	325+00	LT.	W4-1R-48	48″ X 48″														16					
33 / 71	14	I-75	329+50	LT.	E5-H1A-96	8′ X 5′															40		2		
34 / 71	15	FOURTH ST. RAMP D	320+00	LT.	R5-1A-42	42″ X 30″														8.75					
34 / 71	16	FOURTH ST. RAMP D	318+75	LT.	R1-1-48	48″ X 48″														16					
					R5-1-48	48″ X 48″														16					
					R6-1R-54	54″ X 18″														6.75					
					R6-1L-54	54″ X 18″														6.75					
34 / 71	17	FOURTH ST. RAMP C	330+70	LT.	M3-3-24	24″ X 12″														2					
					M1-1-24	24″ X 24″														4					
					M6-2AR-21	21″ X 15″														2.188					
34 / 71	18	FOURTH ST. RAMP C	330+70	RT.	M3-3-24	24″ X 12″														2					
					M1-1-24	24″ X 24″														4					
					M6-2AL-21	21″ X 15″														2.188					
34 / 71	19	FOURTH ST. RAMP D	322+50	LT.	D1-H6A-84	7′ X 4′															28		2		
34 / 71	19A	FOURTH ST. RAMP D	324+50	LT.	W3-1-48	48″ X 48″														16					
				LT.	R5-1A-42	42″ X 30″														8.75					
34 / 71	20	FOURTH ST. RAMP D	324+50	RT.	R5-1A-42	42″ X 30″														8.75					
34 / 71	21	FOURTH ST. RAMP C	324+00	LT.	R1-2-60	60″ X 60″														10.83					
35 / 71	22	FOURTH ST. RAMP B	310+25	RT.	M3-3-24	24″ X 12″														2					
					M1-1-24	24″ X 24″														4					
					M6-2AL-21	21″ X 15″														2.188					
35 / 71	23	FOURTH ST. RAMP A	321+25	RT.	R1-1-48	48″ X 48″														16					
					R5-1-48	48″ X 48″														16					
					R6-1R-54	54″ X 18″														6.75					
					R6-1L-54	54″ X 18″														6.75					
35 / 71	24	FOURTH ST. RAMP B	310+25	LT.	M3-3-24	24″ X 12″														2					
					M1-1-24	24″ X 24″														4					
					M6-2AR-21	21″ X 15″														2.188					
35 / 71	25	FOURTH ST. RAMP A	318+50	RT.	D1-H6A-84	7′ X 4′															28		2		
35 / 71	25A	FOURTH ST. RAMP A	316+50	RT.	W3-1-48	48″ X 48″														16					
					R5-1A-42	42″ X 30″														8.75					
35 / 71	26	FOURTH ST. RAMP A	316+50	LT.	R5-1A-42	42″ X 30″														8.75					
35 / 71	27	FOURTH ST. RAMP A	320+00	RT.	R5-1A-42	42″ X 30″														8.75					
36 / 71	28	I-75	330+20	RT.		12′ X 12′															144		2		
					E1-H5P-96	8′ X 2.5′															20				
36 / 71	29	I-75	333+00	LT.	E11-1D	15′ X 7′								1								105		1	
					E1-H5P-96	8′ X 2.5′																20			
36 / 71	30	I-75	340+50	LT.	D12-H16-108	108″ X 48″															36		2		
36 / 71	31	I-75	338+00	RT.	D5-H8A-144	144″ X 72″															72		2		
37 / 71	32	I-75	345+20	LT.	E11-1	15′ X 7′								1								105		1	
					E1-H5P-96	8′ X 2.5′																20			
37 / 71	33	I-75	345+75	RT.		10′ X 10′															100		2		
37 / 71	34	I-75	348+53	LT.	D10-3-12	12″ X 48″														4					
37 / 71	35	I-75	348+53	RT.	D10-3-12	12″ X 48″														4					
38 / 71	36	I-75	356+50	RT.		15′ X 10′									1							150		1	
					E1-H5P-96	8′ X 2.5′																20			
TOTALS CARRIED TO SUB-SUMMARY SHEET 12							0	0	0	0	0	0	0	2	1	1	0	0	0	311.41	720	688	23	5	

CALCULATED JRW
CHECKED JRL

TRAFFIC CONTROL SIGN SUB-SUMMARY-2

ALL-75-5.53

19 / 71

785
1224

J:\Projects\ALL\7669\traffic\sheets\76691TS018.dgn 10-SEP-2012 1:05PM wrightj

SHEET NO.	REFERENCE NO.	LOCATION	STATION	SIDE	CODE	SIZE	625 GROUND ROD EACH			630 GROUND MOUNTED SUPPORT, NO. 3 POST FT		630 GROUND MOUNTED SUPPORT, NO. 4 POST FT		630 GROUND MOUNTED STRUCTURAL BEAM SUPPORT, S4X7.7 FT		630 GROUND MOUNTED STRUCTURAL BEAM SUPPORT, W6X9 FT		630 GROUND MOUNTED STRUCTURAL BEAM SUPPORT, W8X18 FT		630 GROUND MOUNTED STRUCTURAL BEAM SUPPORT, W10X22 FT		630 GROUND MOUNTED STRUCTURAL BEAM SUPPORT, W10X12 FT		630 GROUND MOUNTED STRUCTURAL BEAM SUPPORT, W12X30 FT		630 ONE WAY SUPPORT, NO. 4 POST FT		630 SIGN POST REFLECTOR EACH	630 BREAKAWAY STRUCTURAL BEAM CONNECTION EACH
38 / 71	37	I-75	362+00	LT.	W4-1R-48	48" X 48"				16.8	16.3																	2	
38 / 71	38	I-75	360+00	RT.	E5-H1A-96	8' X 5'										18.3	19.2												2
38 / 71	39	SIGN NOT USED																											
38 / 71	40	SR309 RAMP 'F'	364+00	RT.	D1-H6A-108	9' X 4'																18.3	19.4						2
					M1-5-45-3	45" X 36"				8.9	8.9																		
					M6-4-30	30" X 21"																							
					M1-5-45-3	45" X 36"																							
					M6-4-30	30" X 21"																							
38 / 71	41	SR309 RAMP 'F'	366+40	LT.	R3-H8BH-36	36" X 30"				15.3	14.9																		
					R5-1A-42	42" X 30"																						2	
38 / 71	42	SR309 RAMP 'F'	366+40	RT.	R3-H8BH-36	36" X 30"				15.1	14.8																		
					R5-1A-42	42" X 30"																						2	
39 / 71	43	SR 309	889+50	LT.		7' X 5'	1																						
					R3-5L-36	36" X 42"																							
					R3-5A-36	36" X 42"																							
39 / 71	44	SR 309	890+50	LT.	R2-1-30	30" X 36"				13.5																			
39 / 71	45	SR 309	891+50	LT.	M1-5-30-3	30" X 24"				13.3	13.5																		
					M3-4-24	24" X 12"																							
					M5-2R-21	21" X 15"																							
					M1-5-30-3	30" X 24"																							
					M3-4-24	24" X 12"																							
					M5-2R-21	21" X 15"																							
39 / 71	46	SR 309 RAMP 'C'	370+50	LT.	R3-H8BT-42	42" X 30"																				17.1	14.8		
					R5-1-48	48" X 48"																						2	
					R6-1L-54	54" X 18"																							
					R6-1R-54	54" X 18"																							
39 / 71	47	SR 309 RAMP 'C'	370+65	RT.	R5-1-48	48" X 48"																				13.2	14.9	2	
					R6-1L-54	54" X 18"																							
					R6-1R-54	54" X 18"																							
59 / 71	48	SR 309	888+10	RT.	M2-H5-108	9' X 4'								14.8	14.7														2
39 / 71	49	SR 309	889+00	RT.	R2-1-30	30" X 36"				13.7																			
39 / 71	50	SR 309	890+00	RT.	R3-H8CBB-48	48" X 30"				13.0	13.1																		
39 / 71	51	SIGN NOT USED																											
39 / 71	52	SR 309	892+70	RT.		8' X 7'	1																						
39 / 71	53	SR 309	892+70	RT.		8' X 7'																							
39 / 71	54	SR 309	892+70	RT.	R3-H8CBB-48	48" X 30"																							
39 / 71	55	SR 309 RAMP 'A'	369+50	LT.	D9-2-24	24" X 24"				8.7																			
					M6-1R-21	21" X 15"																							
					M1-5-30-3	30" X 24"																							
					M6-4-21	21" X 15"																							
					M1-5-30-3	30" X 24"				5.4																			
					M6-4-21	21" X 15"																							
					D7-H1-72	72" X 12"								11.0	11.0														2
					D7-H1-72	72" X 12"																							
40 / 71	56	SR 309	894+00	LT.	R3-H8CA-48	48" X 30"				13.5	13.1																		
40 / 71	57	SR 309	896+70	LT.		10' X 5'																							
40 / 71	58	SR 309	897+00	LT.	R2-1-30	30" X 36"				13.1																			
40 / 71	59	SR 309	895+35	RT.		10' X 5'																							
40 / 71	60	SR 309	895+00	RT.	R2-1-30	30" X 36"				13.1																			
40 / 71	61	SR 309	898+40	RT.	R3-H8DM-54	54" X 30"				12.9	13.0																		
40 / 71	62	SR 309 RAMP 'F'	369+60	LT.	R5-1-48	48" X 48"																				15.5	14.5	2	
					R6-1L-54	54" X 18"																							
					R6-1R-54	54" X 18"																							
41 / 71	63	SR 309 RAMP 'E'	370+62	RT.	D9-2-24	24" X 24"				8.7																			
					M6-1R-21	21" X 15"																							
					M1-5-30-3	30" X 24"																							
					M6-4-21	21" X 15"																							
					M1-5-30-3	30" X 24"				5.4																			
					M6-4-21	21" X 15"																							
					D7-H1-72	72" X 12"								11.0	11.0														
					D7-H1-72	72" X 12"																							
TOTALS CARRIED TO SUB-SUMMARY SHEET 11							2			190.4	107.6	0.0	0.0	36.8	36.7	18.3	19.2	0	0	0	0	18.3	19.4	0	0	45.8	44.2	12	8

CALCULATED JRW
CHECKED JRL

TRAFFIC CONTROL SIGN SUB-SUMMARY-3

ALL-75-5.53

20 / 71

786
1224

wrightj
10-SEP-2012 1:05PM
J:\Projects\ALL\7669\traffic\sheets\76691TS019.dgn

SHEET NO.	REFERENCE NO.	LOCATION	STATION	SIDE	CODE	SIZE	630 SURFACE PREPARATION, NEW SUPPORT SECTION EACH	630 COATING, EPOXY INTERMEDIATE COAT, SUPPORT SECTION EACH	630 COATING, URETHANE TOP COAT, SUPPORT SECTION EACH	630 COATING, ORGANIC ZINC PRIME COAT, SUPPORT SECTION EACH	630 OVERHEAD SIGN SUPPORT, TYPE TC-16.21 DESIGN 11 EACH	630 OVERHEAD SIGN SUPPORT, TYPE TC-12.30, DESIGN 3, AS PER PLAN EACH	630 OVERHEAD SIGN SUPPORT, TYPE TC-12.30, DESIGN 4, AS PER PLAN EACH	630 OVERHEAD SIGN SUPPORT, TYPE TC-12.30, DESIGN 6 EACH	630 OVERHEAD SIGN SUPPORT, TYPE TC-12.30, DESIGN 8 EACH	630 OVERHEAD SIGN SUPPORT, TYPE TC-7.65, DESIGN 8 EACH	630 SIGN ATTACHMENT ASSEMBLY, AS PER PLAN EACH	630 OVERPASS STRUCTURE MOUNTED SIGN SUPPORT, TYPE TC-18.24 EACH	630 OVERPASS STRUCTURE MOUNTED SIGN SUPPORT, TYPE TC-18.26, DESIGN 2 EACH	630 SIGN, FLAT SHEET SF	630 SIGN, GROUND MOUNTED EXTRUSHEET SF	630 SIGN, OVERHEAD EXTRUSHEET SF	630 GROUND MOUNTED STRUCTURAL BEAM SUPPORT FOUNDATION EACH	630 RIGID OVERHEAD SIGN FOUNDATION EACH
38 / 71	37	I-75	362+00	LT.	W4-1R-48	48" X 48"														16				
38 / 71	38	I-75	360+00	RT.	E5-H1A-96	8' X 5'															40		2	
38 / 71	39	SIGN NOT USED																						
38 / 71	40	SR309 RAMP 'F'	364+00	RT.	D1-H6A-108	9' X 4'															36		2	
					M1-5-45-3	45" X 36"														11.25				
					M6-4-30	30" X 21"														4.38				
					M1-5-45-3	45" X 36"														11.25				
					M6-4-30	30" X 21"														4.38				
38 / 71	41	SR309 RAMP 'F'	366+40	LT.	R3-H8BH-36	36" X 30"														7.5				
					R5-1A-42	42" X 30"														8.75				
38 / 71	42	SR309 RAMP 'F'	366+40	RT.	R3-H8BH-36	36" X 30"														7.5				
					R5-1A-42	42" X 30"														8.75				
39 / 71	43	SR 309	889+50	LT.		7' X 5'					1											35		1
					R3-5L-36	36" X 42"														10.5				
					R3-5A-36	36" X 42"														10.5				
39 / 71	44	SR 309	890+50	LT.	R2-1-30	30" X 36"														7.5				
39 / 71	45	SR 309	891+50	LT.	M1-5-30-3	30" X 24"														5				
					M3-4-24	24" X 12"														2				
					M5-2R-21	21" X 15"														2.188				
					M1-5-30-3	30" X 24"														5				
					M3-4-24	24" X 12"														2				
					M5-2R-21	21" X 15"														2.188				
39 / 71	46	SR 309 RAMP 'C'	370+50	LT.	R3-H8BT-42	42" X 30"														8.75				
					R5-1-48	48" X 48"														16				
					R6-1L-54	54" X 18"														6.75				
					R6-1R-54	54" X 18"														6.75				
39 / 71	47	SR 309 RAMP 'C'	370+65	RT.	R5-1-48	48" X 48"														16				
					R6-1L-54	54" X 18"														6.75				
					R6-1R-54	54" X 18"														6.75				
59 / 71	48	SR 309	888+10	RT.	M2-H5-108	9' X 4'															36		2	
39 / 71	49	SR 309	889+00	RT.	R2-1-30	30" X 36"														7.5				
39 / 71	50	SR 309	890+00	RT.	R3-H8CBB-48	48" X 30"														10				
39 / 71	51	SIGN NOT USED																						
39 / 71	52	SR 309	892+70	RT.		8' X 7'	1	1	1	1		1										56		1
39 / 71	53	SR 309	892+70	RT.		8' X 7'																56		
39 / 71	54	SR 309	892+70	RT.	R3-H8CBB-48	48" X 30"											1			10				
39 / 71	55	SR 309 RAMP 'A'	369+50	LT.	D9-2-24	24" X 24"														4				
					M6-1R-21	21" X 15"														2.2				
					M1-5-30-3	30" X 24"														5				
					M6-4-21	21" X 15"														2.2				
					M1-5-30-3	30" X 24"														5				
					M6-4-21	21" X 15"														2.2				
					D7-H1-72	72" X 12"														6			2	
					D7-H1-72	72" X 12"														6				
40 / 71	56	SR 309	894+00	LT.	R3-H8CA-48	48" X 30"														10				
40 / 71	57	SR 309	896+70	LT.		10' X 5'												1				50	2	
40 / 71	58	SR 309	897+00	LT.	R2-1-30	30" X 36"														7.5				
40 / 71	59	SR 309	895+35	RT.		10' X 5'												1				50		
40 / 71	60	SR 309	895+00	RT.	R2-1-30	30" X 36"														7.5				
40 / 71	61	SR 309	898+40	RT.	R3-H8DM-54	54" X 30"														11.25				
40 / 71	62	SR 309 RAMP 'F'	369+60	LT.	R5-1-48	48" X 48"														16				
					R6-1L-54	54" X 18"														6.75				
					R6-1R-54	54" X 18"														6.75				
41 / 71	63	SR 309 RAMP 'E'	370+62	RT.	D9-2-24	24" X 24"														4				
					M6-1R-21	21" X 15"														2.2				
					M1-5-30-3	30" X 24"														5				
					M6-4-21	21" X 15"														2.2				
					M1-5-30-3	30" X 24"														5				
					M6-4-21	21" X 15"														2.2				
					D7-H1-72	72" X 12"														6			2	
					D7-H1-72	72" X 12"														6				
TOTALS CARRIED TO SUB-SUMMARY SHEET 12							1	1	1	1	1	1	0	0	0	0	1	2	0	352.84	112	247	12	2

CALCULATED JRW
CHECKED JRL

TRAFFIC CONTROL SIGN SUB-SUMMARY-4

ALL-75-5.53

J:\Projects\ALL\76691\traffic\sheets\76691TS020.dgn 10-SEP-2012 1:05PM wrightj

SHEET NO.	REFERENCE NO.	LOCATION	STATION	SIDE	CODE	SIZE	625 GROUND ROD EACH			630 GROUND MOUNTED SUPPORT, NO. 3 POST FT		630 GROUND MOUNTED SUPPORT, NO. 4 POST FT		630 GROUND MOUNTED STRUCTURAL BEAM SUPPORT, S4X7.7 FT		630 GROUND MOUNTED STRUCTURAL BEAM SUPPORT, W6X9 FT		630 GROUND MOUNTED STRUCTURAL BEAM SUPPORT, W8X18 FT		630 GROUND MOUNTED STRUCTURAL BEAM SUPPORT, W10X22 FT		630 GROUND MOUNTED STRUCTURAL BEAM SUPPORT, W10X12 FT		630 GROUND MOUNTED STRUCTURAL BEAM SUPPORT, W12X30 FT		630 ONE WAY SUPPORT, NO. 4 POST FT		630 SIGN POST REFLECTOR EACH	630 BREAKAWAY STRUCTURAL BEAM CONNECTION EACH
41 / 71	64	SR 309	889+30	LT.		8′ X 7′	1																						
41 / 71	65	SR 309	889+30	LT.		8′ X 7′																							
41 / 71	66	SARATOGA AVE			R1-1-30	30″ X 30″				13.1																		1	
					R3-2	24″ X 24″																							
41 / 71	67	SR 309	901+55	LT.	M2-H5-108	108″ X 48″								14.7	15.0													2	
41 / 71	68	SR 309	901+95	CL	R3-H4B-36	36″ X 36″				13.5																			
41 / 71	69	SR 309 RAMP 'F'	369+50	RT.	R3-H8BH-36	36″ X 30″																				15.0	16.9		
					R5-1-48	48″ X 48″																						2	
					R6-1L-54	54″ X 18″																							
					R6-1R-54	54″ X 18″																							
41 / 71	70	SR 309	901+00	RT.	M1-5-30-3	30″ X 24″				13.8	14.3																		
					M3-2-24	24″ X 12″																							
					M6-3-21	21″ X 15″																							
					M1-5-30-3	30″ X 24″																							
					M3-2-24	24″ X 12″																							
					M5-2R-21	21″ X 15″																							
41 / 71	71	SIGN NOT USED																											
41 / 71	72	SR 309	903+00	RT.	R2-1-30	30″ X 36″				13.6																			
41 / 71	73	SR 309	903+50	RT.	R3-H8CB-48	48″ X 30″				13.1	13.6																		
42 / 71	74	LOST CREEK BLVD	50+25	LT.	R1-1-30	30″ X 30″				13.7																		1	
					R1-3P-18	18″ X 6″																							
42 / 71	75	WELLESLEY DR	13+15	LT.	R1-1-30	30″ X 30″				13.1																		1	
					R1-3P-18	18″ X 6″																							
42 / 71	76	BRYN MAWR	12+50	RT.	R1-1-30	30″ X 30″				13.3																		1	
					R1-3P-18	18″ X 6″																							
42 / 71	76A	SARATOGA AVE			R1-3P-18	18″ X 6″																						1	
42 / 71	77A	LOST CREEK BLVD	51+00	RT.	R2-1-24	24″ X 30″				13.8																			
42 / 71	77B	BRYN MAWR	12+00	LT.	R2-1-24	24″ X 30″				13.8																			
42 / 71	77C	BRYN MAWR	11+00	LT.	W1-2R-30	30″ X 30″				13.5																		1	
42 / 71	77D	BRYN MAWR	7+00	RT.	W1-2L-30	30″ X 30″				13.2																		1	
42 / 71	77E	DEAN AVE			R1-1-30	30″ X 30″				13.5																		1	
42 / 71	77F	DEAN AVE			W14-2-30	30″ X 30″				13.5																		1	
43 / 71	78	SR 309 RAMP 'C'	373+00	LT.	D1-H6A-108	9′ X 4′																	19.3	17.5					2
					M1-5-45-3	45″ X 36″				8.9	8.9																		
					M6-4-30	30″ X 21″																							
					M1-5-45-3	45″ X 36″																							
					M6-4-30	30″ X 21″																							
43 / 71	78A	TURNER AVE			W14-2-30	30″ X 30″				13.0																		1	
43 / 71	79	SIGN NOT USED																											
43 / 71	80	SR 309 RAMP 'C'	375+00	LT.	R3-H8BT-42	42″ X 30″				17.5	16.5																		
					R5-1A-42	42″ X 30″																						2	
43 / 71	81	SR 309 RAMP 'C'	375+00	RT.	R3-H8BT-42	42″ X 30″				13.4	12.9																		
					R5-1A-42	42″ X 30″																						2	
43 / 71	82	I-75	376+50	LT.	E5-H1A-96	8′ X 5′										20.6	18.6												2
43 / 71	83	I-75	379+00	LT.		13′ X 6′	2																						
					E1-H5P-96	8′ X 2.5′				6.3	6.3																		
43 / 71	84	I-75	379+00	LT.		15′ X 10′																							
					E1-H5P-96	8′ X 2.5′				6.3	6.3																		
43 / 71	85	I-75	377+00	RT.	W4-1R-48	48″ X 48″				16.3	16.8																	2	
44 / 71	86	I-75	390+25	LT.	D5-H8A-144	144″ X 72″																	19.9	21.9					2
44 / 71	87	I-75	394+00	RT.	M1-1-36-2	36″ X 36″				16.3	16.6																		
					M3-1-36	36″ X 18″																							
44 / 71	88	I-75	398+50	LT.		20′ X 7′												45.3	23.0										3
44 / 71	88A	I-75	402+50	LT.		12′ X 6′																	24.3	24.3					2
44 / 71	89	I-75	399+50	RT.		8′ X 12′														30.0	31.6								2
					E1-H5P-96	8′ X 2.5′																							
44 / 71	90	I-75	401+33	LT.	D10-3-12	12″ X 48″				15.8																			
44 / 71	91	I-75	401+33	RT.	D10-3-12	12″ X 48″				16.9																			
44 / 71	91A	I-75	405+00	RT.	R2-1-48	48″ X 60″						18.3	19.5																
45 / 71	92	I-75	406+50	LT.		12′ X 12′																			30.9	31.0			2
					E1-H5P-96	8′ X 2.5′				6.3	6.3																		
TOTALS CARRIED TO SUB-SUMMARY SHEET 11							3			325.5	118.5	18.3	19.5	14.7	15.0	20.6	18.6	45.3	23.0	30.0	31.6	63.5	63.7	30.9	31.0	15.0	16.9	18	17

CALCULATED JRW
CHECKED JRL

TRAFFIC CONTROL SIGN SUB-SUMMARY-5

ALL-75-5.53

22 / 71

788
1224

wrightj 10-SEP-2012 1:05PM J:\Projects\ALL\7669\traffic\sheets\7669ITS021.dgn

SHEET NO.	REFERENCE NO.	LOCATION	STATION	SIDE	CODE	SIZE	630 SURFACE PREPARATION, NEW SUPPORT SECTION EACH	630 COATING, EPOXY INTERMEDIATE COAT, SUPPORT SECTION EACH	630 COATING, URETHANE TOP COAT, SUPPORT SECTION EACH	630 COATING, ORGANIC ZINC PRIME COAT, SUPPORT SECTION EACH	630 OVERHEAD SIGN SUPPORT, TYPE TC-16.21 DESIGN 11 EACH	630 OVERHEAD SIGN SUPPORT, TYPE TC-12.30, DESIGN 3, AS PER PLAN EACH	630 OVERHEAD SIGN SUPPORT, TYPE TC-12.30, DESIGN 4, AS PER PLAN EACH	630 OVERHEAD SIGN SUPPORT, TYPE TC-12.30, DESIGN 6 EACH	630 OVERHEAD SIGN SUPPORT, TYPE TC-12.30, DESIGN 8 EACH	630 OVERHEAD SIGN SUPPORT, TYPE TC-7.65, DESIGN 8 EACH	630 SIGN ATTACHMENT ASSEMBLY, AS PER PLAN EACH	630 OVERPASS STRUCTURE MOUNTED SIGN SUPPORT, TYPE TC-18.24 EACH	630 OVERPASS STRUCTURE MOUNTED SIGN SUPPORT, TYPE TC-18.26, DESIGN 2 EACH	630 SIGN, FLAT SHEET SF	630 SIGN, GROUND MOUNTED EXTRUSHEET SF	630 SIGN, OVERHEAD EXTRUSHEET SF	630 GROUND MOUNTED STRUCTURAL BEAM SUPPORT FOUNDATION EACH	630 RIGID OVERHEAD SIGN FOUNDATION EACH
41 / 71	64	SR 309	889+30	LT.		8′ X 7′	1	1	1	1		1										56		1
41 / 71	65	SR 309	889+30	LT.		8′ X 7′																56		
41 / 71	66	SARATOGA AVE			R1-1-30	30″ X 30″														6.25				
					R3-2	24″ X 24″														4				
41 / 71	67	SR 309	901+55	LT.	M2-H5-108	108″ X 48″															36		2	
41 / 71	68	SR 309	901+95	CL	R3-H4B-36	36″ X 36″														9				
41 / 71	69	SR 309 RAMP 'F'	369+50	RT.	R3-H8BH-36	36″ X 30″														7.5				
					R5-1-48	48″ X 48″														16				
					R6-1L-54	54″ X 18″														6.75				
					R6-1R-54	54″ X 18″														6.75				
41 / 71	70	SR 309	901+00	RT.	M1-5-30-3	30″ X 24″														5				
					M3-2-24	24″ X 12″														2				
					M6-3-21	21″ X 15″														2.188				
					M1-5-30-3	30″ X 24″														5				
					M3-2-24	24″ X 12″														2				
					M5-2R-21	21″ X 15″														2.188				
41 / 71	71	SIGN NOT USED																						
41 / 71	72	SR 309	903+00	RT.	R2-1-30	30″ X 36″														7.5				
41 / 71	73	SR 309	903+50	RT.	R3-H8CB-48	48″ X 30″														10				
42 / 71	74	LOST CREEK BLVD	50+25	LT.	R1-1-30	30″ X 30″														6.25				
					R1-3P-18	18″ X 6″														0.75				
42 / 71	75	WELLESLEY DR	13+15	LT.	R1-1-30	30″ X 30″														6.25				
					R1-3P-18	18″ X 6″														0.75				
42 / 71	76	BRYN MAWR	12+50	RT.	R1-1-30	30″ X 30″														6.25				
					R1-3P-18	18″ X 6″														0.75				
42 / 71	76A	SARATOGA AVE			R1-3P-18	18″ X 6″														0.75				
42 / 71	77A	LOST CREEK BLVD	51+00	RT.	R2-1-24	24″ X 30″														5				
42 / 71	77B	BRYN MAWR	12+00	LT.	R2-1-24	24″ X 30″														5				
42 / 71	77C	BRYN MAWR	11+00	LT.	W1-2R-30	30″ X 30″														6.25				
42 / 71	77D	BRYN MAWR	7+00	RT.	W1-2L-30	30″ X 30″														6.25				
42 / 71	77E	DEAN AVE			R1-1-30	30″ X 30″														6.25				
42 / 71	77F	DEAN AVE			W14-2-30	30″ X 30″														6.25				
43 / 71	78	SR 309 RAMP 'C'	373+00	LT.	D1-H6A-108	9′ X 4′															36		2	
					M1-5-45-3	45″ X 36″														11.25				
					M6-4-30	30″ X 21″														4.38				
					M1-5-45-3	45″ X 36″														11.25				
					M6-4-30	30″ X 21″														4.38				
43 / 71	78A	TURNER AVE			W14-2-30	30″ X 30″														6.25				
43 / 71	79	SIGN NOT USED																						
43 / 71	80	SR 309 RAMP 'C'	375+00	LT.	R3-H8BT-42	42″ X 30″														8.75				
					R5-1A-42	42″ X 30″														8.75				
43 / 71	81	SR 309 RAMP 'C'	375+00	RT.	R3-H8BT-42	42″ X 30″														8.75				
					R5-1A-42	42″ X 30″														8.75				
43 / 71	82	I-75	376+50	LT.	E5-H1A-96	8′ X 5′															40		2	
43 / 71	83	I-75	379+00	LT.		13′ X 6′										1						78		2
					E1-H5P-96	8′ X 2.5′																20		
43 / 71	84	I-75	379+00	LT.		15′ X 10′																150		
					E1-H5P-96	8′ X 2.5′																20		
43 / 71	85	I-75	377+00	RT.	W4-1R-48	48″ X 48″														16				
44 / 71	86	I-75	390+25	LT.	D5-H8A-144	144″ X 72″															72		2	
44 / 71	87	I-75	394+00	RT.	M1-1-36-2	36″ X 36″														9				
					M3-1-36	36″ X 18″														4.5				
44 / 71	88	I-75	398+50	LT.		20′ X 7′															140		3	
44 / 71	88A	I-75	402+50	LT.		12′ X 6′															72		2	
44 / 71	89	I-75	399+50	RT.		8′ X 12′															96		2	
					E1-H5P-96	8′ X 2.5′															20			
44 / 71	90	I-75	401+33	LT.	D10-3-12	12″ X 48″														4				
44 / 71	91	I-75	401+33	RT.	D10-3-12	12″ X 48″														4				
44 / 71	91A	I-75	405+00	RT.	R2-1-48	48″ X 60″														20				
45 / 71	92	I-75	406+50	LT.		12′ X 12′															144		2	
					E1-H5P-96	8′ X 2.5′															20			
TOTALS CARRIED TO SUB-SUMMARY SHEET 12							1	1	1	1	0	1	0	0	0	1	0	0	0	278.89	676	380	17	3

CALCULATED JRW
CHECKED JRL

TRAFFIC CONTROL SIGN SUB-SUMMARY-6

ALL-75-5.53

23 / 71

789
1224

J:\Projects\ALL\7669\traffic\sheets\76691TS022.dgn 10-SEP-2012 1:05PM wrightj

SHEET NO.	REFERENCE NO.	LOCATION	STATION	SIDE	CODE	SIZE	625 GROUND ROD EACH			630 GROUND MOUNTED SUPPORT, NO. 3 POST FT		630 GROUND MOUNTED SUPPORT, NO. 4 POST FT		630 GROUND MOUNTED STRUCTURAL BEAM SUPPORT, S4X7.7 FT		630 GROUND MOUNTED STRUCTURAL BEAM SUPPORT, W6X9 FT		630 GROUND MOUNTED STRUCTURAL BEAM SUPPORT, W8X18 FT		630 GROUND MOUNTED STRUCTURAL BEAM SUPPORT, W10X22 FT		630 GROUND MOUNTED STRUCTURAL BEAM SUPPORT, W10X12 FT		630 GROUND MOUNTED STRUCTURAL BEAM SUPPORT, W12X30 FT		630 ONE WAY SUPPORT, NO. 4 POST FT		630 SIGN POST REFLECTOR EACH	630 BREAKAWAY STRUCTURAL BEAM CONNECTION EACH
45 / 71	93	I-75	419+60	LT.		12′ X 12′																		31.0	29.0				
					E1-H5P-96	8′ X 2.5′				6.3	6.3																		
45 / 71	94	I-75	423+10	LT.	R2-1-48	48″ X 60″						19.5	18.3																
45 / 71	95	I-75	418+00	RT.	W8-13-48	48″ X 48″						16.9	17.6															2	
45 / 71	96	I-75	420+50	RT.		16′ X 7′														23.4	27.9								
45 / 71	97	I-75	426+00	RT.		8′ X 12′														30.8	33.8								
					E1-H5P-96	8′ X 2.5′																							
46 / 71	98	I-75	433+00	LT.	M1-1-36-2	36″ X 36″				18.6	17.6																		
					M3-3-36	36″ X 18″																							
46 / 71	99	I-75	439+40	LT.	I-3	6′ X 3′						15.7	14.3																
46 / 71	100	I-75	437+25	RT.	I-3	6′ X 3′						14.1	16.1																
46 / 71	101	I-75	454+13	LT.	D10-3-12	12″ X 48″				16.5																			
46 / 71	102	I-75	447+00	RT.		11′ X 10′														26.5	24.5							2	
					E1-H5P-96	8′ X 2.5′				6.3	6.3																		
46 / 71	103	I-75	454+13	RT.	D10-3-12	12″ X 48″				16.0																			
47 / 71	104	I-75	455+00	LT.	W4-1R-48	48″ X 48″				16.8	16.0																	2	
47 / 71	105	SR 81 RAMP 'F'	466+45	RT.	R3-H8BJ-36	36″ X 30″				14.6	15.0																		
					R5-1A-42	42″ X 30″																						2	
47 / 71	106	SR 81 RAMP 'F'	464+50	LT.	D1-H6A-84	7′ X 4′																17.9	17.1						2
					M1-5-36-2	36′ X 36″				9.0																			
					M6-4-30	30″ X 21″																							
47 / 71	107	SR 81 RAMP 'F'	466+45	LT.	R3-H8BJ-36	36″ X 30″				15.2	14.8																		
					R5-1A-42	42″ X 30″																						2	
47 / 71	108	I-75	455+50	RT.	E5-H1A-96	8′ X 5′										18.1	18.6												2
47 / 71	109	SR 81 RAMP 'C'	458+15	RT.	R3-H8BH-36	36″ X 30″				14.9	14.6																		
					R5-1A-42	42″ X 30″																						2	
47 / 71	110	SR 81 RAMP 'C'	460+00	RT.	D1-H6A-84	7′ X 4′																18.1	19.4						2
					M1-5-36-2	36′ X 36″				9.0																			
					M6-4-30	30″ X 21″																							
47 / 71	111	SR 81 RAMP 'C'	460+00	LT.	R3-H8BH-36	36″ X 30″				14.5	14.2																		
					R5-1A-42	42″ X 30″																						2	
48 / 71	112	SR 81	432+00	RT.	M1-1-24-2	24″ X 24″				14.0																			
					M2-1-21	21″ X 15″																							
49 / 71	113	SR 81	434+00	LT.	M1-5-24-2	24″ X 24″				13.7																			
					M3-4-24	24″ X 12″																							
49 / 71	114	SR 81	434+15	RT.	R3-H8CG-48	48″ X 30″				12.9	12.8																		
49 / 71	115	SR 81	435+00	RT.	R2-1-30	30″ X 36″				13.4																			
49 / 71	116	SR 81	436+00	RT.	D3-H1B	84″ X 12″				11.1	10.9																		
50 / 71	117	SR 81	437+55	RT.	M1-5-24	24″ X 24″				15.2	15.2																		
					M3-2-24	24″ X 12″																							
					M6-1L-21	21″ X 15″																							
					M1-5-24	24″ X 24″																							
					M3-4-24	24″ X 12″																							
					M6-1R-21	21″ X 15″																							
50 / 71	118	SERVICE RD. 3	37+50	RT.	R1-1-30	30″ X 30″				13.0																		1	
50 / 71	119	SERVICE RD. 3	39+20	LT.	R1-1-30	30″ X 30″				12.6																		1	
TOTALS CARRIED TO SUB-SUMMARY SHEET 11							0			263.6	143.7	66.2	66.3	0	0	18.1	18.6	0	0	80.7	86.2	36.0	36.5	31.0	29.0	0	0	14	8

CALCULATED JRW
CHECKED JRL

TRAFFIC CONTROL SIGN SUB-SUMMARY-7

ALL-75-5.53

24 / 71

790
1224

J:\Projects\ALL\7669\traffic\sheets\7669ITS023.dgn 10-SEP-2012 1:05PM wrightj

SHEET NO.	REFERENCE NO.	LOCATION	STATION	SIDE	CODE	SIZE	630 SURFACE PREPARATION, NEW SUPPORT SECTION EACH	630 COATING, EPOXY INTERMEDIATE COAT, SUPPORT SECTION EACH	630 COATING, URETHANE TOP COAT, SUPPORT SECTION EACH	630 COATING, ORGANIC ZINC PRIME COAT, SUPPORT SECTION EACH	630 OVERHEAD SIGN SUPPORT, TYPE TC-16.21 DESIGN 11 EACH	630 OVERHEAD SIGN SUPPORT, TYPE TC-12.30, DESIGN 3, AS PER PLAN EACH	630 OVERHEAD SIGN SUPPORT, TYPE TC-12.30, DESIGN 4, AS PER PLAN EACH	630 OVERHEAD SIGN SUPPORT, TYPE TC-12.30, DESIGN 6 EACH	630 OVERHEAD SIGN SUPPORT, TYPE TC-12.30, DESIGN 8 EACH	630 OVERHEAD SIGN SUPPORT, TYPE TC-7.65, DESIGN 8 EACH	630 SIGN ATTACHMENT ASSEMBLY, AS PER PLAN EACH	630 OVERPASS STRUCTURE MOUNTED SIGN SUPPORT, TYPE TC-18.24 EACH	630 OVERPASS STRUCTURE MOUNTED SIGN SUPPORT, TYPE TC-18.26, DESIGN 2 EACH	630 SIGN, FLAT SHEET SF	630 SIGN, GROUND MOUNTED EXTRUSHEET SF	630 SIGN, OVERHEAD EXTRUSHEET SF	630 GROUND MOUNTED STRUCTURAL BEAM SUPPORT FOUNDATION EACH	630 RIGID OVERHEAD SIGN FOUNDATION EACH
45 / 71	93	I-75	419+60	LT.		12′ X 12′															144			2	
					E1-H5P-96	8′ X 2.5′															20				
45 / 71	94	I-75	423+10	LT.	R2-1-48	48″ X 60″														20					
45 / 71	95	I-75	418+00	RT.	W8-13-48	48″ X 48″														16					
45 / 71	96	I-75	420+50	RT.		16′ X 7′															112			2	
45 / 71	97	I-75	426+00	RT.		8′ X 12′															96			2	
					E1-H5P-96	8′ X 2.5′															20				
46 / 71	98	I-75	433+00	LT.	M1-1-36-2	36″ X 36″														9					
					M3-3-36	36″ X 18″														4.5					
46 / 71	99	I-75	439+40	LT.	I-3	6′ X 3′														18					
46 / 71	100	I-75	437+25	RT.	I-3	6′ X 3′														18					
46 / 71	101	I-75	454+13	LT.	D10-3-12	12″ X 48″														4					
46 / 71	102	I-75	447+00	RT.		11′ X 10′															110			2	
					E1-H5P-96	8′ X 2.5′															20				
46 / 71	103	I-75	454+13	RT.	D10-3-12	12″ X 48″														4					
47 / 71	104	I-75	455+00	LT.	W4-1R-48	48″ X 48″														16					
47 / 71	105	SR 81 RAMP 'F'	466+45	RT.	R3-H8BJ-36	36″ X 30″														7.5					
					R5-1A-42	42″ X 30″														8.75					
47 / 71	106	SR 81 RAMP 'F'	464+50	LT.	D1-H6A-84	7′ X 4′															28			2	
					M1-5-36-2	36′ X 36″														9					
					M6-4-30	30″ X 21″														4.375					
47 / 71	107	SR 81 RAMP 'F'	466+45	LT.	R3-H8BJ-36	36″ X 30″														7.5					
					R5-1A-42	42″ X 30″														8.75					
47 / 71	108	I-75	455+50	RT.	E5-H1A-96	8′ X 5′															40			2	
47 / 71	109	SR 81 RAMP 'C'	458+15	RT.	R3-H8BH-36	36″ X 30″														7.5					
					R5-1A-42	42″ X 30″														8.75					
47 / 71	110	SR 81 RAMP 'C'	460+00	RT.	D1-H6A-84	7′ X 4′															28			2	
					M1-5-36-2	36′ X 36″														9					
					M6-4-30	30″ X 21″														4.375					
47 / 71	111	SR 81 RAMP 'C'	460+00	LT.	R3-H8BH-36	36″ X 30″														7.5					
					R5-1A-42	42″ X 30″														8.75					
48 / 71	112	SR 81	432+00	RT.	M1-1-24-2	24″ X 24″														4					
					M2-1-21	21″ X 15″														2.188					
49 / 71	113	SR 81	434+00	LT.	M1-5-24-2	24″ X 24″														4					
					M3-4-24	24″ X 12″														1					
49 / 71	114	SR 81	434+15	RT.	R3-H8CG-48	48″ X 30″														10					
49 / 71	115	SR 81	435+00	RT.	R2-1-30	30″ X 36″														7.5					
49 / 71	116	SR 81	436+00	RT.	D3-H1B	84″ X 12″														7					
50 / 71	117	SR 81	437+55	RT.	M1-5-24	24″ X 24″														4					
					M3-2-24	24″ X 12″														2					
					M6-1L-21	21″ X 15″														2.188					
					M1-5-24	24″ X 24″														4					
					M3-4-24	24″ X 12″														2					
					M6-1R-21	21″ X 15″														2.188					
50 / 71	118	SERVICE RD. 3	37+50	RT.	R1-1-30	30″ X 30″														6.25					
50 / 71	119	SERVICE RD. 3	39+20	LT.	R1-1-30	30″ X 30″														6.25					
TOTALS CARRIED TO SUB-SUMMARY SHEET 12							0	0	0	0	0	0	0	0	0	0	0	0	0	265.81	618	0	14	0	

CALCULATED JRW
CHECKED JRL

TRAFFIC CONTROL SIGN SUB-SUMMARY-8

ALL-75-5.53

25 / 71

791
1224

J:\Projects\ALL\7669\traffic\sheets\76691TS024.dgn 10-SEP-2012 1:05PM wrightj

SHEET NO.	REFERENCE NO.	LOCATION	STATION	SIDE	CODE	SIZE	625 GROUND ROD EACH			630 GROUND MOUNTED SUPPORT, NO. 3 POST FT		630 GROUND MOUNTED SUPPORT, NO. 4 POST FT		630 GROUND MOUNTED STRUCTURAL BEAM SUPPORT, S4X7.7 FT		630 GROUND MOUNTED STRUCTURAL BEAM SUPPORT, W6X9 FT		630 GROUND MOUNTED STRUCTURAL BEAM SUPPORT, W8X18 FT		630 GROUND MOUNTED STRUCTURAL BEAM SUPPORT, W10X22 FT		630 GROUND MOUNTED STRUCTURAL BEAM SUPPORT, W10X12 FT		630 GROUND MOUNTED STRUCTURAL BEAM SUPPORT, W12X30 FT		630 ONE WAY SUPPORT, NO. 4 POST FT		630 SIGN POST REFLECTOR EACH	630 BREAKAWAY STRUCTURAL BEAM CONNECTION EACH
51 / 71	120	SR 81	442+00	LT.	D3-H1B	84″ X 12″				13.5	12.2																		
51 / 71	121	SR 81	443+50	LT.	R3-H8DA-54	54″ X 30″				13.9	13.1																		
51 / 71	122	SR 81	445+00	LT.	R2-1-30	30″ X 36″				13.7																			
51 / 71	123	SR 81	442+65	RT.	R3-H8CB-48	48″ X 30″				12.9	12.8																		
51 / 71	124	SR 81	442+15	RT.	M2-H5-108	108″ X 48″								14.9	14.7													2	
51 / 71	125	SIGN NOT USED																											
52 / 71	126	SR 81 RAMP 'F'	462+00	LT.	R5-1-48	48″ X 48″																				15.5	13.8	2	
					R3-H8BJ-36	36″ X 30″																							
					R6-1L-54	54″ X 18″																							
					R6-1R-54	54″ X 18″																							
52 / 71	127	SR 81 RAMP 'F'	462+00	RT.	R5-1-48	48″ X 48″																				14.5	16.8	2	
					R6-1L-54	54″ X 18″																							
					R6-1R-54	54″ X 18″																							
52 / 71	128	SR 81	451+35	LT.		10′ X 5′																							
52 / 71	129	SR 81	447+70	RT.		8′ X 7′	1																						
52 / 71	130	SR 81	447+70	RT.		8′ X 7′																							
52 / 71	131	SIGN NOT USED																											
52 / 71	132	SR 81	450+00	RT.		10′ X 5′																							
53 / 71	133	SR 81	452+50	LT.	R3-H8CA-48	48″ X 30″				12.9	12.9																		
53 / 71	134	SIGN NOT USED																											
53 / 71	135	SR 81	454+00	LT.		8′ X 7′	1																						
53 / 71	136	SR 81	454+00	LT.		8′ X 7′																							
53 / 71	137	SIGN NOT USED																											
53 / 71	138	SR 81 RAMP 'C'	462+30	LT.	R5-1-48	48″ X 48″																				18.3	16.2	2	
					R6-1L-54	54″ X 18″																							
					R6-1R-54	54″ X 18″																							
53 / 71	139	SR 81 RAMP 'C'	462+30	RT.	R5-1-48	48″ X 48″																				14.5	16.8	2	
					R3-H8BH-36	36″ X 30″																							
					R6-1L-54	54″ X 18″																							
					R6-1R-54	54″ X 18″																							
54 / 71	140	SR 81	458+00	LT.	M2-H5-108	108″ X 48″										15.8	16.0											2	
54 / 71	141	SR 81	459+00	LT.	R2-1-30	30″ X 36″				13.4																			
54 / 71	142	SR 81	461+00	LT.	M1-1-24-2	24″ X 24″				14.0																			
					M2-1-21	21″ X 15″																							
54 / 71	143	SR 81	458+00	RT.	W2-2L-36	36″ X 36″				13.4	13.4																	2	
					W16-8P-36	36″ X 8″																							
54 / 71	144	SR 81	459+00	RT.	M1-5-24-2	24″ X 24″				13.6																			
					M3-2-24	24″ X 12″																							
54 / 71	145	SR 81	460+70	RT.	R3-H8CA-48	48″ X 30″				12.9	12.9																		
54 / 71	146	SR 81	461+30	RT.	R2-1-30	30″ X 36″				13.4																			
55 / 71	147	NEUBRECHT RD	14+00	LT	M1-5-24-2	24″ X 24″				14.3																			
					M2-1-21	21″ X 15″																							
55 / 71	148	NEUBRECHT RD	14+90	LT.	R3-H8BJ-36	36″ X 30″				13.5																			
TOTALS CARRIED TO SUB-SUMMARY 11							2			175.4	77.3	0	0	14.9	14.7	15.8	16.0	0	0	0	0	0	0	0	0	62.8	63.6	10	4

CALCULATED JRW CHECKED JRL

TRAFFIC CONTROL SIGN SUB-SUMMARY-9

ALL-75-5.53

26 / 71

792 / 1224

J:\Projects\ALL\76691\traffic\sheets\76691TS025.dgn 10-SEP-2012 1:06PM wrightj

SHEET NO.	REFERENCE NO.	LOCATION	STATION	SIDE	CODE	SIZE	630 SURFACE PREPARATION, NEW SUPPORT SECTION EACH	630 COATING, EPOXY INTERMEDIATE COAT, SUPPORT SECTION EACH	630 COATING, URETHANE TOP COAT, SUPPORT SECTION EACH	630 COATING, ORGANIC ZINC PRIME COAT, SUPPORT SECTION EACH	630 OVERHEAD SIGN SUPPORT, TYPE TC-16.21 DESIGN 11 EACH	630 OVERHEAD SIGN SUPPORT, TYPE TC-12.30, DESIGN 3, AS PER PLAN EACH	630 OVERHEAD SIGN SUPPORT, TYPE TC-12.30, DESIGN 4, AS PER PLAN EACH	630 OVERHEAD SIGN SUPPORT, TYPE TC-12.30, DESIGN 6 EACH	630 OVERHEAD SIGN SUPPORT, TYPE TC-12.30, DESIGN 8 EACH	630 OVERHEAD SIGN SUPPORT, TYPE TC-7.65, DESIGN 8 EACH	630 SIGN ATTACHMENT ASSEMBLY, AS PER PLAN EACH	630 OVERPASS STRUCTURE MOUNTED SIGN SUPPORT, TYPE TC-18.24 EACH	630 OVERPASS STRUCTURE MOUNTED SIGN SUPPORT, TYPE TC-18.26, DESIGN 2 EACH	630 SIGN, FLAT SHEET SF	630 SIGN, GROUND MOUNTED EXTRUSHEET SF	630 SIGN, OVERHEAD EXTRUSHEET SF	630 GROUND MOUNTED STRUCTURAL BEAM SUPPORT FOUNDATION EACH	630 RIGID OVERHEAD SIGN FOUNDATION EACH
51 / 71	120	SR 81	442+00	LT.	D3-H1B	84" X 12"														7				
51 / 71	121	SR 81	443+50	LT.	R3-H8DA-54	54" X 30"														11.25				
51 / 71	122	SR 81	445+00	LT.	R2-1-30	30" X 36"														7.5				
51 / 71	123	SR 81	442+65	RT.	R3-H8CB-48	48" X 30"														10				
51 / 71	124	SR 81	442+15	RT.	M2-H5-108	108" X 48"															36		2	
51 / 71	125	SIGN NOT USED																						
52 / 71	126	SR 81 RAMP 'F'	462+00	LT.	R5-1-48	48" X 48"														16				
					R3-H8BJ-36	36" X 30"														7.5				
					R6-1L-54	54" X 18"														6.75				
					R6-1R-54	54" X 18"														6.75				
52 / 71	127	SR 81 RAMP 'F'	462+00	RT.	R5-1-48	48" X 48"														16				
					R6-1L-54	54" X 18"														6.75				
					R6-1R-54	54" X 18"														6.75				
52 / 71	128	SR 81	451+35	LT.		10' X 5'													1			50		
52 / 71	129	SR 81	447+70	RT.		8' X 7'	1	1	1	1			1									56		1
52 / 71	130	SR 81	447+70	RT.		8' X 7'																56		
52 / 71	131	SIGN NOT USED																						
52 / 71	132	SR 81	450+00	RT.		10' X 5'													1			50		
53 / 71	133	SR 81	452+50	LT.	R3-H8CA-48	48" X 30"														10				
53 / 71	134	SIGN NOT USED																						
53 / 71	135	SR 81	454+00	LT.		8' X 7'	1	1	1	1			1									56		1
53 / 71	136	SR 81	454+00	LT.		8' X 7'																56		
53 / 71	137	SIGN NOT USED																						
53 / 71	138	SR 81 RAMP 'C'	462+30	LT.	R5-1-48	48" X 48"														16				
					R6-1L-54	54" X 18"														6.75				
					R6-1R-54	54" X 18"														6.75				
53 / 71	139	SR 81 RAMP 'C'	462+30	RT.	R5-1-48	48" X 48"														16				
					R3-H8BH-36	36" X 30"														7.5				
					R6-1L-54	54" X 18"														6.75				
					R6-1R-54	54" X 18"														6.75				
54 / 71	140	SR 81	458+00	LT.	M2-H5-108	108" X 48"															36		2	
54 / 71	141	SR 81	459+00	LT.	R2-1-30	30" X 36"														7.5				
54 / 71	142	SR 81	461+00	LT.	M1-1-24-2	24" X 24"														4				
					M2-1-21	21" X 15"														2.188				
54 / 71	143	SR 81	458+00	RT.	W2-2L-36	36" X 36"														9				
					W16-8P-36	36" X 8"														2				
54 / 71	144	SR 81	459+00	RT.	M1-5-24-2	24" X 24"														4				
					M3-2-24	24" X 12"														2				
54 / 71	145	SR 81	460+70	RT.	R3-H8CA-48	48" X 30"														10				
54 / 71	146	SR 81	461+30	RT.	R2-1-30	30" X 36"														7.5				
55 / 71	147	NEUBRECHT RD	14+00	LT	M1-5-24-2	24" X 24"														4				
					M2-1-21	21" X 15"														2.188				
55 / 71	148	NEUBRECHT RD	14+90	LT.	R3-H8BJ-36	36" X 30"														7.5				
TOTALS CARRIED TO SUB-SUMMARY 12							2	2	2	2	0	0	2	0	0	0	0	0	2	240.63	72	324	4	2

CALCULATED JRW
CHECKED JRL

TRAFFIC CONTROL SIGN SUB-SUMMARY-10

ALL-75-5.53

27 / 71

793
1224

J:\Projects\ALL\76691\traffic\sheets\76691TS026.dgn 10-SEP-2012 1:06PM wrightj

SHEET NO.	REFERENCE NO.	LOCATION	STATION	SIDE	CODE	SIZE	625 GROUND ROD EACH			630 GROUND MOUNTED SUPPORT, NO. 3 POST FT		630 GROUND MOUNTED SUPPORT, NO. 4 POST FT		630 GROUND MOUNTED STRUCTURAL BEAM SUPPORT, S4X7.7 FT		630 GROUND MOUNTED STRUCTURAL BEAM SUPPORT, W6X9 FT		630 GROUND MOUNTED STRUCTURAL BEAM SUPPORT, W8X18 FT		630 GROUND MOUNTED STRUCTURAL BEAM SUPPORT, W10X22 FT		630 GROUND MOUNTED STRUCTURAL BEAM SUPPORT, W10X12 FT		630 GROUND MOUNTED STRUCTURAL BEAM SUPPORT, W12X30 FT		630 ONE WAY SUPPORT, NO. 4 POST FT		630 SIGN POST REFLECTOR EACH	630 BREAKAWAY STRUCTURAL BEAM CONNECTION EACH	
56 / 71	149	I-75	469+00	LT.	W8-13-48	48" X 48"						16.7	16.3															2		
56 / 71	150	I-75	471+00	LT.	E5-H1A-96	8' X 5'										18.8	18.3												2	
56 / 71	151	I-75	479+50	LT.		11' X 10'														27.2	25.2								2	
					E1-H5P-96	8' X 2.5'				6.3	6.3																			
56 / 71	152	I-75	470+00	RT.	W4-IR-48	48" X 48"						16.3	16.7															2		
56 / 71	153	I-75	491+00	RT.	M1-1-36-2	36" X 36"				16.4	16.8																			
					M3-1-36	36" X 18"																									
57 / 71	154	I-75	501+50	LT.		8' X 12'														31.2	29.7								2	
					E1-H5P-96	8' X 2.5'																									
57 / 71	155	I-75	501+00	RT.	R2-1-48	48" X 60"								17.6	17.0														2	
57 / 71	156	I-75	506+93	LT.	D10-3-12	12" X 48"				15.4																				
57 / 71	157	I-75	506+93	RT.	D10-3-12	12" X 48"				16.1																				
44 / 71	158	I-75	395+00	LT.		10' X 10'												22.4	25.1										2	
58 / 71	159	I-75	519+10	RT.	E7-H1	16' X 8'														24.8	25.0									
							0			54.2	23.1	33.0	33.0	17.6	17.0	18.8	18.3	22.4	25.1	83.2	79.9	0	0	0	0	0	0	4	10	
SUB-TOTAL - THIS SHEET																														
							5			343.5	218.6	0	0	18.3	17.7	93.4	89.8	24.3	46.6	25.5	27.5	42.1	42.9	31.9	32.1	34.9	34.9	32	19	
SUB-TOTAL - SIGN SUB-SUMMARY - SHEET 1																														
							2			190.4	107.6	0	0	36.8	36.7	18.3	19.2	0	0	0	0	18.3	19.4	0	0	45.8	44.2	12	8	
SUB-TOTAL - SIGN SUB-SUMMARY - SHEET 3																														
							3			325.5	118.5	18.3	19.5	14.7	15	20.6	18.6	45.3	23.0	30.0	31.6	63.5	63.7	30.9	31.0	15.0	16.9	18	17	
SUB-TOTAL - SIGN SUB-SUMMARY - SHEET 5																														
							0			263.6	143.7	66.2	66.3	0	0	18.1	18.6	0	0	80.7	86.2	36.0	36.5	31.0	29.0	0	0	14	8	
SUB-TOTAL - SIGN SUB-SUMMARY - SHEET 7																														
							2			175.4	77.3	0	0	14.9	14.7	15.8	16.0	0	0	0	0	0	0	0	0	62.8	63.6	10	4	
SUB-TOTAL - SIGN SUB-SUMMARY - SHEET 9																														
TOTALS CARRIED TO GENERAL SUMMARY							12			2041.4		236.3		203.4		365.5		186.7		444.6		322.4		185.9		318.1		90	66	

CALCULATED JRW
CHECKED JRL

TRAFFIC CONTROL SIGN SUB-SUMMARY-11

ALL-75-5.53

28 / 71

794
1224

J:\Projects\ALL\76691\traffic\sheets\76691TS027.dgn 10-SEP-2012 1:06PM wrightj

SHEET NO.	REFERENCE NO.	LOCATION	STATION	SIDE	CODE	SIZE	630 SURFACE PREPARATION, NEW SUPPORT SECTION EACH	630 COATING, EPOXY INTERMEDIATE COAT, SUPPORT SECTION EACH	630 COATING, URETHANE TOP COAT, SUPPORT SECTION EACH	630 COATING, ORGANIC ZINC PRIME COAT, SUPPORT SECTION EACH	630 OVERHEAD SIGN SUPPORT, TYPE TC-16.21 DESIGN 11 EACH	630 OVERHEAD SIGN SUPPORT, TYPE TC-12.30, DESIGN 3, AS PER PLAN EACH	630 OVERHEAD SIGN SUPPORT, TYPE TC-12.30, DESIGN 4, AS PER PLAN EACH	630 OVERHEAD SIGN SUPPORT, TYPE TC-12.30, DESIGN 6 EACH	630 OVERHEAD SIGN SUPPORT, TYPE TC-12.30, DESIGN 8 EACH	630 OVERHEAD SIGN SUPPORT, TYPE TC-7.65, DESIGN 8 EACH	630 SIGN ATTACHMENT ASSEMBLY, AS PER PLAN EACH	630 OVERPASS STRUCTURE MOUNTED SIGN SUPPORT, TYPE TC-18.24 EACH	630 OVERPASS STRUCTURE MOUNTED SIGN SUPPORT, TYPE TC-18.26, DESIGN 2 EACH	630 SIGN, FLAT SHEET SF	630 SIGN, GROUND MOUNTED EXTRUSHEET SF	630 SIGN, OVERHEAD EXTRUSHEET SF	630 GROUND MOUNTED STRUCTURAL BEAM SUPPORT FOUNDATION EACH	630 RIGID OVERHEAD SIGN FOUNDATION EACH
56 / 71	149	I-75	469+00	LT.	W8-13-48	48" X 48"														16				
56 / 71	150	I-75	471+00	LT.	E5-H1A-96	8' X 5'															40		2	
56 / 71	151	I-75	479+50	LT.		11' X 10'															110		2	
					E1-H5P-96	8' X 2.5'															20			
56 / 71	152	I-75	470+00	RT.	W4-1R-48	48" X 48"														16				
56 / 71	153	I-75	491+00	RT.	M1-1-36-2	36" X 36"														9				
					M3-1-36	36" X 18"														4.5				
57 / 71	154	I-75	501+50	LT.		8' X 12'															96		2	
					E1-H5P-96	8' X 2.5'															20			
57 / 71	155	I-75	501+00	RT.	R2-1-48	48" X 60"														20			2	
57 / 71	156	I-75	506+93	LT.	D10-3-12	12" X 48"														4				
57 / 71	157	I-75	506+93	RT.	D10-3-12	12" X 48"														4				
44 / 71	158	I-75	395+00	LT.		10' X 10'															100		2	
58 / 71	159	I-75	519+10	RT.	E7-H1	16' X 8'															128		2	
SUB-TOTAL - THIS SHEET							0	0	0	0	0	0	0	0	0	0	0	0	0	73.50	514	0	12	0
SUB-TOTAL - SIGN SUB-SUMMARY - SHEET 2							0	0	0	0	0	0	0	2	1	1	0	0	0	311.41	720	688	23	5
SUB-TOTAL - SIGN SUB-SUMMARY - SHEET 4							1	1	1	1	1	1	0	0	0	0	1	2	0	352.836	112	247	12	2
SUB-TOTAL - SIGN SUB-SUMMARY - SHEET 6							1	1	1	1	0	1	0	0	0	1	0	0	0	278.89	676	380	17	3
SUB-TOTAL - SIGN SUB-SUMMARY - SHEET 8							0	0	0	0	0	0	0	0	0	0	0	0	0	265.81	618	0	14	0
SUB-TOTAL - SIGN SUB-SUMMARY - SHEET 10							2	2	2	2	0	0	2	0	0	0	0	0	2	240.63	72	324	4	2
TOTALS CARRIED TO GENERAL SUMMARY							4	4	4	4	1	2	2	2	1	2	1	2	2	1523	2712	1639	82	12

CALCULATED JRW
CHECKED JRL

TRAFFIC CONTROL SIGN SUB-SUMMARY-12

ALL-75-5.53

29 / 71

795
1224

J:\Projects\ALL\76691\traffic\sheets\76691TS028.dgn 10-SEP-2012 1:06PM wrightj

SHEET NO.	LOCATION	STATION		SIDE	SPACING (FT)	620 DELINEATOR, TYPE C, POST MOUNTED WHITE EACH	620 DELINEATOR, TYPE C, POST MOUNTED YELLOW EACH	620 DELINEATOR, TYPE D, BRACKET MOUNTED WHITE EACH	620 DELINEATOR, TYPE D, BRACKET MOUNTED YELLOW EACH
		FROM	TO						
	I.R. 75	292+00	305+07	RT	400	3	0	0	0
	I.R. 75	309+61	317+94	RT	400	2	0	0	0
	I.R. 75	319+53	354+74	RT	400	9	0	0	0
	I.R. 75	359+46	378+75	RT	400	5	0	0	0
	I.R. 75	381+27	450+51	RT	400	16	0	1	0
	I.R. 75	455+05	471+20	RT	400	3	0	1	0
	I.R. 75	473+84	520+00	RT	400	12	0	0	0
	I.R. 75	292+00	321+17	LT	400	7	0	0	0
	I.R. 75	322+76	329+92	LT	400	2	0	0	0
	I.R. 75	334+81	356+88	LT	400	6	0	0	0
	I.R. 75	360+12	377+42	LT	400	4	0	0	0
	I.R. 75	381+97	450+67	LT	400	16	0	1	0
	I.R. 75	453+90	471+49	LT	400	3	0	1	0
	I.R. 75	476+04	520+00	LT	400	11	0	0	0
	FOURTH STREET RAMP A	305+07	311+07	RT	200	4	0	0	0
	FOURTH STREET RAMP A	316+70	320+70	RT	50	9	0	0	0
	FOURTH STREET RAMP A	309+70	316+70	LT	80	0	10	0	0
	FOURTH STREET RAMP B	310+45	319+45	RT	50	19	0	0	0
	FOURTH STREET RAMP B	313+45	317+95	LT	50	0	10	0	0
	FOURTH STREET RAMP C	322+75	326+75	RT	50	0	9	0	0
	FOURTH STREET RAMP C	321+25	330+25	LT	50	19	0	0	0
	FOURTH STREET RAMP D	323+95	324+55	RT	50	0	1	0	0
	FOURTH STREET RAMP D	324+55	329+40	RT	70	0	7	0	0
	FOURTH STREET RAMP D	319+25	324+55	LT	50	11	0	0	0
	FOURTH STREET RAMP D	324+55	328+05	LT	70	5	0	0	0
	FOURTH STREET RAMP D	328+05	335+40	LT	200	4	0	0	0
	S.R. 309 RAMP A	360+15	364+15	RT	200	0	2	0	0
	S.R. 309 RAMP A	364+15	369+20	RT	90	0	6	0	0
	S.R. 309 RAMP A	356+15	364+15	LT	200	4	0	0	0
	S.R. 309 RAMP A	364+15	369+20	LT	90	6	0	0	0
	S.R. 309 RAMP C	370+75	376+75	RT	100	7	0	0	0
	S.R. 309 RAMP C	370+75	376+75	LT	100	0	7	0	0
	S.R. 309 RAMP C	376+75	381+75	LT	200	0	0	0	2
	S.R. 309 RAMP E	371+00	375+90	RT	70	8	0	0	0
	S.R. 309 RAMP E	375+90	382+60	RT	200	1	0	3	0
	S.R. 309 RAMP E	371+00	378+60	LT	70	0	10	0	0
	S.R. 309 RAMP F	354+10	364+10	RT	200	6	0	0	0
	S.R. 309 RAMP F	364+00	369+10	RT	100	5	0	0	0
	S.R. 309 RAMP F	360+10	364+10	LT	200	0	3	0	0
	S.R. 309 RAMP F	364+00	369+10	LT	100	0	5	0	0
			SUB-TOTAL A			207	70	7	2

SHEET NO.	LOCATION	STATION		SIDE	SPACING (FT)	620 DELINEATOR, TYPE C, POST MOUNTED WHITE EACH	620 DELINEATOR, TYPE C, POST MOUNTED YELLOW EACH	620 DELINEATOR, TYPE D, BRACKET MOUNTED WHITE EACH	620 DELINEATOR, TYPE D, BRACKET MOUNTED YELLOW EACH
		FROM	TO						
	S.R. 81 RAMP B	463+30	465+80	RT	80	0	4	0	0
	S.R. 81 RAMP B	465+80	474+60	RT	200	0	4	0	0
	S.R. 81 RAMP B	463+30	465+80	LT	80	4	0	0	0
	S.R. 81 RAMP B	465+80	470+60	LT	200	3	0	0	0
	S.R. 81 RAMP C	451+30	456+35	RT	200	4	0	0	0
	S.R. 81 RAMP C	456+35	460+15	RT	100	4	0	0	0
	S.R. 81 RAMP C	460+15	461+95	RT	60	3	0	0	0
	S.R. 81 RAMP C	455+10	460+15	LT	100	0	5	0	0
	S.R. 81 RAMP C	460+15	461+95	LT	60	0	4	0	0
	S.R. 81 RAMP D	453+95	459+95	RT	200	4	0	0	0
	S.R. 81 RAMP D	450+95	459+95	LT	200	0	6	0	0
	S.R. 81 RAMP F	462+40	465+40	RT	60	6	0	0	0
	S.R. 81 RAMP F	465+40	470+00	RT	200	3	0	0	0
	S.R. 81 RAMP F	462+40	465+40	LT	60	0	6	0	0
	S.R. 81 RAMP F	465+40	476+00	LT	200	0	6	0	0
			SUB-TOTAL B			31	35	0	0
			DELINEATOR TOTAL			343		9	

CALCULATED SJG CHECKED JRW

TRAFFIC CONTROL DELINEATOR SUB-SUMMARY

ALL-75-5.53

30 / 71

796
1224

J:\Projects\ALL\76691\traffic\sheets\76691TS030.dgn 10-SEP-2012 1:06PM wrightj

PAVEMENT MARKING LEGEND - ITEM 646

WL*	WHITE EDGE LINE	XL	12" CROSSWALK LINE
YL*	YELLOW EDGE LINE	CL	CHANNELIZING LINE 12" INTERSTATE & RAMPS 8" SIDE ROADS
LL*	WHITE LANE LINE	WT	24" WHITE TRANSVERSE LINE
DL	4" DOUBLE YELLOW	YT	24" YELLOW TRANSVERSE LINE
LA	LANE ARROW	SL	24" WHITE STOP LINE
		BL*	DOTTED LINE

* 6" INTERSTATE & RAMPS
4" SIDE ROADS

NOTE:
LANE WIDTH IS 12 FT.
UNLESS OTHERWISE NOTED.

1-WAY RPM
2-WAY RPM

SIGN LEGEND

- NEW
- EXISTING, TO REMAIN
- EXISTING, TO BE REMOVED AND REERECTED
- EXISTING, TO BE REMOVED

NOTE:
INSTALL RAISED PAVEMENT MARKERS
ACCORDING TO STANDARD CONSTRUCTION
DRAWINGS: TC-65.10 AND TC-65.11

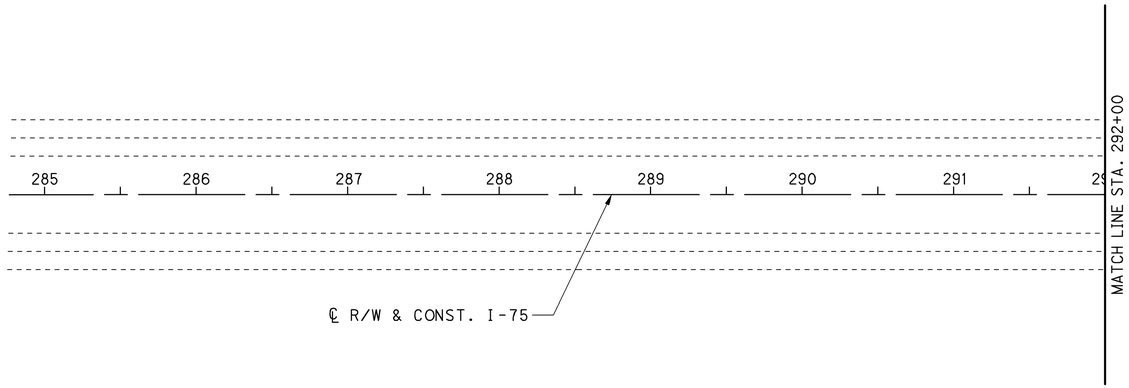

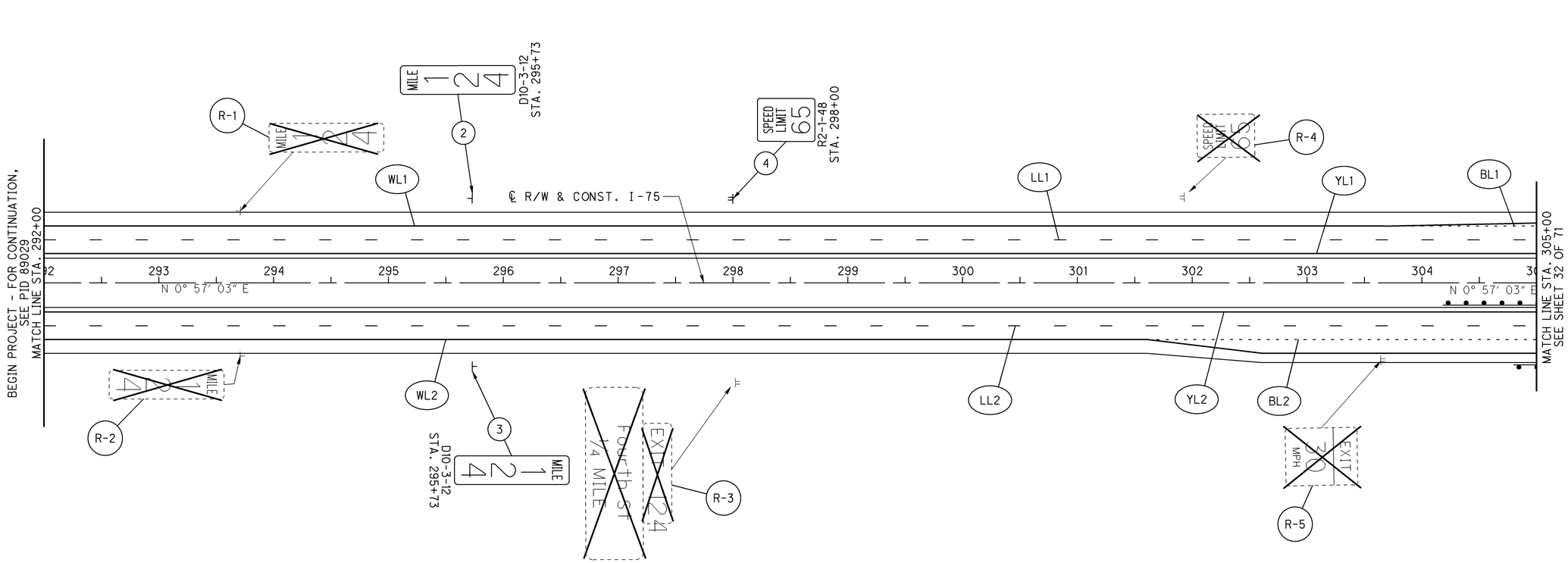

N

HORIZONTAL SCALE IN FEET
0 25 50 100

CALCULATED BKJ
CHECKED JRW

SIGN AND PAVEMENT MARKING PLAN
STA. 292+00 TO STA. 305+00

ALL-75-5.53

31 / 71

797
1224

J:\Projects\ALL\76691\traffic\sheets\76691TP001.dgn 10-SEP-2012 10:44 AM wrightj

SIGN LEGEND

- NEW
- EXISTING, TO REMAIN
- EXISTING, TO BE REMOVED AND REERECTED
- EXISTING, TO BE REMOVED

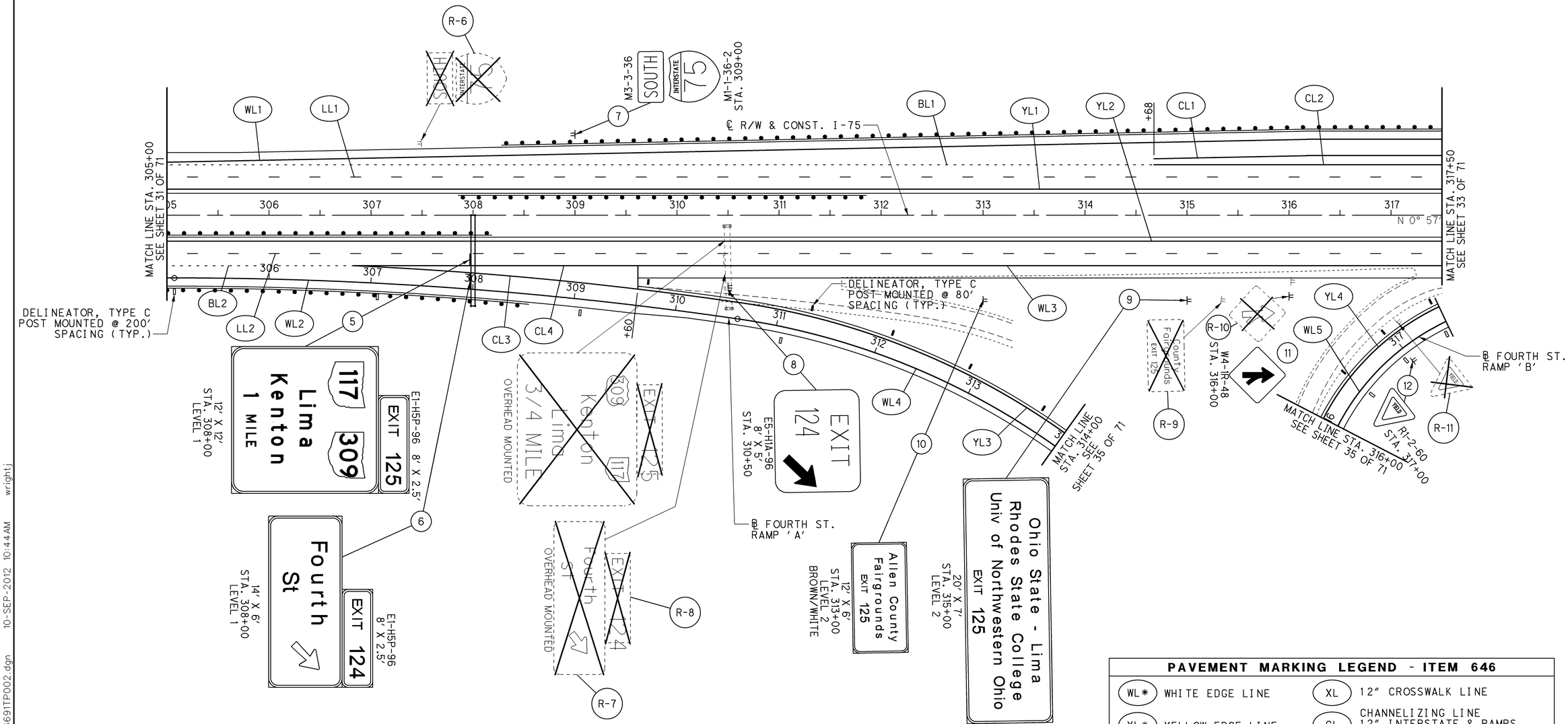

PAVEMENT MARKING LEGEND - ITEM 646

WL*	WHITE EDGE LINE	XL	12" CROSSWALK LINE
YL*	YELLOW EDGE LINE	CL	CHANNELIZING LINE 12" INTERSTATE & RAMPS 8" SIDE ROADS
LL*	WHITE LANE LINE	WT	24" WHITE TRANSVERSE LINE
DL	4" DOUBLE YELLOW	YT	24" YELLOW TRANSVERSE LINE
LA	LANE ARROW	SL	24" WHITE STOP LINE
		BL*	DOTTED LINE

* 6" INTERSTATE & RAMPS
4" SIDE ROADS

DELINEATORS:
- 1-WAY RPM — YELLOW
- 2-WAY RPM — WHITE

NOTE:
LANE WIDTH IS 12 FT.
UNLESS OTHERWISE NOTED.

HORIZONTAL SCALE IN FEET
0 25 50 100

CALCULATED BKJ
CHECKED JRW

SIGN AND PAVEMENT MARKING PLAN
STA. 305+00.00 TO STA. 317+50.00

ALL-75-5.53

32 / 71

798 / 1224

J:\Projects\ALL\76691\traffic\sheets\76691TP002.dgn 10-SEP-2012 10:44 AM wrightj

SIGN LEGEND

- NEW
- EXISTING, TO REMAIN
- EXISTING, TO BE REMOVED AND REERECTED
- EXISTING, TO BE REMOVED

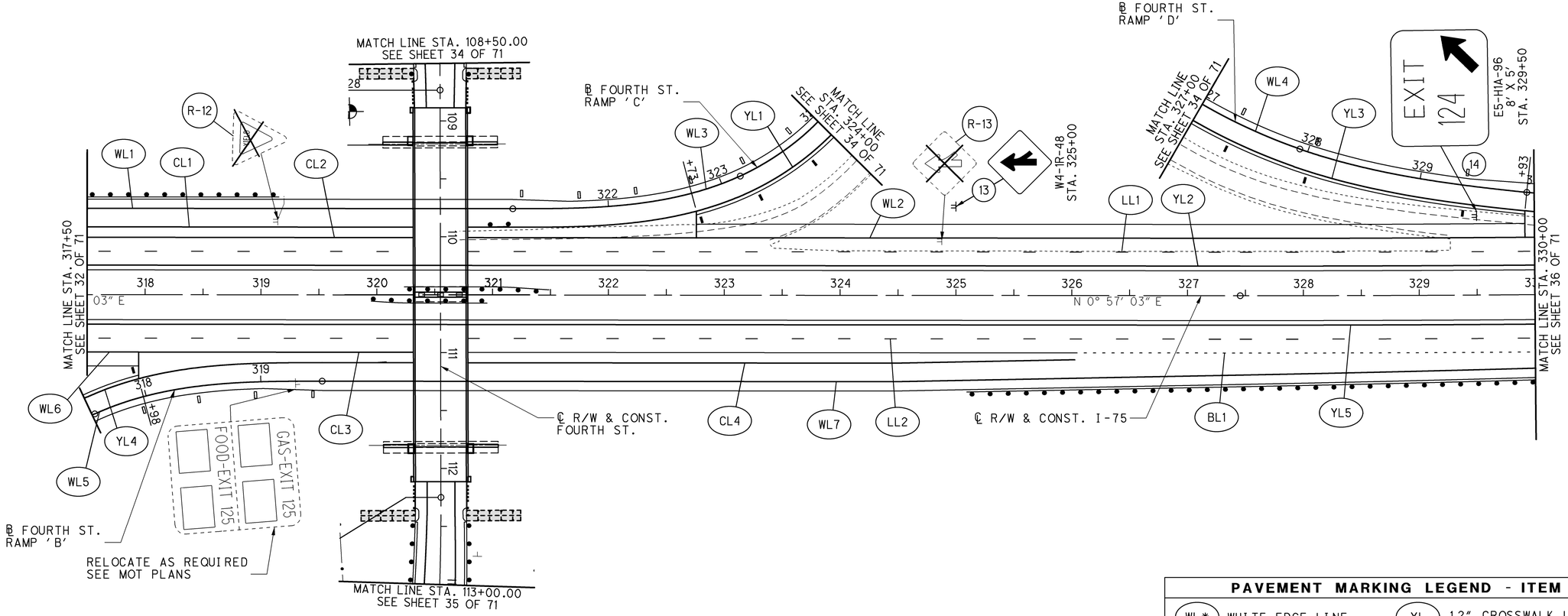

PAVEMENT MARKING LEGEND - ITEM 646

WL*	WHITE EDGE LINE	XL	12" CROSSWALK LINE
YL*	YELLOW EDGE LINE	CL	CHANNELIZING LINE 12" INTERSTATE & RAMPS 8" SIDE ROADS
LL*	WHITE LANE LINE	WT	24" WHITE TRANSVERSE LINE
DL	4" DOUBLE YELLOW	YT	24" YELLOW TRANSVERSE LINE
LA	LANE ARROW	SL	24" WHITE STOP LINE
		BL*	DOTTED LINE

* 6" INTERSTATE & RAMPS
4" SIDE ROADS

DELINEATORS:
- 1-WAY RPM
- 2-WAY RPM
- YELLOW
- WHITE

NOTE:
LANE WIDTH IS 12 FT.
UNLESS OTHERWISE NOTED.

HORIZONTAL SCALE IN FEET
0 25 50 100

CALCULATED BKJ
CHECKED JRW

SIGN AND PAVEMENT MARKING PLAN
STA. 317+50.00 TO STA. 330+00.00

ALL-75-5.53

33 / 71

799
1224

J:\Projects\ALL\76691\traffic\sheets\76691TP003.dgn 10-SEP-2012 10:44AM wrightj

PAVEMENT MARKING LEGEND - ITEM 646

WL*	WHITE EDGE LINE	XL	12″ CROSSWALK LINE
YL*	YELLOW EDGE LINE	CL	CHANNELIZING LINE 12″ INTERSTATE & RAMPS 8″ SIDE ROADS
LL*	WHITE LANE LINE	WT	24″ WHITE TRANSVERSE LINE
DL	4″ DOUBLE YELLOW	YT	24″ YELLOW TRANSVERSE LINE
LA	LANE ARROW	SL	24″ WHITE STOP LINE

* 6″ INTERSTATE & RAMPS
4″ SIDE ROADS

DELINEATORS:
1-WAY RPM — YELLOW
2-WAY RPM — WHITE

SIGN LEGEND

- NEW
- EXISTING, TO REMAIN
- EXISTING, TO BE REMOVED AND REERECTED
- EXISTING, TO BE REMOVED

NOTE:
LANE WIDTH IS 12 FT.
UNLESS OTHERWISE NOTED.

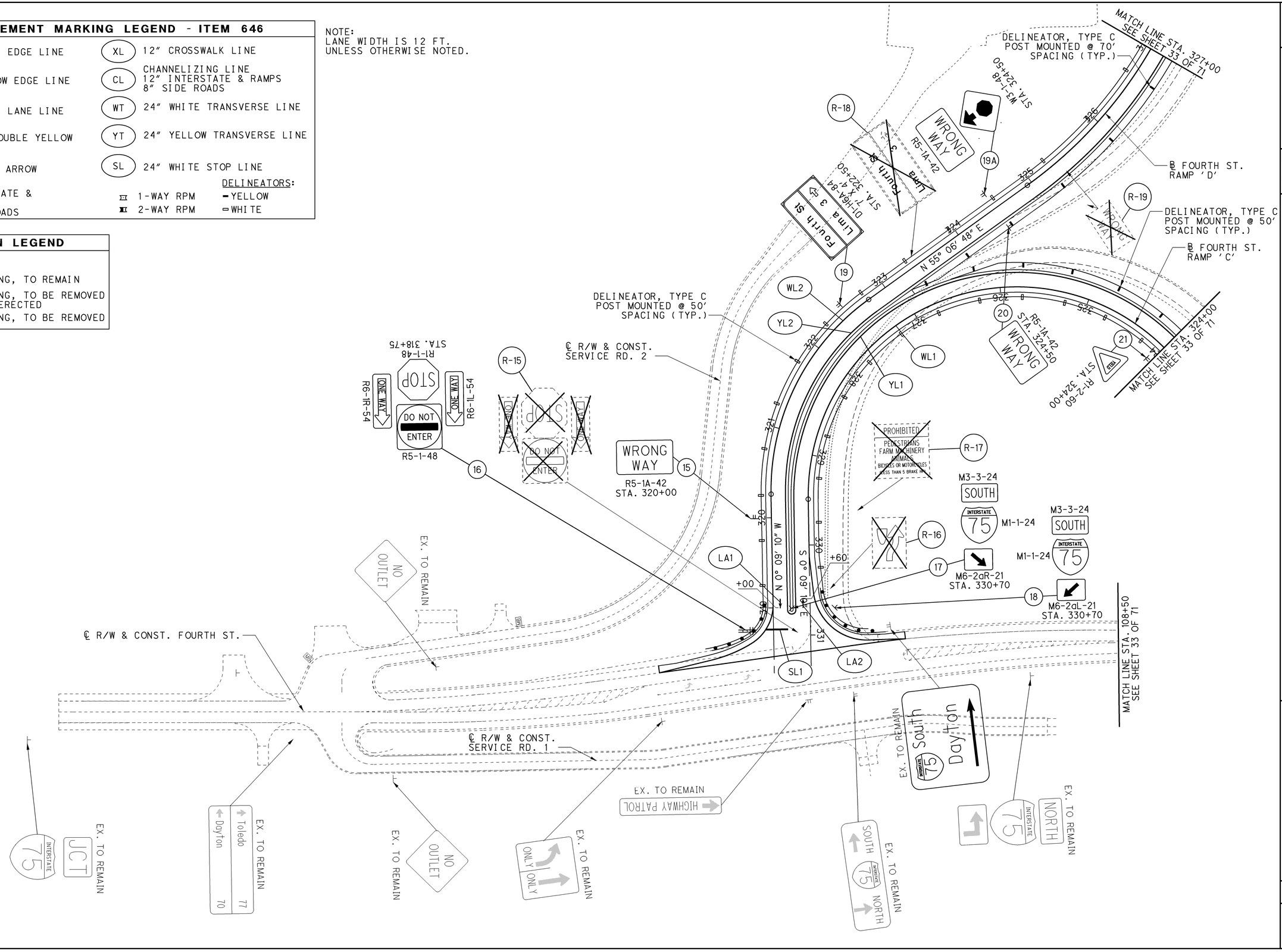

J:\Projects\ALL\76691\traffic\sheets\76691TP004.dgn 10-SEP-2012 10:44AM wrightj

HORIZONTAL SCALE IN FEET
0 25 50 100

CALCULATED BKJ CHECKED JRW

SIGN AND PAVEMENT MARKING PLAN FOURTH ST. RAMPS 'C' AND 'D'

ALL-75-5.53

34 / 71

800 / 1224

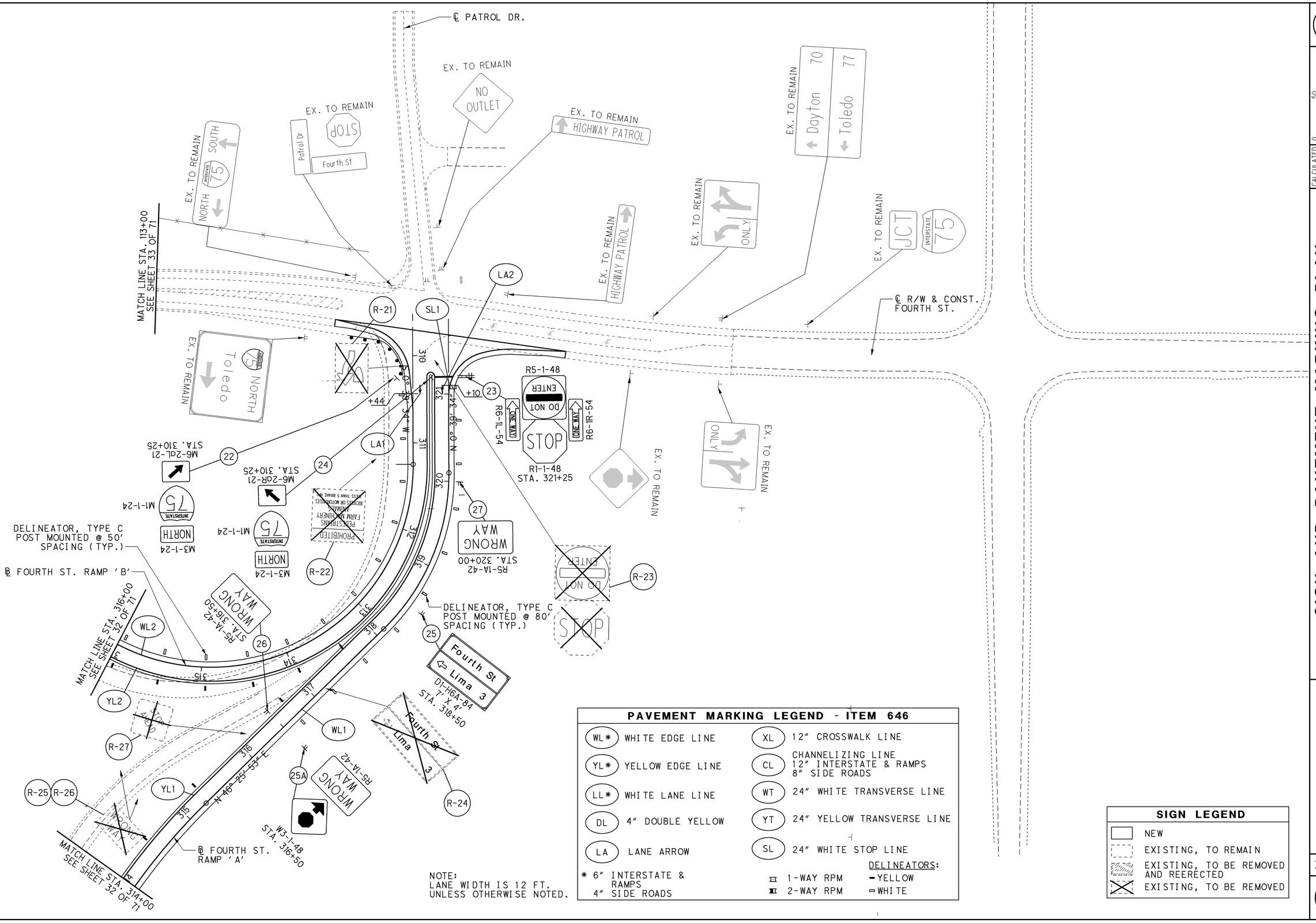

PAVEMENT MARKING LEGEND - ITEM 646

WL*	WHITE EDGE LINE	XL	12" CROSSWALK LINE
YL*	YELLOW EDGE LINE	CL	CHANNELIZING LINE 12" INTERSTATE & RAMPS 8" SIDE ROADS
LL*	WHITE LANE LINE	WT	24" WHITE TRANSVERSE LINE
DL	4" DOUBLE YELLOW	YT	24" YELLOW TRANSVERSE LINE
LA	LANE ARROW	SL	24" WHITE STOP LINE

* 6" INTERSTATE & RAMPS
4" SIDE ROADS

DELINEATORS: 1-WAY RPM, 2-WAY RPM, YELLOW, WHITE

SIGN LEGEND

- NEW
- EXISTING, TO REMAIN
- EXISTING, TO BE REMOVED AND REERECTED
- EXISTING, TO BE REMOVED

NOTE:
LANE WIDTH IS 12 FT.
UNLESS OTHERWISE NOTED.

HORIZONTAL SCALE IN FEET: 0, 25, 50, 100

CALCULATED BKJ
CHECKED JRW

SIGN AND PAVEMENT MARKING PLAN FOURTH ST. RAMPS 'A' AND 'B'

ALL-75-5.53

35 / 71

801
1224

J:\Projects\ALL\76691\traffic\sheets\76691TP005.dgn 10-SEP-2012 10:45AM wrightj

NOTE:
LANE WIDTH IS 12 FT.
UNLESS OTHERWISE NOTED.

PAVEMENT MARKING LEGEND - ITEM 646

WL*	WHITE EDGE LINE	XL	12" CROSSWALK LINE
YL*	YELLOW EDGE LINE	CL	CHANNELIZING LINE 12" INTERSTATE & RAMPS 8" SIDE ROADS
LL*	WHITE LANE LINE	WT	24" WHITE TRANSVERSE LINE
DL	4" DOUBLE YELLOW	YT	24" YELLOW TRANSVERSE LINE
LA	LANE ARROW	SL	24" WHITE STOP LINE
		BL*	DOTTED LINE

* 6" INTERSTATE & RAMPS
4" SIDE ROADS

DELINEATORS:
1-WAY RPM - YELLOW
2-WAY RPM - WHITE

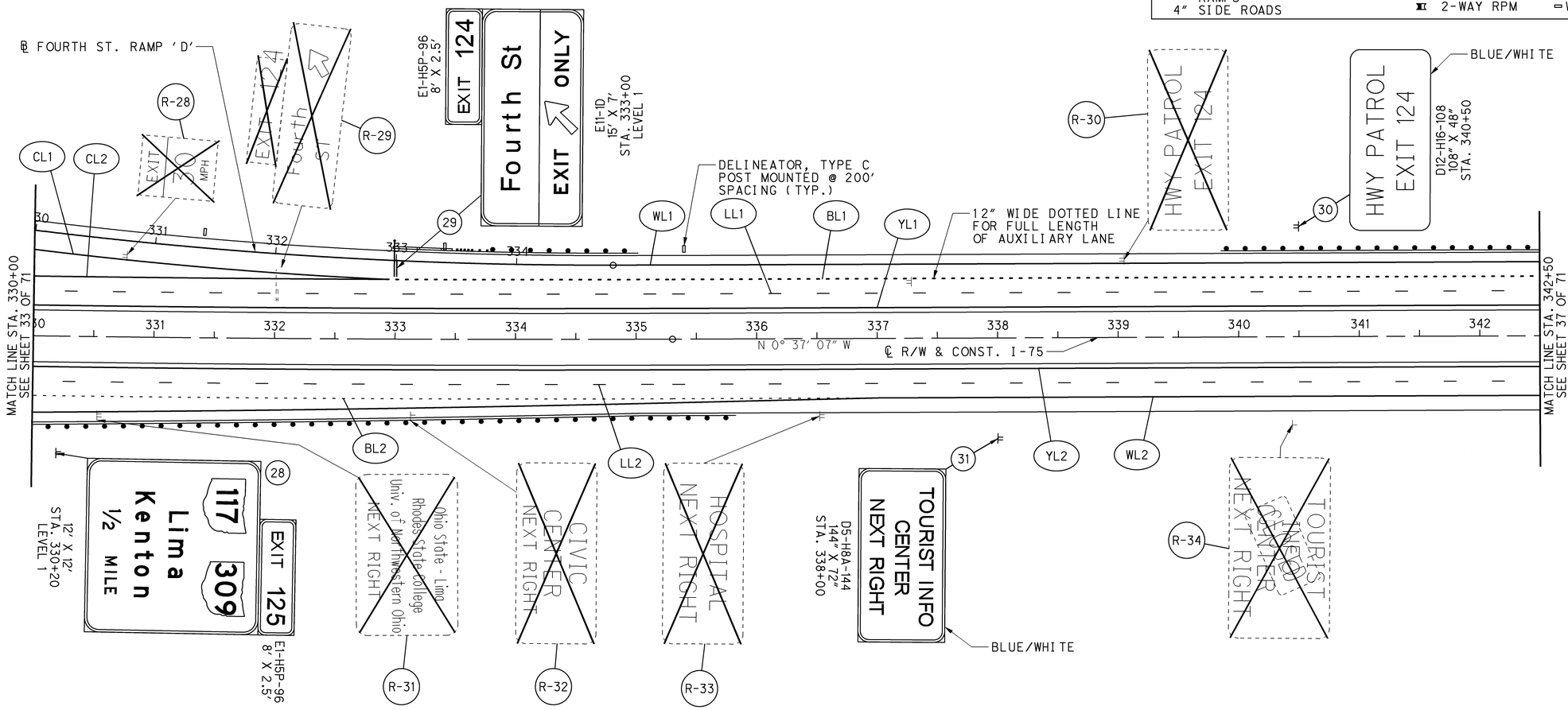

SIGN LEGEND

- NEW
- EXISTING, TO REMAIN
- EXISTING, TO BE REMOVED AND REERECTED
- EXISTING, TO BE REMOVED

N

HORIZONTAL SCALE IN FEET
0 25 50 100

CALCULATED BKJ
CHECKED JRW

SIGN AND PAVEMENT MARKING PLAN
STA. 330+00 TO STA. 342+50

ALL-75-5.53

36 / 71

802
1224

J:\Projects\ALL\76691\traffic\sheets\76691TP006.dgn 10-SEP-2012 10:45AM wrightj

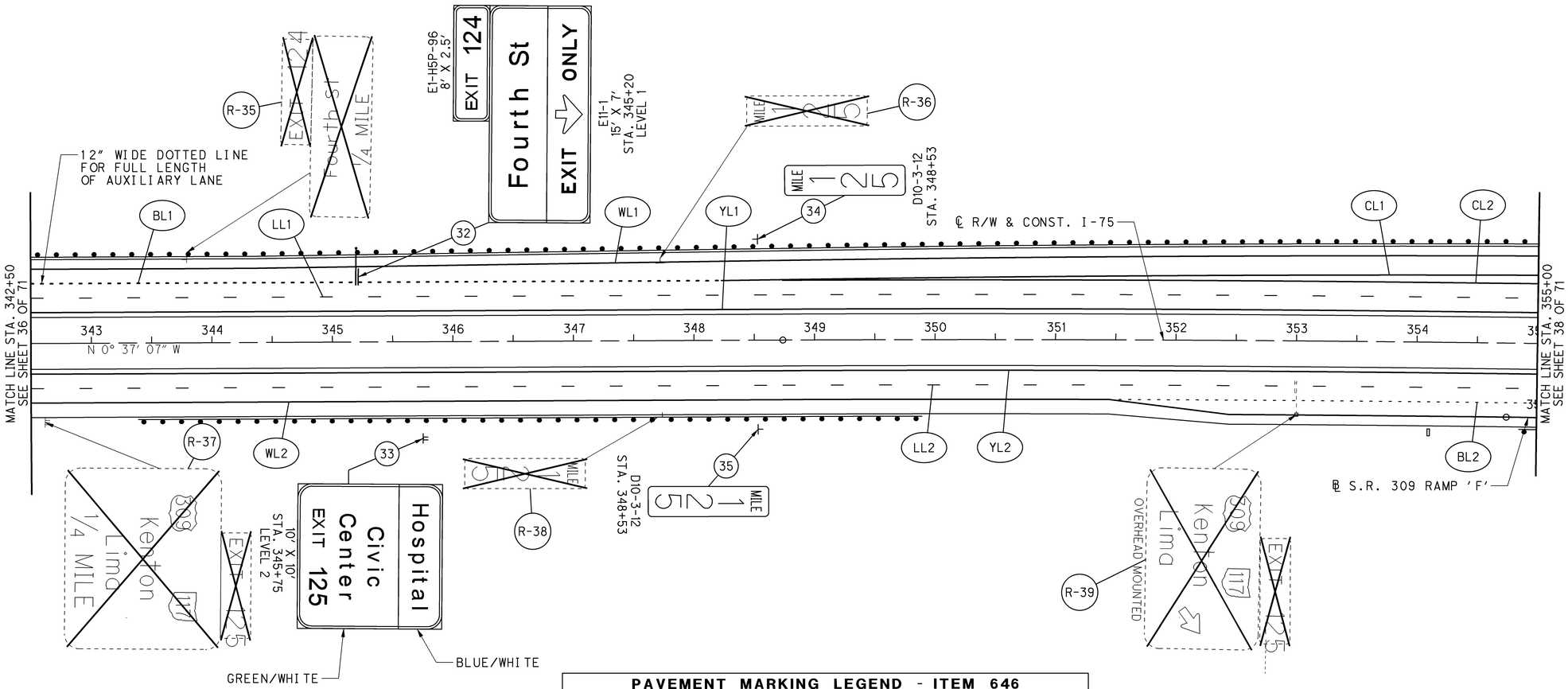

PAVEMENT MARKING LEGEND - ITEM 646

WL*	WHITE EDGE LINE	XL	12" CROSSWALK LINE
YL*	YELLOW EDGE LINE	CL	CHANNELIZING LINE 12" INTERSTATE & RAMPS 8" SIDE ROADS
LL*	WHITE LANE LINE	WT	24" WHITE TRANSVERSE LINE
DL	4" DOUBLE YELLOW	YT	24" YELLOW TRANSVERSE LINE
LA	LANE ARROW	SL	24" WHITE STOP LINE
		BL*	DOTTED LINE

* 6" INTERSTATE & RAMPS
4" SIDE ROADS

DELINEATORS:
- 1-WAY RPM — YELLOW
- 2-WAY RPM — WHITE

NOTE:
LANE WIDTH IS 12 FT.
UNLESS OTHERWISE NOTED.

SIGN LEGEND

- NEW
- EXISTING, TO REMAIN
- EXISTING, TO BE REMOVED AND REERECTED
- EXISTING, TO BE REMOVED

N

0 25 50 100
HORIZONTAL SCALE IN FEET

CALCULATED BKJ
CHECKED JRW

SIGN AND PAVEMENT MARKING PLAN
STA. 342+50 TO STA. 355+00

ALL-75-5.53

37 / 71

803
1224

J:\Projects\ALL\76691\traffic\sheets\76691TP007.dgn 10-SEP-2012 10:45AM wrightj

PAVEMENT MARKING LEGEND - ITEM 646

WL*	WHITE EDGE LINE	XL	12" CROSSWALK LINE
YL*	YELLOW EDGE LINE	CL	CHANNELIZING LINE 12" INTERSTATE & RAMPS 8" SIDE ROADS
LL*	WHITE LANE LINE	WT	24" WHITE TRANSVERSE LINE
DL	4" DOUBLE YELLOW	YT	24" YELLOW TRANSVERSE LINE
LA	LANE ARROW	SL	24" WHITE STOP LINE
		BL*	DOTTED LINE

CHANNELIZING LINE
* 6" INTERSTATE & RAMPS
4" SIDE ROADS

1-WAY RPM
2-WAY RPM

DELINEATORS:
YELLOW
WHITE

SIGN LEGEND

NEW
EXISTING, TO REMAIN
EXISTING, TO BE REMOVED AND REERECTED
EXISTING, TO BE REMOVED

NOTE:
LANE WIDTH IS 12 FT.
UNLESS OTHERWISE NOTED.

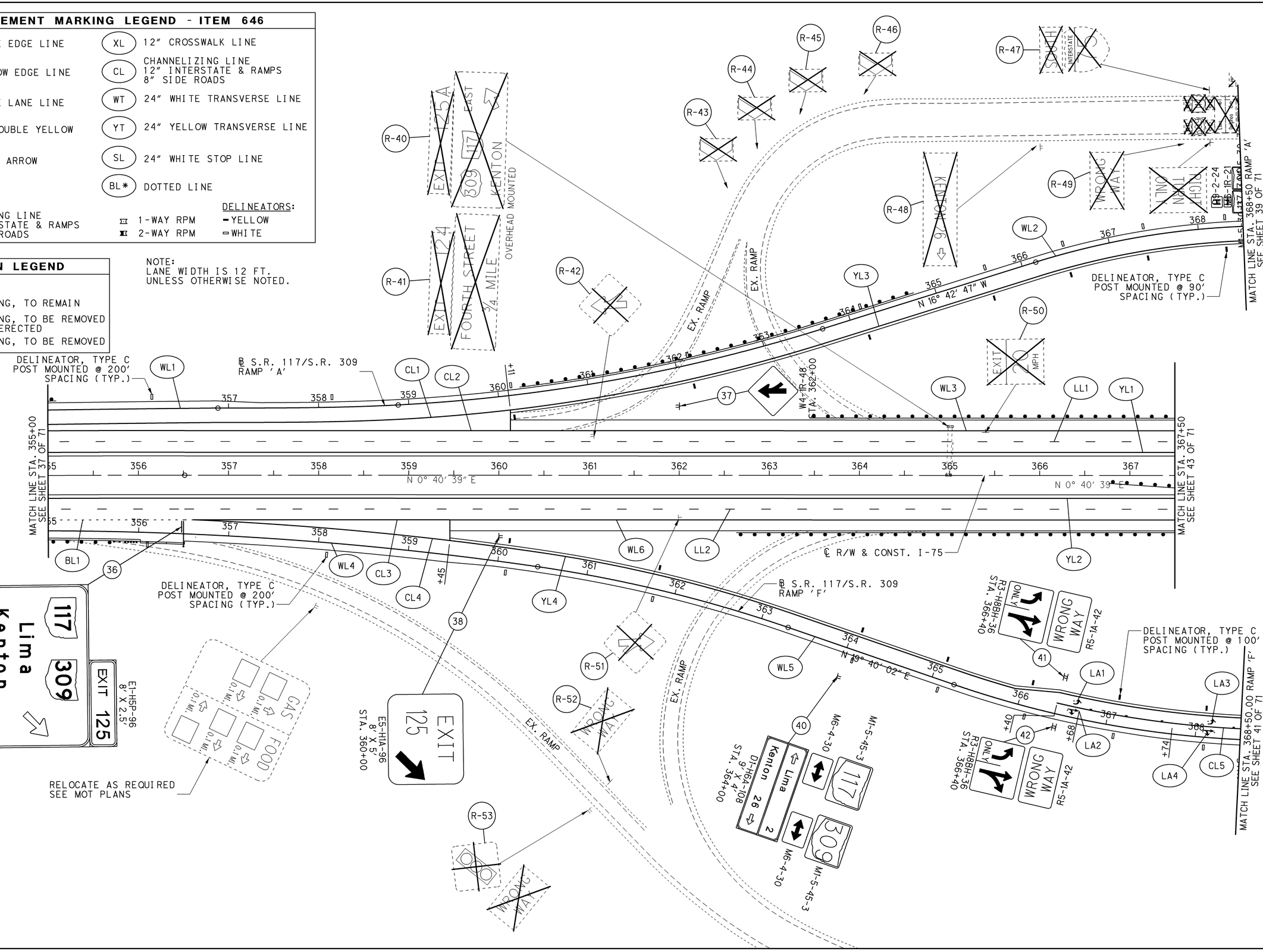

J:\Projects\ALL\76691\traffic\sheets\76691TP008.dgn 10-SEP-2012 10:45AM wrightj

HORIZONTAL SCALE IN FEET
0 25 50 100

CALCULATED BKJ
CHECKED JRW

SIGN AND PAVEMENT MARKING PLAN
STA. 355+00.00 TO STA. 367+50.00

ALL-75-5.53

38 / 71

804
1224

J:\Projects\ALL\76691\traffic\sheets\76691TP009.dgn 10-SEP-2012 10:45AM wrightj

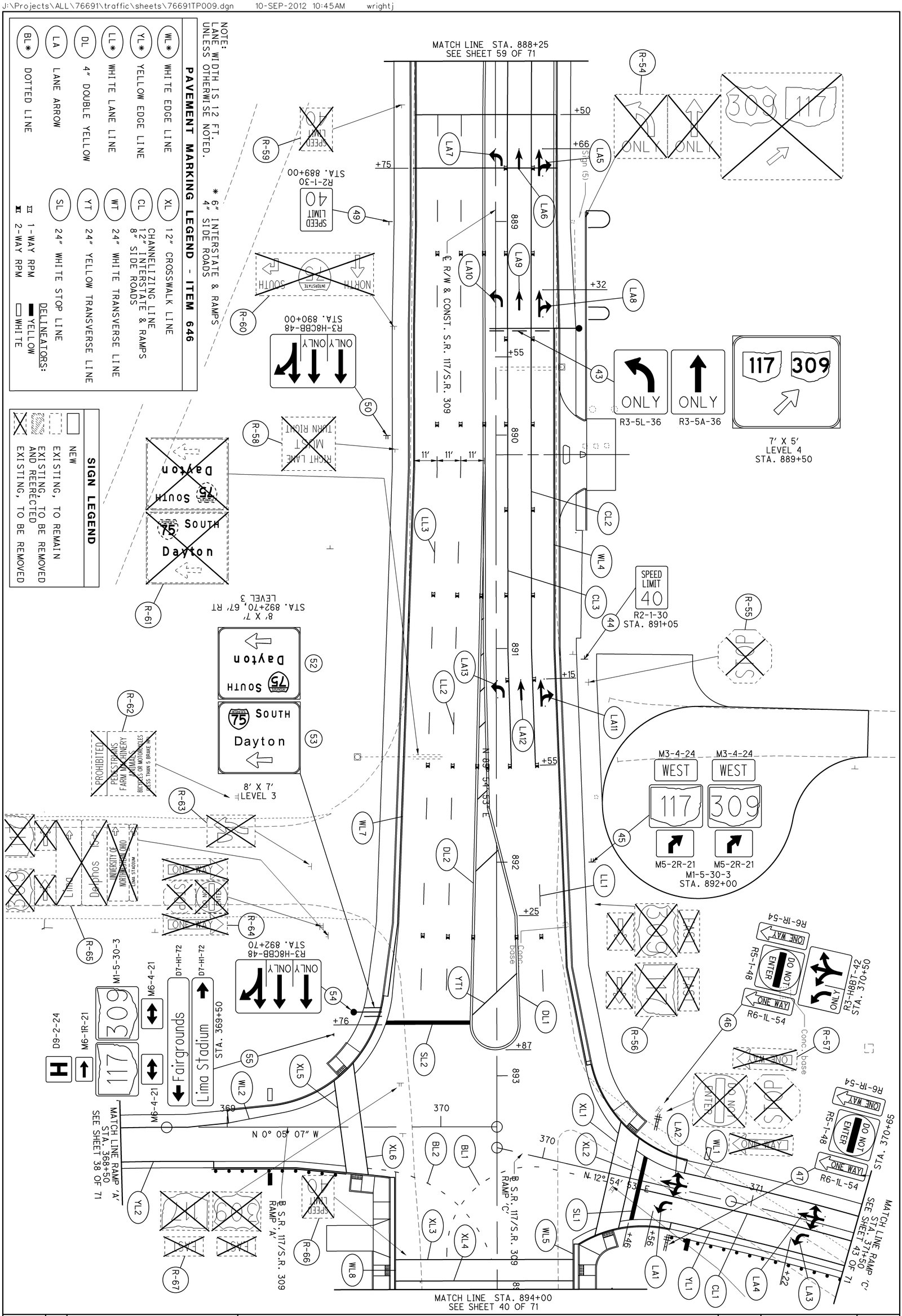

805 / 1224	39 / 71	ALL-75-5.53	SIGN AND PAVEMENT MARKING PLAN S.R. 309 BEGIN WORK TO STA. 894+00.00	CALCULATED BKJ CHECKED JRW	0 10 20 40 HORIZONTAL SCALE IN FEET

SIGN LEGEND

- NEW
- EXISTING, TO REMAIN
- EXISTING, TO BE REMOVED AND REERECTED
- EXISTING, TO BE REMOVED

PAVEMENT MARKING LEGEND ITEM 646

- BL* DOTTED LINE
- XL 12" CROSSWALK LINE
- CL CHANNELIZING LINE 12" INTERSTATE & RAMPS 8" SIDE ROADS
- WT 24" WHITE TRANSVERSE LINE
- YT 24" YELLOW TRANSVERSE LINE
- SL 24" WHITE STOP LINE
- WL* WHITE EDGE LINE
- YL* YELLOW EDGE LINE
- LL* WHITE LANE LINE
- DL 4" DOUBLE YELLOW
- LA LANE ARROW

DELINEATORS:
- 1-WAY RPM — YELLOW
- 2-WAY RPM — WHITE

* 6" INTERSTATE & RAMPS
4" SIDE ROADS

NOTE:
LANE WIDTH IS 12 FT.
UNLESS OTHERWISE NOTED.

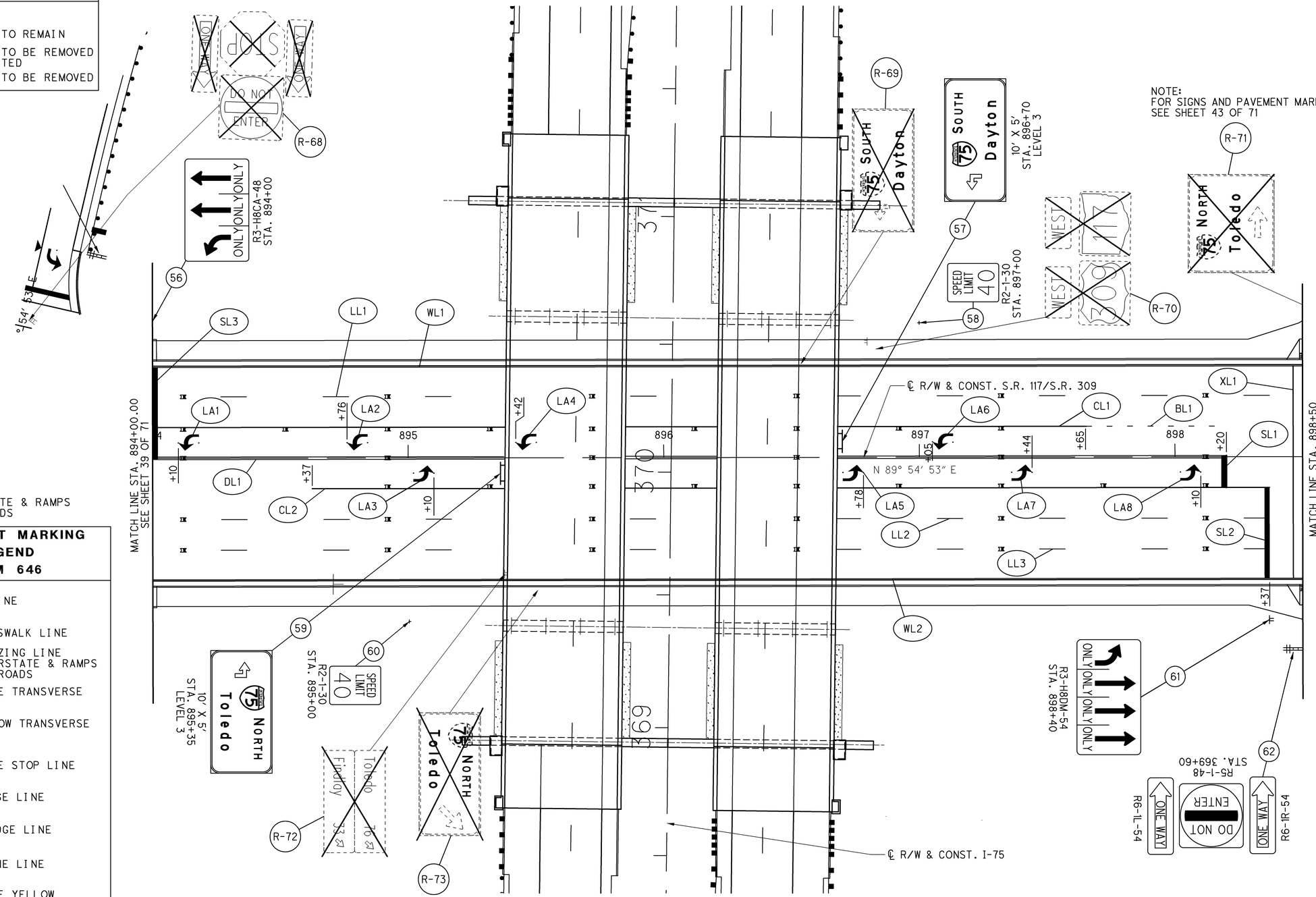

PAVEMENT MARKING PLAN
STA. 894+00 TO STA. 898+50
SIGN AND PAVEMENT MARKING PLAN
S.R. 309 STA. 898+50

HORIZONTAL SCALE IN FEET
0 10 20 40

CALCULATED BKJ
CHECKED JRW

ALL-75-5.53

40 / 71

806
1224

J:\Projects\ALL\76691\traffic\sheets\76691TP010.dgn 10-SEP-2012 10:45AM wrightj

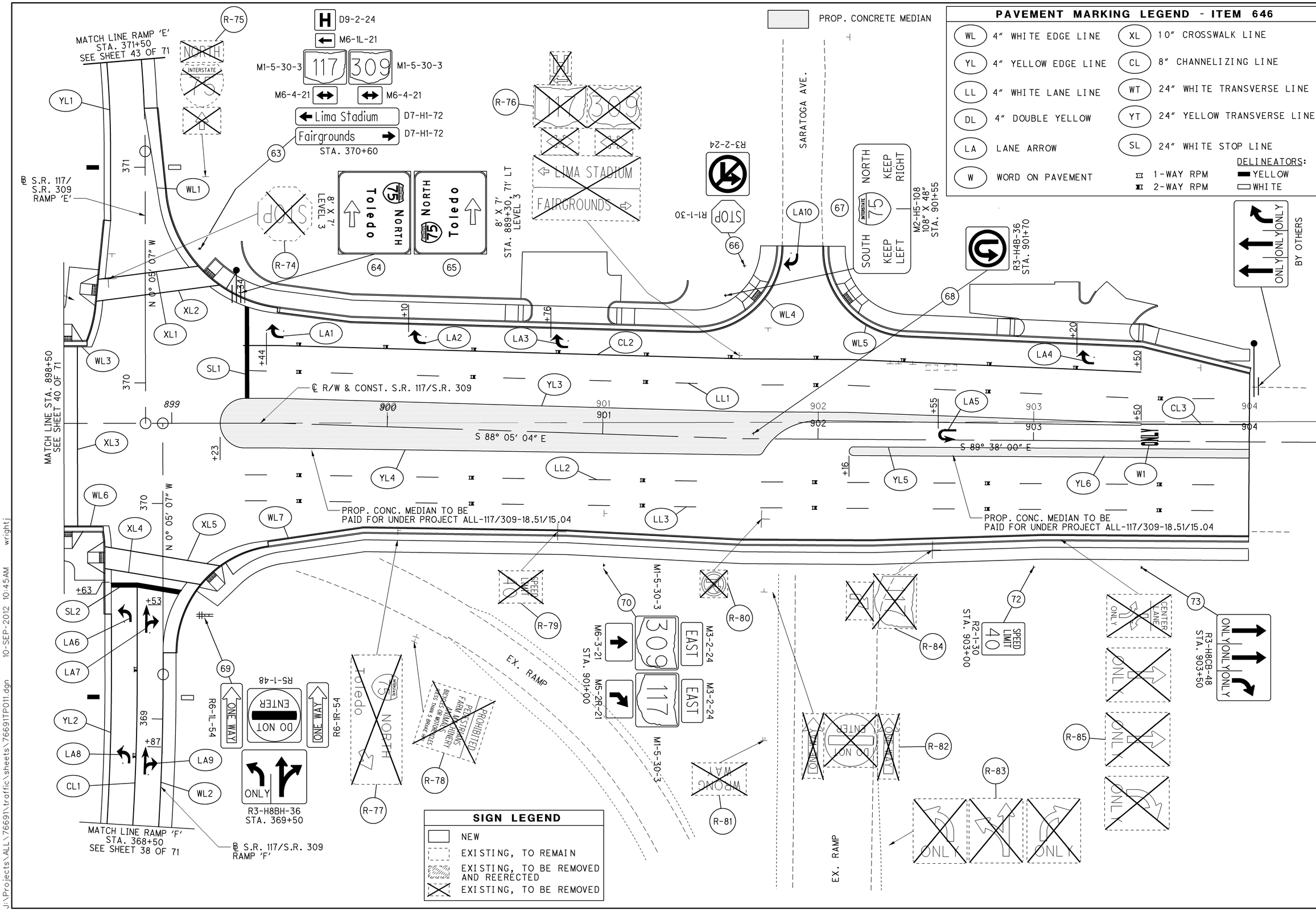
PAVEMENT MARKING LEGEND - ITEM 646
WL 4" WHITE EDGE LINE
YL 4" YELLOW EDGE LINE
LL 4" WHITE LANE LINE
DL 4" DOUBLE YELLOW
LA LANE ARROW
W WORD ON PAVEMENT
XL 10" CROSSWALK LINE
CL 8" CHANNELIZING LINE
WT 24" WHITE TRANSVERSE LINE
YT 24" YELLOW TRANSVERSE LINE
SL 24" WHITE STOP LINE
1-WAY RPM
2-WAY RPM
DELINEATORS:
YELLOW
WHITE
PROP. CONCRETE MEDIAN
MATCH LINE RAMP 'E' STA. 371+50 SEE SHEET 43 OF 71
MATCH LINE STA. 898+50 SEE SHEET 40 OF 71
MATCH LINE RAMP 'F' STA. 368+50 SEE SHEET 38 OF 71
℄ S.R. 117/ S.R. 309 RAMP 'E'
℄ S.R. 117/S.R. 309 RAMP 'F'
℄ R/W & CONST. S.R. 117/S.R. 309
S 88° 05' 04" E
S 89° 38' 00" E
N 0° 05' 07" W
PROP. CONC. MEDIAN TO BE PAID FOR UNDER PROJECT ALL-117/309-18.51/15.04
SARATOGA AVE.
EX. RAMP
SIGN LEGEND
NEW
EXISTING, TO REMAIN
EXISTING, TO BE REMOVED AND REERECTED
EXISTING, TO BE REMOVED
HORIZONTAL SCALE IN FEET
CALCULATED BKJ
CHECKED JRW
SIGN AND PAVEMENT MARKING PLAN
S.R. 309 STA. 898+50 TO END WORK
ALL-75-5.53
41/71
807/1224
J:\Projects\ALL\76691\traffic\sheets\76691TP011.dgn 10-SEP-2012 10:45AM wrightj

SIGN LEGEND

- NEW
- EXISTING, TO REMAIN
- EXISTING, TO BE REMOVED AND REERECTED
- EXISTING, TO BE REMOVED

PAVEMENT MARKING LEGEND - ITEM 642

WL	4" WHITE EDGE LINE	XL	10" CROSSWALK LINE
YL	4" YELLOW EDGE LINE	CL	8" CHANNELIZING LINE
LL	4" WHITE LANE LINE	WT	24" WHITE TRANSVERSE LINE
DL	4" DOUBLE YELLOW	YT	24" YELLOW TRANSVERSE LINE
LA	LANE ARROW	SL	24" WHITE STOP LINE

NOTE:
LANE WIDTH IS 12 FT.
UNLESS OTHERWISE NOTED.

1-WAY RPM
2-WAY RPM

N

HORIZONTAL SCALE IN FEET
0 10 20 40

CALCULATED BKJ
CHECKED JRW

SIGN AND PAVEMENT MARKING PLAN
BRYN MAWR

ALL-75-5.53

42 / 71

808 / 1224

J:\Projects\ALL\76691\traffic\sheets\76691TP012.dgn 10-SEP-2012 10:45AM wrightj

77D
W1-2L-30
STA. 7+00
8
9
R-86
PROHIBITED
PEDESTRIANS
FARM MACHINERY
ANIMALS
BICYCLES OR MOTORCYCLES
LESS THAN 5 BIKE PATH
R-91
SPEED LIMIT 25
10
WL1
WL2
DL1
R-92
THROUGH TRUCKS PROHIBITED
℄ R/W & CONST. BRYN MAWR
77C
W1-2R-30
STA. 11+00
R-93
STOP
R2-1-24
STA. 12+00
SPEED LIMIT 25
77B
R-94
STOP
R-96
SPEED LIMIT 25
STOP
R1-1-30
R1-3P-18
STA. 50+25
74
WL3
52
N 46° 48' 09" E
DL2
WL4
10'
10'
51
℄ R/W & CONST. LOST CREEK BLVD.
77A
R2-1-24
STA. 51+00
SPEED LIMIT 25
R-98
STOP
75
STOP
ALL WAY
R1-1-30
R1-3P-18
STA. 13+15
N 0° 44' 24" W
11
12
13
S 89° 52' 58" E
WELLESLEY DR.
SL2
SL1
R-87
STOP
NORTH
R-88
W14-2-30
STA. 10+71
NO OUTLET
77F
77E
STOP
R1-1-30
STA. 11+18
THROUGH TRUCKS PROHIBITED
R-95
ALL WAY
R1-1-30
R1-3P-18
STA. 12+50
STOP
76
THROUGH TRUCKS PROHIBITED
R-97
SARATOGA AVE.
TO REMAIN
SPEED LIMIT 25
76A
STOP
ALL WAY
R1-3P-18
TO REMAIN
DEAN AVE.
STOP
R-90
THROUGH TRUCKS PROHIBITED
R-89

PAVEMENT MARKING LEGEND - ITEM 646

WL*	WHITE EDGE LINE	XL	12″ CROSSWALK LINE
YL*	YELLOW EDGE LINE	CL	CHANNELIZING LINE 12″ INTERSTATE & RAMPS 8″ SIDE ROADS
LL*	WHITE LANE LINE	WT	24″ WHITE TRANSVERSE LINE
DL	4″ DOUBLE YELLOW	YT	24″ YELLOW TRANSVERSE LINE
LA	LANE ARROW	SL	24″ WHITE STOP LINE
		BL*	DOTTED LINE

* 6″ INTERSTATE & RAMPS
4″ SIDE ROADS

DELINEATORS:
1-WAY RPM — YELLOW
2-WAY RPM — WHITE

NOTE:
LANE WIDTH IS 12 FT.
UNLESS OTHERWISE NOTED.

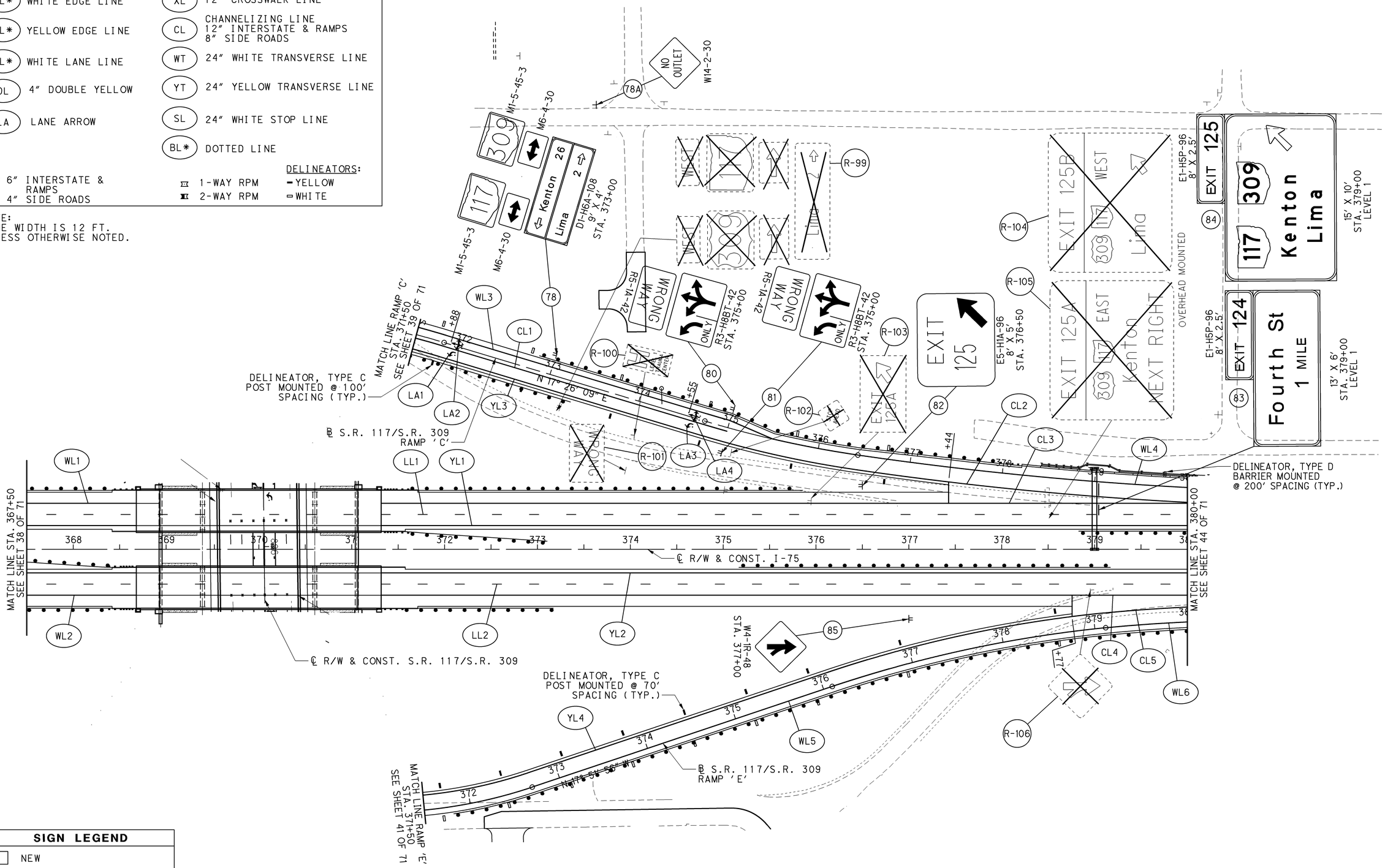

SIGN LEGEND

- NEW
- EXISTING, TO REMAIN
- EXISTING, TO BE REMOVED AND REERECTED
- EXISTING, TO BE REMOVED

HORIZONTAL SCALE IN FEET
0 25 50 100

CALCULATED BKJ
CHECKED JRW

SIGN AND PAVEMENT MARKING PLAN
STA. 367+50.00 TO STA. 380+00.00

ALL-75-5.53

43 / 71

809
1224

J:\Projects\ALL\76691\traffic\sheets\76691TP013.dgn 10-SEP-2012 10:45AM wrightj

J:\Projects\ALL\76691\traffic\sheets\76691TP014.dgn 10-SEP-2012 10:45AM wrightj

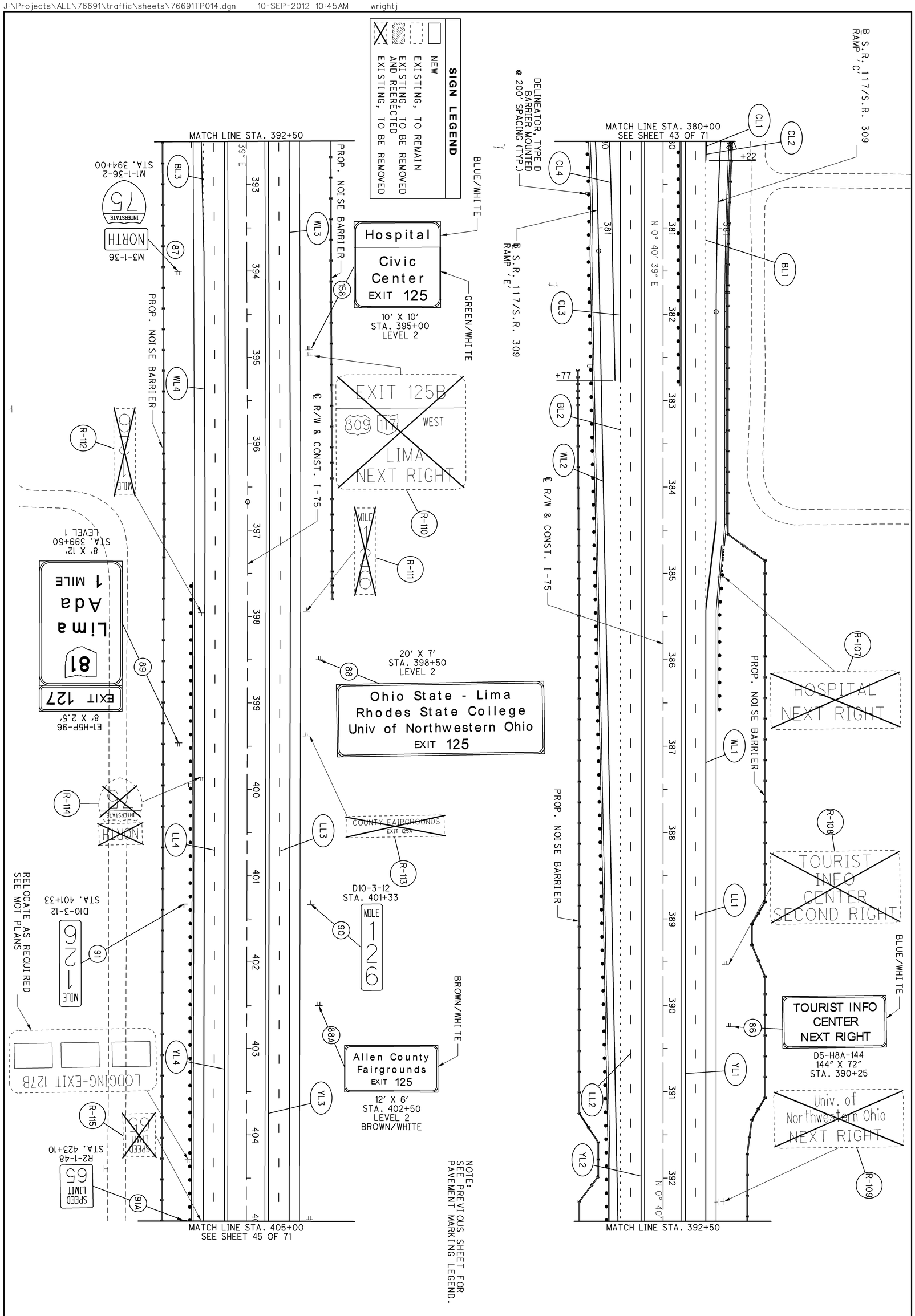

810 / 1224	44 / 71	ALL-75-5.53	SIGN AND PAVEMENT MARKING PLAN STA. 380+00.00 TO STA. 405+00.00	CALCULATED BKJ / CHECKED JRW	0 50 25 100 HORIZONTAL SCALE IN FEET	N

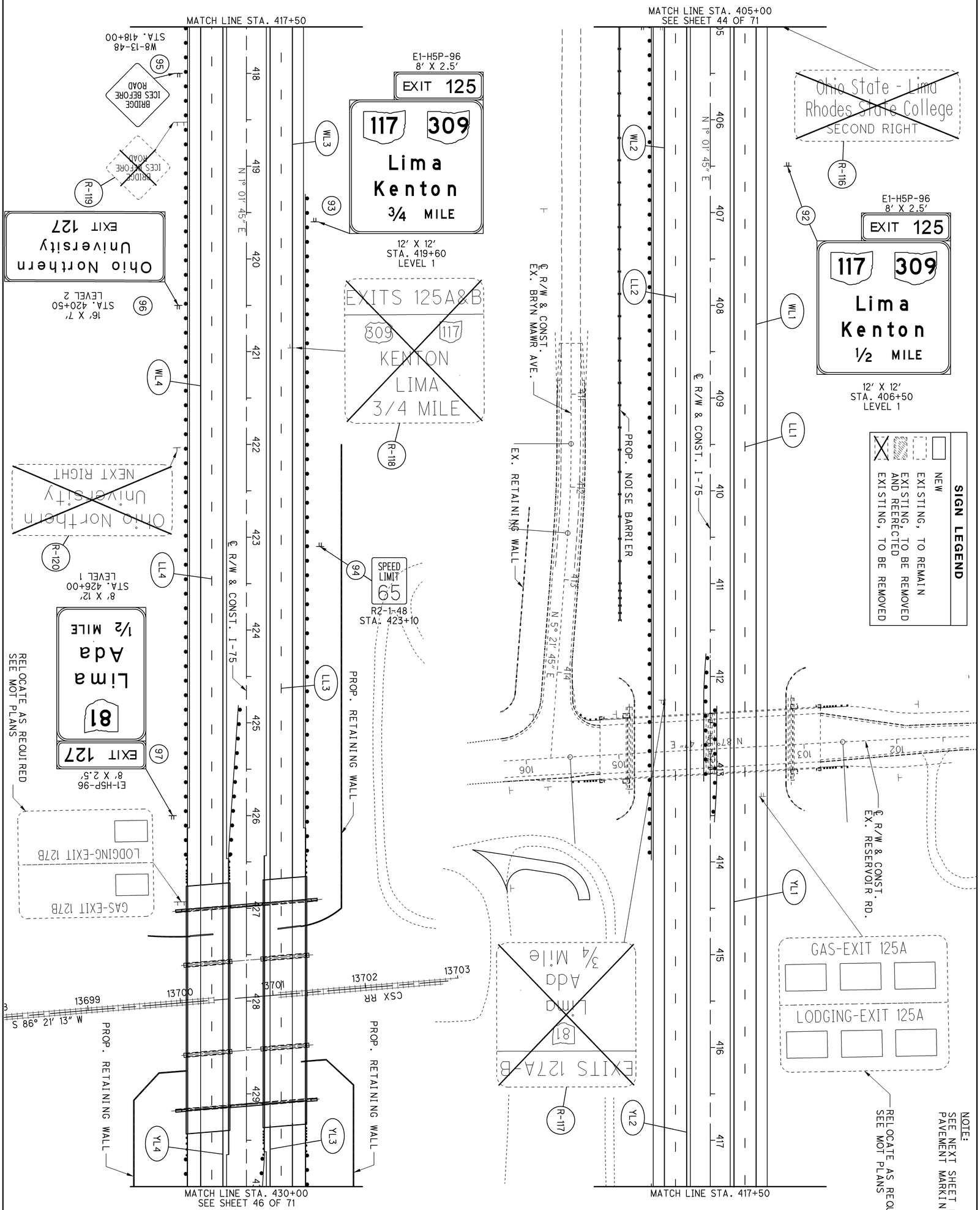

811 1224	45 / 71	ALL-75-5.53	SIGN AND PAVEMENT MARKING PLAN STA. 405+00.00 TO STA. 430+00.00	CALCULATED BKJ / CHECKED JRW	0 50 25 100 HORIZONTAL SCALE IN FEET

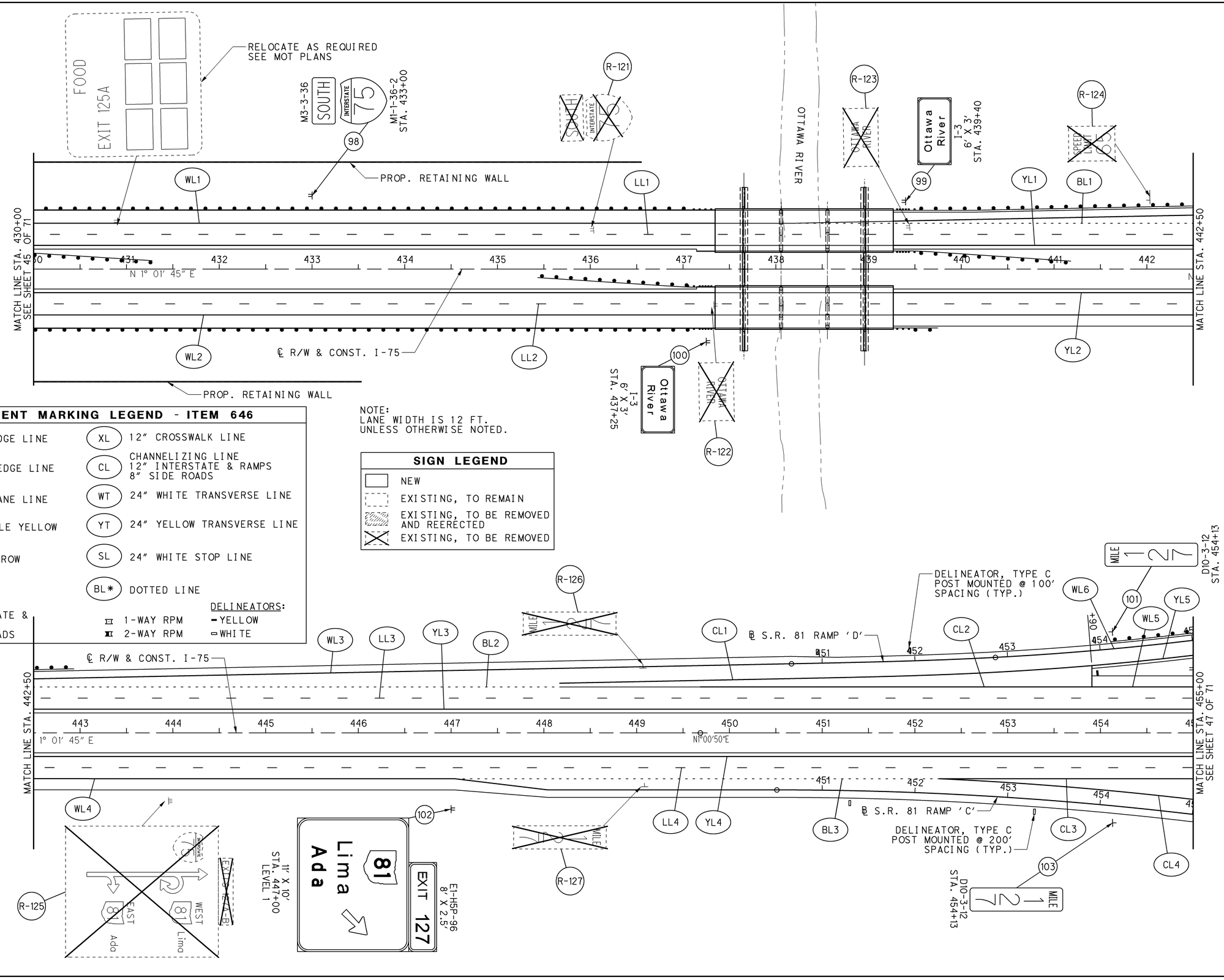

HORIZONTAL SCALE IN FEET
0 25 50 100

CALCULATED BKJ
CHECKED JRW

SIGN AND PAVEMENT MARKING PLAN
STA. 430+00.00 TO STA. 455+00.00

ALL-75-5.53

46 / 71

812
1224

J:\Projects\ALL\76691\traffic\sheets\76691TP016.dgn 10-SEP-2012 10:45AM wrightj

PAVEMENT MARKING LEGEND - ITEM 646

WL*	WHITE EDGE LINE	XL	12" CROSSWALK LINE
YL*	YELLOW EDGE LINE	CL	CHANNELIZING LINE 12" INTERSTATE & RAMPS 8" SIDE ROADS
LL*	WHITE LANE LINE	WT	24" WHITE TRANSVERSE LINE
DL	4" DOUBLE YELLOW	YT	24" YELLOW TRANSVERSE LINE
LA	LANE ARROW	SL	24" WHITE STOP LINE

* 6" INTERSTATE & RAMPS
4" SIDE ROADS

DELINEATORS:
1-WAY RPM - YELLOW
2-WAY RPM - WHITE

NOTE:
LANE WIDTH IS 12 FT.
UNLESS OTHERWISE NOTED.

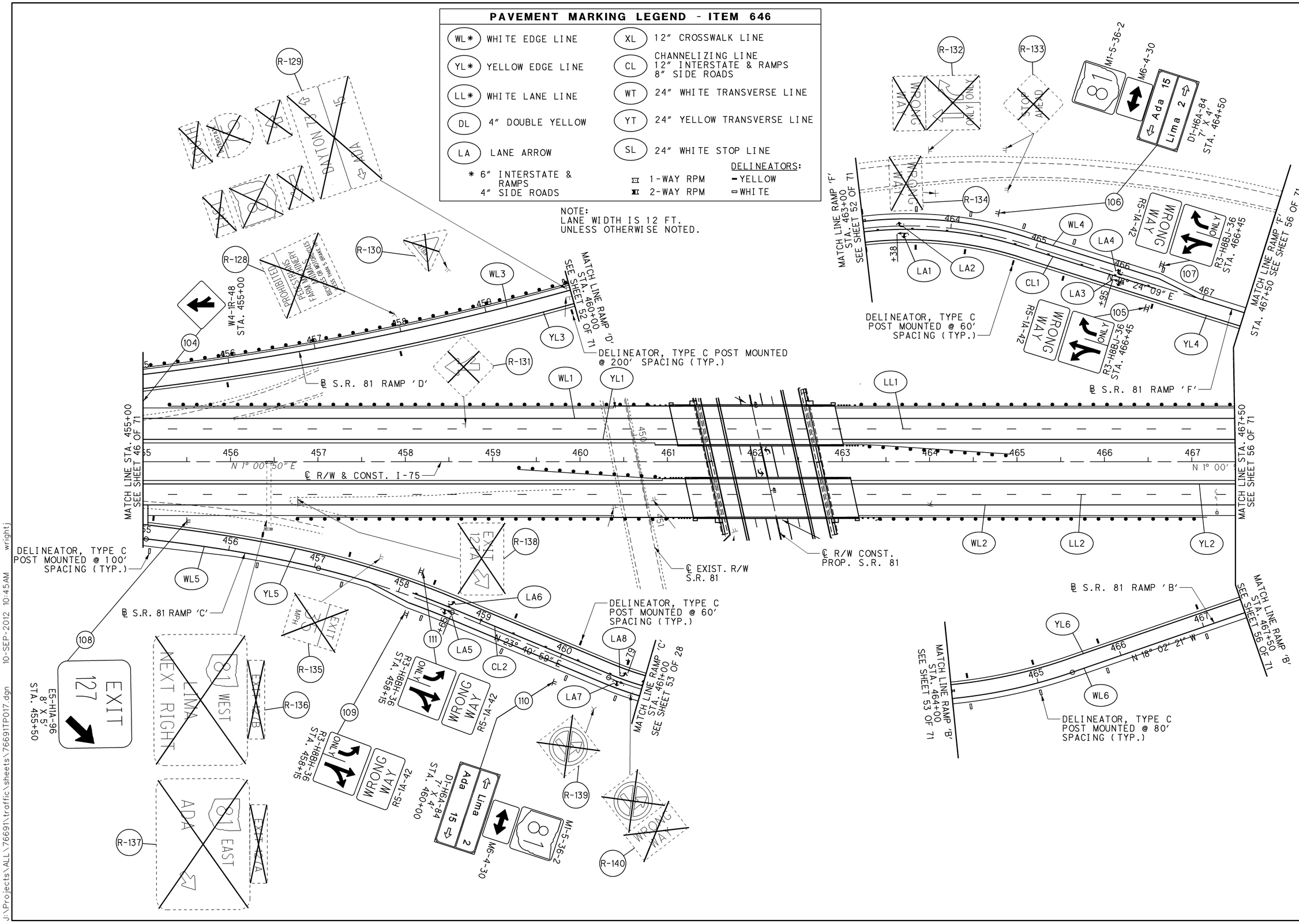

HORIZONTAL SCALE IN FEET
0 25 50 100

CALCULATED BKJ
CHECKED JRW

SIGN AND PAVEMENT MARKING PLAN
STA. 455+00.00 TO STA. 467+50.00

ALL-75-5.53

47 / 71

813
1224

J:\Projects\ALL\76691\traffic\sheets\76691TP017.dgn 10-SEP-2012 10:45AM wrightj

PAVEMENT MARKING LEGEND

ITEM 642 (SERVICE RD. 3)
ITEM 646 (S.R. 81)

WL*	WHITE EDGE LINE	XL	12" CROSSWALK LINE
YL*	YELLOW EDGE LINE	CL	CHANNELIZING LINE 12" INTERSTATE & RAMPS 8" SIDE ROADS
LL*	WHITE LANE LINE	WT	24" WHITE TRANSVERSE LINE
DL	4" DOUBLE YELLOW	YT	24" YELLOW TRANSVERSE LINE
LA	LANE ARROW	SL	24" WHITE STOP LINE

* 6" INTERSTATE & RAMPS
4" SIDE ROADS

1-WAY RPM
2-WAY RPM

SIGN LEGEND

- NEW
- EXISTING, TO REMAIN
- EXISTING, TO BE REMOVED AND REERECTED
- EXISTING, TO BE REMOVED

NOTE:
LANE WIDTH IS 12 FT.
UNLESS OTHERWISE NOTED.

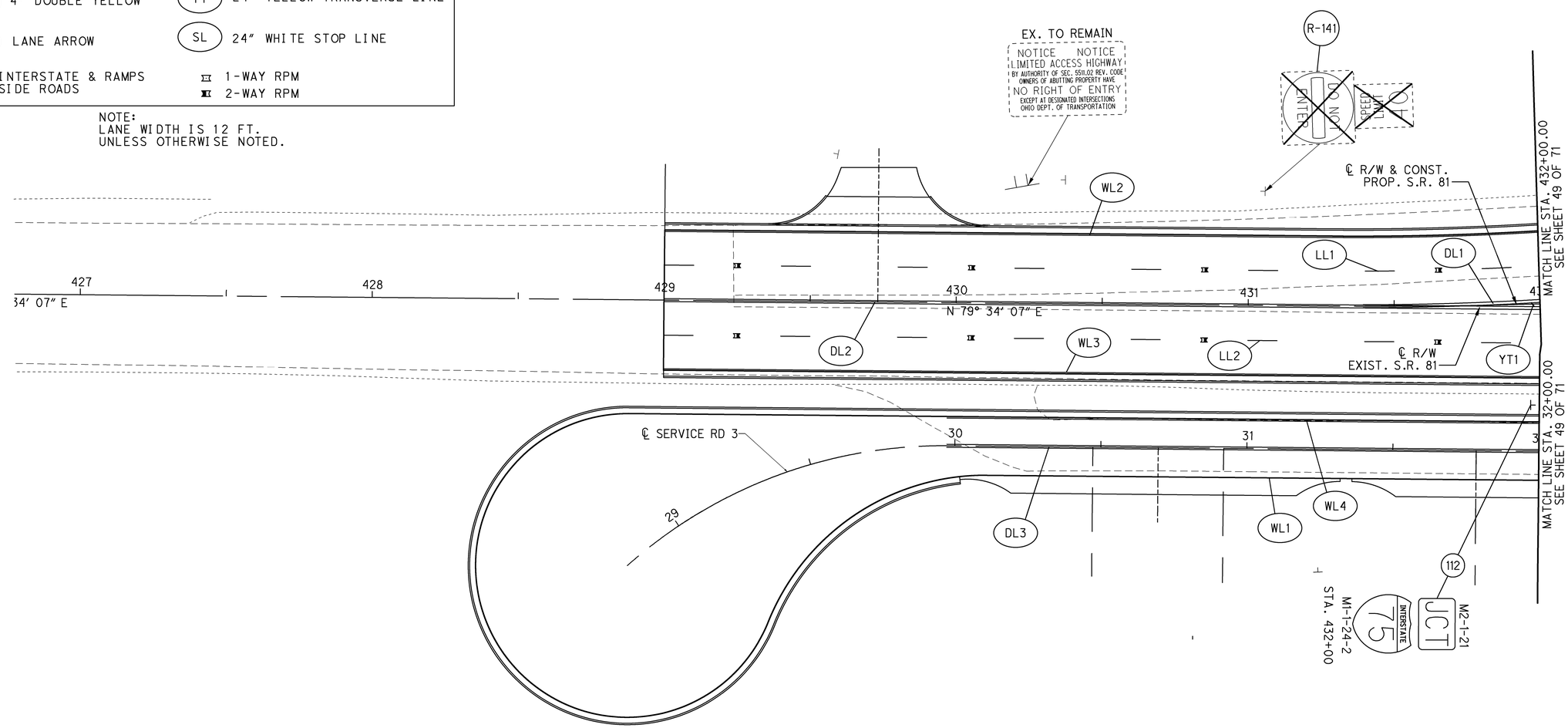

J:\Projects\ALL\76691\traffic\sheets\76691TP018.dgn 10-SEP-2012 10:45AM wrightj

HORIZONTAL SCALE IN FEET
0 10 20 40

CALCULATED BKJ
CHECKED JRW

SIGN AND PAVEMENT MARKING PLAN
S.R. 81 BEGIN WORK TO STA. 432+00.00

ALL-75-5.53

48 / 71

814
1224

PAVEMENT MARKING LEGEND

ITEM 642 (SERVICE RD. 3)
ITEM 646 (S.R. 81)

WL*	WHITE EDGE LINE	XL	12" CROSSWALK LINE
YL*	YELLOW EDGE LINE	CL	CHANNELIZING LINE 12" INTERSTATE & RAMPS 8" SIDE ROADS
LL*	WHITE LANE LINE	WT	24" WHITE TRANSVERSE LINE
DL	4" DOUBLE YELLOW	YT	24" YELLOW TRANSVERSE LINE
LA	LANE ARROW	SL	24" WHITE STOP LINE

* 6" INTERSTATE & RAMPS
4" SIDE ROADS

1-WAY RPM
2-WAY RPM

SIGN LEGEND

- NEW
- EXISTING, TO REMAIN
- EXISTING, TO BE REMOVED AND REERECTED
- EXISTING, TO BE REMOVED

NOTE:
LANE WIDTH IS 12 FT.
UNLESS OTHERWISE NOTED.

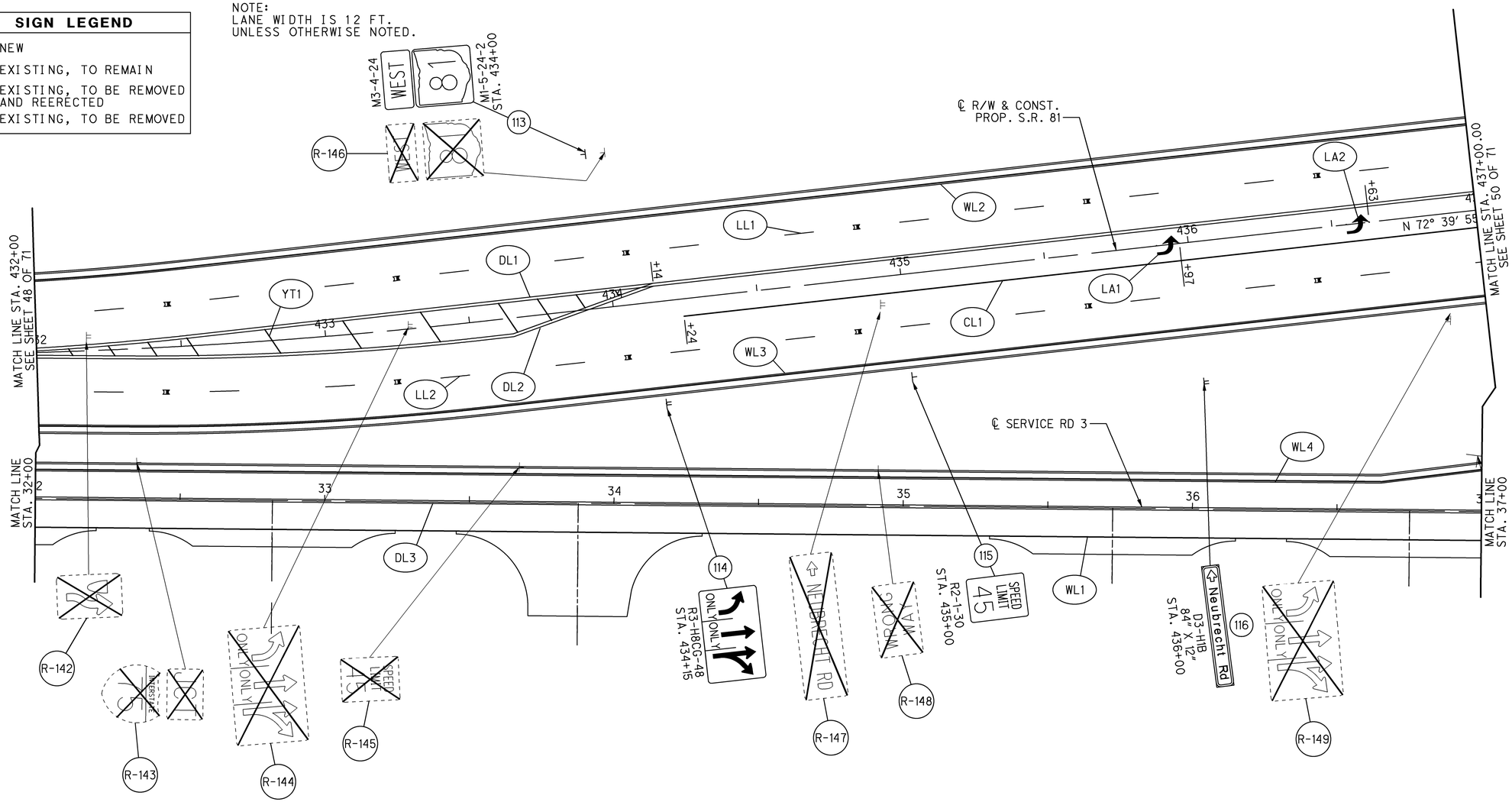

HORIZONTAL SCALE IN FEET
0 10 20 40

CALCULATED BKJ
CHECKED JRW

SIGN AND PAVEMENT MARKING PLAN
S.R. 81 STA. 432+00 TO STA. 437+00

ALL-75-5.53

49 / 71

815
1224

J:\Projects\ALL\76691\traffic\sheets\76691TP019.dgn 10-SEP-2012 10:45AM wrightj

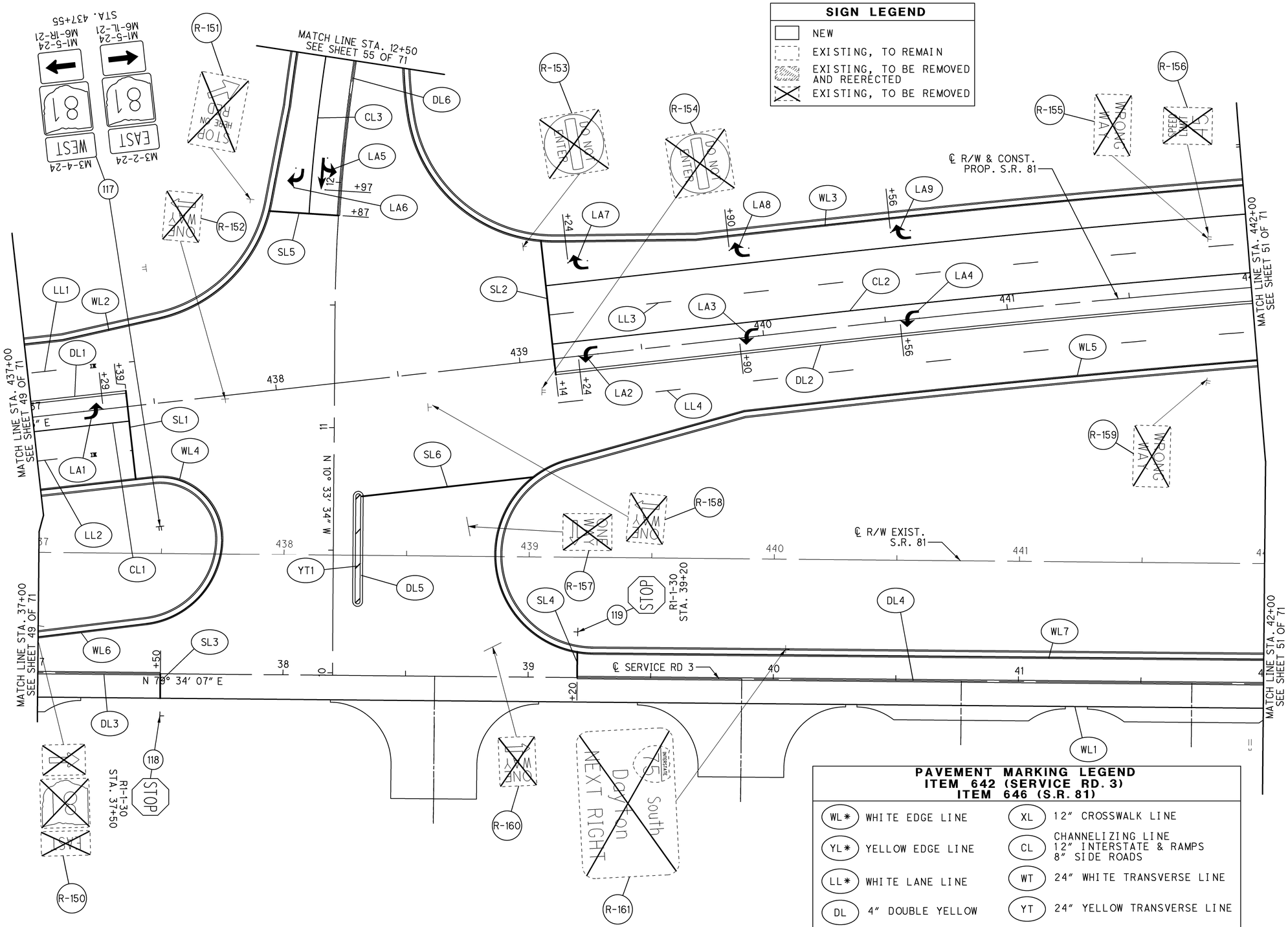

J:\Projects\ALL\76691\traffic\sheets\76691TP020.dgn 10-SEP-2012 10:45AM wrightj

HORIZONTAL SCALE IN FEET
0 10 20 40

CALCULATED BKJ
CHECKED JRW

SIGN AND PAVEMENT MARKING PLAN
S.R. 81 STA. 437+00 TO STA. 442+00

ALL-75-5.53

50 / 71

816 / 1224

NOTE:
SEE NEXT SHEET FOR
PAVEMENT MARKING LEGEND.

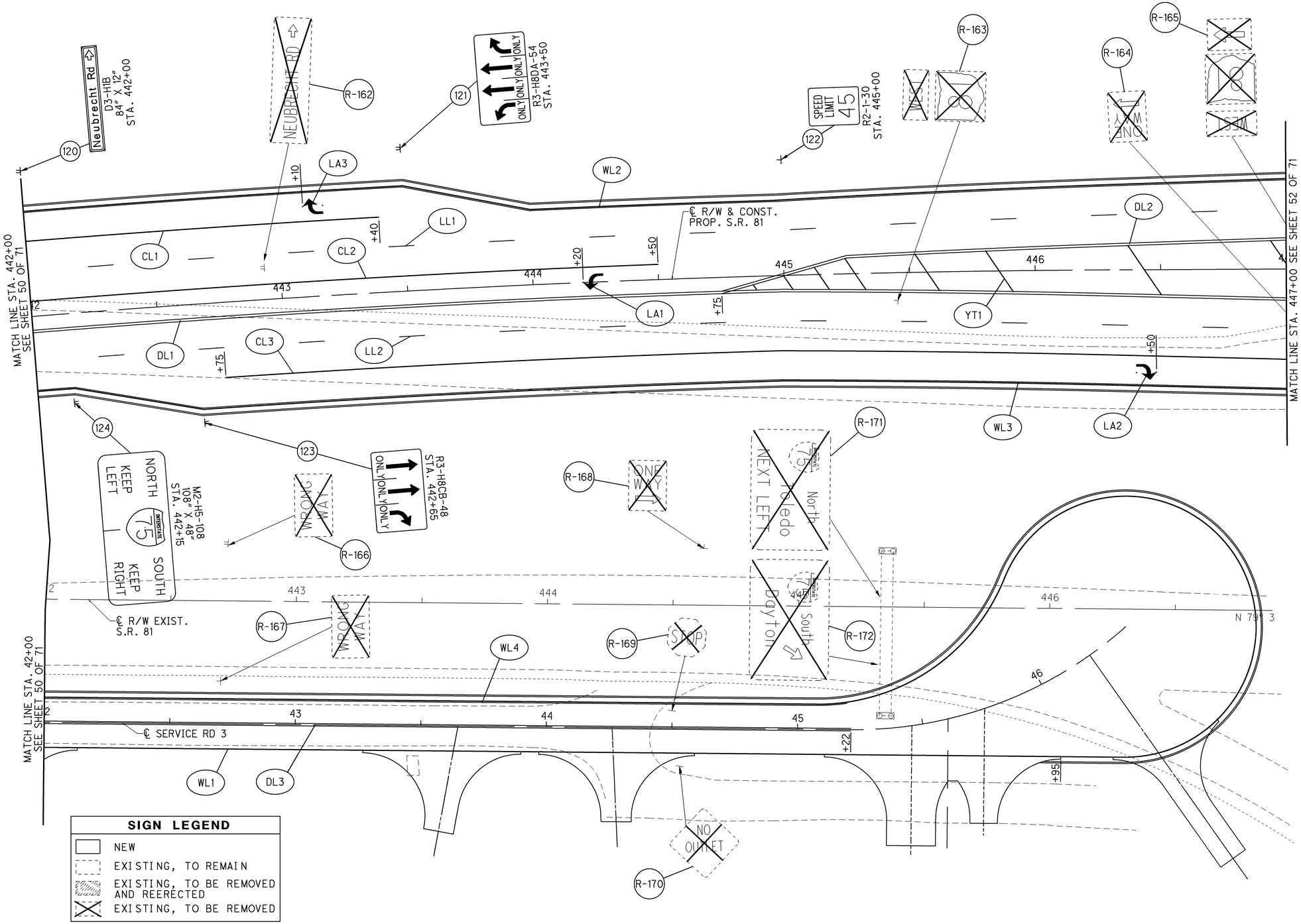

SIGN LEGEND

- NEW
- EXISTING, TO REMAIN
- EXISTING, TO BE REMOVED AND REERECTED
- EXISTING, TO BE REMOVED

N

0 10 20 40 HORIZONTAL SCALE IN FEET

CALCULATED BKJ
CHECKED JRW

SIGN AND PAVEMENT MARKING PLAN
S.R. 81 STA. 442+00 TO STA. 447+00

ALL-75-5.53

51 / 71

817
1224

J:\Projects\ALL\76691\traffic\sheets\76691TP021.dgn 10-SEP-2012 10:45AM wrightj

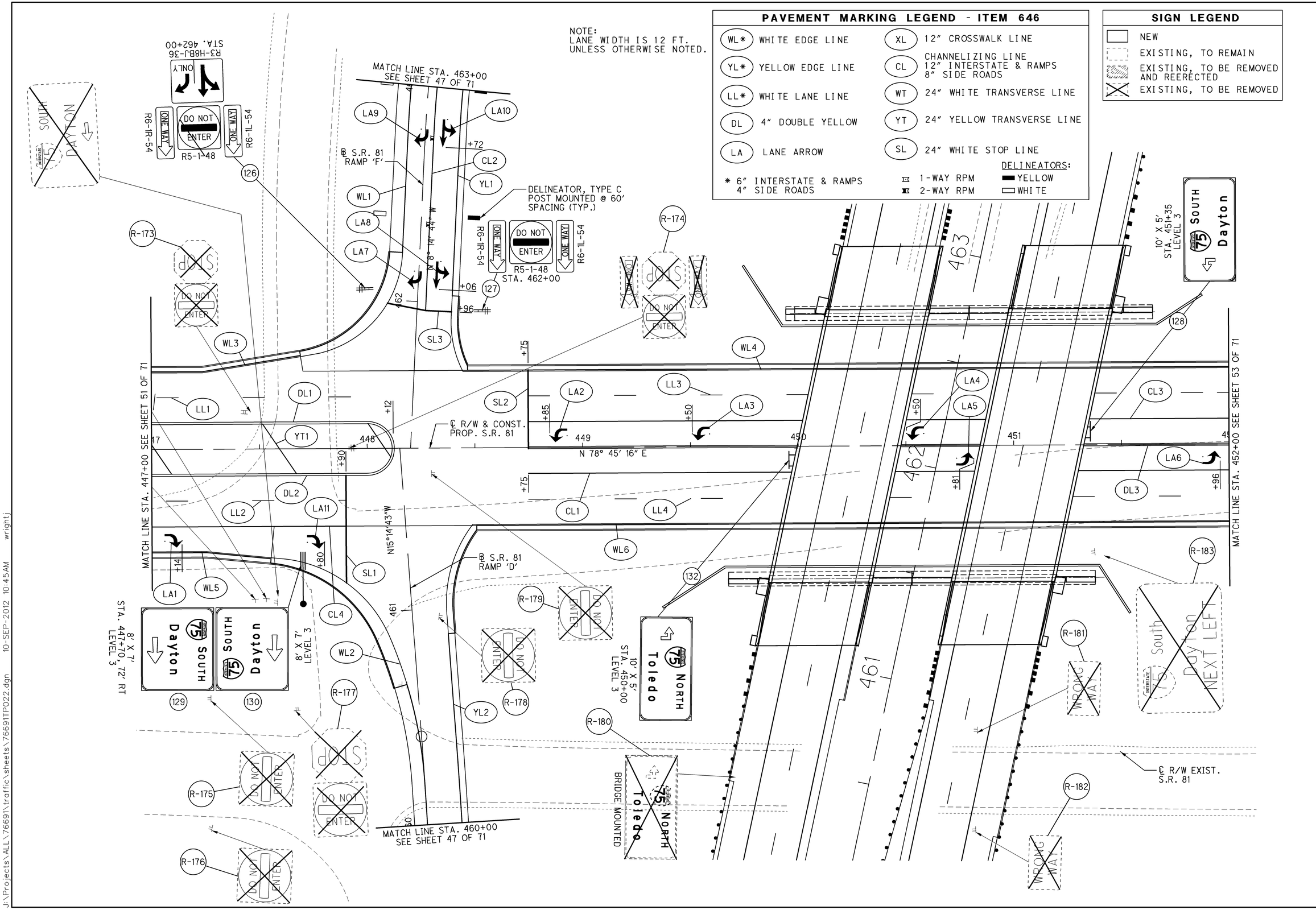

HORIZONTAL SCALE IN FEET 0 10 20 40

CALCULATED BKJ
CHECKED JRW

SIGN AND PAVEMENT MARKING PLAN
S.R. 81 STA. 447+00 TO STA. 452+00

ALL-75-5.53

818/1224

J:\Projects\ALL\76691\traffic\sheets\76691TP022.dgn 10-SEP-2012 10:45AM wrightj

NOTE:
LANE WIDTH IS 12 FT.
UNLESS OTHERWISE NOTED.

SIGN LEGEND

- NEW
- EXISTING, TO REMAIN
- EXISTING, TO BE REMOVED AND REERECTED
- EXISTING, TO BE REMOVED

PAVEMENT MARKING LEGEND - ITEM 646

WL*	WHITE EDGE LINE	XL	12" CROSSWALK LINE
YL*	YELLOW EDGE LINE	CL	CHANNELIZING LINE 12" INTERSTATE & RAMPS 8" SIDE ROADS
LL*	WHITE LANE LINE	WT	24" WHITE TRANSVERSE LINE
DL	4" DOUBLE YELLOW	YT	24" YELLOW TRANSVERSE LINE
LA	LANE ARROW	SL	24" WHITE STOP LINE

* 6" INTERSTATE & RAMPS
4" SIDE ROADS

DELINEATORS: 1-WAY RPM, 2-WAY RPM; YELLOW, WHITE

MATCH LINE STA. 464+00
SEE SHEET 47 OF 71

DELINEATOR, TYPE C POST
MOUNTED @ 80' SPACING (TYP.)

R3-H8CA-48
STA. 452+50

B S.R. 81
RAMP 'B'

8' X 7'
LEVEL 3
STA. 454+00
60' LT

8' X 7'
LEVEL 3

N 1° 12' 04" W

℄ R/W & CONST.
PROP. S.R. 81

℄ R/W & CONST.
EXIST. S.R. 81

N°12'04"W

S 84° 39' 27" E

B S.R. 81
RAMP 'C'

R3-H8BH-36
STA. 462+15

DELINEATOR, TYPE C POST
MOUNTED @ 60' SPACING (TYP.)

STA. 462+30

EX. RAMP

EX. RAMP

MATCH LINE STA. 452+00 SEE SHEET 52 OF 71

MATCH LINE STA. 457+00 SEE SHEET 54 OF 71

MATCH LINE STA. 461+00
SEE SHEET 47 OF 71

J:\Projects\ALL\76691\traffic\sheets\76691TP023.dgn 10-SEP-2012 10:45AM wrightj

N

0 10 20 40 HORIZONTAL SCALE IN FEET

CALCULATED BKJ CHECKED JRW

SIGN AND PAVEMENT MARKING PLAN
S.R. 81 STA. 452+00 TO STA. 457+00

ALL-75-5.53

53 / 71

819
1224

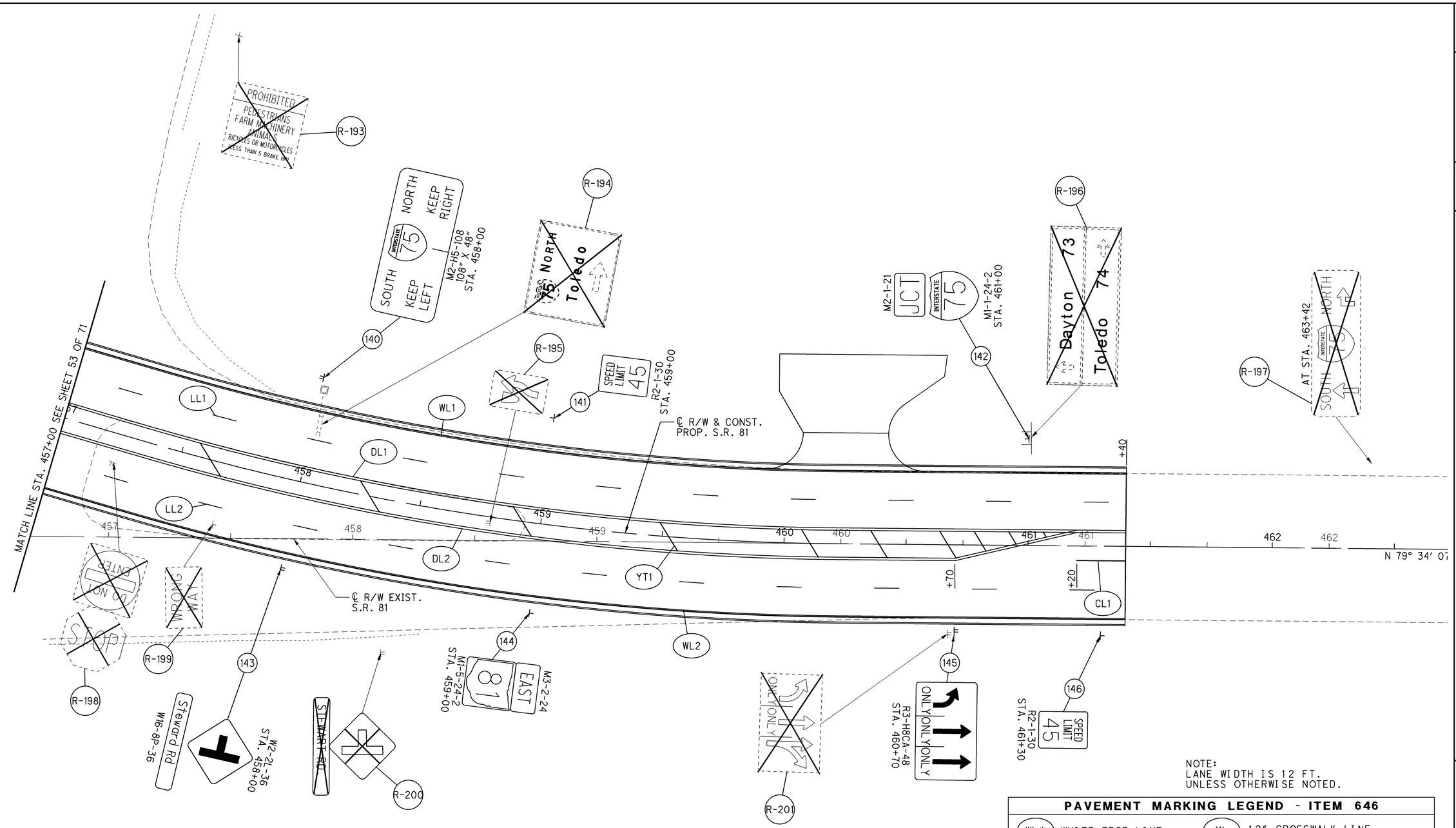

NOTE:
LANE WIDTH IS 12 FT.
UNLESS OTHERWISE NOTED.

SIGN LEGEND

- NEW
- EXISTING, TO REMAIN
- EXISTING, TO BE REMOVED AND REERECTED
- EXISTING, TO BE REMOVED

PAVEMENT MARKING LEGEND - ITEM 646

WL*	WHITE EDGE LINE	XL	12" CROSSWALK LINE
YL*	YELLOW EDGE LINE	CL	CHANNELIZING LINE 12" INTERSTATE & RAMPS 8" SIDE ROADS
LL*	WHITE LANE LINE	WT	24" WHITE TRANSVERSE LINE
DL	4" DOUBLE YELLOW	YT	24" YELLOW TRANSVERSE LINE
LA	LANE ARROW	SL	24" WHITE STOP LINE

* 6" INTERSTATE & RAMPS
4" SIDE ROADS

1-WAY RPM
2-WAY RPM

HORIZONTAL SCALE IN FEET
0 10 20 40

CALCULATED BKJ
CHECKED JRW

SIGN AND PAVEMENT MARKING PLAN
S.R. 81 STA. 457+00 TO END WORK

ALL-75-5.53

54 / 71

820 / 1224

J:\Projects\ALL\76691\traffic\sheets\76691TP024.dgn 10-SEP-2012 10:45AM wrightj

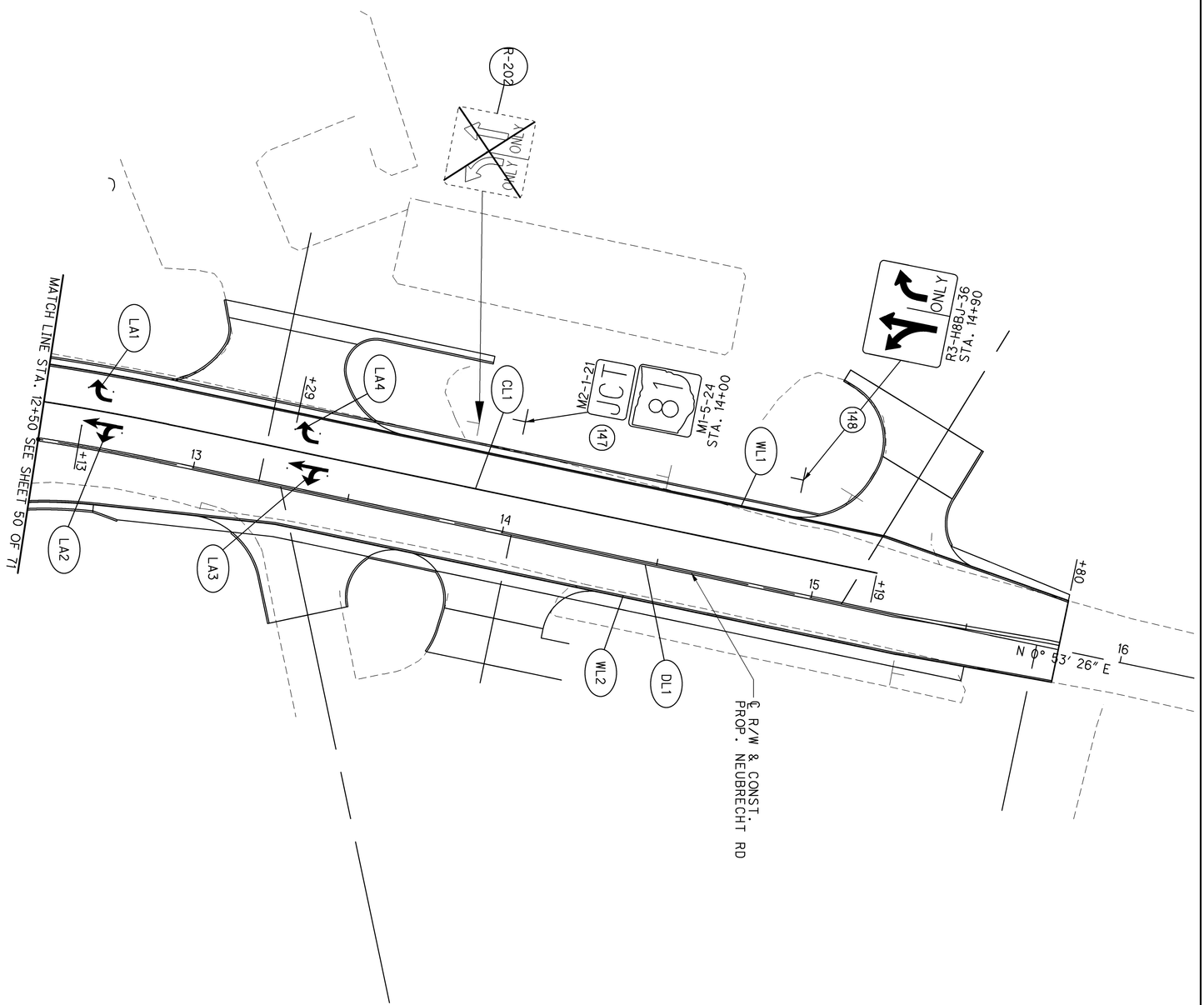

821 / 1224	55 / 71	ALL-75-5.53	SIGN AND PAVEMENT MARKING PLAN NEUBRECHT RD STA. 12+50 TO END WORK	CALCULATED BKJ CHECKED JRW	0 20 10 40 HORIZONTAL SCALE IN FEET	N

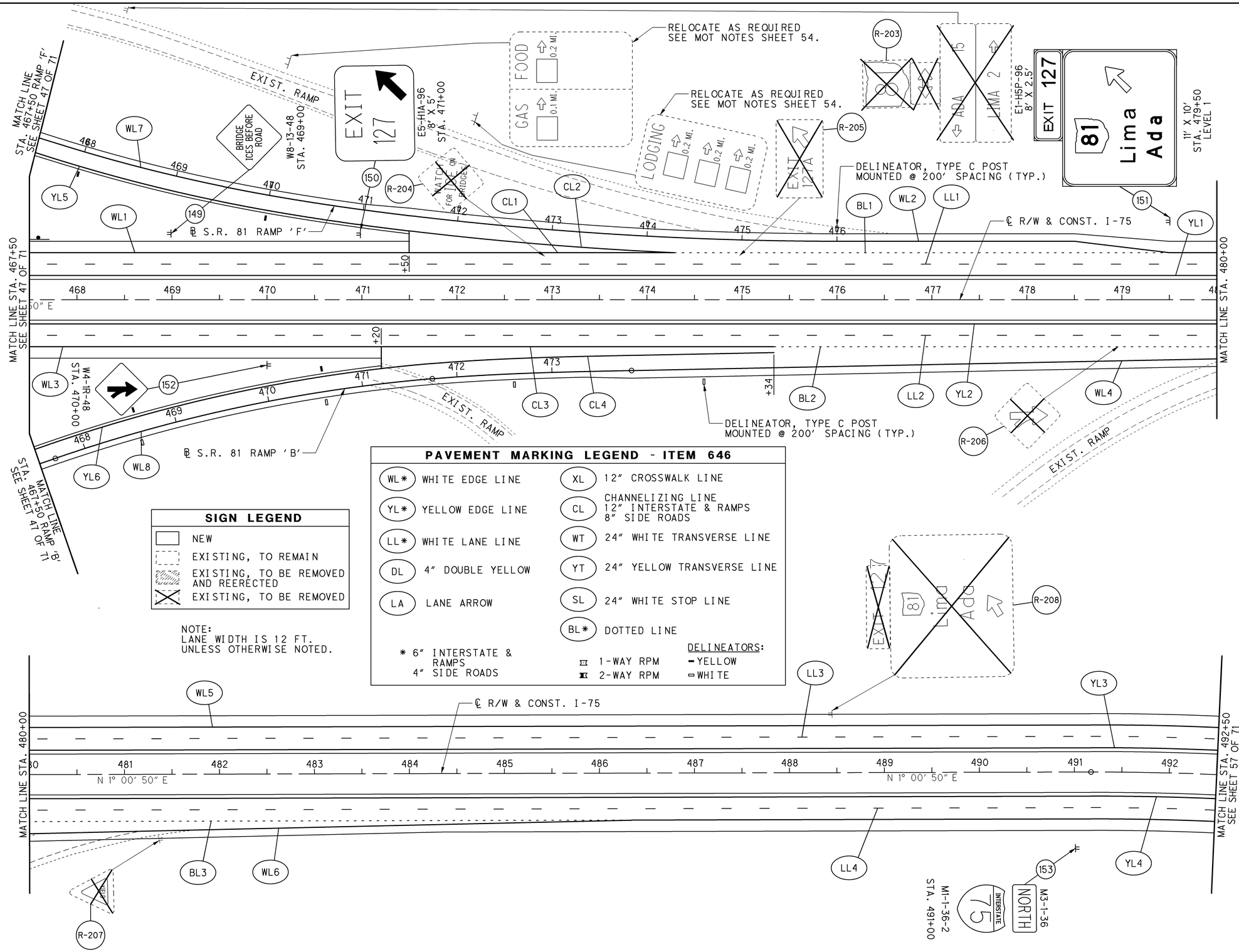

SIGN LEGEND

- NEW
- EXISTING, TO REMAIN
- EXISTING, TO BE REMOVED AND REERECTED
- EXISTING, TO BE REMOVED

NOTE:
LANE WIDTH IS 12 FT.
UNLESS OTHERWISE NOTED.

PAVEMENT MARKING LEGEND - ITEM 646

WL*	WHITE EDGE LINE	XL	12" CROSSWALK LINE
YL*	YELLOW EDGE LINE	CL	CHANNELIZING LINE 12" INTERSTATE & RAMPS 8" SIDE ROADS
LL*	WHITE LANE LINE	WT	24" WHITE TRANSVERSE LINE
DL	4" DOUBLE YELLOW	YT	24" YELLOW TRANSVERSE LINE
LA	LANE ARROW	SL	24" WHITE STOP LINE
		BL*	DOTTED LINE

* 6" INTERSTATE & RAMPS
4" SIDE ROADS

DELINEATORS:
1-WAY RPM – YELLOW
2-WAY RPM – WHITE

J:\Projects\ALL\76691\traffic\sheets\76691TP026.dgn 10-SEP-2012 10:45AM wrightj

HORIZONTAL SCALE IN FEET
0 25 50 100

CALCULATED BKJ
CHECKED JRW

SIGN AND PAVEMENT MARKING PLAN
STA. 467+50.00 TO STA. 492+50.00

ALL-75-5.53

PAVEMENT MARKING LEGEND - ITEM 646

WL*	WHITE EDGE LINE	XL	12" CROSSWALK LINE
YL*	YELLOW EDGE LINE	CL	CHANNELIZING LINE 12" INTERSTATE & RAMPS 8" SIDE ROADS
LL*	WHITE LANE LINE	WT	24" WHITE TRANSVERSE LINE
DL	4" DOUBLE YELLOW	YT	24" YELLOW TRANSVERSE LINE
LA	LANE ARROW	SL	24" WHITE STOP LINE

* 6" INTERSTATE & RAMPS
4" SIDE ROADS

1-WAY RPM
2-WAY RPM

DELINEATORS:
YELLOW
WHITE

SIGN LEGEND

NEW
EXISTING, TO REMAIN
EXISTING, TO BE REMOVED AND REERECTED
EXISTING, TO BE REMOVED

NOTE:
LANE WIDTH IS 12 FT.
UNLESS OTHERWISE NOTED.

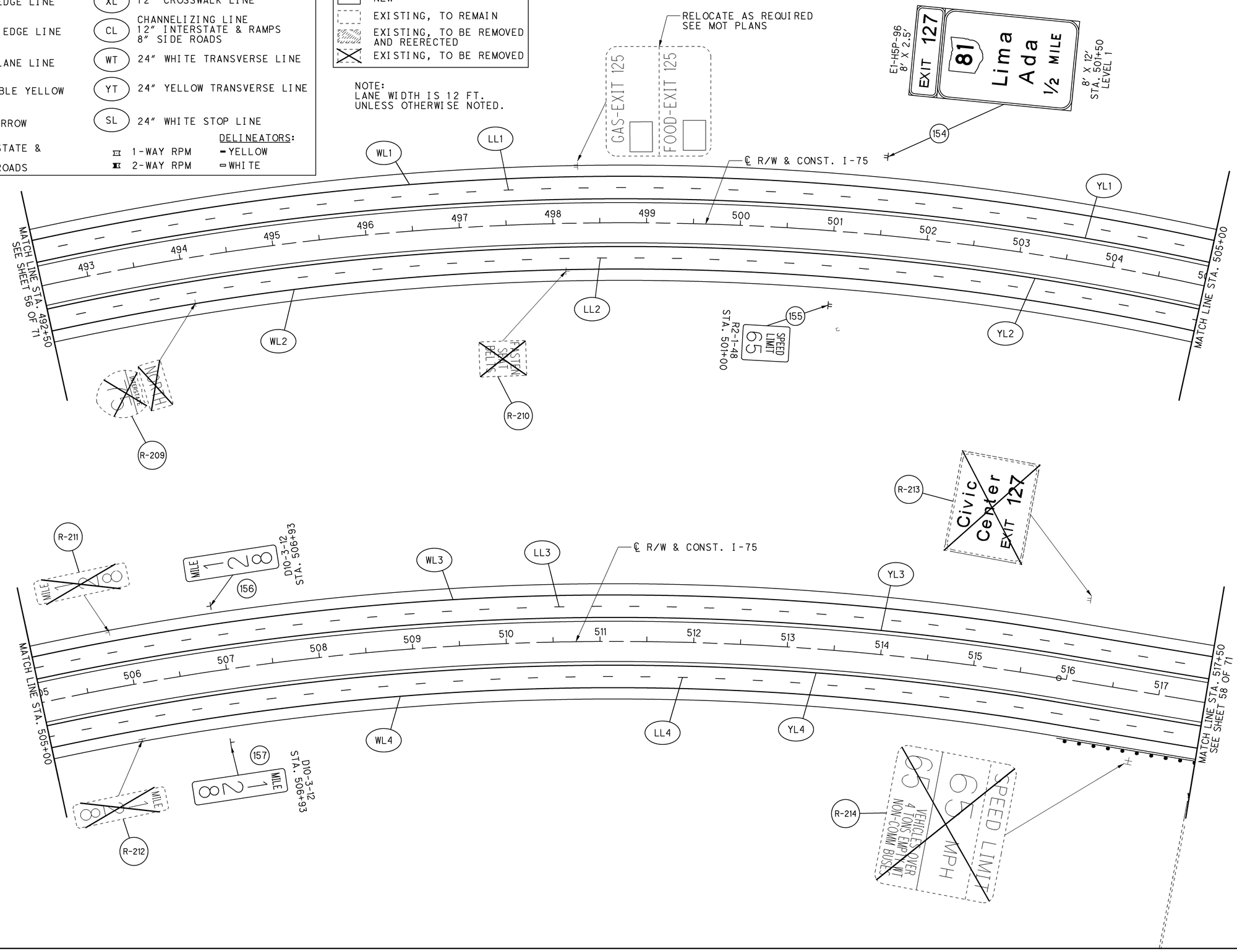

HORIZONTAL SCALE IN FEET
0 25 50 100

CALCULATED BKJ
CHECKED JRW

SIGN AND PAVEMENT MARKING PLAN
STA. 492+50.00 TO STA. 517+50.00

ALL-75-5.53

57 / 71

823
1224

J:\Projects\ALL\76691\traffic\sheets\76691TP027.dgn 10-SEP-2012 10:45AM wrightj

SIGN LEGEND

- NEW
- EXISTING, TO REMAIN
- EXISTING, TO BE REMOVED AND REERECTED
- EXISTING, TO BE REMOVED

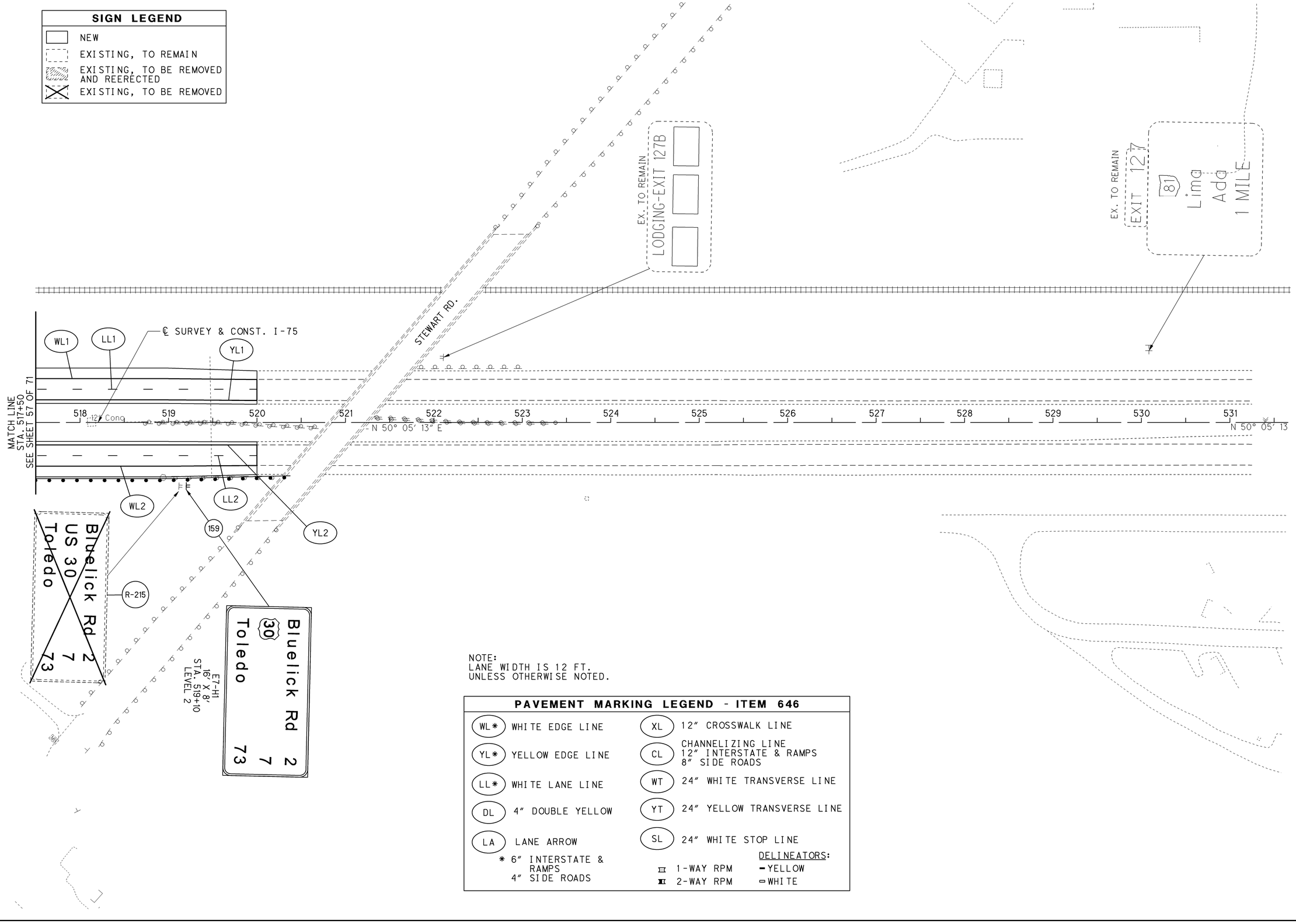

NOTE:
LANE WIDTH IS 12 FT.
UNLESS OTHERWISE NOTED.

PAVEMENT MARKING LEGEND - ITEM 646

WL*	WHITE EDGE LINE	XL	12" CROSSWALK LINE
YL*	YELLOW EDGE LINE	CL	CHANNELIZING LINE 12" INTERSTATE & RAMPS 8" SIDE ROADS
LL*	WHITE LANE LINE	WT	24" WHITE TRANSVERSE LINE
DL	4" DOUBLE YELLOW	YT	24" YELLOW TRANSVERSE LINE
LA	LANE ARROW	SL	24" WHITE STOP LINE

* 6" INTERSTATE & RAMPS
4" SIDE ROADS

DELINEATORS:
- 1-WAY RPM — YELLOW
- 2-WAY RPM — WHITE

HORIZONTAL SCALE IN FEET
0 25 50 100

CALCULATED BKJ
CHECKED JRW

SIGN AND PAVEMENT MARKING PLAN
STA. 517+50.00 TO END WORK

ALL-75-5.53

58 / 71

824
1224

J:\Projects\ALL\76691\traffic\sheets\76691TP028.dgn 10-SEP-2012 10:45AM wrightj

NOTE:
LANE WIDTH IS 12 FT. UNLESS OTHERWISE NOTED.

* 6" INTERSTATE & RAMPS
4" SIDE ROADS

PAVEMENT MARKING LEGEND - ITEM 646

WL*	WHITE EDGE LINE	XL	12" CROSSWALK LINE
YL*	YELLOW EDGE LINE	CL	CHANNELIZING LINE 12" INTERSTATE & RAMPS 8" SIDE ROADS
LL*	WHITE LANE LINE	WT	24" WHITE TRANSVERSE LINE
DL	4" DOUBLE YELLOW	YT	24" YELLOW TRANSVERSE LINE
LA	LANE ARROW	SL	24" WHITE STOP LINE
BL*	DOTTED LINE		

DELINEATORS:
1-WAY RPM — YELLOW
2-WAY RPM — WHITE

S.R. 309/S.R. 117

S. LEONARD AVE.

E. KIBBY ST.

884 885 886 887 888

℄ R/W & CONST. S.R. 117/S.R. 309

EX. STOP LINE TO BE REMOVED

EX. STOP LINE TO REMAIN

EX. STOP LINE TO BE REMOVED

S. LEONARD AVE

DL1 SL1 SL2 XL1 XL2 XL8 CL1 WL1 LA1 +90 CL2 SL3 LA2 XL6 XL5 XL3 XL4 BL1 XL7 DL3 LA3 WL2 48 SL4 DL2

MATCH LINE STA. 888+25
SEE SHEET 39 OF 71

NORTH
KEEP LEFT
75
MISSOURI
KEEP RIGHT
SOUTH

M2-H5-108
STA. 888+10

SIGN LEGEND

- NEW
- EXISTING, TO REMAIN
- EXISTING, TO BE REMOVED AND REERECTED
- EXISTING, TO BE REMOVED

N

HORIZONTAL SCALE IN FEET
0 10 20 40

CALCULATED BKJ
CHECKED JRW

SIGN AND PAVEMENT MARKING PLAN
S.R. 309 & E. KIBBY ST.

ALL-75-5.53

59 / 71

825
1224

J:\Projects\ALL\76691\traffic\sheets\76691TP029.dgn 10-SEP-2012 10:45AM wrightj

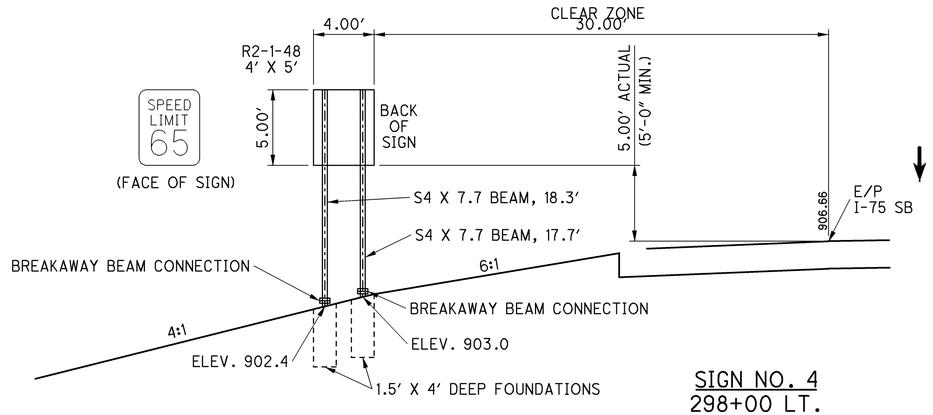

SIGN NO. 4
298+00 LT.

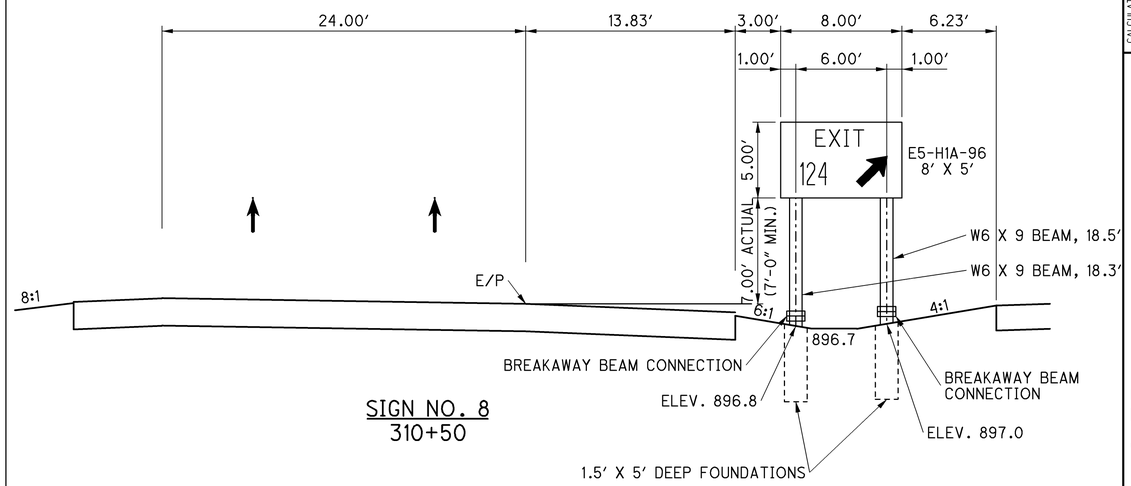

SIGN NO. 8
310+50

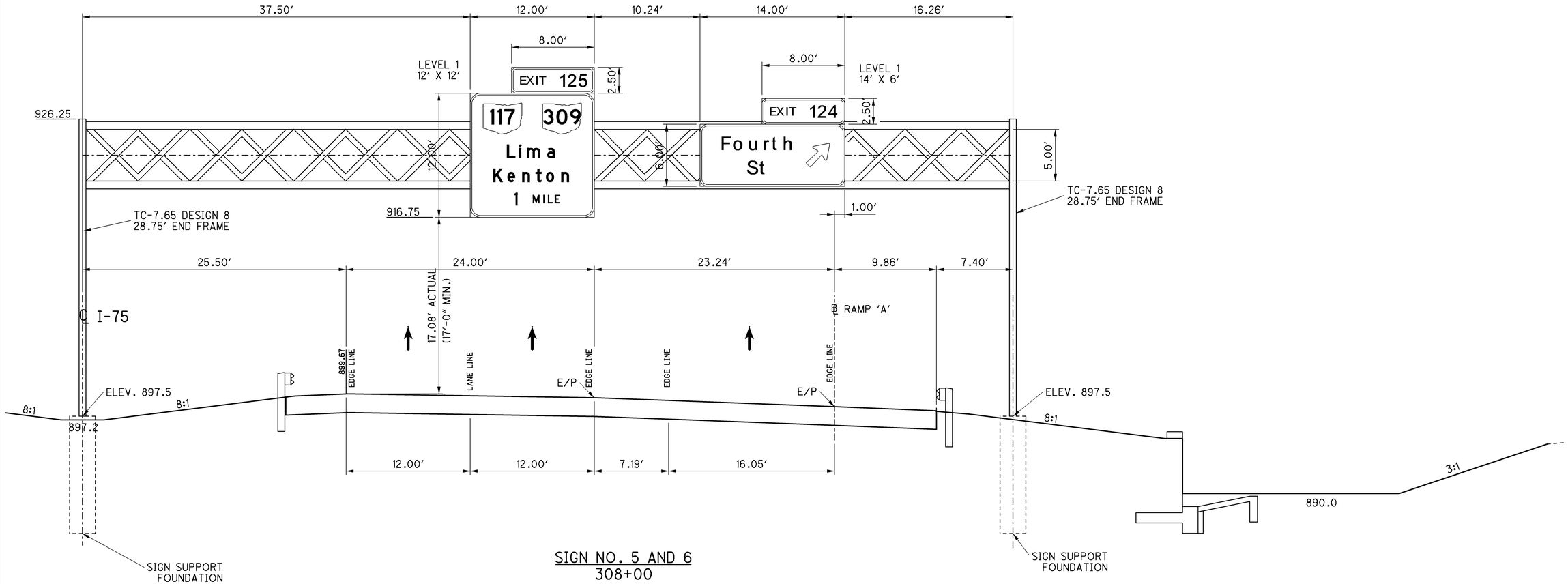

SIGN NO. 5 AND 6
308+00

J:\Projects\ALL\7669\1\traffic\sheets\7669ITE001.dgn 10-SEP-2012 11:33AM wrightj

CALCULATED JRW
CHECKED JRL

ELEVATION VIEWS - I-75
SIGN NO. 4,5,6 & 8

ALL-75-5.53

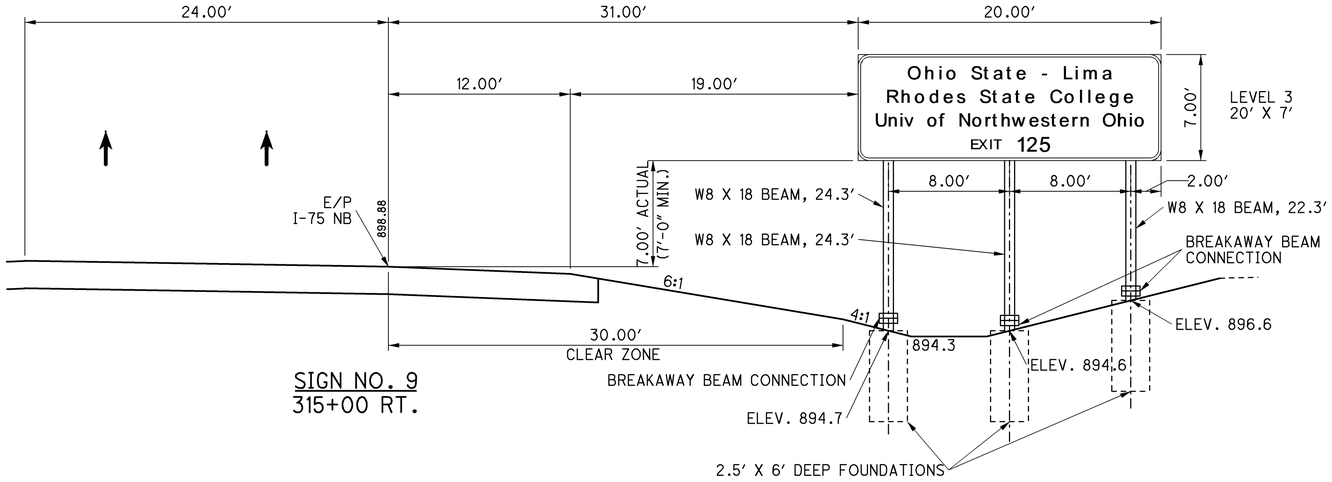

SIGN NO. 9
315+00 RT.

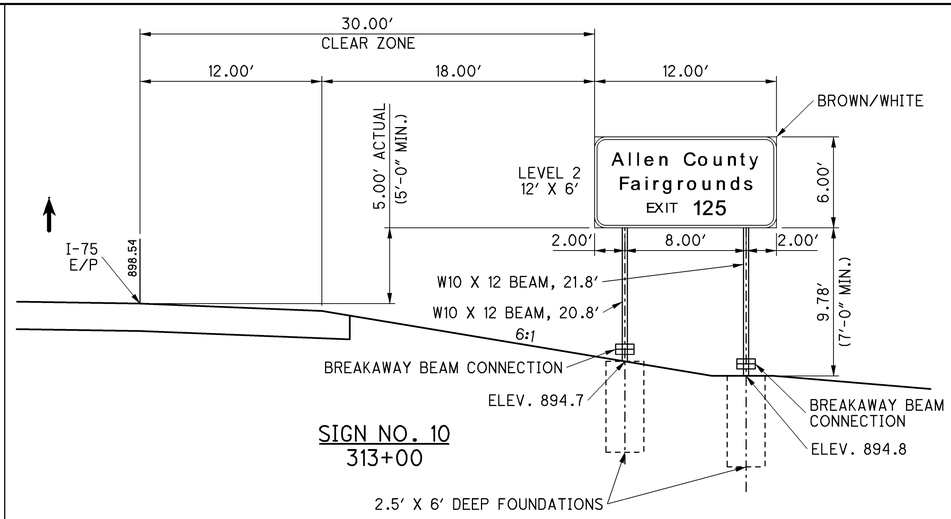

SIGN NO. 10
313+00

SIGN NO. 14
329+50 LT.

SIGN NO. 19
322+50 LT.

SIGN NO. 25
318+50 RT.

SIGN NO. 28
330+20 RT.

CALCULATED JRW
CHECKED JRL

ELEVATION VIEWS - I-75
SIGN NO. 9, 10, 14, 19, 25 & 28

ALL-75-5.53

61 / 71

827
1224

J:\Projects\ALL\76691\traffic\sheets\76691TE002.dgn 10-SEP-2012 11:33AM wrightj

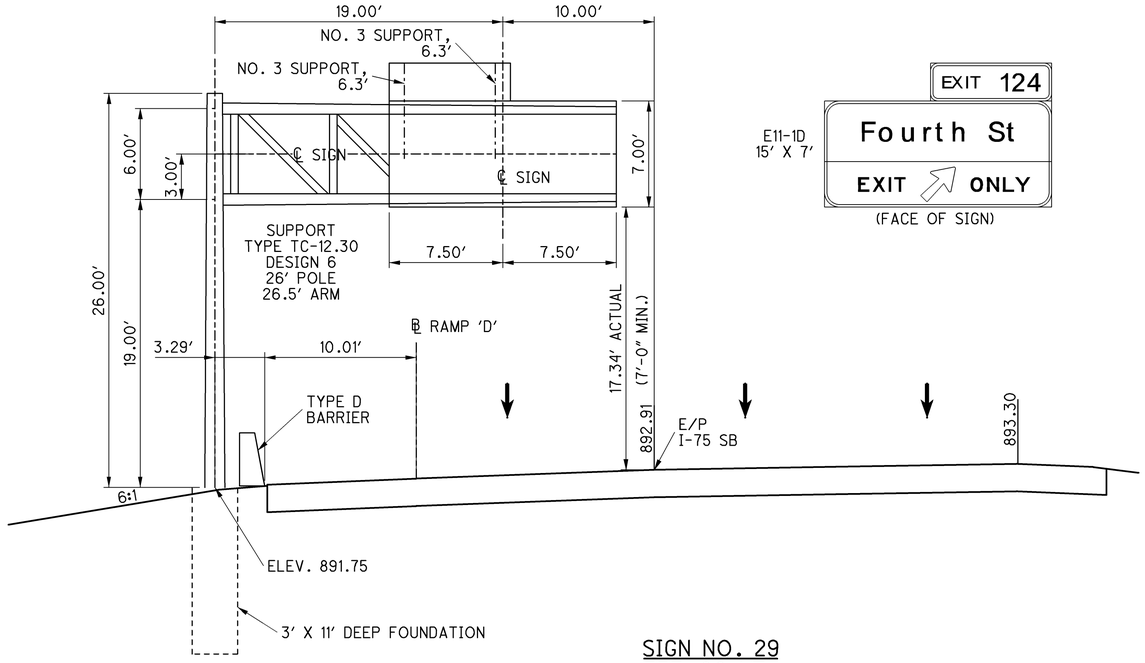

SIGN NO. 29
333+00 LT.

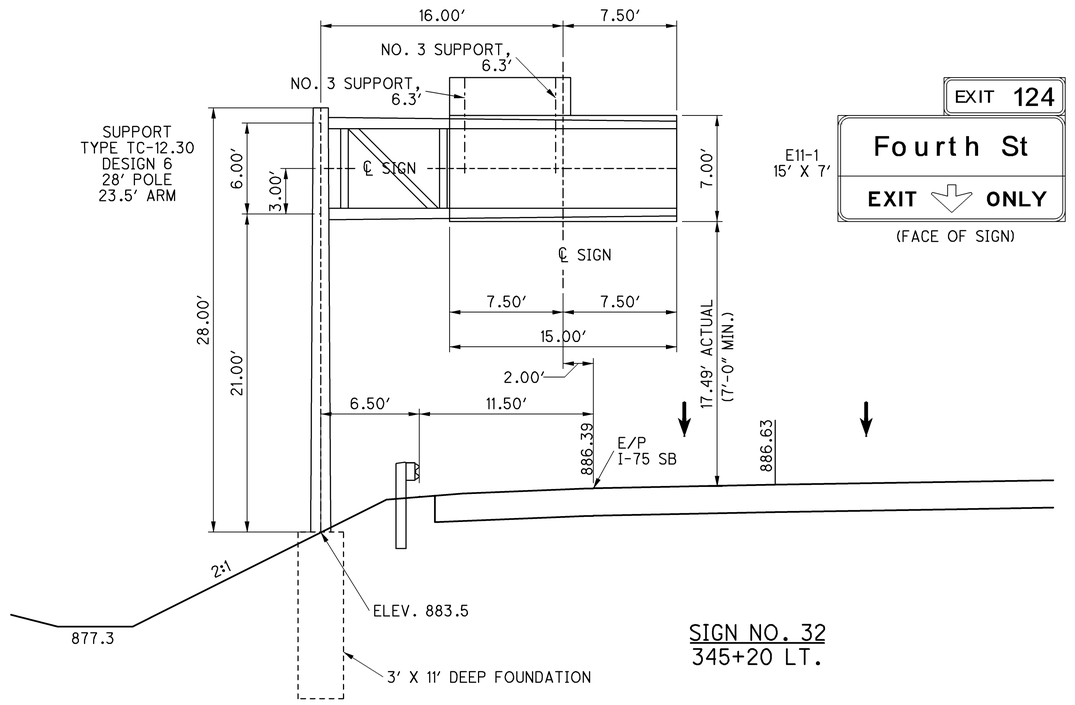

SIGN NO. 32
345+20 LT.

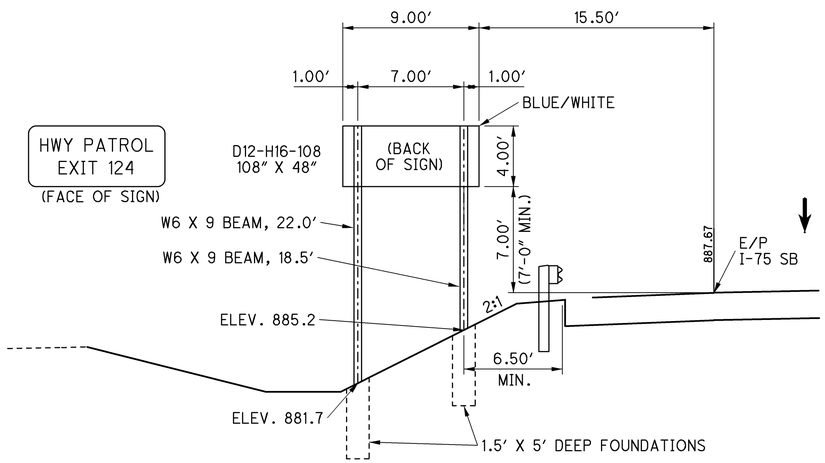

SIGN NO. 30
340+50 LT.

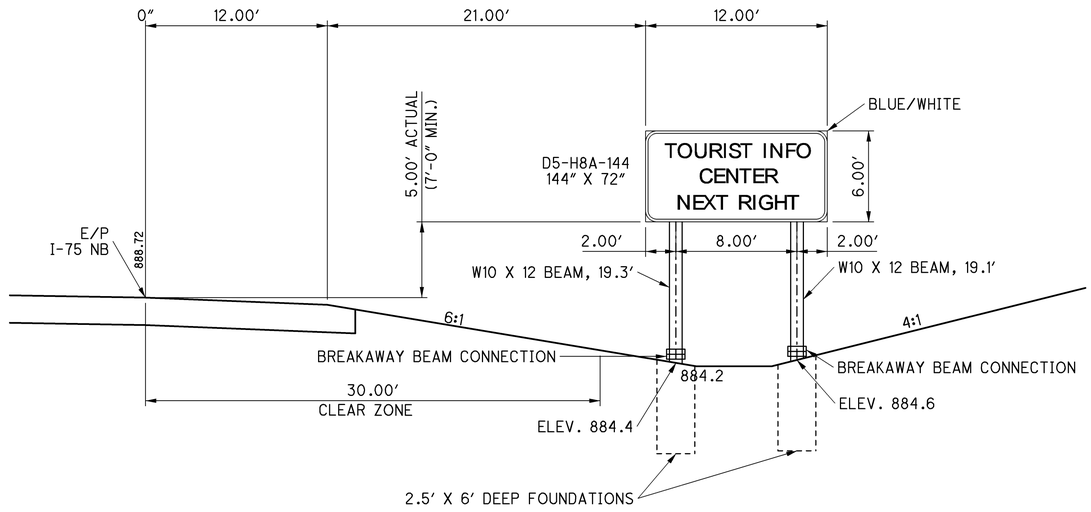

SIGN NO. 31
338+00 RT.

CALCULATED JRW
CHECKED JRL

ELEVATION VIEWS - I-75
SIGN NO. 29, 30, 31 & 32

ALL-75-5.53

828
1224

J:\Projects\ALL\76691\traffic\sheets\76691TE003.dgn 10-SEP-2012 11:33AM wrightj

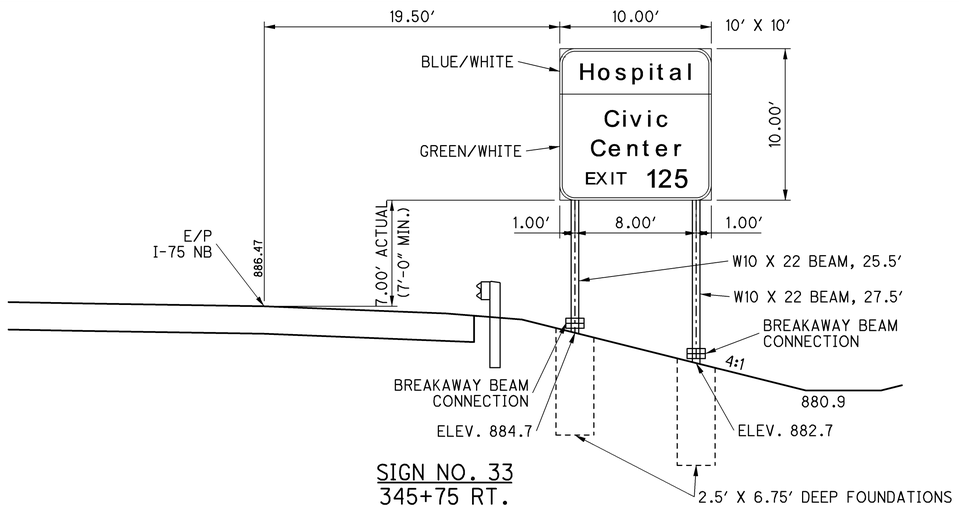

SIGN NO. 33
345+75 RT.

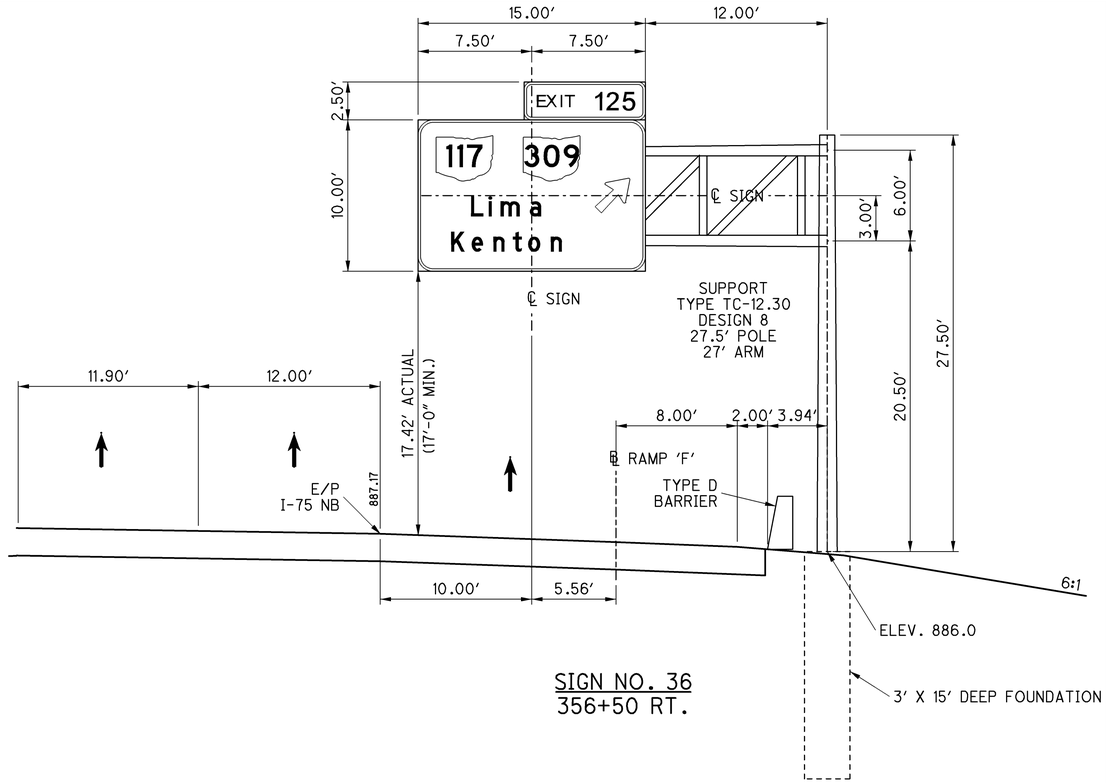

SIGN NO. 36
356+50 RT.

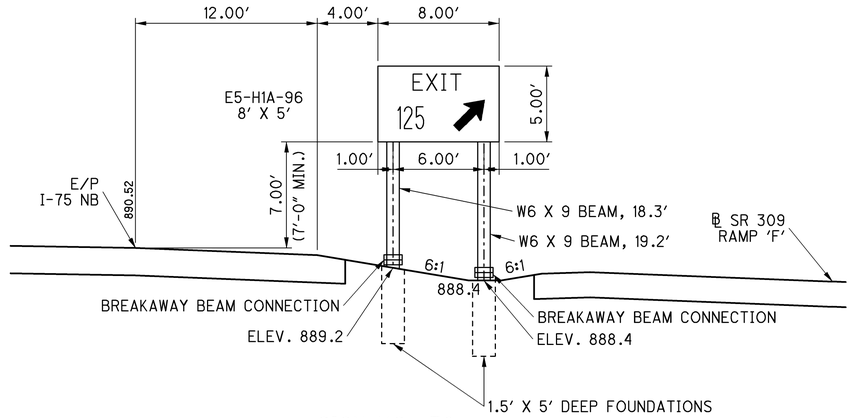

SIGN NO. 38
360+00 RT.

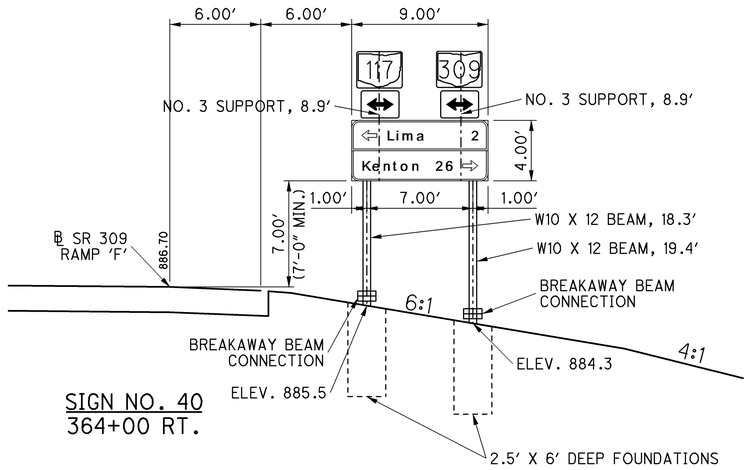

SIGN NO. 40
364+00 RT.

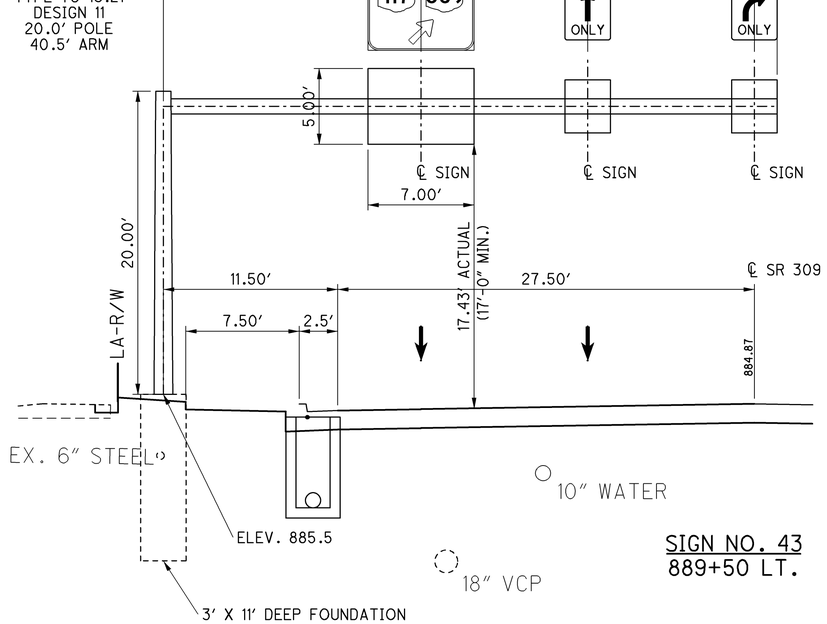

SIGN NO. 43
889+50 LT.

CALCULATED JRW
CHECKED JRL

ELEVATION VIEWS - I-75
SIGN NO. 33, 36, 38, 40 & 43

ALL-75-5.53

63 / 71

829
1224

J:\Projects\ALL\76691\traffic\sheets\76691TE004.dgn 10-SEP-2012 11:33AM wrightj

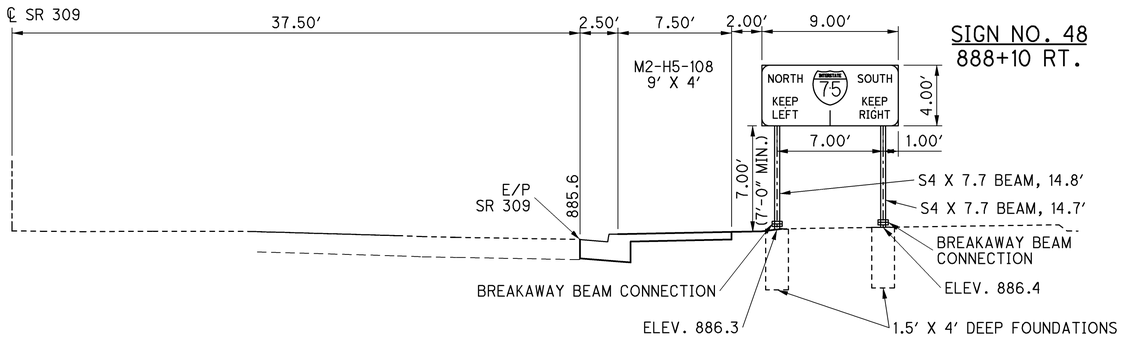

SIGN NO. 48
888+10 RT.

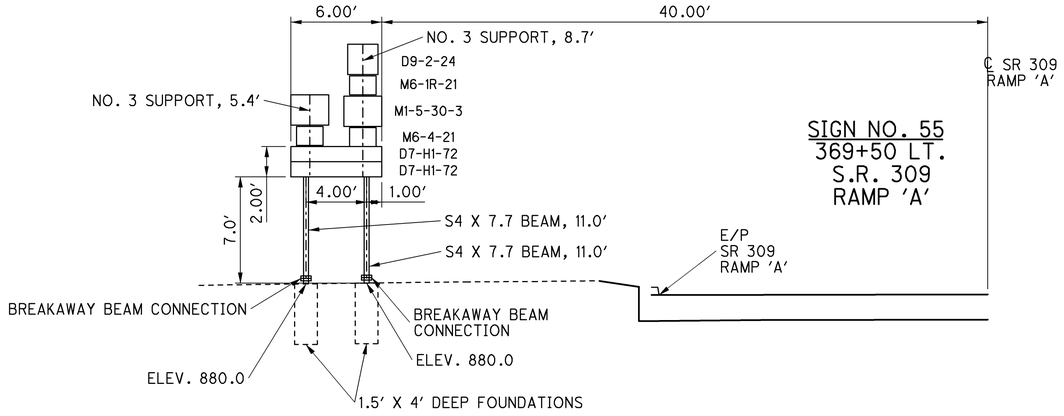

SIGN NO. 55
369+50 LT.
S.R. 309
RAMP 'A'

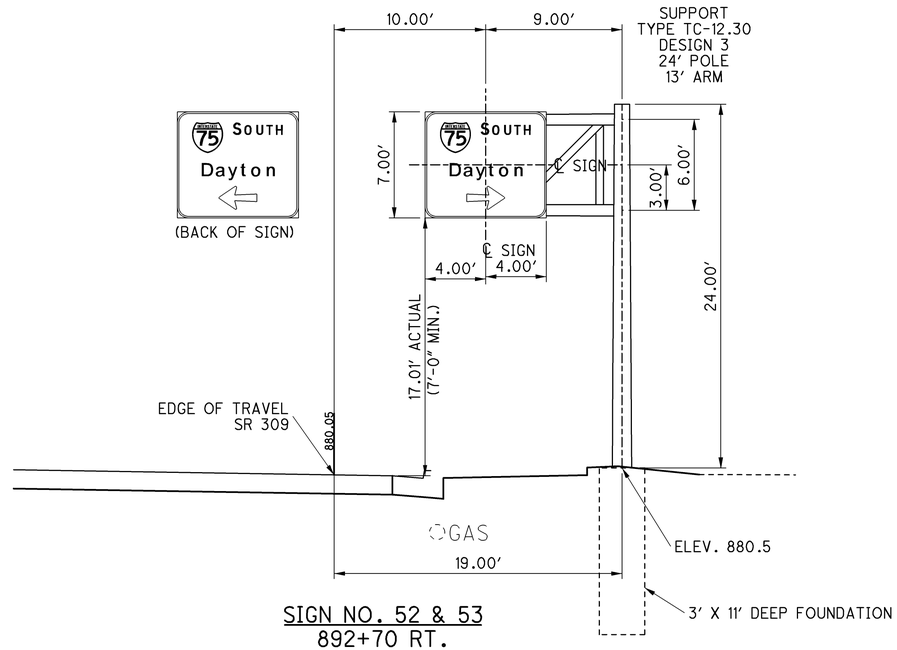

SIGN NO. 52 & 53
892+70 RT.

SEE BRIDGE ALL-75-0703 L/R
FOR ADDITIONAL DETAILS

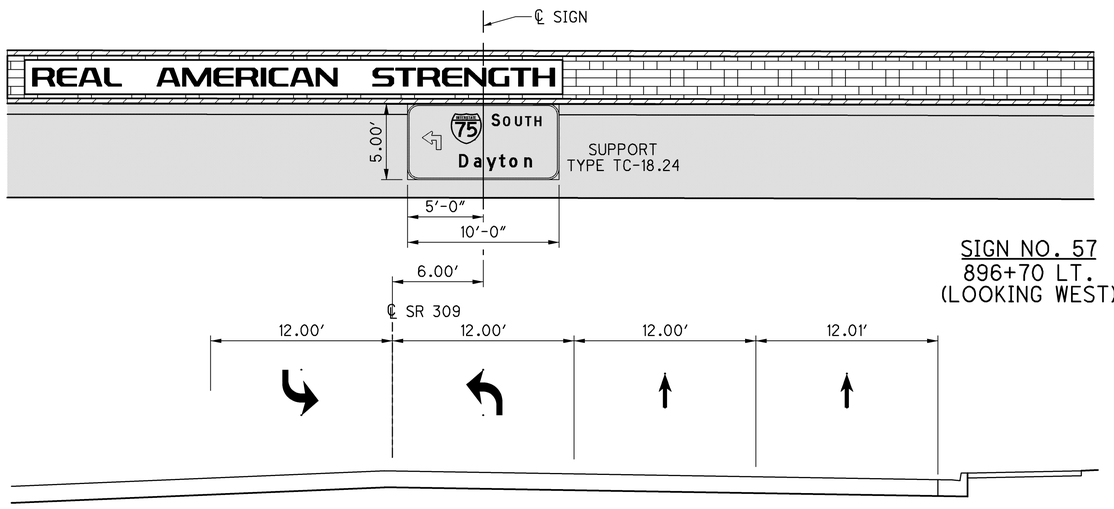

SIGN NO. 57
896+70 LT.
(LOOKING WEST)

SEE BRIDGE ALL-75-0703 L/R
FOR ADDITIONAL DETAILS

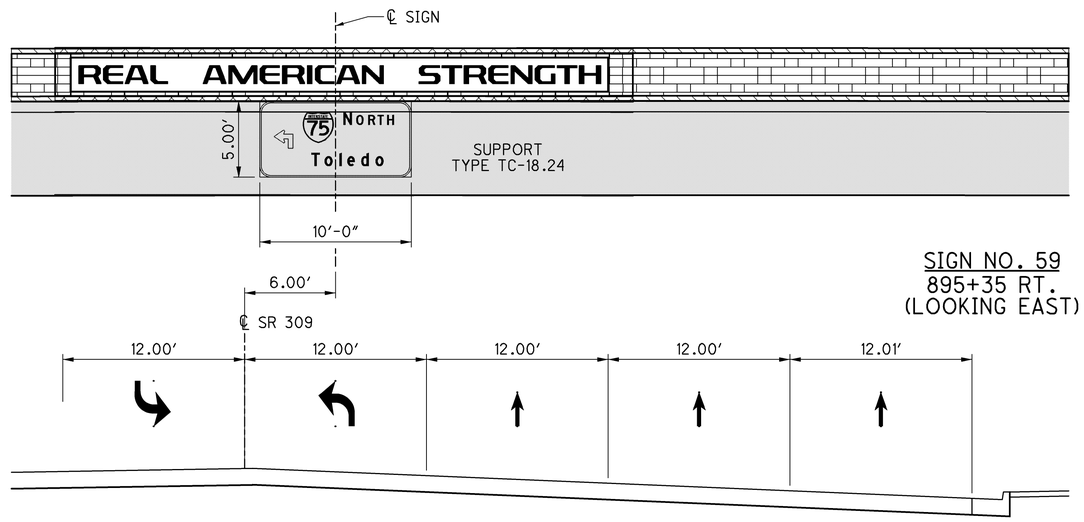

SIGN NO. 59
895+35 RT.
(LOOKING EAST)

CALCULATED JRW
CHECKED JRL

ELEVATION VIEWS - SR 309
SIGN NO. 48, 52, 53, 55, 57 & 59

ALL-75-5.53

64 / 71

830
1224

J:\Projects\ALL\76691\traffic\sheets\76691TE005.dgn 10-SEP-2012 11:33AM wrightj

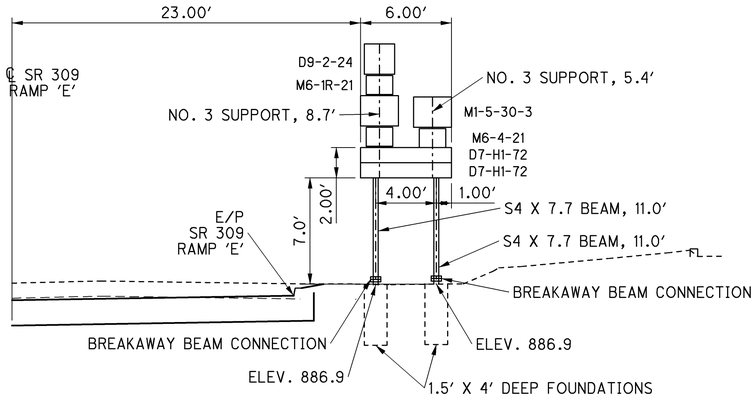

SIGN NO. 63
370+62 RT.
S.R. 309
RAMP 'E'

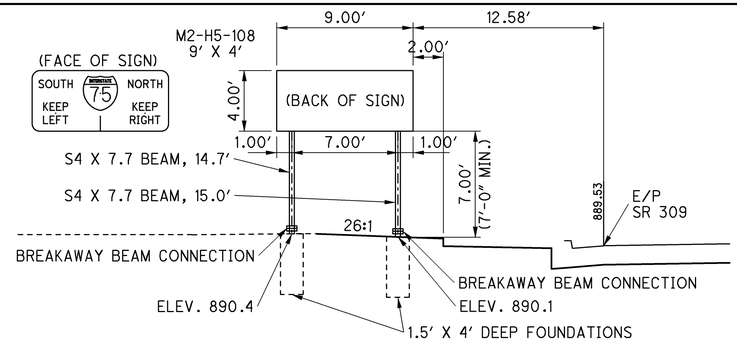

SIGN NO. 67
901+50 LT.

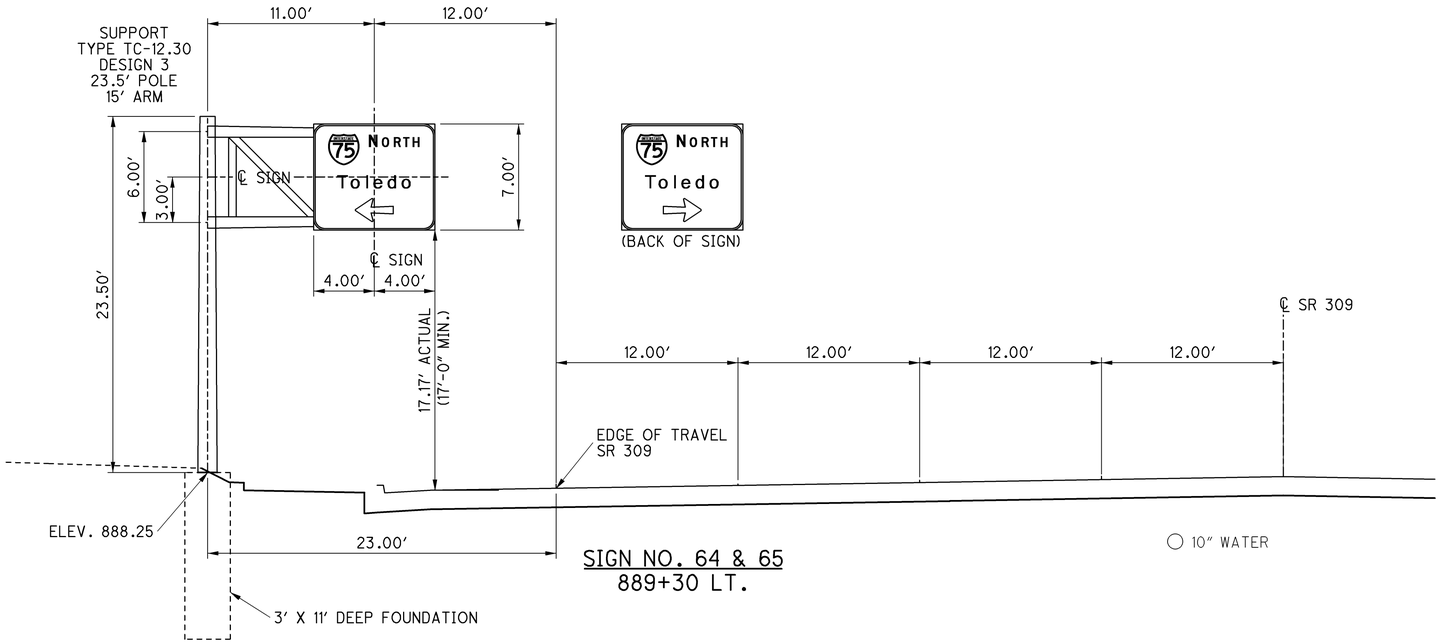

SIGN NO. 64 & 65
889+30 LT.

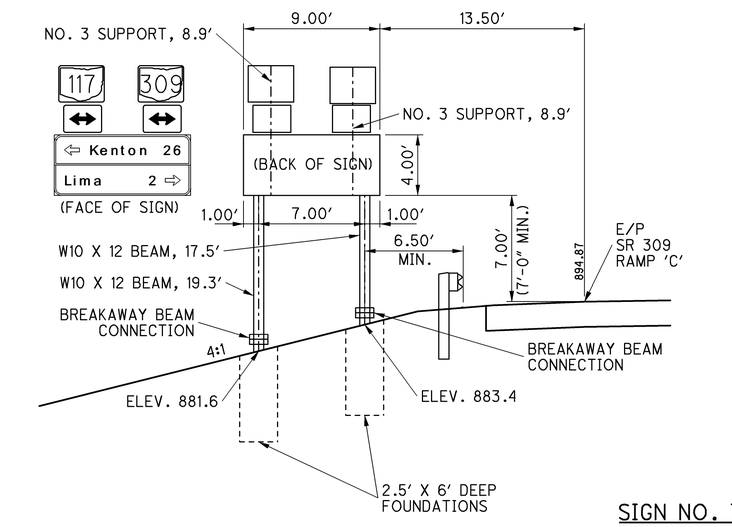

SIGN NO. 78
373+00 LT.

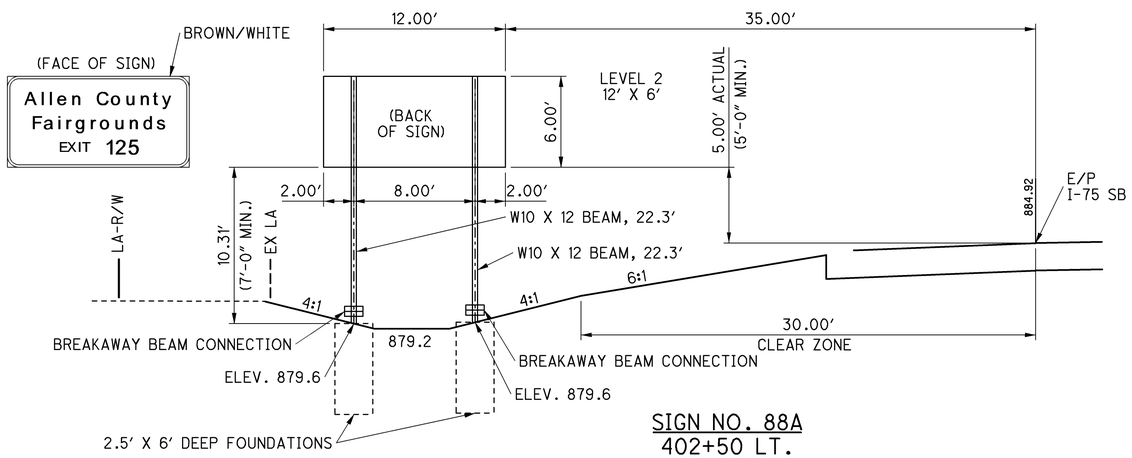

SIGN NO. 88A
402+50 LT.

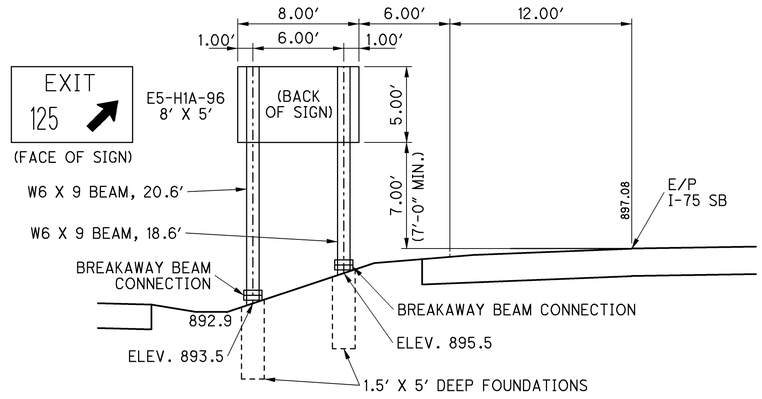

SIGN NO. 82
376+50 LT.

CALCULATED JRW
CHECKED JRL

ELEVATION VIEWS - SR 309 & I-75
SIGN NO. 63, 64, 65, 67, 78, 82 & 88A

ALL-75-5.53

65 / 71

831
1224

J:\Projects\ALL\76691\traffic\sheets\76691TE006.dgn 10-SEP-2012 11:33AM wrightj

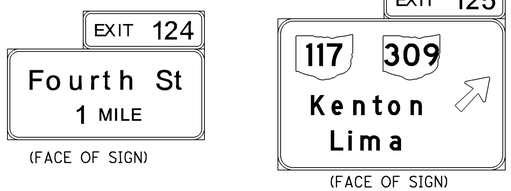

(FACE OF SIGN)

(FACE OF SIGN)

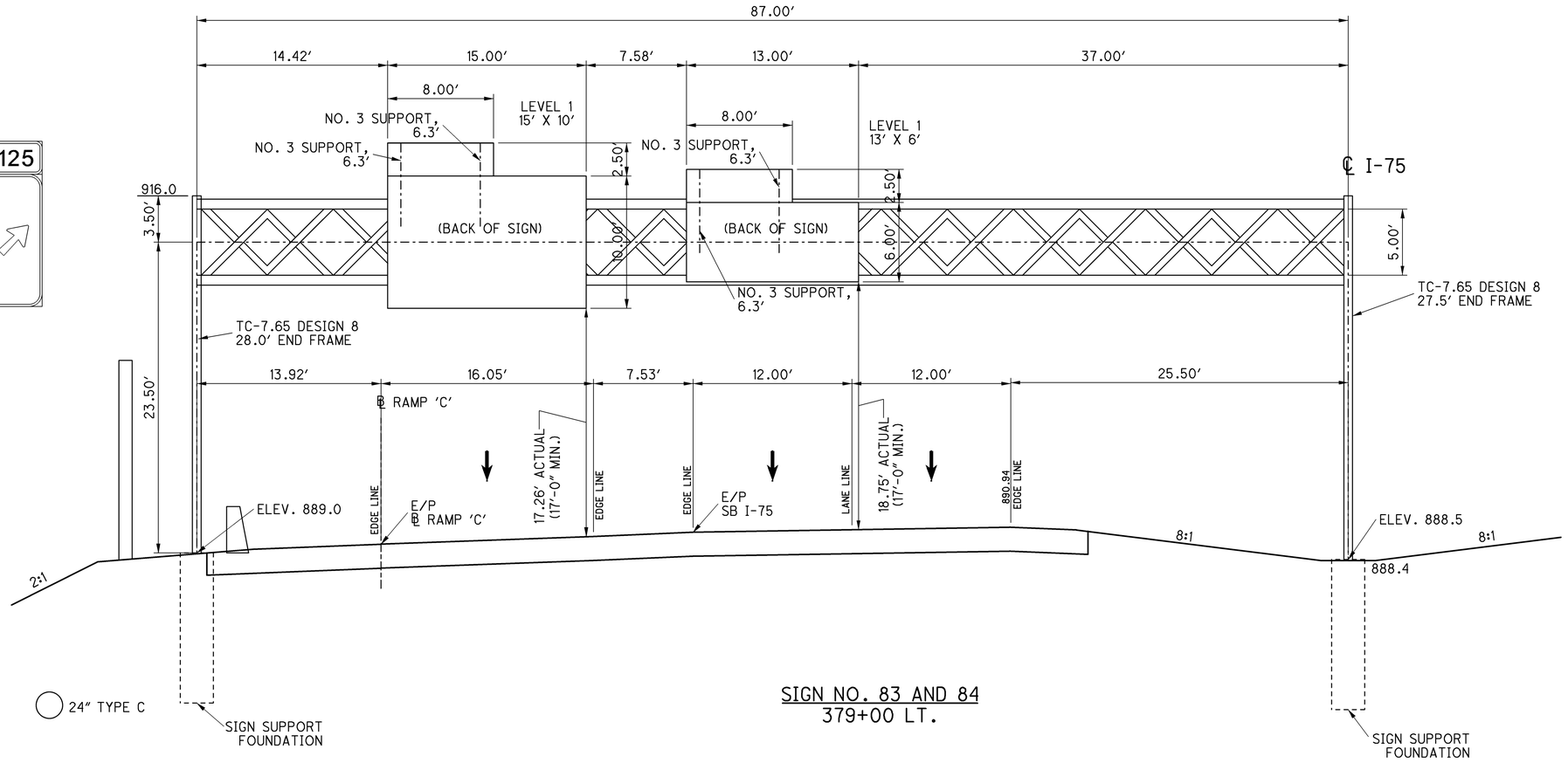

SIGN NO. 83 AND 84
379+00 LT.

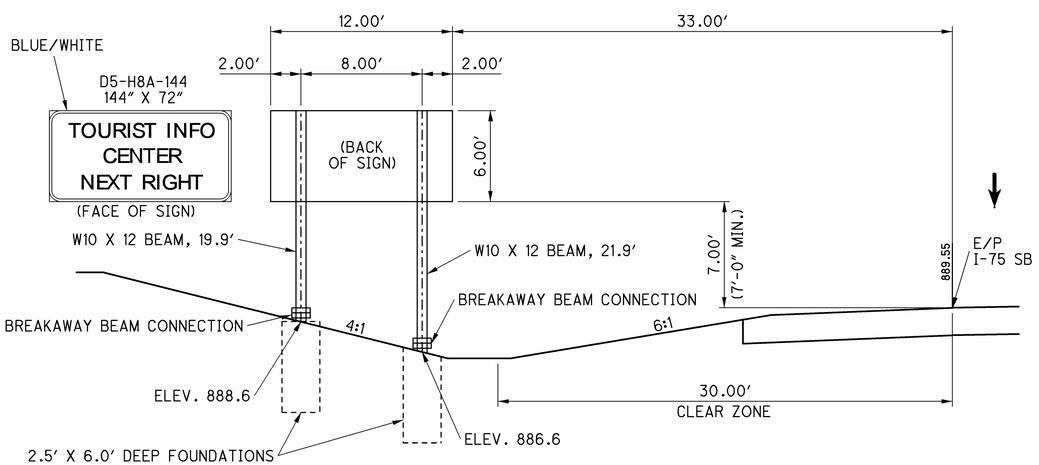

SIGN NO. 86
390+25 LT.

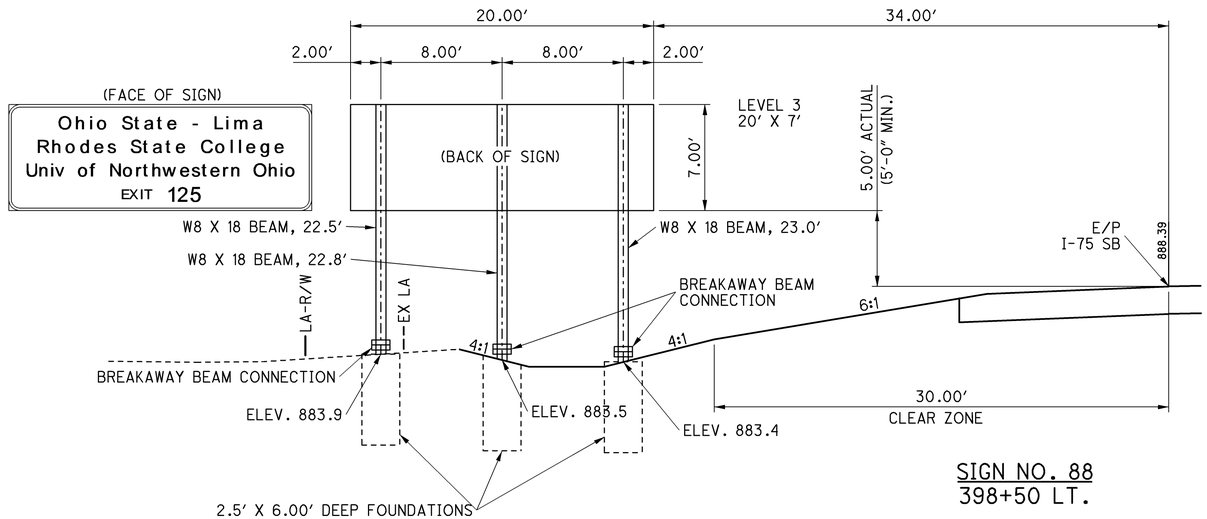

SIGN NO. 88
398+50 LT.

CALCULATED JRW
CHECKED JRL

ELEVATION VIEWS - I-75
SIGN NO. 83, 84, 86 & 88

ALL-75-5.53

66 / 71

832
1224

J:\Projects\ALL\76691\traffic\sheets\76691TE007.dgn 10-SEP-2012 11:33AM wrightj

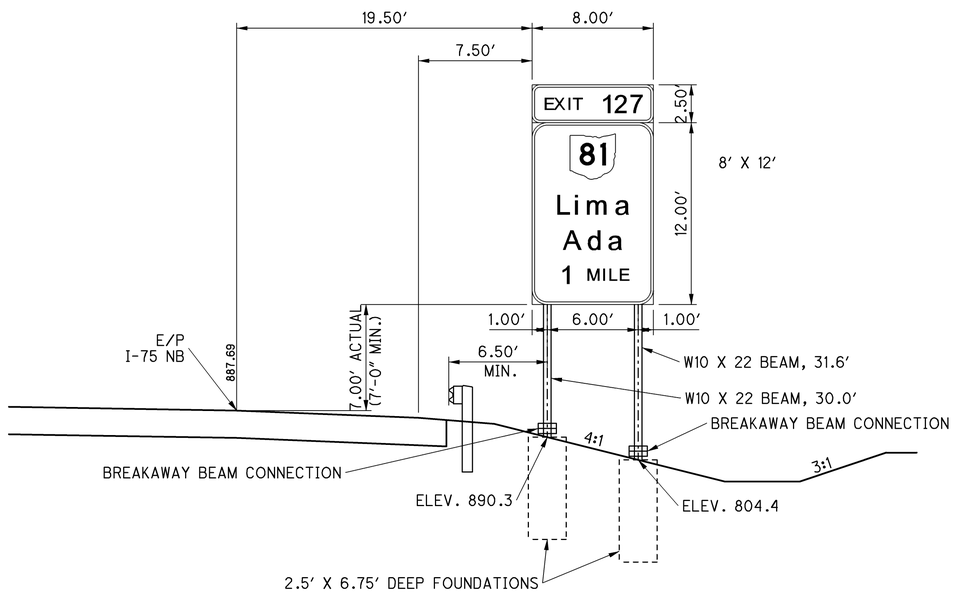

SIGN NO. 89
399+50 RT.

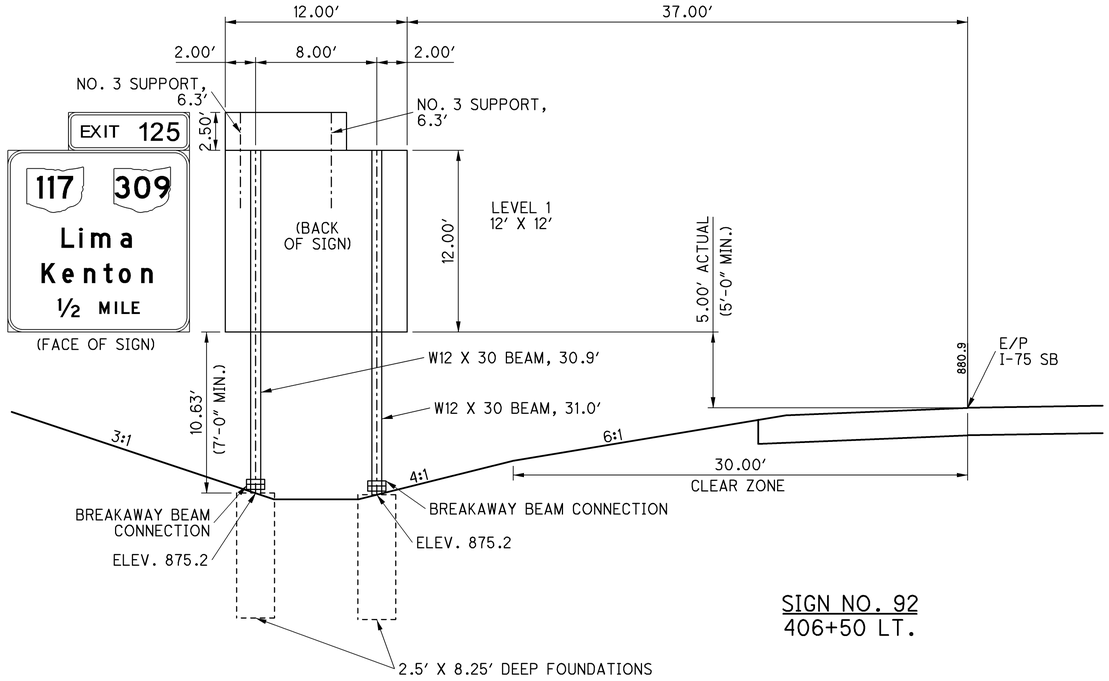

SIGN NO. 92
406+50 LT.

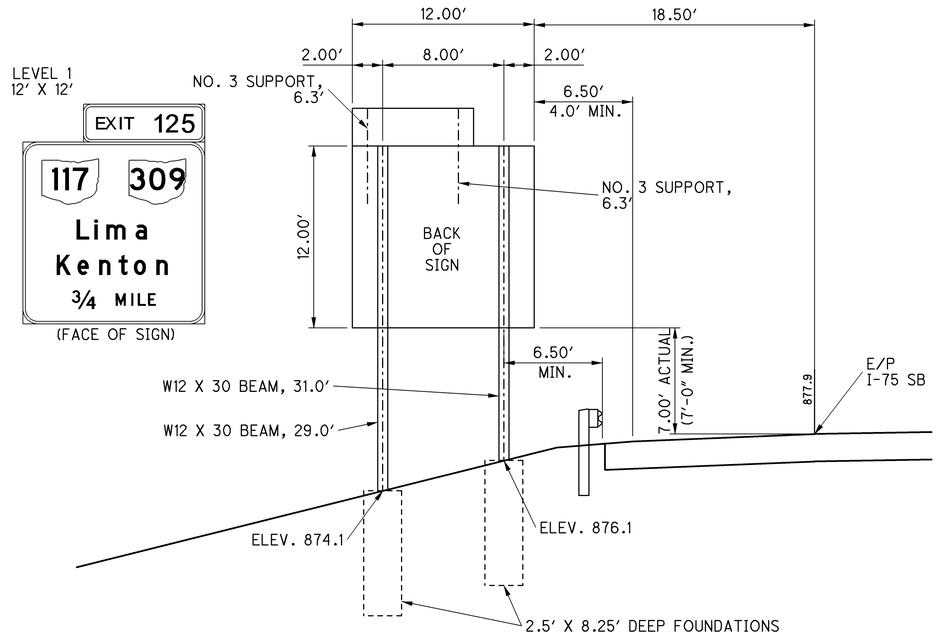

SIGN NO. 93
419+60 LT.

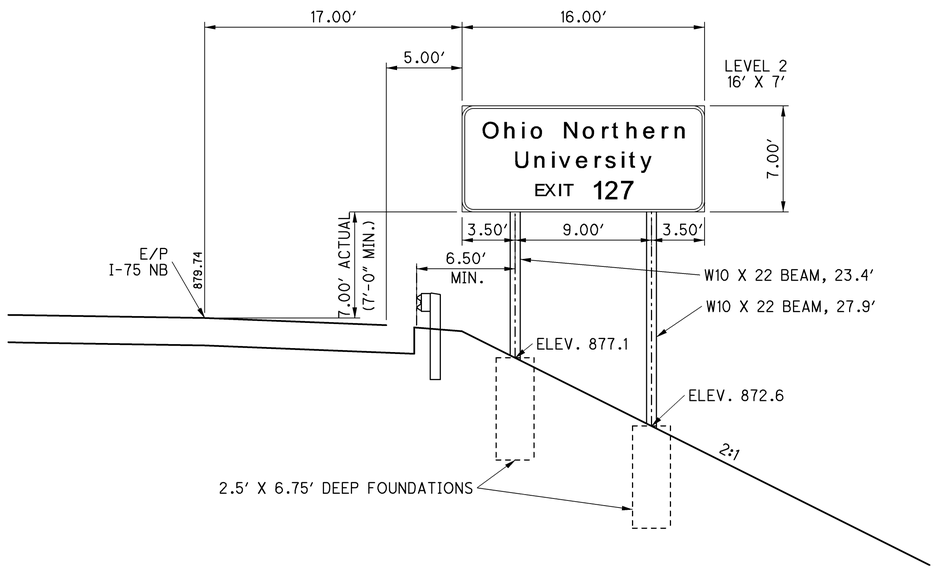

SIGN NO. 96
420+50 RT.

CALCULATED JRW
CHECKED JRL

ELEVATION VIEWS - I-75
SIGN NO. 89, 92, 93 & 96

ALL-75-5.53

J:\Projects\ALL\76691\traffic\sheets\76691TE008.dgn 10-SEP-2012 11:33AM wrightj

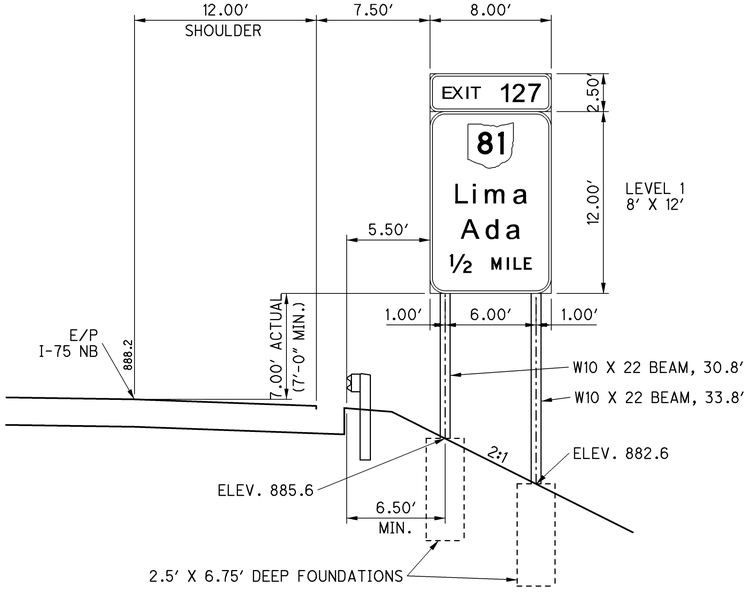

SIGN NO. 97
426+00 RT.

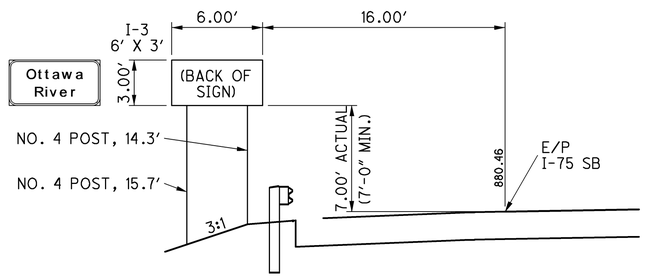

SIGN NO. 99
439+40 LT.

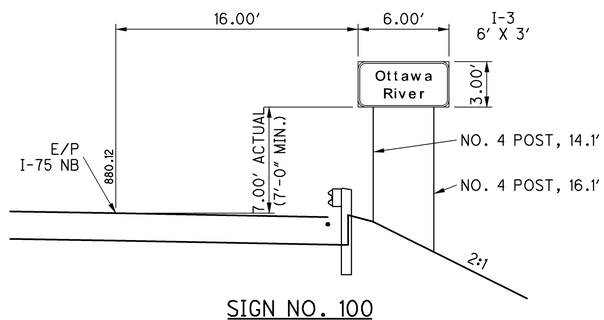

SIGN NO. 100
437+25 RT.

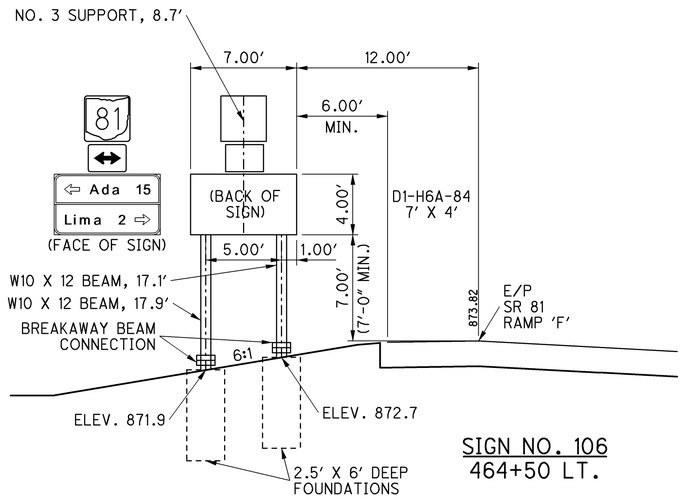

SIGN NO. 106
464+50 LT.

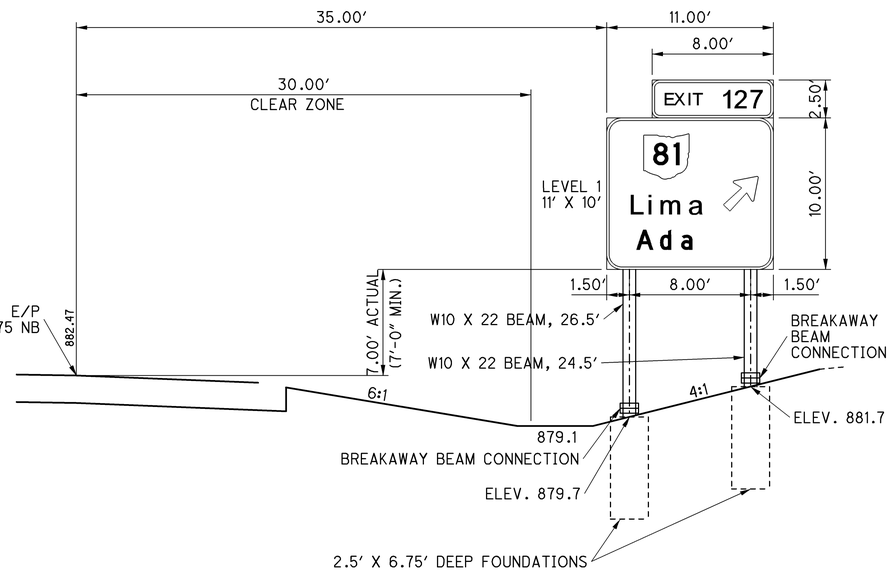

SIGN NO. 102
447+00 RT.

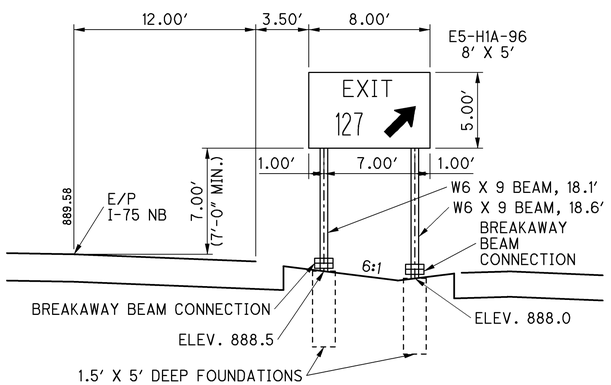

SIGN NO. 108
455+50 RT.

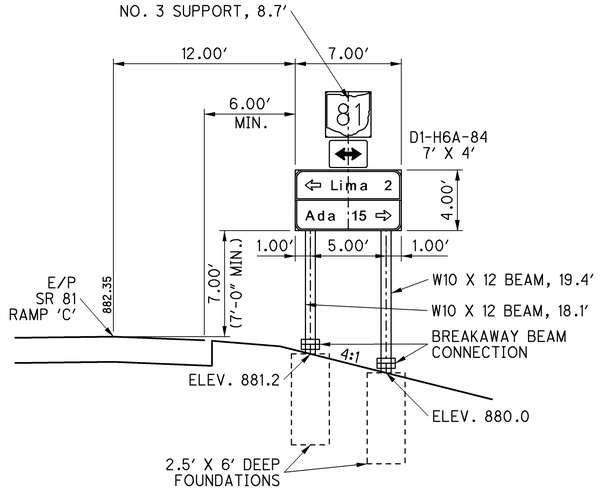

SIGN NO. 110
460+00 RT.

CALCULATED JRW
CHECKED JRL

ELEVATION VIEWS - I-75
SIGN NO. 97, 99, 100, 102, 106, 108 & 110

ALL-75-5.53

J:\Projects\ALL\76691\traffic\sheets\76691TE009.dgn 10-SEP-2012 11:33AM wrightj

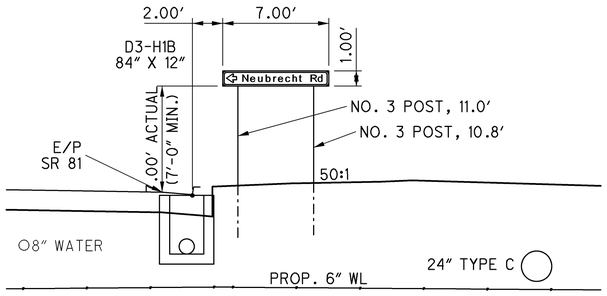

SIGN NO. 116
436+00 RT.

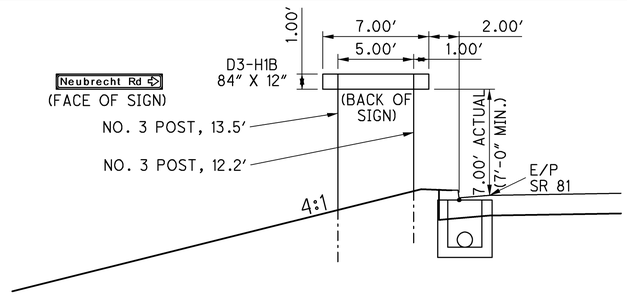

SIGN NO. 120
442+00 LT.

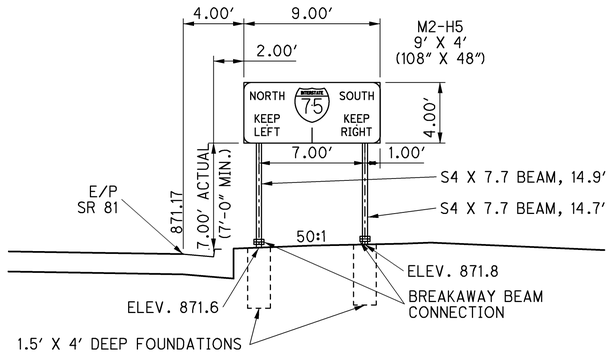

SIGN NO. 124
442+15 RT.



(BACK OF SIGN)

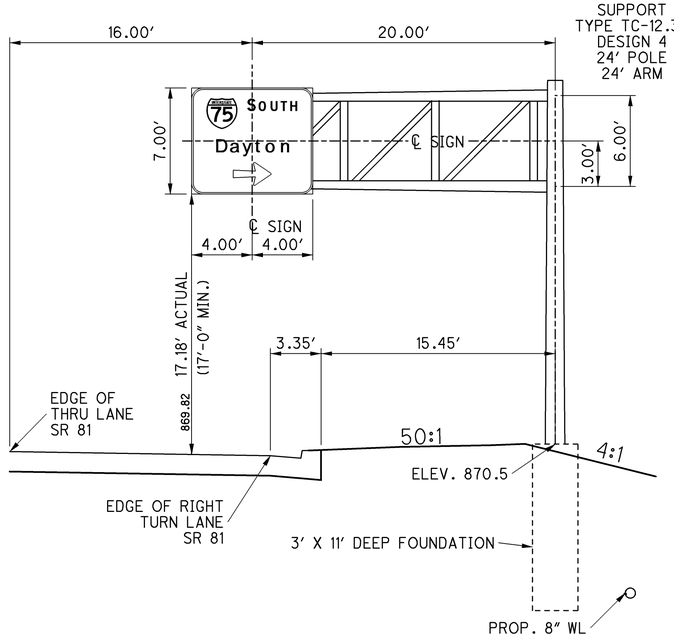

SIGN NO. 129 & 130
447+70 RT.

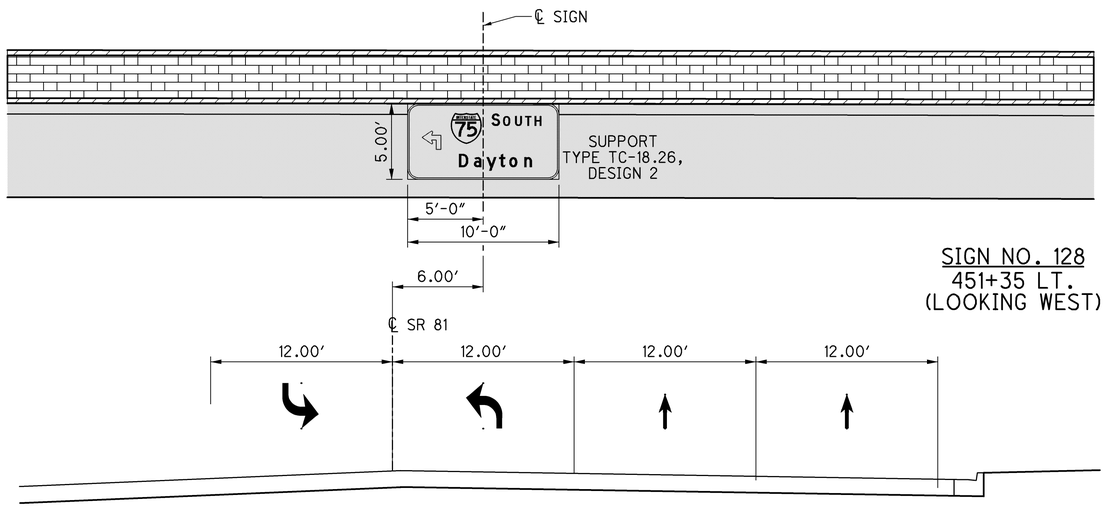

SIGN NO. 128
451+35 LT.
(LOOKING WEST)

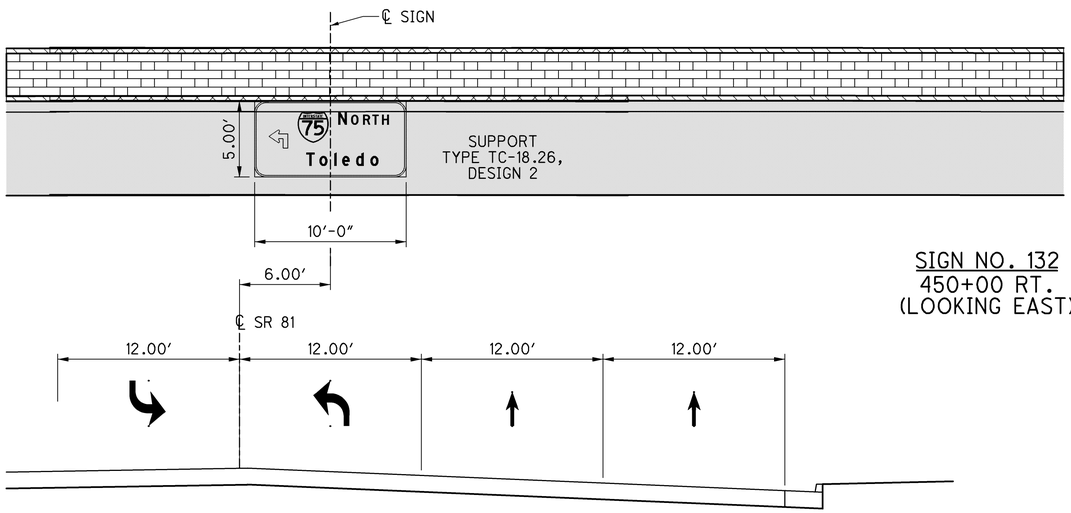

SIGN NO. 132
450+00 RT.
(LOOKING EAST)

ELEVATION VIEWS - I-75
SIGN NO. 116, 120, 124, 125, 128, 129, 130 & 132

CALCULATED JRW
CHECKED JRL

ALL-75-5.53

69 / 71

835
1224

J:\Projects\ALL\76691\traffic\sheets\76691TE010.dgn 10-SEP-2012 11:33AM wrightj

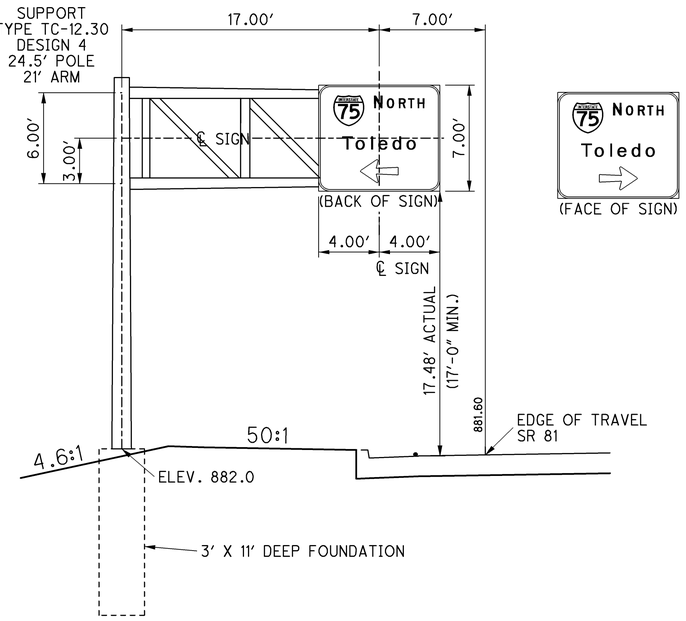

SIGN NO. 135 & 136
454+00 LT.

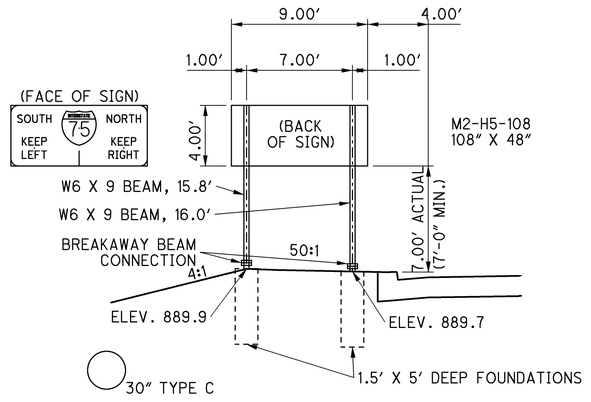

SIGN NO. 140
458+00 LT.

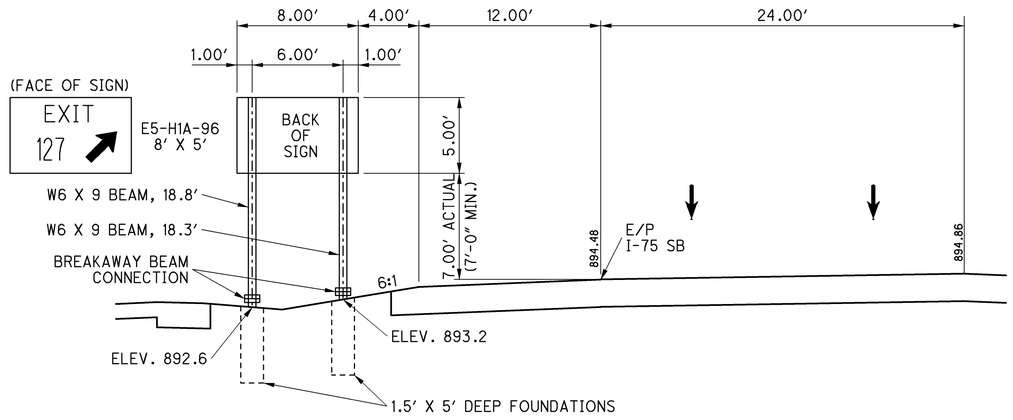

SIGN NO. 150
471+00 LT.

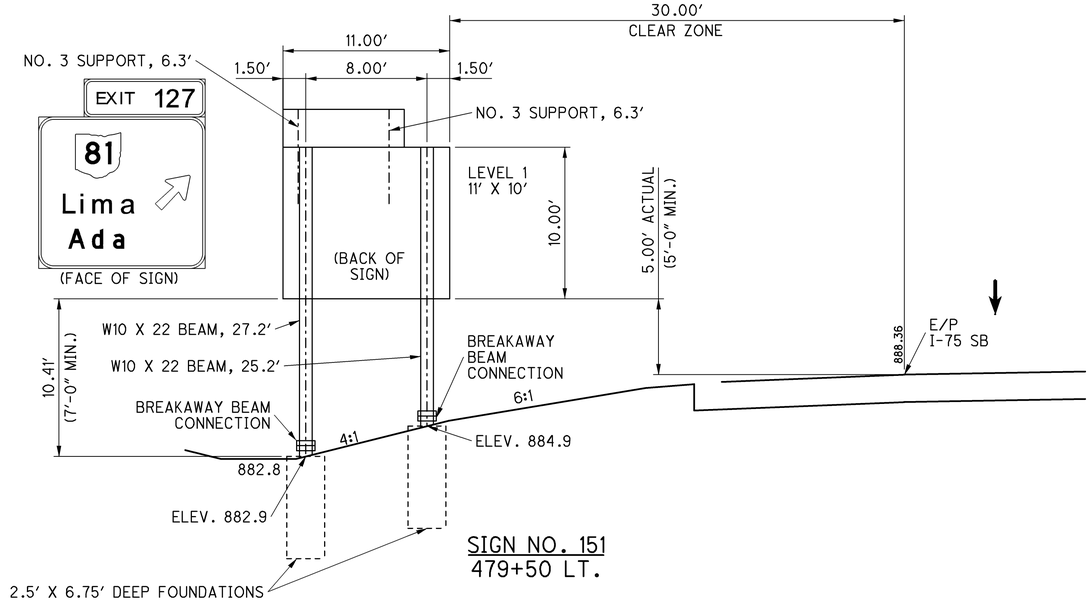

SIGN NO. 151
479+50 LT.

CALCULATED JRW
CHECKED JRL

ELEVATION VIEWS - I-75
SIGN NO. 135, 136, 140, 150 & 151

ALL-75-5.53

70 / 71

836
1224

J:\Projects\ALL\76691\traffic\sheets\76691TE011.dgn 10-SEP-2012 11:33AM wrightj

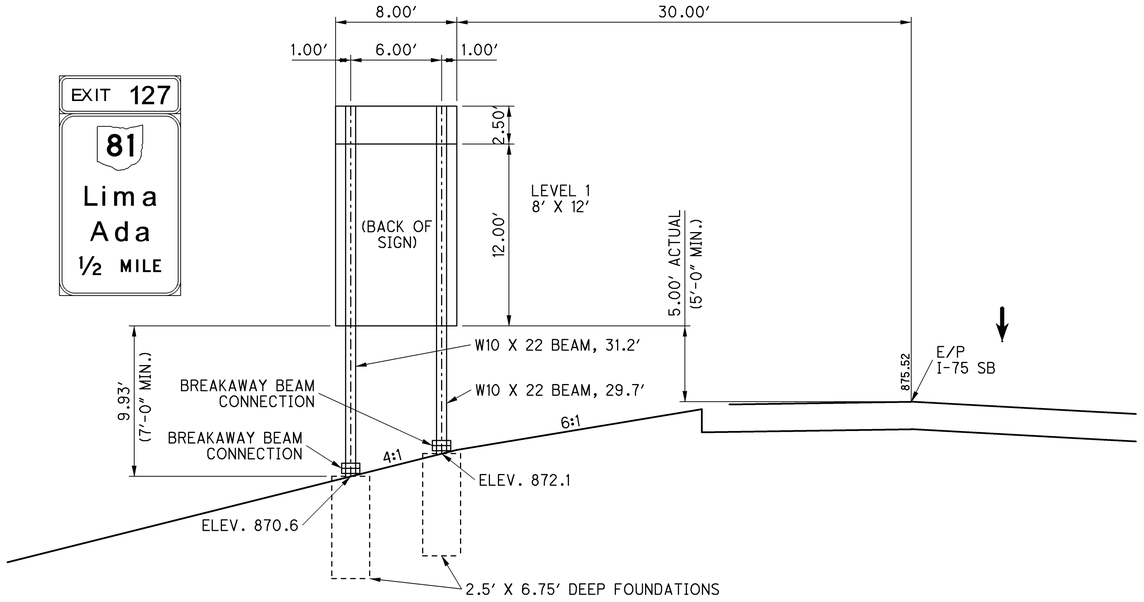

SIGN NO. 154
501+50 LT.

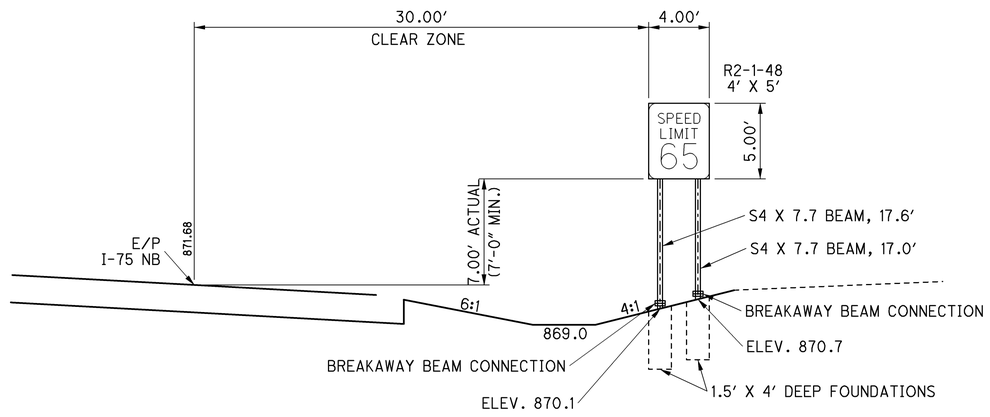

SIGN NO. 155
501+00 RT.

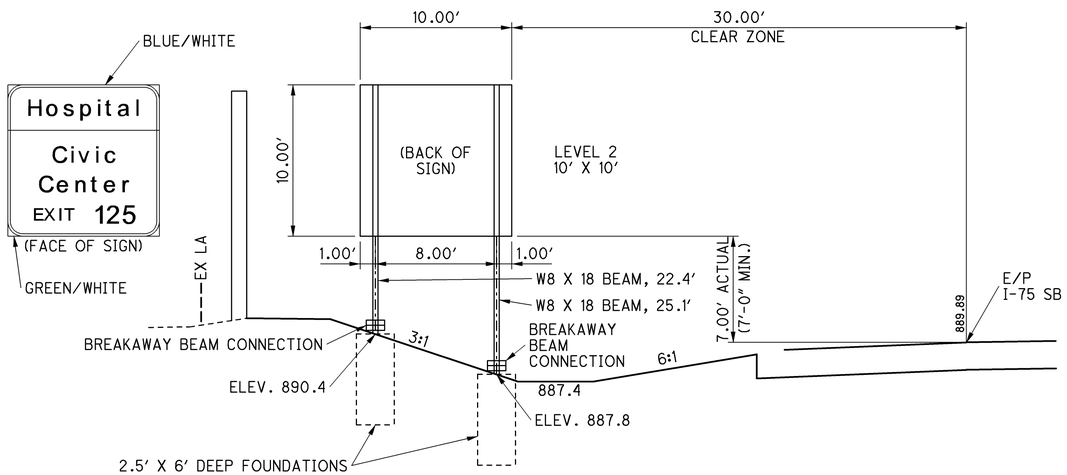

SIGN NO. 158
395+00 LT.

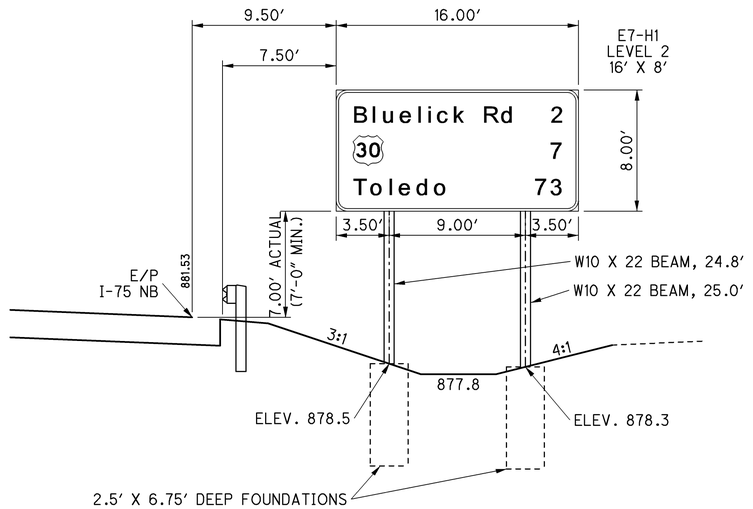

SIGN NO. 159
519+10 RT.

ELEVATION VIEWS - I-75
SIGN NO. 154, 155, 158, & 159

CALCULATED JRW
CHECKED JRL

ALL-75-5.53

71 / 71

837
1224

J:\Projects\ALL\76691\traffic\sheets\76691TE012.dgn 10-SEP-2012 11:33AM wrightj

CALCULATED JRL CHECKED JTB

TRAFFIC SIGNAL GENERAL NOTES

SCOPE OF WORK

IT IS THE INTENT OF THESE PLANS AND SPECIFICATIONS THAT THE CONTRACTOR WILL FURNISH AND INSTALL PEDESTALS, CABLE AND WIRING, FOUNDATIONS, PULL BOXES, GROUND RODS, AND ALL OTHER ITEMS HEREIN, ALONG WITH ALL MATERIALS, LABOR, EQUIPMENT, TOOLS AND INCIDENTALS NECESSARY TO COMPLETE THE SIGNAL SYSTEM, COMPLETE AND ACCEPTED IN ACCORDANCE WITH PLANS AND SPECIFICATIONS OF THE STATE OF OHIO CONSTRUCTION AND MATERIALS SPECIFICATIONS 2010 EDITION.

SPECIFICATIONS

EXCEPT AS MODIFIED BY THESE PLANS AND SPECIFICATIONS, ALL MATERIALS AND WORKMANSHIP SHALL CONFORM TO THE REQUIREMENTS OF THE CURRENT:

1) OMUTCD
2) NATIONAL MUTCD
3) NATIONAL ELECTRICAL CODE (NEC)
4) NATIONAL ELECTRICAL SAFETY CODE (NESC)
5) ASTM STANDARDS
6) ANSI STANDARDS
7) IMSA STANDARDS

WORK ON THIS PROJECT SHALL BE GOVERNED BY THE STATE OF OHIO, DEPARTMENT OF TRANSPORTATION, 2010 "CONSTRUCTION AND MATERIAL SPECIFICATIONS", INCLUDING SUPPLEMENTAL SPECIFICATIONS, AND ODOT "STANDARD CONSTRUCTION DRAWINGS".

COORDINATION OF ACTIVITIES

ALL WORK SHALL BE COORDINATED WITH THE OHIO DEPARTMENT OF TRANSPORTATION (ODOT) AND AMERICAN ELECTRIC POWER FOR ALL TRAFFIC CONTROL PRODUCTS AND ANY OTHER UTILITIES IMPACTED ON THE PROJECT. NOTIFICATION SHALL BE GIVEN TO ODOT AT LEAST 24 HOURS PRIOR TO ANY AND ALL SCHEDULED WORK AND TESTING ON THIS PROJECT REQUIRING THEIR INSPECTION. IT SHALL BE THE RESPONSIBILITY OF THE CONTRACTOR TO COORDINATE THE UNDERGROUND CONSTRUCTION ACTIVITIES ON A CONTINUING BASIS WITH EACH OF THE UTILITY AGENCIES THAT HAVE FACILITIES IN THE IMMEDIATE VICINITY OF THE PROJECT AREA. ODOT SHALL BE CONTACTED REGARDING COORDINATION OF EXISTING SIGNAL REMOVALS AND PROPOSED SIGNAL INSTALLATIONS.

OPERATION OF EXISTING TRAFFIC SIGNALS

THE CONTRACTOR SHALL ENSURE CONTINUED OPERATION OF THE EXISTING TRAFFIC SIGNALS AT ALL TIMES. THIS SHALL INCLUDE MAINTAINING EXISTING SIGNAL CONDUIT DURING CONSTRUCTION OF THE PROPOSED SIGNAL ITEMS, AND MAY INCLUDE HAND EXCAVATING WHERE NECESSARY OR TEMPORARY RUN AROUNDS. ANY DISRUPTION TO THE OPERATION OF ANY TRAFFIC SIGNAL OR EXISTING TRAFFIC SIGNAL HARDWARE SHALL BE RESTORED BY THE CONTRACTOR OR HIS AGENT (SUB-CONTRACTOR) AT NO COST TO ODOT. THE CONTRACTOR SHALL NOTIFY ODOT IMMEDIATELY OF ANY DISRUPTION TO THE OPERATION OF ANY EXISTING TRAFFIC SIGNAL.

MISCELLANEOUS CONSTRUCTION NOTES

1) ALL PULL BOXES AND DRAINAGE CONDUIT SHALL DRAIN TOWARD THE ROADWAY RIGHT-OF-WAY, AS APPROPRIATE OR AS INDICATED IN THE PLANS.

2) CONTRACTOR SHALL HAVE AN IMSA LEVEL 2 CERTIFIED TRAFFIC SIGNAL TECHNICIAN ON THE JOB SITE DURING PERFORMANCE OF ANY SIGNAL RELATED CONSTRUCTION OPERATIONS.

INSPECTION

THE SIGNALS SHALL BE INSPECTED JUST PRIOR TO THE START OF THE TEN (10) DAY PERFORMANCE TEST SPECIFIED IN CMS 632.28(G). ALL OTHER CONSTRUCTION PAY ITEMS SHALL BE COMPLETED INCLUDING ELECTRICAL TESTS SPECIFIED IN 632.28(A-E) AND FUNCTIONAL TEST SPECIFIED IN 632.28(F).

THE PROJECT ENGINEER SHALL NOTIFY THE APPROPRIATE ROADWAY SERVICES PERSONNEL AT ODOT DISTRICT ONE (1) OF THE COMPLETION OF SIGNAL CONSTRUCTION PRIOR TO THE TEN DAY (10) PERFORMANCE TEST. TWO (2) WEEKS NOTICE SHOULD BE GIVEN. THE DISTRICT ONE (1) CONSTRUCTION DEPARTMENT SHALL FOLLOW ALL PROCEDURES SET FORTH IN THE STANDARD OPERATING PROCEDURE OPS-211 SECTION D, PARAGRAPH 3 AND THE DIVISION OF CONSTRUCTION STANDARD OPERATING PROCEDURE PH-C-104. ALL DEFICIENCIES FOUND DURING THE FINAL INSPECTION SHALL BE CORRECTED BEFORE THE COMPLETION OF THE TEN DAY (10) BURN TEST. ANY MAJOR DEFICIENCIES WHICH MAY EFFECT THE OPERATION OF THE SYSTEM SHALL CONSTITUTE A RE-START OF THE TEN (10) DAY BURN TEST AFTER CORRECTIONS ARE COMPLETED. THE TEN (10) DAY BURN TEST MUST BE SUCCESSFULLY COMPLETED BEFORE THE SYSTEM WILL BE ACCEPTED.

GUARANTEE

THE CONTRACTOR SHALL GUARANTEE THAT THE TRAFFIC CONTROL SYSTEM INSTALLED AS PART OF THIS CONTRACT SHALL OPERATE SATISFACTORILY FOR A PERIOD OF 180 DAYS FOLLOWING COMPLETION OF THE 10-DAY PERFORMANCE TEST. IN THE EVENT OF UNSATISFACTORY OPERATION THE CONTRACTOR SHALL CORRECT FAULTY INSTALLATIONS, MAKE REPAIRS AND REPLACE DEFECTIVE PARTS WITH NEW PARTS OF EQUAL OR BETTER QUALITY. EQUIPMENT, MATERIAL AND LABOR COSTS INCURRED IN CORRECTING AN UNSATISFACTORY OPERATION SHALL BE BORNE BY THE CONTRACTOR.

THE GUARANTEE SHALL COVER THE FOLLOWING ITEMS OF THE TRAFFIC CONTROL SYSTEM: CONTROLLERS AND ASSOCIATED EQUIPMENT, DETECTOR UNITS, INTERCONNECT ITEMS (RADIO COMMUNICATION), AND VIDEO DETECTORS AND THEIR SATISFACTORY OPERATION IN BOTH SUMMER AND WINTER MONTHS.

CUSTOMARY MANUFACTURER'S GUARANTEES FOR THE FOREGOING ITEMS SHALL BE TURNED OVER TO THE MAINTAINING AGENCY FOLLOWING ACCEPTANCE OF THE EQUIPMENT.

THE COST OF GUARANTEEING THE TRAFFIC CONTROL EQUIPMENT WILL BE INCIDENTAL TO AND INCLUDED IN THE CONTRACT UNIT PRICE OF THE VARIOUS ITEMS MAKING UP THE SYSTEM.

ITEM 632 : SIGNAL SUPPORT LOCATIONS

PRIOR TO ORDERING THE SIGNAL SUPPORTS THE CONTRACTOR SHALL CONTACT OUPS TO HAVE ALL THE UTILITIES LOCATED IN THE FIELD THEN MEET WITH THE PROJECT ENGINEER TO LOCATE THE PROPOSED SUPPORT LOCATIONS TO INSURE THERE ARE NO CONFLICTS WITH UTILITIES. IF THERE ARE ISSUES THE PROJECT ENGINEER SHALL CONTACT THE DISTRICT ONE PLANNING AND ENGINEERING DEPARTMENT TO RELOCATE THE SUPPORT POLES.

TRAFFIC SIGNAL LANE CLOSURE LIMITATIONS

ALL LANE CLOSURES SHALL BE PER THE MAINTENANCE OF TRAFFIC PLANS AND GENERAL NOTES, SHEETS 49-138.

MAINTENANCE OF TRAFFIC SIGNAL INSTALLATION

FOR THE REQUIREMENTS OF MAINTAINING TRAFFIC SIGNAL OPERATION DURING INSTALLATION, SEE ITEM 614 - MAINTAINING TRAFFIC, AS PER PLAN NOTE ON SHEETS 49-138.

MAINTAINING TRAFFIC

ALL TRAFFIC SIGNAL WORK SHALL CONFORM TO THE MAINTENANCE OF TRAFFIC PLANS AND GENERAL NOTES PROVIDED WITHIN THE PLANS. (SEE SHEETS 49-138.) IN ADDITION, THE FOLLOWING SHALL BE REQUIRED AS IT PERTAINS TO TRAFFIC SIGNAL CONSTRUCTION ACTIVITIES.

THE EXISTING TRAFFIC SIGNAL OPERATIONS FOR ALL PROJECT INTERSECTIONS SHALL BE MAINTAINED OPERATIONAL UNTIL THE NEW SIGNAL OPERATIONS HAVE BEGUN. THIS REQUIREMENT SHALL BE PERFORMED WITH THE EXISTING INSTALLATION, WITH A PORTION OF THE NEW INSTALLATION OR A TEMPORARY SIGNAL INSTALLATION.

ANY CONFLICTS WITH THE VISIBILITY OF EXISTING SIGNAL HEAD(S) FROM NEW SIGNAL INSTALLATIONS SHALL BE REMEDIED BY:

1)LASHING PROPOSED VEHICULAR SIGNAL HEAD(S) IN CONFLICT WITH EXISTING SIGNAL HEAD(S) HORIZONTALLY ALONG MAST ARM, OR

2)NOT INSTALLING PROPOSED VEHICULAR SIGNAL HEAD(S) IN CONFLICT WITH EXISTING SIGNAL HEAD(S) UNTIL IMMEDIATELY PRIOR TO THE TURN ON OF THE NEW SIGNAL.

ANY VEHICULAR TRAFFIC SIGNAL HEAD, NEW, EXISTING OR TEMPORARY, WHICH WILL BE VISIBLE TO DRIVERS WHILE OUT OF OPERATION SHALL BE COVERED IN THE MANNER DESCRIBED IN 632.25.

625 CONDUIT, 1-½", 2" OR 3", 725.052, AS PER PLAN

IN ADDITION TO THE REQUIREMENTS OF 625 THE CONDUIT SHALL ALSO MEET THE FOLLOWING MATERIAL SPECIFICATIONS FOR 725.052 POLYETHYLENE CONDUITS AND FITTINGS. FURNISH POLYETHYLENE CONDUIT EPEC-80-HDPE CONFORMING WITH NEMA STANDARD TC 7 FOR BELOW GROUND ONLY, WHETHER CONCRETE ENCASED OR DIRECT BURIAL. USE FITTINGS CONFORMING TO ASTM D3350.

FURNISH MATERIALS ACCORDING TO THE DEPARTMENT'S QUALIFIED PRODUCTS LIST (QPL).

ITEM 632 : POWER SERVICE, AS PER PLAN

ELECTRIC POWER SHALL BE OBTAINED FROM AMERICAN ELECTRIC POWER (AEP) (800-672-2231) AT THE LOCATIONS INDICATED IN THE PLANS. POWER SUPPLIED SHALL BE 120/240 VOLTS.

POWER SERVICE SHALL BE AS PER CMS ITEM 632 AND SCD TC-83.10 WITH THE FOLLOWING EXCEPTIONS:

1) THE METER BASE MOUNTING HEIGHT SHALL BE NO MORE THAN 5 FEET HIGH TO THE CENTER OF THE METER BASE FROM THE GROUND.

2) THE CONTRACTOR SHALL SUPPLY THE NECESSARY METER BASES.

3) ALL POWER SERVICES SHALL BE METERED. THE METER SHALL HAVE A LEVER OPERATED BYPASS.

4) ALL METER BASE HARDWARE (INCLUDING RISER AND BANDING) SHALL BE PAINTED GLOSSY BLACK TO MATCH POLES.

5) MAINTAIN EXISTING POWER SERVICE ACCOUNT WHENEVER POSSIBLE.

DISCONNECT SWITCH ENCLOSURES FURNISHED IN ACCORDANCE WITH CMS ITEM 632 - POWER SERVICE AS PER PLAN, SHALL INCLUDE A PADLOCK EQUAL TO MASTER NO. 4BKA OR WILSON BOHANNON 660, WITH LOCK BODY OF BRONZE OR BRASS AND KEYING SHALL BE TO THE STATE MASTER.

THE CONTRACTOR SHALL CONTACT THE METER SECTION OF THE POWER COMPANY FOR INFORMATION REGARDING THE METER BASE INSTALLATION PRIOR TO ORDERING POLES. THE CONTRACTOR WILL BE RESPONSIBLE FOR REQUESTING AND SCHEDULING ANY INSPECTIONS THE POWER COMPANY MAY REQUIRE FOR THE POWER SERVICE HOOK UP. THE CONTRACTOR SHALL BE RESPONSIBLE TO CONTACT THE POWER COMPANY FOR THE ELECTRICAL SERVICE CONNECTION. UNDER NO CIRCUMSTANCES SHALL THE CONTRACTOR SPLICE POWER CABLE INTO THE POWER COMPANY'S CIRCUITS. THE VOLTAGE SUPPLIED SHALL BE NOMINALLY 120/240 VOLTS. THE CONTRACTOR IS RESPONSIBLE FOR OBTAINING ANY NECESSARY PERMITS AND THE PAYING OF ALL FEES. THE CONTRACTOR SHALL PAY ALL POWER CHARGES UNTIL THE SIGNAL IS ACCEPTED BY THE MAINTAINING AGENCY.

POWER SUPPLY FOR TRAFFIC SIGNALS

ELECTRIC POWER SHALL BE OBTAINED FROM AMERICAN ELECTRIC POWER (AEP) (800-672-2231) AT THE LOCATIONS INDICATED IN THE PLANS. POWER SUPPLIED SHALL BE 120/240 VOLTS.

ITEM 625 : TRENCH

IN LIEU OF TRENCHING, THE CONTRACTOR MAY USE ITEM 625.14 - JACKING AND BORING AS AN ALTERNATIVE METHOD TO TRENCHING. IF JACKING AND BORING IS USED, THE CONTRACTOR SHALL FOLLOW ALL SPECIFICATIONS AND PROCEDURES FOR SUCH AS OUTLINED BY CMS 625.14. IF JACKING AND BORING IS USED, ONLY RIGID GALVANIZED STEEL CONDUIT OR SCHEDULE 80 POLYVINYL CHLORIDE CONDUIT MAY BE USED AS PER CMS 625.14. NO ADDITIONAL COMPENSATION SHALL BE PROVIDED FOR ELECTIVE USE OF JACKING AND BORING METHODS IN LIEU OF TRENCH, AS INDICATED IN THE PLANS.

ITEM 632 : SIGNAL SUPPORT, MISC.: MECHANICAL DAMPER

THIS ITEM SHALL CONSIST OF THE CONTRACTOR INSTALLING A MASS-SPRING TYPE DAMPER ON A MAST ARM SIGNAL SUPPORT TO REDUCE THE POSSIBILITY OF HARMONIC VIBRATIONS CAUSED BY WIND LOADS. A MECHANICAL DAMPER SHALL BE APPLIED TO ALL MAST ARMS OVER FORTY-EIGHT (48) FEET IN LENGTH. MAST ARMS FORTY-EIGHT (48) FEET OR LESS SHALL REQUIRE A MECHANICAL DAMPER ONLY IF REQUIRED BY THE ENGINEER OR PLANS, OR IF THE OBSERVED VERTICAL OSCILLATION OF THE LOADED ARM IS GREATER THAN EIGHT INCHES (8") MEASURED FROM THE HIGHEST TO THE LOWEST POINT OF DEFLECTION AT WIND SPEEDS OF FIVE TO TWENTY MILES-PER-HOUR (5-20 MPH). THE INSTALLED DAMPER SHALL BE CAPABLE OF REDUCING THE LOADED MAXIMUM VERTICAL MOVEMENT AT THE TIP OF THE ARM TO EIGHT INCHES (8") MEASURED FROM THE HIGHEST TO THE LOWEST POINT OF DEFLECTION AT WIND SPEEDS OF FIVE TO TWENTY MILES-PER-HOUR (5-20 MPH).

ALL ATTACHMENT HARDWARE CONNECTIONS SHALL BE STAINLESS STEEL. THE DAMPER SHALL BE ATTACHED TO THE ARM WITHIN EIGHT FEET (8') OF MAST ARM TIP. INSTALLATION SHALL BE PER THE MANUFACTURER'S GUIDELINES. ACCEPTABLE DEVICES INCLUDE THE FOLLOWING OR APPROVED EQUAL:

1) FLORIDA DOT SPRING-MASS DAMPER - DWG. INDEX NO. 17749

THE DAMPER AND MOUNTING HARDWARE SHALL BE FACTORY PAINTED GLOSSY BLACK TO MATCH THE POLE AND MAST ARM.

PAYMENT FOR THIS ITEM WILL BE AT THE CONTRACT PRICE BID PER EACH COMPLETE AND IN PLACE AND INCLUDE ALL LABOR, MATERIALS & EQUIPMENT NECESSARY TO COMPLETE THE WORK.

ITEM 632 : REMOVAL OF TRAFFIC SIGNAL INSTALLATION, AS PER PLAN

TRAFFIC SIGNAL INSTALLATIONS, INCLUDING SIGNAL HEADS, CABLE, MESSENGER WIRE, STRAIN POLES, MAST ARMS, PEDESTALS, CABINET, CONTROLLER, VIDEO DETECTION CAMERAS, ETC., SHALL BE REMOVED IN ACCORDANCE WITH CMS 632.26 AND AS INDICATED ON THE PLANS. REMOVED ITEMS SHALL BE REUSED AS PART OF A NEW INSTALLATION ON THE PROJECT OR STORED ON THE PROJECT FOR SALVAGE BY DISTRICT ONE TRAFFIC SIGNAL SHOP IN ACCORDANCE WITH THE LISTING GIVEN HEREIN.

ITEMS TO BE REUSED:

THE UNINTERRUPTIBLE POWER SUPPLY (UPS) SHALL BE REUSED AS A PART OF THE NEW TRAFFIC SIGNAL INSTALLATIONS ON THE PROJECT.

ITEMS TO BE STORED:

ITEMS TO BE SALVAGED PER COORDINATION WITH THE DISTRICT ONE TRAFFIC SIGNAL SHOP (CONTACT CURT SYBERT AT 419-999-6926) INCLUDE:
STRAIN POLES, SIGNS, CONTROLLERS AND CABINETS SHALL BE SALVAGED FOR THIS PROJECT.

IN THE EVENT THE ITEMS STORED ON THE PROJECT FOR SALVAGE BY THE LOCAL AGENCY ARE NOT REMOVED, THE CONTRACTOR SHALL, WHEN DIRECTED BY THE ENGINEER IN WRITING, REMOVE AND DISPOSE OF THE ITEMS AT NO ADDITIONAL COST TO THE PROJECT.

CONTRACTOR SHALL PERFORM ALL WORK AGREEMENTS AS INDICATED IN PLANS AND THIS COST SHALL BE INCLUDED IN THE BID PRICE FOR ITEM 632 - REMOVAL OF TRAFFIC SIGNAL INSTALLATION, AS PER PLAN.

ITEM 632 : VEHICULAR SIGNAL HEAD, (LED), BLACK, BY TYPE, WITH BACKPLATE, AS PER PLAN

IN ADDITION TO THE REQUIREMENTS OF CMS 632 AND 732 FOR 3, 4, AND 5 SECTION SIGNAL HEADS, THE FOLLOWING REQUIREMENTS SHALL ALSO APPLY:

LAMPS:
LED, LIGHT EMITTING DIODE, SIGNAL LAMP UNITS SHALL MEET THE REQUIREMENTS OF CMS 732.04(C). ALL LAMP UNITS SHALL BE THE 12 INCH SIZE. LED SIGNAL LAMP UNITS SHALL BE PROVIDED FOR ALL SIGNAL LENS TYPES.

SIGNAL SECTIONS:
1) SIGNAL HEADS & VISORS SHALL BE CONSTRUCTED OF BLACK POLYCARBONATE PLASTIC AND MEET ITE SPECIFICATIONS.

2) PIPE, SPACERS AND FITTINGS CONSTRUCTED OF BLACK POLYCARBONATE PLASTIC MAY BE USED IN LIEU OF GALVANIZED STEEL OR ALUMINUM.

3) BLACK EXTERIOR COLOR SHALL BE OBTAINED BY USE OF COLORED PLASTIC MATERIAL RATHER THAN PAINTING.

4) REFLECTIVE BACKPLATES PER CMS 732.22.

MOUNTING HARDWARE:
1) ALL SIGNAL HEADS SHALL BE RIGIDLY MOUNTED TO THE MAST ARM WITH THE RED LENS CENTERED ON OR NEAR THE MAST ARM. THE BOTTOMS OF THE SIGNAL HEADS SHALL BE LEVEL TO WITHIN 6 INCHES OF EACH OTHER WHILE MAINTAINING A CLEARANCE OF 17' ABOVE THE PAVEMENT.

2) ALL UPPER SIGNAL SUPPORT HARDWARE AND PIPING UP TO AND INCLUDING THE WIRE INLET FITTING SHALL BE FERROUS METAL FOR SIGNAL DISPLAYS OF TWO OR MORE SECTIONS.

3) THE ENTRANCE FITTING SHALL BE OF THE TRI-STUD DESIGN WITH SERRATED RINGS IN ORDER TO ACHIEVE POSITIVE LOCKING.

4) THE CONTRACTOR SHALL BE RESPONSIBLE FOR ALL NECESSARY HARDWARE TO MAINTAIN 17 FEET CLEARANCE HEIGHT.

THE CONTRACTOR SHALL PROVIDE TO ODOT, IN WRITING, THE LED MANUFACTURER'S NAME, SERIAL NUMBER, PART NUMBER, DESCRIPTION OF LAMP, AND DATE OF MANUFACTURE FOR ALL LED UNITS TO BE USED IN THE TRAFFIC SIGNAL HEADS PRIOR TO INSTALLATION, FOR ACCEPTANCE AND WARRANTY PURPOSES. THE INFORMATION SHALL BE SENT TO THE OHIO DEPARTMENT OF TRANSPORTATION (ATTN: CURT SYBERT) AT 2000 N. WEST STREET, LIMA, OHIO 45801.

ODOT WILL MEASURE ITEM 632 - VEHICULAR SIGNAL HEAD, (LED), BLACK, BY TYPE, WITH BACKPLATE, AS PER PLAN BY THE NUMBER OF COMPLETE UNITS FURNISHED AND INSTALLED, WHICH SHALL INCLUDE ALL SUPPORT & MOUNTING HARDWARE, DISCONNECT HANGERS, CLOSURE CAPS, DIMMERS, AND LAMPS AS SPECIFIED.

ALL-75-5.53

838
1224

J:\Projects\ALL\76691\signals\sheets\76691GN001.dgn 11-SEP-2012 9:17PM redden

GROUNDING AND BONDING

THE REQUIREMENTS OF THE CONSTRUCTION AND MATERIAL SPECIFICATIONS (CMS) AND THE HL AND TC SERIES OF STANDARD CONSTRUCTION DRAWINGS ARE MODIFIED AS FOLLOWS:

1) ALL METALLIC PARTS CONTAINING ELECTRICAL CONDUCTORS SHALL BE PERMANENTLY JOINED TO FORM AN EFFECTIVE GROUND FAULT CURRENT PATH BACK TO THE GROUNDED CONDUCTOR IN THE POWER SERVICE DISCONNECT SWITCH.

   A. PROVIDE AN EQUIPMENT GROUNDING CONDUCTOR IN METALLIC CONDUITS (725.04) IN ADDITION TO THE CONDUCTORS SPECIFIED AND BOND THE CONDUIT TO THIS GROUNDING CONDUCTOR.

   B. WHEN AN EQUIPMENT GROUNDING CONDUCTOR IS REQUIRED IN PLASTIC CONDUIT (725.05), THE INSTALLATION SHALL INCLUDE A SEPARATE EQUIPMENT GROUNDING CONDUCTOR IN ADDITION TO THE CONDUCTORS SPECIFIED.

   C. METALLIC CONDUIT CARRYING THE LOOP WIRES FROM IN THE PAVEMENT TO THE PULL BOX SPLICE LOCATION WILL ONLY BE BONDED AT THE PULL BOX END, AND WILL NOT CONTAIN AN EQUIPMENT GROUNDING CONDUCTOR.

   D. METAL PULL BOX LIDS SHALL BE BONDED BY ATTACHMENT OF THE EQUIPMENT GROUNDING CONDUCTOR TO THE FRAME DIAGONAL AS PROVIDED ON HL-30.11.

   E. IF MULTIPLE CONDUIT RUNS BEGIN AND END AT THE SAME POINTS, ONLY ONE EQUIPMENT GROUNDING CONDUCTOR IS REQUIRED.

   F. IF AN EQUIPMENT GROUNDING CONDUCTOR IS NEEDED IN CONDUIT BETWEEN SIGNALIZED INTERSECTIONS FOR UNDERGROUND INTERCONNECT CABLE, THE GROUNDING SYSTEM FOR EACH SIGNALIZED INTERSECTION WILL BE SEPARATED ABOUT MIDWAY BETWEEN THE INTERSECTIONS.

   G. THE MESSENGER WIRE AT SIGNALIZED INTERSECTIONS WILL BE USED AS THE CONDUCTIVE PATH FROM CORNER TO CORNER IF CONDUIT IS NOT PROVIDED UNDER THE ROADWAY. WHEN CONDUIT CONNECTS THE CORNERS OF AN INTERSECTION, AN EQUIPMENT GROUNDING CONDUCTOR SHALL BE USED IN THE CONDUIT.

2) CONDUITS :

   A. THE 725.04 CONDUIT SHALL HAVE GROUNDING BUSHINGS INSTALLED AT ALL TERMINATION POINTS. THE BUSHING MATERIAL SHALL BE COMPATIBLE WITH GALVANIZED STEEL CONDUIT AND THE GROUNDING LUG MATERIAL SHALL BE COMPATIBLE FOR USE WITH COPPER WIRE. THREADED OR COMPRESSION TYPE BUSHINGS MAY BE USED.

   B. THE 725.05 CONDUIT SHALL HAVE THE INSIDE AND OUTSIDE DIAMETERS OF THE CONDUIT DEBURRED AT ALL TERMINATION POINTS.

   C. BOTH ENDS OF METALLIC CONDUIT SHALL BE BONDED TO THE EQUIPMENT GROUNDING CONDUCTOR.

   D. METALLIC CONDUIT MAY BE BONDED TO METALLIC BOXES THROUGH THE USE OF CONDUIT FITTINGS UL APPROVED FOR THIS TYPE OF CONNECTION, WITH THE BOX BONDED TO THE EQUIPMENT GROUNDING CONDUCTOR.

3. WIRE FOR GROUNDING AND BONDING :

   A. USE INSULATED, COPPER WIRE FOR THE EQUIPMENT GROUNDING CONDUCTOR. BONDING JUMPERS IN BOXES AND ENCLOSURES MAY BE BARE OR INSULATED COPPER WIRE. WIRE SIZE SHALL BE AS FOLLOWS :

      I. USE 4 AWG BETWEEN THE POWER SERVICE AND SUPPORTS, POLES, PEDESTALS, CONTROLLER OR FLASHER CABINETS.

      II. USE A MINIMUM 8 AWG BETWEEN LOOP DETECTOR PULL BOXES AND THE FIRST CONDUIT THAT REQUIRES A LARGER SIZE AS SPECIFIED IN 3.A.I. ABOVE.

      III. USE A MINIMUM 8 AWG BETWEEN THE "PREPARE TO STOP WHEN FLASHING" INSTALLATION (INCLUDING SUPPORT) AND THE FIRST CONDUIT THAT REQUIRES A LARGER SIZE AS SPECIFIED IN 3.A.I. ABOVE.

      IV. THE INSULATION SHALL BE GREEN OR GREEN WITH YELLOW STRIPE(S). FOR 4 AWG OR LARGER, INSULATION MAY ALSO BE BLACK WITH GREEN TAPE/LABELS INSTALLED AT ALL ACCESS POINTS.

GROUNDING AND BONDING (CONT'D)

   B. IN A HIGHWAY LIGHTING SYSTEM, THE EQUIPMENT GROUNDING CONDUCTOR SHALL BE THE SAME WIRE SIZE AS THE DUCT CABLE OR DISTRIBUTION CABLE CIRCUIT CONDUCTORS, WITH THE MINIMUM CONDUCTOR SIZE OF 4 AWG. BONDING JUMPERS WILL BE MINIMUM SIZE 4 AWG.

4) GROUND ROD :

   A. A ¾ INCH SCHEDULE 40 PVC CONDUIT WILL BE USED IN FOUNDATIONS AND CONCRETE WALLS FOR THE GROUNDING CONDUCTOR (GROUND WIRE) RACEWAY TO THE GROUND ROD. SHOULD METALLIC CONDUIT BE USED, BOTH ENDS OF THE CONDUIT SHALL BE BONDED TO THE GROUNDING CONDUCTOR.

   B. THE TYPICAL GROUNDING CONDUCTOR (GROUND WIRE) SHALL BE 4 AWG INSULATED, COPPER.

5) THE GREEN CONDUCTOR IN SIGNAL CABLES (CONDUCTOR #4) SHALL NOT BE USED TO SUPPLY POWER TO A SIGNAL INDICATION. IT WILL BE CONNECTED TO THE SIGNAL BODY AS AN EQUIPMENT GROUND IN ALUMINUM HEADS AND IT WILL BE UNUSED IN PLASTIC HEADS. UNUSED CONDUCTORS SHALL BE GROUNDED IN THE CABINET. TYPICAL USE OF CONDUCTORS IS AS FOLLOWS :

COND. NO	COLOR	VEHICLE SIGNAL	PEDESTRIAN SIGNAL
1	BLACK	GREEN BALL	#1 WALK
2	WHITE	AC NEUTRAL	AC NEUTRAL
3	RED	RED BALL	#1 DW/FDW
4	GREEN	EQUIP. GROUND	EQUIP. GROUND
5	ORANGE	YELLOW BALL	#2 DW/FDW
6	BLUE	GREEN ARROW	#2 WALK
7	WHITE/BLACK STRIPE	YELLOW ARROW	NOT USED

6) POWER SERVICE AND DISCONNECT SWITCH :

   A. AT THE POWER SERVICE LOCATION, THE GROUNDING CONDUCTOR (GROUND WIRE) FROM THE DISCONNECT SWITCH NEUTRAL (AC-) BAR TO THE GROUND ROD SHALL BE A CONTINUOUS, UNSPLICED CONDUCTOR. IF SPLICED, IT SHALL BE AN EXOTHERMIC WELD BUTT SPLICE.

   B. THE SERVICE NEUTRAL (AC-) SHALL ONLY BE CONNECTED TO GROUND AT THE PRIMARY POWER SERVICE DISCONNECT SWITCH.

      I. NEMA CONTROLLER CABINETS :

      IF A POWER SERVICE DISCONNECT SWITCH IS LOCATED BEFORE THE CONTROLLER CABINET, THE NEUTRAL (AC-) AND THE GROUNDING BARS IN THE CONTROLLER CABINET SHALL NOT BE CONNECTED TOGETHER AS SHOWN IN NEMA TS-2, FIGURE 5-4.

      II. IF SECONDARY DISCONNECT SWITCHES ARE CONNECTED AFTER THE PRIMARY DISCONNECT SWITCH, THE NEUTRAL (AC-) SHALL ONLY BE GROUNDED AT THE PRIMARY SWITCH. EQUIPMENT GROUNDING CONDUCTORS SHALL BE BROUGHT TO THE PRIMARY SWITCH, BUT SHALL BE GROUNDED AT BOTH SECONDARY AND PRIMARY SWITCHES.

7) STRUCTURE GROUNDING :

HL-50.21 SHOWS A 1/0 AWG STRANDED COPPER CABLE USED FOR STRUCTURE GROUNDING. ADDITIONALLY, THIS SAME CABLE SHALL BE INSULATED AND ANY CONNECTIONS AND BARE COPPER STRANDS EXPOSED TO CONCRETE SHALL BE COVERED WITH MASTIC TO PREVENT CONTACT WITH THE CONCRETE.

8) PAYMENT :

   A. ALL MATERIALS AND WORK REQUIRED TO COMPLETE THE EFFECTIVE GROUND FAULT CURRENT PATH SYSTEM ARE INCIDENTAL TO THE CONDUCTORS INSTALLED BY CONTRACT.

   B. WORK ON BRIDGES MAY BE INCLUDED IN THE BID ITEM FOR "ITEM 625, STRUCTURE GROUNDING".

   C. IN A 3-WIRE HIGHWAY LIGHTING SYSTEM, THE THIRD CONDUCTOR OF THE DUCT CABLE OR DISTRIBUTION CABLE WILL BE USED AS THE EQUIPMENT GROUNDING CONDUCTOR AND MAY AS SUCH BE PART OF THE CABLE BID ITEM.

ITEM 632 : SIGN HANGER ASSEMBLY, MAST ARM, AS PER PLAN

THIS ITEM OF WORK SHALL BE IN ACCORDANCE WITH SPECIFICATION 630 AND SHALL HAVE A RIGID MOUNT HANGER ASSEMBLY IN ACCORDANCE WITH THE DETAIL "SIGN SUPPORT ASSEMBLY, POLE MOUNTED" ON STANDARD CONSTRUCTION DRAWING TC-41.40.

ITEM 632 : PEDESTRIAN SIGNAL HEAD (LED), (COUNTDOWN), TYPE D2, AS PER PLAN

IN ADDITION TO THE REQUIREMENTS OF CMS 632 AND 732, THE FOLLOWING REQUIREMENTS SHALL ALSO APPLY:

1) LED, LIGHT EMITTING DIODE, SIGNAL LAMP UNITS SHALL MEET THE REQUIREMENTS OF CMS 732.04(C). ALL LAMP UNITS SHALL BE THE 12 INCH SIZE.

2) THE LED LAMP UNIT SHALL DISPLAY SOLID FILLED SYMBOLS FOR THE UPRAISED HAND OR THE WALKING PERSON.

3) SIGNAL HEADS & VISORS SHALL BE CONSTRUCTED OF BLACK POLYCARBONATE PLASTIC AND MEET ITE SPECIFICATIONS.

4) PIPE, SPACERS AND FITTINGS CONSTRUCTED OF BLACK POLYCARBONATE PLASTIC MAY BE USED IN LIEU OF GALVANIZED STEEL OR ALUMINUM.

5) BLACK EXTERIOR COLORS SHALL BE OBTAINED BY USE OF COLORED PLASTIC MATERIAL RATHER THAN PAINTING.

6) PEDESTRIAN SIGNAL HEADS SHALL BE COUNTDOWN TYPE MEETING CMS 732.05(D) SPECIFICATIONS.

THE CONTRACTOR SHALL PROVIDE TO ODOT, IN WRITING, THE LED MANUFACTURER'S NAME, SERIAL NUMBER, PART NUMBER, DESCRIPTION OF LAMP, AND DATE OF MANUFACTURE FOR ALL LED UNITS TO BE USED IN THE TRAFFIC SIGNAL HEADS PRIOR TO INSTALLATION, FOR ACCEPTANCE AND WARRANTY PURPOSES. THE INFORMATION SHALL BE SENT TO THE OHIO DEPARTMENT OF TRANSPORTATION (ATTN: CURT SYBERT) AT 2000 N. WEST STREET, LIMA, OHIO 45801.

ODOT WILL MEASURE ITEM 632 - PEDESTRIAN SIGNAL HEAD (LED), (COUNTDOWN), TYPE D2, AS PER PLAN BY THE NUMBER OF COMPLETE UNITS FURNISHED AND INSTALLED, AND WILL INCLUDE ALL SUPPORT AND MOUNTING HARDWARE, CLOSURE CAPS AND LAMPS AS SPECIFIED.

ITEM 632 : PEDESTRIAN PUSHBUTTON, AS PER PLAN

IN ORDER TO CONFORM TO THE AMERICAN WITH DISABILITIES ACT (ADA), THE REQUIREMENTS OF 632.09 AND 732.06 ARE MODIFIED AS FOLLOWS:

A) THE MAXIMUM FORCE REQUIRED TO OPERATE THE PUSHBUTTON SHALL BE 5 POUNDS PER FOOT.

B) THE PUSHBUTTON SHALL BE RAISED OR FLUSH AND SHALL BE A MINIMUM OF 2 INCHES AT ITS SMALLEST DIMENSION.

ITEM 632 : SIGNAL SUPPORT, TYPE TC-81.21, (ALL DESIGNS), AS PER PLAN

IN ADDITION TO ODOT CMS 632.15 AND 732.11, FURNISH AND INSTALL SIGNAL POLES AS SPECIFIED ON THE TRAFFIC SIGNAL PLAN AND DETAIL SHEETS.

THE SIGNAL POLE DESIGNER SHALL PROVIDE DRAWINGS OF A STEEL TAPERED TUBE SIGNAL POLE WITH STRUCTURAL ASPECTS OF THE DESIGN AND MATERIALS IN COMPLIANCE WITH THE 2001 AASHTO STANDARD SPECIFICATIONS, WITH 2006 INTERIM REVISIONS, FOR STRUCTURAL SUPPORTS FOR HIGHWAY SIGNS, LUMINAIRES, AND TRAFFIC SIGNALS. THE SIGNAL POLE SHALL BE ASTM A595 GRADE A WITH A MINIMUM YIELD STRENGTH OF 55 KSI. THE FOLLOWING DESIGN PARAMETERS SHALL BE USED:

1) BASIC WIND SPEED = 90 MPH
2) DESIGN LIFE = 25 YEARS
3) FATIGUE CATEGORY = III
4) GALLOPING: NO
5) TRUCK INDUCED GUST: NO

SUBMIT, TO THE ENGINEER PRIOR TO INCORPORATION: TWO COPIES OF THE SIGNAL POLE DRAWINGS AND SHOP DRAWINGS, WHICH IDENTIFY AND DESCRIBE EACH MANUFACTURED SIGNAL POLE AND SIGNAL POLE ITEM WHICH IS BEING INCORPORATED INTO THE CONSTRUCTION. THE SIGNAL POLE DRAWINGS AND SHOP DRAWINGS SHALL EACH BE REVIEWED, SEALED, STAMPED AND DATED BY TWO OHIO REGISTERED PROFESSIONAL ENGINEERS.

PAYMENT WILL BE AT THE CONTRACT UNIT PRICE FOR ITEM 632 - SIGNAL SUPPORT, TYPE TC-81.21, DESIGN (ALL), AS PER PLAN AND WILL BE FULL COMPENSATION FOR ALL LABOR, MATERIALS, TOOLS, EQUIPMENT AND OTHER INCIDENTALS NECESSARY FOR EACH SUPPORT FURNISHED, IN PLACE, COMPLETE AND ACCEPTED.

ITEM 632 : SIGNAL SUPPORT, TYPE TC-12.30, DESIGN NO. 6 AND 8, AS PER PLAN

IN ADDITION TO ODOT CMS 632.15 AND 732.11, FURNISH AND INSTALL SIGNAL POLES AS SPECIFIED ON THE TRAFFIC SIGNAL PLAN AND DETAIL SHEETS.

THE SIGNAL POLE DESIGNER SHALL PROVIDE DRAWINGS OF A STEEL TAPERED TUBE SIGNAL POLE WITH STRUCTURAL ASPECTS OF THE DESIGN AND MATERIALS IN COMPLIANCE WITH THE 2001 AASHTO STANDARD SPECIFICATIONS, WITH 2006 INTERIM REVISIONS, FOR STRUCTURAL SUPPORTS FOR HIGHWAY SIGNS, LUMINAIRES, AND TRAFFIC SIGNALS. THE SIGNAL POLE SHALL BE ASTM A595 GRADE A WITH A MINIMUM YIELD STRENGTH OF 55 KSI. THE FOLLOWING DESIGN PARAMETERS SHALL BE USED:

1)BASIC WIND SPEED = 90 MPH
2)DESIGN LIFE = 25 YEARS
3)FATIGUE CATEGORY = III
4)GALLOPING: NO
5)TRUCK INDUCED GUST: NO

SUBMIT, TO THE ENGINEER PRIOR TO INCORPORATION: TWO COPIES OF THE SIGNAL POLE DRAWINGS AND SHOP DRAWINGS, WHICH IDENTIFY AND DESCRIBE EACH MANUFACTURED SIGNAL POLE AND SIGNAL POLE ITEM WHICH IS BEING INCORPORATED INTO THE CONSTRUCTION. THE SIGNAL POLE DRAWINGS AND SHOP DRAWINGS SHALL EACH BE REVIEWED, SEALED, STAMPED AND DATED BY TWO OHIO REGISTERED PROFESSIONAL ENGINEERS.

PAYMENT WILL BE AT THE CONTRACT UNIT PRICE FOR ITEM 632 - SIGNAL SUPPORT, TYPE TC-12.30, DESIGN NO. 6 AND 8, AS PER PLAN AND WILL BE FULL COMPENSATION FOR ALL LABOR, MATERIALS, TOOLS, EQUIPMENT AND OTHER INCIDENTALS NECESSARY FOR EACH SUPPORT FURNISHED, IN PLACE, COMPLETE AND ACCEPTED.

ITEM 632 : PEDESTAL, 6' OR 8', TRANSFORMER BASE, AS PER PLAN

ALL NEW PEDESTALS SHALL BE FACTORY PAINTED GLOSSY BLACK FOR ALL LOCATIONS.

CALCULATED JRL CHECKED JTB

TRAFFIC SIGNAL GENERAL NOTES

ALL-75-5.53

839
1224

J:\Projects\ALL\76691\signals\sheets\76691CN002.dgn 11-SEP-2012 9:17PM reddenj

ITEM 633 : CONTROLLER UNIT, TYPE 2070L - WITH CABINET, TYPE 332, AS PER PLAN (EAGLE) - ALTERNATIVE BID

THE CONTROLLER SHALL BE A MODEL AS MANUFACTURED BY EAGLE TRAFFIC CONTROL SYSTEMS, AND SHALL INCORPORATE OR BE FURNISHED WITH ALL THE DESIGN FEATURES, AUXILIARY EQUIPMENT, ACCESSORIES, AND PREWIRED CABINET FEATURES AS REQUIRED IN THE STANDARD BID ITEM.

PAYMENT WILL BE AT THE CONTRACT UNIT PRICE FOR EACH, IN PLACE. ALL CONNECTIONS MADE AND WIRING COMPLETED, TESTED AND ACCEPTED.

ITEM 633 : CONTROLLER UNIT, TYPE 2070L, WITH CABINET, TYPE 332, AS PER PLAN

IN ADDITION TO THE REQUIREMENTS OF CMS 633 AND 733, THE FOLLOWING REQUIREMENTS SHALL APPLY:

THE CONTROLLER UNIT SHALL BE SHIPPED TO THE ODOT SIGNAL SHOP, 1606 WEST BROAD STREET, COLUMBUS, OHIO 43223, EITHER DIRECTLY OR VIA THE ODOT DISTRICT OFFICE 14 DAYS IN ADVANCE OF WHEN THE SOFTWARE IS NEEDED. ANY CONTROLLERS DELIVERED TO THE ODOT SIGNAL SHOP THAT DO NOT CONTAIN THE LATEST CALTRANS CPU OS IMAGE VERSION WILL BE REJECTED AND RETURNED TO THE CONTRACTOR. THE CONTRACTOR SHALL BE RESPONSIBLE FOR UPDATING THE CPU TO THE CURRENT CALTRANS OS IMAGE VERSION. THE TYPE 2070 LOCAL CONTROLLER SHALL BE SUPPLIED WITHOUT CONTROLLER SOFTWARE, BUT WILL BE SUPPLIED WITH THE OPERATION SYSTEM AND CALTRANS REQUIRED SOFTWARE. A PERMANENT MARKING DECAL SHALL BE CLEARLY AFFIXED TO THE CONTROLLER SHOWING DATE OF DELIVERY TO THE PROJECT. CPU BOARDS SHALL CONTAIN THE CURRENT OS IMAGE VERSION, AS LISTED ON THE LATEST ODOT APPROVED CALTRANS QUALIFIED PRODUCT LIST.

THE ODOT SIGNAL SHOP WILL LOAD CONTROLLERS RECEIVED WITH THE REQUIRED SOFTWARE. THE CONTROLLER WILL THEN BE PERFORMANCE TESTED BY THE ODOT SIGNAL SHOP. EVERY EFFORT SHALL BE MADE TO HAVE LOADING AND PERFORMANCE TESTING COMPLETED BY THE ODOT SIGNAL SHOP WITHIN TWO WEEKS OF RECEIPT OF AN INDIVIDUAL CONTROLLER; LARGER GROUPS OF CONTROLLERS SUBMITTED AT THE SAME TIME MAY TAKE LONGER. SHOULD ANY CONTROLLER FAIL THIS PERFORMANCE TEST AFTER BEING LOADED WITH ODOT LICENSED SOFTWARE, THE SOFTWARE WILL BE REMOVED BY THE ODOT SIGNAL SHOP AND THE CONTROLLER REJECTED. REJECTED CONTROLLERS WILL BE RETURNED, EITHER DIRECTLY TO THE CONTRACTOR OR TO THE ODOT DISTRICT OFFICE. CONTROLLERS PASSING THE PERFORMANCE TEST WILL BE LABELED BY THE ODOT SIGNAL SHOP WITH THE OS IMAGE NUMBER, CPU SERIAL NUMBER, SOFTWARE REVISION NUMBER, AND UPLOAD DATE. THIS LABEL IS NOT TO BE REMOVED BY THE CONTRACTOR AND SERVICE AS PROOF THAT THE CONTROLLER HAS BEEN LOADED, TESTED AND APPROVED FOR INITIAL INSTALLATION ON THE PROJECT. SUCH PROOF DOES NOT ALTER THE REQUIRED 10-DAY PERFORMANCE TEST OUTLINED IN CMS SECTIONS 632 AND 633.

ODOT WILL INSTALL THE LOCAL CONTROLLER SOFTWARE PROGRAM. THE CONTRACTOR SHALL PICK UP THE CONTROLLER UNIT WITH THE INSTALLED SOFTWARE FROM DISTRICT. IT SHALL BE THE CONTRACTOR'S RESPONSIBILITY TO PROGRAM THE TYPE 2070 SIGNAL CONTROLLERS PER THE PLANS. THE CONTRACTOR SHALL NOT REASSIGN THE DETECTOR INPUTS IN ORDER TO REDUCE THE NUMBER OF 2-CHANNEL DETECTOR UNITS SUPPLIED, BUT SHALL USE THE STANDARD CALTRANS INPUT FILE DESIGNATIONS.

CABINET AND CONTROLLER SHALL BE WIRED INTO UPS OUTPUT ALARMS FOR SPECIAL STATUS ALARMS; ON BATTERY, LOW BATTERY & TWO (2) HOUR TIMER.

TWO SETS OF CABINET WIRING DIAGRAMS, SERVICE MANUALS, PROGRAMING AND MAINTENANCE INSTRUCTIONS SHALL BE FURNISHED FOR EACH CABINET AND EQUIPMENT ITEM. THE CABINET WIRING DIAGRAMS SHALL BE SUPPLIED IN A CLEAR PLASTIC POUCH FASTENED TO THE INSIDE OF THE CONTROLLER CABINET.

THE TWO SIGNALIZED INTERSECTIONS ALONG S.R. 117/309 WITHIN THE PROJECT SHALL OPERATE UNDER A COORDINATED SIGNAL SYSTEM WITH PRESET, TIME OF DAY CYCLE LENGTHS AND CORRESPONDING OFFSET SETTINGS AS SHOWN IN THE INFORMATION PROVIDED ON THE SIGNAL DETAIL SHEETS. COMMUNICATIONS BETWEEN CONTROLLERS SHALL BE TIME BASED USING INTERNAL CLOCKS.

THE THREE SIGNALIZED INTERSECTIONS ALONG S.R. 81 WITHIN THE PROJECT SHALL OPERATE UNDER A COORDINATED SIGNAL SYSTEM WITH PRESET, TIME OF DAY CYCLE LENGTHS AND CORRESPONDING OFFSET SETTINGS AS SHOWN IN THE INFORMATION PROVIDED ON THE SIGNAL DETAIL SHEETS. COMMUNICATIONS BETWEEN CONTROLLERS SHALL BE TIME BASED USING INTERNAL CLOCKS.

ITEM 633 : CONTROLLER ITEM, MISC.: REUSE OF UNINTERRUPTIBLE POWER SUPPLY (UPS)

THIS ITEM SHALL CONSIST OF THE FOLLOWING:

PRIOR TO REMOVAL CONTRACTOR AND ODOT SIGNAL SHOP PERSONNEL SHALL VERIFY UPS OPERATION. CAREFULLY REMOVE EXISTING UPS AND CABINET FROM THE EXISTING CONTROLLER AND REMOUNT TO NEW CONTROLLER CABINET, INCLUDING ALL NECESSARY WIRING AND CONNECTIONS FOR AN OPERATIONAL SYSTEM. AFTER RE-INSTALLATION AND BATTERY REPLACEMENT, CONTRACTOR AND ODOT SIGNAL SHOP PERSONNEL SHALL AGAIN VERIFY UPS OPERATION.

CABINET AND CONTROLLER SHALL BE WIRED INTO UPS OUTPUT ALARMS FOR SPECIAL STATUS ALARMS; ON BATTERY, LOW BATTERY & TWO (2) HOUR TIMER.

PAYMENT WILL BE AT THE CONTRACT UNIT PRICE FOR ITEM 633 - CONTROLLER ITEM, MISC.: REUSE OF UNINTERRUPTIBLE POWER SUPPLY (UPS) AND WILL BE FULL COMPENSATION FOR ALL LABOR, MATERIALS, TOOLS, EQUIPMENT AND OTHER INCIDENTALS NECESSARY FOR RE-INSTALLATION AND VERIFICATION OF SATISFACTORY OPERATION OF THE UPS.

ITEM 633 : UNINTERRUPTIBLE POWER SUPPLY (UPS), BATTERY REPLACEMENT, AS PER PLAN

IN ADDITION TO THE REQUIREMENTS OF 733.09, PROVIDE FOUR (4) BATTERIES FOR EACH EXISTING UNINTERRUPTIBLE POWER SUPPLY (UPS) CABINET LOCATION SELECTED.

BATTERIES SHALL BE PROVIDED FROM THE DEPARTMENT'S QUALIFIED PRODUCT LIST.

FURNISH BATTERIES CERTIFIED BY THE MANUFACTURER TO OPERATE OVER A TEMPERATURE RANGE OF -13 DEGREE F TO +165 DEGREE F.

PLACE ALL BATTERIES ON BATTERY HEATER MATS IN THE ENCLOSURE.

BATTERIES SHALL BE WARRANTED FOR FULL REPLACEMENT FOR TWO (2) YEARS FROM DATE OF PURCHASE.

THE DEPARTMENT WILL PAY FOR ITEM 633 UNINTERRUPTIBLE POWER SUPPLY (UPS), BATTERY REPLACEMENT, AS PER PLAN AT THE CONTRACT PRICE BID FOR EACH UPS LOCATION WHERE THE FOUR (4) EXISTING BATTERIES ARE REPLACED. PAYMENT SHALL BE FULL COMPENSATION FOR ALL LABOR, MATERIALS, TOOLS, EQUIPMENT, DISPOSAL AND OTHER INCIDENTALS NECESSARY TO REPLACE THE UPS BATTERIES COMPLETE, IN PLACE, AND ACCEPTED.

ITEM 633 : CONTROLLER ITEM, MISC.: UNINTERRUPTIBLE POWER SUPPLY (UPS), STATUS INDICATOR LAMPS

IN ADDITION TO THE REQUIREMENTS OF CMS 633 AND 733, THE CONTRACOTR SHALL FURNISH, INSTALL AND TEST UNINTERRUPTIBLE POWER SUPPLY (UPS) STATUS INDICATOR LAMPS THAT ALLOW MAINTENANCE PERSONNEL AND LAW ENFORCEMENT TO QUICKLY ACCESS WHETHER A TRAFFIC SIGNAL CABINET IS BEING POWERED BY A UPS. A 1-INCH WATERPROOF NEMA 4X OR IP66 LAMP WITH A DOMED RED LENS SHALL BE USED TO INDICATE THE CABINET IS OPERATING UNDER UPS BACKUP POWER (THE "BACKUP" OPERATING CONDISION). THIS LAMP SHALL BE WIRED USING MINIMUM 20GA STRANDED, INSULATED HOOKUP WIRE TO THE STATUS RELAY OUTPUTS OF THE UPS. THE WIRES SHALL BE TERMINATED BY LUGS AT THE DISPLAY END AND PERMANENTLY LABELED "BACKUP POWER STATUS DISPLAY", WITH WIRE POLARITY INDICATED. THIS ITEM INCLUDES PROGRAMMING THE UPS STATUS RELAY OUTPUTS TO PRODUCE THE LAMP STATUS DISPLAYS. THE STATUS DISPLAY SHALL BE SOLID 100% DUTY CYCLE (NOT FLASHING). THE LAMP SHALL BE PLACED IN THE UPS CABINET WALL (NOT THE ROOF) IN SUCH A MANNER AS TO BE SEALED FROM WATER INTRUSION AND VISIBLE FROM A VEHICLE AT THE STOP LINE IN THE CLOSEST LANE OF AT LEAST ONE APPROACH TO THE SIGNALIZED INTERSECITON. THE OPERATING VOLTAGE OF THE LED LAMP SHALL BE 120V AC.

PAYMENT FOR ITEM 633 - CONTROLLER ITEM, MISC.: UNINTERRUPTABLE POWER SUPPLY (UPS), STATUS INDICATOR LAMPS SHALL INCLUDE ALL LABOR AND MATERIALS TO INSTALL THE STATUS INDICATOR LAMPS.

ITEM 633 : CABINET RISER, AS PER PLAN (UPS)

THIS ITEM OF WORK SHALL BE IN CONFORMANCE WITH ODOT SPECIFICATION 633.09 EXCEPT IT SHALL BE INSTALLED FOR THE UPS CABINET. USE A TYPE (SIZE AND SHAPE) OF CABINET RISER COMPATIBLE WITH THE TYHPE OF UPS CABINET SPECIFIED FOR THE PROJECT. THE DEPARTMENT WILL MEASURE ITEM 633 - CABINET RISER, AS PER PLAN (UPS) BY THE NUMBER OF EACH UNIT AND WILL INCLUDE MATERIALS, MOUNTING HARDWARE AND INSTALLATION.

ITEM 633 : UNINTERRUPTIBLE POWER SUPPLY, AS PER PLAN

IN ADDITION TO THE REQUIREMENTS OF CMS 633 AND 733, THE CONTRACTOR SHALL FURNISH, INSTALL AND TEST UNINTERRUPTIBLE POWER SUPPLY (UPS) STATUS INDICATOR LAMPS THAT ALLOW MAINTENANCE PERSONNEL AND LAW ENFORCEMENT TO QUICKLY ASSESS WHETHER A TRAFFIC SIGNAL CABINET IS BEING POWERED BY A UPS. A 1-INCH WATERPROOF NEMA 4X OR IP66 LAMP WITH A DOMED RED LENS SHALL BE USED TO INDICATE THE CABINET IS OPERATING UNDER UPS BACKUP POWER (THE "BACKUP" OPERATING CONDITION). THIS LAMP SHALL BE WIRED USING MINIMUM 20GA STRANDED, INSULATED HOOKUP WIRE TO THE STATUS RELAY OUTPUTS OF THE UPS. THE WIRES SHALL BE TERMINATED BY LUGS AT THE DISPLAY END AND PERMANENTLY LABELED "BACKUP POWER STATUS DISPLAY", WITH WIRE POLARITY INDICATED. THIS ITEM INCLUDES PROGRAMMING THE UPS STATUS RELAY OUTPUTS TO PRODUCE THE LAMP STATUS DISPLAYS. THE STATUS DISPLAY SHALL BE SOLID 100% DUTY CYCLE (NOT FLASHING). THE LAMP SHALL BE PLACED IN THE UPS CABINET WALL (NOT THE ROOF) IN SUCH A MANNER AS TO BE SEALED FROM WATER INTRUSION AND VISIBLE FROM A VEHICLE AT THE STOP LINE IN THE CLOSEST LANE OF AT LEAST ONE APPROACH TO THE SIGNALIZED INTERSECTION. THE OPERATING VOLTAGE OF THE LED LAMP SHALL BE 120V AC.

ITEM 816 : VIDEO DETECTION SYSTEM

THIS ITEM CONSISTS OF FURNISHING AND INSTALLING VIDEO DETECTION CAMERA(S) SYSTEM IN CONFORMANCE WITH SUPPLEMENTAL SPECIFICATION 816 & 907 FOR USE IN LIEU OF A CONVENTIONAL VEHICLE DETECTOR LOOP INSTALLATION. THE CAMERA SYSTEM SHALL INCLUDE THE CAMERA, ALL CABINET HARDWARE COMPONENTS, THE COMMUNICATION CABLES, CONNECTORS, MOUNTING HARDWARE, PC SOFTWARE AND ALL OTHER NECESSARY COMPONENTS TO INSTALL A VIDEO DETECTION CAMERA COMPLETE IN PLACE, THAT IS FULLY FUNCTIONAL WITH THE TRAFFIC SIGNAL CONTROLLER. THE VIDEO DETECTION CABINET HARDWARE SHALL BE CAPABLE OF RUNNING ALL THE DESIGNATED CAMERAS SHOWN IN THE PLANS AT THE INTERSECTION. THE CAMERAS SHALL BE CONFIGURED TO PERFORM VEHICLE COUNTS AND CLASSIFICATIONS AT EACH DETECTION LOCATION SPECIFIED IN THE PLANS.

TEN (10) BUSINESS DAYS PRIOR TO INSTALLATION FO THE VIDEO DETECTION CABINET SYSTEM, THE CONTRACTOR SHALL CONTACT ODOT IN THE EVENT THAT A REPRESENTATIVE WISHES TO BE PRESENT DURING THE INSTALLATION AND CONFIGURATION OF THE VIDEO DETECTION SYSTEM.

INSTALLATION OF THE VIDEO DETECTION SYSTEM SHALL INCLUDE TESTING AND VERIFICATION OF THE DETECTION FIELD TO ASSURE DETECTION NEEDS ARE MET. SHOULD THE DETECTION FIELD BE INADEQUATELY COVERED DUE TO OCCLUSION OR OTHER REASONS, AND ALTERNATIVE CAMERA MOUNTING ON THE MAST ARM OR LUMINAIRE BRACKET SHALL BE EMPLOYED. A MAST ARM ALTERNATE MOUNTING LOCATION SHOULD INCLUDE A FOUR (4) FOOT EXTENSION. THE FINAL CAMERA MOUNTING LOCATION SHALL BE APPROVED BY ODOT.

PAYMENT SHALL BE FULL COMPENSATION FOR ALL LABOR, MATERIALS, TOOLS, EQUIPMENT, CABINET AND MOUNTING HARDWARE, AND OTHER INCIDENTALS NECESSARY FOR EACH VIDEO DETECTION SYSTEM, COMPLETE IN PLACE, ALL CONNECTIONS MADE AND WIRING COMPLETED, TESTED AND ACCEPTED.

ALTERNATE BIDS

THE CONTRACTOR WILL IDENTIFY WHAT THE GENERIC BID IS BEFORE THE ALTERNATE BID CAN BE ADWARDED.

ITEM 816 - VIDEO DETECTION SYSTEM (ITERIS) - ALTERNATE BID

THIS ITEM OF WORK SHALL BE IN CONFORMANCE WITH ODOT SPECIFICATION 816 EXCEPT THE DETECTION SYSTEM SHALL BE AN ITERIS "VANTAGE" MODEL AND SHALL BE THE MOST CURRENT VERSION MANUFACTURED, INCLUDING THE VANTAGE EDGE 2 PROCESSOR AND RZ-4 ADVANCED CAMERA.

ITEM 816 - VIDEO DETECTION SYSTEM (TRAVIS) - ALTERNATE BID

THIS ITEM OF WORK SHALL BE IN CONFORMANCE WITH ODOT SPECIFICATIONS 816 EXCEPT THE DETECTIOBN SYSTEM SHALL BE A RYTHMN ENGINEERING, INC. "INSYNC" MODEL AND SHALL BE THE MOST CURRENT VERSION MANUFACTURED, INCLUDING THE INSYNC PROCESSOR AND SAMSUNG SNZ-5200 DIGITAL IP CAMERA.

SIGNAL POLE PAINTING

ALL NEW POLES AND ARMS SHALL BE FACTORY PAINTED GLOSSY BLACK, IN ACCORDANCE WITH PLAN INSERT SHEET 202310 INCLUDED IN THESE PLANS AS SHEET 840A. ALL ATTACHMENTS ON NEW POLES SUCH AS MOUNTING BRACKETS, BANDING, WEATHERHEADS, RISERS, AND DAMPERS ON POLES SHALL BE PAINTED GLOSSY BLACK TO MATCH POLES AND ARMS.

UNDERDRAINS FOR PULL BOXES

REFERENCE IS MADE TO THE STANDARD CONSTRUCTION DRAWING FOR DETAILS OF DRAINING PULL BOXES. UNDERDRAINS FOR PULL BOXES SHALL BE USED AS DIRECTED BY THE ENGINEER AND SHALL BE PROVIDED WHERE THE LENGTH REQUIRED FOR A SATISFACTORY OUTLET DOES NOT EXCEED 20 FEET. THE FOLLOWING ESTIMATED QUANTITY IS CARRIED TO THE GENERAL SUMMARY FOR THIS PURPOSE.

ITEM 603 - 4" CONDUIT, TYPE E [480] FT.

DETAIL OF 332 CONTROLLER WORK PAD

SEE PLAN INSERT SHEET 208320 INCLUDED IN THESE PLANS AS SHEET 840B FOR TRADITIONAL DETAILS.

NOTES :

1. UPS FOUNDATION ELEVATION SHOULD MATCH THE CABINET FOUNDATION ELEVATION.
2. THE UPS CABINET SHALL BE MOUNTED FLUSH UP AGAINST THE CONTROLLER CABINET AND SEALED WITH SILICONE.
3. CONDUIT AND WIRING FROM THE CONTROLLER CABINET SHALL BE INSTALLED THROUGH THE CABINET RISERS. EACH CABINET SHALL HAVE A RISER.

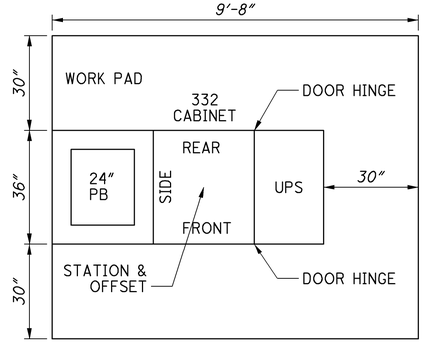

CABINET MODEL 332 :

A CABINET RISER SHALL BE SUPPLIED IN ACCORDANCE WITH ODOT SPECIFICATION 733.04. THE CABINET DOOR HINGES SHALL BE MOUNTED ON THE RIGHT SIDE WHEN FACING THE FRONT OF THE CABINET.

CALCULATED JRL CHECKED JTB

TRAFFIC SIGNAL GENERAL NOTES

ALL-75-5.53

840
1224

J:\Projects\ALL\76691\signals\sheets\76691GN003.dgn 11-SEP-2012 9:17PM reddenj

GENERAL

Overhead sign supports can be separated into major sections such as end frames, trusses, vertical poles and cantilever arms. For the implementation of this work item it will be beneficial to refer to the major sections of the overhead sign supports rather than the whole support. More specific instructions and flexibility can be given based upon the unit of measure and payment per major support section.

The protective coating of overhead sign support sections shall be a four part process to include surface preparation followed by a three coat paint system. This three coat system shall consist of an organic zinc prime coat, an epoxy intermediate coat and a urethane finish coat, with each coat being a different color. The purpose of this coating is to provide protection for new (unweathered) and older (weathered) galvanized steel support sections from corrosive elements in the atmosphere. Coating and surface preparation of new galvanized support sections should be done by the manufacturer.

In the field, the Contractor shall take all necessary precautions to comply with pollution laws, rules or regulations of Federal, State or Local agencies. The coating materials specified for the work can be hazardous to the health of the applicator if not applied as per manufacturer's instruction. The Contractor shall follow the data sheet and the label on the paint containers. These precautions shall include the use of respirators and eye and skin protection as specified. The Contractor shall also insure that his painting operations and locations will not endanger or adversely affect the public in general.

The proposed cleaning and coating operations shall be performed only when the ambient temperature is 50 degrees F (10 Degrees C) or above. Paint shall not be applied during rain, fog or mist, or when the steel surface temperature is less than 5 degrees F (3 degrees C) above the dew point. Paint shall not be applied to wet or damp surfaces or on frosted or ice-coated surfaces. Paint shall not be applied when the relative humidity is greater than 85%. All steel surfaces of trusses and end frames including the welded areas, ballast enclosure mounting bracket and base plates are to be cleaned and coated. Before each coating is applied, it shall be mixed with an approved power mechanical mixer to a uniform consistency which shall be maintained during its application. Each coat shall be applied in a workmanlike manner as a continuous film of uniform thickness which is free of holidays, pores, runs or sags. All coats shall be applied by brush or roller. Thinning of paint is strictly prohibited. Paint not capable of being applied as specified shall not be used. The coating shall penetrate all joints and connections. The Engineer shall be notified 24 hours prior to any cleaning or coating operations so that inspection services can be provided.

COATING SYSTEM

The coating system shall be a three coat paint system conforming to 708.02. Supply the primer, intermediate and finish coats from the same manufacturer.

SURFACE PREPARATION, EXISTING SUPPORT SECTIONS

Existing, weathered galvanized support sections should have their surface preparation as well as their protective coating done under conditions of temperature and humidity within the same range as specified by the manufacturer of the organic zinc prime coat material to be used immediately after this cleaning operation. The support sections shall be prepared for coating by SSPC-SP1 (solvent cleaning) followed by SSPC-SP10 (near white blast cleaning). Before the prepared surface degrades from the prescribed standards, the prime coat shall be applied. In every case, the surface shall be coated with organic zinc prime coat on the same day as the surface preparation. Careful handling and storage will be required to prevent any scraping, marring, or other damage to the prepared surface. Payment shall include all labor, equipment, handling, transportation costs and materials necessary to accomplish this item of work per major support section.

Basis of payment will be as follows:

Item 630 Surface Preparation, Existing Support Section at contract bid price per each major support section.

SURFACE PREPARATION, NEW SUPPORT SECTIONS

New, unweathered galvanized support sections should have their surface preparation as well as their protective coating done at the manufacturer of the support sections.

The support sections shall be prepared for coating by SSPC-SP1 (solvent cleaning) (Do not use alkaline cleaners) followed by SSPC-SP7 (100% brush-off blast of surface). Before the prepared surface degrades from the prescribed standards, the prime coat shall be applied. In every case, the surface shall be coated with the organic zinc prime coat on the same day of surface preparation. Careful handling and storage will be required to prevent any scraping, marring, or other damage to the prepared surface. Payment shall include all labor, equipment, handling, transportation costs and materials necessary to accomplish this item of work per major support section.

Basis of payment will be as follows:

Item 630 Surface Preparation, New Support Section at contract bid price per each major support section.

COATING, ORGANIC ZINC PRIME COAT, SUPPORT SECTIONS

This item shall consist of the application of one (1) coat of an organic zinc primer to support sections. The total dry film thickness of this coat shall be between 1.5 to 2.0 mils (38 to 51 micrometers). If more than one pass is necessary to obtain the required thickness, that cost shall be borne by the Contractor. The color of this coat shall be noticeably different from the base material and other proposed coats. This coat shall in all cases be applied over surfaces that were prepared earlier that same day. The thinning of the material is strictly prohibited. Material not capable of being applied as specified shall not be used.

When the average dry film thickness of this coat over the entire support section is less than the specified 1.5 to 2.0 mils (38 to 51 micrometers) but is at least 1.25 mils (32 micrometers), the contract bid price for this item shall be reduced in direct proportion to the percent deficiency of coating up to 16-2/3%. If the deficiency of coating is more than that 16-2/3% [i.e., the average dry film thickness is less than 1.25 mils (32 micrometers)] the work for this iem shall be considered unsatisfactory and shall be recoated at the full expense of the Contractor, including all labor, equipment and material.

For new support sections the prime coat should be done at the manufacturer of the support sections. Verification by the manufacturer of the coating material for the prime coat will be required. Careful handling and storage will be required to prevent any scraping, marring or other surface damage to the prime coat.

Payment shall include all labor, equipment, handling costs and materials necessary to accomplish this item of work. This prime coat shall be manufactured by the same company supplying the intermediate and top coats. A properly calibrated dry film thickness instrument will be used to check the coating.

Basis of payment will be as follows:

Item 630 Coating, Organic Zinc Prime Coat, Support Section at contract bid price per each major support section.

COATING, EPOXY INTERMEDIATE COAT, SUPPORT SECTIONS

This item shall consist of the application of one (1) coat of epoxy to support sections. The total dry film thickness of this coat shall not be less than six (6.0) mils (152 micrometers). If more than one pass is necessary to obtain the required thickness, that cost shall be borne by the Contractor. Thinning of the material is strictly prohibited. Material not capable of being applied as specified shall not be used.

When the average dry film thickness of this coat over the entire support section is less than the specified 6.0 mils (152 micrometers), but is at least 5.0 mils (127 micrometers), the contract price for this item shall be reduced in direct proportion to the percent deficiency of coating up to 16-2/3%. If the deficiency of coating is more than 16-2/3%, [i.e. the average dry film thickness is less than 5.0 mils (127 micrometers)], the work for this item shall be considered unsatisfactory and shall be recoated at the full expense of the Contractor, including all labor, equipment and material.

At least 24 hours but no more than three (3) days shall elapse after the application of the organic zinc prime coat and before the application of the epoxy intermediate coat. Surfaces shall in all cases be clean before the intermediate coat is applied.

For new support sections, this intermediate coat should be done at the manufacturer of the support sections. Verification by the manufacturer for the intermediate coat will be required. Careful handling and storage will be required to prevent any scraping, marring or other surface damage to the intermediate coat.

Payment shall include all labor, equipment, handling cost and material necessary to accomplish this item of work. This intermediate coat shall be manufactured by the same company supplying the prime and top coats. A properly calibrated dry film thickness instrument will be used to check the coating.

Basis of payment will be as follows:

Item 630 Coating, Epoxy Intermediate Coat, Support Section at contract bid price per each major support section.

COATING, URETHANE FINISH COAT, SUPPORT SECTIONS

This item shall consist of the application of one (1) coat of urethane to support sections. The total dry film thickness of this coat shall not be less than 1.5 mils (38 micrometers). If more than one pass is necessary to obtain the required thickness, that cost shall be borne by the Contractor. Thinning of the material is strictly prohibited. Material not capable of being applied as specified shall not be used. The color of this coat shall be medium grey.

When the average dry film thickness of this coat over the entire support section is less than the specified 1.5 mils(38 micrometers) but is at least 1.0 mil (25 micrometers), the contract price for this item shall be reduced in direct proportion to the percent deficiency of coating up to 33-1/3%. If the deficiency of coating is more than 33-1/3%, [i.e. the average dry film thickness is less than 1.0 mil(25 micrometers)], the work for this item shall be considered unsatisfactory and shall be recoated at the full expense of the Contractor, including all labor, equipment and material.

At least 24 hours but no more than three (3) days shall elapse after the application of the epoxy intermediate coat and before the application of the urethane finish coat. Surfaces shall in all cases be clean before the finish coat is applied.

For new support sections, this finish coat should be done by the manufacturer of the support sections. Verification by the manufacturer for the finish coat will be required. Careful handling and storage will be required to prevent any scraping, marring or other surface damage to the finish coat.

Payment shall include all labor, equipment, handling cost and materials necessary to accomplish this item of work. This finish coat shall be manufactured by the same company supplying the prime and intermediate coats. A properly calibrated, dry film thickness instrument will be used to check the coating.

Basis of payment will be as follows:

Item 630 Coating, Urethane Finish Coat, Support Section at contract bid price per each major support section.

OFFICE OF TRAFFIC ENGINEERING

DESIGNED | REVIEWED LAM

REVISION DATE 01/21/11 | CHECKED

PIS NUMBER 202310

PLAN INSERT SHEET

PROTECTIVE COATING OF OVERHEAD SIGN SUPPORT SECTIONS

ALL-75-5.53

1 / 1

840A 1224

J:\Projects\ALL\76691\signals\sheets\76691CN004.dgn 11-SEP-2012 9:17PM reddenj

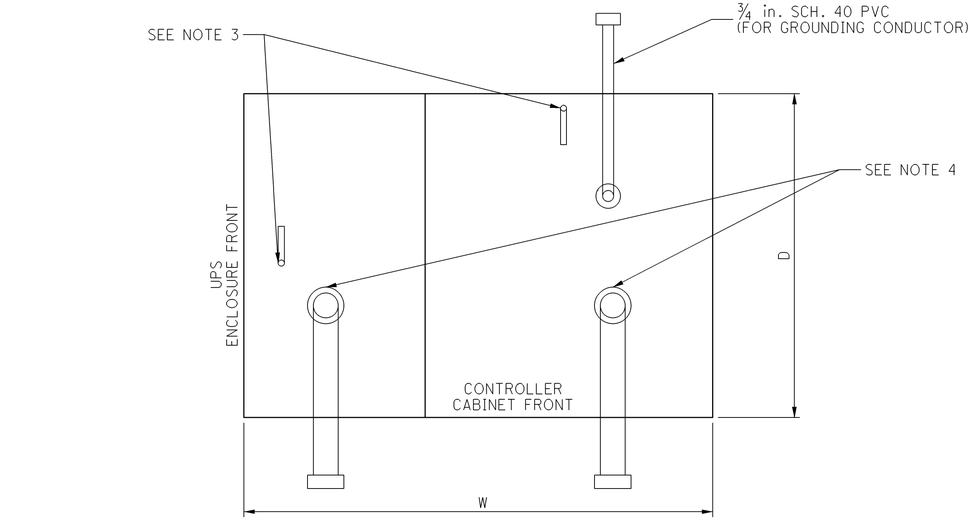

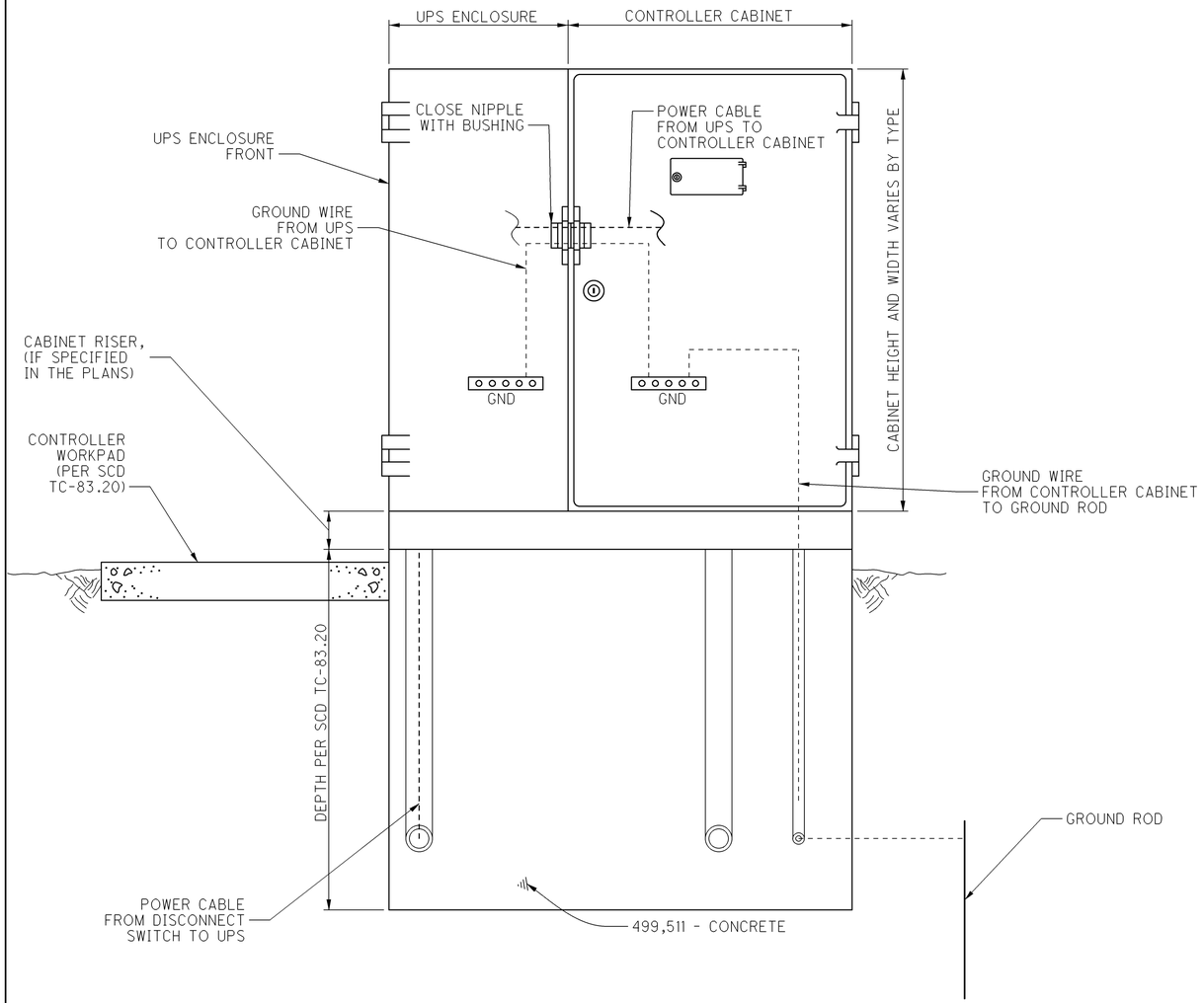

1. The Uninterruptible Power Supply (UPS) enclosure shall be mounted flush up against the traffic signal cabinet and sealed with silicone. The Contractor shall be responsible for providing the necessary power cable between the UPS unit and signal cabinet.

2. The UPS should be placed on the opposite side of the pull box on a 332/336 cabinet (per Standard Construction Drawing TC-83.20). The UPS placement for a NEMA cabinet varies, placement should provide adequate access with respect to slope, guardrail spacing, etc...

3. The size, number, and location of anchor bolts shall be in accordance with the manufacturer's recommendations.

4. The size, number, and orientation of conduit ells shall be as shown in the plan, except that a ¾ inch schedule 40 PVC shall be installed in each foundation.

5. ½ inch preformed joint filler as per CMS 705.03 shall be used between foundations and adjacent paved areas.

6. See Standard Construction Drawing TC-83.20 for further details.

TYPE	W (Inches)	D (Inches)	FOUNDATION CONCRETE (Cu. Yd.)
TS-1	60	24	1.23
TS-2	70	36	2.16
2070/170	50	36	1.54

OFFICE OF TRAFFIC ENGINEERING

DESIGNED RJL | REVIEWED JMY

REVISION DATE 04/20/12 | CHECKED

PIS NUMBER 208320

PLAN INSERT SHEET

UNINTERRUPTIBLE POWER SUPPLY (UPS) AND CONTROLLER CABINET FOUNDATION

ALL-75-5.53

1 / 1

840B
1224

SHEET NO.	LOCATION	603	625	625	625	625	625	625	625		630	630	630	630	630	630	630	630	632
		4" CONDUIT, TYPE E	CONDUIT, 2", 725.052, AS PER PLAN	CONDUIT, 3", 725.04	CONDUIT, 3", 725.052, AS PER PLAN	CONDUIT, JACKED OR DRILLED, 725.04, 3"	TRENCH, 24" DEEP	PULL BOX, 725.08, 24"	GROUND ROD		GROUND MOUNTED SUPPORT, NO. 3 POST	SURFACE PREPARATION, NEW SUPPORT SECTION	COATING, EPOXY INTERMEDIATE COAT, SUPPORT SECTION	COATING, URETHANE TOP COAT, SUPPORT SECTION	COATING, ORGANIC ZINC PRIME COAT, SUPPORT SECTION	SIGN HANGER ASSEMBLY, MAST ARM, AS PER PLAN	SIGN SUPPORT ASSEMBLY, POLE MOUNTED	SIGN, FLAT SHEET	VEHICULAR SIGNAL HEAD, (LED), BLACK, 3-SECTION, 12" LENS, I-WAY, POLYCARBONATE, WITH BACKPLATE, AS PER PLAN
		FT	FT	FT	FT	FT	FT	EACH	EACH		FT	EACH	EACH	EACH	EACH	EACH	EACH	SQ FT	EACH
	S.R. 309 & I-75 SOUTHBOUND RAMPS INTERSECTION																		
	SIGNAL POLE P1 TO PULL BOX B1		8				8		1			1	1	1	1	1		4	2
	PEDESTAL P3 TO PULL BOX B1		18				18		1			1	1	1	1		1	1	
	SIGNAL POLE P2 TO PULL BOX B3		6				6		1			1	1	1	1	2		10.25	5
	PEDESTAL P6 TO PULL BOX B3		35				35		1			1	1	1	1		1	1	
	PEDESTAL P7 TO PULL BOX B3		10				10		1			1	1	1	1		1	1	
	PULL BOX B3 TO PULL BOX B4	20		60			60	1											
	PEDESTAL P8 TO PULL BOX B4		15				15		1			1	1	1	1		1	1	
	PULL BOX B4 TO PULL BOX B1	20		142		142		1											
	PEDESTAL P4 TO PULL BOX B2		7				7		1			1	1	1	1		1	1	
	PEDESTAL P5 TO PULL BOX B2		5				5		1			1	1	1	1		1	1	
	PULL BOX B2 TO PULL BOX B1	20		88			88	1											
	PULL BOX B1 TO CONTROLLER	40			9		9	2	1										
	POWER SOURCE TO CONTROLLER		226				226												
	S.R. 309 & I-75 NORTHBOUND RAMPS INTERSECTION																		
	SIGNAL POLE P1 TO PULL BOX B1		8				8		1			1	1	1	1	1		4	5
	PEDESTAL P3 TO PULL BOX B1		10				10		1			1	1	1	1		1	1	
	PEDESTAL P4 TO PULL BOX B1		16				16		1			1	1	1	1		1	1	
	PEDESTAL P5 TO PULL BOX B2		6				6		1			1	1	1	1		1	1	
	PULL BOX B2 TO PULL BOX B1	20		82			82	1											
	PULL BOX B1 TO PULL BOX B4	20		133		133		1											
	PEDESTAL P7 TO PULL BOX B4		19				19		1			1	1	1	1		1	1	
	PEDESTAL P8 TO PULL BOX B4		18				18		1			1	1	1	1		1	1	
	PULL BOX B4 TO PULL BOX B3	20		76			76	1											
	SIGNAL POLE P2 TO PULL BOX B3		25				25		1			1	1	1	1	1		4	3
	PEDESTAL P6 TO PULL BOX B3		8				8		1			1	1	1	1		1	1	
	PULL BOX B3 TO CONTROLLER	40			7		7	2	1										
	POWER SOURCE TO EXISTING PULL BOX		123				123												
	EXISTING PULL BOX TO CONTROLLER		355				355												
	S.R. 81 & NEUBRECHT ROAD INTERSECTION																		
	SIGNAL POLE 1 TO PULL BOX B1		7				7		1			1	1	1	1		2	4.5	3
	PULL BOX B1 TO PULL BOX B2	20		146		146		1											
	SIGNAL POLE P4 TO PULL BOX B4		8				8		1			1	1	1	1		2	4.5	2
	PULL BOX B4 TO PULL BOX B3	20		159			159	1											
	SIGNAL POLE P3 TO PULL BOX B3		10				10		1			1	1	1	1		2	4.5	2
	PULL BOX B3 TO PULL BOX B2	20		137			137	1											
	SIGNAL POLE P2 TO PULL BOX B2		9				9		1			1	1	1	1		2	4.5	1
	PULL BOX B2 TO CONTROLLER	40	6				6	2	1										
	POWER SOURCE TO PULL BOX B5		47				47												
	PULL BOX B5 TO CONTROLLER	20	44				44	1											
	S.R. 81 & I-75 SOUTHBOUND RAMPS INTERSECTION										26.0							9	
	SIGNAL POLE P1 TO PULL BOX B1		9				9		1			1	1	1	1		2	4.5	2
	PULL BOX B1 TO PULL BOX B2	20		70			70	1											
	SIGNAL POLE P2 TO PULL BOX B3		9				9		1			1	1	1	1		2	4.5	5
	PULL BOX B3 TO PULL BOX B2	20		126			126	1											
	PULL BOX B2 TO CONTROLLER	40	7				7	2	1										
	POWER SOURCE TO CONTROLLER		42				42												
	S.R. 81 & I-75 NORTHBOUND RAMPS INTERSECTION										26.0							9	
	SIGNAL POLE P1 TO PULL BOX B1		21				21		1			1	1	1	1		2	4.5	5
	SIGNAL POLE P2 TO PULL BOX B2		23				23		1			1	1	1	1		2	4.5	2
	PULL BOX B2 TO PULL BOX B3	20		74			74	1											
	PULL BOX B3 TO PULL BOX B1	20		126			126	1											
	PULL BOX B1 TO CONTROLLER	40	33				33	2	1										
	POWER SOURCE TO CONTROLLER		88				88												
	TOTALS CARRIED TO GENERAL SUMMARY	480	1281	1419	16	421	2295	24	29		52.0	24	24	24	24	5	28	88.25	37

CALCULATED JRL
CHECKED JTB

TRAFFIC SIGNAL SUBSUMMARY

ALL-75-5.53

841
1224

\\D01FS101\L_Drive\Pd\76691\Final Cadd Files\Projects\ALL\76691\signals\sheets\76691CS001.dgn 27-SEP-2012 10:58AM jclark1

SHEET NO.	LOCATION	632 VEHICULAR SIGNAL HEAD, (LED), BLACK, 5-SECTION, 12" LENS, 1-WAY, POLYCARBONATE, WITH BACKPLATE, AS PER PLAN EACH	632 PEDESTRIAN SIGNAL HEAD (LED), (COUNTDOWN), TYPE D2, AS PER PLAN EACH	632 COVERING OF VEHICULAR SIGNAL HEAD EACH	632 COVERING OF PEDESTRIAN SIGNAL HEAD EACH	632 PEDESTRIAN PUSHBUTTON, AS PER PLAN EACH	632 SIGNAL CABLE, 2 CONDUCTOR, NO. 14 AWG FT	632 SIGNAL CABLE, 5 CONDUCTOR, NO. 14 AWG FT	632 SIGNAL CABLE, 7 CONDUCTOR, NO. 14 AWG FT	632 SIGNAL SUPPORT FOUNDATION EACH	632 PEDESTAL FOUNDATION EACH	632 POWER CABLE, 2 CONDUCTOR, NO. 6 AWG FT	632 POWER SERVICE, AS PER PLAN EACH	632 CONDUIT RISER, 1" DIAMETER EACH	632 SIGNAL SUPPORT, TYPE TC-12.30 DESIGN 6 POLE, WITH MAST ARMS TC-81.21 DESIGN 11 AND DESIGN 11, AS PER PLAN EACH	632 SIGNAL SUPPORT, TYPE TC-12.30 DESIGN 6 POLE, WITH MAST ARMS TC-81.21 DESIGN 12 AND DESIGN 11, AS PER PLAN EACH	632 SIGNAL SUPPORT, TYPE TC-12.30 DESIGN 8 POLE, WITH MAST ARMS TC-81.21 DESIGN 13 AND DESIGN 11, AS PER PLAN EACH	632 SIGNAL SUPPORT, TYPE TC-81.21, DESIGN 13, AS PER PLAN EACH	632 SIGNAL SUPPORT, TYPE TC-81.21, DESIGN 14, AS PER PLAN EACH
	S.R. 309 & I-75 SOUTHBOUND RAMPS INTERSECTION																		
	SIGNAL POLE P1 TO PULL BOX B1	1		3					99	1								1	
	PEDESTAL P3 TO PULL BOX B1		1		1	1	29	33			1								
	SIGNAL POLE P2 TO PULL BOX B3			5					171	1							1		
	PEDESTAL P6 TO PULL BOX B3		1		1	1	46	50			1								
	PEDESTAL P7 TO PULL BOX B3		1		1	1	21	25			1								
	PULL BOX B3 TO PULL BOX B4						130	130	130										
	PEDESTAL P8 TO PULL BOX B4		1		1	1	26	30			1								
	PULL BOX B4 TO PULL BOX B1						441	441	294										
	PEDESTAL P4 TO PULL BOX B2		1		1	1	18	22			1								
	PEDESTAL P5 TO PULL BOX B2		1		1	1	16	20			1								
	PULL BOX B2 TO PULL BOX B1						186	186											
	PULL BOX B1 TO CONTROLLER						126	126	63										
	POWER SOURCE TO CONTROLLER											275	1	1					
	S.R. 309 & I-75 NORTHBOUND RAMPS INTERSECTION																		
	SIGNAL POLE P1 TO PULL BOX B1			5					171	1					1				
	PEDESTAL P3 TO PULL BOX B1		1		1	1	21	25			1								
	PEDESTAL P4 TO PULL BOX B1		1		1	1	27	31			1								
	PEDESTAL P5 TO PULL BOX B2		1		1	1	17	21			1								
	PULL BOX B2 TO PULL BOX B1						87	87											
	PULL BOX B1 TO PULL BOX B4						414	414	276										
	PEDESTAL P7 TO PULL BOX B4		1		1	1	30	34			1								
	PEDESTAL P8 TO PULL BOX B4		1		1	1	29	33			1								
	PULL BOX B4 TO PULL BOX B3						405	405	162										
	SIGNAL POLE P2 TO PULL BOX B3	1		4					134	1									1
	PEDESTAL P6 TO PULL BOX B3		1		1	1	19	23			1								
	PULL BOX B3 TO CONTROLLER						114	114	57										
	POWER SOURCE TO EXISTING PULL BOX											165							
	EXISTING PULL BOX TO CONTROLLER											367	1	1					
	S.R. 81 & NEUBRECHT ROAD INTERSECTION																		
	SIGNAL POLE 1 TO PULL BOX B1	1		4					109	1								1	
	PULL BOX B1 TO PULL BOX B2								151										
	SIGNAL POLE P4 TO PULL BOX B4			2					100	1									1
	PULL BOX B4 TO PULL BOX B3								164										
	SIGNAL POLE P3 TO PULL BOX B3	1		3					116	1									1
	PULL BOX B3 TO PULL BOX B2								284										
	SIGNAL POLE P2 TO PULL BOX B2	1		2					102	1								1	
	PULL BOX B2 TO CONTROLLER								72										
	POWER SOURCE TO PULL BOX B5											89	1	1					
	PULL BOX B5 TO CONTROLLER											56							
	S.R. 81 & I-75 SOUTHBOUND RAMPS INTERSECTION																		
	SIGNAL POLE P1 TO PULL BOX B1	1		3					111	1									1
	PULL BOX B1 TO PULL BOX B2								75										
	SIGNAL POLE P2 TO PULL BOX B3			5					171	1						1			
	PULL BOX B3 TO PULL BOX B2								262										
	PULL BOX B2 TO CONTROLLER								57										
	POWER SOURCE TO CONTROLLER											91	1	1					
	S.R. 81 & I-75 NORTHBOUND RAMPS INTERSECTION																		
	SIGNAL POLE P1 TO PULL BOX B1			5					206	1							1		
	SIGNAL POLE P2 TO PULL BOX B2	1		3					128	1									1
	PULL BOX B2 TO PULL BOX B3								79										
	PULL BOX B3 TO PULL BOX B1								131										
	PULL BOX B1 TO CONTROLLER								135										
	POWER SOURCE TO CONTROLLER											137	1	1					
	TOTALS CARRIED TO GENERAL SUMMARY	7	12	44	12	12	2202	2250	4010	12	12	1180	5	5	2	1	1	3	5

CALCULATED JRL
CHECKED JTB

TRAFFIC SIGNAL SUBSUMMARY

ALL-75-5.53

842
1224

J:\Projects\ALL\7669\signals\sheets\76691CS002.dgn 11-SEP-2012 9:17PM reddenj

SHEET NO.	LOCATION	632 SIGNAL SUPPORT, MISC.: MECHANICAL DAMPER EACH	632 PEDESTAL, 8', TRANSFORMER BASE, AS PER PLAN EACH	632 REMOVAL OF TRAFFIC SIGNAL INSTALLATION, AS PER PLAN EACH	633 CONTROLLER UNIT, TYPE 2070L, WITH CABINET, TYPE 332, AS PER PLAN EACH	633 CABINET RISER EACH	633 CABINET RISER, AS PER PLAN EACH	633 CABINET FOUNDATION EACH	633 CONTROLLER WORK PAD EACH	633 UNINTERRUPTIBLE POWER SUPPLY (UPS), BATTERY REPLACEMENT, AS PER PLAN EACH	633 UNINTERRUPTIBLE POWER SUPPLY (UPS), AS PER PLAN EACH	633 CONTROLLER ITEM, MISC.: REUSE OF UNINTERRUPTIBLE POWER SUPPLY (UPS) EACH	633 CONTROLLER ITEM, MISC.: UNINTERRUPTIBLE POWER SUPPLY (UPS), STATUS INDIC. LAMPS EACH	816 VIDEO DETECTION SYSTEM EACH					
	S.R. 309 & I-75 SOUTHBOUND RAMPS INTERSECTION																			
	SIGNAL POLE P1 TO PULL BOX B1	1																		
	PEDESTAL P3 TO PULL BOX B1		1																	
	SIGNAL POLE P2 TO PULL BOX B3																			
	PEDESTAL P6 TO PULL BOX B3		1																	
	PEDESTAL P7 TO PULL BOX B3		1																	
	PULL BOX B3 TO PULL BOX B4																			
	PEDESTAL P8 TO PULL BOX B4		1																	
	PULL BOX B4 TO PULL BOX B1																			
	PEDESTAL P4 TO PULL BOX B2		1																	
	PEDESTAL P5 TO PULL BOX B2		1																	
	PULL BOX B2 TO PULL BOX B1																			
	PULL BOX B1 TO CONTROLLER				1	1	1	1	1		1				1					
	POWER SOURCE TO CONTROLLER																			
	S.R. 309 & I-75 NORTHBOUND RAMPS INTERSECTION			1																
	SIGNAL POLE P1 TO PULL BOX B1																			
	PEDESTAL P3 TO PULL BOX B1		1																	
	PEDESTAL P4 TO PULL BOX B1		1																	
	PEDESTAL P5 TO PULL BOX B2		1																	
	PULL BOX B2 TO PULL BOX B1																			
	PULL BOX B1 TO PULL BOX B4																			
	PEDESTAL P7 TO PULL BOX B4		1																	
	PEDESTAL P8 TO PULL BOX B4		1																	
	PULL BOX B4 TO PULL BOX B3																			
	SIGNAL POLE P2 TO PULL BOX B3	1																		
	PEDESTAL P6 TO PULL BOX B3		1																	
	PULL BOX B3 TO CONTROLLER				1	1	1	1	1	1		1	1	1						
	POWER SOURCE TO EXISTING PULL BOX																			
	EXISTING PULL BOX TO CONTROLLER																			
	S.R. 81 & NEUBRECHT ROAD INTERSECTION			1																
	SIGNAL POLE 1 TO PULL BOX B1	1																		
	PULL BOX B1 TO PULL BOX B2																			
	SIGNAL POLE P4 TO PULL BOX B4	1																		
	PULL BOX B4 TO PULL BOX B3																			
	SIGNAL POLE P3 TO PULL BOX B3	1																		
	PULL BOX B3 TO PULL BOX B2																			
	SIGNAL POLE P2 TO PULL BOX B2	1																		
	PULL BOX B2 TO CONTROLLER				1	1	1	1	1	1		1	1	1						
	POWER SOURCE TO PULL BOX B5																			
	PULL BOX B5 TO CONTROLLER																			
	S.R. 81 & I-75 SOUTHBOUND RAMPS INTERSECTION																			
	SIGNAL POLE P1 TO PULL BOX B1	1																		
	PULL BOX B1 TO PULL BOX B2																			
	SIGNAL POLE P2 TO PULL BOX B3																			
	PULL BOX B3 TO PULL BOX B2																			
	PULL BOX B2 TO CONTROLLER				1	1	1	1	1		1				1					
	POWER SOURCE TO CONTROLLER																			
	S.R. 81 & I-75 NORTHBOUND RAMPS INTERSECTION																			
	SIGNAL POLE P1 TO PULL BOX B1	1																		
	SIGNAL POLE P2 TO PULL BOX B2	1																		
	PULL BOX B2 TO PULL BOX B3																			
	PULL BOX B3 TO PULL BOX B1																			
	PULL BOX B1 TO CONTROLLER				1	1	1	1	1		1				1					
	POWER SOURCE TO CONTROLLER																			
TOTALS CARRIED TO GENERAL SUMMARY		9	12	2	5	5	5	5	5	2	3	2	2	5						

CALCULATED JRL
CHECKED JTB

TRAFFIC SIGNAL SUBSUMMARY

ALL-75-5.53

843
1224

\\D0IFS101\L_Drive\Pdv\76691\Final Cadd Files\Projects\ALL\76691\signals\sheets\76691CS003.dgn 27-SEP-2012 10:59AM jclark1

SIGNAL CABLE LENGTHS

FOR INFORMATION ONLY

CALCULATED JRL CHECKED JTB

S.R. 309 & I-75 SOUTHBOUND RAMPS INTERSECTION	CABLE	LENGTH
LOCATION TO LOCATION	NO.	FT
SIGNAL POLE P1		
SIGNAL HEADS 1, 2, 3 TO CONTROLLER	7/C	120
C1 TO CONTROLLER		102
PEDESTAL P3		
PEDESTRIAN SIGNAL HEAD A TO CONTROLLER	5/C	54
PUSHBUTTON A TO CONTROLLER	2/C	50
PEDESTAL P4		
PEDESTRIAN SIGNAL HEAD B TO CONTROLLER	5/C	136
PUSHBUTTON B TO CONTROLLER	2/C	132
PEDESTAL P5		
PEDESTRIAN SIGNAL HEAD C TO CONTROLLER	5/C	134
PUSHBUTTON C TO CONTROLLER	2/C	130
SIGNAL POLE P2		
SIGNAL HEADS 4, 5, 6 TO CONTROLLER	7/C	323
SIGNAL HEADS 7, 8 TO CONTROLLER	7/C	314
C2 TO CONTROLLER		305
C3 TO CONTROLLER		304
PEDESTAL P6		
PEDESTRIAN SIGNAL HEAD D TO CONTROLLER	5/C	283
PUSHBUTTON D TO CONTROLLER	2/C	279
PEDESTAL P7		
PEDESTRIAN SIGNAL HEAD E TO CONTROLLER	5/C	258
PUSHBUTTON E TO CONTROLLER	2/C	254
PEDESTAL P8		
PEDESTRIAN SIGNAL HEAD F TO CONTROLLER	5/C	198
PUSHBUTTON F TO CONTROLLER	2/C	194

S.R. 309 & I-75 NORTHBOUND RAMPS INTERSECTION	CABLE	LENGTH
LOCATION TO LOCATION	NO.	FT
SIGNAL POLE P1		
SIGNAL HEADS 1, 2, 3 TO CONTROLLER	7/C	328
SIGNAL HEADS 4, 5 TO CONTROLLER	7/C	319
C1 TO CONTROLLER		310
C2 TO CONTROLLER		308
PEDESTAL P3		
PEDESTRIAN SIGNAL HEAD A TO CONTROLLER	5/C	263
PUSHBUTTON A TO CONTROLLER	2/C	259
PEDESTAL P4		
PEDESTRIAN SIGNAL HEAD B TO CONTROLLER	5/C	269
PUSHBUTTON B TO CONTROLLER	2/C	265
PEDESTAL P5		
PEDESTRIAN SIGNAL HEAD C TO CONTROLLER	5/C	346
PUSHBUTTON C TO CONTROLLER	2/C	342
SIGNAL POLE P2		
SIGNAL HEADS 6, 7, 8, 9 TO CONTROLLER	7/C	153
C3 TO CONTROLLER		130
PEDESTAL P6		
PEDESTRIAN SIGNAL HEAD D TO CONTROLLER	5/C	42
PUSHBUTTON D TO CONTROLLER	2/C	38
PEDESTAL P7		
PEDESTRIAN SIGNAL HEAD E TO CONTROLLER	5/C	134
PUSHBUTTON E TO CONTROLLER	2/C	130
PEDESTAL P8		
PEDESTRIAN SIGNAL HEAD F TO CONTROLLER	5/C	133
PUSHBUTTON F TO CONTROLLER	2/C	129

S.R. 81 & NEUBRECHT ROAD INTERSECTION	CABLE	LENGTH
LOCATION TO LOCATION	NO.	FT
SIGNAL POLE P1		
SIGNAL HEADS 1, 2, 3, 4 TO CONTROLLER	7/C	278
C1 TO CONTROLLER		257
SIGNAL POLE P2		
SIGNAL HEADS 5, 6 TO CONTROLLER	7/C	120
C2 TO CONTROLLER		105
SIGNAL POLE P3		
SIGNAL HEADS 7, 8, 9 TO CONTROLLER	7/C	276
C3 TO CONTROLLER		260
SIGNAL POLE P4		
SIGNAL HEADS 10, 11 TO CONTROLLER	7/C	424
C4 TO CONTROLLER		413

S.R. 81 & I-75 SOUTHBOUND RAMPS INTERSECTION	CABLE	LENGTH
LOCATION TO LOCATION	NO.	FT
SIGNAL POLE P1		
SIGNAL HEADS 1, 2, 3 TO CONTROLLER	7/C	205
C1 TO CONTROLLER		189
SIGNAL POLE P2		
SIGNAL HEADS 4, 5, 6 TO CONTROLLER	7/C	235
SIGNAL HEADS 7, 8 TO CONTROLLER	7/C	236
C2 TO CONTROLLER		219
C3 TO CONTROLLER		225

S.R. 81 & I-75 NORTHBOUND RAMPS INTERSECTION	CABLE	LENGTH
LOCATION TO LOCATION	NO.	FT
SIGNAL POLE P1		
SIGNAL HEADS 1, 2, 3 TO CONTROLLER	7/C	144
SIGNAL HEADS 4, 5 TO CONTROLLER	7/C	152
C1 TO CONTROLLER		128
C2 TO CONTROLLER		141
SIGNAL POLE P2		
SIGNAL HEADS 6, 7, 8 TO CONTROLLER	7/C	383
C3 TO CONTROLLER		344

SIGNAL CABLE LENGTHS

ALL-75-5.53

844
1224

J:\Projects\ALL\76691\signals\sheets\76691CS004.dgn 11-SEP-2012 9:17PM reddenj

SIGNAL CABLE LENGTHS

FOR INFORMATION ONLY

LEONARD AVE.	CABLE	LENGTH
LOCATION TO LOCATION	NO.	FT
SIGNAL POLE #1		
SIGNAL HEAD #1 to SIGNAL HEAD #2	*5/C*	*22*
SIGNAL HEAD #2 to CONTROLLER	*7/C*	*414*
VDC #1 to CONTROLLER		*420*
SIGNAL HEAD #3 to SIGNAL HEAD #4	*5/C*	*22*
SIGNAL HEAD #4 to CONTROLLER	*7/C*	*380*
VDC #2 to CONTROLLER		*387*
PEDESTAL #1		
PED HEAD A to CONTROLLER	*5/C*	*290*
PUSHBUTTON A to CONTROLLER	*2/C*	*285*
PEDESTAL #5		
PED HEADS H & G to CONTROLLER	*7/C*	*186*
PUSHBUTTONS H & G to CONTROLLER	*5/C*	*181*
SIGNAL POLE #2		
SIGNAL HEAD #5 to CONTROLLER	*7/C*	*300*
SIGNAL HEAD #6 to SIGNAL HEAD #7	*5/C*	*22*
SIGNAL HEAD #7 to CONTROLLER	*7/C*	*282*
VDC #3 to CONTROLLER		*298*
PEDESTAL #2		
PED HEAD B to CONTROLLER	*5/C*	*253*
PUSHBUTTON B to CONTROLLER	*2/C*	*248*
SIGNAL POLE #3		
SIGNAL HEAD #8 to SIGNAL HEAD #9	*5/C*	*22*
SIGNAL HEAD #9 to CONTROLLER	*7/C*	*200*
VDC #4 to CONTROLLER		*206*
PED HEAD C to CONTROLLER	*5/C*	*171*
PUSHBUTTON C to CONTROLLER	*2/C*	*166*
PEDESTAL #3		
PED HEAD D to CONTROLLER	*5/C*	*175*
PUSHBUTTON D to CONTROLLER	*2/C*	*170*
SIGNAL POLE #4		
SIGNAL HEAD #10 to SIGNAL HEAD #11	*5/C*	*22*
SIGNAL HEAD #11 to CONTROLLER	*7/C*	*97*
VDC #5 to CONTROLLER		*105*
PED HEADS E & F to CONTROLLER	*7/C*	*62*
PUSHBUTTON E to CONTROLLER	*2/C*	*57*
PEDESTAL #4		
PUSHBUTTON D to CONTROLLER	*2/C*	*77*

TRAFFIC SIGNALS

		625							632									
SHEET	LOCATION	*CONDUIT, 1-1/2", 725.052, AS PER PLAN*	*CONDUIT, 3", 725.052, AS PER PLAN*	*CONDUIT, JACKED OR DRILLED, 725.04, 3"*	*TRENCH, 24" DEEP*	*PULL BOX, 725.08, 24"*	*GROUND ROD*		*VEHICULAR SIGNAL HEAD, (LED), BLACK, 3 SEC.,12" LENS, 1-WAY, POLYCARBONATE, APP*	*PEDESTRIAN SIGNAL HEAD (LED), (COUNTDOWN), TYPE D2, AS PER PLAN*	*COVERING OF VEHICULAR SIGNAL HEAD*	*COVERING OF PEDESTRIAN SIGNAL HEAD*	*PEDESTRIAN PUSHBUTTON, AS PER PLAN*	*SIGNAL CABLE, 2 CONDUCTOR, NO. 14 AWG*	*SIGNAL CABLE, 5 CONDUCTOR, NO. 14 AWG*	*SIGNAL CABLE, 7 CONDUCTOR, NO. 14 AWG*	*SIGNAL SUPPORT FOUNDATION*	*PEDESTAL FOUNDATION*
NO.	LOCATION TO LOCATION	*FT*	*FT*	*FT*	*FT*	*EACH*	*EACH*		*EACH*	*EACH*	*EACH*	*EACH*	*EACH*	*FT*	*FT*	*FT*	*EACH*	*EACH*
847	LEONARD AVE. INTERSECTION																	
	SIGNAL POLE #1 to PULLBOX #1		*70*		*70*		*1*		*4*		*4*				*44*	*294*	*1*	
	PEDESTAL #1 to PULLBOX #1	*19*			*19*		*1*			*1*		*1*	*1*	*35*	*40*			*1*
	PULLBOX #1 to PULLBOX #5			*86*		*1*								*91*	*91*	*182*		
	PEDESTAL #5 to PULLBOX #5	*6*			*6*		*1*			*2*		*2*	*2*		*22*	*27*		*1*
	PULLBOX #5 to PULLBOX #4			*123*		*1*								*128*	*256*	*384*		
	SIGNAL POLE #2 to PULLBOX #2		*11*		*11*		*1*		*3*		*3*				*22*	*150*	*1*	
	PEDESTAL #2 to PULLBOX #2	*16*			*16*		*1*			*1*		*1*	*1*	*32*	*37*			*1*
	PULLBOX #2 to PULLBOX #3			*73*		*1*								*78*	*78*	*156*		
	SIGNAL POLE #3 to PULLBOX #3		*12*		*12*		*1*		*2*	*1*	*2*	*1*	*1*	*28*	*55*	*62*	*1*	
	PEDESTAL #3 to PULLBOX #3	*16*			*16*		*1*			*1*		*1*	*1*	*32*	*37*			*1*
	PULLBOX #3 to PULLBOX #4			*102*		*1*								*321*	*321*	*321*		
	SIGNAL POLE #4 to PULLBOX #4		*10*		*10*		*1*		*2*	*2*	*2*	*2*	*1*	*26*	*22*	*97*	*1*	
	PEDESTAL #4 to PULLBOX #4	*30*			*30*		*1*						*1*	*46*				*1*
	PULLBOX #4 to CONTROLLER		*38*		*19*	*2*	*1*							*186*	*155*	*248*		
	SERVICE POWER POLE to CONTROLLER		*10*		*10*													
	TOTALS CARRIED TO GENERAL SUMMARY	*87*	*151*	*384*	*219*	*5*	*10*		*11*	*8*	*11*	*8*	*8*	*1003*	*1180*	*1921*	*4*	*5*

TRAFFIC SIGNALS (CONT.)

		632								633								
SHEET	LOCATION	*POWER CABLE, 3 CONDUCTOR, NO. 4 AWG*	*POWER SERVICE, AS PER PLAN*	*SIGNAL SUPPORT, TYPE TC-81.21, DESIGN 2, APP*	*SIGNAL SUPPORT, TYPE TC-81.21, DESIGN 11, APP*	*SIGNAL SUPPORT, TYPE TC-81.21, DESIGN 14, APP*	*PEDESTAL, 6', TRANSFORMER BASE, AS PER PLAN*	*PEDESTAL, 8', TRANSFORMER BASE, AS PER PLAN*	*REMOVAL OF TRAFFIC SIGNAL INSTALLATION, AS PER PLAN*	*CONTROLLER UNIT, TYPE 2070L, WITH CABINET, TYPE 332, AS PER PLAN*	*CABINET RISER*	*CABINET RISER, AS PER PLAN*	*CABINET FOUNDATION*	*CONTROLLER WORK PAD*	*UNINTERRUPTIBLE POWER SUPPLY (UPS), BATTERY REPLACEMENT, AS PER PLAN*	*CONTROLLER ITEM, MISC.: REUSE OF UNINTERRUPTIBLE POWER SUPPLY (UPS)*	*CONTROLLER ITEM, MISC.: UNINTERRUPTIBLE POWER SUPPLY (UPS), STATUS INDIC. LAMPS*	*VIDEO DETECTION SYSTEM*
NO.	LOCATION TO LOCATION	*FT*	*EACH*	*EACH*	*EACH*	*EACH*	*EACH*	*EACH*	*EACH*	*EACH*	*EACH*	*EACH*	*EACH*	*EACH*	*EACH*	*EACH*	*EACH*	*EACH*
847	LEONARD AVE. INTERSECTION								*1*									
	SIGNAL POLE #1 to PULLBOX #1					*1*												
	PEDESTAL #1 to PULLBOX #1							*1*										
	PULLBOX #1 to PULLBOX #5																	
	PEDESTAL #5 to PULLBOX #5							*1*										
	PULLBOX #5 to PULLBOX #4																	
	SIGNAL POLE #2 to PULLBOX #2				*1*													
	PEDESTAL #2 to PULLBOX #2							*1*										
	PULLBOX #2 to PULLBOX #3																	
	SIGNAL POLE #3 to PULLBOX #3			*1*														
	PEDESTAL #3 to PULLBOX #3							*1*										
	PULLBOX #3 to PULLBOX #4																	
	SIGNAL POLE #4 to PULLBOX #4			*1*														
	PEDESTAL #4 to PULLBOX #4						*1*											
	PULLBOX #4 to CONTROLLER		*1*							*1*	*1*	*1*	*1*	*1*	*1*	*1*	*1*	*1*
	SERVICE POWER POLE to CONTROLLER	*25*																
	TOTALS CARRIED TO GENERAL SUMMARY	*25*	*1*	*2*	*1*	*1*	*1*	*4*	*1*	*1*	*1*	*1*	*1*	*1*	*1*	*1*	*1*	*1*

CALCULATED NJV CHECKED MLF

TRAFFIC SIGNAL SUBSUMMARY

ALL-75-5.53

I:\Pd\76691\Signals\76691CQ001.dgn 17-SEP-2012 10:44AM jclark1

SIGNAL SUPPORT ORIENTATION DATA

POLE LOCATION				POLE SIZE						ORIENTATION ANGLES (DEG.)				
INTERSECTION	SHEET	STATION & OFFSET	POLE NO.	TC DESIGN NO.	DESIGN NO.	TOP OF FOUND EL.	POLE HEIGHT	ARM HEIGHT	ARM LENGTH	INDEX ANGLE	HANDHOLE /DOOR	PED SIGNAL	PED PUSH -BUTTON	CONDUIT ELL.
LEONARD AVE.	847	*885+61.00, 50.03'Lt*	1	*81.21*	*14*	*886.50*	*21'*	*19.5'*	*70'*	*11.2*	*180*	-	-	*265*
		886+49.50, 40.21'Lt	PED 1	-	-	*886.29*	*8'*	-	-	*9*	*174*	*0*	*270*	*90*
		886+82.00, 41.81'Lt	2	*81.21*	*11*	*886.09*	*21'*	*19.5'*	*43'*	*0*	*180*	-	-	*229*
		887+02.88, 58.67'Lt	PED 2	-	-	*886.15*	*8'*	-	-	*274*	*205*	*0*	*90*	*139*
		887+54.38, 57.38'Lt	3	*81.21*	*2*	*886.05*	*21'*	*19.5'*	*27'*	*91*	*180*	*270*	*270*	*223*
		887+74.38, 38.33'Lt	PED 3	-	-	*885.95*	*8'*	-	-	*20*	*180*	*0*	*270*	*113*
		887+46.20, 46.18'Rt	4	*81.21*	*2*	*886.49*	*21'*	*19.5'*	*32'*	*271*	*180*	*90/195*	*90/180*	*221*
		887+25.00, 45.59'Rt	PED 4	-	-	*886.45*	*3'*	-	-	*0*	*180*	-	*0*	*104*
		886+36.50, 40.80'Rt	PED 5	-	-	*886.80*	*8'*	-	-	*9*	*220*	*0/81*	*90/351*	*239*

ORIENTATION PLAN

1. *ALL ANGLES MEASURED CLOCKWISE FROM THE INDEX LINE.*
2. *INDEX LINE GOES THROUGH THE CENTER OF THE MAST ARM ON SIGNAL SUPPORTS OR FACE OF PEDESTRIAN SIGNAL HEAD ON PEDESTALS.*
3. *WHEN PEDESTRIAN SIGNALS ARE LOCATED ON NEW STEEL POLES, 1-½" BLIND HALF COUPLINGS SHALL BE PROVIDED IN THE POLE AS PER TC-85.10 AND THE ORIENTATION NOTED IN THE TABLE.*
4. *1-½" B.H.C. LOCATED 27" ABOVE BASE OF POLE.*
5. *CABLE ENTRANCE FOR POWER SERVICE SHALL BE LOCATED 12" ABOVE CENTER LINE OF MAST ARM.*

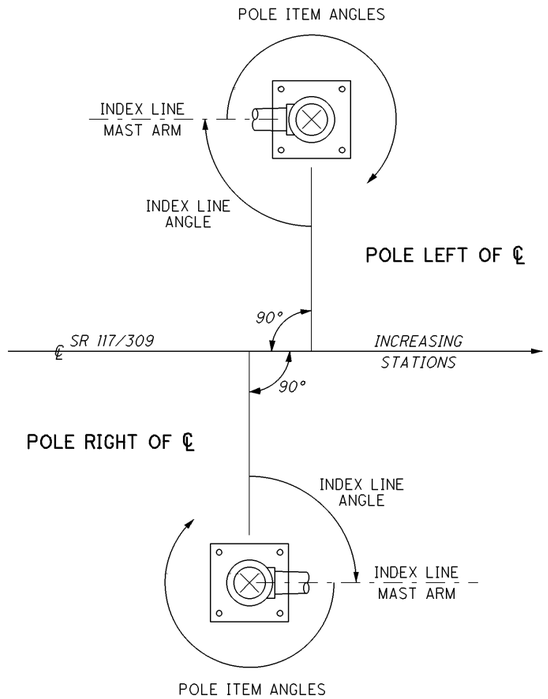

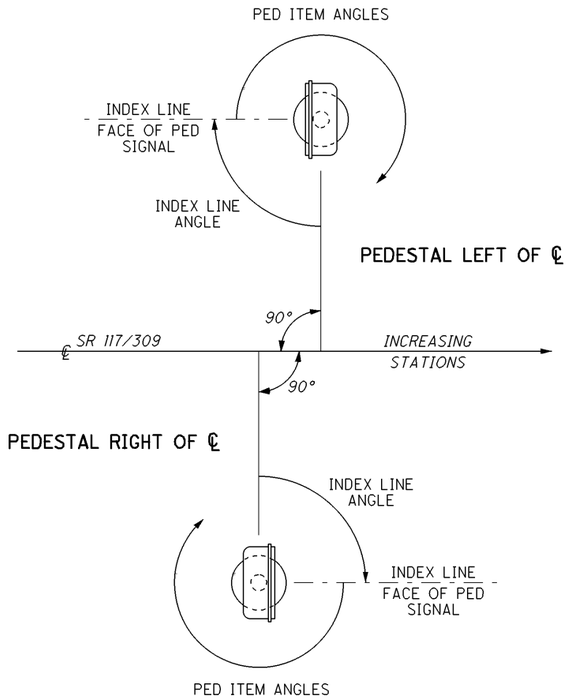

CALCULATED NJV
CHECKED MLF

SIGNAL SUPPORT ORIENTATION DATA

ALL-75-5.53

846
1224

I:\Pd\76691\Signals\76691PD001.dgn 17-SEP-2012 10:45AM jclark1

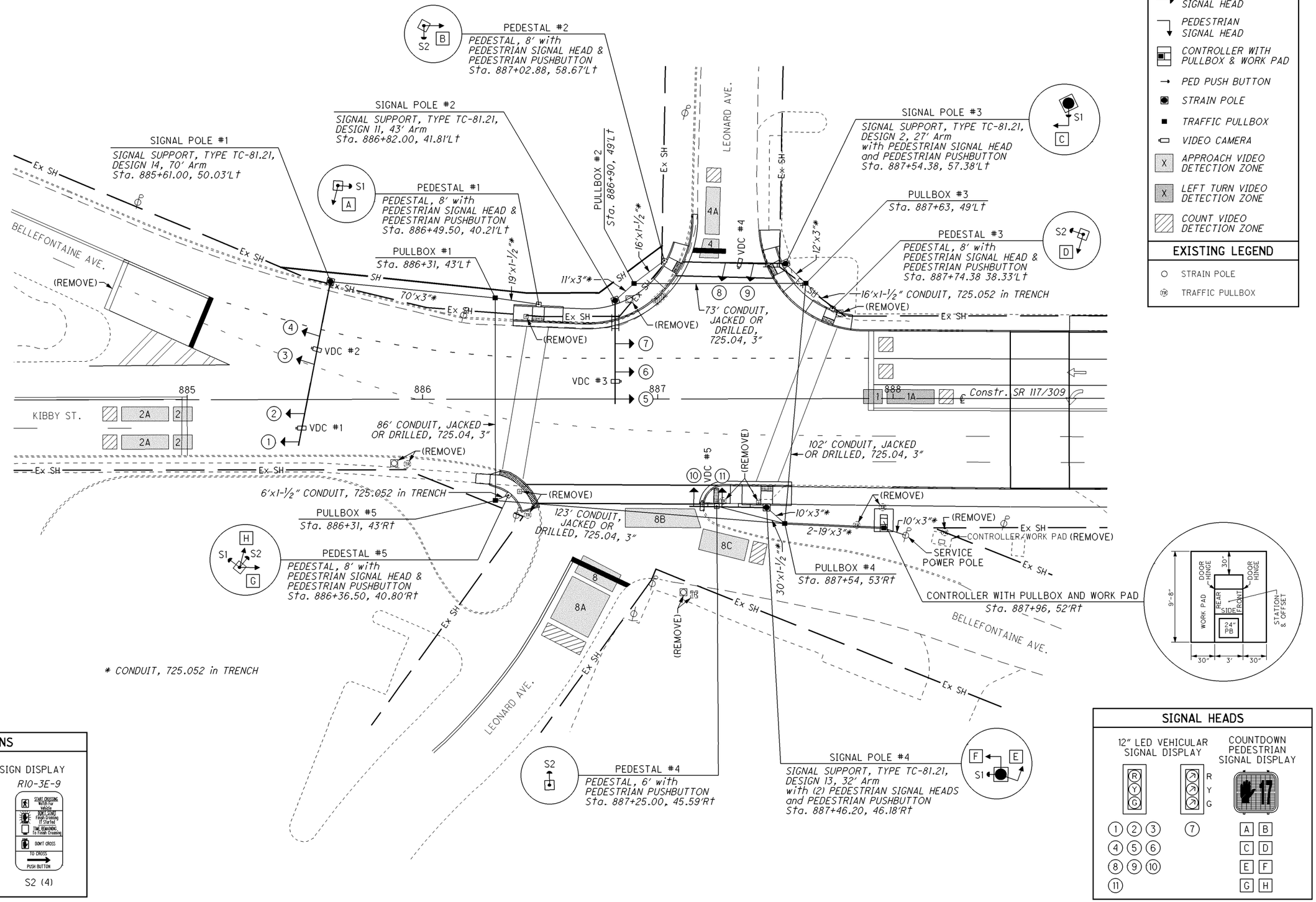

PROPOSED LEGEND

- 3-SECTION VEHICULAR SIGNAL HEAD
- PEDESTRIAN SIGNAL HEAD
- CONTROLLER WITH PULLBOX & WORK PAD
- PED PUSH BUTTON
- STRAIN POLE
- TRAFFIC PULLBOX
- VIDEO CAMERA
- X — APPROACH VIDEO DETECTION ZONE
- X — LEFT TURN VIDEO DETECTION ZONE
- COUNT VIDEO DETECTION ZONE

EXISTING LEGEND

- STRAIN POLE
- TRAFFIC PULLBOX

SIGNS

PUSHBUTTON SIGN DISPLAY

R10-3E-9 — S1 (4)

R10-3E-9 — S2 (4)

SIGNAL HEADS

12" LED VEHICULAR SIGNAL DISPLAY

COUNTDOWN PEDESTRIAN SIGNAL DISPLAY

HORIZONTAL SCALE IN FEET 0 10 20 40

CALCULATED NJV CHECKED MLF

TRAFFIC SIGNAL PLAN
LEONARD AVE.

ALL-75-5.53

847
1224

I:\Pdv\76691\Signals\76691CP001.dgn 17-SEP-2012 10:44AM jclark1

SIGNAL CONTROLLER TIMING CHART

START UP
START IN: *Yellow/Red Flash*
TIME FOR FLASH OR ALL RED: *5 Sec.*
FIRST PHASE(S): *7*

COLOR DISPLAYED: *Green* REST IN RED:
DUAL ENTRY: *Yes ϕ2 & ϕ6, ϕ4 & ϕ8*

			OVERLAP	A	B	C	D
			PHASES	*6,7*			
INTERVAL OR FEATURE			**CONTROLLER MOVEMENT NUMBER**				
		1	2	3	4	5	6	7	8
INTERSECTION MOVEMENT			*EB*		*SB*		*WB*	*SE Lt*	*NB*
MINIMUM GREEN (INITIAL)	(SEC.)		*24*		*10*		*20*	*20*	*10*
ADDED INITIAL	(SEC./ACTUATION)								
MAXIMUM INITIAL	(SEC.)								
PASSAGE TIME (PRESET GAP)	(SEC.)		*4*		*4*		*4*	*3*	*4*
TIME BEFORE REDUCTION	(SEC.)								
MINIMUM GAP	(SEC.)								
TIME TO REDUCE	(SEC.)								
MAXIMUM GREEN 1	(SEC.)		*45*		*30*		*45*	*60*	*30*
MAXIMUM GREEN 2	(SEC.)		*45*		*30*		*45*	*60*	*30*
YELLOW CHANGE	(SEC.)		*4*		*4*		*4*	*4*	*4*
ALL RED CLEARANCE	(SEC.)		*3*		*3*		*3*	*3*	*3*
WALK	(SEC.)		*4*		*5*		*4*		*6*
PEDESTRIAN CLEARANCE	(SEC.)		*17*		*15*		*14*		*18*
RECALL — MAXIMUM	(ON/OFF)		*OFF*		*OFF*		*ON*	*ON*	*OFF*
RECALL — MINIMUM	(ON/OFF)		*OFF*		*OFF*		*OFF*	*OFF*	*OFF*
RECALL — PEDESTRIAN	(ON/OFF)		*OFF*		*OFF*		*OFF*	*OFF*	*OFF*
MEMORY	(ON/OFF)		*OFF*		*OFF*		*OFF*	*OFF*	*OFF*
CALL FOR NON-ACTUATED	NO. 1							*X*	
	NO. 2								

SIGNAL LEGEND

(2)	*2/C #14 AWG (PED PB)*	(PC) *POWER CABLE, 2/C, NO. 6 AWG*	
(3)	*3/C #14 AWG (LED)*	(VC) *VIDEO CABLE*	PH → *PEDESTRIAN SIGNAL HEAD WITH PED PUSHBUTTON*
(5)	*5/C #14 AWG*	*VIDEO DETECTION CAMERA*	PB *PEDESTRIAN PED PUSHBUTTON*
(7)	*7/C #14 AWG*	*PEDESTAL*	■→ *VEHICULAR SIGNAL HEAD*

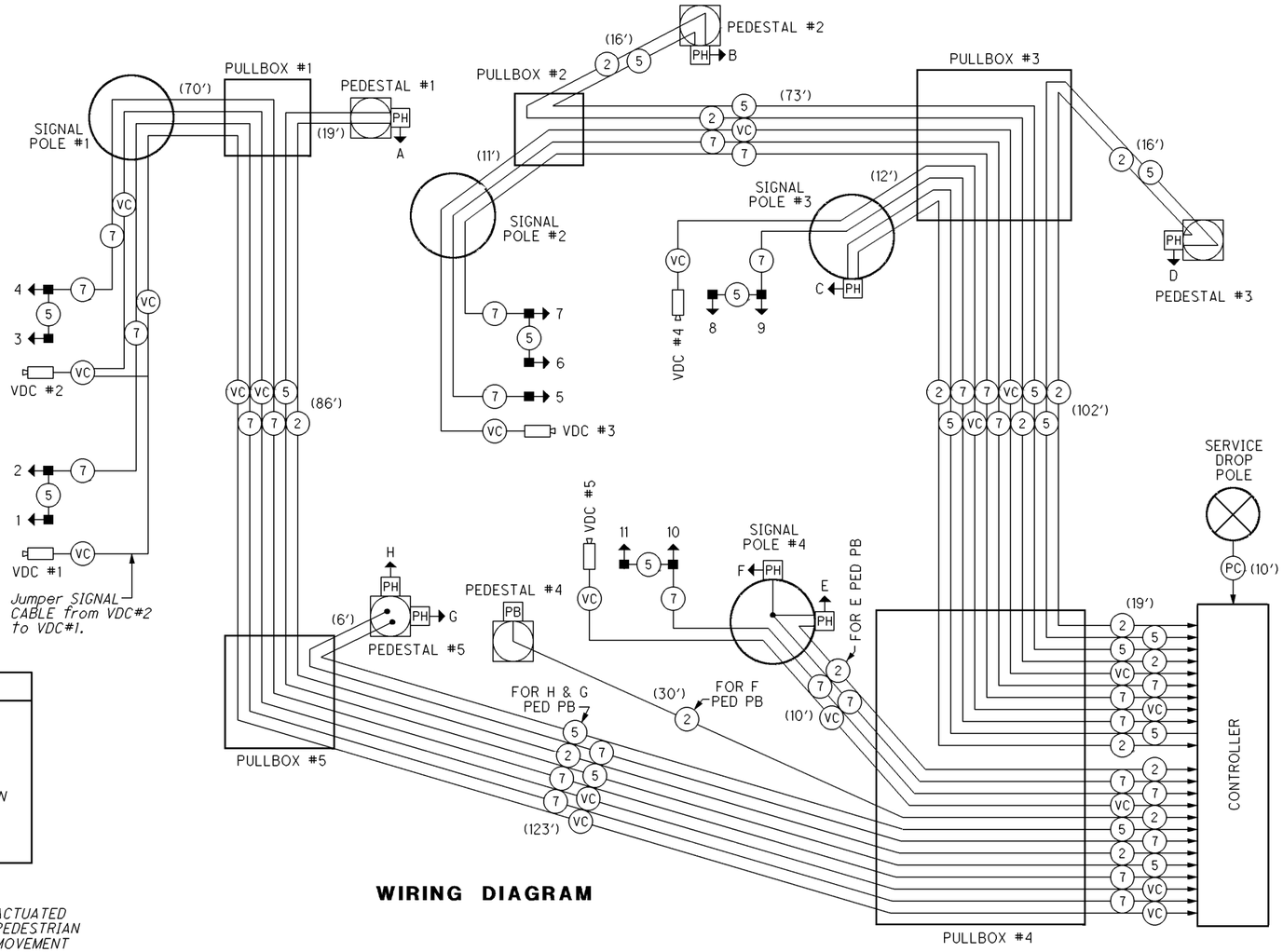

WIRING DIAGRAM

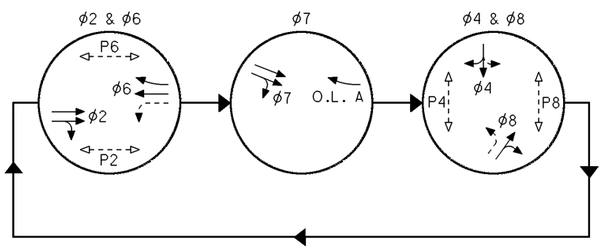

SIGNAL PHASING

VEHICULAR MOVEMENT ⟷ *ACTUATED PEDESTRIAN MOVEMENT*

PHASING NOTES

1. *OMIT CALLS to ϕ1 during ϕ2 GREEN*
2. *OMIT CALLS to ϕ5 during ϕ6 GREEN*
3. *PHASES 1,3,4,5,7 & 8 are ACTUATED*
4. *PHASES 2 and 6 are COORDINATED*
5. *WILLARD AVE. INTERSECTION is the MASTER CONTROLLER LOCATION.*
6. *OVERLAP A (O.L. A) = OVERLAP OF ϕ7*

VIDEO DETECTION NOTES

1. *THE CONTRACTOR IS RESPONSIBLE FOR PROGRAMMING VIDEO DETECTORS IN THE CAMERA AND CONTROLLER.*
2. *IT IS ODOT'S INTENTION THAT LANE COUNT DATA WILL BE COLLECTED THROUGH THE USE OF THE 24 AVAILABLE VOLUME DETECTORS ASSIGNMENTS.*

COORDINATION TIMING CHART

PLAN (CYCLE-SECS.)	SPLITS (G+Y+AR) IN SECONDS — PHASE 1	2	3	4	5	6	7	8	OFFSET *
CYCLE 1 (110 SEC.) SPLIT 1		*35*		*22*		*35*	*53*	*22*	*12*
CYCLE 1 (110 SEC.) SPLIT 2		*40*		*23*		*40*	*47*	*23*	*11*
CYCLE 1 (110 SEC.) SPLIT 3		*34*		*23*		*34*	*53*	*23*	*95*
CYCLE 2 (120 SEC.) SPLIT 1		*37*		*28*		*37*	*55*	*28*	*0*
CYCLE 3 (140 SEC.) SPLIT 1		*52*		*30*		*52*	*58*	*30*	*137*

* *Offsets measured from Coordinated ϕ2 & ϕ6 End of Green/Beginning of Yellow.*

TCB PLAN EVENTS	HOURS	CYCLE/SPLIT/OFFSET
PLAN 1 - (MON - FRI)	*0000 - 0530*	*FREE*
PLAN 1 - (MON - FRI)	*0530 - 1000*	*1/1/1*
PLAN 1 - (MON - FRI)	*1000 - 1400*	*1/2/1*
PLAN 1 - (MON - FRI)	*1400 - 1800*	*2/1/1*
PLAN 1 - (MON - FRI)	*1800 - 2200*	*1/3/1*
PLAN 1 - (MON - FRI)	*2200 - 2400*	*FREE*
PLAN 2 - (SAT - SUN)	*0000 - 0800*	*FREE*
PLAN 2 - (SAT - SUN)	*0800 - 1000*	*1/3/1*
PLAN 2 - (SAT - SUN)	*1000 - 1800*	*1/2/1*
PLAN 2 - (SAT - SUN)	*1800 - 2200*	*1/3/1*
PLAN 2 - (SAT - SUN)	*2200 - 2400*	*FREE*

VIDEO DETECTION CHART

VIDEO DETECTION CAMERA NO.	VIDEO DETECTION ZONE NO.	MOVEMENT	PULSE OR PRESENCE	SIZE	DELAY (SEC.) CAMERA	DELAY (SEC.) SIGNAL CONTROLLER	DELAY INHIBIT (SEC.)	ASSOCIATED CONTROLLER PHASE	INPUT FILE #	TERMINAL NO.
1	2	*EB*	*PRES*	*2-6′x8′*	*0*	-		*ϕ2*	*I*	*2-D,E*
1	2A	*EB*	*PRES*	*2-6′x20′*	*0*	-		*ϕ2*	*I*	*2-J,K*
2	1	*WB*	*PRES*	*6′x8′*	*0*	-		*ϕ1*	*I*	*1-D,E*
2	1A	*WB*	*PRES*	*6′x20′*	*0*	-		*ϕ1*	*I*	*1-J,K*
4	4	*SB*	*PRES*	*7′x8′*	*0*	-		*ϕ4*	*I*	*6-D,E*
4	4A	*SB*	*PRES*	*6′x20′*	*0*	-		*ϕ4*	*I*	*6-J,K*
3	8	*NB*	*PRES*	*18′x8′*	*0*	*10*		*ϕ8*	*J*	*6-D,E*
3	8A	*NB*	*PRES*	*18′x20′*	*0*	*10*		*ϕ8*	*J*	*6-J,K*
3	8B	*NB*	*PRES*	*30′x8′*	*0*	-		*ϕ8*	*J*	*7-D,E*
3	8C	*NB*	*PRES*	*9′x20′*	*0*	-		*ϕ8*	*J*	*7-J,K*

 # I = UPPER INPUT FILE; J = LOWER IMPUT FILE

CALCULATED R.JL CHECKED MLF

SIGNAL WIRING DETAIL LEONARD AVE.

ALL-75-5.53

848
1224

I:\pd\76691\Signals\76691CD001.dgn 17-SEP-2012 10:42AM jclark1

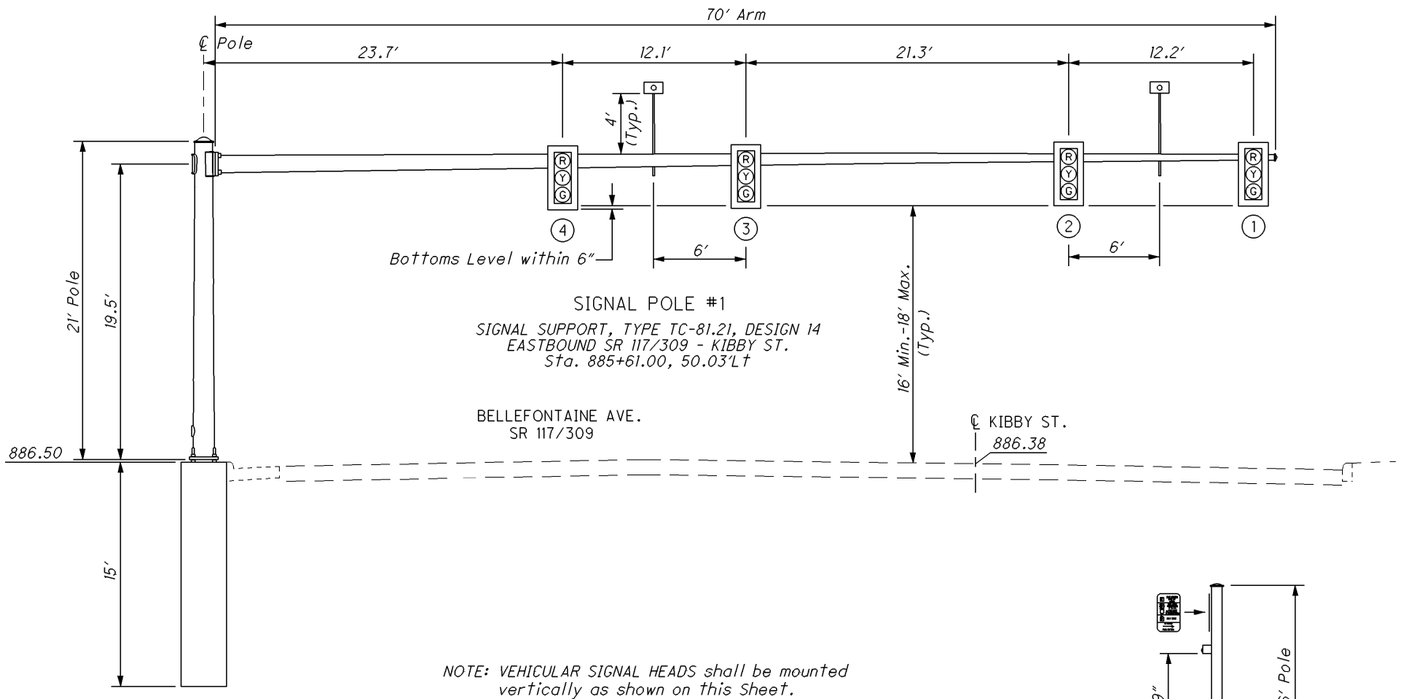

SIGNAL POLE #1

SIGNAL SUPPORT, TYPE TC-81.21, DESIGN 14
EASTBOUND SR 117/309 - KIBBY ST.
Sta. 885+61.00, 50.03'Lt

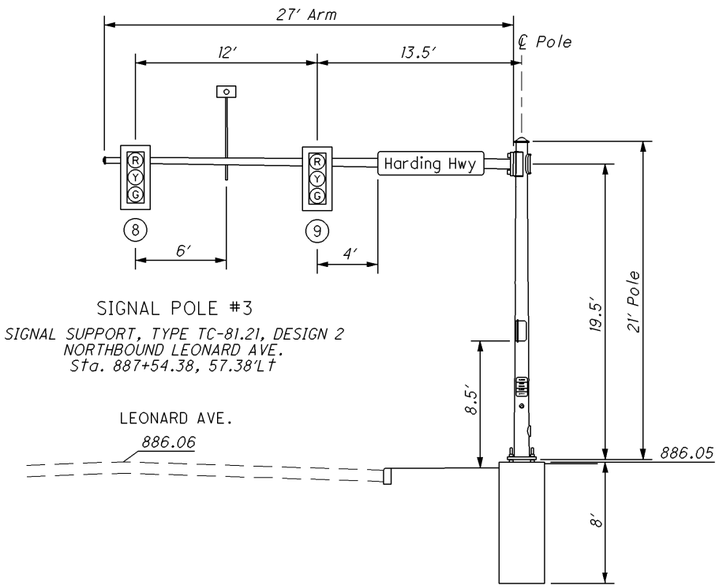

SIGNAL POLE #3

SIGNAL SUPPORT, TYPE TC-81.21, DESIGN 2
NORTHBOUND LEONARD AVE.
Sta. 887+54.38, 57.38'Lt

NOTE: VEHICULAR SIGNAL HEADS shall be mounted vertically as shown on this Sheet.

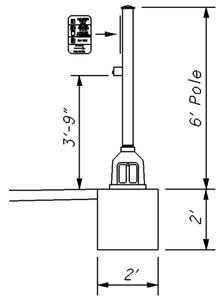

PEDESTAL, 6',
TRANSFORMER BASE,
AS PER PLAN

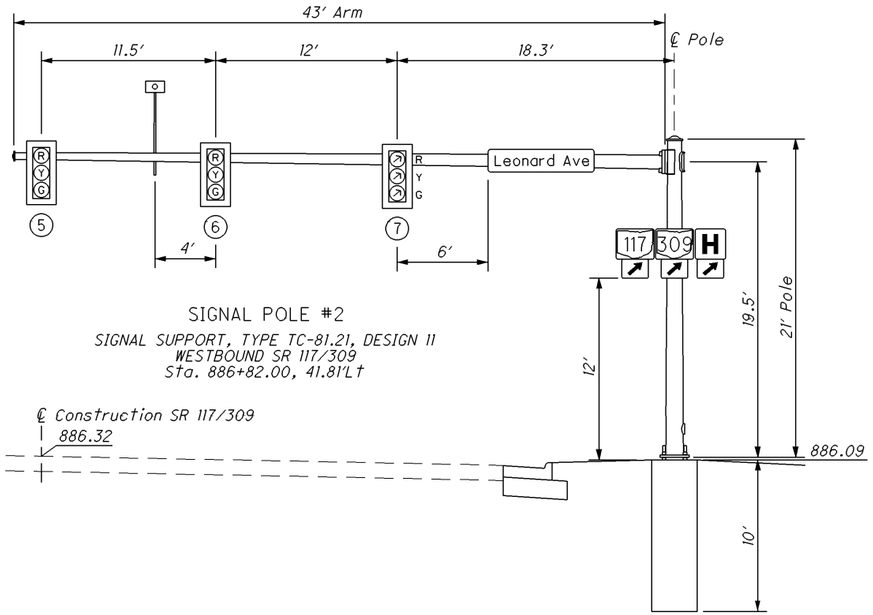

SIGNAL POLE #2

SIGNAL SUPPORT, TYPE TC-81.21, DESIGN 11
WESTBOUND SR 117/309
Sta. 886+82.00, 41.81'Lt

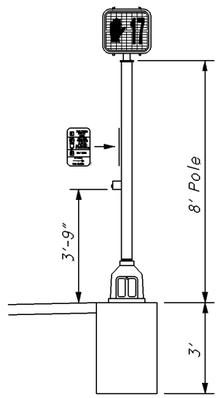

PEDESTAL, 8',
TRANSFORMER BASE,
AS PER PLAN

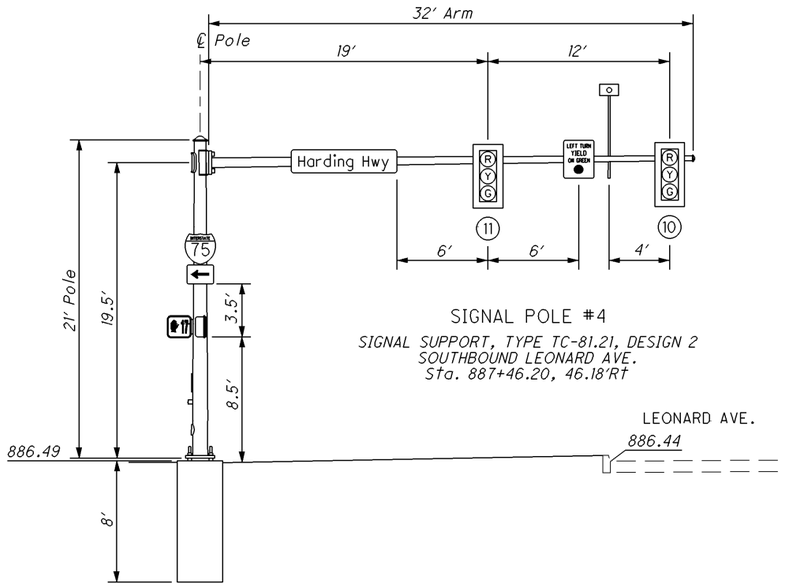

SIGNAL POLE #4

SIGNAL SUPPORT, TYPE TC-81.21, DESIGN 2
SOUTHBOUND LEONARD AVE.
Sta. 887+46.20, 46.18'Rt

HORIZONTAL SCALE IN FEET
0 2.5 5 10

CALCULATED NJV
CHECKED MLF

SIGNAL SUPPORT DETAILS LEONARD AVE.

ALL-75-5.53

849
1224

I:\Pd\76691\Signals\76691CE001.dgn 17-SEP-2012 10:43AM jclark1

(G) 24" PULL BOX B3
STA. 893+57.89, 59.50' RT

(H) 2" CONDUIT W/ 2-7/C, 2-VC
6' IN TRENCH

(I) 2" CONDUIT W/ 1-7/C, 1-VC
8' IN TRENCH

(J) STA. 893+98.11, 9.00' LT

(K) STA. 894+08.11, 9.00' LT

(L) STA. 893+98.11, 21.00' LT

(M) STA. 893+98.11, 33.00' LT

(N) STA. 892+78.01, 21.09' RT

(O) STA. 892+78.01, 33.09' RT

(P) STA. 892+78.01, 44.65' RT

(Q) STA. 893+42.56, 65.57' LT

(R) STA. 893+44.81, 75.31' LT

(S) STA. 893+55.32, 62.63' LT

(T) STA. 893+57.57, 72.37' LT

(U) STA. 893+23.92 ℄ S.R. 309 =
STA. 370+26.30 ℄ RAMP 'A'

(V) STA. 893+33.67 ℄ S.R. 309 =
STA. 369+77.25 ℄ RAMP 'C'

DETAIL "A"
CONTROLLER WORK PAD

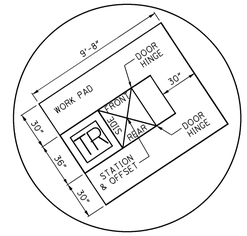

EXISTING POWER POLE

3" CONDUIT W/ 2-5/C, 2-2/C
88' IN TRENCH

8' PEDESTAL, P3
W/ PED. SIGNAL HEAD,
PUSH BUTTON & SN2
STA. 893+17.79, 67.42' LT

2" CONDUIT W/ 1-5/C, 1-2/C
18' IN TRENCH

GROUND MOUNTED
CONTROLLER W/ WORKPAD
STA. 893+06.89, 67.39' LT
SEE DETAIL "A" THIS SHEET

3" CONDUIT W/ 3-7/C,
6-5/C, 6-2/C, 3-VC
9' IN TRENCH

2" CONDUIT W/ POWER
CABLE 226' IN TRENCH

24" PULL BOX B1
STA. 893+02.61,
57.36' LT

SIGNAL SUPPORT, P1
TC-81.21 DESIGN NO. 13
STA. 892+94.62, 59.00' LT

8' PEDESTAL, P4
W/ SIGNAL HEAD, PUSH BUTTON & SN3
STA. 893+83.72, 50.48' LT

2" CONDUIT W/ 1-5/C, 1-2/C
7' IN TRENCH

24" PULL BOX B2
STA. 893+89.90, 48.28' LT

2" CONDUIT W/ 1-5/C, 1-2/C
5' IN TRENCH

8' PEDESTAL, P5
W/ SIGNAL HEAD, PUSH BUTTON & SN4
STA. 893+94.51, 47.40' LT

8' PEDESTAL, P6
W/ SIGNAL HEAD, PUSH BUTTON & SN5
STA. 893+92.71, 59.40' RT

2" CONDUIT W/ 1-5/C, 1-2/C
35' IN TRENCH

SIGNAL SUPPORT, P2
TC-12.30 DESIGN NO. 6
STA. 893+59.77, 64.66' RT

2" CONDUIT W/ 1-5/C, 1-2/C
10' IN TRENCH

8' PEDESTAL, P7
W/ SIGNAL HEAD, PUSH BUTTON & SN6
STA. 893+54.92, 68.71' RT

8' PEDESTAL, P8
W/ SIGNAL HEAD, PUSH BUTTON & SN7
STA. 892+90.36, 76.92' RT

3" CONDUIT W/ 2-7/C, 3-5/C, 3-2/C, 2-VC
142' JACKED OR DRILLED

2" CONDUIT W/ 1-5/C, 1-2/C
15' IN TRENCH

24" PULL BOX B4
STA. 893+03.47, 84.31' RT

3" CONDUIT W/ 2-7/C, 2-5/C, 2-2/C, 2-VC
60' IN TRENCH

℄ RAMP 'A'

℄ RAMP 'C'

PT Sta. 371+80

PC Sta. 370+90.54

PT Sta. 368+7

℄ R/W & CONST. S.R. 309

N 89° 54' 53" E

N 89° 54' 53" W

MATCH LINE STA. 896+00 S.R. 309

1 Sty. Block

TURNING VEHICLES
R10-15-30
SN1

R10-3E-9
SN2, SN4, SN6

R10-3E-9
SN3, SN5, SN7

R3-4-24
SN8, SN9

SIGNAL HEAD DETAIL
12" (LED) LENSES

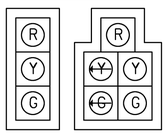

2-8 1

TYPE D2 PEDESTRIAN (LED)
(COUNTDOWN) SIGNAL HEAD



A-F

VEHICULAR SIGNAL HEADS SHALL BE RIGID MOUNTED PER TC-85-20

VIDEO DETECTION CAMERAS AND VIDEO DETECTION ZONES FOR S.R. 309 INTERSECTIONS INCLUDED ON SHEETS 846-855 ARE QUANTIFIED IN ALL-117/309-18.65/15.17 CONSTRUCTION PLANS.

NOTE:
VIDEO DETECTION ZONE AT THE STOP LINE SHOULD BE KEPT SMALL SO THAT MOTORCYCLES AND BICYCLES WILL IMPACT A LARGER PERCENTAGE OF THE DETECTION ZONE.

LEGEND

- VEHICULAR SIGNAL HEAD (3-SECTION)
- VEHICULAR SIGNAL HEAD (5-SECTION)
- PEDESTRIAN SIGNAL HEAD (ONE-WAY)
- PEDESTRIAN PUSH BUTTON
- SIGNAL SUPPORT POLE
- PEDESTRIAN SUPPORT POLE
- VIDEO DETECTION CAMERA
- VIDEO DETECTION ZONE
- SIGNAL PULL BOX
- CONTROLLER WORK PAD
- UNDERGROUND CONDUIT
- SIGN
- OVERHEAD CANTILEVER SIGN

HORIZONTAL SCALE IN FEET
0 10 20 40

CALCULATED JRL
CHECKED JTB

TRAFFIC SIGNAL PLAN
S.R. 309 & I-75 SOUTHBOUND RAMPS

ALL-75-5.53

850
1224

J:\Projects\ALL\76691\signals\sheets\76691CP001.dgn 11-SEP-2012 9:17PM reddenj

TRAFFIC SIGNAL CONTROLLER TIMING CHART

INTERSECTION: SR 309 & I-75 SB

MAINTAINING AGENCY: ODOT

START UP
START IN: Y/R FLASH
TIME FOR FLASH OR ALL RED: 5 SEC.
FIRST PHASES: 2 & 6
COLOR DISPLAYED: GREEN

DUAL ENTRY: YES ϕ2 & ϕ6
REST IN RED:

OVERLAP	A	B	C	D
PHASES				

INTERVAL OR FEATURE			CONTROLLER MOVEMENT NUMBER							
			1	2	3	4	5	6	7	8
INTERSECTION MOVEMENT			WBL	EB	-	SB	-	WB	-	-
MINIMUM GREEN (INITIAL)		(SEC.)	7	20	-	10	-	20	-	-
ADDED INITIAL		(SEC./ACTUATION)	-	-	-	-	-	-	-	-
MAXIMUM INITIAL		(SEC.)	-	-	-	-	-	-	-	-
PASSAGE TIME (PRESET GAP)		(SEC.)	3	4	-	4	-	4	-	-
TIME BEFORE REDUCTION		(SEC.)	-	-	-	-	-	-	-	-
MINIMUM GAP		(SEC.)	-	-	-	-	-	-	-	-
TIME TO REDUCE		(SEC.)	-	-	-	-	-	-	-	-
MAXIMUM GREEN I		(SEC.)	25	55	-	45	-	65	-	-
MAXIMUM GREEN II		(SEC.)	25	55	-	45	-	65	-	-
YELLOW CHANGE		(SEC.)	4	4	-	4	-	4	-	-
ALL RED CLEARANCE		(SEC.)	2.5	2.5	-	3	-	2.5	-	-
WALK		(SEC.)	-	6	-	8	-	6	-	-
PEDESTRIAN CLEARANCE		(SEC.)	-	11	-	22	-	11	-	-
RECALL	MAXIMUM	(ON/OFF)	OFF	OFF	-	OFF	-	OFF	-	-
	MINIMUM	(ON/OFF)	OFF	ON	-	OFF	-	ON	-	-
	PEDESTRIAN	(ON/OFF)	OFF	OFF	-	OFF	-	OFF	-	-
MEMORY		(ON/OFF)	OFF	OFF	-	OFF	-	OFF	-	-
CALL TO NON ACTUATED		NO. 1	-	X	-	-	-	X	-	-
		NO. 2	-	-	-	-	-	-	-	-

SIGNAL SUPPORT ORIENTATION DATA

ELEVATION VIEW	SUPPORT NO.	SUPPORT DESIGN NO.	MAST ARM DESIGN NO.	POLE HEIGHT (FT.)	ARM MOUNTING HT. A	ARM MOUNTING HT. B	L (FT.)	L1 (FT.)	L2 (FT.)	L3 (FT.)	L4 (FT.)	L5 (FT.)	ELEVATION A	ELEVATION B	MAST ARM A ORIENTATION ANGLE (DEGREES)	ORIENTATION ANGLES (DEG.) FROM MAST ARM A: MAST ARM "B"	PEDESTRIAN SIGNAL	PEDESTRIAN PUSHBUTTON	POWER SERVICE	CONTROLLER	HANDHOLE	BRACKET ARM	SIGN SUPPORT ARM
1	P1	13	13	23	21.5		54	52	48	44	40	28	880.48	879.99	0						180		
2	P2A	6	12	23	21.5		46	45	41	37	33	21	880.64	879.89	0	77					180		
3	P2B	6	11	23	21.5		42	41	35	29	23		880.36	879.89									
	P3		PED.	8													283	29			211		
	P4		PED.	8													103	307			217		
	P5		PED.	8													0	0			90		
	P6		PED.	8													0	0			180		
	P7		PED.	8													267	9			189		
	P8		PED.	8													87	318			228		

* DESIGN 6 = TC-12.30 POLE

SIGNAL PHASING DIAGRAM

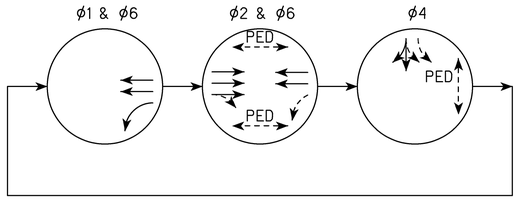

PHASING NOTES:
1. OMIT CALLS TO ϕ1 DURING ϕ2 GREEN.
2. ϕ1 AND ϕ4 ARE ACTUATED.
3. ϕ2 AND ϕ6 ARE COORDINATED.
4. WILLARD AVENUE INTERSECTION IS THE MASTER CONTROLLER LOCATION.

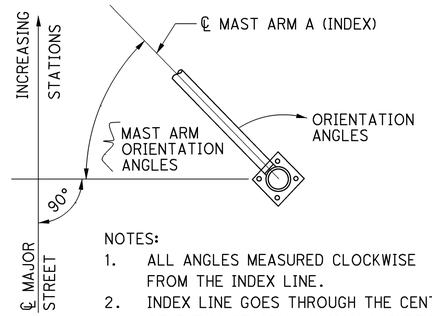

NOTES:
1. ALL ANGLES MEASURED CLOCKWISE FROM THE INDEX LINE.
2. INDEX LINE GOES THROUGH THE CENTER OF THE MAST ARM ON SIGNAL SUPPORTS OR FACE OF PEDESTRIAN SIGNAL HEAD ON PEDESTALS.
3. WHEN PEDESTRIAN SIGNALS ARE LOCATED ON NEW STEELPOLES, 1-½" BLIND HALF COUPLINGS SHALL BE PROVIDED IN THE POLE AS PER TC-85.10 AND THE ORIENTATION NOTD IN THE TABLE.
4. 1-½" B.H.C. LOCATED 27" ABOVE BASE OF POLE.
5. CABLE ENTRANCE FOR POWER SERVICE SHALL BE LOCATED 12" ABOVE CENTER LINE OF MAST ARM.

SIGNAL SUPPORT DETAILS

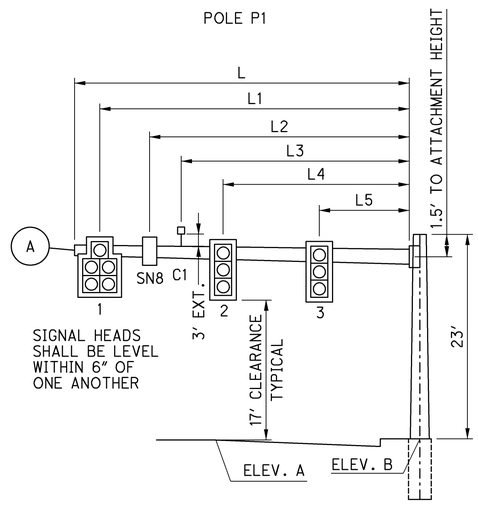

ELEVATION VIEW 1

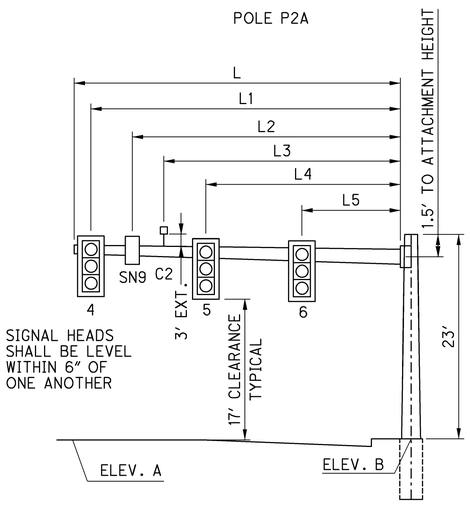

ELEVATION VIEW 2

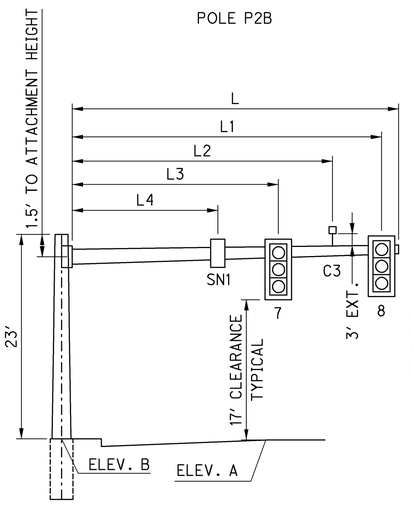

ELEVATION VIEW 3

VIDEO DETECTION CAMERAS AND VIDEO DETECTION ZONES FOR S.R. 309 INTERSECTIONS INCLUDED ON SHEETS 846-855 ARE QUANTIFIED IN ALL-117/309-18.65/15.17 CONSTRUCTION PLANS.

(A) INSTALL DAMPING DEVICE ON ALL MAST ARMS LONGER THAN 48 FEET AS PER THE TRAFFIC SIGNAL GENERAL NOTE ON SHEET 838.

CALCULATED JRL CHECKED JTB

TRAFFIC SIGNAL PLAN DETAILS
S.R. 309 & I-75 SOUTHBOUND RAMPS

ALL-75-5.53

851
1224

J:\Projects\ALL\76691\signals\sheets\76691CD001.dgn 11-SEP-2012 9:17PM reddenj

FIELD WIRING HOOK-UP CHART

SIGNAL HEAD #	INDICATION	FIELD TERMINAL	FLASH
1 (WBLT)	R	ϕ6 R	R
	Y	ϕ6 Y	
	G	ϕ6 G	
	~~Y~~	ϕ1 Y	
	~~G~~	ϕ1 G	
2, 3 (WB)	R	ϕ6 R	R
	Y	ϕ6 Y	
	G	ϕ6 G	
4, 5, 6 (EB)	R	ϕ2 R	R
	Y	ϕ2 Y	
	G	ϕ2 G	

SIGNAL HEAD #	INDICATION	FIELD TERMINAL	FLASH
7, 8 (SB)	R	ϕ4 R	R
	Y	ϕ4 Y	
	G	ϕ4 G	

PEDESTRIAN SIGNAL HEAD #	INDICATION	FIELD TERMINAL	FLASH
A-B (NORTH)	W / FDW	LS 6P G	OUT
	DW	LS 6P R	
C-D (EAST)	W / FDW	LS 4P G	OUT
	DW	LS 4P R	
E-F (SOUTH)	W / FDW	LS 2P G	OUT
	DW	LS 2P R	

VIDEO DETECTION CHART

VIDEO DETECTION CAMERA NUMBER	VIDEO DETECTION ZONE NUMBER	MOVEMENT	PULSE OR PRESENCE	SIZE	DELAY (SEC.) CAMERA	DELAY (SEC.) SIGNAL CONTROLLER	DELAY INHIBIT (SEC.)	ASSOCIATED CONTROLLER PHASE	OVERRIDE PHASE	INPUT FILE*	TERMINAL NO.
C1	DZ1	WB	PRESENCE	30'x6'	0			ϕ1		I	1-D,E
C1	DZ2	WB	COUNT	8'x6'	0			ϕ1		I	1-J,K
C1	DZ3	WB	COUNT	8'x6'	0			ϕ6		J	2-D,E
C1	DZ4	WB	COUNT	8'x6'	0			ϕ6		J	2-J,K
C2	DZ5	EB	COUNT	8'x6'	0			ϕ2		I	2-D,E
C2	DZ6	EB	COUNT	8'x6'	0			ϕ2		I	2-J,K
C2	DZ7	EB	COUNT	8'x6'	0			ϕ2		I	3-D,E
C3	DZ8	SB	PRESENCE	30'x6'	0			ϕ4		I	6-D,E
C3	DZ9	SB	COUNT	8'x6'	0	10		ϕ4		I	6-J,K
C3	DZ10	SB	PRESENCE	30'x6'	0			ϕ4		I	7-D,E
C3	DZ11	SB	COUNT	8'x6'	0			ϕ4		I	7-J,K

*I = UPPER INPUT FILE; J = LOWER INPUT FILE

VIDEO DETECTION CAMERAS AND VIDEO DETECTION ZONES FOR S.R. 309 INTERSECTIONS INCLUDED ON SHEETS 846-855 ARE QUANTIFIED IN ALL-117/309-18.65/15.17 CONSTRUCTION PLANS.

VIDEO DETECTION NOTES:
1. THE CONTRACTOR IS RESPONSIBLE FOR PROGRAMMING VIDEO DETECTORS IN THE CAMERA & CONTROLLER.
2. IT IS ODOT'S INTENTION THAT LANE COUNT DATA WILL BE COLLECTED THROUGH THE USE OF THE 24 AVAILABLE VOLUME DETECTORS ASSIGNMENTS.

WIRING DIAGRAM LEGEND

- (2) 2/C #14 AWG. (PED PB)
- (5) 5/C #14 AWG.
- (7) 7/C #14 AWG.
- (PC) POWER CABLE, 2/C NO. 6 AWG.
- (MB) METER BASE
- POWER SOURCE
- DS DISCONNECT SWITCH
- VEHICULAR SIGNAL HEAD
- VEHICULAR SIGNAL HEAD W/ TURN ARROW (5-SECTION)
- PH PEDESTRIAN SIGNAL HEAD WITH PED PUSHBUTTON
- VIDEO DETECTION CAMERA
- (VC) VIDEO CABLE

WIRING DIAGRAM

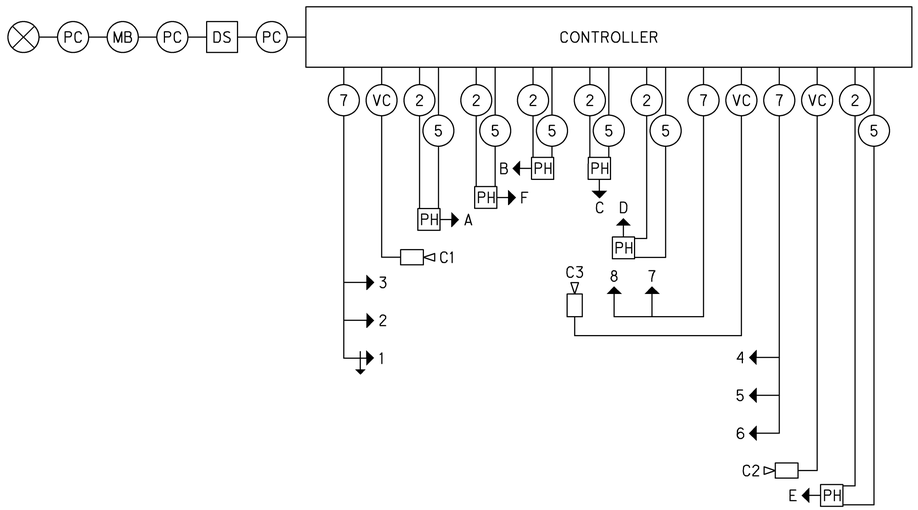

COORDINATION TIMING CHART

PLAN (CYCLE-SEC.)	SPLITS (G + Y + AR) IN SECONDS PHASE 1	2	3	4	5	6	7	8	OFFSET*
CYCLE 1 (110 SEC.) SPLIT 1	18	52	-	40	-	70	-	-	16
CYCLE 1 (110 SEC.) SPLIT 2	18	55	-	37	-	73	-	-	20
CYCLE 1 (110 SEC.) SPLIT 3	18	65	-	27	-	83	-	-	101
CYCLE 2 (120 SEC.) SPLIT 1	20	62	-	38	-	82	-	-	11
CYCLE 3 (140 SEC.) SPLIT 1	20	75	-	45	-	95	-	-	8

NOTES:
*OFFSETS MEASURED FROM COORDINATED ϕ2 & ϕ6 END OF GREEN/BEGINNING OF YELLOW.

TBC PLAN EVENTS	HOURS	CYCLE/SPLIT/OFFSET
PLAN 1 - (MON - FRI)	0000-0530	FREE
PLAN 1 - (MON - FRI)	0530-1000	1 / 1 / 1
PLAN 1 - (MON - FRI)	1000-1400	1 / 2 / 1
PLAN 1 - (MON - FRI)	1400-1800	2 / 1 / 1
PLAN 1 - (MON - FRI)	1800-2200	1 / 3 / 1
PLAN 1 - (MON - FRI)	2200-2400	FREE
PLAN 2 - (SAT - SUN)	0000-0800	FREE
PLAN 2 - (SAT - SUN)	0800-1000	1 / 3 / 1
PLAN 2 - (SAT - SUN)	1000-1800	1 / 2 / 1
PLAN 2 - (SAT - SUN)	1800-2200	1 / 3 / 1
PLAN 2 - (SAT - SUN)	2200-2400	FREE

CALCULATED JRL CHECKED JTB

TRAFFIC SIGNAL PLAN DETAILS
S.R. 309 & I-75 SOUTHBOUND RAMPS

ALL-75-5.53

J:\Projects\ALL\76691\signals\sheets\76691CD002.dgn 11-SEP-2012 9:17PM reddenj

Ⓖ STA. 898+22.11, 9.00′ RT
Ⓗ STA. 898+12.11, 9.00′ RT
Ⓘ STA. 898+39.00, 21.00′ RT
Ⓙ STA. 898+39.00, 33.00′ RT
Ⓚ STA. 898+39.00, 45.00′ RT
Ⓛ STA. 899+31.72, 21.57′ LT
Ⓜ STA. 899+32.09, 33.57′ LT
Ⓝ STA. 899+32.47, 45.63′ LT
Ⓞ STA. 898+80.84, 72.18′ RT
Ⓟ STA. 898+80.84, 82.18′ RT
Ⓠ STA. 898+92.84, 73.16′ RT
Ⓡ STA. 898+92.84, 83.16′ RT

Ⓢ STA. 898+87.84 ℄ S.R. 309 = STA. 369+79.90 ℄ RAMP 'E'
Ⓣ STA. 898+95.84 ℄ S.R. 309 = STA. 370+37.18 ℄ RAMP 'F'

8′ PEDESTAL, P4
W/ PED. SIGNAL HEAD, PUSH BUTTON & SN2
STA. 898+57.08, 66.06′ LT

2″ CONDUIT W/ 1-5/C, 1-2/C
16′ IN TRENCH

SIGNAL SUPPORT, P1
TC-12.30 DESIGN NO. 6
STA. 898+48.84, 63.36′ LT

2″ CONDUIT W/ 2-7/C, 2-VC
8′ IN TRENCH

24″ PULL BOX B1
STA. 898+44.46, 56.72′ LT

2″ CONDUIT W/ 1-5/C, 1-2/C
10′ IN TRENCH

8′ PEDESTAL, P3
W/ PED. SIGNAL HEAD, PUSH BUTTON & SN1
STA. 898+47.85, 46.90′ LT

PC Sta. 371+07.40

℄ RAMP 'E'

DETAIL "A"
CONTROLLER WORK PAD

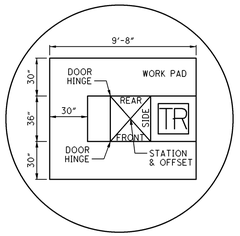

LEGEND

- VEHICULAR SIGNAL HEAD (3-SECTION)
- VEHICULAR SIGNAL HEAD (5-SECTION)
- PEDESTRIAN SIGNAL HEAD (ONE-WAY)
- PEDESTRIAN PUSH BUTTON
- SIGNAL SUPPORT POLE
- PEDESTRIAN SUPPORT POLE
- VIDEO DETECTION CAMERA
- VIDEO DETECTION ZONE
- SIGNAL PULL BOX
- CONTROLLER WORK PAD
- UNDERGROUND CONDUIT
- SIGN
- OVERHEAD CANTILEVER SIGN

3″ CONDUIT W/ 1-5/C, 1-2/C
82′ IN TRENCH

24″ PULL BOX B2
STA. 899+23.30, 80.52′ LT

2″ CONDUIT W/ 1-5/C, 1-2/C
6′ IN TRENCH

8′ PEDESTAL, P5
W/ PED. SIGNAL HEAD, PUSH BUTTON & SN3
STA. 899+24.66, 74.77′ LT

MATCH LINE STA. 896+00 S.R. 309

3″ CONDUIT W/ 2-7/C, 3-5/C, 3-2/C, 2-VC
133′ JACKED OR DRILLED

8′ PEDESTAL, P8
W/ PED. SIGNAL HEAD, PUSH BUTTON & SN6
STA. 898+47.85, 58.90′ RT

2″ CONDUIT W/ 1-5/C, 1-2/C
18′ IN TRENCH

24″ PULL BOX B4
STA. 898+44.26, 76.68′ RT

2″ CONDUIT W/ 1-5/C, 1-2/C
19′ IN TRENCH

PT Sta. 369+20.69

8′ PEDESTAL, P7
W/ PED. SIGNAL HEAD, PUSH BUTTON & SN5
STA. 898+59.94, 65.61′ RT

3″ CONDUIT W/ 2-7/C, 5-5/C, 5-2/C, 2-VC
76′ IN TRENCH

℄ RAMP 'F'

SIGNAL SUPPORT, P2
TC-81.21 DESIGN NO. 14
STA. 899+40.73, 72.45′ RT

2″ CONDUIT W/ 1-7/C, 1-VC
25′ IN TRENCH

8′ PEDESTAL, P6
W/ PED. SIGNAL HEAD, PUSH BUTTON & SN4
STA. 899+21.01, 79.20′ RT

2″ CONDUIT W/ 1-5/C, 1-2/C
8′ IN TRENCH

24″ PULL BOX B3
STA. 899+19.89, 86.89′ RT

3″ CONDUIT W/ 3-7/C, 6-5/C, 6-2/C, 3-VC
7′ IN TRENCH

GROUND MOUNTED CONTROLLER W/ WORKPAD
STA. 899+12.51, 92.32′ RT
SEE DETAIL "A" THIS SHEET

2″ CONDUIT W/ POWER CABLE
355′ IN TRENCH

EXISTING 18″ CIRCULAR PULL BOX
STA. 902+70.76, 79.66′ RT

2″ CONDUIT W/ POWER CABLE
123′ IN TRENCH

EXISTING POWER POLE
STA. 902+63.23, 202.64′ RT

℄ CONST. S.R. 309

S 88° 05′ 04″ E

99+50.00
00.02″ RT.



R10-3E-9
SN2, SN4, SN6



R10-3E-9
SN1, SN3, SN5


R3-4-24
SN7, SN8

SIGNAL HEAD DETAIL
12″ (LED) LENSES

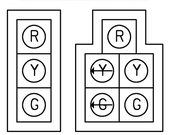

1-5, 7-9 | 6

TYPE D2 PEDESTRIAN (LED) (COUNTDOWN) SIGNAL HEAD



A-F

NOTE:
VIDEO DETECTION ZONE AT THE STOP LINE SHOULD BE KEPT SMALL SO THAT MOTORCYCLES AND BICYCLES WILL IMPACT A LARGER PERCENTAGE OF THE DETECTION ZONE.

VIDEO DETECTION CAMERAS AND VIDEO DETECTION ZONES FOR S.R. 309 INTERSECTIONS INCLUDED ON SHEETS 846-855 ARE QUANTIFIED IN ALL-117/309-18.65/15.17 CONSTRUCTION PLANS.

VEHICULAR SIGNAL HEADS SHALL BE RIGID MOUNTED PER TC-85-20

J:\Projects\ALL\76691\signals\sheets\76691CP002.dgn 11-SEP-2012 9:18PM reddenj

HORIZONTAL SCALE IN FEET
0 10 20 40

CALCULATED JRL | CHECKED JTB

TRAFFIC SIGNAL PLAN
S.R. 309 & I-75 NORTHBOUND RAMPS

ALL-75-5.53

853
1224

TRAFFIC SIGNAL CONTROLLER TIMING CHART

INTERSECTION: SR 309 & I-75 NB

MAINTAINING AGENCY: ODOT

START UP
START IN: Y/R FLASH
TIME FOR FLASH OR ALL RED: 5 SEC.
FIRST PHASES: 2 & 6
COLOR DISPLAYED: GREEN

DUAL ENTRY: YES ϕ2 & ϕ6
REST IN RED:

OVERLAP	A	B	C	D
PHASES				

INTERVAL OR FEATURE			CONTROLLER MOVEMENT NUMBER							
			1	2	3	4	5	6	7	8
INTERSECTION MOVEMENT			-	EB	-	-	EBL	WB	-	NB
MINIMUM GREEN (INITIAL)		(SEC.)	-	20	-	-	7	20	-	10
ADDED INITIAL		(SEC./ACTUATION)	-	-	-	-	-	-	-	-
MAXIMUM INITIAL		(SEC.)	-	-	-	-	-	-	-	-
PASSAGE TIME (PRESET GAP)		(SEC.)	-	4	-	-	3	4	-	4
TIME BEFORE REDUCTION		(SEC.)	-	-	-	-	-	-	-	-
MINIMUM GAP		(SEC.)	-	-	-	-	-	-	-	-
TIME TO REDUCE		(SEC.)	-	-	-	-	-	-	-	-
MAXIMUM GREEN I		(SEC.)	-	65	-	-	25	65	-	35
MAXIMUM GREEN II		(SEC.)	-	65	-	-	25	65	-	35
YELLOW CHANGE		(SEC.)	-	4	-	-	4	4	-	3
ALL RED CLEARANCE		(SEC.)	-	2	-	-	3	2	-	3
WALK		(SEC.)	-	5	-	-	-	5	-	6
PEDESTRIAN CLEARANCE		(SEC.)	-	11	-	-	-	12	-	23
RECALL	MAXIMUM	(ON/OFF)	-	OFF	-	-	OFF	OFF	-	OFF
	MINIMUM	(ON/OFF)	-	ON	-	-	OFF	ON	-	OFF
	PEDESTRIAN	(ON/OFF)	-	OFF	-	-	OFF	OFF	-	OFF
MEMORY		(ON/OFF)	-	OFF	-	-	OFF	OFF	-	OFF
CALL TO NON ACTUATED		NO. 1	-	X	-	-	-	X	-	-
		NO. 2	-	-	-	-	-	-	-	-

SIGNAL SUPPORT ORIENTATION DATA

ELEVATION VIEW	SUPPORT NO.	SUPPORT DESIGN NO.	MAST ARM DESIGN NO.	POLE HEIGHT (FT.)	ARM MOUNTING HT. A	ARM MOUNTING HT. B	L (FT.)	L1 (FT.)	L2 (FT.)	L3 (FT.)	L4 (FT.)	L5 (FT.)	L6 (FT.)	ELEVATION A	ELEVATION B	MAST ARM A ORIENTATION ANGLE (DEGREES)	ORIENTATION ANGLES (DEG.) FROM MAST ARM A: MAST ARM "B"	PEDESTRIAN SIGNAL	PEDESTRIAN PUSHBUTTON	POWER SERVICE	CONTROLLER	HANDHOLE	BRACKET ARM	SIGN SUPPORT ARM
					SIGNAL SUPPORT TYPE TC-81.21 / *TC-12.30									ELEVATION			ORIENTATION ANGLES (DEG.) FROM MAST ARM A							
1	P1A	6	11	22	20.5		45	44	40	36	32	20		886.11	886.31	0	270					180		
2	P1B	6	11	22	20.5		41	40	34	28				886.00	886.31									
3	P2	14	14	23	21.5		67	65	61	57	53	41	29	888.24	888.32	0						180		
	P3		PED.	8														0	270			180		
	P4		PED.	8														263	103			193		
	P5		PED.	8														83	320			138		
	P6		PED.	8														280	127			217		
	P7		PED.	8														100	260			170		
	P8		PED.	8														0	90			180		

* DESIGN 6 = TC-12.30 POLE

SIGNAL PHASING DIAGRAM

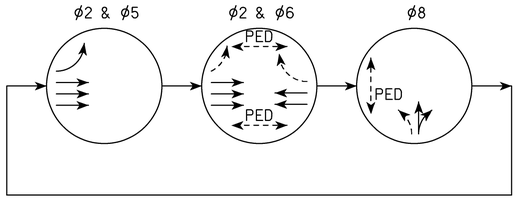

PHASING NOTES:
1. OMIT CALLS TO ϕ5 DURING ϕ6 GREEN.
2. ϕ5 AND ϕ8 ARE ACTUATED.
3. ϕ2 AND ϕ6 ARE COORDINATED.
4. WILLARD AVENUE INTERSECTION IS THE MASTER CONTROLLER LOCATION.

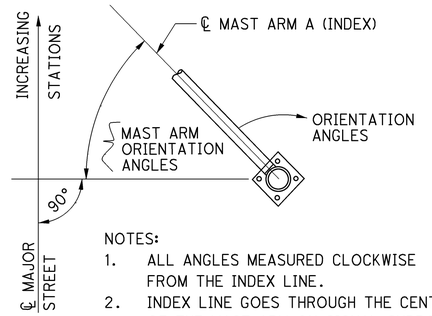

NOTES:
1. ALL ANGLES MEASURED CLOCKWISE FROM THE INDEX LINE.
2. INDEX LINE GOES THROUGH THE CENTER OF THE MAST ARM ON SIGNAL SUPPORTS OR FACE OF PEDESTRIAN SIGNAL HEAD ON PEDESTALS.
3. WHEN PEDESTRIAN SIGNALS ARE LOCATED ON NEW STEELPOLES, 1-½" BLIND HALF COUPLINGS SHALL BE PROVIDED IN THE POLE AS PER TC-85.10 AND THE ORIENTATION NOTD IN THE TABLE.
4. 1-½" B.H.C. LOCATED 27" ABOVE BASE OF POLE.
5. CABLE ENTRANCE FOR POWER SERVICE SHALL BE LOCATED 12" ABOVE CENTER LINE OF MAST ARM.

SIGNAL SUPPORT DETAILS

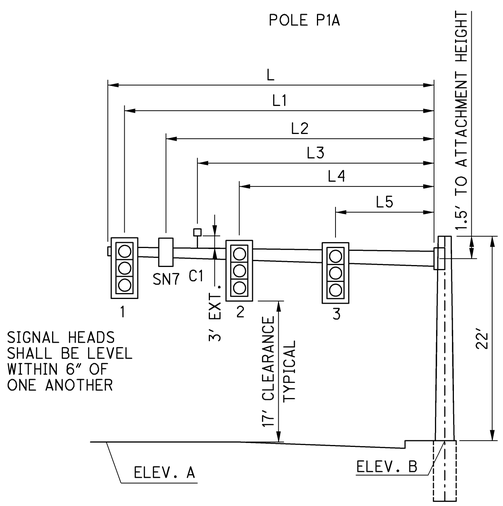

ELEVATION VIEW 1

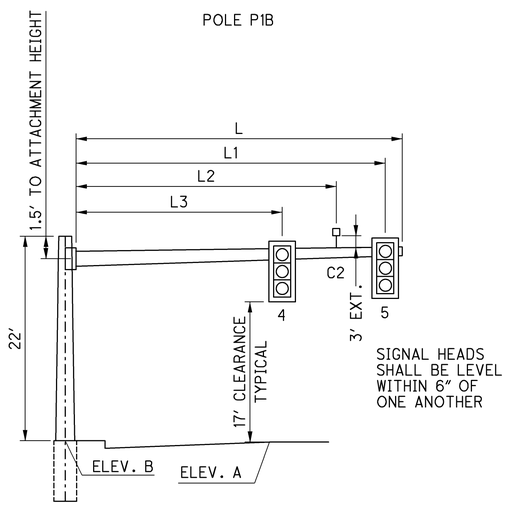

ELEVATION VIEW 2

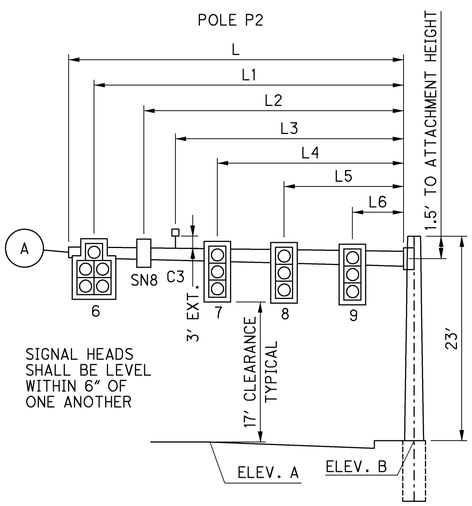

ELEVATION VIEW 3

VIDEO DETECTION CAMERAS AND VIDEO DETECTION ZONES FOR S.R. 309 INTERSECTIONS INCLUDED ON SHEETS 846-855 ARE QUANTIFIED IN ALL-117/309-18.65/15.17 CONSTRUCTION PLANS.

(A) INSTALL DAMPING DEVICE ON ALL MAST ARMS LONGER THAN 48 FEET AS PER THE TRAFFIC SIGNAL GENERAL NOTE ON SHEET 838.

CALCULATED JRL CHECKED JTB

TRAFFIC SIGNAL PLAN DETAILS
S.R. 309 & I-75 NORTHBOUND RAMPS

ALL-75-5.53

J:\Projects\ALL\76691\signals\sheets\76691CD003.dgn 11-SEP-2012 9:18PM reddenj

FIELD WIRING HOOK-UP CHART							
SIGNAL HEAD #	INDICATION	FIELD TERMINAL	FLASH	SIGNAL HEAD #	INDICATION	FIELD TERMINAL	FLASH
1, 2, 3 (WB)	R	ϕ6 R	R	7, 8, 9 (EB)	R	ϕ2 R	R
	Y	ϕ6 Y			Y	ϕ2 Y	
	G	ϕ6 G			G	ϕ2 G	
4, 5 (NB)	R	ϕ8 R	R	PEDESTRIAN SIGNAL HEAD #	INDICATION	FIELD TERMINAL	FLASH
	Y	ϕ8 Y					
	G	ϕ8 G					
6 (EBLT)	R	ϕ2 R	R	A-F (WEST)	W / FDW	LS 8P G	OUT
	Y	ϕ2 Y			DW	LS 8P R	
	G	ϕ2 G		B-C (NORTH)	W / FDW	LS 6P G	OUT
	~~Y~~	ϕ5 Y			DW	LS 6P R	
	~~G~~	ϕ5 G		D-E (SOUTH)	W / FDW	LS 2P G	OUT
					DW	LS 2P R	

VIDEO DETECTION CHART											
VIDEO DETECTION CAMERA NUMBER	VIDEO DETECTION ZONE NUMBER	MOVEMENT	PULSE OR PRESENCE	SIZE	DELAY (SEC.) CAMERA	DELAY (SEC.) SIGNAL CONTROLLER	DELAY INHIBIT (SEC.)	ASSOCIATED CONTROLLER PHASE	OVERRIDE PHASE	INPUT FILE*	TERMINAL NO.
C3	DZ1	EB	PRESENCE	30'x6'	0			ϕ5		J	1-D,E
C3	DZ2	EB	COUNT	8'x6'	0			ϕ5		J	1-J,K
C3	DZ3	EB	COUNT	8'x6'	0			ϕ2		I	2-D,E
C3	DZ4	EB	COUNT	8'x6'	0			ϕ2		I	2-J,K
C3	DZ5	EB	COUNT	8'x6'	0			ϕ2		I	3-D,E
C1	DZ6	WB	COUNT	8'x6'	0			ϕ6		J	2-D,E
C1	DZ7	WB	COUNT	8'x6'	0			ϕ6		J	2-J,K
C1	DZ8	WB	COUNT	8'x6'	0			ϕ6		J	3-D,E
C2	DZ9	NB	PRESENCE	30'x6'	0			ϕ8		J	6-D,E
C2	DZ10	NB	COUNT	8'x6'	0			ϕ8		J	6-J,K
C2	DZ11	NB	PRESENCE	30'x6'	0			ϕ8		J	7-D,E
C2	DZ12	NB	COUNT	8'x6'	0	10		ϕ8		J	7-J,K

*I = UPPER INPUT FILE; J = LOWER INPUT FILE

VIDEO DETECTION CAMERAS AND VIDEO DETECTION ZONES FOR S.R. 309 INTERSECTIONS INCLUDED ON SHEETS 846-855 ARE QUANTIFIED IN ALL-117/309-18.65/15.17 CONSTRUCTION PLANS.

VIDEO DETECTION NOTES:
1. THE CONTRACTOR IS RESPONSIBLE FOR PROGRAMMING VIDEO DETECTORS IN THE CAMERA & CONTROLLER.
2. IT IS ODOT'S INTENTION THAT LANE COUNT DATA WILL BE COLLECTED THROUGH THE USE OF THE 24 AVAILABLE VOLUME DETECTORS ASSIGNMENTS.

WIRING DIAGRAM LEGEND

- (2) 2/C #14 AWG. (PED PB)
- (5) 5/C #14 AWG.
- (7) 7/C #14 AWG.
- (PC) POWER CABLE, 2/C NO. 6 AWG.
- (MB) METER BASE
- POWER SOURCE
- DS DISCONNECT SWITCH
- VEHICULAR SIGNAL HEAD
- VEHICULAR SIGNAL HEAD W/ TURN ARROW (5-SECTION)
- PH PEDESTRIAN SIGNAL HEAD WITH PED PUSHBUTTON
- VIDEO DETECTION CAMERA
- (VC) VIDEO CABLE

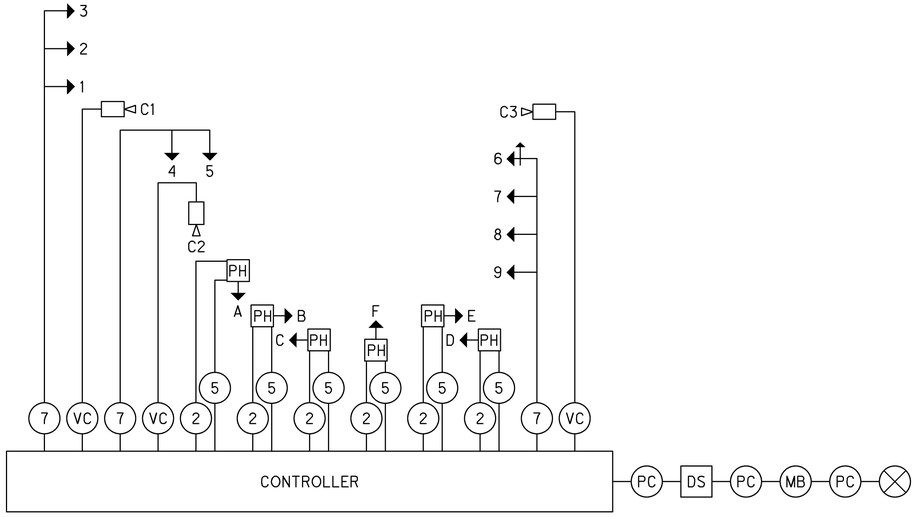

WIRING DIAGRAM

COORDINATION TIMING CHART									
PLAN (CYCLE-SEC.)	SPLITS (G + Y + AR) IN SECONDS								OFFSET*
	PHASE								
	1	2	3	4	5	6	7	8	
CYCLE 1 (110 SEC.) SPLIT 1	-	76	-	-	15	61	-	34	5
CYCLE 1 (110 SEC.) SPLIT 2	-	86	-	-	16	70	-	24	22
CYCLE 1 (110 SEC.) SPLIT 3	-	85	-	-	18	67	-	25	90
CYCLE 2 (120 SEC.) SPLIT 1	-	93	-	-	20	73	-	27	13
CYCLE 3 (140 SEC.) SPLIT 1	-	107	-	-	19	88	-	33	17

NOTES:
*OFFSETS MEASURED FROM COORDINATED ϕ2 & ϕ6 END OF GREEN/BEGINNING OF YELLOW.

TBC PLAN EVENTS	HOURS	CYCLE/SPLIT/OFFSET
PLAN 1 - (MON - FRI)	0000-0530	FREE
PLAN 1 - (MON - FRI)	0530-1000	1 / 1 / 1
PLAN 1 - (MON - FRI)	1000-1400	1 / 2 / 1
PLAN 1 - (MON - FRI)	1400-1800	2 / 1 / 1
PLAN 1 - (MON - FRI)	1800-2200	1 / 3 / 1
PLAN 1 - (MON - FRI)	2200-2400	FREE
PLAN 2 - (SAT - SUN)	0000-0800	FREE
PLAN 2 - (SAT - SUN)	0800-1000	1 / 3 / 1
PLAN 2 - (SAT - SUN)	1000-1800	1 / 2 / 1
PLAN 2 - (SAT - SUN)	1800-2200	1 / 3 / 1
PLAN 2 - (SAT - SUN)	2200-2400	FREE

CALCULATED JRL CHECKED JTB

TRAFFIC SIGNAL PLAN DETAILS S.R. 309 & I-75 NORTHBOUND RAMPS

ALL-75-5.53

855
1224

J:\Projects\ALL\76691\signals\sheets\76691CD004.dgn 11-SEP-2012 9:18PM reddenj

Ⓐ STA. 439+11.94, 3.04′ LT
Ⓑ STA. 439+43.94, 3.37′ LT
Ⓒ STA. 439+11.97, 14.42′ LT
Ⓓ STA. 439+11.97, 26.42′ LT
Ⓔ STA. 439+12.00, 38.42′ RT
Ⓕ STA. 437+41.00, 3.00′ RT
Ⓖ STA. 437+09.00, 3.00′ RT
Ⓗ STA. 437+41.00, 15.00′ RT
Ⓘ STA. 437+41.00, 27.00′ RT
Ⓙ STA. 438+23.91, 67.47′ LT
Ⓚ STA. 438+29.46, 98.99′ LT
Ⓛ STA. 438+12.09, 69.55′ LT
Ⓜ STA. 438+17.64, 101.07′ LT
Ⓝ STA. 438+38.91, 45.00′ RT
Ⓞ STA. 438+38.91, 77.00′ RT
Ⓟ STA. 438+78.91, 45.00′ RT
Ⓠ STA. 438+78.91, 77.00′ RT
Ⓡ STA. 438+23.91 ℄ S.R. 81 = STA. 11+18.04 ℄ NEUBRECHT RD.

DETAIL "A"
CONTROLLER WORK PAD

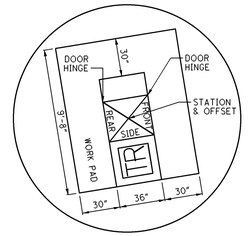

SIGNAL SUPPORT, P2
TC-81.21 DESIGN NO. 13
STA. 439+09.36, 78.43′ LT

2″ CONDUIT W/ 1-7/C, 1-VC
9′ IN TRENCH

24″ PULL BOX B2
STA. 439+16.09, 72.58′ LT

EXISTING POWER POLE

2″ CONDUIT W/ 4-7/C, 4-VC
6′ IN TRENCH

GROUND MOUNTED CONTROLLER W/ WORKPAD
STA. 439+23.01, 72.73′ LT
SEE DETAIL "A" THIS SHEET

2″ CONDUIT W/ POWER CABLE
47′ IN TRENCH

24″ PULL BOX B5
STA. 439+65.77, 68.04′ LT

2″ CONDUIT W/ POWER CABLE
44′ IN TRENCH

3″ CONDUIT W/ 1-7/C, 1-VC
146′ JACKED OR DRILLED

24″ PULL BOX B1
STA. 437+70.44, 65.56′ LT

2″ CONDUIT W/ 1-7/C, 1-VC
7′ IN TRENCH

SIGNAL SUPPORT, P1
TC-81.21 DESIGN NO. 13
STA. 437+67.44, 59.00′ LT

℄ R/W & CONST.
NEUBRECHT RD.

PT Sta. 12+89.62

PC Sta. 11+46.49

℄ R/W & CONST. S.R. 81

N72°39′55″E

SIGNAL SUPPORT, P4
TC-81.21 DESIGN NO. 14
STA. 437+45.00, 50.54′ RT

2″ CONDUIT W/ 1-7/C, 1-VC
8′ IN TRENCH

24″ PULL BOX B4
STA. 437+51.16, 54.67′ RT

3″ CONDUIT W/ 2-7/C, 2-VC
137′ IN TRENCH

SIGNAL SUPPORT, P3
TC-81.21 DESIGN NO. 14
STA. 439+18.93, 68.00′ RT

2″ CONDUIT W/ 1-7/C, 1-VC
10′ IN TRENCH

24″ PULL BOX B3
STA. 439+09.54, 64.01′ RT

3″ CONDUIT W/ 1-7/C, 1-VC
159′ IN TRENCH

R9-3-18
SN1, SN2, SN3,
SN4, SN5, SN6

NOTE:
VIDEO DETECTION ZONE AT THE STOP LINE SHOULD BE KEPT SMALL SO THAT MOTORCYCLES AND BICYCLES WILL IMPACT A LARGER PERCENTAGE OF THE DETECTION ZONE.

SIGNAL HEAD DETAIL
12″ (LED) LENSES

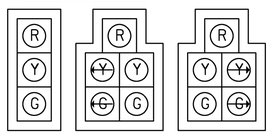

VEHICULAR SIGNAL HEADS SHALL BE RIGID MOUNTED PER TC-85-20

LEGEND

- VEHICULAR SIGNAL HEAD (3-SECTION)
- VEHICULAR SIGNAL HEAD (5-SECTION)
- SIGNAL SUPPORT POLE
- VIDEO DETECTION CAMERA
- VIDEO DETECTION ZONE
- SIGNAL PULL BOX
- CONTROLLER WORK PAD
- UNDERGROUND CONDUIT
- SIGN
- OVERHEAD CANTILEVER SIGN

HORIZONTAL SCALE IN FEET
0 10 20 40

CALCULATED JRL
CHECKED JTB

TRAFFIC SIGNAL PLAN
S.R. 81 & NEUBRECHT ROAD

ALL-75-5.53

856
1224

J:\Projects\ALL\76691\signals\sheets\76691CP003.dgn 11-SEP-2012 9:18PM reddenj

TRAFFIC SIGNAL CONTROLLER TIMING CHART

INTERSECTION: SR 81 & NEUBRECHT RD

MAINTAINING AGENCY: ODOT

START UP
START IN: Y/R FLASH
TIME FOR FLASH OR ALL RED: 5 SEC.
FIRST PHASES: 2 & 6
COLOR DISPLAYED: GREEN

DUAL ENTRY: YES ϕ2 & ϕ6, ϕ4 & ϕ8
REST IN RED:

OVERLAP	A	B	C	D
PHASES	5			

INTERVAL OR FEATURE			CONTROLLER MOVEMENT NUMBER							
			1	2	3	4	5	6	7	8
INTERSECTION MOVEMENT			WBL	EB	-	SB	EBL	WB	-	NB
MINIMUM GREEN (INITIAL)		(SEC.)	7	20	-	10	7	20	-	10
ADDED INITIAL		(SEC./ACTUATION)	-	-	-	-	-	-	-	-
MAXIMUM INITIAL		(SEC.)	-	-	-	-	-	-	-	-
PASSAGE TIME (PRESET GAP)		(SEC.)	3	4	-	4	3	4	-	4
TIME BEFORE REDUCTION		(SEC.)	-	-	-	-	-	-	-	-
MINIMUM GAP		(SEC.)	-	-	-	-	-	-	-	-
TIME TO REDUCE		(SEC.)	-	-	-	-	-	-	-	-
MAXIMUM GREEN I		(SEC.)	20	60	-	45	20	60	-	35
MAXIMUM GREEN II		(SEC.)	20	60	-	45	20	60	-	35
YELLOW CHANGE		(SEC.)	3.5	4.5	-	3.5	3.5	4.5	-	3.5
ALL RED CLEARANCE		(SEC.)	3	2.5	-	3	3	2.5	-	3
WALK		(SEC.)	-	-	-	-	-	-	-	-
PEDESTRIAN CLEARANCE		(SEC.)	-	-	-	-	-	-	-	-
RECALL	MAXIMUM	(ON/OFF)	OFF	OFF	-	OFF	OFF	OFF	-	OFF
	MINIMUM	(ON/OFF)	OFF	ON	-	OFF	OFF	ON	-	OFF
	PEDESTRIAN	(ON/OFF)	OFF	OFF	-	OFF	OFF	OFF	-	OFF
MEMORY		(ON/OFF)	OFF	OFF	-	OFF	OFF	OFF	-	OFF
CALL TO NON ACTUATED		NO. 1	-	X	-	-	-	X	-	-
		NO. 2	-	-	-	-	-	-	-	-

(A) INSTALL DAMPING DEVICE ON ALL MAST ARMS LONGER THAN 48 FEET AS PER THE TRAFFIC SIGNAL GENERAL NOTE ON SHEET 838.

SIGNAL SUPPORT ORIENTATION DATA

ELEVATION VIEW	SUPPORT NO.	SUPPORT DESIGN NO.	MAST ARM DESIGN NO.	POLE HEIGHT (FT.)	ARM MOUNTING HT. A	ARM MOUNTING HT. B	L (FT.)	L1 (FT.)	L2 (FT.)	L3 (FT.)	L4 (FT.)	L5 (FT.)	ELEVATION A	ELEVATION B	MAST ARM A ORIENTATION ANGLE (DEGREES)	ORIENTATION ANGLES (DEG.) FROM MAST ARM A: MAST ARM "B"	PEDESTRIAN SIGNAL	PEDESTRIAN PUSHBUTTON	POWER SERVICE	CONTROLLER	HANDHOLE	BRACKET ARM	SIGN SUPPORT ARM
1	P1	13	13	23	21.5		60	58	52	46	34	22	869.87	869.34	0						180		
2	P2	13	13	24	22.5		59	58	48	38			868.37	866.59	90						180		
3	P3	14	14	23	21.5		69	67	61	55	43		870.05	869.77	0						180		
4	P4	14	14	21	19.5		61	60	54	48			868.62	869.90	100						180		

SIGNAL PHASING DIAGRAM

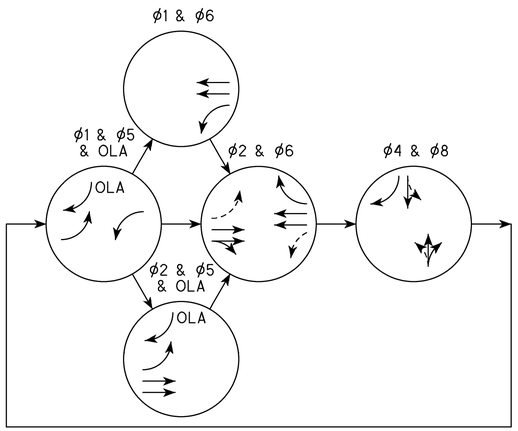

PHASING NOTES:
1. OMIT CALLS TO ϕ1 DURING ϕ2 GREEN.
2. OMIT CALLS TO ϕ5 DURING ϕ6 GREEN.
2. ϕ1, ϕ4, ϕ5 AND ϕ8 ARE ACTUATED.
3. ϕ2 AND ϕ6 ARE COORDINATED.
4. RIGHT ARROW IN ϕ1 & ϕ5 AND ϕ2 & ϕ5.
5. OVERLAP A (OLA) = OVERLAP OF ϕ5.

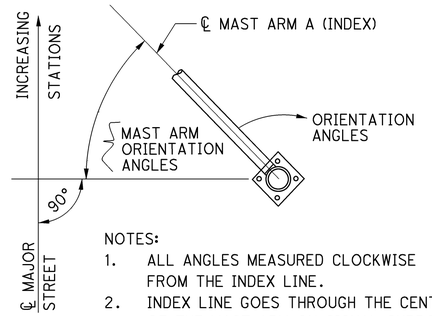

NOTES:
1. ALL ANGLES MEASURED CLOCKWISE FROM THE INDEX LINE.
2. INDEX LINE GOES THROUGH THE CENTER OF THE MAST ARM ON SIGNAL SUPPORTS OR FACE OF PEDESTRIAN SIGNAL HEAD ON PEDESTALS.
3. WHEN PEDESTRIAN SIGNALS ARE LOCATED ON NEW STEELPOLES, 1-½" BLIND HALF COUPLINGS SHALL BE PROVIDED IN THE POLE AS PER TC-85.10 AND THE ORIENTATION NOTD IN THE TABLE.
4. 1-½" B.H.C. LOCATED 27" ABOVE BASE OF POLE.
5. CABLE ENTRANCE FOR POWER SERVICE SHALL BE LOCATED 12" ABOVE CENTER LINE OF MAST ARM.

SIGNAL SUPPORT DETAILS

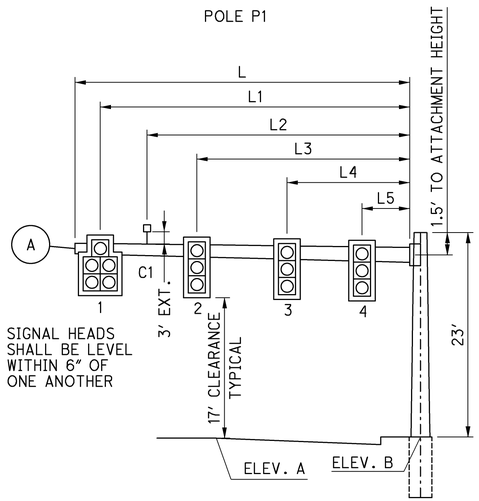

ELEVATION VIEW 1

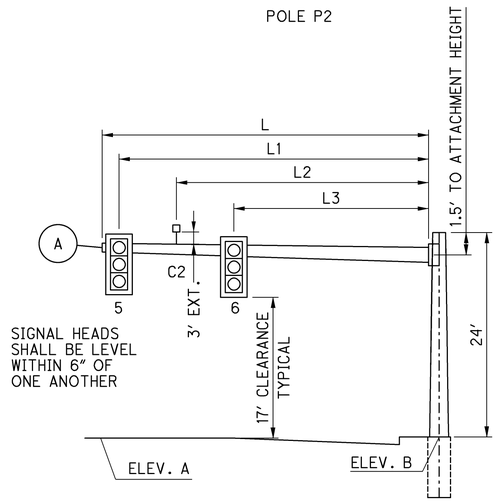

ELEVATION VIEW 2

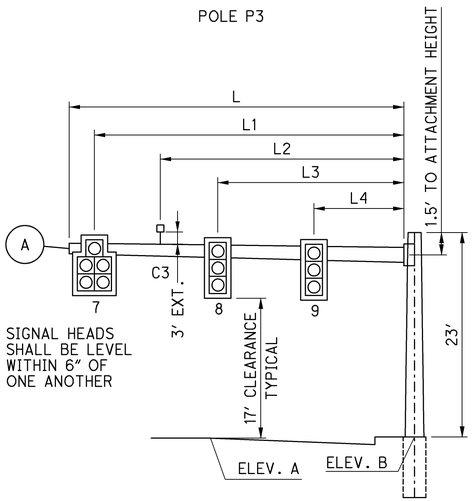

ELEVATION VIEW 3

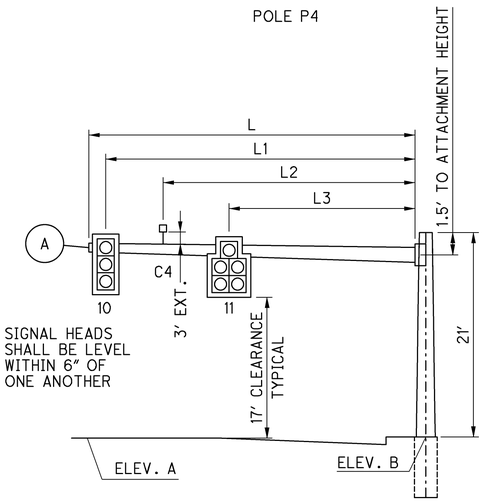

ELEVATION VIEW 4

CALCULATED JRL CHECKED JTB

TRAFFIC SIGNAL PLAN DETAILS
S.R. 81 & NEUBRECHT ROAD

ALL-75-5.53

857
1224

J:\Projects\ALL\7669\signals\sheets\7669ICD005.dgn 11-SEP-2012 9:18PM reddenj

FIELD WIRING HOOK-UP CHART							
SIGNAL HEAD #	INDICATION	FIELD TERMINAL	FLASH	SIGNAL HEAD #	INDICATION	FIELD TERMINAL	FLASH
1 (WBLT)	R	ϕ6 R	R	8, 9 (EB)	R	ϕ2 R	R
	Y	ϕ6 Y			Y	ϕ2 Y	
	G	ϕ6 G			G	ϕ2 G	
	~~Y~~	ϕ1 Y		10 (SB)	R	ϕ4 R	R
	~~G~~	ϕ1 G			Y	ϕ4 Y	
2, 3, 4 (WB)	R	ϕ6 R	R		G	ϕ4 G	
	Y	ϕ6 Y		11 (SBRT)	R	ϕ4 R	R
	G	ϕ6 G			Y	ϕ4 Y	
5, 6 (NB)	R	ϕ8 R	R		G	ϕ4 G	
	Y	ϕ8 Y			~~Y~~	LS 2P Y	OUT
	G	ϕ8 G			~~G~~	LS 2P G	
7 (EBLT)	R	ϕ2 R	R				
	Y	ϕ2 Y					
	G	ϕ2 G					
	~~Y~~	ϕ5 Y					
	~~G~~	ϕ5 G					

VIDEO DETECTION CHART											
VIDEO DETECTION CAMERA NUMBER	VIDEO DETECTION ZONE NUMBER	MOVEMENT	PULSE OR PRESENCE	SIZE	DELAY (SEC.) CAMERA	DELAY (SEC.) SIGNAL CONTROLLER	DELAY INHIBIT (SEC.)	ASSOCIATED CONTROLLER PHASE	OVERRIDE PHASE	INPUT FILE*	TERMINAL NO.
C1	DZ1	WB	COUNT	8'x6'	0			ϕ1		I	1-D,E
C1	DZ2	WB	PRESENCE	30'x6'	0			ϕ1		I	1-J,K
C1	DZ3	WB	COUNT	8'x6'	0			ϕ6		J	2-D,E
C1	DZ4	WB	COUNT	8'x6'	0			ϕ6		J	2-J,K
C1	DZ5	WB	COUNT	8'x6'	0			ϕ6		J	3-D,E
C3	DZ6	EB	COUNT	8'x6'	0			ϕ5		J	1-D,E
C3	DZ7	EB	PRESENCE	30'x6'	0			ϕ5		J	1-J,K
C3	DZ8	EB	COUNT	8'x6'	0			ϕ2		I	2-D,E
C3	DZ9	EB	COUNT	8'x6'	0			ϕ2		I	2-J,K
C4	DZ10	SB	PRESENCE	30'x6'	0			ϕ4		I	6-D,E
C4	DZ11	SB	COUNT	8'x6'	0			ϕ4		I	6-J,K
C4	DZ12	SB	PRESENCE	30'x6'	0	10		ϕ4		I	7-D,E
C4	DZ13	SB	COUNT	8'x6'	0			ϕ4		I	7-J,K
C2	DZ14	NB	PRESENCE	30'x6'	0			ϕ8		J	6-D,E
C2	DZ15	NB	COUNT	8'x6'	0			ϕ8		J	6-J,K
C2	DZ16	NB	PRESENCE	30'x34'	0	10		ϕ8		J	7-D,E
C2	DZ17	NB	COUNT	8'x34'	0			ϕ8		J	7-J,K

*I = UPPER INPUT FILE; J = LOWER INPUT FILE

VIDEO DETECTION NOTES:
1. THE CONTRACTOR IS RESPONSIBLE FOR PROGRAMMING VIDEO DETECTORS IN THE CAMERA & CONTROLLER.
2. IT IS ODOT'S INTENTION THAT LANE COUNT DATA WILL BE COLLECTED THROUGH THE USE OF THE 24 AVAILABLE VOLUME DETECTORS ASSIGNMENTS.

WIRING DIAGRAM LEGEND

- (2) 2/C #14 AWG. (PED PB)
- (5) 5/C #14 AWG.
- (7) 7/C #14 AWG.
- (PC) POWER CABLE, 2/C NO. 6 AWG.
- (MB) METER BASE
- (⊗) POWER SOURCE
- [DS] DISCONNECT SWITCH
- → VEHICULAR SIGNAL HEAD
- ⇉ VEHICULAR SIGNAL HEAD W/ TURN ARROW (5-SECTION)
- [PH]→ PEDESTRIAN SIGNAL HEAD WITH PED PUSHBUTTON
- ▭◁ VIDEO DETECTION CAMERA
- (VC) VIDEO CABLE

WIRING DIAGRAM

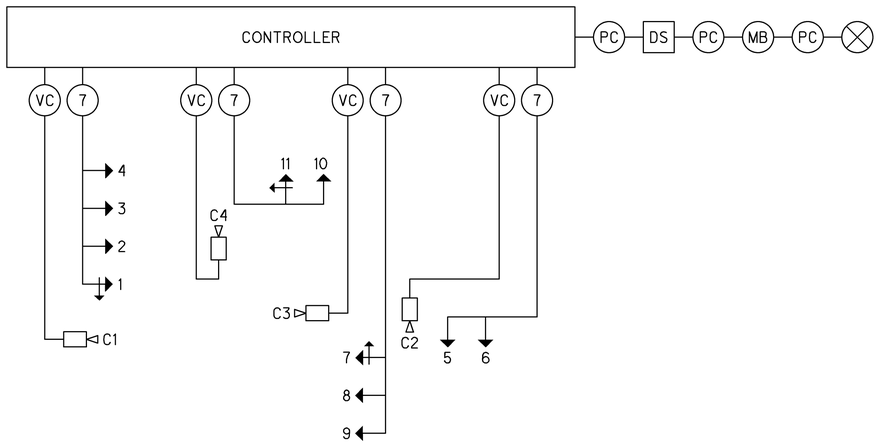

COORDINATION TIMING CHART										
PLAN (CYCLE-SEC.)	SPLITS (G + Y + AR) IN SECONDS PHASE								OFFSET*	
	1	2	3	4	5	6	7	8	#1	#2
CYCLE 1 (95 SEC.) SPLIT 1	15	57	-	23	15	57	-	23	2	-
CYCLE 1 (95 SEC.) SPLIT 2	15	54	-	26	15	54	-	26	91	-
CYCLE 2 (120 SEC.) SPLIT 1	15	57	-	48	15	57	-	48	109	114

NOTES:
*OFFSETS MEASURED FROM COORDINATED ϕ2 & ϕ6 END OF GREEN/BEGINNING OF YELLOW.

TBC PLAN EVENTS	HOURS	CYCLE/SPLIT/OFFSET
PLAN 1 - (MON - FRI)	0000-0530	FREE
PLAN 1 - (MON - FRI)	0530-1000	1 / 1 / 1
PLAN 1 - (MON - FRI)	1000-1330	2 / 1 / 1
PLAN 1 - (MON - FRI)	1330-1800	2 / 1 / 2
PLAN 1 - (MON - FRI)	1800-2200	1 / 2 / 1
PLAN 1 - (MON - FRI)	2200-2400	FREE
PLAN 2 - (SAT - SUN)	0000-0700	FREE
PLAN 2 - (SAT - SUN)	0700-1000	1 / 2 / 1
PLAN 2 - (SAT - SUN)	1000-1800	2 / 1 / 1
PLAN 2 - (SAT - SUN)	1800-2200	1 / 2 / 1
PLAN 2 - (SAT - SUN)	2200-2400	FREE

CALCULATED JRL CHECKED JTB

TRAFFIC SIGNAL PLAN DETAILS S.R. 81 & NEUBRECHT ROAD

ALL-75-5.53

858
1224

J:\Projects\ALL\76691\signals\sheets\76691CD006.dgn 11-SEP-2012 9:18PM reddenj

Ⓐ STA. 448+72.82, 9.00′ LT

Ⓑ STA. 448+82.82, 9.00′ LT

Ⓒ STA. 448+72.82, 21.00′ LT

Ⓓ STA. 448+72.82, 33.00′ LT

Ⓔ STA. 447+92.02, 23.02′ RT

Ⓕ STA. 447+92.02, 35.03′ RT

Ⓖ STA. 447+92.02, 47.03′ RT

Ⓗ STA. 448+30.37, 61.73′ LT

Ⓘ STA. 448+30.93, 71.71′ LT

Ⓙ STA. 448+18.39, 62.40′ LT

Ⓚ STA. 448+18.95, 72.38′ LT

Ⓛ STA. 448+15.19 ℄ S.R. 81 =
STA. 461+75.24 ℄ RAMP 'D'

Ⓜ STA. 448+20.11 ℄ S.R. 81 =
STA. 461+31.81 ℄ RAMP 'F'

Ⓝ STA. 448+45.24, 58.07′ LT

Ⓞ STA. 448+62.78, 40.50′ LT

NOTE:
VIDEO DETECTION ZONE AT THE STOP LINE SHOULD BE KEPT SMALL SO THAT MOTORCYCLES AND BICYCLES WILL IMPACT A LARGER PERCENTAGE OF THE DETECTION ZONE.

DETAIL "A"
CONTROLLER WORK PAD

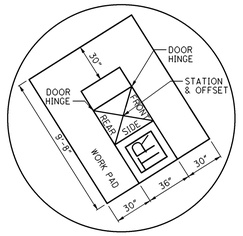

℄ RAMP 'F'

PC Sta. 462+79.55

3" CONDUIT W/ 1-7/C, 1-VC
70′ IN TRENCH

24" PULL BOX B2
STA. 448+58.65, 60.55′ LT

EXISTING POWER POLE

2" CONDUIT W/ POWER CABLE
42" IN TRENCH

2" CONDUIT W/ 3-7/C, 3-VC
7′ IN TRENCH

GROUND MOUNTED CONTROLLER W/ WORKPAD
STA. 448+68.54, 59.99′ LT
SEE DETAIL "A" THIS SHEET

3" CONDUIT W/ 2-7/C, 2-VC
126′ IN TRENCH

24" PULL BOX B1
STA. 447+89.60, 74.02′ LT

2" CONDUIT W/ 1-7/C, 1-VC
9′ IN TRENCH

SIGNAL SUPPORT, P1
TC-81.21 DESIGN NO. 14
STA. 447+81.75, 69.00′ LT

SN1 SN2 SN3 SN4 SN5 SN6 SN7 SN8

DZ1 DZ2 DZ3 DZ4 DZ5 DZ6 DZ7 DZ8 DZ9 DZ10 DZ11

C1 C2 C3

N 8° 14′ 44" W

N 78° 45′ 16" E

N 15° 14′ 43" W

℄ R/W & CONST. S.R. 81

PT Sta. 446+33.68

PT Sta. 460+41.09

℄ RAMP 'D'

SIGNAL SUPPORT, P2
TC-12.30 DESIGN NO. 6
STA. 448+60.28, 57.00′ RT

2" CONDUIT W/ 2-7/C, 2-VC
9′ IN TRENCH

24" PULL BOX B3
STA. 448+57.68, 65.66′ RT

MATCH LINE STA. 451+00 S.R. 81

R9-3-18
SN1, SN2, SN3,
SN4, SN5, SN6

SIGNAL HEAD DETAIL
12" (LED) LENSES

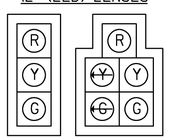

VEHICULAR SIGNAL HEADS SHALL BE RIGID MOUNTED PER TC-85-20

LEGEND

- VEHICULAR SIGNAL HEAD (3-SECTION)
- VEHICULAR SIGNAL HEAD (5-SECTION)
- SIGNAL SUPPORT POLE
- VIDEO DETECTION CAMERA
- VIDEO DETECTION ZONE
- SIGNAL PULL BOX
- CONTROLLER WORK PAD
- UNDERGROUND CONDUIT
- SIGN
- OVERHEAD CANTILEVER SIGN

HORIZONTAL SCALE IN FEET
0 10 20 40

CALCULATED JRL
CHECKED JTB

TRAFFIC SIGNAL PLAN
S.R. 81 & I-75 SOUTHBOUND RAMPS

ALL-75-5.53

859
1224

J:\Projects\ALL\76691\signals\sheets\76691CP004.dgn 11-SEP-2012 9:18PM reddenj

TRAFFIC SIGNAL CONTROLLER TIMING CHART

INTERSECTION: SR 81 & I-75 SB

MAINTAINING AGENCY: ODOT

START UP
START IN: Y/R FLASH
TIME FOR FLASH OR ALL RED: 5 SEC.
FIRST PHASES: 2 & 6
COLOR DISPLAYED: GREEN

DUAL ENTRY: YES ϕ2 & ϕ6
REST IN RED:

OVERLAP	A	B	C	D
PHASES				

INTERVAL OR FEATURE			CONTROLLER MOVEMENT NUMBER							
			1	2	3	4	5	6	7	8
INTERSECTION MOVEMENT			WBL	EB	-	SB	-	WB	-	-
MINIMUM GREEN (INITIAL)		(SEC.)	7	20	-	10	-	20	-	-
ADDED INITIAL		(SEC./ACTUATION)	-	-	-	-	-	-	-	-
MAXIMUM INITIAL		(SEC.)	-	-	-	-	-	-	-	-
PASSAGE TIME (PRESET GAP)		(SEC.)	3	4	-	4	-	4	-	-
TIME BEFORE REDUCTION		(SEC.)	-	-	-	-	-	-	-	-
MINIMUM GAP		(SEC.)	-	-	-	-	-	-	-	-
TIME TO REDUCE		(SEC.)	-	-	-	-	-	-	-	-
MAXIMUM GREEN I		(SEC.)	25	60	-	45	-	65	-	-
MAXIMUM GREEN II		(SEC.)	25	60	-	45	-	65	-	-
YELLOW CHANGE		(SEC.)	3.5	4.5	-	3	-	4.5	-	-
ALL RED CLEARANCE		(SEC.)	3	2	-	3	-	2	-	-
WALK		(SEC.)	-	-	-	-	-	-	-	-
PEDESTRIAN CLEARANCE		(SEC.)	-	-	-	-	-	-	-	-
RECALL	MAXIMUM	(ON/OFF)	OFF	OFF	-	OFF	-	OFF	-	-
	MINIMUM	(ON/OFF)	OFF	ON	-	OFF	-	ON	-	-
	PEDESTRIAN	(ON/OFF)	OFF	OFF	-	OFF	-	OFF	-	-
MEMORY		(ON/OFF)	OFF	OFF	-	OFF	-	OFF	-	-
CALL TO NON ACTUATED		NO. 1	-	X	-	-	-	X	-	-
		NO. 2	-	-	-	-	-	-	-	-

SIGNAL SUPPORT ORIENTATION DATA

ELEVATION VIEW	SUPPORT NO.	SUPPORT DESIGN NO.	MAST ARM DESIGN NO.	POLE HEIGHT (FT.)	ARM MOUNTING HT. A	ARM MOUNTING HT. B	L (FT.)	L1 (FT.)	L2 (FT.)	L3 (FT.)	L4 (FT.)	ELEVATION A	ELEVATION B	MAST ARM A ORIENTATION ANGLE (DEGREES)	ORIENTATION ANGLES (DEG.) FROM MAST ARM A: MAST ARM "B"	PEDESTRIAN SIGNAL	PEDESTRIAN PUSHBUTTON	POWER SERVICE	CONTROLLER	HANDHOLE	BRACKET ARM	SIGN SUPPORT ARM
		SIGNAL SUPPORT TYPE TC-81.21 / *TC-12.30										ELEVATION			ORIENTATION ANGLES (DEG.) FROM MAST ARM A							
1	P1	14	14	24	22.5		64	62	56	50	38	870.80	869.56	0						180		
2	P2A	6	11	22	20.5		45	44	38	32		871.13	871.96	273	87					180		
3	P2B	6	11	22	20.5		39	38	32	26	14	871.83	871.96									

* DESIGN 6 = TC-12.30 POLE

SIGNAL PHASING DIAGRAM

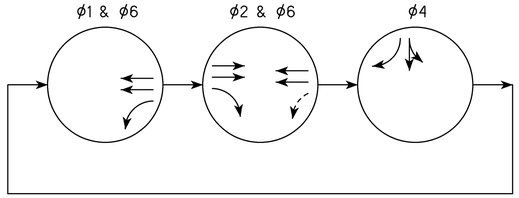

PHASING NOTES:
1. OMIT CALLS TO ϕ1 DURING ϕ2 GREEN.
2. ϕ1 AND ϕ4 ARE ACTUATED.
3. ϕ2 AND ϕ6 ARE COORDINATED.

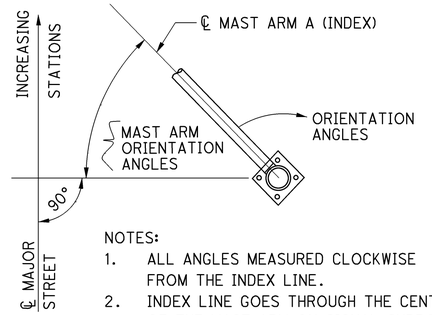

NOTES:
1. ALL ANGLES MEASURED CLOCKWISE FROM THE INDEX LINE.
2. INDEX LINE GOES THROUGH THE CENTER OF THE MAST ARM ON SIGNAL SUPPORTS OR FACE OF PEDESTRIAN SIGNAL HEAD ON PEDESTALS.
3. WHEN PEDESTRIAN SIGNALS ARE LOCATED ON NEW STEELPOLES, 1-½" BLIND HALF COUPLINGS SHALL BE PROVIDED IN THE POLE AS PER TC-85.10 AND THE ORIENTATION NOTD IN THE TABLE.
4. 1-½" B.H.C. LOCATED 27" ABOVE BASE OF POLE.
5. CABLE ENTRANCE FOR POWER SERVICE SHALL BE LOCATED 12" ABOVE CENTER LINE OF MAST ARM.

SIGNAL SUPPORT DETAILS

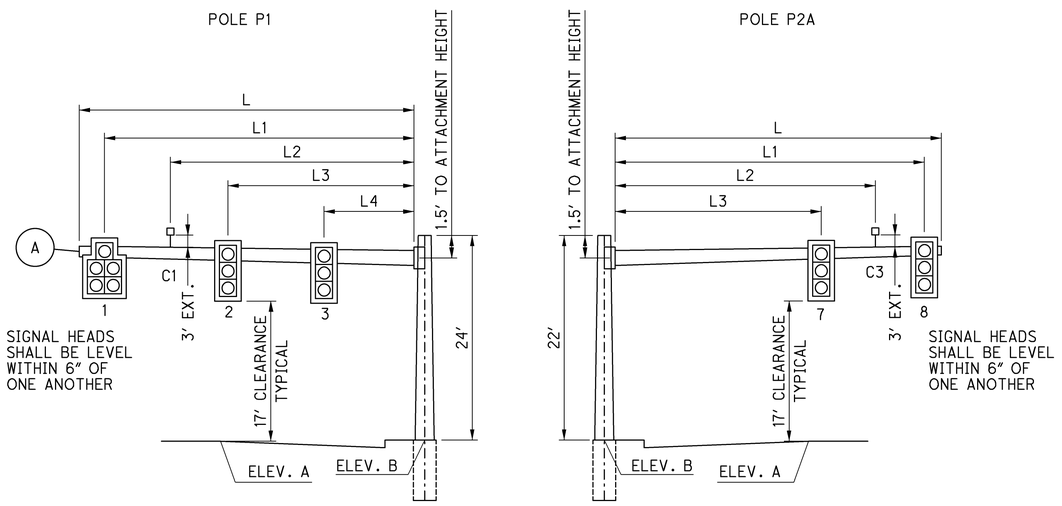

ELEVATION VIEW 1 ELEVATION VIEW 2 ELEVATION VIEW 3

(A) INSTALL DAMPING DEVICE ON ALL MAST ARMS LONGER THAN 48 FEET AS PER THE TRAFFIC SIGNAL GENERAL NOTE ON SHEET 838.

CALCULATED JRL CHECKED JTB

TRAFFIC SIGNAL PLAN DETAILS
S.R. 81 & I-75 SOUTHBOUND RAMPS

ALL-75-5.53

860
1224

J:\Projects\ALL\76691\signals\sheets\76691CD007.dgn 11-SEP-2012 9:18PM reddenj

FIELD WIRING HOOK-UP CHART							
SIGNAL HEAD #	INDICATION	FIELD TERMINAL	FLASH	SIGNAL HEAD #	INDICATION	FIELD TERMINAL	FLASH
1 (WBLT)	R	ϕ6 R	R	4, 5, 6 (EB)	R	ϕ2 R	R
	Y	ϕ6 Y			Y	ϕ2 Y	
	G	ϕ6 G			G	ϕ2 G	
	~~Y~~	ϕ1 Y		7, 8 (SB)	R	ϕ4 R	R
	~~G~~	ϕ1 G			Y	ϕ4 Y	
2, 3 (WB)	R	ϕ6 R	R		G	ϕ4 G	
	Y	ϕ6 Y					
	G	ϕ6 G					

VIDEO DETECTION CHART											
VIDEO DETECTION CAMERA NUMBER	VIDEO DETECTION ZONE NUMBER	MOVEMENT	PULSE OR PRESENCE	SIZE	DELAY (SEC.) CAMERA	DELAY (SEC.) SIGNAL CONTROLLER	DELAY INHIBIT (SEC.)	ASSOCIATED CONTROLLER PHASE	OVERRIDE PHASE	INPUT FILE*	TERMINAL NO.
C1	DZ1	WB	PRESENCE	30'x6'	0			ϕ1		I	1-D,E
C1	DZ2	WB	COUNT	8'x6'	0			ϕ1		I	1-J,K
C1	DZ3	WB	COUNT	8'x6'	0			ϕ6		J	2-D,E
C1	DZ4	WB	COUNT	8'x6'	0			ϕ6		J	2-J,K
C2	DZ5	EB	COUNT	8'x6'	0			ϕ2		I	2-D,E
C2	DZ6	EB	COUNT	8'x6'	0			ϕ2		I	2-J,K
C2	DZ7	EB	COUNT	8'x6'	0			ϕ2		I	3-D,E
C3	DZ8	SB	PRESENCE	30'x6'	0			ϕ4		I	6-D,E
C3	DZ9	SB	COUNT	8'x6'	0			ϕ4		I	6-J,K
C3	DZ10	SB	PRESENCE	30'x6'	0			ϕ4		I	7-D,E
C3	DZ11	SB	COUNT	8'x6'	0	10		ϕ4		I	7-J,K

*I = UPPER INPUT FILE; J = LOWER INPUT FILE

VIDEO DETECTION NOTES:
1. THE CONTRACTOR IS RESPONSIBLE FOR PROGRAMMING VIDEO DETECTORS IN THE CAMERA & CONTROLLER.
2. IT IS ODOT'S INTENTION THAT LANE COUNT DATA WILL BE COLLECTED THROUGH THE USE OF THE 24 AVAILABLE VOLUME DETECTORS ASSIGNMENTS.

WIRING DIAGRAM LEGEND

- (2) 2/C #14 AWG. (PED PB)
- (5) 5/C #14 AWG.
- (7) 7/C #14 AWG.
- (PC) POWER CABLE, 2/C NO. 6 AWG.
- (MB) METER BASE
- (⊗) POWER SOURCE
- DS DISCONNECT SWITCH
- → VEHICULAR SIGNAL HEAD
- → VEHICULAR SIGNAL HEAD W/ TURN ARROW (5-SECTION)
- PH→ PEDESTRIAN SIGNAL HEAD WITH PED PUSHBUTTON
- ▭◁ VIDEO DETECTION CAMERA
- (VC) VIDEO CABLE

WIRING DIAGRAM

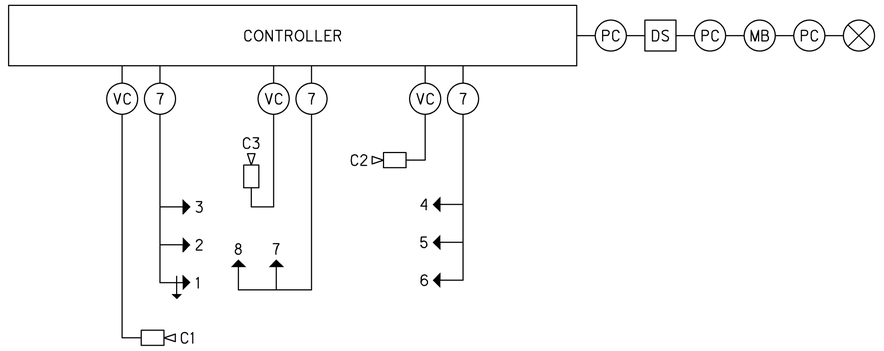

COORDINATION TIMING CHART										
PLAN (CYCLE-SEC.)	SPLITS (G + Y + AR) IN SECONDS PHASE								OFFSET*	
	1	2	3	4	5	6	7	8	#1	#2
CYCLE 1 (95 SEC.) SPLIT 1	20	44	-	31	-	64	-	-	30	-
CYCLE 1 (95 SEC.) SPLIT 2	20	49	-	26	-	69	-	-	88	-
CYCLE 2 (120 SEC.) SPLIT 1	23	57	-	40	-	80	-	-	103	103

NOTES:
*OFFSETS MEASURED FROM COORDINATED ϕ2 & ϕ6 END OF GREEN/BEGINNING OF YELLOW.

TBC PLAN EVENTS	HOURS	CYCLE/SPLIT/OFFSET
PLAN 1 - (MON - FRI)	0000-0530	FREE
PLAN 1 - (MON - FRI)	0530-1000	1 / 1 / 1
PLAN 1 - (MON - FRI)	1000-1330	2 / 1 / 1
PLAN 1 - (MON - FRI)	1330-1800	2 / 1 / 2
PLAN 1 - (MON - FRI)	1800-2200	1 / 2 / 1
PLAN 1 - (MON - FRI)	2200-2400	FREE
PLAN 2 - (SAT - SUN)	0000-0700	FREE
PLAN 2 - (SAT - SUN)	0700-1000	1 / 2 / 1
PLAN 2 - (SAT - SUN)	1000-1800	2 / 1 / 1
PLAN 2 - (SAT - SUN)	1800-2200	1 / 2 / 1
PLAN 2 - (SAT - SUN)	2200-2400	FREE

CALCULATED JRL CHECKED JTB

TRAFFIC SIGNAL PLAN DETAILS S.R. 81 & I-75 SOUTHBOUND RAMPS

ALL-75-5.53

861
1224

J:\Projects\ALL\76691\signals\sheets\76691CD008.dgn 11-SEP-2012 9:18PM reddenj

NOTE:
VIDEO DETECTION ZONE AT THE STOP LINE SHOULD BE KEPT SMALL SO THAT MOTORCYCLES AND BICYCLES WILL IMPACT A LARGER PERCENTAGE OF THE DETECTION ZONE.

DETAIL "A"
CONTROLLER WORK PAD

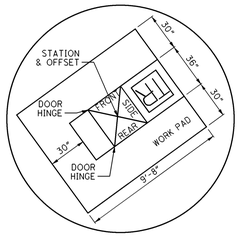

24" PULL BOX B1
STA. 453+13.55, 65.16' LT

2" CONDUIT W/ 3-7/C, 3-VC
33' IN TRENCH

2" CONDUIT W/ 2-7/C, 2-VC
21' IN TRENCH

SIGNAL SUPPORT, P1
TC-12.30 DESIGN NO. 8
STA. 452+95.25, 57.37' LT

GROUND MOUNTED CONTROLLER W/ WORKPAD
STA. 452+80.31, 59.17' LT
SEE DETAIL "A" THIS SHEET

EXISTING POWER POLE

2" CONDUIT W/ POWER CABLE
88' IN TRENCH

℄ RAMP 'B'

PC Sta. 463+63.73

MATCH LINE STA. 451+00 S.R. 81

N 78° 45' 16" E

N 1° 12' 04" W

℄ R/W & CONST. S.R. 81

S 84° 39' 27" E

PT Sta. 462+10.80

Sta. 451+94.59

454+96.19

SN1 SN2 SN3 SN4 SN5 SN6 SN7 SN8

DZ1 DZ2 DZ3 DZ4 DZ5 DZ6 DZ7 DZ8 DZ9 DZ10

C1 C2 C3

A STA. 452+74.54, 9.00' RT
B STA. 452+64.45, 9.00' RT
C STA. 452+74.56, 21.00' RT
D STA. 452+74.59, 33.00' RT
E STA. 453+96.35, 21.00' LT
F STA. 453+96.37, 33.00' LT
G STA. 453+31.25, 66.66' RT
H STA. 453+30.49, 76.64' RT
I STA. 453+44.07, 67.02' RT
J STA. 453+43.62, 77.01' RT
K STA. 453+41.20 ℄ S.R. 81 = STA. 462+89.83 ℄ RAMP 'C'
L STA. 453+49.21 ℄ S.R. 81 = STA. 462+33.32 ℄ RAMP 'B'
M STA. 453+15.30, 56.73' RT
N STA. 452+85.14, 40.49' RT

3" CONDUIT W/ 1-7/C, 1-VC
126' IN TRENCH

24" PULL BOX B3
STA. 453+00.92, 59.98' RT

SIGNAL SUPPORT, P2
TC-81.21 DESIGN NO. 14
STA. 453+98.60, 64.85' RT

2" CONDUIT W/ 1-7/C, 1-VC
23' IN TRENCH

24" PULL BOX B2
STA. 453+77.71, 76.62' RT

3" CONDUIT W/ 1-7/C, 1-VC
74' IN TRENCH

℄ RAMP 'C'

R9-3-18
SN1, SN2, SN3,
SN4, SN5, SN6

SIGNAL HEAD DETAIL
12" (LED) LENSES

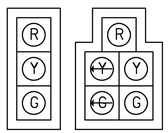

1-5, 7-8 6

VEHICULAR SIGNAL HEADS SHALL BE RIGID MOUNTED PER TC-85-20

LEGEND

- VEHICULAR SIGNAL HEAD (3-SECTION)
- VEHICULAR SIGNAL HEAD (5-SECTION)
- SIGNAL SUPPORT POLE
- VIDEO DETECTION CAMERA
- VIDEO DETECTION ZONE
- SIGNAL PULL BOX
- CONTROLLER WORK PAD
- UNDERGROUND CONDUIT
- SIGN
- OVERHEAD CANTILEVER SIGN

HORIZONTAL SCALE IN FEET
0 10 20 40

CALCULATED JRL
CHECKED JTB

TRAFFIC SIGNAL PLAN
S.R. 81 & I-75 NORTHBOUND RAMPS

ALL-75-5.53

862
1224

J:\Projects\ALL\76691\signals\sheets\76691CP005.dgn 11-SEP-2012 9:18PM reddenj

TRAFFIC SIGNAL CONTROLLER TIMING CHART

INTERSECTION: SR 81 & I-75 NB

MAINTAINING AGENCY: ODOT

START UP
START IN: Y/R FLASH
TIME FOR FLASH OR ALL RED: 5 SEC.
FIRST PHASES: 2 & 6
COLOR DISPLAYED: GREEN

DUAL ENTRY: YES ϕ2 & ϕ6
REST IN RED:

OVERLAP	A	B	C	D
PHASES				

INTERVAL OR FEATURE			CONTROLLER MOVEMENT NUMBER							
			1	2	3	4	5	6	7	8
INTERSECTION MOVEMENT			-	EB	-	-	EBL	WB	-	NB
MINIMUM GREEN (INITIAL)		(SEC.)	-	20	-	-	7	20	-	10
ADDED INITIAL		(SEC./ACTUATION)	-	-	-	-	-	-	-	-
MAXIMUM INITIAL		(SEC.)	-	-	-	-	-	-	-	-
PASSAGE TIME (PRESET GAP)		(SEC.)	-	4	-	-	3	4	-	4
TIME BEFORE REDUCTION		(SEC.)	-	-	-	-	-	-	-	-
MINIMUM GAP		(SEC.)	-	-	-	-	-	-	-	-
TIME TO REDUCE		(SEC.)	-	-	-	-	-	-	-	-
MAXIMUM GREEN I		(SEC.)	-	65	-	-	25	60	-	45
MAXIMUM GREEN II		(SEC.)	-	65	-	-	25	60	-	45
YELLOW CHANGE		(SEC.)	-	4.5	-	-	3	4.5	-	3
ALL RED CLEARANCE		(SEC.)	-	2	-	-	3	2	-	3
WALK		(SEC.)	-	-	-	-	-	-	-	-
PEDESTRIAN CLEARANCE		(SEC.)	-	-	-	-	-	-	-	-
RECALL	MAXIMUM	(ON/OFF)	-	OFF	-	-	OFF	OFF	-	OFF
	MINIMUM	(ON/OFF)	-	ON	-	-	OFF	ON	-	OFF
	PEDESTRIAN	(ON/OFF)	-	OFF	-	-	OFF	OFF	-	OFF
MEMORY		(ON/OFF)	-	OFF	-	-	OFF	OFF	-	OFF
CALL TO NON ACTUATED		NO. 1	-	X	-	-	-	X	-	-
		NO. 2	-	-	-	-	-	-	-	-

SIGNAL SUPPORT ORIENTATION DATA

ELEVATION VIEW	SUPPORT NO.	SUPPORT DESIGN NO.	MAST ARM DESIGN NO.	POLE HEIGHT (FT.)	ARM MOUNTING HT. A	ARM MOUNTING HT. B	L (FT.)	L1 (FT.)	L2 (FT.)	L3 (FT.)	L4 (FT.)	ELEVATION A	ELEVATION B	MAST ARM A ORIENTATION ANGLE (DEGREES)	ORIENTATION ANGLES (DEG.) FROM MAST ARM A: MAST ARM "B"	PEDESTRIAN SIGNAL	PEDESTRIAN PUSHBUTTON	POWER SERVICE	CONTROLLER	HANDHOLE	BRACKET ARM	SIGN SUPPORT ARM
SIGNAL SUPPORT TYPE TC-81.21 / *TC-12.30												ELEVATION			ORIENTATION ANGLES (DEG.) FROM MAST ARM A							
1	P1A	8	13	23	21.5		53	52	46	40		880.35	879.67	6	269					180		
2	P1B	8	11	23	21.5		40	39	33	27	10	880.13	879.67									
3	P2	14	14	24	22.5		67	65	59	53	41	882.10	880.60	353						180		

* DESIGN 8 = TC-12.30 POLE

SIGNAL PHASING DIAGRAM

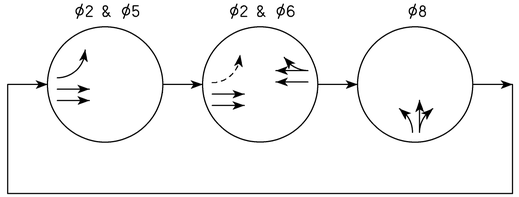

PHASING NOTES:
1. OMIT CALLS TO ϕ5 DURING ϕ6 GREEN.
2. ϕ5 AND ϕ8 ARE ACTUATED.
3. ϕ2 AND ϕ6 ARE COORDINATED.

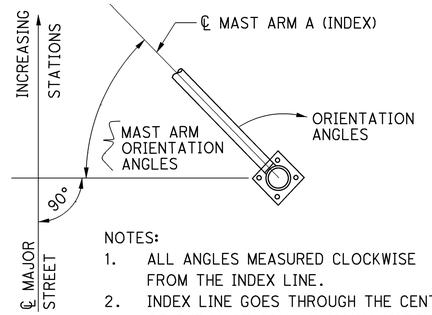

NOTES:
1. ALL ANGLES MEASURED CLOCKWISE FROM THE INDEX LINE.
2. INDEX LINE GOES THROUGH THE CENTER OF THE MAST ARM ON SIGNAL SUPPORTS OR FACE OF PEDESTRIAN SIGNAL HEAD ON PEDESTALS.
3. WHEN PEDESTRIAN SIGNALS ARE LOCATED ON NEW STEELPOLES, 1-½" BLIND HALF COUPLINGS SHALL BE PROVIDED IN THE POLE AS PER TC-85.10 AND THE ORIENTATION NOTD IN THE TABLE.
4. 1-½" B.H.C. LOCATED 27" ABOVE BASE OF POLE.
5. CABLE ENTRANCE FOR POWER SERVICE SHALL BE LOCATED 12" ABOVE CENTER LINE OF MAST ARM.

SIGNAL SUPPORT DETAILS

POLE P1A

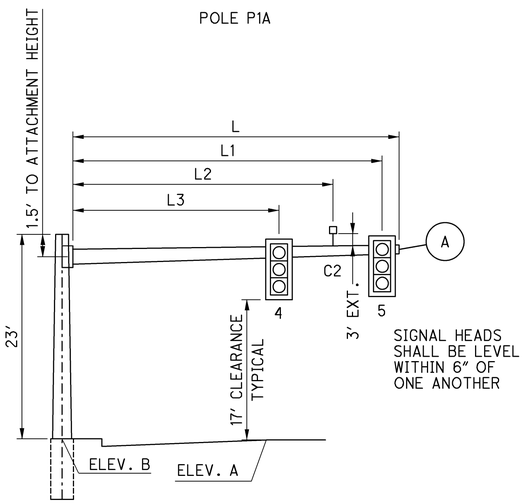

ELEVATION VIEW 1

POLE P1B

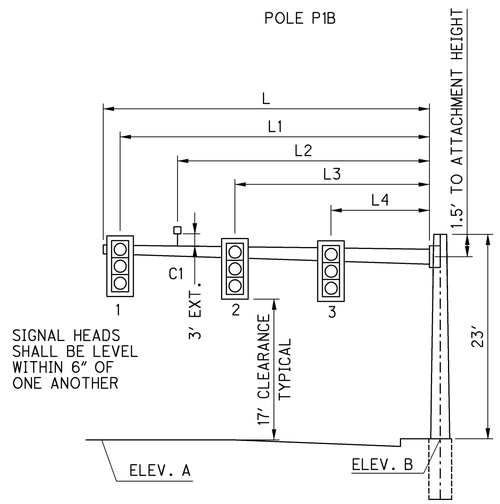

ELEVATION VIEW 2

POLE P2

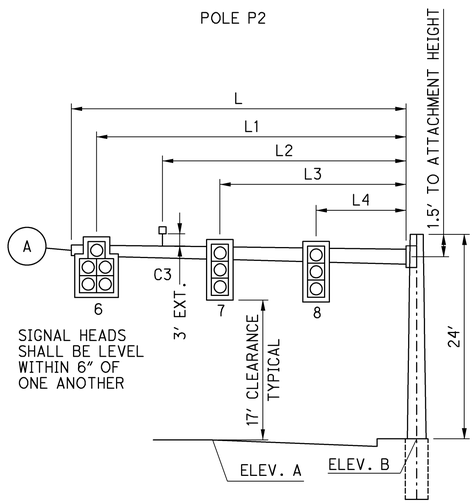

ELEVATION VIEW 3

(A) INSTALL DAMPING DEVICE ON ALL MAST ARMS LONGER THAN 48 FEET AS PER THE TRAFFIC SIGNAL GENERAL NOTE ON SHEET 838.

CALCULATED JRL CHECKED JTB

TRAFFIC SIGNAL PLAN DETAILS
S.R. 81 & I-75 NORTHBOUND RAMPS

ALL-75-5.53

863
1224

J:\Projects\ALL\76691\signals\sheets\76691CD009.dgn 11-SEP-2012 9:18PM reddenj

FIELD WIRING HOOK-UP CHART							
SIGNAL HEAD #	INDICATION	FIELD TERMINAL	FLASH	SIGNAL HEAD #	INDICATION	FIELD TERMINAL	FLASH
1, 2, 3 (WB)	R	ϕ6 R	R	6 (EBLT)	R	ϕ2 R	R
	Y	ϕ6 Y			Y	ϕ2 Y	
	G	ϕ6 G			G	ϕ2 G	
4, 5 (NB)	R	ϕ8 R	R		~~Y~~	ϕ5 Y	
	Y	ϕ8 Y			~~G~~	ϕ5 G	
	G	ϕ8 G		7, 8 (EB)	R	ϕ2 R	R
					Y	ϕ2 Y	
					G	ϕ2 G	

VIDEO DETECTION CHART											
VIDEO DETECTION CAMERA NUMBER	VIDEO DETECTION ZONE NUMBER	MOVEMENT	PULSE OR PRESENCE	SIZE	DELAY (SEC.) CAMERA	DELAY (SEC.) SIGNAL CONTROLLER	DELAY INHIBIT (SEC.)	ASSOCIATED CONTROLLER PHASE	OVERRIDE PHASE	INPUT FILE*	TERMINAL NO.
C3	DZ1	EB	PRESENCE	30'x6'	0			ϕ5		J	1-D,E
C3	DZ2	EB	COUNT	8'x6'	0			ϕ5		J	1-J,K
C3	DZ3	EB	COUNT	8'x6'	0			ϕ2		I	2-D,E
C3	DZ4	EB	COUNT	8'x6'	0			ϕ2		I	2-J,K
C1	DZ5	WB	COUNT	8'x6'	0			ϕ6		J	2-D,E
C1	DZ6	WB	COUNT	8'x6'	0			ϕ6		J	2-J,K
C2	DZ7	NB	PRESENCE	30'x6'	0			ϕ8		J	6-D,E
C2	DZ8	NB	COUNT	8'x6'	0			ϕ8		J	6-J,K
C2	DZ9	NB	PRESENCE	30'x6'	0			ϕ8		J	7-D,E
C2	DZ10	NB	COUNT	8'x6'	0	10		ϕ8		J	7-J,K

*I = UPPER INPUT FILE; J = LOWER INPUT FILE

VIDEO DETECTION NOTES:
1. THE CONTRACTOR IS RESPONSIBLE FOR PROGRAMMING VIDEO DETECTORS IN THE CAMERA & CONTROLLER.
2. IT IS ODOT'S INTENTION THAT LANE COUNT DATA WILL BE COLLECTED THROUGH THE USE OF THE 24 AVAILABLE VOLUME DETECTORS ASSIGNMENTS.

WIRING DIAGRAM LEGEND

- (2) 2/C #14 AWG. (PED PB)
- (5) 5/C #14 AWG.
- (7) 7/C #14 AWG.
- (PC) POWER CABLE, 2/C NO. 6 AWG.
- (MB) METER BASE
- POWER SOURCE
- (DS) DISCONNECT SWITCH
- VEHICULAR SIGNAL HEAD
- VEHICULAR SIGNAL HEAD W/ TURN ARROW (5-SECTION)
- (PH) PEDESTRIAN SIGNAL HEAD WITH PED PUSHBUTTON
- VIDEO DETECTION CAMERA
- (VC) VIDEO CABLE

WIRING DIAGRAM

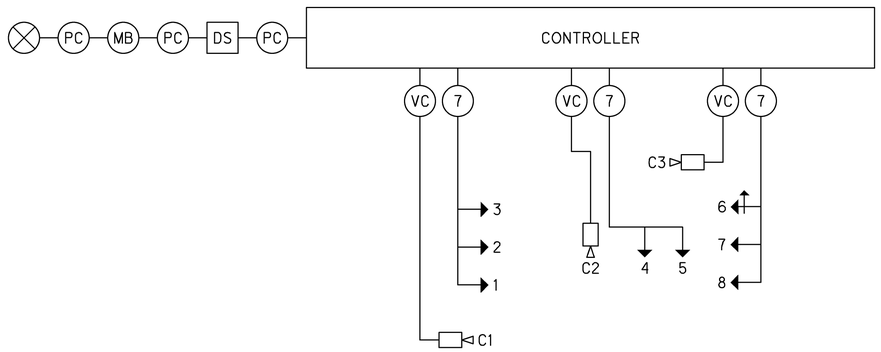

COORDINATION TIMING CHART										
PLAN (CYCLE-SEC.)	SPLITS (G + Y + AR) IN SECONDS PHASE								OFFSET*	
	1	2	3	4	5	6	7	8	#1	#2
CYCLE 1 (95 SEC.) SPLIT 1	-	56	-	-	14	42	-	39	0	-
CYCLE 1 (95 SEC.) SPLIT 2	-	60	-	-	19	41	-	35	0	-
CYCLE 2 (120 SEC.) SPLIT 1	-	75	-	-	18	57	-	45	0	0

NOTES:
*OFFSETS MEASURED FROM COORDINATED ϕ2 & ϕ6 END OF GREEN/BEGINNING OF YELLOW.

TBC PLAN EVENTS	HOURS	CYCLE/SPLIT/OFFSET
PLAN 1 - (MON - FRI)	0000-0530	FREE
PLAN 1 - (MON - FRI)	0530-1000	1 / 1 / 1
PLAN 1 - (MON - FRI)	1000-1330	2 / 1 / 1
PLAN 1 - (MON - FRI)	1330-1800	2 / 1 / 2
PLAN 1 - (MON - FRI)	1800-2200	1 / 2 / 1
PLAN 1 - (MON - FRI)	2200-2400	FREE
PLAN 2 - (SAT - SUN)	0000-0700	FREE
PLAN 2 - (SAT - SUN)	0700-1000	1 / 2 / 1
PLAN 2 - (SAT - SUN)	1000-1800	2 / 1 / 1
PLAN 2 - (SAT - SUN)	1800-2200	1 / 2 / 1
PLAN 2 - (SAT - SUN)	2200-2400	FREE

CALCULATED JRL CHECKED JTB

TRAFFIC SIGNAL PLAN DETAILS S.R. 81 & I-75 NORTHBOUND RAMPS

ALL-75-5.53

J:\Projects\ALL\76691\signals\sheets\76691CD010.dgn 11-SEP-2012 9:18PM reddenj

CONDUIT EXPANSION AND DEFLECTION

EXPANSION FITTINGS SHALL BE OZ TYPE AX, CROUSE HINDS TYPE XJG, APPLETON TYPE AX, OR EQUAL APPROVED BY THE ENGINEER. EACH EXPANSION FITTING SHALL PROVIDE EITHER 4 OR 8 INCHES (100 OR 200 MILLIMETERS) TOTAL MOVEMENT AS SPECIFIED BY THE PLAN DETAILS AND SHALL HAVE AN EXTERNAL COPPER BONDING JUMPER, UNLESS SPECIFIED OTHERWISE BY THE PLAN DETAILS. DEFLECTION COUPLINGS SHALL BE OZ TYPE DX, CROUSE HINDS TYPE XD, APPLETON TYPE DF, OR EQUAL APPROVED BY THE ENGINEER. EACH DEFLECTION COUPLING SHALL HAVE AN EXTERNAL COPPER BONDING JUMPER, UNLESS SPECIFIED OTHERWISE BY THE PLAN DETAILS.

LAMPS

HIGH PRESSURE SODIUM LAMPS SHALL BE GENERAL ELECTRIC LUCALOX, OSRAM SYLVANIA LUMALUX, PHILIPS CERAMALUX, OR EQUAL APPROVED BY THE ENGINEER.

ITEM 625 - LUMINAIRE, BY TYPE

LUMINAIRES- CONVENTIONAL

LUMINAIRES FOR CONVENTIONAL LIGHTING UNITS WITH AN IES TYPE II DISTRIBUTION AND 200 WATT HIGH PRESSURE SODIUM LAMPS SHALL BE AMERICAN ELECTRIC "SERIES 125" WITH PHOTOMETRIC DISTRIBUTION 25SR2 OR 25SR3, COOPER "OVD" WITH PHOTOMETRIC DISTRIBUTION OVD2S2F OR OVD2S3F, GENERAL ELECTRIC "M-400" WITH PHOTOMETRIC DISTRIBUTION 450389 OR 450390, OR EQUAL AS APPROVED BY THE ENGINEER.

LUMINAIRES- LOW MAST

LUMINAIRES FOR LOW-MAST LIGHTING UNITS WITH SYMMETRIC DISTRIBUTION SHALL BE HOLOPHANE "HMST" WITH PHOTOMETRIC DISTRIBUTION 36383, GENERAL ELECTRIC "HM" WITH PHOTOMETRIC DISTRIBUTION 6312, OR COOPER "HMX" WITH PHOTOMETRIC DISTRIBUTION HMX4SDW, OR EQUAL AS APPROVED BY THE ENGINEER. IN ADDITION, OTHER LUMINAIRES WILL BE CONSIDERED IF THE DESIGNED INTENSITY AND UNIFORMITY ARE PROVIDED USING THE DESIGNED POLE LOCATIONS AND THE DESIGNED NUMBER AND TYPE OF FIXTURES PER POLE.

ITEM 625 - POWER SERVICE REMOVED, AS PER PLAN

THIS ITEM OF WORK SHALL CONSIST OF THE REMOVAL AND DISPOSAL OF AN EXISTING POWER SERVICE.

INCLUDED FOR REMOVAL WILL BE ALL POWER SERVICE COMPONENTS, INCLUDING THE POLE, WEATHER HEAD AND ALL ABOVE GRADE WIRING, CONTROL CENTER ENCLOSURE, PHOTOELECTRIC CELL AND ALL OTHER APPURTENANCES. THE CABLE ENCLOSED IN THE 2-INCH CONDUIT WHICH RUNS INTO THE GROUND SHALL BE CUT WHERE IT EXITS THE 2-INCH CONDUIT, APPROXIMATELY 2 FEET BELOW THE GROUND, AND SHALL BE REMOVED WITH THE 2-INCH CONDUIT. THE REMAINING BURIED CABLE SHALL BE ABANDONED. ALL DISTURBED AREAS SHALL BE RESTORED TO MATCH THE SURROUNDING AREA.

ALL POWER SERVICE COMPONENTS, INCLUDING THE POLE, CONTROL CENTER, PHOTOELECTRIC CELL, 2-INCH CONDUIT, WEATHER HEAD AND ALL ABOVE-GROUND WIRING SHALL BECOME THE PROPERTY OF THE CONTRACTOR AND SHALL BE PROPERLY DISPOSED OF OFF THE PROJECT SITE.

THIS ITEM WILL ALSO COMPENSATE THE CONTRACTOR FOR COORDINATING WITH THE POWER COMPANY TO INSURE THAT THE COMPANY DISCONNECTS THE SERVICE, AND THAT ITEMS WHICH BELONG TO THE POWER COMPANY AND ARE REMOVED BY THE CONTRACTOR SUCH AS THE METER BASE SHALL BE RETURNED TO THE POWER COMPANY.

PAYMENT WILL BE MADE AT THE UNIT PRICE BID UNDER CMS ITEM 625, "POWER SERVICE REMOVED, AS PER PLAN" FOR EACH SERVICE REMOVED, WHICH SHALL INCLUDE ALL LABOR, MATERIALS AND INCIDENTALS REQUIRED TO COMPLETE THIS ITEM IN A SATISFACTORY AND WORKMANLIKE MANNER.

ITEM 625 SPECIAL - MAINTAIN EXISTING LIGHTING

EXISTING ROADWAYS WHICH ARE TO REMAIN OPEN TO TRAFFIC DURING CONSTRUCTION OF THIS PROJECT AND ARE LIGHTED SHALL HAVE THE LIGHTING MAINTAINED AS DESCRIBED HEREIN.

BEFORE ANY WORK IS STARTED IN THE IMMEDIATE VICINITY OF ANY EXISTING LIGHTING CIRCUITS, REPRESENTATIVES OF THE STATE, THE MAINTAINING AGENCY, AND THE CONTRACTOR SHALL MAKE A VISUAL INSPECTION OF THE OF THE EXISTING ROADWAY LIGHTING CIRCUITS TO BE MAINTAINED.

DURING THIS INSPECTION A WRITTEN RECORD OF THE CONDITION OF THE EXISTING LIGHTING SHALL BE MADE BY THE STATE'S REPRESENTATIVE. THIS WRITTEN REPORT SHALL NOTE INDIVIDUAL LUMINAIRES WHICH ARE NOT STANDING, AND INDIVIDUAL CIRCUITS WHICH ARE NOT IN WORKING ORDER. THE COMPLETED REPORT SHALL BE SIGNED BY THE REPRESENTATIVES OF THE STATE, THE MAINTAINING AGENCY, AND THE CONTRACTOR. IF, AS A RESULT OF THIS INSPECTION, IT IS DETERMINED THAT THE CONDITION OF THE EXISTING SYSTEM IS BELOW THAT REQUIRED FOR THE SAFETY OF THE TRAVELING PUBLIC, THEN THE MAINTAINING AGENCY SHALL MAKE REPAIRS NECESSARY TO RETURN THE SYSTEM TO AN ACCEPTABLE CONDITION. FOLLOWING THESE REPAIRS, THE SYSTEM SHALL AGAIN BE INSPECTED AND A REPORT MADE AND SIGNED AS OUTLINED HEREIN.

WHEN THE EXISTING SYSTEM IS IN AN ACCEPTABLE CONDITION, IT SHALL BE TURNED OVER TO THE CONTRACTOR WHO SHALL THEN BE REQUIRED TO MAINTAIN THE EXISTING LIGHTING TO THE CONDITION OUTLINED IN THIS REPORT WITH THE EXCEPTION OF KNOCKDOWNS DUE TO TRAFFIC ACCIDENTS.

REPLACEMENTS OF KNOCKED DOWN UNITS SHALL BE DONE ONLY WHEN THE ENGINEER HAS DETERMINED THAT THE REPLACEMENT OF THE KNOCKED DOWN UNIT IS NECESSARY AND SHALL BE PAID SEPARATELY ON A PER UNIT BASIS.

BETTERMENTS SHALL BE COVERED IN ITEMS OF WORK PERTAINING TO THE CONSTRUCTION OF PERMANENT IMPROVEMENTS. THE STATE SHALL GIVE THE CONTRACTOR ONE COPY OF THE EXISTING LIGHTING CIRCUITRY LAYOUT.

WHEN THE CONTRACTOR HAS TAKEN OVER THE MAINTENANCE OF THE EXISTING SYSTEM, HE SHALL PROVIDE ALL REQUIRED LAYOUT AND LOCATING OF EXISTING LIGHTING CIRCUITS WITHIN THE PROJECT.

WOOD POLES WITH OVERHEAD WIRING MAY BE USED. HOWEVER, TEMPORARY LIGHTING SHALL MEET FEDERAL AND STATE SAFETY CRITERIA. IF BREAKAWAY POLES ARE USED TO MEET THIS CRITERIA, THEN UNDERGROUND WIRING WILL BE USED. RECONDITIONED OR USED MATERIALS MAY BE FURNISHED FOR TEMPORARY LIGHTING.

ALL MATERIALS NECESSARY TO COMPLETE THE TEMPORARY LIGHTING SHALL BE FURNISHED AND INSTALLED BY THE CONTRACTOR. A SEPARATE POWER SERVICE WILL BE PROVIDED BY THE CONTRACTOR FOR THE TEMPORARY LIGHTING SYSTEM. THE TEMPORARY LIGHTING SHALL NOT BE SPLICED INTO EXISTING LIGHTING CIRCUITS. THE CONTRACTOR SHALL PAY ALL HOOK-UP FEES AND ELECTRICAL COSTS FOR THE TEMPORARY SYSTEM. THESE COSTS SHALL BE PAID FOR UNDER THE LUMP SUM ITEM SPECIAL MAINTAIN EXISTING LIGHTING. WHEN NO LONGER NEEDED THE TEMPORARY LIGHTING INSTALLATION SHALL BE REMOVED AND PROPERLY DISPOSED OF BY THE CONTRACTOR.

THE LUMP SUM BID FOR ITEM SPECIAL - MAINTAIN EXISTING LIGHTING, SHALL INCLUDE PAYMENT FOR ALL LABOR, EQUIPMENT, MATERIALS, INCIDENTALS, AND TEMPORARY POWER SERVICES NECESSARY TO MAINTAIN THE EXISTING LIGHTING AS SPECIFIED HEREIN. THE UNIT BID PRICE FOR EACH ITEM SPECIAL - REPLACING EXISTING CONVENTIONAL LIGHTING UNIT, SHALL BE FULL PAYMENT FOR THE REPLACEMENT OF AN EXISTING UNIT WHICH HAS BEEN KNOCKED DOWN AFTER THE AFOREMENTIONED INSPECTION AND SHALL INCLUDE ALL LABOR, EQUIPMENT, MATERIALS AND INCIDENTALS NECESSARY TO PROVIDE A REPLACEMENT FOR SUCH UNIT. THE FOLLOWING QUANTITIES HAVE BEEN INCLUDED IN THE LIGHTING GENERAL SUMMARY FOR USE AS DIRECTED BY THE ENGINEER.

ITEM SPECIAL - MAINTAIN EXISTING LIGHTING UNIT, LUMP

ITEM 625 - POWER SERVICE

IN ADDITION TO THE REQUIREMENTS OF THE SPECIFICATIONS, THE FOLLOWING IS ADDED:

THE POWER SUPPLYING AGENCY FOR THIS PROJECT IS:

AMERICAN ELECTRIC POWER
369 E. O'CONNOR AVE.
LIMA, OH 45801
CONTACT: DAN WILSON
TELEPHONE NO. (419) 998-5103

THE ENGINEER SHALL ENSURE THAT EACH POWER ELECTRICAL ENERGY ACCOUNT IS IN THE NAME OF AND THAT THE BILLING ADDRESS IS TO THE MAINTAINING AGENCY NOTED IN THE PLANS. THIS SHALL BE DONE NOT ONLY FOR EACH NEW POWER SERVICE ESTABLISHED BY THIS PROJECT BUT ALSO FOR EACH EXISTING POWER SERVICE, SINCE THERE MAY BE A RE-ASSIGNMENT OF THE RESPONSIBILITY FOR AN EXISTING SERVICE AS A RESULT OF THE WORK PERFORMED BY THIS PROJECT.

THE CONTRACTOR IS RESPONSIBLE TO OBTAIN THE RESPONSIBLE UTILITY OWNER'S SPECIFICATIONS AS IT RELATES TO AN ACCEPTED POWER SERVICE. IN ADDITION TO THE ITEMS INCLUDED UNDER ITEM 625, "POWER SERVICE", THE CONTRACTOR WILL BE RESPONSIBLE TO SUPPLY AND INSTALL ALL APPURTENANCES REQUIRED BY THE POWER COMPANY, INCLUDING BUT NOT LIMITED TO A SECOND DISCONNECT SWITCH.

THE ELECTRIC COMPANY WILL SUPPLY 240/480 VOLT OR 120/240 VOLT SINGLE PHASE, 3 WIRE GROUNDED NEUTRAL POWER SERVICES AS INDICATED BY THE PLAN.

THE CONTRACTOR SHALL MAINTAIN ALL NEW OR MODIFIED STREET CIRCUITS, INCLUDING POWER BILLS, FOR THE ENTIRETY OF THE PROJECT, WITH THE RESPONSIBILITY TURNED OVER TO THE OHIO DEPARTMENT OF TRANSPORTATION ONLY WHEN THE ENTIRE PROJECT HAS BEEN COMPLETED AND ACCEPTED IN FULL BY ODOT.

PAYMENT WILL BE MADE AT THE UNIT BID PRICE FOR EACH CMS ITEM 625, "POWER SERVICE, AS PER PLAN" WHICH SHALL BE FULL COMPENSATION FOR ALL LABOR, MATERIALS AND INCIDENTALS

REQUIRED TO COMPLETE THIS ITEM IN A SATISFACTORY AND WORKMANLIKE MANNER.

ODOT HIGHWAY LIGHTING STANDARD CONSTRUCTION DRAWINGS	
HL-10.11	LIGHT POLE STYLES
HL-10.12	LIGHT POLE DETAILS
HL-10.13	POLE BASE DETAILS
HL-20.11	FOUNDATION AND TRENCH DETAILS
HL-30.11	PULL BOX DETAILS I
HL-30.21	ROADWAY CONDUIT DETAILS I
HL-30.22	ROADWAY CONDUIT DETIALS II
HL-30.31	STRUCTURE CONDUIT DETILS I
HL-30.32	STRUCTURE CONDUIT DETAILS II
HL-30.33	STRUCTURE CONDUIT DETAILS III
HL-40.10	POWER SERVICE POLE MOUNTED
HL-50.11	GROUNDING DETAILS
HL-50.21	STRUCTURE GROUNDING STEEL BEAM BRIDGE
HL-60.11	POLE WIRING I
HL-60.12	POLE WIRING II
HL-60.31	CONTROL CENTER WIRING

CALCULATED JCS CHECKED LH

LIGHTING GENERAL NOTES

ALL-75-5.53

865
1224

J:\Projects\ALL\76691\lighting\sheets\76691LN001.dgn 23-JAN-2013 4:11PM reddenj

SHEET NUMBER													03/IMS/PV/	ITEM	ITEM EXT.	GRAND TOTAL	UNIT	DESCRIPTION	SEE SHEET NO.
867	868	869	870	871	872	873	874												
26	28	26	22	8									110	625	00450	110	EACH	CONNECTION, FUSED PULL APART	
33	18	33	36	8									128	625	00480	128	EACH	CONNECTION, UNFUSED PERMANENT	
0	0	1	0	0									1	625	10490	1	EACH	LIGHT POLE, CONVENTIONAL, DESIGN AT15B40	
9	13	9	7	4									42	625	10490	42	EACH	LIGHT POLE, CONVENTIONAL, DESIGN AT18B40	
4	1	3	4	0									12	625	10494	12	EACH	LIGHT POLE, LOW MAST, DESIGN ATLM40	
13	14	13	11	4									55	625	14100	55	EACH	LIGHT POLE FOUNDATION, 24"X8' DEEP	
2198	777	1473	1920	186									6554	625	23200	6554	FT	NO. 4 AWG 5000 VOLT DISTRIBUTION CABLE	
1364	1588	1400	1132	464									5948	625	23400	5948	FT	NO. 10 AWG POLE AND BRACKET CABLE	
5850	4964	5366	5432	980									22592	625	24320	22592	FT	1-1/2" DUCT CABLE WITH THREE NO. 4 AWG 5000 VOLT CABLES	
382	229	318	489	52									1470	625	25400	1470	FT	CONDUIT, 2", 725.04	
77	0	0	0	0									77	625	25902	77	FT	CONDUIT, 3", JACKED OR DRILLED, 725.04	
9	13	10	7	4									43	625	26251	43	EACH	LUMINAIRE, CONVENTIONAL, (TYPE II, 200W HPS, 480V), AS PER PLAN	865
4	1	3	4	0									12	625	26271	12	EACH	LUMINAIRE, LOW MAST, (SYMMETRIC, 400W HPS, 480V), AS PER PLAN	865
5240	4983	5442	5343	992									22000	625	29000	22000	FT	TRENCH	
5	6	7	7	1									26	625	30700	26	EACH	PULL BOX, 725.08, 18"	
3	0	2	3	0									8	625	30706	8	EACH	PULL BOX, 725.08, 24"	
					3	1	13						17	625	31510	17	EACH	PULL BOX REMOVED	
13	14	13	11	4									55	625	32000	55	EACH	GROUND ROD	
1	0	1	1	0									3	625	34001	3	EACH	POWER SERVICE, AS PER PLAN	865
														625	40000		LUMP	SPECIAL - MAINTAIN EXISTING LIGHTING	865
					0	0	10						10	625	75350	10	EACH	LIGHT TOWER REMOVED	
					50	44	8						102	625	75400	102	EACH	LIGHT POLE REMOVED	
					50	45	8						103	625	75500	103	EACH	LIGHT POLE FOUNDATION REMOVED	
					50	44	48						142	625	75506	142	EACH	LUMINAIRE REMOVED	
					2	0	1						3	625	75511	3	EACH	POWER SERVICE REMOVED, AS PER PLAN	865
					0	0	10						10	625	75540	10	EACH	LIGHT TOWER FOUNDATION REMOVED	
					2	7	4						13	625	75800	13	EACH	DISCONNECT CIRCUIT	

CALCULATED JCS CHECKED LH

LIGHTING GENERAL SUMMARY

ALL-75-5.53

866
1224

27-SEP-2012 1:12PM jclark1

\\D0FS101N_Drive\Pdv\76691\Final Cadd Files\Projects\ALL\76691\lighting\sheets\76691LG001.dgn

SHEET NO.	SIDE	ROADWAY	STATION TO STATION	CIRCUIT NODES	625 CONNECTION, FUSED PULL APART	625 CONNECTION, UNFUSED PERMANENT	625 LIGHT POLE, CONVENTIONAL, DESIGN AT15B40	625 LIGHT POLE, CONVENTIONAL, DESIGN AT18B40	625 LIGHT POLE, LOW MAST, DESIGN ATLM40	625 LIGHT POLE FOUNDATION, 24" X 8' DEEP	625 NO. 4 AWG 5000V DISTRIBUTION CABLE	625 NO. 10 AWG POLE AND BRACKET CABLE	625 1-1/2" DUCT CABLE WITH THREE NO. 4 AWG 5000 VOLT CABLES	625 CONDUIT, 2", 725.04	625 CONDUIT, JACKED OR DRILLED, 3", 725.04	625 LUMINAIRE, CONV. (TYPE II, 200W HPS, 480V), APP	625 LUMINAIRE, LOW MAST (SYMMETRIC, 400W HPS, 480 VOLT), APP	625 TRENCH	625 PULL BOX, 725.08, 18"	625 PULL BOX, 725.08, 24"	625 GROUND ROD	625 POWER SERVICE, AS PER PLAN
				* = MATCH LINE	EACH	EACH	EACH	EACH	EACH	EACH	FT	FT	FT	FT	FT	EACH	EACH	FT	EACH	EACH	EACH	EACH
888	RT	I.R. 75	STA. 302+59	CA-5	2			1		1		116				1					1	
888	RT	IR75/RAMP A	STA. 302+59 TO STA. 309+24	CA-5 TO CA-4									672					662				
888	RT	RAMP A	STA. 309+24	CA-4	2			1		1		116				1					1	
888	RT	RAMP A	STA. 309+24 TO STA. 310+70	CA-4 TO PB-1									156					146				
888	RT	RAMP A	STA. 310+70	PB-1		3													1			
888	RT	RAMP A/IR75	STA. 310+70 TO STA. 310+68	PB-1 TO CA-3							189			53				53				
888	RT	I.R. 75	STA. 310+68	CA-3	2			1		1		116				1					1	
888	RT	RAMP A	STA. 310+70 TO STA. 311+15	PB-1 TO CA-2									54					44				
888	RT	RAMP A	STA. 311+15	CA-2	2			1		1		116				1					1	
888	RT	RAMP A	STA. 311+15 TO STA. 316+00	CA-2 TO *									485					475				
889	RT	RAMP A	STA. 316+00 TO STA. 321+12	* TO PB-2									535					525				
889	RT	RAMP A	STA. 321+12	PB-2		3													1			
889	RT	RAMP A	STA. 321+12 TO STA. 321+11.2	PB-2 TO CA-1									31					21				
889	RT	RAMP A	STA. 321+11.2	CA-1	2				1	1		80					1				1	
889	RT	RAMP A/B	STA. 321+12 TO STA. 310+28	PB-2 TO PB-3							279			83				83				
889	RT	RAMP B	STA. 310+28	PB-3		3													1			
889	RT	RAMP B/4TH	STA. 310+28 TO STA. 115+41	PB-3 TO PB-4									74					64				
889	RT	4TH ST.	STA. 115+41	PB-4		3														1		
889	RT/LT	4TH ST.	STA. 115+41 TO STA. 115+31	PB-4 TO CB-1							261				77							
889	LT	4TH ST.	STA. 115+31	CB-1	2				1	1		80					1				1	
889	RT	4TH ST.	STA. 115+41 TO STA. 115+32	PB-4 TO P.S. 'C'									60					20				
889	RT	4TH ST.	STA. 115+32	PWR SVC 'C'																		1
889	RT	4TH/IR 75	STA. 115+32 TO STA. 320+16	P.S. 'C' TO PB-5									1167					379				
889	RT	I.R. 75	STA. 320+16	PB-5		9														1		
889	RT	I.R. 75	STA. 320+16 TO STA. 319+44	PB-5 TO CB-2									82					72				
889	RT	I.R. 75	STA. 319+44	CB-2	2			1		1		116				1					1	
889	RT	I.R. 75	STA. 320+16 TO STA. 322+44	PB-5 TO CB-3									238					228				
889	RT	I.R. 75	STA. 322+44	CB-3	2			1		1		116				1					1	
889	RT	I.R. 75	STA. 322+44 TO STA. 325+00	CB-3 TO *									268					258				
889	RT/℄	I.R. 75	STA. 320+16 TO STA. 320+20	PB-5 TO PB-6							1292			197				197				
889	LT	I.R. 75	STA. 320+20	PB-6		6														1		
889	LT/RT	IR75/4TH ST.	STA. 320+20 TO STA. 105+87	PB-6 TO CD-1									372					362				
889	RT/℄	4TH ST.	STA. 105+87	CD-1	2				1	1		80					1				1	
889	LT	I.R. 75	STA. 320+20 TO STA. 318+33	PB-6 TO CD-2									198					188				
889	LT	I.R. 75	STA. 318+33	CD-2	2			1		1		116				1					1	
889	LT	I.R. 75	STA. 318+33 TO STA. 315+32	CD-2 TO CD-3									310					301				
889	LT	I.R. 75	STA. 315+32	CD-3	2			1		1		116				1					1	
889	LT	I.R. 75	STA. 320+20 TO STA. 321+33	PB-6 TO CC-1									123					113				
889	LT	I.R. 75	STA. 321+33	CC-1	2			1		1		116				1					1	
889	LT	IR75/RAMP C	STA. 321+33 TO STA. 325+74	CC-1 TO PB-7									425					415				
889	LT	RAMP C	STA. 325+74	PB-7		3													1			
889	LT/RT	RAMP C	STA. 325+74 TO STA. 325+74	PB-7 TO PB-8							177			49				49				
889	RT	RAMP C	STA. 325+74	PB-8		3													1			
889	RT/LT	RAMP C/IR75	STA. 325+74 TO STA. 325+00	PB-8 TO *									24					19				
889	LT	RAMP D	STA. 318+74	CC-2	2				1	1		80					1				1	
889	LT	RAMPD	STA. 318+74 TO STA. 324+00	CC-2 TO *									576					566				
TOTALS CARRIED TO GENERAL SUMMARY					26	33	0	9	4	13	2198	1364	5850	382	77	9	4	5240	5	3	13	1

CALCULATED JCS
CHECKED LH

LIGHTING SUBSUMMARY

ALL-75-5.53

867
1224

\\D01FS01N_Drive\Pw\76691\Final Cadd Files\Projects\ALL\7669\Lighting\sheets\76691LS001.dgn 27-SEP-2012 1:06PM jclark1

SHEET NO.	SIDE	ROADWAY	STATION TO STATION	CIRCUIT NODES	625 CONNECTION, FUSED PULL APART	625 CONNECTION, UNFUSED PERMANENT	625 LIGHT POLE, CONVENTIONAL, DESIGN AT15B40	625 LIGHT POLE, CONVENTIONAL, DESIGN AT18B40	625 LIGHT POLE, LOW MAST, DESIGN ATLM40	625 LIGHT POLE FOUNDATION, 24" X 8' DEEP	625 NO. 4 AWG 5000V DISTRIBUTION CABLE	625 NO. 10 AWG POLE AND BRACKET CABLE	625 1-1/2" DUCT CABLE WITH THREE NO. 4 AWG 5000 VOLT CABLES	625 CONDUIT, 2", 725.04	625 CONDUIT, JACKED OR DRILLED, 3", 725.04	625 LUMINAIRE, CONV. (TYPE II, 200W HPS, 480V), APP	625 LUMINAIRE, LOW MAST (SYMMETRIC, 400W HPS, 480 VOLT), APP	625 TRENCH	625 PULL BOX, 725.08, 18"	625 PULL BOX, 725.08, 24"	625 GROUND ROD	625 POWER SERVICE, AS PER PLAN
				* = MATCH LINE	EACH	EACH	EACH	EACH	EACH	EACH	FT	FT	FT	FT	FT	EACH	EACH	FT	EACH	EACH	EACH	EACH
890	RT	I.R.75	STA. 325+00 TO STA. 325+46	* TO CB-4									54					44				
890	RT	I.R.75	STA. 325+46	CB-4	2			1		1		116				1					1	
890	RT	RAMP D	STA. 324+52 TO STA. 324+75	* TO PB-9									45					35				
890	RT	RAMP D	STA. 324+75	PB-9		3													1			
890	RT/LT	RAMP D	STA. 324+75 TO STA. 324+70	PB-9 TO PB-10							186			52				52				
890	LT	RAMP D	STA. 324+70	PB-10		3													1			
890	LT	RAMP D	STA. 324+70 TO 324+00	PB-10 TO *									80					70				
890	LT	RAMP D	STA. 324+70 TO STA. 328+52	PB-10 TO CC-3									377					367				
890	LT	RAMP D	STA. 328+52	CC-3	2			1		1		116				1					1	
890	LT	RAMP D	STA. 328+53 TO STA. 328+74	CC-3 TO PB-11									32					22				
890	LT	RAMP D	STA. 328+74	PB-11		3													1			
890	LT	RAMP D/IR75	STA. 328+74 TO STA. 328+74	PB-11 TO CC-4							198			56				56				
890	LT	I.R. 75	STA. 328+74	CC-4	2			1		1		116				1					1	
890	LT	RAMP D	STA. 328+74 TO STA. 330+30	PB-11 TO CC-5									165					155				
890	LT	RAMP D	STA. 330+30	CC-5	2			1		1		116				1					1	
890	LT	RAMP D/IR75	STA. 330+30 TO STA. 339+00	CC-5 TO *									879					869				
891	LT	I.R. 75	STA. 339+00 TO STA. 339+23	* TO CC-6									32					22				
891	LT	I.R. 75	STA. 339+23	CC-6	2			1		1		116				1					1	
891	LT	I.R. 75	STA. 351+93	DE-4	2			1		1		116				1					1	
891	LT	I.R. 75	STA. 351+93 TO STA. 353+00	DE-4 TO *									117					107				
891	RT	I.R. 75	STA. 352+45	DF-6	2			1		1		116				1					1	
891	RT	I.R. 75	STA. 352+45 TO STA. 353+00	DF-6 TO *									65					55				
892	RT	I.R. 75	STA. 353+00 TO STA. 354+75	* TO DF-5									185					175				
892	RT	I.R. 75	STA. 354+75	DF-5	2			1		1		116				1					1	
892	RT	IR75/RAMP F	STA. 354+75 TO STA. 359+06	DF-5 TO DF-4									207					197				
892	RT	RAMP F	STA. 359+06	DF-4	2			1		1		116				1					1	
892	RT	RAMP F	STA. 359+06 TO STA. 360+43	DF-4 TO PB-12									144					134				
892	RT	RAMP F	STA. 360+43	PB-12		3													1			
892	RT	RAMP F/IR75	STA. 360+43 TO STA. 360+45	PB-12 TO DF-3							186			62				62				
892	RT	I.R. 75	STA. 360+45	DF-3	2			1		1		116				1					1	
892	RT	RAMP F	STA. 360+43 TO STA. 360+97	PB-12 TO DF-2									65					55				
892	RT	RAMP F	STA. 360+97	DF-2	2			1		1		116				1					1	
892	RT	RAMP F	STA. 360+97 TO STA. 365+50	DF-1 TO *									285					275				
892	LT	I.R. 75	STA. 353+00 TO STA. 355+11	* TO DE-3									222					212				
892	LT	I.R. 75	STA. 355+11	DE-3	2			1		1		116				1					1	
892	LT	IR75/RAMP A	STA. 355+11 TO STA. 358+45	DE-3 TO DE-2									344					334				
892	LT	RAMP A	STA. 358+45	DE-2	2			1		1		116				1					1	
892	LT	RAMP A	STA. 358+45 TO STA. 365+50	DE-2 TO *									710					700				
893	RT	RAMP F	STA. 365+50 TO STA. 369+33	* TO PB-13									406					396				
893	RT	RAMP F	STA. 369+33	PB-13		3													1			
893	RT	RAMP F/SR309	STA. 369+33 TO STA. 899+84	PB-13 TO DF-1									94					84				
893	RT	S.R. 309	STA. 899+84	DF-1	2				1	1		80					1				1	
893	RT	RAMP F	STA. 369+33 TO STA. 369+32	PB-13 TO PB-14							207			59				59				
893	RT	RAMP F	STA. 369+32	PB-14		3													1			
893	RT	RAMP F/SR309	STA. 369+32 TO STA. 894+37	PB-14 TO PB-15									456					446				
TOTALS CARRIED TO GENERAL SUMMARY					28	18	0	13	1	14	777	1588	4964	229	0	13	1	4983	6	0	14	0

CALCULATED JCS
CHECKED LH

LIGHTING SUBSUMMARY

ALL-75-5.53

868
1224

\\D01FS01N_Drive\Pw\76691\Final Cadd Files\Projects\ALL\7669\Lighting\sheets\76691LS002.dgn 27-SEP-2012 1:07PM jclark1

LIGHTING SUBSUMMARY

CALCULATED JCS
CHECKED LH

SHEET NO.	SIDE	ROADWAY	STATION TO STATION	CIRCUIT NODES	625 CONNECTION, FUSED PULL APART	625 CONNECTION, UNFUSED PERMANENT	625 LIGHT POLE, CONVENTIONAL, DESIGN AT15B40	625 LIGHT POLE, CONVENTIONAL, DESIGN AT18B40	625 LIGHT POLE, LOW MAST, DESIGN ATLM40	625 LIGHT POLE FOUNDATION, 24" X 8' DEEP	625 NO. 4 AWG 5000V DISTRIBUTION CABLE	625 NO. 10 AWG POLE AND BRACKET CABLE	625 1-1/2" DUCT CABLE WITH THREE NO. 4 AWG 5000 VOLT CABLES	625 CONDUIT, 2", 725.04	625 CONDUIT, JACKED OR DRILLED, 3", 725.04	625 LUMINAIRE, CONV. (TYPE II, 200W HPS, 480V), APP	625 LUMINAIRE, LOW MAST (SYMMETRIC, 400W HPS, 480 VOLT), APP	625 TRENCH	625 PULL BOX, 725.08, 18"	625 PULL BOX, 725.08, 24"	625 GROUND ROD	625 POWER SERVICE, AS PER PLAN
				* = MATCH LINE	EACH	EACH	EACH	EACH	EACH	EACH	FT	FT	FT	FT	FT	EACH	EACH	FT	EACH	EACH	EACH	EACH
893	LT	RAMP A	STA. 365+50 TO STA. 369+28	* TO PB-18									396					386				
893	LT	RAMP A	STA. 369+28	PB-18		3													1			
893	LT/RT	RAMP A	STA. 369+28 TO STA. 369+47	PB-18 TO PB-17							192			54				54				
893	RT	RAMP A	STA. 369+47	PB-17		3													1			
893	RT	RAMP A/SR309	STA. 369+47 TO STA. 894+17	PB-17 TO DE-1									101					91				
893	RT	S.R. 309	STA. 894+17	DE-1	2				1	1		80					1				1	
893	RT	S.R. 309	STA. 894+17 TO STA. 894+37	DE-1 TO PB-15									30					20				
893	RT	S.R. 309	STA. 894+37	PB-15		6														1		
893	RT/LT	S.R. 309	STA. 894+37 TO STA. 894+37	PB-15 TO PB-16							738			113				113				
893	LT	S.R. 309	STA. 894+37	PB-16		6														1		
893	LT	S.R. 309	STA. 894+37 TO STA. 894+26	PB-16 TO P.S. 'D									63					11				
893	LT	S.R. 309	STA. 894+26	PWR SVC. 'D'																		1
893	LT	S.R. 309	STA. 894+37 TO STA. 898+05	PB-16 TO DH-1									378					368				
893	LT	S.R. 309	STA. 898+05	DH-1	2				1	1		80					1				1	
893	LT	SR309/RAMP E	STA. 898+05 TO STA. 370+77	DH-1 TO PB-22									88					78				
893	LT	RAMP E	STA. 370+77	PB-22		3													1			
893	LT/RT	RAMP E	STA. 370+77 TO STA. 370+82	PB-22 TO PB-23							180			50				50				
893	RT	RAMP E	STA. 370+82	PB-23		3													1			
893	RT	RAMP E	STA. 370+82 TO STA. 374+00	PB-23 TO *									337					327				
893	LT/RT	SR309/RAMP C	STA. 894+26 TO STA. 370+72	P.S.'D' TO PB-19									85					75				
893	RT	RAMP C	STA. 370+72	PB-19		3													1			
893	RT/LT	RAMP C	STA. 370+72 TO STA. 370+59	PB-19 TO PB-20							180			50				50				
893	LT	RAMP C	STA. 370+59	PB-20		3													1			
893	LT	RAMP C/SR309	STA. 370+59 TO STA. 892+54	PB-20 TO DG-1									100					90				
893	LT	S.R. 309	STA. 892+54	DG-1	2				1	1		80					1				1	
893	LT	RAMP C	STA. 370+59 TO STA. 374+00	PB-20 TO *									354					344				
894	RT	RAMP E	STA. 374+00 TO STA. 380+34	* TO DH-2									638					628				
894	RT	RAMP E	STA. 380+34	DH-2	2			1		1		116				1					1	
894	RT	RAMP E/IR75	STA. 380+34 TO STA. 383+34	DH-2 TO DH-3									310					300				
894	RT	I.R. 75	STA. 383+34	DH-3	2			1		1		116				1					1	
894	RT	I.R. 75	STA. 383+34 TO STA. 386+30	DH-3 TO DH-4									307					297				
894	RT	I.R. 75	STA. 386+30	DH-4	2			1		1		116				1					1	
894	LT	RAMP C	STA. 374+00 TO STA. 375+91	* TO DG-2									199					189				
894	LT	RAMP C	STA. 375+91	DG-2	2		1			1		116				1					1	
894	LT	RAMP C	STA. 375+91 TO STA. 376+33	DG-2 TO PB-21									52					42				
894	LT	RAMP C	STA. 376+33	PB-21		3													1			
894	LT	RAMP C/IR75	STA. 376+33 TO STA. 376+33	PB-21 TO DG-3							183			51				51				
894	LT	I.R. 75	STA. 376+33	DG-3	2			1		1		116				1					1	
894	LT	RAMP C	STA. 376+33 TO STA. 377+78	PB-21 TO DG-4									154					144				
894	LT	RAMP C	STA. 377+78	DG-4	2			1		1		116				1					1	
894	LT	RAMP C/IR75	STA. 377+78 TO STA. 384+49.7	DG-4 TO DG-5									680					670				
894	LT	I.R. 75	STA. 384+49.7	DG-5	2			1		1		116				1					1	
895	LT	I.R. 75	STA. 446+33	EJ-4	2			1		1		116				1					1	
895	LT	I.R. 75	STA. 446+33 TO STA. 449+33	EJ-4 TO EJ-3									310					300				
895	LT	I.R. 75	STA. 449+33	EJ-3	2			1		1		116				1					1	
895	LT	IR75/RAMP D	STA. 449+33 TO STA. 452+33	EJ-3 TO EJ-2									310					300				
895	LT	RAMP D	STA. 452+33	EJ-2	2			1		1		116				1					1	
895	LT	RAMP D	STA. 452+33 TO STA. 457+00	EJ-2 TO *									474					464				
TOTALS CARRIED TO GENERAL SUMMARY					26	33	1	9	3	13	1473	1400	5366	318	0	10	3	5442	7	2	13	1

ALL-75-5.53

869
1224

jclark1
27-SEP-2012 1:08PM
\\D01FS01N_Drive\Pd\76691\Final Cadd Files\Projects\ALL\76691\Lighting\sheets\76691LS003.dgn

SHEET NO.	SIDE	ROADWAY	STATION TO STATION	CIRCUIT NODES	625 CONNECTION, FUSED PULL APART	625 CONNECTION, UNFUSED PERMANENT	625 LIGHT POLE, CONVENTIONAL, DESIGN AT15B40	625 LIGHT POLE, CONVENTIONAL, DESIGN AT18B40	625 LIGHT POLE, LOW MAST, DESIGN ATLM40	625 LIGHT POLE FOUNDATION, 24" X 8' DEEP	625 NO. 4 AWG 5000V DISTRIBUTION CABLE	625 NO. 10 AWG POLE AND BRACKET CABLE	625 1-1/2" DUCT CABLE WITH THREE NO. 4 AWG 5000 VOLT CABLES	625 CONDUIT, 2", 725.04	625 CONDUIT, JACKED OR DRILLED, 3", 725.04	625 LUMINAIRE, CONV. (TYPE II, 200W HPS, 480V), APP	625 LUMINAIRE, LOW MAST (SYMMETRIC, 400W HPS, 480 VOLT), APP	625 TRENCH	625 PULL BOX, 725.08, 18"	625 PULL BOX, 725.08, 24"	625 GROUND ROD	625 POWER SERVICE, AS PER PLAN
				* = MATCH LINE	EACH	EACH	EACH	EACH	EACH	EACH	FT	FT	FT	FT	FT	EACH	EACH	FT	EACH	EACH	EACH	EACH
895	RT	I.R. 75	STA. 448+06	EK-5	2			1		1		116				1					1	
895	RT	IR75/RAMP C	STA. 448+06 TO STA. 454+68	EK-5 TO EK-4									669					659				
895	RT	RAMP C	STA. 454+68	EK-4	2			1		1		116				1					1	
895	RT	RAMP C	STA. 454+68 TO STA. 456+14	EK-4 TO PB-29									155					145				
895	RT	RAMP C	STA. 456+14	PB-29		3													1			
895	RT	RAMP C/IR75	STA. 456+14 TO STA. 456+17	PB-29 TO EK-3							186			52				52				
895	RT	I.R. 75	STA. 456+17	EK-3	2			1		1		116				1					1	
895	RT	RAMP C	STA. 456+14 TO STA. 456+57	PB-29 TO EK-2									53					43				
895	RT	RAMP C	STA. 456+57	EK-2	2			1		1		116				1					1	
895	RT	RAMP C	STA. 456+57 TO STA. 457+00	EK-2 TO *									52					42				
896	RT	RAMP C	STA.457+00 TO STA. 461+90	* TO PB-28									508					498				
896	RT	RAMP C	STA. 461+90	PB-28		3													1			
896	RT	RAMP C	STA. 461+90 TO STA. 453+97	PB-28 TO EK-1									110					100				
896	RT	RAMP C	STA. 453+97	EK-1	2				1	1		80					1				1	
896	RT/LT	RAMP C	STA. 461+90 TO STA. 461+92	PB-28 TO PB-27							180			50				50				
896	LT	RAMP C	STA. 461+92	PB-27		3													1			
896	LT/RT	RAMP C/SR81	STA. 461+92 TO STA. 452+66	PB-27 TO PB-26									80					70				
896	RT	S.R. 81	STA. 452+66	PB-26		3														1		
896	RT	S.R. 81	STA. 452+66 TO STA. 449+02	PB-26 TO P.S. 'E'									756					368				
896	RT	S.R. 81	STA. 449+02	PWR SVC 'E'																		1
896	LT	RAMP D	STA. 457+00 TO STA. 460+86	* TO PB-25									398					388				
896	LT	RAMP D	STA. 460+86	PB-25		6														1		
896	LT/RT	RAMP D	STA. 460+86 TO STA. 460+98	PB-25 TO PB-24							546			81				81				
896	RT	RAMP D	STA. 460+98	PB-24		6														1		
896	RT	RAMP D/SR81	STA. 460+98 TO STA. 449+02	PB-24 TO P.S.'E'									54					44				
896	RT	S.R. 81	STA. 449+02 TO STA. 449+08	P.S. 'E' TO EJ-1									33					23				
896	RT	S.R. 81	STA. 449+08	EJ-1	2				1	1		80					1				1	
896	RT	SR81/RAMP D	STA. 449+08 TO STA. 460+98	EJ-1 TO PB-24									63					53				
896	LT	RAMP D/SR81	STA. 460+86 TO STA. 447+67	PB-25 TO PB-33							489			153				153				
896	LT	S.R. 81	STA. 447+67	PB-33		3													1			
896	LT	S.R. 81	STA. 447+67 TO STA. 447+32	PB-33 TO EL-1									46					36				
896	LT	S.R. 81	STA. 447+32	EL-1	2				1	1		80					1				1	
896	LT	S.R. 81/RAMP F	STA. 447+32 TO STA. 469+00	EL-1 TO *									747					737				
896	RT/LT	S.R. 81	STA. 452+66 TO STA. 452+66	PB-26 TO PB-30							339			103				103				
896	LT	S.R. 81	STA. 452+66	PB-30		3													1			
896	LT	S.R. 81	STA. 452+66 TO STA. 452+47	PB-30 TO EM-1									30					20				
896	LT	S.R. 81	STA. 452+47	EM-1	2				1	1		80					1				1	
896	LT	SR81/RAMP B	STA. 452+66 TO STA. 463+34	PB-30 TO PB-31									102					92				
896	LT	RAMP B	STA. 463+34	PB-31		3													1			
896	LT/RT	RAMP B	STA. 463+34 TO STA. 463+39	PB-31 TO PB-32							180			50				50				
896	RT	RAMP B	STA. 463+39	PB-32		3													1			
896	RT	RAMP B	STA. 463+39 TO STA. 469+00	PB-32 TO *									576					566				
897	RT	RAMP B	STA. 469+00 TO STA. 472+73	* TO EM-2									380					370				
897	RT	RAMP B/IR75	STA. 472+73	EM-2	2			1		1		116				1					1	
897	RT	I.R. 75	STA. 472+73 TO STA. 475+74	EM-2 TO EM-3									310					300				
897	RT	I.R. 75	STA. 475+74	EM-3	2			1		1		116				1					1	
897	RT	I.R. 75	STA. 475+74 TO STA. 478+75	EM-3 TO EM-4									310					300				
897	RT	I.R. 75	STA. 478+75	EM-4	2			1		1		116				1					1	
TOTALS CARRIED TO GENERAL SUMMARY					22	36	0	7	4	11	1920	1132	5432	489	0	7	4	5343	7	3	11	1

CALCULATED JCS
CHECKED LH

LIGHTING SUBSUMMARY

ALL-75-5.53

870
1224

\\D01FS01N_Drive\Pd\76691\Final Cadd Files\Projects\ALL\7669\Nighting\sheets\76691LS004.dgn 27-SEP-2012 1:09PM jclark1

SHEET NO.	SIDE	ROADWAY	STATION TO STATION	CIRCUIT NODES	625 CONNECTION, FUSED PULL APART	625 CONNECTION, UNFUSED PERMANENT	625 LIGHT POLE, CONVENTIONAL, DESIGN AT15B40	625 LIGHT POLE, CONVENTIONAL, DESIGN AT18B40	625 LIGHT POLE, LOW MAST, DESIGN ATLM40	625 LIGHT POLE FOUNDATION, 24" X 8' DEEP	625 NO. 4 AWG 5000V DISTRIBUTION CABLE	625 NO. 10 AWG POLE AND BRACKET CABLE	625 1-1/2" DUCT CABLE WITH THREE NO. 4 AWG 5000 VOLT CABLES	625 CONDUIT, 2", 725.04	625 CONDUIT, JACKED OR DRILLED, 3", 725.04	625 LUMINAIRE, CONV. (TYPE II, 200W HPS, 480V), APP	625 LUMINAIRE, LOW MAST (SYMMETRIC, 400W HPS, 480 VOLT), APP	625 TRENCH	625 PULL BOX, 725.08, 18"	625 PULL BOX, 725.08, 24"	625 GROUND ROD	625 POWER SERVICE, AS PER PLAN
				* = MATCH LINE	EACH	EACH	EACH	EACH	EACH	EACH	FT	FT	FT	FT	FT	EACH	EACH	FT	EACH	EACH	EACH	EACH
897	LT	RAMP F	STA. 469+00 TO STA. 470+00	* TO EL-2									101					91				
897	LT	RAMP F	STA. 470+00	EL-2	2			1		1		116				1					1	
897	LT	RAMP F	STA. 470+00 TO STA. 470+45	EL-2 TO PB-34									55					45				
897	LT	RAMP F	STA. 470+45	PB-34		3													1			
897	LT	RAMP F/IR75	STA. 470+45 TO STA. 470+42	PB-34 TO EL-3							186			52				52				
897	LT	I.R. 75	STA. 470+42	EL-3	2			1		1		116				1					1	
897	LT	RAMP F	STA. 470+45 TO STA. 471+91	PB-34 TO EL-4									156					146				
897	LT	RAMP F	STA. 471+91	EL-4	2			1		1		116				1					1	
897	LT	RAMP F/IR75	STA. 471+91 TO STA. 478+51	EL-4 TO EL-5									668					658				
897	LT	I.R. 75	STA. 478+51	EL-5	2			1		1		116				1					1	
TOTALS CARRIED TO GENERAL SUMMARY					8	3	0	4	0	4	186	464	980	52	0	4	0	992	1	0	4	0

CALCULATED JCS
CHECKED LH

LIGHTING SUBSUMMARY

ALL-75-5.53

871
1224

\\D01FS01N_Drive\Pd\76691\Final Cadd Files\Projects\ALL\7669\Lighting\sheets\76691LS005.dgn 27-SEP-2012 1:10PM jclark1

SHEET NO.	SIDE	ROADWAY	CIRCUIT NODES / REMOVAL REFERENCE	625 DISCONNECT CIRCUIT	625 LIGHT POLE REMOVED	625 LIGHT POLE FOUNDATION REMOVED	625 LUMINAIRE REMOVED	625 LIGHT TOWER REMOVED	625 LIGHT TOWER FOUNDATION REMOVED	625 POWER SERVICE REMOVED, AS PER PLAN	625 PULL BOX REMOVED
			* = MATCH LINE	EACH	EACH	EACH	EACH	EACH	EACH	EACH	EACH
877	RT	I.R. 75	R-1		1	1	1				
877	RT	I.R. 75	R-2		1	1	1				
877	RT	I.R. 75	R-3		1	1	1				
877	RT	RAMP A	R-4		1	1	1				
877	RT	I.R. 75	R-5		1	1	1				
877	LT	I.R. 75	R-6		1	1	1				
878	LT	I.R. 75	R-7		1	1	1				
878	RT	I.R. 75	R-8		1	1	1				
878	RT	RAMP B	R-9		1	1	1				
878	LT	FOURTH ST.	R-10							1	
878	RT	I.R. 75	R-11		1	1	1				
878	LT	I.R. 75	R-12		1	1	1				
878	LT	RAMP D	R-14		1	1	1				
878	LT	I.R. 75	R-121								1
879	RT	I.R. 75	R-15		1	1	1				
879	RT	RAMP D	R-16		1	1	1				
879	LT	RAMP D	R-17		1	1	1				
879	LT	I.R. 75	R-18		1	1	1				
879	LT	I.R. 75	R-19	1							
879	LT	I.R. 75	R-20		1	1	1				
880	RT	I.R. 75	R-21		1	1	1				
880	RT	I.R. 75	R-22		1	1	1				
880	RT	I.R. 75	R-23		1	1	1				
880	RT	I.R. 75	R-24		1	1	1				
880	RT	I.R. 75	R-25		1	1	1				
880	LT	I.R. 75	R-26		1	1	1				
880	LT	I.R. 75	R-27		1	1	1				
880	LT	I.R. 75	R-28		1	1	1				
880	LT	I.R. 75	R-29		1	1	1				
881	LT	I.R. 75	R-30		1	1	1				
881	LT	I.R. 75	R-31		1	1	1				
881	LT	I.R. 75	R-32		1	1	1				
881	LT	I.R. 75	R-33		1	1	1				
881	LT	I.R. 75	R-34		1	1	1				
881	LT	RAMP A	R-35		1	1	1				
881	RT	RAMP A	R-36		1	1	1				
881	RT	I.R. 75	R-37		1	1	1				
881	RT	I.R. 75	R-38		1	1	1				
881	LT	RAMP F	R-39		1	1	1				
881	RT	RAMP F	R-40		1	1	1				
881	RT	I.R. 75	R-41		1	1	1				
881	RT	RAMP F	R-42		1	1	1				
881	RT	RAMP F	R-43		1	1	1				
881	RT	RAMP F	R-44		1	1	1				
882	LT	S.R. 309	R-45		1	1	1				
882	LT	RAMP C	R-46		1	1	1				
882	LT	S.R. 309	R-47							1	2
882	LT	S.R. 309	R-48		1	1	1				
882	LT	S.R. 309	R-49		1	1	1				
882	LT	S.R. 309	R-50								
882	LT	S.R. 309	R-51		1	1	1				
882	LT	S.R. 309	R-52		1	1	1				
882	LT	S.R. 309	R-53		1	1	1				
882	RT	I.R. 75	R-54	1							
882	RT	S.R. 309	R-55		1	1	1				
882	RT	S.R. 309	R-56		1	1	1				
TOTALS CARRIED TO GENERAL SUMMARY				2	50	50	50	0	0	2	3

CALCULATED JCS
CHECKED LH

LIGHTING SUBSUMMARY

ALL-75-5.53

872
1224

J:\Projects\ALL\76691\lighting\sheets\76691LS006.dgn 11-SEP-2012 9:18PM reddenj

SHEET NO.	SIDE	ROADWAY	CIRCUIT NODES / REMOVAL REFERENCE * = MATCH LINE	625 DISCONNECT CIRCUIT EACH	625 LIGHT POLE REMOVED EACH	625 LIGHT POLE FOUNDATION REMOVED EACH	625 LUMINAIRE REMOVED EACH	625 LIGHT TOWER REMOVED EACH	625 LIGHT TOWER FOUNDATION REMOVED EACH	625 POWER SERVICE REMOVED, AS PER PLAN EACH	625 PULL BOX REMOVED EACH
882	LT	RAMP B	R-57		1	1	1				
882	RT	S.R. 309	R-58		1	1	1				
882	LT	I.R. 75	R-59	1							
882	LT	I.R. 75	R-60		1	1	1				
882	LT	RAMP B	R-61		1	1	1				
882	LT	RAMP B	R-62		1	1	1				
882	LT	RAMP B	R-63		1	1	1				
882	LT	RAMP B	R-64		1	1	1				
882	LT	RAMP B	R-65		1	1	1				
882	LT	RAMP B	R-66		1	1	1				
882	LT	I.R. 75	R-67	1							
882	LT	I.R. 75	R-68		1	1	1				
882	RT	I.R. 75	R-69		1	1	1				
882	RT	I.R. 75	R-70		1	1	1				
882	RT	RAMP G	R-71		1	1	1				
882	RT	I.R. 75	R-72		1	1	1				
882	RT	RAMP G	R-73		1	1	1				
882	RT	RAMP G	R-74		1	1	1				
882	RT	RAMP G	R-75		1	1	1				
882	LT	RAMP F	R-76		1	1	1				
882	LT	RAMP F	R-77		1	1	1				
882	LT	RAMP F	R-78		1	1	1				
882	RT	RAMP G	R-79		1	1	1				
882	RT	RAMP G	R-80		1	1	1				
882	RT	RAMP G	R-81		1	1	1				
882	RT	RAMP G	R-82		1	1	1				
882	RT	RAMP G	R-83		1	1	1				
882	LT	RAMP F	R-84		1	1	1				
882	LT	RAMP F	R-85	1							
882	LT	S.R. 309	R-86	1							
882	RT	S.R. 309	R-87	1							
882	RT	RAMP A	R-13		1	1	1				
882	RT	RAMP A	R-120	1							1
882	LT	S.R. 309	R-122			1					
883	LT	RAMP C	R-88		1	1	1				
883	LT	RAMP C	R-89		1	1	1				
883	LT	RAMP C	R-90		1	1	1				
883	LT	I.R. 75	R-91		1	1	1				
883	LT	I.R. 75	R-92	1							
883	LT	I.R. 75	R-93		1	1	1				
883	LT	I.R. 75	R-94		1	1	1				
883	LT	I.R. 75	R-95		1	1	1				
883	RT	I.R. 75	R-96		1	1	1				
883	RT	I.R. 75	R-97		1	1	1				
883	RT	I.R. 75	R-98		1	1	1				
883	LT	DEAN AVE.	R-99		1	1	1				
883	LT	DEAN AVE.	R-100		1	1	1				
883	LT	RAMP E	R-101		1	1	1				
883	RT	RAMP E	R-102		1	1	1				
883	RT	RAMP E	R-103		1	1	1				
883	RT	I.R. 75	R-104		1	1	1				
883	RT	I.R. 75	R-105		1	1	1				
883	LT	I.R. 75	R-106		1	1	1				
TOTALS CARRIED TO GENERAL SUMMARY				7	44	45	44	0	0	0	1

CALCULATED JCS
CHECKED LH

LIGHTING SUBSUMMARY

ALL-75-5.53

873
1224

J:\Projects\ALL\76691\lighting\sheets\76691LS007.dgn 11-SEP-2012 9:18PM reddenj

SHEET NO.	SIDE	ROADWAY	CIRCUIT NODES / REMOVAL REFERENCE * = MATCH LINE	625 DISCONNECT CIRCUIT EACH	625 LIGHT POLE REMOVED EACH	625 LIGHT POLE FOUNDATION REMOVED EACH	625 LUMINAIRE REMOVED EACH	625 LIGHT TOWER REMOVED EACH	625 LIGHT TOWER FOUNDATION REMOVED EACH	625 POWER SERVICE REMOVED, AS PER PLAN EACH	625 PULL BOX REMOVED EACH
884	LT	I.R. 75	R-107		1	1	1				
884	LT	I.R. 75	R-108		1	1	1				
884	LT	I.R. 75	R-109		1	1	1				
884	RT	I.R. 75	R-110		1	1	1				
884	RT	I.R. 75	R-111		1	1	1				
884	RT	I.R. 75	R-112		1	1	1				
884	RT	I.R. 75	R-113		1	1	1				
884	RT	I.R. 75	R-114		1	1	1				
885	RT	S.R. 81	R-115							1	
885	RT	RAMP C	R-116	1							
885	RT	S.R. 81	R-117	1							
885	LT	S.R. 81	TOWER A-1				4	1	1		
885	LT	S.R. 81	TOWER A-2				4	1	1		
885	RT	RAMP D	TOWER B-1				4	1	1		
885	LT	RAMP D	TOWER B-2				4	1	1		
885	LT	S.R. 81	TOWER C-1				4	1	1		
885	RT	RAMP C	R-123								1
885	RT	S.R. 81	R-124								1
885	LT	S.R. 81	R-125								1
885	LT	S.R. 81	R-126								1
885	LT	S.R. 81	R-127								1
886	RT	S.R. 81	R-118	1							
886	LT	S.R. 81	R-119	1							
886	RT	RAMP F	TOWER C-2				4	1	1		
886	RT	RAMP E	R-128								1
886	LT	S.R. 81	R-129								1
886	LT	S.R. 81	R-130								1
886	LT	S.R. 81	R-131								1
886	RT	S.R. 81	R-132								1
887	LT	RAMP E	TOWER A-3				4	1	1		
887	RT	RAMP B	TOWER D-1				4	1	1		
887	RT	RAMP B	TOWER D-2				4	1	1		
887	RT	I.R. 75	TOWER D-3				4	1	1		
887	RT	RAMP B	R-133								1
887	RT	RAMP F	R-134								1
887	RT	RAMP E	R-135								1
TOTALS CARRIED TO GENERAL SUMMARY				4	8	8	48	10	10	1	13

CALCULATED JCS
CHECKED LH

LIGHTING SUBSUMMARY

ALL-75-5.53

874
1224

J:\Projects\ALL\76691\lighting\sheets\76691LS008.dgn 11-SEP-2012 9:18PM reddenj

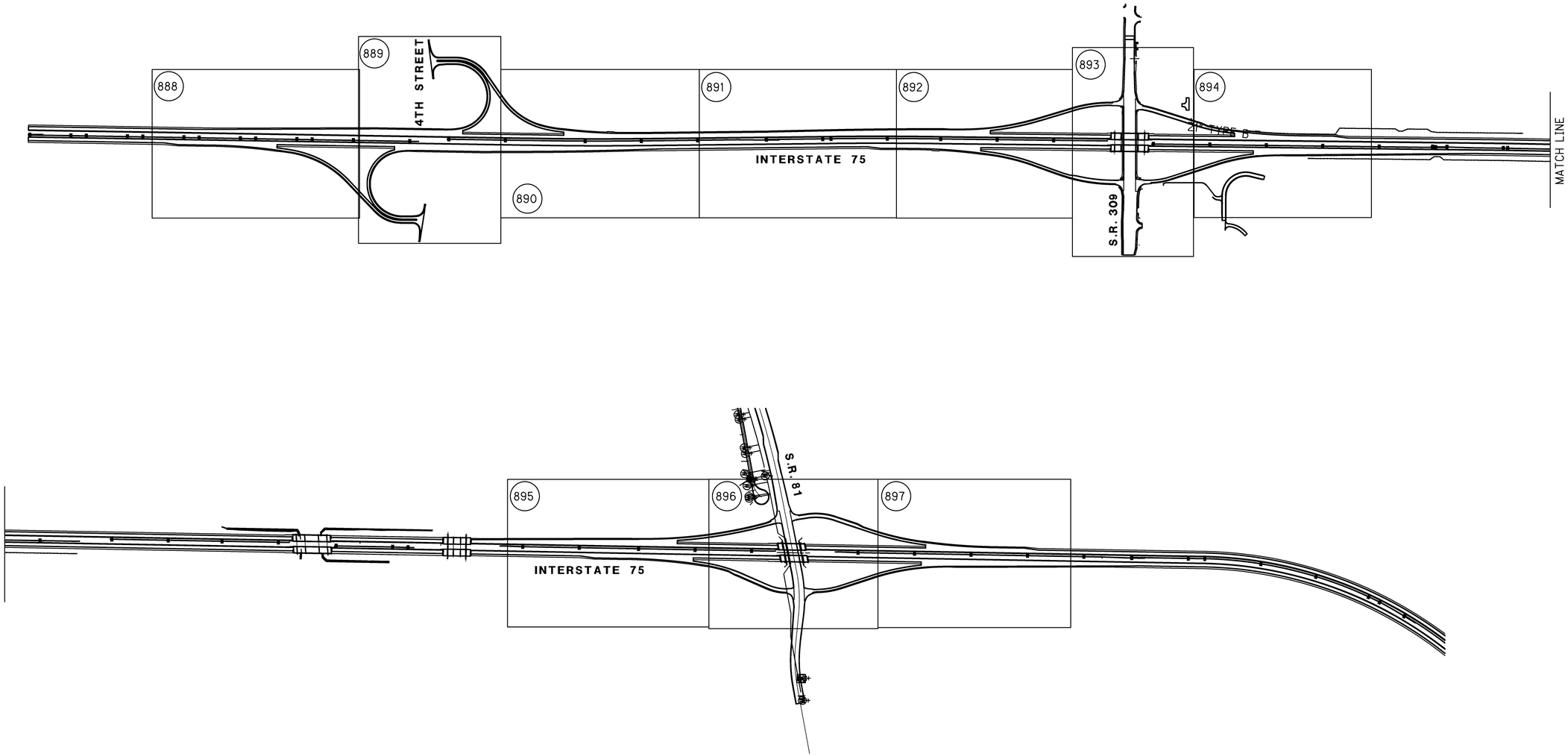

POWER SERVICE INFORMATION

A B - 1
- CIRCUIT NUMBER
- CIRCUIT NAME
- POWER SERVICE NAME

LIGHT POLE INFORMATION

AT 20B 40
- BASE TYPE: A = ANCHOR; AT = ALUMINUM TRANSFORMER
- BRACKET ARMS: 'B' = SINGLE ARM; 'BB' = DOUBLE ARM (IF UNEQUAL ARMS, EX. 10B15B); 'LM' = LOW MAST; 'ON' = POST TOP
- POLE HEIGHT

LEGEND			
	NEW LOW MAST LIGHT POLE, SYMMETRIC DISTRIBUTION, WITH 400W HPS LUMINAIRE, 480V		EXISTING LIGHTING CIRCUIT
	NEW CONVENTIONAL LIGHT POLE WITH TYPE II OR III DISTRIBUTION AS NOTED, WITH 250W HPS LUMINAIRES, 480V		EXISTING LIGHTING CONDUIT
	EXISTING HIGH MAST LIGHT TOWER WITH HPS LUMINAIRES, 480V	AB No. 2	NEW LIGHTING CIRCUIT, NUMBER OF CONDUCTORS (HASHES), CIRCUIT NAME AND CONDUCTOR SIZE.
	EXISTING CONVENTIONAL LIGHT POLE		1-1/2" DUCT CABLE IN 24" DEEP TRENCH
	NEW POWER SERVICE, 240/480V, 1 PHASE, 3 WIRE		PROPOSED LIGHTING CONDUIT, 3", 725.04 (UNLESS NOTED OTHERWISE)
	EXISTING POWER SERVICE, TYPE AS NOTED		PROPOSED LIGHTING CONDUIT, 3", 725.04 (UNLESS NOTED OTHERWISE), JACKED OR DRILLED UNDER PAVEMENT.
			STRUCTURE GROUNDING SYSTEM
PB-1	NEW LIGHTING PULL BOX OR JUNCTION BOX WITH IDENTIFICATION NUMBER (PB=PULL BOX, MJB=MEDIAN JUNCTION BOX, TJB=TRANSITION JUNCTION BOX, SJB=STRUCTURE JUNCTION BOX)	AB-1	POLE IDENTIFICATION NUMBER (NEW)
PB-1	EXISTING LIGHTING PULL BOX OR JUNCTION BOX WITH IDENTIFICATION NUMBER (PB=PULL BOX, MJB=MEDIAN JUNCTION BOX, TJB=TRANSITION JUNCTION BOX, SJB=STRUCTURE JUNCTION BOX)	AB-1	POLE IDENTIFICATION NUMBER (EXISTING)

N

0 200 400 800 HORIZONTAL SCALE IN FEET

CALCULATED JCS
CHECKED LH

LIGHTING SCHEMATIC PLAN

ALL-75-5.53

875
1224

J:\Projects\ALL\76691\lighting\sheets\76691LB001.dgn 11-SEP-2012 9:18PM reddenj

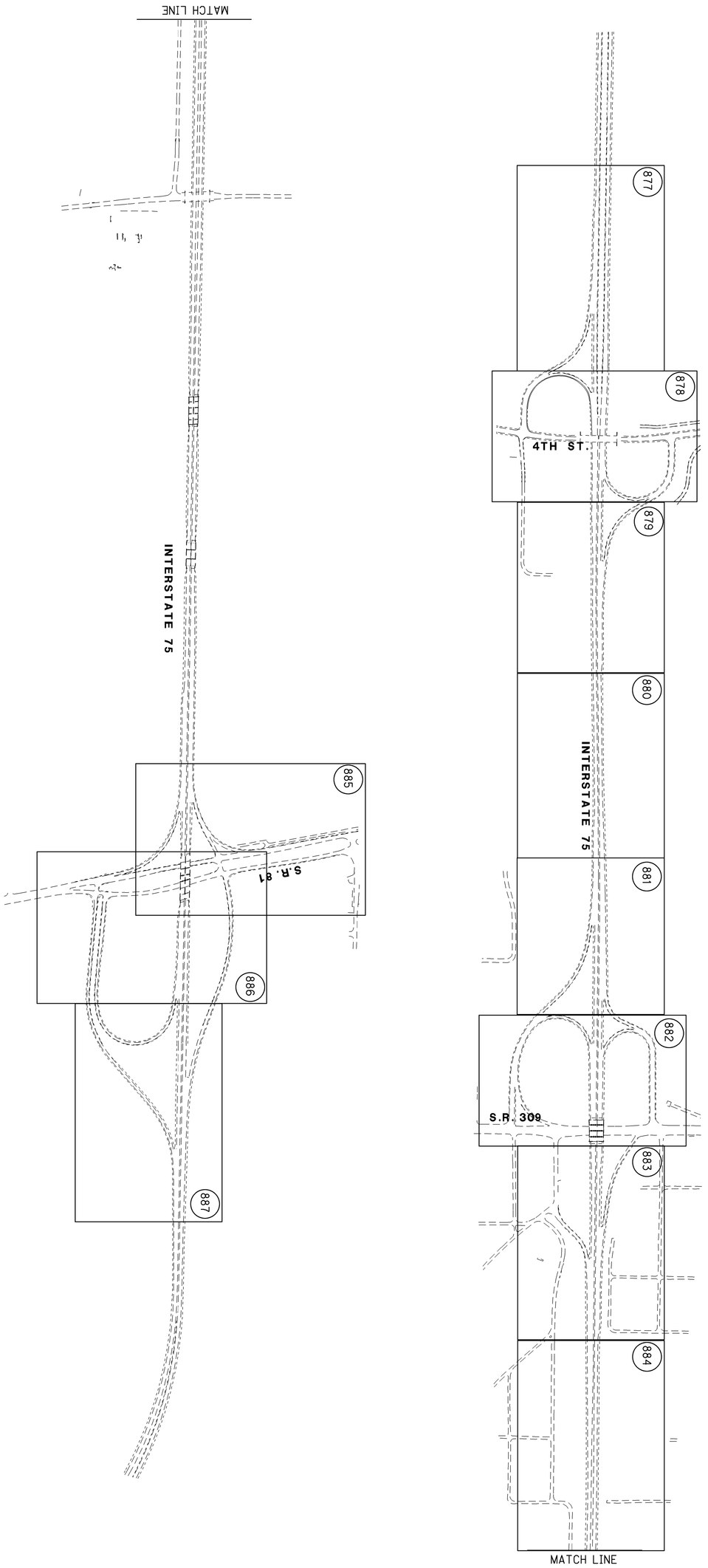

876
1224

ALL-75-5.53

LIGHTING DEMOLITION SCHEMATIC PLAN

CALCULATED JCS
CHECKED LH

0 400
200 800
HORIZONTAL SCALE IN FEET

N

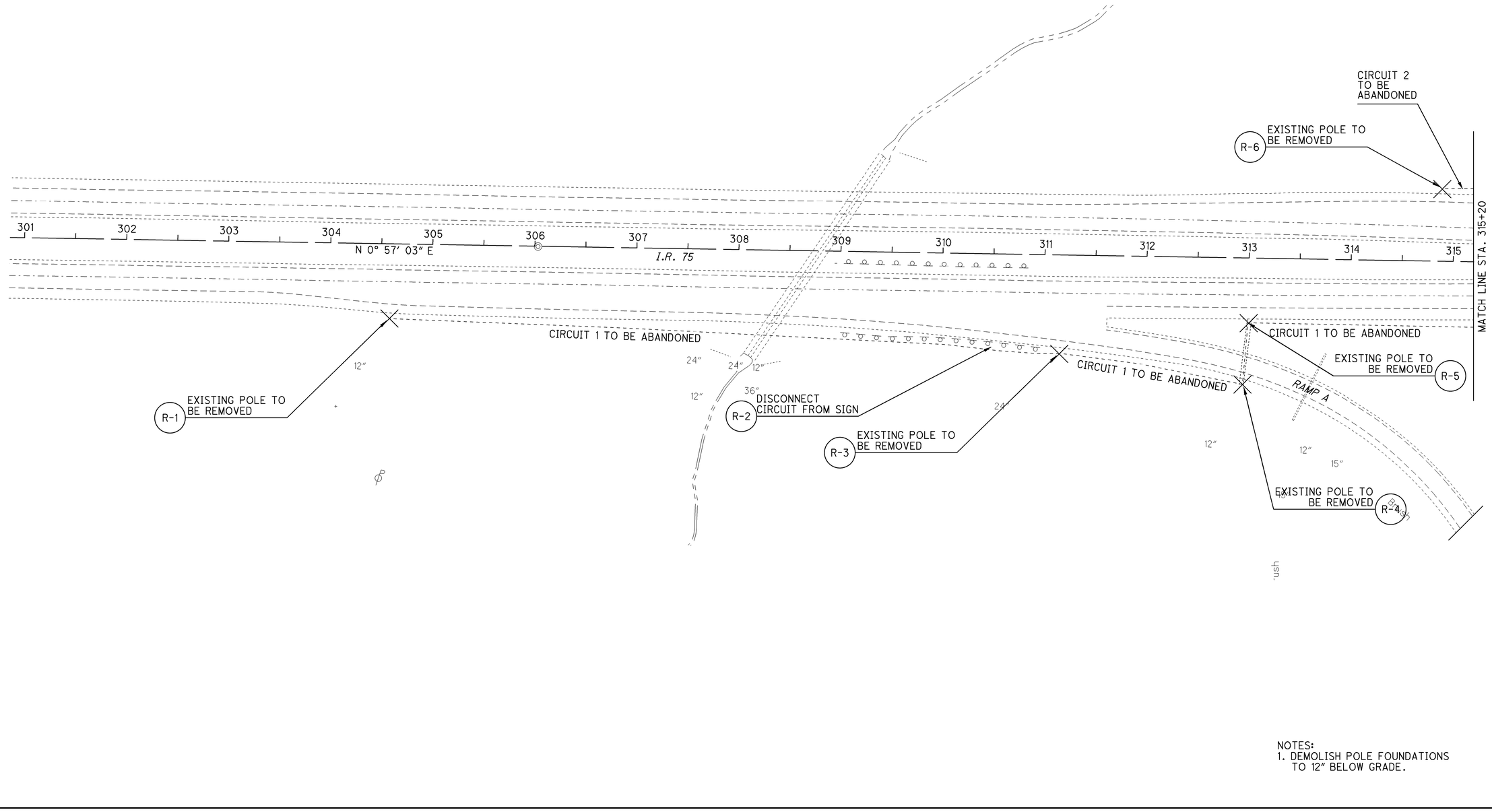

NOTES:
1. DEMOLISH POLE FOUNDATIONS TO 12" BELOW GRADE.

N

0 25 50 100
HORIZONTAL
SCALE IN FEET

CALCULATED JCS
CHECKED LH

LIGHTING DEMOLITION PLAN - I.R. 75

ALL-75-5.53

877
1224

J:\Projects\ALL\76691\lighting\sheets\76691LX001.dgn 11-SEP-2012 9:18PM reddenj

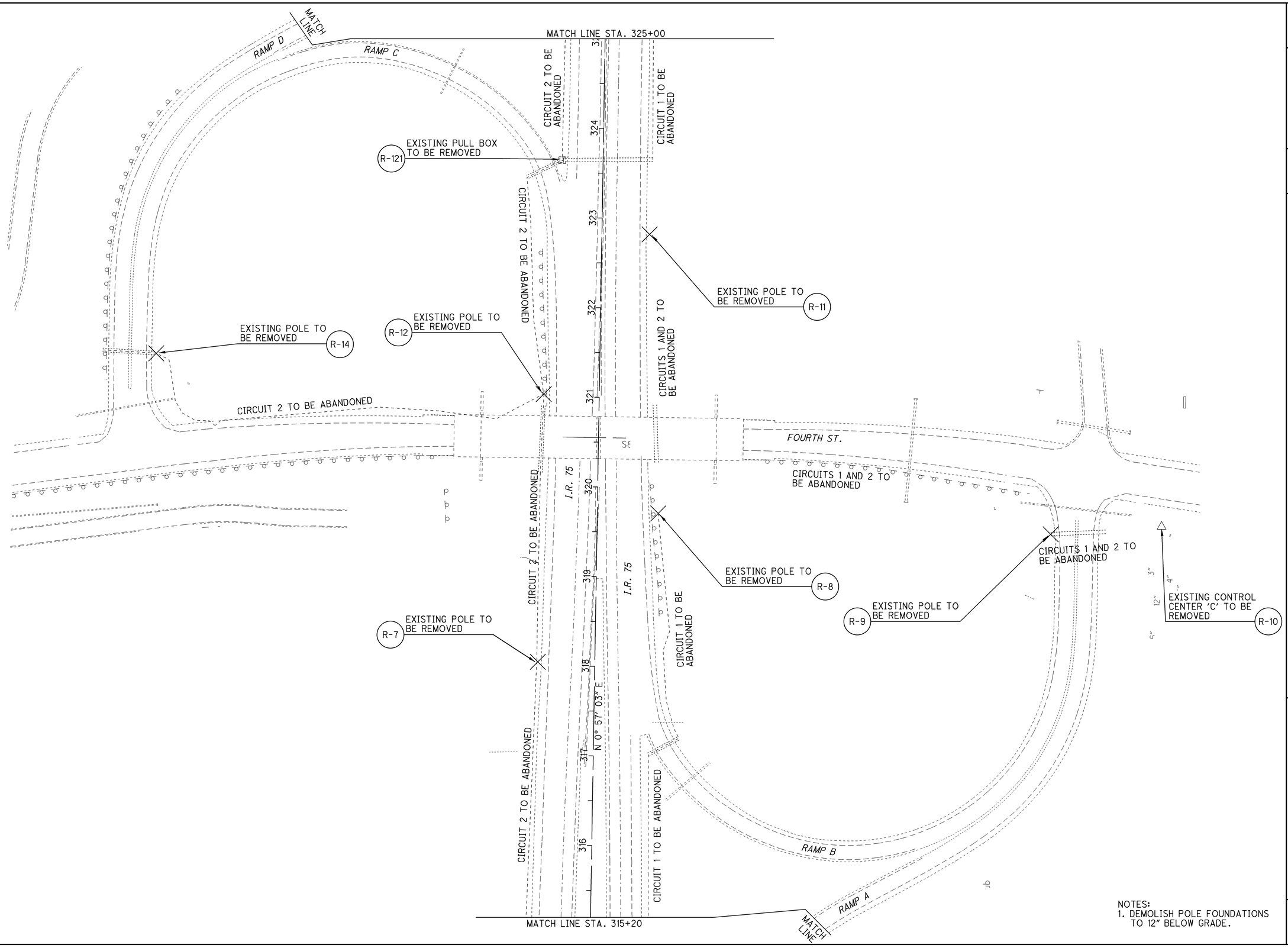

NOTES:
1. DEMOLISH POLE FOUNDATIONS TO 12" BELOW GRADE.

HORIZONTAL SCALE IN FEET
0 25 50 100

CALCULATED JCS
CHECKED LH

LIGHTING DEMOLITION PLAN - I.R. 75

ALL-75-5.53

878
1224

J:\Projects\ALL\7669I\lighting\sheets\7669ILX002.dgn 11-SEP-2012 9:18PM reddenj

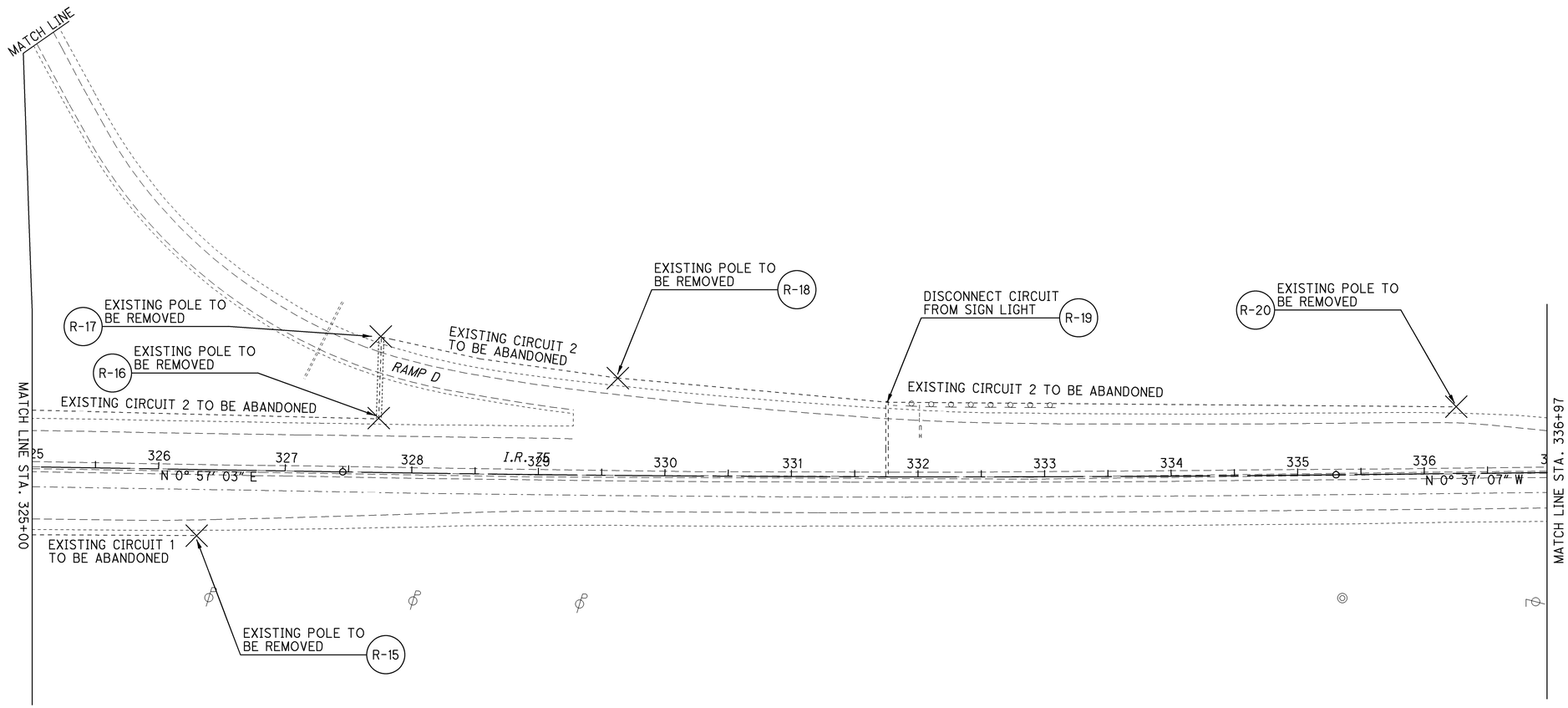

NOTES:
1. DEMOLISH POLE FOUNDATIONS TO 12" BELOW GRADE.

N

HORIZONTAL SCALE IN FEET
0 25 50 100

CALCULATED JCS
CHECKED LH

LIGHTING DEMOLITION PLAN - I.R. 75

ALL-75-5.53

879
1224

J:\Projects\ALL\76691\lighting\sheets\76691LX003.dgn 11-SEP-2012 9:18PM reddenj

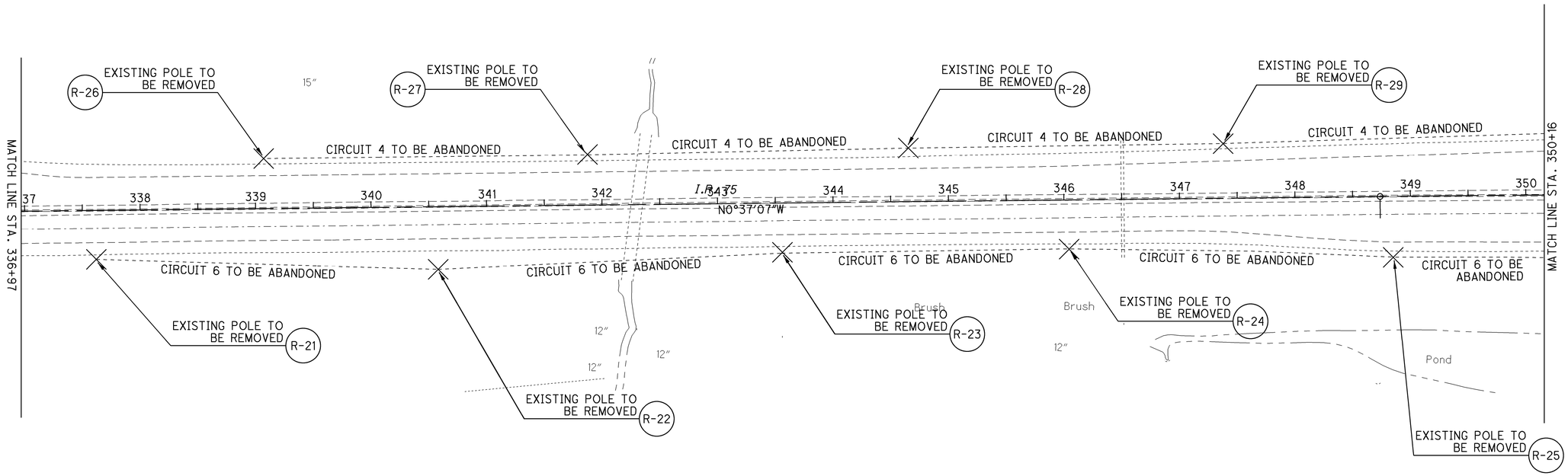

NOTES:
1. DEMOLISH POLE FOUNDATIONS TO 12" BELOW GRADE.

HORIZONTAL SCALE IN FEET
0 25 50 100

CALCULATED JCS
CHECKED LH

LIGHTING DEMOLITION PLAN - I.R. 75

ALL-75-5.53

880
1224

J:\Projects\ALL\76691\lighting\sheets\76691LX004.dgn 11-SEP-2012 9:18PM reddenj

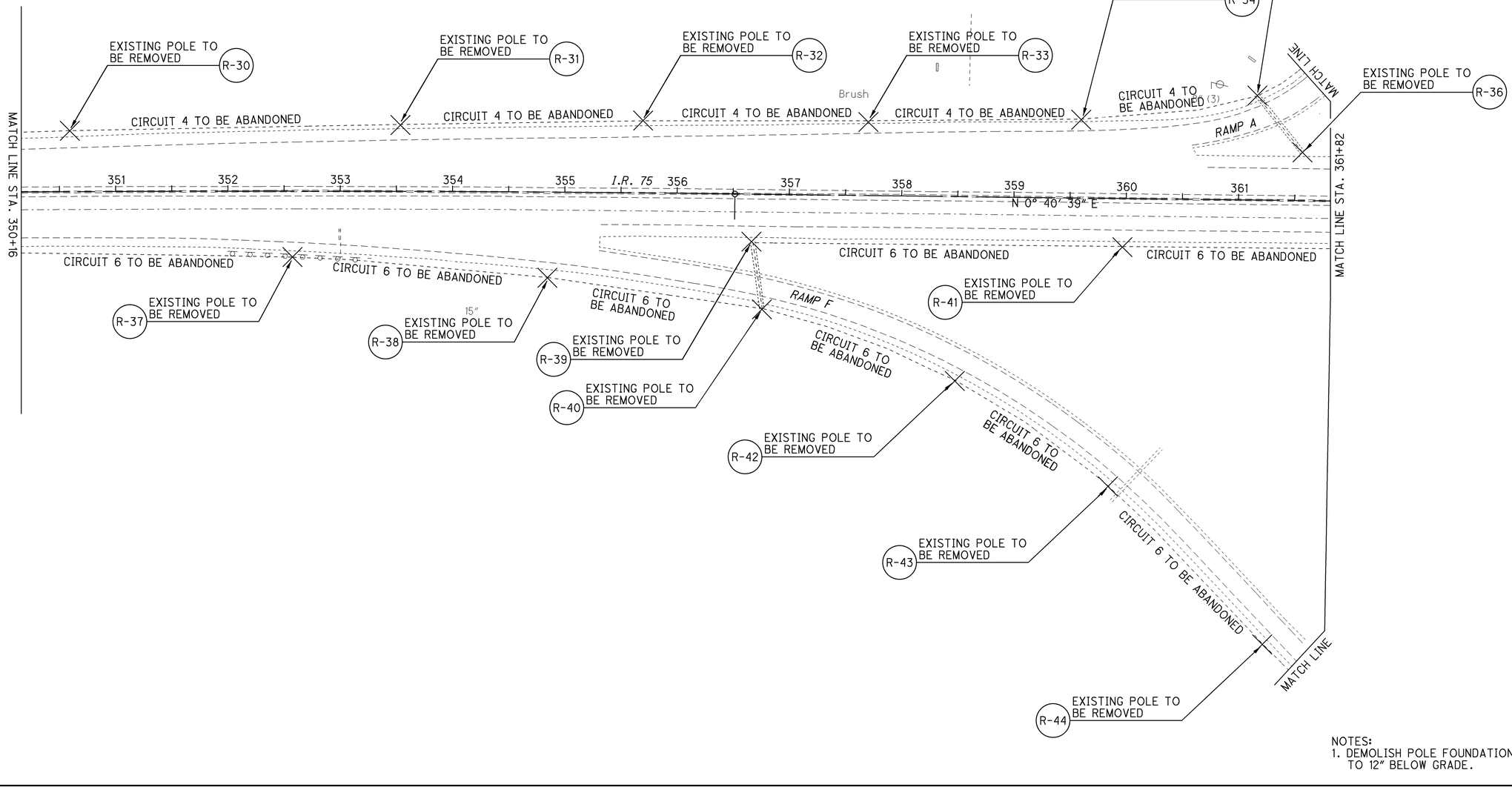

NOTES:
1. DEMOLISH POLE FOUNDATIONS TO 12" BELOW GRADE.

HORIZONTAL SCALE IN FEET
0 25 50 100

CALCULATED JCS
CHECKED LH

LIGHTING DEMOLITION PLAN - I.R. 75

ALL-75-5.53

881
1224

J:\Projects\ALL\76691\lighting\sheets\76691LX005.dgn 11-SEP-2012 9:18PM reddenj

LIGHTING DEMOLITION PLAN - I.R. 75

ALL-75-5.53

CALCULATED JCS | CHECKED LH

HORIZONTAL SCALE IN FEET 0 25 50 100

882/1224

J:\Projects\ALL\76691\lighting\sheets\76691LX006.dgn 11-SEP-2012 9:18PM reddenj

R-86 DISCONNECT CIRCUIT TO SIGN LIGHT
Ground cover Landscaping
R-45 EXISTING POLE TO BE REMOVED
R-46 EXISTING POLE TO BE REMOVED
CIRCUIT 1 TO BE ABANDONED
MATCH LINE
RAMP C
R-47 EXISTING CONTROL CENTER 'D' AND TWO PULL BOXES TO BE REMOVED
CIRCUIT 1 TO BE ABANDONED
R-48 EXISTING POLE TO BE REMOVED
R-122 REMOVE EXISTING POLE FOUNDATION
CIRCUITS 3,4,5 AND 6 TO BE ABANDONED
S.R. 309
MATCH LINE STA. 371+07
R-49 EXISTING POLE TO BE REMOVED
R-50 DISCONNECT CIRCUIT TO SIGN LIGHT
CIRCUIT 2 TO BE ABANDONED
DISCONNECT CIRCUIT TO SIGN LIGHT R-54
MATCH LINE
DEON AVE
R-51 EXISTING POLE TO BE REMOVED
R-52 EXISTING POLE TO BE REMOVED
CIRCUIT 2 TO BE ABANDONED
R-53 EXISTING POLE TO BE REMOVED
S.R. 309
CIRCUITS 3 AND 6 TO BE ABANDONED
R-55 EXISTING POLE TO BE REMOVED
CIRCUITS 4 AND 5 TO BE ABANDONED
R-59 DISCONNECT CIRCUIT TO SIGN LIGHT
R-58 EXISTING POLE TO BE REMOVED
R-57 EXISTING POLE TO BE REMOVED
R-60 EXISTING POLE TO BE REMOVED
R-56 EXISTING POLE TO BE REMOVED
R-87 DISCONNECT CIRCUIT TO SIGN LIGHT
R-120 REMOVE EXISTING PULL BOX
Canopy
1 Sty. Block
CIRCUIT 4 TO BE ABANDONED
CIRCUIT 5 TO BE ABANDONED
CIRCUIT 5 TO BE ABANDONED
R-61 EXISTING POLE TO BE REMOVED
R-62 EXISTING POLE TO BE REMOVED
R-68 EXISTING POLE TO BE REMOVED
R-67 DISCONNECT CIRCUIT FROM SIGN LIGHT
R-63 EXISTING POLE TO BE REMOVED
R-66 EXISTING POLE TO BE REMOVED
R-64 EXISTING POLE TO BE REMOVED
R-65 EXISTING POLE TO BE REMOVED
CIRCUIT 5 TO BE ABANDONED
CIRCUIT 5 TO BE ABANDONED
CIRCUIT 5 TO BE ABANDONED
CIRCUIT 5 TO BE ABANDONED
RAMP B
CIRCUIT 4 TO BE ABANDONED
RAMP A
R-13 EXISTING POLE TO BE REMOVED
MATCH LINE
MATCH LINE STA. 361+82
I.R. 75
N 0° 40' 39" E
CIRCUIT 3 TO BE ABANDONED
CIRCUIT 3 TO BE ABANDONED
CIRCUIT 3 TO BE ABANDONED
CIRCUIT 6 TO BE ABANDONED
CIRCUIT 6 TO BE ABANDONED
R-82 EXISTING POLE TO BE REMOVED
R-83 EXISTING POLE TO BE REMOVED
R-69 EXISTING POLE TO BE REMOVED
R-70 EXISTING POLE TO BE REMOVED
R-71 EXISTING POLE TO BE REMOVED
R-75 EXISTING POLE TO BE REMOVED
R-72 EXISTING POLE TO BE REMOVED
R-73 EXISTING POLE TO BE REMOVED
R-74 EXISTING POLE TO BE REMOVED
RAMP G
RAMP F
CIRCUIT 3 TO BE ABANDONED
CIRCUIT 3 TO BE ABANDONED
CIRCUIT 6 TO BE ABANDONED
R-84 EXISTING POLE TO BE REMOVED
CIRCUIT 6 TO BE ABANDONED
R-81 EXISTING POLE TO BE REMOVED
R-80 EXISTING POLE TO BE REMOVED
R-79 EXISTING POLE TO BE REMOVED
Small trees
CIRCUIT 6 TO BE ABANDONED
DISCONNECT CIRCUIT TO SIGN LIGHT R-85
EXISTING POLE TO BE REMOVED R-78
EXISTING POLE TO BE REMOVED R-77
EXISTING POLE TO BE REMOVED R-76

NOTES:
1. DEMOLISH POLE FOUNDATIONS TO 12" BELOW GRADE.

LIGHTING DEMOLITION PLAN - I.R. 75

ALL-75-5.53

883
1224

HORIZONTAL SCALE IN FEET
0 25 50 100

CALCULATED JCS
CHECKED LH

MATCH LINE STA. 371+07

MATCH LINE STA. 385+15

EXISTING POLE TO BE REMOVED R-88
EXISTING POLE TO BE REMOVED R-89
EXISTING POLE TO BE REMOVED R-90
EXISTING POLE TO BE REMOVED R-91
DISCONNECT CIRCUIT FROM SIGN R-92
EXISTING POLE TO BE REMOVED R-93
EXISTING POLE TO BE REMOVED R-94
EXISTING POLE TO BE REMOVED R-95
EXISTING POLE TO BE REMOVED R-106
EXISTING POLE TO BE REMOVED R-96
EXISTING POLE TO BE REMOVED R-97
EXISTING POLE TO BE REMOVED R-98
EXISTING POLE TO BE REMOVED R-99
EXISTING POLE TO BE REMOVED R-100
EXISTING POLE TO BE REMOVED R-101
EXISTING POLE TO BE REMOVED R-102
EXISTING POLE TO BE REMOVED R-103
EXISTING POLE TO BE REMOVED R-104
EXISTING POLE TO BE REMOVED R-105

CIRCUIT 1 TO BE ABANDONED
CIRCUIT 5 TO BE ABANDONED
CIRCUIT 3 TO BE ABANDONED
CIRCUIT 2 TO BE ABANDONED

RAMP C
RAMP E
I.R. 75
DEON AVE.
N 0° 40' 39" E

372 373 374 375 376 377 378 379 380 381 382 383 384 385

Brush
1 Sty. Brick
Canopy
Rock
Rocks
Sign
4" G

NOTES:
1. DEMOLISH POLE FOUNDATIONS TO 12" BELOW GRADE.

J:\Projects\ALL\7669I\lighting\sheets\7669ILX007.dgn 11-SEP-2012 9:18PM reddenj

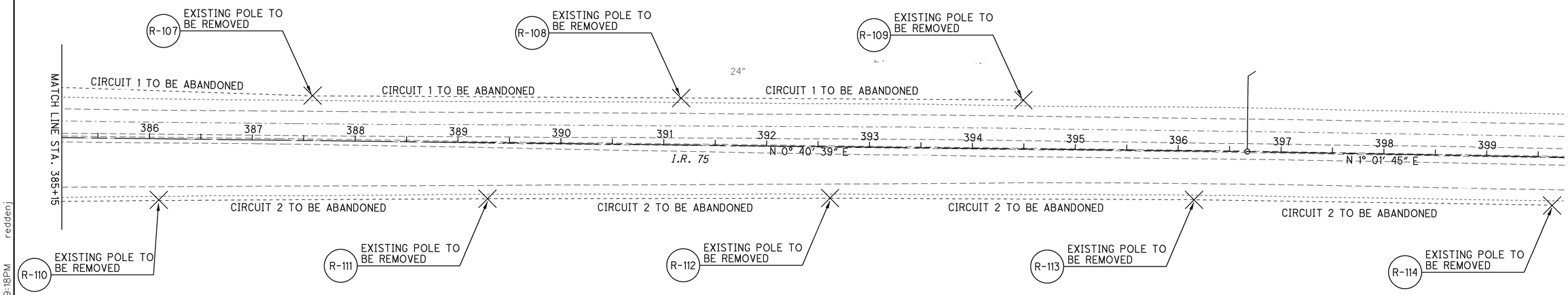

NOTES:
1. DEMOLISH POLE FOUNDATIONS TO 12" BELOW GRADE.

N

0 25 50 100
HORIZONTAL SCALE IN FEET

CALCULATED JCS
CHECKED LH

DEMOLITION PLAN - I.R. 75

LIGHTING

ALL-75-5.53

884
1224

J:\Projects\ALL\76691\lighting\sheets\76691LX008.dgn 11-SEP-2012 9:18PM reddenj

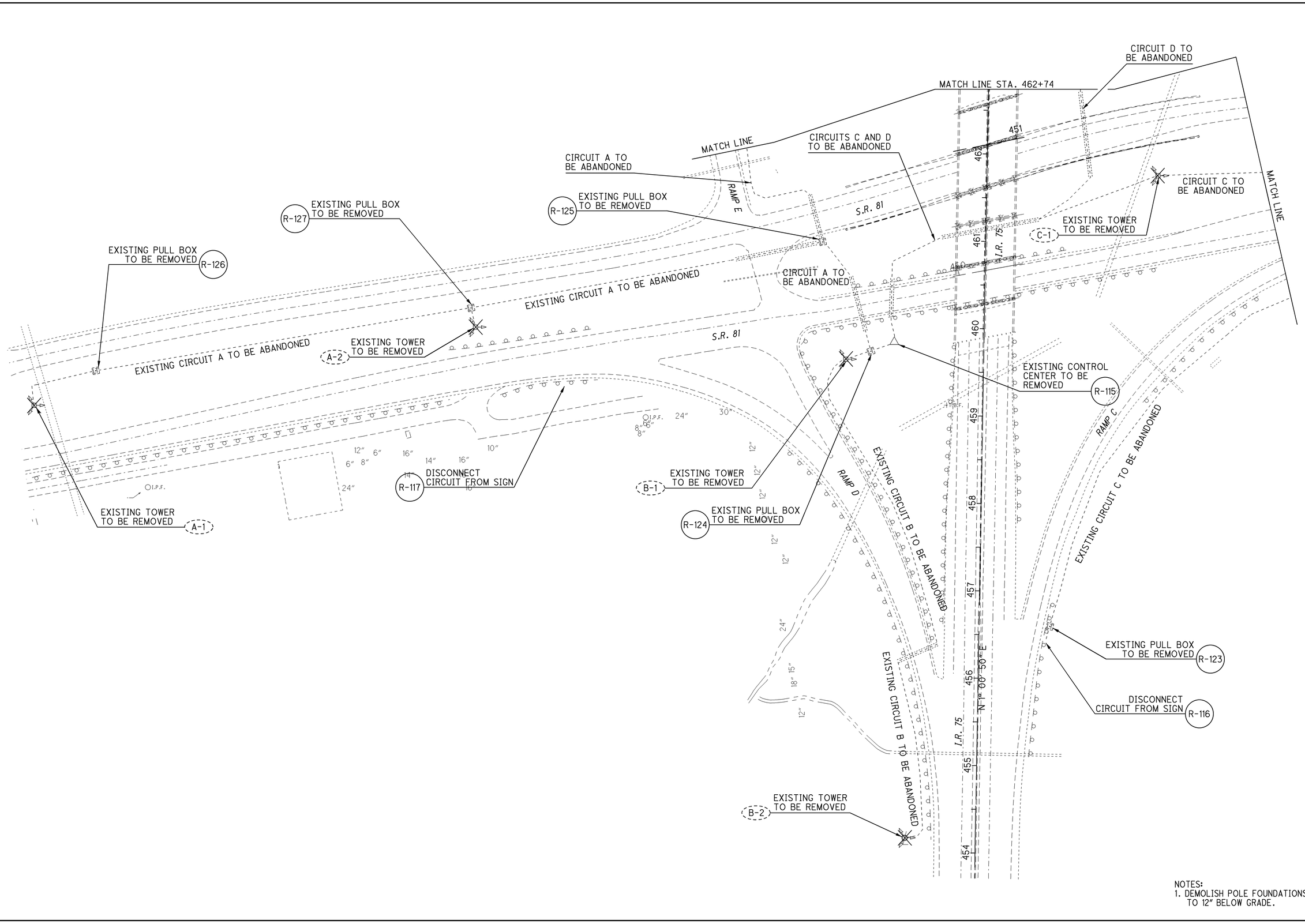

NOTES:
1. DEMOLISH POLE FOUNDATIONS TO 12" BELOW GRADE.

HORIZONTAL SCALE IN FEET
0 25 50 100

CALCULATED JCS
CHECKED LH

DEMOLITION PLAN - I.R. 75

LIGHTING

ALL-75-5.53

885
1224

J:\Projects\ALL\76691\lighting\sheets\76691LX009.dgn 11-SEP-2012 9:18PM reddenj

LIGHTING DEMOLITION PLAN - I.R. 75

ALL-75-5.53

886
1224

CALCULATED JCS
CHECKED LH

HORIZONTAL SCALE IN FEET
0 25 50 100

MATCH LINE

MATCH LINE STA. 469+60

MATCH LINE STA. 462+74

MATCH LINE

MATCH LINE

RAMP E

EXSITNG CIRCUIT A TO BE ABANDONED

EXSITNG CIRCUIT D TO BE ABANDONED

I.R. 75

RAMP B

RAMP F

RAMP C

S.R. 81

S.R. 81

N 1° 00' 50" E

469

468

467

466

465

464

463

12"

12"

12"

12"

18"

18"

18"

36"

36"

36"

24"

Brush

EXISTING PULL BOX TO BE REMOVED R-128

EXISTING PULL BOX TO BE REMOVED R-129

EXISTING TOWER TO BE REMOVED C-2

EXISTING PULL BOX TO BE REMOVED R-130

DISCONNECT CIRCUIT FROM SIGN LIGHT R-118

EXISTING CIRCUIT C TO BE ABANDONED

EXISTING PULL BOX TO BE REMOVED R-131

DISCONNECT CIRCUIT FROM SIGN LIGHT R-119

EXISTING CIRCUIT C TO BE ABANDONED

EXISTING PULL BOX TO BE REMOVED R-132

NOTES:
1. DEMOLISH POLE FOUNDATIONS TO 12" BELOW GRADE.

J:\Projects\ALL\7669\lighting\sheets\7669ILX010.dgn 11-SEP-2012 9:18PM reddenj

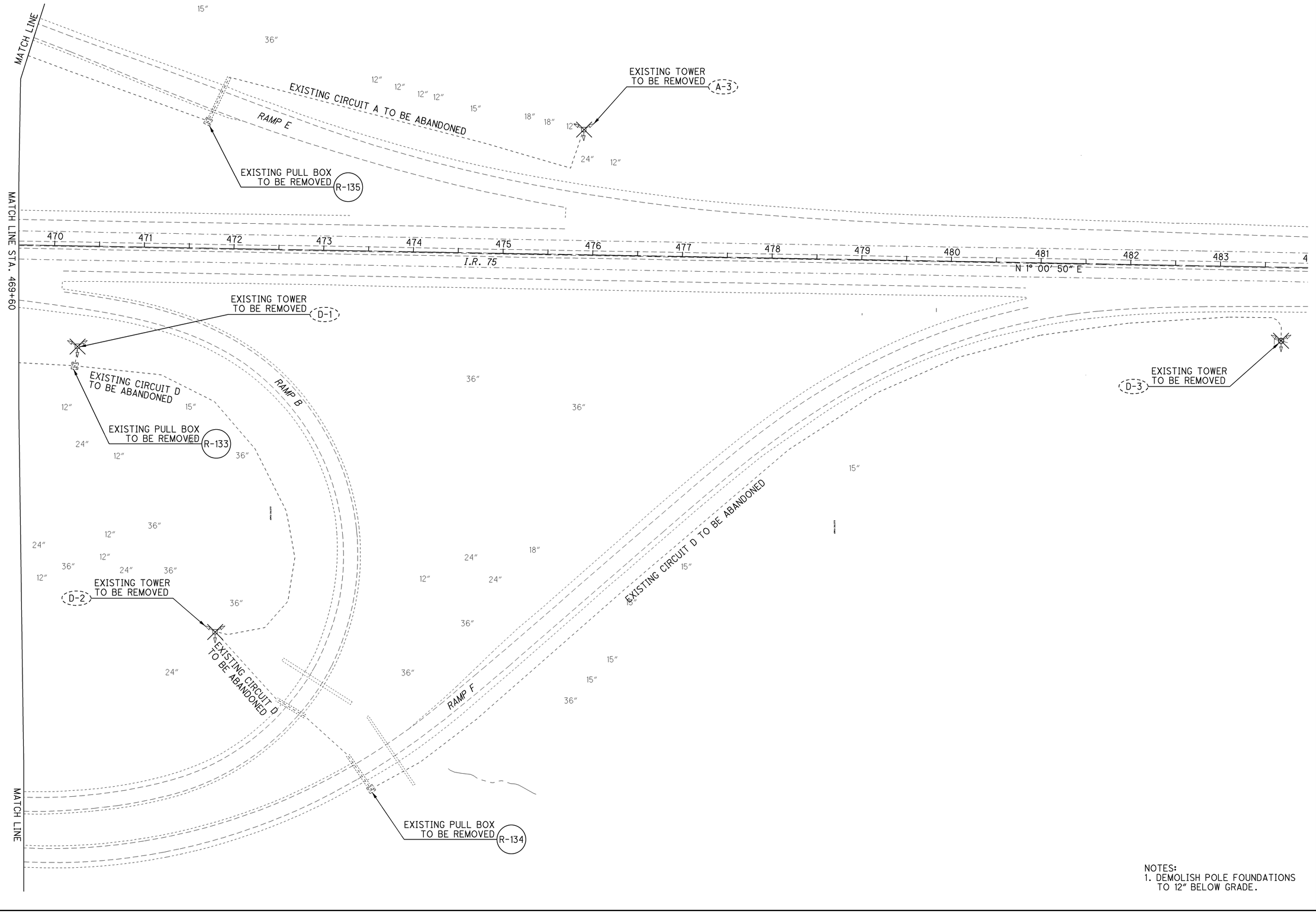

NOTES:
1. DEMOLISH POLE FOUNDATIONS TO 12" BELOW GRADE.

HORIZONTAL SCALE IN FEET
0 25 50 100

CALCULATED JCS
CHECKED LH

LIGHTING DEMOLITION PLAN - I.R. 75

ALL-75-5.53

887
1224

J:\Projects\ALL\76691\lighting\sheets\76691LX011.dgn 11-SEP-2012 9:18PM reddenj

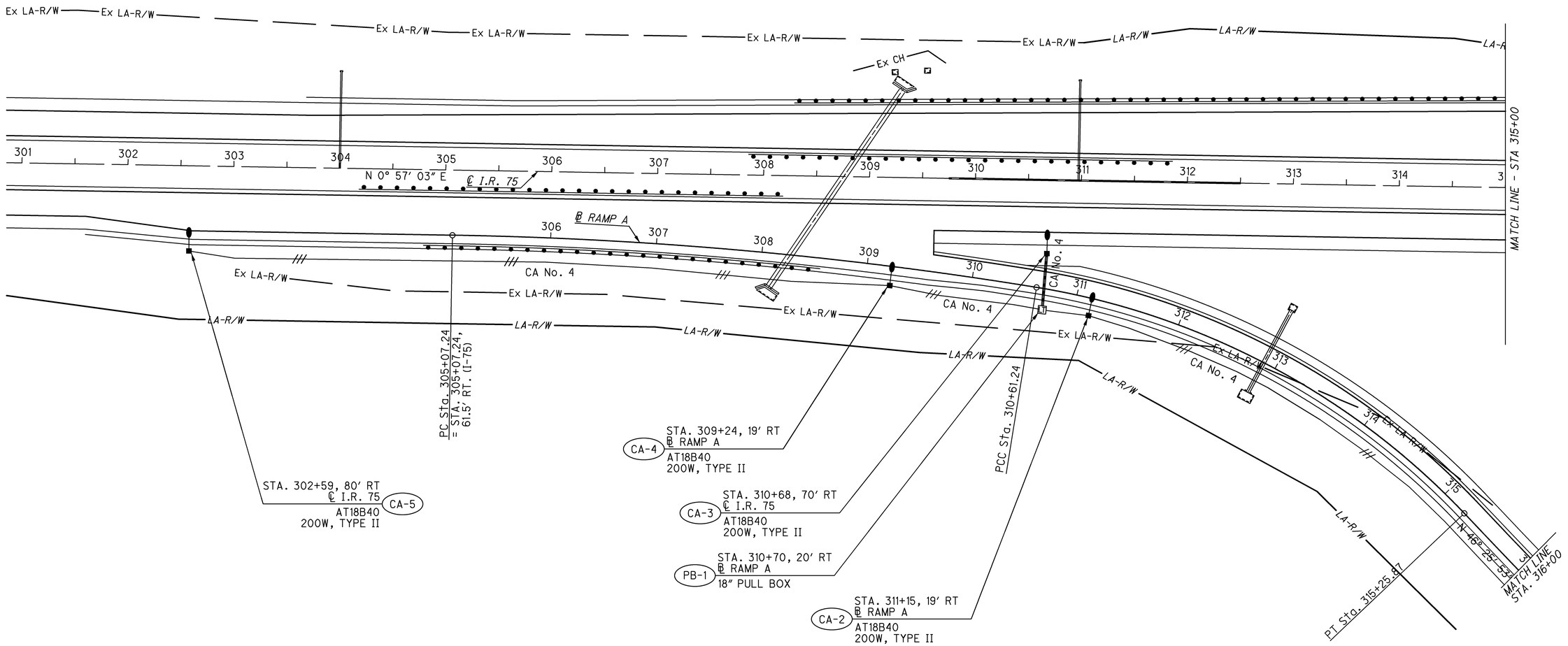

N

0 25 50 100
HORIZONTAL
SCALE IN FEET

CALCULATED JCS
CHECKED LH

LIGHTING PLAN - I.R. 75
STA. 301+00 TO STA. 315+00

ALL-75-5.53

888
1224

J:\Projects\ALL\76691\lighting\sheets\76691LP001.dgn 11-SEP-2012 9:19PM reddenj

MATCH LINE - STA 324+00

MATCH LINE - STA 325+00

PB-8 STA. 325+74, 28' RT ℄ RAMP C 18" PULL BOX

℄ RAMP D

℄ RAMP C

CC No. 4

PT Sta. 322+77.46

SC Sta. 323+17.41

PB-7 STA. 325+74, 20' LT ℄ RAMP C 18" PULL BOX

PT Sta. 329+49.14

PC Sta. 320+26.25

CC-1 STA. 321+33, 18' LT ℄ RAMP C AT18B40 200W, TYPE II

ST Sta. 321+17.41 = STA. 321+17.41, 74.5' LT. (I-75)

CITY OF LIMA

LA-R/W

R/W

N 55° 06' 10" W

N 0° 09' 10" W

S 0° 09' 10" E

℄ 4TH STREET

S89°10'27"E

182°49'33"E

S 81° 10' 27" E

CD No. 4

CC No. 4

CB No. 4

PC Sta. 105+53.28

PT Sta. 108+73.28

PB-6 STA. 320+20, 97' LT ℄ I.R. 75 24" PULL BOX

CD-1 STA. 105+87, 35' RT ℄ 4TH STREET ATLM40

CC-2 STA. 318+74, 50' LT ℄ RAMP D ATLM40

CD-2 STA. 318+33, 93' LT ℄ I.R. 75 AT18B40 200W, TYPE II

CD-3 STA. 315+32, 91' LT ℄ I.R. 75 AT18B40 200W, TYPE II

℄ I.R. 75

℄ RAMP B

N 0° 57' 03" E

CB-3 STA. 322+44, 93' RT ℄ I.R. 75 AT18B40 200W, TYPE II

PB-2 STA. 321+12, 16' RT ℄ RAMP A 18" PULL BOX

CA-1 STA. 321+11.3, 37' RT ℄ RAMP A ATLM40

PB-3 STA. 310+28, 26' RT ℄ RAMP B 18" PULL BOX

PB-5 STA. 320+16, 98' RT ℄ I.R. 75 24" PULL BOX

CB-1 STA. 115+31, 44' LT ℄ 4TH STREET ATLM40

PB-4 STA. 115+41, 32' RT ℄ 4TH STREET 24" PULL BOX

CB No. 4 CC No. 4 CD No. 4

POWER SERVICE 'C' 240/480V, 1 PH, 3W SEE NOTE 1

STA. 115+32, 49' RT ℄ 4TH ST.

ST Sta. 319+52.95 = STA. 319+52.95, 74.5' RT. (I-75)

PT Sta. 115+45.00

PC Sta. 112+25.00

CB-2 STA. 319+44, 18' RT ℄ RAMP B AT18B40 200W, TYPE II

CA No. 4

PT Sta. 320+09.77

PC Sta. 311+24.50

CS Sta. 317+52.95

PC Sta. 318+10.76

℄ RAMP A

MATCH LINE - STA 316+00

MATCH LINE - STA. 315+00

NOTES:
1. PROVIDE NEW POWER SERVICE, POLE MOUNTED. COORDINATE WITH POWER COMPANY FOR EXACT SERVICE LOCATION.

HORIZONTAL SCALE IN FEET
0 25 50 100

CALCULATED JCS
CHECKED LH

PLAN - I.R. 75 STA. 315+00 TO STA. 325+00

ALL-75-5.53

889
1224

J:\Projects\ALL\76691\lighting\sheets\76691LP002.dgn 11-SEP-2012 9:19PM redden

STA. 324+75, 30' RT
℄ RAMP D
PB-9
18" PULL BOX

STA. 324+70 21' LT
℄ RAMP D
PB-10
18" PULL BOX

STA. 328+74, 20' LT
℄ RAMP D
PB-11
18" PULL BOX

STA. 328+74 70' LT
℄ I.R. 75
CC-4
AT18B40
200W, TYPE II

STA. 328+52, 18' LT
℄ RAMP D
CC-3
AT18B40
200W, TYPE II

STA. 330+30, 18' LT
℄ RAMP D
CC-5
AT18B40
200W, TYPE II

MATCH LINE
STA 324+00

CC No. 4

PC Sta. 324+94.31

CS Sta. 327+92.83

SC Sta. 329+92.83

PC Sta. 327+45.44

PT Sta. 334+80.07
= STA. 334+81.07,
61.5' LT. (I-75)

PT Sta. 335+30.27

LA-R/W

N 0° 57' 03" E

N 0° 37' 07" W

MATCH LINE - STA 325+00

MATCH LINE - STA 339+00

STA. 325+46, I.R. 75
18' RT, E.O.P.
CB-4
AT18B40
200W, TYPE II

J:\Projects\ALL\76691\lighting\sheets\76691LP003.dgn 11-SEP-2012 9:19PM reddenj

HORIZONTAL
SCALE IN FEET
0 25 50 100

CALCULATED JCS
CHECKED LH

LIGHTING PLAN - I.R. 75
STA. 325+00 TO STA. 339+00

ALL-75-5.53

890
1224

STA. 339+23, I.R. 75
18' LT, E.O.P.
AT18B40
200W, TYPE II
CC-6

STA. 351+93, I.R. 75
18' LT, E.O.P.
AT18B40
200W, TYPE II
DE-4

CC No. 4

CC No. 4

DE No. 4

DF No. 4

LA-R/W

Ex FL

Ex LA-R/W

MATCH LINE - STA 339+00

MATCH LINE - STA 353+00

339 340 341 342 343 344 345 346 347 348 349 350 351 352

N0°37'07"W

PC Sta. 348+73.75

STA.352+45, I.R. 75
18' RT, E.O.P.
DF-6
AT18B40
200W, TYPE II

J:\Projects\ALL\76691\lighting\sheets\76691LP004.dgn 11-SEP-2012 9:19PM reddenj

HORIZONTAL SCALE IN FEET
0 25 50 100

CALCULATED JCS
CHECKED LH

LIGHTING PLAN - I.R. 75
STA. 339+00 TO STA. 353+00

ALL-75-5.53

891
1224

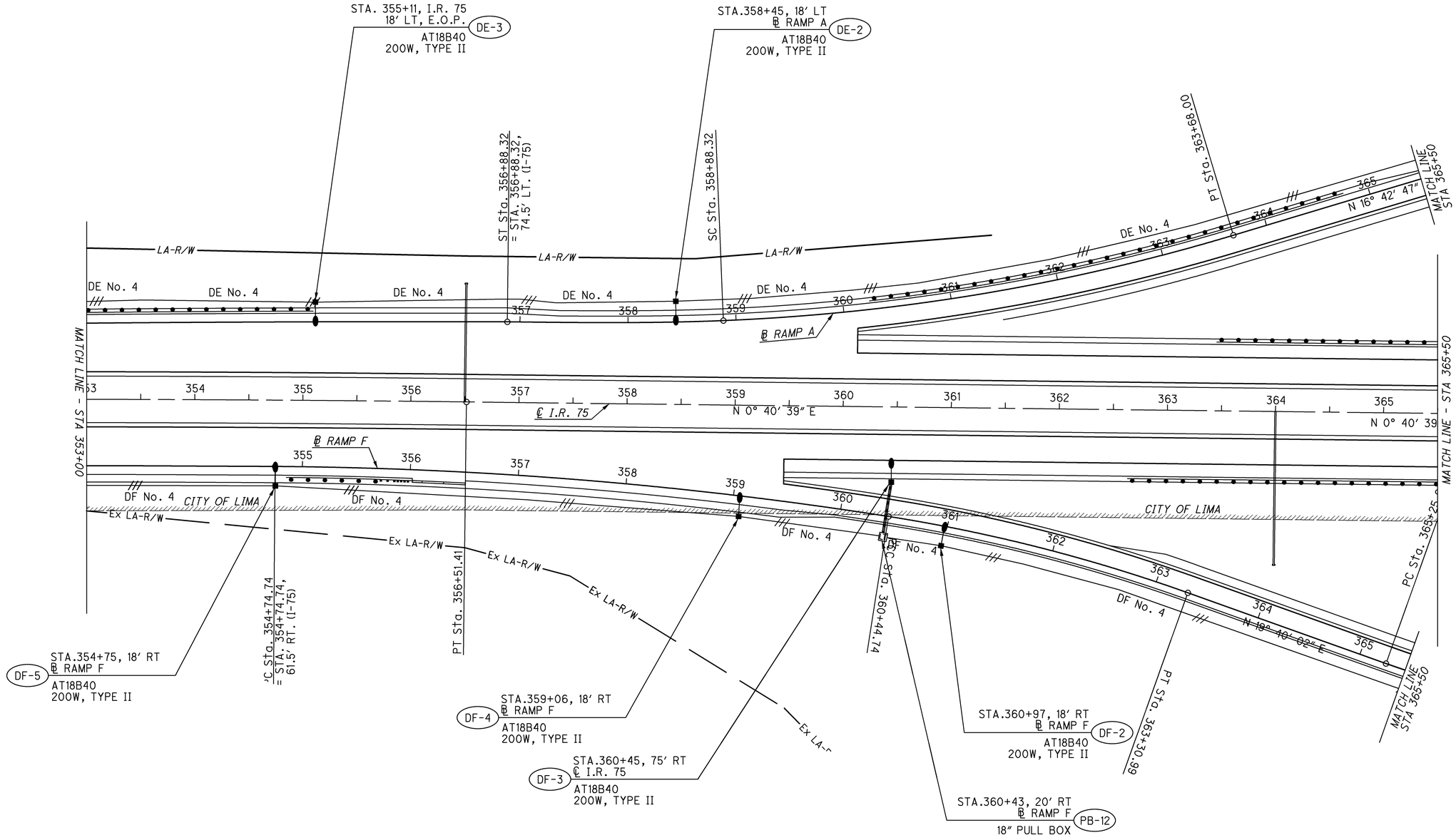

HORIZONTAL SCALE IN FEET
0 25 50 100

CALCULATED JCS
CHECKED LH

LIGHTING PLAN - I.R. 75
STA. 353+00 TO STA. 365+50

ALL-75-5.53

892
1224

J:\Projects\ALL\76691\lighting\sheets\76691LP005.dgn 11-SEP-2012 9:19PM reddenj

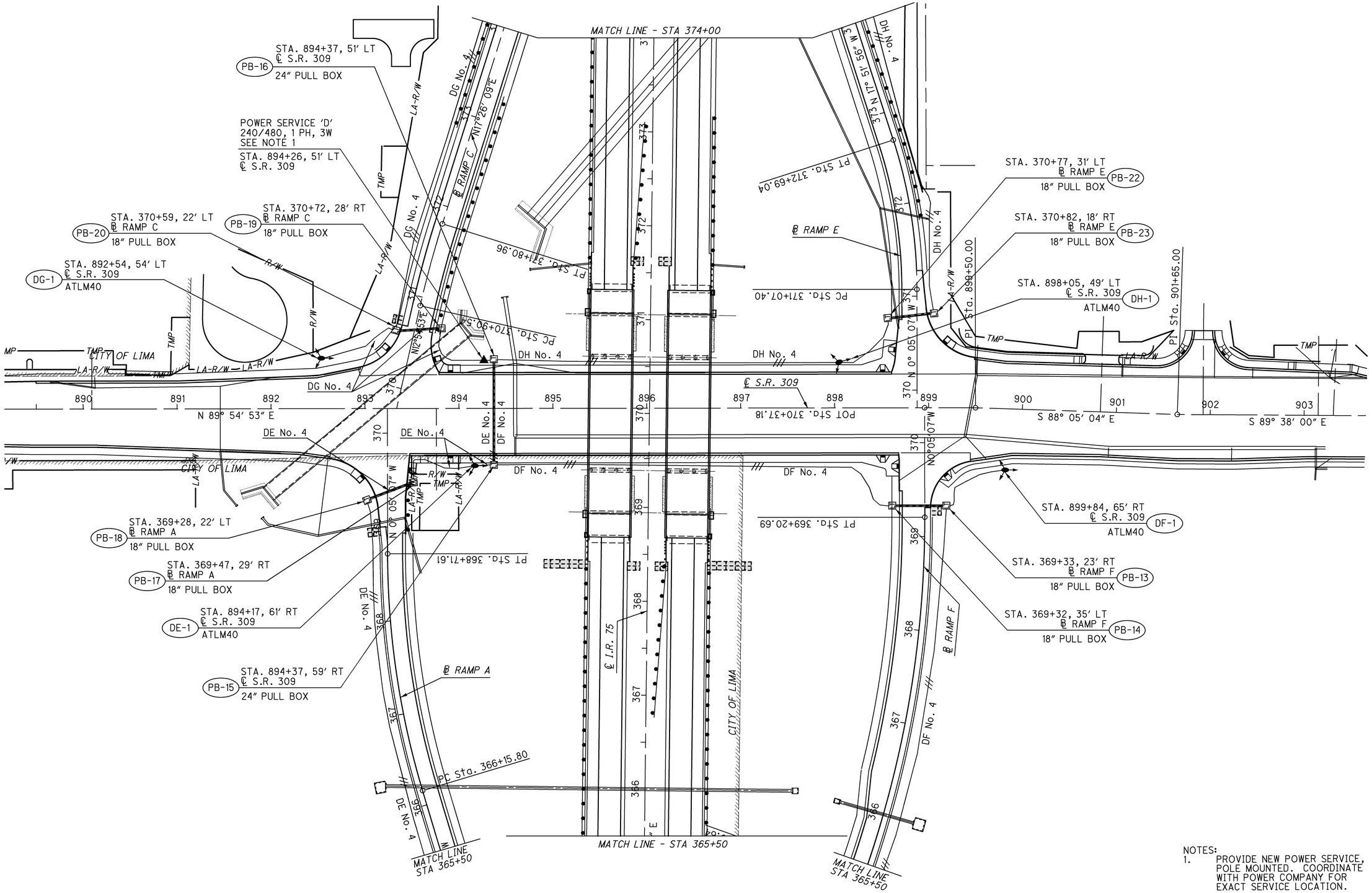

NOTES:
1. PROVIDE NEW POWER SERVICE, POLE MOUNTED. COORDINATE WITH POWER COMPANY FOR EXACT SERVICE LOCATION.

HORIZONTAL SCALE IN FEET
0 25 50 100

CALCULATED JCS
CHECKED LH

LIGHTING PLAN - I.R. 75
STA. 365+50 TO STA. 374+00

ALL-75-5.53

893
1224

J:\Projects\ALL\76691\lighting\sheets\76691LP006.dgn 11-SEP-2012 9:19PM redden

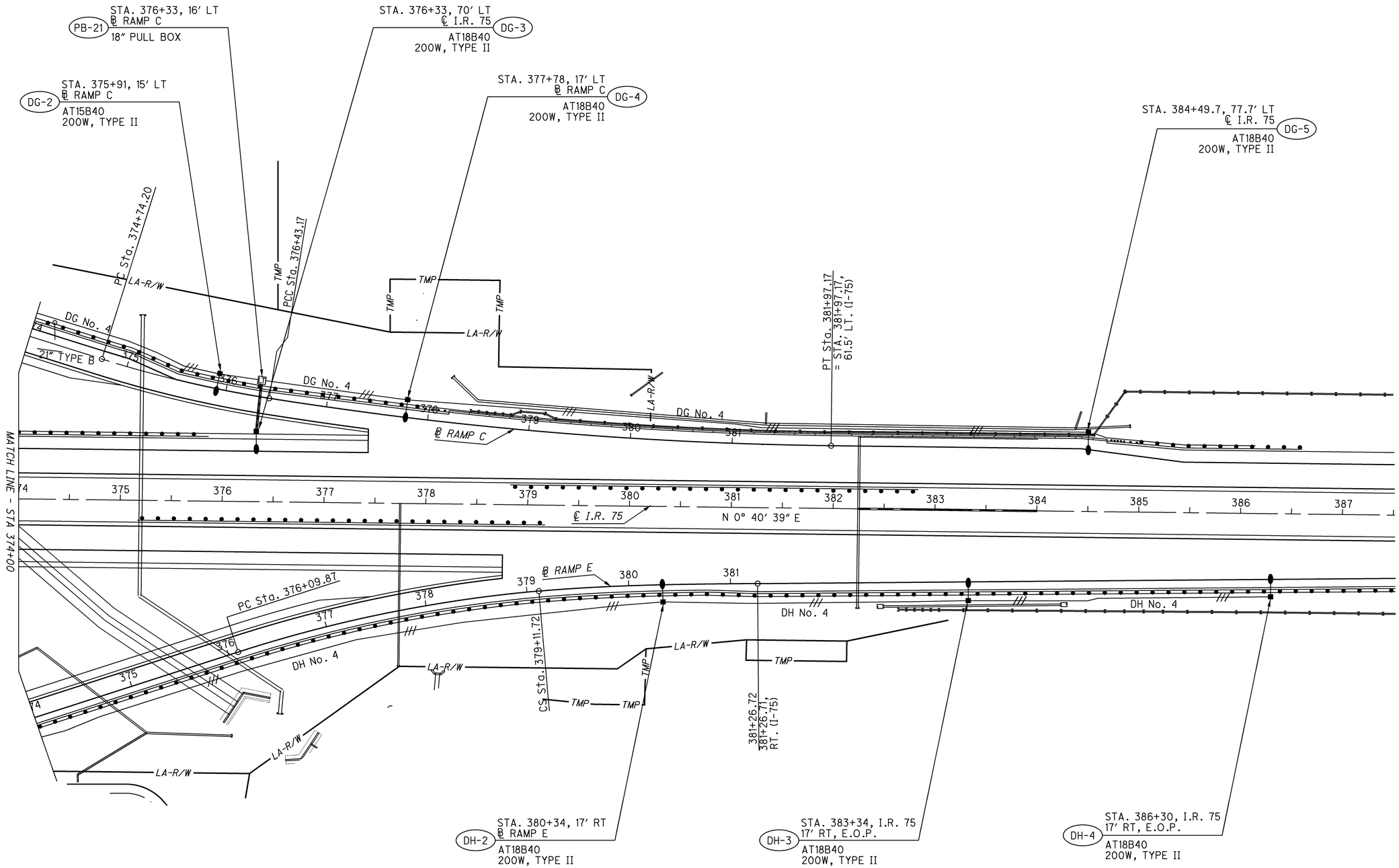

HORIZONTAL SCALE IN FEET
0 25 50 100

CALCULATED JCS
CHECKED LH

LIGHTING PLAN - I.R. 75
STA. 374+00 TO STA. 387+50

ALL-75-5.53

894
1224

J:\Projects\ALL\76691\lighting\sheets\76691LP007.dgn 11-SEP-2012 9:19PM reddenj

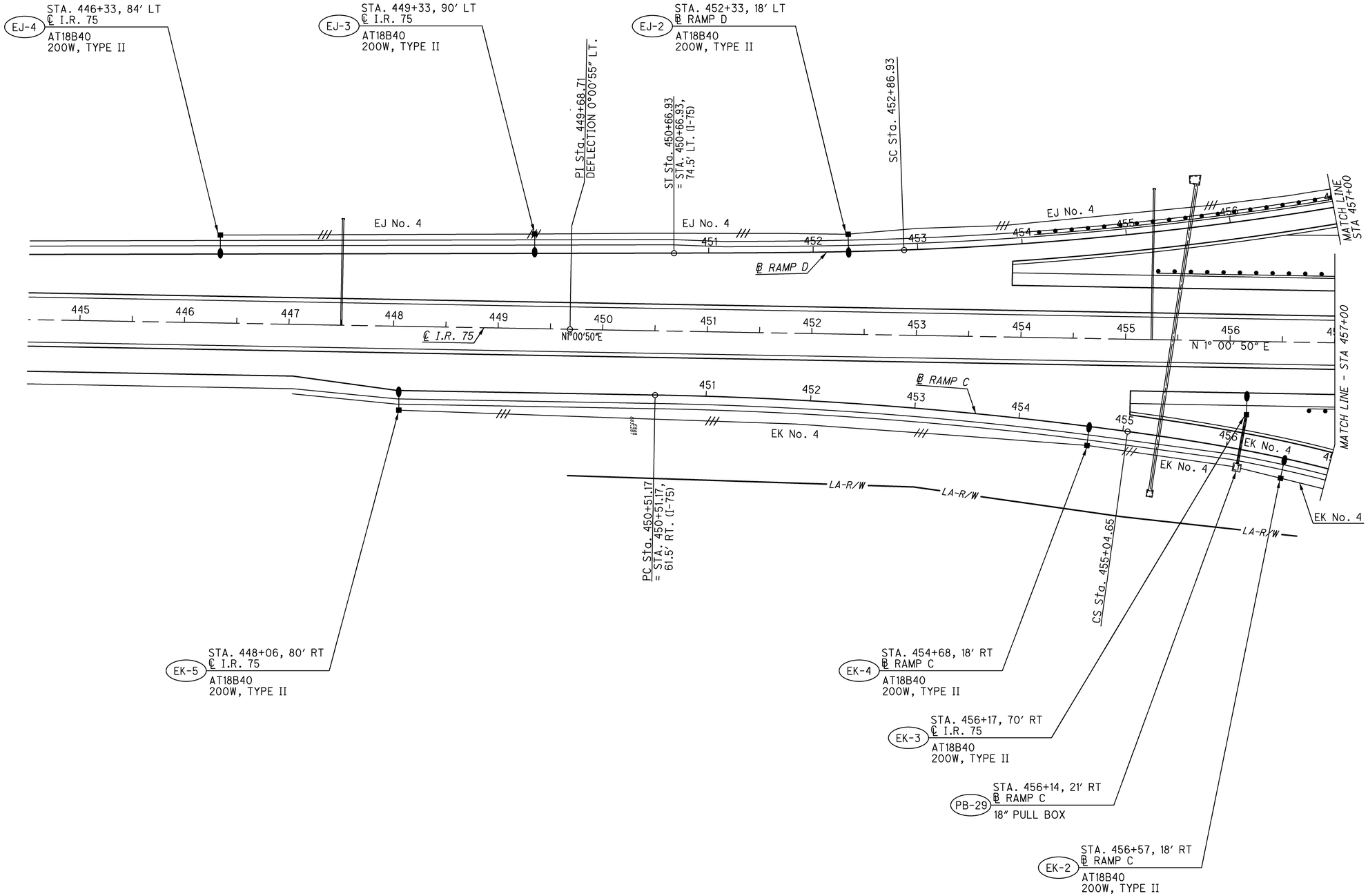

HORIZONTAL SCALE IN FEET
0 25 50 100

CALCULATED JCS
CHECKED LH

PLAN - I.R. 75
STA. 444+50 TO STA. 457+00

ALL-75-5.53

895
1224

J:\Projects\ALL\7669\lighting\sheets\7669ILP008.dgn 11-SEP-2012 9:19PM reddenj

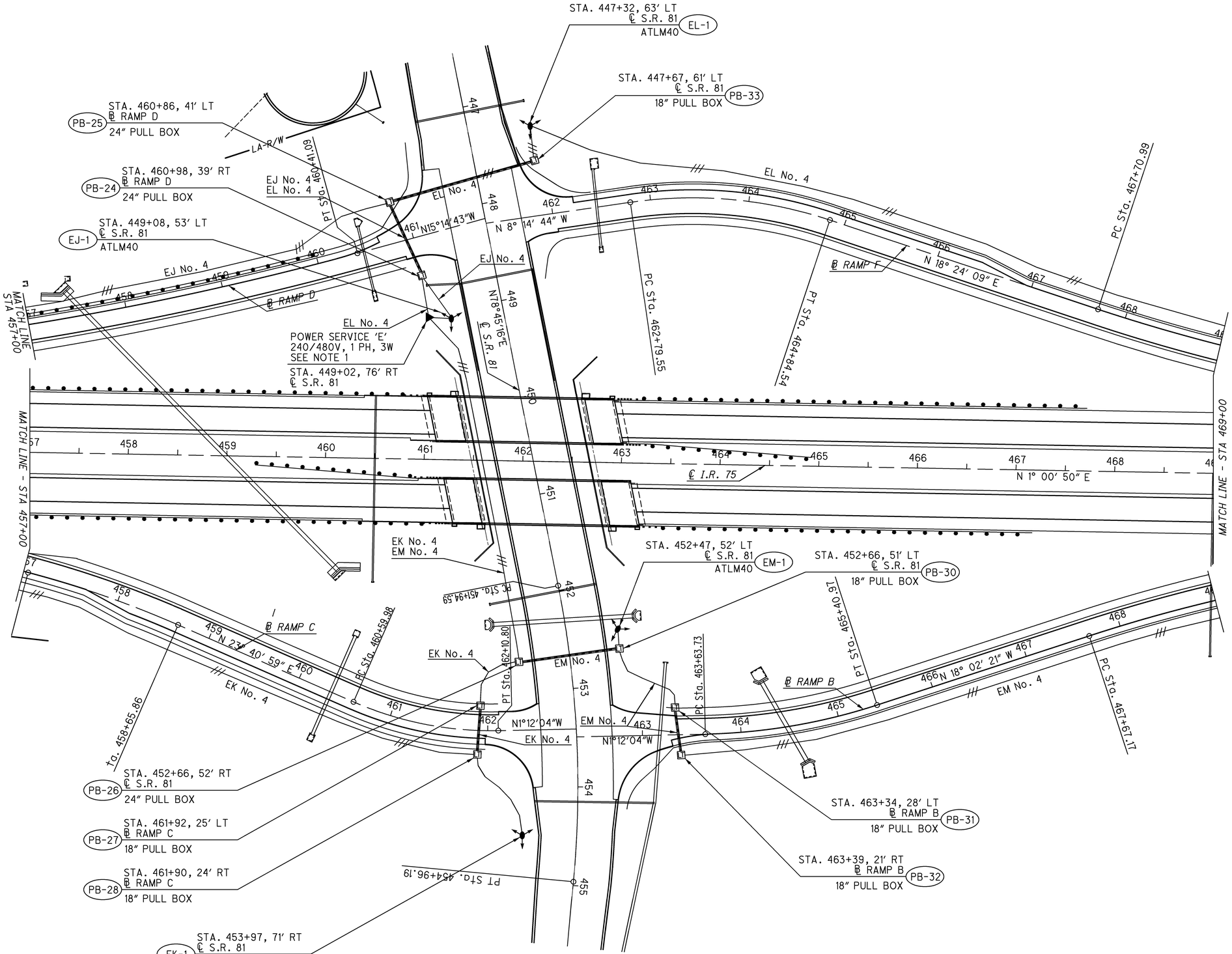

NOTES:
1. PROVIDE NEW POWER SERVICE, POLE MOUNTED. COORDINATE WITH POWER COMPANY FOR EXACT SERVICE LOCATION.

HORIZONTAL SCALE IN FEET
0 25 50 100

CALCULATED JCS
CHECKED LH

LIGHTING PLAN - I.R. 75
STA. 457+00 TO STA. 469+00

ALL-75-5.53

896
1224

J:\Projects\ALL\76691\lighting\sheets\76691LP009.dgn 11-SEP-2012 9:19PM reddenj

STA. 470+45, 19' LT
℄ RAMP F
PB-34
AT18B40
200W, TYPE II

STA. 470+42, 70' LT
℄ I.R. 75
EL-3
AT18B40
200W, TYPE II

STA. 470+00, 19' LT
℄ RAMP F
EL-2
AT18B40
200W, TYPE II

STA. 471+91, 18' LT
℄ RAMP F
EL-4
AT18B40
200W, TYPE II

STA. 478+51, 80' LT
℄ I.R. 75
EL-5
AT18B40
200W, TYPE II

CS Sta. 469+50.57

SC Sta. 471+50.57

PT Sta. 476+04.05
= STA. 476+04.05,
61.5' LT. (I-75)

EL No. 4

LA-R/W

℄ RAMP F

MATCH LINE - STA 469+00

℄ I.R. 75

N 1° 00' 50" E

℄ RAMP B

EM No. 4

CS Sta. 471+73.81

ST Sta. 473+83.81
= STA. 473+83.81,
74.5' RT. (I-75)

STA. 472+73, 19' RT
℄ RAMP B
EM-2
AT18B40
200W, TYPE II

STA. 475+74, 89' RT
℄ I.R. 75
EM-3
AT18B40
200W, TYPE II

STA. 478+75, 83' RT
℄ I.R. 75
EM-4
AT18B40
200W, TYPE II

HORIZONTAL SCALE IN FEET
0 25 50 100

CALCULATED JCS
CHECKED LH

LIGHTING PLAN - I.R. 75
STA. 469+00 TO STA. 482+00

ALL-75-5.53

897
1224

J:\Projects\ALL\76691\lighting\sheets\76691LP010.dgn 11-SEP-2012 9:19PM reddenj

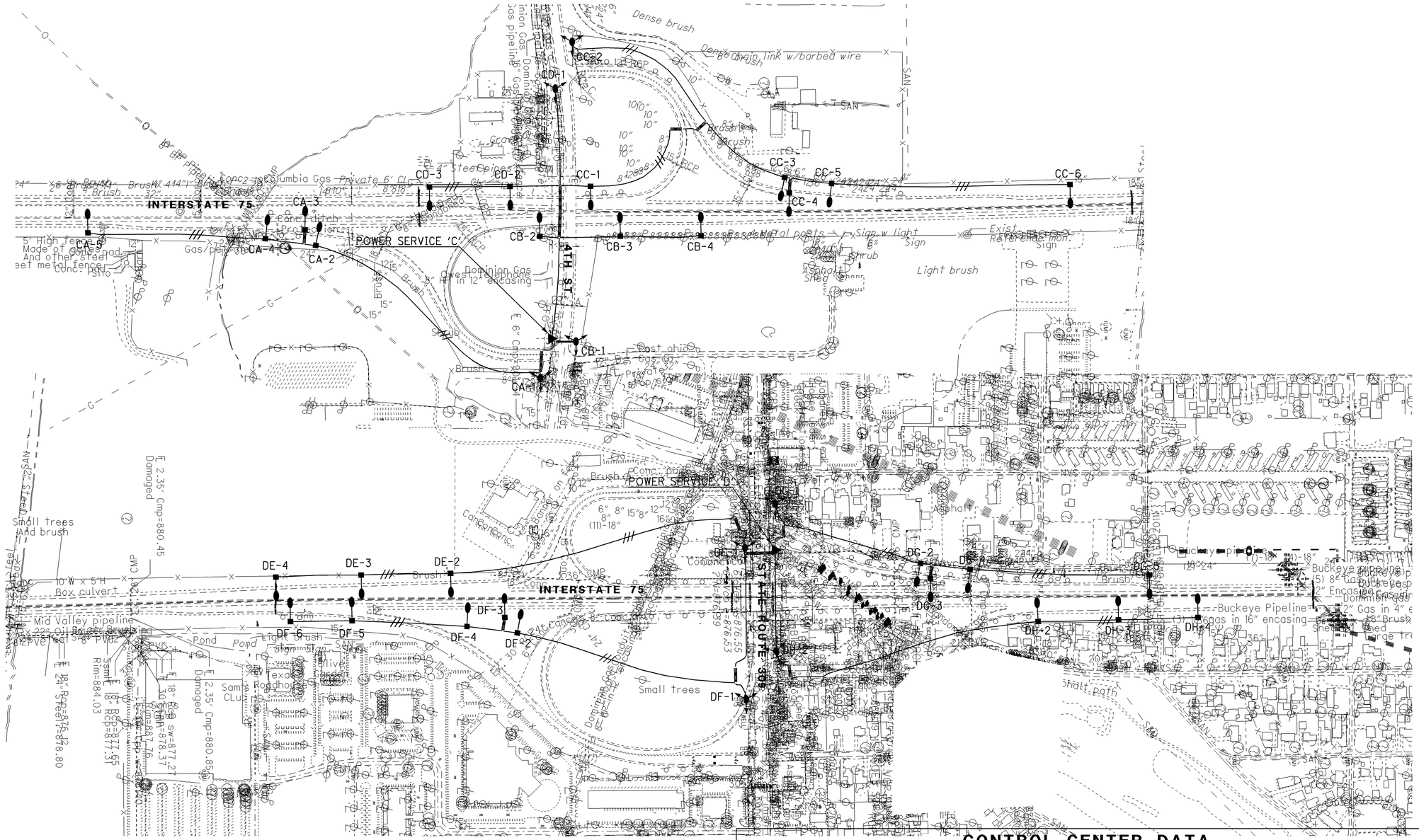

CONTROL CENTER DATA

CONTROL CENTER	LINE VOLTAGE, PHASE	CONNECTED LOAD (KVA)	ENCLOSURE RATING (AMPS)	SERVICE ENTRANCE CONDUCTOR SIZE (AWG)	CIRCUIT NAME	CIRCUIT LOAD (AMPS)	CIRCUIT FUSE SIZE (AMPS)	CIRCUIT CABLE SIZE (AWG)	MAINTAINING AGENCY
PROPOSED 'C'	240/480V 1 PHASE 3 WIRE	5.86 KVA	100	#1/0	A	3.3	30	4	ODOT
					B	2.8	30	4	ODOT
					C	3.9	30	4	ODOT
					D	2.2	30	4	ODOT
PROPOSED 'D'	240/480V 1 PHASE 3 WIRE	6.14 KVA	100	#1/0	E	2.8	30	4	ODOT
					F	3.9	30	4	ODOT
					G	3.3	30	4	ODOT
					H	2.8	30	4	ODOT

HORIZONTAL SCALE IN FEET
0 100 200 400

CALCULATED JCS
CHECKED LH

CIRCUIT DIAGRAMS

LIGHTING

ALL-75-5.53

898
1224

J:\Projects\ALL\76691\lighting\sheets\76691LC001.dgn 11-SEP-2012 9:19PM reddenj

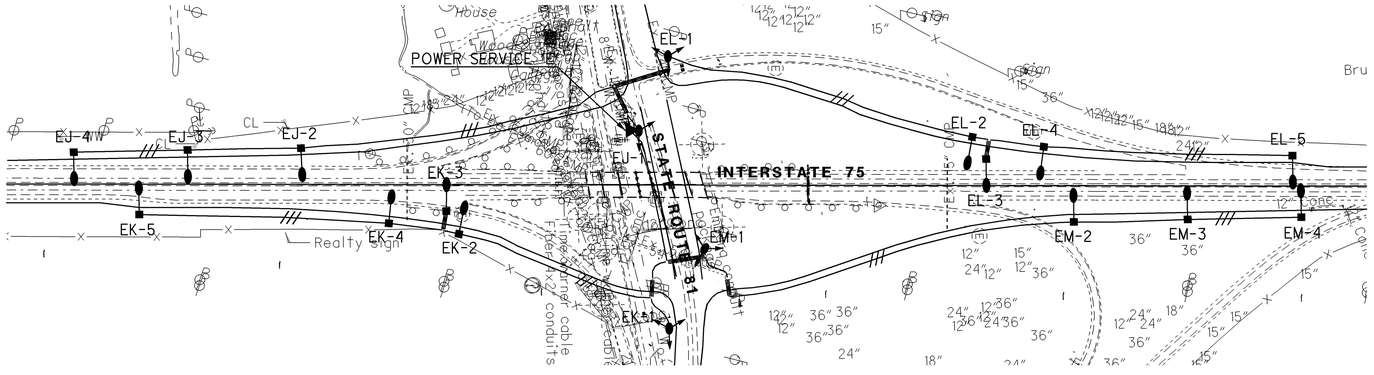

CONTROL CENTER DATA

CONTROL CENTER	LINE VOLTAGE, PHASE	CONNECTED LOAD (KVA)	ENCLOSURE RATING (AMPS)	SERVICE ENTRANCE CONDUCTOR SIZE (AWG)	CIRCUIT NAME	CIRCUIT LOAD (AMPS)	CIRCUIT FUSE SIZE (AMPS)	CIRCUIT CABLE SIZE (AWG)	MAINTAINING AGENCY
PROPOSED 'E'	240/480V 1 PHASE 3 WIRE	5.86 KVA	100	#1/0	J	2.8	30	4	ODOT
					K	3.3	30	4	ODOT
					L	3.3	30	4	ODOT
					M	2.8	30	4	ODOT

N

0 100 200 400 HORIZONTAL SCALE IN FEET

CALCULATED JCS | CHECKED LH

LIGHTING CIRCUIT DIAGRAMS

ALL-75-5.53

899
1224

J:\Projects\ALL\7669I\lighting\sheets\7669ILC002.dgn 11-SEP-2012 9:19PM reddenj

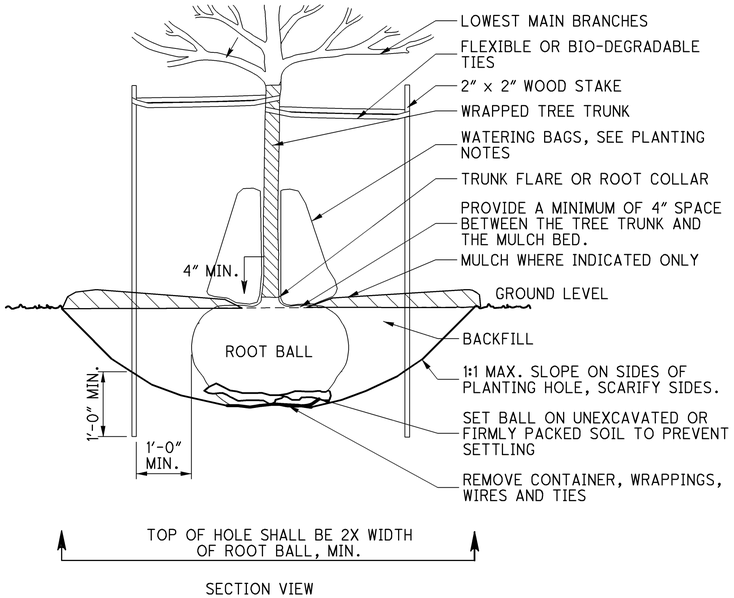

SECTION VIEW

PLANTING ON LEVEL GROUND

NOTES:
1. THIS DETAIL IS AN ADAPTATION OF STANDARD CONSTRUCTION DRAWING LA-1.2 AND SHALL PREVAIL.

2. TREE PLANTING AND BRACING SHALL BE PER CMS 661. SEE PLANTING NOTES FOR WATERING BAG SPECIFICATIONS.

DECIDUOUS TREE PLANTING & BRACING DETAILS

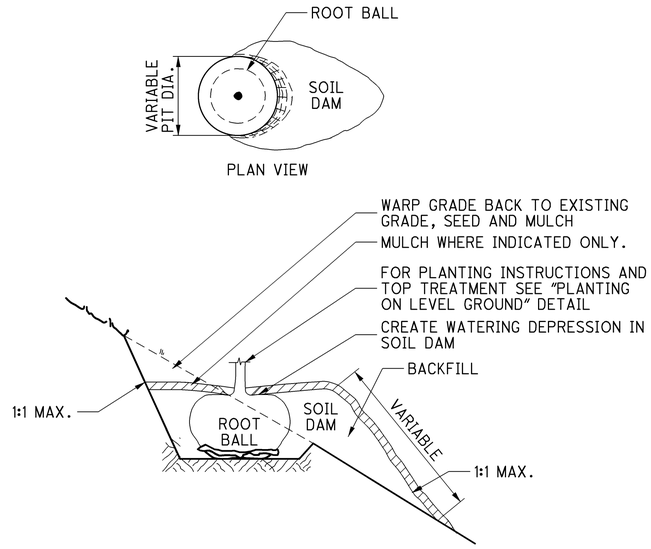

SECTION VIEW

PLANTING ON SLOPE

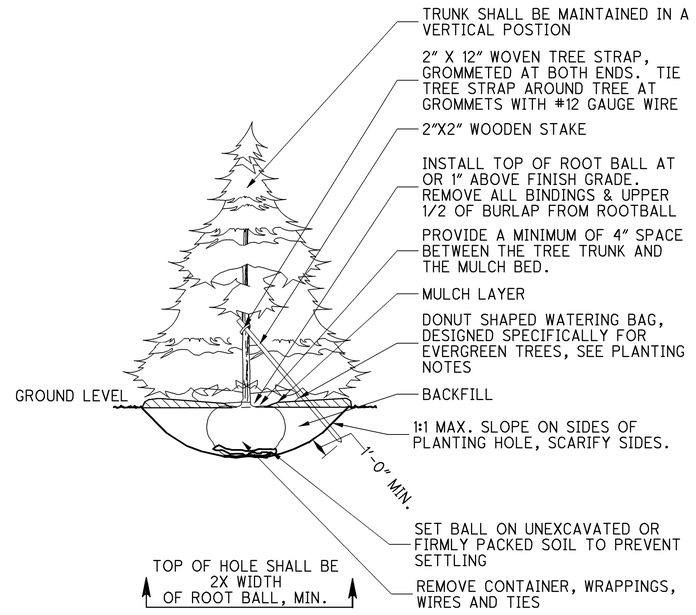

EVERGREEN TREE PLANTING & BRACING DETAILS

LANDSCAPE GENERAL SUMMARY OF QUANTITIES

05/ENH/ OT/	ITEM	ITEM EXT.	GRAND TOTAL	UNIT	INFORMATION			
					DESCRIPTION	COMMON NAME	BOTANICAL NAME	CONDITION / SPACING
					LANDSCAPING			
8	659	00100	8	EACH	SOIL ANALYSIS TEST			
35,286	659	00560	35,286	SQ YD	SEEDING AND MULCHING, CLASS 4B			
7,701	659	00570	7,701	SQ YD	SEEDING AND MULCHING, CLASS 5A			
31,144	659	00580	31,144	SQ YD	SEEDING AND MULCHING, CLASS 5B			
8,000	659	14001	8,000	SQ YD	REPAIR SEEDING AND MULCHING, A.P.P.			
2	659	20000	2	TON	COMMERCIAL FERTILIZER			
15	659	31000	15	ACRES	LIME			
401	659	35000	401	M GAL	WATER			
668	659	40000	668	MSF	MOWING			
27	661	00500	27	SQ YD	MULCH			
15	661	40081	15	EACH	DECIDUOUS TREE, 2" CALIPER, A.P.P.	REDBUD	CERCIS CANADENSIS	B&B / 15' O.C.
29	661	40121	29	EACH	DECIDUOUS TREE, 3" CALIPER, A.P.P.	SYCAMMORE	PLATANUS OCCIDENTALIS	B&B / 30' O.C.
15	661	50161	15	EACH	EVERGREEN TREE, 8' HEIGHT, A.P.P.	PITCH PINE	PINUS RIGIDA	B&B / 20' O.C.
23,010	662	31001	23,010	GALLON	LANDSCAPE WATERING, A.P.P.			
10,220	671	15040	10,220	SQ YD	EROSION CONTROL MAT, TYPE E			

A.P.P. - AS PER PLAN
B&B - BALLED AND BURLAPPED

CALCULATED HLM CHECKED CMS

LANDSCAPE DETAILS AND GENERAL SUMMARY
S.R. 309 & S.R 81 INTERCHANGES

ALL-75-5.53

900
1224

J:\Projects\ALL\76691\landscape\sheets\76691PD001.dgn 14-SEP-2012 10:34AM reddenj

PLANTING MAINTENANCE AND ESTABLISHMENT SCHEDULE

TASK	TIMELINE (MONTHS)												DESCRIPTION OF WORK
	JAN.	FEB.	MAR.	APR.	MAY	JUNE	JULY	AUG.	SEPT.	OCT.	NOV.	DEC.	
DISEASE AND INSECT CONTROL			✓	✓	✓	✓	✓	✓	✓	✓	✓		MONITOR ALL PLANT MATERIAL FOR DISEASE / INSECT INFESTATION AND ENVIRONMENTAL DAMAGE. TREAT PER STANDARD HORTICULTURAL PRACTICES.
REPAIR SEEDING AND MULCHING AND LANDSCAPE AREAS	✓	✓	✓	✓	✓	✓	✓	✓	✓	✓	✓	✓	MONITOR AND RESTORE SEEDED AND LANDSCAPE AREAS THAT HAVE BEEN DISTURBED. RESTORE GRADE, MULCH AND PLANTINGS AS REQUIRED. RESTORE SEEDED AREAS PER CMS 659.
FERTILIZING			✓										ADD SUPPLEMENTAL FERTILIZER TO TREES AFTER ONE GROWING SEASON. APPLY TO THE TOP OF MULCHED AREAS IN ACCORDANCE WITH CMS 661.
MOWING (CLASS 4A, 5A AND 5B)					✓						✓		PROVIDE TWO MOWINGS. SET MOWER DECK AT 6 TO 8 INCHES ABOVE THE GROUND SURFACE AND MOW ALL NATIVE GRASS / WILDFLOWER SEEDED AREAS. CAREFULLY MOW AROUND TREES.
PLANT REPLACEMENTS										✓			REMOVE AND REPLACE DEAD, MISSING OR UNACCEPTABLE PLANTINGS IMMEDIATELY IN ACCORDANCE WITH CMS 661.
PRUNING					✓								THE FIRST SPRING FOLLOWING ONE GROWING SEASON, PRUNE DEAD OR DAMAGED BRANCHES ON TREES PER STANDARD HORTICULTURAL PRACTICES.
TREE STAKING	✓	✓	✓	✓	✓	✓	✓	✓	✓	✓	✓	✓	INSPECT TREE STAKES AND TIES. REPLACE DAMAGED MATERIALS OR ADJUST AS REQUIRED.
TOP DRESS MULCH					✓								TOP DRESS ALL TREES WITH 2" OF SUPPLEMENTAL HARDWOOD BARK MULCH THE FIRST SPRING FOLLOWING ONE GROWING SEASON.
TRASH PICK UP					✓						✓		PICK UP LITTER AND DEBRIS DURING MOWING OPERATIONS.
WATERING			✓	✓	✓	✓	✓	✓	✓	✓	✓		PROVIDE ADEQUATE MOISTURE PER CMS 659 AND 662 AND AS SPECIFIED IN THE WATERING SCHEDULE.
WEED CONTROL						✓		✓					PERFORM AT LEAST TWO WEEDING PROGRAMS AROUND TREES, PER CMS 661.
REMOVAL OF TREE PLANTING ACCESSORIES										✓			REMOVE TREE STAKES, WATERING BAGS AND WRAPPING AT THE END OF THE ESTABLISHMENT PERIOD PER CMS 661.

ALL MAINTENANCE AND ESTABLISHMENT TASKS LISTED ABOVE SHALL BE CONSIDERED INCIDENTAL TO THE PAY ITEMS TO WHICH THEY APPLY AND NO SEPARATE PAYMENT WILL BE MADE.

WATERING SCHEDULE

PLANT MATERIAL	FREQUENCY	WATER APPLICATION RATE
TREES (2 TO 3 INCH CALIPER)	PER CMS 662: WEEKLY FOLLOWING PLANTING	15 GALLONS EACH TREE, *
SEEDING (CLASSES 4B, 5A AND 5B)	PER CMS 659.17: TWO APPLICATIONS WITHIN 7 DAYS AFTER GERMINATION AND A SECONDARY APPLICATION 7 TO 10 DAYS LATER.	300 GALLONS / 1000 SF

* SEE MAINTENANCE SCHEDULE FOR WATERING TIME LINE. IF 1-INCH OR MORE OF PRECIPITATION OCCURS WITHIN ANY PARTICULAR WATERING WEEK DURING THE ESTABLISHMENT PERIOD THE CONTRACTOR MAY OMIT LANDSCAPE WATERING FOR THAT WEEK.

FERTILIZER SCHEDULE

TREES	SEEDING (CLASSES 4B, 5A AND 5B)
PER CMS 661: SLOW RELEASE COMMERCIAL FERTILIZER (0-20-20) AT 5 POUNDS PER CUBIC YARD ADDED TO THE SPECIFIED BACKFILL MIX.	PER CMS 659 (WITH THE FOLLOWING CHANGES): STANDARD COMMERCIAL FERTILIZER 10-10-10 AT A RATE OF 200 LBS PER ACRE.
COST SHALL BE INCLUDED IN UNIT PRICE FOR INDIVIDUAL PLANTINGS AND NO SEPARATE PAYMENT SHALL BE MADE.	PAID FOR AT THE UNIT PRICE FOR COMMERCIAL FERTIZER.

PLANTING NOTES

THE COST FOR FERTILIZER (EXCEPT FOR SEEDED AREAS), PLANTING PIT EXCAVATION AND BACKFILL, WATERING BAGS, STAKING AND WRAPPING SHALL BE INCLUDED IN THE CONTRACT UNIT PRICES FOR THE PLANTING ITEMS PER THE ODOT CONSTRUCTION AND MATERIAL SPECIFICATIONS (CMS) AND NO SEPARATE PAYMENT WILL BE MADE.

PLANTING PIT DIAMETER AND DEPTH VARIES WITH THE TYPE AND SIZE OF THE PLANT ROOT BALL. NOTE LIMITS OF MULCH REQUIRED FOR TREES INDICATED ON THE LANDSCAPE DETAILS.

BACKFILL SHALL BE IN ACCORDANCE WITH CMS 661.

CIRCLING ROOTS / ROOT BOUND CONTAINER GROWN PLANTS SHALL BE REJECTED.

WALLS OF PLANTING HOLES SHALL BE ROUGHENED BEFORE PLANTING.

ONLY FLEXIBLE OR BIODEGRADABLE TIES SHALL BE USED WHEN STAKING TREES. THE TIES SHALL BE LOSE FITTING AND SHALL NOT GIRDLE THE TRUNK. ATTACH TIES TO THE LOWER HALF OF THE TREE AND ALLOW TRUNK MOVEMENT AND GROWTH. ALL WRAP AND STAKING SHALL BE REMOVED AT THE END OF THE ESTABLISHMENT PERIOD, AS PER THE PLANTING MAINTENANCE SCHEDULE.

SEED ALL AREAS WITHIN LIMITS OF LANDSCAPE CONSTRUCTION THAT ARE DISTURBED BY NEW CONSTRUCTION. SEED AT THE RATES SPECIFIED IN CMS 659. THE LIMITS OF LANDSCAPE CONSTRUCTION FOR SHALL BE THE INFIELD AREAS BETWEEN RAMPS, HIGHWAY AND CROSS STREETS AS SHOWN AT SPECIFIC INTERCHANGES. SEEDING FOR OTHER AREAS OF THE PROJECT ARE ADDRESSED ELSEWHERE IN THE CONSTRUCTION DOCUMENTS.

WATER PLANTINGS IMMEDIATELY FOLLOWING INSTALLATION. WATER PLANT MATERIALS DURING BACKFILLING TO ELIMINATE SOIL VOIDS. ALL VEGETATION SHALL RECEIVE SUPPLEMENTAL WATERING DURING THE ESTABLISHMENT PERIOD AT THE RATES INDICATED IN THE WATERING SCHEDULE.

ANY CONFLICTS BETWEEN THE LAYOUT OF PLANTING BEDS AND OBJECTS IN THE FIELD SHALL BE BROUGHT TO THE ATTENTION OF THE ENGINEER FOR RESOLUTION. DO NOT PROCEED WITH CONSTRUCTION IN THESE AREAS UNTIL THE CONFLICT HAS BEEN RESOLVED.

MAINTAIN PLANTINGS, IN ACCORDANCE WITH THE MAINTENANCE SCHEDULE, IMMEDIATELY FOLLOWING INSTALLATION AND THROUGHOUT THE ESTABLISHMENT PERIOD DEFINED IN CMS 661. SEEDED PLANTINGS SHALL BE MAINTAINED FOR THE SAME PERIOD OF TIME.

LOCATE AND STAKE ALL LANDSCAPE ITEMS AND RELATED WORK TO BE PERFORMED INCLUDING BUT NOT LIMITED TREE SETBACKS AND PLANTINGS. OBTAIN APPROVAL FROM THE ENGINEER OF ALL PLANTING LOCATIONS PRIOR TO BEGINNING PLANTING INSTALLATION WORK.

LOCATE AND MARK / STAKE ALL UNDERGROUND CONDUITS AND UTILITIES PRIOR TO LANDSCAPE INSTALLATION. REMOVE STAKES UPON COMPLETION OF PLANTING OPERATIONS.

UNLESS OTHERWISE INDICATED, ALL PLANTINGS SHALL RECEIVE A 4" LAYER OF HARDWOOD MULCH IN ACCORDANCE WITH CMS 661.

PRIOR TO PLANTING OR SEEDING THE CONTRACTOR SHALL ENSURE THAT ALL LANDSCAPE AREAS ARE READY TO RECEIVE PLANTINGS IN ACCORDANCE WITH CMS 659 AND CMS 661. REMOVE ALL CLODS, ROCKS OR DEBRIS GREATER THAN ONE INCH IN DIAMETER PRIOR TO PLANTING.

IMMEDIATELY FOLLOWING TREE INSTALLATION, INSTALL WATERING BAGS. WATERING BAGS SHALL BE, MADE IN THE USA, UV STABILIZED AND CONSTRUCTED OF GREEN POLYETHYLENE WITH NYLON WEBBING. BAGS SHALL CONTAIN WATER RELEASE POINTS THAT SLOWLY RELEASE WATER OVER SEVERAL HOURS. WATERING BAGS SHALL FIT SECURELY BUT LOOSELY AROUND THE BASE OF TREES. THE WATERING BAGS SHALL HAVE A FILLING CAPACITY OF AT LEAST THAT REQUIRED IN THE WATERING SCHEDULE FOR EACH TREE. INSTALL BAGS ACCORDING TO THE MANUFACTURER'S INSTRUCTIONS.

REFER TO PN 661 FOR THE LATEST EDITS TO SECTION 661 OF THE CMS.

CALCULATED HLM | CHECKED CMS

LANDSCAPE NOTES AND SCHEDULES
S.R. 309 & S.R 81 INTERCHANGES

ALL-75-5.53

901
1224

J:\Projects\ALL\76691\landscape\sheets\76691PN001.dgn 14-SEP-2012 10:34AM reddenj

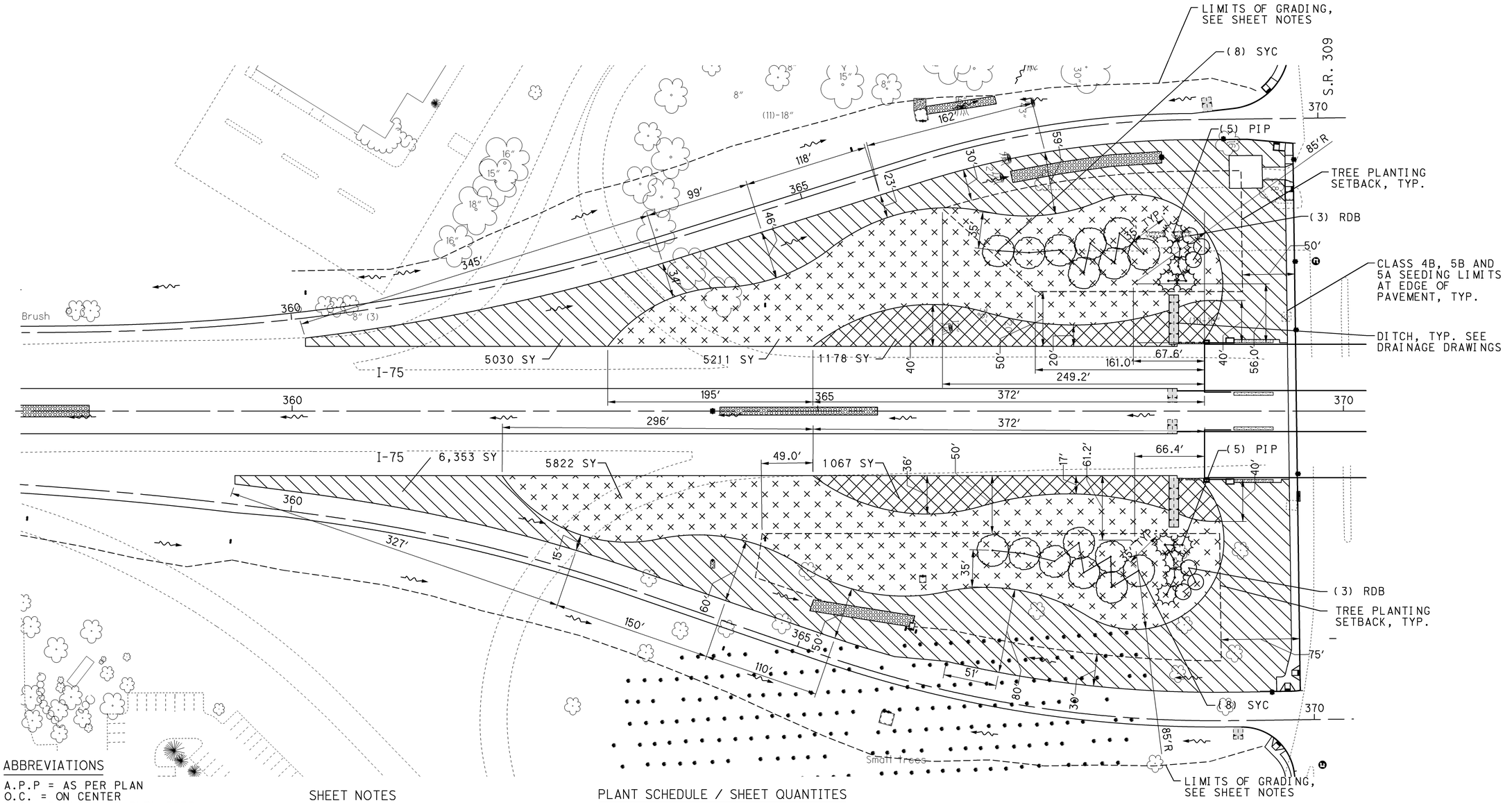

ABBREVIATIONS

A.P.P = AS PER PLAN
O.C. = ON CENTER
B&B = BALLED AND BURLAPPED
SQ YD = SQUARE YARD
SQ FT = SQUARE FOOT
MSF = 1000 SQUARE FEET
M GAL = 1000 GALLONS
TYP. = TYPICAL

LEGEND

- LARGE DECIDUOUS TREE
- SMALL DECIDUOUS TREE
- EVERGREEN TREE
- SEEDING AND MULCHING, CLASS 4B (LOW GROWING NATIVE GRASS)
- SEEDING AND MULCHING, CLASS 5B (NATIVE WILDFLOWERS AND GRASSES)
- SEEDING AND MULCHING, CLASS 5A (ANNUAL AND PERENNIAL WILDFLOWERS)

SHEET NOTES

1. PROTECT ALL EXISTING TREES 20' OUTSIDE LIMITS OF GRADING. DO NOT ALLOW EARTHWORK, CONSTRUCTION VEHICLES, EQUIPMENT OR SUPPLIES WITHIN 20' OF THE BASE OF TREES TO REMAIN SO AS NOT TO COMPACT THE ROOTS, UNLESS OTHERWISE AUTHORIZED BY THE ENGINEER.
2. MAINTAIN 10' CLEAR FROM ALL DITCH FLOW LINES TO TREE PLANTINGS.
3. STAKE-OUT TREE PLANTING SETBACK LOCATIONS PRIOR TO LAYING OUT PLANTINGS.
4. TREES SHALL BE INSTALLED WITHIN SEEDED AREAS AS SHOWN.
5. INSTALL EROSION CONTROL MAT ON ALL LANDSCAPED AREAS WITH SLOPES 2:1 OR GREATER AND ON THE BOTTOM AND SIDES OF ALL NON-RIPRAPPED DITCHES (TO 2' ABOVE FLOWLINE) IN ACCORDANCE WITH MANUFACTURER'S INSTRUCTIONS FOR EACH APPLICATION TYPE.

PLANT SCHEDULE / SHEET QUANTITES

ITEM	UNIT	DESCRIPTION	QTY.	KEY	COMMON NAME	BOTANICAL NAME	CONDITION / SPACING
659E00100	EACH	SOIL TEST ANALYSIS	2				
659E00560	SQ YD	SEEDING AND MULCHING, CLASS 4B	11383				
659E00570	SQ YD	SEEDING AND MULCHING, CLASS 5A	2245				
659E00580	SQ YD	SEEDING AND MULCHING, CLASS 5B	11033				
659E14001	SQ YD	REPAIR SEEDING AND MULCHING, A.P.P.	2000				
659E20000	TON	COMMERCIAL FERTILIZER	0.5				
659E31000	ACRES	LIME	5				
659E35000	M GAL	WATER	133				
659E40000	MSF	MOWING	222				
661E00500	SQ YD	MULCH	15				
661E40081	EACH	DECIDUOUS TREE, 2 " CALIPER, A.P.P.	6	RDB	REDBUD	CERCIS CANADENSIS	B&B / 15' O.C.
661E40121	EACH	DECIDUOUS TREE, 3" CALIPER, A.P.P.	16	SYC	SYCAMORE	PLATANUS OCCIDENTALIS	B&B / 30' O.C.
661E50161	EACH	EVERGREEN TREE, 8' HEIGHT, A.P.P.	10	PIP	PITCH PINE	PINUS RIGIDA	B&B / 20' O.C.
662E31001	GALLON	LANDSCAPE WATERING, A.P.P.	12480				
671E15040	SQ YD	EROSION CONTROL MAT, TYPE E	2508				

N

0 25 50 100 HORIZONTAL SCALE IN FEET

CALCULATED HLM CHECKED CMS

LANDSCAPING PLAN
S.R. 309 INTERCHANGE

ALL-75-5.53

902
1224

J:\Projects\ALL\76691\landscape\sheets\76691PP001.dgn 14-SEP-2012 10:34AM reddenj

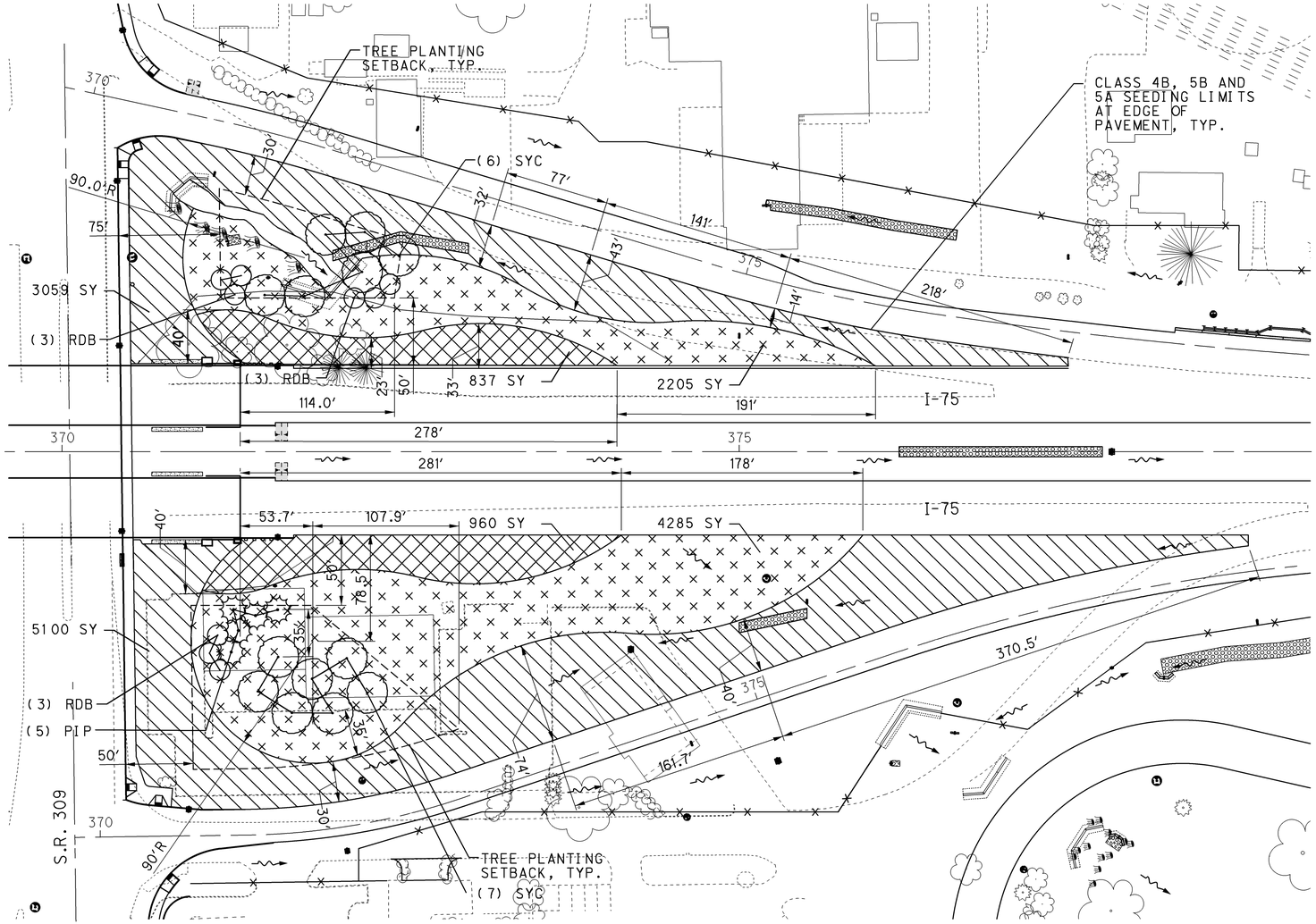

LEGEND

- LARGE DECIDUOUS TREE
- SMALL DECIDUOUS TREE
- EVERGREEN TREE
- SEEDING AND MULCHING, CLASS 4B (LOW GROWING NATIVE GRASS)
- SEEDING AND MULCHING, CLASS 5B (NATIVE WILDFLOWERS AND GRASSES)
- SEEDING AND MULCHING, CLASS 5A (ANNUAL AND PERENNIAL WILDFLOWERS)

SHEET NOTES

1. PROTECT ALL EXISTING TREES 20' OUTSIDE LIMITS OF GRADING. DO NOT ALLOW EARTHWORK, CONSTRUCTION VEHICLES, EQUIPMENT OR SUPPLIES WITHIN 20' OF THE BASE OF TREES TO REMAIN SO AS NOT TO COMPACT THE ROOTS, UNLESS OTHERWISE AUTHORIZED BY THE ENGINEER.
2. MAINTAIN 10' CLEAR FROM ALL DITCH FLOW LINES TO TREE PLANTINGS.
3. STAKE-OUT TREE PLANTING SETBACK LOCATIONS PRIOR TO LAYING OUT PLANTINGS.
4. TREES SHALL BE INSTALLED WITHIN SEEDED AREAS AS SHOWN
5. INSTALL EROSION CONTROL MAT ON ALL LANDSCAPED AREAS WITH SLOPES 2:1 OR GREATER AND ON THE BOTTOM AND SIDES OF ALL NON-RIPRAPPED DITCHES (TO 2' ABOVE FLOWLINE) IN ACCORDANCE WITH MANUFACTURER'S INSTRUCTIONS FOR EACH APPLICATION TYPE.

PLANTING SCHEDULE / LANDSCAPE QUANTITIES

ITEM	UNIT	DESCRIPTION	QTY.	KEY	COMMON NAME	BOTANICAL NAME	CONDITION / SPACING
659E00100	EACH	SOIL TEST ANALYSIS	2				
659E00560	SQ YD	SEEDING AND MULCHING, CLASS 4B	8159				
659E00570	SQ YD	SEEDING AND MULCHING, CLASS 5A	1797				
659E00580	SQ YD	SEEDING AND MULCHING, CLASS 5B	6490				
659E14001	SQ YD	REPAIR SEEDING AND MULCHING, A.P.P.	2000				
659E20000	TON	COMMERCIAL FERTILIZER	0.3				
659E31000	ACRES	LIME	3.4				
659E35000	M GAL	WATER	88.8				
659E40000	MSF	MOWING	148.0				
661E00500	SQ YD	MULCH	12.5				
661E40081	EACH	DECIDUOUS TREE, 2 " CALIPER, A.P.P.	9	RDB	REDBUD	CERCIS CANADENSIS	B&B / 15' O.C.
661E40121	EACH	DECIDUOUS TREE, 3" CALIPER, A.P.P.	13	SYC	SYCAMORE	PLATANUS OCCIDENTALIS	B&B / 30' O.C.
661E50161	EACH	EVERGREEN TREE, 8' HEIGHT, A.P.P.	5	PIP	PITCH PINE	PINUS RIGIDA	B&B / 20' O.C.
662E31001	GALLON	LANDSCAPE WATERING, A.P.P.	10530				
671E15040	SQ YD	EROSION CONTROL MAT, TYPE E	2047				

ABBREVIATIONS

A.P.P = AS PER PLAN
O.C. = ON CENTER
B&B = BALLED AND BURLAPPED
SQ YD = SQUARE YARD
SQ FT = SQUARE FOOT
MSF = 1000 SQUARE FEET
M GAL = 1000 GALLONS
TYP. = TYPICAL

HORIZONTAL SCALE IN FEET
0 25 50 100

CALCULATED HLM
CHECKED CMS

LANDSCAPING PLAN
S.R. 309 INTERCHANGE

ALL-75-5.53

903
1224

J:\Projects\ALL\76691\landscape\sheets\76691PP002.dgn 14-SEP-2012 10:34AM reddenj

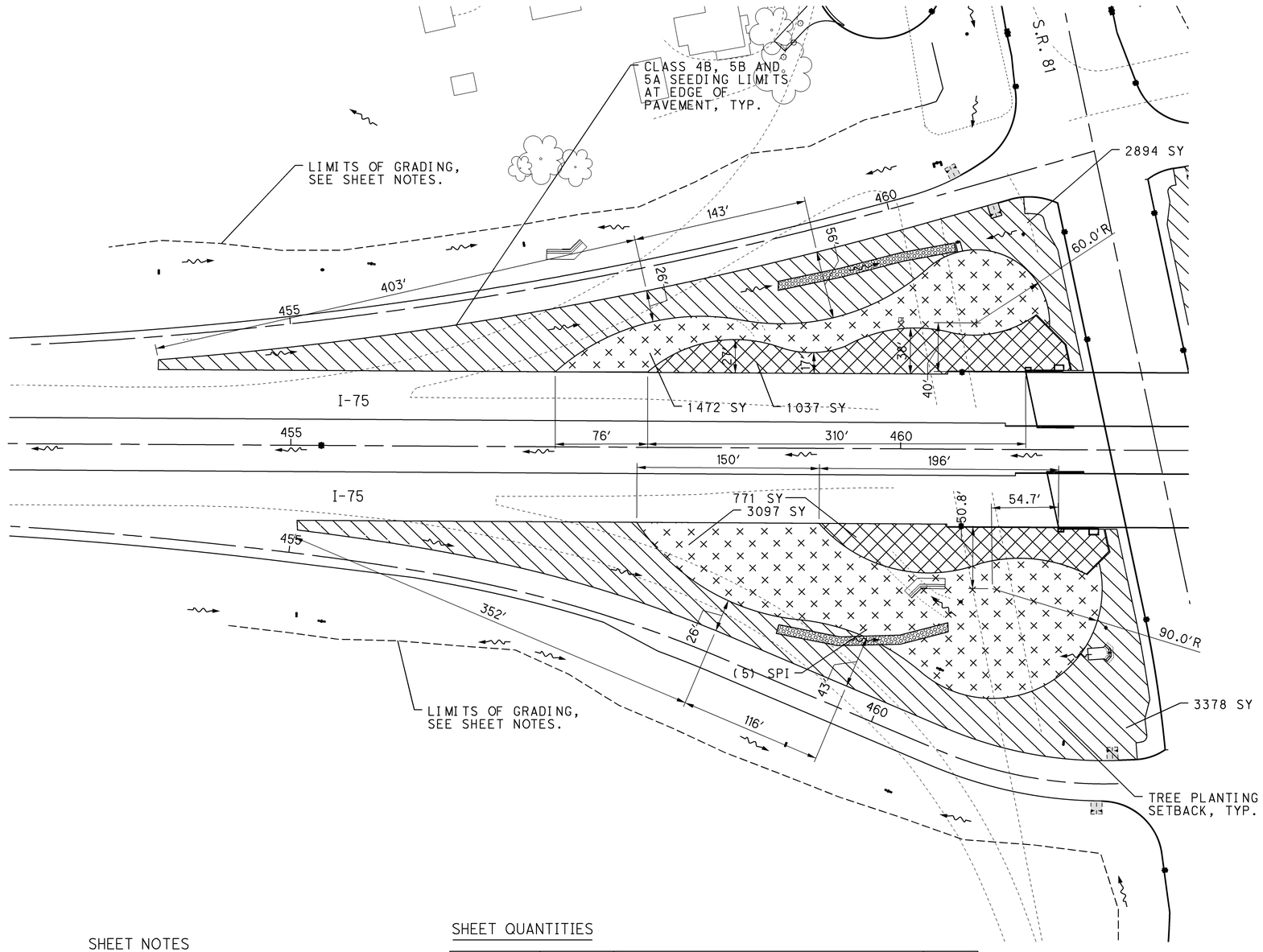

ABBREVIATIONS

A.P.P = AS PER PLAN
SQ YD = SQUARE YARD
SQ FT = SQUARE FOOT
MSF = 1000 SQUARE FEET
M GAL = 1000 GALLONS
TYP. = TYPICAL

LEGEND

- SEEDING AND MULCHING, CLASS 4B (LOW GROWING NATIVE GRASS)
- SEEDING AND MULCHING, CLASS 5B (NATIVE WILDFLOWERS AND GRASSES)
- SEEDING AND MULCHING, CLASS 5A (ANNUAL AND PERENNIAL WILDFLOWERS)

SHEET NOTES

1. PROTECT ALL EXISTING TREES 20' OUTSIDE LIMITS OF GRADING. DO NOT ALLOW EARTHWORK, CONSTRUCTION VEHICLES, EQUIPMENT OR SUPPLIES WITHIN 20' OF THE BASE OF TREES TO REMAIN SO AS NOT TO COMPACT THE ROOTS, UNLESS OTHERWISE AUTHORIZED BY THE ENGINEER.
2. INSTALL EROSION CONTROL MAT ON ALL LANDSCAPED AREAS WITH SLOPES 2:1 OR GREATER AND ON THE BOTTOM AND SIDES OF ALL NON-RIPRAPPED DITCHES (TO 2' ABOVE FLOWLINE) IN ACCORDANCE WITH MANUFACTURER'S INSTRUCTIONS FOR EACH APPLICATION TYPE.

SHEET QUANTITIES

ITEM	UNIT	DESCRIPTION	QTY.
659E00100	EACH	SOIL TEST ANALYSIS	2
659E00560	SQ YD	SEEDING AND MULCHING, CLASS 4B	6272
659E00570	SQ YD	SEEDING AND MULCHING, CLASS 5A	1808
659E00580	SQ YD	SEEDING AND MULCHING, CLASS 5B	4569
659E14001	SQ YD	REPAIR SEEDING AND MULCHING, A.P.P.	2000
659E20000	TON	COMMERCIAL FERTILIZER	0.3
659E31000	ACRES	LIME	2.6
659E35000	M GAL	WATER	68.5
659E40000	MSF	MOWING	114.2
671E15040	SY YD	EROSION CONTROL MAT, TYPE E	3617

HORIZONTAL SCALE IN FEET
0 25 50 100

CALCULATED HLM
CHECKED CMS

LANDSCAPING PLAN
S.R. 81 INTERCHANGE

ALL-75-5.53

904
1224

J:\Projects\ALL\7669I\landscape\sheets\7669IPP003.dgn 14-SEP-2012 10:34AM reddenj

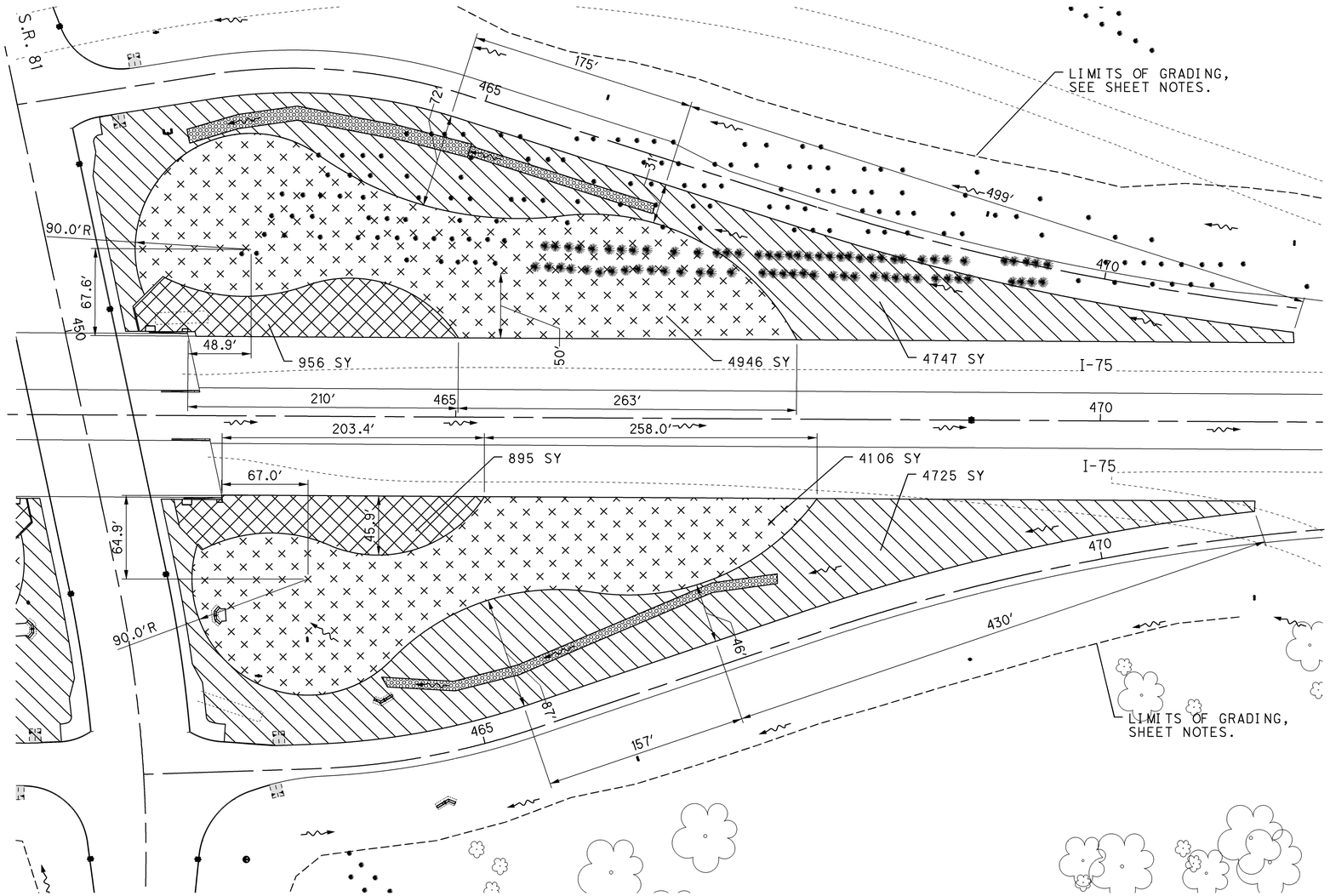

ABBREVIATIONS

A.P.P = AS PER PLAN
SQ YD = SQUARE YARD
SQ FT = SQUARE FOOT
MSF = 1000 SQUARE FEET
M GAL = 1000 GALLONS
TYP. = TYPICAL

LEGEND

- SEEDING AND MULCHING, CLASS 4B (LOW GROWING NATIVE GRASS)
- SEEDING AND MULCHING, CLASS 5B (NATIVE WILDFLOWERS AND GRASSES)
- SEEDING AND MULCHING, CLASS 5A (ANNUAL AND PERENNIAL WILDFLOWERS)

SHEET NOTES

1. PROTECT ALL EXISTING TREES 20' OUTSIDE LIMITS OF GRADING. DO NOT ALLOW EARTHWORK, CONSTRUCTION VEHICLES, EQUIPMENT OR SUPPLIES WITHIN 20' OF THE BASE OF TREES TO REMAIN SO AS NOT TO COMPACT THE ROOTS, UNLESS OTHERWISE AUTHORIZED BY THE ENGINEER.
2. INSTALL EROSION CONTROL MAT ON ALL LANDSCAPED AREAS WITH SLOPES 2:1 OR GREATER AND ON THE BOTTOM AND SIDES OF ALL NON-RIPRAPPED DITCHES (TO 2' ABOVE FLOWLINE) IN ACCORDANCE WITH MANUFACTURER'S INSTRUCTIONS FOR EACH APPLICATION TYPE.

PLANTING SCHEDULE / SHEET QUANTITIES

ITEM	UNIT	DESCRIPTION	QTY.
659E00100	EACH	SOIL TEST ANALYSIS	2
659E00560	SQ YD	SEEDING AND MULCHING, CLASS 4B	9472
659E00570	SQ YD	SEEDING AND MULCHING, CLASS 5A	1851
659E00580	SQ YD	SEEDING AND MULCHING, CLASS 5B	9052
659E14001	SQ YD	REPAIR SEEDING AND MULCHING, A.P.P.	2000
659E20000	TON	COMMERCIAL FERTILIZER	0.4
659E31000	ACRES	LIME	4.2
659E35000	M GAL	WATER	110.0
659E40000	MSF	MOWING	183.4
671E15040	SQ YD	EROSION CONTROL MAT, TYPE E	2047.9

HORIZONTAL SCALE IN FEET
0 25 50 100

CALCULATED HLM
CHECKED CMS

LANDSCAPING PLAN
S.R. 81 INTERCHANGE

ALL-75-5.53

905
1224

J:\Projects\ALL\7669\landscape\sheets\7669IPP004.dgn 14-SEP-2012 10:34AM redden

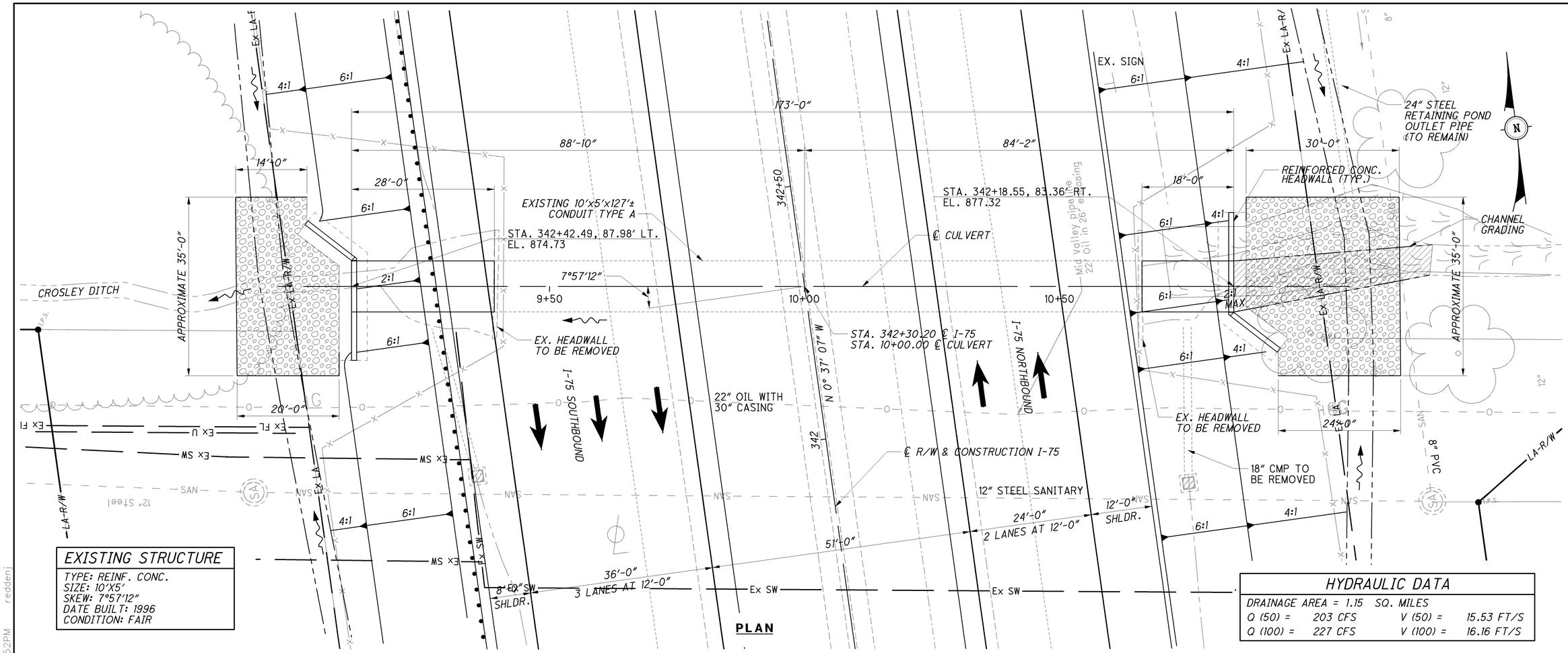

PLAN

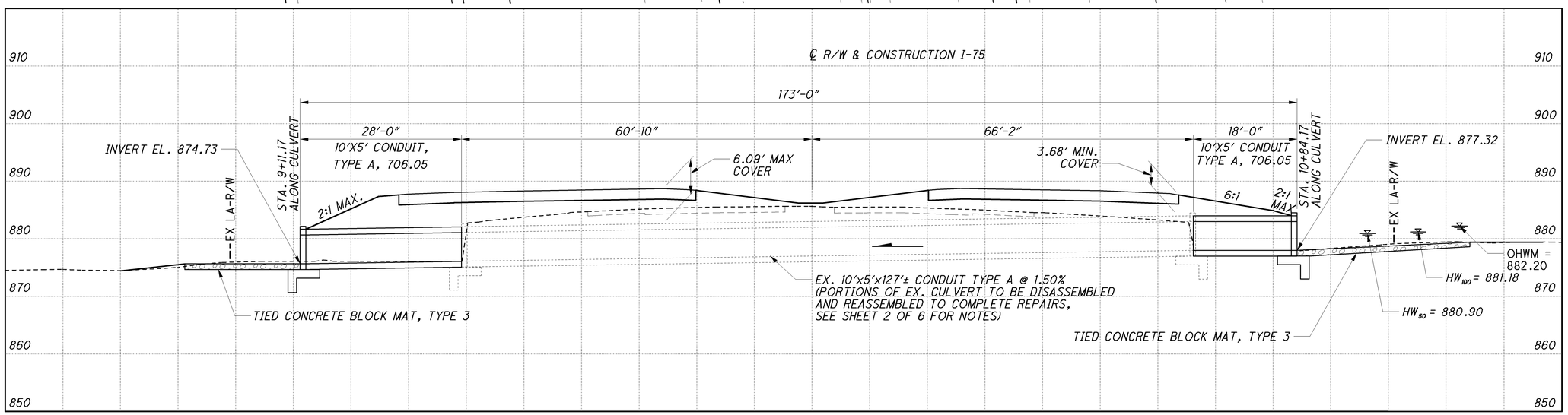

PROFILE
(ALONG ℄ CULVERT)

DESIGN AGENCY
PARSONS BRINCKERHOFF
2945 FARMERS DRIVE
SUITE 350
COLUMBUS, OHIO 43235

DESIGNED	DRAWN	REVIEWED	DATE
SAP	LEL	EBS	05/24/12
CHECKED	REVISED	STRUCTURE FILE NUMBER	
PJL		0201995	

CULVERT PLAN & PROFILE

ALL-075-0652
CULVERT C-38

ALL-75-5.53
PID No. 76691

1 / 6

906
1224

J:\Projects\ALL\76691\structures\C38 Culvert\075_SP001.dgn 11-SEP-2012 8:52PM reddenj

GENERAL NOTES

DESIGN SPECIFICATIONS: THIS STANDARD DRAWING CONFORMS TO "STANDARD SPECIFICATIONS FOR HIGHWAY BRIDGES" ADOPTED BY THE AMERICAN ASSOCIATION OF STATE HIGHWAY AND TRANSPORTATION OFFICIALS, 2010 AND THE ODOT BRIDGE DESIGN MANUAL.

DESIGN DATA: THE FOLLOWING DESIGN DATA IS ASSUMED:

INTERNAL ANGLE OF FRICTION = 30 DEGREES
COEFFICIENT OF FRICTION = 0.30
UNIT WEIGHT OF SOIL = 120 PCF
UNIT WEIGHT OF CONCRETE = 150 PCF
SLOPE OF BACKFILL = 2:1 (TYPE A & B HEADWALLS ONLY)
HEIGHT OF LIVE LOAD SURCHARGE = 2 FT (TYPE C HEADWALLS ONLY)
MAXIMUM FOUNDATION BEARING PRESSURE = 2000 P.S.F.

CONCRETE CLASS C - COMPRESSIVE STRENGTH 4000 PSI
(FOOTING, WINGWALL AND FORESLOPE WALL)

REINFORCING STEEL - ASTM A615, A616, OR A617
GRADE 60 MINIMUM YIELD STRENGTH
60,000 PSI (ALL REINFORCING SHALL BE EPOXY COATED)

PRECAST CONCRETE: AT THE OPTION OF THE CONTRACTOR, PRECAST HEADWALLS MAY BE FURNISHED PER ITEM 602.03 PRECAST STRUCTURES, PROVIDED THEY ARE SIZED TO MEET THE SOIL LOADING AND RESISTANCE PARAMETERS, AND MEET OR EXCEED THE MATERIAL STRENGTHS AND WALL LIMITS AS SHOWN AND SPECIFIED. FULL COMPENSATION FOR THE PRECAST SUBSTITUTION IS THE VOLUME OF CONCRETE AND THE WEIGHT OF THE REINFORCING STEEL FOR THE CORRESPONDING CAST-IN-PLACE STRUCTURE.

FORESLOPE WALL ANCHOR DOWELS: ANCHOR PER CMS 510 WITH NONSHRINK, NONMETALLIC GROUT CONFORMING TO CMS 705.20 AND TO A DEPTH OF 5 ". PAYMENT FOR DOWEL HOLES, GROUT AND INSTALLATION SHALL BE INCLUDED WITH ITEM 511.

AS AN ALTERNATIVE TO RESIN BONDING, THREADED INSERTS OR NONPROTRUDING MECHANICAL CONNECTORS CAST INTO THE CULVERT BY THE MANUFACTURER MAY BE USED PROVIDED THEY CAN RESIST AN ULTIMATE PULL-OUT STRENGTH OF 12 KIPS AND MAINTAIN A MINIMUM COVER OF 3 INCHES AT THE BOTTOM OF THE CULVERT SLAB. MECHANICAL CONNECTORS MUST PROVIDE AN "L-SHAPED" BAR INSIDE THE CULVERT WITH A MINIMUM HORIZONTAL LENGTH OF 12 INCHES. PAYMENT FOR INSERTS OR MECHANICAL CONNECTORS SHALL BE INCLUDED WITH ITEM 603.

BACKFILL LIMITATION: WHEN THE DESIGN HEIGHT IS GREATER THAN 10 FT, THE BACKFILL BEHIND THE WINGWALLS SHALL NOT BE PLACED HIGHER THAN THE ELEVATION OF THE SOIL ABOVE THE TOE. WHEN THE SOIL ABOVE THE TOE IS AT ITS FINISHED ELEVATION, THE REMAINDER OF THE BACKFILL MAY BE PLACED.

10'X5' CONDUIT, TYPE A, 706.05, AS PER PLAN:
BASED ON ODOT INSPECTION REPORTS, REPAIRS WILL BE NECESSARY ON THE EXISTING CULVERT SECTIONS. THE CONTRACTOR SHALL DRAIN, CLEAN, INSPECT, AND RE-SEAL THE EXISTING CULVERT JOINTS FROM THE INTERIOR OF THE CULVERT. THE CONTRACTOR SHOULD PAY PARTICULARLY CLOSE ATTENTION TO THE 5TH, 12TH & 13TH JOINTS (FROM WEST TO EAST) AS INDICATED IN THE ODOT INSPECTION REPORT. ONCE INSPECTED, THE CONTRACTOR MAY MAKE RECOMMENDATIONS FOR ADDITIONAL REPAIRS AND SHALL REVIEW SUCH RECOMMENDATIONS WITH THE ENGINEER BEFORE PROCEEDING.

THIS PAY ITEM INCLUDES THE ABOVE DESCRIBED WORK AND ALL LABOR, EQUIPMENT, AND MATERIALS NECESSARY TO COMPLETE THE WORK. IT ALSO INCLUDES ANY REPAIRS NEEDED DUE TO DAMAGE TO THE EXISTING CULVERT AS A RESULT OF THE REMOVAL OF THE HEADWALLS TO ENSURE A CONNECTION WITH THE PROPOSED SECTIONS. NOTE THAT THE EXISTING HEADWALLS ARE TO BE REMOVED ACCORDING TO THE DETAILS ON PAGE 4/6 AND ARE TO BE PAID FOR WITH ITEM 202.

ALTERNATE METHODS OF REPAIR MAY BE PROPOSED BY THE CONTRACTOR BASED ON SITE CONDITIONS AND WITH THE APPROVAL OF, OR AS DIRECTED BY THE ENGINEER.

CONSTRUCTION PLANS AND INSPECTION PLANS FOR THE EXISTING STRUCTURE ARE ON FILE AT THE OHIO DEPARTMENT OF TRANSPORTATION, DISTRICT ONE OFFICE, 1885 NORTH MCCULLOUGH ST., LIMA, OHIO 45801 AND SHALL BE USED FOR REFERENCE.

ABBREVIATIONS:

APPRX. = APPROXIMATE	LF. = LEFT	(T) = TOP
(B) = BOTTOM	MAX. = MAXIMUN	T&B = TOP AND BOTTOM
BM = BENCH MARK	MIN. = MINIMUM	TYP. = TYPICAL
C.J. = CONSTRUCTION JOINT	M.O.T. = MAINTENACE OF TRAFFIC	VC = VERTICAL CURVE
CLR. = CLEAR	N.F. = NEAR FACE	W.B. = WESTBOUND
CONST. = CONSTRUCTION	P.E.J.F. = PREFORMED EXPANSION JOINT FILLER	YR. = YEAR
C/C = CENTER ON CENTER	PROP. = PROPOSED	
DIA. = DIAMETER	P.V.I. = POINT OF VERTICAL INTERSECTION	
E.B. = EASTBOUND	RT. = RIGHT	
E.F. = EACH FACE	SHLDR = SHOULDER	
EL. = ELEVATION	SER. = SERIES	
EX. = EXISTING	S.R. = STATE ROUTE	
ELEV. = ELEVATION	STA. = STATION	
F.F. = FAR FACE	STR. = STRAIGHT	
INC. = INCREMENT	STM = STORM	

POROUS BACKFILL WITH FILTER FABRIC 1'-6" THICK SHALL BE PLACED BEHIND THE WINGWALLS ONLY AND SHALL EXTEND TO 12" BELOW THE EMBANKMENT SURFACE. GEOTEXTILE FABRIC SHALL BE PLACED BETWEEN THE POROUS BACKFILL AND REPLACED EXCAVATION ADJACENT TO THE STRUCTURE. IT SHALL TURN UNDER THE BOTTOM OF THE POROUS BACKFILL AND RETURN 6" ABOVE THE TOP ELEVATION OF THE WEEPHOLE.

WEEPHOLES SHALL BE PLACED 6" TO 12" ABOVE THE NORMAL WATER ELEVATION OR GROUND LINE AND SHALL HAVE A MAXIMUM SPACING OF 10'-0". A MINIMUM OF ONE WEEPHOLE SHALL BE PROVIDED PER WINGWALL.

PREFORMED EXPANSION JOINT FILLER: PREFORMED EXPANSION JOINT FILLER (PEJF) CONFORMING TO CMS 705.03, 1 INCH THICK, SHALL BE PLACED ABOVE THE FOOTING BETWEEN THE SIDES OF THE BOX CULVERT AND THE ENDS OF THE WINGWALLS. PAYMENT FOR MATERIALS AND INSTALLATION SHALL BE INCLUDED WITH ITEM 516 - 1" PREFORMED EXPANSION JOINT FILLER.

SEALING OF FORESLOPE WALL AND WINGWALLS: ALL EXPOSED FORESLOPE WALL AND WINGWALL CONCRETE SHALL BE SEALED WITH EPOXY-URETHANE SEALER. THE LIMITS SHALL BE AS SHOWN IN THE DIAGRAMS BELOW. PAYMENT FOR THE EPOXY-URETHANE SEALER SHALL BE PER ITEM 512 - SEALING OF CONCRETE SURFACES.

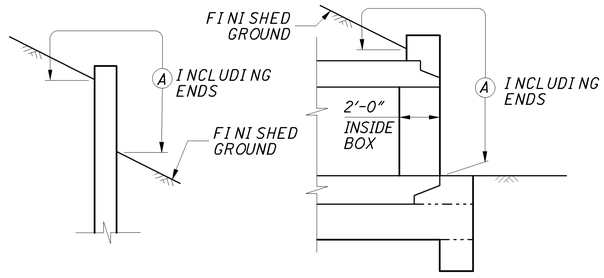

WINGWALL

FORESLOPE WALL AND PRECAST BOX
(CULVERT OUTLET BEVEL SHOWN)

LIMITS OF ITEM 512-SEALING CONCRETE SURFACES

(A) - SEAL ENTIRE CONCRETE SURFACE AREA

WATERPROOFING: TYPE 2 WATERPROOFING, PER CMS 512.09 AND 711.25, SHALL EXTEND VERTICALLY DOWN THE ENTIRE SIDES OF THE PRECAST CULVERT SECTIONS FOR ALL PORTIONS OF THE CULVERT WHICH SHALL BE IN CONTACT WITH THE BACKFILL. PAYMENT FOR THE MEMBRANE WATERPROOFING SHALL BE AT THE CONTRACT PRICE BID PER SQUARE YARD FOR ITEM 512 - TYPE 2 WATERPROOFING.

TYPE 2 WATERPROOFING, PER CMS 512.09 AND 711.25 SHALL BE APPLIED TO THE ENTIRE TOP SURFACE OF THE PRECAST CULVERT SECTIONS AND SHALL EXTEND ONE FOOT VERTICALLY DOWN THE SIDES FOR ALL PORTIONS OF THE CULVERT WHICH SHALL BE IN CONTACT WITH THE BACKFILL. PAYMENT FOR THE MEMBRANE WATERPROOFING SHALL BE AT THE CONTRACT PRICE BID PER SQUARE YARD FOR ITEM 512 - TYPE 2 WATERPROOFING.

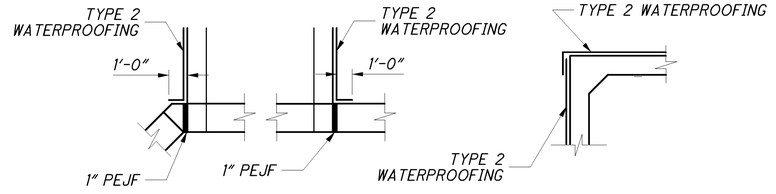

PLAN VIEW SECTION VIEW

WATERPROOFING DETAILS

ESTIMATED QUANTITIES

02/IMS/BR/		ITEM	EXTENSION	TOTAL	UNIT	DESCRIPTION	SEE SHEET
1		202	11201	1	LUMP	PORTIONS OF STRUCTURE REMOVED, AS PER PLAN	4/6
1		503	11100	1	LUMP	COFFERDAMS AND EXCAVATION BRACING	
1		503	21300	1	LUMP	UNCLASSIFIED EXCAVATION	
3938		509	10000	3938	POUND	EPOXY COATED REINFORCING STEEL	
12		511	46000	12	CU YD	CLASS C CONCRETE	
32		511	46500	32	CU YD	CLASS C CONCRETE, FOOTING	
2		511	46600	2	CU YD	CLASS C CONCRETE, HEADWALL	
58		512	10100	58	SQ YD	SEALING OF CONCRETE SURFACES (EPOXY-URETHANE)	
519		512	33000	519	SQ YD	TYPE 2 WATERPROOFING	
28		516	13600	28	SQ FT	1" PREFORMED EXPANSION JOINT FILLER	
14		518	21200	14	CU YD	POROUS BACKFILL WITH FILTER FABRIC	
180		601	21070	180	SQ YD	TIED CONCRETE BLOCK MAT, TYPE 3	
46		603	95000	46	FT	10' X 5' CONDUIT, TYPE A, 706.05	
127		603	95001	127	FT	10' X 5' CONDUIT, TYPE A, 706.05, AS PER PLAN	2/6

CALC. BY: SAP DATE: 4/5/2012
CHECK BY: EBS DATE: 5/16/2012

DESIGN AGENCY
PARSONS BRINCKERHOFF
2545 FARMERS DRIVE
SUITE 350
COLUMBUS, OHIO 43235

DESIGNED	DRAWN	REVIEWED	DATE
SAP	BKJ	EBS	05/24/12
CHECKED	REVISED	STRUCTURE FILE NUMBER	
PJL		0201995	

GENERAL NOTES
ALL-75-0652
CULVERT C-38

ALL-75-5.53
PID No. 76691

2 / 6

907
1224

J:\Projects\ALL\76691\structures\C38 Culvert\075_DM001.dgn 21-DEC-2012 11:48AM carmichael

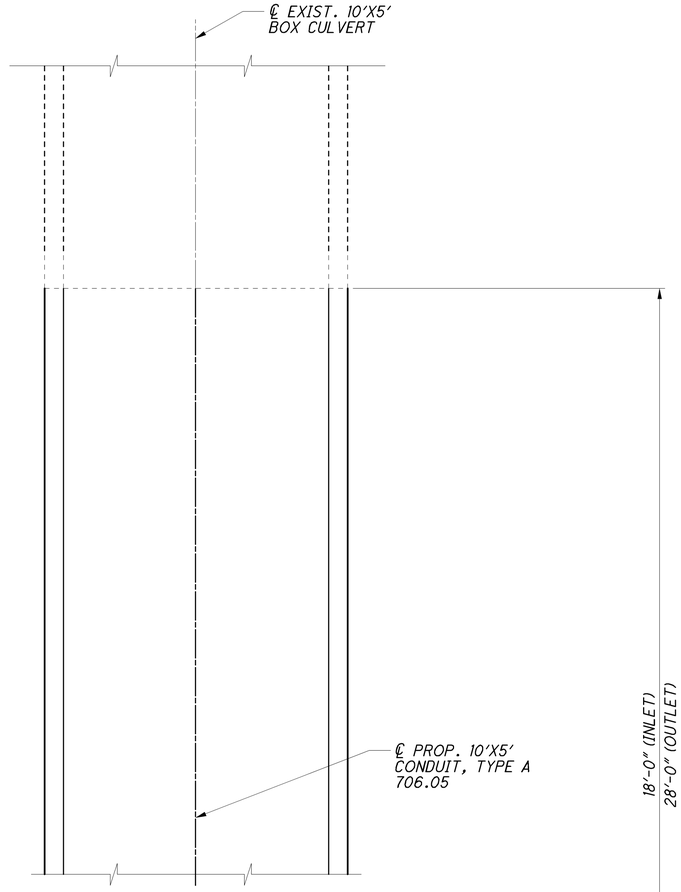

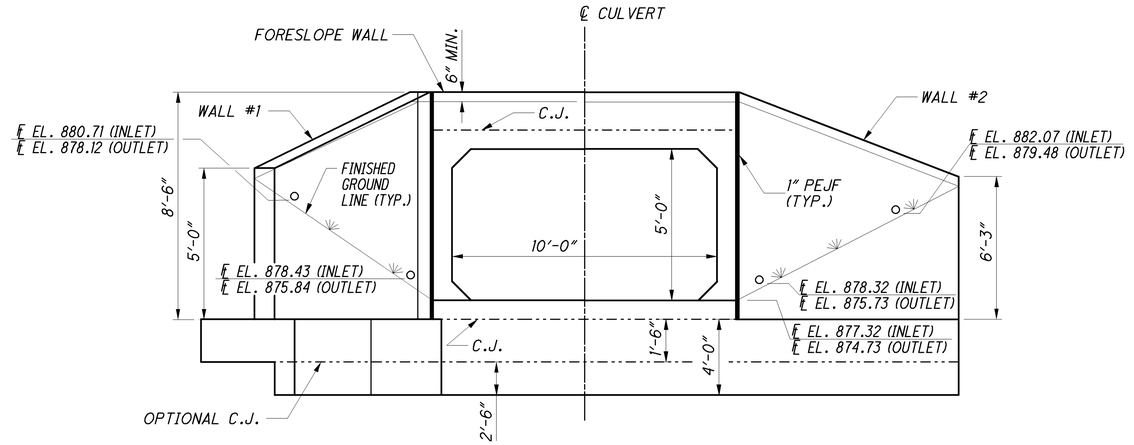

ELEVATION

(INLET & OUTLET)

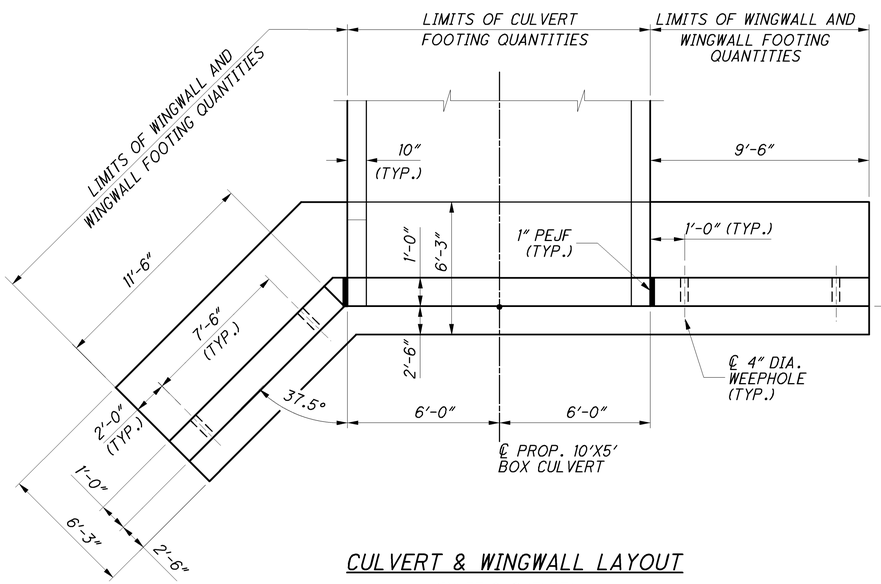

CULVERT & WINGWALL LAYOUT

(INLET & OUTLET)

J:\Projects\ALL\76691\structures\C38 Culvert\075_DM002.dgn 11-SEP-2012 8:52PM reddenj

DESIGN AGENCY
PARSONS BRINCKERHOFF
2545 FARMERS DRIVE
SUITE 350
COLUMBUS, OHIO 43235

DESIGNED	DRAWN	REVIEWED	DATE
SAP	BKJ	EBS	05/24/12
CHECKED	REVISED	STRUCTURE FILE NUMBER	
PJL		0201995	

CULVERT EXTENTION PLAN & ELEV

ALL-075-0652
CULVERT C-38

ALL-75-5.53
PID No. 76691

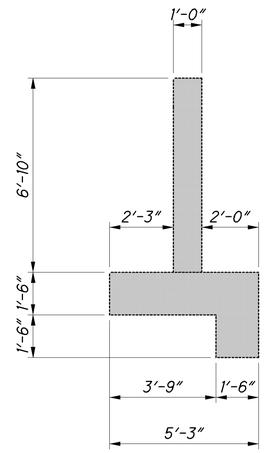

SECTION A-A

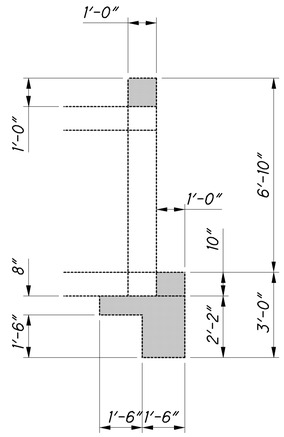

SECTION B-B

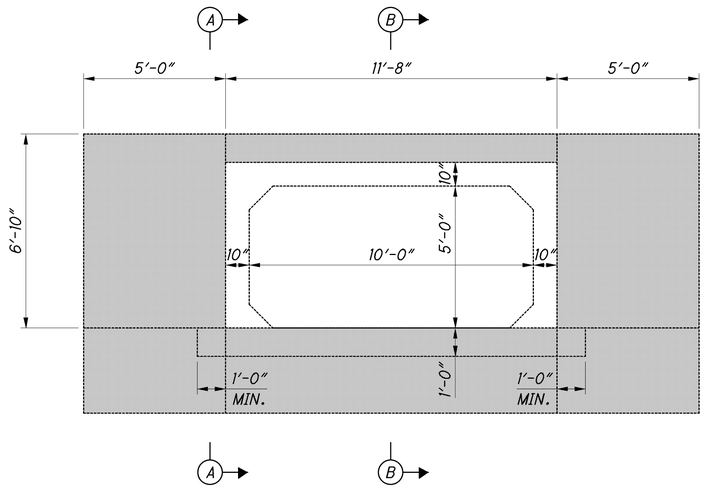

ELEVATION - EXISTING HEADWALL

LEGEND:

PORTION OF EXISTING HEADWALL OR FOOTING TO BE REMOVED

J:\Projects\ALL\76691\structures\C38 Culvert\075_DM004.dgn 11-SEP-2012 8:52PM reddenj

DESIGN AGENCY
PARSONS BRINCKERHOFF
2545 FARMERS DRIVE
SUITE 350
COLUMBUS, OHIO 43235

DESIGNED	DRAWN	REVIEWED	DATE
SAP	BKJ	EBS	05/12/24
CHECKED	REVISED	STRUCTURE FILE NUMBER	
PJL		0201995	

CULVERT EXTENSION DETAILS
ALL-075-0652
CULVERT C-38

ALL-75-5.53
PID No. 76691

909
1224

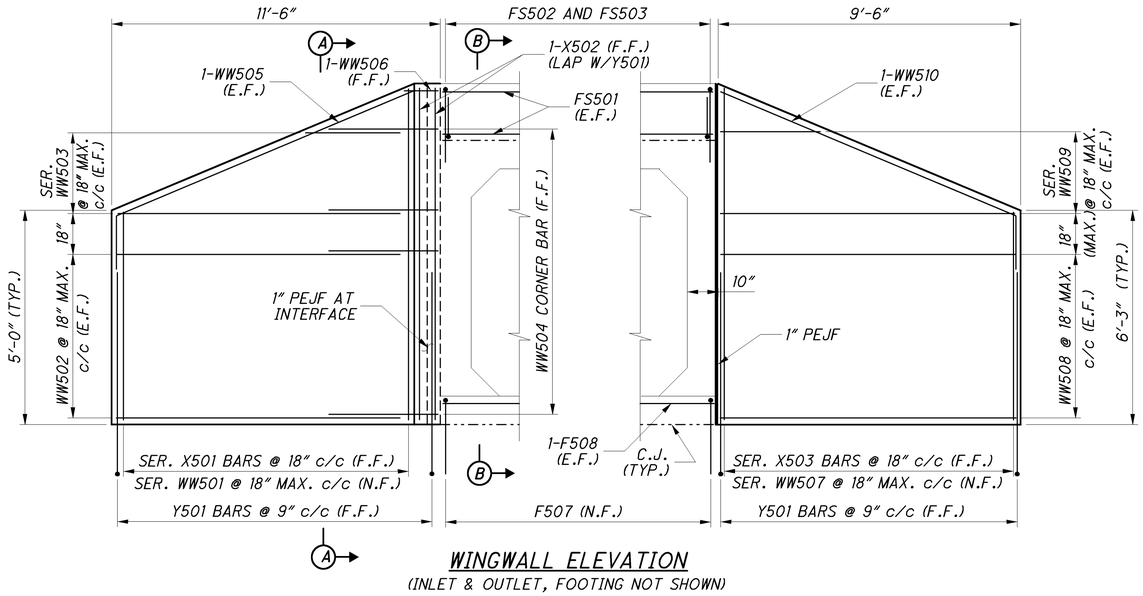

WINGWALL ELEVATION

(INLET & OUTLET, FOOTING NOT SHOWN)

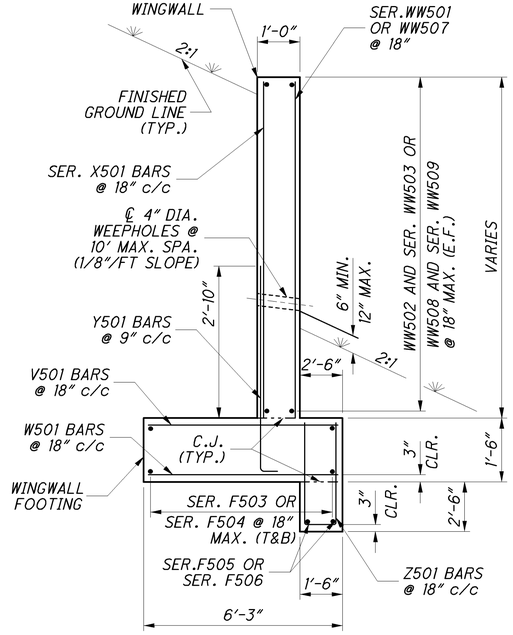

SECTION A-A

(POROUS BACKFILL NOT SHOWN FOR CLARITY)

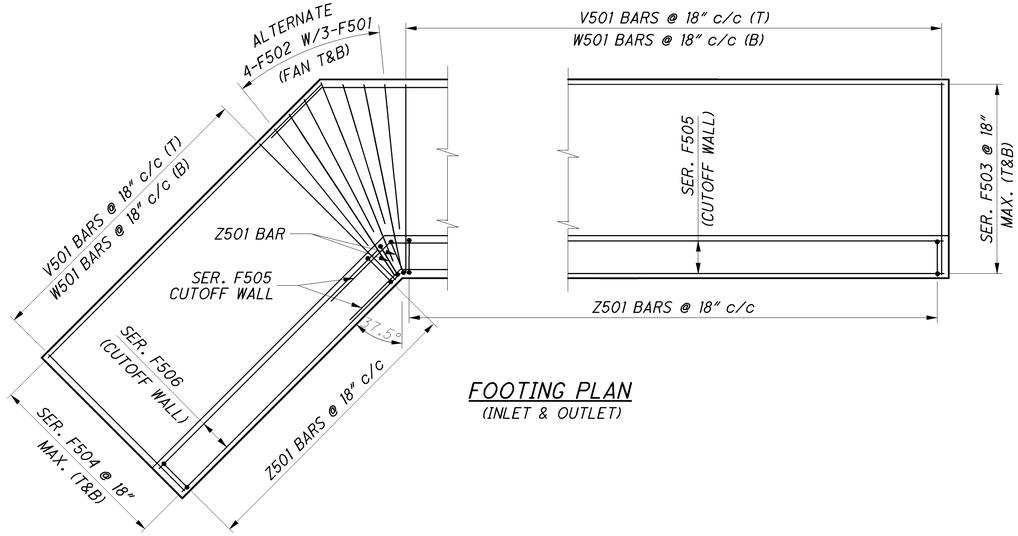

FOOTING PLAN

(INLET & OUTLET)

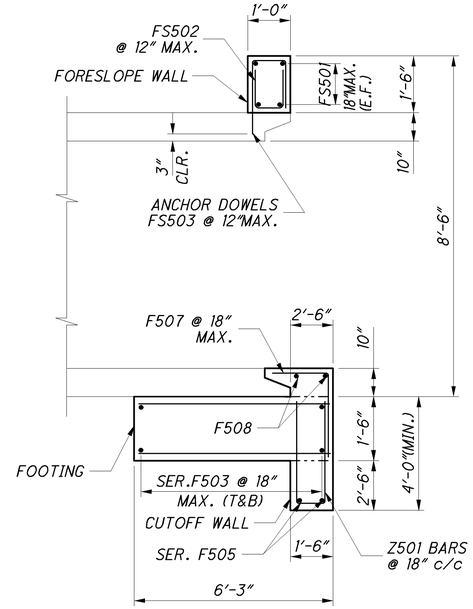

SECTION B-B

(CULVERT INLET BEVEL SHOWN)

NOTES

1. FOR CULVERT LOCATION PLAN, SEE SHEET 1/6.
2. THE BAR SIZE NUMBER IS SPECIFIED ON THE PLANS IN THE BAR MARK COLUMN. THE FIRST DIGIT INDICATES THE BAR SIZE NUMBER. FOR EXAMPLE, WW501 IS A NO.5 BAR. BAR DIMENSIONS SHOWN ARE OUT TO OUT. ALL REINFORCING STEEL SHALL BE EPOXY COATED.
3. THE LAP SPLICE LENGTHS USED IN THESE DETAILS ARE AS FOLLOWS: 2'-5" FOR #5 BARS; 2'-11" FOR #6 BARS.

θ = ℄ CULVERT SKEW FROM LINE NORMAL TO ROADWAY (ROUNDED TO NEAREST 15° INCREMENT FROM 0° TO 45°)

DESIGN AGENCY
PARSONS BRINCKERHOFF
2545 FARMERS DRIVE
SUITE 350
COLUMBUS, OHIO 43235

DESIGNED	DRAWN	REVIEWED	DATE
SAP	BKJ	EBS	05/24/12
CHECKED	REVISED	STRUCTURE FILE NUMBER	
PJL		0201995	

HEADWALL DETAILS
ALL-075-0652
CULVERT C-38

ALL-75-5.53
PID No. 76691

910
1224

J:\Projects\ALL\76691\structures\C38 Culvert\075_DM005.dgn 11-SEP-2012 8:52PM reddenj

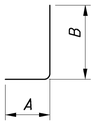

TYPE-1

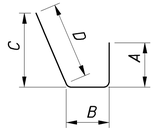

TYPE-2

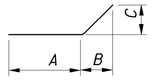

TYPE-3

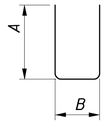

TYPE-5

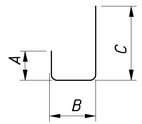

TYPE-7

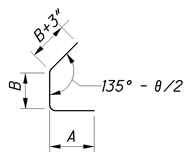

TYPE-8

NOTE:
INLET AND OUTLET HEADWALLS ARE IDENTICAL, THE REINFORCING SCHEDULE PROVIDED INCLUDES BAR QUANTITIES AND WEIGHTS FOR ONLY ONE COMPLETE HEADWALL.

TYPE B HEADWALL REINFORCING SCHEDULE

BAR MARK	NUMBER	LENGTH	WEIGHT (LBS.)	TYPE	BAR TYPE DIMENSIONS A	B	C	D	INC.
					WINGWALLS				
	1	4'- 10"							
X501	SERIES	TO	62	STR.					0'- 5 1/4"
	of 9	8'- 4"							
X502	2	8'- 4"	18	STR.					
	1	6'- 1"							
X503	SERIES	TO	61	STR.					0'- 3 7/8"
	of 8	8'- 4"							
Y501	32	4'- 5"	149	1	0'- 6"	4'- 1"			
	1	4'- 10"							
WW501	SERIES	TO	62	STR.					0'- 5 1/4"
	of 9	8'- 4"							
WW502	8	11'- 2"	94	STR.					
	2	3'- 9"							
WW503	SERIES	TO	47	STR.					3'- 8 1/2"
	of 3	11'- 2"							
WW504	7	3'- 8"	27	2	0'- 7"	0'- 3"	2'- 4"	2'- 11"	
WW505	2	14'- 1"	30	3	2'- 5"	3'- 4"	11'- 2"		
WW506	1	1'- 3"	2	8	0'- 7"	0'- 3"			
	1	6'- 1"							
WW507	SERIES	TO	61	STR.					0'- 3 7/8"
	of 8	8'- 4"							
WW508	8	9'- 2"	77	STR.					
	2	4'- 7"							
WW509	SERIES	TO	29	STR.					4'- 7 "
	of 2	9'- 2"							
WW510	2	11'- 10"	25	3	2'- 5"	2'- 1"	9'- 2"		
					FOOTING & CUTOFF WALL				
V501	23	5'- 11"	142	STR.					
W501	23	5'- 11"	142	STR.					
Z501	25	8'- 2"	213	5	3'- 7"	1'- 2"			
F501	6	5'- 4"	34	STR.					
F502	8	4'- 2"	35	STR.					
	2	22'- 4"			19'- 10 1/4"				
F503	SERIES	TO	249	3	TO	1'- 5 3/4"	1'- 11 1/4"		0'- 8 3/4"
	of 5	25'- 3"			22'- 9 1/4"				
	2	10'- 2"							
F504	SERIES	TO	122	STR.					0'- 8 3/4"
	of 5	13'- 1"							
	1	22'- 4"			19'- 10 1/4"				
F505	SERIES	TO	48	3	TO	1'- 5 3/4"	1'- 11 1/4"		0'- 7 1/8"
	2	22'- 11"			20'- 5 1/4"				
	1	10'- 2"							
F506	SERIES	TO	22	STR.					0'- 7 "
	2	10'- 9"							
F507	9	4'- 5"	42	1	2'- 6"	2'- 0"			
F508	2	11'- 4"	24	STR.					
					FORESLOPE WALL				
FS501	4	11'- 4"	48	STR.					
FS502	13	3'- 5"	47	5	1'- 6"	0'- 8"			
FS503	13	4'- 2"	57	7	1'- 6"	0'- 8"	2'- 3"		
WEIGHT (INLET END ONLY)			1,969						
WEIGHT (OUTLET END ONLY)			1,969						
TOTAL WEIGHT (CARRIED TO EST. QUANTITIES)			3,938						

DESIGN AGENCY
PARSONS BRINCKERHOFF
2545 FARMERS DRIVE
SUITE 350
COLUMBUS, OHIO 43235

DESIGNED	DRAWN	REVIEWED	DATE
SAP	BKJ	EBS	05/24/12
CHECKED	REVISED	STRUCTURE FILE NUMBER	
PJL		0201995	

REINFOCING STEEL SCHEDULE
ALL-075-0652
CULVERT C-38

ALL-75-5.53
PID No. 76691

J:\Projects\ALL\76691\structures\C38 Culvert\075_DM003.dgn 11-SEP-2012 8:52PM reddenj

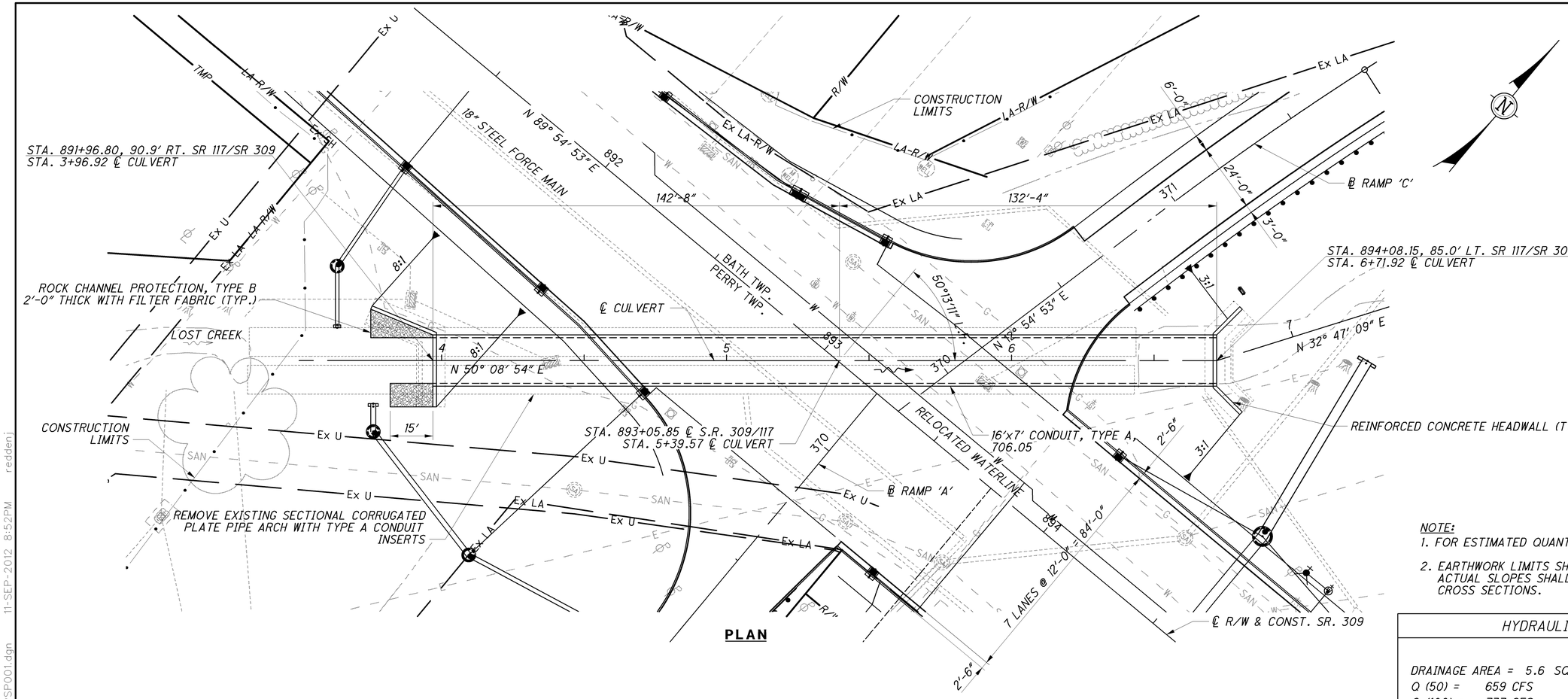

PLAN

NOTE:

1. *FOR ESTIMATED QUANTITIES SEE SHEET* 2/9
2. *EARTHWORK LIMITS SHOWN ARE APPROXIMATE. ACTUAL SLOPES SHALL CONFORM TO PLAN CROSS SECTIONS.*

HYDRAULIC DATA			
DRAINAGE AREA = 5.6 SQ. MILES			
Q (50) =	659 CFS	V (50) =	2.5 FT/S
Q (100) =	737 CFS	V (100) =	2.4 FT/S

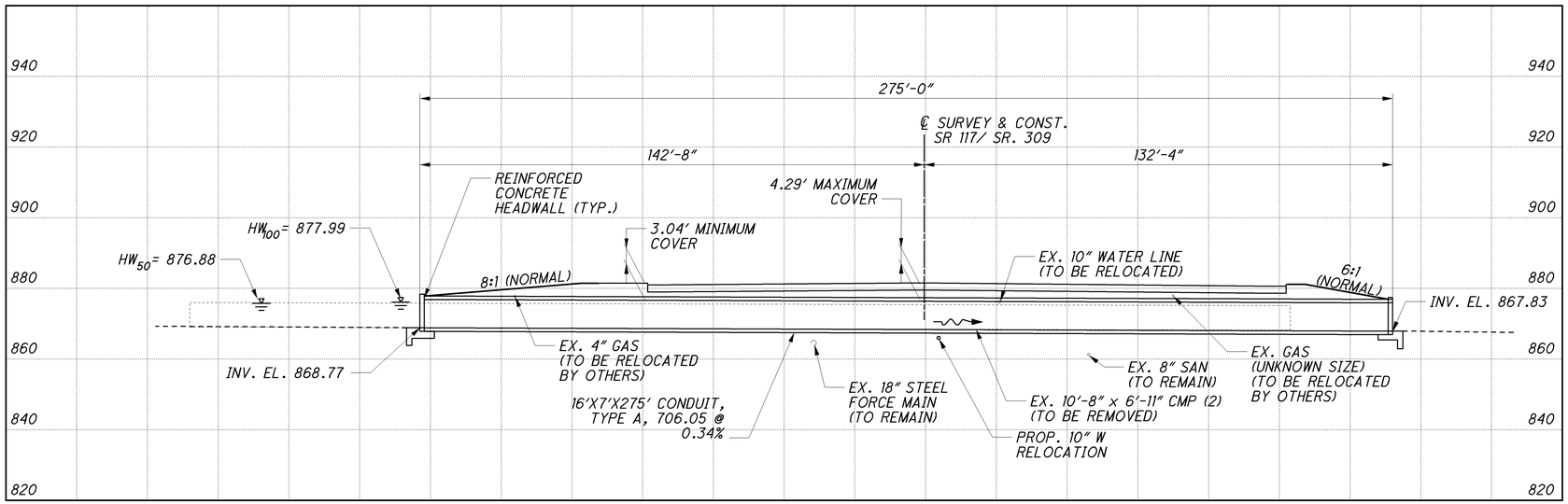

PROFILE

EXISTING STRUCTURE
TYPE:TWIN CORRUGATED PLATE PIPE ARCHES WITH 6'-4" INSERTS
SIZE: 10'-8" X 6'-11" X 312'
SKEW: 50°

DESIGN AGENCY
PARSONS BRINCKERHOFF
2545 FARMERS DRIVE
SUITE 350
COLUMBUS, OHIO 43235

DESIGNED	DRAWN	REVIEWED	DATE
SAP	LEL	EBS	05/24/12
CHECKED	REVISED	STRUCTURE FILE NUMBER	
LEL		0204129	

CULVERT PLAN & PROFILE
ALL-117-1844
S.R. 117/S.R. 309 OVER LOST CREEK

ALL-75-5.53
PID No. 76691

1 / 9

912
1224

J:\Projects\ALL\76691\structures\Lost Creek Culvert\309 Over Lost Creek\075_071IPSP001.dgn 11-SEP-2012 8:52PM reddenj

GENERAL NOTES

DESIGN SPECIFICATIONS: THIS STANDARD DRAWING CONFORMS TO "STANDARD SPECIFICATIONS FOR HIGHWAY BRIDGES" ADOPTED BY THE AMERICAN ASSOCIATION OF STATE HIGHWAY AND TRANSPORTATION OFFICIALS, 2010 AND THE ODOT BRIDGE DESIGN MANUAL.

DESIGN DATA:

INTERNAL ANGLE OF FRICTION = 30 DEGREES
COEFFICIENT OF FRICTION = 0.30
UNIT WEIGHT OF SOIL = 120 PCF
UNIT WEIGHT OF CONCRETE = 150 PCF
SLOPE OF BACKFILL = 2:1
MAXIMUM FOUNDATION BEARING PRESSURE = 2000 P.S.F.

CONCRETE CLASS C - COMPRESSIVE STRENGTH 4000 PSI
(FOOTING, WINGWALL AND FORESLOPE WALL)

REINFORCING STEEL - ASTM A615, A616, OR A617
GRADE 60 MINIMUM YIELD STRENGTH
60,000 PSI (ALL REINFORCING SHALL BE EPOXY COATED)

PRECAST CONCRETE: AT THE OPTION OF THE CONTRACTOR, PRECAST HEADWALLS MAY BE FURNISHED PER ITEM 602.03 PRECAST STRUCTURES, PROVIDED THEY ARE SIZED TO MEET THE SOIL LOADING AND RESISTANCE PARAMETERS, AND MEET OR EXCEED THE MATERIAL STRENGTHS AND WALL LIMITS AS SHOWN AND SPECIFIED. FULL COMPENSATION FOR THE PRECAST SUBSTITUTION IS THE VOLUME OF CONCRETE AND THE WEIGHT OF THE REINFORCING STEEL FOR THE CORRESPONDING CAST-IN-PLACE STRUCTURE.

FORESLOPE WALL ANCHOR DOWELS: ANCHOR PER CMS 510 WITH NONSHRINK, NONMETALLIC GROUT CONFORMING TO CMS 705.20 AND TO A DEPTH OF 5 ". PAYMENT FOR DOWEL HOLES, GROUT AND INSTALLATION SHALL BE INCLUDED WITH ITEM 511.

AS AN ALTERNATIVE TO RESIN BONDING, THREADED INSERTS OR NONPROTRUDING MECHANICAL CONNECTORS CAST INTO THE CULVERT BY THE MANUFACTURER MAY BE USED PROVIDED THEY CAN RESIST AN ULTIMATE PULL-OUT STRENGTH OF 12 KIPS AND MAINTAIN A MINIMUM COVER OF 3 INCHES AT THE BOTTOM OF THE CULVERT SLAB. MECHANICAL CONNECTORS MUST PROVIDE AN "L-SHAPED" BAR INSIDE THE CULVERT WITH A MINIMUM HORIZONTAL LENGTH OF 12 INCHES. PAYMENT FOR INSERTS OR MECHANICAL CONNECTORS SHALL BE INCLUDED WITH ITEM 603.

BACKFILL LIMITATION: WHEN THE DESIGN HEIGHT IS GREATER THAN 10 FT, THE BACKFILL BEHIND THE WINGWALLS SHALL NOT BE PLACED HIGHER THAN THE ELEVATION OF THE SOIL ABOVE THE TOE. WHEN THE SOIL ABOVE THE TOE IS AT ITS FINISHED ELEVATION, THE REMAINDER OF THE BACKFILL MAY BE PLACED.

POROUS BACKFILL WITH FILTER FABRIC 1'-6" THICK SHALL BE PLACED BEHIND THE WINGWALLS ONLY AND SHALL EXTEND TO 12" BELOW THE EMBANKMENT SURFACE. GEOTEXTILE FABRIC SHALL BE PLACED BETWEEN THE POROUS BACKFILL AND REPLACED EXCAVATION ADJACENT TO THE STRUCTURE. IT SHALL TURN UNDER THE BOTTOM OF THE POROUS BACKFILL AND RETURN 6" ABOVE THE TOP ELEVATION OF THE WEEPHOLE. WEEPHOLES SHALL BE PLACED 6" TO 12" ABOVE THE NORMAL WATER ELEVATION OR GROUND LINE AND SHALL HAVE A MAXIMUM SPACING OF 10'-0". A MINIMUM OF ONE WEEPHOLE SHALL BE PROVIDED PER WINGWALL.

PREFORMED EXPANSION JOINT FILLER: PREFORMED EXPANSION JOINT FILLER (PEJF) CONFORMING TO CMS 705.03, 1 INCH THICK, SHALL BE PLACED ABOVE THE FOOTING BETWEEN THE SIDES OF THE BOX CULVERT AND THE ENDS OF THE WINGWALLS. PAYMENT FOR MATERIALS AND INSTALLATION SHALL BE INCLUDED WITH ITEM 516 - 1" PREFORMED EXPANSION JOINT FILLER.

SEALING OF FORESLOPE WALL AND WINGWALLS: ALL EXPOSED FORESLOPE WALL AND WINGWALL CONCRETE SHALL BE SEALED WITH EPOXY-URETHANE SEALER. THE LIMITS SHALL BE AS SHOWN IN THE DIAGRAMS BELOW. PAYMENT FOR THE EPOXY-URETHANE SEALER SHALL BE PER ITEM 512 - SEALING OF CONCRETE SURFACES.

WATERPROOFING: TYPE 2 WATERPROOFING, PER CMS 512.09 AND 711.25, SHALL EXTEND VERTICALLY DOWN THE ENTIRE SIDES OF THE PRECAST CULVERT SECTIONS FOR ALL PORTIONS OF THE CULVERT WHICH SHALL BE IN CONTACT WITH THE BACKFILL. PAYMENT FOR THE MEMBRANE WATERPROOFING SHALL BE AT THE CONTRACT PRICE BID PER SQUARE YARD FOR ITEM 512 - TYPE 2 WATERPROOFING.

TYPE 2 WATERPROOFING, PER CMS 512.09 AND 711.25 SHALL BE APPLIED TO THE ENTIRE TOP SURFACE OF THE PRECAST CULVERT SECTIONS AND SHALL EXTEND ONE FOOT VERTICALLY DOWN THE SIDES FOR ALL PORTIONS OF THE CULVERT WHICH SHALL BE IN CONTACT WITH THE BACKFILL. PAYMENT FOR THE MEMBRANE WATERPROOFING SHALL BE AT THE CONTRACT PRICE BID PER SQUARE YARD FOR ITEM 512 - TYPE 2 WATERPROOFING.

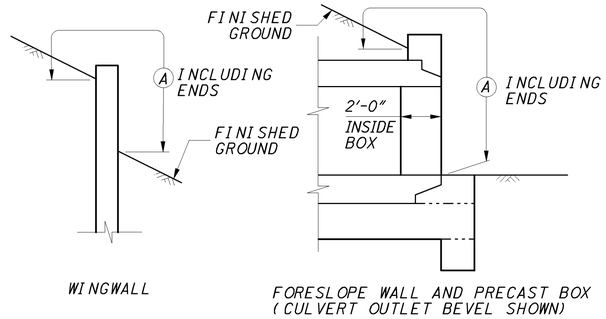

WINGWALL

FORESLOPE WALL AND PRECAST BOX
(CULVERT OUTLET BEVEL SHOWN)

LIMITS OF ITEM 512-SEALING CONCRETE SURFACES

(A) - SEAL ENTIRE CONCRETE SURFACE AREA

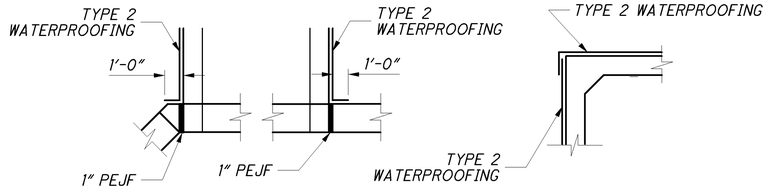

PLAN VIEW

SECTION VIEW

WATERPROOFING DETAILS

ABBREVIATIONS:

APPRX. = APPROXIMATE	N.F. = NEAR FACE
(B) = BOTTOM	P.E.J.F. = PREFORMED EXPANSION JOINT FILLER
BM = BENCH MARK	PROP. = PROPOSED
C.J. = CONSTRUCTION JOINT	P.V.I. = POINT OF VERTICAL INTERSECTION
CLR. = CLEAR	RT. = RIGHT
CONST. = CONSTRUCTION	SHLDR = SHOULDER
C/C = CENTER ON CENTER	SER. = SERIES
DIA. = DIAMETER	S.R. = STATE ROUTE
E.B. = EASTBOUND	STA. = STATION
E.F. = EACH FACE	STR. = STRAIGHT
EL. = ELEVATION	STM = STORM
EX. = EXISTING	(T) = TOP
ELEV. = ELEVATION	T&B = TOP AND BOTTOM
F.F. = FAR FACE	TYP. = TYPICAL
INC. = INCREMENT	VC = VERTICAL CURVE
LF. = LEFT	W.B. = WESTBOUND
MAX. = MAXIMUN	YR. = YEAR
MIN. = MINIMUM	
M.O.T. = MAINTENACE OF TRAFFIC	

ESTIMATED QUANTITIES

02/IMS/BR/		ITEM	EXTENSION	TOTAL	UNIT	DESCRIPTION	SEE SHEET
1		202	11000	1	LUMP	STRUCTURE REMOVED	
1		503	11101	1	LUMP	COFFERDAMS AND EXCAVATION BRACING, AS PER PLAN	6/9, 7/9
1		503	21300	1	LUMP	UNCLASSIFIED EXCAVATION	
6341		509	10000	6341	POUND	EPOXY COATED REINFORCING STEEL	
85		511	46200	85	CU YD	CLASS C CONCRETE	
76		512	10100	76	SQ YD	SEALING OF CONCRETE SURFACES (EPOXY-URETHANE)	
1170		512	33000	1170	SQ YD	TYPE 2 WATERPROOFING	
53		516	13600	53	SQ FT	1" PREFORMED EXPANSION JOINT FILLER	
1		518	21230	1	LUMP	POROUS BACKFILL WITH FILTER FABRIC	
18		601	32104	18	CU YD	ROCK CHANNEL PROTECTION, TYPE B WITH FABRIC FILTER	
275		603	96448	275	FT	16" X 7" CONDUIT, TYPE A, 706.05	

CALC. BY: SAP DATE: 4/10/2012
CHECK BY: EBS DATE: 5/21/2012

DESIGN AGENCY
PARSONS BRINCKERHOFF
2945 FARMERS DRIVE
SUITE 350
COLUMBUS, OHIO 43235

DESIGNED SAP | CHECKED PJL
DRAWN BKJ | REVISED
REVIEWED EBS | DATE 05/24/12
STRUCTURE FILE NUMBER 0204129

GENERAL NOTES
ALL-117-1844
S.R. 117/S.R. 309 OVER LOST CREEK

ALL-75-5.53
PID No. 76691

2 / 9

913
1224

J:\Projects\ALL\76691\structures\Lost Creek Culvert\309 Over Lost Creek\075_DM001.dgn 14-SEP-2012 2:45PM reddenj

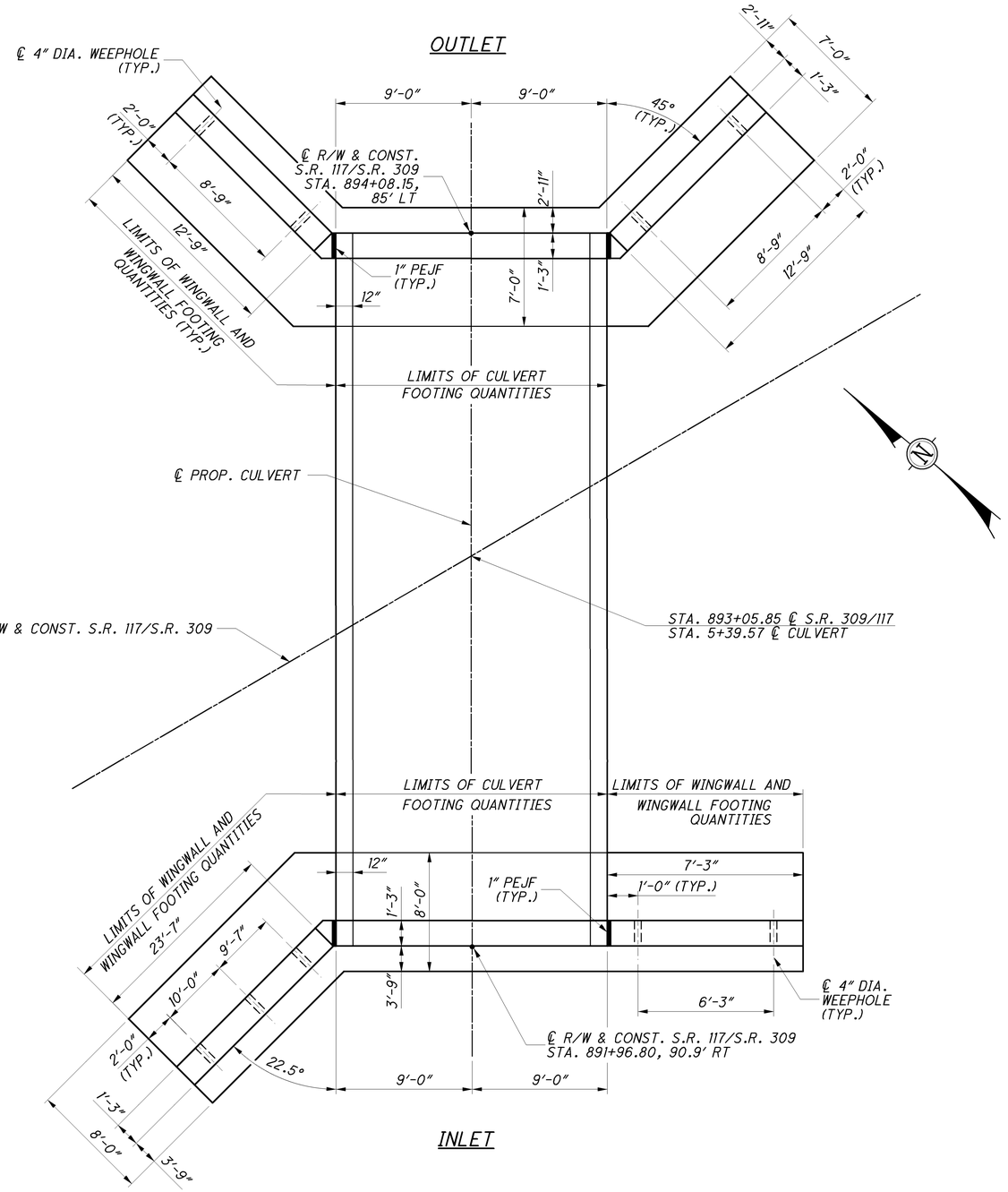

INLET

CULVERT & WINGWALL LAYOUT

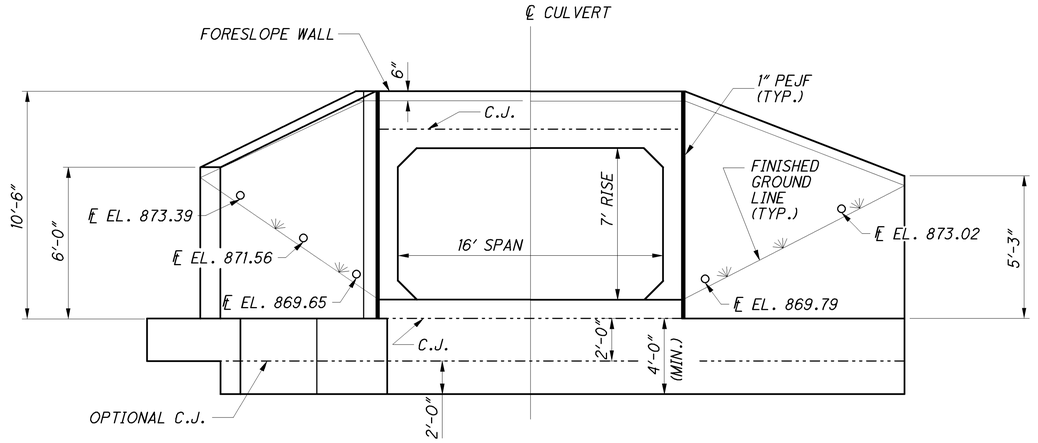

INLET ELEVATION

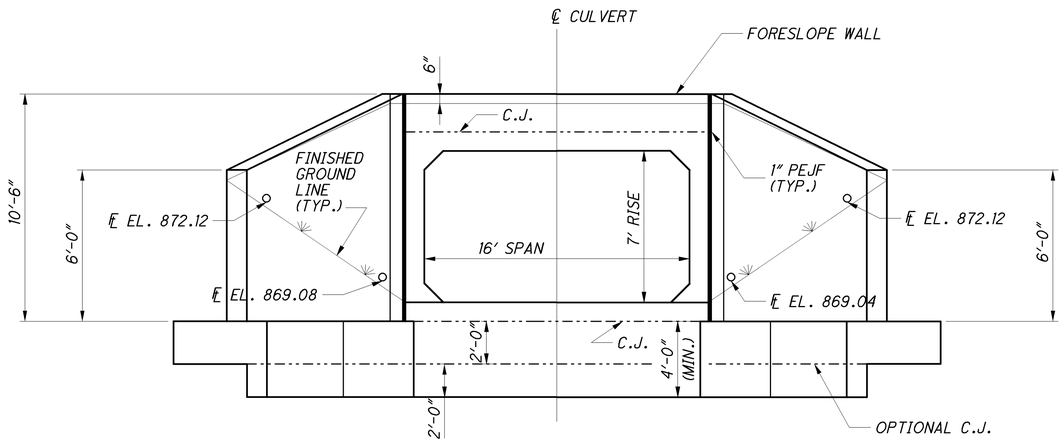

OUTLET ELEVATION

DESIGN AGENCY
PARSONS BRINCKERHOFF
2945 FARMERS DRIVE
SUITE 350
COLUMBUS, OHIO 43235

DESIGNED	DRAWN	REVIEWED	DATE
SAP	TLP	EBS	05/24/12
CHECKED	REVISED	STRUCTURE FILE NUMBER	
PJL		0204129	

CULVERT LAYOUT
ALL-117-1844
S.R. 117/S.R. 309 OVER LOST CREEK

ALL-75-5.53
PID No. 76691

J:\Projects\ALL\76691\structures\Lost Creek Culvert\309 Over Lost Creek\075_DM008.dgn 11-SEP-2012 8:52PM reddenj

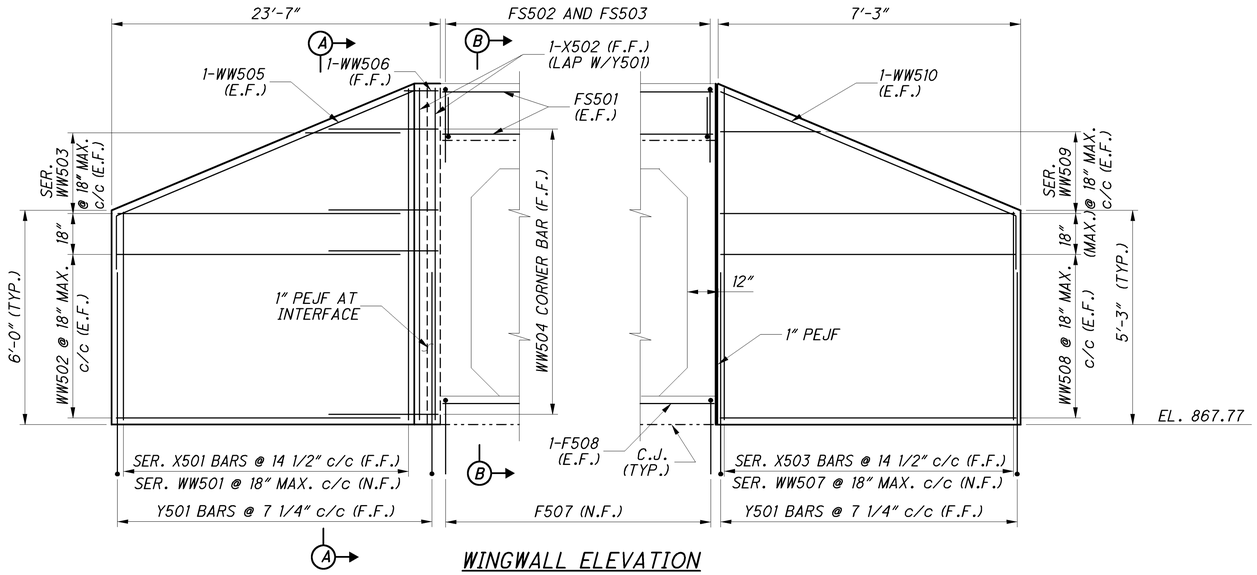

WINGWALL ELEVATION
(INLET, FOOTING NOT SHOWN)

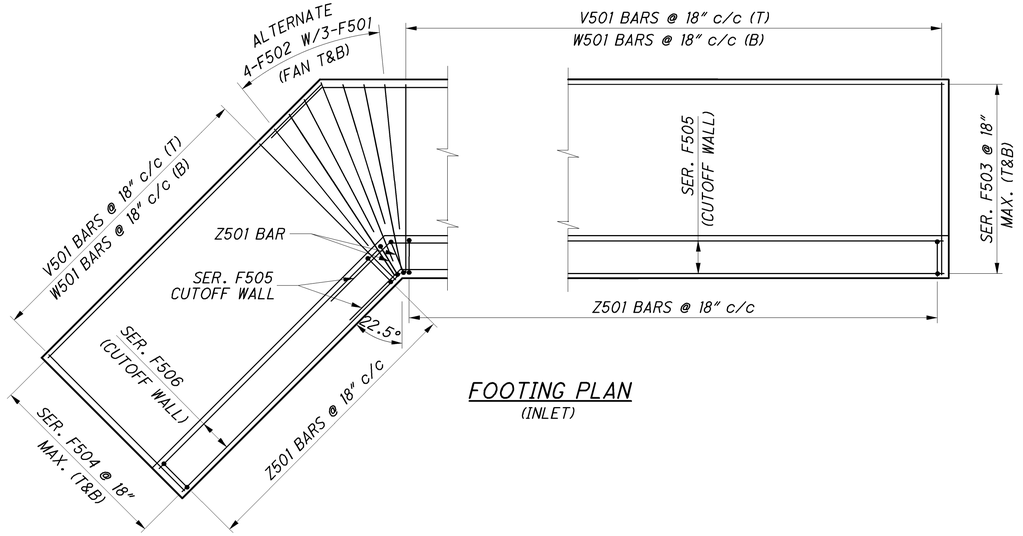

FOOTING PLAN
(INLET)

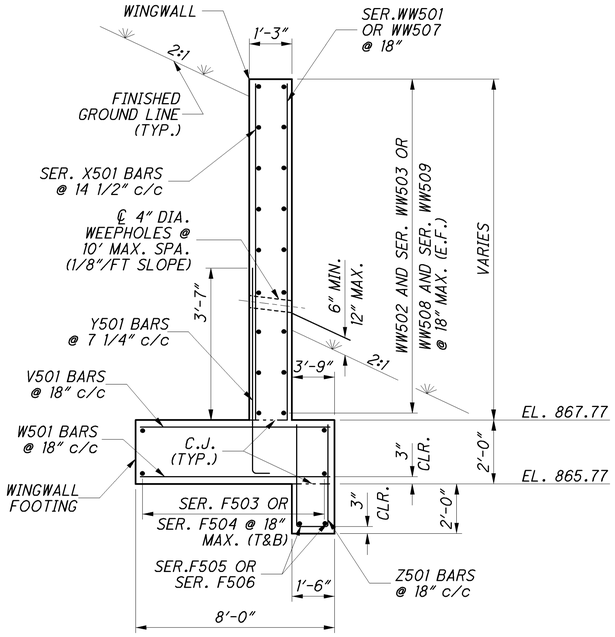

SECTION A-A
(POROUS BACKFILL NOT SHOWN FOR CLARITY)

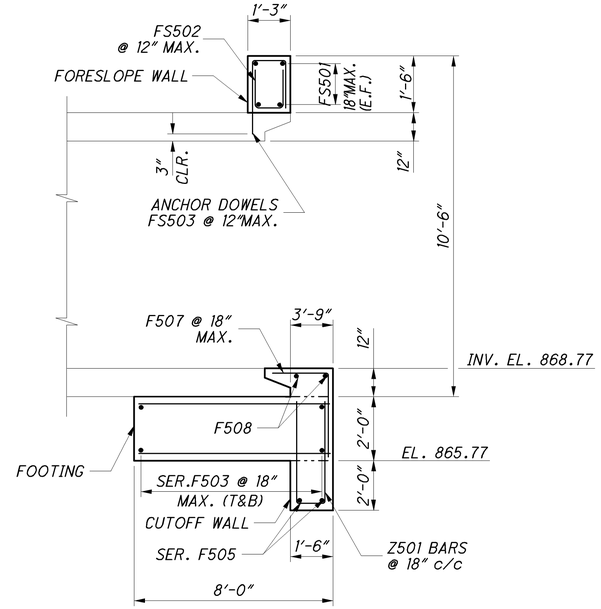

SECTION B-B
(CULVERT INLET BEVEL SHOWN)

NOTES

1. FOR CULVERT LOCATION PLAN, SEE SHEET 3/9.
2. FOR PRECAST BOX CULVERT DETAILS, SEE SHEETS 8/9 & 9/9.
3. THE BAR SIZE NUMBER IS SPECIFIED ON THE PLANS IN THE BAR MARK COLUMN. THE FIRST DIGIT INDICATES THE BAR SIZE NUMBER. FOR EXAMPLE, WW501 IS A NO.5 BAR. BAR DIMENSIONS SHOWN ARE OUT TO OUT. ALL REINFORCING STEEL SHALL BE EPOXY COATED.
4. THE LAP SPLICE LENGTHS USED IN THESE DETAILS ARE AS FOLLOWS: 2'-5" FOR #5 BARS; 2'-11" FOR #6 BARS.
5. FOR REINFORCING SCHEDULE, SEE SHEETS 8/9 & 9/9.
6. THE INTERFACE BETWEEN THE TOP OF FOOTING AND BASE OF WINGWALL STEM SHALL BE INTENTIONALLY ROUGHENED TO A FULL AMPLITUDE OF APPROXIMATELY 1/4" BY MEANS OF A SERRATED TROWEL.

LEGEND:

C.J.	CONSTRUCTION JOINT	N.F.	NEAR FACE
CLR.	CLEAR	SER.	SERIES
DIA.	DIAMETER	STR.	STRAIGHT
E.F.	EACH FACE	(T)	TOP
F.F.	FAR FACE	(B)	BOTTOM
MAX.	MAXIMUM	T&B	TOP AND BOTTOM
MIN.	MINIMUM	TYP.	TYPICAL
PEJF	PREFORMED EXPANSION JOINT FILLER	INC.	INCREMENT

DESIGN AGENCY
PARSONS BRINCKERHOFF
2545 FARMERS DRIVE
SUITE 350
COLUMBUS, OHIO 43235

DESIGNED SAP | DRAWN BKJ | REVIEWED EBS | DATE 05/24/12
CHECKED PJL | REVISED | STRUCTURE FILE NUMBER 0204129

INLET HEADWALL DETAILS
ALL-117-1844
S.R. 117/S.R. 309 OVER LOST CREEK

ALL-75-5.53
PID No. 76691

4 / 9

915
1224

J:\Projects\ALL\76691\structures\Lost Creek Culvert\309 Over Lost Creek\075_DM002.dgn 11-SEP-2012 8:52PM reddenj

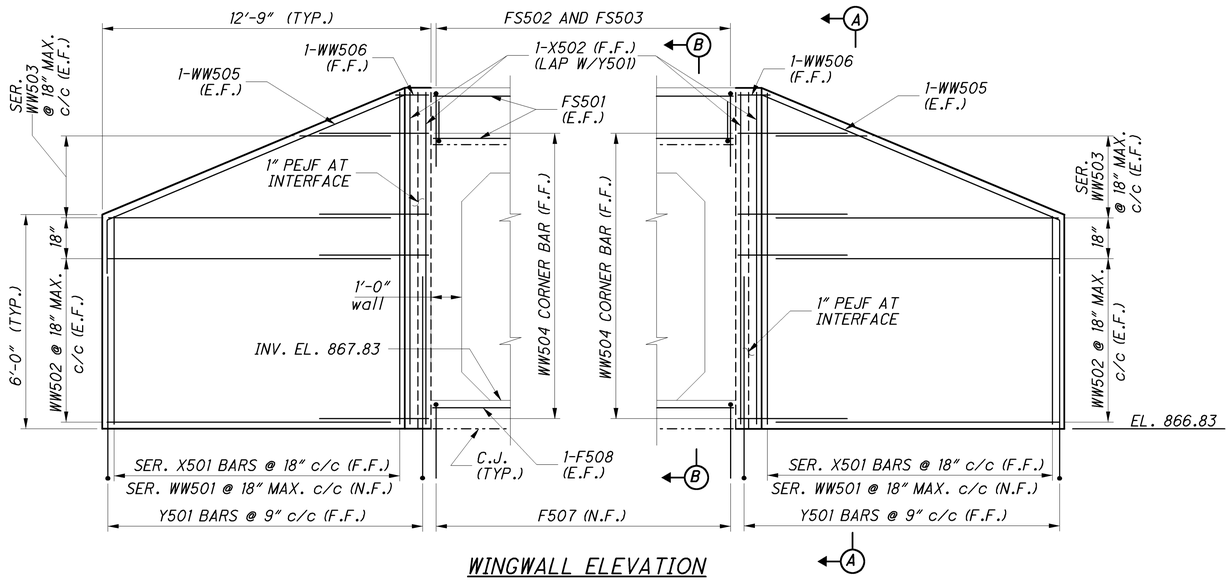

WINGWALL ELEVATION
(OUTLET, FOOTING NOT SHOWN)

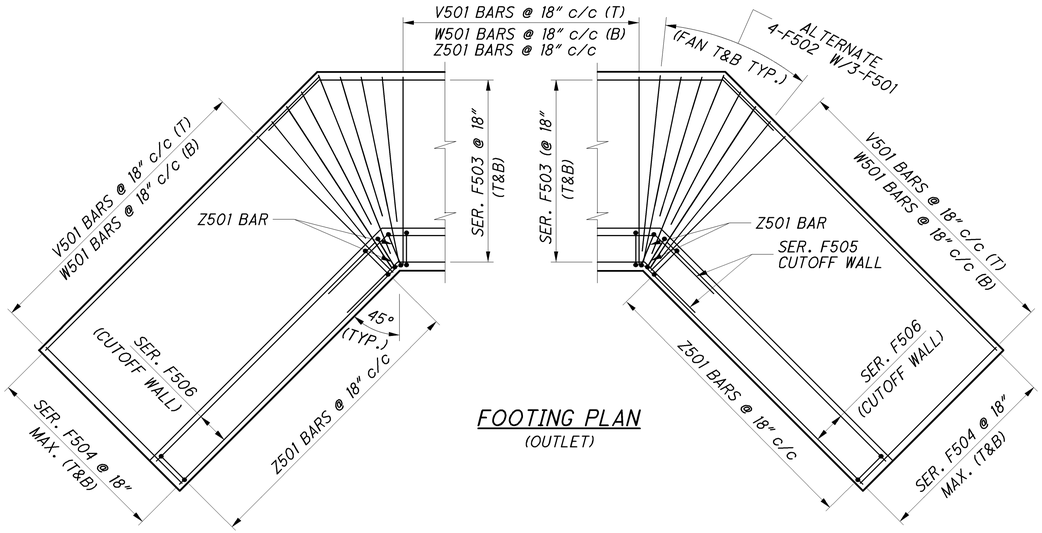

FOOTING PLAN
(OUTLET)

NOTES

1. FOR CULVERT LOCATION PLAN, SEE SHEET 3/9.
2. FOR PRECAST BOX CULVERT DETAILS, SEE SHEETS 8/9 & 9/9.
3. THE BAR SIZE NUMBER IS SPECIFIED ON THE PLANS IN THE BAR MARK COLUMN. THE FIRST DIGIT INDICATES THE BAR SIZE NUMBER. FOR EXAMPLE, WW501 IS A NO.5 BAR. BAR DIMENSIONS SHOWN ARE OUT TO OUT. ALL REINFORCING STEEL SHALL BE EPOXY COATED.
4. THE LAP SPLICE LENGTHS USED IN THESE DETAILS ARE AS FOLLOWS: 2'-5" FOR #5 BARS; 2'-11" FOR #6 BARS.
5. FOR REINFORCING SCHEDULE, SEE SHEETS 8/9 & 9/9.
6. THE INTERFACE BETWEEN THE TOP OF FOOTING AND BASE OF WINGWALL STEM SHALL BE INTENTIONALLY ROUGHENED TO A FULL AMPLITUDE OF APPROXIMATELY 1/4" BY MEANS OF A SERRATED TROWEL.

LEGEND:

C.J.	CONSTRUCTION JOINT	N.F.	NEAR FACE
CLR.	CLEAR	SER.	SERIES
DIA.	DIAMETER	STR.	STRAIGHT
E.F.	EACH FACE	(T)	TOP
F.F.	FAR FACE	(B)	BOTTOM
MAX.	MAXIMUM	T&B	TOP AND BOTTOM
MIN.	MINIMUM	TYP.	TYPICAL
PEJF	PREFORMED EXPANSION JOINT FILLER	INC.	INCREMENT

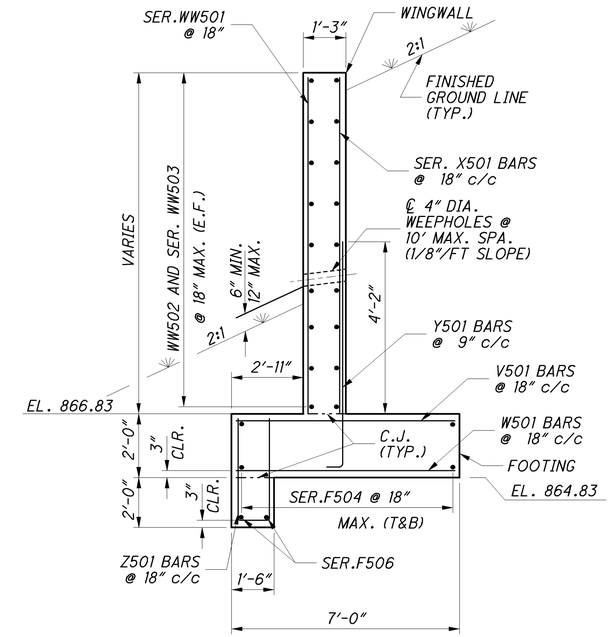

SECTION A-A
(POROUS BACKFILL NOT SHOWN FOR CLARITY)

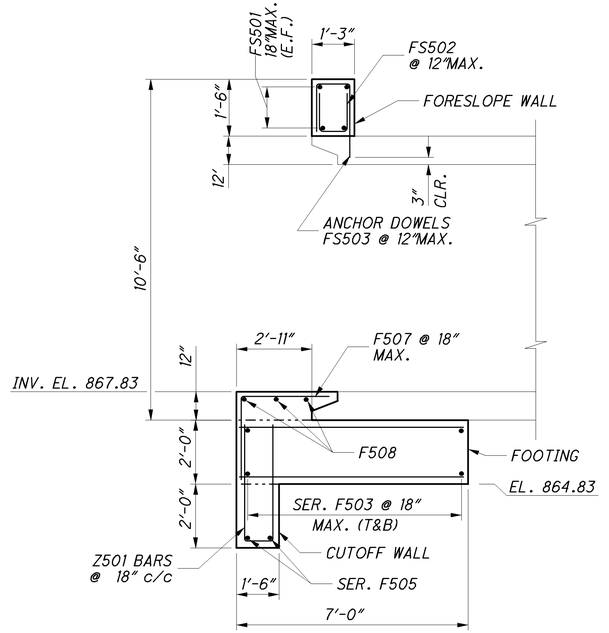

SECTION B-B
(CULVERT INLET BEVEL SHOWN)

DESIGN AGENCY
PARSONS BRINCKERHOFF
2545 FARMERS DRIVE
SUITE 350
COLUMBUS, OHIO 43235

DESIGNED	DRAWN	REVIEWED	DATE
SAP	BKJ	EBS	05/24/12
CHECKED	REVISED	STRUCTURE FILE NUMBER	
PJL		0204129	

OUTLET HEADWALL DETAILS
ALL-75-1844
S.R. 117/S.R. 309 OVER LOST CREEK

ALL-75-5.53
PID No. 76691

5 / 9

916
1224

J:\Projects\ALL\76691\structures\Lost Creek Culvert\309 Over Lost Creek\075_DM004.dgn 11-SEP-2012 8:52PM reddenj

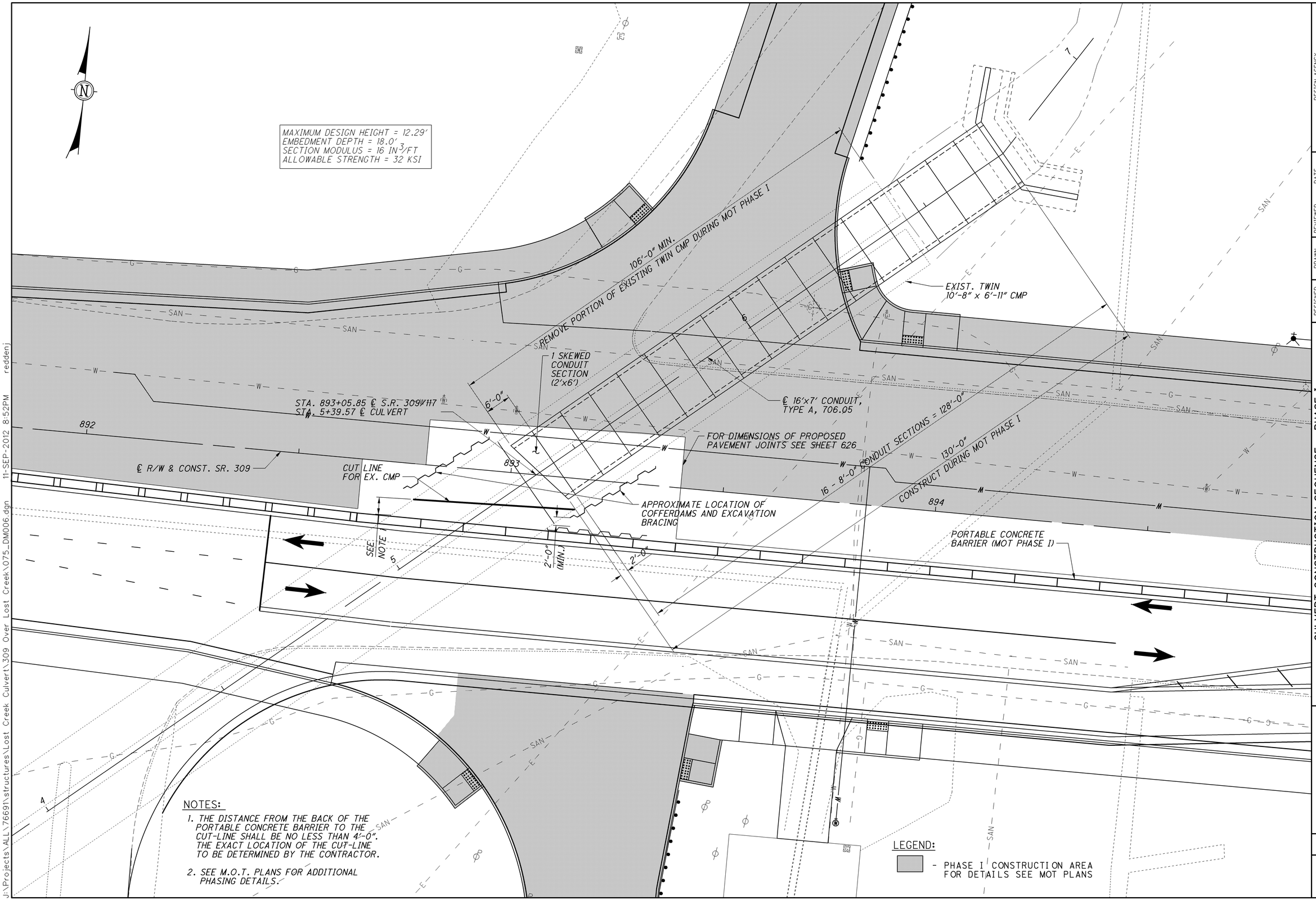

11-SEP-2012 8:52PM redden j:\Projects\ALL\76691\structures\Lost Creek Culvert\309 Over Lost Creek\075_DM006.dgn

DESIGN AGENCY
PARSONS BRINCKERHOFF
2545 FARMERS DRIVE
SUITE 350
COLUMBUS, OHIO 43235

DESIGNED	DRAWN	REVIEWED	DATE
SAP	BKJ	EBS	05/24/12
CHECKED	REVISED	STRUCTURE FILE NUMBER	
PJL		0204129	

CULVERT CONSTRUCTION SEQUENCE - PHASE I
ALL-117-1844
S.R. 117/S.R. 309 OVER LOST CR

ALL-75-5.53
PID No. 76691

6 / 9

917
1224

MAXIMUM DESIGN HEIGHT = 12.29'
EMBEDMENT DEPTH = 18.0'
SECTION MODULUS = 16 IN /FT
ALLOWABLE STRENGTH = 32 KSI

STA. 893+05.85 ℄ S.R. 309/117
STA. 5+39.57 ℄ CULVERT

PORTION OF 16'x7' CONDUIT, CONSTRUCTED DURING PHASE I

892

℄ R/W & CONST. SR. 309

893

894

CUT LINE FOR EX. CMP SEE NOTE 1

FOR DIMENSIONS OF PROPOSED PAVEMENT JOINTS SEE 626.

1 SKEWED CONDUIT SECTION 2' X 6'

℄ 16'x7' CONDUIT, TYPE A, 706.05

6'-0" 6'-0" 7'-0" 6'-0"

PORTABLE CONCRETE BARRIER (MOT PHASE II)

51'-0"
CONSTRUCT DURING MOT PHASE IIA

REMAINDER OF EXIST. TWIN 10'-8" x 6'-11" CMP TO BE REMOVED

15 - 8'-0" CONDUIT SECTIONS = 120'-0"

94'-0"
CONSTRUCT DURING MOT PHASE IIB

NOTES:

1. THE EXACT LOCATION OF THE CUT-LINE TO BE DETERMINED BY THE CONTRACTOR PRIOR TO PHASE I CONSTRUCTION.

2. SEE M.O.T. PLANS FOR ADDITIONAL PHASING DETAILS.

LEGEND:

- PHASE IIA AND IIB CONSTRUCTION AREA FOR DETAILS SEE MOT PLANS

J:\Projects\ALL\76691\structures\Lost Creek Culvert\309 Over Lost Creek\075_DM007.dgn 11-SEP-2012 8:52PM reddenj

DESIGN AGENCY
PARSONS BRINCKERHOFF
2545 FARMERS DRIVE
SUITE 350
COLUMBUS, OHIO 43235

DESIGNED	DRAWN	REVIEWED	DATE
SAP	BKJ	EBS	05/24/12
CHECKED	REVISED	STRUCTURE FILE NUMBER	
PJL		0204129	

CULVERT CONSTRUCTION SEQUENCE - PHASE II

ALL-117-1844
S.R. 117/S.R. 309 OVER LOST CR

ALL-75-5.53
PID No. 76691

7 / 9

918
1224

INLET HEADWALL

TYPE B HEADWALL REINFORCING SCHEDULE

BAR MARK	NUMBER	LENGTH	WEIGHT (LBS.)	TYPE	BAR TYPE DIMENSIONS A	B	C	D	INC.
				WINGWALLS					
	1	5'- 10"							
X501	SERIES	TO	178	STR.					0'- 2 3/4"
	of 21	10'- 4"							
X502	2	10'- 4"	22	STR.					
	1	5'- 1"							
X503	SERIES	TO	57	STR.					0'- 10 1/2"
	of 7	10'- 4"							
Y501	55	5'- 8"	328	1	0'- 6"	5'- 4"			
	1	5'- 10"							
WW501	SERIES	TO	144	STR.					0'- 3 3/8"
	of 17	10'- 4"							
WW502	8	23'- 3"	194	STR.					
	2	7'- 9"							
WW503	SERIES	TO	97	STR.					7'- 9 "
	of 3	23'- 3"							
WW504	7	4'- 7"	34	2	0'- 10"	0'- 7 1/4"	3'- 1/2"	3'- 3 1/4"	
WW505	2	26'- 1"	55	3	2'- 5"	4'- 4"	23'- 3"		
WW506	1	2'- 2"	3	8	0'- 10"	0'- 7 1/4"			
	1	5'- 1"							
WW507	SERIES	TO	49	STR.					1'- 5/8"
	of 6	10'- 4"							
WW508	8	6'- 11"	58	STR.					
	2	1'- 9"							
WW509	SERIES	TO	37	STR.					1'- 8 3/4"
	of 4	6'- 11"							
WW510	2	11'- 0"	23	3	2'- 5"	5'- 1"	6'- 11"		
				FOOTING & CUTOFF WALL					
V501	32	7'- 8"	256	STR.					
W501	32	7'- 8"	256	STR.					
Z501	34	8'- 2"	290	5	3'- 7"	1'- 2"			
F501	6	6'- 11"	44	STR.					
F502	8	5'- 5"	46	STR.					
	2	25'- 2"			22'- 8 1/2"				
F503	SERIES	TO	405	3	TO	0'- 11 1/4"	2'- 3 "		0'- 10 1/4"
	of 7	30'- 3"			27'- 9 3/4"				
	2	20'- 11"							
F504	SERIES	TO	344	STR.					0'- 10 1/2"
	of 7	26'- 2"							
	1	25'- 2"			22'- 8 1/2"				
F505	SERIES	TO	54	3	TO	0'- 11 1/4"	2'- 3 "		0'- 9 1/8"
	2	25'- 11"			23'- 5 3/4"				
	1	20'- 11"							
F506	SERIES	TO	45	STR.					0'- 10 "
	2	21'- 9"							
F507	13	6'- 4"	86	1	3'- 9"	2'- 8"			
F508	2	17'- 9"	38	STR.					
				FORESLOPE WALL					
FS501	4	17'- 9"	75	STR.					
FS502	19	3'- 0"	60	5	1'- 2"	0'- 11"			
FS503	19	3'- 11"	78	7	1'- 2"	0'- 11"	2'- 1"		
		TOTAL	3,356						

Ohio Department of Transportation

ITEM 603 - 16' X 7' CONDUIT TYPE A, 706.05, AS PER PLAN
ALL REQUIREMENTS OF 706.05 SHALL BE MET
EXCEPT AS DETAILED HEREIN:

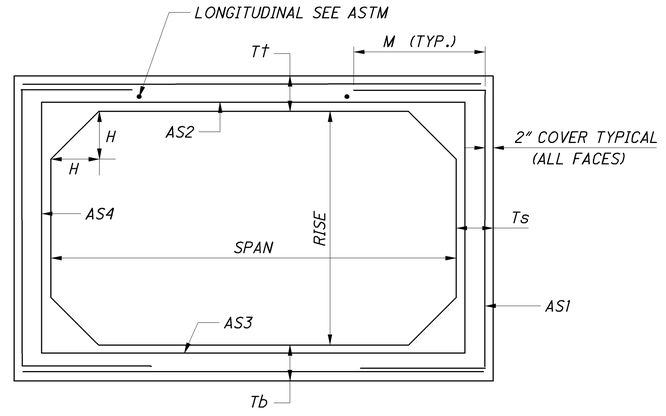

LOADING: HL-93
DEPTH OF COVER 5' TO 6.25 '
FWS = 60 PSF

SPAN	16'
RISE	7'
TT	12"
TB	12"
TS	12"
H	12"
AS1	0.93
AS2	0.93
AS3	0.93
AS4	0.29
M MIN	78"

MAXIMUM SPACING OF THE CIRCUMFERENTIAL REINFORCING SHALL BE 4".

MINIMUM YIELD STRENGTH FOR REINFORCING SHALL BE 60 KSI.

MINIMUM CONCRETE COMPRESSIVE STRENGTH SHALL BE 5000 PSI.

AS MIN = 0.002 X GROSS SECTION AREA REINFORCING UNITS OF SQ IN/FT

BOX CULVERT REINFORCING

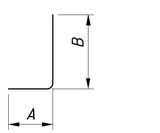

TYPE-1

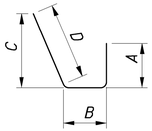

TYPE-2

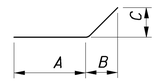

TYPE-3

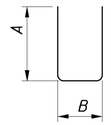

TYPE-5

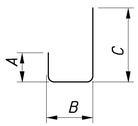

TYPE-7

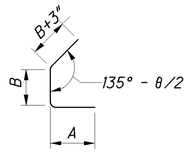

TYPE-8

DESIGN AGENCY
PARSONS BRINCKERHOFF
2545 FARMERS DRIVE
SUITE 350
COLUMBUS, OHIO 43235

DESIGNED SAP | DRAWN BKJ | CHECKED PJL | REVIEWED EBS | DATE 05/24/12 | REVISED | STRUCTURE FILE NUMBER 0204129

REINFORCING STEEL DETAILS
ALL-117-1844
S.R. 117/S.R. 309 OVER LOST CREEK

ALL-75-5.53
PID No. 76691

8 / 9

919
1224

11-SEP-2012 8:52PM reddenj

J:\Projects\ALL\76691\structures\Lost Creek Culvert\309 Over Lost Creek\075_DM003.dgn 11-SEP-2012 8:52PM reddenj

OUTLET HEADWALL

TYPE A HEADWALL REINFORCING SCHEDULE

BAR MARK	NUMBER	LENGTH	WEIGHT (LBS.)	TYPE	BAR TYPE DIMENSIONS A	B	C	D	INC.
					WINGWALLS				
	2	5'- 10"							
X501	SERIES	TO	169	STR.					0'- 6 "
	of 10	10'- 4"							
X502	4	10'- 4"	44	STR.					
Y501	40	6'- 4"	263	1	0'- 6"	5'- 11"			
	2	5'- 10"							
WW501	SERIES	TO	169	STR.					0'- 6 "
	of 10	10'- 4"							
WW502	16	12'- 5"	208	STR.					
	4	4'- 2"							
WW503	SERIES	TO	104	STR.					4'- 1 1/2"
	of 3	12'- 5"							
WW504	14	3'- 11"	58	2	0'- 10"	0'- 3 1/4"	2'- 1 "	2'- 11 1/4"	
WW505	4	15'- 7"	66	3	2'- 5"	4'- 4"	12'- 5"		
WW506	2	1'- 6"	4	4	0'- 10"	0'- 3 1/4"			
					FOOTING & CUTOFF WALL				
V501	30	6'- 8"	209	STR.					
W501	30	6'- 8"	209	STR.					
Z501	34	8'- 2"	290	5	3'- 7"	1'- 2"			
F501	12	6'- 0"	76	STR.					
F502	16	4'- 8"	78	STR.					
	2	20'- 10"					15'- 10 3/4"		
F503	SERIES	TO	296	6	1'- 9"	1'- 9"	TO		1'- 1 1/4"
	of 6	26'- 4"					21'- 5 "		
	4	11'- 5"							
F504	SERIES	TO	321	STR.					0'- 6 5/8"
	of 6	14'- 2"							
	1	20'- 10"					15'- 10 3/4"		
F505	SERIES	TO	45	6	1'- 9"	1'- 9"	TO		0'- 11 3/4"
	2	21'- 10"					16'- 10 1/2"		
	2	11'- 5"							
F506	SERIES	TO	49	STR.					0'- 5 1/8"
	2	11'- 10"							
F507	13	5'- 7"	76	1	3'- 0"	2'- 8"			
F508	2	17'- 9"	38	STR.					
					FORESLOPE WALL				
FS501	4	17'- 9"	75	STR.					
FS502	19	3'- 0"	60	5	1'- 2"	0'- 11"			
FS503	19	3'- 11"	78	7	1'- 2"	0'- 11"	2'- 1"		
		TOTAL	2,985						

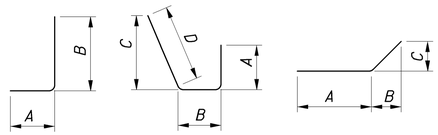

TYPE-1 TYPE-2 TYPE-3

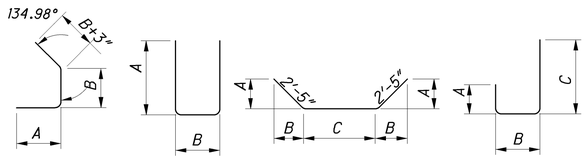

TYPE-4 TYPE-5 TYPE-6 TYPE-7

J:\Projects\ALL\76691\structures\Lost Creek Culvert\309 Over Lost Creek\075_DM005.dgn 11-SEP-2012 8:52PM reddenj

DESIGN AGENCY
PARSONS BRINCKERHOFF
2545 FARMERS DRIVE
SUITE 350
COLUMBUS, OHIO 43235

DESIGNED	DRAWN	REVIEWED	DATE
SAP	BKJ	EBS	05/24/12
CHECKED	REVISED	STRUCTURE FILE NUMBER	
PJL		0204129	

REINFORCING STEEL DETAILS
ALL-117-1844
S.R. 117/S.R. 309 OVER LOST CREEK

ALL-75-5.53
PID No. 76691

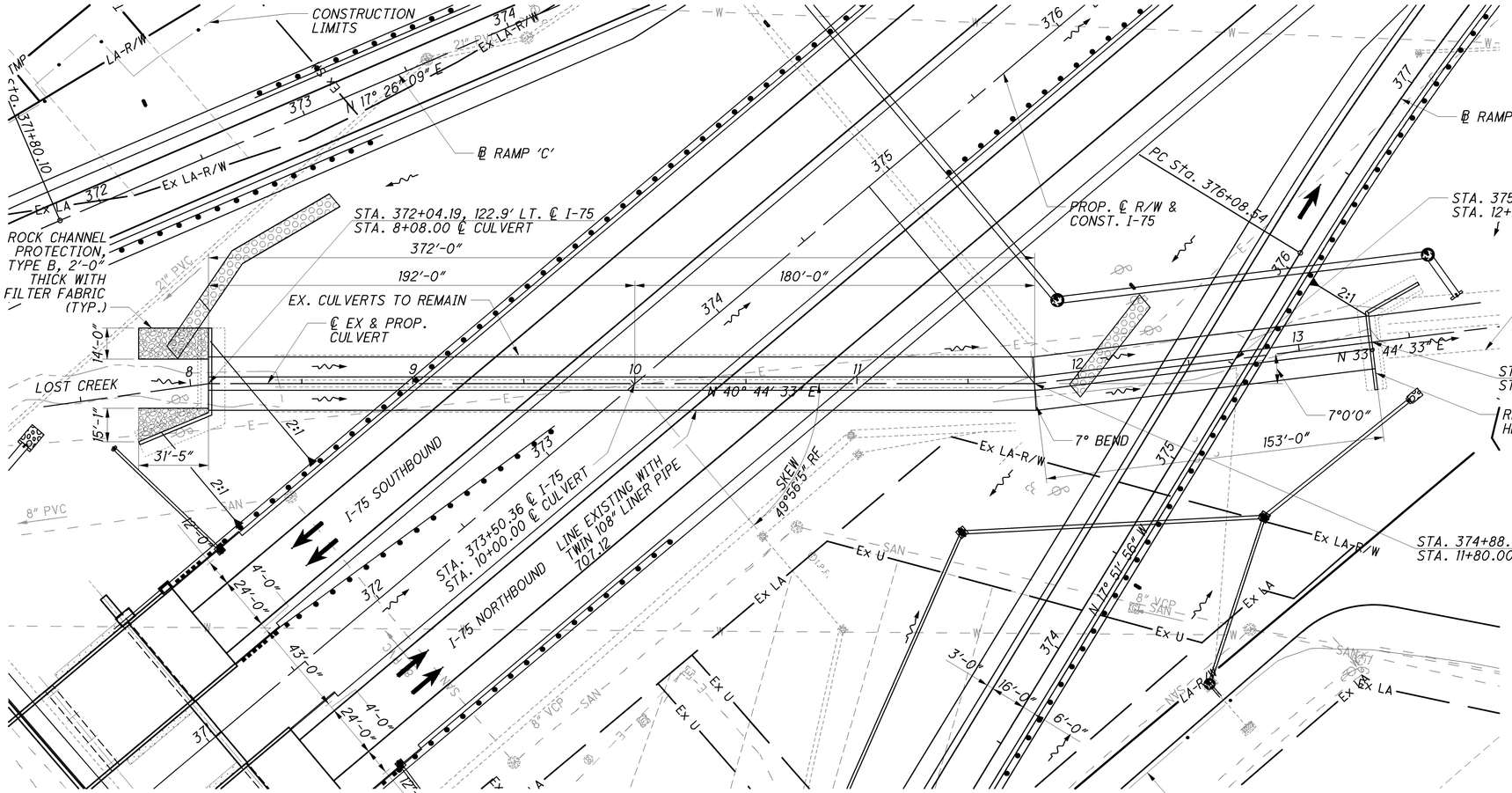

PLAN

EXISTING STRUCTURE

TYPE: TWIN SECTIONAL CORRUGATED METAL CIRCULAR CULVERT

SIZE: 11' DIA X 322' (EACH)

SKEW: 50°

NOTE:

1. FOR ESTIMATED QUANTITIES SEE SHEET 2/8
2. EARTHWORK LIMITS SHOWN ARE APPROXIMATE. ACTUAL SLOPES SHALL CONFORM TO PLAN CROSS SECTIONS.

HYDRAULIC DATA

DRAINAGE AREA = 5.6 SQ. MILES

Q (50) =	659 CFS	V (50) =	2.1 FT/S
Q (100) =	737 CFS	V (100) =	2.1 FT/S

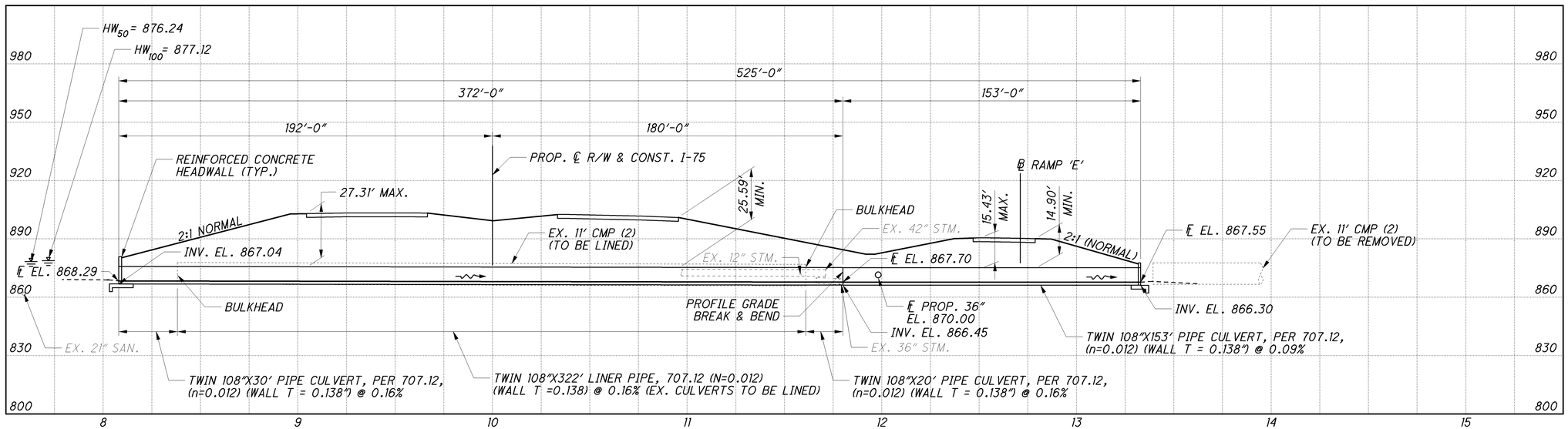

PROFILE

DESIGN AGENCY
PARSONS BRINCKERHOFF
2545 FARMERS DRIVE
SUITE 350
COLUMBUS, OHIO 43235

DESIGNED	DRAWN	REVIEWED	DATE
SAP	LEL	EBS	05/24/12
CHECKED	REVISED	STRUCTURE FILE NUMBER	
LEL		0202061	

CULVERT PLAN & PROFILE
ALL-75-0711
I-75 OVER LOST CREEK

ALL-75-5.53
PID No. 76691

J:\Projects\ALL\76691\structures\Lost Creek Culvert\I75 over Lost Creek\075_0711PSP002.dgn 22-OCT-2012 2:58PM lint

GENERAL NOTES

DESIGN SPECIFICATIONS: THIS STANDARD DRAWING CONFORMS TO "STANDARD SPECIFICATIONS FOR HIGHWAY BRIDGES" ADOPTED BY THE AMERICAN ASSOCIATION OF STATE HIGHWAY AND TRANSPORTATION OFFICIALS, 2002 AND THE ODOT BRIDGE DESIGN MANUAL.

DESIGN DATA: THE FOLLOWING DESIGN DATA IS ASSUMED:

INTERNAL ANGLE OF FRICTION = 30 DEGREES
COEFFICIENT OF FRICTION = 0.30
UNIT WEIGHT OF SOIL = 120 PCF
UNIT WEIGHT OF CONCRETE = 150 PCF
SLOPE OF BACKFILL = 2:1
MAXIMUM FOUNDATION BEARING PRESSURE = 2000 P.S.F.

CONCRETE CLASS C - COMPRESSIVE STRENGTH 4000 PSI
(FOOTING, WINGWALL AND FORESLOPE WALL)

REINFORCING STEEL - ASTM A615, A616, OR A617
GRADE 60 MINIMUM YIELD STRENGTH
60,000 PSI (ALL REINFORCING SHALL BE EPOXY COATED)

PRECAST CONCRETE: AT THE OPTION OF THE CONTRACTOR, PRECAST HEADWALLS MAY BE FURNISHED PER ITEM 602.03 PRECAST STRUCTURES, PROVIDED THEY ARE SIZED TO MEET THE SOIL LOADING AND RESISTANCE PARAMETERS, AND MEET OR EXCEED THE MATERIAL STRENGTHS AND WALL LIMITS AS SHOWN AND SPECIFIED. FULL COMPENSATION FOR THE PRECAST SUBSTITUTION IS THE VOLUME OF CONCRETE AND THE WEIGHT OF THE REINFORCING STEEL FOR THE CORRESPONDING CAST-IN-PLACE STRUCTURE.

BACKFILL LIMITATION: WHEN THE DESIGN HEIGHT IS GREATER THAN 10 FT, THE BACKFILL BEHIND THE WINGWALLS SHALL NOT BE PLACED HIGHER THAN THE ELEVATION OF THE SOIL ABOVE THE TOE. WHEN THE SOIL ABOVE THE TOE IS AT ITS FINISHED ELEVATION, THE REMAINDER OF THE BACKFILL MAY BE PLACED.

POROUS BACKFILL WITH FILTER FABRIC 1'-6" THICK SHALL BE PLACED BEHIND THE WINGWALLS ONLY AND SHALL EXTEND TO 12" BELOW THE EMBANKMENT SURFACE. GEOTEXTILE FABRIC SHALL BE PLACED BETWEEN THE POROUS BACKFILL AND REPLACED EXCAVATION ADJACENT TO THE STRUCTURE. IT SHALL TURN UNDER THE BOTTOM OF THE POROUS BACKFILL AND RETURN 6" ABOVE THE TOP ELEVATION OF THE WEEPHOLE. WEEPHOLES SHALL BE PLACED 6" TO 12" ABOVE THE NORMAL WATER ELEVATION OR GROUND LINE AND SHALL HAVE A MAXIMUM SPACING OF 10'-0". A MINIMUM OF ONE WEEPHOLE SHALL BE PROVIDED PER WINGWALL.

SEALING OF FORESLOPE WALL AND WINGWALLS: ALL EXPOSED FORESLOPE WALL AND WINGWALL CONCRETE SHALL BE SEALED WITH EPOXY-URETHANE SEALER. THE LIMITS SHALL BE AS SHOWN IN THE DIAGRAMS BELOW. PAYMENT FOR THE EPOXY-URETHANE SEALER SHALL BE PER ITEM 512 - SEALING OF CONCRETE SURFACES.

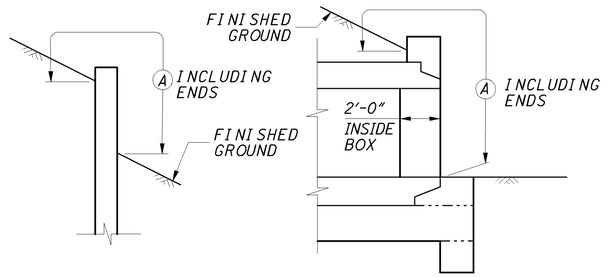

WINGWALL

FORESLOPE WALL AND PRECAST BOX
(CULVERT OUTLET BEVEL SHOWN)

LIMITS OF ITEM 512-SEALING CONCRETE SURFACES

(A) - SEAL ENTIRE CONCRETE SURFACE AREA

ABBREVIATIONS:

APPRX. = APPROXIMATE
(B) = BOTTOM
BM = BENCH MARK
C.J. = CONSTRUCTION JOINT
CLR. = CLEAR
CONST. = CONSTRUCTION
C/C = CENTER ON CENTER
DIA. = DIAMETER
E.B. = EASTBOUND
E.F. = EACH FACE
EL. = ELEVATION
EX. = EXISTING
ELEV. = ELEVATION
F.F. = FAR FACE
INC. = INCREMENT
LF. = LEFT
MAX. = MAXIMUN
MIN. = MINIMUM
M.O.T. = MAINTENACE OF TRAFFIC
N.F. = NEAR FACE
P.E.J.F. = PREFORMED EXPANSION JOINT FILLER
PROP. = PROPOSED
P.V.I. = POINT OF VERTICAL INTERSECTION
RT. = RIGHT
SHLDR = SHOULDER
SER. = SERIES
S.R. = STATE ROUTE
STA. = STATION
STR. = STRAIGHT
STM = STORM
(T) = TOP
T&B = TOP AND BOTTOM
TYP. = TYPICAL
VC = VERTICAL CURVE
W.B. = WESTBOUND
YR. = YEAR

ESTIMATED QUANTITIES

02/IMS/BR/		ITEM	EXTENSION	TOTAL	UNIT	DESCRIPTION	SEE SHEET
2		202	20010	2	EACH	HEADWALL REMOVED	
1		503	11100	1	LUMP	COFFERDAMS AND EXCAVATION BRACING	
1		503	21300	1	LUMP	UNCLASSIFIED EXCAVATION	
17667		509	10000	17667	POUND	EPOXY COATED REINFORCING STEEL	
185		511	46200	185	CU YD	CLASS C CONCRETE	
149		512	10100	149	SQ YD	SEALING OF CONCRETE SURFACES (EPOXY-URETHANE)	
1		518	21230	1	LUMP	POROUS BACKFILL WITH FILTER FABRIC	
53		601	32100	53	CU YD	ROCK CHANNEL PROTECTION, TYPE B WITH FILTER	
406		603	32000	406	EACH	108" CONDUIT, TYPE A	
644		837	10001	644	FT	LINER PIPE, AS PER PLAN	3/8
674		837	20000	674	CU YD	BACKFILL FOR LINER PIPE	

CALC. BY: SAP DATE: 4/10/2012
CHECK BY: EBS DATE: 5/21/2012

DESIGN AGENCY
PARSONS BRINCKERHOFF
2545 FARMERS DRIVE
SUITE 350
COLUMBUS, OHIO 43235

DESIGNED SAP | DRAWN BKJ | REVIEWED EBS | DATE 05/24/12
CHECKED PJL | REVISED | STRUCTURE FILE NUMBER 0202061

GENERAL NOTES
ALL-75-0711
I-75 OVER LOST CREEK

ALL-75-5.53
PID No. 76691

J:\Projects\ALL\76691\structures\Lost Creek Culvert\I75 over Lost Creek\075_DM001.dgn 14-SEP-2012 2:45PM reddenj

ITEM 837 - 108" LINER PIPE, AS PER PLAN

BEFORE MATERIALS ARE ORDERED FOR THIS ITEM, THE CONTRACTOR SHALL FIELD MEASURE THE EXISTING CONDUIT TO ASSURE THAT THE PROPOSED LINER PIPE WILL FIT. FIELD SURVEY INDICATED THE EXISTING PIPE HAS A SAG, IT IS THE CONTRACTOR'S RESPONSIBILITY TO ENSURE THE PROPOSED LINER PIPE MAINTAINS THE LINES AND GRADES AS SHOWN IN THE PLANS. AT THE OPTION OF THE CONTRACTOR, 748.06 MATERIAL, GALVANIZED ON INTERIOR AND EXTERIOR SURFACES PER 711.02, MAY BE USED AS AN ALTERNATE TO THE LINER PIPE.

THIS WORK SHALL CONSIST OF FURNISHING, INSTALLING AND GROUTING THE LINER PIPE INTO THE EXISTING CULVERT, FOR THE PURPOSES OF REHABILITATION. THE WORK SHALL BE DONE ACCORDING TO SUPPLEMENTAL SPECIFICATION 837 EXCEPT AS DETAILED HEREIN.

MATERIALS:
THE LINER PIPE MATERIAL SHALL BE 707.12.

PLAN:
PRIOR TO BEGINNING WORK, A WRITTEN PLAN SHALL BE SUBMITTED TO THE ENGINEER FOR THE PROJECT FILE. IT SHOULD DETAIL THE METHODS OF WATER DIVERSION, THE MEANS OF ACCESS TO THE SITE, THE METHOD OF LINER PIPE INSTALLATION, AND THE METHOD OF GROUT PLACEMENT.

GUIDE RAILS:
GUIDE RAILS SHALL BE STRUCTURAL STEEL MEMBERS OR WOOD RUNNERS PLACED BETWEEN THE EXISTING AND LINER PIPES. STRUCTURAL STEEL SHALL CONFORM TO ASTM A36 AND WOOD BLOCKING SHALL BE PRESSURE TREATED LUMBER IN ACCORDANCE WITH AASHTO M 168. IF GUIDE RAILS ARE TO BE LEFT IN PLACE, THE VOID BETWEEN THE RAILS AND THE LINER'S INVERT SHALL BE FILLED WITH GROUT.

JOINING CONDUIT:
THE CONDUIT SHALL BE INSTALLED USING COUPLING BANDS WITH RUBBER OR FABRIC GASKETS SUFFICIENT TO PREVENT INFILTRATION OF THE GROUT MATERIAL. THE BANDS SHALL BE INSTALLED AT EACH JOINT FORMED BY TWO ADJACENT PIPE SECTIONS. THE GASKET SHALL BE PLACED BETWEEN THE PIPE AND THE BAND, AND THE BAND SHALL BE TIGHTENED AGAINST THE PIPE UNTIL THE GASKET IS SOLIDLY IN CONTACT WITH THE SURFACES OF THE ENDS OF THE PIPE SECTIONS.

GROUTING:
THE ANNULAR SPACE BETWEEN THE EXISTING CULVERT AND THE PROPOSED LINER PIPE SHALL BE FILLED WITH GROUT OR LOW STRENGTH MORTAR BACKFILL. TIMBERS, SHIMS, OR ALIGNMENT BOLTS SHALL BE USED TO MAINTAIN THE GRADE AND SHAPE OF THE LINER PIPE DURING GROUTING OPERATIONS. THE MAXIMUM PRESSURE DEVELOPED BY THE GROUT IN THE VOID SHALL NOT EXCEED THE MANUFACTURER'S RECOMMENDATION FOR THE MAXIMUM ALLOWABLE EXTERNAL PRESSURE FOR THE LINER PIPE. GROUT PLACEMENT WILL BEGIN AT THE DOWNSTREAM END OF THE CULVERT AND PROCEED UPSTREAM. GROUTING SHALL BE DONE THROUGH GROUT FITTINGS PLACED IN THE LINER PIPE. THE LOCATION AND NUMBER OF GROUT FITTINGS SHALL BE PER THE MANUFACTURER'S RECOMMENDATIONS. BEGIN PUMPING AT THE LOWER FITTING ON EITHER SIDE OF THE PIPE. PUMP AT THAT LOCATION UNTIL THE GROUT RISES TO THE LEVEL OF THE FITTING. CONTINUE GROUT PLACEMENT ON THE OPPOSITE SIDE OF THE PIPE, PUMPING UNTIL THE GROUT RISES TO AND SPREADS TO THE ADJOINING FITTING LEVEL. CONTINUE GROUTING BY PUMPING THROUGH HIGHER FITTINGS AND MOVING TO THE CROWN OF THE PIPE. PUMP AT THE CROWN UNTIL RESISTANCE TO PUMPING INCREASES. REPEAT THIS PROCEDURE BY MOVING UPSTREAM TO SUCCESSIVE GROUT FITTING LOCATIONS. THE BULKHEADS MAY BE REMOVED AFTER THE GROUT HAS CURED FOR AT LEAST 48 HOURS. CLEAN THE LINER PIPE OF ALL EXCESS GROUT AND ALL OTHER CONSTRUCTION MATERIALS.

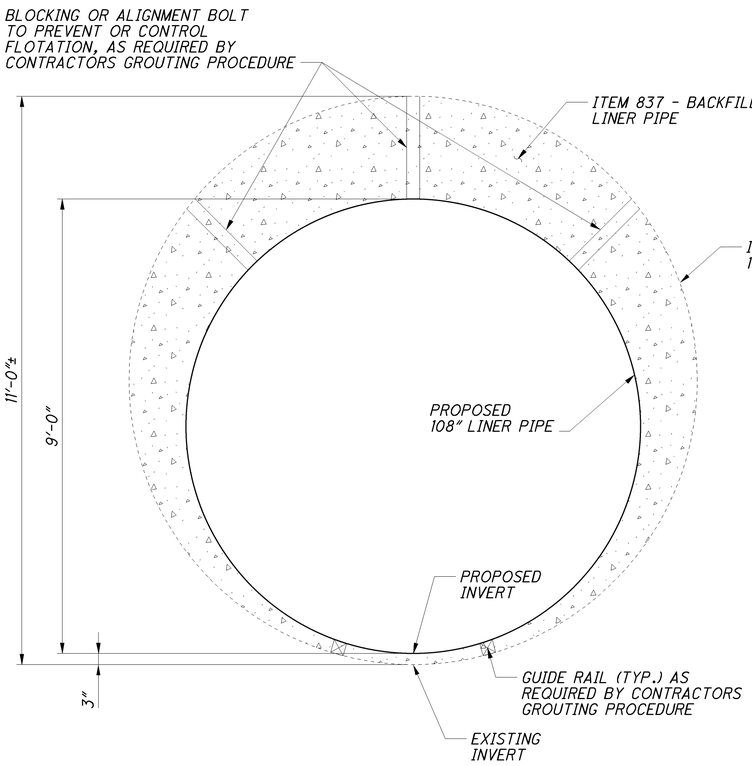

TYPICAL SECTION
11'-0" CMP LINED WITH 108" LINER PIPE, PER 707.12 (N=00.012) (WALL T=0.138)

LEGEND

CMP - CORRUGATED METAL PIPE
HDPE - HIGH DENSITY POLYETHYLENE
PROP. - PROPOSED
INV. - INVERT
DIA. - DIAMETER
EX. - EXISTING
TYP. - TYPICAL

DESIGN AGENCY
PARSONS BRINCKERHOFF
2545 FARMERS DRIVE
SUITE 350
COLUMBUS, OHIO 43235

DESIGNED	DRAWN	REVIEWED	DATE
BKJ	BKJ	EBS	05/24/12
CHECKED	REVISED	STRUCTURE FILE NUMBER	
PJL		0202061	

TYPICAL PIPE SECTION
ALL-75-0711
I-75 OVER LOST CREEK

ALL-75-5.53
PID No. 76691

923
1224

J:\Projects\ALL\76691\structures\Lost Creek Culvert\I75 over Lost Creek\075_DM004.dgn 11-SEP-2012 8:53PM reddenj

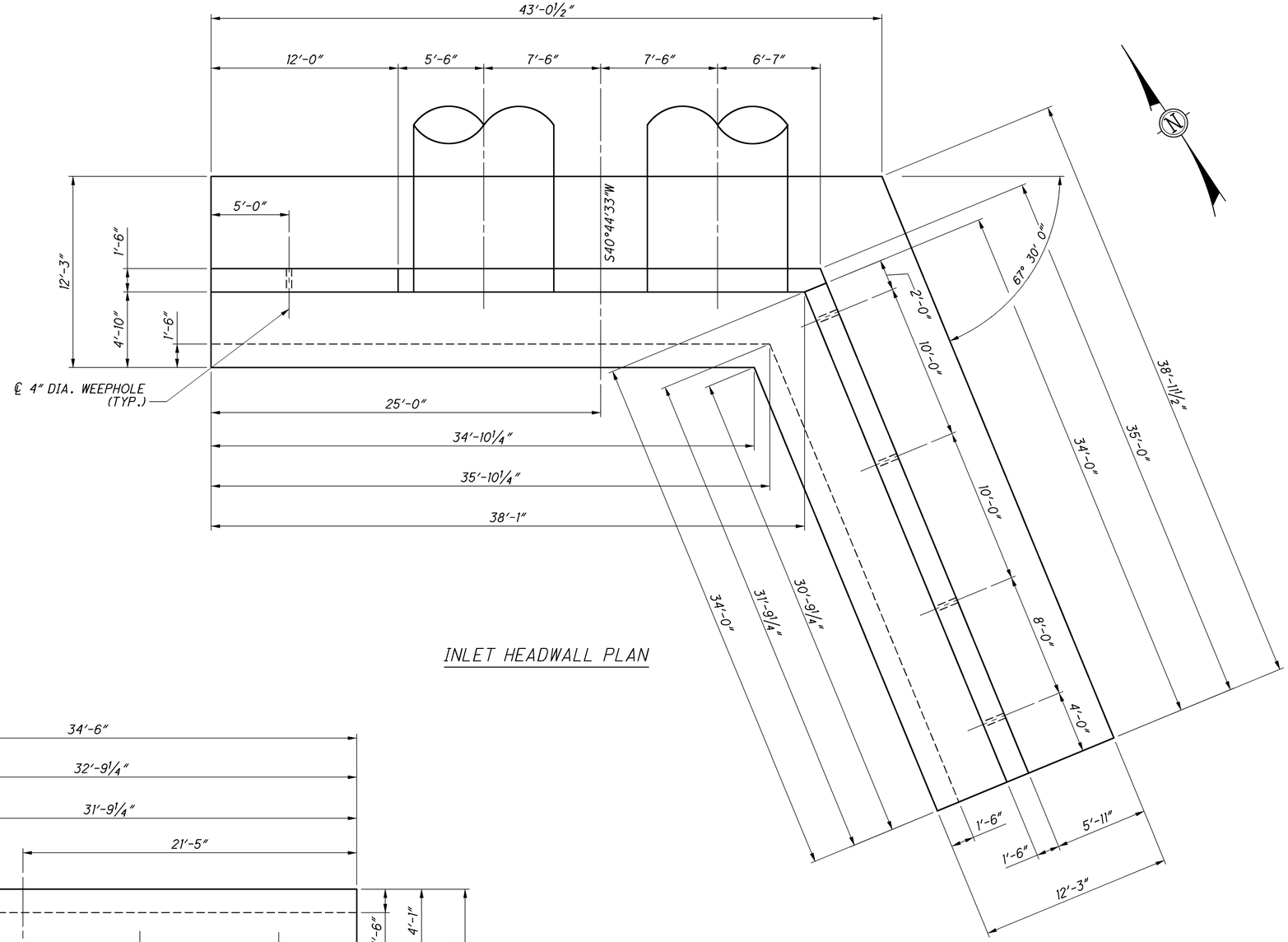

INLET HEADWALL PLAN

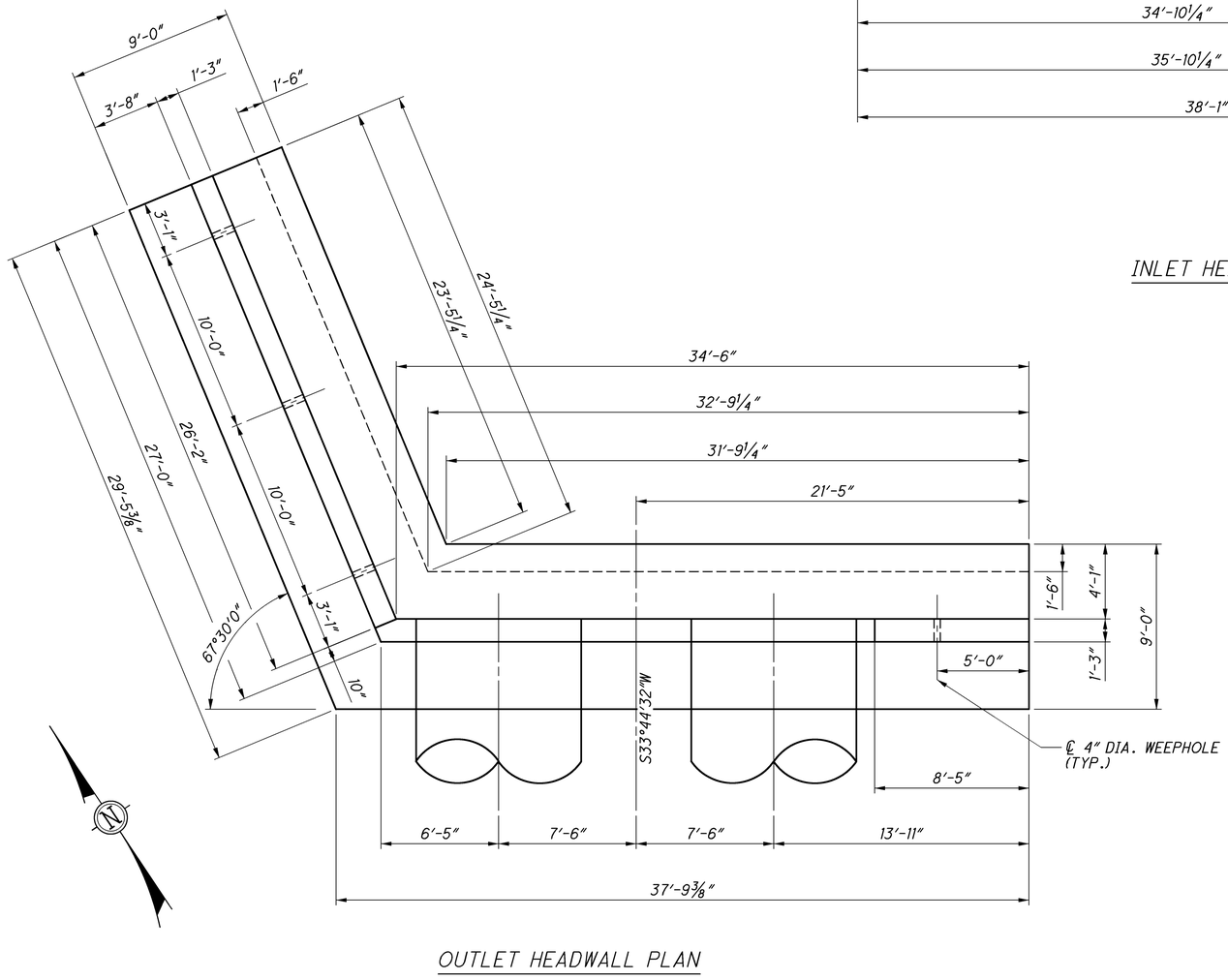

OUTLET HEADWALL PLAN

J:\Projects\ALL\76691\structures\Lost Creek Culvert\I75 over Lost Creek\075_DM007.dgn 11-SEP-2012 8:53PM reddenj

DESIGN AGENCY
PARSONS BRINCKERHOFF
2545 FARMERS DRIVE
SUITE 350
COLUMBUS, OHIO 43235

DESIGNED	DRAWN	REVIEWED	DATE
BKJ	BKJ	EBS	05/24/12
CHECKED	REVISED	STRUCTURE FILE NUMBER	
PJL		0202061	

CULVERT LAYOUT
ALL-75-0711
I-75 OVER LOST CREEK

ALL-75-5.53
PID No. 76691

4 / 8

924
1224

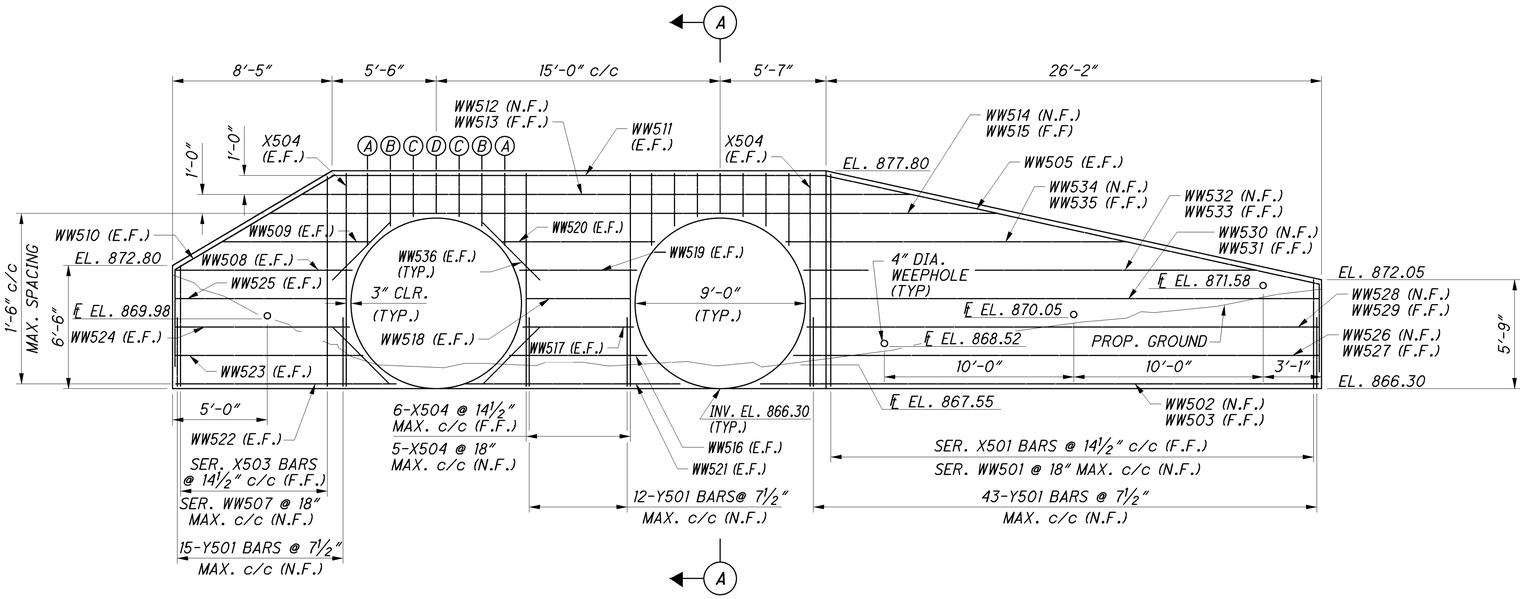

ELEVATION
(FOOTING NOT SHOWN)

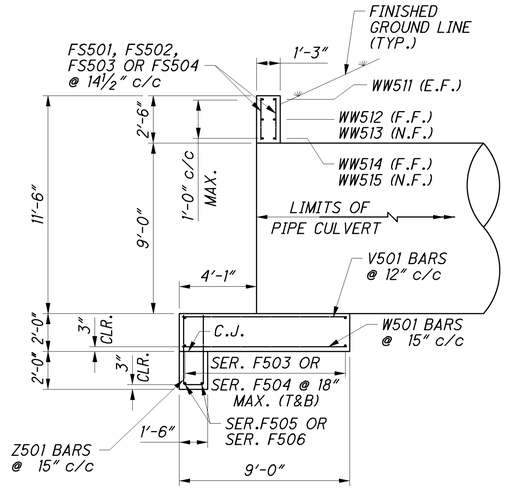

SECTION A-A

TYPICAL VERTICAL REINFORCEMENT
OVER CULVERTS *

- (A)— FS501 (E.F.)
- (B)— FS502 (E.F.)
- (C)— FS503 (E.F.)
- (D)— FS504 (E.F.)

* BARS AR SPACED AT 14½" c/c MAX.

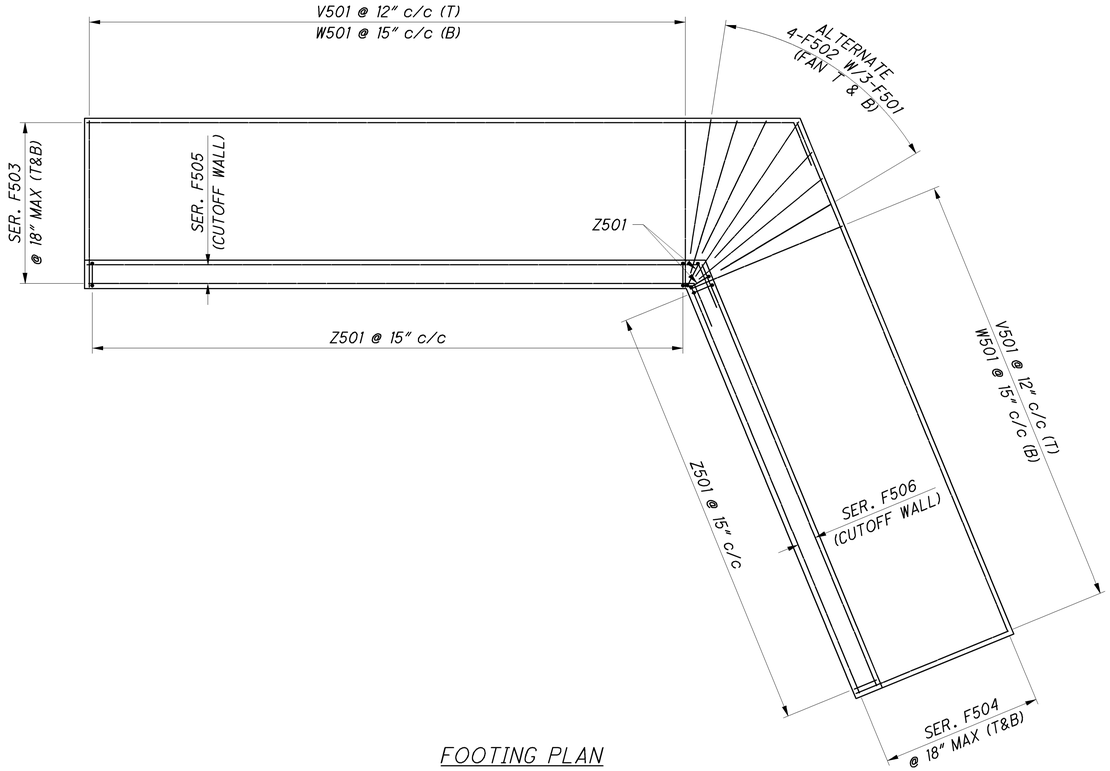

FOOTING PLAN

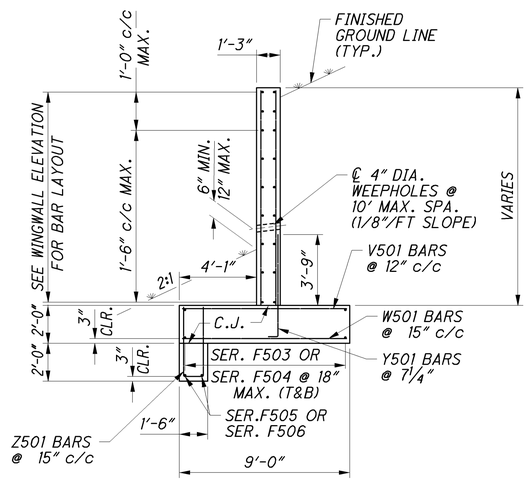

TYPICAL WALL SECTION

DESIGN AGENCY
PARSONS BRINCKERHOFF
2545 FARMERS DRIVE
SUITE 350
COLUMBUS, OHIO 43235

DESIGNED	DRAWN	REVIEWED	DATE
BKJ	BKJ	EBS	05/24/12
CHECKED	REVISED	STRUCTURE FILE NUMBER	
PJL		0202061	

OUTLET HEADWALL DETAILS
ALL-75-0711
I-75 OVER LOST CREEK

ALL-75-5.53
PID No. 76691

5 / 8

925
1224

J:\Projects\ALL\76691\structures\Lost Creek Culver\I75 over Lost Creek\075_DM002.dgn 11-SEP-2012 8:53PM reddenj

TYPE B HEADWALL REINFORCING SCHEDULE (OUTLET)

BAR MARK	NUMBER	LENGTH	WEIGHT (LBS.)	TYPE	BAR TYPE DIMENSIONS A	BAR TYPE DIMENSIONS B	BAR TYPE DIMENSIONS C	INC.
			WINGWALLS					
	1	6'- 4"						
X501	SERIES	TO	212	STR.				0'- 2 3/4"
	of 23	11'- 4"						
X502	2	11'- 4"	24	STR.				
	1	5'- 7"						
X503	SERIES	TO	71	STR.				0'- 9 7/8"
	of 8	11'- 4"						
X504	of 14	11'- 4"	166	STR.				
Y501	70	5'- 11"	432	1	0'- 6 "	5'- 6"		
	1	6'- 4"						
WW501	SERIES	TO	176	STR.				0'- 3 3/8"
	of 19	11'- 4"						
WW502	1	29'- 8"	31	3	26'- 1 "	1'- 4 1/2"	3'- 3 1/2"	
WW503	1	31'- 0"	33	3	26'- 9 "	1'- 7 1/2"	3'- 11 "	
WW505	2	28'- 9"	60	3	2'- 5 "	4'- 10"	25'- 10"	
	1	5'- 7"						
WW507	SERIES	TO	62	STR.				0'- 11 1/2"
	of 7	11'- 4"						
WW508	2	9'- 4"	20	STR.				
WW509	2	7'- 10"	17	STR.				
WW510	2	12'- 3"	26	3	2'- 5 "	5'- 7"	8'- 1"	
WW511	2	26'- 0"	55	STR.				
WW512	1	39'- 0"	41	3	34'- 5 "	1'- 9"	4'- 4"	
WW513	1	40'- 5"	43	3	35'- 1 "	2'- 0"	4'- 11"	
WW514	1	43'- 7"	46	3	34'- 5 "	3'- 6"	8'- 6"	
WW515	1	39'- 11"	42	3	30'- 1 1/2"	3'- 9"	9'- 1"	
WW516	2	7'- 3"	16	STR.				
WW517	2	5'- 10"	13	STR.				
WW518	2	5'- 6"	12	STR.				
WW519	2	6'- 2"	13	STR.				
WW520	2	8'- 0"	17	STR.				
WW521	2	11'- 4"	24	STR.				
WW522	2	11'- 8"	25	STR.				
WW523	2	9'- 10"	21	STR.				
WW524	2	9'- 2"	20	STR.				
WW525	2	9'- 0"	19	STR.				
WW526	1	27'- 11"	30	3	26'- 1 "	0'- 8 1/2"	1'- 8"	
WW527	1	29'- 3"	31	3	26'- 9 "	0'- 11 1/2"	2'- 3 1/2"	
WW528	1	27'- 2"	29	3	26'- 1 "	0'- 5 "	1'- 1/2"	
WW529	1	28'- 6"	30	3	26'- 9 "	0'- 8 "	1'- 7 1/2"	
WW530	1	27'- 0"	29	3	26'- 1 "	0'- 4 1/2"	0'- 10 1/2"	
WW531	1	28'- 4"	30	3	26'- 9 "	0'- 4 "	0'- 11 "	
WW532	1	27'- 4"	29	3	26'- 1 "	0'- 6 "	1'- 2 "	
WW533	1	28'- 8"	30	3	26'- 9 "	0'- 9 "	1'- 9 1/2"	
WW534	1	28'- 4"	30	3	26'- 1 "	0'- 10 1/2"	2'- 1"	
WW535	1	29'- 7"	31	3	26'- 9 "	1'- 1 1/2"	2'- 8"	
WW536	8	4'- 3"	36	STR.				

TYPE B HEADWALL REINFORCING SCHEDULE CONTINUED

BAR MARK	NUMBER	LENGTH	WEIGHT (LBS.)	TYPE	BAR TYPE DIMENSIONS A	BAR TYPE DIMENSIONS B	BAR TYPE DIMENSIONS C	INC.
			FOOTING & CUTOFF WALL					
V501	58	8'- 8"	525	STR.				
W501	47	8'- 8"	425	STR.				
Z501	49	8'- 2"	418	5	3'- 7"	1'- 2"		
F501	6	7'- 10"	50	STR.				
F502	8	6'- 1"	51	STR.				
	2	34'- 1"			31'- 7 3/4"			
F503	SERIES	TO	541	3	TO	0'- 11 1/4"	2'- 3 "	0'- 11 3/4"
	of 7	39'- 11"			37'- 5 1/4"			
	2	23'- 4"						
F504	SERIES	TO	384	STR.				0'- 11 3/4"
	of 7	29'- 2"						
	1	34'- 1"			31'- 7 3/4"			
F505	SERIES	TO	72	3	TO	0'- 11 1/4"	2'- 3 "	0'- 9 1/8"
	2	34'- 10"			32'- 5 "			
	1	23'- 4"						
F506	SERIES	TO	50	STR.				0'- 10 1/8"
	2	24'- 2"						
			FORESLOPE WALL					
FS501	4	3'- 9"	16	STR.				
FS502	4	2'- 9"	12	5	0'- 2"	0'- 11"		
FS503	4	1'- 3"	10	7	0'- 2"	0'- 11"	1'- 1"	
FS504	4	2'- 1"	9	STR.				
		TOTAL	4,635					

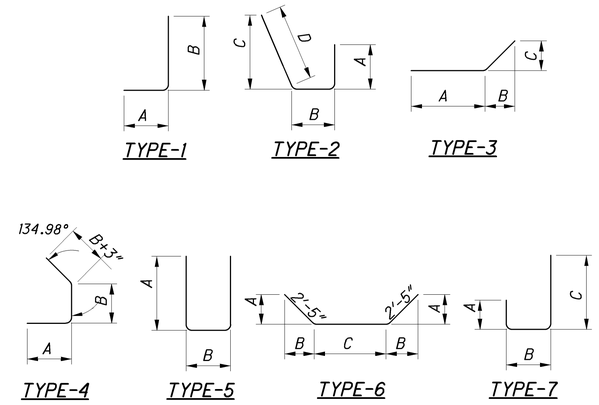

DESIGN AGENCY
PARSONS BRINCKERHOFF
2545 FARMERS DRIVE
SUITE 350
COLUMBUS, OHIO 43235

DESIGNED SAP | DRAWN BKJ | REVIEWED EBS | DATE 05/24/12
CHECKED PJL | REVISED | STRUCTURE FILE NUMBER 0202061

OUTLET HEADWALL REINFORCING STEEL SCHEDULE
ALL-075-0711
I-75 OVER LOST CREEK

ALL-75-5.53
PID No. 76691

6 / 8

926
1224

J:\Projects\ALL\76691\structures\Lost Creek Culvert\I75 over Lost Creek\075_DM003.dgn 11-SEP-2012 8:53PM reddenj

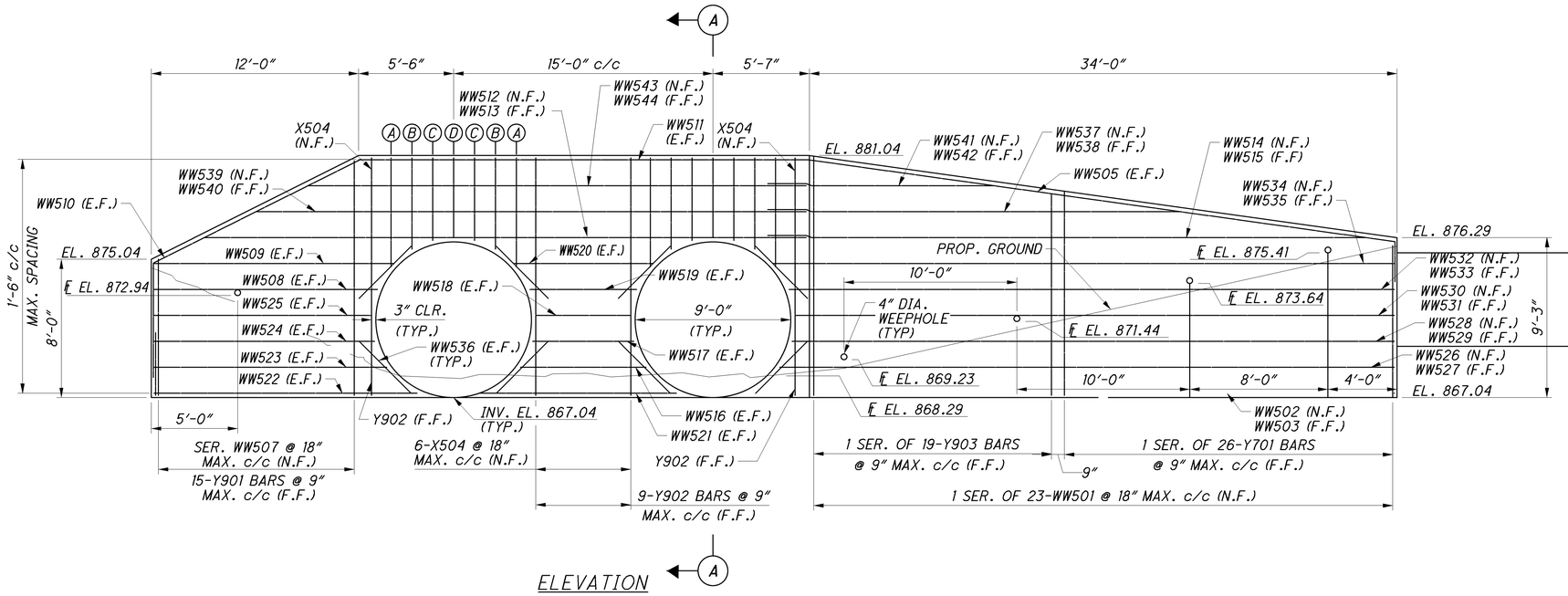

ELEVATION
(FOOTING NOT SHOWN)

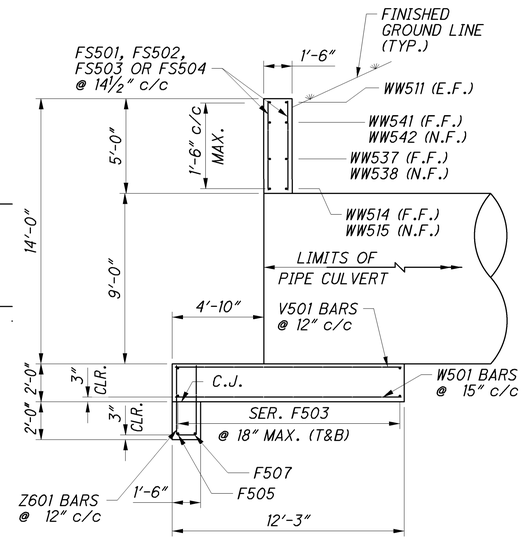

SECTION A-A

TYPICAL VERTICAL REINFORCEMENT
OVER CULVERTS *

- (A) — FS501 (E.F.)
- (B) — FS502 (E.F.)
- (C) — FS503 (E.F.)
- (D) — FS504 (E.F.)

* BARS AR SPACED AT 14½" c/c MAX.

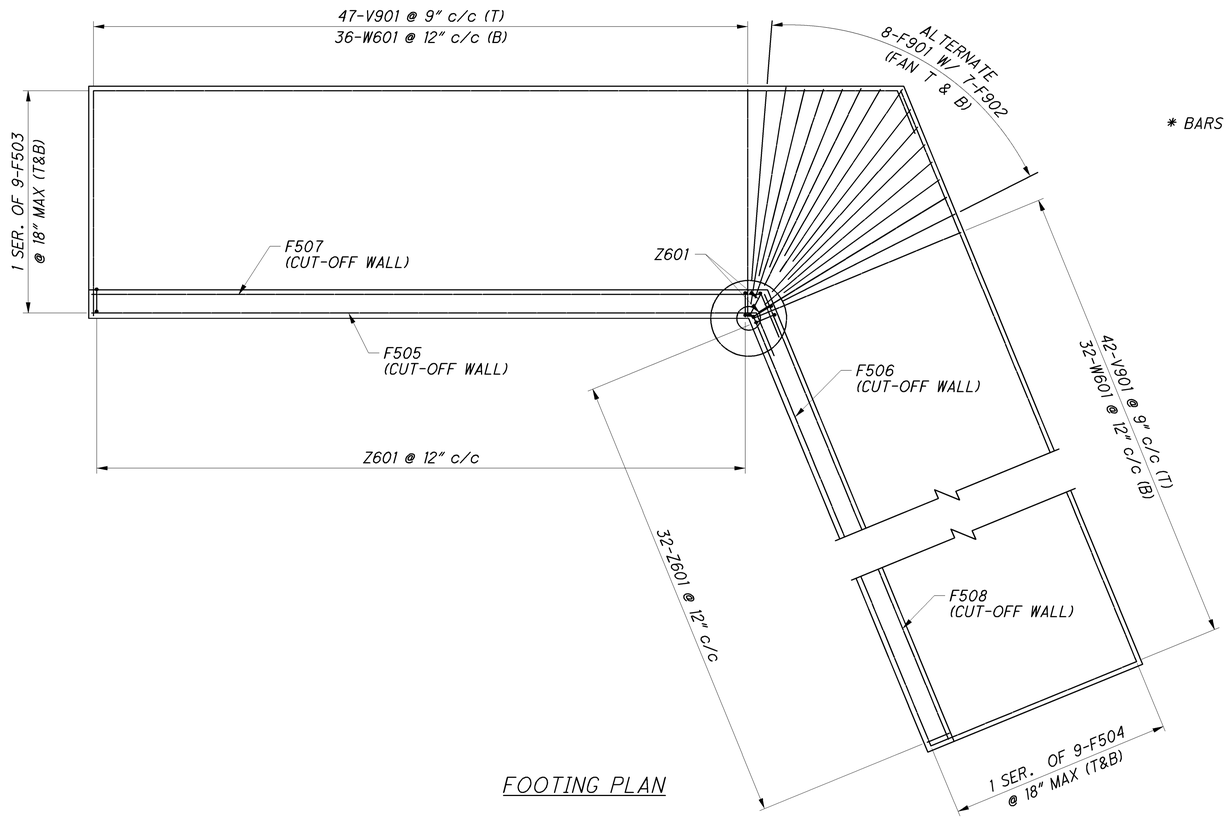

FOOTING PLAN

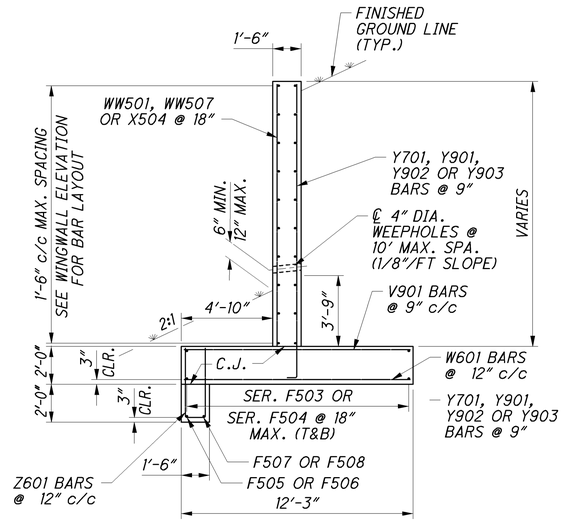

TYPICAL WALL SECTION

DESIGN AGENCY
PARSONS BRINCKERHOFF
2545 FARMERS DRIVE
SUITE 350
COLUMBUS, OHIO 43235

DESIGNED	DRAWN	REVIEWED	DATE
BKJ	BKJ	EBS	05/24/12
CHECKED	REVISED	STRUCTURE FILE NUMBER	
PJL		0202061	

INLET HEADWALL DETAILS
ALL-75-0711
I-75 OVER LOST CREEK

ALL-75-5.53
PID No. 76691

7 / 8

927
1224

I:\Projects\ALL\76691\structures\Lost Creek Culvert\I75 over Lost Creek\075_DM005.dgn 11-SEP-2012 8:53PM reddenj

TYPE B HEADWALL REINFORCING SCHEDULE (INLET)

BAR MARK	NUMBER	LENGTH	WEIGHT (LBS.)	TYPE	BAR TYPE DIMENSIONS A	B	C	INC.
			WINGWALLS					
	1	6'- 4"						
X501	SERIES	TO	212	STR.				0'- 2 3/4"
	of 23	11'- 4"						
X502	2	11'- 4"	24	STR.				
	1	7'- 10"						
X503	SERIES	TO	113	STR.				0'- 7 5/8"
	of 10	13'- 7"						
X504	of 8	13'- 8"	114	STR.				
	1	11'- 1"				10'- 9"		
Y701	SERIES	TO	1,325	1	0'- 6"	TO		1 3/8"
	OF 26	13'- 10"				13'- 6"		
	1	9'- 10 1/2"				9'- 8"		
Y901	SERIES	TO	694	1	0'- 6"	TO		4 5/8"
	OF 16	15'- 7 1/2"				15'- 5"		
Y902	11	15'- 8 1/2"	588	1	0'- 6"	15'- 6"		
	1	13'- 8 1/2"				13'- 6"		
Y903	SERIES	TO	953	1	0'- 6"	TO		1 3/8"
	OF 19	15'- 9 1/2"				15'- 7"		
	1	8'- 11"						
WW501	SERIES	TO	270	STR.				0'- 3 3/8"
	of 23	13'- 7"						
WW502	1	37'- 6"	40	3	33'- 11"	1'- 4 1/2"	3'- 3 1/2"	
WW503	1	38'- 10"	41	3	34'- 7"	1'- 7 1/2"	3'- 11"	
WW505	2	36'- 7"	77	3	2'- 5"	4'- 9"	34'- 0"	
	1	7'- 10"						
WW507	SERIES	TO	101	STR.				0'- 8 5/8"
	of 9	13'- 7"						
WW508	2	12'- 11"	27	STR.				
WW509	2	11'- 5"	24	STR.				
WW510	2	12'- 3"	26	3	2'- 5"	5'- 7"	8'- 1"	
WW511	2	26'- 0"	55	STR.				
WW512	1	34'- 11"	37	STR.				
WW513	1	35'- 9"	38	STR.				
WW514	1	34'- 9"	36	3	2'- 5"	12'- 4 1/2"	29'- 10 1/2"	
WW515	1	35'- 6"	37	3	2'- 5"	15'- 1/2"	30'- 7 1/2"	
WW516	2	7'- 3"	16	STR.				
WW517	2	5'- 10"	13	STR.				
WW518	2	5'- 6"	12	STR.				
WW519	2	6'- 2"	13	STR.				
WW520	2	8'- 0"	17	STR.				
WW521	2	11'- 4"	24	STR.				
WW522	2	15'- 3"	32	STR.				
WW523	2	13'- 5"	28	STR.				
WW524	2	12'- 9"	27	STR.				
WW525	2	12'- 7"	26	STR.				
WW526	1	35'- 9"	38	3	33'- 11"	0'- 8 1/2"	1'- 8"	
WW527	1	37'- 1"	39	3	34'- 7"	0'- 11 1/2"	2'- 3 1/2"	
WW528	1	35'- 0"	37	3	33'- 11"	0'- 5"	1'- 1/2"	
WW529	1	36'- 4"	38	3	34'- 7"	0'- 8"	1'- 7 1/2"	
WW530	1	34'- 10"	37	3	33'- 11"	0'- 4 1/2"	0'- 10 1/2"	

TYPE B HEADWALL REINFORCING SCHEDULE CONTINUED

BAR MARK	NUMBER	LENGTH	WEIGHT (LBS.)	TYPE	BAR TYPE DIMENSIONS A	B	C	INC.
WW531	1	36'- 2"	38	3	34'- 7"	0'- 4"	0'- 11"	
WW532	1	35'- 2"	37	3	33'- 11"	0'- 6"	1'- 2"	
WW533	1	36'- 6"	38	3	34'- 7"	0'- 9"	1'- 9 1/2"	
WW534	1	36'- 2"	38	3	33'- 11"	0'- 10 1/2"	2'- 1"	
WW535	1	37'- 5"	39	3	34'- 7"	1'- 1 1/2"	2'- 8"	
WW536	16	4'- 3"	72	STR.				
WW537	1	23'- 10"	25	3	2'- 5"	12'- 4 1/2"	19'- 9 1/2"	
WW538	1	24'- 8"	26	3	2'- 5"	9'- 4"	20'- 6 1/2"	
WW539	1	32'- 1"	34	STR.				
WW540	1	32'- 11"	35	STR.				
WW541	1	13'- 1"	14	3	2'- 5"	6'- 6"	9'- 10 1/2"	
WW542	1	13'- 11"	15	3	2'- 5"	6'- 10"	10'- 7 1/2"	
WW543	1	29'- 1"	31	STR.				
WW544	1	29'- 11"	32	STR.				
			FOOTING & CUTOFF WALL					
V901	89	11'- 9"	3,556	STR.				
W601	68	11'- 9"	1,201	STR.				
Z601	70	4'- 5"	464	5	3'- 7"	1'- 2"		
F901	8	7'- 10"	214	STR.				
F902	7	11'- 7"	276	STR.				
	2	37'- 7 5/8"			35'- 3"			
F503	SERIES	TO	777	3	TO	0'- 11 1/4"	2'- 3"	0'- 9 7/8"
	of 9	45'- 5/8"			42'- 8"			
	2	30'- 7 1/2"						
F504	SERIES	TO	651	STR.				0'- 10 5/8"
	of 9	38'- 8"						
F505	1	37'- 5 1/2"	39	3	35'- 1"	0'- 11 1/4"	2'- 3"	
F506	1	30'- 9"	32	STR.				
F507	1	37'- 8 1/2"	39	3	35'- 4"	0'- 11 1/4"	2'- 3"	
F508	1	31'- 5"	33	STR.				
			FORESLOPE WALL					
FS501	4	3'- 9"	16	STR.				
FS502	4	2'- 9"	12	5	0'- 2"	0'- 11"		
FS503	4	1'- 3"	10	7	0'- 2"	0'- 11"	1'- 1"	
FS504	4	2'- 1"	9	STR.				
TOTAL			13,032	LBS.				

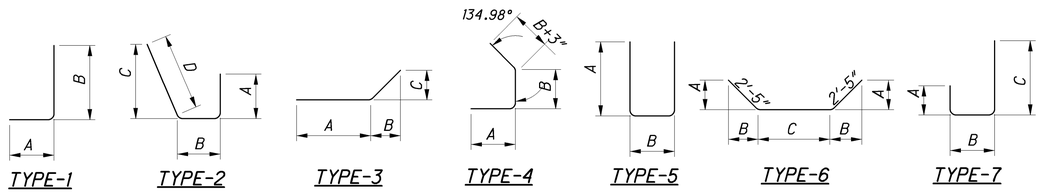

DESIGN AGENCY
PARSONS BRINCKERHOFF
2545 FARMERS DRIVE
SUITE 350
COLUMBUS, OHIO 43235

DESIGNED SAP | DRAWN BKJ | CHECKED PJL | REVIEWED EBS | DATE 05/24/12 | REVISED | STRUCTURE FILE NUMBER 0202061

INLET HEADWALL REINFORCING STEEL SCHEDULE
ALL-075-0711
I-75 OVER LOST CREEK

ALL-75-5.53
PID No. 76691

8 / 8

928
1224

J:\Projects\ALL\76691\structures\Lost Creek Culvert\I75 over Lost Creek\075_DM006.dgn 11-SEP-2012 8:53PM reddenj

EXISTING STRUCTURE

TYPE: TWIN SECTIONAL CORRUGATED METAL CIRCULAR CULVERT

SIZE: 11' DIAX180' (EACH)

SKEW: VARIES

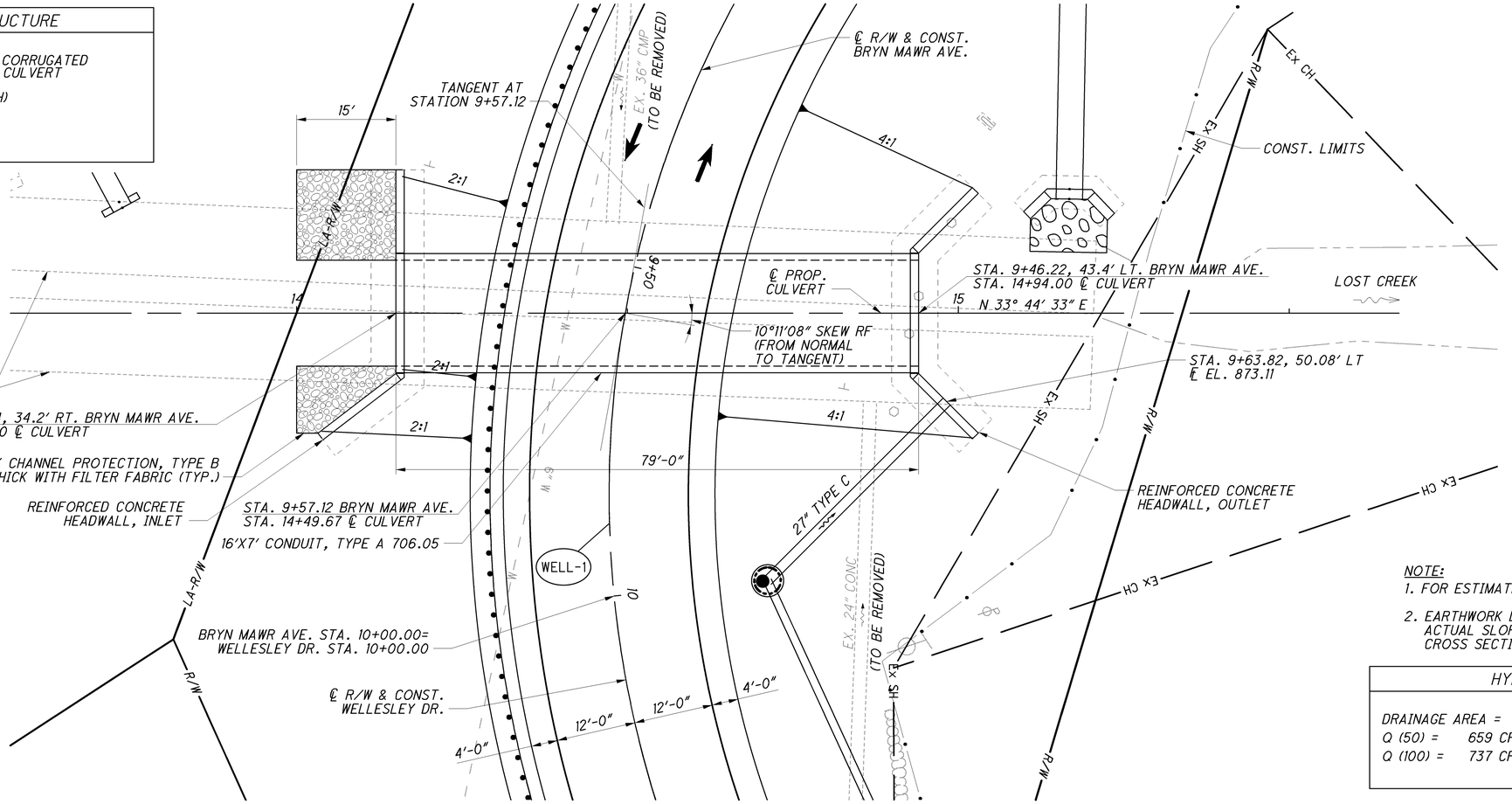

PLAN

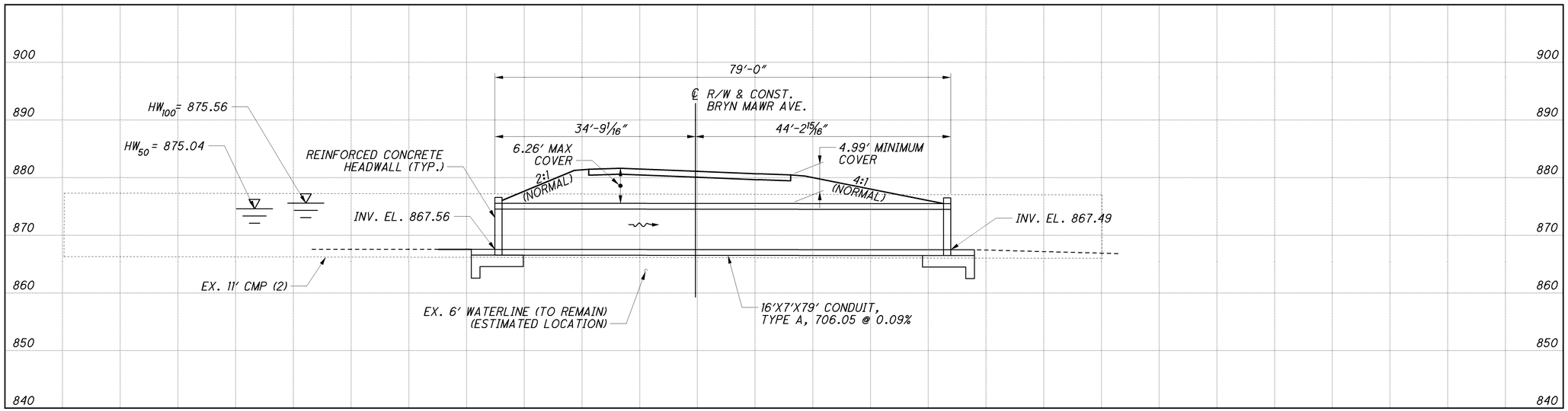

PROFILE

CURVE WELL-1
P.I.= Sta. 9+92.21
D = 103° 28' 28" (LT)
Dc = 37° 00' 00"
R = 154.85'
T = 196.34'
L = 279.66'
E = 95.21'
C = 243.18'
C.B. = S 38° 08' 44" E
e_d = NC

NOTE:

1. FOR ESTIMATED QUANTITIES SEE SHEET 2/7
2. EARTHWORK LIMITS SHOWN ARE APPROXIMATE. ACTUAL SLOPES SHALL CONFORM TO PLAN CROSS SECTIONS.

HYDRAULIC DATA

DRAINAGE AREA = 5.6 SQ. MILES

Q (50) =	659 CFS	V (50) =	3.00 FT/S
Q (100) =	737 CFS	V (100) =	3.10 FT/S

DESIGN AGENCY
PARSONS BRINCKERHOFF
2545 FARMERS DRIVE
SUITE 350
COLUMBUS, OHIO 43235

DESIGNED	DRAWN	REVIEWED	DATE
SAP	LEL	EBS	05/24/12
CHECKED	REVISED	STRUCTURE FILE NUMBER	
LEL		0236993	

CULVERT PLAN & PROFILE
BTH-TR509-0.01
BRYN MAWR AVE. OVER LOST CREEK

ALL-75-5.53
PID No. 76691

J:\Projects\ALL\76691\structures\Lost Creek Culvert\BRYN MAWR CULVERT\075_071IPSP003.dgn 11-SEP-2012 8:53PM reddenj

GENERAL NOTES

DESIGN SPECIFICATIONS: THIS STANDARD DRAWING CONFORMS TO "STANDARD SPECIFICATIONS FOR HIGHWAY BRIDGES" ADOPTED BY THE AMERICAN ASSOCIATION OF STATE HIGHWAY AND TRANSPORTATION OFFICIALS, 2010 AND THE ODOT BRIDGE DESIGN MANUAL.

DESIGN DATA:

INTERNAL ANGLE OF FRICTION = 30 DEGREES
COEFFICIENT OF FRICTION = 0.30
UNIT WEIGHT OF SOIL = 120 PCF
UNIT WEIGHT OF CONCRETE = 150 PCF
SLOPE OF BACKFILL = 2:1
MAXIMUM FOUNDATION BEARING PRESSURE = 2000 P.S.F.

CONCRETE CLASS C - COMPRESSIVE STRENGTH 4000 PSI
(FOOTING, WINGWALL AND FORESLOPE WALL)

REINFORCING STEEL - ASTM A615, A616, OR A617
GRADE 60 MINIMUM YIELD STRENGTH
60,000 PSI (ALL REINFORCING SHALL BE EPOXY COATED)

PRECAST CONCRETE: AT THE OPTION OF THE CONTRACTOR, PRECAST HEADWALLS MAY BE FURNISHED PER ITEM 602.03 PRECAST STRUCTURES, PROVIDED THEY ARE SIZED TO MEET THE SOIL LOADING AND RESISTANCE PARAMETERS, AND MEET OR EXCEED THE MATERIAL STRENGTHS AND WALL LIMITS AS SHOWN AND SPECIFIED. FULL COMPENSATION FOR THE PRECAST SUBSTITUTION IS THE VOLUME OF CONCRETE AND THE WEIGHT OF THE REINFORCING STEEL FOR THE CORRESPONDING CAST-IN-PLACE STRUCTURE.

FORESLOPE WALL ANCHOR DOWELS: ANCHOR PER CMS 510 WITH NONSHRINK, NONMETALLIC GROUT CONFORMING TO CMS 705.20 AND TO A DEPTH OF 5 ". PAYMENT FOR DOWEL HOLES, GROUT AND INSTALLATION SHALL BE INCLUDED WITH ITEM 511.

AS AN ALTERNATIVE TO RESIN BONDING, THREADED INSERTS OR NONPROTRUDING MECHANICAL CONNECTORS CAST INTO THE CULVERT BY THE MANUFACTURER MAY BE USED PROVIDED THEY CAN RESIST AN ULTIMATE PULL-OUT STRENGTH OF 12 KIPS AND MAINTAIN A MINIMUM COVER OF 3 INCHES AT THE BOTTOM OF THE CULVERT SLAB. MECHANICAL CONNECTORS MUST PROVIDE AN "L-SHAPED" BAR INSIDE THE CULVERT WITH A MINIMUM HORIZONTAL LENGTH OF 12 INCHES. PAYMENT FOR INSERTS OR MECHANICAL CONNECTORS SHALL BE INCLUDED WITH ITEM 603.

BACKFILL LIMITATION: WHEN THE DESIGN HEIGHT IS GREATER THAN 10 FT, THE BACKFILL BEHIND THE WINGWALLS SHALL NOT BE PLACED HIGHER THAN THE ELEVATION OF THE SOIL ABOVE THE TOE. WHEN THE SOIL ABOVE THE TOE IS AT ITS FINISHED ELEVATION, THE REMAINDER OF THE BACKFILL MAY BE PLACED.

POROUS BACKFILL WITH FILTER FABRIC 1'-6" THICK SHALL BE PLACED BEHIND THE WINGWALLS ONLY AND SHALL EXTEND TO 12" BELOW THE EMBANKMENT SURFACE. GEOTEXTILE FABRIC SHALL BE PLACED BETWEEN THE POROUS BACKFILL AND REPLACED EXCAVATION ADJACENT TO THE STRUCTURE. IT SHALL TURN UNDER THE BOTTOM OF THE POROUS BACKFILL AND RETURN 6" ABOVE THE TOP ELEVATION OF THE WEEPHOLE. WEEPHOLES SHALL BE PLACED 6" TO 12" ABOVE THE NORMAL WATER ELEVATION OR GROUND LINE AND SHALL HAVE A MAXIMUM SPACING OF 10'-0". A MINIMUM OF ONE WEEPHOLE SHALL BE PROVIDED PER WINGWALL.

PREFORMED EXPANSION JOINT FILLER: PREFORMED EXPANSION JOINT FILLER (PEJF) CONFORMING TO CMS 705.03, 1 INCH THICK, SHALL BE PLACED ABOVE THE FOOTING BETWEEN THE SIDES OF THE BOX CULVERT AND THE ENDS OF THE WINGWALLS. PAYMENT FOR MATERIALS AND INSTALLATION SHALL BE INCLUDED WITH ITEM 516 - 1" PREFORMED EXPANSION JOINT FILLER.

SEALING OF FORESLOPE WALL AND WINGWALLS: ALL EXPOSED FORESLOPE WALL AND WINGWALL CONCRETE SHALL BE SEALED WITH EPOXY-URETHANE SEALER. THE LIMITS SHALL BE AS SHOWN IN THE DIAGRAMS BELOW. PAYMENT FOR THE EPOXY-URETHANE SEALER SHALL BE PER ITEM 512 - SEALING OF CONCRETE SURFACES.

WATERPROOFING: TYPE 2 WATERPROOFING, PER CMS 512.09 AND 711.25, SHALL EXTEND VERTICALLY DOWN THE ENTIRE SIDES OF THE PRECAST CULVERT SECTIONS FOR ALL PORTIONS OF THE CULVERT WHICH SHALL BE IN CONTACT WITH THE BACKFILL. PAYMENT FOR THE MEMBRANE WATERPROOFING SHALL BE AT THE CONTRACT PRICE BID PER SQUARE YARD FOR ITEM 512 - TYPE 2 WATERPROOFING.

TYPE 2 WATERPROOFING, PER CMS 512.09 AND 711.25 SHALL BE APPLIED TO THE ENTIRE TOP SURFACE OF THE PRECAST CULVERT SECTIONS AND SHALL EXTEND ONE FOOT VERTICALLY DOWN THE SIDES FOR ALL PORTIONS OF THE CULVERT WHICH SHALL BE IN CONTACT WITH THE BACKFILL. PAYMENT FOR THE MEMBRANE WATERPROOFING SHALL BE AT THE CONTRACT PRICE BID PER SQUARE YARD FOR ITEM 512 - TYPE 2 WATERPROOFING.

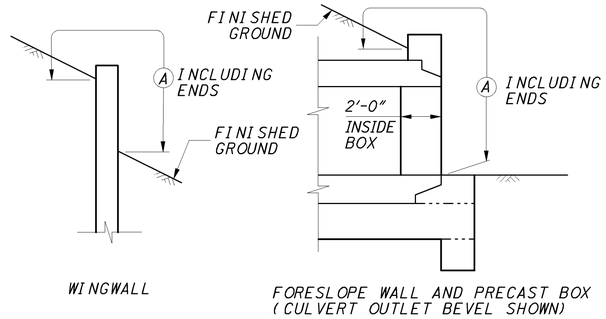

WINGWALL

FORESLOPE WALL AND PRECAST BOX (CULVERT OUTLET BEVEL SHOWN)

LIMITS OF ITEM 512-SEALING CONCRETE SURFACES

(A) - SEAL ENTIRE CONCRETE SURFACE AREA

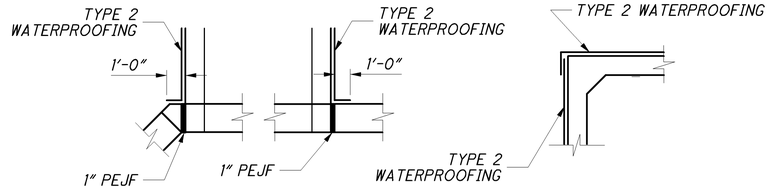

PLAN VIEW

SECTION VIEW

WATERPROOFING DETAILS

ABBREVIATIONS:

APPRX. = APPROXIMATE
(B) = BOTTOM
BM = BENCH MARK
C.J. = CONSTRUCTION JOINT
CLR. = CLEAR
CONST. = CONSTRUCTION
C/C = CENTER ON CENTER
DIA. = DIAMETER
E.B. = EASTBOUND
E.F. = EACH FACE
EL. = ELEVATION
EX. = EXISTING
ELEV. = ELEVATION
F.F. = FAR FACE
INC. = INCREMENT
LF. = LEFT
MAX. = MAXIMUN
MIN. = MINIMUM
M.O.T. = MAINTENACE OF TRAFFIC
N.F. = NEAR FACE
P.E.J.F. = PREFORMED EXPANSION JOINT FILLER
PROP. = PROPOSED
P.V.I. = POINT OF VERTICAL INTERSECTION
RT. = RIGHT
SHLDR = SHOULDER
SER. = SERIES
S.R. = STATE ROUTE
STA. = STATION
STR. = STRAIGHT
STM = STORM
(T) = TOP
T&B = TOP AND BOTTOM
TYP. = TYPICAL
VC = VERTICAL CURVE
W.B. = WESTBOUND
YR. = YEAR

ESTIMATED QUANTITIES

02/IMS/BR/		ITEM	EXTENSION	TOTAL	UNIT	DESCRIPTION	SEE SHEET
1		202	11000	1	LUMP	STRUCTURE REMOVED	
1		503	11100	1	LUMP	COFFERDAMS AND EXCAVATION BRACING	
1		503	21300	1	LUMP	UNCLASSIFIED EXCAVATION	
5964		509	10000	5964	POUND	EPOXY COATED REINFORCING STEEL	
82		511	46200	82	CU YD	CLASS C CONCRETE	
74		512	10100	74	SQ YD	SEALING OF CONCRETE SURFACES (EPOXY-URETHANE)	
342		512	33000	342	SQ YD	TYPE 2 WATERPROOFING	
53		516	13600	53	SQ FT	1" PREFORMED EXPANSION JOINT FILLER	
1		518	21230	1	LUMP	POROUS BACKFILL WITH FILTER FABRIC	
23		601	32104	23	CU YD	ROCK CHANNEL PROTECTION, TYPE B WITH FABRIC FILTER	
79		603	96448	79	FT	16" X 7" CONDUIT, TYPE A, 706.05	

CALC. BY: SAP DATE: 4/10/2012
CHECK BY: EBS DATE: 5/21/2012

DESIGN AGENCY
PARSONS BRINCKERHOFF
2945 FARMERS DRIVE
SUITE 350
COLUMBUS, OHIO 43235

DESIGNED SAP | DRAWN BKJ | REVIEWED EBS | DATE 05/24/12
CHECKED PJL | REVISED | STRUCTURE FILE NUMBER 0236993

GENERAL NOTES & ESTIMATED QUANTITIES
BTH-TR509-0.01
BRYN MAWR AVE. OVER LOST CREEK

ALL-75-5.53
PID No. 76691

2 / 7

930
1224

J:\Projects\ALL\76691\structures\Lost Creek Culvert\BRYN MAWR CULVERT\075_DM001.dgn 14-SEP-2012 2:45PM reddenj

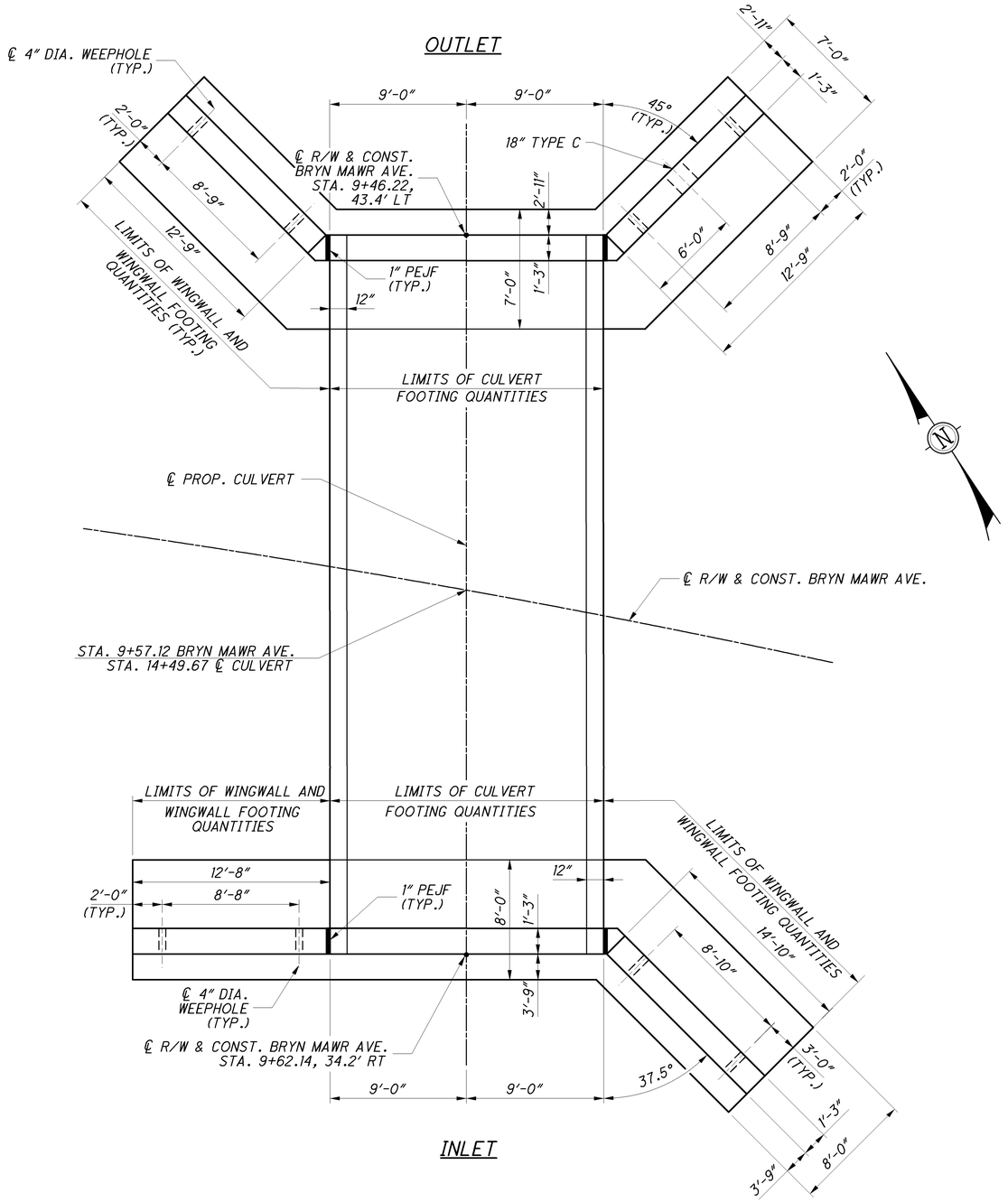

INLET

CULVERT & WINGWALL LAYOUT

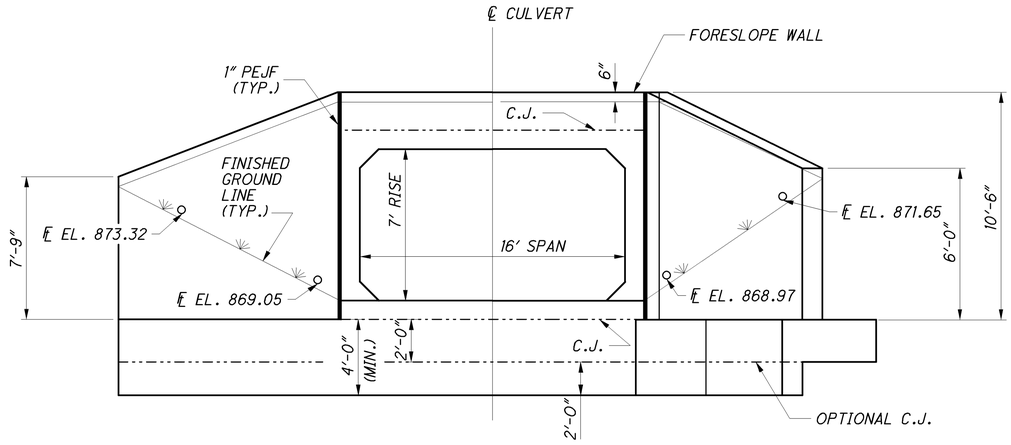

INLET ELEVATION

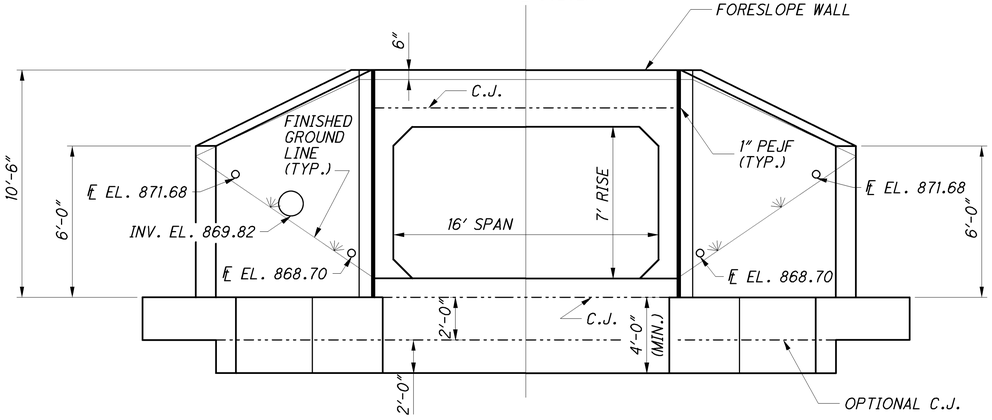

OUTLET ELEVATION

DESIGN AGENCY
PARSONS BRINCKERHOFF
2545 FARMERS DRIVE
SUITE 350
COLUMBUS, OHIO 43235

DESIGNED	DRAWN	REVIEWED	DATE
SAP	TLP	EBS	05/24/12
CHECKED	REVISED	STRUCTURE FILE NUMBER	
PJL		0236993	

CULVERT LAYOUT
BTH-TR509-0.01
BRYN MAWR AVE. OVER LOST CREEK

ALL-75-5.53
PID No. 76691

J:\Projects\ALL\76691\structures\Lost Creek Culvert\BRYN MAWR CULVERT\075_DM006.dgn 11-SEP-2012 8:53PM reddenj

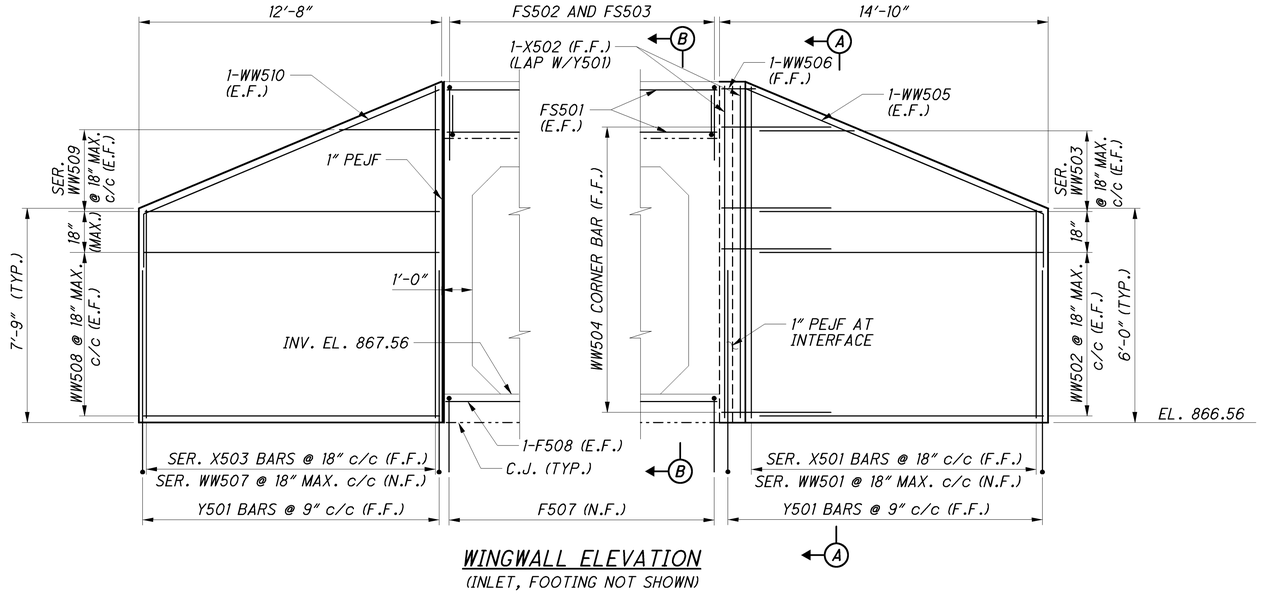

WINGWALL ELEVATION
(INLET, FOOTING NOT SHOWN)

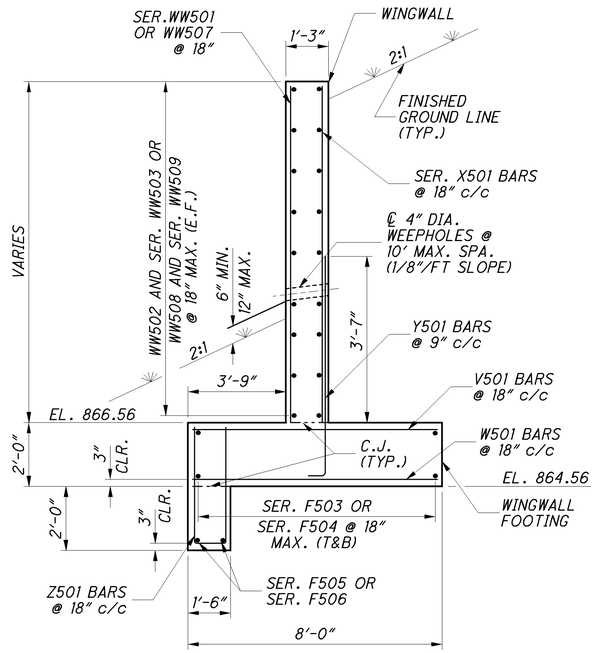

SECTION A-A
(POROUS BACKFILL NOT SHOWN FOR CLARITY)

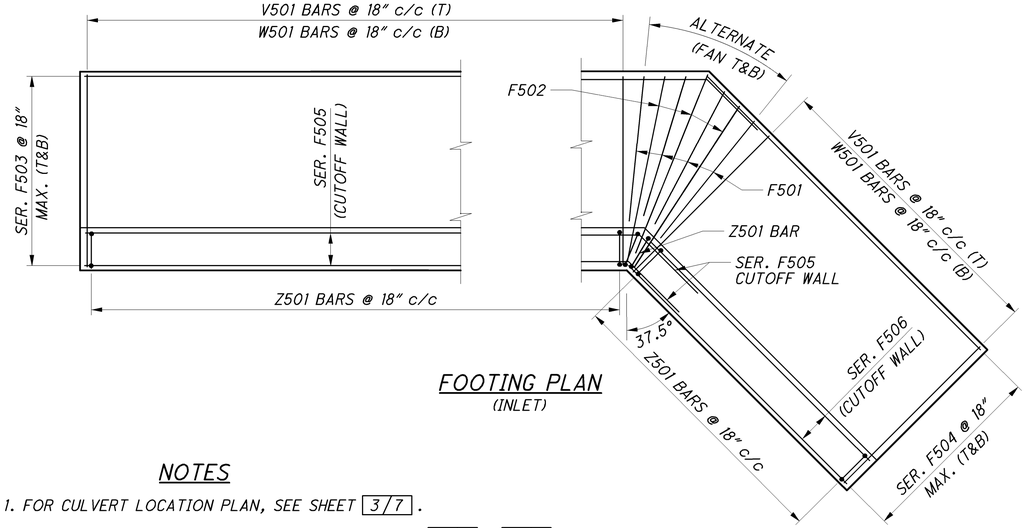

FOOTING PLAN
(INLET)

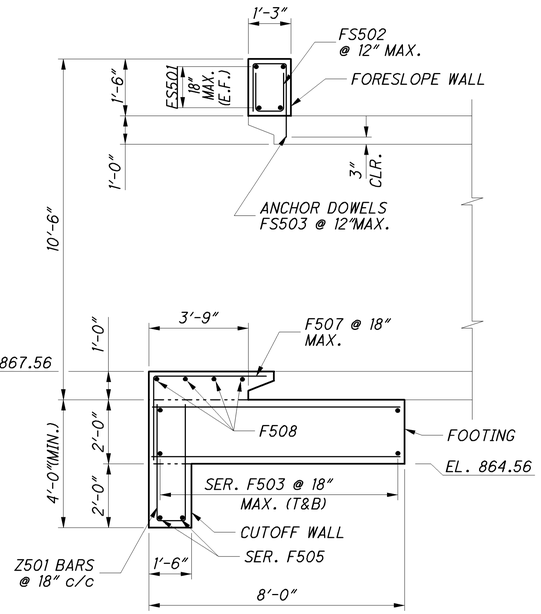

SECTION B-B
(CULVERT INLET BEVEL SHOWN)

NOTES

1. FOR CULVERT LOCATION PLAN, SEE SHEET 3/7 .
2. FOR PRECAST BOX CULVERT DETAILS, SEE SHEETS 6/7 & 7/7 .
3. THE BAR SIZE NUMBER IS SPECIFIED ON THE PLANS IN THE BAR MARK COLUMN. THE FIRST DIGIT INDICATES THE BAR SIZE NUMBER. FOR EXAMPLE, WW501 IS A NO.5 BAR. BAR DIMENSIONS SHOWN ARE OUT TO OUT. ALL REINFORCING STEEL SHALL BE EPOXY COATED.
4. THE LAP SPLICE LENGTHS USED IN THESE DETAILS ARE AS FOLLOWS: 2'-5" FOR #5 BARS; 2'-11" FOR #6 BARS.
5. FOR REINFORCING SCHEDULE, SEE SHEETS 6/7 & 7/7 .
6. THE INTERFACE BETWEEN THE TOP OF FOOTING AND BASE OF WINGWALL STEM SHALL BE INTENTIONALLY ROUGHENED TO A FULL AMPLITUDE OF APPROXIMATELY ¼" BY MEANS OF A SERRATED TROWEL.

LEGEND:

C.J.	CONSTRUCTION JOINT	N.F.	NEAR FACE
CLR.	CLEAR	SER.	SERIES
DIA.	DIAMETER	STR.	STRAIGHT
E.F.	EACH FACE	(T)	TOP
F.F.	FAR FACE	(B)	BOTTOM
MAX.	MAXIMUM	T&B	TOP AND BOTTOM
MIN.	MINIMUM	TYP.	TYPICAL
PEJF	PREFORMED EXPANSION JOINT FILLER	INC.	INCREMENT

DESIGN AGENCY
PARSONS BRINCKERHOFF
2545 FARMERS DRIVE
SUITE 350
COLUMBUS, OHIO 43235

DESIGNED SAP | DRAWN BKJ | REVIEWED EBS | DATE 05/24/12
CHECKED PJL | REVISED | STRUCTURE FILE NUMBER 0236993

INLET HEADWALL DETAILS
BTH-TR509-0.01
BRYN MAWR AVE. OVER LOST CREEK

ALL-75-5.53
PID No. 76691

J:\Projects\ALL\76691\structures\Lost Creek Culvert\BRYN MAWR CULVERT\075_DM003.dgn 11-SEP-2012 8:53PM reddenj

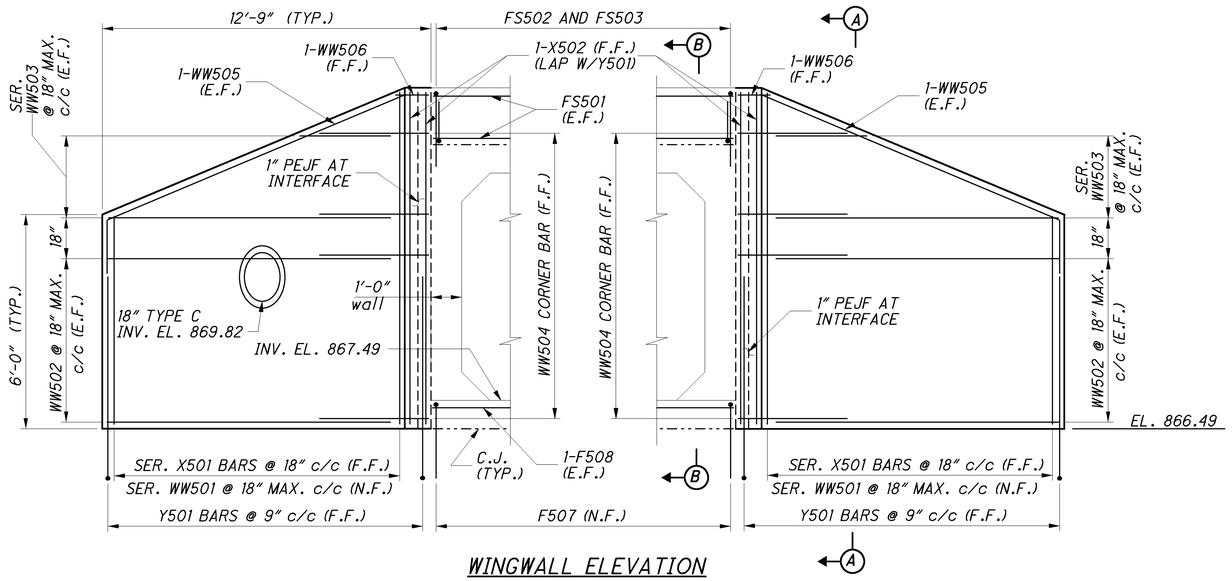

WINGWALL ELEVATION
(OUTLET, FOOTING NOT SHOWN)

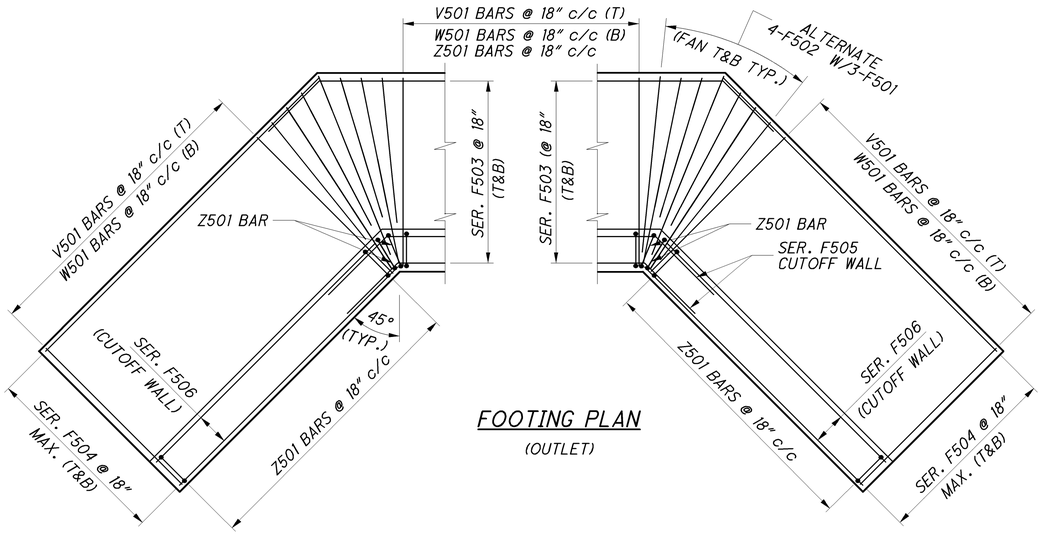

FOOTING PLAN
(OUTLET)

NOTES

1. FOR CULVERT LOCATION PLAN, SEE SHEET 3/7.
2. FOR PRECAST BOX CULVERT DETAILS, SEE SHEETS 6/7 & 7/7.
3. THE BAR SIZE NUMBER IS SPECIFIED ON THE PLANS IN THE BAR MARK COLUMN. THE FIRST DIGIT INDICATES THE BAR SIZE NUMBER. FOR EXAMPLE, WW501 IS A NO.5 BAR. BAR DIMENSIONS SHOWN ARE OUT TO OUT. ALL REINFORCING STEEL SHALL BE EPOXY COATED.
4. THE LAP SPLICE LENGTHS USED IN THESE DETAILS ARE AS FOLLOWS: 2'-5" FOR #5 BARS; 2'-11" FOR #6 BARS.
5. FOR REINFORCING SCHEDULE, SEE SHEETS 6/7 & 7/7.
6. THE INTERFACE BETWEEN THE TOP OF FOOTING AND BASE OF WINGWALL STEM SHALL BE INTENTIONALLY ROUGHENED TO A FULL AMPLITUDE OF APPROXIMATELY 1/4" BY MEANS OF A SERRATED TROWEL.

LEGEND:

C.J.	CONSTRUCTION JOINT	N.F.	NEAR FACE
CLR.	CLEAR	SER.	SERIES
DIA.	DIAMETER	STR.	STRAIGHT
E.F.	EACH FACE	(T)	TOP
F.F.	FAR FACE	(B)	BOTTOM
MAX.	MAXIMUM	T&B	TOP AND BOTTOM
MIN.	MINIMUM	TYP.	TYPICAL
PEJF	PREFORMED EXPANSION JOINT FILLER	INC.	INCREMENT

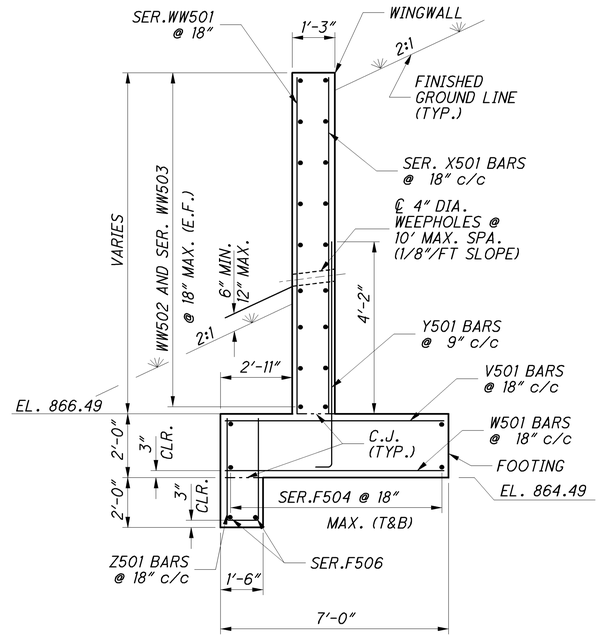

SECTION A-A
(POROUS BACKFILL NOT SHOWN FOR CLARITY)

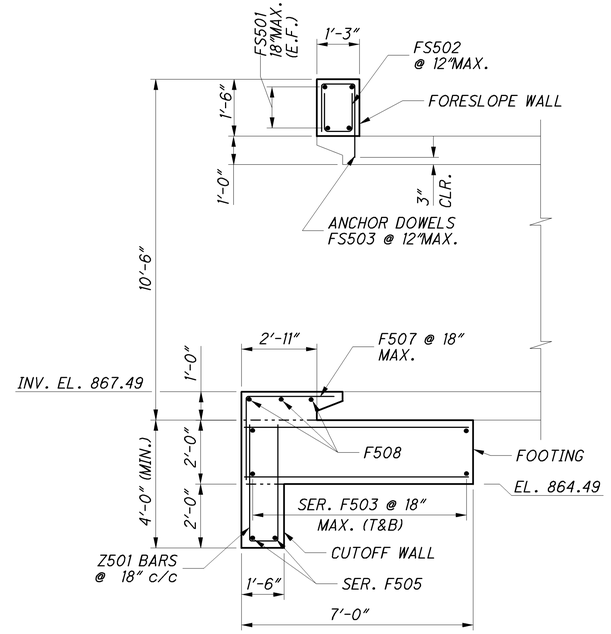

SECTION B-B
(CULVERT INLET BEVEL SHOWN)

DESIGN AGENCY
PARSONS BRINCKERHOFF
2545 FARMERS DRIVE
SUITE 350
COLUMBUS, OHIO 43235

DESIGNED	DRAWN	REVIEWED	DATE
SAP	BKJ	EBS	05/24/12
CHECKED	REVISED	STRUCTURE FILE NUMBER	
PJL		0236993	

OUTLET HEADWALL DETAILS
BTH-TR509-0.01
BRYN MAWR AVE. OVER LOST CREEK

ALL-75-5.53
PID No. 76691

I:\Projects\ALL\76691\structures\Lost Creek Culvert\BRYN MAWR CULVERT\075_DM004.dgn 11-SEP-2012 8:53PM reddenj

INLET HEADWALL

TYPE B HEADWALL REINFORCING SCHEDULE

BAR MARK	NUMBER	LENGTH	WEIGHT (LBS.)	TYPE	BAR TYPE DIMENSIONS A	B	C	D	INC.
				WINGWALLS					
	1	5'- 10"							
X501	SERIES	TO	93	STR.					0'- 5 1/2"
	of 11	10'- 4"							
X502	2	10'- 4"	22	STR.					
	1	7'- 7"							
X503	SERIES	TO	94	STR.					0'- 3 3/4"
	of 10	10'- 4"							
Y501	23	5'- 8"	137	1	0'- 6"	5'- 4"			
	1	5'- 10"							
WW501	SERIES	TO	93	STR.					0'- 5 1/2"
	of 11	10'- 4"							
WW502	8	14'- 6"	121	STR.					
	2	4'- 10"							
WW503	SERIES	TO	61	STR.					4'- 10 "
	of 3	14'- 6"							
WW504	7	4'- 2"	31	2	0'- 10"	0'- 4 1/2"	2'- 5 "	3'- 1/2"	
WW505	2	17'- 7"	37	3	2'- 5"	4'- 4"	14'- 6"		
WW506	1	1'- 9"	2	8	0'- 10"	0'- 4 1/2"			
	1	7'- 7"							
WW507	SERIES	TO	94	STR.					0'- 3 3/4"
	of 10	10'- 4"							
WW508	10	12'- 4"	129	STR.					
	2	6'- 3"							
WW509	SERIES	TO	39	STR.					6'- 1 1/8"
	of 2	12'- 4"							
WW510	2	15'- 0"	32	3	2'- 5"	2'- 7"	12'- 4"		
				FOOTING & CUTOFF WALL					
V501	31	7'- 8"	248	STR.					
W501	31	7'- 8"	248	STR.					
Z501	33	8'- 2"	282	5	3'- 7"	1'- 2"			
F501	6	6'- 11"	44	STR.					
F502	8	5'- 5"	46	STR.					
	2	31'- 2"			28'- 9 "				
F503	SERIES	TO	484	3	TO	1'- 5 3/4"	1'- 11 1/4"		0'- 7 3/4"
	of 7	35'- 0"			32'- 6 1/4"				
	2	12'- 10"							
F504	SERIES	TO	216	STR.					0'- 7 3/4"
	of 7	16'- 8"							
	1	31'- 2"			28'- 9 "				
F505	SERIES	TO	66	3	TO	1'- 5 3/4"	1'- 11 1/4"		0'- 7 "
	2	31'- 9"			29'- 3 3/4"				
	1	12'- 10"							
F506	SERIES	TO	28	STR.					0'- 7 "
	2	13'- 5"							
F507	13	6'- 4"	86	1	3'- 9"	2'- 8"			
F508	2	17'- 9"	38	STR.					
				FORESLOPE WALL					
FS501	4	17'- 9"	75	STR.					
FS502	19	3'- 0"	60	5	1'- 2"	0'- 11"			
FS503	19	3'- 11"	78	7	1'- 2"	0'- 11"	2'- 1"		
		TOTAL	2,984						

Ohio Department of Transportation

ITEM 603 - 16' X 7' CONDUIT TYPE A, 706.05, AS PER PLAN
ALL REQUIREMENTS OF 706.05 SHALL BE MET
EXCEPT AS DETAILED HEREIN:

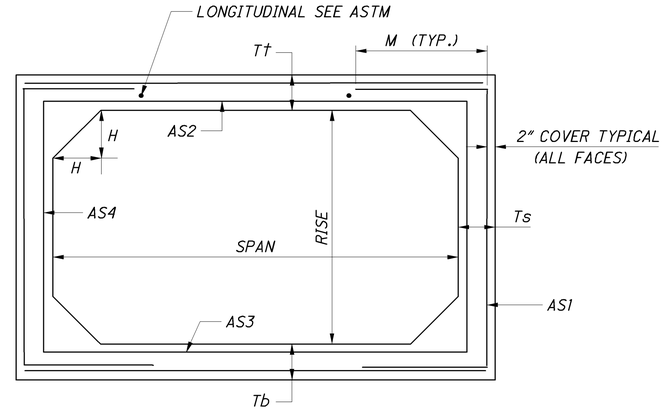

LOADING: HL-93
DEPTH OF COVER 5' TO 6.25 '
FWS = 60 PSF

SPAN	16'
RISE	7'
TT	12"
TB	12"
TS	12"
H	12"
AS1	0.93
AS2	0.93
AS3	0.93
AS4	0.29
M MIN	78"

MAXIMUM SPACING OF THE CIRCUMFERENTIAL REINFORCING SHALL BE 4".
MINIMUM YIELD STRENGTH FOR REINFORCING SHALL BE 60 KSI.
MINIMUM CONCRETE COMPRESSIVE STRENGTH SHALL BE 5000 PSI.
AS MIN = 0.002 X GROSS SECTION AREA REINFORCING UNITS OF SQ IN/FT

BOX CULVERT REINFORCING

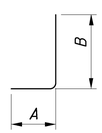

TYPE-1

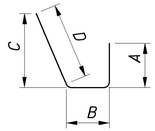

TYPE-2

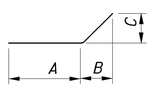

TYPE-3

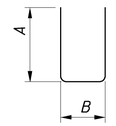

TYPE-5

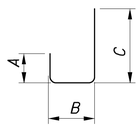

TYPE-7

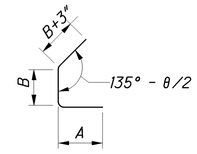

TYPE-8

DESIGN AGENCY
PARSONS BRINCKERHOFF
2945 FARMERS DRIVE
SUITE 350
COLUMBUS, OHIO 43235

DESIGNED SAP | DRAWN BKJ | CHECKED PJL | REVIEWED EBS | DATE 05/24/12 | REVISED | STRUCTURE FILE NUMBER 0236993

REINFORCING STEEL DETAILS
BTH-TR509-0.01
BRYN MAWR AVE. OVER LOST CREEK

ALL-75-5.53
PID No. 76691

6 / 7

934
1224

I:\Projects\ALL\76691\structures\Lost Creek Culvert\BRYN MAWR CULVERT\075_DM002.dgn 11-SEP-2012 8:53PM reddenj

OUTLET HEADWALL

TYPE A HEADWALL REINFORCING SCHEDULE

BAR MARK	NUMBER	LENGTH	WEIGHT (LBS.)	TYPE	BAR TYPE DIMENSIONS A	B	C	D	INC.
					WINGWALLS				
	2	5'- 10"							
X501	SERIES	TO	169	STR.					0'- 6 "
	of 10	10'- 4"							
X502	4	10'- 4"	44	STR.					
Y501	40	6'- 4"	263	1	0'- 6"	5'- 11"			
	2	5'- 10"							
WW501	SERIES	TO	169	STR.					0'- 6 "
	of 10	10'- 4"							
WW502	16	12'- 4"	206	STR.					
	4	4'- 2"							
WW503	SERIES	TO	104	STR.					4'- 1 1/8"
	of 3	12'- 4"							
WW504	14	3'- 11"	58	2	0'- 10"	0'- 3 1/4"	2'- 1 "	2'- 11 1/4"	
WW505	4	15'- 6"	65	3	2'- 5"	4'- 4"	12'- 4"		
WW506	2	1'- 6"	4	4	0'- 10"	0'- 3 1/4"			
					FOOTING & CUTOFF WALL				
V501	30	6'- 8"	209	STR.					
W501	30	6'- 8"	209	STR.					
Z501	34	8'- 2"	290	5	3'- 7"	1'- 2"			
F501	12	6'- 0"	76	STR.					
F502	16	4'- 8"	78	STR.					
	2	20'- 10"					15'- 10 3/4"		
F503	SERIES	TO	296	6	1'- 9"	1'- 9"	TO		1'- 1 1/4"
	of 6	26'- 4"					21'- 5 "		
	4	11'- 4"							
F504	SERIES	TO	319	STR.					0'- 6 5/8"
	of 6	14'- 1"							
	1	20'- 10"					15'- 10 3/4"		
F505	SERIES	TO	45	6	1'- 9"	1'- 9"	TO		0'- 11 3/4"
	2	21'- 10"					16'- 10 1/2"		
	2	11'- 4"							
F506	SERIES	TO	49	STR.					0'- 5 "
	2	11'- 9"							
F507	13	5'- 7"	76	1	3'- 0"	2'- 8"			
F508	2	17'- 9"	38	STR.					
					FORESLOPE WALL				
FS501	4	17'- 9"	75	STR.					
FS502	19	3'- 0"	60	5	1'- 2"	0'- 11"			
FS503	19	3'- 11"	78	7	1'- 2"	0'- 11"	2'- 1"		
		TOTAL	2,980						

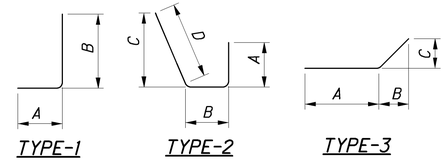

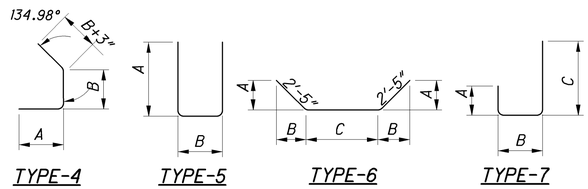

DESIGN AGENCY
PARSONS BRINCKERHOFF
2945 FARMERS DRIVE
SUITE 350
COLUMBUS, OHIO 43235

DESIGNED	DRAWN	REVIEWED	DATE
SAP	BKJ	EBS	05/24/12
CHECKED	REVISED	STRUCTURE FILE NUMBER	
PJL		0236993	

REINFORCING STEEL DETAILS
BTH-TR509-0.01
BRYN MAWR AVE. OVER LOST CREEK

ALL-75-5.53
PID No. 76691

7 / 7

935
1224

J:\Projects\ALL\76691\structures\Lost Creek Culvert\BRYN MAWR CULVERT\075_DM005.dgn 11-SEP-2012 8:53PM reddenj

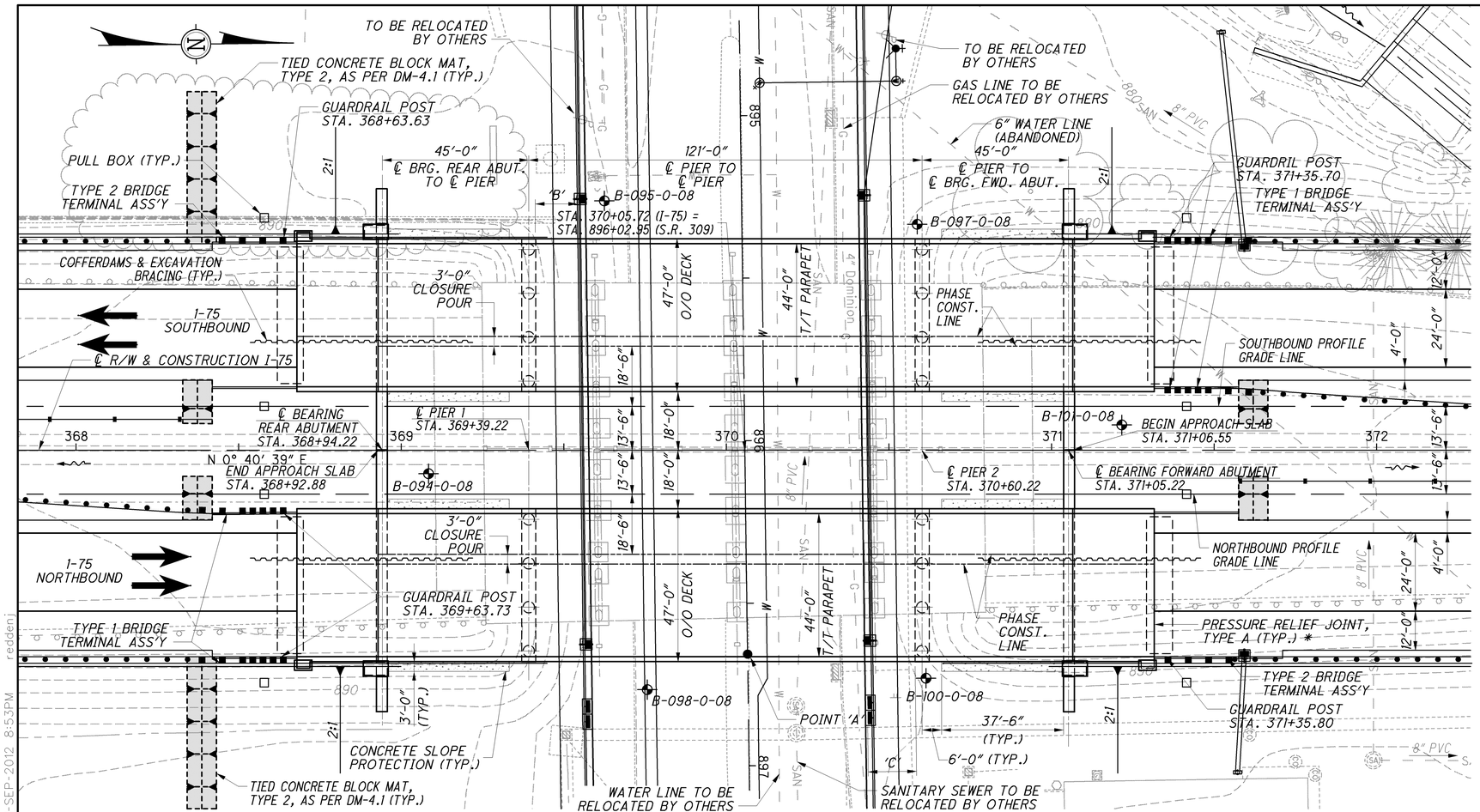

PLAN

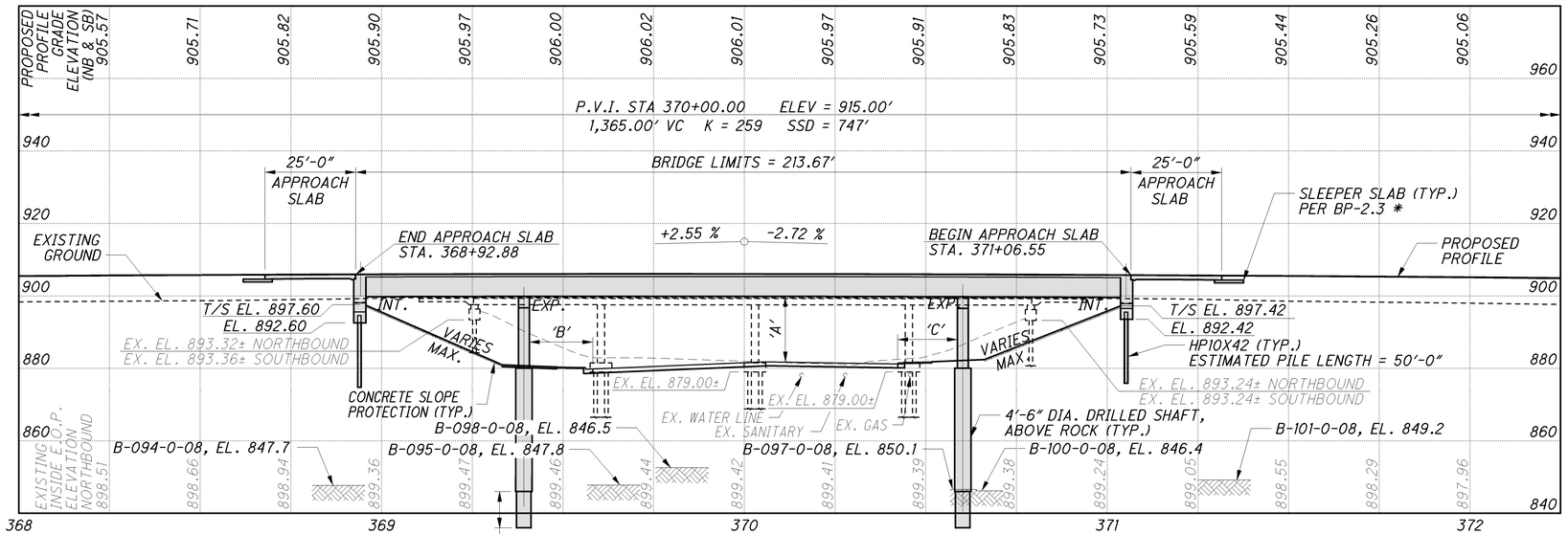

PROFILE

ALONG NORTHBOUND PROFILE GRADE LINE

NOTES

EARTHWORK LIMITS SHOWN ARE APPROXIMATE. ACTUAL SLOPES SHALL CONFORM TO PLAN CROSS SECTIONS.

DESIGN TRAFFIC:
2015 ADT = 49,540 2015 ADTT = 21,302
2035 ADT = 60,240 2035 ADTT = 25,903
DIRECTIONAL DISTRIBUTION =

LEGEND

⊕ BORING LOCATION

● 17.00' REQUIRED MINIMUM VERTICAL CLEARANCE
POINT 'A' - 17.18' ACTUAL MINIMUM VERTICAL CLEARANCE

15.00' REQUIRED MINIMUM HORIZONTAL CLEARANCE
POINT 'B' - 15.92' ACTUAL MINIMUM HORIZONTAL CLEARANCE
POINT 'C' - 15.92' ACTUAL MINIMUM HORIZONTAL CLEARANCE

* USE PRESSURE RELIEF JOINT FOR RIGID PAVEMENT OPTION ONLY.

SOIL BORING LOCATIONS

BORING	STATION, OFFSET	APPROX. TOP OF ROCK
B-094-0-08	STA. 368+99, 7.2' RT.	847.7
B-095-0-08	STA. 369+53, 76.6' LT.	847.8
B-097-0-08	STA. 370+50, 69.5' LT.	850.1
B-098-0-08	STA. 369+67, 73.6' RT.	846.5
B-100-0-08	STA. 370+52, 70.1' RT.	846.4
B-101-0-08	STA. 371+13, 7.8' LT.	849.2

EXISTING STRUCTURE

TYPE: CONTINUOUS 4-SPAN REINFORCED CONCRETE SLAB WITH REINFORCED CONCRETE SUBSTRUCTURE

SPANS: 34'± - 42.5'± - 42.5'± - 34'± c/c BRGS.
ROADWAY: 90.5'± TOE/TOE PARAPETS
LOADING: CF-2000 (51)
SKEW: 0°47.5' RF ±
APPROACH SLABS: AS-1-54 (15' LONG)
ALIGNMENT: TANGENT
CROWN: NORMAL 3/16"/FT.
STRUCTURE FILE NUMBER: 0202010
DATE BUILT: 1956
WEARING SURFACE: MICROSILICA MODIFIED CONCRETE

PROPOSED STRUCTURE

TYPE: THREE SPAN COMPOSITE PRESTRESSED CONCRETE I-BEAM WITH REINFORCED CONCRETE DECK, INTEGRAL ABUTMENTS
SPANS: 45'-0" - 121'-0" - 45'-0" ℄ ABUT. BRG. TO ℄ PIER
ROADWAY: 44'-0" TOE/TOE PARAPET
LOADING: HL-93
FUTURE WEARING SURFACE (FWS) OF 0.060 kips/ ft^2
SKEW: NONE
APPROACH SLABS: 25'-0" LONG (AS-1-81) MODIFIED
WEARING SURFACE: 1" MONOLITHIC
ALIGNMENT: TANGENT
CROWN: 0.016 FT/FT
COORDINATES: LATITUDE 40°43'48"
LONGITUDE 84°4'30"

DESIGN AGENCY
PARSONS BRINCKERHOFF
2545 FARMERS DRIVE
SUITE 350
COLUMBUS, OHIO 43235

DESIGNED PJL | DRAWN LEL | CHECKED SAP | REVIEWED EBS | DATE 05/24/12
REVISED | STRUCTURE NUMBER LEFT: 0202037 RIGHT: 0202053

ALLEN COUNTY
STA. 368+92.88
STA. 371+06.55

SITE PLAN
BRIDGE NO. ALL-75-0703 L&R
I-75 OVER S.R.117 & S.R. 309

ALL-75-5.53
PID No. 76691

1 / 38

936
1224

J:\Projects\ALL_76691\structures\ALL075_0703C\sheets\075_0703CSP001.dgn 11-SEP-2012 8:53PM reddenj

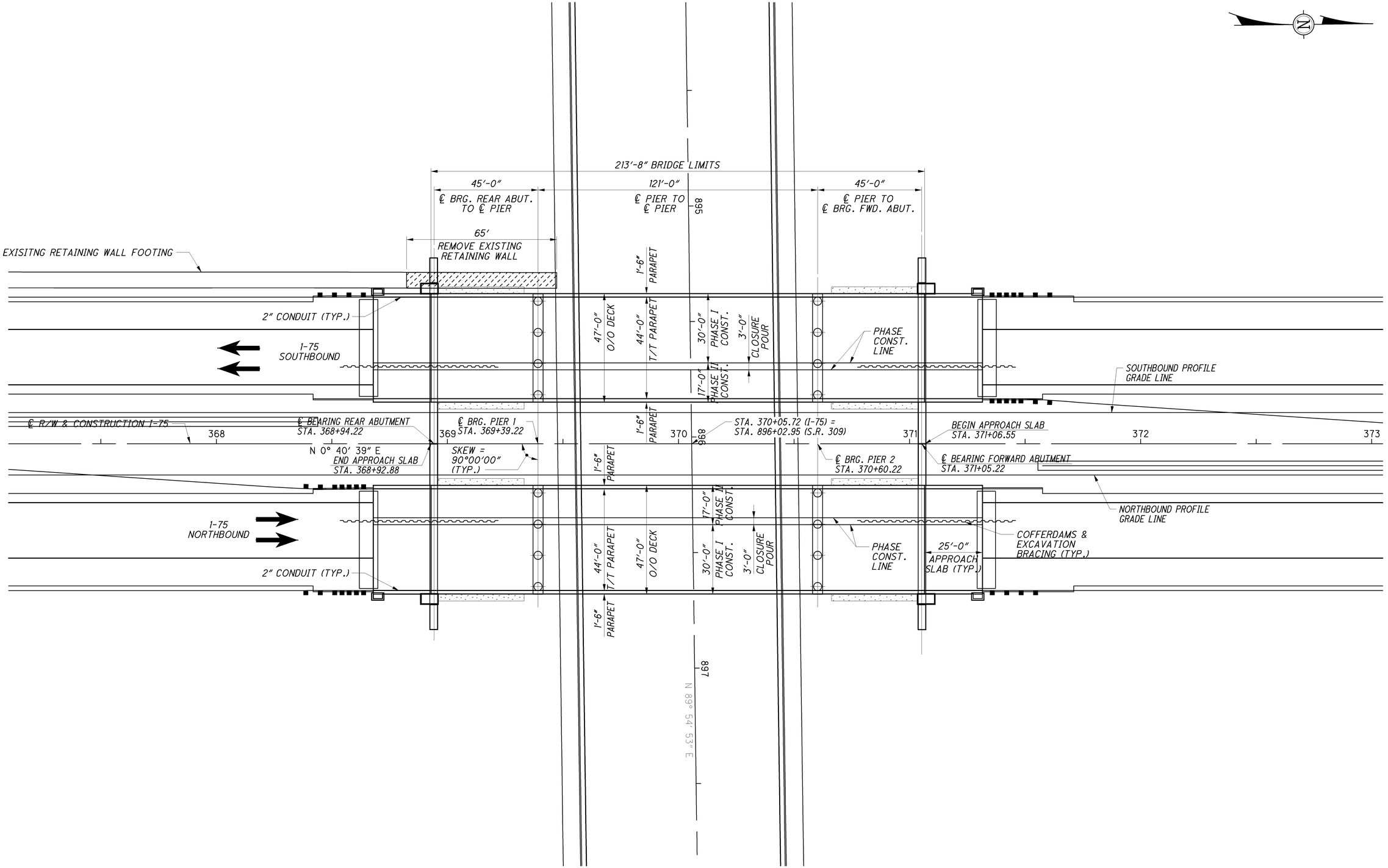

GENERAL PLAN

DESIGN AGENCY
PARSONS BRINCKERHOFF
2545 FARMERS DRIVE
SUITE 350
COLUMBUS, OHIO 43235

DESIGNED	DRAWN	REVIEWED	DATE
SAP	BKJ	EBS	05/24/12
CHECKED	REVISED	STRUCTURE NUMBER	
PJL		LEFT: 0202037 RIGHT: 0202053	

GENERAL PLAN
BRIDGE NO. ALL-75-0703 L&R
I-75 OVER S.R. 117 & S.R. 309

ALL-75-5.53
PID No. 76691

2 / 38

937
1224

J:\Projects\ALL\76691\structures\ALL075_0703C\sheets\075_0703CGP001.dgn 11-SEP-2012 8:53PM reddenj

STANDARD DRAWINGS AND SUPPLEMENTAL SPECIFICATIONS

REFER TO THE FOLLOWING STANDARD BRIDGE DRAWING(S):

AS-1-81	REVISED	07-19-02
BR-1	REVISED	07-19-02
PCB-91	REVISED	07-19-02
PSID-1-99	REVISED	07-18-08
ICD-1-82	REVISED	07-19-02

AND TO THE FOLLOWING SUPPLEMENTAL SPECIFICATION(S):

800	DATED	1-20-12
832	DATED	05-05-09
898	DATED	10-21-11

DESIGN SPECIFICATIONS

DESIGN SPECIFICATIONS: THIS STRUCTURE CONFORMS TO THE "LRFD BRIDGE DESIGN SPECIFICATIONS" ADOPTED BY THE AMERICAN ASSOCIATION OF STATE HIGHWAY AND TRANSPORTATION OFFICIALS, 5th EDITION, INCLUDING THE 2010 INTERIM SPECIFICATIONS2010 AND THE ODOT BRIDGE DESIGN MANUAL, 2007 EXCEPT AS NOTED ELSEWHERE IN THE PLANS.

LOAD MODIFIER FOR OPERATIONAL IMPORTANCE

OPERATIONAL IMPORTANCE: A LOAD MODIFIER OF 1.00 HAS BEEN ASSUMED FOR THE DESIGN OF THIS STRUCTURE IN ACCORDANCE WITH THE AASHTO LRFD BRIDGE DESIGN SPECIFICATIONS, ARTICLE 1.3.5 AND THE ODOT BRIDGE DESIGN MANUAL, 2007.

DESIGN LOADING

DESIGN LOADING: HL-93

FUTURE WEARING SURFACE (FWS) OF 0.060 KIPS/SQ.FT.

DESIGN DATA

DESIGN DATA:
CONCRETE CLASS QSC2 - COMPRESSIVE STRENGTH 4.5 KSI (SUPERSTRUCTURE)
CONCRETE CLASS QSC1 - COMPRESSIVE STRENGTH 4.0 KSI (SUBSTRUCTURE)
CONCRETE CLASS S MODIFIED - COMPRESSIVE STRENGTH 4.0 KSI (DRILLED SHAFT)

REINFORCING STEEL - MINIMUM YIELD STRENGTH 60 KSI
STRUCTURAL STEEL - ASTM A709 GRADE 50 - YIELD STRENGTH 50 KSI
STEEL H-PILES - ASTM A709 GRADE 50 - YIELD STRENGTH 50 KSI

CONCRETE FOR PRESTRESSED BEAMS:
COMPRESSIVE STRENGTH (FINAL) - 7.0 KSI
COMPRESSIVE STRENGTH (RELEASE) - 5.0 KSI
PRESTRESSING STRAND:
AREA = 0.167 SQ.IN.
ULTIMATE STRENGTH = 270 KSI
INITIAL STRESS = 202.5 KSI (LOW RELAXATION STRANDS)

DECK PROTECTION METHOD

EPOXY COATED REINFORCING STEEL

2.5" CONCRETE COVER

SEALING OF CONCRETE SURFACES

MONOLITHIC WEARING SURFACE

MONOLITHIC WEARING SURFACE IS ASSUMED, FOR DESIGN PURPOSES, TO BE 1 INCH THICK.

ITEM 512-SEALING OF CONCRETE SURFACES (EPOXY-URETHANE), AS PER PLAN

EPOXY-URETHANE FOR THE BEAMS SHALL BE FEDERAL COLOR STANDARD NUMBER 25095. EPOXY-URETHANE FOR THE WINGWALL COPING, PIER CAP, ABUTMENT DIAPHRAGM, PARAPET ACCENTS AND TOWER CAPS SHALL BE FEDERAL COLOR STANDARD NUMBER 37875. EPOXY-URETHANE FOR DECK EDGE BELOW PARAPET AND PIER COLUMNS SHALL BE FEDERAL COLOR STANDARD NUMBER 36373. ALL CONCRETE SHALL BE SEALED AS PER PLAN DETAILS.

ITEM 512 - SEALING OF CONCRETE SURFACES (NON-EPOXY) (CLEAR), AS PER PLAN

THE NON-EPOXY (CLEAR) SEALER SHALL BE USED ON THE FOLLOWING SURFACES ACCORDING TO THE DETAILS IN PLANS:

1. ABUTMENT AND WINGWALL FACES.
2. PARAPETS.
3. TOWER FACES.

PAYMENT FOR SEALING SURFACES OF ITEMS 1, 2, AND 3 SHALL BE INCLUDED IN THIS ITEM 512.

ITEM 202, STRUCTURE REMOVED, OVER 20 FOOT SPAN, AS PER PLAN:

STRUCTURE REMOVAL SHALL BE IN ACCORDANCE WITH 202 EXCEPT THAT THE PIERS SHALL BE COMPLETELY REMOVED, INCLUDING PILING, TO 1 FOOT BELOW THE SUBGRADE.

ITEM 202, PORTIONS OF STRUCTURE REMOVED, AS PER PLAN:

THIS WORK CONSISTS OF REMOVING THE EXISTING C.I.P. WALL FROM APPROXIMATE STATION 368+82 TO STATION 369+47 AT AN OFFSET OF 70± FEET LEFT TO THE LIMITS SHOWN ON SHEETS 2/38 AND 3/38. THIS ITEM INCLUDES THE REMOVAL OF EXISITNG SHEET PILING AS NECESSARY FOR REMOVAL OF THE CONCRETE WALL AND CONSTRUCTION OF THE REAR ABUTMENT.

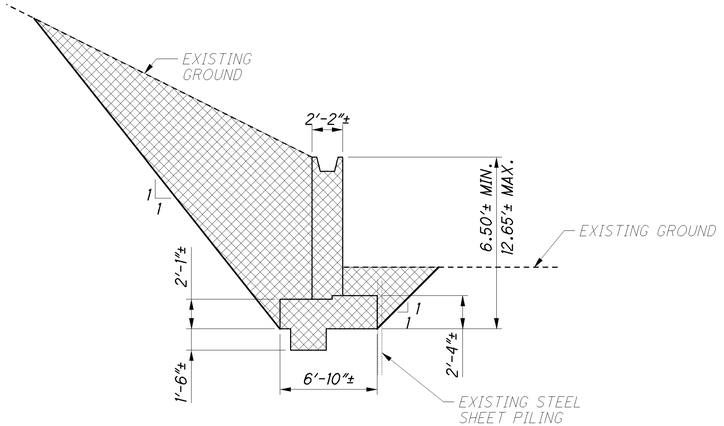

EXISTING RETAINING WALL SECTION

INCLUDED WITH ITEM 202, PORTIONS OF STRUCTURE REMOVED, AS PER PLAN FOR PAYMENT

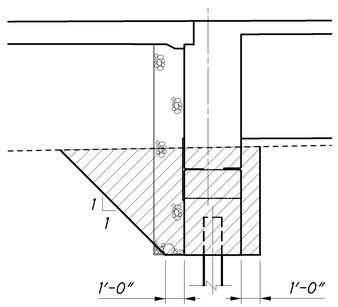

UNCLASSIFIED EXCAVATION AT ABUTMENT

- LIMITS OF UNCLASSIFIED EXCAVATION, AS PER PLAN

PILES TO BEDROCK

DRIVE PILES TO REFUSAL ON BEDROCK. THE DEPARTMENT WILL CONSIDER REFUSAL TO BE OBTAINED BY PENETRATING WEAK BEDROCK FOR SEVERAL INCHES TO A MINIMUM RESISTANCE OF 20 BLOWS PER INCH OR BY CONTACTING STRONG BEDROCK AND THE PILE RECEIVING AT LEAST 20 BLOWS. SELECT THE HAMMER SIZE TO ACHIEVE THE REQUIRED DEPTH TO BEDROCK AND REFUSAL. INSTEAD OF DRIVING TO REFUSAL, THE CONTRACTOR MAY PERFORM DYNAMIC LOAD TESTING ACCORDING TO C&MS 523 TO ESTABLISH A DRIVING CRITERIA FOR EACH PILE TYPE AND CAPACITY. ESTABLISH THE DRIVING CRITERIA TO ACHIEVE AN ULTIMATE BEARING VALUE THAT IS 1.5 TIMES THE TOTAL FACTORED LOAD GIVEN BELOW FOR THE PILES. PAYMENT FOR DYNAMIC LOAD TESTING PERFORMED AT THE CONTRACTOR'S OPTION IS INCLUDED IN THE UNIT PRICE PAY ITEM FOR PILES DRIVEN.

THE TOTAL FACTORED LOAD IS 235 KIPS PER PILE FOR THE REAR AND FORWARD ABUTMENT PILES.

ABUTMENT PILES:
HP10X42 PILES 50 FEET LONG, ORDER LENGTH = 55 FEET

PILE SPLICES

IN LIEU OF USING THE FULL PENETRATION BUTT WELDS SPECIFIED IN CMS 507.09 TO SPLICE STEEL H-PILES, THE CONTRACTOR MAY USE A MANUFACTURED H-PILE SPLICER. FURNISH SPLICERS FROM THE FOLLOWING MANUFACTURER:

ASSOCIATED PILE AND FITTING CORPORATION
8 WOOD HOLLOW RD. PLAZA 1
PARSIPPANY, NJ 07054

INSTALL AND WELD THE SPLICER TO THE PILE SECTIONS IN ACCORDANCE WITH THE MANUFACTURER'S WRITTEN ASSEMBLY PROCEDURE SUPPLIED TO THE ENGINEER BEFORE THE WELDING IS PERFORMED.

ABBREVIATIONS:

ABUT. = ABUTMENT	F.A. = FORWARD ABUTMENT	P.F.J. = PRECOMPRESSED FOAM JOINT
APPROX. = APPROXIMATE	F.F. = FAR FACE	PROP. = PROPOSED
ASS'Y. = ASSEMBLY	FWD. = FORWARD	R.A. = REAR ABUTMENT
BRG. = BEARING	LT. = LEFT	RT. = RIGHT
C/C = CENTER TO CENTER	MAX. = MAXIMUM	SER. = SERIES
C.I.P. = CAST-IN-PLACE	MIN. = MINIMUM	SPA. = SPACES
C.J. = CONSTRUCTION JOINT	N.F. = NEAR FACE	STA. = STATION
CLR. = CLEAR	N.P.C.P.P. = NON-PERFORATED CORRUGATED PLASTIC PIPE	STD. = STANDARD
CONST. = CONSTRUCTION	O/O = OUT TO OUT	T/T = TOE TO TOE
DIA. = DIAMETER	P.C.P.P. = PERFORATED CORRUGATED PLASTIC PIPE	T/S = TOP OF SLOPE
DWG. = DRAWING	P.E.J.F. = PREFORMED EXPANSION JOINT FILLER	TYP. = TYPICAL
E.F. = EACH FACE		D.S. = DOWN STATION
EL. = ELEVATION		U.S. = UP STATION
EST. = ESTIMATE		
EX. = EXISTING		

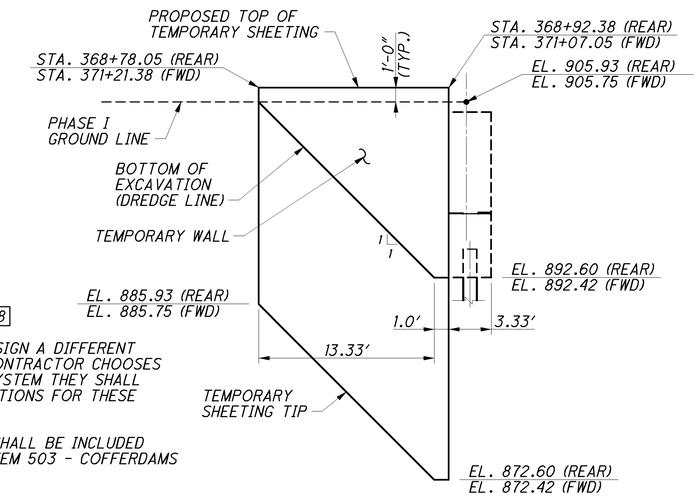

TEMPORARY WALL

TEMPORARY WALL NOTES

1. FOR LOCATION OF WALLS SEE SHEET 1/38
2. THE CONTRACTOR HAS THE OPTION TO DESIGN A DIFFERENT EXCAVATION SUPPORT SYSTEM. IF THE CONTRACTOR CHOOSES TO REDESIGN THE TEMPORARY SUPPORT SYSTEM THEY SHALL PREPARE AND SUBMIT PLANS AND CALCULATIONS FOR THESE ITEMS IN ACCORDANCE WITH CMS 501.05.
3. PAYMENT FOR THE TEMPORARY SHEETING SHALL BE INCLUDED IN THE CONTRACT LUMP SUM PRICE FOR ITEM 503 - COFFERDAMS AND EXCAVATION BRACING, AS PER PLAN.
4. TEMPORARY SHEETING SHALL HAVE A MINIMUM SECTION MODULUS OF 20 IN³/FT BASED ON A 32 KSI ALLOWABLE STRENGTH.

DESIGN AGENCY
PARSONS BRINCKERHOFF
2545 FARMERS DRIVE
SUITE 350
COLUMBUS, OHIO 43235

DESIGNED SAP | DRAWN LEL | REVIEWED EBS | DATE 05/24/12
CHECKED PJL | REVISED | STRUCTURE FILE NUMBER LEFT: 0202037 RIGHT: 0202053

GENERAL NOTES
BRIDGE NO. ALL-75-0703 L&R
I-75 OVER S.R. 117 & S.R. 309

ALL-75-5.53
PID No. 76691

3 / 38

938
1224

J:\Projects\ALL\76691\structures\ALL075_0703C\sheets\075_0703CGN001.dgn 11-SEP-2012 8:53PM reddenj

ITEM 511-CONCRETE, MISC.: FORMING OF ROUGH CUT STONE FINISH USING FORMLINERS

DESCRIPTION;
CONCRETE FORMLINERS SHALL BE USED ON THE FOLLOWING SURFACES ACCORDING TO THE DETAILS IN PLANS:

1.ABUTMENT AND WINGWALL FACES.
2.PARAPETS.
3.TOWER FACES.

THE FORMLINER USED SHALL MEET THE DETAILS SHOWN IN THE PLANS FOR STAGGERED (INTERLOCKING) PATTERNS, INCLUDING DEPTH OF RELIEF AND SIZE OF STONE PATTERN. HORIZONTAL JOINTS IN THE STONE PATTERN SHALL BE ALIGNED AND AT THE SAME ELEVATION. THE FINISHED TEXTURE OF THE ROUGH CUT STONE SHALL BE SIMILAR TO THAT OF RUBBED CONCRETE.

FORMLINERS FOR PATTERN 1 SHALL MATCH THE DIMENSIONAL SPECIFICATIONS OF THE FOLLOWING MANUFACTURER OR APPROVED EQUAL:

PATTERN #1104-R2 (RANDOM CUT STONE)
CUSTOM ROCK
2020 WEST 7TH STREET
ST. PAUL, MN 55116
651-699-1345
WWW.CUSTOM-ROCK.COM

FORMLINERS FOR PATTERN 2 SHALL MATCH THE DIMENSIONAL SPECIFICATIONS OF THE FOLLOWING MANUFACTURER OR APPROVED EQUAL:

PATTERN #1599 (RANDOM CUT STONE)
SPEC FORMLINERS, INC.
530 E. DYER RD.
SANTA ANA, CA 92707
888-429-9550
WWW.SPECFORMLINERS.COM

THE FORMLINER MANUFACTURER SHALL SUBMIT EVIDENCE OF AT LEAST TWO SIMILAR ARCHITECTURAL CONCRETE CONSTRUCTION PROJECTS WITHIN THE PAST FIVE YEARS FOR A REVIEW AND APPROVAL BY THE ENGINEER. COMPLETE SHOP DRAWINGS DETAILING THE STONE PATTERNS SHALL BE SUBMITTED IN ACCORDANCE WITH 501.04 FOR APPROVAL PRIOR TO PLACING ANY CONCRETE WHERE THE FORMLINERS WILL BE USED. SHOP DRAWINGS SHALL INCLUDE FORMLINER INSTALLATION AND CASTING INSTRUCTIONS, AND INDICATE FORMLINER BACKUP, REVEAL, AND CHAMFER STRIP LOCATIONS. THE CONTRACTOR SHALL COORDINATE WITH THE FORMLINER MANUFACTURER TO ASSURE UNDERSTANDING OF FORMLINER USE, TEST PANEL MOCK-UP REQUIREMENTS, AND FINAL CONSTRUCTION PROCEDURES.

MATERIALS:
THE FORMLINER SHALL BE FABRICATED WITH SHAPES THAT ALLOW REMOVAL OF THE FORMS WITHOUT DAMAGE OR VISUAL IMPAIRMENT OF THE CONCRETE, AND SHALL HAVE 1/8" MINIMUM RADII WITH NO SHARP EDGES. THE FORMLINER SHALL BE CAPABLE OF WITHSTANDING APPLIED CONCRETE POUR PRESSURE WITHOUT LEAKAGE, PHYSICAL DEFECT, OR VISUAL IMPAIRMENT.

CONSTRUCTION REQUIREMENTS:
FORMLINERS SHALL BE CLEANED BEFORE EACH USE. DAMAGED FORMLINERS WHOSE CONTINUED USE OR REPAIR WOULD NEGATIVELY IMPACT THE AESTHETICS OF THE FINISHED CONCRETE SHALL BE REPLACED. FORMLINER JOINTS SHALL BE SEALED TO PREVENT CEMENT PASTE FROM BLEEDING. FORMLINERS SHALL BE INSTALLED IN ACCORDANCE WITH THE APPROVED SHOP DRAWINGS. CHAMFERED CORNERS SHALL FORM SMOOTH, SOLID UNBROKEN CONTINUOUS SURFACES WHICH ARE UNIFORMLY STRAIGHT. AN APPROVED COMPATIBLE FORMLINER RELEASE AGENT SHALL BE APPLIED AT A RATE RECOMMENDED BY THE MANUFACTURER.

THE CONCRETE COPING SHALL BE CAST WITH NO FORMLINER USED.

AS PART OF THIS ITEM, A 7 FEET BY 3 FEET SECTION OF WALL THAT COMPRISES A MINIMUM OF ONE COMPLETE STONE BLOCK WILL BE CAST BY THE CONTRACTOR FOR EACH PATTERN USED FOR APPROVAL BY THE ENGINEER. IF THE SECTION DOES NOT MEET THE ENGINEER'S APPROVAL, THE PROPOSED FORMLINER MAY BE REJECTED. THE SECTION MUST BE APPROVED BEFORE PLACINGANY CONCRETE WHERE THE FORMLINERS WILL BE USED. REJECTION OF THE SECTION WILL REQUIRE CONSTRUCTION OF ANOTHER SECTION UNTIL APPROVAL IS GRANTED. THE WALL SECTION SHALL USE ACTUAL PROJECT SPECIFIC MATERIALS, METHODS, AND WORKMANSHIP, INCLUDING CONCRETE MIX (CEMENT TYPE, AGGREGATE GRADATION, SLUMP, WATER/CEMENT RATIO, PLASTICIZERS, AND ADDITIVES), FORMLINER AND FORMWORK SYSTEMS, INSERTS, FORM RELEASE AGENTS, PLACEMENT RATE, FORM PRESSURES, AND JOINT SEALING, VIBRATING, AND STRIPPING PRACTICES. ANY INTENDED PATCHING OR REPAIR PROCEDURES FOR THE CORRECTION OF MINOR DEFECTS THAT DO NOT RESULT IN REJECTION OF THE ENTIRE WALL SECTION SHALL BE DEMONSTRATED ON THE SECTION.

THE ACCEPTED WALL SECTION SHALL BE THE STANDARD BY WHICH THE FINAL CONSTRUCTION WILL BE EVALUATED FOR TECHNICAL AND AESTHETIC MERIT. THE WALL SECTION SHALL BE CONSTRUCTED AT THE CONSTRUCTION SITE, OR AT AN ALTERNATIVE LOCATION AGREED UPON BY THE ENGINEER. UPON COMPLETION OF THE FINAL CONSTRUCTION, THE CONTRACTOR SHALL BE RESPONSIBLE FOR REMOVAL AND DISPOSAL OF THE WALL SECTION MOCK-UP.

PORTIONS OF THE STRUCTURE DETAILED IN THE PLAN SET SHALL BE CAST WITH STONE FACING FORMLINER TEXTURE AND BE SEALED WITH ITEM 512 - SEALING OF CONCRETE SURFACES (NON-EPOXY (CLEAR)).

METHOD OF MEASUREMENT:
ROUGH CUT STONE FORMLINERS WILL NOT BE MEASURED INDIVIDUALLY FOR PAYMENT UNDER THIS ITEM.

BASIS OF PAYMENT:
ITEM 511-CONCRETE, MISC.: FORMING OF ROUGH CUT STONE FINISH USING FORMLINERS WILL BE PAID FOR AT THE CONTRACT SQ. FT. PRICE. THE WORK SHALL INCLUDE FABRICATION AND ERECTION OF FORMLINERS, ALL CONCRETE MATERIAL SHOWN ON THE PLANS, PREPARATION OF FORMLINER SHOP DRAWINGS, AND CONSTRUCTION AND REMOVAL OF THE PRE-CONSTRUCTION WALL SECTION, AND SHALL INCLUDE ALL LABOR, MATERIALS, EQUIPMENT, AND INCIDENTALS REQUIRED TO COMPLETE THIS ITEM.

THE DEPARTMENT WILL PAY FOR SEALING OF CONCRETE SURFACES SEPARATELY UNDER ITEM 512-SEALING OF CONCRETE SURFACES (NON-EPOXY (CLEAR)). SEE THE GENERAL SEALING OF CONCRETE SURFACES PLAN NOTE FOR REQUIREMENTS FOR THE NON-EPOXY (CLEAR) SEALER.

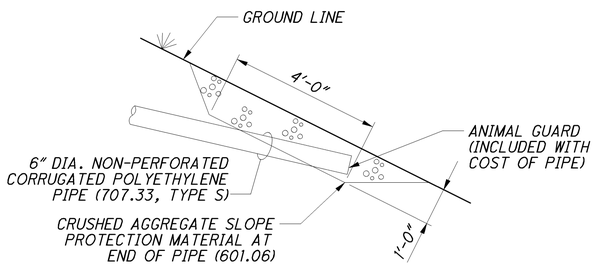

TERMINATION OF 6" NON-PERFORATED CORRUGATED PLASTIC PIPE (NPCPP)

EXISTING STRUCTURE PLANS:

CONSTRUCTION PLANS FOR THE EXISTING BRIDGE ARE ON FILE AT THE OHIO DEPARTMENT OF TRANSPORTATION, DISTRICT ONE OFFICE, 1885 NORTH MCCULLOUGH ST., LIMA, OHIO 45801 AND ARE AVAILABLE FOR REFERENCE.

DRILLED SHAFTS

THE MAXIMUM FACTORED LOAD TO BE SUPPORTED BY EACH DRILLED SHAFT IS 1023 KIPS AT THE PIERS. THIS LOAD IS RESISTED BY THE FACTORED RESISTANCE PROVIDED BY THE DRILLED SHAFT TIP IS 1131 KIPS.

DECK PLACEMENT DESIGN ASSUMPTIONS:

THE FOLLOWING ASSUMPTIONS OF CONSTRUCTION MEANS AND METHODS WERE MADE FOR THE ANALYSIS AND DESIGN OF THE SUPERSTRUCTURE. THE CONTRACTOR IS RESPONSIBLE FOR THE DESIGN OF THE FALSEWORK SUPPORT SYSTEM WITHIN THESE PARAMETERS AND WILL ASSUME RESPONSIBILITY FOR SUPERSTRUCTURE ANALYSIS FOR DEVIATION FROM THESE DESIGN ASSUMPTIONS. AN EIGHT WHEEL FINISHING MACHINE WITH A MAXIMUM WHEEL LOAD OF 1.07 KIPS FOR A TOTAL MACHINE LOAD OF 8.59 KIPS. A MINIMUM OUT-TO-OUT WHEEL SPACING AT EACH END OF THE MACHINE OF 103". A MAXIMUM SPACING OF OVERHANG FALSEWORK BRACKETS OF 48 IN. A MAXIMUM DISTANCE FROM THE CENTERLINE OF THE FASCIA GIRDER TO THE FACE OF THE SAFETY HANDRAIL OF 65".

ITEM 518 - 6" NON-PERFORATED CORRUGATED PLASTIC PIPE, INCLUDING SPECIALS, AS PER PLAN

ANIMAL GUARDS SHALL BE PROVIDED AT THE OUTLET OF THE DRAINAGE PIPES, STEEL BOLTS OR RODS FOR THE ANIMAL GUARDS SHALL BE GALVANIZED PER CMS 711.02. SEE STD DWG. DM 1.1 FOR ADDITIONAL DETAILS AND NOTES. THE ANIMAL GUARDS AND CRUSHED AGGREGATE SLOPE PROTECTION ARE INCIDENTAL TO ITEM 518 - 6" NON-PERFORATED CORRUGATED PLASTIC PIPE, INCLUDING SPECIALS, AS PER PLAN.

ITEM 898 - QC/QA CONCRETE, CLASS QSC2, SUPERSTRUCTURE (PARAPET), AS PER PLAN

THIS ITEM 898 SHALL CONTAIN INTEGRALLY COLORED CONCRETE USING CHROMIX ADMIXTURES AS PROVIDED BY L. M. SCOFIELD COMPANY, DOUGLASVILLE, GEORGIA (800) 800-9000 OR AN APPROVED EQUAL. USE FEDERAL COLOR NUMBER 36373.

ITEM 898 - QC/QA CONCRETE, CLASS QSC1, SUBSTRUCTURE (ABUTMENT INCLUDING FOOTING), AS PER PLAN

THIS ITEM 898 SHALL CONTAIN INTEGRALLY COLORED CONCRETE USING CHROMIX ADMIXTURES AS PROVIDED BY L. M. SCOFIELD COMPANY, DOUGLASVILLE, GEORGIA (800) 800-9000 OR AN APPROVED EQUAL. USE FEDERAL COLOR NUMBER 36373.

IT IS NOT NECESSARY FOR THE CONTRACTOR TO PROVIDE INTEGRAL COLORING IN THE LARGE AND SMALL TOWER CAPS AND THE ABUTMENT FOOTING.

ITEM 898 - QC/QA CONCRETE, CLASS QSC2, SUPERSTRUCTURE (APPROACH SLAB), AS PER PLAN

THE ACCEPTED QUANTITIES SHALL INCLUDE: CONCRETE, CONCRETE BARRIER, END TOWER INCLUDING CAP, REINFORCING STEEL, JOINT FILLERS, JOINT SEALERS, JOINT SEALS, AND WATERPROOFING.

THIS ITEM 898 SHALL CONTAIN INTEGRALLY COLORED CONCRETE USING CHROMIX ADMIXTURES AS PROVIDED BY L. M. SCOFIELD COMPANY, DOUGLASVILLE, GEORGIA (800) 800-9000 OR AN APPROVED EQUAL. USE FEDERAL COLOR NUMBER 36373 FOR ONLY THE APPROACH SLAB PARAPETS AND END TOWERS, INCLUDING CAPS.

DESIGN AGENCY
PARSONS BRINCKERHOFF
2545 FARMERS DRIVE
SUITE 350
COLUMBUS, OHIO 43235

DESIGNED	DRAWN	REVIEWED	DATE
SAP	LEL	EBS	12/14/11
CHECKED	REVISED	STRUCTURE FILE NUMBER	
PJL		LEFT: 0202037 RIGHT: 0202053	

GENERAL NOTES
BRIDGE NO. ALL-75-0703 L&R
I-75 OVER S.R. 117 & S.R. 309

ALL-75-5.53
PID No. 76691

J:\Projects\ALL\76691\structures\ALL075_0703C\sheets\075_0703CGN002.dgn 11-SEP-2012 8:53PM reddenj

02/IMS/BR/	05/ENH/OT/	ITEM	EXTENSION	TOTAL	UNIT	ESTIMATED QUANTITIES DESCRIPTION	ALL-75-0703L ABUT.	 PIER	 SUPER.	 GEN.	SEE SHEET NO.
1		202	11003	1	LUMP	STRUCTURE REMOVED, OVER 20 FOOT SPAN, AS PER PLAN				1	3/38
1		202	11201	1	LUMP	PORTIONS OF STRUCTURE REMOVED, AS PER PLAN				1	3/38
168		202	22900	168	SQ YD	APPROACH SLAB REMOVED				168	
1		503	11101	1	LUMP	COFFERDAMS AND EXCAVATION BRACING, AS PER PLAN				1	3/38
1		503	21301	1	LUMP	UNCLASSIFIED EXCAVATION, AS PER PLAN	1				3/38
1		505	11100	1	LUMP	PILE DRIVING EQUIPMENT MOBILIZATION	1				
1,320		507	00100	1320	FT	STEEL PILES HP10X42, FURNISHED	1320				
1,200		507	00150	1200	FT	STEEL PILES HP10X42, DRIVEN	1200				
24		507	93300	24	EACH	STEEL POINTS OR SHOES	24				
173,878	2,923	509	10000	176,801	POUND	EPOXY COATED REINFORCING STEEL	16,727	41,754	118,320		
	1,931	511	71200	1,931	SQ FT	CONCRETE, MISC.: FORMING OF ROUGH CUT STONE FINISH USING FORMLINERS	1174		590	167	
790	46	512	10051	836	SQ YD	SEALING OF CONCRETE SURFACES (NON-EPOXY), AS PER PLAN	167		597	72	3/38
661	17	512	10101	678	SQ YD	SEALING OF CONCRETE SURFACES (EPOXY-URETHANE), AS PER PLAN	21	272	377	8	3/38
95		512	10300	95	SQ YD	SEALING CONCRETE BRIDGE DECKS WITH HMWM RESIN			95		
13		512	33000	13	SQ YD	TYPE 2 WATERPROOFING	13				
18		515	15040	18	EACH	DRAPED STRAND PRESTRESSED CONCRETE BRIDGE I-BEAM MEMBERS, LEVEL 3, TYPE 4 MOD. (66")			18		
25		515	20000	25	EACH	INTERMEDIATE DIAPHRAGMS			25		
214		516	13600	214	SQ FT	1" PREFORMED EXPANSION JOINT FILLER	200		14		
193		516	13900	193	SQ FT	2" PREFORMED EXPANSION JOINT FILLER	193				
48		516	14014	48	FT	INTEGRAL ABUTMENT EXPANSION JOINT SEAL	48				
12		516	44101	12	EACH	ELASTOMERIC BEARING WITH INTERNAL LAMINATES AND LOAD PLATE (NEOPRENE), AS PER PLAN: 12"X16"X2.35" WITH 13"X25.5"X1.5" LOAD PLATES			12		20/38
12		516	44101	12	EACH	ELASTOMERIC BEARING WITH INTERNAL LAMINATES AND LOAD PLATE (NEOPRENE), AS PER PLAN: 12"X22"X2.87" WITH 13"X25.5"X1.5" LOAD PLATES			12		20/38
12		516	44101	12	EACH	ELASTOMERIC BEARING WITH INTERNAL LAMINATES AND LOAD PLATE (NEOPRENE), AS PER PLAN: 7"X14"X1.75" WITH 12"X15"X1.5" LOAD PLATES			12		21/38
102		518	21200	102	CU YD	POROUS BACKFILL WITH FILTER FABRIC	102				
171		518	40000	171	FT	6" PERFORATED CORRUGATED PLASTIC PIPE	171				
10		518	40011	10	FT	6" NON-PERFORATED CORRUGATED PLASTIC PIPE, INCLUDING SPECIALS, AS PER PLAN	10				4/38
48		524	94904	48	FT	DRILLED SHAFTS, 48" DIAMETER, INTO BEDROCK		48			
272		524	94906	272	FT	DRILLED SHAFTS, 54" DIAMETER, ABOVE BEDROCK		272			
	1	530	00200	1	LUMP	SPECIAL - STRUCTURE, MISC.: BRIDGE MOUNTED DISPLAY				1	37/38
442		601	21000	442	SQ YD	CONCRETE SLOPE PROTECTION				442	
568		625	25400	568	FT	CONDUIT, 2", 725.04			428	140	
4		625	29920	4	EACH	STRUCTURE JUNCTION BOX				4	
4		625	30700	4	EACH	PULL BOX, 725.08, 18"				4	
395		898	10200	395	CU YD	QC/QA CONCRETE, CLASS QSC2, SUPERSTRUCTURE (DECK)			395		
262		898	10705	262	SQ YD	QC/QA CONCRETE, CLASS QSC2, SUPERSTRUCTURE (APPROACH SLAB), (T=15"), AS PER PLAN				262	4/38
56	3	898	11001	59	CU YD	QC/QA CONCRETE, CLASS QSC2, SUPERSTRUCTURE (PARAPET), AS PER PLAN			59		4/38
108		898	20100	108	CU YD	QC/QA CONCRETE, CLASS QSC1, SUBSTRUCTURE (PIER ABOVE FOOTING)		108			
181	26	898	20161	207	CU YD	QC/QA CONCRETE, CLASS QSC1, SUBSTRUCTURE (ABUTMENT INCLUDING FOOTING), AS PER PLAN	207				4/38

CALC. BY: SAP DATE: 4/3/2012
CHECK BY: EBS DATE: 5/21/2012

DESIGN AGENCY
PARSONS BRINCKERHOFF
2945 FARMERS DRIVE
SUITE 350
COLUMBUS, OHIO 43235

DESIGNED	DRAWN	REVIEWED	DATE
SAP	TLP	EBS	05/24/12
CHECKED	REVISED	STRUCTURE FILE NUMBER	
PJL		LEFT: 0202037 RIGHT: 0202053	

ESTIMATED QUANTITIES
BRIDGE NO. ALL-75-0703 L&R
I-75 OVER S.R. 117 & S.R. 309

ALL-75-5.53
PID No. 76691

940
1224

J:\Projects\ALL\76691\structures\ALL075_0703C\sheets\075_0703CEQ001.dgn 17-JAN-2013 12:07PM lint

02/IMS/BR/	05/ENH/OT/	ITEM	EXTENSION	TOTAL	UNIT	ESTIMATED QUANTITIES DESCRIPTION	ALL-75-0703R ABUT.	 PIER	 SUPER.	 GEN.	SEE SHEET NO.
1		202	11003	1	LUMP	STRUCTURE REMOVED, OVER 20 FOOT SPAN, AS PER PLAN				1	3/38
168		202	22900	168	SQ YD	APPROACH SLAB REMOVED				168	
1		503	11101	1	LUMP	COFFERDAMS AND EXCAVATION BRACING, AS PER PLAN				1	3/38
1		503	21301	1	LUMP	UNCLASSIFIED EXCAVATION, AS PER PLAN	1				3/38
1		505	11100	1	LUMP	PILE DRIVING EQUIPMENT MOBILIZATION	1				
1,320		507	00100	1320	FT	STEEL PILES HP10X42, FURNISHED	1320				
1,200		507	00150	1200	FT	STEEL PILES HP10X42, DRIVEN	1200				
24		507	93300	24	EACH	STEEL POINTS OR SHOES	24				
173,878	2,923	509	10000	176,801	POUND	EPOXY COATED REINFORCING STEEL	16,727	41,754	118,320		
	1,931	511	71200	1,931	SQ FT	CONCRETE, MISC.: FORMING OF ROUGH CUT STONE FINISH USING FORMLINERS	1174		590	167	
790	46	512	10051	836	SQ YD	SEALING OF CONCRETE SURFACES (NON-EPOXY), AS PER PLAN	167		597	72	3/38
661	17	512	10101	678	SQ YD	SEALING OF CONCRETE SURFACES (EPOXY-URETHANE), AS PER PLAN	21	272	377	8	3/38
95		512	10300	95	SQ YD	SEALING CONCRETE BRIDGE DECKS WITH HMWM RESIN			95		
13		512	33000	13	SQ YD	TYPE 2 WATERPROOFING	13				
18		515	15040	18	EACH	DRAPED STRAND PRESTRESSED CONCRETE BRIDGE I-BEAM MEMBERS, LEVEL 3, TYPE 4 MOD. (66")			18		
25		515	20000	25	EACH	INTERMEDIATE DIAPHRAGMS			25		
214		516	13600	214	SQ FT	1" PREFORMED EXPANSION JOINT FILLER	200		14		
101		516	13900	101	SQ FT	2" PREFORMED EXPANSION JOINT FILLER	101				
48		516	14014	48	FT	INTEGRAL ABUTMENT EXPANSION JOINT SEAL	48				
12		516	44101	12	EACH	ELASTOMERIC BEARING WITH INTERNAL LAMINATES AND LOAD PLATE (NEOPRENE), AS PER PLAN: 12"X16"X2.35" WITH 13"X25.5"X1.5" LOAD PLATES			12		20/38
12		516	44101	12	EACH	ELASTOMERIC BEARING WITH INTERNAL LAMINATES AND LOAD PLATE (NEOPRENE), AS PER PLAN: 12"X22"X2.87" WITH 13"X25.5"X1.5" LOAD PLATES			12		20/38
12		516	44101	12	EACH	ELASTOMERIC BEARING WITH INTERNAL LAMINATES AND LOAD PLATE (NEOPRENE), AS PER PLAN: 7"X14"X1.75" WITH 12"X15"X1.5" LOAD PLATES			12		21/38
102		518	21200	102	CU YD	POROUS BACKFILL WITH FILTER FABRIC	102				
171		518	40000	171	FT	6" PERFORATED CORRUGATED PLASTIC PIPE	171				
10		518	40011	10	FT	6" NON-PERFORATED CORRUGATED PLASTIC PIPE, INCLUDING SPECIALS, AS PER PLAN	10				4/38
48		524	94904	48	FT	DRILLED SHAFTS, 48" DIAMETER, INTO BEDROCK		48			
272		524	94906	272	FT	DRILLED SHAFTS, 54" DIAMETER, ABOVE BEDROCK		272			
	1	530	00200	1	LUMP	SPECIAL - STRUCTURE, MISC.: BRIDGE MOUNTED DISPLAY				1	37/38
442		601	21000	442	SQ YD	CONCRETE SLOPE PROTECTION				442	
568		625	25400	568	FT	CONDUIT, 2", 725.04			428	140	
4		625	29920	4	EACH	STRUCTURE JUNCTION BOX				4	
4		625	30700	4	EACH	PULL BOX, 725.08, 18"				4	
395		898	10200	395	CU YD	QC/QA CONCRETE, CLASS QSC2, SUPERSTRUCTURE (DECK)			395		
262		898	10705	262	SQ YD	QC/QA CONCRETE, CLASS QSC2, SUPERSTRUCTURE (APPROACH SLAB), (T=15"), AS PER PLAN				262	4/38
56	3	898	11001	59	CU YD	QC/QA CONCRETE, CLASS QSC2, SUPERSTRUCTURE (PARAPET), AS PER PLAN			59		4/38
108		898	20100	108	CU YD	QC/QA CONCRETE, CLASS QSC1, SUBSTRUCTURE (PIER ABOVE FOOTING)		108			
181	26	898	20161	207	CU YD	QC/QA CONCRETE, CLASS QSC1, SUBSTRUCTURE (ABUTMENT INCLUDING FOOTING), AS PER PLAN	207				4/38

CALC. BY: SAP DATE: 4/3/2012
CHECK BY: EBS DATE: 5/21/2012

DESIGN AGENCY
PARSONS BRINCKERHOFF
2945 FARMERS DRIVE
SUITE 350
COLUMBUS, OHIO 43235

DESIGNED	DRAWN	REVIEWED	DATE
SAP	TLP	EBS	05/24/12
CHECKED	REVISED	STRUCTURE FILE NUMBER	
PJL		LEFT: 0202037 RIGHT: 0202053	

ESTIMATED QUANTITIES
BRIDGE NO. ALL-75-0703 L&R
I-75 OVER S.R. 117 & S.R. 309

ALL-75-5.53
PID No. 76691

941
1224

J:\Projects\ALL\76691\structures\ALL075_0703\sheets\075_0703CEQ002.dgn 17-JAN-2013 12:07PM jint

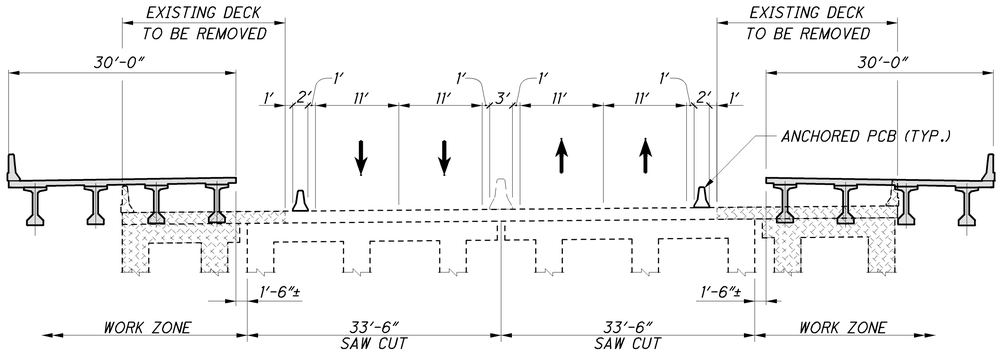

SECTION A-A PHASE I

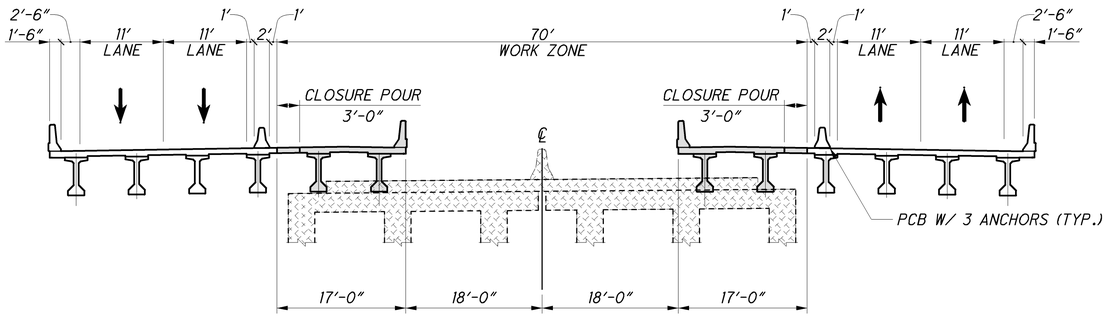

SECTION A-A PHASE II

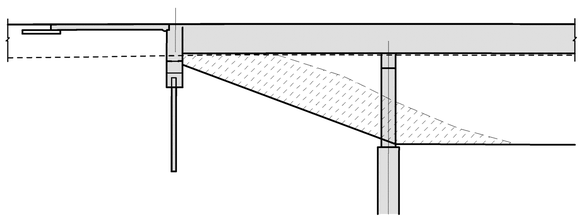

DETAIL A

LEGEND:

- STRUCTURE REMOVAL
- REMOVE EXISTING SPILL THROUGH SLOPE DURING PHASE II
- PROPOSED
- PORTABLE CONCRETE BARRIER (PCB) (TO BE ANCHORED ON BRIDGES AS SHOWN)

SEQUENCE OF CONSTRUCTION

PHASE I

1. INSTALL PORTABLE CONCRETE BARRIER ON THE EXISTING STRUCTURE AND SHIFT LANES.
2. REMOVE THE OUTSIDE PORTIONS OF THE EXISTING STRUCTURE, KEEP THE EXISTING SPILL THROUGH SLOPES IN PLACE AS NECESSARY TO SUPPORT EXISTING ABUTMENT LEFT IN PLACE. KEEP EXISTING THREE COLUMN PIERS IN PLACE.
3. REMOVE THE EXISTING RETAINING WALL TO THE LIMITS SHOWN ON SHEET 2/38.
4. CONSTRUCT THE PROPOSED WESTERN PORTION OF THE SOUTHBOUND STRUCTURE AND EASTERN PORTION OF NORTHBOUND STRUCTURE TO LIMITS SHOWN, INCLUDING PIERS CONSTRUCTED THROUGH REMAINING PORTIONS OF EXISTING SLOPES, SEE DETAIL A.

PHASE II

1. INSTALL PORTABLE CONCRETE BARRIER ON THE NEWLY CONSTRUCTED STRUCTURES AND SHIFT LANES.
2. REMOVE THE REMAINING PORTION OF THE EXISTING STRUCTURE AND THE EXISTING SPILL THROUGH SLOPES.
3. CONSTRUCT THE REMAINDER OF THE SOUTHBOUND AND NORTHBOUND STRUCTURE TO LIMITS SHOWN NOT INCLUDING THE CLOSURE POUR.
4. COMPLETE THE CLOSURE POUR.

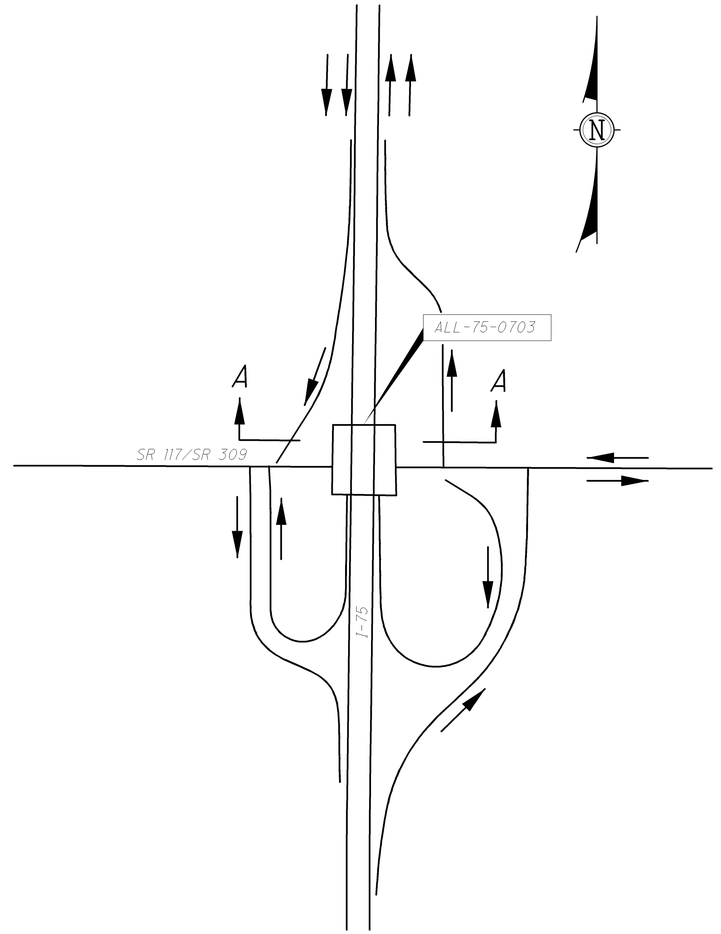

DESIGN AGENCY
PARSONS BRINCKERHOFF
2545 FARMERS DRIVE
SUITE 350
COLUMBUS, OHIO 43235

DESIGNED PJL
DRAWN LEL
CHECKED SAP
REVIEWED EBS
DATE 05/24/12
REVISED
STRUCTURE NUMBER
LEFT: 0202037
RIGHT: 0202053

MAINTENANCE OF TRAFFIC
BRIDGE NO. ALL-75-0703 L&R
I-75 OVER S.R. 117 & S.R. 309

ALL-75-5.53
PID No. 76691

7 / 38

942
1224

J:\Projects\ALL\76691\structures\ALL075_0703C\sheets\075_0703CPC001.dgn 11-SEP-2012 8:53PM reddenj

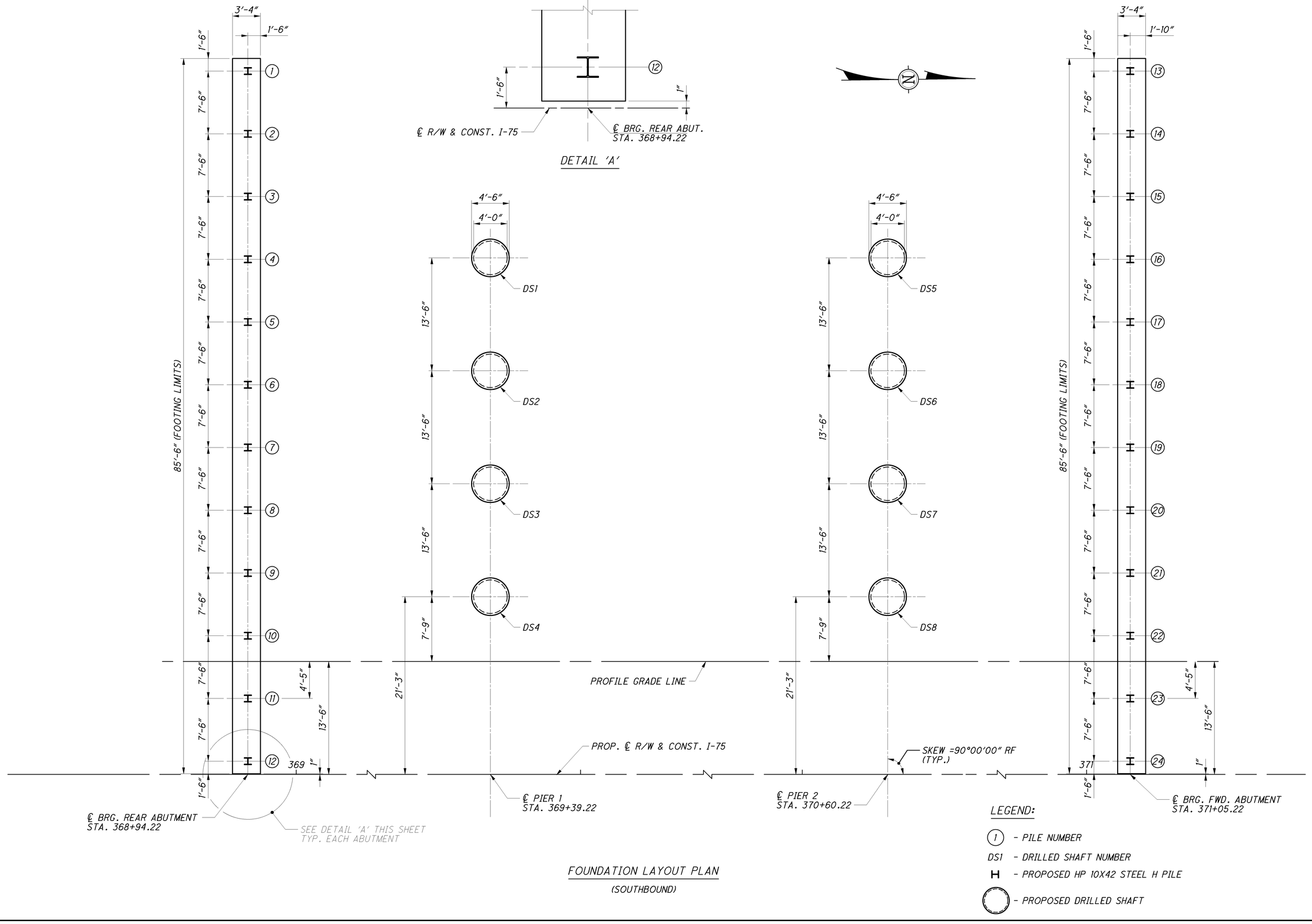

FOUNDATION LAYOUT PLAN
(SOUTHBOUND)

J:\Projects\ALL\76691\structures\ALL075_0703C\sheets\075_0703CFP001.dgn 11-SEP-2012 8:53PM reddenj

DESIGN AGENCY
PARSONS BRINCKERHOFF
2545 FARMERS DRIVE
SUITE 350
COLUMBUS, OHIO 43235

DESIGNED	DRAWN	REVIEWED	DATE
SAP	LEL	EBS	05/24/12
CHECKED	REVISED	STRUCTURE FILE NUMBER	
PJL		LEFT: 0202037 RIGHT: 0202053	

FOUNDATION LAYOUT PLAN (LEFT)
BRIDGE NO. ALL-75-0703 L&R
I-75 OVER S.R. 117 & S.R. 309

ALL-75-5.53
PID No. 76691

8 / 38

943
1224

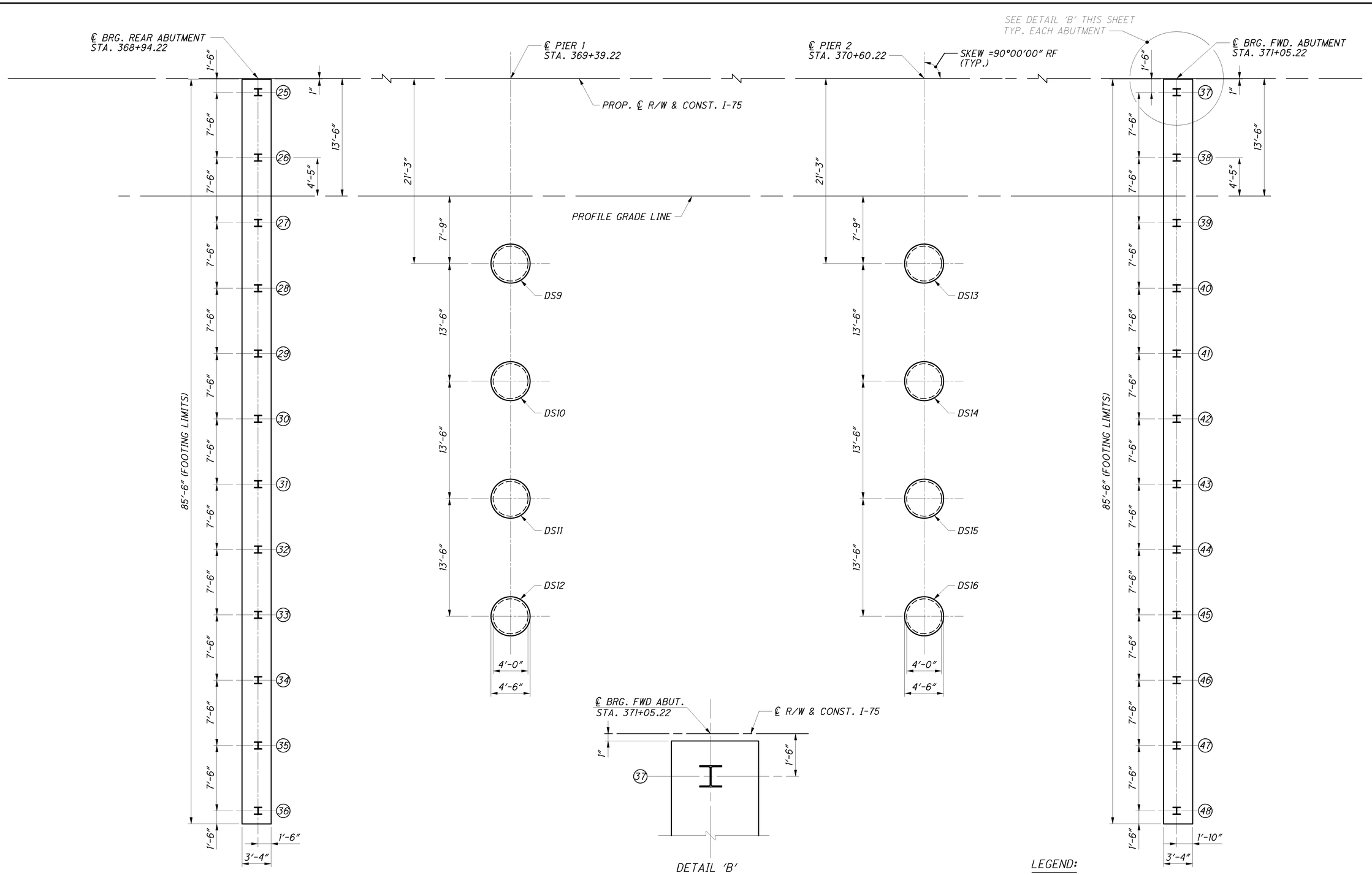

DESIGN AGENCY
PARSONS BRINCKERHOFF
2545 FARMERS DRIVE
SUITE 350
COLUMBUS, OHIO 43235

DESIGNED	DRAWN	REVIEWED	DATE
SAP	LEL	EBS	05/24/12
CHECKED	REVISED	STRUCTURE NUMBER	
PJL		LEFT: 0202037 RIGHT: 0202053	

FOUNDATION LAYOUT PLAN (RIGHT)

BRIDGE NO. ALL-75-0703 L&R
I-75 OVER S.R. 117 & S.R. 309

ALL-75-5.53
PID No. 76691

J:\Projects\ALL\76691\structures\ALL075_0703C\sheets\075_0703CFP002.dgn 11-SEP-2012 8:53PM reddenj

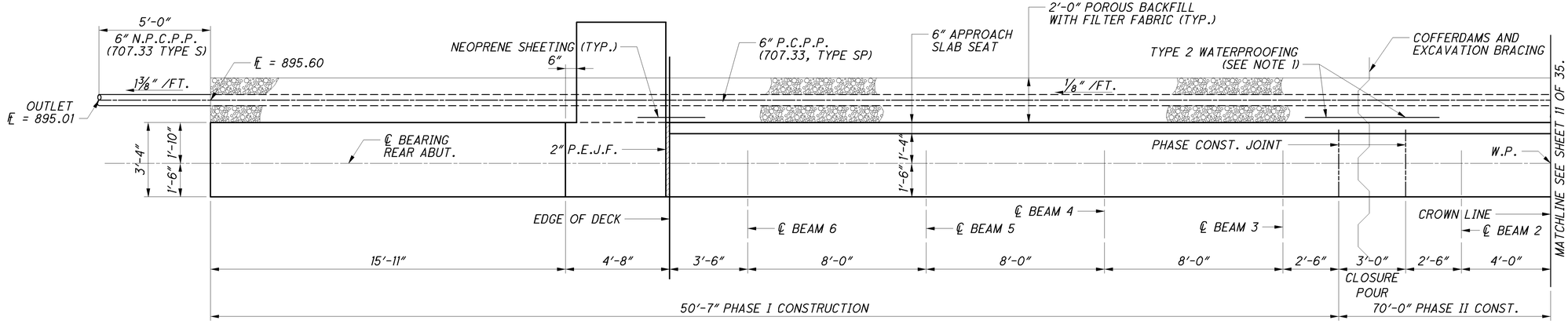

PLAN

(PILES NOT SHOWN FOR CLARITY)

NOTES:

1. TYPE 2 WATERPROOFING SHALL BE 3'-0" WIDE, CENTERED ON JOINTS, AND PLACED FROM THE TOP OF FOOTING TO THE APPROACH SLAB SEAT.
2. FOR SECTIONS A-A & B-B, SEE SHEET 16/38 .
3. FOR FOUNDATION LAYOUT PLAN, SEE SHEET 8 /38 & 9 /38 .
4. FOR AESTHETIC DETAILS, SEE SHEET 35/38 .

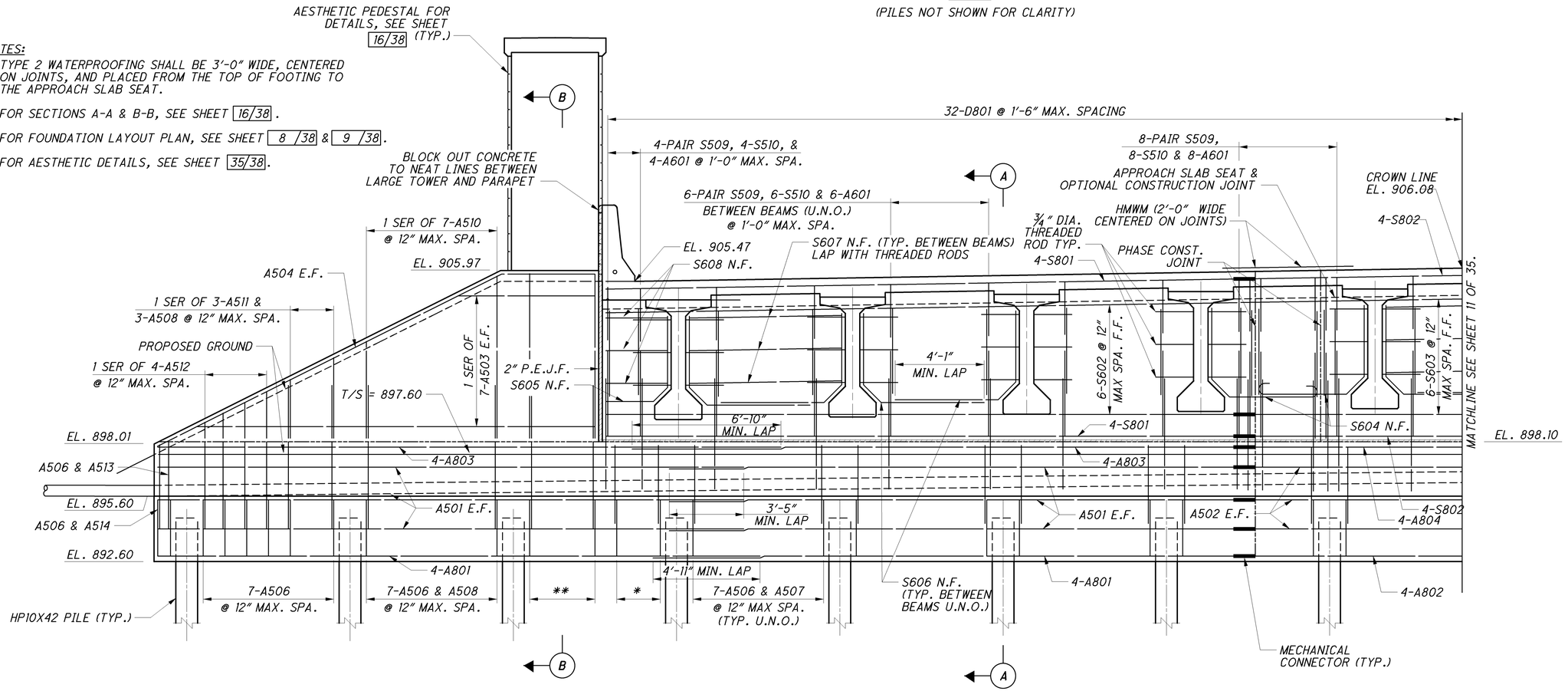

* - 3-A506 & A507
@ 12" MAX. SPA.

** - 4-A506, A508, & A509
@ 12" MAX. SPA.

ELEVATION

(CORBEL REINFORCING NOT SHOWN FOR CLARITY)

DESIGN AGENCY
PARSONS BRINCKERHOFF
2945 FARMERS DRIVE
SUITE 350
COLUMBUS, OHIO 43235

DESIGNED	DRAWN	REVIEWED	DATE
PJL	LEL	EBS	05/24/12
CHECKED	REVISED	STRUCTURE FILE NUMBER	
SAP		LEFT: 0202037 RIGHT: 0202053	

REAR ABUTMENT DETAILS
BRIDGE NO. ALL-75-0703 L&R
I-75 OVER S.R. 117 & S.R. 309

ALL-75-5.53
PID No. 76691

10 / 38

945
1224

J:\Projects\ALL\76691\structures\ALL075_0703C\sheets\075_0703CAR001.dgn 11-SEP-2012 8:53PM reddenj

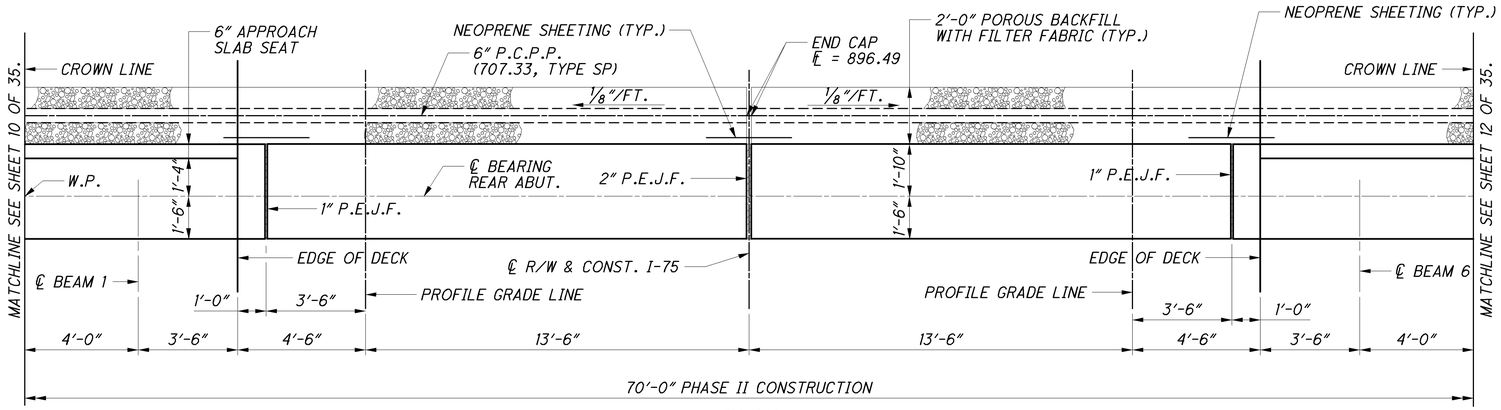

PLAN

(PILES NOT SHOWN FOR CLARITY)

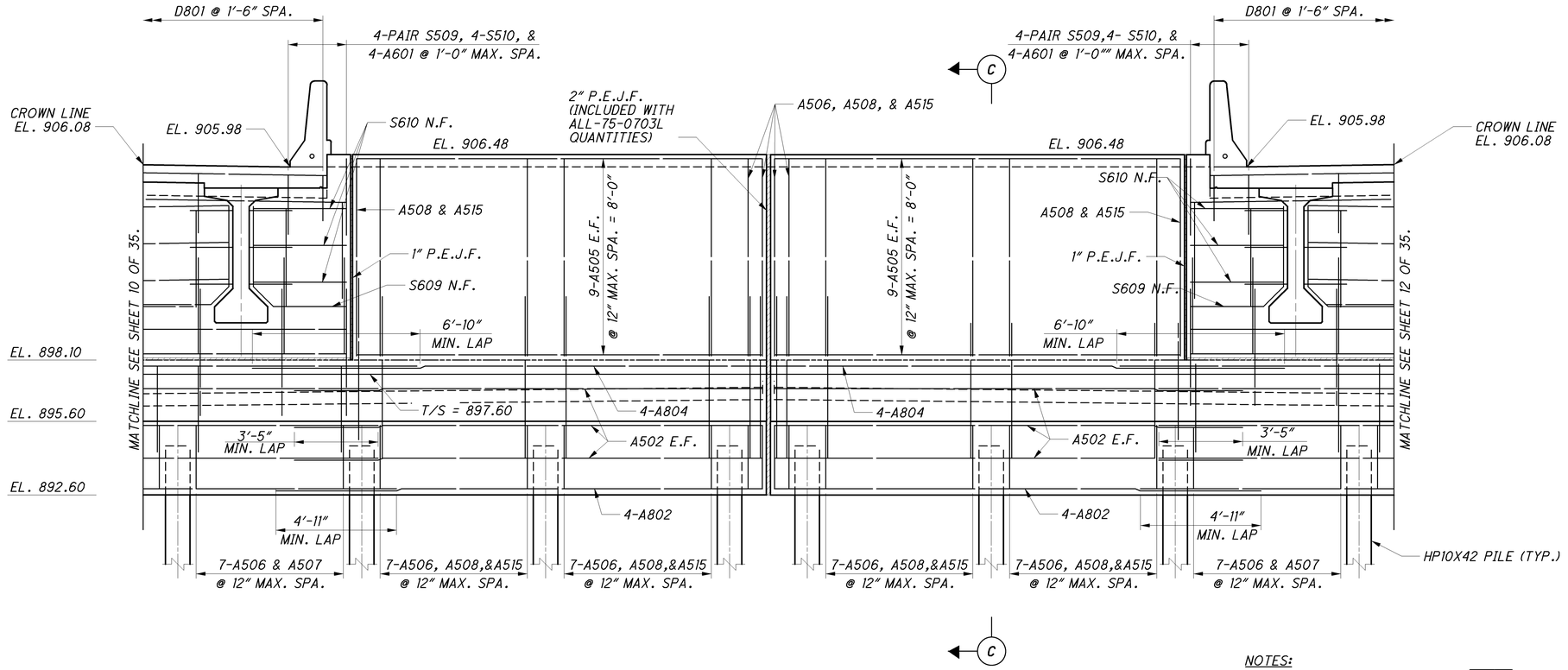

ELEVATION

NOTES:

1. FOR SECTION C-C SEE SHEET 10/38.
2. FOR FOUNDATION LAYOUT PLAN, SEE SHEET 8/38 & 9/38.
3. FOR AESTHETIC DETAILS, SEE SHEET 35/38.

DESIGN AGENCY
PARSONS BRINCKERHOFF
2545 FARMERS DRIVE
SUITE 350
COLUMBUS, OHIO 43235

DESIGNED	DRAWN	REVIEWED	DATE
PJL	LEL	EBS	05/24/12
CHECKED	REVISED	STRUCTURE FILE NUMBER	
SAP		LEFT: 0202037 RIGHT: 0202053	

REAR ABUTMENT DETAILS

BRIDGE NO. ALL-75-0703 L&R
I-75 OVER S.R. 117 & S.R. 309

ALL-75-5.53
PID No. 76691

11 / 38

946
1224

J:\Projects\ALL\76691\structures\ALL075_0703C\sheets\075_0703CAR002.dgn 11-SEP-2012 8:53PM reddenj

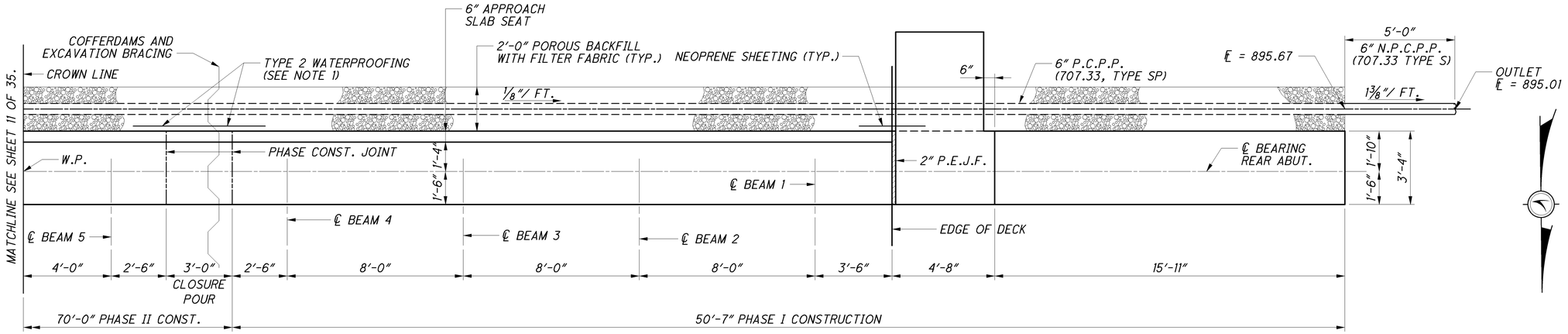

NOTES:

1. TYPE 2 WATERPROOFING SHALL BE 3'-0" WIDE, CENTERED ON JOINTS, AND PLACED FROM THE TOP OF FOOTING TO THE APPROACH SLAB SEAT.
2. FOR SECTIONS A-A & B-B, SEE SHEET 16/38.
3. FOR FOUNDATION LAYOUT PLAN, SEE SHEET 8/38 & 9/38.
4. FOR AESTHETIC DETAILS, SEE SHEET 35/38.

PLAN

(PILES NOT SHOWN FOR CLARITY)

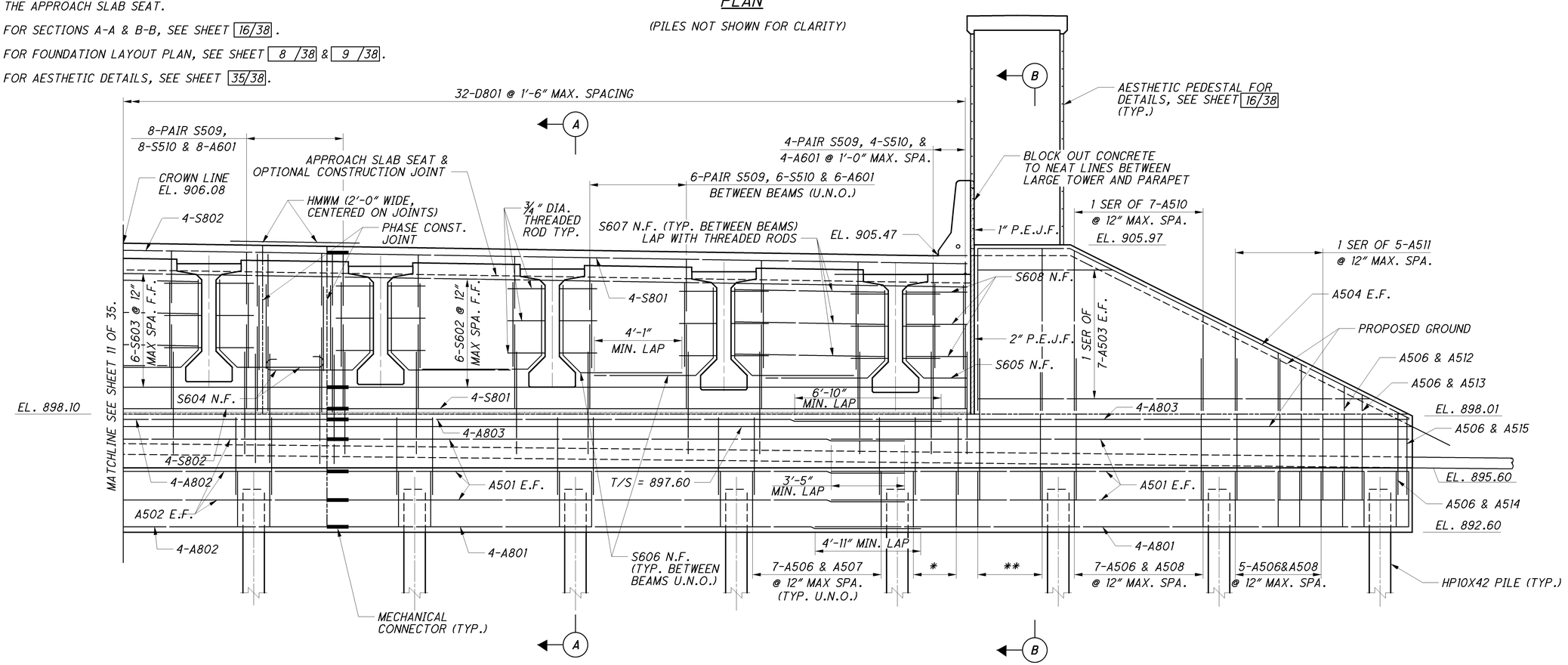

* - A506 & A507 @ 12" MAX. SPA.

** - A506, A508, & A509 @ 12" MAX. SPA.

ELEVATION

(CORBEL REINFORCING NOT SHOWN FOR CLARITY)

DESIGN AGENCY
PARSONS BRINCKERHOFF
2545 FARMERS DRIVE
SUITE 350
COLUMBUS, OHIO 43235

DESIGNED PJL | DRAWN LEL | CHECKED SAP | REVIEWED EBS | DATE 05/24/12

STRUCTURE FILE NUMBER
LEFT: 0202037
RIGHT: 0202053

REVISED

REAR ABUTMENT DETAILS

BRIDGE NO. ALL-75-0703 L&R
I-75 OVER S.R. 117 & S.R. 309

ALL-75-5.53
PID No. 76691

12 / 38

947
1224

J:\Projects\ALL\76691\structures\ALL075_0703C\sheets\075_0703CAR003.dgn 11-SEP-2012 8:53PM reddenj

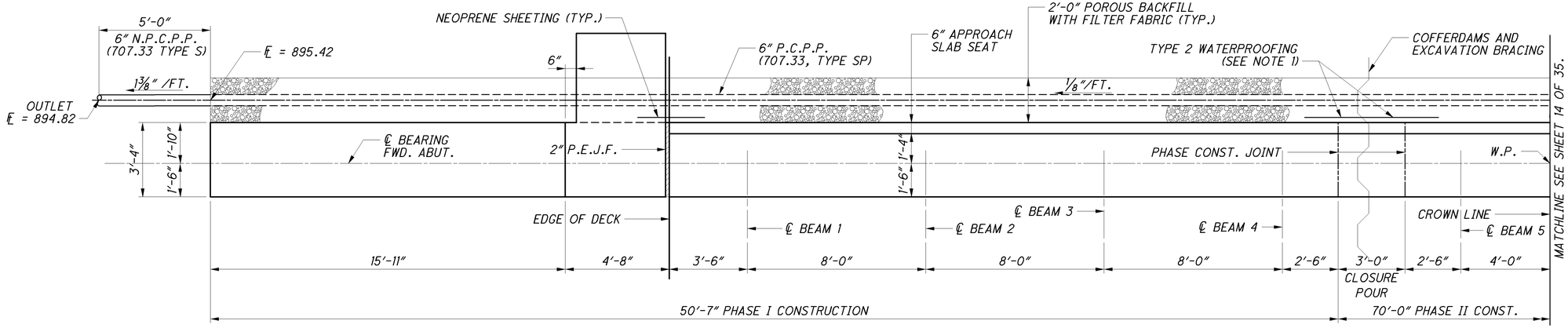

PLAN

(PILES NOT SHOWN FOR CLARITY)

NOTES:

1. TYPE 2 WATERPROOFING SHALL BE 3'-0" WIDE, CENTERED ON JOINTS, AND PLACED FROM THE TOP OF FOOTING TO THE APPROACH SLAB SEAT.
2. FOR SECTIONS A-A & B-B, SEE SHEET 16/38 .
3. FOR FOUNDATION LAYOUT PLAN, SEE SHEET 8 /38 & 9 /38.
4. FOR AESTHETIC DETAILS, SEE SHEET 35/38.

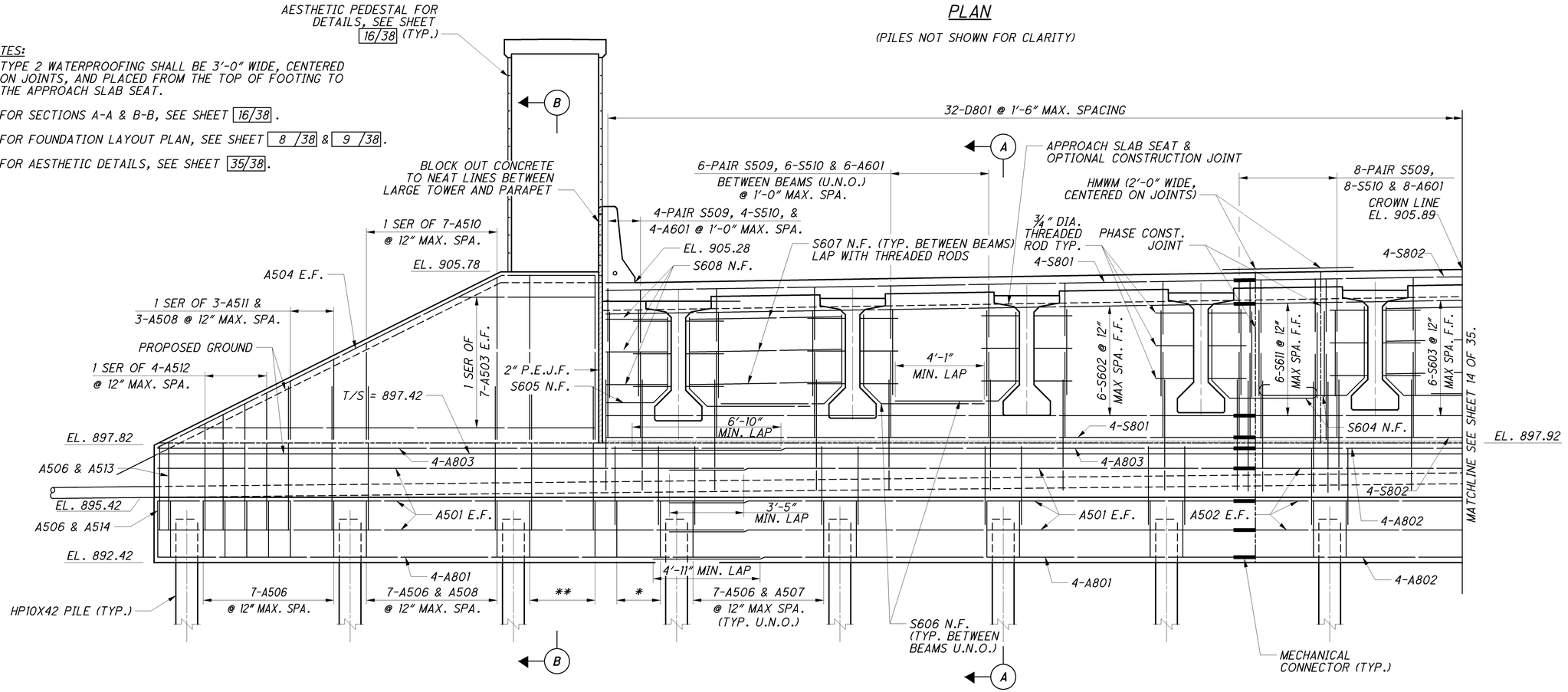

* - 3-A506 & A507
@ 12" MAX. SPA.

** - 4-A506, A508, & A509
@ 12" MAX. SPA.

ELEVATION

(CORBEL REINFORCING NOT SHOWN FOR CLARITY)

DESIGN AGENCY
PARSONS BRINCKERHOFF
2945 FARMERS DRIVE
SUITE 350
COLUMBUS, OHIO 43235

DESIGNED PJL | DRAWN LEL | CHECKED SAP | REVIEWED EBS | DATE 05/24/12 | REVISED

STRAND PATTERN NUMBER
LEFT: 02020037
RIGHT: 02020053

FORWARD ABUTMENT DETAILS

BRIDGE NO. ALL-75-0703 L&R
I-75 OVER S.R. 117 & S.R. 309

ALL-75-5.53
PID No. 76691

13 / 38

948
1224

J:\Projects\ALL\76691\structures\ALL075_0703C\sheets\075_0703CAF001.dgn 11-SEP-2012 8:53PM reddenj

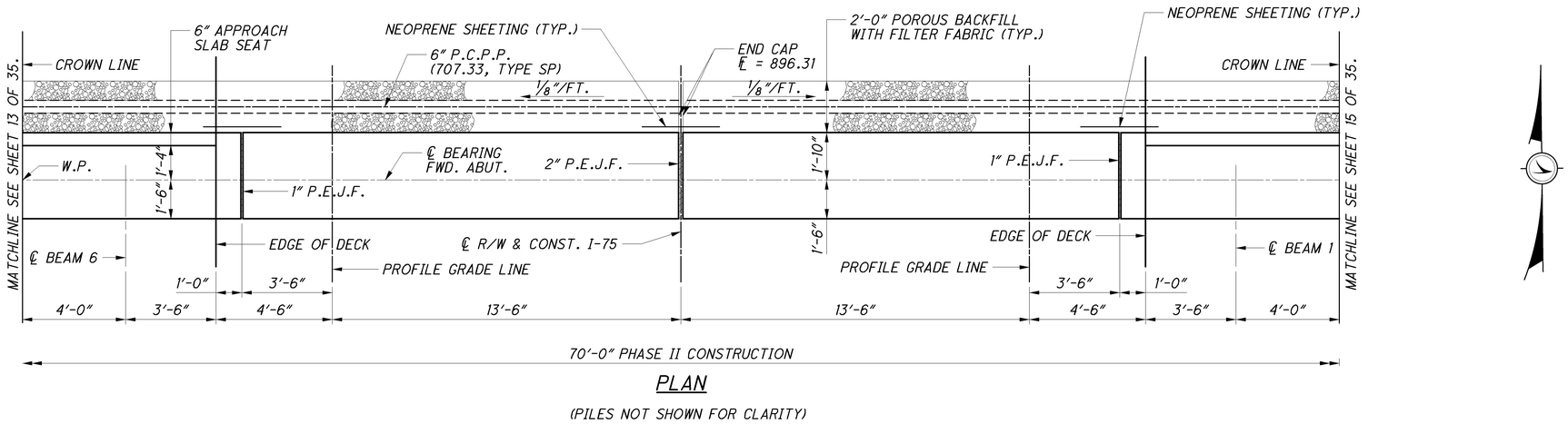

PLAN

(PILES NOT SHOWN FOR CLARITY)

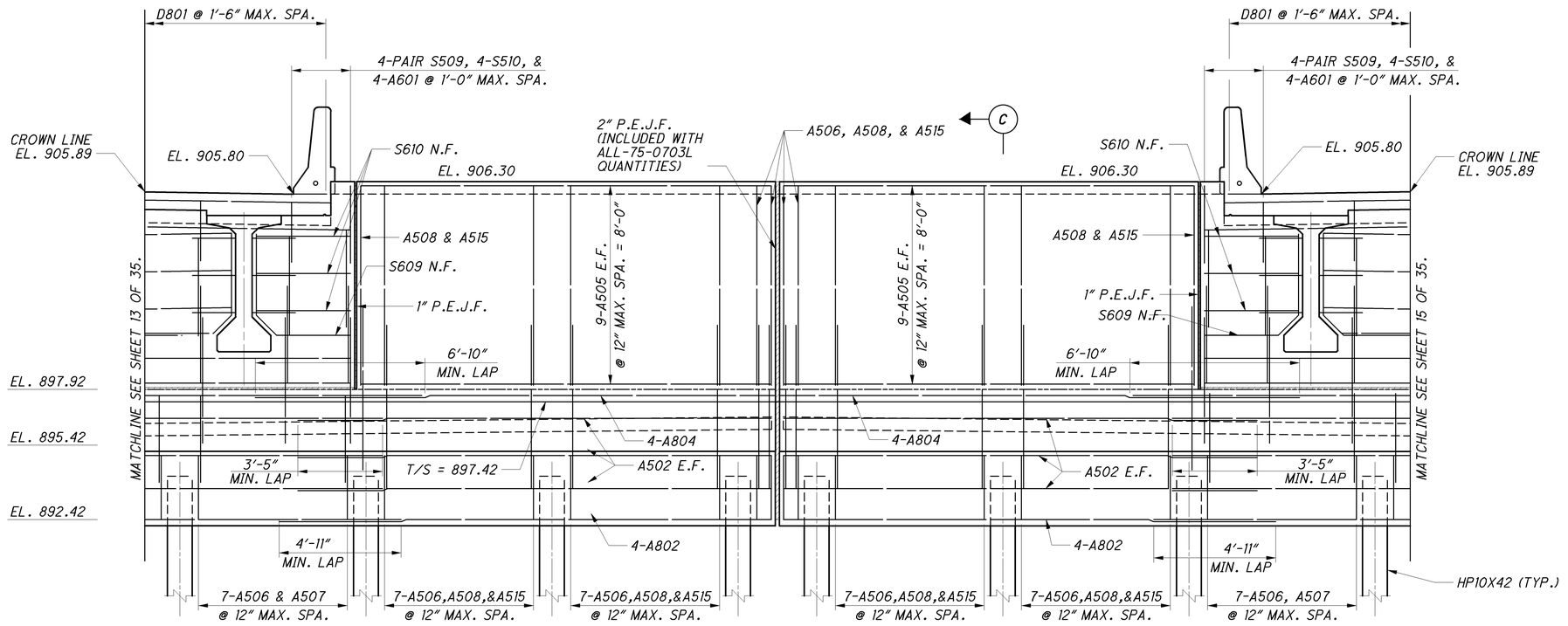

ELEVATION

C

NOTES:

1. FOR SECTION C-C SEE SHEET 10/38.
2. FOR FOUNDATION LAYOUT PLAN, SEE SHEET 8/38 & 9/38.
3. FOR AESTHETIC DETAILS, SEE SHEET 35/38.

DESIGN AGENCY
PARSONS BRINCKERHOFF
2545 FARMERS DRIVE
SUITE 350
COLUMBUS, OHIO 43235

DESIGNED	DRAWN	REVIEWED	DATE
PJL	LEL	EBS	05/24/12
CHECKED	REVISED	STRUCTURE FILE NUMBER	
SAP		LEFT: 0202037 RIGHT: 0202053	

FORWARD ABUTMENT DETAILS

BRIDGE NO. ALL-75-0703 L&R
I-75 OVER S.R. 117 & S.R. 309

ALL-75-5.53
PID No. 76691

14 / 38

949
1224

J:\Projects\ALL\76691\structures\ALL075_0703C\sheets\075_0703CAF002.dgn 11-SEP-2012 8:53PM reddenj

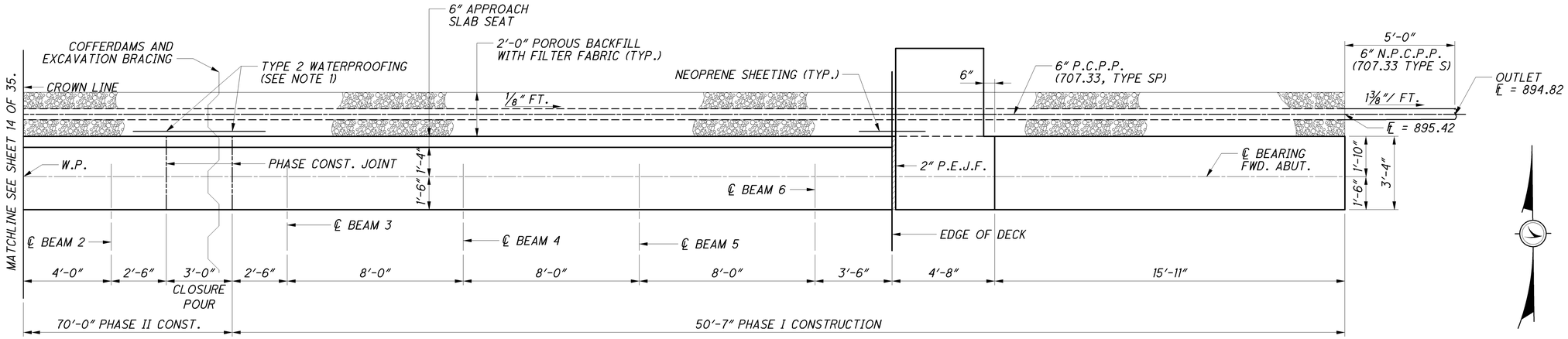

NOTES:

1. TYPE 2 WATERPROOFING SHALL BE 3′-0″ WIDE, CENTERED ON JOINTS, AND PLACED FROM THE TOP OF FOOTING TO THE APPROACH SLAB SEAT.
2. FOR SECTIONS A-A & B-B, SEE SHEET 16/38 .
3. FOR FOUNDATION LAYOUT PLAN, SEE SHEET 8 /38 & 9 /38 .
4. FOR AESTHETIC DETAILS, SEE SHEET 35/38 .

PLAN

(PILES NOT SHOWN FOR CLARITY)

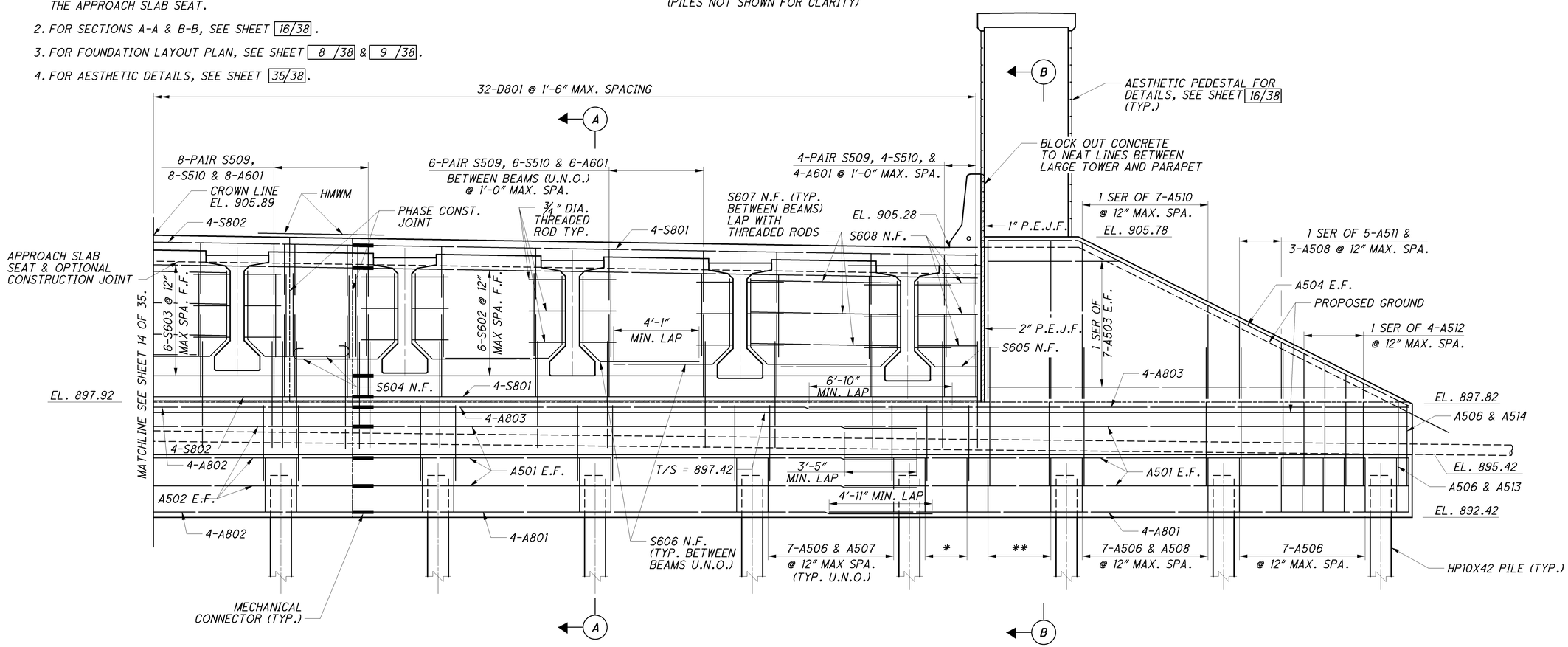

* - A506 & A507 @ 12″ MAX. SPA.

** - A506, A508, & A509 @ 12″ MAX. SPA.

ELEVATION

(CORBEL REINFORCING NOT SHOWN FOR CLARITY)

DESIGN AGENCY
PARSONS BRINCKERHOFF
2545 FARMERS DRIVE
SUITE 350
COLUMBUS, OHIO 43235

DESIGNED	DRAWN	REVIEWED	DATE
PJL	LEL	EBS	05/24/12
CHECKED	REVISED	STRUCTURE FILE NUMBER	
SAP		LEFT: 0202037 RIGHT: 0202053	

FORWARD ABUTMENT DETAILS

BRIDGE NO. ALL-75-0703 L&R
I-75 OVER S.R. 117 & S.R. 309

ALL-75-5.53
PID No. 76691

15 / 38

950
1224

J:\Projects\ALL\76691\structures\ALL075_0703C\sheets\075_0703CAF003.dgn 11-SEP-2012 8:53PM reddenj

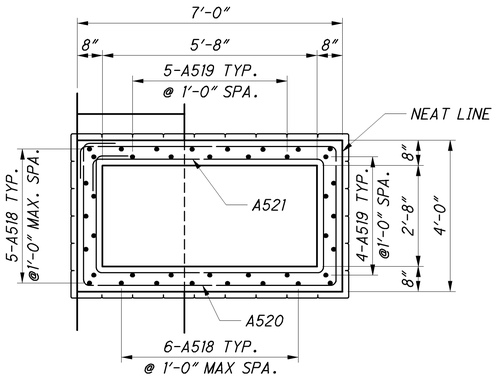

SECTION D-D

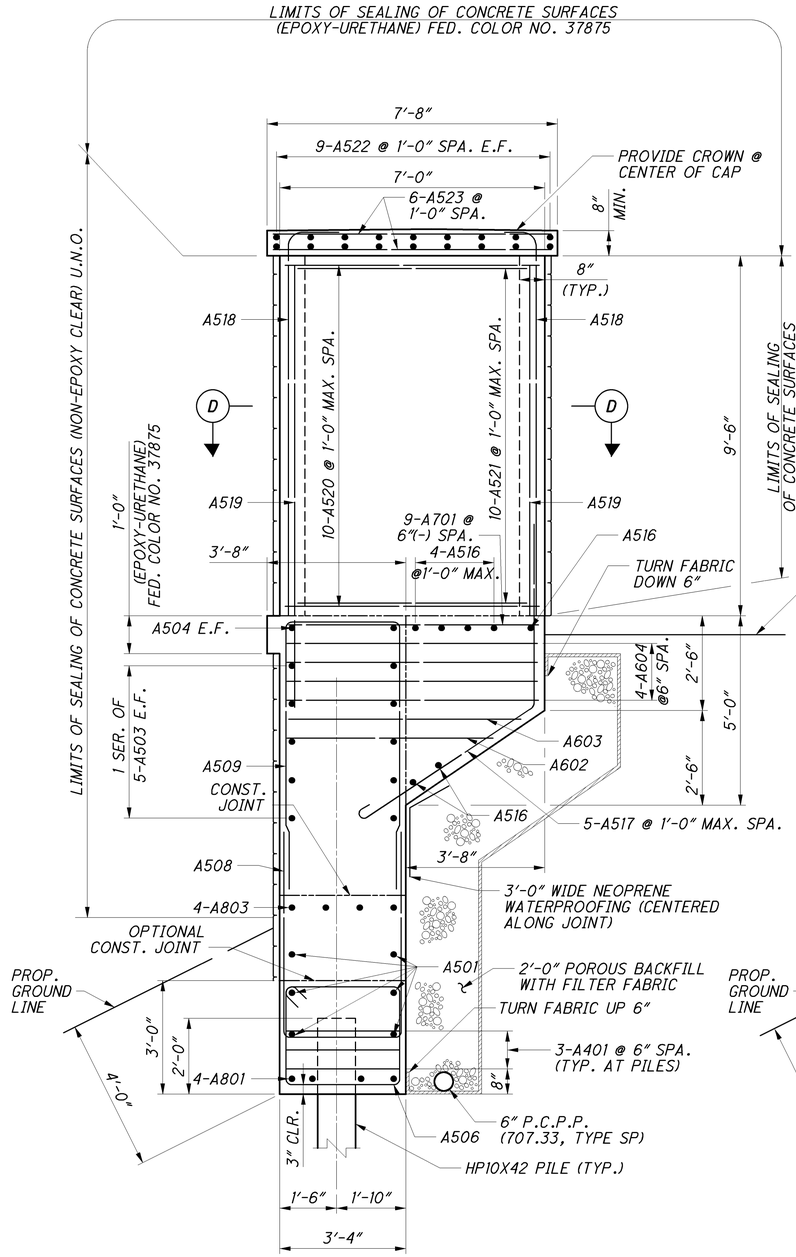

SECTION B-B

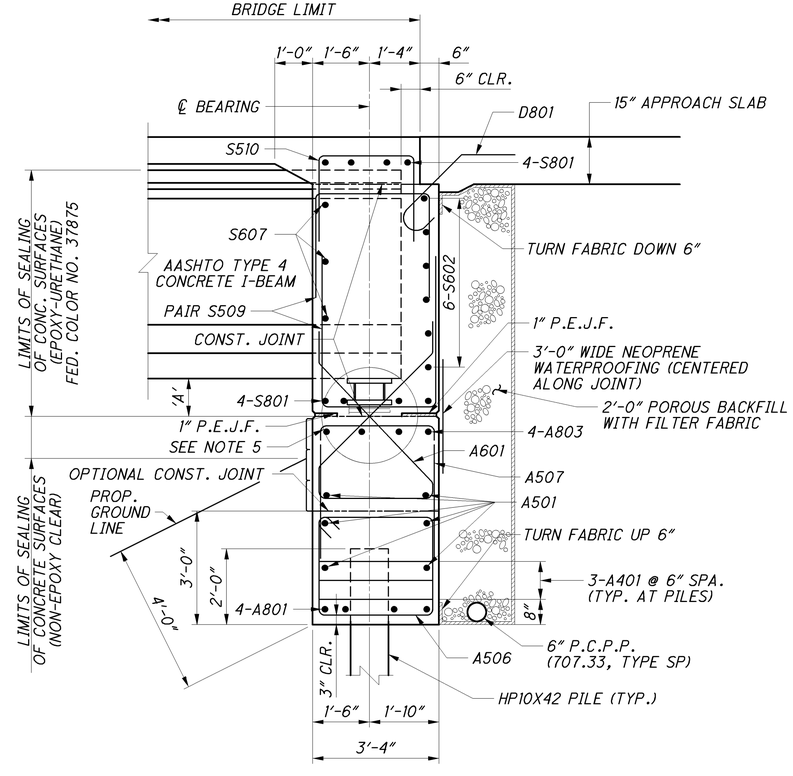

SECTION A-A

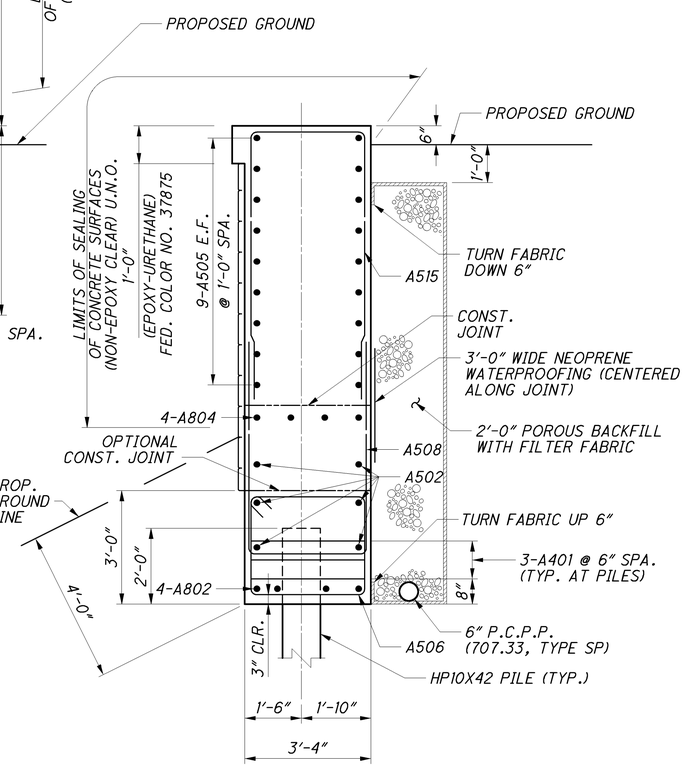

SECTION C-C

NOTES:

1. ABUTMENT DIAPHRAGM CONCRETE, PRESTRESSED CONCRETE SUPERSTRUCTURE, PHASED CONSTRUCTION: PLACE THE DIAPHRAGM CONCRETE ENCASING THE STRUCTURAL MEMBER ENDS OF AN INDIVIDUAL PHASE WITH THE DECK CONCRETE OR AT LEAST 48 HOURS BEFORE PLACEMENT OF THE DECK CONCRETE. IF PLACED SEPARATELY, LOCATE THE HORIZONTAL CONSTRUCTION JOINT BETWEEN THE DIAPHRAGM AND DECK CONCRETE AT THE APPROACH SLAB SEAT. PLACE CLOSURE POUR CONCRETE IN THE DIAPHRAGM AND DECK CONCURRENTLY.

2. NEOPRENE SHEETING, 3 FEET WIDE, SHALL EXTEND FROM APPROACH SLAB DOWN TO THE BOTTOM OF HORIZONTAL NEOPRENE SHEETING AT THE JOINT BETWEEN DIAPHRAGM AND WINGWALL.

3. FOR ADDITIONAL INTEGRAL ABUTMENT DETAILS AND NOTES SEE O.D.O.T. STD. DWG. ICD-1-82.

4. FOR AESTHETIC DETAILS, SEE SHEET 35/38 .

5. FOR BEARING DETAILS, SEE SHEET 21/38 .

BEAM	REAR ABUTMENT DIMENSION 'A'		FORWARD ABUTMENT DIMENSION 'A'	
	0703L	0703R	0703L	0703R
1	1.00'	1.51'	1.00'	1.51'
2	1.13'	1.51'	1.13'	1.51'
3	1.26'	1.38'	1.26'	1.38'
4	1.38'	1.26'	1.38'	1.26'
5	1.51'	1.13'	1.51'	1.13'
6	1.51'	1.00'	1.51'	1.00'

DESIGN AGENCY
PARSONS BRINCKERHOFF
2545 FARMERS DRIVE
SUITE 350
COLUMBUS, OHIO 43235

DESIGNED PJL
DRAWN LEL
CHECKED SAP
REVIEWED EBS
DATE 05/24/12
REVISED
STRUCTURE PROJECT NUMBER
LEFT: 02020377
RIGHT: 02020053

ABUTMENT DETAILS
BRIDGE NO. ALL-75-0703 L&R
I-75 OVER S.R. 117 & S.R. 309

ALL-75-5.53
PID No. 76691

16 / 38

951
1224

J:\Projects\ALL\76691\structures\ALL075_0703\sheets\075_0703CAF004.dgn 16-JAN-2013 5:06PM lint

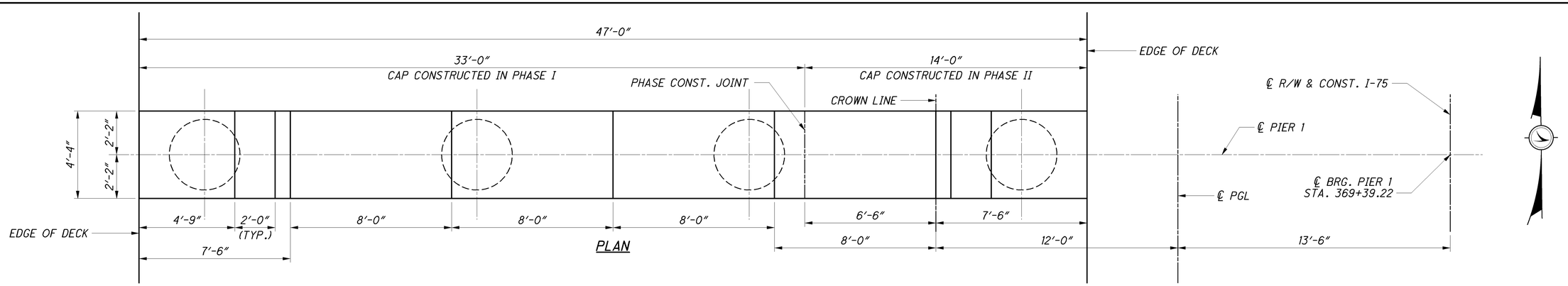

PLAN

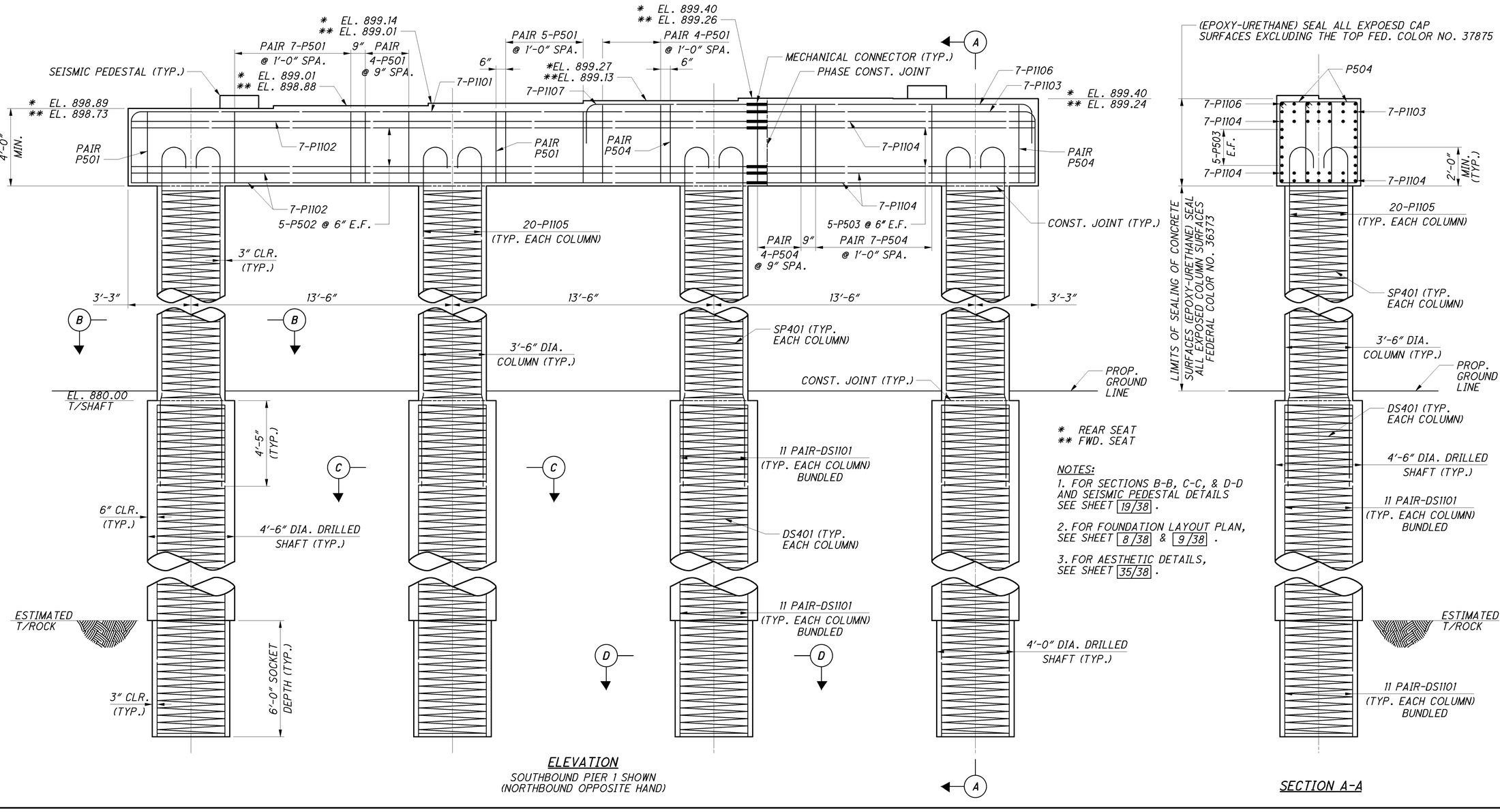

ELEVATION

SOUTHBOUND PIER 1 SHOWN
(NORTHBOUND OPPOSITE HAND)

SECTION A-A

DESIGN AGENCY
PARSONS BRINCKERHOFF
2545 FARMERS DRIVE
SUITE 350
COLUMBUS, OHIO 43235

DESIGNED	DRAWN	REVIEWED	DATE
PJL	LEL	EBS	05/24/12
CHECKED	REVISED	STRUCTURE FILE NUMBER	
SAP		LEFT: 02020377 RIGHT: 02020537	

PIER 1 DETAILS

BRIDGE NO. ALL-75-0703 L&R
I-75 OVER S.R. 117 & S.R. 309

ALL-75-5.53
PID No. 76691

17 / 38

952
1224

J:\Projects\ALL\76691\structures\ALL075_0703C\sheets\075_0703CPI001.dgn 11-SEP-2012 8:53PM reddenj

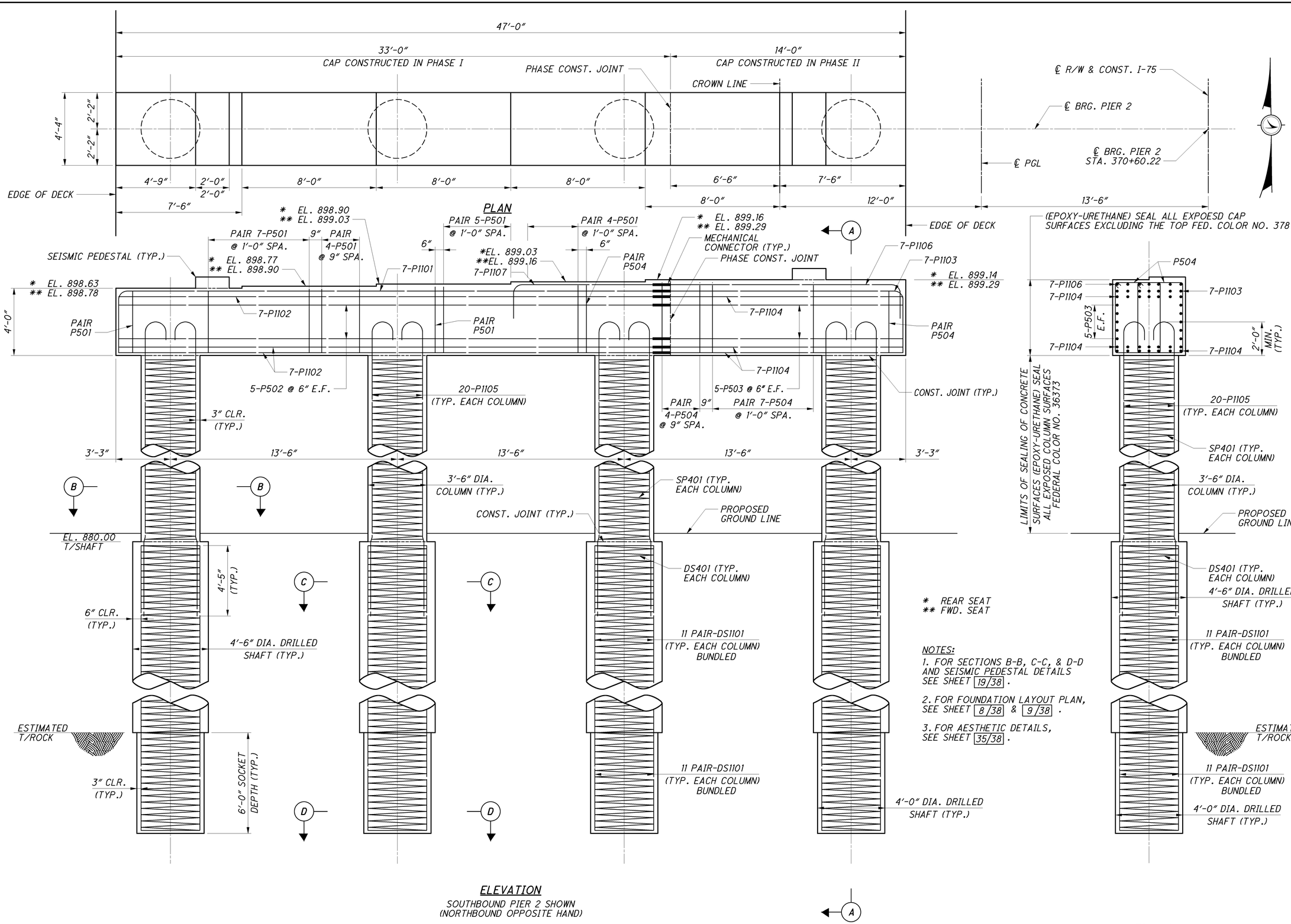

NOTES:

1. FOR SECTIONS B-B, C-C, & D-D AND SEISMIC PEDESTAL DETAILS SEE SHEET 19/38.
2. FOR FOUNDATION LAYOUT PLAN, SEE SHEET 8/38 & 9/38.
3. FOR AESTHETIC DETAILS, SEE SHEET 35/38.

ELEVATION

SOUTHBOUND PIER 2 SHOWN
(NORTHBOUND OPPOSITE HAND)

SECTION A-A

DESIGN AGENCY
PARSONS BRINCKERHOFF
2545 FARMERS DRIVE
SUITE 350
COLUMBUS, OHIO 43235

DESIGNED	DRAWN	REVIEWED	DATE
PJL	LEL	EBS	05/24/12
CHECKED	REVISED	STRUCTURE FILE NUMBER	
SAP		LEFT: 0202037 RIGHT: 0202053	

PIER 2 DETAILS
BRIDGE NO. ALL-75-0703 L&R
I-75 OVER S.R. 117 & S.R. 309

ALL-75-5.53
PID No. 76691

J:\Projects\ALL\76691\structures\ALL075_0703C\sheets\075_0703CP1002.dgn 11-SEP-2012 8:53PM redden

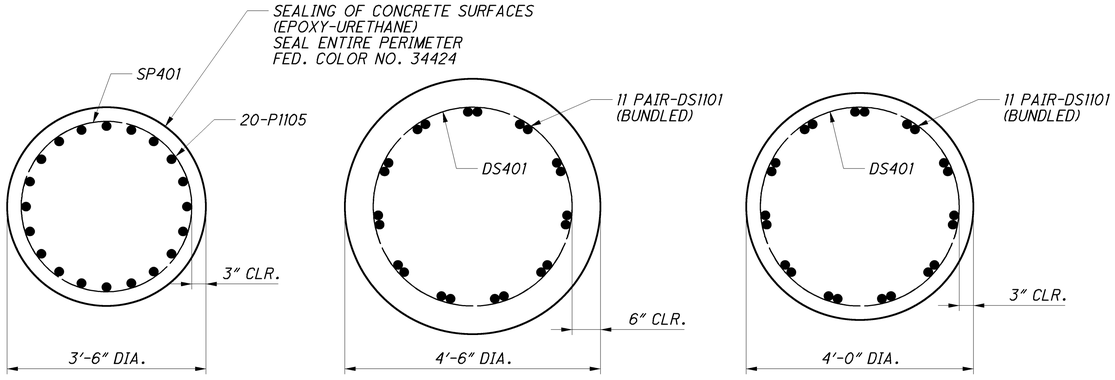

SECTION B-B SECTION C-C SECTION D-D

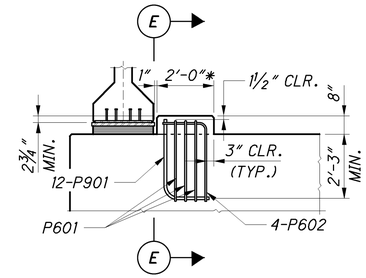

FRONT VIEW OF SEISMIC PEDESTAL

* MEASURED PARALLEL TO THE CENTERLINE OF BEARINGS.

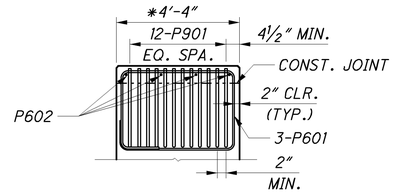

SECTION E-E

* THE SURFACE OF THE BEAM SEAT IN THIS AREA SHALL BE FINISHED WITH A SERRATED TROWEL. THE SERRATIONS SHALL BE ¼" DEEP MINIMUM.

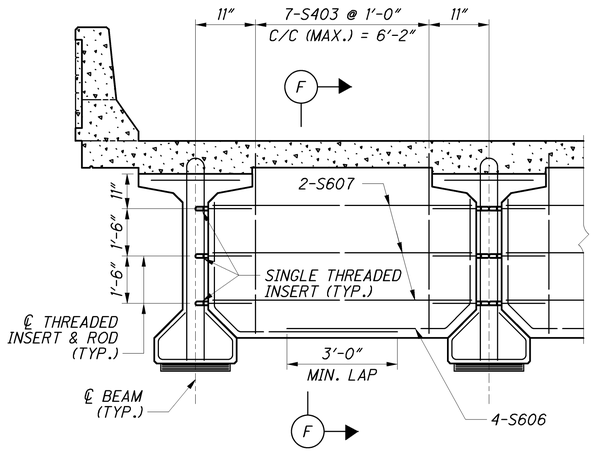

PIER DIAPHRAGM

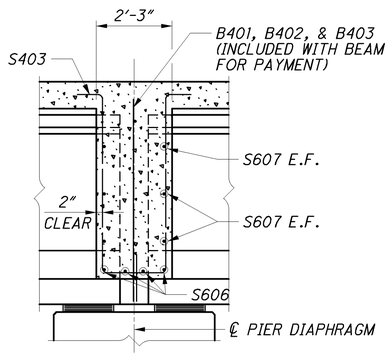

SECTION F-F

DESIGN AGENCY
PARSONS BRINCKERHOFF
2545 FARMERS DRIVE
SUITE 350
COLUMBUS, OHIO 43235

DESIGNED	DRAWN	REVIEWED	DATE
PJL	BKJ	EBS	05/24/12
CHECKED	REVISED	STRUCTURE FILE NUMBER	
SAP	LEL	LEFT: 0202037 RIGHT: 0202053	

PIER DETAILS

BRIDGE NO. ALL-75-0703 L&R
I-75 OVER S.R. 117 & S.R. 309

ALL-75-5.53
PID No. 76691

19 / 38

954
1224

J:\Projects\ALL\76691\structures\ALL075_0703C\sheets\075_0703CPI003.dgn 11-SEP-2012 8:53PM reddenj

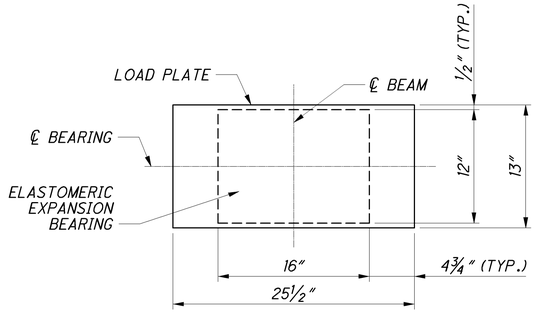

PLAN VIEW - PIER BEARING

PIER 1 REAR BEARING & PIER 2 FORWARD BEARING

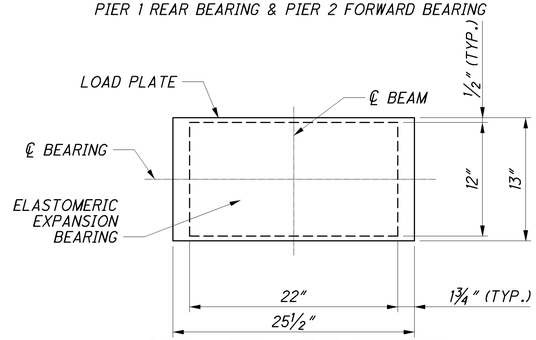

PLAN VIEW - PIER BEARING

PIER 1 FORWARD BEARING & PIER 2 REAR BEARNG

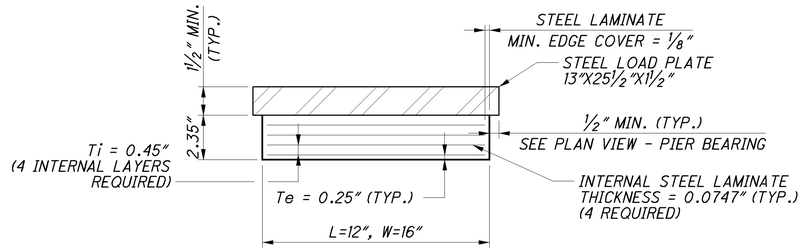

LAMINATED ELASTOMERIC EXPANSION BEARING, 50 DUROMETER

PIER 1 REAR BEARING & PIER 2 FORWARD BEARING
DEAD LOAD REACTION = 75.0 K
LIVE LOAD REACTION = 92.9 K (NO IMPACT)
MAXIMUM DESIGN LOAD = 167.9 K

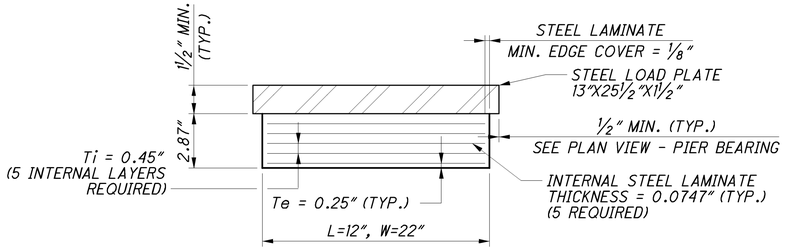

LAMINATED ELASTOMERIC EXPANSION BEARING, 50 DUROMETER

PIER 1 FORWARD BEARING & PIER 2 REAR BEARNG
DEAD LOAD REACTION = 161.1 K
LIVE LOAD REACTION = 105.8 K (NO IMPACT)
MAXIMUM DESIGN LOAD = 266.9 K

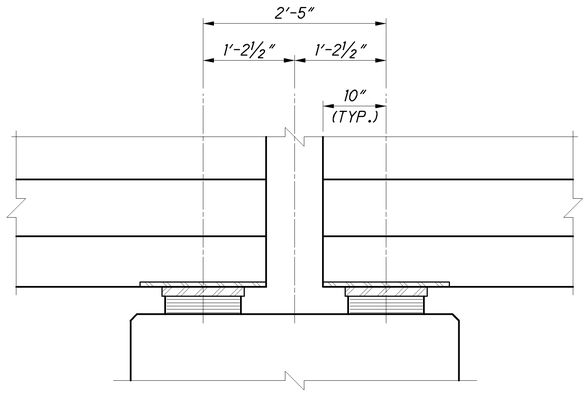

BEARING DETAIL

PIER

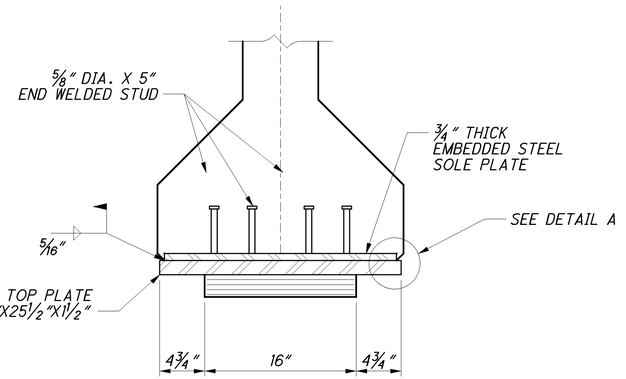

END VIEW

PIER 1 REAR BEARING & PIER 2 FORWARD BEARING WITH LOAD PLATE
(LOAD PLATES ARE TO BE BONDED TO THE ELASTOMER DURING THE MOLDING PROCESS)

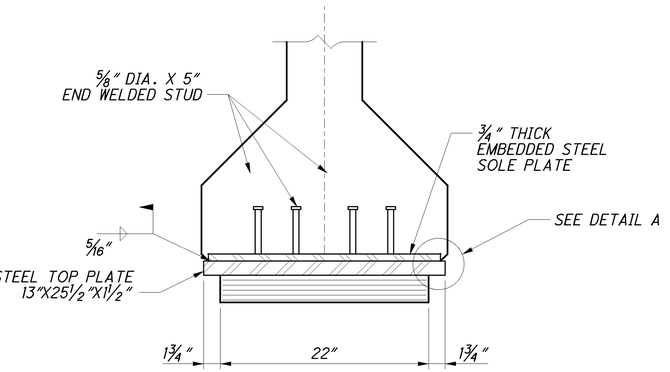

END VIEW

PIER 1 FORWARD BEARING & PIER 2 REAR BEARNG WITH LOAD PLATE
(LOAD PLATES ARE TO BE BONDED TO THE ELASTOMER DURING THE MOLDING PROCESS)

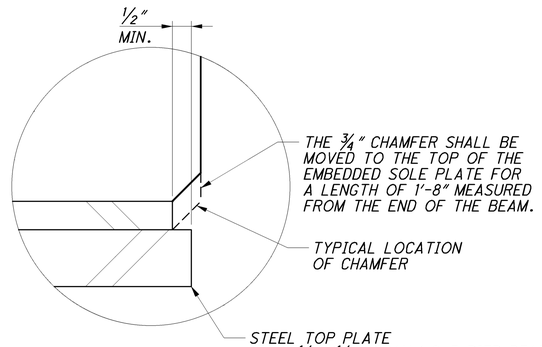

DETAIL A

NOTES:

1. STRUCTURAL STEEL: ALL STRUCTURAL STEEL SHOWN SHALL BE ASTM A709 GRADE 50, UNLESS NOTED OTHERWISE.
2. ELASTOMERIC BEARINGS: THE ELASTOMER SHALL HAVE A HARDNESS OF 50 DUROMETER. THE BEARINGS WERE DESIGNED IN ACCORDANCE WITH SECTION 14.7.6 (METHOD A) OF THE AASHTO LRFD BRIDGE DESIGN SPECIFICATIONS. THE LONG TERM COMPRESSION PROOF LOAD TEST (AASHTO STANDARD SPECIFICATIONS FOR HIGHWAY BRIDGES, DIVISION II, SECTION 18.7.2.6) IS NOT REQUIRED.
3. ALL BEARINGS SHALL BE MARKED PRIOR TO SHIPPING. THE MARKS SHALL INCLUDE THE BEARING LOCATION ON THE BRIDGE, AND A DIRECTION ARROW THAT POINTS UP-STATION. ALL MARKS SHALL BE PERMANENT AND BE VISIBLE AFTER BEARING IS INSTALLED.
4. PAINTING: STEEL LOAD PLATES AT THE PIER SHALL BE SHOP PAINTED WITH AN INORGANIC ZINC PRIMER AS SPECIFIED IN CMS 513.27. APPLY PAINT TO THE EXPOSED STEEL LOAD PLATES IN ACCORDANCE WITH CMS 514. PAYMENT IS INCLUDED IN THE UNIT PRICE BID FOR EACH BEARING.
5. THE STEEL LOAD PLATE SHALL BE BONDED BY VULCANIZATION TO THE ELASTOMER DURING THE MOLDING PROCESS.
6. BASIS OF PAYMENT: THE UNIT BID PRICE SHALL INCLUDE ALL MATERIALS, LABOR, TESTING, AND INCIDENTALS NECESSARY TO FURNISH AND INSTALL LAMINATED ELASTOMERIC BEARINGS. PAYMENT WILL BE MADE AT THE CONTRACT PRICE FOR ITEM 516, EACH, ELASTOMERIC BEARINGS WITH INTERNAL LAMINATES (NEOPRENE), AS PER PLAN: 12"X16"X2.35" WITH 13"X25½"X1½" (MIN.) LOAD PLATES (PIER 1 REAR BEARING AND PIER 2 FORWARD BEARING), 12"X22"X2.87" WITH 13"X25½"X1½" (MIN.) LOAD PLATES (PIER 1 FORWARD BEARING AND PIER 2 REAR BEARING), AND 7"X14"X1.75" WITH 12"X15"X1½" (MIN.) LOAD PLATES (ABUTMENT BEARING).
7. FOR FRAMING PLAN, SEE SHEET 22/38.
8. TOTAL DESIGN LOAD FOR BEARING EQUALS THE SUM OF THE UNFACTORED DEAD LOADS AND UNFACTORED LIVE LOADS (WITHOUT IMPACT).

DESIGN AGENCY
PARSONS BRINCKERHOFF
2545 FARMERS DRIVE
SUITE 350
COLUMBUS, OHIO 43235

DESIGNED	DRAWN	REVIEWED	DATE
SAP	LEL	EBS	05/24/12
CHECKED	REVISED	STRUCTURE NUMBER	
PJL		LEFT: 0202037 RIGHT: 0202053	

BEARING DETAILS
BRIDGE NO. ALL-75-0703 L&R
I-75 OVER S.R. 117 & S.R. 309

ALL-75-5.53
PID No. 76691

J:\Projects\ALL\76691\structures\ALL075_0703C\sheets\075_0703CBR001.dgn 11-SEP-2012 8:53PM reddenj

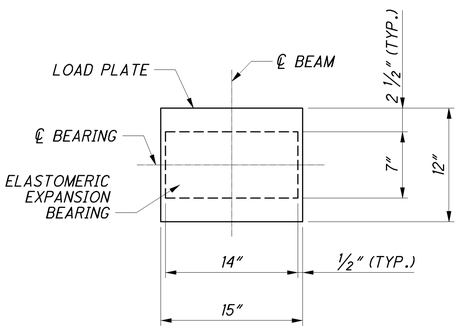

PLAN VIEW - ABUTMENT BEARING

ABUTMENT BEARINGS

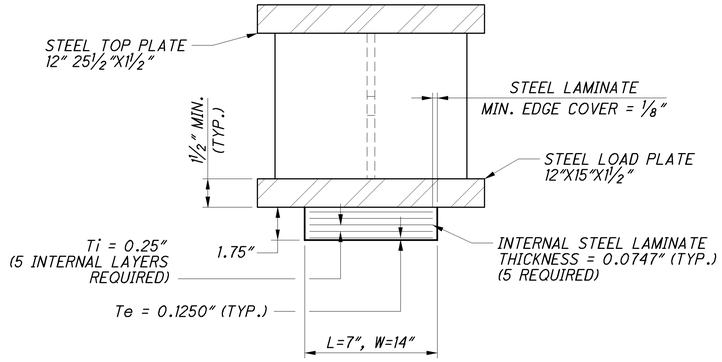

LAMINATED ELASTOMERIC EXPANSION BEARING, 50 DUROMETER

ABUTMENT BEARINGS
DEAD LOAD REACTION = 63.36 K
LIVE LOAD REACTION = 0 K (NO IMPACT)
MAXIMUM DESIGN LOAD = 63.36 K

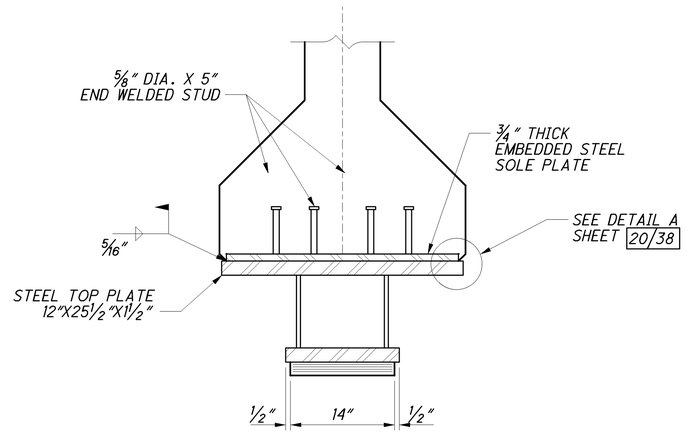

END VIEW

ABUTMENT BEARINGS
(LOAD PLATES ARE TO BE BONDED TO THE ELASTOMER DURING THE MOLDING PROCESS)

TABLE A - SUPPORT POST HEIGHTS					
ALL-75-0703L			ALL-75-0703R		
BEAM	REAR	FORWARD	BEAM	REAR	FORWARD
1	7.25"	7.25"	1	13.40"	13.40"
2	8.79"	8.79"	2	13.40"	13.40"
3	10.32"	10.32"	3	11.86"	11.86"
4	11.86"	11.86"	4	10.32"	10.32"
5	13.40"	13.40"	5	8.79"	8.79"
6	13.40"	13.40"	6	7.25"	7.25"

NOTES:

1. FOR ADDITIONAL BEARING NOTES AND DETAILS SEE SHEET 20/38

DESIGN AGENCY
PARSONS BRINCKERHOFF
2545 FARMERS DRIVE
SUITE 350
COLUMBUS, OHIO 43235

DESIGNED	DRAWN	REVIEWED	DATE
SAP	LEL	EBS	05/24/12
CHECKED	REVISED	STRUCTURE FILE NUMBER	
PJL		LEFT: 0202037 RIGHT: 0202053	

BEARING DETAILS
BRIDGE NO. ALL-75-0703 L&R
I-75 OVER S.R. 117 & S.R. 309

ALL-75-5.53
PID No. 76691

21 / 38

956
1224

J:\Projects\ALL\76691\structures\ALL075_0703C\sheets\075_0703CBR002.dgn 11-SEP-2012 8:54PM reddenj

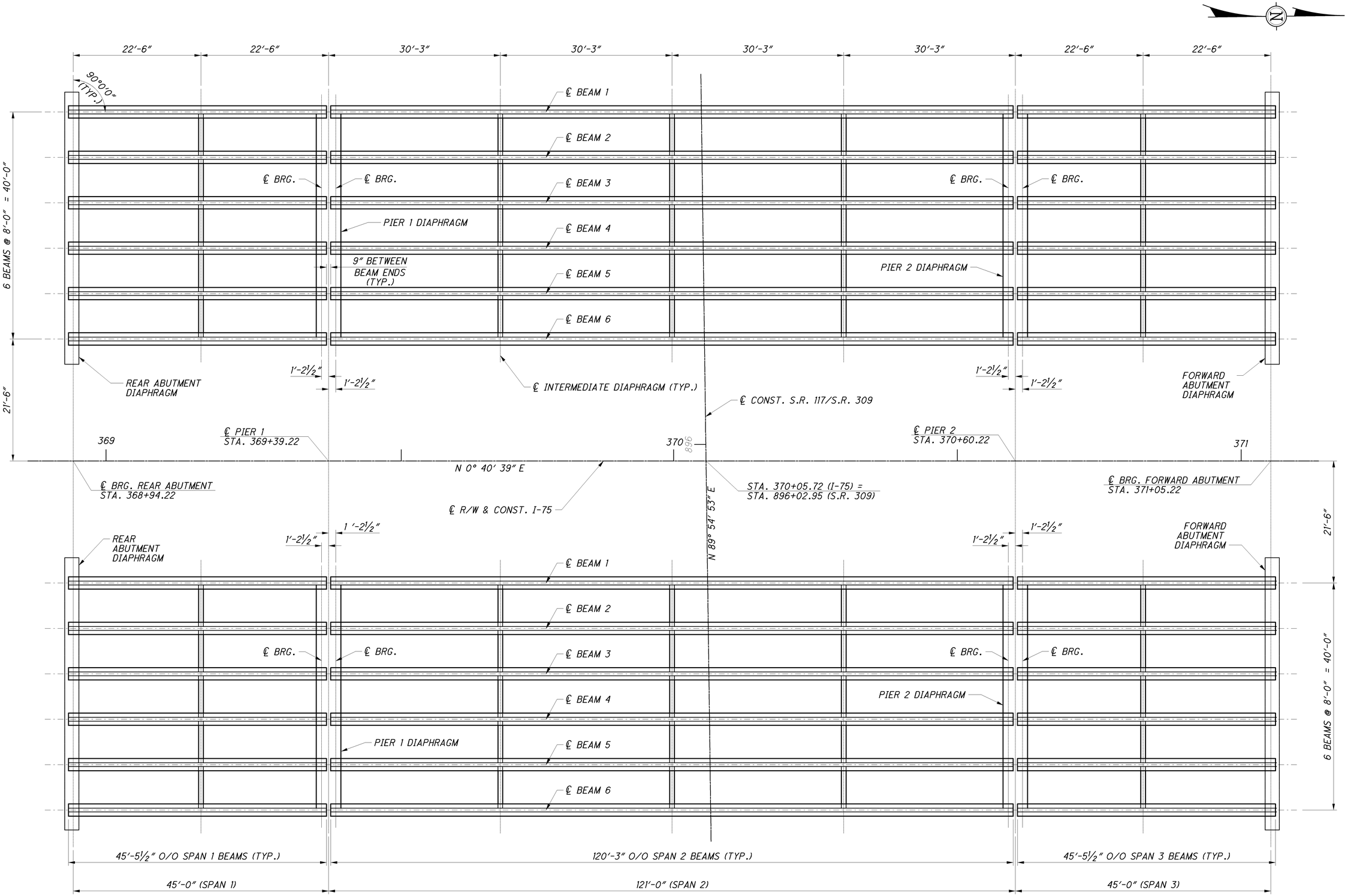

DESIGN AGENCY
PARSONS BRINCKERHOFF
2545 FARMERS DRIVE
SUITE 350
COLUMBUS, OHIO 43235

DESIGNED	DRAWN	REVIEWED	DATE
PJL	BKJ	EBS	05/24/12
CHECKED	REVISED	STRUCTURE NUMBER	
SAP		LEFT: 0202053	
		RIGHT: 0202053	

FRAMING PLAN

ALL-75-0703 L&R
I-75 OVER S.R. 117 & S.R. 309

ALL-75-5.53
PID No. 76691

J:\Projects\ALL\76691\structures\ALL075_0703C\sheets\075_0703CSD001.dgn 11-SEP-2012 8:54PM reddenj

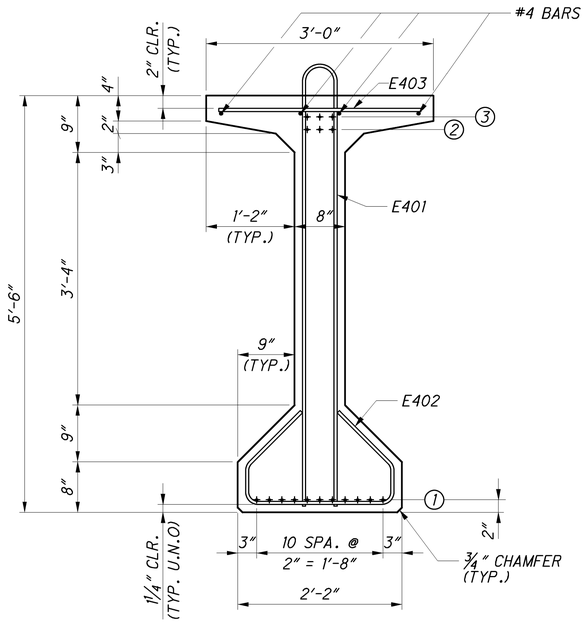

TYPICAL MID-SPAN SECTION

(SPANS 1 AND 3)

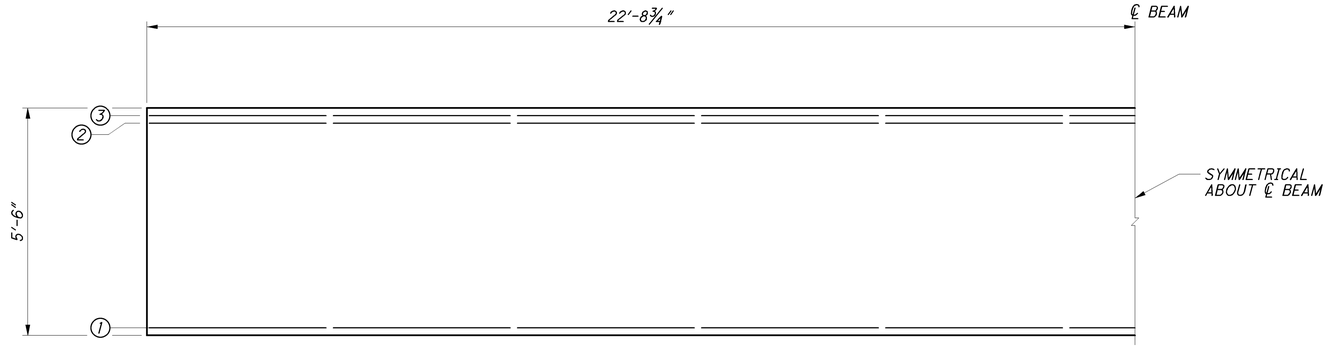

DRAPING DETAIL

NOT TO SCALE
(SPANS 1 AND 3)

BEAM MARK	NUMBER OF STRANDS PER ROW ①	②	③	TOTAL STRANDS	CONCRETE STRENGTHS f'ci	f'c	E401 BARS REQ'D	E402 BARS REQ'D	E403 BARS REQ'D	E405 BARS REQ'D
END	8	3	3	14	5	7	31	37	31	12
MID-SPAN	8	3	3							

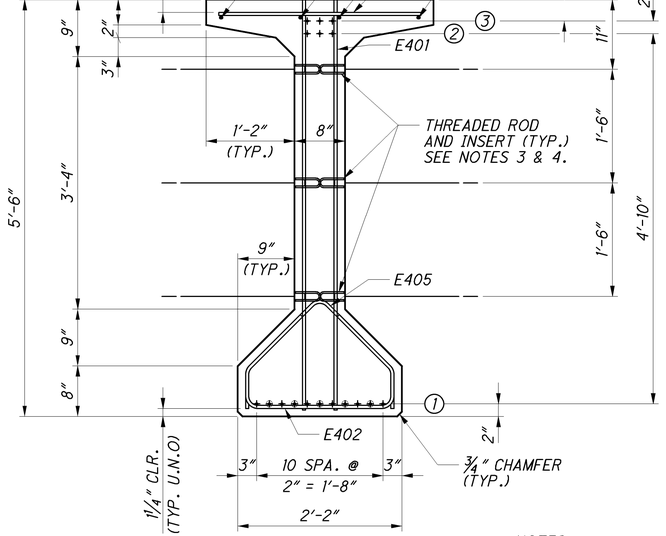

TYPICAL END SECTION

(SPANS 1 AND 3)

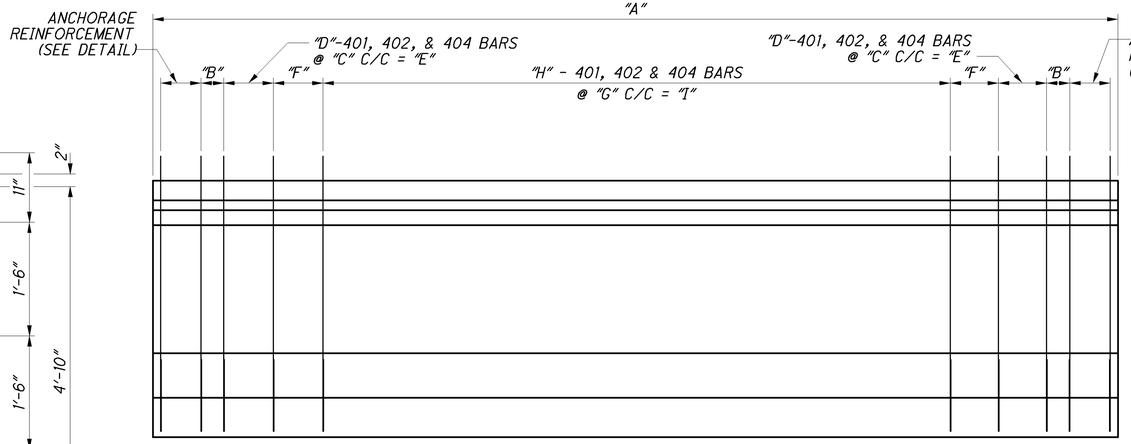

SHEAR REINFORCEMENT

NOT TO SCALE
(SPANS 1 AND 3)

NO. REQ'D.	BEAM DIMENSIONS DIMENSIONS "A"	"B"	"C"	"D"	"E"	"F"	"G"	"H"	"I"	APPROXIMATE WEIGHT (LBS)
24	45'-5 1/2"	6"	6"	3	1'-0"	1'-8 3/4"	2'-0"	19	36'-0"	42,995

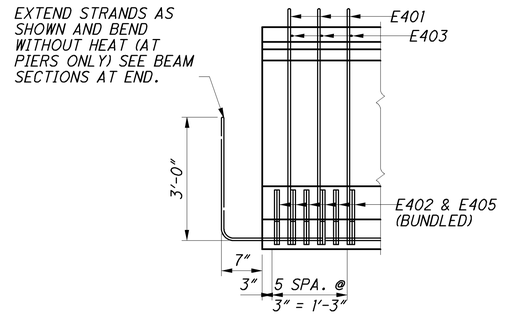

ANCHORAGE REINFORCEMENT

NOTES:

1. ALL REINFORCEMENT IS TO BE EPOXY COATED.
2. SEE GENERAL NOTES FOR INITIAL STRAND STRESS AND TENSION LOAD.
3. PROVIDE THREADED RODS AND INSERTS ON EACH FACE OF WEB FOR INTERIOR BEAMS. PROVIDE THREADED RODS AND INSERTS ON THE INTERIOR WEB FACE FOR FASCIA BEAMS.
4. DIMENSIONS SHOWN FOR THE THREADED RODS AND INSERTS FOR THE INTERMEDIATE DIAPHRAGMS SHALL BE ADJUSTED AS NECESSARY TO AVOID THE PRESTRESSING STRANDS AT ALL LOCATIONS.
5. SHIPPING STRANDS: THE FABRICATOR MAY ADD SHIPPING STRANDS AT THE LOCATIONS SHOWN ON SCD PSID-1-99 SHEET 1 OF 8. THESE SHIPPING STRANDS SHALL BE DEBONDED FOR THE ENTIRE LENGTH OF THE BEAM EXCEPT FOR THE LAST 10'-0" AT EACH END. THE STRANDS SHALL BE CUT AFTER ALL HANDLING OPERATIONS ARE COMPLETE.
6. ALL BEAMS SHALL BE STORED FOR A MINIMUM OF 90 DAYS PRIOR TO DECK PLACEMENT.
7. FOR ADDITIONAL NOTES AND DETAILS SEE ODOT STD. DWG PSID-1-99.
8. VERTICAL REINFORCEMENT QUANTITIES INCLUDE PIER DIAPHRAGM STEEL.

LEGEND:

⊕ - EXTENDED STRANDS AT PIER DIAPHRAGM ONLY

DESIGN AGENCY
PARSONS BRINCKERHOFF
2945 FARMERS DRIVE
SUITE 350
COLUMBUS, OHIO 43235

DESIGNED SAP | DRAWN LEL | REVIEWED EBS | DATE 05/24/12 | CHECKED PJL | REVISED

STRAND PAT. NUMBER
LEFT: 02020037
RIGHT: 02020053

SUPERSTRUCTURE DETAILS
BRIDGE NO. ALL-75-0703 L&R
I-75 OVER S.R. 117 & S.R. 309

ALL-75-5.53
PID No. 76691

J:\Projects\ALL\76691\structures\ALL075_0703\sheets\075_0703CSD002.dgn 11-SEP-2012 8:54PM redden

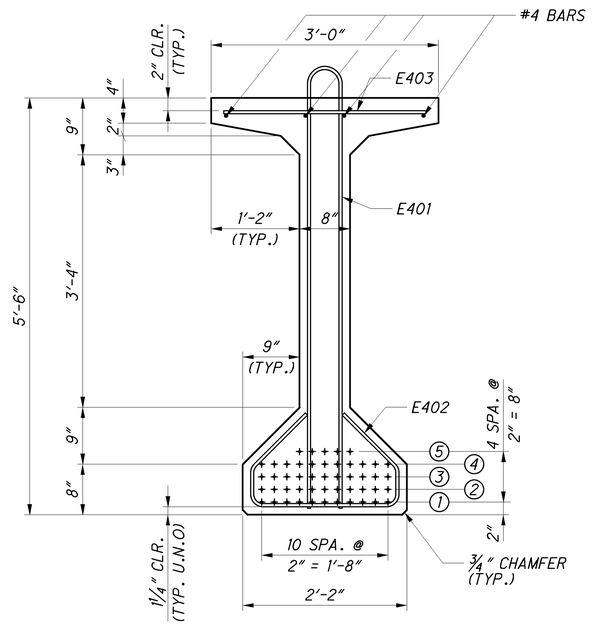

TYPICAL MID-SPAN SECTION
(SPAN 2)

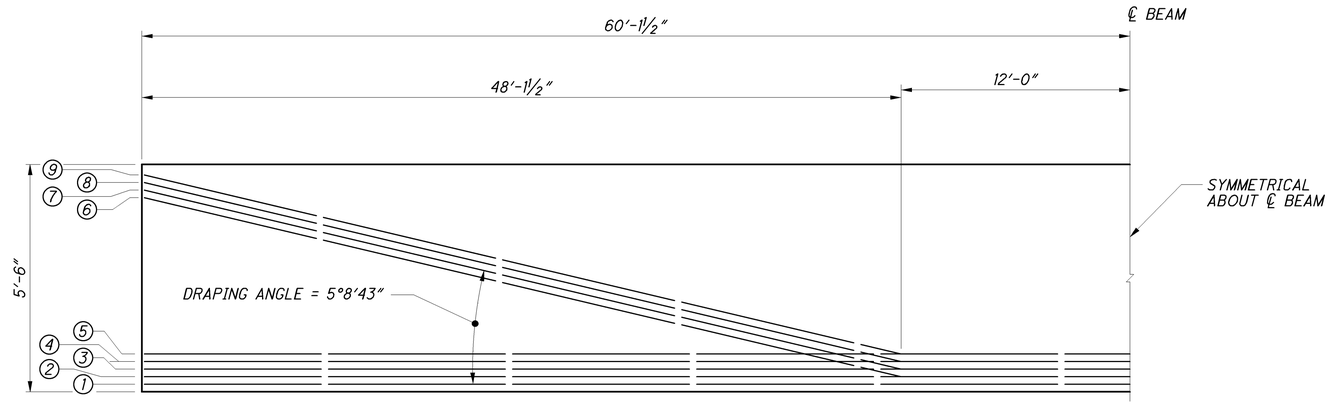

DRAPING DETAIL
NOT TO SCALE
(SPAN 2)

NUMBER OF STRANDS PER ROW											CONCRETE STRENGTHS		E401 BARS REQ'D	E402 BARS REQ'D	E404 BARS REQ'D	E405 BARS REQ'D
BEAM MARK	①	②	③	④	⑤	⑥	⑦	⑧	⑨	TOTAL STRANDS	f'ci	f'c				
END	11	8	8	8	2	3	3	3	3	49	5	7	73	79	73	12
MID-SPAN	11	11	11	11	5	–	–	–	–							

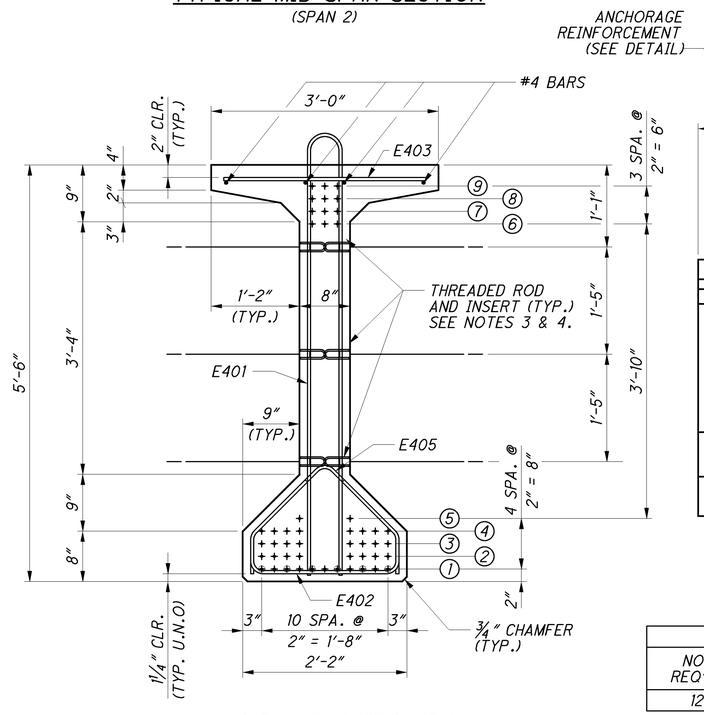

TYPICAL END SECTION
(SPAN 2)

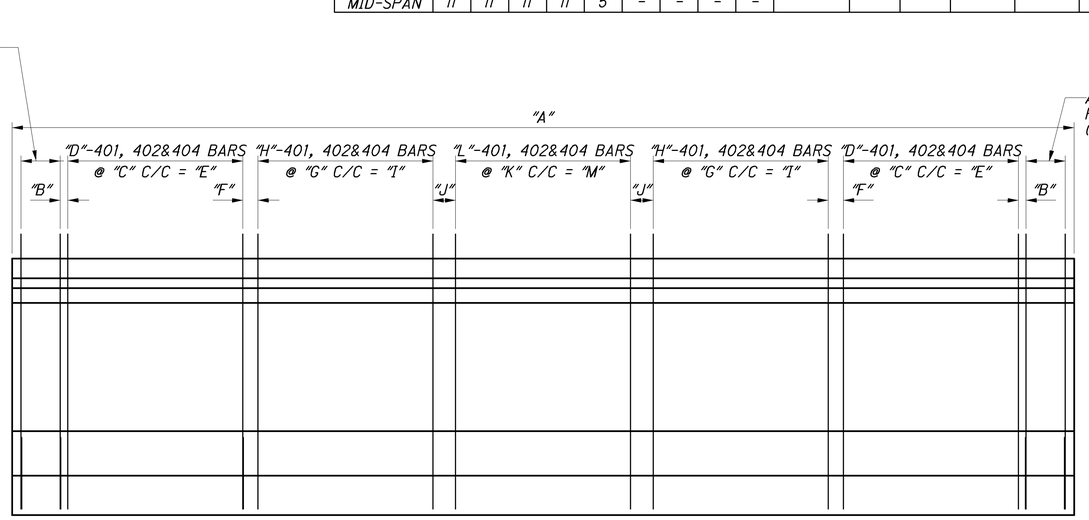

SHEAR REINFORCEMENT
NOT TO SCALE
(SPAN 2)

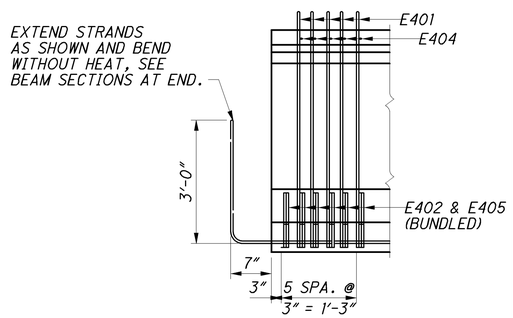

ANCHORAGE REINFORCEMENT

BEAM DIMENSIONS														
NO. REQ'D.	DIMENSIONS													APPROXIMATE WEIGHT (LBS)
	"A"	"B"	"C"	"D"	"E"	"F"	"G"	"H"	"I"	"J"	"K"	"L"	"M"	
12	120'-3"	6"	6"	11	5'-0"	1'-0"	1'-0"	5	4'-0"	1'-1½"	2'-0"	48	94	113,733

LEGEND:

⊕ - EXTENDED STRANDS AT PIER DIAPHRAGM ONLY

NOTES:

1. FOR NOTES SEE SHEET 23/38.
2. FOR LOCATIONS OF TRAFFIC SIGN SUPPORT ANCHOR BOLTS SEE SHEET 36/38. THE INSTALLATION OF THE TRAFFIC SIGN WILL ASSUME ALL STRANDS AND REINFORCEMENT HAS BEEN PLACED ACCURATELY.

DESIGN AGENCY
PARSONS BRINCKERHOFF
2945 FARMERS DRIVE
SUITE 350
COLUMBUS, OHIO 43235

DESIGNED	DRAWN	REVIEWED	DATE
SAP	LEL	EBS	05/24/12
CHECKED	REVISED	STRUCTURE FILE NUMBER	
PJL		LEFT: 0202037 RIGHT: 0202053	

SUPERSTRUCTURE DETAILS
BRIDGE NO. ALL-75-0703 L&R
I-75 OVER S.R. 117 & S.R. 309

ALL-75-5.53
PID No. 76691

24 / 38

959
1224

J:\Projects\ALL\76691\structures\ALL075_0703C\sheets\075_0703CSD003.dgn 11-SEP-2012 8:54PM reddenj

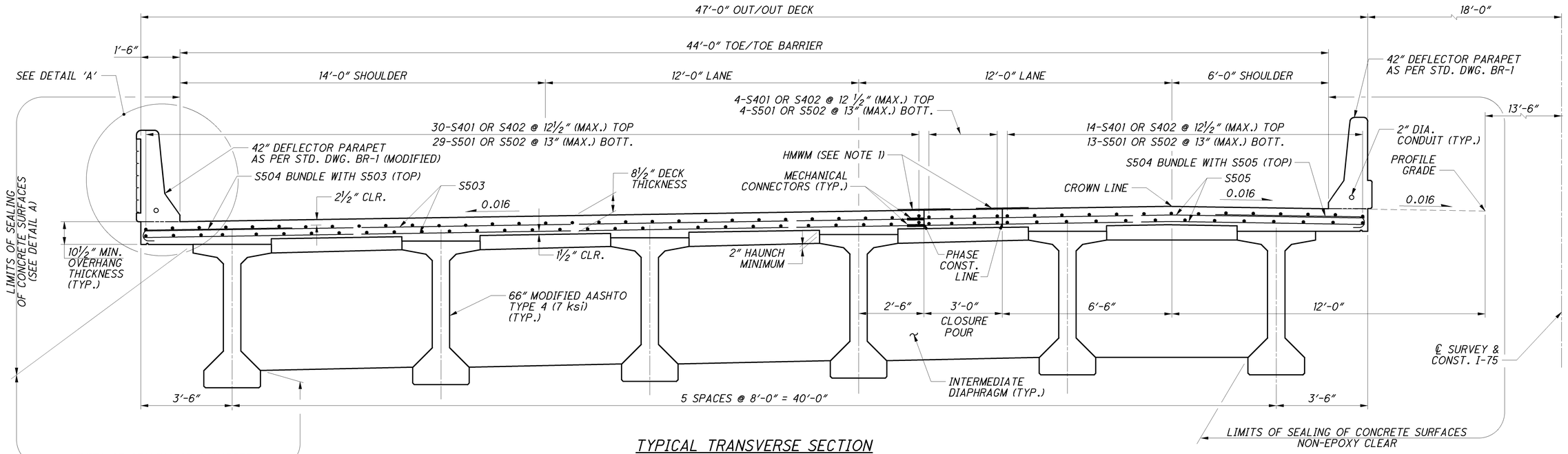

TYPICAL TRANSVERSE SECTION

SOUTHBOUND SHOWN
NORTHBOUND SYMMETRICAL ABOUT CENTERLINE I-75

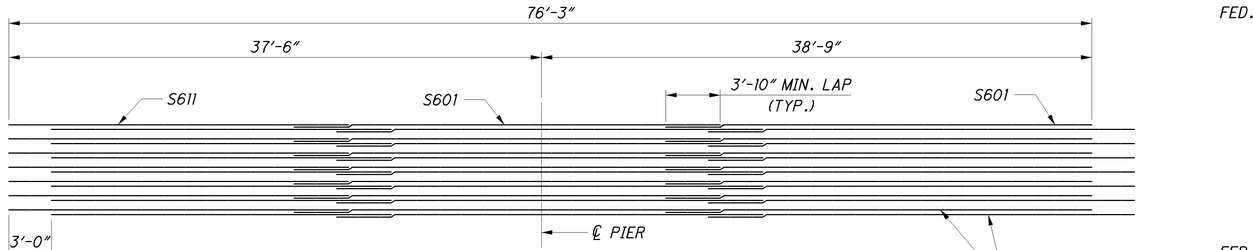

NEGATIVE MOMENT REINFORCEMENT

(TOP MAT)
PIER 1 MOMENT REINFORCEMENT SHOWN
PIER 2 MOMENT REINFORCEMENT IS OPPOSITE HAND ABOUT ℄ OF PIER

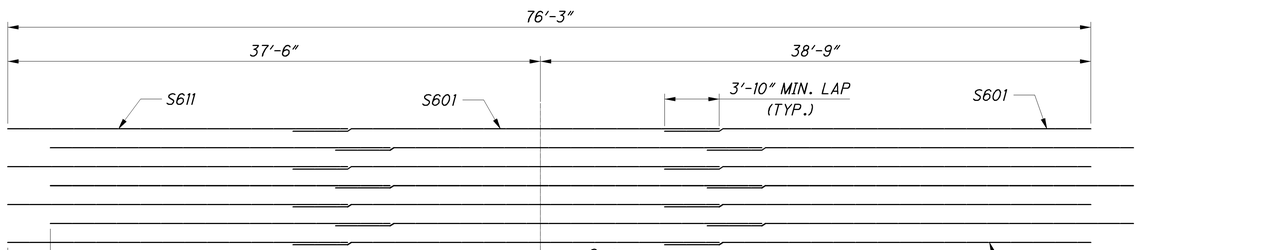

NEGATIVE MOMENT REINFORCEMENT

(BOTTOM MAT)
PIER 1 MOMENT REINFORCEMENT SHOWN
PIER 2 MOMENT REINFORCEMENT IS OPPOSITE HAND ABOUT ℄ OF PIER

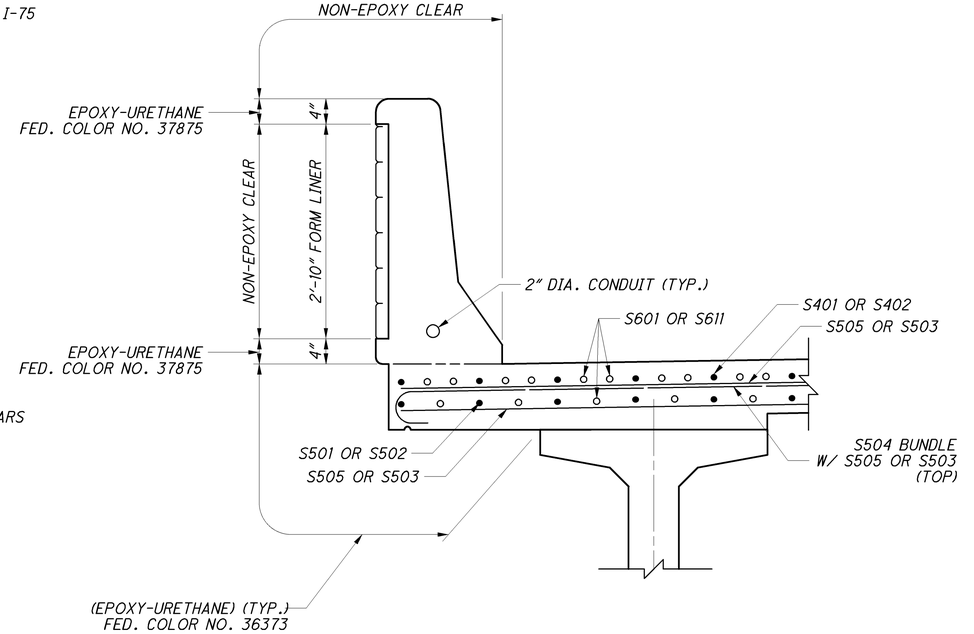

DETAIL A

NOTES:

1. HMWM SEALER SHALL BE 2'-0" WIDE, CENTERED ON EACH CONSTRUCTION JOINT.
2. SEE PSID-1-99 FOR INTERMEDIATE DIAPHRAGM DETAILS.

DESIGN AGENCY
PARSONS BRINCKERHOFF
2545 FARMERS DRIVE
SUITE 350
COLUMBUS, OHIO 43235

DESIGNED PJL | DRAWN LEL | REVIEWED EBS | DATE 05/24/12
CHECKED SAP | REVISED | STRUCTURE FILE NUMBER LEFT: 0202037 RIGHT: 0202053

SUPERSTRUCTURE DETAILS
BRIDGE NO. ALL-75-0703 L&R
I-75 OVER S.R. 117 & S.R. 309

ALL-75-5.53
PID No. 76691

25 / 38

960
1224

J:\Projects\ALL\76691\structures\ALL075_0703C\sheets\075_0703CTS001.dgn 11-SEP-2012 8:54PM reddenj

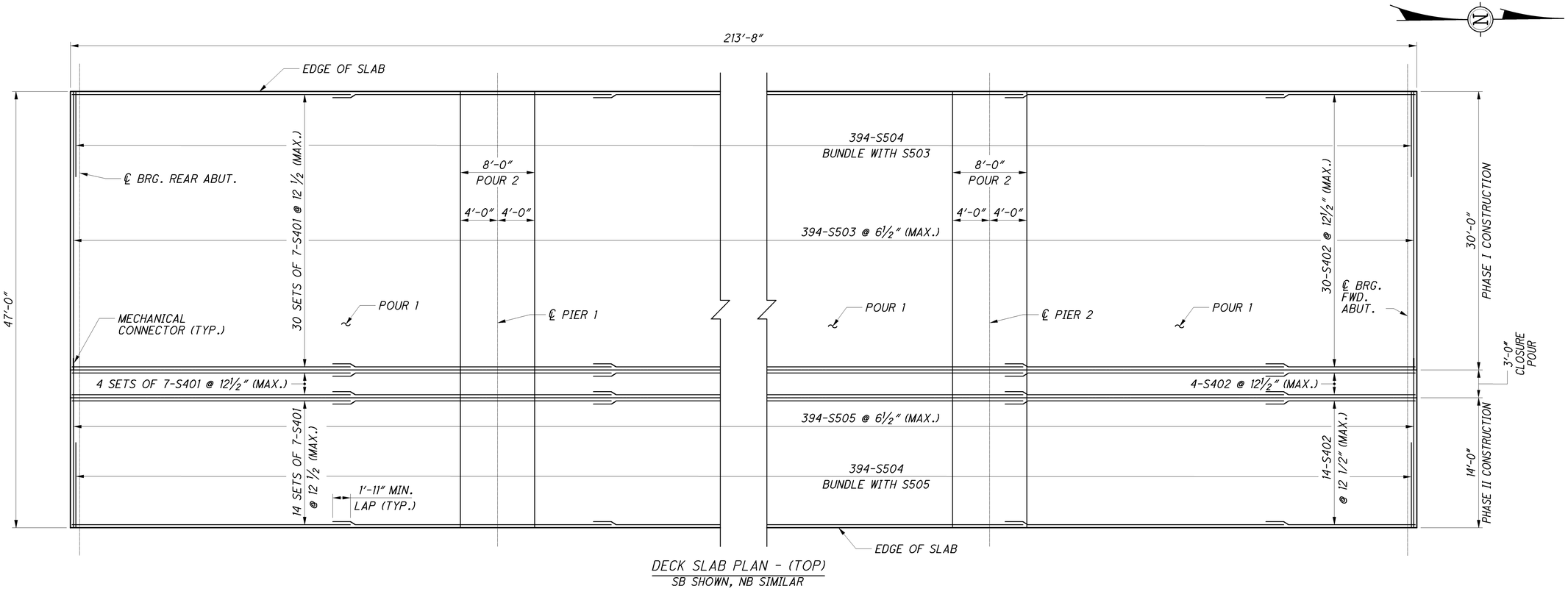

DECK SLAB PLAN - (TOP)

SB SHOWN, NB SIMILAR

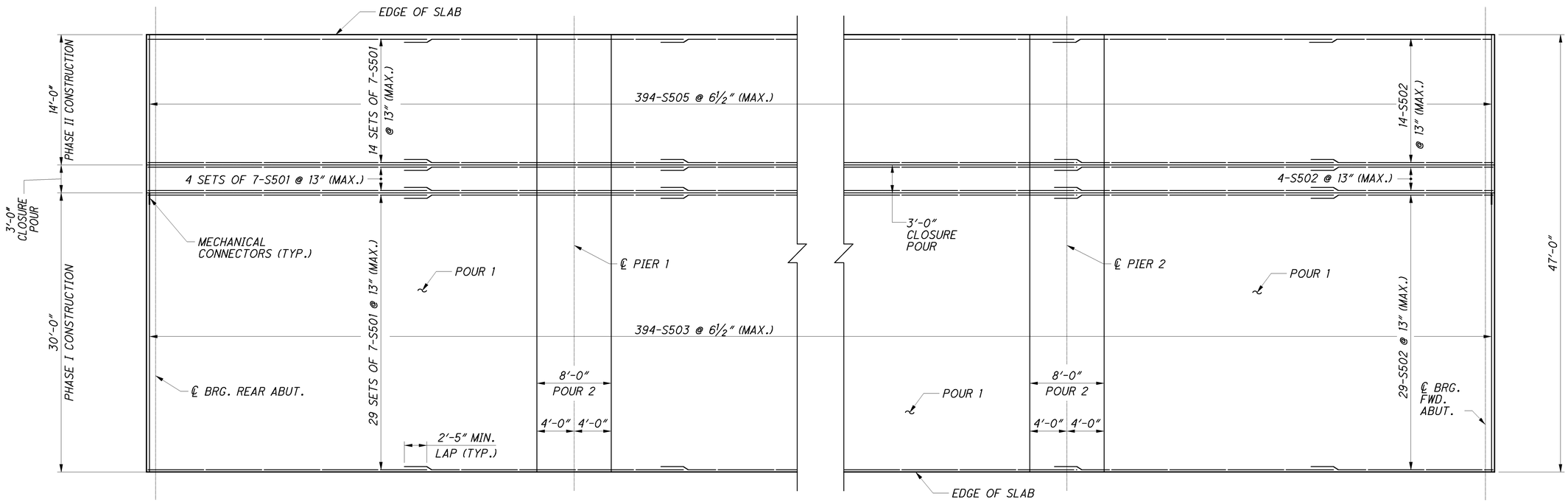

DECK SLAB PLAN - (BOTTOM)

NB SHOWN, SB SIMILAR

J:\Projects\ALL\76691\structures\ALL075_0703C\sheets\075_0703CDP001.dgn 11-SEP-2012 8:54PM reddenj

DESIGN AGENCY
PARSONS BRINCKERHOFF
2945 FARMERS DRIVE
SUITE 350
COLUMBUS, OHIO 43235

DESIGNED	DRAWN	REVIEWED	DATE
PJL	BKJ	EBS	05/24/12
CHECKED	REVISED	STRUCTURE FILE NUMBER	
SAP		LEFT: 0202037 RIGHT: 0202053	

DECK PLAN

BRIDGE NO. ALL-75-0703 L&R
I-75 OVER S.R. 117 &S.R. 309

ALL-75-5.53
PID No. 76691

26/38

961
1224

LEFT SCREED TABLE

	LOCATION	CL BRG. REAR ABUT.	1/4	1/2	3/4	CL BRG. PIER REAR	CL BRG. PIER FWD.	1/10	2/10	3/10	4/10	5/10	6/10	7/10	8/10	9/10	CL BRG. PIER REAR	CL BRG. PIER FWD.	1/4	1/2	3/4	CL BRG. FWD ABUT.
LEFT TOE OF BARRIER	STATION	368+94.22	369+05.16	369+16.11	369+27.06	369+38.01	369+40.42	369+52.28	369+64.14	369+76.00	369+87.86	369+99.72	370+11.57	370+23.43	370+35.29	370+47.15	370+59.01	370+61.42	370+72.37	370+83.32	370+94.27	371+05.22
	FINAL DECK SURFACE EL.	905.47	905.50	905.53	905.55	905.57	905.58	905.59	905.60	905.60	905.60	905.59	905.58	905.56	905.54	905.51	905.47	905.46	905.43	905.38	905.34	905.28
	DEFLECTION	0.00	0.00	0.00	0.00	0.00	0.00	0.04	0.09	0.12	0.14	0.15	0.14	0.12	0.09	0.04	0.00	0.00	0.00	0.00	0.00	0.00
	SCREED EL.	905.47	905.50	905.53	905.55	905.57	905.58	905.63	905.69	905.72	905.74	905.74	905.72	905.68	905.63	905.55	905.47	905.46	905.43	905.38	905.34	905.28
BEAM 1	STATION	368+94.22	369+05.16	369+16.11	369+27.06	369+38.01	369+40.42	369+52.28	369+64.14	369+76.00	369+87.86	369+99.72	370+11.57	370+23.43	370+35.29	370+47.15	370+59.01	370+61.42	370+72.37	370+83.32	370+94.27	371+05.22
	FINAL DECK SURFACE EL.	905.50	905.53	905.56	905.59	905.60	905.61	905.62	905.63	905.63	905.63	905.62	905.61	905.59	905.57	905.54	905.50	905.50	905.46	905.42	905.37	905.32
	DEFLECTION	0.00	0.00	0.00	0.00	0.00	0.00	0.04	0.09	0.12	0.14	0.15	0.14	0.12	0.09	0.04	0.00	0.00	0.00	0.00	0.00	0.00
	SCREED EL.	905.50	905.53	905.56	905.59	905.60	905.61	905.66	905.72	905.75	905.77	905.77	905.75	905.71	905.66	905.58	905.50	905.50	905.46	905.42	905.37	905.32
	TOP OF HAUNCH EL	904.79	904.83	904.85	904.88	904.90	904.90	904.95	905.01	905.05	905.06	905.07	905.04	905.00	904.95	904.87	904.80	904.79	904.75	904.71	904.66	904.61
BEAM 2	STATION	368+94.22	369+05.16	369+16.11	369+27.06	369+38.01	369+40.42	369+52.28	369+64.14	369+76.00	369+87.86	369+99.72	370+11.57	370+23.43	370+35.29	370+47.15	370+59.01	370+61.42	370+72.37	370+83.32	370+94.27	371+05.22
	FINAL DECK SURFACE EL.	905.63	905.66	905.69	905.71	905.73	905.74	905.75	905.76	905.76	905.76	905.75	905.74	905.72	905.70	905.67	905.63	905.62	905.59	905.54	905.50	905.44
	DEFLECTION	0.00	0.00	0.00	0.00	0.00	0.00	0.05	0.10	0.13	0.16	0.16	0.16	0.13	0.10	0.05	0.00	0.00	0.00	0.00	0.00	0.00
	SCREED EL.	905.63	905.66	905.69	905.71	905.73	905.74	905.80	905.86	905.89	905.92	905.91	905.90	905.85	905.80	905.72	905.63	905.62	905.59	905.54	905.50	905.44
	TOP OF HAUNCH EL	904.92	904.95	904.98	905.01	905.02	905.03	905.09	905.15	905.18	905.21	905.20	905.19	905.14	905.09	905.01	904.92	904.92	904.88	904.83	904.79	904.74
BEAM 3	STATION	368+94.22	369+05.16	369+16.11	369+27.06	369+38.01	369+40.42	369+52.28	369+64.14	369+76.00	369+87.86	369+99.72	370+11.57	370+23.43	370+35.29	370+47.15	370+59.01	370+61.42	370+72.37	370+83.32	370+94.27	371+05.22
	FINAL DECK SURFACE EL.	905.76	905.79	905.82	905.84	905.86	905.86	905.88	905.89	905.89	905.89	905.88	905.87	905.85	905.82	905.79	905.76	905.75	905.71	905.67	905.62	905.57
	DEFLECTION	0.00	0.00	0.00	0.00	0.00	0.00	0.05	0.10	0.13	0.16	0.16	0.16	0.13	0.10	0.05	0.00	0.00	0.00	0.00	0.00	0.00
	SCREED EL.	905.76	905.79	905.82	905.84	905.86	905.86	905.93	905.99	906.02	906.05	906.04	906.03	905.98	905.92	905.84	905.76	905.75	905.71	905.67	905.62	905.57
	TOP OF HAUNCH EL	905.05	905.08	905.11	905.13	905.15	905.16	905.22	905.28	905.31	905.34	905.33	905.32	905.27	905.22	905.14	905.05	905.04	905.01	904.96	904.92	904.86
BEAM 4	STATION	368+94.22	369+05.16	369+16.11	369+27.06	369+38.01	369+40.42	369+52.28	369+64.14	369+76.00	369+87.86	369+99.72	370+11.57	370+23.43	370+35.29	370+47.15	370+59.01	370+61.42	370+72.37	370+83.32	370+94.27	371+05.22
	FINAL DECK SURFACE EL.	905.89	905.92	905.95	905.97	905.99	905.99	906.01	906.01	906.02	906.02	906.01	905.99	905.98	905.95	905.92	905.89	905.88	905.84	905.80	905.75	905.70
	DEFLECTION	0.00	0.00	0.00	0.00	0.00	0.00	0.05	0.10	0.13	0.16	0.16	0.16	0.13	0.10	0.05	0.00	0.00	0.00	0.00	0.00	0.00
	SCREED EL.	905.89	905.92	905.95	905.97	905.99	905.99	906.06	906.11	906.15	906.18	906.17	906.15	906.11	906.05	905.97	905.89	905.88	905.84	905.80	905.75	905.70
	TOP OF HAUNCH EL	905.18	905.21	905.24	905.26	905.28	905.28	905.35	905.41	905.44	905.47	905.46	905.45	905.40	905.34	905.26	905.18	905.17	905.13	905.09	905.04	904.99
PHASE CONSTRUCTION LINE	STATION	368+94.22	369+05.16	369+16.11	369+27.06	369+38.01	369+40.42	369+52.28	369+64.14	369+76.00	369+87.86	369+99.72	370+11.57	370+23.43	370+35.29	370+47.15	370+59.01	370+61.42	370+72.37	370+83.32	370+94.27	371+05.22
	FINAL DECK SURFACE EL.	905.93	905.96	905.99	906.01	906.03	906.03	906.05	906.05	906.06	906.06	906.05	906.03	906.02	905.99	905.96	905.93	905.92	905.88	905.84	905.79	905.74
	DEFLECTION	0.00	0.00	0.00	0.00	0.00	0.00	0.05	0.10	0.13	0.16	0.16	0.16	0.13	0.10	0.05	0.00	0.00	0.00	0.00	0.00	0.00
	SCREED EL.	905.93	905.96	905.99	906.01	906.03	906.03	906.10	906.15	906.19	906.22	906.21	906.19	906.15	906.09	906.01	905.93	905.92	905.88	905.84	905.79	905.74
PHASE CONSTRUCTION LINE	STATION	368+94.22	369+05.16	369+16.11	369+27.06	369+38.01	369+40.42	369+52.28	369+64.14	369+76.00	369+87.86	369+99.72	370+11.57	370+23.43	370+35.29	370+47.15	370+59.01	370+61.42	370+72.37	370+83.32	370+94.27	371+05.22
	FINAL DECK SURFACE EL.	905.97	906.01	906.03	906.06	906.08	906.08	906.09	906.10	906.11	906.10	906.10	906.08	906.06	906.04	906.01	905.98	905.97	905.93	905.89	905.84	905.79
	DEFLECTION	0.00	0.00	0.00	0.00	0.00	0.00	0.05	0.10	0.13	0.16	0.16	0.16	0.13	0.10	0.05	0.00	0.00	0.00	0.00	0.00	0.00
	SCREED EL.	905.97	906.01	906.03	906.06	906.08	906.08	906.14	906.20	906.24	906.26	906.26	906.24	906.19	906.14	906.06	905.98	905.97	905.93	905.89	905.84	905.79
BEAM 5	STATION	368+94.22	369+05.16	369+16.11	369+27.06	369+38.01	369+40.42	369+52.28	369+64.14	369+76.00	369+87.86	369+99.72	370+11.57	370+23.43	370+35.29	370+47.15	370+59.01	370+61.42	370+72.37	370+83.32	370+94.27	371+05.22
	FINAL DECK SURFACE EL.	906.01	906.05	906.07	906.10	906.12	906.12	906.13	906.14	906.15	906.14	906.14	906.12	906.10	906.08	906.05	906.02	906.01	905.97	905.93	905.88	905.83
	DEFLECTION	0.00	0.00	0.00	0.00	0.00	0.00	0.05	0.10	0.13	0.16	0.16	0.16	0.13	0.10	0.05	0.00	0.00	0.00	0.00	0.00	0.00
	SCREED EL.	906.01	906.05	906.07	906.10	906.12	906.12	906.18	906.24	906.28	906.30	906.30	906.28	906.23	906.18	906.10	906.02	906.01	905.97	905.93	905.88	905.83
	TOP OF HAUNCH EL	905.31	905.34	905.37	905.39	905.41	905.41	905.48	905.53	905.57	905.60	905.59	905.57	905.53	905.47	905.39	905.31	905.30	905.26	905.22	905.17	905.12
CROWN	STATION	368+94.22	369+05.16	369+16.11	369+27.06	369+38.01	369+40.42	369+52.28	369+64.14	369+76.00	369+87.86	369+99.72	370+11.57	370+23.43	370+35.29	370+47.15	370+59.01	370+61.42	370+72.37	370+83.32	370+94.27	371+05.22
	FINAL DECK SURFACE EL.	906.08	906.11	906.14	906.16	906.18	906.18	906.20	906.21	906.21	906.21	906.20	906.19	906.17	906.14	906.11	906.08	906.07	906.03	905.99	905.94	905.89
	DEFLECTION	0.00	0.00	0.00	0.00	0.00	0.00	0.05	0.10	0.13	0.15	0.16	0.15	0.13	0.10	0.05	0.00	0.00	0.00	0.00	0.00	0.00
	SCREED EL.	906.08	906.11	906.14	906.16	906.18	906.18	906.25	906.31	906.34	906.36	906.36	906.34	906.30	906.24	906.16	906.08	906.07	906.03	905.99	905.94	905.89
BEAM 6	STATION	368+94.22	369+05.16	369+16.11	369+27.06	369+38.01	369+40.42	369+52.28	369+64.14	369+76.00	369+87.86	369+99.72	370+11.57	370+23.43	370+35.29	370+47.15	370+59.01	370+61.42	370+72.37	370+83.32	370+94.27	371+05.22
	FINAL DECK SURFACE EL.	906.01	906.05	906.07	906.10	906.12	906.12	906.13	906.14	906.15	906.14	906.14	906.12	906.10	906.08	906.05	906.02	906.01	905.97	905.93	905.88	905.83
	DEFLECTION	0.00	0.00	0.00	0.00	0.00	0.00	0.04	0.09	0.12	0.14	0.15	0.14	0.12	0.09	0.04	0.00	0.00	0.00	0.00	0.00	0.00
	SCREED EL.	906.01	906.05	906.07	906.10	906.12	906.12	906.17	906.23	906.27	906.28	906.29	906.26	906.22	906.17	906.09	906.02	906.01	905.97	905.93	905.88	905.83
	TOP OF HAUNCH EL	905.31	905.34	905.37	905.39	905.41	905.41	905.47	905.52	905.56	905.58	905.58	905.55	905.52	905.46	905.38	905.31	905.30	905.26	905.22	905.17	905.12
RIGHT TOE OF BARRIER	STATION	368+94.22	369+05.16	369+16.11	369+27.06	369+38.01	369+40.42	369+52.28	369+64.14	369+76.00	369+87.86	369+99.72	370+11.57	370+23.43	370+35.29	370+47.15	370+59.01	370+61.42	370+72.37	370+83.32	370+94.27	371+05.22
	FINAL DECK SURFACE EL.	905.98	906.01	906.04	906.07	906.08	906.09	906.10	906.11	906.11	906.11	906.10	906.09	906.07	906.05	906.02	905.98	905.98	905.94	905.90	905.85	905.80
	DEFLECTION	0.00	0.00	0.00	0.00	0.00	0.00	0.04	0.09	0.12	0.14	0.15	0.14	0.12	0.09	0.04	0.00	0.00	0.00	0.00	0.00	0.00
	SCREED EL.	905.98	906.01	906.04	906.07	906.08	906.09	906.14	906.20	906.23	906.25	906.25	906.23	906.19	906.14	906.06	905.98	905.98	905.94	905.90	905.85	905.80

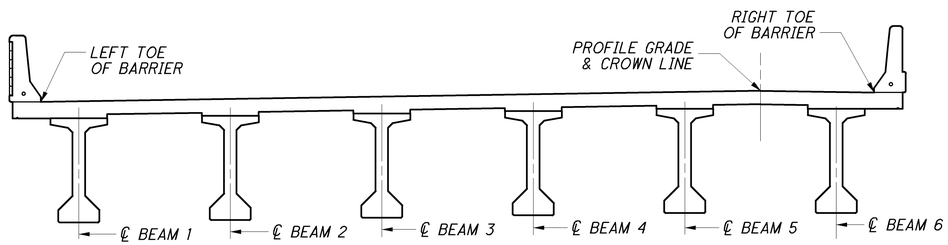

TYPICAL LEFT BRIDGE SECTION

NOTES:

1. CAMBER

CALCULATED CAMBER FOR SPAN 2 BEAMS AT THE TIME OF RELEASE IS 2¼ INCHES.

CALCULATED CAMBER FOR SPAN 2 BEAMS AT THE TIME OF ERECTION IS 3⅞ INCHES.

CALCULATED LONG-TERM CAMBER FOR SPAN 2 BEAMS IS 5⅝ INCHES.

CALCULATED CAMBER FOR SPAN 1 AND 3 BEAMS AT THE TIME OF RELEASE IS 0 INCHES.

CALCULATED CAMBER FOR SPAN 1 AND 3 BEAMS AT THE TIME OF ERECTION IS 0 INCHES.

CALCULATED LONG-TERM CAMBER FOR SPAN 1 AND 3 BEAMS IS 0 INCHES.

2. SCREED ELEVATIONS

SCREED ELEVATIONS SHOWN REPRESENT THE THEORETICAL DECK SURFACE LOCATION PRIOR TO DEFLECTIONS CAUSED BY DECK PLACEMENT AND OTHER ANTICIPATED DEAD LOADS.

3. DECK SLAB THICKNESS FOR CONCRETE QUANTITY

I-BEAM ARE THEORETICAL DIMENSIONS. THE HAUNCH DEPTH IS THE TOPPING THICKNESS MINUS THE DESIGN SLAB THICKNESS. THE DEPARTMENT WILL PAY FOR SUPERSTRUCTURE CONCRETE BASED ON THE DESIGN SLAB THICKNESS AND THE AVERAGE OF THE THEORETICAL HAUNCH DEPTHS AT MID-SPAN AND AT EACH BEAM BEARING EVEN THOUGH DEVIATION FROM THE DIMENSIONS SHOWN MAY BE NECESSARY TO PLACE THE DECK SURFACE AT THE FINISHED GRADE. ONCE ALL BEAMS ARE SET IN THEIR FINAL POSITION, THE ACTUAL CAMBER FOR EACH MEMBER WILL BE THE TOP OF BEAM ELEVATION AT MID-SPAN MINUS THE AVERAGE TOP OF BEAM ELEVATION AT EACH BEARING. THE ACTUAL TOPPING THICKNESS AT MID-SPAN WILL BE THE THEORETICAL DIMENSION PLUS OR MINUS THE DIFFERENCE THE TOPPING THICKNESSES SHOWN FROM THE TOP OF THE DECK SLAB TO THE TOP OF THE TOP FLANGE ALONG THE CENTERLINE OF THE BETWEEN THE ACTUAL AND ANTICIPATED CAMBER.

4. TOP OF HAUNCH ELEVATIONS

TOP OF HAUNCH ELEVATIONS SHOWN REPRESENT THE THEORETICAL LOCATION OF THE BOTTOM OF THE DECK ABOVE THE BEAM/GIRDER HAUNCH PRIOR TO DEFLECTIONS CAUSED BY DECK PLACEMENT AND OTHER ANTICIPATED DEAD LOADS.

5. FINAL DECK SURFACE ELEVATIONS

FINAL DECK SURFACE ELEVATIONS SHOWN REPRESENT THE DECK SURFACE LOCATION AFTER ALL ANTICIPATED DEAD LOAD DEFLECTIONS HAVE OCCURRED.

DESIGN AGENCY
PARSONS BRINCKERHOFF
2945 FARMERS DRIVE
SUITE 350
COLUMBUS, OHIO 43235

DESIGNED SAP | DRAWN LEL | REVIEWED EBS | DATE 05/24/12 | STRUCTURE NUMBER LEFT: 0202037 RIGHT: 0202053 | CHECKED PJL | REVISED

LEFT BRIDGE - SCREED TABLE

BRIDGE NO. ALL-75-0703 L&R
I-75 OVER S.R. 117 & S.R. 309

ALL-75-5.53
PID No. 76691

J:\Projects\ALL\76691\structures\ALL075_0703C\sheets\075_0703CSD004.dgn 11-SEP-2012 8:54PM reddenj

RIGHT SCREED TABLE

LOCATION		CL BRG. REAR ABUT.	CL BRG. REAR ABUT.	1/4	1/2	3/4	CL BRG. PIER REAR	CL BRG. PIER FWD.	1/10	2/10	3/10	4/10	5/10	6/10	7/10	8/10	9/10	CL BRG. PIER REAR	CL BRG. PIER FWD.	1/4	1/2	3/4	CL BRG. FWD ABUT.
LEFT TOE OF BARRIER	STATION	368+94.22	369+05.16	369+16.11	369+27.06	369+38.01	369+40.42	369+52.28	369+64.14	369+76.00	369+87.86	369+99.72	370+11.57	370+23.43	370+35.29	370+47.15	370+59.01	370+61.42	370+72.37	370+83.32	370+94.27	371+05.22
	FINAL DECK SURFACE EL.	905.98	906.01	906.04	906.07	906.08	906.09	906.10	906.11	906.11	906.11	906.10	906.09	906.07	906.05	906.02	905.98	905.98	905.94	905.90	905.85	905.80
	DEFLECTION	0.00	0.00	0.00	0.00	0.00	0.00	0.04	0.09	0.12	0.14	0.15	0.14	0.12	0.09	0.04	0.00	0.00	0.00	0.00	0.00	0.00
	SCREED EL.	905.98	906.01	906.04	906.07	906.08	906.09	906.14	906.20	906.23	906.25	906.25	906.25	906.23	906.19	906.14	906.06	905.98	905.94	905.90	905.85	905.80
BEAM 1	STATION	368+94.22	369+05.16	369+16.11	369+27.06	369+38.01	369+40.42	369+52.28	369+64.14	369+76.00	369+87.86	369+99.72	370+11.57	370+23.43	370+35.29	370+47.15	370+59.01	370+61.42	370+72.37	370+83.32	370+94.27	371+05.22
	FINAL DECK SURFACE EL.	906.01	906.05	906.07	906.10	906.12	906.12	906.13	906.14	906.15	906.14	906.14	906.12	906.10	906.08	906.05	906.02	906.01	905.97	905.93	905.88	905.83
	DEFLECTION	0.00	0.00	0.00	0.00	0.00	0.00	0.04	0.09	0.12	0.14	0.15	0.14	0.12	0.09	0.04	0.00	0.00	0.00	0.00	0.00	0.00
	SCREED EL.	906.01	906.05	906.07	906.10	906.12	906.12	906.17	906.23	906.27	906.28	906.29	906.26	906.22	906.17	906.09	906.02	906.01	905.97	905.93	905.88	905.83
	TOP OF HAUNCH EL	905.31	905.34	905.37	905.39	905.41	905.41	905.47	905.52	905.56	905.58	905.58	905.55	905.52	905.46	905.38	905.31	905.30	905.26	905.22	905.17	905.12
CROWN	STATION	368+94.22	369+05.16	369+16.11	369+27.06	369+38.01	369+40.42	369+52.28	369+64.14	369+76.00	369+87.86	369+99.72	370+11.57	370+23.43	370+35.29	370+47.15	370+59.01	370+61.42	370+72.37	370+83.32	370+94.27	371+05.22
	FINAL DECK SURFACE EL.	906.08	906.11	906.14	906.16	906.18	906.18	906.20	906.21	906.21	906.21	906.20	906.19	906.17	906.14	906.11	906.08	906.07	906.03	905.99	905.94	905.89
	DEFLECTION	0.00	0.00	0.00	0.00	0.00	0.00	0.05	0.10	0.13	0.15	0.16	0.15	0.13	0.10	0.05	0.00	0.00	0.00	0.00	0.00	0.00
	SCREED EL.	906.08	906.11	906.14	906.16	906.18	906.18	906.25	906.31	906.34	906.36	906.36	906.34	906.30	906.24	906.16	906.08	906.07	906.03	905.99	905.94	905.89
BEAM 2	STATION	368+94.22	369+05.16	369+16.11	369+27.06	369+38.01	369+40.42	369+52.28	369+64.14	369+76.00	369+87.86	369+99.72	370+11.57	370+23.43	370+35.29	370+47.15	370+59.01	370+61.42	370+72.37	370+83.32	370+94.27	371+05.22
	FINAL DECK SURFACE EL.	906.01	906.05	906.07	906.10	906.12	906.12	906.13	906.14	906.15	906.14	906.14	906.12	906.10	906.08	906.05	906.02	906.01	905.97	905.93	905.88	905.83
	DEFLECTION	0.00	0.00	0.00	0.00	0.00	0.00	0.05	0.10	0.13	0.16	0.16	0.16	0.13	0.10	0.05	0.00	0.00	0.00	0.00	0.00	0.00
	SCREED EL.	906.01	906.05	906.07	906.10	906.12	906.12	906.18	906.24	906.28	906.30	906.30	906.28	906.23	906.18	906.10	906.02	906.01	905.97	905.93	905.88	905.83
	TOP OF HAUNCH EL	905.31	905.34	905.37	905.39	905.41	905.41	905.48	905.53	905.57	905.60	905.59	905.57	905.53	905.47	905.39	905.31	905.30	905.26	905.22	905.17	905.12
PHASE CONSTRUCTION LINE	STATION	368+94.22	369+05.16	369+16.11	369+27.06	369+38.01	369+40.42	369+52.28	369+64.14	369+76.00	369+87.86	369+99.72	370+11.57	370+23.43	370+35.29	370+47.15	370+59.01	370+61.42	370+72.37	370+83.32	370+94.27	371+05.22
	FINAL DECK SURFACE EL.	905.97	906.01	906.03	906.06	906.08	906.08	906.09	906.10	906.11	906.10	906.10	906.08	906.06	906.04	906.01	905.98	905.97	905.93	905.89	905.84	905.79
	DEFLECTION	0.00	0.00	0.00	0.00	0.00	0.00	0.05	0.10	0.13	0.16	0.16	0.16	0.13	0.10	0.05	0.00	0.00	0.00	0.00	0.00	0.00
	SCREED EL.	905.97	906.01	906.03	906.06	906.08	906.08	906.14	906.20	906.24	906.26	906.26	906.24	906.19	906.14	906.06	905.98	905.97	905.93	905.89	905.84	905.79
PHASE CONSTRUCTION LINE	STATION	368+94.22	369+05.16	369+16.11	369+27.06	369+38.01	369+40.42	369+52.28	369+64.14	369+76.00	369+87.86	369+99.72	370+11.57	370+23.43	370+35.29	370+47.15	370+59.01	370+61.42	370+72.37	370+83.32	370+94.27	371+05.22
	FINAL DECK SURFACE EL.	905.93	905.96	905.99	906.01	906.03	906.03	906.05	906.05	906.06	906.06	906.05	906.03	906.02	905.99	905.96	905.93	905.92	905.88	905.84	905.79	905.74
	DEFLECTION	0.00	0.00	0.00	0.00	0.00	0.00	0.05	0.10	0.13	0.16	0.16	0.16	0.13	0.10	0.05	0.00	0.00	0.00	0.00	0.00	0.00
	SCREED EL.	905.93	905.96	905.99	906.01	906.03	906.03	906.10	906.15	906.19	906.22	906.21	906.19	906.15	906.09	906.01	905.93	905.92	905.88	905.84	905.79	905.74
BEAM 3	STATION	368+94.22	369+05.16	369+16.11	369+27.06	369+38.01	369+40.42	369+52.28	369+64.14	369+76.00	369+87.86	369+99.72	370+11.57	370+23.43	370+35.29	370+47.15	370+59.01	370+61.42	370+72.37	370+83.32	370+94.27	371+05.22
	FINAL DECK SURFACE EL.	905.89	905.92	905.95	905.97	905.99	905.99	906.01	906.01	906.02	906.02	906.01	905.99	905.98	905.95	905.92	905.89	905.88	905.84	905.80	905.75	905.70
	DEFLECTION	0.00	0.00	0.00	0.00	0.00	0.00	0.05	0.10	0.13	0.16	0.16	0.16	0.13	0.10	0.05	0.00	0.00	0.00	0.00	0.00	0.00
	SCREED EL.	905.89	905.92	905.95	905.97	905.99	905.99	906.06	906.11	906.15	906.18	906.17	906.15	906.11	906.05	905.97	905.89	905.88	905.84	905.80	905.75	905.70
	TOP OF HAUNCH EL	905.18	905.21	905.24	905.26	905.28	905.28	905.35	905.41	905.44	905.47	905.46	905.45	905.40	905.34	905.26	905.18	905.17	905.13	905.09	905.04	904.99
BEAM 4	STATION	368+94.22	369+05.16	369+16.11	369+27.06	369+38.01	369+40.42	369+52.28	369+64.14	369+76.00	369+87.86	369+99.72	370+11.57	370+23.43	370+35.29	370+47.15	370+59.01	370+61.42	370+72.37	370+83.32	370+94.27	371+05.22
	FINAL DECK SURFACE EL.	905.76	905.79	905.82	905.84	905.86	905.86	905.88	905.89	905.89	905.89	905.88	905.87	905.85	905.82	905.79	905.76	905.75	905.71	905.67	905.62	905.57
	DEFLECTION	0.00	0.00	0.00	0.00	0.00	0.00	0.05	0.10	0.13	0.16	0.16	0.16	0.13	0.10	0.05	0.00	0.00	0.00	0.00	0.00	0.00
	SCREED EL.	905.76	905.79	905.82	905.84	905.86	905.86	905.93	905.99	906.02	906.05	906.04	906.03	905.98	905.92	905.84	905.76	905.75	905.71	905.67	905.62	905.57
	TOP OF HAUNCH EL	905.05	905.08	905.11	905.13	905.15	905.16	905.22	905.28	905.31	905.34	905.33	905.32	905.27	905.22	905.14	905.05	905.04	905.01	904.96	904.92	904.86
BEAM 5	STATION	368+94.22	369+05.16	369+16.11	369+27.06	369+38.01	369+40.42	369+52.28	369+64.14	369+76.00	369+87.86	369+99.72	370+11.57	370+23.43	370+35.29	370+47.15	370+59.01	370+61.42	370+72.37	370+83.32	370+94.27	371+05.22
	FINAL DECK SURFACE EL.	905.63	905.66	905.69	905.71	905.73	905.74	905.75	905.76	905.76	905.76	905.75	905.74	905.72	905.70	905.67	905.63	905.62	905.59	905.54	905.50	905.44
	DEFLECTION	0.00	0.00	0.00	0.00	0.00	0.00	0.05	0.10	0.13	0.16	0.16	0.16	0.13	0.10	0.05	0.00	0.00	0.00	0.00	0.00	0.00
	SCREED EL.	905.63	905.66	905.69	905.71	905.73	905.74	905.80	905.86	905.89	905.92	905.91	905.90	905.85	905.80	905.72	905.63	905.62	905.59	905.54	905.50	905.44
	TOP OF HAUNCH EL	904.92	904.95	904.98	905.01	905.02	905.03	905.09	905.15	905.18	905.21	905.20	905.19	905.14	905.09	905.01	904.92	904.92	904.88	904.83	904.79	904.74
BEAM 6	STATION	368+94.22	369+05.16	369+16.11	369+27.06	369+38.01	369+40.42	369+52.28	369+64.14	369+76.00	369+87.86	369+99.72	370+11.57	370+23.43	370+35.29	370+47.15	370+59.01	370+61.42	370+72.37	370+83.32	370+94.27	371+05.22
	FINAL DECK SURFACE EL.	905.50	905.53	905.56	905.59	905.60	905.61	905.62	905.63	905.63	905.63	905.62	905.61	905.59	905.57	905.54	905.50	905.50	905.46	905.42	905.37	905.32
	DEFLECTION	0.00	0.00	0.00	0.00	0.00	0.00	0.04	0.09	0.12	0.14	0.15	0.14	0.12	0.09	0.04	0.00	0.00	0.00	0.00	0.00	0.00
	SCREED EL.	905.50	905.53	905.56	905.59	905.60	905.61	905.66	905.72	905.75	905.77	905.77	905.75	905.71	905.66	905.58	905.50	905.50	905.46	905.42	905.37	905.32
	TOP OF HAUNCH EL	904.79	904.83	904.85	904.88	904.90	904.90	904.95	905.01	905.05	905.06	905.07	905.04	905.00	904.95	904.87	904.80	904.79	904.75	904.71	904.66	904.61
RIGHT TOE OF BARRIER	STATION	368+94.22	369+05.16	369+16.11	369+27.06	369+38.01	369+40.42	369+52.28	369+64.14	369+76.00	369+87.86	369+99.72	370+11.57	370+23.43	370+35.29	370+47.15	370+59.01	370+61.42	370+72.37	370+83.32	370+94.27	371+05.22
	FINAL DECK SURFACE EL.	905.47	905.50	905.53	905.55	905.57	905.58	905.59	905.60	905.60	905.60	905.59	905.58	905.56	905.54	905.51	905.47	905.46	905.43	905.38	905.34	905.28
	DEFLECTION	0.00	0.00	0.00	0.00	0.00	0.00	0.04	0.09	0.12	0.14	0.15	0.14	0.12	0.09	0.04	0.00	0.00	0.00	0.00	0.00	0.00
	SCREED EL.	905.47	905.50	905.53	905.55	905.57	905.58	905.63	905.69	905.72	905.74	905.74	905.72	905.68	905.63	905.55	905.47	905.46	905.43	905.38	905.34	905.28

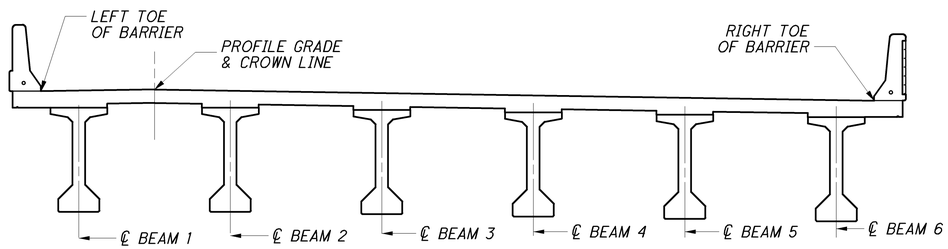

TYPICAL RIGHT BRIDGE SECTION

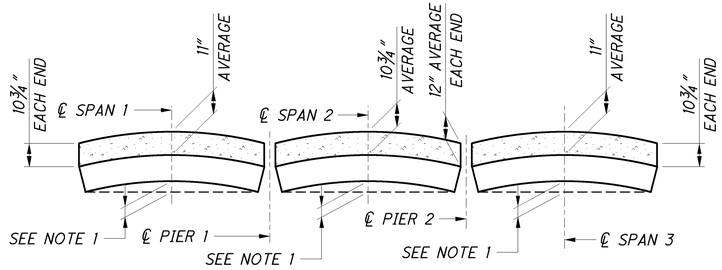

DECK SLAB THICKNESS DIAGRAM

MEASURED ALONG ℄ BEAM

NOTE:
FOR NOTES SEE SHEET 27/38.

DESIGN AGENCY
PARSONS BRINCKERHOFF
2945 FARMERS DRIVE
SUITE 350
COLUMBUS, OHIO 43235

DATE: 05/24/12
REVIEWED: EBS
DRAWN: LEL
DESIGNED: SAP
CHECKED: PJL
STRUCTURE NUMBER: LEFT: 0202037 RIGHT: 0202053
REVISED

RIGHT BRIDGE - SCREED TABLE
BRIDGE NO. ALL-75-0703 L&R
I-75 OVER S.R. 117 & S.R. 309

ALL-75-5.53
PID No. 76691

28 / 38

963
1224

J:\Projects\ALL\76691\structures\ALL075_0703\sheets\075_0703CSD005.dgn 11-SEP-2012 8:54PM reddenj

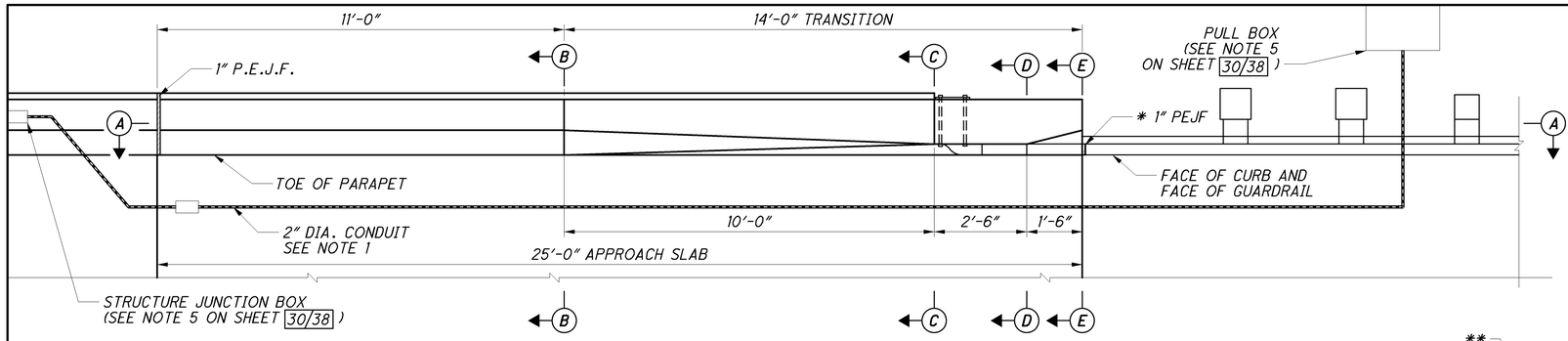

PART PLAN ON APPROACH SLABS (MEDIAN PARAPET)

FOR OUTSIDE PARAPET ON APPROACH SLABS SEE SHEET 30/38 .

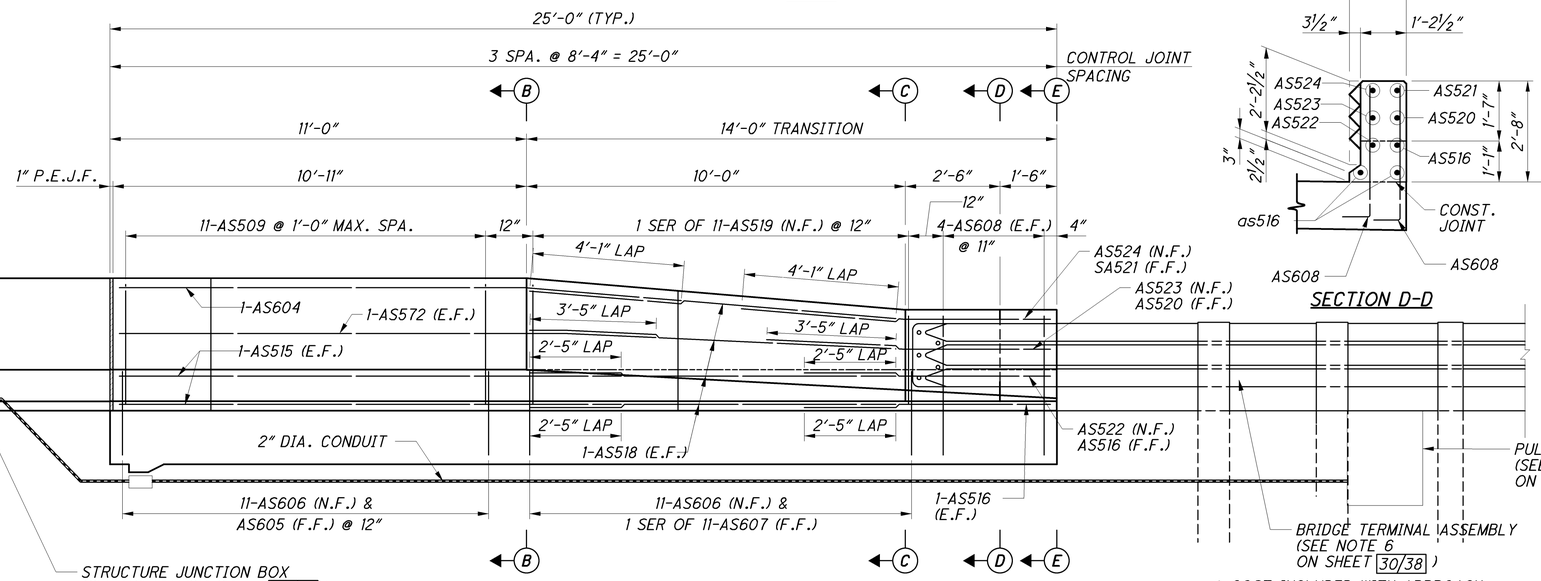

SECTION A-A

* COST INCLUDED WITH APPROACH SLAB FOR PAYMENT.

** LIMITS OF CONCRETE SEALING (NON-EPOXY CLEAR)

*** FIELD BEND IF NECESSARY

NOTES

1. FOR NOTES, SEE SHEET 30/38 .

SECTION D-D

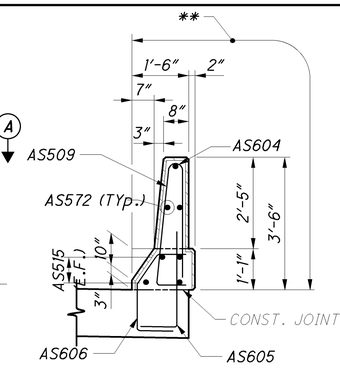

SECTION B-B

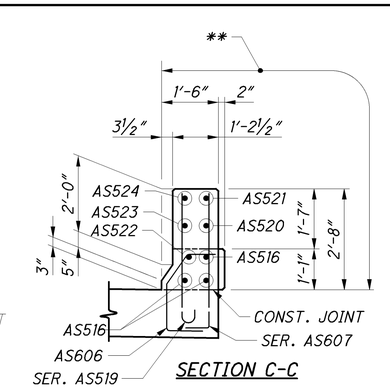

SECTION C-C

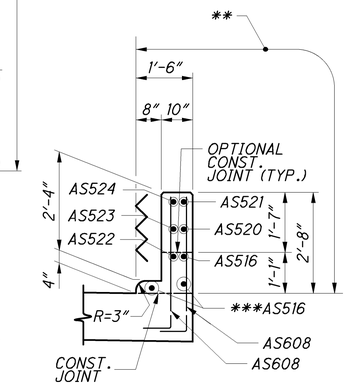

SECTION E-E

DETAIL A

(SECTION THROUGH SAWCUT)
SAWCUT PERIMETER = 8'-1"

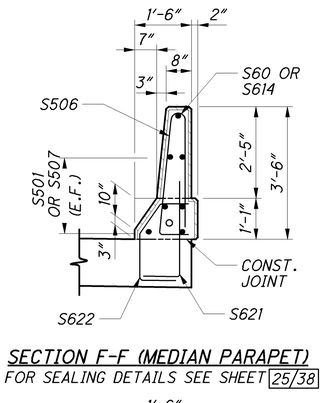

SECTION F-F (MEDIAN PARAPET)

FOR SEALING DETAILS SEE SHEET 25/38

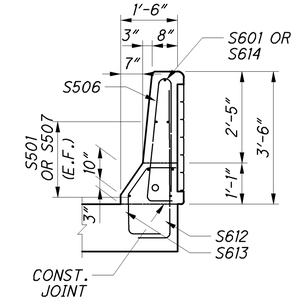

SECTION F-F (OUTSIDE PARAPET)

FOR SEALING DETAILS SEE A ON SHEET 25/38 .

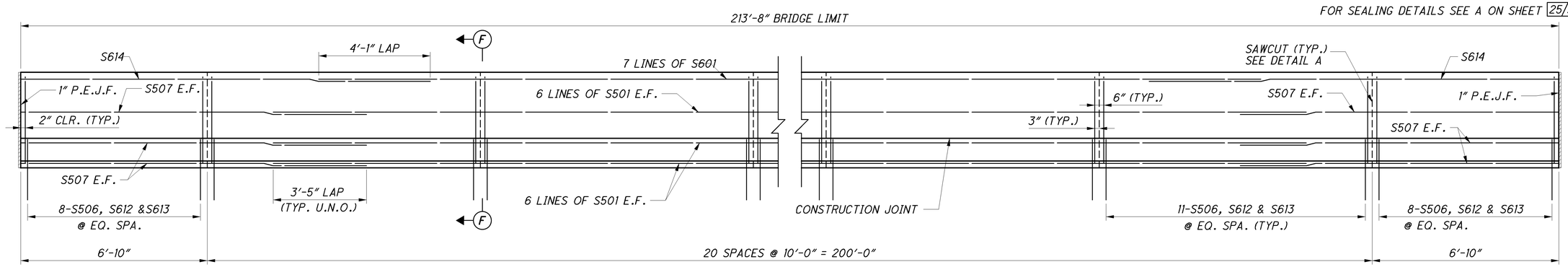

PARAPET ELEVATION

DESIGN AGENCY
PARSONS BRINCKERHOFF
2545 FARMERS DRIVE
SUITE 350
COLUMBUS, OHIO 43235

DESIGNED SAP | DRAWN LEL | REVIEWED EBS | DATE 05/24/12
CHECKED PJL | REVISED | STRUCTURE FILE NUMBER LEFT: 0202037 RIGHT: 0202053

PARAPET DETAILS 1 OF 2
BRIDGE NO. ALL-75-0703 L&R
I-75 OVER S.R. 117 & S.R. 309

ALL-75-5.53
PID No. 76691

29 / 38

964
1224

J:\Projects\ALL\76691\structures\ALL075_0703C\sheets\075_0703CRA001.dgn 11-SEP-2012 8:54PM redderj

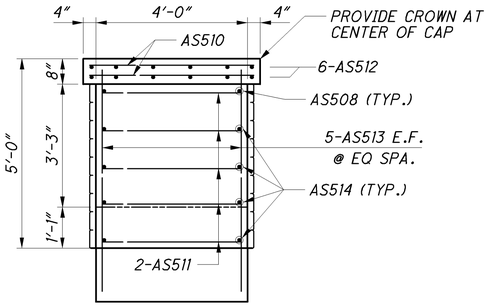

SECTION G-G

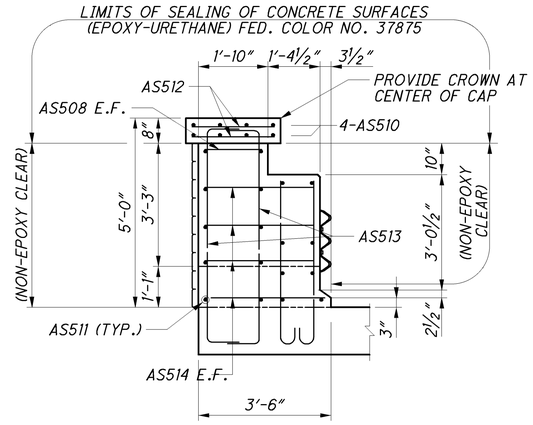

SECTION E-E
TOWER DETAIL

JUNCTION BOX LOCATION (APPROX.)			
NORTHBOUND		SOUTHBOUND	
STATION	SIDE	STATION	SIDE
369+06	LT. & RT.	369+06	LT. & RT.
370+94	LT. & RT.	370+94	LT. & RT.

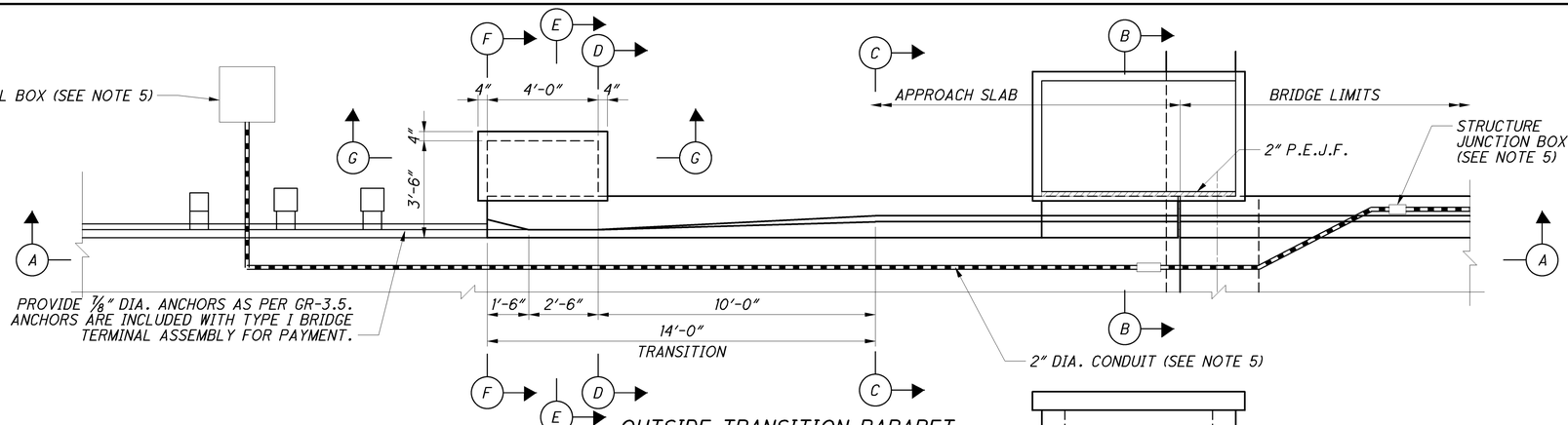

OUTSIDE TRANSITION PARAPET
FOR MEDIAN PARAPET DETAILS SEE SHEET 29/38 .

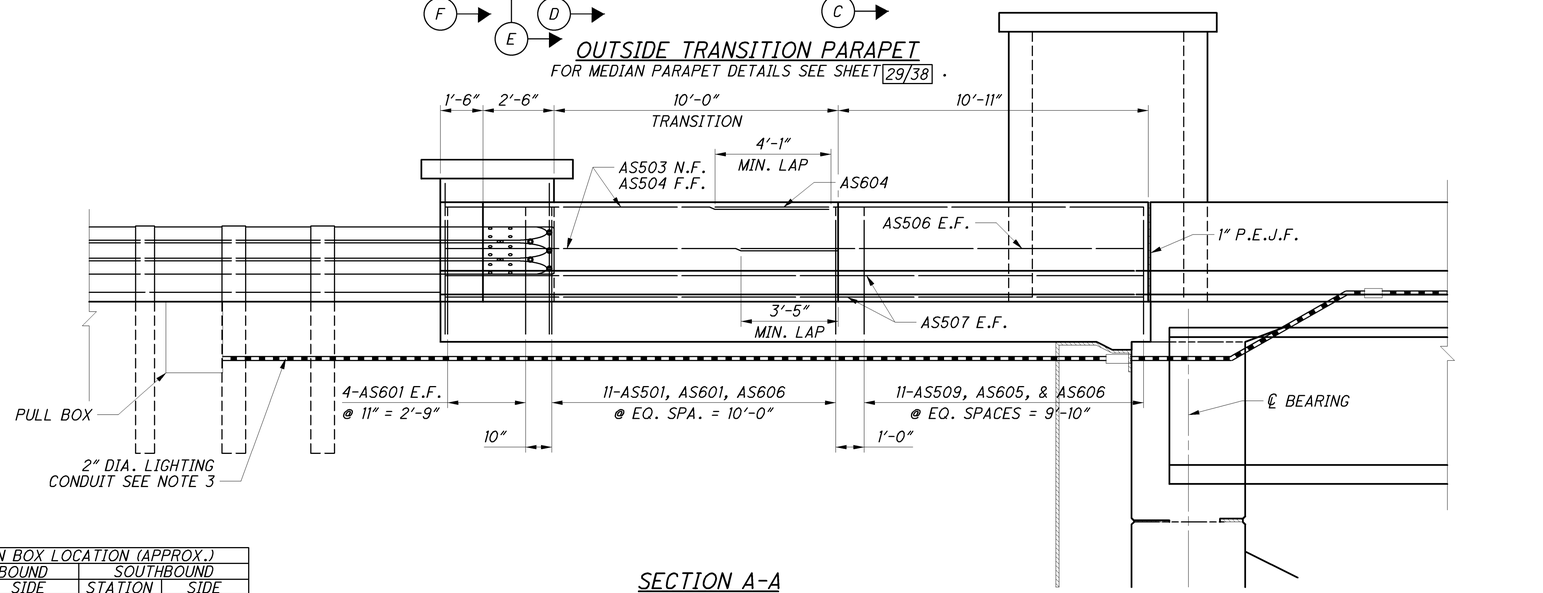

SECTION A-A

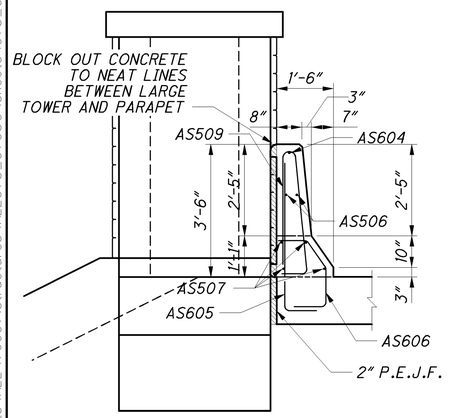

SECTION B-B

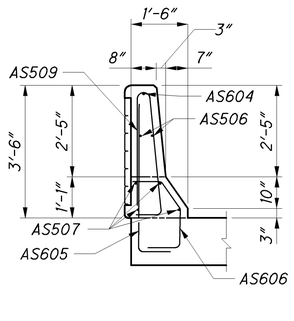

SECTION C-C

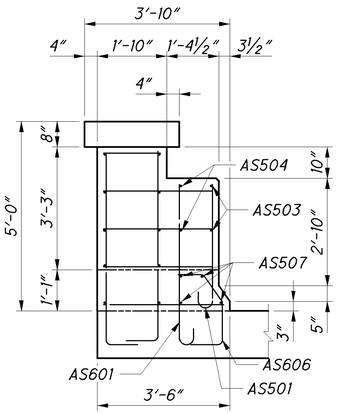

SECTION D-D

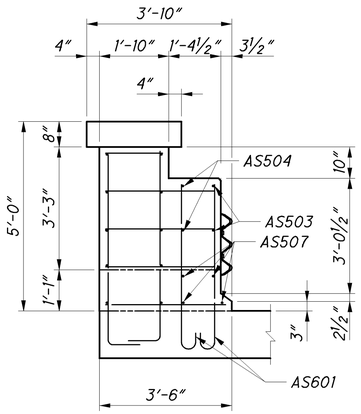

SECTION E-E
PARAPET DETAIL

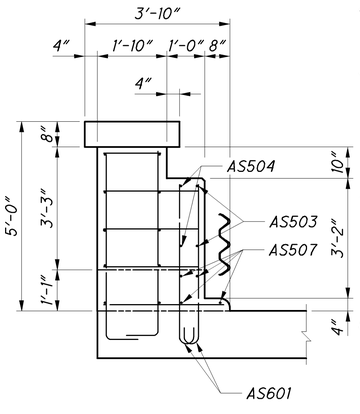

SECTION F-F

NOTES:

1. FOR AESTHETIC DETAILS, SEE SHEET 35/38 .
2. FOR ADDITIONAL NOTES AND DETAILS, SEE STANDARD CONSTRUCTION DRAWING BR-1.
3. THE COST OF THE APPROACH SLAB PARAPET, EXCLUDING SEALING AND FORMLINER, SHALL BE INCLUDED WITH ITEM 898, QC/QA CONCRETE, CLASS QSC 2, SUPERSTRUCTURE (APPROACH SLAB), (T=15″), AS PER PLAN.
4. ALL LABOR AND MATERIAL, EXCLUDING SEALING AND FORMLINER, NECESSARY TO CONSTRUCT TOWER SHOWN IN SECTION D-D, E-E, AND F-F SHALL BE INCLUDED WITH APPROACH SLAB FOR PAYMENT.
5. FOR ADDITIONAL NOTES AND DETAILS OF PULL BOXES, STRUCTURE JUNCTION BOXES, AND CONDUIT, SEE STANDARD CONSTRUCTION DRAWING HL-30.11, HL-30.31, HL-30.32. SEE SHEETS 5/38 AND 6/38 FOR QUANTITIES FOR THESE ITEMS.
6. FOR BRIDGE TERMINAL ASSEMBLIES SEE ROADWAY STANDARD DRAWINGS GR-3.1 AND GR-3.2. SEE ROADWAY PLANS FOR DETAILS AND PAYMENT.

DESIGN AGENCY
PARSONS BRINCKERHOFF
2945 FARMERS DRIVE
SUITE 350
COLUMBUS, OHIO 43235

DESIGNED	DRAWN	REVIEWED	DATE
SAP	LEL	EBS	05/24/12
CHECKED	REVISED	STRUCTURE NUMBER	
PJL		LEFT: 0202037 RIGHT: 0202053	

PARAPET DETAILS 2 OF 2
BRIDGE NO. ALL-75-0703 L&R
I-75 OVER S.R. 117 & S.R. 309

ALL-75-5.53
PID No. 76691

J:\Projects\ALL_76691\structures\ALL075_0703\sheets\075_0703CRA002.dgn 11-SEP-2012 8:54PM reddenj

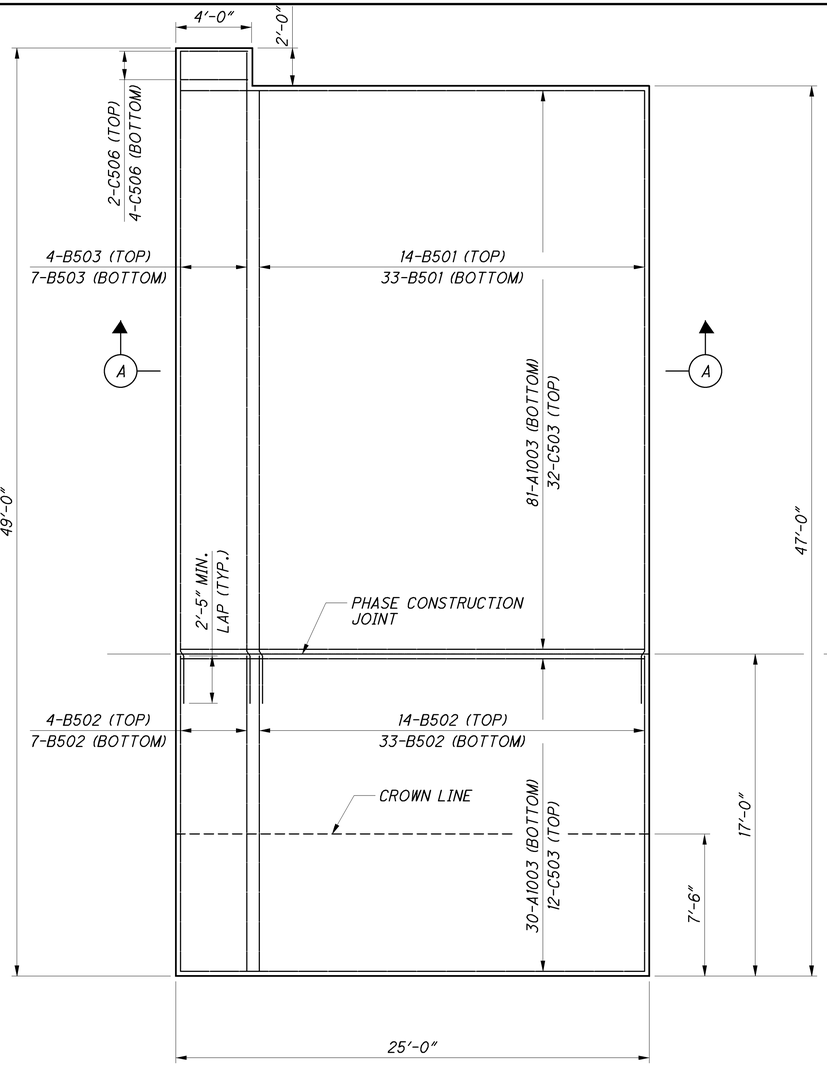

REAR APPROACH SLAB PLAN

(SEE SECTIONS A-A & B-B FOR SPACING)
(SOUTHBOUND SHOWN, NORTHBOUND SIMILAR)

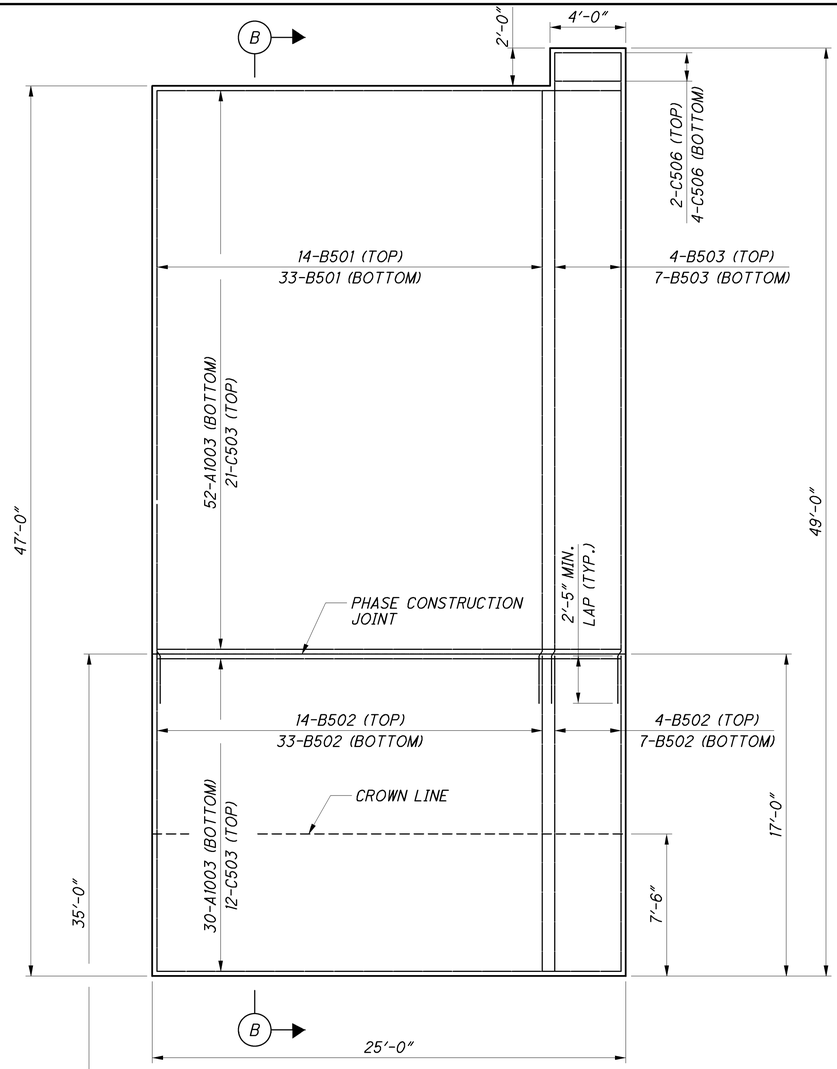

FORWARD APPROACH SLAB PLAN

(SEE SECTIONS A-A & B-B FOR SPACING)
(SOUTHBOUND SHOWN, NORTHBOUND SIMILAR)



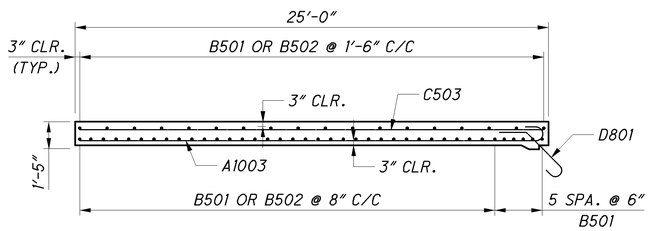

SECTION A-A

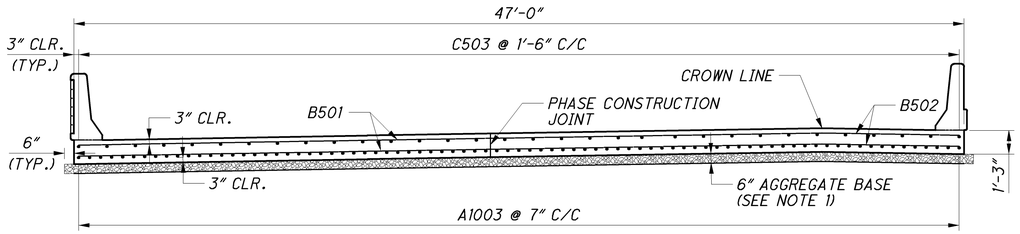

SECTION B-B

NOTES:

1. 6" AGGREGATE BASE INCLUDED WITH ROADWAY QUANTITIES FOR PAYMENT.
2. SUBGRADE COMPACTION INCLUDED WITH ROADWAY QUANTITIES FOR PAYMENT.
3. ADJUST LOCATION OF LONGITUDINAL REINFORCEMENT TO CLEAR THE CONSTRUCTION JOINT BY 2".
4. FOR APPROACH SLAB ELEVATIONS SEE SHEET 32/38.

DESIGN AGENCY
PARSONS BRINCKERHOFF
2545 FARMERS DRIVE
SUITE 350
COLUMBUS, OHIO 43235

DESIGNED	DRAWN	REVIEWED	DATE
PJL	TLP	EBS	05/24/12
CHECKED	REVISED	STRUCTURE FILE NUMBER	
SAP		LEFT: 02020037 RIGHT: 02020053	

APPROACH SLAB DEATILS

BRIDGE NO. ALL-75-0703 L&R
I-75 OVER S.R.117 & S.R. 309

ALL-75-5.53
PID No. 76691

31 / 38

966
1224

J:\Projects\ALL\76691\structures\ALL075_0703C\sheets\075_0703CMD001.dgn 11-SEP-2012 8:54PM reddenj

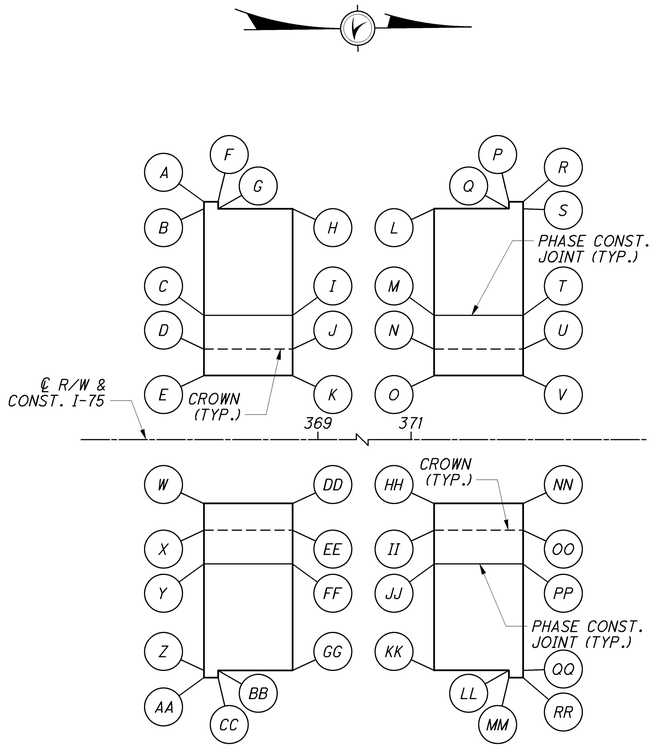

SLAB CORNER ELEVATIONS TABLE					
			STATION	OFFSET	ELEVATION
SOUTHBOUND	RA	A	368+67.88	67.00' LT.	905.32
		B	368+67.88	65.00' LT.	905.35
		C	368+67.88	35.00' LT.	905.83
		D	368+67.88	25.50' LT.	905.98
		E	368+67.88	18.00' LT.	905.86
		F	368+71.88	67.00' LT.	905.34
		G	368+71.88	65.00' LT.	905.37
		H	368+92.88	65.00' LT.	905.44
		I	368+92.88	35.00' LT.	905.92
		J	368+92.88	25.50' LT.	906.07
		K	368+92.88	18.00' LT.	905.95
	FA	L	371+06.55	65.00' LT.	905.25
		M	371+06.55	35.00' LT.	905.73
		N	371+06.55	25.50' LT.	905.89
		O	371+06.55	18.00' LT.	905.77
		P	371+27.55	67.00' LT.	905.11
		Q	371+27.55	65.00' LT.	905.14
		R	371+31.55	67.00' LT.	905.09
		S	371+31.55	65.00' LT.	905.12
		T	371+31.55	35.00' LT.	905.60
		Q	371+31.55	25.50' LT.	905.75
		V	371+31.55	18.00' LT.	905.63
NORTHBOUND	RA	W	368+67.88	18.00' RT.	905.86
		X	368+67.88	25.50' RT.	905.98
		Y	368+67.88	35.00' RT.	905.83
		Z	368+67.88	65.00' RT.	905.35
		AA	368+67.88	67.00' RT.	905.32
		BB	368+71.88	65.00' RT.	905.37
		CC	368+71.88	67.00' RT.	905.34
		DD	368+92.88	18.00' RT.	905.95
		EE	368+92.88	25.50' RT.	906.07
		FF	368+92.88	35.00' RT.	905.92
		GG	368+92.88	65.00' RT.	905.44
	FA	HH	371+06.55	18.00' RT.	905.77
		II	371+06.55	25.50' RT.	905.89
		JJ	371+06.55	35.00' RT.	905.73
		KK	371+06.55	65.00' RT.	905.25
		LL	371+27.55	65.00' RT.	905.14
		MM	371+27.55	67.00' RT.	905.11
		NN	371+31.55	18.00' RT.	905.63
		OO	371+31.55	25.50' RT.	905.75
		PP	371+31.55	35.00' RT.	905.60
		QQ	371+31.55	65.00' RT.	905.12
		RR	371+31.55	67.00' RT.	905.09

DESIGN AGENCY
PARSONS BRINCKERHOFF
2545 FARMERS DRIVE
SUITE 350
COLUMBUS, OHIO 43235

DESIGNED	DRAWN	REVIEWED	DATE
PJL	TLP	EBS	05/24/12
CHECKED	REVISED	STRUCTURE FILE NUMBER	
SAP		LEFT: 02020137 RIGHT: 02020053	

APPROACH SLAB DEATILS
BRIDGE NO. ALL-75-0703 L&R
I-75 OVER S.R.117 & S.R. 309

ALL-75-5.53
PID No. 76691

32 / 38

967
1224

J:\Projects\ALL\76691\structures\ALL075_0703\sheets\075_0703CMD002.dgn 11-SEP-2012 8:54PM reddenj

MARK	NUMBER TOTAL	LENGTH	WEIGHT	TYPE	DIMENSIONS A	B	C	D	E	R	INC
SUPERSTRUCTURE											
S401	672	30'- 00"	13,467	STR.							
S402	96	16'- 09"	1,075	STR.							
S403	140	13'- 03"	1,240	6	1'-11"	5'-2"	8"				
S501	802	30'- 00"	25,095	STR.							
S502	94	20'- 03"	1,986	STR.							
S503	1576	29'- 10"	49,040	STR.							
S504	1576	9'- 09"	16,027	16	9'-2"						
S505	1576	16'- 10"	27,671	STR.							
S506	944	7'- 01"	6,975	23	8"	3'-3"	3'-0"			1 1/2"	
	48	28'- 08"	1,436	STR.							
S509	320	11'- 03"	3,755	2	4'-3"	3'-0"	4'-3"				
S510	160	6'- 11"	1,155	2	2'-4"	2'-6"	2'-4"				
S601	1092	30'- 00"	49,206	STR.							
S602	24	29'- 10"	1,076	STR.							
S603	24	16'- 10"	607	STR.							
S604	8	8'- 11"	108	29	3'-3"	9"	9"	4'-0"			
S605	4	6'- 05"	39	13	2'-2"	9"	9"	3'-3"			
S606	192	9'- 00"	2,596	13	4'-9"	9"	9"	3'-3"			
S607	180	7'- 00"	1,893	STR.							
S608	12	2'- 10"	52	STR.							
S609	4	7'- 03"	44	13	3'-0"	9"	9"	3'-3"			
S610	12	3'- 09"	68	STR.							
S611	380	23'- 11"	13,651	STR.							
S612	944	4'- 08"	6,617	1	1'-0"	3'-10"					
S613	944	4'- 01"	5,790	14	10 1/2"	1'-11"	8 1/2"	6"	9"		
S614	8	18'- 00"	217	STR.							
S801	32	29'- 10"	2,549	STR.							
S802	32	17'- 10"	1,524	STR.							
D801	128	4'- 11"	1,681	18	2'-7"	1'-0"	1'-0"				
SUPERSTRUCTURE TOTAL			236,640								

MARK	NUMBER TOTAL	LENGTH	WEIGHT	TYPE	DIMENSIONS A	B	C	D	E	R	INC
PIER											
SP401	16	14'- 06"	4,133	27	4 1/2"	3'-0"	14'-6"				
P501	144	13'- 03"	1,991	3	2'-8"	3'-8"					
P502	40	32'- 10"	1,370	STR.							
P503	40	13'- 10"	578	STR.							
P504	136	13'- 09"	1,951	3	2'-8"	3'-11"					
P601	24	14'- 10"	535	28	2'-10	4'-0"	1'-0"				
P602	32	4'- 03"	205	1	1'-7"	2'-10"					
P901	96	4'- 02"	1,360	1	1'-7"	2'-10"					
P1101	28	36'- 02"	5,381	STR.							
P1102	84	32'- 10"	14,654	STR.							
P1103	28	17'- 02"	2,554	1	3'-8"	13'-10"					
P1104	84	13'- 10"	6,174	STR.							
P1105	320	22'- 09"	38,679	13	21'-2"						
P1106	28	15'- 06"	2,306	1	13'-10"	2'-0"					
P1107	28	11'- 00"	1,637	1	9'-4"	2'-0"					
PIER TOTAL			83,508								

MARK	NUMBER TOTAL	LENGTH	WEIGHT	TYPE	DIMENSIONS A	B	C	D	E	R	INC
DRILLED SHAFT											
DS401	16	39'- 06"	12,555	27	4 1/2"	3'-6"	39'-6"				
DS1101	352	39'- 06"	73,872	STR.							
DRILLED SHAFT TOTAL			86,427								
FOR INFORMATION ONLY. NOT INCLUDED WITH ITEM 509.											

NOTES:

1. THE BAR SIZE NUMBER IS SPECIFIED ON THE PLANS IN THE BAR MARK COLUMN. THE FIRST DIGIT WHERE THREE DIGITS ARE USED, AND THE FIRST TWO DIGITS WHERE FOUR ARE USED, INDICATES THE BAR SIZE NUMBER. FOR EXAMPLE, P601 IS A NO. 6 BAR. BAR DIMENSIONS SHOWN ARE OUT TO OUT UNLESS OTHERWISE INDICATED. R INDICATES INSIDE RADIUS, UNLESS OTHERWISE NOTED. "STD." WRITTEN IN PLACE OF A DIMENSION INDICATES A STANDARD BEND AT THE END OF THE BAR.

2. ALL REINFORCEMENT IS TO BE EPOXY COATED.

DESIGN AGENCY
PARSONS BRINCKERHOFF
2545 FARMERS DRIVE
SUITE 350
COLUMBUS, OHIO 43235

DESIGNED SAP | DRAWN LEL | REVIEWED EBS | DATE 05/24/12

CHECKED PJL | REVISED

STRUCTURE NUMBER
LEFT: 0202037
RIGHT: 0202053

REINFORCING STEEL LIST

BRIDGE NO. ALL-75-0703 L&R
I-75 OVER S.R. 117 & S.R. 309

ALL-75-5.53
PID No. 76691

J:\Projects\ALL\76691\structures\ALL075_0703\sheets\075_0703CRL001.dgn 25-OCT-2012 11:51AM lint

MARK	NUMBER			LENGTH	WEIGHT	TYPE	DIMENSIONS							
	REAR	FWD.	TOTAL				A	B	C	D	E	F	R	INC
ABUTMENTS														
A401	72	72	144	9'- 10"	946	3	2'-11"	1'-9"						
A501	24	24	48	26'- 11"	1,348	STR.								
A502	24	24	48	19'- 01"	956	STR.								
	4	4	8	6'- 04"										
A503	SER. OF	SER. OF	SER. OF	TO	721	STR.								2'-0"
	7	7	7	18'- 04"										
A504	4	4	8	22'- 00"	184	19	17'-8"	3'-10"	1'-11"					
A505	36	36	72	16'- 06"	1,240	STR.								
A506	162	162	324	11'- 09"	3,971	3	3'-0"	2'-7"						
A507	90	90	180	10'- 03"	1,925	2	3'-9"	3'-0"	3'-9"					
A508	60	60	120	15'- 11"	1,993	2	6'-7"	3'-0"	6'-7"					
A509	8	8	16	18'- 01"	302	2	7'-8"	3'-0"	7'-8"					
	2	2	4	11'- 09"			4'-6"		4'-6"					
A510	SER. OF	SER. OF	SER. OF	TO	431	2	TO	3'-0"	TO					1'-4"
	7	7	7	17'- 09"			7'-6"		7'-6"					
	2	2	4	8'- 03"			2'-9"		2'-9"					
A511	SER. OF	SER. OF	SER. OF	TO	116	2	TO	3'-0"	TO					1'-0"
	3	3	3	10'- 03"			3'-9"		3'-9"					
	2	2	4	16'- 03"				4'-10"						
A512	SER. OF	SER. OF	SER. OF	TO	297	3	3'-0"	TO						1'-0"
	4	4	4	19'- 03"				6'-4"						
A513	2	2	4	14'- 09"	62	3	3'-0"	4'-1"						
A514	2	2	4	14'- 03"	60	3	3'-0"	3'-10"						
A515	32	32	64	18'- 11"	1,263	2	8'-1"	3'-0"	8'-1"					
A516	14	14	28	3'- 08"	108	STR.								
A517	10	10	20	10'- 02"	213	18	5'-4"	2'-8"	4'-0"					
A518	44	44	88	10'- 09"	987	1	10"	10'-0"						
A519	36	36	72	11'- 08"	877	STR.								
A520	20	20	40	21'- 09"	908	33	6'-8"	3'-8"	10"					
A521	20	20	40	19'- 01"	797	33	6'-0"	3'-0"	10"					
A522	36	36	72	4'- 04"	326	STR.								
A523	24	24	48	7'- 04"	368	STR.								
A601	80	80	160	14'- 07"	3,505	26	3'-0"	5"	3'-5"	10"	2'-9"	1'-4"		
A602	2	2	4	19'- 06"	118	33	3'-8"	5'-6"	1'-0"					
A603	2	2	4	21'- 00"	127	33	3'-8"	6'-3"	1'-0"					
A604	8	8	16	21'- 10"	525	33	3'-8"	6'-8"	1'-0"					
A701	18	18	36	6'- 08"	491	STR.								
A801	16	16	32	27'- 08"	2,364	STR.								
A802	16	16	32	19'- 10"	1,695	STR.								
A803	16	16	32	28'- 08"	2,450	STR.								
A804	16	16	32	20'- 10"	1,780	STR.								
ABUTMENT TOTAL					33,454									

MARK	NUMBER	LENGTH	WEIGHT	TYPE	DIMENSIONS						
	TOTAL				A	B	C	D	E	R	INC
APPROACH SLABS											
B501	188	32'- 03"	6,324	STR.							
B502	232	16'- 07"	4,013	STR.							
B503	44	34'- 03"	1,572	STR.							
C503	132	24'- 06"	3,374	STR.							
C506	24	3'- 06"	88	STR.							
AS501	44	3'- 01"	142	16	2'-6"						
AS503	8	13'- 10"	116	25	10'-0"	2'-5"	1'-4"	1 1/2"	5"		
AS504	8	13'- 08"	115	STR.							
AS506	8	14'- 02"	119	STR.							
AS507	16	24'- 07"	411	STR.							
AS508	8	1'- 06"	13	STR.							
AS509	88	7'- 01"	651	23	8"	3'-3"	3'-0"			1 1/2"	
AS510	32	4'- 04"	145	STR.							
AS511	40	3'- 08"	153	STR.							1"
AS512	48	2'- 02"	109	STR.							
AS513	40	6'- 09"	282	2	10"	5'-4"	10"				
AS514	32	2'- 10"	95	STR.							
AS515	16	13'- 03"	222	STR.							
AS516	12	6'- 05"	81								
AS518	32	10'- 00"	334	STR.							
	4	3'- 00"			2'-5"						
AS519	SER. OF	TO	157	16	TO						
	11	3'- 10"			3'-3"						
AS520	4	7'- 05"	31	STR.							
AS521	4	8'- 01"	34	STR.							
AS522	4	6'- 07"	28	19	5'-2"	1'-4"	4"				
AS523	4	7'- 06"	32	19	6'-1"	1'-4"	4"				
AS524	4	8'- 02"	35	19	6'-9"	1'-4"	4"				
AS572	8	14'- 03"	119	STR.							
AS601	76	4'- 00"	457	16	3'-4"						
AS604	8	15'- 00"	181	STR.							
AS605	88	3'- 10"	507	1	1'-0"	3					
AS606	176	3'- 05"	904	14	10 1/2"	1'-3"	8 1/2"	6"	9"		
	4	4'- 04"				3'-6"					
AS607	SER. OF	TO	314	1	1'-0"	TO					1"
	11	5'- 02"				4'-4"					
AS608	32	4'- 04"	209	1	1'-0"	3'-6"					
A1003	328	25'- 11"	36,579	16	24'-6"						
APPROACH SLAB TOTAL			57,946								
FOR INFORMATION ONLY. NOT INCLUDED WITH ITEM 509.											

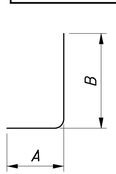

TYPE-1

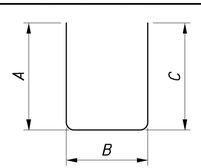

TYPE-2

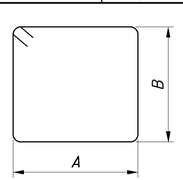

TYPE-3

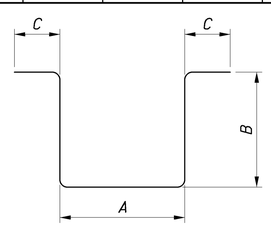

TYPE-6

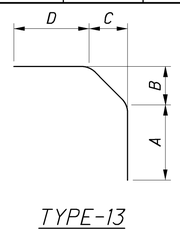

TYPE-13

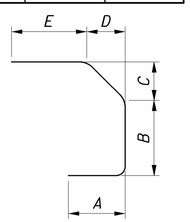

TYPE-14

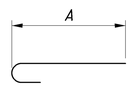

TYPE-16

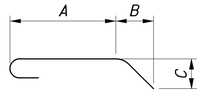

TYPE-18

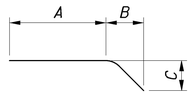

TYPE-19

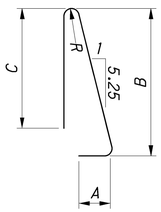

TYPE-23

TYPE-26

TYPE-25

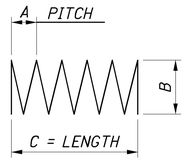

TYPE-27

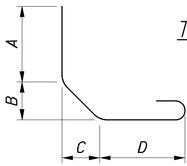

TYPE-29

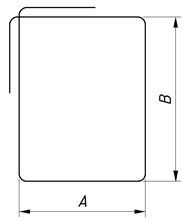

TYPE-33

NOTES:

1. THE BAR SIZE NUMBER IS SPECIFIED ON THE PLANS IN THE BAR MARK COLUMN. THE FIRST DIGIT WHERE THREE DIGITS ARE USED, AND THE FIRST TWO DIGITS WHERE FOUR ARE USED, INDICATES THE BAR SIZE NUMBER. FOR EXAMPLE, P601 IS A NO. 6 BAR. BAR DIMENSIONS SHOWN ARE OUT TO OUT UNLESS OTHERWISE INDICATED. R INDICATES INSIDE RADIUS, UNLESS OTHERWISE NOTED. "STD." WRITTEN IN PLACE OF A DIMENSION INDICATES A STANDARD BEND AT THE END OF THE BAR.

2. ALL REINFORCEMENT IS TO BE EPOXY COATED.

DESIGN AGENCY
PARSONS BRINCKERHOFF
2545 FARMERS DRIVE
SUITE 350
COLUMBUS, OHIO 43235

DATE 05/24/12
REVIEWED EBS
DRAWN LEL
DESIGNED SAP
CHECKED PJL
REVISED
STRUCTURE NUMBER
LEFT: 0202037
RIGHT: 0202053

REINFORCING STEEL LIST

BRIDGE NO. ALL-75-0703 L&R
I-75 OVER S.R. 117 & S.R. 309

ALL-75-5.53
PID No. 76691

34 / 38

969
1224

J:\Projects\ALL\76691\structures\ALL075_0703C\sheets\075_0703CRL002.dgn 17-JAN-2013 11:55AM jint

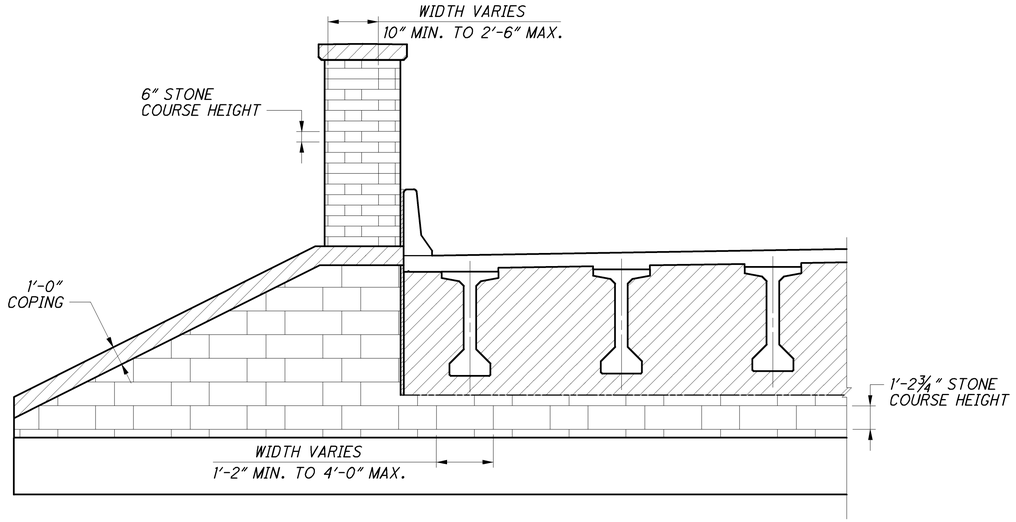

ABUTMENT AESTHETICS

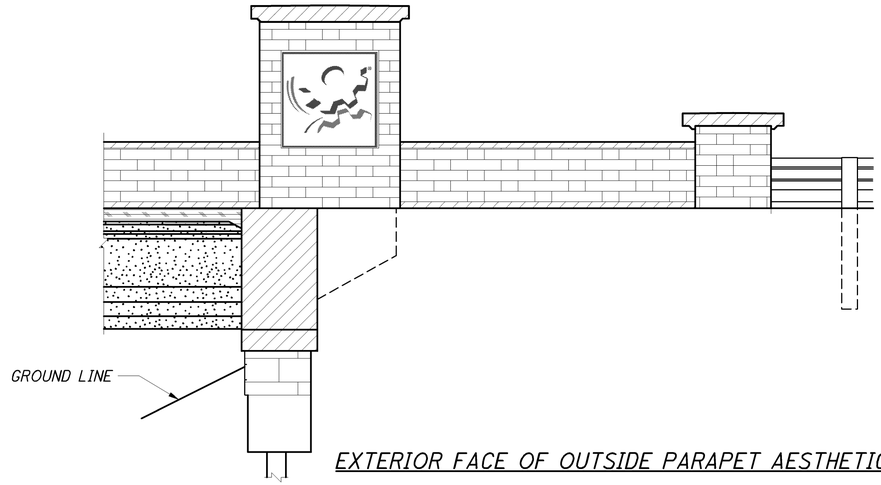

EXTERIOR FACE OF OUTSIDE PARAPET AESTHETICS

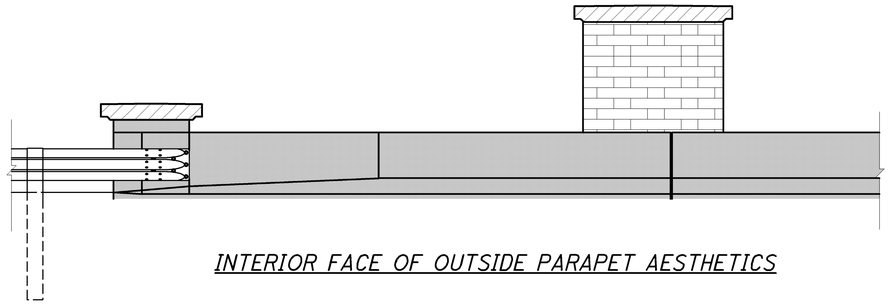

INTERIOR FACE OF OUTSIDE PARAPET AESTHETICS

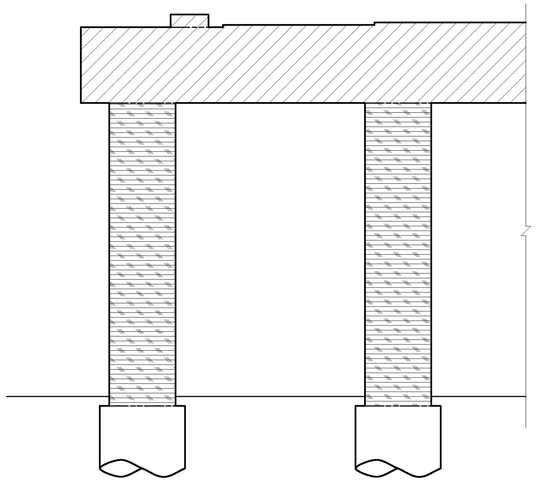

PIER AESTHETICS

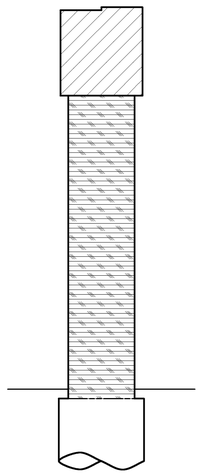

PIER SECTION

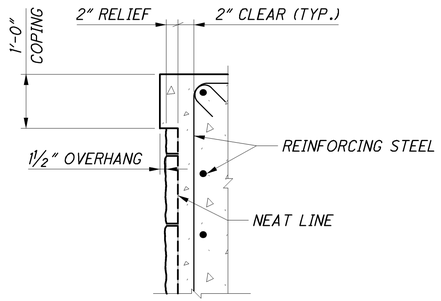

TYPICAL FORMLINER SECTION
SECTION AT WINGWALL SHOWN

LEGEND:

- FORMLINER PATTERN 1:
  - ROUGH CUT STONE FORMLINER W/ 2" RELIEF AND INTEGRALLY COLORED CONCRETE, FEDERAL COLOR NO. 36373, GRAY
- FORMLINER PATTERN 2:
  - ROUGH CUT STONE FORMLINER W/ 1⅝" RELIEF AND INTEGRALLY COLORED CONCRETE, FEDERAL COLOR NO. 36373, GRAY
- INTEGRALLY COLORED CONCRETE FEDERAL COLOR NO. 36373, GRAY
- EPOXY-URETHANE SEALER FEDERAL COLOR NO. 25095, BLUE
- EPOXY-URETHANE SEALER FEDERAL COLOR NO. 37875, WHITE
- EPOXY-URETHANE SEALER FEDERAL COLOR NO. 36373, GRAY

DESIGN AGENCY
PARSONS BRINCKERHOFF
2945 FARMERS DRIVE
SUITE 350
COLUMBUS, OHIO 43235

DESIGNED	DRAWN	REVIEWED	DATE
SAP	LEL	EBS	05/24/12
CHECKED	REVISED	STRUCTURE NUMBER	
PJL		LEFT: 0202037 RIGHT: 0202053	

AESTHETICS DETAILS
BRIDGE NO. ALL-75-0703 L&R
I-75 OVER S.R. 117 & S.R. 309

ALL-75-5.53
PID No. 76691

J:\Projects\ALL\76691\structures\ALL075_0703C\sheets\075_0703CMD003.dgn 11-SEP-2012 8:54PM reddenj

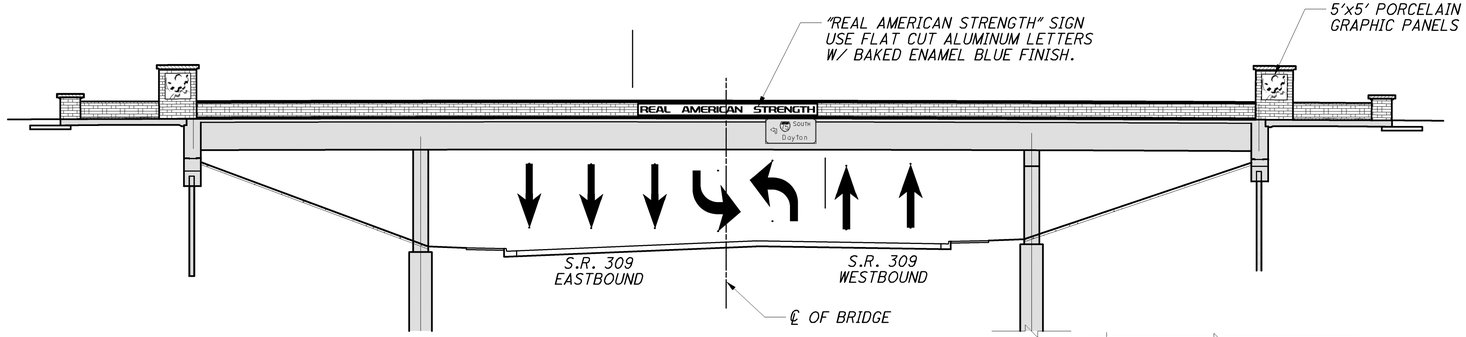

ELEVATION VIEW

(EAST SIDE NORTHBOUND BRIDGE SHOWN, WEST SIDE SOUTHBOUND VIEW SIMILAR)

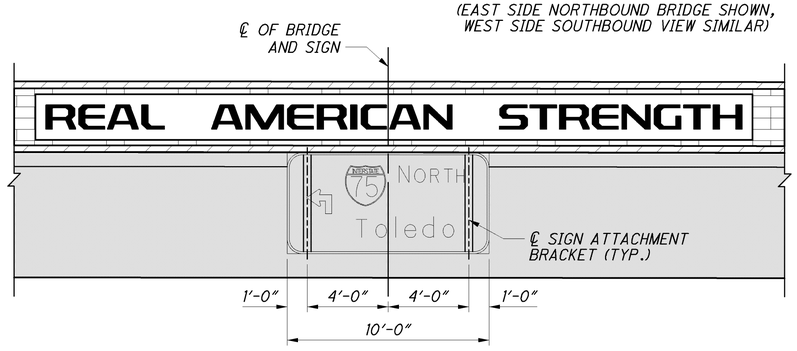

WEST SIDE

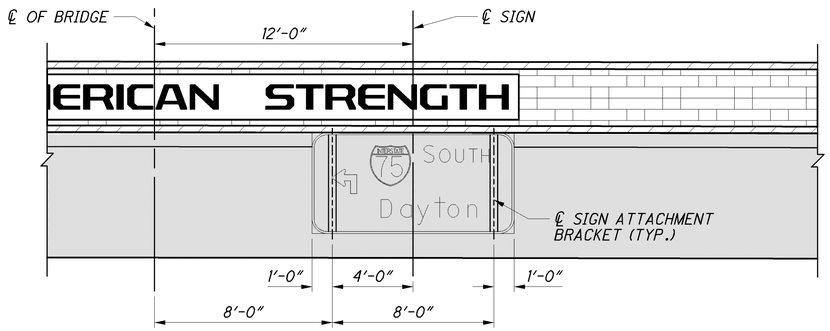

EAST SIDE

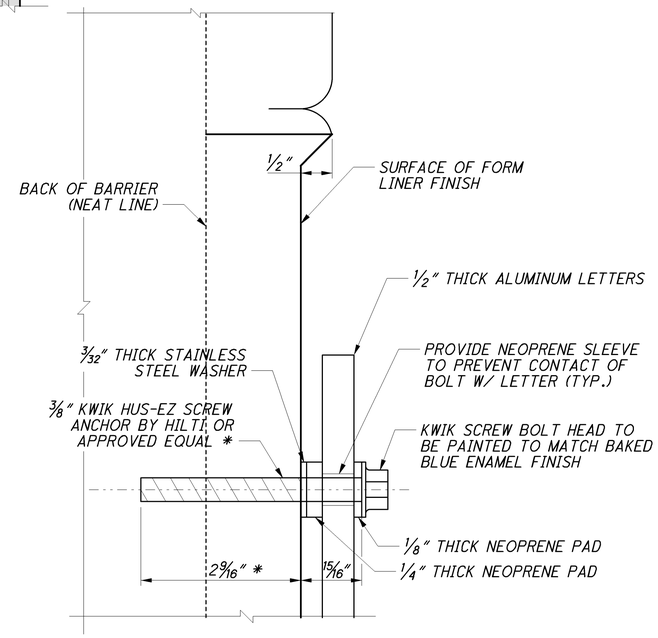

DETAIL A

* CONTRACTOR TO REFER TO MANUFACTURER SPECIFICATIONS FOR PROPER ANCHOR BOLT INSTALLATION

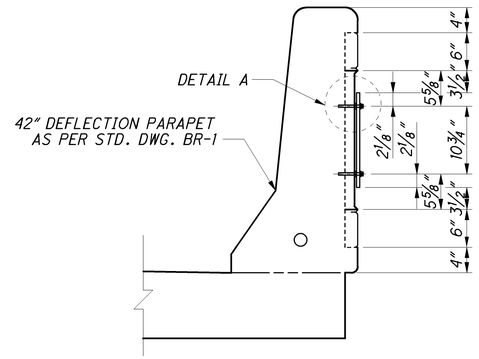

SECTION A-A

NOTES:

1. 1/8" AND 1/4" THICK WHITE ELASTOMERIC PADS, ASTM D4637, TYPE I (DUROMETER 50-55) OR APPROVED EQUAL SHALL BE PROVIDED BETWEEN BOLT HEADS AND WASHERS AND THE PLAQUE FACES TO PROTECT THE PORCELAIN ENAMEL COATING.
2. FOR NOTES SEE SHEET 37/38.
3. SEE STANDARD DRAWING TC-18.24 FOR ADDITIONAL NOTES AND DETAILS REGARDING THE MOUNTED SIGN SUPPORT. THE VERTICAL LOCATION OF THE LOWER ANCHOR BOLT SHALL BE A MINIMUM OF 26 INCHES FROM THE BOTTOM OF THE BEAM. ALL WORK NECESSARY TO FABRICATE AND INSTALL THE BOTTOM SIGN CONNECTIONS SHALL BE BASED ON THE FINAL ANCHOR BOLT LOCATIONS IN THE BEAMS, BASED ON FIELD MEASUREMENT.

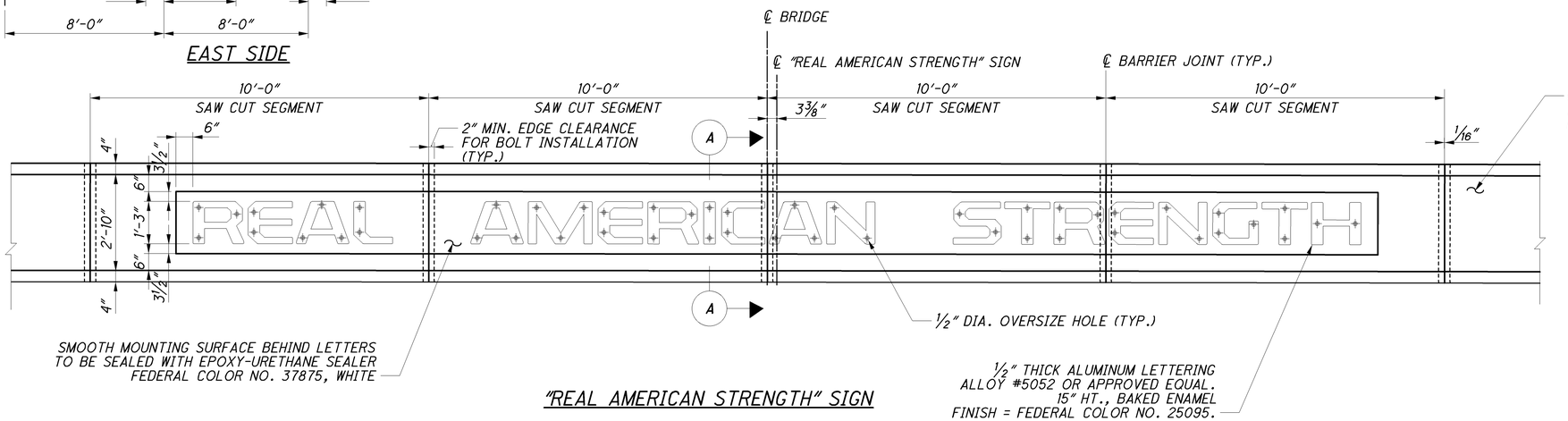

"REAL AMERICAN STRENGTH" SIGN

DESIGN AGENCY
PARSONS BRINCKERHOFF
2545 FARMERS DRIVE
SUITE 350
COLUMBUS, OHIO 43235

DESIGNED	DRAWN	REVIEWED	DATE
ACF	TLP	EBS	05/24/12
CHECKED	REVISED	STRIPPING FILE NUMBER	
EJC		LEFT: 0202037 RIGHT: 0202053	

AESTHETICS DETAILS
BRIDGE NO. ALL-75-0703 L&R
I-75 OVER S.R. 117 & S.R. 309

ALL-75-5.53
PID No. 76691

36/38

971
1224

J:\Projects\ALL\76691\structures\ALL075_0703C\sheets\075_0703CMD004.dgn 11-SEP-2012 8:54PM reddenj

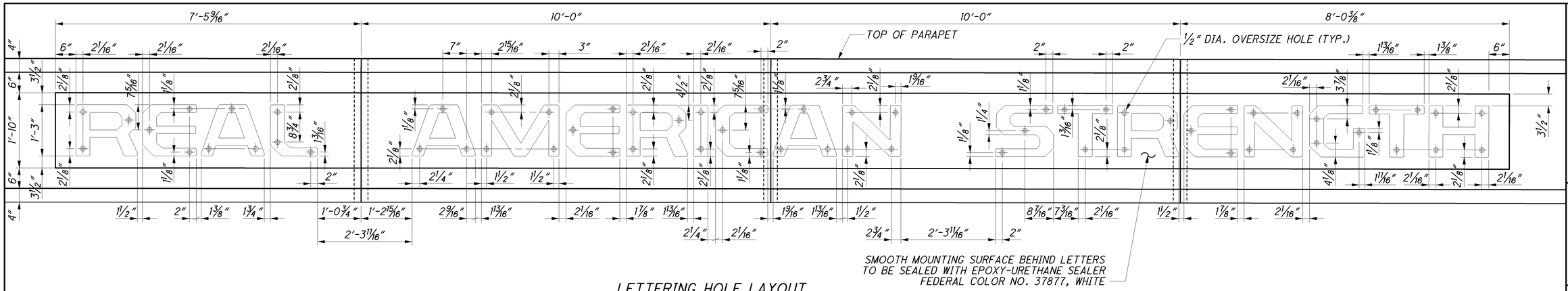

LETTERING HOLE LAYOUT

(HOLES IN PARAPET TO BE FIELD DRILLED PER ANCHOR MANUFACTURER'S SPECIFICATIONS)

NOTE:
ONLY ONE RECURRING LETTER WAS DIMENSIONED TO PROVIDE CLARITY FOR THE DRAWING. IF LETTER IS NOT DIMENSIONED, LOOK TO SIMILAR LETTER FOR THE DIMENSIONING AND CONSTRUCT SIMILIAR.

NOTES:

1. ALL HARDWARE, INCLUDING ANCHOR BOLTS AND WASHERS SHALL BE STAINLESS STEEL.
2. TO ENSURE CORROSION DOES NOT OCCUR BETWEEN THE STEEL PARTS AND ALUMINUM PARTS, PREVENT CONTACT BETWEEN ALUMINUM AND STEEL PARTS WITH A MINIMUM 1/16 INCH THICK CHLOROPRENE OR NEOPRENE GASKET OR APPROVED EQUAL.
3. HOLES IN BRIDGE PARAPET AND TOWERS ARE FIELD DRILLED AND SHALL BE PREPARED PER THE ANCHOR BOLT MANUFACTURERS GUIDELINES.
4. "REAL AMERICAN STRENGTH" SHALL BE FASTENED PER THE DETAIL ON THE EAST SIDE OF THE NORTHBOUND STRUCTURE AND THE WEST SIDE OF THE SOUTHBOUND STRUCTURE VISIBLE TO MOTORISTS TRAVELING EAST AND WEST ON S.R. 309. THE GEAR PLAQUES WILL BE FASTENED TO THE OUTSIDE FACE OF ALL FOUR LARGE BRIDGE TOWERS, VISIBLE TO S.R. 309 TRAFFIC.
5. TRUE TYPE FONT REXLIA FREE WILL BE USED FOR ALL BRIDGE AESTHETIC LETTERING. USE 15 INCH TALL LETTERS FOR "REAL AMERICAN STRENGTH". THE FONT IS AVAILABLE FROM THE CITY OF LIMA AND THE LOCAL COMMUNITY BRANDING COMMITTEE WEBSITE, WWW.REALAMERICANSTRENGTH.COM.

ITEM SPECIAL 530 - STRUCTURE, MISC. BRIDGE MOUNTED DISPLAYS:

THIS ITEM INCLUDES MOUNTING OF ALUMINUM LETTERS AND FOUR "GEAR LOGO" PLAQUES TO THE PROPOSED BRIDGE. THIS INCLUDES THE PHRASE "REAL AMERICAN STRENGTH" ON THE EAST AND WEST OUTSIDE PARAPETS OF THE BRIDGES AND ONE 5' X 5' "GEAR LOGO" PLAQUE ON EACH OF THE FOUR LARGE TOWERS/PILASTERS.

THE CITY OF LIMA SHALL PROVIDE THE GRAPHIC IMAGES FOR THE GEAR LOGO SHOWN AND ANY ADDITIONAL INFORMATION TO ACCURATELY REPRODUCE THE DISPLAYS SHOWN ON THESE SHEETS. THE GEAR LOGO PLAQUES SHALL BE COMPRISED OF PORCELAIN ENAMEL COATED GRAPHIC PANELS SUPPLIED BY ADVANCED SIGNS, 2222 ASHMORE AVENUE, CHATANOOGA, TN 37415, PHONE 866-780-0619 OR AN APPROVED EQUAL. THEY SHALL BE ATTACHED TO THE CONCRETE TOWERS BY STAINLESS STEEL HILTI KWIK HUS-EZ SCREW ANCHORS OR APPROVED EQUAL.

THE CONTRACTOR IN COORDINATION WITH THE DISPLAY PROVIDER SHALL PROVIDE SHOP DRAWINGS AND SAMPLES OF WORK FOR APPROVAL BY THE ENGINEER AND CITY OF LIMA. THE ENGINEER SHALL DETERMINE WHEN ADDITIONAL REVIEW WILL BE REQUIRED BY FHWA. THE CONTRACTOR AND SUPPLIER MUST COORINATE THESE DRAWINGS. ENSURE THAT THE SHOP DRAWINGS MEET PROJECT REQUIREMENTS, INCLUDING MATERIALS, FIELD MEASUREMENTS, CONSTRUCTION SPECIFICATIONS, CONTRACT DOCUMENTS, PERFORMANCE CRITERIA, AND SIMILAR DATA.

THE CITY OF LIMA WILL NOT MAKE ALLOWANCE FOR ADDITIONAL COST OR DELAYS TO THE CONTRACTOR FOR INCORRECT MANUFACTURING AS A RESULT OF FAILURE TO COORDINATE.

FOR THE SHOP DRAWINGS, THE CONTRACTOR SHALL VERIFY AND ADJUST ACCORDINGLY THE DIMENSIONS FOR THE LETTER AND PLAQUE CONNECTIONS WITH FIELD MEASUREMENTS OF THE MOUNTING SURFACES. THE REQUIRED SHOP DRAWINGS SHALL INCLUDE, BUT ARE NOT LIMITED TO, THE FEATURES OUTLINED ABOVE, AN ELEVATION VIEW INCLUDING DIMENSIONS FROM THE CENTER OF THE DISPLAY TO THE MOUNTING HOLES, AND DIMENSIONS AND FABRICATION DETAILS OF ANY CONNECTION TEMPLATES OR OTHER DEVICES OR HARDWARE. THE DISPLAYS SHALL NOT BE MANUFACTURED UNTIL RECEIVING APPROVAL OF THE SHOP DRAWINGS.

ALL COSTS ASSOCIATED WITH THE DISPLAYS, INCLUDING ADDITIONAL WORK DESCRIBED ABOVE, AS WELL AS THE COMPLETE INSTALLATION AND ASSEMBLY OF THE DISPLAYS (INCLUDING OVERHEAD AND PROFIT) SHALL BE INCLUDED IN THE LUMP SUM PRICE FOR ITEM SPECIAL 530 - STRUCTURE, MISC.: BRIDGE MOUNTED DISPLAYS.

DESIGN AGENCY
PARSONS BRINCKERHOFF
2545 FARMERS DRIVE
SUITE 350
COLUMBUS, OHIO 43235

DESIGNED	DRAWN	REVIEWED	DATE
ACF	TLP	EBS	05/24/12
CHECKED	REVISED	STRUCTURE FILE NUMBER	
EJC		LEFT: 0202037 RIGHT: 0202053	

AESTHETICS DETAILS
BRIDGE NO. ALL-75-0703 L&R
I-75 OVER S.R. 117 & S.R. 309

ALL-75-5.53
PID No. 76691

37 / 38

972
1224

J:\Projects\ALL\76691\structures\ALL075_0703C\sheets\075_0703CMD005.dgn 11-SEP-2012 8:54PM reddenj

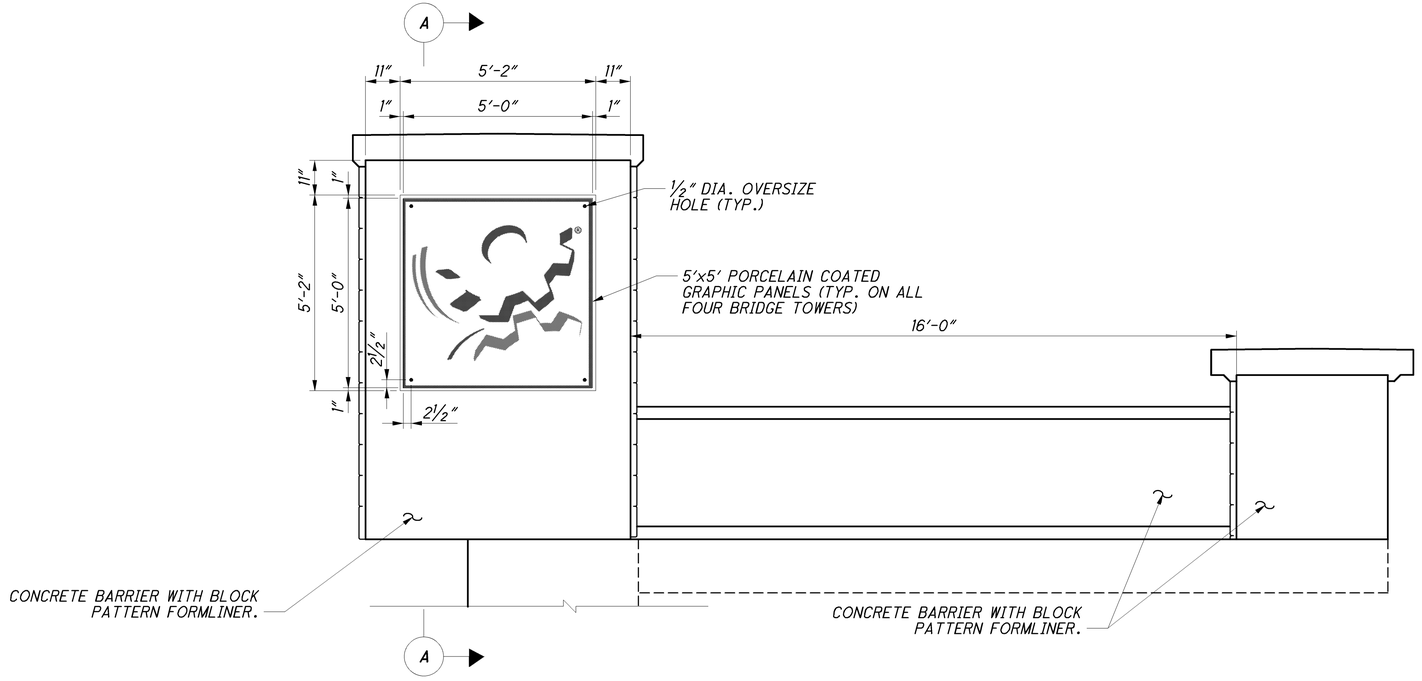

"GEAR LOGO" PLAQUE

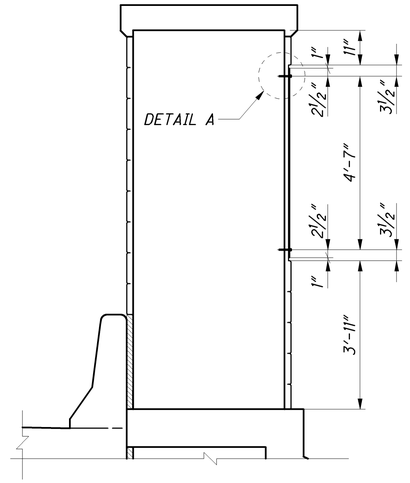

SECTION A-A

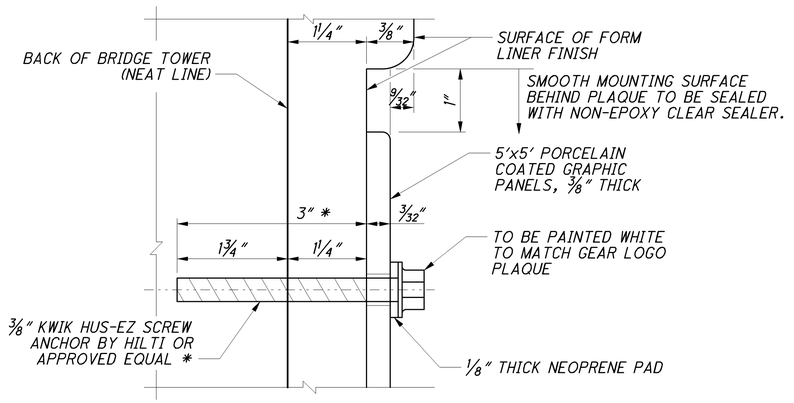

DETAIL A

* CONTRACTOR TO REFER TO MANUFACTURER SPECIFICATIONS FOR PROPER ANCHOR BOLT INSTALLATION

J:\Projects\ALL\76691\structures\ALL075_0703C\sheets\075_0703CMD006.dgn 11-SEP-2012 8:54PM reddenj

DESIGN AGENCY
PARSONS BRINCKERHOFF
2545 FARMERS DRIVE
SUITE 350
COLUMBUS, OHIO 43235

DESIGNED	DRAWN	REVIEWED	DATE
ACF	TLP	EBS	05/24/12
CHECKED	REVISED	STRIPPING FILE NUMBER	
EJC		LEFT: 02020037 RIGHT: 02020053	

AESTHETICS DETAILS
BRIDGE NO. ALL-75-0703 L&R
I-75 OVER S.R. 117 & S.R. 309

ALL-75-5.53
PID No. 76691

38 / 38

973
1224

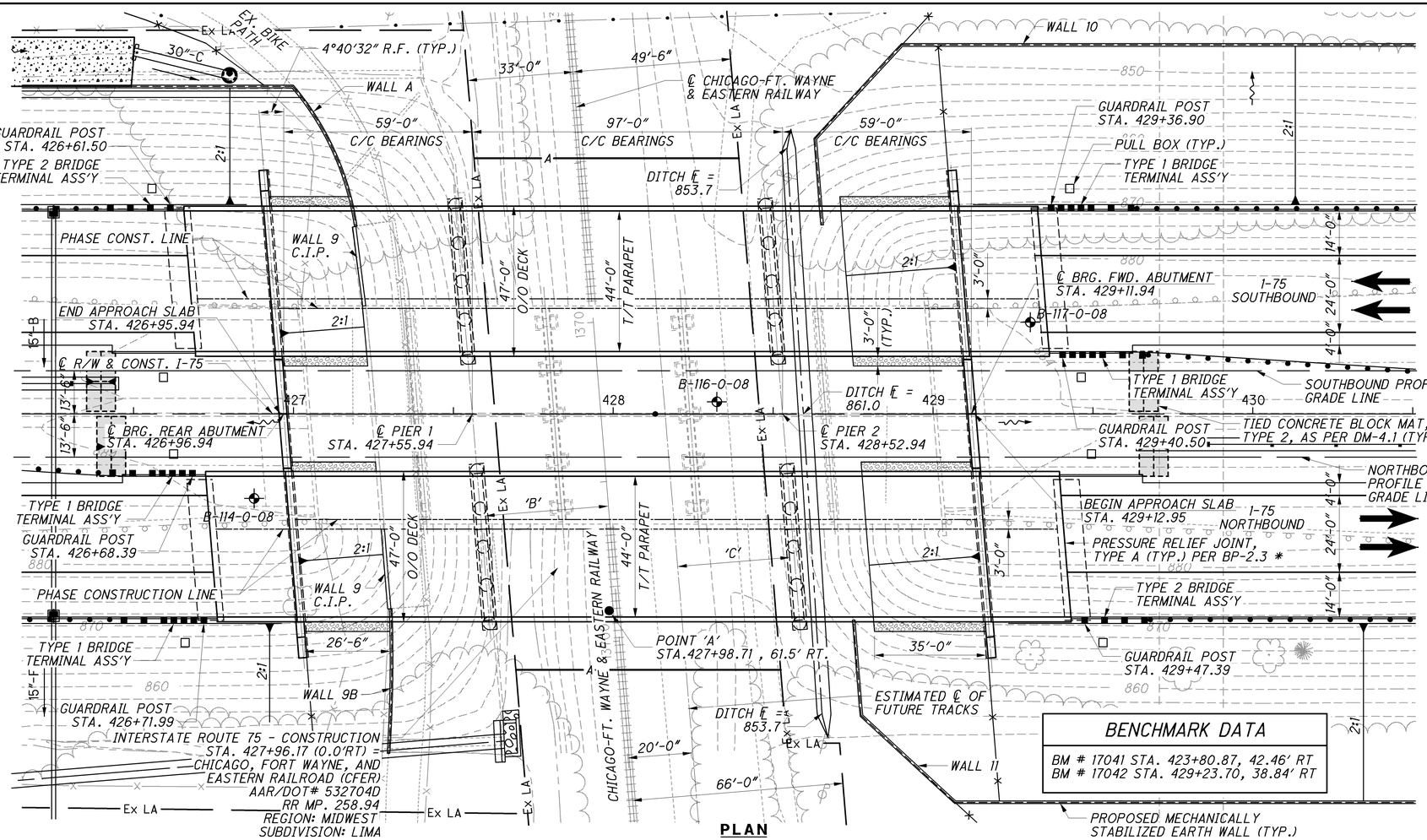

PLAN

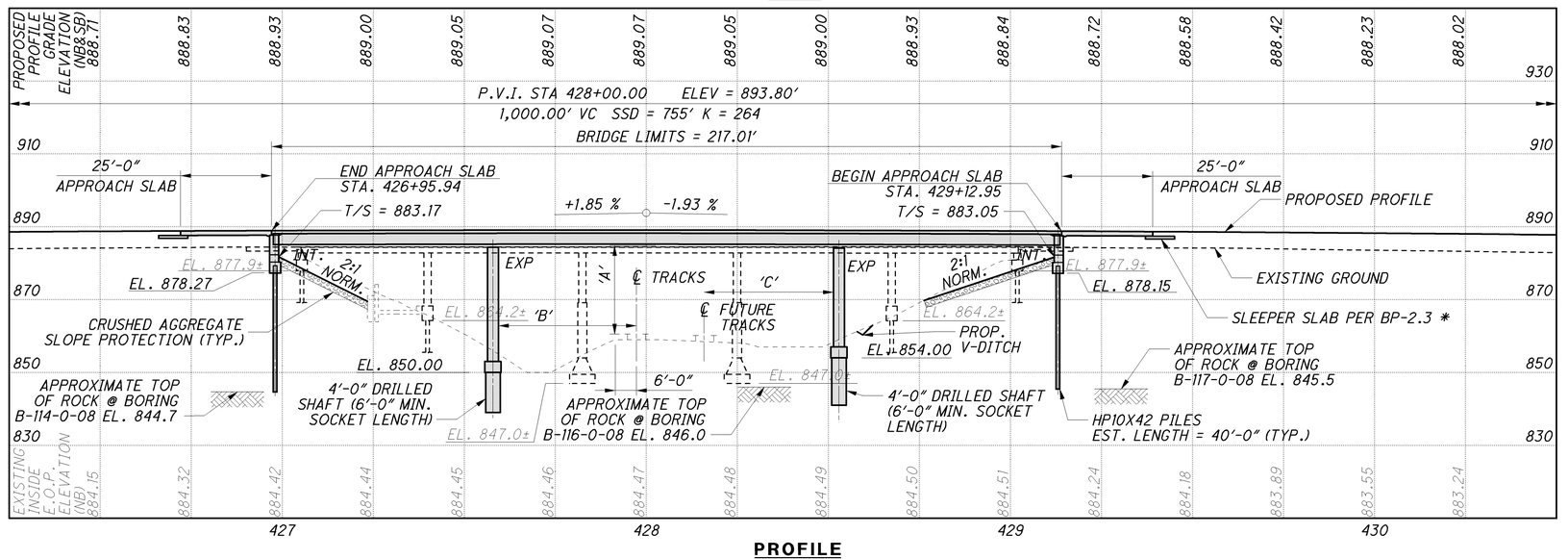

PROFILE
ALONG N.B. PROFILE GRADE LINE

NOTES

EARTHWORK LIMITS SHOWN ARE APPROXIMATE. ACTUAL SLOPES SHALL CONFORM TO PLAN CROSS SECTIONS.

DESIGN TRAFFIC:
2015 ADT = 49,540 2015 ADTT = 20,807
2035 ADT = 60,240 2035 ADTT = 25,301
DIRECTIONAL DISTRIBUTION = 0.50

FOR MSE WALL DETAILS SEE SHEET (746/1224) TO (766/1224).

LEGEND

⌖ BORING LOCATION

● 23.50' REQUIRED MINIMUM VERTICAL CLEARANCE
POINT 'A' - 23.98' ACTUAL MINIMUM VERTICAL CLEARANCE

25.00' REQUIRED MINIMUM HORIZONTAL CLEARANCE
POINT 'B' - 38.59' ACTUAL MINIMUM HORIZONTAL CLEARANCE
POINT 'C' - 35.09' ACTUAL MINIMUM HORIZONTAL CLEARANCE

N

* PROVIDE PRESSURE RELIEF JOINT FOR RIGID PAVEMENT OPTION ONLY

SOIL BORING LOCATIONS

BORING	STATION, OFFSET	APPROX. TOP OF ROCK
B-114-0-08	STA. 426+87.7, 26.4' RT.	844.7
B-116-0-08	STA. 428+32.4, 3.8' LT.	846.0
B-117-0-08	STA. 429+30.4, 28.7' LT.	845.5

EXISTING STRUCTURE

TYPE: CONTINUOUS 4-SPAN REINFORCED CONCRETE SLAB WITH REINFORCED CONCRETE SUBSTRUCTURE

SPANS: 34'± - 42.5'± - 42.5'± - 34'±
ROADWAY: 64'-0"± TOE/TOE PARAPETS
LOADING: CF-2000 (51)
SKEW: 4°34.5' RT ±
APPROACH SLABS: AS-1-54 (L=15')
ALIGNMENT: TANGENT
CROWN: NORMAL 3/16"/FT.
STRUCTURE FILE NUMBER: 0202193
DATE BUILT: 1956
WEARING SURFACE: MICROSILICA MODIFIED CONCRETE

PROPOSED STRUCTURE

TYPE: THREE-SPAN STEEL (A709 GRADE 50W) BEAMS WITH REINFORCED CONCRETE DECK, INTEGRAL ABUTMENTS, AND WALL-TYPE PIERS.
SPANS: 59'-0", 97'-0", 59'-0" ℄ ABUT. BRG. TO ℄ PIERS
ROADWAY: 44'-0" TOE/TOE PARAPET
LOADING: HL-93
FUTURE WEARING SURFACE (FWS) OF 0.060 kips/ft^2
SKEW: 4°40'32" RIGHT FORWARD
APPROACH SLABS: AS-1-81, 25'-0" LONG (MODIFIED)
WEARING SURFACE: 1" MONOLITHIC
ALIGNMENT: TANGENT
CROWN: 0.016 FT/FT
COORDINATES: LATITUDE 40°44'48"
LONGITUDE 84°4'30"

BENCHMARK DATA

BM # 17041 STA. 423+80.87, 42.46' RT
BM # 17042 STA. 429+23.70, 38.84' RT

DESIGN AGENCY
PARSONS BRINCKERHOFF
2945 FARMERS DRIVE
SUITE 350
COLUMBUS, OHIO 43235

DATE 05/24/12
REVIEWED EBS
STRUCTURE NUMBER LEFT: 0202185 RIGHT: 0202215
DRAWN LEL
REVISED
DESIGNED PJL
CHECKED SAP

ALLEN COUNTY
STA. 426+95.94
STA. 429+12.95

SITE PLAN
BRIDGE NO. ALL-75-0813 L&R
I-75 OVER CHICAGO-FT. WAYNE & EASTERN RAILWAY

ALL-75-5.53
PID No. 76691

1 / 37
(974/1224)

J:\Projects\ALL 76691\structures\ALL075_0813C\sheets\075_0813CSP001.dgn 17-JAN-2013 10:52AM jint

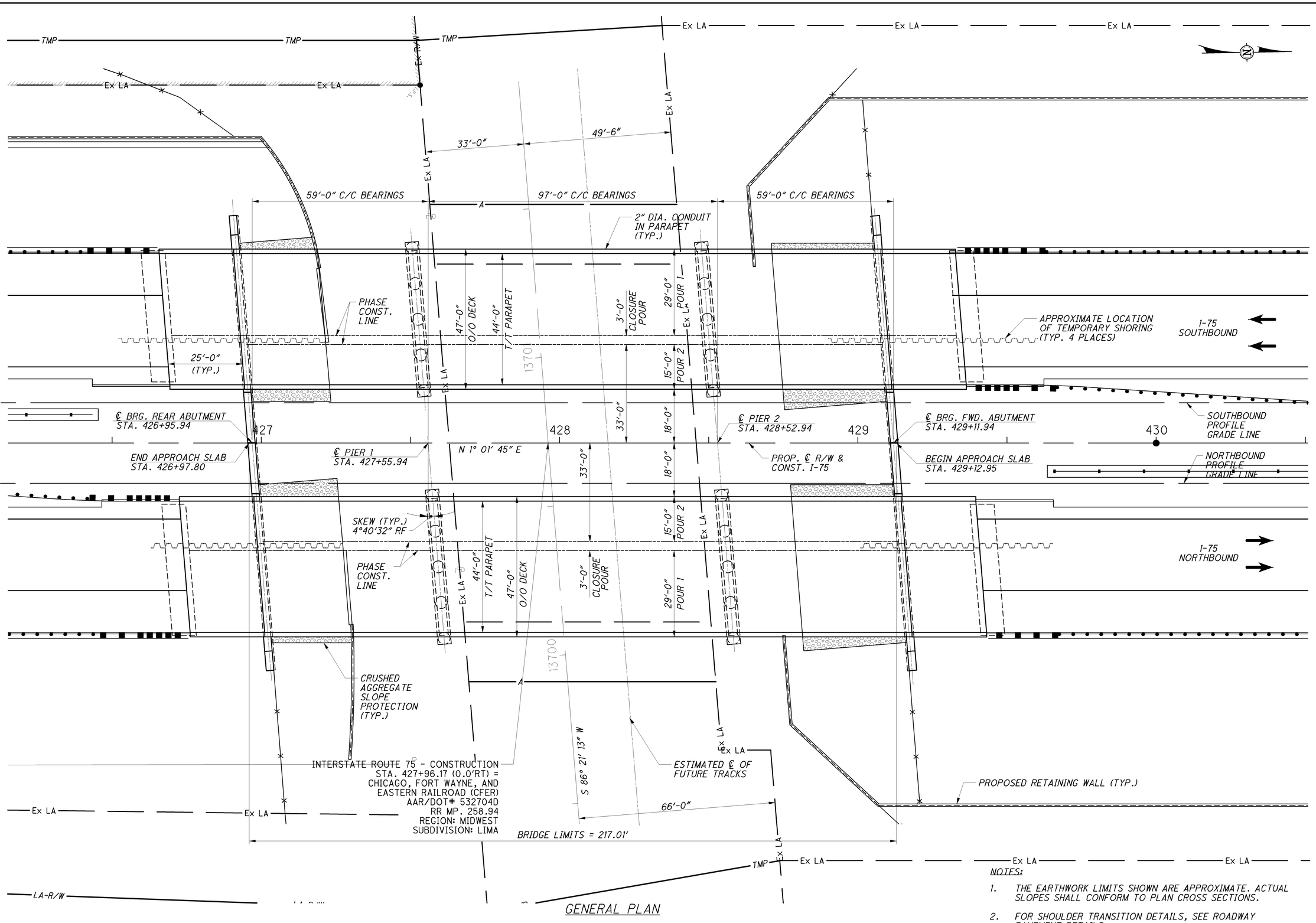

GENERAL PLAN

NOTES:

1. THE EARTHWORK LIMITS SHOWN ARE APPROXIMATE. ACTUAL SLOPES SHALL CONFORM TO PLAN CROSS SECTIONS.
2. FOR SHOULDER TRANSITION DETAILS, SEE ROADWAY PAVEMENT DETAILS.

DESIGN AGENCY
PARSONS BRINCKERHOFF
2945 FARMERS DRIVE
SUITE 350
COLUMBUS, OHIO 43235

DESIGNED	DRAWN	REVIEWED	DATE
PJL	LEL/BKJ	EBS	05/24/12
CHECKED	REVISED	STRUCTURE NUMBER	
SAP		LEFT: 0202185 RIGHT: 0202215	

ALLEN COUNTY
STA. 426+97.80
STA. 429+10.81

GENERAL PLAN
BRIDGE NO. ALL-75-0813 L&R
I-75 OVER CHICAGO-FT. WAYNE & EASTERN RAILWAY

ALL-75-5.53
PID No. 76691

2 / 37

975
1224

J:\Projects\ALL\76691\structures\ALL075_0813C\sheets\075_0813CGP001.dgn 11-SEP-2012 8:54PM reddenj

STANDARD DRAWINGS AND SUPPLEMENTAL SPECIFICATIONS

REFER TO THE FOLLOWING STANDARD BRIDGE DRAWING(S):

AS-1-81	REVISED	07-19-02
BR-1	REVISED	07-19-02
GSD-1-96	REVISED	07-19-02
ICD-1-82	REVISED	07-19-02
PCB-91	REVISED	07-19-02

AND TO THE FOLLOWING SUPPLEMENTAL SPECIFICATION(S):

800	DATED 1-20-12
832	DATED 05-05-09
898	DATED 10-21-11

DESIGN SPECIFICATIONS

DESIGN SPECIFICATIONS: THIS STRUCTURE CONFORMS TO THE "LRFD BRIDGE DESIGN SPECIFICATIONS" ADOPTED BY THE AMERICAN ASSOCIATION OF STATE HIGHWAY AND TRANSPORTATION OFFICIALS, FIFTH EDITION, INCLUDING THE 2010 INTERIM SPECIFICATIONS, AND THE ODOT BRIDGE DESIGN MANUAL, 2007 EXCEPT AS NOTED ELSEWHERE IN THE PLANS.

DESIGN DATA

CONCRETE CLASS QSC2 - COMPRESSIVE STRENGTH 4.5 KSI (SUPERSTRUCTURE)

CONCRETE CLASS QSC1 - COMPRESSIVE STRENGTH 4.0 KSI (SUBSTRUCTURE)

CONCRETE CLASS S MODIFIED - COMPRESSIVE STRENGTH 4.0 KSI (DRILLED SHAFT)

REINFORCING STEEL - MINIMUM YIELD STRENGTH 60 KSI

STRUCTURAL STEEL - ASTM A709 GRADE 50W - YIELD STRENGTH 50 KSI

STEEL H-PILES - ASTM A572 - YIELD STRENGTH 50 KSI

LOAD MODIFIER FOR OPERATIONAL IMPORTANCE

OPERATIONAL IMPORTANCE: A LOAD MODIFIER OF 1.00 HAS BEEN ASSUMED FOR THE DESIGN OF THIS STRUCTURE IN ACCORDANCE WITH THE AASHTO LRFD BRIDGE DESIGN SPECIFICATIONS, ARTICLE 1.3.5 AND THE ODOT BRIDGE DESIGN MANUAL, 2007.

DESIGN LOADING

DESIGN LOADING: HL-93

FUTURE WEARING SURFACE (FWS) OF 0.060 KIPS/SQ.FT.

DECK PROTECTION METHOD

EPOXY COATED REINFORCING STEEL

2.5" CONCRETE COVER

SEALING OF CONCRETE SURFACES

MONOLITHIC WEARING SURFACE

MONOLITHIC WEARING SURFACE IS ASSUMED, FOR DESIGN PURPOSES, TO BE 1 INCH THICK.

ITEM 512-SEALING OF CONCRETE SURFACES, EPOXY-URETHANE, AS PER PLAN

EPOXY-URETHANE FOR THE WINGWALL COPING, ABUTMENT DIAPHRAGMS, AND PARAPET ACCENTS SHALL BE FEDERAL COLOR STANDARD NUMBER 37875. EPOXY-URETHANE FOR THE BEAMS SHALL BE FEDERAL COLOR STANDARD NUMBER 25095. EPOXY-URETHANE FOR DECK EDGE SHALL BE FEDERAL COLOR STANDARD NUMBER 36373. ALL CONCRETE SHALL BE SEALED AS PER PLAN DETAILS.

ITEM 512 - SEALING OF CONCRETE SURFACES ((NON-EPOXY) (CLEAR)), AS PER PLAN

THE NON-EPOXY (CLEAR) SEALER SHALL BE USED ON THE FOLLOWING SURFACES ACCORDING TO THE DETAILS IN PLANS:

1. ABUTMENT AND WINGWALL FACES.
2. PIER WALLS.
3. PARAPETS.

PAYMENT FOR SEALING SURFACES OF ITEMS 1, 2 AND 3 SHALL BE INCLUDED IN THIS ITEM 512.

EXISTING STRUCTURE PLANS:

CONSTRUCTION PLANS FOR THE EXISTING BRIDGE ARE ON FILE AT THE OHIO DEPARTMENT OF TRANSPORTATION, DISTRICT ONE OFFICE, 1885 NORTH MCCULLOUGH ST., LIMA, OHIO 45801 AND ARE AVAILABLE FOR REFERENCE.

PILES TO BEDROCK

DRIVE PILES TO REFUSAL ON BEDROCK. THE DEPARTMENT WILL CONSIDER REFUSAL TO BE OBTAINED BY PENETRATING WEAK BEDROCK FOR SEVERAL INCHES TO A MINIMUM RESISTANCE OF 20 BLOWS PER INCH OR BY CONTACTING STRONG BEDROCK AND THE PILE RECEIVING AT LEAST 20 BLOWS. SELECT THE HAMMER SIZE TO ACHIEVE THE REQUIRED DEPTH TO BEDROCK AND REFUSAL. INSTEAD OF DRIVING TO REFUSAL, THE CONTRACTOR MAY PERFORM DYNAMIC LOAD TESTING ACCORDING TO C&MS 523 TO ESTABLISH A DRIVING CRITERIA FOR EACH PILE TYPE AND CAPACITY. ESTABLISH THE DRIVING CRITERIA TO ACHIEVE AN ULTIMATE BEARING VALUE THAT IS 1.5 TIMES THE TOTAL FACTORED LOAD GIVEN BELOW FOR THE PILES. PAYMENT FOR DYNAMIC LOAD TESTING PERFORMED AT THE CONTRACTOR'S OPTION IS INCLUDED IN THE UNIT PRICE PAY ITEM FOR PILES DRIVEN.

THE TOTAL FACTORED LOAD IS 184 KIPS PER PILE FOR THE REAR AND FORWARD ABUTMENT PILES.

ABUTMENT PILES: HP10X42 PILES 40 FEET LONG, ORDER LENGTH = 45 FEET

PILE SPLICES

PILE SPLICES: IN LIEU OF USING THE FULL PENETRATION BUTT WELDS SPECIFIED IN CMS 507.09 TO SPLICE STEEL H-PILES, THE CONTRACTOR MAY USE A MANUFACTURED H-PILE SPLICER. FURNISH SPLICERS FROM THE FOLLOWING MANUFACTURER:

ASSOCIATED PILE AND FITTING CORPORATION
262 RUTHERFORD BLVD.
CLIFTON, NEW JERSEY 07014

INSTALL AND WELD THE SPLICER TO THE PILE SECTIONS IN ACCORDANCE WITH THE MANUFACTURER'S WRITTEN ASSEMBLY PROCEDURE SUPPLIED TO THE ENGINEER BEFORE THE WELDING IS PERFORMED.

ITEM 511-CONCRETE, MISC.: FORMING OF ROUGH CUT STONE FINISH USING FORMLINERS

DESCRIPTION; CONCRETE FORMLINERS SHALL BE USED ON THE ABUTMENT WINGWALLS AND PIERS AS SPECIFIED IN THE PLANS:

1. ABUTMENT AND WINGWALL FACES.
2. PIER WALLS.
3. PARAPETS.
4. TOWER FACES.

THE FORMLINER USED SHALL MEET THE DETAILS SHOWN IN THE PLANS FOR STAGGERED (INTERLOCKING) PATTERNS, INCLUDING DEPTH OF RELIEF AND SIZE OF STONE PATTERN. HORIZONTAL JOINTS IN THE STONE PATTERN SHALL BE ALIGNED AND AT THE SAME ELEVATION. THE FINISHED TEXTURE OF THE ROUGH CUT STONE SHALL BE SIMILAR TO THAT OF RUBBED CONCRETE.

FORMLINERS FOR PATTERN 1 SHALL MATCH THE DIMENSIONAL SPECIFICATIONS OF THE FOLLOWING MANUFACTURER OR APPROVED EQUAL:

PATTERN #1104-R2 (RANDOM CUT STONE)
CUSTOM ROCK
2020 WEST 7TH STREET
ST. PAUL, MN 55116
651-699-1345
WWW.CUSTOM-ROCK.COM

FORMLINERS FOR PATTERN 2 SHALL MATCH THE DIMENSIONAL SPECIFICATIONS OF THE FOLLOWING MANUFACTURER OR APPROVED EQUAL:

PATTERN #1599 (RANDOM CUT STONE)
SPEC FORMLINERS, INC.
530 E. DYER RD.
SANTA ANA, CA 92707
888-429-9550
WWW.SPECFORMLINERS.COM

THE FORMLINER MANUFACTURER SHALL SUBMIT EVIDENCE OF AT LEAST TWO SIMILAR ARCHITECTURAL CONCRETE CONSTRUCTION PROJECTS WITHIN THE PAST FIVE YEARS FOR A REVIEW AND APPROVAL BY THE ENGINEER. COMPLETE SHOP DRAWINGS DETAILING THE STONE PATTERNS SHALL BE SUBMITTED IN ACCORDANCE WITH 501.04 FOR APPROVAL PRIOR TO PLACING ANY CONCRETE WHERE THE FORMLINERS WILL BE USED. SHOP DRAWINGS SHALL INCLUDE FORMLINER INSTALLATION AND CASTING INSTRUCTIONS, AND INDICATE FORMLINER BACKUP, REVEAL, AND CHAMFER STRIP LOCATIONS. THE CONTRACTOR SHALL COORDINATE WITH THE FORMLINER MANUFACTURER TO ASSURE UNDERSTANDING OF FORMLINER USE, TEST PANEL MOCK-UP REQUIREMENTS, AND FINAL CONSTRUCTION PROCEDURES.

MATERIALS:
THE FORMLINER SHALL BE FABRICATED WITH SHAPES THAT ALLOW REMOVAL OF THE FORMS WITHOUT DAMAGE OR VISUAL IMPAIRMENT OF THE CONCRETE, AND SHALL HAVE 1#8" MINIMUM RADII WITH NO SHARP EDGES. THE FORMLINER SHALL BE CAPABLE OF WITHSTANDING APPLIED CONCRETE POUR PRESSURE WITHOUT LEAKAGE, PHYSICAL DEFECT, OR VISUAL IMPAIRMENT.

CONSTRUCTION REQUIREMENTS:
FORMLINERS SHALL BE CLEANED BEFORE EACH USE. DAMAGED FORMLINERS WHOSE CONTINUED USE OR REPAIR WOULD NEGATIVELY IMPACT THE AESTHETICS OF THE FINISHED CONCRETE SHALL BE REPLACED. FORMLINER JOINTS SHALL BE SEALED TO PREVENT CEMENT PASTE FROM BLEEDING. FORMLINERS SHALL BE INSTALLED IN ACCORDANCE WITH THE APPROVED SHOP DRAWINGS. CHAMFERED CORNERS SHALL FORM SMOOTH, SOLID UNBROKEN CONTINUOUS SURFACES WHICH ARE UNIFORMLY STRAIGHT. AN APPROVED COMPATIBLE FORMLINER RELEASE AGENT SHALL BE APPLIED AT A RATE RECOMMENDED BY THE MANUFACTURER.

THE CONCRETE COPING SHALL BE CAST WITH NO FORMLINER USED.

AS PART OF THIS ITEM, A 7 FEET BY 3 FEET SECTION OF WALL THAT COMPRISES A MINIMUM OF ONE COMPLETE STONE BLOCK WILL BE CAST BY THE CONTRACTOR FOR EACH PATTERN USED FOR APPROVAL BY THE ENGINEER. IF THE SECTION DOES NOT MEET THE ENGINEER'S APPROVAL,THE PROPOSED FORMLINER MAY BE REJECTED. THE SECTION MUST BE APPROVED BEFORE PLACING ANY CONCRETE WHERE THE FORMLINERS WILL BE USED. REJECTION OF THE SECTION WILL REQUIRE CONSTRUCTION OF ANOTHER SECTION UNTIL APPROVAL IS GRANTED. THE WALL SECTION SHALL USE ACTUAL PROJECT SPECIFIC MATERIALS, METHODS, AND WORKMANSHIP, INCLUDING CONCRETE MIX (CEMENT TYPE, AGGREGATE GRADATION, SLUMP, WATER/CEMENT RATIO, PLASTICIZERS, AND ADDITIVES), FORMLINER AND FORMWORK SYSTEMS, INSERTS, FORM RELEASE AGENTS, PLACEMENT RATE, FORM PRESSURES, AND JOINT SEALING, VIBRATING, AND STRIPPING PRACTICES. ANY INTENDED PATCHING OR REPAIR PROCEDURES FOR THE CORRECTION OF MINOR DEFECTS THAT DO NOT RESULT IN REJECTION OF THE ENTIRE WALL SECTION SHALL BE DEMONSTRATED ON THE SECTION.

THE ACCEPTED WALL SECTION SHALL BE THE STANDARD BY WHICH THE FINAL CONSTRUCTION WILL BE EVALUATED FOR TECHNICAL AND AESTHETIC MERIT. THE WALL SECTION SHALL BE CONSTRUCTED AT THE CONSTRUCTION SITE, OR AT AN ALTERNATIVE LOCATION AGREED UPON BY THE ENGINEER. UPON COMPLETION OF THE FINAL CONSTRUCTION, THE CONTRACTOR SHALL BE RESPONSIBLE FOR REMOVAL AND DISPOSAL OF THE WALL SECTION MOCK-UP.

PORTIONS OF THE STRUCTURE DETAILED IN THE PLAN SET SHALL BE CAST WITH STONE FACING FORMLINER TEXTURE AND BE SEALED WITH ITEM 512 - SEALING OF CONCRETE SURFACES (NON-EPOXY (CLEAR)).

METHOD OF MEASUREMENT:
ROUGH CUT STONE FORMLINERS WILL NOT BE MEASURED INDIVIDUALLY FOR PAYMENT UNDER THIS ITEM.

BASIS OF PAYMENT:
ITEM 511-CONCRETE, MISC.: FORMING OF ROUGH CUT STONE FINISH USING FORMLINERS WILL BE PAID FOR AT THE CONTRACT SQ. FT. PRICE. THE WORK SHALL INCLUDE FABRICATION AND ERECTION OF FORMLINERS, ALL CONCRETE MATERIAL SHOWN ON THE PLANS, PREPARATION OF FORMLINER SHOP DRAWINGS, AND CONSTRUCTION AND REMOVAL OF THE PRE-CONSTRUCTION WALL SECTION, AND SHALL INCLUDE ALL LABOR, MATERIALS, EQUIPMENT, AND INCIDENTALS REQUIRED TO COMPLETE THIS ITEM.

THE DEPARTMENT WILL PAY FOR SEALING OF CONCRETE SURFACES SEPARATELY UNDER ITEM 512-SEALING OF CONCRETE SURFACES (NON-EPOXY (CLEAR)). SEE THE GENERAL SEALING OF CONCRETE SURFACES PLAN NOTE FOR REQUIREMENTS FOR THE NON-EPOXY (CLEAR) SEALER.

DRILLED SHAFTS

THE MAXIMUM FACTORED LOAD TO BE SUPPORTED BY EACH DRILLED SHAFT IS 688 KIPS AT THE PIERS. THIS LOAD IS RESISTED BY TIP RESISTANCE ONLY. THE FACTORED RESISTANCE PROVIDED BY THE DRILLED SHAFT TIP IS 779 KIPS.

CONSTRUCTION CLEARANCE

MAINTAIN A CONSTRUCTION CLEARANCE OF 13 FEET HORIZONTALLY FROM THE CENTER OF TRACKS AND 20 FEET VERTICALLY FROM A POINT LEVEL WITH THE TOP OF THE HIGHER RAIL, AND 6 FEET FROM THE CENTER OF TRACKS, AT ALL TIMES.

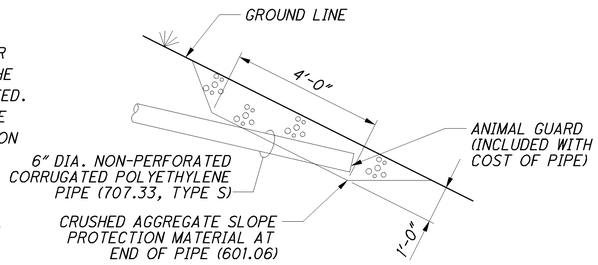

TERMINATION OF 6" NON-PERFORATED CORRUGATED PLASTIC PIPE (NPCPP)

DESIGN AGENCY
PARSONS BRINCKERHOFF
2945 FARMERS DRIVE
SUITE 350
COLUMBUS, OHIO 43235

DESIGNED	DRAWN	REVIEWED	DATE
PJL	LEL	EBS	05/24/12
CHECKED	REVISED	STRUCTURE FILE NUMBER	
SAP		LEFT: 0202185 RIGHT: 0202215	

GENERAL NOTES
BRIDGE NO. ALL-75-0813 L&R
1-75 OVER CHICAGO-FT. WAYNE & EASTERN RAILWAY

ALL-75-5.53
PID No. 76691

976
1224

J:\Projects\ALL 76691\structures\ALL075_0813C\sheets\075_0813CGN001.dgn 17-JAN-2013 10:54AM jint

DECK PLACEMENT DESIGN ASSUMPTIONS

THE FOLLOWING ASSUMPTIONS OF CONSTRUCTION MEANS AND METHODS WERE MADE FOR THE ANALYSIS AND DESIGN OF THE SUPERSTRUCTURE. THE CONTRACTOR IS RESPONSIBLE FOR THE DESIGN OF THE FALSEWORK SUPPORT SYSTEM WITHIN THESE PARAMETERS AND WILL ASSUME RESPONSIBILITY FOR SUPERSTRUCTURE ANALYSIS FOR DEVIATION FROM THESE DESIGN ASSUMPTIONS.

AN EIGHT WHEEL FINISHING MACHINE WITH A MAXIMUM WHEEL LOAD OF 1.07 KIPS FOR A TOTAL MACHINE LOAD OF 8.59 KIPS.

A MINIMUM OUT-TO-OUT WHEEL SPACING AT EACH END OF THE MACHINE OF 103".

A MAXIMUM SPACING OF OVERHANG FALSEWORK BRACKETS OF 48 IN.

A MAXIMUM DISTANCE FROM THE CENTERLINE OF THE FASCIA GIRDER TO THE FACE OF THE SAFETY HANDRAIL OF 65".

ITEM 518 - 6" NON-PERFORATED CORRUGATED PLASTIC PIPE, INCLUDING SPECIALS, AS PER PLAN

ANIMAL GUARDS SHALL BE PROVIDED AT THE OUTLET OF THE DRAINAGE PIPES, STEEL BOLTS OR RODS FOR THE ANIMAL GUARDS SHALL BE GALVANIZED PER CMS 711.02. SEE STD DWG. DM 1.1 FOR ADDITIONAL DETAILS AND NOTES. THE ANIMAL GUARDS AND CRUSHED AGGREGATE SLOPE PROTECTION ARE INCIDENTAL TO ITEM 518 - 6" NON-PERFORATED CORRUGATED PLASTIC PIPE, INCLUDING SPECIALS, AS PER PLAN.

ITEM 898 - QC/QA CONCRETE, CLASS QSC2, SUPERSTRUCTURE (APPROACH SLAB), AS PER PLAN

THIS ITEM 898 SHALL CONTAIN INTEGRALLY COLORED CONCRETE USING CHROMIX ADMIXTURES AS PROVIDED BY L. M. SCOFIELD COMPANY, DOUGLASVILLE, GEORGIA (800) 800-9000 OR AN APPROVED EQUAL. USE FEDERAL COLOR NUMBER 36373 FOR ONLY THE APPROACH PARAPETS AND END TOWERS.

ACCEPTED QUANTITIES SHALL INCLUDE: CONCRETE, CONCRETE BARRIERS, REINFORCING STEEL, JOINT FILLERS, JOINT SEALERS, JOINT SEALS AND WATERPROOFING.

ITEM 898 - QC/QA CONCRETE, CLASS QSC2, SUBSTRUCTURE (ABUTMENT INCLUDING FOOTING), AS PER PLAN

ITEM 898 - QC/QA CONCRETE, CLASS QSC2, SUBSTRUCTURE (PIER ABOVE FOOTING), AS PER PLAN

ITEM 898 - QC/QA CONCRETE, CLASS QSC2, SUPERSTRUCTURE (PARAPET), AS PER PLAN

THIS ITEM 898 SHALL CONTAIN INTEGRALLY COLORED CONCRETE USING CHROMIX ADMIXTURES AS PROVIDED BY L. M. SCOFIELD COMPANY, DOUGLASVILLE, GEORGIA (800) 800-9000 OR AN APPROVED EQUAL. USE FEDERAL COLOR NUMBER 36373.

IT IS NOT NECESSARY FOR THE CONTRACTOR TO PROVIDE INTEGRAL COLORING IN THE PIER CAPS AND THE ABUTMENT FOOTING.

RAILROAD

ALL MOVEMENTS OF EQUIPMENT WITHIN RAILROAD PROPERTY MUST BE COORDINATED WITH THE RAILROAD FLAGGER.

DURING TRAIN MOVEMENTS THROUGH THE PROJECT LOCATION, VEHICLES, EQUIPMENT, AND PERSONNEL WILL NOT BE ALLOWED TO OPERATE WITHIN 25 FEET OF THE TRACK.

ANY DAMAGE CAUSED BY THE ROADWAY WORK TO THE TRACK OR RAILROAD PROPERTY WILL REQUIRE REPAIR BY THE ROADWAY AUTHORITY OR THEIR DESIGNATED CONTRACTOR IMMEDIATELY UPON NOTIFICATION FROM THE RAILROAD OR THEIR DESIGNATED PERSONNEL OR CONTRACTOR.

RAILROAD CONT'D

RAILROAD COORDINATOR & FLAGGER

THE ROADWAY AUTHORITY, OR DESIGNATED CONTRACTOR, SHALL COORDINATE WITH THE RAILROAD WHENEVER CONTRACTOR'S WORK ACTIVITIES ARE LOCATED OVER, UNDER, OR WITHIN THE RAILROAD RIGHT-OF-WAY. A MINIMUM OF 72 HOURS NOTICE IN ADVANCE OF ANY WORK PERFORMED WITHIN OR ADJACENT TO THE RAILROAD RIGHT-OF-WAY. TO SCHEDULE A RAILROAD FLAGGER OR COORDINATE ALL RAILROAD ACTIVITIES, CONTACT THE FOLLOWING RAILROAD PERSONNEL:

RAILROAD FLAGGER AND PROTECTIVE SERVICES AND DEVICES WILL BE REQUIRED AND FURNISHED WHEN CONTRACTOR'S WORK ACTIVITIES ARE LOCATED OVER, UNDER, OR WITHIN THE RAILROAD RIGHT-OF-WAY. THE CONTRACTOR SHALL PROVIDE THE RAILROAD A MINIMUM OF 72 HOURS NOTICE IN ADVANCE OF ANY WORK PERFORMED WITHIN OR ADJACENT TO THE RAILROAD RIGHT-OF-WAY.

DAVID MURPHY - GENERAL MANAGER
CHICAGO, FORT WAYNE, AND EASTERN RAILROAD (CFER)
3010 EAST PONTIAC STREET
FT. WAYNE, IN 46803
OFFICE: 317-308-9198
E-MAIL DAVID.MURPHY@RAILAMERICA.COM
OR
BRADY PETERS - ROADMASTER
CHICAGO, FORT WAYNE, AND EASTERN RAILROAD (CFER)
3010 EAST PONTIAC STREET
FT. WAYNE, IN 46803
MOBILE: 513-218-9058
E-MAIL: BRADY.PETERS@RAILAMERICA.COM

CONTRACTOR MUST SUBMIT DETAILED DEMOLITION PLANS, STAMPED AND SIGNED BY A OHIO LICENSED PROFESSIONAL ENGINEER, TO THE CFER AT LEAST 45 DAYS PRIOR TO COMMENCING ANY WORK. THE PLANS MUST BE REVIEWED AND APPROVED BY THE CFER PRIOR TO COMMENCING WORK. THIS WORK SHALL BE CONSIDERED INCIDENTAL TO THE EXISTING BRIDGE REMOVAL, ITEM 202.

CONTRACTOR SHALL SUBMIT TO CF&E RR ANY TEMPORARY SCAFFOLDING OR TEMPORARY STRUCTURES DETAIL TO BE CONSTRUCTED WITHIN THE RAILROAD R/W FOR APPROVAL PRIOR TO BEGINNING WORK.

ANY ENTRY OR CONSTRUCT ACTIVITIES ON THE RAILROAD RIGHT-OF-WAY MUST BE AUTHORIZED BY THE RAILROAD IN WRITING PRIOR TO THE COMMENCEMENT OF WORK. WRITTEN AUTHORIZATION IS OBTAINED THROUGH A RIGHT OF ENTRY PERMIT OR CONTRACTOR OCCUPANCY/ACCESS AGREEMENT. THE APPLICATION IS ACCESSIBLE VIA THE FOLLOWING LINK ENTITLED "ACCESSING PROPERTY" FOUND AT THE RAILAMERICA WEB SITE:

HTTP://WWW.RAILAMERICA.COM/REALESTATE/ACCESSING PROPERTY.ASPX

PLEASE CONTACT THE REAL ESTATE DEPARTMENT AT 904-538-6365 WITH ANY QUESTIONS ABOUT RIGHT OF ENTRY PERMITS.

BALLAST PROTECTION

THE CONTRACTOR SHALL PROVIDE DETAILS TO CF&E RR REGARDING THE USE OR DESIGN OF A "COVER-MAT" OR SIMILAR PROTECTION OF THE TRACK BALLAST AND STRUCTURE. THE TRACK BALLAST AND STRUCTURE MUST BE PROTECTED TO PREVENT INFILTRATION OF THE ACCUMULATED DUST AND FOREIGN MATTER OR ANY OTHER MATERIAL INTO THE TRACK BALLAST AND STRUCTURE WHICH WOULD CREATE INSTABILITY AND DETERIORATION OF THE TRACK BALLAST AND STRUCTURE. PLEASE PROVIDE THE METHOD IN WHICH THE TRACK BALLAST AND STRUCTURE WILL BE PROTECTED FROM THIS OUTFALL AND ANY OTHER MATERIAL THAT MAY OR HAVE THE POTENTIAL TO FALL FROM THE REMOVAL WORK AND INFILTRATE OR DAMAGE THE TRACK BALLAST AND STRUCTURE.

PAYMENT FOR ALL LABOR, EQUIPTMENT, AND MATERIALS NECESSARY FOR THIS WORK SHALL BE CONSIDERED INCIDENTAL TO THE DEMOLITION OF THE EXISTING BRIDGE AND CONSTRUCTION OF THE PROPOSED.

CRANE, BOOM, AND EQUIPMENT OPERATION GUIDELINES

- THE CF&E RR REQUIREMENTS ARE FOR ALL EQUIPMENT TO MAINTAIN A STATIONARY DISTANCE OF 25' MINIMUM FROM THE CENTERLINE OF TRACK. PLEASE MAINTAIN THESE CLEARANCES AT ALL TIMES.

- ALL MOVEMENTS OF EQUIPMENT WITHIN RAILROAD RIGHT OF WAY MUST BE COORDINATED WITH THE RAILROAD FLAGGER.

- DURING TRAIN MOVEMENTS THROUGH THE PROJECT LOCATION, VEHICLES, EQUIPMENT, AND PERSONNEL WILL NOT BE ALLOWED TO OPERATE WITHIN 25 FEET OF THE TRACK.

- ANY DAMAGE CAUSED BY THE ROADWAY WORK TO THE TRACK OR RAILROAD PROPERTY WILL REQUIRE REPAIR IMMEDIATELY UPON NOTIFICATION FROM THE RAILROAD OR THEIR DESIGNATED PERSONNEL OR CONTRACTOR. IF THE DAMAGE AFFECTS THE TRACK, TRACK STRUCTURE, RAILROAD FACILITIES, OR TRAIN OPERATIONS AS DETERMINED BY THE RAILROAD, THE REPAIRS WILL BE PERFORMED BY THE RAILROAD AT THE ROADWAY AUTHORITIES EXPENSE INCLUDING ALL ASSOCIATED COSTS OF DELAYS OF THE RAILROAD.

- NO CRANE OR BOOM EQUIPMENT WILL BE ALLOWED TO SET UP TO WORK OR PARK WITHIN BOOM DISTANCE PLUS 15 FEET OF CENTERLINE OF TRACK WITHOUT SPECIFIC PERMISSION FROM RAILROAD OFFICIAL AND FLAGMAN.

- NO CRANE OR BOOM EQUIPMENT WILL BE ALLOWED TO FOUL TRACK OR LIFT A LOAD OVER THE TRACK WITHOUT FLAG PROTECTION AND TRACK TIME.

- ALL EMPLOYEES WILL STAY WITH THEIR MACHINES WHEN CRANE OR BOOM EQUIPMENT IS WITHIN 25' OF, OR ALIGNED IN THE DIRECTION OF THE TRACK.

- ALL CRANES AND BOOM EQUIPMENT UNDER LOAD WILL STOP WORK WHILE TRAIN IS PASSING AND BE 25' CLEAR OF TRACK CENTERLINE.

- SWINGING LOADS MUST BE SECURED TO PREVENT MOVEMENT WHILE TRAIN IS PASSING.

- NO LOAD WILL BE SUSPENDED ABOVE A MOVING TRAIN OR WITHIN 25' OF THE TRACK CENTERLINE.

- NO EQUIPMENT WILL BE ALLOWED WITHIN 25 FEET OF CENTERLINE OF TRACK WITHOUT SPECIFIC AUTHORIZATION OF FLAGMAN.

- TRUCKS, TRACTORS OR ANY EQUIPMENT WILL NOT TOUCH BALLAST LINE WITHOUT SPECIFIC PERMISSION FROM RAILROAD OFFICIAL AND FLAGMAN.

- NO EQUIPMENT OR LOAD MOVEMENT WITHIN 25 FEET OR ABOVE A STANDING TRAIN OR RAILROAD EQUIPMENT WITHOUT SPECIFIC AUTHORIZATION OF THE FLAGMAN.

- ALL OPERATING EQUIPMENT WITHIN 25 FEET OF TRACK MUST HALT OPERATIONS WHEN A TRAIN IS PASSING. ALL OTHER OPERATING EQUIPMENT MAY BE HALTED BY THE FLAGMAN IF THE FLAGMAN VIEWS THE OPERATION TO BE DANGEROUS TO THE PASSING TRAIN.

- ALL EQUIPMENT, LOADS AND CABLES ARE PROHIBITED FROM TOUCHING RAILS.

- WHILE CLEARING AND GRUBBING, NO VEGETATION WILL BE REMOVED FROM RAILROAD EMBANKMENT WITH HEAVY EQUIPMENT WITHOUT SPECIFIC PERMISSION FROM THE RAILROAD ENGINEER AND FLAGMAN.

- NO EQUIPMENT OR MATERIALS WILL BE PARKED OR STORED ON RAILROAD'S PROPERTY UNLESS SPECIFIC AUTHORIZATION IS GRANTED FROM THE RAILROAD ENGINEER.

- ALL UNATTENDED EQUIPMENT THAT IS LEFT PARKED ON RAILROAD PROPERTY MUST BE 25'; CLEAR OF THE CENTER OF TRACK TO ANY PART OF THE EQUIPMENT, AND SHALL BE EFFECTIVELY IMMOBILIZED SO THAT IT CANNOT BE MOVED BY UNAUTHORIZED PERSONS.

- ALL CRANES AND BOOM EQUIPMENT WILL BE TURNED AWAY FROM TRACK AND BE A MINIMUM OF 25' CLEAR FROM THE CENTERLINE OF TRACK AFTER EACH WORK DAY OR WHENEVER UNATTENDED BY AN OPERATOR.

ADDITIONALLY, THE RAILROAD SPECIAL PROVISIONS INCLUDED WITH THE ROADWAY CONSTRUCTION AGREEMENT MUST ALSO BE ADHERED TO.

PILE DRIVING OPERATIONS

DUE TO CLOSE PROXIMITY OF PILE DRIVING OPERATIONS, TRACK MUST BE MONITORED FOR MOVEMENT BY A LICENSED LAND SURVEYOR. SOILS ADJACENT TO PILE DRIVING OPERATIONS SHALL BE MONITORED BY A LICENSED LAND SURVEYOR. VIBRATION DURING ALL DRIVING SHALL BE MONITORED TO ENSURE STABILITY OF TRACK AND TRACK BED IS NOT COMPROMISED.

MOVEMENT OR DAMAGE TO TRACK, BALLAST, AND/OR SUBGRADE SHALL BE REPAIRED BY THE CONTRACTOR.

PAYMENT FOR ALL LABOR, EQUIPMENT, AND MATERIALS NECESSARY FOR THIS WORK SHALL BE INCLUDED WITH ITEM 507 STEEL PILES HP10X42, DRIVEN, AS PER PLAN.

ABBREVIATIONS:

ABUT. = ABUTMENT
APPROX. = APPROXIMATE
ASS'Y = ASSEMBLY
BRG. = BEARING
C/C = CENTER TO CENTER
C.J. = CONSTRUCTION JOINT
CLR. = CLEAR
CONST. = CONSTRUCTION
DIA. = DIAMETER
DWG. = DRAWING
E.F. = EACH FACE
EL. = ELEVATION
EST. = ESTIMATE
EX. = EXISTING
F.A. = FORWARD ABUTMENT
F.F. = FAR FACE
FWD. = FORWARD
HMWM = HIGH MOLECULAR WEIGHT METHACRYLATE
LT. = LEFT
MAX. = MAXIMUM
MIN. = MINIMUM
N.F. = NEAR FACE
N.P.C.P.P. = NON-PERFORATED CORRUGATED PLASTIC PIPE
O/O = OUT TO OUT
P.C.P.P. = PERFORATED CORRUGATED PLASTIC PIPE
P.E.J.F. = PREFORMED EXPANSION JOINT FILLER
PROP. = PROPOSED
R.A. = REAR ABUTMENT
RT. = RIGHT
SER. = SERIES
SPA. = SPACES
STA. = STATION
STD. = STANDARD
T/T = TOE TO TOE
T/S = TOP OF SLOPE
TYP. = TYPICAL
D.S. = DOWN STATION
U.S. = UP STATION

DESIGN AGENCY
PARSONS BRINCKERHOFF
2545 FARMERS DRIVE
SUITE 350
COLUMBUS, OHIO 43235

DESIGNED	DRAWN	REVIEWED	DATE
PJL	LEL	EBS	05/24/12
CHECKED	REVISED	STRUCTURE FILE NUMBER	
SAP		LEFT: 0202185 RIGHT: 0202216	

GENERAL NOTES
BRIDGE NO. ALL-75-0813 L&R
I-75 OVER CHICAGO-FT. WAYNE & EASTERN RAILWAY

ALL-75-5.53
PID No. 76691

\\D01FS101\L_Drive\Pdt\7669\Final Cadd Files\Projects\ALL\7669\structures\ALL075_0813C\sheets\075_0813CGN002.dgn 14-JAN-2013 1:41PM jclark1

02/IMS/BR/	05/ENH/OT/	ITEM	EXTENSION	TOTAL	UNIT	ESTIMATED QUANTITIES DESCRIPTION	ALL-75-0813L ABUT.	 PIER	 SUPER.	 GEN.	SEE SHEET
1		202	11003	1	LUMP	STRUCTURE REMOVED, OVER 20 FOOT SPAN, AS PER PLAN				1	4/37
97		202	22900	97	SQ YD	APPROACH SLAB REMOVED				97	
1		503	11100	1	LUMP	COFFERDAMS AND EXCAVATION BRACING				1	
1		503	21301	1	LUMP	UNCLASSIFIED EXCAVATION, AS PER PLAN	1				4/37
1		505	11100	1	LUMP	PILE DRIVING EQUIPMENT MOBILIZATION	1				
990		507	00100	990	FT	STEEL PILES HP10X42, FURNISHED	990				
880		507	00150	880	FT	STEEL PILES HP10X42, DRIVEN	880				
22		507	93300	22	EACH	STEEL POINTS OR SHOES	22				
214,876		509	10000	214,876	POUND	EPOXY COATED REINFORCING STEEL	10,871	98,291	105,714		
	7,191	511	71200	7,191	SQ FT	CONCRETE, MISC.: FORMING OF ROUGH STONE FINISH USING FORMLINERS	574	5,860	615	142	3/37
1,208		512	10051	1,208	SQ YD	SEALING OF CONCRETE SURFACES (NON-EPOXY), AS PER PLAN	84	696	340	88	3/37
108		512	10101	108	SQ YD	SEALING OF CONCRETE SURFACES (EPOXY-URETHANE), AS PER PLAN	7		97	4	3/37
97		512	10300	97	SQ YD	SEALING CONCRETE BRIDGE DECKS WITH HMWM RESIN			97		
9		512	33000	9	SQ YD	TYPE 2 WATERPROOFING	9				
345,729		513	10240	345,729	POUND	STRUCTURAL STEEL MEMBERS, LEVEL 2			345,729		
4,824		513	20000	4,824	EACH	WELDED STUD SHEAR CONNECTORS			4,824		
93		516	13200	93	SQ FT	1/2" PREFORMED EXPANSION JOINT FILLER	93				
135		516	13600	135	SQ FT	1" PREFORMED EXPANSION JOINT FILLER	121		14		
59		516	13900	59	SQ FT	2" PREFORMED EXPANSION JOINT FILLER	59				
97		516	14014	97	FT	INTEGRAL ABUTMENT EXPANSION JOINT SEAL	97				
12		516	44101	12	EACH	ELASTOMERIC BEARING WITH INTERNAL LAMINATES AND LOAD PLATE (NEOPRENE), AS PER PLAN: 12"X16"X 2 3/4" WITH 13"X17"X1 1/2" LOAD PLATES			12		21/37
71		518	21200	71	CU YD	POROUS BACKFILL WITH FILTER FABRIC	71				
153		518	40000	153	FT	6" PERFORATED CORRUGATED PLASTIC PIPE	153				
73		518	40011	73	FT	6" NON-PERFORATED CORRUGATED PLASTIC PIPE, INCLUDING SPECIALS, AS PER PLAN	73				4/37
65		524	94902	65	FT	DRILLED SHAFTS, 48" DIAMETER, ABOVE BEDROCK		65			
60		524	94904	60	FT	DRILLED SHAFTS, 48" DIAMETER, INTO BEDROCK		60			
363		601	20000	363	SQ YD	CRUSHED AGGREGATE SLOPE PROTECTION				363	
574		625	25400	574	FT	CONDUIT, 2", 725.04	434			140	
4		625	29920	4	EACH	STRUCTURE JUNCTION BOX				4	
4		625	30700	4	EACH	PULL BOX, 725.08, 18"				4	
334		898	10200	334	CU YD	QC/QA CONCRETE, CLASS QSC2, SUPERSTRUCTURE (DECK)			334		
262		898	10705	262	SQ YD	QC/QA CONCRETE, CLASS QSC2, SUPERSTRUCTURE (APPROACH SLAB), (T=15"), AS PER PLAN				262	4/37
56	4	898	11001	60	CU YD	QC/QA CONCRETE, CLASS QSC2, SUPERSTRUCTURE (PARAPET), AS PER PLAN			60		4/37
302	36	898	20101	338	CU YD	QC/QA CONCRETE, CLASS QSC1, SUBSTRUCTURE (PIER ABOVE FOOTING), AS PER PLAN		338			4/37
123	4	898	20161	127	CU YD	QC/QA CONCRETE, CLASS QSC1, SUBSTRUCTURE (ABUTMENT INCLUDING FOOTING), AS PER PLAN	127				4/37
52		898	20300	52	CU YD	QC/QA CONCRETE, CLASS QSC1, SUBSTRUCTURE (FOOTING)		52			

CALC. BY: SAP DATE: 4/5/2012
CHECK BY: EBS DATE: 5/21/2012

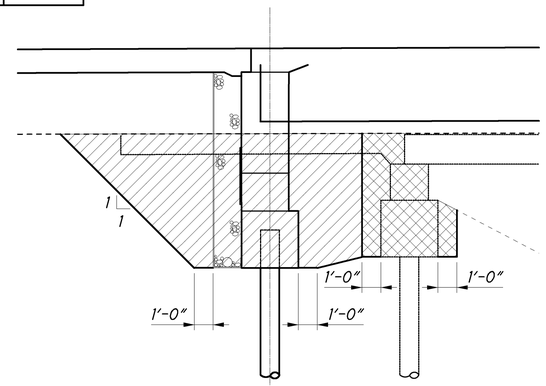

UNCLASSIFIED EXCAVATION AT ABUTMENT

- LIMITS OF UNCLASSIFIED EXCAVATION, AS PER PLAN
- INCLUDED WITH ITEM 202 FOR PAYMENT

DESIGN AGENCY
PARSONS BRINCKERHOFF
2545 FARMERS DRIVE
SUITE 350
COLUMBUS, OHIO 43235

DESIGNED PJL | DRAWN LEL | CHECKED SAP | REVISED

REVIEWED EBS | DATE 05/24/12

STRUCTURE FILE NUMBER
LEFT: 0202185
RIGHT: 0202216

ESTIMATED QUANTITIES
BRIDGE NO. ALL-75-0813 L&R
I-75 OVER CHICAGO-FT. WAYNE & EASTERN RAILWAY

ALL-75-5.53
PID No. 76691

J:\Projects\ALL\76691\structures\ALL075_0813C\sheets\075_0813CEQ001.dgn 17-JAN-2013 12:07PM jint

02/IMS/BR/	05/ENH/OT/	ITEM	EXTENSION	TOTAL	UNIT	ESTIMATED QUANTITIES DESCRIPTION	ALL-75-0813R ABUT.	 PIER	 SUPER.	 GEN.	SEE SHEET
1		202	11003	1	LUMP	STRUCTURE REMOVED, OVER 20 FOOT SPAN, AS PER PLAN				1	4/37
97		202	22900	97	SQ YD	APPROACH SLAB REMOVED				97	
1		503	11100	1	LUMP	COFFERDAMS AND EXCAVATION BRACING				1	
1		503	21301	1	LUMP	UNCLASSIFIED EXCAVATION, AS PER PLAN	1				4/37
1		505	11100	1	LUMP	PILE DRIVING EQUIPMENT MOBILIZATION	1				
990		507	00100	990	FT	STEEL PILES HP10X42, FURNISHED	990				
880		507	00150	880	FT	STEEL PILES HP10X42, DRIVEN	880				
22		507	93301	22	EACH	STEEL POINTS OR SHOES, AS PER PLAN	22				
214,875		509	10000	214,875	POUND	EPOXY COATED REINFORCING STEEL	10,870	98,291	105,714		
	7,191	511	71200	7,191	SQ FT	CONCRETE, MISC.: FORMING OF ASHLAR STONE FINISH USING FORMLINERS	574	5,860	615	142	3/37
1,208		512	10050	1,208	SQ YD	SEALING OF CONCRETE SURFACES (NON-EPOXY)	84	696	340	88	3/37
108		512	10101	108	SQ YD	SEALING OF CONCRETE SURFACES (EPOXY-URETHANE), AS PER PLAN	7		97	4	3/37
97		512	10300	97	SQ YD	SEALING CONCRETE BRIDGE DECKS WITH HMWM RESIN			97		
9		512	33000	9	SQ YD	TYPE 2 WATERPROOFING	9				
345,729		513	10240	345,729	POUND	STRUCTURAL STEEL MEMBERS, LEVEL 2			345,729		
4,824		513	20000	4,824	EACH	WELDED STUD SHEAR CONNECTORS			4,824		
93		516	13200	93	SQ FT	1/2" PREFORMED EXPANSION JOINT FILLER	93				
135		516	13600	135	SQ FT	1" PREFORMED EXPANSION JOINT FILLER	121		14		
97		516	14014	97	FT	INTEGRAL ABUTMENT EXPANSION JOINT SEAL	97				
12		516	44101	12	EACH	ELASTOMERIC BEARING WITH INTERNAL LAMINATES AND LOAD PLATE (NEOPRENE), AS PER PLAN: 16"X12"X 2 3/4" WITH 17"X13"X1 1/2" LOAD PLATES			12		21/37
71		518	21200	71	CU YD	POROUS BACKFILL WITH FILTER FABRIC	71				
153		518	40000	153	FT	6" PERFORATED CORRUGATED PLASTIC PIPE	153				
62		518	40011	62	FT	6" NON-PERFORATED CORRUGATED PLASTIC PIPE, INCLUDING SPECIALS, AS PER PLAN	62				4/37
65		524	94902	65	FT	DRILLED SHAFTS, 48" DIAMETER, ABOVE BEDROCK		65			
60		524	94904	60	FT	DRILLED SHAFTS, 48" DIAMETER, INTO BEDROCK		60			
363		601	20000	363	SQ YD	CRUSHED AGGREGATE SLOPE PROTECTION				363	
574		625	25400	574	FT	CONDUIT, 2", 725.04	434			140	
4		625	29920	4	EACH	STRUCTURE JUNCTION BOX				4	
4		625	30700	4	EACH	PULL BOX, 725.08, 18"				4	
334		898	10200	334	CU YD	QC/QA CONCRETE, CLASS QSC2, SUPERSTRUCTURE (DECK)			334		
262		898	10705	262	SQ YD	QC/QA CONCRETE, CLASS QSC2, SUPERSTRUCTURE (APPROACH SLAB), (T=15"), AS PER PLAN				262	4/37
56	4	898	11001	60	CU YD	QC/QA CONCRETE, CLASS QSC2, SUPERSTRUCTURE (PARAPET), AS PER PLAN			60		4/37
302	36	898	20101	338	CU YD	QC/QA CONCRETE, CLASS QSC1, SUBSTRUCTURE (PIER ABOVE FOOTING), AS PER PLAN		338			4/37
123	4	898	20161	127	CU YD	QC/QA CONCRETE, CLASS QSC1, SUBSTRUCTURE (ABUTMENT INCLUDING FOOTING), AS PER PLAN	127				4/37
52		898	20300	52	CU YD	QC/QA CONCRETE, CLASS QSC1, SUBSTRUCTURE (FOOTING)		52			

CALC. BY: SAP DATE: 4/5/2012
CHECK BY: EBS DATE: 5/21/2012

DESIGN AGENCY
PARSONS BRINCKERHOFF
2545 FARMERS DRIVE
SUITE 350
COLUMBUS, OHIO 43235

REVIEWED EBS DATE 05/24/12
STRUCTURE FILE NUMBER LEFT: 0202185 RIGHT: 0202216
DRAWN LEL REVISED
DESIGNED PJL CHECKED SAP

ESTIMATED QUANTITIES
BRIDGE NO. ALL-75-0813 L&R
I-75 OVER CHICAGO-FT. WAYNE & EASTERN RAILWAY

ALL-75-5.53
PID No. 76691

J:\Projects\ALL\76691\structures\ALL075_0813C\sheets\075_0813CEQ002.dgn 17-JAN-2013 12:07PM jint

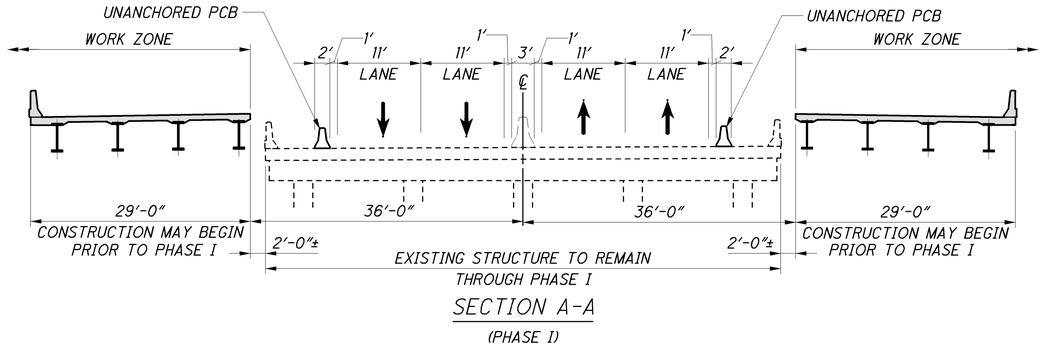

SECTION A-A

(PHASE I)

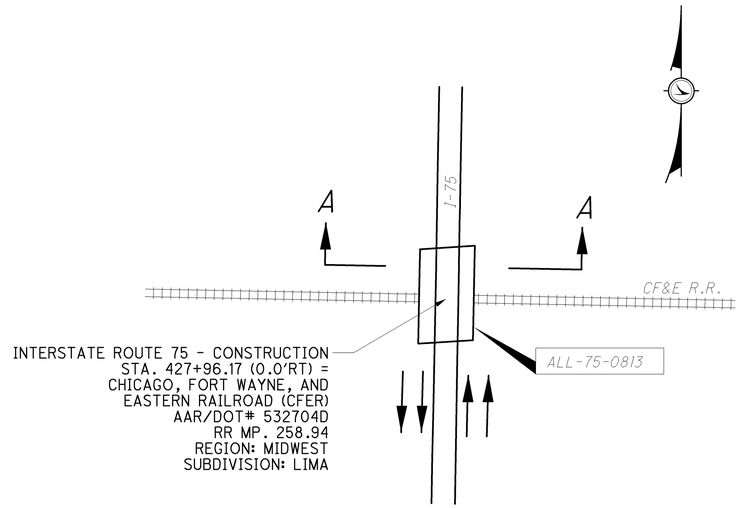

INTERSTATE ROUTE 75 - CONSTRUCTION
STA. 427+96.17 (0.0'RT) =
CHICAGO, FORT WAYNE, AND
EASTERN RAILROAD (CFER)
AAR/DOT# 532704D
RR MP. 258.94
REGION: MIDWEST
SUBDIVISION: LIMA

LEGEND:

- REMOVAL
- PROPOSED
- PORTABLE CONCRETE BARRIER

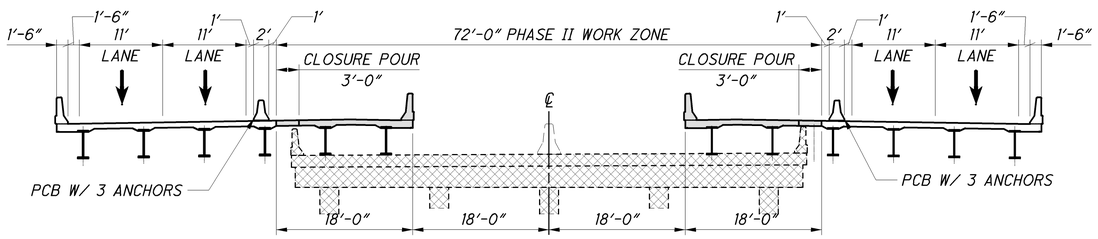

SECTION A-A

(PHASE II)

SEQUENCE OF CONSTRUCTION

PHASE I

1. INSTALL PORTABLE CONCRETE BARRIER ON THE EXISTING STRUCTURE AND SHIFT LANES.
2. CONSTRUCT THE PROPOSED WESTERN PORTION OF THE SOUTHBOUND STRUCTURE AND EASTERN PORTION OF THE NORTHBOUND STRUCTURE TO THE LIMITS SHOWN.

PHASE II

1. INSTALL PORTABLE CONCRETE BARRIER ON THE NEWLY CONSTRUCTED STRUCTURES AND SHIFT LANES.
2. REMOVE EXISTING STRUCTURE.
3. CONSTRUCT THE REMAINDER OF THE SOUTHBOUND AND NORTHBOUND STRUCTURE TO THE LIMITS SHOWN NOT INCLUDING THE CLOSURE POUR.
4. COMPLETE THE SOUTHBOUND AND NORTHBOUND CLOSURE POURS.

DESIGN AGENCY
PARSONS BRINCKERHOFF
2545 FARMERS DRIVE
SUITE 350
COLUMBUS, OHIO 43235

DESIGNED	DRAWN	REVIEWED	DATE
PJL	LEL	EBS	05/24/12
CHECKED	REVISED	STRUCTURE NUMBER	
SAP		LEFT: 0202185 RIGHT: 0202215	

MAINTENANCE OF TRAFFIC

BRIDGE NO. ALL-75-0813 L&R

I-75 OVER CHICAGO-FT. WAYNE & EASTERN RAILWAY

ALL-75-5.53

PID No. 76691

J:\Projects\ALL\76691\structures\ALL075_0813C\sheets\075_0813CPC001.dgn 11-SEP-2012 8:54PM reddenj

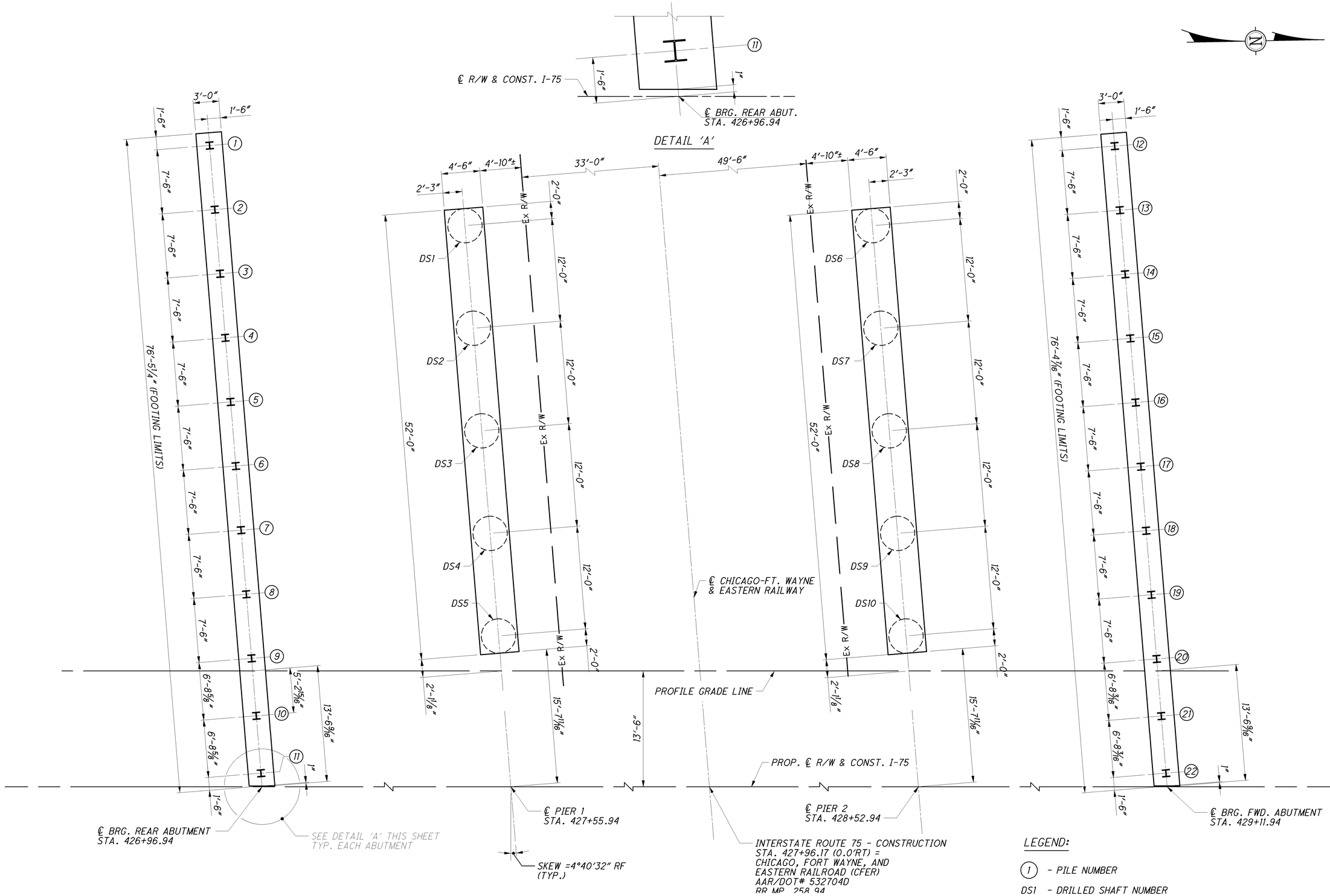

FOUNDATION LAYOUT PLAN

J:\Projects\ALL\76691\structures\ALL075_0813C\sheets\075_0813CFP001.dgn 11-SEP-2012 8:54PM reddenj

DESIGN AGENCY
PARSONS BRINCKERHOFF
2545 FARMERS DRIVE
SUITE 350
COLUMBUS, OHIO 43235

DESIGNED	DRAWN	REVIEWED	DATE
PJL	BKJ	EBS	05/24/12
CHECKED	REVISED	STRUCTURE FILE NUMBER	
SAP		LEFT: 0202185 RIGHT: 0202216	

FOUNDATION PLAN
BRIDGE NO. ALL-75-0813 L
I-75 OVER CHICAGO-FT. WAYNE & EASTERN RAILWAY

ALL-75-5.53
PID No. 76691

8 / 37

981
1224

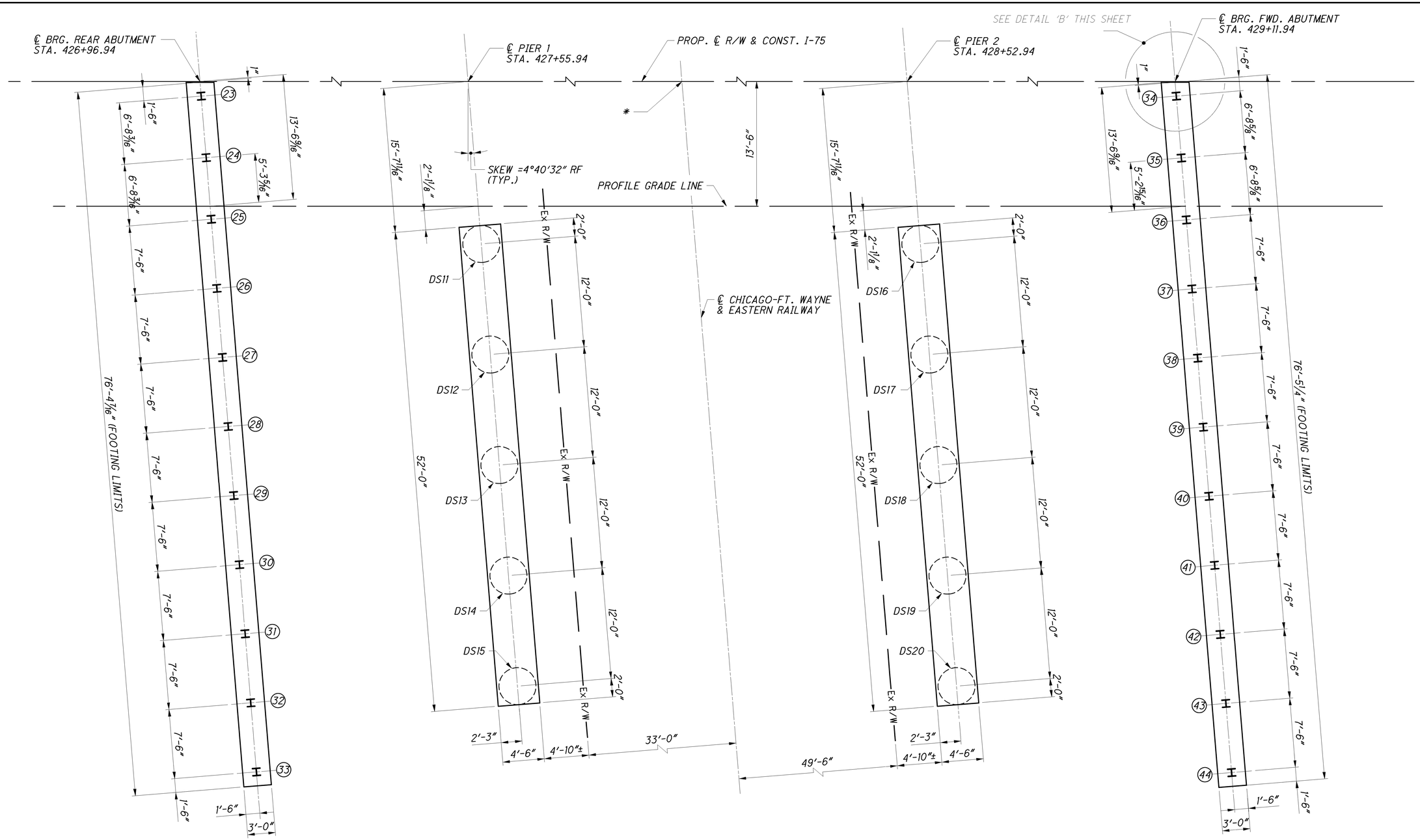

J:\Projects\ALL\76691\structures\ALL075_0813C\sheets\075_0813CFP002.dgn 11-SEP-2012 8:54PM reddenj

DESIGN AGENCY
PARSONS BRINCKERHOFF
2545 FARMERS DRIVE
SUITE 350
COLUMBUS, OHIO 43235

DESIGNED	DRAWN	REVIEWED	DATE
PJL	BKJ	EBS	05/24/12
CHECKED	REVISED	STRUCTURE FILE NUMBER	
SAP		LEFT: 0202185 RIGHT: 0202216	

FOUNDATION PLAN

BRIDGE NO. ALL-75-0813 R
I-75 OVER CHICAGO-FT. WAYNE & EASTERN RAILWAY

ALL-75-5.53
PID No. 76691

9 / 37

982
1224

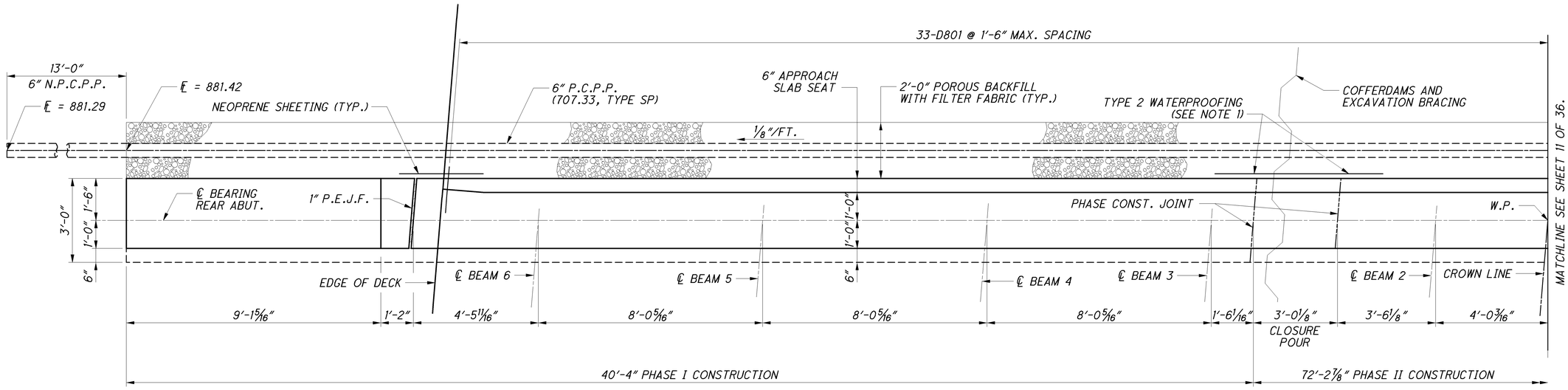

PLAN

(PILES NOT SHOWN FOR CLARITY)

NOTES:

1. TYPE 2 WATERPROOFING SHALL BE 3'-0" WIDE, CENTERED ON JOINTS, AND PLACED FROM THE TOP OF FOOTING TO THE APPROACH SLAB SEAT.
2. FOR SECTIONS A-A & B-B, SEE SHEET 16/37.
3. FOR FOUNDATION LAYOUT PLAN, SEE SHEET 8&9/37.
4. FOR AESTHETIC DETAILS, SEE SHEET 37/37.
5. FOR DRAINAGE SEE MSE WALL 9 DRAINAGE SCHEMATIC SHEET 746/1224.

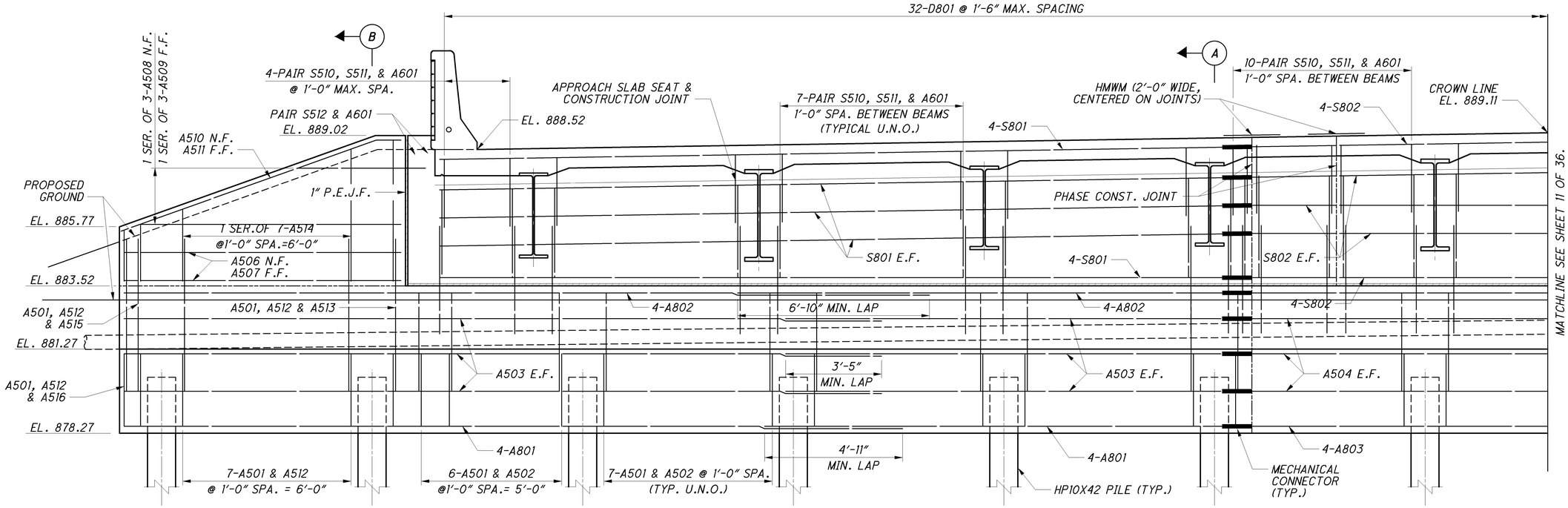

ELEVATION

DESIGN AGENCY
PARSONS BRINCKERHOFF
2545 FARMERS DRIVE
SUITE 350
COLUMBUS, OHIO 43235

DESIGNED PJL
DRAWN LEL
REVIEWED EBS
DATE 05/24/12
CHECKED SAP
REVISED
STRUCTURE FILE NUMBER
LEFT: 0202185
RIGHT: 0202216

REAR ABUTMENT DETAILS

BRIDGE NO. ALL-75-0813 L&R

I-75 OVER CHICAGO-FT. WAYNE & EASTERN RAILWAY

ALL-75-5.53

PID No. 76691

10/37

983/1224

J:\Projects\ALL\76691\structures\ALL075_0813C\sheets\075_0813CAR001.dgn 11-SEP-2012 8:54PM redden

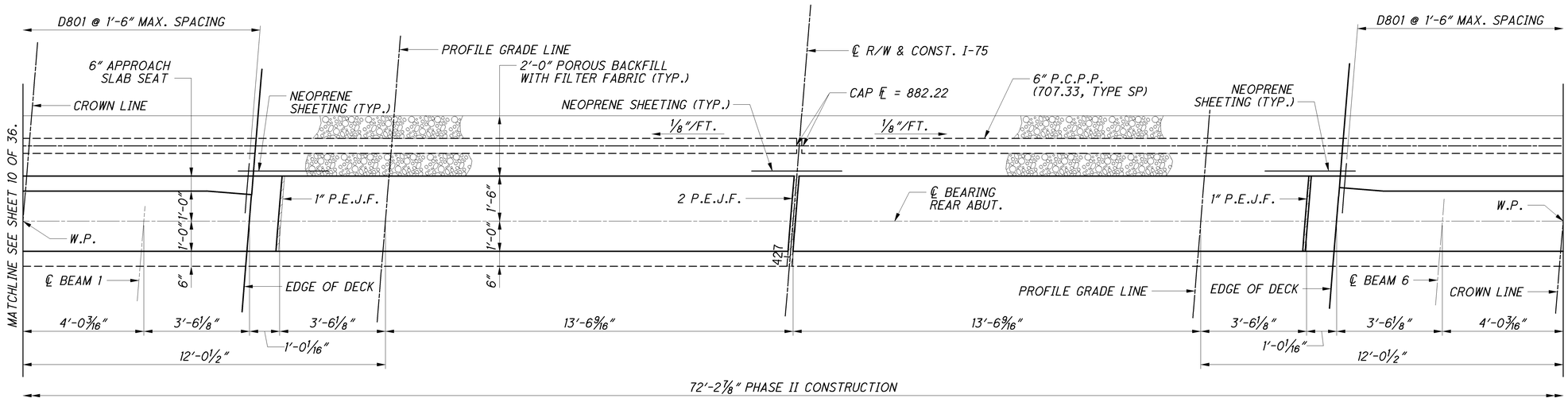

NOTES:

1. FOR SECTIONS A-A & B-B, SEE SHEET 16/37 .
2. FOR FOUNDATION LAYOUT PLAN, SEE SHEET 8&9/37 .
3. FOR AESTHETIC DETAILS, SEE SHEET 37/37.
4. FOR DRAINAGE SEE MSE WALL 9 DRAINAGE SCHEMATIC SHEET 746/1224.

PLAN

(PILES NOT SHOWN FOR CLARITY)

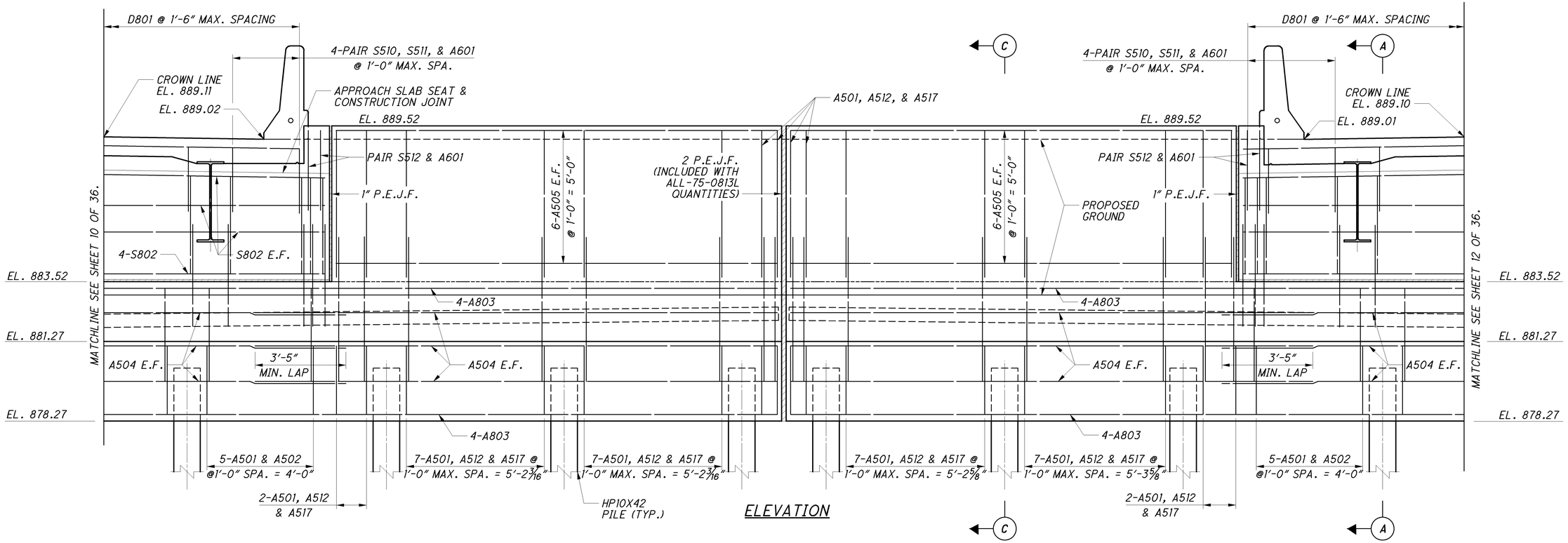

ELEVATION

reddenj
J:\Projects\ALL\76691\structures\ALL075_0813C\sheets\075_0813CAR002.dgn 11-SEP-2012 8:54PM

DESIGN AGENCY
PARSONS BRINCKERHOFF
2545 FARMERS DRIVE
SUITE 350
COLUMBUS, OHIO 43235

DESIGNED PJL | DRAWN LEL | REVIEWED EBS | DATE 05/24/12
CHECKED SAP | REVISED | STRUCTURE FILE NUMBER LEFT: 0202185 RIGHT: 0202216

REAR ABUTMENT DETAILS
BRIDGE NO. ALL-75-0813 L&R
I-75 OVER CHICAGO-FT. WAYNE & EASTERN RAILWAY

ALL-75-5.53
PID No. 76691

11 / 37

984/1224

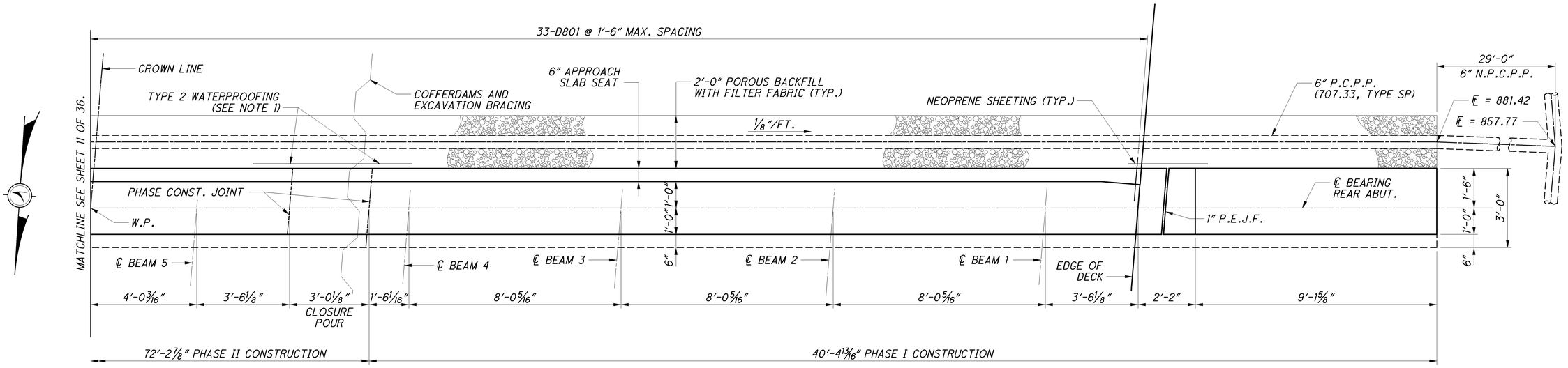

PLAN

(PILES NOT SHOWN FOR CLARITY)

NOTES:

1. TYPE 2 WATERPROOFING SHALL BE 3'-0" WIDE, CENTERED ON JOINTS, AND PLACED FROM THE TOP OF FOOTING TO THE APPROACH SLAB SEAT.
2. FOR SECTIONS A-A & B-B, SEE SHEET 16/37 .
3. FOR FOUNDATION LAYOUT PLAN, SEE SHEET 8&9/37 .
4. FOR AESTHETIC DETAILS, SEE SHEET 37/37.
5. FOR DRAINAGE SEE MSE WALL 9 DRAINAGE SCHEMATIC SHEET 746/1224.

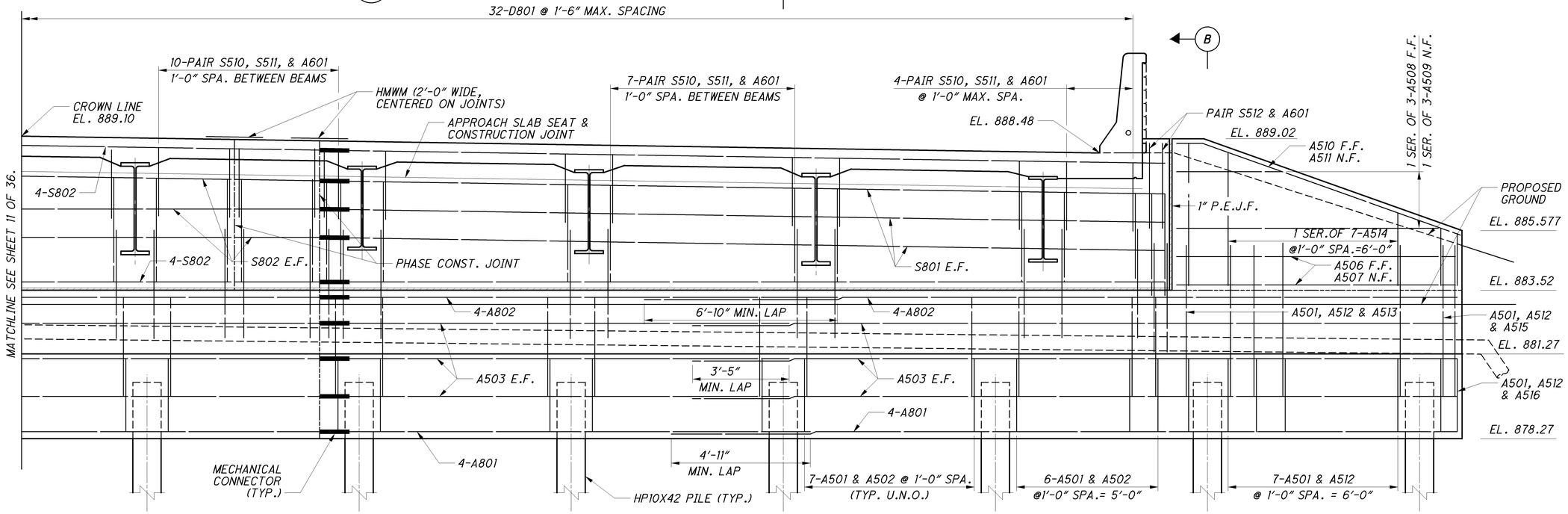

ELEVATION

DESIGN AGENCY
PARSONS BRINCKERHOFF
2545 FARMERS DRIVE
SUITE 350
COLUMBUS, OHIO 43235

DESIGNED	DRAWN	REVIEWED	DATE
PJL	LEL	EBS	05/24/12
CHECKED	REVISED	STRUCTURE FILE NUMBER	
SAP		LEFT: 0202185 RIGHT: 0202216	

REAR ABUTMENT DETAILS

BRIDGE NO. ALL-75-0813 L&R
I-75 OVER CHICAGO-FT. WAYNE & EASTERN RAILWAY

ALL-75-5.53
PID No. 76691

12/37

985/1224

J:\Projects\ALL\76691\structures\ALL075_0813C\sheets\075_0813CAR003.dgn 11-SEP-2012 8:54PM reddenj

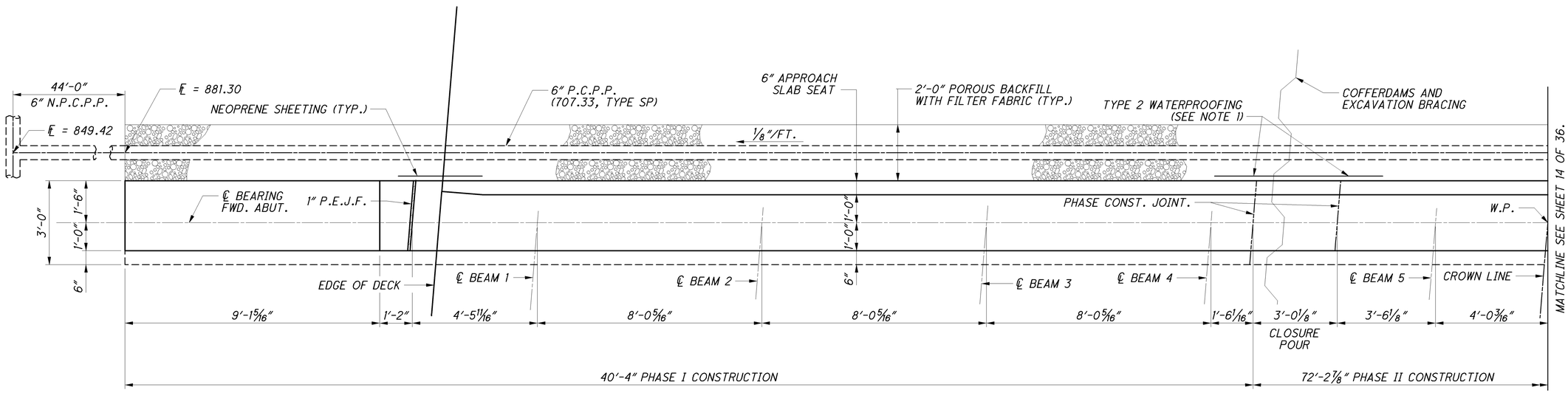

PLAN

(PILES NOT SHOWN FOR CLARITY)

NOTES:

1. TYPE 2 WATERPROOFING SHALL BE 3'-0" WIDE, CENTERED ON JOINTS, AND PLACED FROM THE TOP OF FOOTING TO THE APPROACH SLAB SEAT.
2. FOR SECTIONS A-A & B-B, SEE SHEET 16/37 .
3. FOR FOUNDATION LAYOUT PLAN, SEE SHEET 8&9/37.
4. FOR AESTHETIC DETAILS, SEE SHEET 37/37.
5. FOR DRAINAGE SEE MSE WALLS 10 & 11 DRAINAGE SCHEMATIC SHEET 754/1224 .

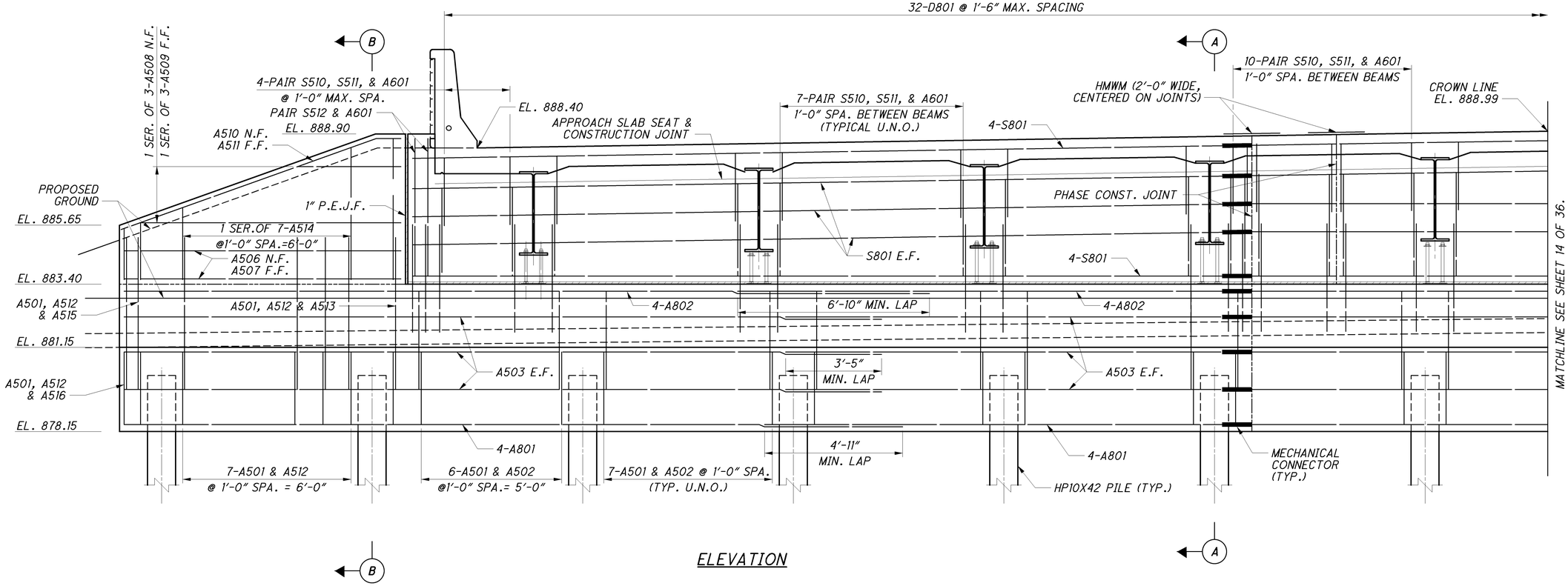

ELEVATION

DESIGN AGENCY
PARSONS BRINCKERHOFF
2545 FARMERS DRIVE
SUITE 350
COLUMBUS, OHIO 43235

DESIGNED	DRAWN	REVIEWED	DATE
PJL	LEL	EBS	05/24/12
CHECKED	REVISED	STRUCTURE FILE NUMBER	
SAP		LEFT: 0202185 RIGHT: 0202216	

FORWARD ABUTMENT DETAILS

BRIDGE NO. ALL-75-0813 L&R
I-75 OVER CHICAGO-FT. WAYNE & EASTERN RAILWAY

ALL-75-5.53
PID No. 76691

13 / 37

986/1224

J:\Projects\ALL\76691\structures\ALL075_0813C\sheets\075_0813CAF001.dgn 11-SEP-2012 8:54PM reddenj

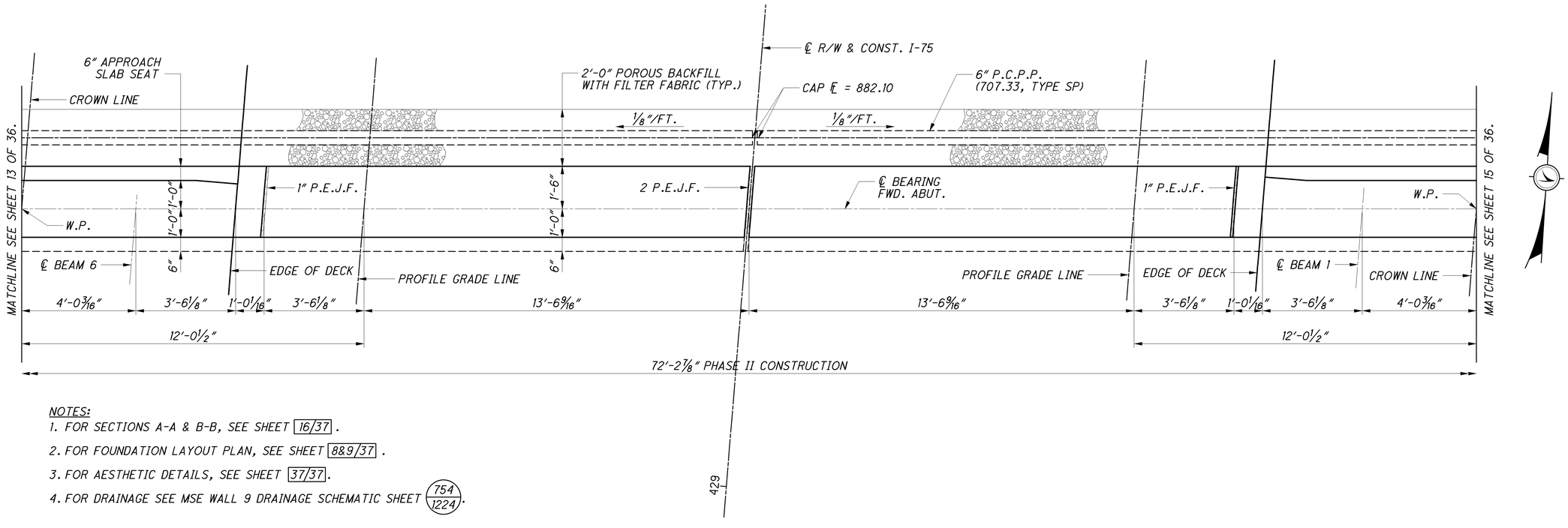

NOTES:

1. FOR SECTIONS A-A & B-B, SEE SHEET 16/37 .
2. FOR FOUNDATION LAYOUT PLAN, SEE SHEET 8&9/37 .
3. FOR AESTHETIC DETAILS, SEE SHEET 37/37.
4. FOR DRAINAGE SEE MSE WALL 9 DRAINAGE SCHEMATIC SHEET 754/1224.

PLAN

(PILES NOT SHOWN FOR CLARITY)

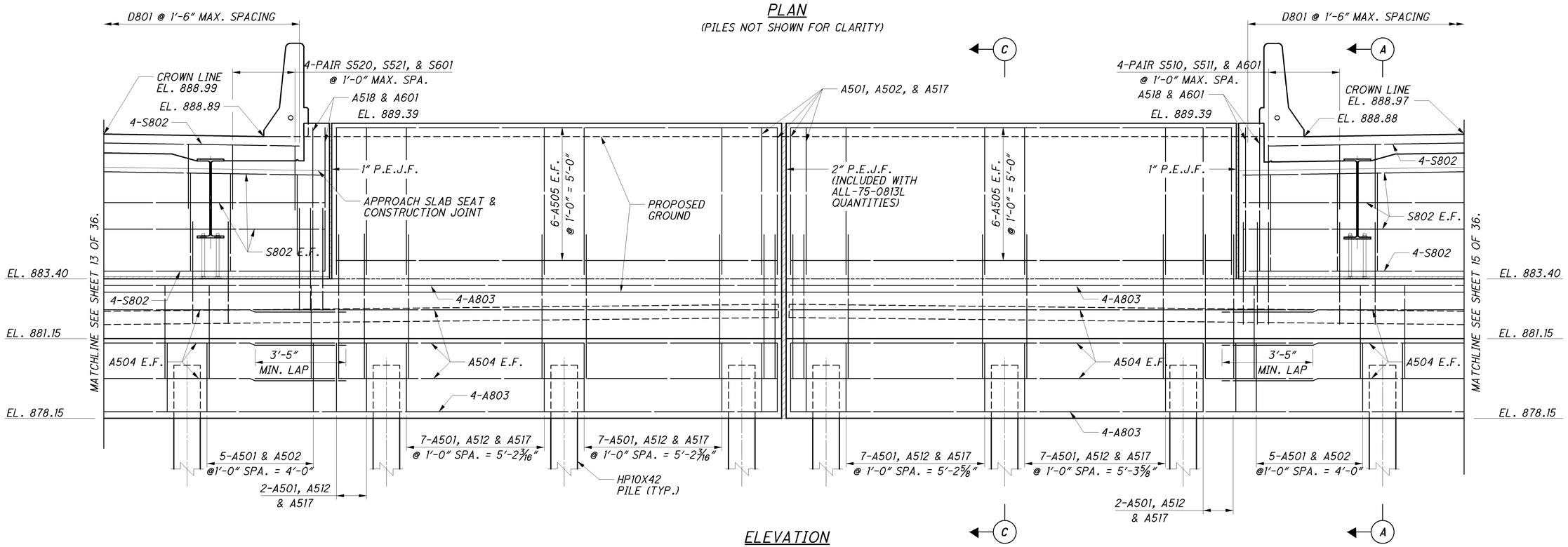

ELEVATION

J:\Projects\ALL\76691\structures\ALL075_0813C\sheets\075_0813CAF002.dgn 11-SEP-2012 8:55PM reddenj

DESIGN AGENCY
PARSONS BRINCKERHOFF
2545 FARMERS DRIVE
SUITE 350
COLUMBUS, OHIO 43235

DESIGNED	DRAWN	REVIEWED	DATE
PJL	LEL	EBS	05/24/12
CHECKED	REVISED	STRUCTURE FILE NUMBER	
SAP		LEFT: 0202185 RIGHT: 0202216	

FORWARD ABUTMENT DETAILS

BRIDGE NO. ALL-75-0813 L&R
I-75 OVER CHICAGO-FT. WAYNE & EASTERN RAILWAY

ALL-75-5.53
PID No. 76691

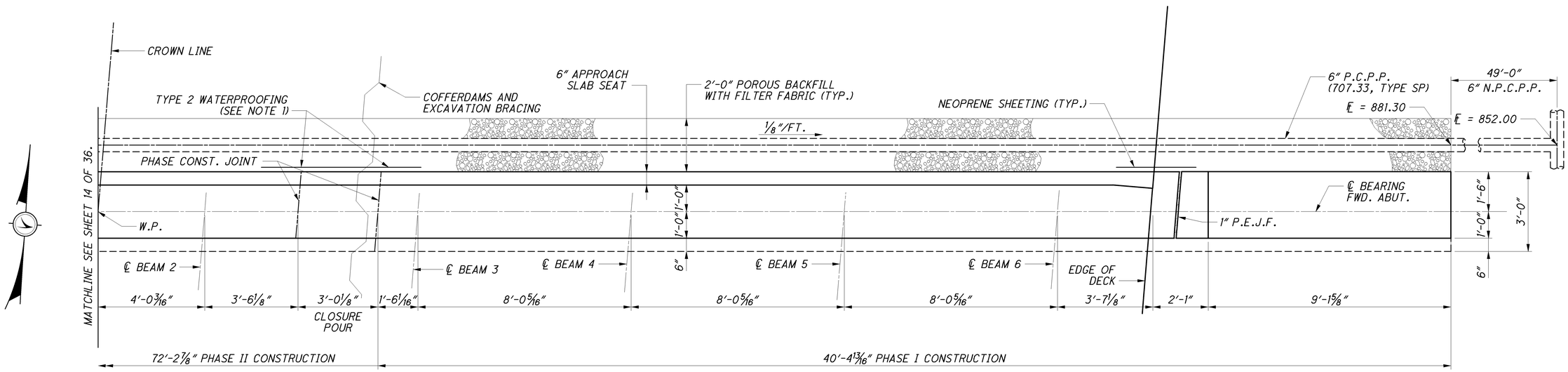

PLAN

(PILES NOT SHOWN FOR CLARITY)

NOTES:

1. TYPE 2 WATERPROOFING SHALL BE 3'-0" WIDE, CENTERED ON JOINTS, AND PLACED FROM THE TOP OF FOOTING TO THE APPROACH SLAB SEAT.
2. FOR SECTIONS A-A & B-B, SEE SHEET 16/37 .
3. FOR FOUNDATION LAYOUT PLAN, SEE SHEET 8&9/37 .
4. FOR AESTHETIC DETAILS, SEE SHEET 37/37 .
5. FOR DRAINAGE SEE MSE WALLS 10 & 11 DRAINAGE SCHEMATIC SHEET 754/1224 .

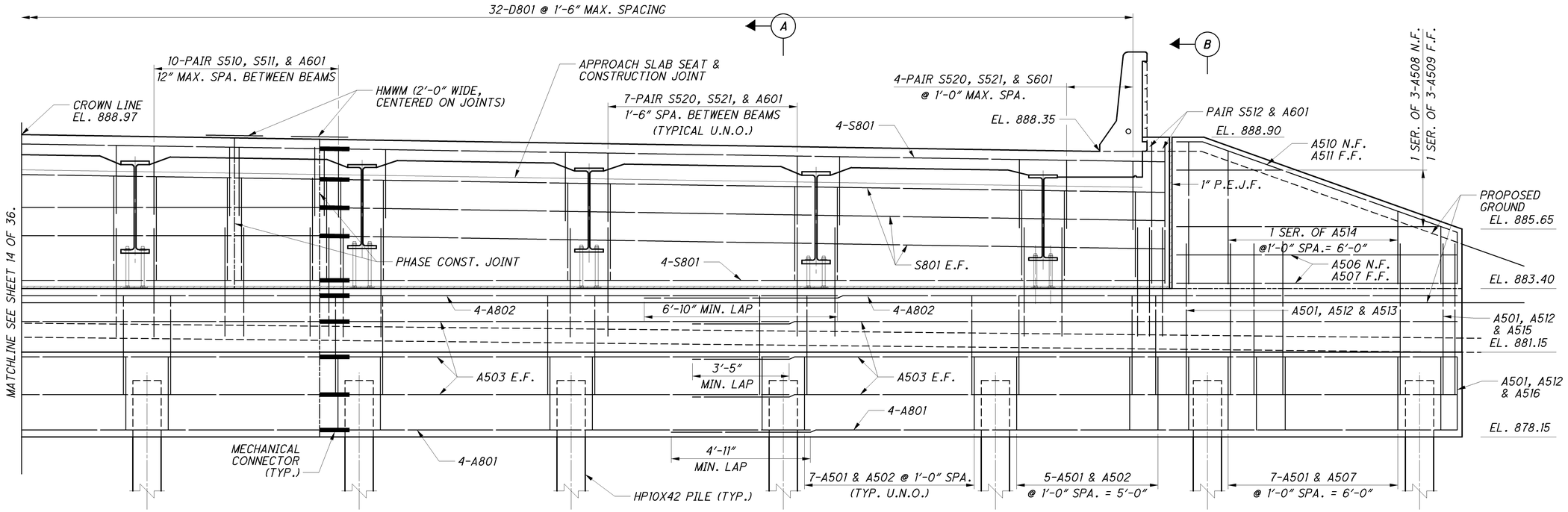

ELEVATION

DESIGN AGENCY
PARSONS BRINCKERHOFF
2545 FARMERS DRIVE
SUITE 350
COLUMBUS, OHIO 43235

DESIGNED	DRAWN	REVIEWED	DATE
PJL	LEL	EBS	05/24/12
CHECKED	REVISED	STRUCTURE FILE NUMBER	
SAP		LEFT: 0202185 RIGHT: 0202216	

FORWARD ABUTMENT DETAILS

BRIDGE NO. ALL-75-0813 L&R
I-75 OVER CHICAGO-FT. WAYNE & EASTERN RAILWAY

ALL-75-5.53
PID No. 76691

15 / 37

988/1224

J:\Projects\ALL\76691\structures\ALL075_0813C\sheets\075_0813CAF003.dgn 11-SEP-2012 8:55PM reddenj

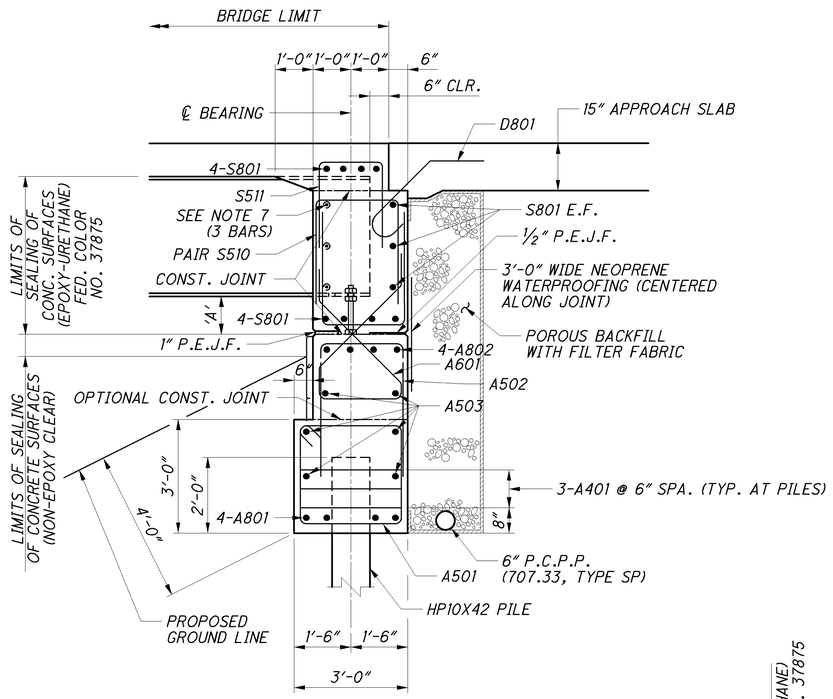

SECTION A-A

BEAM	REAR ABUTMENT DIMENSION 'A'		FORWARD ABUTMENT DIMENSION 'A'	
	0813L	0813R	0813L	0813R
1	1'-0"	1'-6 3/16"	1'-0 1/16"	1'-6 1/4"
2	1'-1 9/16"	1'-6 1/2"	1'-1 5/16"	1'-6 3/16"
3	1'-3 1/8"	1'-4 15/16"	1'-3 1/16""	1'-4 5/8"
4	1'-4 11/16"	1'-3 7/16"	1'-4 13/16""	1'-3 1/16"
5	1'-6 1/4"	1'-1 15/16"	1'-6 1/16""	1'-1 1/2"
6	1'-6 5/16"	1'-0 9/16"	1'-6 3/8"	1'-0"

NOTES:

1. ABUTMENT DIAPHRAGM CONCRETE, STEEL SUPERSTRUCTURE, PHASED CONSTRUCTION: PLACE THE CONCRETE IN THE ABUTMENT DIAPHRAGM ENCASING STRUCTURAL STEEL MEMBERS OF AN INDIVIDUAL PHASE SEPARATELY OR WITH THE DECK CONCRETE OF THAT PHASE. IF THE DIAPHRAGM CONCRETE IS PLACED SEPARATELY, ALLOW AT LEAST 48 HOURS OF SET TIME BEFORE PLACING DECK CONCRETE. LOCATE THE HORIZONTAL CONSTRUCTION JOINT BETWEEN THE DIAPHRAGM AND DECK CONCRETE AT THE APPROACH SLAB SEAT.
2. PROVIDE 2 - 1¼" DIAMETER BOLTS (6" - 7 UNC) BOLTS WITH 2 NUTS AND 2 - 3" X 3" X ¼" WASHERS PER BOLT WITH A 3" X 10½" X⅜" BASE PLATE.
3. NEOPRENE SHEETING, 3 FEET WIDE, SHALL EXTEND FROM APPROACH SLAB DOWN TO THE BOTTOM OF HORIZONTAL NEOPRENE SHEETING AT THE JOINT BETWEEN DIAPHRAGM AND WINGWALL.
4. FOR ADDITIONAL INTERGRAL ABUTMENT DETAILS AND NOTES SEE O.D.O.T. STD. DWG. ICD-1-82.
5. PROVIDE 2" DIAMETER HOLES IN BEAM WEB.
6. FOR AESTHETIC DETAILS, SEE SHEET 37/37 .

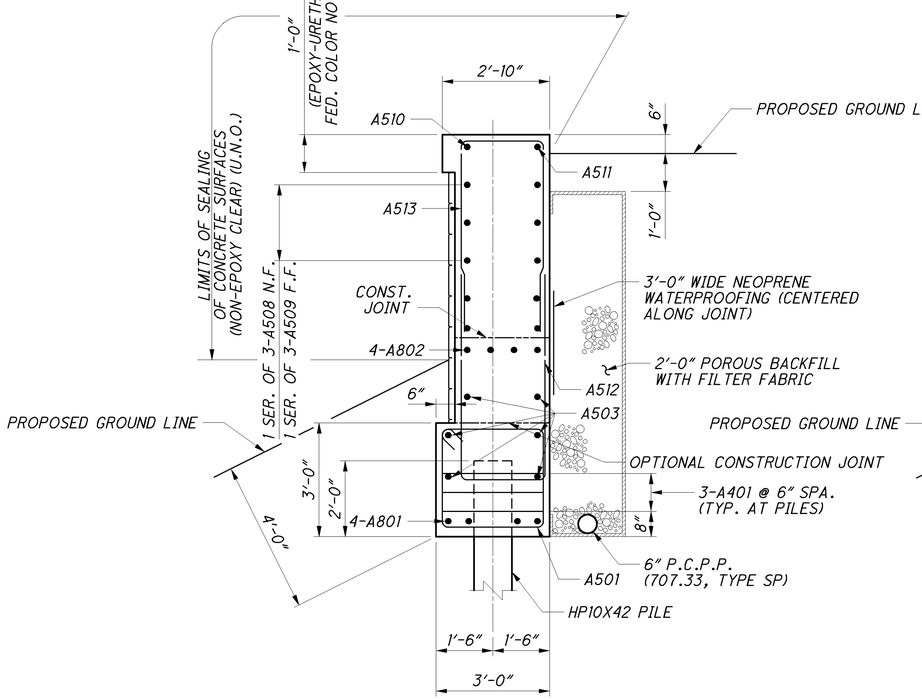

SECTION B-B

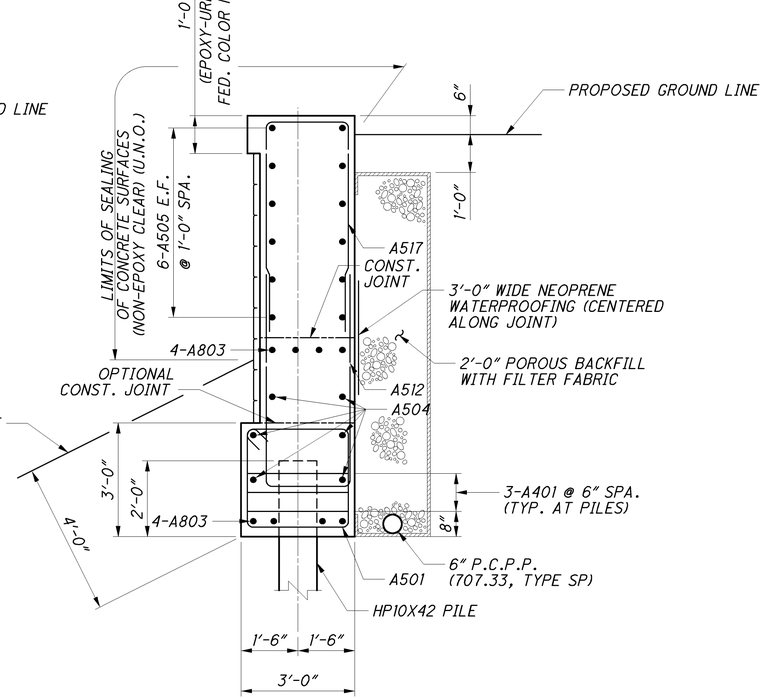

SECTION C-C

DESIGN AGENCY
PARSONS BRINCKERHOFF
2945 FARMERS DRIVE
SUITE 350
COLUMBUS, OHIO 43235

DESIGNED	DRAWN	REVIEWED	DATE
PJL	LEL	EBS	05/24/12
CHECKED	REVISED	STRUCTURE FILE NUMBER	
SAP		LEFT: 0202185 RIGHT: 0202216	

ABUTMENT DETAILS
BRIDGE NO. ALL-75-0813 L&R
I-75 OVER CHICAGO-FT. WAYNE & EASTERN RAILWAY

ALL-75-5.53
PID No. 76691

16 / 37

989
1224

J:\Projects\ALL\76691\structures\ALL075_0813C\sheets\075_0813CAF004.dgn 16-JAN-2013 5:06PM lint

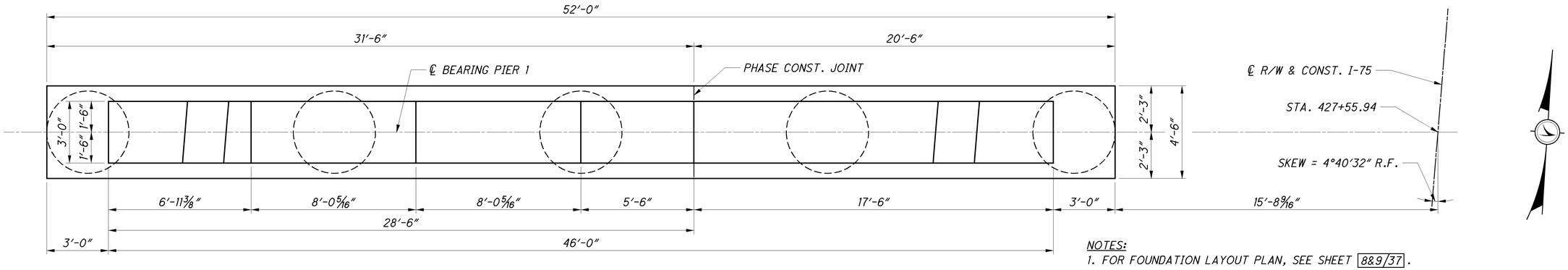

NOTES:

1. FOR FOUNDATION LAYOUT PLAN, SEE SHEET 8&9/37.
2. FOR AESTHETIC DETAILS, SEE SHEET 37/37.
3. THE PLACEMENT OF THE P401 BARS SHALL ALTERNATE SUCH THE 90° HOOKS SHALL BE STAGGERED.

PLAN

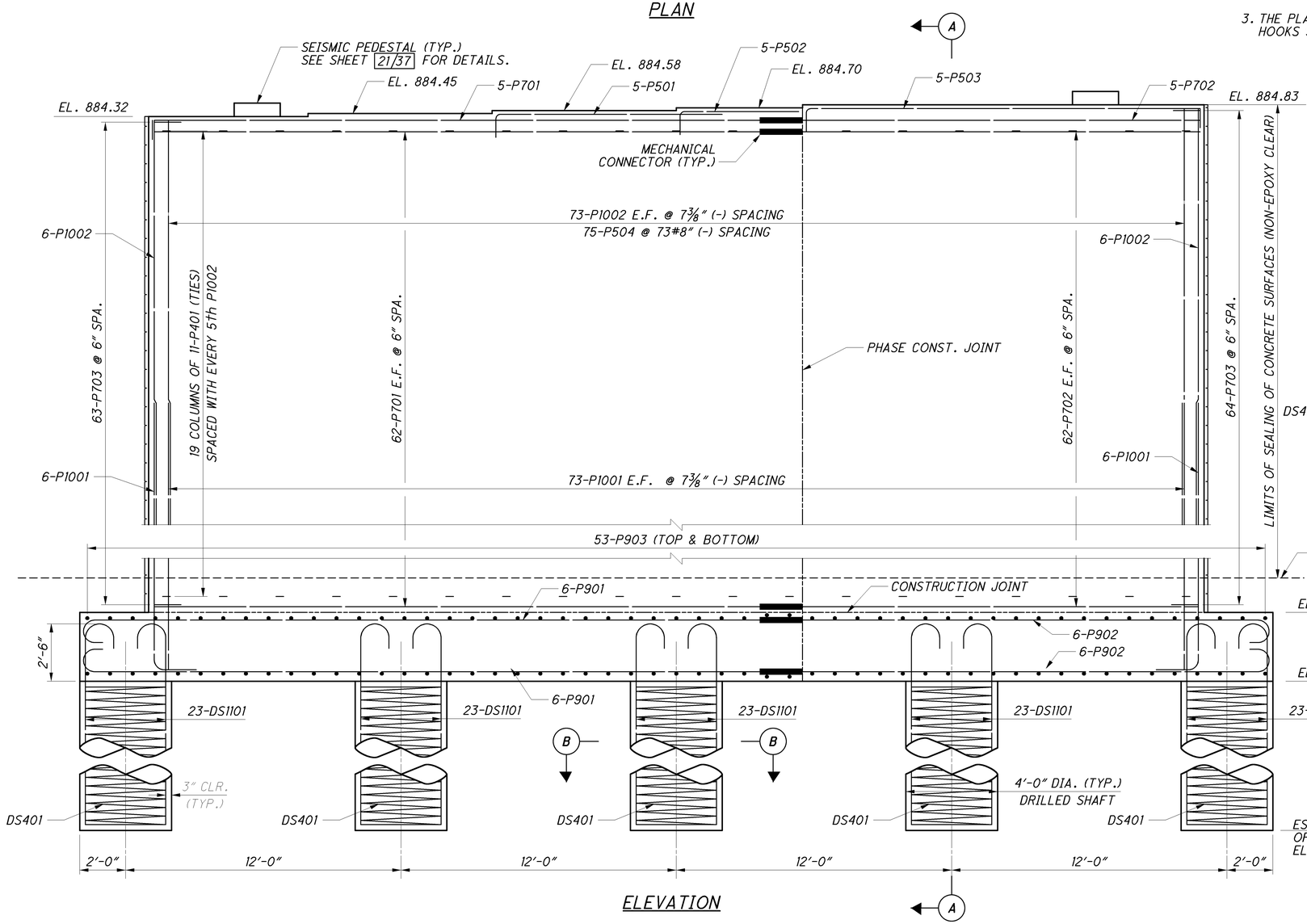

ELEVATION

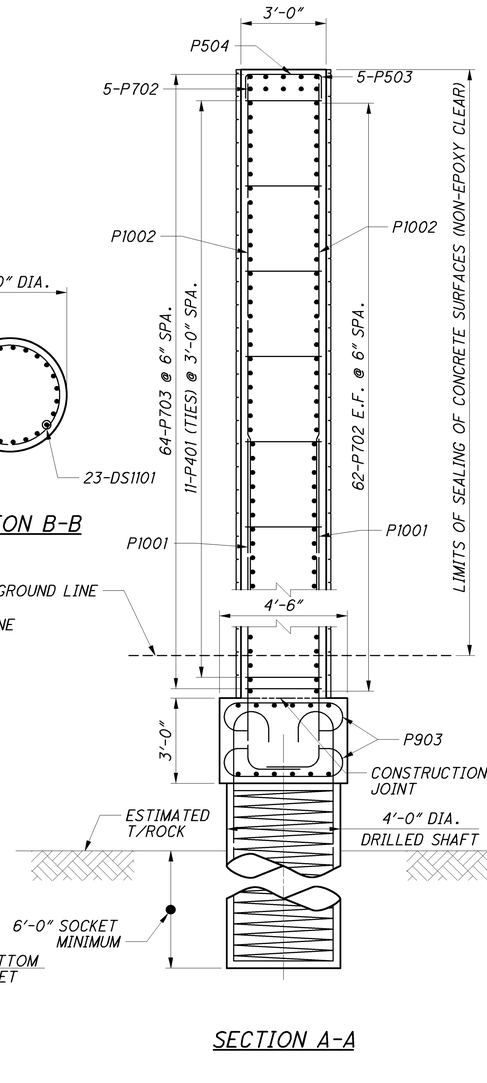

SECTION A-A

DESIGN AGENCY
PARSONS BRINCKERHOFF
2545 FARMERS DRIVE
SUITE 350
COLUMBUS, OHIO 43235

DESIGNED	DRAWN	REVIEWED	DATE
PJL	LEL	EBS	05/24/12
CHECKED	REVISED	STRUCTURE FILE NUMBER	
SAP		LEFT: 0202185 RIGHT: 0202216	

SOUTHBOUND PIER 1 DETAILS
BRIDGE NO. ALL-75-0813 L&R
I-75 OVER CHICAGO-FT. WAYNE & EASTERN RAILWAY

ALL-75-5.53
PID No. 76691

17 / 37

990
1224

J:\Projects\ALL\76691\structures\ALL075_0813C\sheets\075_0813CP1001.dgn 11-SEP-2012 8:55PM reddenj

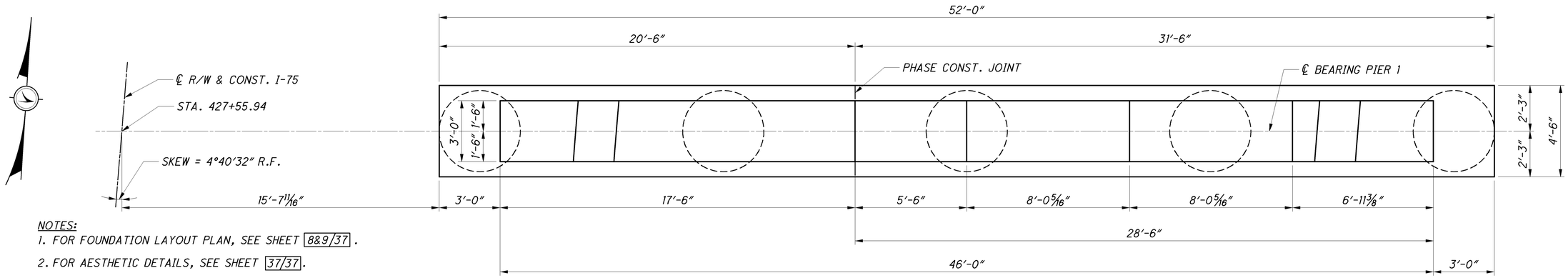

NOTES:

1. FOR FOUNDATION LAYOUT PLAN, SEE SHEET 8&9/37 .
2. FOR AESTHETIC DETAILS, SEE SHEET 37/37.
3. THE PLACEMENT OF THE P401 BARS SHALL ALTERNATE SUCH THE 90° HOOKS SHALL BE STAGGERED.

PLAN

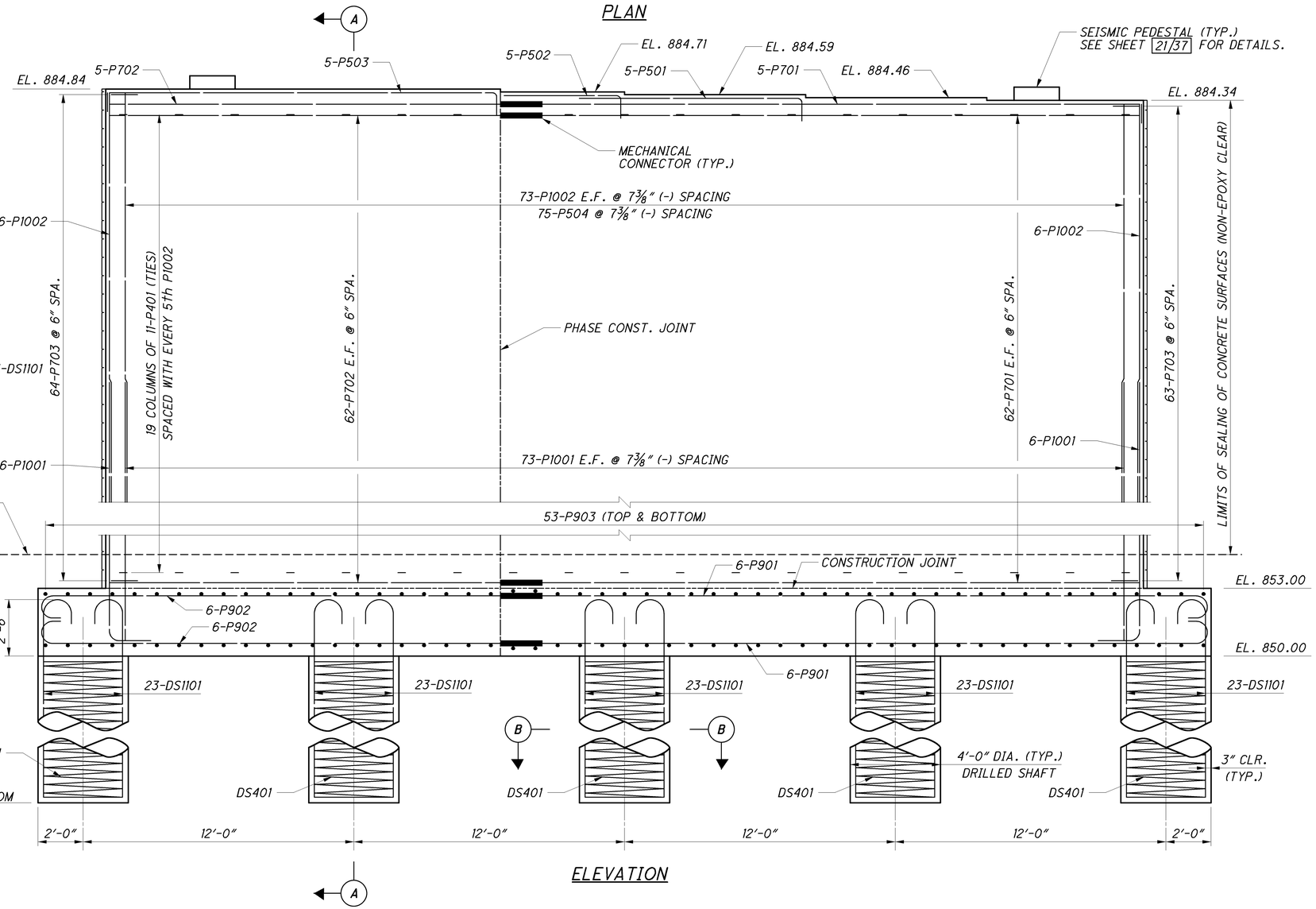

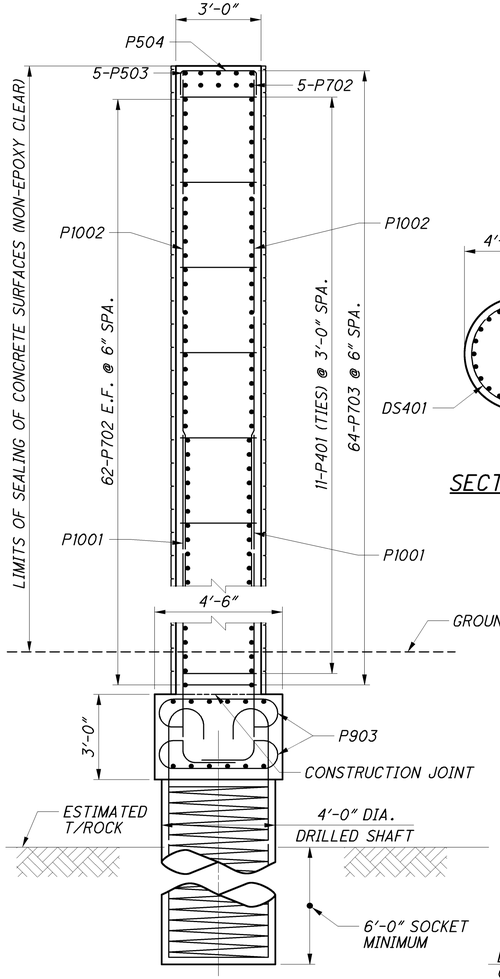

SECTION A-A

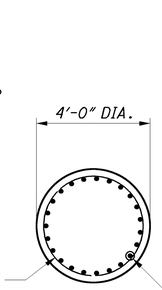

SECTION B-B

ELEVATION

DESIGN AGENCY
PARSONS BRINCKERHOFF
2545 FARMERS DRIVE
SUITE 350
COLUMBUS, OHIO 43235

DESIGNED PJL
DRAWN LEL
CHECKED SAP
REVIEWED EBS
DATE 05/24/12
STRUCTURE FILE NUMBER
LEFT: 0202185
RIGHT: 0202216
REVISED

NORTHBOUND PIER 1 DETAILS
BRIDGE NO. ALL-75-0813 L&R
I-75 OVER CHICAGO-FT. WAYNE & EASTERN RAILWAY

ALL-75-5.53
PID No. 76691

J:\Projects\ALL\76691\structures\ALL075_0813C\sheets\075_0813CP1002.dgn 11-SEP-2012 8:55PM reddenj

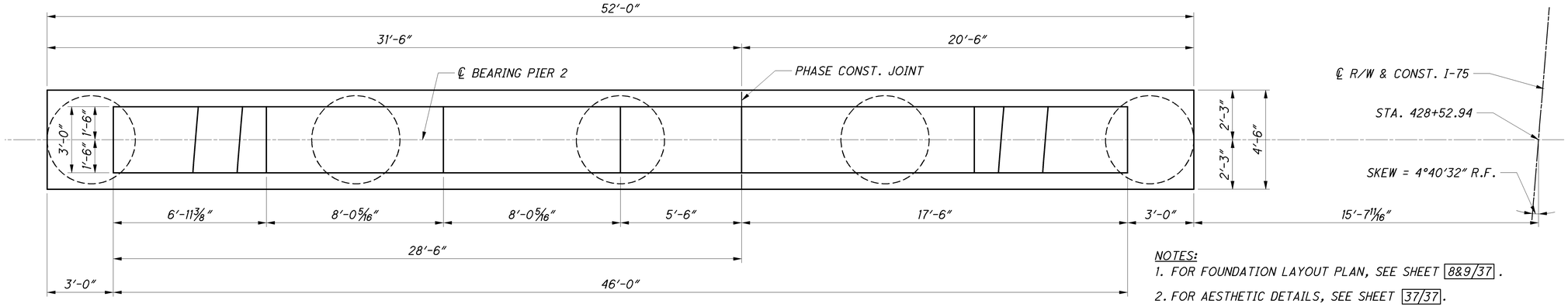

NOTES:

1. FOR FOUNDATION LAYOUT PLAN, SEE SHEET 8&9/37.
2. FOR AESTHETIC DETAILS, SEE SHEET 37/37.
3. THE PLACEMENT OF THE P401 BARS SHALL ALTERNATE SUCH THE 90° HOOKS SHALL BE STAGGERED.

PLAN

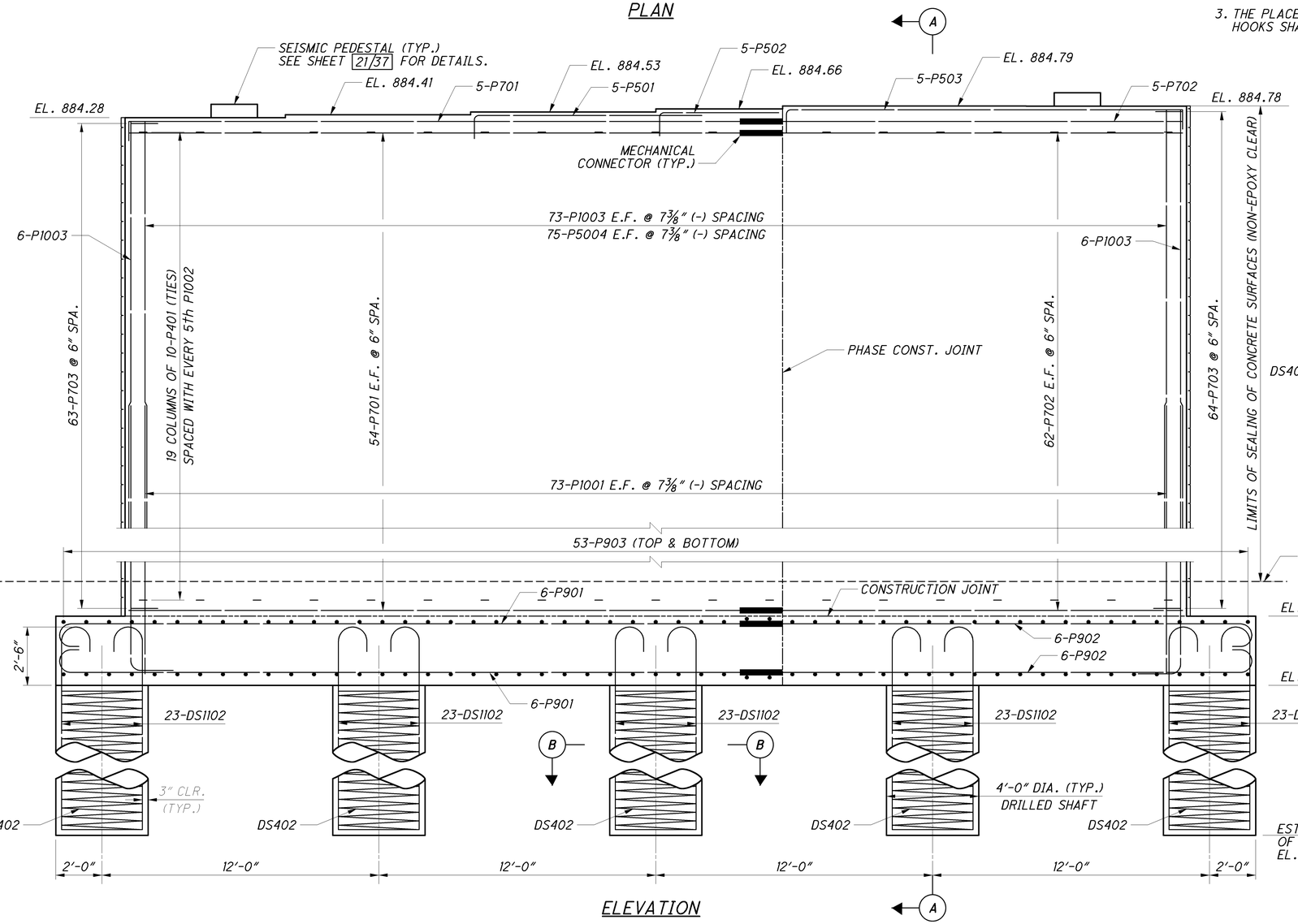

ELEVATION

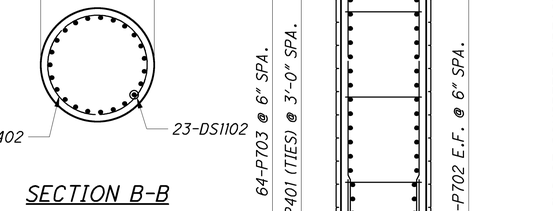

SECTION B-B

SECTION A-A

DESIGN AGENCY
PARSONS BRINCKERHOFF
2545 FARMERS DRIVE
SUITE 350
COLUMBUS, OHIO 43235

DESIGNED	DRAWN	REVIEWED	DATE
PJL	LEL	EBS	05/24/12
CHECKED	REVISED	STRUCTURE FILE NUMBER	
SAP		LEFT: 0202185 RIGHT: 0202216	

SOUTHBOUND PIER 2 DETAILS

BRIDGE NO. ALL-75-0813 L&R
I-75 OVER CHICAGO-FT. WAYNE & EASTERN RAILWAY

ALL-75-5.53
PID No. 76691

J:\Projects\ALL\76691\structures\ALL075_0813C\sheets\075_0813CP1003.dgn 11-SEP-2012 8:55PM reddenj

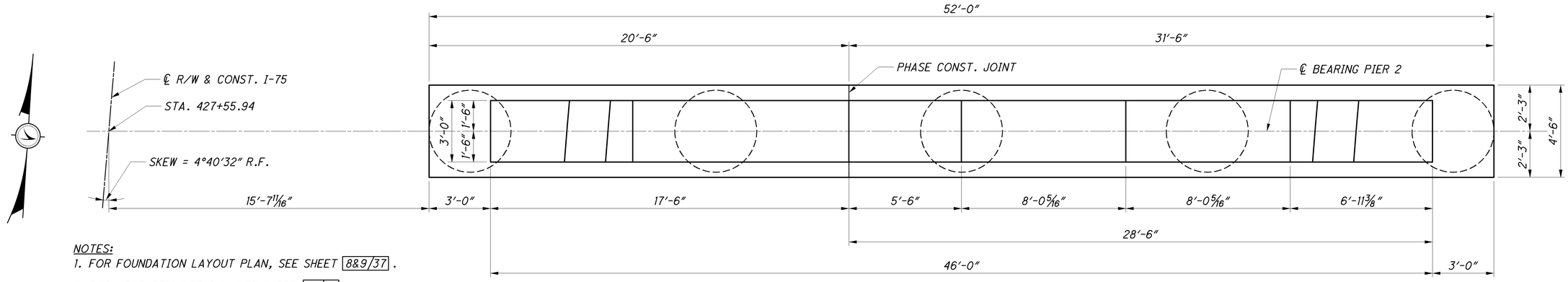

NOTES:

1. FOR FOUNDATION LAYOUT PLAN, SEE SHEET 8&9/37 .
2. FOR AESTHETIC DETAILS, SEE SHEET 37/37.
3. THE PLACEMENT OF THE P401 BARS SHALL ALTERNATE SUCH THE 90° HOOKS SHALL BE STAGGERED.

PLAN

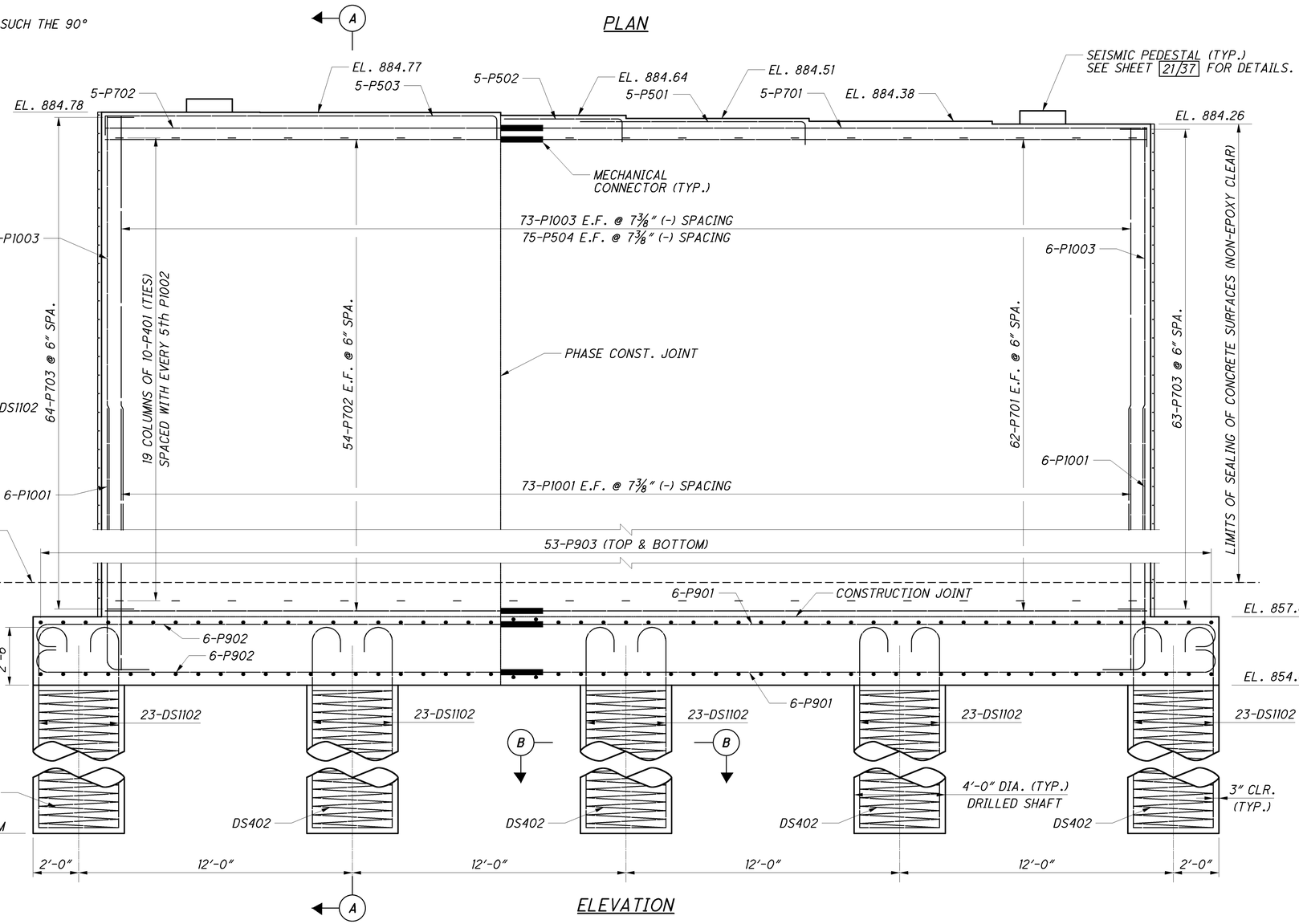

ELEVATION

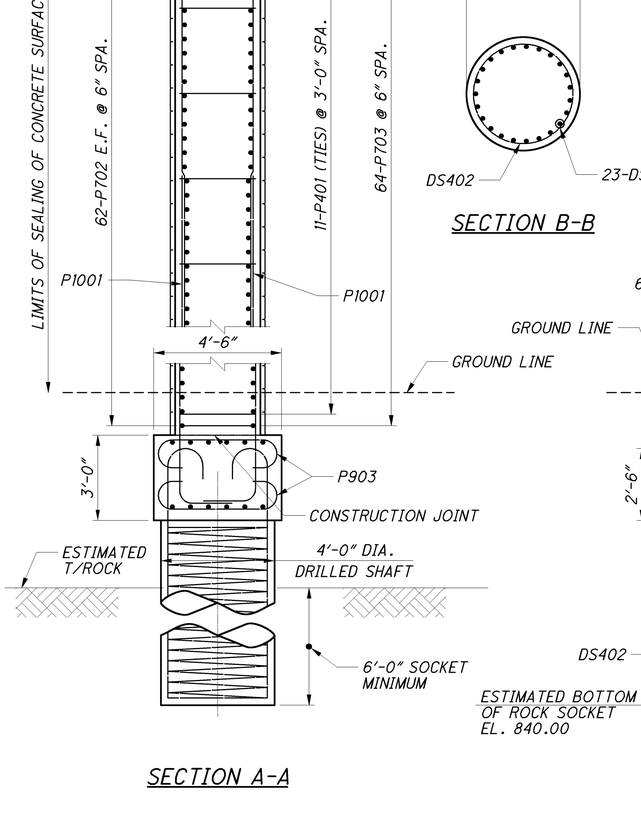

SECTION A-A

J:\Projects\ALL\76691\structures\ALL075_0813C\sheets\075_0813CPI004.dgn 11-SEP-2012 8:55PM reddenj

DESIGN AGENCY
PARSONS BRINCKERHOFF
2545 FARMERS DRIVE
SUITE 350
COLUMBUS, OHIO 43235

DESIGNED	DRAWN	REVIEWED	DATE
PJL	LEL	EBS	05/24/12
CHECKED	REVISED	STRUCTURE FILE NUMBER	
SAP		LEFT: 0202185 RIGHT: 0202216	

NORTHBOUND PIER 2 DETAILS

BRIDGE NO. ALL-75-0813 L&R
I-75 OVER CHICAGO-FT. WAYNE & EASTERN RAILWAY

ALL-75-5.53
PID No. 76691

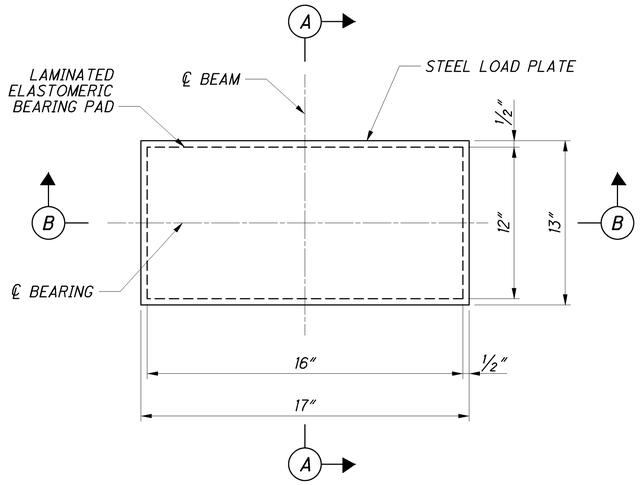

PLAN VIEW - PIER BEARING

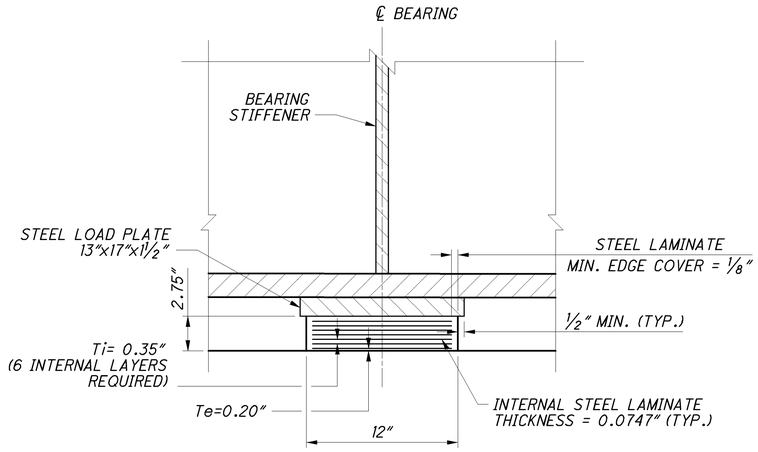

SECTION A-A

LAMINATED ELASTOMERIC EXPANSION PIER BEARING, 50 DUROMETER

DEAD LOAD REACTION = 114.7K

LIVE LOAD REACTION = 102.4K (NO IMPACT)

MAXIMUM DESIGN LOAD = 217.1K

NOTES:

STRUCTRAL STEEL:

ALL STRUCTURAL STEEL SHOWN SHALL BE ASTM A709 GRADE 50, UNLESS NOTED OTHERWISE.

ELASTOMERIC BEARINGS:

ELASTOMERIC BEARINGS: THE ELASTOMER SHALL HAVE A HARDNESS OF 50 DUROMETER. THE BEARINGS WERE DESIGNED IN ACCORDANCE WITH SECTION 14.7.6 (METHOD A) OF THE AASHTO LRFD BRIDGE DESIGN SPECIFICATIONS. THE LONGTERM COMPRESSION PROOF LOAD TEST (AASHTO STANDARD SPECIFICATIONS FOR HIGHWAY BRIDGES, DIVISION II, SECTION 18.7.2.6) IS NOT REQUIRED.

ALL BEARINGS SHALL BE MARKED PRIOR TO SHIPPING. THE MARKS SHALL INCLUDE THE BEARING LOCATION ON THE BRIDGE, AND A DIRECTION ARROW THAT POINTS UP-STATION. ALL MARKS SHALL BE PERMANENT AND BE VISIBLE AFTER THE BEARING IS INSTALLED.

BASIS OF PAYMENT:

THE UNIT BID PRICE SHALL INCLUDE ALL MATERIALS, LABOR, TESTING, AND INCIDENTALS NECESSARY TO FURNISH AND INSTALL LAMINATED ELASTOMERIC BEARINGS. PAYMENT WILL BE MADE AT THE CONTRACT PRICE FOR ITEM 516, EACH, ELASTOMERIC BEARINGS WITH INTERNAL LAMINATES (NEOPRENE), AS PER PLAN: 12"X16"X2¾" WITH 13"X17"X1½" (MIN.) LOAD PLATES (ABUTMENTS AND PIERS)

PAINTING:

STEEL LOAD PLATES AT THE PIER SHALL BE SHOP PAINTED WITH AN INORGANIC ZINC PRIMER AS SPECIFICED IN CMS 513.27. APPLY PAINT TO THE EXPOSED STEEL LOAD PLATES IN ACCORDANCE WITH CMS 514. PAYMENT IS INCLUDED IN THE UNIT PRICE BID FOR EACH BEARING.

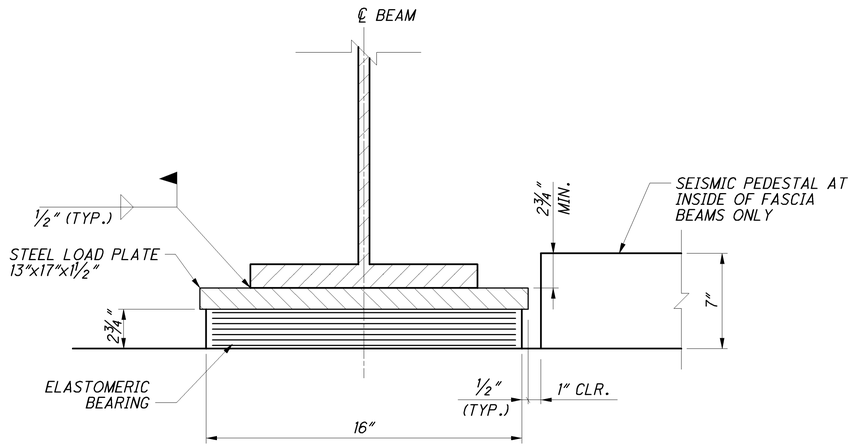

SECTION B-B

PIER BEARING WITH LOAD PLATE
(LOAD PLATES ARE TO BE BONDED TO THE ELASTOMER DURING THE MOLDING PROCESS)

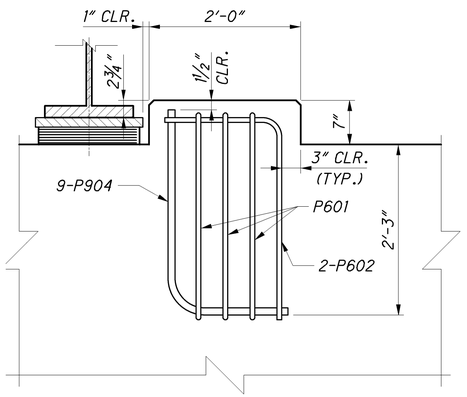

FRONT VIEW OF SEISMIC PEDESTAL

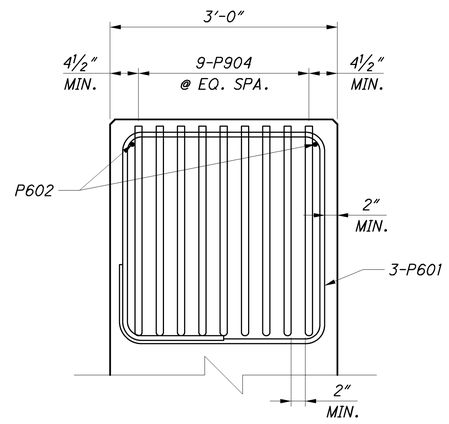

SECTION C-C

DESIGN AGENCY
PARSONS BRINCKERHOFF
2945 FARMERS DRIVE
SUITE 350
COLUMBUS, OHIO 43235

DESIGNED	DRAWN	REVIEWED	DATE
PJL	BKJ	EBS	05/24/12
CHECKED	REVISED	STRUCTURE FILE NUMBER	
SAP		LEFT: 0202185 RIGHT: 0202216	

BEARING DETAILS
BRIDGE NO. ALL-75-0813 L&R
I-75 OVER CHICAGO-FT. WAYNE & EASTERN RAILWAY

ALL-75-5.53
PID No. 76691

21 / 37

994
1224

J:\Projects\ALL\76691\structures\ALL075_0813C\sheets\075_0813CBR001.dgn 11-SEP-2012 8:55PM reddenj

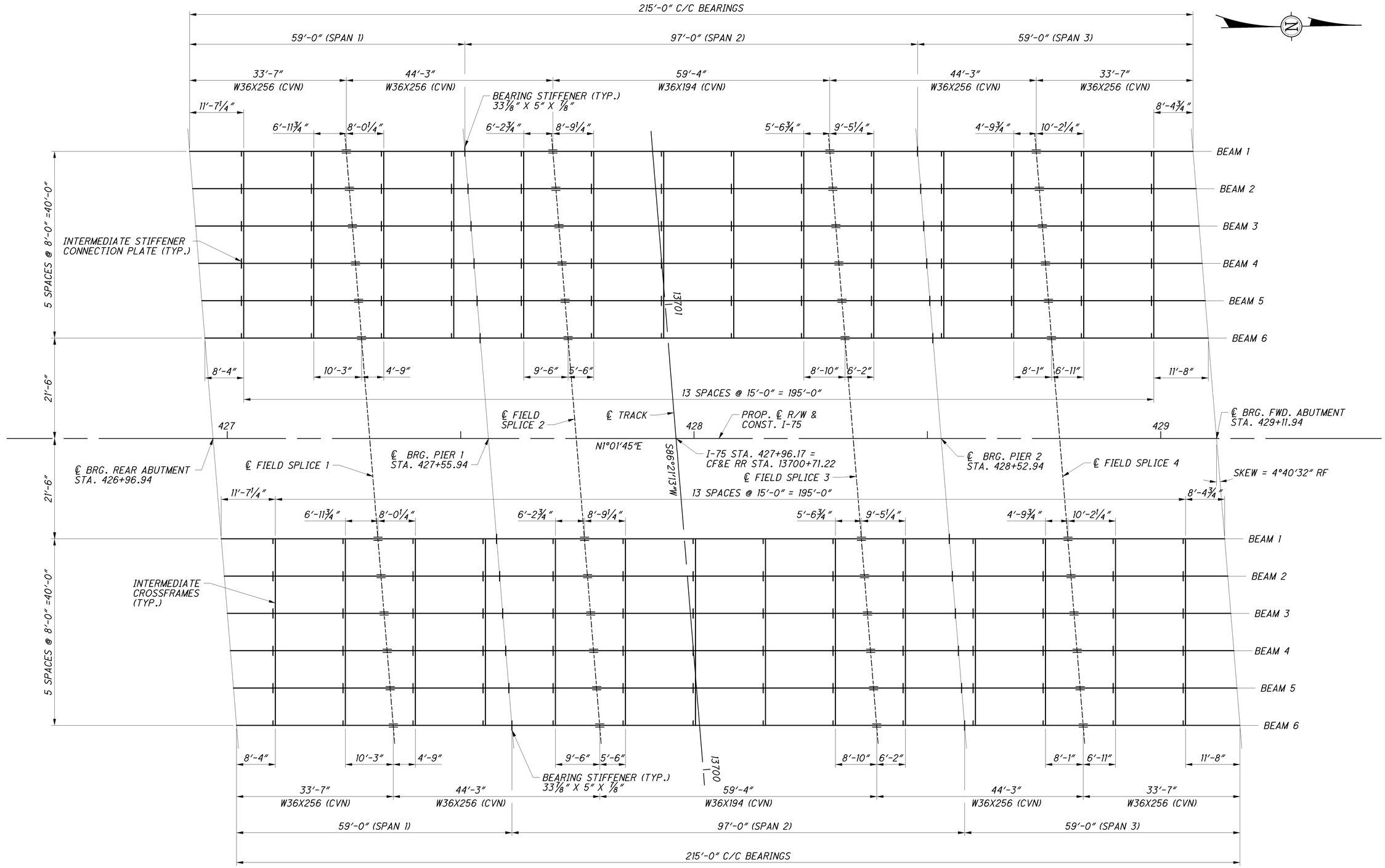

FRAMING PLAN

NOTES:
1. PROVIDE INTERMEDIATE CROSSFRAMES PER GSD-1-96.

DESIGN AGENCY
PARSONS BRINCKERHOFF
2945 FARMERS DRIVE
SUITE 350
COLUMBUS, OHIO 43235

DESIGNED	DRAWN	REVIEWED	DATE
PJL	BKJ	EBS	05/24/12
CHECKED	REVISED	STRUCTURE FILE NUMBER	
SAP		LEFT: 0202185 RIGHT: 0202216	

FRAMING PLAN
BRIDGE NO. ALL-75-0813 L&R
I-75 OVER CHICAGO-FT. WAYNE & EASTERN RAILWAY

ALL-75-5.53
PID No. 76691

22 / 37

995
1224

J:\Projects\ALL\76691\structures\ALL075_0813C\sheets\075_0813CSD001.dgn 29-NOV-2012 2:16PM jint

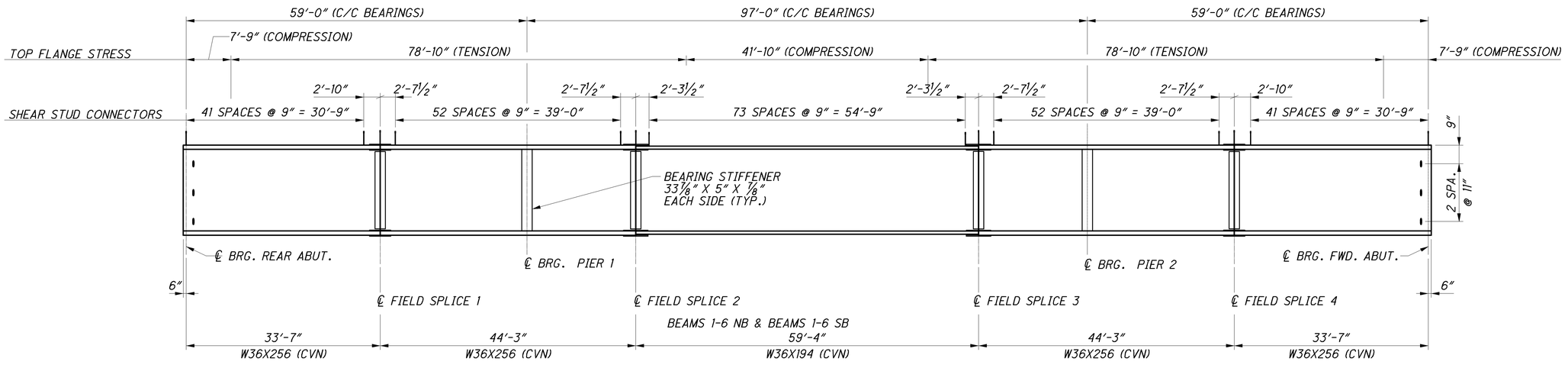

BEAM ELEVATION

NOTES:

1. CVN: WHERE A SHAPE OR PLATE IS DESIGNATED (CVN), FURNISH MATERIAL THAT MEETS THE MINIMUM NOTCH TOUGHNESS REQUIREMENTS AS SPECIFIED IN 711.01.

2. THE HOLE DIAMETER IN THE CROSS FRAMES AND GIRDER STIFFENERS SHALL BE 3/16" LARGER THAN THE DIAMETER OF THE ERECTION BOLTS. ERECTION BOLTS SHALL BE HIGH STRENGTH BOLTS AND SHALL REMAIN IN PLACE. SUPPLY TWO HARDENED WASHERS WITH EACH HIGH STRENGTH BOLT. FULLY TORQUE THE BOLTS OR USE A LOCK WASHER IN ADDITION TO THE TWO HARDENED WASHERS. FURNISH ERECTION BOLTS AS PART OF ITEM 513.

3. FIELD SPLICE 1 AND 4 MAY BE OMITTED AND THE W36X256 SECTION EXTENDED TO 6" PAST THE ABUTMENT BEARINGS.

4. WELD ATTACHMENT OF SUPPORTS FOR CONCRETE DECK FINISHING MACHINE TO AREAS OF THE FASCIA STRINGER FLANGES DESIGNATED "COMPRESSION". DO NOT WELD ATTACHMENTS TO AREAS DESIGNATED "TENSION". FILLET WELDS TO COMPRESSION FLANGES SHALL BE AT LEAST 1" FROM EDGE OF FLANGE, BE NO MORE THAN 2" LONG, AND BE AT LEAST 1/4" FOR THICKNESSES UP TO 3/4" OR 5/16" FOR GREATER THAN 3/4" THICK.

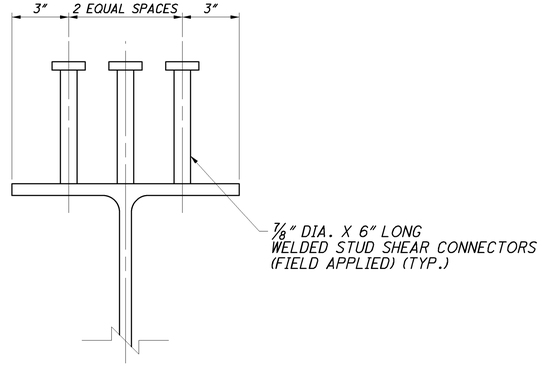

BEAM SHEAR CONNECTOR DETAIL

DESIGN AGENCY
PARSONS BRINCKERHOFF
2945 FARMERS DRIVE
SUITE 350
COLUMBUS, OHIO 43235

DESIGNED	DRAWN	REVIEWED	DATE
PJL	BKJ	EBS	05/24/12
CHECKED	REVISED	STRUCTURE FILE NUMBER	
SAP		LEFT: 0202185 RIGHT: 0202215	

BEAM ELEVATION
BRIDGE NO. ALL-75-0813 L&R
I-75 OVER CHICAGO-FT. WAYNE & EASTERN RAILWAY

ALL-75-5.53
PID No. 76691

23 / 37

996
1224

J:\Projects\ALL\76691\structures\ALL075_0813C\sheets\075_0813CSD004.dgn 11-SEP-2012 8:55PM reddenj

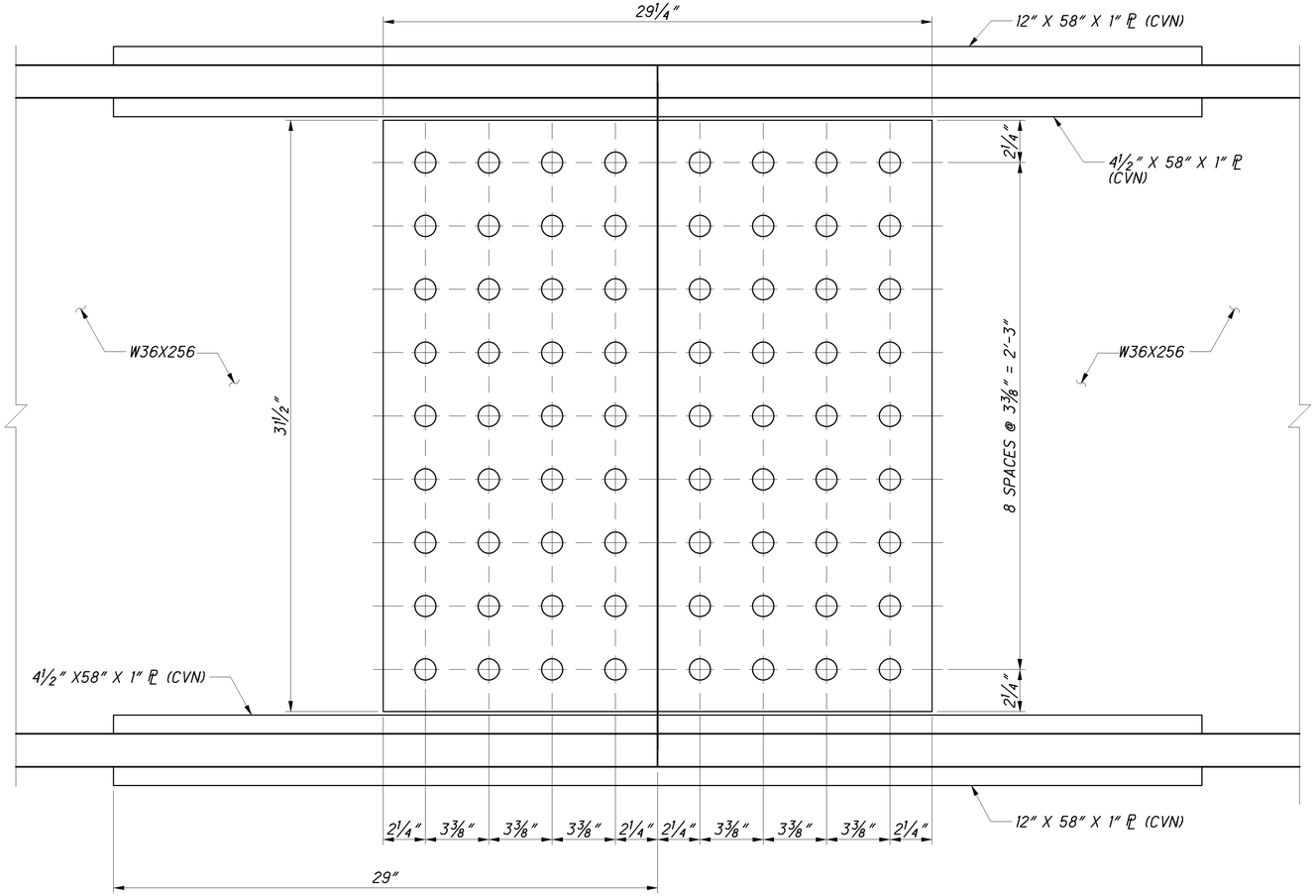

BEAM FIELD SPLICE ELEVATION

FIELD SLICE 1 SHOWN
FIELD SPLICE 4 OPPOSITE HAND

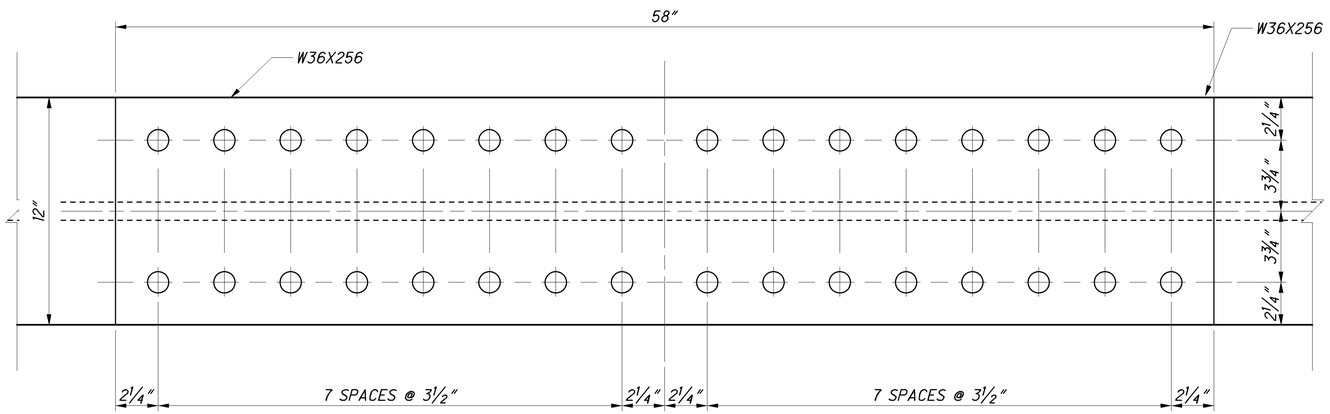

TOP AND BOTTOM FLANGE PLAN

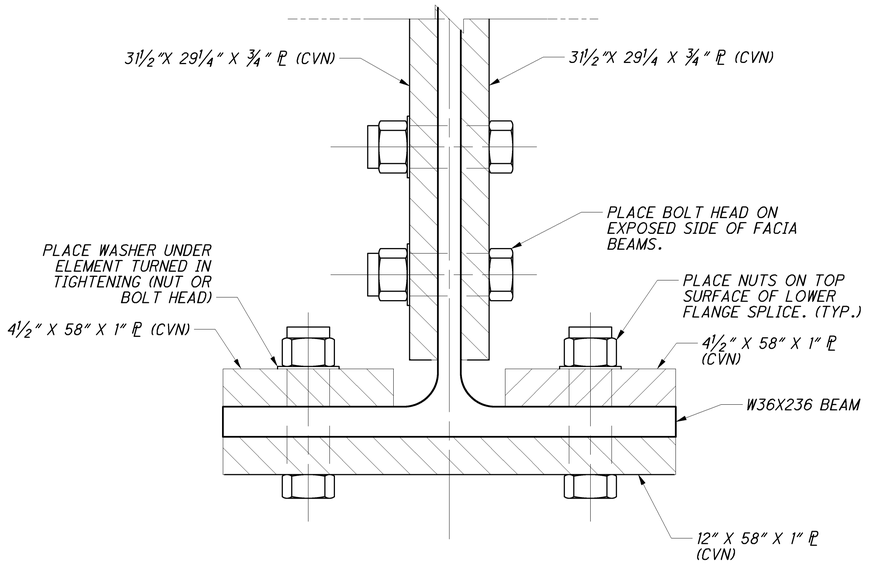

PARTIAL SECTION

NOTES:

1. HIGH STRENGTH BOLTS SHALL BE 1 1/8" DIAMETER TYPE III A325 UNLESS OTHERWISE NOTED.
2. CVN: WHERE A SHAPE OR PLATE IS DESIGNATED (CVN), FURNISH MATERIAL THAT MEETS THE MINIMUM NOTCH TOUGHNESS REQUIREMENTS AS SPECIFIED IN 711.01.

DESIGN AGENCY
PARSONS BRINCKERHOFF
2945 FARMERS DRIVE
SUITE 350
COLUMBUS, OHIO 43235

DESIGNED	DRAWN	REVIEWED	DATE
PJL	BKJ	EBS	05/24/12
CHECKED	REVISED	STRUCTURE FILE NUMBER	
SAP		LEFT: 0202185 RIGHT: 0202216	

FIELD SPLICE DETAIL - SPLICE 1 & 4
BRIDGE NO. ALL-75-0813 L&R
I-75 OVER CHICAGO-FT. WAYNE & EASTERN RAILWAY

ALL-75-5.53
PID No. 76691

J:\Projects\ALL\76691\structures\ALL075_0813C\sheets\075_0813CSD006.dgn 11-SEP-2012 8:55PM reddenj

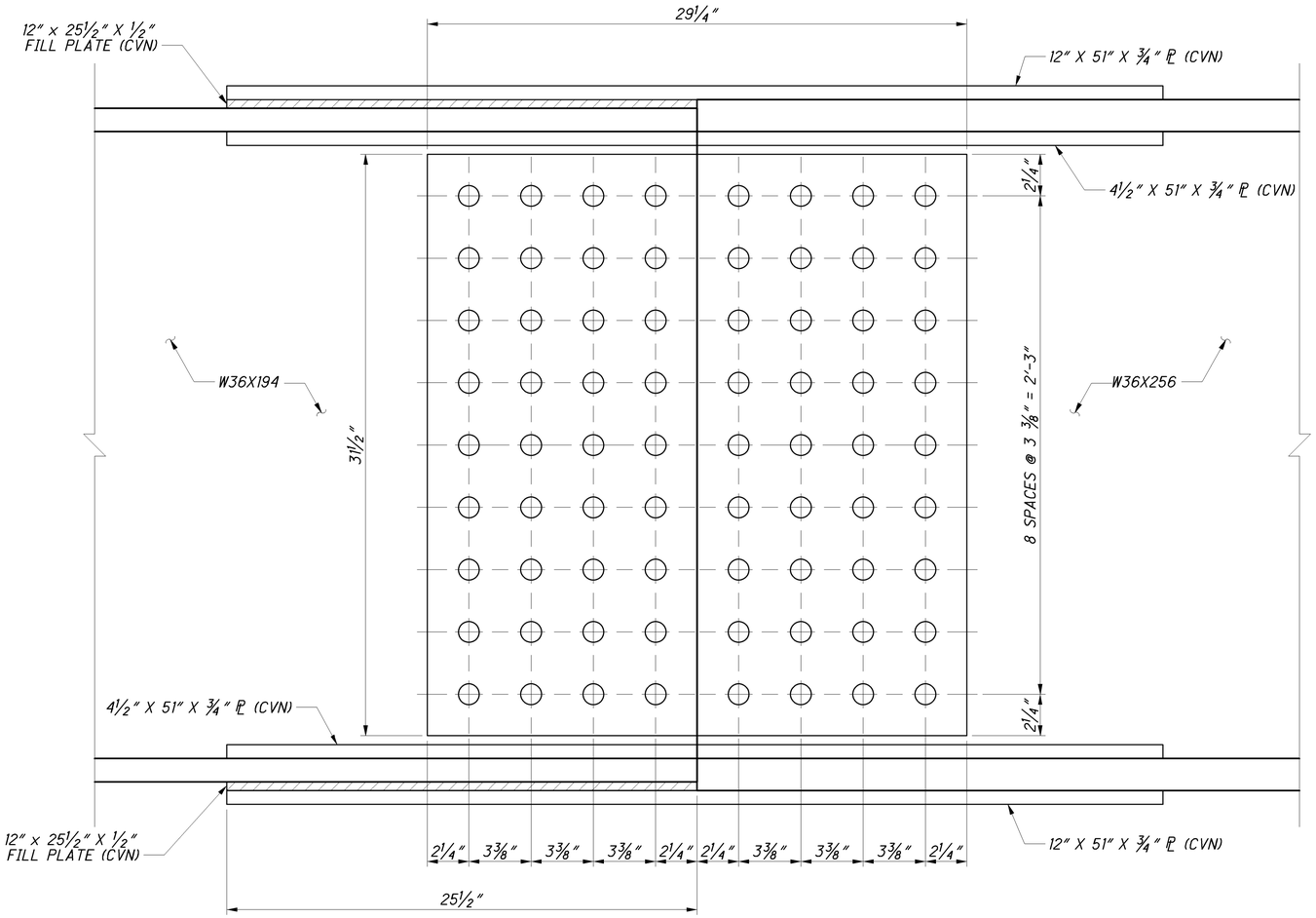

BEAM FIELD SPLICE ELEVATION

FIELD SPLICE 3 SHOWN
FIELD SPLICE 2 OPPOSITE HAND

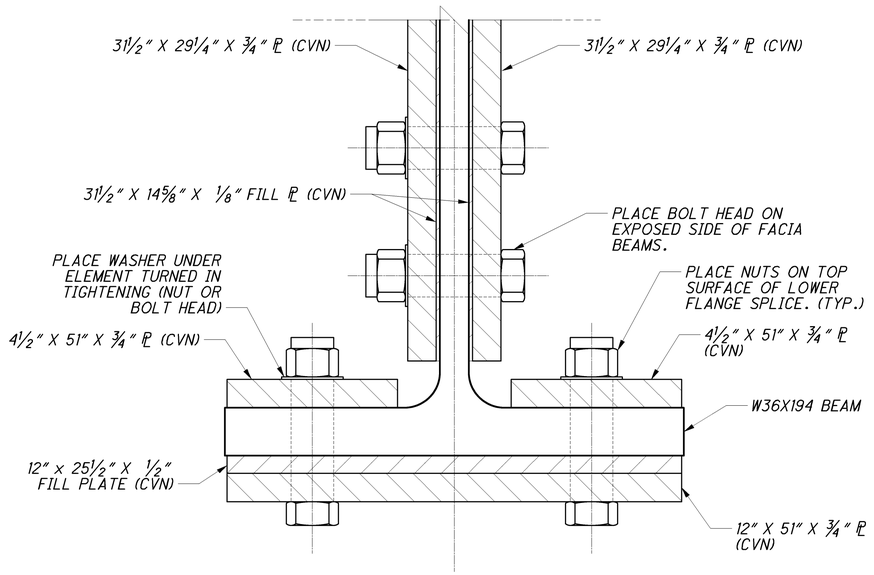

PARTIAL SECTION

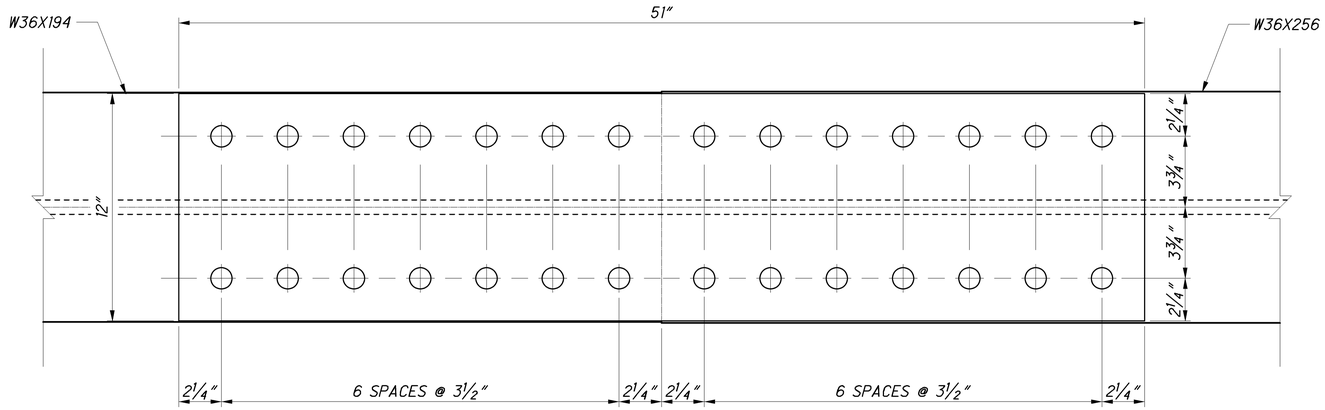

TOP AND BOTTOM FLANGE PLAN

NOTES:

1. HIGH STRENGTH BOLTS SHALL BE 1 1/8" DIAMETER TYPE III A325 UNLESS OTHERWISE NOTED.
2. CVN: WHERE A SHAPE OR PLATE IS DESIGNATED (CVN), FURNISH MATERIAL THAT MEETS THE MINIMUM NOTCH TOUGHNESS REQUIREMENTS AS SPECIFIED IN 711.01.

DESIGN AGENCY
PARSONS BRINCKERHOFF
2545 FARMERS DRIVE
SUITE 350
COLUMBUS, OHIO 43235

DESIGNED	DRAWN	REVIEWED	DATE
PJL	BKJ	EBS	05/24/12
CHECKED	REVISED	STRUCTURE FILE NUMBER	
SAP		LEFT: 0202185 RIGHT: 0202216	

FIELD SPLICE DETAILS - SPLICE 2 & 3
BRIDGE NO. ALL-75-0813 L&R
I-75 OVER CHICAGO-FT. WAYNE & EASTERN RAILWAY

ALL-75-5.53
PID No. 76691

25 / 37

998
1224

J:\Projects\ALL\76691\structures\ALL075_0813C\sheets\075_0813CSD007.dgn 29-NOV-2012 2:25PM jint

SOUTHBOUND CAMBER TABLE

GIRDER	SPAN LOCATION	℄ BRG. REAR ABUT.	0.25	0.50	SPLICE 1	0.75	℄ BRG. PIER 1	SPLICE 2	0.25	0.50	0.75	SPLICE 3	℄ BRG. PIER 2	0.25	SPLICE 4	0.50	0.75	℄ BRG. FORWARD ABUT.
1	DEFLECTION DUE TO WEIGHT OF STEEL	0	0	0	-0	-0	0	2/16	3/16	5/16	3/16	2/16	0	-0	-0	0	0	0
	DEFLECTION DUE TO REMAINING DEAD LOAD	0	2/16	2/16	1/16	- 1/16	0	11/16	14/16	1 7/16	14/16	11/16	0	- 1/16	1/16	2/16	2/16	0
	GEOMETRIC CORRECTION	0	2/16	3/16	3/16	2/16	0	5/16	6/16	9/16	6/16	5/16	0	2/16	3/16	3/16	2/16	0
	REQUIRED SHOP CAMBER	0	5/16	5/16	4/16	1/16	0	1 2/16	1 7/16	2 5/16	1 7/16	1 2/16	0	1/16	4/16	5/16	5/16	0
2	DEFLECTION DUE TO WEIGHT OF STEEL	0	0	0	-0	-0	0	2/16	3/16	5/16	3/16	2/16	0	-0	-0	0	0	0
	DEFLECTION DUE TO REMAINING DEAD LOAD	0	2/16	1/16	1/16	- 1/16	0	10/16	13/16	1 6/16	13/16	10/16	0	- 1/16	1/16	1/16	2/16	0
	GEOMETRIC CORRECTION	0	2/16	3/16	3/16	2/16	0	5/16	6/16	9/16	6/16	5/16	0	2/16	3/16	3/16	2/16	0
	REQUIRED SHOP CAMBER	0	5/16	5/16	4/16	1/16	0	1 1/16	1 6/16	2 3/16	1 6/16	1 1/16	0	1/16	4/16	5/16	5/16	0
3	DEFLECTION DUE TO WEIGHT OF STEEL	0	0	0	-0	-0	0	2/16	3/16	5/16	3/16	2/16	0	-0	-0	0	0	0
	DEFLECTION DUE TO REMAINING DEAD LOAD	0	2/16	1/16	1/16	- 1/16	0	10/16	13/16	1 6/16	13/16	10/16	0	- 1/16	1/16	1/16	2/16	0
	GEOMETRIC CORRECTION	0	2/16	3/16	3/16	2/16	0	5/16	6/16	9/16	6/16	5/16	0	2/16	3/16	3/16	2/16	0
	REQUIRED SHOP CAMBER	0	5/16	5/16	4/16	1/16	0	1 1/16	1 6/16	2 3/16	1 6/16	1 1/16	0	1/16	4/16	5/16	5/16	0
4	DEFLECTION DUE TO WEIGHT OF STEEL	0	0	0	-0	-0	0	2/16	3/16	5/16	3/16	2/16	0	-0	-0	0	0	0
	DEFLECTION DUE TO REMAINING DEAD LOAD	0	2/16	1/16	1/16	- 1/16	0	10/16	13/16	1 6/16	13/16	10/16	0	- 1/16	1/16	1/16	2/16	0
	GEOMETRIC CORRECTION	0	2/16	3/16	3/16	2/16	0	5/16	6/16	9/16	6/16	5/16	0	2/16	3/16	3/16	2/16	0
	REQUIRED SHOP CAMBER	0	5/16	5/16	4/16	1/16	0	1 1/16	1 6/16	2 3/16	1 6/16	1 1/16	0	1/16	4/16	5/16	5/16	0
5	DEFLECTION DUE TO WEIGHT OF STEEL	0	0	0	-0	-0	0	2/16	3/16	5/16	3/16	2/16	0	-0	-0	0	0	0
	DEFLECTION DUE TO REMAINING DEAD LOAD	0	2/16	1/16	1/16	- 1/16	0	10/16	13/16	1 6/16	13/16	10/16	0	- 1/16	1/16	1/16	2/16	0
	GEOMETRIC CORRECTION	0	2/16	3/16	3/16	2/16	0	5/16	6/16	9/16	6/16	5/16	0	2/16	3/16	3/16	2/16	0
	REQUIRED SHOP CAMBER	0	5/16	5/16	4/16	1/16	0	1 1/16	1 6/16	2 3/16	1 6/16	1 1/16	0	1/16	4/16	5/16	5/16	0
6	DEFLECTION DUE TO WEIGHT OF STEEL	0	0	0	-0	-0	0	2/16	3/16	5/16	3/16	2/16	0	-0	-0	0	0	0
	DEFLECTION DUE TO REMAINING DEAD LOAD	0	2/16	2/16	1/16	- 1/16	0	11/16	14/16	1 7/16	14/16	11/16	0	- 1/16	1/16	2/16	2/16	0
	GEOMETRIC CORRECTION	0	2/16	3/16	3/16	2/16	0	5/16	6/16	9/16	6/16	5/16	0	2/16	3/16	3/16	2/16	0
	REQUIRED SHOP CAMBER	0	5/16	5/16	4/16	1/16	0	1 2/16	1 7/16	2 5/16	1 7/16	1 2/16	0	1/16	4/16	5/16	5/16	0

NORTHBOUND CAMBER TABLE

GIRDER	SPAN LOCATION	℄ BRG. REAR ABUT.	0.25	0.50	SPLICE 1	0.75	℄ BRG. PIER 1	SPLICE 2	0.25	0.50	0.75	SPLICE 3	℄ BRG. PIER 2	0.25	SPLICE 4	0.50	0.75	℄ BRG. FORWARD ABUT.
1	DEFLECTION DUE TO WEIGHT OF STEEL	0	0	0	-0	-0	0	2/16	3/16	5/16	3/16	2/16	0	-0	-0	0	0	0
	DEFLECTION DUE TO REMAINING DEAD LOAD	0	2/16	2/16	1/16	- 1/16	0	11/16	14/16	1 7/16	14/16	11/16	0	- 1/16	1/16	2/16	2/16	0
	GEOMETRIC CORRECTION	0	2/16	3/16	3/16	2/16	0	5/16	6/16	9/16	6/16	5/16	0	2/16	3/16	3/16	2/16	0
	REQUIRED SHOP CAMBER	0	5/16	5/16	4/16	1/16	0	1 2/16	1 7/16	2 5/16	1 7/16	1 2/16	0	1/16	4/16	5/16	5/16	0
2	DEFLECTION DUE TO WEIGHT OF STEEL	0	0	0	-0	-0	0	2/16	3/16	5/16	3/16	2/16	0	-0	-0	0	0	0
	DEFLECTION DUE TO REMAINING DEAD LOAD	0	2/16	1/16	1/16	- 1/16	0	10/16	13/16	1 6/16	13/16	10/16	0	- 1/16	1/16	1/16	2/16	0
	GEOMETRIC CORRECTION	0	2/16	3/16	3/16	2/16	0	5/16	6/16	9/16	6/16	5/16	0	2/16	3/16	3/16	2/16	0
	REQUIRED SHOP CAMBER	0	5/16	5/16	4/16	1/16	0	1 1/16	1 6/16	2 3/16	1 6/16	1 1/16	0	1/16	4/16	5/16	5/16	0
3	DEFLECTION DUE TO WEIGHT OF STEEL	0	0	0	-0	-0	0	2/16	3/16	5/16	3/16	2/16	0	-0	-0	0	0	0
	DEFLECTION DUE TO REMAINING DEAD LOAD	0	2/16	1/16	1/16	- 1/16	0	10/16	13/16	1 6/16	13/16	10/16	0	- 1/16	1/16	1/16	2/16	0
	GEOMETRIC CORRECTION	0	2/16	3/16	3/16	2/16	0	5/16	6/16	9/16	6/16	5/16	0	2/16	3/16	3/16	2/16	0
	REQUIRED SHOP CAMBER	0	5/16	5/16	4/16	1/16	0	1 1/16	1 6/16	2 3/16	1 6/16	1 1/16	0	1/16	4/16	5/16	5/16	0
4	DEFLECTION DUE TO WEIGHT OF STEEL	0	0	0	-0	-0	0	2/16	3/16	5/16	3/16	2/16	0	-0	-0	0	0	0
	DEFLECTION DUE TO REMAINING DEAD LOAD	0	2/16	1/16	1/16	- 1/16	0	10/16	13/16	1 6/16	13/16	10/16	0	- 1/16	1/16	1/16	2/16	0
	GEOMETRIC CORRECTION	0	2/16	3/16	3/16	2/16	0	5/16	6/16	9/16	6/16	5/16	0	2/16	3/16	3/16	2/16	0
	REQUIRED SHOP CAMBER	0	5/16	5/16	4/16	1/16	0	1 1/16	1 6/16	2 3/16	1 6/16	1 1/16	0	1/16	4/16	5/16	5/16	0
5	DEFLECTION DUE TO WEIGHT OF STEEL	0	0	0	-0	-0	0	2/16	3/16	5/16	3/16	2/16	0	-0	-0	0	0	0
	DEFLECTION DUE TO REMAINING DEAD LOAD	0	2/16	1/16	1/16	- 1/16	0	10/16	13/16	1 6/16	13/16	10/16	0	- 1/16	1/16	1/16	2/16	0
	GEOMETRIC CORRECTION	0	2/16	3/16	3/16	2/16	0	5/16	6/16	9/16	6/16	5/16	0	2/16	3/16	3/16	2/16	0
	REQUIRED SHOP CAMBER	0	5/16	5/16	4/16	1/16	0	1 1/16	1 6/16	2 3/16	1 6/16	1 1/16	0	1/16	4/16	5/16	5/16	0
6	DEFLECTION DUE TO WEIGHT OF STEEL	0	0	0	-0	-0	0	2/16	3/16	5/16	3/16	2/16	0	-0	-0	0	0	0
	DEFLECTION DUE TO REMAINING DEAD LOAD	0	2/16	2/16	1/16	- 1/16	0	11/16	14/16	1 7/16	14/16	11/16	0	- 1/16	1/16	2/16	2/16	0
	GEOMETRIC CORRECTION	0	2/16	3/16	3/16	2/16	0	5/16	6/16	9/16	6/16	5/16	0	2/16	3/16	3/16	2/16	0
	REQUIRED SHOP CAMBER	0	5/16	5/16	4/16	1/16	0	1 2/16	1 7/16	2 5/16	1 7/16	1 2/16	0	1/16	4/16	5/16	5/16	0

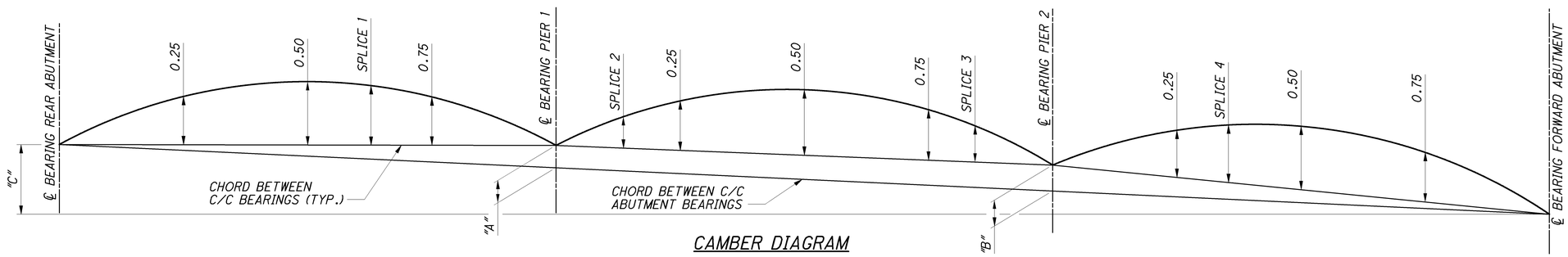

CAMBER DIAGRAM

SOUTHBOUND BLOCKING TABLE

BLOCKING	DIM "A"	DIM "B"	DIM "C"
BEAM 1	2 1/16	2 1/16	1
BEAM 2	2 1/16	2 1/16	1 1/16
BEAM 3	2 1/16	2 1/16	1 2/16
BEAM 4	2 1/16	2 1/16	1 3/16
BEAM 5	2 1/16	2 1/16	1 4/16
BEAM 6	2 1/16	2 1/16	1 6/16

NORTHBOUND BLOCKING TABLE

BLOCKING	DIM "A"	DIM "B"	DIM "C"
BEAM 1	2 1/16	2 1/16	1 11/16
BEAM 2	2 1/16	2 1/16	1 12/16
BEAM 3	2 1/16	2 1/16	1 13/16
BEAM 4	2 1/16	2 1/16	1 14/16
BEAM 5	2 1/16	2 1/16	1 15/16
BEAM 6	2 1/16	2 1/16	2

DESIGN AGENCY
PARSONS BRINCKERHOFF
2945 FARMERS DRIVE
SUITE 350
COLUMBUS, OHIO 43235

DESIGNED	DRAWN	REVIEWED	DATE
PJL	LEL	EBS	05/24/12
CHECKED	REVISED	STRUCTURE FILE NUMBER	
SAP		LEFT: 0202185 RIGHT: 0202216	

CAMBER TABLE

BRIDGE NO. ALL-75-0813 L&R
I-75 OVER CHICAGO-FT. WAYNE & EASTERN RAILWAY

ALL-75-5.53
PID No. 76691

J:\Projects\ALL\76691\structures\ALL075_0813C\sheets\075_0813CSD005.dgn 11-SEP-2012 8:55PM reddenj

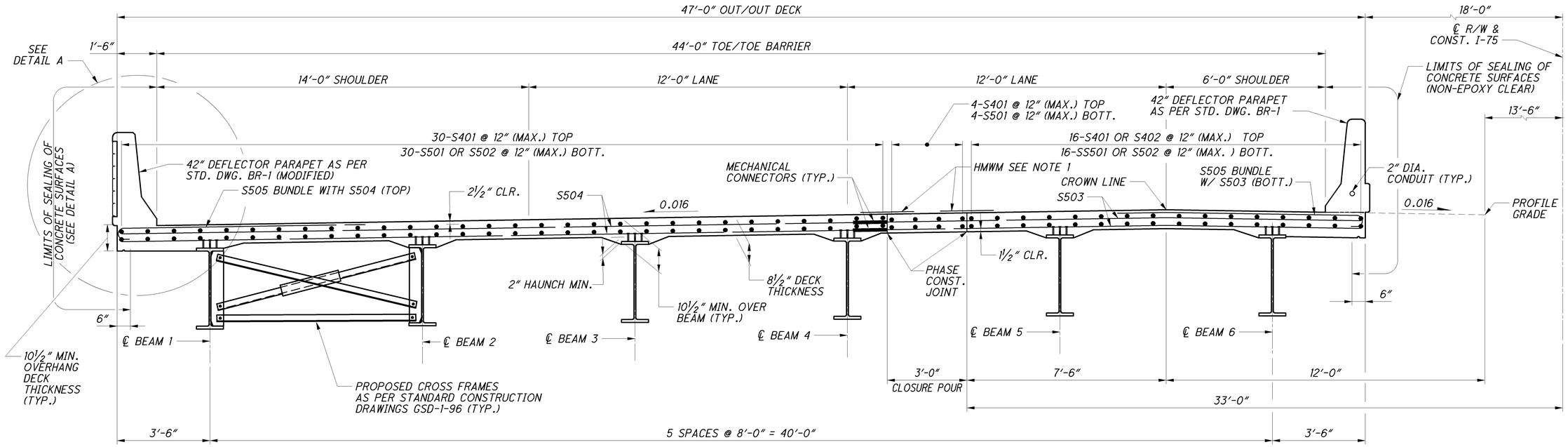

TYPICAL TRANSVERSE SECTION

SOUTHBOUND SHOWN
NORTHBOUND SYMMETRICAL ABOUT ℄ I-75

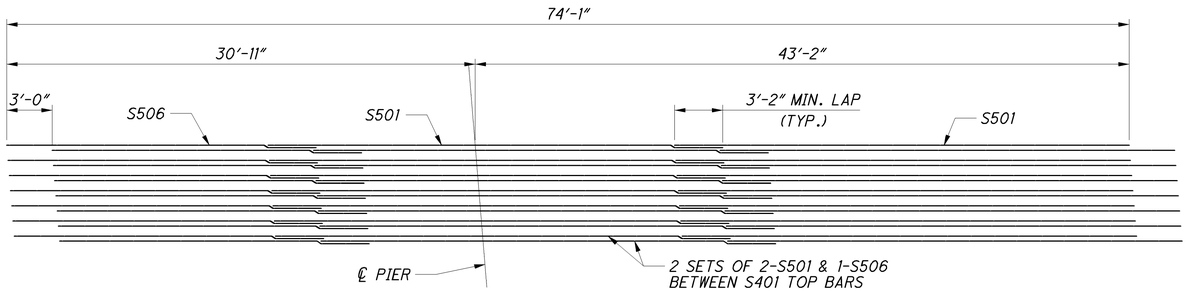

NEGATIVE MOMENT REINFORCEMENT

(TOP MAT)

PIER 1 MOMENT REINFORCING SHOWN,
PIER 2 MOMENT REINFORCING IS
OPPOSITE HAND ABOUT ℄ OF PIER

NOTES:
1. HMWM SEALER SHALL BE 2'-0" WIDE, CENTERED ON EACH CONSTRUCTION JOINT.

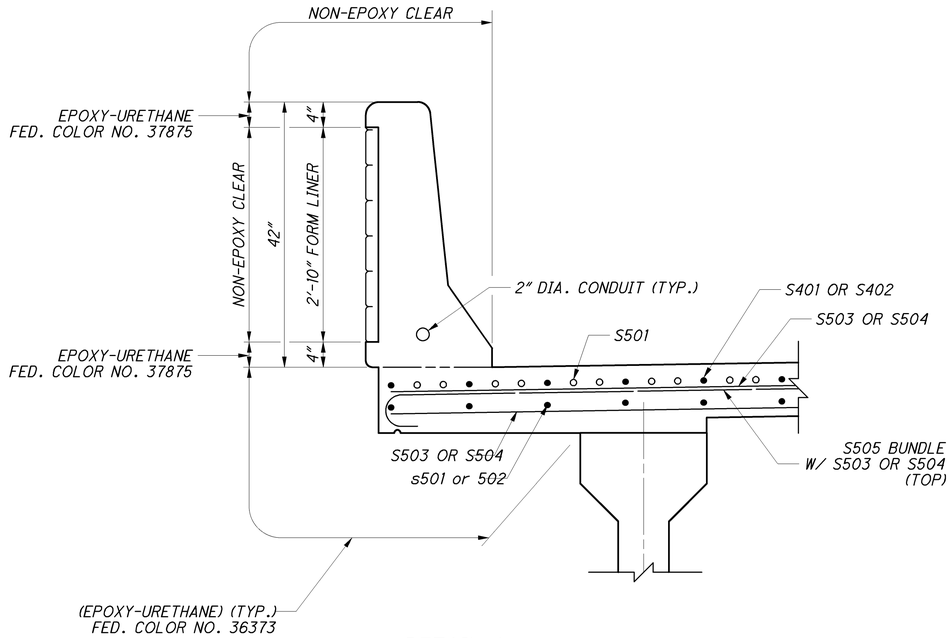

DETAIL A

(FOR NOTES AND DETAILS NOT SHOWN, SEE STANDARD DRAWING BR-1)

DESIGN AGENCY
PARSONS BRINCKERHOFF
2545 FARMERS DRIVE
SUITE 350
COLUMBUS, OHIO 43235

DESIGNED	DRAWN	REVIEWED	DATE
PJL	BKJ	EBS	05/24/12
CHECKED	REVISED	STRUCTURE FILE NUMBER	
SAP		LEFT: 0202185 RIGHT: 0202216	

TRANSVERSE SECTION
BRIDGE NO. ALL-75-0813 L&R
I-75 OVER CHICAGO-FT. WAYNE & EASTERN RAILWAY

ALL-75-5.53
PID No. 76691

27 / 37

1000 / 1224

J:\Projects\ALL\76691\structures\ALL075_0813C\sheets\075_0813CTS001.dgn 11-SEP-2012 8:55PM reddenj

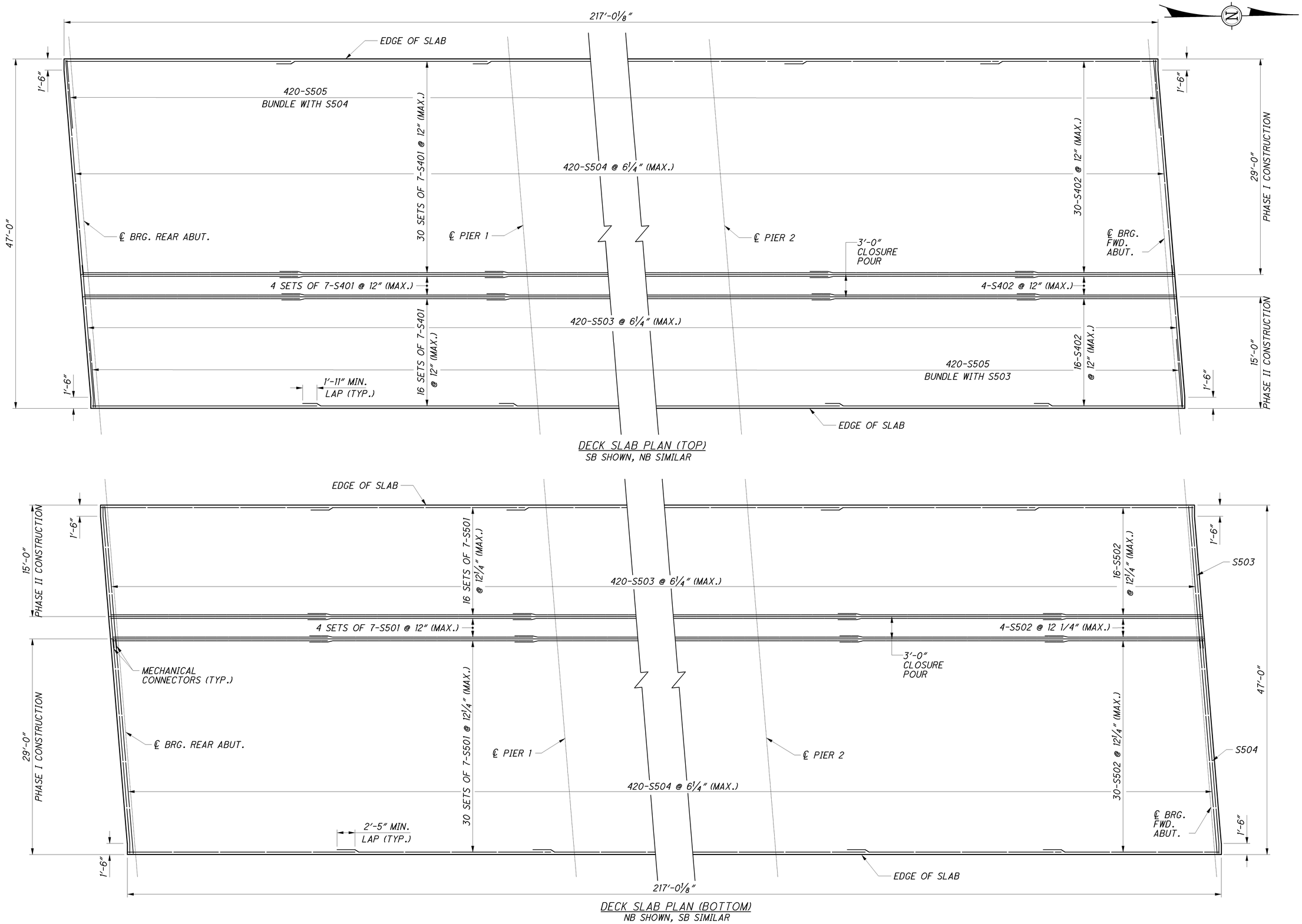

DESIGN AGENCY
PARSONS BRINCKERHOFF
2545 FARMERS DRIVE
SUITE 350
COLUMBUS, OHIO 43235

DESIGNED	DRAWN	REVIEWED	DATE
BKJ	BKJ	PJL	05/24/12
CHECKED	REVISED	STRUCTURE FILE NUMBER	
EBS		LEFT: 0202185 RIGHT: 0202215	

DECK PLAN
BRIDGE NO. ALL-75-0813 L&R
I-75 OVER CHICAGO-FT. WAYNE & EASTERN RAILWAY

ALL-75-5.53
PID No. 76691

28 / 37

1001
1224

J:\Projects\ALL\76691\structures\ALL075_0813C\sheets\075_0813CDP001.dgn 11-SEP-2012 8:55PM reddenj

I-75 LEFT BRIDGE SCREED TABLE																	
	LOCATION	CL BRG. REAR ABUT.	1/4	1/2	SPLICE 1	3/4	CL BRG. PIER 1	SPLICE 2	1/4	1/2	3/4	SPLICE 3	CL BRG. PIER 2	1/4	SPLICE 4	1/2	3/4	CL BRG. FORWARD ABUT.
LEFT TOE OF BARRIER	STATION	426+91.75	427+06.50	427+21.25	427+25.33	427+36.00	427+50.75	427+69.58	427+75.00	427+99.25	428+23.50	428+28.92	428+47.75	428+62.50	428+73.17	428+77.25	428+92.00	429+06.75
	FINAL DECK SURFACE EL.	888.48	888.53	888.57	888.58	888.61	888.63	888.65	888.66	888.66	888.64	888.63	888.59	888.56	888.52	888.51	888.46	888.40
	DEFLECTION	0.00	0.01	0.01	0.00	0.00	0.00	0.05	0.07	0.12	0.07	0.05	0.00	0.00	0.00	0.01	0.01	0.00
	SCREED EL.	888.48	888.54	888.58	888.58	888.61	888.63	888.70	888.73	888.78	888.71	888.68	888.59	888.56	888.52	888.52	888.47	888.40
BEAM 1	STATION	426+91.91	427+06.66	427+21.41	427+25.50	427+36.16	427+50.91	427+69.75	427+75.16	427+99.41	428+23.66	428+29.08	428+47.91	428+62.66	428+73.33	428+77.41	428+92.16	429+06.91
	FINAL DECK SURFACE EL.	888.51	888.56	888.60	888.61	888.64	888.66	888.68	888.69	888.69	888.67	888.66	888.63	888.59	888.56	888.54	888.49	888.43
	DEFLECTION	0.00	0.01	0.01	0.00	0.00	0.00	0.05	0.07	0.12	0.07	0.05	0.00	0.00	0.00	0.01	0.01	0.00
	SCREED EL.	888.51	888.57	888.61	888.61	888.64	888.66	888.73	888.76	888.81	888.74	888.71	888.63	888.59	888.56	888.55	888.50	888.43
	TOP OF HAUNCH EL.	887.80	887.86	887.91	887.91	887.93	887.96	888.03	888.05	888.10	888.03	888.00	887.92	887.88	887.85	887.84	887.79	887.72
BEAM 2	STATION	426+92.57	427+07.32	427+22.07	427+26.15	427+36.82	427+51.57	427+70.40	427+75.82	428+00.07	428+24.32	428+29.73	428+48.57	428+63.32	428+73.98	428+78.07	428+92.82	429+07.57
	FINAL DECK SURFACE EL.	888.64	888.69	888.73	888.74	888.77	888.79	888.81	888.82	888.82	888.80	888.79	888.75	888.71	888.68	888.67	888.61	888.55
	DEFLECTION	0.00	0.01	0.01	0.00	0.00	0.00	0.05	0.07	0.11	0.07	0.05	0.00	0.00	0.00	0.01	0.01	0.00
	SCREED EL.	888.64	888.70	888.74	888.74	888.77	888.79	888.86	888.89	888.93	888.87	888.84	888.75	888.71	888.68	888.68	888.62	888.55
	TOP OF HAUNCH EL.	887.94	887.99	888.04	888.04	888.06	888.08	888.15	888.18	888.22	888.16	888.13	888.04	888.01	887.97	887.97	887.92	887.84
BEAM 3	STATION	426+93.22	427+07.97	427+22.72	427+26.81	427+37.47	427+52.22	427+71.06	427+76.47	428+00.72	428+24.97	428+30.39	428+49.22	428+63.97	428+74.64	428+78.72	428+93.47	429+08.22
	FINAL DECK SURFACE EL.	888.77	888.82	888.86	888.87	888.90	888.92	888.94	888.94	888.94	888.92	888.91	888.88	888.84	888.81	888.79	888.74	888.68
	DEFLECTION	0.00	0.01	0.01	0.00	0.00	0.00	0.05	0.07	0.11	0.07	0.05	0.00	0.00	0.00	0.01	0.01	0.00
	SCREED EL.	888.77	888.83	888.87	888.87	888.90	888.92	888.99	889.01	889.05	888.99	888.96	888.88	888.84	888.81	888.80	888.75	888.68
	TOP OF HAUNCH EL.	888.07	888.12	888.17	888.17	888.19	888.21	888.28	888.31	888.35	888.28	888.26	888.17	888.13	888.10	888.10	888.04	887.97
BEAM 4	STATION	426+93.88	427+08.63	427+23.38	427+27.46	427+38.13	427+52.88	427+71.71	427+77.13	428+01.38	428+25.63	428+31.04	428+49.88	428+64.63	428+75.29	428+79.38	428+94.13	429+08.88
	FINAL DECK SURFACE EL.	888.90	888.95	888.99	889.00	889.03	889.05	889.07	889.07	889.07	889.05	889.04	889.00	888.97	888.93	888.92	888.87	888.80
	DEFLECTION	0.00	0.01	0.01	0.00	0.00	0.00	0.05	0.07	0.11	0.07	0.05	0.00	0.00	0.00	0.01	0.01	0.00
	SCREED EL.	888.90	888.96	889.00	889.00	889.03	889.05	889.12	889.14	889.18	889.12	889.09	889.00	888.97	888.93	888.93	888.88	888.80
	TOP OF HAUNCH EL.	888.20	888.25	888.30	888.30	888.32	888.34	888.41	888.43	888.47	888.41	888.38	888.30	888.26	888.23	888.22	888.17	888.09
LEFT PHASE CONSTRUCTION	STATION	426+94.00	427+08.75	427+23.50	427+27.58	427+38.25	427+53.00	427+71.83	427+77.25	428+01.50	428+25.75	428+31.17	428+50.00	428+64.75	428+75.42	428+79.50	428+94.25	429+09.00
	FINAL DECK SURFACE EL.	888.93	888.98	889.02	889.03	889.05	889.07	889.09	889.10	889.10	889.07	889.07	889.03	888.99	888.96	888.94	888.89	888.83
	DEFLECTION	0.00	0.01	0.01	0.00	0.00	0.00	0.05	0.07	0.11	0.07	0.05	0.00	0.00	0.00	0.01	0.01	0.00
	SCREED EL.	888.93	888.99	889.03	889.03	889.05	889.07	889.14	889.17	889.21	889.14	889.12	889.03	888.99	888.96	888.95	888.90	888.83
RIGHT PHASE CONSTRUCTION	STATION	426+94.24	427+08.99	427+23.74	427+27.83	427+38.49	427+53.24	427+72.08	427+77.49	428+01.74	428+25.99	428+31.41	428+50.24	428+64.99	428+75.66	428+79.74	428+94.49	429+09.24
	FINAL DECK SURFACE EL.	888.98	889.03	889.07	889.08	889.10	889.12	889.14	889.14	889.14	889.12	889.11	889.08	889.04	889.00	888.99	888.94	888.87
	DEFLECTION	0.00	0.01	0.01	0.00	0.00	0.00	0.05	0.07	0.11	0.07	0.05	0.00	0.00	0.00	0.01	0.01	0.00
	SCREED EL.	888.98	889.04	889.08	889.08	889.10	889.12	889.19	889.21	889.25	889.19	889.16	889.08	889.04	889.00	889.00	888.95	888.87
BEAM 5	STATION	426+94.53	427+09.28	427+24.03	427+28.11	427+38.78	427+53.53	427+72.36	427+77.78	428+02.03	428+26.28	428+31.70	428+50.53	428+65.28	428+75.95	428+80.03	428+94.78	429+09.53
	FINAL DECK SURFACE EL.	889.03	889.08	889.12	889.13	889.16	889.18	889.20	889.20	889.20	889.18	889.17	889.13	889.09	889.06	889.05	888.99	888.93
	DEFLECTION	0.00	0.01	0.01	0.00	0.00	0.00	0.05	0.07	0.11	0.07	0.05	0.00	0.00	0.00	0.01	0.01	0.00
	SCREED EL.	889.03	889.09	889.13	889.13	889.16	889.18	889.25	889.27	889.31	889.25	889.22	889.13	889.09	889.06	889.06	889.00	888.93
	TOP OF HAUNCH EL.	888.33	888.38	888.43	888.43	888.42	888.45	888.47	888.54	888.56	888.60	888.54	888.51	888.42	888.38	888.35	888.35	888.29	888.22
CROWN	STATION	426+94.86	427+09.61	427+24.36	427+28.44	427+39.11	427+53.86	427+72.69	427+78.11	428+02.36	428+26.61	428+32.02	428+50.86	428+65.61	428+76.27	428+80.36	428+95.11	429+09.86
	FINAL DECK SURFACE EL.	889.10	889.15	889.19	889.20	889.22	889.24	889.26	889.26	889.26	889.24	889.23	889.19	889.16	889.12	889.11	889.05	888.99
	DEFLECTION	0.00	0.01	0.01	0.00	0.00	0.00	0.05	0.07	0.12	0.07	0.05	0.00	0.00	0.00	0.01	0.01	0.00
	SCREED EL.	889.10	889.16	889.20	889.20	889.22	889.24	889.31	889.33	889.38	889.31	889.28	889.19	889.16	889.12	889.12	889.06	888.99
BEAM 6	STATION	426+95.19	427+09.94	427+24.69	427+28.77	427+39.44	427+54.19	427+73.02	427+78.44	428+02.69	428+26.94	428+32.35	428+51.19	428+65.94	428+76.60	428+80.69	428+95.44	429+10.19
	FINAL DECK SURFACE EL.	889.04	889.09	889.13	889.13	889.16	889.18	889.20	889.20	889.20	889.18	889.17	889.13	889.09	889.06	889.04	888.99	888.92
	DEFLECTION	0.00	0.01	0.01	0.00	0.00	0.00	0.05	0.07	0.12	0.07	0.05	0.00	0.00	0.00	0.01	0.01	0.00
	SCREED EL.	889.04	889.10	889.14	889.13	889.16	889.18	889.25	889.27	889.32	889.25	889.22	889.13	889.09	889.06	889.05	889.00	888.92
	TOP OF HAUNCH EL.	888.33	888.39	888.43	888.43	888.45	888.47	888.54	888.56	888.61	888.54	888.51	888.42	888.38	888.35	888.35	888.29	888.22
RIGHT TOE OF BARRIER	STATION	426+95.35	427+10.10	427+24.85	427+28.93	427+39.60	427+54.35	427+73.18	427+78.60	428+02.85	428+27.10	428+32.52	428+51.35	428+66.10	428+76.77	428+80.85	428+95.60	429+10.35
	FINAL DECK SURFACE EL.	889.01	889.05	889.09	889.10	889.13	889.15	889.17	889.17	889.17	889.14	889.14	889.10	889.06	889.03	889.01	888.96	888.89
	DEFLECTION	0.00	0.01	0.01	0.00	0.00	0.00	0.05	0.07	0.12	0.07	0.05	0.00	0.00	0.00	0.01	0.01	0.00
	SCREED EL.	889.01	889.06	889.10	889.10	889.13	889.15	889.22	889.24	889.29	889.21	889.19	889.10	889.06	889.03	889.02	888.97	888.89

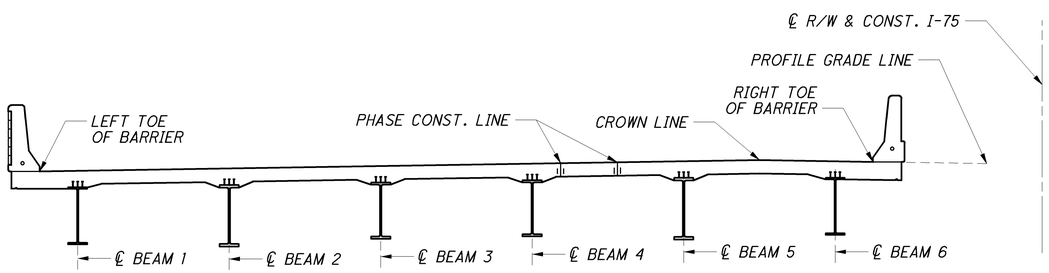

SCREED ELEVATIONS

SCREED ELEVATIONS SHOWN REPRESENT THE THEORETICAL DECK SURFACE LOCATION PRIOR TO DEFLECTIONS CAUSED BY DECK PLACEMENT AND OTHER ANTICIPATED DEAD LOADS.

TOP OF HAUNCH ELEVATIONS

TOP OF HAUNCH ELEVATIONS SHOWN REPRESENT THE THEORETICAL LOCATION OF THE BOTTOM OF THE DECK ABOVE THE BEAM/GIRDER HAUNCH PRIOR TO DEFLECTIONS CAUSED BY DECK PLACEMENT AND OTHER ANTICIPATED DEAD LOADS.

FINAL DECK SURFACE ELEVATIONS

FINAL DECK SURFACE ELEVATIONS SHOWN REPRESENT THE DECK SURFACE LOCATION AFTER ALL ANTICIPATED DEAD LOAD DEFLECTIONS HAVE OCCURRED.

DECK SLAB CONCRETE QUANTITY

THE ESTIMATED QUANTITY OF DECK SLAB CONCRETE IS BASED ON THE CONSTANT DECK SLAB THICKNESS, AS SHOWN, PLUS THE QUANTITY OF CON- CRETE THAT FORMS EACH BEAM/GIRDER HAUNCH. THE ESTIMATE ASSUMES A CONSTANT HAUNCH THICKNESS OF 2 INCHES AND A CONSTANT HAUNCH WIDTH OUTSIDE THE EDGE OF EACH BEAM/ GIRDER FLANGE OF 9 INCHES. DEVIATE FROM THIS HAUNCH THICKNESS AS NECESSARY TO PLACE THE DECK SURFACE AT THE FINISHED GRADE. THE ALLOWABLE TOLERANCE FOR THE HAUNCH WIDTH OUTSIDE THE EDGE OF EACH BEAM/GIRDER FLANGE IS +/- 3 INCHES.

THE HAUNCH THICKNESS WAS MEASURED AT THE CENTERLINE OF THE BEAM/GIRDER, FROM THE SURFACE OF THE DECK TO THE BOTTOM OF THE TOP FLANGE MINUS THE DECK SLAB THICKNESS. THE AREA OF ALL EMBEDDED STEEL PLATES HAS BEEN DEDUCTED FROM THE HAUNCH QUANTITY IN ACCORDANCE WITH 511.24.

DESIGN AGENCY
PARSONS BRINCKERHOFF
2945 FARMERS DRIVE
SUITE 350
COLUMBUS, OHIO 43235

DESIGNED	DRAWN	REVIEWED	DATE
PJL	LEL	EBS	05/24/12
CHECKED	REVISED	STRUCTURE FILE NUMBER	
SAP		LEFT: 0202185 RIGHT: 0202215	

LEFT BRIDGE - SCREED TABLE

BRIDGE NO. ALL-75-0813 L&R
I-75 OVER CHICAGO-FT. WAYNE & EASTERN RAILWAY

ALL-75-5.53
PID No. 76691

J:\Projects\ALL\76691\structures\ALL075_0813C\sheets\075_0813CSD002.dgn 11-SEP-2012 8:55PM reddenj

I-75 RIGHT BRIDGE SCREED TABLE

	LOCATION	CL BRG. REAR ABUT.	1/4	1/2	SPLICE 1	3/4	CL BRG. PIER 1	SPLICE 2	1/4	1/2	3/4	SPLICE 3	CL BRG. PIER 2	1/4	SPLICE 4	1/2	3/4	CL BRG. FORWARD ABUT.
LEFT TOE OF BARRIER	STATION	426+98.54	427+13.29	427+28.04	427+32.12	427+42.79	427+57.54	427+76.37	427+81.79	428+06.04	428+30.29	428+35.70	428+54.54	428+69.29	428+79.95	428+84.04	428+98.79	429+13.54
	FINAL DECK SURFACE EL.	889.02	889.06	889.10	889.11	889.13	889.15	889.17	889.17	889.17	889.14	889.13	889.09	889.05	889.01	889.00	888.94	888.88
	DEFLECTION	0.00	0.01	0.01	0.00	0.00	0.00	0.05	0.07	0.12	0.07	0.05	0.00	0.00	0.00	0.01	0.01	0.00
	SCREED EL.	889.02	889.07	889.11	889.11	889.13	889.15	889.22	889.24	889.29	889.21	889.18	889.09	889.05	889.01	889.01	888.95	888.88
BEAM 1	STATION	426+98.70	427+13.45	427+28.20	427+32.29	427+42.95	427+57.70	427+76.54	427+81.95	428+06.20	428+30.45	428+35.87	428+54.70	428+69.45	428+80.12	428+84.20	428+98.95	429+13.70
	FINAL DECK SURFACE EL.	889.05	889.10	889.13	889.14	889.16	889.18	889.20	889.20	889.20	889.17	889.16	889.12	889.08	889.05	889.03	888.97	888.91
	DEFLECTION	0.00	0.01	0.01	0.00	0.00	0.00	0.05	0.07	0.12	0.07	0.05	0.00	0.00	0.00	0.01	0.01	0.00
	SCREED EL.	889.05	889.11	889.14	889.14	889.16	889.18	889.25	889.27	889.32	889.24	889.21	889.12	889.08	889.05	889.04	888.98	888.91
	TOP OF HAUNCH EL.	888.34	888.40	888.43	888.43	888.45	888.48	888.54	888.56	888.61	888.53	888.50	888.41	888.37	888.34	888.33	888.28	888.20
CROWN	STATION	426+99.03	427+13.78	427+28.53	427+32.61	427+43.28	427+58.03	427+76.86	427+82.28	428+06.53	428+30.78	428+36.20	428+55.03	428+69.78	428+80.45	428+84.53	428+99.28	429+14.03
	FINAL DECK SURFACE EL.	889.11	889.16	889.20	889.21	889.23	889.25	889.26	889.27	889.26	889.23	889.22	889.18	889.14	889.11	889.09	889.04	888.97
	DEFLECTION	0.00	0.01	0.01	0.00	0.00	0.00	0.05	0.07	0.12	0.07	0.05	0.00	0.00	0.00	0.01	0.01	0.00
	SCREED EL.	889.11	889.17	889.21	889.21	889.23	889.25	889.31	889.34	889.38	889.30	889.27	889.18	889.14	889.11	889.10	889.05	888.97
BEAM 2	STATION	426+99.36	427+14.11	427+28.86	427+32.94	427+43.61	427+58.36	427+77.19	427+82.61	428+06.86	428+31.11	428+36.52	428+55.36	428+70.11	428+80.77	428+84.86	428+99.61	429+14.36
	FINAL DECK SURFACE EL.	889.05	889.10	889.13	889.14	889.16	889.19	889.20	889.20	889.20	889.17	889.16	889.12	889.08	889.04	889.03	888.97	888.91
	DEFLECTION	0.00	0.01	0.01	0.00	0.00	0.00	0.05	0.07	0.11	0.07	0.05	0.00	0.00	0.00	0.01	0.01	0.00
	SCREED EL.	889.05	889.11	889.14	889.14	889.16	889.19	889.25	889.27	889.31	889.24	889.21	889.12	889.08	889.04	889.04	888.98	888.91
	TOP OF HAUNCH EL.	888.34	888.40	888.44	888.44	888.46	888.48	888.54	888.56	888.60	888.53	888.50	888.41	888.37	888.34	888.33	888.27	888.20
LEFT PHASE CONSTRUCTION	STATION	426+99.64	427+14.39	427+29.14	427+33.23	427+43.89	427+58.64	427+77.48	427+82.89	428+07.14	428+31.39	428+36.81	428+55.64	428+70.39	428+81.06	428+85.14	428+99.89	429+14.64
	FINAL DECK SURFACE EL.	889.00	889.04	889.08	889.09	889.11	889.13	889.14	889.15	889.14	889.11	889.10	889.06	889.02	888.99	888.97	888.91	888.85
	DEFLECTION	0.00	0.01	0.01	0.00	0.00	0.00	0.05	0.07	0.11	0.07	0.05	0.00	0.00	0.00	0.01	0.01	0.00
	SCREED EL.	889.00	889.05	889.09	889.09	889.11	889.13	889.19	889.22	889.25	889.18	889.15	889.06	889.02	888.99	888.98	888.92	888.85
RIGHT PHASE CONSTRUCTION	STATION	426+99.89	427+14.64	427+29.39	427+33.47	427+44.14	427+58.89	427+77.72	427+83.14	428+07.39	428+31.64	428+37.05	428+55.89	428+70.64	428+81.30	428+85.39	429+00.14	429+14.89
	FINAL DECK SURFACE EL.	888.95	888.99	889.03	889.04	889.06	889.08	889.10	889.10	889.09	889.06	889.06	889.01	888.97	888.94	888.92	888.87	888.80
	DEFLECTION	0.00	0.01	0.01	0.00	0.00	0.00	0.05	0.07	0.11	0.07	0.05	0.00	0.00	0.00	0.01	0.01	0.00
	SCREED EL.	888.95	889.00	889.04	889.04	889.06	889.08	889.15	889.17	889.20	889.13	889.11	889.01	888.97	888.94	888.93	888.88	888.80
BEAM 3	STATION	427+00.01	427+14.76	427+29.51	427+33.59	427+44.26	427+59.01	427+77.84	427+83.26	428+07.51	428+31.76	428+37.18	428+56.01	428+70.76	428+81.43	428+85.51	429+00.26	429+15.01
	FINAL DECK SURFACE EL.	888.93	888.97	889.01	889.02	889.04	889.06	889.07	889.07	889.07	889.04	889.03	888.99	888.95	888.91	888.90	888.84	888.77
	DEFLECTION	0.00	0.01	0.01	0.00	0.00	0.00	0.05	0.07	0.11	0.07	0.05	0.00	0.00	0.00	0.01	0.01	0.00
	SCREED EL.	888.93	888.98	889.02	889.02	889.04	889.06	889.12	889.14	889.18	889.11	889.08	888.99	888.95	888.91	888.91	888.85	888.77
	TOP OF HAUNCH EL.	888.22	888.27	888.31	888.31	888.33	888.35	888.41	888.44	888.47	888.40	888.37	888.28	888.24	888.20	888.20	888.14	888.07
BEAM 4	STATION	427+00.66	427+15.41	427+30.16	427+34.25	427+44.91	427+59.66	427+78.50	427+83.91	428+08.16	428+32.41	428+37.83	428+56.66	428+71.41	428+82.08	428+86.16	429+00.91	429+15.66
	FINAL DECK SURFACE EL.	888.80	888.84	888.88	888.89	888.91	888.93	888.94	888.95	888.94	888.91	888.90	888.86	888.82	888.78	888.77	888.71	888.64
	DEFLECTION	0.00	0.01	0.01	0.00	0.00	0.00	0.05	0.07	0.11	0.07	0.05	0.00	0.00	0.00	0.01	0.01	0.00
	SCREED EL.	888.80	888.85	888.89	888.89	888.91	888.93	888.99	889.02	889.05	888.98	888.95	888.86	888.82	888.78	888.78	888.72	888.64
	TOP OF HAUNCH EL.	888.09	888.15	888.18	888.18	888.20	888.22	888.29	888.31	888.34	888.27	888.24	888.15	888.11	888.07	888.07	888.01	887.93
BEAM 5	STATION	427+01.32	427+16.07	427+30.82	427+34.90	427+45.57	427+60.32	427+79.15	427+84.57	428+08.82	428+33.07	428+38.49	428+57.32	428+72.07	428+82.74	428+86.82	429+01.57	429+16.32
	FINAL DECK SURFACE EL.	888.67	888.72	888.76	888.76	888.78	888.80	888.82	888.82	888.81	888.78	888.77	888.73	888.69	888.65	888.64	888.58	888.51
	DEFLECTION	0.00	0.01	0.01	0.00	0.00	0.00	0.05	0.07	0.11	0.07	0.05	0.00	0.00	0.00	0.01	0.01	0.00
	SCREED EL.	888.67	888.73	888.77	888.76	888.78	888.80	888.87	888.89	888.92	888.85	888.82	888.73	888.69	888.65	888.65	888.59	888.51
	TOP OF HAUNCH EL.	887.97	888.02	888.06	888.06	888.08	888.10	888.16	888.18	888.21	888.14	888.11	888.02	887.98	887.94	887.94	887.88	887.80
BEAM 6	STATION	427+01.93	427+16.68	427+31.43	427+35.52	427+46.18	427+60.93	427+79.77	427+85.18	428+09.43	428+33.68	428+39.10	428+57.93	428+72.68	428+83.35	428+87.43	429+02.18	429+16.93
	FINAL DECK SURFACE EL.	888.56	888.60	888.64	888.65	888.66	888.68	888.70	888.70	888.69	888.66	888.65	888.61	888.57	888.53	888.52	888.46	888.39
	DEFLECTION	0.00	0.01	0.01	0.00	0.00	0.00	0.05	0.07	0.12	0.07	0.05	0.00	0.00	0.00	0.01	0.01	0.00
	SCREED EL.	888.56	888.61	888.65	888.65	888.66	888.68	888.75	888.77	888.81	888.73	888.70	888.61	888.57	888.53	888.53	888.47	888.39
	TOP OF HAUNCH EL.	887.85	887.90	887.94	887.94	887.96	887.98	888.04	888.06	888.10	888.02	887.99	887.90	887.86	887.82	887.82	887.76	887.68
RIGHT TOE OF BARRIER	STATION	427+02.14	427+16.89	427+31.64	427+35.72	427+46.39	427+61.14	427+79.97	427+85.39	428+09.64	428+33.89	428+39.30	428+58.14	428+72.89	428+83.55	428+87.64	429+02.39	429+17.14
	FINAL DECK SURFACE EL.	888.52	888.56	888.60	888.61	888.62	888.64	888.66	888.66	888.65	888.62	888.61	888.57	888.53	888.49	888.47	888.42	888.35
	DEFLECTION	0.00	0.01	0.01	0.00	0.00	0.00	0.05	0.07	0.12	0.07	0.05	0.00	0.00	0.00	0.01	0.01	0.00
	SCREED EL.	888.52	888.57	888.61	888.61	888.62	888.64	888.71	888.73	888.77	888.69	888.66	888.57	888.53	888.49	888.48	888.43	888.35

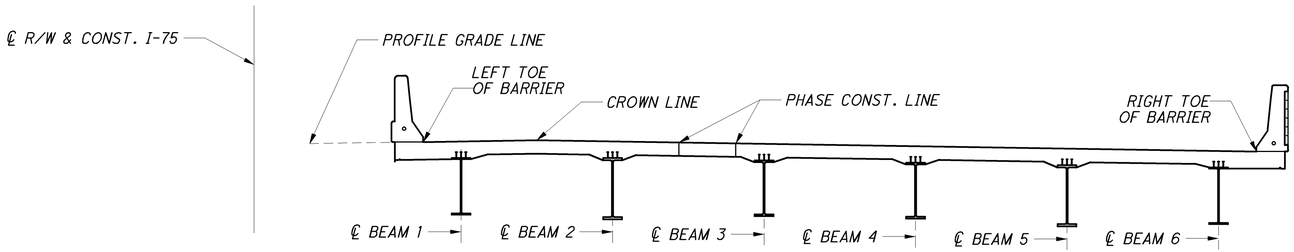

DESIGN AGENCY
PARSONS BRINCKERHOFF
2945 FARMERS DRIVE
SUITE 350
COLUMBUS, OHIO 43235

DESIGNED PJL | DRAWN LEL | CHECKED SAP | REVIEWED EBS | DATE 05/24/12

REVISED | STRUCTURE FILE NUMBER LEFT: 0202185 RIGHT: 0202216

RIGHT BRIDGE - SCREED TABLE

BRIDGE NO. ALL-75-0813 L&R

I-75 OVER CHICAGO-FT. WAYNE & EASTERN RAILWAY

ALL-75-5.53

PID No. 76691

J:\Projects\ALL\76691\structures\ALL075_0813C\sheets\075_0813CSD003.dgn 11-SEP-2012 8:55PM reddenj

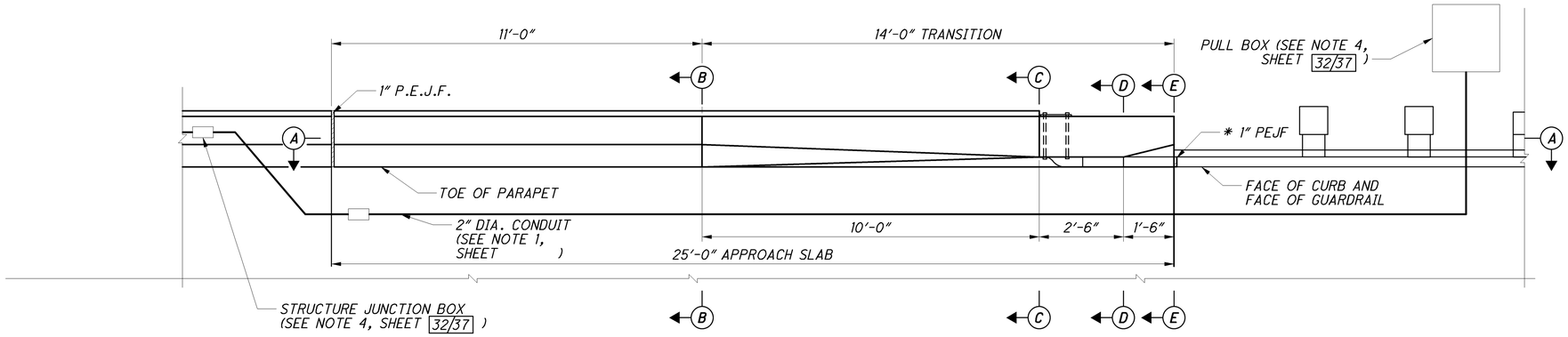

PART PLAN AT APPROACH SLABS

* COST INCLUDED WITH APPROACH SLAB FOR PAYMENT.

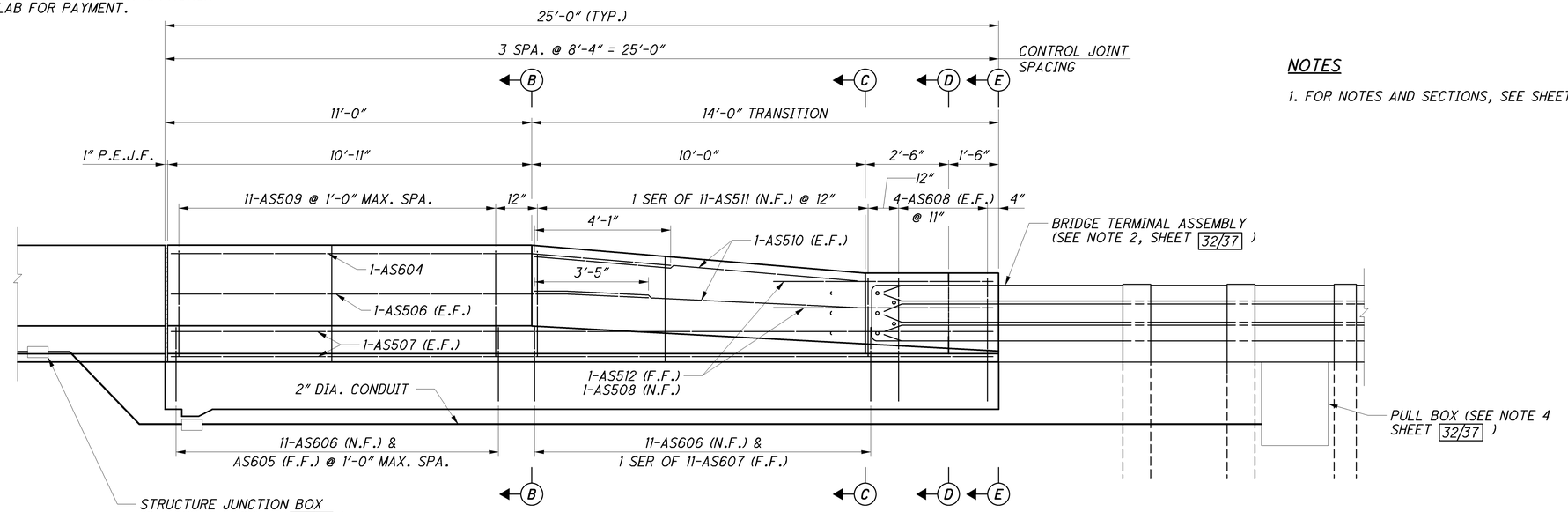

SECTION A-A

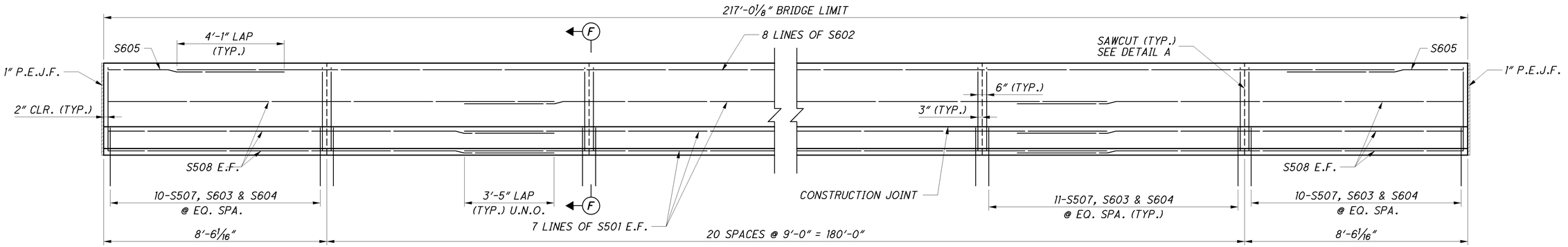

PARAPET ELEVATION

NOTES

1. FOR NOTES AND SECTIONS, SEE SHEET 32/37 .

DESIGN AGENCY
PARSONS BRINCKERHOFF
2545 FARMERS DRIVE
SUITE 350
COLUMBUS, OHIO 43235

DATE 05/24/12
REVIEWED EBS
DRAWN BKJ
DESIGNED PJL
CHECKED SAP
REVISED
STRUCTURE FILE NUMBER
LEFT: 0202185
RIGHT: 0202216

PARAPET DETAILS 1 OF 2
BRIDGE NO. ALL-75-0813 L&R
I-75 OVER CHICAGO-FT. WAYNE & EASTERN RAILWAY

ALL-75-5.53
PID No. 76691

31/37

1004
1224

J:\Projects\ALL\76691\structures\ALL075_0813C\sheets\075_0813CRA001.dgn 11-SEP-2012 8:55PM reddenj

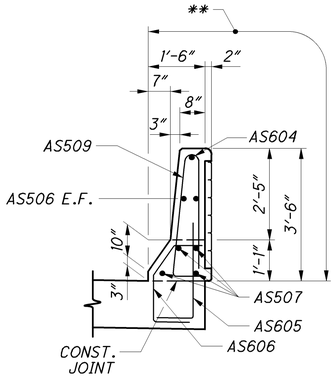

SECTION B-B (OUTSIDE PARAPET)

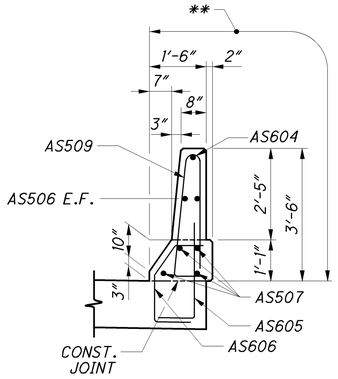

SECTION B-B (MEDIAN PARAPET)

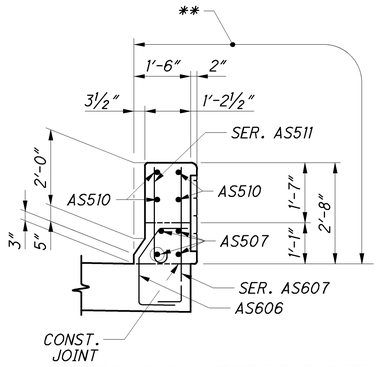

SECTION C-C (OUTSIDE PARAPET)

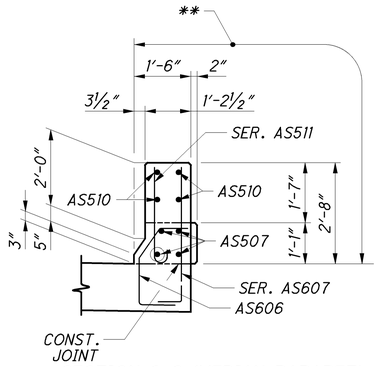

SECTION C-C (MEDIAN PARAPET)

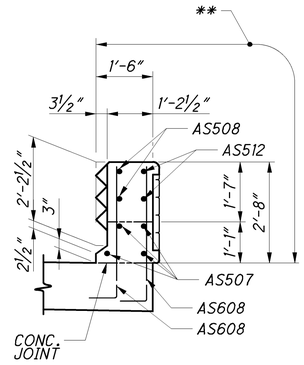

SECTION D-D (OUTSIDE PARAPET)

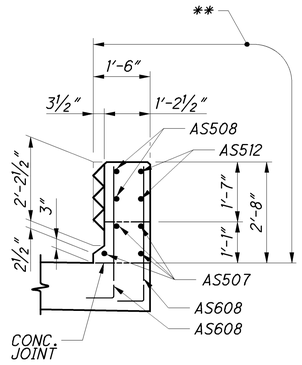

SECTION D-D (MEDIAN PARAPET)

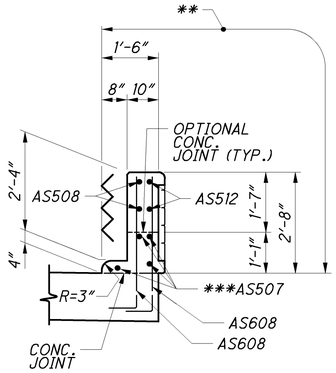

SECTION E-E (OUTSIDE PARAPET)

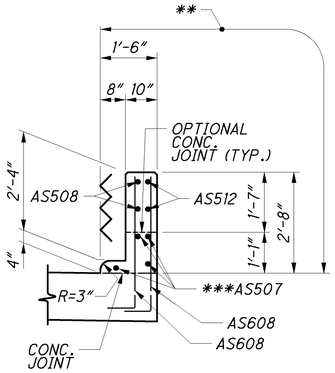

SECTION E-E (MEDIAN PARAPET)

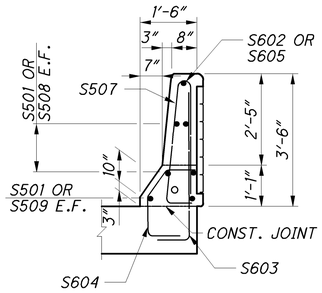

SECTION F-F (OUTSIDE PARAPET)

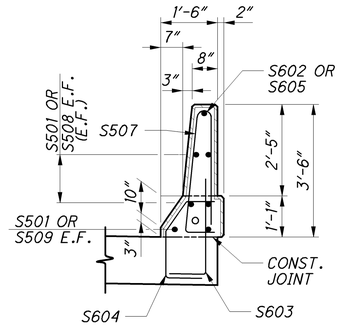

SECTION F-F (MEDIAN PARAPET)

FOR SEALING DETAILS SEE DETAIL A ON SHEET 27/37 .

JUNCTION BOX LOCATION (APPROX.)			
NORTHBOUND		SOUTHBOUND	
STATION	SIDE	STATION	SIDE
427+10	LT.	427+03	LT.
429+03	LT.	428+96	LT.
427+13	RT.	427+06	RT.
429+06	RT.	428+99	RT.

NOTES

1. FOR ADDITIONAL NOTES AND DETAILS, SEE STANDARD CONSTRUCTION DRAWINGS BR-1 & AS-1-81.
2. FOR BRIDGE TERMINAL ASSEMBLIES SEE ROADWAY STANDARD DRAWINGS GR-3.1 AND GR-3.2. SEE ROADWAY PLANS FOR DETAILS AND PAYMENT.
3. THE COST OF THE APPROACH SLAB PARAPET, EXCLUDING SEALING AND FORMLINER, SHALL BE INCLUDED WITH ITEM 898, QA/QC CONCRETE, CLASS QSC2, SUPERSTRUCTURE (APPROACH SLAB), (T=15"), AS PER PLAN.
4. FOR ADDITIONAL NOTES AND DETAILS OF PULL BOXES, STRUCTURE JUNCTION BOXES, AND CONDUIT, SEE STANDARD CONSTRUCTION DRAWING HL-30.11, HL-30.31, HL-30.32. SEE SHEETS 5/37 AND 6/37 FOR QUANTITIES FOR THESE ITEMS.
5. FOR AESTHETIC DETAILS, SEE SHEET 37/37.
6. FOR LOCATIONS OF SECTIONS AND DETAIL B SEE SHEET 31/37 .

* COST INCLUDED WITH APPROACH SLAB FOR PAYMENT

** LIMITS OF CONCRETE SEALING

*** FIELD BEND IF NECESSARY

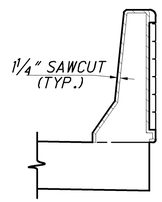

DETAIL B (OUTSIDE PARAPET)

(SECTION THROUGH SAWCUT)
SAWCUT PERIMETER = 8'-1"

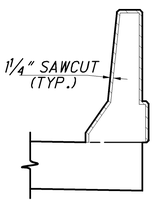

DETAIL B (MEDIAN PARAPET)

(SECTION THROUGH SAWCUT)
SAWCUT PERIMETER = 8'-1"

DESIGN AGENCY
PARSONS BRINCKERHOFF
2945 FARMERS DRIVE
SUITE 350
COLUMBUS, OHIO 43235

DESIGNED	DRAWN	REVIEWED	DATE
PJL	BKJ	EBS	05/24/12
CHECKED	REVISED	STRUCTURE FILE NUMBER	
SAP		LEFT: 0202185 RIGHT: 0202216	

PARAPET DETAILS 2 OF 2
BRIDGE NO. ALL-75-0813 L&R
I-75 OVER CHICAGO-FT. WAYNE & EASTERN RAILWAY

ALL-75-5.53
PID No. 76691

32/37

1005
1224

J:\Projects\ALL\76691\structures\ALL075_0813C\sheets\075_0813CRA002.dgn 11-SEP-2012 8:55PM reddenj

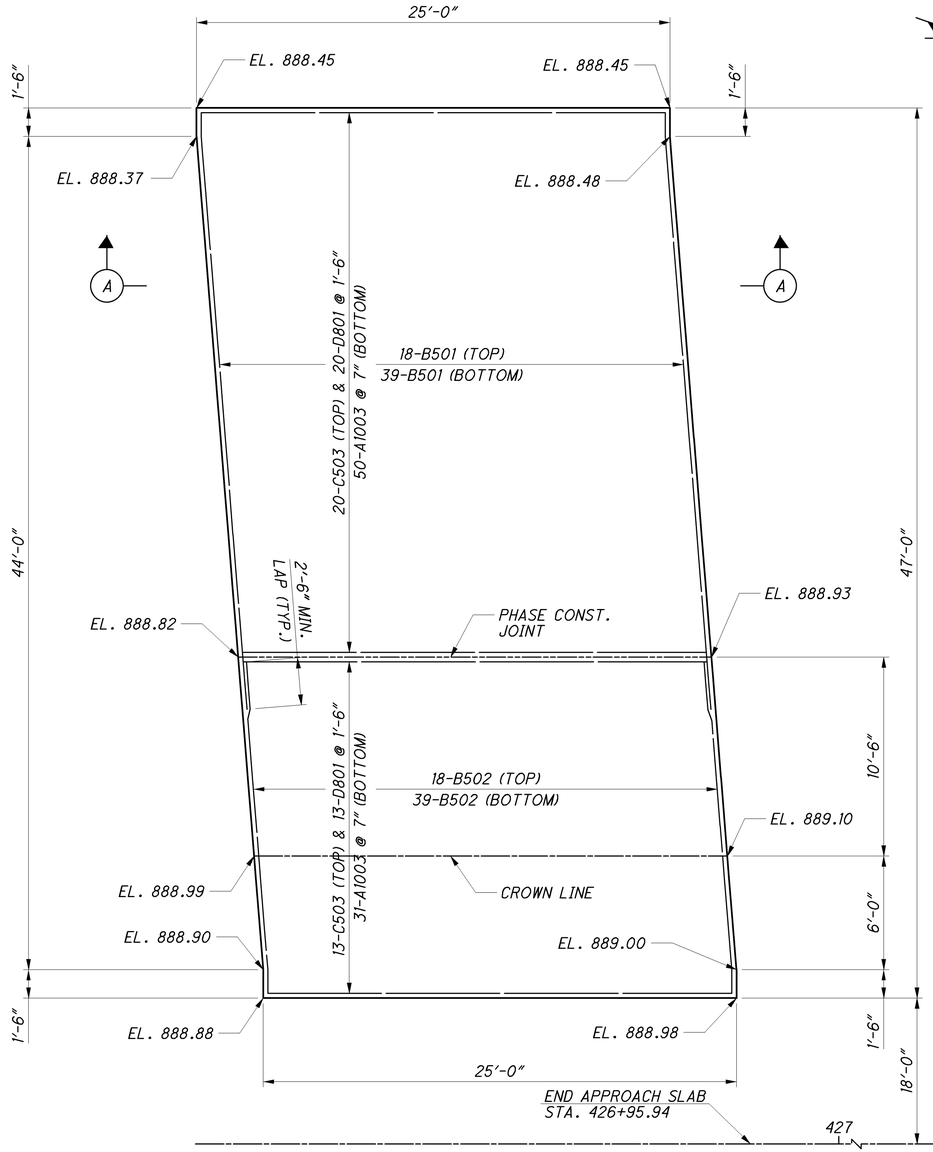

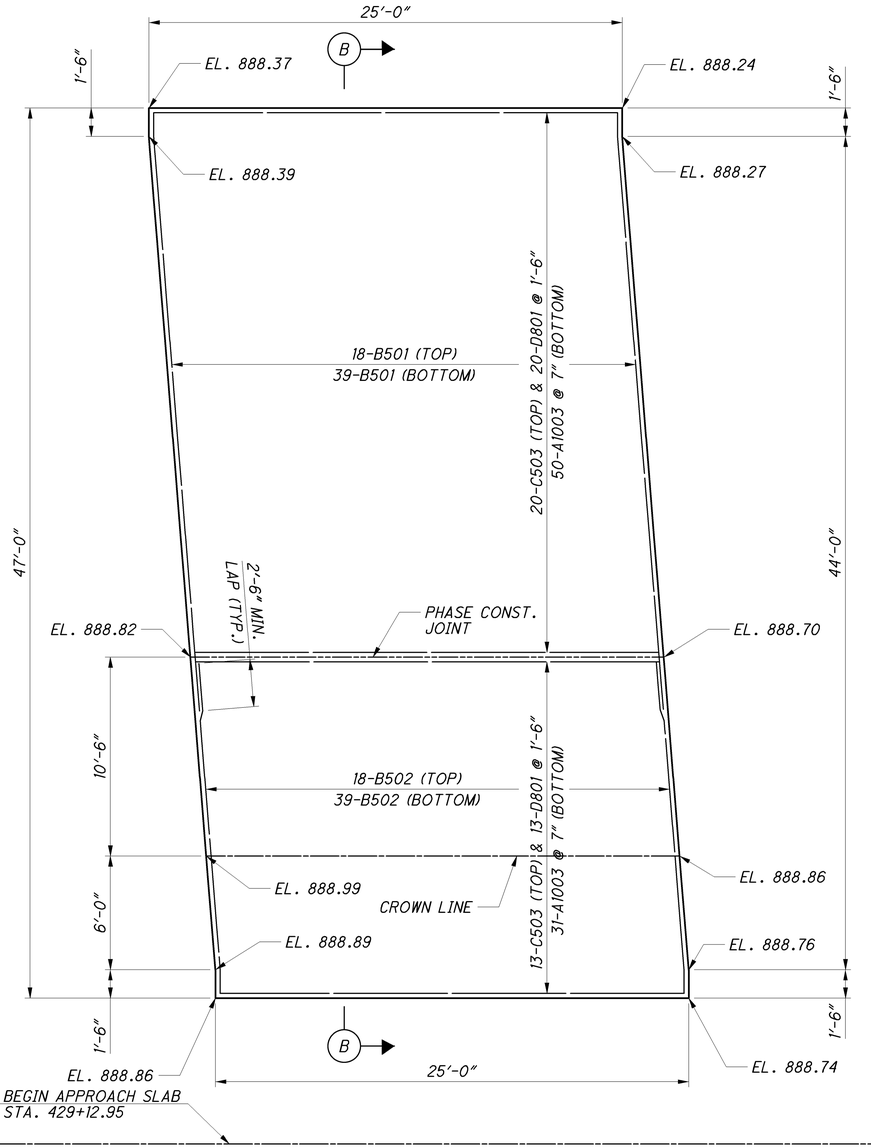

SOUTHBOUND APPROACH SLAB PLAN

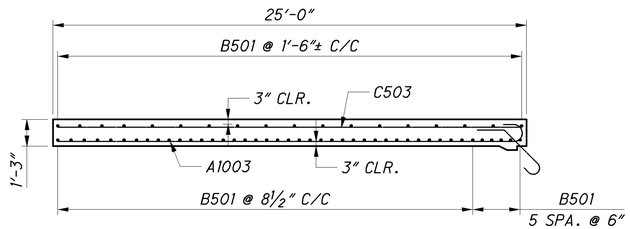

SECTION A-A

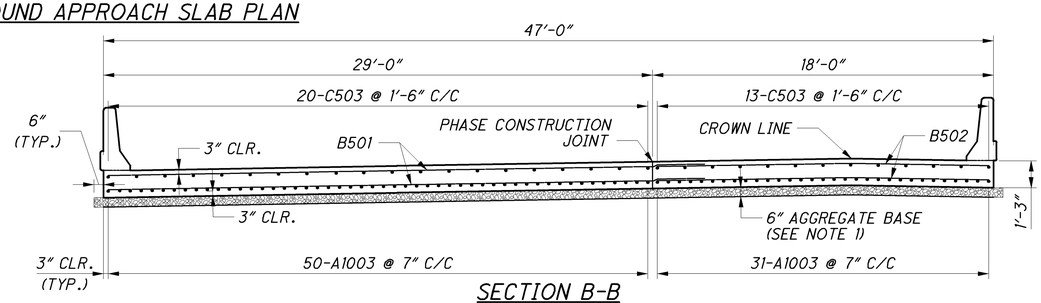

SECTION B-B

NOTES:

1. 6" AGGREGATE BASE INCLUDED WITH ROADWAY QUANTITIES FOR PAYMENT.
2. SUBGRADE COMPACTION INCLUDED WITH ROADWAY QUANTITIES FOR PAYMENT.
3. ADJUST LOCATION OF LONGITUDINAL REINFORCEMENT TO CLEAR THE CONSTRUCTION JOINT BY 2".
4. SEE SHEET 7/37 FOR CONSTRUCTION PHASING.

DESIGN AGENCY
PARSONS BRINCKERHOFF
2945 FARMERS DRIVE
SUITE 350
COLUMBUS, OHIO 43235

DESIGNED	DRAWN	REVIEWED	DATE
PJL	LEL	EBS	05/24/12
CHECKED	REVISED	STRUCTURE FILE NUMBER	
SAP		LEFT: 0202185 RIGHT: 0202216	

APPROACH SLAB DETAILS
BRIDGE NO. ALL-75-0813 L&R
I-75 OVER CHICAGO-FT. WAYNE & EASTERN RAILWAY

ALL-75-5.53
PID No. 76691

33/37

1006
1224

J:\Projects\ALL\76691\structures\ALL075_0813C\sheets\075_0813CMD001.dgn 11-SEP-2012 8:55PM reddenj

NOTES:

1. 6″ AGGREGATE BASE INCLUDED WITH ROADWAY QUANTITIES FOR PAYMENT.
2. SUBGRADE COMPACTION INCLUDED WITH ROADWAY QUANTITIES FOR PAYMENT.
3. ADJUST LOCATION OF LONGITUDINAL REINFORCEMENT TO CLEAR THE CONSTRUCTION JOINT BY 2″.
4. SEE SHEET 7/37 FOR CONSTRUCTION PHASING.

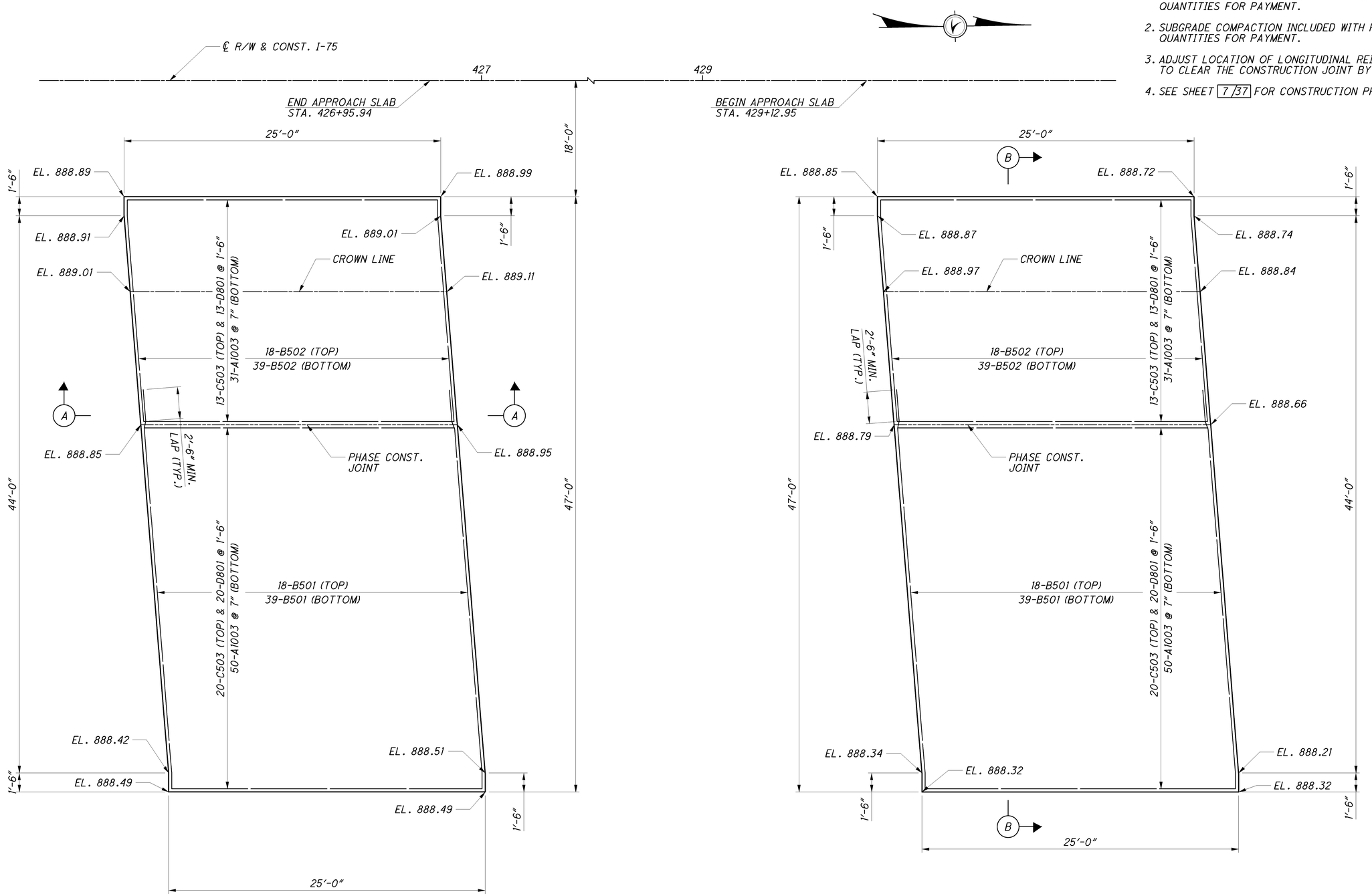

NORTHBOUND APPROACH SLAB PLAN

DESIGN AGENCY
PARSONS BRINCKERHOFF
2545 FARMERS DRIVE
SUITE 350
COLUMBUS, OHIO 43235

DESIGNED	DRAWN	REVIEWED	DATE
PJL	LEL	EBS	05/24/12
CHECKED	REVISED	STRUCTURE FILE NUMBER	
SAP		LEFT: 0202185 RIGHT: 0202216	

APPROACH SLAB DETAILS
BRIDGE NO. ALL-75-0813 L&R
I-75 OVER CHICAGO-FT. WAYNE & EASTERN RAILWAY

ALL-75-5.53
PID No. 76691

34/37

1007
1224

J:\Projects\ALL\76691\structures\ALL075_0813C\sheets\075_0813CMD002.dgn 11-SEP-2012 8:55PM reddenj

MARK	NUMBER TOTAL	LENGTH	WEIGHT	TYPE	DIMENSIONS A	B	C	D	E	R	INC
SUPERSTRUCTURE											
S401	700	30'- 00"	14,028	STR.							
S402	100	20'- 01"	1,342	STR.							
S501	1620	30'- 00"	50,690	STR.							
S502	100	23'- 08"	2,469	STR.							
S503	1680	17'- 11"	31,395	STR.							
S504	1680	28'- 11"	50,669	STR.							
S505	1680	9'- 09"	17,085	16	9'-2"						
S506	376	20'- 05"	8,007	STR.							
S507	960	7'- 01"	7,093	23	8"	3'-3"	3'-0"			1 1/2"	
S508	48	17'- 00"	852	STR.							
S510	368	8'- 03"	3,167	2	3'-2"	2'-2"	3'-2"				
S511	184	6'- 03"	1,200	2	2'-5"	1'-8"	2'-5"				
S512	32	9'- 11"	331	2	4'-0"	2'-2"	4'-4"				
S602	32	30'- 00"	1,442	STR.							
S603	960	4'- 08"	6,729	1	1'-0"	3'-10"					
S604	960	4'- 01"	5,888	14	10 1/2"	1'-11"	8 1/2"	6"	9"		
S605	8	6'- 09"	82	STR.							
D801	128	4'- 11"	1,681	18	2'-7"	1'-0"	1'-0"				
S801	56	29'- 10"	4,461	STR.							
S802	56	18'- 10"	2,816	STR.							
SUPERSTRUCTURE TOTAL			211,427								

MARK	NUMBER TOTAL	LENGTH	WEIGHT	TYPE	DIMENSIONS A	B	C	D	E	R	INC
APPROACH SLABS											
B501	228	31'- 06"	7,491	STR.							
B502	228	17'- 08"	4,202	STR.							
C503	132	24'- 06"	3,374	STR.							
AS506	16	14'- 03"	238	STR.							
AS507	32	24'- 07"	821	STR.							
AS508	16	5'- 08"	95	25	1'-10"	2'-5"	1'-4"	1 1/2"	5"		
AS509	88	7'- 01"	651	23	8"	3'-3"	3'-0"			1 1/2"	
AS510	32	10'- 00"	334	STR.							
	8	3'- 00"			2'-5"						
AS511	SER. OF	TO	314	16	TO						1"
	11	3'- 10"			3'-3"						
AS512	16	5'- 08"	95	STR.							
AS604	8	14'- 10"	179	STR.							
AS605	88	3'- 10"	507	1	1'-0"	3'-0"					
AS606	176	3'- 05"	904	14	10 1/2"	1'-3"	8 1/2"	6"	9"		
	8	4'- 04"				3'-6"					
AS607	SER. OF	TO	628	1	1'-0"	TO					1"
	11	5'- 02"				4'-4"					
AS608	64	4'- 04"	417	1	1'-0"	3'-6"					
A1003	324	25'- 11"	36,133	16	24'-6"						
APPROACH SLAB TOTAL			56,383								
FOR INFORMATION ONLY. NOT INCLUDED WITH ITEM 509.											

MARK	NUMBER TOTAL	LENGTH	WEIGHT	TYPE	DIMENSIONS A	B	C	D	E	R	INC
PIER											
P401	836	3'- 08"	2,048	17	2'-8"						
P501	20	10'- 03"	214	1	10"	9'-6"					
P502	20	5'- 11"	124	1	10"	5'-2"					
P503	20	17'- 11"	374	1	10"	17'-2"					
P504	300	4'- 01"	1,278	2	10"	2'-8"	10"				
P601	24	12'- 00"	433	33	2'-9"	2'-8"	1'-0"				
P602	16	4'- 02"	101	1	1'-7"	2'-9"					
P701	516	28'- 04"	29,884	STR.							
P702	516	17'- 04"	18,282	STR.							
P703	508	4'- 08"	4,846	2	1'-2"	2'-8"	1'-2"				
P901	48	32'- 07"	5,318	16	31'-4"						
P902	48	21'- 07"	3,523	16	20'-4"						
P903	424	6'- 08"	9,611	17	4'-2"						
P904	72	4'- 01"	1,000	1	1'-7"	2'-9"					
P1001	632	21'- 00"	57,110	1	19'-6"	1'-10"					
P1002	316	25'- 00"	33,994	STR.							
P1003	316	20'- 11"	28,442	STR.							
PIER TOTAL			196,582								

MARK	NUMBER TOTAL	LENGTH	WEIGHT	TYPE	DIMENSIONS A	B	C	D	E	R	INC
DRILLED SHAFT											
DS401	10	10'- 06"	2,246	27	4 1/2"	3'-6"	10'-6"				
DS402	10	12'- 06"	2,632	27	4 1/2"	3'-6"	12'-6"				
DS1101	230	14'- 10"	18,127	STR.							
DS1102	230	15'- 10"	19,349	STR.							
DRILLED SHAFT TOTAL			42,354								
FOR INFORMATION ONLY. NOT INCLUDED WITH ITEM 509.											

NOTES:

1. THE BAR SIZE NUMBER IS SPECIFIED ON THE PLANS IN THE BAR MARK COLUMN. THE FIRST DIGIT WHERE THREE DIGITS ARE USED, AND THE FIRST TWO DIGITS WHERE FOUR ARE USED, INDICATES THE BAR SIZE NUMBER. FOR EXAMPLE, P601 IS A NO. 6 BAR. BAR DIMENSIONS SHOWN ARE OUT TO OUT UNLESS OTHERWISE INDICATED. R INDICATES INSIDE RADIUS, UNLESS OTHERWISE NOTED.

2. ALL REINFORCEMENT IS TO BE EPOXY COATED.

DESIGN AGENCY
PARSONS BRINCKERHOFF
2945 FARMERS DRIVE
SUITE 350
COLUMBUS, OHIO 43235

DESIGNED PJL | DRAWN LEL | REVIEWED EBS | DATE 05/24/12
CHECKED SAP | REVISED | STRUCTURE FILE NUMBER LEFT: 0202185 RIGHT: 0202216

REINFORCING STEEL LIST
BRIDGE NO. ALL-75-0813 L&R
I-75 OVER CHICAGO-FT. WAYNE & EASTERN RAILWAY

ALL-75-5.53
PID No. 76691

1008
1224

J:\Projects\ALL\76691\structures\ALL075_0813C\sheets\075_0813CRL001.dgn 25-OCT-2012 11:52AM lint

MARK	NUMBER			LENGTH	WEIGHT	TYPE	DIMENSIONS						
	REAR	FWD.	TOTAL				A	B	C	D	E	R	INC
ABUTMENTS													
A401	66	66	132	9'- 02"	809	3	2'-7"	1'-9"					
A501	148	148	296	11'- 01"	3,422	3	2'-8"	2'-7"					
A502	92	92	184	8'- 11"	1,712	2	3'-6"	2'-2"	3'-6"				
A503	24	24	48	21'- 11"	1,098	STR.							
A504	24	24	48	19'- 08"	985	STR.							
A505	24	24	48	16'- 07"	831	STR.							
A506	4	4	8	9'- 09"	82	STR.							
A507	4	4	8	9'- 11"	83	STR.							
	2	2	4	3'- 08"									
A508	SER. OF	SER. OF	SER. OF	TO	81	STR.							2'-9 1/2"
	3	3	3	9'- 03"									
	2	2	4	3'- 10"									
A509	SER. OF	SER. OF	SER. OF	TO	83	STR.							2'-9 1/2"
	3	3	3	9'- 05"									
A510	2	2	4	10'- 04"	44	19	10"	9'-0"	3'-3"				
A511	2	2	4	10'- 06"	44	19	1'-0"	9'-0"	3'-3"				
A512	28	28	56	14'- 11"	872	2	6'-6"	2'-2"	6'-6"				
A513	2	2	4	11'- 09"	50	2	5'-0"	2'-2"	5'-0"				
	2	2	4	6'- 11"			2'-6"		2'-6"				
A514	SER. OF	SER. OF	SER. OF	TO	268	2	TO	2'-2"	TO				9"
	7	7	7	11'- 05"			4'-9"		4'-9"				
A515	2	2	4	6'- 01"	26	2	2'-1"	2'-2"	2'-1"				
A516	2	2	4	5'- 07"	24	2	1'-10"	2'-2"	1'-10"				
A517	36	36	72	13'- 01"	983	2	5'-7"	2'-2"	5'-7"				
A601	100	100	200	10'- 09"	3,230	26	2'-2"	5"	2'-7"	10"	1'-9"		
A801	16	16	32	22'- 08"	1,937	STR.							
A802	16	16	32	23'- 07"	2,015	STR.							
A803	16	16	32	35'- 10"	3,062	STR.							
ABUTMENT TOTAL					21,741								

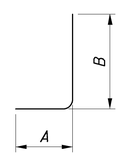

TYPE-1

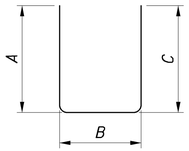

TYPE-2

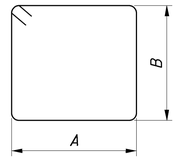

TYPE-3

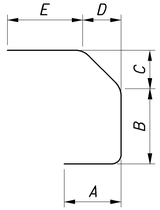

TYPE-14

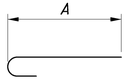

TYPE-16

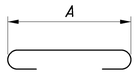

TYPE-17

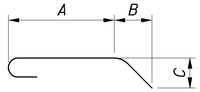

TYPE-18

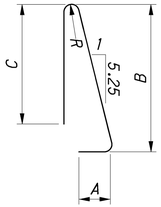

TYPE-23

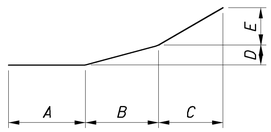

TYPE-25

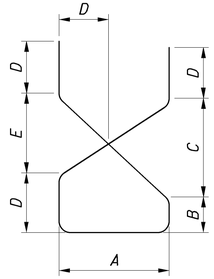

TYPE-26

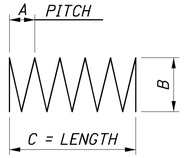

TYPE-27

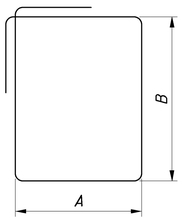

TYPE-33

DESIGN AGENCY
PARSONS BRINCKERHOFF
2945 FARMERS DRIVE
SUITE 350
COLUMBUS, OHIO 43235

DESIGNED PJL | DRAWN LEL | REVIEWED EBS | DATE 05/24/12
CHECKED SAP | REVISED | STRUCTURE FILE NUMBER LEFT: 0202185 RIGHT: 0202216

REINFORCING STEEL LIST
BRIDGE NO. ALL-75-0813 L&R
I-75 OVER CHICAGO-FT. WAYNE & EASTERN RAILWAY

ALL-75-5.53
PID No. 76691

36 / 37

1009
1224

J:\Projects\ALL\76691\structures\ALL075_0813C\sheets\075_0813CRL002.dgn 17-JAN-2013 11:55AM lint

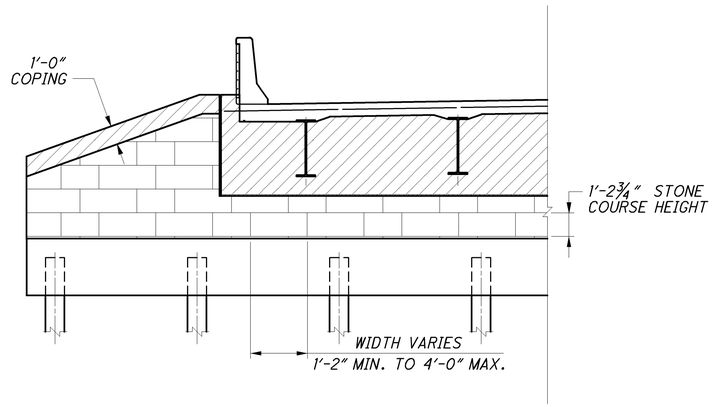

ABUTMENT AESTHETICS

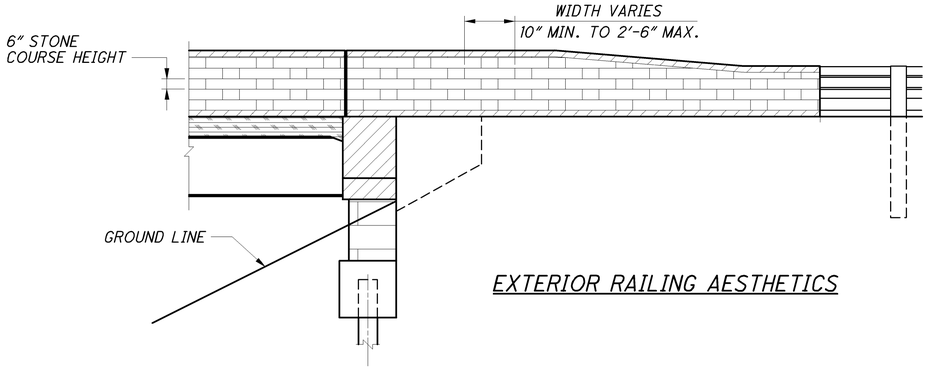

EXTERIOR RAILING AESTHETICS

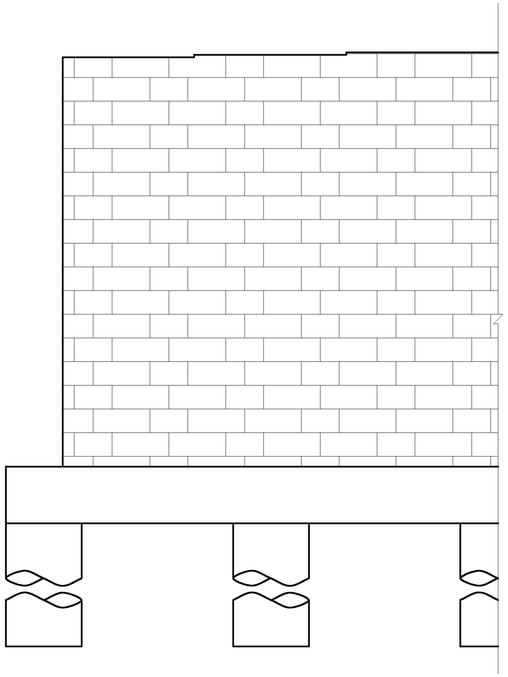

PIER AESTHETICS

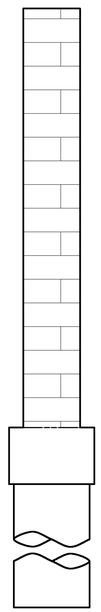

PIER SECTION

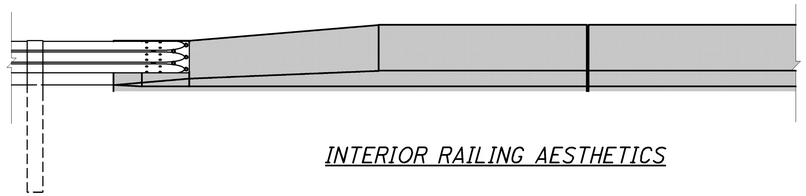

INTERIOR RAILING AESTHETICS

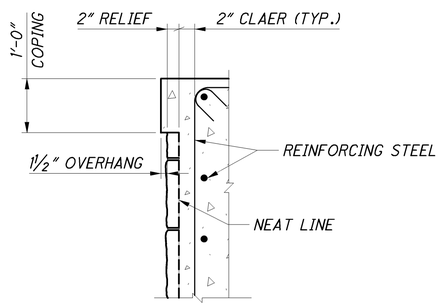

TYPICAL FORMLINER SECTION

SECTION AT WINGWALL SHOWN

LEGEND:

- FORMLINER PATTERN 1:
  - ROUGH CUT STONE FORMLINER W/ 2" RELIEF AND INTEGRALLY COLORED CONCRETE, FEDERAL COLOR NO. 36373, GRAY
- FORMLINER PATTERN 2:
  - ROUGH CUT STONE FORMLINER W/ 1⅝" RELIEF AND INTEGRALLY COLORED CONCRETE, FEDERAL COLOR NO. 36373, GRAY
- INTEGRALLY COLORED CONCRETE FEDERAL COLOR NO. 36373, GRAY
- EPOXY-URETHANE SEALER FEDERAL COLOR NO. 37875, WHITE
- EPOXY-URETHANE SEALER FEDERAL COLOR NO. 36373, GRAY

DESIGN AGENCY
PARSONS BRINCKERHOFF
2545 FARMERS DRIVE
SUITE 350
COLUMBUS, OHIO 43235

DESIGNED	DRAWN	REVIEWED	DATE
PJL	LEL	EBS	05/24/12
CHECKED	REVISED	STRUCTURE FILE NUMBER	
SAP		LEFT: 0202185 RIGHT: 0202215	

AESTHETICS DETAILS

BRIDGE NO. ALL-75-0813 L/R
I-75 OVER CHICAGO-FT. WAYNE & EASTERN RAILWAY

ALL-75-5.53
PID No. 76691

37 / 37

1010
1224

J:\Projects\ALL\76691\structures\ALL075_0813C\sheets\075_0813CMD003.dgn 11-SEP-2012 8:55PM reddenj

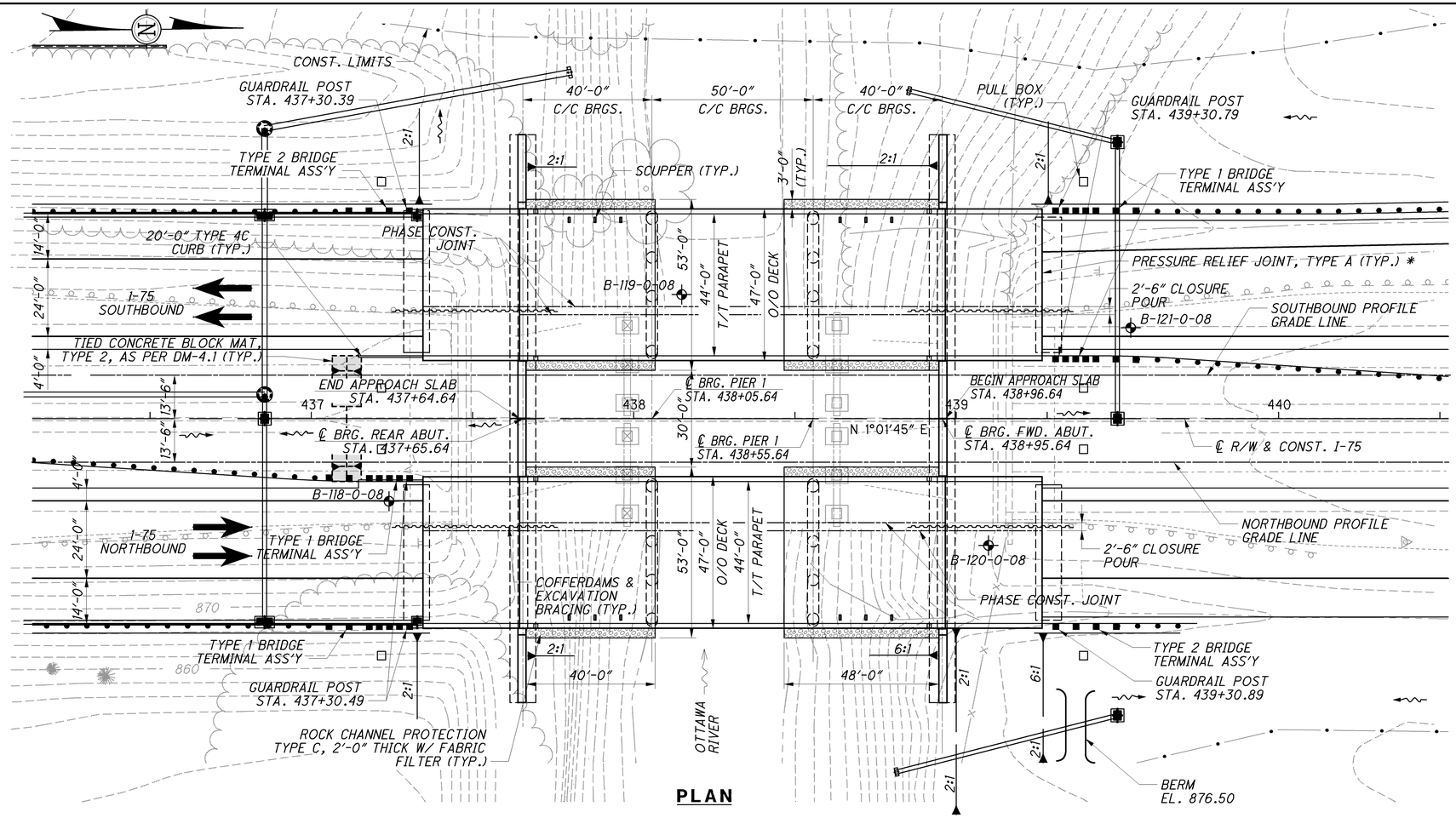

PLAN

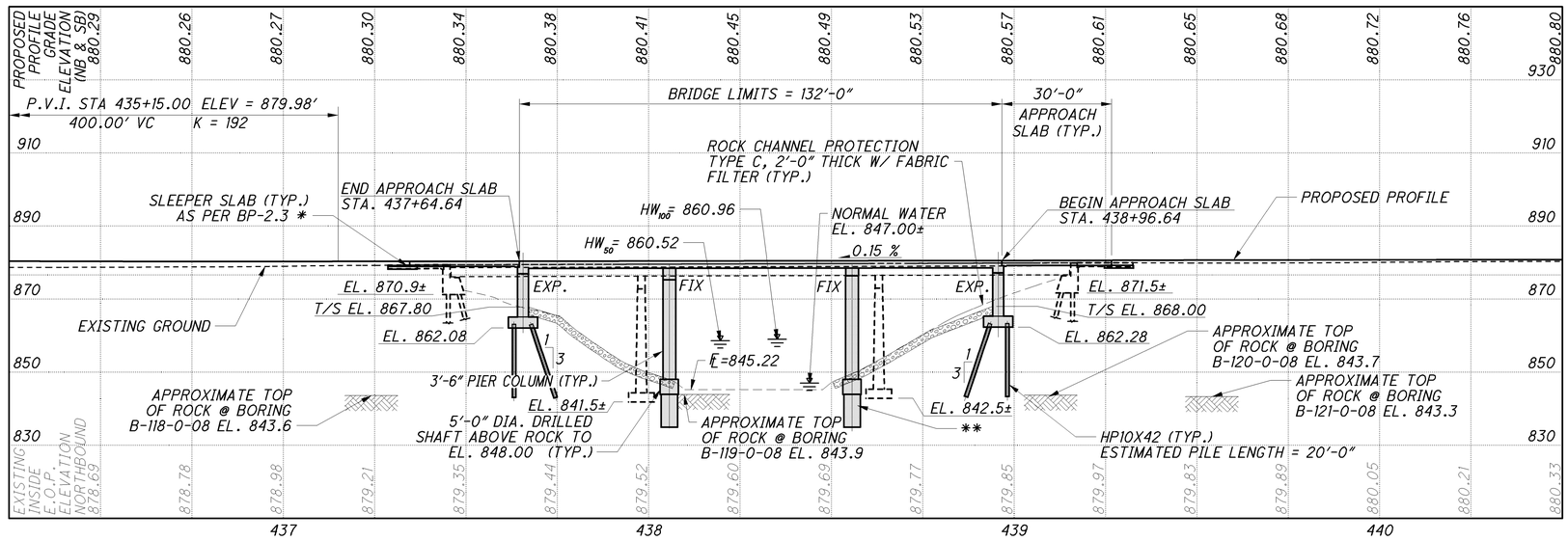

PROFILE

(ALONG NORTHBOUND PROPOSED PROFILE GRADE LINE)

** 4'-6" DRILLED SHAFT IN ROCK, MIN. 9' EMBEDMENT (TYP.)

NOTES

EARTHWORK LIMITS SHOWN ARE APPROXIMATE. ACTUAL SLOPES SHALL CONFORM TO PLAN CROSS SECTIONS.

DESIGN TRAFFIC:
2015 ADT = 49,540 2015 ADTT = 16,010
2035 ADT = 60,240 2035 ADTT = 23,494
DIRECTIONAL DISTRIBUTION = 0.50

LEGEND

BORING LOCATION

HYDRAULIC DATA

DRAINAGE AREA = 123 SQ. MILES
Q (50) = 6,090 CFS V (50) = 7.15 FT/S
Q (100) = 6,490 CFS V (100) = 7.30 FT/S
STRUCTURE CLEARS THE 50 YEAR DESIGN HW BY 21.8 FEET.
OHWM = 852.4

* USE PRESSURE RELIEF JOINT FOR RIGID PAVEMENT OPTION ONLY.

SOIL BORING LOCATIONS

BORING	STATION, OFFSET	APPROX. TOP OF ROCK
B-118-0-08	STA. 437+24.1, 25.6' RT.	843.6
B-119-0-08	STA. 438+14.9, 38.5' LT.	843.9
B-120-0-08	STA. 439+10.0, 39.3' RT.	843.7
B-121-0-08	STA. 439+54.1, 28.2' LT.	843.3

EXISTING STRUCTURE

TYPE: CONTINUOUS 3-SPAN STEEL BEAM WITH REINFORCED CONCRETE DECK AND SUBSTRUCTURE

SPANS: 52'± - 65'± - 52'± C/C BRGS.
ROADWAY: 62'-0"± F/F 2' SAFETY CURB
LOADING: CF-2000(51)
SKEW: NONE
APPROACH SLABS: AS-1-54 (L=15')
ALIGNMENT: TANGENT
CROWN: NORMAL 3/16"/FT.
STRUCTURAL FILE NUMBER: 0202223
DATE BUILT: 1956
WEARING SURFACE: MICROSILICA MODIFIED CONCRETE

PROPOSED STRUCTURE

TYPE: CONTINUOUS 3-SPAN REINFORCED CONCRETE SLAB WITH SEMI-INTEGRAL ABUTMENTS AND CAP AND COLUMN PIERS.

SPAN: 40'-0"-50'-0"-40'-0" C/C BEARINGS
ROADWAY: 44'-0" TOE/TOE PARAPET
LOADING: HL-93
FUTURE WEARING SURFACE (FWS) OF 0.060 kips/ft
SKEW: NONE
APPROACH SLABS: 30'-0" LONG (AS-1-81) (MODIFIED)
WEARING SURFACE: 1" MONOLITHIC
ALIGNMENT: TANGENT
CROWN: 0.016 FT/FT
COORDINATES: LATITUDE 40°45'0"
LONGITUDE 84°4'30"

DESIGN AGENCY
PARSONS BRINCKERHOFF
2545 FARMERS DRIVE
SUITE 350
COLUMBUS, OHIO 43235

DESIGNED PJL | DRAWN LEL | CHECKED SAP | REVIEWED EBS | DATE 05/24/12 | REVISED

STRUCTURE FILE NUMBER
LEFT: 0202231
RIGHT: 0202290

ALLEN COUNTY
STA. 437+64.64
STA. 438+96.64

SITE PLAN
ALL-75-0832 L&R
I-75 OVER OTTAWA RIVER

ALL-75-5.53
PID No. 76691

J:\Projects\ALL\76691\structures\ALL075_0832C\sheets\075_0832CSP001.dgn 11-SEP-2012 8:55PM reddenj

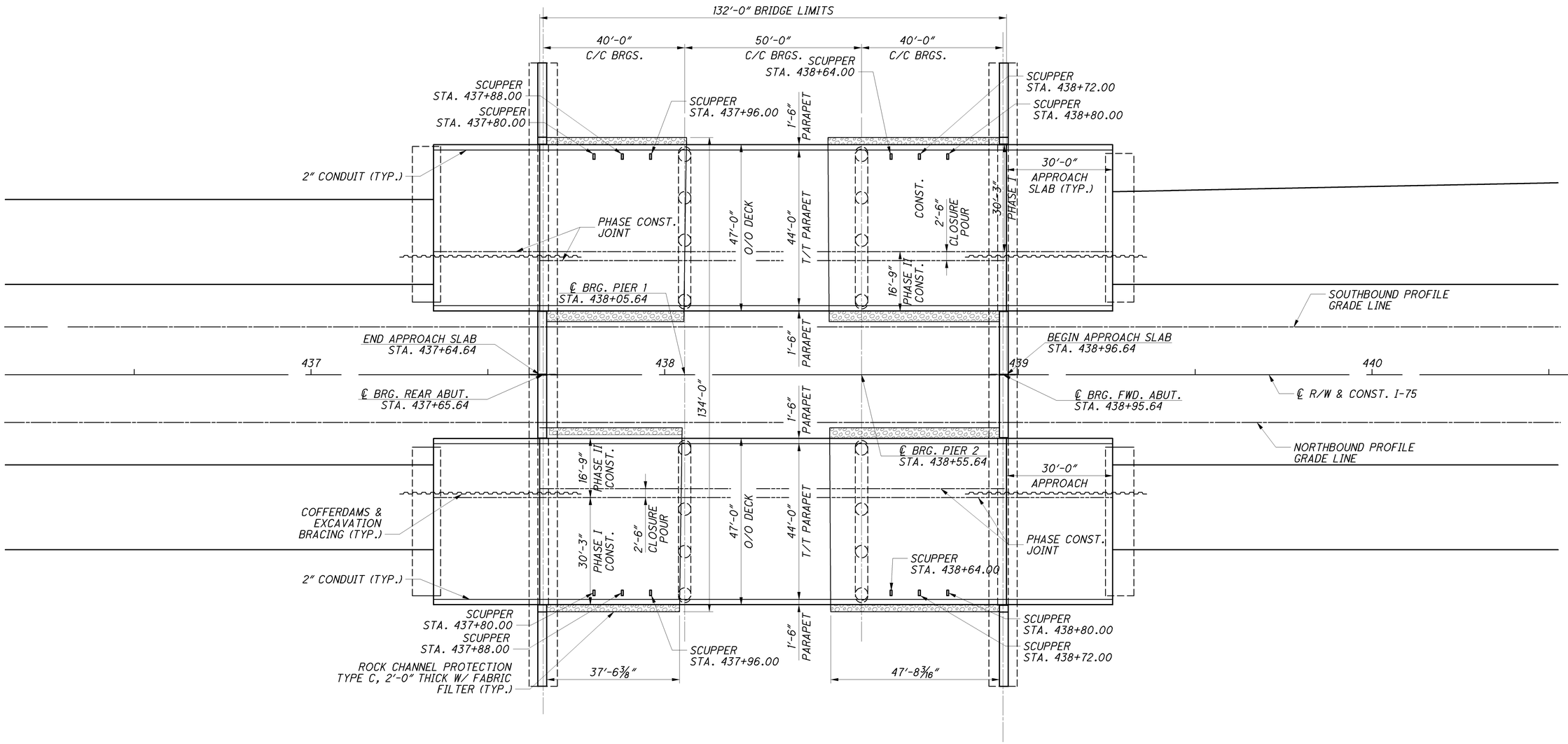

GENERAL PLAN

DESIGN AGENCY
PARSONS BRINCKERHOFF
2545 FARMERS DRIVE
SUITE 350
COLUMBUS, OHIO 43235

DESIGNED	DRAWN	REVIEWED	DATE
PJL	TLP	EBS	05/24/12
CHECKED	REVISED	STRUCTURE NUMBER	
SAP		LEFT: 0202231 RIGHT: 0202290	

GENERAL PLAN
ALL-75-0832 L&R
I-75 OVER OTTAWA RIVER

ALL-75-5.53
PID No. 76691

2 / 29

1012
1224

J:\Projects\ALL\76691\structures\ALL075_0832C\sheets\075_0832CGP001.dgn 11-SEP-2012 8:55PM reddenj

STANDARD DRAWINGS AND SUPPLEMENTAL SPECIFICATIONS

REFER TO THE FOLLOWING STANDARD BRIDGE DRAWING(S):

AS-1-81 REVISED 07-19-02
BR-1 REVISED 07-19-02
CS-1-08 DATED 07-18-08
PCB-91 REVISED 07-19-02
SICD-1-96 REVISED 07-19-02

AND TO THE FOLLOWING SUPPLEMENTAL SPECIFICATION(S):

800 DATED 1-20-12
832 DATED 05-05-09
898 DATED 10-21-11

DESIGN SPECIFICATIONS

THIS STRUCTURE CONFORMS TO THE "LRFD BRIDGE DESIGN SPECIFICATIONS" ADOPTED BY THE AMERICAN ASSOCIATION OF STATE HIGHWAY AND TRANSPORTATION OFFICIALS, 5TH EDITION , INCLUDING THE 2010 INTERIM SPECIFICATIONS, AND THE ODOT BRIDGE DESIGN MANUAL, 2007.

DESIGN DATA

CONCRETE CLASS QSC2 - COMPRESSIVE STRENGTH 4.5 KSI (SUPERSTRUCTURE)
CONCRETE CLASS QSC1 - COMPRESSIVE STRENGTH 4.0 KSI (SUBSTRUCTURE)
CONCRETE CLASS S MODIFIED - COMPRESSIVE STRENGTH 4.0 KSI (DRILLED SHAFT)
REINFORCING STEEL - MINIMUM YIELD STRENGTH 60 KSI
STEEL H-PILES - ASTM A572 - YIELD STRENGTH 50 KSI

LOAD MODIFIER FOR OPERATIONAL IMPORTANCE

A LOAD MODIFIER OF 1.00 HAS BEEN ASSUMED FOR THE DESIGN OF THIS STRUCTURE IN ACCORDANCE WITH THE AASHTO LRFD BRIDGE DESIGN SPECIFICATIONS, ARTICLE 1.3.5 AND THE ODOT BRIDGE DESIGN MANUAL, 2007.

DESIGN LOADING

DESIGN LOADING: HL-93

FUTURE WEARING SURFACE (FWS) OF 0.060 KIPS/SQ.FT.

DECK PROTECTION METHOD

EPOXY COATED REINFORCING STEEL

2.5" CONCRETE COVER

SEALING OF CONCRETE SURFACES

MONOLITHIC WEARING SURFACE

MONOLITHIC WEARING SURFACE IS ASSUMED, FOR DESIGN PURPOSES, TO BE 1 INCH THICK.

EXISTING STRUCTURE PLANS:

CONSTRUCTION PLANS FOR THE EXISTING BRIDGE ARE ON FILE AT THE OHIO DEPARTMENT OF TRANSPORTATION, DISTRICT ONE OFFICE, 1885 NORTH MCCULLOUGH ST., LIMA, OHIO 45801 AND ARE AVAILABLE FOR REFERENCE.

ITEM 503, COFFERDAMS AND EXCAVATION BRACING, AS PER PLAN

THE DESIGN SHOWN ON THE PLANS FOR TEMPORARY SUPPORT OF EXCAVATION IS ONE REPRESENTATIVE DESIGN THAT MAY BE USED TO CONSTRUCT THE PROJECT. THE CONTRACTOR MAY CONSTRUCT THE DESIGN SHOWN ON THE PLANS OR PREPARE AN ALTERNATE DESIGN TO SUPPORT THE SIDES OF EXCAVATIONS. IF CONSTRUCTING AN ALTERNATE DESIGN FOR TEMPORARY SUPPORT OF EXCAVATION, PREPARE AND PROVIDE PLANS IN ACCORDANCE WITH C&MS 501.05. THE DEPARTMENT WILL PAY FOR THE TEMPORARY SUPPORT OF EXCAVATION AT THE CONTRACT LUMP SUM PRICE FOR COFFERDAMS AND EXCAVATION BRACING. NO ADDITIONAL PAYMENT WILL BE MADE FOR PROVIDING AN ALTERNATE DESIGN.

PILES TO BEDROCK

DRIVE PILES TO REFUSAL ON BEDROCK. THE DEPARTMENT WILL CONSIDER REFUSAL TO BE OBTAINED BY PENETRATING WEAK BEDROCK FOR SEVERAL INCHES TO A MINIMUM RESISTANCE OF 20 BLOWS PER INCH OR BY CONTACTING STRONG BEDROCK AND THE PILE RECEIVING AT LEAST 20 BLOWS. SELECT THE HAMMER SIZE TO ACHIEVE THE REQUIRED DEPTH TO BEDROCK AND REFUSAL. INSTEAD OF DRIVING TO REFUSAL, THE CONTRACTOR MAY PERFORM DYNAMIC LOAD TESTING ACCORDING TO C&MS 523 TO ESTABLISH A DRIVING CRITERIA FOR EACH PILE TYPE AND CAPACITY. ESTABLISH THE DRIVING CRITERIA TO ACHIEVE AN ULTIMATE BEARING VALUE THAT IS 1.5 TIMES THE TOTAL FACTORED LOAD GIVEN BELOW FOR THE PILES. PAYMENT FOR DYNAMIC LOAD TESTING PERFORMED AT THE CONTRACTOR'S OPTION IS INCLUDED IN THE UNIT PRICE PAY ITEM FOR PILES DRIVEN.

THE TOTAL FACTORED LOAD IS 213 KIPS PER PILE FOR THE REAR AND FORWARD ABUTMENT PILES.

ABUTMENT PILES:
HP10X42 PILES 25 FEET LONG, ORDER LENGTH

PILE SPLICES

IN LIEU OF USING THE FULL PENETRATION BUTT WELDS SPECIFIED IN CMS 507.09 TO SPLICE STEEL H-PILES, THE CONTRACTOR MAY USE A MANUFACTURED H-PILE SPLICER. FURNISH SPLICERS FROM THE FOLLOWING MANUFACTURER:

ASSOCIATED PILE AND FITTING CORPORATION
262 RUTHERFORD BLVD.
CLIFTON, NEW JERSEY 07014

INSTALL AND WELD THE SPLICER TO THE PILE SECTIONS IN ACCORDANCE WITH THE MANUFACTURER'S WRITTEN ASSEMBLY PROCEDURE SUPPLIED TO THE ENGINEER BEFORE THE WELDING IS PERFORMED.

DRILLED SHAFTS

THE MAXIMUM FACTORED LOAD TO BE SUPPORTED BY EACH DRILLED SHAFT IS 853 KIPS AT THE PIERS. THIS LOAD IS RESISTED BY TIP RESISTANCE. THE FACTORED RESISTANCE PROVIDED BY THE DRILLED SHAFT TIP IS 986 KIPS.

DECK PLACEMENT DESIGN ASSUMPTIONS:

DECK PLACEMENT DESIGN ASSUMPTIONS:
THE FOLLOWING ASSUMPTIONS OF CONSTRUCTION MEANS AND METHODS WERE MADE FOR THE ANALYSIS AND DESIGN OF THE SUPERSTRUCTURE. THE CONTRACTOR IS RESPONSIBLE FOR THE DESIGN OF THE FALSEWORK SUPPORT SYSTEM WITHIN THESE PARAMETERS AND WILL ASSUME RESPONSIBILITY FOR SUPERSTRUCTURE ANALYSIS FOR DEVIATION FROM THESE DESIGN ASSUMPTIONS.

AN EIGHT WHEEL FINISHING MACHINE WITH A MAXIMUM WHEEL LOAD OF 1.07 KIPS FOR A TOTAL MACHINE LOAD OF 8.59 KIPS.

A MINIMUM OUT-TO-OUT WHEEL SPACING AT EACH END OF THE MACHINE OF 103".

A MAXIMUM SPACING OF OVERHANG FALSEWORK BRACKETS OF 48 IN.

A MAXIMUM DISTANCE FROM THE CENTERLINE OF THE FASCIA GIRDER TO THE FACE OF THE SAFETY HANDRAIL OF 65".

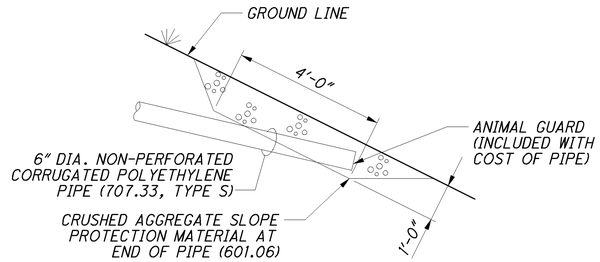

TERMINATION OF 6" NON-PERFORATED CORRUGATED PLASTIC PIPE (NPCPP)

ITEM 898 - QC/QA CONCRETE, CLASS QSC2, SUPERSTRUCTURE (APPROACH SLAB), AS PER PLAN

ACCEPTED QUANTITIES SHALL INCLUDE: CONCRETE, CONCRETE BARRIERS, REINFORCING STEEL, JOINT FILLERS, JOINT SEALERS, JOINT SEALS, AND WATERPROOFING. THE DEPARTMENT WILL MEASURE APPROACH SLABS BY THE NUMBER OF SQUARE YARDS.

ITEM 518 - 6" NON-PERFORATED CORRUGATED PLASTIC PIPE, INCLUDING SPECIALS, AS PER PLAN

ANIMAL GUARDS SHALL BE PROVIDED AT THE OUTLET OF THE DRAINAGE PIPES, STEEL BOLTS OR RODS FOR THE ANIMAL GUARDS SHALL BE GALVANIZED PER CMS 711.02. SEE STD DWG. DM 1.1 FOR ADDITIONAL DETAILS AND NOTES. THE ANIMAL GUARDS AND CRUSHED AGGREGATE SLOPE PROTECTION ARE INCIDENTAL TO ITEM 518 - 6" NON-PERFORATED CORRUGATED PLASTIC PIPE, INCLUDING SPECIALS, AS PER PLAN.

ABUTMENT CONSTRUCTION

EXCAVATION FOR THE ABUTMENT CONSTRUCTION SHALL BE AS SHOWN ON THE PLANS. AFTER THE FOOTING AND THE BREASTWALL HAVE BEEN CONSTRUCTED, CONSTRUCT THE EMBANKMENT IMMEDIATELY BEHIND THE ABUTMENTS UP TO THE BEAM SEAT ELEVATION AND ON A 1:1 SLOPE UP TO THE SUBGRADE ELEVATION PRIOR TO SETTING THE BEAMS ON THE ABUTMENTS.

ABBREVIATIONS:

ABUT. = ABUTMENT
APPROX. = APPROXIMATE
ASS'Y = ASSEMBLY
BRG. = BEARING
C/C = CENTER TO CENTER
C.J. = CONSTRUCTION JOINT
CLR. = CLEAR
CONST. = CONSTRUCTION
DIA. = DIAMETER
DWG. = DRAWING
E.F. = EACH FACE
EL. = ELEVATION
EST. = ESTIMATE
EX. = EXISTING
F.A. = FORWARD ABUTMENT
F.F. = FAR FACE
FWD. = FORWARD
LT. = LEFT
MAX. = MAXIMUM
MIN. = MINIMUM
N.F. = NEAR FACE
N.P.C.P.P. = NON-PERFORATED CORRUGATED PLASTIC PIPE
O/O = OUT TO OUT
P.C.P.P. = PERFORATED CORRUGATED PLASTIC PIPE
P.E.J.F. = PREFORMED EXPANSION JOINT FILLER
P.F.J. = PRECOMPRESSED FOAM JOINT
PROP. = PROPOSED
R.A. = REAR ABUTMENT
RT. = RIGHT
SER. = SERIES
SPA. = SPACES
STA. = STATION
STD. = STANDARD
T/T = TOE TO TOE
T/S = TOP OF SLOPE
TYP. = TYPICAL
D.S. = DOWN STATION
U.S. = UP STATION

J:\Projects\ALL\76691\structures\ALL075_0832C\sheets\075_0832CGN001.dgn 11-SEP-2012 8:55PM reddenj

DESIGN AGENCY
PARSONS BRINCKERHOFF
2945 FARMERS DRIVE
SUITE 350
COLUMBUS, OHIO 43235

DESIGNED	DRAWN	REVIEWED	DATE
PJL	LEL	EBS	05/24/12
CHECKED	REVISED	STRUCTURE FILE NUMBER	
SAP		LEFT: 0202231 RIGHT: 0202290	

GENERAL NOTES
BRIDGE NO. ALL-75-0832 L&R
I-75 OVER OTTAWA RIVER

ALL-75-5.53
PID No. 89029

1013
1224

02/IMS/BR/		ITEM	EXTENSION	TOTAL	UNIT	ESTIMATED QUANTITIES DESCRIPTION	ALL-75-0832L ABUT.	PIER	SUPER.	GEN.	SEE SHEET NO.
1		202	11002	1	LUMP	STRUCTURE REMOVED, OVER 20 FOOT SPAN				1	
94		202	22900	94	SQ YD	APPROACH SLAB REMOVED				94	
1		503	11101	1	LUMP	COFFERDAMS AND EXCAVATION BRACING, AS PER PLAN				1	26/29
1		503	21301	1	LUMP	UNCLASSIFIED EXCAVATION, AS PER PLAN	1				4/29
1		505	11100	1	LUMP	PILE DRIVING EQUIPMENT MOBILIZATION	1				
1,400		507	00100	1,400	FT	STEEL PILES HP10X42, FURNISHED	1,400				
1,120		507	00150	1,120	FT	STEEL PILES HP10X42, DRIVEN	1,120				
56		507	93300	56	EACH	STEEL POINTS OR SHOES	56				
170,053		509	10000	170,053	POUND	EPOXY COATED REINFORCING STEEL	29,914	39,213	100,926		
1,015		512	10100	1,015	SQ YD	SEALING OF CONCRETE SURFACES (EPOXY-URETHANE)	216	346	340	113	
59		512	10300	59	SQ YD	SEALING CONCRETE BRIDGE DECKS WITH HMWM RESIN			59		
13		512	33000	13	SQ YD	TYPE 2 WATERPROOFING	13				
14		516	13600	14	SQ FT	1" PREFORMED EXPANSION JOINT FILLER			14		
175		516	13900	175	SQ FT	2" PREFORMED EXPANSION JOINT FILLER	175				
94		516	14020	94	FT	SEMI-INTEGRAL ABUTMENT EXPANSION JOINT SEAL	94				
94		516	42600	94	FT	ELASTOMERIC BEARING PAD, MISC.: 1.75" X 10" ELASTOMERIC BEARING PAD			94		
163		518	21200	163	CU YD	POROUS BACKFILL WITH FILTER FABRIC	163				
177		518	40000	177	FT	6" PERFORATED CORRUGATED PLASTIC PIPE	177				
35		518	40011	35	FT	6" NON-PERFORATED CORRUGATED PLASTIC PIPE, INCLUDING SPECIALS, AS PER PLAN	35				3/29
72		524	94908	72	FT	DRILLED SHAFTS, 54" DIAMETER, INTO BEDROCK		72			
33		524	94914	33	FT	DRILLED SHAFTS, 60" DIAMETER, ABOVE BEDROCK		33			
346		601	32204	346	CU YD	ROCK CHANNEL PROTECTION, TYPE C WITH FABRIC FILTER				346	
424		625	25400	424	FT	CONDUIT, 2", 725.04			264	160	
4		625	29920	4	EACH	STRUCTURE JUNCTION BOX				4	
4		625	30700	4	EACH	PULL BOX, 725.08, 18"				4	
480		898	10220	480	CU YD	QC/QA CONCRETE, CLASS QSC2, SUPERSTRUCTURE (DECK)			480		
314		898	10709	314	SQ YD	QC/QA CONCRETE, CLASS QSC2, SUPERSTRUCTURE (APPROACH SLAB), (T=17"), AS PER PLAN				314	3/29
34		898	11000	34	CU YD	QC/QA CONCRETE, CLASS QSC2, SUPERSTRUCTURE (PARAPET)			34		
113		898	20100	113	CU YD	QC/QA CONCRETE, CLASS QSC1, SUBSTRUCTURE (PIER ABOVE FOOTING)		113			
217		898	20150	217	CU YD	QC/QA CONCRETE, CLASS QSC1, SUBSTRUCTURE (ABUTMENT)	217				
157		898	20300	157	CU YD	QC/QA CONCRETE, CLASS QSC1, SUBSTRUCTURE (FOOTING)	157				

CALC BY: SAP
CHCK BY: EBS

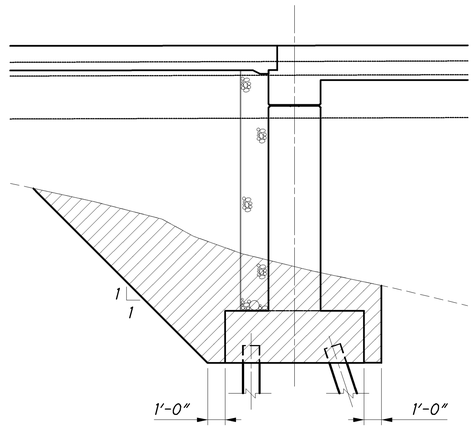

UNCLASSIFIED EXCAVATION AT ABUTMENT

- LIMITS OF UNCLASSIFIED EXCAVATION, AS PER PLAN

DESIGN AGENCY
PARSONS BRINCKERHOFF
2545 FARMERS DRIVE
SUITE 350
COLUMBUS, OHIO 43235

DESIGNED	DRAWN	REVIEWED	DATE
SAP	BKJ	EBS	05/24/12
CHECKED	REVISED	STRUCTURE FILE NUMBER	
PJL		LEFT: 0202231 RIGHT: 0202290	

ESTIMATED QUANTITIES
BRIDGE NO. ALL-75-0832 L&R
I-75 OVER OTTAWA RIVER

ALL-75-5.53
PID No. 76691

J:\Projects\ALL\76691\structures\ALL075_0832C\sheets\075_0832CEQ001.dgn 24-JAN-2013 10:43AM jint

02/IMS/BR/		ITEM	EXTENSION	TOTAL	UNIT	ESTIMATED QUANTITIES	ALL-75-0832R				SEE
						DESCRIPTION	ABUT.	PIER	SUPER.	GEN.	SHEET NO.
1		202	11002	1	LUMP	STRUCTURE REMOVED, OVER 20 FOOT SPAN				1	
94		202	22900	94	SQ YD	APPROACH SLAB REMOVED				94	
1		503	11101	1	LUMP	COFFERDAMS AND EXCAVATION BRACING, AS PER PLAN				1	26/29
1		503	21301	1	LUMP	UNCLASSIFIED EXCAVATION, AS PER PLAN	1				4/29
1		505	11100	1	LUMP	PILE DRIVING EQUIPMENT MOBILIZATION	1				
1,400		507	00100	1,400	FT	STEEL PILES HP10X42, FURNISHED	1,400				
1,120		507	00150	1,120	FT	STEEL PILES HP10X42, DRIVEN	1,120				
56		507	93300	56	EACH	STEEL POINTS OR SHOES	56				
170,053		509	10000	170,053	POUND	EPOXY COATED REINFORCING STEEL	29,914	39,213	100,926		
1,015		512	10100	1,015	SQ YD	SEALING OF CONCRETE SURFACES (EPOXY-URETHANE)	216	346	340	113	
59		512	10300	59	SQ YD	SEALING CONCRETE BRIDGE DECKS WITH HMWM RESIN			59		
13		512	33000	13	SQ YD	TYPE 2 WATERPROOFING	13				
14		516	13600	14	SQ FT	1" PREFORMED EXPANSION JOINT FILLER			14		
48		516	13900	48	SQ FT	2" PREFORMED EXPANSION JOINT FILLER	48				
94		516	14020	94	FT	SEMI-INTEGRAL ABUTMENT EXPANSION JOINT SEAL	94				
94		516	42600	94	FT	ELASTOMERIC BEARING PAD, MISC.: 1.75" X 10" ELASTOMERIC BEARING PAD			94		
163		518	21200	163	CU YD	POROUS BACKFILL WITH FILTER FABRIC	163				
177		518	40000	177	FT	6" PERFORATED CORRUGATED PLASTIC PIPE	177				
35		518	40011	35	FT	6" NON-PERFORATED CORRUGATED PLASTIC PIPE, INCLUDING SPECIALS, AS PER PLAN	35				3/29
72		524	94908	72	FT	DRILLED SHAFTS, 54" DIAMETER, INTO BEDROCK		72			
33		524	94914	33	FT	DRILLED SHAFTS, 60" DIAMETER, ABOVE BEDROCK		33			
346		601	32204	346	CU YD	ROCK CHANNEL PROTECTION, TYPE C WITH FABRIC FILTER				346	
424		625	25400	424	FT	CONDUIT, 2", 725.04			264	160	
4		625	29920	4	EACH	STRUCTURE JUNCTION BOX				4	
4		625	30700	4	EACH	PULL BOX, 725.08, 18"				4	
480		898	10220	480	CU YD	QC/QA CONCRETE, CLASS QSC2, SUPERSTRUCTURE (DECK)			480		
313		898	10709	313	SQ YD	QC/QA CONCRETE, CLASS QSC2, SUPERSTRUCTURE (APPROACH SLAB), (T=17"), AS PER PLAN				313	3/29
34		898	11000	34	CU YD	QC/QA CONCRETE, CLASS QSC2, SUPERSTRUCTURE (PARAPET)			34		
113		898	20100	113	CU YD	QC/QA CONCRETE, CLASS QSC1, SUBSTRUCTURE (PIER ABOVE FOOTING)		113			
217		898	20150	217	CU YD	QC/QA CONCRETE, CLASS QSC1, SUBSTRUCTURE (ABUTMENT)	217				
157		898	20300	157	CU YD	QC/QA CONCRETE, CLASS QSC1, SUBSTRUCTURE (FOOTING)	157				

CALC BY: SAP DATE: 3/28/2012
CHCK BY: EBS DATE: 5/21/2012

DESIGN AGENCY
PARSONS BRINCKERHOFF
2545 FARMERS DRIVE
SUITE 350
COLUMBUS, OHIO 43235

DESIGNED	DRAWN	REVIEWED	DATE
PJL	BKJ	EBS	05/24/12
CHECKED	REVISED	STRUCTURE FILE NUMBER	
SAP		LEFT: 0202231 RIGHT: 0202290	

ESTIMATED QUANTITIES
BRIDGE NO. ALL-75-0832 L&R
I-75 OVER OTTAWA RIVER

ALL-75-5.53
PID No. 76691

1015
1224

J:\Projects\ALL\76691\structures\ALL075_0832C\sheets\075_0832CEQ002.dgn 24-JAN-2013 10:43AM lint

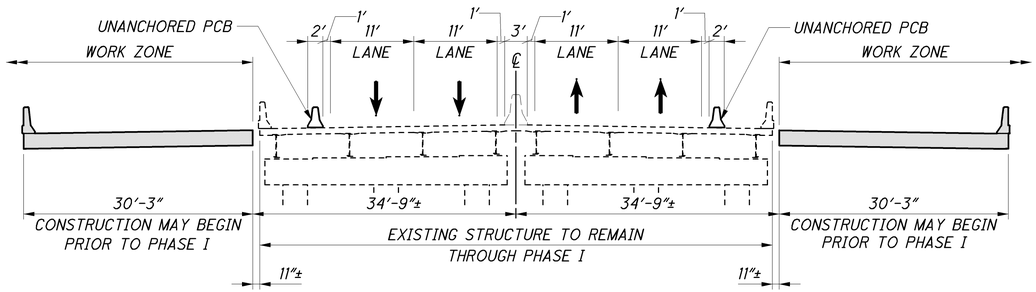

SECTION A-A

PHASE I

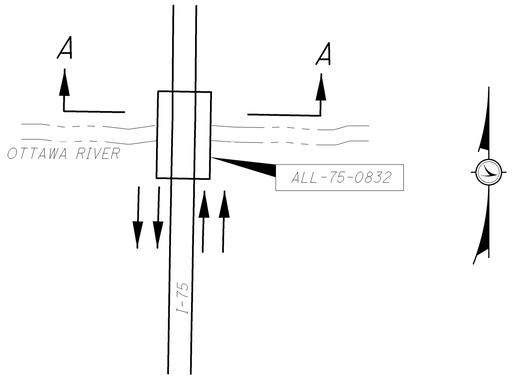

LEGEND:

- REMOVAL
- PROPOSED
- PORTABLE CONCRETE BARRIER (PCB) (TO BE ANCHORED ON BRIDGES AS SHOWN)

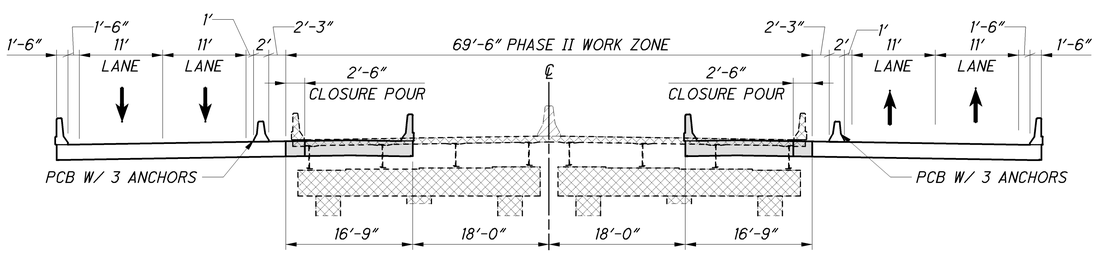

SECTION A-A

PHASE II

SEQUENCE OF CONSTRUCTION

PHASE I

1. INSTALL PORTABLE CONCRETE BARRIER ON THE EXISTING STRUCTURE AND SHIFT LANES.
2. CONSTRUCT THE PROPOSED WESTERN PORTION OF THE SOUTHBOUND STRUCTURE AND EASTERN PORTION OF THE NORTHBOUND STRUCTURE TO THE LIMITS SHOWN.

PHASE II

1. INSTALL PORTABLE CONCRETE BARRIER ON THE NEWLY CONSTRUCTED STRUCTURES AND SHIFT LANES.
2. REMOVE EXISTING STRUCTURE.
3. CONSTRUCT THE REMAINDER OF THE SOUTHBOUND AND NORTHBOUND STRUCTURE TO THE LIMITS SHOWN NOT INCLUDING THE CLOSURE POUR.
4. COMPLETE THE SOUTHBOUND AND NORTHBOUND CLOSURE POURS.

J:\Projects\ALL\76691\structures\ALL075_0832C\sheets\075_0832CPC001.dgn 11-SEP-2012 8:55PM reddenj

DESIGN AGENCY
PARSONS BRINCKERHOFF
2545 FARMERS DRIVE
SUITE 350
COLUMBUS, OHIO 43235

DESIGNED	DRAWN	REVIEWED	DATE
PJL	LEL	EBS	05/24/12
CHECKED	REVISED	STRUCTURE NUMBER	
SAP		LEFT: 0202231 RIGHT: 0202290	

MAINTENANCE OF TRAFFIC
BRIDGE NO. ALL-75-0832 L&R
I-75 OVER OTTAWA RIVER

ALL-75-5.53
PID No. 76691

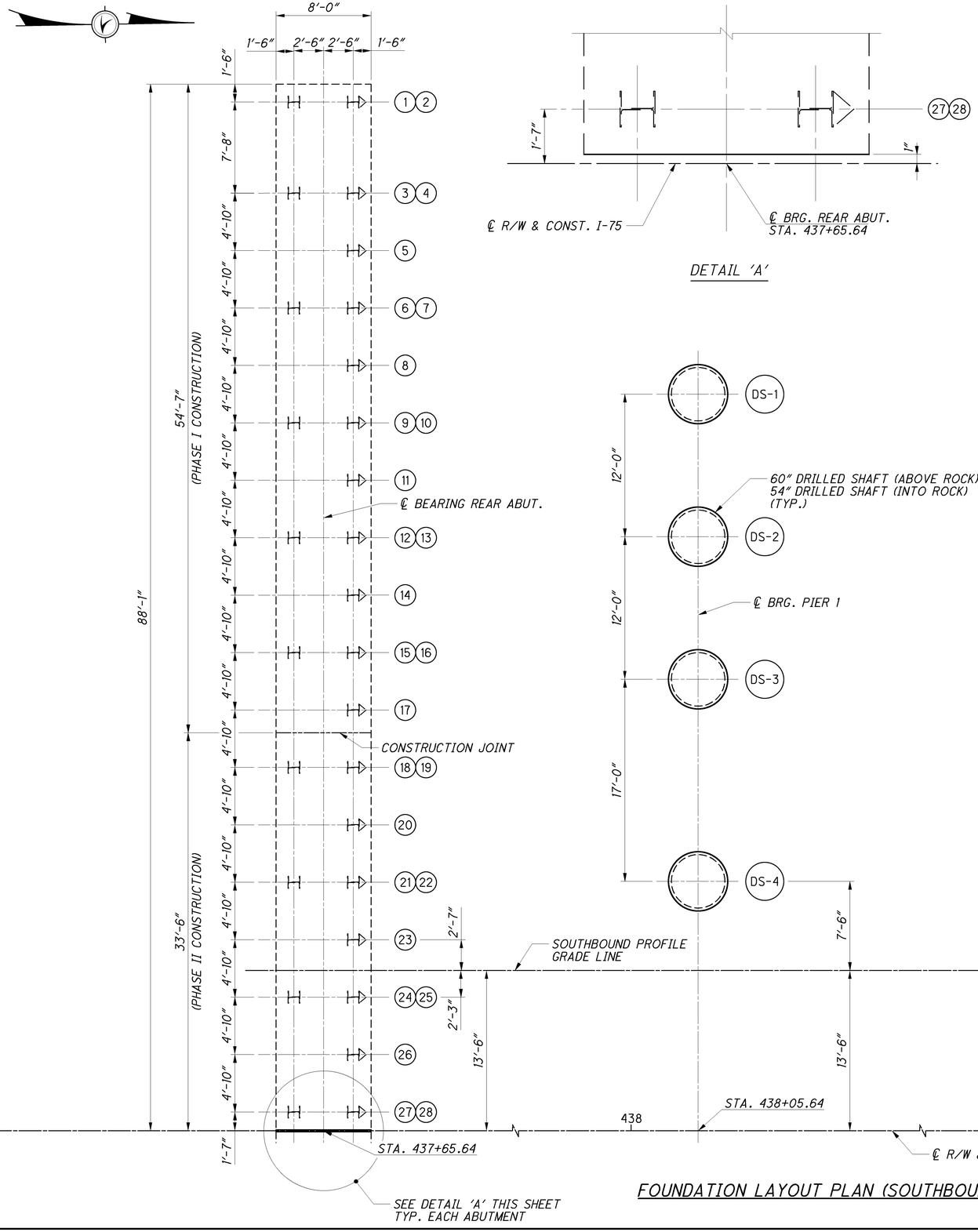

FOUNDATION LAYOUT PLAN (SOUTHBOUND LANES)

FOUNDATION LAYOUT PLAN - SOUTHBOUND

BRIDGE NO. ALL-75-0832 L&R
I-75 OVER OTTAWA RIVER

ALL-75-5.53
PID No. 76691

7 / 29

1017
1224

DESIGN AGENCY
PARSONS BRINCKERHOFF
2545 FARMERS DRIVE
SUITE 350
COLUMBUS, OHIO 43235

DESIGNED	DRAWN	REVIEWED	DATE
PJL	BKJ	EBS	05/24/12
CHECKED	REVISED	STRUCTURE NUMBER	
SAP		LEFT: 0202231 RIGHT: 0202290	

J:\Projects\ALL\76691\structures\ALL075_0832C\sheets\075_0832CFP001.dgn 11-SEP-2012 8:55PM reddenj

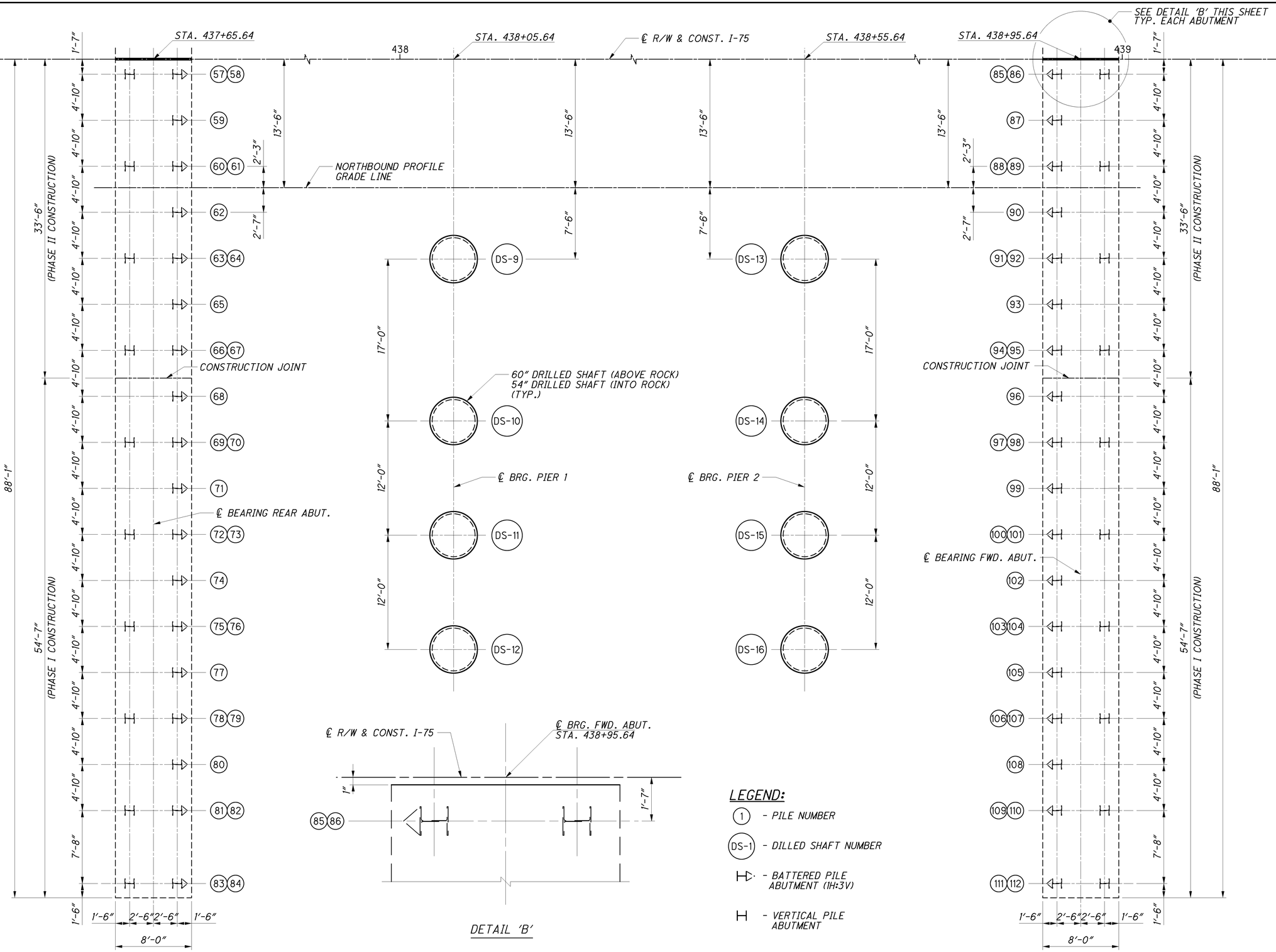

FOUNDATION LAYOUT PLAN (NORTHBOUND LANES)

DESIGN AGENCY
PARSONS BRINCKERHOFF
2545 FARMERS DRIVE
SUITE 350
COLUMBUS, OHIO 43235

DESIGNED	DRAWN	REVIEWED	DATE
PJL	BKJ	EBS	05/24/12
CHECKED	REVISED	STRUCTURE NUMBER	LEFT: 0202231 RIGHT: 0202290
SAP			

FOUNDATION LAYOUT PLAN - NORTHBOUND
BRIDGE NO. ALL-75-0832 L&R
I-75 OVER OTTAWA RIVER

ALL-75-5.53
PID No. 76691

8 / 29

1018
1224

I:\Projects\ALL\76691\structures\ALL075_0832C\sheets\075_0832CFP002.dgn 11-SEP-2012 8:55PM reddenj

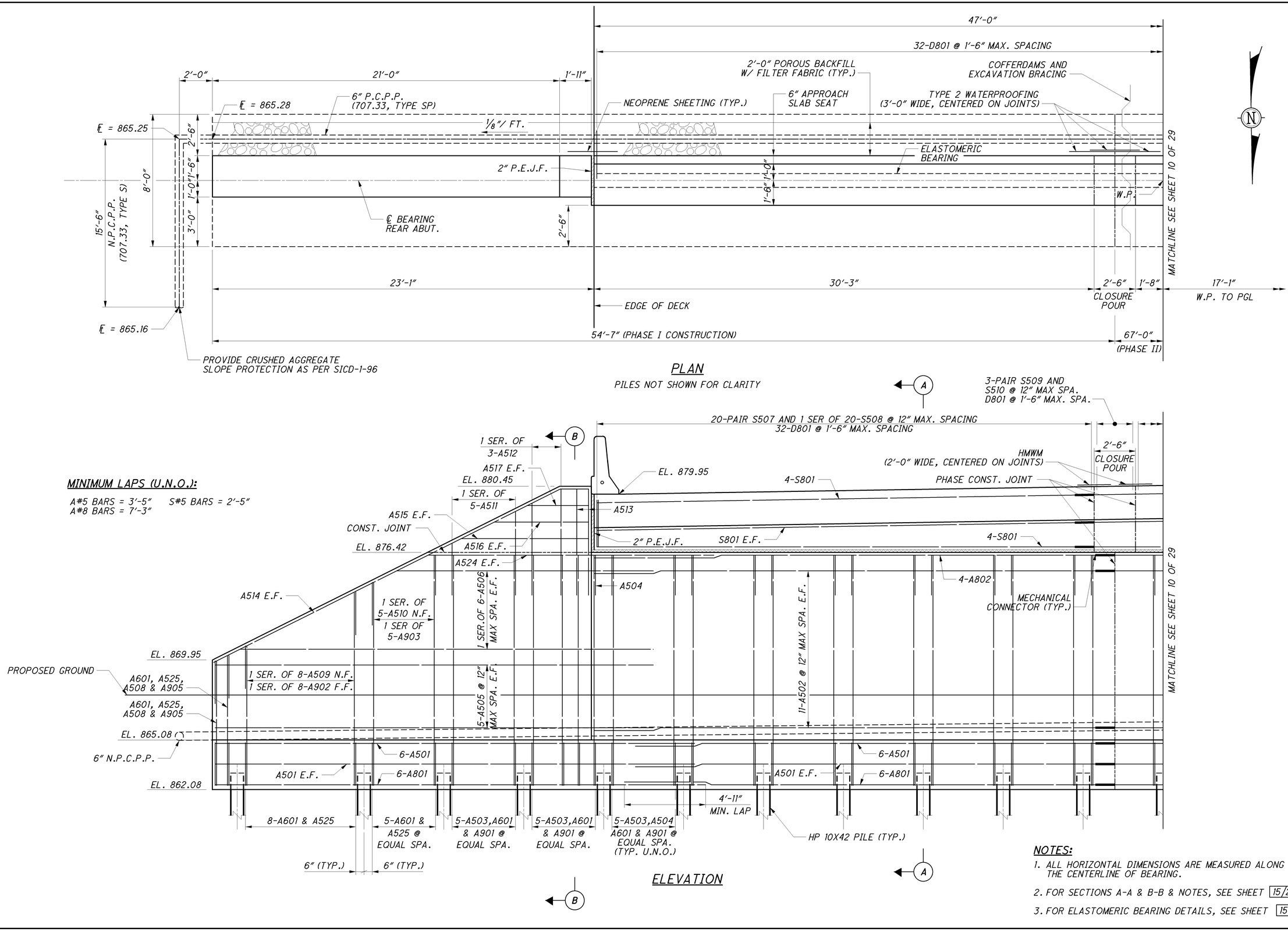

NOTES:

1. ALL HORIZONTAL DIMENSIONS ARE MEASURED ALONG THE CENTERLINE OF BEARING.
2. FOR SECTIONS A-A & B-B & NOTES, SEE SHEET 15/29 .
3. FOR ELASTOMERIC BEARING DETAILS, SEE SHEET 15/29 .

DESIGN AGENCY
PARSONS BRINCKERHOFF
2545 FARMERS DRIVE
SUITE 350
COLUMBUS, OHIO 43235

DESIGNED PJL
DRAWN LEL
CHECKED SAP
REVIEWED EBS
DATE 05/24/12
STRUCTURE NUMBER LEFT: 0202231 RIGHT: 0202290
REVISED

REAR ABUTMENT DETAILS
BRIDGE NO. ALL-75-0832 L&R
I-75 OVER OTTAWA RIVER

ALL-75-5.53
PID No. 76691

9 / 29

1019
1224

J:\Projects\ALL\76691\structures\ALL075_0832C\sheets\075_0832CAR001.dgn 11-SEP-2012 8:55PM reddenj

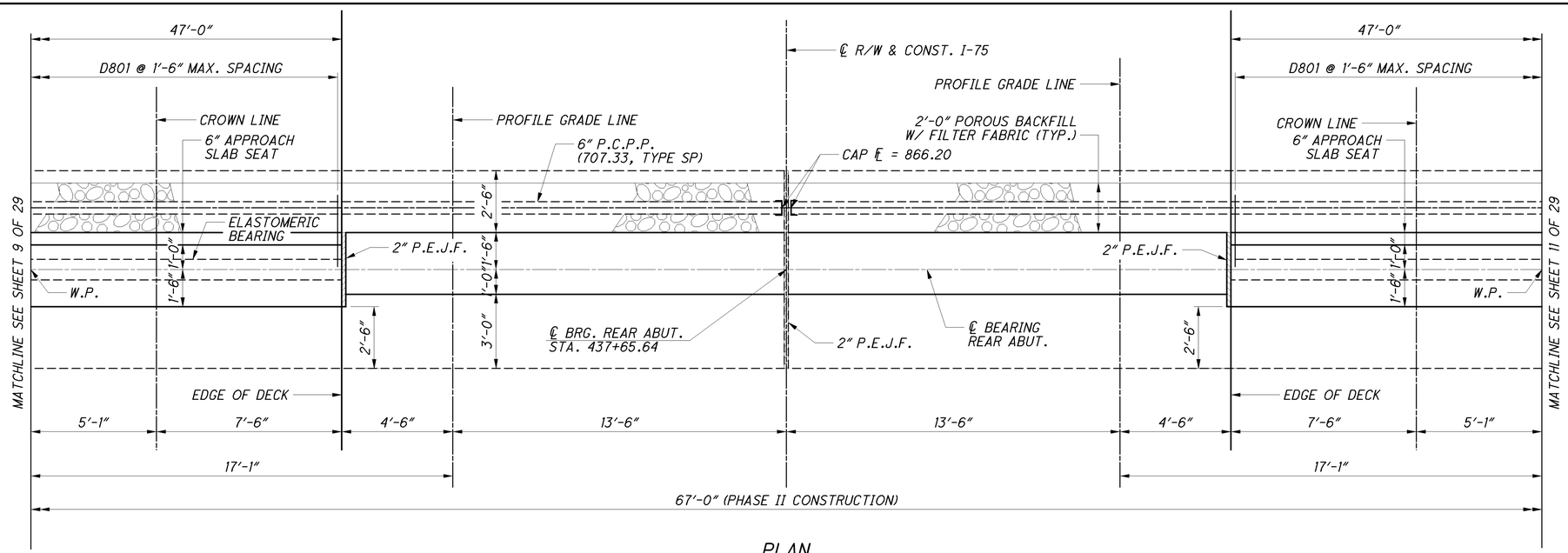

PLAN

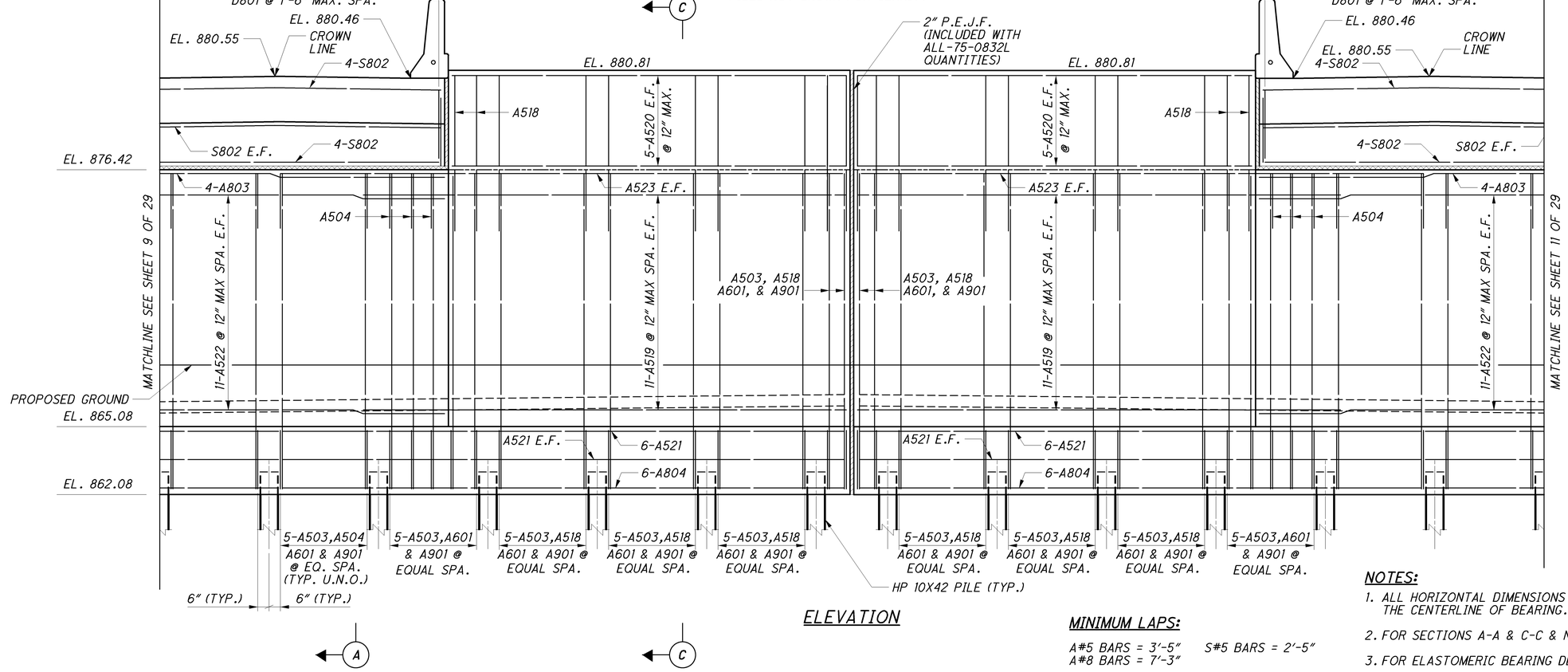

ELEVATION

MINIMUM LAPS:

A#5 BARS = 3'-5" S#5 BARS = 2'-5"
A#8 BARS = 7'-3"

NOTES:

1. ALL HORIZONTAL DIMENSIONS ARE MEASURED ALONG THE CENTERLINE OF BEARING.
2. FOR SECTIONS A-A & C-C & NOTES, SEE SHEET 15/29 .
3. FOR ELASTOMERIC BEARING DETAILS, SEE SHEET 15/29 .

DESIGN AGENCY
PARSONS BRINCKERHOFF
2945 FARMERS DRIVE
SUITE 350
COLUMBUS, OHIO 43235

DESIGNED	DRAWN	REVIEWED	DATE
PJL	LEL	EBS	05/24/12
CHECKED	REVISED	STRUCTURE FILE NUMBER	LEFT: 0202231 RIGHT: 0202290
SAP			

REAR ABUTMENT DETAILS

BRIDGE NO. ALL-75-0832 L&R
I-75 OVER OTTAWA RIVER

ALL-75-5.53
PID No. 76691

10 / 29

1020
1224

J:\Projects\ALL\76691\structures\ALL075_0832C\sheets\075_0832CAR002.dgn 11-SEP-2012 8:56PM reddenj

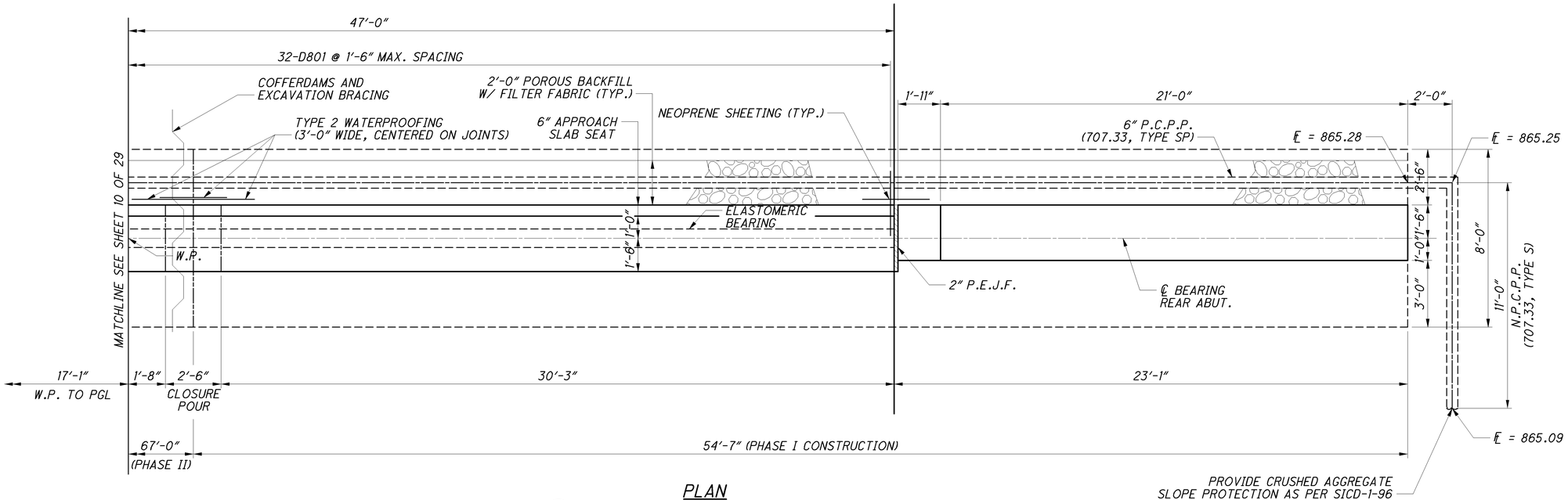

PLAN

PILES NOT SHOWN FOR CLARITY

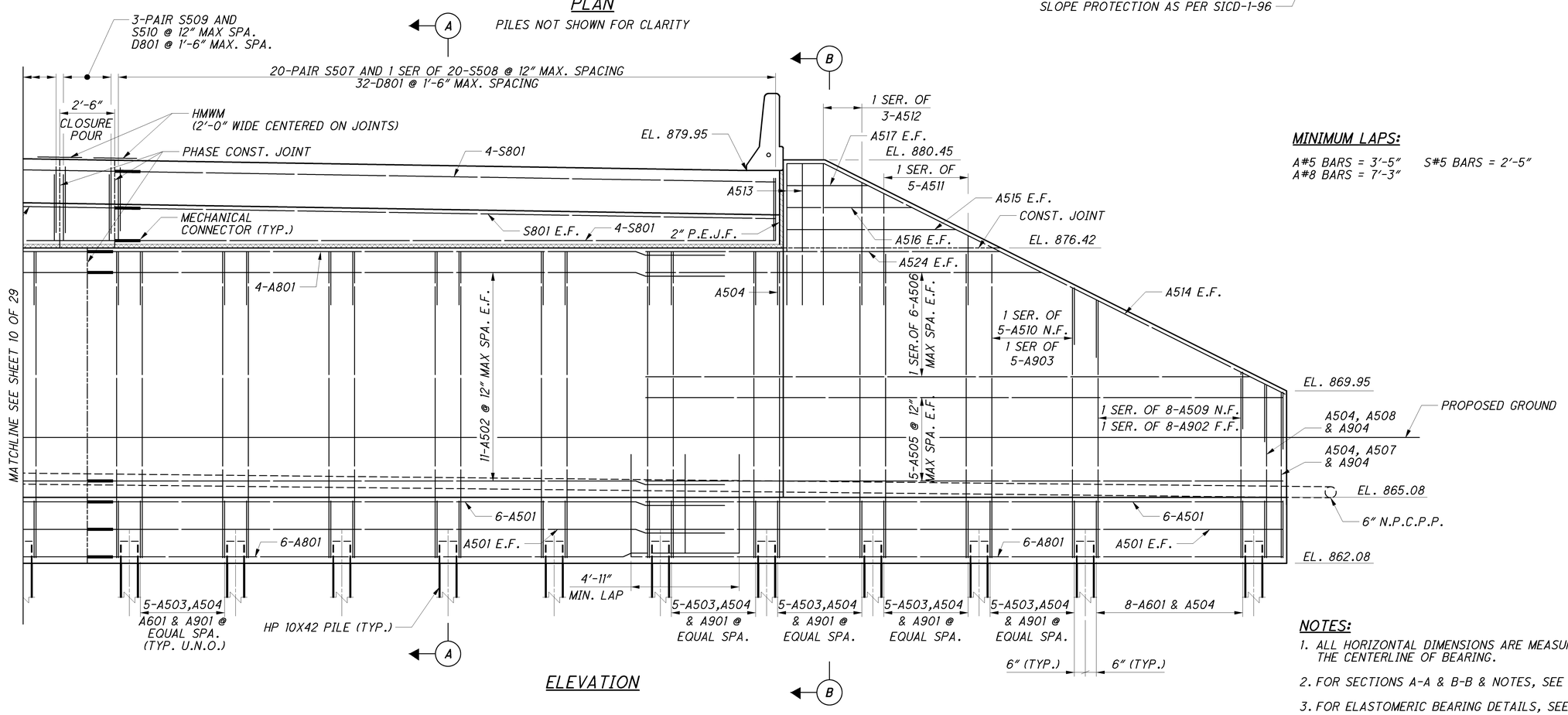

ELEVATION

MINIMUM LAPS:

A#5 BARS = 3'-5" S#5 BARS = 2'-5"
A#8 BARS = 7'-3"

NOTES:

1. ALL HORIZONTAL DIMENSIONS ARE MEASURED ALONG THE CENTERLINE OF BEARING.
2. FOR SECTIONS A-A & B-B & NOTES, SEE SHEET 15/25 .
3. FOR ELASTOMERIC BEARING DETAILS, SEE SHEET 15/25 .

DESIGN AGENCY
PARSONS BRINCKERHOFF
2545 FARMERS DRIVE
SUITE 350
COLUMBUS, OHIO 43235

DESIGNED	DRAWN	REVIEWED	DATE
PJL	LEL	EBS	05/24/12
CHECKED	REVISED	STRUCTURE NUMBER	
SAP		LEFT: 0202231 RIGHT: 0202290	

REAR ABUTMENT DETAILS
BRIDGE NO. ALL-75-0832 L&R
I-75 OVER OTTAWA RIVER

ALL-75-5.53
PID No. 76691

11 / 25

1021
1224

J:\Projects\ALL 76691\structures\ALL075_0832C\sheets\075_0832CAR003.dgn 11-SEP-2012 8:56PM reddenj

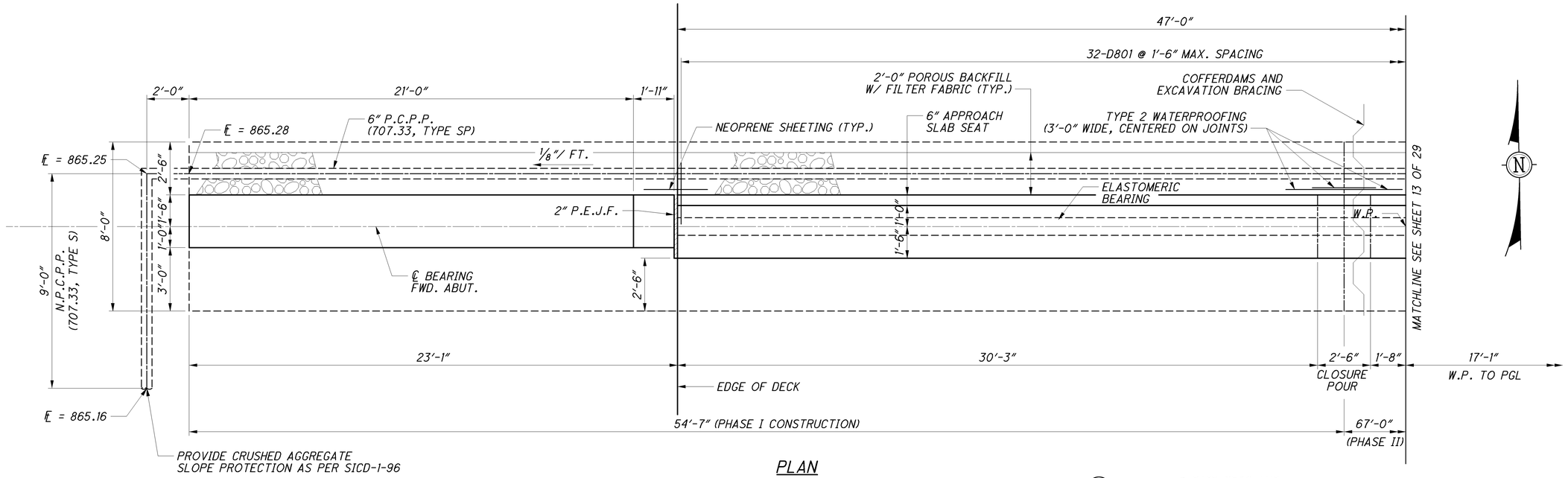

PLAN

PILES NOT SHOWN FOR CLARITY

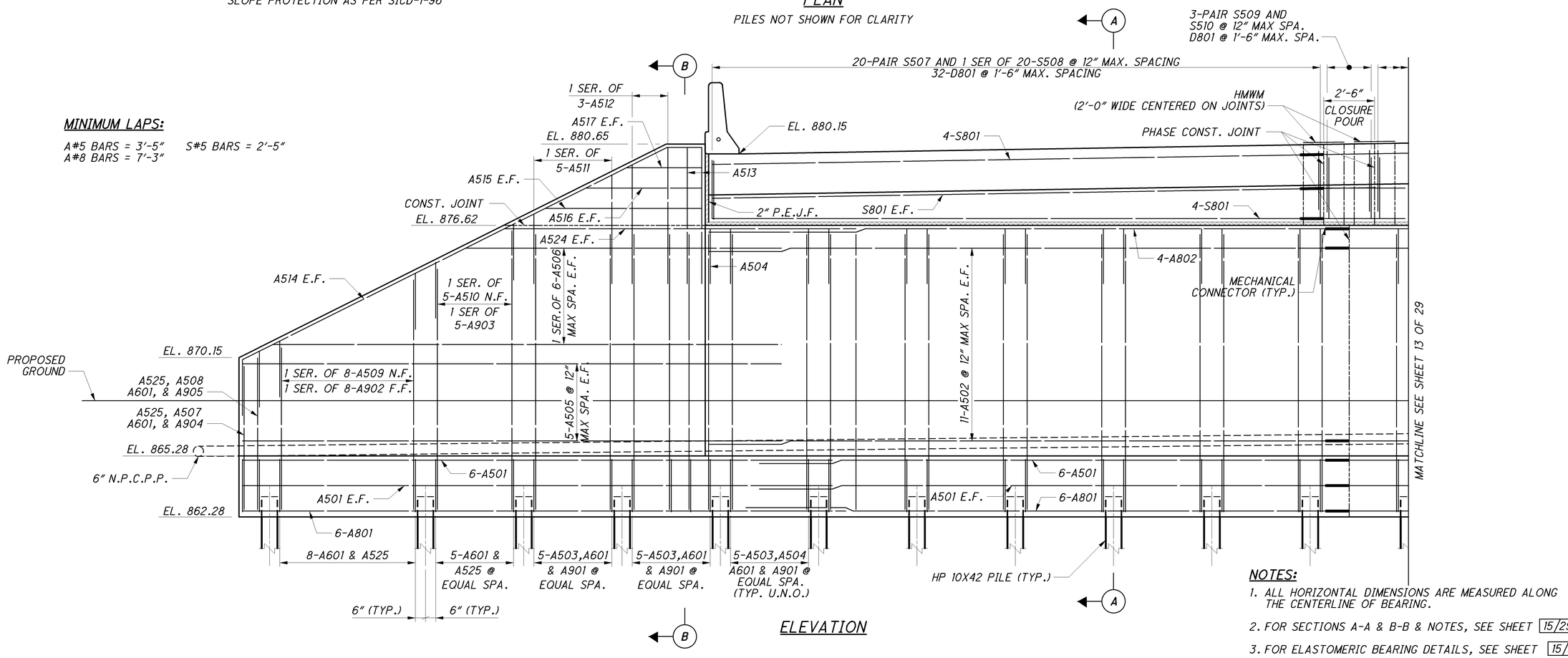

ELEVATION

MINIMUM LAPS:

A#5 BARS = 3'-5" S#5 BARS = 2'-5"
A#8 BARS = 7'-3"

NOTES:

1. ALL HORIZONTAL DIMENSIONS ARE MEASURED ALONG THE CENTERLINE OF BEARING.
2. FOR SECTIONS A-A & B-B & NOTES, SEE SHEET 15/29 .
3. FOR ELASTOMERIC BEARING DETAILS, SEE SHEET 15/29 .

DESIGN AGENCY
PARSONS BRINCKERHOFF
2945 FARMERS DRIVE
SUITE 350
COLUMBUS, OHIO 43235

DESIGNED PJL
DRAWN BKJ
CHECKED SAP
REVIEWED EBS
DATE 05/24/12
STRUCTURE NUMBER LEFT: 0202231 RIGHT: 0202290
REVISED

FORWARD ABUTMENT DETAILS

BRIDGE NO. ALL-75-0832 L&R
1-75 OVER OTTAWA RIVER

ALL-75-5.53
PID No. 76691

12 / 29

1022 / 1224

J:\Projects\ALL\76691\structures\ALL075_0832\sheets\075_0832CAF001.dgn 11-SEP-2012 8:56PM reddenj

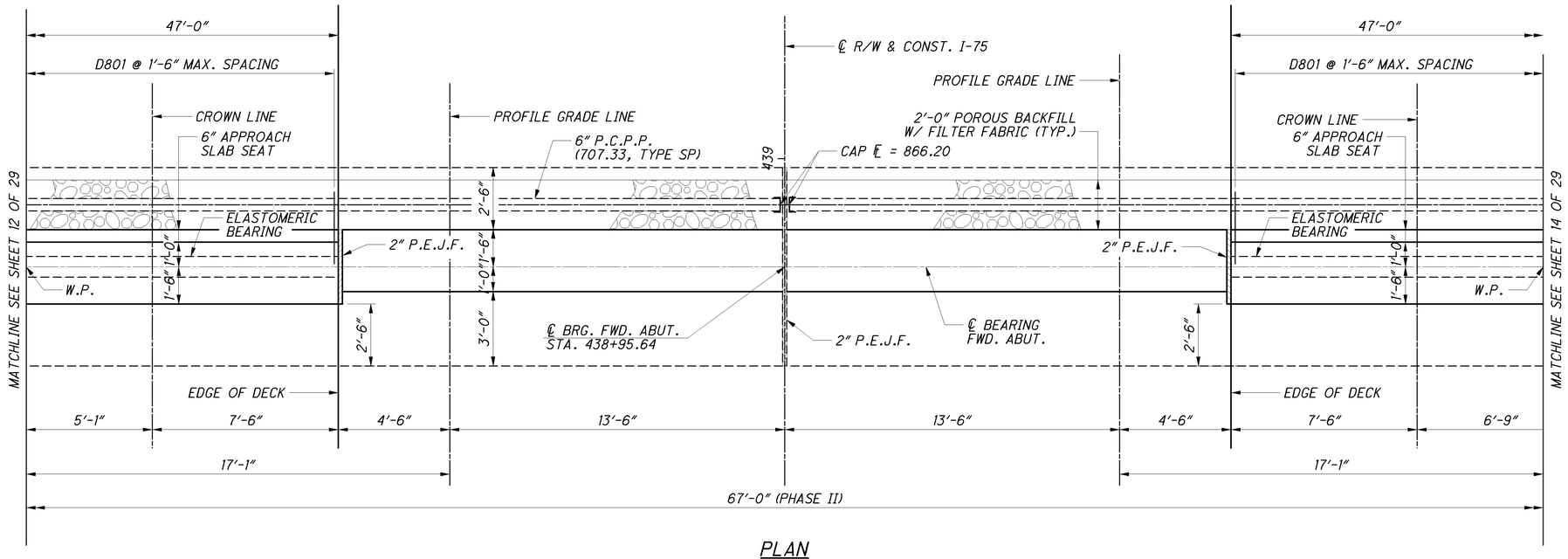

PLAN

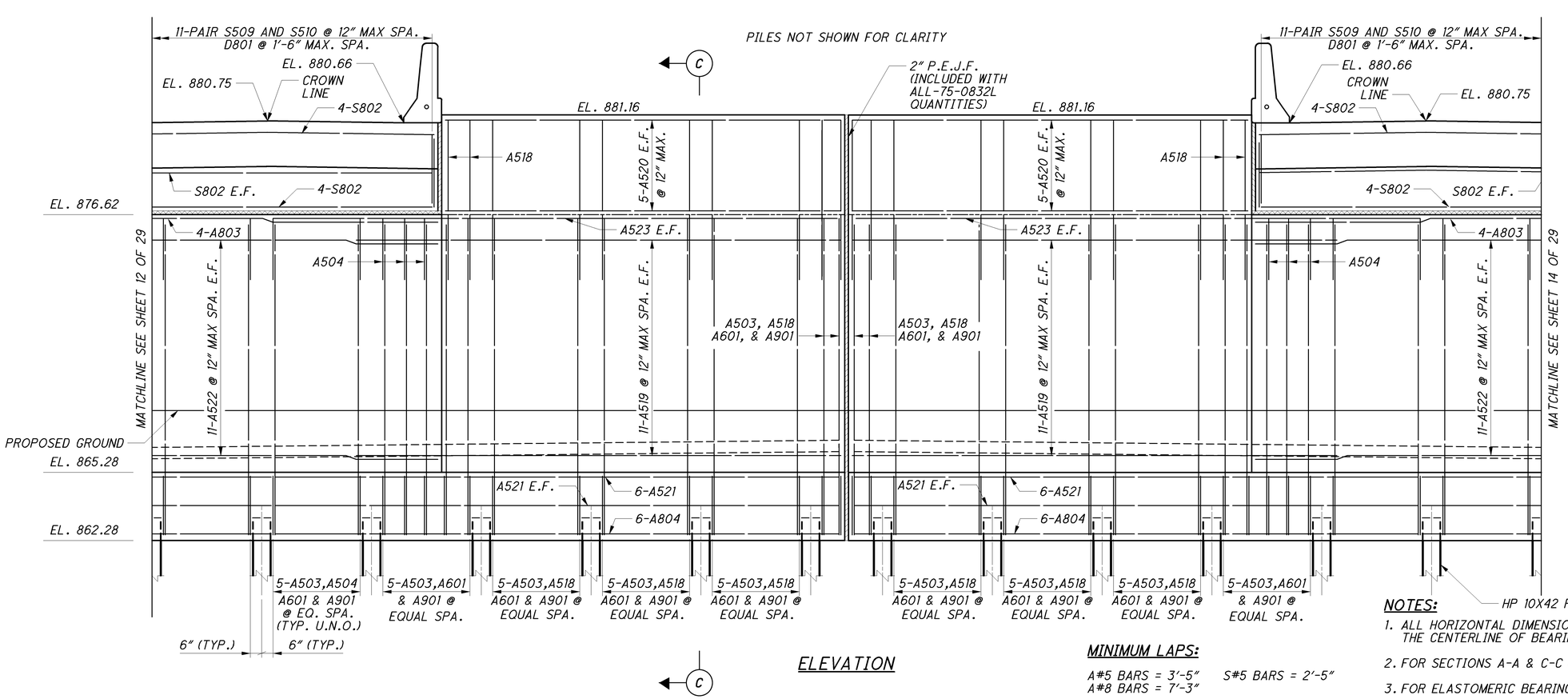

ELEVATION

MINIMUM LAPS:

A#5 BARS = 3'-5" S#5 BARS = 2'-5"
A#8 BARS = 7'-3"

NOTES:

1. ALL HORIZONTAL DIMENSIONS ARE MEASURED ALONG THE CENTERLINE OF BEARING.
2. FOR SECTIONS A-A & C-C NOTES, SEE SHEET 15/29 .
3. FOR ELASTOMERIC BEARING DETAILS, SEE SHEET 15/29 .

DESIGN AGENCY
PARSONS BRINCKERHOFF
2545 FARMERS DRIVE
SUITE 350
COLUMBUS, OHIO 43235

DESIGNED PJL
DRAWN LEL
CHECKED SAP
REVIEWED EBS
DATE 05/24/12
REVISED
STRUCTURE NUMBER
LEFT: 0202231
RIGHT: 0202290

FORWARD ABUTMENT DETAILS
BRIDGE NO. ALL-75-0832 L&R
I-75 OVER OTTAWA RIVER

ALL-75-5.53
PID No. 76691

13 / 29

1023
1224

J:\Projects\ALL\76691\structures\ALL075_0832C\sheets\075_0832CAF002.dgn 11-SEP-2012 8:56PM reddenj

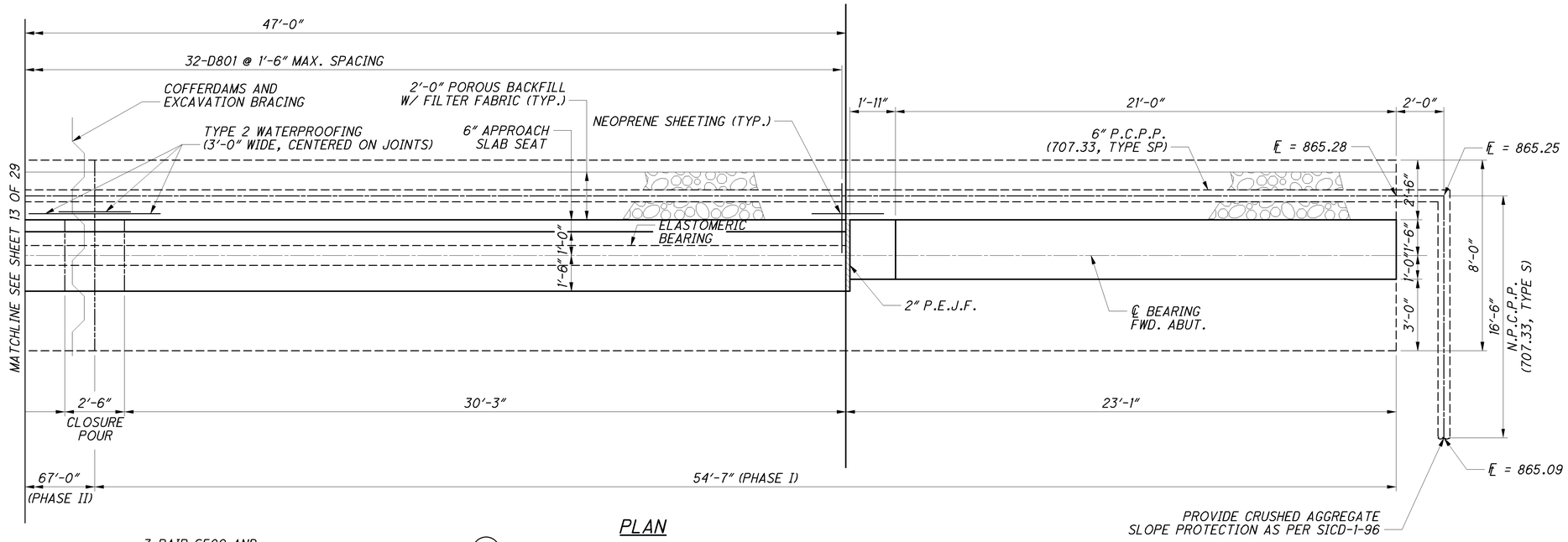

PLAN

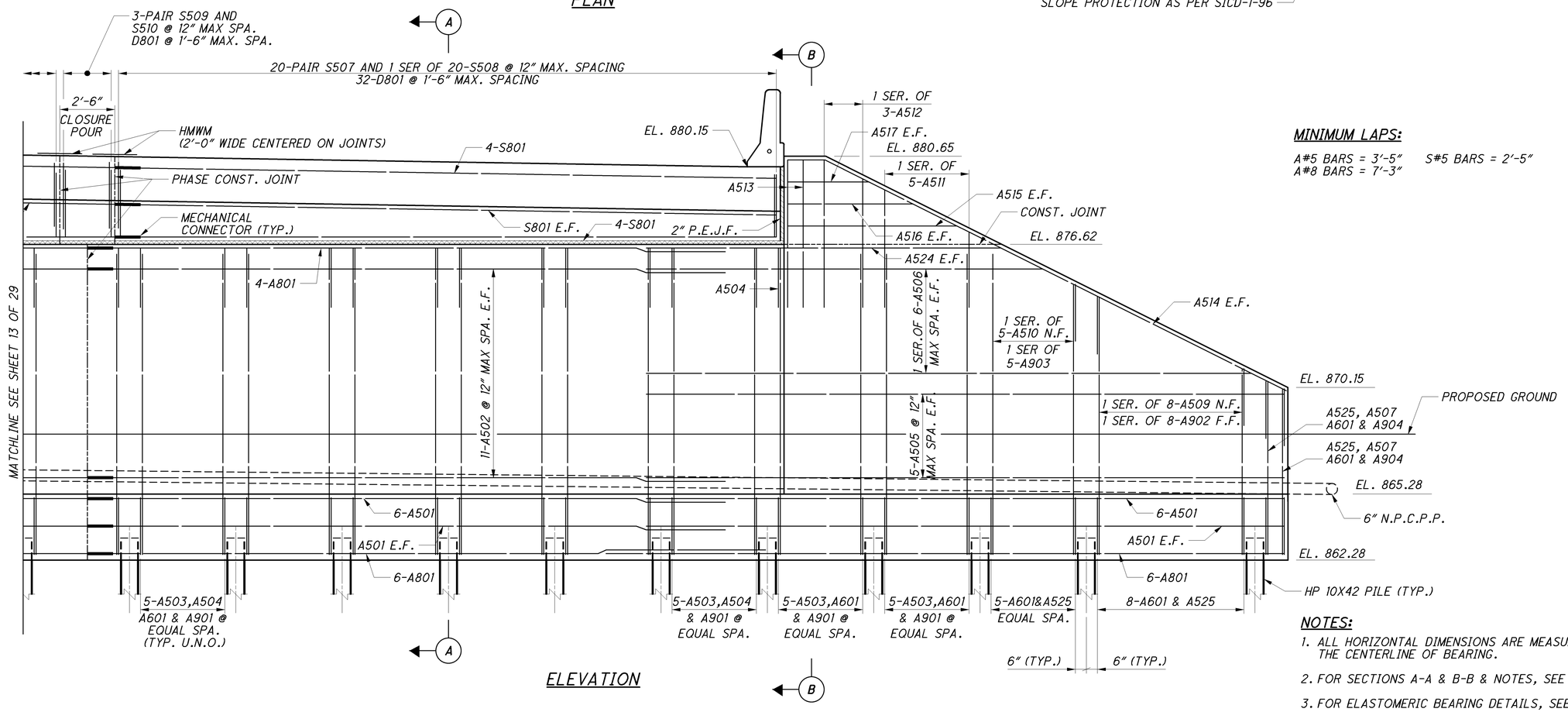

ELEVATION

MINIMUM LAPS:

A#5 BARS = 3'-5" S#5 BARS = 2'-5"
A#8 BARS = 7'-3"

NOTES:

1. ALL HORIZONTAL DIMENSIONS ARE MEASURED ALONG THE CENTERLINE OF BEARING.
2. FOR SECTIONS A-A & B-B & NOTES, SEE SHEET 15/29 .
3. FOR ELASTOMERIC BEARING DETAILS, SEE SHEET 15/29 .

DESIGN AGENCY
PARSONS BRINCKERHOFF
2945 FARMERS DRIVE
SUITE 350
COLUMBUS, OHIO 43235

DESIGNED	DRAWN	REVIEWED	DATE
PJL	LEL	EBS	05/24/12
CHECKED	REVISED	STRUCTURE NUMBER	
SAP		LEFT: 0202231 RIGHT: 0202290	

FORWARD ABUTMENT DETAILS
BRIDGE NO. ALL-75-0832 L&R
I-75 OVER OTTAWA RIVER

ALL-75-5.53
PID No. 76691

14 / 29

1024
1224

J:\Projects\ALL\76691\structures\ALL075_0832C\sheets\075_0832CAF003.dgn 11-SEP-2012 8:56PM reddenj

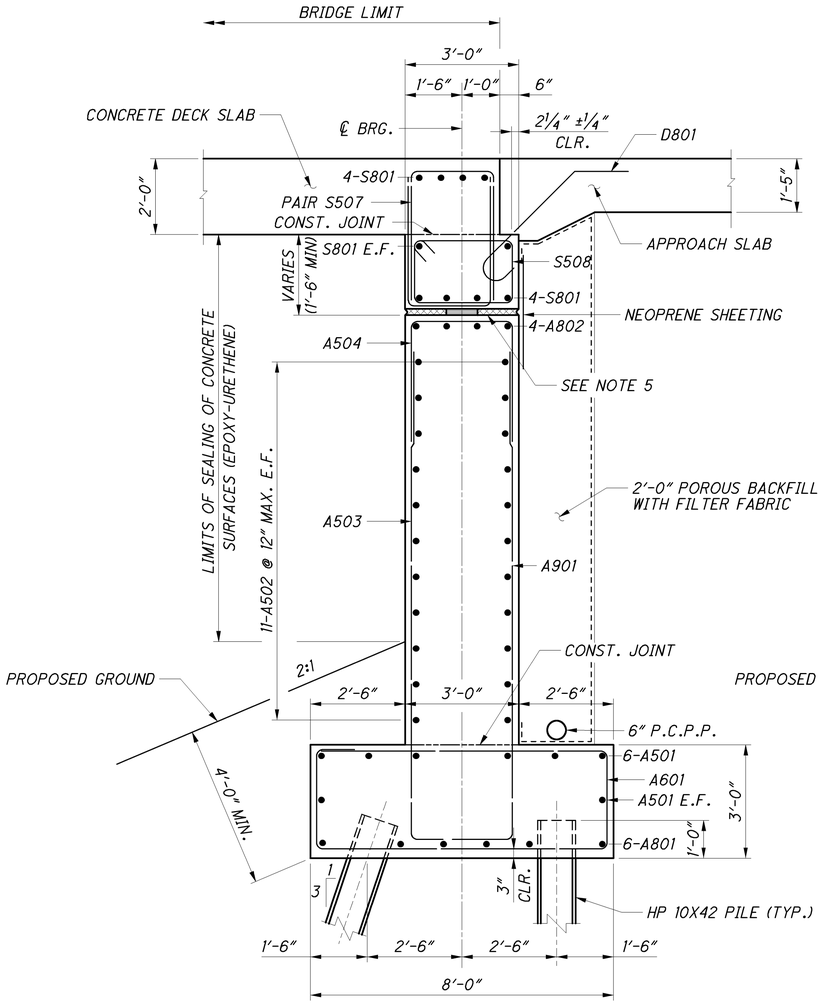

SECTION A-A

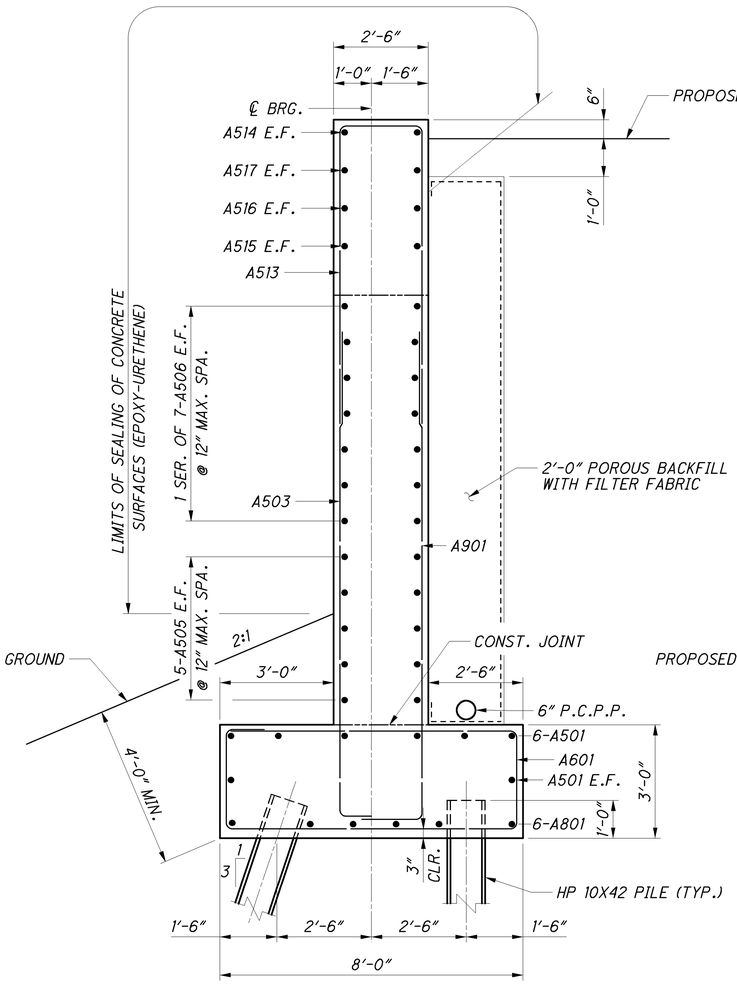

SECTION B-B

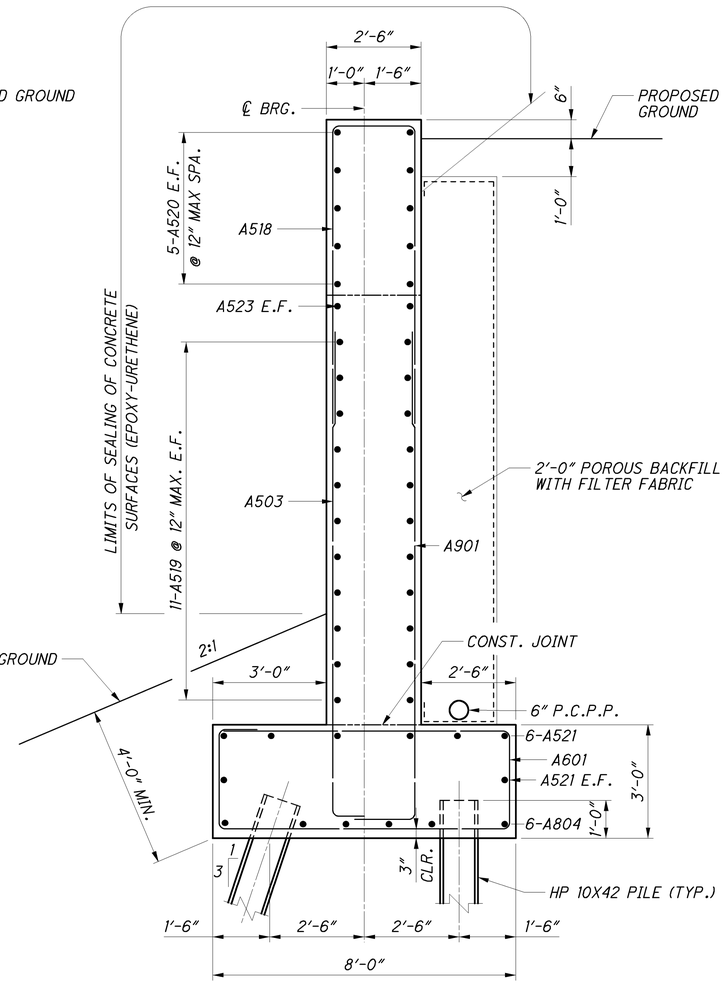

SECTION C-C

NOTES:

1. BEARING DIMENSIONS SHOULD BE VERIFIED BY THE MANUFACTURER. BEARINGS MUST ACCOMMODATE A SHEAR DEFORMATION OF 0.853", A SERVICE ROTATION OF 0.010 RADIANS, AND THE COMPRESSIVE LOADS LISTED ON THIS SHEET.
2. ELASTOMERIC BEARINGS: THE ELASTOMER SHALL HAVE A HARDNESS OF 60 DUROMETER.
3. BASIS OF PAYMENT: THE UNIT BID PRICE SHALL INCLUDE ALL MATERIALS, LABOR, TESTING, AND INCIDENTALS NECESSARY TO FURNISH AND INSTALL ELASTOMERIC BEARINGS. PAYMENT WILL BE MADE AT THE CONTRACT PRICE FOR ITEM 516, ELASTOMERIC BEARING PAD, MISC.
4. TOTAL DESIGN LOAD FOR BEARING EQUALS THE SUM OF THE UNFACTORED DEAD LOADS AND UNFACTORED LIVE LOADS (WITHOUT IMPACT).
5. EXPANDED POLYSTYRENE FILLER OR REMOVABLE FORMS SHALL BE USED IN FORMING TO PROVIDE THE CLEARANCE REQUIRED BETWEEN THE ABUTMENT AND SUPERSTRUCTURE AND SHALL BE INCLUDED WITH THE SUPERSTRUCTURE CONCRETE FOR PAYMENT.

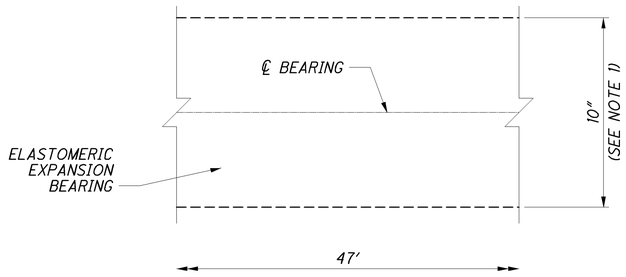

PLAN VIEW - ABUTMENT BEARING

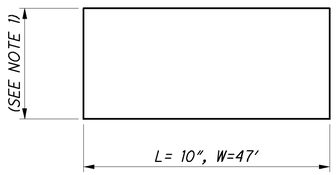

ELASTOMERIC EXPANSION BEARING, 60 DUROMETER

ABUTMENTS
DEAD LOAD REACTION = 21.93 K
LIVE LOAD REACTION = 11.79 K (NO IMPACT)
MAXIMUM DESIGN LOAD = 33.72 K

DESIGN AGENCY
PARSONS BRINCKERHOFF
2545 FARMERS DRIVE
SUITE 350
COLUMBUS, OHIO 43235

DESIGNED	DRAWN	REVIEWED	DATE
PJL	LEL	EBS	05/24/12
CHECKED	REVISED	SFN/MAT'L PROJECT NUMBER	
SAP		LEFT: 0202231 RIGHT: 0202290	

ABUTMENT DETAILS
BRIDGE NO. ALL-75-0832 L&R
I-75 OVER OTTAWA RIVER

ALL-75-5.53
PID No. 76691

15 / 29

1025
1224

J:\Projects\ALL\76691\structures\ALL075_0832C\sheets\075_0832CABO04.dgn 24-JAN-2013 10:11AM jint

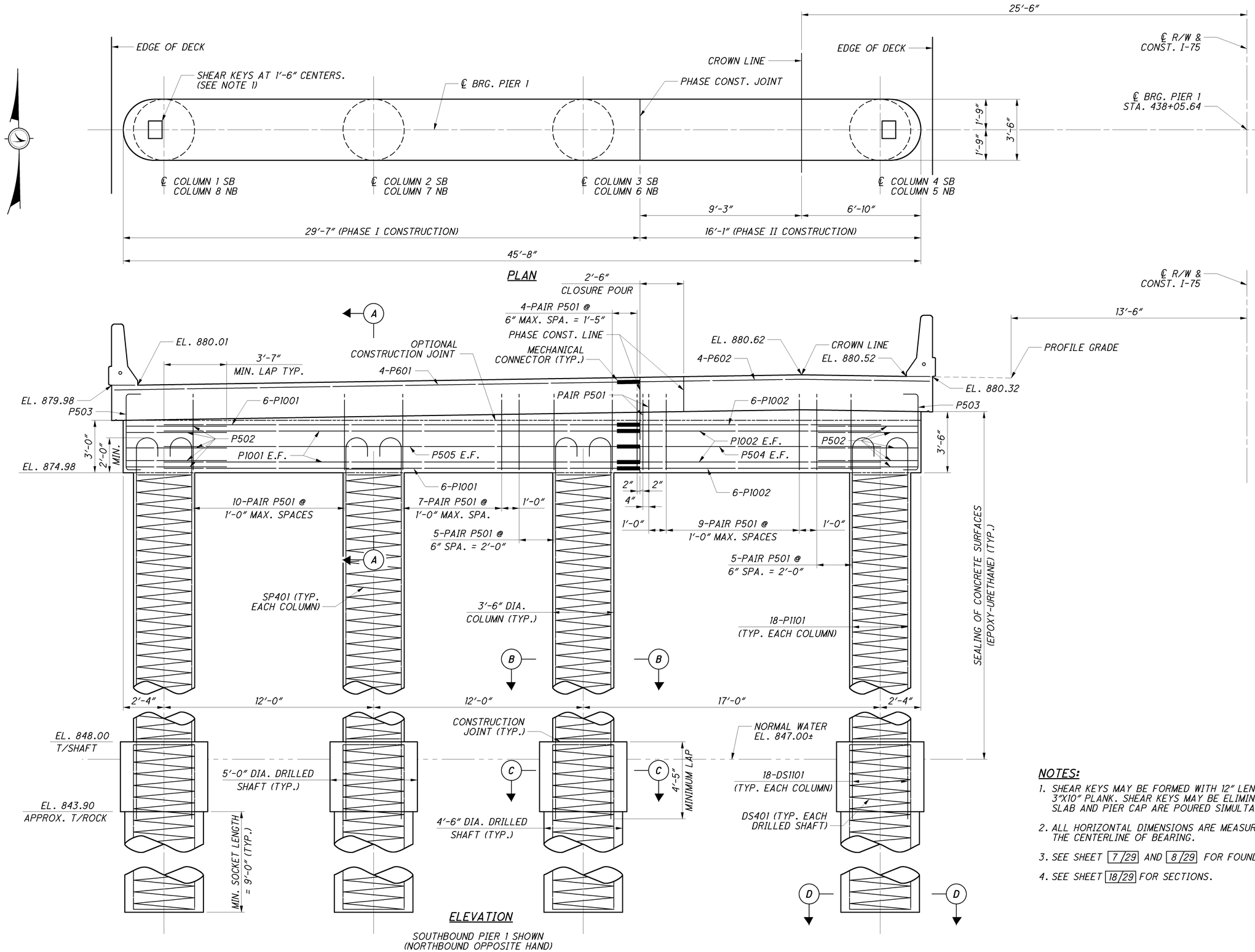

NOTES:

1. SHEAR KEYS MAY BE FORMED WITH 12" LENGTHS OF 3"X10" PLANK. SHEAR KEYS MAY BE ELIMINATED IF BRIDGE SLAB AND PIER CAP ARE POURED SIMULTANEOUSLY.
2. ALL HORIZONTAL DIMENSIONS ARE MEASURED ALONG THE CENTERLINE OF BEARING.
3. SEE SHEET 7/29 AND 8/29 FOR FOUNDATION LAYOUT PLAN.
4. SEE SHEET 18/29 FOR SECTIONS.

DESIGN AGENCY
PARSONS BRINCKERHOFF
2545 FARMERS DRIVE
SUITE 350
COLUMBUS, OHIO 43235

DESIGNED PJL | DRAWN LEL | CHECKED SAP | REVIEWED EBS | DATE 05/24/12 | REVISED

STRUCTURE NUMBER
LEFT: 0202231
RIGHT: 0202290

PIER 1 DETAILS
BRIDGE NO. ALL-75-0832 L&R
I-75 OVER OTTAWA RIVER

ALL-75-5.53
PID No. 76691

16 / 29

1026
1224

J:\Projects\ALL\76691\structures\ALL075_0832C\sheets\075_0832CPI001.dgn 11-SEP-2012 8:56PM reddenj

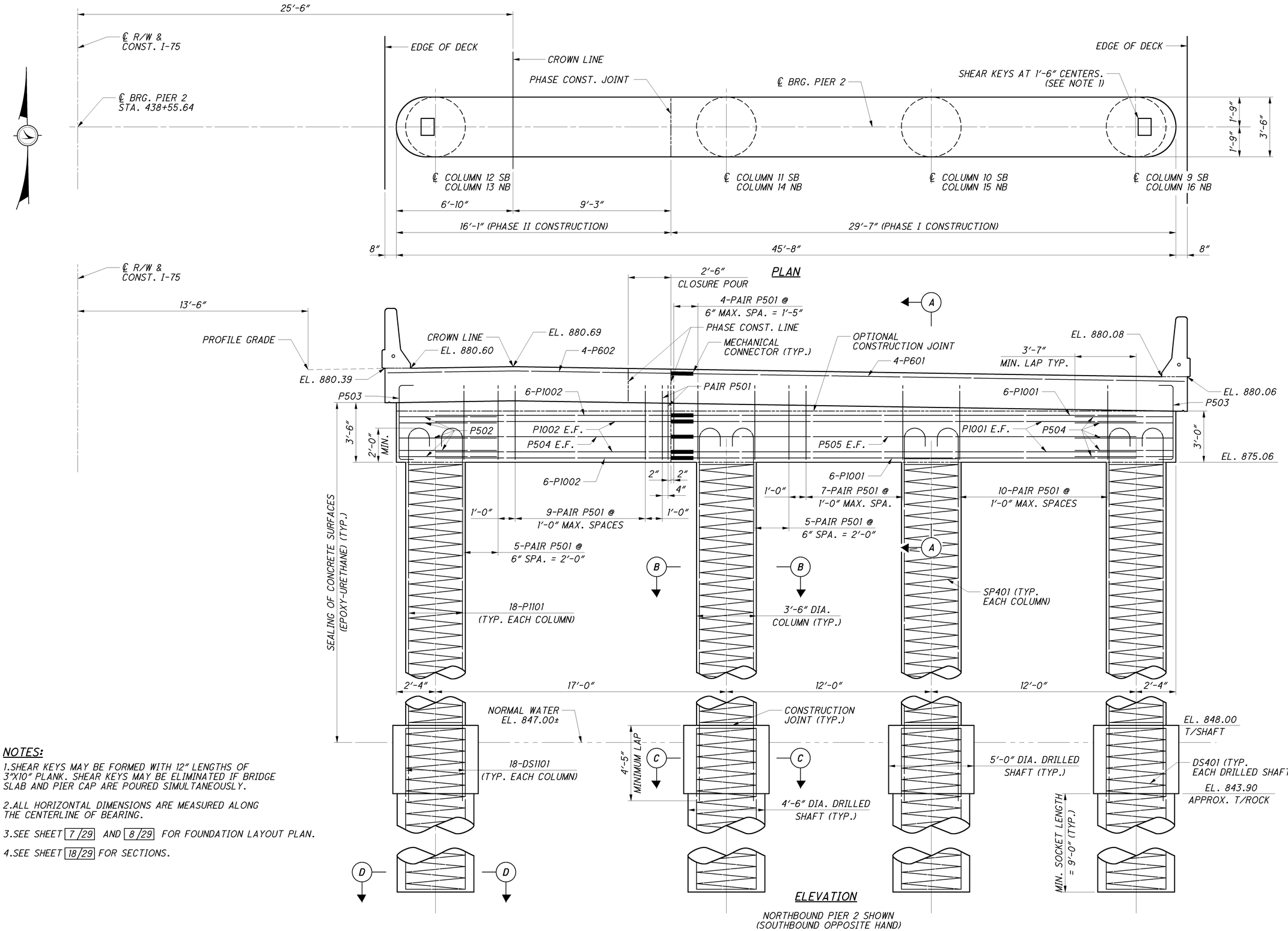

NOTES:

1. SHEAR KEYS MAY BE FORMED WITH 12" LENGTHS OF 3"X10" PLANK. SHEAR KEYS MAY BE ELIMINATED IF BRIDGE SLAB AND PIER CAP ARE POURED SIMULTANEOUSLY.
2. ALL HORIZONTAL DIMENSIONS ARE MEASURED ALONG THE CENTERLINE OF BEARING.
3. SEE SHEET 7/29 AND 8/29 FOR FOUNDATION LAYOUT PLAN.
4. SEE SHEET 18/29 FOR SECTIONS.

DESIGN AGENCY
PARSONS BRINCKERHOFF
2545 FARMERS DRIVE
SUITE 350
COLUMBUS, OHIO 43235

DESIGNED PJL
DRAWN LEL
REVIEWED EBS
DATE 05/24/12
CHECKED SAP
REVISED
STRUCTURE NUMBER LEFT: 0202231 RIGHT: 0202290

PIER 2 DETAILS
BRIDGE NO. ALL-75-0832 L/R
I-75 OVER OTTAWA RIVER

ALL-75-5.53
PID No. 76691

17 / 29

1027
1224

J:\Projects\ALL\76691\structures\ALL075_0832C\sheets\075_0832CPI002.dgn 11-SEP-2012 8:56PM reddenj

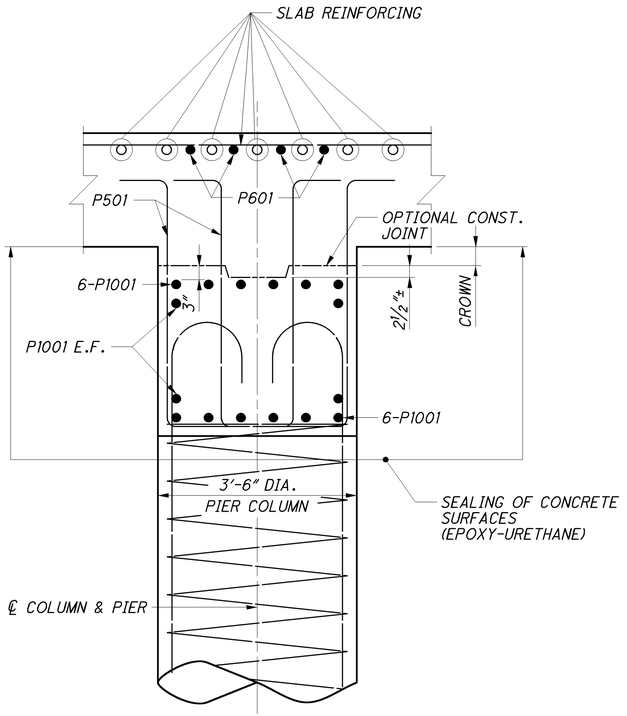

SECTION A-A

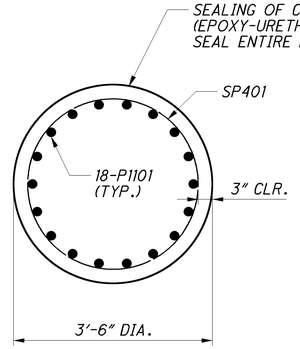

SECTION B-B

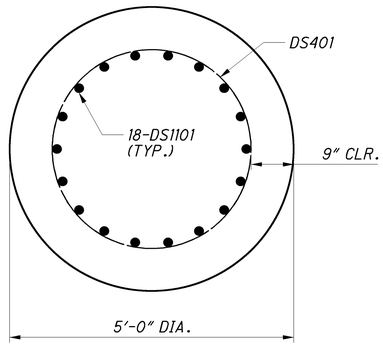

SECTION C-C

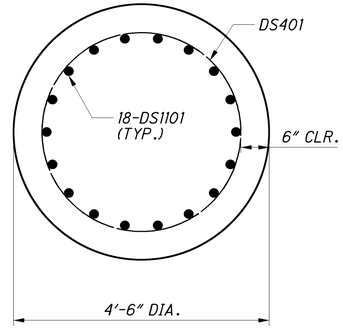

SECTION D-D

NOTES:

1. SEE SHEETS 16/29 AND 17/29 FOR SECTION LOCATIONS A-A, B-B, C-C AND D-D.

DESIGN AGENCY
PARSONS BRINCKERHOFF
2545 FARMERS DRIVE
SUITE 350
COLUMBUS, OHIO 43235

DESIGNED	DRAWN	REVIEWED	DATE
PJL	LEL	EBS	05/24/12
CHECKED	REVISED	STRUCTURE NUMBER	
SAP		LEFT: 0202231 RIGHT: 0202290	

PIER DETAILS
BRIDGE NO. ALL-75-0832 L&R
I-75 OVER OTTAWA RIVER

ALL-75-5.53
PID No. 76691

18 / 29

1028
1224

J:\Projects\ALL\76691\structures\ALL075_0832C\sheets\075_0832CPI003.dgn 11-SEP-2012 8:56PM reddenj

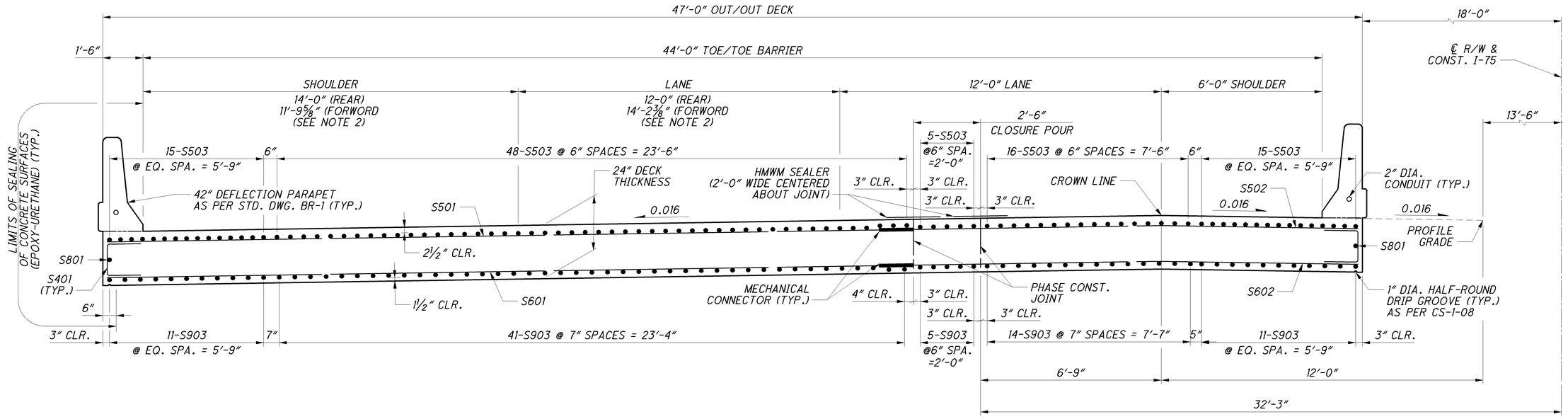

TYPICAL TRANSVERSE SECTION

SOUTHBOUND SHOWN

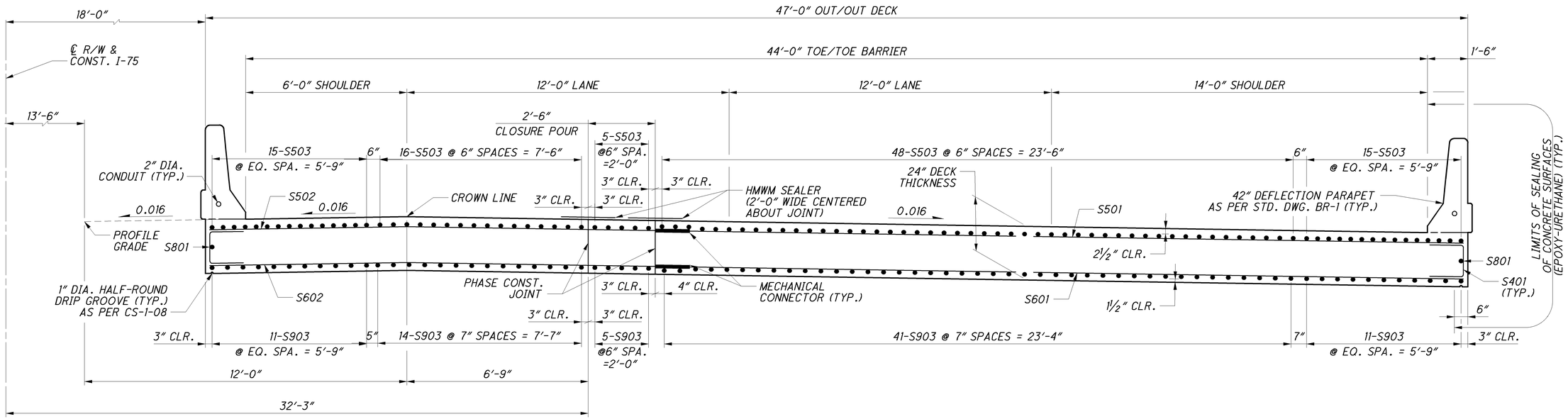

TYPICAL TRANSVERSE SECTION

NORTHBOUND SHOWN

NOTES:

1. FOR ADDITIONAL NOTES AND DETAILS NOT SHOWN SEE STD. DWG. CS-1-08.
2. DIMENSIONS GIVEN AT BRIDGE LIMITS.
3. SEE SHEET 6/29 FOR CONSTRUCTION PHASING.

DESIGN AGENCY
PARSONS BRINCKERHOFF
2545 FARMERS DRIVE
SUITE 350
COLUMBUS, OHIO 43235

DESIGNED	DRAWN	REVIEWED	DATE
PJL	LEL	EBS	05/24/12
CHECKED	REVISED	STRUCTURE FILE NUMBER	
SAP		LEFT: 0202231 RIGHT: 0202290	

TRANSVERSE SECTION
BRIDGE NO. ALL-75-0832 L&R
1-75 OVER OTTAWA RIVER

ALL-75-5.53
PID No. 76691

J:\Projects\ALL\76691\structures\ALL075_0832C\sheets\075_0832CTS001.dgn 11-SEP-2012 8:56PM reddenj

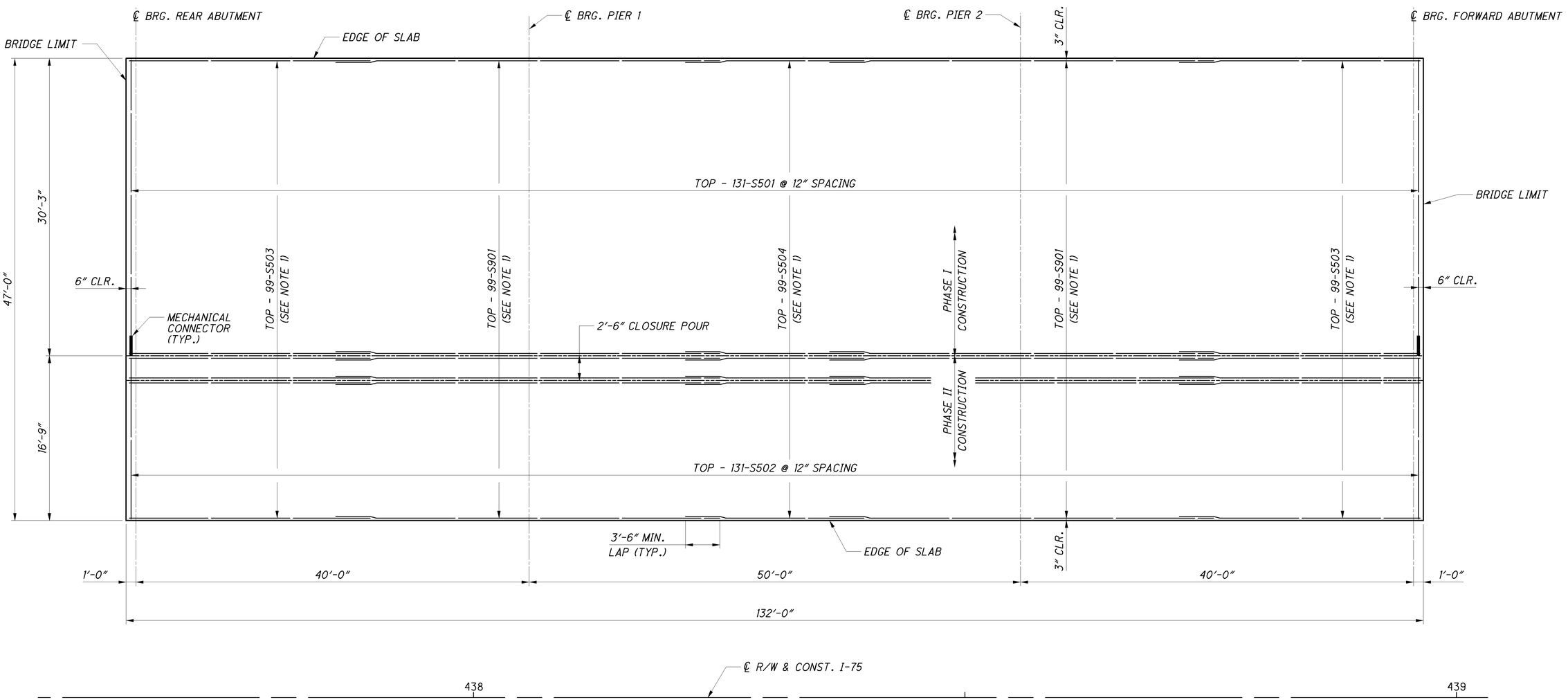

DECK SLAB PLAN (TOP)

(SOUTHBOUND SHOWN NORTHBOUND OPPOSITE HAND)

NOTES:

1. SEE TRANSVERSE SECTION FOR BARS SPACING SHEET 19/29 .
2. FOR ADDITIONAL NOTES AND DETAILS NOT SHOWN SEE STD. DWG. CS-1-08.
3. SEE SHEET 6/29 FOR CONSTRUCTION PHASING.

DESIGN AGENCY
PARSONS BRINCKERHOFF
2945 FARMERS DRIVE
SUITE 350
COLUMBUS, OHIO 43235

DESIGNED	DRAWN	REVIEWED	DATE
PJL	LEL	EBS	05/24/12
CHECKED	REVISED	STRUCTURE FILE NUMBER	
SAP		LEFT: 0202231 RIGHT: 0202290	

DECK PLAN - TOP MAT
BRIDGE NO. ALL-75-0832 L&R
I-75 OVER OTTAWA RIVER

ALL-75-5.53
PID No. 89029

1030
1224

J:\Projects\ALL\76691\structures\ALL075_0832C\sheets\075_0832CDP001.dgn 11-SEP-2012 8:56PM reddenj

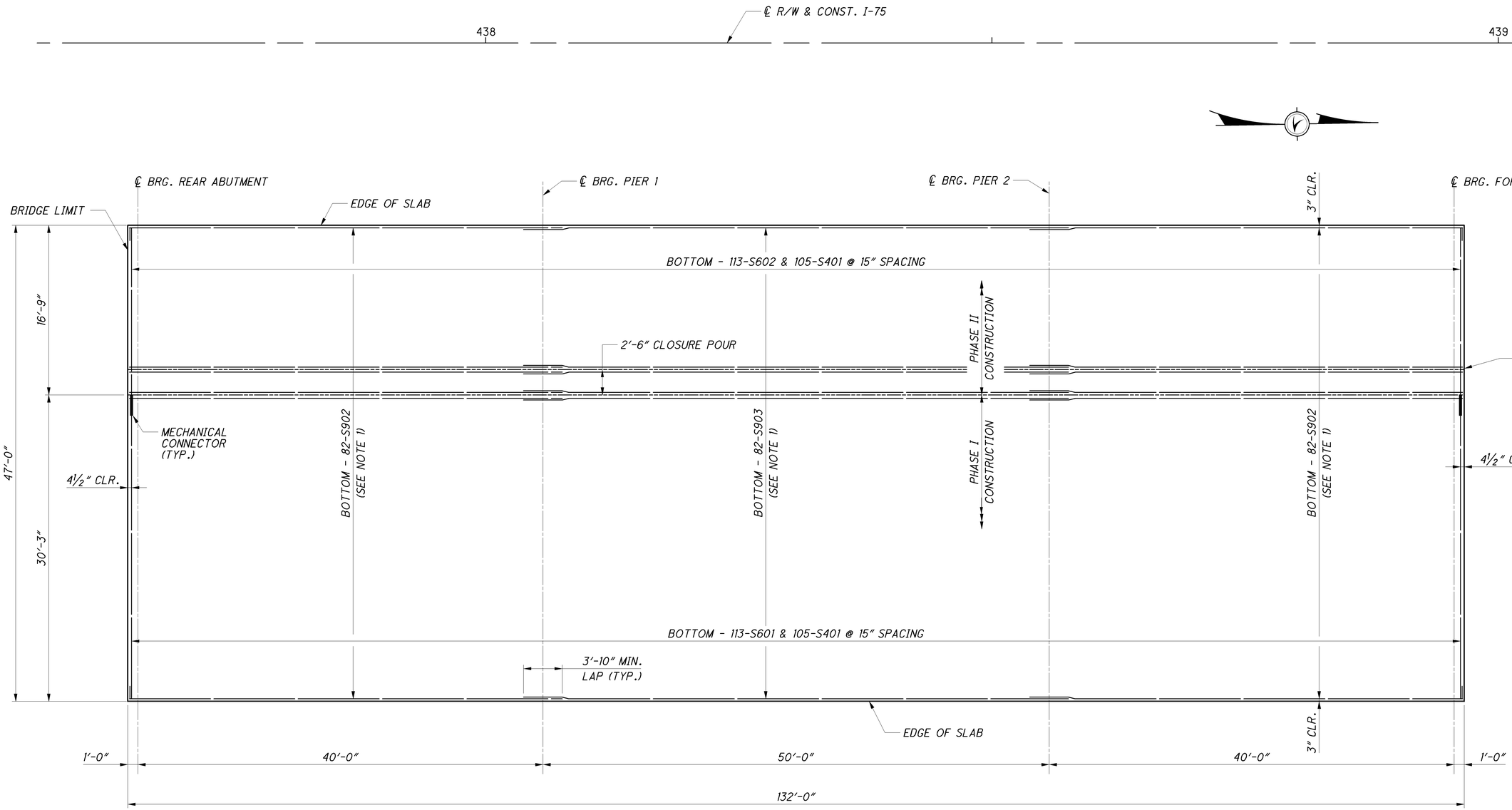

DECK SLAB PLAN (BOTTOM)

(NORTHBOUND SHOWN SOUTHBOUND OPPOSITE HAND)

NOTES:

1. SEE TRANSVERSE SECTION FOR BARS SPACING SHEET 19/29 .
2. FOR ADDITIONAL NOTES AND DETAILS NOT SHOWN SEE STD. DWG. CS-1-08.
3. SEE SHEET 6/29 FOR CONSTRUCTION PHASING.

J:\Projects\ALL\76691\structures\ALL075_0832C\sheets\075_0832CDP002.dgn 11-SEP-2012 8:56PM reddenj

DESIGN AGENCY
PARSONS BRINCKERHOFF
2545 FARMERS DRIVE
SUITE 350
COLUMBUS, OHIO 43235

DESIGNED	DRAWN	REVIEWED	DATE
PJL	LEL	EBS	05/24/12
CHECKED	REVISED	STRUCTURE FILE NUMBER	
SAP		LEFT: 0202231 RIGHT: 0202290	

DECK PLAN - BOTTOM MAT
BRIDGE NO. ALL-75-0832 L&R
I-75 OVER OTTAWA RIVER

ALL-75-5.53
PID No. 89029

21 / 29

1031
1224

NORTHBOUND

FINAL DECK SURFACE ELEVATIONS

FINAL DECK SURFACE ELEVATION TABLE														
	LOCATION	CL BRG. REAR ABUT.	1/4	1/2	3/4	CL BRG. PIER 1	1/4	1/2	3/4	CL BRG. PIER 2	1/4	1/2	3/4	CL BRG. FWD. ABUT.
LEFT EDGE OF DECK	STATION	437+65.64	437+75.64	437+85.64	437+95.64	438+05.64	438+18.14	438+30.64	438+43.14	438+55.64	438+65.64	438+75.64	438+85.64	438+95.64
	FINAL DECK SURFACE EL.	880.43	880.45	880.46	880.48	880.50	880.51	880.53	880.55	880.57	880.59	880.60	880.62	880.63
LEFT TOE OF BARRIER	STATION	437+65.64	437+75.64	437+85.64	437+95.64	438+05.64	438+18.14	438+30.64	438+43.14	438+55.64	438+65.64	438+75.64	438+85.64	438+95.64
	FINAL DECK SURFACE EL.	880.46	880.47	880.49	880.50	880.52	880.54	880.56	880.58	880.60	880.61	880.63	880.64	880.66
CROWN LINE	STATION	437+65.64	437+75.64	437+85.64	437+95.64	438+05.64	438+18.14	438+30.64	438+43.14	438+55.64	438+65.64	438+75.64	438+85.64	438+95.64
	FINAL DECK SURFACE EL.	880.55	880.57	880.58	880.60	880.62	880.63	880.65	880.67	880.69	880.71	880.72	880.74	880.75
PHASE CONST. JOINT	STATION	437+65.64	437+75.64	437+85.64	437+95.64	438+05.64	438+18.14	438+30.64	438+43.14	438+55.64	438+65.64	438+75.64	438+85.64	438+95.64
	FINAL DECK SURFACE EL.	880.45	880.46	880.48	880.49	880.51	880.53	880.55	880.56	880.58	880.60	880.61	880.63	880.65
PHASE CONST. JOINT	STATION	437+65.64	437+75.64	437+85.64	437+95.64	438+05.64	438+18.14	438+30.64	438+43.14	438+55.64	438+65.64	438+75.64	438+85.64	438+95.64
	FINAL DECK SURFACE EL.	880.41	880.42	880.44	880.45	880.47	880.49	880.51	880.52	880.54	880.56	880.57	880.59	880.61
RIGHT TOE OF BARRIER	STATION	437+65.64	437+75.64	437+85.64	437+95.64	438+05.64	438+18.14	438+30.64	438+43.14	438+55.64	438+65.64	438+75.64	438+85.64	438+95.64
	FINAL DECK SURFACE EL.	879.95	879.96	879.98	879.99	880.01	880.03	880.05	880.06	880.08	880.10	880.11	880.13	880.15
RIGHT EDGE OF DECK	STATION	437+65.64	437+75.64	437+85.64	437+95.64	438+05.64	438+18.14	438+30.64	438+43.14	438+55.64	438+65.64	438+75.64	438+85.64	438+95.64
	FINAL DECK SURFACE EL.	879.92	879.94	879.95	879.97	879.98	880.00	880.02	880.04	880.06	880.08	880.09	880.11	880.12

SOUTHBOUND

FINAL DECK SURFACE ELEVATIONS

FINAL DECK SURFACE ELEVATION TABLE														
	LOCATION	CL BRG. REAR ABUT.	1/4	1/2	3/4	CL BRG. PIER 1	1/4	1/2	3/4	CL BRG. PIER 2	1/4	1/2	3/4	CL BRG. FWD. ABUT.
LEFT EDGE OF DECK	STATION	437+65.64	437+75.64	437+85.64	437+95.64	438+05.64	438+18.14	438+30.64	438+43.14	438+55.64	438+65.64	438+75.64	438+85.64	438+95.64
	FINAL DECK SURFACE EL.	879.92	879.94	879.95	879.97	879.98	880.00	880.02	880.04	880.06	880.08	880.09	880.11	880.12
LEFT TOE OF BARRIER	STATION	437+65.64	437+75.64	437+85.64	437+95.64	438+05.64	438+18.14	438+30.64	438+43.14	438+55.64	438+65.64	438+75.64	438+85.64	438+95.64
	FINAL DECK SURFACE EL.	879.95	879.96	879.98	879.99	880.01	880.03	880.05	880.06	880.08	880.10	880.11	880.13	880.15
PHASE CONST. JOINT	STATION	437+65.64	437+75.64	437+85.64	437+95.64	438+05.64	438+18.14	438+30.64	438+43.14	438+55.64	438+65.64	438+75.64	438+85.64	438+95.64
	FINAL DECK SURFACE EL.	880.41	880.42	880.44	880.45	880.47	880.49	880.51	880.52	880.54	880.56	880.57	880.59	880.61
PHASE CONST. JOINT	STATION	437+65.64	437+75.64	437+85.64	437+95.64	438+05.64	438+18.14	438+30.64	438+43.14	438+55.64	438+65.64	438+75.64	438+85.64	438+95.64
	FINAL DECK SURFACE EL.	880.45	880.46	880.48	880.49	880.51	880.53	880.55	880.56	880.58	880.60	880.61	880.63	880.65
CROWN LINE	STATION	437+65.64	437+75.64	437+85.64	437+95.64	438+05.64	438+18.14	438+30.64	438+43.14	438+55.64	438+65.64	438+75.64	438+85.64	438+95.64
	FINAL DECK SURFACE EL.	880.55	880.57	880.58	880.60	880.62	880.63	880.65	880.67	880.69	880.71	880.72	880.74	880.75
RIGHT TOE OF BARRIER	STATION	437+65.64	437+75.64	437+85.64	437+95.64	438+05.64	438+18.14	438+30.64	438+43.14	438+55.64	438+65.64	438+75.64	438+85.64	438+95.64
	FINAL DECK SURFACE EL.	880.46	880.47	880.49	880.50	880.52	880.54	880.56	880.58	880.60	880.61	880.63	880.64	880.66
RIGHT EDGE OF DECK	STATION	437+65.64	437+75.64	437+85.64	437+95.64	438+05.64	438+18.14	438+30.64	438+43.14	438+55.64	438+65.64	438+75.64	438+85.64	438+95.64
	FINAL DECK SURFACE EL.	880.43	880.45	880.46	880.48	880.50	880.51	880.53	880.55	880.57	880.59	880.60	880.62	880.63

NOTES:

1. FINAL DECK ELEVATIONS SHOWN REPRESENT THE DECK SURFACE LOCATION AFTER ALL ANTICIPATED DEAD LOAD DEFLECTIONS HAVE OCCURRED.

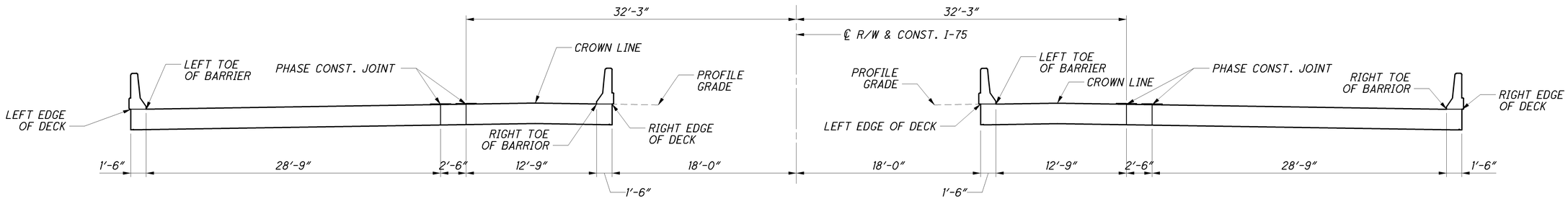

DECK SURFACE SECTION

DESIGN AGENCY
PARSONS BRINCKERHOFF
2545 FARMERS DRIVE
SUITE 350
COLUMBUS, OHIO 43235

DESIGNED	DRAWN	REVIEWED	DATE
PJL	LEL	EBS	05/24/12
CHECKED	REVISED	STRUCTURE FILE NUMBER	
SAP		LEFT: 0202231 RIGHT: 0202290	

FINAL DECK SURFACE ELEVATIONS
BRIDGE NO. ALL-75-0832 L&R
I-75 OVER OTTAWA RIVER

ALL-75-5.53
PID No. 89029

J:\Projects\ALL\76691\structures\ALL075_0832C\sheets\075_0832CSD001.dgn 11-SEP-2012 8:56PM reddenj

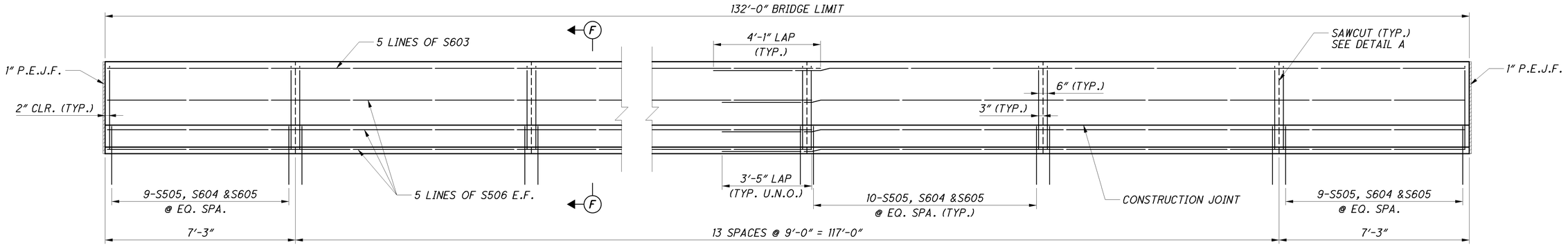

PARAPET ELEVATION

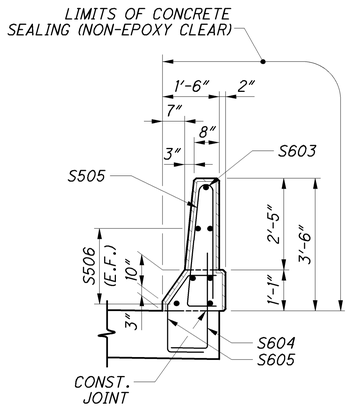

SECTION F-F

JUNCTION BOX LOCATION (APPROX.)			
NORTHBOUND		SOUTHBOUND	
STATION	SIDE	STATION	SIDE
437+77	LT. & RT.	437+77	LT. & RT.
438+84	LT. & RT.	438+84	LT. & RT.

DESIGN AGENCY
PARSONS BRINCKERHOFF
2945 FARMERS DRIVE
SUITE 350
COLUMBUS, OHIO 43235

DESIGNED PJL
DRAWN BKJ
REVIEWED EBS
DATE 05/24/12
CHECKED SAP
REVISED
STRUCTURE FILE NUMBER
LEFT: 0202231
RIGHT: 0202290

PARAPET DETAILS
BRIDGE NO. ALL-75-0832 L&R
I-75 OVER OTTAWA RIVER

ALL-75-5.53
PID No. 76691

23 / 29

1033
1224

J:\Projects\ALL\76691\structures\ALL075_0832C\sheets\075_0832CRA002.dgn 11-SEP-2012 8:56PM reddenj

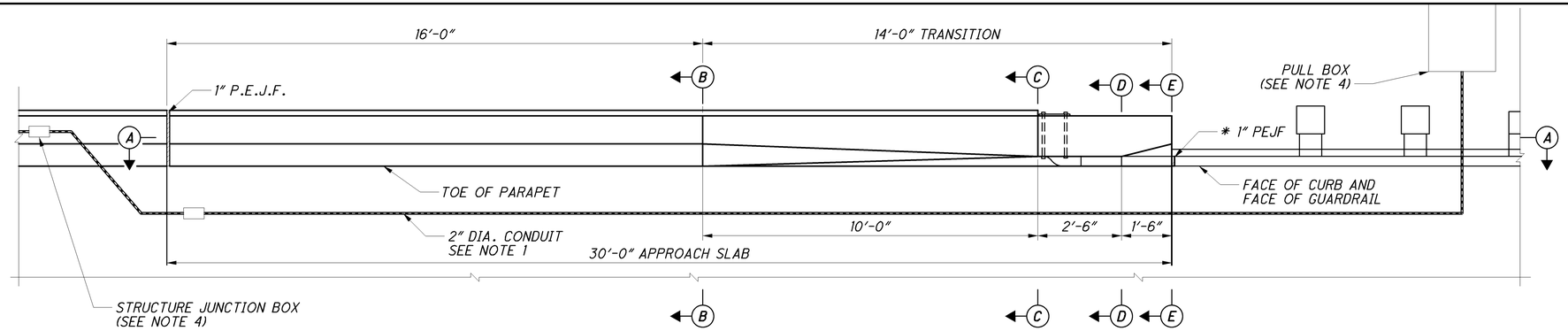

PART PLAN AT APPROACH SLABS

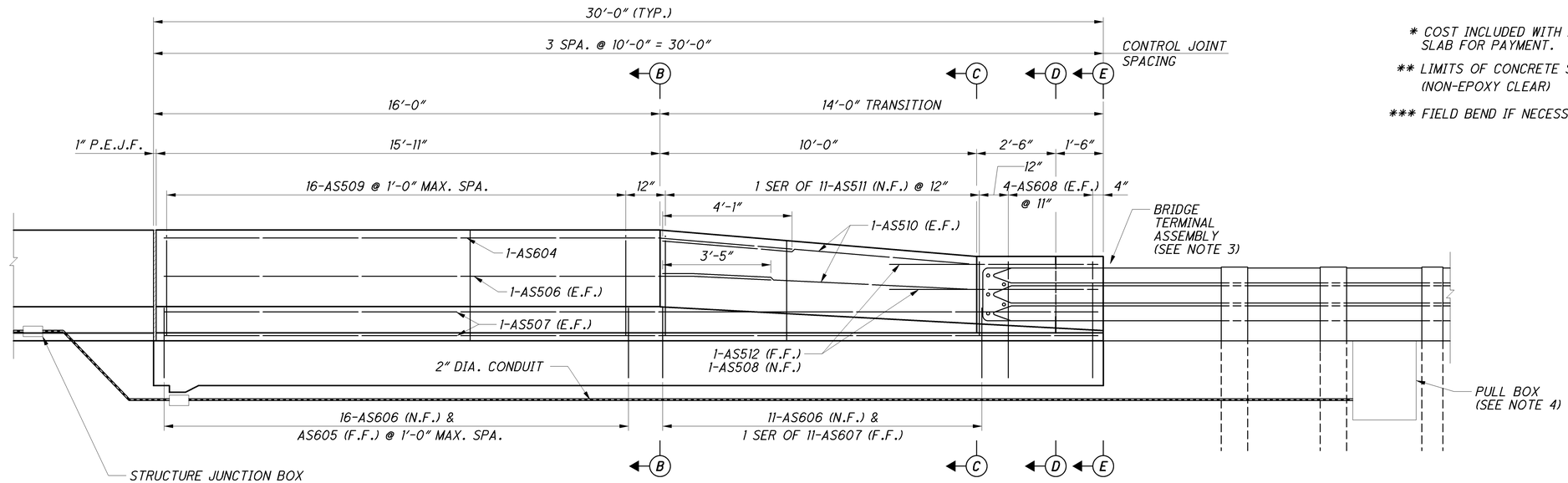

SECTION A-A

* COST INCLUDED WITH APPROACH SLAB FOR PAYMENT.

** LIMITS OF CONCRETE SEALING (NON-EPOXY CLEAR)

*** FIELD BEND IF NECESSARY

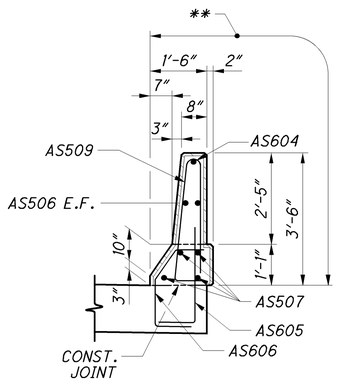

SECTION B-B

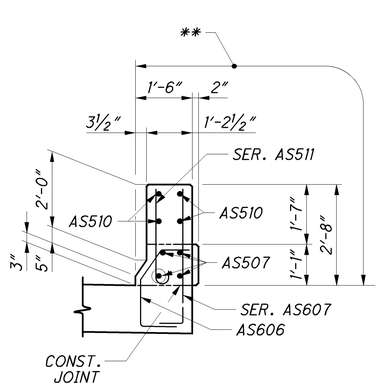

SECTION C-C

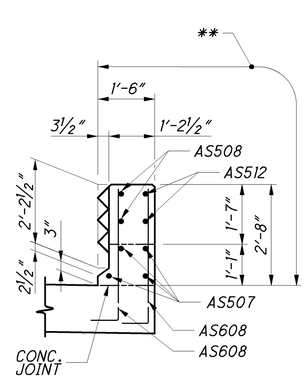

SECTION D-D

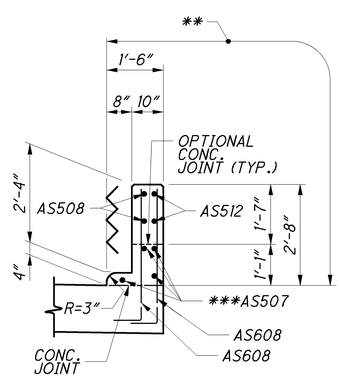

SECTION E-E

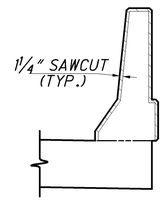

DETAIL A

(SECTION THROUGH SAWCUT)
SAWCUT PERIMETER = 8'-1"

NOTES

1. FOR ADDITIONAL NOTES AND DETAILS, SEE STANDARD CONSTRUCTION DRAWINGS BR-1
2. FOR ADDITIONAL APPROACH SLAB DETAILS SEE O.D.O.T. STANDARD DRAWING AS-1-81.
3. FOR BRIDGE TERMINAL ASSEMBLIES SEE ROADWAY STANDARD DRAWINGS GR-3.1 AND GR-3.2. SEE ROADWAY PLANS FOR DETAILS AND PAYMENT.
4. FOR ADDITIONAL NOTES AND DETAILS OF PULL BOXES, STRUCTURE JUNCTION BOXES, AND CONDUIT, SEE STANDARD CONSTRUCTION DRAWING HL-30.11, HL-30.31, HL-30.32. SEE SHEET 4/29 & 5/29 FOR QUANTITIES FOR THESE ITEMS.
5. THE COST OF THE APPROACH SLAB PARAPET, EXCLUDING SEALING, SHALL BE INCLUDED WITH ITEM 898, QA/QC CONCRETE, CLASS QSC2, SUPERSTRUCTURE (APPROACH SLAB), (T=17"), AS PER PLAN.

DESIGN AGENCY
PARSONS BRINCKERHOFF
2945 FARMERS DRIVE
SUITE 350
COLUMBUS, OHIO 43235

DESIGNED	DRAWN	REVIEWED	DATE
PJL	BKJ	EBS	05/24/12
CHECKED	REVISED	STRUCTURE FILE NUMBER	
SAP		LEFT: 0202231 RIGHT: 0202290	

PARAPET DETAILS

BRIDGE NO. ALL-75-0832 L&R
I-75 OVER OTTAWA RIVER

ALL-75-5.53
PID No. 76691

24/29

1034
1224

J:\Projects\ALL\76691\structures\ALL075_0832C\sheets\075_0832CRA001.dgn 11-SEP-2012 8:56PM reddenj

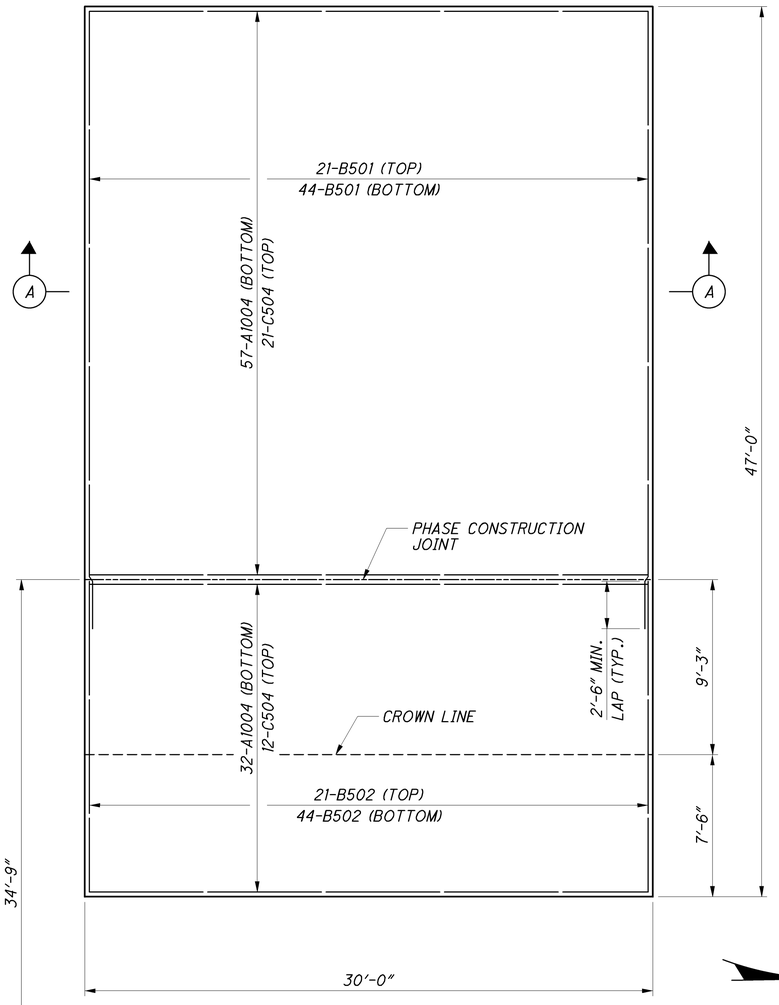

REAR APPROACH SLAB PLAN

(SEE SECTIONS A-A & B-B FOR SPACING)
(SOUTHBOUND SHOWN, NORTHBOUND SIMILAR)

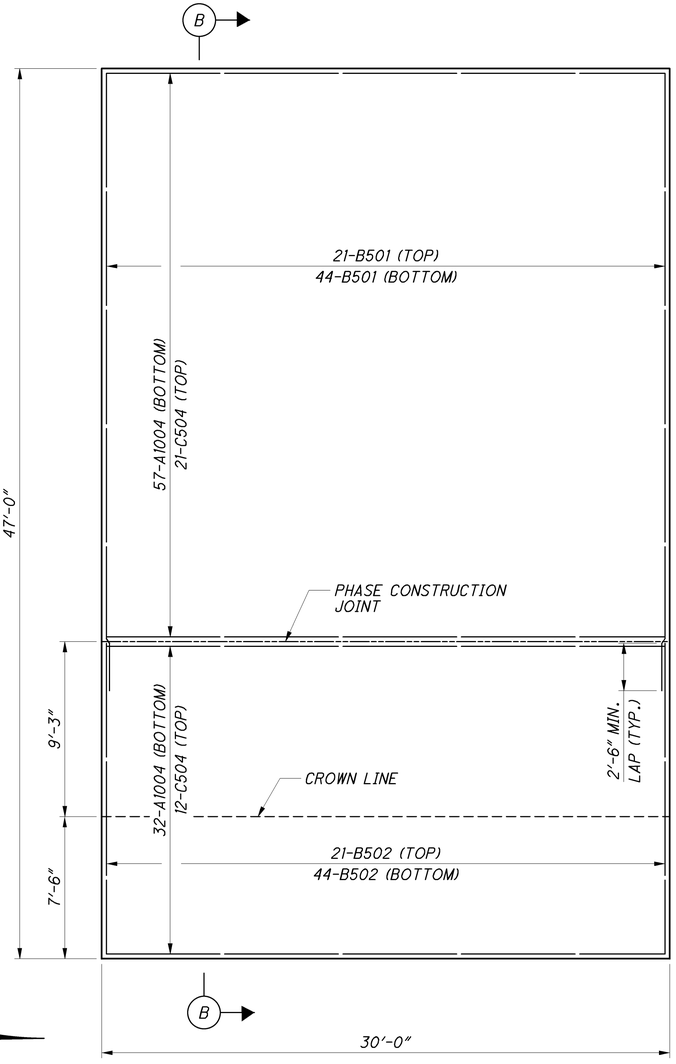

FORWARD APPROACH SLAB PLAN

(SEE SECTIONS A-A & B-B FOR SPACING)
(SOUTHBOUND SHOWN, NORTHBOUND SIMILAR)

SLAB CORNER ELEVATIONS TABLE					
			STATION	OFFSET	ELEVATION
SOUTHBOUND	RA	A	437+34.64	65.00' LT.	879.87
		B	437+34.64	34.75' LT.	880.36
		C	437+34.64	25.50' LT.	880.51
		D	437+34.64	18.00' LT.	880.41
		E	437+64.64	65.00' LT.	879.92
		F	437+64.64	34.75' LT.	880.40
		G	437+64.64	25.50' LT.	880.55
		H	437+64.64	18.00' LT.	880.46
	FA	I	438+96.64	65.00' LT.	880.12
		J	438+96.64	34.75' LT.	880.61
		K	438+96.64	25.50' LT.	880.76
		L	438+96.64	18.00' LT.	880.66
		M	439+26.64	65.00' LT.	880.17
		N	439+26.64	34.75' LT.	880.65
		O	439+26.64	25.50' LT.	880.80
		P	439+26.64	18.00' LT.	880.71
NORTHBOUND	RA	Q	437+34.64	65.00' RT.	879.87
		R	437+34.64	34.75' RT.	880.36
		S	437+34.64	25.50' RT.	880.51
		T	437+34.64	18.00' RT.	880.41
		U	437+64.64	65.00' RT.	879.92
		V	437+64.64	34.75' RT.	880.40
		W	437+64.64	25.50' RT.	880.55
		X	437+64.64	18.00' RT.	880.46
	FA	Y	438+96.64	65.00' RT.	880.12
		Z	438+96.64	34.75' RT.	880.61
		AA	438+96.64	25.50' RT.	880.76
		BB	438+96.64	18.00' RT.	880.66
		CC	439+26.64	65.00' RT.	880.17
		DD	439+26.64	34.75' RT.	880.65
		EE	439+26.64	25.50' RT.	880.80
		FF	439+26.64	18.00' RT.	880.71

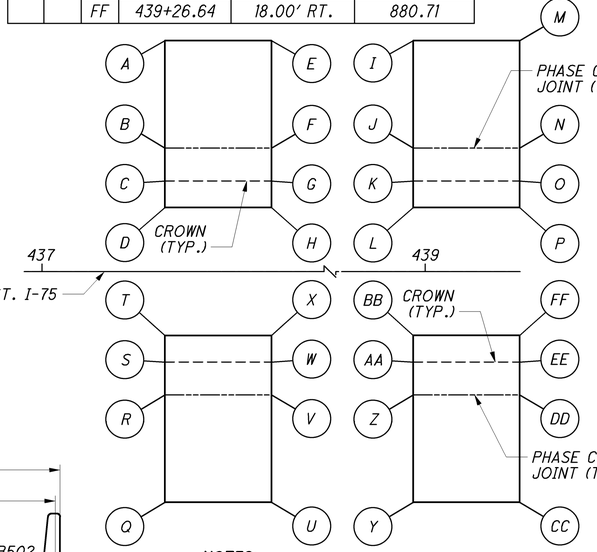

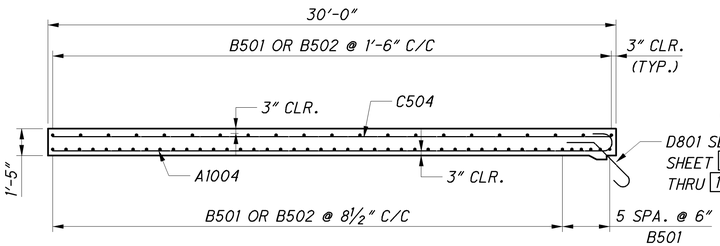

SECTION A-A

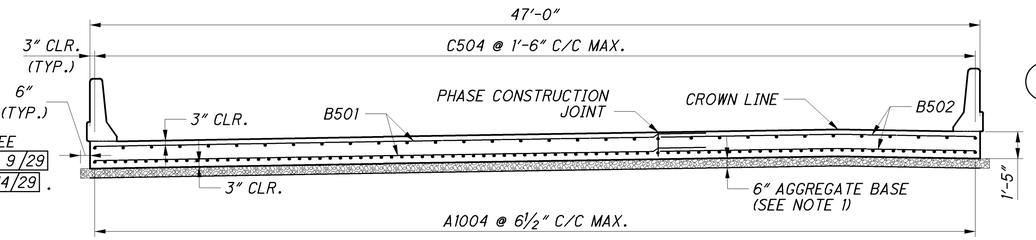

SECTION B-B

℄ R/W & CONST. I-75

439

NOTES:

1. 6" AGGREGATE BASE INCLUDED WITH ROADWAY QUANTITIES FOR PAYMENT.
2. SUBGRADE COMPACTION INCLUDED WITH ROADWAY QUANTITIES FOR PAYMENT.
3. ADJUST LOCATION OF LONGITUDINAL REINFORCEMENT TO CLEAR THE CONSTRUCTION JOINT BY 2".
4. SEE SHEET 6/29 FOR CONSTRUCTION PHASING.

DESIGN AGENCY
PARSONS BRINCKERHOFF
2545 FARMERS DRIVE
SUITE 350
COLUMBUS, OHIO 43235

DESIGNED	DRAWN	REVIEWED	DATE
PJL	TLP	EBS	05/24/12
CHECKED	REVISED	STRIPPING BID NUMBER	
SAP		LEFT: 0202231 RIGHT: 0202290	

MODIFIED APPROACH SLAB DEATILS

BRIDGE NO. ALL-75-0832 L&R
I-75 OVER OTTAWA RIVER

ALL-75-5.53
PID No. 76691

25 / 29

1035
1224

J:\Projects\ALL\76691\structures\ALL075_0832C\sheets\075_0832CMD001.dgn 11-SEP-2012 8:56PM reddenj

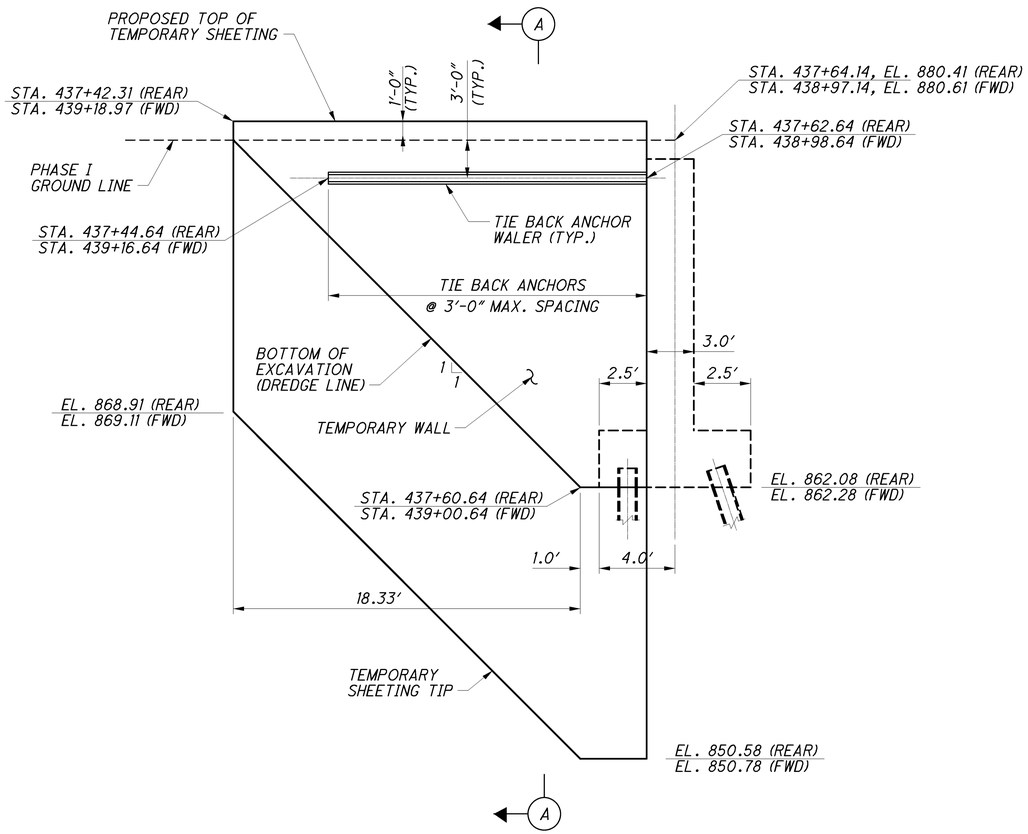

TEMPORARY SHEETING ELEVATION

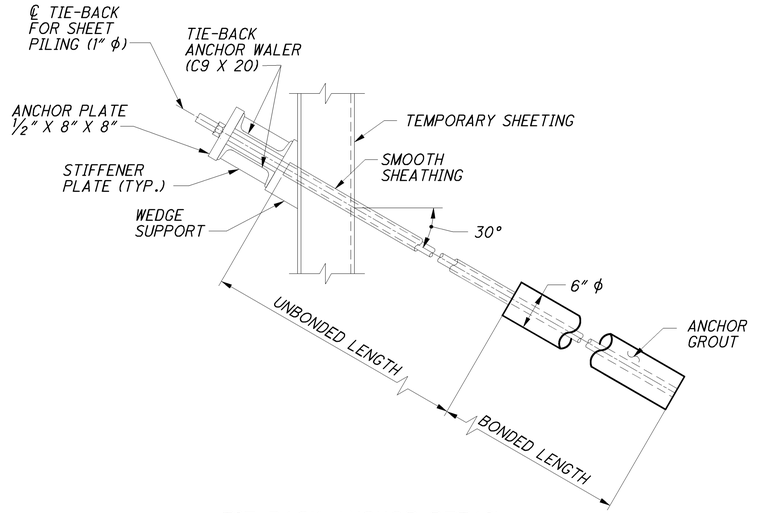

TIE-BACK ANCHOR DETAIL

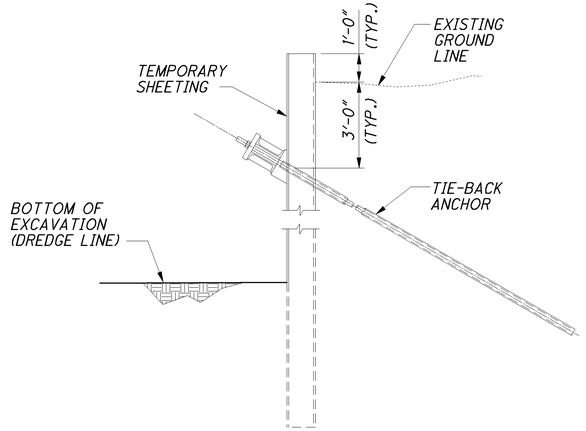

SECTION A-A

NOTES:

1. FOR LOCATION OF TEMPORARY SHEETING, SEE SHEET 2/29.
2. THE CONTRACTOR HAS THE OPTION TO DESIGN A DIFFERENT EXCAVATION SUPPORT SYSTEM. IF THE CONTRACTOR CHOOSES TO REDESIGN THE TEMPORARY SUPPORT SYSTEM THEY SHALL PREPARE AND SUBMIT PLANS AND CALCULATIONS FOR THESE ITEMS IN ACCORDANCE WITH CMS 501.05. DESIGN, INSTALL AND TEST TIE-BACKS IN ACCORDANCE WITH "RECOMMENDATIONS FOR PRESTRESSED ROCK AND SOIL ANCHORS", 4TH EDITION 2004, BY THE POST-TENSIONING INSTITUTE (PTI).
3. PAYMENT FOR THE TEMPORARY SHEETING SHALL BE INCLUDED IN THE CONTRACT LUMP SUM PRICE FOR ITEM 503 - COFFERDAMS AND EXCAVATION BRACING, AS PER PLAN.
4. ADJUST THE VERTICAL AND HORIZONTAL ANGLES OF THE TIE-BACK ANCHORS TO ACCOMMODATE THE PROPOSED METHOD OF INSTALLATION AND TO AVOID ANY OBSTRUCTIONS. HOWEVER, AS THE VERTICAL AND HORIZONTAL ANGLES OF THE TIE-BACK ANCHORS INCREASE THE COMPONENT OF THE TIE-BACK DESIGN LOAD PERPENDICULAR TO THE WALL WILL DECREASE. THUS THE DESIGN LOAD IN THE TIE-BACK SHALL BE ADJUSTED ACCORDINGLY SUCH THAT THE COMPONENT OF THE DESIGN LOAD PERPENDICULAR TO THE WALL IS NOT REDUCED.
5. THE MINIMUM UNFACTORED SOIL ANCHOR LOAD SHALL BE 18 KIPS.
6. THE BONDED LENGTH SHALL BE 35'. THE UNBONDED LENGTH SHALL BE 15'.
7. TEMPORARY SHEETING SHALL HAVE A MINIMUM SECTION MODULUS OF 15 IN^3/ FT BASED ON A 25 KSI ALLOWABLE STRENGTH.

DESIGN AGENCY
PARSONS BRINCKERHOFF
2545 FARMERS DRIVE
SUITE 350
COLUMBUS, OHIO 43235

DESIGNED	DRAWN	REVIEWED	DATE
SAP	TLP	EBS	05/24/12
CHECKED	REVISED	STRUCTURE NUMBER	
EBS		LEFT: 0202231 RIGHT: 0202290	

TEMPORARY SHEETING ELEVATION AND DEATILS
BRIDGE NO. ALL-75-0832 L&R
I-75 OVER OTTAWA RIVER

ALL-75-5.53
PID No. 76691

J:\Projects\ALL\76691\structures\ALL075_0832C\sheets\075_0832CMD002.dgn 11-SEP-2012 8:56PM reddenj

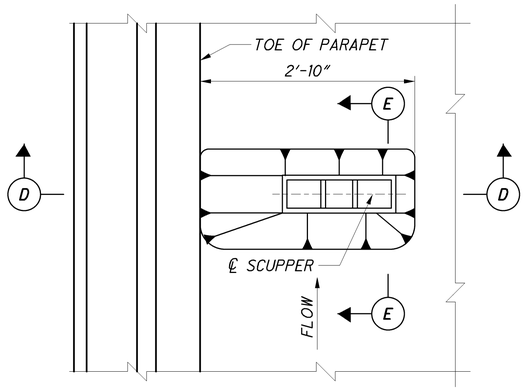

PLAN

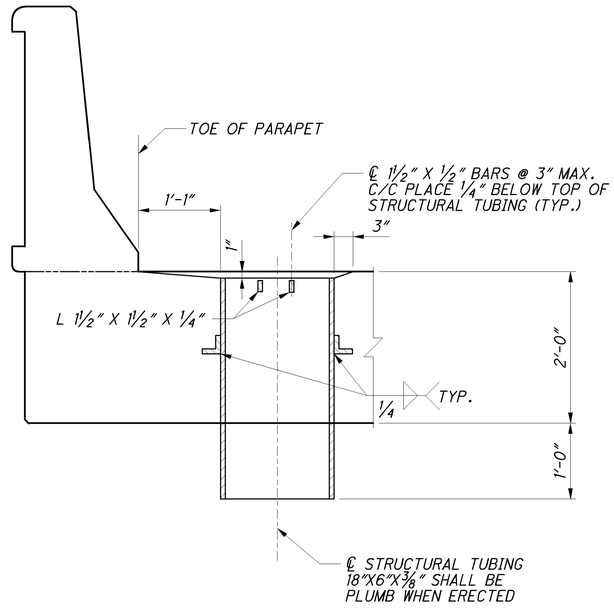

SECTION D-D

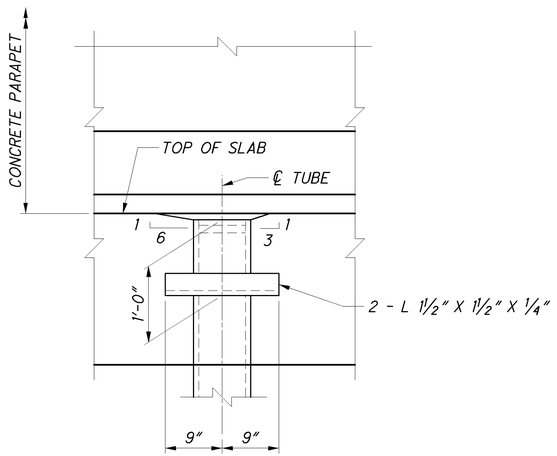

SECTION E-E

SCUPPER NOTES:

1. *ALL MATERIALS INCLUDING STRUCTURAL TUBING, SUPPORT ANGLES, AND OTHER HARDWARE SHALL BE GALVANIZED PER 711.02.*
2. *PAYMENT: ALL MATERIALS, EQUIPMENT, DELIVERY, AND LABOR NECESSARY IN THE FABRICATION AND INSTALLATION FOR THE SCUPPER AS DETAILED SHALL BE INCLUDED IN THE UNIT PRICE OF: SCUPPER, INCLUDING SUPPORTS, AS PER PLAN.*
3. *FOR ADDITIONAL NOTES AND DETAILS SEE GSD-1-96.*

DESIGN AGENCY
PARSONS BRINCKERHOFF
2545 FARMERS DRIVE
SUITE 350
COLUMBUS, OHIO 43235

DESIGNED	DRAWN	REVIEWED	DATE
PJL	LEL	EBS	05/24/12
CHECKED	REVISED	STRUCTURE FILE NUMBER	
SAP		LEFT: 0202231 RIGHT: 0202290	

SCUPPER DETAILS
BRIDGE NO. ALL-75-0832 L&R
I-75 OVER OTTAWA RIVER

ALL-75-5.53
PID No. 89029

27 / 29

1037
1224

J:\Projects\ALL\76691\structures\ALL075_0832C\sheets\075_0832CSC001.dgn 11-SEP-2012 8:56PM reddenj

MARK	NUMBER TOTAL	LENGTH	WEIGHT	TYPE	DIMENSIONS A	B	C	D	E	R	INC
					SUPERSTRUCTURE						
S401	420	3'- 04"	936	2	1'-3"	1'-6"	1'-3"				
S501	262	30'- 00"	8,198	STR.							
S502	262	16'- 06"	4,509	STR.							
S503	396	24'- 09"	10,223	STR.							
S504	198	17'- 11"	3,701	STR.							
S505	592	7'- 01"	4,374	23	9"	3'-0"	3'-2"			2 1/4"	
S506	120	29'- 01"	3,641	STR.							
S507	160	7'- 07"	1,266	2	2'-10"	2'-2"	2'-10"				
	4	7'- 11"				1'-0"					
S508	SER. OF	TO	703	3	2'-8"	TO					5/8"
	20	8'- 11"				1'-6"					
S509	112	7'- 11"	925	2	3'-0"	2'-2"	3'-0"				
S510	56	8'- 11"	521	3	2'-8"	1'-6"					
S601	226	30'- 00"	10,184	STR.							
S602	226	16'- 07"	5,630	STR.							
S603	20	29'- 08"	892	STR.							
S604	592	4'- 08"	4,150	1	1'-0"	3'-10"					
S605	592	4'- 01"	3,631	14	10 1/2"	1'-11"	8 1/2"	6"	9"		
D801	128	5'- 02"	1,766	18	2'-10"	1'-0"	1'-0"				
S801	40	30'- 01"	3,213	STR.							
S802	40	16'- 07"	1,772	STR.							
S901	396	39'- 01"	52,622	STR.							
S902	328	43'- 11"	48,976	16	42'-8"						
S903	164	53'- 10"	30,018	STR.							
D801	128	5'- 07"	1,909	18	3'-7"	1'-0"	1'-0"				
SUPERSTRUCTURE TOTAL			203,760								

MARK	NUMBER TOTAL	LENGTH	WEIGHT	TYPE	DIMENSIONS A	B	C	D	E	R	INC
					APPROACH SLABS						
B501	260	32'- 09"	8,882	STR.							
B502	260	16'- 03"	4,407	STR.							
C504	132	29'- 06"	4,062	STR.							
AS506	16	19'- 02"	320	STR.							
AS507	32	29'- 07"	988	STR.							
AS508	16	5'- 08"	95	25	1'-10"	2'-5"	1'-4"	1 1/2"	5"		
AS509	128	7'- 01"	946	23	8"	3'-3"	3'-0"			1 1/2"	
AS510	32	10'- 00"	334	STR.							
	8	3'- 00"			2'-5"						
AS511	SER. OF	TO	314	16	TO						1"
	11	3'- 10"			3'-3"						
AS512	16	5'- 08"	95	STR.							
AS604	8	19'- 10"	239	STR.							
AS605	128	4'- 00"	770	1	1'-0"	3'-2"					
AS606	216	3'- 07"	1,163	14	10 1/2"	1'-5"	8 1/2"	6"	9"		
	8	4'- 06"				3'-8"					
AS607	SER. OF	TO	650	1	1'-0"	TO					1"
	11	5'- 04"				4'-6"					
AS608	64	4'- 06"	433	1	1'-0"	3'-8"					
A1003	356	30'- 11"	47,361	16	29'-6"						
APPROACH SLAB TOTAL			71,059								
FOR INFORMATION ONLY. NOT INCLUDED WITH ITEM 509.											

MARK	NUMBER TOTAL	LENGTH	WEIGHT	TYPE	DIMENSIONS A	B	C	D	E	R	INC
					PIER						
SP401	16	26'- 08"	7,360	27	4 1/2"	3'-0"	26'-8"				
P501	336	11'- 10"	4,147	6	4'-3"	2'-2"	10"				
P502	40	13'- 04"	557	24	3'-2"	4'-2"				1-7"	
P503	8	5'- 09"	48	2	10"	4'-4"	10"				
P504	8	13'- 09"	115	STR.							
P505	8	27'- 03"	228	STR.							
P601	16	30'- 01"	723	STR.							
P602	16	16'- 07"	399	STR.							
P1001	64	27'- 03"	7,505	STR.							
P1002	64	13'- 09"	3,787	STR.							
P1101	288	35'- 00"	53,556	16	33'-5"						
PIER TOTAL			78,425								

MARK	NUMBER TOTAL	LENGTH	WEIGHT	TYPE	DIMENSIONS A	B	C	D	E	R	INC
					DRILLED SHAFT						
DS401	16	12'- 10"	4,320	27	4 1/2"	3'-6"	12'-10"				
DS1101	288	12'- 10"	19,637	STR.							
DRILLED SHAFT TOTAL			23,957								
FOR INFORMATION ONLY. NOT INCLUDED WITH ITEM 509.											

NOTES:

1. THE BAR SIZE NUMBER IS SPECIFIED ON THE PLANS IN THE BAR MARK COLUMN. THE FIRST DIGIT WHERE THREE DIGITS ARE USED, AND THE FIRST TWO DIGITS WHERE FOUR ARE USED, INDICATES THE BAR SIZE NUMBER. FOR EXAMPLE, P601 IS A NO. 6 BAR. BAR DIMENSIONS SHOWN ARE OUT TO OUT UNLESS OTHERWISE INDICATED. R INDICATES INSIDE RADIUS, UNLESS OTHERWISE NOTED.

2. ALL REINFORCEMENT IS TO BE EPOXY COATED.

DESIGN AGENCY
PARSONS BRINCKERHOFF
2945 FARMERS DRIVE
SUITE 350
COLUMBUS, OHIO 43235

DESIGNED PJL | DRAWN LEL | REVIEWED EBS | DATE 05/24/12
CHECKED SAP | REVISED | STRUCTURE FILE NUMBER LEFT: 0202231 RIGHT: 0202290

REINFORCING STEEL LIST

BRIDGE NO. ALL-75-0832 L&R
I-75 OVER OTTAWA RIVER

ALL-75-5.53
PID No. 89029

J:\Projects\ALL\76691\structures\ALL075_0832C\sheets\075_0832CRL001.dgn 25-OCT-2012 11:52AM lint

MARK	NUMBER			LENGTH	WEIGHT	TYPE	DIMENSIONS						
	REAR	FWD.	TOTAL				A	B	C	D	E	R	INC
ABUTMENTS													
A501	32	32	64	28'- 11"	1,931	STR.							
A502	44	44	88	31'- 04"	2,876	STR.							
A503	154	154	308	14'- 03"	4,578	1	10"	13'-6"					
A504	98	98	196	7'- 11"	1,619	2	2'-9"	2'-8"	2'-9"				
A505	20	20	40	26'- 08"	1,113	STR.							
	4	4	8	13'- 08"									
A506	SER. OF	SER. OF	SER. OF	TO	968	STR.							2'-3 1/4"
	6	6	6	25'- 00"									
A507	2	2	4	7'- 10"	33	1	10"	7'-1"					
A508	2	2	4	8'- 03"	35	1	10"	7'-6"					
	2	2	4	8'- 09"				8'-0"					
A509	SER. OF	SER. OF	SER. OF	TO	345	1	10"	TO					5 3/4"
	8	8	8	11'- 11"				11'-4"					
	2	2	4	12'- 07"				11'-10"					
A510	SER. OF	SER. OF	SER. OF	TO	283	1	10"	TO					5 3/4"
	5	5	5	14'- 06"				13'-9"					
	2	2	4	8'- 11"			3'-6"		3'-6"				
A511	SER. OF	SER. OF	SER. OF	TO	226	2	TO	2'-2"	TO				11 1/2"
	5	5	5	12'- 09"			5'-5"		5'-5"				
	2	2	4	13'- 09"			5'-11"		5'-11"				
A512	SER. OF	SER. OF	SER. OF	TO	183	2	TO	2'-2"	TO				10"
	3	3	3	15'- 05"			6'-9"		6'-9"				
A513	4	4	8	15'- 05"	129	2	6'-9"	2'-2"	6'-9"				
A514	4	4	8	25'- 00"	209	19	23'-4"	1'-6"	9"				
A515	4	4	8	7'- 09"	65	STR.							
A516	4	4	8	5'- 09"	48	STR.							
A517	4	4	8	3'- 09"	32	STR.							
A518	38	38	76	16'- 01"	1,275	2	7'-1"	2'-2"	7'-1"				
A519	44	44	88	21'- 04"	1,959	STR.							
A520	20	20	40	17'- 05"	727	STR.							
A521	16	16	32	33'- 03"	1,110	STR.							
A522	44	44	88	15'- 06"	1,423	STR.							
A523	4	4	8	25'- 02"	210	STR.							
A524	4	4	8	17'- 04"	145	STR.							
A525	30	30	60	7'- 05"	465	2	2'-9"	2'-2"	2'-9"				
A601	184	184	368	21'- 08"	11,976	33	7'-8"	2'-7"					
A801	24	24	48	29'- 08"	3,803	STR.							
A802	8	8	16	31'- 04"	1,339	STR.							
A803	8	8	16	15'- 06"	663	STR.							
A804	12	12	24	33'- 03"	2,131	STR.							
A901	154	154	308	14'- 10"	15,534	1	1'-7"	13'-6"					
	2	2	4	9'- 04"				8'-0"					
A902	SER. OF	SER. OF	SER. OF	TO	1,197	1	1'-7"	TO					5 3/4"
	8	8	8	12'- 08"				11'-4"					
	2	2	4	13'- 02"				11'-10"					
A903	SER. OF	SER. OF	SER. OF	TO	961	1	1'-7"	TO					5 3/4"
	5	5	5	15'- 01"				13'-9"					
A904	2	2	4	8'- 05"	115	1	1'-7"	7'-1"					
A905	2	2	4	8'- 10"	121	1	1'-7"	7'-6"					
ABUTMENT TOTAL					59,827								

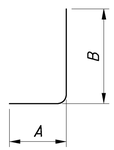

TYPE-1

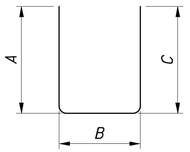

TYPE-2

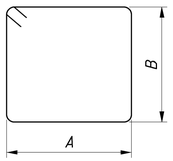

TYPE-3

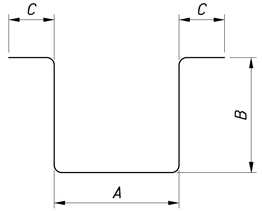

TYPE-6

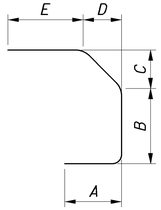

TYPE-14

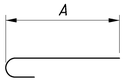

TYPE-16

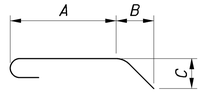

TYPE-18

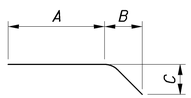

TYPE-19

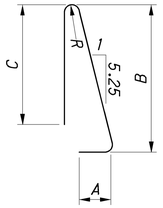

TYPE-23

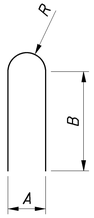

TYPE-24

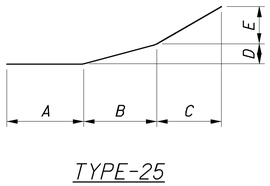

TYPE-25

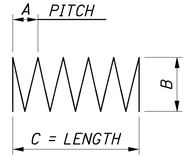

TYPE-27

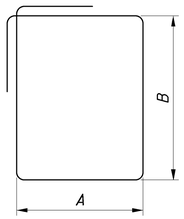

TYPE-33

NOTES:

1. THE BAR SIZE NUMBER IS SPECIFIED ON THE PLANS IN THE BAR MARK COLUMN. THE FIRST DIGIT WHERE THREE DIGITS ARE USED, AND THE FIRST TWO DIGITS WHERE FOUR ARE USED, INDICATES THE BAR SIZE NUMBER. FOR EXAMPLE, P601 IS A NO. 6 BAR. BAR DIMENSIONS SHOWN ARE OUT TO OUT UNLESS OTHERWISE INDICATED. R INDICATES INSIDE RADIUS, UNLESS OTHERWISE NOTED.

2. ALL REINFORCEMENT IS TO BE EPOXY COATED.

DESIGN AGENCY
PARSONS BRINCKERHOFF
2545 FARMERS DRIVE
SUITE 350
COLUMBUS, OHIO 43235

DESIGNED PJL | DRAWN LEL | REVIEWED EBS | DATE 05/24/12

CHECKED SAP | REVISED

STRUCTURE NUMBER
LEFT: 0202231
RIGHT: 0202290

REINFORCING STEEL LIST

BRIDGE NO. ALL-75-0832 L&R
I-75 OVER OTTAWA RIVER

ALL-75-5.53
PID No. 89029

J:\Projects\ALL\76691\structures\ALL075_0832C\sheets\075_0832CRL002.dgn 11-SEP-2012 8:56PM reddenj

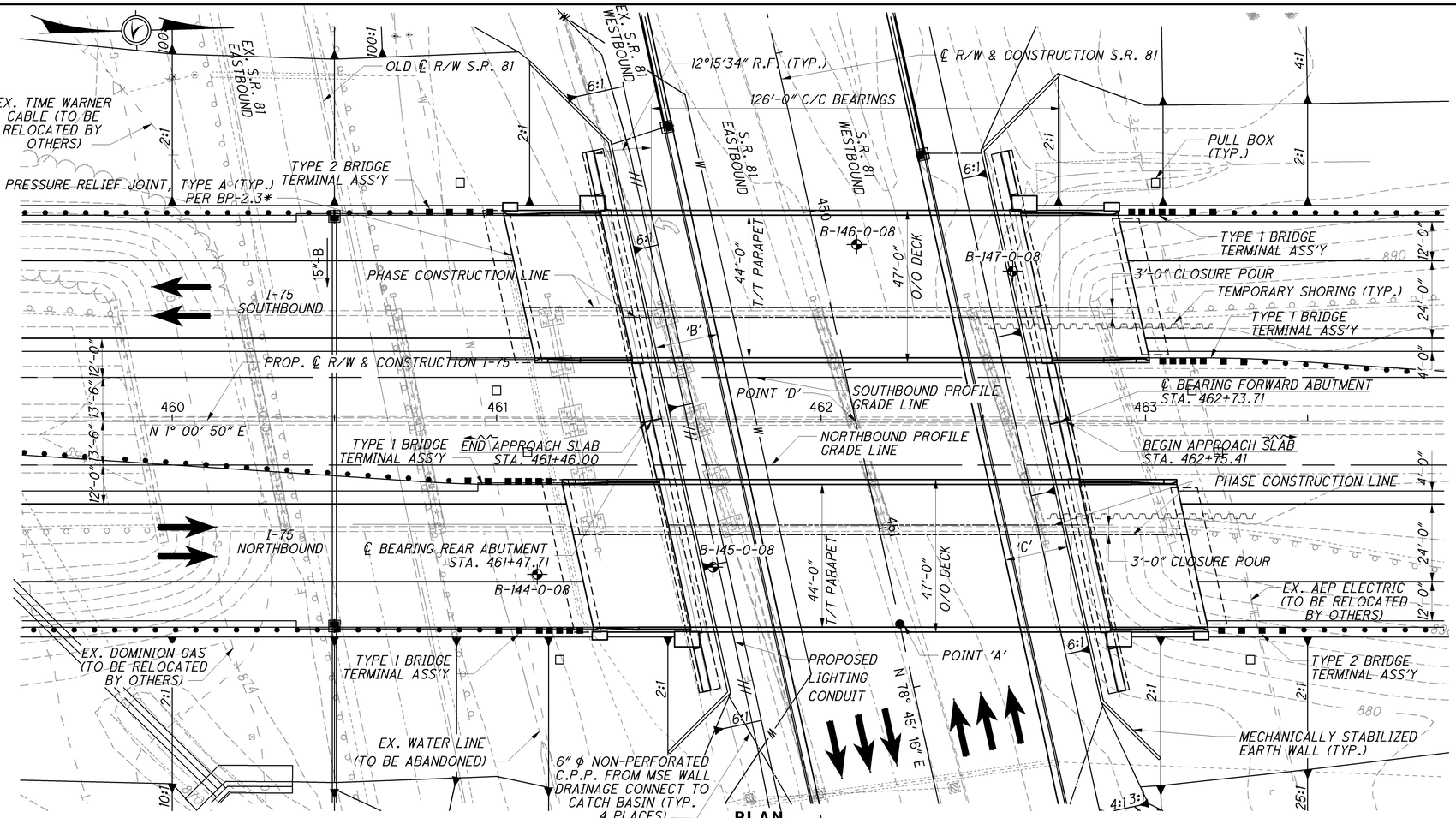

PLAN

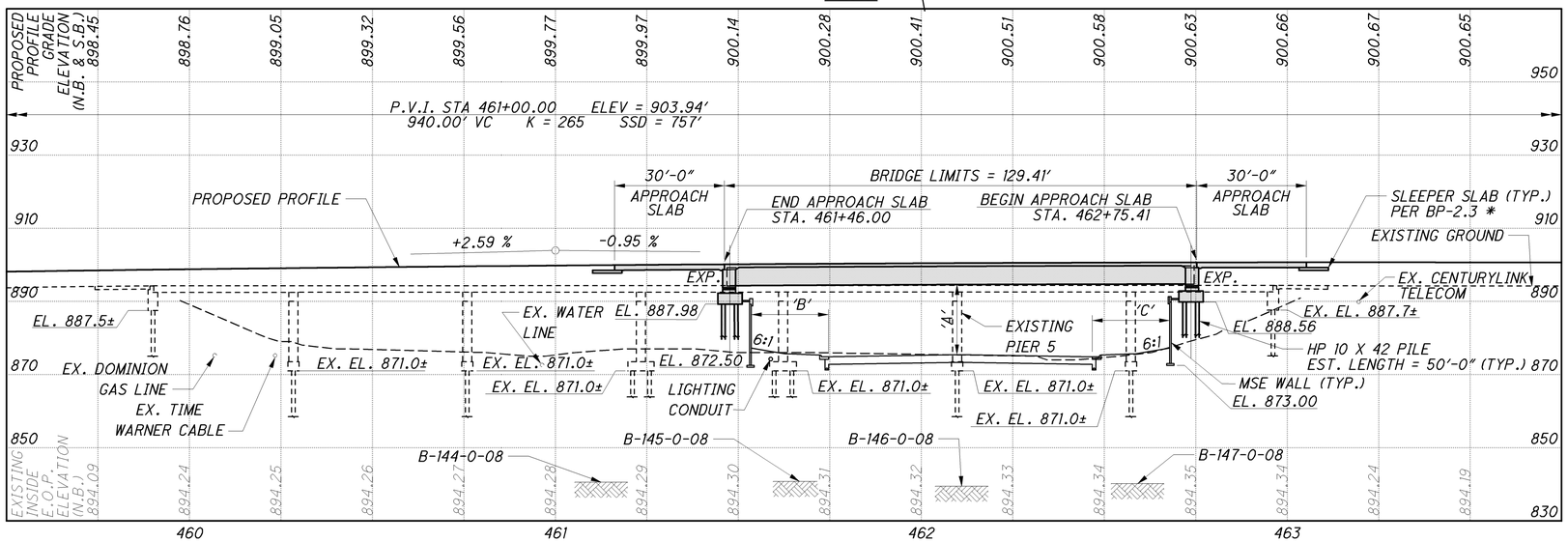

PROFILE
ALONG NORTHBOUND PROFILE GRADE LINE

NOTES

EARTHWORK LIMITS SHOWN ARE APPROXIMATE. ACTUAL SLOPES SHALL CONFORM TO PLAN CROSS SECTIONS.

DESIGN TRAFFIC:
2015 ADT = 49,540 2015 ADTT = 20,807
2035 ADT = 60,240 2035 ADTT = 25,301
DIRECTIONAL DISTRIBUTION = 0.50

LEGEND

⌖ BORING LOCATION

● 17.00' REQUIRED MINIMUM VERTICAL CLEARANCE
POINT 'A' - 17.22' ACTUAL MINIMUM VERTICAL CLEARANCE

19.00' REQUIRED MINIMUM HORIZONTAL CLEARANCE
POINT 'B' - 19.47' ACTUAL MINIMUM HORIZONTAL CLEARANCE
POINT 'C' - 19.49' ACTUAL MINIMUM HORIZONTAL CLEARANCE

POINT 'D' - STA. 462+10.70 PROP. ℄ R/W & CONSTRUCTION I-75
STA. 450+66.08 ℄ R/W & CONSTRUCTION S.R. 81

* PROVIDE PRESSURE RELIEF JOINT FOR RIGID PAVEMENT OPTION ONLY

SOIL BORING LOCATIONS

BORING	STATION (I-75), OFFSET	APPROX. TOP OF ROCK EL.
B-144-0-08	STA. 461+12.5, 47.2' RT.	840.6
B-145-0-08	STA. 461+66.7, 45.0' RT.	840.8
B-146-0-08	STA. 462+11.0, 54.5' LT.	839.5
B-147-0-08	STA. 462+59.1, 46.3' LT.	840.2

EXISTING STRUCTURE

TYPE: CONTINUOUS 7-SPAN REINFORCED CONCRETE SLAB WITH REINFORCED CONCRETE SUBSTRUCTURE
SPANS: 37.49'±-47.5'±-47.5'±-38.89'±-47.5'±-47.5'± & 37.49'± C/C BRGS.
ROADWAY: 62'-0"± F/F 2' SAFETY CURB
LOADING: CF-2000 (51)
SKEW: VARIES 11°27' RF± & 17°53' RF±
APPROACH SLABS: AS-1-54 (L=15')
ALIGNMENT: TANGENT
CROWN: NORMAL 3/16"/FT.
STRUCTURE FILE NUMBER: 0202258
DATE BUILT: 1956
WEARING SURFACE: MICROSILICA MODIFIED CONCRETE

PROPOSED STRUCTURE

TYPE: SINGLE SPAN COMPOSITE PRESTRESSED CONCRETE I-BEAM WITH REINFORCED CONCRETE DECK, SEMI-INTEGRAL ABUTMENTS, AND MSE WALLS.
SPANS: 126'-0" C/C BEARINGS
ROADWAY: 44'-0" TOE/TOE PARAPET
LOADING: HL-93
FUTURE WEARING SURFACE (FWS) OF 0.060 kips/ft^2
SKEW: 12°15'34" RIGHT FORWARD
APPROACH SLABS: AS-1-81, 30'-0" LONG (MODIFIED)
WEARING SURFACE: 1" MONOLITHIC
ALIGNMENT: TANGENT
CROWN: 0.016 FT/FT
COORDINATES: LATITUDE 40°45'21"
LONGITUDE 84°4'31"

DESIGN AGENCY
PARSONS BRINCKERHOFF
2945 FARMERS DRIVE
SUITE 350
COLUMBUS, OHIO 43235

DESIGNED PJL | DRAWN BKJ | CHECKED SAP | REVIEWED EBS | DATE 05/24/12
STRUCTURE FILE NUMBER LEFT: 0202266 RIGHT: 0202274

ALLEN COUNTY
STA. 461+46.00
STA. 462+75.41

SITE PLAN
BRIDGE NO. ALL-75-0875 L&R
I-75 OVER S.R. 81

ALL-75-5.53
PID No. 76691

1 / 45

1040
1224

I:\Projects\ALL\76691\structures\ALL075_0875C\sheets\075_0875CSP001.dgn 11-SEP-2012 8:56PM reddenj

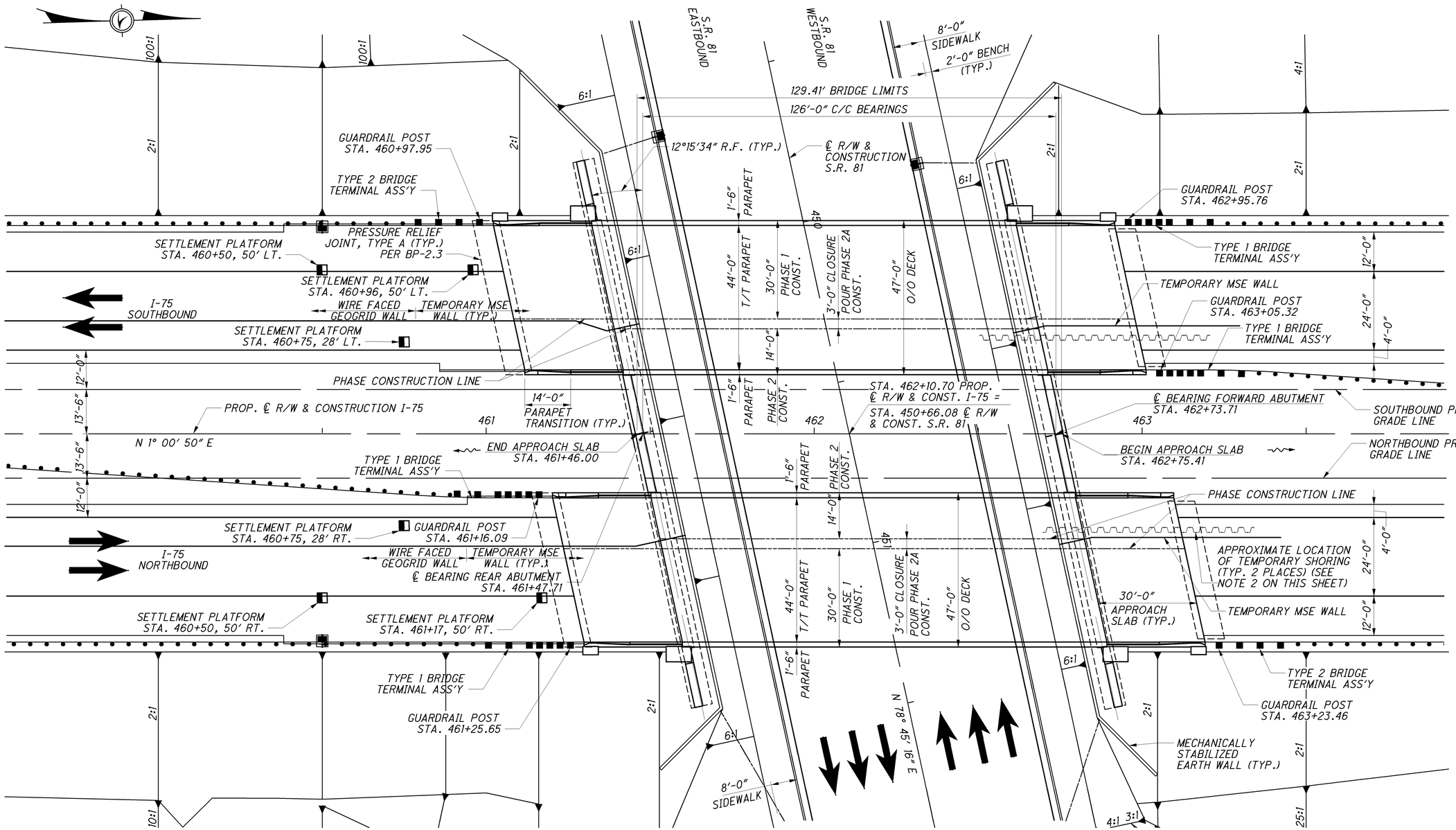

GENERAL PLAN

NOTES:

1. THE EARTHWORK LIMITS SHOWN ARE APPROXIMATE. ACTUAL SLOPES SHALL CONFORM TO PLAN CROSS SECTIONS.
2. FOR TEMPORARY SHORING DETAILS, SEE SHEET 45/45.
3. FOR SHOULDER TRANSITION DETAILS, SEE ROADWAY PAVEMENT DETAILS.

DESIGN AGENCY
PARSONS BRINCKERHOFF
2945 FARMERS DRIVE
SUITE 350
COLUMBUS, OHIO 43235

DESIGNED	DRAWN	REVIEWED	DATE
ECM	RCK	EBS	05/24/12
CHECKED	REVISED	STRUCTURE NUMBER	LEFT: 02022268 RIGHT: 02022274

GENERAL PLAN
BRIDGE NO. ALL-75-0875 L/R
1-75 OVER S.R. 81

ALL-75-5.53
PID No. 76691

2 / 45

1041
1224

J:\Projects\ALL\76691\structures\ALL075_0875C\sheets\075_0875CGP001.dgn 11-SEP-2012 8:56PM reddenj

STANDARD DRAWINGS AND SUPPLEMENTAL SPECIFICATIONS

REFER TO THE FOLLOWING STANDARD BRIDGE DRAWING(S):

AS-1-81	REVISED	07-19-02
BR-1	REVISED	07-19-02
PCB-91	REVISED	07-19-02
PSID-1-99	REVISED	07-18-08
SICD	REVISED	07-19-02

AND TO THE FOLLOWING SUPPLEMENTAL SPECIFICATION(S):

800	DATED	4-20-12
832	DATED	5-5-09
840	DATED	4-20-12
898	DATED	10-2-11

DESIGN SPECIFICATIONS

DESIGN SPECIFICATIONS: THIS STRUCTURE CONFORMS TO THE "LRFD BRIDGE DESIGN SPECIFICATIONS" ADOPTED BY THE AMERICAN ASSOCIATION OF STATE HIGHWAY AND TRANSPORTATION OFFICIALS, 5TH EDITION, INCLUDING THE 2010 INTERIM SPECIFICATIONS AND THE ODOT BRIDGE DESIGN MANUAL, 2007 EXCEPT AS NOTED ELSEWHERE IN THE PLANS.

DESIGN DATA

DESIGN DATA:

CONCRETE CLASS QSC2 - COMPRESSIVE STRENGTH 4.5 KSI (SUPERSTRUCTURE)

CONCRETE CLASS QSC1 - COMPRESSIVE STRENGTH 4.0 KSI (SUBSTRUCTURE)

REINFORCING STEEL - MINIMUM YIELD STRENGTH 60 KSI

STRUCTURAL STEEL - ASTM A709 GRADE 50 - YIELD STRENGTH 50 KSI

CONCRETE FOR PRESTRESSED BEAMS:

COMPRESSIVE STRENGTH (FINAL) - 10.0 KSI

COMPRESSIVE STRENGTH (RELEASE) - 7.0 KSI

PRESTRESSING STRAND:

AREA = 0.217 SQ.IN.

ULTIMATE STRENGTH = 270 KSI

INITIAL STRESS = 202.5 KSI (LOW RELAXATION STRANDS)

LOAD MODIFIER FOR OPERATIONAL IMPORTANCE

OPERATIONAL IMPORTANCE: A LOAD MODIFIER OF 1.00 HAS BEEN ASSUMED FOR THE DESIGN OF THIS STRUCTURE IN ACCORDANCE WITH THE AASHTO LRFD BRIDGE DESIGN SPECIFICATIONS, ARTICLE 1.3.5 AND THE ODOT BRIDGE DESIGN MANUAL, 2007.

DESIGN LOADING

DESIGN LOADING: HL-93

FUTURE WEARING SURFACE (FWS) OF 0.060 KIPS/SQ.FT.

DECK PROTECTION METHOD

EPOXY COATED REINFORCING STEEL

2.5" CONCRETE COVER

SEALING OF CONCRETE SURFACES

MONOLITHIC WEARING SURFACE

MONOLITHIC WEARING SURFACE IS ASSUMED, FOR DESIGN PURPOSES, TO BE 1 INCH THICK.

ITEM 512-SEALING OF CONCRETE SURFACES (EPOXY-URETHANE), AS PER PLAN

EPOXY-URETHANE FOR THE BEAMS SHALL BE FEDERAL COLOR STANDARD NUMBER 25095. EPOXY-URETHANE FOR THE MES AND WINGWALL COPING, ABUTMENT DIAPHRAGM, PARAPET ACCENTS AND TOWER CAPS SHALL BE FEDERAL COLOR STANDARD NUMBER 37875. EPOXY-URETHANE FOR DECK EDGE BELOW PARAPET SHALL BE FEDERAL COLOR STANDARD NUMBER 36373. ALL CONCRETE SHALL BE SEALED AS PER PLAN DETAILS.

ITEM 512 - SEALING OF CONCRETE SURFACES (NON-EPOXY CLEAR), AS PER PLAN

THE NON-EPOXY (CLEAR) SEALER SHALL BE USED ON THE FOLLOWING SURFACES ACCORDING TO THE DETAILS IN PLANS:

1. ABUTMENT AND WINGWALL FACES.
2. PARAPETS.
3. TOWER FACES.
4. MSE WALL PANELS

PAYMENT FOR SEALING SURFACES OF ITEMS 1, 2, 3, AND 4 SHALL BE INCLUDED IN THIS ITEM 512.

EXISTING STRUCTURE PLANS:

CONSTRUCTION PLANS FOR THE EXISTING BRIDGE ARE ON FILE AT THE OHIO DEPARTMENT OF TRANSPORTATION, DISTRICT ONE OFFICE, 1885 NORTH MCCULLOUGH ST., LIMA, OHIO 45801 AND ARE AVAILABLE FOR REFERENCE.

STRUCTURE REMOVED, OVER 20' SPAN, AS PER PLAN

STRUCTURE REMOVAL SHALL BE IN ACCORDANCE WITH 202 EXCEPT THAT THE EXISTING PIER 5 SHALL BE COMPLETELY REMOVED, INCLUDING PILING, TO THE EXISTING BOTTOM OF FOOTING ELEVATION (871.00±)

PILE DRIVING CONSTRAINTS

PRIOR TO DRIVING ABUTMENT PILES TO THE ULTIMATE BEARING VALUE (UBV) OR TO REFUSAL ON BEDROCK, CONSTRUCT THE MSE WALL AND THE BRIDGE APPROACH EMBANKMENT BEHIND THE ABUTMENT UP TO THE BOTTOM OF THE FOOTING FOR A MINIMUM DISTANCE OF 50' MIN. BEHIND THE REAR ABUTMENT (SEE SHEET 62), AND 200' BEHIND THE FORWARD ABUTMENT. THE CONTRACTOR MAY PRE-DRIVE ABUTMENT PILES BEFORE CONSTRUCTING MSE WALLS. PRE-DRIVING CONSISTS OF INSTALLING THE ABUTMENT PILES INTO THE SOIL ONLY AS FAR AS NECESSARY SO THAT THE PILE WILL REMAIN VERTICAL DURING MSE WALL CONSTRUCTION. IF PRE-DRIVING PILES, INSTALL PILE SLEEVES AROUND PILES BEFORE CONSTRUCTING THE MSE WALL. AT LEAST THREE FEET OF PILE MUST EXTEND ABOVE THE TOP OF THE PILE SLEEVE TO MEET THE REQUIREMENTS OF CMS 507.09 REGARDING SPLICES. DO NOT DRIVE ABUTMENT PILES TO THE UBV OR TO REFUSAL ON BEDROCK UNTIL AFTER THE ABOVE REQUIRED MSE WALL AND EMBANKMENT HAVE BEEN CONSTRUCTED AND A 90 CALENDAR DAY WAITING PERIOD HAS ELAPSED. THE ENGINEER MAY ADJUST THE LENGTH OF THE WAITING PERIOD BASED ON SETTLEMENT PLATFORM READINGS. AFTER THE SPECIFIED WAITING PERIOD HAS ELAPSED, DRIVE ABUTMENT PILES TO THE UBV OR TO REFUSAL ON BEDROCK. IN ORDER TO REMOVE ANY NEGATIVE SKIN FRICTION THAT HAS DEVELOPED DURING THE WAITING PERIOD, DRIVE EACH ABUTMENT PILE A DISTANCE OF AT LEAST 0.5".

IF NOT PRE-DRIVING ABUTMENT PILES, INSTALL THE ABUTMENT PILES THROUGH PILE SLEEVES AFTER THE ABOVE REQUIRED MSE WALL AND EMBANKMENT HAVE BEEN CONSTRUCTED AND THE SPECIFIED WAITING PERIOD HAS ELAPSED.

PROPRIETARY RETAINING WALL DATA

THE PROPRIETARY WALL SUPPLIER SHALL DESIGN THE INTERNAL STABILITY OF A MECHANICALLY STABILIZED EARTH (MSE) WALL IN ACCORDANCE WITH SS840 TO SUPPORT THE ABUTMENT. THE DESIGN FOR INTERNAL STABILITY SHALL INCLUDE A NOMINAL (I.E. UNFACTORED) HORIZONTAL STRIP LOAD DUE TO FRICTION (FR) FROM THE SUPERSTRUCTURE OF 1.38 K/FT APPLIED PERPENDICULAR TO THE FACE OF WALL AT THE BASE OF THE CONCRETE FOOTING. THIS STRIP LOAD DOES NOT INCLUDE EARTH PRESSURE LOADS FROM THE ABUTMENT BACKFILL. HOWEVER, THE PROPRIETARY WALL SUPPLIER SHALL INCLUDE EARTH PRESSURE LOADS FROM THE ABUTMENT BACKFILL IN THE DESIGN CALCULATIONS.

PILE DESIGN LOADS (ULTIMATE BEARING VALUE)

PILES TO BEDROCK: DRIVE PILES TO REFUSAL ON BEDROCK. THE DEPARTMENT WILL CONSIDER REFUSAL TO BE OBTAINED BY PENETRATING WEAK BEDROCK FOR SEVERAL INCHES TO A MINIMUM RESISTANCE OF 20 BLOWS PER INCH OR BY CONTACTING STRONG BEDROCK AND THE PILE RECEIVING AT LEAST 20 BLOWS. SELECT THE HAMMER SIZE TO ACHIEVE THE REQUIRED DEPTH TO BEDROCK AND REFUSAL. INSTEAD OF DRIVING TO REFUSAL, THE CONTRACTOR MAY PERFORM DYNAMIC LOAD TESTING ACCORDING TO C&MS 523 TO ESTABLISH A DRIVING CRITERIA FOR EACH PILE TYPE AND CAPACITY. ESTABLISH THE DRIVING CRITERIA TO ACHIEVE AN ULTIMATE BEARING VALUE THAT IS 1.5 TIMES THE TOTAL FACTORED LOAD GIVEN BELOW FOR THE PILES. PAYMENT FOR DYNAMIC LOAD TESTING PERFORMED AT THE CONTRACTOR'S OPTION IS INCLUDED IN THE UNIT PRICE PAY ITEM FOR PILES DRIVEN.

THE TOTAL FACTORED LOAD IS 306 KIPS PER PILE FOR THE 120 ABUTMENT PILES.

REAR ABUTMENT PILES:
HP10 X 42 PILES 55 FEET LONG, ORDER LENGTH

FORWARD ABUTMENT PILES:
HP10 X 42 PILES 55 FEET LONG, ORDER LENGTH

PILE SPLICES

IN LIEU OF USING THE FULL PENETRATION BUTT WELDS SPECIFIED IN CMS 507.09 TO SPLICE STEEL H-PILES, THE CONTRACTOR MAY USE A MANUFACTURED H-PILE SPLICER. FURNISH SPLICERS FROM THE FOLLOWING MANUFACTURER:

ASSOCIATED PILE AND FITTING CORPORATION
262 RUTHERFORD BLVD.
CLIFTON, NEW JERSEY 07014

INSTALL AND WELD THE SPLICER TO THE PILE SECTIONS IN ACCORDANCE WITH THE MANUFACTURER'S WRITTEN ASSEMBLY PROCEDURE SUPPLIED TO THE ENGINEER BEFORE THE WELDING IS PERFORMED.

DESIGN AGENCY
PARSONS BRINCKERHOFF
2545 FARMERS DRIVE
SUITE 350
COLUMBUS, OHIO 43235

DESIGNED	DRAWN	REVIEWED	DATE
BMG	RCK	EBS	05/24/12
CHECKED	REVISED	STRUCTURE FILE NUMBER	
ECM		LEFT: 0202266 RIGHT: 0202274	

GENERAL NOTES
BRIDGE NO. ALL-75-0875 L/R
I-75 OVER S.R. 81

ALL-75-5.53
PID No. 76691

J:\Projects\ALL\76691\structures\ALL075_0875C\sheets\075_0875CGN001.dgn 16-JAN-2013 5:46PM phillipst

ITEM 511-CONCRETE, MISC.: FORMING OF ROUGH CUT STONE FINISH USING FORMLINERS

DESCRIPTION;
CONCRETE FORMLINERS SHALL BE USED ON THE ABUTMENT WINGWALLS AND MSE WALLS AS SPECIFIED IN THE PLANS.

THE FORMLINER USED SHALL MEET THE DETAILS SHOWN IN THE PLANS FOR STAGGERED (INTERLOCKING) PATTERNS, INCLUDING DEPTH OF RELIEF AND SIZE OF STONE PATTERN. HORIZONTAL JOINTS IN THE STONE PATTERN SHALL BE ALIGNED AND AT THE SAME ELEVATION. THE FINISHED TEXTURE OF THE ROUGH CUT STONE SHALL BE SIMILAR TO THAT OF RUBBED CONCRETE.

FORMLINERS FOR PATTERN 1 SHALL MATCH THE DIMENSIONAL SPECIFICATIONS OF THE FOLLOWING MANUFACTURER OR APPROVED EQUAL:

PATTERN #1104-R2 (RANDOM CUT STONE)
CUSTOM ROCK
2020 WEST 7TH STREET
ST. PAUL, MN 55116
651-699-1345
WWW.CUSTOM-ROCK.COM

FORMLINERS FOR PATTERN 2 SHALL MATCH THE DIMENSIONAL SPECIFICATIONS OF THE FOLLOWING MANUFACTURER OR APPROVED EQUAL:

PATTERN #1599 (RANDOM CUT STONE)
SPEC FORMLINERS, INC.
530 E. DYER RD.
SANTA ANA, CA 92707
888-429-9550
WWW.SPECFORMLINERS.COM

THE FORMLINER MANUFACTURER SHALL SUBMIT EVIDENCE OF AT LEAST TWO SIMILAR ARCHITECTURAL CONCRETE CONSTRUCTION PROJECTS WITHIN THE PAST FIVE YEARS FOR A REVIEW AND APPROVAL BY THE ENGINEER. COMPLETE SHOP DRAWINGS DETAILING THE STONE PATTERNS SHALL BE SUBMITTED IN ACCORDANCE WITH 501.04 FOR APPROVAL PRIOR TO PLACING ANY CONCRETE WHERE THE FORMLINERS WILL BE USED. SHOP DRAWINGS SHALL INCLUDE FORMLINER INSTALLATION AND CASTING INSTRUCTIONS, AND INDICATE FORMLINER BACKUP, REVEAL, AND CHAMFER STRIP LOCATIONS. THE CONTRACTOR SHALL COORDINATE WITH THE FORMLINER MANUFACTURER TO ASSURE UNDERSTANDING OF FORMLINER USE, TEST PANEL MOCK-UP REQUIREMENTS, AND FINAL CONSTRUCTION PROCEDURES.

MATERIALS:
THE FORMLINER SHALL BE FABRICATED WITH SHAPES THAT ALLOW REMOVAL OF THE FORMS WITHOUT DAMAGE OR VISUAL IMPAIRMENT OF THE CONCRETE, AND SHALL HAVE ⅛" MINIMUM RADII WITH NO SHARP EDGES. THE FORMLINER SHALL BE CAPABLE OF WITHSTANDING APPLIED CONCRETE POUR PRESSURE WITHOUT LEAKAGE, PHYSICAL DEFECT, OR VISUAL IMPAIRMENT.

CONSTRUCTION REQUIREMENTS:
FORMLINERS SHALL BE CLEANED BEFORE EACH USE. DAMAGED FORMLINERS WHOSE CONTINUED USE OR REPAIR WOULD NEGATIVELY IMPACT THE AESTHETICS OF THE FINISHED CONCRETE SHALL BE REPLACED. FORMLINER JOINTS SHALL BE SEALED TO PREVENT CEMENT PASTE FROM BLEEDING. FORMLINERS SHALL BE INSTALLED IN ACCORDANCE WITH THE APPROVED SHOP DRAWINGS. CHAMFERED CORNERS SHALL FORM SMOOTH, SOLID UNBROKEN CONTINUOUS SURFACES WHICH ARE UNIFORMLY STRAIGHT. AN APPROVED COMPATIBLE FORMLINER RELEASE AGENT SHALL BE APPLIED AT A RATE RECOMMENDED BY THE MANUFACTURER.

THE CONCRETE COPING SHALL BE CAST WITH NO FORMLINER USED.

AS PART OF THIS ITEM, A 7 FEET BY 3 FEET SECTION OF WALL THAT COMPRISES A MINIMUM OF ONE COMPLETE STONE BLOCK WILL BE CAST BY THE CONTRACTOR FOR EACH PATTERN USED FORAPPROVAL BY THE ENGINEER. IF THE SECTION DOES NOT MEET THE ENGINEER'S APPROVAL, THE PROPOSED FORMLINER MAY BE REJECTED. THE SECTION MUST BE APPROVED BEFORE PLACING ANY CONCRETE WHERE THE FORMLINERS WILL BE USED. REJECTION OF THE SECTION WILL REQUIRE CONSTRUCTION OF ANOTHER SECTION UNTIL APPROVAL IS GRANTED. THE WALL SECTION SHALL USE ACTUAL PROJECT SPECIFIC MATERIALS, METHODS, AND WORKMANSHIP, INCLUDING CONCRETE MIX (CEMENT TYPE, AGGREGATE GRADATION, SLUMP, WATER/CEMENT RATIO, PLASTICIZERS, AND ADDITIVES), FORMLINER AND FORMWORK SYSTEMS, INSERTS, FORM RELEASE AGENTS, PLACEMENT RATE, FORM PRESSURES, AND JOINT SEALING, VIBRATING, AND STRIPPING PRACTICES. ANY INTENDED PATCHING OR REPAIR PROCEDURES FOR THE CORRECTION OF MINOR DEFECTS THAT DO NOT RESULT IN REJECTION OF THE ENTIRE WALL SECTION SHALL BE DEMONSTRATED ON THE SECTION.

THE ACCEPTED WALL SECTION SHALL BE THE STANDARD BY WHICH THE FINAL CONSTRUCTION WILL BE EVALUATED FOR TECHNICAL AND AESTHETIC MERIT. THE WALL SECTION SHALL BE CONSTRUCTED AT THE CONSTRUCTION SITE, OR AT AN ALTERNATIVE LOCATION AGREED UPON BY THE ENGINEER. UPON COMPLETION OF THE FINAL CONSTRUCTION, THE CONTRACTOR SHALL BE RESPONSIBLE FOR REMOVAL AND DISPOSAL OF THE WALL SECTION MOCK-UP.

PORTIONS OF THE ABUTMENTS AND PIERS DETAILED IN THE PLAN SET SHALL BE CAST WITH STONE FACING FORMLINER TEXTURE AND BE SEALED WITH ITEM 512 - SEALING OF CONCRETE SURFACES (NON-EPOXY (CLEAR)).

THE FORMLINER FOR THE MSE WALL PANELS SHALL BE SIMILAR TO THE FORMLINER FOR THE ABUTMENTS AND PIERS. THE MANUFACTURING OF THE FORMLINERS SHALL BE COORDINATED TO PROVIDE A SIMILAR AESTHETIC APPEARANCE.

METHOD OF MEASUREMENT:
ROUGH CUT STONE FORMLINERS WILL NOT BE MEASURED INDIVIDUALLY FOR PAYMENT UNDER THIS ITEM.

BASIS OF PAYMENT:
ITEM 511-CONCRETE, MISC.: FORMING OF ROUGH CUT STONE FINISH USING FORMLINERS WILL BE PAID FOR AT THE CONTRACT SQ. FT. PRICE. THE WORK SHALL INCLUDE FABRICATION AND ERECTION OF FORMLINERS, ALL CONCRETE MATERIAL SHOWN ON THE PLANS, PREPARATION OF FORMLINER SHOP DRAWINGS, AND CONSTRUCTION AND REMOVAL OF THE PRE-CONSTRUCTION WALL SECTION, AND SHALL INCLUDE ALL LABOR, MATERIALS, EQUIPMENT, AND INCIDENTALS REQUIRED TO COMPLETE THIS ITEM.

THE DEPARTMENT WILL PAY FOR SEALING OF CONCRETE SURFACES SEPARATELY UNDER ITEM 512-SEALING OF CONCRETE SURFACES (NON-EPOXY (CLEAR)). SEE THE GENERAL SEALING OF CONCRETE SURFACES PLAN NOTE FOR REQUIREMENTS FOR THE NON-EPOXY (CLEAR) SEALER.

DECK PLACEMENT DESIGN ASSUMPTIONS:

DECK PLACEMENT DESIGN ASSUMPTIONS:
THE FOLLOWING ASSUMPTIONS OF CONSTRUCTION MEANS AND METHODS WERE MADE FOR THE ANALYSIS AND DESIGN OF THE SUPERSTRUCTURE. THE CONTRACTOR IS RESPONSIBLE FOR THE DESIGN OF THE FALSEWORK SUPPORT SYSTEM WITHIN THESE PARAMETERS AND WILL ASSUME RESPONSIBILITY FOR SUPERSTRUCTURE ANALYSIS FOR DEVIATION FROM THESE DESIGN ASSUMPTIONS.

AN EIGHT WHEEL FINISHING MACHINE WITH A MAXIMUM WHEEL LOAD OF 9.21 KIPS FOR A TOTAL MACHINE LOAD OF 1.15 KIPS.

A MINIMUM OUT-TO-OUT WHEEL SPACING AT EACH END OF THE MACHINE OF 103".

A MAXIMUM SPACING OF OVERHANG FALSEWORK BRACKETS OF 48 IN.

A MAXIMUM DISTANCE FROM THE CENTERLINE OF THE FASCIA GIRDER TO THE FACE OF THE SAFETY HANDRAIL OF 65".

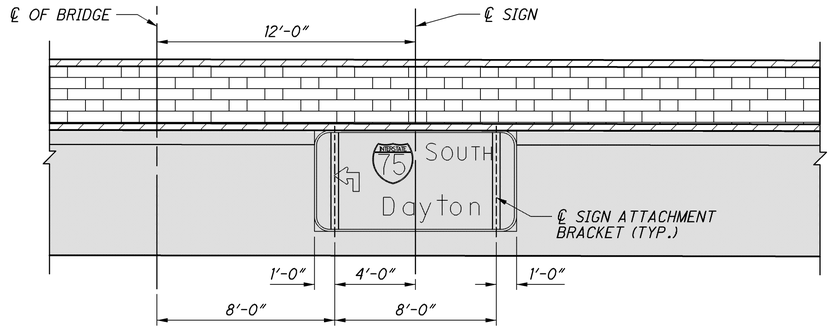

SIGN PLACEMENT DETAIL

SR81 WESTBOUND SIGN SHOWN
EASTBOUND SIMILAR

NOTES:
1. SEE STANDARD DRAWING TC-18.26 FOR ADDITIONAL NOTES AND DETAILS REGARDING THE MOUNTED SIGN SUPPORT. THE VERTICAL LOCATION OF THE LOWER ANCHOR BOLT SHALL BE A MINIMUM OF 26 INCHES FROM THE BOTTOM OF THE BEAM. ALL WORK NECESSARY TO FABRICATE AND INSTALL THE BOTTOM SIGN CONNECTIONS SHALL BE BASED ON THE FINAL ANCHOR BOLT LOCATIONS IN THE BEAMS, BASED ON FIELD MEASUREMENT.

DESIGN AGENCY
PARSONS BRINCKERHOFF
2945 FARMERS DRIVE
SUITE 350
COLUMBUS, OHIO 43235

DESIGNED	DRAWN	REVIEWED	DATE
BMG	RCK	EBS	05/24/12
CHECKED	REVISED	STRUCTURE FILE NUMBER	
ECM		LEFT: 0202256	
		RIGHT: 0202274	

GENERAL NOTES
BRIDGE NO. ALL-75-0875 L/R
1-75 OVER S.R. 81

ALL-75-5.53
PID No. 76691

J:\Projects\ALL\76691\structures\ALL075_0875C\sheets\075_0875CGN002.dgn 11-SEP-2012 8:56PM redenj

ITEM 840 - MECHANICALLY STABILIZED EARTH WALL, AS PER PLAN

THIS ITEM 840 SHALL CONTAIN INTEGRALLY COLORED CONCRETE USING CHROMIX ADMIXTURES AS PROVIDED BY L.M. SCOFIELD COMPANY, DOUGLASVILLE, GEORGIA (800) 800-9900 OR AN APPROVED EQUAL MATCHING FEDERAL COLOR NO. 36373.

AESTHETIC TREATMENT SHALL BE SIMILAR TO THOSE DESCRIBED FOR ITEM 511 ON SHEET 4/45. SEE SHEET 39/45 FOR ADDITIONAL AESTHETIC DETAILS.

ITEM 898 - QC/QA CONCRETE, CLASS QSC2, SUPERSTRUCTURE (APPROACH SLAB), AS PER PLAN

THE ACCEPTED QUANTITIES SHALL INCLUDE: CONCRETE, PARAPETS, END TOWERS INCLUDING CAPS, REINFORCING STEEL, JOINT FILLERS, JOINT SEALERS, JOINT SEALS AND WATER PROOFING. THE PARAPET AND END TOWER PORTION OF THIS IEM 898 SHALL CONTAIN INTEGRALLY COLORED CONCRETE USING CHROMIX ADMIXTURES AS PROVIDED BY L.M. SCOFIELD COMPANY, DOUGLASVILLE, GEORGIA (800) 800-9900 OR AN APPROVED EQUAL MATCHING FEDERAL COLOR NO. 36373.

ITEM 898 - QC/QA CONCRETE, CLASS QSC2, SUBSTRUCTURE (ABUTMENT INCLUDING FOOTING), AS PER PLAN

THIS ITEM 898 SHALL CONTAIN INTEGRALLY COLORED CONCRETE USING CHROMIX ADMIXTURES AS PROVIDED BY L.M. SCOFIELD COMPANY, DOUGLASVILLE, GEORGIA (800) 800-9900 OR AN APPROVED EQUAL MATCHING FEDERAL COLOR NO. 36373.

IT IS NOT NECESSARY FOR THE CONTRACTOR TO PROVIDE INTEGRAL COLORING IN THE LARGE AND SMALL TOWER CAPS.

ITEM 898 - QC/QA CONCRETE, CLASS QSC2, SUPERSTRUCTURE (PARAPET), AS PER PLAN

THIS ITEM 898 SHALL CONTAIN INTEGRALLY COLORED CONCRETE USING CHROMIX ADMIXTURES AS PROVIDED BY L.M. SCOFIELD COMPANY, DOUGLASVILLE, GEORGIA (800) 800-9900 OR AN APPROVED EQUAL MATCHING FEDERAL COLOR NO. 36373.

ITEM SPECIAL-SETTLEMENT PLATFORMS:

SETTLEMENT PLATFORMS WILL BE REQUIRED DURING MULTIPLE PHASES OF CONSTRUCTION. PLACEMENT OF PLATFORMS WILL BE DEPENDENT UPON THE CONSTRUCTION METHODS AND PHASING USED BY THE CONTRACTOR. THESE PLANS ALLOW FOR THE USE OF SIX SETTLEMENT PLATFORMS AT THE REAR ABUTMENT. TWO PLATFORMS ARE TO BE PLACED DURING INITIAL CONSTRUCTION OF THE REAR ABUTMENT EMBANKMENT PRIOR TO RELOCATION OF SR 81 TRAFFIC. TWO PLATFORMS ARE TO BE USED WHILE THE REMAINDER OF THE REMAINDER OF THE 200 FEET OF REAR ABUTMENT NEW EMBANKMENT IS PLACED AFTER RELOCATION OF SR81 TRAFFIC. THE FINAL TWO PLATFORMS ARE TO BE USED DURING THE NEXT PHASE OF CONSTRUCTION WHEN THE REMAINDER OF THE EMBANKMENT IS PLACED.

DESCRIPTION: THIS ITEM CONSISTS OF FURNISHING, CONSTRUCTING, AND MAINTAINING SETTLEMENT PLATFORMS AND OBTAINING SETTLEMENT READINGS AS REQUIRED BY THE PLANS OR AS DIRECTED BY THE ENGINEER. AT THE OPTION AND EXPENSE OF THE CONTRACTOR, ADDITIONAL SETTLEMENT PLATFORMS MAY BE INSTALLED AT LOCATIONS APPROVED BY THE ENGINEER. SETTLEMENT READINGS SHALL BE TAKEN WEEKLY DURING CONSTRUCTION AND DURING ANY SPECIFIED WAITING PERIOD. THE READINGS SHALL BE PLOTTED ON GRAPH PAPER PRESENTING DEFORMATION (ON THE NEGATIVE Y-AXIS) AND FILL HEIGHT (ON THE POSITIVE Y-AXIS) VERSUS TIME (ON THE X-AXIS). A COPY OF EACH CUMULATIVE PLOT SHALL BE SENT TO THE DISTRICT GEOTECHNICAL ENGINEER AND THE OFFICE OF GEOTECHNICAL ENGINEERING, ATTENTION: GEOTECHNICAL DESIGN COORDINATOR, AFTER EACH SETTLEMENT READING IS RECORDED.

THE DEPARTMENT WILL CONSIDER VIBRATING WIRE SETTLEMENT MONITORING PLATFORMS IN LIEU OF THE CONVENTIONAL SETTLEMENT PLATFORMS. THE CONTRACTOR SHOULD PROVIDE DETAILS OF THE PROPOSED VIBRATING WIRE SETTLEMENT PLATFORMS AS WELL AS DESIGN DRAWINGS OF THE PROPOSED PLATFORM AND CABLING LAYOUT TO THE ENGINEER AT LEAST 30 DAYS PRIOR TO CONSTRUCTION. THE DEPARTMENT WILL REQUIRE 10 WORKING DAYS FOR REVIEW AND APPROVAL. THE DESIGN DRAWINGS SHOULD ILLUSTRATE THE PROPOSED SETTLEMENT VIBRATING WIRE SETTLEMENT PLATFORM LOCATIONS WITH ALL EXISTING AND PROPOSED SITE FEATURES TO VERIFY THE PROPOSED CABLING WILL NOT CONFLICT WITH EXSITING FACILITIES, PROPOSED FACILITIES OR UTILITIES. NO ADDITIONAL PAYMENT WILL BE PROVIDED IF THE CONTRACTOR ELECTS TO UTILIZE VIBRATING WIRE SETTLEMENT PLATFORMS.

MATERIALS: SOUND LUMBER SUCH AS ¾ INCH EXTERIOR GRADE PLYWOOD SHALL BE USED FOR THE BASE. THE PIPE SHALL BE 2 ½" STANDARD BLACK PIPE WITH THREADED FITTINGS AS SHOWN ON THE PLANS. A STEEL PLATE 36"x36"x1/8" MAY BE SUBSTITUTED FOR THE LUMBER FOR THE PLATFORMS, AT CONTRACTORS OPTION.

CONSTRUCTION REQUIREMENTS: THE 36"x36" PLATFORM SHALL CONFORM TO THE DETAILS SHOWN ON THE PLANS. THE PLATFORM SHALL BE SET ON A LEVEL SURFACE. THE PIPES SHALL BE FIRMLY SECURED TO THE PLATFORMS AND SHALL BE MAINTAINED IN PLUMB POSITION DURING THE PLACEMENT OF THE EMBANKMENT. PIPES SHALL BE MARKED AT INTERVALS BY THE CONTRACTOR TO FACILITATE MEASUREMENT OF THE DEPTH OF FILL. THE CONTRACTOR SHALL STOP WORK IN ANY LOCATION WHERE A SETTLEMENT PLATFORM HAS BEEN DISTURBED OR DAMAGED UNTIL THE NECESSARY CORRECTIONS OR REPLACEMENT HAS BEEN PERFORMED.

PRIOR TO PAVING, THE TOP OF THE SETTLEMENT PLATFORM PIPE SHALL BE CUT OFF 2 FEET BELOW THE FINISHED SURFACE OF THE SUBGRADE OR TOPSOIL SURFACE, WHICHEVER IS APPLICABLE.

METHOD OF MEASUREMENT: THE NUMBER OF SETTLEMENT PLATFORMS TO BE PAID FOR WILL BE THE ACTUAL NUMBER OF SETTLEMENT PLATFORMS COMPLETED, MAINTAINED, AND ACCEPTED BY THE ENGINEER.

BASIS OF PAYMENT: PAYMENT WILL BE MADE AT THE CONTRACT UNIT PRICE PER EACH FOR "ITEM SPECIAL, SETTLEMENT PLATFORMS" WHICH IS COMPENSATED FOR CONSTRUCTION, MAINTAINING AND MONITORING THE SETTLEMENT PLATFORMS INCLUDING FURNISHING ALL LABOR, EQUIPMENT, MATERIALS AND INCIDENTALS NECESSARY TO COMPLETE THIS WORK. PAYMENT WILL NOT BE MADE FOR SETTLEMENT PLATFORMS WHICH BECOME USELESS BECAUSE OF DAMAGE INFLICTED BY THE CONTRACTOR'S OPERATIONS.

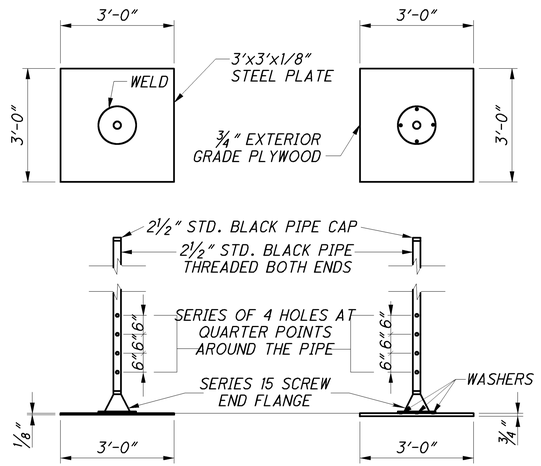

NOTES:

1. SETTLEMENT PLATES SHALL BE PLACED AT THE LOCATIONS INDICATED ON SHEET 2, UNLESS OTHERWISE DIRECTED BY THE ENGINEER.
2. CONTRACTOR HAS OPTION OF USING EITHER STEEL OR PLYWOOD PLATFORM BASE.
3. CONTRACTOR SHALL FURNISH MATERIALS AND LABOR TO EXTEND PIPE UP THROUGH ENTIRE FILL.
4. SETTLEMENT PLATFORMS SHALL BE ANCHORED BY STAKES DRIVEN AT EACH CORNER TO PREVENT OVERTURNING.
5. CONTRACTOR WILL ESTABLISH MONUMENTS AT A MINIMUM OF SIX (6) LOCATIONS AROUND EXTERIOR PERIMETER OF WALL TO MONITOR SETTLEMENT AT BASE. MONUMENTS TO BE SURVEYED AT REGULAR INTERVALS DURING CONSTRUCTION AT SAME FREQUENCY AS SETTLEMENT PLATFORMS. MONUMENTS MAY CONSIST OF CHISELED NOTCHES ON WALL FACE OR STEEL RODS OR CONCRETE PIERS SET AT LEAST 30 INCHES BELOW GRADE AT BASE OF WALL.

DESIGN AGENCY
PARSONS BRINCKERHOFF
2945 FARMERS DRIVE
SUITE 350
COLUMBUS, OHIO 43235

DESIGNED	DRAWN	REVIEWED	DATE
BMG	RCK	EBS	05/24/12
CHECKED	REVISED	STRUCTURE NUMBER	
ECM		LEFT: 0202266 RIGHT: 0202274	

GENERAL NOTES
BRIDGE NO. ALL-75-0875 L/R
I-75 OVER S.R. 81

ALL-75-5.53
PID No. 76691

J:\Projects\ALL\76691\structures\ALL075_0875C\sheets\075_0875CGN003.dgn 11-SEP-2012 8:56PM reddenj

ITEM SPECIAL - MISC: TEMPORARY SURCHARGE

DESCRIPTION: THIS ITEM CONSISTS OF DESIGNING, CONSTRUCTING, AND REMOVING A TEMPORARY SURCHARGE AT THE LOCATIONS AND LIMITS DESCRIBED IN THE PLANS.

AS DIRECTED IN THE PILE DRIVING CONSTRAINTS, A TEMPORARY SURCHARGE IS NECESSARY AT THE ABUTMENTS FOR THIS BRIDGE TO MITIGATE EMBANKMENT SETTLEMENT. CONSTRUCT THE TEMPORARY SURCHARGE SO IT EXTENDS VERTICALLY FROM THE ELEVATION OF THE BOTTOM OF THE PROPOSED ABUTMENT FOOTING TO THE PROPOSED ROADWAY SUBGRADE ELEVATION. CONSTRUCT THE TEMPORARY SURCHARGE USING ITEM 203 EMBANKMENT WITH A DRY DENSITY OF AT LEAST 105 PCF AFTER COMPACTION. SUPPORT THE SIDES OF THE TEMPORARY SURCHARGE SO THAT THE TOP OF THE SURCHARGE MATERIAL IS NO MORE THAN 2 FEET (MEASURED HORIZONTALLY) FROM THE BACK FACE OF THE PROPOSED MSE WALLS. CONSTRUCT THE TEMPORARY SURCHARGE SO THAT IT EXTENDS AT LEAST 200 FEET BEHIND THE REAR ABUTMENT AND AT LEAST 100 FEET BEHIND THE FORWARD ABUTMENT. PREPARE AND PROVIDE SHOP DRAWINGS AND DESIGN CALCULATIONS FOR THE TEMPORARY SURCHARGE, INCLUDING THE METHOD USED TO SUPPORT THE SIDES OF THE TEMPORARY SURCHARGE AND ALL DETAILS OF THE SUPPORT SYSTEM. ENSURE THE TEMPORARY SURCHARGE DESIGN ACCOMMODATES THE LOCATION AND COMPOSITION OF THE PROPOSED MSE WALLS FOR THE BRIDGE STRUCTURE. HAVE TWO OHIO REGISTERED ENGINEERS SIGN, SEAL, AND DATE THE DRAWINGS AND CALCULATIONS ACCORDING TO C&MS 501.05. SUBMIT THE DRAWINGS AND CALCULATIONS TO THE ENGINEER AT LEAST 30 DAYS BEFORE CONSTRUCTION OF THE TEMPORARY SURCHARGE BEGINS.

REMOVE THE TEMPORARY SURCHARGE AFTER THE CONDITIONS SPECIFIED IN THE PILE DRIVING CONSTRAINTS ARE SATISFIED AND THE ENGINEER AUTHORIZES REMOVAL. BASIS OF PAYMENT: THE DEPARTMENT WILL PAY FOR ALL LABOR, EQUIPMENT AND MATERIALS NECESSARY TO DESIGN, CONSTRUCT AND REMOVE THE TEMPORARY SURCHARGE AT THE REAR AND FORWARD ABUTMENTS FOR THE BRIDGE AT THE CONTRACT LUMP SUM BID PRICE FOR ITEM SPECIAL 690E98400 SPECIAL-MISC: TEMPORARY SURCHARGE.

ITEM SPECIAL - RETAINING WALL MISC.: TEMPORARY MSE WALL

THIS WORK CONSISTS OF DESIGNING THE INTERNAL STABILITY OF THE WALL; PREPARING SHOP DRAWINGS; AND FABRICATING AND CONSTRUCTING THE TEMPORARY MSE WALL. THE TEMPORARY WALL SHALL FOLLOW SUPPLEMENTAL SPECIFICATION 840, EXCEPT AS NOTED HEREIN.

1. THE CONTRACTOR MAY USE A TEMPORARY WIRE FACED MSE WALL, IN LIEU OF CONCRETE PANELS. STEEL ELEMENTS FOR THIS WALL ARE NOT REQUIRED TO BE GALVANIZED OR EPOXY COATED.

2. THE DESIGN SHALL PROVIDE A MINIMUM DESIGN LIFE OF THREE YEARS.

3. A CONCRETE LEVELING PAD IS NOT REQUIRED.

BASIS OF PAYMENT: PAYMENT WILL BE MADE AT THE CONTRACT LUMP SUM PRICE PER "ITEM SPECIAL - RETAINING WALL MISC.: TEMPORARY MSE WALL".

USE THE FOLLOWING SOIL PARAMETERS IN THE DESIGN. THESE PARAMETERS ARE NOT TO BE USED FOR MATERIAL ACCEPTANCE.

FILL ZONE	TYPE OF SOIL	DESIGN SOIL UNIT WEIGHT	FRICTION ANGLE	COHESION
REINFORCED SOIL	SELECT GRANULAR BACKFILL	120 LBS/FT	34°	0
RETAINED SOIL	ON-SITE VARYING FROM SANDY LEAN CLAY TO SILTY SAND	120 LBS/FT	30°	0
FOUNDATION	ON-SITE VARYING FROM SANDY SILT TO SILT AND CLAY	120 LBS/FT	24°	0

ABBREVIATIONS:

ABUT. = ABUTMENT
APPROX. = APPROXIMATE
BRG. = BEARING
C/C = CENTER TO CENTER
C.J. = CONSTRUCTION JOINT
CLR. = CLEAR
CONST. = CONSTRUCTION
DIA. = DIAMETER
DWG. = DRAWING
E.F. = EACH FACE
EL. = ELEVATION
EST. = ESTIMATE
EX. = EXISTING
F.A. = FORWARD ABUTMENT
F.F. = FAR FACE
FWD. = FORWARD
HMWM = HIGH MOLECULAR WEIGHT METHACRYLATE
LT. = LEFT
MAX. = MAXIMUM
MIN. = MINIMUM
N.F. = NEAR FACE
N.P.C.P.P. = NON-PERFORATED CORRUGATED PLASTIC PIPE
O/O = OUT TO OUT
P.C.P.P. = PERFORATED CORRUGATED PLASTIC PIPE
P.E.J.F. = PREFORMED EXPANSION JOINT FILLER
P.F.J. = PRECOMPRESSED FOAM JOINT
PROP. = PROPOSED
R.A. = REAR ABUTMENT
RT. = RIGHT
SER. = SERIES
SPA. = SPACES
STA. = STATION
STD. = STANDARD
T/T = TOE TO TOE
T/S = TOP OF SLOPE
TYP. = TYPICAL
U.N.O. = UNLESS NOTED OTHERWISE

J:\Projects\ALL\76691\structures\ALL075_0875C\sheets\075_0875CGN004.dgn 11-SEP-2012 8:56PM redden

DESIGN AGENCY
PARSONS BRINCKERHOFF
2545 FARMERS DRIVE
SUITE 350
COLUMBUS, OHIO 43235

DESIGNED BMG | DRAWN RCK | REVIEWED EBS | DATE 05/24/12 | CHECKED ECM | REVISED | STRUCTURE FILE NUMBER LEFT: 0202268 RIGHT: 0202274

GENERAL NOTES
BRIDGE NO. ALL-75-0875 L/R
I-75 OVER S.R. 81

ALL-75-5.53
PID No. 76691

1045
1224

MADE BY: RCK | DATE: 6/21/11
CHECKED BY: APV | DATE: 11/16/11

02/IMS/BR/	05/ENH/OT/	ITEM	EXTENSION	TOTAL	UNIT	ESTIMATED QUANTITIES DESCRIPTION	ALL-75-0875 L ABUT.	SUPER.	GEN.	SEE SHEET NO.
1		202	11003	1	LUMP	STRUCTURE REMOVED, OVER 20 FOOT SPAN, AS PER PLAN			LUMP	9/45
94		202	22900	94	SQ YD	APPROACH SLAB REMOVED			94	
442		203	20000	442	CU YD	EMBANKMENT	442			
1106		203	35110	1106	CU YD	GRANULAR MATERIAL, TYPE B	1106			
1		503	11101	1	LUMP	COFFERDAMS AND EXCAVATION BRACING, AS PER PLAN			LUMP	45/45
1		505	11100	1	LUMP	PILE DRIVING EQUIPMENT MOBILIZATION			LUMP	
3300		507	00100	3300	FT	STEEL PILES HP10X42, FURNISHED	3300			
3000		507	00150	3000	FT	STEEL PILES HP10X42, DRIVEN	3000			
60		507	93300	60	EACH	STEEL POINTS OR SHOES	60			
74,389	3016	509	10000	77,405	POUND	EPOXY COATED REINFORCING STEEL	17,875	59,530		
	2948	511	71200	2948	SQ FT	CONCRETE, MISC.: FORMING OF ROUGH CUT STONE FINISH USING FORMLINERS	2400	351	197	
770	53	512	10051	823	SQ YD	SEALING OF CONCRETE SURFACES (NON-EPOXY), AS PER PLAN	320	395	108	3/45
227	17	512	10101	244	SQ YD	SEALING OF CONCRETE SURFACES (EPOXY-URETHANE), AS PER PLAN	55	181	8	3/45
58		512	10300	58	SQ YD	SEALING CONCRETE BRIDGE DECKS WITH HMWM RESIN		58		
12		512	33000	12	SQ YD	TYPE 2 WATERPROOFING	12			
6		515	15030	6	EACH	DRAPED STRAND PRESTRESSED CONCRETE BRIDGE I-BEAM MEMBERS, LEVEL 3, TYPE 4 MOD. (60 IN.)		6		
15		515	20000	15	EACH	INTERMEDIATE DIAPHRAMS		15		
14		516	13600	14	SQ FT	1" PREFORMED EXPANSION JOINT FILLER	14			
187		516	13900	187	SQ FT	2" PREFORMED EXPANSION JOINT FILLER	187			
142		516	14020	142	FT	SEMI-INTEGRAL ABUTMENT EXPANSION JOINT SEAL	142			
12		516	44201	12	EACH	ELASTOMERIC BEARING WITH INTERNAL LAMINATES AND LOAD PLATE (NEOPRENE), AS PER PLAN 12" X 23" X 3.65" WITH 13" X 24" X 1 1/2" LOAD PLATES	12			19/45
97		518	21200	97	CU YD	POROUS BACKFILL WITH FILTER FABRIC	97			
237		518	40000	237	FT	6" PERFORATED CORRUGATED PLASTIC PIPE	237			
43		518	40011	43	FT	6" NON-PERFORATED CORRUGATED PLASTIC PIPE, INCLUDING SPECIALS, AS PER PLAN	43			13/45, 14/45
55		601	21050	55	SQ YD	TIED CONCRETE BLOCK MAT, TYPE 1	55			
419		625	25400	419	FT	CONDUIT, 2", 725.04		259	160	
4		625	29920	4	EACH	STRUCTURE JUNCTION BOX			4	
4		625	30700	4	EACH	PULL BOX, 725.08, 18"			4	
4039		840	20001	4039	SQ FT	MECHANICALLY STABILIZED EARTH WALL, AS PER PLAN	4039			5/45
1487		840	21000	1487	CU YD	WALL EXCAVATION	1487			
633		840	22000	633	SQ YD	FOUNDATION PREPARATION	633			
2846		840	23000	2846	CU YD	SELECT GRANULAR BACKFILL	2846			
470		840	25010	470	FT	6" DRAINAGE PIPE, PERFORATED	470			
37		840	25020	37	FT	6" DRAINAGE PIPE, NON-PERFORATED	37			
	4039	840	26050	4039	SQ FT	AESTHETIC SURFACE TREATMENT	4039			
242		840	26000	242	FT	CONCRETE COPING	242			
5		840	27000	5	DAY	ON-SITE ASSISTANCE	5			
1		840	28000	1	LUMP	SGB INSPECTION AND COMPACTION TESTING	1			
264		898	10210	264	CU YD	QC/QA CONCRETE, CLASS QSC2, SUPERSTRUCTURE (DECK)		264		
316		898	10709	316	SQ YD	QC/QA CONCRETE, CLASS QSC2, SUPERSTRUCTURE (APPROACH SLAB), (T=17"), AS PER PLAN			316	5/45
31	3	898	11001	34	CU YD	QC/QA CONCRETE, CLASS QSC2, SUPERSTRUCTURE (PARAPET), AS PER PLAN		34		5/45
192	23	898	20161	215	CU YD	QC/QA CONCRETE, CLASS QSC1, SUBSTRUCTURE (ABUTMENT INCLUDING FOOTING), AS PER PLAN	215			5/45
1		SPECIAL	610E60000	1	LUMP	SPECIAL - RETAINING WALL, MISC.: TEMPORARY MSE WALL			LUMP	6/45
3		SPECIAL	203E65000	3	EACH	SPECIAL - SETTLEMENT PLATFORM			3	5/45
1		SPECIAL	690E98400	1	LUMP	SPECIAL - MISC.: TEMPORARY SURCHARGE			LUMP	6/45

DESIGN AGENCY
PARSONS BRINCKERHOFF
2545 FARMERS DRIVE
SUITE 350
COLUMBUS, OHIO 43235

DESIGNED APV | DRAWN RCK | REVIEWED EBS | DATE 05/24/12
CHECKED EMC | REVISED | STRUCTURE CONSTRUCTION NUMBER LEFT: 0202266

LEFT BRIDGE - ESTIMATED QUANTITIES
BRIDGE NO. ALL-75-0875 L
I-75 OVER S.R. 81

ALL-75-5.53
PID No. 76691

J:\Projects\ALL\76691\structures\ALL075_0875C\sheets\075_0875CEQ001.dgn 14-JAN-2013 11:43AM jint

						MADE BY: RCK			DATE: 6/21/11
						CHECKED BY: APV			DATE: 11/16/11
02/IMS/BR/	05/ENH/OT/	ITEM	EXTENSION	TOTAL	UNIT	ESTIMATED QUANTITIES	ALL-75-0875 R			SEE SHEET NO.
						DESCRIPTION	ABUT.	SUPER.	GEN.	
1		202	11003	1	LUMP	STRUCTURE REMOVED, OVER 20 FOOT SPAN, AS PER PLAN			LUMP	9/45
94		202	22900	94	SQ YD	APPROACH SLAB REMOVED			94	
442		203	20000	442	CU YD	EMBANKMENT	442			
1108		203	35110	1108	CU YD	GRANULAR MATERIAL, TYPE B	1108			
1		503	11101	1	LUMP	COFFERDAMS AND EXCAVATION BRACING, AS PER PLAN			LUMP	45/45
1		505	11100	1	LUMP	PILE DRIVING EQUIPMENT MOBILIZATION			LUMP	
3300		507	00100	3300	FT	STEEL PILES HP10X42, FURNISHED	3300			
3000		507	00150	3000	FT	STEEL PILES HP10X42, DRIVEN	3000			
60		507	93300	60	EACH	STEEL POINTS OR SHOES	60			
74,389	3016	509	10000	77,405	POUND	EPOXY COATED REINFORCING STEEL	17,874	59,531		
	2948	511	71200	2948	SQ FT	CONCRETE, MISC.: FORMING OF ROUGH CUT STONE FINISH USING FORMLINERS	2400	351	197	
3390	53	512	10051	3443	SQ YD	SEALING OF CONCRETE SURFACES (NON-EPOXY), AS PER PLAN	2453	707	283	3/45
227	17	512	10101	244	SQ YD	SEALING OF CONCRETE SURFACES (EPOXY-URETHANE), AS PER PLAN	55	181	8	3/45
58		512	10300	58	SQ YD	SEALING CONCRETE BRIDGE DECKS WITH HMWM RESIN		58		
12		512	33000	12	SQ YD	TYPE 2 WATERPROOFING	12			
6		515	15030	6	EACH	DRAPED STRAND PRESTRESSED CONCRETE BRIDGE I-BEAM MEMBERS, LEVEL 3, TYPE 4 MOD. (60 IN.)		6		
15		515	20000	15	EACH	INTERMEDIATE DIAPHRAMS		15		
14		516	13600	14	SQ FT	1" PREFORMED EXPANSION JOINT FILLER	14			
142		516	13900	142	SQ FT	2" PREFORMED EXPANSION JOINT FILLER	142			
134		516	14020	134	FT	SEMI-INTEGRAL ABUTMENT EXPANSION JOINT SEAL	134			
12		516	44201	12	EACH	ELASTOMERIC BEARING WITH INTERNAL LAMINATES AND LOAD PLATE (NEOPRENE), AS PER PLAN 12" X 23" X 3.65" WITH 13" X 24" X 1 1/2" LOAD PLATES	12			19/45
97		518	21200	97	CU YD	POROUS BACKFILL WITH FILTER FABRIC	97			
235		518	40000	235	FT	6" PERFORATED CORRUGATED PLASTIC PIPE	235			
40		518	40011	40	FT	6" NON-PERFORATED CORRUGATED PLASTIC PIPE, INCLUDING SPECIALS, AS PER PLAN	40			15/45, 16/45
51		601	21050	51	SQ YD	TIED CONCRETE BLOCK MAT, TYPE 1	51			
419		625	25400	419	FT	CONDUIT, 2", 725.04		259	160	
4		625	29920	4	EACH	STRUCTURE JUNCTION BOX			4	
4		625	30700	4	EACH	PULL BOX, 725.08, 18"			4	
3559		840	20001	3559	SQ FT	MECHANICALLY STABILIZED EARTH WALL, AS PER PLAN	3559			5/45
1524		840	21000	1524	CU YD	WALL EXCAVATION	1524			
610		840	22000	610	SQ YD	FOUNDATION PREPARATION	610			
2950		840	23000	2950	CU YD	SELECT GRANULAR BACKFILL	2950			
442		840	25010	442	FT	6" DRAINAGE PIPE, PERFORATED	442			
102		840	25020	102	FT	6" DRAINAGE PIPE, NON-PERFORATED	102			
	3559	840	26050	3559	SQ FT	AESTHETIC SURFACE TREATMENT	3559			
225		840	26000	225	FT	CONCRETE COPING	225			
5		840	27000	5	DAY	ON-SITE ASSISTANCE	5			
1		840	28000	1	LUMP	SGB INSPECTION AND COMPACTION TESTING	1			
264		898	10210	264	CU YD	QC/QA CONCRETE, CLASS QSC2, SUPERSTRUCTURE (DECK)		264		
316		898	10709	316	SQ YD	QC/QA CONCRETE, CLASS QSC2, SUPERSTRUCTURE (APPROACH SLAB), (T=17"), AS PER PLAN			316	5/45
31	3	898	11001	34	CU YD	QC/QA CONCRETE, CLASS QSC2, SUPERSTRUCTURE (PARAPET), AS PER PLAN		34		5/45
195	23	898	20161	218	CU YD	QC/QA CONCRETE, CLASS QSC1, SUBSTRUCTURE (ABUTMENT INCLUDING FOOTING), AS PER PLAN	218			5/45
1		SPECIAL	610E60000	1	LUMP	SPECIAL - RETAINING WALL, MISC.: TEMPORARY MSE WALL			LUMP	6/45
3		SPECIAL	203E65000	3	EACH	SPECIAL - SETTLEMENT PLATFORM			3	5/45
1		SPECIAL	690E98400	1	LUMP	SPECIAL - MISC.: TEMPORARY SURCHARGE			LUMP	6/45

DESIGN AGENCY
PARSONS BRINCKERHOFF
2545 FARMERS DRIVE
SUITE 350
COLUMBUS, OHIO 43235

DESIGNED APV | DRAWN RCK | REVIEWED EBS | DATE 05/24/12
CHECKED EMC | REVISED | STRUCTURE FILE NUMBER RIGHT: 0202274

RIGHT BRIDGE - ESTIMATED QUANTITIES
BRIDGE NO. ALL-75-0875 R
I-75 OVER S.R. 81

ALL-75-5.53
PID No. 76691

1047
1224

J:\Projects\ALL\76691\structures\ALL075_0875C\sheets\075_0875CEQ002.dgn 14-JAN-2013 11:43:AM lint

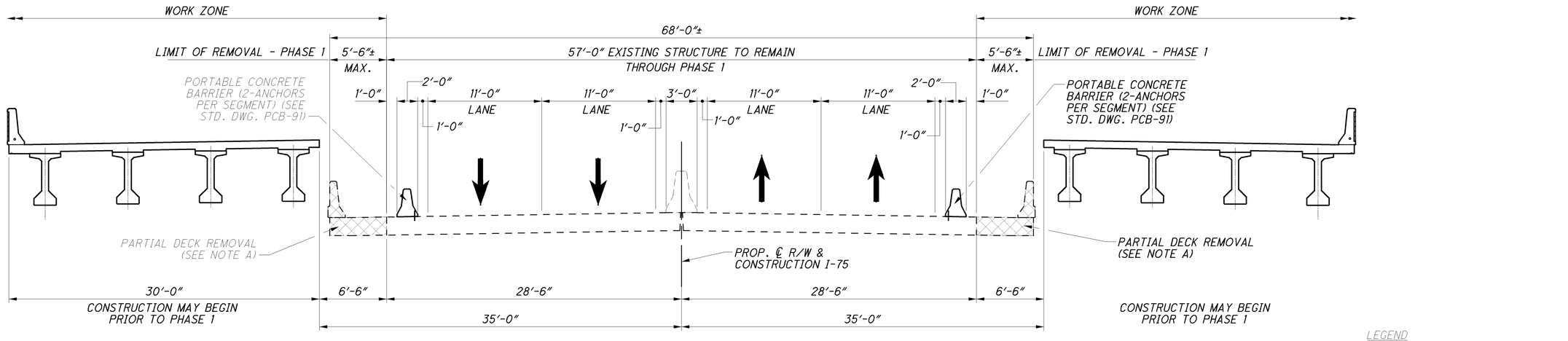

MAINTENANCE OF TRAFFIC AND CONSTRUCTION - PHASE 1

LEGEND

▨ - CONCRETE REMOVAL

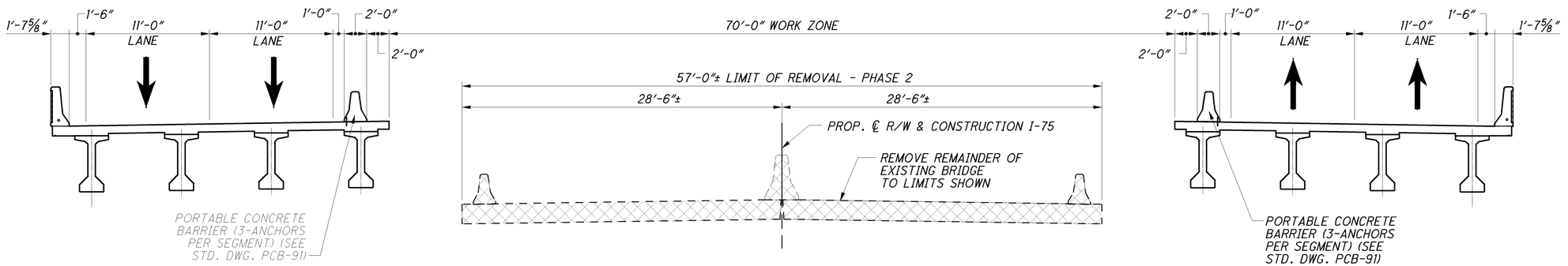

MAINTENANCE OF TRAFFIC AND REMOVAL - PHASE 2

NOTE A:

EXISTING BRIDGE DECK AND ABUTMENT SHALL BE REMOVED AS REQUIRED BETWEEN THE FOLLOWING APPROXIMATE STATIONS TO PLACE THE PROPOSED ABUTMENTS, TEMPORARY SHEETING AND MSE WALLS. CONCRETE REMOVAL WITHIN 1' OF PIER FACE SHALL NOT BE PERMITTED.

EAST EDGE OF DECK: STA. 461+25 TO 461+70
AND STA. 462+65 TO 463+35

WEST EDGE OF DECK: STA. 461+10 TO 461+60
AND STA. 462+55 TO 463+25

SUGGESTED CONSTRUCTION SEQUENCE

PHASE 1

1. INSTALL PORTABLE CONCRETE BARRIER AS SHOWN ON THE PLANS.
2. DIRECT TRAFFIC TOWARDS REMAINING PORTION OF THE BRIDGE.
3. REMOVE PORTION OF EXISTING DECK AS REQUIRED PER NOTE A.
4. CONSTRUCT NEW STRUCTURE AS SHOWN ON MAINTENANCE OF TRAFFIC PHASE 1 CONSTRUCTION.

PHASE 2

1. INSTALL PORTABLE CONCRETE BARRIERS ON THE NEWLY CONSTRUCTED DECK AS SHOWN.
2. DIRECT TRAFFIC TOWARDS NEWLY CONSTRUCTED PORTION OF THE BRIDGE.
3. REMOVE EXISTING BRIDGE, INCLUDING SUBSTRUCTURES, TO THE LIMIT SHOWN IN MAINTENANCE OF TRAFFIC PHASE 2 REMOVAL.
4. CONSTRUCT NEW STRUCTURE AS SHOWN ON MAINTENANCE OF TRAFFIC PHASE 2 CONSTRUCTION.

PHASE 2-A

1. PLACE CLOSURE POUR DECK CONCRETE.
2. SEAL LONGITUDINAL JOINTS WITH HIGH MOLECULAR WEIGHT METHACRYLATE (HMWM).
3. RESUME NORMAL TRAFFIC.

DESIGN AGENCY
PARSONS BRINCKERHOFF
2545 FARMERS DRIVE
SUITE 350
COLUMBUS, OHIO 43235

DESIGNED	DRAWN	REVIEWED	DATE
ECM	RCK	EBS	05/24/12
CHECKED	REVISED	STRUCTURE FILE NUMBER	
BMG			

PHASE CONSTRUCTION DETAILS
BRIDGE NO. ALL-75-0875 L/R
I-75 OVER S.R. 81

ALL-75-5.53
PID No. 76691

J:\Projects\ALL\76691\structures\ALL075_0875C\sheets\075_0875CPC001.dgn 11-SEP-2012 8:56PM reddenj

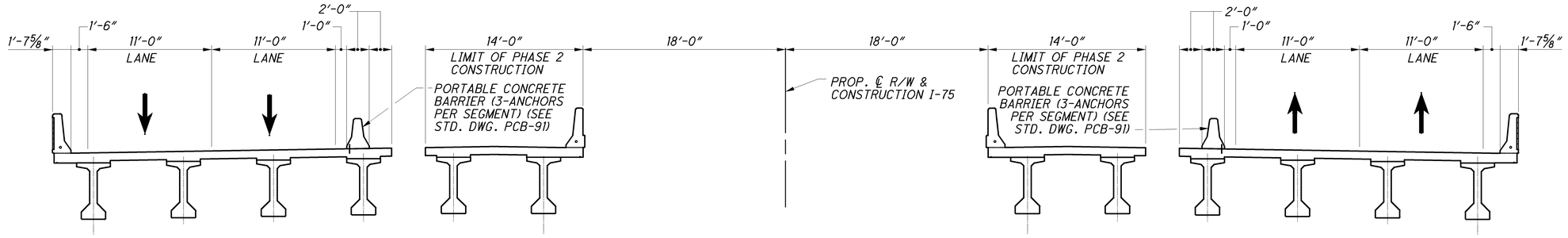

MAINTENANCE OF TRAFFIC AND CONSTRUCTION - PHASE 2

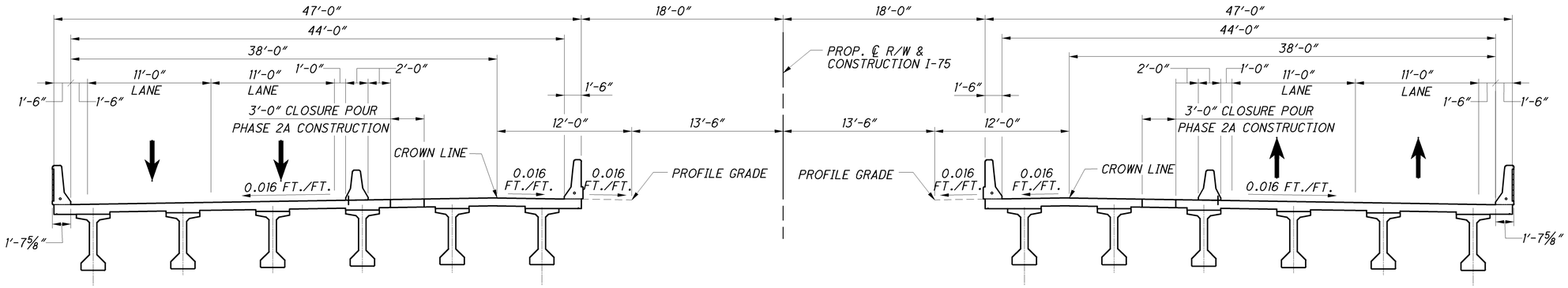

MAINTENANCE OF TRAFFIC AND CONSTRUCTION - PHASE 2A

NOTE:
FOR MOT NOTES, SEE SHEET 9/45.

J:\Projects\ALL\76691\structures\ALL075_0875\sheets\075_0875CPC002.dgn 11-SEP-2012 8:56PM reddenj

DESIGN AGENCY
PARSONS BRINCKERHOFF
2545 FARMERS DRIVE
SUITE 350
COLUMBUS, OHIO 43235

DESIGNED	DRAWN	REVIEWED	DATE
ECM	RCK	EBS	05/24/12
CHECKED	REVISED	STRUCTURE FILE NUMBER	
BMG			

PHASE CONSTRUCTION DETAILS
BRIDGE NO. ALL-75-0875 L/R
I-75 OVER S.R. 81

ALL-75-5.53
PID No. 76691

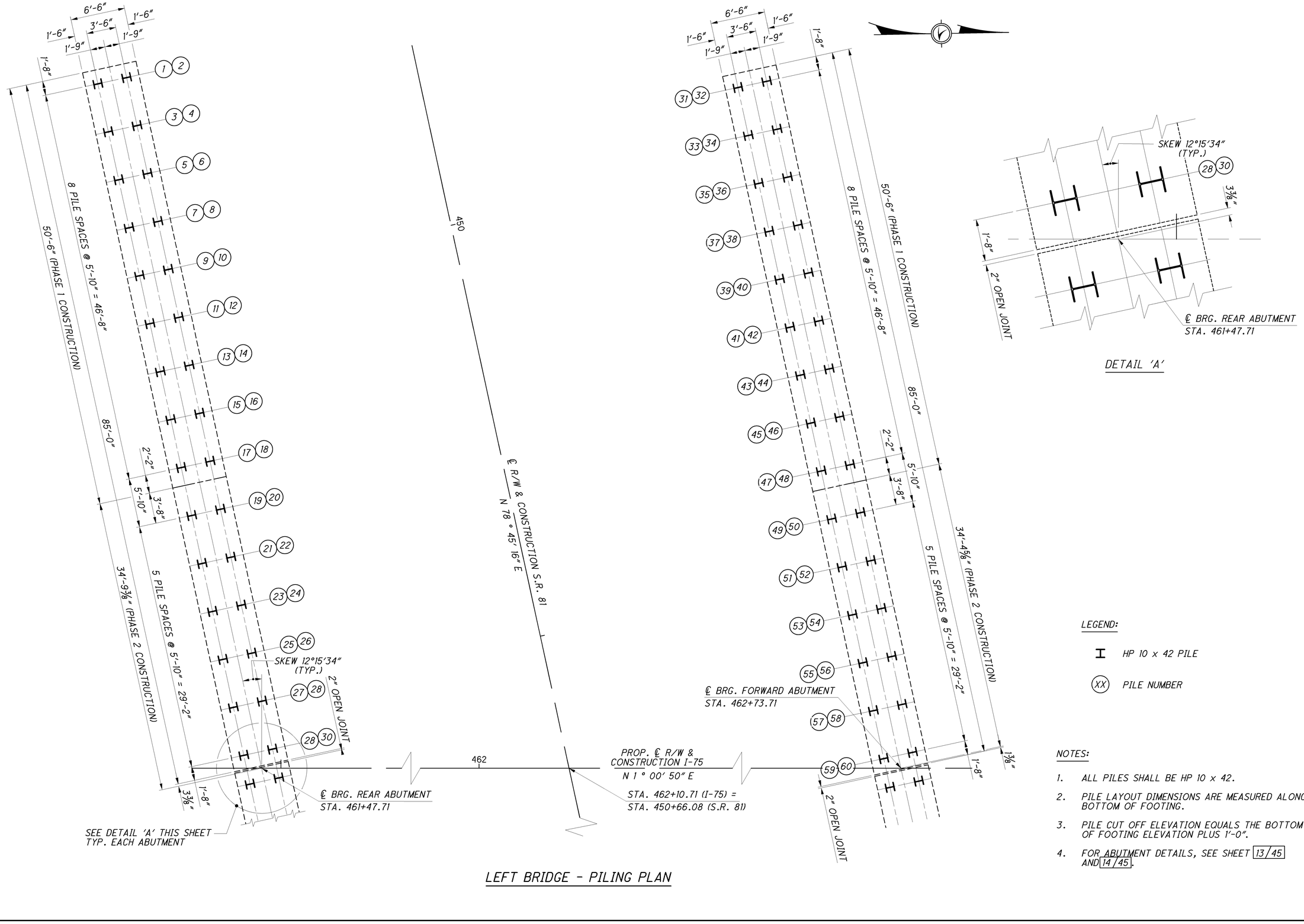

DETAIL 'A'

LEFT BRIDGE - PILING PLAN

LEGEND:

H HP 10 x 42 PILE

(XX) PILE NUMBER

NOTES:

1. ALL PILES SHALL BE HP 10 x 42.
2. PILE LAYOUT DIMENSIONS ARE MEASURED ALONG BOTTOM OF FOOTING.
3. PILE CUT OFF ELEVATION EQUALS THE BOTTOM OF FOOTING ELEVATION PLUS 1'-0".
4. FOR ABUTMENT DETAILS, SEE SHEET 13/45 AND 14/45.

DESIGN AGENCY
PARSONS BRINCKERHOFF
2545 FARMERS DRIVE
SUITE 350
COLUMBUS, OHIO 43235

DESIGNED	DRAWN	REVIEWED	DATE
ECM	RCK	EBS	05/24/12
CHECKED	REVISED	STRUCTURE NUMBER	
BMG		LEFT: 0202268 RIGHT: 0202274	

LEFT BRIDGE - FOUNDATION LAYOUT
BRIDGE NO. ALL-75-0875 L/R
I-75 OVER S.R. 81

ALL-75-5.53
PID No. 76691

11 / 45

1050
1224

J:\Projects\ALL\76691\structures\ALL075_0875C\sheets\075_0875CFP001.dgn 11-SEP-2012 8:56PM reddenj

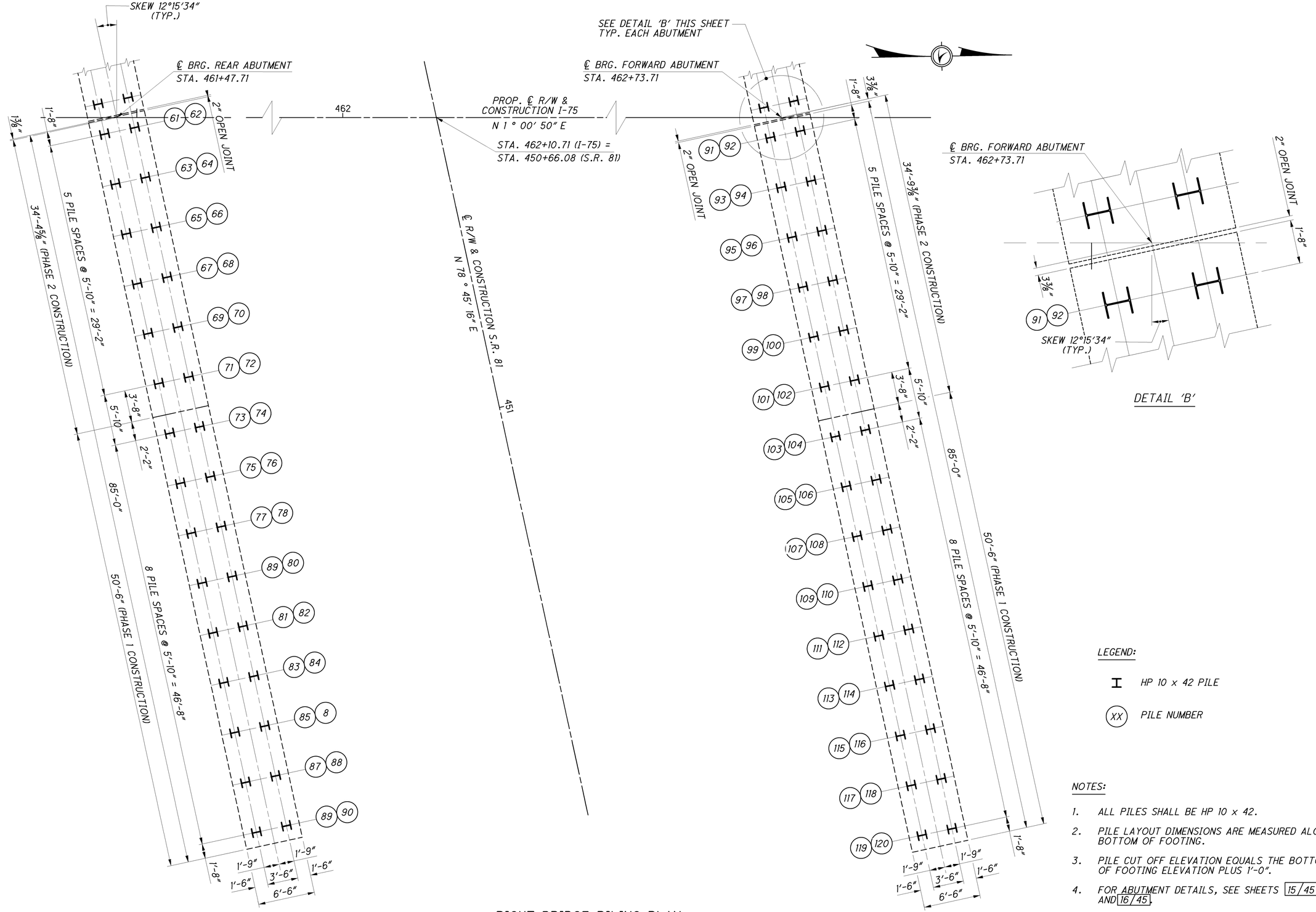

RIGHT BRIDGE-PILING PLAN

DETAIL 'B'

LEGEND:

- I — HP 10 x 42 PILE
- (XX) — PILE NUMBER

NOTES:

1. ALL PILES SHALL BE HP 10 x 42.
2. PILE LAYOUT DIMENSIONS ARE MEASURED ALONG BOTTOM OF FOOTING.
3. PILE CUT OFF ELEVATION EQUALS THE BOTTOM OF FOOTING ELEVATION PLUS 1'-0".
4. FOR ABUTMENT DETAILS, SEE SHEETS 15/45 AND 16/45.

DESIGN AGENCY
PARSONS BRINCKERHOFF
2545 FARMERS DRIVE
SUITE 350
COLUMBUS, OHIO 43235

DESIGNED	DRAWN	REVIEWED	DATE
ECM	RCK	EBS	05/24/12
CHECKED	REVISED	STRUCTURE NUMBER	
BMG		LEFT: 0202268 RIGHT: 0202274	

RIGHT BRIDGE - FOUNDATION LAYOUT PLAN
BRIDGE NO. ALL-75-0875 L/R
I-75 OVER S.R. 81

ALL-75-5.53
PID No. 76691

12 / 45

1051
1224

J:\Projects\ALL\76691\structures\ALL075_0875C\sheets\075_0875CFP002.dgn 11-SEP-2012 8:56PM reddenj

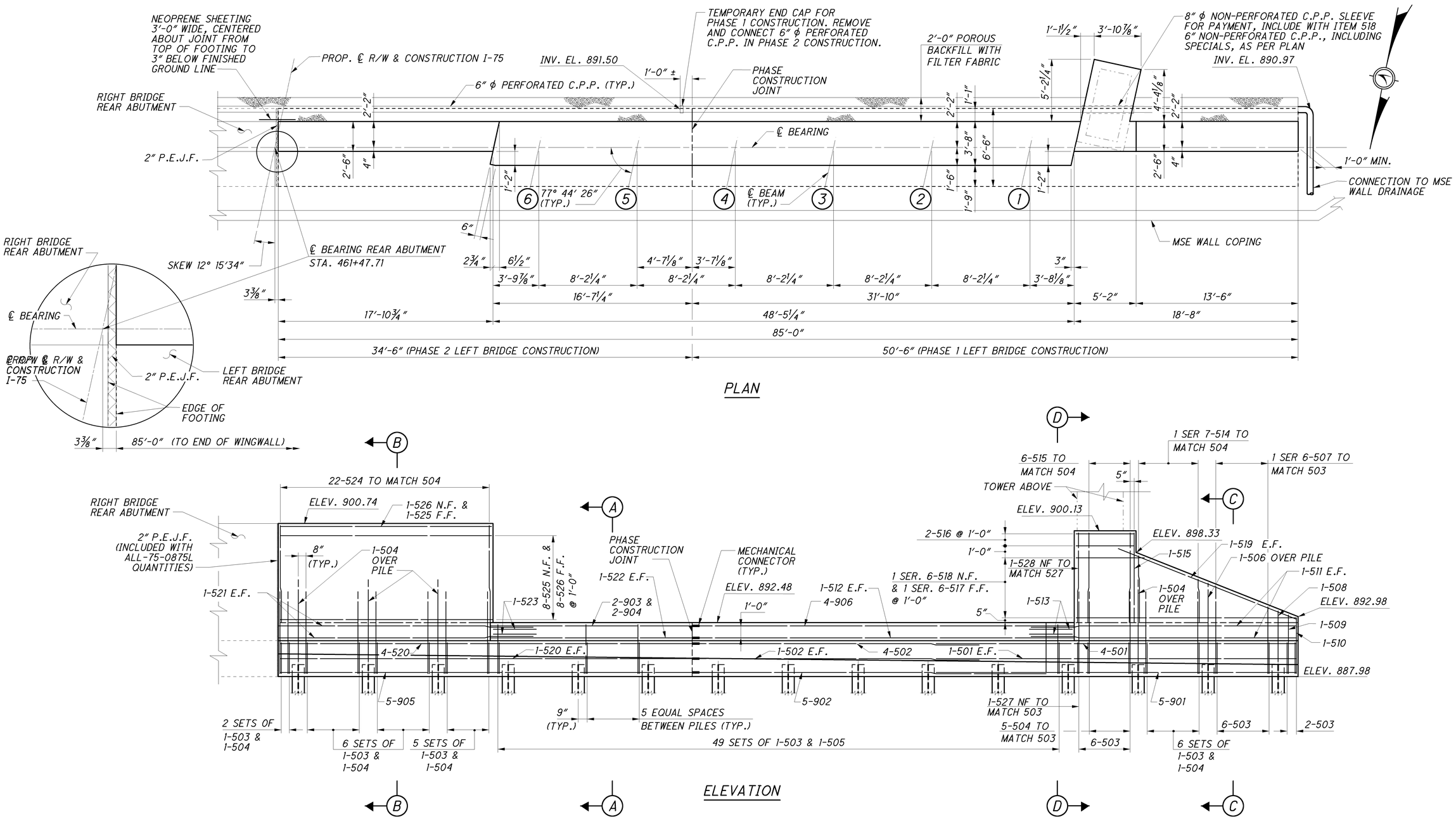

PLAN

ELEVATION

MINIMUM LAP LENGTHS	
#5 HORIZONTAL	= 3'-7"
#5 VERTICAL	= 2'-7"
#9	= 9'-2"

ALL BAR MARKS SHALL BE PREFIXED LRA FOR LEFT BRIDGE REAR ABUTMENT

NOTES:

1. FOR MSE WALL DETAILS, SEE SHEET 40/45
2. FOR FOUNDATION LAYOUT PLAN, SEE SHEET 11/45.
3. FOR SECTIONS A-A THRU C-C, SEE SHEET 17/45.
4. FOR VIEW D-D AND TOWER DETAILS, SEE SHEET 18/45.
5. FOR FORWARD ABUTMENT DETAILS, SEE SHEET 14/45.
6. FOR REINFORCEMENT BAR LIST, SEE SHEET 35/45.
7. FOR SEMI-INTEGRAL DIAPHRAGM DETAILS, SEE SHEET 24/45.

DESIGN AGENCY
PARSONS BRINCKERHOFF
2545 FARMERS DRIVE
SUITE 350
COLUMBUS, OHIO 43235

DESIGNED	DRAWN	REVIEWED	DATE
ECM	RCK	EBS	05/24/12
CHECKED	REVISED	STRUCTURE NUMBER	
BMG		LEFT: 0202266 RIGHT: 0202274	

LEFT BRIDGE REAR ABUTMENT PLAN AND ELEVATION
BRIDGE NO. ALL-75-0875 L/R
I-75 OVER S.R. 81

ALL-75-5.53
PID No. 76691

13 / 45

1052
1224

J:\Projects\ALL\76691\structures\ALL075_0875C\sheets\075_0875CAR001.dgn 11-SEP-2012 8:56PM reddenj

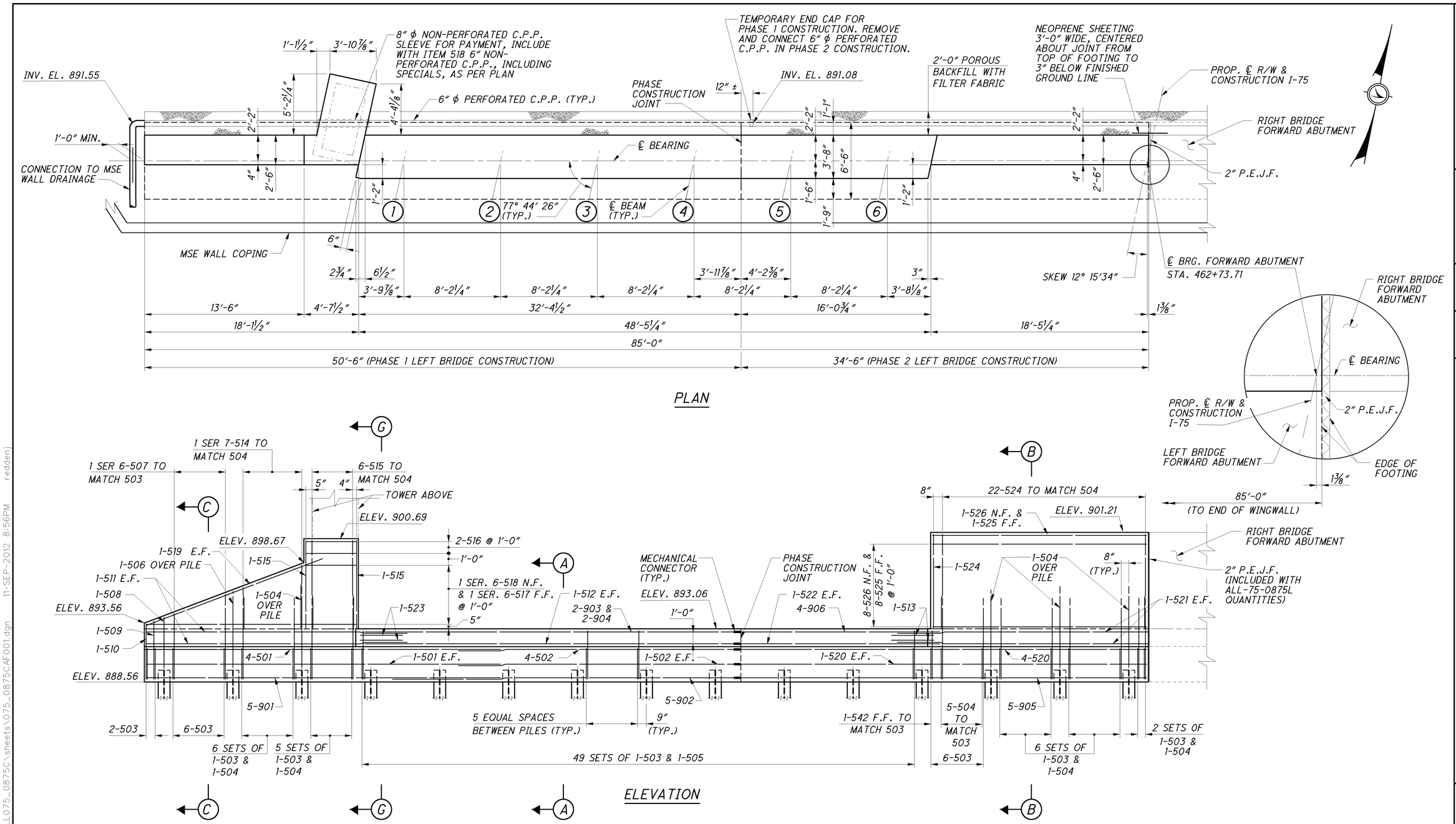

MINIMUM LAP LENGTHS	
#5 HORIZONTAL	= 3'-7"
#5 VERTICAL	= 2'-7"
#9	= 9'-2"

ALL BAR MARKS SHALL BE PREFIXED LFA FOR LEFT BRIDGE FORWARD ABUTMENT

NOTES:

1. FOR MSE WALL DETAILS, SEE SHEET 41/45
2. FOR FOUNDATION LAYOUT PLAN, SEE SHEET 11/45.
3. FOR SECTIONS A-A THRU C-C, SEE SHEET 17/45.
4. FOR VIEW G-G AND TOWER DETAILS, SEE SHEET 18/45.
5. FOR REAR ABUTMENT DETAILS, SEE SHEET 13/45.
6. FOR REINFORCEMENT BAR LIST, SEE SHEET 36/45.
7. FOR SEMI-INTEGRAL DIAPHRAGM DETAILS, SEE SHEET 25/45.

DESIGN AGENCY
PARSONS BRINCKERHOFF
2545 FARMERS DRIVE
SUITE 350
COLUMBUS, OHIO 43235

DESIGNED	DRAWN	REVIEWED	DATE
ECM	RCK	EBS	05/24/12
CHECKED	REVISED	STRUCTURE NUMBER	
BMG		LEFT: 0202268 RIGHT: 0202274	

LEFT BRIDGE FORWARD ABUTMENT PLAN AND ELEVATION

BRIDGE NO. ALL-75-0875 L/R
I-75 OVER S.R. 81

ALL-75-5.53
PID No. 76691

14 / 15

1053
1224

J:\Projects\ALL\76691\structures\ALL075_0875C\sheets\075_0875CAF001.dgn 11-SEP-2012 8:56PM reddenj

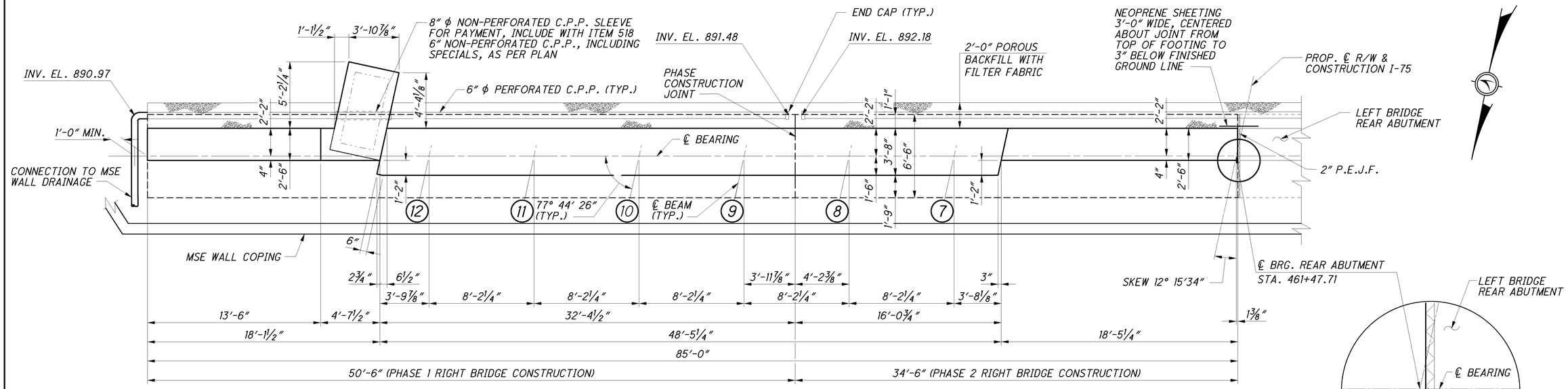

MINIMUM LAP LENGTHS	
#5 HORIZONTAL	= 3'-7"
#5 VERTICAL	= 2'-7"
#9	= 9'-2"

ALL BAR MARKS SHALL BE PREFIXED RRA FOR RIGHT BRIDGE REAR ABUTMENT

NOTES:

1. FOR MSE WALL DETAILS, SEE SHEET 40/45 .
2. FOR FOUNDATION LAYOUT PLAN, SEE SHEET 12/45 .
3. FOR SECTIONS A-A THRU C-C, SEE SHEET 17/45 .
4. FOR VIEW G-G AND TOWER DETAILS, SEE SHEET 18/45 .
5. FOR FORWARD ABUTMENT DETAILS, SEE SHEET 16/45 .
6. FOR REINFORCEMENT BAR LIST, SEE SHEET 35/45 .
7. FOR SEMI-INTEGRAL DIAPHRAGM DETAILS, SEE SHEET 25/45 .

DESIGN AGENCY
PARSONS BRINCKERHOFF
2545 FARMERS DRIVE
SUITE 350
COLUMBUS, OHIO 43235

DESIGNED	DRAWN	REVIEWED	DATE
ECM	RCK	EBS	05/24/12
CHECKED	REVISED	STRUCTURE NUMBER	
BMG		LEFT: 0202268 RIGHT: 0202274	

RIGHT BRIDGE REAR ABUTMENT PLAN AND ELEVATION

BRIDGE NO. ALL-75-0875 L/R
I-75 OVER S.R. 81

ALL-75-5.53
PID No. 76691

15 / 45

1054
1224

J:\Projects\ALL\76691\structures\ALL075_0875C\sheets\075_0875CAR004.dgn 11-SEP-2012 8:56PM reddenj

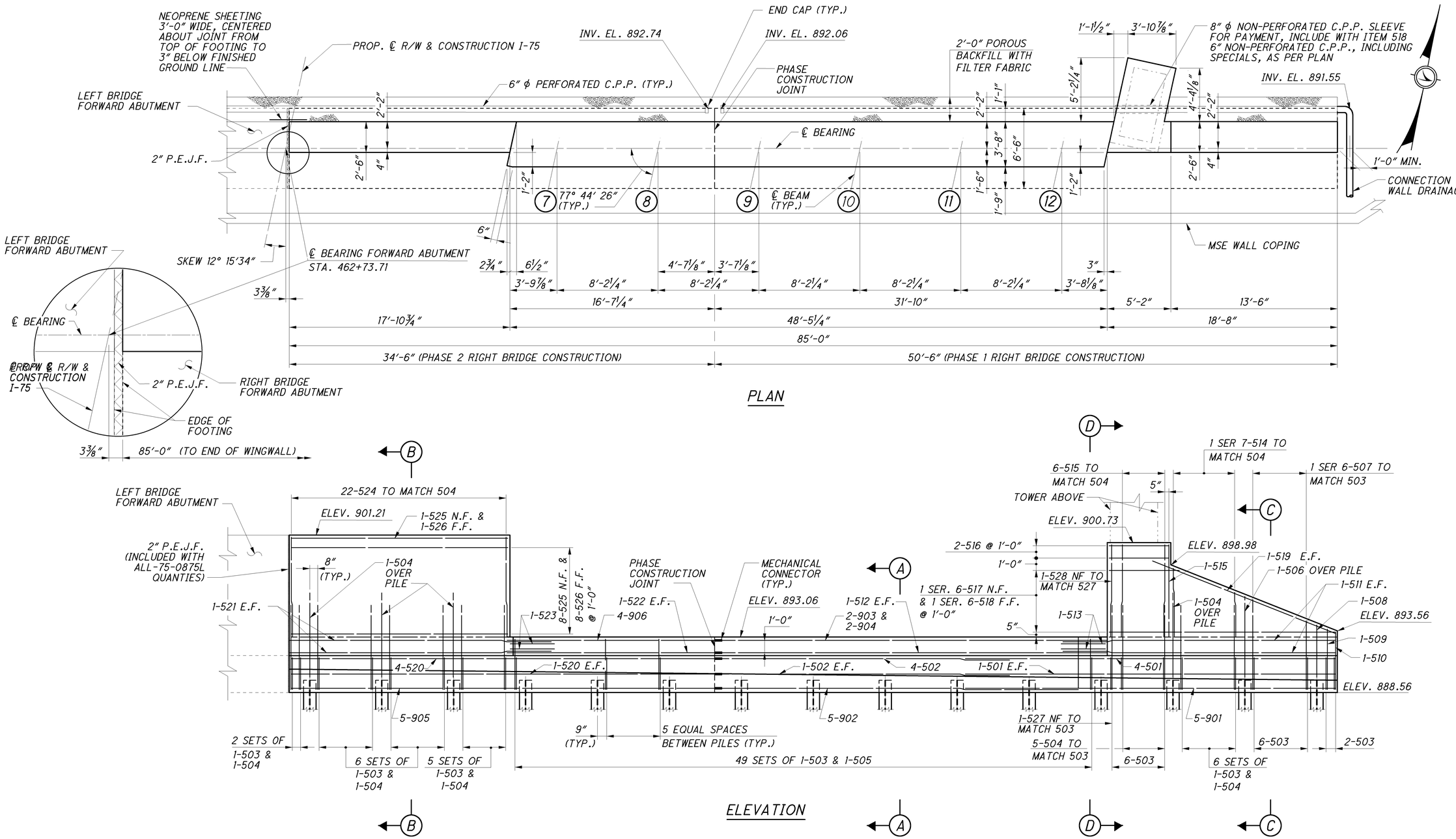

PLAN

ELEVATION

MINIMUM LAP LENGTHS	
#5 HORIZONTAL	= 3'-7"
#5 VERTICAL	= 2'-7"
#9	= 9'-2"

ALL BAR MARKS SHALL BE PREFIXED RFA FOR RIGHT BRIDGE FORWARD ABUTMENT

NOTES:

1. FOR MSE WALL DETAILS, SEE SHEET 41/45 .
2. FOR FOUNDATION LAYOUT PLAN, SEE SHEET 12/45 .
3. FOR SECTIONS A-A THRU C-C, SEE SHEET 17/45 .
4. FOR VIEW D-D AND TOWER DETAILS, SEE SHEET 18/45 .
5. FOR REAR ABUTMENT DETAILS, SEE SHEET 15/45 .
6. FOR REINFORCEMENT BAR LIST, SEE SHEET 36/45 .
7. FOR SEMI-INTEGRAL DIAPHRAGM DETAILS, SEE SHEET 24/45 .

DESIGN AGENCY
PARSONS BRINCKERHOFF
2545 FARMERS DRIVE
SUITE 350
COLUMBUS, OHIO 43235

DESIGNED ECM
DRAWN RCK
CHECKED BMG
REVIEWED EBS
DATE 05/24/12
REVISED
STRUCTURE NUMBER LEFT: 0202266 RIGHT: 0202274

RIGHT BRIDGE FORWARD ABUTMENT PLAN AND ELEVATION
BRIDGE NO. ALL-75-0875 L/R
I-75 OVER S.R. 81

ALL-75-5.53
PID No. 76691

16 / 45

1055
1224

J:\Projects\ALL\76691\structures\ALL075_0875C\sheets\075_0875CAF002.dgn 11-SEP-2012 8:56PM reddenj

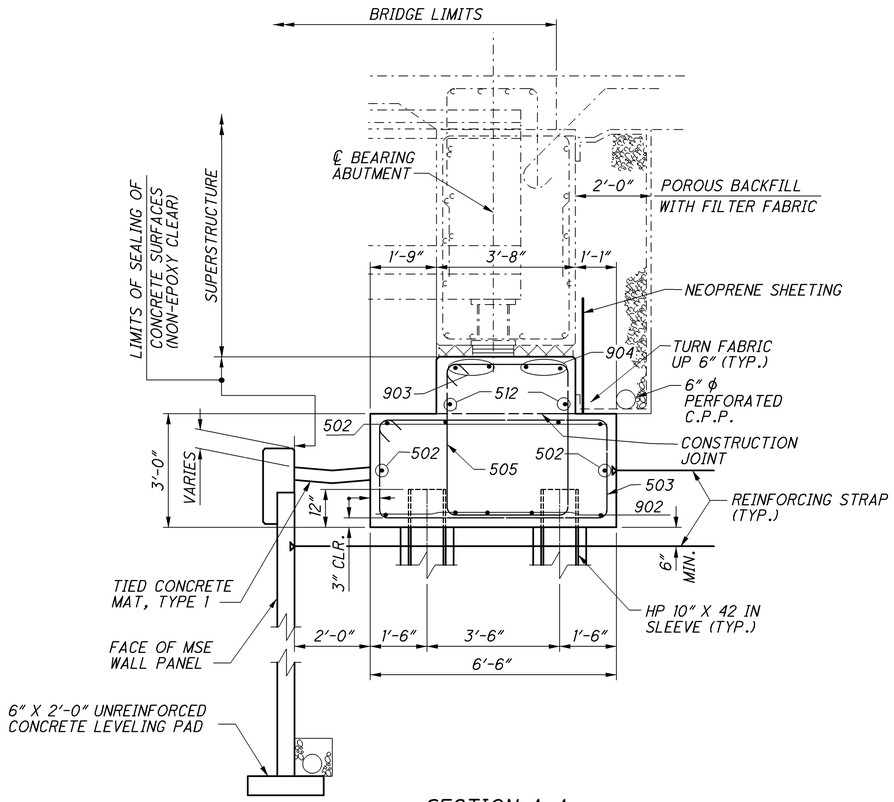

SECTION A-A

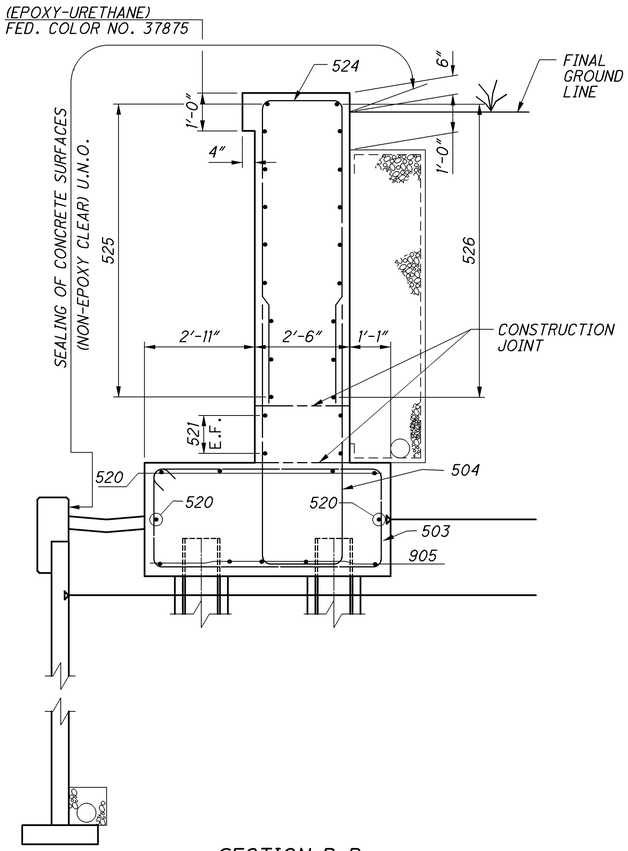

SECTION B-B

(SEE SECTION A-A FOR DETAILS NOT SHOWN)

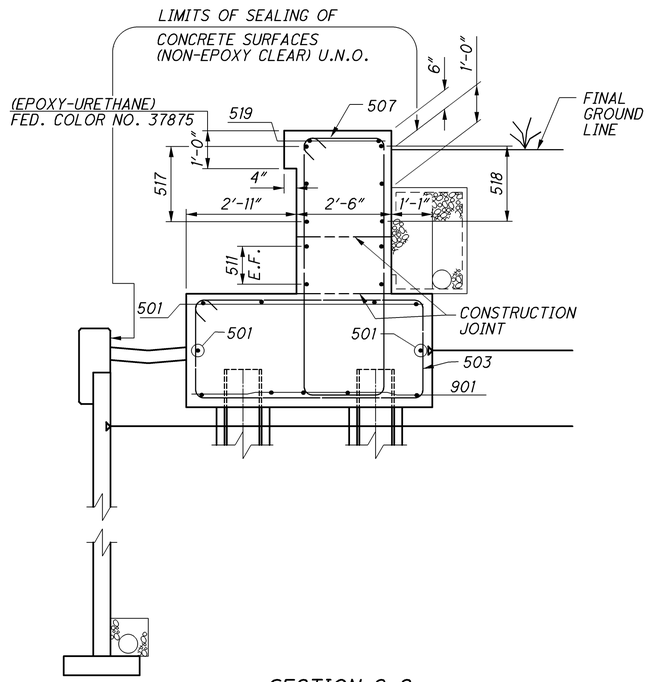

SECTION C-C

(SEE SECTION A-A FOR DETAILS NOT SHOWN)

NOTES:

1. FOR LOCATION OF SECTIONS, SEE SHEETS 13/45 THRU 16/45.
2. FOR SUPERSTRUCTURE DETAILS, SEE SHEETS 20/45 THRU 30/45.
3. FOR MSE WALL DETAILS, SEE SHEETS 40/45 AND 41/45.
4. FOR TIED CONCRETE BLOCK MAT ELEVATIONS, SEE SHEETS 40/45 AND 41/45.

ALL BAR MARKS SHALL BE PREFIXED :
LRA FOR LEFT BRIDGE REAR ABUTMENT
LFA FOR LEFT BRIDGE FORWARD ABUTMENT
RRA FOR RIGHT BRIDGE REAR ABUTMENT
RFA FOR RIGHT BRIDGE FORWARD ABUTMENT

J:\Projects\ALL\76691\structures\ALL075_0875C\sheets\075_0875CAR002.dgn 11-SEP-2012 8:57PM redden

DESIGN AGENCY
PARSONS BRINCKERHOFF
2945 FARMERS DRIVE
SUITE 350
COLUMBUS, OHIO 43235

DESIGNED	DRAWN	REVIEWED	DATE
ECM	RCK	EBS	05/24/12
CHECKED	REVISED	STRUCTURE FILE NUMBER	
BMG		LEFT: 0202273	
		RIGHT: 0202274	

ABUTMENT SECTIONS
BRIDGE NO. ALL-75-0875 L/R
I-75 OVER S.R. 81

ALL-75-5.53
PID No. 76691

17 / 45

1056
1224

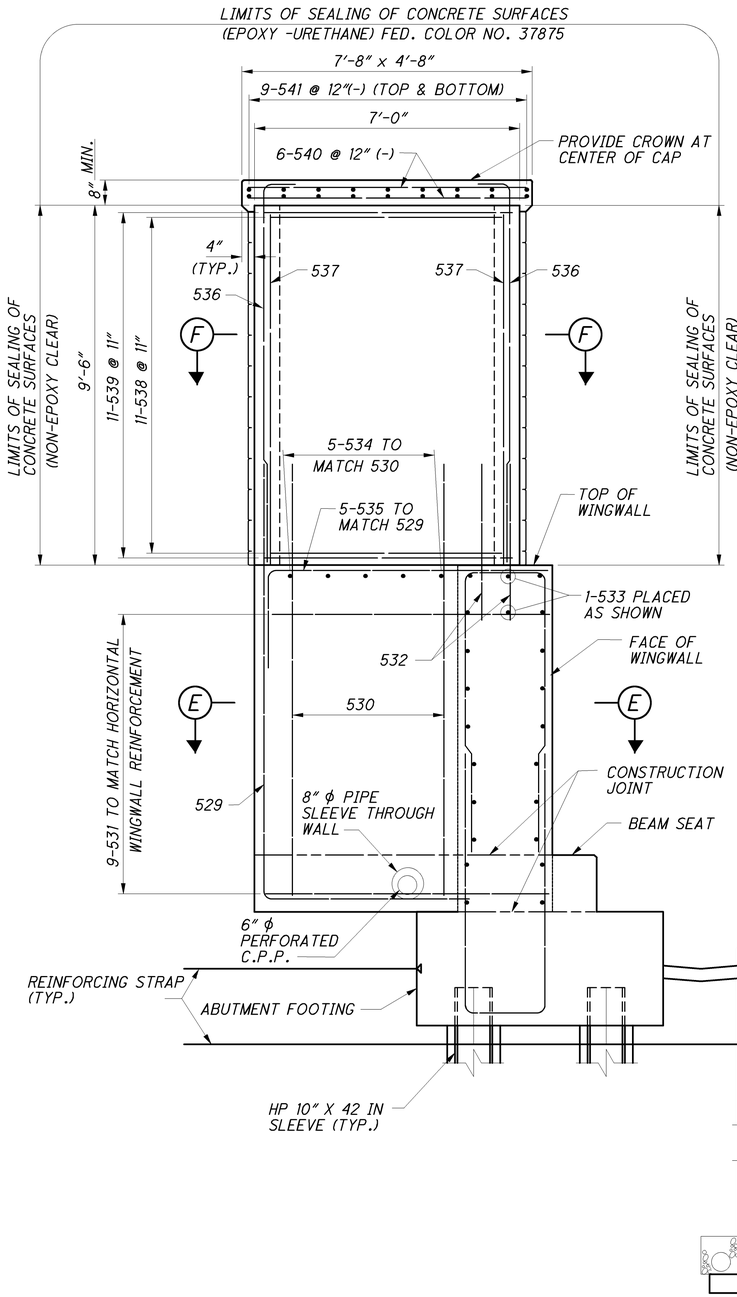

VIEW D-D

(VIEW G-G OPPOSITE HAND)
(FOOTING REINFORCEMENT NOT SHOWN FOR CLARITY)

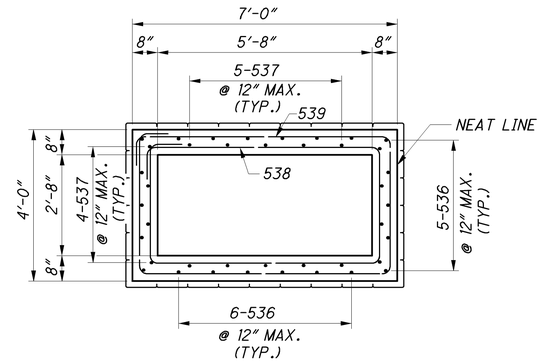

SECTION F-F

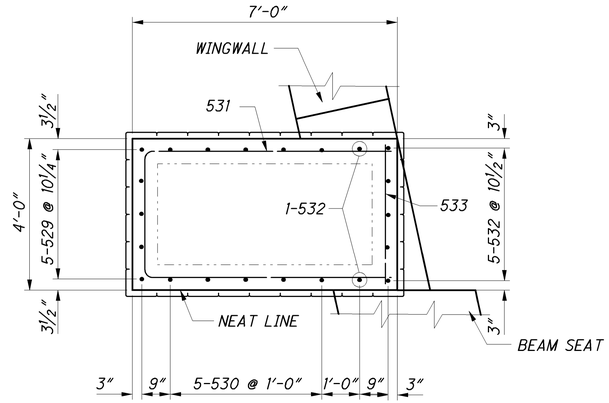

SECTION E-E

(WINGWALL REINFORCEMENT NOT SHOWN FOR CLARITY)

NOTES:

1. FOR ABUTMENT DETAILS, SEE SHEETS 13/45 THRU 17/45.
2. FOR AESTHETIC DETAILS, SEE SHEET 39/45.
3. FOR REINFORCING BAR LIST, SEE SHEET 35/45 AND 36/45.

ALL BAR MARKS SHALL BE PREFIXED LRA FOR LEFT BRIDGE REAR ABUTMENT, LFA FOR LEFT BRIDGE FORWARD ABUTMENT, RRA FOR RIGHT BRIDGE REAR ABUTMENT AND RFA FOR RIGHT BRIDGE FORWARD ABUTMENT.

DESIGN AGENCY
PARSONS BRINCKERHOFF
2545 FARMERS DRIVE
SUITE 350
COLUMBUS, OHIO 43235

DESIGNED	DRAWN	REVIEWED	DATE
ECM	RCK	EBS	05/24/12
CHECKED	REVISED	STRUCTURE FILE NUMBER	
BMG		LEFT: 0202268 RIGHT: 0202274	

ABUTMENT TOWER DETAILS

BRIDGE NO. ALL-75-0875 L/R
I-75 OVER S.R. 81

ALL-75-5.53
PID No. 76691

J:\Projects\ALL\76691\structures\ALL075_0875C\sheets\075_0875CAR003.dgn 11-SEP-2012 8:57PM reddenj

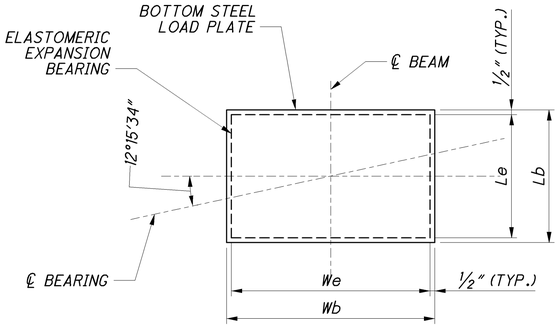

BEARING PLAN VIEW

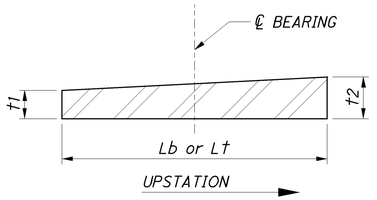

STEEL PLATE

(BOTTOM LOAD PLATE OR BEVELED TOP PLATE)
(SEE TABLE FOR DIMENSIONS)

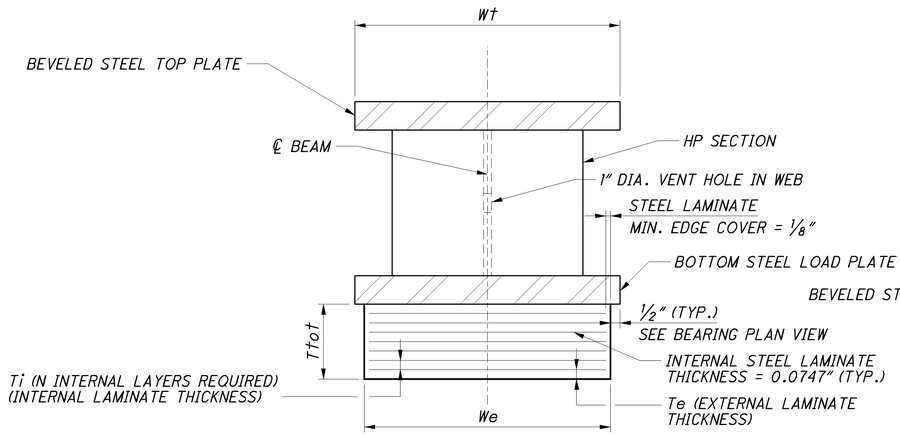

LAMINATED ELASTOMERIC EXPANSION BEARING, 50 DUROMETER

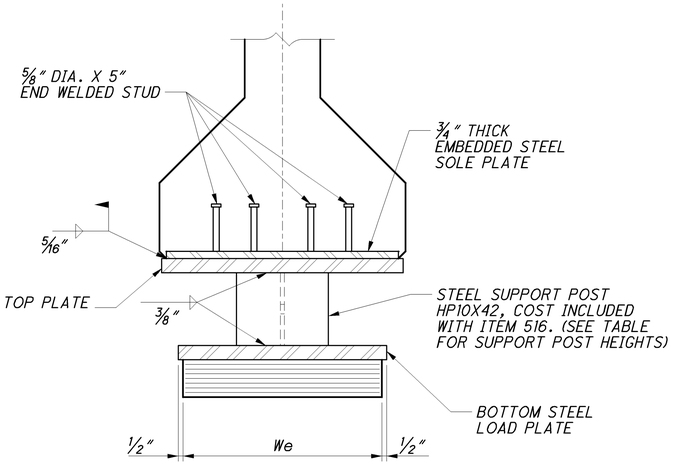

END VIEW

BEARING LOCATION		BEARING TYPE	DEAD LOAD (Kip)	LIVE LOAD (Kip)	TOTAL LOAD (Kip)	Le (in.)	We (in.)	Ti (in.)	N (no. of Ti's)	Te (1 EA.) (in.)	NUMBER OF INTERNAL LAMINATES (0.0747")	Ttot (in.)	BOTTOM STEEL LOAD PLATE (in.)				STEEL TOP PLATE (in.)				HP SUPPORT POSTS (in.)
													Wb	Lb	t1	t2	Wt	Lt	t1	t2	
REAR ABUTMENT	BEAM 1	EXPANSION	186	91	277	12	23	0.41	7	0.26	7	3.65	24	13	1.5	1.5	25.5	12	1.5	1.7500	6.0000
	BEAM 2																				8.0000
	BEAM 3																				9.6250
	BEAM 4																				10.6875
	BEAM 5																				12.5000
	BEAM 6																				12.8750
	BEAM 7	EXPANSION	186	91	277	12	23	0.41	7	0.26	7	3.65	24	13	1.5	1.5	25.5	12	1.5	1.6875	13.6250
	BEAM 8																				13.5625
	BEAM 9																				12.0000
	BEAM 10																				11.1875
	BEAM 11																				9.8125
	BEAM 12																				8.0625
FWD ABUTMENT	BEAM 1	EXPANSION	186	91	277	12	23	0.41	7	0.26	7	3.65	24	13	1.5	1.5	25.5	12	1.5	1.6250	6.0000
	BEAM 2																				7.9375
	BEAM 3																				9.4375
	BEAM 4																				10.3750
	BEAM 5																				12.1250
	BEAM 6																				12.3750
	BEAM 7	EXPANSION	186	91	277	12	23	0.41	7	0.26	7	3.65	24	13	1.5	1.5	25.5	12	1.5	1.6250	12.5625
	BEAM 8																				12.3750
	BEAM 9																				10.6875
	BEAM 10																				9.8750
	BEAM 11																				8.3750
	BEAM 12																				6.5625

NOTES:

1. ELASTOMERIC BEARINGS: THE ELASTOMER SHALL HAVE A HARDNESS OF 50 DUROMETER. THE BEARINGS WERE DESIGNED IN ACCORDANCE WITH SECTION 14.7.6 (METHOD A) OF THE AASHTO LRFD BRIDGE DESIGN SPECIFICATIONS. THE LONG TERM COMPRESSION PROOF LOAD TEST (AASHTO STANDARD SPECIFICATION FOR HIGHWAY BRIDGES, DIVISION II, SECTION 18.7.2.6) IS NOT REQUIRED.
2. WELDING: CONTROL WELDING SO THAT THE PLATE TEMPERATURE AT THE ELASTOMER BONDED SURFACE DOES NOT EXCEED 300°F AS DETERMINED BY USE OF PYROMETRIC STICKS OR OTHER TEMPERATURE MONITORING DEVICES.
3. BEARING REPOSITIONING: IF THE BEAM IS ERECTED AT AN AMBIENT TEMPERATURE HIGHER THAN 80°F OR LOWER THAN 40°F AND THE BEARING SHEAR DEFLECTION EXCEEDS ⅛ OF THE BEARING HEIGHT AT 60°F (±10°F), RAISE THE BEAMS TO ALLOW THE BEARINGS TO RETURN TO THEIR UNDEFORMED SHAPE AT 60°F (±10°F).
4. THE STEEL LOAD PLATE SHALL BE BONDED BY VULCANIZATION TO THE ELASTOMER DURING THE MOLDING PROCESS.
5. TOTAL DESIGN LOAD FOR BEARING EQUALS THE SUM OF THE DEAD LOADS AND LIVE LOADS (WITHOUT IMPACT) TABULATED IN THE BEARING TABLE.
6. BASIS OF PAYMENT: THE UNIT BID PRICE SHALL INCLUDE ALL MATERIALS, LABOR, TESTING, AND INCIDENTALS NECESSARY TO FURNISH AND INSTALL LAMINATED ELASTOMERIC BEARINGS. SAMPLE BEARINGS SHALL NOT BE MEASURED FOR PAYMENT. PAYMENT WILL BE MADE AT THE CONTRACT PRICE FOR ITEM 516 - ELASTOMERIC BEARING WITH INTERNAL LAMINATES AND LOAD PLATE (NEOPRENE), AS PER PLAN.
7. ALL BEARINGS SHALL BE MARKED PRIOR TO SHIPPING. THE MARKS SHALL INCLUDE THE BEARING LOCATION ON THE BRIDGE, AND A DIRECTION ARROW THAT POINTS UP-STATION. ALL MARKS SHALL BE PERMANENT AND BE VISIBLE AFTER THE BEARING IS INSTALLED.
8. FOR FRAMING PLAN, SEE SHEETS 20/45 AND 21/45.

DESIGN AGENCY
PARSONS BRINCKERHOFF
2545 FARMERS DRIVE
SUITE 350
COLUMBUS, OHIO 43235

DESIGNED ECM
DRAWN APV
CHECKED SJG
REVIEWED EBS
DATE 05/24/12
REVISED
STRUCTURE NUMBER LEFT: 0202266 RIGHT: 0202274

BEARING DETAILS
BRIDGE NO. ALL-75-0875 L/R
I-75 OVER S.R. 81

ALL-75-5.53
PID No. 76691

J:\Projects\ALL\76691\structures\ALL075_0875C\sheets\075_0875CBR001.dgn 11-SEP-2012 8:57PM reddenj

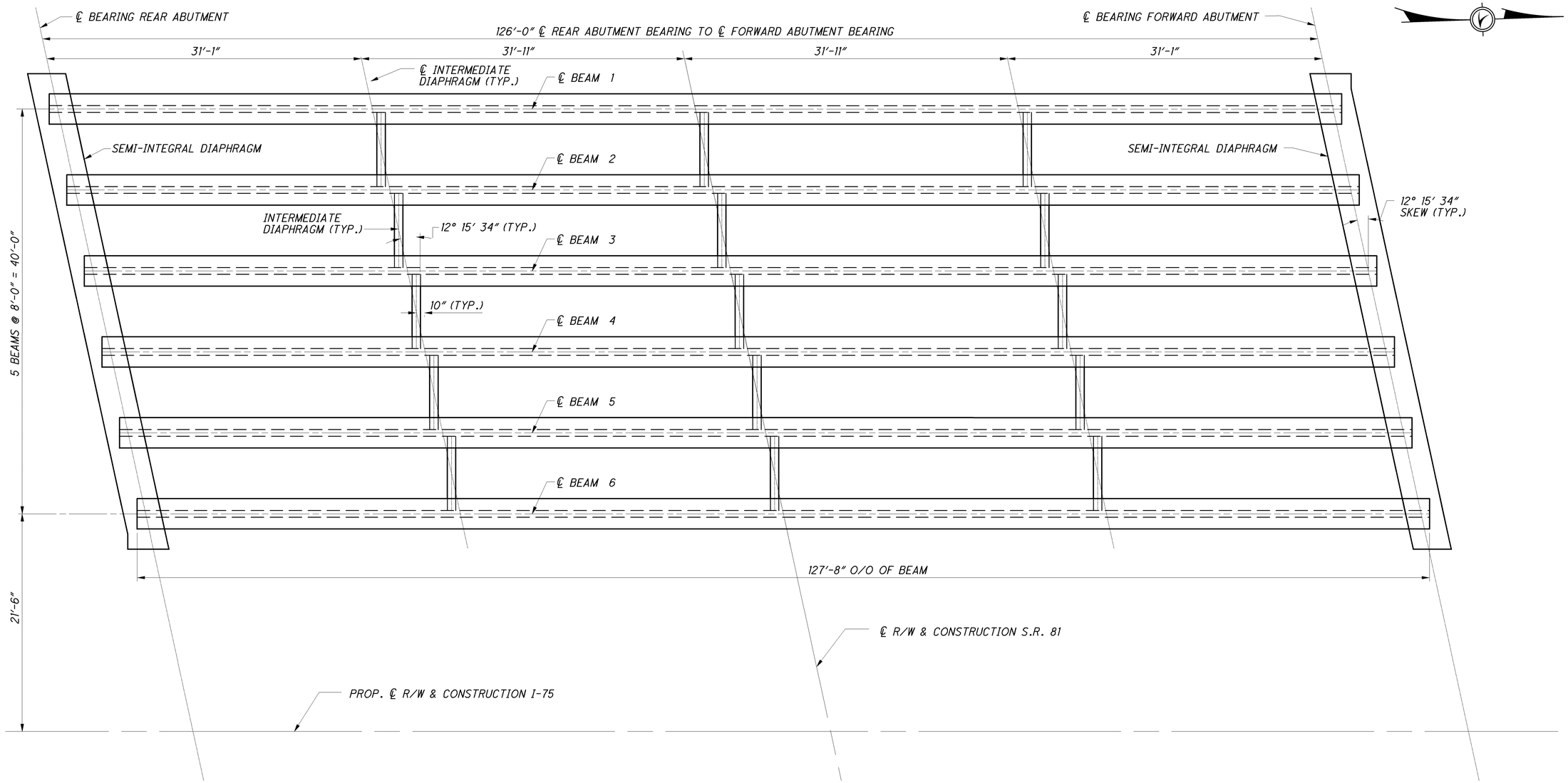

FRAMING PLAN (LEFT BRIDGE)

NOTES:

1. FOR DETAILS OF INTERMEDIATE DIAPHRAGMS, SEE ODOT STANDARD DRAWINGS PSID-1-99 SHEETS 1 TO 8 OF 8.
2. DO NOT PLACE THE DECK CONCRETE UNTIL ALL INTERMEDIATE DIAPHRAGMS HAVE BEEN PROPERLY INSTALLED. IF CONCRETE DIAPHRAGMS ARE USED, COMPLETE THE INSTALLATION OF THE INTERMEDIATE DIAPHRAGMS AT LEAST 48 HOURS BEFORE DECK PLACEMENT BEGINS. CONCRETE SHALL BE CLASS S.
3. FOR SEMI-INTEGRAL ABUTMENT DIAPHRAGM DETAILS, SEE SHEETS 24/45 AND 25/45 .

DESIGN AGENCY
PARSONS BRINCKERHOFF
2545 FARMERS DRIVE
SUITE 350
COLUMBUS, OHIO 43235

DESIGNED	DRAWN	REVIEWED	DATE
ECM	RCK	EBS	05/24/12
CHECKED	REVISED	STRUCTURE NUMBER	
BMG		LEFT: 0202266 RIGHT: 0202274	

LEFT BRIDGE - FRAMING PLAN
BRIDGE NO. ALL-75-0875 L/R
I-75 OVER S.R. 81

ALL-75-5.53
PID No. 76691

20 / 45

1059
1224

J:\Projects\ALL\76691\structures\ALL075_0875C\sheets\075_0875CSD001.dgn 11-SEP-2012 8:57PM reddenj

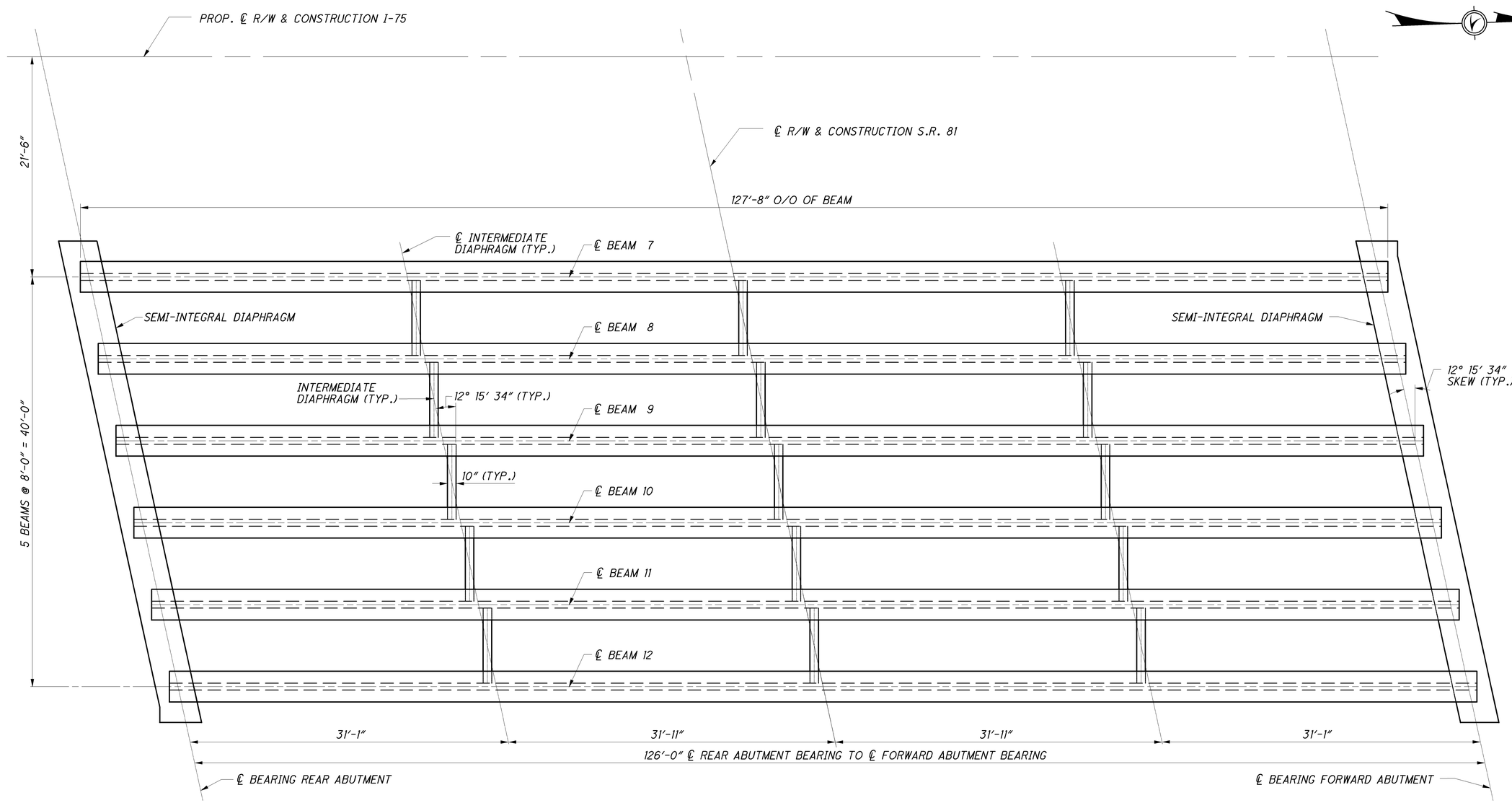

FRAMING PLAN (RIGHT BRIDGE)

NOTES:

1. FOR DETAILS OF INTERMEDIATE DIAPHRAGMS, SEE ODOT STANDARD DRAWINGS PSID-1-99 SHEETS 1 TO 8 OF 8.
2. DO NOT PLACE THE DECK CONCRETE UNTIL ALL INTERMEDIATE DIAPHRAGMS HAVE BEEN PROPERLY INSTALLED. IF CONCRETE DIAPHRAGMS ARE USED, COMPLETE THE INSTALLATION OF THE INTERMEDIATE DIAPHRAGMS AT LEAST 48 HOURS BEFORE DECK PLACEMENT BEGINS. CONCRETE SHALL BE CLASS S.
3. FOR SEMI-INTEGRAL ABUTMENT DIAPHRAGM DETAILS, SEE SHEETS 24/45 AND 25/45.

DESIGN AGENCY
PARSONS BRINCKERHOFF
2945 FARMERS DRIVE
SUITE 350
COLUMBUS, OHIO 43235

DESIGNED	DRAWN	REVIEWED	DATE
ECM	RCK	EBS	05/24/12
CHECKED	REVISED	STRUCTURE NUMBER	
BMG		LEFT: 0202268 RIGHT: 0202274	

RIGHT BRIDGE - FRAMING PLAN
BRIDGE NO. ALL-75-0875 L/R
I-75 OVER S.R. 81

ALL-75-5.53
PID No. 76691

21 / 45

1060
1224

J:\Projects\ALL\76691\structures\ALL075_0875C\sheets\075_0875CSD002.dgn 11-SEP-2012 8:57PM reddenj

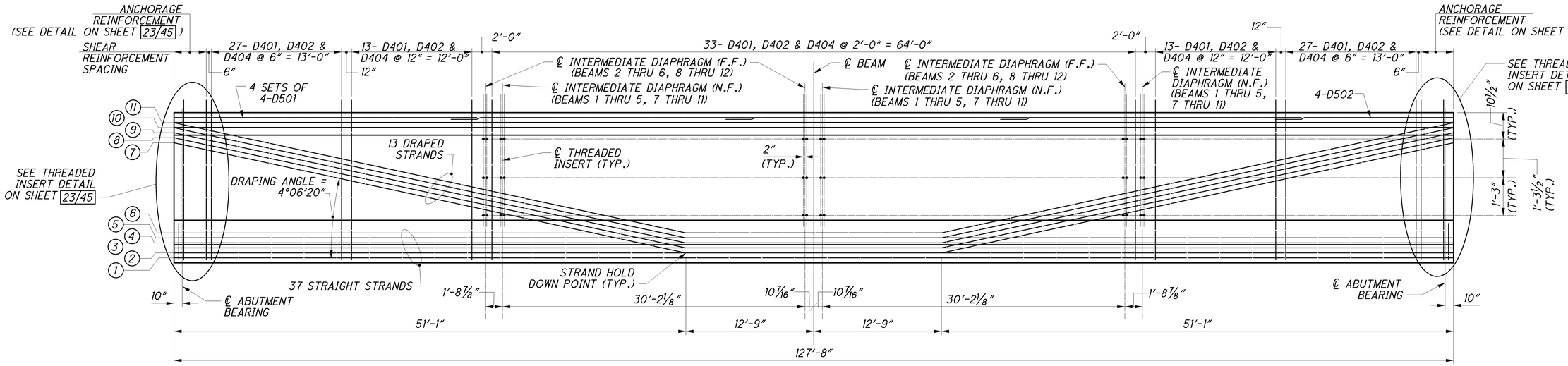

TYPICAL BEAM ELEVATION

(THREADED INSERTS AND 1¼" ϕ SLEEVES FOR DIAPHRAGMS NOT SHOWN FOR CLARITY)

NOTES:

1. FOR NOTES, SEE SHEET 23/45.

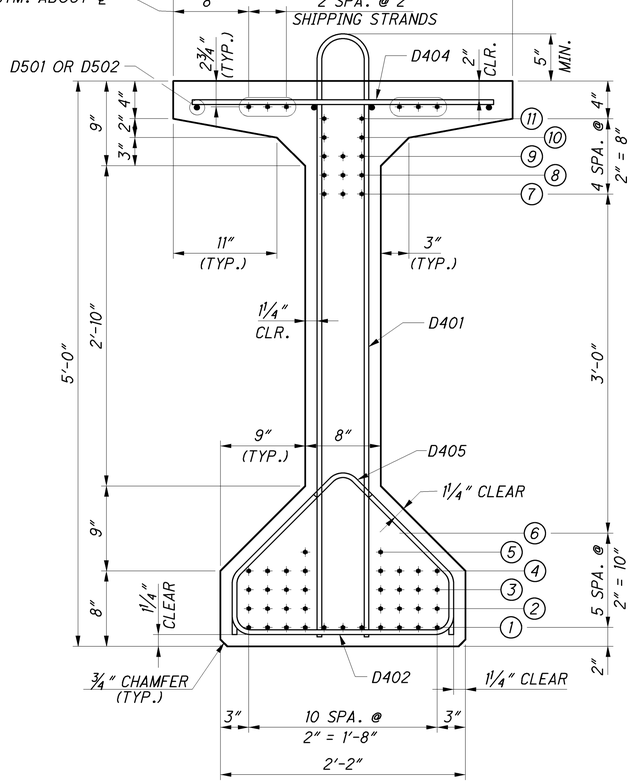

MODIFIED AASHTO TYPE 4 (60") SECTION AT BEAM END

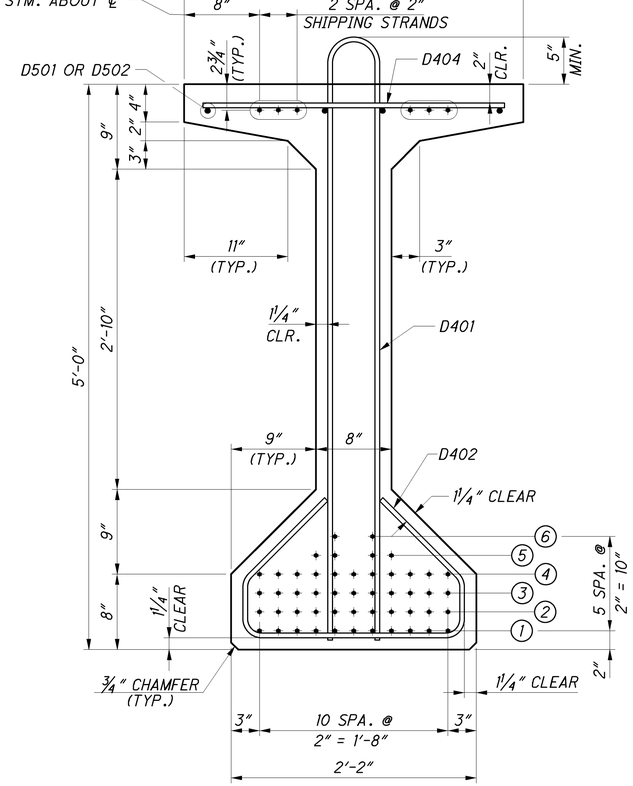

MODIFIED AASHTO TYPE 4 (60") SECTION AT BEAM MIDSPAN

DESIGN AGENCY
PARSONS BRINCKERHOFF
2545 FARMERS DRIVE
SUITE 350
COLUMBUS, OHIO 43235

DESIGNED	DRAWN	REVIEWED	DATE
ECM	APV	EBS	05/24/12
CHECKED	REVISED	STRUCTURE FILE NUMBER	
BMG		LEFT: 0202266 RIGHT: 0202274	

BEAM ELEVATION AND SECTIONS
BRIDGE NO. ALL-75-0875 L/R
I-75 OVER S.R. 81

ALL-75-5.53
PID No. 76691

J:\Projects\ALL\76691\structures\ALL075_0875C\sheets\075_0875CSD003.dgn 11-SEP-2012 8:57PM reddenj

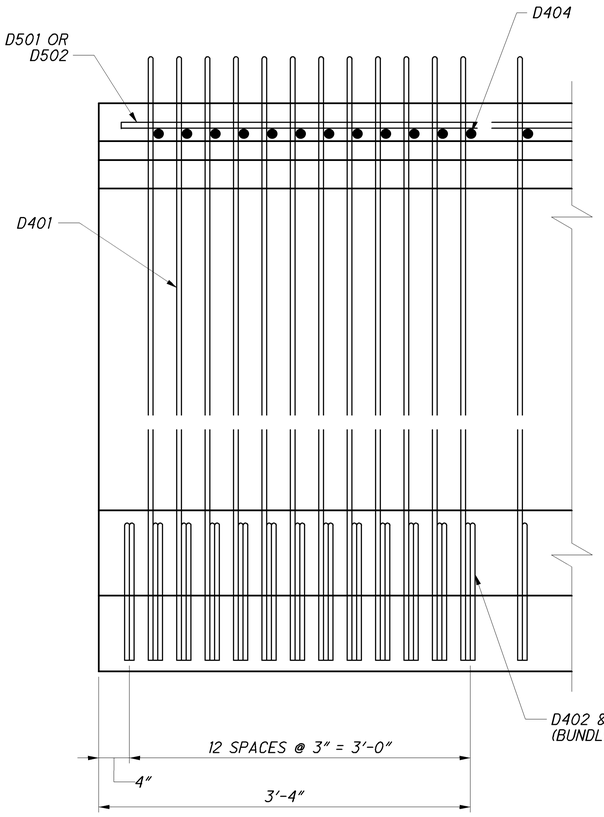

ANCHORAGE REINFORCEMENT DETAIL

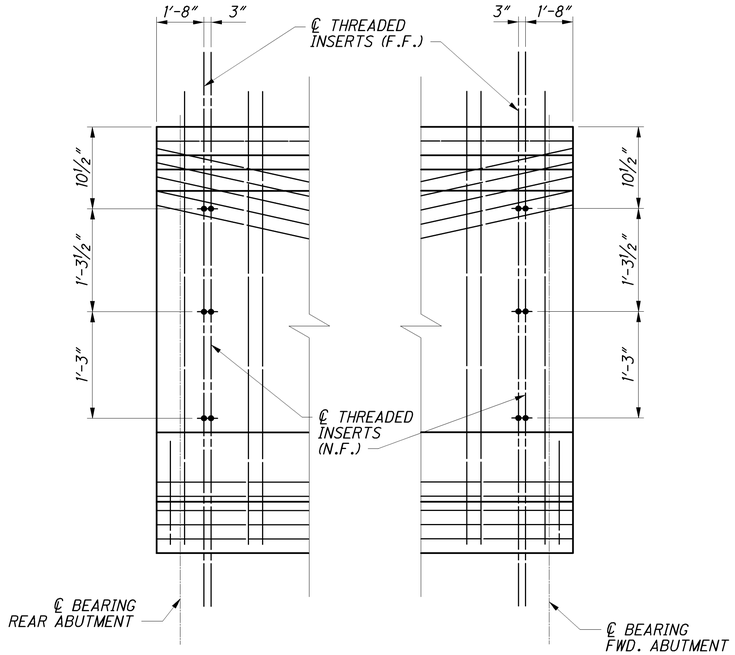

THREADED INSERT LOCATIONS

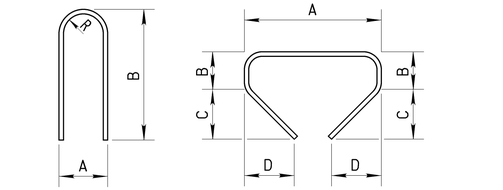

BENDING DIAGRAMS

(ALL DIMENSIONS ARE OUT-TO-OUT)

MARK	NUMBER REQUIRED	TYPE	DIMENSIONS				
			A	B	C	D	R
MODIFIED AASHTO TYPE 4 (60")							
D401	1,644	1	5½"	5'-4"			2¼"
D402	1,668	2	1'-11½"	6¼"	8½"	8½"	
D404	1,644	3	2'-8"				
D405	312	4	6¼"	11¾"			
D501	192	3	30'-0"				
D502	48	3	17'-6"				

BAR SIZE IS INDICATED IN THE BAR MARK. THE FIRST LETTER IDENTIFIES THE BAR LOCATION, THE NEXT DIGIT INDICATES THE INCH-POUND BAR SIZE AND THE REMAINING DIGITS ITS SEQUENCE NUMBER. ALL STEEL SHALL BE EPOXY COATED. QUANTITIES SHOWN ARE THE TOTAL REQUIRED FOR ALL 12 BEAMS.

BEAM MARK	NUMBER OF STRANDS PER ROW											TOTAL STRANDS	CONCRETE STRENGTHS		D401 BARS REQ'D	D402 BARS REQ'D	D404 BARS REQ'D	D405 BARS REQ'D
	①	②	③	④	⑤	⑥	⑦	⑧	⑨	⑩	⑪		f'ci	f'c				
END	11	8	8	8	2	-	3	3	3	2	2	50	7	10	137	139	137	26
MID-SPAN	11	11	11	11	4	2	-	-	-	-	-							

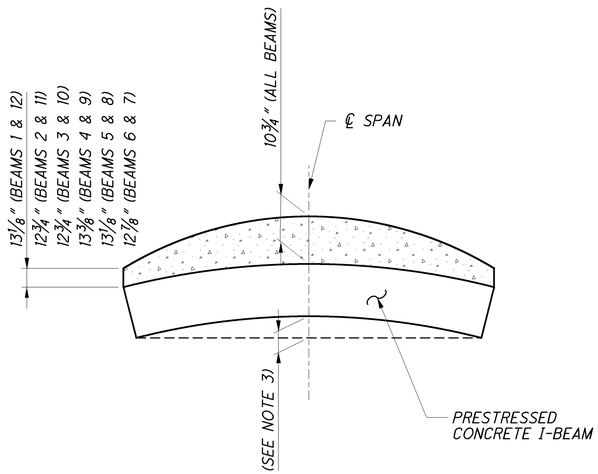

DECK SLAB THICKNESS DIAGRAM

NOTES:

1. FOR DIAPHRAGM DETAILS, SEE SHEETS 24/45 AND 25/45 .
2. FOR DETAILS NOT SHOWN, SEE ODOT STANDARD DRAWING PSID-1-99.
3. THE CALCULATED CAMBER AT THE TIME OF RELEASE IS 3.350". THE CALCULATED CAMBER AT THE TIME OF ERECTION IS 5.893". THE CALCULATED LONG-TERM CAMBER IS 8.345".
4. THE TOPPING THICKNESSES SHOWN FROM THE TOP OF THE DECK SLAB TO THE TOP OF THE TOP FLANGE ALONG THE CENTERLINE OF THE I-BEAM ARE THEORETICAL DIMENSIONS. THE HAUNCH DEPTH IS THE TOPPING THICKNESS MINUS THE DESIGN SLAB THICKNESS. THE DEPARTMENT WILL PAY FOR SUPERSTRUCTURE CONCRETE BASED ON THE DESIGN SLAB THICKNESS AND THE AVERAGE OF THE THEORETICAL HAUNCH DEPTHS AT MID-SPAN AND AT EACH BEAM BEARING EVEN THOUGH DEVIATION FROM THE DIMENSIONS SHOWN MAY BE NECESSARY TO PLACE THE DECK SURFACE AT THE FINISHED GRADE. ONCE ALL BEAMS ARE SET IN THEIR FINAL POSITION, THE ACTUAL CAMBER FOR EACH MEMBER WILL BE AT THE TOP OF BEAM ELEVATION AT MID-SPAN MINUS THE AVERAGE TOP OF BEAM ELEVATION AT EACH BEARING. THE ACTUAL TOPPING THICKNESS AT MID-SPAN WILL BE THE THEORETICAL DIMENSION PLUS OR MINUS THE DIFFERENCE BETWEEN THE ACTUAL AND ANTICIPATED CAMBER.
5. FOR THREADED RODS AND INSERT LOCATIONS AT INTERMEDIATE DIAPHRAGMS, SEE SHEET 22/45 .
6. ALL BEAMS SHALL BE STORED FOR A MINIMUM OF 90 DAYS PRIOR TO DECK PLACEMENT.
7. FOR EMBEDDED STEEL SOLE PLATE DETAIL, SEE ODOT STANDARD DRAWING PSID-1-99, SHEET 4 OF 6.

DESIGN AGENCY
PARSONS BRINCKERHOFF
2545 FARMERS DRIVE
SUITE 350
COLUMBUS, OHIO 43235

DESIGNED	DRAWN	REVIEWED	DATE
ECM	APV	EBS	05/24/12
CHECKED	REVISED	STRUCTURE NUMBER	
BMG		LEFT: 0202268 RIGHT: 0202274	

BEAM DETAILS

BRIDGE NO. ALL-75-0875 L/R
I-75 OVER S.R. 81

ALL-75-5.53
PID No. 76691

J:\Projects\ALL\76691\structures\ALL075_0875C\sheets\075_0875CSD004.dgn 11-SEP-2012 8:57PM reddenj

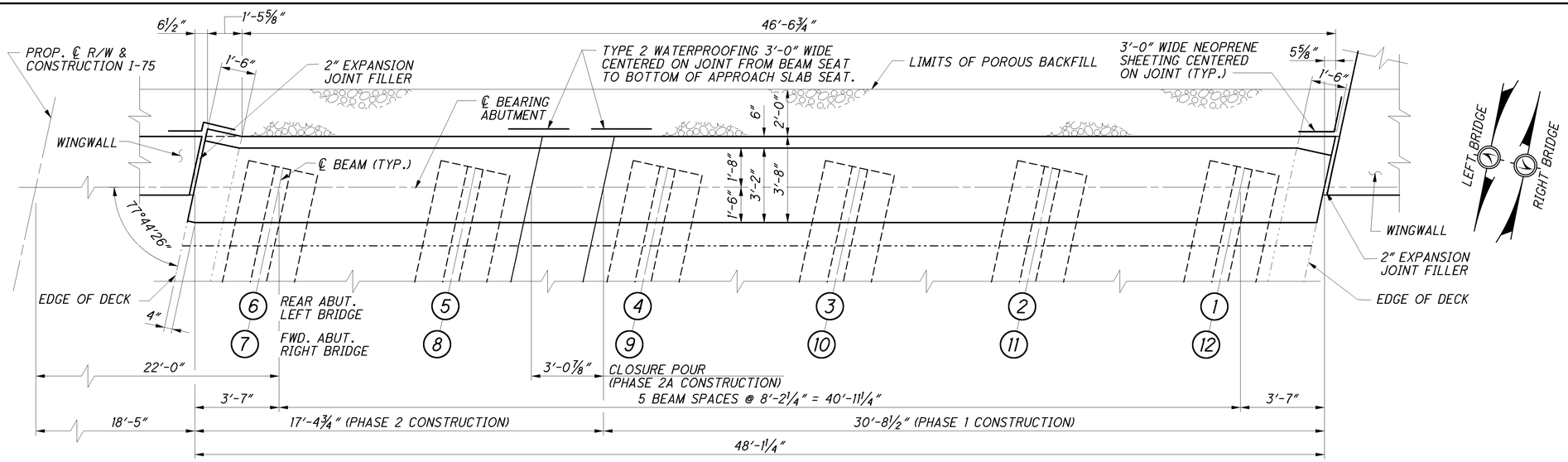

PLAN

REAR ABUTMENT LEFT BRIDGE OR FORWARD ABUTMENT RIGHT BRIDGE SHOWN

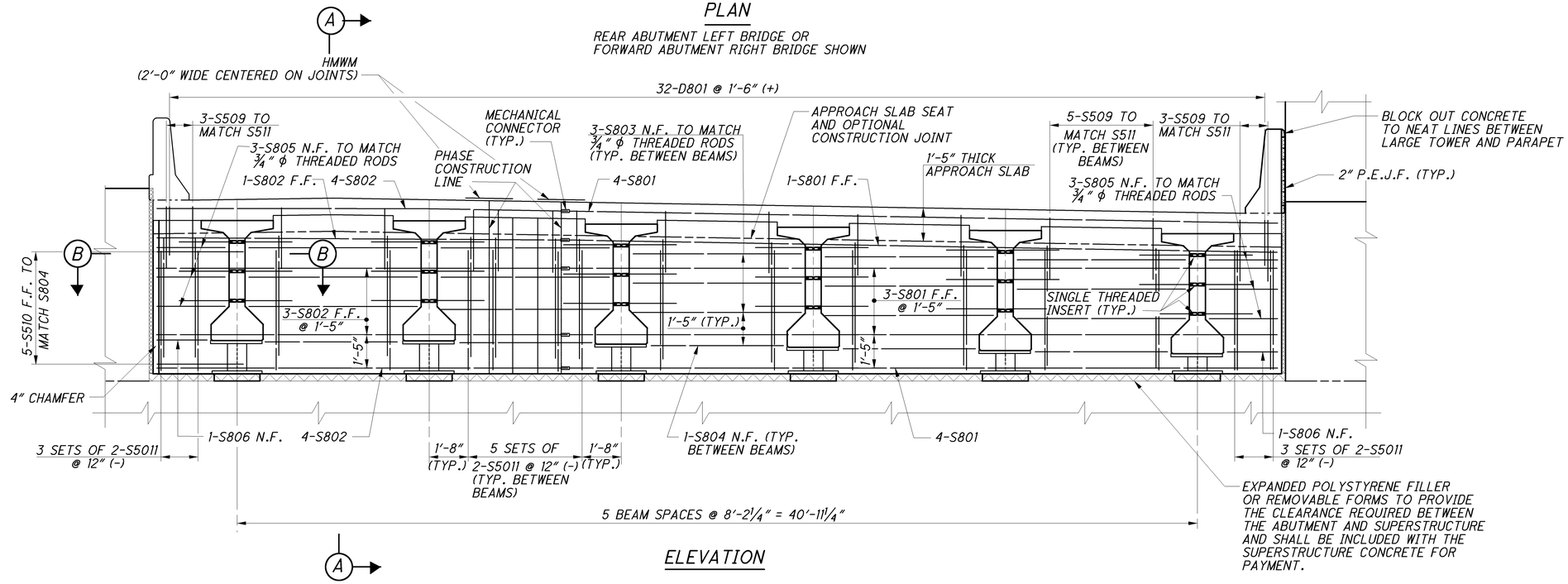

ELEVATION

NOTES:

1. ALL VERTICAL REINFORCEMENT PLACED PARALLEL TO BEAMS.
2. FOR FRAMING PLAN, SEE SHEET 20/45 AND 21/45 .
3. FOR REINFORCEMENT BAR LIST, SEE SHEET 37/45 .
4. FOR ABUTMENT DETAILS, SEE SHEETS 13/45 THRU 17/45 .
5. FOR SLAB PLAN, SEE SHEET 26/45 AND 27/45 .
6. FOR APPROACH SLAB DETAILS, SEE SHEETS 31/45 THRU 34/45 .
7. FOR TOP OF DECK ELEVATIONS AT ℄ OF BEARING, SEE SHEET 29/45 AND 30/45 .
8. FOR ADDITIONAL DIAPHRAGM DETAILS, SEE ODOT STANDARD DRAWING SICD-1-96, SHEET 1 THRU 7 OF 7.

DESIGN AGENCY
PARSONS BRINCKERHOFF
2545 FARMERS DRIVE
SUITE 350
COLUMBUS, OHIO 43235

DESIGNED	DRAWN	REVIEWED	DATE
ECM	RCK	EBS	05/24/12
CHECKED	REVISED	STRUCTURE NUMBER	
APV		LEFT: 0202268 RIGHT: 0202274	

SEMI-INTEGRAL ABUTMENT DIAPHRAGM DETAILS

BRIDGE NO. ALL-75-0875 L/R
I-75 OVER S.R. 81

ALL-75-5.53
PID No. 76691

J:\Projects\ALL\76691\structures\ALL075_0875C\sheets\075_0875CSD005.dgn 11-SEP-2012 8:57PM reddenj

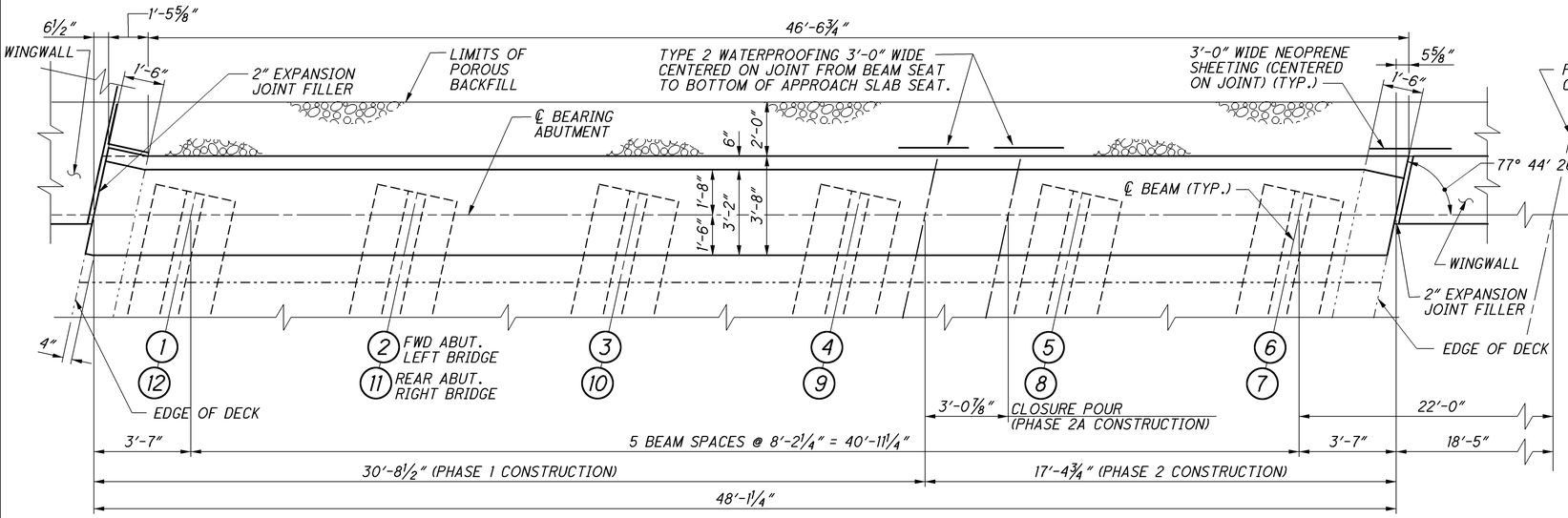

PLAN

FORWARD ABUTMENT LEFT BRIDGE OR REAR ABUTMENT RIGHT BRIDGE SHOWN

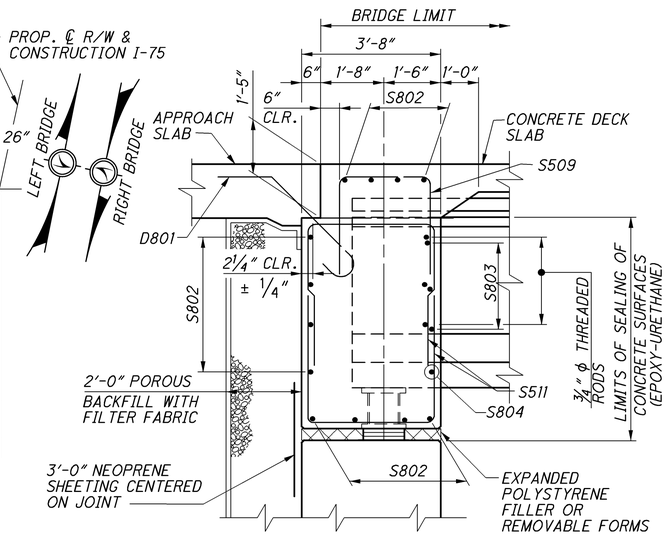

SECTION A-A

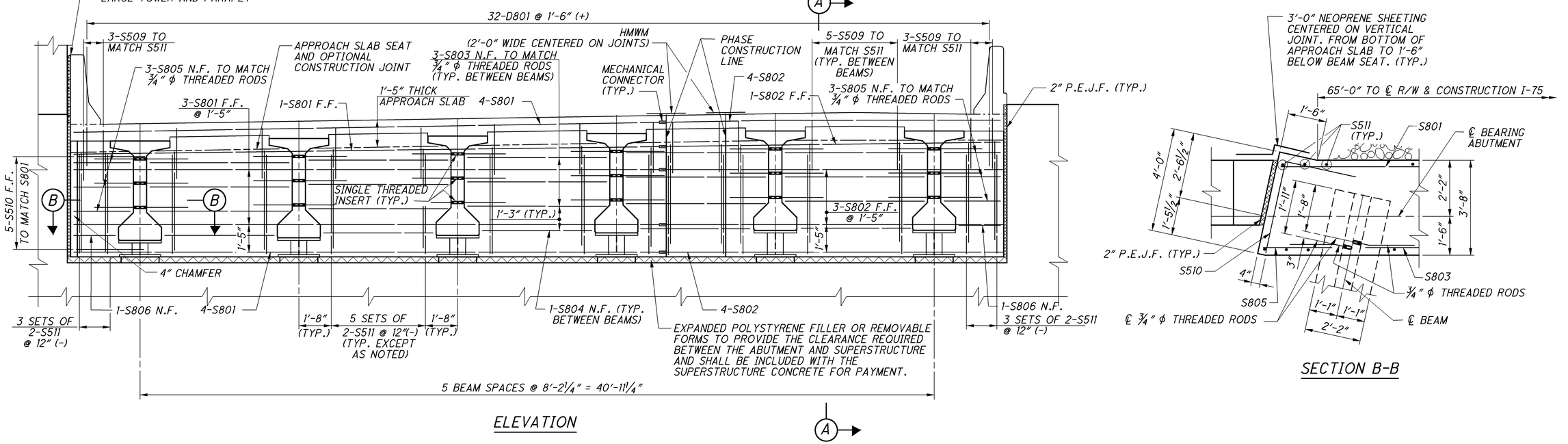

ELEVATION

SECTION B-B

NOTES:

1. ALL VERTICAL REINFORCEMENT PLACED PARALLEL TO BEAMS.
2. FOR ADDITIONAL NOTES, SEE SHEET 24/45.

DESIGN AGENCY
PARSONS BRINCKERHOFF
2545 FARMERS DRIVE
SUITE 350
COLUMBUS, OHIO 43235

DESIGNED	DRAWN	REVIEWED	DATE
ECM	RCK	EBS	05/24/12
CHECKED	REVISED	STRUCTURE FILE NUMBER	
APV		LEFT: 0202273 RIGHT: 0202274	

DETAILS

SEMI-INTEGRAL ABUTMENT DIAPHRAGM DETAILS
BRIDGE NO. ALL-75-0875 L/R
I-75 OVER S.R. 81

ALL-75-5.53
PID No. 76691

25/45

1064
1224

J:\Projects\ALL\76691\structures\ALL075_0875C\sheets\075_0875CSD006.dgn 11-SEP-2012 8:57PM reddenj

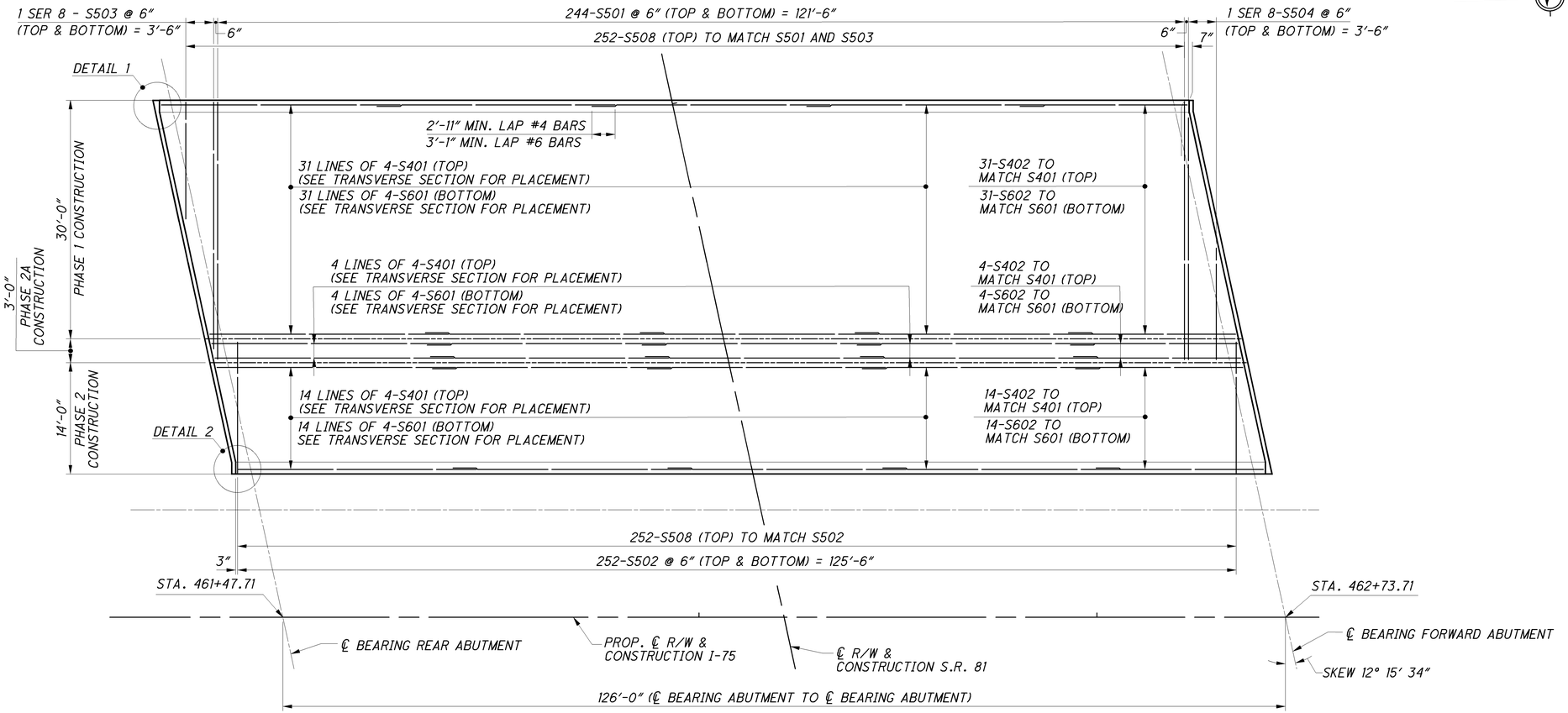

SLAB PLAN (LEFT BRIDGE)

(PARAPETS NOT SHOWN)

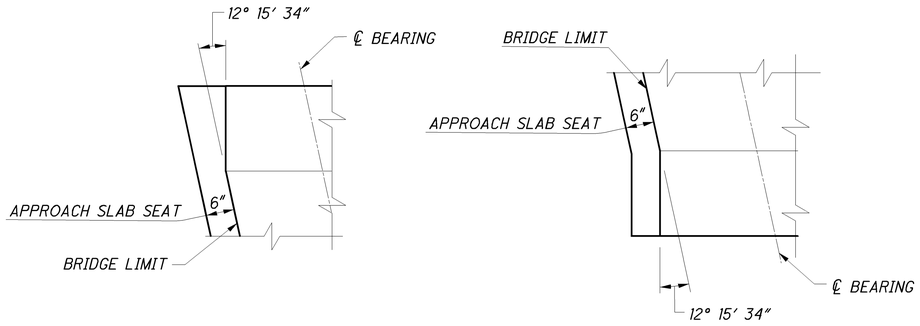

DETAIL 1

DETAIL 2

NOTES:

1. FOR TRANSVERSE SECTION AND RAILING DETAILS, SEE SHEET 28/45 .
2. FOR SEMI-INTEGRAL DIAPHRAGM DETAILS, SEE SHEET 24/45 AND 25/45 .
3. FOR FRAMING PLAN SEE SHEET 20/45.
4. FOR REINFORCING SCHEDULE, SEE SHEET 37/45 .

DESIGN AGENCY
PARSONS BRINCKERHOFF
2945 FARMERS DRIVE
SUITE 350
COLUMBUS, OHIO 43235

DESIGNED	DRAWN	REVIEWED	DATE
ECM	RCK	EBS	05/24/12
CHECKED	REVISED	STRUCTURE NUMBER	
APV		LEFT: 0202268 RIGHT: 0202274	

LEFT BRIDGE DECK REINFORCING PLAN

BRIDGE NO. ALL-75-0875 L/R
I-75 OVER S.R. 81

ALL-75-5.53
PID No. 76691

26/45

1065
1224

J:\Projects\ALL\76691\structures\ALL075_0875C\sheets\075_0875CDP001.dgn 11-SEP-2012 8:57PM reddenj

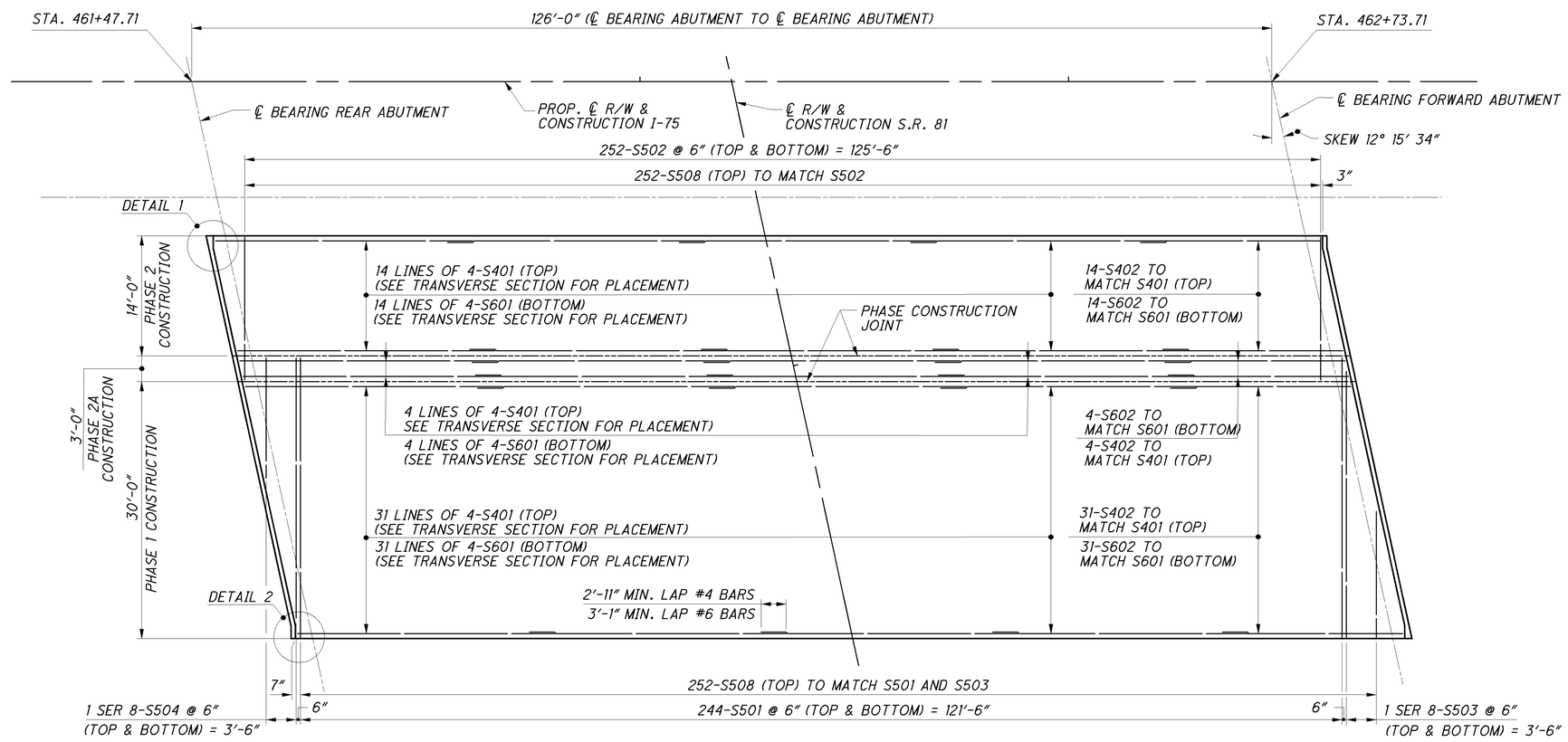

SLAB PLAN (RIGHT BRIDGE)

(PARAPETS NOT SHOWN)

NOTES:

1. FOR DETAIL 1 AND 2, SEE SHEET 26/45.
2. FOR TRANSVERSE SECTION AND RAILING DETAILS, SEE SHEET 28/45 .
3. FOR SEMI-INTEGRAL DIAPHRAGM DETAILS, SEE SHEET 24/45 AND 25/45 .
4. FOR FRAMING PLAN SEE SHEET 21/45 .
5. FOR REINFORCING SCHEDULE, SEE SHEET 37/45 .

DESIGN AGENCY
PARSONS BRINCKERHOFF
2945 FARMERS DRIVE
SUITE 350
COLUMBUS, OHIO 43235

DESIGNED	DRAWN	REVIEWED	DATE
ECM	RCK	EBS	05/24/12
CHECKED	REVISED	STRUCTURE NUMBER	
APV		LEFT: 0202268 RIGHT: 0202274	

RIGHT BRIDGE DECK REINFORCING PLAN
BRIDGE NO. ALL-75-0875 L/R
I-75 OVER S.R. 81

ALL-75-5.53
PID No. 76691

27/45

1066
1224

J:\Projects\ALL\76691\structures\ALL075_0875C\sheets\075_0875CDP002.dgn 11-SEP-2012 8:57PM reddenj

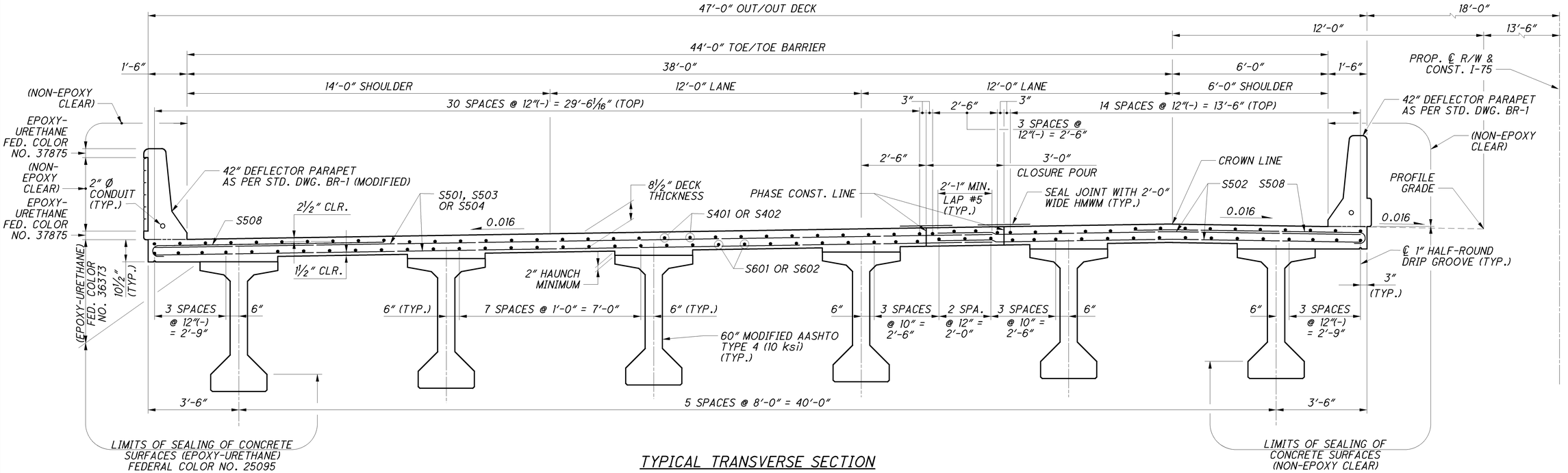

TYPICAL TRANSVERSE SECTION

SOUTHBOUND SHOWN
NORTHBOUND SYMMETRICAL ABOUT CENTERLINE I-75

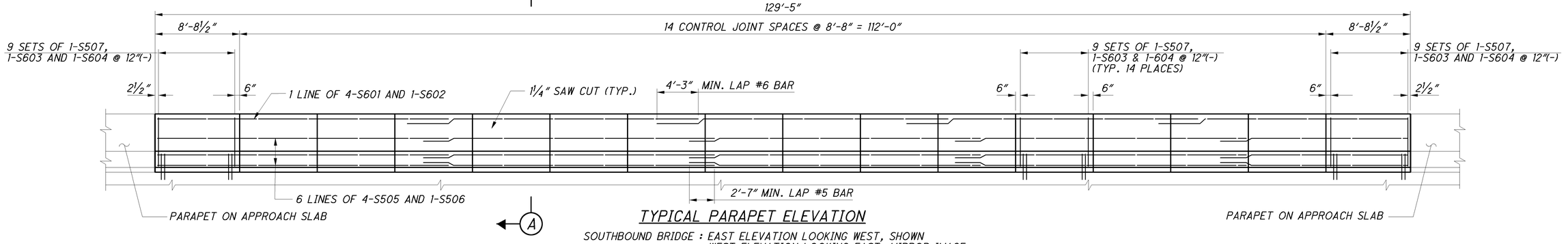

TYPICAL PARAPET ELEVATION

SOUTHBOUND BRIDGE : EAST ELEVATION LOOKING WEST, SHOWN
WEST ELEVATION LOOKING EAST, MIRROR IMAGE
NORTHBOUND BRIDGE : SYMMETRICAL ABOUT CENTERLINE I-75

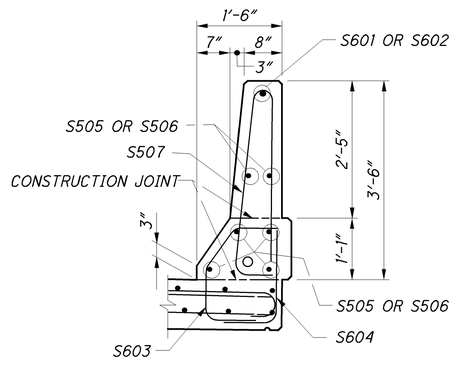

SECTION A-A

(MEDIAN PARAPET)

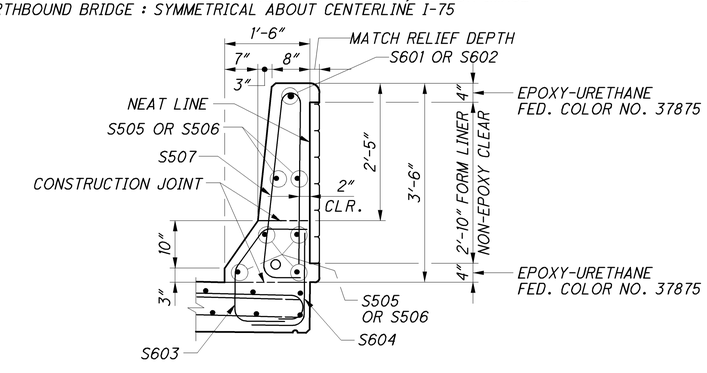

SECTION A-A

(OUTSIDE PARAPET)

NOTES:

1. FOR GENERAL NOTES, SEE SHEETS 3/45 THRU 6/45.
2. FOR SLAB PLANS, SEE SHEETS 26/45 AND 27/45.
3. FOR ADDITIONAL BARRIER NOTES AND DETAILS, SEE ODOT STANDARD DRAWING BR-1.
4. FOR AESTHETIC DETAILS, SEE SHEET 39/45.
5. FOR PARAPET ON APPROACH SLAB DETAILS, SEE SHEETS 33/45 AND 34/45.
6. FOR 2" ϕ CONDUIT PLACEMENT, SEE ODOT STANDARD DRAWING HL 30.32.

DESIGN AGENCY
PARSONS BRINCKERHOFF
2545 FARMERS DRIVE
SUITE 350
COLUMBUS, OHIO 43235

DESIGNED	DRAWN	REVIEWED	DATE
ECM	RCK	EBS	05/24/12
CHECKED	REVISED	STRUCTURE FILE NUMBER	
APV		LEFT: 0302260 RIGHT: 0302274	

SUPERSTRUCTURE DETAILS
BRIDGE NO. ALL-75-0875 L/R
I-75 OVER S.R. 81

ALL-75-5.53
PID No. 76691

28 / 45

1067
1224

J:\Projects\ALL\76691\structures\ALL075_0875C\sheets\075_0875CTS001.dgn 11-SEP-2012 8:57PM reddenj

I-75 LEFT BRIDGE SCREED TABLE

	LOCATION	CL BRG. REAR ABUT.	1/10	2/10	3/10	4/10	5/10	6/10	7/10	8/10	9/10	CL BRG. FWD ABUT.
LEFT TOE OF BARRIER	STATION	461+33.91	461+46.51	461+59.11	461+71.71	461+84.31	461+96.91	462+09.51	462+22.11	462+34.71	462+47.31	462+59.91
	FINAL DECK SURFACE EL.	899.63	899.71	899.79	899.86	899.93	899.99	900.04	900.09	900.13	900.17	900.20
	DEFLECTION	0.00	0.06	0.12	0.16	0.19	0.20	0.19	0.16	0.12	0.06	0.00
	SCREED EL.	899.63	899.77	899.90	900.02	900.12	900.19	900.23	900.25	900.25	900.23	900.20
	TOP OF HAUNCH EL.	-----	-----	-----	-----	-----	-----	-----	-----	-----	-----	-----
BEAM 1	STATION	461+34.35	461+46.95	461+59.55	461+72.15	461+84.75	461+97.35	462+09.95	462+22.55	462+35.15	462+47.75	462+60.35
	FINAL DECK SURFACE EL.	899.66	899.74	899.82	899.89	899.96	900.02	900.08	900.12	900.17	900.20	900.23
	DEFLECTION	0.00	0.06	0.12	0.17	0.19	0.20	0.19	0.17	0.12	0.06	0.00
	SCREED EL.	899.66	899.80	899.94	900.06	900.15	900.22	900.27	900.29	900.28	900.26	900.23
	TOP OF HAUNCH EL.	898.95	899.10	899.23	899.35	899.44	899.51	899.56	899.58	899.57	899.55	899.52
BEAM 2	STATION	461+36.09	461+48.69	461+61.29	461+73.89	461+86.49	461+99.09	462+11.69	462+24.29	462+36.89	462+49.49	462+62.09
	FINAL DECK SURFACE EL.	899.80	899.88	899.96	900.03	900.09	900.15	900.21	900.25	900.30	900.33	900.36
	DEFLECTION	0.00	0.06	0.12	0.17	0.20	0.21	0.20	0.17	0.12	0.06	0.00
	SCREED EL.	899.80	899.94	900.08	900.20	900.29	900.36	900.41	900.42	900.42	900.39	900.36
	TOP OF HAUNCH EL.	899.09	899.23	899.37	899.49	899.59	899.66	899.70	899.72	899.71	899.69	899.65
BEAM 3	STATION	461+37.82	461+50.42	461+63.02	461+75.62	461+88.22	462+00.82	462+13.42	462+26.02	462+38.62	462+51.22	462+63.82
	FINAL DECK SURFACE EL.	899.93	900.02	900.09	900.16	900.23	900.29	900.34	900.39	900.43	900.46	900.49
	DEFLECTION	0.00	0.06	0.12	0.17	0.20	0.21	0.20	0.17	0.12	0.06	0.00
	SCREED EL.	899.93	900.08	900.22	900.33	900.43	900.50	900.54	900.56	900.55	900.52	900.49
	TOP OF HAUNCH EL.	899.23	899.37	899.51	899.62	899.72	899.79	899.83	899.85	899.84	899.82	899.78
BEAM 4	STATION	461+39.56	461+52.16	461+64.76	461+77.36	461+89.96	462+02.56	462+15.16	462+27.76	462+40.36	462+52.96	462+65.56
	FINAL DECK SURFACE EL.	900.07	900.15	900.23	900.30	900.36	900.42	900.47	900.52	900.56	900.59	900.62
	DEFLECTION	0.00	0.06	0.12	0.17	0.20	0.21	0.20	0.17	0.12	0.06	0.00
	SCREED EL.	900.07	900.21	900.33	900.44	900.53	900.60	900.64	900.66	900.66	900.64	900.62
	TOP OF HAUNCH EL.	899.36	899.50	899.62	899.74	899.82	899.89	899.93	899.95	899.95	899.94	899.91
LEFT PHASE CONST. LINE	STATION	461+40.10	461+52.70	461+65.30	461+77.90	461+90.50	462+03.10	462+15.70	462+28.30	462+40.90	462+53.50	462+66.10
	FINAL DECK SURFACE EL.	900.11	900.19	900.27	900.34	900.40	900.46	900.51	900.56	900.60	900.63	900.66
	DEFLECTION	0.00	0.06	0.12	0.17	0.20	0.21	0.20	0.17	0.12	0.06	0.00
	SCREED EL.	900.11	900.25	900.37	900.48	900.57	900.64	900.68	900.70	900.70	900.68	900.66
	TOP OF HAUNCH EL.	899.40	899.54	899.66	899.77	899.86	899.93	899.97	899.99	899.99	899.97	899.95
RIGHT PHASE CONST. LINE	STATION	461+40.76	461+53.36	461+65.96	461+78.56	461+91.16	462+03.76	462+16.36	462+28.96	462+41.56	462+54.16	462+66.76
	FINAL DECK SURFACE EL.	900.16	900.25	900.32	900.39	900.45	900.51	900.56	900.61	900.65	900.68	900.71
	DEFLECTION	0.00	0.07	0.13	0.18	0.21	0.23	0.21	0.18	0.13	0.07	0.00
	SCREED EL.	900.16	900.30	900.42	900.53	900.62	900.68	900.73	900.75	900.75	900.73	900.71
	TOP OF HAUNCH EL.	899.46	899.59	899.71	899.82	899.91	899.97	900.02	900.04	900.04	900.02	900.00
BEAM 5	STATION	461+41.30	461+53.90	461+66.50	461+79.10	461+91.70	462+04.30	462+16.90	462+29.50	462+42.10	462+54.70	462+67.30
	FINAL DECK SURFACE EL.	900.21	900.29	900.36	900.43	900.49	900.55	900.60	900.65	900.69	900.72	900.75
	DEFLECTION	0.00	0.06	0.12	0.17	0.20	0.21	0.20	0.17	0.12	0.06	0.00
	SCREED EL.	900.21	900.35	900.48	900.59	900.68	900.75	900.79	900.81	900.80	900.78	900.75
	TOP OF HAUNCH EL.	899.50	899.64	899.77	899.88	899.97	900.04	900.08	900.10	900.09	900.07	900.04
CROWN LINE	STATION	461+42.17	461+54.77	461+67.37	461+79.97	461+92.57	462+05.17	462+17.77	462+30.37	462+42.97	462+55.57	462+68.17
	FINAL DECK SURFACE EL.	900.28	900.36	900.43	900.50	900.56	900.62	900.67	900.71	900.75	900.78	900.81
	DEFLECTION	0.00	0.06	0.12	0.17	0.20	0.21	0.20	0.17	0.12	0.06	0.00
	SCREED EL.	900.28	900.42	900.55	900.67	900.76	900.83	900.87	900.88	900.87	900.85	900.81
	TOP OF HAUNCH EL.	899.57	899.71	899.84	899.96	900.05	900.12	900.16	900.17	900.16	900.14	900.10
BEAM 6	STATION	461+43.04	461+55.64	461+68.24	461+80.84	461+93.44	462+06.04	462+18.64	462+31.24	462+43.84	462+56.44	462+69.04
	FINAL DECK SURFACE EL.	900.22	900.30	900.37	900.44	900.50	900.56	900.61	900.65	900.69	900.72	900.75
	DEFLECTION	0.00	0.06	0.12	0.17	0.19	0.20	0.19	0.17	0.12	0.06	0.00
	SCREED EL.	900.22	900.36	900.50	900.62	900.71	900.78	900.82	900.83	900.82	900.79	900.75
	TOP OF HAUNCH EL.	899.51	899.65	899.79	899.91	900.00	900.07	900.11	900.12	900.11	900.08	900.04
RIGHT TOE OF BARRIER	STATION	461+43.47	461+56.07	461+68.67	461+81.27	461+93.87	462+06.47	462+19.07	462+31.67	462+44.27	462+56.87	462+69.47
	FINAL DECK SURFACE EL.	900.19	900.27	900.34	900.41	900.47	900.53	900.58	900.62	900.66	900.69	900.72
	DEFLECTION	0.00	0.06	0.12	0.16	0.19	0.20	0.19	0.16	0.12	0.06	0.00
	SCREED EL.	900.19	900.34	900.47	900.59	900.68	900.75	900.79	900.80	900.79	900.76	900.72
	TOP OF HAUNCH EL.	-----	-----	-----	-----	-----	-----	-----	-----	-----	-----	-----

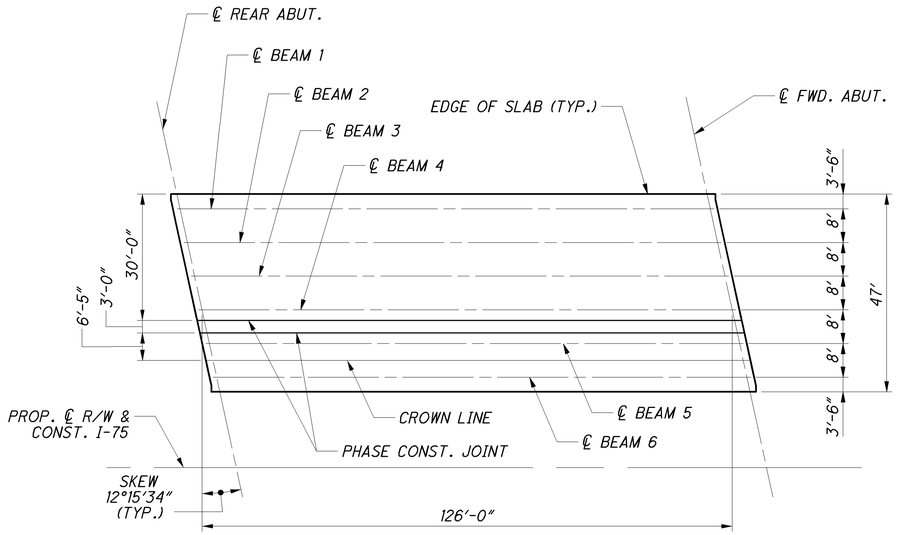

LEFT BRIDGE DECK PLAN

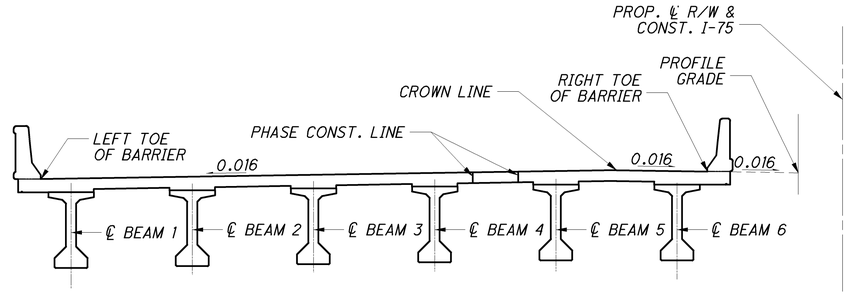

TYPICAL LEFT BRIDGE CROSS SECTION

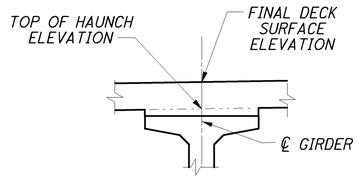

DECK HANCH DETAIL

NOTES:

1. SCREED ELEVATIONS SHOWN REPRESENT THE THEORETICAL DECK SURFACE LOCATION PRIOR TO DEFLECTIONS CAUSED BY DECK PLACEMENT AND OTHER ANTICIPATED DEAD LOADS.
2. TOP OF HAUNCH ELEVATIONS SHOWN REPRESENT THE THEORETICAL LOCATION OF THE BOTTOM OF THE DECK ABOVE THE BEAM/GIRDER HAUNCH PRIOR TO DEFLECTIONS CAUSED BY DECK PLACEMENT AND OTHER ANTICIPATED DEAD LOADS.
3. FINAL DECK SURFACE ELEVATIONS SHOWN REPRESENT THE DECK SURFACE LOCATION AFTER ALL ANTICIPATED DEAD LOAD DEFLECTIONS HAVE OCCURRED.
4. FOR TRANSVERSE SECTION, SEE SHEET 28/45 .
5. FOR DECK SLAB THICKNESS DIAGRAM, SEE SHEET 23/45 .

DESIGN AGENCY
PARSONS BRINCKERHOFF
2945 FARMERS DRIVE
SUITE 350
COLUMBUS, OHIO 43235

DESIGNED ECM | DRAWN APV | REVIEWED EBS | DATE 05/24/12 | CHECKED SJG | REVISED

STRUCTURE NUMBER
LEFT: 0202266
RIGHT: 0202274

LEFT BRIDGE - SCREED ELEVATIONS
BRIDGE NO. ALL-75-0875 L/R
I-75 OVER S.R. 81

ALL-75-5.53
PID No. 76691

J:\Projects\ALL\76691\structures\ALL075_0875C\sheets\075_0875CSD007.dgn 11-SEP-2012 8:57PM reddenj

I-75 RIGHT BRIDGE SCREED TABLE

	LOCATION	CL BRG. REAR ABUT.	1/10	2/10	3/10	4/10	5/10	6/10	7/10	8/10	9/10	CL BRG. FWD ABUT.
LEFT TOE OF BARRIER	STATION	461+51.95	461+64.55	461+77.15	461+89.75	462+02.35	462+14.95	462+27.55	462+40.15	462+52.75	462+65.35	462+77.95
	FINAL DECK SURFACE EL.	900.24	900.32	900.39	900.45	900.51	900.56	900.61	900.65	900.68	900.71	900.73
	DEFLECTION	0.00	0.07	0.13	0.18	0.21	0.22	0.21	0.18	0.13	0.07	0.00
	SCREED EL.	900.24	900.39	900.52	900.63	900.72	900.79	900.82	900.83	900.81	900.78	900.73
	TOP OF HAUNCH EL.	-----	-----	-----	-----	-----	-----	-----	-----	-----	-----	-----
BEAM 7	STATION	461+52.38	461+64.98	461+77.58	461+90.18	462+02.78	462+15.38	462+27.98	462+40.58	462+53.18	462+65.78	462+78.38
	FINAL DECK SURFACE EL.	900.28	900.35	900.42	900.49	900.54	900.60	900.64	900.68	900.72	900.74	900.77
	DEFLECTION	0.00	0.06	0.13	0.18	0.21	0.22	0.21	0.18	0.13	0.06	0.00
	SCREED EL.	900.28	900.42	900.55	900.66	900.75	900.81	900.85	900.86	900.84	900.81	900.77
	TOP OF HAUNCH EL.	899.57	899.71	899.84	899.95	900.04	900.11	900.14	900.15	900.13	900.10	900.06
CROWN LINE	STATION	461+53.25	461+65.85	461+78.45	461+91.05	462+03.65	462+16.25	462+28.85	462+41.45	462+54.05	462+66.65	462+79.25
	FINAL DECK SURFACE EL.	900.35	900.42	900.49	900.55	900.61	900.66	900.71	900.75	900.78	900.81	900.83
	DEFLECTION	0.00	0.06	0.12	0.17	0.20	0.21	0.20	0.17	0.12	0.06	0.00
	SCREED EL.	900.35	900.48	900.61	900.72	900.81	900.87	900.90	900.91	900.90	900.87	900.83
	TOP OF HAUNCH EL.	899.64	899.77	899.90	900.01	900.10	900.16	900.20	900.21	900.19	900.16	900.12
BEAM 8	STATION	461+54.12	461+66.72	461+79.32	461+91.92	462+04.52	462+17.12	462+29.72	462+42.32	462+54.92	462+67.52	462+80.12
	FINAL DECK SURFACE EL.	900.29	900.36	900.43	900.50	900.55	900.60	900.65	900.69	900.72	900.75	900.77
	DEFLECTION	0.00	0.06	0.12	0.16	0.19	0.20	0.19	0.16	0.12	0.06	0.00
	SCREED EL.	900.29	900.42	900.55	900.66	900.74	900.80	900.84	900.85	900.84	900.81	900.77
	TOP OF HAUNCH EL.	899.58	899.71	899.84	899.95	900.03	900.09	900.13	900.14	900.13	900.10	900.06
LEFT PHASE CONST. LINE	STATION	461+54.66	461+67.26	461+79.86	461+92.46	462+05.06	462+17.66	462+30.26	462+42.86	462+55.46	462+68.06	462+80.66
	FINAL DECK SURFACE EL.	900.25	900.33	900.40	900.46	900.52	900.57	900.61	900.65	900.68	900.71	900.73
	DEFLECTION	0.00	0.06	0.11	0.15	0.18	0.19	0.18	0.15	0.11	0.06	0.00
	SCREED EL.	900.25	900.39	900.51	900.61	900.70	900.76	900.79	900.80	900.79	900.77	900.73
	TOP OF HAUNCH EL.	899.55	899.68	899.80	899.91	899.99	900.05	900.08	900.10	900.09	900.06	900.02
RIGHT PHASE CONST. LINE	STATION	461+55.32	461+67.92	461+80.52	461+93.12	462+05.72	462+18.32	462+30.92	462+43.52	462+56.12	462+68.72	462+81.32
	FINAL DECK SURFACE EL.	900.21	900.28	900.35	900.42	900.47	900.52	900.57	900.60	900.64	900.66	900.68
	DEFLECTION	0.00	0.04	0.12	0.16	0.19	0.20	0.19	0.16	0.12	0.06	0.00
	SCREED EL.	900.21	900.33	900.47	900.58	900.66	900.72	900.75	900.76	900.75	900.72	900.68
	TOP OF HAUNCH EL.	899.50	899.62	899.76	899.87	899.95	900.01	900.05	900.06	900.04	900.01	899.97
BEAM 9	STATION	461+55.86	461+68.46	461+81.06	461+93.66	462+06.26	462+18.86	462+31.46	462+44.06	462+56.66	462+69.26	462+81.86
	FINAL DECK SURFACE EL.	900.17	900.25	900.32	900.38	900.43	900.48	900.53	900.57	900.60	900.62	900.64
	DEFLECTION	0.00	0.05	0.11	0.15	0.17	0.18	0.17	0.15	0.11	0.05	0.00
	SCREED EL.	900.17	900.30	900.42	900.52	900.61	900.67	900.70	900.71	900.70	900.68	900.64
	TOP OF HAUNCH EL.	899.47	899.59	899.71	899.82	899.90	899.96	899.99	900.00	900.00	899.97	899.94
BEAM 10	STATION	461+57.60	461+70.20	461+82.80	461+95.40	462+08.00	462+20.60	462+33.20	462+45.80	462+58.40	462+71.00	462+83.60
	FINAL DECK SURFACE EL.	900.06	900.13	900.20	900.26	900.32	900.37	900.41	900.45	900.48	900.50	900.52
	DEFLECTION	0.00	0.06	0.12	0.17	0.20	0.21	0.20	0.17	0.12	0.06	0.00
	SCREED EL.	900.06	900.20	900.32	900.43	900.52	900.58	900.61	900.62	900.60	900.57	900.52
	TOP OF HAUNCH EL.	899.35	899.49	899.62	899.72	899.81	899.87	899.90	899.91	899.89	899.86	899.81
BEAM 11	STATION	461+59.33	461+71.93	461+84.53	461+97.13	462+09.73	462+22.33	462+34.93	462+47.53	462+60.13	462+72.73	462+85.33
	FINAL DECK SURFACE EL.	899.95	900.02	900.08	900.14	900.20	900.25	900.29	900.33	900.36	900.38	900.40
	DEFLECTION	0.00	0.06	0.12	0.17	0.20	0.21	0.20	0.17	0.12	0.06	0.00
	SCREED EL.	899.95	900.08	900.21	900.31	900.40	900.46	900.49	900.50	900.48	900.44	900.40
	TOP OF HAUNCH EL.	899.24	899.37	899.50	899.61	899.69	899.75	899.78	899.79	899.77	899.74	899.69
BEAM 12	STATION	461+61.07	461+73.67	461+86.27	461+98.87	462+11.47	462+24.07	462+36.67	462+49.27	462+61.87	462+74.47	462+87.07
	FINAL DECK SURFACE EL.	899.83	899.90	899.97	900.03	900.08	900.13	900.17	900.21	900.24	900.26	900.28
	DEFLECTION	0.00	0.06	0.12	0.16	0.19	0.20	0.19	0.16	0.12	0.06	0.00
	SCREED EL.	899.83	899.96	900.09	900.19	900.27	900.33	900.36	900.37	900.35	900.32	900.28
	TOP OF HAUNCH EL.	899.12	899.25	899.38	899.48	899.56	899.62	899.65	899.66	899.64	899.61	899.57
RIGHT TOE OF BARRIER	STATION	461+61.51	461+74.11	461+86.71	461+99.31	462+11.91	462+24.51	462+37.11	462+49.71	462+62.31	462+74.91	462+87.51
	FINAL DECK SURFACE EL.	899.80	899.87	899.94	900.00	900.05	900.10	900.14	900.18	900.21	900.23	900.25
	DEFLECTION	0.00	0.06	0.12	0.16	0.19	0.20	0.19	0.16	0.12	0.06	0.00
	SCREED EL.	899.80	899.93	900.05	900.16	900.24	900.30	900.33	900.34	900.32	900.29	900.25
	TOP OF HAUNCH EL.	-----	-----	-----	-----	-----	-----	-----	-----	-----	-----	-----

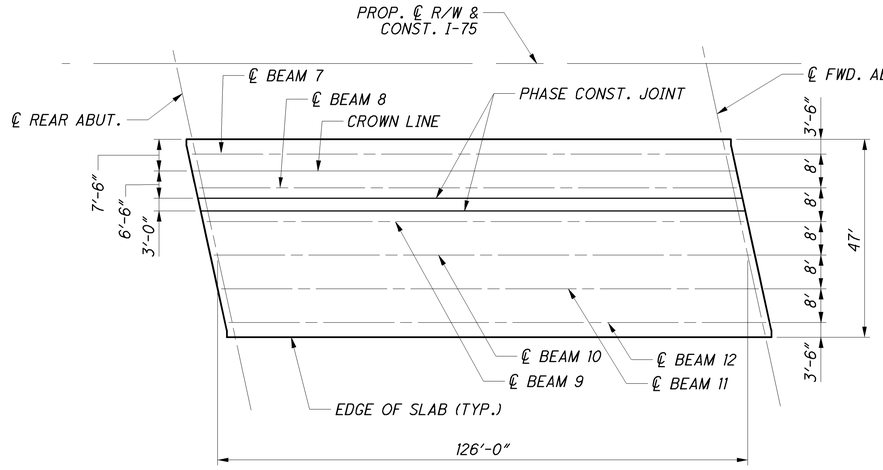

RIGHT BRIDGE DECK PLAN

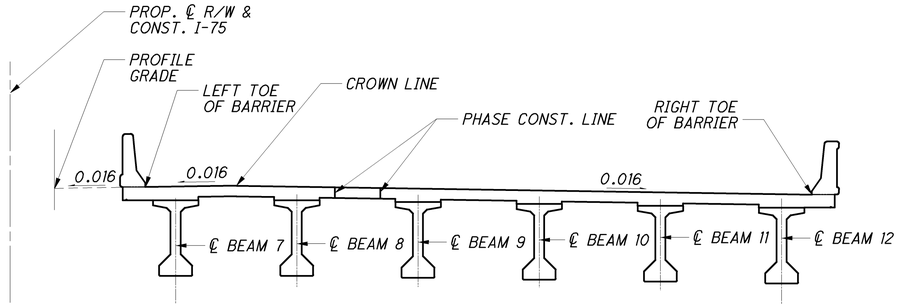

TYPICAL RIGHT BRIDGE CROSS SECTION

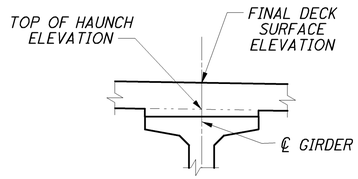

DECK HANCH DETAIL

NOTES:

1. SCREED ELEVATIONS SHOWN REPRESENT THE THEORETICAL DECK SURFACE LOCATION PRIOR TO DEFLECTIONS CAUSED BY DECK PLACEMENT AND OTHER ANTICIPATED DEAD LOADS.
2. TOP OF HAUNCH ELEVATIONS SHOWN REPRESENT THE THEORETICAL LOCATION OF THE BOTTOM OF THE DECK ABOVE THE BEAM/GIRDER HAUNCH PRIOR TO DEFLECTIONS CAUSED BY DECK PLACEMENT AND OTHER ANTICIPATED DEAD LOADS.
3. FINAL DECK SURFACE ELEVATIONS SHOWN REPRESENT THE DECK SURFACE LOCATION AFTER ALL ANTICIPATED DEAD LOAD DEFLECTIONS HAVE OCCURRED.
4. FOR TRANSVERSE SECTION, SEE SHEET 28/45 .
5. FOR DECK SLAB THICKNESS DIAGRAM, SEE SHEET 23/45 .

DESIGN AGENCY
PARSONS BRINCKERHOFF
2945 FARMERS DRIVE
SUITE 350
COLUMBUS, OHIO 43235

DESIGNED	DRAWN	REVIEWED	DATE
ECM	APV	EBS	05/24/12
CHECKED	REVISED	STRUCTURE FILE NUMBER	
SJG		LEFT: 0202266 RIGHT: 0202274	

RIGHT BRIDGE - SCREED ELEVATIONS
BRIDGE NO. ALL-75-0875 L/R
I-75 OVER S.R. 81

ALL-75-5.53
PID No. 76691

30 / 45

1069
1224

J:\Projects\ALL\76691\structures\ALL075_0875C\sheets\075_0875CSD008.dgn 11-SEP-2012 8:57PM reddenj

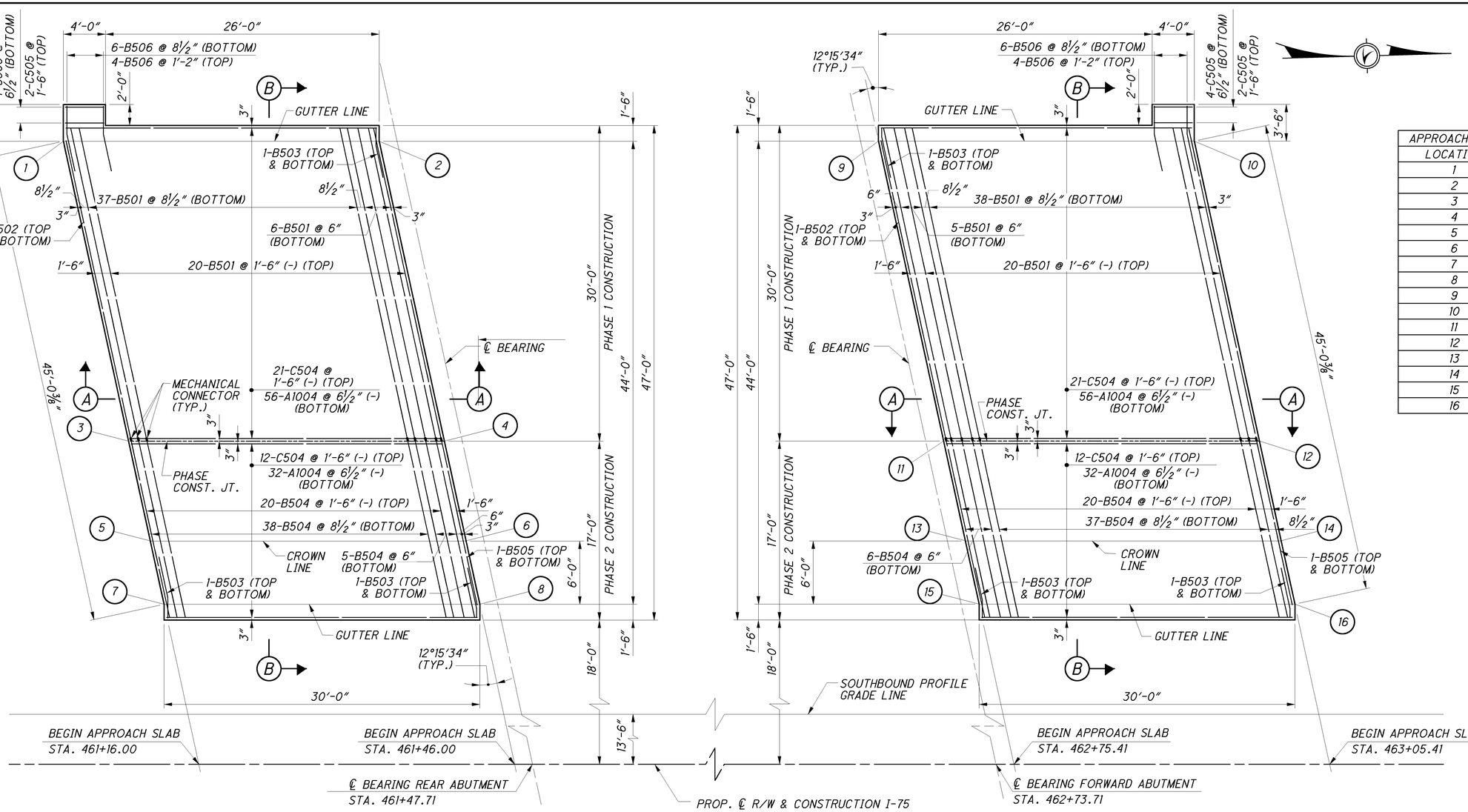

REAR APPROACH SLAB PLAN

FORWARD APPROACH SLAB PLAN

APPROACH SLAB ELEVATION TABLE	
LOCATION	ELEVATION
1	899.38
2	899.60
3	899.88
4	900.10
5	900.05
6	900.27
7	899.96
8	900.18
9	900.19
10	900.24
11	900.66
12	900.70
13	900.82
14	900.85
15	900.72
16	900.76

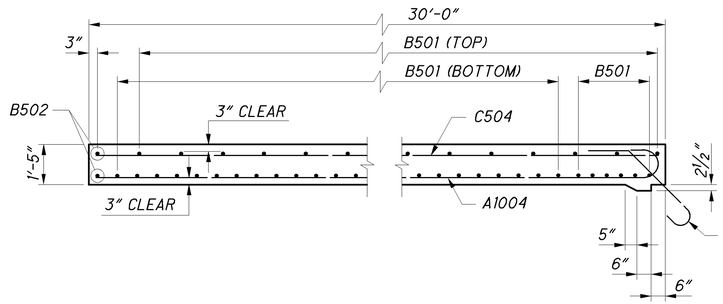

SECTION A-A

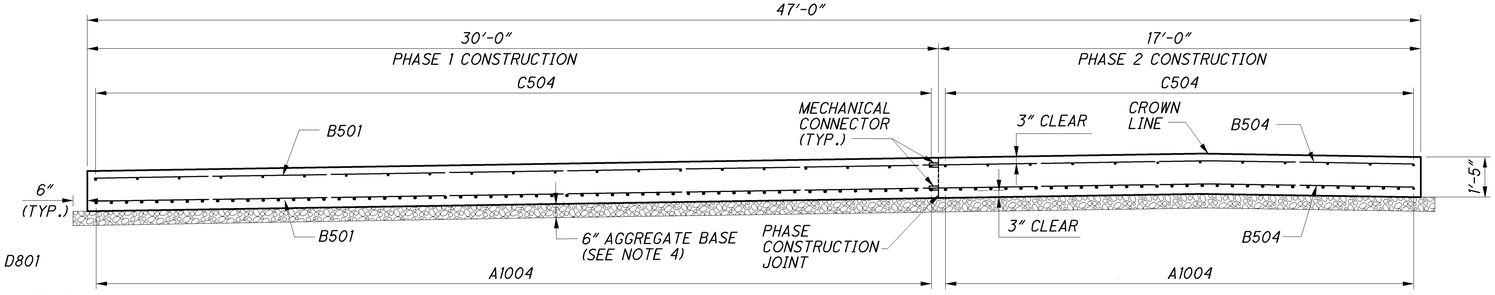

SECTION B-B

NOTES:

1. FOR ADDITIONAL NOTES AND DETAILS. SEE ODOT STANDARD DRAWING AS-1-81.
2. FOR PARAPET DETAILS, SEE SHEET 28/45.
3. FOR REINFORCING STEEL LIST, SEE SHEET 38/45.
4. 6" AGGREGATE BASE INCLUDED WITH ROADWAY QUANTITIES FOR PAYMENT.

DESIGN AGENCY
PARSONS BRINCKERHOFF
2945 FARMERS DRIVE
SUITE 350
COLUMBUS, OHIO 43235

DESIGNED	DRAWN	REVIEWED	DATE
ECM	RCK	EBS	05/24/12
CHECKED	REVISED	STRUCTURE NUMBER	
SJG		LEFT: 0202268 RIGHT: 0202274	

LEFT BRIDGE - APPROACH SLAB DETAILS

BRIDGE NO. ALL-75-0875 L/R
I-75 OVER S.R. 81

ALL-75-5.53
PID No. 76691

J:\Projects\ALL\76691\structures\ALL075_0875C\sheets\075_0875CMD001.dgn 11-SEP-2012 8:57PM reddenj

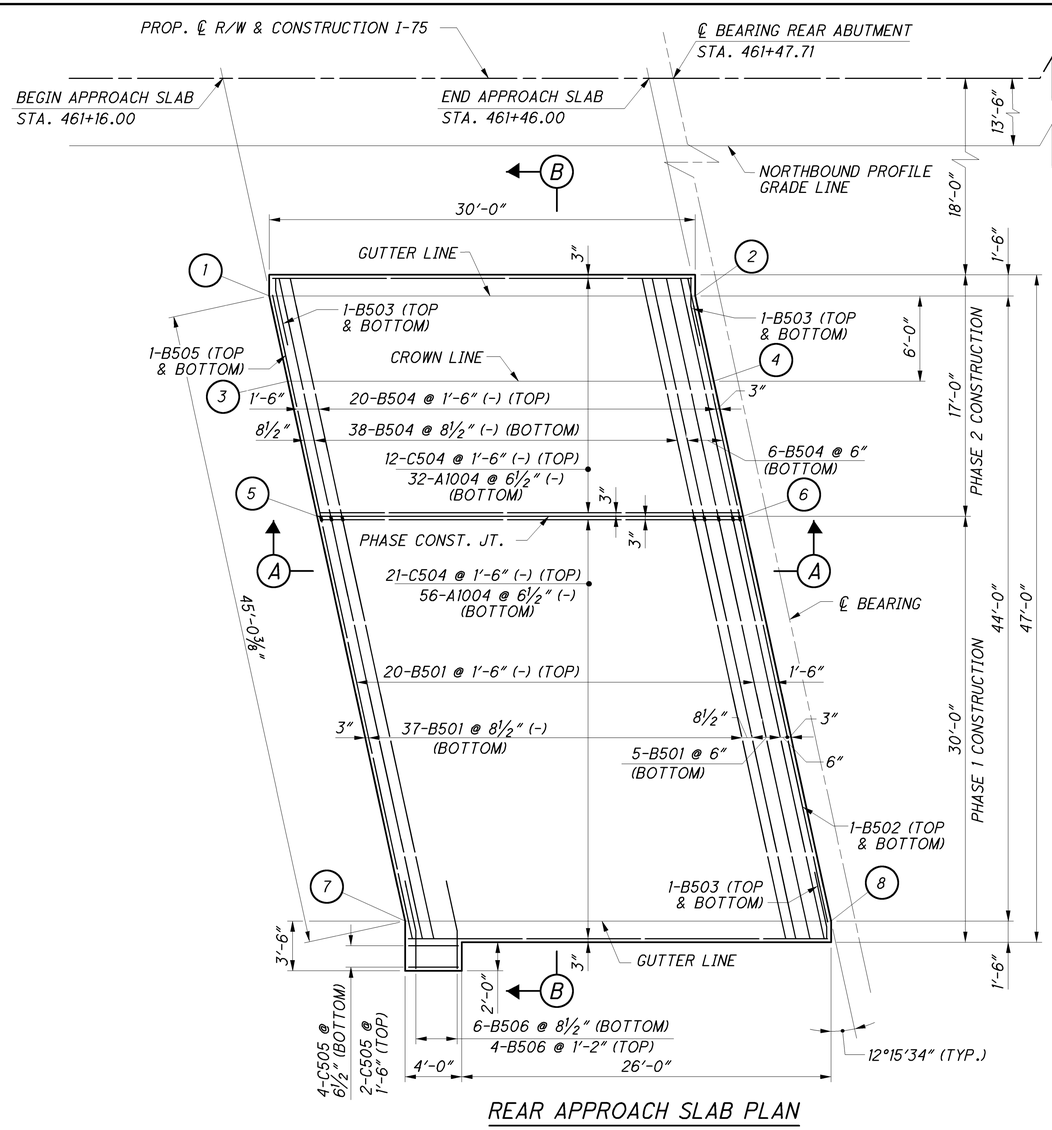

REAR APPROACH SLAB PLAN

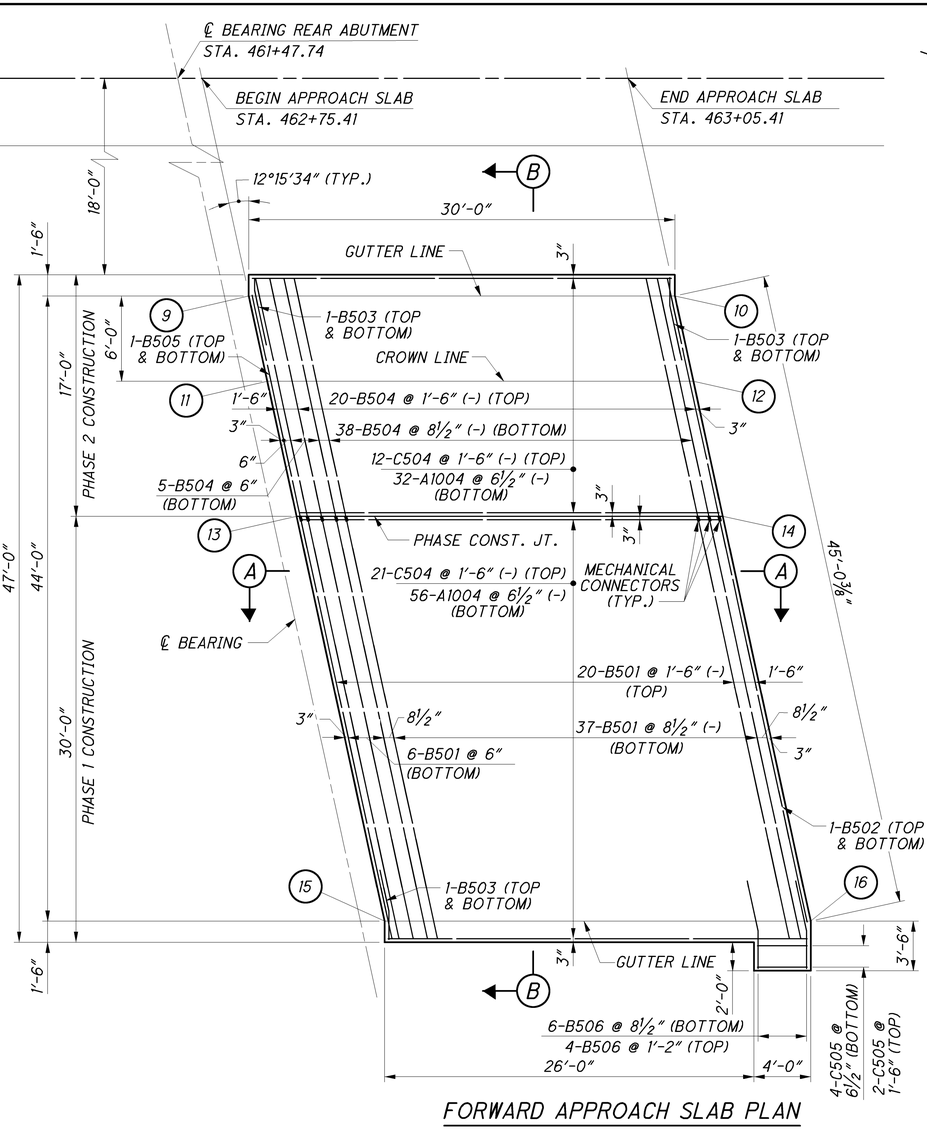

FORWARD APPROACH SLAB PLAN

APPROACH SLAB ELEVATION TABLE	
LOCATION	ELEVATION
1	900.03
2	900.23
3	900.13
4	900.34
5	900.00
6	900.20
7	899.59
8	899.78
9	900.74
10	900.76
11	900.83
12	900.86
13	900.69
14	900.71
15	900.24
16	900.25

NOTES:

1. FOR SECTION A-A, SECTION B-B, AND ADDITIONAL NOTES, SEE SHEET 31/45.

DESIGN AGENCY
PARSONS BRINCKERHOFF
2545 FARMERS DRIVE
SUITE 350
COLUMBUS, OHIO 43235

DESIGNED	DRAWN	REVIEWED	DATE
ECM	RCK	EBS	05/24/12
CHECKED	REVISED	STRUCTURE NUMBER	
SJG		LEFT: 0202266 RIGHT: 0202274	

RIGHT BRIDGE - APPROACH SLAB DETAILS

BRIDGE NO. ALL-75-0875 L/R
I-75 OVER S.R. 81

ALL-75-5.53
PID No. 76691

J:\Projects\ALL\76691\structures\ALL075_0875C\sheets\075_0875CMD002.dgn 11-SEP-2012 8:57PM reddenj

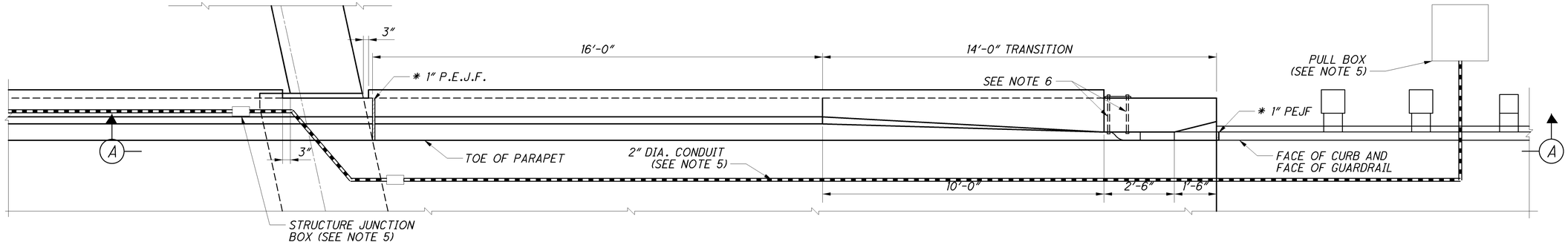

PART PLAN AT APPROACH SLABS (INSIDE PARAPET)

FOR OUTSIDE ON APPROACH SLABS
SEE SHEET 34/45.

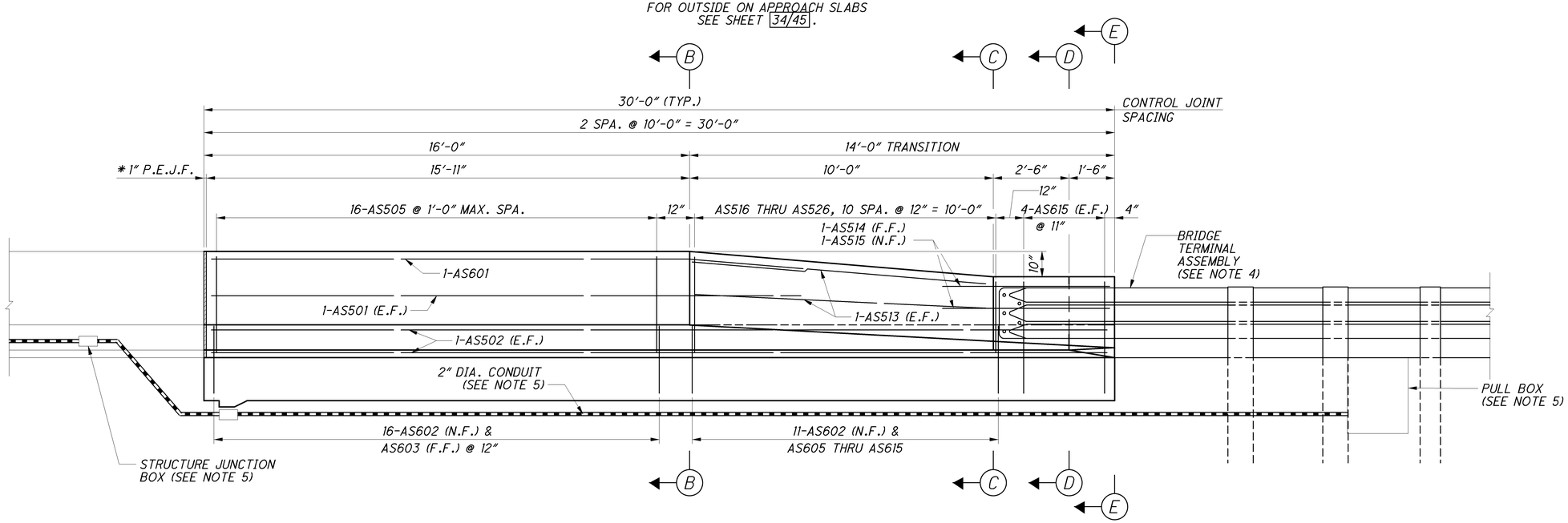

SECTION A-A

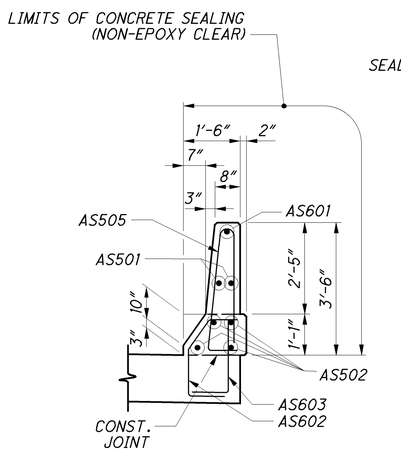

SECTION B-B

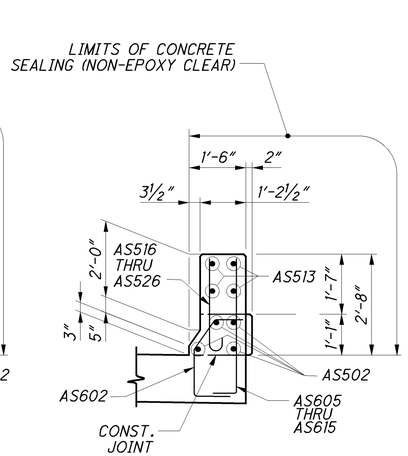

SECTION C-C

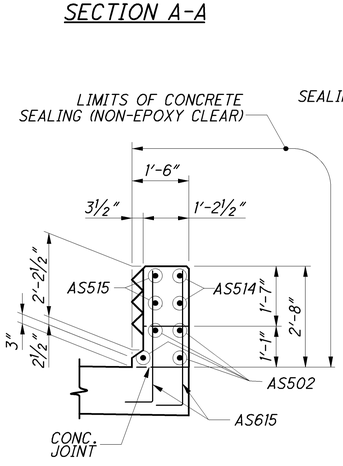

SECTION D-D

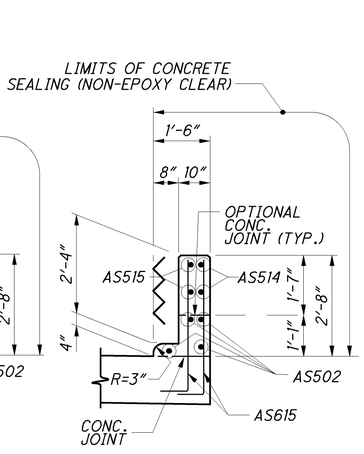

SECTION E-E

NOTES

1. FOR AESTHETIC DETAILS, SEE SHEET 39/45.
2. FOR REINFORCING STEEL LIST, SEE SHEET 38/45.
3. THE COST OF THE APPROACH SLAB PARAPET, EXCLUDING SEALING AND FORMLINER, SHALL BE INCLUDED WITH ITEM 898, QC/QA CONCRETE, CLASS QSC2, SUPERSTRUCTURE (APPROACH SLAB), (T=17"), AS PER PLAN.
4. FOR BRIDGE TERMINAL ASSEMBLIES SEE ROADWAY STANDARD DRAWINGS GR-3.1 AND GR-3.2. SEE ROADWAY PLANS FOR DETAILS AND PAYMENT.
5. FOR ADDITIONAL NOTES AND DETAILS OF PULL BOXES, STRUCTURE JUNCTION BOXES, AND CONDUIT, SEE STANDARD CONSTRUCTION DRAWINGS HL-30.11, HL-30.31, HL-30.32. SEE SHEETS 7/45 AND 8/45 FOR QUANTITIES FOR THESE ITEMS.
6. ⅞" DIAMETER ASTM A 325 THROUGH BOLTS (LENGTH TO BE DETERMINED IN FIELD IN ACCORDANCE WITH PARAPET WIDTH) INTO BEARING PLATE WITH STANDARD WASHERS AND NUTS.

DESIGN AGENCY
PARSONS BRINCKERHOFF
2545 FARMERS DRIVE
SUITE 350
COLUMBUS, OHIO 43235

DESIGNED	DRAWN	REVIEWED	DATE
ECM	RCK	EBS	05/24/12
CHECKED	REVISED	STRUCTURE NUMBER	
APV		LEFT: 0202268 RIGHT: 0202274	

MEDIAN APPROACH SLAB DETAILS
BRIDGE NO. ALL-75-0875 L/R
I-75 OVER S.R. 81

ALL-75-5.53
PID No. 76691

33/45

1072
1224

redden
11-SEP-2012 8:57PM
J:\Projects\ALL\76691\structures\ALL075_0875C\sheets\075_0875CMD004.dgn

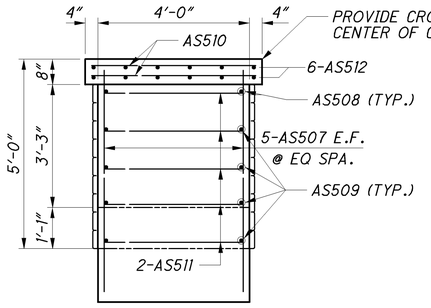

SECTION G-G

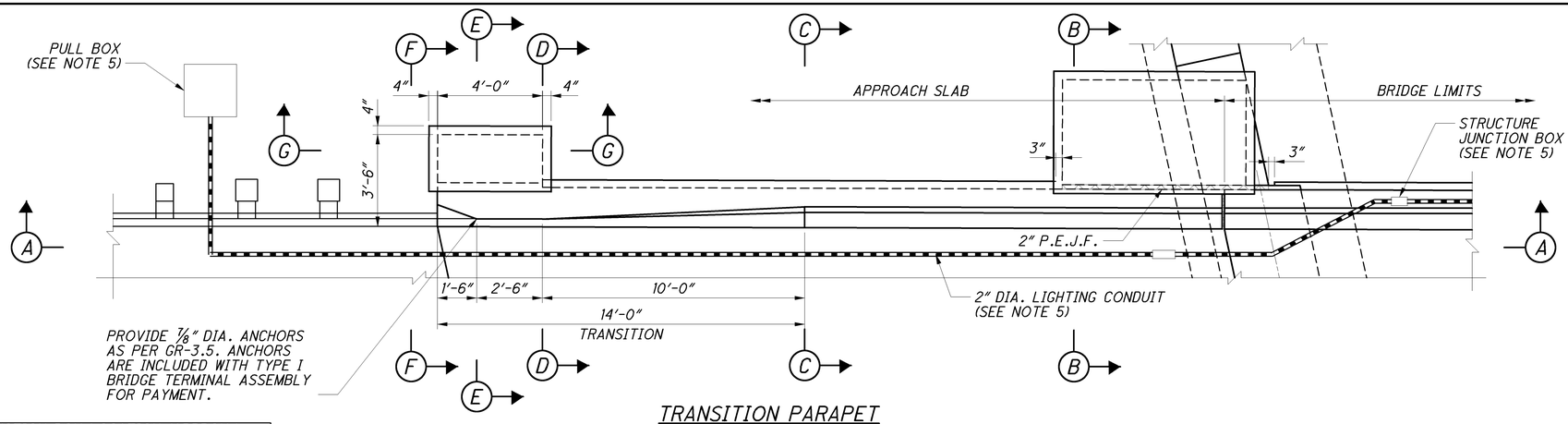

TRANSITION PARAPET

JUNCTION BOX LOCATION (APPROX.)			
NORTHBOUND		SOUTHBOUND	
STATION	SIDE	STATION	SIDE
461+64	LT.	461+46	LT.
462+67	LT.	462+49	LT.
461+73	RT.	461+55	RT.
762+76	RT.	462+58	RT.

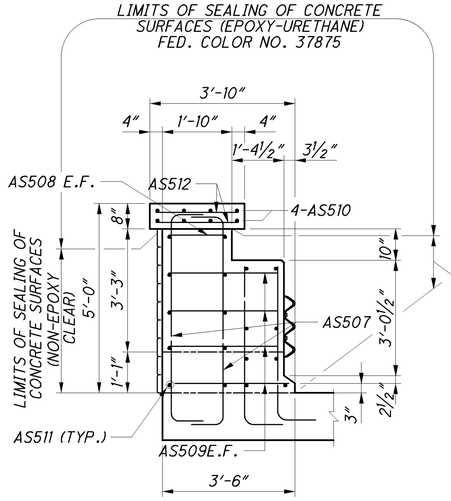

SECTION E-E
TOWER DETAIL

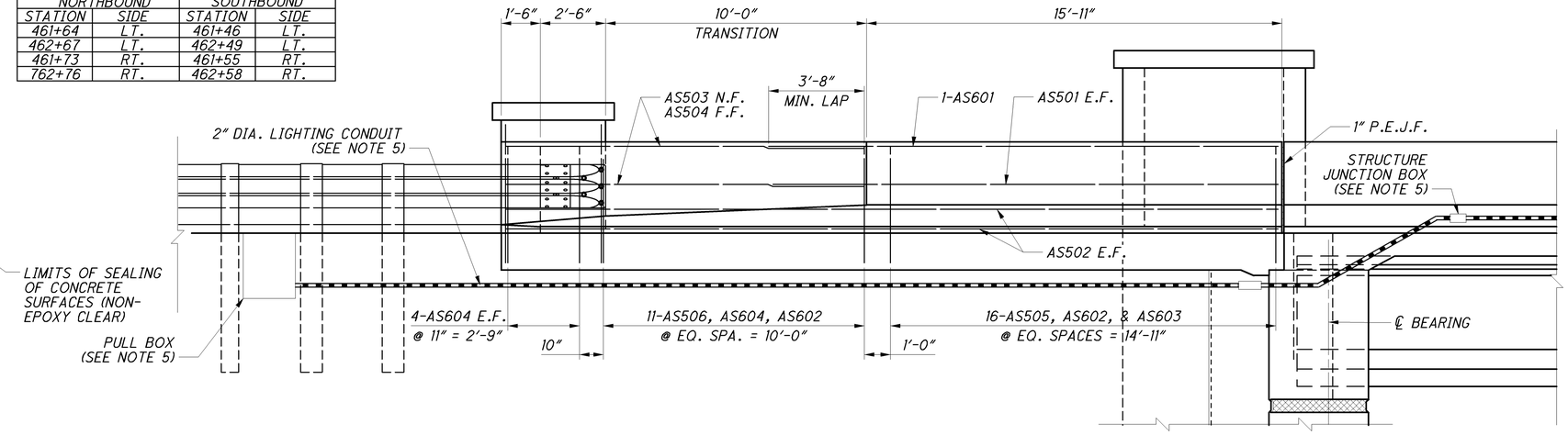

SECTION A-A

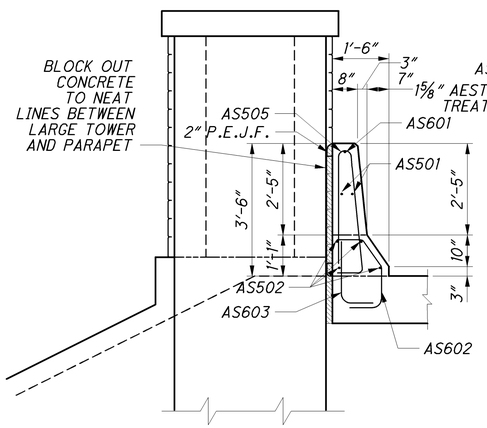

SECTION B-B

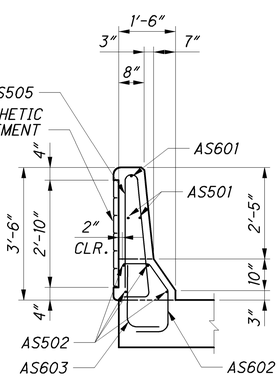

SECTION C-C

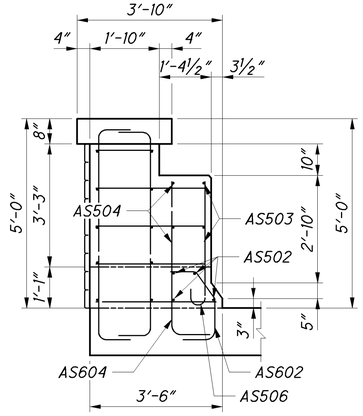

SECTION D-D

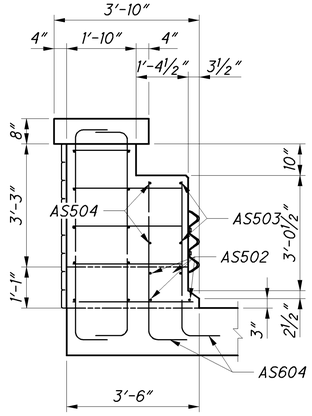

SECTION E-E
PARAPET DETAIL

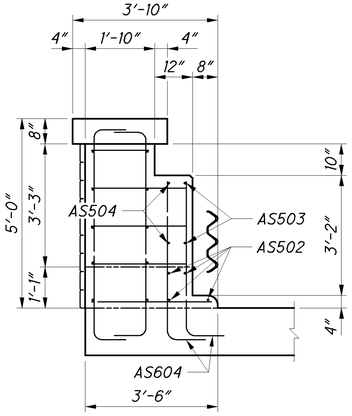

SECTION F-F

NOTES:

1. FOR AESTHETIC DETAILS, SEE SHEET 39/45.
2. FOR REINFORCING STEEL LIST, SEE SHEET 38/45.
3. THE COST OF THE APPROACH SLAB PARAPET, EXCLUDING SEALING AND FORMLINER SHALL BE INCLUDED WITH ITEM 898, QC/QA CONCRETE, CLASS QSC2, SUPERSTRUCTURE (APPROACH SLAB), (T=17″), AS PER PLAN.
4. FOR ABBREVIATIONS, SEE SHEET 6/45.
5. FOR ADDITIONAL NOTES AND DETAILS OF PULL BOXES, STRUCTURE JUNCTION BOXES, AND CONDUIT, SEE STANDARD CONSTRUCTION DRAWINGS HL-30.11, HL-30.31, HL-30.32. SEE SHEETS 7/45 AND 8/45 FOR QUANTITIES FOR THESE ITEMS.
6. ALL LABOR AND MATERIAL, EXCLUDING SEALING AND FORMLINER, NECESSARY TO CONSTRUCT TOWER SHOWN IN SECTION D-D, E-E, AND F-F SHALL BE INCLUDED WITH APPROACH SLAB FOR PAYMENT.

DESIGN AGENCY
PARSONS BRINCKERHOFF
2545 FARMERS DRIVE
SUITE 350
COLUMBUS, OHIO 43235

DESIGNED	DRAWN	REVIEWED	DATE
ECM	RCK	EBS	05/24/12
CHECKED	REVISED	STRUCTURE FILE NUMBER	
BMG		LEFT: 0202268 RIGHT: 0202274	

DETAILS

EXTERIOR APPROACH SLAB PARAPET DETAILS

BRIDGE NO. ALL-75-0875 L/R
I-75 OVER S.R. 81

ALL-75-5.53
PID No. 76691

J:\Projects\ALL\76691\structures\ALL075_0875C\sheets\075_0875CMD003.dgn 11-SEP-2012 8:57PM reddenj

MARK	NUMBER			LENGTH	WEIGHT	TYPE	DIMENSIONS						
	LEFT	RIGHT	TOTAL				A	B	C	D	E	RAD	INC
REAR ABUTMENT													
RA501	6	6	12	30'-0"	375	STR.							
RA502	6	6	12	23'-10"	298	37							
RA503	88	88	176	17'-8"	3243	3	6'-0"	2'-7"					
RA504	34	34	68	15'-9"	1117	2	6'-11"	2'-2"	6'-11"				
RA505	49	49	98	15'-4"	1567	3	3'-4"	4'-1"					
RA506	1	1	2	18'-1"	38	3	6'-7"	2'-2"					
	1	1	2	15'-10"				5'-6"					
RA507	SER.	SER.	SER.	TO	220	3	2'-2"	TO					0'-8 3/8"
	6	6	6	19'-4"				7'-3"					
RA508	1	1	2	13'-4"	28	3	2'-2"	4'-3"					
RA509	1	1	2	14'-9"	31	3	2'-2"	4'-11"					
RA510	1	1	2	14'-3"	30	3	2'-2"	4'-8"					
RA511	4	4	8	22'-6"	188	STR.							
RA512	2	2	4	31'-7"	132	37							
RA513	2	2	4	6'-10"	29	19	3'-7"	0'-8 1/2"	3'-4"				
	1	1	2	8'-11"			3'-6"		3'-6"				
RA514	SER.	SER.	SER.	TO	137	2	TO	2'-2"	TO				0'-9 5/8"
	6	6	6	12'-11"			5'-6"		5'-6"				
RA515	7	7	14	16'-9"	245	2	7'-5"	2'-2"	7'-5"				
RA516	2	2	4	10'-10"	45	2	4'-9"	2'-1"	4'-3"				
	1	1	2	5'-2"									
RA517	SER.	SER.	SER.	TO	143	STR.							2'-6 1/4"
	6	6	6	17'-9"									
	1	1	2	5'-7"									
RA518	SER.	SER.	SER.	TO	149	STR.							2'-6 1/4"
	6	6	6	18'-2"									
RA519	2	2	4	15'-9"	66	STR.							
RA520	6	6	12	34'-4"	430	38							
RA521	4	4	8	22'-3"	186	STR.							
RA522	2	2	4	15'-10"	66	38							
RA523	2	2	4	7'-4"	31	11	0'-8 3/4"	3'-4"	4'-1"				
RA524	22	22	44	17'-11"	822	2	8'-0"	2'-2"	8'-0"				
RA525	9	9	18	18'-0"	338	STR.							
RA526	9	9	18	17'-6"	329	STR.							
RA527	1		1	7'-8"	8	1	0'-10"	6'-11"					
RA528	1	1	2	7'-5"	15	STR.							
RA529	5	5	10	17'-4"	181	1	5'-5"	12'-0"					
RA530	5	5	10	27'-3"	284	2	12'-0"	3'-6"	12'-0"				
RA531	9	9	18	16'-0"	300	2	6'-5"	3'-5"	6'-5"				
RA532	7	7	14	4'-0"	58	STR.							
RA533	2	2	4	3'-8"	15	STR.							
RA534	5	5	10	4'-11"	51	2	0'-10"	3'-6"	0'-10"				
RA535	5	5	10	6'-2"	64	1	0'-10"	5'-5"					
RA536	22	22	44	10'-9"	493	1	0'-10"	10'-0"					
RA537	18	18	36	9'-4"	350	STR.							
RA538	11	11	22	19'-4"	444	33	6'-1"	3'-1"	0'-10"				
RA539	11	11	22	21'-8"	497	33	6'-8"	3'-8"	0'-10"				

MARK	NUMBER			LENGTH	WEIGHT	TYPE	DIMENSIONS						
	LEFT	RIGHT	TOTAL				A	B	C	D	E	RAD	INC
REAR ABUTMENT (CONT'D)													
RA540	12	12	24	7'-4"	184	STR.							
RA541	18	18	36	4'-4"	163	STR.							
RA542		1	1	4'-10"	5	1	0'-10"	4'-1"					
RA901	5	5	10	30'-0"	1020	STR.							
RA902	5	5	10	29'-5"	1000	37							
RA903	2	2	4	15'-7"	212	38							
RA904	2	2	4	16'-4"	222	38							
RA905	5	5	10	34'-3"	1164	38							
RA906	4	4	8	32'-2"	875	37							
			TOTAL WEIGHT =		17888	LBS.							

NOTES:

1. FOR NOTES, SEE SHEET 38/45.

DESIGN AGENCY
PARSONS BRINCKERHOFF
2545 FARMERS DRIVE
SUITE 350
COLUMBUS, OHIO 43235

DESIGNED	DRAWN	REVIEWED	DATE
ECM	RCK	EBS	05/24/12
CHECKED	REVISED	STRUCTURE FILE NUMBER	
APV		LEFT: 0202268	
		RIGHT: 0202274	

REINFORCING STEEL LIST

BRIDGE NO. ALL-75-0875 L/R
I-75 OVER S.R. 81

ALL-75-5.53
PID No. 76691

1074
1224

J:\Projects\ALL\76691\structures\ALL075_0875C\sheets\075_0875CRL001.dgn 11-SEP-2012 8:57PM reddenj

MARK	NUMBER			LENGTH	WEIGHT	TYPE	DIMENSIONS						
	LEFT	RIGHT	TOTAL				A	B	C	D	E	RAD	INC
FORWARD ABUTMENT													
FA501	6	6	12	30'-0"	375	STR.							
FA502	6	6	12	23'-10"	298	37							
FA503	88	88	176	17'-8"	3243	3	6'-0"	2'-7"					
FA504	34	34	68	15'-11"	1129	2	7'-0"	2'-2"	7'-0"				
FA505	49	49	98	15'-4"	1567	3	3'-4"	4'-1"					
FA506	1	1	2	17'-10"	37	3	2'-2"	6'-6"					
	1	1	2	15'-10"				5'-6"					
FA507	SER.	SER.	SER.	TO	219	3	2'-2"	TO					0'-7 3/4"
	6	6	6	19'-1"				7'-1"					
FA508	1	1	2	13'-4"	28	3	2'-2"	4'-3"					
FA509	1	1	2	14'-9"	31	3	2'-2"	4'-11"					
FA510	1	1	2	14'-3"	30	3	2'-2"	4'-8"					
FA511	4	4	8	22'-6"	188	STR.							
FA512	2	2	4	31'-7"	132	37							
FA513	2	2	4	6'-10"	29	19	3'-7"	0'-8 1/2"	3'-4"				
	1	1	2	8'-7"			3'-4"		3'-4"				
FA514	SER.	SER.	SER.	TO	153	2	TO	2'-2"	TO				0'-7 5/8"
	7	7	7	12'-5"			5'-3"		5'-3"				
FA515	7	7	14	16'-9"	245	2	7'-5"	2'-2"	7'-5"				
FA516	2	2	4	10'-11"	46	2	4'-9"	2'-2"	4'-3"				
	1	1	2	4'-9"									
FA517	SER.	SER.	SER.	TO	144	STR.							2'-8 3/8"
	6	6	6	18'-3"									
	1	1	2	4'-3"									
FA518	SER.	SER.	SER.	TO	138	STR.							2'-8 3/8"
	6	6	6	17'-9"									
FA519	2	2	4	15'-8"	65	STR.							
FA520	6	6	12	34'-3"	429	38							
FA521	4	4	8	22'-0"	184	STR.							
FA522	2	2	4	15'-8"	65	38							
FA523	2	2	4	7'-7"	32	11	0'-8 1/2"	3'-4"	4'-4"				
FA524	22	22	44	17'-9"	815	2	7'-11"	2'-2"	7'-11"				
FA525	9	9	18	17'-6"	329	STR.							
FA526	9	9	18	18'-0"	338	STR.							
FA527		1	1	7'-8"	8	1	0'-10"	6'-11"					
FA528		1	1	7'-5"	8	STR.							
FA529	5	5	10	17'-2"	179	1	5'-5"	11'-10"					
FA530	5	5	10	26'-11"	281	2	11'-10"	3'-6"	11'-10"				
FA531	9	9	18	16'-0"	300	2	6'-5"	3'-5"	6'-5"				
FA532	7	7	14	4'-0"	58	STR.							
FA533	2	2	4	3'-8"	15	STR.							
FA534	5	5	10	4'-11"	51	2	0'-10"	3'-6"	0'-10"				
FA535	5	5	10	6'-2"	64	1	0'-10"	5'-5"					
FA536	22	22	44	10'-9"	493	1	0'-10"	10'-0"					
FA537	18	18	36	9'-4"	350	STR.							
FA538	11	11	22	19'-4"	444	33	6'-1"	3'-1"	0'-10"				
FA539	11	11	22	21'-8"	497	33	6'-8"	3'-8"	0'-10"				

MARK	NUMBER			LENGTH	WEIGHT	TYPE	DIMENSIONS						
	LEFT	RIGHT	TOTAL				A	B	C	D	E	RAD	INC
FORWARD ABUTMENT (CONT'D)													
FA540	12	12	24	7'-4"	184	STR.							
FA541	18	18	36	4'-4"	163	STR.							
FA542	1		1	4'-10"	5	1	0'-10"	4'-1"					
FA901	5	5	10	30'-0"	1020	STR.							
FA902	5	5	10	29'-5"	1000	37							
FA903	2	2	4	31'-5"	427	37							
FA904	2	2	4	32'-2"	437	37							
FA905	5	5	10	34'-3"	1164	38							
FA906	4	4	8	15'-7"	424	38							
				TOTAL WEIGHT =	17861	LBS.							

NOTES:

1. FOR NOTES, SEE SHEET 38/45.

DESIGN AGENCY
PARSONS BRINCKERHOFF
2545 FARMERS DRIVE
SUITE 350
COLUMBUS, OHIO 43235

DESIGNED	DRAWN	REVIEWED	DATE
ECM	RCK	EBS	05/24/12
CHECKED	REVISED	STRUCTURE FILE NUMBER	
APV		LEFT: 0202268 RIGHT: 0202274	

REINFORCING STEEL LIST
BRIDGE NO. ALL-75-0875 L/R
I-75 OVER S.R. 81

ALL-75-5.53
PID No. 76691

36/45

1075
1224

J:\Projects\ALL\76691\structures\ALL075_0875C\sheets\075_0875CRL002.dgn 11-SEP-2012 8:57PM reddenj

MARK	NUMBER			LENGTH	WEIGHT	TYPE	DIMENSIONS						
	LEFT	RIGHT	TOTAL				A	B	C	D	E	RAD	INC
SUPERSTRUCTURE													
S401	196	196	392	30'-0"	7856	STR.							
S402	49	49	98	21'-1"	1380	STR.							
S501	488	488	976	32'-7"	33169	STR.							
S502	504	504	1008	16'-7"	17435	STR.							
	2	2	4	14'-8"									
S503	SER.	SER.	SER.	TO	762	STR.							2'-4"
	8	8	8	31'-0"									
	2	2	4	14'-0"									
S504	SER.	SER.	SER.	TO	740	STR.							2'-4"
	8	8	8	30'-4"									
S505	48	48	96	30'-0"	3004	STR.							
S506	12	12	24	19'-3"	482	STR.							
S507	270	270	540	6'-11"	3896	23	0'-8"	3'-3"	3'-0"	0'-9 1/2"		0'-1 1/2"	
S508	504	504	1008	9'-4"	9813	16	8'-9"						
S509	62	62	124	7'-8"	992	2	2'-7"	2'-9"	2'-7"				
S510	10	10	20	6'-7"	137	1	3'-0"	3'-8"					
S511	122	122	244	11'-8"	2969	2	4'-3"	3'-5"	4'-3"				
S601	204	204	408	30'-0"	18384	STR.							
S602	51	51	102	26'-3"	4022	STR.							
S603	270	270	540	3'-2"	2568	14	0'-10 1/2"	0'-10 1/2"	0'-8 1/2"	0'-6"	0'-9"		
S604	270	270	540	2'-4"	1893	1	0'-11"	1'-7"					
S801	24	24	48	30'-6"	3909	37							
S802	24	24	48	17'-2"	2200	38							
S803	30	30	60	7'-2"	1148	STR.							
S804	10	10	20	5'-8"	303	STR.							
S805	12	12	24	2'-11"	187	STR.							
S806	4	4	8	2'-2"	46	STR.							
D801	64	64	128	5'-2"	1766	18	2'-11"	1'-0"	1'-0"				
SUPERSTRUCTURE TOTAL					119061	LBS.							

NOTES:

1. FOR NOTES, SEE SHEET 38/45.

DESIGN AGENCY
PARSONS BRINCKERHOFF
2545 FARMERS DRIVE
SUITE 350
COLUMBUS, OHIO 43235

DESIGNED	DRAWN	REVIEWED	DATE
ECM	RCK	EBS	05/24/12
CHECKED	REVISED	STRUCTURE NUMBER	
APV		LEFT: 0202268 RIGHT: 0202274	

REINFORCING STEEL LIST
BRIDGE NO. ALL-75-0875 L/R
I-75 OVER S.R. 81

ALL-75-5.53
PID No. 76691

J:\Projects\ALL\76691\structures\ALL075_0875C\sheets\075_0875CRL003.dgn 11-SEP-2012 8:57PM reddenj

MARK	NUMBER			LENGTH	WEIGHT	TYPE	DIMENSIONS						
	LEFT	RIGHT	TOTAL				A	B	C	D	E	RAD	INC
APPROACH SLABS													
A1004	176	176	352	30'-11"	46828	16	29'-6"						
AS501	8	8	16	19'-7"	327	STR.							
AS502	16	16	32	29'-6"	985	STR.							
AS503	4	4	8	13'-10"	115	25	10'-0"	2'-5"	1'-4 1/4"	0'-1 1/2"	0'-5"		
AS504	4	4	8	13'-10"	115	STR.							
AS505	64	64	128	6'-11"	923	23	0'-8"	3'-3"	3'-0"	0'-9 5/8"		0'-1 1/2"	
AS506	22	22	44	3'-9"	172	16	3'-2"						
AS507	20	20	40	8'-8"	362	2	1'-6"	5'-11"	1'-6"				
AS508	4	4	8	1'-6"	13	STR.							
AS509	16	16	32	2'-10"	95	STR.							
AS510	8	8	16	4'-4"	72	STR.							
AS511	20	20	40	3'-8"	153	STR.							
AS512	24	24	48	2'-2"	108	STR.							
AS513	8	8	16	10'-0"	167	STR.							
AS514	4	4	8	5'-8"	47	STR.							
AS515	4	4	8	5'-8"	47	25	1'-10"	2'-5"	1'-4 1/4"	0'-1 1/2"	0'-5"		
AS516	2	2	4	3'-10"	16	16	3'-3"						
AS517	2	2	4	3'-9"	16	16	3'-2"						
AS518	2	2	4	3'-8"	15	16	3'-1"						
AS519	2	2	4	3'-7"	15	16	3'-0"						
AS520	2	2	4	3'-6"	15	16	2'-11"						
AS521	2	2	4	3'-5"	14	16	2'-10"						
AS522	2	2	4	3'-4"	14	16	2'-9"						
AS523	2	2	4	3'-3"	14	16	2'-8"						
AS524	2	2	4	3'-2"	13	16	2'-7"						
AS525	2	2	4	3'-1"	13	16	2'-6"						
AS526	2	2	4	3'-0"	13	16	2'-5"						
AS601	4	4	8	19'-7"	235	STR.							
AS602	108	108	216	3'-8"	1190	14	0'-10 1/2"	1'-5"	0'-8 1/2"	0'-6"	0'-9"		
AS603	64	64	128	2'-11"	561	1	1'-0"	2'-1"					
AS604	38	38	76	5'-4"	609	1	1'-0"	4'-6"					
AS605	2	2	4	5'-3"	32	1	1'-0"	4'-5"					
AS606	2	2	4	5'-2"	31	1	1'-0"	4'-4"					
AS607	2	2	4	5'-1"	31	1	1'-0"	4'-3"					
AS608	2	2	4	5'-0"	30	1	1'-0"	4'-2"					
AS609	2	2	4	4'-11"	30	1	1'-0"	4'-1"					
AS610	2	2	4	4'-10"	29	1	1'-0"	4'-0"					
AS611	2	2	4	4'-9"	29	1	1'-0"	3'-11"					
AS612	2	2	4	4'-8"	28	1	1'-0"	3'-10"					
AS613	2	2	4	4'-7"	28	1	1'-0"	3'-9"					
AS614	2	2	4	4'-6"	27	1	1'-0"	3'-8"					
AS615	10	10	20	4'-5"	133	1	1'-0"	3'-7"					

MARK	NUMBER			LENGTH	WEIGHT	TYPE	DIMENSIONS						
	LEFT	RIGHT	TOTAL				A	B	C	D	E	RAD	INC
APPROACH SLABS (CONT'D)													
B501	126	126	252	30'-5"	7995	37							
B502	4	4	8	29'-2"	243	37							
B503	12	12	24	4'-10"	121	19	3'-7"	1'-2 5/8"	0'-3 1/4"				
B504	126	126	252	17'-2"	4512	38							
B505	4	4	8	15'-10"	132	38							
B506	20	20	40	7'-1"	296	19	3'-6"	3'-6"	0'-9 1/8"				
C504	66	66	132	29'-6"	4061	STR.							
C505	12	12	24	3'-6"	88	STR.							
APPROACH SLAB TOTAL					71158	LBS.							
FOR INFORMATION ONLY, NOT INCLUDED WITH ITEM 509.													

BAR BENDING DIAGRAMS

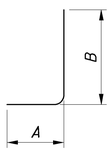

TYPE-1

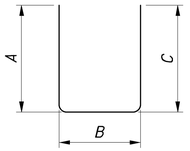

TYPE-2

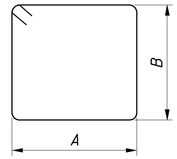

TYPE-3

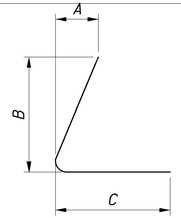

TYPE-11

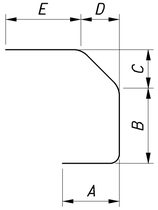

TYPE-14

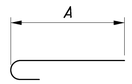

TYPE-16

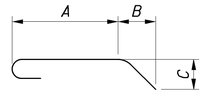

TYPE-18

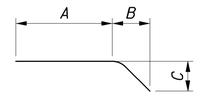

TYPE-19

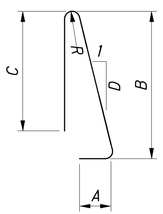

TYPE-23

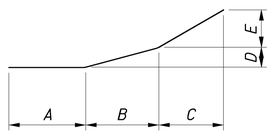

TYPE-25

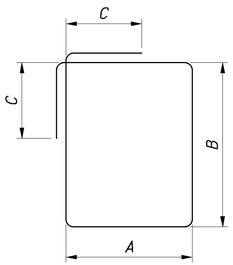

TYPE-33

NOTES:

1. THE BAR SIZE NUMBER IS SPECIFIED ON THE PLANS IN THE BAR MARK COLUMN. THE FIRST DIGIT WHERE THREE DIGITS ARE USED, AND THE FIRST TWO DIGITS WHERE FOUR ARE USED, INDICATES THE BAR SIZE NUMBER. FOR EXAMPLE, P601 IS A NO. 6 BAR. BAR DIMENSIONS SHOWN ARE OUT TO OUT UNLESS OTHERWISE INDICATED. R INDICATES INSIDE RADIUS, UNLESS OTHERWISE NOTED. "STD." WRITTEN IN PLACE OF A DIMENSION INDICATES A STANDARD BEND AT THE END OF THE BAR.

2. ALL REINFORCEMENT IS TO BE EPOXY COATED.

3. FOR LIST OF ABBREVIATIONS, SEE SHEET 6/45.

DESIGN AGENCY
PARSONS BRINCKERHOFF
2545 FARMERS DRIVE
SUITE 350
COLUMBUS, OHIO 43235

DESIGNED ECM
DRAWN RCK
CHECKED APV
REVIEWED EBS
DATE 05/24/12
STRUCTURE NUMBER
LEFT: 02022186
RIGHT: 02022274
REVISED

REINFORCING STEEL LIST
BRIDGE NO. ALL-75-0875 L/R
I-75 OVER S.R. 81

ALL-75-5.53
PID No. 76691

1077
1224

J:\Projects\ALL\76691\structures\ALL075_0875C\sheets\075_0875CRL004.dgn 11-SEP-2012 8:57PM reddenj

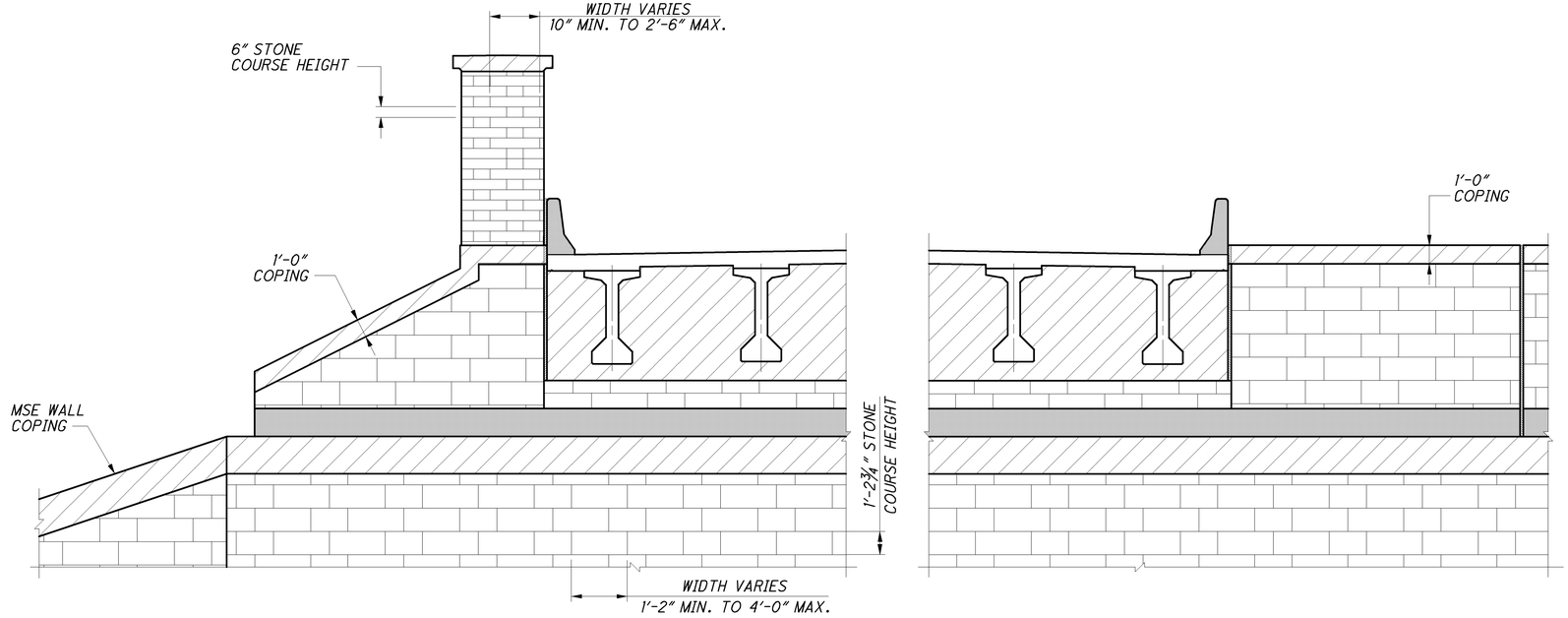

ABUTMENT AESTHETICS

LEFT FORWARD AND RIGHT REAR ABUTMENT SHOWN,
RIGHT FORWARD AND LEFT REAR ABUTMENT OPPOSITE HAND

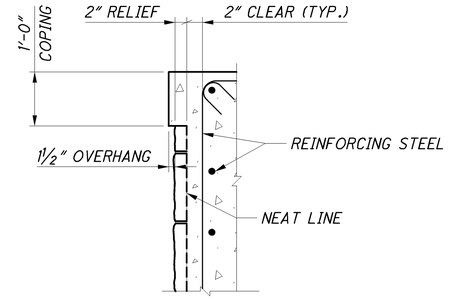

TYPICAL FORMLINER SECTION

SECTION AT WINGWALL SHOWN

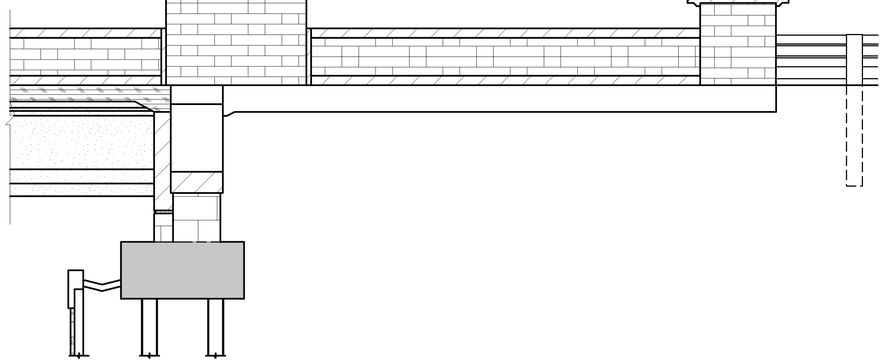

EXTERIOR RAILING AESTHETICS

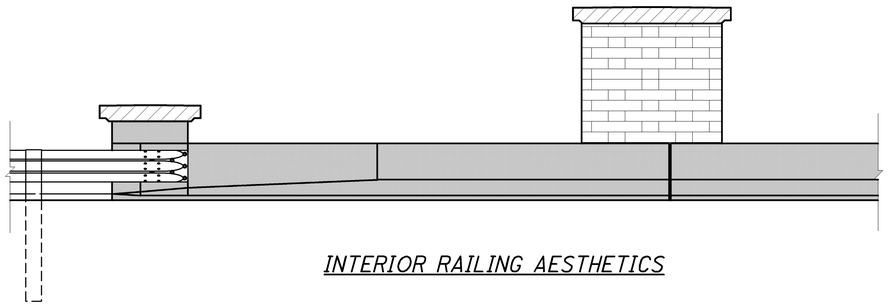

INTERIOR RAILING AESTHETICS

LEGEND:

FORMLINER PATTERN 1:
- ROUGH CUT STONE FORMLINER W/ 2" RELIEF AND INTEGRALLY COLORED CONCRETE, FEDERAL COLOR NO. 36373, GRAY

FORMLINER PATTERN 2:
-ROUGH CUT STONE FORMLINER W/ 1⅝" RELIEF AND INTEGRALLY COLORED CONCRETE, FEDERAL COLOR NO. 36373, GRAY

-INTEGRALLY COLORED CONCRETE FEDERAL COLOR NO. 36373, GRAY

-EPOXY-URETHANE SEALER FEDERAL COLOR NO. 25095, BLUE

-EPOXY-URETHANE SEALER FEDERAL COLOR NO. 37875, WHITE

-EPOXY-URETHANE SEALER FEDERAL COLOR NO. 36373, GRAY

DESIGN AGENCY
PARSONS BRINCKERHOFF
2545 FARMERS DRIVE
SUITE 350
COLUMBUS, OHIO 43235

DESIGNED	DRAWN	REVIEWED	DATE
ECM	RCK	EBS	05/24/12
CHECKED	REVISED	STRUCTURE NUMBER	
APV		LEFT: 0202266 RIGHT: 0202274	

AESTHETIC DETAILS
BRIDGE NO. ALL-75-0875 L/R
I-75 OVER S.R. 81

ALL-75-5.53
PID No. 76691

39 / 45

1078
1224

J:\Projects\ALL\76691\structures\ALL075_0875C\sheets\075_0875CMD007.dgn 11-SEP-2012 8:57PM reddenj

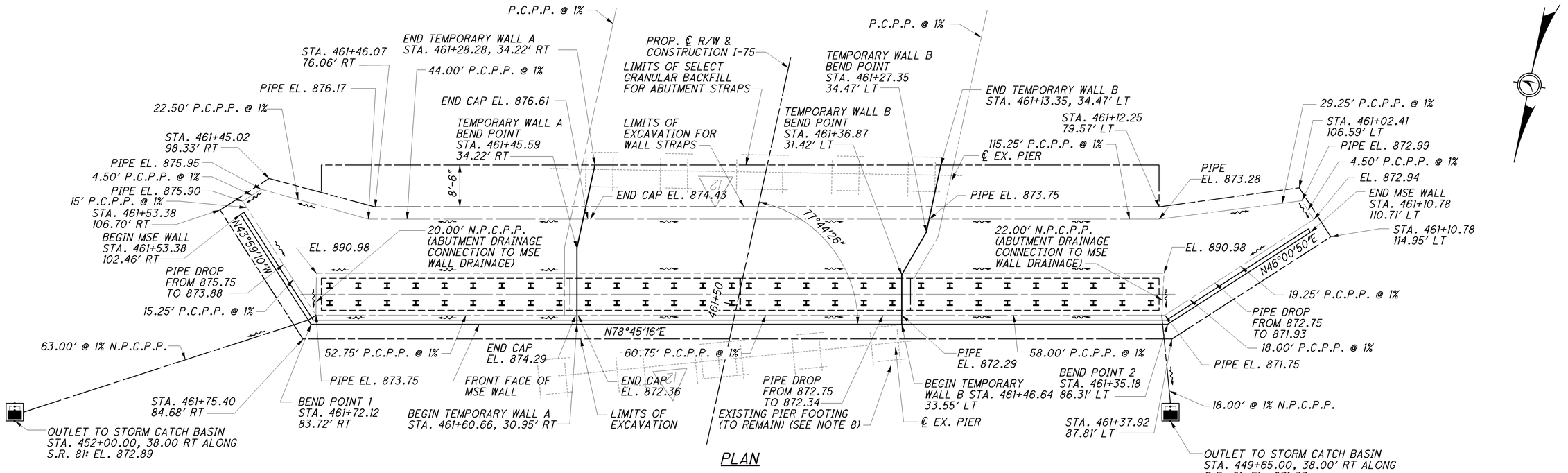

PLAN

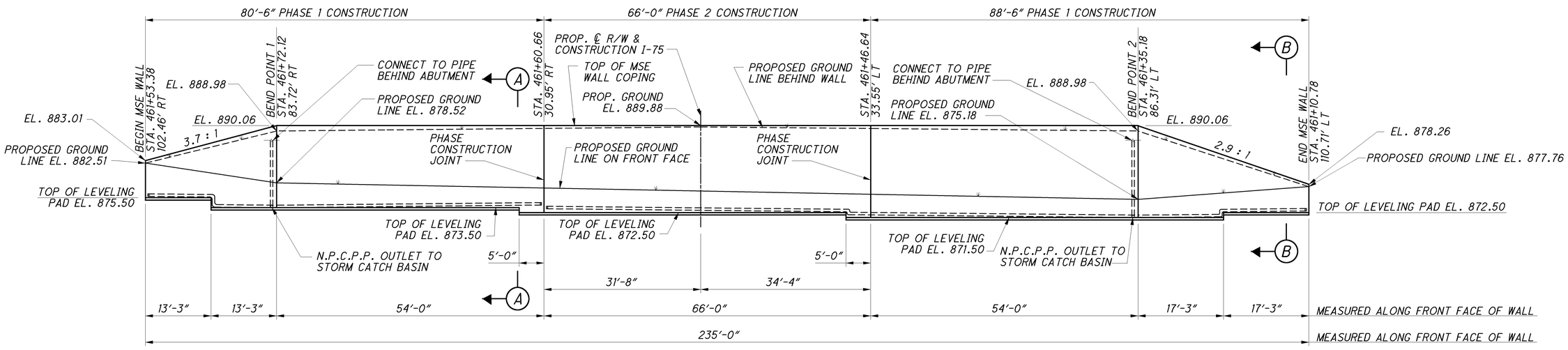

ELEVATION

(DEVELOPED ELEVATION ALONG FRONT FACE OF WALL)

NOTES:

1. FOR SECTION A-A AND SECTION B-B, SEE SHEET 42/45.
2. ALL WALL STATIONS AND OFFSETS ARE MEASURED TO FACE OF WALL.
3. ALL DRAINAGE PIPES ARE 6" ϕ.
4. PIPE ELEVATIONS ARE MEASURED AT THE INVERT.
5. ALL TOP OF WALL ELEVATIONS ARE MEASURED TO THE TOP OF MSE WALL COPING.
6. FOR AESTHETIC DETAILS, SEE SHEET 39/45.
7. CARE SHALL BE GIVEN WHEN INSTALLING PROPOSED MSE WALL AROUND EXISTING PIER. THERE IS APPROXIMATELY 1'-0" CLEAR BETWEEN THE FRONT FACE OF MSE WALL AND THE EXISTING FOOTING. THE EXISTING PIER FOOTING WILL BE ABANDONED DURING STAGE 2 CONSTRUCTION.
8. THE PROPOSED GROUND LINE BEHIND WALL SHALL BE TIED CONCRETE BLOCK MAT.

DESIGN AGENCY
PARSONS BRINCKERHOFF
2945 FARMERS DRIVE
SUITE 350
COLUMBUS, OHIO 43235

DESIGNED	DRAWN	REVIEWED	DATE
ECM	ECM	EBS	05/24/12
CHECKED	REVISED	STRUCTURE NUMBER	
SJG		LEFT: 0202268 RIGHT: 0202274	

PLAN AND ELEVATION - MSE WALL AT REAR ABUTMENT

BRIDGE NO. ALL-75-0875 L/R
I-75 OVER S.R. 81

ALL-75-5.53
PID No. 76691

J:\Projects\ALL\76691\structures\ALL075_0875C\sheets\075_0875CMD005.dgn 11-SEP-2012 8:57PM reddenj

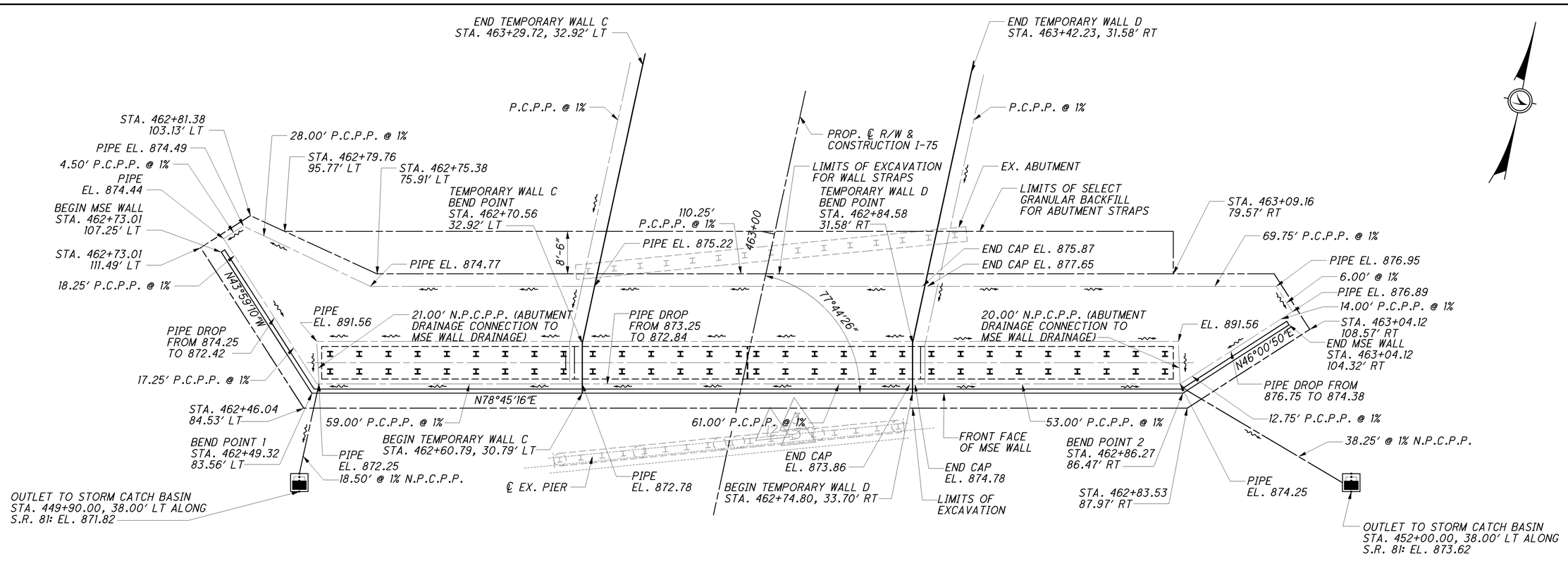

PLAN

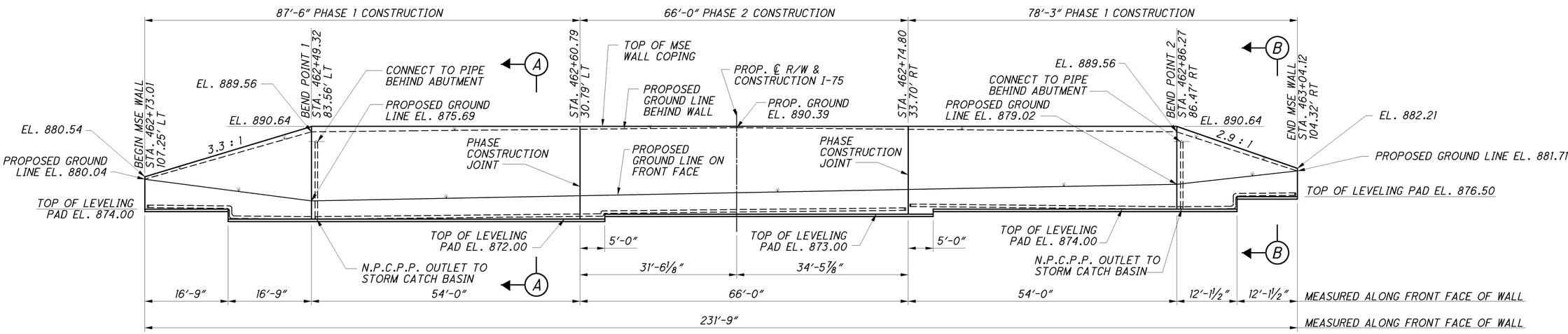

ELEVATION

(DEVELOPED ELEVATION ALONG FRONT FACE OF WALL)

NOTES:

1. FOR SECTION A-A AND SECTION B-B, SEE SHEET 42/45.
2. ALL WALL STATIONS AND OFFSETS ARE MEASURED TO FACE OF WALL.
3. ALL DRAINAGE PIPES ARE 6" ϕ.
4. PIPE ELEVATIONS ARE MEASURED AT THE INVERT.
5. ALL TOP OF WALL ELEVATIONS ARE MEASURED TO THE TOP OF MSE WALL COPING.
6. FOR AESTHETIC DETAILS, SEE SHEET 39/45.
7. THE PROPOSED GROUND LINE BEHIND WALL SHALL BE TIED CONCRETE BLOCK MAT.

DESIGN AGENCY
PARSONS BRINCKERHOFF
2545 FARMERS DRIVE
SUITE 350
COLUMBUS, OHIO 43235

DESIGNED	DRAWN	REVIEWED	DATE
ECM	ECM	EBS	05/24/12
CHECKED	REVISED	STRUCTURE NUMBER	
SJG		LEFT: 0202286	
		RIGHT: 0202274	

PLAN AND ELEVATION - MSE WALL AT FORWARD ABUTMENT
BRIDGE NO. ALL-75-0875 L/R
I-75 OVER S.R. 81

ALL-75-5.53
PID No. 76691

41 / 45

1080
1224

J:\Projects\ALL\76691\structures\ALL075_0875C\sheets\075_0875CMD006.dgn 11-SEP-2012 8:57PM reddenj

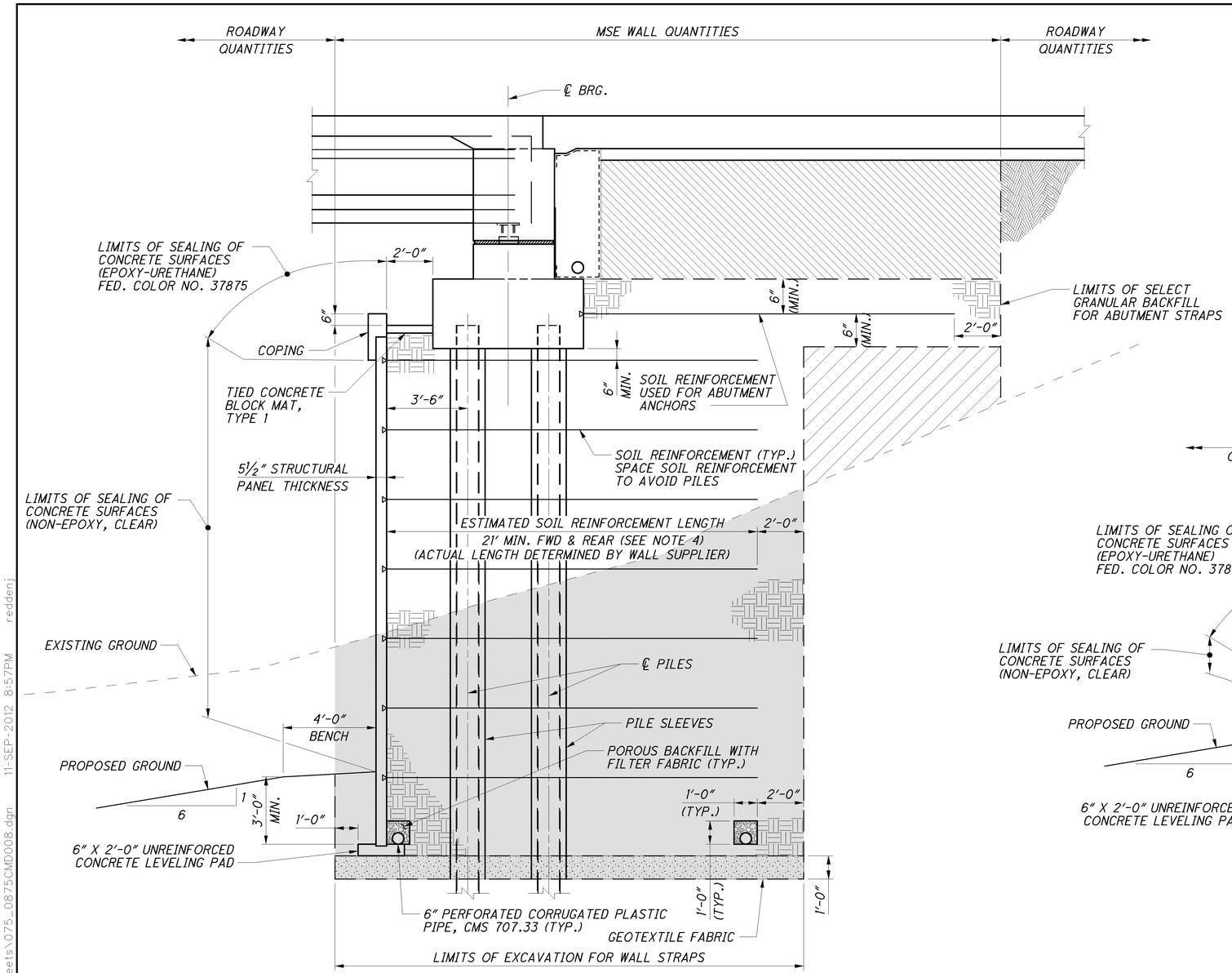

SECTION A-A

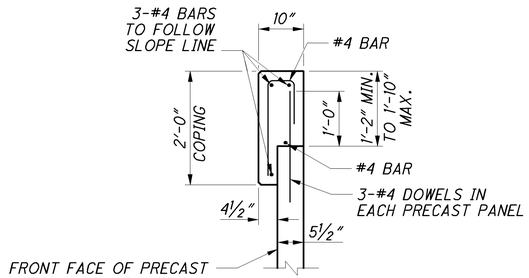

MSE WALL COPING

ALL REINFORCING STEEL TO BE EPOXY COATED

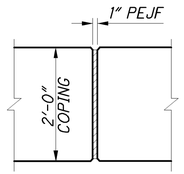

COPING EXPANSION JOINTS

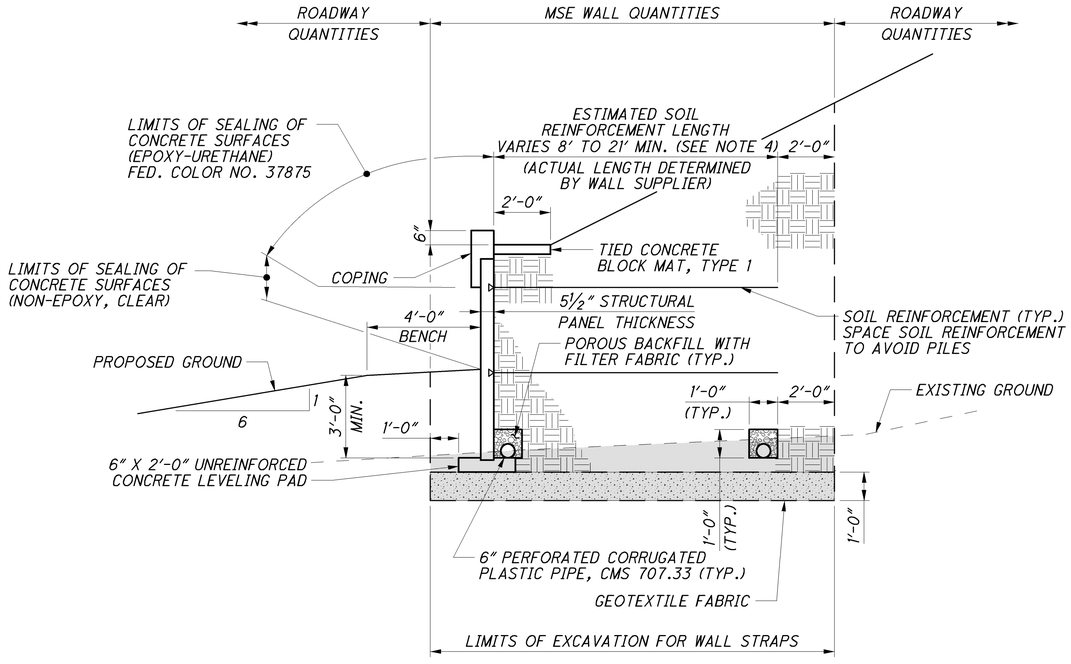

SECTION B-B

LEGEND:

- ITEM 840 SELECT GRANULAR BACKFILL (SGB)
- ITEM 840 WALL EXCAVATION
- ITEM 203 EMBANKMENT TO BE INCLUDED WITH ROADWAY QUANTITIES
- ITEM 203 GRANULAR MATERIAL, TYPE C (SEE NOTE 5)
- ITEM 203 GRANULAR MATERIAL, TYPE B (SEE NOTE 5)
- ITEM 203 EMBANKMENT

NOTES:

1. THE LINE WHICH DEFINES THE LIMIT OF THE SELECT GRANULAR BACKFILL IS NOT AN ALLOWABLE SLOPE FOR EXCAVATION. CUT THE SIDES OF ALL EXCAVATIONS TO PREVENT CAVING, OR PROTECT THE EXCAVATION FROM CAVING.
2. DESIGN THE INTERNAL STABILITY OF A MECHANICALLY STABILIZED EARTH (MSE) WALL IN ACCORDANCE WITH SUPPLEMENTAL SPECIFICATION 840 TO SUPPORT THE ABUTMENT. THE FACTORED BEARING RESISTANCE AT THE BASE OF THE REINFORCED SOIL MASS IS 11.4 K/FT². CONTACT THE ENGINEER IF THE ACTUAL BEARING RESISTANCE WILL EXCEED THE FACTORED BEARING RESISTANCE.
3. FOR LOCATION OF SECTIONS A-A AND B-B, SEE SHEETS 40/45 & 41/45 .
4. ALL STATIONS AND OFFSETS FOR MSE WALL CONSTRUCTION ARE BASED ON THE MINIMUM SOIL REINFORCEMENT LENGTH AS ESTIMATED ON THE PLANS. THE CONTRACTOR IS RESPONSIBLE FOR THE FINAL REINFORCEMENT LENGTH AND SHALL MAKE NECESSARY ADJUSTMENTS TO THE PLANS.
5. GRANULAR MATERIAL SHALL BE INCLUDED IN WALL QUANTITIES. GRANULAR MATERIAL, TYPE C SHALL BE INCLUDED WITH ITEM 840 FOUNDATION PREPARATION FOR PAYMENT.

DESIGN AGENCY
PARSONS BRINCKERHOFF
2945 FARMERS DRIVE
SUITE 350
COLUMBUS, OHIO 43235

DESIGNED	DRAWN	REVIEWED	DATE
ECM	SJG	EBS	05/24/12
CHECKED	REVISED	STRUCTURE NUMBER	
BMG		LEFT: 0202266 RIGHT: 0202274	

MSE WALL DETAILS
BRIDGE NO. ALL-75-0875
I-75 OVER S.R. 81

ALL-75-5.53
PID No. 76691

42 / 45

1081
1224

J:\Projects\ALL\76691\structures\ALL075_0875C\sheets\075_0875CMD008.dgn 11-SEP-2012 8:57PM reddenj

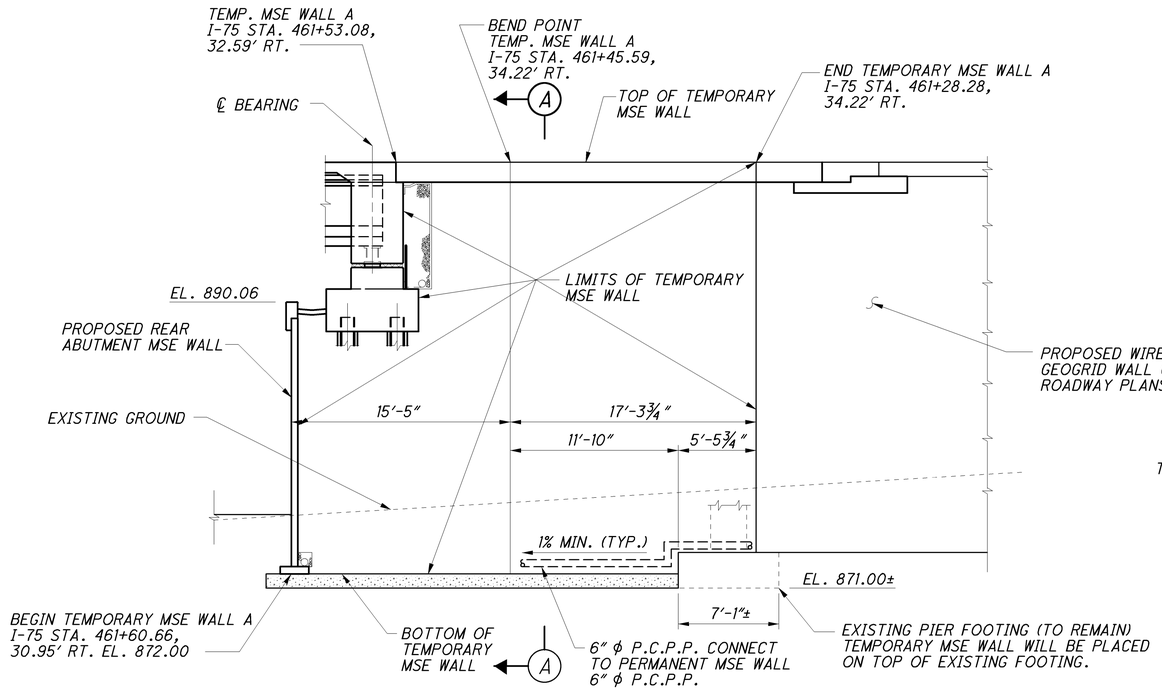

ELEVATION TEMPORARY MSE WALL A

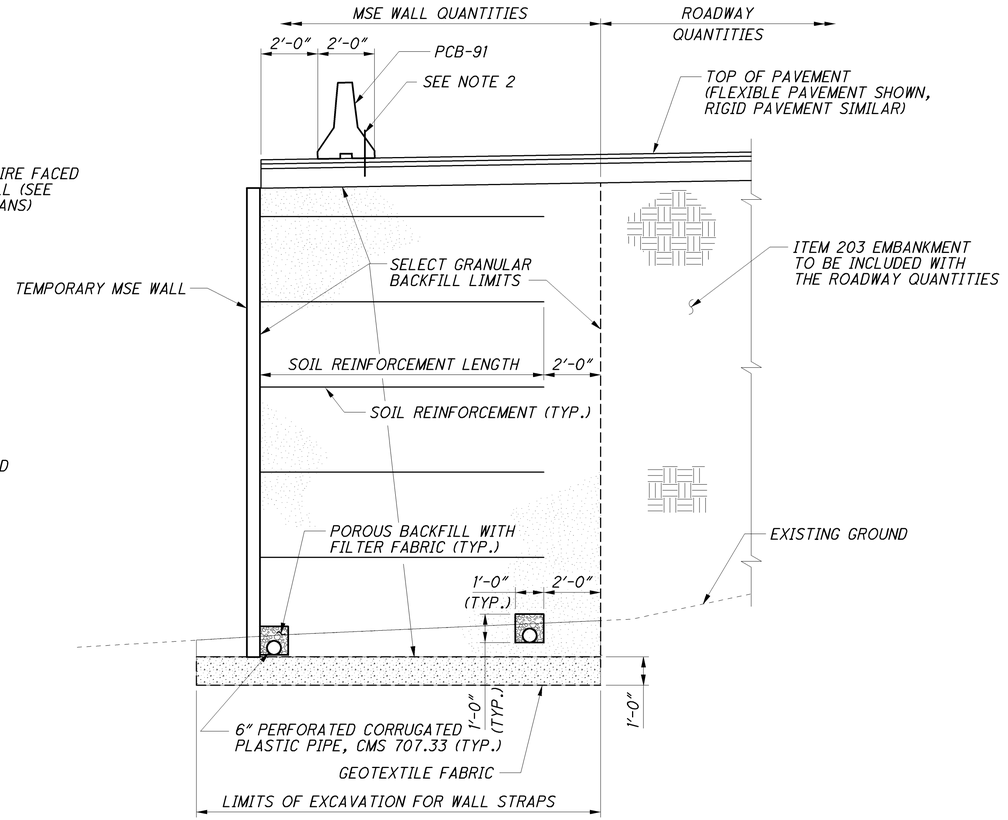

SECTION A-A

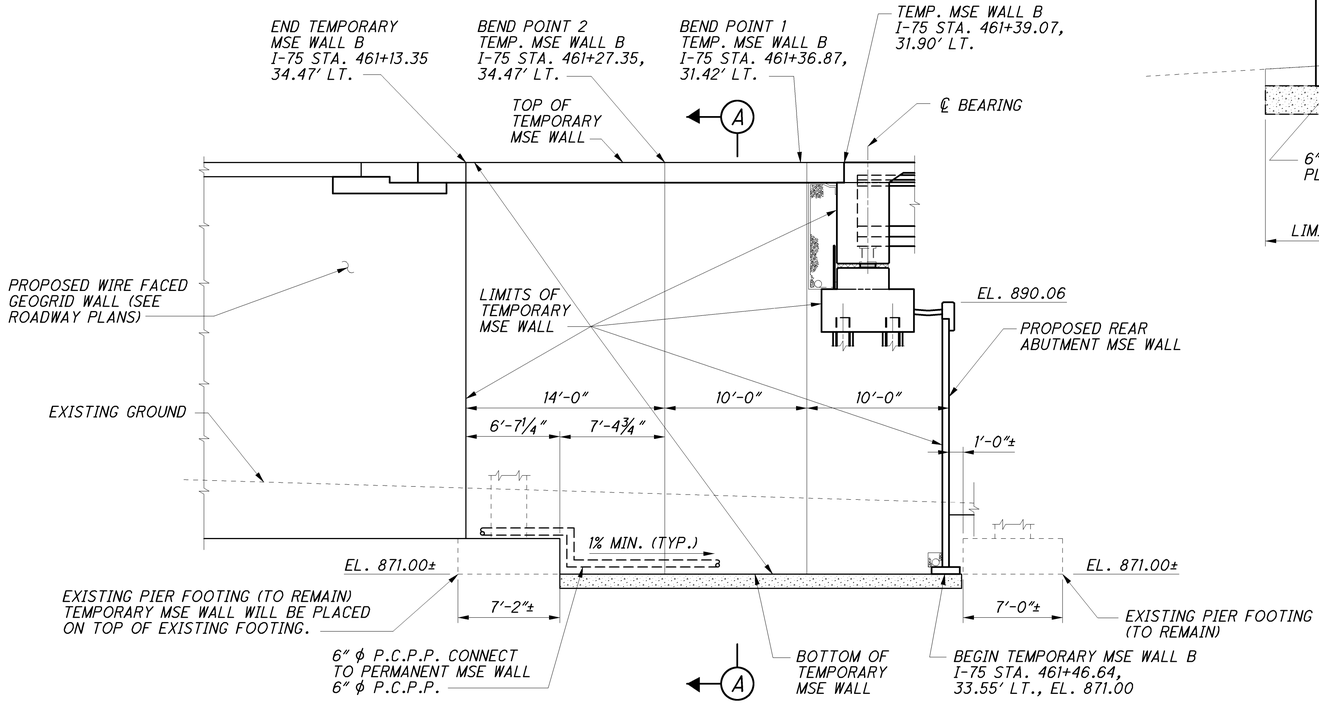

ELEVATION TEMPORARY MSE WALL B

LEGEND:

ITEM 203 GRANULAR MATERIAL, TYPE C (SEE NOTE 3)

NOTES:

1. FOR LOCATION OF TEMPORARY MSE WALL A AND B, SEE SHEET 40/45 .
2. FOR FLEXIBLE PAVEMENT, ANCHOR THE PCB ON AT LEAST 2" OF ASPHALT WITH 4 ANCHORING BOLTS PER BARRIER SEGMENT, ONE LOCATED AT EACH CORNER OF THE PORTABLE CONCRETE BARRIER (PCB). EACH ANCHOR BOLT SHALL BE 1" ϕ HIGH STRENGTH STEEL WITH A NUT AND WASHER AS SPECIFIED IN PCB-91. ANCHOR BOLTS WILL BE A MINIMUM OF 36" LONG. FOR RIGID PAVEMENTS, USE 2 ANCHOR BOLTS PER PCB-91. EACH ANCHOR BOLT SHALL BE 1" ϕ HIGH STRENGTH STEEL WITH A NUT AND WASHER AS SPECIFIED IN PCB-91. ANCHOR BOLTS WILL BE A MINIMUM OF 36" LONG.
3. GRANULAR MATERIAL, TYPE C SHALL BE INCLUDED WITH ITEM 840 FOUNDATION PREPARATION FOR PAYMENT.

DESIGN AGENCY
PARSONS BRINCKERHOFF
2545 FARMERS DRIVE
SUITE 350
COLUMBUS, OHIO 43235

DESIGNED	DRAWN	REVIEWED	DATE
ECM	ECM	EBS	05/24/12
CHECKED	REVISED	STRUCTURE NUMBER	
SJG		LEFT: 0202266 RIGHT: 0202274	

ELEVATION TEMPORARY MSE WALL - REAR ABUTMENT
BRIDGE NO. ALL-75-0875 L/R
I-75 OVER S.R. 81

ALL-75-5.53
PID No. 76691

43/45

1082
1224

J:\Projects\ALL\76691\structures\ALL075_0875C\sheets\075_0875CMD010.dgn 11-SEP-2012 8:57PM reddeni

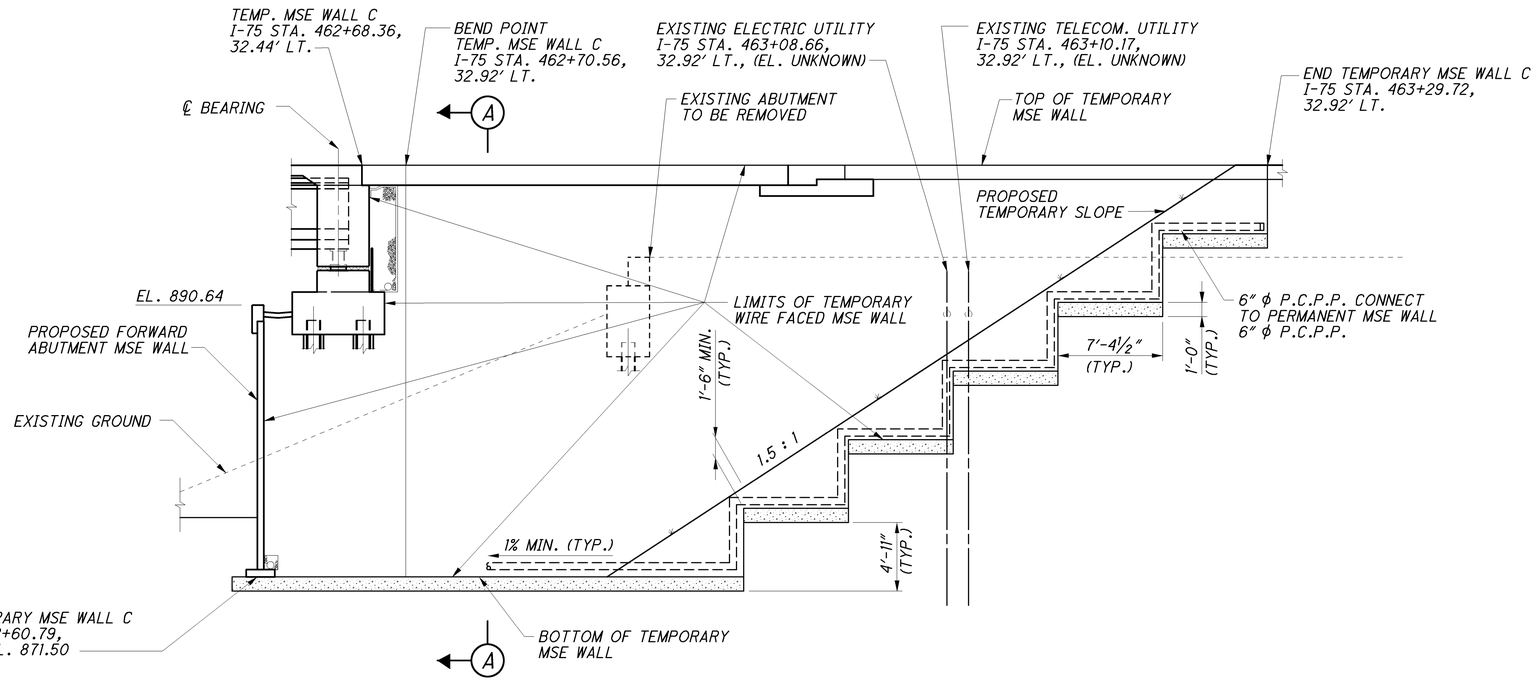

ELEVATION TEMPORARY MSE WALL C

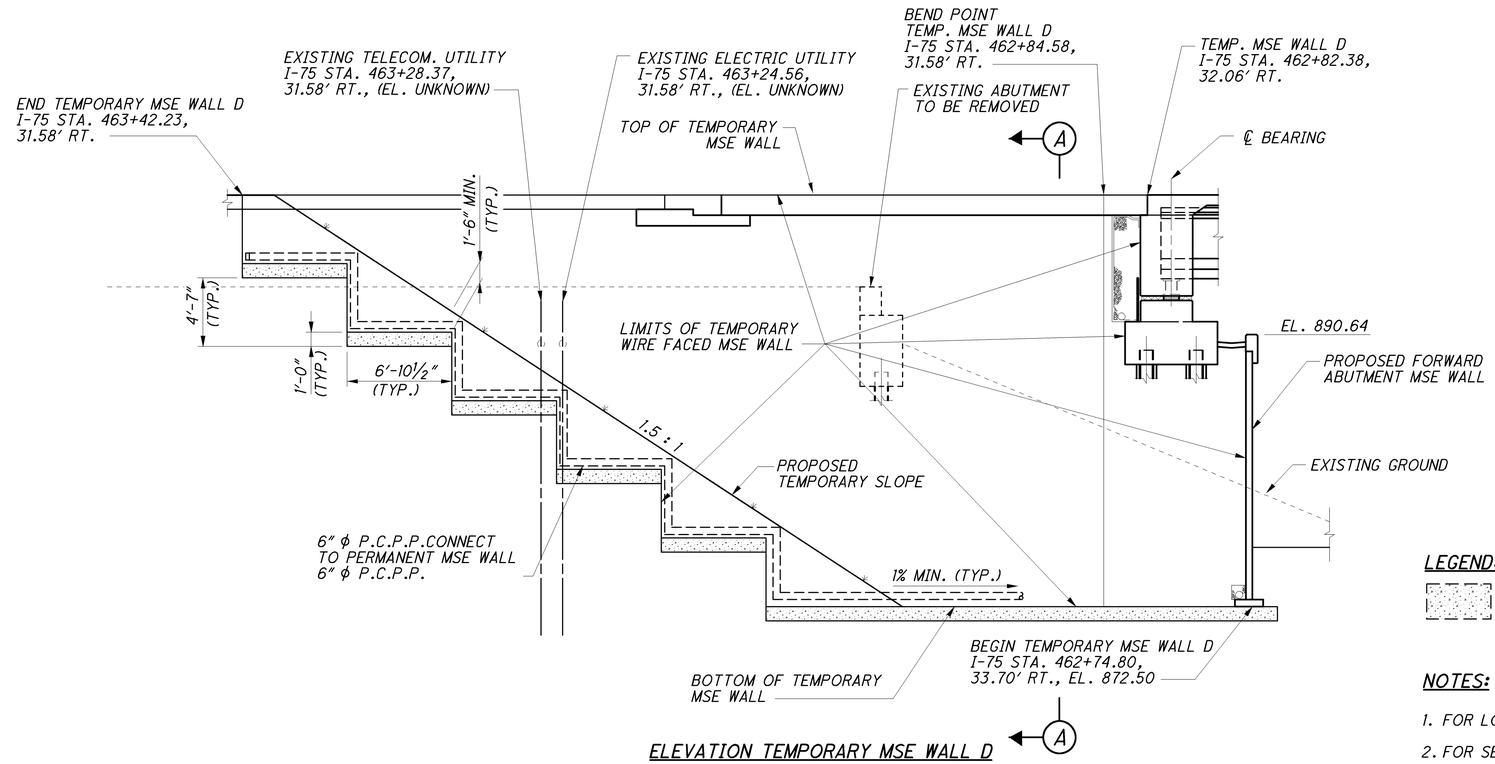

ELEVATION TEMPORARY MSE WALL D

LEGEND:

ITEM 203 GRANULAR MATERIAL, TYPE C (SEE NOTE 3)

NOTES:

1. FOR LOCATION OF TEMPORARY MSE WALL C AND D, SEE SHEET 41/45.
2. FOR SECTION A-A, SEE SHEET 43/45.
3. GRANULAR MATERIAL, TYPE C SHALL BE INCLUDED WITH ITEM 840 FOUNDATION PREPARATION FOR PAYMENT.

DESIGN AGENCY
PARSONS BRINCKERHOFF
2545 FARMERS DRIVE
SUITE 350
COLUMBUS, OHIO 43235

DESIGNED	DRAWN	REVIEWED	DATE
ECM	ECM	EBS	05/24/12
CHECKED	REVISED	STRUCTURE NUMBER	
SJG		LEFT: 0202266 RIGHT: 0202274	

ELEVATION TEMPORARY MSE WALL - FORWARD ABUTMENT
BRIDGE NO. ALL-75-0875 L/R
I-75 OVER S.R. 81

ALL-75-5.53
PID No. 76691

1083
1224

J:\Projects\ALL\76691\structures\ALL075_0875C\sheets\075_0875CMD009.dgn 11-SEP-2012 8:57PM reddenj

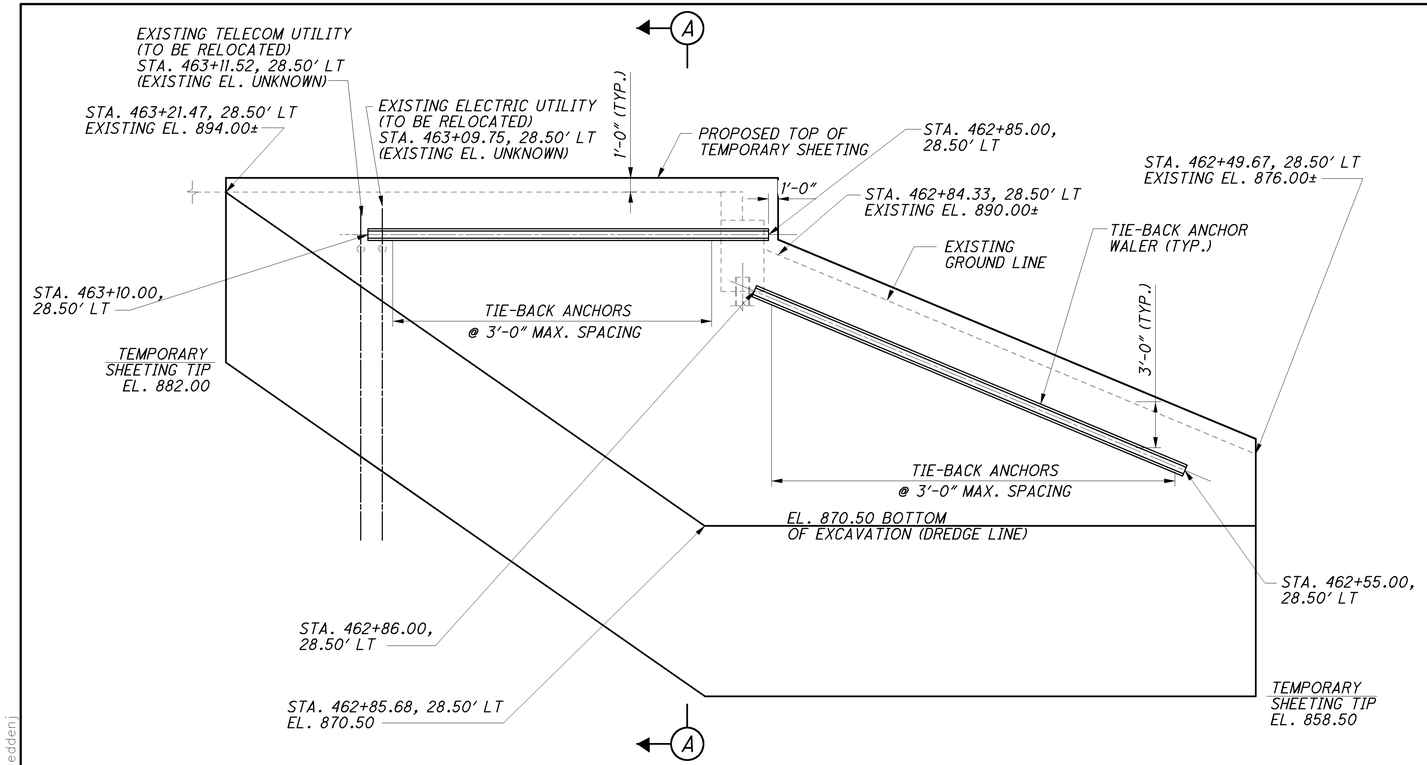

ELEVATION TEMPORARY SHEETING FOR MSE WALL C

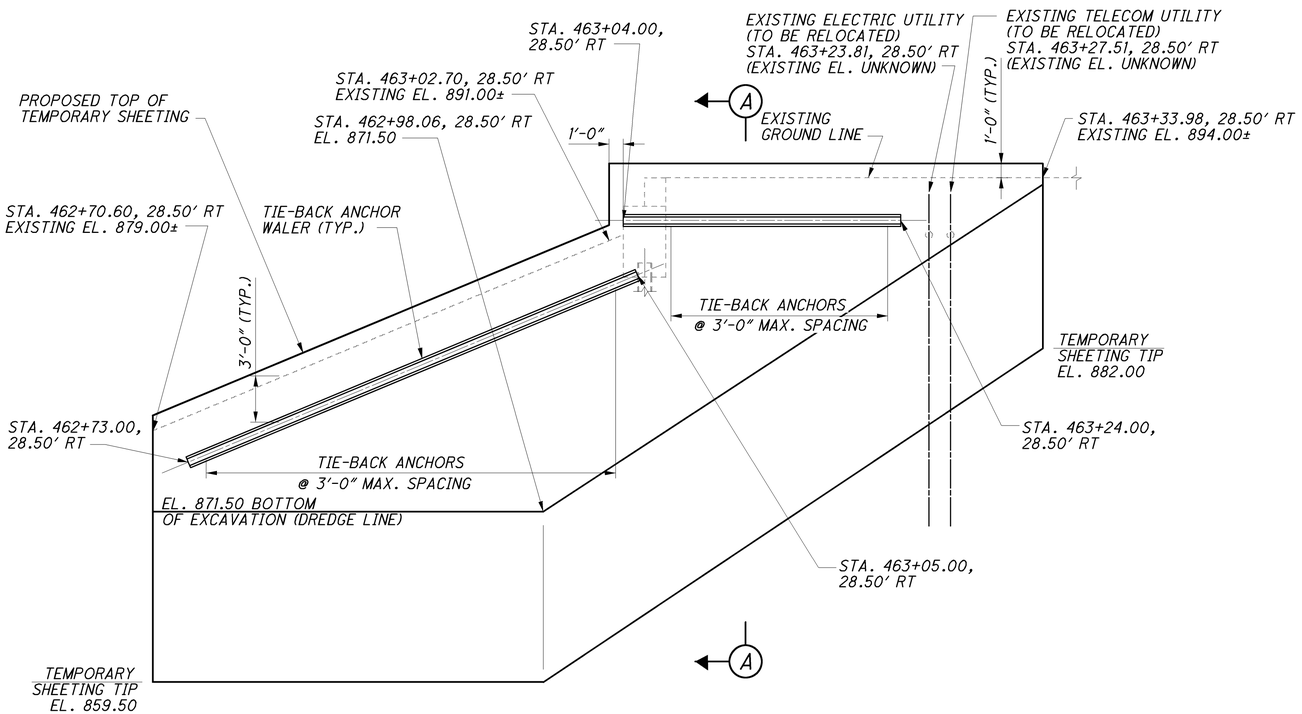

ELEVATION TEMPORARY SHEETING FOR MSE WALL D

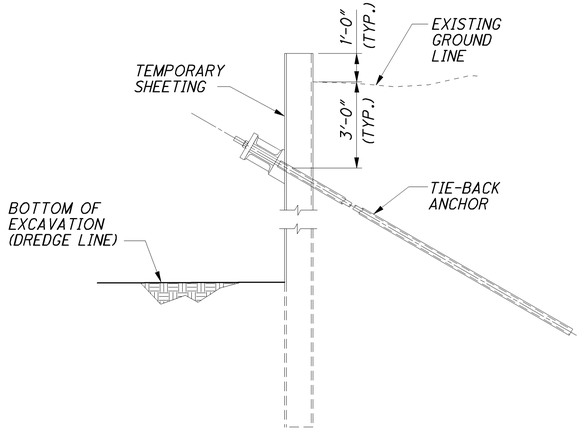

SECTION A-A

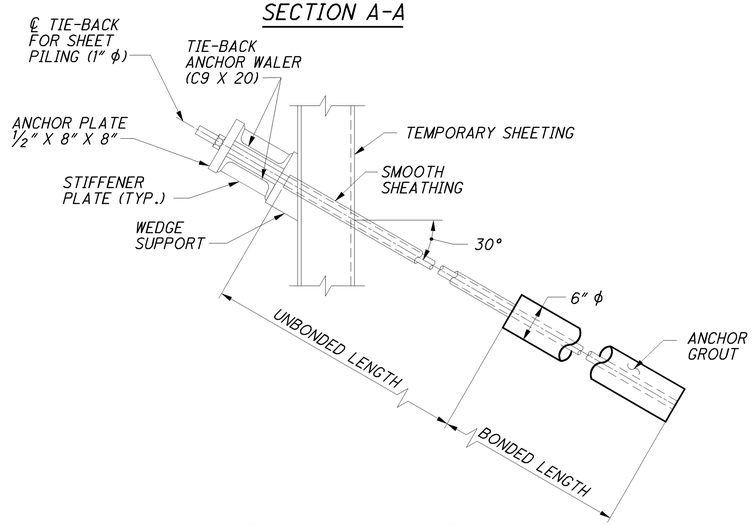

TIE-BACK ANCHOR DETAIL

NOTES:

1. FOR LOCATION OF TEMPORARY MSE WALLS C AND D, SEE SHEET 41/45 .
2. THE CONTRACTOR HAS THE OPTION TO DESIGN A DIFFERENT EXCAVATION SUPPORT SYSTEM. IF THE CONTRACTOR CHOOSES TO REDESIGN THE TEMPORARY SUPPORT SYSTEM THEY SHALL PREPARE AND SUBMIT PLANS AND CALCULATIONS FOR THESE ITEMS IN ACCORDANCE WITH CMS 501.05. DESIGN, INSTALL AND TEST TIE-BACKS IN ACCORDANCE WITH "RECOMMENDATIONS FOR PRESTRESSED ROCK AND SOIL ANCHORS", 4TH EDITION 2004, BY THE POST-TENSIONING INSTITUTE (PTI).
3. PAYMENT FOR THE TEMPORARY SHEETING SHALL BE INCLUDED IN THE CONTRACT LUMP SUM PRICE FOR ITEM 503 - COFFERDAMS AND EXCAVATION BRACING, AS PER PLAN.
4. ADJUST THE VERTICAL AND HORIZONTAL ANGLES OF THE TIE-BACK ANCHORS TO ACCOMMODATE THE PROPOSED METHOD OF INSTALLATION AND TO AVOID ANY OBSTRUCTIONS. HOWEVER, AS THE VERTICAL AND HORIZONTAL ANGLES OF THE TIE-BACK ANCHORS INCREASE THE COMPONENT OF THE TIE-BACK DESIGN LOAD PERPENDICULAR TO THE WALL WILL DECREASE. THUS THE DESIGN LOAD IN THE TIE-BACK SHALL BE ADJUSTED ACCORDINGLY SUCH THAT THE COMPONENT OF THE DESIGN LOAD PERPENDICULAR TO THE WALL IS NOT REDUCED.
5. THE MINIMUM UNFACTORED SOIL ANCHOR LOAD SHALL BE 20 KIPS.
6. THE BONDED LENGTH SHALL BE 41'. THE UNBONDED LENGTH SHALL BE 17'.
7. TEMPORARY SHEETING SHALL HAVE A MINIMUM SECTION MODULUS OF 19 IN^3/ FT BASED ON A 25 KSI ALLOWABLE STRENGTH.

DESIGN AGENCY
PARSONS BRINCKERHOFF
2945 FARMERS DRIVE
SUITE 350
COLUMBUS, OHIO 43235

DESIGNED	DRAWN	REVIEWED	DATE
ECM	ECM	EBS	05/24/12
CHECKED	REVISED	STRUCTURE NUMBER	
SJG		LEFT: 0202268 RIGHT: 0202274	

FORWARD ABUTMENT - TEMPORARY SHEETING ELEVATION & DETAILS

BRIDGE NO. ALL-75-0875 L/R
I-75 OVER S.R. 81

ALL-75-5.53
PID No. 76691

45/45

1084
1224

J:\Projects\ALL\76691\structures\ALL075_0875C\sheets\075_0875CMD011.dgn 11-SEP-2012 8:57PM reddenj

ALLEN COUNTY
PERRY TOWNSHIP
SEC. 8 SE 1/4 & NE 1/4, T.4S., R.7E.
CITY OF LIMA

NOTE:

ESTIMATED QUANTITIES ON THIS SHEET:

ITEM 607 FENCE, TYPE 47, AS PER PLAN 1601 FT.

ITEM 607 FENCE, TYPE CLT, AS PER PLAN 0 FT.

ITEM 607 FENCELINE SEEDING AND MULCHING 1601 FT.

FENCING QUANTITIES INCLUDE ALL HARDWARE, POST, ETC., COMPLETE IN PLACE AND ARE CARRIED TO THE FENCING SUB-SUMMARY TABLE ON SHEET 1110.

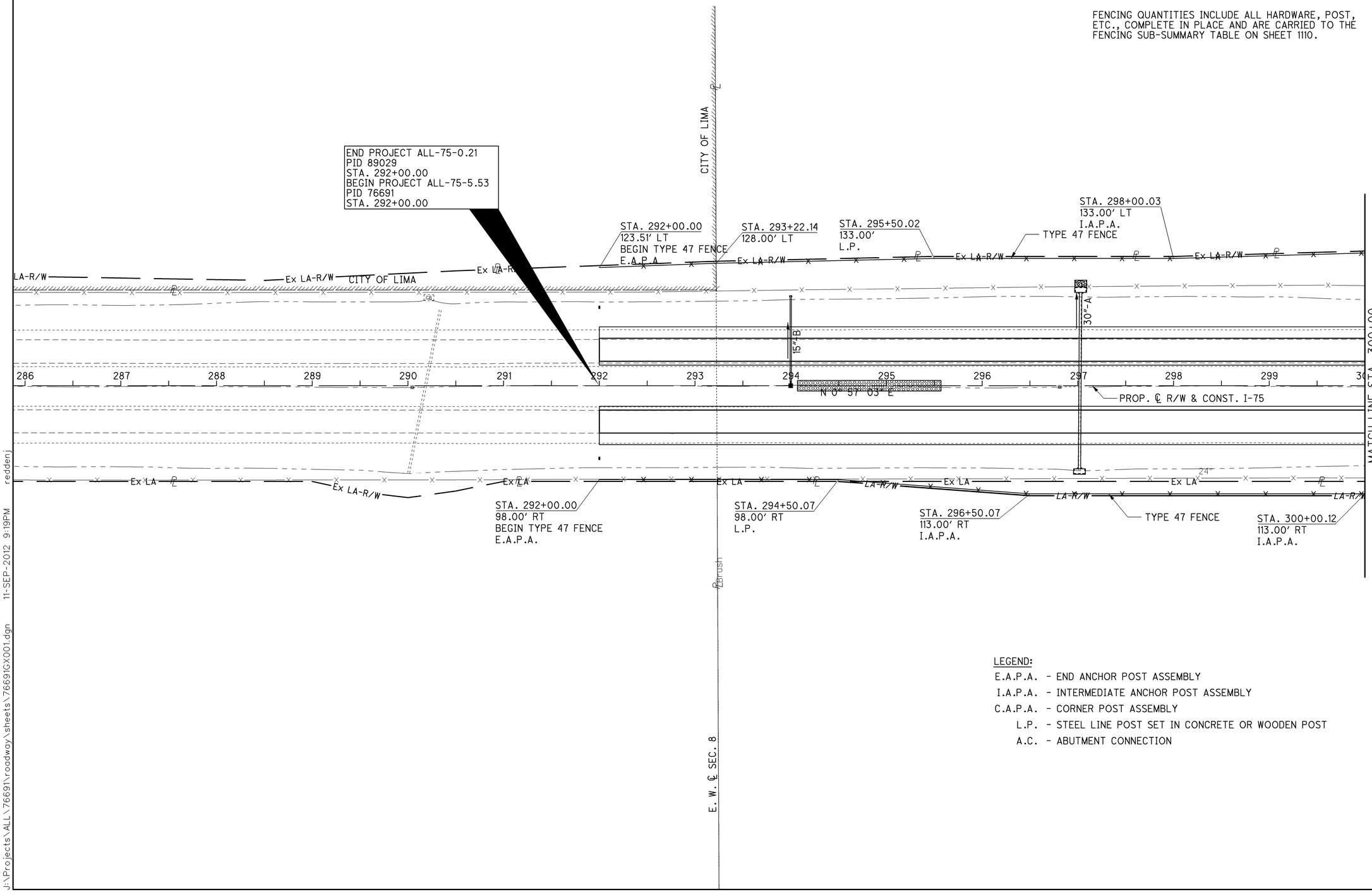

LEGEND:

E.A.P.A. - END ANCHOR POST ASSEMBLY
I.A.P.A. - INTERMEDIATE ANCHOR POST ASSEMBLY
C.A.P.A. - CORNER POST ASSEMBLY
L.P. - STEEL LINE POST SET IN CONCRETE OR WOODEN POST
A.C. - ABUTMENT CONNECTION

HORIZONTAL SCALE IN FEET
0 25 50 100

CALCULATED CAC
CHECKED KDO

FENCING PLAN
BEGIN PROJECT TO STA. 300+00

ALL-75-5.53

1085
1224

J:\Projects\ALL\76691\roadway\sheets\76691GX001.dgn 11-SEP-2012 9:19PM reddenj

ALLEN COUNTY
PERRY TOWNSHIP
SEC. 8, NE 1/4, T. 4 S., R. 7 E.

NOTE:

ESTIMATED QUANTITIES ON THIS SHEET:

ITEM 607 FENCE, TYPE 47, AS PER PLAN 2618 FT.

ITEM 607 FENCE, TYPE CLT, AS PER PLAN 0 FT.

ITEM 607 FENCELINE SEEDING AND MULCHING 2618 FT.

FENCING QUANTITIES INCLUDE ALL HARDWARE, POST, ETC., COMPLETE IN PLACE AND ARE CARRIED TO THE FENCING SUB-SUMMARY TABLE ON SHEET 1110.

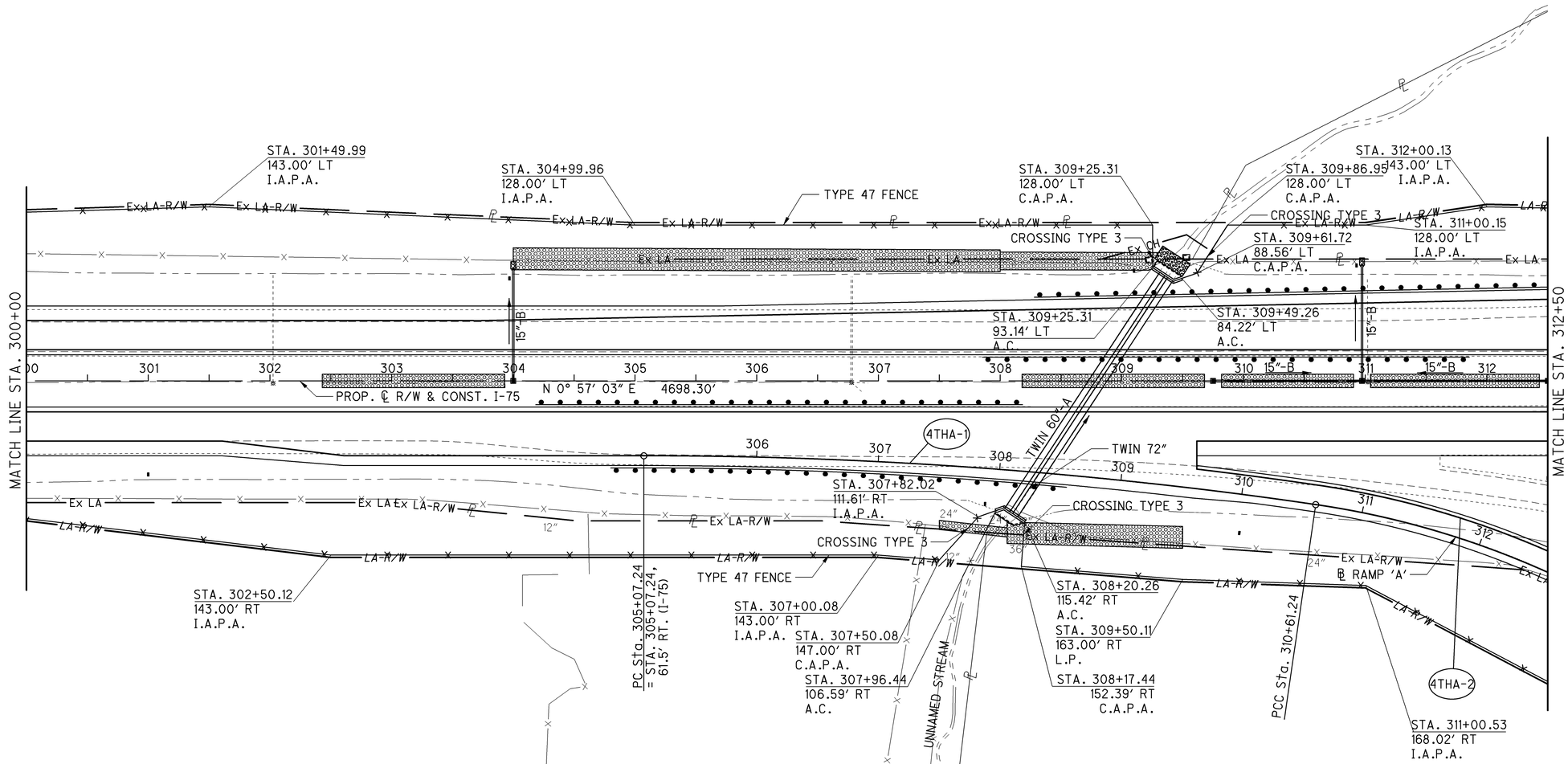

CURVE 4THA-1
P.I.= Sta. 307+84.73
D = 8° 18' 36" (RT)
Dc = 1° 30' 00"
R = 3,819.72'
T = 277.49'
L = 554.00'
E = 10.07'
C = 553.51'
C.B. = N 5° 06' 21" E

CURVE 4THA-2
P.I.= Sta. 313+02.06
D = 37° 10' 14" (RT)
Dc = 8° 00' 00"
R = 716.20'
T = 240.82'
L = 464.63'
E = 39.40'
C = 456.53'
C.B. = N 27° 50' 46" E

LEGEND:
E.A.P.A. - END ANCHOR POST ASSEMBLY
I.A.P.A. - INTERMEDIATE ANCHOR POST ASSEMBLY
C.A.P.A. - CORNER POST ASSEMBLY
L.P. - STEEL LINE POST SET IN CONCRETE OR WOODEN POST
A.C. - ABUTMENT CONNECTION

HORIZONTAL SCALE IN FEET
0 25 50 100

CALCULATED CAC
CHECKED KDO

FENCING PLAN
STA. 300+00 TO STA. 312+50

ALL-75-5.53

1086
1224

J:\Projects\ALL\76691\roadway\sheets\76691GX002.dgn 14-JAN-2013 5:19PM fedak

ALLEN COUNTY
PERRY TOWNSHIP
SEC. 8, NE 1/4 & SEC. 5, SE 1/4, T. 3 S., R. 7 E.

NOTE:

ESTIMATED QUANTITIES ON THIS SHEET:

ITEM 607 FENCE, TYPE 47, AS PER PLAN 1979 FT.

ITEM 607 FENCE, TYPE CLT, AS PER PLAN 0 FT.

ITEM 607 FENCELINE SEEDING AND MULCHING 1979 FT.

FENCING QUANTITIES INCLUDE ALL HARDWARE, POST, ETC., COMPLETE IN PLACE AND ARE CARRIED TO THE FENCING SUB-SUMMARY TABLE ON SHEET 1110.

CURVE 4TH-2
P.I.= Sta. 107+13.54
D = 8° 00′ 00″ (RT)
Dc = 2° 30′ 00″
R = 2,291.83′
T = 160.26′
L = 320.00′
E = 5.60′
C = 319.74′
C.B. = N 86° 49′ 33″ E

CURVE 4TH-3
P.I.= Sta. 113+85.26
D = 8° 00′ 00″ (RT)
Dc = 2° 30′ 00″
R = 2,291.83′
T = 160.26′
L = 320.00′
E = 5.60′
C = 319.74′
C.B. = S 85° 10′ 27″ E

CURVE 4THA-2
P.I.= Sta. 313+02.06
D = 37° 10′ 14″ (RT)
Dc = 8° 00′ 00″
R = 716.20′
T = 240.82′
L = 464.63′
E = 39.40′
C = 456.53′
C.B. = N 27° 50′ 46″ E

CURVE 4THB-2
P.I. STA. 318+20.83
Ls = 200.00′
θs = 24° 45′ 00″
LT = 134.66′
ST = 67.87′
x = 196.30′
y = 28.42′
k = 99.38′
p = 7.15′

CURVE 4THB-1
P.I.= Sta. 321+92.59
D = 155° 32′ 30″ (RT)
Dc = 24° 45′ 00″
R = 231.50′
T = 1,068.08′
L = 628.45′
E = 861.39′
C = 452.49′
C.B. = S 78° 25′ 49″ W

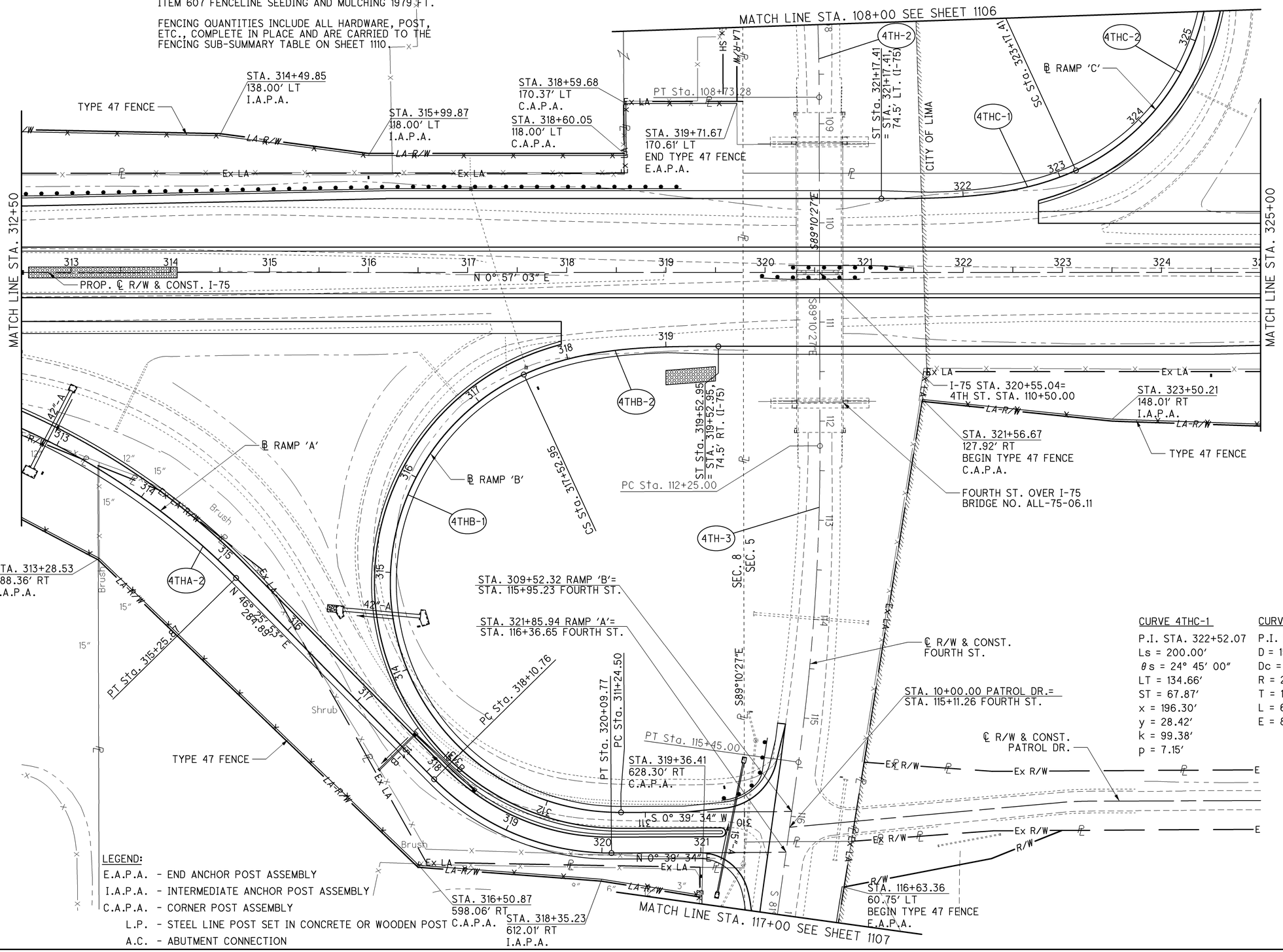

CURVE 4THC-1
P.I. STA. 322+52.07
Ls = 200.00′
θs = 24° 45′ 00″
LT = 134.66′
ST = 67.87′
x = 196.30′
y = 28.42′
k = 99.38′
p = 7.15′

CURVE 4THC-2
P.I. STA. 334+23.30
D = 156° 21′ 13″ (LT)
Dc = 24° 45′ 00″
R = 231.50′
T = 1,105.89′
L = 631.73′
E = 898.36′

LEGEND:
E.A.P.A. - END ANCHOR POST ASSEMBLY
I.A.P.A. - INTERMEDIATE ANCHOR POST ASSEMBLY
C.A.P.A. - CORNER POST ASSEMBLY
L.P. - STEEL LINE POST SET IN CONCRETE OR WOODEN POST
A.C. - ABUTMENT CONNECTION

HORIZONTAL SCALE IN FEET 0 25 50 100

CALCULATED CAC
CHECKED KDO

FENCING PLAN
STA. 312+50 TO STA. 325+00

ALL-75-5.53

J:\Projects\ALL\76691\roadway\sheets\76691GX003.dgn 11-SEP-2012 9:19PM reddenj

CURVE 4THD-2
P.I.= Sta. 326+48.41
D = 35° 04′ 30″ (LT)
Dc = 11° 45′ 00″
R = 487.62′
T = 154.10′
L = 298.51′
E = 23.77′
C = 293.87′
C.B. = N 37° 34′ 33″ E

CURVE 4THD-3
P.I. STA. 328+67.42
Ls = 200.00′
θs = 13° 15′ 00″
LT = 126.20′
ST = 74.59′
x = 198.80′
y = 17.10′
k = 99.82′
p = 2.98′

CURVE 4THD-4
P.I.= Sta. 332+36.78
D = 7° 18′ 31″ (LT)
Dc = 1° 30′ 00″
R = 3,819.72′
T = 243.95′
L = 487.25′
E = 7.78′
C = 486.92′
C.B. = N 3° 08′ 02″ E

CURVE I75-5
P.I.= Sta. 331+37.88
D = 1° 34′ 11″ (LT)
Dc = 0° 12′ 00″
R = 28,647.89′
T = 392.44′
L = 784.83′
E = 2.69′
C = 784.81′
C.B. = N 0° 09′ 58″ E

ALLEN COUNTY
PERRY TOWNSHIP
SEC. 5, SE 1/4, T. 4 S., R. 7 E.
CITY OF LIMA

NOTE:

ESTIMATED QUANTITIES ON THIS SHEET:

ITEM 607 FENCE, TYPE 47, AS PER PLAN 1711 FT.

ITEM 607 FENCE, TYPE CLT, AS PER PLAN 630 FT.

ITEM 607 FENCELINE SEEDING AND MULCHING 2341 FT.

FENCING QUANTITIES INCLUDE ALL HARDWARE, POST, ETC., COMPLETE IN PLACE AND ARE CARRIED TO THE FENCING SUB-SUMMARY TABLE ON SHEET 1110.

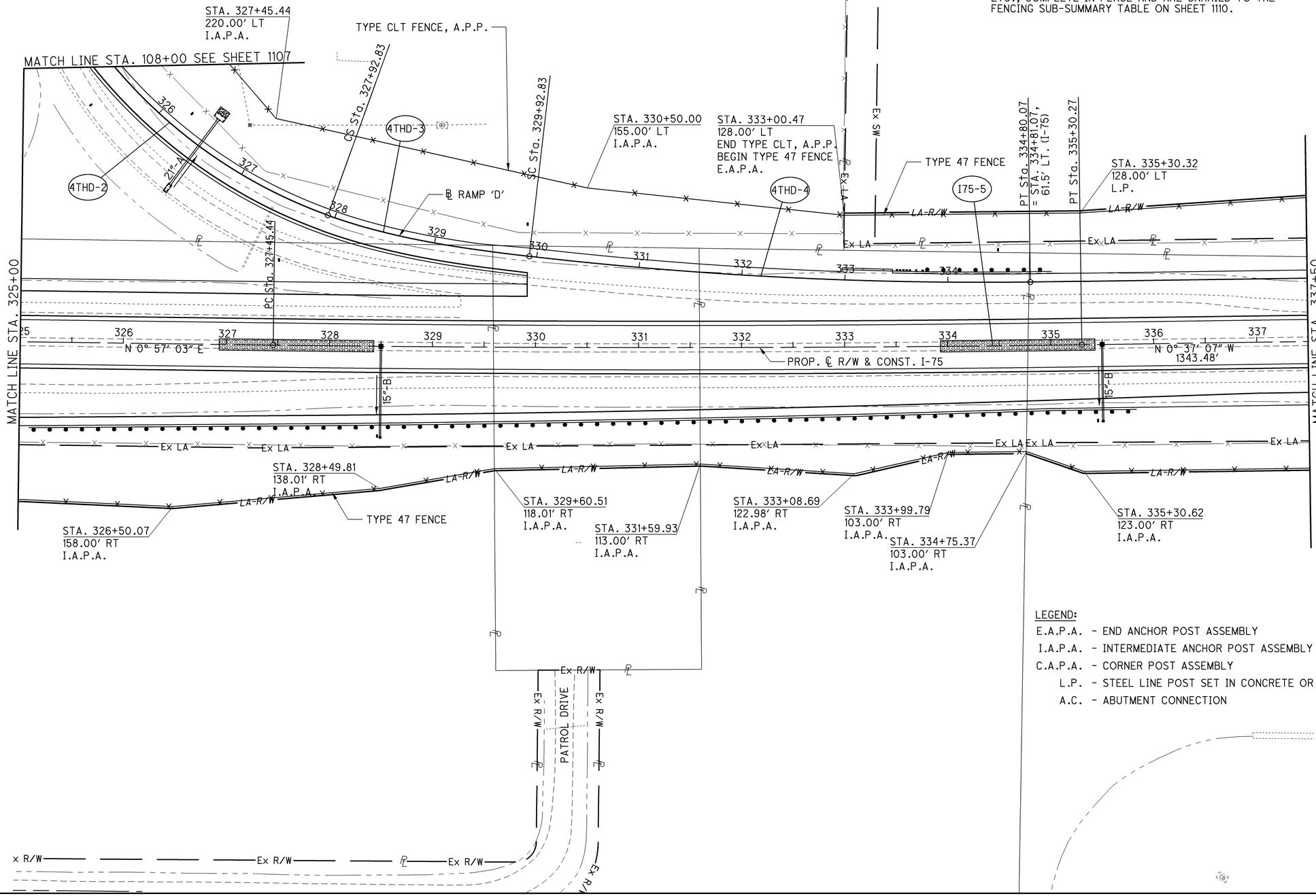

LEGEND:
E.A.P.A. - END ANCHOR POST ASSEMBLY
I.A.P.A. - INTERMEDIATE ANCHOR POST ASSEMBLY
C.A.P.A. - CORNER POST ASSEMBLY
L.P. - STEEL LINE POST SET IN CONCRETE OR WOODEN POST
A.C. - ABUTMENT CONNECTION

HORIZONTAL SCALE IN FEET
0 25 50 100

CALCULATED CAC
CHECKED KDO

FENCING PLAN
STA. 325+00 TO STA. 337+50

ALL-75-5.53

1088
1224

J:\Projects\ALL\76691\roadway\sheets\76691GX005.dgn 11-SEP-2012 9:19PM reddenj

ALLEN COUNTY
PERRY TOWNSHIP
SEC. 5, SE 1/4 & NE 1/4, T. 4 S., R. 7 E.
CITY OF LIMA

NOTE:

ESTIMATED QUANTITIES ON THIS SHEET:

ITEM 601 ROCK CHANNEL PROTECTION, TYPE B, W/FILTER 23 CU YD

ITEM 607 FENCE, TYPE 47, AS PER PLAN 1475 FT.

ITEM 607 FENCE, TYPE CLT, AS PER PLAN 1273 FT.

ITEM 607 FENCELINE SEEDING AND MULCHING 2748 FT.

FENCING QUANTITIES INCLUDE ALL HARDWARE, POST, ETC., COMPLETE IN PLACE AND ARE CARRIED TO THE FENCING SUB-SUMMARY TABLE ON SHEET 1110.

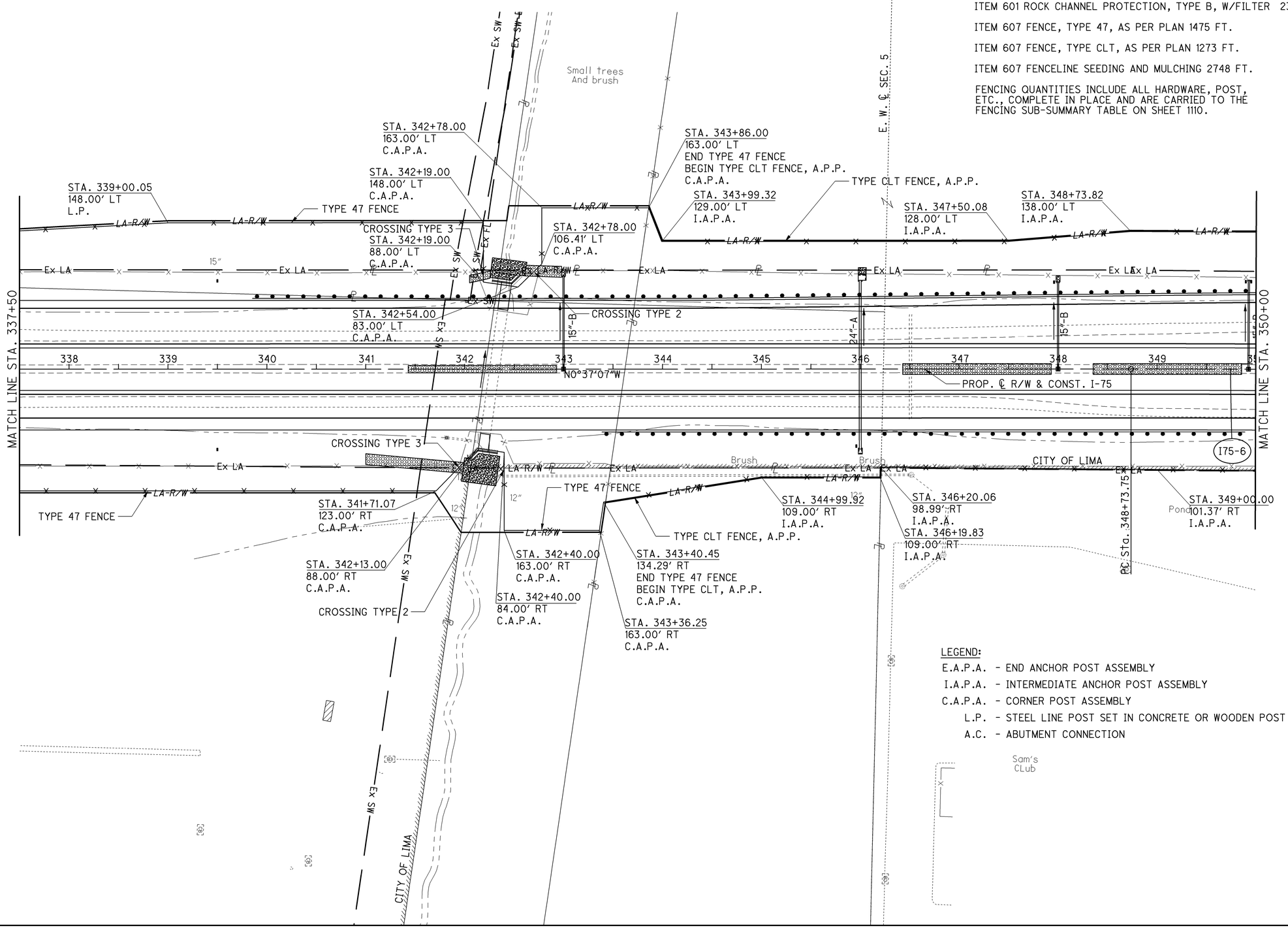

CURVE I75-6
P.I.= Sta. 352+62.60
= 1° 17' 46" (RT)
Dc = 0° 10' 00"
R = 34,377.47'
T = 388.85'
L = 777.67'
E = 2.20'
C = 777.65'
C.B. = N 0° 01' 46" E

LEGEND:

E.A.P.A. - END ANCHOR POST ASSEMBLY
I.A.P.A. - INTERMEDIATE ANCHOR POST ASSEMBLY
C.A.P.A. - CORNER POST ASSEMBLY
L.P. - STEEL LINE POST SET IN CONCRETE OR WOODEN POST
A.C. - ABUTMENT CONNECTION

HORIZONTAL SCALE IN FEET
0 25 50 100

CALCULATED CAC
CHECKED KDO

FENCING PLAN
STA. 337+50 TO STA. 350+00

ALL-75-5.53

1089
1224

J:\Projects\ALL\76691\roadway\sheets\76691GX007.dgn 11-SEP-2012 9:19PM reddenj

NOTE:

ESTIMATED QUANTITIES ON THIS SHEET:

ITEM 607 FENCE, TYPE 47, AS PER PLAN 0 FT.

ITEM 607 FENCE, TYPE CLT, AS PER PLAN 2766 FT.

ITEM 607 FENCELINE SEEDING AND MULCHING 2766 FT.

ITEM 202 FENCE REMOVED 409 FT.

FENCING QUANTITIES INCLUDE ALL HARDWARE, POST, ETC., COMPLETE IN PLACE AND ARE CARRIED TO THE FENCING SUB-SUMMARY TABLE ON SHEET 1110.

ALLEN COUNTY
PERRY TOWNSHIP
SEC. 5, NE 1/4, T. 4 S., R. 7 E.
CITY OF LIMA

CURVE I75-6
P.I.= Sta. 352+62.60
D = 1° 17′ 46″ (RT)
Dc = 0° 10′ 00″
R = 34,377.47′
T = 388.85′
L = 777.67′
E = 2.20′
C = 777.65′
C.B. = N 0° 01′ 46″ E

CURVE 309A-1
P.I. STA. 358+21.67
Ls = 200.00′
θs = 3° 00′ 00″
LT = 133.35′
ST = 66.68′
x = 199.95′
y = 3.49′
k = 99.99′
p = 0.87′

CURVE 309A-2
P.I.= Sta. 360+77.61
D = 17° 23′ 25″ (LT)
Dc = 3° 00′ 00″
R = 1,909.86′
D c = 14° 23′ 25″ (LT)
Lc = 479.68′
Es = 22.65′
C = 478.42′
C.B.1 = N 0° 19′ 21″ W
C.B. = N 9° 31′ 04″ W

CURVE 309F-1
P.I.= Sta. 357+60.13
D = 8° 33′ 00″ (RT)
Dc = 1° 30′ 00″
R = 3,819.72′
T = 285.53′
L = 570.00′
E = 10.66′
C = 569.47′
C.B. = N 4° 39′ 28″ E

CURVE 309F-2
P.I.= Sta. 361+88.14
D = 10° 44′ 03″ (RT)
Dc = 3° 45′ 00″
R = 1,527.89′
T = 143.54′
L = 286.25′
E = 6.73′
C = 285.83′
C.B. = N 14° 18′ 00″ E

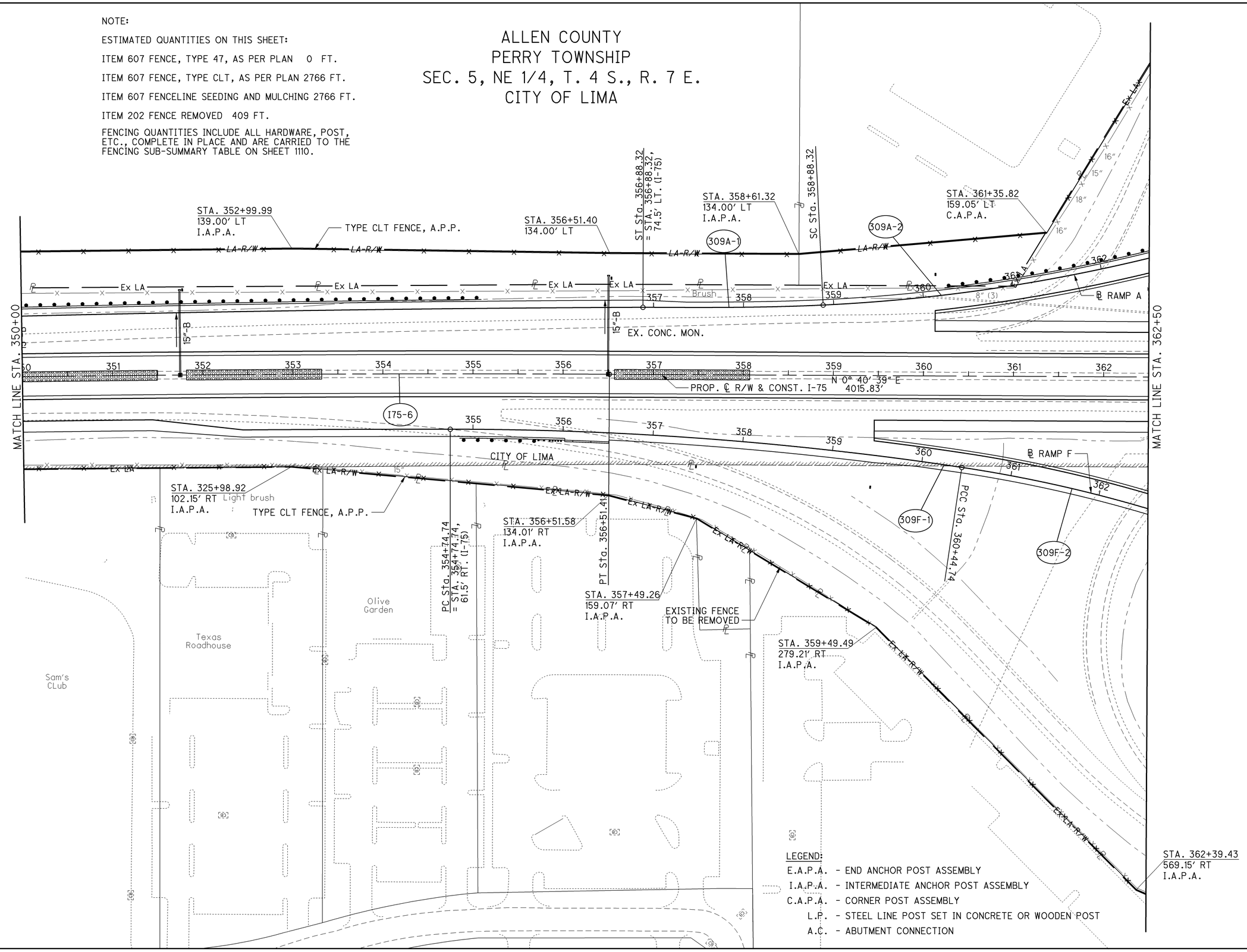

LEGEND:
E.A.P.A. - END ANCHOR POST ASSEMBLY
I.A.P.A. - INTERMEDIATE ANCHOR POST ASSEMBLY
C.A.P.A. - CORNER POST ASSEMBLY
L.P. - STEEL LINE POST SET IN CONCRETE OR WOODEN POST
A.C. - ABUTMENT CONNECTION

HORIZONTAL SCALE IN FEET
0 25 50 100

CALCULATED CAC
CHECKED KDO

FENCING PLAN
STA. 350+00 TO STA. 362+50

ALL-75-5.53

1090
1224

J:\Projects\ALL\76691\roadway\sheets\76691GX008.dgn 11-SEP-2012 9:19PM reddenj

ALLEN COUNTY
PERRY TOWNSHIP
SEC. 5, NE 1/4, T. 4 S., R. 7 E.
BATH TOWNSHIP
SEC. 32, SE 1/4, T. 3 S., R. 7 E.
CITY OF LIMA

NOTE:

ESTIMATED QUANTITIES ON THIS SHEET:

ITEM 607 FENCE, TYPE 47, AS PER PLAN 0 FT.

ITEM 607 FENCE, TYPE CLT, AS PER PLAN 1236 FT.

ITEM 607 FENCELINE SEEDING AND MULCHING 1236 FT.

ITEM 625 GROUND ROD 1 EACH

FENCING QUANTITIES INCLUDE ALL HARDWARE, POST, ETC., COMPLETE IN PLACE AND ARE CARRIED TO THE FENCING SUB-SUMMARY TABLE ON SHEET 1110.

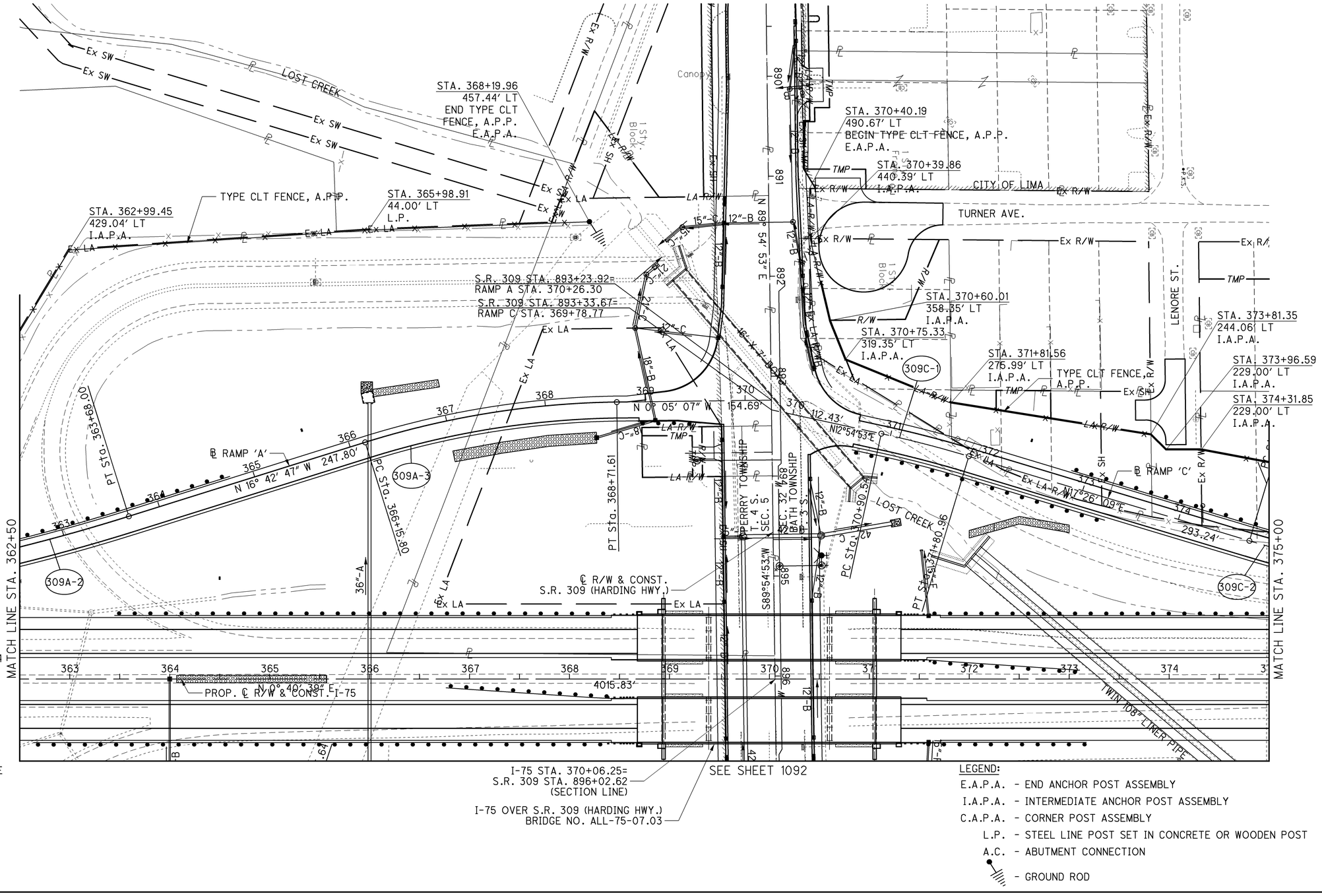

CURVE 309A-2
P.I.= Sta. 360+77.61
D = 17° 23' 25" (LT)
Dc = 3° 00' 00"
R = 1,909.86'
D c = 14° 23' 25" (LT)
Lc = 479.68'
Es = 22.65'
C = 478.42'
C.B.1 = N 0° 19' 21" W
C.B. = N 9° 31' 04" W

CURVE 309A-3
P.I.= Sta. 367+44.61
D = 16° 37' 40" (RT)
Dc = 6° 30' 00"
R = 881.47'
T = 128.81'
L = 255.81'
E = 9.36'
C = 254.92'
C.B. = N 8° 23' 57" W

CURVE 309C-1
P.I.= Sta. 371+35.77
D = 4° 31' 15" (RT)
Dc = 5° 00' 00"
R = 1,145.92'
T = 45.23'
L = 90.42'
E = 0.89'
C = 90.40'
C.B. = N 15° 10' 31" E

CURVE 309C-2
P.I.= Sta. 375+58.84
D = 8° 26' 54" (LT)
Dc = 5° 00' 00"
R = 1,145.92'
T = 84.64'
L = 168.97'
E = 3.12'
C = 168.82'
C.B. = N 13° 12' 42" E

LEGEND:
E.A.P.A. - END ANCHOR POST ASSEMBLY
I.A.P.A. - INTERMEDIATE ANCHOR POST ASSEMBLY
C.A.P.A. - CORNER POST ASSEMBLY
L.P. - STEEL LINE POST SET IN CONCRETE OR WOODEN POST
A.C. - ABUTMENT CONNECTION
- GROUND ROD

HORIZONTAL SCALE IN FEET
0 25 50 100

CALCULATED CAC
CHECKED KDO

FENCING PLAN
STA. 362+50 TO STA. 375+00

ALL-75-5.53

1091
1224

J:\Projects\ALL\76691\roadway\sheets\76691GX009.dgn 11-SEP-2012 9:19PM reddenj

ALLEN COUNTY
PERRY TOWNSHIP
SEC. 5, NE 1/4, T. 4 S., R. 7 E.
BATH TOWNSHIP
SEC. 32, SE 1/4, T. 3 S., R. 7 E.
CITY OF LIMA

NOTE:

ESTIMATED QUANTITIES ON THIS SHEET:

ITEM 607 FENCE, TYPE 47, AS PER PLAN 0 FT.

ITEM 607 FENCE, TYPE CLT, AS PER PLAN 1163 FT.

ITEM 607 FENCELINE SEEDING AND MULCHING 1163 FT.

ITEM 202 FENCE REMOVED 712 FT.

FENCING QUANTITIES INCLUDE ALL HARDWARE, POST, ETC., COMPLETE IN PLACE AND ARE CARRIED TO THE FENCING SUB-SUMMARY TABLE ON SHEET 1110.

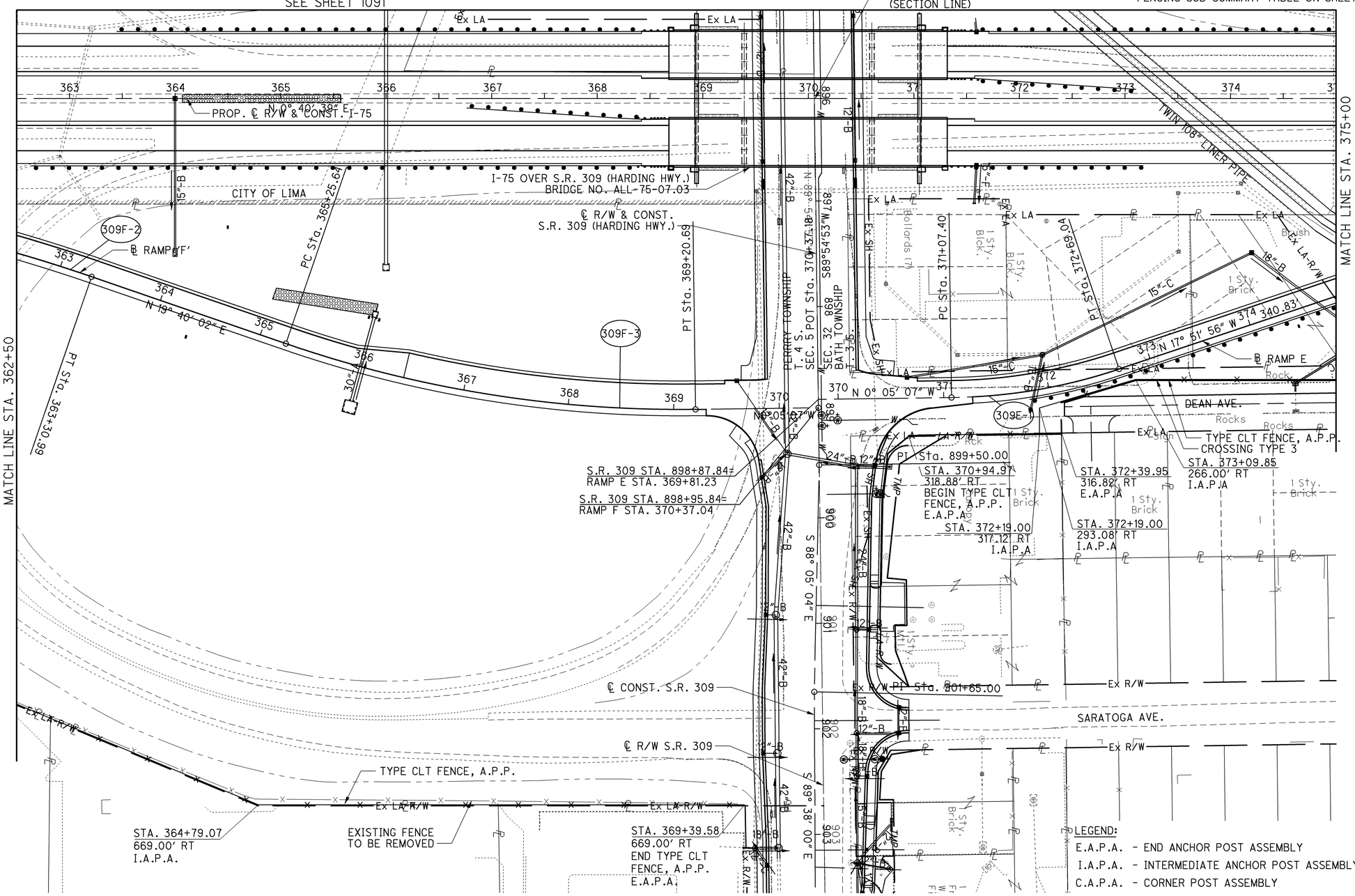

CURVE 309E-1
P.I.= Sta. 371+88.87
D = 17° 46' 49" (LT)
Dc = 11° 00' 00"
R = 520.87'
T = 81.47'
L = 161.64'
E = 6.33'
C = 160.99'
C.B. = N 8° 58' 31" W

CURVE 309E-2
P.I.= Sta. 361+88.14
D = 10° 44' 03" (RT)
Dc = 3° 45' 00"
R = 1,527.89'
T = 143.54'
L = 286.25'
E = 6.73'
C = 285.83'
C.B. = N 14° 18' 00" E

CURVE 309E-3
P.I.= Sta. 367+25.00
D = 19° 45' 08" (LT)
Dc = 5° 00' 00"
R = 1,145.92'
T = 199.50'
L = 395.05'
E = 17.24'
C = 393.09'
C.B. = N 9° 47' 28" E

LEGEND:
E.A.P.A. - END ANCHOR POST ASSEMBLY
I.A.P.A. - INTERMEDIATE ANCHOR POST ASSEMBLY
C.A.P.A. - CORNER POST ASSEMBLY
L.P. - STEEL LINE POST SET IN CONCRETE OF WOODEN POST
A.C. - ABUTMENT CONNECTION

HORIZONTAL SCALE IN FEET
0 25 50 100

CALCULATED CAC
CHECKED KDO

FENCING PLAN
STA. 362+50 TO STA. 375+00

ALL-75-5.53

1092
1224

J:\Projects\ALL\76691\roadway\sheets\76691GX010.dgn 11-SEP-2012 9:19PM reddenj

ALLEN COUNTY
BATH TOWNSHIP
SEC. 32, SE 1/4, T. 3 S., R. 7 E.

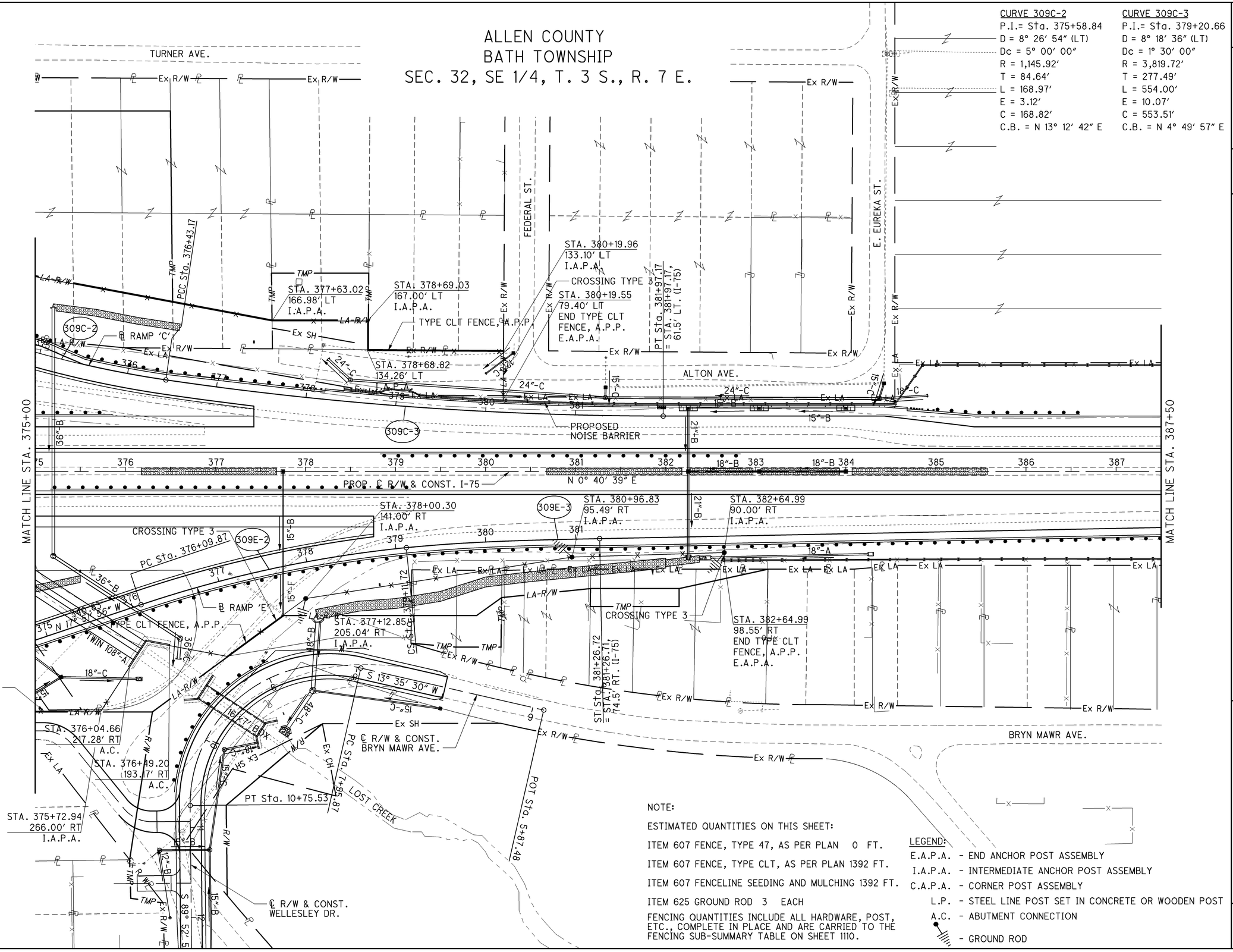

CURVE 309C-2	CURVE 309C-3
P.I.= Sta. 375+58.84	P.I.= Sta. 379+20.66
D = 8° 26′ 54″ (LT)	D = 8° 18′ 36″ (LT)
Dc = 5° 00′ 00″	Dc = 1° 30′ 00″
R = 1,145.92′	R = 3,819.72′
T = 84.64′	T = 277.49′
L = 168.97′	L = 554.00′
E = 3.12′	E = 10.07′
C = 168.82′	C = 553.51′
C.B. = N 13° 12′ 42″ E	C.B. = N 4° 49′ 57″ E

HORIZONTAL SCALE IN FEET: 0, 25, 50, 100

CALCULATED CAC
CHECKED KDO

CURVE 309E-2
P.I.= Sta. 377+61.43
D = 12° 49′ 42″ (RT)
Dc = 4° 15′ 00″
R = 1,348.14′
T = 151.56′
L = 301.84′
E = 8.49′
C = 301.21′
C.B. = N 11° 27′ 05″ W

CURVE 309E-3
P.I. STA. 379+83.43
Ls = 215.00′
θs = 4° 34′ 08″
LT = 143.38′
ST = 71.71′
x = 214.86′
y = 5.71′
k = 107.48′
p = 1.43′

NOTE:

ESTIMATED QUANTITIES ON THIS SHEET:

ITEM 607 FENCE, TYPE 47, AS PER PLAN 0 FT.

ITEM 607 FENCE, TYPE CLT, AS PER PLAN 1392 FT.

ITEM 607 FENCELINE SEEDING AND MULCHING 1392 FT.

ITEM 625 GROUND ROD 3 EACH

FENCING QUANTITIES INCLUDE ALL HARDWARE, POST, ETC., COMPLETE IN PLACE AND ARE CARRIED TO THE FENCING SUB-SUMMARY TABLE ON SHEET 1110.

LEGEND:
E.A.P.A. - END ANCHOR POST ASSEMBLY
I.A.P.A. - INTERMEDIATE ANCHOR POST ASSEMBLY
C.A.P.A. - CORNER POST ASSEMBLY
L.P. - STEEL LINE POST SET IN CONCRETE OR WOODEN POST
A.C. - ABUTMENT CONNECTION
- GROUND ROD

FENCING PLAN
STA. 375+00 TO STA. 387+50

ALL-75-5.53

1093
1224

J:\Projects\ALL\76691\roadway\sheets\76691GX011.dgn 11-SEP-2012 9:20PM reddenj

ALLEN COUNTY
BATH TOWNSHIP
SEC. 32, SE 1/4 & NE 1/4, T.3 S., R. 7 E.

NOTE:

ESTIMATED QUANTITIES ON THIS SHEET:

ITEM 607 FENCE, TYPE 47, AS PER PLAN 260 FT.

ITEM 607 FENCE, TYPE CLT, AS PER PLAN 0 FT.

ITEM 607 FENCELINE SEEDING AND MULCHING 260 FT.

FENCING QUANTITIES INCLUDE ALL HARDWARE, POST, ETC., COMPLETE IN PLACE AND ARE CARRIED TO THE FENCING SUB-SUMMARY TABLE ON SHEET 1110.

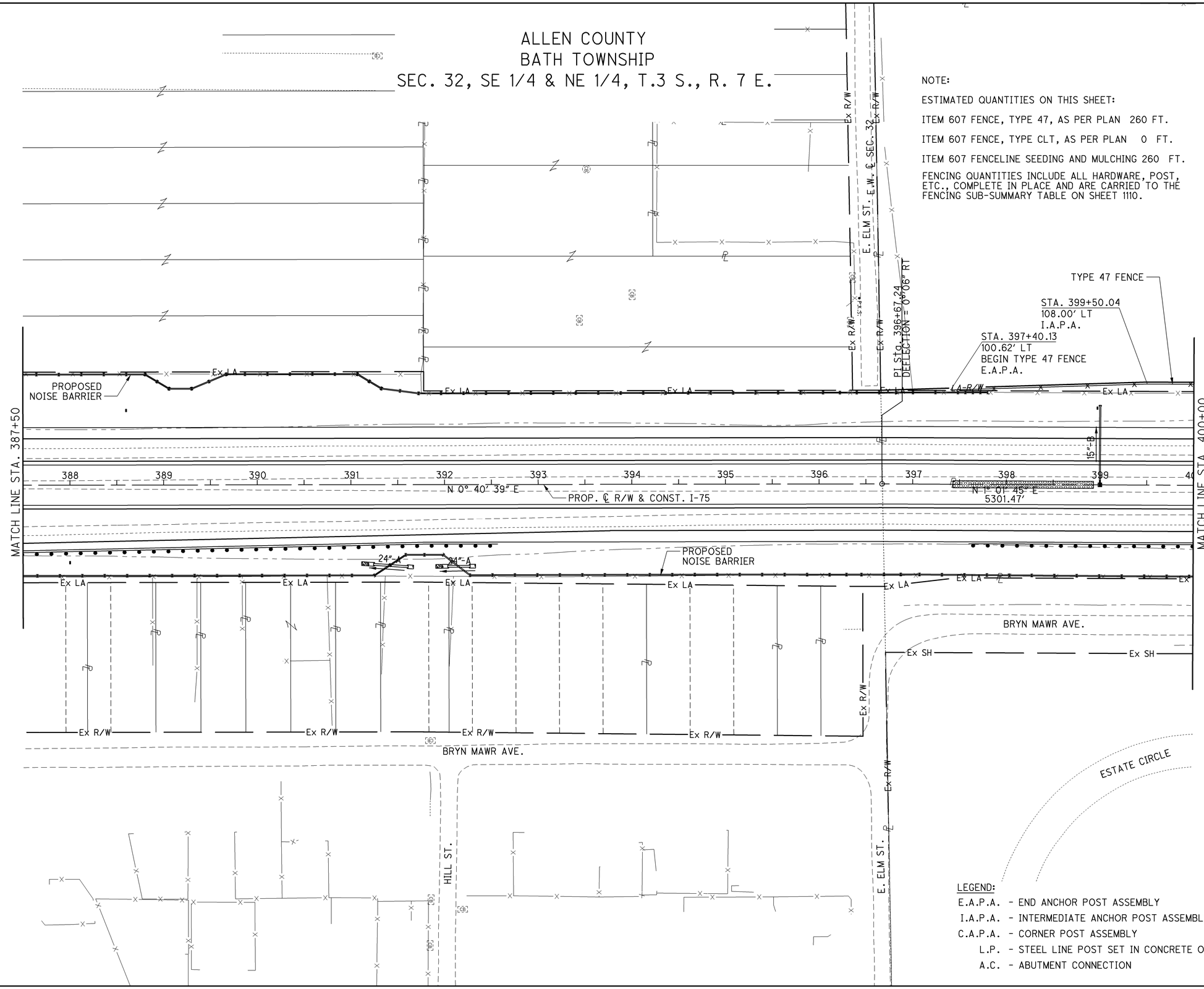

LEGEND:

E.A.P.A. - END ANCHOR POST ASSEMBLY

I.A.P.A. - INTERMEDIATE ANCHOR POST ASSEMBLY

C.A.P.A. - CORNER POST ASSEMBLY

L.P. - STEEL LINE POST SET IN CONCRETE OR WOODEN POST

A.C. - ABUTMENT CONNECTION

HORIZONTAL SCALE IN FEET
0 25 50 100

CALCULATED CAC
CHECKED KDO

FENCING PLAN
STA. 387+50 TO STA. 400+00

ALL-75-5.53

1094
1224

J:\Projects\ALL\76691\roadway\sheets\76691GX012.dgn 11-SEP-2012 9:20PM reddenj

ALLEN COUNTY
BATH TOWNSHIP
SEC. 32, NE 1/4, T.3 S., R. 7 E.

NOTE:

ESTIMATED QUANTITIES ON THIS SHEET:

ITEM 607 FENCE, TYPE 47, AS PER PLAN 996 FT.

ITEM 607 FENCE, TYPE CLT, AS PER PLAN 0 FT.

ITEM 607 FENCELINE SEEDING AND MULCHING 996 FT.

ITEM 625 GROUND ROD 1 EACH

FENCING QUANTITIES INCLUDE ALL HARDWARE, POST, ETC., COMPLETE IN PLACE AND ARE CARRIED TO THE FENCING SUB-SUMMARY TABLE ON SHEET 1110.

LEGEND:

E.A.P.A. - END ANCHOR POST ASSEMBLY
I.A.P.A. - INTERMEDIATE ANCHOR POST ASSEMBLY
C.A.P.A. - CORNER POST ASSEMBLY
L.P. - STEEL LINE POST SET IN CONCRETE OR WOODEN POST
A.C. - ABUTMENT CONNECTION
- GROUND ROD

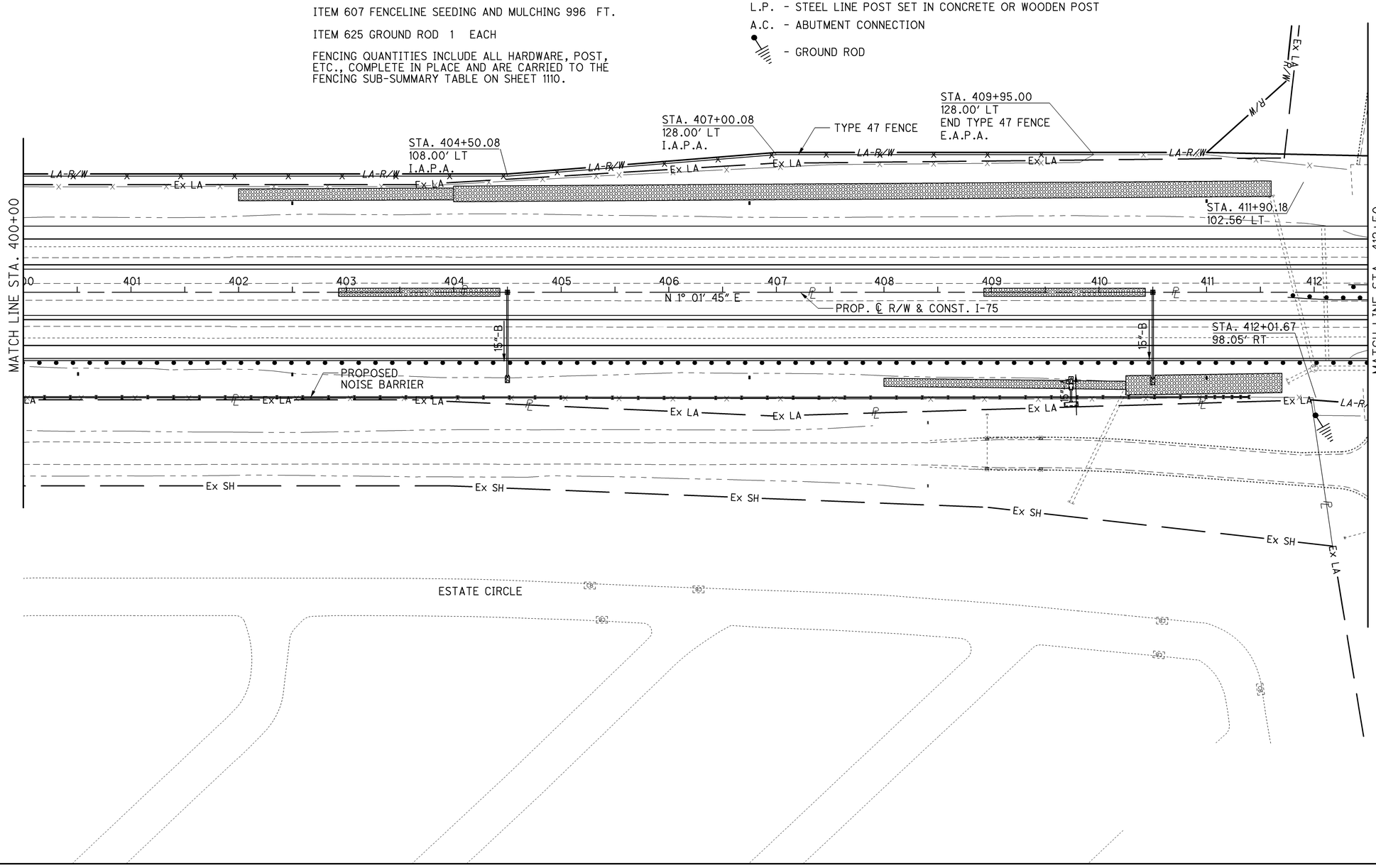

HORIZONTAL SCALE IN FEET
0 25 50 100

CALCULATED CAC
CHECKED KDO

FENCING PLAN
STA. 400+00 TO STA. 412+50

ALL-75-5.53

1095
1224

J:\Projects\ALL\76691\roadway\sheets\76691GX013.dgn 11-SEP-2012 9:20PM reddenj

NOTE:

ESTIMATED QUANTITIES ON THIS SHEET:

ITEM 601 ROCK CHANNEL PROTECTION, TYPE B, W/FILTER 17 CU YD

ITEM 607 FENCE, TYPE 47, AS PER PLAN 1933 FT.

ITEM 607 FENCE, TYPE CL 150 FT.

ITEM 607 FENCELINE SEEDING AND MULCHING 2083 FT.

ITEM 625 GROUND ROD 5 EACH

FENCING QUANTITIES INCLUDE ALL HARDWARE, POST, ETC., COMPLETE IN PLACE AND ARE CARRIED TO THE FENCING SUB-SUMMARY TABLE ON SHEET 1110.

ALLEN COUNTY
BATH TOWNSHIP
SEC. 32, NE 1/4, SEC. 29, SE 1/4, T.3 S., R. 7 E.
CITY OF LIMA

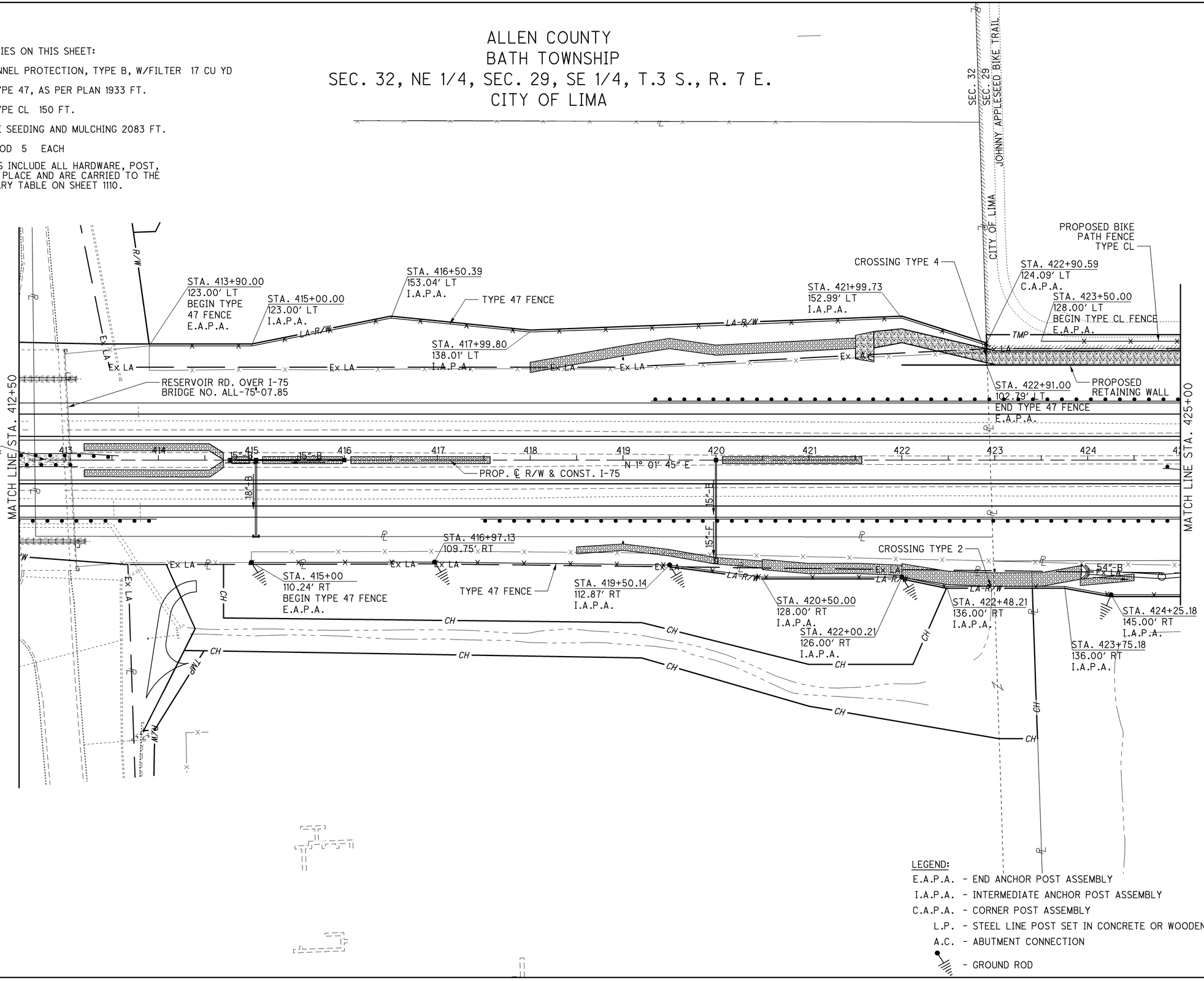

LEGEND:

E.A.P.A. - END ANCHOR POST ASSEMBLY
I.A.P.A. - INTERMEDIATE ANCHOR POST ASSEMBLY
C.A.P.A. - CORNER POST ASSEMBLY
L.P. - STEEL LINE POST SET IN CONCRETE OR WOODEN POST
A.C. - ABUTMENT CONNECTION
- GROUND ROD

HORIZONTAL SCALE IN FEET
0 25 50 100

CALCULATED CAC
CHECKED KDO

FENCING PLAN
STA. 412+50 TO STA. 425+00

ALL-75-5.53

1096
1224

J:\Projects\ALL\76691\roadway\sheets\76691GX014.dgn 11-SEP-2012 9:20PM redden

ALLEN COUNTY
BATH TOWNSHIP
SEC. 29, SE 1/4, T.3 S., R. 7 E.
CITY OF LIMA

NOTE:

ESTIMATED QUANTITIES ON THIS SHEET:

ITEM 607 FENCE, TYPE 47, AS PER PLAN 2090 FT.

ITEM 607 FENCE, TYPE CL 197 FT.

ITEM 607 FENCELINE SEEDING AND MULCHING 2567 FT.

ITEM 625 GROUND ROD 4 EACH

FENCING QUANTITIES INCLUDE ALL HARDWARE, POST, ETC., COMPLETE IN PLACE AND ARE CARRIED TO THE FENCING SUB-SUMMARY TABLE ON SHEET 1110.

NOTE:
1. INTERSTATE ROUTE 75 - CONSTRUCTION
STA. 427+96.17 (0.0'RT) =
CHICAGO, FORT WAYNE, AND
EASTERN RAILROAD (CFER)
AAR/DOT# 532704D
RR MP. 258.94
REGION: MIDWEST
SUBDIVISION: LIMA

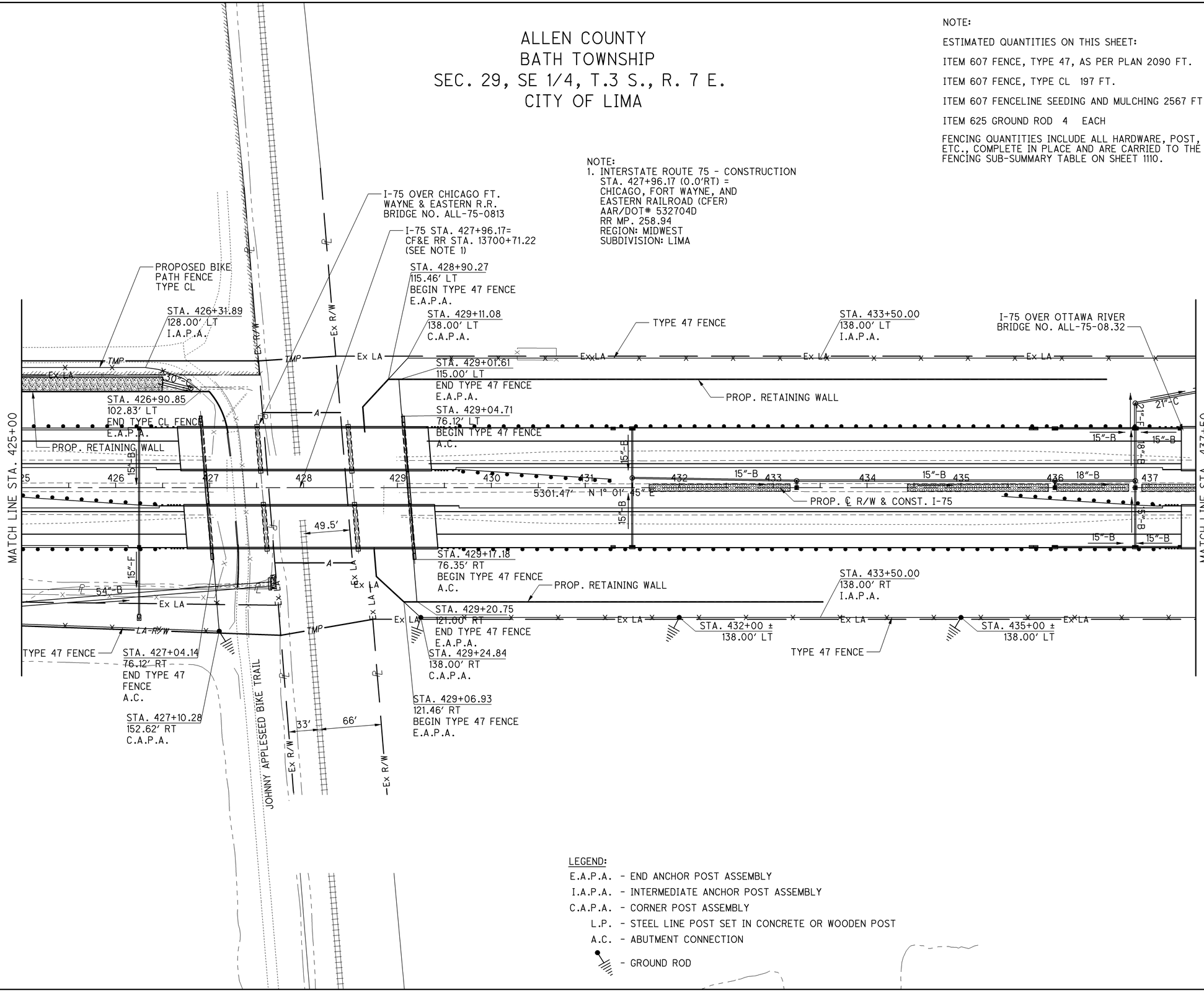

LEGEND:

E.A.P.A. - END ANCHOR POST ASSEMBLY
I.A.P.A. - INTERMEDIATE ANCHOR POST ASSEMBLY
C.A.P.A. - CORNER POST ASSEMBLY
L.P. - STEEL LINE POST SET IN CONCRETE OR WOODEN POST
A.C. - ABUTMENT CONNECTION
- GROUND ROD

HORIZONTAL SCALE IN FEET
0 25 50 100

CALCULATED CAC
CHECKED KDO

FENCING PLAN
STA. 425+00 TO STA. 437+50

ALL-75-5.53

1097
1224

J:\Projects\ALL\76691\roadway\sheets\76691GX015.dgn 11-SEP-2012 9:20PM reddenj

ALLEN COUNTY
BATH TOWNSHIP
SEC. 29, SE 1/4 & NE 1/4, T.3 S., R. 7 E.

NOTE:

ESTIMATED QUANTITIES ON THIS SHEET:

ITEM 607 FENCE, TYPE 47, AS PER PLAN 2464 FT.

ITEM 607 FENCE, TYPE CLT, AS PER PLAN 0 FT.

ITEM 607 FENCELINE SEEDING AND MULCHING 2464 FT.

ITEM 625 GROUND ROD 2 EACH

FENCING QUANTITIES INCLUDE ALL HARDWARE, POST, ETC., COMPLETE IN PLACE AND ARE CARRIED TO THE FENCING SUB-SUMMARY TABLE ON SHEET 1110.

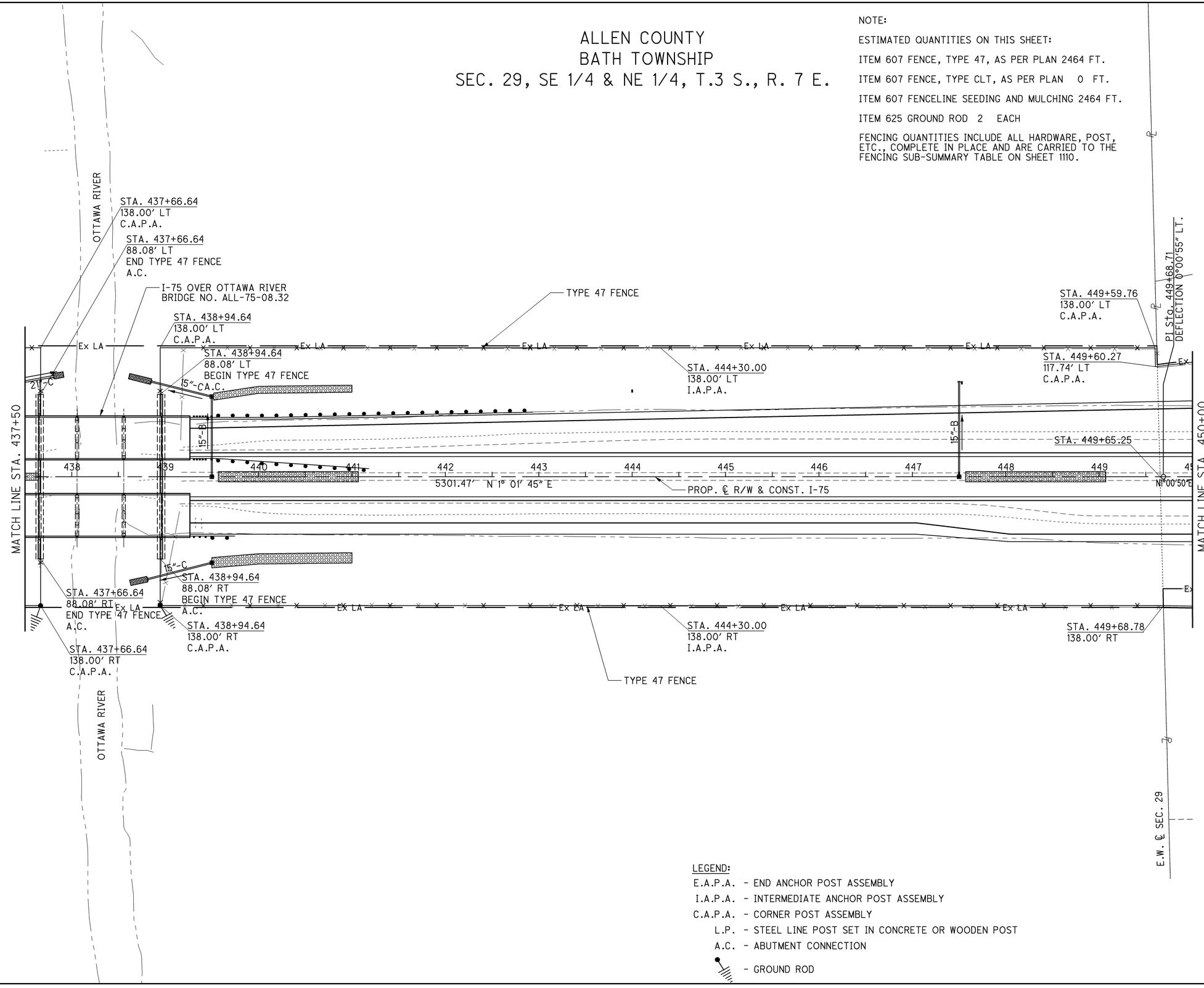

LEGEND:

E.A.P.A. - END ANCHOR POST ASSEMBLY

I.A.P.A. - INTERMEDIATE ANCHOR POST ASSEMBLY

C.A.P.A. - CORNER POST ASSEMBLY

L.P. - STEEL LINE POST SET IN CONCRETE OR WOODEN POST

A.C. - ABUTMENT CONNECTION

- GROUND ROD

HORIZONTAL SCALE IN FEET
0 25 50 100

CALCULATED CAC
CHECKED KDO

FENCING PLAN
STA. 437+00 TO STA. 450+00

ALL-75-5.53

1098
1224

J:\Projects\ALL\76691\roadway\sheets\76691GX016.dgn 11-SEP-2012 9:20PM reddenj

CURVE 81D-1
P.I. STA. 452+13.61
Ls = 220.00′
θs = 1° 55′ 30″
LT = 146.68′
ST = 73.34′
x = 219.98′
y = 2.46′
k = 110.00′
p = 0.62′

CURVE 81D-2
P.I.= Sta. 456+09.25
D = 15° 07′ 22″ (LT)
Dc = 1° 45′ 00″
R = 3,274.04′
D c = 13° 11′ 52″ (LT)
Lc = 754.16′
Es = 29.03′
C = 752.49′
C.B.1 = N 0° 45′ 52″ W
C.B. = N 8° 38′ 48″ W

ALLEN COUNTY
BATH TOWNSHIP
SEC. 29, NE 1/4, T.3 S., R. 7 E.

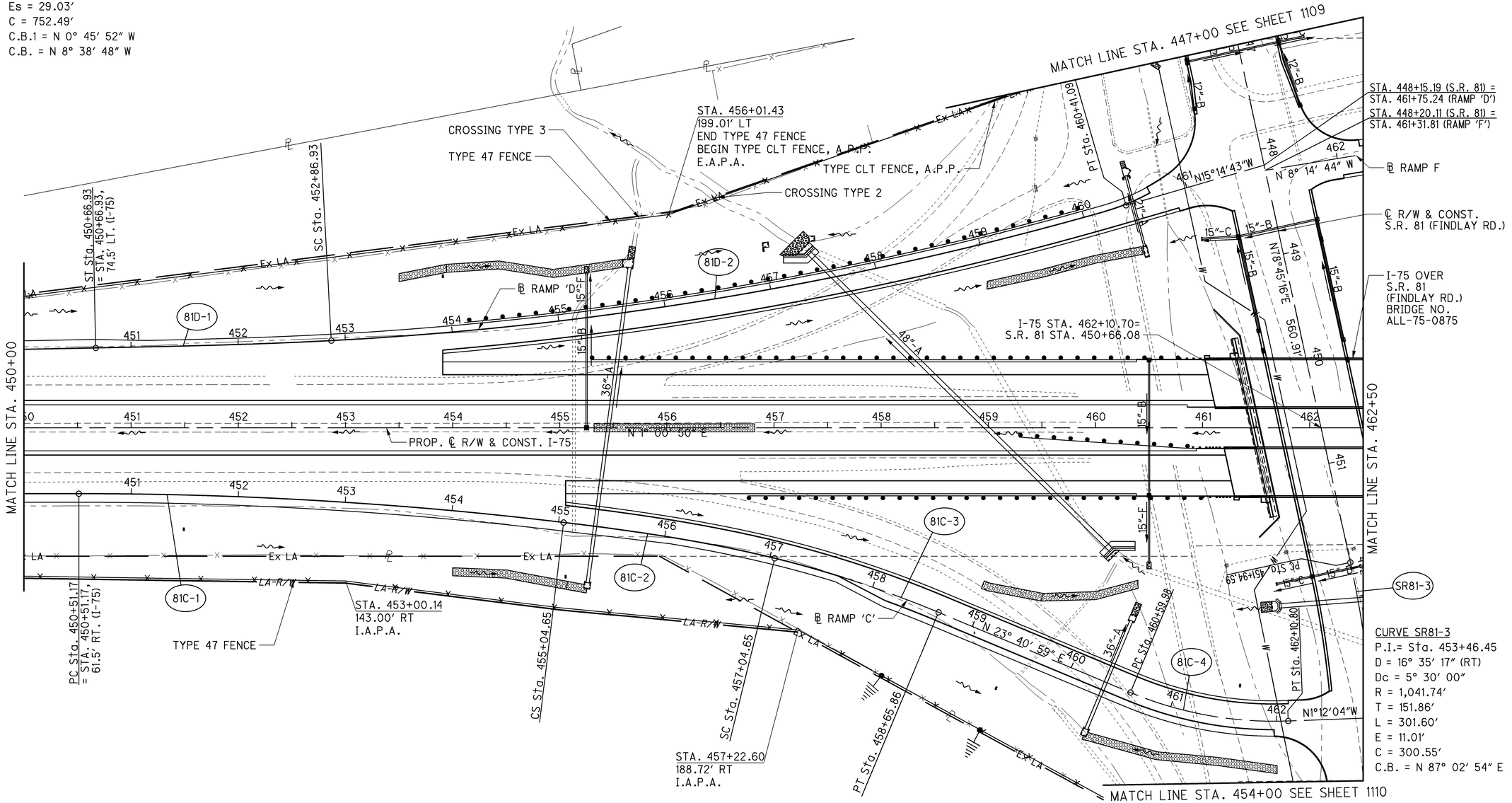

CURVE SR81-3
P.I.= Sta. 453+46.45
D = 16° 35′ 17″ (RT)
Dc = 5° 30′ 00″
R = 1,041.74′
T = 151.86′
L = 301.60′
E = 11.01′
C = 300.55′
C.B. = N 87° 02′ 54″ E

CURVE 81C-1
P.I.= Sta. 452+78.18
D = 6° 48′ 08″ (RT)
Dc = 1° 30′ 00″
R = 3,819.72′
T = 227.01′
L = 453.48′
E = 6.74′
C = 453.22′
C.B. = N 4° 24′ 54″ E

CURVE 81C-2
P.I. STA. 456+23.82
Ls = 200.00′
θs = 7° 00′ 00″
LT = 119.17′
ST = 81.06′
x = 199.63′
y = 9.88′
k = 99.95′
p = 1.16′

CURVE 81C-3
P.I.= Sta. 457+85.42
D = 8° 52′ 00″ (RT)
Dc = 5° 30′ 00″
R = 1,041.74′
T = 80.77′
L = 161.21′
E = 3.13′
C = 161.05′
C.B. = N 19° 14′ 59″ E

CURVE 81C-4
P.I.= Sta. 461+36.60
D = 24° 53′ 03″ (LT)
Dc = 16° 30′ 00″
R = 347.25′
T = 76.61′
L = 150.81′
E = 8.35′
C = 149.63′
C.B. = N 11° 14′ 27″ E

LEGEND:
E.A.P.A. - END ANCHOR POST ASSEMBLY
I.A.P.A. - INTERMEDIATE ANCHOR POST ASSEMBLY
C.A.P.A. - CORNER POST ASSEMBLY
L.P. - STEEL LINE POST SET IN CONCRETE OR WOODEN POST
A.C. - ABUTMENT CONNECTION
- GROUND ROD

NOTE:
ESTIMATED QUANTITIES ON THIS SHEET:
ITEM 601 ROCK CHANNEL PROTECTION, TYPE B, W/FILTER 6.7 CU YD
ITEM 607 FENCE, TYPE 47, AS PER PLAN 1639 FT.
ITEM 607 FENCE, TYPE CLT, AS PER PLAN 350 FT.
ITEM 607 FENCELINE SEEDING AND MULCHING 1992 FT.
ITEM 625 GROUND ROD 2 EACH
FENCING QUANTITIES INCLUDE ALL HARDWARE, POST, ETC., COMPLETE IN PLACE AND ARE CARRIED TO THE FENCING SUB-SUMMARY TABLE ON SHEET 1110.

HORIZONTAL SCALE IN FEET
0 25 50 100
CALCULATED CAC CHECKED KDO

FENCING PLAN
STA. 450+00 TO STA. 462+50

ALL-75-5.53

1099
1224

J:\Projects\ALL\76691\roadway\sheets\76691GX017.dgn 11-SEP-2012 9:20PM reddenj

LEGEND:

E.A.P.A. - END ANCHOR POST ASSEMBLY
I.A.P.A. - INTERMEDIATE ANCHOR POST ASSEMBLY
C.A.P.A. - CORNER POST ASSEMBLY
L.P. - STEEL LINE POST SET IN CONCRETE OR WOODEN POST
A.C. - ABUTMENT CONNECTION

ALLEN COUNTY
BATH TOWNSHIP
SEC. 29, NE 1/4, T. 3 S., R. 7 E.

NOTE:

ESTIMATED QUANTITIES ON THIS SHEET:

ITEM 607 FENCE, TYPE 47, AS PER PLAN 0 FT.

ITEM 607 FENCE, TYPE CLT, AS PER PLAN 844 FT.

ITEM 607 FENCELINE SEEDING AND MULCHING 844 FT.

ITEM 202 FENCE REMOVED 1037 FT.

FENCING QUANTITIES INCLUDE ALL HARDWARE, POST, ETC., COMPLETE IN PLACE AND ARE CARRIED TO THE FENCING SUB-SUMMARY TABLE ON SHEET 1110.

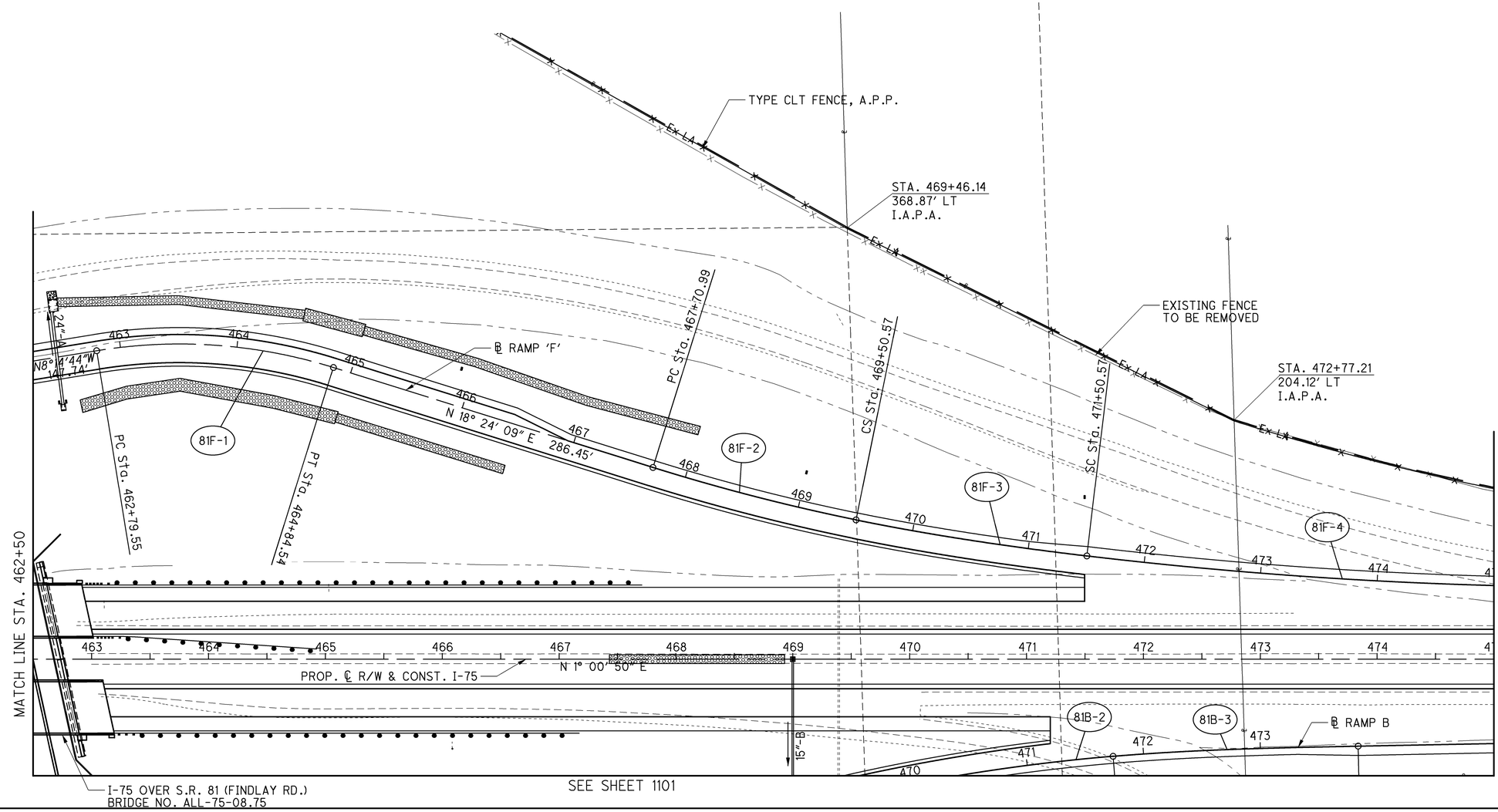

CURVE 81F-1
P.I.= Sta. 463+83.93
D = 26° 38' 53" (RT)
Dc = 13° 00' 00"
R = 440.74'
T = 104.38'
L = 204.99'
E = 12.19'
C = 203.14'
C.B. = N 5° 04' 43" E

CURVE 81F-2
P.I.= Sta. 468+60.86
D = 5° 50' 11" (LT)
Dc = 3° 15' 00"
R = 1,762.95'
T = 89.87'
L = 179.58'
E = 2.29'
C = 179.50'
C.B. = N 15° 29' 04" E

CURVE 81F-3
P.I. STA. 470+38.34
Ls = 200.00'
θs = 4° 45' 00"
LT = 112.34'
ST = 87.77'
x = 199.81'
y = 7.27'
k = 99.98'
p = 0.51'

CURVE 81F-4
P.I.= Sta. 473+77.58
D = 6° 48' 08" (LT)
Dc = 1° 30' 00"
R = 3,819.72'
T = 227.01'
L = 453.48'
E = 6.74'
C = 453.22'
C.B. = N 4° 24' 54" E

CURVE 81B-2
P.I.= Sta. 469+71.54
D = 14° 13' 57" (RT)
Dc = 3° 30' 00"
R = 1,637.02'
T = 204.37'
L = 406.64'
E = 12.71'
C = 405.59'
C.B. = N 10° 55' 23" W

CURVE 81B-3
P.I. STA. 472+43.84
Ls = 210.00'
θs = 3° 40' 30"
LT = 140.03'
ST = 70.03'
x = 209.91'
y = 4.49'
k = 104.99'
p = 1.12'

HORIZONTAL SCALE IN FEET
0 25 50 100
CALCULATED CAC
CHECKED KDO

FENCING PLAN
STA. 462+50 TO STA. 475+00

ALL-75-5.53

1100
1224

J:\Projects\ALL\76691\roadway\sheets\76691GX021.dgn 11-SEP-2012 9:20PM reddenj

ALLEN COUNTY
BATH TOWNSHIP
SEC. 29, NE 1/4, T. 3 S., R. 7 E.

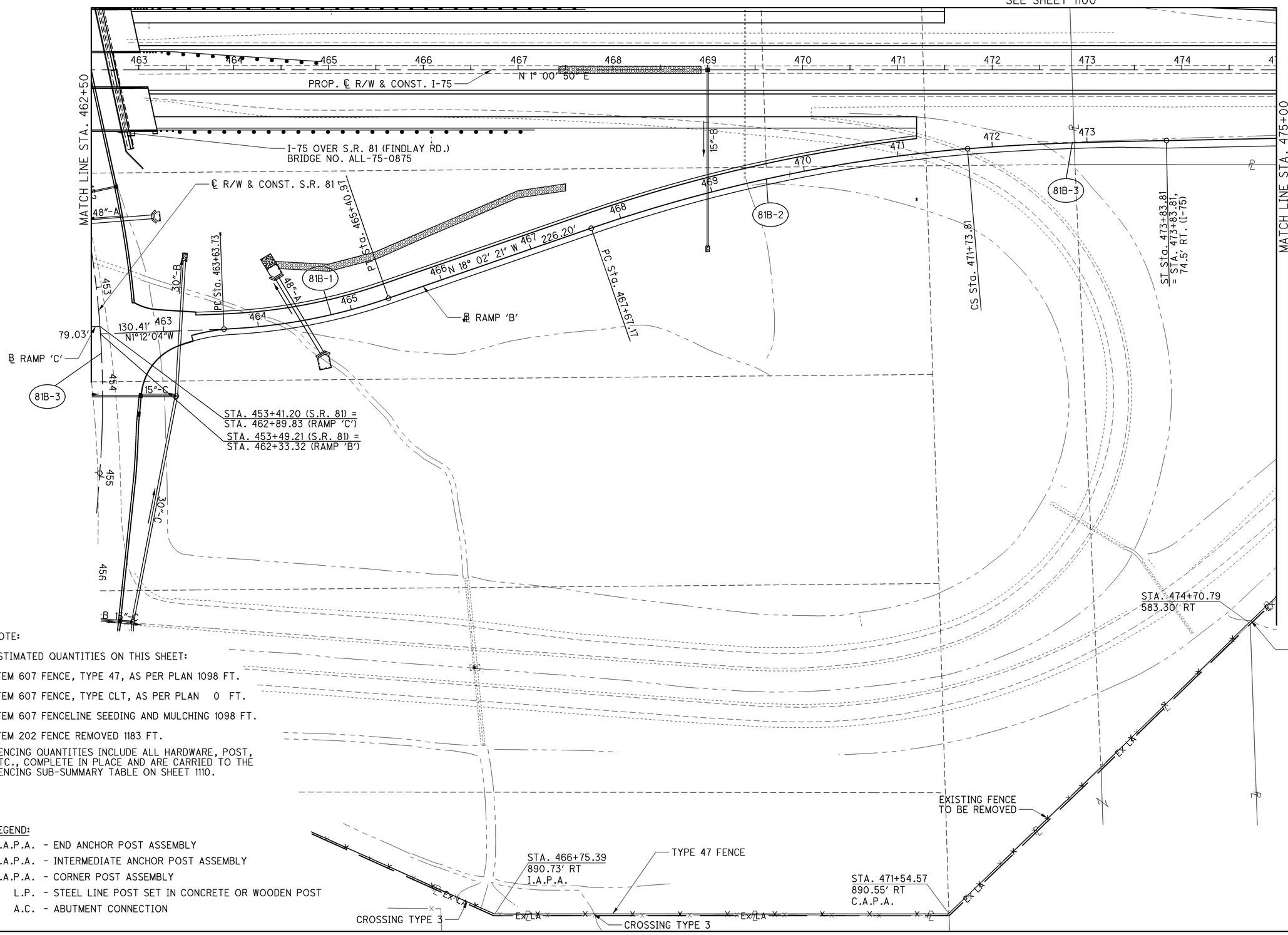

CURVE 81B-1
P.I.= Sta. 464+52.99
D = 16° 50' 17" (LT)
Dc = 9° 30' 00"
R = 603.11'
T = 89.26'
L = 177.24'
E = 6.57'
C = 176.60'
C.B. = N 9° 37' 13" W

CURVE 81B-2
P.I.= Sta. 469+71.54
D = 14° 13' 57" (RT)
Dc = 3° 30' 00"
R = 1,637.02'
T = 204.37'
L = 406.64'
E = 12.71'
C = 405.59'
C.B. = N 10° 55' 23" W

CURVE 81B-3
P.I. STA. 472+43.84
Ls = 210.00'
θs = 3° 40' 30"
LT = 140.03'
ST = 70.03'
x = 209.91'
y = 4.49'
k = 104.99'
p = 1.12'

CURVE SR81-3
P.I.= Sta. 453+46.45
D = 16° 35' 17" (RT)
Dc = 5° 30' 00"
R = 1,041.74'
T = 151.86'
L = 301.60'
E = 11.01'
C = 300.55'
C.B. = N 87° 02' 54" E

NOTE:

ESTIMATED QUANTITIES ON THIS SHEET:

ITEM 607 FENCE, TYPE 47, AS PER PLAN 1098 FT.

ITEM 607 FENCE, TYPE CLT, AS PER PLAN 0 FT.

ITEM 607 FENCELINE SEEDING AND MULCHING 1098 FT.

ITEM 202 FENCE REMOVED 1183 FT.

FENCING QUANTITIES INCLUDE ALL HARDWARE, POST, ETC., COMPLETE IN PLACE AND ARE CARRIED TO THE FENCING SUB-SUMMARY TABLE ON SHEET 1110.

LEGEND:

E.A.P.A. - END ANCHOR POST ASSEMBLY
I.A.P.A. - INTERMEDIATE ANCHOR POST ASSEMBLY
C.A.P.A. - CORNER POST ASSEMBLY
L.P. - STEEL LINE POST SET IN CONCRETE OR WOODEN POST
A.C. - ABUTMENT CONNECTION

HORIZONTAL SCALE IN FEET
0 25 50 100

CALCULATED CAC
CHECKED KDO

FENCING PLAN
STA. 462+50 TO STA. 475+00

ALL-75-5.53

1101
1224

J:\Projects\ALL\76691\roadway\sheets\76691GX022.dgn 11-SEP-2012 9:20PM reddenj

ALLEN COUNTY
BATH TOWNSHIP
SEC. 29, NE 1/4, SEC. 20, SE 1/4, T. 3 S., R. 7 E.

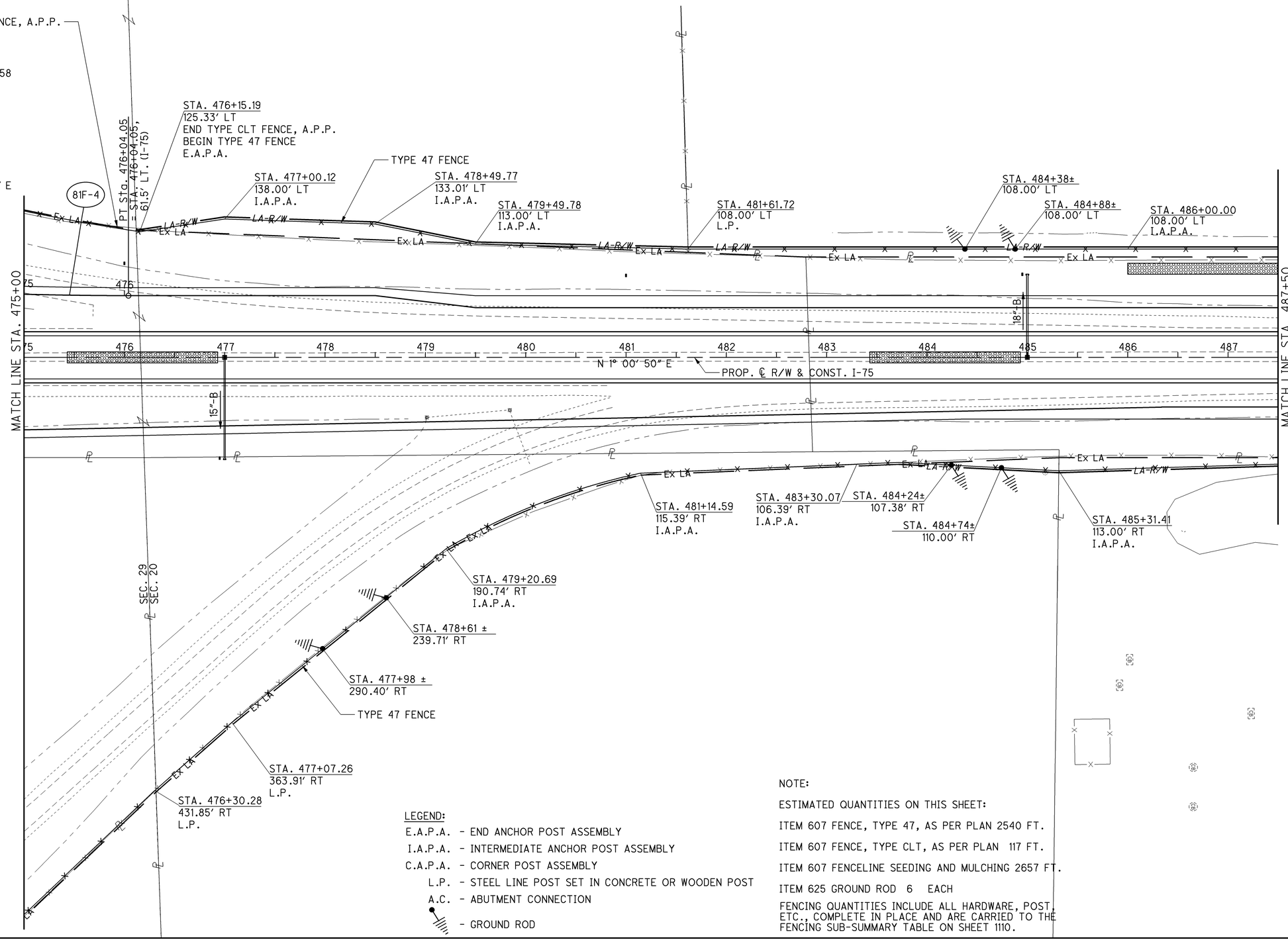

LEGEND:

E.A.P.A. - END ANCHOR POST ASSEMBLY
I.A.P.A. - INTERMEDIATE ANCHOR POST ASSEMBLY
C.A.P.A. - CORNER POST ASSEMBLY
L.P. - STEEL LINE POST SET IN CONCRETE OR WOODEN POST
A.C. - ABUTMENT CONNECTION
- GROUND ROD

NOTE:

ESTIMATED QUANTITIES ON THIS SHEET:

ITEM 607 FENCE, TYPE 47, AS PER PLAN 2540 FT.

ITEM 607 FENCE, TYPE CLT, AS PER PLAN 117 FT.

ITEM 607 FENCELINE SEEDING AND MULCHING 2657 FT.

ITEM 625 GROUND ROD 6 EACH

FENCING QUANTITIES INCLUDE ALL HARDWARE, POST, ETC., COMPLETE IN PLACE AND ARE CARRIED TO THE FENCING SUB-SUMMARY TABLE ON SHEET 1110.

N

HORIZONTAL SCALE IN FEET
0 25 50 100

CALCULATED CAC
CHECKED KDO

FENCING PLAN
STA. 475+00 TO STA. 487+50

ALL-75-5.53

1102
1224

J:\Projects\ALL\76691\roadway\sheets\76691GX023.dgn 11-SEP-2012 9:20PM reddenj

ALLEN COUNTY
BATH TOWNSHIP
SEC. 20, SE 1/4, T. 3 S., R. 7 E.

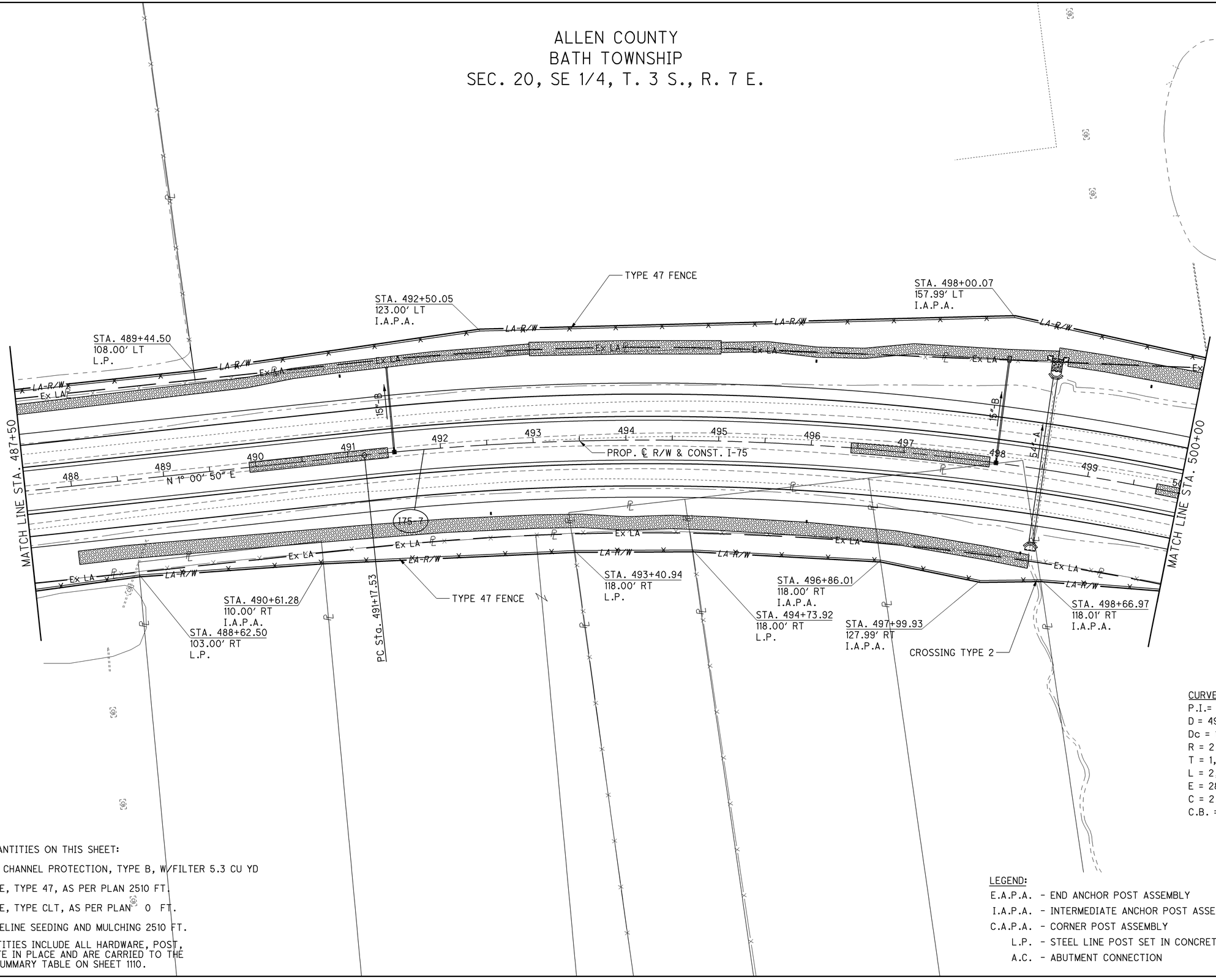

CURVE I75-7
P.I.= Sta. 504+36.28
D = 49° 04' 23" (RT)
Dc = 1° 59' 00"
R = 2,888.86'
T = 1,318.76'
L = 2,474.27'
E = 286.77'
C = 2,399.34'
C.B. = N 25° 33' 02" E

NOTE:

ESTIMATED QUANTITIES ON THIS SHEET:

ITEM 601 ROCK CHANNEL PROTECTION, TYPE B, W/FILTER 5.3 CU YD

ITEM 607 FENCE, TYPE 47, AS PER PLAN 2510 FT.

ITEM 607 FENCE, TYPE CLT, AS PER PLAN 0 FT.

ITEM 607 FENCELINE SEEDING AND MULCHING 2510 FT.

FENCING QUANTITIES INCLUDE ALL HARDWARE, POST, ETC., COMPLETE IN PLACE AND ARE CARRIED TO THE FENCING SUB-SUMMARY TABLE ON SHEET 1110.

LEGEND:

E.A.P.A. - END ANCHOR POST ASSEMBLY
I.A.P.A. - INTERMEDIATE ANCHOR POST ASSEMBLY
C.A.P.A. - CORNER POST ASSEMBLY
L.P. - STEEL LINE POST SET IN CONCRETE OR WOODEN POST
A.C. - ABUTMENT CONNECTION

HORIZONTAL SCALE IN FEET
0 25 50 100

CALCULATED CAC
CHECKED KDO

FENCING PLAN
STA. 487+50 TO STA. 500+00

ALL-75-5.53

1103
1224

J:\Projects\ALL\76691\roadway\sheets\76691GX024.dgn 11-SEP-2012 9:20PM reddenj

ALLEN COUNTY
BATH TOWNSHIP
SEC. 20, SE 1/4 & NE 1/4 , T. 3 S., R. 7 E.

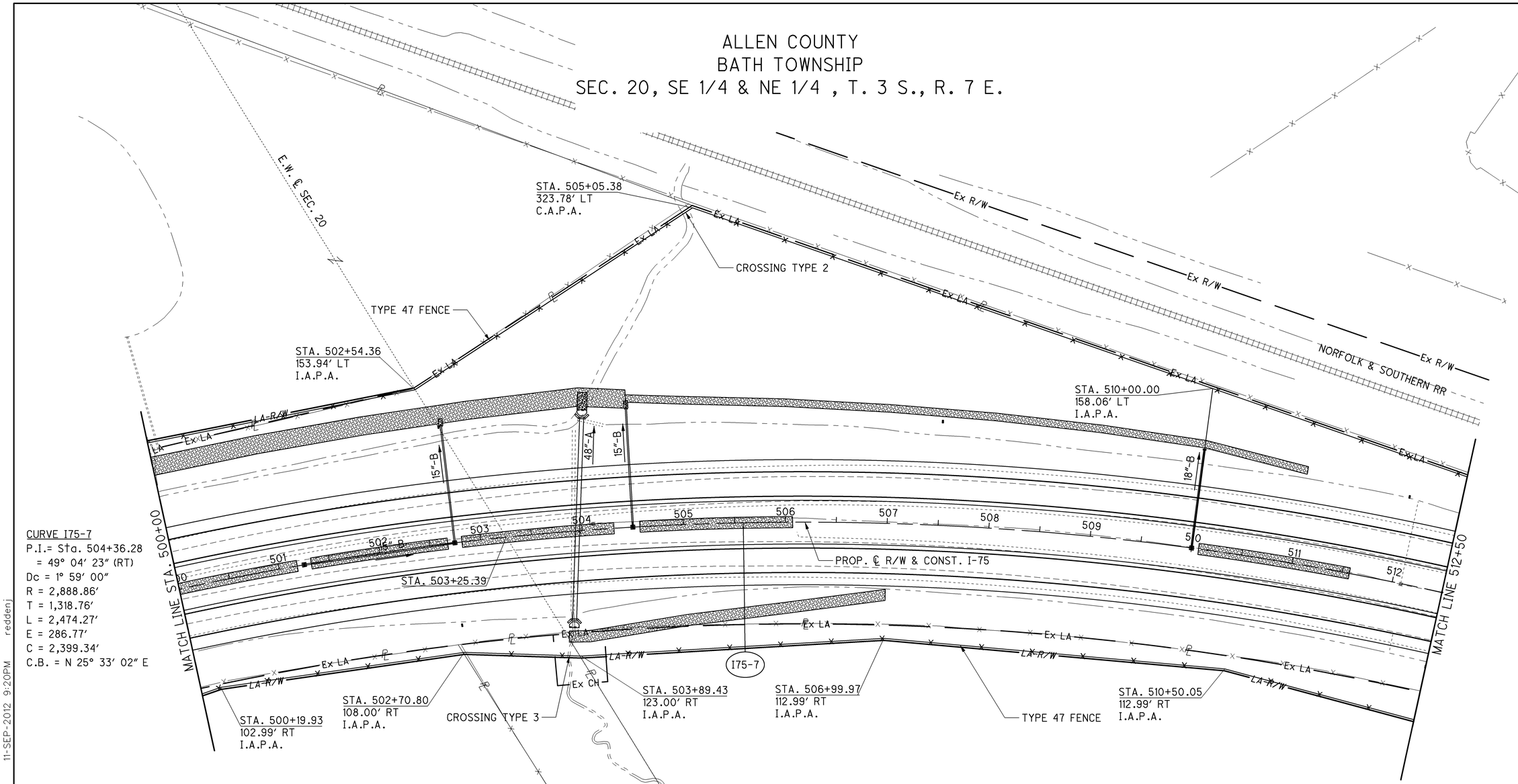

CURVE I75-7
P.I.= Sta. 504+36.28
= 49° 04' 23" (RT)
Dc = 1° 59' 00"
R = 2,888.86'
T = 1,318.76'
L = 2,474.27'
E = 286.77'
C = 2,399.34'
C.B. = N 25° 33' 02" E

LEGEND:
E.A.P.A. - END ANCHOR POST ASSEMBLY
I.A.P.A. - INTERMEDIATE ANCHOR POST ASSEMBLY
C.A.P.A. - CORNER POST ASSEMBLY
L.P. - STEEL LINE POST SET IN CONCRETE OR WOODEN POST
A.C. - ABUTMENT CONNECTION

NOTE:

ESTIMATED QUANTITIES ON THIS SHEET:

ITEM 601 ROCK CHANNEL PROTECTION, TYPE B, W/FILTER 5.7 CU YD

ITEM 607 FENCE, TYPE 47, AS PER PLAN 2602 FT.

ITEM 607 FENCE, TYPE CLT, AS PER PLAN 0 FT.

ITEM 607 FENCELINE SEEDING AND MULCHING 2602 FT.

FENCING QUANTITIES INCLUDE ALL HARDWARE, POST, ETC., COMPLETE IN PLACE AND ARE CARRIED TO THE FENCING SUB-SUMMARY TABLE ON SHEET 1110.

HORIZONTAL SCALE IN FEET
0 25 50 100

CALCULATED CAC
CHECKED KDO

FENCING PLAN
STA. 500+00 TO STA. 512+50

ALL-75-5.53

1104
1224

J:\Projects\ALL\76691\roadway\sheets\76691GX025.dgn 11-SEP-2012 9:20PM reddenj

LEGEND:

E.A.P.A. - END ANCHOR POST ASSEMBLY
I.A.P.A. - INTERMEDIATE ANCHOR POST ASSEMBLY
C.A.P.A. - CORNER POST ASSEMBLY
L.P. - STEEL LINE POST SET IN CONCRETE OR WOODEN POST
A.C. - ABUTMENT CONNECTION

NOTE:

ESTIMATED QUANTITIES ON THIS SHEET:

ITEM 607 FENCE, TYPE 47, AS PER PLAN 1448 FT.

ITEM 607 FENCE, TYPE CLT, AS PER PLAN 0 FT.

ITEM 607 FENCELING SEEDING AND MULCHING 1448 FT.

FENCING QUANTITIES INCLUDE ALL HARDWARE, POST, ETC., COMPLETE IN PLACE AND ARE CARRIED TO THE FENCING SUB-SUMMARY TABLE ON SHEET 1110.

ALLEN COUNTY
BATH TOWNSHIP
SEC. 20, NE 1/4, & SEC. 21, NE 1/4, T. 3 S., R. 7 E.

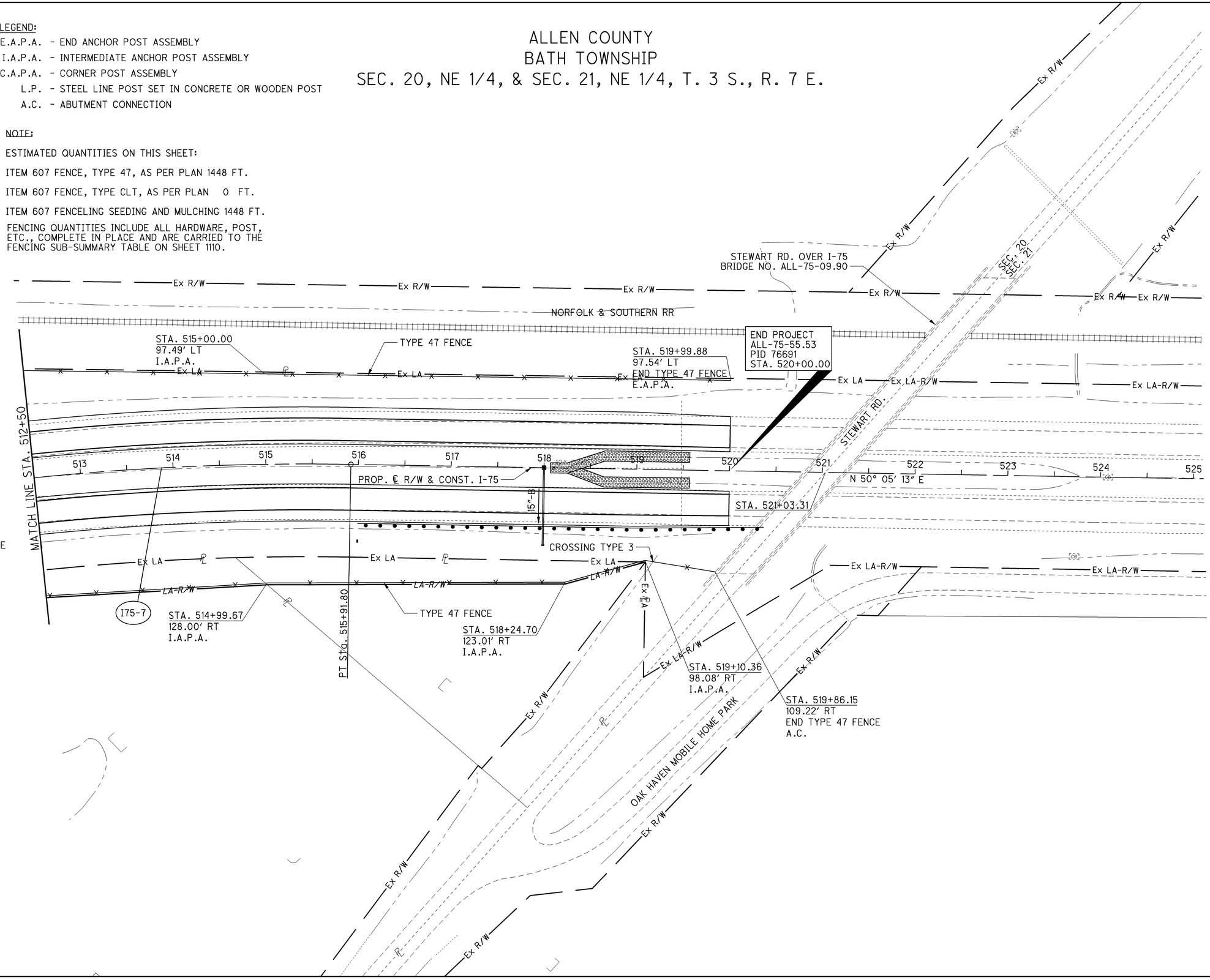

CURVE I75-7
P.I.= Sta. 504+36.28
D = 49° 04' 23" (RT)
Dc = 1° 59' 00"
R = 2,888.86'
T = 1,318.76'
L = 2,474.27'
E = 286.77'
C = 2,399.34'
C.B. = N 25° 33' 02" E

HORIZONTAL SCALE IN FEET
0 25 50 100

CALCULATED CAC
CHECKED KDO

FENCING PLAN
STA 512+50 TO END PROJECT

ALL-75-5.53

1105
1224

J:\Projects\ALL\76691\roadway\sheets\76691GX026.dgn 11-SEP-2012 9:20PM reddenj

ALLEN COUNTY
PERRY TOWNSHIP
SEC. 8, NE 1/4 & SEC. 5, SE 1/4, T. 3 S., R. 7 E.
CITY OF LIMA

LEGEND:
E.A.P.A. - END ANCHOR POST ASSEMBLY
I.A.P.A. - INTERMEDIATE ANCHOR POST ASSEMBLY
C.A.P.A. - CORNER POST ASSEMBLY
L.P. - STEEL LINE POST SET IN CONCRETE OR WOODEN POST
A.C. - ABUTMENT CONNECTION

NOTE:
ESTIMATED QUANTITIES ON THIS SHEET:
ITEM 607 FENCE, TYPE 47, AS PER PLAN 364 FT.
ITEM 607 FENCE, TYPE CLT, AS PER PLAN 371 FT.
ITEM 607 FENCE REMOVE AND REBUILT, TYPE 47 404 FT.
ITEM 607 FENCELINE SEEDING AND MULCHING 1139 FT.

FENCING QUANTITIES INCLUDE ALL HARDWARE, POST, ETC., COMPLETE IN PLACE AND ARE CARRIED TO THE FENCING SUB-SUMMARY TABLE ON SHEET 1110.

HORIZONTAL SCALE IN FEET: 0, 25, 50, 100

CALCULATED CAC
CHECKED KDO

CURVE 4TH-1
P.I.= Sta. 101+60.80
D = 8° 00′ 00″ (LT)
Dc = 2° 30′ 00″
R = 2,291.83′
T = 160.26′
L = 320.00′
E = 5.60′
C = 319.74′
C.B. = N 86° 49′ 33″ E

CURVE 4TH-2
P.I.= Sta. 107+13.54
D = 8° 00′ 00″ (RT)
Dc = 2° 30′ 00″
R = 2,291.83′
T = 160.26′
L = 320.00′
E = 5.60′
C = 319.74′
C.B. = N 86° 49′ 33″ E

CURVE 4THC-2
P.I. STA. 334+23.30
D = 156° 21′ 13″ (LT)
Dc = 24° 45′ 00″
R = 231.50′
T = 1,105.89′
L = 631.73′
E = 898.36′

CURVE 4THD-4
P.I.= Sta. 332+36.78
D = 7° 18′ 31″ (LT)
Dc = 1° 30′ 00″
R = 3,819.72′
T = 243.95′
L = 487.25′
E = 7.78′
C = 486.92′
C.B. = N 3° 08′ 02″ E

CURVE SER1-2
P.I.= Sta. 13+89.71
D = 7° 02′ 59″ (LT)
Dc = 28° 56′ 14″
R = 198.00′
T = 12.20′
L = 24.36′
E = 0.38′
C = 24.35′
C.B. = N 86° 21′ 03″ E

CURVE SER1-3
P.I.= Sta. 16+85.98
D = 11° 43′ 37″ (RT)
Dc = 19° 05′ 55″
R = 300.00′
T = 30.81′
L = 61.40′
E = 1.58′
C = 61.29′
C.B. = N 88° 41′ 21″ E

CURVE SER2-2
P.I.= Sta. 14+44.88
D = 76° 13′ 11″ (LT)
Dc = 29° 00′ 00″
R = 197.57′
T = 154.97′
L = 262.83′
E = 53.53′
C = 243.87′
C.B. = N 44° 49′ 11″ E

CURVE SER2-3
P.I.= Sta. 17+32.10
D = 35° 49′ 51″ (RT)
Dc = 29° 00′ 00″
R = 197.57′
T = 63.87′
L = 123.55′
E = 10.07′
C = 121.55′
C.B. = N 24° 37′ 31″ E

PC Sta. 100+00.53
STA. 100+34.34
37.82′ LT
BEGIN TYPE 47 FENCE
E.A.P.A.
STA. 101+17.51
40.08′ LT
I.A.P.A.
℄ PROP. R/W & CONST. SERVICE RD. 1
STA. 102+88.42
55.42′ LT
L.P.
STA. 104+02.59
65.32′ LT
END TYPE 47
BEGIN REMOVE AND REBUILT, TYPE 47
C.A.P.A.
CROSSING TYPE 3
PT Sta. 103+20.53
STA. 104+43.78
224.89′ LT
L.P.
℄ PROP. R/W & CONST. SERVICE RD. 2
STA. 105+04.85
384.79′ LT
C.A.P.A.
REMOVED AND REBUILT, TYPE 47 FENCE
℄ R/W & CONST. FOURTH ST.
STA. 104+10.03
116.20′ LT
I.A.P.A.
EXIST. GATE
STA. 105+58.02
425.82′ LT
END REMOVE AND REBUILT, TYPE 47
BEGIN TYPE CLT, A.P.P.
C.A.P.A.
TYPE CLT FENCE, A.P.P.
℄ RAMP 'D'
PC Sta. 324+94.31
℄ RAMP 'C'
PT Sta. 329+49.14
PC Sta. 320+26.25
PT Sta. 322+77.46
CITY OF LIMA
UNNAMED STREAM
SEC. 8 / SEC. 5
MATCH LINE STA. 108+00 SEE SHEET 1087

FENCING PLAN - 4TH STREET
STA. 100+00 TO STA. 108+00

ALL-75-5.53

1106
1224

J:\Projects\ALL\76691\roadway\sheets\76691GX006.dgn 11-SEP-2012 9:20PM reddenj

ALLEN COUNTY
PERRY TOWNSHIP
SEC. 8, NE 1/4 & SEC. 5, SE 1/4, T. 3 S., R. 7 E.

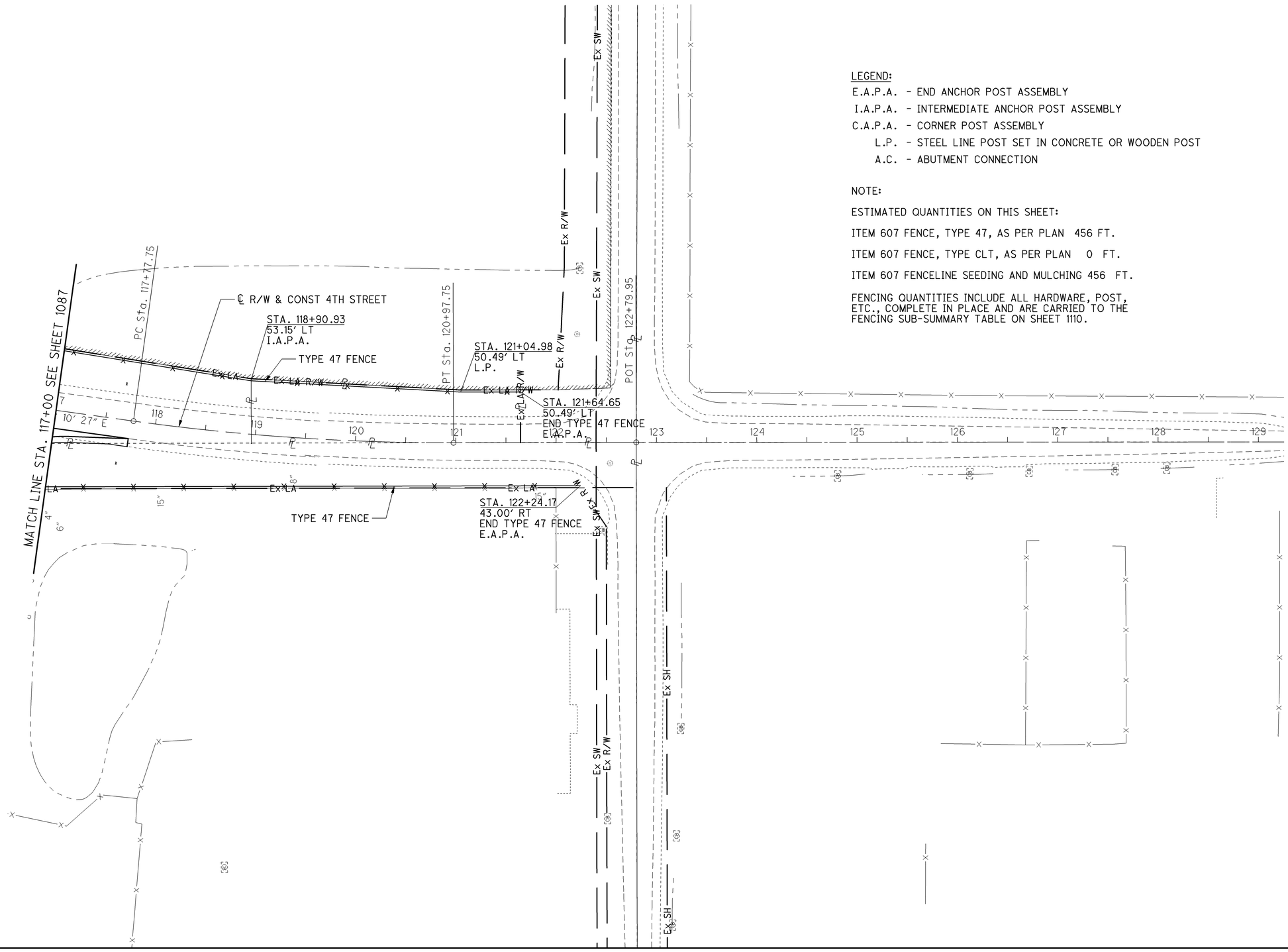

LEGEND:

E.A.P.A. - END ANCHOR POST ASSEMBLY
I.A.P.A. - INTERMEDIATE ANCHOR POST ASSEMBLY
C.A.P.A. - CORNER POST ASSEMBLY
L.P. - STEEL LINE POST SET IN CONCRETE OR WOODEN POST
A.C. - ABUTMENT CONNECTION

NOTE:

ESTIMATED QUANTITIES ON THIS SHEET:

ITEM 607 FENCE, TYPE 47, AS PER PLAN 456 FT.

ITEM 607 FENCE, TYPE CLT, AS PER PLAN 0 FT.

ITEM 607 FENCELINE SEEDING AND MULCHING 456 FT.

FENCING QUANTITIES INCLUDE ALL HARDWARE, POST, ETC., COMPLETE IN PLACE AND ARE CARRIED TO THE FENCING SUB-SUMMARY TABLE ON SHEET 1110.

HORIZONTAL SCALE IN FEET
0 25 50 100

CALCULATED CAC
CHECKED KDO

FENCING PLAN - 4TH STREET
STA. 117+00 TO STA. 123+00

ALL-75-5.53

1107
1224

J:\Projects\ALL\76691\roadway\sheets\76691GX004.dgn 11-SEP-2012 9:20PM reddenj

LEGEND:

E.A.P.A. - END ANCHOR POST ASSEMBLY
I.A.P.A. - INTERMEDIATE ANCHOR POST ASSEMBLY
C.A.P.A. - CORNER POST ASSEMBLY
L.P. - STEEL LINE POST SET IN CONCRETE OR WOODEN POST
A.C. - ABUTMENT CONNECTION

NOTE:

ESTIMATED QUANTITIES ON THIS SHEET:

ITEM 607 FENCE, TYPE 47, AS PER PLAN 0 FT.

ITEM 607 FENCE, TYPE CLT, AS PER PLAN 546 FT.

ITEM 607 FENCELINE SEEDING AND MULCHING 546 FT.

FENCING QUANTITIES INCLUDE ALL HARDWARE, POST, ETC., COMPLETE IN PLACE AND ARE CARRIED TO THE FENCING SUB-SUMMARY TABLE ON SHEET 1110.

ALLEN COUNTY
BATH TOWNSHIP
SEC. 29, NE 1/4, T.3 S., R. 7 E.

PI Sta. 424+58.80
PI Sta. 429+00.00
STA. 430+74.21
49.42' LT
I.A.P.A.
STA. 430+07.38
48.91' LT
BEGIN TYPE CLT
FENCE, A.P.P.
E.A.P.A.
PC Sta. 431+26.40
℄ R/W & CONST S.R. 81
TYPE CLT
FENCE, A.P.P.
PT Sta. 433+56.52
STA. 435+21.16
80.98' LT
I.A.P.A.
N 79° 34' 07" E
PC Sta. 28+71.82
PT Sta. 28+97.82
℄ R/W & CONST SERVICE RD. #3
MATCHLINE STA. 436+00 SEE SHEET 1099

HORIZONTAL SCALE IN FEET
0 25 50 100

CALCULATED CAC
CHECKED KDO

FENCING PLAN - S.R. 81
STA. 429+00 TO STA. 436+00

ALL-75-5.53

1108
1224

J:\Projects\ALL\76691\roadway\sheets\76691GX020.dgn 11-SEP-2012 9:20PM reddenj

LEGEND:

E.A.P.A. - END ANCHOR POST ASSEMBLY

I.A.P.A. - INTERMEDIATE ANCHOR POST ASSEMBLY

C.A.P.A. - CORNER POST ASSEMBLY

L.P. - STEEL LINE POST SET IN CONCRETE OR WOODEN POST

A.C. - ABUTMENT CONNECTION

NOTE:

ESTIMATED QUANTITIES ON THIS SHEET:

ITEM 607 FENCE, TYPE 47, AS PER PLAN 0 FT.

ITEM 607 FENCE, TYPE CLT, AS PER PLAN 2048 FT.

ITEM 607 FENCELINE SEEDING AND MULCHING 2048 FT.

ITEM 202 FENCE REMOVED 791 FT.

FENCING QUANTITIES INCLUDE ALL HARDWARE, POST, ETC., COMPLETE IN PLACE AND ARE CARRIED TO THE FENCING SUB-SUMMARY TABLE ON SHEET 1110.

ALLEN COUNTY
BATH TOWNSHIP
SEC. 29, NE 1/4, T.3 S., R. 7 E.

STA. 445+75.77
471.12' LT
I.A.P.A

EXISTING FENCE TO BE REMOVED

TYPE CLT FENCE, A.P.P.

℄ R/W & CONST. NEUBRECHT RD.

STA. 438+90.68
169.20' LT
BEGIN TYPE CLT FENCE, A.P.P.
E.A.P.A.

STA. 437+90.43
149.08' LT
END TYPE CLT FENCE, A.P.P.
E.A.P.A.

STA. 440+80.45
187.07' LT
I.A.P.A

PT Sta. 12+89.62

TYPE CLT FENCE, A.P.P.

℄ R/W & CONST. S.R. 81

PC Sta. 11+46.49

N 72° 38' 55" E

N 79° 34' 07" E

N 10° 33' 33" W

MATCHLINE STA. 436+00 SEE SHEET 1099

TYPE CLT FENCE, A.P.P.

STA. 443+00
97.90' RT
I.A.P.A.

PC Sta. 45+21.45

Sta. 446+33.68

STA. 446+84.88
80.98' RT
I.A.P.A.

MATCHLINE STA. 447+00

℄ R/W & CONST. SERVICE RD. #3

STA. 439+25.69
90.92' RT
END TYPE CLT FENCE, A.P.P.
E.A.P.A.

2 Sty. Conc. Hotel

Red Carpet Inn & Suites

BP Canopy

1 Sty. Brick & Metal

1 Conc. Franks

1 Sty. Brick & metal

HORIZONTAL SCALE IN FEET
0 25 50 100

CALCULATED CAC
CHECKED KDO

FENCING PLAN - S.R. 81
STA. 436+00 TO STA. 447+00

ALL-75-5.53

1109
1224

J:\Projects\ALL\76691\roadway\sheets\76691GX018.dgn 11-SEP-2012 9:20PM reddenj

CURVE SR81-4
P.I.= Sta. 458+78.67
D = 15° 46′ 26″ (LT)
Dc = 5° 30′ 00″
R = 1,041.74′
T = 144.31′
L = 286.80′
E = 9.95′
C = 285.89′
C.B. = N 87° 27′ 20″ E
e_d = NC

CURVE SR81-3
P.I.= Sta. 453+46.45
D = 16° 35′ 17″ (RT)
Dc = 5° 30′ 00″
R = 1,041.74′
T = 151.86′
L = 301.60′
E = 11.01′
C = 300.55′
C.B. = N 87° 02′ 54″ E
e_d = NC

ALLEN COUNTY
BATH TOWNSHIP
SEC. 29, NE 1/4, T.3 S., R. 7 E.

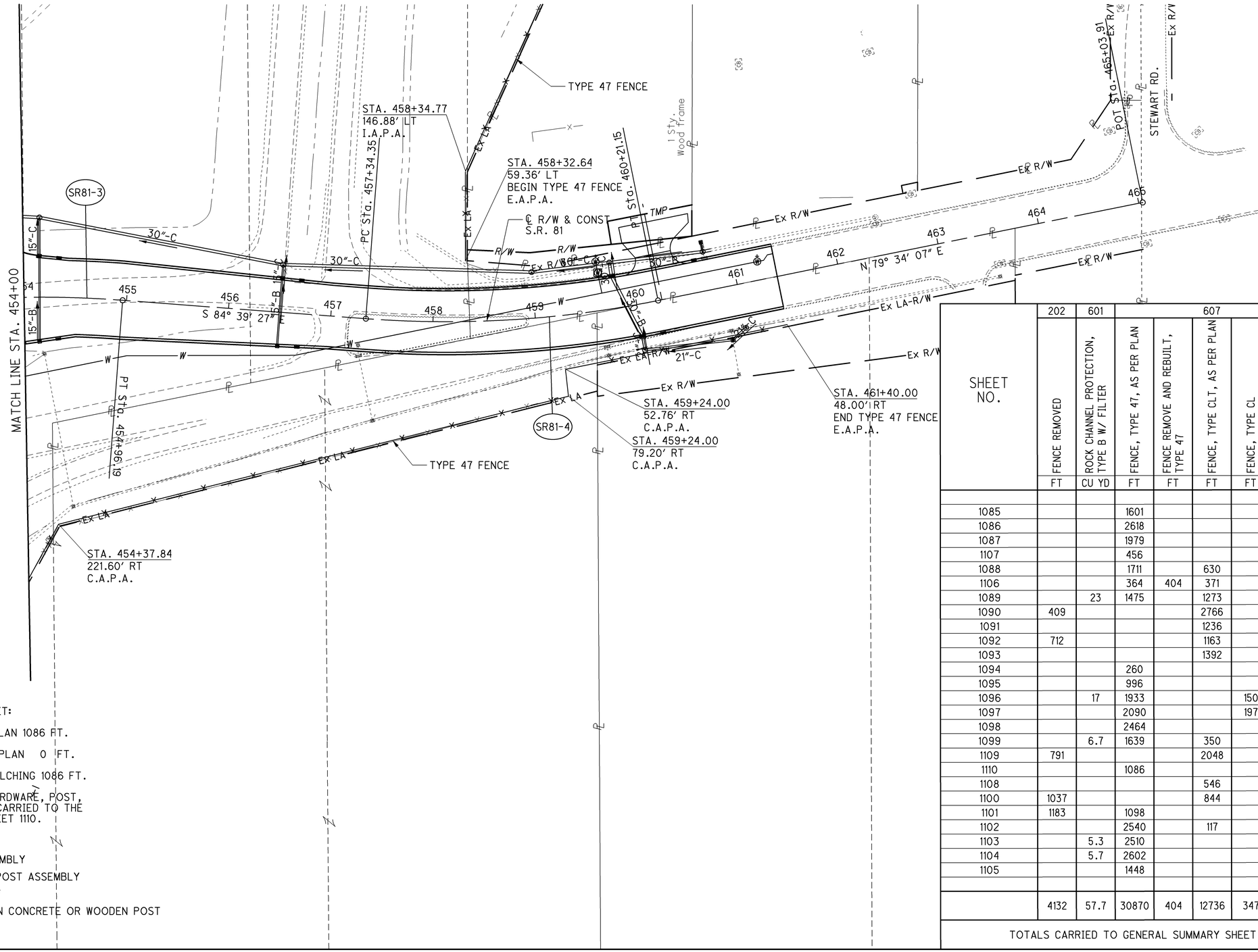

NOTE:

ESTIMATED QUANTITIES ON THIS SHEET:

ITEM 607 FENCE, TYPE 47, AS PER PLAN 1086 FT.

ITEM 607 FENCE, TYPE CLT, AS PER PLAN 0 FT.

ITEM 607 FENCELINE SEEDING AND MULCHING 1086 FT.

FENCING QUANTITIES INCLUDE ALL HARDWARE, POST, ETC., COMPLETE IN PLACE AND ARE CARRIED TO THE FENCING SUB-SUMMARY TABLE ON SHEET 1110.

LEGEND:
E.A.P.A. - END ANCHOR POST ASSEMBLY
I.A.P.A. - INTERMEDIATE ANCHOR POST ASSEMBLY
C.A.P.A. - CORNER POST ASSEMBLY
L.P. - STEEL LINE POST SET IN CONCRETE OR WOODEN POST
A.C. - ABUTMENT CONNECTION

SHEET NO.	202 FENCE REMOVED FT	601 ROCK CHANNEL PROTECTION, TYPE B W/ FILTER CU YD	607 FENCE, TYPE 47, AS PER PLAN FT	607 FENCE REMOVE AND REBUILT, TYPE 47 FT	607 FENCE, TYPE CLT, AS PER PLAN FT	607 FENCE, TYPE CL FT	607 FENCELINE SEEDING AND MULCHING FT	625 GROUND ROD EACH
1085			1601				1601	
1086			2618				2618	
1087			1979				1979	
1107			456				456	
1088			1711		630		2341	
1106			364	404	371		1139	
1089		23	1475		1273		2748	
1090	409				2766		2766	
1091					1236		1236	1
1092	712				1163		1163	
1093					1392		1392	3
1094			260				260	
1095			996				996	1
1096		17	1933			150	2083	5
1097			2090			197	2567	4
1098			2464				2464	2
1099		6.7	1639		350		1992	2
1109	791				2048		2048	
1110			1086				1086	
1108					546		546	
1100	1037				844		844	
1101	1183		1098				1098	
1102			2540		117		2657	6
1103		5.3	2510				2510	
1104		5.7	2602				2602	
1105			1448				1448	
	4132	57.7	30870	404	12736	347	44640	24

TOTALS CARRIED TO GENERAL SUMMARY SHEET 140

HORIZONTAL SCALE IN FEET
0 25 50 100

CALCULATED CAC
CHECKED KDO

FENCING PLAN - S.R. 81
STA. 450+00 TO STA. 462+50

ALL-75-5.53

1110
1224

J:\Projects\ALL\76691\roadway\sheets\76691GX019.dgn 18-DEC-2012 1:20PM coffield

CENTERLINE LEGEND SHEET
ALL-75-0.21/5.53
ALL-75-6.11/7.85

ALLEN COUNTY
SHAWNEE TOWNSHIP
SEC. 13, 23, 24 & 26, T-4-S, R-6-E
PERRY TOWNSHIP
SEC. 5, 8, 17 & 18, T-4-S, R-7-E
BATH TOWNSHIP
SEC. 20, 29 & 32, T-3S, R-7E
VILLAGE OF SHAWNEE
CITY OF LIMA

BASIS FOR BEARINGS:

BEARINGS ARE BASED UPON OHIO NORTH ZONE GRID COORDINATES. A PROJECT ADJUSTMENT FACTOR (P.A.F.) OF 1.00008098 HAS BEEN USED TO PROVIDE GROUND COORDINATES FOR THIS PROJECT. TO OBTAIN STATE PLANE GRID COORDINATES, DIVIDE EACH NORTHING AND EASTING BY THE P.A.F.

THE BASIS OF THE EXISTING ℄ OF R/W LOCATIONS WERE DETERMINED BY THE FOLLOWING ODOT R/W PLANS ON FILE FROM THE OHIO DEPARTMENT OF TRANSPORTATION, DISTRICT 1 OFFICE LIMA, OHIO:
1-75 - ALL-25-0.00 (DATED 1955) AND ALL-25 (8.26-11.80) (DATED 1951)
BREESE ROAD - ALL-25-0.00 (DATED 1955) AND ALL-25-(2.12)(3.28)(5.08)(6.11) PART I (DATED 1958)
McCLAIN ROAD - ALL-25-0.00 (DATED 1955)
S.R. 65 -ALL-25-0.00 (DATED 1955)
HANTHORN ROAD -ALL-25-0.00 (DATED 1955)
4TH STREET - ALL-25-(2.12)(3.28)(5.08)(6.11) PART IV (DATED 1958)
PATROL DRIVE - ALL-25-(2.12)(3.28)(5.08)(6.11) PART IV (DATED 1958)
S.R. 309 - ALL-30S-16.73 (DATED 1954)
RESERVOIR ROAD - ALL-25-0.00 (DATED 1955)
BRYN MAWR - ALL-25-0.00 (DATED 1955)
S.R. 81 - ALL-25 (8.26-11.80) (DATED 1951) AND ALL-75-8.75 (DATED 1978)
NEUBRECHT ROAD - ALL-75-8.75 (DATED 1978)

THE PROPOSED RIGHT OF WAY SHALL BE REFERENCED FROM THE CENTERLINE OF RIGHT OF WAY.

THE PLACING OF MONUMENTS SHALL BE UNDER THE DIRECTION OF A SURVEYOR REGISTERED IN THE STATE OF OHIO. THE CENTERLINE MONUMENT ASSEMBLY BOX(S) WILL BE INSTALLED BY THE HIGHWAY CONTRACTOR'S SURVEYOR AT THE TIME OF CONSTRUCTION.

CHANGES OR ALTERATIONS TO THE LOCATION OF ANY MONUMENTS SHOWN ON THIS PLAT, REQUIRES PRIOR APPROVAL OF THE DISTRICT REAL ESTATE ADMINISTRATOR OF THE OHIO DEPARTMENT OF TRANSPORTATION. A REVISED CENTERLINE PLAT WITH THE NEW LOCATIONS SHALL BE RECORDED IN THE APPLICABLE COUNTY RECORDS AND THE OHIO DEPARTMENT OF TRANSPORTATION. SPECIFICATIONS FOR CENTERLINE MONUMENTS, REFERENCE MONUMENTS AND RIGHT OF WAY MONUMENTS ARE SHOWN ON STANDARD CONSTRUCTION DRAWING RM-1.1 OF THE OHIO DEPARTMENT OF TRANSPORTATION.

I, Kerry D. Osborn, P. S. have reestablished the existing and proposed centerlines of right of way listed below for The Ohio Department of Transportation, District 1, based on the surveys provided from Jeffrey L. Waggamon, P.S. and Robert C. Canter, P.S. between August 2006 and the date of this certification. The results of that survey are contained herein.

As a part of this project I have reestablished the locations of the existing and proposed centerlines of Right of Way for I-75, Yoder Rd., 4th St., Patrol Drive, Service Rd's 1, 2 & 3, Wellesley Dr., Dean Ave., Bryn Mawr Ave., and Lost Creek Blvd. for this project shown herein.

All of my work contained herein was conducted in accordance with Ohio Administrative Code 4733-37 commonly known as "A Minimum Standards for Boundary Surveys in the State of Ohio" unless noted.

The words I and my as used herein are to mean either myself or someone working under my direct supervision.

_____ _____
Kerry D. Osborn, P.S., Professional Land Surveyor 7326 Date:

I, Robert C. Canter, P. S. have conducted a survey of the existing conditions for The Ohio Department of Transportation, District 1 between August 2006 and the date of this certification. The results of that survey are contained herein.

The horizontal coordinates expressed herein are project ground coordinates, based on the Ohio State Plane Coordinates system NAD 83, North Zone using 95 adjustment, by ties to the NGS network using stations, AUG-75-12.45 (LA2478), ALL-75-03.98 (LA2474), ALL-75-04.48 (LA2475), ALL-75-09.51 (LA2476), DEFI (AJ7186, KNTN (DF4052 and SIDN (AJ7196). The Project Adjustment Factor used for this project is 1.00008098. To obtain Ohio State Plane Grid Coordinates divide each project ground coordinate northing and easting by the project adjustment factor.

All of my work contained herein was conducted in accordance with Ohio Administrative Code 4733-37 commonly known as "A Minimum Standards for Boundary Surveys in the State of Ohio" unless noted.

The words I and my as used herein are to mean either myself or someone working under my direct supervision.

_____ _____
Robert C. Canter, P.S., Professional Land Surveyor 7226 Date:

J:\Projects\ALL\76691\row\sheets\76691RL001.dgn 12-SEP-2012 9:38AM redden j

INDEX OF SHEETS:

LEGEND SHEET	1
CENTERLINE PLAT	2-4, 6, 7, 9, 10, 13, 16, 18, 20
BREESE RD. INTERCHANGE DETAIL	5
S.R. 65 INTERCHANGE DETAIL	8
FOURTH ST. INTERCHANGE DETAIL	11, 12
S.R. 309 INTERCHANGE DETAIL	14
S.R. 309 SIDE ROAD DETAIL	15
RESERVOIR RD. DETAIL	17
S.R. 81 INTHERCHANGE DETAIL	19
DETAIL OLD I-75	21
PROPOSED I-75 MONUMENT TABLE	22
PROPOSED SIDEROAD MONUMENT TABLE	23
SECTION CORNER COORDINATE TABLE	24
FOUND MONUMENT TABLE	25

I, Jeffrey L. Waggamon, P.S. have conducted a survey by the Ohio Department of Transportation, District 1 to recover and or establish the section and 1/4 section corners along and adjacent to Interstate Route 75 in Allen County, Ohio and do hereby certify that:

As a part of this project I have reestablished the locations of the existing centerlines of Right of Way for Breese Rd., McClain Rd., SR 65, Hanthorn Rd., SR 309, Reservoir Rd., SR 81, Neubrecht Rd. and Service Road 3 shown herein.

The survey shown on this plan is the result of field work performed by the Ohio Department of Transportation, District 1 between August 2006 and the date of this certification;

The monuments shown on said section and 1/4 section corners have been set or found;

The horizontal coordinates expressed herein are Grid Coordinates based on the State Plane Coordinate system, North Zone, CORS adjustment, by ties to the CORS network using stations, Lima, Kenton, Sidney and Van Wert and fit to match project control points established by Canter surveying for the ALL-75-0.21 project. The Project Adjustment Factor used for this project is 1.00008098;

The words I and my as used herein are to mean that either myself or someone working for me under my direct control or supervision.

_____ _____
Jeffrey L. Waggamon, P.S., Professional Land Surveyor #7125 Date

COMPARISON TABLE FOR OLD ℄ RW I-75 AND PROP. ℄ R/W & CONST. I-75		
OLD ℄ STATION	DIFFERENCE	PROP. ℄ STATION
0+00.00	0'	0+00.00
156+10.95	0'	156+10.95
ALIGNMENT CHANGE (McCLAIN ROAD CURVE)		
181+54.01	+25.09'	181+28.92
239+58.25	+25.09'	239+33.16
ALIGNMENT CHANGE (HANTHORN ROAD CURVE)		
282+36.00	+188.86'	280+47.14
462+55.62 (BK)	+188.86'	460+66.82
457+55.66 (AH)	-311.16'	460+66.82
559+97.32	-311.16'	563.08.48

NOTE: OLD ℄ R/W IS ONLY SHOWN WHERE ALIGNMENT IS DIFFERENT FROM PROP. ℄ R/W & CONST.

MONUMENT LEGEND

- EXISTING R/W MONUMENT BOX
- PROPOSED R/W MONUMENT BOX
- EXISTING CONCRETE MONUMENT
- PROPOSED CONCRETE MONUMENT
- RAILROAD SPIKE FOUND
- RAILROAD SPIKE SET
- I.R.F. IRON PIN FOUND
- I.R.F. IRON PIN FOUND W/ ID CAP
- I.R.S. IRON PIN SET W/ ID CAP
- P.F. IRON PIPE FOUND
- P.S. IRON PIPE SET
- P.K.F. P.K. NAIL FOUND
- P.K.S. P.K. NAIL SET
- CALCULATED POINT
- SECTION LINE
- 1/4 SECTION LINE
- STONE FOUND
- MINE SPIKE SET
- T.B.F. T BAR FOUND
- OTHER

PROJECT DESCRIPTION

THE FOLLOWING IS A LIST OF WHICH ROADWAY IMPROVEMENTS ARE TO BE CONSTRUCTED WITH EACH PID:
PID 89029 - I-75 FROM STA. 0+00 TO 292+00, BREESE RD. AND RAMPS, McCLAIN RD., SR 65 AND RAMPS, YODER RD., HANTHORN RD.
PID 76691 - I-75 FROM STA. 292+00 TO 520+00, 4TH ST. RAMPS, SR 309 AND RAMPS, WELLESLEY DR., DEAN AVE., BRYN MAWR AVE., LOST CREEK BLVD. SR 81 AND RAMPS, NEUBRECHT RD., SERVICE ROAD 3.
PID 87965 - 4TH ST. PATROL DRIVE, SERVICE ROADS 1 AND 2, RESERVOIR RD., RELOCATED BRYN MAWR AVE.

NOTES:
THE 5 CHARACTER STRING AT EACH SECTION CORNER OR 1/4 SECTION CORNER IS THE POINT NUMBER. THE ALPHA CHARACTER REPRESENTS THE TOWNSHIP, THE FIRST 2 DIGITS ARE THE SECTION NUMBER AND THE LAST 2 DIGITS REPRESENT THE LOCATION WITHIN THE SECTION.

PLANS PREPARED BY:

FIRM NAME : PARSONS BRINCKERHOFF

PLANS PREPARED BY: BRYAN K. JACKSON

DATE COMPLETED: 11/09/2010

SURVEYORS SEAL

SURVEYORS SEAL

SURVEYORS SEAL

RECEIVED _____, 20____
RECORDED _____, 20____
BOOK _____ PAGE _____

COUNTY RECORDER

FEDERAL PROJECT NO. E100878 E036702 E100451

PID NO. 76691 87965 89029

CALCULATED BKJ CHECKED KDO

CENTERLINE PLAT
LEGEND SHEET

ALL-75-0.21/05.53
ALL-75-06.11/07.85

1 / 25

1111
1224

ALLEN COUNTY

SHAWNEE TOWNSHIP
SECTION 26
T-4-S, R-6-E
VILLAGE OF FORT SHAWNEE

S 1/4 CORNER
SECTION 26
S2615

1,426.30'
S89°35'16"E

POT Sta. 0+00.00

VILLAGE OF FORT SHAWNEE
CORPORATION LIMIT

CENTER OF
SECTION 26
S2623

1,424.65'
S89°34'50"E

PI Sta. 26+49.46

HUME ROAD

FREYERS 2ND SUBDIVISION
P.B. 7 PG. 129

BEGIN PROJECT
ALL-75-0.21
PID 89029
STA. 11+00

STA. 26+49.46
FD CONC. MON.
(FORMER PI
STA. 26+48.79)

5 10 2649.46' 15 20 25 30 35 2,585.86' 40 45 50

N 0° 40' 53" E

N 0° 56' 07" E

STA. 10+01.21
FD. CONC. MON
(FORMER POT
STA. 10+00.00)

SEE DETAIL 'A'
THIS SHEET

STA. 26+52.15
1/4 SECTION LINE

PROP. ℄ R/W & CONST. I-75

MATCH LINE STA. 50+00.00

AUGLAIZE COUNTY
DUCHOUQUET TOWNSHIP SECTION 35
SHAWNEE TWP. SECTION 26
ALLEN COUNTY

1,229.70'
S89°35'16"E

E. & W. ℄ SECTION 26

1,220.39'
S89°34'50"E

SE CORNER
SECTION 26
S2605

SECTION 26
SECTION 25

E 1/4 CORNER
SECTION 26
S2523

STA. 26+49.46
FD CONC. MON.
(FORMER PI
STA. 26+48.79)

PI Sta. 26+49.46

E. & W. ℄ SECTION 26

PROP. ℄ R/W & CONST. I-75

STA. 26+52.15
1/4 SECTION LINE

DETAIL 'A'
NOT TO SCALE

NOTE:
FOR COMPARISON OF OLD ℄ R/W & PROP.
℄ R/W & CONST. SEE TABLE ON SHEET 1 OF 25.

HORIZONTAL SCALE IN FEET
0 100 200 400

PID NO.
76691
87965
89029

R/W DESIGNER: BKJ
R/W REVIEWER: KDO

CENTERLINE PLAT
STA. 11+00.00 TO STA. 50+00.00

ALL-75-0.21/ 5.53
ALL-75-6.11/ 7.85

2 / 25

1112
1224

J:\Projects\ALL\76691\row\sheets\76691RC001.dgn 12-SEP-2012 9:38AM reddenj

ALLEN COUNTY

SHAWNEE TOWNSHIP
SECTIONS 23, 24 & 26
T-4-S, R-6-E
VILLAGE OF FORT SHAWNEE

10" IRON POST FOUND
CENTER OF SECTION 23
S2313

N. & S. ℄ SECTION 23

E. & W. ℄ SECTION 23

N 1/4 CORNER
SECTION 26,
S 1/4 CORNER
SECTION 23
S2611

SECTION 23
SECTION 26

CURVE I75-1
P.I.= Sta. 64+32.51
D = 23° 36' 15" (RT)
Dc = 1° 00' 00"
R = 5,729.58'
T = 1,197.19'
L = 2,360.42'
E = 123.74'
C = 2,343.76'
C.B. = N 12° 44' 15" E

CURVE I75-2
P.I.= Sta. 98+00.86
D = 16° 18' 41" (RT)
Dc = 0° 40' 00"
R = 8,594.37'
T = 1,231.69'
L = 2,446.73'
E = 87.81'
C = 2,438.47'
C.B. = N 32° 41' 43" E

S 89°26'37" E 2,129.52'

FOUND CONC. MON.
STA. 75+94.15, 0.03' LT
(FORMER PT STA. 75+94.05)

STA. 80+77.59
1/4 SECTION LINE

FOUND CONCRETE MON.
STA. 85+67.23
(FORMER PC STA. 85+67.28)

STA. 92+91.87
SECTION LINE

1,596.55'
N 0° 27' 48" E

PROP. ℄ R/W & CONST. I-75

FOUND CONCRETE MON.
STA. 52+35.72
(FORMER PC STA. 52+35.72)

S 89°28'57" E 1444.20'

STA 53+03.55
SECTION LINE

STA. 53+21±

MATCH LINE STA. 50+00.00

O 2585.86'
N0°56'07"E

PC Sta. 52+35.32

SEE DETAIL 'A'
THIS SHEET

LITTLE OTTAWA RIVER

1,210.53'
S 89°28'57" E

SEE DETAIL 'B'
THIS SHEET

N 24° 32' 22" E 973.43

SEE DETAIL 'C'
THIS SHEET

PT Sta. 75+95.74

S 89°26'37" E 522.75'

PC Sta. 85+69.17

1,096.32'
N 0° 27' 48" E

FREED DITCH

BREESE RD.
℄ RAMP B

MATCH LINE STA. 100+00.00

12" X 12" CONCRETE POST FOUND
W 1/4 CORNER SECTION 24,
E 1/4 CORNER SECTION 23
S2423

SECTION 23
SECTION 24

SECTION 26
SECTION 25

NE CORNER SECTION 26,
SE CORNERSECTION 23
8"X10" WOODEN POST FOUND
S2521

I75-1

I75-2

PROP. ℄ R/W & CONST. I-75

FOUND CONCRETE MON.
STA. 52+35.72
(FORMER PC STA. 52+35.72)

I75-1

N0°56'07"E

PC Sta. 52+35.32

PROP. ℄ R/W & CONST. I-75

DETAIL 'A'
NOT TO SCALE

FOUND CONC. MON.
STA. 75+94.15, 0.03' LT
(FORMER PT STA. 75+94.05)

N 24° 32' 22" E

I75-1

PT Sta. 75+95.74

DETAIL 'B'
NOT TO SCALE

PROP. ℄ R/W
& CONST. I-75

FOUND CONCRETE MON.
STA. 85+67.23
(FORMER PC STA. 85+67.28)

N 24° 32' 22" E

I75-2

PC Sta. 85+69.17

DETAIL 'C'
NOT TO SCALE

NOTE:
FOR COMPARISON OF OLD ℄ R/W & PROP.
℄ R/W & CONST. SEE TABLE ON SHEET 1 OF 25.

FOR BREESE RD. RAMP GEOMETRY SEE SHEET 5 OF 25.

HORIZONTAL SCALE IN FEET
0 100 200 400

PID NO.
76691
87965
89029

R/W DESIGNER BKJ
R/W REVIEWER KDO

CENTERLINE PLAT
STA. 50+00.00 TO STA. 100+00.00

ALL-75-0.21/ 5.53
ALL-75-6.11/ 7.85

3 / 25

1113
1224

J:\Projects\ALL\76691\row\sheets\76691RC002.dgn 12-SEP-2012 9:38AM reddenj

ALLEN COUNTY

SHAWNEE TOWNSHIP
SECTIONS 13 & 24
T-4-S, R-6-E
VILLAGE OF FORT SHAWNEE

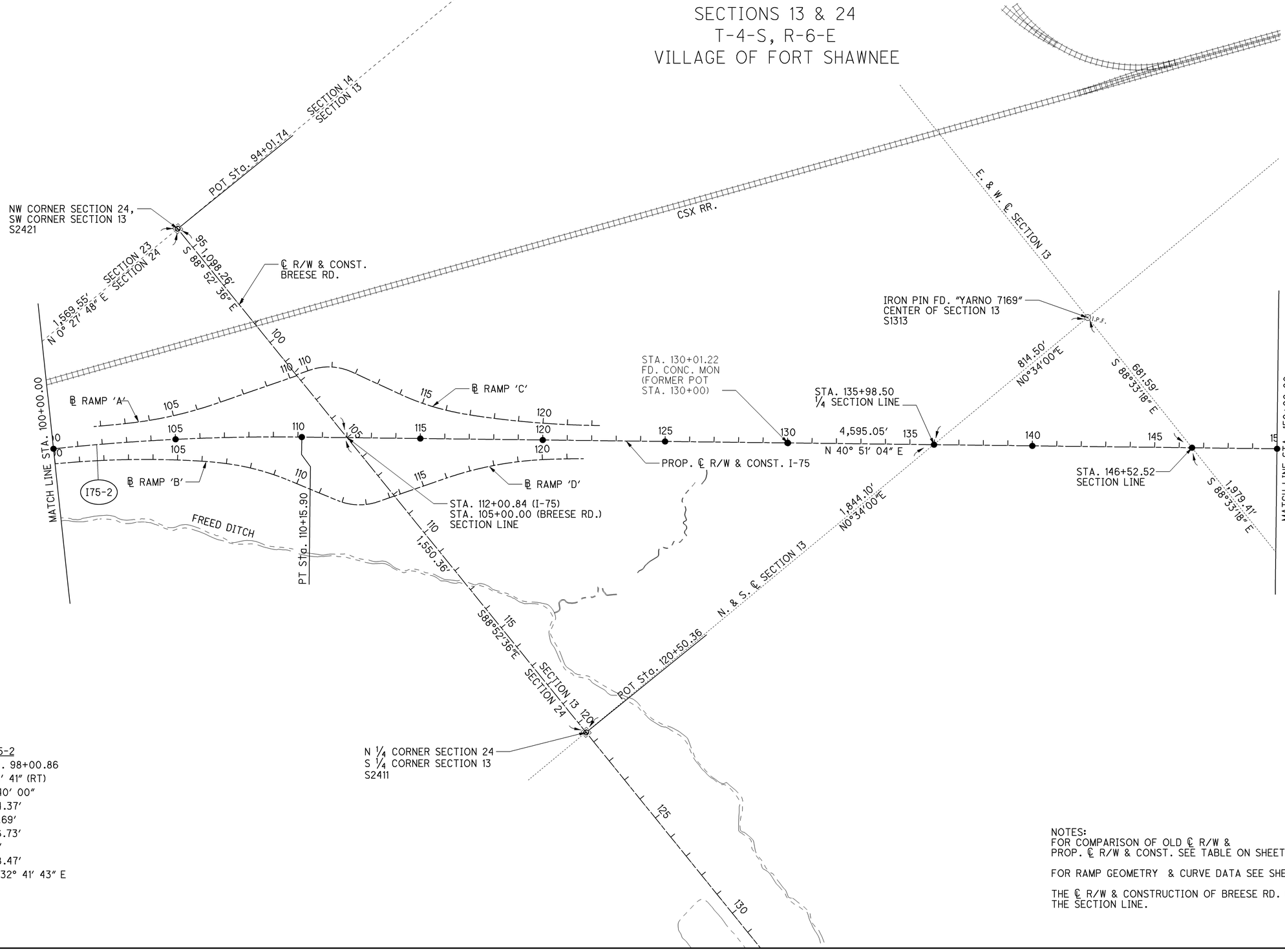

CURVE I75-2
P.I.= Sta. 98+00.86
D = 16° 18' 41" (RT)
Dc = 0° 40' 00"
R = 8,594.37'
T = 1,231.69'
L = 2,446.73'
E = 87.81'
C = 2,438.47'
C.B. = N 32° 41' 43" E

NOTES:
FOR COMPARISON OF OLD ℄ R/W &
PROP. ℄ R/W & CONST. SEE TABLE ON SHEET 1 OF 25.

FOR RAMP GEOMETRY & CURVE DATA SEE SHEET 5 OF 25.

THE ℄ R/W & CONSTRUCTION OF BREESE RD. IS ON
THE SECTION LINE.

HORIZONTAL SCALE IN FEET
0 100 200 400

PID NO.
76691
87965
89029

R/W DESIGNER BKJ
R/W REVIEWER KDO

CENTERLINE PLAT
STA. 100+00.00 TO STA. 150+00.00

ALL-75-0.21/ 5.53
ALL-75-6.11/ 7.85

4 / 25

1114
1224

J:\Projects\ALL\76691\row\sheets\76691RC003.dgn 12-SEP-2012 9:39AM reddenj

ALLEN COUNTY

SHAWNEE TOWNSHIP
SECTIONS 13 & 24
T-4-S, R-6-E
VILLAGE OF FORT SHAWNEE

PROPOSED BREESE RD. RAMP ℄ COORDINATE TABLE				
STATION	GROUND COORDINATES		GRID COORDINATES	
	NORTHING	EASTING	NORTHING	EASTING
RAMP "A"				
TS 101+72.43	375,078.5877	1,517,761.0002	375,048.2163	1,517,638.1019
SC 103+82.43	375,252.6477	1,517,878.4183	375,222.2622	1,517,755.5105
PT 106+80.44	375,519.3558	1,518,010.4522	375,488.9487	1,517,887.5337
RAMP "B"				
PC 99+32.31	374,803.5030	1,517,737.3155	374,773.1539	1,517,614.4191
CS 105+42.86	375,282.7577	1,518,114.5369	375,252.3698	1,517,991.6099
SC 107+42.86	375,422.3407	1,518,257.5824	375,391.9415	1,518,134.6439
PT 109+60.57	375,542.9100	1,518,438.3304	375,512.5010	1,518,315.3772
PC 111+81.57	375,644.7737	1,518,634.4549	375,614.3564	1,518,511.4858
PT 113+48.96	375,766.7911	1,518,743.6966	375,736.3640	1,518,620.7187
RAMP "C"				
PC 110+09.38	375,902.1456	1,518,154.0432	375,871.7075	1,518,031.1130
PT 111+86.34	376,028.3917	1,518,271.8546	375,997.9434	1,518,148.9149
PC 114+03.83	376,120.5865	1,518,468.8369	376,090.1307	1,518,345.8813
CS 115+78.01	376,207.8004	1,518,619.3553	376,177.3376	1,518,496.3875
SC 117+78.01	376,334.7414	1,518,773.7296	376,304.2683	1,518,650.7493
PT 122+31.49	376,659.3687	1,519,089.9914	376,628.8693	1,518,966.9855
RAMP "D"				
PC 115+95.05	376,039.2958	1,518,848.9739	376,008.8466	1,518,725.9875
CS 119+52.10	376,352.9609	1,519,017.6133	376,322.4863	1,518,894.6132
ST 121+67.10	376,521.7107	1,519,150.7500	376,491.2224	1,519,027.7391

CURVE BREA-1
P.I. STA. 103+12.46
Ls = 210.00′
f s = 3° 40′ 30″
LT = 140.03′
ST = 70.03′
x = 209.91′
y = 4.49′
k = 104.99′
p = 1.12′

CURVE BREA-2
P.I.= Sta. 104+75.48
D = 14° 06′ 20″ (LT)
Dc = 3° 30′ 00″
R = 1,637.02′
D c = 10° 25′ 50″ (LT)
Lc = 298.01′
Es = 13.05′
C = 297.60′
C.B.1 = N 34° 00′ 11″ E
C.B. = N 26° 20′ 16″ E

(1) N 21°07′21″ E, 71.54′

(2) N 21°07′21″ E, 60.17′

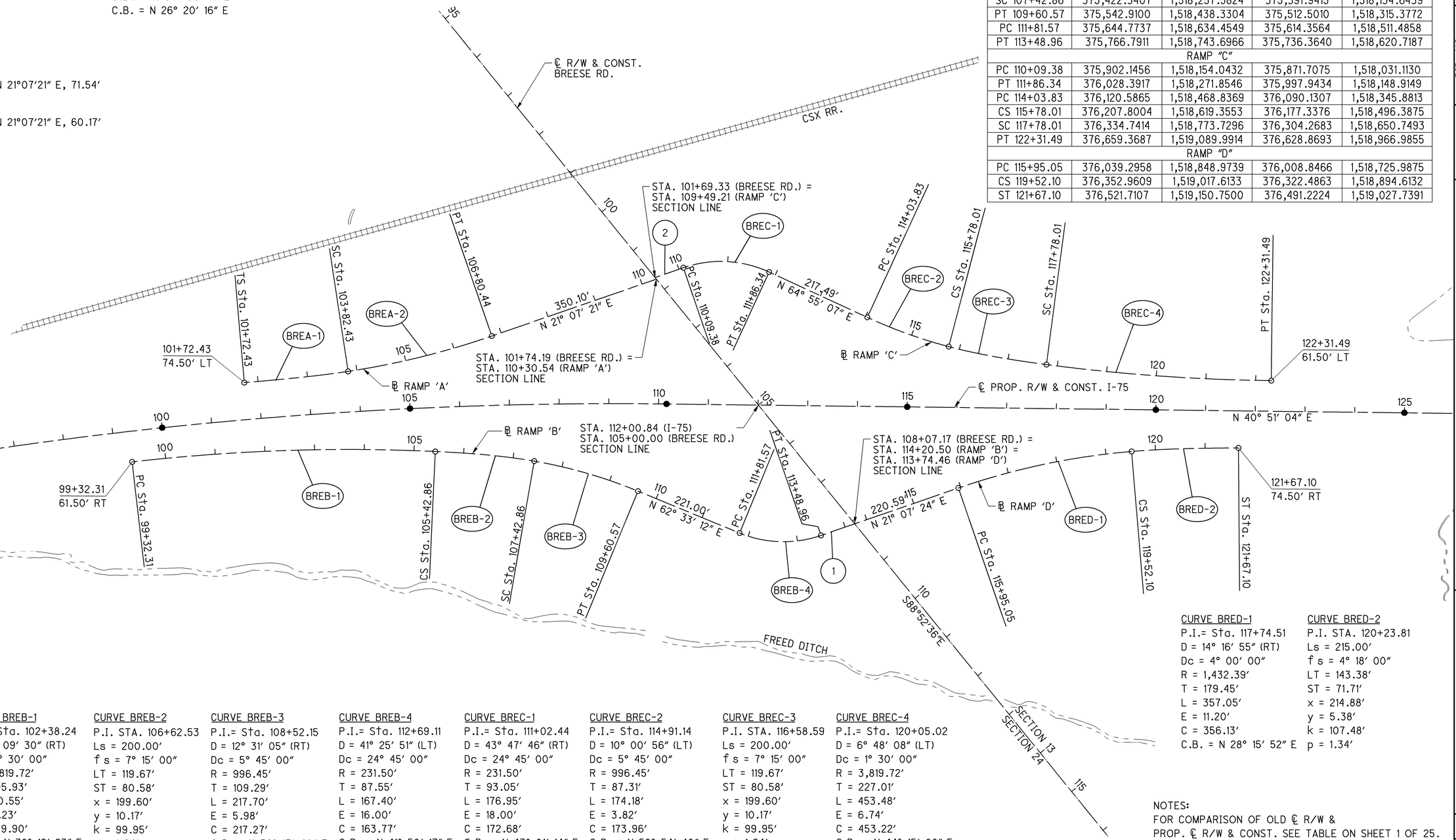

CURVE BRED-1
P.I.= Sta. 117+74.51
D = 14° 16′ 55″ (RT)
Dc = 4° 00′ 00″
R = 1,432.39′
T = 179.45′
L = 357.05′
E = 11.20′
C = 356.13′
C.B. = N 28° 15′ 52″ E

CURVE BRED-2
P.I. STA. 120+23.81
Ls = 215.00′
f s = 4° 18′ 00″
LT = 143.38′
ST = 71.71′
x = 214.88′
y = 5.38′
k = 107.48′
p = 1.34′

CURVE BREB-1
P.I.= Sta. 102+38.24
D = 9° 09′ 30″ (RT)
Dc = 1° 30′ 00″
R = 3,819.72′
T = 305.93′
L = 610.55′
E = 12.23′
C = 609.90′
C.B. = N 38° 12′ 23″ E

CURVE BREB-2
P.I. STA. 106+62.53
Ls = 200.00′
f s = 7° 15′ 00″
LT = 119.67′
ST = 80.58′
x = 199.60′
y = 10.17′
k = 99.95′
p = 1.24′

CURVE BREB-3
P.I.= Sta. 108+52.15
D = 12° 31′ 05″ (RT)
Dc = 5° 45′ 00″
R = 996.45′
T = 109.29′
L = 217.70′
E = 5.98′
C = 217.27′
C.B. = N 56° 17′ 40″ E

CURVE BREB-4
P.I.= Sta. 112+69.11
D = 41° 25′ 51″ (LT)
Dc = 24° 45′ 00″
R = 231.50′
T = 87.55′
L = 167.40′
E = 16.00′
C = 163.77′
C.B. = N 41° 50′ 17″ E

CURVE BREC-1
P.I.= Sta. 111+02.44
D = 43° 47′ 46″ (RT)
Dc = 24° 45′ 00″
R = 231.50′
T = 93.05′
L = 176.95′
E = 18.00′
C = 172.68′
C.B. = N 43° 01′ 14″ E

CURVE BREC-2
P.I.= Sta. 114+91.14
D = 10° 00′ 56″ (LT)
Dc = 5° 45′ 00″
R = 996.45′
T = 87.31′
L = 174.18′
E = 3.82′
C = 173.96′
C.B. = N 59° 54′ 40″ E

CURVE BREC-3
P.I. STA. 116+58.59
Ls = 200.00′
f s = 7° 15′ 00″
LT = 119.67′
ST = 80.58′
x = 199.60′
y = 10.17′
k = 99.95′
p = 1.24′

CURVE BREC-4
P.I.= Sta. 120+05.02
D = 6° 48′ 08″ (LT)
Dc = 1° 30′ 00″
R = 3,819.72′
T = 227.01′
L = 453.48′
E = 6.74′
C = 453.22′
C.B. = N 44° 15′ 08″ E

NOTES:
FOR COMPARISON OF OLD ℄ R/W & PROP. ℄ R/W & CONST. SEE TABLE ON SHEET 1 OF 25.

THE ℄ R/W & CONSTRUCTION OF BREESE RD. IS ON THE SECTION LINE.

HORIZONTAL SCALE IN FEET
0 50 100 200

PID NO. 76691 87965 89029

R/W DESIGNER BKJ
R/W REVIEWER KDO

CENTERLINE PLAT
BREESE RD. INTERCHANGE DETAIL

ALL-75-0.21/ 5.53
ALL-75-6.11/ 7.85

5 / 25

1115
1224

J:\Projects\ALL\76691\row\sheets\7669IRC03A.dgn 12-SEP-2012 9:39AM reddenj

ALLEN COUNTY

SHAWNEE TOWNSHIP
SECTION 13
T-4-S, R-6-E
VILLAGE OF FORT SHAWNEE

PERRY TOWNSHIP
SECTION 18
T-4-S, R-7-E
CITY OF LIMA

CURVE I75EX-1
P.I.= Sta. 169+39.08
D = 49° 34′ 27″ (RT)
Dc = 3° 00′ 00″
R = 1,909.86′
Ls = 300.00′
f s = 4° 30′ 00″
LT = 200.06′
ST = 100.06′
x = 299.81′
y = 7.85′
k = 149.97′
p = 1.96′
D c = 40° 34′ 27″ (RT)
Lc = 1,352.47′
Ts = 1,032.83′
Es = 195.97′
C = 1,324.39′
C1=C2 = 299.92′
C.B.1 = N 42° 21′ 04″ E
C.B. = N 65° 38′ 17″ E
C.B.2 = S 88° 55′ 31″ W

CURVE I75-3
P.I.= Sta. 169+39.08
D = 49° 34′ 27″ (RT)
Dc = 2° 30′ 00″
R = 2,291.83′
Ls = 535.00′
f s = 6° 41′ 15″
LT = 356.92′
ST = 178.57′
x = 534.27′
y = 20.79′
k = 267.38′
p = 5.20′
D c = 36° 11′ 57″ (RT)
Lc = 1,447.97′
Ts = 1,328.13′
Es = 238.30′
C = 1,424.01′
C1=C2 = 534.68′
C.B.1 = N 43° 04′ 48″ E
C.B. = N 65° 38′ 17″ E
C.B.2 = S 88° 11′ 47″ W

NW CORNER SECTION 18 P1821
HANTHORN RD.
MB1821 1.84′ EAST OF SECTION CORNER
SECTION 12
SECTION 13
POT Sta. 112+77.51
NE CORNER SECTION 13 S1301
N 0°55′07″ E 110 917.72′
N 0°55′07″ E 951.37′
SECTION 7
SECTION 18
N 1/4 CORNER SECTION 18 P1811
1,203.48′ N 0°54′48″ E CITY OF LIMA
STA. 173+34.78 (OLD ℄ I-75) = STA. 103+59.79 (McCLAIN RD.) SECTION LINE
OLD ℄ I-75
I75EX-1
PROP. ℄ R/W & CONST. I-75
STA. 173+06.27 (PROP. ℄ R/W & CONST. I-75) = STA. 103+26.13 (McCLAIN RD.) SECTION LINE
SEE DETAIL '75-B" SHEET 21 OF 25
STA. 159+06.00, 3.49′ LT FD. CONC. MON. (FORMER TS STA. 159+06.62)
I75-3
SEE DETAIL '75-A" SHEET 21 OF 25
SC Sta. 161+45.95 PROP. ℄ R/W
SC Sta. 162+06.24 OLD ℄ R/W
TS Sta. 159+06.24 OLD ℄ R/W
TS Sta. 156+10.95 PROP. ℄ R/W
CS Sta. 175+58.72 OLD ℄ R/W
CS Sta. 175+93.92 PROP. ℄ R/W
ST Sta. 178+58.72 OLD ℄ R/W
ST Sta. 181+28.92 PROP. ℄ R/W
PROP. ℄ R/W & CONST. I-75
STA. 189+73.43 FD. CONC. MON. (FORMER POT STA. 190+00)
STA. 197+53.47 1/4 SECTION LINE
S 89° 34′ 29″ E 5804.25′
CITY OF LIMA
MATCH LINE STA. 200+00.00
MATCH LINE STA. 150+00.00
4595.05′ N 40° 51′ 04″ E
PROP. ℄ R/W & CONST. I-75
FORT SHAWNEE CORPORATION LIMIT CITY OF LIMA
N 0° 55′ 07″ E 1,703.81′
℄ R/W & CONST. McCLAIN RD.
STA. 89+76.97 WEST 1/4 CORNER SECTION 18 P1823
STA. 90+34.18 2.58′ RT T100
1 COMMERCE PARKWAY
S 88° 55′ 16″ E
1,737.47′ N 0°55′07″ E
EAST 1/4 CORNER SECTION 13 S1303
PI Sta. 86+22.32
1,979.41′ S 88° 33′ 18″ E
STA. 89+76.97 2.65′ RT MB1823
I.P.K.F.
CITY OF LIMA
E. & W. ℄ SECTION 18
CENTER OF SECTION 18 P1813
N. & S. ℄ SECTION 18
1,442.53′ N 0°54′48″ E
T101
I.P.S.
SHAWNEE TWP. SECTION 13
PERRY TWP. SECTION 18
R6E
R7E

NOTES:
FOR COMPARISON OF OLD ℄ R/W & PROP. ℄ R/W & CONST. SEE TABLE ON SHEET 1 OF 25.

THE ℄ R/W & CONSTRUCTION OF McCLAIN RD. IS ON THE SECTION LINE.

HORIZONTAL SCALE IN FEET
0 100 200 400

PID NO. 76691 87965 89029

R/W DESIGNER BKJ
R/W REVIEWER KDO

CENTERLINE PLAT
STA. 150+00.00 TO STA. 200+00.00

ALL-75-0.21/ 5.53
ALL-75-6.11/ 7.85

6 / 25

1116
1224

J:\Projects\ALL\76691\row\sheets\7669IRC004.dgn 12-SEP-2012 9:39AM redden j

ALLEN COUNTY

PERRY TOWNSHIP
SECTIONS 17 & 18
T-4-S, R-7-E
CITY OF LIMA

CURVE I75EX-2	CURVE I75-4
P.I.= Sta. 265+01.69	P.I.= Sta. 264+76.60
D = 89° 28′ 28″ (LT)	D = 89° 28′ 28″ (LT)
Dc = 3° 00′ 00″	Dc = 2° 30′ 00″
R = 1,909.86′	R = 2,291.83′
Ls = 400.00′	Ls = 535.00′
f s = 6° 00′ 00″	f s = 6° 41′ 15″
LT = 266.82′	LT = 356.92′
ST = 133.47′	ST = 178.57′
x = 399.56′	x = 534.27′
y = 13.95′	y = 20.79′
k = 199.93′	k = 267.38′
p = 3.49′	p = 5.20′
D c = 77° 28′ 28″ (LT)	D c = 76° 05′ 58″ (LT)
Lc = 2,582.48′	Lc = 3,043.97′
Ts = 2,095.80′	Ts = 2,543.43′
Es = 783.70′	Es = 941.86′
C = 2,390.18′	C = 2,825.12′
C1=C2 = 399.81′	C1=C2 = 534.68′
C.B.1 = N 88° 25′ 32″ E	C.B.1 = N 88° 11′ 47″ E
C.B. = N 45° 41′ 17″ E	C.B. = N 45° 41′ 17″ E
C.B.2 = S 2° 57′ 03″ W	C.B.2 = S 3° 10′ 47″ W

POT Sta. 64+78.23
SECTION 7
SECTION 18
POT Sta. 115+82.85
SECTION 8
SECTION 17
℄ R/W & CONST. HANTHORN RD.
CITY OF LIMA
S 89° 03′ 59″ E
℄ R/W & CONST. S.R. 65
NW CORNER SECTION 17
NE CORNER SECTION 18
P1721
1,182.85′
N 0° 51′ 59″ E
POT Sta. 8239+00.00
8240
PROP. ℄ R/W & CONST. I-75
MATCH LINE STA. 250+00.00
STA. 224+02.80 (I-75) =
STA. 104+00.00 (S.R. 65)
SECTION LINE
℄ RAMP 'B'
℄ RAMP 'C'
MATCH LINE STA. 200+00.00
CITY OF LIMA
STA. 210+80±
5,804.25′
S 89° 34′ 29″ E
PROP. ℄ R/W & CONST. I-75
℄ RAMP 'A'
℄ RAMP 'D'
STA. 237+16.78 (I-75) =
STA. 8248+47.69 (RR)
SEE DETAIL '75-C'
SHEET 21 OF 25
TS Sta. 239+33.16
PROP. ℄ R/W
STA. 243+82.52,
12.37′ RT
FD. CONC. MON.
(FORMER TS
STA. 244+12.06)
SC Sta. 244+68.16
PROP. ℄ R/W
I75-4
TS Sta. 244+05.89
OLD ℄ R/W
OLD ℄ I-75
SC Sta. 248+05.89
OLD ℄ R/W
I75EX-2
1,465.61′
N 0° 51′ 59″ E
STA. 98+05.29 (S.R. 65) =
STA. 0+00.00 (YODER RD.)
SECTION LINE
℄ PROP. YODER RD.
8250
8255
2,000.00′
S 1° 07′ 59″ W
POT Sta. 8259+00.00
INDIANA & OHIO RR
CITY OF LIMA
SECTION 18
SECTION 17
N. & S. ℄ SECTION 17
E. & W. ℄ SECTION 18
POT Sta. 89+34.39
E. & W. ℄ SECTION 17
E ½ CORNER SECTION 18
W ½ CORNER SECTION 17
P1723
CENTER OF
SECTION 17
P1713

NOTES:
FOR S.R. 65 RAMP AND YODER RD. GEOMETRY & CURVE DATA SEE SHEET 8 OF 25.

FOR COMPARISON OF OLD ℄ R/W &
PROP. ℄ R/W & CONST. SEE TABLE ON SHEET 1 OF 25.

THE ℄ R/W & CONSTRUCTION OF S.R. 65
IS ON THE SECTION LINE.

HORIZONTAL SCALE IN FEET
0 100 200 400

PID NO. 76691 87965 89029

R/W DESIGNER BKJ
R/W REVIEWER KDO

CENTERLINE PLAT
STA. 200+00.00 TO STA. 250+00.00

ALL-75-0.21/5.53
ALL-75-6.11/7.85

7 / 25

1117
1224

J:\Projects\ALL\76691\row\sheets\76691RC005.dgn 12-SEP-2012 9:39AM reddenj

ALLEN COUNTY

PERRY TOWNSHIP
SECTIONS 17 & 18
T-4-S, R-7-E
CITY OF LIMA

CURVE 65A-1
P.I.= Sta. 216+77.22
D = 8° 18′ 36″ (RT)
Dc = 1° 30′ 00″
R = 3,819.72′
T = 277.49′
L = 554.00′
E = 10.07′
C = 553.51′
C.B. = S 85° 25′ 11″ E

CURVE 65A-2
P.I.= Sta. 220+30.42
D = 6° 07′ 47″ (RT)
Dc = 4° 00′ 00″
R = 1,432.39′
T = 76.69′
L = 153.24′
E = 2.05′
C = 153.17′
C.B. = S 78° 12′ 00″ E

CURVE 65B-1
P.I. STA. 216+23.69
Ls = 200.00′
f s = 2° 00′ 00″
LT = 133.34′
ST = 66.67′
x = 199.98′
y = 2.33′
k = 100.00′
p = 0.58′

CURVE 65B-2
P.I.= Sta. 219+24.77
D = 13° 24′ 47″ (LT)
Dc = 2° 00′ 00″
R = 2,864.79′
D c = 11° 24′ 47″ (LT)
Lc = 570.66′
Es = 20.03′
C = 569.71′
C.B.1 = N 88° 36′ 46″ E
C.B. = N 81° 34′ 23″ E

℄ R/W & CONST. S.R. 65
N 0° 51′ 59″ E
PROP. ℄ R/W & CONST. I-75
S89°34′29″E
CITY OF LIMA
214+90.35
74.50′ LT
TS Sta. 214+90.35
SC Sta. 216+90.35
PT Sta. 222+61.01
65B-1
65B-2
℄ RAMP 'B'
156.24′
N 75°51′59″ E
℄ RAMP 'C'
718.16′
S 80° 53′ 07″ E
PC Sta. 231+12.14
PT Sta. 236+91.54
65C-1
236+91.54
61.50′ LT
213+99.73
61.50′ RT
℄ RAMP 'A'
65A-1
65A-2
PC Sta. 213+99.73
PCC Sta. 219+53.73
PT Sta. 221+06.97
L 309.00′
S 75° 08′ 06″ E
STA. 106+13.89 (S.R. 65) =
STA. 223+93.98 (RAMP 'C')
SECTION LINE
STA. 106+07.78 (S.R. 65) =
STA. 224+17.25 (RAMP 'B')
SECTION LINE
STA. 224+02.80 (I-75) =
STA. 104+00.00 (S.R. 65)
SECTION LINE
STA. 101+91.13 (S.R. 65) =
STA. 224+15.97 (RAMP 'A')
SECTION LINE
STA. 101+81.09 (S.R. 65) =
STA. 223+90.86 (RAMP 'D')
SECTION LINE
STA. 98+05.29 (S.R. 65) =
STA. 0+00.00 (YODER RD.)
SECTION LINE
CITY OF LIMA
SECTION 18
SECTION 17
INDIANA & OHIO RR.
POT Sta. 8+38.29
252.31′
N 79° 51′ 58″ E
℄ RAMP 'D'
65D-1
65D-2
CS Sta. 234+84.50
ST Sta. 236+84.50
236+84.50
74.50′ RT
118.68′
N74°09′46″E
230+08.22
180.05′ RT
PT Sta. 7+19.61
PC Sta. 226+43.17
PC Sta. 5+44.77
5° 14′ 43″
140.00′
PT Sta. 4+04.77
PC Sta. 1+80.85
180.85′
S 89° 08′ 57″ E
Y-1
Y-2
℄ PROP. YODER RD.

PROPOSED S.R. 65 RAMP ℄ COORDINATE TABLE				
STATION	GROUND COORDINATES		GRID COORDINATES	
	NORTHING	EASTING	NORTHING	EASTING
RAMP "A"				
PC 213+99.73	380,084.3828	1,526,814.0816	380,053.6061	1,526,690.4502
PCC 219+53.73	380,040.1813	1,527,365.8284	380,009.4081	1,527,242.1523
PT 221+06.97	380,008.8589	1,527,515.7591	379,978.0883	1,527,392.0709
RAMP "B"				
TS 214+90.35	380,219.7064	1,526,905.7100	380,188.9187	1,526,782.0712
SC 216+90.35	380,224.5477	1,527,105.6405	380,193.7596	1,526,981.9855
PT 222+61.01	380,308.0388	1,527,669.2020	380,277.2439	1,527,545.5014
RAMP "C"				
PC 231+12.14	380,238.5107	1,528,529.8949	380,207.7215	1,528,406.1246
PT 236+91.54	380,190.3681	1,529,106.7351	380,159.5828	1,528,982.9181
RAMP "D"				
PC 226+43.17	379,963.9453	1,528,062.6436	379,933.1783	1,527,938.9111
CS 234+84.50	380,050.7459	1,528,898.7247	380,019.9719	1,528,774.9245
ST 236+84.50	380,054.4241	1,529,098.6882	380,023.6498	1,528,974.8718

CURVE Y-1
P.I.= Sta. 3+12.82
D = 76° 08′ 00″ (LT)
Dc = 34° 00′ 00″
R = 168.52′
T = 131.98′
L = 223.92′
E = 45.53′
C = 207.81′
C.B. = N 52° 47′ 03″ E

CURVE Y-2
P.I.= Sta. 6+40.98
D = 59° 26′ 43″ (RT)
Dc = 34° 00′ 00″
R = 168.52′
T = 96.21′
L = 174.84′
E = 25.53′
C = 167.10′
C.B. = N 44° 26′ 25″ E

CURVE 65C-1
P.I.= Sta. 234+02.39
D = 8° 41′ 28″ (LT)
Dc = 1° 30′ 00″
R = 3,819.72′
T = 290.26′
L = 579.40′
E = 11.01′
C = 578.85′
C.B. = S 85° 13′ 45″ E

CURVE 65D-1
P.I.= Sta. 230+64.60
D = 8° 24′ 48″ (RT)
Dc = 1° 00′ 00″
R = 5,729.58′
T = 421.42′
L = 841.33′
E = 15.48′
C = 840.57′
C.B. = N 84° 04′ 22″ E

CURVE 65D-2
P.I. STA. 235+51.17
Ls = 200.00′
f s = 1° 00′ 00″
LT = 133.34′
ST = 66.67′
x = 199.99′
y = 1.16′
k = 100.00′
p = 0.29′

HORIZONTAL SCALE IN FEET

PID NO. 76691 87965 89029

R/W DESIGNER BKJ
R/W REVIEWER KDO

CENTERLINE PLAT
S.R. 65 INTERSECTION DETAIL

ALL-75-0.21/ 5.53
ALL-75-6.11/ 7.85

8 / 25

1118
1224

J:\Projects\ALL\76691\row\sheets\76691RC05A.dgn 12-SEP-2012 9:39AM reddenj

ALLEN COUNTY

PERRY TOWNSHIP
SECTIONS 8 & 17
T-4-S, R-7-E
CITY OF LIMA

(A)

CENTER OF SECTION 17 TO OLD ℄ I-75:
N 0°53'41" E, 1,548.05'

CENTER OF SECTION 17 TO PROP. ℄ R/W & CONST. I-75:
N 0°53'41" E, 1,656.04'

(B)

NORTH ¼ CORNER SECTION 17 TO PROP. ℄ R/W & CONST. I-75:
N 0°53'41" E, 987.10'

NORTH ¼ CORNER SECTION 17 TO ℄ OLD 75:
N 0°53'41" E, 1,095.09'

WEST ¼ CORNER
OF SECTION 8
852

CENTER OF
SECTION 8
KC283

N. & S. ℄ SECTION 8

CITY OF LIMA

1,422.89'
S 89°18'48" E

NORTH ¼ CORNER SECTION 17
SOUTH ¼ CORNER SECTION 8
P1711

PI Sta. 91+33.82

MATCH LINE STA. 250+00.00

N. & S. ℄ SECTION 17

STA. 250+80.91
¼ SECTION LINE

CENTER OF
SECTION 17
P1713

¼ SECTION LINE
STA. 250+88.71

℄ R/W & CONST.
HANTHORN RD.

PROP. ℄ R/W & CONST. I-75

175-4

I75EX-2

OLD ℄ I-75

STA. 102+54.27 (HANTHORN RD.) =
STA. 266+05.69 (PROP. ℄ R/W & CONST. I-75)
SECTION LINE

CS Sta. 275+12.14
PROP. ℄ R/W

ST Sta. 280+47.14
PROP. ℄ R/W

CITY OF LIMA

STA. 267+13.10±

STA. 269+35.04±

STA. 104+00.00 (HANTHORN RD.) =
STA. 268+26.04 (℄ EXIST. I-75)
SECTION LINE

CS Sta. 273+88.37
OLD ℄ R/W

ST Sta. 277+88.37
OLD ℄ R/W

S 89° 22' 54" E

SECTION 8
SECTION 17

STA. 275+98.72, 12.29' RT
FD. CONC. MON.
(FORMER ST STA. 277+94.28)

SEE DETAIL '75-D'
SHEET 21 OF 25

END PROJECT ALL-75-00.21
PID 89029
STA. 292+00.00
BEGIN PROJECT ALL-75-05.53
PID 76691
STA. 292+00.00

4698.30'
N 0° 57' 03" E

PROP. ℄ R/W & CONST. I-75

STA. 293+22.68
¼ SECTION LINE

MATCH LINE STA. 300+00.00

1,230.85'
S 89°18'48" E

E. & W. ℄ SECTION 8

EAST ¼ CORNER
OF SECTION 8
P0923

SECTION 8
SECTION 9

(C)

NORTH ¼ CORNER SECTION 17 TO PROP. ℄ R/W & CONST. I-75:
S 89°22'54" E, 1,120.45'

NORTH ¼ CORNER SECTION 17 TO OLD ℄ I-75:
S 89°22'54" E, 1,266.18'

(D)

NE CORNER SECTION 17 TO PROP. ℄ R/W & CONST. I-75:
S 89°22'54" E, 1,531.80'

NE CORNER SECTION 17 TO OLD ℄ I-75:
S 89°22'54" E, 1,386.80'

NE CORNER SECTION 17
SE CORNER SECTION 8
P1621

POT Sta. 117+86.08

SECTION 17
SECTION 16

GREELY CHAPEL RD.

CURVE I75EX-2	CURVE I75-4
P.I.= Sta. 265+01.69	P.I.= Sta. 264+76.60
D = 89° 28' 28" (LT)	D = 89° 28' 28" (LT)
Dc = 3° 00' 00"	Dc = 2° 30' 00"
R = 1,909.86'	R = 2,291.83'
Ls = 400.00'	Ls = 535.00'
f s = 6° 00' 00"	f s = 6° 41' 15"
LT = 266.82'	LT = 356.92'
ST = 133.47'	ST = 178.57'
x = 399.56'	x = 534.27'
y = 13.95'	y = 20.79'
k = 199.93'	k = 267.38'
p = 3.49'	p = 5.20'
D c = 77° 28' 28" (LT)	D c = 76° 05' 58" (LT)
Lc = 2,582.48'	Lc = 3,043.97'
Ts = 2,095.80'	Ts = 2,543.43'
Es = 783.70'	Es = 941.86'
C = 2,390.18'	C = 2,825.12'
C1=C2 = 399.81'	C1=C2 = 534.68'
C.B.1 = N 88° 25' 32" E	C.B.1 = N 88° 11' 47" E
C.B. = N 45° 41' 17" E	C.B. = N 45° 41' 17" E
C.B.2 = S 2° 57' 03" W	C.B.2 = S 3° 10' 47" W

NOTES:
FOR COMPARISON OF OLD ℄ R/W &
PROP. ℄ R/W & CONST. SEE TABLE ON SHEET 1 OF 25.

THE ℄ R/W & CONSTRUCTION OF HANTHORN ROAD
IS ON THE SECTION LINE.

HORIZONTAL SCALE IN FEET
0 100 200 400

PID NO.
76691
89029

R/W DESIGNER BKJ
R/W REVIEWER KDO

CENTERLINE PLAT
STA. 250+00.00 TO STA. 300+00.00

ALL-75-0.21/5.53
ALL-75-6.11/7.85

9 / 25

1119
1224

J:\Projects\ALL\76691\row\sheets\76691RC006.dgn 12-SEP-2012 9:39AM redderj

NOTES:
FOR GEOMETRY OF RAMPS, SERVICE ROADS AND PATROL DRIVE SEE SHEET 11 OF 25.

FOR COMPARISON OF OLD ℄ R/W & PROP. ℄ R/W & CONST. SEE TABLE ON SHEET 1 OF 25.

ALLEN COUNTY

PERRY TOWNSHIP
SECTIONS 4, 5, 8 & 9
T-4-S, R-7-E
CITY OF LIMA

CITY OF LIMA

S ¼ CORNER SECTION 5
N ¼ CORNER SECTION 8
P0811

BEGIN PROJECT
ALL-75-6.11
PID 87965
STA. 96+70.00

N. & S. ℄ SECTION 8

WEBB COMPANY ADDITION
P.B. 3 PG. 267

N. & S. ℄ SECTION 5
CITY OF LIMA

CENTER OF SECTION 5
C687

POT Sta. 96+19.53

1,425.96′
S 89°10′27″ E

SEE DETAIL '4-A'
SHEET 11 OF 25

PC STA. 100+00.53
SECTION LINE

CITY OF LIMA

℄ R/W & CONST.
SERVICE RD. 1

4TH-1

PT Sta. 103+20.53

℄ R/W & CONST. FOURTH ST.

℄ R/W & CONST.
SERVICE RD. 2

PC Sta. 105+53.28

4TH-2

℄ RAMP 'D'

STA. 335+34.12, 95.38′ LT
FD. CONC. MON
(FORMER PT
STA. 329+32.73, 95′ LT)

PT Sta. 335+30.27

STA. 346+23.35
¼ SECTION LINE

I75-6

1,389.86′
S 89°17′40″ E

E. & W. ℄ SECTION 5

STA. 306+02.99
FD. CONC. MON.
(FORMER POT
STA. 308+00)

PT Sta. 108+73.28

STA. 320+55.04 (I-75) =
STA. 110+50.00 (4TH ST.)

PROP. ℄ R/W & CONST. I-75

MATCH LINE STA. 300+00.00

4698.30′
N 0° 57′ 03″ E

℄ RAMP 'C'

STA. 319+78.04
SECTION LINE

321+60.12±

1343.48′
N 0° 37′ 07″ W

CITY OF LIMA

MATCH LINE STA. 350+00.00

℄ RAMP 'A'

℄ RAMP 'B'

PC Sta. 112+25.00

I75-5

PC Sta. 327+45.44

STA. 335+34.04, 94.42′ RT
FD. CONC. MON.
(FORMER PT
STA. 329+32.73, 95′ RT)

SECTION 8
SECTION 5

CITY OF LIMA

4TH-3

PT Sta. 115+45.00

℄ R/W & CONST.
PATROL DRIVE

1,274.12′
S 89°17′40″ E

PC Sta. 348+73.75

SEE DETAIL '4-B'
SHEET 11 OF 25

PC Sta. 117+77.75

1,225.78′
S 89°10′27″ E

4TH-4

SUSPEND PROJECT
ALL-75-6.11
PID 87965
STA. 119+64.00

PT Sta. 120+97.75
SECTION LINE

POT Sta. 122+79.95

SECTION 8
SECTION 9

GREELY
CHAPEL RD.

CITY OF LIMA

SECTION 5
SECTION 4

NE CORNER SECTION 8
SE CORNER SECTION 5
P0921

E 1/4 CORNER
OF SECTION 5
P0423

1. N 82°49′33″ E 232.75′
2. S 89°10′27″ E 351.72′
3. S 81°10′27″ E 232.75′
4. S 89°10′27″ E 182.21′
5. S 89°10′27″ E 381.01′

CURVE I75-5
P.I.= Sta. 331+37.88
D = 1° 34′ 11″ (LT)
Dc = 0° 12′ 00″
R = 28,647.89′
T = 392.44′
L = 784.83′
E = 2.69′
C = 784.81′
C.B. = N 0° 09′ 58″ E

CURVE I75-6
P.I.= Sta. 352+62.60
D = 1° 17′ 46″ (RT)
Dc = 0° 10′ 00″
R = 34,377.47′
T = 388.85′
L = 777.67′
E = 2.20′
C = 777.65′
C.B. = N 0° 01′ 46″ E

CURVE 4TH-1
P.I.= Sta. 101+60.80
D = 8° 00′ 00″ (LT)
Dc = 2° 30′ 00″
R = 2,291.83′
T = 160.26′
L = 320.00′
E = 5.60′
C = 319.74′
C.B. = N 86° 49′ 33″ E

CURVE 4TH-2
P.I.= Sta. 107+13.54
D = 8° 00′ 00″ (RT)
Dc = 2° 30′ 00″
R = 2,291.83′
T = 160.26′
L = 320.00′
E = 5.60′
C = 319.74′
C.B. = N 86° 49′ 33″ E

CURVE 4TH-3
P.I.= Sta. 113+85.26
D = 8° 00′ 00″ (RT)
Dc = 2° 30′ 00″
R = 2,291.83′
T = 160.26′
L = 320.00′
E = 5.60′
C = 319.74′
C.B. = S 85° 10′ 27″ E

CURVE 4TH-4
P.I.= Sta. 119+38.01
D = 8° 00′ 00″ (LT)
Dc = 2° 30′ 00″
R = 2,291.83′
T = 160.26′
L = 320.00′
E = 5.60′
C = 319.74′
C.B. = S 85° 10′ 27″ E

HORIZONTAL SCALE IN FEET
0 100 200 400

PID NO. 76691 87965 89029

R/W DESIGNER BKJ
R/W REVIEWER KDO

CENTERLINE PLAT
STA. 300+00.00 TO STA. 350+00.00

ALL-75-0.21/5.53
ALL-75-6.11/7.85

10 / 25

1120
1224

J:\Projects\ALL\76691\row\sheets\76691RC007.dgn 12-SEP-2012 9:39AM reddenj

ALLEN COUNTY

PERRY TOWNSHIP
SECTIONS 5 & 8
T-4-S, R-7-E
CITY OF LIMA

CITY OF LIMA

SEE DETAIL '4-A' THIS SHEET

℄ R/W & CONST. SERVICE RD. 1

℄ R/W & CONST. SERVICE RD. 2

℄ R/W & CONST. FOURTH ST.

N89°52'32"E 298.41

N82°49'33"E 253.30

N0°09'10"W 198.55

S0°09'10"E 187.19

PC Sta. 13+77.51

PT Sta. 14+01.87

PC Sta. 16+55.17

PT Sta. 17+16.58

PI Sta. 17+60.40

PC Sta. 12+89.91

PT Sta. 15+52.73

PC Sta. 16+68.22

115.49'
N6°42'35"E

SER1-2

SER2-2

SER2-3

SER1-3

STA. 104+66.14 (4TH ST.) =
STA. 318+27.70 (RAMP 'D')

STA. 105+07.45 (4TH ST.) =
STA. 331+36.34 (RAMP 'C')

SECTION 5
SECTION 8

PT Sta. 115+45.00

STA. 115+95.23 (FOURTH ST.) =
STA. 309+52.32 (RAMP 'B'

℄ R/W & CONST.
PROP. PATROL DRIVE

273.36'
N4°16'19"W

STA. 116+11.26 (FOURTH ST.) =
STA. 10+00.00 (PATROL DR.)

STA. 116+36.65 (FOURTH ST.) =
STA. 321+85.94 (RAMP 'A')

℄ R/W & CONST.
FOURTH ST.

STA. 321+44.00
SECTION LINE

STA. 310+00.02
SECTION LINE

PC Sta. 311+24.50

172.18'
S0°39'34"W

N0°39'34"E
176.17'

PT Sta. 320+09.77

℄ RAMP 'B'

℄ RAMP 'A'

DETAIL '4-B'
NOT TO SCALE

POT Sta. 19+06.71

114.93'
N42°32'27"E

PT Sta. 17+91.78

325+52.88
516.02' LT

PT Sta. 322+77.46

216.85'
N 55° 06' 48" E

PC Sta. 324+94.31

CS Sta. 327+92.83

SC Sta. 329+92.83

℄ RAMP 'D'

PT Sta. 334+80.07

334+81.07
61.50' LT

PROP. ℄ R/W & CONST. I-75

4THD-1
4THD-2
4THD-3
4THD-4

4THC-1
4THC-2

PC Sta. 320+26.25

PT Sta. 329+49.14

SC Sta. 323+17.41

TS Sta. 321+17.41

℄ RAMP 'C'

321+17.41
74.50' LT

STA. 320+55.04 (I-75) =
STA. 110+50.00 (4TH ST.)

319+60.13
267.82' LT

POT Sta. 18+40.00

STA. 319+78.04
SECTION LINE

319+52.95
74.50' RT

S89°10'27"E

ST Sta. 319+52.95

CS Sta. 317+52.95

PC Sta. 311+24.50

PT Sta. 320+09.77

PC Sta. 318+10.76

4THB-1
4THB-2

℄ RAMP 'B'

℄ RAMP 'A'

284.89'
N 46° 25' 53" E

4THA-1
4THA-2
4THA-3

PCC Sta. 310+61.24

PT Sta. 315+25.87

305+07.24
61.50' RT
PC Sta. 305+07.24

STA. 99+83.99 (FOURTH ST.) =
STA. 10+00.00 (SERVICE RD. 1) =
STA. 10+00.00 (SERVICE RD. 2)
SECTION LINE

PC Sta. 10+33.58

PT Sta. 10+69.40

PC Sta. 10+23.55

PT Sta. 10+79.11

PC Sta. 100+00.53
SECTION LINE

SER1-1
SER2-1

℄ R/W & CONST.
SERVICE RD. 2

℄ R/W & CONST.
FOURTH ST.

℄ R/W & CONST.
SERVICE RD. 1

DETAIL '4-A'
NOT TO SCALE

POT Sta. 16+01.52

326+25.07
532.17' RT

297.85'
N0°43'41"E

℄ R/W & CONST.
PROP. PATROL DRIVE

PATR-1

PT Sta. 13+03.66

PC Sta. 12+73.36

STA. 10+65.92±

SEE DETAIL '4-B' THIS SHEET

1. S 0°49'33" W 23.55'
2. N 0°49'33" E 33.58'
3. S 85°26'50" E 43.83'
4. S 88°56'50" E 79.60'

NOTE:
FOR CURVE DATA AND COORDINATE TABLE SEE SHEET 12 OF 25.

HORIZONTAL SCALE IN FEET
0 50 100 200

PID NO.
76691
87965
89029

R/W DESIGNER BKJ
R/W REVIEWER KDO

CENTERLINE PLAT
FOURTH ST. INTERCHANGE DETAIL

ALL-75-0.21/ 5.53
ALL-75-6.11/ 7.85

11 / 25

1121
1224

J:\Projects\ALL\76691\row\sheets\76691RC500.dgn 12-SEP-2012 9:39AM redden

CURVE PATR-1
P.I.= Sta. 12+88.52
D = 5° 00′ 00″ (RT)
Dc = 16° 30′ 00″
R = 347.25′
T = 15.16′
L = 30.30′
E = 0.33′
C = 30.29′
C.B. = N 1° 46′ 19″ W

CURVE SER1-1
P.I.= Sta. 10+59.13
D = 90° 57′ 01″ (LT)
Dc = 163° 42′ 08″
R = 35.00′
T = 35.59′
L = 55.56′
E = 14.91′
C = 49.91′
C.B. = S 44° 38′ 57″ E

CURVE SER1-2
P.I.= Sta. 13+89.71
D = 7° 02′ 59″ (LT)
Dc = 28° 56′ 14″
R = 198.00′
T = 12.20′
L = 24.36′
E = 0.38′
C = 24.35′
C.B. = N 86° 21′ 03″ E

CURVE SER1-3
P.I. Sta. 16+85.98
D = 11° 43′ 37″ (RT)
Dc = 19° 05′ 55″
R = 300.00′
T = 30.81′
L = 61.40′
E = 1.58′
C = 61.29′
C.B. = N 88° 41′ 21″ E

CURVE SER2-1
P.I.= Sta. 10+55.35
D = 82° 06′ 13″ (RT)
Dc = 229° 10′ 59″
R = 25.00′
T = 21.77′
L = 35.82′
E = 8.15′
C = 32.84′
C.B. = N 41° 52′ 40″ E

CURVE SER2-2
P.I.= Sta. 14+44.88
D = 76° 13′ 11″ (LT)
Dc = 29° 00′ 00″
R = 197.57′
T = 154.97′
L = 262.83′
E = 53.53′
C = 243.87′
C.B. = N 44° 49′ 11″ E

CURVE SER2-3
P.I.= Sta. 17+32.10
D = 35° 49′ 51″ (RT)
Dc = 29° 00′ 00″
R = 197.57′
T = 63.87′
L = 123.55′
E = 10.07′
C = 121.55′
C.B. = N 24° 37′ 31″ E

CURVE 4THA-1
P.I.= Sta. 307+84.73
D = 8° 18′ 36″ (RT)
Dc = 1° 30′ 00″
R = 3,819.72′
T = 277.49′
L = 554.00′
E = 10.07′
C = 553.51′
C.B. = N 5° 06′ 21″ E

CURVE 4THA-2
P.I.= Sta. 313+02.06
D = 37° 10′ 14″ (RT)
Dc = 8° 00′ 00″
R = 716.20′
T = 240.82′
L = 464.63′
E = 39.40′
C = 456.53′
C.B. = N 27° 50′ 46″ E

CURVE 4THA-3
P.I.= Sta. 319+15.92
D = 45° 46′ 20″ (LT)
Dc = 23° 00′ 00″
R = 249.11′
T = 105.16′
L = 199.01′
E = 21.29′
C = 193.76′
C.B. = N 23° 32′ 43″ E

CURVE 4THB-1
P.I.= Sta. 321+92.59
D = 155° 32′ 30″ (RT)
Dc = 24° 45′ 00″
R = 231.50′
T = 1,068.08′
L = 628.45′
E = 861.39′
C = 452.49′
C.B. = S 78° 25′ 49″ W

CURVE 4THB-2
P.I. STA. 318+20.83
Ls = 200.00′
f s = 24° 45′ 00″
LT = 134.66′
ST = 67.87′
x = 196.30′
y = 28.42′
k = 99.38′
p = 7.15′

CURVE 4THC-1
P.I. STA. 322+52.07
Ls = 200.00′
f s = 24° 45′ 00″
LT = 134.66′
ST = 67.87′
x = 196.30′
y = 28.42′
k = 99.38′
p = 7.15′

CURVE 4THC-2
P.I. STA. 334+23.30
D = 156° 21′ 13″ (LT)
Dc = 24° 45′ 00″
R = 231.50′
T = 1,105.89′
L = 631.73′
E = 898.36′

CURVE 4THD-1
P.I.= Sta. 321+62.60
D = 55° 15′ 58″ (RT)
Dc = 22° 00′ 00″
R = 260.44′
T = 136.34′
L = 251.21′
E = 33.53′
C = 241.58′
C.B. = N 27° 28′ 49″ E

CURVE 4THD-2
P.I.= Sta. 326+48.41
D = 35° 04′ 30″ (LT)
Dc = 11° 45′ 00″
R = 487.62′
T = 154.10′
L = 298.51′
E = 23.77′
C = 293.87′
C.B. = N 37° 34′ 33″ E

CURVE 4THD-3
P.I. STA. 328+67.42
Ls = 200.00′
f s = 13° 15′ 00″
LT = 126.20′
ST = 74.59′
x = 198.80′
y = 17.10′
k = 99.82′
p = 2.98′

CURVE 4THD-4
P.I.= Sta. 332+36.78
D = 7° 18′ 31″ (LT)
Dc = 1° 30′ 00″
R = 3,819.72′
T = 243.95′
L = 487.25′
E = 7.78′
C = 486.92′
C.B. = N 3° 08′ 02″ E

PROPOSED FOURTH ST. RAMP Ⓑ COORDINATE TABLE

STATION	GROUND COORDINATES		GRID COORDINATES	
	NORTHING	EASTING	NORTHING	EASTING
RAMP "A"				
PC 305+07.24	385,110.0274	1,532,035.7924	385,078.8437	1,531,911.7382
PCC 310+61.24	385,661.3455	1,532,085.0538	385,630.1172	1,531,960.9956
PT 315+25.87	386,065.0083	1,532,298.2971	386,033.7473	1,532,174.2216
PC 318+10.76	386,261.3621	1,532,504.7158	386,230.0852	1,532,380.6236
PT 320+09.77	386,438.9896	1,532,582.1179	386,407.6983	1,532,458.0194
RAMP "B"				
PC 311+24.50	386,449.3290	1,532,541.2342	386,418.0369	1,532,417.1391
CS 317+52.95	386,358.5765	1,532,097.9384	386,327.2917	1,531,973.8792
ST 319+52.95	386,555.3213	1,532,072.7838	386,524.0206	1,531,948.7266
RAMP "C"				
TS 321+17.41	386,722.2328	1,531,926.5337	386,690.9186	1,531,802.4883
SC 323+17.41	386,918.9775	1,531,901.3791	386,887.6473	1,531,777.3358
PT 329+49.14	386,824.9437	1,531,458.0689	386,793.6212	1,531,334.0615
RAMP "D"				
PC 320+26.25	386,831.1418	1,531,417.0522	386,799.8188	1,531,293.0481
PT 322+77.46	387,045.4679	1,531,528.5298	387,014.1275	1,531,404.5167
PC 324+94.31	387,169.4970	1,531,706.4104	387,138.1466	1,531,582.3829
CS 327+92.83	387,402.4040	1,531,885.6169	387,371.0347	1,531,761.5748
SC 329+92.83	387,597.7927	1,531,926.0924	387,566.4076	1,531,802.0471
PT 334+80.07	388,083.9809	1,531,952.7129	388,052.5564	1,531,828.6654

PID NO. 76691 87965 89029

R/W DESIGNER BKJ | R/W REVIEWER KDO

CENTERLINE PLAT
FOURTH ST. INTERCHANGE CURVE DATA

ALL-75-0.21/ 5.53
ALL-75-6.11/ 7.85

12 / 25

1122
1224

J:\Projects\ALL\76691\row\sheets\76691RC07A.dgn 12-SEP-2012 9:39AM reddenj

NOTES:
FOR RAMP GEOMETRY SEE SHEET 14 OF 25.

FOR GEOMETRY OF LOST CREEK BLVD.
WELLESLEY DR. AND BRYN MAWR AVE.
SEE SHEET 15 OF 25.

FOR COMPARISON OF OLD ℄ R/W &
PROP. ℄ R/W & CONST. SEE TABLE ON SHEET 1 OF 25.

THE ℄ R/W S.R. 309 IS ON THE SECTION LINE.

ALLEN COUNTY

PERRY TOWNSHIP
SECTIONS 4 & 5
T-4-S, R-7-E
CITY OF LIMA

BATH TOWNSHIP
SECTION 32
T-3-S, R-7-E
CITY OF LIMA

N ¼ CORNER
OF SECTION 5
P0511

N. & S. ℄ SECTION 5

S ¼ CORNER
OF SECTION 32
B3215

POT Sta. 883+75.83

CITY OF LIMA

N. & S. ℄ SECTION 32

CENTER OF
SECTION 32
B3213

1 S 88° 05′ 04″ E 215.00′
2 S 89° 38′ 00″ E 235.11′
3 S 89° 38′ 00″ E 479.96′

℄ R/W &
CONSTRUCTION
S.R. 309

HIRAM HOLDRIDGE
SUBDIVISION
P.B. 3 PG. 375

CURVE I75-6
P.I.= Sta. 352+62.60
D = 1° 17′ 46″ (RT)
Dc = 0° 10′ 00″
R = 34,377.47′
T = 388.85′
L = 777.67′
E = 2.20′
C = 777.65′
C.B. = N 0° 01′ 46″ E

LOST CREEK

885
N 89° 54′ 53″ E
1,227.23′
890
CITY OF LIMA

CITY
OF LIMA

S89°44′42″W
1,211.36′

STA. 896+02.95 (S.R. 309) =
STA. 370+05.72 (I-75)
SECTION LINE

R. RAY NELSON
P.B. 7 PG. 79

SEE DETAIL 'A'
THIS SHEET

PROP. ℄ R/W & CONST. I-75

PI Sta. 396+67.24

STA. 356+56.95,
95.04′ RT
FD. CONC. MON.
(FORMER PT
STA. 358+57.76,
95′ LT)

PT Sta. 356+51.41

℄ RAMP 'A'

℄ RAMP 'C'

STA. 369+59.94±

I75-6

MATCH LINE STA. 350+00.00

CITY OF LIMA

℄ RAMP 'E'

℄ RAMP 'F'

LOST CREEK SUBDIVISION
NUMBER 2
P.B. 3 PG. 411

MATCH LINE
STA. 400+00.00

PI Sta. 899+50.00
(CONST. ℄)

PI Sta. 901+65.00
(CONST. ℄)

℄ CONSTRUCTION
S.R. 309

EQUATION:
Sta 904+00.11 BK =
Sta 904+00.00 AH
(CONST. ℄)

℄ R/W S.R. 309

℄ R/W & CONST.
BRYN MAWR AVE.

℄ R/W & CONST.
WELLESLEY DR.

℄ R/W & CONST.
LOST CREEK BLVD

LOST CREEK SUBDIVISION
NUMBER 1
P.B. 3 PG. 411

STA. 396+67.75
¼ SECTION LINE

STA. 396+67.82,
95.00′ RT
FD. CONC. MON.
(FORMER PI
STA. 398+68.66,
95′ RT)

S89°44′42″W
1,424.06′

E. & W ℄ SEC. 32

LOST CREEK

EASTGATE
PARK NO. 4
P.B. 21 PG. 142

EASTGATE
PARK NO. 1
P.B. 18 PG. 123

EASTGATE
PARK NO. 2
P.B. 19 PG. 62

LOST CREEK
SUBDIVISION
NUMBER 5
P.B. 6 PG. 98

LOST CREEK
RESERVOIR

POT Sta. 908+79.96
(CONST. ℄)

SECTION 5
SECTION 4

NE CORNER OF
SECTION 5
P0421

POT Sta. 910+20.67

SECTION 32
SECTION 33

EAST ¼ CORNER
SECTION 32
B3323

SE CORNER OF
SECTION 32
B3325

T-4-S
T-3-S

LOST CREEK
SUBDIVISION
NUMBER 1
P.B. 3 PG. 411

PERRY TWP.
SECTION 5
BATH TWP.
SECTION 32

PI Sta. 396+67.24

E. & W ℄ SEC. 32

PROP. ℄ R/W & CONST. I-75

¼ SECTION LINE
STA. 396+67.75

STA. 396+67.82,
95.00′ RT
FD. CONC. MON.
(FORMER PI
STA. 398+68.66,
95′ RT)

DETAIL 'A'
NOT TO SCALE

HORIZONTAL
SCALE IN FEET
0 100 200 400

PID NO.
76691
87965
89029

R/W DESIGNER
BKJ

R/W REVIEWER
KDO

CENTERLINE PLAT
STA. 350+00.00 TO STA. 400+00.00

ALL-75-0.21/5.53
ALL-75-6.11/7.85

13 / 25

1123
1224

J:\Projects\ALL\76691\row\sheets\76691RC008.dgn 12-SEP-2012 9:39AM reddenj

PROPOSED S.R. 309 RAMP ℄ COORDINATE TABLE				
STATION	GROUND COORDINATES		GRID COORDINATES	
	NORTHING	EASTING	NORTHING	EASTING
RAMP "A"				
TS 356+88.32	390,292.5719	1,531,925.5529	390,260.9686	1,531,801.5076
SC 358+88.32	390,492.5443	1,531,924.4270	390,460.9248	1,531,800.3818
PT 363+68.00	390,964.3775	1,531,845.3184	390,932.7198	1,531,721.2796
PC 366+15.80	391,201.7119	1,531,774.0561	391,170.0350	1,531,650.0231
PT 368+71.61	391,453.8939	1,531,736.8212	391,422.1965	1,531,612.7912
RAMP "C"				
PC 370+90.54	391,718.1840	1,531,771.4712	391,686.4652	1,531,647.4384
PT 371+80.96	391,805.4273	1,531,795.1344	391,773.7015	1,531,671.0997
PC 374+74.20	392,085.1977	1,531,883.0011	392,053.4492	1,531,758.9593
PCC 376+43.17	392,249.5450	1,531,921.5834	392,217.7832	1,531,797.5384
PT 381+97.17	392,801.0920	1,531,968.2120	392,769.2855	1,531,844.1633
RAMP "E"				
PC 371+07.40	391,735.5867	1,532,300.3183	391,703.8665	1,532,176.2427
PT 372+69.04	391,894.6074	1,532,275.2020	391,862.8743	1,532,151.1284
PC 376+09.87	392,219.0061	1,532,170.6396	392,187.2468	1,532,046.5745
CS 379+11.72	392,514.2243	1,532,110.8379	392,482.4411	1,531,986.7776
ST 381+26.72	392,729.0337	1,532,103.3696	392,697.2331	1,531,979.3099
RAMP "F"				
PC 354+74.74	390,077.7085	1,532,059.4753	390,046.1226	1,531,935.4192
PCC 360+44.74	390,645.2989	1,532,105.7200	390,613.6670	1,531,981.6601
PT 363+30.99	390,922.2716	1,532,176.3197	390,890.6173	1,532,052.2541
PC 365+25.64	391,105.5691	1,532,241.8314	391,073.8999	1,532,117.7605
PT 369+20.69	391,492.9370	1,532,308.6789	391,461.2365	1,532,184.6026

1. N0°05'07"W, 116.49'
2. N0°05'07"W, 126.17'
3. N0°05'07"W, 154.69'
4. N12°54'53"E, 112.43'

℄ R/W & CONSTRUCTION S.R. 309

PERRY TOWNSHIP SECTIONS 5 T-4-S, R-7-E CITY OF LIMA

BATH TOWNSHIP SECTION 32 T-3-S, R-7-E CITY OF LIMA

CURVE 309C-1
P.I.= Sta. 371+35.77
D = 4° 31' 15" (RT)
Dc = 5° 00' 00"
R = 1,145.92'
T = 45.23'
L = 90.42'
E = 0.89'
C = 90.40'
C.B. = N 15° 10' 31" E

CURVE 309C-2
P.I.= Sta. 375+58.84
D = 8° 26' 54" (LT)
Dc = 5° 00' 00"
R = 1,145.92'
T = 84.64'
L = 168.97'
E = 3.12'
C = 168.82'
C.B. = N 13° 12' 42" E

CURVE 309C-3
P.I.= Sta. 379+20.66
D = 8° 18' 36" (LT)
Dc = 1° 30' 00"
R = 3,819.72'
T = 277.49'
L = 554.00'
E = 10.07'
C = 553.51'
C.B. = N 4° 49' 57" E

LOST CREEK

CITY OF LIMA

N 89° 54' 53" E

STA. 893+23.92 (S.R. 309) = STA. 370+26.30 (RAMP 'A' SECTION LINE

STA. 893+33.67 (S.R. 309) = STA. 369+78.11 (RAMP 'C') SECTION LINE

HIRAM HOLDRIDGE SUBDIVISION P.B. 3 PG. 375

TS Sta. 356+88.32
SC Sta. 358+88.32
PT Sta. 363+68.00
PC Sta. 366+15.80
PT Sta. 368+71.61
PC Sta. 370+90.54
PT Sta. 371+80.96
PC Sta. 374+74.20
PCC Sta. 376+43.17
PT Sta. 381+97.17

309A-1 309A-2 309A-3 309C-1 309C-2 309C-3

N 16° 42' 47" W 247.80'

N 17° 26' 09" E 293.24'

STA. 369+75.74±
STA. 374+30.47±
STA. 371+99.10±
STA. 369+55.71±

356+88.32 74.50' LT
381+97.17 61.50' LT

℄ RAMP 'A'
℄ RAMP 'C'

PROP. ℄ R/W & CONST. I-75

STA. 896+02.95 (S.R. 309) = STA. 370+05.72 (I-75)

℄ RAMP 'F'
℄ RAMP 'E'

STA. 360+41.74±

354+74.74 61.50' RT
381+26.71 74.50' RT

309F-1 309F-2 309F-3 309E-1 309E-2 309E-3

PC Sta. 354+74.74
PCC Sta. 360+44.74
PT Sta. 363+30.99
PC Sta. 365+25.64
PT Sta. 369+20.69
PC Sta. 371+07.40
PT Sta. 372+69.04
PC Sta. 376+09.87
CS Sta. 379+11.72
ST Sta. 381+26.72

N 19° 40' 02" E 194.65'

N 17° 51' 56" W 340.83'

STA. 374+52.72±
STA. 370+08.79±

STA. 898+95.84 (S.R. 309) = STA. 370+37.18 (RAMP 'F') SECTION LINE

STA. 898+87.84 (S.R. 309) = STA. 369+81.23 (RAMP 'E') SECTION LINE

EASTGATE PARK NO. 1 P.B. 18 PG. 123

EASTGATE PARK NO. 4 P.B. 21 PG. 142

LOST CREEK SUBDIVISION NUMBER 1 P.B. 3 PG. 411

LOST CREEK SUBDIVISION NUMBER 1 P.B. 3 PG. 411

LOST CREEK

℄ CONSTRUCTION S.R. 309

℄ R/W S.R. 309

S88°05'04"E

S89°38'00"E

N89°53'24"E

PERRY TWP. SECTION 5

BATH TWP. SECTION 32

T.4.S.

T.3.S.

CURVE 309A-1
P.I. STA. 358+21.67
Ls = 200.00'
f s = 3° 00' 00"
LT = 133.35'
ST = 66.68'
x = 199.95'
y = 3.49'
k = 99.99'
p = 0.87'

CURVE 309A-2
P.I.= Sta. 360+77.61
D = 17° 23' 25" (LT)
Dc = 3° 00' 00"
R = 1,909.86'
D c = 14° 23' 25" (LT)
Lc = 479.68'
Es = 22.65'
C = 478.42'
C.B.1 = N 0° 19' 21" W
C.B. = N 9° 31' 04" W

CURVE 309A-3
P.I.= Sta. 367+44.61
D = 16° 37' 40" (RT)
Dc = 6° 30' 00"
R = 881.47'
T = 128.81'
L = 255.81'
E = 9.36'
C = 254.92'
C.B. = N 8° 23' 57" W

CURVE 309F-1
P.I.= Sta. 357+60.27
D = 8° 33' 00" (RT)
Dc = 1° 30' 00"
R = 3,819.72'
T = 285.53'
L = 570.00'
E = 10.66'
C = 569.47'
C.B. = N 4° 39' 28" E

CURVE 309F-2
P.I.= Sta. 361+88.28
D = 10° 44' 03" (RT)
Dc = 3° 45' 00"
R = 1,527.89'
T = 143.54'
L = 286.25'
E = 6.73'
C = 285.83'
C.B. = N 14° 18' 00" E

CURVE 309F-3
P.I.= Sta. 367+25.14
D = 19° 45' 08" (LT)
Dc = 5° 00' 00"
R = 1,145.92'
T = 199.50'
L = 395.05'
E = 17.24'
C = 393.09'
C.B. = N 9° 47' 28" E

CURVE 309E-1
P.I.= Sta. 371+88.87
D = 17° 46' 49" (LT)
Dc = 11° 00' 00"
R = 520.87'
T = 81.47'
L = 161.64'
E = 6.33'
C = 160.99'
C.B. = N 8° 58' 31" W

CURVE 309E-2
P.I.= Sta. 377+61.43
D = 12° 49' 42" (RT)
Dc = 4° 15' 00"
R = 1,348.14'
T = 151.56'
L = 301.84'
E = 8.49'
C = 301.21'
C.B. = N 11° 27' 05" W

CURVE 309E-3
P.I. STA. 379+83.43
Ls = 215.00'
f s = 4° 34' 08"
LT = 143.38'
ST = 71.71'
x = 214.86'
y = 5.71'
k = 107.48'
p = 1.43'

N

0 50 100 200 HORIZONTAL SCALE IN FEET

PID NO. 76691 87965 89029

R/W DESIGNER BKJ
R/W REVIEWER KDO

CENTERLINE PLAT S.R. 309 INTERCHANGE DETAIL

ALL-75-0.21/ 5.53
ALL-75-6.11/ 7.85

14 / 25

1124 / 1224

J:\Projects\ALL\76691\row\sheets\76691RC08A.dgn 12-SEP-2012 9:39AM reddenj

ALLEN COUNTY

BATH TOWNSHIP
SECTION 32
T-3-S, R-7-E

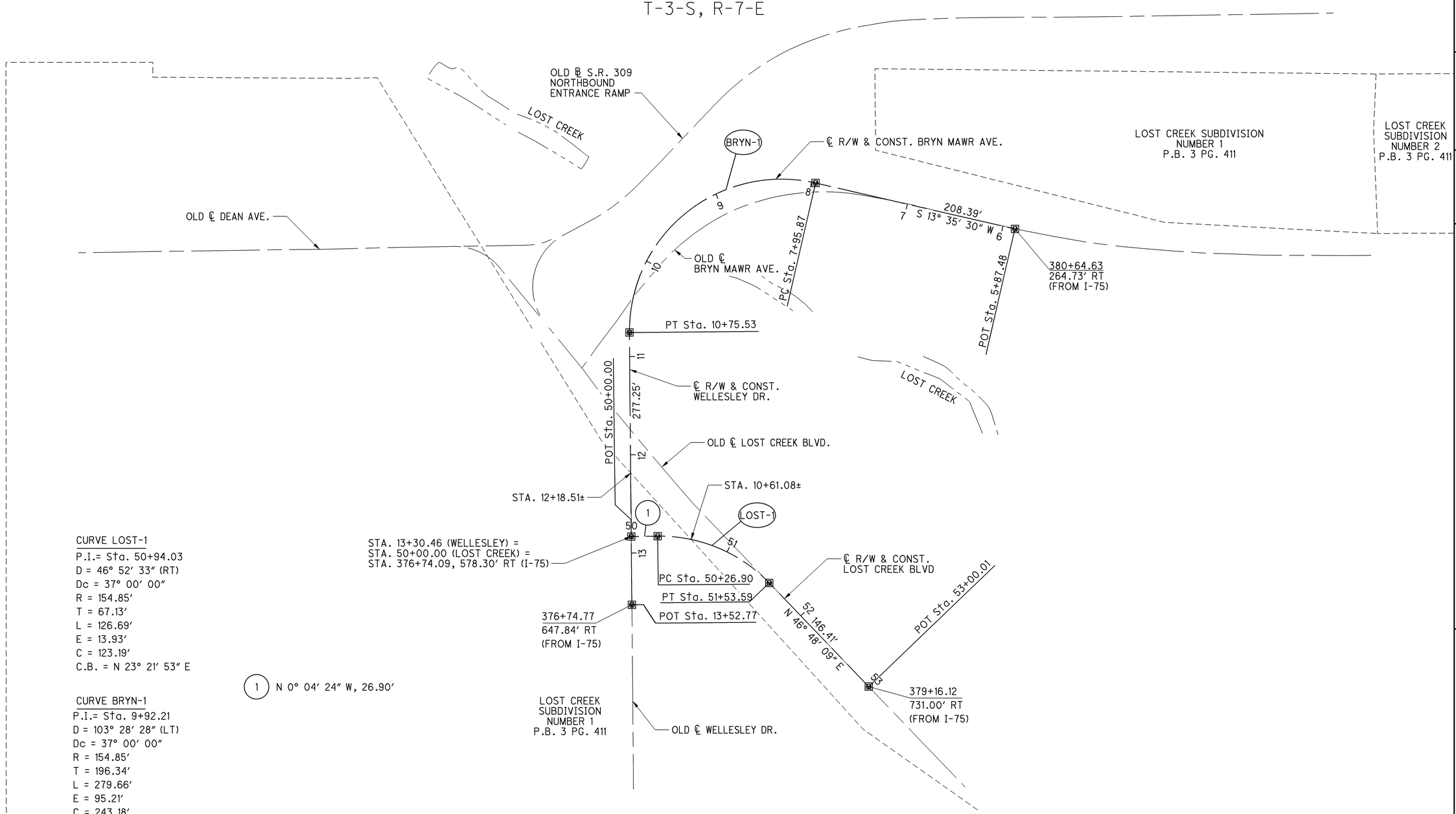

CURVE LOST-1
P.I.= Sta. 50+94.03
D = 46° 52' 33" (RT)
Dc = 37° 00' 00"
R = 154.85'
T = 67.13'
L = 126.69'
E = 13.93'
C = 123.19'
C.B. = N 23° 21' 53" E

CURVE BRYN-1
P.I.= Sta. 9+92.21
D = 103° 28' 28" (LT)
Dc = 37° 00' 00"
R = 154.85'
T = 196.34'
L = 279.66'
E = 95.21'
C = 243.18'
C.B. = S 38° 08' 44" E

(1) N 0° 04' 24" W, 26.90'

NOTES:
℄ R/W & CONST. BRYN MAWR AVE.
DOES NOT CONTINUE TO SHEET 16 OF 25.

ALL "OLD" ℄'S SHOWN ON THIS SHEET
ARE FOR GRAPHIC REPRESENTATION ONLY.

HORIZONTAL SCALE IN FEET
0 25 50 100

PID NO. 76691 87965 89029

R/W DESIGNER BKJ
R/W REVIEWER KDO

CENTERLINE PLAT
SR. 309 SIDEROAD DETAIL SHEET

ALL-75-0.21/ 5.53
ALL-75-6.11/ 7.85

15 / 25

1125
1224

J:\Projects\ALL\76691\row\sheets\76691RC600.dgn 12-SEP-2012 9:39AM reddenj

ALLEN COUNTY

BATH TOWNSHIP
SECTIONS 29 & 32
T-3-S, R-7-E

NOTES:
℄ CONST. RESERVOIR RD. NOT SHOWN FOR CLARITY
SEE DETAIL SHEET 17 OF 25.

FOR COMPARISON OF EX. ℄ R/W &
PROP. ℄ R/W & CONST. SEE TABLE ON SHEET 1 OF 25.

CURVE RESRW-1	CURVE RESRW-2	CURVE BRYN-2
P.I.= Sta. 101+08.16	P.I.= Sta. 107+35.53	P.I.= Sta. 412+01.55
D = 2° 26′ 17″ (LT)	D = 3° 36′ 17″ (LT)	D = 4° 20′ 00″ (RT)
Dc = 0° 57′ 45″	Dc = 1° 01′ 13″	Dc = 4° 30′ 00″
R = 5,953.61′	R = 5,615.90′	R = 1,273.24′
T = 126.69′	T = 176.72′	T = 48.17′
L = 253.34′	L = 353.32′	L = 96.30′
E = 1.35′	E = 2.78′	E = 0.91′
C = 253.32′	C = 353.27′	C = 96.27′
C.B. = N 89° 09′ 13″ E	C.B. = N 86° 07′ 56″ E	C.B. = N 3° 11′ 45″ E

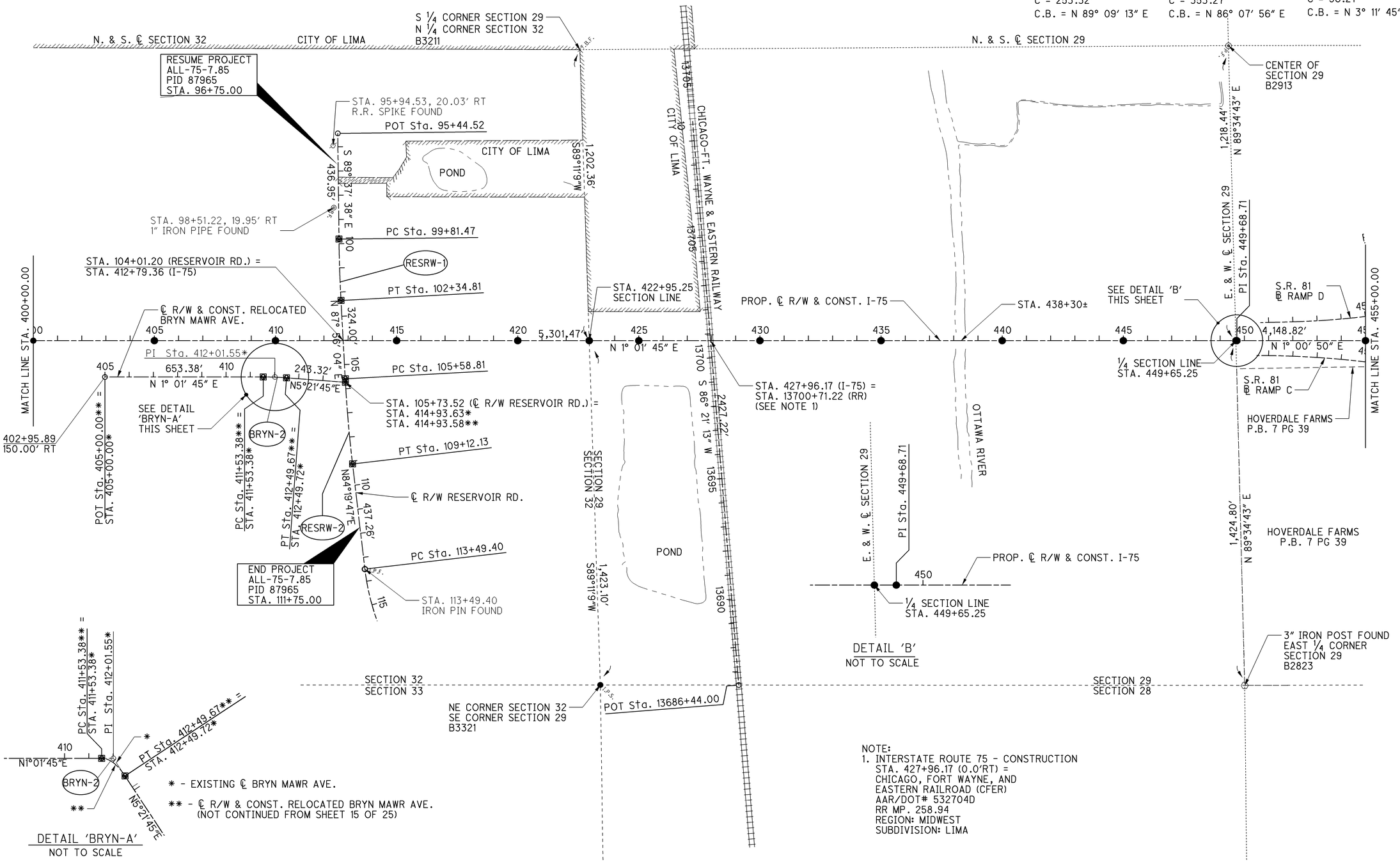

DETAIL 'BRYN-A'
NOT TO SCALE

DETAIL 'B'
NOT TO SCALE

NOTE:
1. INTERSTATE ROUTE 75 - CONSTRUCTION
STA. 427+96.17 (0.0′RT) =
CHICAGO, FORT WAYNE, AND
EASTERN RAILROAD (CFER)
AAR/DOT# 532704D
RR MP. 258.94
REGION: MIDWEST
SUBDIVISION: LIMA

HORIZONTAL SCALE IN FEET
0 100 200 400

PID NO. 76691 87965 89029

R/W DESIGNER BKJ
R/W REVIEWER KDO

CENTERLINE PLAT
STA. 400+00.00 TO STA. 455+00.00

ALL-75-0.21/ 5.53
ALL-75-6.11/ 7.85

16 / 25

1126
1224

J:\Projects\ALL\76691\row\sheets\76691RC009.dgn 12-SEP-2012 9:39AM reddenj

CURVE RES-1
P.I.= Sta. 101+31.44
D = 2° 32′ 00″ (LT)
Dc = 1° 00′ 00″
R = 5,729.58′
T = 126.69′
L = 253.33′
E = 1.40′
C = 253.31′
C.B. = N 89° 07′ 47″ E

CURVE RES-2
P.I.= Sta. 107+29.13
D = 3° 32′ 00″ (LT)
Dc = 1° 00′ 00″
R = 5,729.58′
T = 176.72′
L = 353.33′
E = 2.72′
C = 353.27′
C.B. = N 86° 05′ 47″ E

CURVE RESRW-1
P.I.= Sta. 101+08.16
D = 2° 26′ 17″ (LT)
Dc = 0° 57′ 45″
R = 5,953.61′
T = 126.69′
L = 253.34′
E = 1.35′
C = 253.32′
C.B. = N 89° 09′ 13″ E

CURVE RESRW-2
P.I.= Sta. 107+35.53
D = 3° 36′ 17″ (LT)
Dc = 1° 01′ 13″
R = 5,615.90′
T = 176.72′
L = 353.32′
E = 2.78′
C = 353.27′
C.B. = N 86° 07′ 56″ E

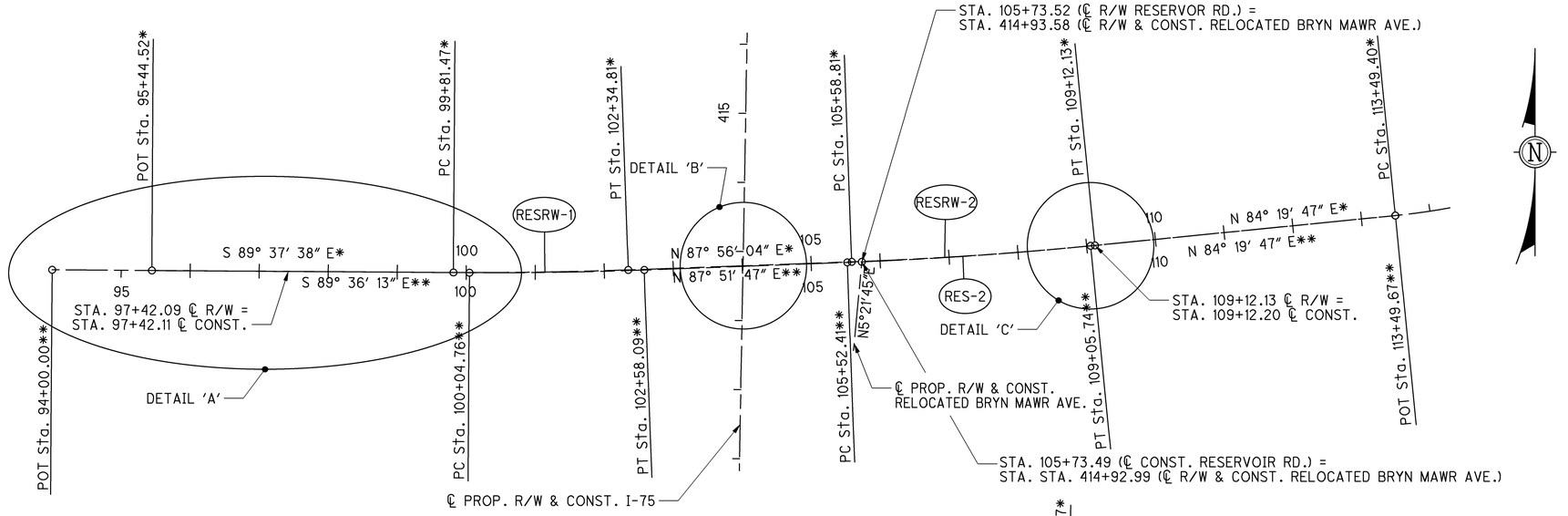

* ℄ R/W RESERVOIR RD.
** ℄ CONST. RESERVOIR RD.

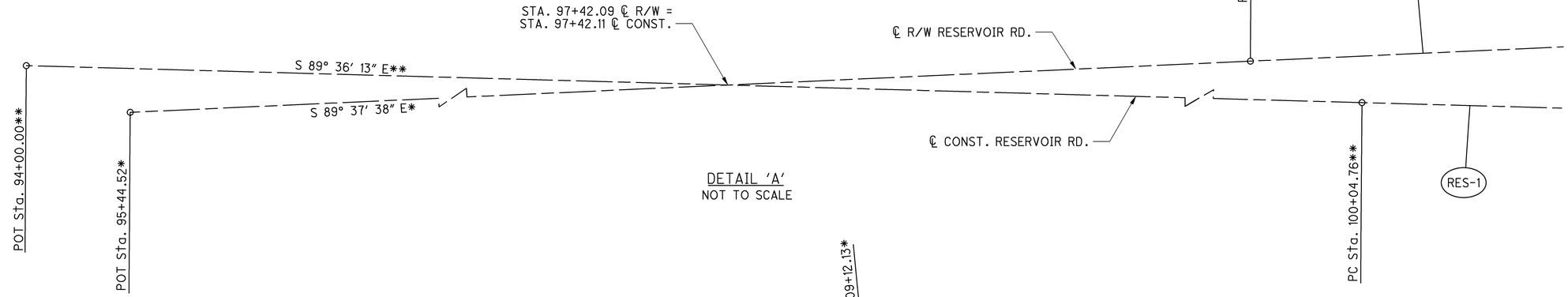

DETAIL 'A'
NOT TO SCALE

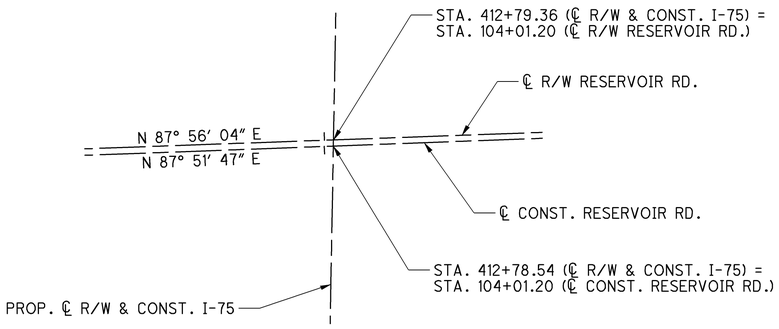

DETAIL 'B'
NOT TO SCALE

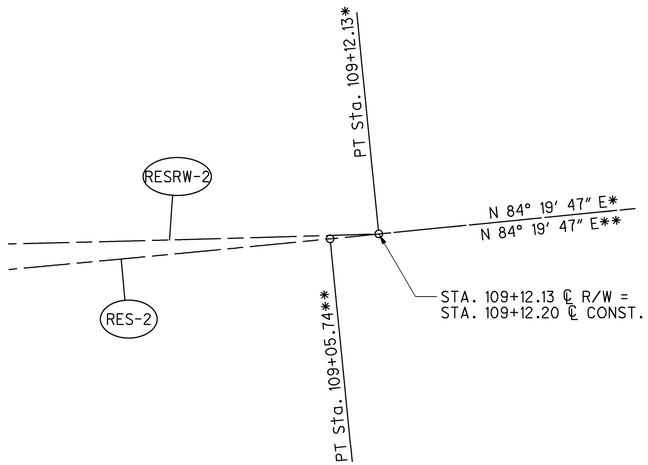

DETAIL 'C'
NOT TO SCALE

NOTE:
SEE SHEET 16 OF 25 FOR RELOCATED BRYN MAWR.

J:\Projects\ALL\76691\row\sheets\76691RC201.dgn 12-SEP-2012 9:39AM reddenj

PID NO. 76691 89029
R/W DESIGNER BKJ
R/W REVIEWER KDO

CENTERLINE PLAT
DETAIL SHEET - RESERVOIR RD.

ALL-75-0.21/5.53
ALL-75-6.11/7.85

17 / 25

1127
1224

ALLEN COUNTY

BATH TOWNSHIP
SECTIONS 20 & 29
T-3-S, R-7-E

CURVE SRV-1
P.I. Sta. 29+40.31
D = 42° 08′ 15″ (RT)
Dc = 35° 15′ 32″
R = 162.50′
T = 62.60′
L = 119.51′
E = 11.64′
C = 116.83′
C.B. = N 58° 30′ 00″ E

CURVE NEU-1
P.I.= Sta. 12+18.30
D = 11° 27′ 00″ (RT)
Dc = 8° 00′ 00″
R = 716.20′
T = 71.80′
L = 143.13′
E = 3.59′
C = 142.89′
C.B. = N 4° 50′ 04″ W

CURVE SR81-1
P.I.= Sta. 432+41.60
D = 6° 54′ 12″ (LT)
Dc = 3° 00′ 00″
R = 1,909.86′
T = 115.20′
L = 230.11′
E = 8.10′
C = 229.97
C.B. = N 76° 07′ 01″ E

CURVE SR81-2
P.I.= Sta. 443+29.51
D = 6° 05′ 21″ (RT)
Dc = 1° 00′ 00″
R = 5,729.58′
T = 304.74′
L = 608.91′
E = 11.01′
C = 608.63′
C.B. = N 75° 42′ 36″ E

CURVE SR81-3
P.I.= Sta. 453+46.45
D = 16° 35′ 17″ (RT)
Dc = 5° 30′ 00″
R = 1,041.74′
T = 151.86′
L = 301.60′
E = 11.01′
C = 300.55′
C.B. = N 87° 02′ 54″ E

CURVE SR81-4
P.I.= Sta. 458+78.67
D = 15° 46′ 26″ (LT)
Dc = 5° 30′ 00″
R = 1,041.74′
T = 144.31′
L = 286.80′
E = 9.95′
C = 285.89′
C.B. = N 87° 27′ 20″ E

CURVE SRV-2
P.I. Sta. 45+83.83
D = 42° 08′ 15″ (LT)
Dc = 35° 15′ 32″
R = 162.50′
T = 62.60′
L = 119.51′
E = 11.64′
C = 116.83′
C.B. = N 58° 30′ 00″ E

FINDLAY RD.
N79°34′07″E
441.20′
SRV-1
PI Sta. 429+00.00
N79°34′07″E, 226.40′
STA. 431+26.40 (OLD S.R. 81) =
PC Sta. 431+26.40 (PROP. S.R. 81)
PC Sta. 28+77.71
PT Sta. 29+97.22
SR81-1
PT Sta. 433+56.52
N79°34′07″E
1524.01′
1
SEE DETAIL 'A'
THIS SHEET
STA. 438+02.96
¼ SECTION LINE
STA. 438+23.91 (S.R. 81) =
STA. 11+18.04 (NEUBRECHT RD.)
POT Sta. 18+75.11
STA. 437+85.65
¼ SECTION LINE
STA. 437+75.84
¼ SECTION LINE
CENTER OF
SECTION 29
B2913
953.69′
N0°53′26″E
PT Sta. 12+89.62
1,684.74′
N0°53′26″E
N. & S. ℄ SECTION 20
STA. 38+20.23
(SERVICE RD. 3) =
STA. 9+99.01
(NEUBRECHT RD.)
NEU-1
℄ R/W & CONST. NEUBRECHT RD.
S ¼ CORNER OF SECTION 20
N ¼ CORNER OF SECTION 29
B2911
HOVERDALE FARMS
P.B. 7 PG. 39
PC Sta. 11+46.49
PC Sta. 440+24.77
SR81-2
℄ R/W & CONST.
SERVICE ROAD 3
N79°34′07″E
OLD ℄ R/W
S.R. 81
℄ R/W & CONST.
S.R. 81
PT Sta. 446+33.68
PC Sta. 45+21.23
SRV-2
PT Sta. 46+40.74
HOVERDALE FARMS
P.B. 7 PG. 39
℄ RAMP 'D'
℄ RAMP 'F'
2
4148.82′
N 1° 00′ 50″ E
STA. 450+66.08 (S.R 81) =
STA. 462+10.70 (I-75)
PC Sta. 451+94.59
℄ RAMP 'C'
℄ RAMP 'B'
PT Sta. 454+96.19
SR81-3
HOVERDALE FARMS
P.B. 7 PG. 39
3
PC Sta. 457+34.35
SR81-4
STA. 459+97.84 (OLD S.R. 81) =
PT Sta. 460+21.15 (PROP. S.R. 81)
FINDLAY RD.
N 79°34′07″E
482.76′
SECTION LINE =
STA. 464+79.48 (OLD. S.R. 81)
STA. 465+02.79 (PROP. S.R. 81)
POT STA. 464+80.60 (OLD S.R. 81)
POT STA. 465+03.91 (PROP. S.R. 81)
EXISTING R/W MONUMENT BOX FOUND
1,353.04′
N0°50′33″E
STEWART RD.
1,312.31′
N0°50′33″E
SECTION 29
SECTION 28
E ¼ CORNER OF SECTION 29
3″ IRON POST FOUND
B2823
N88°59′37″E
1,224.50′
SECTION 29
SECTION 20
N88°59′37″E
1,417.25′
NE CORNER OF SECTION 29
SE CORNER OF SECTION 20
B2821
STA. 476+16.32
SECTION LINE
PROP. ℄ R/W & CONST. I-75
STA. 490+32.07, 95.01′ RT
FD. CONC. MON.
(FORMER PC STA. 488+07.09)
PC Sta. 491+17.53
I75-7
STA. 503+25.39
¼ SECTION LINE
MATCH LINE STA. 510+00.00
N89°1′46″E
1,486.03′
N89°1′46″E
1,141.35′
CENTER OF
SECTION 20
B2013
E. & W. ℄ SECTION 20
NORFOLK SOUTHERN
OLD ℄ R/W
S.R. 81
N 79° 34′ 07″ E
N 72° 39′ 55″ E
℄ R/W & CONST.
S.R. 81
STA. 438+02.96
¼ SECTION LINE
STA. 438+23.91 (S.R. 81) =
STA. 11+18.04 (NEUBRECHT RD.)
STA. 37+75.84
¼ SECTION LINE
N0°53′26″E
N. & S. ℄ SECTION 20
STA. 437+85.65
¼ SECTION LINE
146.49′
N 10° 33′ 34″ W
PT Sta. 12+89.62
NEU-1
℄ R/W & CONST. NEUBRECHT RD.
STA. 38+20.23 (SERVICE RD. 3) =
STA. 9+99.01 (NEUBRECHT RD.)
℄ R/W & CONST.
SERVICE ROAD 3
PC Sta. 11+46.49
DETAIL 'A'
NOT TO SCALE
E ¼ CORNER
OF SECTION 20
B2123
SECTION 20
SECTION 21

* PROP. ℄ R/W & CONST. I-75 STA. 460+66.56 =
OLD ℄ R/W I-75 STA. 462+73.40 BK/STA. 457+55.66 AH
OLD ℄ R/W S.R. 81 STA. 450+30.36

** HOVERDALE FARM SUBDIVISION LINE =
STA. 460+66.56± PROP. ℄ R/W & CONST. I-75

1. N 72° 39′ 55″ E
668.25′
2. N 78° 45′ 16″ E
560.91′
3. S 84° 39′ 27″ E
238.16′

NOTES:
FOR COMPARISON OF OLD ℄ R/W &
PROP. ℄ R/W & CONST. SEE TABLE ON SHEET 1 OF 25.

FOR S.R. 81 INTERCHANGE RAMP GEOMETRY SEE SHEET 19 OF 25.

CURVE I75-7
P.I.= Sta. 504+36.28
D = 49° 04′ 23″ (RT)
Dc = 1° 59′ 00″
R = 2,888.86′
T = 1,318.76′
L = 2,474.27′
E = 286.77′
C = 2,399.34′
C.B. = N 25° 33′ 02″ E

HORIZONTAL SCALE IN FEET
0 100 200 400

PID NO.
76691
87965
89029

R/W DESIGNER BKJ
R/W REVIEWER KDO

CENTERLINE PLAT
STA. 455+00.00 TO STA. 510+00.00

ALL-75-0.21/ 5.53
ALL-75-6.11/ 7.85

18 / 25

1128
1224

J:\Projects\ALL\76691\row\sheets\7669IRC010.dgn 12-SEP-2012 9:39AM reddenj

ALLEN COUNTY

BATH TOWNSHIP
SECTIONS 20 & 29
T-3-S, R-7-E

PROPOSED S.R. 81 RAMP ℄ COORDINATE TABLE				
STATION	GROUND COORDINATES		GRID COORDINATES	
	NORTHING	EASTING	NORTHING	EASTING
RAMP "B"				
PC 463+63.73	400,986.9924	1,532,440.9225	400,954.5231	1,532,316.8355
PT 465+40.97	401,161.1136	1,532,411.4091	401,128.6302	1,532,287.3245
PC 467+67.17	401,376.1980	1,532,341.3615	401,343.6972	1,532,217.2825
CS 471+73.81	401,774.4442	1,532,264.5059	401,741.9111	1,532,140.4332
ST 473+83.81	401,984.3470	1,532,259.5346	401,951.7969	1,532,135.4623
RAMP "C"				
PC 450+51.17	399,652.3062	1,532,205.2569	399,619.9450	1,532,081.1890
CS 455+04.65	400,104.1769	1,532,240.1463	400,071.7791	1,532,116.0755
SC 457+04.65	400,300.6073	1,532,277.0825	400,268.1936	1,532,153.0087
PT 458+65.86	400,452.6561	1,532,330.1792	400,420.2301	1,532,206.1011
PC 460+59.98	400,630.4256	1,532,408.1516	400,597.9852	1,532,284.0672
PT 462+10.80	400,777.1857	1,532,437.3198	400,744.7334	1,532,313.2331
RAMP "D"				
TS 450+66.93	399,670.4748	1,532,069.5572	399,638.1121	1,531,945.5003
SC 452+86.93	399,890.4442	1,532,066.6226	399,858.0637	1,531,942.5659
PT 460+41.09	400,634.3866	1,531,953.4930	400,601.9459	1,531,829.4455
RAMP "F"				
PC 462+79.55	400,910.9890	1,531,901.8539	400,878.5259	1,531,777.8105
PT 464+84.54	401,113.3341	1,531,919.8362	401,080.8546	1,531,795.7914
PC 467+70.99	401,385.1397	1,532,010.2673	401,352.6382	1,531,886.2152
CS 469+50.57	401,558.1257	1,532,058.1898	401,525.6102	1,531,934.1338
SC 471+50.57	401,755.0909	1,532,092.5640	401,722.5594	1,531,968.5052
PT 476+04.05	402,206.9616	1,532,127.4534	402,174.3935	1,532,003.3918

HOVERDALE FARMS
P.B. 7 PG. 39

STA. 443+88.34±
(S.R. 81)

℄ OLD R/W
S.R. 81

℄ PROP. R/W & CONST.
S.R. 81

℄ R/W & CONSTR.
SERVICE RD. 3

PT Sta. 460+41.09

STA. 448+15.19 (S.R. 81) =
STA. 461+75.24 (RAMP 'D')

STA. 448+20.11 (S.R. 81) =
STA. 461+31.81 (RAMP 'F')

STA. 448+19.70 (OLD S.R. 81) =
STA. 460+37.05 (RAMP D)

TS Sta. 450+66.93

SC Sta. 452+86.93

81D-1

81D-2

℄ RAMP 'D'

450+66.93
74.50' LT

STA. 460+70.83'
(℄ RAMP 'D')

STA. 449+74.91±
(OLD S.R. 81)

STA. 460+55.10±
(℄ I-75)

1

2

PC Sta. 462+79.55

PT Sta. 464+84.54

81F-1

N 18° 24' 09" E 286.45'

PC Sta. 467+70.99

81F-2

CS Sta. 469+50.57

81F-3

SC Sta. 471+50.57

81F-4

476+04.05
61.50' LT

PT Sta. 476+04.05

SEC. 29
SEC. 20

℄ RAMP 'F'

STA. 450+66.08 (S.R. 81) =
STA. 462+10.70 (I-75)

℄ PROP. R/W & CONST. I-75

HOVERDALE FARMS
P.B. 7 PG. 39

450+51.17
61.50' RT

81C-1

81C-2

81C-3

81C-4

PC Sta. 450+51.17

CS Sta. 455+04.65

SC Sta. 457+04.65

PT Sta. 458+65.86

℄ RAMP 'C'

PC Sta. 460+59.98

N 23° 40' 59" E 194.12'

STA. 460+81.10±
(℄ RAMP C)

STA. 453+06.79 (OLD S.R. 81) =
STA 461+52.10 (RAMP C)

STA. 453+41.20 (S.R. 81) =
STA. 462+89.83 (RAMP 'C')

PT Sta. 462+10.80

3

4

PC Sta. 463+63.73

81B-1

PT Sta. 465+40.97

N 18° 02' 21" W 226.20'

℄ RAMP 'B'

81B-2

CS Sta. 471+73.81

81B-3

473+83.81
74.50' RT

ST Sta. 473+83.81

PC Sta. 467+67.17

STA. 453+49.21 (S.R. 81) =
STA. 462+33.32 (RAMP 'B')

E. & W. ℄ SECTION 29

E.W. ℄ SEC. 29

SEC. 29
SEC. 20

SECTION 29
SECTION 20

1 N15°14'43"W, 134.15'

2 N8°14'44"W, 147.74'

3 N1°12'04"W, 79.03'

4 N1°12'04"W, 130.41'

CURVE 81F-1
P.I.= Sta. 463+83.93
D = 26° 38' 53" (RT)
Dc = 13° 00' 00"
R = 440.74'
T = 104.38'
L = 204.99'
E = 12.19'
C = 203.14'
C.B. = N 5° 04' 43" E

CURVE 81F-2
P.I.= Sta. 468+60.86
D = 5° 50' 11" (LT)
Dc = 3° 15' 00"
R = 1,762.95'
T = 89.87'
L = 179.58'
E = 2.29'
C = 179.50'
C.B. = N 15° 29' 04" E

CURVE 81F-3
P.I. STA. 470+38.34
Ls = 200.00'
f s = 4° 45' 00"
LT = 112.34'
ST = 87.77'
x = 199.81'
y = 7.27'
k = 99.98'
p = 0.51'

CURVE 81F-4
P.I.= Sta. 473+77.58
D = 6° 48' 08" (LT)
Dc = 1° 30' 00"
R = 3,819.72'
T = 227.01'
L = 453.48'
E = 6.74'
C = 453.22'
C.B. = N 4° 24' 54" E

CURVE 81D-1
P.I. STA. 452+13.61
Ls = 220.00'
f s = 1° 55' 30"
LT = 146.68'
ST = 73.34'
x = 219.98'
y = 2.46'
k = 110.00'
p = 0.62'

CURVE 81D-2
P.I.= Sta. 456+09.25
D = 15° 07' 22" (LT)
Dc = 1° 45' 00"
R = 3,274.04'
D c = 13° 11' 52" (LT)
Lc = 754.16'
Es = 29.03'
C = 752.49'
C.B.1 = N 0° 45' 52" W
C.B. = N 8° 38' 48" W

CURVE 81C-1
P.I.= Sta. 452+78.18
D = 6° 48' 08" (RT)
Dc = 1° 30' 00"
R = 3,819.72'
T = 227.01'
L = 453.48'
E = 6.74'
C = 453.22'
C.B. = N 4° 24' 54" E

CURVE 81C-2
P.I. STA. 456+23.82
Ls = 200.00'
f s = 7° 00' 00"
LT = 119.17'
ST = 81.06'
x = 199.63'
y = 9.88'
k = 99.95'
p = 1.16'

CURVE 81C-3
P.I.= Sta. 457+85.42
D = 8° 52' 00" (RT)
Dc = 5° 30' 00"
R = 1,041.74'
T = 80.77'
L = 161.21'
E = 3.13'
C = 161.05'
C.B. = N 19° 14' 59" E

CURVE 81C-4
P.I.= Sta. 461+36.60
D = 24° 53' 03" (LT)
Dc = 16° 30' 00"
R = 347.25'
T = 76.61'
L = 150.81'
E = 8.35'
C = 149.63'
C.B. = N 11° 14' 27" E

CURVE 81B-1
P.I.= Sta. 464+52.99
D = 16° 50' 17" (LT)
Dc = 9° 30' 00"
R = 603.11'
T = 89.26'
L = 177.24'
E = 6.57'
C = 176.60'
C.B. = N 9° 37' 13" W

CURVE 81B-2
P.I.= Sta. 469+71.54
D = 14° 13' 57" (RT)
Dc = 3° 30' 00"
R = 1,637.02'
T = 204.37'
L = 406.64'
E = 12.71'
C = 405.59'
C.B. = N 10° 55' 23" W

CURVE 81B-3
P.I. STA. 472+43.84
Ls = 210.00'
f s = 3° 40' 30"
LT = 140.03'
ST = 70.03'
x = 209.91'
y = 4.49'
k = 104.99'
p = 1.12'

HORIZONTAL SCALE IN FEET
0 50 100 200

PID NO. 76691 87965 89029

R/W DESIGNER BKJ
R/W REVIEWER KDO

CENTERLINE PLAT
S.R. 81 INTERCHANGE DETAIL

ALL-75-0.21/ 5.53
ALL-75-6.11/ 7.85

19 / 25

1129
1224

J:\Projects\ALL\76691\row\sheets\76691RC10A.dgn 12-SEP-2012 9:39AM reddenj

ALLEN COUNTY

BATH TOWNSHIP
SECTIONS 20 & 21
T-3-S, R-7-E

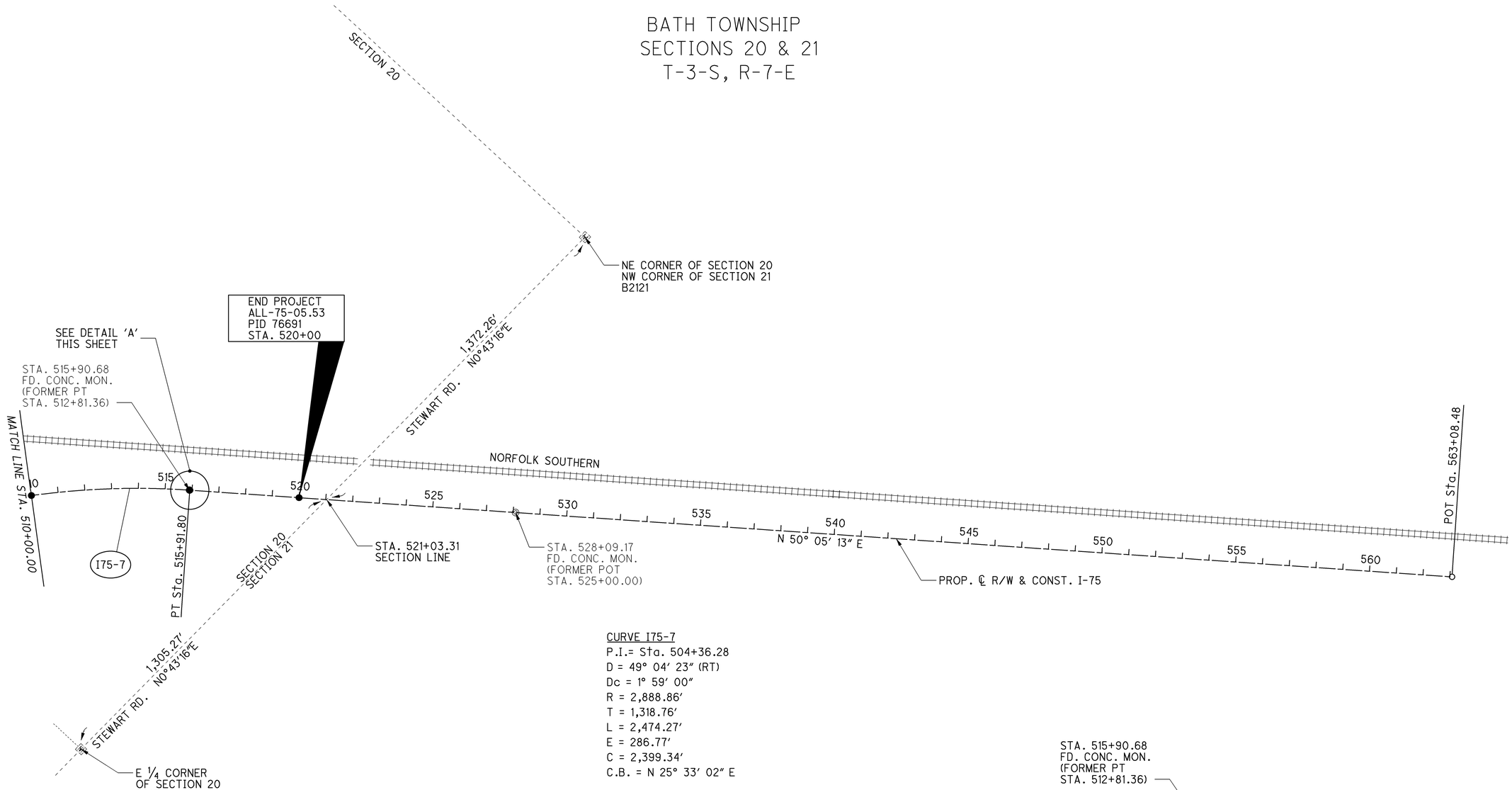

CURVE I75-7
P.I.= Sta. 504+36.28
D = 49° 04' 23" (RT)
Dc = 1° 59' 00"
R = 2,888.86'
T = 1,318.76'
L = 2,474.27'
E = 286.77'
C = 2,399.34'
C.B. = N 25° 33' 02" E

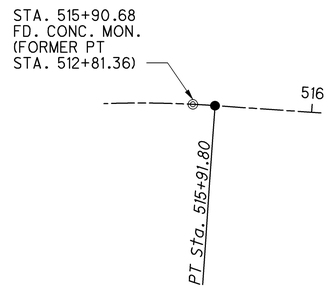

DETAIL 'A'
NOT TO SCALE

NOTE:
FOR COMPARISON OF OLD ℄ R/W &
PROP. ℄ R/W & CONST. SEE TABLE ON SHEET 1 OF 25.

HORIZONTAL SCALE IN FEET
0 100 200 400

PID NO. 76691 87965 89029

R/W DESIGNER BKJ
R/W REVIEWER KDO

CENTERLINE PLAT
510+00.00 TO END PROJECT

ALL-75-0.21/ 5.53
ALL-75-6.11/ 7.85

20 / 25

1130
1224

J:\Projects\ALL\76691\row\sheets\76691RC011.dgn 12-SEP-2012 9:39AM reddenj

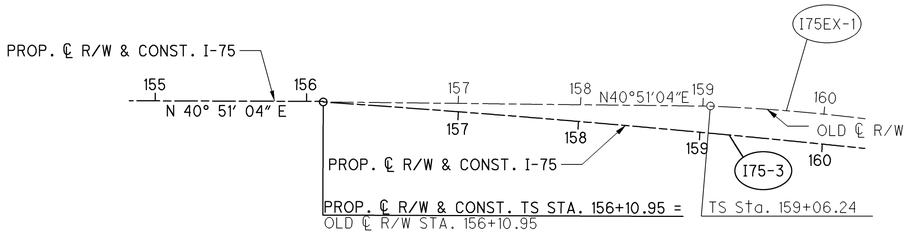

DETAIL '75-A'

NOT TO SCALE

SEE SHEET 6 OF 25 FOR CURVE DATA.

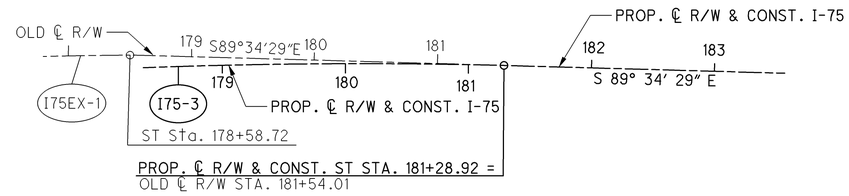

DETAIL '75-B'

NOT TO SCALE

SEE SHEET 6 OF 25 FOR CURVE DATA.

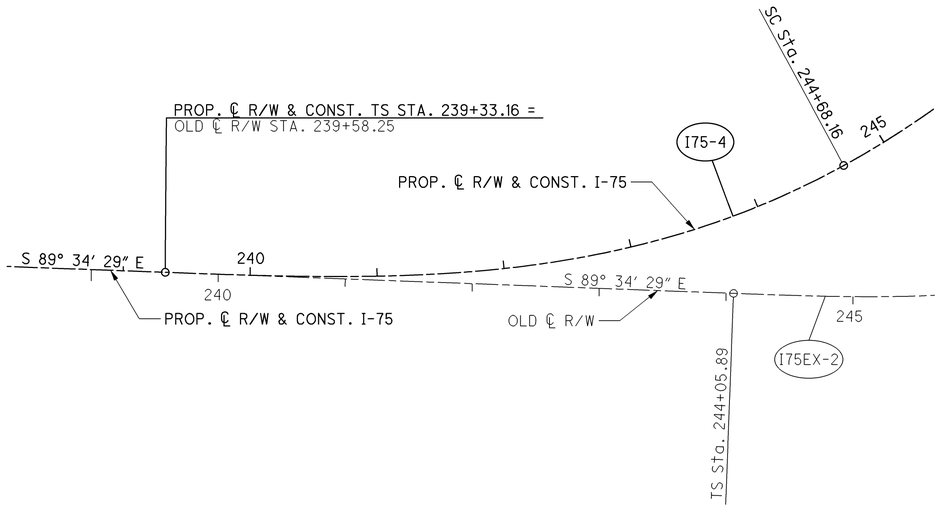

DETAIL '75-C'

NOT TO SCALE

SEE SHEET 7 OF 25 FOR CURVE DATA.

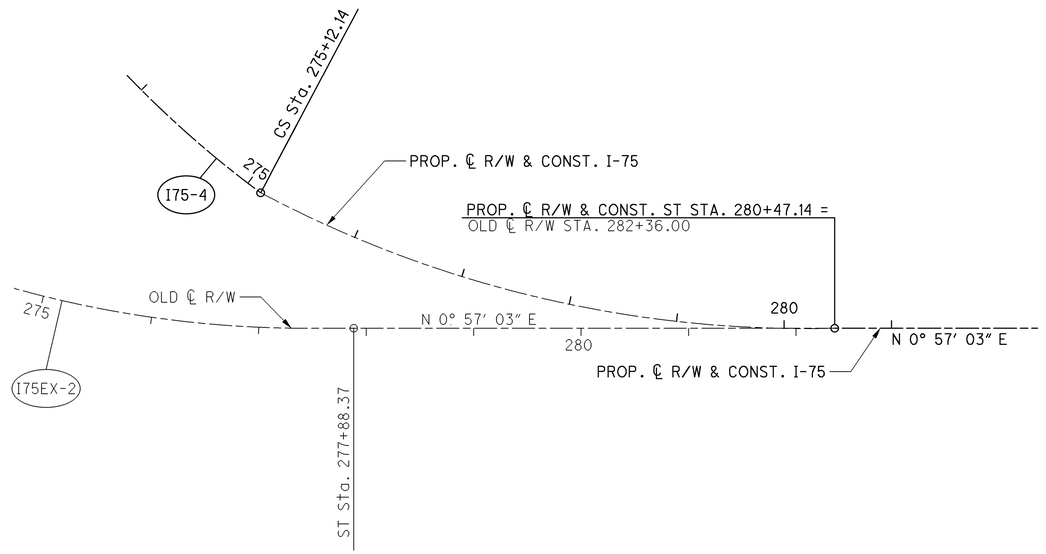

DETAIL '75-D'

NOT TO SCALE

SEE SHEET 9 OF 25 FOR CURVE DATA.

PID NO.
76691
87965
89029

R/W DESIGNER
BKJ

R/W REVIEWER
KDO

CENTERLINE PLAT
DETAIL SHEET - OLD I-75

ALL-75-0.21/5.53
ALL-75-6.11/7.85

21 / 25

1131
1224

J:\Projects\ALL\76691\row\sheets\76691RC200.dgn 12-SEP-2012 9:39AM redden j

PROPOSED MAINLINE I-75								
STATION	SET AT	DISTANCE FROM ℄	℄ REFERENCE MONUMENTS	GROUND COORDINATES		GRID COORDINATES		MONUMENT TYPE
				NORTHING	EASTING	NORTHING	EASTING	
0+00.00	COUNTY LINE	℄	1	365,241.1642	1,516,029.4355	365,211.5894	1,515,906.6774	CONC. MON.
5+00.00	POT	℄	1	365,741.1289	1,516,035.3821	365,711.5136	1,515,912.6235	CONC. MON.
11+00.00	POT	℄	1	366,341.0864	1,516,042.5180	366,311.4225	1,515,919.7588	CONC. MON.
15+00.00	POT	℄	1	366,741.0581	1,516,047.2753	366,711.3618	1,515,924.5157	CONC. MON.
20+00.00	POT	℄	1	367,241.0228	1,516,053.2218	367,211.2860	1,515,930.4618	CONC. MON.
25+00.00	POT	℄	1	367,740.9874	1,516,059.1684	367,711.2101	1,515,936.4079	CONC. MON.
26+49.46	PI *	℄	0	367,890.4375	1,516,060.9460	367,860.6481	1,515,938.1853	
26+52.15	1/4 SEC. LINE	℄	1	367,893.1228	1,516,060.9898	367,863.3332	1,515,938.2291	CONC. MON.
30+00.00	POT	℄	1	368,240.9301	1,516,066.6682	368,211.1124	1,515,943.9071	CONC. MON.
35+00.00	POT	℄	1	368,740.8635	1,516,074.8301	368,711.0053	1,515,952.0683	CONC. MON.
40+00.00	POT	℄	1	369,240.7969	1,516,082.9920	369,210.8982	1,515,960.2295	CONC. MON.
45+00.00	POT	℄	1	369,740.7303	1,516,091.1539	369,710.7911	1,515,968.3908	CONC. MON.
50+00.00	POT	℄	1	370,240.6636	1,516,099.3158	370,210.6839	1,515,976.5520	CONC. MON.
52+35.32	PC *	℄	0	370,475.9529	1,516,103.1572	370,445.9542	1,515,980.3931	
55+00.00	POC	℄	1	370,740.4031	1,516,113.5878	370,710.3830	1,515,990.8229	CONC. MON.
60+00.00	POC	℄	1	371,237.4309	1,516,166.5479	371,207.3705	1,516,043.7787	CONC. MON.
65+00.00	POC	℄	1	371,727.9516	1,516,262.6253	371,697.8515	1,516,139.8483	CONC. MON.
70+00.00	POC	℄	1	372,208.2319	1,516,401.0888	372,178.0929	1,516,278.3006	CONC. MON.
75+95.74	PT	℄	1	372,762.0392	1,516,619.9188	372,731.8554	1,516,497.1129	CONC. MON.
80+79.59	1/4 SEC. LINE	℄	1	373,200.3609	1,516,820.0390	373,170.1416	1,516,697.2169	CONC. MON.
85+69.17	PC	℄	1	373,647.5422	1,517,024.2041	373,617.2867	1,516,901.3654	CONC. MON.
90+00.00	POC	℄	1	374,034.8092	1,517,212.8830	374,004.5223	1,517,090.0290	CONC. MON.
92+91.87	SEC. LINE	℄	1	374,291.5733	1,517,351.6259	374,261.2656	1,517,228.7607	CONC. MON.
95+00.00	POC	℄	1	374,471.7253	1,517,455.8518	374,441.4030	1,517,332.9782	CONC. MON.
100+00.00	POC	℄	1	374,893.7748	1,517,723.8139	374,863.4184	1,517,600.9186	CONC. MON.
105+00.00	POC	℄	1	375,299.5297	1,518,015.8627	375,269.1404	1,517,892.9437	CONC. MON.
110+15.90	PT	℄	1	375,699.6508	1,518,341.3965	375,669.2291	1,518,218.4512	CONC. MON.
115+00.00	POT	℄	1	376,065.8328	1,518,658.0462	376,035.3815	1,518,535.0752	CONC. MON.
120+00.00	POT	℄	1	376,444.0391	1,518,985.0936	376,413.5571	1,518,862.0961	CONC. MON.
125+00.00	POT	℄	1	376,822.2454	1,519,312.1411	376,791.7328	1,519,189.1172	CONC. MON.
130+00.00	POT	℄	1	377,200.4516	1,519,639.1885	377,169.9084	1,519,516.1381	CONC. MON.
135+98.50	1/4 SEC. LINE	℄	1	377,653.1643	1,520,030.6640	377,622.5844	1,519,907.5819	CONC. MON.
140+00.00	POT	℄	1	377,956.8642	1,520,293.2833	377,926.2597	1,520,170.1799	CONC. MON.
146+52.52	1/4 SEC. LINE	℄	1	378,450.4376	1,520,720.0926	378,419.7932	1,520,596.9547	CONC. MON.
150+00.00	POT	℄	1	378,713.2767	1,520,947.3782	378,682.6110	1,520,824.2219	CONC. MON.
156+10.95	TS	℄	1	379,175.4035	1,521,346.9944	379,144.7004	1,521,223.8057	CONC. MON.
161+45.95	SC	℄	1	379,565.9316	1,521,712.1881	379,535.1968	1,521,588.9698	CONC. MON.
165+00.00	POC	℄	1	379,783.8666	1,521,990.7735	379,753.1142	1,521,867.5327	CONC. MON.
170+00.00	POC	℄	1	380,013.2017	1,522,433.9613	379,982.4307	1,522,310.6846	CONC. MON.
175+93.92	CS	℄	1	380,153.3311	1,523,009.3996	380,122.5488	1,522,886.0763	CONC. MON.
181+28.92	ST	℄	1	380,170.1594	1,523,543.8108	380,139.3757	1,523,420.4442	CONC. MON.
185+00.00	POT	℄	1	380,167.4049	1,523,914.8856	380,136.6214	1,523,791.4890	CONC. MON.
190+00.00	POT	℄	1	380,163.6936	1,524,414.8718	380,132.9104	1,524,291.4347	CONC. MON.
195+00.00	POT	℄	1	380,159.9822	1,524,914.8580	380,129.1993	1,524,791.3804	CONC. MON.
197+53.47	1/4 SEC. LINE	℄	1	380,158.1008	1,525,168.3243	380,127.3181	1,525,044.8262	CONC. MON.
200+00.00	POT	℄	1	380,156.2709	1,525,414.8442	380,125.4883	1,525,291.3261	CONC. MON.
205+00.00	POT	℄	1	380,152.5596	1,525,914.8305	380,121.7773	1,525,791.2719	CONC. MON.
210+00.00	POT	℄	1	380,148.8482	1,526,414.8167	380,118.0662	1,526,291.2176	CONC. MON.
215+00.00	POT	℄	1	380,145.1369	1,526,914.8029	380,114.3552	1,526,791.1634	CONC. MON.
220+00.00	POT	℄	1	380,141.4255	1,527,414.7891	380,110.6441	1,527,291.1091	CONC. MON.
225+00.00	POT	℄	1	380,137.7142	1,527,914.7754	380,106.9331	1,527,791.0549	CONC. MON.
230+00.00	POT	℄	1	380,134.0028	1,528,414.7616	380,103.2220	1,528,291.0006	CONC. MON.
235+00.00	POT	℄	1	380,130.2915	1,528,914.7478	380,099.5110	1,528,790.9463	CONC. MON.
239+33.16	TS	℄	1	380,127.0763	1,529,347.8979	380,096.2961	1,529,224.0613	CONC. MON.
244+68.16	SC	℄	1	380,143.9046	1,529,882.3091	380,113.1230	1,529,758.4293	CONC. MON.
250+80.91	1/4 SEC. LINE	℄	1	380,290.8876	1,530,475.2851	380,260.0941	1,530,351.3572	CONC. MON.
255+00.00	POC	℄	1	380,479.7114	1,530,848.7769	380,448.9026	1,530,724.8188	CONC. MON.
260+00.00	POC	℄	1	380,789.0424	1,531,240.3434	380,758.2086	1,531,116.3536	CONC. MON.
265+00.00	POC	℄	1	381,175.7916	1,531,555.6766	381,144.9265	1,531,431.6613	CONC. MON.
270+00.00	POC	℄	1	381,621.6239	1,531,779.8273	381,590.7227	1,531,655.7938	CONC. MON.
275+12.14	CS	℄	1	382,117.4277	1,531,903.8141	382,086.4863	1,531,779.7706	CONC. MON.
280+47.14	ST	℄	1	382,651.2806	1,531,933.4727	382,620.2960	1,531,809.4268	CONC. MON.
285+00.00	POT	℄	1	383,104.0818	1,531,940.9885	383,073.0605	1,531,816.9420	CONC. MON.
290+00.00	POT	℄	1	383,604.0129	1,531,949.2865	383,572.9512	1,531,825.2393	CONC. MON.
TOTAL			62	CARRIED TO SHEET 23 AND INCLUDED WITH TOTAL FOR ALL-75-0.21				

PROPOSED MAINLINE I-75								
STATION	SET AT	DISTANCE FROM ℄	℄ REFERENCE MONUMENTS	GROUND COORDINATES		GRID COORDINATES		MONUMENT TYPE
				NORTHING	EASTING	NORTHING	EASTING	
293+22.68	1/4 SEC. LINE	℄	1	383,926.6474	1,531,954.6417	383,895.5595	1,531,830.5941	CONC. MON.
295+00.00	POT	℄	1	384,103.9441	1,531,957.5846	384,072.8419	1,531,833.5367	CONC. MON.
300+00.00	POT	℄	1	384,603.8752	1,531,965.8826	384,572.7325	1,531,841.8340	CONC. MON.
305+00.00	POT	℄	1	385,103.8064	1,531,974.1807	385,072.6232	1,531,850.1315	CONC. MON.
310+00.00	POT	℄	1	385,603.7375	1,531,982.4788	385,572.5138	1,531,858.4289	CONC. MON.
315+00.00	POT	℄	1	386,103.6686	1,531,990.7768	386,072.4045	1,531,866.7262	CONC. MON.
319+78.04	SEC. LINE	℄	1	386,581.6408	1,531,998.7104	386,550.3380	1,531,874.6592	CONC. MON.
325+00.00	POT	℄	1	387,103.5309	1,532,007.3729	387,072.1858	1,531,883.3210	CONC. MON.
327+45.44	PC	℄	1	387,348.9325	1,532,011.4462	387,317.5675	1,531,887.3940	CONC. MON.
330+00.00	POC	℄	1	387,603.4775	1,532,014.5401	387,572.0919	1,531,890.4876	CONC. MON.
335+30.27	PT	℄	1	388,133.7382	1,532,013.7213	388,102.3097	1,531,889.6689	CONC. MON.
340+00.00	POT	℄	1	388,603.4419	1,532,008.6488	388,571.9753	1,531,884.5968	CONC. MON.
346+23.35	1/4 SEC. LINE	℄	1	389,226.7575	1,532,001.9174	389,195.2405	1,531,877.8659	CONC. MON.
348+73.75	PC	℄	1	389,477.1381	1,531,999.2134	389,445.6008	1,531,875.1621	CONC. MON.
355+00.00	POC	℄	1	390,103.3814	1,531,998.1548	390,071.7934	1,531,874.1036	CONC. MON.
356+51.41	PT	℄	1	390,254.7881	1,531,999.6114	390,223.1878	1,531,875.5601	CONC. MON.
360+00.00	POT	℄	1	390,603.3499	1,532,003.7324	390,571.7214	1,531,879.6808	CONC. MON.
365+00.00	POT	℄	1	391,103.3149	1,532,009.6435	391,071.6459	1,531,885.5914	CONC. MON.
372+00.00	POT	℄	1	391,803.2660	1,532,017.9190	391,771.5403	1,531,893.8662	CONC. MON.
375+00.00	POT	℄	1	392,103.2451	1,532,021.4657	392,071.4952	1,531,897.4126	CONC. MON.
380+00.00	POT	℄	1	392,603.2101	1,532,027.3767	392,571.4197	1,531,903.3232	CONC. MON.
385+00.00	POT	℄	1	393,103.1752	1,532,033.2878	393,071.3443	1,531,909.2338	CONC. MON.
390+00.00	POT	℄	1	393,603.1402	1,532,039.1989	393,571.2688	1,531,915.1444	CONC. MON.
396+67.24	PI *	℄	0	394,270.3348	1,532,047.0871	394,238.4094	1,531,923.0320	
396+67.75	1/4 SEC. LINE	℄	1	394,270.8455	1,532,047.0963	394,238.9200	1,531,923.0412	CONC. MON.
400+00.00	POT	℄	1	394,603.0399	1,532,053.0638	394,571.0875	1,531,929.0082	CONC. MON.
405+00.00	POT	℄	1	395,102.9593	1,532,062.0444	395,070.9665	1,531,937.9881	CONC. MON.
410+00.00	POT	℄	1	395,602.8786	1,532,071.0249	395,570.8453	1,531,946.9678	CONC. MON.
415+00.00	POT	℄	1	396,102.7980	1,532,080.0055	396,070.7242	1,531,955.9477	CONC. MON.
420+00.00	POT	℄	1	396,023.7173	1,532,088.9860	395,991.6499	1,531,964.9275	CONC. MON.
422+95.25	SEC. LINE	℄	1	392,897.9208	1,532,094.2891	392,866.1065	1,531,970.2302	CONC. MON.
425+00.00	POT	℄	1	397,102.6366	1,532,097.9666	397,070.4818	1,531,973.9074	CONC. MON.
430+00.00	POT	℄	1	397,602.5560	1,532,106.9471	397,570.3608	1,531,982.8871	CONC. MON.
435+00.00	POT	℄	1	398,102.4753	1,532,115.9277	398,070.2396	1,531,991.8670	CONC. MON.
440+00.00	POT	℄	1	398,602.3947	1,532,124.9082	398,570.1185	1,532,000.8468	CONC. MON.
445+00.00	POT	℄	1	399,102.3140	1,532,133.8888	399,069.9973	1,532,009.8266	CONC. MON.
449+65.25	1/4 SEC. LINE	℄	1	399,567.4922	1,532,142.2452	399,535.1378	1,532,018.1824	CONC. MON.
449+68.71	PI	℄	1	399,570.9496	1,532,142.3073	399,538.5950	1,532,018.2445	CONC. MON.
455+00.00	POT	℄	1	400,102.1552	1,532,151.7093	400,069.7576	1,532,027.6457	CONC. MON.
460+00.00	POT	℄	1	400,602.0769	1,532,160.5576	400,569.6388	1,532,036.4933	CONC. MON.
465+00.00	POT	℄	1	401,101.9986	1,532,169.4059	401,069.5200	1,532,045.3409	CONC. MON.
470+00.00	POT	℄	1	401,601.9203	1,532,178.2542	401,569.4012	1,532,054.1885	CONC. MON.
476+16.32	SEC. LINE	℄	1	402,218.1425	1,532,189.1609	402,185.5735	1,532,065.0943	CONC. MON.
480+00.00	POT	℄	1	402,601.7637	1,532,195.9508	402,569.1636	1,532,071.8836	CONC. MON.
485+00.00	POT	℄	1	403,101.6854	1,532,204.7991	403,069.0449	1,532,080.7312	CONC. MON.
491+17.53	PC	℄	1	403,719.1172	1,532,215.7272	403,686.4267	1,532,091.6584	CONC. MON.
495+00.00	POC	℄	1	404,099.9652	1,532,247.7537	404,067.2438	1,532,123.6823	CONC. MON.
500+00.00	POC	℄	1	404,585.4253	1,532,364.8223	404,552.6646	1,532,240.7414	CONC. MON.
503+25.39	1/4 SEC. LINE	℄	1	404,887.5054	1,532,485.2980	404,854.7203	1,532,361.2074	CONC. MON.
505+00.00	POC	℄	1	405,043.4712	1,532,563.7456	405,010.6734	1,532,439.6486	CONC. MON.
510+00.00	POC	℄	1	405,460.4158	1,532,838.5796	405,427.5843	1,532,714.4604	CONC. MON.
515+91.80	PT	℄	1	405,883.8112	1,533,250.5780	405,850.9454	1,533,126.4254	CONC. MON.
520+00.00	POT (END PROJECT)	℄	1	406,145.7204	1,533,563.6743	406,112.8334	1,533,439.4964	CONC. MON.
TOTAL			52	CARRIED TO SHEET 23 AND INCLUDED WITH TOTAL FOR ALL-75-05.53				

* NO MONUMENT TO BE SET AT THIS LOCATION

PID NO. 76691 89029

R/W DESIGNER BKJ

R/W REVIEWER KDO

CENTERLINE MONUMENT TABLE I-75

PROPOSED

ALL-75-0.21/5.53
ALL-75-6.11/7.85

1132
1224

J:\Projects\ALL\76691\row\sheets\76691RC100.dgn 12-SEP-2012 9:39AM reddenj

PROPOSED YODER RD.								
STATION	SET AT	DISTANCE FROM ℄	℄ REFERENCE MONUMENTS	GROUND COORDINATES		GRID COORDINATES		MONUMENT TYPE
				NORTHING	EASTING	NORTHING	EASTING	
0+00.00	S.R. 65	℄	1	379,543.7918	1,527,808.5835	379,513.0588	1,527,684.8716	R/W MON. BOX
1+80.85	PC	℄	1	379,541.1066	1,527,989.4104	379,510.3738	1,527,865.6838	R/W MON. BOX
4+04.77	PT	℄	1	379,666.7928	1,528,154.9005	379,636.0499	1,528,031.1605	R/W MON. BOX
5+44.77	PC	℄	1	379,802.1994	1,528,190.4679	379,771.4455	1,528,066.7251	R/W MON. BOX
7+19.61	PT	℄	1	379,921.5075	1,528,307.4669	379,890.7439	1,528,183.7146	R/W MON. BOX
		TOTAL	5	INCLUDED WITH TOTAL FOR ALL-75-0.21				

PROPOSED FOURTH ST.								
STATION	SET AT	DISTANCE FROM ℄	℄ REFERENCE MONUMENTS	GROUND COORDINATES		GRID COORDINATES		MONUMENT TYPE
				NORTHING	EASTING	NORTHING	EASTING	
99+83.99	SERVICE RDS.	℄	1	386,596.9404	1,530,937.3248	386,565.6363	1,530,813.3595	R/W MON. BOX
100+00.53	PC	℄	1	386,596.7020	1,530,953.8644	386,565.3979	1,530,829.8978	R/W MON. BOX
103+20.53	PT	℄	1	386,614.4064	1,531,273.1140	386,583.1009	1,531,149.1215	R/W MON. BOX
105+53.28	PC	℄	1	386,643.4730	1,531,504.0375	386,612.1651	1,531,380.0263	R/W MON. BOX
108+73.28	PT	℄	1	386,661.1773	1,531,823.2871	386,629.8680	1,531,699.2501	R/W MON. BOX
112+25.00	PC	℄	1	386,656.1079	1,532,174.9697	386,624.7990	1,532,050.9042	R/W MON. BOX
115+45.00	PT	℄	1	386,629.2090	1,532,493.5763	386,597.9023	1,532,369.4850	R/W MON. BOX
117+77.75	PC	℄	1	386,593.4984	1,532,723.5661	386,562.1946	1,532,599.4562	R/W MON. BOX
		TOTAL	8	INCLUDED WITH TOTAL FOR ALL-75-6.11/7.85				

PROPOSED SERVICE RD. 1								
STATION	SET AT	DISTANCE FROM ℄	℄ REFERENCE MONUMENTS	GROUND COORDINATES		GRID COORDINATES		MONUMENT TYPE
				NORTHING	EASTING	NORTHING	EASTING	
10+23.55	PC	℄	1	386,573.3956	1,530,936.9854	386,542.0934	1,530,813.0202	R/W MON. BOX
10+79.11	PT	℄	1	386,537.8912	1,530,972.0578	386,506.5919	1,530,848.0897	R/W MON. BOX
13+77.51	PC	℄	1	386,538.5394	1,531,270.4638	386,507.2400	1,531,146.4716	R/W MON. BOX
14+01.87	PT	℄	1	386,540.0890	1,531,294.7611	386,508.7895	1,531,170.7669	R/W MON. BOX
16+55.17	PC	℄	1	386,571.7225	1,531,546.0771	386,540.4205	1,531,422.0625	R/W MON. BOX
17+16.58	PT	℄	1	386,573.1245	1,531,607.3559	386,541.8223	1,531,483.3364	R/W MON. BOX
17+60.40	PI	℄	1	386,569.5458	1,531,651.0430	386,538.2439	1,531,527.0199	R/W MON. BOX
		TOTAL	7	INCLUDED WITH TOTAL FOR ALL-75-6.11/7.85				

PROPOSED SERVICE RD. 2								
STATION	SET AT	DISTANCE FROM ℄	℄ REFERENCE MONUMENTS	GROUND COORDINATES		GRID COORDINATES		MONUMENT TYPE
				NORTHING	EASTING	NORTHING	EASTING	
10+33.58	PC	℄	1	386,630.5156	1,530,937.8088	386,599.2088	1,530,813.8435	R/W MON. BOX
10+69.40	PT	℄	1	386,654.9651	1,530,959.7290	386,623.6563	1,530,835.7619	R/W MON. BOX
12+89.91	PC	℄	1	386,682.1067	1,531,178.5543	386,650.7957	1,531,054.5695	R/W MON. BOX
15+52.73	PT	℄	1	386,855.0914	1,531,350.4537	386,823.7664	1,531,226.4550	R/W MON. BOX
16+68.22	PC	℄	1	386,969.7924	1,531,363.9479	386,938.4581	1,531,239.9481	R/W MON. BOX
17+91.78	PT	℄	1	387,080.2888	1,531,414.5961	387,048.9456	1,531,290.5922	R/W MON. BOX
		TOTAL	6	INCLUDED WITH TOTAL FOR ALL-75-6.11/7.85				

PROPOSED SERVICE RD. 3								
STATION	SET AT	DISTANCE FROM ℄	℄ REFERENCE MONUMENTS	GROUND COORDINATES		GRID COORDINATES		MONUMENT TYPE
				NORTHING	EASTING	NORTHING	EASTING	
28+77.71	PC	℄	1	400,191.2790	1,530,071.4448	400,158.8741	1,529,947.5496	R/W MON. BOX
29+97.22	PT	℄	1	400,252.3242	1,530,171.0615	400,219.9144	1,530,047.1583	R/W MON. BOX
38+20.23	NEUBRECHT	℄	1	400,401.3368	1,530,980.4754	400,368,9149	1,530,856.5066	R/W MON. BOX
45+21.23	PC	℄	1	400,528.2576	1,531,669.8902	400,495.8254	1,531,545.8656	R/W MON. BOX
46+40.74	PT	℄	1	400,589.3028	1,531,769.5069	400,556.8657	1,531,645.4742	R/W MON. BOX
		TOTAL	5	INCLUDED WITH TOTAL FOR ALL-75-5.53				

PROPOSED PATROL DRIVE								
STATION	SET AT	DISTANCE FROM ℄	℄ REFERENCE MONUMENTS	GROUND COORDINATES		GRID COORDINATES		MONUMENT TYPE
				NORTHING	EASTING	NORTHING	EASTING	
10+00.00	4TH ST.	℄	1	386,619.0420	1,532,559.0556	386,587.7361	1,532,434.9590	R/W MON. BOX
12+73.36	PC	℄	1	386,891.6410	1,532,538.6935	386,860.3131	1,532,414.5986	R/W MON. BOX
13+03.66	PT	℄	1	386,921.9199	1,532,537.7569	386,890.5895	1,532,413.6620	R/W MON. BOX
		TOTAL	3	INCLUDED WITH TOTAL FOR ALL-75-6.11/7.85				

PROPOSED RESERVOIR RD. ℄ R/W								
STATION	SET AT	DISTANCE FROM ℄	℄ REFERENCE MONUMENTS	GROUND COORDINATES		GRID COORDINATES		MONUMENT TYPE
				NORTHING	EASTING	NORTHING	EASTING	
99+81.47	PC	℄	1	395,872.4500	1,531,656.4693	395,840.3948	1,531,532.4458	R/W MON. BOX
102+34.81	PT	℄	1	395,876.1919	1,531,909.7643	395,844.1364	1,531,785.7203	R/W MON. BOX
105+58.81	PC	℄	1	395,887.8690	1,532,233.5519	395,855.8126	1,532,109.4817	R/W MON. BOX
109+12.13	PT	℄	1	395,911.6983	1,532,586.0125	395,879.6400	1,532,461.9137	R/W MON. BOX
		TOTAL	4	INCLUDED WITH TOTAL FOR ALL-75-6.11/7.85				

PROPOSED RELOCATED BRYN MAWR RD.								
STATION	SET AT	DISTANCE FROM ℄	℄ REFERENCE MONUMENTS	GROUND COORDINATES		GRID COORDINATES		MONUMENT TYPE
				NORTHING	EASTING	NORTHING	EASTING	
411+53.38	PC	℄	1	395,549.4558	1,532,220.0895	395,517.4268	1,532,096.0204	R/W MON. BOX
412+49.67	PT	℄	1	395,645.5794	1,532,225.4566	395,613.5426	1,532,101.3870	R/W MON. BOX
414+93.58	RESERVOIR RD.	℄	1	395,887.8355	1,532,248.1965	395,855.7791	1,532,124.1251	R/W MON. BOX
		TOTAL	3	INCLUDED WITH TOTAL FOR ALL-75-6.11/7.85				

PROPOSED BRYN MAWR AVE.								
STATION	SET AT	DISTANCE FROM ℄	℄ REFERENCE MONUMENTS	GROUND COORDINATES		GRID COORDINATES		MONUMENT TYPE
				NORTHING	EASTING	NORTHING	EASTING	
5+87.48	POT	℄	1	392,664.7026	1,532,292.8495	392,632.9072	1,532,168.7745	R/W MON. BOX
7+95.87	PC	℄	1	392,462.1508	1,532,243.8784	392,430.3718	1,532,119.8073	R/W MON. BOX
		TOTAL	2	INCLUDED WITH TOTAL FOR ALL-75-5.53				

PROPOSED WELLESLEY DR.								
STATION	SET AT	DISTANCE FROM ℄	℄ REFERENCE MONUMENTS	GROUND COORDINATES		GRID COORDINATES		MONUMENT TYPE
				NORTHING	EASTING	NORTHING	EASTING	
10+75.53	PT	℄	1	392,270.9071	1,532,394.0788	392,239.1436	1,532,269.9956	R/W MON. BOX
13+52.77	POT	℄	1	392,270.3405	1,532,671.3239	392,238.5770	1,532,547.2182	R/W MON. BOX
		TOTAL	2	INCLUDED WITH TOTAL FOR ALL-75-5.53				

PROPOSED LOST CREEK BLVD.								
STATION	SET AT	DISTANCE FROM ℄	℄ REFERENCE MONUMENTS	GROUND COORDINATES		GRID COORDINATES		MONUMENT TYPE
				NORTHING	EASTING	NORTHING	EASTING	
10+00.00	POT	℄	1	392,270.4826	1,532,601.7797	392,238.7191	1,532,477.6797	R/W MON. BOX
10+26.90	PC	℄	1	392,297.3843	1,532,601.7453	392,265.6186	1,532,477.6453	R/W MON. BOX
11+53.59	PT	℄	1	392,410.4704	1,532,650.5993	392,378.6956	1,532,526.4953	R/W MON. BOX
13+00.01	POT	℄	1	392,510.6927	1,532,757.3351	392,478.9098	1,532,633.2225	R/W MON. BOX
		TOTAL	4	INCLUDED WITH TOTAL FOR ALL-75-5.53				

PROPOSED S.R. 81								
STATION	SET AT	DISTANCE FROM ℄	℄ REFERENCE MONUMENTS	GROUND COORDINATES		GRID COORDINATES		MONUMENT TYPE
				NORTHING	EASTING	NORTHING	EASTING	
429+00.00	PI	℄	1	400,282.9126	1,530,066.5800	400,250.5003	1,529,942.6852	R/W MON. BOX
431+26.40	PC	℄	1	400,323.9046	1,530,289.2422	400,291.4890	1,530,165.3294	R/W MON. BOX
433+56.52	PT	℄	1	400,379.0842	1,530,512.4967	400,346.6641	1,530,388.5658	R/W MON. BOX
440+24.77	PC	℄	1	400,578.1917	1,531,150.3976	400,545.7555	1,531,026.4151	R/W MON. BOX
446+33.68	PT	℄	1	400,728.4201	1,531,740.1931	400,695.9717	1,531,616.1628	R/W MON. BOX
451+94.59	PC	℄	1	400,837.8050	1,532,290.3322	400,805.3478	1,532,166.2574	R/W MON. BOX
454+96.19	PT	℄	1	400,853.2805	1,532,590.4811	400,820.8220	1,532,466.3820	R/W MON. BOX
457+34.35	PC	℄	1	400,831.1054	1,532,827.6110	400,798.6487	1,532,703.4927	R/W MON. BOX
460+21.15	PT	℄	1	400,843.7972	1,533,113.2203	400,811.3395	1,532,989.0788	R/W MON. BOX
		TOTAL	8	INCLUDED WITH TOTAL FOR ALL-75-5.53				

PROPOSED NEUBRECHT RD.								
STATION	SET AT	DISTANCE FROM ℄	℄ REFERENCE MONUMENTS	GROUND COORDINATES		GRID COORDINATES		MONUMENT TYPE
				NORTHING	EASTING	NORTHING	EASTING	
11+18.04	S.R. 81	℄	1	400,518.3459	1,530,958.6635	400,485.9146	1,530,834.6965	R/W MON. BOX
11+46.49	PC	℄	1	400,546.3206	3,206.0000	400,513.8870	3,205.7404	R/W MON. BOX
12+89.62	PT	℄	1	400,688.6992	1,530,941.4068	400,656.2541	1,530,817.4412	R/W MON. BOX
		TOTAL	3	INCLUDED WITH TOTAL FOR ALL-75-5.53				

PROPOSED MONUMENTS TO BE SET ALL-75-0.21				
LOCATION	PID	CONCRETE MON.	R/W MON. BOX	TOTAL
MAINLINE I-75	76691	62	0	62
YODER RD.		0	5	5
	TOTAL	62	5	67

PROPOSED MONUMENTS TO BE SET ALL-75-5.53				
LOCATION	PID	CONCRETE MON.	R/W MON. BOX	TOTAL
MAINLINE I-75	76691	52	0	52
BRYN MAWR AVE.		0	2	2
WELLESLEY DR.		0	2	2
LOST CREEK BLVD.		0	4	4
S.R. 81		0	9	9
NEUBRECHT RD.		0	3	3
		0	5	5
	TOTAL	52	25	77

PROPOSED MONUMENTS TO BE SET ALL-75-6.11/7.85				
LOCATION	PID	CONCRETE MON.	R/W MON. BOX	TOTAL
FOURTH ST.	87965	0	8	8
SERVICE RD. 1		0	7	7
SERVICE RD. 2		0	6	6
PATROL DRIVE		0	3	3
RESERVOIR RD.		0	4	4
RELOCATED BRYN MAWR RD.		0	3	3
	TOTAL	0	31	31

PID NO. 76691 87965 89029

R/W DESIGNER BKJ

R/W REVIEWER KDO

PROPOSED CENTERLINE MONUMENT TABLE SIDE ROADS

ALL-75-0.21/5.53 ALL-75-6.11/7.85

1133
1224

J:\Projects\ALL\76691\row\sheets\76691RC101.dgn 12-SEP-2012 9:39AM redden

POINT #	GROUND COORDINATES		GRID COORDINATES		DESCRIPTION
	NORTHING	EASTING	NORTHING	EASTING	
852	383,975.4601	1,527,881.9567	383,944.3683	1,527,758.2388	5/8" IRON PIN SET BY BACON
B2013	404,862.3338	1,530,999.4830	404,829.5507	1,530,875.5127	ALLEN COUNTY MONUMENT BOX FOUND
B2121	407,584.1579	1,533,660.1860	407,551.1544	1,533,536.0003	ALLEN COUNTY MONUMENT BOX FOUND
B2123	404,906.8386	1,533,626.4890	404,874.0519	1,533,502.3060	ALLEN COUNTY MONUMENT BOX FOUND
B2821	402,243.0350	1,533,606.1950	402,210.4640	1,533,482.0136	ALLEN COUNTY MONUMENT BOX FOUND
B2823	399,577.9727	1,533,567.0053	399,545.6175	1,533,442.8271	3" POST IRON FOUND
B2911	402,196.6354	1,530,964.8480	402,164.0682	1,530,840.8805	ALLEN COUNTY MONUMENT BOX FOUND
B2913	399,558.5297	1,530,923.8380	399,526.1761	1,530,799.8738	1 1/2" IRON PIPE FOUND
B3211	396,880.8373	1,530,892.0520	396,848.7005	1,530,768.0904	"T" FENCE POST FOUND (PAROL EVIDENCE INDICATES THIS IS THE SECTION CORNER)"
B3213	394,265.4571	1,530,835.7490	394,233.5321	1,530,711.7920	RAILROAD SPIKE SET FROM ORIGINAL SUBDIVISION IRON PIPES FOUND AT SE CORNER OF LOT 9203 AND THE SW CORNER OF LOT 9198 AS PER EAST LINCOLN PARK ADDITION
B3215	391,607.1728	1,530,788.5000	391,575.4630	1,530,664.5468	RAILROAD SPIKE FOUND
B3321	396,918.1393	1,533,517.1529	396,885.9995	1,533,392.9787	SET ODOT 3/4' IRON PIN
B3323	394,277.1799	1,533,471.1409	394,245.2539	1,533,346.9705	CALCULATED POINT FROM K&K SURVEY FOR ROBERT RISSMAN
B3325	391,611.1036	1,533,433.4504	391,579.3935	1,533,309.2830	CALCULATED POINT ESTABLISHED 114.18' TO EAST FROM P0421
P0421	391,611.5238	1,533,319.2712	391,579.8137	1,533,195.1131	RESET FROM PRIOR SURVEY REFERENCE ON RECORD AT ODOT
P0423	389,211.0666	1,533,275.9410	389,179.5508	1,533,151.7864	ALLEN COUNTY MONUMENT BOX FOUND
P0511	391,607.6086	1,530,665.6182	391,575.8988	1,530,541.6749	CALCULATED POINT ESTABLISHED EQUIDISTANT FROM P0521 AND P0421
C687	389,243.8736	1,530,612.1662	389,212.3552	1,530,488.2273	5/8' PIPE SET BY K&K, 1" DEEP (KOHLI & KALIHER)
P0811	386,602.1936	1,530,572.8970	386,570.8891	1,530,448.9612	ALLEN COUNTY MONUMENT BOX FOUND
KC283	383,943.7000	1,530,531.8556	383,912.6108	1,530,407.9232	CAPPED 5/8" IRON PIN SET BY POGGEMEYER
P0921	386,563.9733	1,533,224.3600	386,532.6719	1,533,100.2095	ALLEN COUNTY MONUMENT BOX FOUND
P0923	383,911.8962	1,533,185.4080	383,880.8095	1,533,061.2607	ALLEN COUNTY MONUMENT BOX FOUND
P1621	381,249.2563	1,533,142.8000	381,218.3852	1,533,018.6561	ALLEN COUNTY MONUMENT BOX FOUND
P1711	381,277.8739	1,530,490.7010	381,247.0005	1,530,366.7719	ALLEN COUNTY MONUMENT BOX FOUND
P1713	378,635.0521	1,530,449.4222	378,604.3927	1,530,325.4964	CALCULATED POINT ESTABLISHED USING INTERSECTION OF P1723 TO P1623 AND P1711 TO P2011
P1721	381,321.1466	1,527,835.4590	381,290.2697	1,527,711.7449	ALLEN COUNTY MONUMENT BOX FOUND
P1723	378,672.9909	1,527,795.4160	378,642.3284	1,527,671.7051	ALLEN COUNTY MONUMENT BOX FOUND
P1811	381,361.4276	1,525,187.5100	381,330.5475	1,525,064.0103	ALLEN COUNTY MONUMENT BOX FOUND
P1813	378,715.7495	1,525,145.3277	378,685.0836	1,525,021.8314	CAPPED IRON PIN SET AS PER (COMMERCE PARKWAY DEDICATION PLAT)
P1821	381,413.6287	1,522,745.4765	381,382.7443	1,522,622.1746	CALCULATED POINT ESTABLISHED USING INTERSECTION OF P1811 TO MB1821 AND S1301 TO S1203
P1823	378,755.1308	1,522,704.5582	378,724.4617	1,522,581.2596	CALCULATED POINT ESTABLISHED USING INTERSECTION OF P1813 TO MB1823 AND S1303 TO S1301
MB1821	381,413.5893	1,522,747.3190	381,382.7049	1,522,624.0169	ALLEN COUNTY MONUMENT BOX FOUND
MB1823	378,755.0800	1,522,707.6700	378,724.4109	1,522,584.3711	ALLEN COUNTY MONUMENT BOX FOUND
T100	378,812.3000	1,522,705.0300	378,781.6263	1,522,581.7313	ALLEN COUNTY MONUMENT BOX FOUND (COMMERCE PARKWAY ROAD MONUMENTATION)
T101	378,766.2800	1,525,325.9200	378,735.6100	1,525,202.4091	ALLEN COUNTY MONUMENT BOX FOUND (COMMERCE PARKWAY ROAD MONUMENTATION)
S1301	381,055.3676	1,522,741.4372	381,024.5122	1,522,618.1356	ALLEN COUNTY MONUMENT BOX FOUND
S1303	378,400.5241	1,522,698.8729	378,369.8837	1,522,575.5747	P.K. NAIL FOUND
S1313	378,467.6249	1,520,038.7185	378,436.9791	1,519,915.6357	IRON PIN FOUND (YARNO #7169)
S2313	373,221.0359	1,514,690.6209	373,190.8149	1,514,567.9712	10" IRON POST FOUND
S2401	375,753.5095	1,522,659.5630	375,723.0834	1,522,536.2680	ALLEN COUNTY MONUMENT BOX FOUND
S2411	375,809.1534	1,520,012.4280	375,778.7228	1,519,889.3474	ALLEN COUNTY MONUMENT BOX FOUND
S2421	375,861.0749	1,517,364.3180	375,830.6401	1,517,241.4518	ALLEN COUNTY MONUMENT BOX FOUND
S2423	373,195.2857	1,517,342.7605	373,165.0668	1,517,219.8960	12" X 12" CONCRETE POST
S2521	370,533.2341	1,517,315.1566	370,503.2307	1,517,192.2944	"8" X 10" WOODEN POST FOUND"
S2523	367,884.1910	1,517,281.3460	367,854.4022	1,517,158.4865	ALLEN COUNTY MONUMENT BOX FOUND
S2605	365,232.3143	1,517,259.0996	365,202.7402	1,517,136.2419	CALCULATED POINT ESTABLISHED USING DISTANCE INTERSECT FROM S2523 AND CAPPED YOKUM PIN FOUND 203
S2611	370,557.2151	1,514,660.5406	370,527.2098	1,514,537.8933	CALCULATED POINT EQUIDISTANT BETWEEN POINTS S2621 AND S2521
S2615	365,251.4291	1,514,603.1684	365,221.8534	1,514,480.5258	CALCULATED POINT ON LINE BETWEEN S2710 AND S2605 AT PRORATED DISTANCE
S2623	367,903.5496	1,514,636.3790	367,873.7592	1,514,513.7337	ALLEN COUNTY MONUMENT BOX FOUND

J:\Projects\ALL\76691\row\sheets\76691RC300.dgn 12-SEP-2012 9:39AM reddenj

PID NO. 76691 87965 89029

R/W DESIGNER BKJ
R/W REVIEWER KDO

SECTION CORNER COORDINATE TABLE

ALL-75-0.21/ 5.53
ALL-75-6.11/ 7.85

FOUND MONUMENTATION USED TO ESTABLISH CENTERLINES							
OLD (FORMER) STATION	PROPOSED STATION	OFFSET	DESCRIPTION	GROUND COORDINATES		GRID COORDINATES	
				NORTHING	EASTING	NORTHING	EASTING
10+00.00	10+01.21	℄	CONC. MON	366,242.3068	1,516,041.3431	366,212.6509	1,515,918.5840
26+48.79	26+49.46	℄	CONC. MON	367,890.4375	1,516,060.9460	367,860.6481	1,515,938.1853
52+35.72	52+36.41	℄	CONC. MON	370,476.3522	1,516,103.1637	370,446.3535	1,515,980.3996
75+94.05	75+94.15	0.03′ LT	CONC. MON	372,760.5985	1,516,619.2299	372,730.4148	1,516,496.4240
85+67.28	85+67.23	℄	CONC. MON	373,645.7767	1,517,023.3980	373,615.5213	1,516,900.5594
130+00.00	130+01.22	℄	CONC. MON	377,201.3710	1,519,639.9835	377,170.8277	1,519,516.9330
159+06.62	159+06.00	3.49′ LT	CONC. MON	379,398.6511	1,521,540.0440	379,367.9299	1,521,416.8397
190+00.00	189+73.43	℄	CONC. MON	380,163.8908	1,524,388.3030	380,133.1076	1,524,264.8680
244+12.06	243+82.52	12.37′ RT	CONC. MON	380,123.7355	1,529,797.9610	380,092.9556	1,529,674.0880
277+94.28	275+98.72	12.29′ RT	CONC. MON	382,202.2206	1,531,926.0190	382,171.2724	1,531,801.9737
308+00.00	306+02.99	℄	CONC. MON	385,206.7858	1,531,975.8900	385,175.5943	1,531,851.8406
329+32.73, 95′ LT	335+34.12	95.38′ LT	CONC. MON	388,136.5552	1,531,918.3090	388,105.1264	1,531,794.2643
329+32.73, 95′ RT	335+34.04	94.42′ RT	CONC. MON	388,138.5283	1,532,108.0980	388,107.0994	1,531,984.0379
358+57.76, 95′ LT	356+56.95	95.04′ LT	CONC. MON	390,261.4438	1,531,904.6479	390,229.8430	1,531,780.6043
398+68.66, 95′ RT	396+67.82	95.00′ RT	CONC. MON	394,269.2117	1,532,142.0805	394,237.2864	1,532,018.0177
N/A	113+49.67*	℄	IRON PIN FOUND	395,954.9210	1,533,021.3430	395,922.8592	1,532,897.2090
N/A	98+51.25*	19.91′ RT	1″ PIPE FOUND	395,853.3433	1,531,526.0916	395,821.2897	1,531,402.0787
N/A	95+94.55*	20.09′ RT	R.R. SPIKE FOUND	395,854.9374	1,531,269.4001	395,822.8837	1,531,145.4079
N/A	464+80.60**	℄	R/W MON. BOX FOUND	400,931.2037	1,533,587.9989	400,898.7389	1,533,463.8190
488+07.09	490+32.07	95.01′ RT	CONC. MON	403,631.9907	1,532,309.2065	403,599.3072	1,532,185.1301
512+81.36	515+90.68	℄	CONC. MON	405,883.0913	1,533,249.7174	405,850.2255	1,533,125.5649
525+00.00	528+09.17	℄	CONC. MON	406,664.9021	1,534,184.3243	406,631.9730	1,534,060.0961

NOTE: STATIONS AND OFFSETS GIVEN ARE REFERENCING THE ℄ R/W & CONST. I-75 UNLESS NOTED OTHERWISE

* ℄ R/W RESERVOIR RD.
** OLD ℄ R/W S.R. 81

PID NO. 76691 87965 89029

R/W DESIGNER BKJ | R/W REVIEWER KDO

FOUND CENTERLINE MONUMENTATION

ALL-75-0.21/ 5.53
ALL-75-6.11/ 7.85

J:\Projects\ALL\76691\row\sheets\76691RC400.dgn 12-SEP-2012 9:39AM reddenj

RIGHT OF WAY LEGEND SHEET ALL-75-5.53

ALLEN COUNTY
PERRY TOWNSHIP
SEC. 5 SE 1/4, NE 1/4, SEC. 8 NE 1/4, T.4S., R.7E.
BATH TOWNSHIP
SEC. 20 SE 1/4, NE 1/4, SEC. 29 SE 1/4, SW 1/4, NE 1/4
SEC. 32 SE 1/4, NE 1/4, T.3S., R.7E.
CITY OF LIMA

UTILITY OWNERS

SEE SHEET 2 OF 87 FOR UTILITY OWNERS AND LOCATION INFORMATION.

NOTE:

THE EXISTING R/W WIDTH LOCATIONS WERE DETERMINED USING THE FOLLOWING ODOT R/W PLANS ON FILE FROM THE OHIO DEPARTMENT OF TRANSPORTATION, DISTRICT 1 OFFICE LIMA, OHIO:
I-75 - ALL-25-0.00 (DATED 1955)
4TH STREET - ALL-25-(2.12)(3.28)(5.08)(6.11) PART IV (DATED 1958)
PATROL DRIVE - ALL-25-(2.12)(3.28)(5.08)(6.11) PART IV (DATED 1958)
RESERVOIR ROAD - ALL-25-0.00 (DATED 1955)
BRYN MAWR - ALL-25-0.00 (DATED 1955)

THIS IMPROVEMENT IS ESPECIALLY DESIGNED FOR THROUGH TRAFFIC AND HAS BEEN DECLARED A LIMITED ACCESS HIGHWAY OR FREEWAY BY ACTION OF THE DIRECTOR IN ACCORDANCE WITH THE PROVISIONS OF SECTION 5511.02 OF THE REVISED CODE OF OHIO.

I, Jeffrey L. Waggamon, P. S. have conducted a survey of the existing conditions for the Ohio Department of Transportation, District 1. The results of that survey are contained herein.

The survey shown on this plan is the result of field work performed by the Ohio Department of Transportation, District 1 between August 2006 and the date of this certification;

The horizontal coordinates expressed herein are Grid Coordinates based on the State Plane Coordinate system, North Zone, CORS adjustment, by ties to the CORS network using stations, Lima, Kenton, Sidney and Van Wert and fit to match project control points established by Canter surveying for the ALL-75-0.21 project. The Project Adjustment Factor used for this project is 1.00008098;

As a part of this project I have reestablished the locations of the existing property lines and the existing centerline of Right of Way of S.R. 309, S.R. 81 & Neubrecht Rd. for property takes contained herein.

As a part of this work I have set the monuments at the proposed Property corners, Section Corners and other points as shown herein.

All Right of Way Monuments set and/or reset by the contractor's surveyor will include a cap as per Standard Construction Drawing RM-1.1 and bear the surveyor's Ohio registration number and/or name or company name. This work will be done in accordance with OAC 4733-37 as cited below.

All of my work contained herein was conducted in accordance with Ohio Administrative Code 4733-37 commonly known as "A Minimum Standards for Boundary Surveys in the State of Ohio" unless noted.

The words I and my as used herein are to mean that either myself or someone working for me under my direct control or supervision.

_____ _____
Jeffrey L. Waggamon, P.S., Date
Professional Land Surveyor #7125

MONUMENT LEGEND

- EXISTING R/W MONUMENT BOX
- PROPOSED R/W MONUMENT BOX
- EXISTING CONCRETE MONUMENT
- PROPOSED CONCRETE MONUMENT
- RAILROAD SPIKE FOUND
- RAILROAD SPIKE SET
- I.R.F. IRON PIN FOUND
- I.R.F. IRON PIN FOUND W/ ID CAP
- I.R.S. IRON PIN SET W/ ID CAP
- I.P.F. IRON PIPE FOUND
- I.P.S. IRON PIPE SET
- P.K.F. P.K. NAIL FOUND
- P.K.S. P.K. NAIL SET

CONVENTIONAL SYMBOLS

County Line
Township Line
Section Line
Corporation Line or
Fence Line (Ex.) (Pr)
Center Line
Limited Access R/W (Ex.) Ex LA-R/W
Limited Access R/W (Pr.) LA-R/W
Limited Access Easement (Ex.) Ex LA
Right of Way (Ex) Ex R/W
Right of Way (Pr) R/W
Standard Highway Easement (Ex.) Ex SH
Standard Highway Easement (Pr.) SH
Temporary Right of Way TMP
Channel Easement (Pr.) CH
Aerial Easement (Pr.) A
Sewer Easement (Ex.) Ex SW
Sewer Easement (Pr.) SW
Utility Easement (Ex.) Ex U
General Easement (Ex.)
Railroad or
Guardrail (Ex.) (Pr.)
Construction Limits
Edge of Pavement (Ex.)
Edge of Pavement (Pr.)
Edge of Shoulder (Ex.)
Edge of Shoulder (Pr.)
Ditch / Creek (Ex.)
Ditch / Creek (Pr.)
Tree Line (Ex)
Ownership Hook Symbol , Example
Property Line Symbol , Example
Break Line Symbol , Example
Tree (Pr) , Tree (Ex) , Shrub (Ex)
Tree (Remove) , Shrub (Remove)
Evergreen (Ex) , Stump
Evergreen (Remove) , Stump (Remove)
Wetland (Pr) , Grass (Pr) , Aerial Target
Post (Ex) , Mailbox (Ex) MB , Mailbox (Pr) MB
Light (Ex) , Telephone Marker (Ex) TEL
Fire Hydrant (Ex) , Water Meter (Ex) W
Water Valve (Ex) , Utility Valve Unknown (Ex.) U
Telephone Pole (Ex) , Power Pole (Ex)
Private Light Pole (Ex) , Public Light Pole (Ex)
Manhole (Pr) , Tower Light (Ex.)
Catch Basin (Pr) , Power Pole with Light (Ex.)

INDEX OF SHEETS:

LEGEND SHEET	1, 2
PROPERTY MAPS	3-9
SUMMARY OF ADDITIONAL R/W	10-18
R/W SCHEMATIC SHEET	19
R/W DETAIL SHEETS	20-40
R/W TOPOGRAPHIC SHEETS	41-83 (ODD SHEET NUMBERS)
R/W BOUNDARY SHEETS	42-84 (EVEN SHEET NUMBERS)
RAILROAD PLAT	85,86
DEAN AVE. VACATION PLAT	87

I, Kerry D. Osborn, P. S. have reestablished the existing and proposed centerlines of right of way listed below for The Ohio Department of Transportation, District 1, based on the surveys provided from Jeffrey L. Waggamon, P.S. and Robert C. Canter, P.S. between August 2006 and the date of this certification.
The results of that survey are contained herein.

As a part of this project I have reestablished the locations of the existing and proposed centerlines of Right of Way for I-75, Wellesley Dr., Bryn Mawr Ave. and Lost Creek Blvd. forthis project shown herein.

As a part of this project I have calculated the proposed property lines, Gross Take, present roadway occupied (PRO), Net Take and Net Residue; as well as prepared the legal descriptions necessary to acquire these parcels as shown herein.

All of my work contained herein was conducted in accordance with Ohio Administrative Code 4733-37 commonly known as "A Minimum Standards for Boundary Surveys in the State of Ohio" unless noted.

The words I and my as used herein are to mean either myself or someone working under my direct supervision.

_____ _____
Kerry D. Osborn, P.S., Date:
Professional Land Surveyor 7326

PROJECT DESCRIPTION

PROJECT CONSISTS OF 4.32 MILES OF 4-LANE INTERSTATE HIGHWAY RECONSTRUCTION WITH PROVISIONS FOR A FUTURE ADDITIONAL MEDIAN LANE. INCLUDES THREE INTERCHANGES; FOURTH STREET, SR 309, AND SR 81. SIDEWALKS WILL BE ADDED AT SR 309 AND SR 81. ALSO INCLUDED ARE VARIOUS SIDE ROAD IMPROVEMENTS. THE PROJECT UPGRADES PAVEMENT, ALIGNMENT, AND VARIOUS OTHER DEFICIENCIES.

PROJECT CONTROL

STATE PLANE GRID NAD 83, NORTH ZONE, 95 ADJUSTMENT
PROJECT ADJUSTMENT FACTOR 1.00008098

PLANS PREPARED BY:

FIRM NAME : PARSONS BRINCKERHOFF
PLANS PREPARED BY: CHRISTOPHER A. COFFIELD
FIELD REVIEW BY: CHRIS COFFIELD, ANGELA FEDAK, ED CARMICHAEL
DATE COMPLETED: MARCH 14 AND 15, 2011
OWNERSHIP VERIFIED BY: JASON MILES
DATE COMPLETED: MARCH 22, 2011
DATE COMPLETED: MARCH 25, 2011

STRUCTURE KEY

- RESIDENTIAL
- COMMERCIAL
- OUT-BUILDING

LEGEND:
WL = FEE SIMPLE WITH LIMITATION OF ACCESS
WD = WARRANTY DEED
PRW = PROPERTY RIGHT FEE SIMPLE
SH = STANDARD HIGHWAY EASEMENT
SL = SLOPE EASEMENT
T = TEMPORARY EASEMENT
S = SEWER EASEMENT
CH = CHANNEL EASEMENT
A = AERIAL EASEMENT
V = IN NAME OF ANOTHER STATE AGENCY, LPA, ETC.
R = SPECIAL RESERVATION (SUBSURFACE RIGHTS)

I, Robert C. Canter, P. S. have conducted a survey of the existing conditions for The Ohio Department of Transportation, District 1 between August 2006 and the date of this certification.
The results of that survey are contained herein.

The horizontal coordinates expressed herein are project ground coordinates, based on the Ohio State Plane Coordinates system NAD 83, North Zone using 95 adjustment, by ties to the NGS network using stations, AUG-75-12.45 (LA2478), ALL-75-03.98 (LA2474), ALL-75-04.48 (LA2475), ALL-75-09.51 (LA2476), DEFI (AJ7186, KNTN (DF4052 and SIDN (AJ7196).The Project Adjustment Factor used for this project is 1.00008098. To obtain Ohio State Plane Grid Coordinates divide each project ground coordinate northing and easting by the project adjustment factor.

As a part of this project I provided survey to be used to reestablished the locations of the existing centerlines of Right of Way for I-75, Wellesley Dr., Bryn Mawr Ave. and Lost Creek Blvd. for this project shown herein.

All of my work contained herein was conducted in accordance with Ohio Administrative Code 4733-37 commonly known as "A Minimum Standards for Boundary Surveys in the State of Ohio" unless noted.

The words I and my as used herein are to mean either myself or someone working under my direct supervision.

_____ _____
Robert C. Canter, P.S., Professional Land Surveyor 7226 Date:

SURVEYORS SEAL
STATE OF OHIO · JEFFREY L. WAGGAMON · S-7125 · REGISTERED PROFESSIONAL SURVEYOR

SURVEYORS SEAL
STATE OF OHIO · ROBERT C. CANTER · S-7226 · REGISTERED PROFESSIONAL SURVEYOR

SURVEYORS SEAL
STATE OF OHIO · KERRY D. OSBORN · S-7326 · REGISTERED PROFESSIONAL SURVEYOR

FEDERAL PROJECT NO. E036702
PID NO. 76691
CALCULATED CAC CHECKED KDO
RIGHT OF WAY LEGEND SHEET
ALL-75-5.53
1 / 87
1136 1224

J:\Projects\ALL\76691\row\sheets\76691RL002.dgn 12-SEP-2012 9:37AM reddenj

UTILITIES

THE LOCATION OF THE UNDERGROUND UTILITIES SHOWN ON THE PLANS ARE AS OBTAINED FROM THE OWNERS AS REQUIRED BY SECTION 153.64 O.R.C.

LISTED BELOW ARE ALL UTILITIES LOCATED WITHIN THE PROJECT CONSTRUCTION LIMITS TOGETHER WITH THEIR RESPECTIVE OWNERS:

AEP Contact:
209 N. Wood Street,
Fostoria, Ohio 44830
Attn.: Jeff Meyers
AEP (419) 436-2008
Email: jdmeyers@aep.com

Dan Wilson
369 E. O'Connor Ave.
Lima, Ohio 45801
419-998-5103
dewilson@aep.com

Ms. Tram Trinh
AEP Transmission
700 Morrison Road
Gahanna, OH 43240

Allen County Sanitary
Engineer's Office
Brad Niemeyer,
Assistant Sanitary Engineer
(419) 228-3700
3230 N. Cole St.
Lima, Oh 45801

Mike Lerma
(419) 655-2966
Email: Michael.lerma@bp.com
12716 Tank Farm Road
Cygnet, OH 43413

BP Oil Pipeline
Adam Neu (419) 222-7221
Email: Neua1@bp.com
1771 Buckeye Rd
Lima, OH 45804

Buckeye Partners
Buckeye Pipe Line Co. LP
940 Buckeye Rd
Lima, Ohio 45802
ATTN: Marty White
(419) 236-7766
Email: mwhite@buckeye.com

City of Lima Sanitary Department
50 Town Square
Lima, Oh 45801
ATTN: Dave Schnipke,
Env. Compliance Manager
(419-221-5294)
Email: Dave.Schnipke@cityhall.lima.oh.us

City of Lima Water Department
1405 Reservoir Road
Lima, Oh 45804
ATTN: Kent Shoemaker (419-221-5283)

Columbia Gas Transmission
1804 Broad Ave.
Findlay, OH 45840
Attn: Kevin Coppes
(419) 427-3200

Dominion East Ohio Gas Company
150 S. Jackson St.
Lima, Ohio 45801
ATTN: John Downing (419) 226-4864
email: John483@dom.com
(800) 877-4715

TEPPCO
2700 Hart Road
Lebanon, Ohio 45036
ATTN: Bob Sanders (513) 932-5886
cell (513) 304-0758; fax (513) 932-7077
rgsaunders@epco.com

Time Warner Cable
3100 Elida Rd
Lima, Ohio 45805
ATTN: Gary Hohenbrink

Embarq
122 S Elizabeth Street
Lima, Ohio 45801
ATTN: Bill Perrin
(419) 226-6220
Email: William.r.perrin@embarq.com

Marathon Pipe Line LLC
539 S. Main St., Room 7642
Findlay, OH 45840
Attn: Dave Wisner
(419) 421-2211
Email: dswisner@marathonoil.com

Telephone Service Company
2 Willipie St.
PO Box 408
Wapakoneta, OH 45895
Randy Heinl
(419) 739-2241
Email: randy@telserco.com

Mid Valley Pipeline
PO 219
Cygnet, OH 43413
Or
5152 Rockridge Road
Cygnet, OH 43413
Attn: Chester Wilson
(419) 236-6887
Email: cwilson@sunocologistics.com
(888) 786-3260

Qwest Communications
2626 N. Wapak Rd.
Elida, OH 45807
Attn: Mike Adams
(cell) 419-392-4133;
office 419-229-7355)
Email: mike.adams@qwest.com
George McElvain-Denver
(303)-837-3926
for plans and legal issues.

SUBSURFACE UTILITY EXPLORATION (SUE)

DISTRICT 1 CONTRACTED WITH A SUE CONSULTANT TO PERFORM EXPLORATION SERVICES ALONG THE MAINLINE OF I-75. THE CONTRACTOR SHALL CONTACT THE DISTRICT 1 UTILITY COORDINATOR TO REVIEW THE PLAN, NOTES, AND DATA PRIOR TO BIDDING AND CONSTRUCTION.

REV. BY	DATE	DESCRIPTION

DATE COMPLETED MARCH 25, 2011

FEDERAL PROJECT NO. E036702

PID NO. 76691

CALCULATED CAC
CHECKED KDO

RIGHT OF WAY
UTILITY OWNER LIST

ALL-75-5.53

1137
1224

J:\Projects\ALL\76691\row\sheets\76691RL003.dgn 12-SEP-2012 9:37AM reddenj

ALLEN COUNTY
PERRY TOWNSHIP
SEC. 5, SE 1/4, NE 1/4 & SEC. 8 NE 1/4, T. 4 S., R. 7 E.
CITY OF LIMA

(76*) EAST OHIO GAS COMPANY
47080001002000

(78*) BARBARA A. POLING
47051101019000

(79*) 75 & FOURTH STREET INC.,
AN OHIO CORPORATION
47050004006009, 4705000401000

(80*) OVERTIME PROPERTIES, LLC,
AN OHIO LIMITED LIABILITY COMPANY
47050004006000, 47050004008000

(82*) JENNIFER L. CROWE
47050004010001

(83*) STEVEN L. FARMER &
TRACY R. FARMER
47050004011000

(84*) DAVID B. STEINER &
NANCY STEINER
47050004012000

(85*) ROSCHMAN FAMILY PARTNERSHIP
NO 1 LTD., A FLORIDA LIMITED
PARTNERSHIP
47050004003002,47050004003003

(87*) STATE OF OHIO,
DEPARTMENT OF TRANSPORTATION
47050004013000

(88*) STATE OF OHIO,
DEPARTMENT
OF HIGHWAY SAFETY
47050004004000

(225) CITY OF LIMA, OHIO
47050004002000

(225A) CITY OF LIMA, OHIO
47050004014000

(71**)

BEGIN PROJECT
ALL-75-6.11/7.85
PID 87965
STA. 96+70.00

N. S. ℄ SEC. 8

EASEMENT OVER ALL OF
NE 1/4 OF SEC. 8 TO WEST
OHIO GAS COMPANY,
VOL. 439, PG. 287
PARTIAL RELEASE OF EASEMENT
TO CONSOLIDATED BOTTLING IN
VOL. 476, PG. 18

BLANKET EASEMENT OVER NE 1/4 OF
SEC. 8 TO INLAND CORPORATION
VOL. 319, PG. 108

BLANKET EASEMENT OVER NE 1/4 OF
SEC. 8 WITH EXCEPTION OF PARCEL 76
TO OHIO POWER COMPANY
VOL. 400, PG. 627

BLANKET EASEMENT FOR A LINE OF
POLES WITHIN 1' OF THE
LIMITS OF ANY HIGHWAY AS
NOW OR HERAFTER LAID OUT
TO THE OHIO POWER COMPANY
IN VOL. 248, PG. 59

℄ R/W & CONST.
FOURTH ST.

(72A*) STEINER INVESTMENTS, LLC
47080001003000

℄ R/W & CONST.
SERVICE RD. 1

℄ R/W & CONST.
SERVICE RD. 2

℄ R/W & CONST.
PATROL DR.

CITY OF LIMA

GLENN AVE.

WEBB COMPANY
ADDITION
D.B. 3, PG. 267

4705003001000

WATER LINE EASEMENT
TO CITY OF LIMA
VOL. 995, PG. 525

BLANKET EASEMENT TO
THE OHIO POWER COMPANY
VOL. 267, PG. 338
PARTIAL RELEASE IN
VOL. 785, PG. 823

(91) SARA KLAY ARNETT
MARGARET KLAY TURNBULL,
JOHN E. KLAY,
WILLIAM D. KLAY &
BARBARA KAY BROWNING
47050004005000

60' WIDE
INGRESS/EGRESS
EASEMENT
VOL. 801, PG. 179

20' SEWER EASEMENT
VOL. 468, PG. 685

20' EASEMENT TO BUCKEYE
PIPELINE COMPANY
IN VOL. 48, PG. 95
MIDVALLEY PIPELINE
VOL. 607, PG. 82
MARATHON PIPELINE
VOL. 607, PG. 95

EASEMENT WITHIN 8' OF
ROADS TO LIMA TELEPHONE
AND TELEGRAPH COMPANY
IN VOL. 47, PG. 265

(94) SULAI HOSPITALITY, INC
47050001008000

30' WIDE SEWER EASEMENT
TO CITY OF LIMA
VOL. 2006, PG. 6769

UNNAMED DITCH

PROP. ℄ R/W & CONST. I-75

BEGIN ACQUISITION
ALL-75-5.53
PID 87965
STA. 294+50.00

END PROJECT ALL-75-0.21
PID 89029
STA. 292+00.00
BEGIN PROJECT ALL-75-5.53
PID 76691
STA. 292+00.00

20' WIDE EASEMENT
BUCKEYE PIPELINE COMPANY
AN OHIO CORPORATION
VOL. 554, PG. 56

50' WIDE EASEMENT
BUCKEYE PIPELINE COMPANY
AN OHIO CORPORATION
VOL. 504, PG. 206

BLANKET EASEMENT OVER
NE 1/4 OF SEC. 8
TO THE STANDARD OIL COMPANY
VOL. 239, PG. 23

(72) STEINER INVESTMENTS, LLC
47080001003001

EASEMENT OVER ALL OF THE
NE 1/4 OF SEC. 8 TO OHIO
FUEL GAS COMPANY
VOL. 233, PG. 585
PARTIAL RELEASE OF EASEMENT
TO CONSOLIDATED BOTTLING
IN VOL. 475, PG. 666

(74) RKO BOTTLERS OF
LIMA, INC.
A CORPORATION
47080001004000

BEGIN ACQUISITION
STA. 116+58.29

(75) THE CONSOLIDATED
BOTTLING COMPANY
47080001001000

END LIMTIED
ACCESS R/W LEFT
STA. 121+65.65

END ACQUISITION
STA. 122+79.95

END LIMTIED
ACCESS R/W RIGHT
STA. 122+79.95

(86*) RESICOM DEVELOPMENT, LLC,
AN OHIO LIMITED LIABILITY COMPANY
47050004003001

SUSPEND PROJECT
ALL-75-6.11/7.85
PID 87965
STA. 119+64.00

(85*) 47050004003003

(85*) ROSCHMAN FAMILY
PARTNERSHIP
NO 1 LTD.,
A FLORIDA LIMITED
PARTNERSHIP
47050004003002

50' SEWER EASEMENT
TO THE CITY OF LIMA
VOL. 468, PG. 592

(90) 3RM FINDLAY, LLC
47050004003000

20' WIDE EASEMENT TO
OHIO POWER COMPANY
VOL. 827, PG. 567

10' EASEMENT TO
UNITED TELEPHONE
COMPANY OF OHIO
VOL., 857, PG. 164

EASEMENT ALONG
EAST R/W OF I-75
TO THE OHIO POWER
COMPANY IN
VOL. 370, PG. 38

(93) SAMS REAL
ESTATE BUSINESS
TRUST
47050001011000

(92) STEINER
INVESTMENTS, LLC
47050004001000

EASEMENT TO PUT POLE WITHIN 1' OF R/W OF
GREELEY CHAPEL AS NOW OR HEREAFTER TO THE
OHIO POWER COMPANY VOL. 285, PG. 132

GREELY CHAPEL RD.

SEE SHEET 4 OF 87

MATCH LINE STA. 350+00.00

* PROPOSED R/W FROM THIS PARCEL IS TO BE ACQUIRED
WITH PROJECT ALL-75-6.11/7.85, PID 87965.

** PROPOSED R/W FROM THIS PARCEL IS TO BE ACQUIRED
WITH PROJECT ALL-75-0.21, PID 89029.

REV. BY	DATE	DESCRIPTION
CAC	1/10/12	REVISED OWNER OF PARCEL 90
DATE COMPLETED		MARCH 25, 2011

HORIZONTAL SCALE IN FEET
0 100 200 400

PID NO. 76691

R/W DESIGNER CAC
R/W REVIEWER KDO

PROPERTY MAP
BEGIN PROJECT TO STA. 350+00.00
ALL-75-5.53

3 / 87

1138
1224

J:\Projects\ALL\76691\row\sheets\76691RM001.dgn 12-SEP-2012 9:37AM redden

ALLEN COUNTY
PERRY TOWNSHIP
SEC. 5 NE 1/4, T. 4 S., R. 7 E.
CITY OF LIMA

ALLEN COUNTY
BATH TOWNSHIP
SEC. 32 SE 1/4 NE 1/4, E 1/2, T. 3 S., R. 7 E.
CITY OF LIMA

(93) SAMS REAL ESTATE BUSINESS TRUST 47050001011000

(95) TEXAS ROADHOUSE HOLDINGS LLC 47050001010010

(96) N & D RESTAURANT INC. 47050001010009

(97) CRACKER BARREL OLD COUNTRY STORE INC 47050001010005

(98) BETTY L. ROSCHMAN, TRUSTEE 47050001010000

(99) LIMA HOTEL 2007 CIBCZO, LLC 47050001010004

(100) LIMA UNITED AUTOMOBILE WORKERS BUILDING CORPORATION, AN OHIO CORPORATION, NOT FOR PROFIT 47050001009000

(102) M SX PENVEST II BUSINESS TRUST 47050001010001

(139) ALICE LOIS RIDENOUR 37320905013001, 37320905013000

(141) ROSA MAE JARVIS 37320905012000

(142) RICHARD L. THOMAS 37320905011000

(143) WESLEY STARKEY, JR. & VICKY LYNN STARKEY 37320905010000

(144) BETTY RUTH BEACH 37320905009000

(145) JOHN D. MCPHERON & CARRIE JO MCPHERON 37320905008000 37320905007000

(147) KENIS CRISP & JULIE CRISP 37320905006000

(150) PAMELA S. GROTHOUSE 37320905005000

(151) ORAL SHENK & WILLIAM A SHENK 37320905004000

(152) JACK E JOHNSON & LORI J JOHNSON 37320905003000

(153) DENISE K. EARLY 37320905002000

(154) DENNIS R. MCNAMARA & KEANNA MCNAMARA 37320905001000

NOTE:
FOR PARCELS 101, 103, 104, 105, 107, 111, 111A, 113, 115, 117, 118, 119, 120, 121, 128, 132, 133, 135, 136, 137, 138, 228, 229, 230, 231, 232, 249, 250 SEE DETAIL SHEET 5 OF 87.

FOR DETAIL OF PARCEL 248 SEE SHEET 8 OF 87.

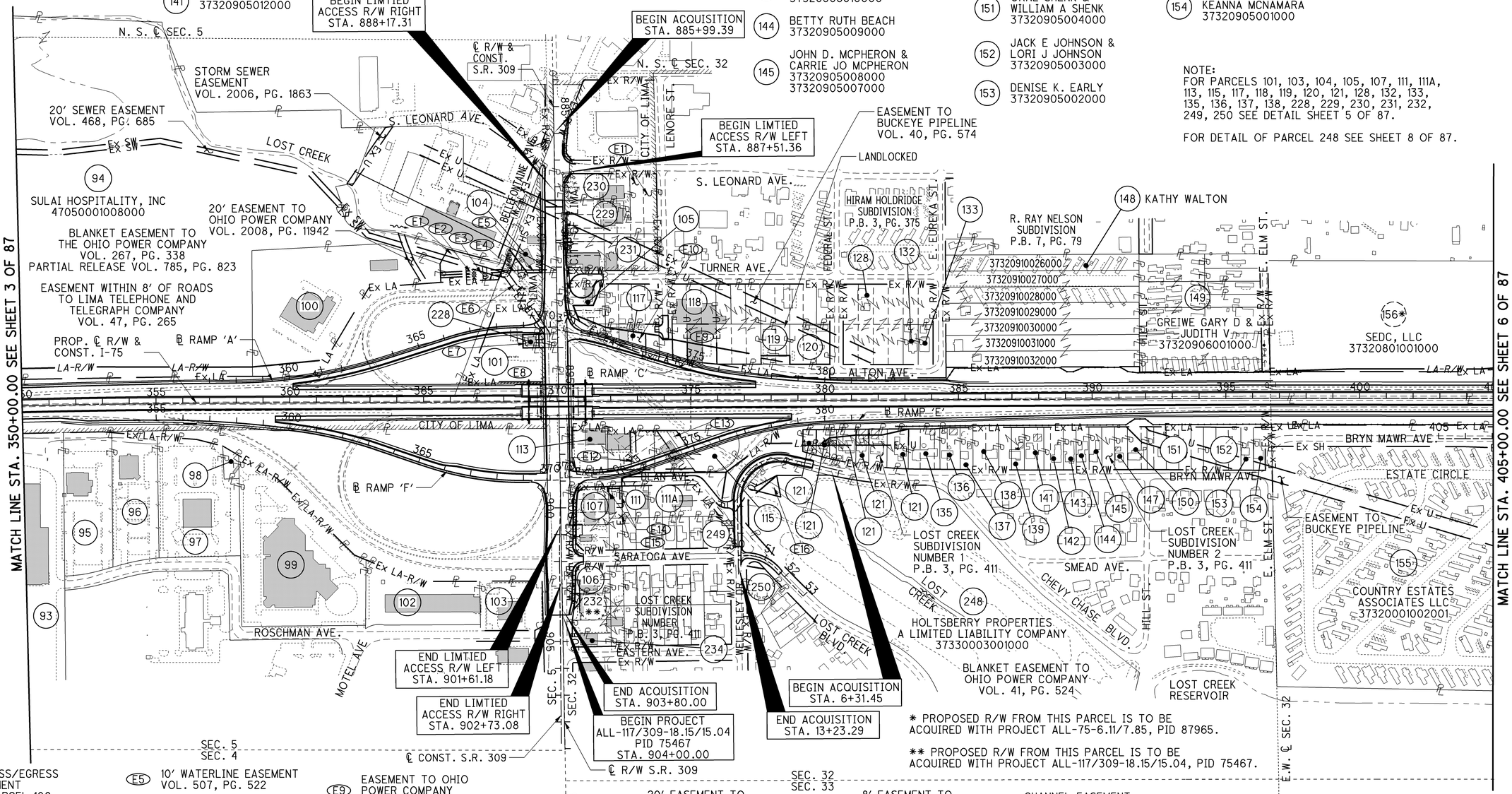

* PROPOSED R/W FROM THIS PARCEL IS TO BE ACQUIRED WITH PROJECT ALL-75-6.11/7.85, PID 87965.

** PROPOSED R/W FROM THIS PARCEL IS TO BE ACQUIRED WITH PROJECT ALL-117/309-18.15/15.04, PID 75467.

(E1) INGRESS/EGRESS EASEMENT TO PARCEL 100 VOL. 395, PG. 727 VOL. 506, PG. 705

(E2) SEWER EASEMENT VOL. 506, PG. 704

(E3) WATERLINE EASEMENT VOL. 506, PG 704

(E4) 10' WATERLINE EASEMENT VOL. 520, PG. 165

(E5) 10' WATERLINE EASEMENT VOL. 507, PG. 522

(E6) 20' SEWER EASEMENT TO CITY OF LIMA VOL. 468, PG. 595

(E7) BLANKET EASEMENT TO OHIO POWER COMPANY VOL. 550, PG. 256

(E8) BLANKET EASEMENT TO OHIO POWER COMPANY VOL. 550, PG. 266

(E9) EASEMENT TO OHIO POWER COMPANY VOL. 538, PG. 547

(E10) BLANKET EASEMENT TO OHIO POWER COMPANY VOL. 344, PG. 499

(E11) BLANKET EASEMENT TO OHIO POWER COMPANY OVER PART OF LOTS 15596 & 15597 VOL. 559, PG. 390 VOL. 559, PG. 389

(E12) 20' EASEMENT TO OHIO POWER COMPANY VOL. 2007, PG. 179

(E13) UTILITY EASEMENT RESERVED VOL. 371, PG. 264

(E14) EASEMENT TO OHIO POWER COMPANY VOL. 786, PG. 454

(E15) 8' EASEMENT TO WEST OHIO GAS CO. VOL. 784, PG. 182

(E16) CHANNEL EASEMENT VOL. 352, PG. 310

PERRY TWP. T. 4 S. BATH TWP. T. 3 S.

REV. BY	DATE	DESCRIPTION
CAC	5/1/12	ADDED UTILITY EASEMENTS TO PARCEL 121
CAC	4/19/12	REMOVED PARCEL 111-T
CAC	3/12/12	REVISED 230-WL; CHANGED 122, 123, 126 & 127 TO 121
CAC	11/18/11	REVISED TAKES FROM 104, 229, 230 & 231
CAC	11/10/11	REVISED DEAN AVE.
CAC	10/25/11	ADDED PARCEL 111-T
CAC	9/28/11	REVISED 229-T
CAC	8/25/11	REVISED DRIVEWAYS FOR 229 & 231
CAC	6/22/11	ADDED PARCELS 230 & 231; REVISED
		BEGIN ACQUISITION OF SR 309
CAC	5/2/11	DASHED CALLOUT FOR PARCEL 232
REV. BY	DATE	DESCRIPTION
DATE COMPLETED		MARCH 25, 2011

HORIZONTAL SCALE IN FEET
0 100 200 400

PID NO. 76691

R/W DESIGNER CAC
R/W REVIEWER KDO

PROPERTY MAP
STA. 350+00.00 TO STA. 405+00.00

ALL-75-5.53

4 / 87

1139
1224

J:\Projects\ALL\76691\row\sheets\76691RM002.dgn 12-SEP-2012 9:37AM reddenj

ALLEN COUNTY
PERRY TOWNSHIP
SEC. 5 NE 1/4, T. 4 S., R. 7 E.
CITY OF LIMA

ALLEN COUNTY
BATH TOWNSHIP
SEC. 32, SE 1/4, T. 3 S., R. 7 E.
CITY OF LIMA

101 AVNEE INVESTMENTS INC.
47050001002000

104 DAVID STEINER & MARIE B. STEINER AND JRMCB PROPERTY, LLC AN OHIO LIMITED LIABILITY COMPANY
47050001004000

105 LEWIS GENE WARNER
37321214006000

106 HIGHLAWN FARMS FAMILY LIMITED PARTNERSHIP
37321211012000, 37321211013000

107 F.W. ENGLEFIELD IV & B. B. ENGLEFIELD
37321212004000, 37321212005000, 37321212006000, 37321212007000

111 LOST CREEK OFFICES LLC
37321212003000, 37321212003001

111A BRYN MAWR OFFICES, LLC
37321212002000

113 LIMA-75 LLC
37321213002000, 37321213001001

115 CAROL M. SCHMIDTHORST, TRUSTEE
37321213001000, 37321213001002

117 SEDC LLC
37321214001000

118 ISSAM FAZA & SHARON FAZA
37321208005000, 37321208006000, 37321208007000, 37321208008000, 37321208009000

119 NANCY CLEGG HART
37321208001000

120 KATHY WALTON
37321208001001

121 FRANKLIN REAL ESTATE COMPANY INC., A PENNSYLVANIA CORPORATION
37321202007000
37321202006000
37321202005000
37321202004000
37321202003000
37321202002001
37321202001001

128 KATHY WALTON
37321203002000, 37321203003000, 37321203004000, 37321203005000, 37321203006000, 37321203007000, 37321203008000, 37321203009000, 37321203010000, 37321203011000

132 STEVEN ROSS DUNAHAY & REBCCA SUE DUNAHAY
37321203012000

133 MICHAEL R. JORDAN
37321203001000

135 JOSHUSA EDWARD ENYART & BARBARA ANN ENYART, TRUSTEES
37320905017000

136 DOUGLAS R. HYDE & JEANNE L. HYDE
3732095016000

137 HAROLD S. CARTWRIGHT
37320905015000

138 KAREN NORBECK
37320905014000

228 CITY OF LIMA, OHIO
47050001003000

229 SEDC, LLC
37321215001000, 37321215001001

230 JOMA REALTY, LLC A NEW YORK LIMITED LIABILITY COMPANY
37321215001002, 37321215001003

231 JOHNNY THI & YVONNE IVY NGUYEN
37321215003000, 37321215003001, 37321215002000, 37321215001004, 37321215001005

232 BANK ONE OF LIMA, NATIONAL ASSOCIATION, LIMA, OHIO
37321211011000, 37321211014000, 37321211015000, 37321211017000

249 DONNIE F. MIOLEN AND CAROL S. MIOLEN 37321212001000

250 MICHAEL S. PAHL
37321201011000

R. RAY NELSON SUBDIVISION P.B. 7, PG. 79

HIRAM HOLDRIDGE SUBDIVISION P.B. 3, PG. 375

LOST CREEK SUBDIVISION NUMBER 2 P.B. 3, PG. 411

LOST CREEK SUBDIVISION NUMBER 1 P.B. 3, PG. 411

LANDLOCKED

HOLTSBERRY PROPERTIES A LIMITED LIABILITY COMPANY 37330003001000

BLANKET EASEMENT TO OHIO POWER COMPANY VOL. 41, PG. 524

BEGIN ACQUISITION STA. 6+31.45

END ACQUISITION STA. 13+23.29

END ACQUISITION STA. 903+80.00

BEGIN PROJECT ALL-117/309-18.15/15.04 PID 75467 STA. 904+00.00

BEGIN ACQUISITION STA. 885+99.39

BEGIN LIMTIED ACCESS R/W LEFT STA. 887+51.36

BEGIN LIMTIED ACCESS R/W RIGHT STA. 888+17.31

END LIMTIED ACCESS R/W LEFT STA. 901+61.18

END LIMTIED ACCESS R/W RIGHT STA. 902+73.08

℄ R/W & CONST. BRYN MAWR AVE

℄ R/W & CONST. LOST CREEK BLVD.

℄ R/W & CONST. WELLESLEY DR.

℄ R/W & CONST. S.R. 309

PROP. ℄ R/W & CONST. I-75

℄ RAMP 'A'

℄ RAMP 'C'

℄ RAMP 'F'

℄ R/W S.R. 309 SEC. 32 BATH TWP. T. 3 S. / PERRY TWP. SEC. 5 T. 4 S.

℄ CONST. S.R. 309

20' EASEMENT TO OHIO POWER COMPANY VOL. 2008 PG. 11942

20' SEWER EASEMENT VOL. 468, PG. 685

E1 INGRESS/EGRESS EASEMENT TO PARCEL 100 VOL. 395, PG. 727 VOL. 506, PG. 705

E2 SEWER EASEMENT VOL. 506, PG. 704

E3 WATERLINE EASEMENT VOL. 506, PG 704

E4 10' WATERLINE EASEMENT VOL. 520, PG. 165

E5 10' WATERLINE EASEMENT VOL. 507, PG. 522

E6 20' SEWER EASEMENT TO CITY OF LIMA VOL., 468, PG. 595

E7 BLANKET EASEMENT TO OHIO POWER COMPANY VOL. 550, PG. 256

E8 BLANKET EASEMENT TO OHIO POWER COMPANY VOL. 550, PG. 266

E9 EASEMENT TO OHIO POWER COMPANY VOL. 538, PG. 547

E10 BLANKET EASEMENT TO OHIO POWER COMPANY VOL. 344, PG. 499

E11 BLANKET EASEMENT TO OHIO POWER COMPANY OVER PART OF LOTS 15596 & 15597 VOL. 559, PG. 390 VOL. 559, PG. 389

E12 20' EASEMENT TO OHIO POWER COMPANY VOL. 2007, PG. 17970

E13 UTILITY EASEMENT RESERVED VOL. 371, PG. 264

E14 EASEMENT TO OHIO POWER COMPANY VOL. 786, PG. 454

E15 8' EASEMENT TO WEST OHIO GAS CO. VOL. 784, PG. 182

E16 CHANNEL EASEMENT VOL. 352, PG. 310

E17 BUCKEYE PIPELINE EASEMENT VOL. 40, PG. 574

E18 OHIO POWER COMPANY VOL. 2012, PG. 1876

E19 OHIO POWER COMPANY VOL. 2012, PG. 1877

E20 OHIO POWER COMPANY VOL. 2012, PG. 1878

E21 OHIO POWER COMPANY VOL. 2012, PG. 5446

E22 OHIO POWER COMPANY VOL. 2012, PG. 2781

(232) PROPOSED R/W FROM PARCEL 232 IS TO BE ACQUIRED WITH PROJECT ALL-117/309-18.15/15.04, PID 75467.

NOTES:
1. FOR DETAIL OF PARCEL 248 SEE SHEET 6 OF 7.
2. NUMBERS IN PARENTHESIS REPRESENT LOT NUMBERS AS PROVIDED BY THE ALLEN COUNTY AUDITOR'S OFFICE GIS SYSTEM.

REV. BY	DATE	DESCRIPTION
CAC	12/12/11	UPDATED OWNER OF PARCEL 230
CAC	11/18/11	REVISED TAKES FROM 104, 229, 230 & 231
CAC	11/10/11	REVISED DEAN AVE.
CAC	10/25/11	ADDED PARCEL 111-T
CAC	9/28/11	REVISED 229-T
CAC	8/25/11	REVISED 229-T & 231-T
CAC	6/22/11	REVISED BEGIN ACQUISITION STA.; ADDED PARCELS 230 & 231; REVISED 106-T
CAC	5/2/11	DASHED CALLOUT FOR PARCEL 232
CAC	4/27/11	UPDATED OWNER OF PARCEL 121
CAC	7/25/12	REVISED OWNER OF PARCEL 229
CAC	5/1/12	ADDED UTILITY EASEMENTS TO PARCEL 121
CAC	4/19/12	REMOVED PARCEL 111-T
CAC	3/12/12	REVISED 230-WL; CHANGED 122, 123, 126 & 127 TO 121; ADDED EASEMENTS TO 121

DATE COMPLETED MARCH 25, 2011

HORIZONTAL SCALE IN FEET 0 50 100 200

PID NO. 76691

R/W DESIGNER CAC
R/W REVIEWER KDO

PROPERTY MAP
S.R. 309 DETAIL

ALL-75-5.53

5 / 87

1140
1224

J:\Projects\ALL\76691\row\sheets\76691RM02B.dgn 12-SEP-2012 9:37AM reddenj

ALLEN COUNTY
BATH TOWNSHIP
SEC. 32 NE 1/4, SEC. 29 SE 1/4, T. 3 S., R. 7 E.
CITY OF LIMA

159* THOMAS E. HOLLENBACHER, ROY A. HOLLENBACHER & JUDITH A. POLING 37320501011000, 37320501012000
161* CYNTHIA E. MUSKUS & DARRELL E. SHERWOOD 37320501009000
162* JESSIE RAY RAMSEY 37320501006000, 37320501007000
163* RICHARD A. COTRELL 37320501008000
165* RCCC LTD 37320801004000
166* CLIFFORD A. BOYER 37320801003000
167* TIMOTHY E. NAYLOR & CHERYL E. NAYLOR 37320801002000
168 CITY OF LIMA, OHIO A MUNICIPAL CORPORATION 37290004002001
177 LAURA L. SMITH 37290001015000
178 ANGELA R DAVIS 37290001014000
179 DEAN A BURRELL & DENISE BURRELL 37290001013000 37290001013001
181 IGNACIO RODRIGUEZ 37290001012000
182 MATTHEW J A GOSSARD & THOMAS E BRIM 37290001010000 37290001011000
185 JAR INVESTMENT, LLC, A FLORIDA LIMITED LIABILITY COMPANY 37290001008000
251 CARY INDUSTRIES, LLC 37290002018000
252 PMP REALTY LLC, A MAINE LIMITED LIABILITY COMPANY 37290002017000 37290002016000
253 211 INVESTMENTS, INC., AN OHIO CORPORATION 37290002015000
187 DHN INVESTMENTS, LLC, AN OHIO LIMITED LIABILITY COMPANY 37290002013002

E1 BLANKET EASEMENT TO THE OHIO POWER COMPANY IN VOL. 285, PG. 321
E2 SEWER EASEMENT TO ALLEN COUNTY BOARD OF COMMISSIONERS VOL. 550, PG. 57 VOL. 556, PG. 654
E3 ACCESS EASEMENT TO BOARD OF COMMISSIONERS OF ALLEN COUNTY, OHIO VOL. 571, PG. 473
E4 BLANKET EASEMENT FOR OVERHANG OF WIRES TO OHIO POWER COMPANY IN VOL. 546, PG. 426
E5 BLANKET EASEMENT TO THE OHIO POWER COMPANY IN VOL. 285, PG. 320
E6 SEWER EASEMENT TO BOARD OF COMMISSIONERS OF ALLEN COUNTY, OHIO VOL. 551, PG. 631
E7 BLANKET EASEMENT TO THE OHIO POWER COMPANY IN VOL. 285, PG. 321
E8 BLANKET EASEMENT TO THE OHIO POWER COMPANY IN VOL. 285, PG. 321
E9 INGRESS/EGRESS EASEMENT VOL. 810, PG. 792
E10 SEWER EASEMENT TO BOARD OF COMMISSIONERS OF ALLEN COUNTY, OHIO VOL. 552, PG. 617
E11 INGRESS/EGRESS EASEMENT VOL. 600, PG. 759
50' INGRESS/EGRESS EASEMENT VOL. 917, PG. 837
E12 SANITARY SEWER EASEMENT VOL. 555, PG. 529
10" SEWER EASEMENT VOL. 917, PG. 837
EASEMENT TO ALLEN COUNTY BOARD OF COMMISSIONERS VOL. 854, PG. 17
E13 SANITARY SEWER EASEMENT VOL. 550, PG. 61
E14 SANITARY SEWER EASEMENT VOL. 550, PG. 65
E15 SANITARY SEWER EASEMENT VOL. 576, PG. 409
E16 SANITARY SEWER EASEMENT VOL. 551, PG. 160
E17 SANITARY SEWER EASEMENT VOL. 578, PG. 399
E18 EASEMENT TO ALLEN COUNTY COMMISSIONERS VOL. 854, PG. 11
E19 SANITARY SEWER EASEMENT VOL. 552, PG. 621
E20 SANITARY SEWER EASEMENT VOL. 551, PG. 635
E21 SANITARY SEWER EASEMENT VOL. 554, PG. 325

RESUME PROJECT ALL-75-6.11/7.85 PID 87965 STA. 96+75.00
END PROJECT ALL-75-6.11/7.85 PID 87965 STA. 111+75.00
CITY OF LIMA
N. & S. ℄ SECTION 32
N. S. ℄ SECTION 29
N. LEONARD AVE. Ex R/W
BRYN MAWR AVE Ex SH
℄ R/W & CONST. BRYN MAWR AVE.
℄ R/W RESERVOIR RD.
SEDC, LLC 37320801001000
MATTHEW J. TAYLOR 37320501010000
JESSIE RAY RAMSEY 37320501005001
37320501011000
37320501012000
SLUDGE POND
37290004003000
ISSAM FAZA & SHARON FAZA 37320001001000
COUNTRY ESTATES ASSOCIATES LLC 37320001002001
LOST CREEK RESERVOIR
HEATHER DR.
JOHNNY APPLESEED BIKEPATH
CITY OF LIMA 37290004002000
DETENTION POND
NEW YORK CENTRAL LINES, LLC A DELAWARE LIMITED LIABILITY COMPANY, NKA CSX TRANSPORTATION, INC., A VIRGINIA CORPORATION 37290004004000
NATIONAL LIME & STONE CO 37290004001000
OTTAWA RIVER
PROP. ℄ R/W & CONST. I-75
℄ RAMP 'C'
℄ RAMP 'D'
HOVERDALE FARMS SUBDIVISION P.B. 7, PG. 39
FIRST ASSEMBLY OF GOD, INC., AN OHIO CORPORATION 37290001018000
MATCH LINE STA. 405+00.00 SEE SHEET 4 OF 87
MATCH LINE STA. 460+00.00 SEE SHEET 7 OF 87

PERPETUAL EASEMENT FOR OVERHEAD BRIDGE AND NECESSARY PIERS VOL. 355, PG. 145
PRIVATE TUNNEL UNDER I-75 BETWEEN QUARRIES
BLANKET EASEMENT TO CRC PROPERTIES INC. FOR COMMUNICATION LINES VOL. 762, PG. 143
SEWER EASEMENT TO BOARD OF COMMISIONERS OF ALLEN COUNTY, OHIO VOL. 572, PG. 300
WATERLINE EASEMENT TO CITY OF LIMA VOL. 380, PG. 212
BLANKET EASEMENT TO OHIO POWER COMPANY VOL. 822, PG. 282
EASEMENT TO JOHNNY APPLESEED METROPOLITAN PARK DISTRICT VOL. 2009, PG. 13877
BLANKET EASEMENT TO OHIO POWER COMPANY VOL. 285, PG. 332 VOL. 248, PG. 48

NOTES REGARDING THE EXISTING R/W ALONG SERVICE ROAD NO. 3:

1. THAT THE EXISTING R/W LINE ON THE SOUTH SIDE OF THE SERVICE ROAD WAS ORIGINALLY ACQUIRED AS L/A
2. THAT THE DECISION IN FRANKLIN COUNTY COMMON PLEAS COURT CASE 196997 AS RECORDED IN VOL 361 PAGE 697 MODIFIED THIS L/A TO ONLY PROHIBIT DIRECT ACCESS TO SR 81 AND I 75 BUT PERMITTED DIRECT ACCESS TO THE SERVICE ROAD.
3. THEREFORE WE ARE MOVING THE L/A LINE NORTH AS SHOWN HEREIN TO REFLECT THE INTENT OF THIS RULING.

Ⓐ - INTERSTATE ROUTE 75 - CONSTRUCTION STA. 427+96.17 (0.0'RT) = CHICAGO, FORT WAYNE, AND EASTERN RAILROAD (CFER) AAR/DOT# 532704D RR MP. 258.94 REGION: MIDWEST SUBDIVISION: LIMA

NUMBERS IN PARENTHESIS REPRESENT LOT NUMBERS AS PROVIDED BY THE ALLEN COUNTY AUDITOR'S OFFICE GIS SYSTEM.

* PROPOSED R/W FROM THIS PARCEL IS TO BE ACQUIRED WITH PROJECT ALL-75-6.11/7.85, PID 87965

BEGIN LIMITED ACCESS R/W RIGHT STA. 428+30.20
BEGIN ACQUISITION STA. 428+08.86
BEGIN LIMITED ACCESS R/W LEFT STA. 428+89.04
℄ R/W & CONST. S.R. 81
℄ R/W & CONST. SERVICE RD. 3
℄ R/W & CONST. NEUBRECHT RD.
SUSPEND LIMITED ACCESS R/W RIGHT STA. 436+44.48
RESUME LIMITED ACCESS R/W RIGHT STA. 436+44.48
211 INVESTMENTS INC 37290002014000
T & M AUTO SALES LLC 37290001009000
37290002017000
37290002016000
37290002014001
37290001011000
37290001010000
37290001013001
37290001013000
37290001016000
37290001017000

REV. BY	DATE	DESCRIPTION
CAC	5/21/12	REVISED OWNER OF PARCEL 172
CAC	5/7/12	REVISED OWNER OF PARCEL 253
CAC	12/8/11	REVISED OWNER OF PARCEL 218
CAC	8/25/11	REMOVED 218-SH1, 218-SH2, 218-SH3, 218-SH4 AND 218-CH
CAC	6/22/11	REVISED PARCEL 185-T
DATE COMPLETED	MARCH 24, 2011	

HORIZONTAL SCALE IN FEET 0 100 200 400
PID NO. 76691
R/W DESIGNER CAC
R/W REVIEWER KDO
PROPERTY MAP
STA. 405+00.00 TO STA. 460+00.00
ALL-75-5.53
6 / 87
1141 / 1224

J:\Projects\ALL\76691\row\sheets\76691RM003.dgn 12-SEP-2012 9:37AM reddenj

ALLEN COUNTY
BATH TOWNSHIP
SEC. 29 SE 1/4, NE 1/4, T. 3 S., R. 7 E.

(172) FIRST ASSEMBLY OF GOD, INC., AN OHIO CORPORATION 37290001017000, 37290001018000

(176) MARK E WOLFE 37290001021000

(187) DHN INVESTMENTS, LLC, AN OHIO LIMITED LIABILITY COMPANY 37290002013002

(188) WAFFLE HOUSE, INC., A GEORGIA CORPORATION 37290001007000

(189) KIRIT B. PATEL 37290001007001

(190) CHANDNI CORPORATION 37290001006000

(199) BELIEVER CHRISTIAN FELLOWSHIP AKA BELIEVERS CHRISTIAN FELLOWSHIP 37200004010000 37200004009000

(200) STEPHEN P CASEBOLT & LAURIE L CASEBOLT 37200004011000

(201) JUDITH L. BOWMAN AND DAMON L. BOWMAN, TRUSTEES OR THEIR SUCCESSORS IN TRUST UNDER THE JUDITH L. BOWMAN LIVING TRUST, DATED JUNE 26, 1996 37200004012000, 37200004013000

(204) MARTHA JEAN MILLER, TRANSFER ON DEATH TO RAY J. MILLER, BENEFICIARY 37200004014000

(205) DAVID A. ANDERSON AND ANNE MARIE ANDERSON 37200004015000

(206) WILLIAM L. JAMES 37200004016000

(208) MICHAEL P KOHLI & TWILA J KOHLI 37200004001000

(210) RONNIE D VIRES 37200001010000

(240A) RICHARD M. TOTH AND CATHI A. TOTH 37290001023000

(246) R & C REAL ESTATE INVESTMENTS INC., AN OHIO CORPORATION 37290002013001

fence with 4" x 4" posts

END ACQUISITION STA. 17+20.13

℄ R/W & CONST. NEUBRECHT RD.

N.S. ℄ SEC. 29 — Ex R/W — N.S. ℄ SEC. 20

BLANKET EASEMENT TO OHIO POWER COMPANY VOL. 470, PG. 387 VOL. 470, PG. 325 VOL. 458, PG. 302 VOL. 458, PG. 300 VOL. 319, PG. 335 VOL. 248, PG. 523 VOL. 248, PG. 481 VOL. 248, PG. 443 VOL. 43, PG. 436

10' EASEMENT TO OHIO POWER COMPANY VOL. 718, PG. 762 (LOCATION OUTSIDE PROJECT AREA EXACT LOCATION UNKNOWN)

10' EASEMENT TO OHIO POWER COMPANY VOL. 583, PG. 622

10' EASEMENT TO OHIO POWER COMPANY VOL. 839, PG. 441

10' EASEMENT TO OHIO POWER COMPANY VOL. 733, PG. 496

37200004005000

37200004003000

HOVERDALE FARMS SUBDIVISION P.B. 7, PG. 39

37290001002000

ROWLAND E. RONE & ANNA PAULINE RONE 37200004006000

LIMA HOTEL INC. 37290001003000

MK LANDLORD DE LIMITED PARTNERSHIP, A DELAWARE LIMITED PARTNERSHIP 37200004004000

BLANKET EASEMENT TO OHIO POWER COMPANY VOL. 43, PG. 435 VOL. 248, PG. 445 VOL. 43, PG. 435

16' WIDE GAS EASEMENT WEST OHIO GAS COMPANY (VOL. 734, PG. 283 (LOCATION UNKNOWN)

25' SEWER EASEMENT VOL. 849, PG. 154

UNITED STATES PLASTIC CORP., A CORPORATION ORGANIZED AND EXISTING UNDER THE LAWS OF THE STATE OF OHIO 37200004002000

POND

℄ R/W & CONST. S.R. 81

℄ RAMP 'D'

℄ RAMP 'F'

℄ RAMP 'C'

℄ RAMP 'B'

PROP. ℄ R/W & CONST. I-75

RETENTION POND

35' SEWER EASEMENT VOL. 848, PG. 835

10'X10' EASEMENT TO OHIO POWER COMPANY VOL. 851, PG. 198

SCOTT W CAMPBELL 37200004007000

BLANKET EASEMENT TO OHIO POWER COMPANY VOL. 470, PG. 387 VOL. 470, PG. 325 VOL. 458, PG. 302 VOL. 458, PG. 300 VOL. 319, PG. 335 VOL. 248, PG. 523 VOL. 248, PG. 443 VOL. 43, PG. 436

TERRY SCHAAF 37200004019000

CHANNEL EASEMENT VOL. 330, PG. 42 VOL. 329, PG. 1

DERAND L MOORE 37200001008000

NORFOLK & WESTERN RAILWAY CO 37200003014000

END ACQUISITION STA. 519+10.92

END LIMITED ACCESS R/W LEFT STA. 458+35.00

BLANKET EASEMENT TO OHIO POWER COMPANY VOL. 234, PG. 364

RICHARD M & CATHI A TOTH, TRUSTEE 37290001022000

37290001026000 PAMELA ANN STEVENSON 37290001027000 JERRY D MARTIN & VICKIE L MARTIN 37290001001000

37200004009000 37200004010000 37200004012000 37200004013000

15' WIDE EASEMENT TO OHIO POWER COMPANY VOL. 911, PG. 761

HOVERDALE FARMS SUBDIVISION P.B. 7, PG. 39

HOVERDALE FARMS SUBDIVISION P.B. 7, PG. 39

STEWART RD.

END ACQUISITION STA. 460+72.08

END LIMITED ACCESS R/W RIGHT STA. 463+67.83

END PROJECT ALL-75-5.53 PID 76691 STA. 520+00.00

MATCH LINE STA. 460+00.00 SEE SHEET 6 OF 87

E.W. ℄ SEC. 20

(E1) 45' INGRESS/EGRESS, UTILITY, SIGN EASEMENT VOL. 481, PG. 623 VOL. 640, PG. 650

(E2) SIGN & BUILDING FACIA EASEMENT VOL. 885, PG. 503

(E3) SHARED TRUCK PARKING EASEMENT VOL. 615, PG. 774

(E4) BLANKET EASEMENT TO OHIO POWER COMPANY VOL. 285, PG. 332 VOL. 248, PG. 48

(E5) SEWER EASEMENT BOARD OF COMMISIONERS OF ALLEN COUNTY, OHIO VOL. 849, PG. 203

NOTE:
NUMBERS IN PARENTHESIS REPRESENT LOT NUMBERS AS PROVIDED BY THE ALLEN COUNTY AUDITOR'S OFFICE GIS SYSTEM.

REV. BY	DATE	DESCRIPTION
CAC	5/21/12	REVISED OWNER OF PARCEL 172
CAC	3/12/12	REVISED 176-WD & 176-T
CAC	1/10/12	CORRECTED ALL-75-5.53 IN TITLE BLOCK
CAC	1/4/12	REVISED OWNER OF 199
CAC	8/25/11	REVISED OWNER OF 205;
		REVISED 187-T, 188-T AND 246-T;
		REVISED END ACQUISITION ON NEUBRECHT
DATE COMPLETED		MARCH 25, 2011

HORIZONTAL SCALE IN FEET: 0, 100, 200, 400

PID NO. 76691

R/W DESIGNER CAC
R/W REVIEWER KDO

PROPERTY MAP
STA. 460+00.00 TO END PROJECT

ALL-75-5.53

7 / 87

1142
1224

J:\Projects\ALL\76691\row\sheets\76691RM004.dgn 12-SEP-2012 9:37AM reddenj

ALLEN COUNTY
PERRY TOWNSHIP
SEC. 5 NE 1/4, T. 4 S., R. 7 E.
CITY OF LIMA

ALLEN COUNTY
BATH TOWNSHIP
SEC. 32 SE 1/4, SEC. 33 SW 1/4, T. 3 S., R. 7 E.
CITY OF LIMA

E. ELM ST.
E. W. ℄ SEC. 32
E. W. ℄ SEC. 33
PROP. ℄ R/W & CONST. I-75
HILL ST.
248
HOLTSBERRY PROPERTIES,
A LIMITED LIABILITY COMPANY
37330003001000
(LOST CREEK COUNTRY CLUB)
BLANKET EASEMENT TO
OHIO POWER COMPANY
VOL. 41, PG. 524
SEC. 32
SEC. 33
N. S. ℄ SEC. 33
BRYN MAWR AVE.
ALTON AVE.
LOST CREEK BLVD.
LOST CREEK
CHANNEL EASEMENT
VOL. 352, PG. 310
℄ RAMP 'E'
WELLESLEY DR.
TURNER AVE.
℄ RAMP 'C'
LENORE ST.
CITY OF LIMA
DEAN AVE.
SARATOGA AVE
EASTERN AVE.
WILLARD AVE.
℄ R/W & CONST.
S.R. 309
℄ R/W S.R. 309
BATH TWP.
SEC. 32 T. 3 S.
EX PERRY TWP.
SEC. 5 T. 4 S.
BATH TWP. SEC. 33 T. 3 S.
PERRY TWP. SEC. 4 T. 4 S.
FEDERAL ST.
E. EUREKA ST.
℄ CONST. S.R. 309
BELLEFONTAINE AVE.
℄ RAMP 'F'
℄ RAMP 'A'
SEC. 5
SEC. 4

REV. BY	DATE	DESCRIPTION
DATE COMPLETED		MARCH 25, 2011

HORIZONTAL SCALE IN FEET
0 100 200 400

PID NO. 76691

R/W DESIGNER CAC
R/W REVIEWER KDO

PROPERTY MAP
DETAIL PARCEL 248

ALL-75-5.53

8 / 87

1143
1224

J:\Projects\ALL\76691\row\sheets\76691RM02A.dgn 12-SEP-2012 9:37AM reddenj

ALLEN COUNTY
BATH TOWNSHIP
SEC. 29, SEC. 32, T. 3 S., R. 7 E.
CITY OF LIMA

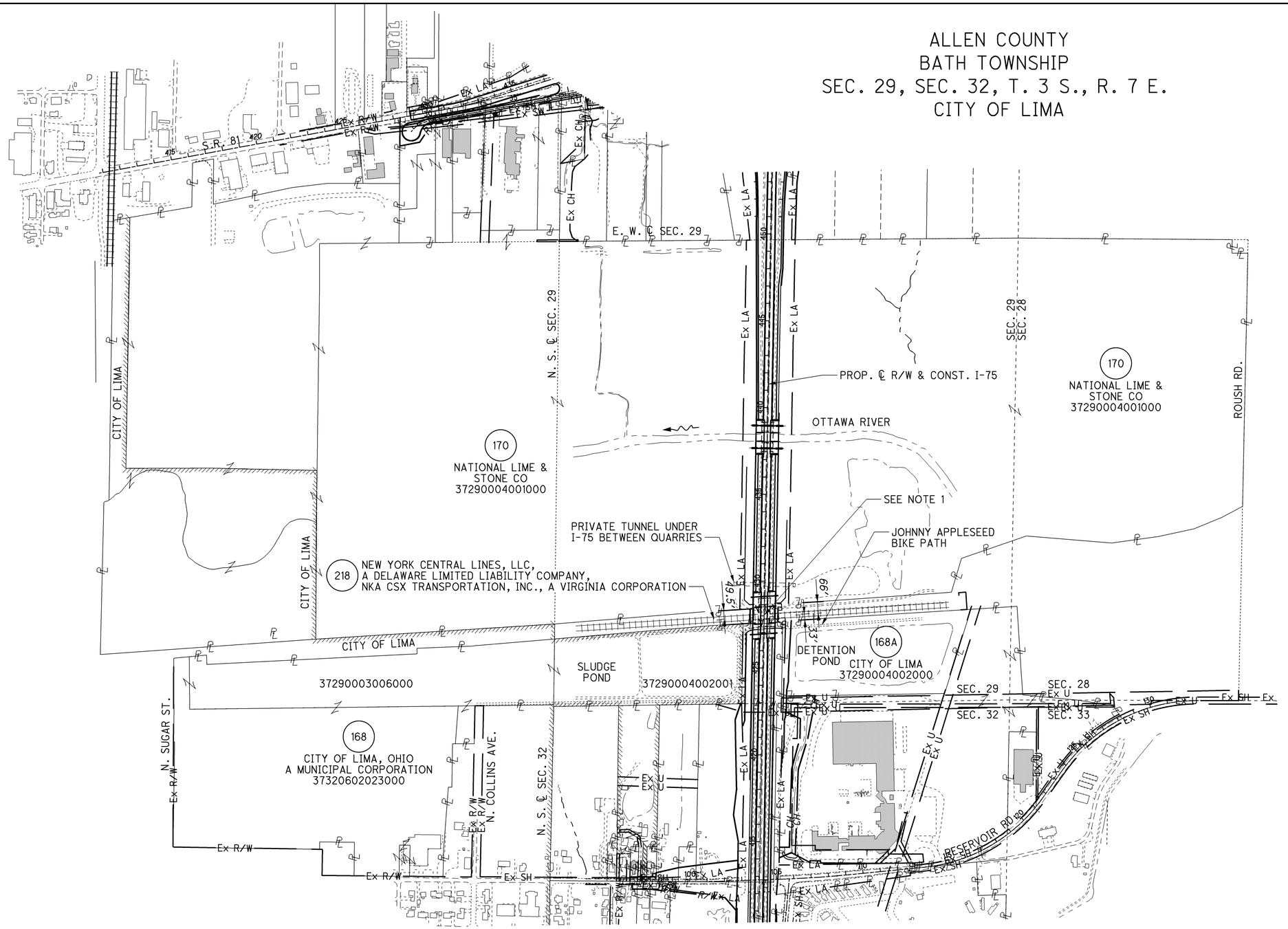

NOTE:
1. INTERSTATE ROUTE 75 - CONSTRUCTION
   STA. 427+96.17 (0.0'RT) =
   CHICAGO, FORT WAYNE, AND
   EASTERN RAILROAD (CFER)
   AAR/DOT# 532704D
   RR MP. 258.94
   REGION: MIDWEST
   SUBDIVISION: LIMA

REV. BY	DATE	DESCRIPTION
CAC	12/8/11	REVISED OWNER OF PARCEL 218
DATE COMPLETED	MARCH 25, 2011	

HORIZONTAL SCALE IN FEET
0 150 300 600

PID NO. 76691

R/W DESIGNER CAC
R/W REVIEWER KDO

PROPERTY MAP
DETAIL OF PARCELS 168 & 170

ALL-75-5.53

9 / 87

1144
1224

J:\Projects\ALL\76691\row\sheets\76691RM03A.dgn 12-SEP-2012 9:37AM reddenj

TOTAL NUMBER OF :

59 OWNERSHIPS
94 PARCELS
3 TOTAL TAKES
27 OWNERSHIPS W/ STRUCTURES INVOLVED

RECORD AREA - TOTAL PRO - NET TAKE = NET RESIDUE
GROSS TAKE - PRO IN TAKE = NET TAKE
* DENOTES RIGHT OF WAY ENCROACHMENT
(c) = CALCULATED AREA

GRANTEE:
ALL RIGHT OF WAY ACQUIRED IN THE NAME OF STATE OF OHIO
UNLESS OTHERWISE SHOWN.

ALL AREAS IN ACRES

PARCEL NO.	OWNER	SHEET NO.	OWNERS RECORD BOOK	OWNERS RECORD PAGE	AUDITOR'S PARCEL	RECORD AREA	TOTAL P.R.O.	GROSS TAKE	P.R.O. IN TAKE	NET TAKE	STRUCTURE	NET RESIDUE LEFT	NET RESIDUE RIGHT	TYPE FUND	REMARKS	AS ACQUIRED BOOK	AS ACQUIRED PAGE
72-WL	STEINER INVESTMENTS, LLC	3,20,21	2006	1551	47080001003001	38.420	1.050	0.734	0	0.734	YES(4)		36.636	FEDERAL/STATE	28 ' WOVEN WIRE FENCE, 35' OF FENCE MADE OF GATES AND STEEL,		
														90/10	32 ' WOVEN WIRE FENCE AND 2 WOOD POLES		
73															NOT USED		
74-WL	RKO BOTTLERS OF LIMA, INC. A CORPORATION	3,21,22	606	909	47080001004000	12.70	0.328	0.557	0	0.557			11.815				
75-WL	THE CONSOLIDATED BOTTLING COMPANY	3,22,41-44	576	383	47080001001000	11.28	1.075	1.540	0.646	0.894	YES(2)		9.311		100 ' WOVEN WIRE FENCE AND 317' CHAIN LINK FENCE W/ BARB WIRE		
			475	664													
76-89															NOT USED		
90-WLR	3RM FINDLAY, LLC	3,23,24	2011	10714	47050004003000	20.460	3.729	3.474	3.007	0.467	YES(7)S		16.264		6 LIGHT POLES, ELEC. METER BOX; DOUBLE FACED LIGHTED SIGN;		
															NO TAKE OF SUBSURFACE RIGHTS		
	(50% OIL & GAS RIGHTS) MARATHON OIL														OIL AND GAS RIGHTS RESERVED IN V108/P127, TRANSFERRED IN V653/P808		
	COMPANY, AN OHIO CORPORATION																
	(50% OIL & GAS RIGHTS) WESTERN STATES OIL														ACQUIRED 50% OIL & GAS INTEREST IN V763/P505		
	COMPANY, INC.																
91-WL	SARA KLAY ARNETT	3,23,24	761	316	47050004005000	29.870	0	0.879	0	0.879							
	MARGARET KLAY TURNBULL		761	310	47050003001000	4.660	0	0	0	0							
	JOHN E. KLAY		761	304													
	WILLIAM D. KLAY		874	662													
	BARBARA KAY BROWNING																
	TOTAL 91-WL					34.530	0	0.879	0	0.879		33.651					
92-WLR	STEINER INVESTMENTS, LLC	3,24	910	749	47050004001000	10.020	0.498	0.107	0	0.107	YES(1)		9.415		36' WOVEN WIRE FENCE; NO TAKE OF SUBSURFACE RIGHTS		
	(50% OIL & GAS RIGHTS) MARATHON OIL		910	751											DEED OF REFERENCE FOR GAS AND OIL RIGHTS:		
	COMPANY		910	753											DB 61 PG 127, DB 653 PG 808 AND DB 797 PG 466		
	(50% OIL & GAS RIGHTS) MERIDIAN OIL, INC.																
93	SAMS REAL ESTATE BUSINESS TRUST	3,4,24,25	850	566	47050001011000	13.82	0.646								NO ADDITIONAL R/W REQUIRED		
94-WL	SULAI HOSPITALITY, INC.	3,4,24,25,26	2006	12886	47050001008000	46.160	0.046	1.247	0	1.247	YES(2)S(1)	44.867			66' WOVEN WIRE FENCE, HAYBALES; REALTOR SIGN		
95	TEXAS ROADHOUSE HOLDINGS LLC	4,25			47050001010010	2.52	0								NO ADDITIONAL R/W REQUIRED		
96	N & D RESTAURANT INC.	4,25			47050001010009	1.9	0								NO ADDITIONAL R/W REQUIRED		
97	CRACKER BARREL OLD COUNTRY STORE INC.	4,25			47050001010005	2.846	0								NO ADDITIONAL R/W REQUIRED		
98	BETTY L. ROSCHMAN, TRUSTEE	4,25			47050001010000	0.156	0							FEDERAL/STATE 90/10	NO ADDITIONAL R/W REQUIRED		

LEGEND:
WL = FEE SIMPLE WITH LIMITATION OF ACCESS
WD = WARRANTY DEED
PRW = PROPERTY RIGHT FEE SIMPLE
SH = STANDARD HIGHWAY EASEMENT
SL = SLOPE EASEMENT
T = TEMPORARY EASEMENT
S = SEWER EASEMENT
CH = CHANNEL EASEMENT
A = AERIAL EASEMENT
V = IN NAME OF ANOTHER STATE AGENCY
R = SPECIAL RESERVATION (SUBSURFACE RIGHTS)

NOTE: UNDER NO CIRCUMSTANCES ARE TEMPORARY EASEMENTS TO BE USED FOR STORAGE OF MATERIAL OR EQUIPMENT BY THE CONTRACTOR UNLESS NOTED OTHERWISE.

NOTE: ALL TEMPORARY PARCELS TO BE OF 24 MONTH DURATION.

REV. BY	DATE	DESCRIPTION
CAC	5/15/12	REVISED TOTAL # PARCELS
CAC	5/1/12	REVISED TOTAL # PARCELS
CAC	4/19/12	REVISED TOTAL # PARCELS & OWNERSHIPS
CAC	3/12/12	REVISED TOTAL # OWNERSHIPS & OWNERSHIPS W/ STRUCTURES INVOLVED
CAC	2/22/12	CHANGED 92-WL TO 92-WLR; ADDED MINERAL RIGHTS INFO
CAC	1/10/12	REVISED OWNER & OWNER'S RECORD FOR 90
CAC	11/18/11	REVISED TOTAL # PARCELS & OWNERSHIPS
CAC	10/25/11	REVISED TOTAL # PARCELS & OWNERSHIPS
CAC	10/5/11	CHANGED 92-WLR TO 92-WL
CAC	8/25/11	REVISED TOTAL NUMBER OF PARCELS
CAC	6/22/11	REVISED TOTAL # PARCELS & OWNERSHIPS
REV. BY	DATE	DESCRIPTION
		FIELD REVIEW BY CAC, ACF, EJC DATE: 3/14/11 & 3/15/11
		OWNERSHIP VERIFIED BY JTM DATE: 3/22/11
		DATE COMPLETED MARCH 25, 2011

FEDERAL PROJECT NO. E036702
PID NO. 76691
STATE JOB NO. 416366
R/W DESIGNER CAC
R/W REVIEWER KDO

SUMMARY OF ADDITIONAL RIGHT OF WAY PARCELS 72 - 98

ALL-75-5.53

1145
1224

J:\Projects\ALL\76691\row\sheets\76691RS001.dgn 12-SEP-2012 9:37AM reddenj

RECORD AREA - TOTAL PRO - NET TAKE = NET RESIDUE
GROSS TAKE - PRO IN TAKE = NET TAKE
* DENOTES RIGHT OF WAY ENCROACHMENT
(c) = CALCULATED AREA

GRANTEE:
ALL RIGHT OF WAY ACQUIRED IN THE NAME OF STATE OF OHIO
UNLESS OTHERWISE SHOWN.

ALL AREAS IN ACRES

PARCEL NO.	OWNER	SHEET NO.	OWNERS RECORD BOOK	OWNERS RECORD PAGE	AUDITOR'S PARCEL	RECORD AREA	TOTAL P.R.O.	GROSS TAKE	P.R.O. IN TAKE	NET TAKE	STRUCTURE	NET RESIDUE LEFT	NET RESIDUE RIGHT	TYPE FUND	REMARKS	AS ACQUIRED BOOK	AS ACQUIRED PAGE
99	LIMA HOTEL 2007 CIBCZO, LLC	4,25			47050001010004	5.000	0							FEDERAL/STATE	NO ADDITIONAL R/W REQUIRED		
														90/10			
100-WL	LIMA UNITED AUTOMOBILE WORKERS BUILDING	4,25,26	506	704	47050001009000	4.610	0	0.274	0	0.274	YES(1)S(1)	4.336			LIGHT POLE; REALTOR SIGN; * BANNER ON RW FENCE		
	CORPORATION, AN OHIO CORPORATION,																
	NOT FOR PROFIT																
101-WL	AVNEE INVESTMENTS INC.	4,26	891	272	47050001002000	3.450	1.725	3.450	1.725	1.725	YES(17)S(2)	0			TOTAL TAKE; 12 WOOD POST, LIGHT POLE, 2 METAL POLES,		
		45-48,53,54													12' OF SHORT BRICK WALL, FROST FREE WATER VALVE;		
															SINGLE POST DOUBLE FACED LIGHTED SIGN AND DOUBLE		
															FACED SIGN WITH LIGHT; * LIGHT POLE AND METAL POLE		
102	M SX PENVEST II BUSINESS TRUST	4			47050001010001	1.840	0								NO ADDITIONAL R/W REQUIRED		
103	BOB EVANS FARMS, INC	4,5,27	2009	5276	47050001001000	0.941	0								NO ADDITIONAL R/W REQUIRED		
			813	582													
104-WL	DAVID STEINER AND MARIE B. STEINER AND	4,5,26,44A	2008	15548	47050001004000	1.154	0.769	0.570	0.570	0		0.385			* LIGHT POLE; LOSS OF 2 DRIVEWAYS ON SR 309		
	JRMCB PROPERTY, LLC, AN OHIO LIMITED	44B,45,46	360	649													
104-T	LIABILTY COMPANY	4,5,26,45,46						0.072	0	0.072					FOR GRADING PURPOSES AND TO REMOVE 2 DRIVEWAYS;		
105-WL	LEWIS GENE WARNER	4,5,26,45-48,55,56	569	241	37321214006000	0.615	0.013	0.117	0.012	0.105	YES(5)S(2)				2 WOOD POST, 48' CHAIN LINK FENCE AND 2 TEST WELLS;		
															* TEST WELL AND 6 WOOD POST; SINGLE POST DOUBLE		
															FACED LIGHTED SIGN W/O INSERT		
105-WDV		4,5,26,45-48,55,56						0.188	0.001	0.187	YES(8)S(1)				BUILDING, 3 TEST WELLS, LIGHT POLE, ABOVE GROUND		
	GRAND TOTAL					0.615	0.013	0.305	0.013	0.292		0.310			STORAGE TANK,16' WOOD FENCE, AND A BOLLARD;		
															DOUBLE SIDED SIGN ON LIGHT POLE		
															IN THE NAME OF THE BOARD OF COMISSIONERS OF ALLEN COUNTY, OHIO		
106-WD	HIGHLAWN FARMS FAMILY LIMITED PARTNERSHIP	4,5,27,49-52	2006	2757	37321211012000	(0.172)	0	0.027	0	0.027	S(1)				DOUBLE FACED LIGHTED SIGN; LOSS OF SOUTHERN ASPHALT		
			850	710	37321211013000	(0.172)	0	0.023	0	0.023					DRIVE ON SARATOGA AVE.		
	TOTAL 106-WD					(0.344)	0	0.050	0	0.050			0.294				
106-T		4,5,27,49-52			37321211012000			0.005	0	0.005					TO CONSTRUCT A DRIVEWAY AND TO REMOVE PART OF A PARKING LOT		
					37321211013000			0.019	0	0.019							
	TOTAL 106-T							0.024	0	0.024							
														FEDERAL/STATE			
														90/10			

LEGEND:
WL = FEE SIMPLE WITH LIMITATION OF ACCESS
WD = WARRANTY DEED
PRW = PROPERTY RIGHT FEE SIMPLE
SH = STANDARD HIGHWAY EASEMENT
SL = SLOPE EASEMENT
T = TEMPORARY EASEMENT
S = SEWER EASEMENT
CH = CHANNEL EASEMENT
A = AERIAL EASEMENT
V = IN NAME OF ANOTHER STATE AGENCY
R = SPECIAL RESERVATION (SUBSURFACE RIGHTS)

NOTE: UNDER NO CIRCUMSTANCES ARE TEMPORARY EASEMENTS TO BE USED FOR STORAGE OF MATERIAL OR EQUIPMENT BY THE CONTRACTOR UNLESS NOTED OTHERWISE.

NOTE: ALL TEMPORARY PARCELS TO BE OF 24 MONTH DURATION.

REV. BY	DATE	DESCRIPTION
BKJ	5/29/12	UPDATED DB/PG FOR PARCEL 105
CAC	11/18/11	ADDED 104-WL; REVISED 104-T
CAC	6/22/11	REVISED 106-T
FIELD REVIEW BY CAC, ACF, EJC		DATE: 3/14/11 & 3/15/11
OWNERSHIP VERIFIED BY JTM		DATE: 3/22/11
DATE COMPLETED MARCH 25, 2011		

FEDERAL PROJECT NO. E036702
PID NO. 76691
STATE JOB NO. 41636 6
R/W DESIGNER CAC
R/W REVIEWER KDO

SUMMARY OF ADDITIONAL RIGHT OF WAY
PARCELS 99 - 106

ALL-75-5.53

11 / 87

1146
1224

J:\Projects\ALL\76691\row\sheets\76691RS002.dgn 12-SEP-2012 9:37AM reddenj

RECORD AREA - TOTAL PRO - NET TAKE = NET RESIDUE
GROSS TAKE - PRO IN TAKE = NET TAKE
* DENOTES RIGHT OF WAY ENCROACHMENT
(c) = CALCULATED AREA

GRANTEE:
ALL RIGHT OF WAY ACQUIRED IN THE NAME OF STATE OF OHIO
UNLESS OTHERWISE SHOWN.

ALL AREAS IN ACRES

PARCEL NO.	OWNER	SHEET NO.	OWNERS RECORD BOOK	OWNERS RECORD PAGE	AUDITOR'S PARCEL	RECORD AREA	TOTAL P.R.O.	GROSS TAKE	P.R.O. IN TAKE	NET TAKE	STRUCTURE	NET RESIDUE LEFT	NET RESIDUE RIGHT	TYPE FUND	REMARKS	AS ACQUIRED BOOK	AS ACQUIRED PAGE
107-WL	F.W. ENGLEFIELD IV AND B.B. ENGLEFIELD	4,5,27,49,50	904	170	37321212005000	0.476	0.054	0.105	0.054	0.051	YES(5)			FEDERAL/STATE	1 LIGHT, 4 TEST WELLS, 2 DRIVES; LOSS OF WESTERLY DRIVE		
		59,60			37321212006000	0.346	0	0.063	0	0.063				90/10	ON SR 309 AND DRIVE ON DEAN AVE.; 35' WIDE POINT OF		
					37321212004000	0.137	0	0.001	0	0.001					ACCESS TO BE ALLOWED LEFT OF STA. 900+85		
					37321212007000	0.137	0	0	0	0					* SIGN, TEST WELL, LIGHT, FROST FREE WATER VALVE		
	TOTAL 107-WL					1.096	0.054	0.169	0.054	0.115			0.927				
107-T		4,5,27,49,50			37321212005000			0.046	0	0.046					FOR GRADING PURPOSES AND CONSTRUCT SIDEWALK AND CURB		
					37321212006000			0.038	0	0.038							
	TOTAL 107-T							0.084	0	0.084							
108-110															NOT USED		
111	LOST CREEK OFFICES, LLC	4,5,27,	889	792	37321212003000	0.137	0								NO ADDITIONAL R/W REQUIRED		
		59-60			37321212003001	0.137	0										
111A	BRYN MAWR OFFICES, LLC	4,5,27,28	2010	13675	37321212002000	0.594	0								NO ADDITIONAL R/W REQUIRED		
		59-62															
112															NOT USED		
113-WL	LIMA-75 LLC	4,5,27,47-50	2007	14651	37321213002000	0.568	0.081	0.568	0.081	0.487	YES(28)S(1)				TOTAL TAKE; BUILDING, 9 LIGHTS, 55' OF BLOCK WALL, 4		
		59,60			37321213001001	0.595	0	0.595	0	0.595					GATES, 9 BOLLARDS, 3 MONITORING WELLS AND 65' OF		
	TOTAL 113-WL					1.163	0.081	1.163	0.081	1.082			0		METAL FENCE; DOUBLE FACED LIGHTED SIGN		
114															NOT USED		
115-WL	CAROL M. SCHMIDTHORST, TRUSTEE	4,5,27,28	950	739	37321213001000	0.320	0	0.320	0	0.320	YES(3)S(1)				TOTAL TAKE; BUILDING, LIGHT, 135' GUARDRAIL;		
		59-62	950	737	37321213001002	0.710	0.588	0.710	0.588	0.122					DOUBLE FACED LIGHTED SIGN		
	TOTAL 115-WL					1.030	0.588	1.030	0.588	0.442			0				
116															NOT USED		
117-WL	SEDC, LLC	4,5,26,55,56	2008	6002	37321214001000	(0.435)	0.137	0.310	0.093	0.217	YES(9)				AUDITOR SHOWS AREA OF 0.351 ACRES; 3 DOG KENNELS, 3 DOG		
															HOUSES, MAILBOX, 10' CHAIN LINK FENCE AND A BUILDING		
117-WDV		4,5,26,55,56						0.044	0.044	0					IN THE NAME OF THE BOARD OF COMMISIONERS OF ALLEN COUNTY, OHIO		
	GRAND TOTAL					(0.435)	0.137	0.354	0.137	0.217		0.081					
117-E		4,5,26,55,56						0.081	0	0.081	YES(1)						
117-T		4,5,26,55,56						0.029	0	0.029	YES(1)				TO DEMOLISH A BUILDING; 20' CHAIN LINK FENCE		
118-WL	ISSAM FAZA AND SHARON FAZA	4,5,26,28	833	848	37321208009000	1.108	0	0.439	0	0.439	YES(9)				BUILDING, 8 PARKING TURTLES		
		55-58	834	607	37321208008000	0.568	0	0	0	0							
			847	804	37321208007000	0.189	0	0	0	0							
			836	671	37321208006000	0.189	0	0	0	0							
					37321208005000	0.189	0	0	0	0							
	TOTAL 118-WL					2.243	0	0.439	0	0.439		1.804					
118-T		4,5,26,28			37321208009000			0.394	0	0.394	YES(2)				TO DEMOLISH A BUILDING; ANTENNA, LARGE VENT FAN		
		55-58			37321208008000			0.426	0	0.426							
					37321208007000			0.144	0	0.144							
	TOTAL 118-T							0.964	0	0.964							
119-WL	NANCY CLEGG HART	4,5,28,57,58	781	442	37321208001000	0.319	0.034	0.079	0.034	0.045	YES(8)	0.240(LL)	0		SURVEYED RECORD AREA 0.371 AC.; HOUSE, 5 LIGHTS, MAILBOX,		
			787	703											32' CHAIN LINK FENCE; * FLAGPOLE; THE RESIDUE IS LANDLOCKED		
119-EL		4,5,28,57,58						0.292	0	0.292							
119-T		4,5,28,57,58						0.128	0	0.128				FEDERAL/STATE	TO DEMOLISH A BUILDING		
														90/10			

LEGEND:
WL = FEE SIMPLE WITH LIMITATION OF ACCESS
WD = WARRANTY DEED
PRW = PROPERTY RIGHT FEE SIMPLE
SH = STANDARD HIGHWAY EASEMENT
SL = SLOPE EASEMENT
T = TEMPORARY EASEMENT
S = SEWER EASEMENT
CH = CHANNEL EASEMENT
A = AERIAL EASEMENT
V = IN NAME OF ANOTHER STATE AGENCY
R = SPECIAL RESERVATION (SUBSURFACE RIGHTS)

NOTE: UNDER NO CIRCUMSTANCES ARE TEMPORARY EASEMENTS TO BE USED FOR STORAGE OF MATERIAL OR EQUIPMENT BY THE CONTRACTOR UNLESS NOTED OTHERWISE.

NOTE: ALL TEMPORARY PARCELS TO BE OF 24 MONTH DURATION.

REV. BY	DATE	DESCRIPTION
CAC	9/12/12	CHANGED 119-E TO 119-EL
CAC	5/15/12	ADDED PARCEL 117-E
CAC	4/19/12	REMOVED PARCEL 111-T
CAC	10/25/11	ADDED PARCEL 111-T
CAC	6/22/11	ADDED 119-E & REMARK FOR 119-WL

FIELD REVIEW BY CAC, ACF, EJC DATE: 3/14/11 & 3/15/11
OWNERSHIP VERIFIED BY JTM DATE: 3/22/11
DATE COMPLETED MARCH 25, 2011

FEDERAL PROJECT NO. E036702
PID NO. 76691
STATE JOB NO. 416366
R/W DESIGNER CAC
R/W REVIEWER KDO

SUMMARY OF ADDITIONAL RIGHT OF WAY
PARCELS 107 - 119

ALL-75-5.53

1147
1224

J:\Projects\ALL\76691\row\sheets\76691RS003.dgn 12-SEP-2012 9:37AM reddenj

RECORD AREA - TOTAL PRO - NET TAKE = NET RESIDUE
GROSS TAKE - PRO IN TAKE = NET TAKE
* DENOTES RIGHT OF WAY ENCROACHMENT
(c) = CALCULATED AREA

GRANTEE:
ALL RIGHT OF WAY ACQUIRED IN THE NAME OF STATE OF OHIO
UNLESS OTHERWISE SHOWN.

ALL AREAS IN ACRES

PARCEL NO.	OWNER	SHEET NO.	OWNERS RECORD BOOK	OWNERS RECORD PAGE	AUDITOR'S PARCEL	RECORD AREA	TOTAL P.R.O.	GROSS TAKE	P.R.O. IN TAKE	NET TAKE	STRUCTURE	NET RESIDUE LEFT	NET RESIDUE RIGHT	TYPE FUND	REMARKS	AS ACQUIRED BOOK	AS ACQUIRED PAGE
120-PRW	KATHY WALTON	4,5,28,57,58	790	231	37321208001001	0.517	0							FEDERAL/STATE	LOSE OF ACCESS TO ALTON AVE.		
														90/10			
121-WL1	FRANKLIN REAL ESTATE COMPANY, INC.	4,5,28,63,64	2011	12127	37321202007000	0.103	0	0.058	0	0.058	YES(4)				SURVEYED RECORD AREA 0.102 AC.; HOUSE 3 WOOD POST;		
	A PENNSYLVANIA CORPORATION														* WOOD POST		
121-WL2		4,5,28,63,64	2012	2074	37321202006000	0.126	0	0.051	0	0.051	YES(1)				SURVEYED RECORD AREA 0.117 AC.; * BRICK FIRE PIT;		
															HOUSE		
121-WL3		4,5,28,63,64	2011	12038	37321202005000	0.063	0	0.017	0	0.017	YES(3)				22 ' WOVEN WIRE FENCE, 30' CHAIN LINK FENCE AND		
					37321202004000	0.208	0	0.042	0	0.042					CLOTHES LINE POST; *SHED, 11' CHAIN LINK FENCE AND		
	TOTAL 123-WL						0	0.059	0	0.059					9' WOVEN WIRE FENCE		
121-WL4		4,5,28,63,64	2011	12129	37321202003000	0.145	0	0.024	0	0.024	YES(1)				OLD SWING SET; * BUILDING, FENCE AND GATE		
121-WL5		4,5,28,63,64	2011	12128	37321202002001	(0.220)	0	0.033	0	0.033	YES(1)				12' WOOD FENCE; * BUILDING, 8' METAL FENCE AND 10' WOOD FENCE		
					37321202001001	(0.270)	0	0.016	0	0.016							
	TOTAL 127-WL						0	0.049	0	0.049	YES(1)				7' WOOD FENCE		
	GRAND TOTAL					(1.135)	0	0.241	0	0.241			0.894				
121-T1		4,5,28,63,64			37321202007000			0.038	0	0.038					TO DEMOLISH A BUILDING		
121-T2		4,5,28,63,64			37321202006000			0.047	0	0.047					TO DEMOLISH A BUILDING		
121-T3		4,5,28,63,64			37321202003000			0.022	0	0.022					TO DEMOLISH BUILDING		
121-T4		4,5,28,63,64			37321202002001			0.023	0	0.023					TO DEMOLISH BUILDING		
122-127															NOT USED		
128	KATHY WALTON				37321203008000	0.193	0								NO ADDITIONAL R/W REQUIRED		
					37321203009000	0.193	0										
					37321203010000	0.193	0										
					37321203011000	0.193	0										
129-131															NOT USED		
132	STEVEN ROSS DUNAHAY AND REBECCA SUE DUNAHAY	4,5,28			37321203012000	0.193	0								NO ADDITIONAL R/W REQUIRED		
133	MICHAEL R. JORDAN	4,5,28			37321203001000	0.193	0								NO ADDITIONAL R/W REQUIRED		
134															NOT USED		
135	JOSHUA EDWARDS ENYART AND BARBARA ANN	4,5,28,63,64	2007	11739	37320905017000	0.399	0								NO ADDITIONAL R/W REQUIRED; * SHED AND 10' CHAIN LINK FENCE		
	ENYART, TRUSTEES																
		4,5,28,63,64															
136	DOUGLAS R. HYDE AND JEANNE L. HYDE				37320905016000	0.251	0								NO ADDITIONAL R/W REQUIRED; * 7' WOOD FENCE		
137	HAROLD S. CARTWRIGHT	4,5,28			37320905015000	0.164	0								NO ADDITIONAL R/W REQUIRED; * SHED AND 10' CHAIN LINK FENCE		
138	KAREN NORBECK	4,5,28			37320905014000	0.328	0								NO ADDITIONAL R/W REQUIRED; * 7' FENCE		
139	ALICE LOIS RIDENOUR	4,28			37320905013001	0.164	0								NO ADDITIONAL R/W REQUIRED		
					37320905013000	0.164	0										
														FEDERAL/STATE			
140														90/10	NOT USED		

LEGEND:
WL = FEE SIMPLE WITH LIMITATION OF ACCESS
WD = WARRANTY DEED
PRW = PROPERTY RIGHT FEE SIMPLE
SH = STANDARD HIGHWAY EASEMENT
SL = SLOPE EASEMENT
T = TEMPORARY EASEMENT
S = SEWER EASEMENT
CH = CHANNEL EASEMENT
A = AERIAL EASEMENT
V = IN NAME OF ANOTHER STATE AGENCY
R = SPECIAL RESERVATION (SUBSURFACE RIGHTS)

NOTE: UNDER NO CIRCUMSTANCES ARE TEMPORARY EASEMENTS TO BE USED FOR STORAGE OF MATERIAL OR EQUIPMENT BY THE CONTRACTOR UNLESS NOTED OTHERWISE.

NOTE: ALL TEMPORARY PARCELS TO BE OF 24 MONTH DURATION.

REV. BY	DATE	DESCRIPTION
CAC	9/12/12	REMOVED SHEDS FROM 121-WL2
CAC	5/1/12	REMOVED 121-E1 AND 121-E2
CAC	3/12/12	CHANGED 122, 123, 126 & 127 TO 121
CAC	6/22/11	ADDED 121-E & 122-E; ADDED REMARK FOR 121-WL & 122-WL
CAC	4/27/11	UPDATED OWNER AND DB/PG FOR PARCEL 121
FIELD REVIEW BY CAC, ACF, EJC		DATE: 3/14/11 & 3/15/11
OWNERSHIP VERIFIED BY JTM		DATE: 3/22/11
DATE COMPLETED MARCH 25, 2011		

FEDERAL PROJECT NO. E036702
PID NO. 76691
STATE JOB NO. 416366
R/W DESIGNER CAC
R/W REVIEWER KDO

SUMMARY OF ADDITIONAL RIGHT OF WAY
PARCELS 120 - 140

ALL-75-5.53

13 / 87

1148
1224

J:\Projects\ALL\76691\row\sheets\76691RS004.dgn 12-SEP-2012 9:37AM reddenj

RECORD AREA - TOTAL PRO - NET TAKE = NET RESIDUE
GROSS TAKE - PRO IN TAKE = NET TAKE
* DENOTES RIGHT OF WAY ENCROACHMENT
(c) = CALCULATED AREA

GRANTEE:
ALL RIGHT OF WAY ACQUIRED IN THE NAME OF STATE OF OHIO
UNLESS OTHERWISE SHOWN.

ALL AREAS IN ACRES

PARCEL NO.	OWNER	SHEET NO.	OWNERS RECORD BOOK	OWNERS RECORD PAGE	AUDITOR'S PARCEL	RECORD AREA	TOTAL P.R.O.	GROSS TAKE	P.R.O. IN TAKE	NET TAKE	STRUCTURE	NET RESIDUE LEFT	NET RESIDUE RIGHT	TYPE FUND	REMARKS	AS ACQUIRED BOOK	AS ACQUIRED PAGE
141	ROSA MAE JARVIS	4,29			37320905012000	0.25	0							FEDERAL/STATE	NO ADDITIONAL R/W REQUIRED		
														90/10			
142	RICHARD L. THOMAS	4,29			37320905011000	0.248	0								NO ADDITIONAL R/W REQUIRED; * 8' CHAIN LINK FENCE		
143	WESLEY STARKEY, JR AND VICKY LYNN STARKEY	4,29			37320905010000	0.163	0								NO ADDITIONAL R/W REQUIRED; * 8' CHAIN LINK FENCE		
144	BETTY RUTH BEACH	4,29			37320905009000	0.163	0								NO ADDITIONAL R/W REQUIRED; * 8' CHAIN LINK FENCE		
145	JOHN D. MCPHERON AND CARRIE JO MCPHERON	4,29			37320905008000	0.163	0								NO ADDITIONAL R/W REQUIRED; * 8' CHAIN LINK FENCE		
					37320905007000	0.163	0										
146															NOT USED		
147	KENIS CRISP AND JULIE CRISP	4,29			37320905006000	0.163	0								NO ADDITIONAL R/W REQUIRED; * SHED AND 8' CHAIN LINK FENCE		
148	KATHY WALTON	4,28,29			37320910032000	1	0								NO ADDITIONAL R/W REQUIRED		
149	GARY D. GREIWE AND JUDITH V. GREIWE	4,29			37320906001000	1	0								NO ADDITIONAL R/W REQUIRED; * 8' CHAIN LINK FENCE		
150	PAMELA S. GROTHOUSE	4,29			37320905005000	0.248	0								NO ADDITIONAL R/W REQUIRED; * 8' CHAIN LINK FENCE		
151	ORAL SHENK AND WILLIAM A. SHENK	4,29			37320905004000	0.712	0								NO ADDITIONAL R/W REQUIRED		
152	JACK E. JOHNSON AND LORI J. JOHNSON	4,29			37320905003000	0.472	0								NO ADDITIONAL R/W REQUIRED; * SHED		
153	DENISE K. EARLY	4,29			37320905002000	0.159	0								NO ADDITIONAL R/W REQUIRED		
154	DENNIS R. MCNAMARA AND KEANNA MCNAMARA	4,29			37320905001000	0.159	0								NO ADDITIONAL R/W REQUIRED; * SHED		
155	COUNTRY ESTATES ASSOCIATES, LLC.	4,6,29,30			37320001002001	39.66	3.161								NO ADDITIONAL R/W REQUIRED		
156-167															NOT USED		
168-WL	THE CITY OF LIMA, OHIO, A MUNICIPAL CORPORATION	6,9,31,32,85	280	358	37290004002001	13.10	2.448	2.448	2.448	0							
					37290003006000	15.160	0	0	0	0							
					37320602023000	32.090	0	0	0	0							
	TOTAL 168-WL					60.350	2.448	2.448	2.448	0		57.902					
168-T		6,9,31,32			37290004002001			0.159	0	0.159					TO CONSTRUCT BIKE PATH FENCE AND FOR GRADING PURPOSES		
168A-WL	THE CITY OF LIMA, OHIO	6,9,31,32,85	482	441	37290004002000	10.66	0.152	0.417	0.152	0.265			10.243				
169															NOT USED		
170	NATIONAL LIME & STONE CO.	6,9,32,33,85	254	378	37290004001000	195.71	13.609								NO ADDITIONAL R/W REQUIRED		
171															NOT USED		
172-WL1	FIRST ASSEMBLY OF GOD, INC.,	6,7,33,34	2012	1862	37290001016000	4.770	0	0.546	0	0.546	S(1)				REALTOR SIGN		
	AN OHIO CORPORATION				37290001017000	6.860	0.586	0	0	0							
					37290001018000	7.510	0.506	0	0	0							
	TOTAL 172-WL1							0.546	0	0.546							
172-WL2		6,7,34,75-78			37290001017000			0.586	0.586	0					PROPOSED 25' WIDE POINT OF ACCESS ALLOWED FROM		
					37290001018000			0.506	0.506	0					THE EXIST. SEVICE ROAD NEAR SR 81 STA. 459+50		
	TOTAL 172-WL2							1.092	1.092	0							
	GRAND TOTAL					19.140	1.092	1.638	1.092	0.546				FEDERAL/STATE			
													17.502	90/10			

LEGEND:
WL = FEE SIMPLE WITH LIMITATION OF ACCESS
WD = WARRANTY DEED
PRW = PROPERTY RIGHT FEE SIMPLE
SH = STANDARD HIGHWAY EASEMENT
SL = SLOPE EASEMENT
T = TEMPORARY EASEMENT
S = SEWER EASEMENT
CH = CHANNEL EASEMENT
A = AERIAL EASEMENT
V = IN NAME OF ANOTHER STATE AGENCY
R = SPECIAL RESERVATION (SUBSURFACE RIGHTS)

NOTE: UNDER NO CIRCUMSTANCES ARE TEMPORARY EASEMENTS TO BE USED FOR STORAGE OF MATERIAL OR EQUIPMENT BY THE CONTRACTOR UNLESS NOTED OTHERWISE.

NOTE: ALL TEMPORARY PARCELS TO BE OF 24 MONTH DURATION.

REV. BY	DATE	DESCRIPTION
CAC	12/18/12	ADDED POINT OF ACCESS ON 172-WL2
CAC	5/21/12	REVISED OWNER & OWNERS RECORD OF 172
FIELD REVIEW BY CAC, ACF, EJC		DATE: 3/14/11 & 3/15/11
OWNERSHIP VERIFIED BY JTM		DATE: 3/22/11
DATE COMPLETED MARCH 25, 2011		

FEDERAL PROJECT NO. E036702
PID NO. 76691
STATE JOB NO. 416366
R/W DESIGNER CAC
R/W REVIEWER KDO

SUMMARY OF ADDITIONAL RIGHT OF WAY
PARCELS 141 - 172

ALL-75-5.53

1149
1224

J:\Projects\ALL\76691\row\sheets\76691RS005.dgn 18-DEC-2012 1:21PM coffield

RECORD AREA - TOTAL PRO - NET TAKE = NET RESIDUE
GROSS TAKE - PRO IN TAKE = NET TAKE
* DENOTES RIGHT OF WAY ENCROACHMENT
(c) = CALCULATED AREA

GRANTEE:
ALL RIGHT OF WAY ACQUIRED IN THE NAME OF STATE OF OHIO
UNLESS OTHERWISE SHOWN.

ALL AREAS IN ACRES

PARCEL NO.	OWNER	SHEET NO.	OWNERS RECORD BOOK	OWNERS RECORD PAGE	AUDITOR'S PARCEL	RECORD AREA	TOTAL P.R.O.	GROSS TAKE	P.R.O. IN TAKE	NET TAKE	STRUCTURE	NET RESIDUE LEFT	NET RESIDUE RIGHT	TYPE FUND	REMARKS	AS ACQUIRED BOOK	AS ACQUIRED PAGE
173-175														FEDERAL/STATE	NOT USED		
														90/10			
176-WD	MARK E. WOLFE	7,36,77-80	799	321	37290001021000	2.39	0	0.045	0	0.045			2.345				
176-T		7,77-80						0.050	0	0.050					TO CONSTRUCT A DRIVEWAY		
177	LAURA L. SMITH	6,33,34,73,74	2008	2417	37290001015000	2.360	0								NO ADDITIONAL R/W REQUIRED		
178	ANGELA R. DAVIS	6,34	938	484	37290001014000	0.34	0								NO ADDITIONAL R/W REQUIRED		
179	DEAN A. BURRELL AND DENISE BURRELL	6,33,34,71-74	2007	10207	37290001013000	6.62	0								NO ADDITIONAL R/W REQUIRED		
			2007	10206	37290001013001	0.17	0										
180															NOT USED		
181-WD	IGNACIO RODRIGUEZ	6,71,72	866	523	37290001012000	2.000	0.136	0.136	0.136	0		1.864					
181-T		6,71,72						0.021	0	0.021	YES(2)				55' WOOD RAIL FENCE AND BUS SHED; TO CONSTRUCT A DRIVEWAY		
182-WD	MATTHEW J.A. GOSSARD AND THOMAS E. BRIM	6,71,72	937	222	37290001011000	4.330	0.221	0.221	0.221	0							
					37290001010000	0.540	0.139	0.139	0.139	0							
	TOTAL 182-WD					4.870	0.360	0.360	0.360	0		4.510					
182-T		6,71,72			37290001010000			0.009	0	0.009					TO CONSTRUCT A DRIVEWAY AND FOR MOT PURPOSES		
183															NOT USED		
184-T	T & M AUTO SALES, LLC	6,69-72	925	610	37290001009000	3.950	0	0.024	0	0.024					TO CONSTRUCT A DRIVEWAY		
185-T	JAR INVESTMENT, LLC, A FLORIDA LIMITED	6,69,70	953	807	37290001008000	1.16	0	0.155	0	0.155					TO CONSTRUCT A DRIVEWAY, REMOVE BRUSH AND FOR MOT PURPOSES		
	LIABILITY COMPANY																
186-T	211 INVESTMENTS INC.	6,67-70	917	837	37290002014000	2.360	0	0.027	0	0.027					TO CONSTRUCT 3 DRIVEWAYS AND FOR MOT PURPOSES		
					37290002014001	5.580	0	0.101	0	0.101							
	TOTAL 186-T					7.740	0	0.128	0	0.128							
187-WDV	DHN INVESTMENTS, L.L.C., AN OHIO LIMITED	6,7,67-70,81,82	2007	10160	37290002013002	3.630	0.152	0.207	0.152	0.055		3.423			IN THE NAME OF THE BOARD OF COMMISSIONERS OF ALLEN COUNTY, OHIO		
	LIABILITY COMPANY																
187-T		6,7,67-70,81,82						0.103	0	0.103					TO CONSTRUCT 2 DRIVEWAYS AND MAINTENANCE OF TRAFFIC PURPOSES		
188-T	WAFFLE HOUSE, INC., A GEORGIA CORPORATION	7,81,82	615	774	37290001007000	0.740	0.206	0.078	0	0.078					* PARKING LOT; TO CONSTRUCT 2 DRIVEWAYS AND REMOVE PAVEMENT;		
189	KIRIT B. PATEL	7,81-84	885	503	37290001007001	1.020	0.076								NO ADDITIONAL R/W REQUIRED		
190	CHANDNI CORPORATION	7,35,83,84			37290001006000	8.42	0.148								NO ADDITIONAL R/W REQUIRED		
191	LIMA HOTEL INC.	7,35	2007	15180	37290001003000	7.11	0.224								NO ADDITIONAL R/W REQUIRED		
					37290001027000	2.83	0.112										
192	PAMELA ANN STEVENSON	7,36	864	797	37290001026000	2.33	0.114								NO ADDITIONAL R/W REQUIRED		
193															NOT USED		
194	JERRY D. MARTIN AND VICKIE L. MARTIN	7,36,37	882	753	37290001001000	3.43	0.113							FEDERAL/STATE	NO ADDITIONAL R/W REQUIRED		
195														90/10	NOT USED		

LEGEND:
WL = FEE SIMPLE WITH LIMITATION OF ACCESS
WD = WARRANTY DEED
PRW = PROPERTY RIGHT FEE SIMPLE
SH = STANDARD HIGHWAY EASEMENT
SL = SLOPE EASEMENT
T = TEMPORARY EASEMENT
S = SEWER EASEMENT
CH = CHANNEL EASEMENT
A = AERIAL EASEMENT
V = IN NAME OF ANOTHER STATE AGENCY
R = SPECIAL RESERVATION (SUBSURFACE RIGHTS)

NOTE: UNDER NO CIRCUMSTANCES ARE TEMPORARY EASEMENTS TO BE USED FOR STORAGE OF MATERIAL OR EQUIPMENT BY THE CONTRACTOR UNLESS NOTED OTHERWISE.

NOTE: ALL TEMPORARY PARCELS TO BE OF 24 MONTH DURATION.

REV. BY	DATE	DESCRIPTION
CAC	3/12/12	REVISED 176-WD & 176-T
CAC	8/25/11	REVISED 188-T AND REMARKS; COMBINED 188-T1 & 188-T2 INTO 188-T
CAC	6/22/11	REVISED 185-T; ADDED REMARK FOR 188-T
FIELD REVIEW BY CAC, ACF, EJC		DATE: 3/14/11 & 3/15/11
OWNERSHIP VERIFIED BY JTM		DATE: 3/22/11
DATE COMPLETED MARCH 25, 2011		

FEDERAL PROJECT NO. E036702
PID NO. 76691
STATE JOB NO. 41366
R/W DESIGNER CAC
R/W REVIEWER KDO

SUMMARY OF ADDITIONAL RIGHT OF WAY PARCELS 173 - 195

ALL-75-5.53

15 / 87

1150
1224

J:\Projects\ALL\76691\row\sheets\76691RS006.dgn 12-SEP-2012 9:37AM redden

RECORD AREA - TOTAL PRO - NET TAKE = NET RESIDUE
GROSS TAKE - PRO IN TAKE = NET TAKE
* DENOTES RIGHT OF WAY ENCROACHMENT
(c) = CALCULATED AREA

GRANTEE:
ALL RIGHT OF WAY ACQUIRED IN THE NAME OF STATE OF OHIO UNLESS OTHERWISE SHOWN.

ALL AREAS IN ACRES

PARCEL NO.	OWNER	SHEET NO.	OWNERS RECORD BOOK	OWNERS RECORD PAGE	AUDITOR'S PARCEL	RECORD AREA	TOTAL P.R.O.	GROSS TAKE	P.R.O. IN TAKE	NET TAKE	STRUCTURE	NET RESIDUE LEFT	NET RESIDUE RIGHT	TYPE FUND	REMARKS	AS ACQUIRED BOOK	AS ACQUIRED PAGE
196-WL	SCOTT W. CAMPBELL	7,37	910	594	37200004007000	22.520	2.056	1.861	1.834	0.027			20.437	FEDERAL/STATE			
														90/10			
197-WL	ROWLAND E. RONE AND ANNA PAULINE RONE	7,35-37	674	812	37200004006000	13.360	3.576	3.336	3.220	0.116	YES(1)				WOOD POST		
			631	771	37290001002000	8.040	2.234	1.992	1.992	0							
	TOTAL 197-WL					21.400	5.810	5.328	5.212	0.116		15.474					
198-WL	MK LANDLORD DE LIMITED PARTNERSHIP,	7,37,38	942	343	37200004004000	19.810	0.503	0.173	0	0.173	YES(3)				6' CHAIN LINK FENCE, 12' CHAIN LINK FENCE AND LIGHT POLE		
	A DELAWARE LIMITED PARTNERSHIP				37200004005000	0.500	0.078	0	0	0							
	TOTAL 198-WL					20.310	0.581	0.173	0	0.173		19.556					
199-WL	BELIEVER CHRISTIAN FELLOWSHIP AKA	7,37,38	738	278	37200004010000	7.870	0.144	0.076	0	0.076	YES(2)				2 HORSESHOE PITS		
	BELIEVERS CHRISTIAN FELLOWSHIP		848	119	37200004009000	2.000	0.082	0	0	0							
	TOTAL 199-WL					9.870	0.226	0.076	0	0.076			9.568				
200-WL	STEPHEN P. CASEBOLT AND LAURIE L. CASEBOLT	7,38	2007	13456	37200004011000	6.000	0.189	0.093	0.054	0.039			5.772				
201-WL	JUDITH L. BOWMAN AND DAMON L. BOWMAN,	7,38	820	66	37200004012000	6.900	0.159	0.093	0	0.093							
	TRUSTEES OR THEIR SUCCESSORS IN TRUST,				37200004013000	2.940	0.067	0.018	0	0.018							
	UNDER THE JUDITH L. BOWMAN LIVING TRUST,																
	DATED JUNE 26, 1996																
	TOTAL 201-WL					9.840	0.226	0.111	0	0.111			9.503				
202-WL	UNITED STATES PLASTIC CORP., A CORPORATION	7,38,39	2009	7502	37200004002000	21.830	0.088	0.702	0	0.702							
	ORGANIZED AND EXISTING UNDER THE LAWS OF				37200004003000	11.670	0.472	0	0	0							
	THE STATE OF OHIO																
	TOTAL 202-WL					33.500	0.560	0.702	0	0.702		32.238					
203															NOT USED		
204-WL	MARTHA JEAN MILLER, TRANSFER ON DEATH	7,38	938	262	37200004014000	3.880	0.174	0.145	0.086	0.059	YES(1)		3.647		20' OF OLD FENCE		
	TO RAY J. MILLER, BENEFICIARY																
205-WL	DAVID A. ANDERSON & ANNE MARIE ANDERSON	7,38	2011	6851	37200004015000	6.000	0.376	0.340	0.241	0.099	YES(1)		5.525		20' OF BARB WIRE FENCE		
			441	216													
206-WL	WILLIAM L. JAMES	7,38	474	542	37200004016000	4.610	0.458	0.447	0.346	0.101			4.051				
														FEDERAL/STATE			
														90/10			

LEGEND:
WL = FEE SIMPLE WITH LIMITATION OF ACCESS
WD = WARRANTY DEED
PRW = PROPERTY RIGHT FEE SIMPLE
SH = STANDARD HIGHWAY EASEMENT
SL = SLOPE EASEMENT
T = TEMPORARY EASEMENT
S = SEWER EASEMENT
CH = CHANNEL EASEMENT
A = AERIAL EASEMENT
V = IN NAME OF ANOTHER STATE AGENCY
R = SPECIAL RESERVATION (SUBSURFACE RIGHTS)

NOTE: UNDER NO CIRCUMSTANCES ARE TEMPORARY EASEMENTS TO BE USED FOR STORAGE OF MATERIAL OR EQUIPMENT BY THE CONTRACTOR UNLESS NOTED OTHERWISE.

NOTE: ALL TEMPORARY PARCELS TO BE OF 24 MONTH DURATION.

REV. BY	DATE	DESCRIPTION
CAC	1/4/12	REVISED OWNER OF PARCEL 199
CAC	8/25/11	REVISED OWNER AND OWNER'S RECORD FOR 205
FIELD REVIEW BY CAC, ACF, EJC		DATE: 3/14/11 & 3/15/11
OWNERSHIP VERIFIED BY JTM		DATE: 3/22/11
DATE COMPLETED MARCH 25, 2011		

FEDERAL PROJECT NO. E036702
PID NO. 76691
STATE JOB NO. 416366
R/W DESIGNER CAC
R/W REVIEWER KDO

SUMMARY OF ADDITIONAL RIGHT OF WAY
PARCELS 196 - 206

ALL-75-5.53

16 / 87

1151
1224

J:\Projects\ALL\76691\row\sheets\76691RS007.dgn 12-SEP-2012 9:37AM reddenj

RECORD AREA - TOTAL PRO - NET TAKE = NET RESIDUE
GROSS TAKE - PRO IN TAKE = NET TAKE
* DENOTES RIGHT OF WAY ENCROACHMENT
(c) = CALCULATED AREA

GRANTEE:
ALL RIGHT OF WAY ACQUIRED IN THE NAME OF STATE OF OHIO
UNLESS OTHERWISE SHOWN.

ALL AREAS IN ACRES

PARCEL NO.	OWNER	SHEET NO.	OWNERS RECORD BOOK	OWNERS RECORD PAGE	AUDITOR'S PARCEL	RECORD AREA	TOTAL P.R.O.	GROSS TAKE	P.R.O. IN TAKE	NET TAKE	STRUCTURE	NET RESIDUE LEFT	NET RESIDUE RIGHT	TYPE FUND	REMARKS	AS ACQUIRED BOOK	AS ACQUIRED PAGE
207-WL	TERRY SCHAAF	7,38,39	563	298	37200004019000	3.560	0	0.097	0	0.097	YES(2)		3.463	FEDERAL/STATE	DOG STATUE AND FAKE WATER HYDRANT		
														90/10			
208-WL	MICHAEL P. KOHLI AND TWILA J. KOHLI	7,39	600	889	37200004001000	2.500	0.067	0.044	0	0.044	YES(2)		2.389		12' WOVEN WIRE FENCE		
209-WL	DERAND L. MOORE	7,39,40	2007	16841	37200001008000	12.250	0.517	0.568	0	0.568			11.165				
210-WL	RONNIE D. VIRES	7,40	2008	1031	37200001010000	1.520	0.371	0.244	0	0.244			0.905				
218-A1	NEW YORK CENTRAL LINES, LLC	6,32,85	2007	17158	37290004004000	5.950	0	1656 SF	0	1656 SF							
218-A2	A DELAWARE LIMITED LIABILITY COMPANY,	6,32,85	859	170				1656 SF	0	1656 SF							
218-T	NKA CSX TRANSPORTATION, INC.,	6,32,85						24428 SF	0	24428 SF					TO CONSTRUCT BRIDGE		
	A VIRGINIA CORPORATION																
220	NORFOLK & WESTERN RAILWAY COMPANY	7,39,40			37200003014000										NO ADDITIONAL R/W REQUIRED		
221-224															NOT USED		
225-WL	CITY OF LIMA, OHIO	3,24	694	166	47050004002000	3.700	0.170	0.211	0	0.211			3.319				
225A-WL	CITY OF LIMA, OHIO	3,24	694	166	47050004014000	6.570	0	0.211	0	0.211		6.359					
226-227															NOT USED		
228-WD	CITY OF LIMA, OHIO	4,5,26,47,48,53,54	485	362	47050001003000	0.110	0.023	0.046	0.023	0.023		0.064					
228-T		4,5,26,47,48,53,54						0.021	0	0.021					TO CONSTRUCT A DRIVEWAY AND FOR GRADING PURPOSES		
229-WL	SEDC, LLC	4,5,26,45,46	2012	00565	37321215001001	0.015	0.015	0.015	0.015	0					LOSS OF DRIVEWAY ON SR 309		
					37321215001000	1.23	0	0.011	0	0.011							
	TOTAL 229-WL					1.245	0.015	0.026	0.015	0.011		1.219					
229-T		4,5,26,45,46			37321215001000			0.043	0	0.043					TO REMOVE DRIVEWAY, CONSTRUCT SIDEWALK AND CURB		
230-WL	JOMA REALTY, LLC A NEW YORK LIMITED	4,5,45,46	2011	10175	37321215001002	0.582	0	0.005	0	0.005							
	LIABILITY COMPANY				37321215001003	0.018	0.018	0.018	0.018	0							
	TOTAL 230-WL					0.600	0.018	0.023	0.018	0.005		0.577					
231-WL	JOHNNY THI AND YVONNE IVY NGUYEN	4,5,26,45,46	2011	06132	37321215003001	0.015	0.015	0.015	0.015	0	S				DOUBLE FACED LIGHTED WITH LED SIGN;		
					37321215001005	0.003	0.003	0.003	0.003	0					35' POINT OF ACCESS LEFT OF STA. 890+09.23		
					37321215003000	0.359	0	0.007	0	0.007							
					37321215001004	0.230	0	0.006	0	0.006							
					37321215002000	0.500	0	0	0	0							
	TOTAL 231-WL					1.107	0.018	0.031	0.018	0.013		1.076					
231-T		4,5,26,45,46			37321215003000			0.040	0	0.040					TO CONSTRUCT DRIVEWAYS, SIDEWALK AND CURB		
					37321215001004			0.013	0	0.013							
	TOTAL 231-T							0.053	0	0.053							
232-T	BANK ONE OF LIMA, NATIONAL	4,5,27,51,52	770	390	37321211011000	0.172	0	0	0	0					TO CONSTRUCT DRIVEWAY AND FOR GRADING PURPOSES		
	ASSOCIATION, LIMA, OHIO		489	75	37321211017000	0.172	0	0	0	0					TO BE ACQUIRED WITH PROJECT ALL-117/309-18.15/15.04, PID 75467.		
					37321211014000	0.344	0	0.020	0	0.020							
					37321211015000	0.172	0	0	0	0				FEDERAL/STATE			
	TOTAL 232-T					0.860	0	0.020	0	0.020				90/10			

LEGEND:
WL = FEE SIMPLE WITH LIMITATION OF ACCESS
WD = WARRANTY DEED
PRW = PROPERTY RIGHT FEE SIMPLE
SH = STANDARD HIGHWAY EASEMENT
SL = SLOPE EASEMENT
T = TEMPORARY EASEMENT
S = SEWER EASEMENT
CH = CHANNEL EASEMENT
A = AERIAL EASEMENT
V = IN NAME OF ANOTHER STATE AGENCY
R = SPECIAL RESERVATION (SUBSURFACE RIGHTS)

NOTE: UNDER NO CIRCUMSTANCES ARE TEMPORARY EASEMENTS TO BE USED FOR STORAGE OF MATERIAL OR EQUIPMENT BY THE CONTRACTOR UNLESS NOTED OTHERWISE.

NOTE: ALL TEMPORARY PARCELS TO BE OF 24 MONTH DURATION.

REV. BY	DATE	DESCRIPTION
CAC	7/25/12	REV. 229 OWNER & OWNER'S RECORD
CAC	3/12/12	REVISED 230-WL
CAC	2/22/12	REMOVED THE REALTOR SIGN FROM PARCEL 231
CAC	12/12/11	REV. 230 OWNER, OWNER'S RECORD & SHEET #'S
CAC	12/8/11	REVISED OWNER OF 218, AND OWNER'S RECORD
CAC	11/18/11	CHANGED 229-WD TO 229-WL & 231-WD TO 231-WL;
		REVISED 229-T & 231-T; ADDED 230-WL
CAC	9/28/11	REVISED 229-T
CAC	8/25/11	REMOVED 218-SH1, 218-SH2, 218-3, 218-SH4 & 218-CH; REVISED 229-T AND 231-T
CAC	6/22/11	REVISED 229-WD AND 229-T; ADDED 231-WD AND 231-T; ADDED PARCEL 230
CAC	5/2/11	ADDED REMARK FOR 232-T

REV. BY	DATE	DESCRIPTION
FIELD REVIEW BY CAC, ACF, EJC		DATE: 3/14/11 & 3/15/11
OWNERSHIP VERIFIED BY JTM		DATE: 3/22/11
DATE COMPLETED MARCH 25, 2011		

FEDERAL PROJECT NO. E036702
PID NO. 76691
STATE JOB NO. 416366
R/W DESIGNER CAC
R/W REVIEWER KDO

SUMMARY OF ADDITIONAL RIGHT OF WAY
PARCELS 207 - 232

ALL-75-5.53

1152
1224

J:\Projects\ALL\76691\row\sheets\76691RS008.dgn 12-SEP-2012 9:37AM reddenj

RECORD AREA - TOTAL PRO - NET TAKE = NET RESIDUE
GROSS TAKE - PRO IN TAKE = NET TAKE
* DENOTES RIGHT OF WAY ENCROACHMENT
(c) = CALCULATED AREA

GRANTEE:
ALL RIGHT OF WAY ACQUIRED IN THE NAME OF STATE OF OHIO
UNLESS OTHERWISE SHOWN.

ALL AREAS IN ACRES

PARCEL NO.	OWNER	SHEET NO.	OWNERS RECORD BOOK	OWNERS RECORD PAGE	AUDITOR'S PARCEL	RECORD AREA	TOTAL P.R.O.	GROSS TAKE	P.R.O. IN TAKE	NET TAKE	STRUCTURE	NET RESIDUE LEFT	NET RESIDUE RIGHT	TYPE FUND	REMARKS	AS ACQUIRED BOOK	AS ACQUIRED PAGE
233-239														FEDERAL/STATE	NOT USED		
														90/10			
240A	RICHARD M. TOTH AND CATHI A. TOTH	7,79,80	738	743	37290001023000	1.57	0194								NO ADDITIONAL R/W REQUIRED		
240B	RICHARD M. TOTH AND CATHI A. TOTH, TRUSTEE	7,79,80	821	83	37290001022000	4.160	0								NO ADDITIONAL R/W REQUIRED		
241-245															NOT USED		
246-T	R & C REAL ESTATE INVESTMENTS INC., AN	7,81,82	875	707	37290002013001	1.790	0.151	0.087	0	0.087					TO CONSTRUCT A DRIVEWAY & MAINTANANCE OF TRAFFIC PURPOSES		
	OHIO CORPORATION																
247															NOT USED		
248-WDV	HOLTSBERRY PROPERTIES, A LIMITED	4,5,8,28	921	319	37330003001000	111.460	0.293	0.408	0.293	0.115	YES(1)				IN THE NAME OF THE BOARD OF COMMISSIONERS OF ALLEN COUNTY		
	LIABILITY COMPANY	61-64	911	31									111.052		105' OF SPLIT RAIL FENCE		
			900	38													
249-T	DONNIE F. MIOLEN AND CAROL S. MIOLEN	4,5,28	842	11	37321212001000	0.221	0	0.018	0	0.018					TO CONSTRUCT A DRIVEWAY		
		61,62															
250-WDV	MICHAEL S. PAHL	4,5,61,62	709	786	37321201011000	0.304	0	0.021	0	0.021			0.283		IN THE NAME OF THE BOARD OF COMMISSIONERS OF ALLEN COUNTY		
251	CARY INDUSTRIES, LLC	6,65,66	869	695	37290002018000	1.71									NO ADDITIONAL R/W REQUIRED		
252-WL	PMP REALTY LLC, A MAINE LIMITED LIABILITY	6,65-68	2006	4671	37290002017000	1.680	0.276	0.212	0.212	0							
	COMPANY		2010	748	37290002016000	3.450	0.151	0.079	0.079	0							
	TOTAL 252-WL							0.291	0.291	0							
252-WD		6,65-68			37290002017000			0.431	0.064	0.367	YES(1)				300' OF CHAIN LINE FENCE		
					37290002016000			0.072	0.072	0							
	TOTAL 252-WD							0.503	0.136	0.367							
	GRAND TOTAL					5.130	0.427	0.794	0.427	0.367		4.336					
252-T		6,65-68			37290002017000			0.012	0	0.012					TO CONSTRUCT 2 DRIVEWAYS AND MOT PURPOSES		
					37290002016000			0.016	0	0.016							
	TOTAL 252-T							0.028	0	0.028							
253-WL	211 INVESTMENTS, INC., AN OHIO CORPORATION	6,67,68	2012	2787	37290002015000	2.490	0.309	0.157	0.157	0							
253-WD		6,67,68						0.152	0.152	0							
	GRAND TOTAL					2.490	0.309	0.309	0.309	0		2.181					
253-T		6,67,68						0.021	0	0.021					TO CONSTRUCT 2 DRIVEWAYS, GRADING AND MOT PURPOSES		
														FEDERAL/STATE			
														90/10			

LEGEND:
WL = FEE SIMPLE WITH LIMITATION OF ACCESS
WD = WARRANTY DEED
PRW = PROPERTY RIGHT FEE SIMPLE
SH = STANDARD HIGHWAY EASEMENT
SL = SLOPE EASEMENT
T = TEMPORARY EASEMENT
S = SEWER EASEMENT
CH = CHANNEL EASEMENT
A = AERIAL EASEMENT
V = IN NAME OF ANOTHER STATE AGENCY
R = SPECIAL RESERVATION (SUBSURFACE RIGHTS)

NOTE: UNDER NO CIRCUMSTANCES ARE TEMPORARY EASEMENTS TO BE USED FOR STORAGE OF MATERIAL OR EQUIPMENT BY THE CONTRACTOR UNLESS NOTED OTHERWISE.

NOTE: ALL TEMPORARY PARCELS TO BE OF 24 MONTH DURATION.

REV. BY	DATE	DESCRIPTION
CAC	5/7/12	REVISED OWNER OF PARCEL 253
CAC	8/25/11	REVISED 246-T
FIELD REVIEW BY CAC, ACF, EJC		DATE: 3/14/11 & 3/15/11
OWNERSHIP VERIFIED BY JTM		DATE: 3/22/11
DATE COMPLETED MARCH 25, 2011		

FEDERAL PROJECT NO. E036702
PID NO. 76691
STATE JOB NO. 416366
R/W DESIGNER CAC
R/W REVIEWER KDO

SUMMARY OF ADDITIONAL RIGHT OF WAY
PARCELS 240A - 253

ALL-75-5.53

1153
1224

J:\Projects\ALL\76691\row\sheets\76691RS009.dgn 12-SEP-2012 9:37AM reddenj

ALLEN COUNTY
PERRY TOWNSHIP
SEC. 5 E 1/2, SEC. 8 E. 1/2, T. 4 S., R. 7 E
CITY OF LIMA

ALLEN COUNTY
BATH TOWNSHIP
SEC. 29 E 1/2, SEC. 32 E. 1/2, T. 3 S., R. 7 E
CITY OF LIMA

REV. BY	DATE	DESCRIPTION
CAC	11/18/11	ADDED SHEETS 44A & 44B
DATE COMPLETED		MARCH 25, 2011

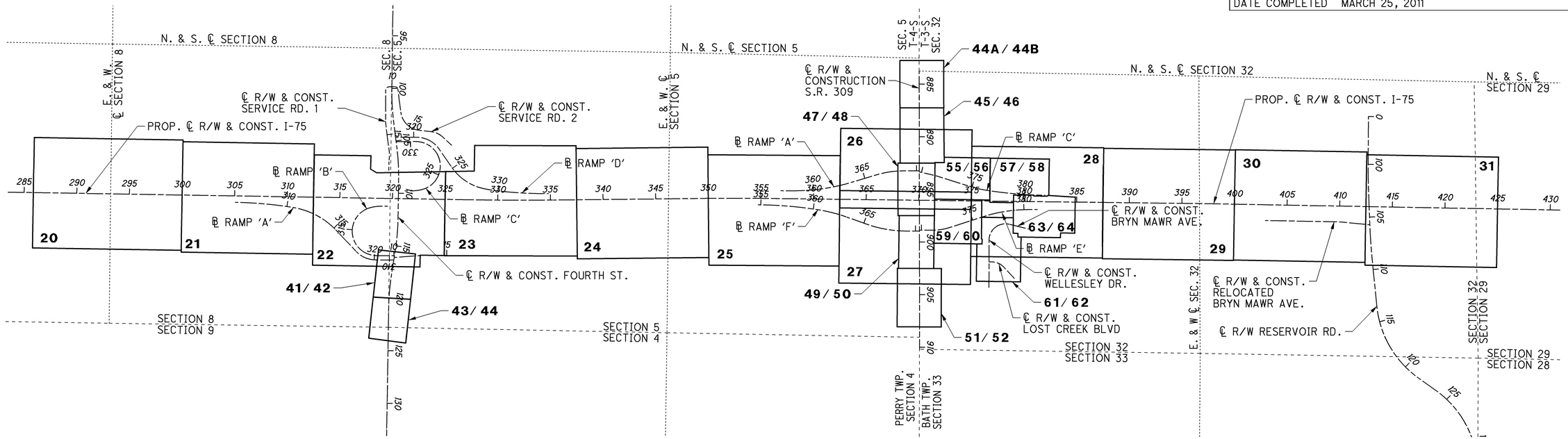

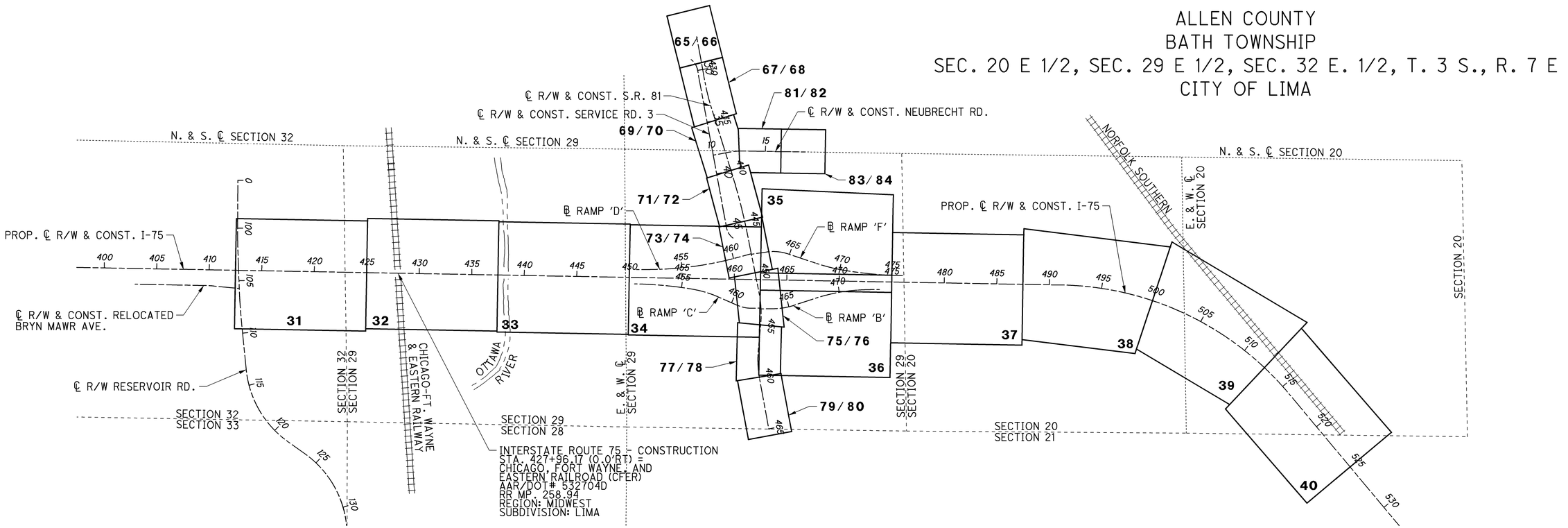

HORIZONTAL SCALE IN FEET
0 500 1000

PID NO. 76691

R/W DESIGNER CAC
R/W REVIEWER KDO

RIGHT OF WAY SCHEMATIC PLAN

ALL-75-5.53

19 / 87

1154
1224

J:\Projects\ALL\76691\row\sheets\76691RL004.dgn 12-SEP-2012 9:37AM reddenj

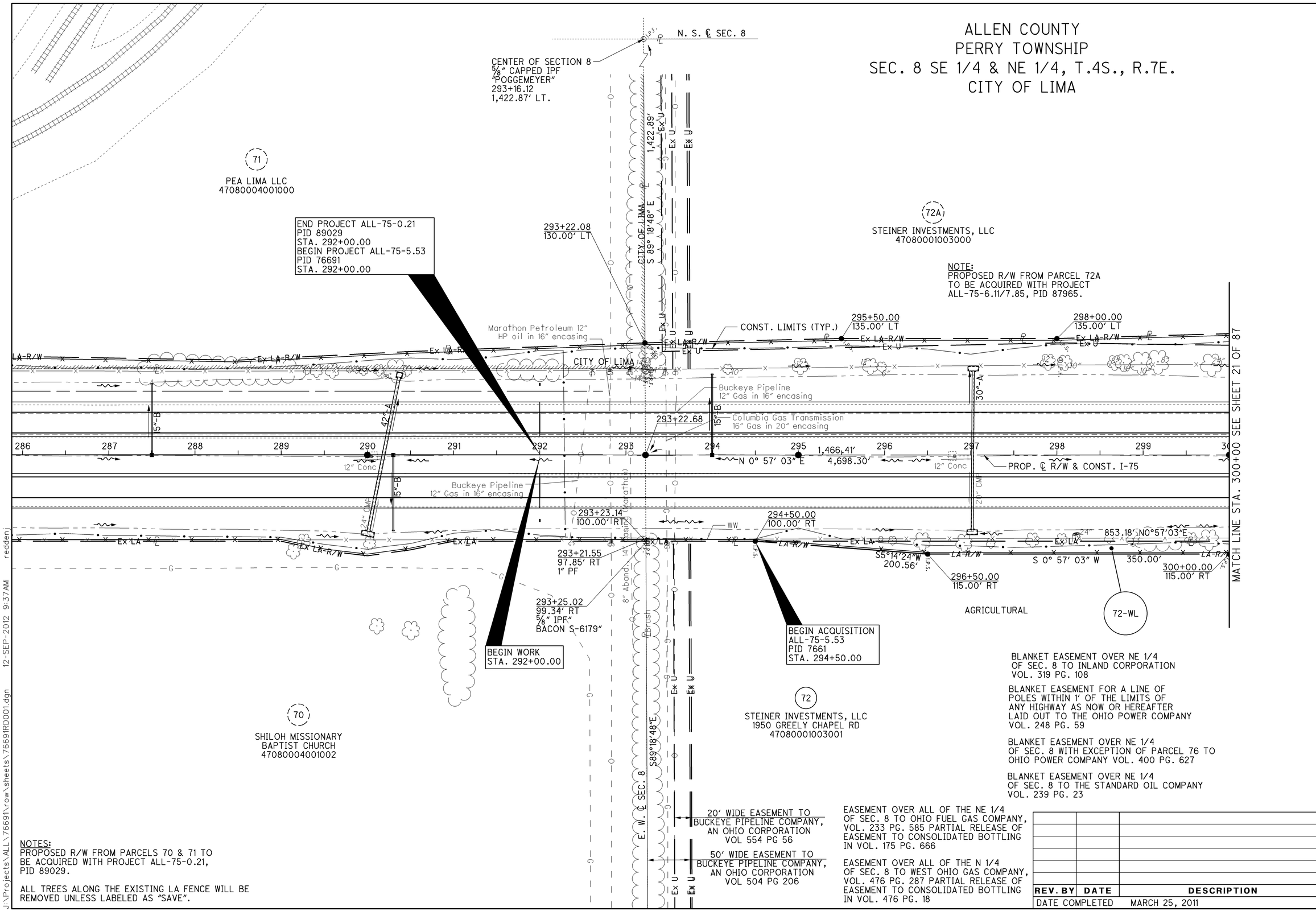

BLANKET EASEMENT OVER NE 1/4 OF SEC. 8 TO INLAND CORPORATION VOL. 319 PG. 108

BLANKET EASEMENT FOR A LINE OF POLES WITHIN 1' OF THE LIMITS OF ANY HIGHWAY AS NOW OR HEREAFTER LAID OUT TO THE OHIO POWER COMPANY VOL. 248 PG. 59

BLANKET EASEMENT OVER NE 1/4 OF SEC. 8 WITH EXCEPTION OF PARCEL 76 TO OHIO POWER COMPANY VOL. 400 PG. 627

BLANKET EASEMENT OVER NE 1/4 OF SEC. 8 TO THE STANDARD OIL COMPANY VOL. 239 PG. 23

EASEMENT OVER ALL OF THE NE 1/4 OF SEC. 8 TO OHIO FUEL GAS COMPANY, VOL. 233 PG. 585 PARTIAL RELEASE OF EASEMENT TO CONSOLIDATED BOTTLING IN VOL. 175 PG. 666

EASEMENT OVER ALL OF THE N 1/4 OF SEC. 8 TO WEST OHIO GAS COMPANY, VOL. 476 PG. 287 PARTIAL RELEASE OF EASEMENT TO CONSOLIDATED BOTTLING IN VOL. 476 PG. 18

NOTES:
PROPOSED R/W FROM PARCELS 70 & 71 TO BE ACQUIRED WITH PROJECT ALL-75-0.21, PID 89029.

ALL TREES ALONG THE EXISTING LA FENCE WILL BE REMOVED UNLESS LABELED AS "SAVE".

REV. BY	DATE	DESCRIPTION
DATE COMPLETED		MARCH 25, 2011

HORIZONTAL SCALE IN FEET 0 25 50 100

PID NO. 76691

R/W DESIGNER CAC
R/W REVIEWER KDO

RIGHT OF WAY PLAN
BEGIN PROJECT TO STA. 300+00

ALL-75-5.53

1155/1224

J:\Projects\ALL\76691\row\sheets\76691RD001.dgn 12-SEP-2012 9:37AM reddenj

ALLEN COUNTY
PERRY TOWNSHIP
SEC. 8, NE 1/4, T. 4 S., R. 7 E.

(A) S 82° 23′ 07″ E, 27.60′

(B) N 22° 50′ 34″ E, 106.65′

(C) S 89° 02′ 57″ E, 124.45′

(72A)
STEINER INVESTMENTS, LLC
47080001003000

NOTE:
PROPOSED R/W FROM PARCEL 72A & 76 TO BE ACQUIRED WITH PROJECT ALL-75-6.11/7.85, PID 87965.

10" BP Pipelines
8" BP Pipelines

CONST. LIMITS (TYP.)

MATCH LINE STA. 300+00 SEE SHEET 20 OF 87

MATCH LINE STA. 312+50 SEE SHEET 22 OF 87

301+50.00
145.00′ LT

305+00.00
130.00′ LT

309+75.02
130.00′ LT

311+00.00
130.00′ LT

312+00.00
145.00′ LT

Ex LA-R/W
Ex LA-R/W
Ex U
Ex U
Brush
6-2″
12″ Conc.
15″-B
15″ Conc.
Ex LA
Ex U
Conc.
2-10″
20″
Ex GM
Ex LA
Columbia Gas
Ex LA
10″ 6-8″
8
10″
14″

307+89.09

00 301 302 303 304 305 306 1,466.41′ 307 308 309 310 15″-B 311 15″-B 312

PROP. ℄ R/W & CONST. I-75
N 0° 57′ 03″ E 4698.30′

4THA-1

306 307 308 309 310 311 312

303+02.70, 100.02′ RT
5/8″ I.P.F "BACON S-6179″

304+52.73, 115.09′ RT
5/8″ I.P.F "BACON S-6179″

304+53.18
115.00′ RT

306+52.78, 114.91′ RT
5/8″ I.P.F "BACON S-6179″

853.18′
N 0° 57′ 03″ E

Ex LA
Ex LA-R/W
WW
Poles (2)
N6°39′41″E
150.75′
303+03.18
100.00′ RT
136.24′
N 0° 57′ 03″ E
N4°55′49″E
200.00′
450.00′
S 0° 57′ 03″ W
86.16′
S5°31′29″W
TWIN 72″
12″ EMP
24″ CMP
12″ EMP
18″ CMP
Ex LA-R/W
Gas/petroleum
164.64′
S 5° 31′ 29″ W
150.08′
S2°51′36″W
RAMP 'A'
440.15′
Ex LA-R/W
N 4° 55′ 49″ E
Conc. ditch Protection
4THA-2

S 7° 47′ 37″ W
251.79′

300+00.00
115.00′ RT

302+50.00
145.00′ RT

303+03.18
100.00′ RT

Conc. pad
5′ High fence Made of gates And other steel

307+00.00
145.00′ RT

307+85.89
151.87′ RT

311+00.00
170.00′ RT

S28°48′37″W
257.08′

312+28.18
155.00′ RT

312+25.05
158.00′ RT
3/4″ P.F.

72-WL

74-WL

309+50.00
165.00′ RT

PCC Sta. 310+61.24

PC Sta. 305+07.24
= STA. 305+07.24,
61.5′ RT. (I-75)

306+53.18
115.00′ RT

307+89.09
124.45′ RT

14′ High sheet metal fence
Conc. pad
Silo
AGRICULTURAL

72
STEINER INVESTMENTS, LLC
1950 GREELY CHAPEL RD
47080001003001

UNNAMED STREAM
Old WW
GRAVEL
COMMERCIAL

74
RKO BOTTLERS OF
LIMA, INC. A CORPORATION
1850 GREELY CHAPEL RD
47080001004000

76
EAST OHIO GAS COMPANY
47080001002000

BLANKET EASEMENT OVER NE 1/4 OF SEC. 8 TO INLAND CORPORATION VOL. 319 PG. 108

BLANKET EASEMENT FOR A LINE OF POLES WITHIN 1′ OF THE LIMITS OF ANY HIGHWAY AS NOW OR HEREAFTER LAID OUT TO THE OHIO POWER COMPANY VOL. 248 PG. 59

BLANKET EASEMENT OVER NE 1/4 OF SEC. 8 WITH EXCEPTION OF PARCEL 76 TO OHIO POWER COMPANY VOL. 400 PG. 627

BLANKET EASEMENT OVER NE 1/4 OF SEC. 8 TO THE STANDARD OIL COMPANY VOL. 239 PG. 23

EASEMENT OVER ALL OF THE NE 1/4 OF SEC. 8 TO OHIO FUEL GAS COMPANY, VOL. 233 PG. 585 PARTIAL RELEASE OF EASEMENT TO CONSOLIDATED BOTTLING IN VOL. 175 PG. 666

EASEMENT OVER ALL OF THE N 1/4 OF SEC. 8 TO WEST OHIO GAS COMPANY, VOL. 476 PG. 287 PARTIAL RELEASE OF EASEMENT TO CONSOLIDATED BOTTLING IN VOL. 476 PG. 18

CURVE 4THA-1
P.I.= Sta. 307+84.73
D = 8° 18′ 36″ (RT)
Dc = 1° 30′ 00″
R = 3,819.72′
T = 277.49′
L = 554.00′
E = 10.07′
C = 553.51′
C.B. = N 5° 06′ 21″ E

CURVE 4THA-2
P.I.= Sta. 313+02.06
D = 37° 10′ 14″ (RT)
Dc = 8° 00′ 00″
R = 716.20′
T = 240.82′
L = 464.63′
E = 39.40′
C = 456.53′
C.B. = N 27° 50′ 46″ E

NOTE:
ALL TREES ALONG THE EXISTING LA FENCE WILL BE REMOVED UNLESS LABELED AS "SAVE".

REV. BY	DATE	DESCRIPTION

DATE COMPLETED MARCH 25, 2011

HORIZONTAL SCALE IN FEET
0 25 50 100

PID NO. 76691

R/W DESIGNER CAC
R/W REVIEWER KDO

RIGHT OF WAY PLAN
STA. 300+00 TO STA. 312+50

ALL-75-5.53

21 / 87

1156
1224

J:\Projects\ALL\76691\row\sheets\76691RD002.dgn 12-SEP-2012 9:37AM reddenj

ALLEN COUNTY
PERRY TOWNSHIP
SEC. 8, NE 1/4 & SEC. 5, SE 1/4, T. 4 S., R. 7 E.

REV. BY	DATE	DESCRIPTION
DATE COMPLETED	MARCH 25, 2011	

CURVE 4TH-2
P.I.= Sta. 107+13.54
D = 8° 00′ 00″ (RT)
Dc = 2° 30′ 00″
R = 2,291.83′
T = 160.26′
L = 320.00′
E = 5.60′
C = 319.74′
C.B. = N 86° 49′ 33″ E

CURVE 4TH-3
P.I.= Sta. 113+85.26
D = 8° 00′ 00″ (RT)
Dc = 2° 30′ 00″
R = 2,291.83′
T = 160.26′
L = 320.00′
E = 5.60′
C = 319.74′
C.B. = S 85° 10′ 27″ E

CURVE 4THA-2
P.I.= Sta. 313+02.06
D = 37° 10′ 14″ (RT)
Dc = 8° 00′ 00″
R = 716.20′
T = 240.82′
L = 464.63′
E = 39.40′
C = 456.53′
C.B. = N 27° 50′ 46″ E

CURVE 4THB-2
P.I. STA. 318+20.83
Ls = 200.00′
θs = 24° 45′ 00″
LT = 134.66′
ST = 67.87′
x = 196.30′
y = 28.42′
k = 99.38′
p = 7.15′

CURVE 4THB-1
P.I.= Sta. 321+92.59
D = 155° 32′ 30″ (RT)
Dc = 24° 45′ 00″
R = 231.50′
T = 1,068.08′
L = 628.45′
E = 861.39′
C = 452.49′
C.B. = S 78° 25′ 49″ W

72A
STEINER INVESTMENTS, LLC
47080001003000

76
EAST OHIO GAS COMPANY
47080001002000

NOTES:
FOR PARCEL 75-WL ALONG FOURTH ST.
SEE SHEETS 41-44.

PROPOSED R/W FROM PARCELS 76, 85 & 86 TO BE ACQUIRED WITH PROJECT ALL-75-6.11/7.85, PID 87965.

ALL TREES ALONG THE EXISTING LA FENCE WILL BE REMOVED UNLESS MARKED AS "SAVE".

MATCH LINE STA. 312+50 SEE SHEET 21 OF 87

MATCH LINE STA. 325+00 SEE SHEET 23 OF 87

PROP. ℄ R/W & CONST. I-75

N 0° 57′ 03″ E 4698.30′

POT Sta. 18+40.00

PT Sta. 108+73.28

CONST. LIMITS (TYP.)

4" Steel pipes

Gravel

Concrete Slope Paving

Post

Gate

Fence

314+50.00 140.00′ LT

316+00.00 120.00′ LT

318+57.66 172.36′ LT

318+58.04 120.00′ LT

319+57.66 172.58′ LT

319+71.66 172.61′ LT

319+78.04

Private 6′ CL

Ex LA

LA-R/W

12" Abandoned

8" Abandoned

8" CPP

18" RCP

15" RCP

42"-A

313+27.13 194.76′ RT

313+27.14 198.77′ RT ¾" P.F.

313+89.94 220.00′ RT

℄ RAMP 'A'

314+92.85 300.00′ RT

℄ RAMP 'B'

4THB-2

4THB-1

4THA-2

4TH-2

4TH-3

4THC-1

4THC-2

87
STATE OF OHIO, DEPARTMENT OF TRANSPORTATION
47050004013000

CITY OF LIMA

℄ RAMP 'C'

SC Sta. 323+17.41

ST Sta. 321+17.41 = STA. 321+17.41, 74.5′, Lt. (I-75)

ST Sta. 319+52.95 = STA. 319+52.95, 74.5′ RT. (I-75)

I-75 STA. 320+55.04= 4TH ST. STA. 110+50.00
321+58.36
130.00′ RT

323+50.00 150.00′ RT

FOURTH ST. OVER I-75
BRIDGE NO. ALL-75-06.11

PC Sta. 112+25.00

Qwest telephone
Dominion Gas
8" HP in 12" encasing

S89°10′27″E

S0°39′52″W

S 0° 39′ 34″ W

N 0° 39′ 34″ E

N 4° 16′ 19″ W

N 0° 43′ 41″ E

SEC. 8

SEC. 5

NOTE:
SEE SHEETS 41 - 44 FOR A CONTINUATION OF PARCEL 75-WL.

74-WL

74
RKO BOTTLERS OF LIMA, INC. A CORPORATION
1850 GREELY CHAPEL RD
47080001004000

313+27.35 290.00′ RT

COMMERCIAL

S28°46′37″W 257.08′

BLANKET EASEMENT FOR A LINE OF POLES WITHIN 1′ OF THE LIMITS OF ANY HIGHWAY AS NOW OR HEREAFTER LAID OUT TO THE OHIO POWER COMPANY VOL. 248 PG. 59

BLANKET EASEMENT OVER NE 1/4 OF SEC. 8 WITH EXCEPTION OF PARCEL 76 TO OHIO POWER COMPANY VOL. 400 PG. 627

BLANKET EASEMENT OVER NE 1/4 OF SEC. 8 TO THE STANDARD OIL COMPANY VOL. 239 PG. 23

EASEMENT OVER ALL OF THE NE 1/4 OF SEC. 8 TO OHIO FUEL GAS COMPANY, VOL. 233 PG. 585 PARTIAL RELEASE OF EASEMENT TO CONSOLIDATED BOTTLING IN VOL. 175 PG. 666

EASEMENT OVER ALL OF THE N 1/4 OF SEC. 8 TO WEST OHIO GAS COMPANY, VOL. 476 PG. 287 PARTIAL RELEASE OF EASEMENT TO CONSOLIDATED BOTTLING IN VOL. 476 PG. 18

75-WL

N 46° 25′ 53″ E 284.89′

S 44° 48′ 20″ W 447.44′

PT Sta. 315+25.69

PC Sta. 318+10.76

PC Sta. 320+09.77

PC Sta. 311+24.50

N 61° 40′ 59″ E 338.17′

75
THE CONSOLIDATED BOTTLING COMPANY
1750 GREELY CHAPEL RD
47080001001000

COMMERCIAL

316+58.13 596.33′ RT 2" P.F. 3.5" HIGH

316+58.18 595.00′ RT

N1°59′53″E 321.22′

S 5° 16′ 43″ W 185.53′

316+50.00 600.00′ RT

318+35.00 614.00′ RT

319+34.41 630.00′ RT

319+79.35 600.84′ RT

319+34.35 600.02′ RT

319+31.63 602.03′ RT ¾" P.F. 3.5" HIGH

115+45.00

S10°05′38″W 100.69′

BLANKET EASEMENT OVER NE 1/4 OF SEC. 8 TO INLAND CORPORATION VOL. 319 PG. 108

85
ROSCHMAN FAMILY PARTNERSHIP NO 1 LTD., A FLORIDA LIMITED PARTNERSHIP
47050004003003

℄ R/W & CONST. FOURTH ST.

STA. 309+52.32 RAMP 'B'= STA. 115+95.23 FOURTH ST.

STA. 10+00.00 PATROL DR.= STA. 115+11.26 FOURTH ST.

STA. 321+85.94 RAMP 'A'= STA. 116+36.65 FOURTH ST.

℄ R/W & CONST. PATROL DR.

Commercial Land for sale

East ohio Gas co.

Private stop sign

Asph

Private sign

PC Sta. 12

PT Sta. 13

86
RESICOM DEVELOPMENT, LLC, AN OHIO LIMITED LIABILITY CO.
47050004003001

A	N 22° 50′ 34″ E, 67.68′
B	N 89° 10′ 27″ W, 595.86′
C	S 89° 10′ 27″ E, 624.94′
D	N 22° 50′ 34″ E, 106.65′
E	S 89° 10′ 44″ E, 95.24′
F	N 38° 48′42″ E, 130.35′

CURVE 4THC-1
P.I. STA. 322+52.07
Ls = 200.00′
θs = 24° 45′ 00″
LT = 134.66′
ST = 67.87′
x = 196.30′
y = 28.42′
k = 99.38′
p = 7.15′

CURVE 4THC-2
P.I. STA. 334+23.30
D = 156° 21′ 13″ (LT)
Dc = 24° 45′ 00″
R = 231.50′
T = 1,105.89′
L = 631.73′
E = 898.36′

HORIZONTAL SCALE IN FEET
0 25 50 100

PID NO. 76691

R/W DESIGNER CAC
R/W REVIEWER KDO

RIGHT OF WAY PLAN
STA. 312+50 TO STA. 325+00

ALL-75-5.53

22 / 87

1157
1224

J:\Projects\ALL\76691\row\sheets\76691RD003.dgn 12-SEP-2012 9:37AM redden

ALLEN COUNTY
PERRY TOWNSHIP
SEC. 5, SE 1/4, T. 4 S., R. 7 E.
CITY OF LIMA

CURVE 4THD-2
P.I.= Sta. 326+48.41
D = 35° 04′ 30″ (LT)
Dc = 11° 45′ 00″
R = 487.62′
T = 154.10′
L = 298.51′
E = 23.77′
C = 293.87′
C.B. = N 37° 34′ 33″ E

CURVE 4THD-3
P.I. STA. 328+67.42
Ls = 200.00′
θs = 13° 15′ 00″
LT = 126.20′
ST = 74.59′
x = 198.80′
y = 17.10′
k = 99.82′
p = 2.98′

CURVE 4THD-4
P.I.= Sta. 332+36.78
D = 7° 18′ 31″ (LT)
Dc = 1° 30′ 00″
R = 3,819.72′
T = 243.95′
L = 487.25′
E = 7.78′
C = 486.92′
C.B. = N 3° 08′ 02″ E

CURVE I75-5
P.I.= Sta. 331+37.88
D = 1° 34′ 11″ (LT)
Dc = 0° 12′ 00″
R = 28,647.89′
T = 392.44′
L = 784.83′
E = 2.69′
C = 784.81′
C.B. = N 0° 09′ 58″ E

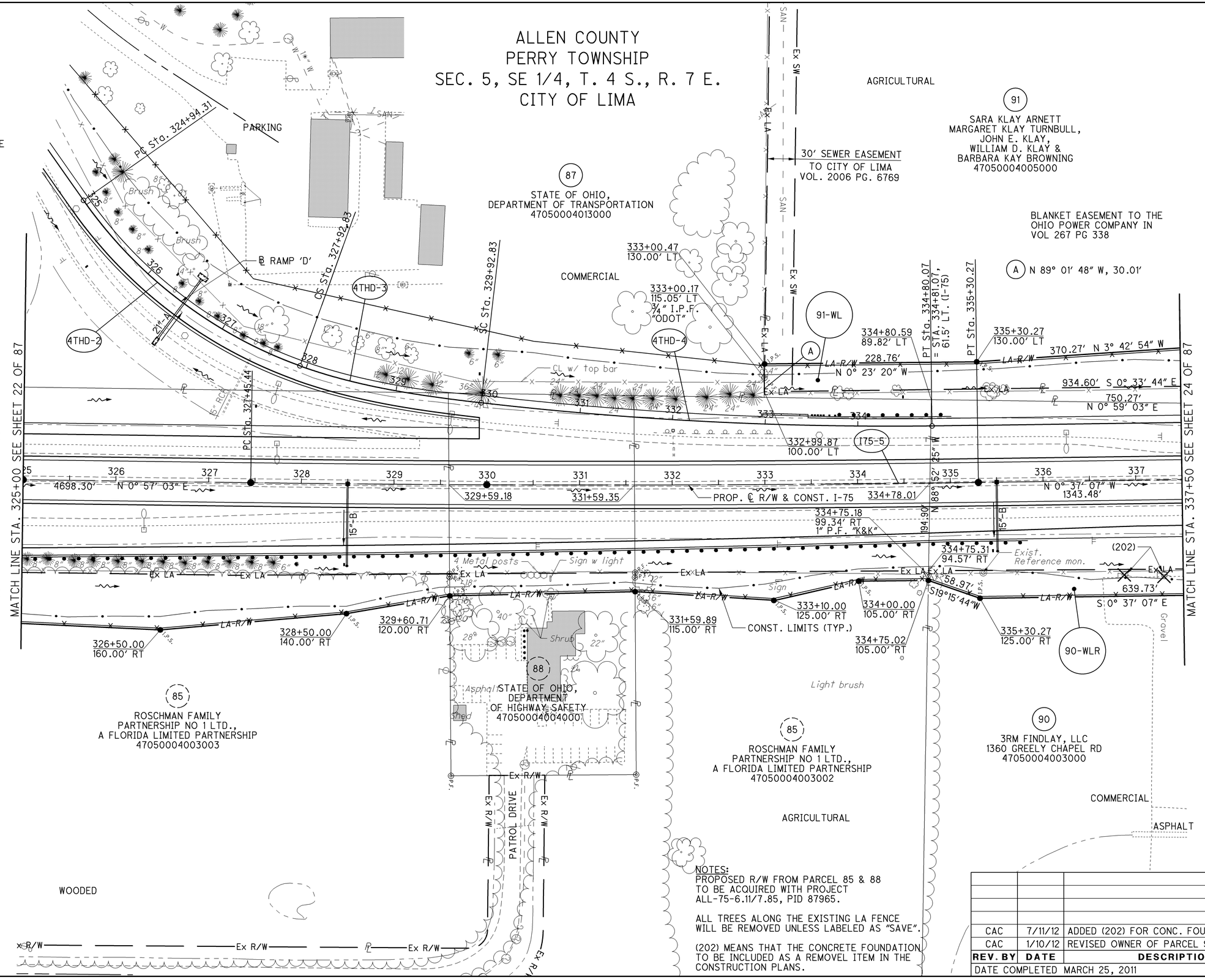

NOTES:
PROPOSED R/W FROM PARCEL 85 & 88 TO BE ACQUIRED WITH PROJECT ALL-75-6.11/7.85, PID 87965.

ALL TREES ALONG THE EXISTING LA FENCE WILL BE REMOVED UNLESS LABELED AS "SAVE".

(202) MEANS THAT THE CONCRETE FOUNDATION TO BE INCLUDED AS A REMOVEL ITEM IN THE CONSTRUCTION PLANS.

REV. BY	DATE	DESCRIPTION
CAC	7/11/12	ADDED (202) FOR CONC. FOUNDATIONS ON 90
CAC	1/10/12	REVISED OWNER OF PARCEL 90

DATE COMPLETED MARCH 25, 2011

HORIZONTAL SCALE IN FEET
0 25 50 100

R/W DESIGNER CAC
R/W REVIEWER KDO

PID NO. 76691

RIGHT OF WAY PLAN
STA. 325+00 TO STA. 337+50

ALL-75-5.53

23 / 87

1158
1224

J:\Projects\ALL\76691\row\sheets\76691RD004.dgn 12-SEP-2012 9:37AM reddenj

ALLEN COUNTY
PERRY TOWNSHIP
SEC. 5, SE 1/4 & NE 1/4, T. 4 S., R. 7 E.
CITY OF LIMA

(A) S 55° 52′ 21″ W, 47.97′
(B) S 82°17′21″ E, 170.68′
(C) S 82° 17′ 21″ E, 50.53′
(D) S 82° 17′ 21″ E, 65.69′
(E) N 82° 17′ 21″ W, 65.69′
(F) N 82° 17′ 21″ W, 35.37′
(G) S 89° 17′ 40″ E, 10.00′
(H) N 82° 17′ 21″ W, 65.69′
(I) N 67° 59′ 39″ E, 37.59′
(J) N 89° 22′ 53″ E, 100.00′
(K) S 89° 22′ 53″ W, 100.00′
(L) S 89° 22′ 53″ W, 100.00′
(M) N 0° 37′ 07″ W, 141.49′

91
SARA KLAY ARNETT
MARGARRET KLAY TURNBULL,
JOHN E. KLAY,
WILLIAM D. KLAY &
BARBARA KAY BROWNING
47050004005000

20′ EASEMENT
BUCKEYE PIPELINE COMPANY
VOL 48 PG 95
MID-VALLEY PIPELINE
VOL 607 PG 82
MARATHON PIPELINE
VOL 607 PG 95

20′ SEWER EASEMENT
VOL 468 PG 685

VACANT
Small trees
And brush

225A
CITY OF LIMA, OHIO
47050004014000

BLANKET EASEMENT TO THE
OHIO POWER COMPANY IN
VOL 267 PG 338
PARTIAL RELEASE IN
VOL 785 PG 823

E. W. ℄ SEC. 5
S89°17′40″E

94
SULAI HOSPITALITY, INC
47050001008000

EASEMENT WITHIN 8′ OF ROADS
TO LIMA TELEPHONE AND
TELEGRAPH COMPANY IN
VOL 47 PG 265

AGRICULTURAL

339+00.00
150.00′ LT
370.27′
N 3° 42′ 54″ W
342.60′
N 0° 37′ 07″ W
342+42.60
150.00′ LT
342+44.80
165.00′ LT
342+35.28
100.00′ LT
342+30.73
68.88′ LT
342+20.64
342+06.00
343+86.29
165.00′ LT
344+00.00
130.00′ LT
343+76.78
100.00′ LT
347+50.00
130.00′ LT
348+73.75
140.00′ LT
348+73.75
100.00′ LT
124.15′
N0°15′49″W
427.98′
N 5° 14′ 19″ W
350.00′
496.97′
179.91′ S0°01′46″W
141.49′
S0°37′07″E
65.69′
S82°17′21″E
750.27′
N 0° 59′ 03″ E
934.60′
S 0° 33′ 44″ E
1343.48′
388.07′
N0°37′07″W
246.58′
417.35′
343+62.13
346+23.35
250.40′
639.73′
S 0° 37′ 07″ E
273.55′
159.60′
S9° 37′ 51″E
120.81′
S0°37′07″E
345+00.00
110.00′ RT
346+21.04
100.00′ RT
346+20.81
110.00′ RT
343+42.37
135.00′ RT
343+37.98
165.00′ RT
342+06.18
99.50′ RT
343+47.49
100.00′ RT
341+70.00
125.00′ RT
341+96.48
165.00′ RT
342+06.00
100.00′ RT
1,164.09′
N 89° 17′ 40″ W
1,274.12′

Ex LA
Ex SW
Ex SAN
Ex STM
Ex LA R/W
LA R/W
CONST. LIMITS (TYP.)
PROP. ℄ R/W & CONST. I-75
CL
WW
Mid Valley pipeline
22″ CMP in 26″ encasing
Ex 24″ CMP
Ex 28″ CMP
Ex 12″ CMP
Ex 18″ CMP
Ex 30″ CPP
8″ PVC
8″ PVC SAN
Ex 12″ Steel
Ex 10″ W
Ex 12″ W
Ex 16″ W
Ex 8″ W
Ex 6″ W
Ex 4″ W
Ex 2″ W
Ex 15″ Storm
Ex 12″ Storm
Ex 8″ Storm
Ex 6″ Storm
Ex 4″ Storm
Ex 2″ Storm
Ex 15″ San
Ex 12″ San
Ex 8″ San
Ex 6″ San
Ex 4″ San
Ex 2″ San
Ex 15″ Sanitary
Ex 12″ Sanitary
Ex 8″ Sanitary
Ex 6″ Sanitary
Ex 4″ Sanitary
Ex 2″ Sanitary
Ex 15″ Sanitary Force Main
Ex 12″ Sanitary Force Main
Ex 8″ Sanitary Force Main
Ex 6″ Sanitary Force Main
Ex 4″ Sanitary Force Main
Ex 2″ Sanitary Force Main

NOTE:
ALL TREES ALONG THE EXISTING LA FENCE WILL BE REMOVED UNLESS LABELED AS "SAVE".

LEGEND:

PAVEMENT TO BE REMOVED

* ENCROACHMENT

(A) S 89° 20′ 13″ E, 35.00′

(B) S 58° 06′ 15″ E, 70.16′

(C) N 89° 19′ 21″ W, 100.00′

ALLEN COUNTY
PERRY TOWNSHIP
SEC. 5, NE 1/4, T. 4 S., R. 7 E.
CITY OF LIMA

BLANKET EASEMENT TO
THE OHIO POWER COMPANY
VOL 267 PG 338
PARTIAL RELEASE IN
VOL 785 PG 823

(94)
SULAI HOSPITALITY, INC
47050001008000

EASEMENT WITHIN 8′ OF ROADS TO LIMA TELEPHONE AND TELEGRAPH COMPANY IN VOL 47 PG 265

CURVE I75-6
P.I.= Sta. 352+62.60
D = 1° 17′ 46″ (RT)
Dc = 0° 10′ 00″
R = 34,377.47′
T = 388.85′
L = 777.67′
E = 2.20′
C = 777.65′
C.B. = N 0° 01′ 46″ E

CURVE 309A-1
P.I. STA. 358+21.67
Ls = 200.00′
θs = 3° 00′ 00″
LT = 133.35′
ST = 66.68′
x = 199.95′
y = 3.49′
k = 99.99′
p = 0.87′

CURVE 309A-2
P.I.= Sta. 360+77.61
D = 17° 23′ 25″ (LT)
Dc = 3° 00′ 00″
R = 1,909.86′
D c = 14° 23′ 25″ (LT)
Lc = 479.68′
Es = 22.65′
C = 478.42′
C.B.1 = N 0° 19′ 21″ W
C.B. = N 9° 31′ 04″ W

CURVE 309F-1
P.I.= Sta. 357+60.13
D = 8° 33′ 00″ (RT)
Dc = 1° 30′ 00″
R = 3,819.72′
T = 285.53′
L = 570.00′
E = 10.66′
C = 569.47′
C.B. = N 4° 39′ 28″ E

CURVE 309F-2
P.I.= Sta. 361+88.14
D = 10° 44′ 03″ (RT)
Dc = 3° 45′ 00″
R = 1,527.89′
T = 143.54′
L = 286.25′
E = 6.73′
C = 285.83′
C.B. = N 14° 18′ 00″ E

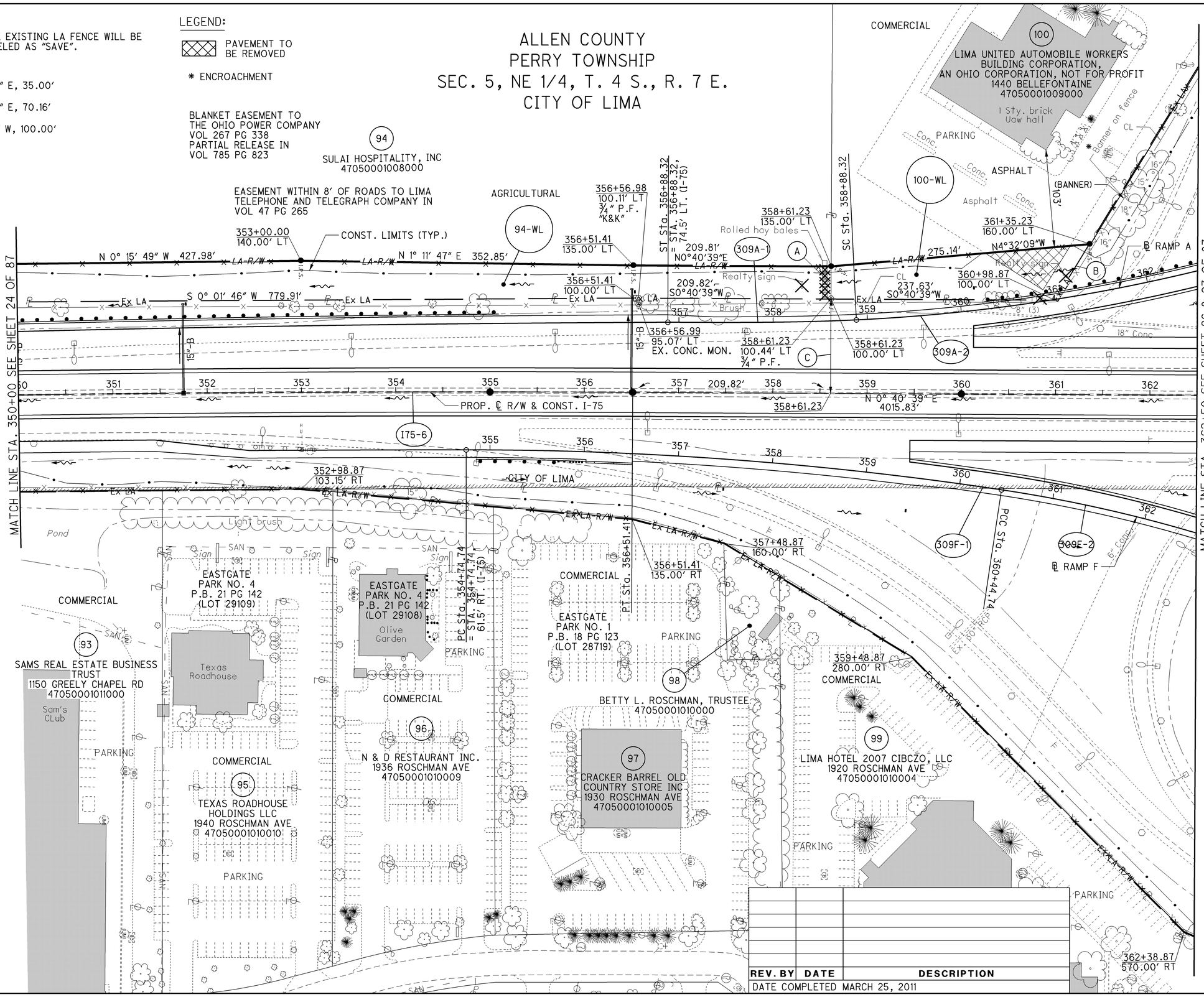

REV. BY	DATE	DESCRIPTION

DATE COMPLETED MARCH 25, 2011

HORIZONTAL SCALE IN FEET
0 25 50 100

PID NO. 76691

R/W DESIGNER CAC
R/W REVIEWER KDO

RIGHT OF WAY PLAN
STA. 350+00 TO STA. 362+50

ALL-75-5.53

25 / 87

1160
1224

J:\Projects\ALL\76691\row\sheets\76691RD006.dgn 12-SEP-2012 9:37AM reddenj

ALLEN COUNTY
PERRY TOWNSHIP
SEC. 5, NE 1/4, T. 4 S., R. 7 E.
BATH TOWNSHIP
SEC. 32, SE 1/4, T. 3 S., R. 7 E.
CITY OF LIMA

NOTE:
INFORMATION FOR PARCELS 104, 105, 117, 118, 228, AND 229 CAN BE FOUND ON THE SR 309 AND I-75 TOPOGRAPHY AND BOUNDARY SHEETS 45-48 & 55-58.

FOR A DETAIL OF PARCEL 101 SEE SHEETS 53 & 54.

SEE SHEETS 45-52 FOR SR 309.

NUMBERS IN PARENTHESIS REPRESENT LOT NUMBERS AS PROVIDED BY THE ALLEN COUNTY AUDITOR'S OFFICE GIS SYSTEM.

ALL TREES ALONG THE EXISTING LA FENCE WILL BE REMOVED UNLESS LABELED AS "SAVE".

BLANKET EASEMENT TO THE OHIO POWER COMPANY VOL 267PG 338 PARTIAL RELEASE IN VOL 785 PG 823

INGRESS/EGRESS EASEMENT TO PARCEL 100 VOL 395 PG 727 VOL 506 PG 705

20' WIDE OHIO POWER COMPANY VOL 2008 PG 11942

20' SEWER EASEMENT VOL 468 PG 685

LIMA UNITED AUTOMOBILE WORKERS BUILDING CORPORATION, AN OHIO CORPORATION, NOT FOR PROFIT 1440 BELLEFONTAINE AVE. 47050001009000

CONST. LIMITS (TYP.)

WATERLINE EASEMENT VOL 506 PG 704

SEWER EASEMENT VOL 506 PG 704

BLANKET EASEMENT ON PARCEL 101 TO OHIO POWER COMPANY VOL 550 PG 266

20' SEWER EASEMENT CITY OF LIMA VOL 468 PG 595

PUMP STATION

AVNEE INVESTMENTS INC 47050001002000

BLANKET EASEMENT TO OHIO POWER COMPANY VOL 550 PG 256

VACANT

℄ R/W & CONST. S.R. 309 (HARDING HWY.)

PROP. ℄ R/W & CONST. I-75

I-75 STA. 370+05.72= S.R. 309 STA. 896+02.95 (SECTION LINE)

I-75 OVER S.R. 309 (HARDING HWY.) BRIDGE NO. ALL-75-07.03

37321215001001 SEDC LLC

37321215001000

37321215001005 (15505)

37321215003001

10' WATERLINE EASEMENT VOL 520 PG 165

10' WATERLINE EASEMENT VOL 507 PG 522

1513-1521 HARDING HWY. 37321215003000

JOHNNY THI & YVONNE IVY NGUYEN 37321215002000

CITY OF LIMA

1507 HARDING HWY.

PARKING 37321215001004

HIRAM HOLDRIDGE SUBDIVISION P.B. 3 PG. 375

EASEMENT TO BUCKEYE PIPELINE VOL 40 PG 574

TURNER AVE.

BLANKET EASEMENT ON PARCEL 117 TO OHIO POWER COMPANY VOL 344 PG 499

LENORE ST.

ISSAM FAZA & SHARON FAZA 1925 LENORE ST. 37321208008000

37321208009000

EASEMENT TO OHIO POWER CO. VOL 538 PG 547

COMMERCIAL

LOST CREEK

CURVE 309A-2
P.I.= Sta. 360+77.61
D = 17° 23' 25" (LT)
Dc = 3° 00' 00"
R = 1,909.86'
D c = 14° 23' 25" (LT)
Lc = 479.68'
Es = 22.65'
C = 478.42'
C.B.1 = N 0° 19' 21" W
C.B. = N 9° 31' 04" W

CURVE 309A-3
P.I.= Sta. 367+44.61
D = 16° 37' 40" (RT)
Dc = 6° 30' 00"
R = 881.47'
T = 128.81'
L = 255.81'
E = 9.36'
C = 254.92'
C.B. = N 8° 23' 57" W

CURVE 309C-1
P.I.= Sta. 371+35.77
D = 4° 31' 15" (RT)
Dc = 5° 00' 00"
R = 1,145.92'
T = 45.23'
L = 90.42'
E = 0.89'
C = 90.40'
C.B. = N 15° 10' 31" E

CURVE 309C-2
P.I.= Sta. 375+58.84
D = 8° 26' 54" (LT)
Dc = 5° 00' 00"
R = 1,145.92'
T = 84.64'
L = 168.97'
E = 3.12'
C = 168.82'
C.B. = N 13° 12' 42" E

(105) LEWIS GENE WARNER 1601 HARDING HWY. 37321214006000

(117) SEDC LLC 1908 LENORE ST. 37321214001000

(228) CITY OF LIMA 47050001003000

(104) DAVID STEINER AND MARIE B. STEINER JRMCB PROPERTY, LLC AN OHIO LIMITED LIABILITY COMPANY 1570 E. HARDING HWY. 47050001004000

(94) SULAI HOSPITALITY, INC 47050001008000

SEE SHEET 27 OF 87

MATCH LINE STA. 362+50 SEE SHEET 25 OF 87

MATCH LINE STA. 375+00 SEE SHEET 28 OF 87

REV. BY	DATE	DESCRIPTION
CAC	7/25/12	REVISED OWNER OF PARCEL 229
CAC	5/15/12	ADDED PARCEL 117-E
CAC	3/29/12	CORRECT STA. EQ. AT I-75 & SR 309
CAC	2/22/12	REMOVED THE REALTOR SIGN FROM PARCEL 231
CAC	11/18/11	CHANGED 229-WD TO 229-WL & 231-WD TO 231-WL;
		REV. 104-T, 229-T & 231-T; ADDED 104-WL
CAC	9/28/11	REVISED 229-T
CAC	8/25/11	REVISED 229-T AND 231-T
CAC	6/22/11	REVISED 229-WD AND 229-T;
		ADDED 231-WD AND 231-T
REV. BY	DATE	DESCRIPTION

DATE COMPLETED MARCH 25, 2011

HORIZONTAL SCALE IN FEET 0 25 50 100

PID NO. 76691

R/W DESIGNER CAC
R/W REVIEWER KDO

RIGHT OF WAY PLAN
STA. 362+50 TO STA. 375+00

ALL-75-5.53

26 / 87

1161
1224

J:\Projects\ALL\76691\row\sheets\76691RD007.dgn 12-SEP-2012 9:37AM reddenj

NOTE:
INFORMATION FOR PARCELS 106, 107, 111, 113, 115, AND 232 CAN BE FOUND ON THE SR 309 AND I-75 TOPOGRAPHY AND BOUNDARY SHEETS 49-52 & 59-62.

SEE SHEETS 45-52 FOR SR 309.

NUMBERS IN PARENTHESIS REPRESENT LOT NUMBERS AS PROVIDED BY THE ALLEN COUNTY AUDITOR'S OFFICE GIS SYSTEM.

ALL TREES ALONG THE EXISTING LA FENCE WILL BE REMOVED UNLESS LABELED AS "SAVE".

ALLEN COUNTY
PERRY TOWNSHIP
SEC. 5, NE 1/4, T. 4 S., R. 7 E.
BATH TOWNSHIP
SEC. 32, SE 1/4, T. 3 S., R. 7 E.
CITY OF LIMA

(106) HIGHLAWN FARMS FAMILY LIMITED PARTNERSHIP
723 SARATOGA AVE.
37321211012000, 37321211013000

(107) F.W. ENGLEFIELD IV & B. B. ENGLEFIELD
713 DEAN AVE
37321212004000, 37321212005000
37321212006000, 37321212007000

(111) LOST CREEK OFFICES, LLC
711 DEAN AVE
37321212003000, 37321212003001

(113) LIMA-75 LLC
708, 710, 712,
714, 716 DEAN AVE
37321213002000, 37321213001001

(115) CAROL M. SCHMIDTHORST, TRUSTEE
704 DEAN AVE
37321213001000

(232) BANK ONE OF LIMA
NATIONAL ASSOCIATION,
LIMA, OHIO
1799 HARDING HWY.
37321211014000

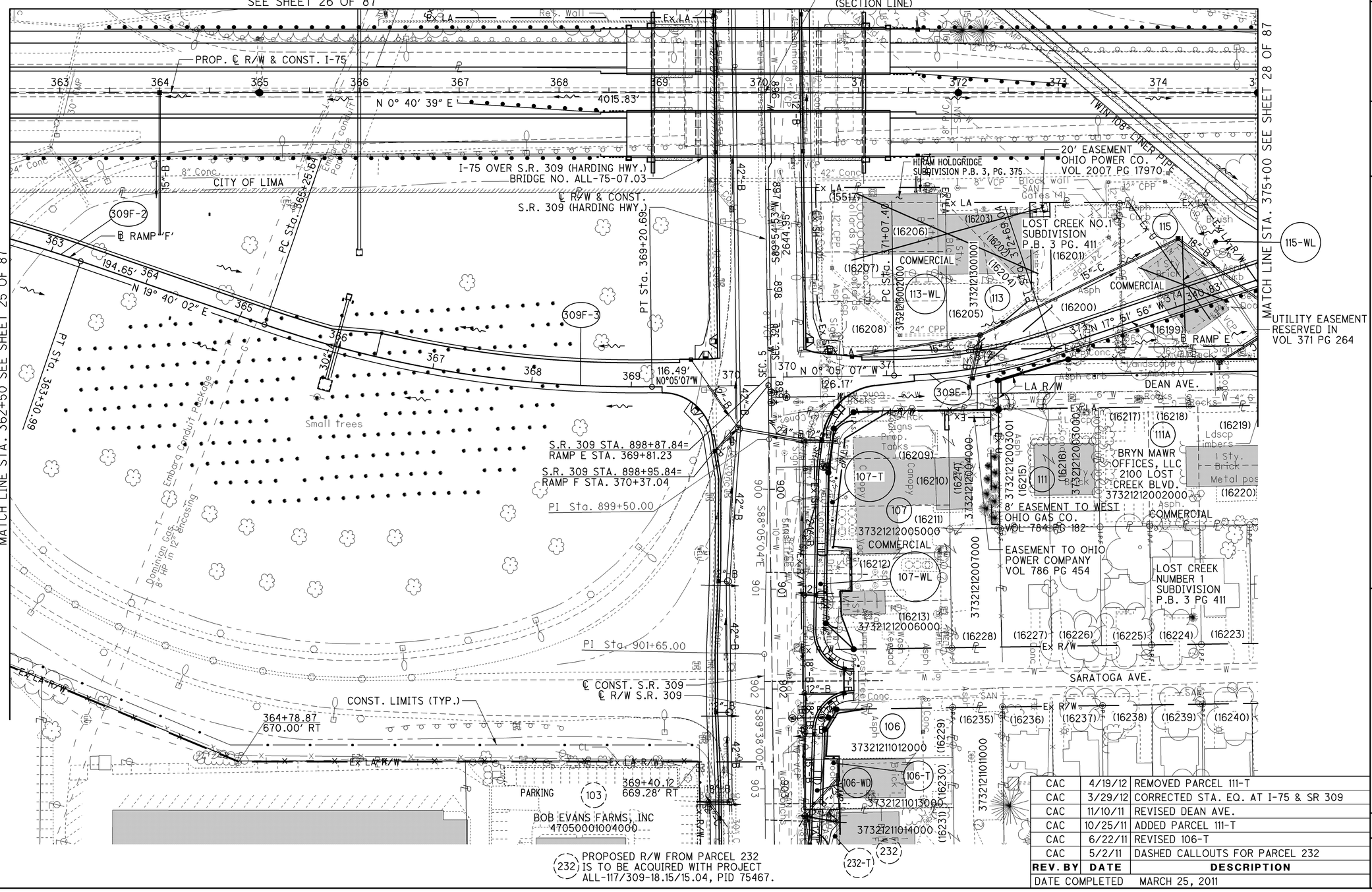

CURVE 309E-1
P.I.= Sta. 371+88.87
D = 17° 46' 49" (LT)
Dc = 11° 00' 00"
R = 520.87'
T = 81.47'
L = 161.64'
E = 6.33'
C = 160.99'
C.B. = N 8° 58' 31" W

CURVE 309F-2
P.I.= Sta. 361+88.14
D = 10° 44' 03" (RT)
Dc = 3° 45' 00"
R = 1,527.89'
T = 143.54'
L = 286.25'
E = 6.73'
C = 285.83'
C.B. = N 14° 18' 00" E

CURVE 309F-3
P.I.= Sta. 367+25.00
D = 19° 45' 08" (LT)
Dc = 5° 00' 00"
R = 1,145.92'
T = 199.50'
L = 395.05'
E = 17.24'
C = 393.09'
C.B. = N 9° 47' 28" E

(232) PROPOSED R/W FROM PARCEL 232 IS TO BE ACQUIRED WITH PROJECT ALL-117/309-18.15/15.04, PID 75467.

REV. BY	DATE	DESCRIPTION
CAC	4/19/12	REMOVED PARCEL 111-T
CAC	3/29/12	CORRECTED STA. EQ. AT I-75 & SR 309
CAC	11/10/11	REVISED DEAN AVE.
CAC	10/25/11	ADDED PARCEL 111-T
CAC	6/22/11	REVISED 106-T
CAC	5/2/11	DASHED CALLOUTS FOR PARCEL 232
DATE COMPLETED		MARCH 25, 2011

HORIZONTAL SCALE IN FEET
0 25 50 100

PID NO. 76691

R/W DESIGNER CAC
R/W REVIEWER KDO

RIGHT OF WAY PLAN
STA. 362+50 TO STA. 375+00

ALL-75-5.53

27 / 87

1162
1224

J:\Projects\ALL\76691\row\sheets\76691RD007A.dgn 12-SEP-2012 9:37AM reddenj

ALLEN COUNTY
BATH TOWNSHIP
SEC. 32, SE 1/4, T. 3 S., R. 7 E.

115 CAROL M. SCHMIDTHORST, TRUSTEE
704 DEAN AVE.
37321213001002

118 ISSAM FAZA & SHARON FAZA
1925 LENORE ST.
37321208009000

119 NANCY CLEGG HART
608 ALTON AVE.
37321208001000

120 KATHY WALTON
606 ALTON AVE.
37321208001001

121 FRANKLIN REAL ESTATE COMPANY, INC., A PENNSYLVANIA CORPORATION
602 BRYN MAWR AVE.
37321202007000
600 BRYN MAWR AVE.
37321202006000
512 BRYN MAWR AVE.
37320202004000
37321202005000
510 BRYN MAWR AVE.
37321202003000
504 & 508 BRYN MAWR AVE.
37321202001001
37321202002001

128 KATHY WALTON

132 STEVEN DUNAHAY, ROSS DUNAHAY & REBECCA SUE DUNAHAY
37321203012000

133 MICHAEL R JORDAN
37321203001000

135 JOSHUSA ENYART, EDWARD ENYART & BARBARA ANN ENYART, TRUSTEES
500 BRYN MAWR RD.
37320905017000

136 DOUGLAS R HYDE & JEANNE L HYDE
412 BRYN MAWR RD.
37320905016000

137 HAROLD S. CARTWRIGHT
410 BRYN MAWR RD.
37320905015000

138 KAREN NORBECK
406 BRYN MAWR AVE.
37320905014000

139 ALICE LOIS RIDENOUR
402 BRYN MAWR RD.
37320905013001
37320905013000

111A BRYN MAWR OFFICES, LLC
2100 LOST CREEK BLVD.
37321212002000

248 HOLTSBERRY PROPERTIES, A LIMITED LIABILITY COMPANY
2409 LOST CREEK BLVD.
37330003001000

249 DONNIE F. MIOLEN AND CAROL S. MIOLEN
2112 LOST CREEK BLVD.
37321212001000

37320910026000 (TRACT G)
(TRACT H) 37320910027000
(TRACT I) 37320910028000
(TRACT J) 37320910029000
RESIDENTIAL (TRACT K) 37320910030000
(TRACT L) 37320910031000
(TRACT M)

148 KATHY WALTON 37320910032000

504 ALTON AVE. 500-502 ALTON AVE.

R. RAY NELSON SUBDIVISION PB 7 PG 79

HIRAM HOLDRIDGE SUBDIVISION PB 3 PG 375

REPLAT OF LOST CREEK NUMBER 1 SUBDIVISION VOL. 2006, PG. 11496

LOST CREEK NUMBER 2 SUBDIVISION PB 3 PG 411

LOST CREEK NUMBER 1 SUBDIVISION PB 3 PG 411

EASEMENT TO BUCKEYE PIPELINE VOL 40 PG 574

EASEMENT TO OHIO POWER COMPANY VOL 538 PG 547

CHANNEL EASEMENT VOL 352 PG 310

BLANKET EASEMENT ON PARCEL 248 TO OHIO POWER COMPANY VOL 41 PG 524

PROPOSED NOISE BARRIER

VACATED FEDERAL ST.

℄ R/W & CONST. BRYN MAWR AVE.

℄ R/W & CONST. WELLESLEY DR.

℄ R/W & CONST. I-75

CONST. LIMITS (TYP.)

ALTON AVE.

BRYN MAWR AVE.

FEDERAL ST.

E. EUREKA ST.

DEAN AVE.

LOST CREEK

GOLF COURSE

MATCH LINE STA. 375+00 SEE SHEETS 26 & 27 OF 87

MATCH LINE STA. 387+50 SEE SHEET 29 OF 87

PC Sta. 376+09.87

PT Sta. 10+75.53

PCC Sta. 376+43.17

PT Sta. 381+97.17 = STA. 381+97.17 BK. (L-75) = STA. 374.13 AHD. (L-75)

POT Sta. 5+48.48

PC Sta. 7+95.27

CURVE 309C-2
P.I.= Sta. 375+58.84
D = 8° 26′ 54″ (LT)
Dc = 5° 00′ 00″
R = 1,145.92′
T = 84.64′
L = 168.97′
E = 3.12′
C = 168.82′
C.B. = N 13° 12′ 42″ E

CURVE 309C-3
P.I.= Sta. 379+20.66
D = 8° 18′ 36″ (LT)
Dc = 1° 30′ 00″
R = 3,819.72′
T = 277.49′
L = 554.00′
E = 10.07′
C = 553.51′
C.B. = N 4° 49′ 57″ E

CURVE 309E-2
P.I.= Sta. 377+61.43
D = 12° 49′ 42″ (RT)
Dc = 4° 15′ 00″
R = 1,348.14′
T = 151.56′
L = 301.84′
E = 8.49′
C = 301.21′
C.B. = N 11° 27′ 05″ W

UTILITY EASEMENT RESERVED IN VOL 371 PG 264

CURVE 309E-3
P.I. STA. 379+83.43
Ls = 215.00′
θs = 4° 34′ 08″
LT = 143.38′
ST = 71.71′
x = 214.86′
y = 5.71′
k = 107.48′
p = 1.43′

CURVE BRYN-1
P.I.= Sta. 9+92.21
D = 103° 28′ 28″ (LT)
Dc = 37° 00′ 00″
R = 154.85′
T = 196.34′
L = 279.66′
E = 95.21′
C = 243.18′
C.B. = S 38° 08′ 44″ E

* ENCROACHMENT

NOTE:
STRUCTURES SHOWN TO BE REMOVED ON 121-WL1 AND 121-WL2 ARE TO BE REMOVED BY THE CONTRACTOR.

STRUCTURES SHOWN TO BE REMOVED ON 121-WL3, 121-WL4, 121-WL5, 121-T3 AND 121-T4 HAVE ALREADY BEEN REMOVED BY OTHERS.

NOTES:
INFORMATION FOR PARCEL 111, 115, 118, 119, 120, 121, 248, AND 249 CAN BE FOUND ON TOPOGRAPHY AND BOUNDARY SHEETS 55-64.

NUMBERS IN PARENTHESIS REPRESENT LOT NUMBERS AS PROVIDED BY THE ALLEN COUNTY AUDITOR'S OFFICE GIS SYSTEM.

ALL TREES ALONG THE EXISTING LA FENCE WILL BE REMOVED UNLESS LABELED AS "SAVE".

REV. BY	DATE	DESCRIPTION
CAC	9/12/12	CHANGED 119-E TO 119-EL; ADDED 121 STRUCTURE NOTE
CAC	5/7/12	ADDED "X" TO GARAGE ON PARCEL 118
CAC	5/1/12	REMOVED 121-E1 AND 121-E2
CAC	3/12/12	CHANGED 122, 123, 126 & 127 TO 121
CAC	11/10/11	REVISED DEAN AVE
CAC	6/22/11	ADDED PARCELS 119-E, 121-E & 122-E
CAC	4/27/11	UPDATED OWNER FOR PARCEL 121
DATE COMPLETED		MARCH 25, 2011

HORIZONTAL SCALE IN FEET 0 25 50 100

PID NO. 76691

R/W DESIGNER CAC
R/W REVIEWER KDO

RIGHT OF WAY PLAN
STA. 375+00 TO STA. 387+50

ALL-75-5.53

28 / 87

1163
1224

J:\Projects\ALL\76691\row\sheets\76691RD008.dgn 12-SEP-2012 9:37AM reddenj

NOTES:
NUMBERS IN PARENTHESIS REPRESENT LOT NUMBERS AS PROVIDED BY THE ALLEN COUNTY AUDITOR'S OFFICE GIS SYSTEM.

ALL TREES ALONG THE EXISTING LA FENCE WILL BE REMOVED UNLESS LABELED AS "SAVE".

* - ENCROACHMENT

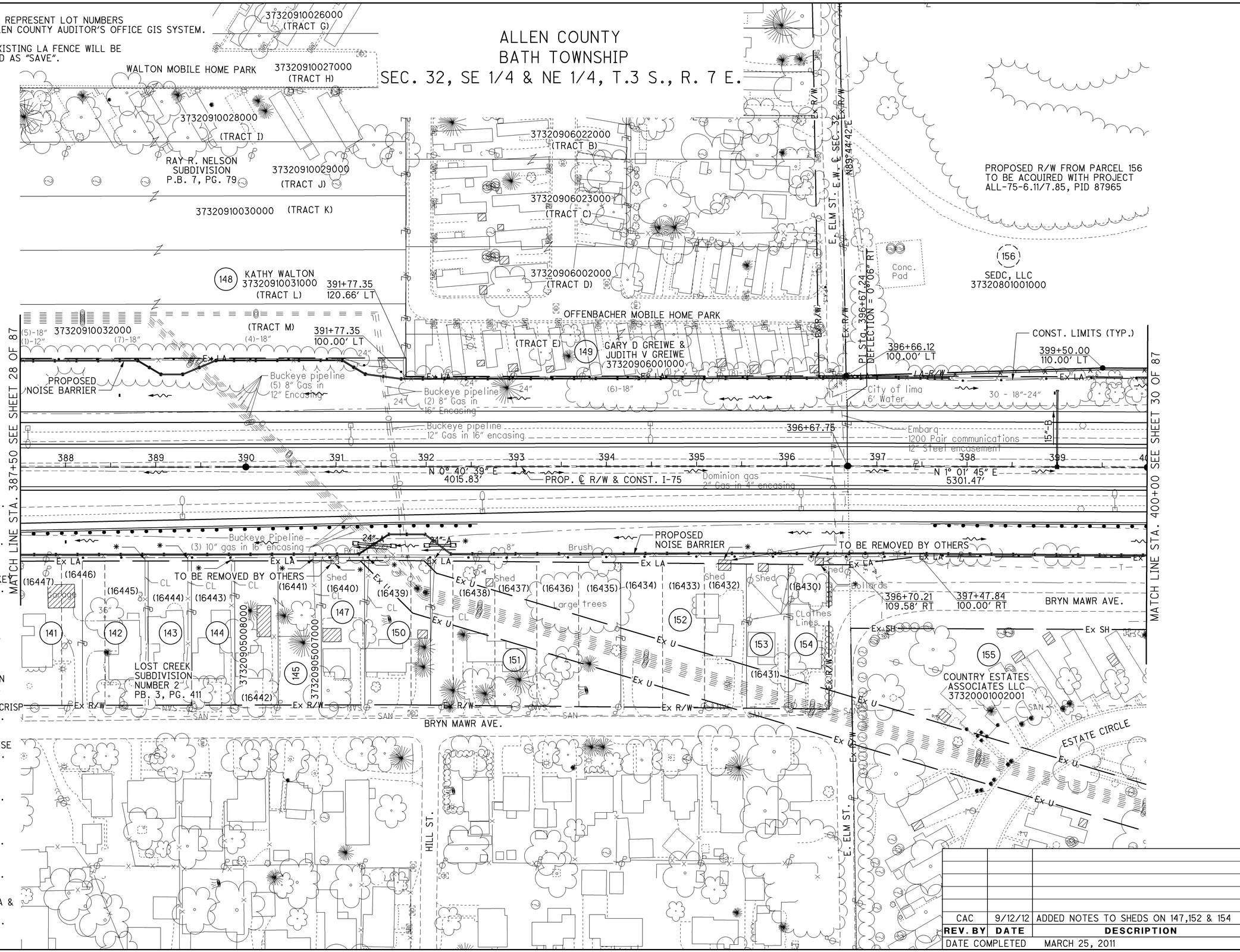

REV. BY	DATE	DESCRIPTION
CAC	9/12/12	ADDED NOTES TO SHEDS ON 147,152 & 154

DATE COMPLETED MARCH 25, 2011

HORIZONTAL SCALE IN FEET 0 25 50 100

PID NO. 76691

R/W DESIGNER CAC
R/W REVIEWER KDO

RIGHT OF WAY PLAN
STA. 387+50 TO STA. 400+00

ALL-75-5.53

J:\Projects\ALL\76691\row\sheets\76691RD009.dgn 12-SEP-2012 9:38AM reddenj

ALLEN COUNTY
BATH TOWNSHIP
SEC. 32, NE 1/4, T.3 S., R. 7 E.

NOTE:
RESERVIOR ROAD AND BRYN MAWR AVE. IMPROVEMENT
PART OF ALL-75-6.11/7.85, PID 87965

ALL TREES ALONG THE EXISTING LA FENCE WILL BE REMOVED UNLESS LABELED AS "SAVE".

PROPOSED R/W FROM PARCEL 156
TO BE ACQUIRED WITH PROJECT
ALL-75-6.11/7.85, PID 87965

156
SEDC, LLC
37320801001000

155
COUNTRY ESTATES
ASSOCIATES LLC
37320001002001

ESTATE CIRCLE

CONST. LIMITS (TYP.)

404+50.00
110.00' LT

407+00.00
130.00' LT

411+00.00
130.00' LT

411+73.71
196.34' LT

Brush w/ trees under 12"

Brush w/ trees Under 12"

MATCH LINE STA. 400+00 SEE SHEET 29 OF 87

MATCH LINE STA. 412+50 SEE SHEET 31 OF 87

5301.47' N 1° 01' 45" E

PROP. ℄ R/W & CONST. I-75

PROPOSED NOISE BARRIER

403+64.63
100.00' RT

403+64.55
99.83' RT

406+97.13
115.00' RT

411+97.13
100.00' RT

℄ R/W CONST. BRYN MAWR AVE.

653.38'

243.32'

1200 Pair telephone Embarq

ABANDONED 16" W

BYRN-2

CURVE BRYN-2
P.I.= Sta. 412+01.55
D = 4° 20' 00" (RT)
Dc = 4° 30' 00"
R = 1,273.24'
T = 48.17'
L = 96.30'
E = 0.91'
C = 96.27'
C.B. = N 3° 11' 45" E
e_d = NC

REV. BY	DATE	DESCRIPTION
DATE COMPLETED		MARCH 25, 2011

HORIZONTAL SCALE IN FEET
0 25 50 100

PID NO. 76691

R/W DESIGNER CAC
R/W REVIEWER KDO

RIGHT OF WAY PLAN
STA. 400+00 TO STA. 412+50

ALL-75-5.53

30 / 87

1165
1224

J:\Projects\ALL\76691\row\sheets\76691RD010.dgn 12-SEP-2012 9:38AM reddenj

(A) S 89° 11′ 10″ W, 10.56′
(B) S 1° 44′ 04″ W, 40.85′
(C) S 89° 03′ 26″ W, 18.35′
(D) S 1° 01′ 45″ W, 34.44′
(E) S 11° 13′ 59″ W, 50.80′
(F) S 89° 11′ 09″ W, 15.01′
(G) S 89° 11′ 09″ W, 228.72′
(H) S 0° 54′ 43″ W, 473.11′
(I) S 1° 01′ 45″ W, 75.00′
(J) N 1° 01′ 45″ E, 461.11′

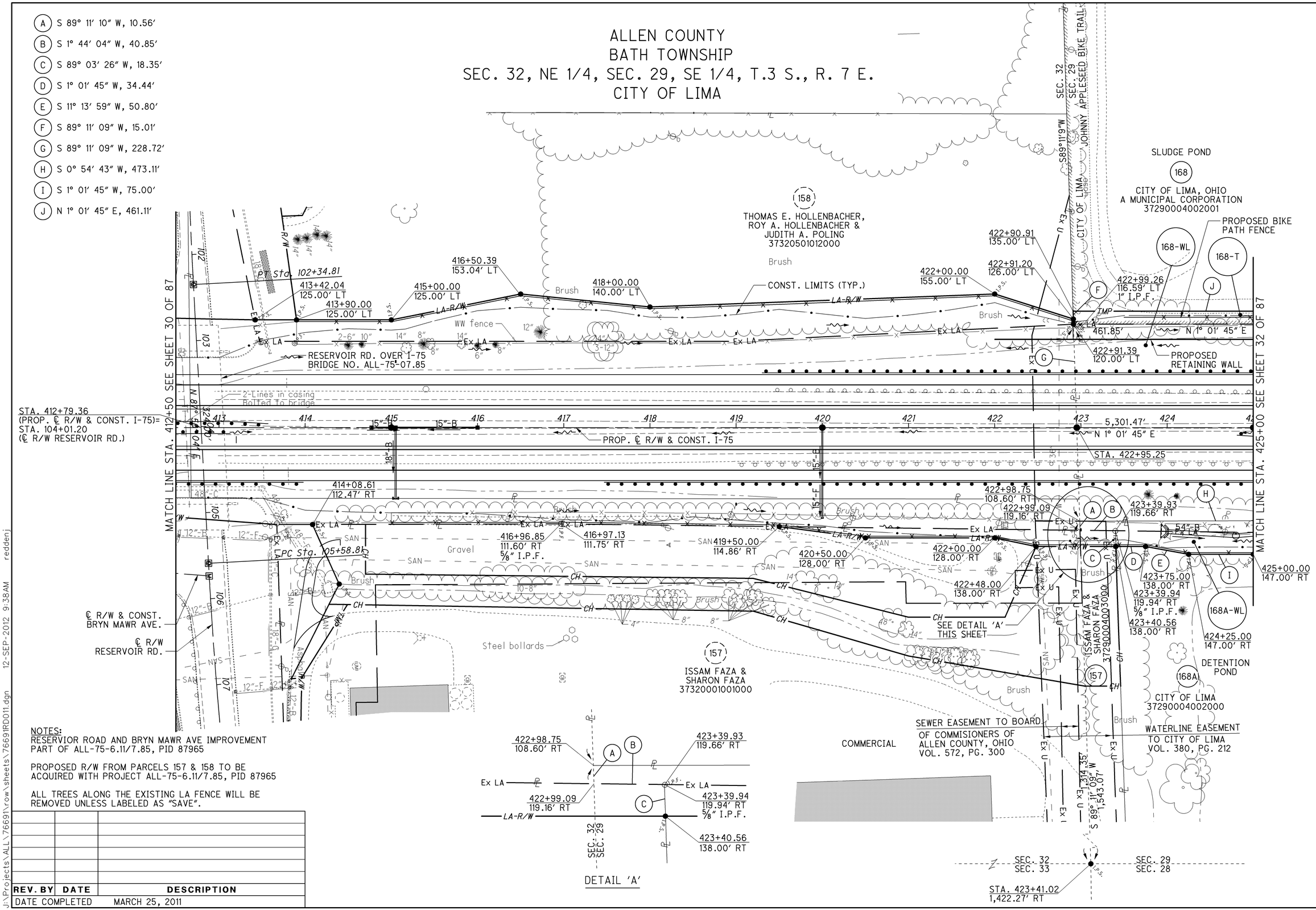

NOTES:
RESERVIOR ROAD AND BRYN MAWR AVE IMPROVEMENT
PART OF ALL-75-6.11/7.85, PID 87965

PROPOSED R/W FROM PARCELS 157 & 158 TO BE
ACQUIRED WITH PROJECT ALL-75-6.11/7.85, PID 87965

ALL TREES ALONG THE EXISTING LA FENCE WILL BE
REMOVED UNLESS LABELED AS "SAVE".

REV. BY	DATE	DESCRIPTION
DATE COMPLETED		MARCH 25, 2011

J:\Projects\ALL\76691\row\sheets\76691RD011.dgn 12-SEP-2012 9:38AM reddenj

HORIZONTAL SCALE IN FEET 0 25 50 100

PID NO. 76691

R/W DESIGNER CAC
R/W REVIEWER KDO

RIGHT OF WAY PLAN
STA. 412+50 TO STA. 425+00

ALL-75-5.53

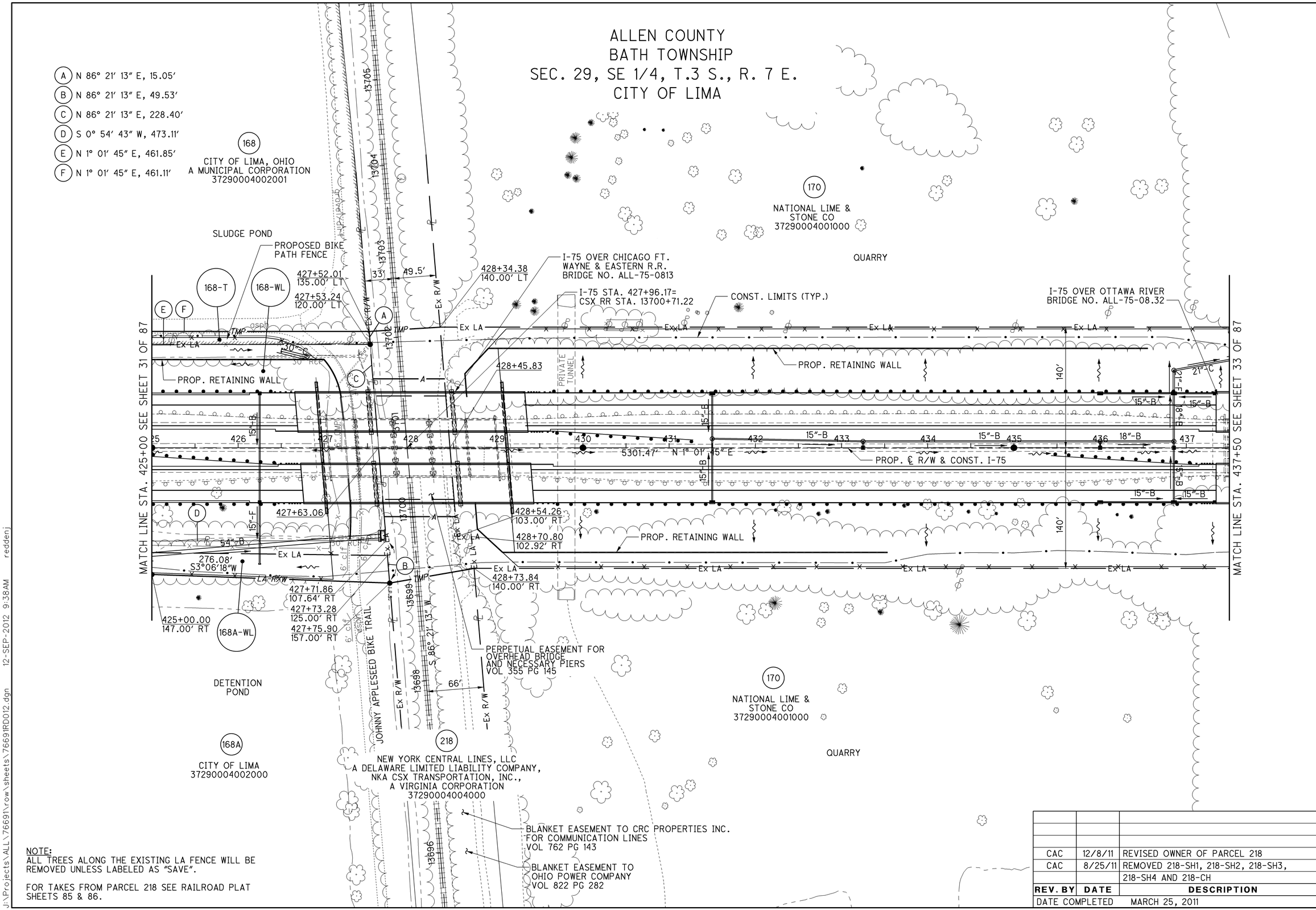

NOTE:
ALL TREES ALONG THE EXISTING LA FENCE WILL BE REMOVED UNLESS LABELED AS "SAVE".

FOR TAKES FROM PARCEL 218 SEE RAILROAD PLAT SHEETS 85 & 86.

REV. BY	DATE	DESCRIPTION
CAC	12/8/11	REVISED OWNER OF PARCEL 218
CAC	8/25/11	REMOVED 218-SH1, 218-SH2, 218-SH3, 218-SH4 AND 218-CH

DATE COMPLETED MARCH 25, 2011

HORIZONTAL SCALE IN FEET 0 25 50 100

PID NO. 76691

R/W DESIGNER CAC
R/W REVIEWER KDO

RIGHT OF WAY PLAN
STA. 425+00 TO STA. 437+50

ALL-75-5.53

J:\Projects\ALL\76691\row\sheets\76691RD012.dgn 12-SEP-2012 9:38AM reddenj

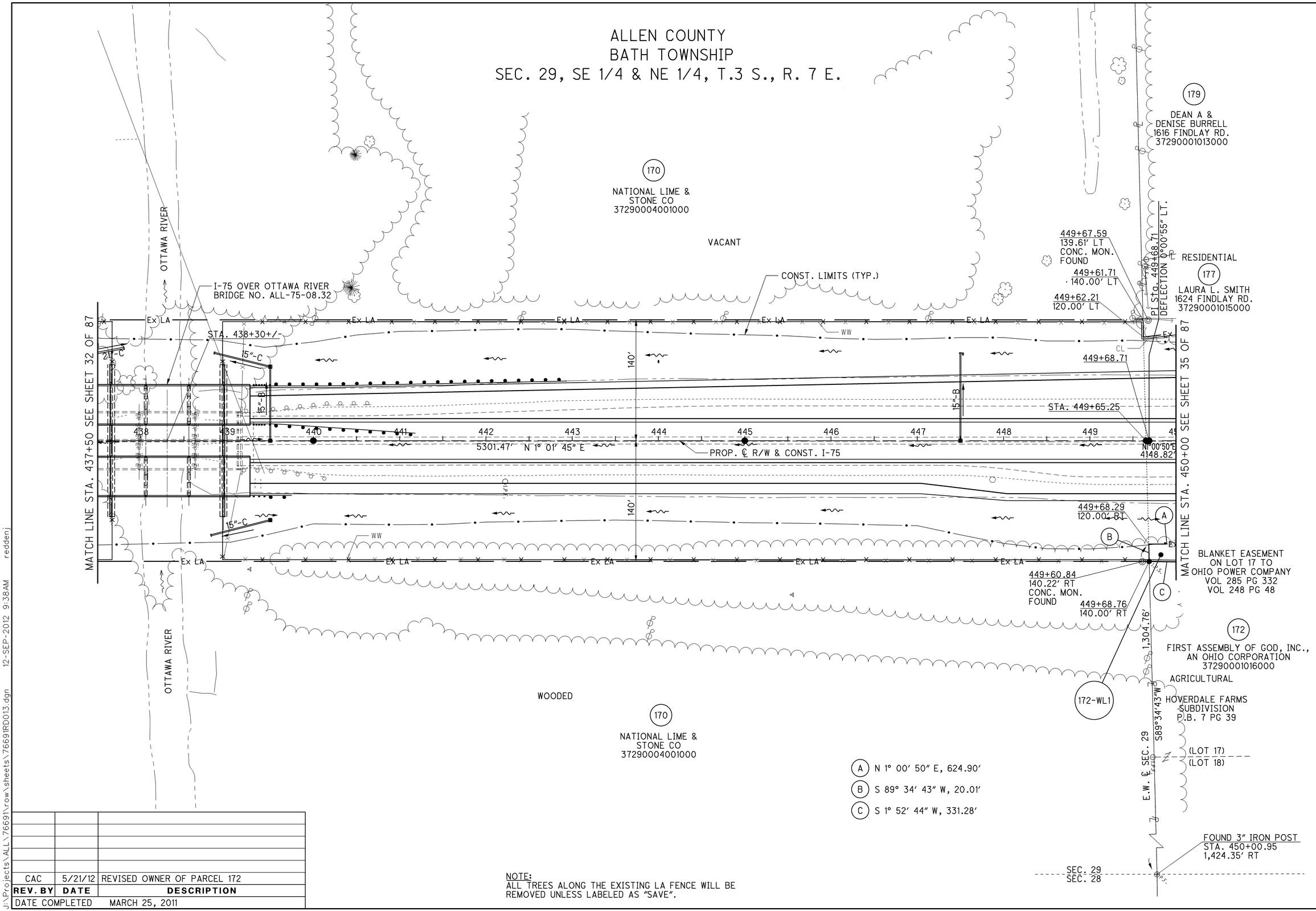

NOTE:
ALL TREES ALONG THE EXISTING LA FENCE WILL BE REMOVED UNLESS LABELED AS "SAVE".

REV. BY	DATE	DESCRIPTION
CAC	5/21/12	REVISED OWNER OF PARCEL 172
DATE COMPLETED		MARCH 25, 2011

J:\Projects\ALL\76691\row\sheets\76691RD013.dgn 12-SEP-2012 9:38AM reddenj

HORIZONTAL SCALE IN FEET 0 25 50 100

PID NO. 76691

R/W DESIGNER CAC
R/W REVIEWER KDO

RIGHT OF WAY PLAN
STA. 437+50 TO STA. 450+00

ALL-75-5.53

ALLEN COUNTY
BATH TOWNSHIP
SEC. 29, NE 1/4, T.3 S., R. 7 E.

CURVE 81D-1
P.I. STA. 452+13.61
Ls = 220.00′
θs = 1° 55′ 30″
LT = 146.68′
ST = 73.34′
x = 219.98′
y = 2.46′
k = 110.00′
p = 0.62′

CURVE 81D-2
P.I.= Sta. 456+09.25
D = 15° 07′ 22″ (LT)
Dc = 1° 45′ 00″
R = 3,274.04′
D c = 13° 11′ 52″ (LT)
Lc = 754.16′
Es = 29.03′
C = 752.49′
C.B.1 = N 0° 45′ 52″ W
C.B. = N 8° 38′ 48″ W

(A) S 29° 45′ 34″ W, 13.17′
(B) S 76° 55′ 15″ W, 541.15′
(C) N 79° 34′ 07″ E, 542.52′

(179) DEAN A & DENISE BURRELL 1616 FINDLAY RD. 37290001013000

(178) ANGELA R DAVIS 37290001014000

1618 FINDLAY RD.

(177) LAURA L. SMITH 1624 FINDLAY RD. 37290001015000

RESIDENTIAL

456+05.75 201.57′ LT

458+93.25 301.69′ LT

460+49.44 355.95′ LT

ST Sta. 450+66.93 = STA. 450+66.93, 74.5′ LT. (I-75)

SC Sta. 452+86.93

CONST. LIMITS (TYP.)

81D-1

81D-2

℄ RAMP 'D'

℄ RAMP 'C'

℄ RAMP F

OLD ℄ S.R. 81

I-75 STA. 462+10.70= S.R. 81 STA. 450+66.08

℄ R/W & CONST. S.R. 81 (FINDLAY RD.)

I-75 OVER S.R. 81 (FINDLAY RD.) BRIDGE NO. ALL-75-0875

STA. 448+15.19 (S.R. 81) = STA. 461+75.24 (RAMP 'D')
STA. 448+20.11 (S.R. 81) = STA. 461+31.81 (RAMP 'F')

PROP. ℄ R/W & CONST. I-75

N 1° 00′ 50″ E 4148.82′

N 19° 34′ 07″ E 447.08′

N15°14′43″W 134.15′

N 8° 14′ 44″ W 147.74′

N19°55′02″E 3580.60′

N78°45′16″E 560.9′

PC Sta. 460+41.08

PT Sta. 462+10.80

PC Sta. 460+59.98

PT Sta. 462+51.59

N1°12′04″W 79.03′

MATCH LINE STA. 450+00 SEE SHEET 33 OF 87

MATCH LINE STA. 462+50 SEE SHEETS 35 AND 36 OF 87

81C-1 81C-2 81C-3 81C-4 SR81-3

331.28′ S 1° 52′ 44″ W

624.90′ N 1° 00′ 50″ E

146.95′ N29°45′34″E

222.96′ S 6° 19′ 59″ W

201.56′ S 8° 08′ 20″ W

194.12′ N 23° 40′ 59″ E

112.10′ N0°31′10″E

Realty sign

453+00.00 145.00′ RT

455+93.16 120.00′ RT

455+00.00 170.00′ RT

457+22.00 190.67′ RT

454+31.72 234.95′ RT (SR 81)

454+39.58 223.30′ RT (SR 81)

454+28.89 122.88′ RT (SR 81)

172-WL1 172-WL2

CS Sta. 455+04.65

SC Sta. 457+04.65

PT Sta. 458+65.86

PC Sta. 450+51.17 = STA. 450+51.17, 61.5′ RT. (I-75)

BLANKET EASEMENT ON LOT 17 TO OHIO POWER COMPANY VOL 285 PG 332 VOL 148 PG 48

(172) FIRST ASSEMBLY OF GOD, INC., AN OHIO CORPORATION 37290001016000

HOVERDALE FARMS P.B. 7 PG 39

AGRICULTURAL

(LOT 17)

(LOT 18)

(172) FIRST ASSEMBLY OF GOD, INC., AN OHIO CORPORATION 37290001017000

(LOT 9)

(LOT 10)

(LOT 11)

(LOT 12)

Time warner cable fiber 4x2" conduits

Time warner cable

CURVE SR81-3
P.I.= Sta. 453+46.45
D = 16° 35′ 17″ (RT)
Dc = 5° 30′ 00″
R = 1,041.74′
T = 151.86′
L = 301.60′
E = 11.01′
C = 300.55′
C.B. = N 87° 02′ 54″ E

CURVE 81C-1
P.I.= Sta. 452+78.18
D = 6° 48′ 08″ (RT)
Dc = 1° 30′ 00″
R = 3,819.72′
T = 227.01′
L = 453.48′
E = 6.74′
C = 453.22′
C.B. = N 4° 24′ 54″ E

CURVE 81C-2
P.I. STA. 456+23.82
Ls = 200.00′
θs = 7° 00′ 00″
LT = 119.17′
ST = 81.06′
x = 199.63′
y = 9.88′
k = 99.95′
p = 1.16′

CURVE 81C-3
P.I.= Sta. 457+85.42
D = 8° 52′ 00″ (RT)
Dc = 5° 30′ 00″
R = 1,041.74′
T = 80.77′
L = 161.21′
E = 3.13′
C = 161.05′
C.B. = N 19° 14′ 59″ E

CURVE 81C-4
P.I.= Sta. 461+36.60
D = 24° 53′ 03″ (LT)
Dc = 16° 30′ 00″
R = 347.25′
T = 76.61′
L = 150.81′
E = 8.35′
C = 149.63′
C.B. = N 11° 14′ 27″ E

NOTE:
FOR S.R. 81, SEE SHEETS 65-80.

ALL TREES ALONG THE EXISTING LA FENCE WILL BE REMOVED UNLESS LABELED AS "SAVE".

SEE SHEETS 75-78 FOR PARCEL 172-WL2

REV. BY	DATE	DESCRIPTION
CAC	5/21/12	REVISED OWNER OF PARCEL 172
DATE COMPLETED		MARCH 25, 2011

HORIZONTAL SCALE IN FEET 0 25 50 100

PID NO. 76691

R/W DESIGNER CAC
R/W REVIEWER KDO

RIGHT OF WAY PLAN
STA. 450+00 TO STA. 462+50
ALL-75-5.53

34 / 87

1169
1224

J:\Projects\ALL\76691\row\sheets\76691RD014.dgn 12-SEP-2012 9:38AM reddenj

ALLEN COUNTY
BATH TOWNSHIP
SEC. 29, NE 1/4, T. 3 S., R. 7 E.

MATCH LINE A-A ON THIS SHEET

NOTE:
FOR S.R. 81,
SEE SHEETS 65-80.

ALL TREES ALONG THE EXISTING LA FENCE WILL BE REMOVED UNLESS LABELED AS "SAVE".

(A) RADIUS = 2,221.83', ARC LENGTH = 343.62'
CHORD BEARING = N 14° 10' 54" E
CHORD LENGTH = 343.28'
CENTRAL ANGLE = 8° 51' 40" (LT)

REV. BY	DATE	DESCRIPTION
DATE COMPLETED	MARCH 25, 2011	

(LOT 7)
463+34.15
799.44' LT
Ex LA
(LOT 8)
PARKING
PARKING
COMMERICAL
465+66.21
584.58' LT
190
CHANDNI CORPORATION
1210 NEUBRECHT RD
37290001006000
191
LIMA HOTEL, INC.
1250 NEUBRECHT RD
37290001003000
HOVERDALE FARMS
SUBDIVISION
P.B. 7 PG. 39
(LOT 9)
CONST. LIMITS (TYP.)
469+46.58
369.77' LT
COMMERICAL
(LOT 5)
(LOT 4)
197
ROWLAND E RONE &
ANNA PAULINE RONE
1304 NEUBRECHT RD
37290001002000
(LOT 1)
COMMERICAL
BLANKET EASEMENT
ON PARCEL 197 TO
OHIO POWER COMPANY
VOL 248 PG 445
VOL 43 PG 435
472+77.58
204.94' LT
3/4" PF
472+77.59
205.05' LT
472+77.60
204.78' LT
5/8" IPF "SHELDON"
N8°14'44"W, 147.44'
24"-A
℄ RAMP 'F'
(LOT 10)
PC Sta. 462+19.55
PT Sta. 464+84.34
PC Sta. 467+70.99
CS Sta. 469+50.57
SC Sta. 471+50.57
N 18° 24' 09" E 286.45'
81F-1
81F-2
81F-3
81F-4
81B-2
81B-3
℄ RAMP B
197-WL
A
S 89° 10' 28" W 305.10'
472+84.17
PROP. ℄ R/W & CONST. I-75
N 1° 00' 50" E 4148.82'
15'-B
I-75 OVER S.R. 81 (FINDLAY RD.)
BRIDGE NO. ALL-75-08.75

MATCH LINE STA. 462+50 SEE SHEET 34 OF 87
SEE SHEET 36 OF 87
MATCH LINE STA. 475+00 SEE SHEET 37 OF 87

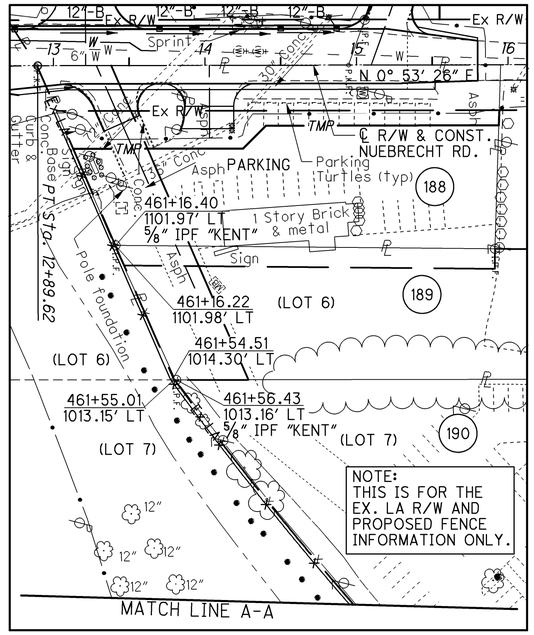

CURVE 81F-1
P.I.= Sta. 463+83.93
D = 26° 38' 53" (RT)
Dc = 13° 00' 00"
R = 440.74'
T = 104.38'
L = 204.99'
E = 12.19'
C = 203.14'
C.B. = N 5° 04' 43" E

CURVE 81F-2
P.I.= Sta. 468+60.86
D = 5° 50' 11" (LT)
Dc = 3° 15' 00"
R = 1,762.95'
T = 89.87'
L = 179.58'
E = 2.29'
C = 179.50'
C.B. = N 15° 29' 04" E

CURVE 81F-3
P.I. STA. 470+38.34
Ls = 200.00'
θs = 4° 45' 00"
LT = 112.34'
ST = 87.77'
x = 199.81'
y = 7.27'
k = 99.98'
p = 0.51'

CURVE 81F-4
P.I.= Sta. 473+77.58
D = 6° 48' 08" (LT)
Dc = 1° 30' 00"
R = 3,819.72'
T = 227.01'
L = 453.48'
E = 6.74'
C = 453.22'
C.B. = N 4° 24' 54" E

CURVE 81B-2
P.I.= Sta. 469+71.54
D = 14° 13' 57" (RT)
Dc = 3° 30' 00"
R = 1,637.02'
T = 204.37'
L = 406.64'
E = 12.71'
C = 405.59'
C.B. = N 10° 55' 23" W

CURVE 81B-3
P.I. STA. 472+43.84
Ls = 210.00'
f s = 3° 40' 30"
LT = 140.03'
ST = 70.03'
x = 209.91'
y = 4.49'
k = 104.99'
p = 1.12'

HORIZONTAL SCALE IN FEET
0 25 50 100

PID NO. 76691

R/W DESIGNER CAC
R/W REVIEWER KDO

RIGHT OF WAY PLAN
STA. 462+50 TO STA. 475+00

ALL-75-5.53

35 / 87

1170
1224

J:\Projects\ALL\76691\row\sheets\76691RD015.dgn 12-SEP-2012 9:38AM redden

NOTES:
SEE SHEETS 65-80
FOR S.R. 81.

FOR PARCEL 176
SEE SHEETS 77-80.

ALL TREES ALONG THE EXISTING LA FENCE WILL BE REMOVED UNLESS LABELED AS "SAVE".

ALLEN COUNTY
BATH TOWNSHIP
SEC. 29, NE 1/4, T. 3 S., R. 7 E.

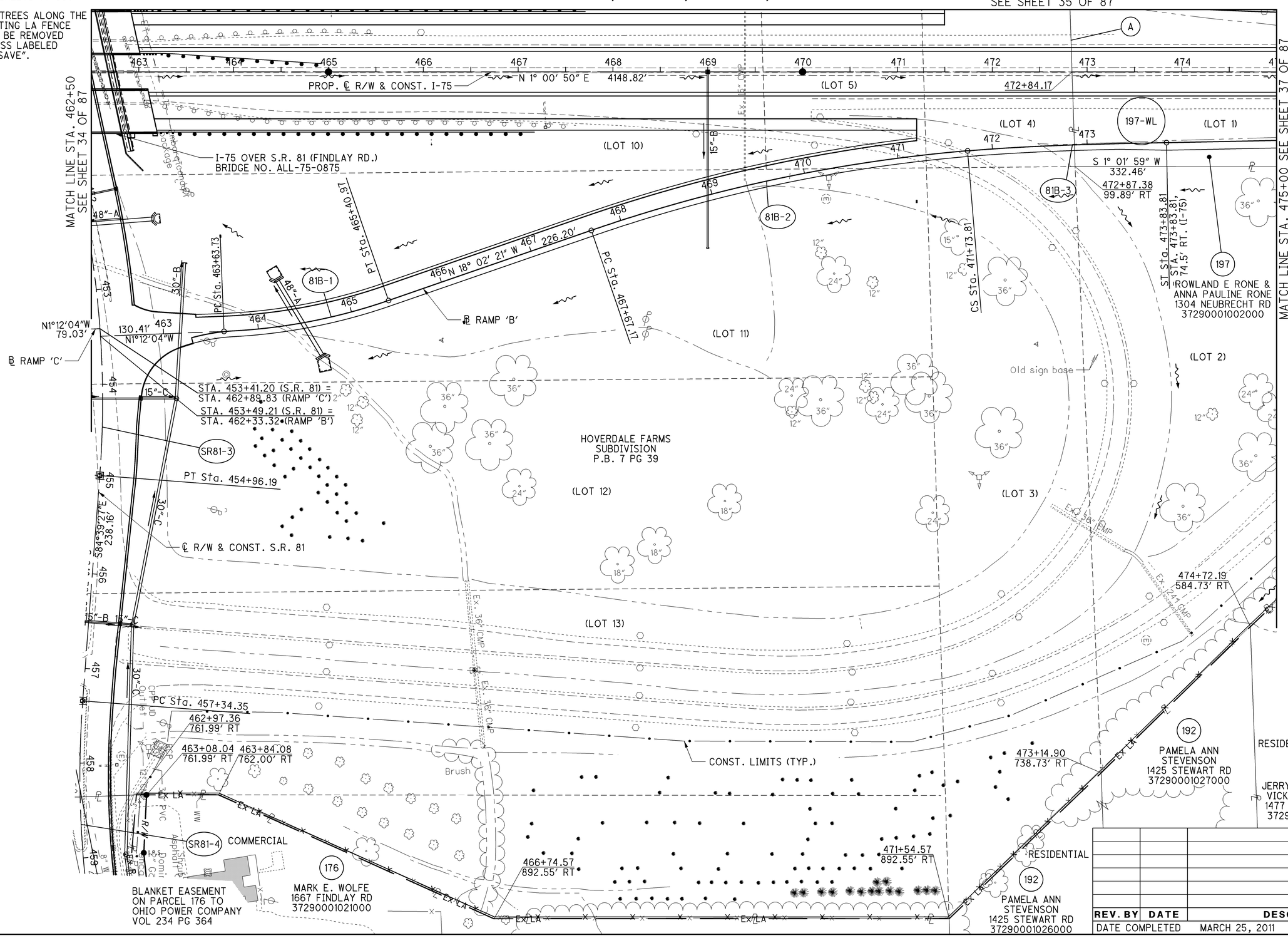

CURVE 81B-1
P.I.= Sta. 464+52.99
D = 16° 50′ 17″ (LT)
Dc = 9° 30′ 00″
R = 603.11′
T = 89.26′
L = 177.24′
E = 6.57′
C = 176.60′
C.B. = N 9° 37′ 13″ W

CURVE 81B-2
P.I.= Sta. 469+71.54
D = 14° 13′ 57″ (RT)
Dc = 3° 30′ 00″
R = 1,637.02′
T = 204.37′
L = 406.64′
E = 12.71′
C = 405.59′
C.B. = N 10° 55′ 23″ W

CURVE 81B-3
P.I. STA. 472+43.84
Ls = 210.00′
θs = 3° 40′ 30″
LT = 140.03′
ST = 70.03′
x = 209.91′
y = 4.49′
k = 104.99′
p = 1.12′

CURVE SR81-3
P.I.= Sta. 453+46.45
D = 16° 35′ 17″ (RT)
Dc = 5° 30′ 00″
R = 1,041.74′
T = 151.86′
L = 301.60′
E = 11.01′
C = 300.55′
C.B. = N 87° 02′ 54″ E

CURVE SR81-4
P.I.= Sta. 458+78.67
D = 15° 46′ 26″ (LT)
Dc = 5° 30′ 00″
R = 1,041.74′
T = 144.31′
L = 286.80′
E = 9.95′
C = 285.89′
C.B. = N 87° 27′ 20″ E

REV. BY	DATE	DESCRIPTION
DATE COMPLETED		MARCH 25, 2011

HORIZONTAL SCALE IN FEET
0 25 50 100

PID NO. 76691

R/W DESIGNER CAC
R/W REVIEWER KDO

RIGHT OF WAY PLAN
STA. 462+50 TO STA. 475+00

ALL-75-5.53

36 / 87

1171
1224

J:\Projects\ALL\76691\row\sheets\76691RD015A.dgn 12-SEP-2012 9:38AM reddenj

ALLEN COUNTY
BATH TOWNSHIP
SEC. 29, NE 1/4, SEC. 20, SE 1/4, T. 3 S., R. 7 E.

CURVE 81F-4
P.I.= Sta. 473+77.58
D = 6° 48′ 08″ (LT)
Dc = 1° 30′ 00″
R = 3,819.72′
T = 227.01′
L = 453.48′
E = 6.74′
C = 453.22′
C.B. = N 4° 24′ 54″ E

197
ROWLAND E. RONE &
ANNA PAULINE RONE
1304 NEUBRECHT RD
37290001002000

BLANKET EASEMENT ON
PARCEL 197 TO
OHIO POWER COMPANY
VOL 248 PG 445
VOL 43 PG 435

HOVERDALE FARMS
P.B. 7 PG. 39
(LOT 1)

197
ROWLAND E. RONE &
ANNA PAULINE RONE
1304 NEUBRECHT RD
37200004006000

PT Sta. 476+04.05 = STA. 476+04.05, 61.5′ LT. (I-75)

476+11.84
126.85′ LT

477+00.00
140.00′ LT

478+50.00
135.00′ LT

479+50.00
115.00′ LT

481+61.75
110.00′ LT

481+61.90
104.72′ LT

481+61.91
104.57′ LT

482+79.20
100.00′ LT

197-WL
81F-4
B
A
198-WL

N 7° 28′ 12″ W 89.13′
N 2° 55′ 23″ E 150.08′
N 12° 19′ 36″ E 101.98′
N 2° 22′ 00″ E 211.80′
N 3° 19′ 05″ E 117.39′
N 1° 00′ 50″ E 782.72′
S 1° 00′ 50″ W 665.58′
N89°00′09″E 1947.27′

Brush
COMMERICAL
Metokote
1 Sty.
Blk & metal
Gravel
Metal
Car
Port
Asphalt
12″ CMP
PARKING
COMMERICAL
Wood
Posts
25′ SEWER EASEMANT
VOL 849 PG 154
Ex U
CL
63′
77′
20″ PVC
W.P.S.
WW
Ex LA
LA-R/W
5/8″ I.P.F.
"S-6081"

16′ WIDE GAS EASEMENT
(LOCATION UNKNOWN)
WEST OHIO GAS COMPANY
VOL 734 PG 283

198
MK LANDLORD DE
LIMITED PARTNERSHIP,
A DELAWARE LIMITED PARTNERSHIP
1340 NEUBRECHT RD
37200004004000

BLANKET EASEMENT ON
PARCEL 198 TO
OHIO POWER COMPANY
VOL 470 PG 387
VOL 470 PG 325
VOL 458 PG 302
VOL 458 PG 300
VOL 319 PG 335
VOL 248 PG 523
VOL 248 PG 481
VOL 248 PG 443
VOL 43 PG 436

HORIZONTAL SCALE IN FEET
0 25 50 100

PID NO. 76691

R/W DESIGNER CAC
R/W REVIEWER KDO

RIGHT OF WAY PLAN
STA. 475+00 TO STA. 487+50

ALL-75-5.53

37 / 87

1172
1224

MATCH LINE STA. 475+00 SEE SHEETS 35 AND 36 OF 87

STA. 476+16.32
476
475
477
478
479
1,328.46′
480
1,501.21′
481
482
482+82.71
483
484
485
485+31.58
486
487
915.26′
N 1° 00′ 50″ E
4148.82′
PROP. ℄ R/W & CONST. I-75
1,445.04′

MATCH LINE STA. 487+50 SEE SHEET 38 OF 87

15″-B
12″ Conc
Ex U
20″ PVC
482+86.02
94.15′ RT
485+31.68
92.00′ RT
485+31.58
100.00′ RT
331.22′
N1°00′50″E
Less than 12″
Ex LA
LA-R/W
S4°00′51″W
159.61′
S 0° 42′ 53″ E
331.49′
Horseshoe pit
Retention pond
132′
199-WL
CHURCH
199
BELIEVER CHRISTIAN FELLOWSHIP
AKA BELIEVERS CHRISTIAN FELLOWSHIP
1695 STEWART RD
37200004010000
PARKING
(3)-Less than 12″
SAN
E
F
D
E

332.46′
S1°01′59″W
666.20′
911.86′
N 0° 30′ 41″ E 257.22′
S 1° 22′ 15″ E
476+19.85
100.00′ RT
481+15.00
117.35′ RT
483+72.00
106.65′ RT
485+31.39
115.00′ RT
CONST. LIMTS (TYP.)
C
196-WL
(LOT 2)
HOVERDALE FARMS
SUBDIVISION
P.B. 7 PG. 39
SEC. 29
SEC. 20 S 88° 59′ 37″ W
333.56′
36″
18
15″
WW
479+21.95
192.29′ RT
196
SCOTT W. CAMPBELL
37200004007000
AGRICULTURAL
274.85′
S 38° 02′ 27″ E
102.59′
S40°25′08″E
477+08.52
365.46′ RT
476+31.61
433.35′ RT
194
JERRY D MARTIN &
VICKIE L MARTIN
1477 STEWART RD
37290001001000
RESIDENTIAL
1,317.19′
1,417.25′
FOUND ALLEN COUNTY
ENGINEER'S MONUMENT BOX
STA. 476+66.28, 1,416.37′ RT
SEC. 29
SEC. 28
SEC. 20
SEC. 21
STEWART RD.

35′ SEWER EASEMANT
VOL 848 PG 835

BLANKET EASEMENT ON PARCEL 196
TO OHIO POWER COMPANY
VOL 470 PG 387
VOL 470 PG 325
VOL 458 PG 302
VOL 458 PG 300
VOL 319 PG 335
VOL 248 PG 523
VOL 248 PG 443
VOL 43 PG 436

(A) N 89° 17′ 48″ E, 5.28′

(B) RADIUS = 2,221.83′, ARC LENGTH = 343.62′
CHORD BEARING = N 14° 10′ 54″ E
CHORD LENGTH = 343.28′
CENTRAL ANGLE = 8° 51′ 40″ (LT)

(C) RADIUS = 646.20′, ARC LENGTH = 207.98′
CHORD BEARING = S 20° 12′ 06″ E
CHORD LENGTH = 207.09′
CENTRAL ANGLE = 18° 26′ 27″ (LT)

(D) S 88° 16′ 06″ E, 23.00′

(E) N 88° 16′ 06″ W, 15.00′

(F) S 88° 59′ 10″ E, 100.00′

NOTE:
ALL TREES ALONG THE EXISTING LA FENCE WILL BE REMOVED UNLESS LABELED AS "SAVE".

REV. BY	DATE	DESCRIPTION
CAC	1/4/12	REVISED OWNER OF 199
DATE COMPLETED		MARCH 25, 2011

J:\Projects\ALL\76691\row\sheets\76691RD016.dgn 12-SEP-2012 9:38AM redden

NOTES:
ALL TREES ALONG THE EXISTING LA FENCE WILL BE REMOVED UNLESS LABELED AS "SAVE".

ALLEN COUNTY
BATH TOWNSHIP
SEC. 20, SE 1/4, T. 3 S., R. 7 E.

16' WIDE GAS EASEMENT
(LOCATION UNKNOWN)
WEST OHIO GAS COMPANY
VOL 734 PG 283

198
MK LANDLORD DE
LIMITED PARTNERSHIP,
A DELAWARE LIMITED PARTNERSHIP
1340 NEUBRECHT RD
37200004004000

10' EASEMANT TO
OHIO POWER COMPANY
VOL 733 PG 496

BLANKET EASEMENT ON
PARCEL 198 TO
OHIO POWER COMPANY
VOL 470 PG 387
VOL 470 PG 325
VOL 458 PG 302
VOL 458 PG 300
VOL 319 PG 335
VOL 248 PG 523
VOL 248 PG 481
VOL 248 PG 443
VOL 43 PG 436

1 Sty.
Blk & metal
Warehouse
Type bldg.

COMMERICAL

202
UNITED STATES PLASTIC CORP.,
A CORPORATION ORGANIZED AND
EXISTING UNDER THE LAWS OF THE STATE OF OHIO
1390 NEUBRECHT RD
37200004002000

1 Sty.
Brick & metal
Factory

PARKING

Pond

Field

Grass

Gravel

Asphalt

Brush

Retention pond

Old fence
(No posts)

198-WL
202-WL
199-WL
200-WL
201-WL
204-WL
205-WL
206-WL
207-WL

CL
RCP
Ex LA
LA-R/W
PROP. ℄ R/W & CONST. I-75
CONST. LIMITS (TYP.)
MATCH LINE STA. 487+50 SEE SHEET 37 OF 87
MATCH LINE STA. 500+00 SEE SHEET 39 OF 87
PC Sta. 491+17.53

N 1° 00' 50" E 782.72'
S1°00'50"W 665.58'
N 1° 00' 50" E 1,328.46'
1,445.04'
N 1° 00' 50" E 4148.82'
N 1° 09' 48" W 311.45'
N 5° 38' 08" E 577.31'
N 19° 32' 22" E 478.20'
S9°25'25"W 523.85'
N0°30'41"E 199.41'
N0°30'41"E 126.06'
N0°30'41"E 167.19'
N0°30'41"E 198.77'
N1°00'50"E 331.22'
S0°42'53"E 331.49'
S3°01'56"W 198.76'
S4°27'46"W 270.60'
S6°45'50"W 127.40'
S10°11'05"W 203.18'
S18°39'12"W 109.58'
S6°22'41"W 65.08'
S 11°33'59" W 147.58'

489+44.46
110.00' LT
491+17.53
100.00' LT
492+50.00
125.00' LT
489+44.80
99.21' LT
1" P.F.
489+44.78
100.00' LT
S 1° 00' 50" W 172.75'
495+10.44
100.00' LT
497+14.11
100.63' LT
498+00.00
160.00' LT
496+64.62
31.04' RT
496+64.62
498+28.26
6.51' LT
493+36.07
493+36.07
76.95' RT
494+64.55
63.53' RT
498+02.82
488+62.94
89.09' RT
490+61.71
87.35' RT
490+61.53
99.85' RT
491+17.53
100.00' RT
492+98.60
100.00' RT
493+99.13
99.43' RT
494+70.55
100.00' RT
496+81.02
100.00' RT
498+60.81
100.00' RT
498+30.17
498+60.42
98.78' RT
488+62.80
100.00' RT
488+62.73
105.00' RT
490+61.53
100.00' RT
490+61.36
112.00' RT
492+96.43
100.15' RT
493+38.67
100.00' RT
493+40.97
120.00' RT
494+73.90
120.00' RT
496+85.93
120.00' RT
497+07.32
97.02' RT
498+00.00
130.00' RT
498+67.22
120.00' RT
498+60.42
98.78' RT
1/2" I.P.F.

CHURCH
BELIEVER CHRISTIAN FELLOWSHIP
AKA BELIEVERS CHRISTIAN FELLOWSHIP
1695 STEWART RD
37200004010000

AGRICULTURAL
STEPHEN P. CASEBOLT &
LAURIE L. CASEBOLT
1751 STEWART RD
37200004011000

AGRICULTURAL
JUDITH L. BOWMAN AND
DAMON L. BOWMAN, TRUSTEES
OR THEIR SUCCESSORS IN TRUST,
UNDER THE JUDITH L. BOWMAN
LIVING TRUST, DATED JUNE 26, 1996
1801 STEWART RD
37200004012000

37200004013000

WOODED
MARTHA JEAN MILLER,
TRANSFER ON DEATH
TO RAY J. MILLER,
BENEFICIARY
1833 STEWART RD
37200004014000

RESIDENTIAL
DAVID A. ANDERSON &
ANNE MARIE ANDERSON
1869 STEWART RD
37200004015000

AGRICULTURAL
WILLIAM L. JAMES
1895 STEWART RD
37200004016000

WOODED
TERRY SCHAAF
37200004019000

CURVE I75-7
P.I.= Sta. 504+36.28
D = 49° 04' 23" (RT)
Dc = 1° 59' 00"
R = 2,888.86'
T = 1,318.76'
L = 2,474.27'
E = 286.77'
C = 2,399.34'
C.B. = N 25° 33' 02" E

(A) N 89° 12' 38" E, 10.00'
(B) S 88° 12' 44" E, 5.00'
(C) N 88° 12' 44" W, 15.91'
(D) S 88° 10' 44" E, 24.65'
(E) N 88° 10' 44" W, 12.00'
(F) N 1° 00' 50" E, 56.00'
(G) RADIUS = 2,788.86', ARC LENGTH = 213.49'
CHORD BEARING = N 3° 12' 25" E
CHORD LENGTH = 213.44'
CENTRAL ANGLE = 4° 23' 10" (RT)
(H) RADIUS = 2,988.86', ARC LENGTH = 406.51'
CHORD BEARING = S 4° 54' 37" W
CHORD LENGTH = 406.20'
CENTRAL ANGLE = 7° 47' 34" (LT)
(I) N 89° 07' 59" E, 20.12'
(J) N 89° 07' 59" E, 43.31'
(K) N 88° 52' 37" E, 57.19'
(L) S 88° 41' 47" W, 20.93'
(M) RADIUS = 2,788.86', ARC LENGTH = 390.93'
CHORD BEARING = N 19° 46' 17" E
CHORD LENGTH = 390.61'
CENTRAL ANGLE = 8° 01' 53" (RT)
(N) N 88° 59' 10" W, 100.00'
(O) S 88° 59' 10" E, 112.00'
(P) RADIUS = 2,888.86', ARC LENGTH = 218.55'
CHORD BEARING = N 3° 10' 52" E
CHORD LENGTH = 218.49'
CENTRAL ANGLE = 4° 20' 04" (RT)
(Q) S 84° 39' 05" E, 76.95'
(R) RADIUS = 2,888.86', ARC LENGTH = 547.09'
CHORD BEARING = N 6° 26' 21" E
CHORD LENGTH = 546.27'
CENTRAL ANGLE = 10° 51' 02" (RT)
(S) S 78° 08' 08" E, 31.04'
(T) N 88° 56' 23" E, 91.35'
(U) N 88° 41' 47" E, 132.15'

REV. BY	DATE	DESCRIPTION
CAC	1/4/12	REVISED OWNER OF 199
CAC	8/25/11	REVISED OWNER OF 205
DATE COMPLETED		MARCH 25, 2011

HORIZONTAL SCALE IN FEET
0 25 50 100

PID NO. 76691

R/W DESIGNER CAC
R/W REVIEWER KDO

RIGHT OF WAY PLAN
STA. 487+50 TO STA. 500+00

ALL-75-5.53

38 / 87

1173
1224

J:\Projects\ALL\76691\row\sheets\76691RD017.dgn 12-SEP-2012 9:38AM redderj

ALLEN COUNTY
BATH TOWNSHIP
SEC. 20, SE 1/4 & NE 1/4 , T. 3 S., R. 7 E.

(A) RADIUS = 2,788.86', ARC LENGTH = 390.93'
CHORD BEARING = N 19° 46' 17" E
CHORD LENGTH = 390.61'
CENTRAL ANGLE = 8° 01' 53" (RT)

(B) N 88° 31' 50" E, 11.06'

(C) S 11° 33' 59" W, 147.58'

(D) S 9° 25' 25" W, 523.85'

(E) RADIUS = 2,788.86', ARC LENGTH = 106.43'
CHORD BEARING = N 24° 52' 49" E
CHORD LENGTH = 106.42'
CENTRAL ANGLE = 2° 11' 11" (RT)

(F) N 89° 01' 46" E, 28.08'

(G) RADIUS = 2,788.86', ARC LENGTH = 1,051.08'
CHORD BEARING = N 36° 46' 14" E
CHORD LENGTH = 1,044.87'
CENTRAL ANGLE = N 21° 35' 38" (RT)

(H) RADIUS = 2,888.86', ARC LENGTH = 59.63'
CHORD BEARING = S 24° 22' 43" W
CHORD LENGTH = 59.63'
CENTRAL ANGLE = 1° 10' 58" (LT)

(I) S 66° 12' 46" E, 100.00'

(J) S 22° 35' 06" W, 241.31'

CURVE I75-7
P.I.= Sta. 504+36.28
D = 49° 04' 23" (RT)
Dc = 1° 59' 00"
R = 2,888.86'
T = 1,318.76'
L = 2,474.27'
E = 286.77'
C = 2,399.34'
C.B. = N 25° 33' 02" E

OVERLAP TABLE FOR EX. CHANNEL EASEMENT	
208-WL	0.010 AC.
209-WL	0.018 AC.

NOTE:
ALL TREES ALONG THE EXISTING LA FENCE WILL BE REMOVED UNLESS LABELED AS "SAVE".

DND - DO NOT DISTURB

REV. BY	DATE	DESCRIPTION
DATE COMPLETED	MARCH 25, 2011	

HORIZONTAL SCALE IN FEET: 0, 25, 50, 100

PID NO. 76691

R/W DESIGNER CAC
R/W REVIEWER KDO

RIGHT OF WAY PLAN
STA. 500+00 TO STA. 512+50

ALL-75-5.53

39 / 87

1174
1224

J:\Projects\ALL\76691\row\sheets\76691RD018.dgn 12-SEP-2012 9:38AM reddenj

ALLEN COUNTY
BATH TOWNSHIP
SEC. 20, NE 1/4, & SEC. 21, NE 1/4, T. 3 S., R. 7 E.

CURVE I75-7
P.I.= Sta. 504+36.28
D = 49° 04′ 23″ (RT)
Dc = 1° 59′ 00″
R = 2,888.86′
T = 1,318.76′
L = 2,474.27′
E = 286.77′
C = 2,399.34′
C.B. = N 25° 33′ 02″ E

MATCH LINE STA. 512+50 SEE SHEET 39 OF 87

Ex R/W
NORFOLK & WESTERN RAILWAY CO 37200003014000
NORFOLK & SOUTHERN RR
STEWART RD. OVER I-75 BRIDGE NO. ALL-75-09.90
SEC. 20
SEC. 21
CONST. LIMITS (TYP.)
END ACQUISITION STA. 519+10.92
END PROJECT ALL-75-55.53 PID 76691 STA. 520+00.00
Ex LA
Ex LA-R/W
STEWART RD.
519+10.92
PROP. ℄ R/W & CONST. I-75
513 514 515 516 517 518 519 520 521 522 523 524
N 50° 05′ 13″ E 4716.68′
STA. 521+03.31
514+64.76 100.00′ RT
515+91.80 100.00′ RT
519+10.92 100.00′ RT
514+64.22 99.52′ RT P.F.
514+99.70 130.00′ RT
518+25.00 125.00′ RT
S 45° 47′ 31″ W 430.46′
PT Sta. 515+91.80
209-WL
210-WL
RESIDENTIAL
210 RONNIE D. VIRES 2177 STEWART RD. 37200001010000
209 DERAND L. MOORE 2121 STEWART RD. 37200001008000
WOODED
OAK HAVEN MOBILE HOME PARK
END WORK STA. 520+05.12
N 0° 43′ 16″ E 1,305.27′
FOUND ALLEN COUNTY ENGINEER'S MONUMENT BOX STA. 510+82.00, 960.60′ RT
E.W. ℄ SEC. 20
E.W. ℄ SEC. 21
SEC. 20 / SEC. 21

(A) RADIUS = 2,788.86′, ARC LENGTH = 1,051.08′
CHORD BEARING = N 36° 46′ 14″ E
CHORD LENGTH = 1,044.87′
CENTRAL ANGLE = 21° 35′ 38″ (RT)

(B) N 89° 43′ 04″ E, 45.00′

(C) RADIUS = 2,788.86′, ARC LENGTH = 122.64′
CHORD BEARING = N 48° 49′ 38″ E
CHORD LENGTH = 122.63′
CENTRAL ANGLE = 02° 31′ 11″ (RT)

(D) S 50° 05′ 13″ W, 192.39′

(E) S 39° 54′ 47″ E, 100.00′

(F) S 33° 51′ 50″ W, 89.48′

(G) S 48° 56′ 42″ W, 321.20′

(H) N 50° 05′ 13″ E, 319.12′

NOTE:
ALL TREES ALONG THE EXISTING LA FENCE WILL BE REMOVED UNLESS LABELED AS "SAVE".

REV. BY	DATE	DESCRIPTION
DATE COMPLETED		MARCH 25, 2011

HORIZONTAL SCALE IN FEET
0 25 50 100

PID NO. 76691
R/W DESIGNER CAC
R/W REVIEWER KDO

RIGHT OF WAY PLAN
STA 512+50 TO END PROJECT
ALL-75-5.53

40 / 87
1175
1224

J:\Projects\ALL\76691\row\sheets\76691RD019.dgn 12-SEP-2012 9:38AM redderj

ALLEN COUNTY
PERRY TOWNSHIP
SEC. 5, SE 1/4 & SEC. 8, NE 1/4, T. 4 S., R. 7 E.
CITY OF LIMA

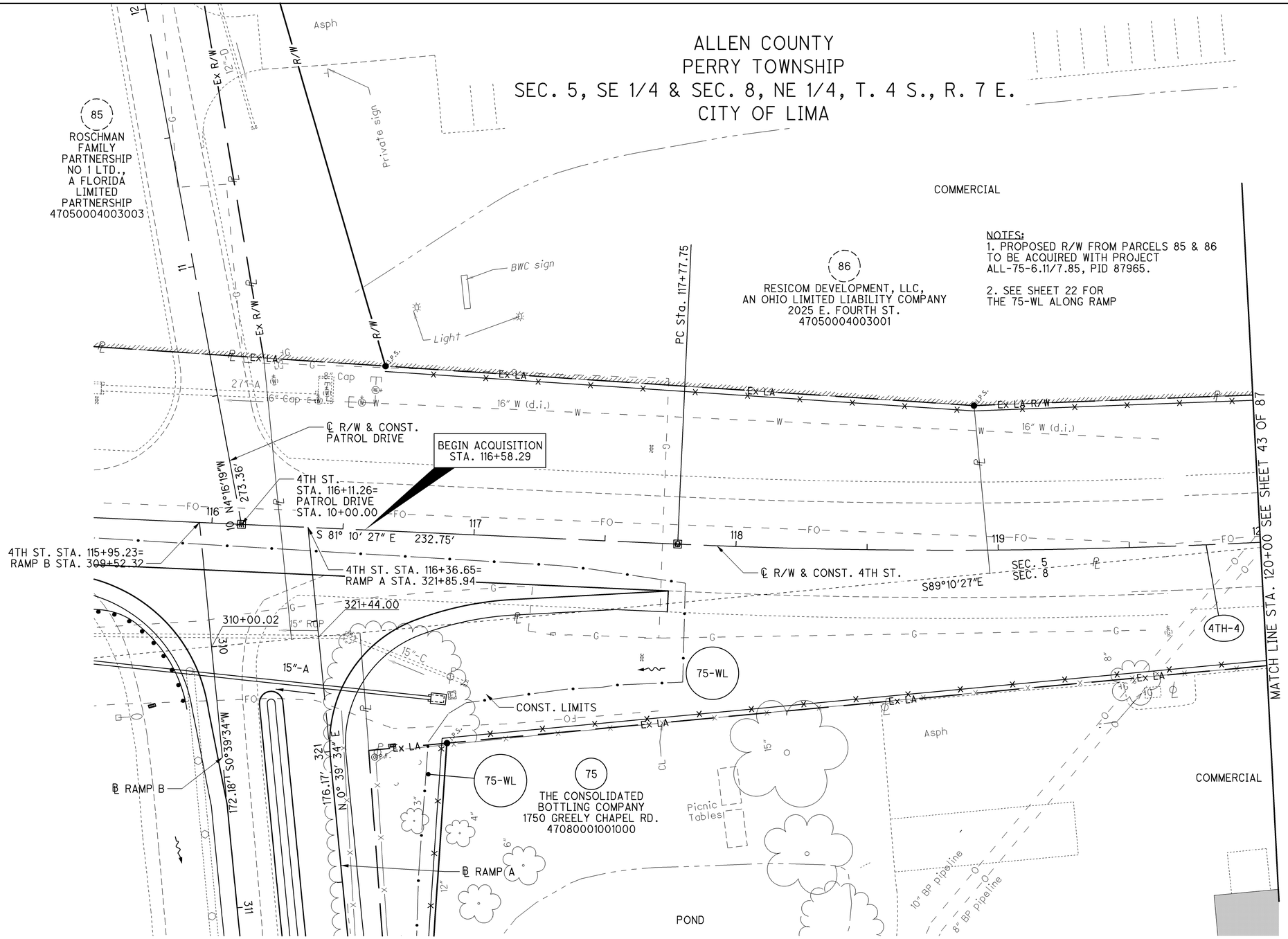

NOTES:
1. PROPOSED R/W FROM PARCELS 85 & 86 TO BE ACQUIRED WITH PROJECT ALL-75-6.11/7.85, PID 87965.

2. SEE SHEET 22 FOR THE 75-WL ALONG RAMP

CURVE 4TH-4
P.I.= Sta. 119+38.01
D = 8° 00' 00" (LT)
Dc = 2° 30' 00"
R = 2,291.83'
T = 160.26'
L = 320.00'
E = 5.60'
C = 319.74'
C.B. = S 85° 10' 27" E

EASEMENT OVER ALL OF THE NE 1/4 OF SEC. 8 TO WEST OHIO GAS COMPANY, VOL. 476, PG. 287 PARTIAL RELEASE OF EASEMENT TO CONSOLIDATED BOTTLING IN VOL. 476, PG. 18

BLANKET EASEMENT OVER NE 1/4 OF SEC. 8 WITH EXCEPTION OF PARCEL 76 TO OHIO POWER COMPANY VOL. 400, PG. 627

BLANKET EASEMENT OVER NE 1/4 OF SEC. 8 TO INLAND CORPORATION VOL. 319, PG. 108

BLANKET EASEMENT FOR A LINE OF POLES WITHIN 1' OF THE LIMITS OF ANY HIGHWAY AS NOW OR HEREAFTER LAID OUT TO THE OHIO POWER COMPANY VOL. 248, PG. 59

BLANKET EASEMENT OVER NE 1/4 OF SEC. 8 TO THE STANDARD OIL COMPANY VOL. 239, PG. 23

EASEMENT OVER ALL OF THE NE 1/4 OF SEC. 8 TO OHIO FUEL GAS COMPANY VOL. 233, PG. 585 PARTIAL RELEASE OF EASEMENT TO CONSOLIDATED BOTTLING IN VOL. 175, PG. 666

NOTE:
ALL TREES ALONG THE EXISTING LA FENCE WILL BE REMOVED UNLESS LABELED AS "SAVE".

REV. BY	DATE	DESCRIPTION
DATE COMPLETED		MARCH 25, 2011

HORIZONTAL SCALE IN FEET 0 10 20 40

PID NO. 76691

R/W DESIGNER CAC
R/W REVIEWER KDO

RIGHT OF WAY TOPO SHEET
4TH STREET
STA. 116+00.00 TO STA. 120+00.00

ALL-75-5.53

1176/1224

J:\Projects\ALL\76691\row\sheets\76691RT504.dgn 12-SEP-2012 9:38AM reddenj

ALLEN COUNTY
PERRY TOWNSHIP
SEC. 5, SE 1/4 & SEC. 8, NE 1/4, T. 4 S., R. 7 E.
CITY OF LIMA

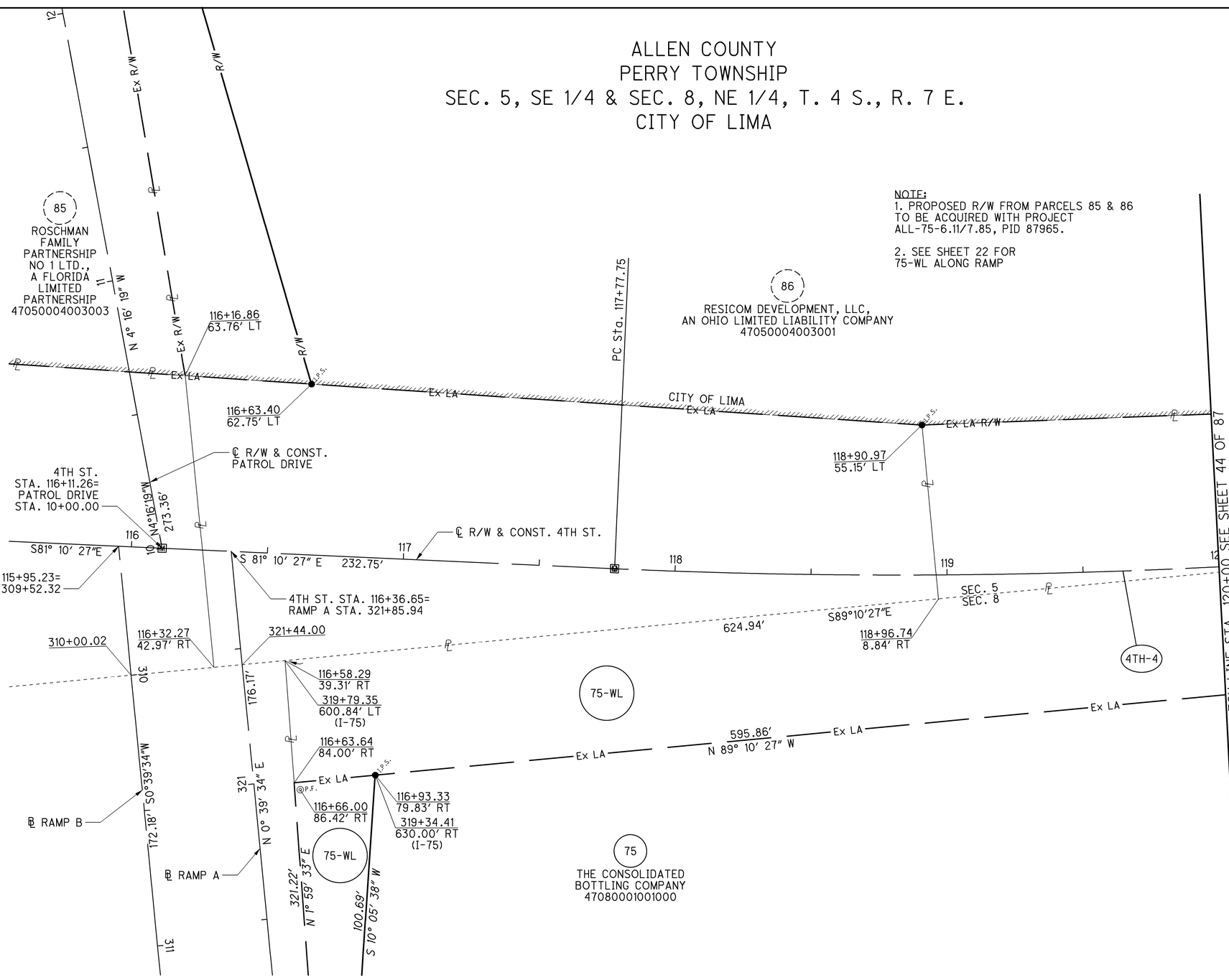

CURVE 4TH-4
P.I.= Sta. 119+38.01
D = 8° 00' 00" (LT)
Dc = 2° 30' 00"
R = 2,291.83'
T = 160.26'
L = 320.00'
E = 5.60'
C = 319.74'
C.B. = S 85° 10' 27" E

EASEMENT OVER ALL OF THE NE 1/4 OF SEC. 8 TO WEST OHIO GAS COMPANY, VOL. 476, PG. 287 PARTIAL RELEASE OF EASEMENT TO CONSOLIDATED BOTTLING IN VOL. 476, PG. 18

BLANKET EASEMENT OVER NE 1/4 OF SEC. 8 WITH EXCEPTION OF PARCEL 76 TO OHIO POWER COMPANY VOL. 400, PG. 627

BLANKET EASEMENT OVER NE 1/4 OF SEC. 8 TO INLAND CORPORATION VOL. 319, PG. 108

BLANKET EASEMENT FOR A LINE OF POLES WITHIN 1' OF THE LIMITS OF ANY HIGHWAY AS NOW OR HEREAFTER LAID OUT TO THE OHIO POWER COMPANY VOL. 248, PG. 59

BLANKET EASEMENT OVER NE 1/4 OF SEC. 8 TO THE STANDARD OIL COMPANY VOL. 239, PG. 23

EASEMENT OVER ALL OF THE NE 1/4 OF SEC. 8 TO OHIO FUEL GAS COMPANY VOL. 233, PG. 585 PARTIAL RELEASE OF EASEMENT TO CONSOLIDATED BOTTLING IN VOL. 175, PG. 666

REV. BY	DATE	DESCRIPTION
DATE COMPLETED		MARCH 25, 2011

HORIZONTAL SCALE IN FEET
0 10 20 40

PID NO. 76691

R/W DESIGNER CAC
R/W REVIEWER KDO

RIGHT OF WAY BOUNDARY SHEET
4TH STREET
STA. 116+00.00 TO STA. 120+00.00

ALL-75-5.53

42 / 87

1177
1224

J:\Projects\ALL\76691\row\sheets\7669IRB504.dgn 12-SEP-2012 9:38AM redden

ALLEN COUNTY
PERRY TOWNSHIP
SEC. 5, SE 1/4 & SEC. 8, NE 1/4, T. 4 S., R. 7 E.
CITY OF LIMA

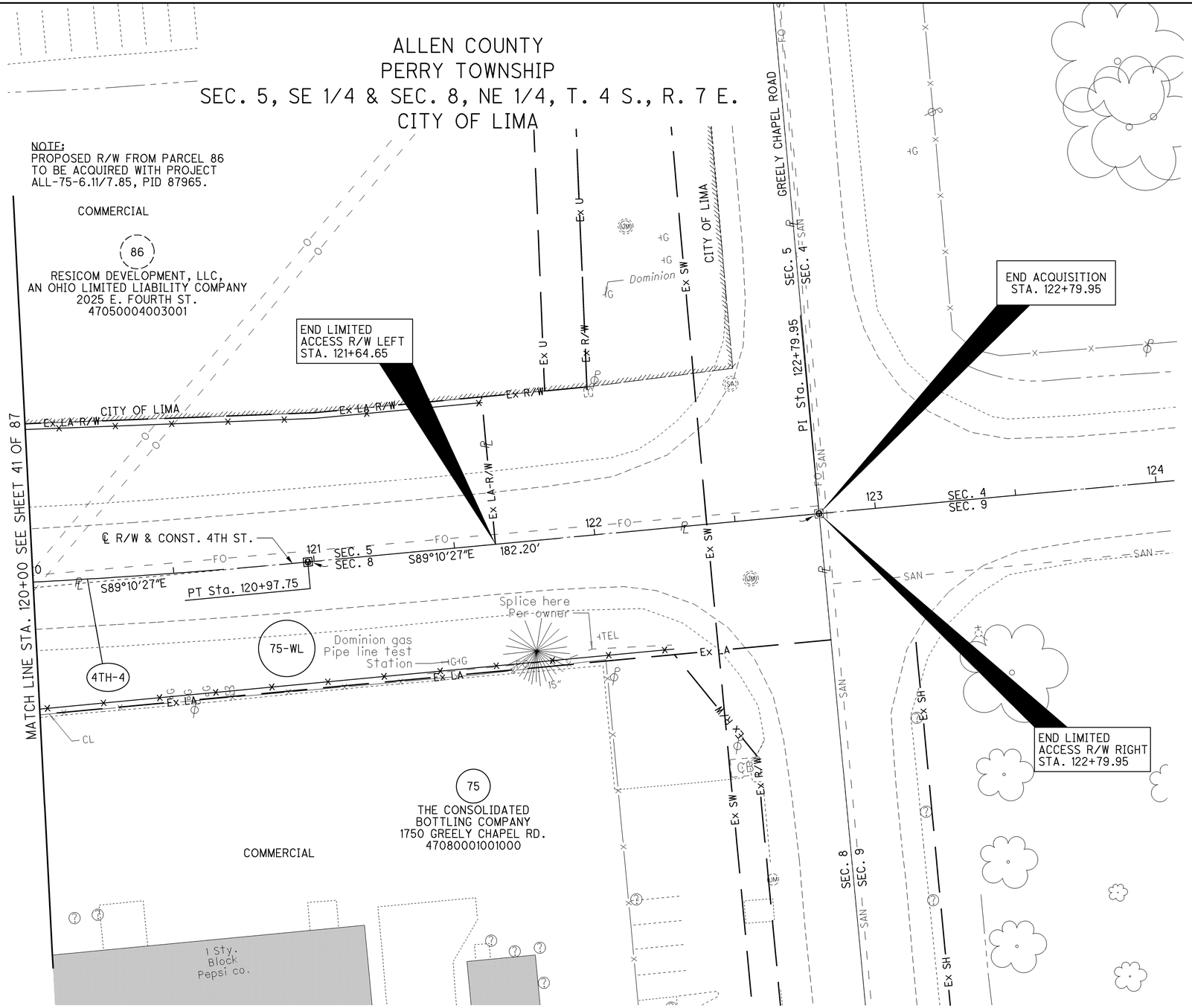

CURVE 4TH-4
P.I.= Sta. 119+38.01
D = 8° 00′ 00″ (LT)
Dc = 2° 30′ 00″
R = 2,291.83′
T = 160.26′
L = 320.00′
E = 5.60′
C = 319.74′
C.B. = S 85° 10′ 27″ E

NOTE:
ALL TREES ALONG THE EXISTING LA FENCE WILL BE REMOVED UNLESS LABELED AS "SAVE".

EASEMENT OVER ALL OF THE NE 1/4 OF SEC. 8 TO WEST OHIO GAS COMPANY, VOL. 476, PG. 287 PARTIAL RELEASE OF EASEMENT TO CONSOLIDATED BOTTLING IN VOL. 476, PG. 18

BLANKET EASEMENT OVER NE 1/4 OF SEC. 8 WITH EXCEPTION OF PARCEL 76 TO OHIO POWER COMPANY VOL. 400, PG. 627

BLANKET EASEMENT OVER NE 1/4 OF SEC. 8 TO INLAND CORPORATION VOL. 319, PG. 108

BLANKET EASEMENT FOR A LINE OF POLES WITHIN 1' OF THE LIMITS OF ANY HIGHWAY AS NOW OR HEREAFTER LAID OUT TO THE OHIO POWER COMPANY VOL. 248, PG. 59

BLANKET EASEMENT OVER NE 1/4 OF SEC. 8 TO THE STANDARD OIL COMPANY VOL. 239, PG. 23

EASEMENT OVER ALL OF THE NE 1/4 OF SEC. 8 TO OHIO FUEL GAS COMPANY VOL. 233, PG. 585 PARTIAL RELEASE OF EASEMENT TO CONSOLIDATED BOTTLING IN VOL. 175, PG. 666

REV. BY	DATE	DESCRIPTION
DATE COMPLETED		MARCH 25, 2011

HORIZONTAL SCALE IN FEET
0 10 20 40

PID NO. 76691

R/W DESIGNER CAC
R/W REVIEWER KDO

RIGHT OF WAY TOPO SHEET
4TH STREET
STA. 120+00.00 TO STA. 122+79.95

ALL-75-5.53

43 / 87

1178
1224

J:\Projects\ALL\76691\row\sheets\76691RT504A.dgn 12-SEP-2012 9:38AM reddenj

ALLEN COUNTY
PERRY TOWNSHIP
SEC. 5, SE 1/4 & SEC. 8, NE 1/4, T. 4 S., R. 7 E.
CITY OF LIMA

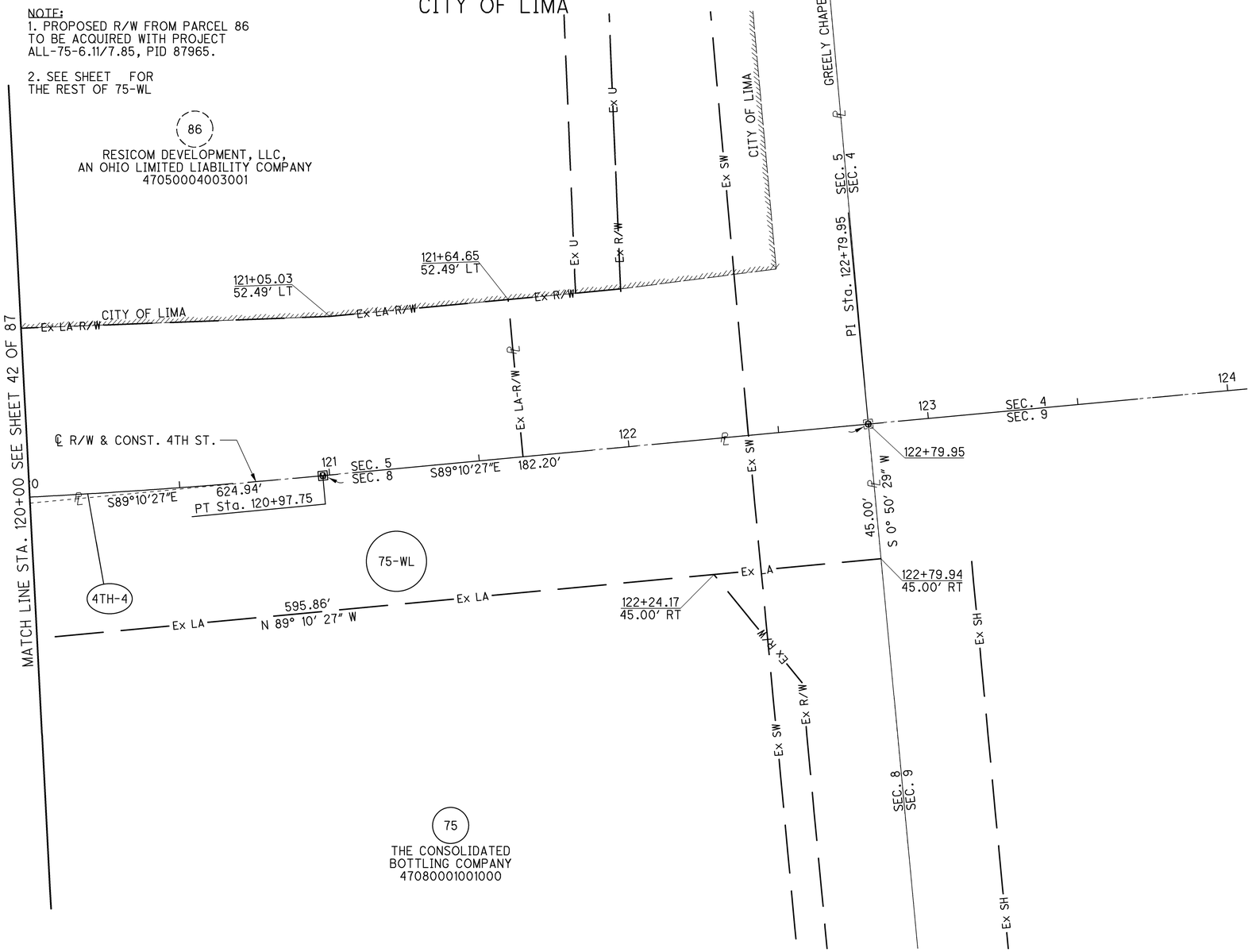

CURVE 4TH-4
P.I.= Sta. 119+38.01
D = 8° 00' 00" (LT)
Dc = 2° 30' 00"
R = 2,291.83'
T = 160.26'
L = 320.00'
E = 5.60'
C = 319.74'
C.B. = S 85° 10' 27" E

EASEMENT OVER ALL OF THE NE 1/4 OF SEC. 8 TO WEST OHIO GAS COMPANY, VOL. 476, PG. 287 PARTIAL RELEASE OF EASEMENT TO CONSOLIDATED BOTTLING IN VOL. 476, PG. 18

BLANKET EASEMENT OVER NE 1/4 OF SEC. 8 WITH EXCEPTION OF PARCEL 76 TO OHIO POWER COMPANY VOL. 400, PG. 627

BLANKET EASEMENT OVER NE 1/4 OF SEC. 8 TO INLAND CORPORATION VOL. 319, PG. 108

BLANKET EASEMENT FOR A LINE OF POLES WITHIN 1' OF THE LIMITS OF ANY HIGHWAY AS NOW OR HEREAFTER LAID OUT TO THE OHIO POWER COMPANY VOL. 248, PG. 59

BLANKET EASEMENT OVER NE 1/4 OF SEC. 8 TO THE STANDARD OIL COMPANY VOL. 239, PG. 23

EASEMENT OVER ALL OF THE NE 1/4 OF SEC. 8 TO OHIO FUEL GAS COMPANY VOL. 233, PG. 585 PARTIAL RELEASE OF EASEMENT TO CONSOLIDATED BOTTLING IN VOL. 175, PG. 666

REV. BY	DATE	DESCRIPTION
DATE COMPLETED		MARCH 25, 2011

HORIZONTAL SCALE IN FEET
0 10 20 40

PID NO. 76691

R/W DESIGNER CAC
R/W REVIEWER KDO

RIGHT OF WAY BOUNDARY SHEET
4TH STREET
STA. 120+00.00 TO STA. 122+79.95

ALL-75-5.53

44 / 87

1179
1224

J:\Projects\ALL\76691\row\sheets\76691RB504A.dgn 12-SEP-2012 9:38AM reddenj

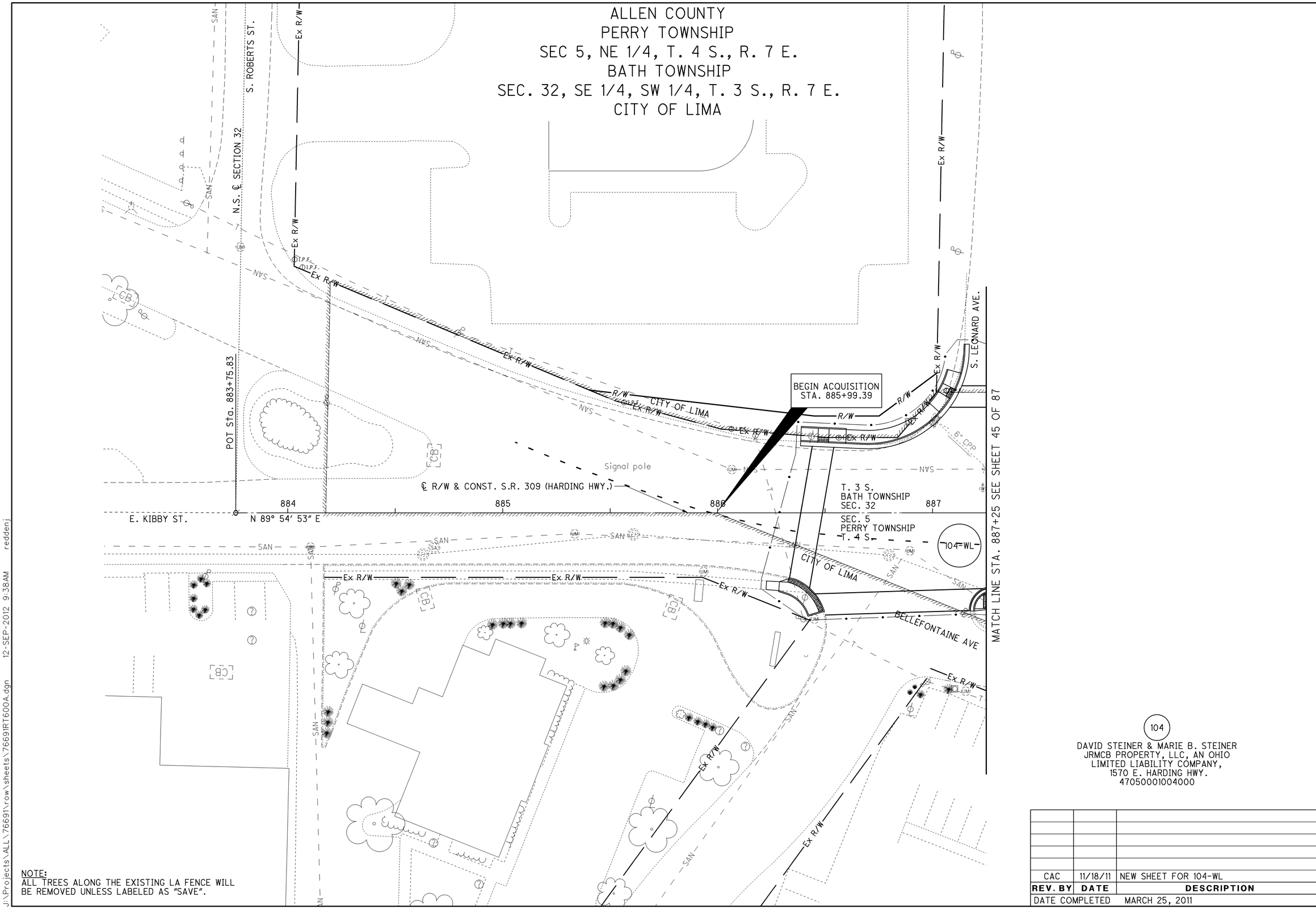

NOTE:
ALL TREES ALONG THE EXISTING LA FENCE WILL BE REMOVED UNLESS LABELED AS "SAVE".

REV. BY	DATE	DESCRIPTION
CAC	11/18/11	NEW SHEET FOR 104-WL

DATE COMPLETED MARCH 25, 2011

HORIZONTAL SCALE IN FEET 0 10 20 40

PID NO. 76691

R/W DESIGNER CAC
R/W REVIEWER KDO

RIGHT OF WAY TOPO SHEET
SR 309
STA. 883+75.83 TO STA. 887+25.00

ALL-75-5.53

44A/87

1180/1224

J:\Projects\ALL\76691\row\sheets\76691RT600A.dgn 12-SEP-2012 9:38AM reddenj

ALLEN COUNTY
PERRY TOWNSHIP
SEC 5, NE 1/4, T. 4 S., R. 7 E.
BATH TOWNSHIP
SEC. 32, SE 1/4, SW 1/4, T. 3 S., R. 7 E.
CITY OF LIMA

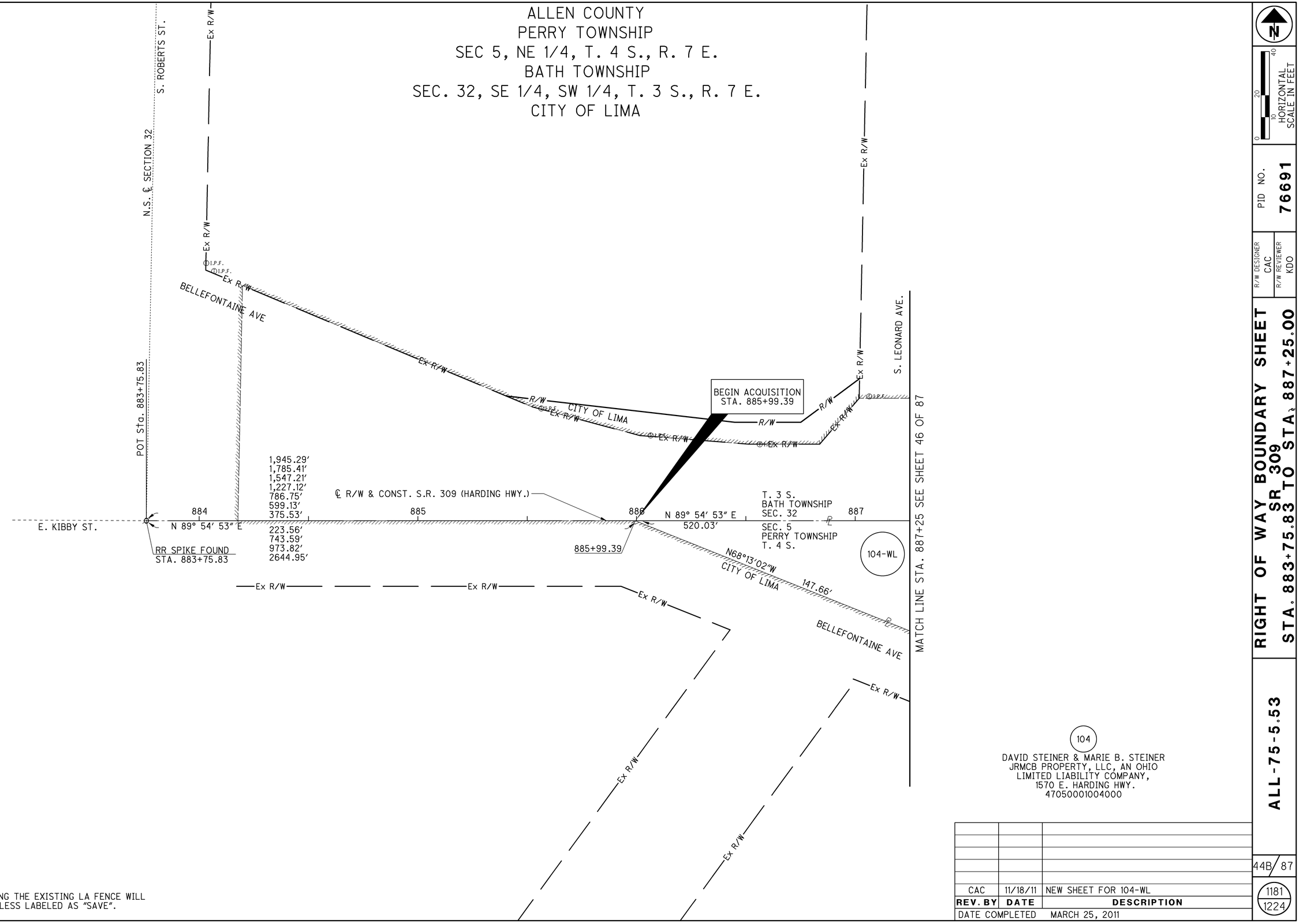

104
DAVID STEINER & MARIE B. STEINER
JRMCB PROPERTY, LLC, AN OHIO
LIMITED LIABILITY COMPANY,
1570 E. HARDING HWY.
47050001004000

NOTE:
ALL TREES ALONG THE EXISTING LA FENCE WILL BE REMOVED UNLESS LABELED AS "SAVE".

REV. BY	DATE	DESCRIPTION
CAC	11/18/11	NEW SHEET FOR 104-WL
DATE COMPLETED		MARCH 25, 2011

HORIZONTAL SCALE IN FEET
0 10 20 40

R/W DESIGNER CAC
R/W REVIEWER KDO

PID NO. 76691

RIGHT OF WAY BOUNDARY SHEET
SR 309
STA. 883+75.83 TO STA. 887+25.00

ALL-75-5.53

44B / 87

1181
1224

J:\Projects\ALL\76691\row\sheets\76691RB600A.dgn 12-SEP-2012 9:38AM reddenj

ALLEN COUNTY
PERRY TOWNSHIP
SEC 5, NE 1/4, T. 4 S., R. 7 E.
BATH TOWNSHIP
SEC. 32, SE 1/4, T. 3 S., R. 7 E.
CITY OF LIMA

MATCH LINE STA. 887+25 SEE SHEET 44A OF 87

MATCH LINE STA. 892+50 SEE SHEET 47 OF 87

S. LEONARD AVE.

TURNER AVE.

(LOT 15594) 1 Sty Block

HIRAM HOLDRIDGE SUBDIVISION P.B. 3 PG. 375

(LOT 15501)

(LOT 15502)

(LOT 15503)

(LOT 15504)

(LOT 15505)

(LOT 15506)

(LOT 15507) 1 Sty. Frame

(LOT 15508)

(LOT 15509)

(LOT 15560)

37321215002000 (LOT 15593)

105 LEWIS GENE WARNER 1601 HARDING HWY. 37321214006000

231 JOHNNY THI AND YVONNE IVY NGUYEN 1513-1521 HARDING HWY. 37321215003000

229 SEDC, LLC 1507 HARDING HWY. 37321215001000

230 JOMA REALTY, LLC A NEW YORK LIMITED LIABILITY COMPANY 1503 HARDING HWY. 37321215001002

PARKING

PARKING 37321215001004

COMMERCIAL

BUCKEYE PIPELINE EASEMENT VOL 40 PG 574

Ex U

Ex R/W

CITY OF LIMA R/W

ASPHALT CUL-DE-SAC 45' R

NOTE:
THE PROPOSED R/W IS A MINIMUM OF 3" FROM THE OVERHANG OF THE BUILDING.

THE TEMPORARY EASEMENT IS AGAINST THE OVERHANG OF THE BUILDING TO CONSTRUCT THE SIDEWALK.

PROPOSED PAVED AREA EX. DRIVEWAY TO BE REMOVED

PROPOSED PAVED AREA

Ground cover Landscaping

DO NOT DISTURB SIGN

229-WL

229-T

231-WL

231-T

230-WL

APPROX. FACE OF BLDG.

STA. 890+09.23 31.5' ASPHALT

Asphalt

Ground cover Landscaping

Wood posts (3)

Metal

1 Sty. Frame

Woodboard Fence

Metal

Wood

Gravel

Above Ground Storage Tank

Asph

1 Sty Block

Conc.

Sign

Gravel

105-WDV

105-WL

Borland

Asph

Sign (3)

Asph

TO BE REMOVED BY OTHERS

6" VCP

6" VCP

18" VCP

CITY OF LIMA

Conc. walk

Sign (5)

TMP

Ex SH

LA R/W

37321215001003

37321215001001

37321215001005

37321215003001

T. 3 S. BATH TOWNSHIP SEC. 32

SEC. 5 PERRY TOWNSHIP T. 4 S.

PROP. 35' WIDE POINT OF ACCESS LEFT OF STA. 890+09.23

Gravel

12"-B

8" VCP

15" Conc

12"-B

PUBLIC STREET LIGHT

sign On overhang (DND)

℄ R/W & CONST. S.R. 309 (HARDING HWY.)

N 89° 54' 53" E

2644.95'

STA. 891+19.51

10" W

Conc. base

16" Cast Iron Force main

12"-B

12" Conc

BEGIN LIMITED ACCESS R/W LEFT STA. 887+51.36

BEGIN LIMITED ACCESS R/W RIGHT STA. 888+17.31

BEGIN WORK STA. 888+48.20

EX. DRIVEWAY TO BE REMOVED

EX. DRIVEWAY TO BE REMOVED

PUBLIC STREET LIGHT

PRIVATE LIGHT

888 889 890 891 892

Ex SH

LA R/W

TMP

(SAVE)

30" Conc

SAN

Asph

10' WATERLINE EASEMENT VOL 507 PG 522

DND CANOPY

Canopy

Sign DND

104-T

104-WL

SHELL GAS STATION

104

DAVID STEINER & MARIE B. STEINER JRMCB PROPERTY, LLC, AN OHIO LIMITED LIABILITY COMPANY, 1570 E. HARDING HWY. 47050001004000

Air pump

Conc.

1 Sty. Block

CONST. LIMITS

10 ' WIDE WATERLINE EASEMENT VOL 520 PG 165

101 AVNEE INVESTMENTS INC. 470500001002000

BLANKET EASEMENT TO OHIO POWER COMPANY VOL 267 PG 338 PARTIAL RELEASE IN VOL 785 PG 823

BLANKET EASEMENT TO OHIO POWER COMPANY VOL 550 PG 266

CITY OF LIMA Dominion gas (Unkn. size)

12" Conc

15"-C

12" CPP

101-WL

20' WIDE SEWER ESM'T TO CITY OF LIMA VOL 468 PG 595

NOTE:
FOR A DETAIL OF PARCEL 101-WL, SEE SHEETS 53 & 54

BELLEFONTAINE AVE

Ex R/W

LOST CREEK

NOTE:
ALL TREES ALONG THE EXISTING LA FENCE WILL BE REMOVED UNLESS LABELED AS "SAVE".

LEGEND:

- PAVEMENT TO BE REMOVED
- DND - DO NOT DISTURB
- * - ENCROACHMENT

REV. BY	DATE	DESCRIPTION
CAC	9/12/12	REVISED SIGN LOCATION ON 231
CAC	7/25/12	REVISED OWNER OF 229
CAC	3/12/12	REVISED 230-WL
CAC	2/22/12	REMOVED REALTOR SIGN ON PARCEL 231
CAC	12/12/11	REVISED OWNER OF 230
CAC	11/18/11	REV. 104-T, 229-T, 231-T; ADDED 104-WL & 230-WL;
		CHANGED 229-WD & 231-WD TO 229-WL & 231-WL
CAC	9/28/11	REVISED 229-T
CAC	8/25/11	REVISED 229-T AND 231-T
CAC	6/22/11	REVISED 229-WD, 229-T & BEGIN ACQ STA;
		ADDED 231-WD & 231-T; ADDED PARCEL 230
DATE COMPLETED		MARCH 25, 2011

HORIZONTAL SCALE IN FEET 0 10 20 40

PID NO. 76691

R/W DESIGNER CAC
R/W REVIEWER KDO

RIGHT OF WAY TOPO SHEET
SR 309
STA. 887+25.00 TO STA. 892+50.00

ALL-75-5.53

45 / 87

1182
1224

J:\Projects\ALL\76691\row\sheets\76691RT600.dgn 12-SEP-2012 9:38AM reddenj

ALLEN COUNTY
PERRY TOWNSHIP
SEC 5, NE 1/4, T. 4 S., R. 7 E.
BATH TOWNSHIP
SEC. 32, SE 1/4, T. 3 S., R. 7 E.
CITY OF LIMA

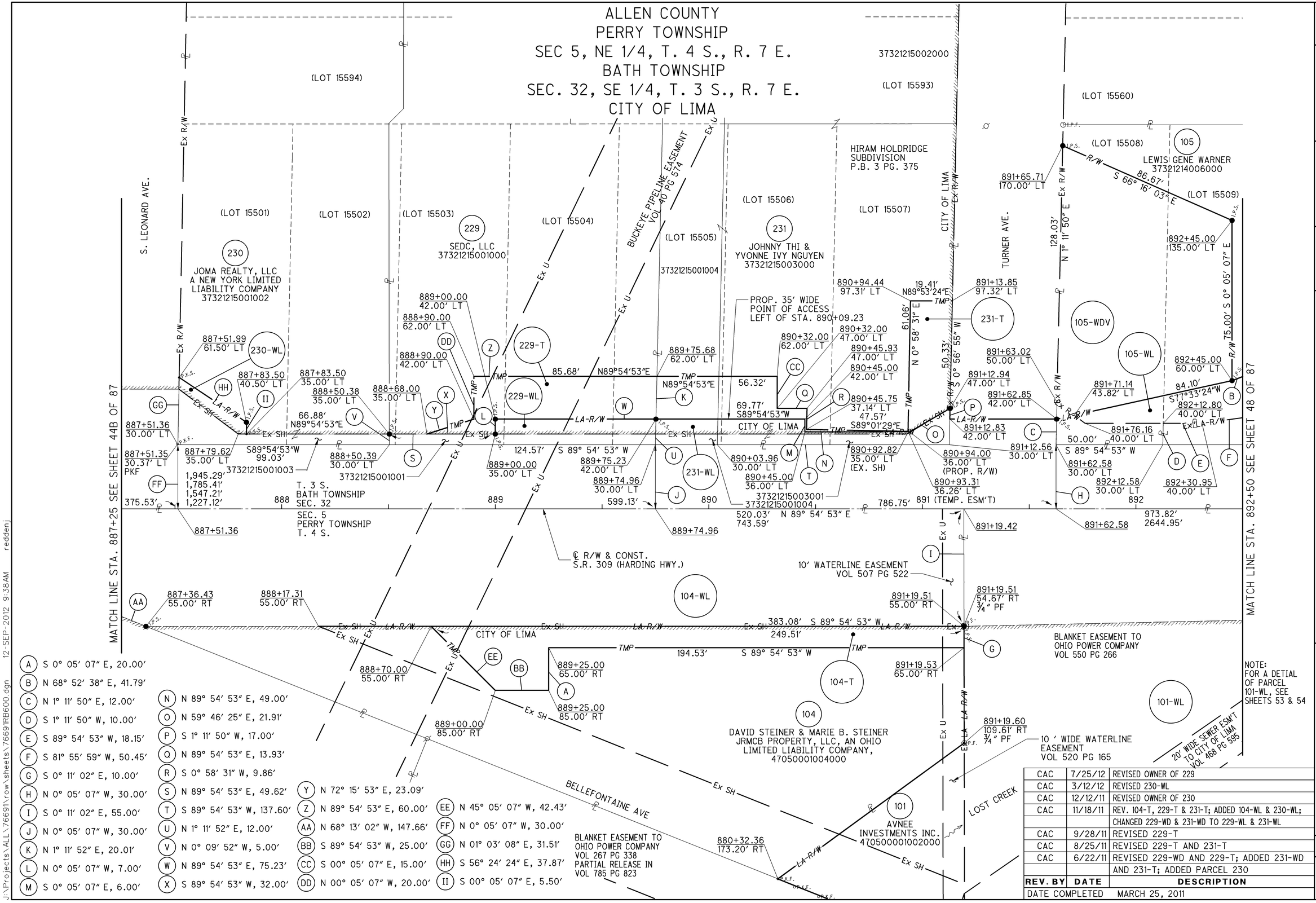

A	S 0° 05' 07" E, 20.00'	
B	N 68° 52' 38" E, 41.79'	
C	N 1° 11' 50" E, 12.00'	
D	S 1° 11' 50" W, 10.00'	
E	S 89° 54' 53" W, 18.15'	
F	S 81° 55' 59" W, 50.45'	
G	S 0° 11' 02" E, 10.00'	
H	N 0° 05' 07" W, 30.00'	
I	S 0° 11' 02" E, 55.00'	
J	N 0° 05' 07" W, 30.00'	
K	N 1° 11' 52" E, 20.01'	
L	N 0° 05' 07" W, 7.00'	
M	S 0° 05' 07" E, 6.00'	
N	N 89° 54' 53" E, 49.00'	
O	N 59° 46' 25" E, 21.91'	
P	S 1° 11' 50" W, 17.00'	
Q	N 89° 54' 53" E, 13.93'	
R	S 0° 58' 31" W, 9.86'	
S	N 89° 54' 53" E, 49.62'	
T	S 89° 54' 53" W, 137.60'	
U	N 1° 11' 52" E, 12.00'	
V	N 0° 09' 52" W, 5.00'	
W	N 89° 54' 53" E, 75.23'	
X	S 89° 54' 53" W, 32.00'	
Y	N 72° 15' 53" E, 23.09'	
Z	N 89° 54' 53" E, 60.00'	
AA	N 68° 13' 02" W, 147.66'	
BB	S 89° 54' 53" W, 25.00'	
CC	S 00° 05' 07" E, 15.00'	
DD	N 00° 05' 07" W, 20.00'	
EE	N 45° 05' 07" W, 42.43'	
FF	N 0° 05' 07" W, 30.00'	
GG	N 01° 03' 08" E, 31.51'	
HH	S 56° 24' 24" E, 37.87'	
II	S 00° 05' 07" E, 5.50'	

REV. BY	DATE	DESCRIPTION
CAC	7/25/12	REVISED OWNER OF 229
CAC	3/12/12	REVISED 230-WL
CAC	12/12/11	REVISED OWNER OF 230
CAC	11/18/11	REV. 104-T, 229-T & 231-T; ADDED 104-WL & 230-WL; CHANGED 229-WD & 231-WD TO 229-WL & 231-WL
CAC	9/28/11	REVISED 229-T
CAC	8/25/11	REVISED 229-T AND 231-T
CAC	6/22/11	REVISED 229-WD AND 229-T; ADDED 231-WD AND 231-T; ADDED PARCEL 230
DATE COMPLETED		MARCH 25, 2011

HORIZONTAL SCALE IN FEET
0 10 20 40

PID NO. 76691

R/W DESIGNER CAC
R/W REVIEWER KDO

RIGHT OF WAY BOUNDARY SHEET
SR 309
STA. 887+25.00 TO STA. 892+50.00

ALL-75-5.53

46 / 87

1183
1224

J:\Projects\ALL\76691\row\sheets\7669IRB600.dgn 12-SEP-2012 9:38AM redden

ALLEN COUNTY
PERRY TOWNSHIP
SEC 5, NE 1/4, T. 4 S., R. 7 E.
BATH TOWNSHIP
SEC. 32, SE 1/4, T. 3 S., R. 7 E.
CITY OF LIMA

NOTES:
ALL TREES ALONG THE EXISTING LA FENCE WILL BE REMOVED UNLESS LABELED AS "SAVE".

SEE SHEETS 20-40 FOR I-75.

* - ENCROACHMENT

CURVE 309C-1
P.I.= Sta. 371+35.77
D = 4° 31′ 15″ (RT)
Dc = 5° 00′ 00″
R = 1,145.92′
T = 45.23′
L = 90.42′
E = 0.89′
C = 90.40′
C.B. = N 15° 10′ 31″ E

105
LEWIS GENE WARNER
1601 HARDING HWY.
37321214006000

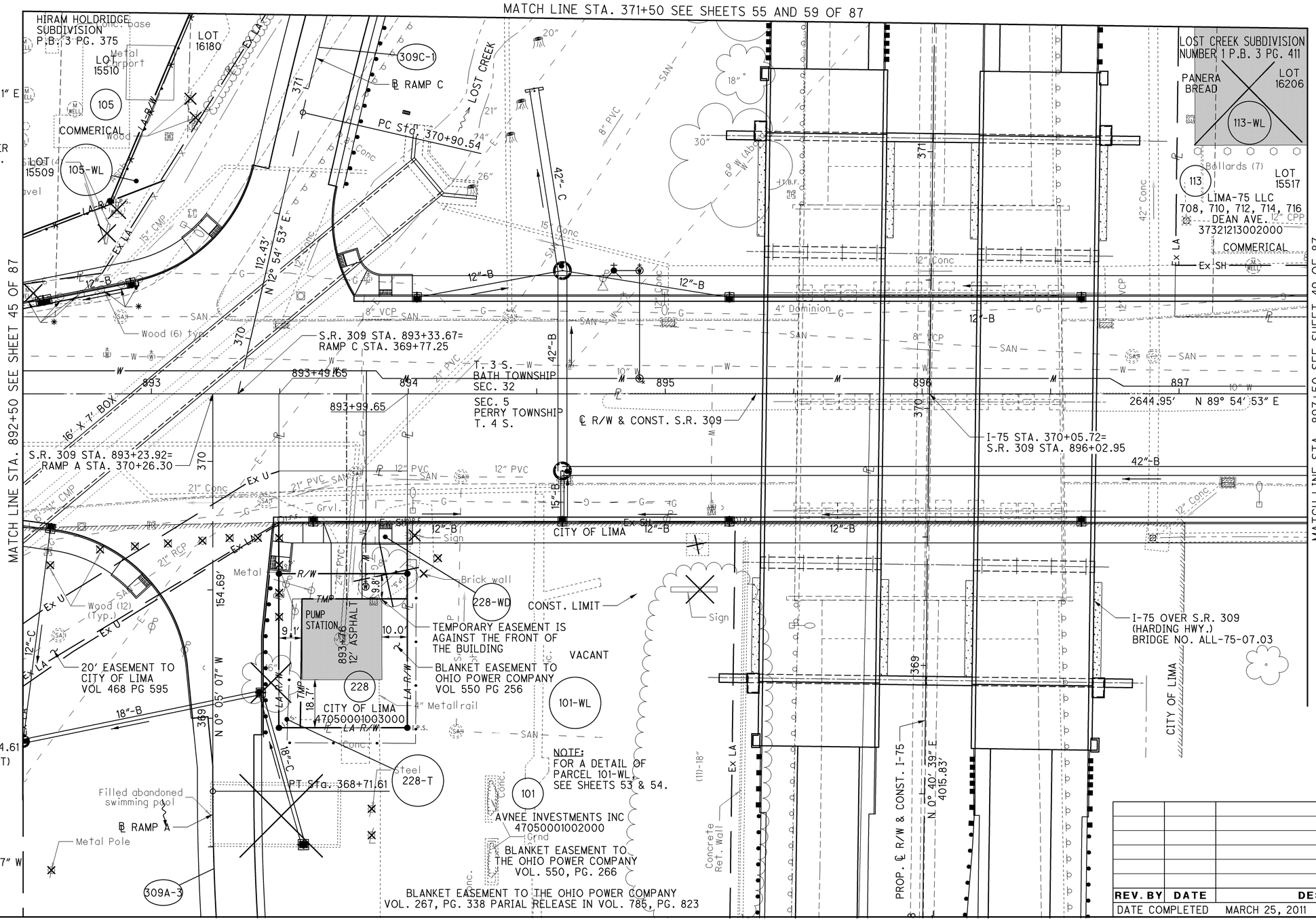

CURVE 309A-3
P.I.= Sta. 367+44.61
D = 16° 37′ 40″ (RT)
Dc = 6° 30′ 00″
R = 881.47′
T = 128.81′
L = 255.81′
E = 9.36′
C = 254.92′
C.B. = N 8° 23′ 57″ W

REV. BY	DATE	DESCRIPTION

DATE COMPLETED MARCH 25, 2011

HORIZONTAL SCALE IN FEET 0 10 20 40

PID NO. 76691

R/W DESIGNER CAC
R/W REVIEWER KDO

RIGHT OF WAY TOPO SHEET
SR 309
STA. 892+50.00 TO STA. 897+50.00

ALL-75-5.53

J:\Projects\ALL\76691\row\sheets\76691RT601.dgn 12-SEP-2012 9:38AM reddenj

ALLEN COUNTY
PERRY TOWNSHIP
SEC 5, NE 1/4, T. 4 S., R. 7 E.
BATH TOWNSHIP
SEC. 32, SE 1/4, T. 3 S., R. 7 E.
CITY OF LIMA

(A) S 0° 05′ 07″ E, 30.00′
(B) S 0° 05′ 07″ E, 70.00′
(C) S 89° 54′ 53″ W, 8.35′
(D) S 0° 05′ 07″ E, 9.79′
(E) S 0° 05′ 07″ E, 40.00′
(F) N 0° 05′ 07″ W, 40.00′

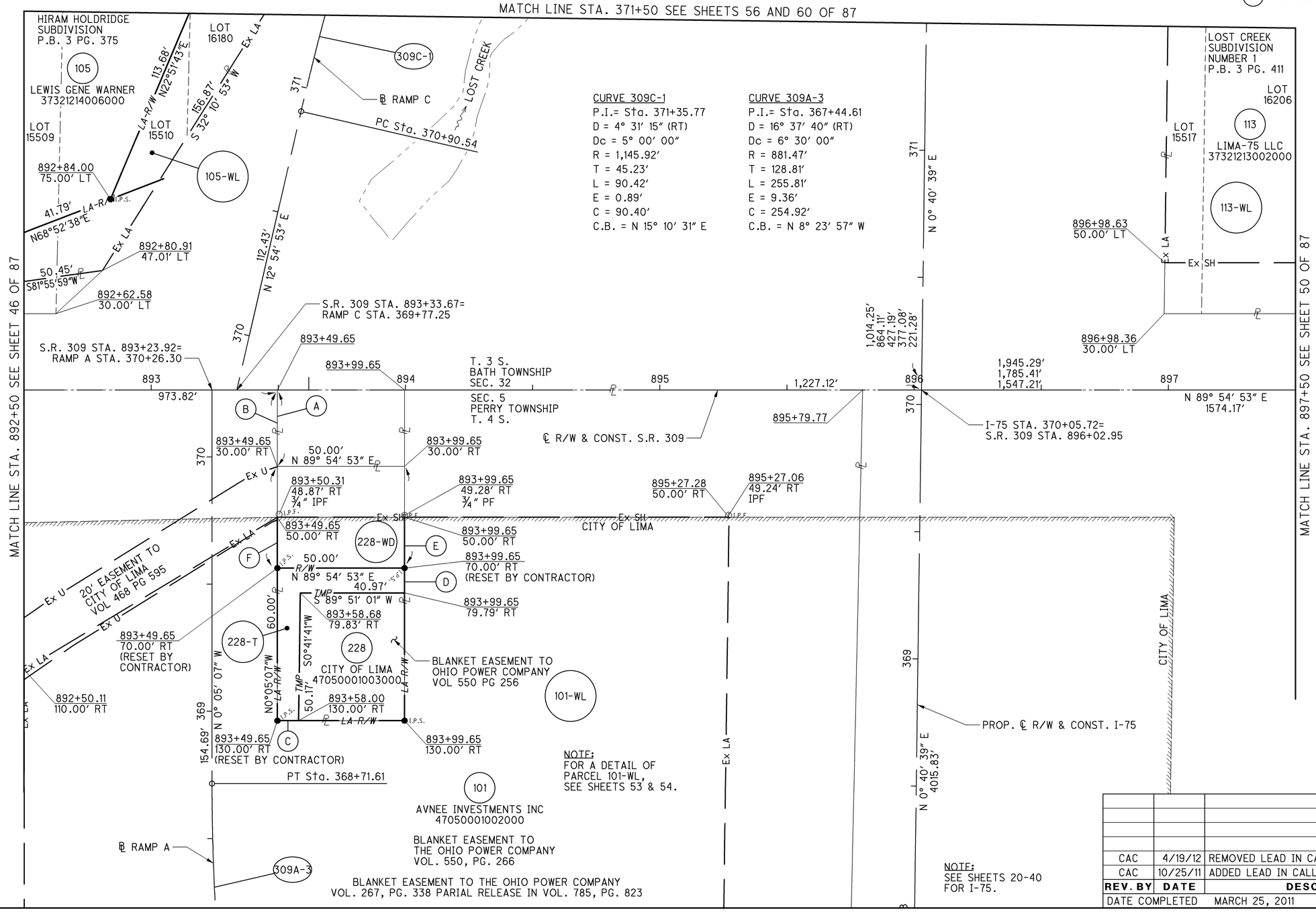

REV. BY	DATE	DESCRIPTION
CAC	4/19/12	REMOVED LEAD IN CALL FOR 111-T
CAC	10/25/11	ADDED LEAD IN CALL FOR 111-T
DATE COMPLETED		MARCH 25, 2011

HORIZONTAL SCALE IN FEET
0 10 20 40

PID NO. 76691

R/W DESIGNER CAC
R/W REVIEWER KDO

RIGHT OF WAY BOUNDARY SHEET
SR 309
STA. 892+50.00 TO STA. 897+50.00

ALL-75-5.53

48 / 87

1185
1224

J:\Projects\ALL\76691\row\sheets\76691RB601.dgn 12-SEP-2012 9:38AM reddenj

ALLEN COUNTY
PERRY TOWNSHIP
SEC 5, NE 1/4, T. 4 S., R. 7 E.
BATH TOWNSHIP
SEC. 32, SE 1/4, T. 3 S., R. 7 E.

* - ENCROACHMENT

** - THESE 4 MONITORING WELLS WILL BE ABANDONED AND ALL OTHERS WILL BE PROTECTED DURING CONSTRUCTION.

(202) - ENCROACHMENT TO BE REMOVED BY THE CONTRACTOR

106 HIGHLAWN FARMS FAMILY LIMITED PARTNERSHIP 723 SARATOGA AVE. 37321211012000

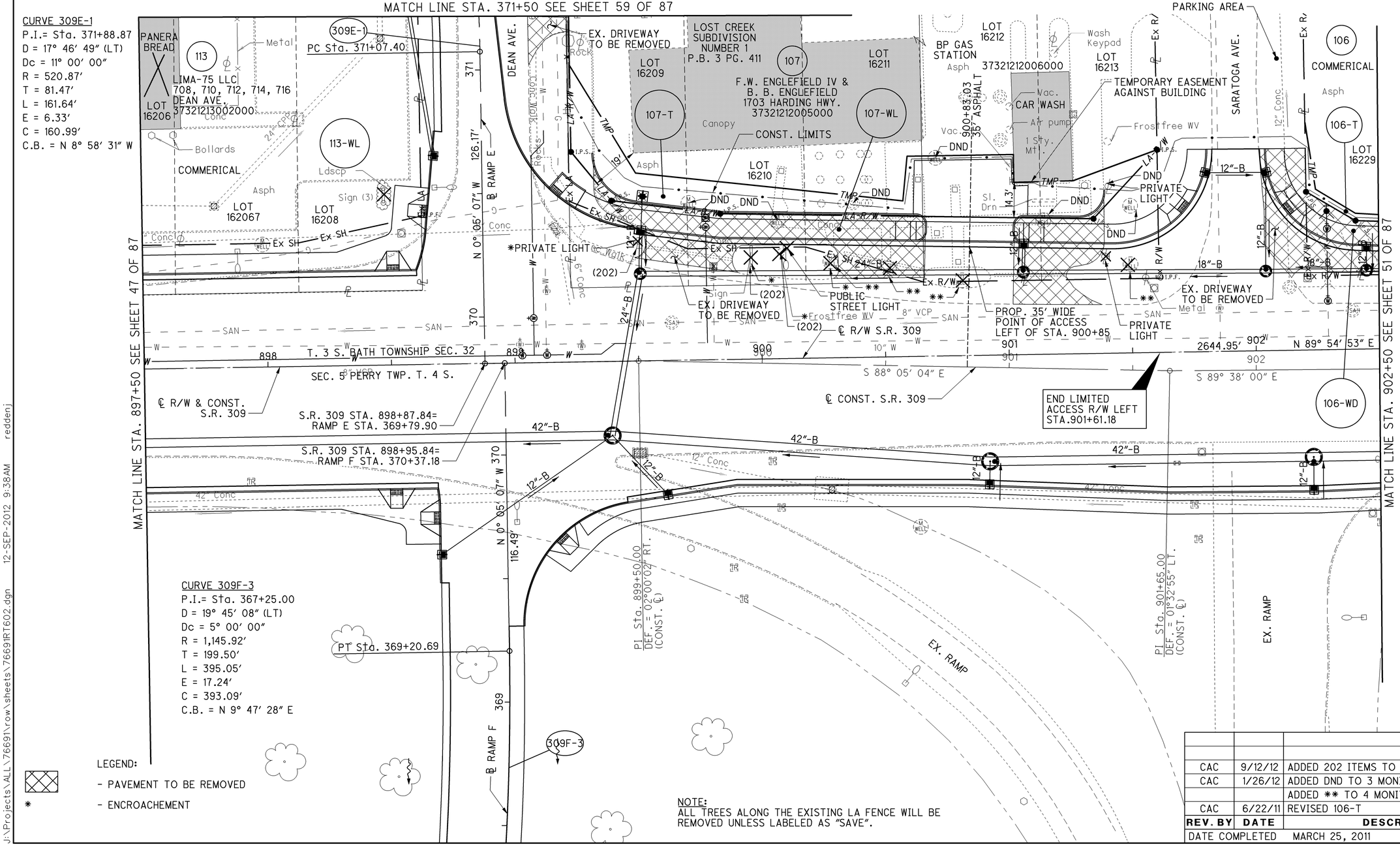

NOTE:
ALL TREES ALONG THE EXISTING LA FENCE WILL BE REMOVED UNLESS LABELED AS "SAVE".

REV. BY	DATE	DESCRIPTION
CAC	9/12/12	ADDED 202 ITEMS TO PARCEL 107
CAC	1/26/12	ADDED DND TO 3 MONITORING WELLS;
		ADDED ** TO 4 MONITORING WELLS W/NOTE
CAC	6/22/11	REVISED 106-T
DATE COMPLETED		MARCH 25, 2011

HORIZONTAL SCALE IN FEET
0 10 20 40

PID NO. 76691

R/W DESIGNER CAC
R/W REVIEWER KDO

RIGHT OF WAY TOPO SHEET
SR 309
STA. 897+50.00 TO STA. 902+50.00

ALL-75-5.53

49 / 87

1186
1224

J:\Projects\ALL\76691\row\sheets\76691RT602.dgn 12-SEP-2012 9:38AM reddenj

(A) S 0° 08′ 10″ E, 145.00′
(B) N 0° 08′ 10″ W, 35.00′
(C) S 0° 05′ 07″ E, 11.25′
(D) S 87° 29′ 52″ E, 80.19′
(E) S 58° 51′ 54″ E, 23.15′
(F) N 0° 05′ 07″ W, 30.00′
(G) N 0° 05′ 07″ W, 30.00′
(H) N 0° 08′ 33″ W, 28.00′
(I) S 38° 45′ 24″ E, 25.62′
(J) S 08° 09′ 07″ E, 27.27′
(K) S 58° 04′ 47″ E, 18.87′
(L) S 85° 50′ 56″ E, 27.07′

ALLEN COUNTY
PERRY TOWNSHIP
SEC 5, NE 1/4, T. 4 S., R. 7 E.
BATH TOWNSHIP
SEC. 32, SE 1/4, T. 3 S., R. 7 E.

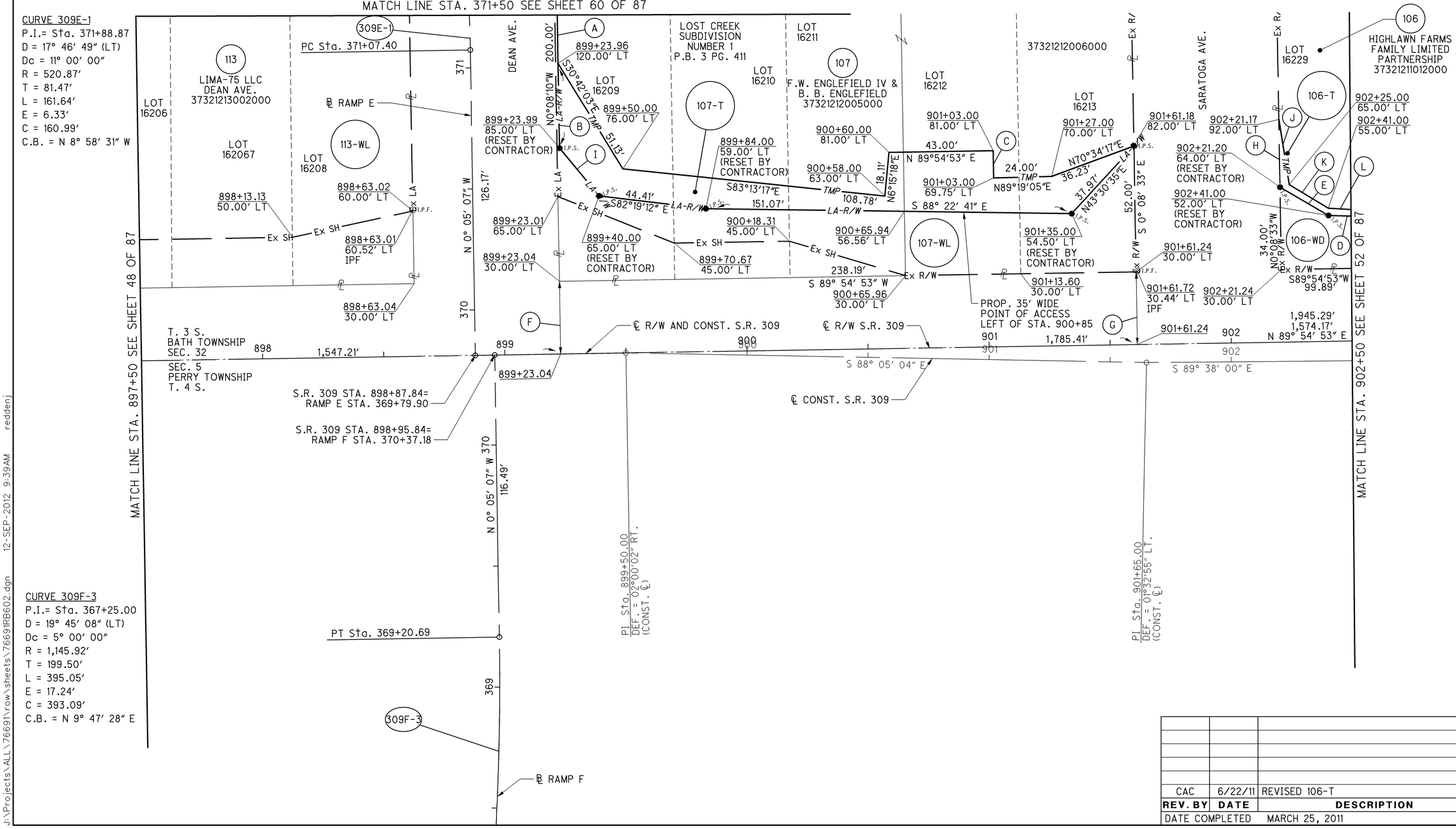

REV. BY	DATE	DESCRIPTION
CAC	6/22/11	REVISED 106-T
DATE COMPLETED		MARCH 25, 2011

HORIZONTAL SCALE IN FEET
0 10 20 40

PID NO. 76691

R/W DESIGNER CAC
R/W REVIEWER KDO

RIGHT OF WAY BOUNDARY SHEET
SR 309
STA. 897+50.00 TO STA. 902+50.00

ALL-75-5.53

50 / 87

1187
1224

J:\Projects\ALL\76691\row\sheets\76691RB602.dgn 12-SEP-2012 9:39AM reddenj

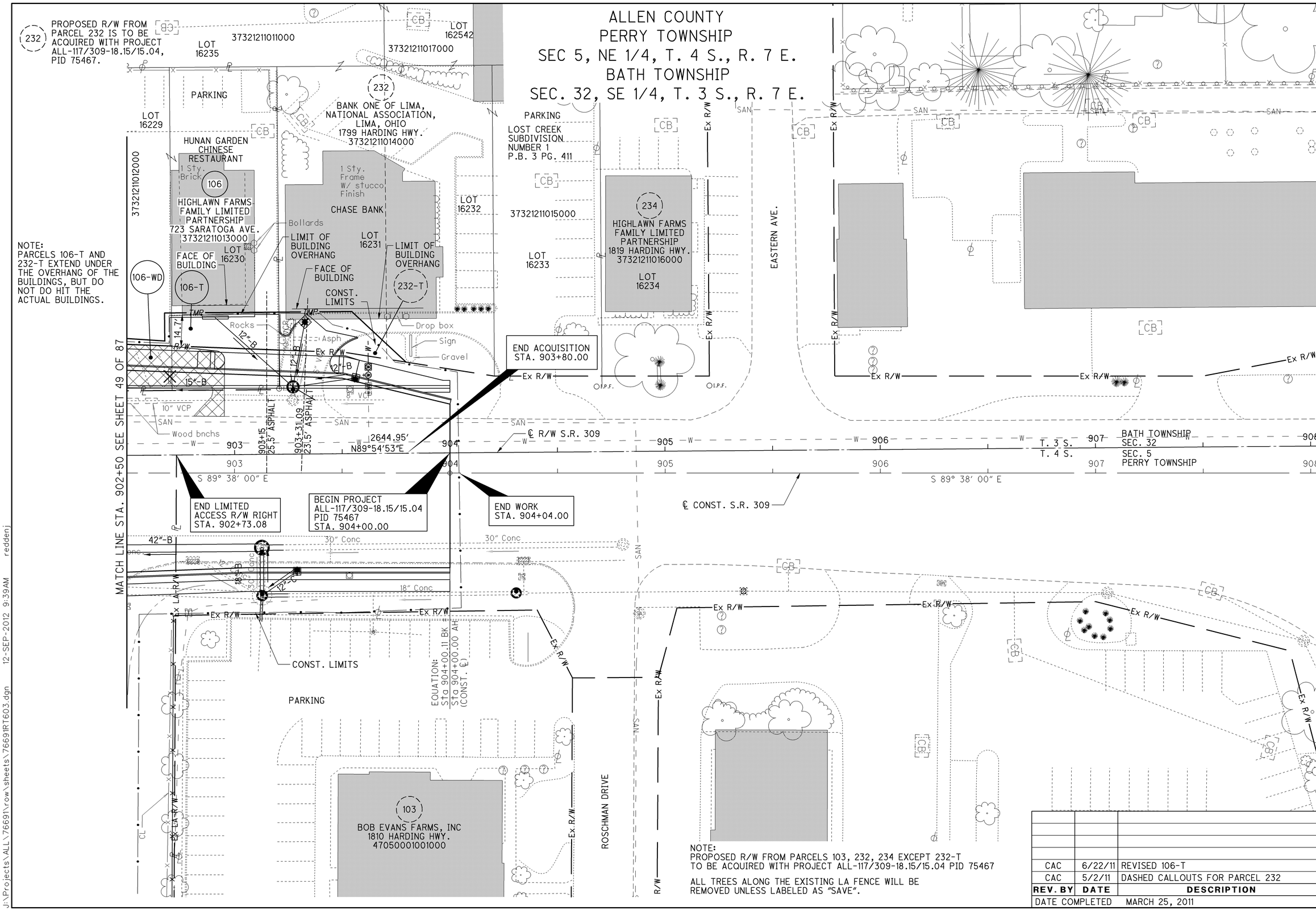

REV. BY	DATE	DESCRIPTION
CAC	6/22/11	REVISED 106-T
CAC	5/2/11	DASHED CALLOUTS FOR PARCEL 232

DATE COMPLETED MARCH 25, 2011

HORIZONTAL SCALE IN FEET 0 10 20 40

PID NO. 76691

R/W DESIGNER CAC
R/W REVIEWER KDO

RIGHT OF WAY TOPO SHEET
SR 309
STA. 902+50.00 TO STA. 904+10.00

ALL-75-5.53

J:\Projects\ALL\76691\row\sheets\76691RT603.dgn 12-SEP-2012 9:39AM reddenj

ALLEN COUNTY
PERRY TOWNSHIP
SEC 5, NE 1/4, T. 4 S., R. 7 E.
BATH TOWNSHIP
SEC. 32, SE 1/4, T. 3 S., R. 7 E.

232 PROPOSED R/W FROM PARCEL 232 IS TO BE ACQUIRED WITH PROJECT ALL-117/309-18.15/15.04, PID 75467.

LOT 16235 — 37321211011000 — LOT 162542 — 37321211017000

106 HIGHLAWN FARMS FAMILY LIMITED PARTNERSHIP 37321211013000

LOT 16231

232 BANK ONE OF LIMA, NATIONAL ASSOCIATION, LIMA, OHIO 37321211014000

LOST CREEK SUBDIVISION NUMBER 1 P.B. 3 PG. 411

37321211012000

LOT 16230

LOT 16232

37321211015000

234 HIGHLAWN FARMS FAMILY LIMITED PARTNERSHIP 37321211016000

LOT 16233

LOT 16234

EASTERN AVE.

Ex R/W

902+68.00 66.00′ LT — 106-T — 903+21.10 66.00′ LT — 53.10′ TMP N89°54′53″E TMP — 903+55.00 66.00′ LT — 232-T — E — F — H — I — D — 903+21.11 48.38′ LT — 80.19′ R/W S87°29′52″E — 903+80.00 42.32′ LT — A — C — G — 902+68.00 53.00′ LT — 99.89′ S 89° 54′ 53″ W — I.P.F. — 903+51.89 47.00′ LT — 106-WD — 902+71.18 30.00′ LT — B — 903+21.12 30.00′ LT — 903+20.91 30.48′ LT — ½″ I.P.F. — 902+73.01 1,945.29′ — 903 — 2644.95′ N89°54′53″E

℄ R/W S.R. 309

T. 3 S. BATH TOWNSHIP SEC. 32 / SEC. 5 PERRY TOWNSHIP T. 4 S.

903 904 905 906 907 908

S 89° 38′ 00″ E

903+21.12

℄ CONST. S.R. 309

MATCH LINE STA. 902+50 SEE SHEET 50 OF 87

Ex LA-R/W

EQUATION:
Sta 904+00.11 BK =
Sta 904+00.00 AH
(CONST. ℄)

103 BOB EVANS FARMS, INC 47050001001000

ROSCHMAN DRIVE

(A) S 0° 06′ 59″ E, 18.38′
(B) N 0° 05′ 07″ W, 30.00′
(C) N 87° 31′ 05″ W, 30.81′
(D) S 0° 06′ 59″ E, 17.62′
(E) N 89° 54′ 53″ E, 33.90′
(F) S 46° 37′ 57″ E, 34.44′
(G) N 80° 37′ 20″ W, 28.50′
(H) S 85° 50′ 56″ E, 27.07′
(I) N 00° 05′ 07″ W, 13.00′

NOTE:
PROPOSED R/W FROM PARCELS 103, 232, 234 EXCEPT 232-T TO BE ACQUIRED WITH PROJECT ALL-117/309-18.15/15.04 PID 75467

REV. BY	DATE	DESCRIPTION
CAC	6/22/11	REVISED 106-T
CAC	5/2/11	DASHED CALLOUTS FOR PARCEL 232
DATE COMPLETED		MARCH 25, 2011

HORIZONTAL SCALE IN FEET: 0 10 20 40

PID NO. 76691

R/W DESIGNER CAC
R/W REVIEWER KDO

RIGHT OF WAY BOUNDARY SHEET
SR 309
STA. 902+50.00 TO STA. 904+10.00

ALL-75-5.53

52 / 87

1189 / 1224

J:\Projects\ALL\76691\row\sheets\76691RB603.dgn 12-SEP-2012 9:39AM redderj

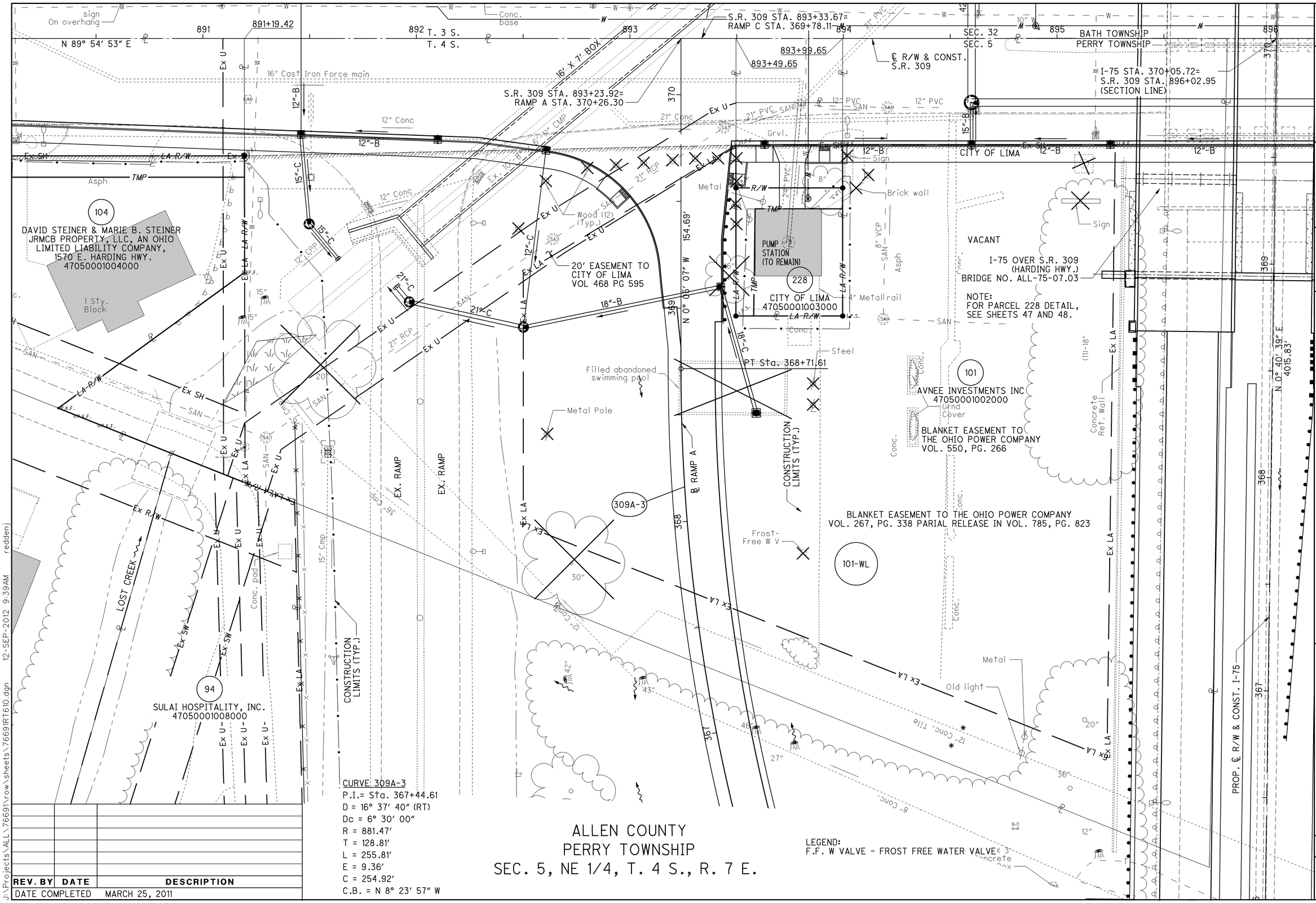

CURVE 309A-3
P.I.= Sta. 367+44.61
D = 16° 37′ 40″ (RT)
Dc = 6° 30′ 00″
R = 881.47′
T = 128.81′
L = 255.81′
E = 9.36′
C = 254.92′
C.B. = N 8° 23′ 57″ W

ALLEN COUNTY
PERRY TOWNSHIP
SEC. 5, NE 1/4, T. 4 S., R. 7 E.

LEGEND:
F.F. W VALVE - FROST FREE WATER VALVE

REV. BY	DATE	DESCRIPTION
DATE COMPLETED	MARCH 25, 2011	

J:\Projects\ALL\76691\row\sheets\76691RT610.dgn 12-SEP-2012 9:39AM reddenj

HORIZONTAL SCALE IN FEET

PID NO. 76691

R/W DESIGNER CAC
R/W REVIEWER KDO

RIGHT OF WAY TOPO SHEET
DETAIL OF PARCEL 101

ALL-75-5.53

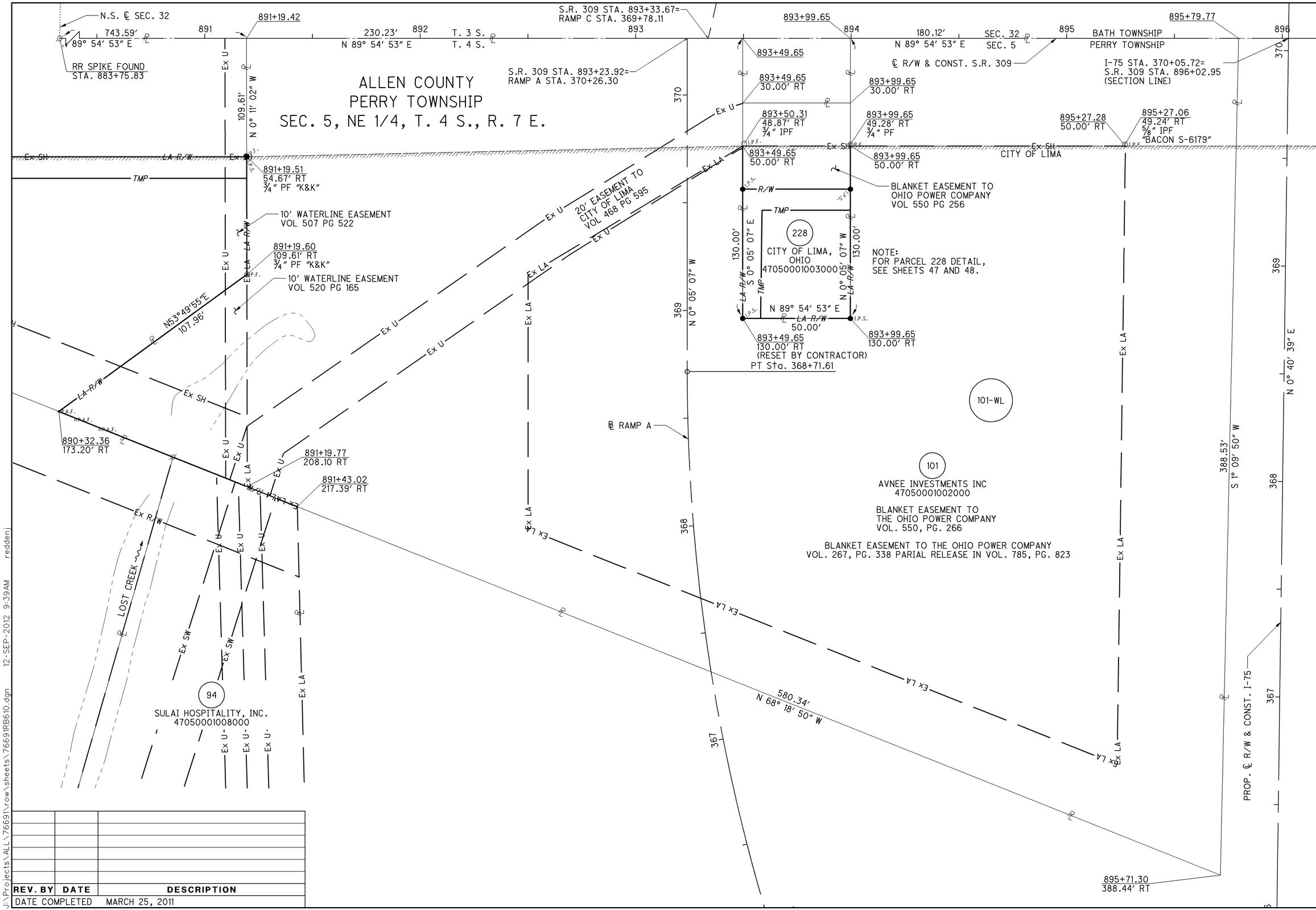

REV. BY	DATE	DESCRIPTION
DATE COMPLETED	MARCH 25, 2011	

J:\Projects\ALL\76691\row\sheets\76691RB610.dgn 12-SEP-2012 9:39AM reddenj

HORIZONTAL SCALE IN FEET 0 10 20 40

PID NO. 76691

CAC R/W REVIEWER KDO

RIGHT OF WAY BOUNDARY SHEET
DETAIL OF PARCEL 101

ALL-75-5.53

1191/1224

LEGEND:

▨ - PAVEMENT TO BE REMOVED

DND- DO NOT DISTURB

NOTE:
ALL TREES ALONG THE EXISTING LA FENCE WILL BE REMOVED UNLESS LABELED AS "SAVE".

ALLEN COUNTY
BATH TOWNSHIP
SEC. 32, SE 1/4, T. 3 S., R. 7 E.

CURVE 309C-1
P.I.= Sta. 371+35.77
D = 4° 31′ 15″ (RT)
Dc = 5° 00′ 00″
R = 1,145.92′
T = 45.23′
L = 90.42′
E = 0.89′
C = 90.40′
C.B. = N 15° 10′ 31″ E

CURVE 309C-2
P.I.= Sta. 375+58.84
D = 8° 26′ 54″ (RT)
Dc = 5° 00′ 00″
R = 1,145.92′
T = 84.64′′
L = 168.97′
E = 3.12′
C = 168.82′
C.B. = N 13° 12′ 42″ E

CURVE 309C-3
P.I.= Sta. 379+20.66
D = 8° 18′ 36″ (LT)
Dc = 1° 30′ 00″
R = 3,819.72′
T = 277.49′
L = 554.00′
E = 10.07′
C = 553.51′
C.B. = N 4° 49′ 57″ E

(LOT 15509) HIRAM HOLDRIDGE SUBDIVISION P.B. 3 PG. 375
(LOT 15510) COMMERCIAL
(LOT 15560)
(LOT 15561)
(LOT 15562)
(LOT 15563)
(LOT 15564)
(LOT 15565)
(LOT 15566)
(LOT 15567)
(LOT 15568)
(LOT 16180)
(LOT 16179)
(LOT 16178)
(LOT 16177)
(LOT 16176)
(LOT 15554) COMMERCIAL
(LOT 15555)
(LOT 15553)
(LOT 15552)
(LOT 15551)

105 LEWIS GENE WARNER 1601 HARDING HWY. 37321214006000

117 COMMERCIAL

118 ISSAM FAZA & SHARON FAZA 1925 LENORE ST. 37321208009000

SEDC LLC 1908 LENORE ST. 37321214001000

37321208008000 — TPC 1 Sty. Metal/Block Industrial

37321208007000

37321208006000

LENORE ST.

BUCKEYE PIPELINE EASEMENT VOL 40 PG 574

BLANKET EASEMENT TO OHIO POWER CO. VOL 344 PG 499

EASEMENT TO OHIO POWER CO. VOL 538 PG 547

MATCH LINE STA. 371+50 SEE SHEET 47 OF 87

MATCH LINE STA. 376+75 SEE SHEET 57 OF 87

LOST CREEK

PT Sta. 371+80.96

PC Sta. 374+74.20

PCC Sta. 376+43.17

N 17° 26′ 09″ E

N 0° 40′ 39″ E 4015.83′

PROP. ℄ R/W & CONST. I-75

℄ RAMP C

CONST. LIMIT (TYP.)

Ex 11′-2″ CMP

Ex. 14′-2″ CMP

Ex. 36″ CMP

21″ PVC

Ex. 12″ (2) CMP

Ex. 36″ Abandoned

Stainless steel Tank

Prop. tank Strg.

Antenna

2 Car Wood/metal Garage

Large vent. fan on Conc. pad w/ brick ornsd. wall

Conc. planting Turtles (3)

Asphalt

Gravel

Brick & conc. Found.

Dog Kennels

1 Sty. Block

Shed

Wood fence

Semi Trailer

RR tie

Wood Pile (4)

Sign

Steps

Conc. Pad

Conc. walk

Ex R/W

Ex LA-R/W

Ex SH

Ex U

TMP

CB

CL

SAN

Aspht

Conc

Gravel

REV. BY	DATE	DESCRIPTION
CAC	5/15/12	ADDED PARCEL 117-E
CAC	5/7/12	ADDED "X" TO GARAGE ON PARCEL 118
DATE COMPLETED		MARCH 25, 2011

HORIZONTAL SCALE IN FEET: 0, 10, 20, 40

PID NO. 76691

R/W DESIGNER CAC
R/W REVIEWER KDO

RIGHT OF WAY TOPO SHEET
I-75 LEFT
STA. 371+50 TO STA. 376+75

ALL-75-5.53

55 / 87

1192 / 1224

J:\Projects\ALL\76691\row\sheets\76691RT606.dgn 12-SEP-2012 9:39AM redderj

ALLEN COUNTY
BATH TOWNSHIP
SEC. 32, SE 1/4, T. 3 S., R. 7 E.

(LOT 15509)
105
LEWIS GENE WARNER
37321214006000
(LOT 15510)
105-WL
HIRAM HOLDRIDGE SUBDIVISION
P.B. 3 PG. 375
ESTHER W. BAILEY
DB 946 PG 649
37321214004000
(LOT 15560)
RANDA MEKOLITES
DB 761 PG 293
37321214003000
(LOT 15561)
117-T
(LOT 15562)
FEDERAL NATIONAL MORTGAGE ASSOCIATION
DB 2001 PG 299
37321214002000
(LOT 15563)
Ex R/W
LENORE ST.
(LOT 15564)
(LOT 15565)
(LOT 15566)
37321208008000
37321208007000
37321208006000
118-T
(LOT 15567)
(LOT 15568)
BUCKEYE PIPELINE EASEMENT
VOL 40 PG 574
TMP
220.14'
N 0° 40' 39" E
374+29.99
400.00' LT
376+50.14
400.00' LT
170.01'
N90°00'00"W
Ex R/W
372+27.00
288.73' LT
371+81.58
289.15' LT
372+81.45
288.24' LT
372+82.13
287.95' LT
5/8" I.P.F.
"SHELDON"
373+31.38
287.79' LT
373+32.18
288.06' LT
5/8" I.P.F.
"SHELDON"
54.45'
N 1° 11' 50" E
49.94'
N 1° 11' 50" E
Ex SH
113.68'
N 22° 51' 43" E
371+81.73
277.00' LT
(LOT 16179)
18.98'
N89°19'21"W
27.24'
N89°58'43"E
34.79'
S89°59'22"W
42.34'
S90°00'00"E
373+81.32
287.33' LT
374+31.39
287.63' LT
1/2" I.P.F.
(LOT 16180)
117
SEDC LLC
37321214001000
371+82.18
240.66' LT
36.34'
S89°57'28"W
117-E
(LOT 16177)
117-WDV
(LOT 16176)
50.65'
S 9° 45' 49" W
LA-R/W 55.48'
N 9° 45' 49" E
202.64'
(LOT 16178)
372+27.00
269.76' LT
372+81.78
261.00' LT
373+81.82
245.00' LT
373+31.80
253.00' LT
373+97.00
230.00' LT
(LOT 15554)
(LOT 15553)
(LOT 15555)
118
ISSAM FAZA & SHARON FAZA
1925 LENORE ST.
37321208009000
EASEMENT TO OHIO POWER CO.
VOL 538 PG 547
(LOT 15552)
(LOT 15551)
211.35'
N 89° 59' 19" E
156.87'
S32°10'53"W
Ex LA 59.00'
S32°10'53"W
BLANKET EASEMENT TO OHIO POWER CO.
VOL 344 PG 499
117-WL
374+32.00
230.00' LT
224.51'
336.77'
LA-R/W
N 11° 17' 10" E
MATCH LINE STA. 371+50 SEE SHEET 48 OF 87
MATCH LINE STA. 376+75 SEE SHEET 58 OF 87
309C-1
372+22.74
215.80' LT
PT Sta. 371+80.96
℄ Ex LA-R/W
54.07'
S 22° 36' 02" W
293.24'
℄ RAMP C
N 17° 26' 09" E
372+32.49
209.83' LT
26.77'
S22°28'57"W
26.06'
S14°55'25"W
51.29'
S 13° 19' 16" W
Ex LA-R/W
373
372+82.65
189.64' LT
373+07.50
179.70' LT
373+32.65
182.71' LT
373+32.76
173.29' LT
373+82.80
162.06' LT
373+82.74
167.63' LT
82.95'
S90°00'00"E
76.42'
N90°00'00"W
374+32.91
153.58' LT
374+24.84
154.95' LT
374
166.14'
S6°17'24"W
375+98.24
137.33' LT
376+52.68
188.67' LT
PCC Sta. 376+43.17
165.17'
S1°07'01"W
375+98.79
132.96' LT
5/8" I.P.F.
"SHELDON"
375
376
309C-2
309C-3
PC Sta. 374+74.20
LOST CREEK
N 89° 19' 21" W 269.76'
N 89° 19' 21" W 162.06'
N 89° 19' 21" W 153.58'
PROP. ℄ R/W & CONST. I-75
372+27.00
373+82.80
374+32.91
221.28'
372
373
377.08'
374
427.19'
N 0° 40' 39" E
4015.83'
375
1,014.25'
864.11'

CURVE 309C-1
P.I.= Sta. 371+35.77
D = 4° 31' 15" (RT)
Dc = 5° 00' 00"
R = 1,145.92'
T = 45.23'
L = 90.42'
E = 0.89'
C = 90.40'
C.B. = N 15° 10' 31" E

CURVE 309C-2
P.I.= Sta. 375+58.84
D = 8° 26' 54" (RT)
Dc = 5° 00' 00"
R = 1,145.92'
T = 84.64'
L = 168.97'
E = 3.12'
C = 168.82'
C.B. = N 13° 12' 42" E

CURVE 309C-3
P.I.= Sta. 379+20.66
D = 8° 18' 36" (LT)
Dc = 1° 30' 00"
R = 3,819.72'
T = 277.49'
L = 554.00'
E = 10.07'
C = 553.51'
C.B. = N 4° 49' 57" E

REV. BY	DATE	DESCRIPTION
CAC	5/15/12	ADDED PARCEL 117-E
DATE COMPLETED		MARCH 25, 2011

N

HORIZONTAL SCALE IN FEET
0 10 20 40

PID NO. 76691

R/W DESIGNER CAC
R/W REVIEWER KDO

RIGHT OF WAY BOUNDARY SHEET
I-75 LEFT
STA. 371+50 TO STA. 376+75

ALL-75-5.53

56/87

1193/1224

J:\Projects\ALL\76691\row\sheets\76691RB606.dgn 12-SEP-2012 9:39AM reddenj

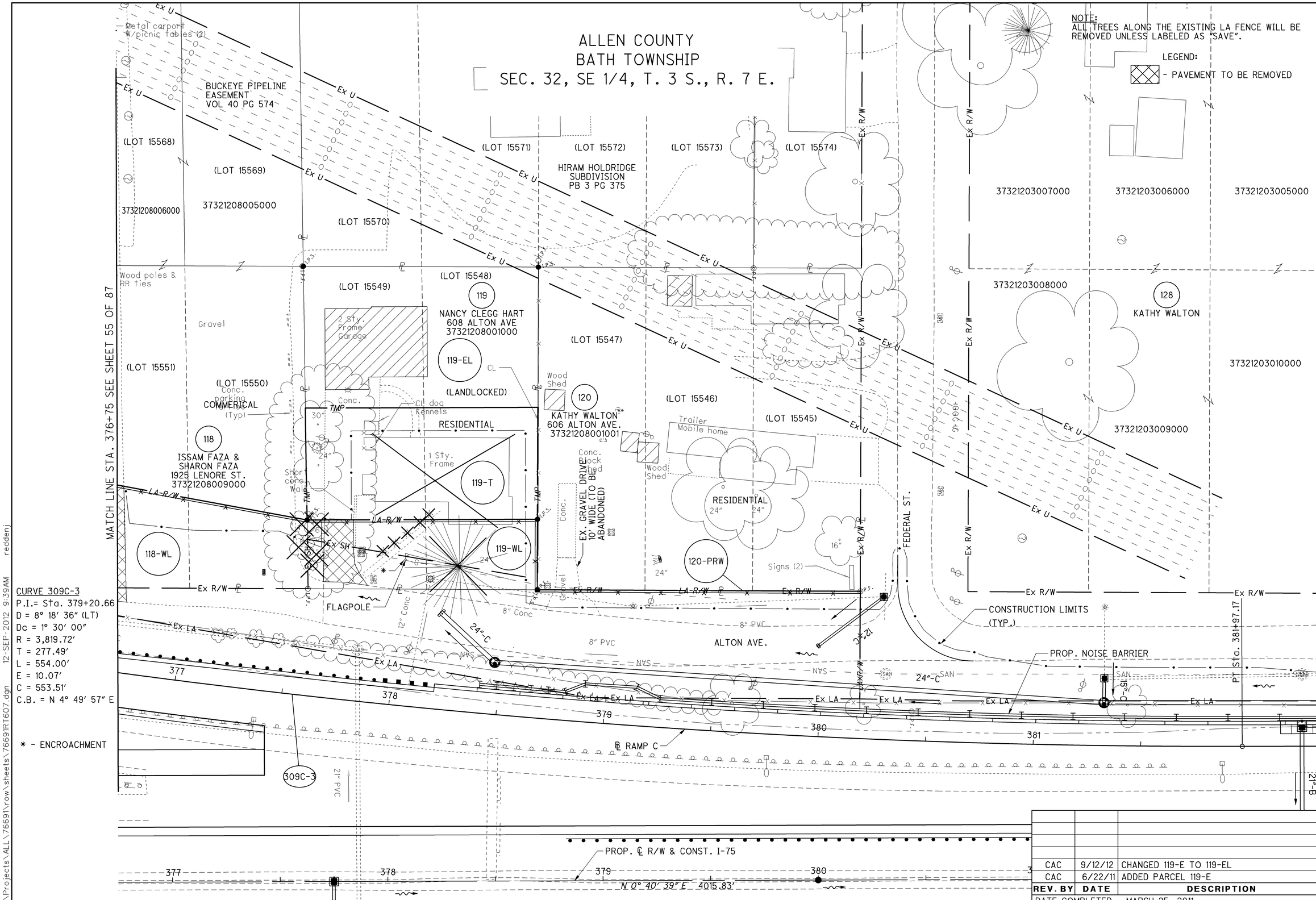

REV. BY	DATE	DESCRIPTION
CAC	9/12/12	CHANGED 119-E TO 119-EL
CAC	6/22/11	ADDED PARCEL 119-E

DATE COMPLETED MARCH 25, 2011

HORIZONTAL SCALE IN FEET 0 10 20 40

PID NO. 76691

R/W DESIGNER CAC
R/W REVIEWER KDO

RIGHT OF WAY TOPO SHEET
I-75 LEFT
STA. 376+75.00 TO STA. 381+00.00

ALL-75-5.53

1194/1224

J:\Projects\ALL\76691\row\sheets\76691RT607.dgn 12-SEP-2012 9:39AM reddenj

ALLEN COUNTY
BATH TOWNSHIP
SEC. 32, SE 1/4, T. 3 S., R. 7 E.

MATCH LINE STA. 376+75 SEE SHEET 56 OF 87

BUCKEYE PIPELINE EASEMENT VOL 40 PG 574

(LOT 15568) (LOT 15569) (LOT 15570) (LOT 15571) (LOT 15572) (LOT 15573) (LOT 15574)

HIRAM HOLDRIDGE SUBDIVISION PB 3 PG 375

37321208006000 37321208005000 37321203007000 37321203006000 37321203005000

Ex U Ex R/W

CURVE 309C-3
P.I.= Sta. 379+20.66
D = 8° 18′ 36″ (LT)
Dc = 1° 30′ 00″
R = 3,819.72′
T = 277.49′
L = 554.00′
E = 10.07′
C = 553.51′
C.B. = N 4° 49′ 57″ E

377+61.20
285.92′ LT
1/2″ I.P.F.
S-5772

377+61.59
285.90′ LT

109.22′
N 1° 02′ 56″ E

378+70.85
288.18′ LT
1/2″ I.P.F.

378+70.81
285.19′ LT

379+20.85
284.86′ LT

119 NANCY CLEGG HART 37321208001000 (LANDLOCKED)

119-EL

(LOT 15551) (LOT 15550) (LOT 15549) (LOT 15548) (LOT 15547) (LOT 15546) (LOT 15545)

117.91′ 117.19′

377+62.39
220.00′ LT

TMP
107.99′
N 0° 40′ 39″ E

378+70.38
220.00′ LT

S 89° 58′ 59″ W 52.00′
S 88° 56′ 49″ E 52.00′

118 ISSAM FAZA & SHARON FAZA 37321208009000

119-T

120 KATHY WALTON 37321208001001

128 KATHY WALTON 37321203008000

37321203009000 37321203010000

LA-R/W
336.77′
N 11° 17′ 10″ E

378+70.04
168.00′ LT

107.02′
N 0° 40′ 39″ E

377+63.02
168.00′ LT

377+63.13
159.04′ LT

Ex SH

31.94′ Ex SH S 89° 58′ 59″ W

32.75′ S 88° 56′ 49″ E

118-WL 119-WL 120-PRW

377+08.35
136.49′ LT

165.17′
S 1° 07′ 01″ W

106.42′
S 1° 07′ 01″ W

150.15′
S 1° 07′ 01″ W

377+63.41
136.07′ LT

377+63.24
136.07′ LT
1/2″ I.P.F.

378+69.86
140.23′ LT

378+70.04
135.38′ LT
3/4″ P.F.

378+69.82
135.25′ LT

380+19.97
134.10′ LT
1″ P.F.

FEDERAL ST.

ALTON AVE.

Ex LA

377 378 379 380 381

378+94.83
85.06′ LT

380+19.59
84.10′ LT

380+69.06
82.99′ LT

PT Sta. 381+97.17

℄ RAMP C

309C-3

N 89° 19′ 21″ W 135.25′

N 89° 19′ 21″ W 134.10′

378+69.82

PROP. ℄ R/W & CONST. I-75

380+19.97

377 378 864.11′ 379 N 0° 40′ 39″ E 4015.83′ 1,014.25′ 380

REV. BY	DATE	DESCRIPTION
CAC	9/12/12	CHANGED 119-E TO 119-EL
CAC	6/22/11	ADDED PARCEL 119-E
DATE COMPLETED		MARCH 25, 2011

HORIZONTAL SCALE IN FEET 0 10 20 40

PID NO. 76691

R/W DESIGNER CAC
R/W REVIEWER KDO

RIGHT OF WAY BOUNDARY SHEET
I-75 LEFT
STA. 376+75.00 TO STA. 381+00.00

ALL-75-5.53

58 / 87

1195
1224

J:\Projects\ALL\76691row\sheets\76691RB607.dgn 12-SEP-2012 9:39AM reddenj

ALLEN COUNTY
BATH TOWNSHIP
SEC. 32, SE 1/4, T. 3 S., R. 7 E.

CURVE 309E-1
P.I.= Sta. 371+88.87
D = 17° 46′ 49″ (LT)
Dc = 11° 00′ 00″
R = 520.87′
T = 81.47′
L = 161.64′
E = 6.33′
C = 160.99′
C.B. = N 8° 58′ 31″ W

MATCH LINE STA. 371+50 SEE SHEETS 47 AND 49 OF 87

MATCH LINE STA. 376+00 SEE SHEET 61 OF 87

372 373 374 375

N 0° 40′ 39″ E 4015.83′

PROP. ℄ R/W & CONST. I-75

TWIN 108″ LINER PIPE

8″ PVC

8″ VCP

Block wall

Gates (4)

42″ Conc

12″ CPP

24″ CPP

Ex LA

SAN

Ex U

Asph Curb

Brush

LOST CREEK

36″-B

18″-B

15″-C

15″-B

18″-C

12″ Conc

Asph

Ldscp

Shrubs

Sign

Rock

Landscape Timbers

Asph curb

Rocks

Metal posts

Below ground floor

Canopy

Conc.

Asph.

Ex LA-R/W

LA-R/W

NYS

Ex U

Ex LA

PT Sta. 372+69.04

℄ RAMP E

PARKING

DEAN AVE.

CONST. LIMITS

309E-1

34′ CONC.

(15517)
PANERA BREAD
1 Sty. Brick.
(16206)
37321213002000

(16203)

113
LIMA-75 LLC
708, 710, 712, 714, 716 DEAN AVE.
37321213001001

(16202)

(16201)

20′ EASEMENT
OHIO POWER COMPANY
VOL. 2007, PG. 17970

UTILITY EASEMENT RESERVED IN VOL. 371, PG. 264

(16200)

115-WL

(16207)

COMMERICAL
(16205)
113-WL

(16204)

(16208)
PARKING

COMMERICAL

(16199)
37321213001000

115
CAROL M. SCHMIDTHORST, TRUSTEE
704 DEAN AVE.
37321213001002

107-WL

107
F.W. ENGLEFIELD IV & B. B. ENGLEFIELD
1703 HARDING HWY.
37321212005000

COMMERICAL
37321212004000

EASEMENT TO OHIO POWER COMPANY
VOL. 786, PG. 454

COMMERICAL
37321212003000

111A
BRYN MAWR OFFICES, LLC
37321212002000

3732121200300l

8′ EASEMENT
WEST OHIO GAS CO.
VOL. 784, PG. 182

111
LOST CREEK OFFICES, LLC
1 Sty. Brick
711 DEAN AVE
(16216)

1 Sty. Brick
2100 LOST CREEK BLVD.
(16220)
(16219)

LOST CREEK NUMBER 1 SUBDIVISION
P.B. 3 PG. 411

1703 HARDING HWY
BP GAS STATION
(16212)
(16214)
(16215)
(16217)
(16218)

N 17° 51′ 56″ W 340.83′

374

373

372

- PAVEMENT TO BE REMOVED

NOTE:
ALL TREES ALONG THE EXISTING LA FENCE WILL BE REMOVED UNLESS LABELED AS "SAVE".

REV. BY	DATE	DESCRIPTION
CAC	4/19/12	REMOVED PARCEL 111-T
CAC	11/10/11	REVISED DEAN AVE
CAC	10/25/11	ADDED PARCEL 111-T
DATE COMPLETED		MARCH 25, 2011

HORIZONTAL SCALE IN FEET
0 10 20 40

PID NO. 76691

R/W DESIGNER CAC
R/W REVIEWER KDO

ALL-75-5.53

RIGHT OF WAY TOPO SHEET
I-75 RIGHT
STA. 371+50.00 TO STA. 376+00.00

59 / 87

1196 / 1224

J:\Projects\ALL\76691\row\sheets\76691RT605.dgn 12-SEP-2012 9:39AM reddenj

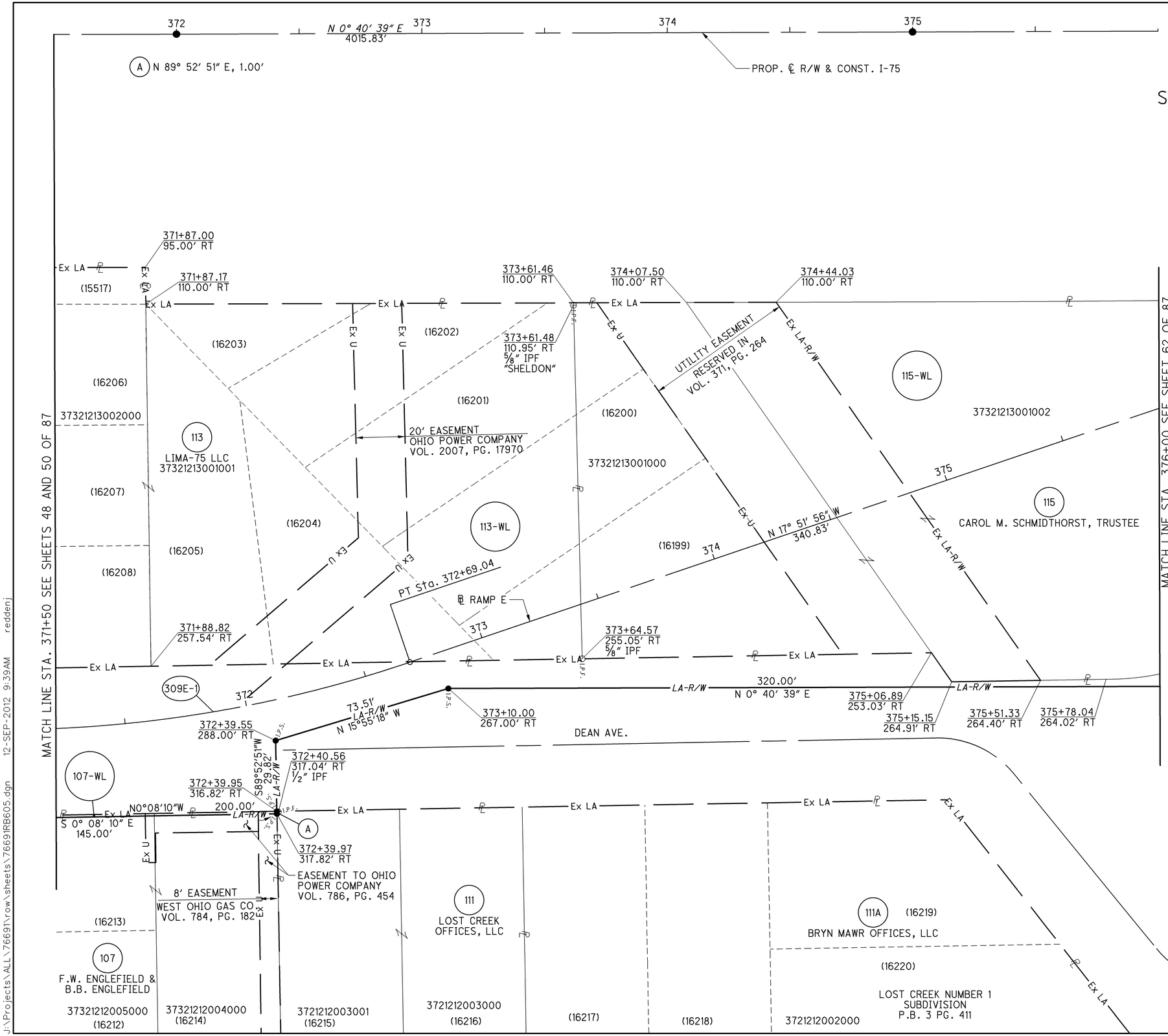

ALLEN COUNTY
BATH TOWNSHIP
SEC. 32, SE 1/4, T. 3 S., R. 7 E.

CURVE 309E-1
P.I.= Sta. 371+88.87
D = 17° 46′ 49″ (LT)
Dc = 11° 00′ 00″
R = 520.87′
T = 81.47′
L = 161.64′
E = 6.33′
C = 160.99′
C.B. = N 8° 58′ 31″ W

REV. BY	DATE	DESCRIPTION
CAC	4/19/12	REMOVED PARCEL 111-T
CAC	10/25/11	ADDED PARCEL 111-T

DATE COMPLETED MARCH 25, 2011

HORIZONTAL SCALE IN FEET 0 10 20 40

PID NO. 76691

R/W DESIGNER CAC
R/W REVIEWER KDO

RIGHT OF WAY BOUNDARY SHEET
I-75 RIGHT
STA. 371+50.00 TO STA. 376+00.00

ALL-75-5.53

J:\Projects\ALL\76691\row\sheets\76691RB605.dgn 12-SEP-2012 9:39AM reddenj

ALLEN COUNTY
BATH TOWNSHIP
SEC. 32, SE 1/4, T. 3 S., R. 7 E.

CURVE BRYN-1
P.I.= Sta. 9+92.21
D = 103° 28′ 28″ (LT)
Dc = 37° 00′ 00″
R = 154.85′
T = 196.34′
L = 279.66′
E = 95.21′
C = 243.18′
C.B. = S 38° 08′ 44″ E

CURVE LOST-1
P.I.= Sta. 50+94.03
D = 46° 52′ 33″ (RT)
Dc = 37° 00′ 00″
R = 154.85′
T = 67.13′
L = 126.69′
E = 13.93′
C = 123.19′
C.B. = N 23° 21′ 53″ E

MATCH LINE STA. 7+75.00 SEE SHEET 63 OF 87

MATCH LINE STA. 376+00 SEE SHEET 59 OF 87

208.39' S13°35'30"W

PC Sta. 7+95.87

℄ R/W & CONST. BRYN MAWR AVE.

8+51.75

8+68.96

10+71.59

11+26.40

10+93.20 DEAN AVE.

11+61.67

℄ R/W & CONST. WELLESLEY DR.

℄ RAMP E

EXIST. I-75 ENTRANCE RAMP

LA-R/W

21" PVC

36" CMP

15" Conc

11' CMP

48"-C

36"-C

15"-C

18"-B

15"-B

12"-B

6" W

10

11

12

13

16'x7' BOX

Underdrain Outlet

RR ties (4)

Metal posts

Landscaping

Split rail Wood fence

Ex CH

CHANNEL EASEMENT VOL 352 PG 310

LOST CREEK

Ex SH

Shrubs

Sign Rock

Brick

12" Conc

15" VCP

4" VCP

Asph.

BBall Pole

Shed

1 Sty. Frame

1½ Sty Frame

Basketball Pole

Conc.

GRATE=886.46
4" VCP =884.46

S 89° 52′ 58″ E 277.25′

N 46° 48′ 09″ E 146.41′

BLANKET EASEMENT ON PARCEL 248
TO OHIO POWER COMPANY
VOL 41 PG 524

Green

Sand trap

℄ R/W & CONST. LOST CREEK BLVD .

CONST. LIMITS

Ex R/W

Ex LA R/W

R/W

PT Sta. 10+75.53

PT Sta. 51+53.59

PC Sta. 50+26.90

N 00° 04′ 24″ W 236.39′

END ACQUISITION STA. 13+23.29

POT Sta. 13+52.77

END WORK STA. 13+27.00

WELLESLEY DR. STA. 12+83.23=
LOST CREEK BLVD. STA. 50+00.00

SARATOGA AVE.

LOST CREEK SUBDIVISION NUMBER 1
P.B. 3 PG. 411

LOT 16294

LOT 16243

LOT 16222

LOT 16221

LOT 16220

(SAVE) 64.43′

(SAVE)

248
HOLTSBERRY PROPERTIES,
A LIMITED LIABILITY COMPANY
2409 LOST CREEK BLVD.
37330003001000

115
CAROL M. SCHMIDTHORST, TRUSTEE
704 DEAN AVE
37321213001002
COMMERICAL

115-WL

BRYN-1

248-WDV

250-WDV

250
MICHAEL S. PAHL
2200 LOST CREEK BLVD.
37321201011000
RESIDENTIAL

249
DONNIE F. MIOLEN AND
CAROL S. MIOLEN
2112 LOST CREEK BLVD.
37321212001000

249-T

LOST-1

111A
BRYN MAWR OFFICES, LLC
2100 LOST CREEK BLVD.
37321212002000
COMMERICAL

NOTES:
ALL TREES ALONG THE EXISTING LA FENCE WILL BE REMOVED UNLESS LABELED AS "SAVE".

REV. BY	DATE	DESCRIPTION
CAC	11/10/11	REVISED DEAN AVE
DATE COMPLETED		MARCH 25, 2011

HORIZONTAL SCALE IN FEET
0 10 20 40

PID NO. 76691

R/W DESIGNER CAC
R/W REVIEWER KDO

RIGHT OF WAY TOPO SHEET
BRYN MAWR AVE., WELLESLEY DR.
STA. 7+75.00 TO STA. 13+52.77

ALL-75-5.53

61 / 87

1198
1224

J:\Projects\ALL\76691\row\sheets\76691RT604.dgn reddenj 12-SEP-2012 9:39AM

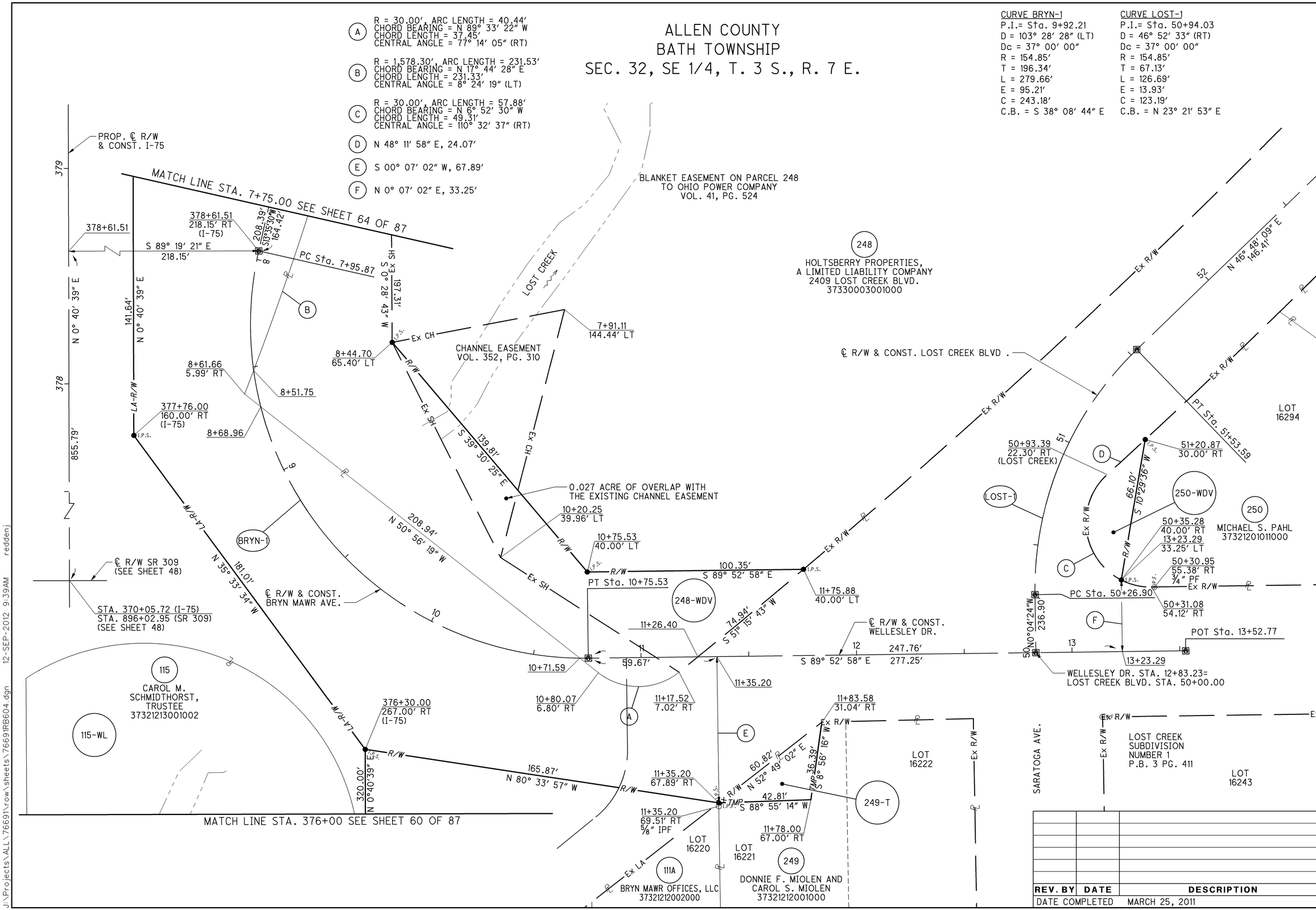

ALLEN COUNTY
BATH TOWNSHIP
SEC. 32, SE 1/4, T. 3 S., R. 7 E.
A R = 30.00', ARC LENGTH = 40.44'
CHORD BEARING = N 89° 33' 22" W
CHORD LENGTH = 37.45'
CENTRAL ANGLE = 77° 14' 05" (RT)
B R = 1,578.30', ARC LENGTH = 231.53'
CHORD BEARING = N 17° 44' 28" E
CHORD LENGTH = 231.33'
CENTRAL ANGLE = 8° 24' 19" (LT)
C R = 30.00', ARC LENGTH = 57.88'
CHORD BEARING = N 6° 52' 30" W
CHORD LENGTH = 49.31'
CENTRAL ANGLE = 110° 32' 37" (RT)
D N 48° 11' 58" E, 24.07'
E S 00° 07' 02" W, 67.89'
F N 0° 07' 02" E, 33.25'
CURVE BRYN-1
P.I.= Sta. 9+92.21
D = 103° 28' 28" (LT)
Dc = 37° 00' 00"
R = 154.85'
T = 196.34'
L = 279.66'
E = 95.21'
C = 243.18'
C.B. = S 38° 08' 44" E
CURVE LOST-1
P.I.= Sta. 50+94.03
D = 46° 52' 33" (RT)
Dc = 37° 00' 00"
R = 154.85'
T = 67.13'
L = 126.69'
E = 13.93'
C = 123.19'
C.B. = N 23° 21' 53" E
PROP. ℄ R/W & CONST. I-75
MATCH LINE STA. 7+75.00 SEE SHEET 64 OF 87
378+61.51
S 89° 19' 21" E
218.15'
378+61.51
218.15' RT
(I-75)
208.39'
S13°35'30"W
164.42'
PC Sta. 7+95.87
S 0° 28' 43" W
197.31'
N 0° 40' 39" E
141.64'
N 0° 40' 39" E
855.79'
8+61.66
5.99' RT
8+51.75
8+68.96
377+76.00
160.00' RT
(I-75)
LA-R/W
8+44.70
65.40' LT
Ex CH
CHANNEL EASEMENT
VOL. 352, PG. 310
LOST CREEK
BLANKET EASEMENT ON PARCEL 248
TO OHIO POWER COMPANY
VOL. 41, PG. 524
248
HOLTSBERRY PROPERTIES,
A LIMITED LIABILITY COMPANY
2409 LOST CREEK BLVD.
37330003001000
7+91.11
144.44' LT
℄ R/W & CONST. LOST CREEK BLVD.
Ex R/W
N 46° 48' 09" E
146.41'
PT Sta. 51+53.59
LOT
16294
50+93.39
22.30' RT
(LOST CREEK)
51+20.87
30.00' RT
66.10'
S 10°29'36" W
250-WDV
250
MICHAEL S. PAHL
37321201011000
50+35.28
40.00' RT
13+23.29
33.25' LT
50+30.95
55.38' RT
3/4" PF
PC Sta. 50+26.90
50+31.08
54.12' RT
POT Sta. 13+52.77
13+23.29
WELLESLEY DR. STA. 12+83.23=
LOST CREEK BLVD. STA. 50+00.00
N0°04'24"W
236.90
LOST-1
0.027 ACRE OF OVERLAP WITH
THE EXISTING CHANNEL EASEMENT
10+20.25
39.96' LT
10+75.53
40.00' LT
PT Sta. 10+75.53
100.35'
S 89° 52' 58" E
11+75.88
40.00' LT
248-WDV
74.94'
S 51° 15' 43" W
11+26.40
59.67'
10+71.59
10+80.07
6.80' RT
11+17.52
7.02' RT
11+35.20
℄ R/W & CONST.
WELLESLEY DR.
247.76'
277.25'
S 89° 52' 58" E
℄ R/W SR 309
(SEE SHEET 48)
STA. 370+05.72 (I-75)
STA. 896+02.95 (SR 309)
(SEE SHEET 48)
℄ R/W & CONST.
BRYN MAWR AVE.
BRYN-1
208.94'
N 50° 56' 19" W
181.01'
N 35° 33' 34" W
115
CAROL M.
SCHMIDTHORST,
TRUSTEE
37321213001002
115-WL
376+30.00
267.00' RT
(I-75)
320.00'
N 0°40'39" E
165.87'
N 80° 33' 57" W
MATCH LINE STA. 376+00 SEE SHEET 60 OF 87
11+35.20
67.89' RT
11+35.20
69.51' RT
5/8" IPF
LOT
16220
LOT
16221
11+83.58
31.04' RT
60.82'
N 52° 49' 02" E
36.39'
S 8° 56' 16" W
42.81'
S 88° 55' 14" W
11+78.00
67.00' RT
249-T
249
DONNIE F. MIOLEN AND
CAROL S. MIOLEN
37321212001000
111A
BRYN MAWR OFFICES, LLC
37321212002000
LOT
16222
SARATOGA AVE.
LOST CREEK
SUBDIVISION
NUMBER 1
P.B. 3 PG. 411
LOT
16243
REV. BY
DATE
DESCRIPTION
DATE COMPLETED
MARCH 25, 2011
HORIZONTAL
SCALE IN FEET
PID NO.
76691
R/W DESIGNER
CAC
R/W REVIEWER
KDO
RIGHT OF WAY BOUNDARY SHEET
BRYN MAWR AVE., WELLESLEY DR.
STA. 7+75.00 TO STA. 13+52.77
ALL-75-5.53
62/87
1199/1224
J:\Projects\ALL\76691\row\sheets\76691RB604.dgn 12-SEP-2012 9:39AM reddenj

ALLEN COUNTY
BATH TOWNSHIP
SEC. 32, SE 1/4, T. 3 S., R. 7 E.

121 FRANKLIN REAL ESTATE COMPANY, INC., A PENNSYLVANIA CORPORATION
37321202007000
37321202006000
37321202005000
37321202004000
37321202003000
37321202002001
37321202001001

CURVE 309E-2
P.I.= Sta. 377+61.43
D = 12° 49' 42" (RT)
Dc = 4° 15' 00"
R = 1,348.14'
T = 151.56'
L = 301.84'
E = 8.49'
C = 301.21'
C.B. = N 11° 27' 05" W

CURVE 309E-3
P.I. STA. 379+83.43
Ls = 215.00'
θs = 4° 34' 08"
LT = 143.38'
ST = 71.71'
x = 214.86'
y = 5.71'
k = 107.48'
p = 1.43'

NOTE:
ALL TREES ALONG THE EXISTING LA FENCE WILL BE REMOVED UNLESS LABELED AS "SAVE".

* - ENCROACHMENT

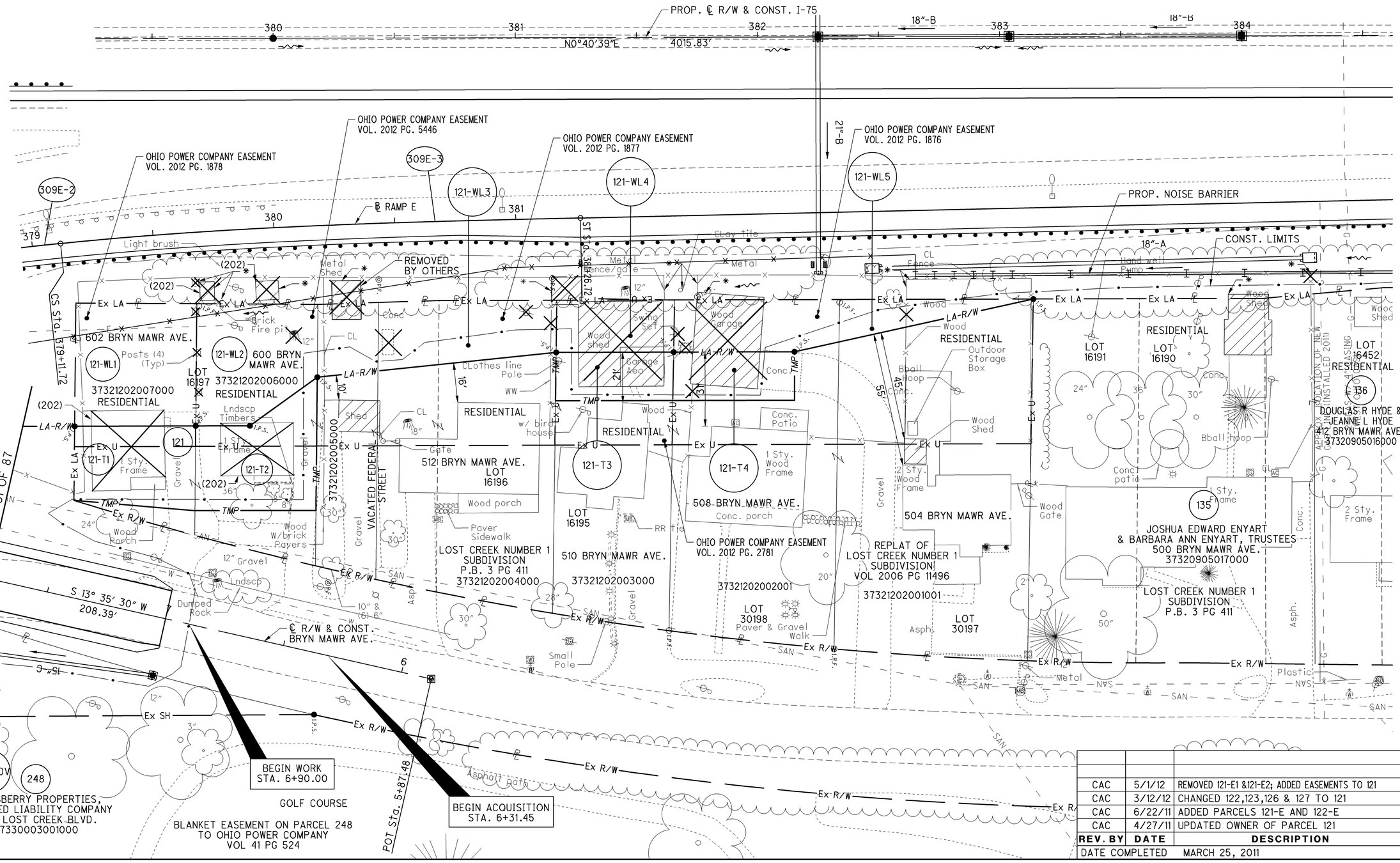

REV. BY	DATE	DESCRIPTION
CAC	5/1/12	REMOVED 121-E1 &121-E2; ADDED EASEMENTS TO 121
CAC	3/12/12	CHANGED 122,123,126 & 127 TO 121
CAC	6/22/11	ADDED PARCELS 121-E AND 122-E
CAC	4/27/11	UPDATED OWNER OF PARCEL 121
DATE COMPLETED		MARCH 25, 2011

HORIZONTAL SCALE IN FEET
0 10 20 40

PID NO. 76691

CAC R/W REVIEWER KDO

RIGHT OF WAY TOPO SHEET
BRYN MAWR AVE.
STA. 5+87.48 TO STA. 7+75.00

ALL-75-5.53

63 / 87

1200 / 1224

J:\Projects\ALL\76691\row\sheets\76691RT608.dgn 12-SEP-2012 9:39AM reddenj

ALLEN COUNTY
BATH TOWNSHIP
SEC. 32, SE 1/4, T. 3 S., R. 7 E.

121 FRANKLIN REAL ESTATE COMPANY, INC., A PENNSYLVANIA CORPORATION

CURVE 309E-2
P.I.= Sta. 377+61.43
D = 12° 49′ 42″ (RT)
Dc = 4° 15′ 00″
R = 1,348.14′
T = 151.56′
L = 301.84′
E = 8.49′
C = 301.21′
C.B. = N 11° 27′ 05″ W

CURVE 309E-3
P.I. STA. 379+83.43
Ls = 215.00′
θs = 4° 34′ 08″
LT = 143.38′
ST = 71.71′
x = 214.86′
y = 5.71′
k = 107.48′
p = 1.43′

STA. 370+05.72 (I-75) = STA. 896+02.95 (SR 309) (SEE SHEET48)

℄ R/W SR 309 (SEE SHEET 48)

379 962.55′ 379+68.27 380 1,111.20′ 381+16.92 N0°40′39″E 381 1,159.83′ 381+65.55 382 4015.83′ 383 384

PROP. ℄ R/W & CONST. I-75

S 89° 19′ 21″ E 109.53′

S 89° 19′ 21″ E 108.49′

S 89° 19′ 21″ E 108.49′

309E-2 309E-3

OHIO POWER COMPANY VOL. 2012 PG. 5446

379 380 381

379+68.27 109.53′ RT

379+18.27 109.13′ RT

380+18.27 109.93′ RT

380+43.40 99.71′ RT 2″ PF "STEEL"

380+43.28 109.21′ RT

380+68.29 108.49′ RT

381+15.09 99.50′ RT 2″ PF "STEEL"

381+16.92 108.49′ RT

381+65.55 108.49′ RT

381+74.92 107.19′ RT 5/8″ IPF

382+33.69 109.60′ RT 5/8″ I.P.F.

383+13.71 108.49′ RT

384+08.27 108.49′ RT

384+58.18 104.19′ RT

121-WL4 121-WL5

50.00′ Ex LA N1°08′09″E

50.00′ Ex LA N 0°58′18″ W

50.04′ Ex LA

48.63′ N0°40′39″E

48.63′ Ex LA N 0° 40′ 39″ E

Ex LA N 0° 40′ 39″ E

148.16′ Ex LA N 0° 40′ 39″ E

Ex LA

Ex LA

Ex LA

LA-R/W

S11°36′58″E 101.02′

379+69.08 110.50′ RT 5/8″ IPF

380+17.90 140.00′ RT 37321202006000

379+67.65 160.00′ RT (RESET BY CONTRACTOR)

379+17.64 160.00′ RT

50.00′ S 0° 40′ 39″ W

22.35′ N0°40′39″E

34.33′ S34°57′32″E

99.18′ S 5° 06′ 35″ E

48.55′ S0°40′39″W

48.49′ S0°40′39″W

50.27′ S 0° 40′ 39″ W

382+15.00 130.00′ RT

N0°40′39″E 49.88′

S89°19′21″E

381+65.12 130.00′ RT

381+16.57 130.00′ RT (RESET BY CONTRACTOR)

381+16.24 150.00′ RT

381+64.73 150.00′ RT

382+15.00 150.00′ RT

380+42.93 137.46′ RT

379+90.00 160.00′ RT (RESET BY CONTRACTOR)

380+17.22 195.00′ RT

379+17.26 190.62′ RT

379+67.21 195.00′ RT

379+67.09 205.16′ RT

380+16.93 217.89′ RT

TMP S 5° 41′ 04″ W 50.14′

TMP S0°40′39″W 50.00′

Ex R/W

77.89′ S 88° 36′ 49″ E

S 13° 35′ 30″ W 164.42′

208.39′

6+31.45 ℄ R/W & CONST. BRYN MAWR AVE.

6+31.45 25.05′ LT

S 0° 28′ 43″ W Ex SH 197.31′

MATCH LINE STA. 7+75 SEE SHEET 62 OF 87

ROT Sta. 5+87.48

Ex U 37321202007000

Ex U 37321202005000

Ex U

Ex U

Ex U

Ex U

30.63′ Ex LA N88°36′49″W

35.00′ S88°36′49″E 45.17′

55.00′ S 88° 36′ 49″ E

20.00′ TMP N88°23′24″W

20.00′ TMP S88°11′40″E

20.00′ TMP S89°19′21″E

21.51′ S88°23′24″E

21.51′ S88°11′40″E

30.07′ S88°36′49″E

50.47′ S 88° 36′ 49″ E

Ex U

OHIO POWER COMPANY VOL. 2012 PG. 1878

OHIO POWER COMPANY VOL. 2012 PG. 1877

OHIO POWER COMPANY VOL. 2012 PG. 2781

OHIO POWER COMPANY VOL. 2012 PG. 1876

VACATED FEDERAL STREET

LOST CREEK NUMBER 1 SUBDIVISION P.B. 3 PG 411

REPLAT OF LOST CREEK NUMBER 1 SUBDIVISION VOL 2006 PG 11496

LOST CREEK NUMBER 1 SUBDIVISION P.B. 3 PG 411

LOT 16197 LOT 16196 LOT 16195 LOT 30197 LOT 16191 LOT 16190 LOT 16452

37321202004000 37321202003000 37321202002001 37321202001001

LOT 30198

121 121-T1 121-T2 121-T3 121-T4 121-WL1 121-WL2 121-WL3

135 JOSHUSA EDWARD ENYART & BARBARA ANN ENYART, TRUSTEE 37320905017000

136 DOUGLAS R HYDE & JEANNE L HYDE 37320905016000

248-WDV

248 HOLTSBERRY PROPERTIES, A LIMITED LIABILITY COMPANY 2409 LOST CREEK BLVD. 37330003001000

BLANKET EASEMENT ON PARCEL 248 TO OHIO POWER COMPANY VOL 41 PG 524

(A) S 76° 24′ 30″ E, 25.05′

(B) R = 1578.30′
ARC LENGTH = 231.53′
CHORD BEARING = N17°44′28″E
CHORD LENGTH = 231.33′
CENTRAL ANGLE = 8°24′19″ (LT)

(C) N 0° 40′ 39″ E, 141.64′

(D) R = 1518.30′
ARC LENGTH = 51.90′
CHORD BEARING = S16°56′50″W
CHORD LENGTH = 51.90′
CENTRAL ANGLE = 1°57′31″ (RT)

(E) R = 1518.30′
ARC LENGTH = 51.45′
CHORD BEARING = S14°59′50″W
CHORD LENGTH = 51.44′
CENTRAL ANGLE = 1°56′29″ (RT)

REV. BY	DATE	DESCRIPTION
CAC	5/1/12	REMOVED 121-E1 & 121-E2; ADDED EASEMENT TO 121
CAC	3/12/12	CHANGED 122,123,126 & 127 TO 121
CAC	6/22/11	ADDED PARCELS 121-E AND 122-E
CAC	4/27/11	UPDATED OWNER OF PARCEL 121
DATE COMPLETED		MARCH 25, 2011

HORIZONTAL SCALE IN FEET 0 10 20 40

PID NO. 76691

CAC R/W REVIEWER KDO

RIGHT OF WAY BOUNDARY SHEET
BRYN MAWR AVE.
STA. 5+87.48 TO STA. 7+75.00

ALL-75-5.53

64 / 87

1201 / 1224

J:\Projects\ALL\76691\row\sheets\76691RB608.dgn 12-SEP-2012 9:39AM reddenj

NOTES REGARDING THE EXISTING R/W ALONG SERVICE ROAD NO. 3:

1. THAT THE EXISTING R/W LINE ON THE SOUTH SIDE OF THE SERVICE ROAD WAS ORIGINALLY ACQUIRED AS L/A
2. THAT THE DECISION IN FRANKLIN COUNTY COMMON PLEAS COURT CASE 196997 AS RECORDED IN VOL 361 PAGE 697 MODIFIED THIS L/A TO ONLY PROHIBIT DIRECT ACCESS TO SR 81 AND I 75 BUT PERMITTED DIRECT ACCESS TO THE SERVICE ROAD.
3. THEREFORE WE ARE MOVING THE L/A LINE NORTH AS SHOWN HEREIN TO REFLECT THE INTENT OF THIS RULING.

ALLEN COUNTY
BATH TOWNSHIP
SEC. 29, NW 1/4, T. 3 S., R. 7 E.

CURVE SRV-1
P.I. Sta. 29+40.31
Δ = 42° 08′ 15″ (RT)
Dc = 35° 15′ 32″
R = 162.50′
T = 62.60′
L = 119.51′
E = 11.64′
C = 116.83′
C.B. = N 58° 30′ 00″ E

PI Sta. 424+58.80

Ex R/W

425 426 427 428 429

N 79° 34′ 07″ E

℄ R/W & CONST. S.R. 81

BEGIN LIMITED ACCESS R/W LEFT STA. 428+89.04

BEGIN ACQUISITION STA. 428+08.86

BEGIN LIMITED ACCESS R/W RIGHT STA. 428+30.20

428+39.90

BEGIN WORK STA. 428+95.33

PARKING

STEVEN A. & MYRA M. DIEPENBROCK
1505 FINDLAY RD
37290002011001

PI STA. 429+00.00

Sign Pole

Asph

8" RCP

429+73.13
25.8' ASPHALT

12"-B

Ex

N 79° 34′ 07″ E
226.40′

252-WL

SEE SHEET 67 OF 87

SANITARY SEWER EASEMENT
VOL. 553 PG. 529

SANITARY SEWER EASEMENT
VOL. 550, PG. 61

COMMERCIAL

PARKING

251
CARY INDUSTRIES, LLC
1420 FINDLAY RD.
37290002018000

12" Conc

Gravel

12"-C

8" Steel

Conc. Sign Base

15"-B

SRV-1

LA R/W

FORCE MAIN

Ex SW

Ex SH

Gore

Dominion

MATCH LINE STA. 430+00 SEE SHEET 87

N79°34′07″E
1524.01′

℄ R/W & CONST. SERVICE RD. 3

PI Sta. 29+97.22

TMP

12"-B

Asph

FC Sta. 28+77.71

252-T

252-WD

252 COMMERCIAL
PMP REALTY LLC,
A MAINE LIMITED LIABILITY COMPANY
1504-1510 FINDLAY RD
37290002017000

Conc. Retaining Wall

Supply yard
Various Pipes
And fittings

CONSTRUCTION LIMITS

PAVED STORAGE YARD

LEGEND:

PAVEMENT TO BE REMOVED

NOTE:
ALL TREES ALONG THE EXISTING LA FENCE WILL BE REMOVED UNLESS LABELED AS "SAVE".

REV. BY	DATE	DESCRIPTION
CAC	9/12/12	UPDATED DRAINAGE ON PARCEL 252
DATE COMPLETED		MARCH 25, 2011

HORIZONTAL SCALE IN FEET
0 10 20 40

PID NO. 76691

R/W DESIGNER CAC
R/W REVIEWER KDO

RIGHT OF WAY TOPO SHEET
SR 81
STA. 438+00.00 TO STA. 430+00.00

ALL-75-5.53

65 / 87

1202
1224

J:\Projects\ALL\76691\row\sheets\7669IRT800A.dgn 12-SEP-2012 9:39AM reddenj

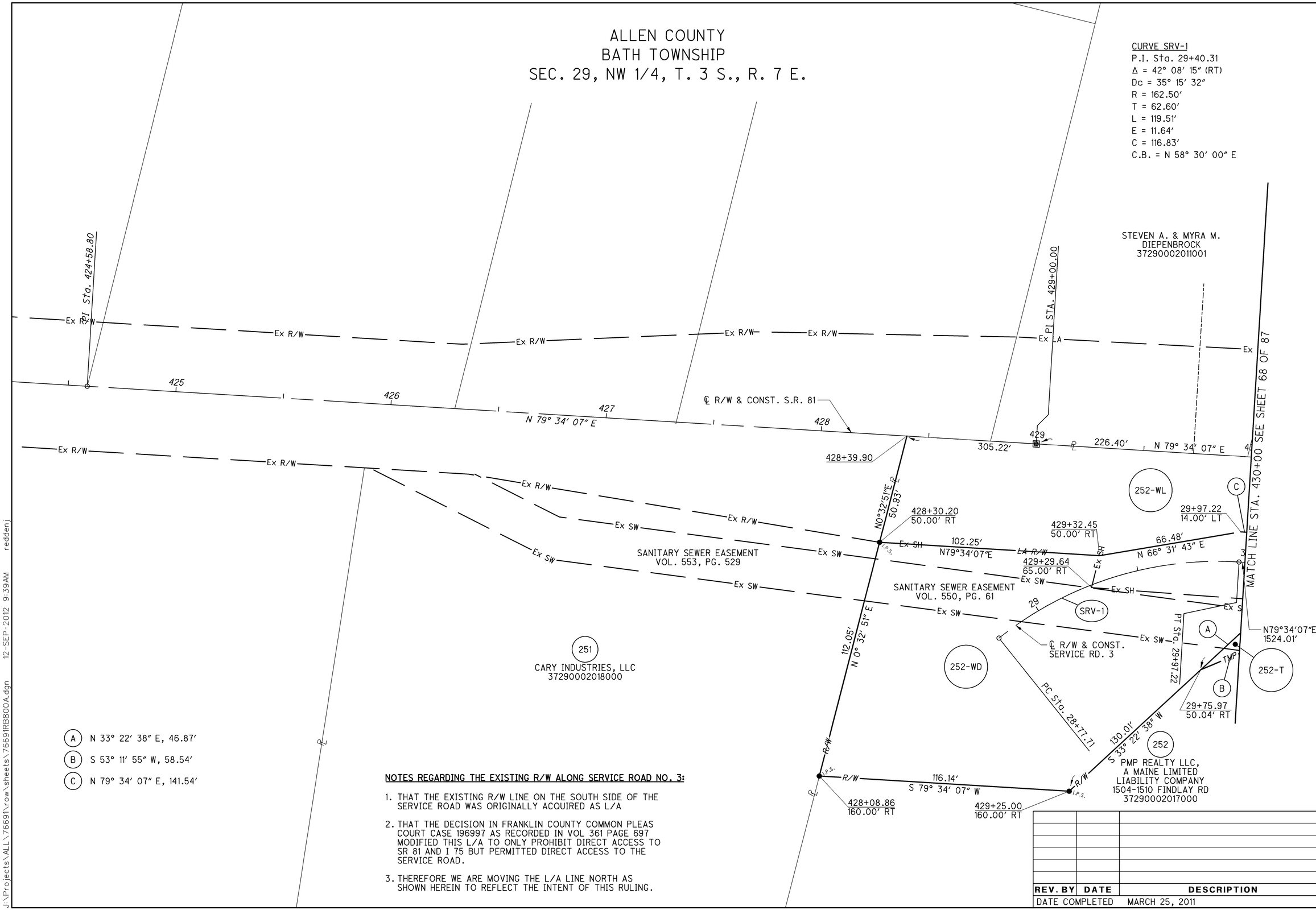

NOTES REGARDING THE EXISTING R/W ALONG SERVICE ROAD NO. 3:

1. THAT THE EXISTING R/W LINE ON THE SOUTH SIDE OF THE SERVICE ROAD WAS ORIGINALLY ACQUIRED AS L/A
2. THAT THE DECISION IN FRANKLIN COUNTY COMMON PLEAS COURT CASE 196997 AS RECORDED IN VOL 361 PAGE 697 MODIFIED THIS L/A TO ONLY PROHIBIT DIRECT ACCESS TO SR 81 AND I 75 BUT PERMITTED DIRECT ACCESS TO THE SERVICE ROAD.
3. THEREFORE WE ARE MOVING THE L/A LINE NORTH AS SHOWN HEREIN TO REFLECT THE INTENT OF THIS RULING.

REV. BY	DATE	DESCRIPTION
DATE COMPLETED	MARCH 25, 2011	

HORIZONTAL SCALE IN FEET 0 10 20 40

PID NO. 76691

R/W DESIGNER CAC
R/W REVIEWER KDO

RIGHT OF WAY BOUNDARY SHEET
SR 81
438+00.00 TO STA. 430+00.00

ALL-75-5.53

J:\Projects\ALL\76691\row\sheets\76691RB800A.dgn 12-SEP-2012 9:39AM reddenj

NOTE:
ALL TREES ALONG THE EXISTING LA FENCE WILL BE REMOVED UNLESS LABELED AS "SAVE".

LEGEND:
DND - DO NOT DISTURB

ALLEN COUNTY
BATH TOWNSHIP
SEC. 29, NW 1/4, T. 3 S., R. 7 E.

CURVE SR81-1
P.I.= Sta. 432+41.60
D = 6° 54′ 12″ (LT)
Dc = 3° 00′ 00″
R = 1,909.86′
T = 115.20′
L = 230.11′
E = 3.47′
C = 229.97′
C.B. = N 76° 07′ 01″ E

NOTES REGARDING THE EXISTING R/W ALONG SERVICE ROAD NO. 3:

1. THAT THE EXISTING R/W LINE ON THE SOUTH SIDE OF THE SERVICE ROAD WAS ORIGINALLY ACQUIRED AS L/A
2. THAT THE DECISION IN FRANKLIN COUNTY COMMON PLEAS COURT CASE 196997 AS RECORDED IN VOL 361 PAGE 697 MODIFIED THIS L/A TO ONLY PROHIBIT DIRECT ACCESS TO SR 81 AND I 75 BUT PERMITTED DIRECT ACCESS TO THE SERVICE ROAD.
3. THEREFORE WE ARE MOVING THE L/A LINE NORTH AS SHOWN HEREIN TO REFLECT THE INTENT OF THIS RULING.

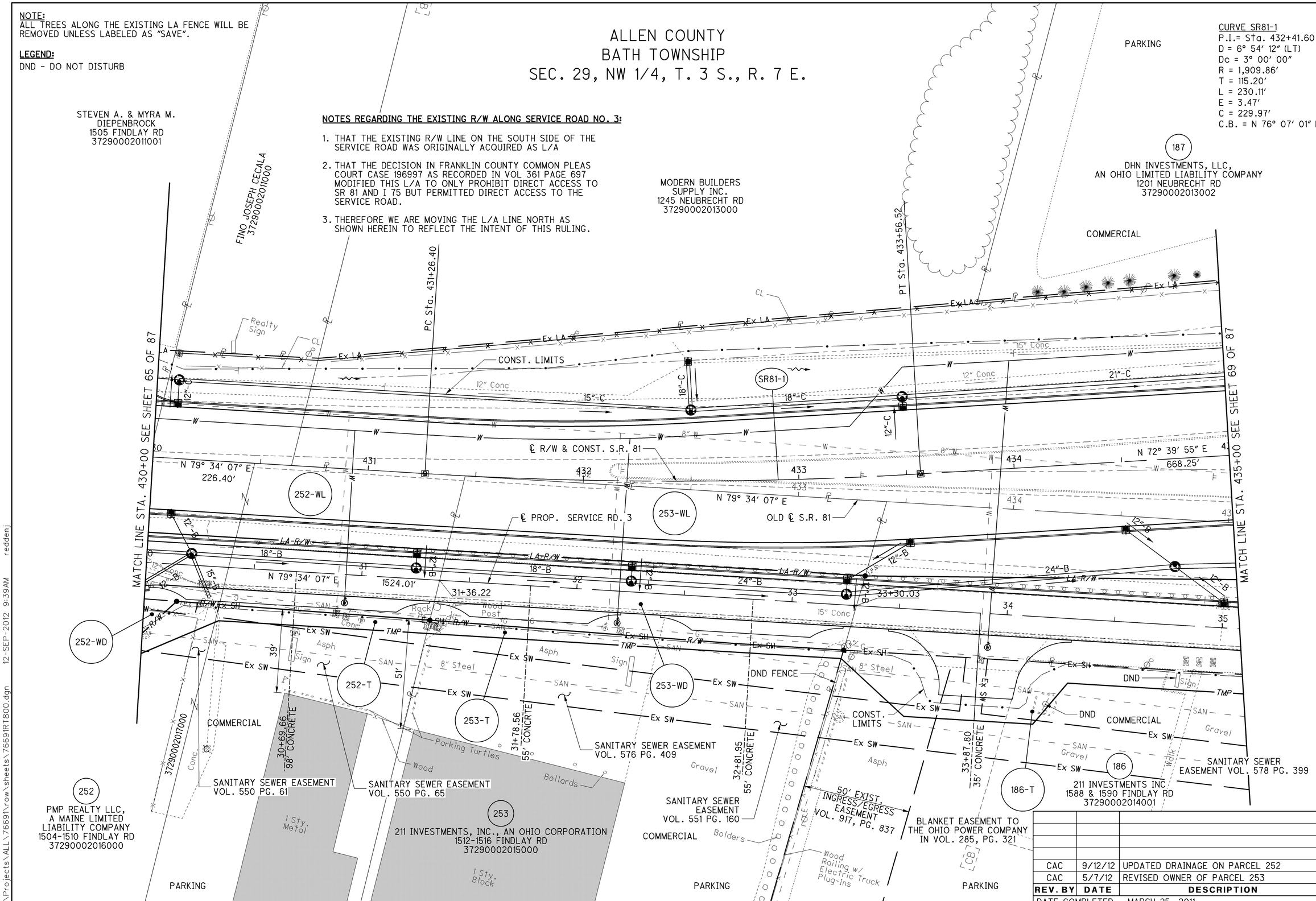

REV. BY	DATE	DESCRIPTION
CAC	9/12/12	UPDATED DRAINAGE ON PARCEL 252
CAC	5/7/12	REVISED OWNER OF PARCEL 253

DATE COMPLETED MARCH 25, 2011

HORIZONTAL SCALE IN FEET 0 10 20 40

PID NO. 76691

R/W DESIGNER CAC
R/W REVIEWER KDO

RIGHT OF WAY TOPO SHEET
SR 81
STA. 430+00.00 TO STA. 435+00.00

ALL-75-5.53

J:\Projects\ALL\76691\row\sheets\76691RT800.dgn 12-SEP-2012 9:39AM reddenj

NOTES REGARDING THE EXISTING R/W ALONG SERVICE ROAD NO. 3:

1. THAT THE EXISTING R/W LINE ON THE SOUTH SIDE OF THE SERVICE ROAD WAS ORIGINALLY ACQUIRED AS L/A
2. THAT THE DECISION IN FRANKLIN COUNTY COMMON PLEAS COURT CASE 196997 AS RECORDED IN VOL 361 PAGE 697 MODIFIED THIS L/A TO ONLY PROHIBIT DIRECT ACCESS TO SR 81 AND I 75 BUT PERMITTED DIRECT ACCESS TO THE SERVICE ROAD.
3. THEREFORE WE ARE MOVING THE L/A LINE NORTH AS SHOWN HEREIN TO REFLECT THE INTENT OF THIS RULING.

ALLEN COUNTY
BATH TOWNSHIP
SEC. 29, NW 1/4, T. 3 S., R. 7 E.

CURVE SR81-1
P.I.= Sta. 432+41.60
D = 6° 54′ 12″ (LT)
Dc = 3° 00′ 00″
R = 1,909.86′
T = 115.20′
L = 230.11′
E = 3.47′
C = 229.97′
C.B. = N 76° 07′ 01″ E

STEVEN A. & MYRA M. DIEPENBROCK
37290002011001

FINO JOSEPH CECALA
37290002011000

MODERN BUILDERS SUPPLY INC.
37290002013000

187
DHN INVESTMENTS, LLC, AN OHIO LIMITED LIABILITY COMPANY
37290002013002

MATCH LINE STA. 430+00 SEE SHEET 66 OF 87

226.40′ N 79° 34′ 07″ E

305.22′

430+74.13 50.42′ LT

PC Sta. 431+26.40

PT Sta. 433+56.52

433+87.69 78.40′ LT

433+87.54 77.95′ LT 5/8″ IPF "SHELDON"

Ex LA

SR81-1

℄ R/W & CONST. S.R. 81

31+45.12 49.00′ LT

431+45.12 0.09′ RT

35.57′ S0°08′11″E

195.95′ N 79° 34′ 07″ E

668.25′ N 72° 39′ 55″ E

33+41.07 49.00′ LT

OLD ℄ S.R. 81

35.88′ S 2° 15′ 48″ W

MATCH LINE STA. 435+00 SEE SHEET 70 OF 87

252-WD

252-WL

253-WL

253-WD

30+15.00 17.18′ RT

141.54′ N 79° 34′ 07″ E

31+38.76 14.00′ LT

194.43′ S 79° 34′ 07″ W

33+33.19 14.00′ LT

317.22′ N 76° 40′ 39″ E

1524.01′

630.72′

643.04′ N 79° 34′ 07″ E

31+32.80

31+45.12

31+36.22

31+32.80 18.80′ RT

32+73.73 21.00′ RT

33+30.03

℄ R/W & CONST. SERVICE RD. 3

117.81′ S 80° 21′ 30″ W

96.68′ S 79° 34′ 07″ W

N 80° 27′ 47″ E 140.94′

S 79° 34′ 07″ W

192.72′

51.58′ N 79° 34′ 07″ E

33+25.30 21.00′ RT

SANITARY SEWER EASEMENT VOL. 550 PG 61

S53°11′55″W 58.54′

30+35.00 25.00′ RT

SANITARY SEWER EASEMENT VOL. 550 PG 65

31+31.68 25.00′ RT

SANITARY SEWER EASEMENT VOL. 576 PG 409

SANITARY SEWER EASEMENT VOL. 551 PG 160

33+24.04 25.00′ RT

N61°10′55″W 39.51′

446.33′ N 79° 34′ 07″ E

339.83′ S 79° 34′ 07″ W

S26°26′18″W 25.00′

34+30.00 30.00′ RT

60.00′ S79°34′07″W

33+55.00 50.00′ RT

34++15.00 50.00′ RT

SANITARY SEWER EASEMENT VOL. 578 PG 399

37290002017000

252
PMP REALTY LLC, A MAINE LIMITED LIABILITY COMPANY
37290002016000

252-T

253-T

253
211 INVESTMENTS, INC., AN OHIO CORPORATION
37290002015000

186-T

186
211 INVESTMENTS INC
37290002014001

50′ EXIST. INGRESS/EGRESS EASEMENT VOL. 917, PG. 837

BLANKET EASEMENT TO THE OHIO POWER COMPANY IN VOL. 285, PG. 321

(A) S 33° 22′ 38″ W, 130.01′ (252-WD)
S 33° 22′ 38″ W, 46.87′ (252-T)

(B) S 0° 08′ 11″ E, 6.30′

(C) N 2° 15′ 48″ E, 4.10′

(D) S 10° 25′ 53″ E, 18.80′

(E) S 0° 08′ 11″ E, 33.34′

(F) S 2° 15′ 48″ W, 35.88′

(G) N 10° 25′ 53″ W, 49.00′

REV. BY	DATE	DESCRIPTION
CAC	5/7/12	REVISED OWNER OF PARCEL 253
DATE COMPLETED		MARCH 25, 2011

HORIZONTAL SCALE IN FEET
0 10 20 40

PID NO. 76691

R/W DESIGNER CAC
R/W REVIEWER KDO

RIGHT OF WAY BOUNDARY SHEET 1
SR 81
STA. 430+00.00 TO STA. 435+00.00

ALL-75-5.53

68 / 87

1205
1224

J:\Projects\ALL\76691\row\sheets\76691RB800.dgn 12-SEP-2012 9:39AM reddenj

ALLEN COUNTY
BATH TOWNSHIP
SEC. 29, NW 1/4 & NE 1/4, T. 3 S., R. 7 E.

CURVE NEU-1
P.I.= Sta. 12+18.30
D = 11° 27′ 00″ (RT)
Dc = 8° 00′ 00″
R = 716.20′
T = 71.80′
L = 143.13′
E = 3.59′
C = 142.89′
C.B. = N 4° 50′ 04″ W

E1 EASEMENT TO ALLEN COUNTY COMISSIONERS VOL. 854, PG. 11

E2 SANITARY SEWER EASEMENT VOL. 552, PG. 621

E3 BLANKET EASEMENT TO OHIO POWER COMPANY VOL. 546, PG. 422

E4 CHANNEL EASEMENT VOL. 319, PG. 241

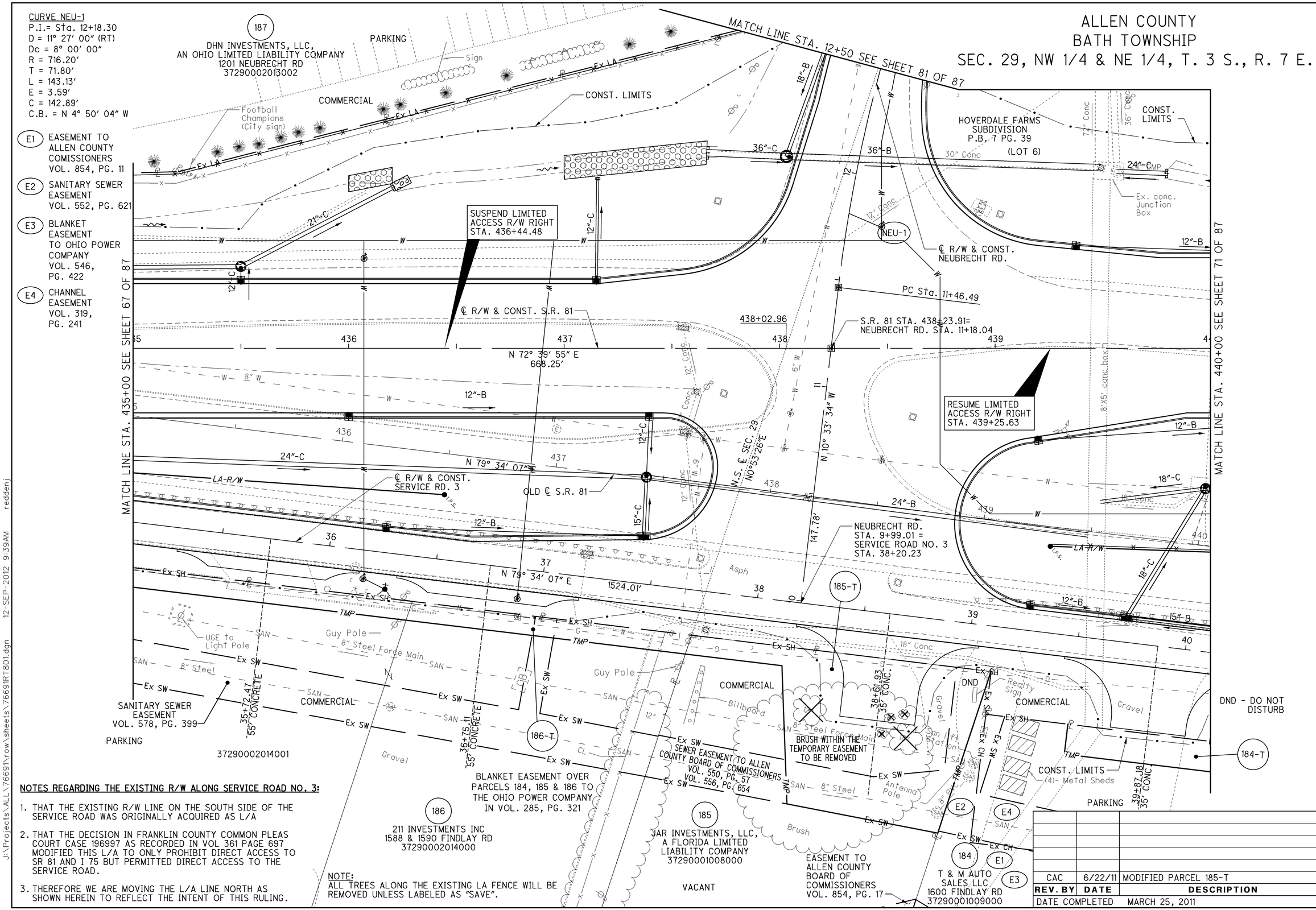

NOTES REGARDING THE EXISTING R/W ALONG SERVICE ROAD NO. 3:

1. THAT THE EXISTING R/W LINE ON THE SOUTH SIDE OF THE SERVICE ROAD WAS ORIGINALLY ACQUIRED AS L/A
2. THAT THE DECISION IN FRANKLIN COUNTY COMMON PLEAS COURT CASE 196997 AS RECORDED IN VOL 361 PAGE 697 MODIFIED THIS L/A TO ONLY PROHIBIT DIRECT ACCESS TO SR 81 AND I 75 BUT PERMITTED DIRECT ACCESS TO THE SERVICE ROAD.
3. THEREFORE WE ARE MOVING THE L/A LINE NORTH AS SHOWN HEREIN TO REFLECT THE INTENT OF THIS RULING.

NOTE:
ALL TREES ALONG THE EXISTING LA FENCE WILL BE REMOVED UNLESS LABELED AS "SAVE".

REV. BY	DATE	DESCRIPTION
CAC	6/22/11	MODIFIED PARCEL 185-T

DATE COMPLETED MARCH 25, 2011

HORIZONTAL SCALE IN FEET 0 10 20 40

PID NO. 76691

R/W DESIGNER CAC
R/W REVIEWER KDO

RIGHT OF WAY TOPO SHEET
SR 81
STA. 435+00.00 TO STA. 440+00.00

ALL-75-5.53

J:\Projects\ALL\76691\row\sheets\76691RT801.dgn 12-SEP-2012 9:39AM reddenj

ALLEN COUNTY
BATH TOWNSHIP
SEC. 29, NW 1/4 & NE 1/4, T. 3 S., R. 7 E.

CURVE NEU-1
P.I.= Sta. 12+18.30
D = 11° 27′ 00″ (RT)
Dc = 8° 00′ 00″
R = 716.20′
T = 71.80′
L = 143.13′
E = 3.59′
C = 142.89′
C.B. = N 4° 50′ 04″ W

187
DHN INVESTMENTS, LLC,
AN OHIO LIMITED LIABILITY COMPANY
37290002013002

MATCH LINE STA. 12+50 SEE SHEET 82 OF 87

℄ Ex LA

435+21.03
81.98′ LT

℄ Ex LA

435+22.88
81.60′ LT
5/8″ I.P.F.
"SHELDON"

NOTES REGARDING THE EXISTING R/W ALONG SERVICE ROAD NO. 3:

1. THAT THE EXISTING R/W LINE ON THE SOUTH SIDE OF THE SERVICE ROAD WAS ORIGINALLY ACQUIRED AS L/A
2. THAT THE DECISION IN FRANKLIN COUNTY COMMON PLEAS COURT CASE 196997 AS RECORDED IN VOL 361 PAGE 697 MODIFIED THIS L/A TO ONLY PROHIBIT DIRECT ACCESS TO SR 81 AND I 75 BUT PERMITTED DIRECT ACCESS TO THE SERVICE ROAD.
3. THEREFORE WE ARE MOVING THE L/A LINE NORTH AS SHOWN HEREIN TO REFLECT THE INTENT OF THIS RULING.

℄ R/W & CONST. NEUBRECHT RD.

12

NEU-1

HOVERDALE FARMS
SUBDIVISION
P.B. 7 PG. 39

(LOT 6)

N.S. ℄ SEC. 29
N0°53′26″E

PC Sta. 11+46.49

℄ R/W & CONST. S.R. 81

438+02.96

S.R. 81 STA. 438+23.91=
NEUBRECHT RD. STA. 11+18.04

435 436 437 438 439 440

N 72° 39′ 55″ E
668.25′

SUSPEND LIMITED ACCESS R/W RIGHT STA. 436+44.48

RESUME LIMITED ACCESS R/W RIGHT STA. 439+25.63

11

N 10° 33′ 34″ W

MATCH LINE STA. 435+00 SEE SHEET 68 OF 87

MATCH LINE STA. 440+00 SEE SHEET 72 OF 87

436 437 438 439 440

LA-R/W 317.22′ N 76° 40′ 39″ E

OLD ℄ S.R. 81

N 79° 34′ 07″ E

℄ R/W & CONST. SERVICE RD. 3

36+50.00
30.00′ LT

436+44.48
67.95′ RT

146.29′

NEUBRECHT RD.
STA. 9+99.01 =
SERVICE ROAD NO. 3
STA. 38+20.23

LA-R/W 748.74′ N 74° 45′ 13″ E

439+25.63
91.92′ RT

39+32.00
40.00′ LT

36 37 38 39 40

37+75.84

Ex SH ℄ 446.33′ N 79° 34′ 07″ E Ex SH

TMP

339.83′ S 79° 34′ 07″ W

Ex SH ℄ Ex SH

D

37+71.63
21.00′ RT

174.16′
1524.01′

39+50.00

278.78′
587.59′

A

45.17′ S 79° 34′ 07″ W

Ex SH ℄ 140.00′ N 79° 34′ 07″ E Ex SH

39+11.63
21.00′ RT

E

184-T

186-T

185-T

37+69.83
30.00′ RT

38+15.00
30.00′ RT

Ex SW SANITARY SEWER EASEMENT VOL. 578, PG. 399 Ex SW

Ex SW Ex SW

N 19°23′36″ W 64.19′

79.00′ S0°53′26″W

Ex SH Ex SW Ex CH

39+50.00
41.00′ RT

Ex SH ℄ 75.00′ N 79° 34′ 07″ E

B

39+11.63
41.00′ RT

TMP 75.00′ S 79° 34′ 07″ W

39+50.00
55.00′ RT

37290002014001

186
211 INVESTMENTS INC
37290002014000

Ex SW SEWER EASEMENT TO ALLEN COUNTY BOARD OF COMMISSIONERS VOL. 550, PG. 57 VOL. 556, PG. 54 Ex SW

TMP

71.30′ S 83° 37′ 55″ W Ex SW

39+96.12
98.46′ RT

E2 E4

Ex SW Ex CH

BLANKET EASEMENT OVER PARCELS 184, 185 & 186 TO THE OHIO POWER COMPANY IN VOL. 285, PG. 321

C

185
JAR INVESTMENTS, LLC,
A FLORIDA LIMITED
LIABILITY COMPANY
37290001008000

E.W. ℄ SEC. 29

1½″ IRON PIPE FOUND
36+11.94, 818.62′ RT

EASEMENT TO ALLEN COUNTY BOARD OF COMMISSIONERS VOL. 854, PG. 17

184
T & M AUTO SALES LLC
37290001009000

E1 E3

(A) S 0° 53′ 26″ W, 9.18′
(B) N 10° 25′ 53″ W, 14.00′
(C) N 0° 53′ 26″ E, 813.45′
(D) N 0° 53′ 26″ E, 834.87′
(E) S 10° 25′ 53″ E, 41.00′

E1 EASEMENT TO ALLEN COUNTY COMISSIONERS VOL. 854, PG. 11
E2 SANITARY SEWER EASEMENT VOL. 552, PG. 621
E3 BLANKET EASEMENT TO OHIO POWER COMPANY VOL. 546, PG. 422
E4 CHANNEL EASEMENT VOL. 319, PG. 241

REV. BY	DATE	DESCRIPTION
CAC	6/22/11	MODIFIED PARCEL 185-T
DATE COMPLETED		MARCH 25, 2011

HORIZONTAL SCALE IN FEET
0 10 20 40

PID NO. 76691

R/W DESIGNER CAC
R/W REVIEWER KDO

RIGHT OF WAY BOUNDARY SHEET
SR 81
STA. 435+00.00 TO STA. 440+00.00

ALL-75-5.53

70 / 87

1207
1224

J:\Projects\ALL\76691\row\sheets\7669IRB801.dgn 12-SEP-2012 9:39AM reddenj

NOTES REGARDING THE EXISTING R/W ALONG SERVICE ROAD NO. 3:

1. THAT THE EXISTING R/W LINE ON THE SOUTH SIDE OF THE SERVICE ROAD WAS ORIGINALLY ACQUIRED AS L/A
2. THAT THE DECISION IN FRANKLIN COUNTY COMMON PLEAS COURT CASE 196997 AS RECORDED IN VOL 361 PAGE 697 MODIFIED THIS L/A TO ONLY PROHIBIT DIRECT ACCESS TO SR 81 AND I 75 BUT PERMITTED DIRECT ACCESS TO THE SERVICE ROAD.
3. THEREFORE WE ARE MOVING THE L/A LINE NORTH AS SHOWN HEREIN TO REFLECT THE INTENT OF THIS RULING.

NOTES:
SEE SHEET 35 FOR THE EX. LA R/W AND PROP. FENCE LOCATION ON THE NORTH SIDE OF SR 81.

ALL TREES ALONG THE EXISTING LA FENCE WILL BE REMOVED UNLESS LABELED AS "SAVE".

(202) - TO BE REMOVED BY THE CONTRACTOR

ALLEN COUNTY
BATH TOWNSHIP
SEC. 29, NE 1/4, T. 3 S., R. 7 E.

REV. BY	DATE	DESCRIPTION
CAC	9/12/12	ADDED (202) TO SHED ON 181-T
DATE COMPLETED	MARCH 25, 2011	

HORIZONTAL SCALE IN FEET: 0, 10, 20, 40

CONST. LIMITS
(LOT 8)
(LOT 7)
(LOT 6)
(LOT 9)
HOVERDALE FARMS SUBDIVISION P.B. 7 PG. 39
MATCH LINE STA. 440+00 SEE SHEET 69 OF 87
MATCH LINE STA. 445+00 SEE SHEET 73 OF 87
℄ R/W & CONST. S.R. 81
℄ R/W & CONST. SERVICE RD. 3
OLD ℄ S.R. 81
EX. E.B. S.R. 81
SR81-2
182-WD
181-WD
N72°39'55"E 668.25'
Pt. Sta. 440+24.77
N 79° 34' 07" E
1524.01'
40+47.40
40+76.75 55' CONCRETE
41+70.79 55' CONCRETE
42+76.10
43+63.43
44+26.17 12" ASPHALT
Landscape Block wall
Gravel
Bench
Dominion gas 2" Gas in 4" encasing
12" VCP
Ex SH
Ex SW
Ex SR/W
TMP
Landscape Wall
Gate
Link
Rack
Wood
Asphalt
Concrete
Brick
Metal Body shop
Metal Auto shop
1 Sty.
2 Sty.
Shed
Bus Shelter
Landscape
SAN
CL
W
LA-R/W
15"-C
18"-C
12"-B
12"-C
15"-B
8" W
15" Conc
16"
14"
10"
24"
34'
48'13'
(202)
(SAVE)

184-T
184
T & M AUTO SALES LLC
1600 FINDLAY RD
37290001009000
COMMERCIAL

182-T
182
MATTHEW J A GOSSARD & THOMAS E BRIM
1608 FINDLAY RD
37290001011000
COMMERCIAL

181-T
181
IGNACIO RODRIGUEZ
1610 FINDLAY RD
37290001012000
RESIDENTIAL

179
DEAN A. BURRELL & DENISE BURRELL
1616 FINDLAY RD
37290001013000
RESIDENTIAL

(E1) CHANNEL EASEMENT VOL. 319, PG. 241

(E2) BLANKET EASEMENT TO THE OHIO POWER COMPANY IN VOL. 285, PG. 321

(E3) SANITARY SEWER EASEMENT VOL. 552, PG. 621

(E4) SANITARY SEWER EASEMENT VOL. 551, PG. 635

(E5) SANITARY SEWER EASEMENT VOL. 554, PG. 325

ACCESS EASEMENT TO BOARD OF COMMISSIONERS OF ALLEN COUNTY, OHIO VOL. 571, PG. 473

BLANKET EASEMENT FOR OVERHANG OF WIRES TO OHIO POWER COMPANY IN VOL. 546, PG. 426

SEWER EASEMENT TO BOARD OF COMMISSIONERS OF ALLEN COUNTY, OHIO VOL. 551, PG. 631

BLANKET EASEMENT TO THE OHIO POWER COMPANY IN VOL. 285, PG. 320

SEWER EASEMENT TO BOARD OF COMMISSIONERS OF ALLEN COUNTY, OHIO VOL. 551, PG. 631

INGRESS/EGRESS EASEMENT VOL. 810, PG. 792

SEWER EASEMENT TO BOARD OF COMMISSIONERS OF ALLEN COUNTY, OHIO VOL. 552, PG. 617

CURVE SR81-2
P.I.= Sta. 443+29.51
D = 6° 05' 21" (RT)
Dc = 1° 00' 00"
R = 5,729.58'
T = 304.74'
L = 608.91'
E = 8.10'
C = 608.63'
C.B. = N 75° 42' 36" E

J:\Projects\ALL\76691\row\sheets\76691RT802.dgn 12-SEP-2012 9:39AM reddenj

PID NO. 76691

R/W DESIGNER CAC
R/W REVIEWER KDO

RIGHT OF WAY TOPO SHEET
SR 81
STA. 440+00.00 TO STA. 445+00.00

ALL-75-5.53

71 / 87

1208
1224

NOTES REGARDING THE EXISTING R/W ALONG SERVICE ROAD NO. 3:

1. THAT THE EXISTING R/W LINE ON THE SOUTH SIDE OF THE SERVICE ROAD WAS ORIGINALLY ACQUIRED AS L/A
2. THAT THE DECISION IN FRANKLIN COUNTY COMMON PLEAS COURT CASE 196997 AS RECORDED IN VOL 361 PAGE 697 MODIFIED THIS L/A TO ONLY PROHIBIT DIRECT ACCESS TO SR 81 AND I 75 BUT PERMITTED DIRECT ACCESS TO THE SERVICE ROAD.
3. THEREFORE WE ARE MOVING THE L/A LINE NORTH AS SHOWN HEREIN TO REFLECT THE INTENT OF THIS RULING.

NOTE:
SEE SHEET 35 FOR THE EX. LA R/W LOCATION ON THE NORTH SIDE OF SR 81.

ALLEN COUNTY
BATH TOWNSHIP
SEC. 29, NE 1/4, T. 3 S., R. 7 E.

REV. BY	DATE	DESCRIPTION
DATE COMPLETED		MARCH 25, 2011

HORIZONTAL SCALE IN FEET: 0, 10, 20, 40

HOVERDALE FARMS SUBDIVISION P.B. 7 PG. 39

(LOT 6) (LOT 7) (LOT 8) (LOT 9)

MATCH LINE STA. 440+00 SEE SHEET 70 OF 87

MATCH LINE STA. 445+00 SEE SHEET 74 OF 87

℄ R/W & CONST. S.R. 81

SR81-2

N72°39'55"E 668.25'

PC Sta. 440+24.77

441 442 443 444

(A) N 79° 34' 07" E, 75.00'
(B) S 10° 25' 53" E, 14.00'
(C) S 79° 34' 07" W, 75.00'
(D) N 20° 49' 05" E, 5.85'
(E) S 0° 31' 31" W, 5.09'
(F) S 79° 34' 07" W, 17.71'
(G) S 10° 25' 53" E, 16.00'
(H) S 10° 25' 53" E, 16.00'
(I) S 20° 49' 05" W, 29.24'

(E1) CHANNEL EASEMENT VOL. 319, PG. 241

(E2) BLANKET EASEMENT TO THE OHIO POWER COMPANY IN VOL. 285, PG. 321

(E3) SANITARY SEWER EASEMENT VOL. 552, PG. 621

(E4) SANITARY SEWER EASEMENT VOL. 551, PG. 635

(E5) SANITARY SEWER EASEMENT VOL. 554, PG. 325

LA-R/W 748.74' N 74° 45' 13" E LA-R/W LA-R/W

228.53' N 79° 34' 07" E

90.38' N 79° 34' 07" E

40+56.91 49.00' LT

42+85.44 49.00' LT

43+75.82 49.00' LT

OLD ℄ S.R. 81

91.68' N 0° 32' 47" E

71.26' S 0° 21' 45" W

67.08' S 0° 21' 45" W

66.17' S 0° 21' 45" W

40+47.40

40+54.62

278.78'

40+54.62 16.00' RT

41 N 79° 34' 07" E

41+35.33 16.00' RT

80.70' N 79° 34' 07" E

42

43

43+63.43

587.59'

43+66.48

℄ R/W & CONST. SERVICE RD. 3

44

1524.01'

S79°34'07"W 82.77'

137.74' S 79° 34' 07" W

42+72.88 16.90' RT

42+76.10

90.56' N 78° 59' 57" E

43+63.43 16.00' RT

43.43'

42+72.10 21.00' RT

43+20.00 16.43' RT

TMP N44°30'14"W 35.70'

30.54' S0°21'45"W

40+51.59 21.00' RT

40+39.45 41.00' RT

40+25.00 41.00' RT

40+25.00 55.00' RT

41+34.36 21.00' RT

Ex SH R/W Ex SH

Ex SW

Ex SH

TMP

I.P.S.

184-T

182-T

182-WD

181-WD

181-T

184 T & M AUTO SALES LLC 37290001009000

37290001010000

182 MATTHEW J A GOSSARD & THOMAS E BRIM 37290001011000

ACCESS EASEMENT TO BOARD OF COMMISSIONERS OF ALLEN COUNTY, OHIO VOL. 571, PG. 473

BLANKET EASEMENT FOR OVERHANG OF WIRES TO OHIO POWER COMPANY IN VOL. 546, PG. 426

BLANKET EASEMENT TO THE OHIO POWER COMPANY IN VOL. 285, PG. 320

SEWER EASEMENT TO BOARD OF COMMISSIONERS OF ALLEN COUNTY, OHIO VOL. 551, PG. 631

SEWER EASEMENT TO BOARD OF COMMISSIONERS OF ALLEN COUNTY, OHIO VOL. 552, PG. 617

43+57.71 46.00' RT

43+40.00 46.00' RT

INGRESS/EGRESS EASEMENT VOL. 810, PG. 792

IGNACIO RODRIGUEZ 37290001012000 — 181

179 DEAN A. BURRELL & DENISE E. BURRELL 37290001013000

CURVE SR81-2
P.I.= Sta. 443+29.51
D = 6° 05' 21" (RT)
Dc = 1° 00' 00"
R = 5,729.58'
T = 304.74'
L = 608.91'
E = 8.10'
C = 608.63'
C.B. = N 75° 42' 36" E

J:\Projects\ALL\76691\row\sheets\76691RB802.dgn 12-SEP-2012 9:39AM redderj

PID NO. 76691

R/W DESIGNER CAC
R/W REVIEWER KDO

RIGHT OF WAY BOUNDARY SHEET
SR 81
STA. 440+00.00 TO STA. 445+00.00

ALL-75-5.53

72 / 87

1209 / 1224

ALLEN COUNTY
BATH TOWNSHIP
SEC. 29, NE 1/4, T. 3 S., T. 7 E.

NOTES REGARDING THE EXISTING R/W ALONG SERVICE ROAD NO. 3:

1. THAT THE EXISTING R/W LINE ON THE SOUTH SIDE OF THE SERVICE ROAD WAS ORIGINALLY ACQUIRED AS L/A
2. THAT THE DECISION IN FRANKLIN COUNTY COMMON PLEAS COURT CASE 196997 AS RECORDED IN VOL 361 PAGE 697 MODIFIED THIS L/A TO ONLY PROHIBIT DIRECT ACCESS TO SR 81 AND I 75 BUT PERMITTED DIRECT ACCESS TO THE SERVICE ROAD.
3. THEREFORE WE ARE MOVING THE L/A LINE NORTH AS SHOWN HEREIN TO REFLECT THE INTENT OF THIS RULING.

(LOT 8)

CURVE SR81-2
P.I.= Sta. 443+29.51
D = 6° 05′ 21″ (RT)
Dc = 1° 00′ 00″
R = 5,729.58′
T = 304.74′
L = 608.91′
E = 8.10′
C = 608.63′
C.B. = N 75° 42′ 36″ E

HOVERDALE FARMS SUBDIVISION
P.B. 7 PG. 39

(LOT 9)

CONST. LIMITS

CURVE SRV-2
P.I. Sta. 45+83.83
Δ = 42° 08′ 15″ (LT)
Dc = 35° 15′ 32″
R = 162.50′
T = 62.60′
L = 119.51′
E = 11.64′
C = 116.83′
C.B. = N 58° 30′ 00″ E

EX. EXIT RAMP 'F'

24″-A

℄ RAMP F

(LOT 10)

NOTES:
ALL TREES ALONG THE EXISTING LA FENCE WILL BE REMOVED UNLESS LABELED AS "SAVE".

SEE SHEETS 20-40 FOR I-75.

MATCH LINE STA. 445+00 SEE SHEET 71 OF 87

MATCH LINE STA. 450+00 SEE SHEET 75 OF 87

℄ R/W & CONST. S.R. 81

S.R. 81 STA.448+20.11=
RAMP F STA. 461+31.81

S.R. 81 STA.448+15.19=
RAMP D STA. 461+75.24

PT Sta. 446+33.68

SR81-2

N 8° 14′ 44″ W 147.74′

N 78° 45′ 16″ E 560.91′

I-75 OVER S.R. 81 (FINDLAY RD.)
BRIDGE NO. ALL-75-08.75

N 15° 31′ 43″ W 134.15′

Ex. 24″ CMP

Ex. 12″ CMP

CONC.

179

DEAN A BURRELL &
DENISE BURRELL
1616 FINDLAY RD.
37290001013001
37290001013000

177

LAURA L. SMITH
1624 FINDLAY RD.
37290001015000

PC Sta. 45+21.23

PT Sta. 45+40.74

OLD ℄ S.R. 81

℄ R/W & CONST.
SERVICE RD. 3

SRV-2

46+22.51
12′ ASPHALT

N79° 34′07″E
1524.01′

N 79° 34′ 07″ E

PT Sta. 460+41.09

81D-2

℄ RAMP D

CURVE 81D-2
P.I.= Sta. 456+09.25
D = 15° 07′ 22″ (LT)
Dc = 1° 45′ 00″
R = 3,274.04′
D c = 13° 11′ 52″ (LT)
Lc = 754.16′
Es = 29.03′
C = 752.49′
C.B.1 = N 0° 45′ 52″ W
C.B. = N 8° 38′ 48″ W

45+45.66
19.5′ ASPHALT

45+75.46
11′ ASPHALT

INGRESS/EGRESS
EASEMENT
VOL. 600, PG. 759

SEWER EASEMENT TO
BOARD OF COMMISSIONERS
OF ALLEN COUNTY, OHIO
VOL. 552, PG. 617

RESIDENTIAL
37290001013000

RESIDENTIAL
37290001015000

CONST. LIMITS

EX. ENTRANCE RAMP 'D'

S.B. I-75

REV. BY	DATE	DESCRIPTION
DATE COMPLETED	MARCH 25, 2011	

HORIZONTAL SCALE IN FEET
0 10 20 40

PID NO. 76691

R/W DESIGNER CAC
R/W REVIEWER KDO

RIGHT OF WAY TOPO SHEET
SR 81
STA. 445+00.00 TO STA. 450+00.00

ALL-75-5.53

73 / 87

1210
1224

J:\Projects\ALL\76691\row\sheets\76691RT803.dgn 12-SEP-2012 9:39AM reddenj

ALLEN COUNTY
BATH TOWNSHIP
SEC. 29, NE 1/4, T. 3 S., T. 7 E.

NOTES REGARDING THE EXISTING R/W ALONG SERVICE ROAD NO. 3:

1. THAT THE EXISTING R/W LINE ON THE SOUTH SIDE OF THE SERVICE ROAD WAS ORIGINALLY ACQUIRED AS L/A
2. THAT THE DECISION IN FRANKLIN COUNTY COMMON PLEAS COURT CASE 196997 AS RECORDED IN VOL 361 PAGE 697 MODIFIED THIS L/A TO ONLY PROHIBIT DIRECT ACCESS TO SR 81 AND I 75 BUT PERMITTED DIRECT ACCESS TO THE SERVICE ROAD.
3. THEREFORE WE ARE MOVING THE L/A LINE NORTH AS SHOWN HEREIN TO REFLECT THE INTENT OF THIS RULING.

(LOT 8)

CURVE SR81-2
P.I.= Sta. 443+29.51
D = 6° 05′ 21″ (RT)
Dc = 1° 00′ 00″
R = 5,729.58′
T = 304.74′
L = 608.91′
E = 8.10′
C = 608.63′
C.B. = N 75° 42′ 36″ E

HOVERDALE FARMS
SUBDIVISION
P.B. 7 PG. 39

(LOT 9)

(LOT 10)

℄ RAMP F

N 8° 14′ 44″ W 147.74′

℄ R/W & CONST. S.R. 81

S.R. 81 STA.448+20.11=
RAMP F STA. 461+31.81

S.R. 81 STA.448+15.19=
RAMP D STA. 461+75.24

N 78° 45′ 16″ E 560.91′

MATCH LINE STA. 445+00 SEE SHEET 72 OF 87

MATCH LINE STA. 450+00 SEE SHEET 76 OF 87

SR81-2

PT Sta. 446+33.68

446+84.00
82.00′ RT

748.74′
N 74° 45′ 13″ E

LA-R/W

PT Sta. 46+40.74

PC Sta. 45+21.23

OLD ℄ S.R. 81

SRV-2

℄ R/W & CONST.
SERVICE RD. 3

N79° 34′07″E, 1524.01′

SEWER EASEMENT TO
BOARD OF COMMISSIONERS
OF ALLEN COUNTY, OHIO
VOL. 552, PG. 617

INGRESS/EGRESS
EASEMENT
VOL. 600, PG. 759

165.34′
S 18° 08′ 39″ E

N 79° 34′ 07″ E

PT Sta. 460+41.09

81D-2

℄ RAMP D

461
N 15° 14′ 43″ W 134.15′

460

445+26.91
227.59′ RT
5/8″ IPF
"SHELDON"

446+21.07
229.72′ RT
5/8″ IPF
"SHELDON"

446+21.06
229.96′ RT

447+03.86
246.15′ RT

Ex SH

Ex SW

37290001013000

179 DEAN A BURRELL &
DENISE BURRELL
37290001013001

177 LAURA L. SMITH
37290001015000

CURVE SRV-2
P.I. Sta. 45+83.83
Δ = 42° 08′ 15″ (LT)
Dc = 35° 15′ 32″
R = 162.50′
T = 62.60′
L = 119.51′
E = 11.64′
C = 116.83′
C.B. = N 58° 30′ 00″ E

CURVE 81D-2
P.I.= Sta. 456+09.25
D = 15° 07′ 22″ (LT)
Dc = 1° 45′ 00″
R = 3,274.04′
D c = 13° 11′ 52″ (LT)
Lc = 754.16′
Es = 29.03′
C = 752.49′
C.B.1 = N 0° 45′ 52″ W
C.B. = N 8° 38′ 48″ W

NOTE:
SEE SHEETS 20-40 FOR I-75.

REV. BY	DATE	DESCRIPTION
DATE COMPLETED		MARCH 25, 2011

HORIZONTAL SCALE IN FEET
0 10 20 40

PID NO. 76691

R/W DESIGNER CAC
R/W REVIEWER KDO

RIGHT OF WAY BOUNDARY SHEET
SR 81
STA. 445+00.00 TO STA. 450+00.00

ALL-75-5.53

74 / 87

1211
1224

J:\Projects\ALL\76691row\sheets\76691RB803.dgn 12-SEP-2012 9:40AM reddenj

ALLEN COUNTY
BATH TOWNSHIP
SEC. 29, NE 1/4, T. 3 S., R. 7 E.

CURVE SR81-3
P.I.= Sta. 453+46.45
D = 16° 35′ 17″ (RT)
Dc = 5° 30′ 00″
R = 1,041.74′
T = 151.86′
L = 301.60′
E = 11.01′
C = 300.55′
C.B. = N 87° 02′ 54″ E

REV. BY	DATE	DESCRIPTION
CAC	5/21/12	REVISED OWNER OF PARCEL 172
DATE COMPLETED		MARCH 25, 2011

HORIZONTAL SCALE IN FEET
0 10 20 40

PROP. ℄ R/W & CONST. I-75
Fiberq conduit
Telepackage
I-75 OVER S.R. 81 (FINDLAY RD.)
BRIDGE NO. ALL-75-08.75
(LOT 10)
I-75 STA. 462+10.70=
S.R. 81 STA. 450+66.08
MATCH LINE STA. 450+00 SEE SHEET 73 OF 87
N 78° 45′ 16″ E
560.91′
PC Sta. 451+94.59
PT Sta. 462+10.80
N 1° 00′ 50″ E
4148.82
EX. E.B. S.R. 81
Time warner cable
Coax
PC Sta. 460+59.98
OLD ℄ S.R. 81
℄ RAMP C
81C-4
EX. EXIT RAMP 'C'
CONST. LIMITS
(LOT 18)
(LOT 17)
37290001016000
AGRICULTURAL
FIRST ASSEMBLY OF GOD, INC.,
AN OHIO CORPORATION
37290001017000
BLANKET ESM'T
ON LOT 17 TO
OHIO POWER
COMPANY
VOL 285 PG 332
vOL 248 PG 48
172-WL2
172
℄ R/W & CONST. S.R. 81
S.R. 81 STA. 453+49.21 =
RAMP B STA. 462+33.32
S.R. 81 STA. 453+41.20 =
RAMP C STA. 462+89.83
N 1° 12′ 04″ W
130.41′
N 1° 12′ 04″ W
79.03′
S 84° 39′ 27″ E
238.16′
N 79° 34′ 07″ E
℄ RAMP B
81B-1
PC Sta. 463+63.73
PT Sta. 454+26.19
MATCH LINE STA. 455+00 SEE SHEET 77 OF 87
HOVERDALE FARMS
SUBDIVISION
P.B. 7 PG. 39
(LOT 11)
(LOT 12)
SR81-3
48″-A
36″-A
15″-B
15″-C
15″-E
12″ Conc.
Ex. 54″ RCP
Ex. 36″ RCP
8″ W

CURVE 81B-1
P.I.= Sta. 464+52.99
D = 16° 50′ 17″ (LT)
Dc = 9° 30′ 00″
R = 603.11′
T = 89.26′
L = 177.24′
E = 6.57′
C = 176.60′
C.B. = N 9° 37′ 13″ W

CURVE 81C-4
P.I.= Sta. 461+36.60
D = 24° 53′ 03″ (LT)
Dc = 16° 30′ 00″
R = 347.25′
T = 76.61′
L = 150.81′
E = 8.35′
C = 149.63′
C.B. = N 11° 14′ 27″ E

NOTES:
ALL TREES ALONG THE EXISTING LA FENCE WILL BE REMOVED UNLESS LABELED AS "SAVE".

SEE SHEETS 20-40 FOR I-75.

R/W DESIGNER CAC
R/W REVIEWER KDO

PID NO. 76691

RIGHT OF WAY TOPO SHEET
SR 81
STA. 450+00.00 TO STA. 455+00.00

ALL-75-5.53

75 / 87

1212 / 1224

J:\Projects\ALL\76691row\sheets\76691RT804.dgn 12-SEP-2012 9:40AM reddenj

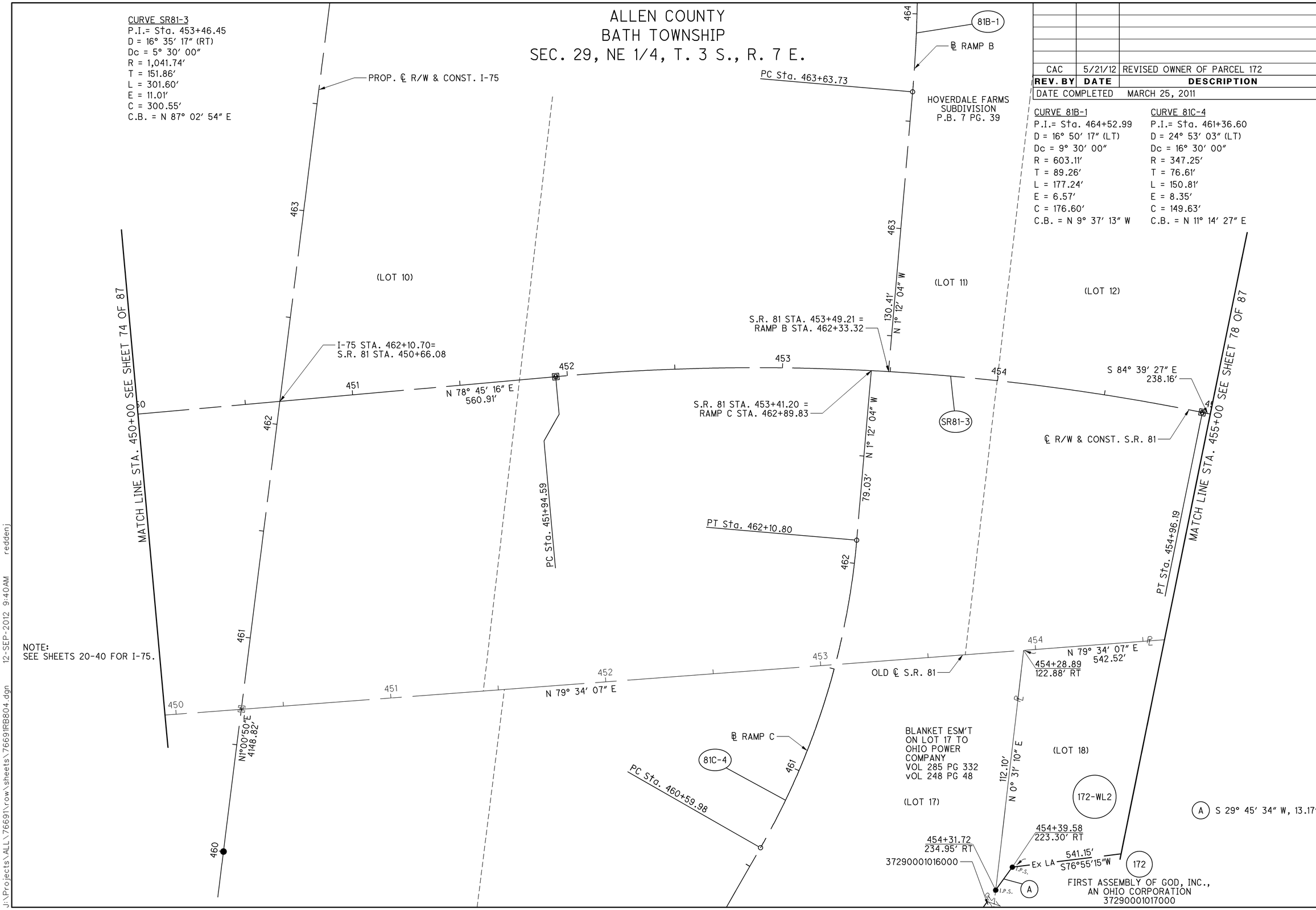

REV. BY	DATE	DESCRIPTION
CAC	5/21/12	REVISED OWNER OF PARCEL 172

DATE COMPLETED MARCH 25, 2011

PID NO. 76691

R/W DESIGNER CAC
R/W REVIEWER KDO

RIGHT OF WAY BOUNDARY SHEET
SR 81
STA. 450+00.00 TO STA. 455+00.00

ALL-75-5.53

J:\Projects\ALL\76691\row\sheets\76691RB804.dgn 12-SEP-2012 9:40AM reddenj

NOTE:
ALL TREES ALONG THE EXISTING LA FENCE WILL BE REMOVED UNLESS LABELED AS "SAVE".

ALLEN COUNTY
BATH TOWNSHIP
SEC.29, NE 1/4, T. 3 S., R. 7 E.

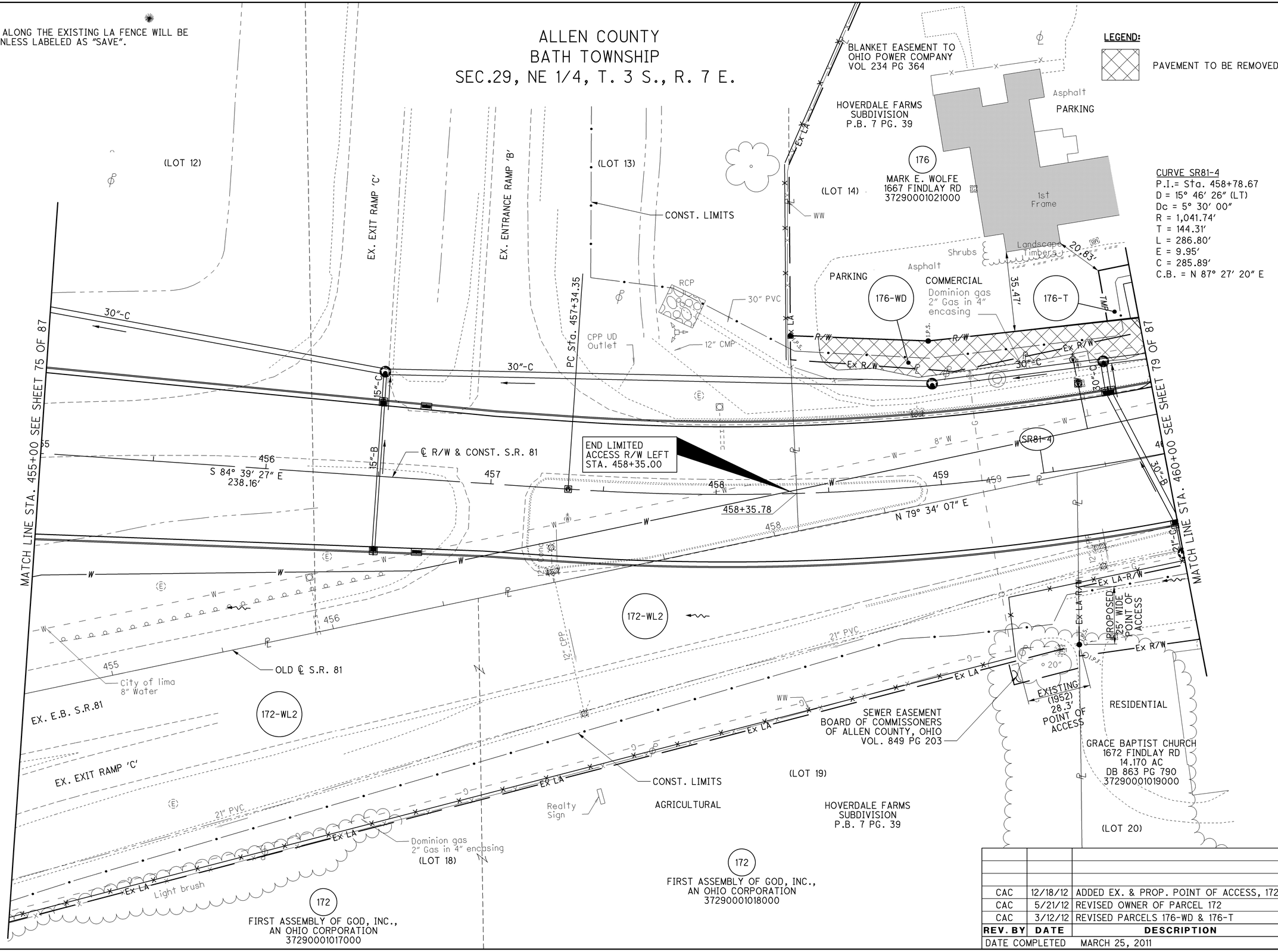

REV. BY	DATE	DESCRIPTION
CAC	12/18/12	ADDED EX. & PROP. POINT OF ACCESS, 172
CAC	5/21/12	REVISED OWNER OF PARCEL 172
CAC	3/12/12	REVISED PARCELS 176-WD & 176-T

DATE COMPLETED MARCH 25, 2011

HORIZONTAL SCALE IN FEET 0 10 20 40

PID NO. 76691

R/W DESIGNER CAC
R/W REVIEWER KDO

RIGHT OF WAY TOPO SHEET
SR 81
STA. 455+00.00 TO STA. 460+00.00

ALL-75-5.53

J:\Projects\ALL\76691\row\sheets\76691RT805.dgn 18-DEC-2012 1:22PM coffield

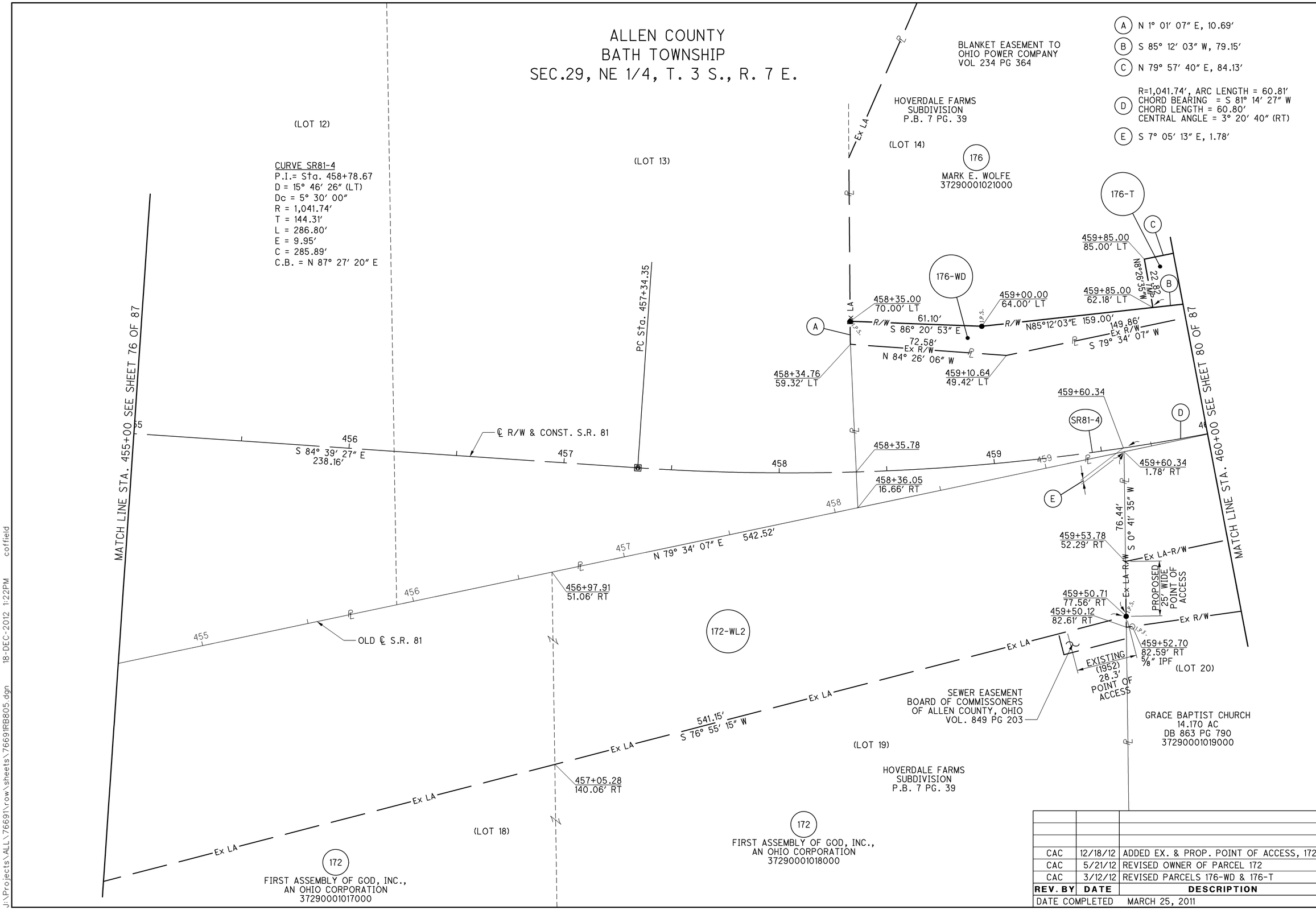

REV. BY	DATE	DESCRIPTION
CAC	12/18/12	ADDED EX. & PROP. POINT OF ACCESS, 172
CAC	5/21/12	REVISED OWNER OF PARCEL 172
CAC	3/12/12	REVISED PARCELS 176-WD & 176-T

DATE COMPLETED MARCH 25, 2011

HORIZONTAL SCALE IN FEET 0 10 20 40

PID NO. 76691

R/W DESIGNER CAC
R/W REVIEWER KDO

RIGHT OF WAY BOUNDARY SHEET
SR 81
STA. 455+00.00 TO STA. 460+00.00

ALL-75-5.53

1215/1224

J:\Projects\ALL\76691\row\sheets\76691RB805.dgn 18-DEC-2012 1:22PM coffield

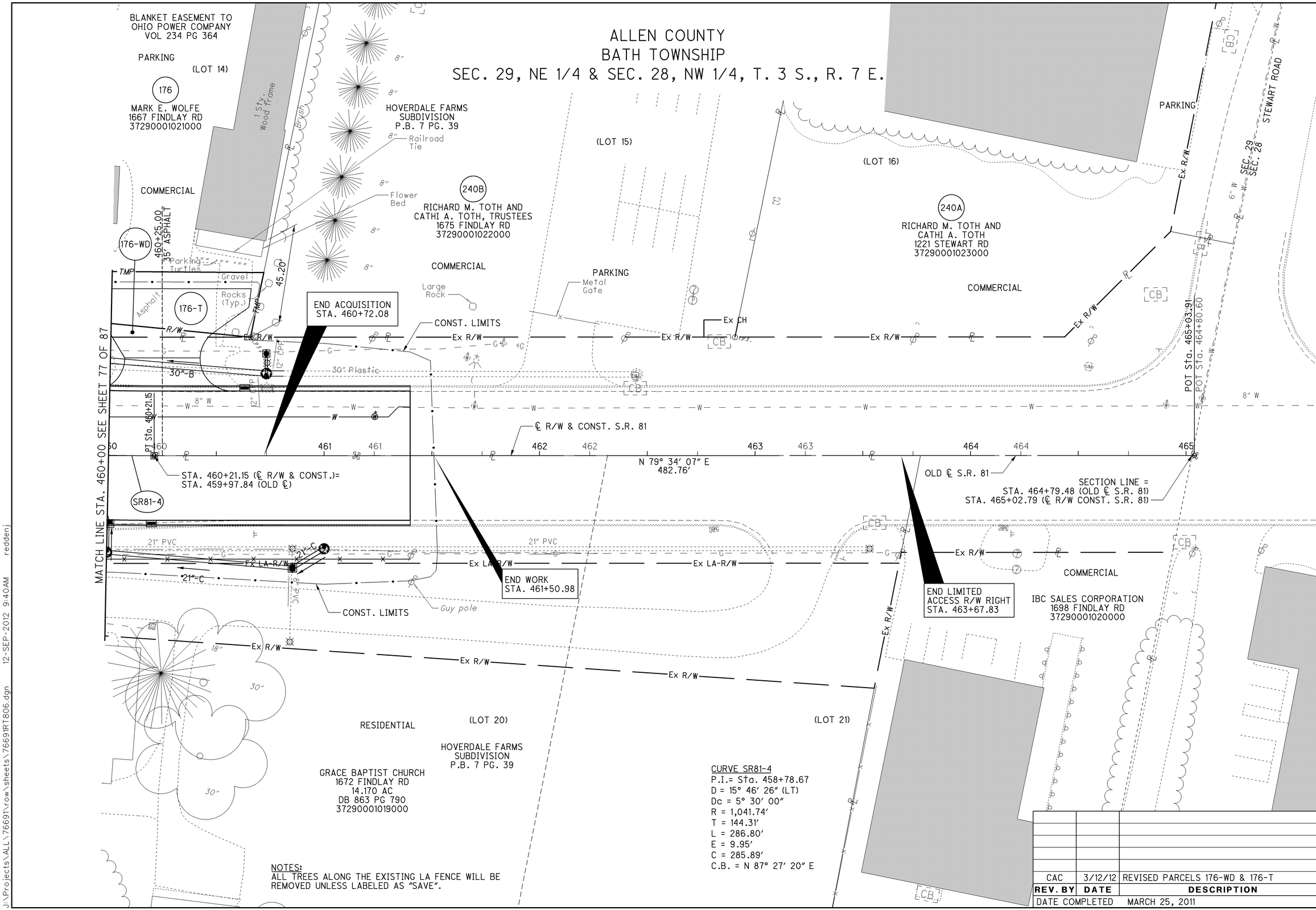

NOTES:
ALL TREES ALONG THE EXISTING LA FENCE WILL BE REMOVED UNLESS LABELED AS "SAVE".

REV. BY	DATE	DESCRIPTION
CAC	3/12/12	REVISED PARCELS 176-WD & 176-T

DATE COMPLETED MARCH 25, 2011

HORIZONTAL SCALE IN FEET 0 10 20 40

PID NO. 76691

R/W DESIGNER CAC
R/W REVIEWER KDO

RIGHT OF WAY TOPO SHEET
SR 81
STA. 460+00.00 TO STA. 465+03.91

ALL-75-5.53

J:\Projects\ALL\76691\row\sheets\76691RT806.dgn 12-SEP-2012 9:40AM reddenj

ALLEN COUNTY
BATH TOWNSHIP
SEC. 29, NE 1/4 & SEC. 28, NW 1/4, T. 3 S., R. 7 E.

BLANKET EASEMENT TO
OHIO POWER COMPANY
VOL 234 PG 364

176
MARK E. WOLFE
37290001021000

HOVERDALE FARMS
SUBDIVISION
P.B. 7 PG. 39

(LOT 14)

(LOT 15)

(LOT 16)

240B
RICHARD M. TOTH AND
CATHI A. TOTH, TRUSTEES
37290001022000

240A
RICHARD M. TOTH AND
CATHI A. TOTH
37290001023000

176-WD

176-T

460+72.08
85.00' LT

TMP 84.13'
N 79° 57' 40" E

TMP 30.62'
S1°09'12"W

460+65.92
54.94' LT
¾" IPF "ODOT"

79.15'
S 85°12'03" W

159.00' R/W

S 79°34'07" W 149.86'

Ex R/W

460+65.93
55.00' LT

N10°25'53"W
55.00'

Ex CH

462+90.67
54.93' LT
¾" IPF "ODOT"

462+90.69
55.00' LT

464+92.92
103.94' LT

465+03.91
98.07' LT

STEWART ROAD

SEC. 29
SEC. 28

464+43.69
55.00' LT

POT Sta. 465+03.91
POT Sta. 464+80.60

MATCH LINE STA. 460+00 SEE SHEET 78 OF 87

460 461 462 463 464 465

POT Sta. 460+21.15

℄ R/W & CONST. S.R. 81

460+54.66

462+31.53

437.98'
N 79° 34' 07" E
482.76'

462+79.41

463+76.80

OLD ℄ S.R. 81

SECTION LINE =
STA. 464+79.48 (OLD ℄ S.R. 81)
STA. 465+02.79 (℄ R/W & CONST. S.R. 81)

FOUND MONUMENT BOX
STA. 465+03.91
(℄ R/W & CONST. S.R. 81)

SR81-4

STA. 460+21.15 (℄ R/W & CONST.)=
STA. 459+97.84 (OLD ℄)

462+21.63
50.00' RT

463+67.83
45.00' RT

463+66.83
50.00' RT

Ex LA-R/W

462+12.08
98.24' RT

463+55.27
108.00' RT

IBC SALES CORPORATION
37290001020000

(LOT 20)

HOVERDALE FARMS
SUBDIVISION
P.B. 7 PG. 39

(LOT 21)

GRACE BAPTIST CHURCH
14.170 AC
DB 863 PG 790
37290001019000

CURVE SR81-4
P.I.= Sta. 458+78.67
D = 15° 46' 26" (LT)
Dc = 5° 30' 00"
R = 1,041.74'
T = 144.31'
L = 286.80'
E = 9.95'
C = 285.89'
C.B. = N 87° 27' 20" E

(A) R = 1041.74'
ARC LENGTH = 60.81'
CHORD BEARING = S81°14'27"W
CHORD LENGTH = 60.80'
CENTRAL ANGLE = 03°20'40" RT

(A) N 1° 01' 07" E, 10.69'
(B) S 85° 33' 40" W, 79.18'
(C) N 79° 57' 40" E, 84.13'

HORIZONTAL SCALE IN FEET
0 10 20 40

PID NO. 76691

R/W DESIGNER CAC
R/W REVIEWER KDO

RIGHT OF WAY BOUNDARY SHEET
SR 81
STA. 460+00.00 TO STA. 465+03.91

ALL-75-5.53

80 / 87

1217
1224

REV. BY	DATE	DESCRIPTION
CAC	3/12/12	REVISED PARCELS 176-WD & 176-T
DATE COMPLETED		MARCH 25, 2011

J:\Projects\ALL\76691\row\sheets\76691RB806.dgn 12-SEP-2012 9:40AM reddenj

ALLEN COUNTY
BATH TOWNSHIP
SEC. 29, NE 1/4 & NW 1/4, T. 3 S., R. 7 E.

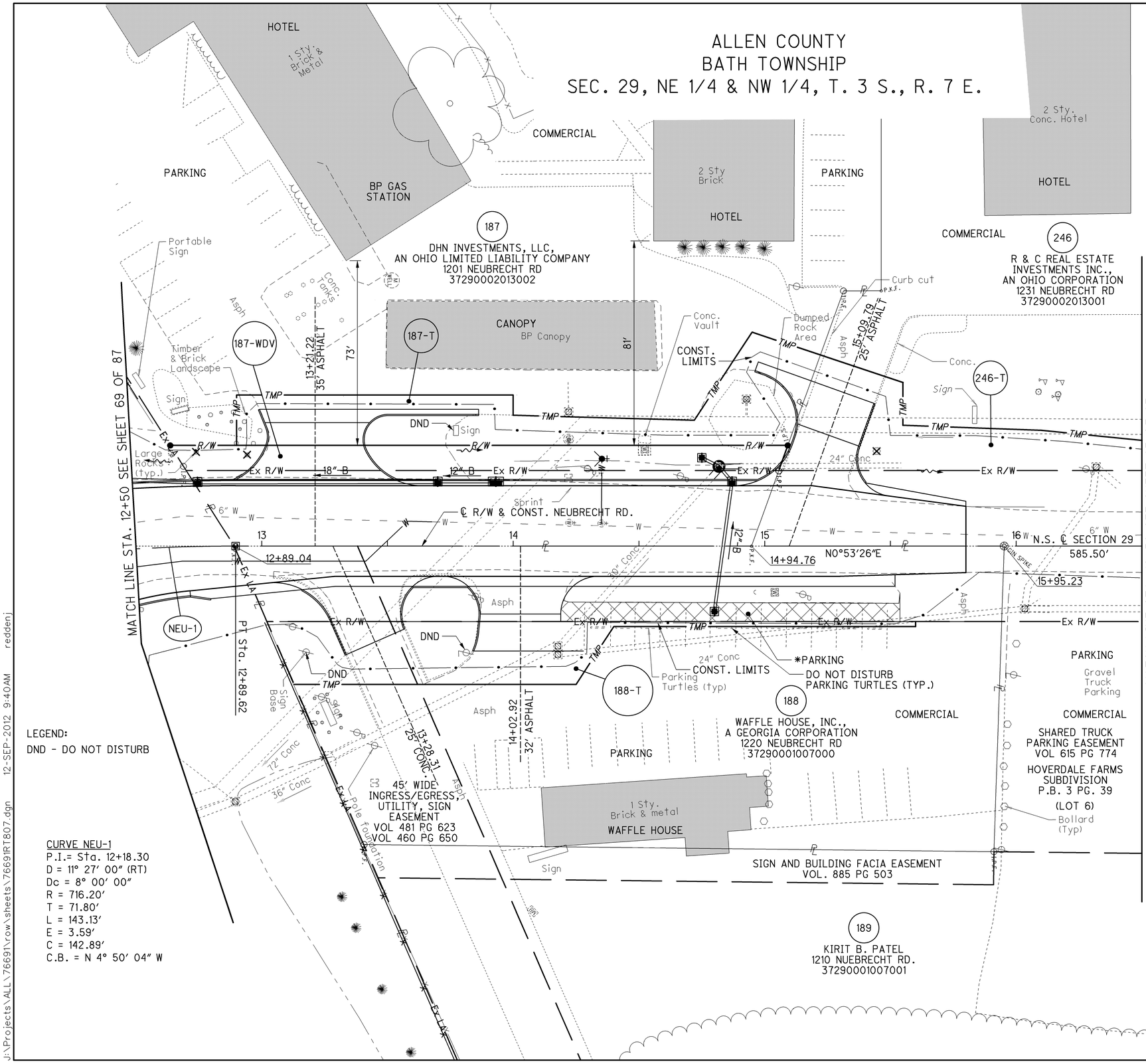

LEGEND:

PAVEMENT TO BE REMOVED

* - ENCROACHMENT

LEGEND:
DND - DO NOT DISTURB

CURVE NEU-1
P.I.= Sta. 12+18.30
D = 11° 27′ 00″ (RT)
Dc = 8° 00′ 00″
R = 716.20′
T = 71.80′
L = 143.13′
E = 3.59′
C = 142.89′
C.B. = N 4° 50′ 04″ W

NOTES:
ALL TREES ALONG THE EXISTING LA FENCE WILL BE REMOVED UNLESS LABELED AS "SAVE".

FOR A CONTINUATION OF THE EXISTING R/W OF SR 81 AND THE PROPOSED FENCE, SEE SHEET 35.

REV. BY	DATE	DESCRIPTION
CAC	9/12/12	188 - MOVED EX. PARKING BUMPERS TO NEW LOCATION
CAC	9/28/11	ADDED X TO STEEL POST ON 246-T
CAC	9/13/11	CORRECTED THE CALLOUT FOR 187-WDV
CAC	8/25/11	REVISED 188-T AND 246-T; COMBINED
		187-T1 & 187-T2 INTO 187-T
CAC	6/22/11	ADDED DURATION NOTE FOR 188-T;
		ADDED DND TO SIGN BASE ON PARCEL 188
DATE COMPLETED		MARCH 25, 2011

HORIZONTAL SCALE IN FEET
0 10 20 40

PID NO. 76691

R/W DESIGNER CAC
R/W REVIEWER KDO

RIGHT OF WAY TOPO SHEET
STA. 12+50.00 TO 16+50.00

ALL-75-5.53

81 / 87

1218
1224

J:\Projects\ALL\76691\row\sheets\76691RT807.dgn 12-SEP-2012 9:40AM reddenj

ALLEN COUNTY
BATH TOWNSHIP
SEC. 29, NE 1/4 & NW 1/4, T. 3 S., R. 7 E.

(A) S 89° 06′ 34″ E, 8.00′
(B) N 69° 16′ 36″ W, 10.63′
(C) N 89° 06′ 34″ W, 20.00′
(D) S 89° 06′ 34″ E, 2.00′
(E) S 89° 06′ 34″ E, 30.00′
(F) N 89° 06′ 34″ W, 40.00′

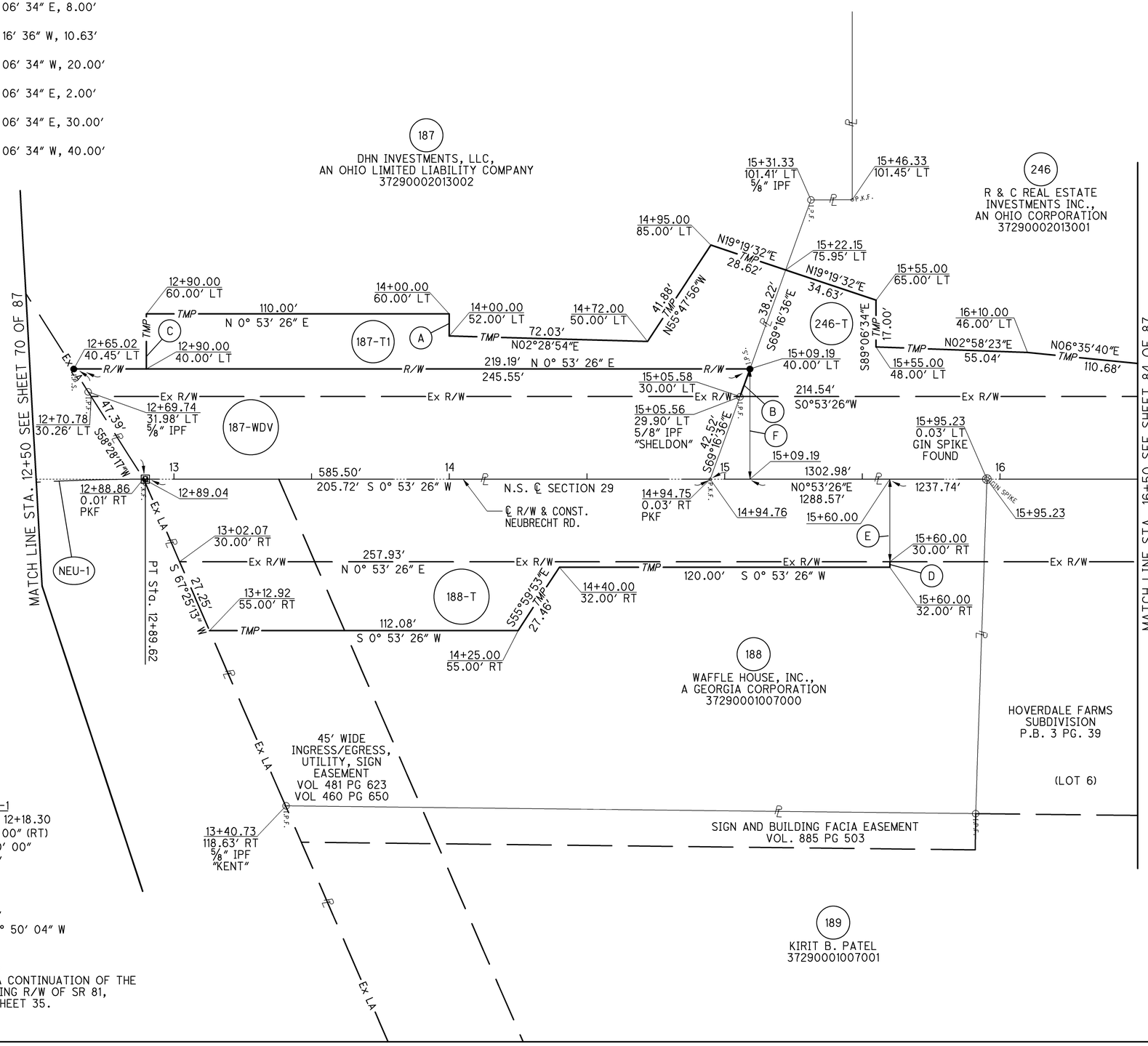

CURVE NEU-1
P.I.= Sta. 12+18.30
D = 11° 27′ 00″ (RT)
Dc = 8° 00′ 00″
R = 716.20′
T = 71.80′
L = 143.13′
E = 3.59′
C = 142.89′
C.B. = N 4° 50′ 04″ W

NOTE:
FOR A CONTINUATION OF THE
EXISTING R/W OF SR 81,
SEE SHEET 35.

REV. BY	DATE	DESCRIPTION
CAC	8/25/11	REVISED 188-T AND 246-T; COMBINED 187-T1 AND 187-T2 INTO 187-T
CAC	6/22/11	ADDED A DURATION NOTE FOR PARCEL 188-T
DATE COMPLETED		MARCH 25, 2011

HORIZONTAL SCALE IN FEET
0 10 20 40

PID NO. 76691

R/W DESIGNER CAC
R/W REVIEWER KDO

RIGHT OF WAY BOUNDARY SHEET
NEUBRECHT ROAD
STA. 12+50.00 TO STA. 16+50.00

ALL-75-5.53

82 / 87

1219
1224

J:\Projects\ALL\76691\row\sheets\76691RB807.dgn 12-SEP-2012 9:40AM reddenj

NOTES:
ALL TREES ALONG THE EXISTING LA FENCE WILL BE REMOVED UNLESS LABELED AS "SAVE".

ALLEN COUNTY
BATH TOWNSHIP
SEC. 29, NE 1/4 & NW 1/4, T. 3 S., R. 7 E.

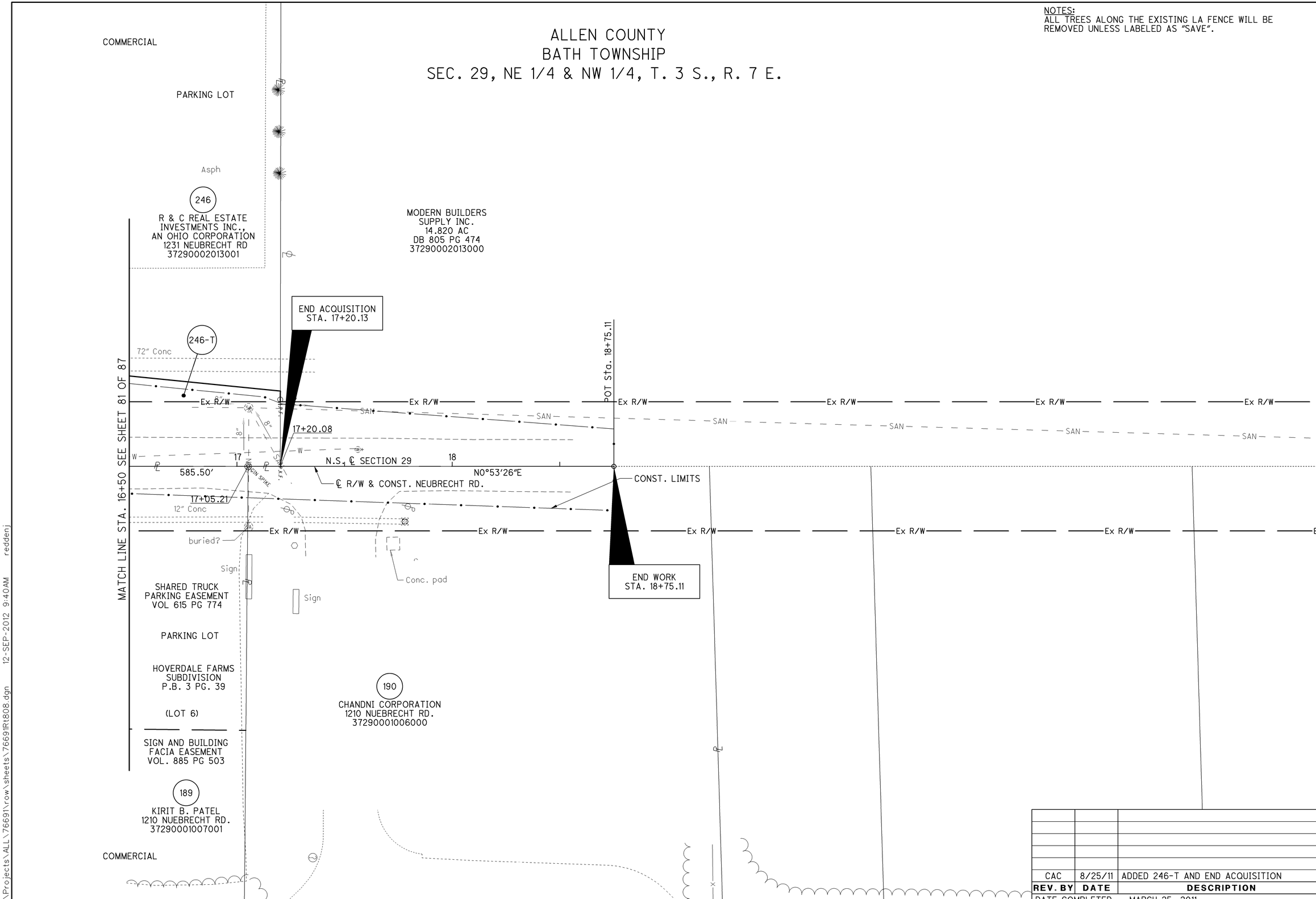

REV. BY	DATE	DESCRIPTION
CAC	8/25/11	ADDED 246-T AND END ACQUISITION
DATE COMPLETED		MARCH 25, 2011

HORIZONTAL SCALE IN FEET 0 10 20 40

PID NO. 76691

R/W DESIGNER CAC
R/W REVIEWER KDO

RIGHT OF WAY TOPO SHEET
NEUBRECHT ROAD
STA. 16+50.00 TO 18+75.11

ALL-75-5.53

J:\Projects\ALL\76691\row\sheets\76691Rt808.dgn 12-SEP-2012 9:40AM reddenj

ALLEN COUNTY
BATH TOWNSHIP
SEC. 29, NE 1/4 & NW 1/4, T. 3 S., R. 7 E.

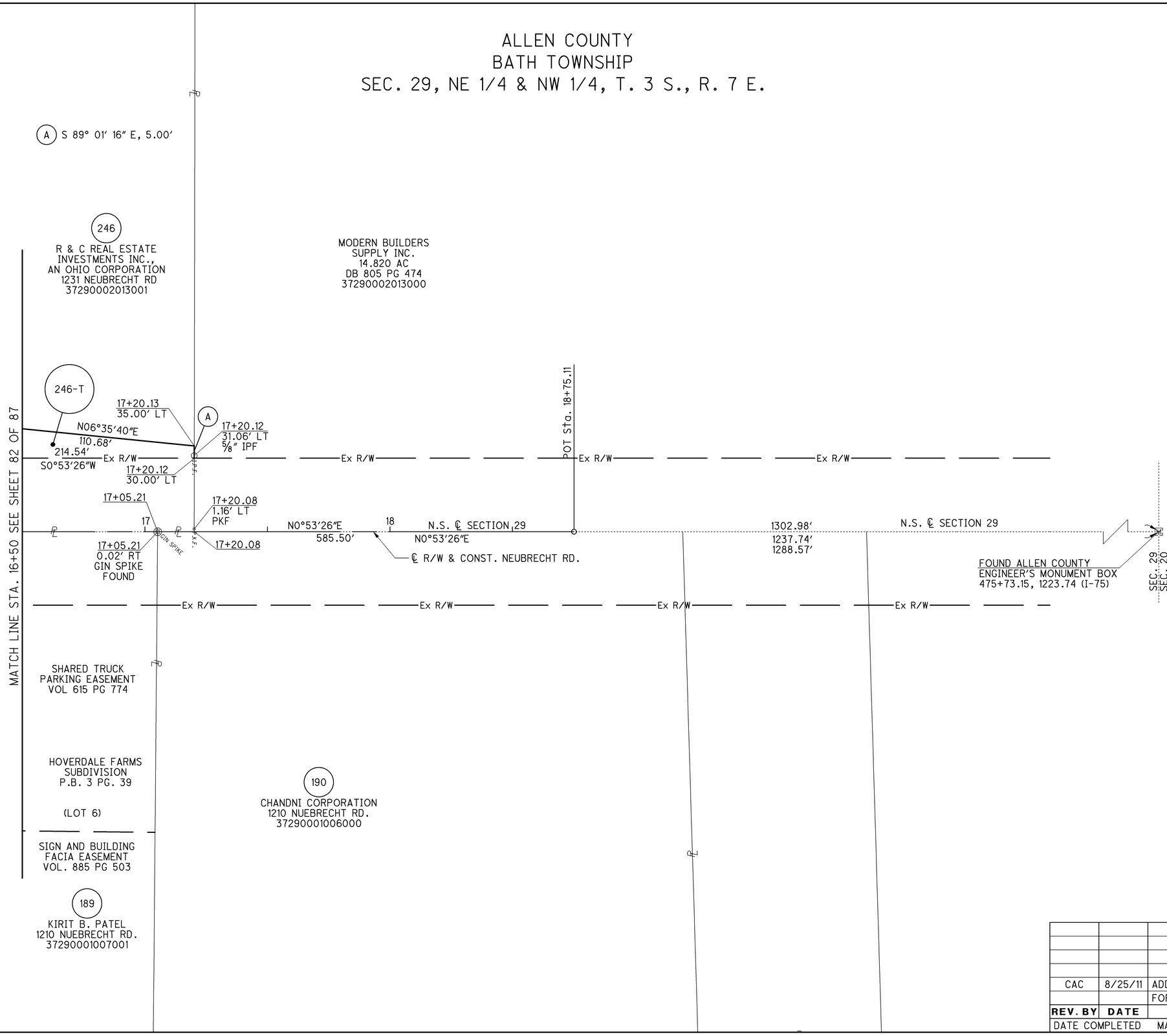

REV. BY	DATE	DESCRIPTION
CAC	8/25/11	ADDED 246-T; REVISED LEAD-IN DIMENSION
		FOR PARCELS 187-T & 188-T
DATE COMPLETED		MARCH 25, 2011

HORIZONTAL SCALE IN FEET
0 10 20 40

PID NO. 76691

R/W DESIGNER CAC
R/W REVIEWER KDO

RIGHT OF WAY BOUNDARY SHEET
NEUBRECHT ROAD
STA. 16+50.00 TO STA. 18+75.11

ALL-75-5.53

84 / 87

1221
1224

J:\Projects\ALL\76691\row\sheets\76691RB808.dgn 12-SEP-2012 9:40AM reddenj

OPERATING RAILROAD COMPANY
C.F.&E. RAILROAD

NEW YORK CENTRAL LINES, LLC, A DELAWARE LIMITED LIABILITY COMPANY, NKA CSX TRANSPORTATION, INC.,A VIRGINIA CORPORATION

ALLEN COUNTY
BATH TOWNSHIP
T-3-S, R-7-E
SECTION 29 SE 1/4

OVERLAP TABLE				
PARCEL NUMBER	EASEMENT REQUIRED	TOTAL AREA	AREA OF OVERLAP	
			AERIAL	TEMPORARY
218-A1	AERIAL	1656		1656
218-A2	AERIAL	1656		1656
218-T	TEMPORARY	24428	3312	

ALL AREAS IN SQ. FT.

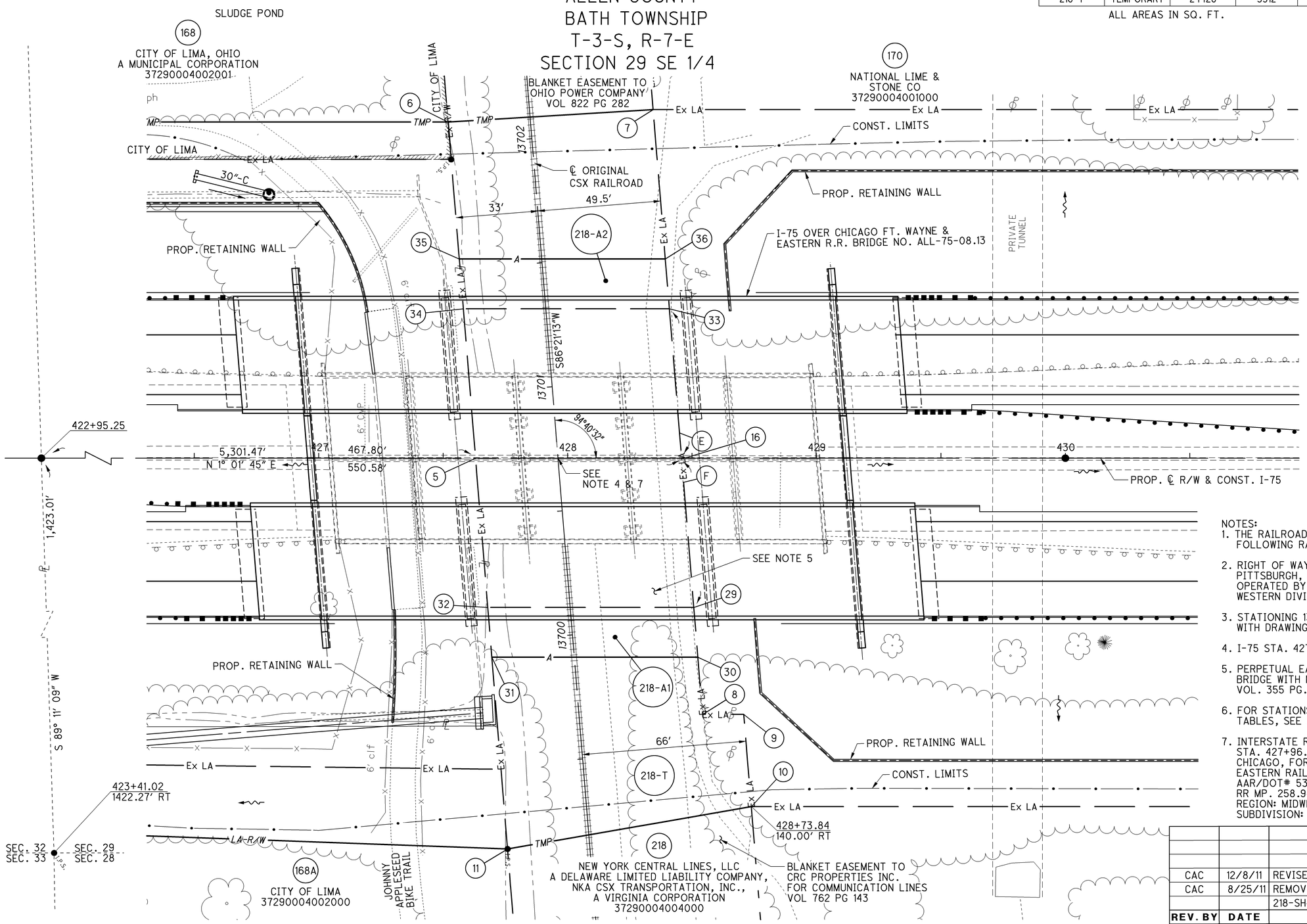

NOTES:
1. THE RAILROAD STATIONING IS FROM THE FOLLOWING RAILROAD VALUATION MAPS:
2. RIGHT OF WAY AND TRACK MAP PITTSBURGH, FORT WAYNE AND CHICAGO RAILWAY OPERATED BY PENNSYLVANIA COMPANY, WESTERN DIVISION.
3. STATIONING 13658+66.1 TO STATION 13711+46.1 WITH DRAWING SHEET NO. 69 V. 3
4. I-75 STA. 427+96.17 = CSX RR STA. 13700+71.22
5. PERPETUAL EASEMENT FOR AN OVERHEAD BRIDGE WITH NECESSARY PIERS VOL. 355 PG. 145
6. FOR STATIONS/OFFSET AND BEARING/DISTANCE TABLES, SEE SHEET 86 OF 87.
7. INTERSTATE ROUTE 75 - CONSTRUCTION STA. 427+96.17 (0.0'RT) = CHICAGO, FORT WAYNE, AND EASTERN RAILROAD (CFER) AAR/DOT# 532704D RR MP. 258.94 REGION: MIDWEST SUBDIVISION: LIMA

REV. BY	DATE	DESCRIPTION
CAC	12/8/11	REVISED OWNER OF PARCEL 218
CAC	8/25/11	REMOVED 218-SH1, 218-SH2, 218-SH3,
		218-SH4 AND 218-CH
DATE COMPLETED		MARCH 25, 2011

N

HORIZONTAL SCALE IN FEET
0 10 20 40

P.I.D. NO. 76691

R/W DESIGNER CAC
R/W REVIEWER KDO

RAILROAD PLAT
NEW YORK CENTRAL LINES, LLC
NKA CSX TRANSPORTATION, INC.

ALL-75-5.53

85 / 87

1222
1224

J:\Projects\ALL\76691\row\sheets\76691RR001.dgn 12-SEP-2012 9:40AM reddenj

PROPOSED TAKES			
PARCEL	COURSE	BEARING	DISTANCE
218-T	5-6	S 86°21′ 13″ W	135.45′
	6-7	N 2°26′ 41″ W	82.52′
	7-8	N 86°21′ 13″ E	243.81′
	8-9	N 0° 45′ 08″ E	16.55′
	9-10	N 86°21′ 13″ E	37.20′
	10-11	S 8° 49′ 04″ E	99.40′
	11-5	S 86°21′ 13″ W	157.52′
218-A1	29-30	N 86°21′ 13″ E	20.07′
	30-31	S 1 °01′ 45″ W	82.78′
	31-32	S 86°21′ 13″ W	20.07′
	32-29	N 1 °01′ 45″ E	82.78′
218-A2	33-34	S 1 °01′ 45″ W	82.78′
	34-35	S 86°21′ 13″ W	20.07′
	35-36	N 1 °01′ 45″ E	82.78′
	36-33	N 86°21′ 13″ E	20.07′

ROADWAY POINT DATA						
POINT #	PROP. I-75		CSX RAILROAD		COORDINATES	
	STATION	OFFSET	STATION	OFFSET	NORTHING	EASTING
5	427+63.06	℄	13700+73.92	33.00′ LT	397,365.65	1,532,102.69
6	427+52.01	135.00′ LT	13702+09.37	33.00′ LT	397,357.04	1,531,967.51
7	428+34.38	140.00′ LT	13702+07.64	49.50′ RT	397,439.48	1,531,964.00
8	428+54.26	103.00′ RT	13699+63.83	49.50′ RT	397,454.98	1,532,207.31
9	428+70.80	102.92′ RT	13699+62.56	66.00′ RT	397,471.53	1,532,207.53
10	428+73.84	140.00′ RT	13699+25.36	66.00′ RT	397,473.90	1,532,244.66
11	427+75.90	157.00′ RT	13699+16.40	33.00′ LT	397,375.67	1,532,259.90
16	428+45.83	℄	13700+67.17	49.50′ RT	397,448.41	1,532,104.18
29	428+50.74	60.00′ RT	13700+06.97	49.50′ RT	397,452.24	1,532,164.26
30	428+52.37	80.00′ RT	13699+86.91	49.50′ RT	397,453.52	1,532,184.28
31	427+69.60	80.00′ RT	13699+93.65	33.00′ LT	397,370.76	1,532,182.80
32	427+67.96	60.00′ RT	13700+13.72	33.00′ LT	397,369.48	1,532,162.77
33	428+40.92	60.00′ LT	13701+27.37	49.50′ RT	397,444.58	1,532,044.10
34	427+58.15	60.00′ LT	13701+34.12	33.00′ LT	397,361.82	1,532,042.61
35	427+56.51	80.00′ LT	13701+54.19	33.00′ LT	397,360.55	1,532,022.59
36	428+39.29	80.00′ LT	13701+47.44	49.50′ RT	397,443.31	1,532,024.07

REV. BY	DATE	DESCRIPTION
CAC	12/8/11	REVISED OWNER OF PARCEL 218
CAC	8/25/11	REMOVED 218-SH1, 218-SH2, 218-SH3,
		218-SH4 AND 218-CH
DATE COMPLETED		MARCH 25, 2011

N

0 10 20 40 HORIZONTAL SCALE IN FEET

PID NO. 76691

R/W DESIGNER CAC
R/W REVIEWER KDO

RAILROAD PLAT
NEW YORK CENTRAL LINES, LLC
NKA CSX TRANSPORTATION, INC.

ALL-75-5.53

86 / 87

1223
1224

J:\Projects\ALL\76691\row\sheets\76691RR002.dgn 12-SEP-2012 9:40AM reddenj

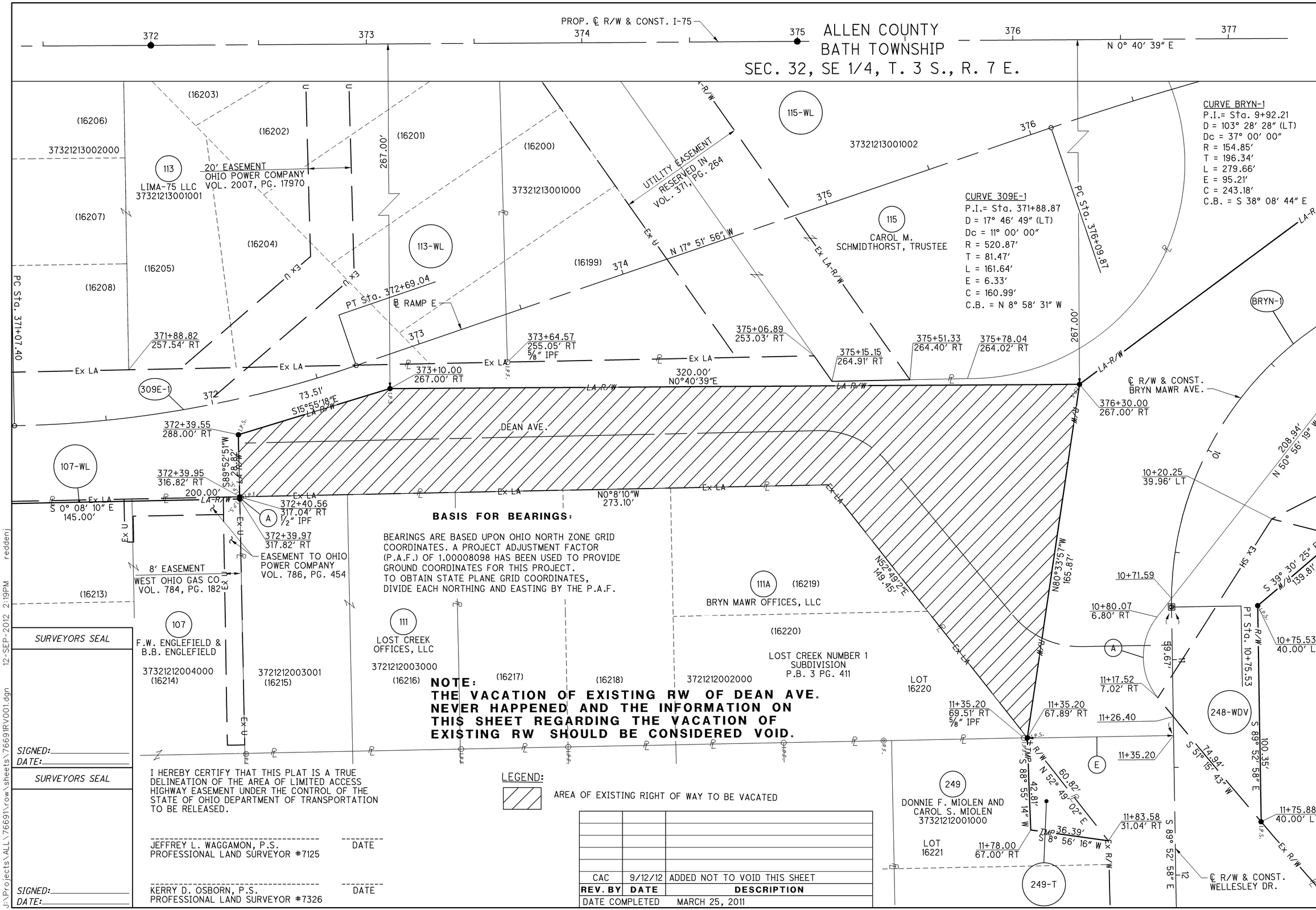

I HEREBY CERTIFY THAT THIS PLAT IS A TRUE DELINEATION OF THE AREA OF LIMITED ACCESS HIGHWAY EASEMENT UNDER THE CONTROL OF THE STATE OF OHIO DEPARTMENT OF TRANSPORTATION TO BE RELEASED.

JEFFREY L. WAGGAMON, P.S. — DATE
PROFESSIONAL LAND SURVEYOR #7125

KERRY D. OSBORN, P.S. — DATE
PROFESSIONAL LAND SURVEYOR #7326

SURVEYORS SEAL

SIGNED:
DATE:

SURVEYORS SEAL

SIGNED:
DATE:

REV. BY	DATE	DESCRIPTION
CAC	9/12/12	ADDED NOT TO VOID THIS SHEET
DATE COMPLETED		MARCH 25, 2011

HORIZONTAL SCALE IN FEET 0 10 20 40

PID NO. 76691

R/W DESIGNER CAC
R/W REVIEWER KDO

VACATION PLAT
DEAN AVE

ALL-75-5.53

87/87

1224/1224

J:\Projects\ALL\76691\row\sheets\76691RV001.dgn 12-SEP-2012 2:19PM reddenj

PROJECT DESCRIPTION

THIS PROJECT CONSISTS OF THE GEOTECHNICAL EXPLORATION OF A 9 MILE SEGMENT OF INTERSTATE 75 BETWEEN THE AUGLAIZE/ALLEN COUNTY LINE AND SR 81 IN ALLEN COUNTY. THE EASTERN AND WESTERN LIMITS OF THE STUDY AREA GENERALLY FOLLOW THE EXISTING ALIGNMENT OF I-75. ADDITIONAL AREAS EXTEND FURTHER EAST AND WEST OF I-75 TO ALLOW FOR A BROADER SCOPE OF INTERCHANGE IMPROVEMENTS AND OTHER ROADWAY MODIFICATIONS.

HISTORIC RECORDS

HISTORIC BORING RECORDS FOR THE PROJECT AREA WERE REQUESTED FROM THE ODOT OFFICE OF GEOTECHNICAL ENGINEERING AND THE DISTRICT. HISTORIC SOUNDING RECORDS EXIST AND ARE DISCUSSED IN THE ROADWAY EXPLORATION REPORT. DUE TO CHANGES IN STATIONING, LOCATIONS FOR THE SOUNDINGS ARE NOT CERTAIN AND ARE NOT SHOWN ON THE ROADWAY EXPLORATION DRAWINGS.

GEOLOGY

THE ROADWAY SITE IS LOCATED IN THE CENTRAL OHIO CLAYEY TILL PLAIN. THIS REGION IS COMPRISED OF GROUND MORAINE AND END MORAINE TILL DEPOSITS OVERLYING DOLOMITE AND DOLOMITE WITH INTERBEDDED SHALE. THE NATURAL OVERBURDEN THICKNESS RANGES BETWEEN JUST A FEW FEET IN THE VICINITY OF THE OTTAWA RIVER TO APPROXIMATELY 130 FEET NEAR THE INTERSECTION OF I-75 AND HANTHORN ROAD. CAVES AND OTHER KARST FEATURES MAY BE PRESENT ACCORDING TO THE PHYSIOGRAPHIC REGIONS OF OHIO MAP (ODNR, 1998), BUT NO KNOWN FEATURES WERE IDENTIFIED ON THE OHIO KARST AREAS MAP (ODNR, 2007).

RECONNAISSANCE

A FIELD RECONNAISSANCE WAS COMPLETED ON MARCH 13, 2007, FOCUSING MAINLY ON PAVEMENT CONDITIONS, SITE TOPOGRAPHY AND DRAINAGE. THE MAINLINE SHOULDER PAVEMENTS SHOW EXTENSIVE "ALLIGATOR" CRACKING AND THE MAINLINE PAVEMENTS SHOW REFLECTIVE CRACKING AT THE EXPANSION JOINT LOCATIONS. THE SURROUNDING AREA IS DESCRIBED AS GENTLY UNDULATING WITH MOST OF THE SURROUNDING AREA CONSISTING OF OPEN FIELD OR LIGHTLY DEVELOPED COMMERCIAL AND RESIDENTIAL DISTRICTS. DRAINAGE ALONG THE ALIGNMENT IS DESCRIBED AS SLUGGISH WITH AREAS OF STANDING WATER, AND FLOWING WATER IN DRAINAGE DITCHES AND NATURAL STREAMS GENERALLY CREATING STEEP TO VERTICAL CUT BANKS IN THE SOIL PROFILE.

SUBSURFACE EXPLORATION

DURING THE FIRST PHASE OF DRILLING, 122 SOIL PROFILE BORINGS WERE DRILLED IN LANES OF TRAFFIC, ON MEDIANS OR ON SHOULDERS AT SELECTED AREAS THROUGHOUT THE PROJECT AREA SPACED APPROXIMATELY 400 FEET APART. DURING THE SECOND PHASE OF DRILLING, 84 BORINGS WERE ADVANCED ALONG ENTRANCE AND EXIT RAMPS OF THE INTERCHANGES, AREAS OF PROPOSED HIGHWAY REALIGNMENT, AND SELECTED SECONDARY ROADS IN AREAS OF PROPOSED UPGRADES. A THIRD PHASE OF DRILLING, CONSISTING OF 36 BORINGS, WAS PERFORMED ALONG ADDITIONAL SECONDARY ROADS IN AREAS OF PROPOSED UPGRADES. THE BORINGS WERE ADVANCED USING 3.25-INCH I.D. HOLLOW-STEM AUGERS. STANDARD PENETRATION TEST (SPT) SAMPLES WERE OBTAINED AT CONTINUOUS INTERVALS WITH A MINIMUM OF FOUR TESTS PER BOREHOLE FOR ALL SUBGRADE BORINGS AND AT 2.5 FOOT INTERVALS FOR ALL PROPOSED EMBANKMENTS OR CUT AND FILL AREAS. SPT SAMPLES WERE OBTAINED USING A TRUCK-MOUNTED DRILL RIG WITH A CALIBRATED AUTOMATIC HAMMER WITH AN ENERGY RATIO (ER) OF 80% (JUNE, 2007) DURING PHASES ONE AND TWO. MULTIPLE DRILL RIGS WERE USED DURING PHASE THREE AND INCLUDED A TRUCK-MOUNTED RIG WITH AN ER OF 74.4% (FEB., 2010), A TRACK-MOUNTED RIG WITH AN ER OF 81.9% (FEB., 2010), AND AN ATV-MOUNTED RIG WITH ER OF 88.4% (OCT., 2009) TWO OF THE BORINGS PERFORMED IN THE FIRST MOBILIZATION EXTENDED TO BEDROCK IN THE VICINITY OF THE QUARRY TUNNEL. UPON ENCOUNTERING BEDROCK, NQ-SIZED ROCK CORING EQUIPMENT WAS USED TO OBTAIN 45 TO 46 FEET OF ROCK CORE SAMPLE. AT THE CONCLUSION OF DRILLING OPERATIONS, BOREHOLES WERE BACKFILLED WITH AUGER SOIL CUTTINGS AND PAVEMENT WAS PATCHED WITH ASPHALT COLD PATCH.

EXPLORATION FINDINGS

SOILS ENCOUNTERED ALONG THE PROJECT ALIGNMENT CONSISTED PRIMARILY OF FINE GRAINED GLACIAL SOILS CLASSIFYING AS SILT AND CLAY (A-6A), SILTY CLAY (A-6B) AND CLAY (A-7-6), AND TO A LESSER EXTENT SANDY SILT (A-4A) AND SILT (A-4B). FEW COARSE GRAINED SOILS WERE ENCOUNTERED IN VARIOUS AREAS CONSISTING OF COARSE AND FINE SAND (A-3A), GRAVEL WITH SAND AND SILT (A-2-4), GRAVEL WITH SAND SILT AND CLAY (A-2-6), GRAVEL (A-1-A) AND GRAVEL WITH SAND (A-1-B). IN THE TWO BORINGS LOCATED NEAR THE QUARRY TUNNEL, THE BEDROCK ENCOUNTERED CONSISTED OF MODERATELY TO UNWEATHERED DOLOMITE, SHALE AND LIMESTONE IN VARIOUS LAYERING AND INTERBEDDED PERCENTAGES.

SPECIFICATIONS

THIS ROADWAY EXPLORATION WAS PERFORMED IN ACCORDANCE WITH THE STATE OF OHIO, DEPARTMENT OF TRANSPORTATION, OFFICE OF GEOTECHNICAL ENGINEERING, SPECIFICATIONS FOR GEOTECHNICAL EXPLORATION (SGE) AND THE GEOTECHNICAL BULLETIN 1 (GB1). THE EXPLORATIONS WERE PERFORMED OVER A SPAN OF SEVERAL YEARS, SO THE MOST RECENT EDITIONS OF THE SPECIFICATIONS WERE FOLLOWED AT THE TIME OF DRILLING.

AVAILABLE INFORMATION

ALL AVAILABLE SOIL AND BEDROCK INFORMATION THAT CAN BE CONVENIENTLY SHOWN ON THE PROFILE SHEETS HAS BEEN SO REPORTED. ADDITIONAL SUBSURFACE EXPLORATIONS MAY HAVE BEEN MADE TO STUDY SOME SPECIAL ASPECT OF THE PROJECT. COPIES OF THIS DATA, IF ANY, MAY BE INSPECTED IN THE DISTRICT DEPUTY DIRECTOR'S OFFICE, THE OFFICE OF GEOTECHNICAL ENGINEERING AT 1600 WEST BROAD STREET COLUMBUS, OHIO OR THE OFFICE OF STRUCTURAL ENGINEERING AT 1980 WEST BROAD STREET COLUMBUS, OHIO.

LEGEND

DESCRIPTION	ODOT CLASS	CLASSIFIED MECH./VISUAL	
GRAVEL AND/OR STONE FRAGMENTS	A-1-a	13	7
GRAVEL AND/OR STONE FRAGMENTS WITH SAND	A-1-b	7	5
GRAVEL WITH SAND AND SILT	A-2-4	10	3
GRAVEL WITH SAND, SILT AND CLAY	A-2-6	9	10
COARSE AND FINE SAND	A-3a	1	0
SANDY SILT	A-4a	34	27
SILT	A-4b	6	7
SILT AND CLAY	A-6a	260	343
SILTY CLAY	A-6b	191	215
CLAY	A-7-6	83	80
	TOTAL	614	697
SHALE	VISUAL		
LIMESTONE	VISUAL		
DOLOMITE	VISUAL		
PAVEMENT OR BASE = X = APPROXIMATE THICKNESS	VISUAL		
SOD AND TOPSOIL = X = APPROXIMATE THICKNESS	VISUAL		

EXPLORATION LOCATION - PLAN VIEW.

DRIVE SAMPLE AND/OR ROCK CORE BORING PLOTTED TO VERTICAL SCALE ONLY. HORIZONTAL BAR INDICATES A CHANGE IN STRATIGRAPHY.

WC — INDICATES WATER CONTENT IN PERCENT.

N_{60} — INDICATES STANDARD PENETRATION RESISTANCE NORMALIZED TO 60% DRILL ROD ENERGY RATIO.

* — INDICATES A SAMPLE TAKEN WITHIN 3 FEET OF PROPOSED GRADE.

● — PLASTIC SOIL WITH MOISTURE CONTENT EQUAL TO OR GREATER THAN THE LIQUID LIMIT MINUS THREE.

SS — INDICATES A SPLIT SPOON SAMPLE.

NP — INDICATES A NON-PLASTIC SAMPLE.

TR — INDICATES TOP OF ROCK.

RECON. - MMF 3/07
DRILLING - MM, MW, AC - 6/07-7/07
DRAWN - MJ 10/07, 9/09-10/09, MJ 5/10
REVIEWED - RJK 10/09, RJK 5/10

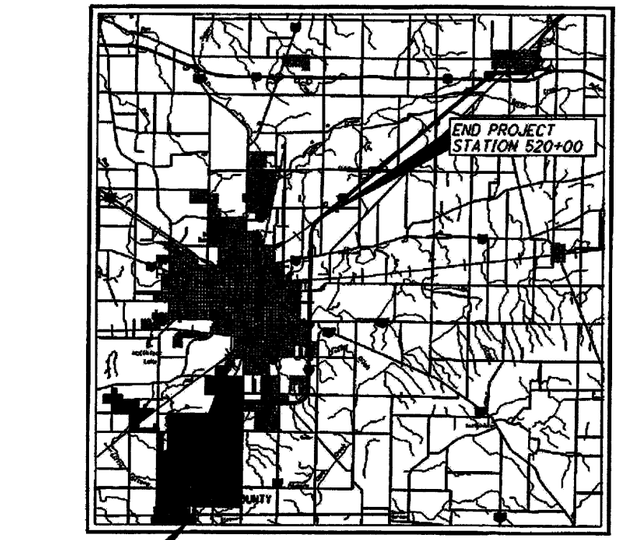

PARTICLE SIZE DEFINITIONS

12"	3"	2.0 mm	0.42 mm	0.074 mm	0.005 mm
BOULDERS |	COBBLES |	GRAVEL |	COARSE SAND |	FINE SAND |	SILT | CLAY
		No. 10 SIEVE	No. 40 SIEVE	No. 200 SIEVE	

DESIGN AGENCY
STANTEC CONSULTING SERVICES INC.
CINCINNATI, OHIO

PID NO. 76691

SOIL PROFILE

ALL-75-0.21

1/90

V:\1755\active\175530002\geotechnical\drawing\ODOTSubmittal\projects\ALL\76691\roadway\sheets\76691IC001.dgn

INDEX OF SHEETS					
LOCATION FROM STA.	TO STA.	PLAN VIEW SHEET	PROFILE SHEET	CUT MAX.	FILL EMB. MAX
I-75 MAINLINE					
0+00	14+00	18	18	0 FT	3 FT
14+00	29+00	19	19	0 FT	3 FT
29+00	44+00	20	20	0 FT	3 FT
44+00	59+00	21	21	0 FT	4 FT
59+00	74+00	22	22	0 FT	3 FT
74+00	89+00	23	23	0 FT	5 FT
89+00	104+00	24	24	0 FT	6 FT
104+00	119+00	25	25	2 FT	6 FT
119+00	134+00	26	26	0 FT	4 FT
134+00	149+00	27	27	0 FT	4 FT
149+00	164+00	28	28	2 FT	4 FT
164+00	179+00	29	29	<1 FT	3 FT
179+00	194+00	30	30	0 FT	4 FT
194+00	209+00	31	31	0 FT	3 FT
209+00	224+00	32	32	0 FT	7 FT
224+00	239+00	33	33	0 FT	11 FT
239+00	254+00	34	34	0 FT	10 FT
254+00	269+00	35	35	<2 FT	6 FT
269+00	284+00	36	36	8 FT	3 FT
284+00	299+00	37	37	0 FT	3 FT
299+00	314+00	38	38	0 FT	4 FT
314+00	329+00	39	39	<1 FT	3 FT
329+00	344+00	40	40	0 FT	3 FT
344+00	359+00	41	41	<1 FT	2 FT
359+00	374+00	42	42	0 FT	10 FT
374+00	389+00	43	43	<1 FT	9 FT
389+00	404+00	44	44	<1 FT	0 FT
404+00	419+00	45	45	<1 FT	2 FT
419+00	434+00	46	46	0 FT	5 FT
434+00	449+00	47	47	<1 FT	3 FT
449+00	464+00	48	48	<1 FT	5 FT
464+00	479+00	49	49	0 FT	7 FT

INDEX OF SHEETS					
LOCATION FROM STA.	TO STA.	PLAN VIEW SHEET	PROFILE SHEET	CUT MAX.	FILL EMB. MAX
BREESE RD.		50	50	0 FT	2 FT
BREESE RD. RAMP A		51	51	0 FT	<1 FT
BREESE RD. RAMP B		52	52	0 FT	2 FT
BREESE RD. RAMP C		53	53	<1 FT	2 FT
BREESE RD. RAMP D		54	54	0 FT	<1 FT
McCLAIN RD.		55	55	10 FT	9 FT
McCLAIN RD. CONT.		56	56	0 FT	2 FT
S.R. 65		57	57	0 FT	<1 FT
S.R. 65 CONT.		58	58	0 FT	0 FT
S.R. 65 RAMP A		59	59	0 FT	2 FT
S.R. 65 RAMP B		60	60	<1 FT	<1 FT
S.R. 65 RAMP C		61	61	<1 FT	7 FT
S.R. 65 RAMP D		62	62	0 FT	8 FT
YODER RD.		63	63	3 FT	2 FT
HANTHORN RD.		64	64	0 FT	4 FT
FOURTH ST.		65	65	<1 FT	3 FT
FOURTH ST. CONT.		66	66	0 FT	3 FT
FOURTH ST. RAMP A		67	67	2 FT	3 FT
FOURTH ST. RAMP B		68	68	2 FT	<1 FT
FOURTH ST. RAMP C		69	69	3 FT	2 FT
FOURTH ST. RAMP D		70	70	2 FT	5 FT
PATROL DRIVE		71	71	0 FT	2 FT
S.R. 117/309		72	72	<1 FT	0 FT
S.R. 117/309 CONT.		73	73	<1 FT	0 FT
S.R. 117/309 RAMP A		74	74	<1 FT	3 FT
S.R. 117/309 RAMP F		75	75	<1 FT	3 FT
S.R. 117/309 RAMP C		76	76	<1 FT	8 FT
S.R. 117/309 RAMP E		77	77	<1 FT	10 FT
S.R. 117/309 ASSOC.		78	78	TBD FT	TBD FT
S.R. 117/309 ASSOC.		79	79	TBD FT	TBD FT
S.R. 117/309 ASSOC.		80	80	TBD FT	TBD FT
S.R. 117/309 ASSOC.		81	81	TBD FT	TBD FT
BRYN MAWR AVE.		82	82	0 FT	3 FT

INDEX OF SHEETS					
LOCATION FROM STA.	TO STA.	PLAN VIEW SHEET	PROFILE SHEET	CUT MAX.	FILL EMB. MAX
RESERVOIR RD.		83	83	0 FT	4 FT
S.R. 81		84	84	<1 FT	0 FT
S.R. 81 CONT.		85	85	2 FT	2 FT
S.R. 81 RAMP C		86	86	0 FT	6 FT
S.R. 81 RAMP D		87	87	3 FT	7 FT
S.R. 81 RAMP B		88	88	0 FT	6 FT
S.R. 81 RAMP F		89	89	4 FT	4 FT
NEUBRECHT RD.		90	90	<1 FT	0 FT

DESIGN AGENCY
STANTEC CONSULTING SERVICES INC.
CINCINNATI, OHIO

PID NO. 76691

INDEX OF SHEETS

ALL-75-0.21

12/157

V:\1755\active\175530002\geotechnical\drawing\ODOTSubmittal\projects\ALL\76691\roadway\sheets\76691IC002.dgn

SUMMARY OF SOIL TEST DATA
INTERSTATE 75 MAINLINE

EXPLORATION NO., STATION & OFFSET	FROM TO	SAMPLE ID	% REC	% AGG	% CS	% FS	% SILT	% CLAY	LL	PL	PI	% WC	ODOT CLASS
B-001-0-07	0.0 - 1.5	SS-1	100	15	8	11	18	48	42	18	24	14	A-7-6 (12)
STA. 0+00, 1.0' RT.	1.5 - 3.0	SS-2	100	3	6	11	34	46	32	16	16	13	A-6b (10)
NORTHING=365242	3.0 - 4.5	SS-3	93	4	6	11	34	45	32	16	16	15	A-6b (10)
EASTING=1516031	4.5 - 6.0	SS-4	100				SAME AS SS-3					15	A-6b (VISUAL)
	6.0 - 7.5	SS-5	93				SAME AS SS-3					16	A-6b (VISUAL)
	7.5 - 9.0	SS-6	80				SAME AS SS-3					16	A-6b (VISUAL)
B-002-0-07	0.0 - 1.5	SS-1	87	4	5	11	29	50	41	17	24	15	A-7-6 (14)
STA. 4+01, CENTERLINE	1.5 - 3.0	SS-2	100	2	4	11	42	42	30	18	12	13	A-6a (9)
NORTHING= 365642	3.0 - 4.5	SS-3	67				SAME AS SS-2					15	A-6a (VISUAL)
EASTING= 1516034	4.5 - 6.0	SS-4	100				SAME AS SS-2					15	A-6a (VISUAL)
	6.0 - 7.5	SS-5	73				SAME AS SS-2					16	A-6a (VISUAL)
	7.5 - 9.0	SS-6	100				SAME AS SS-2					16	A-6a (VISUAL)
B-003-0-07	1.8 - 3.3	SS-1	87	14	9	11	27	40	35	18	17	17	A-6b (9)
STA. 8+01, 30' RT.	3.3 - 4.8	SS-2	73	3	6	12	32	48	39	19	20	20	A-6b (12)
NORTHING= 366041	4.8 - 6.3	SS-3	100	5	5	12	33	45	29	17	12	18	A-6a (9)
EASTING= 1516069	6.3 - 7.8	SS-4	87				SAME AS SS-3					15	A-6a (VISUAL)
	7.8 - 9.3	SS-5	100				SAME AS SS-3					16	A-6a (VISUAL)
	9.3 - 10.8	SS-6	100				SAME AS SS-3					17	A-6a (VISUAL)
B-004-0-07	1.5 - 3.0	SS-1	73	1	4	11	28	55	44	17	27	22	A-7-6 (16)*
STA. 12+01, 30' LT.	3.0 - 4.5	SS-2	100	4	6	12	32	47	34	18	16	15	A-6b (10)*
NORTHING= 3664422	4.5 - 6.0	SS-3	67				SAME AS SS-5					15	A-6a (VISUAL)
EASTING= 1516013	6.0 - 7.5	SS-4	100				SAME AS SS-5					15	A-6a (VISUAL)
	7.5 - 9.0	SS-5	100	6	6	11	34	44	31	18	13	16	A-6a (9)
	9.0 - 10.5	SS-6	100				SAME AS SS-5					16	A-6a (VISUAL)
B-005-0-07	0.0 - 1.5	SS-1	80	40	16	10	18	16	33	21	12	11	A-2-6 (0)
STA. 15+99, 76' RT.	1.5 - 3.0	SS-2	93	5	7	12	32	45	28	17	11	16	A-6a (8)
NORTHING= 366840	3.0 - 4.5	SS-3	100	5	7	13	32	43	30	17	13	16	A-6a (9)
EASTING= 1516124	4.5 - 6.0	SS-4	100				SAME AS SS-4					17	A-6a (VISUAL)
	6.0 - 7.5	SS-5	100				SAME AS SS-4					16	A-6a (VISUAL)
	7.5 - 9.0	SS-6	80				SAME AS SS-4					16	A-6a (VISUAL)
	9.0 - 10.5	SS-7	100				SAME AS SS-4					18	A-6a (VISUAL)
B-006-0-07	0.0 - 1.5	SS-1	73	20	10	9	26	35	38	18	20	12	A-6b (9)*
STA. 20+77, 63' LT.	1.5 - 3.0	SS-2	67				SAME AS SS-3					19	A-4a (VISUAL)
NORTHING= 367319	3.0 - 4.5	SS-3	100	4	7	15	41	34	23	16	7	17	A-4a (8)
EASTING= 1515992	4.5 - 6.0	SS-4	100	7	6	11	36	40	28	18	10	17	A-4a (8)
	6.0 - 7.5	SS-5	80				SAME AS SS-4					17	A-4a (VISUAL)
	7.5 - 9.0	SS-6	100				SAME AS SS-4					16	A-4a (VISUAL)
B-007-0-07	0.0 - 1.5	SS-1	0				SAME AS BS-3					-	A-6b (VISUAL)
STA. 24+01, CENTERLINE	1.5 - 3.0	SS-2	0				SAME AS BS-3					-	A-6b (VISUAL)
NORTHING= 367642	3.0 BAG	BS-3	100	4	5	10	31	49	35	17	18	13	A-6b (11)
EASTING= 1516057	3.0 - 4.5	SS-4	100	4	7	12	35	43	30	18	12	16	A-6a (9)
	4.5 - 6.0	SS-5	100				SAME AS SS-4					13	A-6a (VISUAL)
	6.0 - 7.5	SS-6	100				SAME AS SS-7					16	A-6a (VISUAL)
	7.5 - 9.0	SS-7	100	4	6	11	35	45	31	17	14	15	A-6a (10)
B-008-0-07	1.5 - 3.0	SS-1	100				SAME AS SS-1					24	A-6b (VISUAL)*
STA. 28+01, 30' RT.	3.0 - 4.5	SS-2	100	3	4	10	31	52	40	19	21	20	A-6b (12)
NORTHING= 368041	4.5 - 6.0	SS-3	80	23	7	9	31	30	33	20	13	25	A-6a (7)
EASTING= 1516093	6.0 - 7.5	SS-4	100				SAME AS SS-3					26	A-6a (VISUAL)
	7.5 - 9.0	SS-5	80				SAME AS SS-3					18	A-6a (VISUAL)
	9.0 - 10.5	SS-6	100				SAME AS SS-3					19	A-6a (VISUAL)
B-009-0-07	1.4 - 2.9	SS-1	87	4	5	12	32	47	36	16	20	20	A-6b (12)*
STA. 32+01, 30 LT.	2.9 - 4.4	SS-2	100	2	5	12	36	45	36	16	20	20	A-6b (12)
NORTHING= 368422	4.4 - 5.9	SS-3	100				SAME AS SS-2					26	A-6b (VISUAL)
EASTING= 151040	5.9 - 7.4	SS-4	100	1	4	13	38	45	38	21	17	23	A-6b (11)
	7.4 - 8.9	SS-5	80				SAME AS SS-4					22	A-6b (VISUAL)
	8.9 - 10.4	SS-6	73				SAME AS SS-4					20	A-6b (VISUAL)

SUMMARY OF SOIL TEST DATA
INTERSTATE 75 MAINLINE - CONTINUED

EXPLORATION NO., STATION & OFFSET	FROM TO	SAMPLE ID	% REC	% AGG	% CS	% FS	% SILT	% CLAY	LL	PL	PI	% WC	ODOT CLASS
B-010-0-07	0.0 - 1.5	SS-1	40	11	8	11	32	38	34	21	13	8	A-6a (8)*
STA. 36+01, 30' RT.	1.5 - 3.0	SS-2	0				SAME AS SS-1					-	A-6a (VISUAL)*
NORTHING= 368841	3.0 - 4.5	SS-3	0				SAME AS SS-2					-	A-6a (VISUAL)
EASTING= 1516106	4.5 BAG	BS-4	100	24	7	10	23	35	33	18	15	14	A-6a (7)
	4.5 - 6.0	SS-5	100	7	6	10	31	45	30	18	12	17	A-6a (9)
	6.0 - 7.5	SS-6	73				SAME AS SS-6					16	A-6a (VISUAL)
	7.5 - 9.0	SS-7	100				SAME AS SS-6					16	A-6a (VISUAL)
	9.0 - 10.5	SS-8	100				SAME AS SS-6					16	A-6a (VISUAL)
B-011-0-07	0.0 - 1.5	SS-1	87	51	17	9	22	2	32	21	11	5	A-2-6 (0)*
STA. 40+69, 61' LT.	1.5 - 3.0	SS-2	83	3	6	12	29	50	37	17	20	17	A-6b (12)*
NORTHING= 369311	3.0 - 4.5	SS-3	100	1	3	10	34	52	36	18	18	23	A-6b (11)
EASTING= 1516023	4.5 - 6.0	SS-4	67				SAME AS SS-4					24	A-6b (VISUAL)
	6.0 - 7.5	SS-5	100				SAME AS SS-4					16	A-6b (VISUAL)
	7.5 - 9.0	SS-6	100				SAME AS SS-4					16	A-6b (VISUAL)
B-012-0-07	0.0 - 1.5	SS-1	93	22	12	12	24	30	32	16	16	9	A-6b (6)
STA. 44+01, CENTERLINE	1.5 - 3.0	SS-2	100	1	4	14	36	45	37	21	16	20	A-6b (10)
NORTHING= 369641	3.0 - 4.5	SS-3	93	1	4	9	39	47	41	20	21	21	A-7-6 (13)
EASTING= 1516090	4.5 - 6.0	SS-4	100				SAME AS SS-3					21	A-7-6 (VISUAL)
	6.0 - 7.5	SS-5	100				SAME AS SS-3					16	A-7-6 (VISUAL)
	7.5 - 9.0	SS-6	100				SAME AS SS-3					16	A-7-6 (VISUAL)
B-013-0-07	2.0 - 3.5	SS-1	100	7	6	11	32	45	30	18	12	15	A-6a (9)
STA. 48+01, 30' RT.	3.5 - 5.0	SS-2	100	5	2	8	29	55	35	19	16	15	A-6b (10)
NORTHING= 370041	5.0 - 6.5	SS-3	93				SAME AS SS-2					17	A-6b (VISUAL)
EASTING= 1516126	6.5 - 8.0	SS-4	100				SAME AS SS-2					16	A-6b (VISUAL)
	8.0 - 9.5	SS-5	100				SAME AS SS-2					16	A-6b (VISUAL)
	9.5 - 11.0	SS-6	87				SAME AS SS-2					16	A-6b (VISUAL)
B-014-0-07	0.6 - 2.1	SS-1	100	GRAY GRAVEL WITH SAND, SILT AND CLAY								5	A-2-6 (VISUAL)*
STA. 52+01, 30' LT.	2.1 - 3.6	SS-2	87	2	4	11	34	49	34	18	16	22	A-6b (10)
NORTHING= 370442	3.6 - 5.1	SS-3	100	4	7	11	31	47	35	17	18	20	A-6b (11)
EASTING= 1516073	5.1 - 6.6	SS-4	100				SAME AS SS-3					19	A-6b (VISUAL)
	6.6 - 8.1	SS-5	73				SAME AS SS-3					21	A-6b (VISUAL)
	8.1 - 9.6	SS-6	93				SAME AS SS-3					19	A-6b (VISUAL)
B-015-0-07	0.0 - 1.5	SS-1	80	14	8	10	31	38	32	17	15	9	A-6a (9)
STA. 55+83, 72' RT.	1.5 - 3.0	SS-2	100	3	7	12	33	46	29	16	13	13	A-6a (9)
NORTHING= 370818	3.0 - 4.5	SS-3	80	2	5	12	31	50	36	18	18	22	A-6b (11)
EASTING= 1516191	4.5 - 6.0	SS-4	73				SAME AS SS-3					19	A-6b (VISUAL)
	6.0 - 7.5	SS-5	93				SAME AS SS-3					26	A-6b (VISUAL)
	7.5 - 9.0	SS-6	100				SAME AS SS-3					19	A-6b (VISUAL)
	9.0 - 10.5	SS-7	100				SAME AS SS-3					17	A-6b (VISUAL)
B-016-0-07	0.0 - 1.5	SS-1	87	31	11	7	24	28	38	19	19	10	A-6b (6)
STA. 60+52, 65' LT.	1.5 - 3.0	SS-2	77	8	7	12	31	42	34	19	15	17	A-6a (10)
NORTHING= 371299	3.0 - 4.5	SS-3	93				SAME AS SS-2					17	A-6a (VISUAL)
EASTING= 1516110	4.5 - 6.0	SS-4	100				SAME AS SS-2					15	A-6a (VISUAL)
	6.0 - 7.5	SS-5	47				SAME AS SS-6					15	A-6a (VISUAL)
	7.5 - 9.0	SS-6	100	5	5	10	34	46	30	17	13	16	A-6a (9)
B-017-0-07	0.0 - 1.5	SS-1	93	22	14	12	23	30	31	16	15	9	A-6a (6)
STA. 64+01, CENTERLINE	1.5 - 3.0	SS-2	93	3	5	11	34	47	32	17	15	14	A-6a (10)
NORTHING= 371631	3.0 - 4.5	SS-3	100	4	6	11	35	45	29	18	11	16	A-6a (8)
EASTING= 1516241	4.5 - 6.0	SS-4	100				SAME AS SS-3					10	A-6a (VISUAL)
	6.0 - 7.5	SS-5	93				SAME AS SS-3					16	A-6a (VISUAL)
	7.5 - 9.0	SS-6	100				SAME AS SS-3					16	A-6a (VISUAL)
B-018-0-07	1.8 - 3.3	SS-1	100	4	2	11	40	43	28	17	11	15	A-6a (8)*
STA. 68+01, 30' RT.	3.3 - 4.8	SS-2	93	5	6	11	32	47	29	18	11	16	A-6a (8)*
NORTHING= 372010	4.8 - 6.3	SS-3	100				SAME AS SS-2					16	A-6a (VISUAL)
EASTING= 1516370	6.3 - 7.8	SS-4	100				SAME AS SS-2					16	A-6a (VISUAL)
	7.8 - 9.3	SS-5	100				SAME AS SS-2					17	A-6a (VISUAL)
	9.3 - 10.8	SS-6	100				SAME AS SS-2					18	A-6a (VISUAL)

DRAWN MJ CHECKED RJK

SOIL PROFILE
SUMMARY OF SOIL TEST DATA

ALL-75-0.21

V:\1755\active\175530002\geotechnical\drawing\ODOTSubmittal\projects\ALL\76691\roadway\sheets\76691ID001.dgn

SUMMARY OF SOIL TEST DATA
INTERSTATE 75 MAINLINE - CONTINUED

EXPLORATION NO., STATION & OFFSET	FROM	TO	SAMPLE ID	% REC	% AGG	% CS	% FS	% SILT	% CLAY	LL	PL	PI	% WC	ODOT CLASS
B-019-0-07	1.4	2.9	SS-1	80	4	7	11	35	44	29	17	12	16	A-6a (9)*
STA. 71+01, 30' LT.	2.9	4.4	SS-2	100	5	6	11	34	46	30	17	13	16	A-6a (9)
NORTHING= 372313	4.4	5.9	SS-3	93				SAME AS SS-2					17	A-6a (VISUAL)
EASTING= 1516406	5.9	7.4	SS-4	100				SAME AS SS-2					17	A-6a (VISUAL)
	7.4	8.9	SS-5	93				SAME AS SS-2					16	A-6a (VISUAL)
	8.9	10.4	SS-6	87				SAME AS SS-2					17	A-6a (VISUAL)
B-020-0-07	0.0	1.5	SS-1	67				SAME AS SS-2					16	A-6b (VISUAL)*
STA. 76+02, 68' RT.	1.5	3.0	SS-2	73	30	12	9	20	29	32	16	16	16	A-6b (5)
NORTHING= 372739	3.0	4.5	SS-3	73	4	6	11	30	49	31	17	14	17	A-6a (10)
EASTING= 1516685	4.5	6.0	SS-4	100				SAME AS SS-3					16	A-6a (VISUAL)
	6.0	7.5	SS-5	100				SAME AS SS-3					17	A-6a (VISUAL)
	7.5	9.0	SS-6	100				SAME AS SS-3					17	A-6a (VISUAL)
	9.0	10.5	SS-7	67				SAME AS SS-3					16	A-6a (VISUAL)
B-021-0-07	0.0	1.5	SS-1	67	12	9	14	31	34	34	19	15	9	A-6a (8)*
STA. 80+33, 69' LT.	1.5	3.0	SS-2	33				SAME AS SS-1					26	A-6a (VISUAL)
NORTHING= 373189	3.0	4.5	SS-3	93	4	6	11	34	46	33	18	15	16	A-6a (10)
EASTING= 1516739	4.5	6.0	SS-4	100	6	6	11	31	46	34	19	15	18	A-6a (10)
	6.0	7.5	SS-5	100				SAME AS SS-4					15	A-6a (VISUAL)
	7.5	9.0	SS-6	100				SAME AS SS-4					16	A-6a (VISUAL)
B-022-0-07	0.0	1.5	SS-1	100	7	6	13	34	41	38	17	21	12	A-6b (12)
STA. 84+01, CENTERLINE	1.5	3.0	SS-2	100				SAME AS SS-1					18	A-6b (VISUAL)
NORTHING= 373494	3.0	4.5	SS-3	93	4	8	18	31	39	38	19	19	19	A-6b (11)
EASTING= 1516954	4.5	6.0	SS-4	100				SAME AS SS-3					21	A-6b (VISUAL)
	6.0	7.5	SS-5	73				SAME AS SS-6					22	A-6b (VISUAL)
	7.5	9.0	SS-6	100	6	5	19	33	37	37	19	18	23	A-6b (10)
B-023-0-07	1.8	3.3	SS-1	67	8	7	12	32	42	31	18	13	17	A-6a (9)*
STA. 88+01, 30' RT.	3.3	4.8	SS-2	73	6	5	12	30	47	35	17	18	19	A-6b (11)
NORTHING= 373844	4.8	6.3	SS-3	27				SAME AS SS-2					19	A-6b (VISUAL)
EASTING= 1517150	6.3	7.8	SS-4	100				SAME AS SS-2					17	A-6b (VISUAL)
	7.8	9.3	SS-5	100	4	18	12	29	37	38	19	19	18	A-6b (10)
	9.3	10.8	SS-6	100				SAME AS SS-5					26	A-6b (VISUAL)
B-024-0-07	1.5	3.0	SS-1	87	3	7	12	32	46	34	16	18	15	A-6b (11)*
STA. 92+01, 30' LT.	3.0	4.5	SS-2	100	2	4	12	34	49	37	18	19	21	A-6b (12)
NORTHING= 374266	4.5	6.0	SS-3	53				SAME AS SS-2					22	A-6b (VISUAL)
EASTING= 1517281	6.0	7.5	SS-4	73				SAME AS SS-2					21	A-6b (VISUAL)
	7.5	9.0	SS-5	100				SAME AS SS-6					22	A-6b (VISUAL)
	9.0	10.5	SS-6	80	4	9	13	30	44	38	18	20	25	A-6b (12)
B-025-0-07	0.0	1.5	SS-1	67	12	11	12	28	38	36	20	16	18	A-6b (8)
STA. 96+05, 70' RT.	1.5	3.0	SS-2	67	4	6	12	35	43	30	16	14	16	A-6a (10)
NORTHING= 374524	3.0	4.5	SS-3	100	40	3	8	22	28	36	21	15	22	A-6a (10)
EASTING= 1517569	4.5	6.0	SS-4	100				SAME AS SS-3					30	A-6a (VISUAL)
	6.0	7.5	SS-5	53				SAME AS SS-6					26	A-6b (VISUAL)
	7.5	9.0	SS-6	73	1	6	28	26	39	35	15	20	23	A-6b (10)
	9.0	10.5	SS-7	80				SAME AS SS-6					26	A-6b (VISUAL)
B-026-0-07	0.5	2.0	SS-1	40									6	A-2-6 (VISUAL)*
STA. 100+01, 29' LT.	2.0	3.5	SS-2	40				SAME AS BS-4					21	A-6a (VISUAL)
NORTHING= 374911	3.5	5.0	SS-3	7				SAME AS BS-4					20	A-6a (VISUAL)
EASTING= 1517700	5.0	BAG	BS-4	100	38	12	8	18	25	30	16	14	20	A-6a (3)
	5.0	6.5	SS-5	100	4	6	11	33	46	31	17	14	17	A-6a (10)
	6.5	8.0	SS-6	67				SAME AS SS-5					17	A-6a (VISUAL)
	8.0	9.5	SS-7	93				SAME AS SS-5					16	A-6a (VISUAL)
B-027-0-07	0.0	1.5	SS-1	73	6	4	11	28	52	52	21	31	22	A-7-6 (18)
STA. 104+01, 1' RT.	1.5	3.0	SS-2	87	1	2	10	29	59	54	23	31	28	A-7-6 (19)
NORTHING= 375220	3.0	4.5	SS-3	80	1	3	11	29	56	48	20	28	23	A-7-6 (17)
EASTING= 1517957	4.5	6.0	SS-4	87				SAME AS SS-3					22	A-7-6 (VISUAL)
	6.0	7.5	SS-5	93				SAME AS SS-3					20	A-7-6 (VISUAL)
	7.5	9.0	SS-6	100				SAME AS SS-3					21	A-7-6 (VISUAL)

SUMMARY OF SOIL TEST DATA
INTERSTATE 75 MAINLINE - CONTINUED

EXPLORATION NO., STATION & OFFSET	FROM	TO	SAMPLE ID	% REC	% AGG	% CS	% FS	% SILT	% CLAY	LL	PL	PI	% WC	ODOT CLASS
B-028-0-07	1.8	3.3	SS-1	73				SAME AS SS-2					18	A-6b (VISUAL)
STA. 108+01, 31' RT.	3.3	4.8	SS-2	100	1	5	10	27	57	40	19	21	25	A-6b (12)
NORTHING= 375516	4.8	6.3	SS-3	100	30	20	11	17	23	30	18	12	17	A-6a (2)
EASTING= 1518226	6.3	7.8	SS-4	100				SAME AS SS-3					18	A-6a (VISUAL)
	7.8	9.3	SS-5	100				SAME AS SS-3					25	A-6a (VISUAL)
	9.3	10.8	SS-6	100				SAME AS SS-3					17	A-6a (VISUAL)
B-029-0-07	0.9	2.4	SS-1	100				GRAY GRAVEL WITH SAND, SILT AND CLAY					18	A-2-6 (VISUAL)*
STA. 112+01, 29' LT.	2.4	3.9	SS-2	100	4	8	10	36	42	32	18	14	15	A-6a (10)
NORTHING= 375859	3.9	5.4	SS-3	100	6	9	10	32	44	31	18	13	16	A-6a (9)
EASTING= 1518440	5.4	6.9	SS-4	100				SAME AS SS-3					16	A-6a (VISUAL)
	6.9	8.4	SS-5	47				SAME AS SS-3					17	A-6a (VISUAL)
	8.4	9.9	SS-6	100				SAME AS SS-3					16	A-6a (VISUAL)
B-030-0-07	0.0	1.5	SS-1	93	3	7	12	29	49	33	17	16	7	A-6b (10)
STA. 116+09, 62' RT.	1.5	3.0	SS-2	47				SAME AS SS-1					11	A-6b (VISUAL)
NORTHING= 376107	3.0	4.5	SS-3	67				SAME AS SS-4					23	A-6b (VISUAL)
EASTING= 1518776	4.5	6.0	SS-4	80	10	9	12	26	44	35	18	17	25	A-6b (10)
	6.0	7.5	SS-5	100	4	5	11	33	47	30	18	12	17	A-6a (9)
	7.5	9.0	SS-6	100				SAME AS SS-5					16	A-6a (VISUAL)
	9.0	10.5	SS-7	100				SAME AS SS-5					16	A-6a (VISUAL)
B-031-0-07	0.0	1.5	SS-1	73	35	7	8	21	30	39	15	24	15	A-6b (8)
STA. 121+46, 73' LT.	1.5	3.0	SS-2	87	10	7	12	31	40	34	17	17	18	A-6b (10)
NORTHING= 376603	3.0	4.5	SS-3	93	5	6	10	37	42	31	19	12	16	A-6a (9)
EASTING= 1519025	4.5	6.0	SS-4	100				SAME AS SS-3					16	A-6a (VISUAL)
	6.0	7.5	SS-5	73				SAME AS SS-3					16	A-6a (VISUAL)
	7.5	9.0	SS-6	100				SAME AS SS-3					16	A-6a (VISUAL)
B-032-0-07	0.0	1.5	SS-1	100	1	3	9	28	58	47	22	25	19	A-7-6 (15)
STA. 124+01, CENTERLINE	1.5	3.0	SS-2	93	4	5	11	32	49	35	19	16	16	A-6b (10)
NORTHING= 376747	3.0	4.5	SS-3	100				SAME AS SS-2					16	A-6b (VISUAL)
EASTING= 1519248	4.5	6.0	SS-4	100	0	4	10	33	54	40	19	21	17	A-6b (12)
	6.0	7.5	SS-5	100				SAME AS SS-4					16	A-6b (VISUAL)
	7.5	9.0	SS-6	100				SAME AS SS-4					16	A-6b (VISUAL)
B-033-0-07	1.0	2.5	SS-1	87				SAME AS SS-2					16	A-6a (VISUAL)*
STA. 128+01, 30' RT.	2.5	4.0	SS-2	47	9	7	11	31	42	31	17	14	17	A-6a (9)
NORTHING= 377030	4.0	5.5	SS-3	53				SAME AS SS-4					18	A-6b (VISUAL)
EASTING= 1518532	5.5	7.0	SS-4	53	3	5	12	28	53	38	19	19	22	A-6b (12)
	7.0	8.5	SS-5	80				SAME AS SS-4					22	A-6b (VISUAL)
	8.5	10.0	SS-6	7				SAME AS SS-4					23	A-6b (VISUAL)
B-034-0-07	1.5	3.0	SS-1	0				GRAY GRAVEL WITH SAND, SILT AND CLAY					-	A-2-6 (VISUAL)*
STA. 132+01, 30' LT.	3.0	4.5	SS-2	100	3	3	10	29	54	43	20	23	23	A-7-6 (14)*
NORTHING= 377372	4.5	6.0	SS-3	87				SAME AS SS-2					16	A-7-6 (VISUAL)
EASTING= 1519748	6.0	7.5	SS-4	100	4	6	11	34	45	33	17	16	17	A-6b (10)
	7.5	9.0	SS-5	93				SAME AS SS-4					17	A-6b (VISUAL)
	9.0	10.5	SS-6	93				SAME AS SS-4					18	A-6b (VISUAL)
B-035-0-07	0.0	1.5	SS-1	73				TOPSOIL					14	(VISUAL)*
STA. 135+92, 65' RT.	1.5	3.0	SS-2	80	1	4	11	41	44	35	19	16	22	A-6b (10)
NORTHING= 377606	3.0	4.5	SS-3	100	2	4	9	30	56	44	19	25	21	A-7-6 (15)
EASTING= 1520076	4.5	6.0	SS-4	100	9	7	9	28	47	41	19	22	19	A-7-6 (13)
	6.0	7.5	SS-5	73				SAME AS SS-4					23	A-7-6 (VISUAL)
	7.5	9.0	SS-6	100				SAME AS SS-4					19	A-7-6 (VISUAL)
B-036-0-07	0.0	1.5	SS-1	73				GRAY GRAVEL WITH SAND, SILT AND CLAY					8	A-2-6 (VISUAL)*
STA. 141+37, 65' LT.	1.5	3.0	SS-2	83	5	6	13	35	42	29	16	13	16	A-6a (9)*
NORTHING= 378103	3.0	4.5	SS-3	100	7	6	12	35	39	28	17	11	15	A-6a (8)
EASTING= 1520334	4.5	6.0	SS-4	100				SAME AS SS-3					15	A-6a (VISUAL)
	6.0	7.5	SS-5	47				SAME AS SS-3					15	A-6a (VISUAL)
	7.5	9.0	SS-6	100				SAME AS SS-3					15	A-6a (VISUAL)

DRAWN MJ
CHECKED RJK

SOIL PROFILE

SUMMARY OF SOIL TEST DATA

ALL-75-0.21

V:\1755\active\175530002\geotechnical\drawing\ODOTSubmittal\projects\ALL\76691\roadway\sheets\76691D002.dgn

SUMMARY OF SOIL TEST DATA
INTERSTATE 75 MAINLINE - CONTINUED

EXPLORATION NO., STATION & OFFSET	FROM TO	SAMPLE ID	% REC	% AGG	% CS	% FS	% SILT	% CLAY	LL	PL	PI	% WC	ODOT CLASS
B-037-0-07	0.0 - 1.5	SS-1	100	7	6	11	34	41	29	17	12	14	A-6a (9)*
STA. 144+01, CENTERLINE	1.5 - 3.0	SS-2	100	3	6	12	35	44	28	17	11	15	A-6a (8)
NORTHING= 378260	3.0 - 4.5	SS-3	100	5	6	12	34	42	28	15	13	16	A-6a (9)
EASTING= 1520555	4.5 - 6.0	SS-4	100				SAME AS SS-3					15	A-6a (VISUAL)
	6.0 - 7.5	SS-5	100				SAME AS SS-3					18	A-6a (VISUAL)
	7.5 - 9.0	SS-6	40				SAME AS SS-3					15	A-6a (VISUAL)
B-038-0-07	1.5 - 3.0	SS-1	87	1	4	10	41	43	39	21	18	26	A-6b (11)*
STA. 148+01, 30' RT.	3.0 - 4.5	SS-2	80	0	2	8	35	54	45	19	26	24	A-7-6 (15)
NORTHING= 378543	4.5 - 6.0	SS-3	33				SAME AS SS-2					19	A-7-6 (VISUAL)
EASTING= 1520839	6.0 - 7.5	SS-4	53				SAME AS SS-2					20	A-7-6 (VISUAL)
	7.5 - 9.0	SS-5	100				SAME AS SS-2					23	A-7-6 (VISUAL)
	9.0 - 10.5	SS-6	53				SAME AS SS-2					16	A-7-6 (VISUAL)
B-039-0-07	1.5 - 3.0	SS-1	73	3	4	11	33	49	39	17	22	21	A-6b (13)*
STA. 152+01, 30' LT.	3.0 - 4.5	SS-2	80	1	3	11	32	54	49	22	27	28	A-7-6 (17)
NORTHING= 378885	4.5 - 6.0	SS-3	93				SAME AS SS-2					29	A-7-6 (VISUAL)
EASTING= 1521056	6.0 - 7.5	SS-4	100	1	2	10	34	54	50	20	30	24	A-7-6 (18)
	7.5 - 9.0	SS-5	93				SAME AS SS-4					22	A-7-6 (VISUAL)
	9.0 - 10.5	SS-6	100				SAME AS SS-4					25	A-7-6 (VISUAL)
B-040-0-07	0.0 - 1.5	SS-1	80	33	19	10	17	21	32	17	15	15	A-6a (2)*
STA. 155+84, 65' RT.	1.5 - 3.0	SS-2	73	4	3	10	27	56	50	23	27	29	A-7-6 (17)
NORTHING= 379113	3.0 - 4.5	SS-3	93	1	7	13	31	49	50	21	29	28	A-7-6 (18)
EASTING= 1521378	4.5 - 6.0	SS-4	100				SAME AS SS-3					27	A-7-6 (VISUAL)
	6.0 - 7.5	SS-5	73				SAME AS SS-3					24	A-7-6 (VISUAL)
	7.5 - 9.0	SS-6	100				SAME AS SS-3					26	A-7-6 (VISUAL)
B-041-0-07	0.0 - 1.5	SS-1	100	2	4	19	34	41	34	17	17	11	A-6b (11)*
STA. 161+22, 82' LT.	1.5 - 3.0	SS-2	100				SAME AS SS-1					14	A-6b (VISUAL)*
NORTHING= 379609	3.0 - 4.5	SS-3	87				SAME AS SS-1					21	A-6b (VISUAL)
EASTING= 1521638	4.5 - 6.0	SS-4	100				SAME AS SS-5					24	A-6a (VISUAL)
	6.0 - 7.5	SS-5	80	3	6	14	35	42	31	17	14	20	A-6a (10)
	7.5 - 9.0	SS-6	100	6	11	41	15	28	37	13	24	22	A-6b (6)
B-042-0-07	0.0 - 1.5	SS-1	100	2	4	11	34	49	49	18	31	20	A-7-6 (18)
STA. 163+97, 29' LT.	1.5 - 3.0	SS-2	67	2	4	12	28	54	45	19	26	24	A-7-6 (15)
NORTHING= 379748	3.0 - 4.5	SS-3	73	1	2	10	35	52	48	21	27	24	A-7-6 (16)
EASTING= 1521889	4.5 - 6.0	SS-4	87				SAME AS SS-3					18	A-7-6 (VISUAL)
	6.0 - 7.5	SS-5	53				SAME AS SS-3					22	A-7-6 (VISUAL)
	7.5 - 9.0	SS-6	100				SAME AS SS-3					24	A-7-6 (VISUAL)
B-018-0-08	2.5 - 4.0	SS-1	100	2	4	17	40	37	42	18	24	27	A-7-6 (14)
STA. 165+22, 27' RT.	5.0 - 6.5	SS-2	100	4	6	11	40	39	33	18	15	18	A-6a (10)
NORTHING= 379774	7.5 - 9.0	SS-3	100				SAME AS SS-3					18	A-6a (VISUAL)
EASTING= 1522024	10.0 - 11.5	SS-4	100	6	6	11	39	38	28	16	12	15	A-6a (9)
B-043-0-07	1.8 - 3.3	SS-1	93				SAME AS SS-2					19	A-7-6 (VISUAL)*
STA. 167+91, 9' LT.	3.3 - 4.8	SS-2	67	0	4	16	33	47	42	16	26	22	A-7-6 (15)
NORTHING= 379938	4.8 - 6.3	SS-3	80	5	7	14	31	44	38	19	19	25	A-6b (12)
EASTING= 1522239	6.3 - 7.8	SS-4	100	21	10	9	23	37	41	19	22	21	A-7-6 (10)
	7.8 - 9.3	SS-5	100				SAME AS SS-4					18	A-7-6 (VISUAL)
	9.3 - 10.8	SS-6	100				SAME AS SS-4					16	A-7-6 (VISUAL)
B-019-0-08	2.5 - 4.0	SS-1	60				SAME AS SS-2					27	A-7-6 (VISUAL)
STA. 169+15, 24' RT.	5.0 - 6.5	SS-2	87	1	2	11	37	49	49	21	28	28	A-7-6 (17)
NORTHING= 379959	7.5 - 9.0	SS-3	100				SAME AS SS-2					16	A-7-6 (VISUAL)
EASTING= 1522365	10.0 - 11.5	SS-4	100	4	5	10	43	38	27	15	12	14	A-6a (9)
B-044-0-07	1.0 - 2.5	SS-1	93	38	13	8	19	23	32	16	16	24	A-6b (3)*
STA. 171+85, 65' LT.	2.5 - 4.0	SS-2	87	1	2	11	37	49	38	19	19	25	A-6b (12)*
NORTHING= 380135	4.0 - 5.5	SS-3	100	3	3	10	33	51	44	18	26	23	A-7-6 (15)
EASTING= 1522591	5.5 - 7.0	SS-4	93				SAME AS SS-3					19	A-7-6 (VISUAL)
	7.0 - 8.5	SS-5	100				SAME AS SS-3					23	A-7-6 (VISUAL)
	8.5 - 10.0	SS-6	100				SAME AS SS-3					21	A-7-6 (VISUAL)

SUMMARY OF SOIL TEST DATA
INTERSTATE 75 MAINLINE - CONTINUED

EXPLORATION NO., STATION & OFFSET	FROM TO	SAMPLE ID	% REC	% AGG	% CS	% FS	% SILT	% CLAY	LL	PL	PI	% WC	ODOT CLASS
B-045-0-07	0.0 - 1.5	SS-1	80									16	A-2-6 (VISUAL)*
STA. 175+94, 44' RT.	1.5 - 3.0	SS-2	67	0	6	11	34	49	42	18	24	23	A-7-6 (14)
NORTHING= 380109	3.0 - 4.5	SS-3	80	0	3	10	41	46	41	18	23	24	A-7-6 (13)
EASTING= 1523014	4.5 - 6.0	SS-4	100				SAME AS SS-3					23	A-7-6 (VISUAL)
	6.0 - 7.5	SS-5	93	4	9	40	33	15	22	18	4	28	A-4a (3)
	7.5 - 9.0	SS-6	100	3	16	34	28	20	24	14	10	24	A-4a (3)
B-025-0-08	2.5 - 4.0	SS-1	67	4	3	14	47	32	43	19	24	24	A-7-6 (14)
STA. 177+39, 58' RT.	5.0 - 6.5	SS-2	80				SAME AS SS-1					27	A-7-6 (VISUAL)
NORTHING= 380108	7.5 - 9.0	SS-3	87				SAME AS SS-4					24	A-4a (VISUAL)
EASTING= 1523157	10.0 - 11.5	SS-4	100	4	5	27	38	26	25	15	10	21	A-4a (6)
B-046-0-07	0.0 - 1.5	SS-1	73	7	7	12	35	39	43	20	23	19	A-7-6 (14)*
STA. 180+42, 72' LT.	1.5 - 3.0	SS-2	87	2	4	11	36	47	40	19	21	24	A-6b (12)
NORTHING= 380242	3.0 - 4.5	SS-3	93				SAME AS SS-2					25	A-6b (VISUAL)
EASTING= 1523458	4.5 - 6.0	SS-4	100	1	2	15	29	54	44	17	27	24	A-7-6 (16)
	6.0 - 7.5	SS-5	100				SAME AS SS-4					21	A-7-6 (VISUAL)
	7.5 - 9.0	SS-6	87				SAME AS SS-4					23	A-7-6 (VISUAL)
B-047-0-07	0.0 - 1.5	SS-1	100	1	4	12	34	49	37	19	18	22	A-6b (11)*
STA. 183+78, CENTERLINE	1.5 - 3.0	SS-2	100	4	5	12	37	43	32	16	16	16	A-6b (10)
NORTHING= 380169	3.0 - 4.5	SS-3	100				SAME AS SS-2					15	A-6b (VISUAL)
EASTING= 1523793	4.5 - 6.0	SS-4	100				SAME AS SS-2					17	A-6b (VISUAL)
	6.0 - 7.5	SS-5	73				SAME AS SS-2					16	A-6b (VISUAL)
	7.5 - 9.0	SS-6	100				SAME AS SS-2					17	A-6b (VISUAL)
B-048-0-07	1.5 - 3.0	SS-1	93				SAME AS SS-2					14	A-4a (VISUAL)*
STA. 187+78, 30' RT.	3.0 - 4.5	SS-2	100	5	5	11	39	40	27	17	10	17	A-4a (8)
NORTHING= 380136	4.5 - 6.0	SS-3	100	7	16	14	28	35	30	17	13	16	A-6a (7)
EASTING= 1524193	6.0 - 7.5	SS-4	100				SAME AS SS-3					14	A-6a (VISUAL)
	7.5 - 9.0	SS-5	100				SAME AS SS-3					16	A-6a (VISUAL)
	9.0 - 10.5	SS-6	67				SAME AS SS-3					16	A-6a (VISUAL)
B-049-0-07	1.5 - 3.0	SS-1	87	8	17	17	24	33	29	16	13	21	A-6a (6)*
STA. 191+78, 30' LT.	3.0 - 4.5	SS-2	87	1	3	12	38	46	39	19	20	23	A-6b (12)*
NORTHING= 380193	4.5 - 6.0	SS-3	87				SAME AS SS-2					26	A-6b (VISUAL)
EASTING= 1524593	6.0 - 7.5	SS-4	93				SAME AS SS-2					24	A-6b (VISUAL)
	7.5 - 9.0	SS-5	93				SAME AS SS-2					23	A-6b (VISUAL)
	9.0 - 10.5	SS-6	100				SAME AS SS-2					19	A-6b (VISUAL)
B-050-0-07	0.0 - 1.5	SS-1	73	38	17	11	17	17	35	20	15	14	A-2-6 (1)*
STA. 195+61, 58' RT.	1.5 - 3.0	SS-2	80	23	15	18	20	24	32	15	17	23	A-6b (4)*
NORTHING= 380102	3.0 - 4.5	SS-3	67				SAME AS SS-2					24	A-6b (VISUAL)
EASTING= 1524975	4.5 - 6.0	SS-4	73				SAME AS SS-2					40	A-6b (VISUAL)
	6.0 - 7.5	SS-5	100				SAME AS SS-2					26	A-6b (VISUAL)
	7.5 - 9.0	SS-6	100				SAME AS SS-2					21	A-6b (VISUAL)
B-051-0-07	0.0 - 1.5	SS-1	100	4	6	12	38	40	29	17	12	14	A-6a (9)*
STA. 200+30, 74' LT.	1.5 - 3.0	SS-2	87	9	7	14	35	36	27	16	11	16	A-6a (7)
NORTHING= 380230	3.0 - 4.5	SS-3	100				SAME AS SS-2					15	A-6a (VISUAL)
EASTING= 1525446	4.5 - 6.0	SS-4	100	3	5	11	35	45	30	18	12	15	A-6a (9)
	6.0 - 7.5	SS-5	100				SAME AS SS-4					16	A-6a (VISUAL)
	7.5 - 9.0	SS-6	100				SAME AS SS-4					16	A-6a (VISUAL)
B-052-0-07	0.0 -1.5	SS-1	100	8	5	9	39	39	31	17	14	15	A-6a (10)
STA. 203+78, CENTERLINE	1.5 - 3.0	SS-2	100	4	5	11	34	46	29	18	11	15	A-6a (8)
NORTHING= 380154	3.0 - 4.5	SS-3	100	5	6	11	33	45	30	16	14	16	A-6a (10)
EASTING= 1525793	4.5 - 6.0	SS-4	100				SAME AS SS-3					15	A-6a (VISUAL)
	6.0 - 7.5	SS-5	93				SAME AS SS-3					16	A-6a (VISUAL)
	7.5 - 9.0	SS-6	100				SAME AS SS-3					16	A-6a (VISUAL)

DRAWN MJ
CHECKED RJK

SOIL PROFILE
SUMMARY OF SOIL TEST DATA

ALL-75-0.21

V:\1755\active\175530002\geotechnical\drawing\ODOTSubmittal\projects\ALL\76691\roadway\sheets\76691D003.dgn

SUMMARY OF SOIL TEST DATA
INTERSTATE 75 MAINLINE - CONTINUED

EXPLORATION NO., STATION & OFFSET	FROM	TO	SAMPLE ID	% REC	% AGG	% CS	% FS	% SILT	% CLAY	LL	PL	PI	% WC	ODOT CLASS
B-053-0-07	1.5	3.0	SS-1	87	2	6	13	33	46	30	15	15	14	A-6a (10)
STA. 207+78, 30' RT.	3.0	4.5	SS-2	100	3	5	12	33	47	30	17	13	15	A-6a (9)
NORTHING= 380121	4.5	6.0	SS-3	87	2	7	12	35	45	30	18	12	15	A-6a (9)
EASTING= 1526193	6.0	7.5	SS-4	100				SAME AS SS-3					16	A-6a (VISUAL)
	7.5	9.0	SS-5	100				SAME AS SS-3					16	A-6a (VISUAL)
	9.0	10.5	SS-6	87				SAME AS SS-3					17	A-6a (VISUAL)
B-054-0-07	0.6	2.1	SS-1	100	25	8	10	26	31	34	18	16	14	A-6b (7)*
STA. 212+30, 81' LT.	2.1	3.6	SS-2	67	32	16	11	21	20	36	21	15	19	A-6a (3)
NORTHING= 380228	3.6	5.1	SS-3	67				SAME AS SS-2					23	A-6a (VISUAL)
EASTING= 1526646	5.1	6.6	SS-4	80				SAME AS SS-2					24	A-6a (VISUAL)
	6.6	8.1	SS-5	80				SAME AS SS-2					29	A-6a (VISUAL)
	8.1	9.6	SS-6	100	4	4	13	32	47	43	20	23	37	A-7-6 (14)
B-055-0-07	0.0	1.5	SS-1	80				SAME AS SS-2					12	A-6a (VISUAL)
STA. 215+52, 62' RT.	1.5	3.0	SS-2	80	12	11	16	31	32	33	19	14	12	A-6a (7)
NORTHING= 380075	3.0	4.5	SS-3	100				SAME AS SS-4					28	A-6b (VISUAL)
EASTING= 1526967	4.5	6.0	SS-4	80	2	4	10	26	58	38	19	19	20	A-6b (12)
	6.0	7.5	SS-5	100				SAME AS SS-4					15	A-6b (VISUAL)
	7.5	9.0	SS-6	100				SAME AS SS-4					16	A-6b (VISUAL)
B-056-0-07	0.9	2.4	SS-1	100									3	A-2-6 (VISUAL)
STA. 219+78, 30' LT.	2.4	3.9	SS-2	80	24	8	10	24	34	33	17	16	14	A-6b (7)
NORTHING= 380172	3.9	5.4	SS-3	100	4	6	18	27	45	32	16	16	16	A-6b (10)
EASTING= 1527393	5.4	6.9	SS-4	100				SAME AS SS-3					17	A-6b (VISUAL)
	6.9	8.4	SS-5	100				SAME AS SS-3					17	A-6b (VISUAL)
	8.4	9.9	SS-6	100				SAME AS SS-3					20	A-6b (VISUAL)
B-057-0-07	0.0	1.5	SS-1	80	19	6	16	25	34	35	17	18	18	A-6b (8)
STA. 222+70, 1' LT.	1.5	3.0	SS-2	87	2	4	20	33	41	36	16	20	18	A-6b (12)
NORTHING= 380140	3.0	4.5	SS-3	93				SAME AS SS-3					20	A-6b (VISUAL)
EASTING= 1527685	4.5	6.0	SS-4	100				SAME AS SS-3					18	A-6b (VISUAL)
	6.0	7.5	SS-5	83				SAME AS SS-3					23	A-6b (VISUAL)
	7.5	9.0	SS-6	87	2	4	15	32	47	38	17	21	19	A-6b (12)
B-058-0-07	1.0	2.5	SS-1	87	47	14	7	16	16	24	15	9	9	A-2-4 (0)
STA. 227+78,30' RT.	2.5	4.0	SS-2	100	10	9	11	30	40	27	15	12	15	A-6a (8)
NORTHING= 380106	4.0	5.5	SS-3	67				SAME AS SS-2					12	A-6a (VISUAL)
EASTING= 1528193	5.5	7.0	SS-4	80	37	23	5	16	18	27	15	12	13	A-2-6 (0)
	7.0	8.5	SS-5	67				SAME AS SS-6					18	A-6a (VISUAL)
	8.5	10.0	SS-6	87	20	5	10	28	37	30	15	15	18	A-6a (8)
B-059-0-07	1.4	2.9	SS-1	100				SAME AS SS-2					16	A-6a (VISUAL)
STA. 231+78, 30' LT.	2.9	4.4	SS-2	93	5	6	11	33	45	29	15	14	13	A-6a (10)
NORTHING= 380163	4.4	5.9	SS-3	47				SAME AS SS-2					11	A-6a (VISUAL)
EASTING= 1528593	5.9	7.4	SS-4	93				SAME AS SS-5					14	A-6a (VISUAL)
	7.4	8.9	SS-5	100	8	8	11	33	40	29	16	13	14	A-6a (9)
	8.9	10.4	SS-6	93				SAME AS SS-5					15	A-6a (VISUAL)
B-060-0-07	0.6	2.2	SS-1	87	81	10	2	4	3	NP	NP	NP	11	A-1-a (0)
STA. 235+78, 30' RT.	2.2	3.7	SS-2	73	5	9	11	30	45	27	16	11	13	A-6a (8)
NORTHING= 380100	3.7	5.2	SS-3	87				SAME AS SS-2					13	A-6a (VISUAL)
EASTING= 1528993	5.2	6.7	SS-4	100	10	10	11	25	45	29	16	13	12	A-6a (8)
	6.7	8.2	SS-5	67				SAME AS SS-4					14	A-6a (VISUAL)
	8.2	9.7	SS-6	80				SAME AS SS-4					15	A-6a (VISUAL)
B-061-0-07	0.0	1.5	SS-1	100	4	6	23	26	42	37	16	21	21	A-6b (11)
STA. 241+01, 2' LT.	1.5	3.0	SS-2	100	5	5	16	32	42	32	16	16	19	A-6b (10)
NORTHING= 380128	3.0	4.5	SS-3	93	4	5	12	31	49	35	17	18	18	A-6b (11)
EASTING= 1529518	4.5	6.0	SS-4	80				SAME AS SS-3					16	A-6b (VISUAL)
	6.0	7.5	SS-5	100				SAME AS SS-3					16	A-6b (VISUAL)
	7.5	9.0	SS-6	93				SAME AS SS-3					16	A-6b (VISUAL)

SUMMARY OF SOIL TEST DATA
INTERSTATE 75 MAINLINE - CONTINUED

EXPLORATION NO., STATION & OFFSET	FROM	TO	SAMPLE ID	% REC	% AGG	% CS	% FS	% SILT	% CLAY	LL	PL	PI	% WC	ODOT CLASS
B-064-0-07	1.4	2.9	SS-1	100	10	7	11	31	41	30	16	14	16	A-6a (9)
STA. 248+17, 20' RT.	2.9	4.4	SS-2	67				SAME AS SS-1					18	A-6a (VISUAL)
NORTHING= 380189	4.4	5.9	SS-3	93				SAME AS SS-5					17	A-6b (VISUAL)
EASTING= 1530230	5.9	7.4	SS-4	47				SAME AS SS-5					17	A-6b (VISUAL)
	7.4	8.9	SS-5	100	4	5	14	31	46	35	18	17	18	A-6b (11)
	8.9	10.4	SS-6	93				SAME AS SS-5					23	A-6b (VISUAL)
B-062-0-07	0.0	1.5	SS-1	80				SAME AS SS-2					13	A-6a (VISUAL)
STA. 249+10, 145' RT.	1.5	3.0	SS-2	67	27	18	11	20	24	32	18	14	15	A-6a (3)
NORTHING= 380096	3.0	4.5	SS-3	33				SAME AS SS-2					28	A-6a (VISUAL)
EASTING= 1530357	4.5	6.0	SS-4	73	4	6	12	30	48	32	18	14	19	A-6a (10)
	6.0	7.5	SS-5	73				SAME AS SS-4					17	A-6a (VISUAL)
	7.5	9.0	SS-6	100				SAME AS SS-4					17	A-6a (VISUAL)
B-054-1-08	1.0	2.5	SS-1	87	1	5	12	40	42	35	16	19	18	A-6b (12)
STA. 252+15, 25' RT.	3.5	5.0	SS-2	73				SAME AS SS-1					16	A-6b (VISUAL)
NORTHING= 380321	6.0	7.5	SS-3	100	3	6	12	41	38	31	16	15	15	A-6a (10)
EASTING= 1530609	8.5	10.0	SS-4	47				SAME AS SS-3					14	A-6a (VISUAL)
B-063-0-07	1.5	3.0	SS-1	7				SAME AS SS-2					20	A-6a (VISUAL)
STA. 252+81, 169' RT.	3.0	4.5	SS-2	87	1	4	18	29	48	32	17	15	15	A-6a (10)
NORTHING= 380221	4.5	6.0	SS-3	100				SAME AS SS-2					16	A-6a (VISUAL)
EASTING= 1530734	6.0	7.5	SS-4	100	4	7	11	32	45	31	17	14	16	A-6a (10)
	7.5	9.0	SS-5	73				SAME AS SS-4					16	A-6a (VISUAL)
	9.0	10.5	SS-6	47				SAME AS SS-4					16	A-6a (VISUAL)
B-054-0-08	2.5	4.0	SS-1	87	3	7	12	39	39	33	16	17	15	A-6b (11)
STA. 255+45, 83' RT.	5.0	6.5	SS-2	100	5	5	14	35	41	42	19	23	23	A-7-6 (14)
NORTHING= 380435	7.5	9.0	SS-3	100	5	5	11	38	41	33	18	15	18	A-6a (10)
EASTING= 1530932	10.0	11.5	SS-4	100				SAME AS SS-3					17	A-6a (VISUAL)
B-054-2-08	1.0	2.5	SS-1	40				SAME AS SS-2					18	A-6a (VISUAL)
STA. 256+02, 1' RT.	3.5	5.0	SS-2	80	4	6	12	38	40	33	18	15	15	A-6a (10)
NORTHING= 380535	6.0	7.5	SS-3	100				SAME AS SS-2					17	A-6a (VISUAL)
EASTING= 1530936	8.5	10.0	SS-4	100	3	7	12	41	37	29	15	14	16	A-6a (10)
B-065-0-07	0.0	1.5	SS-1	73	44	22	10	12	12	28	19	9	5	A-2-4 (0)
STA. 256+86, 84' RT.	1.5	3.0	SS-2	80	5	8	12	33	43	29	16	13	16	A-6a (9)
NORTHING=380517	3.0	4.5	SS-3	100				SAME AS SS-2					16	A-6a (VISUAL)
EASTING= 1531052	4.5	6.0	SS-4	67				SAME AS SS-2					16	A-6a (VISUAL)
	6.0	7.5	SS-5	100				SAME AS SS-2					16	A-6a (VISUAL)
	7.5	9.0	SS-6	100				SAME AS SS-2					17	A-6a (VISUAL)
B-055-0-08	2.5	4.0	SS-1	100	4	6	11	41	38	31	17	14	16	A-6a (10)
STA. 259+37, 97' RT.	5.0	6.5	SS-2	100				SAME AS SS-1					17	A-6a (VISUAL)
NORTHING= 380675	7.5	9.0	SS-3	100	5	6	11	47	31	30	15	15	18	A-6a (10)
EASTING= 1531261	10.0	11.5	SS-4	100				SAME AS SS-3					20	A-6a (VISUAL)
B-056-1-08	1.0	2.5	SS-1	67	9	6	11	37	37	29	13	16	14	A-6b (10)
STA. 259+96, 3' RT.	3.5	5.0	SS-2	73				SAME AS SS-3					16	A-6a (VISUAL)
NORTHING= 380784	6.0	7.5	SS-3	100	9	6	11	41	33	27	14	13	16	A-6a (9)
EASTING= 1531240	8.5	10.0	SS-4	80				SAME AS SS-3					16	A-6a (VISUAL)
B-066-0-07	0.0	1.5	SS-1	100	24	9	13	23	30	33	18	15	13	A-6a (6)
STA. 260+08, 221' RT.	1.5	3.0	SS-2	67	29	6	9	22	34	37	18	19	19	A-6b (8)
NORTHING= 380638	3.0	4.5	SS-3	100				SAME AS SS-2					29	A-6b (VISUAL)
EASTING= 1531402	4.5	6.0	SS-4	80				SAME AS SS-6					29	A-7-6 (VISUAL)
	6.0	7.5	SS-5	73				SAME AS SS-6					29	A-7-6 (VISUAL)
	7.5	9.0	SS-6	100	0	1	7	28	64	61	20	41	27	A-7-6 (20)
B-067-0-07	1.5	3.0	SS-1	100	20	4	8	25	44	38	20	18	13	A-6b (10)
STA. 262+85, 197' RT.	3.0	4.5	SS-2	100	4	8	12	32	46	31	17	14	15	A-6a (10)
NORTHING= 380879	4.5	6.0	SS-3	67				SAME AS SS-2					16	A-6a (VISUAL)
EASTING= 1531585	6.0	7.5	SS-4	87				SAME AS SS-2					15	A-6a (VISUAL)
	7.5	9.0	SS-5	100				SAME AS SS-2					15	A-6a (VISUAL)
	9.0	10.5	SS-6	27				SAME AS SS-2					14	A-6a (VISUAL)

DRAWN MJ
CHECKED RJK

SOIL PROFILE

SUMMARY OF SOIL TEST DATA

ALL-75-0.21

6 / 90

156 / 157

V:\1755\active\175530002\geotechnical\drawing\ODOTSubmittal\projects\ALL\76691\roadway\sheets\76691D004.dgn

SUMMARY OF SOIL TEST DATA
INTERSTATE 75 MAINLINE - CONTINUED

EXPLORATION NO., STATION & OFFSET	FROM TO	SAMPLE ID	% REC	% AGG	% CS	% FS	% SILT	% CLAY	LL	PL	PI	% WC	ODOT CLASS
B-056-0-08	2.5 - 4.0	SS-1	100	7	7	11	41	34	32	17	15	18	A-6a (10)
STA. 263+08, 89' RT.	5.0 - 6.5	SS-2	67				SAME AS SS-1					15	A-6a (VISUAL)
NORTHING= 380965	7.5 - 9.0	SS-3	87				SAME AS SS-1					17	A-6a (VISUAL)
EASTING= 153515	10.0 - 11.5	SS-4	100	5	5	11	44	35	28	13	15	16	A-6a (10)
B-056-2-08	1.0 - 2.5	SS-1	67	3	6	12	41	38	32	18	14	15	A-6a (10)
STA. 263+93, 2' RT.	3.5 - 5.0	SS-2	73				SAME AS SS-1					15	A-6a (VISUAL)
NORTHING= 381087	6.0 - 7.5	SS-3	80				SAME AS SS-4					16	A-6a (VISUAL)
EASTING= 1531498	8.5 - 10.0	SS-4	100	4	6	12	41	37	25	13	12	16	A-6a (9)
B-068-0-07	0.0 - 1.5	SS-1	100	25	7	10	23	36	40	18	22	19	A-6b (10)
STA. 265+57, 149' RT.	1.5 - 3.0	SS-2	100	4	5	11	34	47	35	17	18	15	A-6b (11)
NORTHING= 381146	3.0 - 4.5	SS-3	100				SAME AS SS-4					16	A-6a (VISUAL)
EASTING= 1531713	4.5 - 6.0	SS-4	100	9	6	11	32	42	32	17	15	16	A-6a (10)
	6.0 - 7.5	SS-5	93				SAME AS SS-4					15	A-6a (VISUAL)
	7.5 - 9.0	SS-6	73				SAME AS SS-4					16	A-6a (VISUAL)
B-056-3-08	1.0 - 2.5	SS-1	47				SAME AS SS-2					14	A-6b (VISUAL)
STA. 267+98, 3' RT.	3.5 - 5.0	SS-2	53	2	5	11	40	42	37	17	20	14	A-6b (12)
NORTHING= 381435	6.0 - 7.5	SS-3	100				SAME AS SS-2					16	A-6b (VISUAL)
EASTING= 1531704	8.5 - 10.0	SS-4	100	3	6	11	39	41	31	16	15	16	A-6a (10)
B-069-0-07	1.0 - 2.5	SS-1	87				SAME AS SS-2					18	A-7-6 (VISUAL)
STA. 268+96, 75' RT.	2.5 - 4.0	SS-2	73	2	5	10	28	56	50	19	31	24	A-7-6 (18)
NORTHING= 381496	4.0 - 5.5	SS-3	53				SAME AS SS-4					28	A-6b (VISUAL)
EASTING= 1531810	5.5 - 7.0	SS-4	100	3	5	11	33	48	38	19	19	29	A-6b (12)
	7.0 - 8.5	SS-5	83				SAME AS SS-4					17	A-6b (VISUAL)
	8.5 - 10.0	SS-6	100	9	7	12	33	39	30	17	13	16	A-6a (9)
B-062-0-08	2.5 - 4.0	SS-1	100	7	7	12	38	36	29	14	15	16	A-6a (10)*
STA. 270+53, 22' RT.	5.0 - 6.5	SS-2	100				SAME AS SS-1					16	A-6a (VISUAL)
NORTHING= 381664	7.5 - 9.0	SS-3	100	5	6	11	38	40	30	16	14	16	A-6a (10)
EASTING= 1531818	10.0 - 11.5	SS-4	100				SAME AS SS-3					16	A-6a (VISUAL)
B-070-0-07	1.1 - 2.6	SS-1	80	19	9	10	26	37	31	18	13	16	A-6a (7)*
STA. 272+57, 87' RT.	2.6 - 4.1	SS-2	100	5	6	11	32	47	33	18	15	15	A-6a (10)*
NORTHING= 381846	4.1 - 5.6	SS-3	93				SAME AS SS-2					16	A-6a (VISUAL)
EASTING= 1531940	5.6 - 7.1	SS-4	100				SAME AS SS-2					16	A-6a (VISUAL)
	7.1 - 8.6	SS-5	53				SAME AS SS-2					16	A-6a (VISUAL)
	8.6 - 10.1	SS-6	7				SAME AS SS-2					16	A-6a (VISUAL)
B-071-0-07	0.0 - 1.5	SS-1	93				SAME AS SS-2					11	A-6b (VISUAL)*
STA. 275+39, 44' LT.	1.5 - 3.0	SS-2	87	16	8	12	27	37	37	19	18	18	A-6b (9)*
NORTHING= 382150	3.0 - 4.5	SS-3	93	3	6	10	33	47	33	18	15	16	A-6a (10)
EASTING= 1531864	4.5 - 6.0	SS-4	93				SAME AS SS-3					13	A-6a (VISUAL)
	6.0 - 7.5	SS-5	93				SAME AS SS-3					16	A-6a (VISUAL)
	7.5 - 9.0	SS-6	73				SAME AS SS-3					16	A-6a (VISUAL)
B-072-0-07	0.0 - 1.5	SS-1	100	27	11	12	20	30	35	18	17	15	A-6b (5)*
STA. 280+50, 20' RT.	1.5 - 3.0	SS-2	93	1	3	14	36	46	38	20	18	20	A-6b (11)*
NORTHING= 382653	3.0 - 4.5	SS-3	80				SAME AS SS-2					25	A-6b (VISUAL)
EASTING= 1531953	4.5 - 6.0	SS-4	0				SAME AS SS-2					-	A-6b (VISUAL)
	6.0 - 7.5	SS-5	80				SAME AS SS-2					22	A-6b (VISUAL)
	7.5 - 9.0	SS-6	100	6	5	10	33	45	37	17	20	20	A-6b (12)
B-073-0-07	2.3 - 3.8	SS-1	87	3	6	10	37	45	30	17	13	15	A-6a (9)*
STA. 284+45, 30' RT.	3.8 - 5.3	SS-2	100	3	6	11	32	48	30	17	13	16	A-6a (9)
NORTHING= 383048	5.3 - 6.8	SS-3	67				SAME AS SS-5					7	A-2-6 (VISUAL)
EASTING= 1531970	6.8 - 8.3	SS-4	7				SAME AS SS-5					12	A-2-6 (VISUAL)
	8.3 - 9.8	SS-5	100	12	59	12	10	8	37	19	18	16	A-2-6 (0)
	9.8 - 11.3	SS-6	93				SAME AS SS-5					16	A-2-6 (VISUAL)

SUMMARY OF SOIL TEST DATA
INTERSTATE 75 MAINLINE - CONTINUED

EXPLORATION NO., STATION & OFFSET	FROM TO	SAMPLE ID	% REC	% AGG	% CS	% FS	% SILT	% CLAY	LL	PL	PI	% WC	ODOT CLASS
B-074-0-07	1.5 - 3.0	SS-1	87	5	4	16	32	44	34	19	15	20	A-6a (10)*
STA. 288+45, 30' LT.	3.0 - 4.5	SS-2	100	6	5	12	34	43	37	19	18	21	A-6b (11)*
NORTHING= 383449	4.5 - 6.0	SS-3	93	7	9	12	28	44	41	19	22	24	A-7-6 (12)
EASTING= 1531917	6.0 - 7.5	SS-4	87				SAME AS SS-3					26	A-7-6 (VISUAL)
	7.5 - 9.0	SS-5	100				SAME AS SS-3					35	A-7-6 (VISUAL)
	9.0 - 10.5	SS-6	7				SAME AS SS-3					18	A-7-6 (VISUAL)
B-075-0-07	0.0 - 1.5	SS-1	2				SAME AS SS-2					13	A-6b (VISUAL)*
STA. 291+55, 68' RT.	1.5 - 3.0	SS-2	73	4	7	12	34	44	39	21	18	30	A-6b (11)
NORTHING= 383758	3.0 - 4.5	SS-3	80	1	8	13	34	44	40	18	22	23	A-6b (13)
EASTING= 1532020	4.5 - 6.0	SS-4	67				SAME AS SS-3					20	A-6b (VISUAL)
	6.0 - 7.5	SS-5	100				SAME AS SS-3					14	A-6b (VISUAL)
	7.5 - 9.0	SS-6	100				SAME AS SS-3					17	A-6b (VISUAL)
B-076-0-07	0.0 - 1.5	SS-1	0				SAME AS SS-3					-	A-6b (VISUAL)*
STA. 295+53, 62' LT.	1.5 - 3.0	SS-2	53				SAME AS SS-3					19	A-6b (VISUAL)*
NORTHING= 384158	3.0 - 4.5	SS-3	80	4	4	10	35	47	37	18	19	17	A-6b (12)
EASTING= 1531896	4.5 - 6.0	SS-4	93	6	5	10	31	47	33	19	14	17	A-6a (10)
	6.0 - 7.5	SS-5	73				SAME AS SS-4					16	A-6a (VISUAL)
	7.5 - 9.0	SS-6	100	4	5	10	32	48	31	18	13	16	A-6a (9)
B-077-0-07	0.0 - 1.5	SS-1	100	6	6	11	34	44	36	18	18	13	A-6b (11)
STA. 300+51, 5' RT.	1.5 - 3.0	SS-2	100	5	5	11	34	46	32	17	15	14	A-6a (10)
NORTHING= 384655	3.0 - 4.5	SS-3	100				SAME AS SS-2					16	A-6a (VISUAL)
EASTING= 1531972	4.5 - 6.0	SS-4	100				SAME AS SS-2					13	A-6a (VISUAL)
	6.0 - 7.5	SS-5	100	4	5	11	36	44	31	16	15	16	A-6a (10)
	7.5 - 9.0	SS-6	100				SAME AS SS-5					15	A-6a (VISUAL)
B-078-0-07	1.0 - 2.5	SS-1	87				SAME AS SS-2					18	A-6a (VISUAL)*
STA. 304+45, 30' RT.	2.5 - 4.0	SS-2	67	8	6	13	35	38	28	17	11	15	A-6a (8)
NORTHING= 385048	4.0 - 5.5	SS-3	87	3	6	11	37	43	29	17	12	16	A-6a (9)
EASTING= 1532003	5.5 - 7.0	SS-4	80				SAME AS SS-3					16	A-6a (VISUAL)
	7.0 - 8.5	SS-5	1				SAME AS SS-3					3	A-6a (VISUAL)
	8.5 - 10.0	SS-6	73				SAME AS SS-3					16	A-6a (VISUAL)
B-079-0-07	1.4 - 2.9	SS-1	93	4	10	17	33	36	28	16	12	17	A-6a (8)
STA. 308+45, 30' LT.	2.9 - 4.4	SS-2	87	3	6	15	34	43	39	19	20	24	A-6b (12)
NORTHING= 385449	4.4 - 5.9	SS-3	93				SAME AS SS-2					24	A-6b (VISUAL)
EASTING= 1531950	5.9 - 7.4	SS-4	100				SAME AS SS-6					20	A-6a (VISUAL)
	7.4 - 8.9	SS-5	87				SAME AS SS-6					22	A-6a (VISUAL)
	8.9 - 10.4	SS-6	100	5	5	12	39	40	29	18	11	16	A-6a (8)
B-080-0-07	2.1 - 3.6	SS-1	100	4	7	14	33	43	31	18	13	14	A-6a (9)*
STA. 312+45, 30' RT.	3.6 - 5.1	SS-2	100	2	6	13	35	44	29	17	12	15	A-6a (9)
NORTHING= 385848	5.1 - 6.6	SS-3	100				SAME AS SS-2					16	A-6a (VISUAL)
EASTING= 1532017	6.6 - 8.1	SS-4	100				SAME AS SS-2					18	A-6a (VISUAL)
	8.1 - 9.6	SS-5	87				SAME AS SS-2					18	A-6a (VISUAL)
	9.6 - 11.1	SS-6	100				SAME AS SS-2					14	A-6a (VISUAL)
B-081-0-07	0.0 - 1.5	SS-1	100	5	5	15	35	42	36	18	18	13	A-6b (11)*
STA. 316+45, 30' LT.	1.5 - 3.0	SS-2	93	1	3	15	33	49	39	21	18	21	A-6b (11)*
NORTHING= 386249	3.0 - 4.5	SS-3	100	1	2	10	26	60	48	18	30	23	A-7-6 (18)
EASTING= 1531964	4.5 - 6.0	SS-4	87				SAME AS SS-3					19	A-7-6 (VISUAL)
	6.0 - 7.5	SS-5	93				SAME AS SS-3					24	A-7-6 (VISUAL)
	7.5 - 9.0	SS-6	100				SAME AS SS-3					17	A-7-6 (VISUAL)
B-082-0-07	0.0 - 1.5	SS-1	87	49	18	9	12	12	23	16	7	15	A-2-4 (0)*
STA. 321+34, 59' RT.	1.5 - 3.0	SS-2	100	5	7	12	34	43	26	17	9	15	A-4a (8)*
NORTHING= 386737	3.0 - 4.5	SS-3	100				SAME AS SS-2					16	A-4a (VISUAL)
EASTING= 1532060	4.5 - 6.0	SS-4	80				SAME AS SS-2					16	A-4a (VISUAL)
	6.0 - 7.5	SS-5	100				SAME AS SS-2					16	A-4a (VISUAL)
	7.5 - 9.0	SS-6	67				SAME AS SS-2					14	A-4a (VISUAL)

DRAWN MJ CHECKED RJK

SOIL PROFILE

SUMMARY OF SOIL TEST DATA

ALL-75-0.21

7 / 90

7 / 157

V:\1755\active\175530002\geotechnical\drawing\ODOTSubmittal\projects\ALL\76691\roadway\sheets\766911D005.dgn

SUMMARY OF SOIL TEST DATA
INTERSTATE 75 MAINLINE - CONTINUED

EXPLORATION NO., STATION & OFFSET	FROM TO	SAMPLE ID	% REC	% AGG	% CS	% FS	% SILT	% CLAY	LL	PL	PI	% WC	ODOT CLASS
B-083-0-07	0.8 - 2.3	SS-1	33	72	15	4	6	3	NP	NP	NP	20	A-1-a (0)*
STA. 323+95, 15' RT.	2.3 - 3.8	SS-2	73	3	5	13	31	48	36	19	17	20	A-6b (11)
NORTHING= 386998	3.8 - 5.3	SS-3	63				SAME AS SS-2					16	A-6b (VISUAL)
EASTING= 1532021	5.3 - 6.8	SS-4	93				SAME AS SS-2					16	A-6b (VISUAL)
	6.8 - 8.3	SS-5	80				SAME AS SS-2					17	A-6b (VISUAL)
	8.3 - 9.8	SS-6	100				SAME AS SS-2					17	A-6b (VISUAL)
B-084-0-07	1.5 - 3.0	SS-1	100	3	4	9	50	35	24	17	7	17	A-4b (8)*
STA. 327+95, 15' LT.	3.0 - 4.5	SS-2	100	4	6	12	39	39	26	17	9	16	A-4a (8)
NORTHING= 387399	4.5 - 6.0	SS-3	93	23	9	14	25	30	30	17	13	16	A-6a (5)
EASTING= 1531997	6.0 - 7.5	SS-4	100				SAME AS SS-3					18	A-6a (VISUAL)
	7.5 - 9.0	SS-5	93				SAME AS SS-3					16	A-6a (VISUAL)
	9.0 - 10.5	SS-6	87				SAME AS SS-3					16	A-6a (VISUAL)
B-085-0-07	1.5 - 3.0	SS-1	100	9	7	11	31	42	28	17	11	15	A-6a (8)*
STA. 331+95, 29' RT.	3.0 - 4.5	SS-2	100	4	7	13	35	43	29	17	12	15	A-6a (9)
NORTHING= 387798	4.5 - 6.0	SS-3	100				SAME AS SS-2					16	A-6a (VISUAL)
EASTING= 1532045	6.0 - 7.5	SS-4	87				SAME AS SS-2					16	A-6a (VISUAL)
	7.5 - 9.0	SS-5	67				SAME AS SS-2					18	A-6a (VISUAL)
	9.0 - 10.5	SS-6	80				SAME AS SS-2					17	A-6a (VISUAL)
B-086-0-07	0.0 - 1.5	SS-1	80	13	5	11	31	40	42	19	23	21	A-7-6 (13)*
STA. 335+70, 58' LT.	1.5 - 3.0	SS-2	93	4	6	12	32	45	32	18	14	16	A-6a (10)
NORTHING= 388173	3.0 - 4.5	SS-3	100				SAME AS SS-2					16	A-6a (VISUAL)
EASTING= 1531995	4.5 - 6.0	SS-4	100	5	6	13	35	40	29	17	12	17	A-6a (9)
	6.0 - 7.5	SS-5	100				SAME AS SS-4					16	A-6a (VISUAL)
	7.5 - 9.0	SS-6	100				SAME AS SS-4					16	A-6a (VISUAL)
B-087-0-07	1.3 - 2.8	SS-1	40	8	7	14	28	43	37	15	22	18	A-6b (12)
STA. 339+95, CENTERLINE	2.8 - 4.3	SS-2	73				SAME AS SS-1					27	A-6b (VISUAL)
NORTHING= 388598	4.3 - 5.8	SS-3	63				SAME AS SS-1					22	A-6b (VISUAL)
EASTING= 1532008	5.8 - 7.3	SS-4	27				SAME AS SS-1					19	A-6b (VISUAL)
	7.3 - 8.8	SS-5	80				SAME AS SS-1					16	A-6b (VISUAL)
	8.8 - 10.3	SS-6	100				SAME AS SS-1					15	A-6b (VISUAL)
B-088-0-07	0.0 - 1.5	SS-1	80	3	9	14	28	46	48	18	30	16	A-7-6 (17)*
STA. 344+14, 54' RT.	1.5 - 3.0	SS-2	63				SAME AS SS-1					17	A-7-6 (VISUAL)*
NORTHING= 389018	3.0 - 4.5	SS-3	73	7	19	49	12	13	22	17	5	24	A-3a (0)
EASTING= 1532058	4.5 - 6.0	SS-4	100				SAME AS SS-5					15	A-6a (VISUAL)
	6.0 - 7.5	SS-5	80	3	6	11	37	44	26	15	11	14	A-6a (8)
	7.5 - 9.0	SS-6	100				SAME AS SS-5					15	A-6a (VISUAL)
B-089-0-07	1.5 - 3.0	SS-1	60	28	17	18	18	19	26	16	10	16	A-4a (0)*
STA. 347+95, 15' LT.	3.0 - 4.5	SS-2	100	2	3	12	36	47	52	20	32	30	A-7-6 (18)
NORTHING= 389398	4.5 - 6.0	SS-3	80				SAME AS SS-2					26	A-7-6 (VISUAL)
EASTING= 1531985	6.0 - 7.5	SS-4	67				SAME AS SS-2					26	A-7-6 (VISUAL)
	7.5 - 9.0	SS-5	7				SAME AS SS-2					17	A-7-6 (VISUAL)
	9.0 - 10.5	SS-6	100	4	6	11	36	43	30	17	13	18	A-6a (9)
B-090-0-07	0.0 - 1.5	SS-1	67				SAME AS SS-2					13	A-6a (VISUAL)*
STA. 352+07, 69' RT.	1.5 - 3.0	SS-2	80	3	6	12	34	45	30	17	13	16	A-6a (9)*
NORTHING= 389811	3.0 - 4.5	SS-3	93				SAME AS SS-2					17	A-6a (VISUAL)
EASTING= 1532066	4.5 - 6.0	SS-4	80				SAME AS SS-2					17	A-6a (VISUAL)
	6.0 - 7.5	SS-5	100				SAME AS SS-2					17	A-6a (VISUAL)
	7.5 - 9.0	SS-6	93				SAME AS SS-2					17	A-6a (VISUAL)
B-091-0-07	0.0 - 1.5	SS-1	100	9	6	16	32	37	37	19	18	17	A-6b (10)*
STA. 355+58, 69' LT.	1.5 - 3.0	SS-2	87	2	4	14	38	41	36	21	15	20	A-6a (10)
NORTHING= 390162	3.0 - 4.5	SS-3	100	1	2	10	34	54	45	19	26	24	A-7-6 (15)
EASTING= 1531929	4.5 - 6.0	SS-4	100				SAME AS SS-3					26	A-7-6 (VISUAL)
	6.0 - 7.5	SS-5	100	3	4	11	31	50	43	19	24	21	A-7-6 (14)
	7.5 - 9.0	SS-6	100				SAME AS SS-5					21	A-7-6 (VISUAL)

SUMMARY OF SOIL TEST DATA
INTERSTATE 75 MAINLINE - CONTINUED

EXPLORATION NO., STATION & OFFSET	FROM TO	SAMPLE ID	% REC	% AGG	% CS	% FS	% SILT	% CLAY	LL	PL	PI	% WC	ODOT CLASS
B-092-0-07	1.4 - 2.9	SS-1	87	34	13	18	17	19	27	15	12	14	A-6a (1)
STA. 359+95, 1' LT.	2.9 - 4.4	SS-2	100	4	5	19	34	38	32	18	14	18	A-6a (9)
NORTHING= 390598	4.4 - 5.9	SS-3	40				SAME AS SS-4					20	A-6b (VISUAL)
EASTING= 1532003	5.9 - 7.4	SS-4	100	7	10	18	28	37	37	17	20	21	A-6b (10)
	7.4 - 8.9	SS-5	0				SAME AS SS-4					-	A-6b (VISUAL)
	8.9 - 10.4	SS-6	67				SAME AS SS-4					16	A-6b (VISUAL)
B-093-0-07	0.7 - 2.2	SS-1	20	69	19	5	5	2	NP	NP	NP	4	A-1-a (0)
STA. 363+95, 14' RT.	2.2 - 3.7	SS-2	80	6	5	4	66	18	22	14	8	14	A-4b (8)
NORTHING= 390998	3.7 - 5.2	SS-3	93				SAME AS SS-2					16	A-4b (VISUAL)
EASTING= 1532022	5.2 - 6.7	SS-4	53				SAME AS SS-2					14	A-4b (VISUAL)
	6.7 - 8.2	SS-5	93				SAME AS SS-2					16	A-4b (VISUAL)
	8.2 - 9.7	SS-6	87				SAME AS SS-2					14	A-4b (VISUAL)
B-094-0-07	1.0 - 2.5	SS-1	87				SAME AS SS-2					10	A-6a (VISUAL)
STA. 367+95, 16' LT.	2.5 - 4.0	SS-2	87	15	11	18	25	32	30	15	15	19	A-6a (6)
NORTHING= 391398	4.0 - 5.5	SS-3	93	8	9	21	27	36	33	17	16	19	A-6b (8)
EASTING= 1531997	5.5 - 7.0	SS-4	73				SAME AS SS-3					19	A-6b (VISUAL)
	7.0 - 8.5	SS-5	87				SAME AS SS-3					21	A-6b (VISUAL)
	8.5 - 10.0	SS-6	67	22	8	14	25	31	37	17	20	22	A-6b (8)
B-095-0-07	0.5 - 2.0	SS-1	100									4	A-1-b (VISUAL)
STA. 371+95, 29' RT.	2.0 - 3.5	SS-2	67	5	7	13	34	42	28	17	11	15	A-6a (8)
NORTHING= 391798	3.5 - 5.0	SS-3	100				SAME AS SS-2					18	A-6a (VISUAL)
EASTING= 1532047	5.0 - 6.5	SS-4	63				SAME AS SS-2					23	A-6a (VISUAL)
	6.5 - 8.0	SS-5	80				SAME AS SS-2					17	A-6a (VISUAL)
	8.0 - 9.5	SS-6	67				SAME AS SS-2					21	A-6a (VISUAL)
B-096-0-07	1.2 - 2.7	SS-1	100				SAME AS SS-3					14	A-6a (VISUAL)
STA. 375+95, 30' LT.	2.7 - 4.2	SS-2	47				SAME AS SS-3					15	A-6a (VISUAL)
NORTHING= 392198	4.2 - 5.7	SS-3	100	10	7	11	33	39	30	17	13	14	A-6a (9)
EASTING= 1531992	5.7 - 7.2	SS-4	80	5	6	13	33	43	29	16	13	16	A-6a (9)
	7.2 - 8.7	SS-5	100	8	6	14	33	39	29	16	13	16	A-6a (9)
	8.7 - 10.2	SS-6	93				SAME AS SS-5					15	A-6a (VISUAL)
B-097-0-07	1.5 - 3.0	SS-1	40	30	14	13	19	25	28	15	13	10	A-6a (3)
STA. 380+21, 29' RT.	3.0 - 4.5	SS-2	100	5	6	14	35	41	29	17	12	11	A-6a (9)
NORTHING= 392624	4.5 - 6.0	SS-3	100				SAME AS SS-2					15	A-6a (VISUAL)
EASTING= 1532057	6.0 - 7.5	SS-4	87				SAME AS SS-2					17	A-6a (VISUAL)
	7.5 - 9.0	SS-5	100				SAME AS SS-2					22	A-6a (VISUAL)
	9.0 - 10.5	SS-6	80				SAME AS SS-2					21	A-6a (VISUAL)
B-098-0-07	0.8 - 2.3	SS-1	20									3	A-1-b (VISUAL)*
STA. 383+95, 14' RT.	2.3 - 3.8	SS-2	47				SAME AS SS-4					16	A-6a (VISUAL)*
NORTHING= 392998	3.8 - 5.3	SS-3	47				SAME AS SS-4					21	A-6a (VISUAL)
EASTING= 1532046	5.3 - 6.8	SS-4	87	4	8	12	4	72	29	17	12	17	A-6a (9)
	6.8 - 8.3	SS-5	20				SAME AS SS-4					17	A-6a (VISUAL)
	8.3 - 9.8	SS-6	87	6	7	12	33	43	29	17	12	19	A-6a (9)
B-099-0-07	1.5 - 3.0	SS-1	73	14	29	14	22	22	26	16	10	15	A-4a (2)*
STA. 387+95, 16' LT.	3.0 - 4.5	SS-2	100				SAME AS SS-1					15	A-4a (VISUAL)
NORTHING= 393398	4.5 - 6.0	SS-3	80				SAME AS SS-1					16	A-4a (VISUAL)
EASTING= 1532021	6.0 - 7.5	SS-4	93				SAME AS SS-1					19	A-4a (VISUAL)
	7.5 - 9.0	SS-5	100				SAME AS SS-6					18	A-4a (VISUAL)
	9.0 - 10.5	SS-6	100	6	7	13	35	40	27	17	10	14	A-4a (8)
B-100-0-07	0.0 - 1.5	SS-1	93	21	14	12	25	28	33	18	15	16	A-6a (6)
STA. 392+70, 66' RT.	1.5 - 3.0	SS-2	100	5	9	13	33	41	32	17	15	16	A-6a (10)
NORTHING= 393872	3.0 - 4.5	SS-3	87				SAME AS SS-2					15	A-6a (VISUAL)
EASTING= 1532109	4.5 - 6.0	SS-4	87				SAME AS SS-2					17	A-6a (VISUAL)
	6.0 - 7.5	SS-5	40				SAME AS SS-2					16	A-6a (VISUAL)
	7.5 - 9.0	SS-6	0				SAME AS SS-2					-	A-6a (VISUAL)

DRAWN MJ
CHECKED RJK

SOIL PROFILE

SUMMARY OF SOIL TEST DATA

ALL-75-0.21

V:\1755\active\175530002\geotechnical\drawing\ODOTSubmittal\projects\ALL\76691\roadway\sheets\76691ID006.dgn

SUMMARY OF SOIL TEST DATA
INTERSTATE 75 MAINLINE - CONTINUED

EXPLORATION NO., STATION & OFFSET	FROM	TO	SAMPLE ID	% REC	% AGG	% CS	% FS	% SILT	% CLAY	LL	PL	PI	% WC	ODOT CLASS
B-101-0-07	0.0	1.5	SS-1	87	46	8	8	18	21	29	17	12	19	A-6a (1)*
STA. 395+27, 48' LT.	1.5	3.0	SS-2	100	7	7	15	31	41	25	15	10	15	A-4a (7)
NORTHING= 394131	3.0	4.5	SS-3	93				SAME AS SS-2					17	A-4a (VISUAL)
EASTING= 1531997	4.5	6.0	SS-4	100				SAME AS SS-2					16	A-4a (VISUAL)
	6.0	7.5	SS-5	47				SAME AS SS-2					16	A-4a (VISUAL)
	7.5	9.0	SS-6	100				SAME AS SS-2					17	A-4a (VISUAL)
B-102-0-07	1.7	3.2	SS-1	73				SAME AS SS-2					17	A-6b (VISUAL)*
STA. 399+82, CENTERLINE	3.2	4.7	SS-2	100	2	6	11	28	54	38	19	19	24	A-6b (12)
NORTHING= 394585	4.7	6.2	SS-3	100				SAME AS SS-2					15	A-6b (VISUAL)
EASTING= 1532052	6.2	7.7	SS-4	100				SAME AS SS-2					15	A-6b (VISUAL)
	7.7	9.2	SS-5	100				SAME AS SS-2					15	A-6b (VISUAL)
	9.2	10.7	SS-6	87				SAME AS SS-2					17	A-6b (VISUAL)
B-103-0-07	1.5	3.0	SS-1	93	2	5	12	33	49	35	18	17	15	A-6b (11)*
STA. 403+82, 14' RT.	3.0	4.5	SS-2	87				SAME AS SS-1					23	A-6b (VISUAL)
NORTHING= 394985	4.5	6.0	SS-3	93				SAME AS SS-1					22	A-6b (VISUAL)
EASTING= 1532074	6.0	7.5	SS-4	100				SAME AS SS-1					23	A-6b (VISUAL)
	7.5	9.0	SS-5	100				SAME AS SS-1					19	A-6b (VISUAL)
	9.0	10.5	SS-6	87				SAME AS SS-1					18	A-6b (VISUAL)
B-104-0-07	1.8	3.3	SS-1	100	4	5	13	34	44	28	18	10	14	A-6a (8)*
STA. 407+82, 15' LT.	3.3	4.8	SS-2	73	3	8	12	33	43	29	18	11	16	A-6a (8)
NORTHING= 395385	4.8	6.3	SS-3	93				SAME AS SS-2					15	A-6a (VISUAL)
EASTING= 1532052	6.3	7.8	SS-4	80				SAME AS SS-2					16	A-6a (VISUAL)
	7.8	9.3	SS-5	100				SAME AS SS-2					16	A-6a (VISUAL)
	9.3	10.8	SS-6	100				SAME AS SS-2					15	A-6a (VISUAL)
B-105-0-07	0.9	2.4	SS-1	73	69	18	5	5	3	NP	NP	NP	5	A-1-a (0)*
STA. 411+82, 30' RT.	2.4	3.9	SS-2	0				SAME AS SS-1					-	A-1-a (VISUAL)*
NORTHING= 395784	3.9	5.4	SS-3	47	11	6	11	31	41	33	17	16	21	A-6b (10)
EASTING= 1532104	5.4	6.9	SS-4	80				SAME AS SS-3					26	A-6b (VISUAL)
	6.9	8.4	SS-5	100				SAME AS SS-3					25	A-6b (VISUAL)
	8.4	9.9	SS-6	87				SAME AS SS-3					27	A-6b (VISUAL)
B-106-0-07	0.0	1.5	SS-1	100	16	7	12	26	39	32	18	14	11	A-6a (8)*
STA. 415+22, 49' LT.	1.5	3.0	SS-2	93	7	7	13	31	42	33	18	15	16	A-6a (10)*
NORTHING= 396126	3.0	4.5	SS-3	100				SAME AS SS-2					15	A-6a (VISUAL)
EASTING= 1532032	4.5	6.0	SS-4	100				SAME AS SS-2					16	A-6a (VISUAL)
	6.0	7.5	SS-5	87				SAME AS SS-2					15	A-6a (VISUAL)
	7.5	9.0	SS-6	100				SAME AS SS-2					15	A-6a (VISUAL)
B-107-0-07	1.5	3.0	SS-1	1				SAME AS SS-2					11	A-6a (VISUAL)
STA. 419+82, CENTERLINE	3.0	4.5	SS-2	47	19	8	13	26	33	29	16	13	13	A-6a (6)
NORTHING= 396585	4.5	6.0	SS-3	100				SAME AS SS-2					16	A-6a (VISUAL)
EASTING= 1532089	6.0	7.5	SS-4	100				SAME AS SS-2					15	A-6a (VISUAL)
	7.5	9.0	SS-5	100				SAME AS SS-2					16	A-6a (VISUAL)
	9.0	10.5	SS-6	67				SAME AS SS-2					19	A-6a (VISUAL)
B-108-0-07	0.8	2.3	SS-1	87	66	19	4	6	5	20	15	5	5	A-1-a (0)
STA. 423+82, 15' RT.	2.3	3.8	SS-2	93	3	6	12	35	44	31	17	14	15	A-6a (10)
NORTHING= 396984	3.8	5.3	SS-3	100				SAME AS SS-2					16	A-6a (VISUAL)
EASTING= 1532111	5.3	6.8	SS-4	100				SAME AS SS-2					15	A-6a (VISUAL)
	6.8	8.3	SS-5	73				SAME AS SS-2					15	A-6a (VISUAL)
	8.3	9.8	SS-6	100				SAME AS SS-2					15	A-6a (VISUAL)
B-109-0-07	0.9	2.4	SS-1	100	78	12	3	4	3	NP	NP	NP	14	A-1-a (0)
STA. 426+77, 15' LT.	2.4	3.9	SS-2	87	5	6	13	32	44	32	18	14	16	A-6a (10)
NORTHING= 397280	3.9	5.4	SS-3	100				SAME AS SS-2					16	A-6a (VISUAL)
EASTING= 1532086	5.4	6.9	SS-4	87				SAME AS SS-2					14	A-6a (VISUAL)
	6.9	8.4	SS-5	93				SAME AS SS-2					22	A-6a (VISUAL)
	8.4	9.9	SS-6	100				SAME AS SS-2					17	A-6a (VISUAL)

SUMMARY OF SOIL TEST DATA
INTERSTATE 75 MAINLINE - CONTINUED

EXPLORATION NO., STATION & OFFSET	FROM	TO	SAMPLE ID	% REC	% AGG	% CS	% FS	% SILT	% CLAY	LL	PL	PI	% WC	ODOT CLASS
B-109-1-07	0.9	2.4	SS-1	100	66	19	4	6	5	22	15	7	14	A-2-4 (0)
STA. 429+32, 24' RT.	2.4	3.9	SS-2	100	15	11	14	27	33	31	17	14	16	A-6a (6)
NORTHING= 397535	3.9	5.4	SS-3	73				SAME AS SS-2					16	A-6a (VISUAL)
EASTING= 1532081	5.4	6.9	SS-4	60				SAME AS SS-2					15	A-6a (VISUAL)
	6.9	8.4	SS-5	53				SAME AS SS-2					16	A-6a (VISUAL)
	10.0	11.5	SS-6	27				SAME AS SS-2					11	A-6a (VISUAL)
	12.5	14.0	SS-7	60				SAME AS SS-2					18	A-6a (VISUAL)
	15.0	16.5	SS-8	100				SAME AS SS-2					16	A-6a (VISUAL)
	17.5	19.0	SS-9	73				SAME AS SS-2					16	A-6a (VISUAL)
	20.0	21.5	SS-10	100				SAME AS SS-2					16	A-6a (VISUAL)
	22.5	24.0	SS-11	100				SAME AS SS-2					20	A-6a (VISUAL)
	25.0	26.5	SS-12	100				SAME AS SS-2					13	A-6a (VISUAL)
	27.5	29.0	SS-13	60				SAME AS SS-2					17	A-6a (VISUAL)
	30.0	31.5	SS-14	80				SAME AS SS-2					22	A-6a (VISUAL)
	32.5	34.0	SS-15	93				SAME AS SS-2					22	A-6a (VISUAL)
	35.0	36.5	SS-16	93				SAME AS SS-2					16	A-6a (VISUAL)
	37.5	37.1	SS-17	0				SAME AS SS-2					-	A-6a (VISUAL)
B-110-0-07	0.5	2.0	SS-1	93	80	15	3	0	2	NP	NP	NP	3	A-1-a (0)
STA. 430+77, 30' RT.	2.0	3.5	SS-2	100	5	6	11	34	44	38	17	21	13	A-6a (8)
NORTHING= 397679	3.5	5.0	SS-3	100				SAME AS SS-2					15	A-6a (VISUAL)
EASTING= 1532139	5.0	6.5	SS-4	100				SAME AS SS-2					16	A-6a (VISUAL)
	6.5	8.0	SS-5	87				SAME AS SS-2					19	A-6a (VISUAL)
	10.0	11.5	SS-6	100				SAME AS SS-2					17	A-6a (VISUAL)
	12.5	14.0	SS-7	100	5	15	11	29	40	31	16	15	16	A-6a (9)
	15.0	16.5	SS-8	100				SAME AS SS-7					16	A-6a (VISUAL)
	17.5	19.0	SS-9	100				SAME AS SS-7					16	A-6a (VISUAL)
	20.0	21.5	SS-10	100				SAME AS SS-7					25	A-6a (VISUAL)
	22.5	24.0	SS-11	100	13	9	29	27	23	30	17	13	15	A-6a (4)
	25.0	26.5	SS-12	80				SAME AS SS-11					15	A-6a (VISUAL)
	27.5	29.0	SS-13	100				SAME AS SS-11					12	A-6a (VISUAL)
	30.0	31.5	SS-14	93				SAME AS SS-11					21	A-6a (VISUAL)
	32.5	34.0	SS-15	2				SAME AS SS-11					16	A-6a (VISUAL)
	35.1	35.3	SS-16	2				SAME AS SS-11					-	A-6a (VISUAL)
B-111-0-07	0.9	2.4	SS-1	100									2	A-1-b (VISUAL)
STA. 434+77, 30' LT.	2.4	3.9	SS-2	100	4	7	13	32	45	32	18	14	15	A-6a (10)
NORTHING= 398080	3.9	5.4	SS-3	73				SAME AS SS-2					24	A-6a (VISUAL)
EASTING= 1532086	5.4	6.9	SS-4	80				SAME AS SS-2					14	A-6a (VISUAL)
	6.9	8.4	SS-5	100				SAME AS SS-2					13	A-6a (VISUAL)
	8.4	9.9	SS-6	100				SAME AS SS-2					13	A-6a (VISUAL)
B-112-0-07	1.3	2.8	SS-1	100	61	22	6	7	4	NP	NP	NP	4	A-1-a (0)*
STA. 437+17, CENTERLINE	2.8	4.3	SS-2	93				SAME AS SS-1					21	A-1-a (VISUAL)
NORTHING= 398319	4.3	5.8	SS-3	67	10	5	12	36	37	35	16	19	19	A-6b (11)
EASTING= 1532120	5.8	7.3	SS-4	33				SAME AS SS-3					8	A-6b (VISUAL)
	7.3	8.8	SS-5	80				SAME AS SS-3					16	A-6b (VISUAL)
	8.8	10.3	SS-6	73				SAME AS SS-3					16	A-6b (VISUAL)
B-113-0-07	0.0	1.5	SS-1	93									3	A-1-b (VISUAL)
STA. 441+29, 51' RT.	1.5	3.0	SS-2	87	10	12	17	23	38	37	21	16	24	A-6b (8)
NORTHING= 398731	3.0	4.5	SS-3	93	3	5	10	26	57	35	19	16	18	A-6b (10)
EASTING= 1532178	4.5	6.0	SS-4	93				SAME AS SS-3					18	A-6b (VISUAL)
	6.0	7.5	SS-5	100				SAME AS SS-3					17	A-6b (VISUAL)
	7.5	9.0	SS-6	67				SAME AS SS-3					16	A-6b (VISUAL)
B-114-0-07	2.0	3.5	SS-1	80	5	13	14	29	40	29	17	12	15	A-6a (8)*
STA. 445+17, 8' LT.	3.5	5.0	SS-2	100	4	6	12	29	49	34	19	15	16	A-6a (10)
NORTHING= 399119	5.0	6.5	SS-3	100				SAME AS SS-2					16	A-6a (VISUAL)
EASTING= 1532127	6.5	8.0	SS-4	100				SAME AS SS-2					16	A-6a (VISUAL)
	8.0	9.5	SS-5	93				SAME AS SS-2					17	A-6a (VISUAL)
	9.5	11.0	SS-6	67				SAME AS SS-2					19	A-6a (VISUAL)

DRAWN MJ
CHECKED RJK

SOIL PROFILE
SUMMARY OF SOIL TEST DATA

ALL-75-0.21

V:\1755\active\175530002\geotechnical\drawing\ODOTSubmittal\projects\ALL\76691\roadway\sheets\76691D007.dgn

SUMMARY OF SOIL TEST DATA
INTERSTATE 75 MAINLINE - CONTINUED

EXPLORATION NO., STATION & OFFSET	FROM TO	SAMPLE ID	% REC	% AGG	% CS	% FS	% SILT	% CLAY	LL	PL	PI	% WC	ODOT CLASS
B-115-0-07	0.0 - 1.5	SS-1	100	4	27	16	21	32	31	16	15	16	A-6a (5)
STA. 449+23, 62' RT.	1.5 - 3.0	SS-2	87	5	6	11	27	52	34	18	16	17	A-6b (10)
NORTHING= 399524	3.0 - 4.5	SS-3	100				SAME AS SS-2					17	A-6b (VISUAL)
EASTING= 1532203	4.5 - 6.0	SS-4	100				SAME AS SS-2					16	A-6b (VISUAL)
	6.0 - 7.5	SS-5	100				SAME AS SS-2					17	A-6b (VISUAL)
	7.5 - 9.0	SS-6	100				SAME AS SS-2					18	A-6b (VISUAL)
B-116-0-07	0.0 - 1.5	SS-1	100									22	A-1-a (VISUAL)*
STA. 453+33, 53' LT.	1.5 - 3.0	SS-2	87	7	8	13	27	46	36	19	17	24	A-6b (10)
NORTHING= 399936	3.0 - 4.5	SS-3	100				SAME AS SS-2					16	A-6b (VISUAL)
EASTING= 1532096	4.5 - 6.0	SS-4	93				SAME AS SS-2					16	A-6b (VISUAL)
	6.0 - 7.5	SS-5	100				SAME AS SS-6					17	A-6a (VISUAL)
	7.5 - 9.0	SS-6	100	2	5	19	32	42	28	16	12	20	A-6a (9)
B-117-0-07	0.9 - 2.4	SS-1	100	81	10	4	3	2	NP	NP	NP	4	A-1-a (0)
STA. 457+17, CENTERLINE	2.4 - 3.9	SS-2	93	9	9	12	30	41	27	15	12	13	A-6a (8)
NORTHING= 400319	3.9 - 5.4	SS-3	0				SAME AS SS-2					-	A-6a (VISUAL)
EASTING= 1532156	5.4 - 6.9	SS-4	100				SAME AS SS-2					14	A-6a (VISUAL)
	6.9 - 8.4	SS-5	87				SAME AS SS-2					14	A-6a (VISUAL)
	8.4 - 9.9	SS-6	100				SAME AS SS-2					14	A-6a (VISUAL)
B-118-0-07	0.5 - 2.0	SS-1	100	74	14	4	5	4	NP	NP	NP	13	A-1-a (0)
STA. 459+27, 28' RT.	2.0 - 3.5	SS-2	87	4	7	11	35	43	29	15	14	13	A-6a (10)
NORTHING= 400528	3.5 - 5.0	SS-3	93				SAME AS SS-2					13	A-6a (VISUAL)
EASTING= 1532188	5.0 - 6.5	SS-4	100				SAME AS SS-2					15	A-6a (VISUAL)
	6.5 - 8.0	SS-5	87				SAME AS SS-2					14	A-6a (VISUAL)
	8.0 - 9.5	SS-6	87				SAME AS SS-2					12	A-6a (VISUAL)
B-119-0-07	0.5 - 2.0	SS-1	100	73	15	5	5	3	20	16	4	4	A-1-a (0)
STA. 463+62, 8' LT.	2.0 - 3.5	SS-2	93	7	7	12	27	47	33	17	16	16	A-6b (10)
NORTHING= 400964	3.5 - 5.0	SS-3	100				SAME AS SS-2					18	A-6b (VISUAL)
EASTING= 1532159	5.0 - 6.5	SS-4	80				SAME AS SS-2					17	A-6b (VISUAL)
	6.5 - 8.0	SS-5	100				SAME AS SS-2					16	A-6b (VISUAL)
	8.0 - 9.5	SS-6	100				SAME AS SS-2					20	A-6b (VISUAL)
B-120-0-07	0.0 - 1.5	SS-1	93				SAME AS SS-2					11	A-6b (VISUAL)
STA. 467+82, 66' RT.	1.5 - 3.0	SS-2	87	4	5	13	29	49	35	18	17	17	A-6b (11)
NORTHING= 401383	3.0 - 4.5	SS-3	80				SAME AS SS-2					21	A-6b (VISUAL)
EASTING= 1532241	4.5 - 6.0	SS-4	100				SAME AS SS-2					17	A-6b (VISUAL)
	6.0 - 7.5	SS-5	87				SAME AS SS-2					24	A-6b (VISUAL)
	7.5 - 9.0	SS-6	100				SAME AS SS-2					24	A-6b (VISUAL)
B-121-0-07	0.0 - 1.5	SS-1	100	31	18	9	18	24	33	20	13	10	A-6a (2)*
STA. 471+05, 39' LT.	1.5 - 3.0	SS-2	80	4	7	12	37	41	30	18	12	19	A-6a (9)
NORTHING= 401708	3.0 - 4.5	SS-3	87				SAME AS SS-2					23	A-6a (VISUAL)
EASTING= 1532141	4.5 - 6.0	SS-4	100				SAME AS SS-2					24	A-6a (VISUAL)
	6.0 - 7.5	SS-5	100				SAME AS SS-2					18	A-6a (VISUAL)
	7.5 - 9.0	SS-6	100				SAME AS SS-2					20	A-6a (VISUAL)

SUMMARY OF SOIL TEST DATA
BREESE RD

EXPLORATION NO., STATION & OFFSET	FROM TO	SAMPLE ID	% REC	% AGG	% CS	% FS	% SILT	% CLAY	LL	PL	PI	% WC	ODOT CLASS
B-009-1-08	1.0 - 2.5	SS-1	67	4	6	10	35	45	35	17	18	22	A-6b (11)*
STA. 100+65, 7' LT.	2.5 - 4.0	SS-2	67				SAME AS SS-1					20	A-6b (VISUAL)
NORTHING= 375855	4.0 - 5.5	SS-3	0				SAME AS SS-1					-	A-6b (VISUAL)
EASTING= 1518027	5.5 - 7.0	SS-4	100	1	4	10	34	51	44	18	26	25	A-7-6 (15)
B-009-0-08	2.5 - 4.0	SS-1	27				SAME AS SS-3					19	A-7-6 (VISUAL)
STA. 103+27, 11' RT.	5.0 - 6.5	SS-2	33				SAME AS SS-3					21	A-7-6 (VISUAL)
NORTHING= 376832	7.5 - 9.0	SS-3	100	3	3	10	40	44	43	18	25	23	A-7-6 (15)
EASTING= 1518289	10.0 - 11.5	SS-4	47				SAME AS SS-3					22	A-7-6 (VISUAL)
STRUCTURAL BORING - GREATER DEPTHS NOT SHOWN													
B-013-0-08	2.5 - 4.0	SS-1	33				SAME AS SS-2					19	A-6b (VISUAL)
STA. 106+74, 6' LT.	5.0 - 6.5	SS-2	80	6	5	13	36	40	33	17	16	17	A-6b (11)
NORTHING= 375842	7.5 - 9.0	SS-3	93				SAME AS SS-2					18	A-6b (VISUAL)
EASTING= 1518637	10.0 - 11.5	SS-4	100				SAME AS SS-2					19	A-6b (VISUAL)
STRUCTURAL BORING - GREATER DEPTHS NOT SHOWN													
B-013-1-08	1.0 - 2.5	SS-1	56	3	4	13	39	41	31	12	15	18	A-6a (10)*
STA. 111+95, 8' LT.	2.5 - 4.0	SS-2	80									6	A-1-a (VISUAL)*
NORTHING= 375834	4.0 - 5.5	SS-3	73	11	5	24	28	32	39	17	22	19	A-6b (10)
EASTING= 1519158	5.5 - 7.0	SS-4	73				SAME AS SS-3					24	A-6b (VISUAL)

SUMMARY OF SOIL TEST DATA
BREESE ROAD RAMP A

EXPLORATION NO., STATION & OFFSET	FROM TO	SAMPLE ID	% REC	% AGG	% CS	% FS	% SILT	% CLAY	LL	PL	PI	% WC	ODOT CLASS
B-005-0-08	1.1 - 2.6	SS-1	27				SAME AS SS-2					15	A-6b (VISUAL)
STA. 104+86, 103' LT.	2.6 - 4.1	SS-2	73	4	5	11	37	43	33	17	16	17	A-6b (11)
NORTHING=375351	4.1 - 5.6	SS-3	100	5	6	11	32	46	33	18	15	17	A-6a (10)
EASTING=1517925	5.6 - 7.1	SS-4	93				SAME AS SS-3					16	A-6a (VISUAL)
B-007-0-08	1.1 - 2.6	SS-1	67	6	3	11	33	47	45	17	28	20	A-7-6 (16)*
STA. 108+56, 226' LT.	2.6 - 4.1	SS-2	80				SAME AS SS-1					21	A-7-6 (VISUAL)
NORTHING= 375722	4.1 - 5.6	SS-3	67				SAME AS SS-1					22	A-7-6 (VISUAL)
EASTING= 1518065	5.6 - 7.1	SS-4	73	4	3	10	39	45	43	19	24	25	A-7-6 (14)

SUMMARY OF SOIL TEST DATA
BREESE ROAD RAMP B

EXPLORATION NO., STATION & OFFSET	FROM TO	SAMPLE ID	% REC	% AGG	% CS	% FS	% SILT	% CLAY	LL	PL	PI	% WC	ODOT CLASS
B-006-0-08	1.1 - 2.6	SS-1	67	8	5	13	36	39	37	18	19	20	A-6b (12)*
STA. 107+59, 98' RT.	2.6 - 4.1	SS-2	80	1	4	15	38	42	40	21	19	24	A-6b (12)
NORTHING= 375441	4.1 - 5.6	SS-3	80				SAME AS SS-2					23	A-6b (VISUAL)
EASTING= 1518253	5.6 - 7.1	SS-4	67				SAME AS SS-2					23	A-6b (VISUAL)
B-008-0-08	1.1 - 2.6	SS-1	93	4	4	13	35	44	38	17	21	19	A-6b (13)*
STA. 111+26, 239' RT.	2.6 - 4.1	SS-2	63				SAME AS SS-1					22	A-6b (VISUAL)
NORTHING= 375981	4.1 - 5.6	SS-3	0				SAME AS SS-1					-	A-6b (VISUAL)
EASTING= 1518594	5.6 - 7.1	SS-4	93	2	6	12	39	41	36	18	18	21	A-6b (11)

DRAWN MJ
CHECKED RJK

SOIL PROFILE
SUMMARY OF SOIL TEST DATA

ALL-75-0.21

V:\1755\active\175530002\geotechnical\drawing\ODOTSubmittal\projects\ALL\76691\roadway\sheets\76691ID008.dgn

SUMMARY OF SOIL TEST DATA
BREESE ROAD RAMP C

EXPLORATION NO., STATION & OFFSET	FROM TO	SAMPLE ID	% REC	% AGG	% CS	% FS	% SILT	% CLAY	LL	PL	PI	% WC	ODOT CLASS
B-014-0-08	1.1 - 2.6	SS-1	67	4	5	11	31	49	36	17	19	17	A-6b (12)*
STA. 112+09, 271' LT.	2.6 - 4.1	SS-2	73				SAME AS SS-1					19	A-6b (VISUAL)*
NORTHING= 376023	4.1 - 5.6	SS-3	73				SAME AS SS-1					24	A-6b (VISUAL)
EASTING= 1518262	5.6 - 7.1	SS-4	63	2	4	9	36	49	44	18	26	26	A-7-6 (15)
B-016-0-08	1.1 - 2.6	SS-1	93	4	4	11	35	46	38	18	20	16	A-6b (12)*
STA. 115+74, 109' LT.	2.6 - 4.1	SS-2	100	3	7	10	40	40	31	17	14	17	A-6a (10)
NORTHING= 376194	4.1 - 5.6	SS-3	100				SAME AS SS-2					22	A-6a (VISUAL)
EASTING= 1518624	5.6 - 7.1	SS-4	73				SAME AS SS-2					16	A-6a (VISUAL)

SUMMARY OF SOIL TEST DATA
BREESE ROAD RAMP D

EXPLORATION NO., STATION & OFFSET	FROM TO	SAMPLE ID	% REC	% AGG	% CS	% FS	% SILT	% CLAY	LL	PL	PI	% WC	ODOT CLASS
B-015-0-08	1.1 - 2.6	SS-1	100	3	4	13	37	43	37	17	20	17	A-6b (12)*
STA. 115+41, 177' RT.	2.6 - 4.1	SS-2	93	3	5	14	37	41	38	18	20	21	A-6b (12)
NORTHING= 375981	4.1 - 5.6	SS-3	27				SAME AS SS-2					15	A-6b (VISUAL)
EASTING= 1518819	5.6 - 7.1	SS-4	53				SAME AS SS-2					18	A-6b (VISUAL)
B-017-0-08	1.1 - 2.6	SS-1	100	5	5	11	38	41	31	18	13	16	A-6a (9)*
STA. 118+39, 95' RT.	2.6 - 4.1	SS-2	100	5	6	11	39	39	30	18	12	15	A-6a (9)
NORTHING= 376260	4.1 - 5.6	SS-3	87				SAME AS SS-2					16	A-6a (VISUAL)
EASTING= 1518952	5.6 - 7.1	SS-4	87				SAME AS SS-2					16	A-6a (VISUAL)

SUMMARY OF SOIL TEST DATA
McCLAIN ROAD

EXPLORATION NO., STATION & OFFSET	FROM TO	SAMPLE ID	% REC	% AGG	% CS	% FS	% SILT	% CLAY	LL	PL	PI	% WC	ODOT CLASS
B-019-1-08	1.0 - 2.5	SS-1	67	1	2	9	54	34	31	18	13	19	A-6a (9)*
STA. 89+47, 3' RT.	2.5 - 4.0	SS-2	87	4	5	11	37	43	33	18	15	17	A-6a (10)
NORTHING= 378723	4.0 - 5.5	SS-3	80				SAME AS SS-2					16	A-6a (VISUAL)
EASTING= 1522709	5.5 - 7.0	SS-4	100				SAME AS SS-2					15	A-6a (VISUAL)
B-019-2-08	0.6 - 2.1	SS-1	80				SAME AS SS-2					18	A-7-6 (VISUAL)
STA. 93+65, 10' LT.	2.1 - 3.6	SS-2	60	1	3	7	42	47	44	20	24	25	A-7-6 (14)
NORTHING= 379141	3.6 - 5.1	SS-3	7				SAME AS SS-2					15	A-7-6 (VISUAL)
EASTING= 1522702	5.1 - 6.6	SS-4	67	3	4	9	33	51	44	19	25	25	A-7-6 (15)
	6.6 - 8.1	SS-5	100				SAME AS SS-4					17	A-7-6 (VISUAL)
B-019-3-08	1.0 - 2.5	SS-1	53	3	3	8	39	47	39	17	22	22	A-6b (13)
STA. 97+64, 5' RT.	2.5 - 4.0	SS-2	73	6	5	9	34	46	39	17	22	22	A-6b (13)
NORTHING= 379540	4.0 - 5.5	SS-3	80				SAME AS SS-2					15	A-6b (VISUAL)
EASTING= 1522723	5.5 - 7.0	SS-4	100				SAME AS SS-2					16	A-6b (VISUAL)
B-020-0-08	2.5 - 4.0	SS-1	80	3	5	11	40	41	32	18	14	17	A-6a (10)
STA. 102+30, 7' RT.	5.0 - 6.5	SS-2	100				SAME AS SS-1					17	A-6a (VISUAL)
NORTHING= 380006	7.5 - 9.0	SS-3	87	0	2	10	50	38	43	16	27	27	A-7-6 (15)
EASTING= 1522733	10.0 - 11.5	SS-4	80	4	2	10	41	43	35	16	19	19	A-6b (12)
STRUCTURAL BORING - GREATER DEPTHS NOT SHOWN													
B-024-0-08	2.5 - 4.0	SS-1	0				SAME AS SS-2					-	A-6a (VISUAL)
STA. 105+38, 9' LT.	5.0 - 6.5	SS-2	80	4	4	12	39	41	31	16	15	18	A-6a (10)
NORTHING= 380314	7.5 - 9.0	SS-3	67				SAME AS SS-2					20	A-6a (VISUAL)
EASTING= 1522721	10.0 - 11.5	SS-4	93	3	5	11	39	42	41	18	23	23	A-7-6 (13)
STRUCTURAL BORING - GREATER DEPTHS NOT SHOWN													
B-024-1-08	1.0 - 2.5	SS-1	53	5	4	10	36	45	39	17	22	16	A-6b (13)*
STA. 108+44, 10' RT.	2.5 - 4.0	SS-2	67	3	5	11	38	43	33	17	16	18	A-6b (10)*
NORTHING= 380620	4.0 - 5.5	SS-3	67				SAME AS SS-2					19	A-6b (VISUAL)
EASTING= 1522745	5.5 - 7.0	SS-4	67				SAME AS SS-2					20	A-6b (VISUAL)

SUMMARY OF SOIL TEST DATA
STATE ROUTE 65

EXPLORATION NO., STATION & OFFSET	FROM TO	SAMPLE ID	% REC	% AGG	% CS	% FS	% SILT	% CLAY	LL	PL	PI	% WC	ODOT CLASS
B-040-0-08	1.5 - 3.0	SS-1	73	1	3	20	41	35	33	18	15	20	A-6a (10)*
STA. 93+02, 10' RT.	3.0 - 4.5	SS-2	53	9	7	21	24	39	42	16	26	23	A-7-6 (12)
NORTHING= 379040	4.5 - 6.0	SS-3	27				SAME AS SS-2					17	A-7-6 (VISUAL)
EASTING= 1527811	6.0 - 7.5	SS-4	53	8	5	12	35	40	38	18	20	18	A-6b (12)
B-039-0-08	1.5 - 3.0	SS-1	0				SAME AS SS-2					-	A-6a (VISUAL)*
STA. 97+10, 11' RT.	3.0 - 4.5	SS-2	67	16	6	11	31	36	33	18	15	15	A-6a (9)
NORTHING= 379449	4.5 - 6.0	SS-3	100	15	5	10	36	34	32	18	14	16	A-6a (9)
EASTING= 1527818	6.0 - 7.5	SS-4	80				SAME AS SS-3					15	A-6a (VISUAL)
B-038-0-08	0.9 - 2.4	SS-1	53	8	6	14	34	39	35	18	17	20	A-6b (11)*
STA. 101+27, 41' LT.	2.4 - 3.9	SS-2	33				COMBINED WITH SS-1					17	A-6b (11)
NORTHING= 379866	3.9 - 5.4	SS-3	80	28	4	9	26	33	34	17	17	18	A-6b (8)
EASTING= 1527772	5.4 - 6.9	SS-4	80				SAME AS SS-3					17	A-6b (VISUAL)
B-044-0-08 (RAMP D BORING)	1.5 - 3.0	SS-1	60	9	6	11	36	38	31	17	14	16	A-6a (10)
STA. 224+77, 168' RT.	3.0 - 4.5	SS-2	60				SAME AS SS-1					17	A-6a (VISUAL)
NORTHING= 379970	4.5 - 6.0	SS-3	100	13	6	11	34	36	30	17	13	16	A-6a (8)
EASTING= 1527890	6.0 - 7.5	SS-4	100				SAME AS SS-3					16	A-6a (VISUAL)
B-045-0-08 (RAMP C BORING)	1.5 - 3.0	SS-1	60	3	7	11	30	49	49	19	30	24	A-7-6 (18)
STA. 224+88, 203' LT.	3.0 - 4.5	SS-2	80	3	2	9	38	48	47	19	28	22	A-7-6 (17)
NORTHING= 380340	4.5 - 6.0	SS-3	0				SAME AS SS-2					-	A-7-6 (VISUAL)
EASTING= 1527904	6.0 - 7.5	SS-4	1				SAME AS SS-2					23	A-7-6 (VISUAL)
B-031-0-08	0.9 - 2.4	SS-1	27	16	5	19	26	34	40	17	23	22	A-6b (10)*
STA. 106+70, 43' LT.	2.4 - 3.9	SS-2	27				COMBINED WITH SS-1					20	A-6b (10)*
NORTHING= 380409	3.9 - 5.4	SS-3	20				SAME AS SS-1					18	A-6b (VISUAL)
EASTING= 1527778	5.4 - 6.9	SS-4	80	4	6	12	37	41	31	17	14	17	A-6a (10)
B-030-0-08	1.5 - 3.0	SS-1	60	4	6	29	34	27	30	16	14	15	A-6a (7)*
STA. 110+21, 8' LT.	3.0 - 4.5	SS-2	67				COMBINED WITH SS-1					30	A-6a (7)
NORTHING= 380759	4.5 - 6.0	SS-3	2				SAME AS SS-4					4	A-7-6 (VISUAL)
EASTING= 1527819	6.0 - 7.5	SS-4	53	3	6	14	29	48	50	18	32	23	A-7-6 (18)

SUMMARY OF SOIL TEST DATA
STATE ROUTE 65 RAMP A

EXPLORATION NO., STATION & OFFSET	FROM TO	SAMPLE ID	% REC	% AGG	% CS	% FS	% SILT	% CLAY	LL	PL	PI	% WC	ODOT CLASS
B-055-0-07 (I-75 MAINLINE)	0.0 - 1.5	SS-1	80				SAME AS SS-2					12	A-6a (VISUAL)
STA. 215+52, 62' RT.	1.5 - 3.0	SS-2	80	12	11	16	31	32	33	19	14	12	A-6a (7)
NORTHING= 380075	3.0 - 4.5	SS-3	100				SAME AS SS-4					28	A-6b (VISUAL)
EASTING= 1526967	4.5 - 6.0	SS-4	80	2	4	10	26	58	38	19	19	20	A-6b (12)
	6.0 - 7.5	SS-5	100				SAME AS SS-4					15	A-6b (VISUAL)
	7.5 - 9.0	SS-6	100				SAME AS SS-4					16	A-6b (VISUAL)
B-026-0-08	1.5 - 3.0	SS-1	40				SAME AS SS-2					22	A-6b (VISUAL)
STA. 218+77, 88' RT.	3.0 - 4.5	SS-2	67	4	5	17	38	36	34	15	19	19	A-6b (11)
NORTHING= 380055	4.5 - 6.0	SS-3	73	3	6	21	40	30	31	17	14	21	A-6a (8)
EASTING= 1527291	6.0 - 7.5	SS-4	73				SAME AS SS-3					25	A-6a (VISUAL)
B-028-0-08	1.5 - 3.0	SS-1	73	4	7	12	40	37	31	17	14	16	A-6a (10)
STA. 222+67, 177' RT.	3.0 - 4.5	SS-2	100	8	7	13	39	34	30	20	10	16	A-4a (7)
NORTHING= 379963	4.5 - 6.0	SS-3	100				SAME AS SS-2					17	A-4a (VISUAL)
EASTING= 1527681	6.0 - 7.5	SS-4	100				SAME AS SS-2					19	A-4a (VISUAL)

DRAWN MJ
CHECKED RJK

SOIL PROFILE

SUMMARY OF SOIL TEST DATA

ALL-75-0.21

(11) / (157)

V:\1755\active\175530002\geotechnical\drawing\ODOTSubmittal\projects\ALL\76691\roadway\sheets\76691D009.dgn

SUMMARY OF SOIL TEST DATA
STATE ROUTE 65 RAMP B

EXPLORATION NO., STATION & OFFSET	FROM TO	SAMPLE ID	% REC	% AGG	% CS	% FS	% SILT	% CLAY	LL	PL	PI	% WC	ODOT CLASS
B-027-0-08	1.5 - 3.0	SS-1	40				SAME AS SS-2					17	A-6b (VISUAL)*
STA. 218+73, 91' LT.	3.0 - 4.5	SS-2	67	15	10	13	31	31	32	16	16	17	A-6b (8)
NORTHING= 380233	4.5 - 6.0	SS-3	80	16	9	12	34	29	30	16	14	16	A-6a (7)
EASTING= 1527288	6.0 - 7.5	SS-4	80				SAME AS SS-3					18	A-6a (VISUAL)
B-029-0-08	1.5 - 3.0	SS-1	100	23	5	14	29	29	30	16	14	15	A-6a (6)*
STA. 222+60, 175' LT.	3.0 - 4.5	SS-2	100	9	6	11	44	30	30	17	13	17	A-6a (9)
NORTHING= 380315	4.5 - 6.0	SS-3	100				SAME AS SS-2					17	A-6a (VISUAL)
EASTING= 1527676	6.0 - 7.5	SS-4	100				SAME AS SS-2					16	A-6a (VISUAL)

SUMMARY OF SOIL TEST DATA
STATE ROUTE 65 RAMP C

EXPLORATION NO., STATION & OFFSET	FROM TO	SAMPLE ID	% REC	% AGG	% CS	% FS	% SILT	% CLAY	LL	PL	PI	% WC	ODOT CLASS
B-045-0-08	1.5 - 3.0	SS-1	60	3	7	11	30	49	49	19	30	24	A-7-6 (18)*
STA. 224+88, 203' LT.	3.0 - 4.5	SS-2	80	3	2	9	38	48	47	19	28	22	A-7-6 (17)*
NORTHING= 380340	4.5 - 6.0	SS-3	0				SAME AS SS-2					-	A-7-6 (VISUAL)
EASTING= 1527904	6.0 - 7.5	SS-4	1				SAME AS SS-2					23	A-7-6 (VISUAL)
B-047-0-08	1.1 - 2.6	SS-1	0				SAME AS SS-2					-	A-6a (VISUAL)
STA. 228+73, 115' LT.	2.6 - 4.1	SS-2	53	5	7	11	41	36	28	15	13	12	A-6a (9)
NORTHING= 380250	4.1 - 5.6	SS-3	33				SAME AS SS-2					13	A-6a (VISUAL)
EASTING= 1528288	5.6 - 7.1	SS-4	100	6	9	13	38	34	28	14	14	12	A-6a (9)
B-059-0-07 (I-75 MAINLINE)	1.4 - 2.9	SS-1	100				SAME AS SS-2					16	A-6a (VISUAL)
STA. 231+78, 30' LT.	2.9 - 4.4	SS-2	93	5	6	11	33	45	29	15	14	13	A-6a (10)
NORTHING= 380163	4.4 - 5.9	SS-3	47				SAME AS SS-2					11	A-6a (VISUAL)
EASTING= 1528593	5.9 - 7.4	SS-4	93				SAME AS SS-5					14	A-6a (VISUAL)
	7.4 - 8.9	SS-5	100	8	8	11	33	40	29	16	13	14	A-6a (9)
	8.9 - 10.4	SS-6	93				SAME AS SS-5					15	A-6a (VISUAL)

SUMMARY OF SOIL TEST DATA
STATE ROUTE 65 RAMP D

EXPLORATION NO., STATION & OFFSET	FROM TO	SAMPLE ID	% REC	% AGG	% CS	% FS	% SILT	% CLAY	LL	PL	PI	% WC	ODOT CLASS
B-044-0-08	1.5 - 3.0	SS-1	60	9	6	11	36	38	31	17	14	16	A-6a (10)*
STA. 224+77, 168' RT.	3.0 - 4.5	SS-2	60				SAME AS SS-1					17	A-6a (VISUAL)
NORTHING= 379970	4.5 - 6.0	SS-3	100	13	6	11	34	36	30	17	13	16	A-6a (8)
EASTING= 1527890	6.0 - 7.5	SS-4	100				SAME AS SS-3					16	A-6a (VISUAL)
B-046-0-08	1.5 - 3.0	SS-1	100	10	7	13	32	38	31	16	15	15	A-6a (9)*
STA. 228+76, 94' RT.	3.0 - 4.5	SS-2	100				SAME AS SS-1					19	A-6a (VISUAL)
NORTHING= 380041	4.5 - 6.0	SS-3	47				SAME AS SS-1					14	A-6a (VISUAL)
EASTING= 1528290	6.0 - 7.5	SS-4	67	9	7	11	38	35	29	16	13	14	A-6a (9)
B-060-0-07 (I-75 MAINLINE)	0.6 - 2.2	SS-1	87	81	10	2	4	3	NP	NP	NP	11	A-1-a (0)
STA. 235+78, 30' RT.	2.2 - 3.7	SS-2	73	5	9	11	30	45	27	16	11	13	A-6a (8)
NORTHING= 380100	3.7 - 5.2	SS-3	87				SAME AS SS-2					13	A-6a (VISUAL)
EASTING= 1528993	5.2 - 6.7	SS-4	100	10	10	11	25	45	29	16	13	12	A-6a (8)
	6.7 - 8.2	SS-5	67				SAME AS SS-4					14	A-6a (VISUAL)
	8.2 - 9.7	SS-6	80				SAME AS SS-4					15	A-6a (VISUAL)

SUMMARY OF SOIL TEST DATA
YODER ROAD RELOCATION AT SR 65

EXPLORATION NO., STATION & OFFSET	FROM TO	SAMPLE ID	% REC	% AGG	% CS	% FS	% SILT	% CLAY	LL	PL	PI	% WC	ODOT CLASS
B-039-0-08 (SR 65 BORING)	1.5 - 3.0	SS-1	0				SAME AS SS-2					-	A-6a (VISUAL)
STA. 97+10, 11' RT.	3.0 - 4.5	SS-2	67	16	6	11	31	36	33	18	15	15	A-6a (9)
NORTHING= 379449	4.5 - 6.0	SS-3	100	15	5	10	36	34	32	18	14	16	A-6a (9)
EASTING= 1527818	6.0 - 7.5	SS-4	80				SAME AS SS-3					15	A-6a (VISUAL)
B-041-0-08	2.5 - 4.0	SS-1	80	11	5	14	35	35	36	17	19	20	A-6b (11)*
STA. 2+80, 5' RT.	5.0 - 6.5	SS-2	0				SAME AS SS-1					-	A-6b (VISUAL)
NORTHING= 379564	7.5 - 9.0	SS-3	40	21	6	11	31	31				13	A-4a (VISUAL)
EASTING= 1528086	10.0 - 11.5	SS-4	100	3	5	11	49	32	27	17	10	15	A-4a (8)
	12.5 - 14.0	SS-5	100	4	6	12	43	35	25	15	10	14	A-4a (8)
B-042-0-08	2.5 - 4.0	SS-1	67	13	4	11	31	41	39	18	21	26	A-6b (12)*
STA. 4+11, 14' RT.	5.0 - 6.5	SS-2	80	9	5	11	36	39	30	17	13	17	A-6a (9)
NORTHING= 379669	7.5 - 9.0	SS-3	87				SAME AS SS-2					15	A-6a (VISUAL)
EASTING= 1528170	10.0 - 11.5	SS-4	100	15	5	10	36	34	26	15	11	14	A-6a (8)
B-043-0-08	2.5 - 4.0	SS-1	100	2	6	13	37	42	33	17	16	23	A-6b (10)*
STA. 7+61, 14' LT.	5.0 - 6.5	SS-2	100				SAME AS SS-4					16	A-4b (VISUAL)
NORTHING= 379946	7.5 - 9.0	SS-3	100				SAME AS SS-4					19	A-4b (VISUAL)
EASTING= 1528344	10.0 - 11.5	SS-4	100	1	5	9	51	34	28	18	10	21	A-4b (8)

SUMMARY OF SOIL TEST DATA
HANTHORN ROAD

EXPLORATION NO., STATION & OFFSET	FROM TO	SAMPLE ID	% REC	% AGG	% CS	% FS	% SILT	% CLAY	LL	PL	PI	% WC	ODOT CLASS
B-057-1-08	1.0 - 2.5	SS-1	67				SAME AS SS-2					14	A-6a (VISUAL)
STA. 97+31, 10' LT.	2.5 - 4.0	SS-2	80	25	9	16	27	23	30	18	12	16	A-6a (4)
NORTHING= 381281	4.0 - 5.5	SS-3	73	12	8	25	31	24	25	14	11	16	A-6a (4)
EASTING= 1531087	5.5 - 7.0	SS-4	100				SAME AS SS-3					22	A-6a (VISUAL)
B-057-0-08	2.5 - 4.0	SS-1	20				SAME AS SS-2					24	A-6b (VISUAL)
STA. 101+02, 14' LT.	5.0 - 6.5	SS-2	80	5	4	13	38	40	38	17	21	21	A-6b (13)
NORTHING= 381281	7.5 - 9.0	SS-3	67	2	2	15	35	46	42	17	25	23	A-7-6 (14)
EASTING= 1531459	10.0 - 11.5	SS-4	100				SAME AS SS-3					20	A-7-6 (VISUAL)
STRUCTURAL BORING - GREATER DEPTHS NOT SHOWN													
B-058-0-08	2.5 - 4.0	SS-1	100	2	3	13	38	44	40	17	23	23	A-6b (13)
STA. 101+82, 10' RT.	5.0 - 6.5	SS-2	100				SAME AS SS-1					20	A-6b (VISUAL)
NORTHING= 381257	7.5 - 9.0	SS-3	87				SAME AS SS-1					24	A-6b (VISUAL)
EASTING= 1531538	10.0 - 11.5	SS-4	100				SAME AS SS-1					22	A-6b (VISUAL)
STRUCTURAL BORING - GREATER DEPTHS NOT SHOWN													
B-059-0-08	2.5 - 4.0	SS-1	60				SAME AS SS-2					20	A-7-6 (VISUAL)
STA. 102+72, 11' LT.	5.0 - 6.5	SS-2	87	3	3	14	35	45	44	17	27	22	A-7-6 (16)
NORTHING= 381277	7.5 - 9.0	SS-3	93				SAME AS SS-2					20	A-7-6 (VISUAL)
EASTING= 1531629	10.0 - 11.5	SS-4	100				SAME AS SS-2					23	A-7-6 (VISUAL)
STRUCTURAL BORING - GREATER DEPTHS NOT SHOWN													
B-061-1-08	1.0 - 2.5	SS-1	67	4	4	12	34	46	42	17	25	19	A-7-6 (14)
STA. 106+26, 6' RT.	2.5 - 4.0	SS-2	67	3	6	13	33	45	38	16	22	19	A-6b (13)
NORTHING= 381255	4.0 - 5.5	SS-3	73				SAME AS SS-4					22	A-7-6 (VISUAL)
EASTING= 1531983	5.5 - 7.0	SS-4	80	4	4	11	33	48	42	17	25	23	A-7-6 (14)
B-061-2-08	1.0 - 2.5	SS-1	67	6	4	12	35	43	40	17	23	20	A-6b (13)
STA. 110+33, 11' LT.	2.5 - 4.0	SS-2	80	1	2	16	38	43	38	17	21	23	A-6b (12)
NORTHING= 381268	4.0 - 5.5	SS-3	80				SAME AS SS-2					19	A-6b (VISUAL)
EASTING= 1532390	5.5 - 7.0	SS-4	100				SAME AS SS-2					17	A-6a (VISUAL)
	7.0 - 8.5	SS-5	100	9	16	28	23	24	29	15	14	21	A-6a (4)
	8.5 - 10.0	SS-6	87	2	3	7	40	48	30	18	12	20	A-6a (9)

DRAWN MJ
CHECKED RJK

SOIL PROFILE

SUMMARY OF SOIL TEST DATA

ALL-75-0.21

12/90

(12/157)

V:\1755\active\175530002\geotechnical\drawing\ODOTSubmittal\projects\ALL\76691\roadway\sheets\76691l0010.dgn

SUMMARY OF SOIL TEST DATA
FOURTH STREET

EXPLORATION NO., STATION & OFFSET	FROM TO	SAMPLE ID	% REC	% AGG	% CS	% FS	% SILT	% CLAY	LL	PL	PI	% WC	ODOT CLASS
B-076-1-08	1.0 - 2.5	SS-1	60	7	4	14	38	37	33	16	17	22	A-6b (11)*
STA. 97+26, 8' LT.	2.5 - 4.0	SS-2	47				SAME AS SS-1					23	A-6a (VISUAL)*
NORTHING= 386608	4.0 - 5.5	SS-3	40				SAME AS SS-1					19	A-6a (VISUAL)
EASTING= 1530380	5.5 - 7.0	SS-4	93	3	6	11	37	43	30	17	13	15	A-6a (9)
B-076-0-08	1.5 - 3.0	SS-1	67	4	8	12	38	38	26	14	12	12	A-6a (9)*
STA. 101+90, 9' LT.	3.0 - 4.5	SS-2	87	12	7	10	37	34	28	14	14	13	A-6a (9)
NORTHING= 386611	4.5 - 6.0	SS-3	80				SAME AS SS-2					12	A-6a (VISUAL)
EASTING= 1531143	6.0 - 7.5	SS-4	93				SAME AS SS-2					16	A-6a (VISUAL)
B-075-0-08	1.1 - 2.6	SS-1	67	11	68	15	5	1	29	14	15	13	A-2-6 (0)
STA. 106+12, 17' RT.	2.6 - 4.1	SS-2	87	4	7	12	40	37	30	16	14	14	A-6a (10)
NORTHING= 386634	4.1 - 5.6	SS-3	53				SAME AS SS-2					13	A-6a (VISUAL)
EASTING= 1531564	5.6 - 7.1	SS-4	67				SAME AS SS-2					14	A-6a (VISUAL)
B-074-0-08	2.5 - 4.0	SS-1	100	5	6	11	40	38	30	16	14	15	A-6a (10)
STA. 109+26, 8' LT.	5.0 - 6.5	SS-2	80				SAME AS SS-1					18	A-6a (VISUAL)
NORTHING= 386669	7.5 - 9.0	SS-3	93				SAME AS SS-1					16	A-6a (VISUAL)
EASTING= 1531876	10.0 - 11.5	SS-4	100				SAME AS SS-5					19	A-6b (VISUAL)
	12.5 - 14.0	SS-5	93	5	5	12	39	39	33	17	16	17	A-6b (11)
STRUCTURAL BORING - GREATER DEPTHS NOT SHOWN													
B-070-0-08	2.5 - 4.0	SS-1	93	3	6	11	41	39	30	16	14	14	A-6a (10)
STA. 111+78, 8' LT.	5.0 - 6.5	SS-2	87	5	6	11	39	39	31	17	14	16	A-6a (10)
NORTHING= 386665	7.5 - 9.0	SS-3	100				SAME AS SS-2					15	A-6a (VISUAL)
EASTING= 1532128	10.0 - 11.5	SS-4	100				SAME AS SS-2					16	A-6a (VISUAL)
STRUCTURAL BORING - GREATER DEPTHS NOT SHOWN													
B-069-0-08	1.1 - 2.6	SS-1	80	7	6	10	38	39	29	14	15	13	A-6a (10)*
STA. 114+89, 18' LT.	2.6 - 4.1	SS-2	1				SAME AS SS-1					20	A-6a (VISUAL)
NORTHING= 386655	4.1 - 5.6	SS-3	73	3	5	12	42	38	29	16	13	14	A-6a (9)
EASTING= 1532440	5.6 - 7.1	SS-4	100				SAME AS SS-3					15	A-6a (VISUAL)
B-068-0-08	1.1 - 2.6	SS-1	60	3	5	14	43	35	30	16	14	17	A-6a (10)*
STA. 118+26, 25' LT.	2.6 - 4.1	SS-2	80	3	5	9	39	44	34	17	17	17	A-6b (11)
NORTHING= 386612	4.1 - 5.6	SS-3	67				SAME AS SS-2					16	A-6b (VISUAL)
EASTING= 1532774	5.6 - 7.1	SS-4	80				SAME AS SS-2					15	A-6b (VISUAL)

SUMMARY OF SOIL TEST DATA
FOURTH STREET RAMP A

EXPLORATION NO., STATION & OFFSET	FROM TO	SAMPLE ID	% REC	% AGG	% CS	% FS	% SILT	% CLAY	LL	PL	PI	% WC	ODOT CLASS
B-063-0-08	1.1 - 2.6	SS-1	67	11	4	11	37	37	33	17	16	18	A-6b (10)*
STA. 311+82, 94' RT.	2.6 - 4.1	SS-2	53				SAME AS SS-1					15	A-6b (VISUAL)
NORTHING= 385784	4.1 - 5.6	SS-3	33				SAME AS SS-4					16	A-6a (VISUAL)
EASTING= 1532079	5.6 - 7.1	SS-4	87	4	5	10	10	41	31	17	14	16	A-6a (10)
B-064-0-08	1.1 - 2.6	SS-1	33				SAME AS SS-2					14	A-6a (VISUAL)*
STA. 315+45, 320' RT.	2.6 - 4.1	SS-2	80	8	5	10	40	37	29	16	13	16	A-6a (9)
NORTHING= 386143	4.1 - 5.6	SS-3	100	4	6	13	40	37	28	16	12	15	A-6a (9)
EASTING= 1532311	5.6 - 7.1	SS-4	100				SAME AS SS-3					15	A-6a (VISUAL)
B-066-0-08 (RAMP B BORING)	1.1 - 2.6	SS-1	93	0	6	17	41	36	33	16	17	18	A-6b (11)
STA. 316+72, 440' RT.	2.6 - 4.1	SS-2	100	4	6	12	40	38	30	17	13	15	A-6a (9)
NORTHING= 386268	4.1 - 5.6	SS-3	80				SAME AS SS-2					16	A-6a (VISUAL)
EASTING= 152434	5.6 - 7.1	SS-4	100	3	6	13	40	38	29	16	13	16	A-6a (9)
B-067-0-08	1.1 - 2.6	SS-1	67	2	6	10	41	41	31	15	16	13	A-6b (10)*
STA. 318+69, 556' RT.	2.6 - 4.1	SS-2	67				SAME AS SS-1					12	A-6b (VISUAL)*
NORTHING= 386463	4.1 - 5.6	SS-3	67	4	5	10	42	39	32	16	16	21	A-6b (10)
EASTING= 1532553	5.6 - 7.1	SS-4	87	0	3	13	44	40	36	18	18	20	A-6b (11)

SUMMARY OF SOIL TEST DATA
FOURTH STREET RAMP B

EXPLORATION NO., STATION & OFFSET	FROM TO	SAMPLE ID	% REC	% AGG	% CS	% FS	% SILT	% CLAY	LL	PL	PI	% WC	ODOT CLASS
B-064-0-08 (RAMP A BORING)	1.1 - 2.6	SS-1	33				SAME AS SS-2					14	A-6a (VISUAL)
STA. 315+45, 320' RT.	2.6 - 4.1	SS-2	80	8	5	10	40	37	29	16	13	16	A-6a (9)
NORTHING= 386143	4.1 - 5.6	SS-3	100	4	6	13	40	37	28	16	12	15	A-6a (9)
EASTING= 1532311	5.6 - 7.1	SS-4	100				SAME AS SS-3					15	A-6a (VISUAL)
B-066-0-08	1.1 - 2.6	SS-1	93	0	6	17	41	36	33	16	17	18	A-6b (11)*
STA. 316+72, 440' RT.	2.6 - 4.1	SS-2	100	4	6	12	40	38	30	17	13	15	A-6a (9)*
NORTHING= 386268	4.1 - 5.6	SS-3	80				SAME AS SS-2					16	A-6a (VISUAL)
EASTING= 152434	5.6 - 7.1	SS-4	100	3	6	13	40	38	29	16	13	16	A-6a (9)
B-065-0-08	1.1 - 2.6	SS-1	80	16	9	16	31	28	38	19	19	25	A-6b (8)*
STA. 317+28, 82' RT.	2.6 - 4.1	SS-2	20				SAME AS SS-1					19	A-6b (VISUAL)
NORTHING= 386330	4.1 - 5.6	SS-3	53				SAME AS SS-1					30	A-6b (VISUAL)
EASTING= 1532077	5.6 - 7.1	SS-4	100	0	2	9	43	46	52	20	32	32	A-7-6 (18)
B-067-0-08 (RAMP A BORING)	1.1 - 2.6	SS-1	67	2	6	10	41	41	31	15	16	13	A-6b (10)
STA. 318+69, 556' RT.	2.6 - 4.1	SS-2	67				SAME AS SS-1					12	A-6b (VISUAL)
NORTHING= 386463	4.1 - 5.6	SS-3	67	4	5	10	42	39	32	16	16	21	A-6b (10)
EASTING= 1532553	5.6 - 7.1	SS-4	87	0	3	13	44	40	36	18	18	20	A-6b (11)

SUMMARY OF SOIL TEST DATA
FOURTH STREET RAMP C

EXPLORATION NO., STATION & OFFSET	FROM TO	SAMPLE ID	% REC	% AGG	% CS	% FS	% SILT	% CLAY	LL	PL	PI	% WC	ODOT CLASS
B-077-0-08	1.1 - 2.6	SS-1	100	4	6	13	40	37	30	15	15	15	A-6a (10)*
STA. 322+66, 500' LT.	2.6 - 4.1	SS-2	87				SAME AS SS-1					12	A-6a (VISUAL)*
NORTHING= 386878	4.1 - 5.6	SS-3	80	2	7	11	43	37	27	14	13	12	A-6a (9)
EASTING= 1531504	5.6 - 7.1	SS-4	80	2	6	11	41	40	27	14	13	14	A-6a (9)
B-078-0-08	1.1 - 2.6	SS-1	73				SAME AS SS-2					19	A-6b (VISUAL)*
STA. 323+21, 61' LT.	2.6 - 4.1	SS-2	100	2	6	13	38	41	34	17	17	25	A-6b (11)
NORTHING= 386926	4.1 - 5.6	SS-3	53				SAME AS SS-2					16	A-6b (VISUAL)
EASTING= 1531943	5.6 - 7.1	SS-4	100	4	8	14	39	35	33	16	17	17	A-6b (11)
B-079-0-08	1.1 - 2.6	SS-1	60	16	21	20	27	16	23	14	9	8	A-4a (2)*
STA. 324+87, 292' LT.	2.6 - 4.1	SS-2	0				SAME AS SS-3					5	A-6b (VISUAL)*
NORTHING= 387095	4.1 - 5.6	SS-3	100	10	13	11	38	28	35	15	20	17	A-6b (10)
EASTING= 1531715	5.6 - 7.1	SS-4	87				SAME AS SS-3					13	A-6b (VISUAL)

SUMMARY OF SOIL TEST DATA
FOURTH STREET RAMP D

EXPLORATION NO., STATION & OFFSET	FROM TO	SAMPLE ID	% REC	% AGG	% CS	% FS	% SILT	% CLAY	LL	PL	PI	% WC	ODOT CLASS
B-080-0-08	1.1 - 2.6	SS-1	47				SAME AS SS-2					20	A-6a (VISUAL)*
STA. 324+75, 408' LT.	2.6 - 4.1	SS-2	87	5	8	14	36	37	28	14	14	14	A-6a (9)*
NORTHING= 387086	4.1 - 5.6	SS-3	67				SAME AS SS-4					20	A-6b (VISUAL)
EASTING= 1531599	5.6 - 7.1	SS-4	93	0	3	16	48	33	38	16	22	15	A-6b (13)
B-081-0-08	1.1 - 2.6	SS-1	80									17	A-6b (VISUAL)*
STA. 327+54, 83' LT.	2.6 - 4.1	SS-2	100	2	6	10	44	38	32	16	16	15	A-6b (10)*
NORTHING= 387359	4.1 - 5.6	SS-3	100									15	A-6a (VISUAL)
EASTING= 1531928	5.6 - 7.1	SS-4	93	3	7	12	42	37	30	16	14	16	A-6a (10)

DRAWN MJ CHECKED RJK

SOIL PROFILE

SUMMARY OF SOIL TEST DATA

ALL-75-0.21

13 / 90

(13 / 157)

V:\1755\active\175530002\geotechnical\drawing\ODOTSubmittal\projects\ALL\76691\roadway\sheets\76691D011.dgn 76691D011.dgn

SUMMARY OF SOIL TEST DATA
PATROL DRIVE

EXPLORATION NO., STATION & OFFSET	FROM TO	SAMPLE ID	% REC	% AGG	% CS	% FS	% SILT	% CLAY	LL	PL	PI	% WC	ODOT CLASS
B-078-1-08	1.0 - 2.5	SS-1	60	1	3	13	42	41	42	20	22	25	A-7-6 (13)*
STA. 12+81, 1' RT.	2.5 - 4.0	SS-2	87	1	3	9	36	51	52	19	33	28	A-7-6 (18)*
NORTHING= 386901	4.0 - 5.5	SS-3	67				SAME AS SS-2					22	A-7-6 (VISUAL)
EASTING= 1532542	5.5 - 7.0	SS-4	100				SAME AS SS-2					26	A-7-6 (VISUAL)

SUMMARY OF SOIL TEST DATA
STATE ROUTE 309 / BELLEFONTAINE AVENUE

EXPLORATION NO., STATION & OFFSET	FROM TO	SAMPLE ID	% REC	% AGG	% CS	% FS	% SILT	% CLAY	LL	PL	PI	% WC	ODOT CLASS
B-106-5-08	1.5 - 3.0	SS-1	53	4	5	11	45	35	31	18	13	20	A-6a (9)
STA. 880+64, 312' LT.	3.0 - 4.5	SS-2	40				SAME AS SS-1					17	A-6a (VISUAL)
NORTHING= 391921	4.5 - 6.0	SS-3	87	6	7	11	40	36	29	16	13	19	A-6a (9)
EASTING= 1530481	6.0 - 7.5	SS-4	100				SAME AS SS-3					17	A-6a (VISUAL)
B-106-2-08	1.5 - 3.0	SS-1	67	3	10	31	33	23	24	13	11	17	A-6a (5)
STA. 882+77, 155' LT.	3.0 - 4.5	SS-2	47				SAME AS SS-3					20	A-6b (VISUAL)
NORTHING= 391763	4.5 - 6.0	SS-3	73	1	6	31	28	34	38	14	24	20	A-6b (11)
EASTING= 1530694	6.0 - 7.5	SS-4	80				SAME AS SS-3					22	A-6b (VISUAL)
B-106-1-08	0.0 - 1.5	SS-1	87	0	5	40	39	16	23	16	7	15	A-4a (4)
STA. 885+82, 70' LT.	2.5 - 4.0	SS-2	73				SAME AS SS-1					21	A-4a (VISUAL)
NORTHING= 391679	5.0 - 6.5	SS-3	93	26	22	12	15	25	40	20	20	27	A-6b (4)
EASTING= 1530997	7.5 - 9.0	SS-4	80				SAME AS SS-5					14	A-6a (VISUAL)
	10.0 - 11.5	SS-5	100	6	6	12	39	37	27	13	14	13	A-6a (10)
B-106-0-08	1.5 - 3.0	SS-1	67	9	3	15	66	7	NP	NP	NP	21	A-4b (8)*
STA. 889+87, 35' RT.	3.0 - 4.5	SS-2	87				COMBINED WITH SS-1					15	A-4b (8)
NORTHING= 391573	4.5 - 6.0	SS-3	53	33	17	16	28	6	NP	NP	NP	17	A-2-4 (0)
EASTING= 1531340	6.0 - 7.5	SS-4	47				COMBINED WITH SS-3					10	A-2-4 (0)
B-089-0-08	1.5 - 3.0	SS-1	87	30	20	23	16	11	26	15	11	13	A-2-6 (0)*
STA. 901+43, 17' LT.	3.0 - 4.5	SS-2	67	27	3	16	24	30	25	15	10	13	A-4a (4)
NORTHING= 391626	4.5 - 6.0	SS-3	53				COMBINED WITH SS-2					15	A-4a (4)
EASTING= 1532556	6.0 - 7.5	SS-4	87				SAME AS SS-2					11	A-4a (VISUAL)
B-091-0-08	1.5 - 3.0	SS-1	33	5	8	41	25	21	NP	NP	NP	15	A-4a (2)*
STA. 902+06, 104' LT.	3.0 - 4.5	SS-2	67				COMBINED WITH SS-1					18	A-4a (2)
NORTHING= 391714	4.5 - 6.0	SS-3	100	4	27	21	22	26	41	18	23	24	A-7-6 (7)
EASTING= 1532618	6.0 - 7.5	SS-4	100				SAME AS SS-3					28	A-7-6 (VISUAL)
B-088-0-08	1.5 - 3.0	SS-1	2				SAME AS SS-2					18	A-6a (VISUAL)
STA. 905+57, 11' LT.	3.0 - 4.5	SS-2	67	22	10	14	30	24	31	16	15	20	A-6a (6)
NORTHING= 391621	4.5 - 6.0	SS-3	0				SAME AS SS-2					-	A-6a (VISUAL)
EASTING= 1532971	6.0 - 7.5	SS-4	53	4	6	14	36	40	42	16	26	23	A-7-6 (15)
B-087-0-08	1.5 - 3.0	SS-1	67				SAME AS SS-2					24	A-6a (VISUAL)
STA. 908+05, 8' LT.	3.0 - 4.5	SS-2	87	4	7	12	39	38	29	17	12	16	A-6a (9)
NORTHING= 391619	4.5 - 6.0	SS-3	100	66	17	8	8	1	NP	NP	NP	15	A-1-a (0)
EASTING= 1533218	6.0 - 7.5	SS-4	100	2	15	18	39	26	26	17	9	17	A-4a (6)

SUMMARY OF SOIL TEST DATA
LENORE AVENUE

EXPLORATION NO., STATION & OFFSET	FROM TO	SAMPLE ID	% REC	% AGG	% CS	% FS	% SILT	% CLAY	LL	PL	PI	% WC	ODOT CLASS
B-104-1-08	1.0 - 2.5	SS-1	53	9	7	29	26	29	36	17	19	26	A-6b (8)
STA. 885+92, 391' LT.	2.5 - 4.0	SS-2	67	2	4	26	29	39	41	17	24	22	A-7-6 (12)
NORTHING= 392000	4.0 - 5.5	SS-3	73				SAME AS SS-4					24	A-6b (VISUAL)
EASTING= 1531008	5.5 - 7.0	SS-4	80	6	5	22	31	36	37	18	19	25	A-6b (0)
	7.0 - 8.5	SS-5	87	4	6	15	44	31	27	16	11	17	A-6a (8)

SUMMARY OF SOIL TEST DATA
INDUSTRY AVENUE COURT / LEONARD AVENUE EXTENSION

EXPLORATION NO., STATION & OFFSET	FROM TO	SAMPLE ID	% REC	% AGG	% CS	% FS	% SILT	% CLAY	LL	PL	PI	% WC	ODOT CLASS
B-081-1-08	0.0 - 1.5	SS-1	80	67	15	6	9	3	23	17	6	11	A-1-a (0)
STA. 880+93, 1280' RT.	2.5 - 4.0	SS-2	87				SAME AS SS-3					20	A-4a (VISUAL)
NORTHING= 390329	5.0 - 6.5	SS-3	80	17	17	21	33	12	20	16	4	17	A-4a (2)
EASTING= 1530504	7.5 - 9.0	SS-4	73				SAME AS SS-5					14	A-6a (VISUAL)
	10.0 - 11.5	SS-5	100	5	5	12	39	39	25	14	11	15	A-6a (8)
B-102-2-08	1.0 - 2.5	SS-1	67	14	21	16	20	29	45	20	25	21	A-7-6 (8)
STA. 885+30, 510' RT.	2.5 - 4.0	SS-2	67				SAME AS SS-1					24	A-7-6 (VISUAL)
NORTHING= 391098	4.0 - 5.5	SS-3	67	6	8	13	38	35	29	17	12	16	A-6a (8)
EASTING= 1530947	5.5 - 7.0	SS-4	93	7	6	13	39	35	25	14	11	14	A-6a (8)
B-081-2-08	0.0 - 1.5	SS-1	80	4	5	23	34	34	38	19	19	17	A-6b (10)
STA. 885+39, 1193' RT.	2.5 - 4.0	SS-2	73				SAME AS SS-1					18	A-6b (VISUAL)
NORTHING= 390415	5.0 - 6.5	SS-3	100	0	4	22	39	35	33	17	16	18	A-6b (10)
EASTING= 1530957	7.5 - 9.0	SS-4	67				SAME AS SS-3					22	A-6b (VISUAL)
	10.0 - 11.5	SS-5	67	41	29	15	10	5	NP	NP	NP	14	A-1-b (0)
B-102-1-08	0.0 - 1.5	SS-1	67	36	18	13	21	12	29	15	14	17	A-2-6 (1)
STA. 885+58, 807' RT.	2.5 - 4.0	SS-2	33				SAME AS SS-3					21	A-2-4 (VISUAL)
NORTHING= 390801	5.0 - 6.5	SS-3	80	34	18	16	22	10	25	16	9	9	A-2-4 (0)
EASTING= 1530975	7.5 - 9.0	SS-4	73				SAME AS SS-3					15	A-2-4 (VISUAL)
	10.0 - 11.5	SS-5	100	5	5	12	41	37	26	14	12	13	A-6a (9)
B-081-3-08	0.0 - 1.5	SS-1	87				SAME AS SS-2					21	A-6a (VISUAL)
STA. 889+39, 812' RT.	2.5 - 4.0	SS-2	100	0	7	33	35	25	30	18	12	20	A-6a (6)
NORTHING= 390796	5.0 - 6.5	SS-3	100				SAME AS SS-2					30	A-6a (VISUAL)
EASTING= 1531356	7.5 - 9.0	SS-4	87	9	22	37	18	14	24	17	7	24	A-2-4 (0)
	10.0 - 11.5	SS-5	80	6	5	11	38	40	27	15	12	14	A-6a (9)

SUMMARY OF SOIL TEST DATA
INDUSTRY AVENUE

EXPLORATION NO., STATION & OFFSET	FROM TO	SAMPLE ID	% REC	% AGG	% CS	% FS	% SILT	% CLAY	LL	PL	PI	% WC	ODOT CLASS
B-103-4-08	1.0 - 2.5	SS-1	67	70	16	5	7	2				3	A-1-a (VISUAL)
STA. 876+26, 107' RT.	2.5 - 4.0	SS-2	40				SAME AS SS-1					12	A-1-a (VISUAL)
NORTHING= 391504	4.0 - 5.5	SS-3	87	5	5	15	33	42	40	20	20	23	A-6b (12)
EASTING= 1530041	5.5 - 7.0	SS-4	87				SAME AS SS-3					26	A-6b (VISUAL)

SUMMARY OF SOIL TEST DATA
KIBBY STREET

EXPLORATION NO., STATION & OFFSET	FROM TO	SAMPLE ID	% REC	% AGG	% CS	% FS	% SILT	% CLAY	LL	PL	PI	% WC	ODOT CLASS
B-103-3-08	1.5 - 3.0	SS-1	0				SAME AS SS-3					-	A-6a (VISUAL)
STA. 880+93, 19' RT.	3.0 - 4.5	SS-2	7				SAME AS SS-3					4	A-6a (VISUAL)
NORTHING= 391590	4.5 - 6.0	SS-3	80	5	6	17	38	34	28	16	12	17	A-6a (8)
EASTING= 1530508	6.0 - 7.5	SS-4	100	6	7	12	43	32	27	16	11	18	A-6a (8)
B-103-2-08	1.0 - 2.5	SS-1	80	34	13	18	19	16	26	15	11	8	A-2-6 (0)
STA. 886+47, 74' RT.	2.5 - 4.0	SS-2	80	9	12	17	28	34	40	20	20	32	A-6b (9)
NORTHING= 391534	4.0 - 5.5	SS-3	73				SAME AS SS-2					25	A-6b (VISUAL)
EASTING= 1531063	5.5 - 7.0	SS-4	93	7	7	17	29	40	58	17	41	25	A-7-6 (18)
B-103-1-08	1.0 - 2.5	SS-1	100	1	6	49	29	15	20	15	5	19	A-4a (2)
STA. 887+12, 94' RT.	2.5 - 4.0	SS-2	87				SAME AS SS-1					17	A-4a (VISUAL)
NORTHING= 391514	5.0 - 6.5	SS-3	67	15	17	18	24	26	34	16	18	23	A-6b (6)
EASTING= 1531128	7.5 - 9.0	SS-4	80				SAME AS SS-5					14	A-6a (VISUAL)
	10.0 - 11.5	SS-5	100	5	6	12	38	39	27	15	12	16	A-6a (9)

DRAWN MJ
CHECKED RJK

SOIL PROFILE
SUMMARY OF SOIL TEST DATA

ALL-75-0.21

V:\1755\active\175530002\geotechnical\drawing\ODOTSubmittal\projects\ALL\76691\roadway\sheets\76691D012.dgn

SUMMARY OF SOIL TEST DATA
COLLINS AVENUE

EXPLORATION NO., STATION & OFFSET	FROM TO	SAMPLE ID	% REC	% AGG	% CS	% FS	% SILT	% CLAY	LL	PL	PI	% WC	ODOT CLASS
B-106-4-08	1.0 - 2.5	SS-1	67	3	5	12	31	49	39	17	22	19	A-6b (13)
STA. 873+27, 175' LT.	2.5 - 4.0	SS-2	80				SAME AS SS-1					15	A-6b (VISUAL)
NORTHING= 391787	4.0 - 5.5	SS-3	100	6	5	12	36	41	31	17	14	14	A-6a (10)
EASTING= 1529744	5.5 - 7.0	SS-4	93				SAME AS SS-3					15	A-6a (VISUAL)
B-104-3-08	1.0 - 2.5	SS-1	67	1	3	19	39	38	36	16	20	18	A-6b (12)
STA. 875+75, 507' LT.	2.5 - 4.0	SS-2	60				SAME AS SS-1					20	A-6b (VISUAL)
NORTHING= 392117	4.0 - 5.5	SS-3	73	4	4	13	34	45	37	18	19	21	A-6b (12)
EASTING= 1529993	5.5 - 7.0	SS-4	93				SAME AS SS-3					16	A-6b (VISUAL)

SUMMARY OF SOIL TEST DATA
STATE ROUTE 309 RAMP A

EXPLORATION NO., STATION & OFFSET	FROM TO	SAMPLE ID	% REC	% AGG	% CS	% FS	% SILT	% CLAY	LL	PL	PI	% WC	ODOT CLASS
B-102-0-08	2.5 - 4.0	SS-1	53	2	6	26	39	27	26	16	10	16	A-4a (6)
STA. 362+96, 135' LT.	5.0 - 6.5	SS-2	53				COMBINED WITH SS-1					27	A-4a (6)
NORTHING= 390900	7.5 - 9.0	SS-3	67				SAME AS SS-1					14	A-4a (VISUAL)
EASTING= 1531872	10.0 - 11.5	SS-4	100	6	6	11	39	38	24	16	8	15	A-4a (8)
B-103-0-08	2.5 - 4.0	SS-1	80	19	17	47	12	5	23	14	9	12	A-2-4 (0)
STA. 366+89, 225' LT.	5.0 - 6.5	SS-2	67				SAME AS SS-1					20	A-2-4 (VISUAL)
NORTHING= 391295	7.5 - 9.0	SS-3	100	4	6	12	39	39	29	17	12	16	A-6a (9)
EASTING= 1531787	10.0 - 11.5	SS-4	100				SAME AS SS-3					15	A-6a (VISUAL)
B-105-0-08	1.5 - 3.0	SS-1	33	20	16	21	26	17	NP	NP	NP	21	A-4a (2)*
STA. 368+58, 302' LT.	3.0 - 4.5	SS-2	53				COMBINED WITH SS-1					11	A-4a (2)
NORTHING= 391565	4.5 - 6.0	SS-3	67	24	9	26	24	17	26	15	11	15	A-6a (1)
EASTING= 1531713	6.0 - 7.5	SS-4	1				COMBINED WITH SS-3					20	A-6a (1)

SUMMARY OF SOIL TEST DATA
STATE ROUTE 309 RAMP C

EXPLORATION NO., STATION & OFFSET	FROM TO	SAMPLE ID	% REC	% AGG	% CS	% FS	% SILT	% CLAY	LL	PL	PI	% WC	ODOT CLASS
B-104-0-08	1.5 - 3.0	SS-1	67	28	26	19	15	12	NP	NP	NP	16	A-2-4 (0)*
STA. 370+88, 267' LT.	3.0 - 4.5	SS-2	80	26	21	17	22	14	27	16	11	19	A-6a (0)
NORTHING= 391694	4.5 - 6.0	SS-3	53				SAME AS SS-2					15	A-6a (VISUAL)
EASTING= 1531749	6.0 - 7.5	SS-4	43				SAME AS SS-2					17	A-6a (VISUAL)
B-107-0-08	2.5 - 4.0	SS-1	60	6	7	11	38	38	30	14	16	15	A-6b (10)
STA. 373+82, 119' LT.	5.0 - 6.5	SS-2	73				COMBINED WITH SS-1					18	A-6b (10)
NORTHING= 391987	7.5 - 9.0	SS-3	100				SAME AS SS-1					21	A-6b (VISUAL)
EASTING= 1531901	10.0 - 11.5	SS-4	67				SAME AS SS-1					16	A-6b (VISUAL)
	12.5 - 14.0	SS-5	100	3	4	23	41	29	32	16	16	19	A-6b (9)
	14.0 - 26.5	SS-6	1				SAME AS SS-5					14	A-6b (VISUAL)
B-108-0-08	2.5 - 4.0	SS-1	40				SAME AS SS-2					14	A-6b (VISUAL)
STA. 377+24, 68' LT.	5.0 - 6.5	SS-2	73	5	7	11	38	39	31	15	16	17	A-6b (10)
NORTHING= 392328	7.5 - 9.0	SS-3	100				SAME AS SS-2					19	A-6b (VISUAL)
EASTING= 1531956	10.0 - 11.5	SS-4	100	12	9	15	34	30	36	16	20	15	A-6b (10)

SUMMARY OF SOIL TEST DATA
STATE ROUTE 309 RAMP E

EXPLORATION NO., STATION & OFFSET	FROM TO	SAMPLE ID	% REC	% AGG	% CS	% FS	% SILT	% CLAY	LL	PL	PI	% WC	ODOT CLASS
B-264-0-08	2.5 - 4.0	SS-1	53	30	34	17	16	3	NP	NP	NP	13	A-1-b (0)
STA. 373+72, 246' RT.	5.0 - 6.5	SS-2	60				COMBINED WITH SS-1					9	A-1-b (0)
NORTHING= 391972	7.5 - 9.0	SS-3	100	4	7	13	41	35	26	15	11	16	A-6a (8)
EASTING= 1532266	10.0 - 11.5	SS-4	100				SAME AS SS-3					16	A-6a (VISUAL)
B-265-0-08	2.5 - 4.0	SS-1	100	5	10	12	27	46	31	16	15	15	A-6b (10)
STA. 376+96, 146' RT.	5.0 - 6.5	SS-2	80				SAME AS SS-3					15	A-6a (VISUAL)
NORTHING= 392298	7.5 - 9.0	SS-3	87	3	6	20	42	29	32	17	15	15	A-6a (9)
EASTING= 1532170	10.0 - 11.5	SS-4	80	19	4	9	41	27	26	17	9	29	A-4a (7)

SUMMARY OF SOIL TEST DATA
STATE ROUTE 309 RAMP F

EXPLORATION NO., STATION & OFFSET	FROM TO	SAMPLE ID	% REC	% AGG	% CS	% FS	% SILT	% CLAY	LL	PL	PI	% WC	ODOT CLASS
B-082-0-08	2.5 - 4.0	SS-1	67	12	12	12	31	33	47	23	24	22	A-7-6 (12)
STA. 361+39, 157' RT.	5.0 - 6.5	SS-2	73				COMBINED WITH SS-1					23	A-7-6 (12)
NORTHING= 390740	7.5 - 9.0	SS-3	80				SAME AS SS-1					29	A-7-6 (VISUAL)
EASTING= 1532162	10.0 - 11.5	SS-4	100	41	37	11	8	3	NP	NP	NP	24	A-1-b (0)
B-084-0-08	2.5 - 4.0	SS-1	67	0	5	40	27	28	29	17	12	22	A-6a (5)
STA. 364+38, 217' RT.	5.0 - 6.5	SS-2	80				SAME AS SS-3					20	A-1-b (VISUAL)
NORTHING= 391039	7.5 - 9.0	SS-3	100	48	20	16	12	4	NP	NP	NP	16	A-1-b (0)
EASTING= 1532226	10.0 - 11.5	SS-4	100	7	6	12	41	34	26	15	11	17	A-6a (8)
B-083-0-08	2.5 - 4.0	SS-1	67	30	31	17	19	3	NP	NP	NP	13	A-1-b (0)*
STA. 367+59, 268' RT.	5.0 - 6.5	SS-2	73				COMBINED WITH SS-1					16	A-1-b (0)*
NORTHING= 391359	7.5 - 9.0	SS-3	100	3	17	40	21	19	24	14	10	17	A-4a (1)
EASTING= 1532280	10.0 - 11.5	SS-4	100				SAME AS SS-3					15	A-4a (VISUAL)
B-093-0-08	2.5 - 4.0	SS-1	67	37	14	12	23	14	26	15	11	18	A-6a (1)*
STA. 369+67, 253' RT.	5.0 - 6.5	SS-2	67				COMBINED WITH SS-1					16	A-6a (1)
NORTHING= 391560	7.5 - 9.0	SS-3	67				SAME AS SS-1					17	A-6a (VISUAL)
EASTING= 1532268	10.0 - 11.5	SS-4	100	10	5	11	40	34	26	15	11	17	A-6a (8)
	12.5 - 14.0	SS-5	100				SAME AS SS-4					16	A-6a (VISUAL)

SUMMARY OF SOIL TEST DATA
BRYN MAWR AVENUE

EXPLORATION NO., STATION & OFFSET	FROM TO	SAMPLE ID	% REC	% AGG	% CS	% FS	% SILT	% CLAY	LL	PL	PI	% WC	ODOT CLASS
B-111-4-08	1.0 - 2.5	SS-1	87	5	6	12	37	40	30	16	14	14	A-6a (10)*
STA. 410+70, 10' LT.	2.5 - 4.0	SS-2	93				SAME AS SS-1					17	A-6a (VISUAL)*
NORTHING= 395467	4.0 - 5.5	SS-3	67				SAME AS SS-1					18	A-6a (VISUAL)
EASTING= 1532212	5.5 - 7.0	SS-4	80				SAME AS SS-5					28	A-7-6 (VISUAL)
	7.0 - 8.5	SS-5	87	2	2	8	35	53	49	19	30	30	A-7-6 (18)
B-111-8-08	1.0 - 2.5	SS-1	67	9	6	12	35	38	30	16	14	10	A-6a (9)
STA. 413+75, 10' LT.	2.5 - 4.0	SS-2	67	4	6	12	39	39	31	16	15	15	A-6a (10)
NORTHING= 395772	4.0 - 5.5	SS-3	100				SAME AS SS-2					16	A-6a (VISUAL)
EASTING= 1532230	5.5 - 7.0	SS-4	87				SAME AS SS-2					14	A-6a (VISUAL)

DRAWN MJ CHECKED RJK

SOIL PROFILE

SUMMARY OF SOIL TEST DATA

ALL-75-0.21

V:\1755\active\175530002\geotechnical\drawing\ODOTSubmittal\projects\ALL\7669\roadway\sheets\7669HD013.dgn

SUMMARY OF SOIL TEST DATA
RESERVOIR ROAD

EXPLORATION NO., STATION & OFFSET	FROM TO	SAMPLE ID	% REC	% AGG	% CS	% FS	% SILT	% CLAY	LL	PL	PI	% WC	ODOT CLASS
B-113-1-08	1.0 - 2.5	SS-1	67									6	A-1-a (VISUAL)
STA. 98+54, 7' LT.	2.5 - 4.0	SS-2	73	1	5	11	33	50	42	18	24	18	A-7-6 (14)
NORTHING= 395881	4.0 - 5.5	SS-3	87	5	5	12	36	42	32	16	16	14	A-6b (10)
EASTING= 1531530	5.5 - 7.0	SS-4	100				SAME AS SS-3					16	A-6b (VISUAL)
B-112-3-08	1.5 - 3.0	SS-1	73	5	6	13	36	40	29	16	13	17	A-6a (9)*
STA. 109+90, 8' LT.	3.0 - 4.5	SS-2	80	4	6	13	37	40	31	17	14	16	A-6a (10)
NORTHING= 395929	4.5 - 6.0	SS-3	100				SAME AS SS-2					16	A-6a (VISUAL)
EASTING= 1532664	6.0 - 7.5	SS-4	67				SAME AS SS-2					16	A-6a (VISUAL)

SUMMARY OF SOIL TEST DATA
STATE ROUTE 81

EXPLORATION NO., STATION & OFFSET	FROM TO	SAMPLE ID	% REC	% AGG	% CS	% FS	% SILT	% CLAY	LL	PL	PI	% WC	ODOT CLASS
B-135-0-08	1.5 - 3.0	SS-1	67	28	6	12	24	30	34	16	18	18	A-6b (7)*
STA. 433+36, 40' LT.	3.0 - 4.5	SS-2	20				COMBINED WITH SS-1					21	A-6b (7)
NORTHING= 400412	4.5 - 6.0	SS-3	0				SAME AS SS-1					-	A-6b (VISUAL)
EASTING= 1530482	6.0 - 7.5	SS-4	47						41	20	21	24	A-6b (VISUAL)
B-134-0-08	2.5 - 4.0	SS-1	40	29	7	11	24	29	36	17	19	13	A-6b (7)*
STA. 437+30, 44' LT.	5.0 - 6.5	SS-2	53	9	3	9	43	36	29	16	13	21	A-6a (9)
NORTHING= 400533	7.5 - 9.0	SS-3	67				COMBINED WITH SS-2					18	A-6a (9)
EASTING= 1530856	10.0 - 11.5	SS-4	67	13	5	10	37	35	28	16	12	17	A-6a (8)
B-133-0-08	2.5 - 4.0	SS-1	67	9	6	16	33	36	35	19	16	18	A-6b (9)*
STA. 441+36, 18' LT.	5.0 - 6.5	SS-2	67				COMBINED WITH SS-1					24	A-6b (9)
NORTHING= 400627	7.5 - 9.0	SS-3	67	10	4	21	27	38	38	17	21	18	A-6b (11)
EASTING= 1531252	10.0 - 11.5	SS-4	67				COMBINED WITH SS-3					21	A-6b (11)
B-132-0-08	2.5 - 4.0	SS-1	67	11	7	13	31	38	31	17	14	16	A-6a (9)*
STA. 445+36, 17' RT.	5.0 - 6.5	SS-2	67				COMBINED WITH SS-1					15	A-6a (9)
NORTHING= 400692	7.5 - 9.0	SS-3	80				SAME AS SS-1					14	A-6a (VISUAL)
EASTING= 1531648	10.0 - 11.5	SS-4	87	7	8	20	38	27	22	14	8	13	A-4a (7)
B-131-0-08	2.5 - 4.0	SS-1	100	3	6	10	32	49	34	19	15	15	A-6a (10)
STA. 454+98, 20' RT.	5.0 - 6.5	SS-2	100				SAME AS SS-1					17	A-6a (VISUAL)
NORTHING= 400833	7.5 - 9.0	SS-3	100				SAME AS SS-1					19	A-6a (VISUAL)
EASTING= 1532590	10.0 - 11.5	SS-4	100	4	7	16	40	33	26	15	11	14	A-6a (8)
B-130-0-08	1.5 - 2.6	SS-1	2				SAME AS SS-2					6	A-6b (VISUAL)*
STA. 485+95, 2' RT.	2.6 - 4.1	SS-2	67	7	9	10	32	42	38	20	18	7	A-6b (11)
NORTHING= 400826	4.1 - 5.6	SS-3	80				COMBINED WITH SS-2					22	A-6b (11)
EASTING= 1532988	5.6 - 7.1	SS-4	100	8	6	10	33	43	34	19	15	18	A-6a (10)

SUMMARY OF SOIL TEST DATA
NUEBRECHT ROAD

EXPLORATION NO., STATION & OFFSET	FROM TO	SAMPLE ID	% REC	% AGG	% CS	% FS	% SILT	% CLAY	LL	PL	PI	% WC	ODOT CLASS
B-137-1-08	1.0 - 2.5	SS-1	13				SAME AS SS-3					5	A-6b (VISUAL)*
STA. 14+59, 2' RT.	2.5 - 4.0	SS-2	13				SAME AS SS-3					22	A-6b (VISUAL)
NORTHING= 400859	4.0 - 5.5	SS-3	67	19	6	18	28	30	39	15	24	22	A-6b (10)
EASTING= 1530949	5.5 - 7.0	SS-4	87				SAME AS SS-5					22	A-4a (VISUAL)
	7.0 - 8.5	SS-5	73	2	4	45	37	12	NP	NP	NP	23	A-4a (3)

SUMMARY OF SOIL TEST DATA
STATE ROUTE 81 RAMP B

EXPLORATION NO., STATION & OFFSET	FROM TO	SAMPLE ID	% REC	% AGG	% CS	% FS	% SILT	% CLAY	LL	PL	PI	% WC	ODOT CLASS
B-136-0-08	2.5 - 4.0	SS-1	100	0	2	16	48	34	35	20	15	22	A-6a (10)
STA. 463+34, 254' RT.	5.0 - 6.5	SS-2	100	3	6	16	33	42	41	19	22	22	A-7-6 (13)
NORTHING= 400931	7.5 - 9.0	SS-3	100				SAME AS SS-2					17	A-7-6 (VISUAL)
EASTING= 1532421	10.0 - 11.5	SS-4	100	3	5	15	32	45	31	16	15	18	A-6a (10)
B-138-0-08	2.5 - 4.0	SS-1	100	1	7	12	30	50	42	20	22	21	A-7-6 (13)
STA. 466+18, 211' RT.	5.0 - 6.5	SS-2	100				SAME AS SS-4					16	A-6a (VISUAL)
NORTHING= 401216	7.5 - 9.0	SS-3	100				SAME AS SS-4					17	A-6a (VISUAL)
EASTING= 1532382	10.0 - 11.5	SS-4	100	6	8	14	37	35	28	17	11	17	A-6a (8)
B-140-0-08	2.5 - 4.0	SS-1	100	5	7	14	38	36	32	16	16	22	A-6b (10)
STA. 468+67, 171' RT.	5.0 - 6.5	SS-2	100				SAME AS SS-1					23	A-6b (VISUAL)
NORTHING= 401466	7.5 - 9.0	SS-3	100				SAME AS SS-3					18	A-6a (VISUAL)
EASTING= 1532346	10.0 - 11.5	SS-4	100	4	6	13	36	41	30	17	13	17	A-6a (9)
B-142-0-08	2.5 - 4.0	SS-1	100	2	3	9	32	54	50	20	30	25	A-7-6 (18)
STA. 470+70, 140' RT.	5.0 - 6.5	SS-2	87				SAME AS SS-1					18	A-7-6 (VISUAL)
NORTHING= 401670	7.5 - 9.0	SS-3	100				SAME AS SS-1					17	A-7-6 (VISUAL)
EASTING= 1532320	10.0 - 11.5	SS-4	100	2	5	10	35	48	36	18	18	16	A-6b (11)

SUMMARY OF SOIL TEST DATA
STATE ROUTE 81 RAMP C

EXPLORATION NO., STATION & OFFSET	FROM TO	SAMPLE ID	% REC	% AGG	% CS	% FS	% SILT	% CLAY	LL	PL	PI	% WC	ODOT CLASS
B-122-0-08	2.5 - 4.0	SS-1	67	10	6	11	32	41	36	18	18	20	A-6b (11)
STA. 455+65, 58' RT.	5.0 - 6.5	SS-2	80				COMBINED WITH SS-1					23	A-6b (11)
NORTHING= 400166	7.5 - 9.0	SS-3	87	7	7	13	32	41	35	18	17	19	A-6b (11)
EASTING= 1532211	10.0 - 11.5	SS-4	100				SAME AS SS-3					23	A-6b (VISUAL)
B-124-0-08	2.5 - 4.0	SS-1	53	14	7	13	31	35	38	20	18	20	A-6b (10)
STA. 457+50, 93' RT.	5.0 - 6.5	SS-2	27				COMBINED WITH SS-1					21	A-6b (10)
NORTHING= 400351	7.5 - 9.0	SS-3	67					33	17	16		20	A-6b (VISUAL)
EASTING= 1532250	10.0 - 11.5	SS-4	67	2	4	12	36	46	43	19	24	24	A-7-6 (14)
B-126-0-08	2.5 - 4.0	SS-1	27				SAME AS SS-2					15	A-6a (VISUAL)
STA. 459+28, 192' RT.	5.0 - 6.5	SS-2	80	2	7	14	35	42	31	17	14	20	A-6a (10)
NORTHING= 400526	7.5 - 9.0	SS-3	87				SAME AS SS-4					18	A-6b (VISUAL)
EASTING= 1532351	10.0 - 11.5	SS-4	67	4	5	12	32	47	35	18	17	17	A-6b (11)
B-128-0-08	2.5 - 4.0	SS-1	0				SAME AS SS-2					-	A-6a (VISUAL)
STA. 461+28, 245' RT.	5.0 - 6.5	SS-2	67	12	14	14	32	28	32	18	14	17	A-6a (7)
NORTHING= 400726	7.5 - 9.0	SS-3	53				COMBINED WITH SS-2					25	A-6a (7)
EASTING= 1532408	10.0 - 11.5	SS-4	87	1	10	11	35	43	39	21	18	27	A-6b (11)

DRAWN MJ
CHECKED RJK

SOIL PROFILE

SUMMARY OF SOIL TEST DATA

ALL-75-0.21

16 / 90

16 / 157

V:\1755\active\175530002\geotechnical\drawing\ODOTSubmittal\projects\ALL\7669\roadway\sheets\7669ID014.dgn

SUMMARY OF SOIL TEST DATA
STATE ROUTE 81 RAMP D

EXPLORATION NO., STATION & OFFSET	FROM	TO	SAMPLE ID	% REC	% AGG	% CS	% FS	% SILT	% CLAY	LL	PL	PI	% WC	ODOT CLASS
B-123-0-08	2.5	4.0	SS-1	67	4	7	12	36	41	30	16	14	16	A-6a (10)
STA. 454+95, 51' LT.	5.0	6.5	SS-2	40				SAME AS SS-1					17	A-6a (VISUAL)
NORTHING= 400098	7.5	9.0	SS-3	67	3	5	12	36	44	35	18	17	25	A-6b (11)
EASTING= 1532101	10.0	11.5	SS-4	67				COMBINED WITH SS-3					23	A-6b (11)
B-125-0-08	2.5	4.0	SS-1	60	8	8	13	32	39	30	16	14	15	A-6a (9)*
STA. 456+84, 99' LT.	5.0	6.5	SS-2	80				SAME AS SS-3					17	A-6b (VISUAL)
NORTHING= 400288	7.5	9.0	SS-3	87	4	5	13	28	49	39	17	22	24	A-6b (13)
EASTING= 1532057	10.0	11.5	SS-4	73				SAME AS SS-3					23	A-6b (VISUAL)
B-127-0-08	2.5	4.0	SS-1	67				SAME AS SS-2					16	A-6a (VISUAL)*
STA. 458+67, 187' LT.	5.0	6.5	SS-2	80	4	6	12	36	42	29	16	13	14	A-6a (9)
NORTHING= 400472	7.5	9.0	SS-3	53	2	2	10	33	53	46	19	27	24	A-7-6 (16)
EASTING= 1531972	10.0	11.5	SS-4	67	1	2	11	37	49	43	18	25	21	A-7-6 (15)
B-129-0-08	2.5	4.0	SS-1	100	2	6	13	37	42	33	20	13	19	A-6a (9)*
STA. 460+64, 222' LT.	5.0	6.5	SS-2	100	1	5	9	48	37	29	17	12	19	A-6a (9)*
NORTHING= 400370	7.5	9.0	SS-3	67				SAME AS SS-2					18	A-6a (VISUAL)
EASTING= 1531940	10.0	11.5	SS-4	2				SAME AS SS-2					23	A-6a (VISUAL)

SUMMARY OF SOIL TEST DATA
STATE ROUTE 81 RAMP F

EXPLORATION NO., STATION & OFFSET	FROM	TO	SAMPLE ID	% REC	% AGG	% CS	% FS	% SILT	% CLAY	LL	PL	PI	% WC	ODOT CLASS
B-137-0-08	2.5	4.0	SS-1	100	10	10	17	33	30	27	15	12	16	A-6a (6)*
STA. 461+93, 218' LT.	5.0	6.5	SS-2	87	1	1	8	74	16	NP	NP	NP	21	A-4b (8)
NORTHING= 400799	7.5	9.0	SS-3	60				SAME AS SS-2					24	A-4b (VISUAL)
EASTING= 1531946	10.0	11.5	SS-4	100	1	4	59	23	13	NP	NP	NP	23	A-4a (0)
B-139-0-08	2.5	4.0	SS-1	100	2	6	9	34	49	42	20	22	26	A-7-6 (13)*
STA. 464+86, 186' LT.	5.0	6.5	SS-2	100				SAME AS SS-1					15	A-7-6 (VISUAL)*
NORTHING= 401091	7.5	9.0	SS-3	100				SAME AS SS-1					18	A-7-6 (VISUAL)
EASTING= 1531983	10.0	11.5	SS-4	100	3	9	11	34	43	31	19	12	17	A-6a (9)
	12.5	14.0	SS-5	100				SAME AS SS-4					18	A-6a (VISUAL)
	15.0	16.5	SS-6	100	4	6	16	34	40	40	19	21	16	A-6b (12)
B-141-0-08	2.5	4.0	SS-1	100				SAME AS SS-2					25	A-6a (VISUAL)*
STA. 467+89, 161' LT.	5.0	6.5	SS-2	100	3	5	10	32	50	34	19	15	15	A-6a (10)*
NORTHING= 401393	7.5	9.0	SS-3	100				SAME AS SS-2					16	A-6a (VISUAL)
EASTING= 1532014	10.0	11.5	SS-4	100	3	5	11	36	45	32	19	13	16	A-6a (9)
B-143-0-08	2.5	4.0	SS-1	100	3	5	11	37	44	36	17	19	16	A-6b (12)
STA. 470+91, 135' LT.	5.0	6.5	SS-2	100				SAME AS SS-1					16	A-6b (VISUAL)
NORTHING= 401695	7.5	9.0	SS-3	100	2	5	11	38	44	30	18	12	18	A-6a (9)
EASTING= 1532045	10.0	11.5	SS-4	100				SAME AS SS-3					19	A-6a (VISUAL)

DRAWN MJ CHECKED RJK

SOIL PROFILE

SUMMARY OF SOIL TEST DATA

ALL-75-0.21

17 / 90

17 / 157

V:\1765\active\175530002\geotechnical\drawing\ODOTSubmittal\projects\ALL_76691\roadway\sheets\76691D015.dgn

V:\1755\active\175530002\geotechnical\drawing\ODOTSubmittal\projects\ALL\76691\roadway\sheets\76691P001.dgn

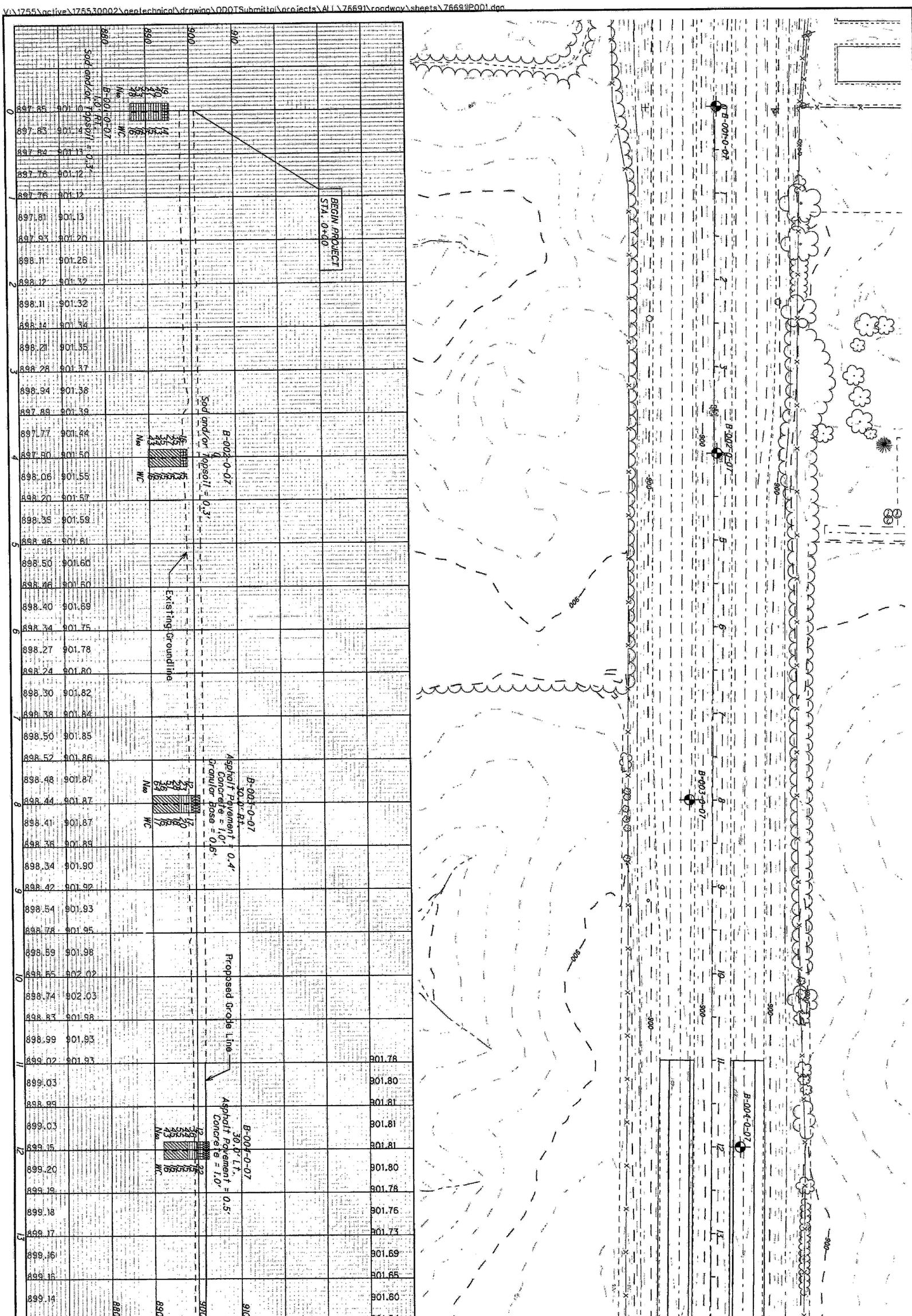

18 / 90	ALL-75-0.21	SOIL PROFILE I-75 STATION 0+00 - 14+00	DRAWN M.J.	CHECKED J.M.M.	HORIZONTAL SCALE IN FEET

V:\1755\active\175530002\geotechnical\drawing\ODOTSubmittal\projects\ALL\76691\roadway\sheets\76691IP002.dgn

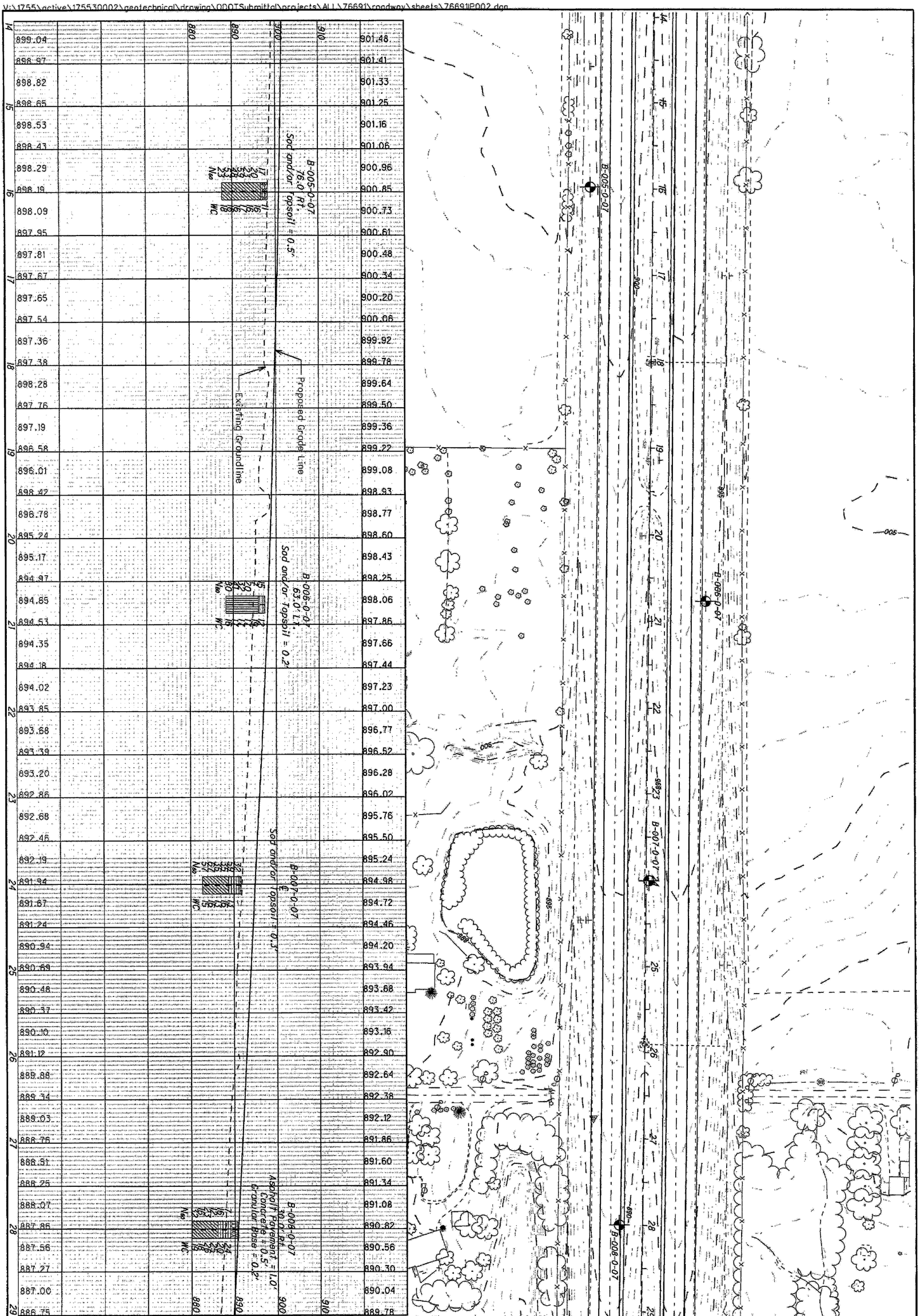

19/157	19/90	ALL-75-0.21	SOIL PROFILE I-75 STATION 14+00 - 29+00	DRAWN M.J. CHECKED J.M.M	0 25 50 100 HORIZONTAL SCALE IN FEET

V:\1755\active\1755300002\geotechnical\drawing\ODOTSubmittal\projects\ALL\76691\roadway\sheets\76691IP003.dgn

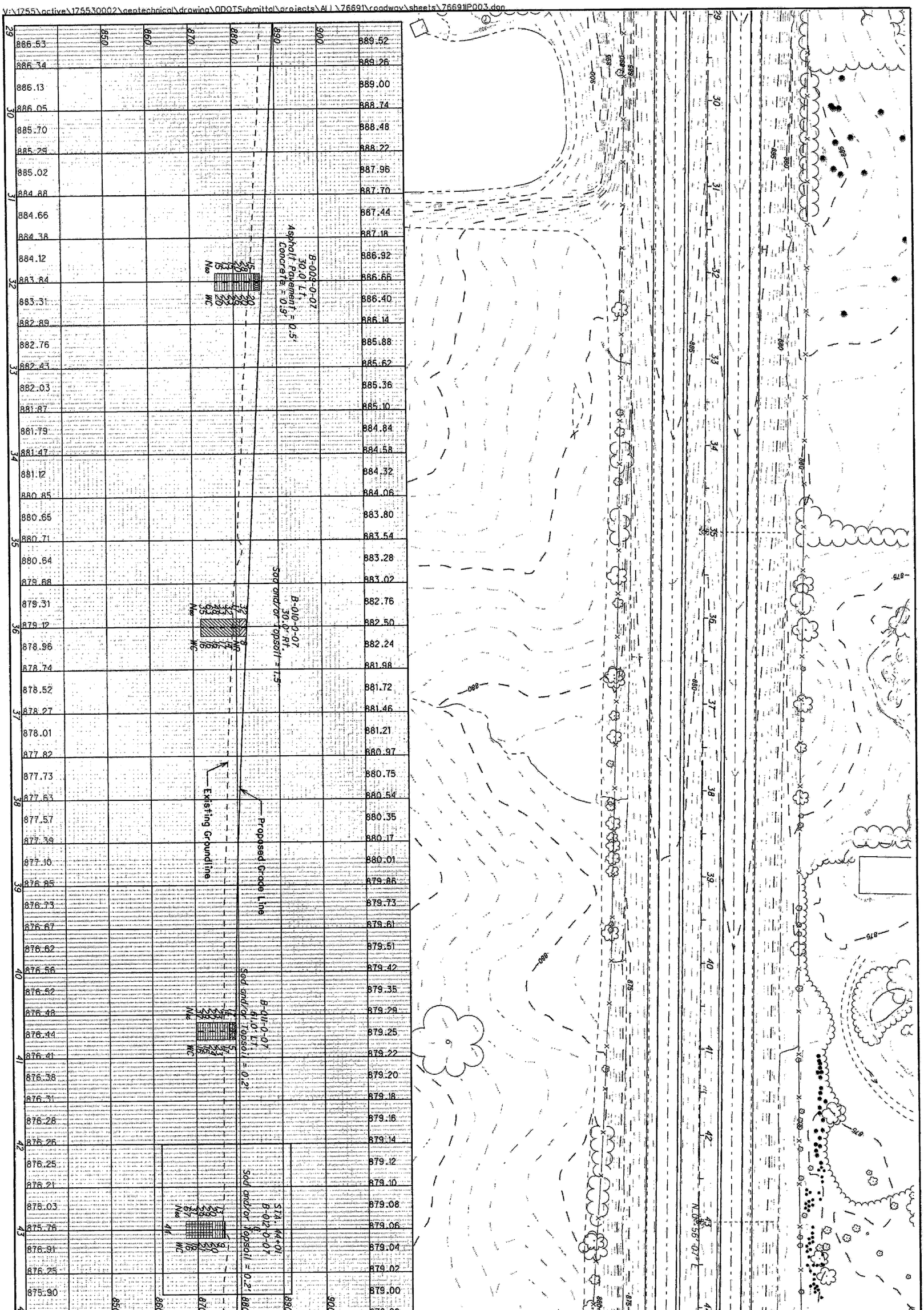

157 / 20 / 90	ALL-75-0.21	SOIL PROFILE I-75 STATION 29+00 - 44+00	DRAWN M.J.	CHECKED J.M.M.	HORIZONTAL SCALE IN FEET

V:\1755\active\175530002\geotechnical\drawing\ODOTSubmittal\projects\ALL\76691\roadway\sheets\76691IP004.dgn

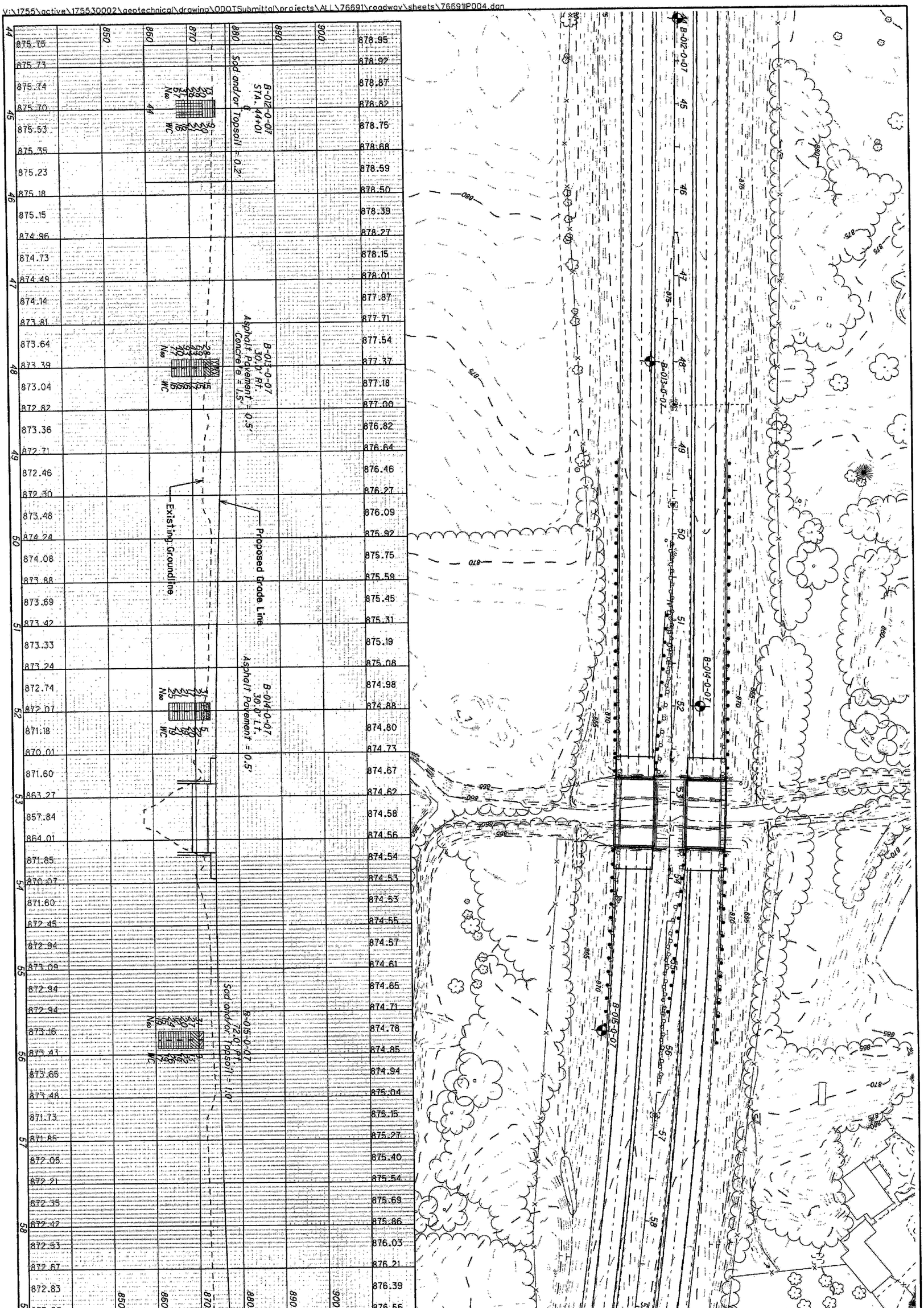

| | | |

V:\1755\active\175530002\geotechnical\drawing\ODOTSubmittal\projects\ALL\76691\roadway\sheets\76691IP005.dgn

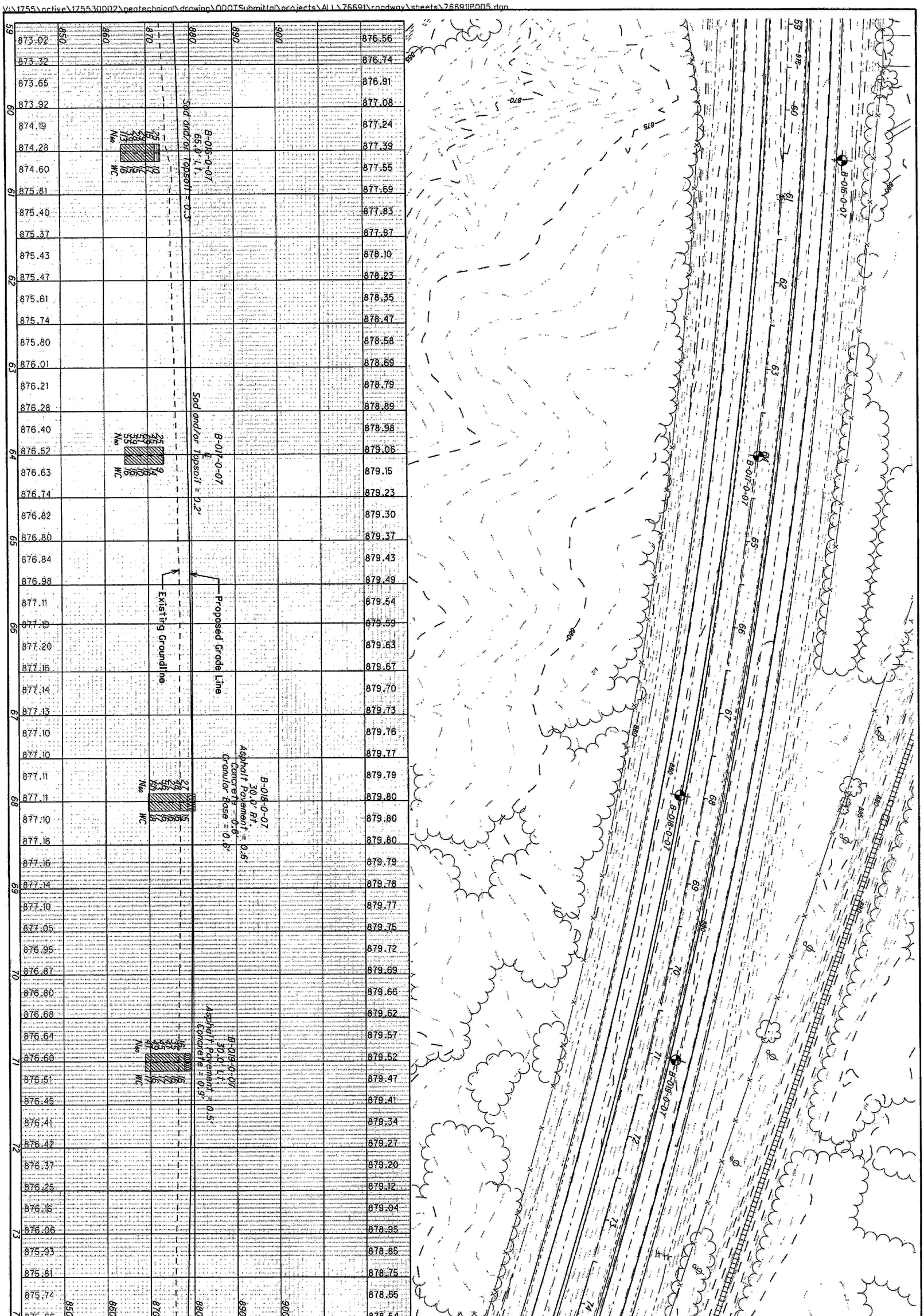

22/157	22/90	ALL-75-0.21	SOIL PROFILE I-75 STATION 59+00 - 74+00	DRAWN M.J. CHECKED J.M.M.	0 25 50 100 HORIZONTAL SCALE IN FEET

V:\1755\active\175530002\geotechnical\drawing\ODOTSubmittal\projects\ALL\76691\roadway\sheets\76691IP006.dgn

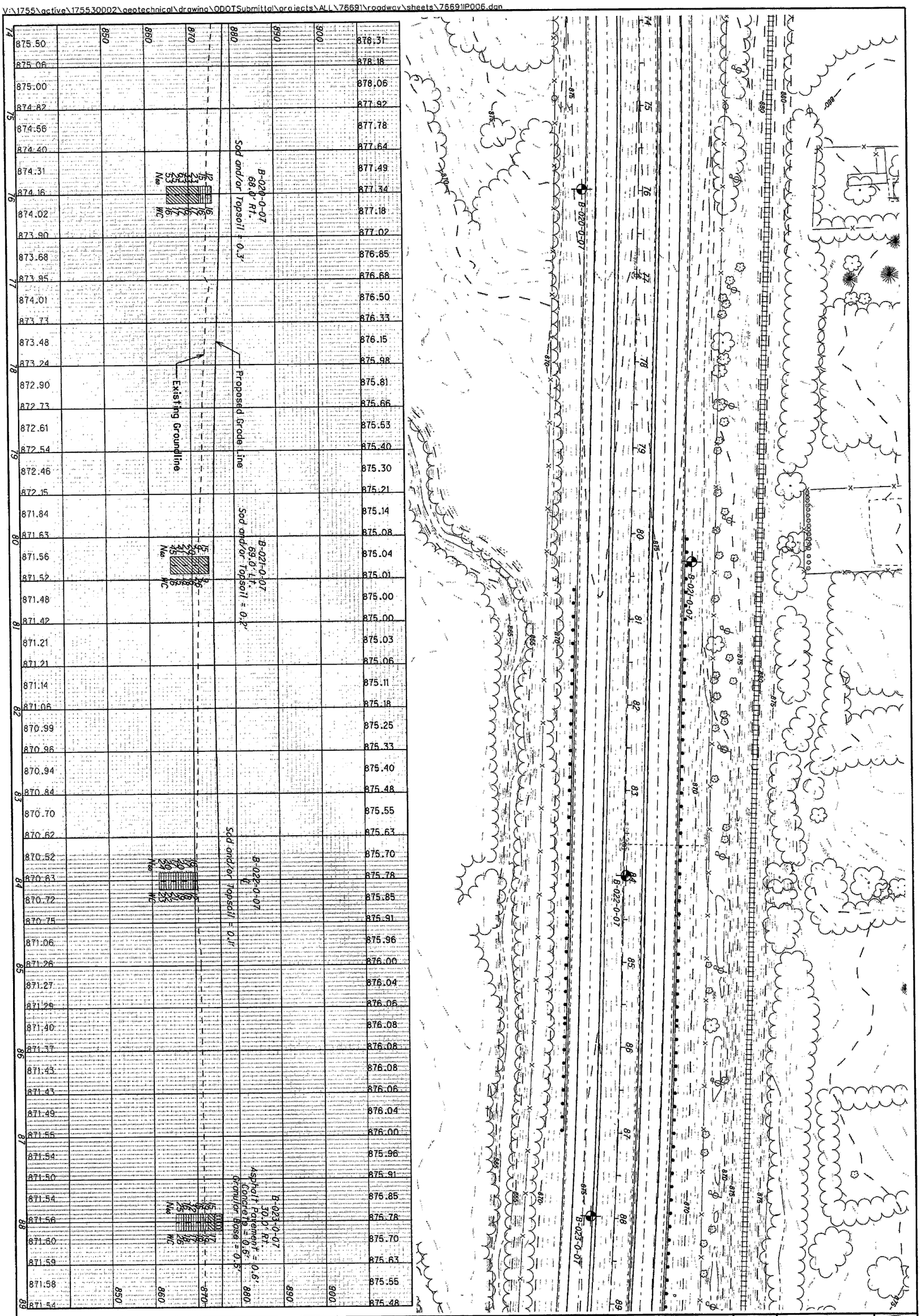

23/57	23/90	ALL-75-0.21	SOIL PROFILE I-75 STATION 74+00 - 89+00

DRAWN M.J.
CHECKED J.M.M.

0 25 50 100
HORIZONTAL SCALE IN FEET

V:\1755\active\175530002\geotechnical\drawing\ODOTSubmittal\projects\ALL\76691\roadway\sheets\76691P007.dgn

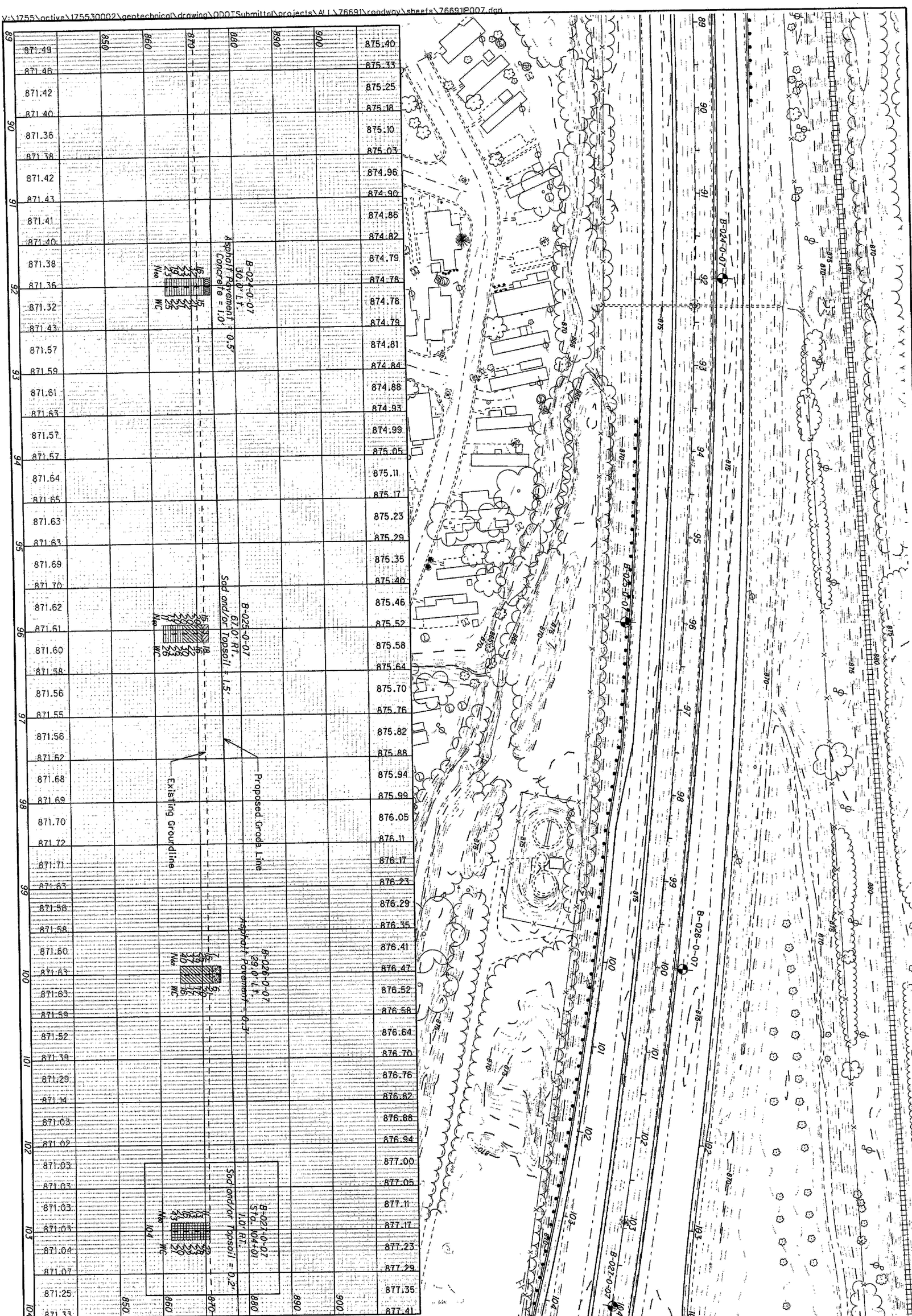

24 / 157	24 / 90	ALL-75-0.21	SOIL PROFILE I-75 STATION 89+00 - 104+00	DRAWN M.J. CHECKED J.M.M.	0 50 25 100 HORIZONTAL SCALE IN FEET

V:\1755\active\175530002\geotechnical\drawing\ODOTSubmittal\projects\ALL\76691\roadway\sheets\76691IP008.dgn

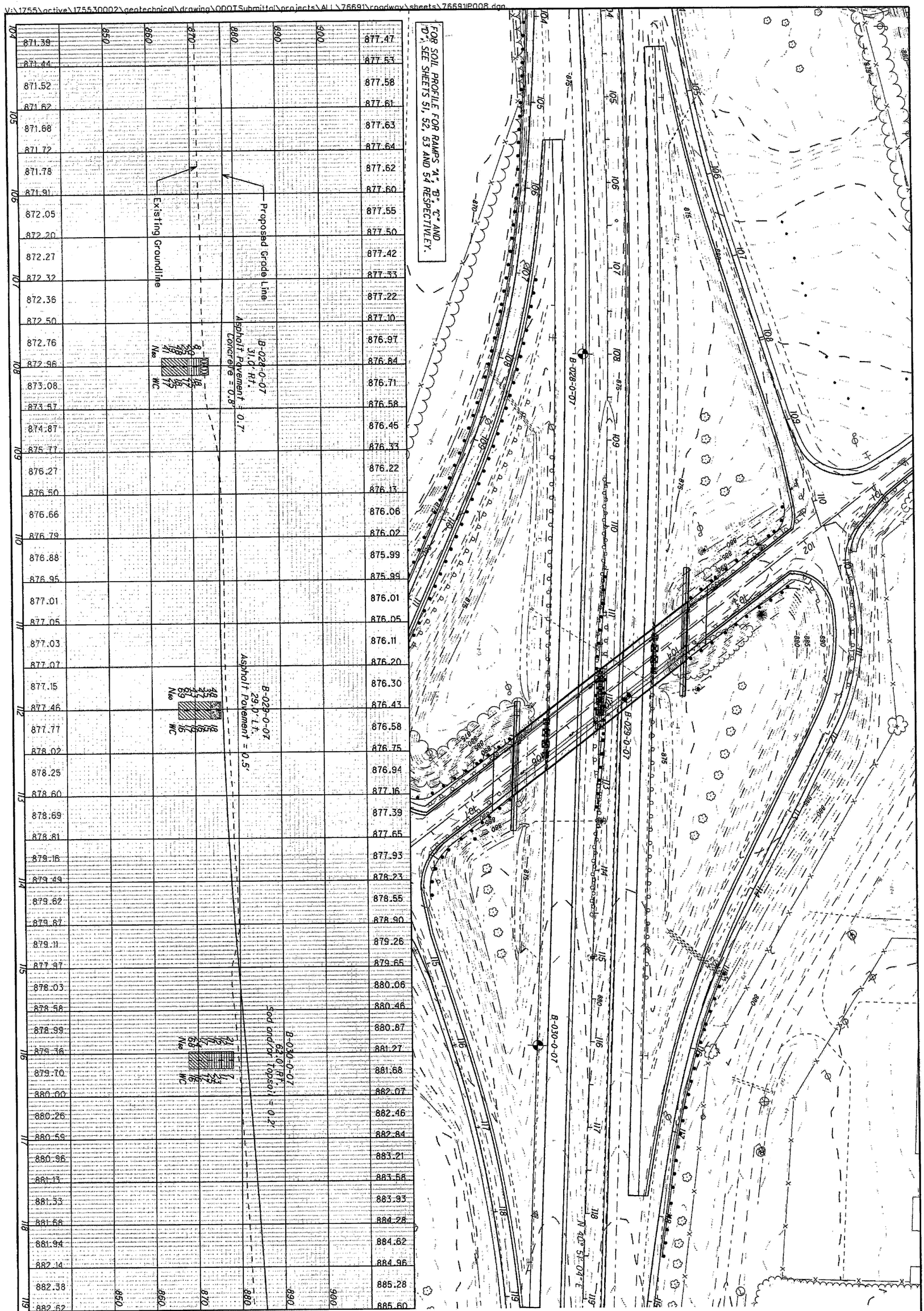

25/157	25/90	ALL-75-0.21	SOIL PROFILE I-75 STATION 104+00 - 119+00	DRAWN M.J. CHECKED J.M.M.	0 25 50 100 HORIZONTAL SCALE IN FEET

V:\1755\active\175530002\geotechnical\drawing\ODOTSubmittal\projects\ALL\76691\roadway\sheets\76691P009.dgn

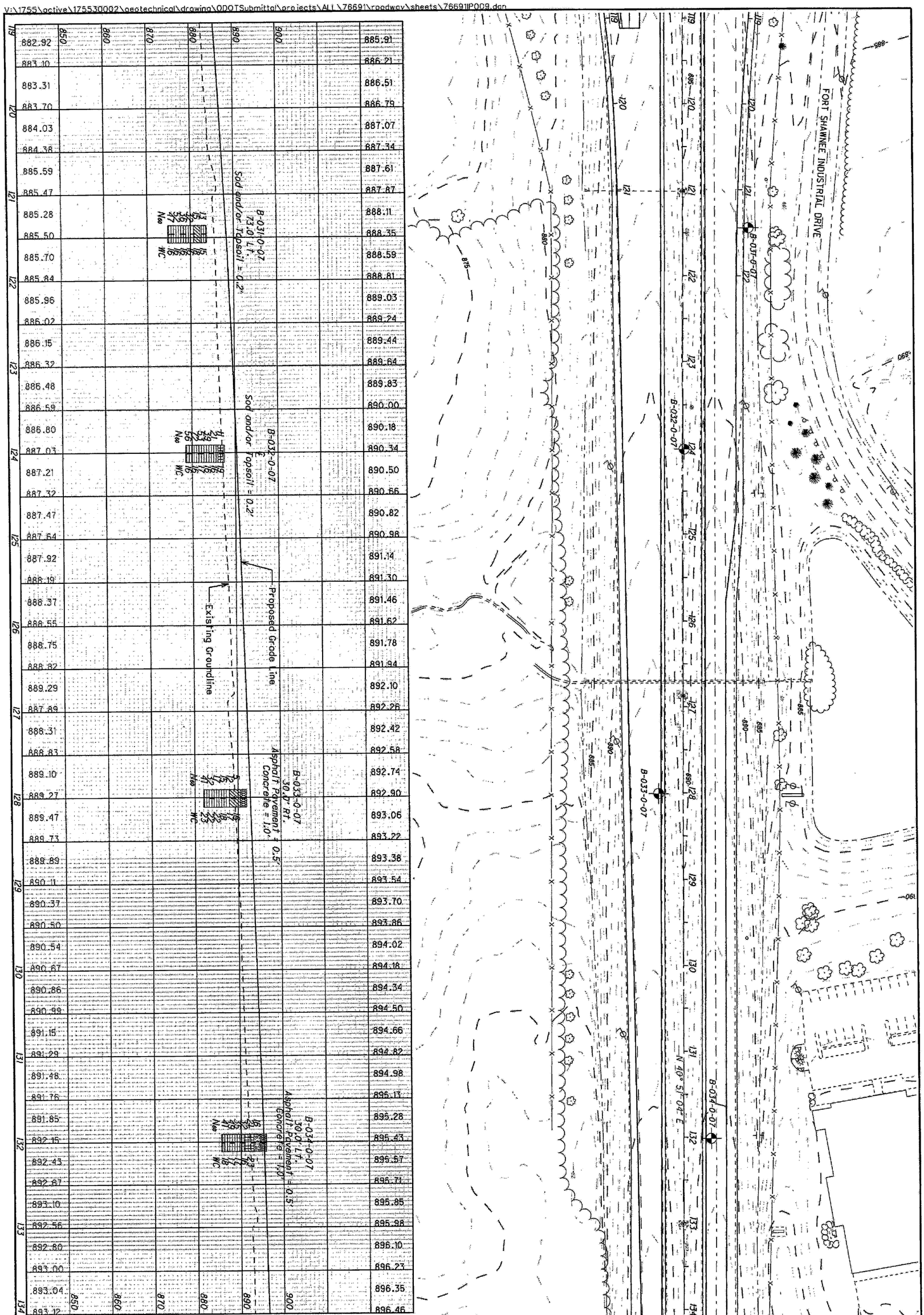

| | | |

V:\1755\active\175530002\geotechnical\drawing\ODOTSubmittal\projects\ALL\76691\roadway\sheets\76691P010.dgn

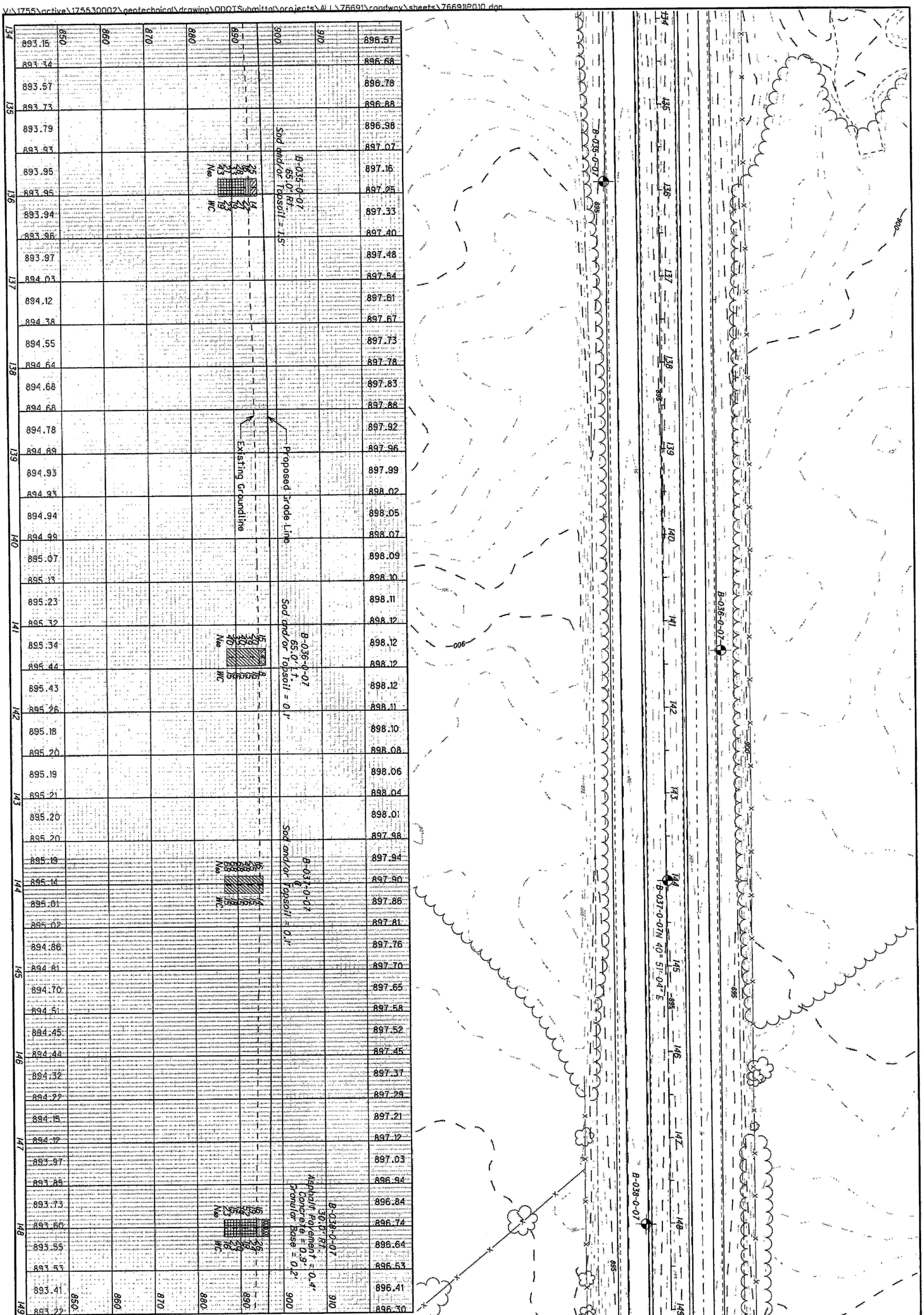

| | | |

V:\1755\active\175530002\geotechnical\drawing\ODOTSubmittal\projects\ALL\76691\roadway\sheets\76691IP011.dgn

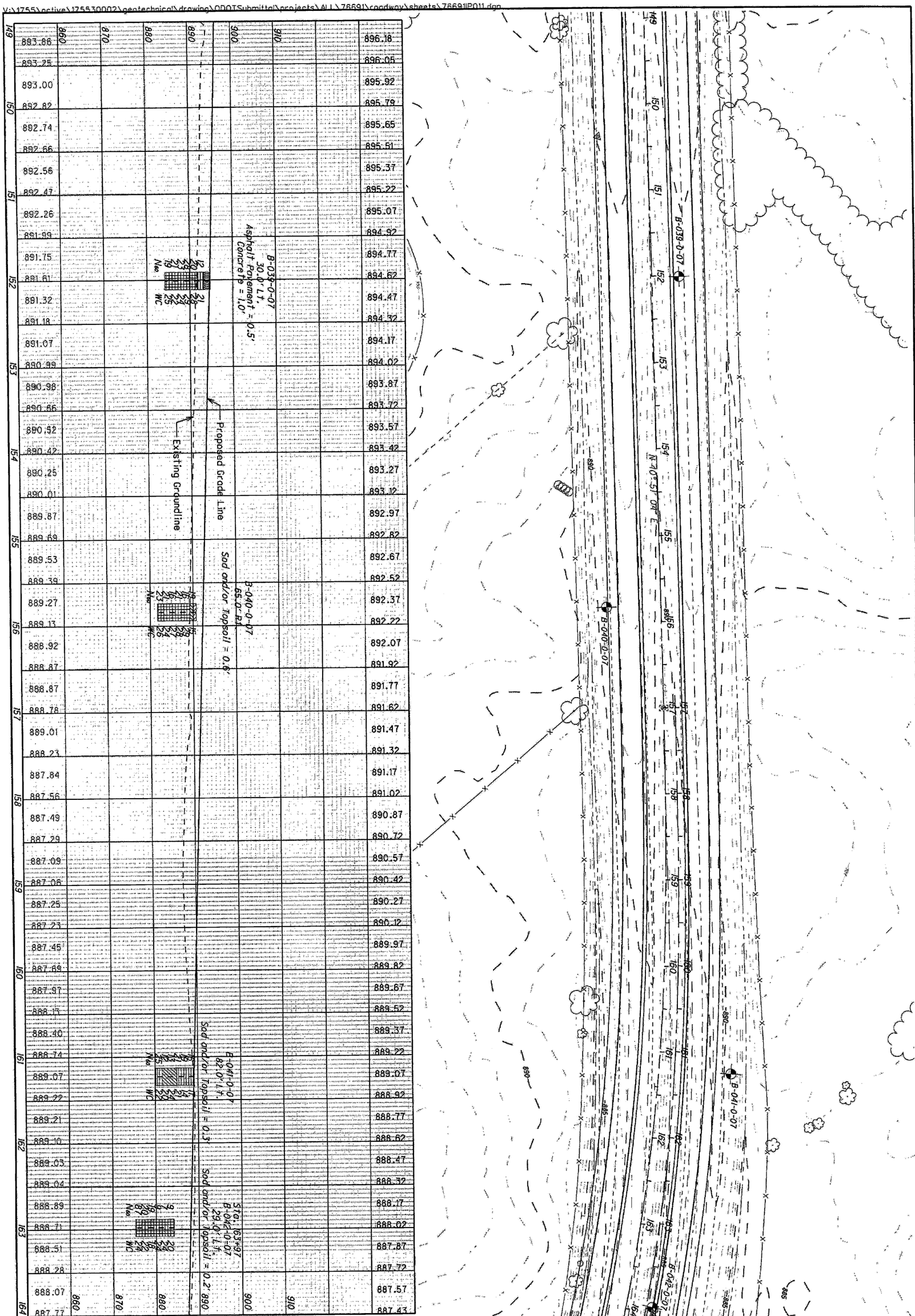

28 / 157	28 / 90	ALL-75-0.21	SOIL PROFILE I-75 STATION 149+00 - 164+00

DRAWN M.J.
CHECKED J.M.M.

0 50
25 100
HORIZONTAL SCALE IN FEET

N

V:\1755\active\175530002\geotechnical\drawing\ODOTSubmittal\projects\ALL\76691\roadway\sheets\76691IP012.dgn

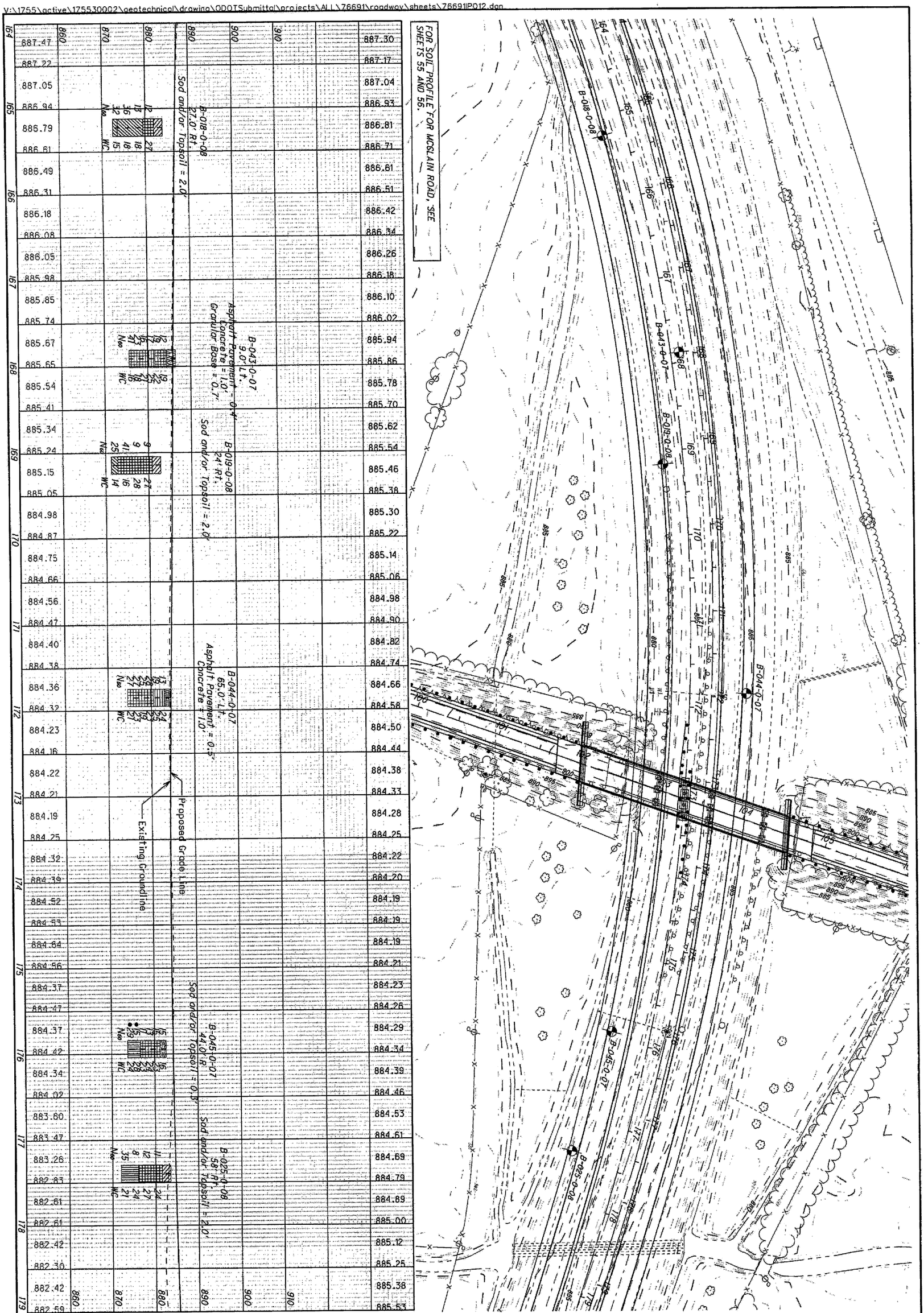

29/157	29/90	ALL-75-0.21	SOIL PROFILE I-75 STATION 164+00 - 179+00	DRAWN M.J. CHECKED J.M.M.	HORIZONTAL SCALE IN FEET

V:\1755\active\175530002\geotechnical\drawing\ODOTSubmittal\projects\ALL\76691\roadway\sheets\76691IP013.dgn

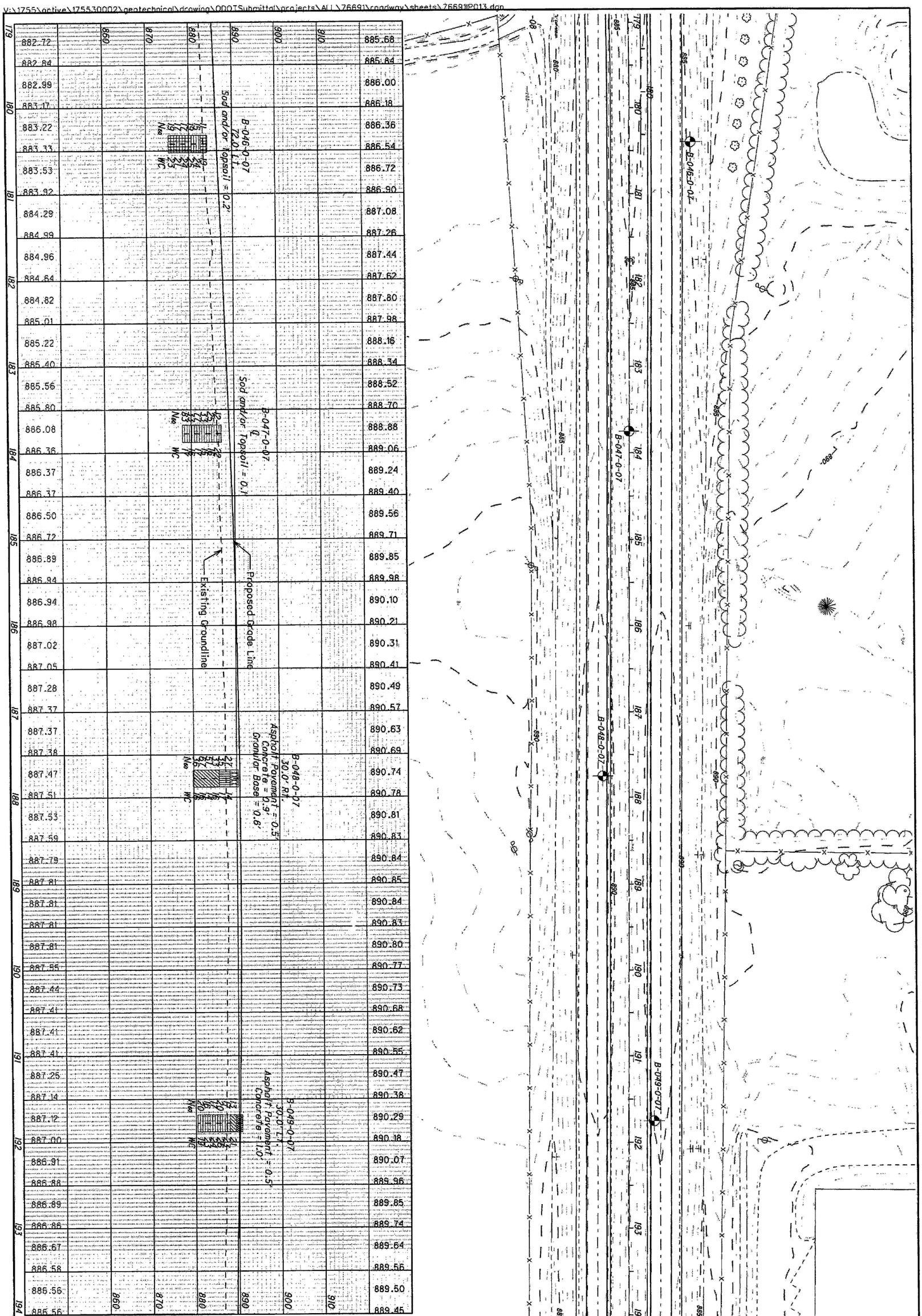

30/157	30/90	ALL-75-0.21	SOIL PROFILE I-75 STATION 179+00 - 194+00	DRAWN M.J. CHECKED J.M.M.	0 50 25 100 HORIZONTAL SCALE IN FEET

V:\1755\active\175530002\geotechnical\drawing\ODOTSubmittal\projects\ALL\76691\roadway\sheets\76691IP014.dgn

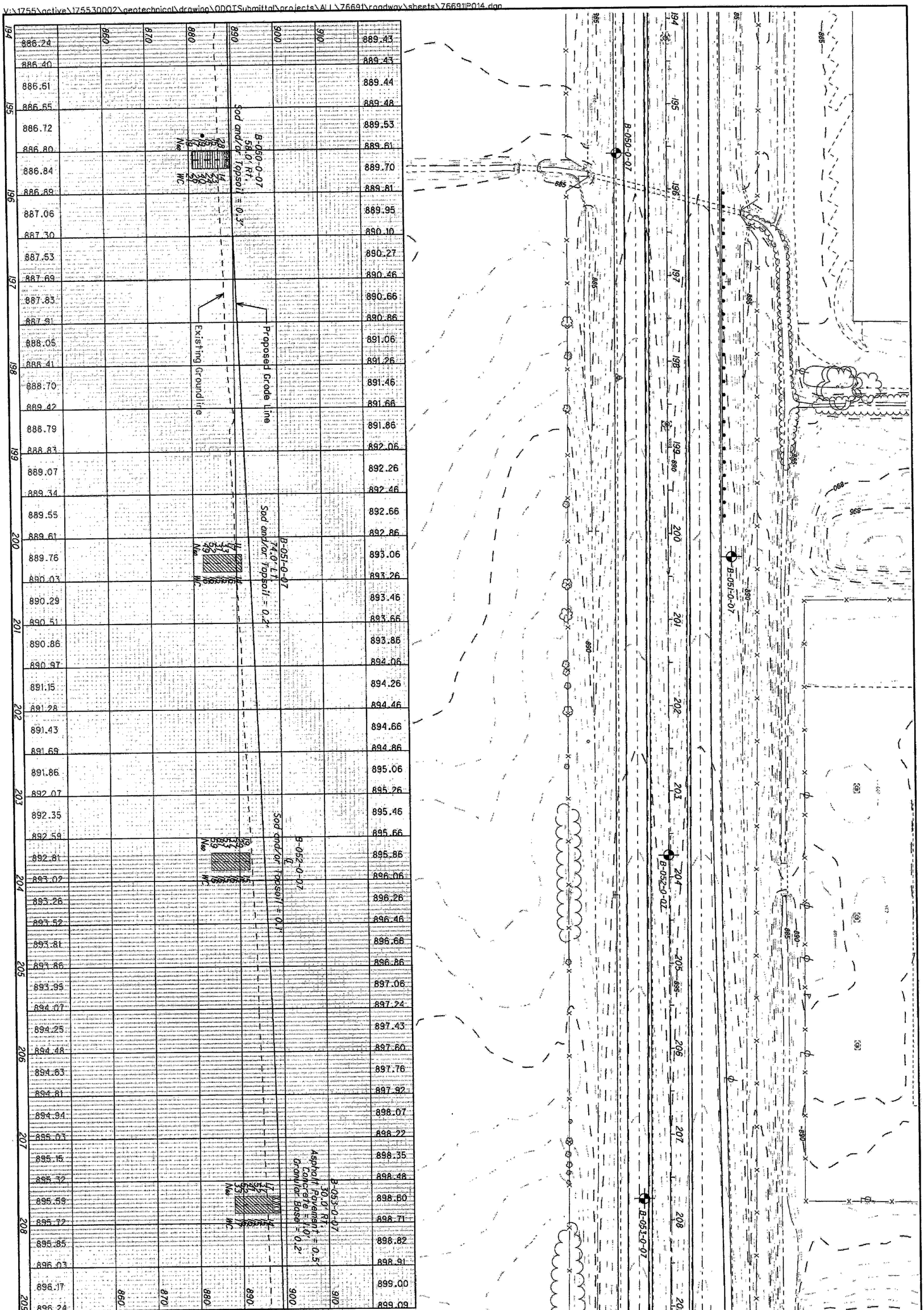

31/157	31/90	ALL-75-0.21	SOIL PROFILE I-75 STATION 194+00 - 209+00	DRAWN M.J. CHECKED J.M.M.	HORIZONTAL SCALE IN FEET

V:\1755\active\175530002\geotechnical\drawing\ODOTSubmittal\projects\ALL\76691\roadway\sheets\76691IP015.dgn

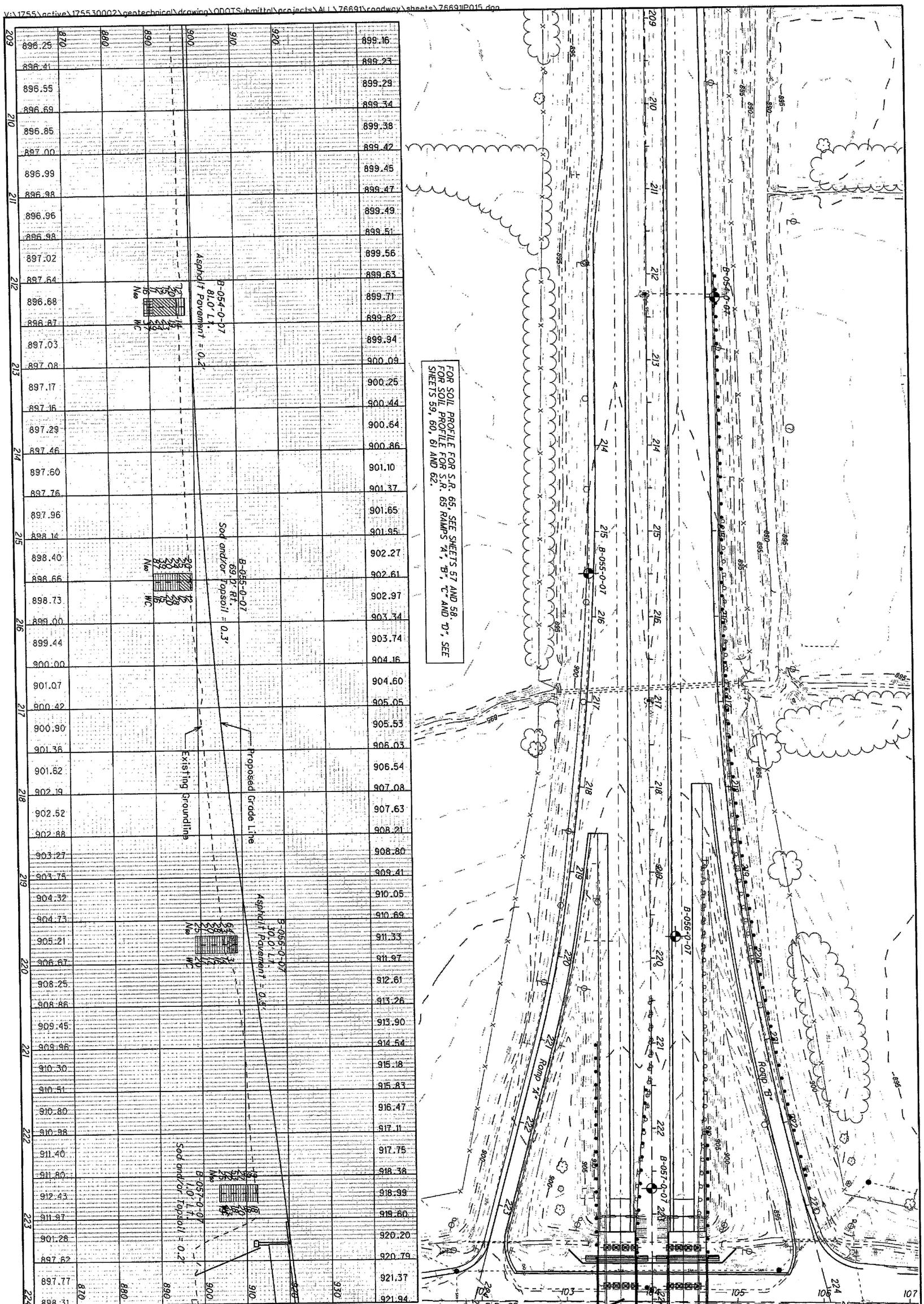

32/157	32/90	ALL-75-0.21	SOIL PROFILE I-75 STATION 209+00 - 224+00	DRAWN M.J. CHECKED J.M.M.	HORIZONTAL SCALE IN FEET

V:\1755\active\175530002\geotechnical\drawing\ODOTSubmittal\projects\ALL\76691\roadway\sheets\76691P016.dgn

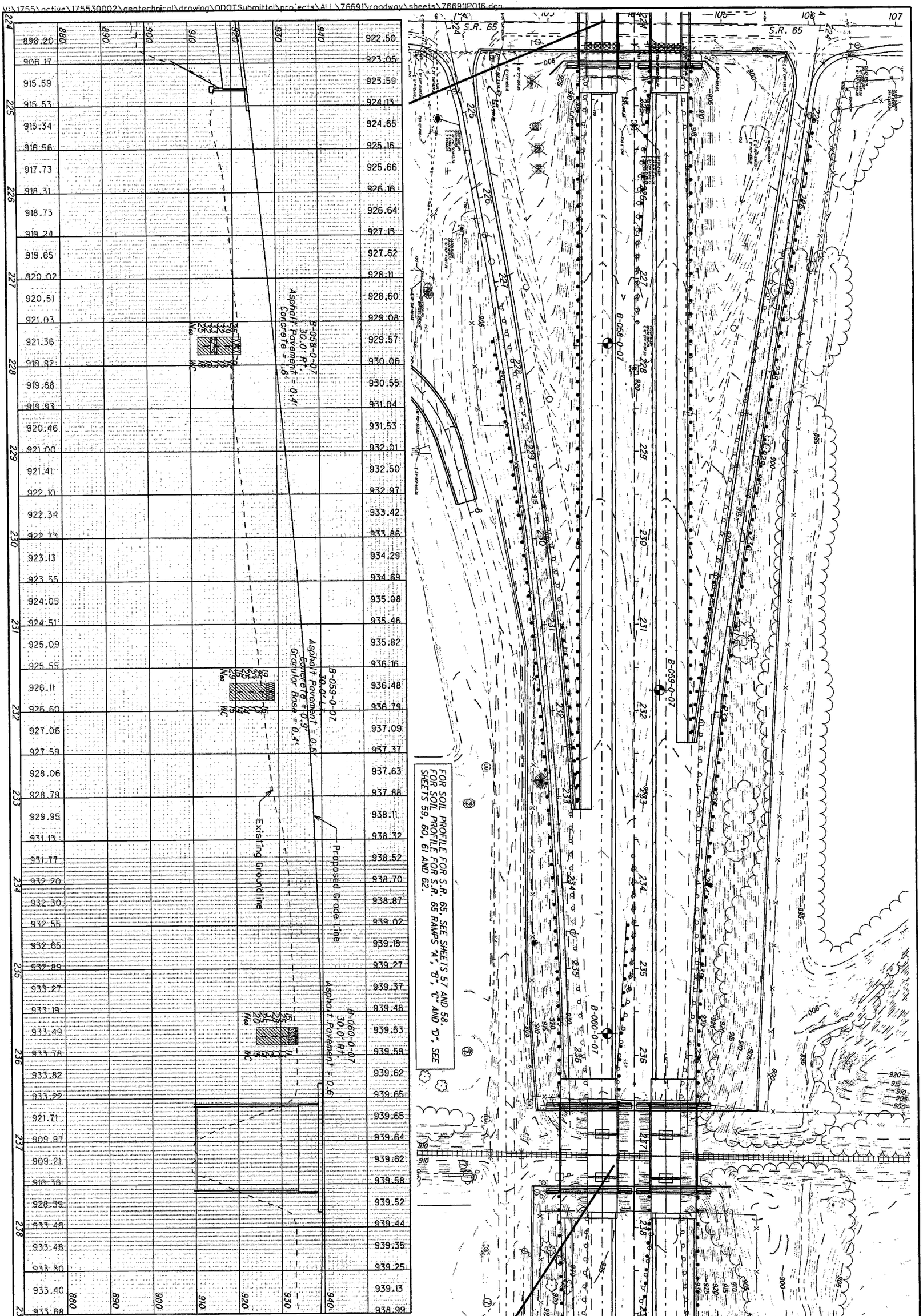

33/57	33/90	ALL-75-0.21	SOIL PROFILE I-75 STATION 224+00 - 239+00	DRAWN M.J. CHECKED J.M.M.	0 50 25 100 HORIZONTAL SCALE IN FEET

V:\1755\active\175530002\geotechnical\drawing\ODOTSubmittal\projects\ALL\76691\roadway\sheets\76691P017.dgn

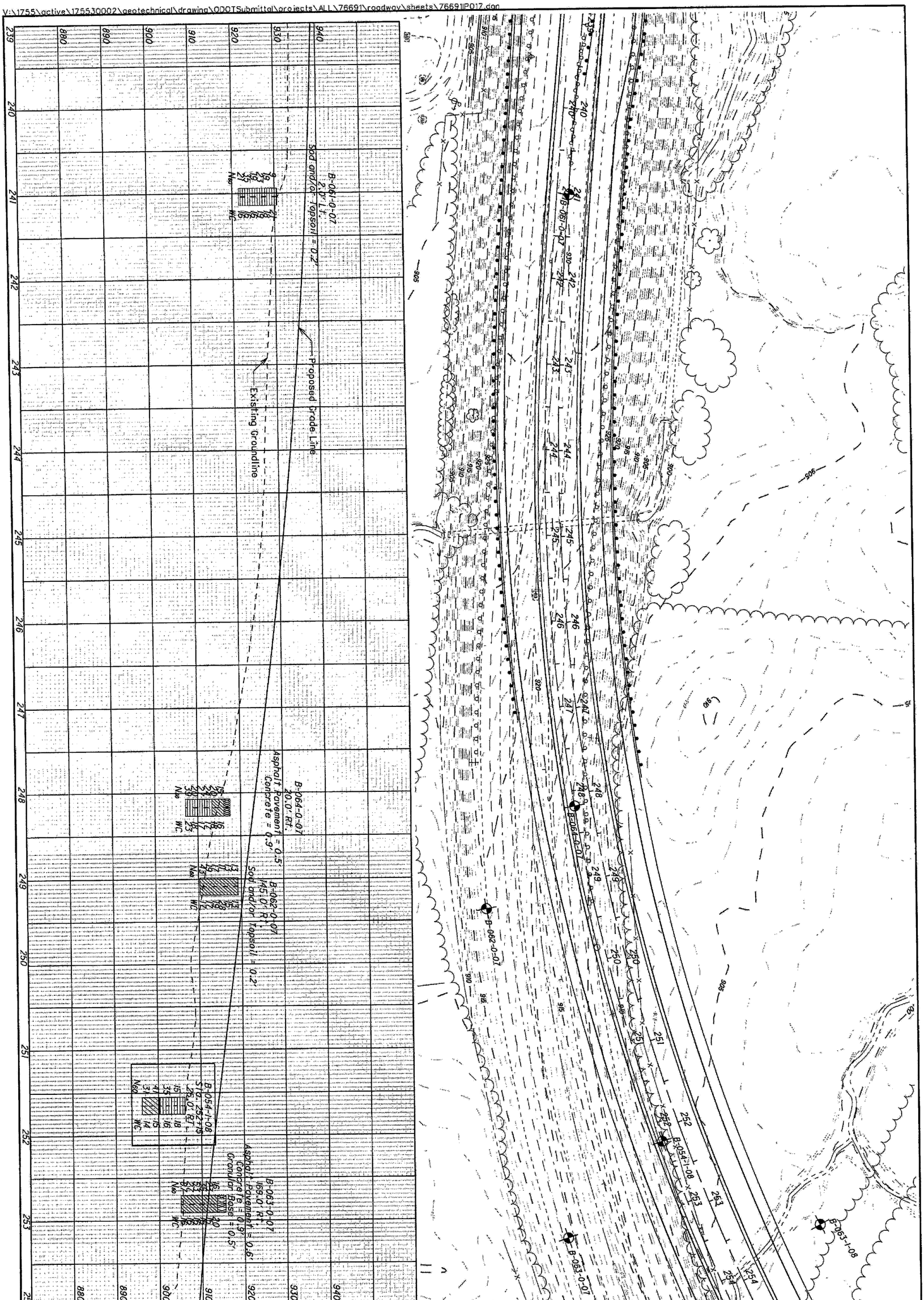

34/157	34/90	ALL-75-0.21	SOIL PROFILE I-75 STATION 239+00 - 254+00	DRAWN M.J. CHECKED J.M.M.	0 50 25 100 HORIZONTAL SCALE IN FEET

V:\1755\active\175530002\geotechnical\drawing\ODOTSubmittal\projects\ALL\76691\roadway\sheets\76691P018.dgn

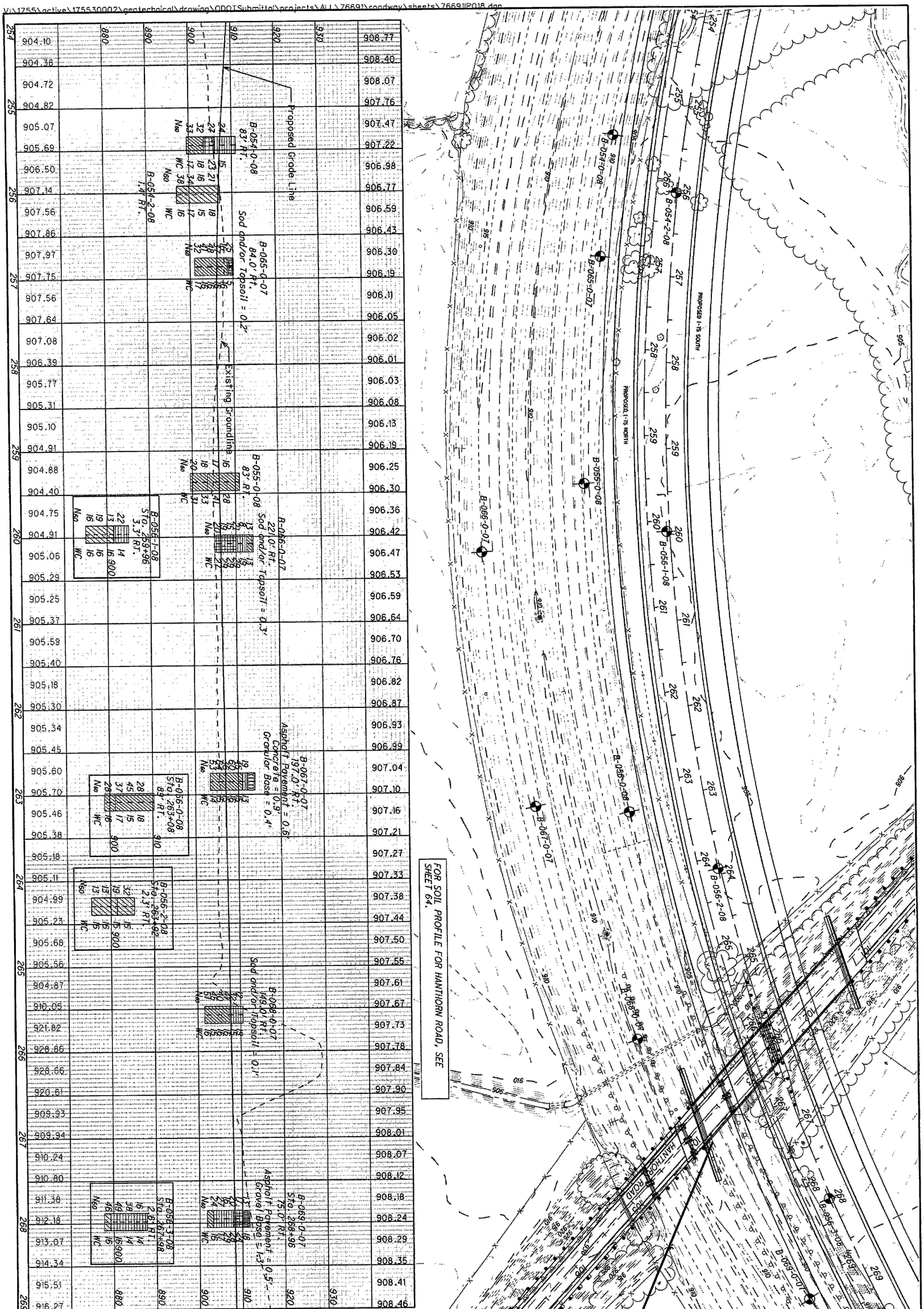

| | | |

V:\1755\active\175530002\geotechnical\drawing\ODOTSubmittal\projects\ALL\76691\roadway\sheets\76691P019.dgn

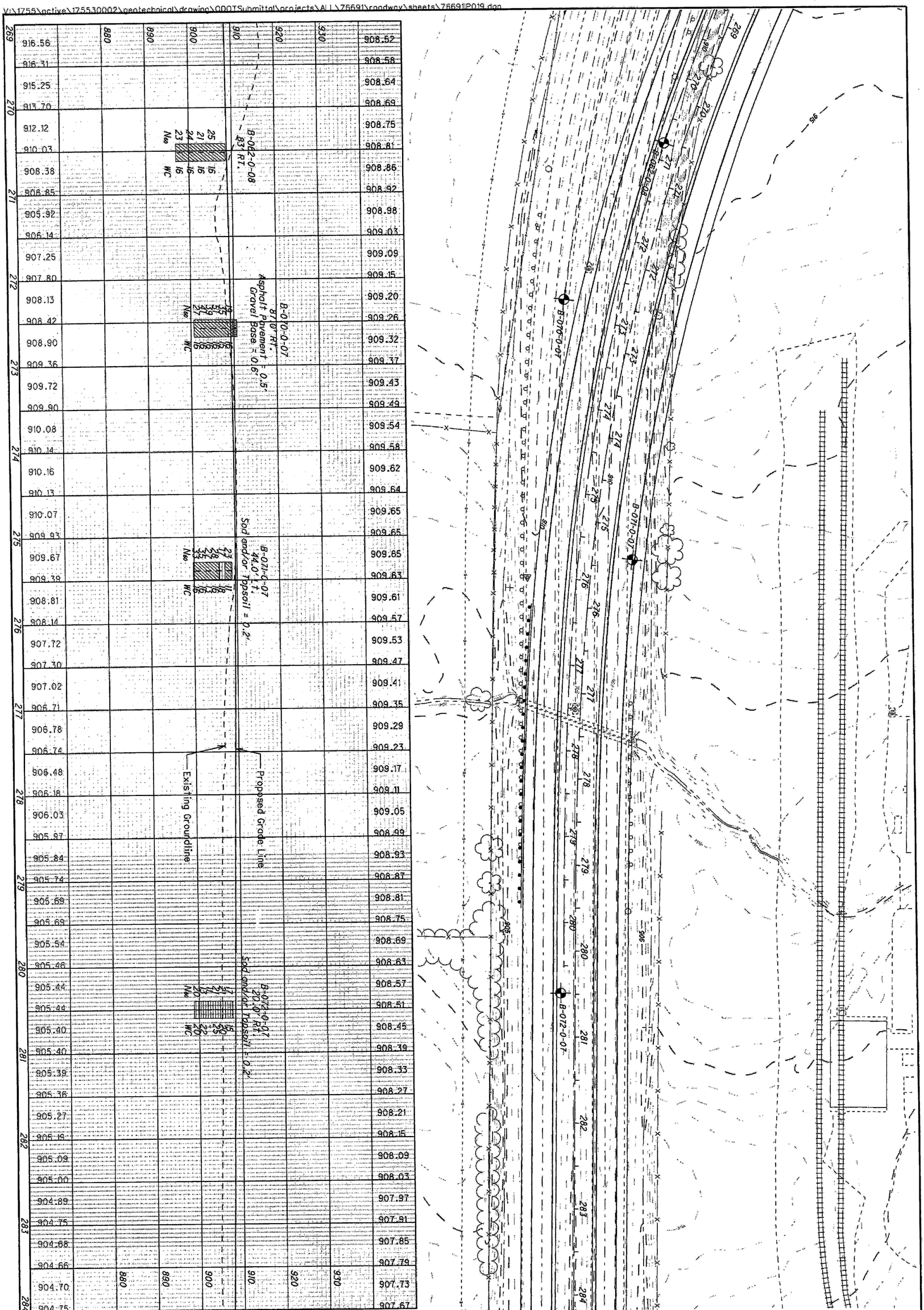

| | | |

V:\1755\active\175530002\geotechnical\drawing\ODOTSubmittal\projects\ALL\76691\roadway\sheets\76691P020.dgn

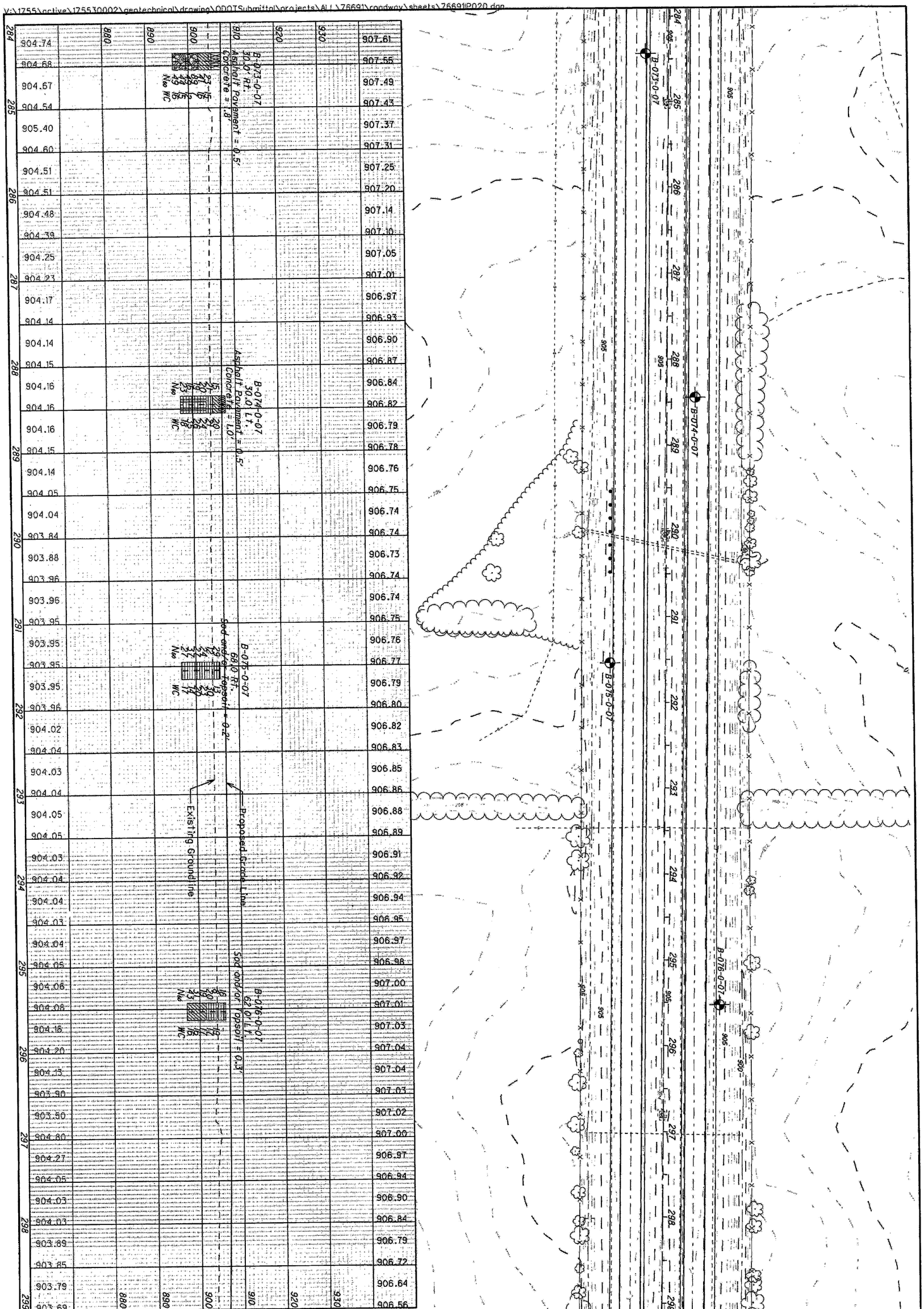

37/157	37/90	ALL-75-0.21	SOIL PROFILE I-75 STATION 284+00 - 299+00	DRAWN M.J. CHECKED J.M.M.	0 25 50 100 HORIZONTAL SCALE IN FEET

V:\1755\active\175530002\geotechnical\drawing\ODOTSubmittal\projects\ALL\76691\roadway\sheets\76691IP021.dgn

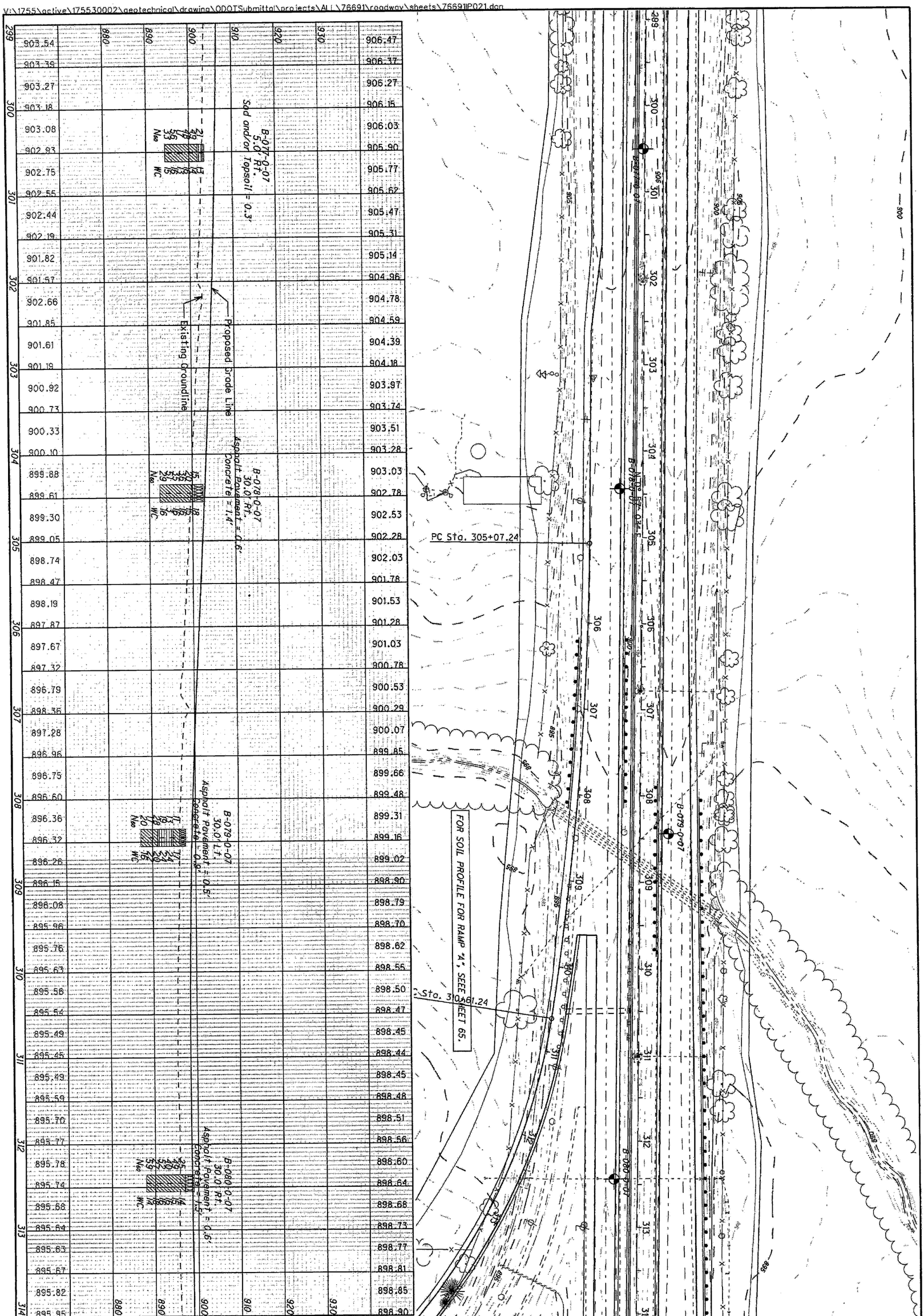

38/157	38/90	ALL-75-0.21	SOIL PROFILE I-75 STATION 299+00 - 314+00	DRAWN M.J. CHECKED J.M.M.	HORIZONTAL SCALE IN FEET

V:\1755\active\1755300002\geotechnical\drawing\ODOTSubmittal\projects\ALL\76691\roadway\sheets\76691P022.dgn

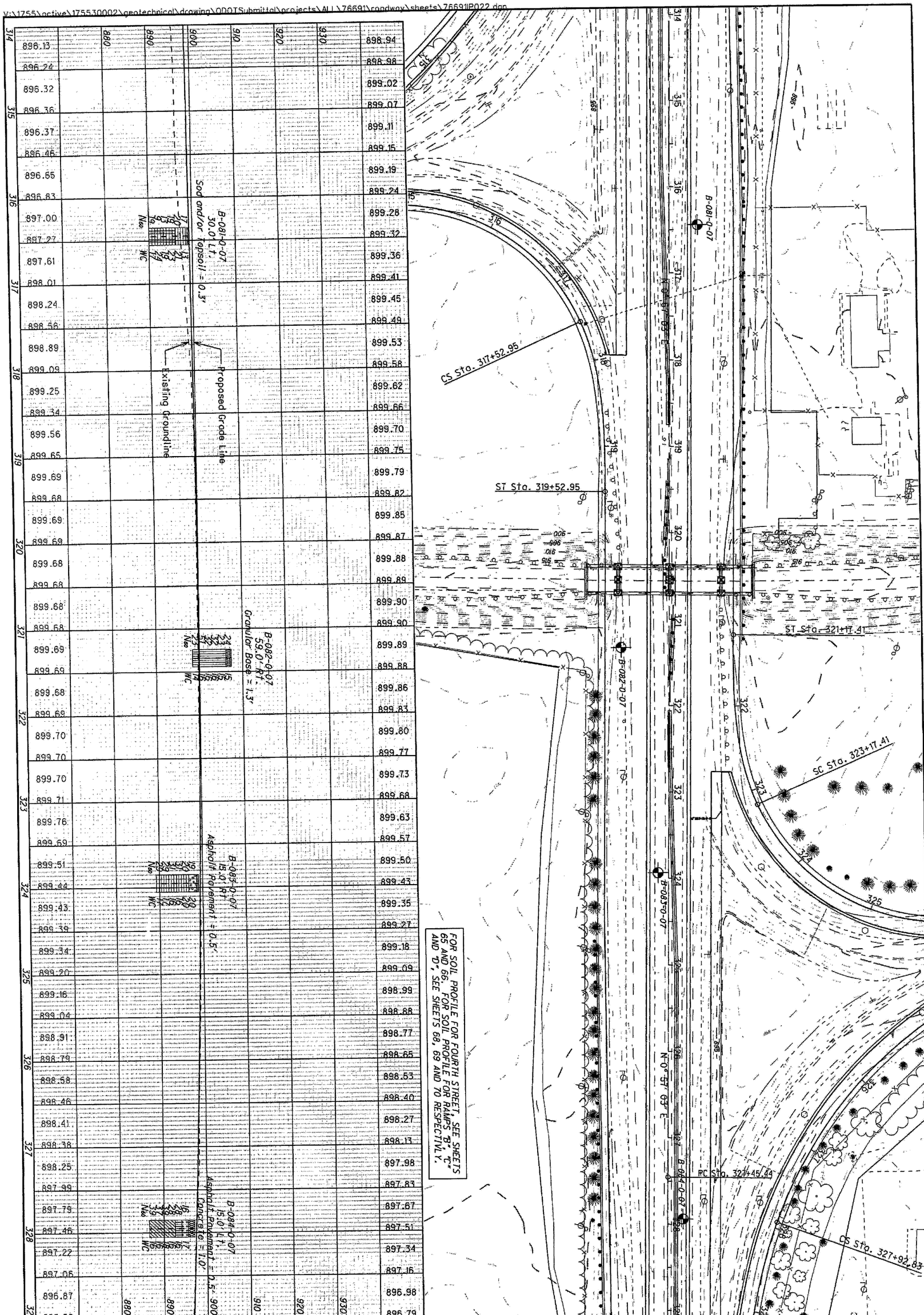

37 / 157	39 / 90	ALL-75-0.21	SOIL PROFILE I-75 STATION 314+00 - 329+00	DRAWN M.J. CHECKED J.M.M.	0 50 25 100 HORIZONTAL SCALE IN FEET

V:\1755\active\175530002\geotechnical\drawing\ODOTSubmittal\projects\ALL\76691\roadway\sheets\76691P023.dgn

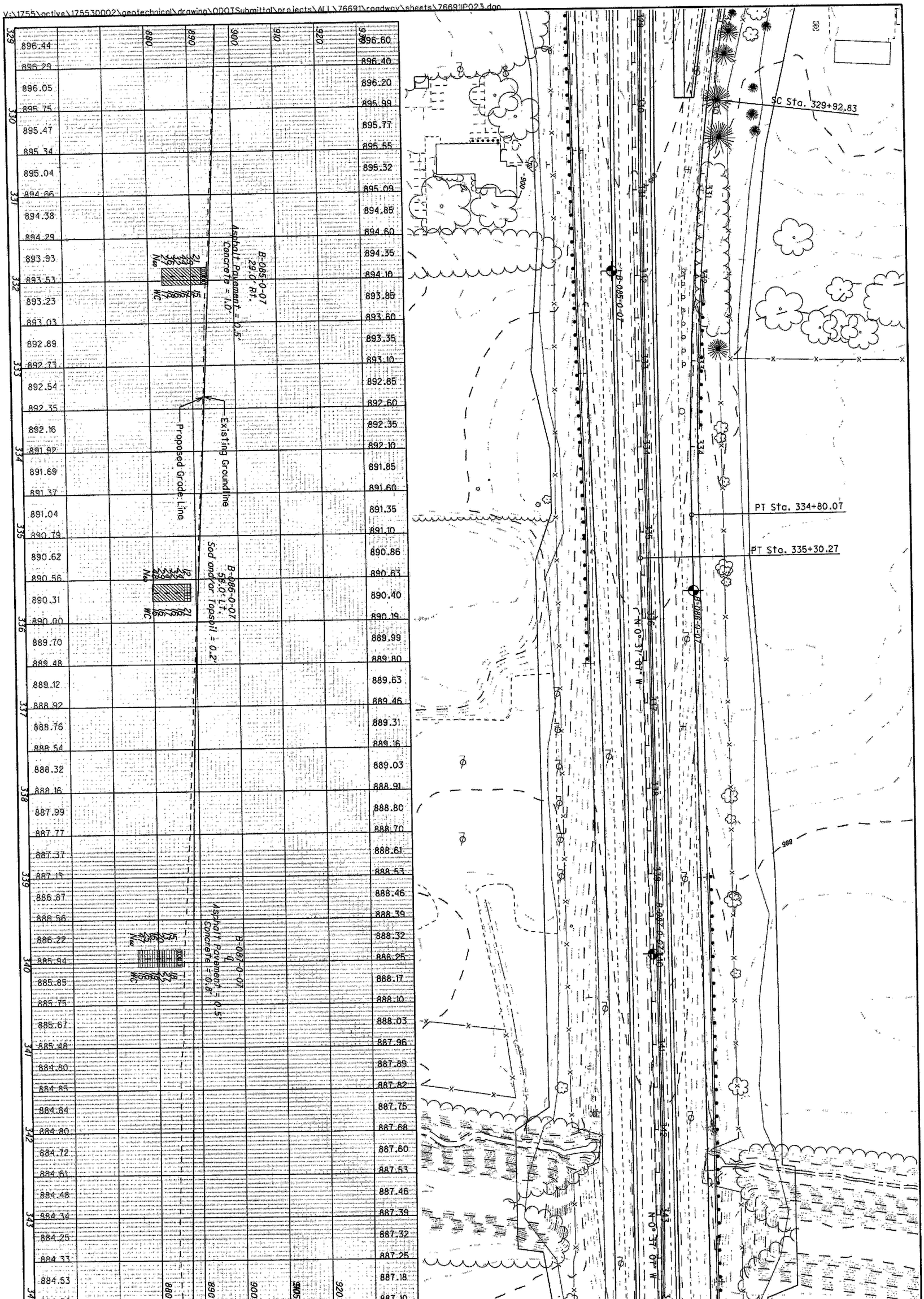

40/157	40/90	ALL-75-0.21	SOIL PROFILE I-75 STATION 329+00 - 344+00	DRAWN M.J. CHECKED J.M.M.	0 25 50 100 HORIZONTAL SCALE IN FEET

V:\1755\active\175530002\geotechnical\drawing\ODOTSubmittal\projects\ALL\76691\roadway\sheets\76691IP024.dgn

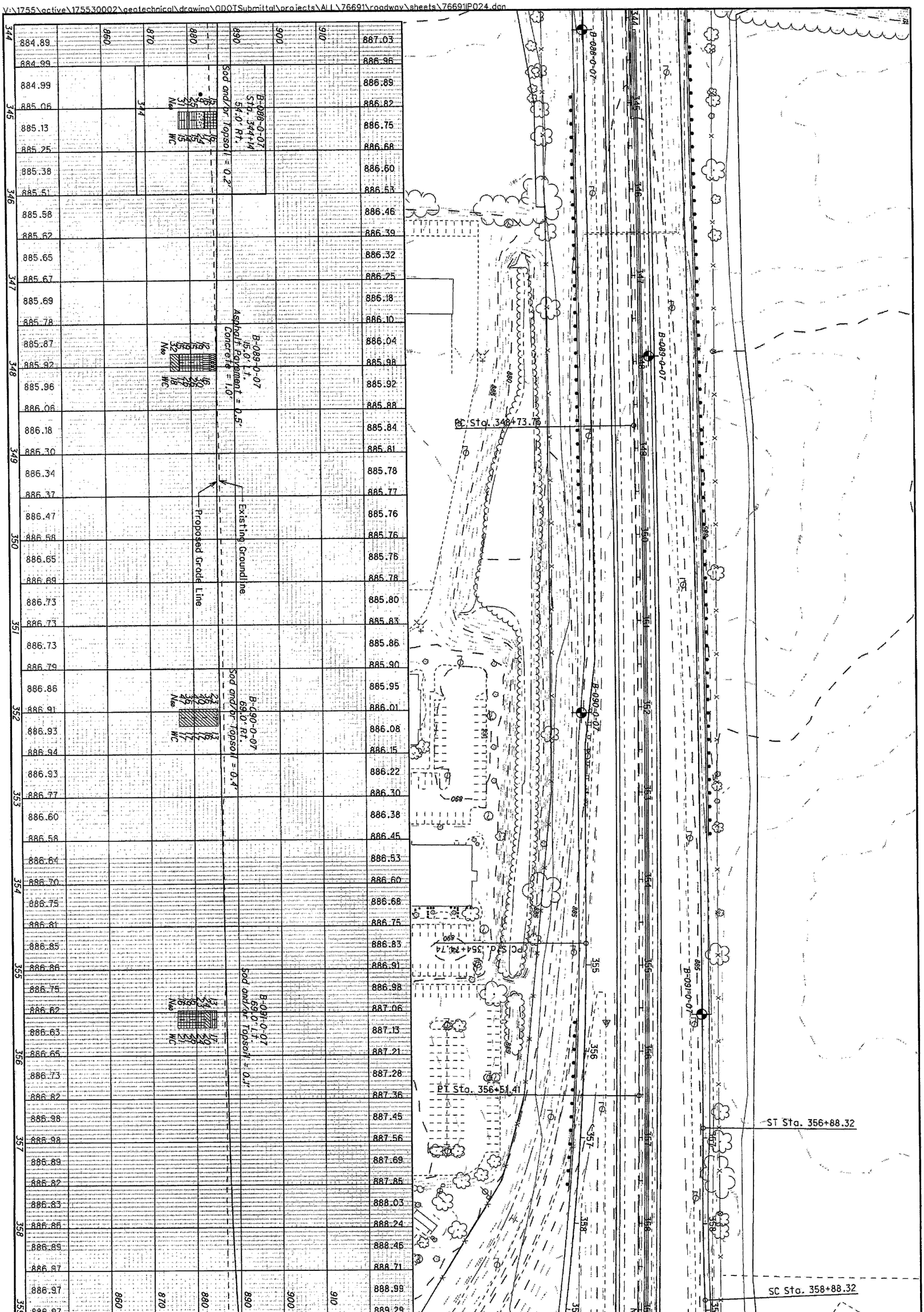

41/157	41/90	ALL-75-0.21	SOIL PROFILE I-75 STATION 344+00 - 359+00	DRAWN M.J. CHECKED J.M.M.	0 25 50 100 HORIZONTAL SCALE IN FEET

V:\1755\active\175530002\geotechnical\drawing\ODOTSubmittal\projects\ALL\76691\roadway\sheets\76691P025.dgn

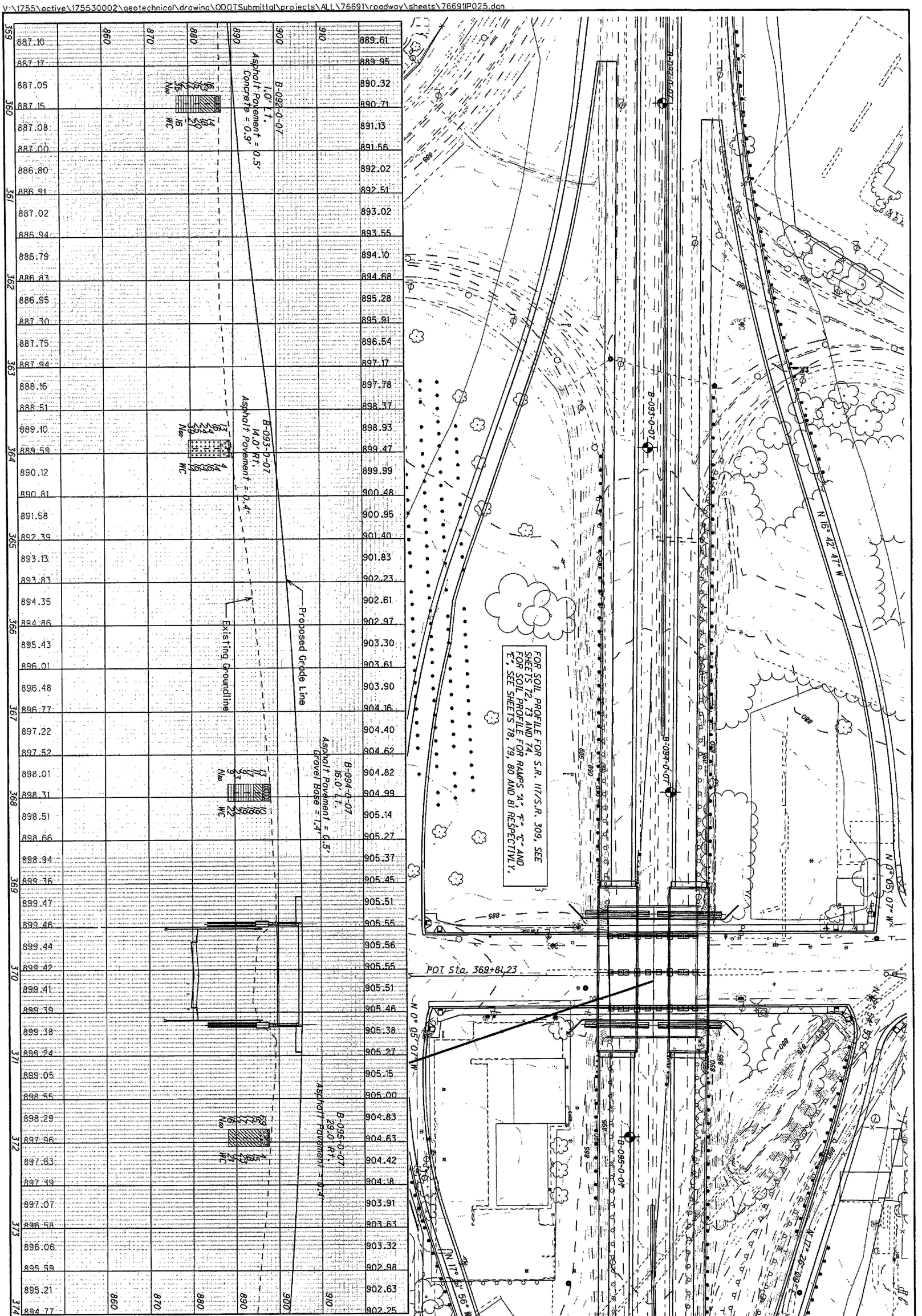

SOIL PROFILE
I-75 STATION 359+00 - 374+00

DRAWN M.J.
CHECKED J.M.M.

HORIZONTAL SCALE IN FEET
0 25 50 100

V:\1755\active\175530002\geotechnical\drawing\ODOTSubmittal\projects\ALL\76691\roadway\sheets\76691IP026.dgn

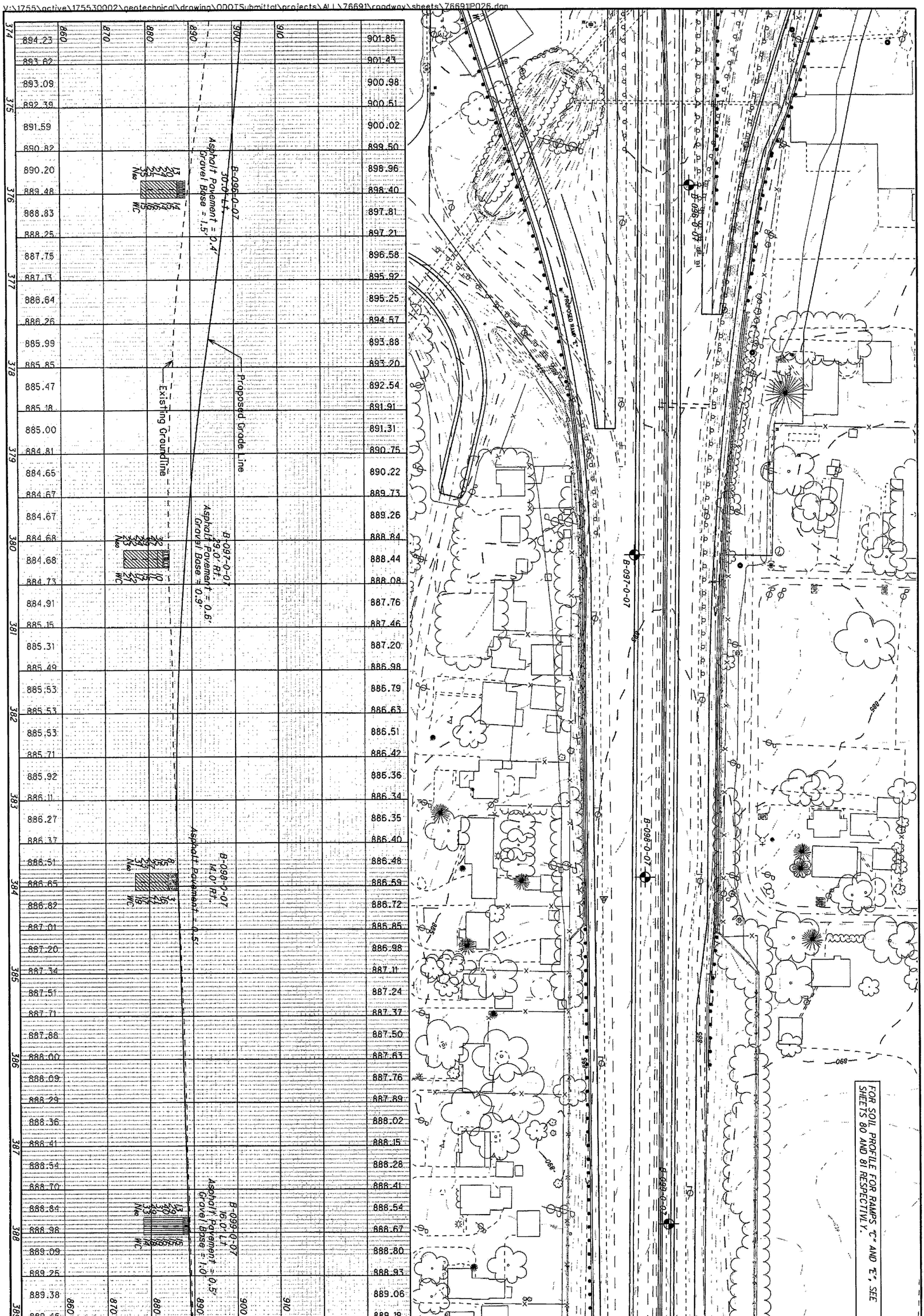

43/157	43/90	ALL-75-0.21	SOIL PROFILE I-75 STATION 374+00 - 389+00	DRAWN M.J. CHECKED J.M.M.	0 25 50 100 HORIZONTAL SCALE IN FEET

V:\1755\active\175530002\geotechnical\drawing\ODOT\submittal\projects\ALL\76691\roadway\sheets\76691l2027.dgn

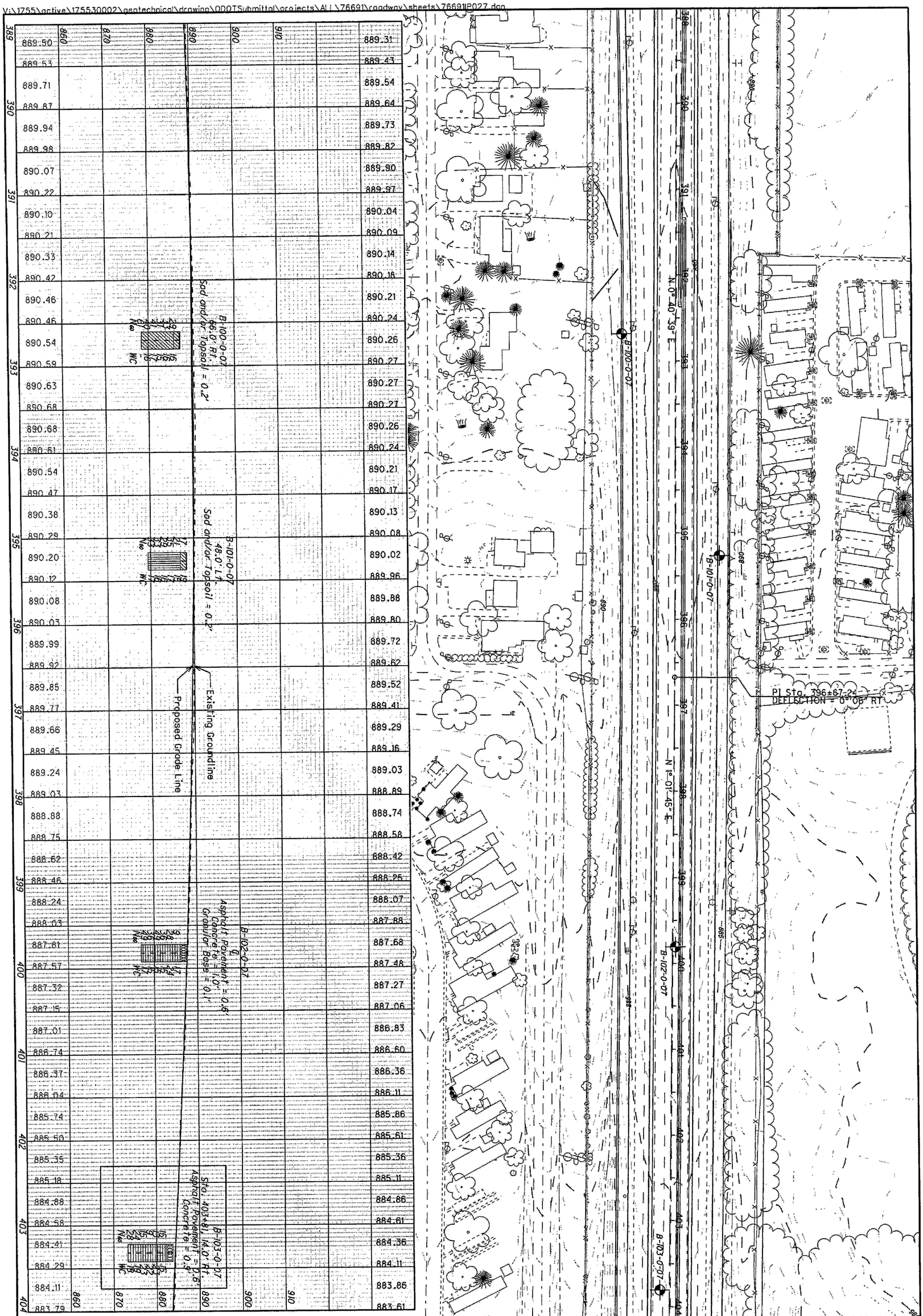

44 / 157	44 / 90	ALL-75-0.21	SOIL PROFILE I-75 STATION 389+00 - 404+00	DRAWN M.J. CHECKED J.M.M. 0 50 25 100 HORIZONTAL SCALE IN FEET

V:\1755\active\175530002\geotechnical\drawing\ODOTSubmittal\projects\ALL\76691\roadway\sheets\76691P028.dgn

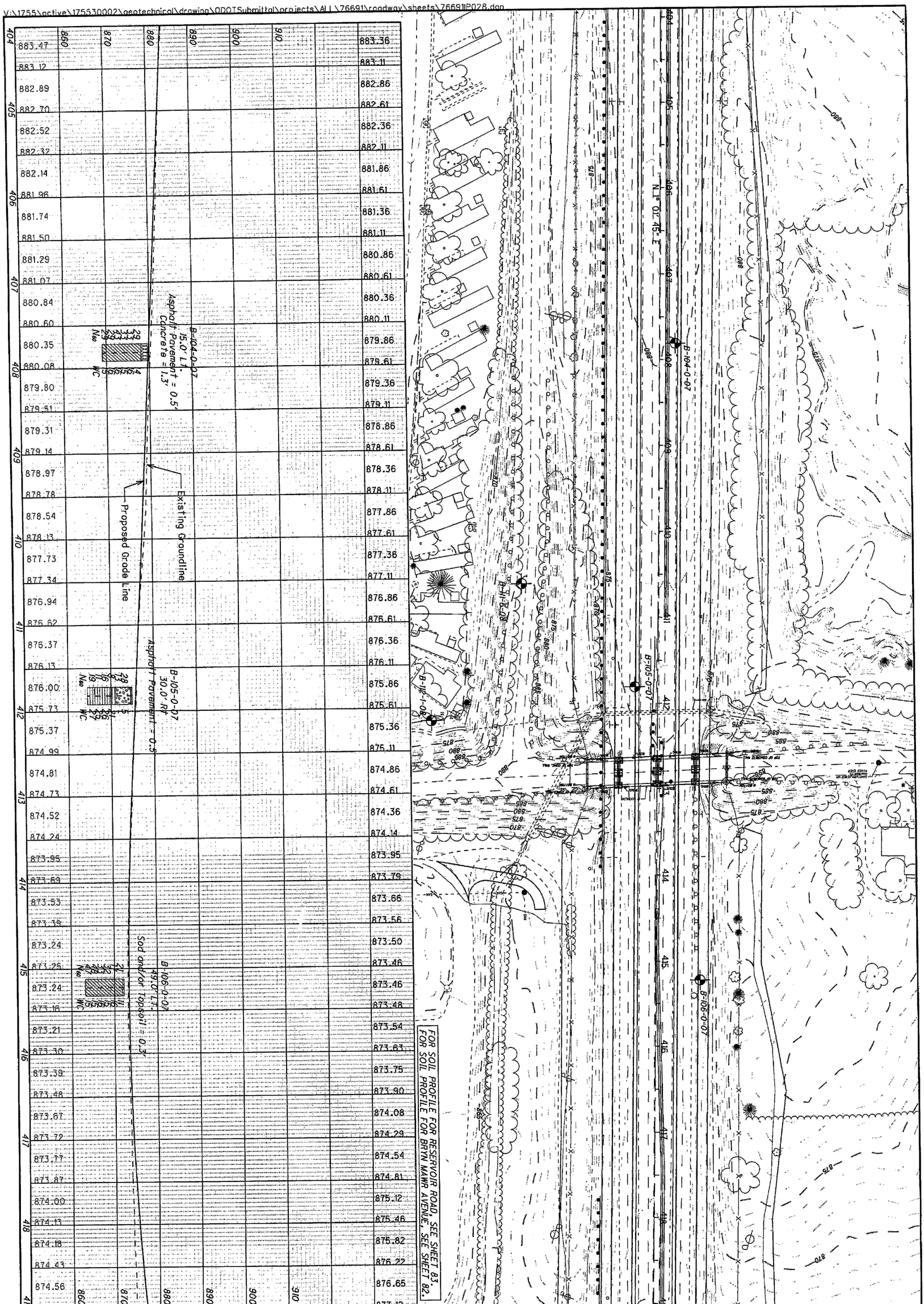

45/90	ALL-75-0.21	SOIL PROFILE I-75 STATION 404+00 - 419+00	DRAWN M.J. CHECKED J.M.M.	0 50 25 100 HORIZONTAL SCALE IN FEET	N

V:\1755\active\175530002\geotechnical\drawing\ODOTSubmittal\projects\ALL\76691\roadway\sheets\76691IP029.dgn

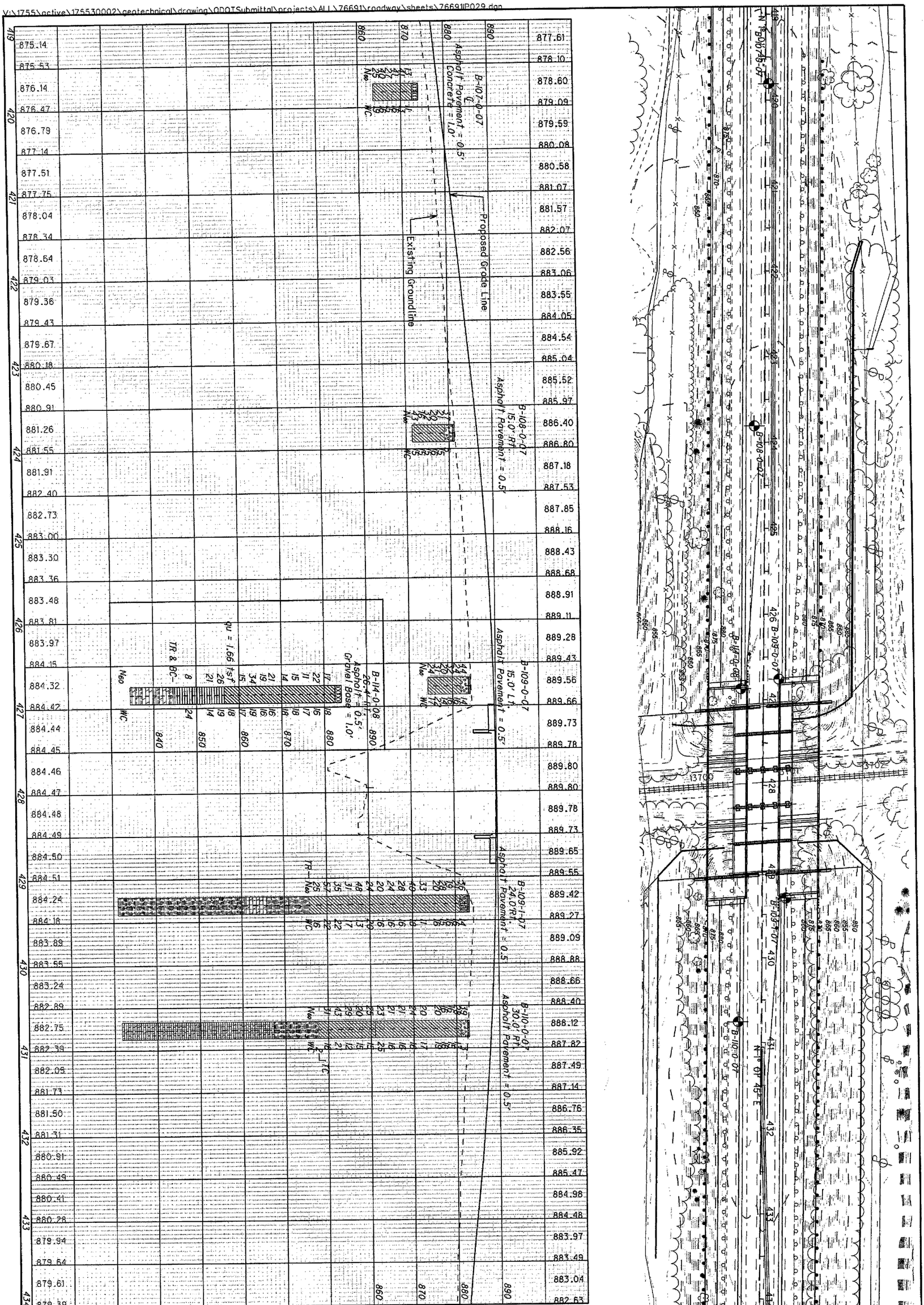

SOIL PROFILE

I-75 STATION 419+00 - 434+00

DRAWN M.J.

CHECKED J.M.M.

HORIZONTAL SCALE IN FEET

0 25 50 100

V:\1755\active\175530002\geotechnical\drawing\ODOTSubmittal\projects\ALL\76691\roadway\sheets\76691P030.dgn

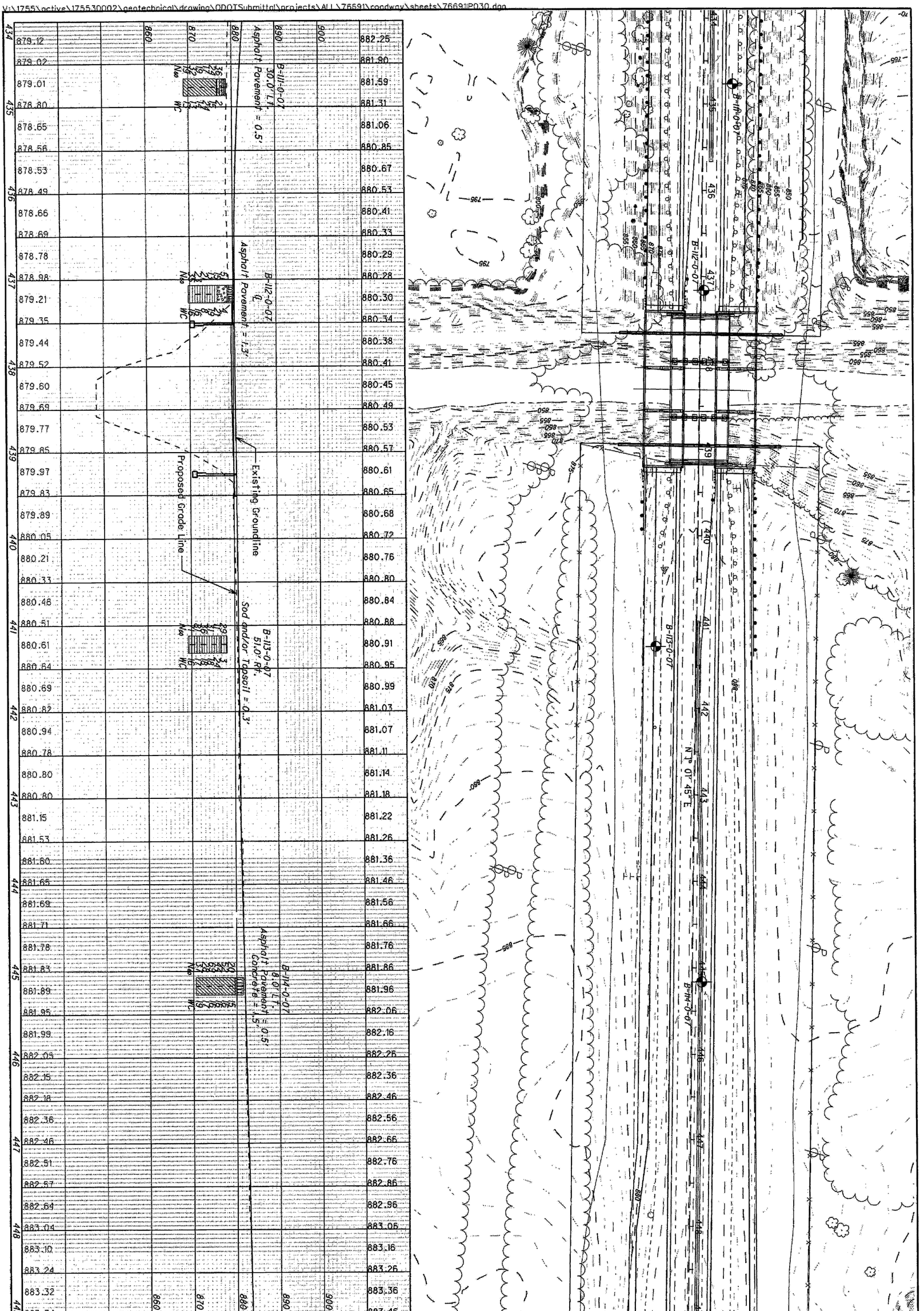

47/152	47/90	ALL-75-0.21	SOIL PROFILE I-75 STATION 434+00 - 449+00	DRAWN M.J. CHECKED J.M.M.	0 50 25 100 HORIZONTAL SCALE IN FEET

V:\1755\active\1755300002\geotechnical\drawing\ODOTSubmittal\projects\ALL\76691\roadway\sheets\76691IP031.dgn

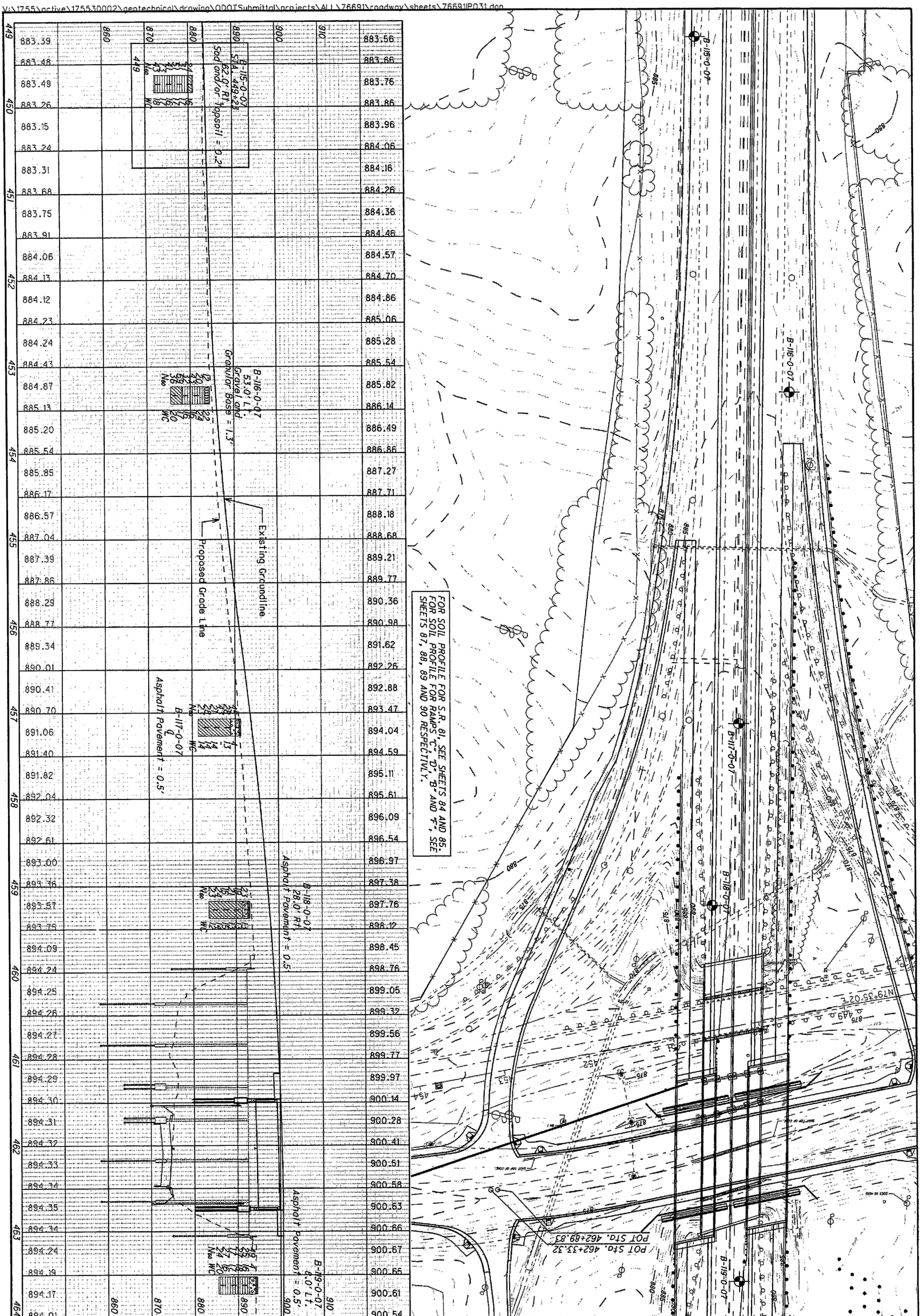

| | | |

V:\1755\active\175530002\geotechnical\drawing\ODOTSubmittal\projects\ALL\76691\roadway\sheets\76691P032.dgn

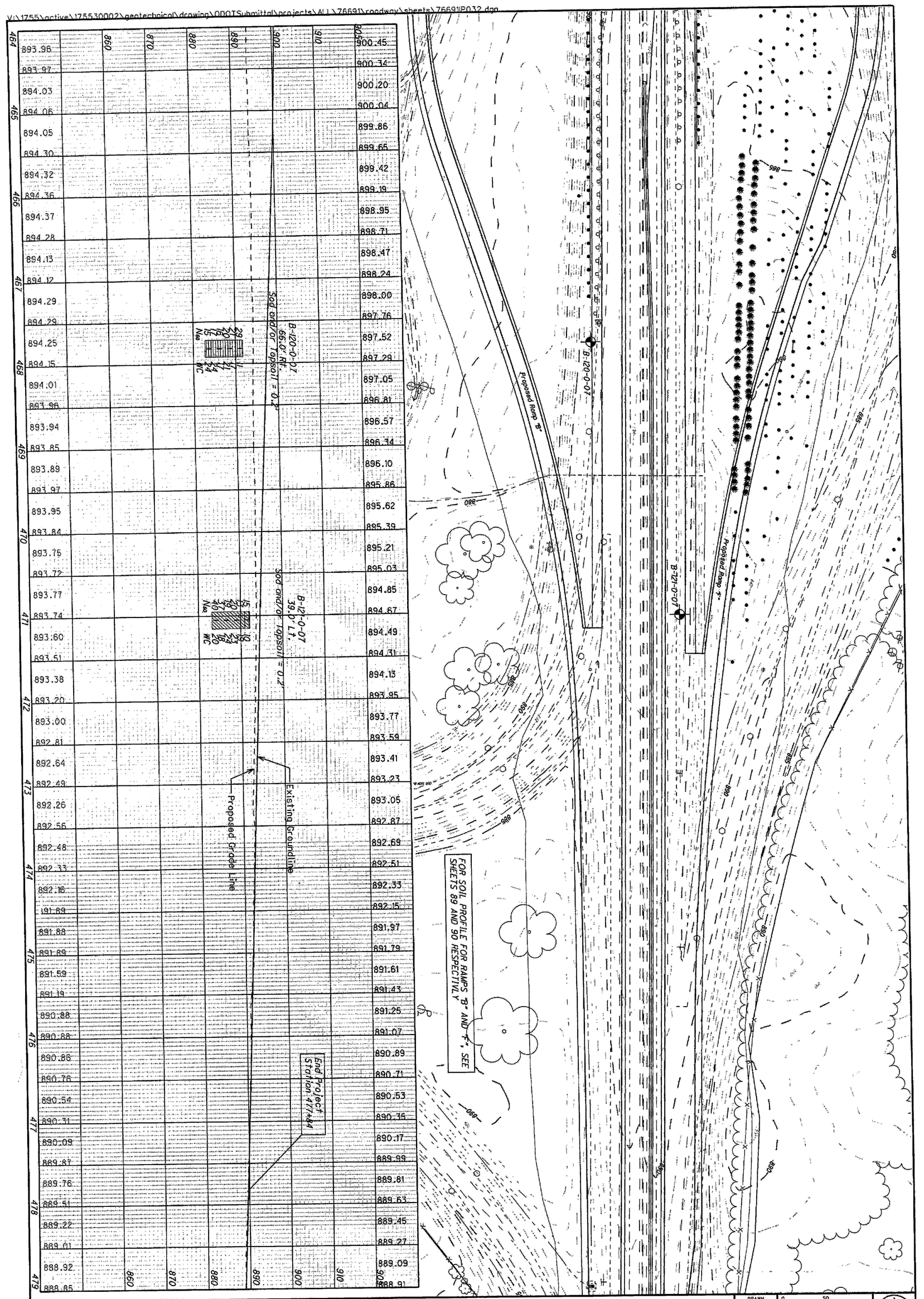

49/90	ALL-75-0.21	SOIL PROFILE I-75 STATION 464+00 - 479+00	DRAWN M.J. CHECKED J.M.M.	0 25 50 100 HORIZONTAL SCALE IN FEET	N

V:\1755\active\175530002\geotechnical\drawing\ODOTSubmittal\projects\ALL\76691\roadway\sheets\76691P033.dgn

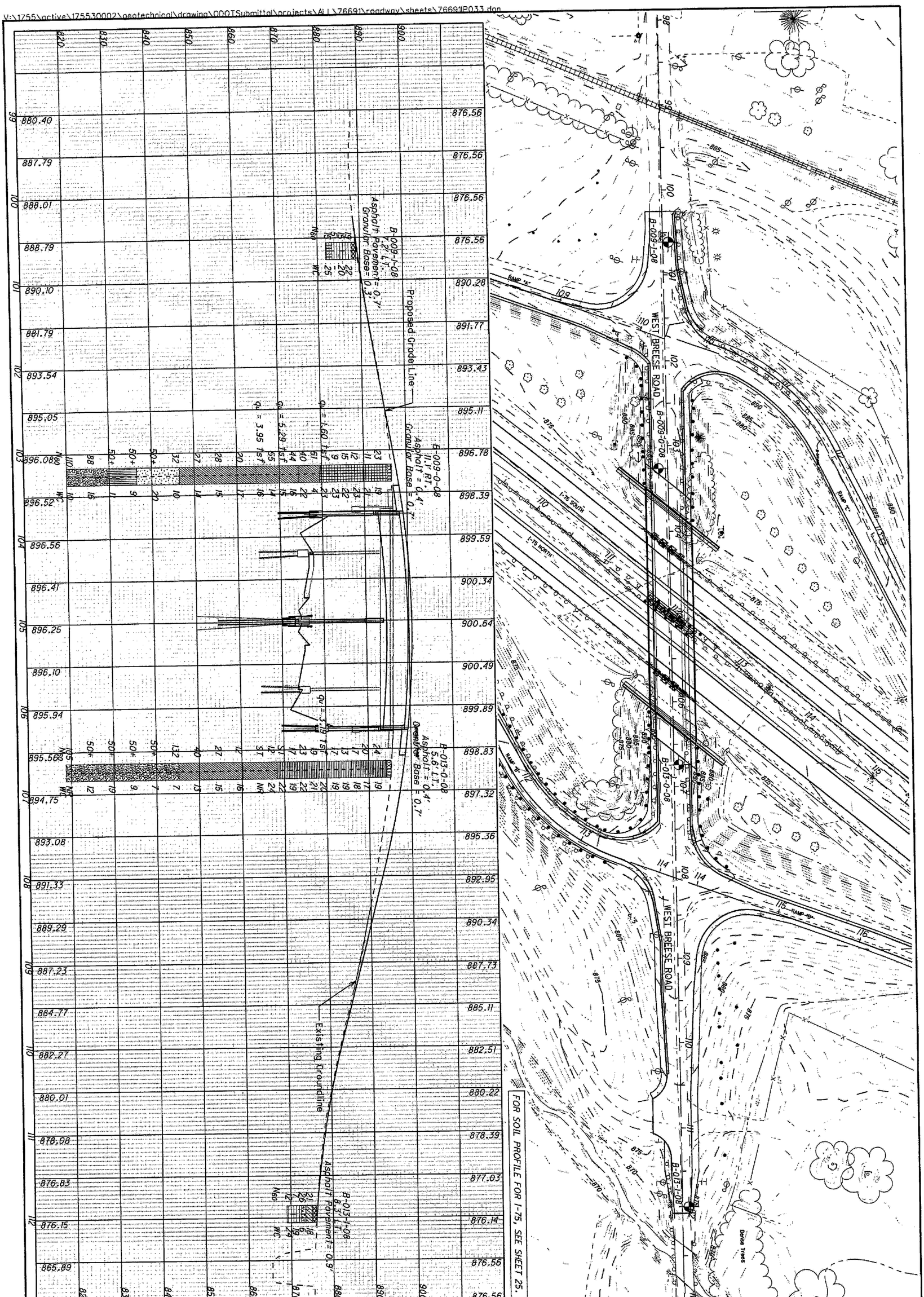

50/90	ALL-75-0.21	SOIL PROFILE BREESE ROAD STA. 99+00 - 113+00	DRAWN M.J. CHECKED R.J.K.	HORIZONTAL SCALE IN FEET

V:\1755\active\175530002\geotechnical\drawing\ODOTSubmittal\projects\ALL\76691\roadway\sheets\76691P034.dgn

FOR SOIL PROFILE FOR I-75, SEE SHEETS 24 AND 25.

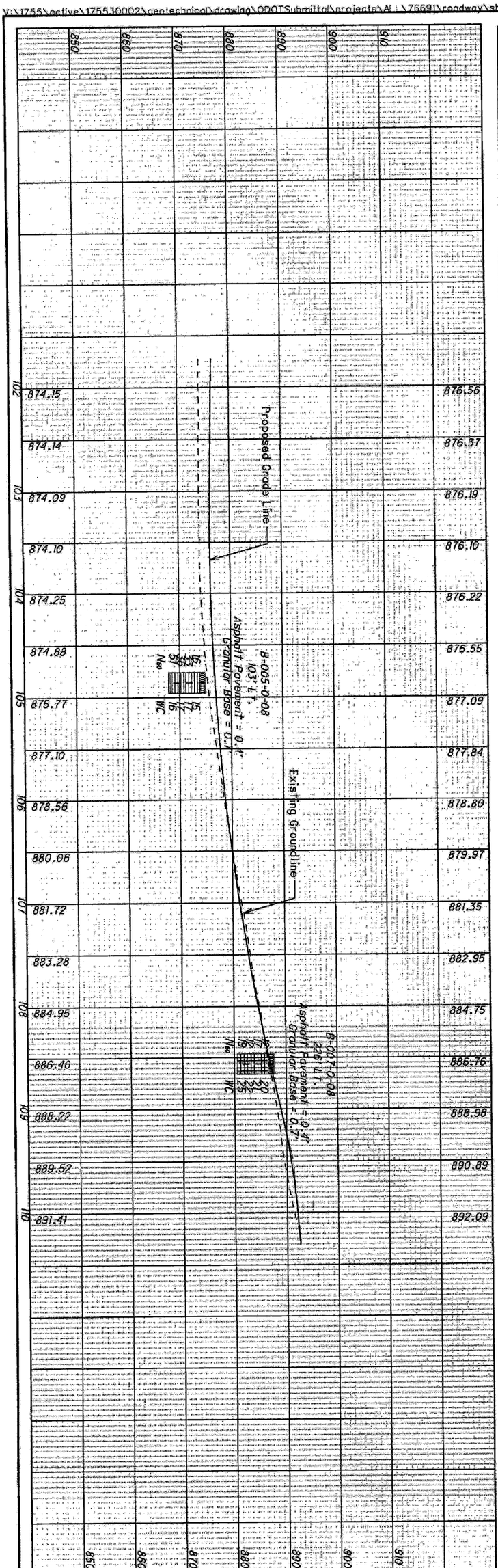

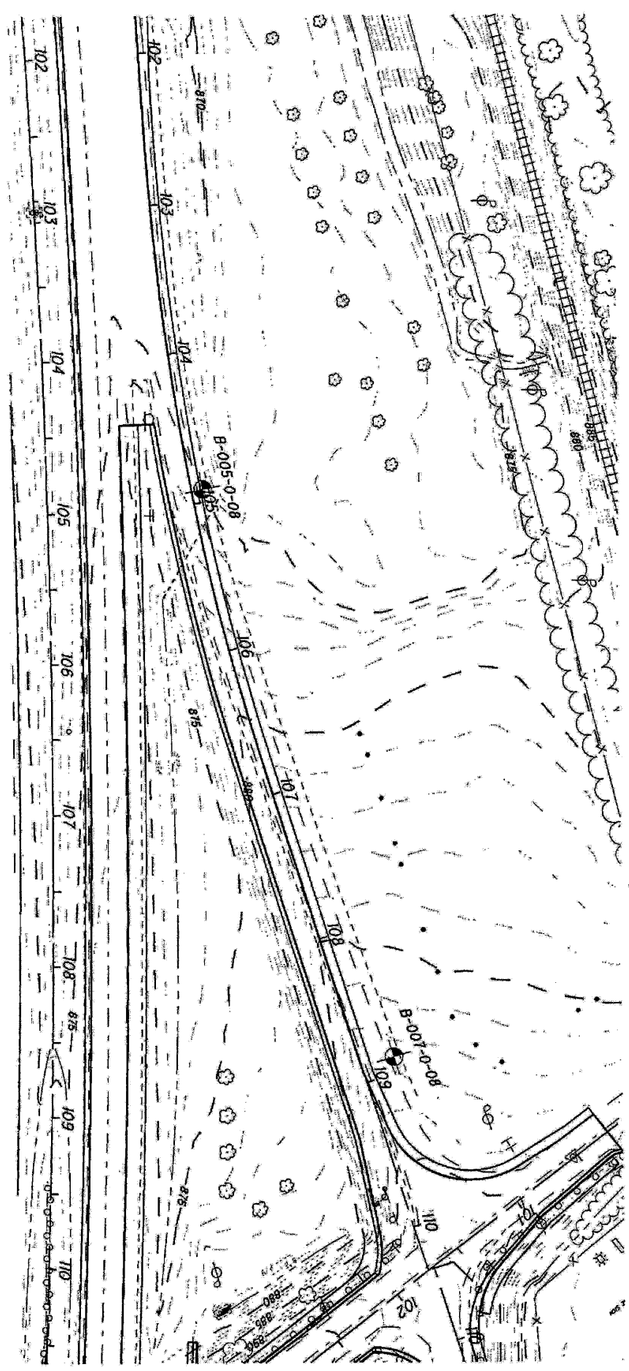

51/157	51/90	ALL-75-0.21	SOIL PROFILE BREESE ROAD - RAMP A	DRAWN M.J.	CHECKED J.M.M.	0 50 25 100 HORIZONTAL SCALE IN FEET	N

V:\1755\active\175530002\geotechnical\drawing\ODOTSubmittal\projects\ALL\76691\roadway\sheets\76691P035.dgn

FOR SOIL PROFILE FOR I-75, SEE SHEETS 24 AND 25.

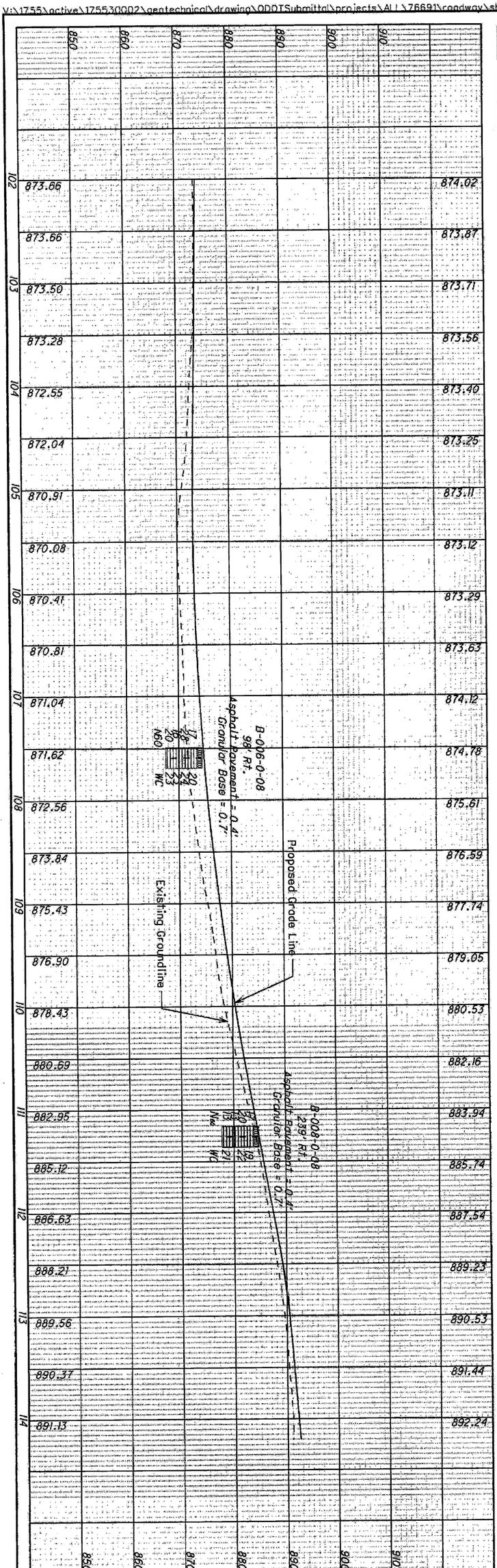

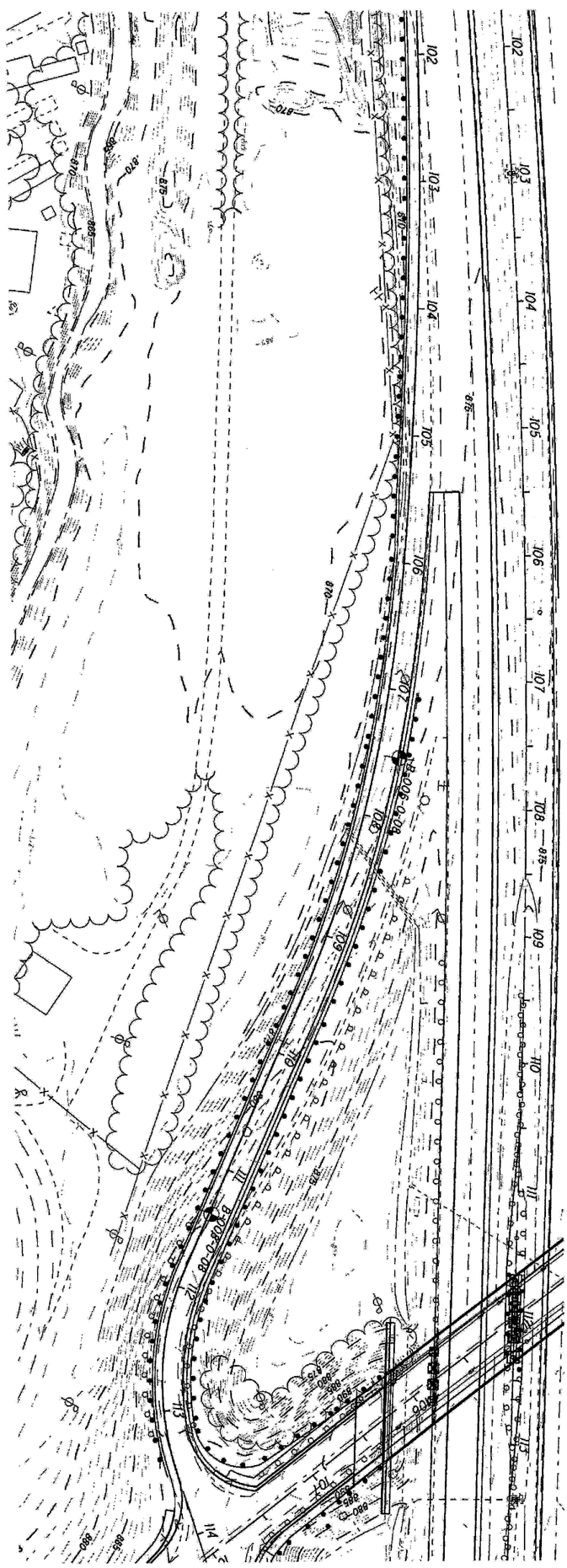

V:\1755\active\175530002\geotechnical\drawing\ODOTSubmittal\projects\ALL\76691\roadway\sheets\76691l2036.dgn

FOR SOIL PROFILE FOR I-75, SEE SHEETS 25 AND 26.

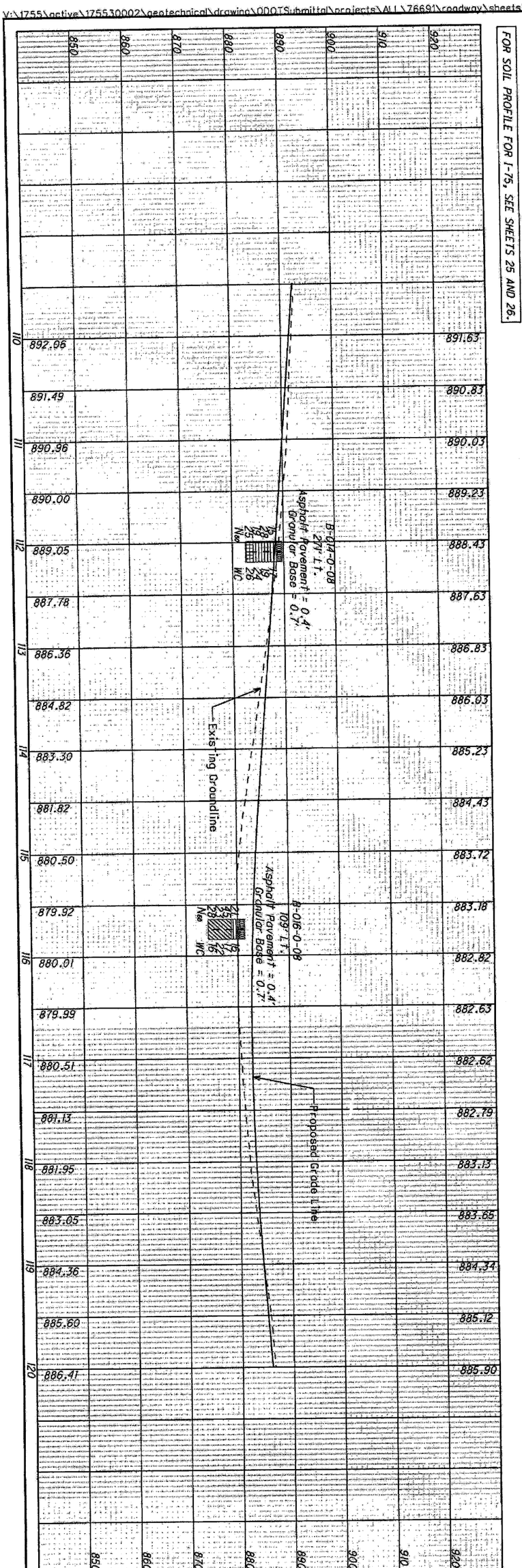

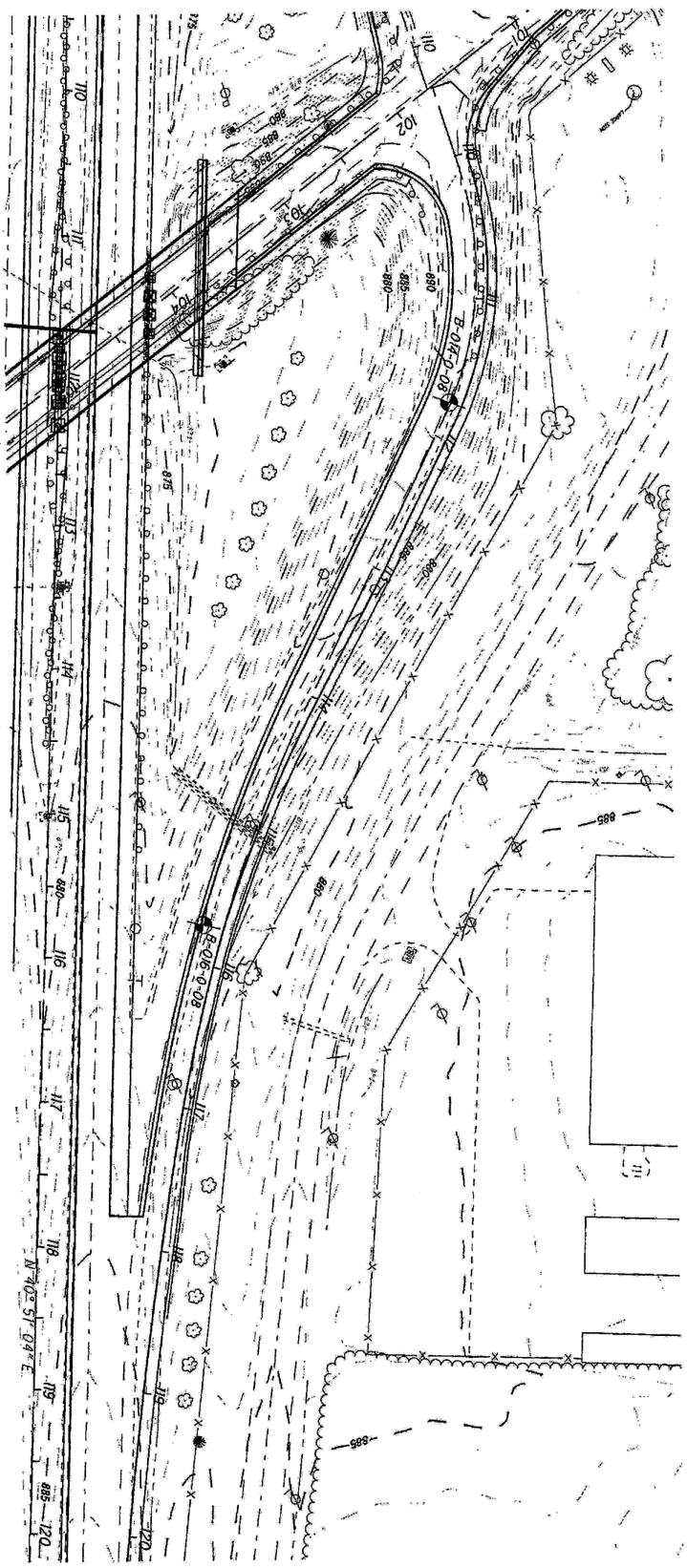

53/157	53/90	ALL-75-0.21	SOIL PROFILE BREESE ROAD - RAMP C	DRAWN M.J. CHECKED J.M.M.	0 50 25 100 HORIZONTAL SCALE IN FEET

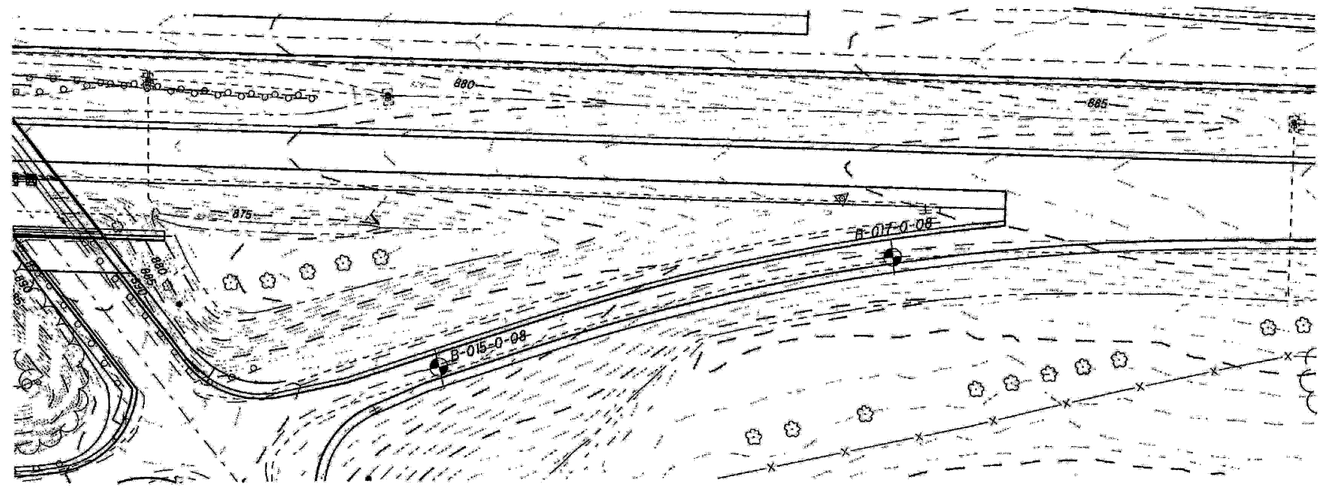

FOR SOIL PROFILE FOR I-75, SEE SHEETS 25 AND 26.

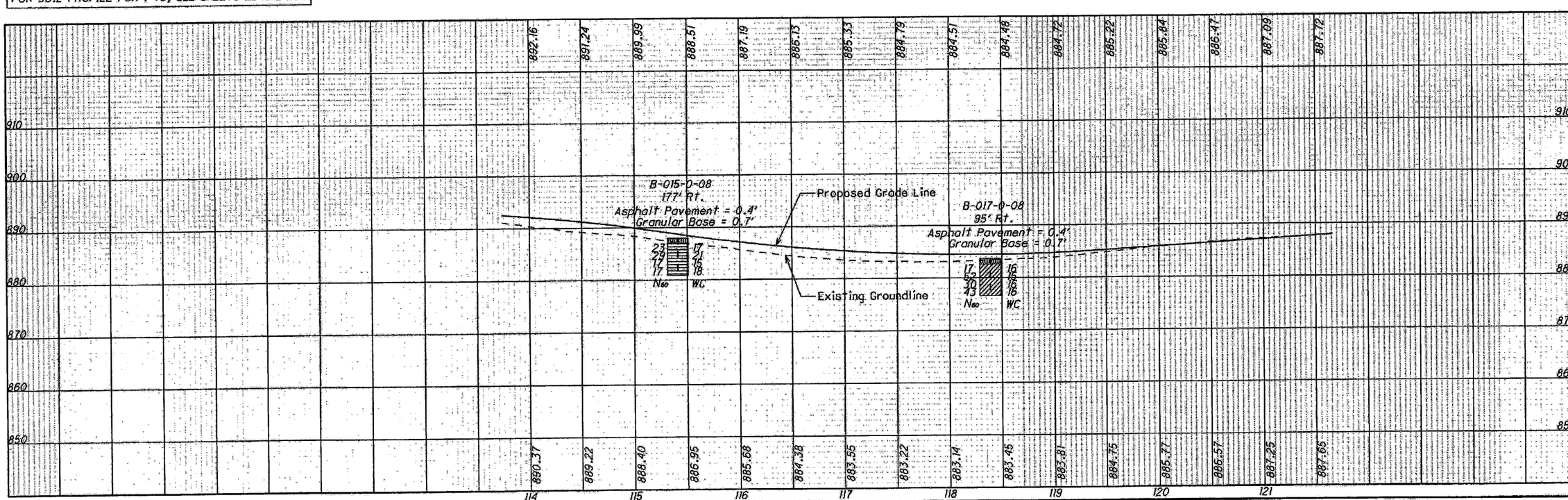

V:\1755\active\175530002\geotechnical\drawing\ODOTSubmittal\projects\ALL\76691\roadway\sheets\76691IP037.dgn

N

0 25 50 100
HORIZONTAL SCALE IN FEET

DRAWN M.J.
CHECKED J.M.M.

SOIL PROFILE
BREESE ROAD - RAMP D

ALL-75-0.21

V:\1755\active\1755300002\geotechnical\drawing\ODOTSubmittal\projects\ALL\76691\roadway\sheets\76691P038.dgn

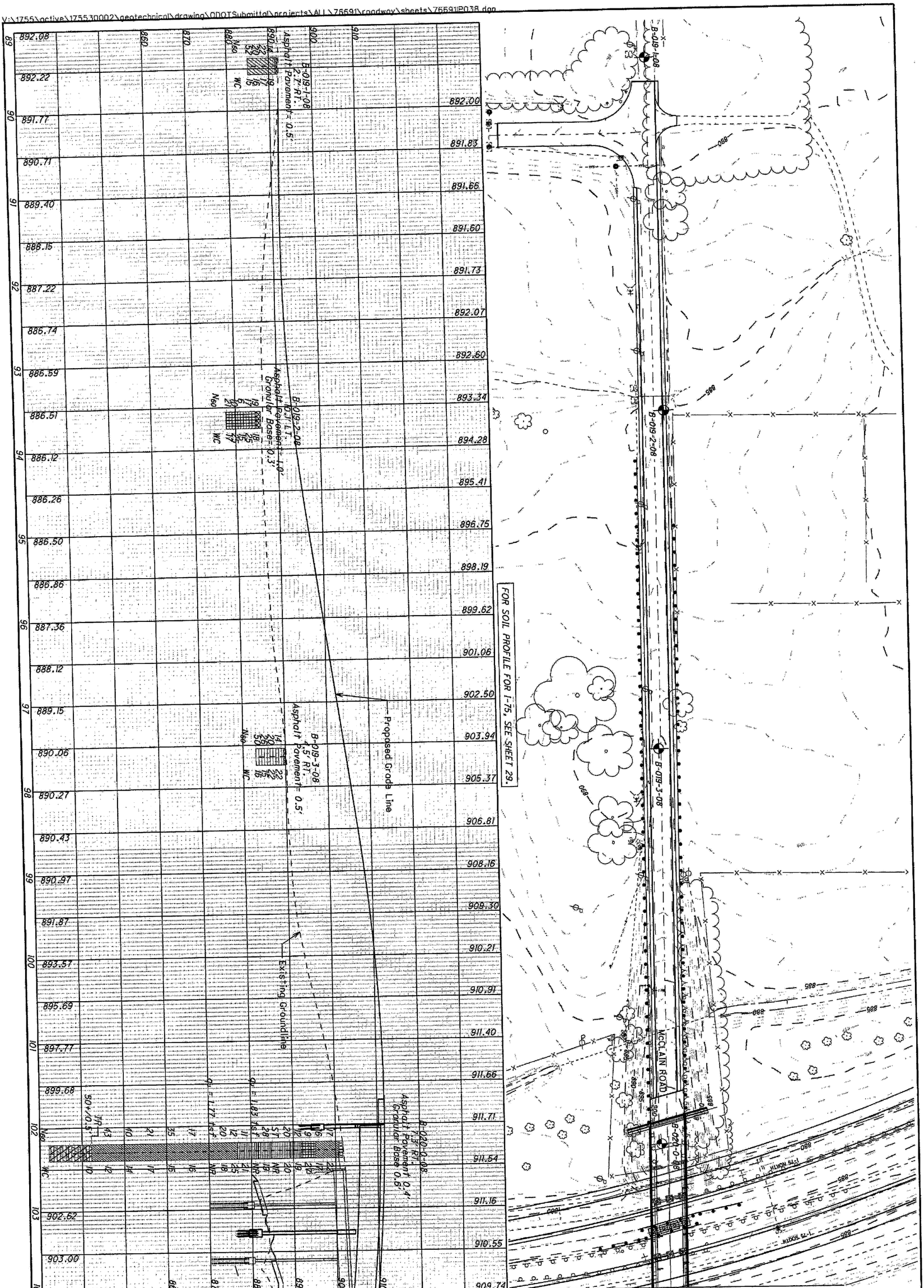

55/90	ALL-75-0.21	SOIL PROFILE McCLAIN ROAD STA. 89+00 - 104+00	DRAWN M.J. CHECKED R.J.K.	0 50 25 100 HORIZONTAL SCALE IN FEET	N

V:\1755\active\1755300002\geotechnical\drawing\ODOTSubmittal\projects\ALL\76691\roadway\sheets\76691P039.dgn

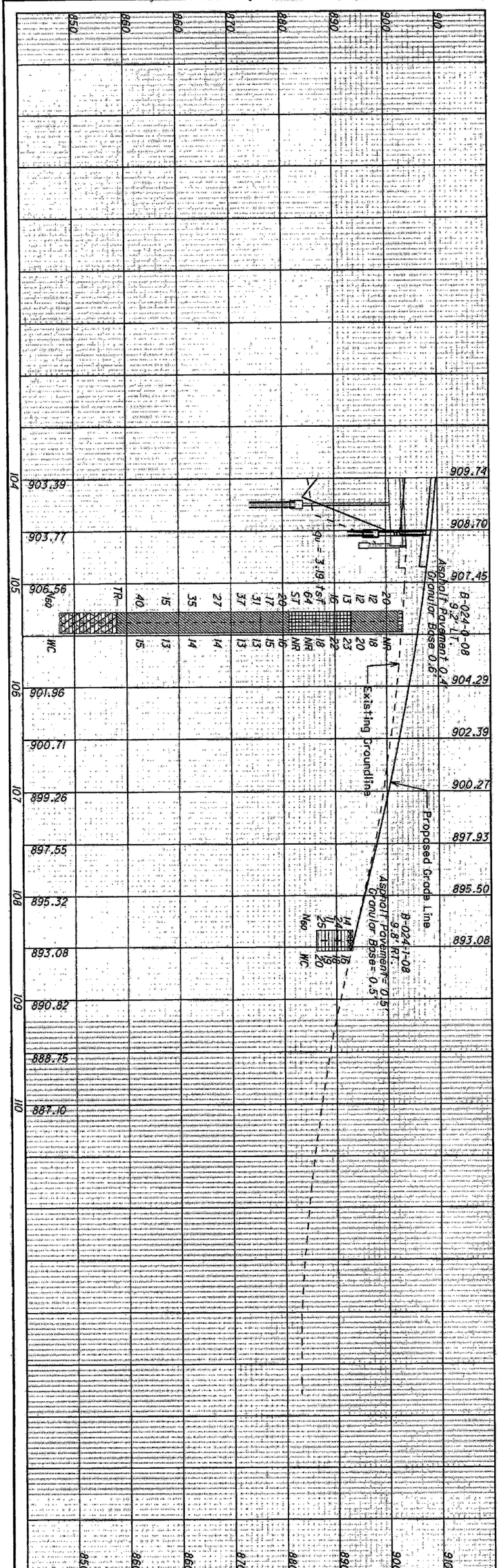

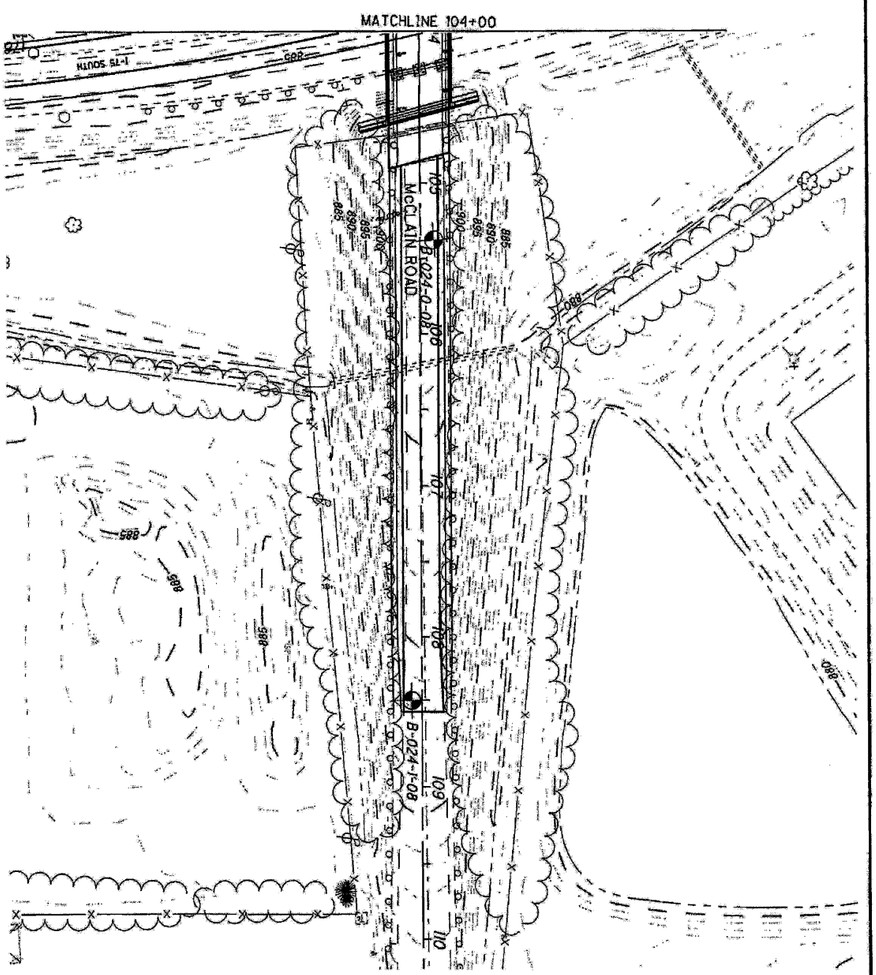

FOR SOIL PROFILE FOR I-75, SEE SHEET 29.

57	56/90	ALL-75-0.21	SOIL PROFILE McCLAIN ROAD STA. 104+00 - 110+00	DRAWN M.J. CHECKED R.J.K.	0 50 25 100 HORIZONTAL SCALE IN FEET

SOIL PROFILE FOR I-75, SEE SHEETS 32 AND 33.
FOR SOIL PROFILE FOR RAMPS "A" AND "D", SEE SHEETS 59 AND 62 RESPECTIVLY.

HORIZONTAL SCALE IN FEET
0 25 50 100

DRAWN M.J.
CHECKED J.M.M.

SOIL PROFILE
S.R. 65 - UNDER I-75
ALL-75-0.21

57 / 90
57 / 157

X:\1755\active\175530002\geotechnical\drawing\ODOTSubmittal\projects\ALL_76691\roadway\sheets\76691IP040.dgn

V:\1755\active\1755300002\geotechnical\drawing\ODOTSubmittal\projects\ALL\76691\roadway\sheets\76691IP041.dgn

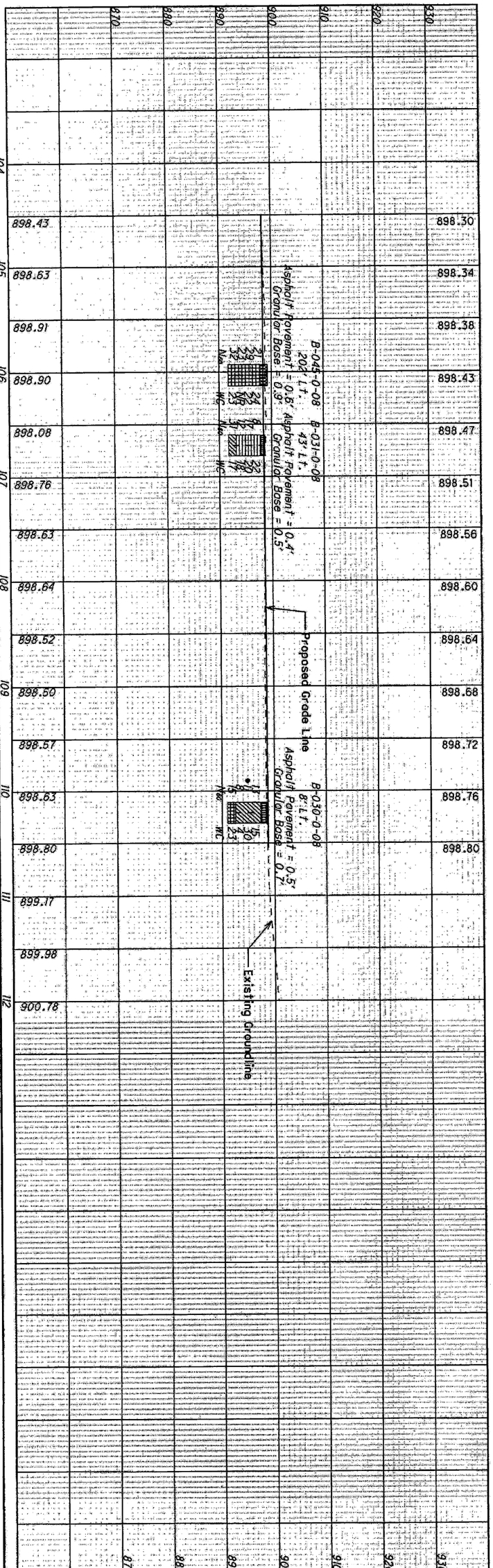

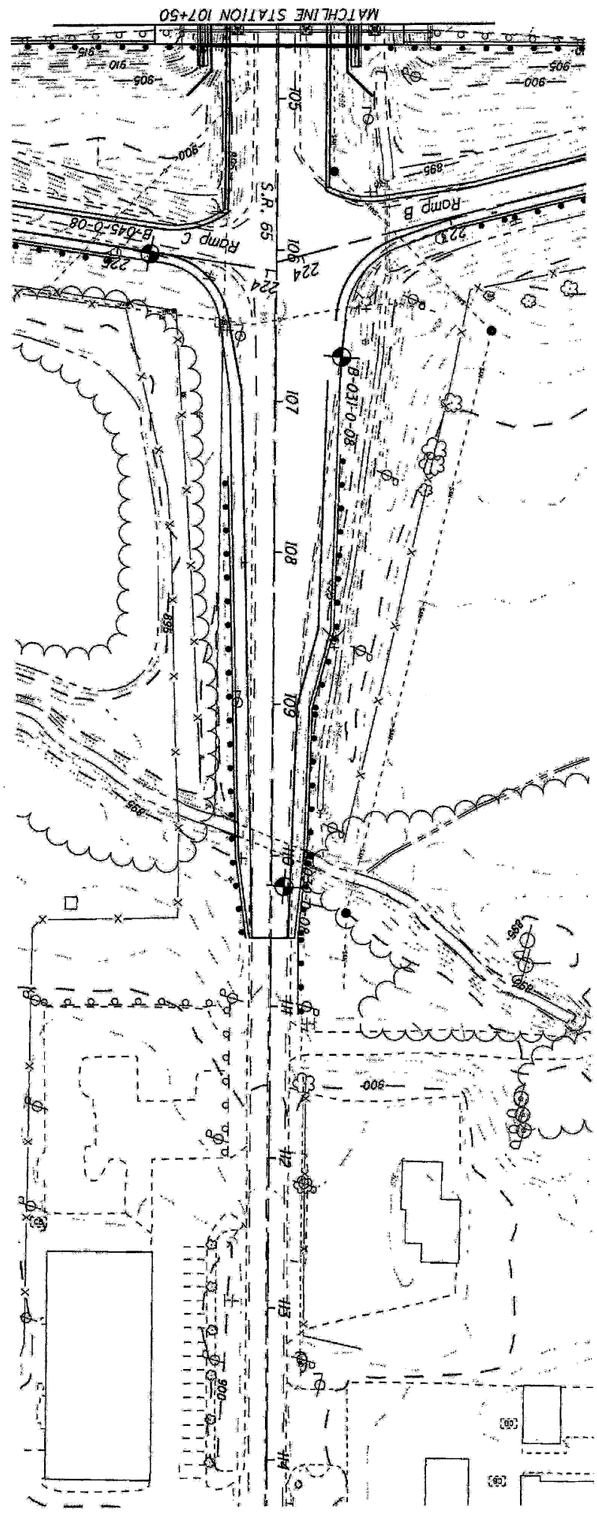

FOR SOIL PROFILE FOR I-75, SEE SHEETS 32 AND 33.
FOR SOIL PROFILE FOR RAMPS "B" AND "C", SEE SHEETS 60 AND 61.

157	58/90	ALL-75-0.21	SOIL PROFILE S.R. 65 - UNDER I-75 - CONTINUED	DRAWN M.J. CHECKED J.M.M.	0 50 25 100 HORIZONTAL SCALE IN FEET

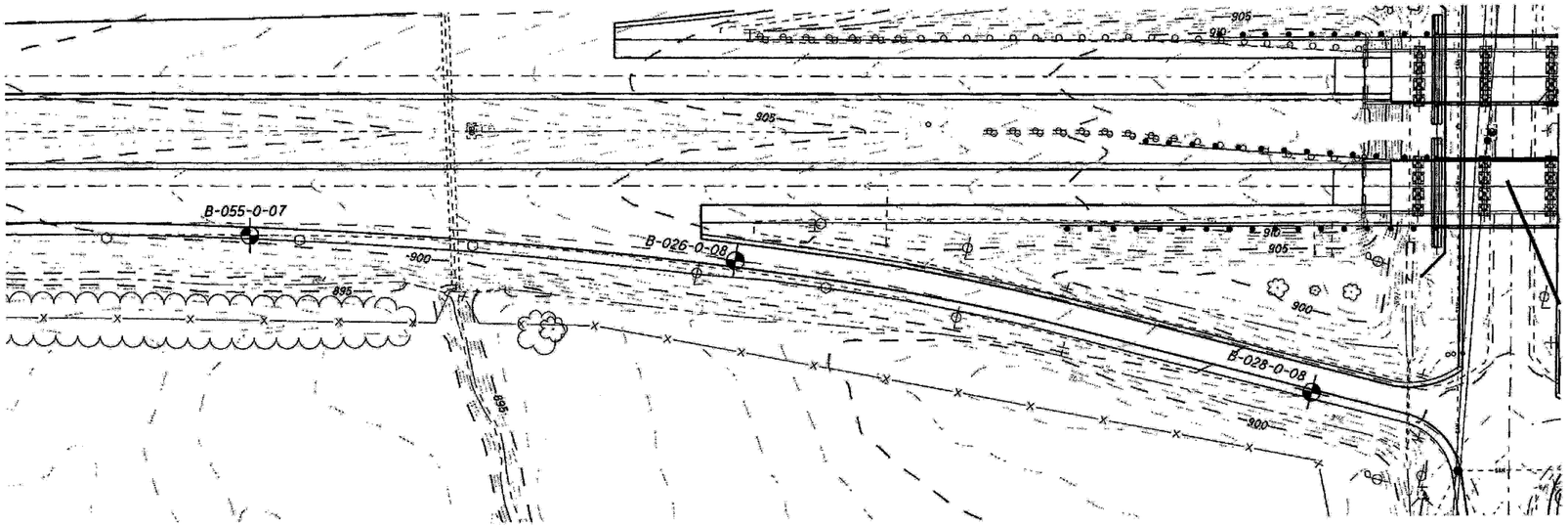

FOR SOIL PROFILE FOR I-75, SEE SHEET 32.

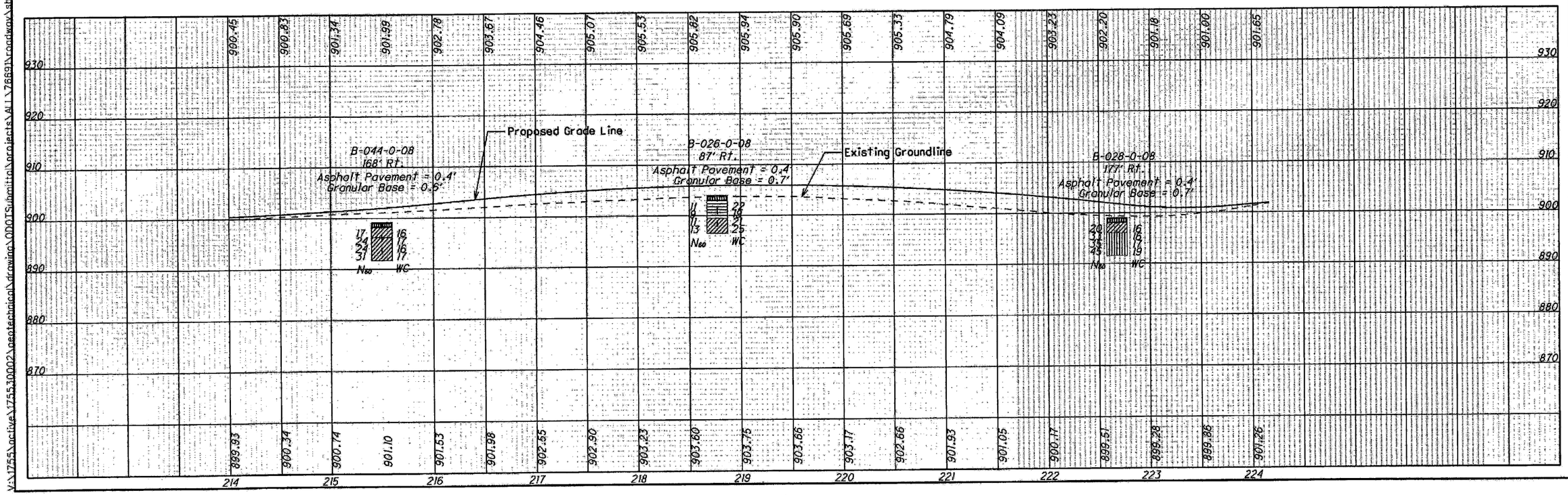

HORIZONTAL SCALE IN FEET
0 25 50 100

DRAWN M.J.
CHECKED J.M.M.

SOIL PROFILE
S.R. 65 - RAMP A

ALL-75-0.21

V:\1755\active\175530002\geotechnical\drawing\ODOTSubmittal\projects\ALL\76691\roadway\sheets\76691P042.dgn

V:\1755\active\175530002\geotechnical\drawing\ODOTSubmittal\projects\ALL\7669)\roadway\sheets\76691P043.dgn

FOR SOIL PROFILE FOR I-75, SEE SHEET 32.

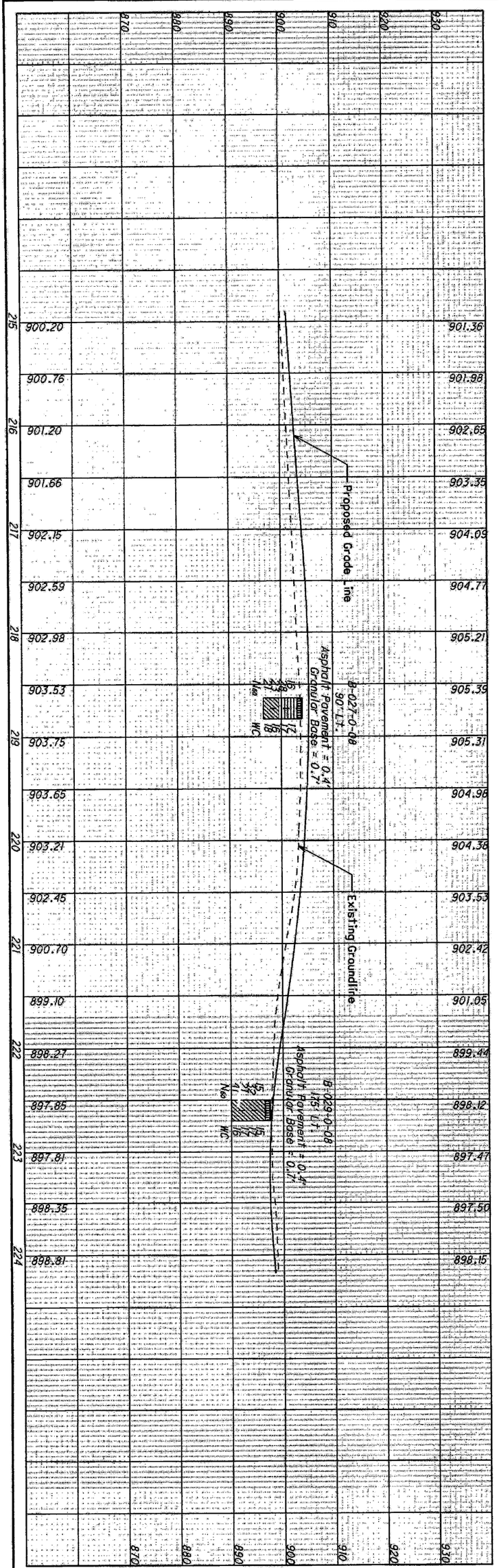

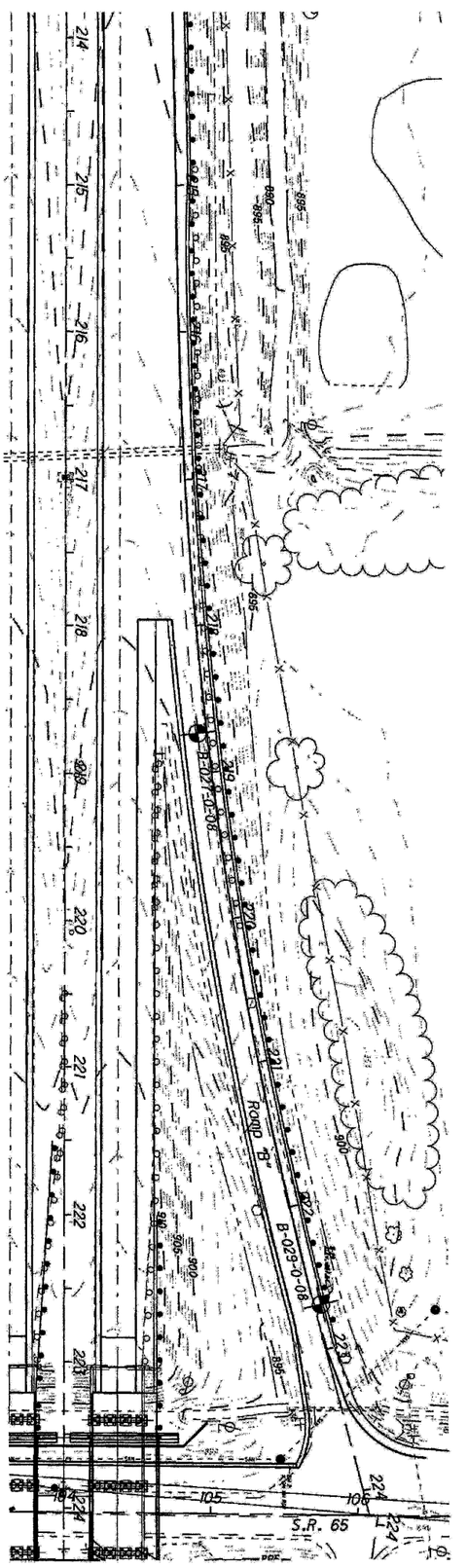

157	60/90	ALL-75-0.21	SOIL PROFILE S.R. 65 - RAMP B	DRAWN M.J. CHECKED J.M.M.	0 50 25 100 HORIZONTAL SCALE IN FEET

V:\1755\active\175530002\geotechnical\drawing\ODOTSubmittal\projects\ALL\76691\roadway\sheets\76691P044.dgn

FOR SOIL PROFILE FOR -75, SEE SHEETS 32 AND 33.

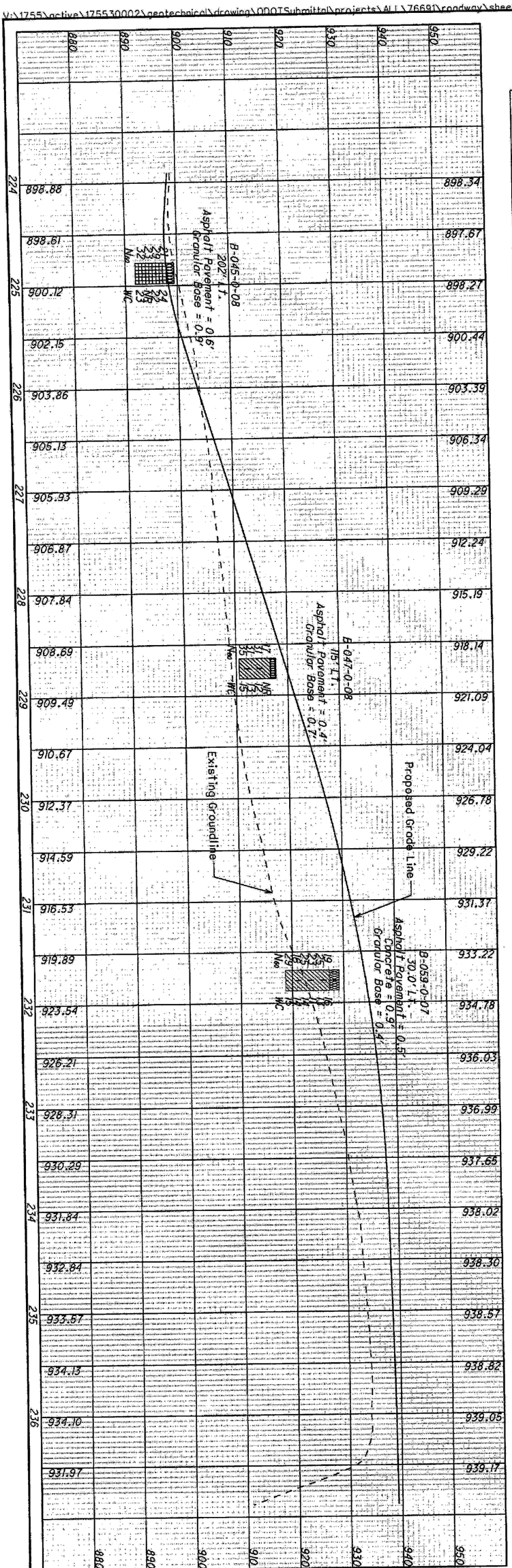

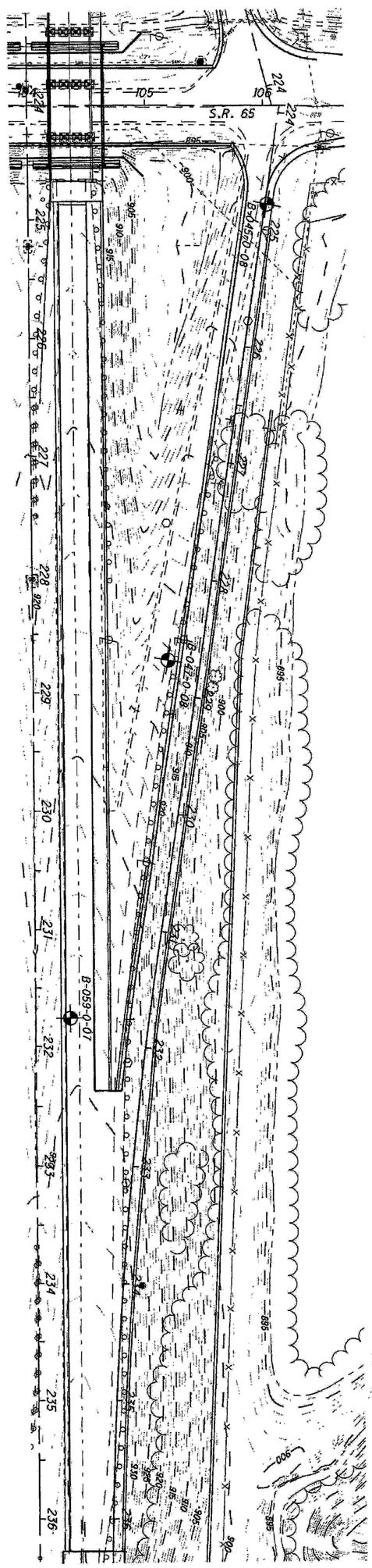

61 / 157	61 / 90	ALL-75-0.21	SOIL PROFILE S.R. 65 - RAMP C	DRAWN M.J. CHECKED J.M.M.	0 50 25 100 HORIZONTAL SCALE IN FEET

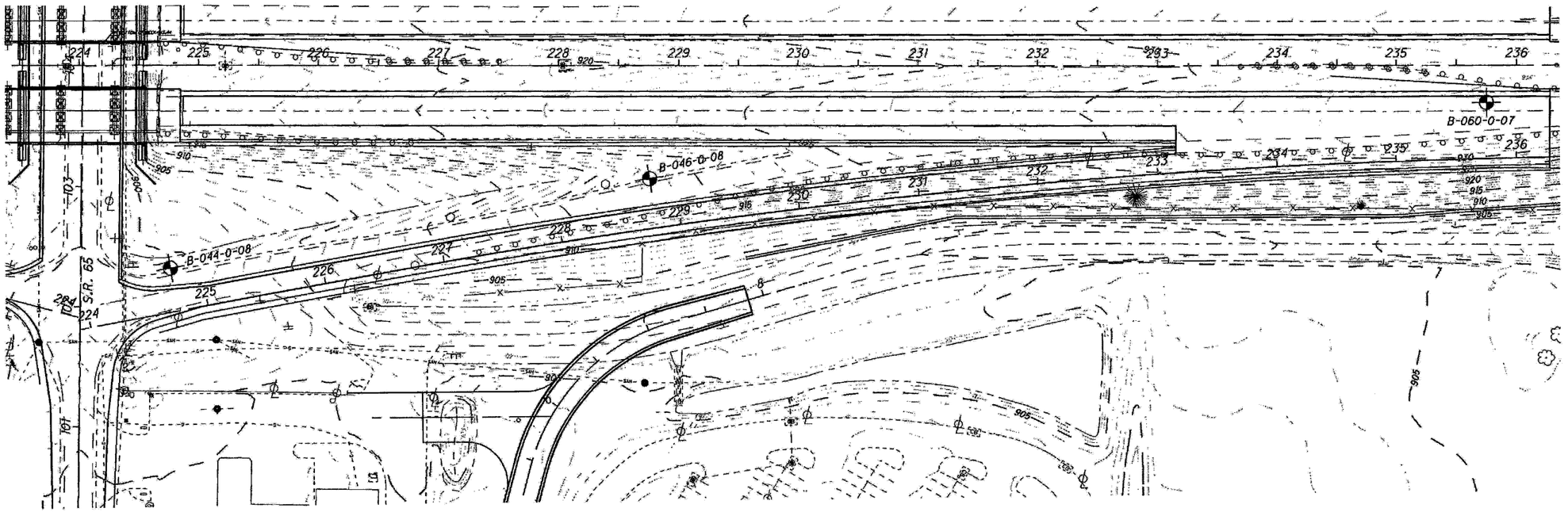

FOR SOIL PROFILE FOR I-75, SEE SHEET 32 AND 33.
FOR SOIL PROFILE FOR S.R. 65, SEE SHEETS 57 AND 58.
FOR SOIL PROFILE FOR YODER ROAD, SEE SHEET 63.

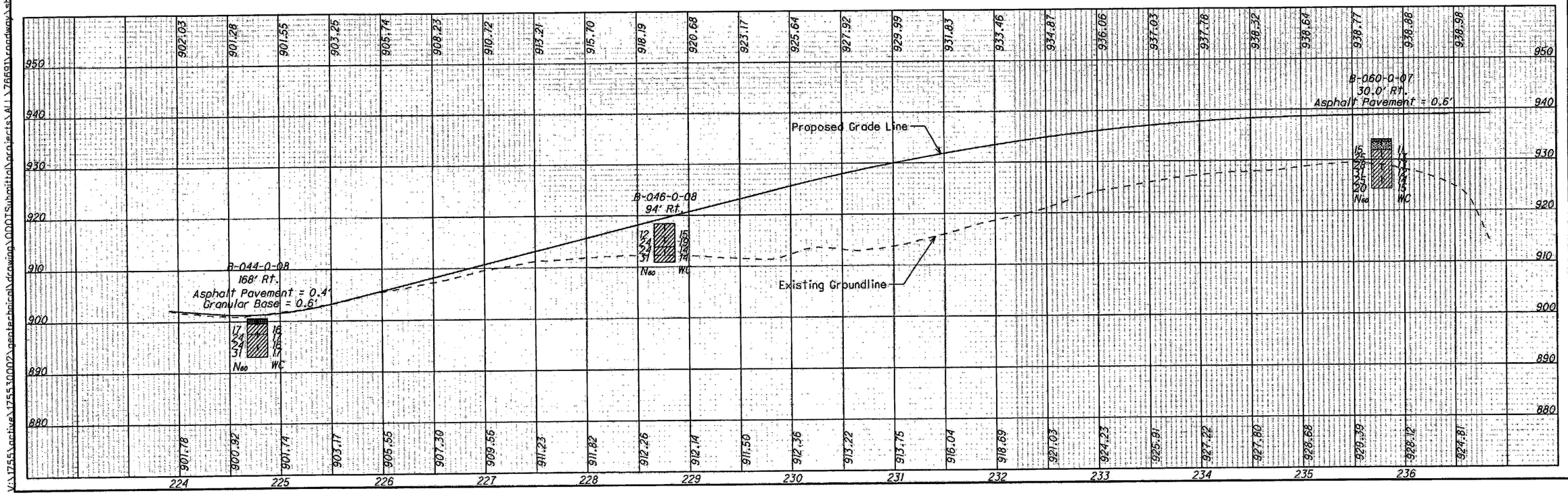

HORIZONTAL SCALE IN FEET
0 25 50 100

DRAWN M.J.
CHECKED J.M.M.

SOIL PROFILE
S.R. 65 - RAMP D

ALL-75-0.21

62/90

62/57

V:\1755\active\175530002\geotechnical\drawing\ODOTS\hpilot\projects\ALL\76691\roadway\sheets\76691ND045.dgn

V:\1755\active\175530002\geotechnical\drawing\ODOTSubmittal\projects\ALL\76691\roadway\sheets\76691IP046.dgn

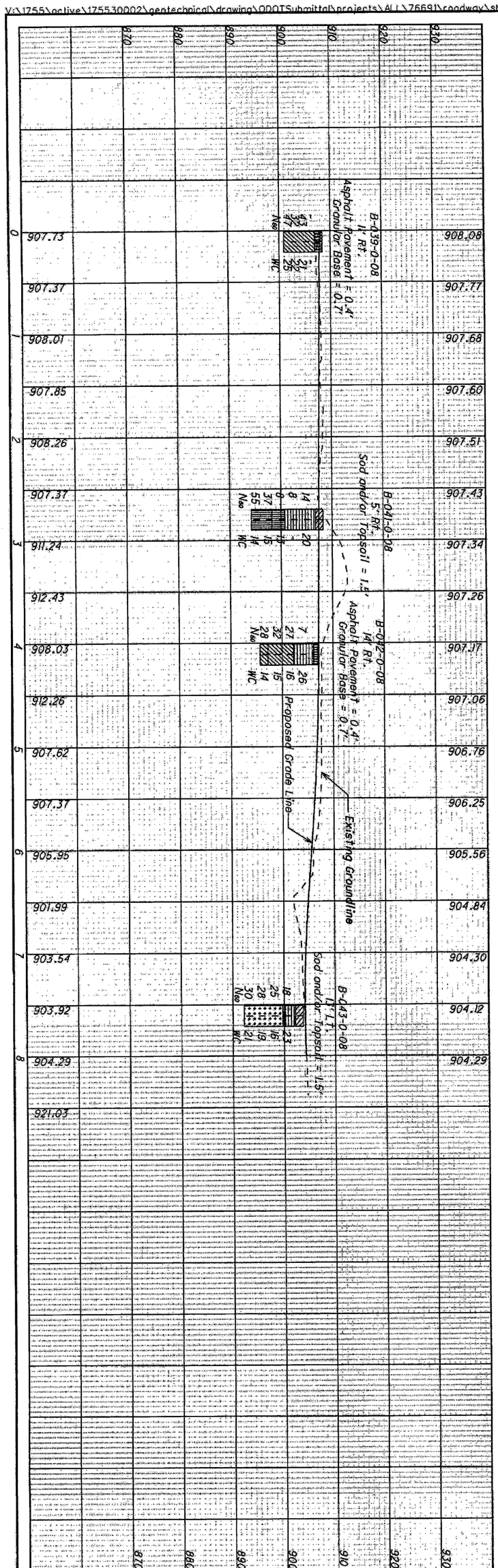

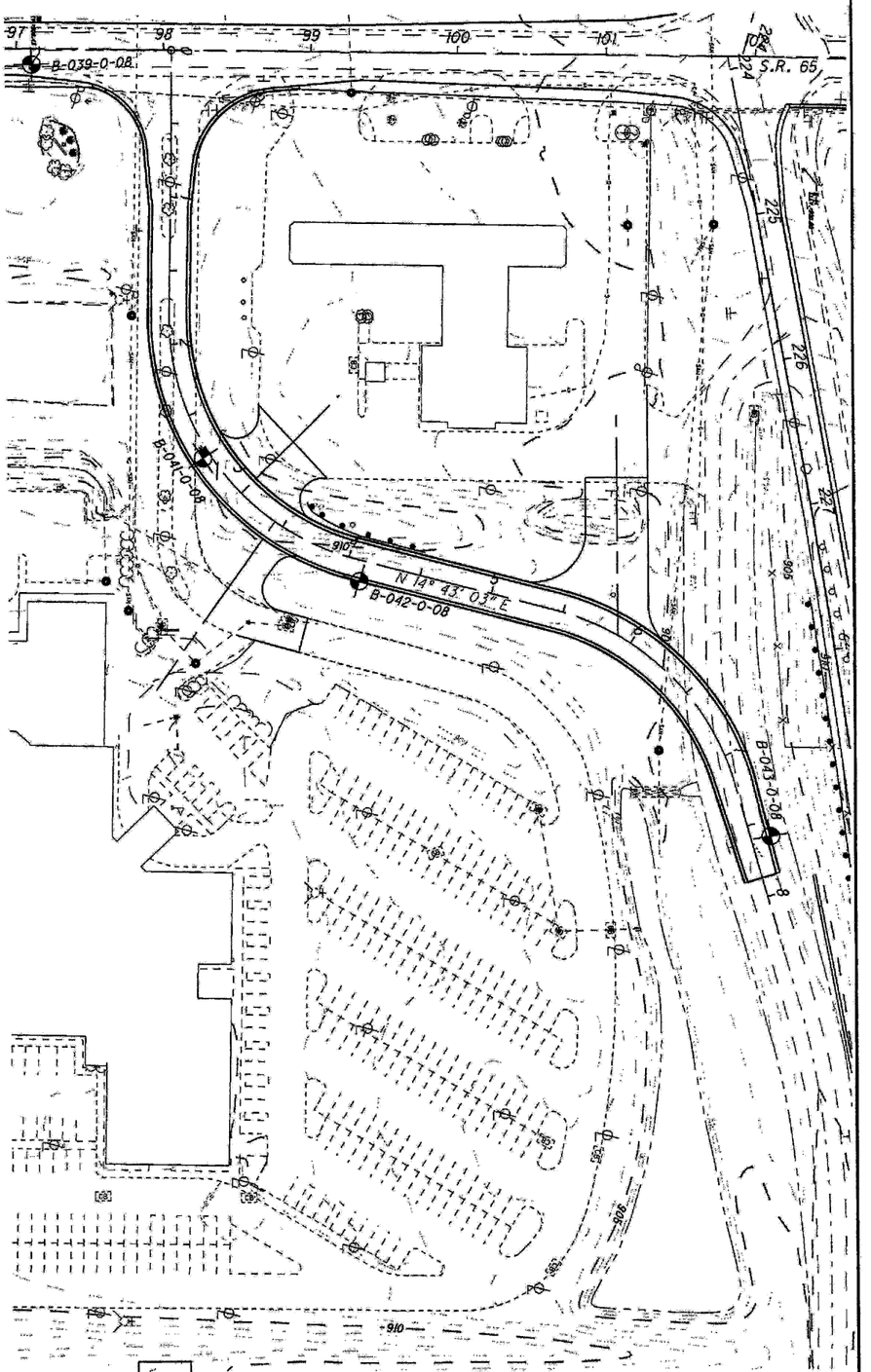

FOR SOIL PROFILE FOR S.R. 65, SEE SHEETS 57 AND 58.
FOR SOIL PROFILE FOR RAMP "D", SEE SHEET 62.

63 / 90	ALL-75-0.21	SOIL PROFILE YODER ROAD	DRAWN M.J.	CHECKED J.M.M.	0 50 25 100 HORIZONTAL SCALE IN FEET	N

HORIZONTAL SCALE IN FEET

DRAWN M.J.
CHECKED R.J.K.

SOIL PROFILE

HANTHORN ROAD STA. 96+00 - 111+00

ALL-75-0.21

64/90

157

Y:\1755\active\75530002\geotechnical\drawing\ODOTS_hamilton\projects\ALL\76691\roadway\sheets\76691P047.dgn

V:\1755\active\175530002\geotechnical\drawing\ODOTSubmittal\projects\ALL\76691\roadway\sheets\76691P048.dgn

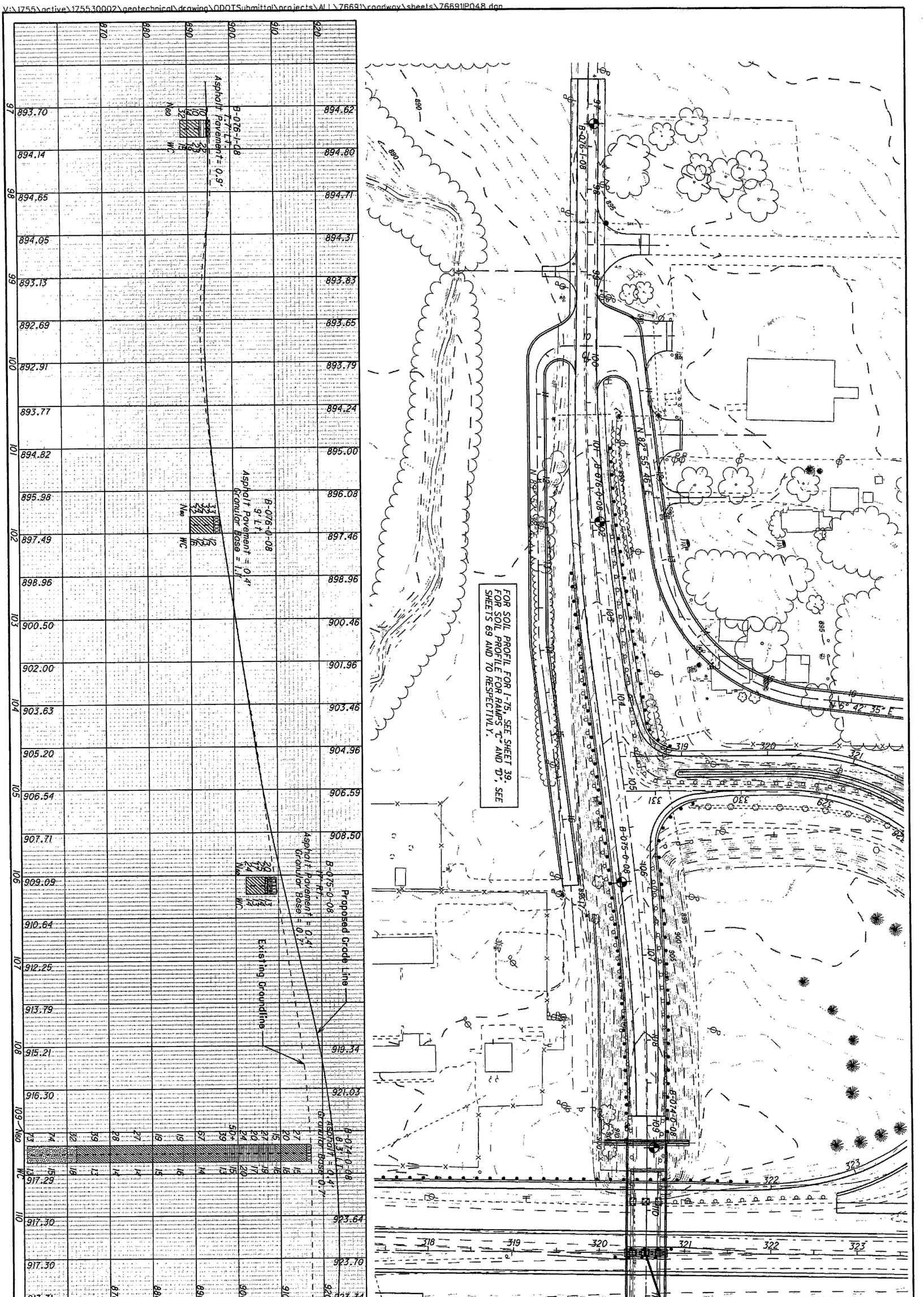

65/90	ALL-75-0.21	SOIL PROFILE FOURTH STREET - OVER I-75	DRAWN M.J.	0 50 25 100	N
			CHECKED J.M.M.	HORIZONTAL SCALE IN FEET	

V:\1755\active\175530002\geotechnical\drawing\ODOTSubmittal\projects\ALL\75691\roadway\sheets\75691IP049.dgn

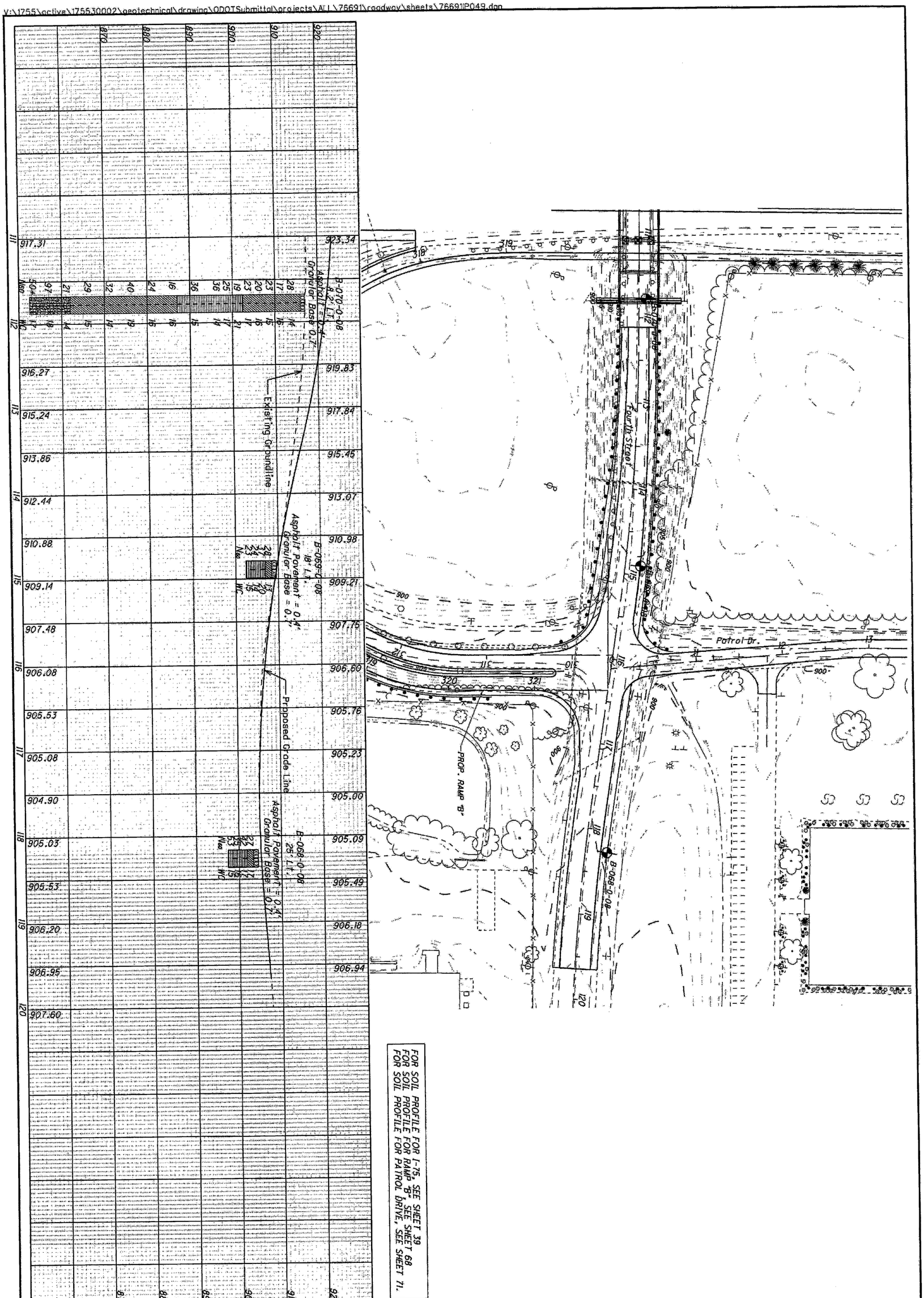

FOR SOIL PROFILE FOR I-75, SEE SHEET 39
FOR SOIL PROFILE FOR RAMP "B", SEE SHEET 68
FOR SOIL PROFILE FOR PATROL DRIVE, SEE SHEET 71.

157	96 / 99	ALL-75-0.21	SOIL PROFILE FOURTH STREET - OVER I-75 - CONTINUED	DRAWN M.J. CHECKED J.M.M.	0 50 25 100 HORIZONTAL SCALE IN FEET

V:\1755\active\175530002\geotechnical\drawing\ODOTSubmittal\projects\ALL\76691\roadway\sheets\76691P050.dgn

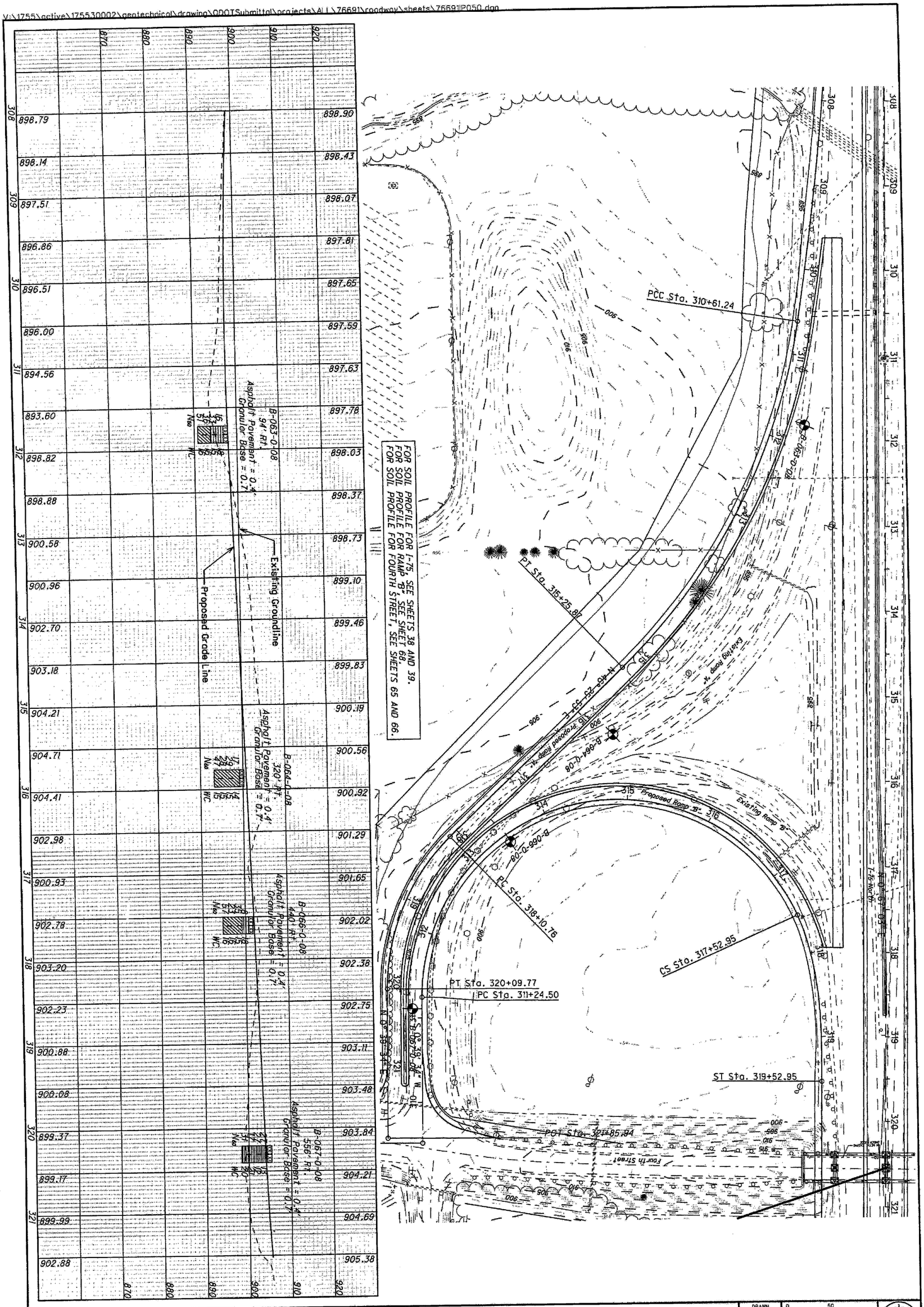

67/90	ALL-75-0.21	SOIL PROFILE FOURTH STREET - RAMP A	DRAWN M.J.	0 50 25 100	N
			CHECKED J.M.M.	HORIZONTAL SCALE IN FEET	

V:\1755\active\1755300002\geotechnical\drawing\ODOTSubmittal\projects\ALL\76691\roadway\sheets\76691P051.dgn

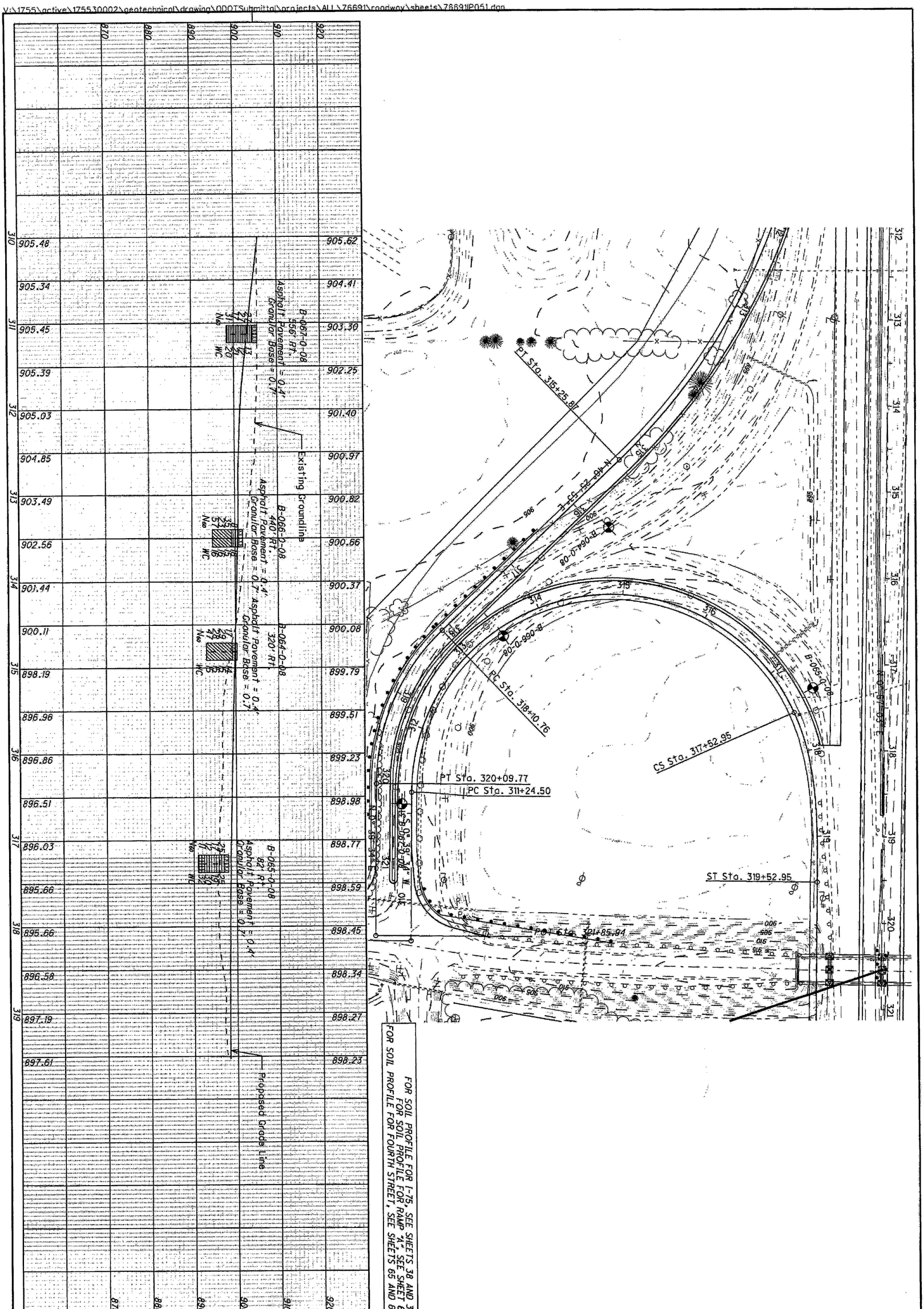

FOR SOIL PROFILE FOR I-75, SEE SHEETS 38 AND 39.
FOR SOIL PROFILE FOR RAMP "A", SEE SHEET 67.
FOR SOIL PROFILE FOR FOURTH STREET, SEE SHEETS 65 AND 66.

68/157	68/90	ALL-75-0.21	SOIL PROFILE FOURTH STREET - RAMP B	DRAWN M.J. CHECKED J.M.M.	0 50 25 100 HORIZONTAL SCALE IN FEET

FOR SOIL PROFILE FOR I-75, SEE SHEETS 39 AND 40.
FOR SOIL PROFILE FOR FOURTH STREET, SEE SHEETS 65 AND 66.
FOR SOIL PROFILE FOR RAMP "D", SEE SHEET 70.

POT Sta. 331+36.34
PT Sta. 329+49.14
PC Sta. 320+26.25
ST Sta. 321+17.41
SC Sta. 323+17.41
PT Sta. 325+77.46
PC Sta. 324+94.31
CS Sta. 327+92.83
SC Sta. 329+92.83
PC Sta. 324+45.48

B-077-0-08
B-078-0-08
B-079-0-08
B-080-0-08
N 09° 18' E

B-078-0-08
61' Lt.
Asphalt Pavement = 0.4'
Granular Base = 0.7'

B-079-0-08
292' Lt.
Asphalt Pavement = 0.4'
Granular Base = 0.7'

Sta. 324+75.1
B-080-0-08
408' Lt
Asphalt Pavement = 0.4'
Granular Base = 0.7'

B-077-0-08
500' Lt.
Asphalt Pavement = 0.4'
Granular Base = 0.7'

Existing Groundline
Proposed Grade Line

N60 WC

SOIL PROFILE
FOURTH STREET - RAMP C

HORIZONTAL SCALE IN FEET
0 25 50 100

DRAWN M.J.
CHECKED J.M.M.

ALL-75-0.21

69/90
69/157

V:\17553\active\175530002\geotechnical\drawing\ODOTSubmittal\projects\ALL\76691\roadway\sheets\76691P052.dgn

V:\1755\active\175530002\geotechnical\drawing\ODOTSubmittal\projects\ALL\76691\roadway\sheets\76691IP053.dgn

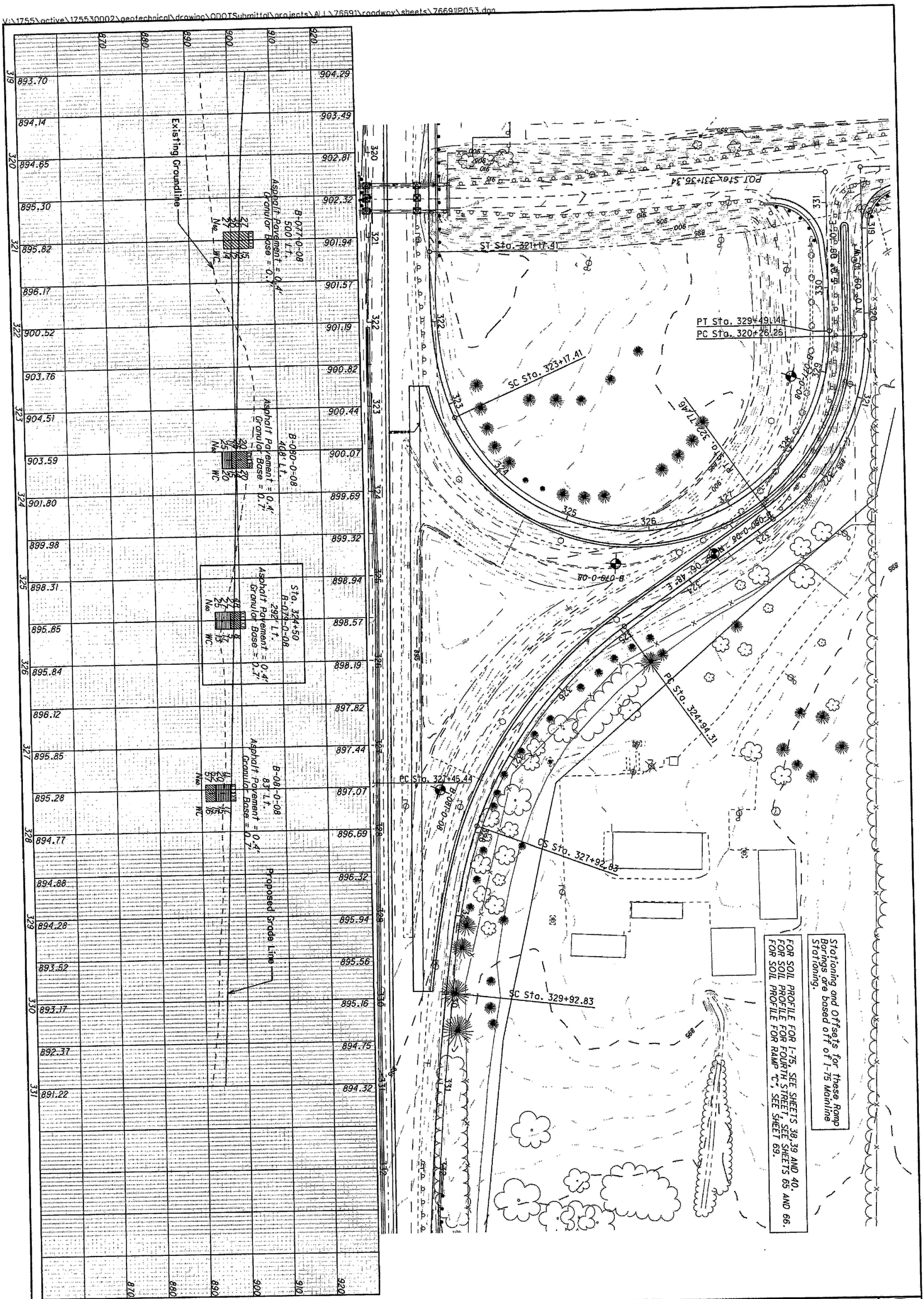

70/90	ALL-75-0.21	SOIL PROFILE FOURTH STREET - RAMP D	DRAWN M.J. CHECKED J.M.M.	0 25 50 100 HORIZONTAL SCALE IN FEET

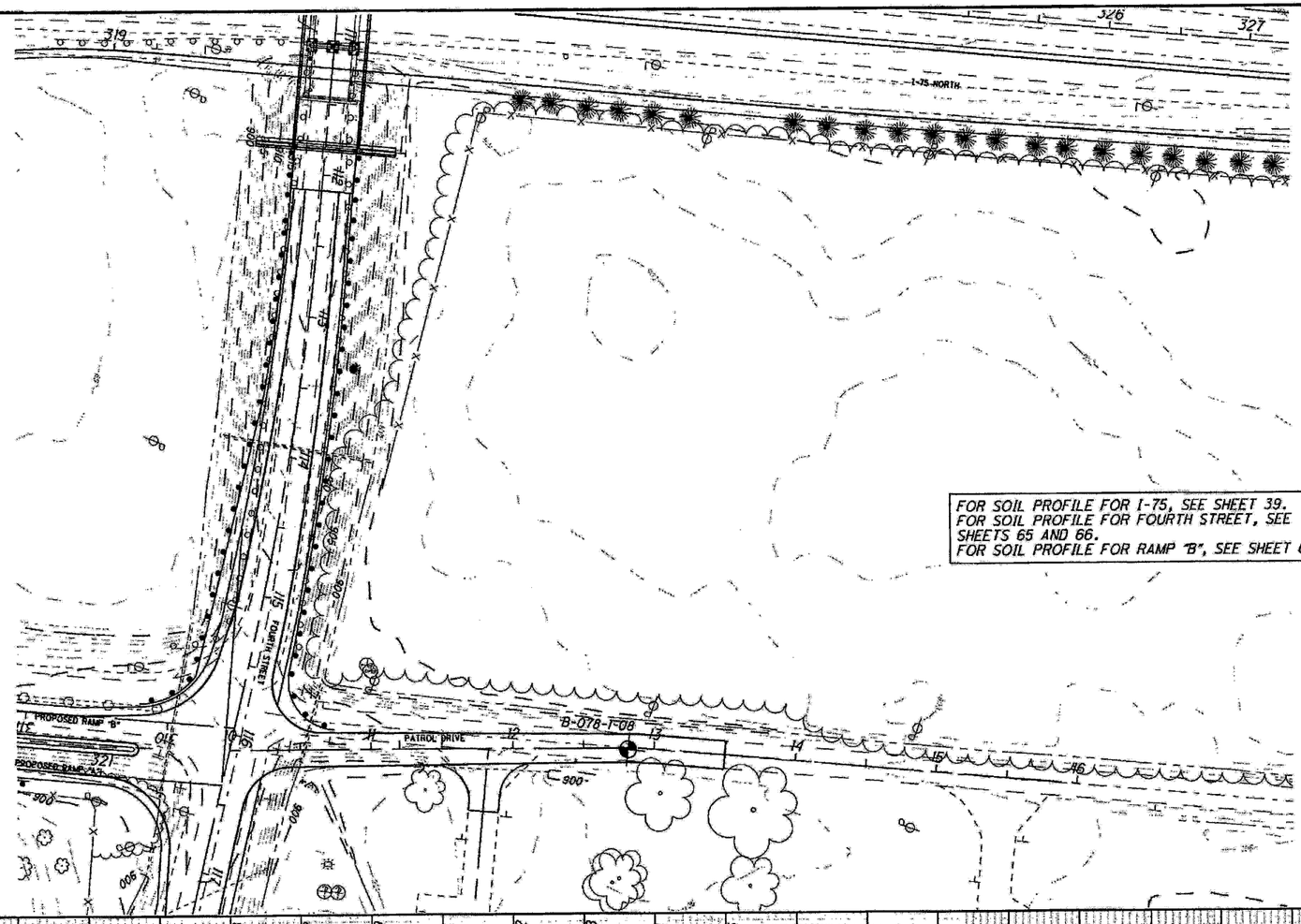

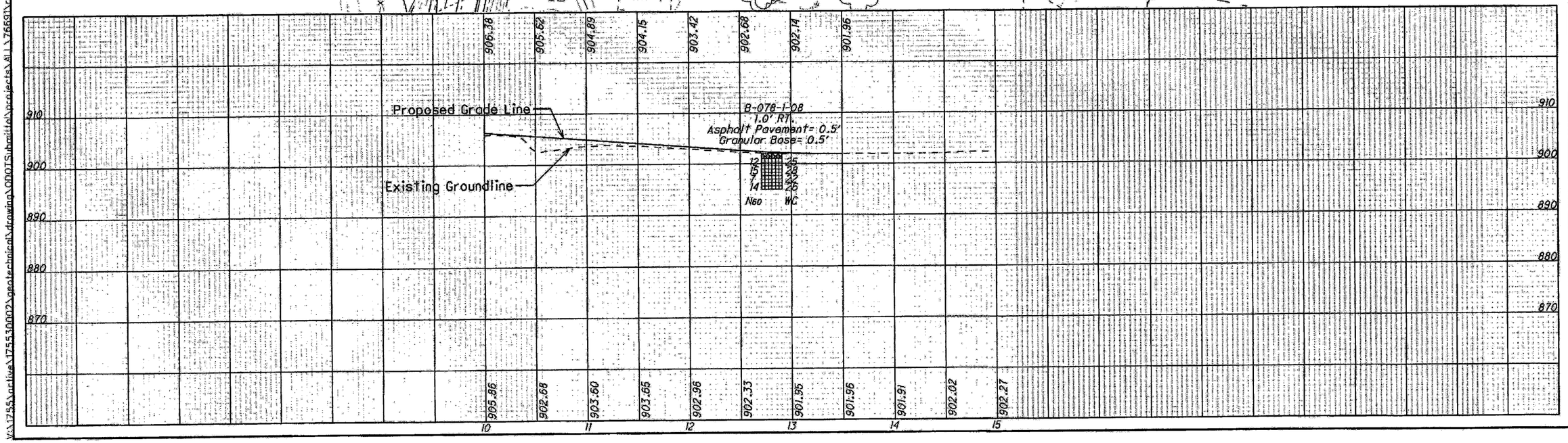

SOIL PROFILE
DRIVE STA. 10+00 - 15+00
PATROL DR

HORIZONTAL SCALE IN FEET
0 25 50 100

DRAWN M.J.
CHECKED J.M.M.

ALL-75-0.21

71/90

71/57

X:\1755\active\175530002\geotechnical\drawing\ODOT\Submittal\projects\ALL\76691\roadway\sheets\76691P054.dgn

V:\1755\active\1755300002\geotechnical\drawing\ODOTSubmittal\projects\ALL\76691\roadway\sheets\76691P055.dgn

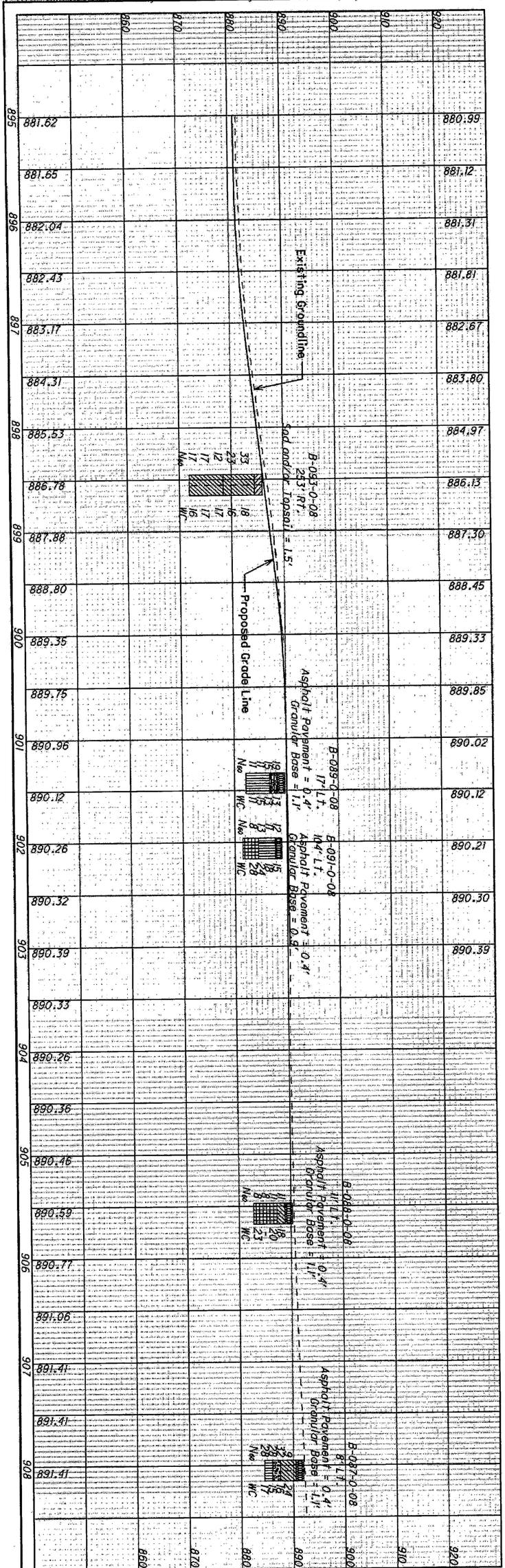

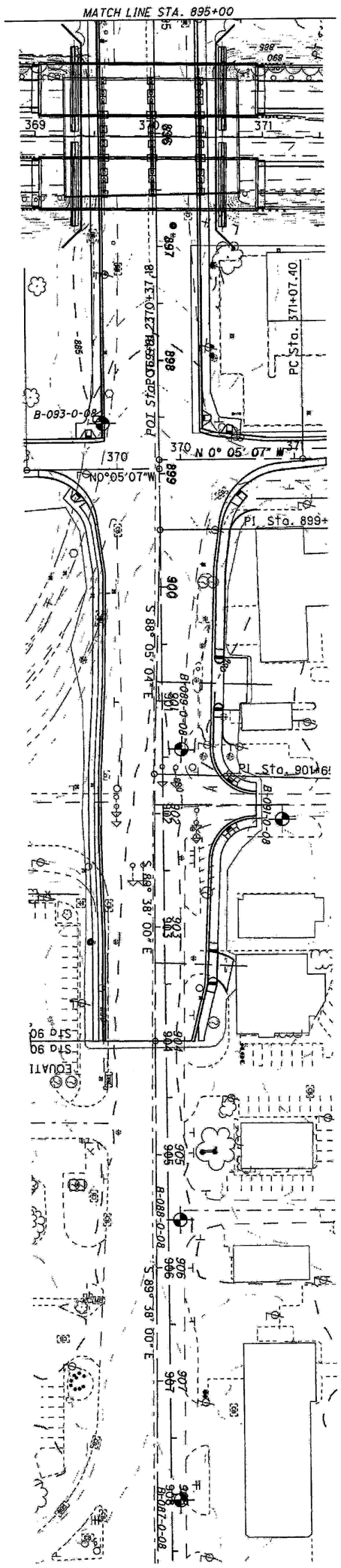

72/153	72/90	ALL-75-0.21	SOIL PROFILE S.R. 117/S.R. 309 - UNDER I-75	DRAWN M.J. CHECKED J.M.M. 0 25 50 100 HORIZONTAL SCALE IN FEET

V:\1755\active\175530002\geotechnical\drawing\ODOTSubmittal\projects\ALL\76691\roadway\sheets\76691P056.dgn

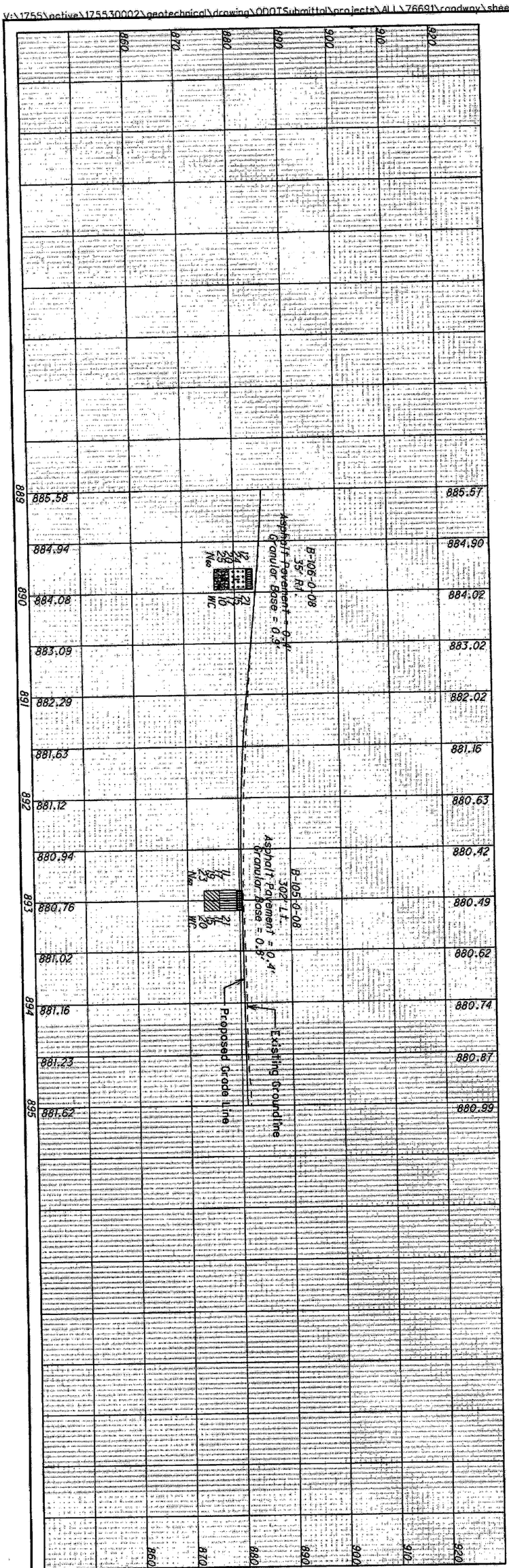

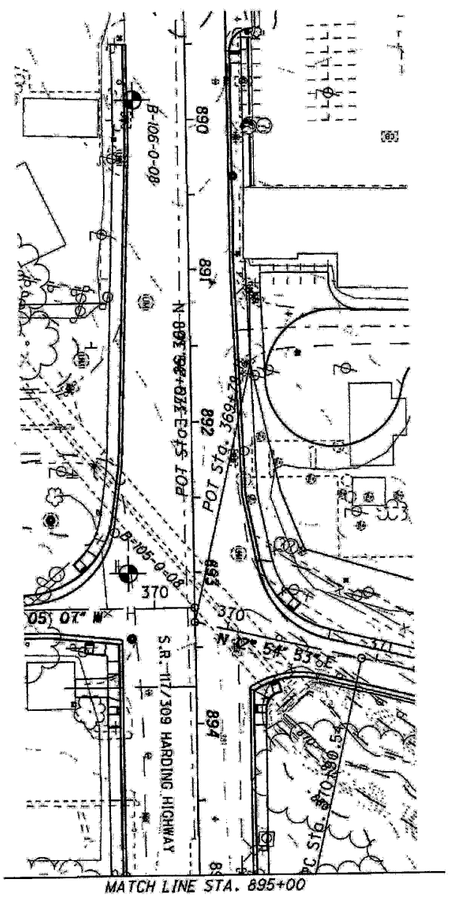

23/57	73/90	ALL-75-0.21	SOIL PROFILE S.R. 117/S.R. 309 - UNDER I-75 - CONT.	DRAWN M.J. CHECKED J.M.M.	0 50 100 25 HORIZONTAL SCALE IN FEET

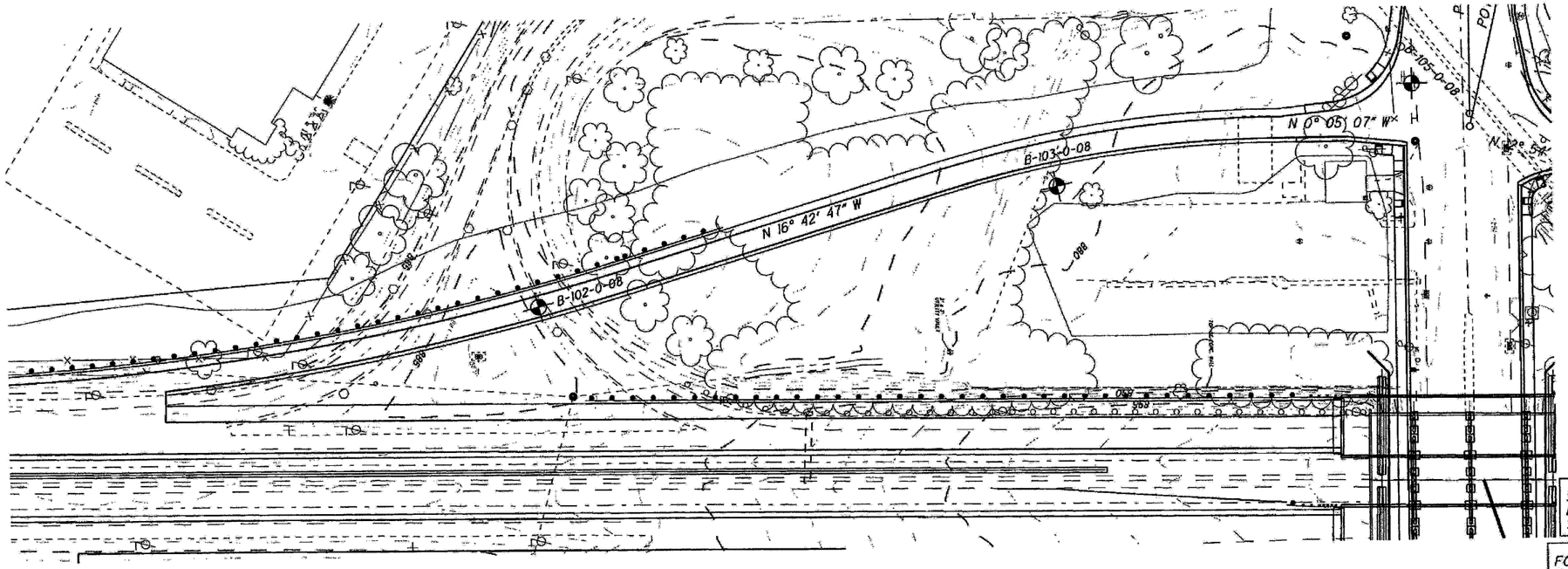

Stationing and Offsets for these Ramp Borings are based off of I-75 Mainline Stationing.

FOR SOIL PROFILE FOR I-75, SEE SHEET 42.
FOR SOIL PROFILES FOR S.R. 117/S.R. 309, SEE SHEETS 72 AND 73.

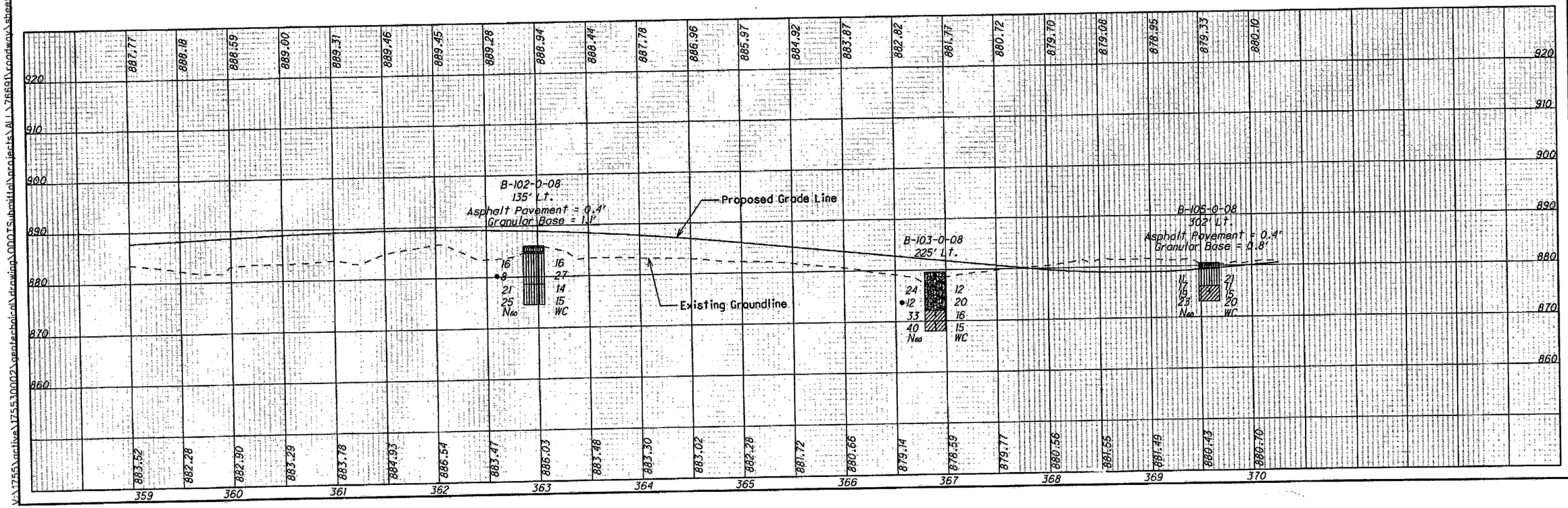

DRAWN M.J.
CHECKED J.M.M.

HORIZONTAL SCALE IN FEET
0 25 50 100

SOIL PROFILE
S.R. 117/S.R. 309 - RAMP A
S.R. 117
ALL-75-0.21

74/90
(74/157)

V:\1755\active\175530002\geotechnical\drawing\DOTS\build\projects\ALL\76691\roadway\sheets\76691P061.dgn

V:\1755\active\175530002\geotechnical\drawing\ODOTSubmittal\projects\ALL\76691\roadway\sheets\76691P062.dgn

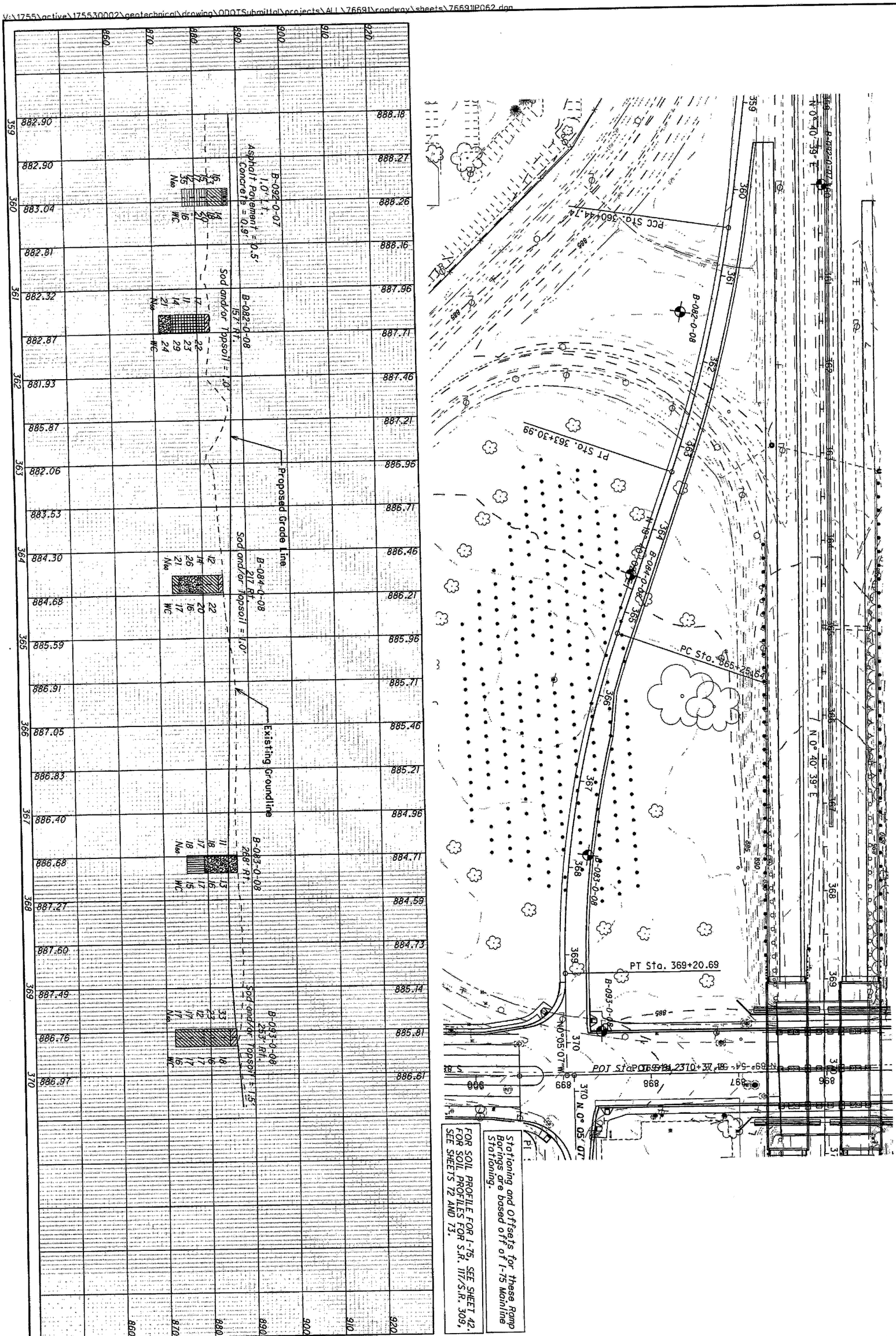

75/157	75/90	ALL-75-0.21	SOIL PROFILE S.R. 117/S.R. 309 - RAMP F	DRAWN M.J. CHECKED J.M.M.	0 50 25 100 HORIZONTAL SCALE IN FEET

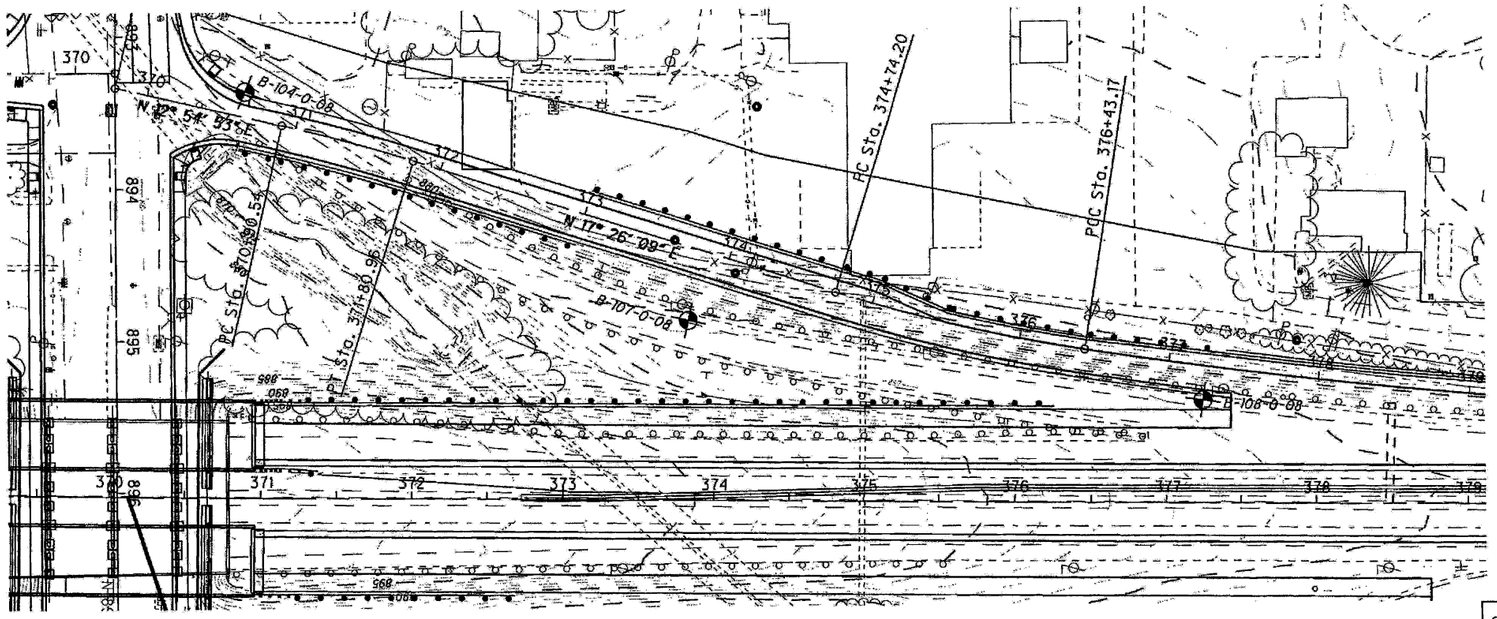

Stationing and Offsets for these Ramp Borings are based off of I-75 Mainline Stationing.

FOR SOIL PROFILE FOR I-75, SEE SHEET 42.
FOR SOIL PROFILES FOR S.R. 117/S.R. 309, SEE SHEETS 72 AND 73.

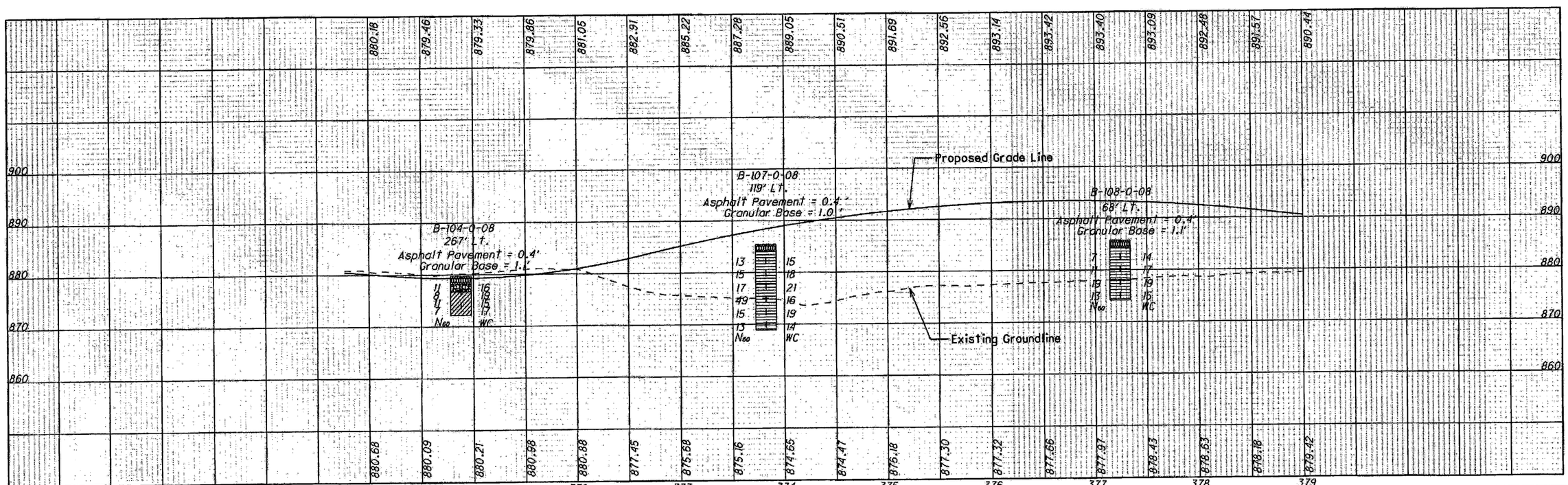

HORIZONTAL SCALE IN FEET
0 25 50 100

DRAWN M.J.
CHECKED J.M.M.

SOIL PROFILE
S.R. 117 / S.R. 309 - RAMP C

ALL-75-0.21

V:\1755\active\175530002\geotechnical\drawing\ODOTSubmittal\projects\ALL\76691\roadway\sheets\76691P063.dgn

FOR SOIL PROFILE FOR I-75, SEE SHEETS 42 AND 43.
FOR SOIL PROFILE FOR S.R. 117, SEE SHEETS 72 AND 73.

Stationing and Offsets for these Ramp Borings are based off of I-75 Mainline Stationing.

SOIL PROFILE
S.R. 117 / S.R. 309 - RAMP E

DRAWN M.J.
CHECKED J.M.M.

HORIZONTAL SCALE IN FEET
0 25 50 100

ALL-75-0.21

77 / 90

(77 / 157)

V:\1755\active\175530002\geotechnical\drawing\ODOTSubmittal\projects\ALL\76691\roadway\sheets\76691RD064.dgn

V:\1755\active\175530002\geotechnical\drawing\ODOTSubmittal\projects\ALL\76691\roadway\sheets\76691P058.dgn

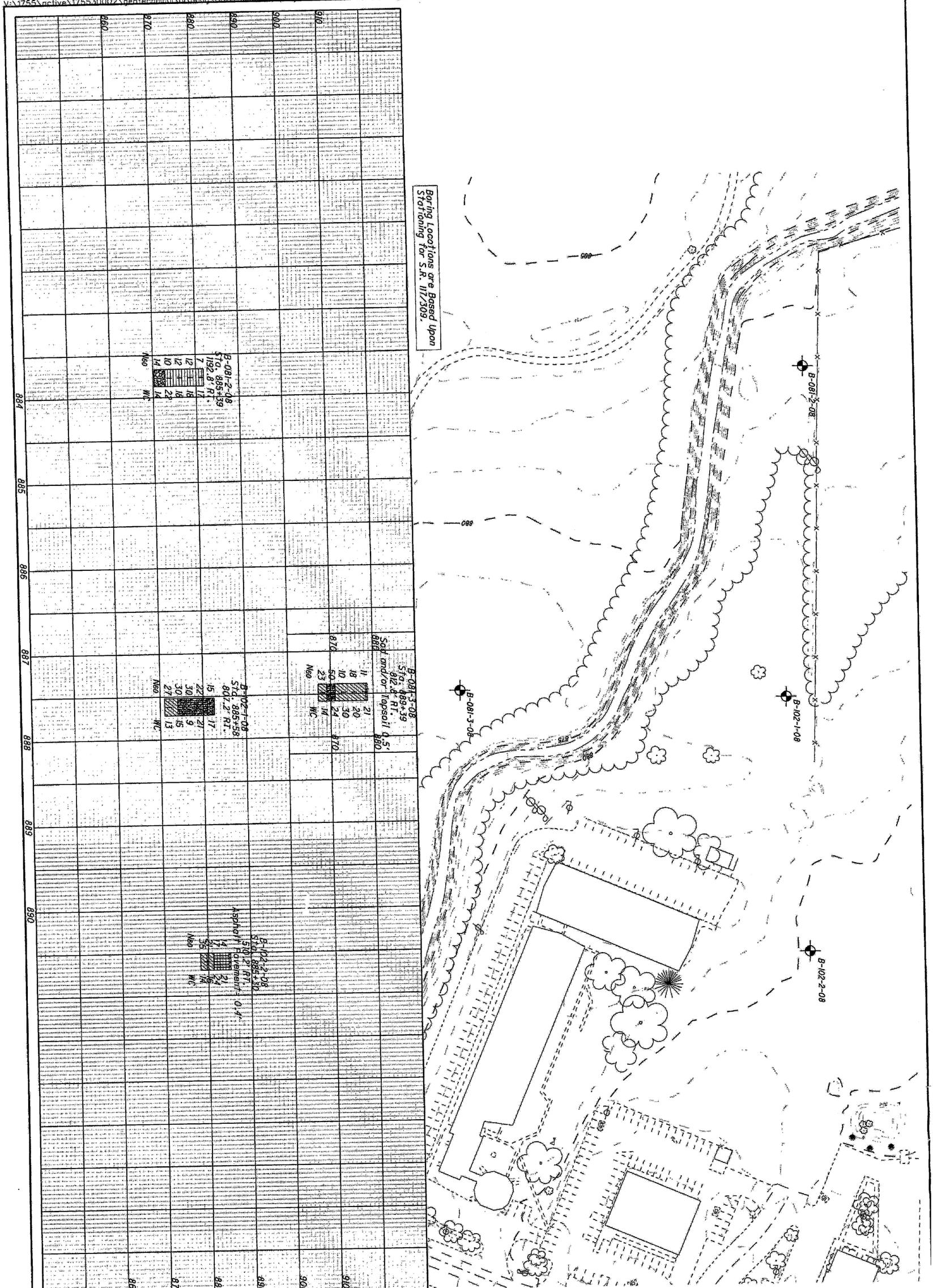

28/57	78/90	ALL-75-0.21	SOIL PROFILE S.R. 117/ S.R. 309 AND ASSOCIATED ROADS	DRAWN M.J. CHECKED J.M.M.	0 25 50 100 HORIZONTAL SCALE IN FEET

V:\1755\active\175530002\geotechnical\drawing\ODOTSubmittal\projects\ALL\76691\roadway\sheets\76691P059.dgn

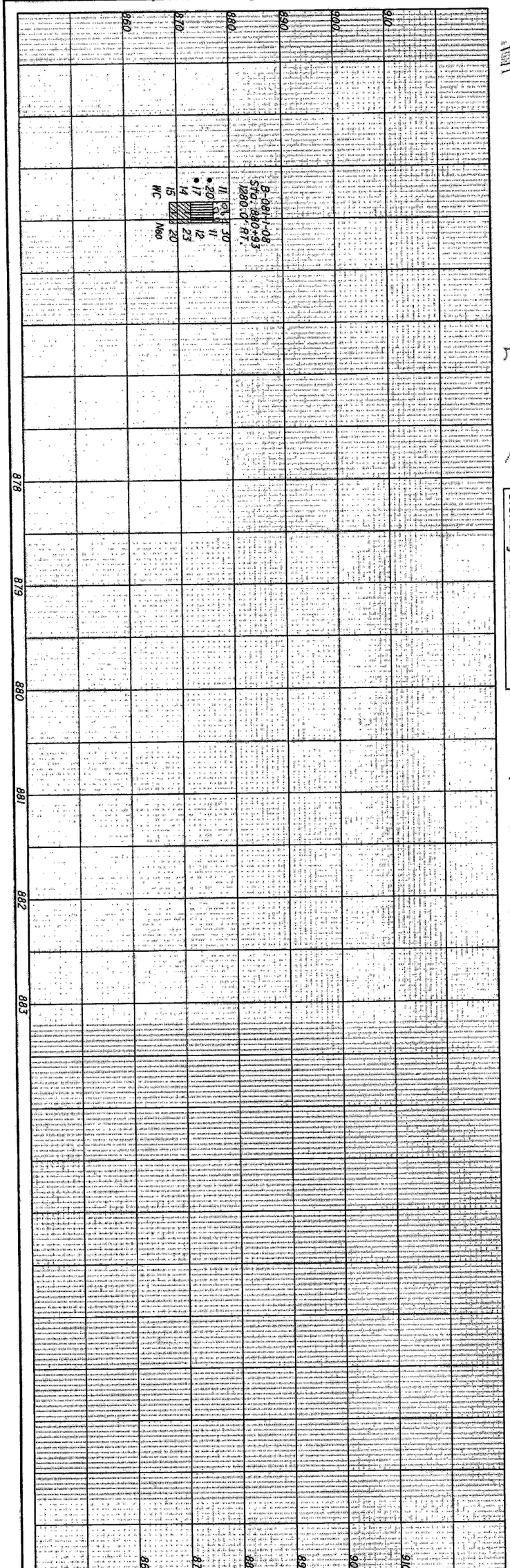

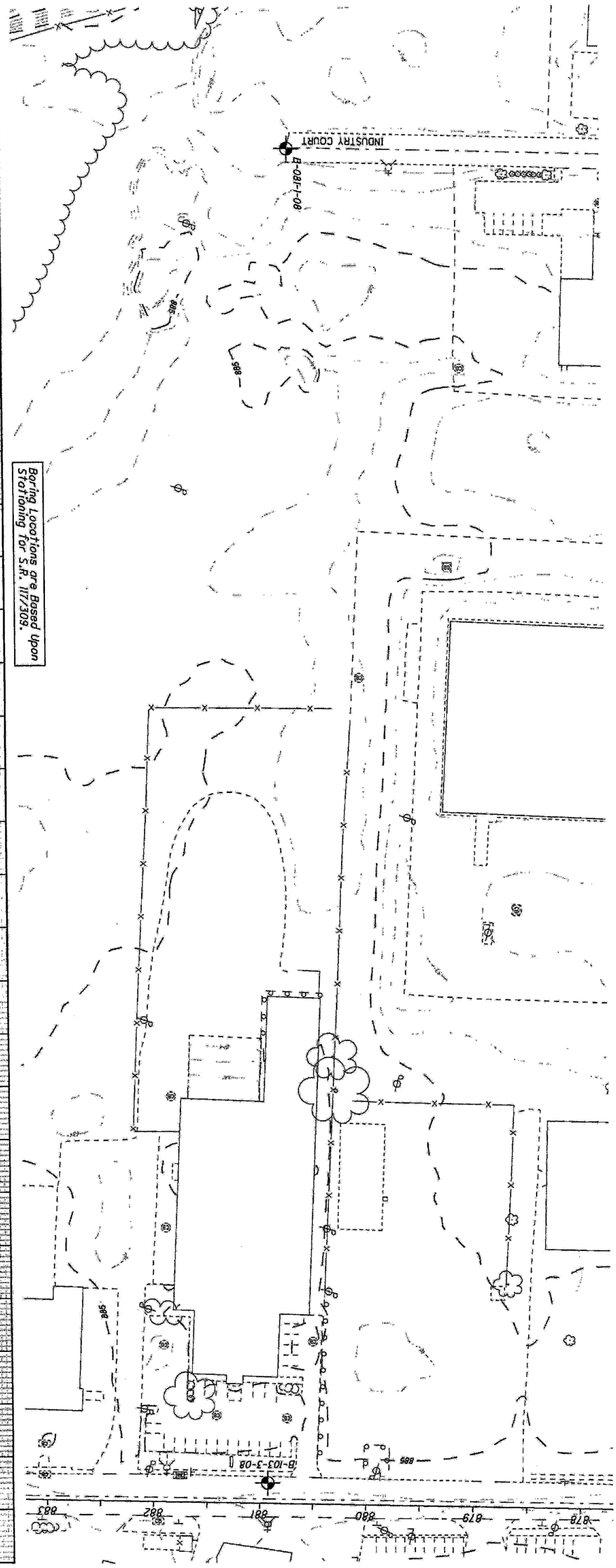

29 / 57	79 / 90	ALL-75-0.21	SOIL PROFILE S.R. 117 / S.R. 309 AND ASSOCIATED ROADS	DRAWN M.J. CHECKED J.M.M.	0 50 25 100 HORIZONTAL SCALE IN FEET

Boring Locations are Based Upon Stationing for S.R. 117/309.

HORIZONTAL SCALE IN FEET
0 25 50 100

DRAWN M.J.
CHECKED J.M.M.

SOIL PROFILE
S.R. 117/S.R. 309 AND ASSOCIATED ROADS

ALL-75-0.21

80/90

80/157

V:\1755\active\175530002\geotechnical\drawings\ODOTSubmittal\projects\ALL\7669\roadway\sheets\7669112060.dgn

B-104-1-08
B-106-5-08
B-106-2-08
B-106-1-08
B-103-3-08
B-103-2-08
B-105-1-08
B-103-4-08

Boring Locations are Based Upon Stationing for S.R. 117/309.

B-106-5-08
Sta. 880+64
312' LT.
Asphalt Pavement= 0.4'
Concrete= 0.5'

B-103-4-08
Sta. 876+25.7
107.0' RT.
Asphalt Pavement= 0.6'
Granular Base= 0.4'

B-103-3-08
Sta. 880+93
19.1' RT.
Asphalt Pavement= 0.3'
Concrete= 0.9'

B-106-2-08
Sta. 882+77
155' LT.
Asphalt Pavement= 0.4'
Concrete= 1.1'

Existing Groundline

B-103-2-08
Sta. 886+47
74.2' RT.
Asphalt Pavement= 0.5'

B-106-1-08
Sta. 885+62
70.5' LT.

B-103-1-08
Sta. 887+12
94.3' RT.
Asphalt Pavement= 0.5'

Proposed Grade Line

B-104-1-08
Sta. 885+92
391.4' LT.
Asphalt Pavement= 0.5'

N60 WC

HORIZONTAL SCALE IN FEET
0 25 50 100

DRAWN M.J.
CHECKED J.M.M.

SOIL PROFILE
S.R. 117/S.R. 309 AND ASSOCIATED ROADS
ALL-75-0.21

81/90
81/157

V:\1755\active\175530002\geotechnical\drawing\ODOT\submittal\projects\ALL\766911\roadway\sheets\766911D057.dgn

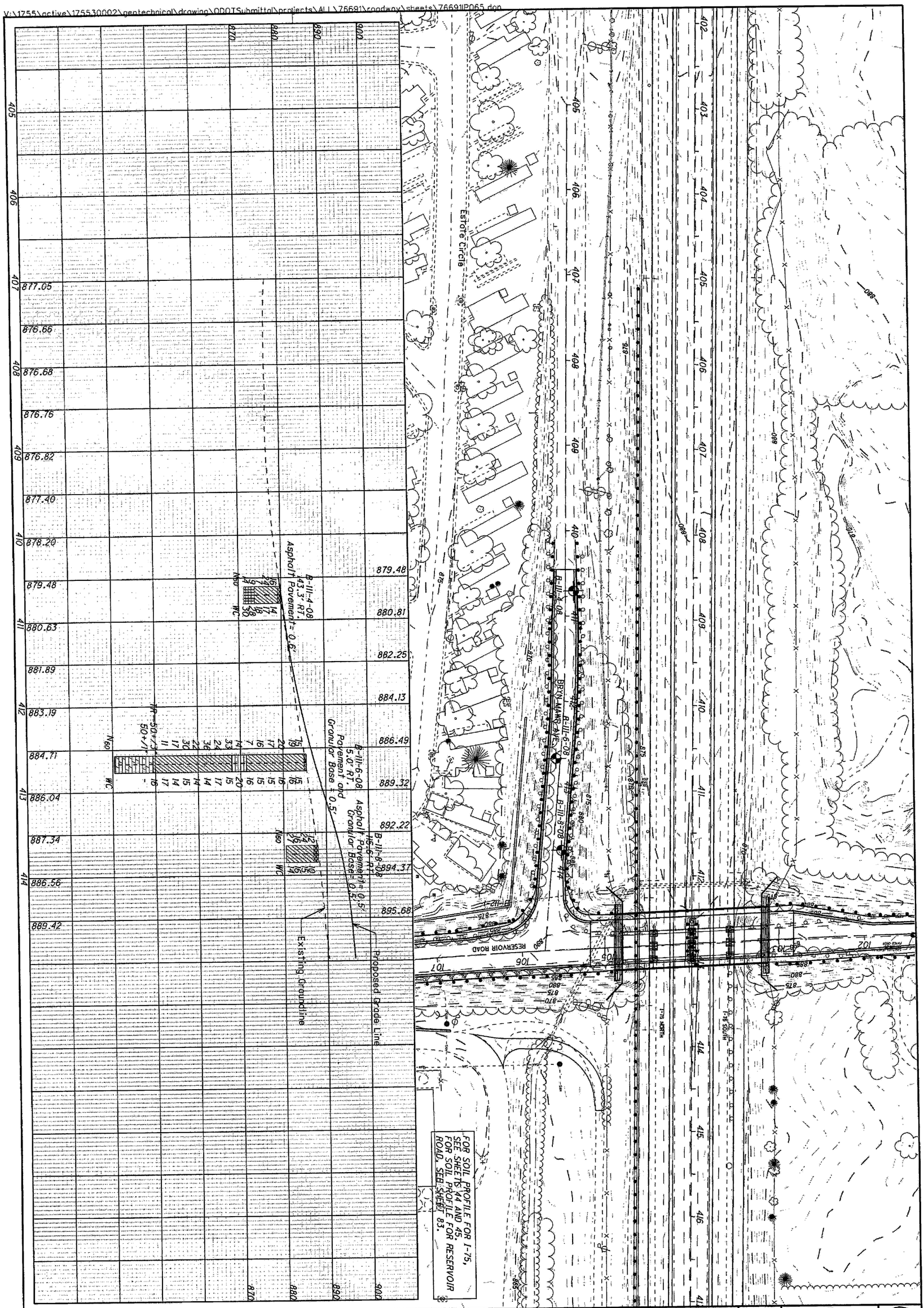

82 (157)	82/90	ALL-75-0.21	SOIL PROFILE BRYN MAWR ROAD STA. 405+00 - 413+93	DRAWN M.J. CHECKED J.M.M.	0 50 25 100 HORIZONTAL SCALE IN FEET

V:\1755\active\175530002\geotechnical\drawing\ODOTSubmittal\projects\ALL\76691\roadway\sheets\76691P066.dgn

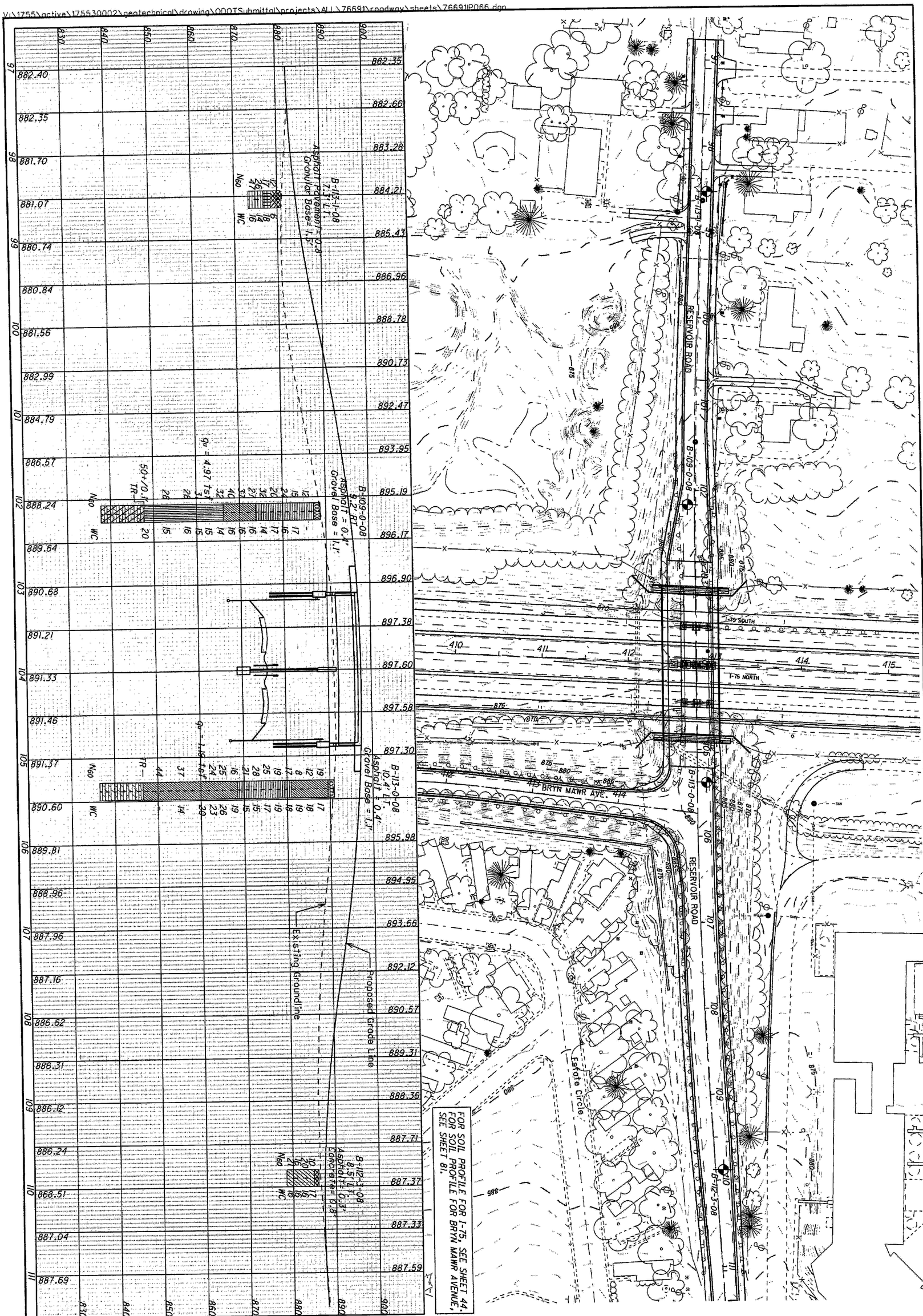

83/157	83/90	ALL-75-0.21	SOIL PROFILE RESERVOIR ROAD STA. 97+00 - 111+40	DRAWN M.J. CHECKED J.M.M.	0 50 25 100 HORIZONTAL SCALE IN FEET

PT Sta. 12+89.62

PC Sta. 11+46.49

PT Sta. A33+56.52

PC Sta. 9+99.01

MATCH LINE STA. 445+50

B-135-0-08

B-134-0-08

B-133-0-08

B-132-0-08

N 72° 39' 55" E

N 10° 33' 32" W

N 79° 34' 07" E

FOR SOIL PROFILE FOR NEUBRECHT ROAD, SEE SHEET 90.

B-135-0-08
40' Lt.
Asphalt Pavement = 0.5'
Granular Base = 0.5'

B-134-0-08
44' Lt.
Asphalt Pavement = 0.4'
Granular Base = 0.7'

B-133-0-08
18' Lt.
Asphalt Pavement = 0.4'
Granular Base = 0.7'

B-132-0-08
17' Lt.
Asphalt Pavement = 0.4'
Granular Base = 0.7'

Existing Groundline

Proposed Grade Line

HORIZONTAL SCALE IN FEET
0 25 50 100

DRAWN M.J.
CHECKED J.M.M.

SOIL PROFILE
S.R. 81 - UNDER I-75
ALL-75-0.21

84/90

(84/157)

V:\17255\active\17255.30002\geotechnical\drawing\ODOTSubmittal\projects\ALL\76691\roadway\sheets\76691P067.dgn

V:\1755\active\175530002\geotechnical\drawing\ODOTSubmittal\projects\ALL\76691\roadway\sheets\76691R068.dgn

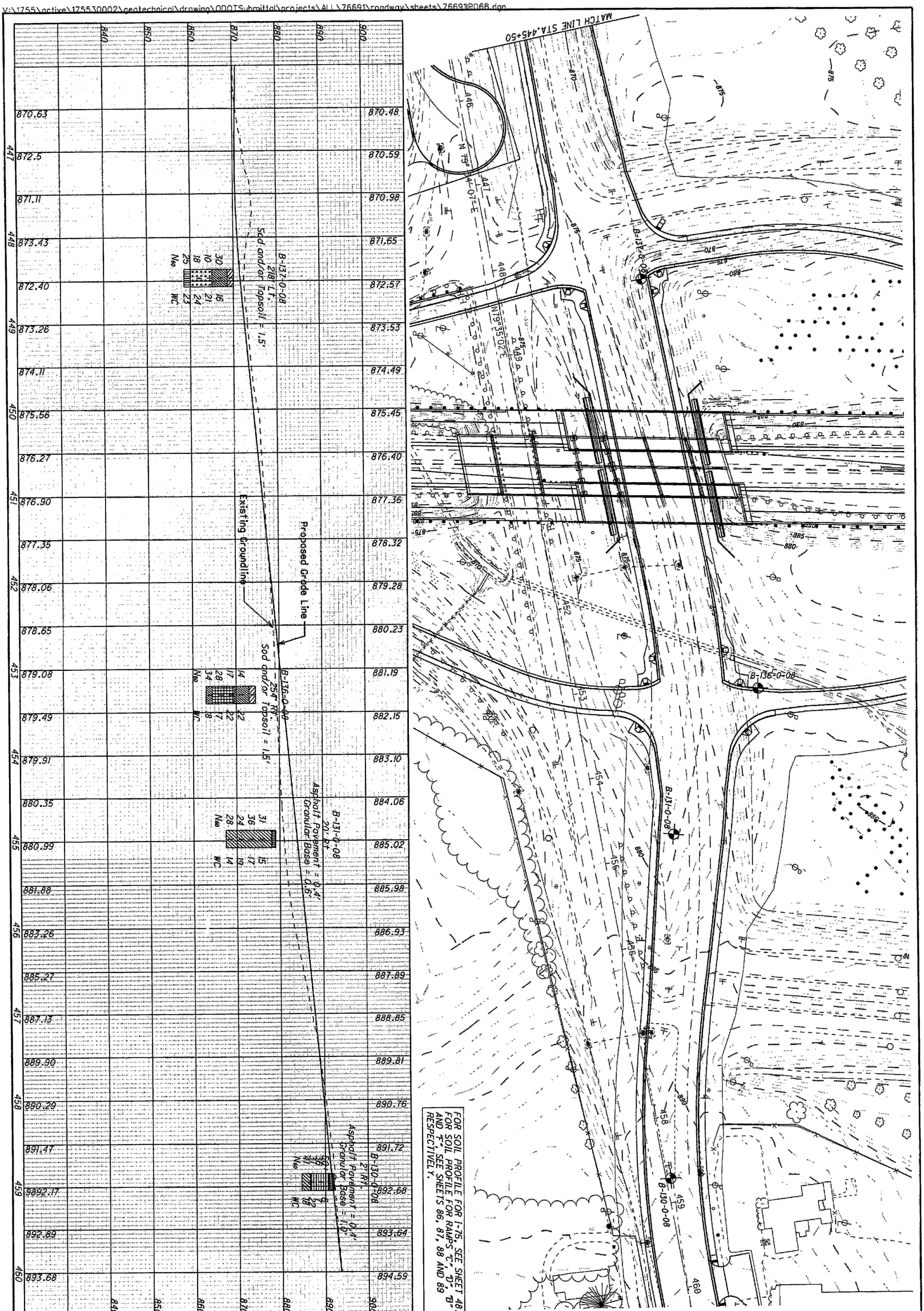

85/157	85/90	ALL-75-0.21	SOIL PROFILE S.R. 81 - UNDER I-75 - CONT.	DRAWN M.J. CHECKED J.M.M.	0 50 25 100 HORIZONTAL SCALE IN FEET

V:\1755\active\175530002\geotechnical\drawing\ODOTSubmittal\projects\ALL\76691\roadway\sheets\76691P070.dgn

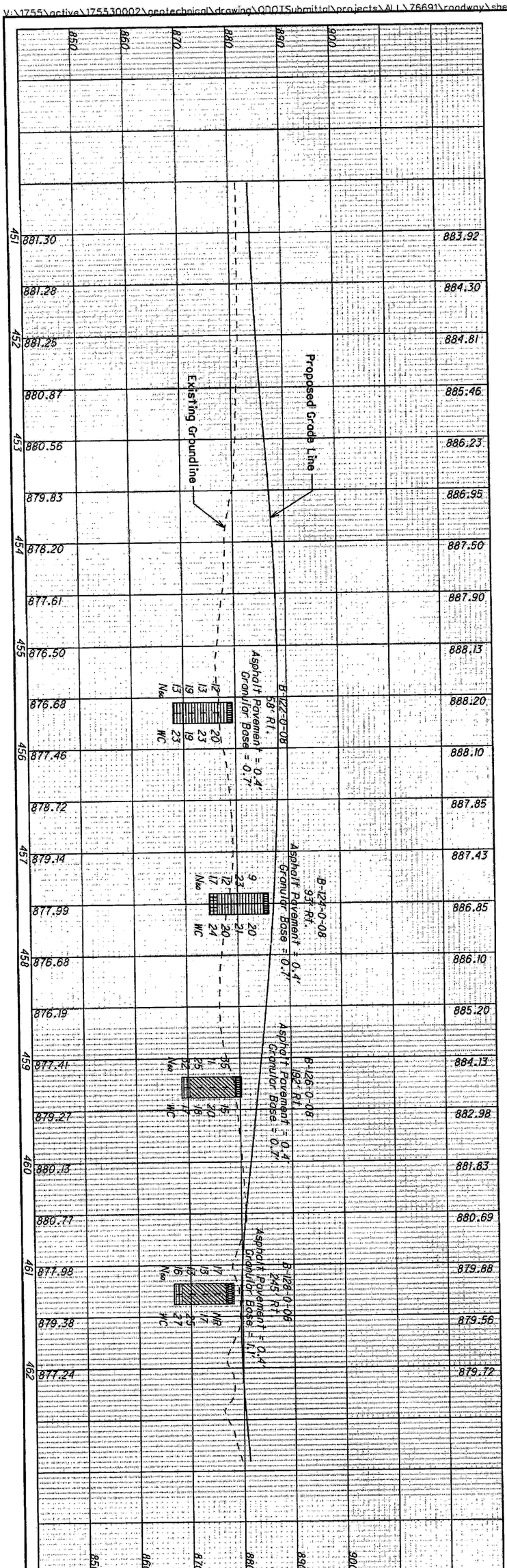

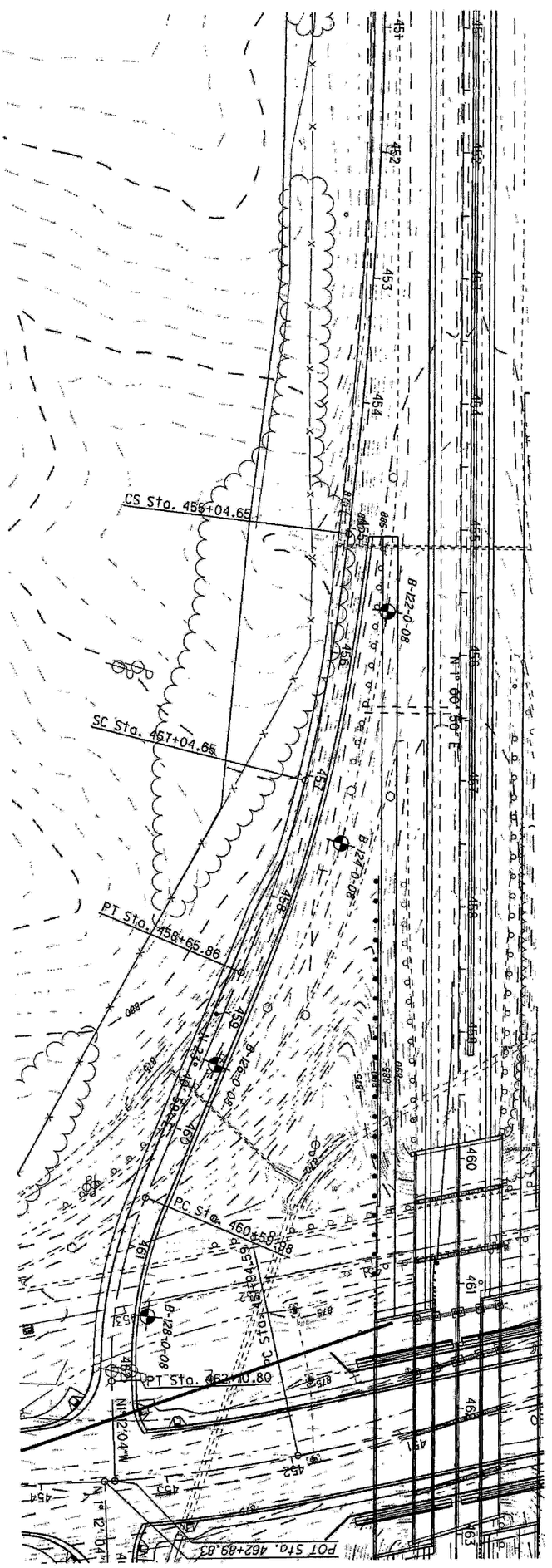

FOR SOIL PROFILE FOR I-75, SEE SHEET 4B.
FOR SOIL PROFILES FOR S.R. 81, SEE SHEETS 84 AND 85.

81 / 151	86 / 90	ALL-75-0.21	SOIL PROFILE S.R. 81 - RAMP C	DRAWN M.J. CHECKED J.M.M.	0 50 25 100 HORIZONTAL SCALE IN FEET

V:\1755\active\175530002\geotechnical\drawing\ODOTSubmittal\projects\ALL\76691\roadway\sheets\76691P071.dgn

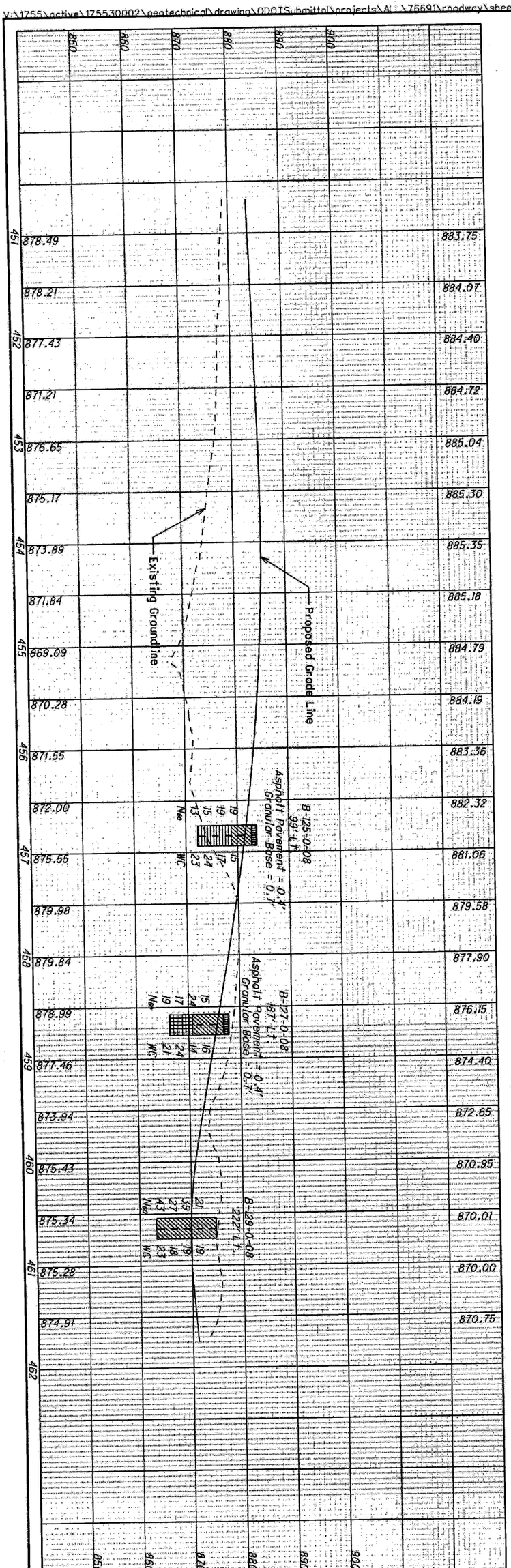

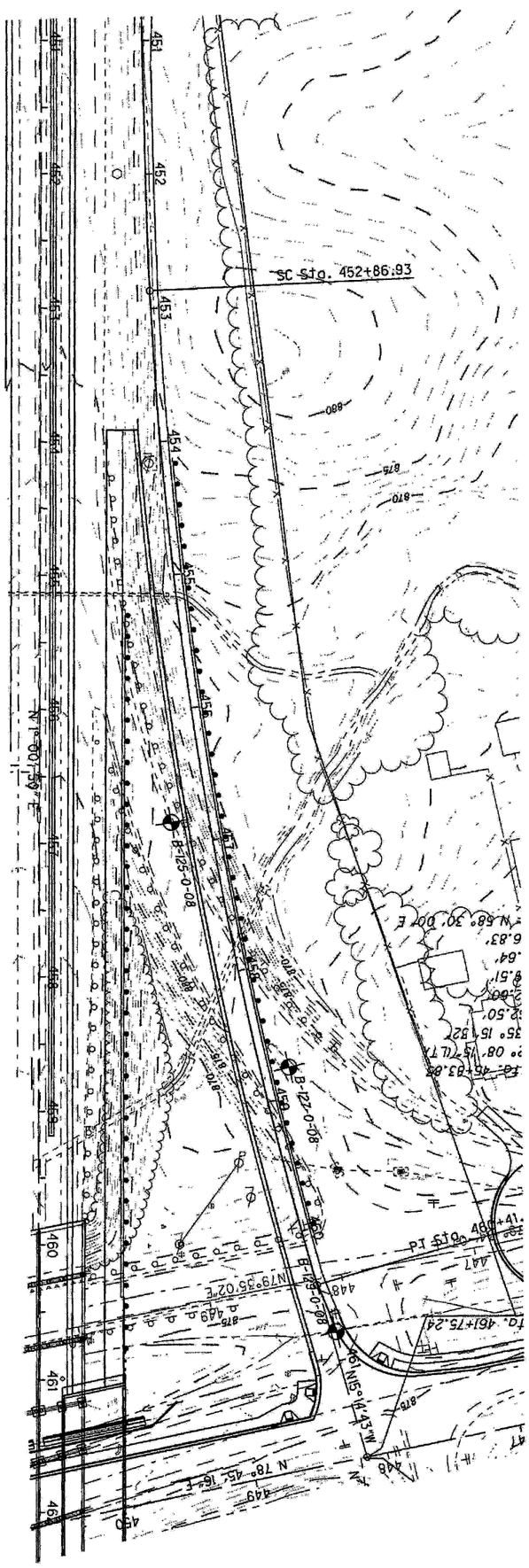

Stationing and Offsets for these Ramp Borings are based off of I-75 Mainline Stationing.

FOR SOIL PROFILE FOR I-75, SEE SHEET 48. FOR SOIL PROFILES FOR S.R. 81, SEE SHEETS 84 AND 85.

157	87/90	ALL-75-0.21	SOIL PROFILE S.R. 81 - RAMP D	DRAWN M.J. CHECKED J.M.M.	0 50 25 100 HORIZONTAL SCALE IN FEET

V:\1755\active\175530002\geotechnical\drawing\ODOTSubmittal\projects\ALL\76691\roadway\sheets\76691P072.dgn

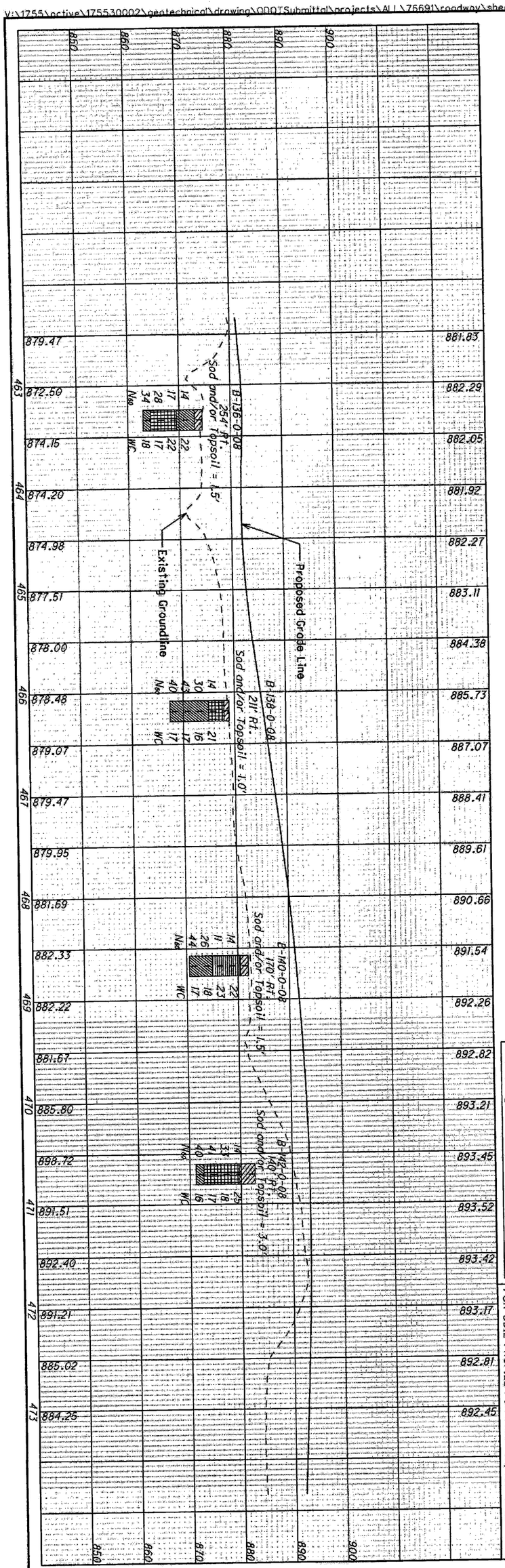

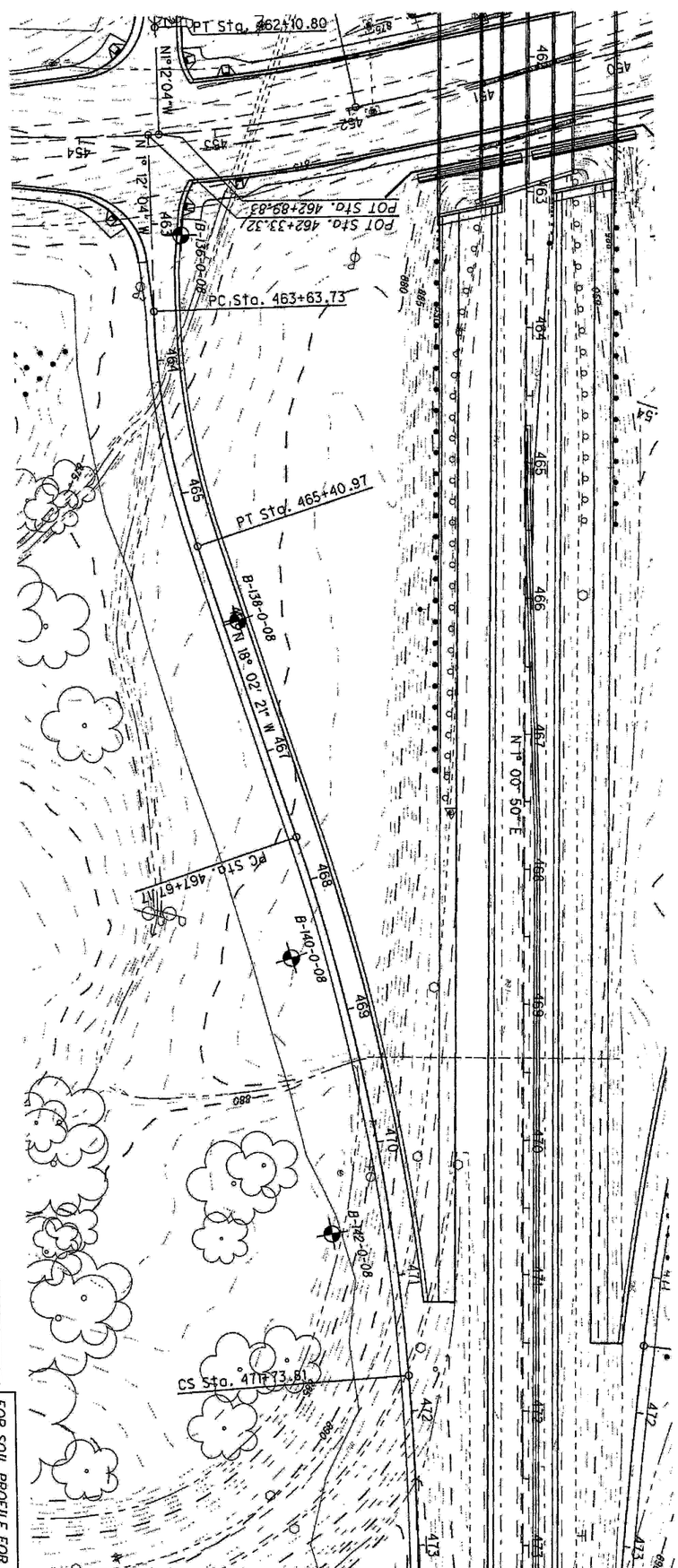

Stationing and offsets for these Ramp Borings are based off of I-75 Mainline Stationing.

FOR SOIL PROFILE FOR I-75, SEE SHEETS 48 AND 49.
FOR SOIL PROFILES FOR S.R. 81, SEE SHEETS 84 AND 85.
FOR SOIL PROFILE FOR RAMP "C", SEE SHEET 86.

88 (157)	88/90	ALL-75-0.21	SOIL PROFILE S.R. 81 - RAMP B	DRAWN M.J. CHECKED J.M.M.	0 50 25 100 HORIZONTAL SCALE IN FEET

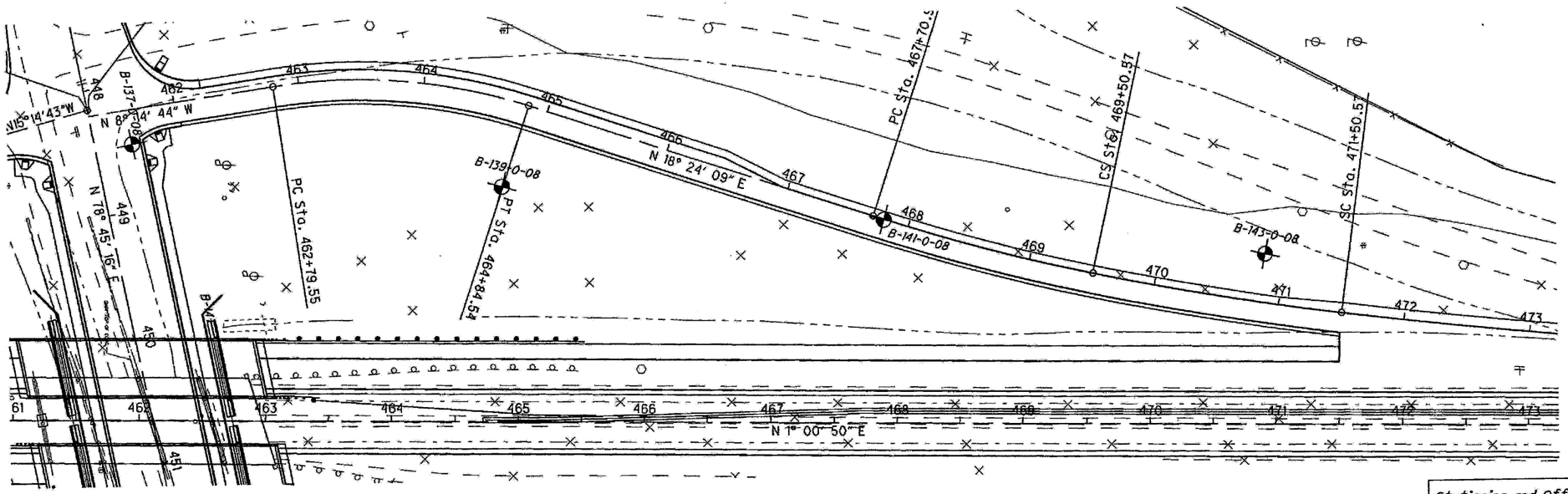

Stationing and Offsets for these Ramp Borings are based off of I-75 Mainline Stationing.

FOR SOIL PROFILE FOR I-75, SEE SHEETS 48 AND 49.
FOR SOIL PROFILES FOR S.R. 81, SEE SHEETS 84 AND 85.

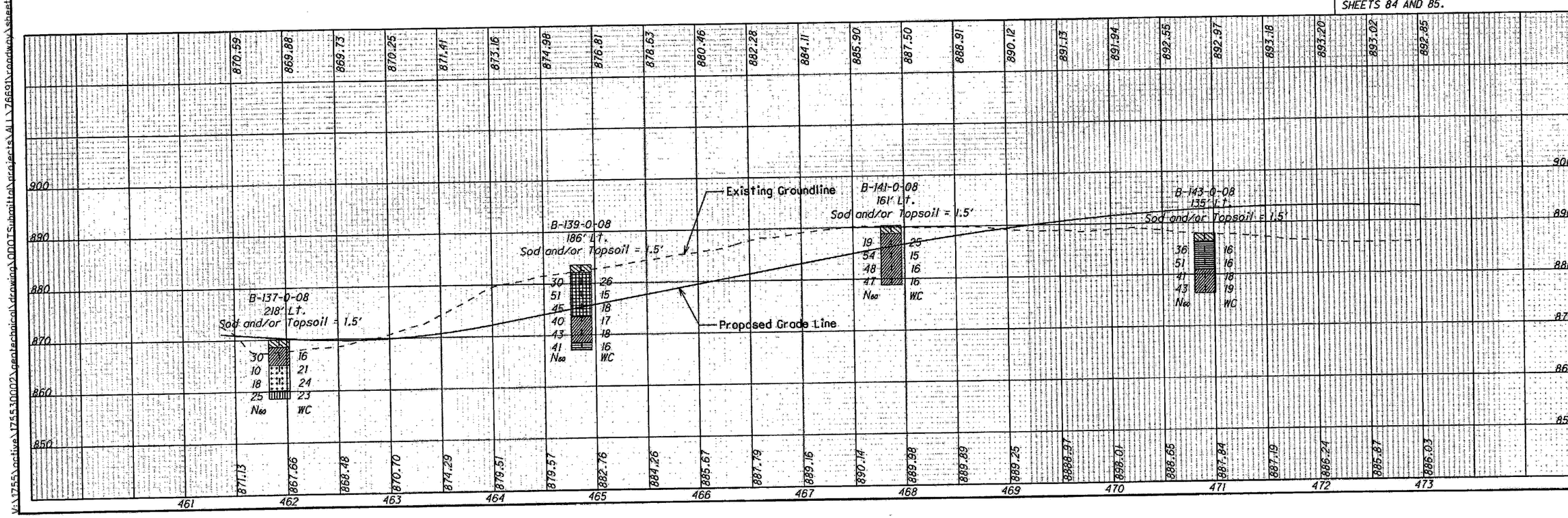

HORIZONTAL SCALE IN FEET

DRAWN M.J.
CHECKED J.M.M.

SOIL PROFILE
S.R. 81 - RAMP F

ALL-75-0.21

V:\1755\active\175530002\geotechnical\drawing\ODOTSubmittal\projects\ALL\76691\roadway\sheets\76691P073.dgn

V:\1755\active\1755300002\geotechnical\drawing\ODOTSubmittal\projects\ALL\76691\roadway\sheets\76691P069.dgn

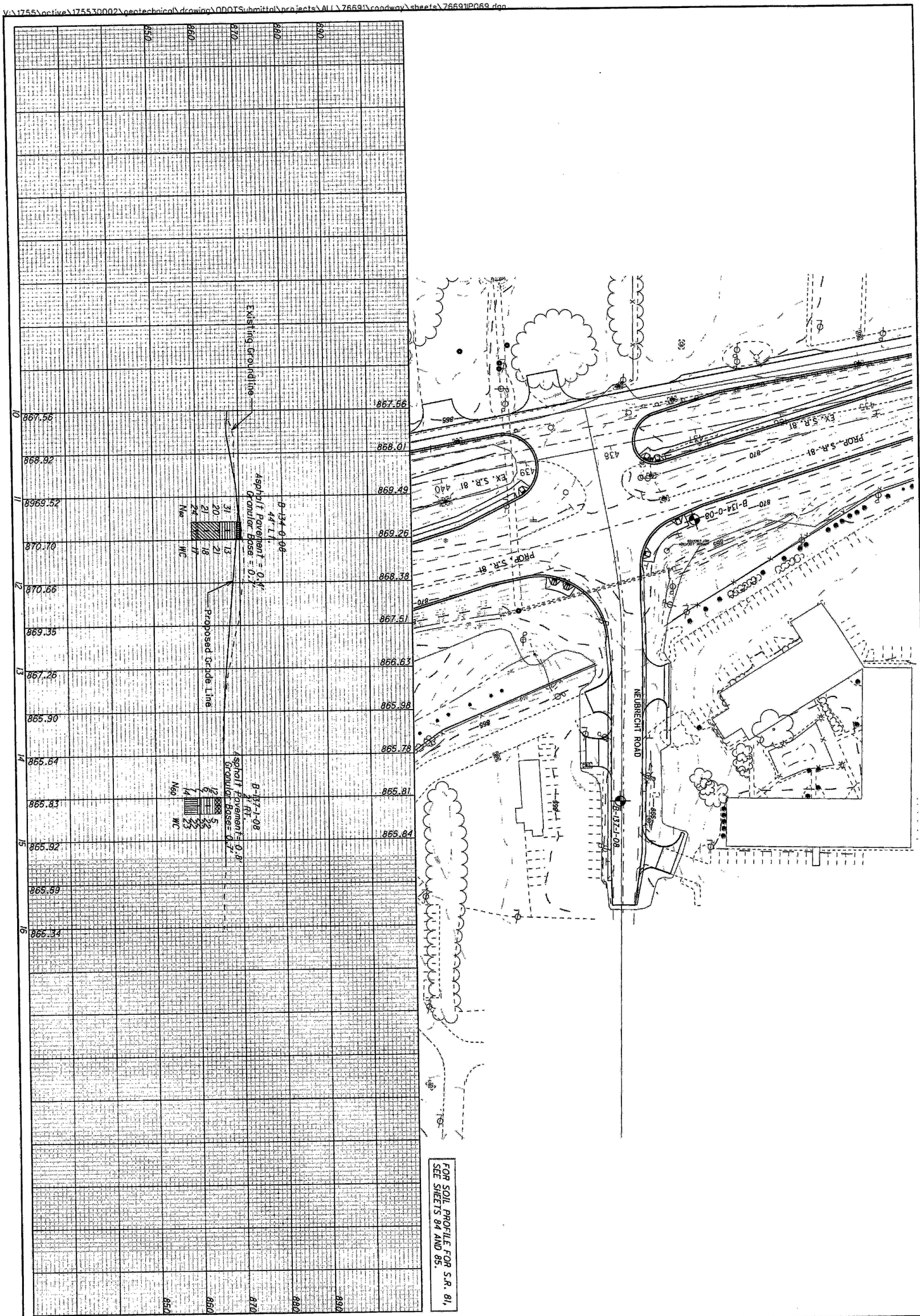

15	90/90	ALL-75-0.21	SOIL PROFILE NEUBRECHT ROAD STA. 10+00 - 16+00	DRAWN M.J. CHECKED J.M.M.	0 50 25 100 HORIZONTAL SCALE IN FEET

PROJECT DESCRIPTION

CONSTRUCT SEVEN RETAINING STRUCTURES ALONG I-75 AND CONNECTING SIDE ROADS.

HISTORIC RECORDS

HISTORIC BORING RECORDS FOR THE EXISITNG BRIDGE WERE REQUESTED FROM THE ODOT OFFICE OF GEOTECHNICAL ENGINEERING AND THE DISTRICT. NO SIGNIFICANT HISTORICAL DATA WAS FOUND FOR THE STRUCTURE LOCATIONS.

GEOLOGY

THE STRUCTURE SITE IS LOCATED IN THE CENTRAL OHIO CLAYEY TILL PLAIN. THIS REGION IS COMPRISED OF GROUND MORAINE AND END MORAINE TILL DEPOSITS OVERLYING DOLOMITE WITH INTERBEDDED SHALE. CAVES AND OTHER KARST FEATURES MAY BE PRESENT ACCORDING TO THE PHYSIOGRAPHIC REGION OF OHIO MAP (ODNR, 1998), BUT NO KNOWN FEATURES WERE IDENTIFIED IN THE OHIO KARST AREAS MAP (ODNR, 2007).

RECONNAISSANCE

A FIELD RECONNAISSANCE WAS COMPLETED ON MARCH 13, 2007, FOCUSING MAINLY ON PAVEMENT CONDITIONS AND SITE TOPOGRAPHY AND DRAINAGE. THE MAINLINE SHOULDER PAVEMENTS SHOW EXTENSIVE "ALLIGATOR" CRACKING AND THE MAINLINE PAVEMENTS SHOW REFLECTIVE CRACKING AT THE EXPANSION JOINT LOCATIONS.

THE SURROUNDING AREA IS DESCRIBED AS GENTLY UNDULATING MOSTLY CONSISTING OF OPEN FIELD OR LIGHTLY DEVELOPED COMMERCIAL AND RESIDENTIAL DISTRICTS. DRAINAGE ALONG THE ALIGNMENT IS DESCRIBED AS SLUGGISH WITH AREAS OF STANDING WATER, AND FLOWING WATER IN DRAINAGE DITCHES AND NATURAL STREAMS GENERALLY CREATING STEEP TO VERTICAL CUT BANKS IN THE SOIL PROFILE.

SUBSURFACE EXPLORATION

A TOTAL OF 34 BORINGS WERE ADVANCED FOR THE VARIOUS WALLS. THE BORINGS WERE ADVANCED USING 3.25-INCH I.D. HOLLOW-STEM AUGERS. STANDARD PENETRATION TEST (SPT) AND UNDISTURBED SHELBY TUBE (ST) SAMPLES WERE OBTAINED FOR THE UPPER 30 FEET OF EACH BORING AT 2.5-FOOT INTERVALS AND AT 5-FOOT INTERVALS BELOW THIS DEPTH INTO A MINIMUM OF 20 FEET OF HARD OR DENSE SOILS (N_{60} >30). WHEN BEDROCK WAS ENCOUNTERED, NQ SIZED ROCK CORING EQUIPMENT WAS USED TO OBTAIN A MINIMUM OF FIVE FEET OF ROCK CORE. SPT SAMPLES WERE OBTAINED USING THREE DIFFERENT DRILL RIGS WITH CALIBRATED AUTOMATIC HAMMERS WITH ENERGY RATIOS (ER) OF 81.9%(CALIBRATED ON 2/24/2010), 74.4%(CALIBRATED ON 2/24/2010), AND 83.1%(CALIBRATED ON 10/10/2010) AS SHOWN ON THE BORING LOGS. AT THE CONCLUSION OF DRILLING OPERATIONS, BOREHOLES WERE BACKFILLED WITH EITHER AUGER SOIL CUTTINGS OR BENTENITE CHIPS DEPENDING UPON CONDITIONS ENCOUNTERED.

EXPLORATION FINDINGS

MEDIUM STIFF TO HARD FINE GRAINED GLACIAL SOILS CLASSIFYING PREDOMINANTLY AS SILT AND CLAY (A-6A), WITH LESSER AMOUNTS OF SILTY CLAY (A-6B), CLAY (A-7-6), SANDY SILT (A-4A) AND SILT (A-4B) WERE ENCOUNTERED IN ALL BORINGS. FEW LAYERS OF LOOSE TO VERY DENSE COARSE GRAINED SOILS CLASSIFYING AS GRAVEL (A-1-A), GRAVEL WITH SAND (A-1-B), GRAVEL WITH SAND AND SILT (A-2-4), GRAVEL WITH SAND, SILT AND CLAY (A-2-6) AND COARSE AND FINE SAND (A-3A) WERE ENCOUNTERED AT VARIOUS DEPTHS ACROSS THE PROJECT LOCATIONS. COBBLES AND BOULDERS WERE ENCOUNTERED AT VARIOUS DEPTHS IN THE BORINGS ADVANCED FOR WALLS 1, 3 AND 4. BEDROCK WAS ENCOUNTERED AT ELEVATIONS RANGING FROM 842 TO 849 FEET IN THE BORINGS ADVANCED FOR WALLS 8, 9, 10 AND 11. BEDROCK WAS DESCRIBED AS DOLOMITE AND INTERBEDDED DOLOMITE AND SHALE, WITH RQD VALUES RANGING FROM 0% TO 26%.

PERCHED GROUND WATER WAS ENCOUNTERED IN FEW COARSE GRAINED DEPOSITS, BUT NO STATIC WATER LEVEL WAS OBSERVED IN THE BORINGS PRIOR BORING TERMINATION.

SPECIFICATIONS

THIS GEOTECHNICAL EXPLORATION WAS PERFORMED IN ACCORDANCE WITH THE STATE OF OHIO, DEPARTMENT OF TRANSPORTATION, OFFICE OF GEOTECHNICAL ENGINEERING, SPECIFICATIONS FOR GEOTECHNICAL EXPLORATIONS, DATED JANUARY 2009.

AVAILABLE INFORMATION

ALL AVAILABLE SOIL AND BEDROCK INFORMATION THAT CAN BE CONVENIENTLY SHOWN ON THE PROFILE SHEETS HAS BEEN SO REPORTED. ADDITIONAL SUBSURFACE EXPLORATIONS MAY HAVE BEEN MADE TO STUDY SOME SPECIAL ASPECT OF THE PROJECT. COPIES OF THIS DATA, IF ANY, MAY BE INSPECTED IN THE DISTRICT DEPUTY DIRECTOR'S OFFICE, THE OFFICE OF GEOTECHNICAL ENGINEERING AT 1600 WEST BROAD STREET OR THE OFFICE OF STRUCTURAL ENGINEERING AT 1980 WEST BROAD STREET.

LEGEND

DESCRIPTION	ODOT CLASS	CLASSIFIED MECH./VISUAL	
GRAVEL AND/OR STONE FRAGMENTS	A-1-a	5	2
GRAVEL AND/OR STONE FRAGMENTS WITH SAND	A-1-b	3	3
GRAVEL AND/OR STONE FRAGMENTS WITH SAND AND SILT	A-2-4	3	4
GRAVEL AND/OR STONE FRAGMENTS WITH SAND AND SILT & CLAY	A-2-6	1	2
COARSE AND FINE SAND	A-3a	2	1
SANDY SILT	A-4a	24	41
SILT	A-4b	3	1
SILT AND CLAY	A-6a	68	145
SILTY CLAY	A-6b	16	9
CLAY	A-7-6	10	6
	TOTAL	135	214
DOLOMITE	*VISUAL*		
SHALE	*VISUAL*		
PAVEMENT OR BASE = X = APPROXIMATE THICKNESS	*VISUAL*		
SOD AND TOPSOIL = X = APPROXIMATE THICKNESS	*VISUAL*		

EXPLORATION LOCATION - PLAN VIEW

DRIVE SAMPLE AND/OR ROCK CORE BORING PLOTTED TO VERTICAL SCALE ONLY. HORIZONTAL BAR INDICATES A CHANGE IN STRATIGRAPHY.

WC INDICATES WATER CONTENT IN PERCENT.

N_{60} INDICATES CORRECTED STANDARD PENETRATION RESISTANCE FOR 60% EFFICIENCY.

W— INDICATES FREE WATER.

● PLASTIC SOIL WITH MOISTURE CONTENT EQUAL TO OR GREATER THAN THE LIQUID LIMIT MINUS THREE.

⊖ NON-PLASTIC SOIL WITH MOISTURE CONTENT GREATER THAN OR EQUAL TO 25%, OR GREATER THAN 19% WITH A WET APPEARANCE.

NP INDICATES A NON-PLASTIC SAMPLE.

ST INDICATES A SHELBY TUBE SAMPLE.

SS INDICATES A SPLIT SPOON SAMPLE, STANDARD PENETRATION TEST.

NQ CORE SAMPLE.

TR INDICATES TOP OF ROCK.

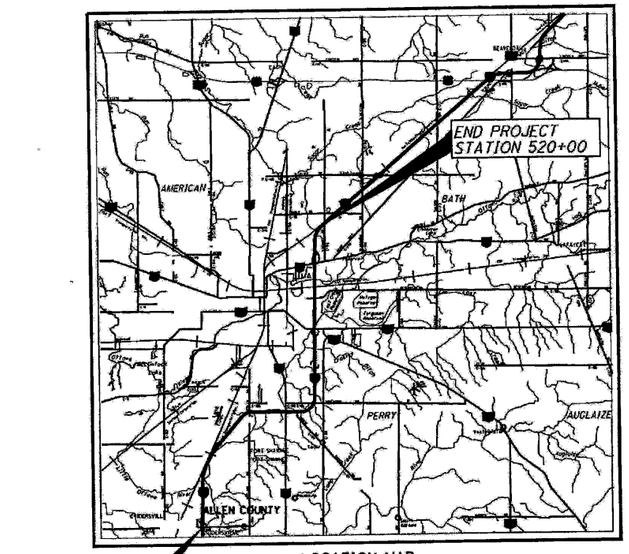

PARTICLE SIZE DEFINITIONS

12"	3"	2.0 mm	0.42 mm	0.074 mm	0.005 mm
BOULDERS |	COBBLES |	GRAVEL |	COARSE SAND |	FINE SAND |	SILT | CLAY
		No. 10 SIEVE	No. 40 SIEVE	No. 200 SIEVE	

SHEETS 2/34 THRU 9/34,14/34 THRU 23/34 & 32/34 THRU 34/34 ARE OMITTED

RECON. - M.M.F. 03/07
DRILLING - MID OHIO 1/27/10-2/18/10, 5/26/10, M.M. - 2/24/10-2/25/10
M.W. - 4/2/09-4/7/09
DRAWN - M.J. 1/10-11/10
REVIEWED - J.M.M. 6 /10, R.J.K. 11/10

DESIGN AGENCY
STANTEC CONSULTING SERVICES INC.
CINCINNATI, OHIO

PID NO. 76691

STRUCTURE FOUNDATION EXPLORATION
RETAINING WALLS ALONG I-75

ALL-75-0.21

1/34

91/157

V:\1755\active\175530002\geotechnical\drawing\ODOTPlans\projects\ALL\76691\structures\Retaining Walls\SHEETS\76691ZG001.dgn

V:\1755\active\175530002\geotechnical\drawing\ODOTPlans\projects\ALL\76691\structures\Retaining Walls\SHEETS\76691ZP009.dgn

LA-R/W

TMP

Ex LA-R/W

B-148-0-08

B-150-0-08

B-152-0-08

BEGIN RETAINING WALL 9

PROPOSED RETAINING WALL 9

I 75 SOUTHBOUND LANES

I 75 NORTHBOUND LANES

EX. CONC. BARRIER

℄ CONSTRUCTION I 75

CONRAIL RAILROAD

N 1° 01' 45" E

422 423 424 425 426 427

855 860 865 870 875 880

APPROXIMATE TOP OF RETAINING WALL 9

BOTTOM OF FOUNDATION WALL 9

B-148-0-08
114.0' LT.
15 26 29 TR
16 17 21
N_{60} WC

B-150-0-08
114.0' LT.
12 8 8 50/1" TR
16 26 21 27 W
N_{60} WC

B-152-0-08
114.0' LT.
15 6 8 TR
23 24 18 W
N_{60} WC

880 870 860 850 840 830 820

422+00 423+00 424+00 425+00 426+00 427+00

N

HORIZONTAL SCALE IN FEET
0 10 20 30

DRAWN MSJ
CHECKED RJK

STRUCTURE FOUNDATION EXPLORATION
RETAINING WALL 9 STA. 422+00 TO STA. 426+91

ALL-75-0.21

10 / 34

92 / 137

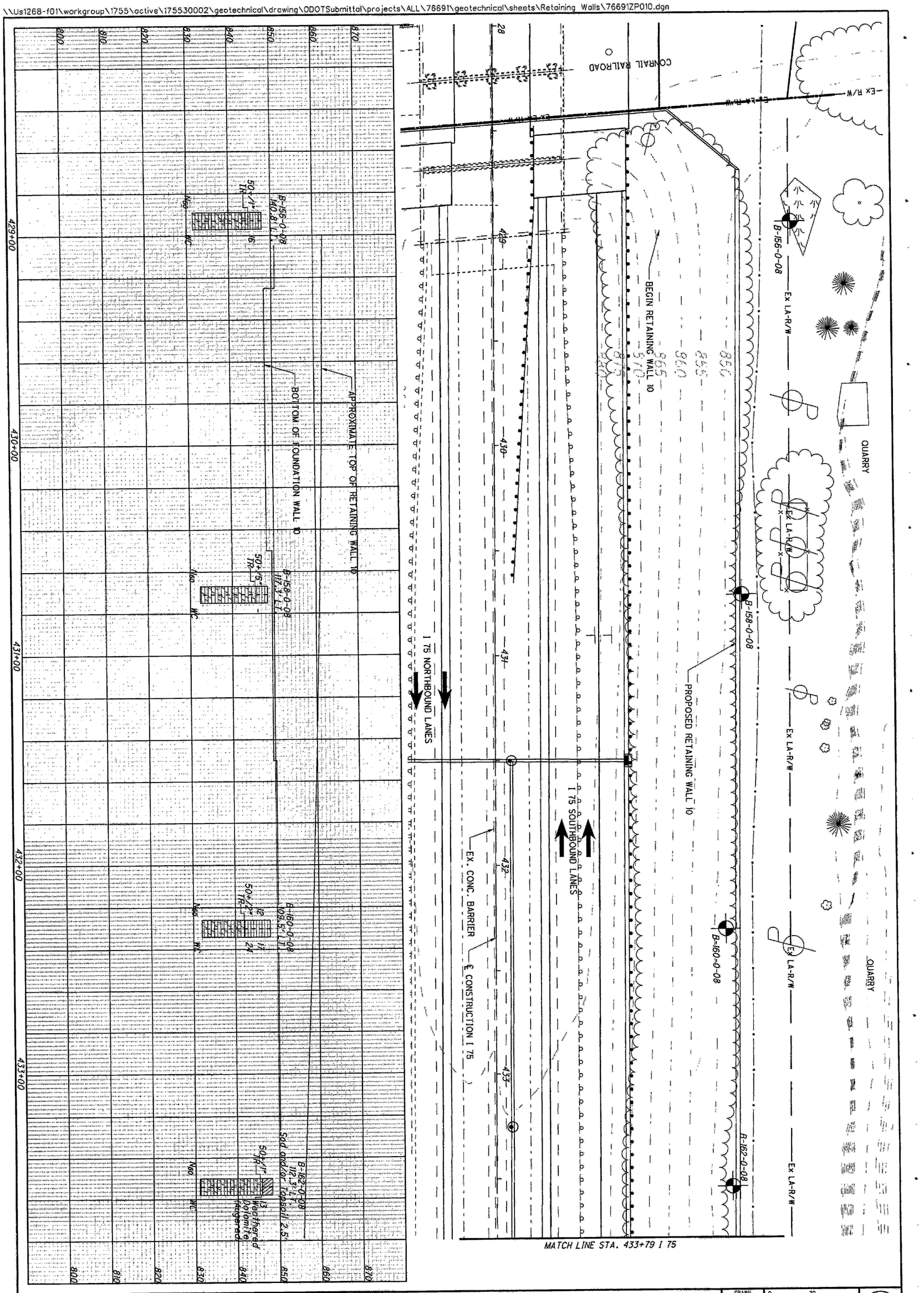

23 / 57	11 / 34	ALL-75-0.21	STRUCTURE FOUNDATION EXPLORATION RETAINING WALL 10 STA. 428+70 TO STA. 433+79	DRAWN MSJ CHECKED RJK	0 20 40 10 HORIZONTAL SCALE IN FEET

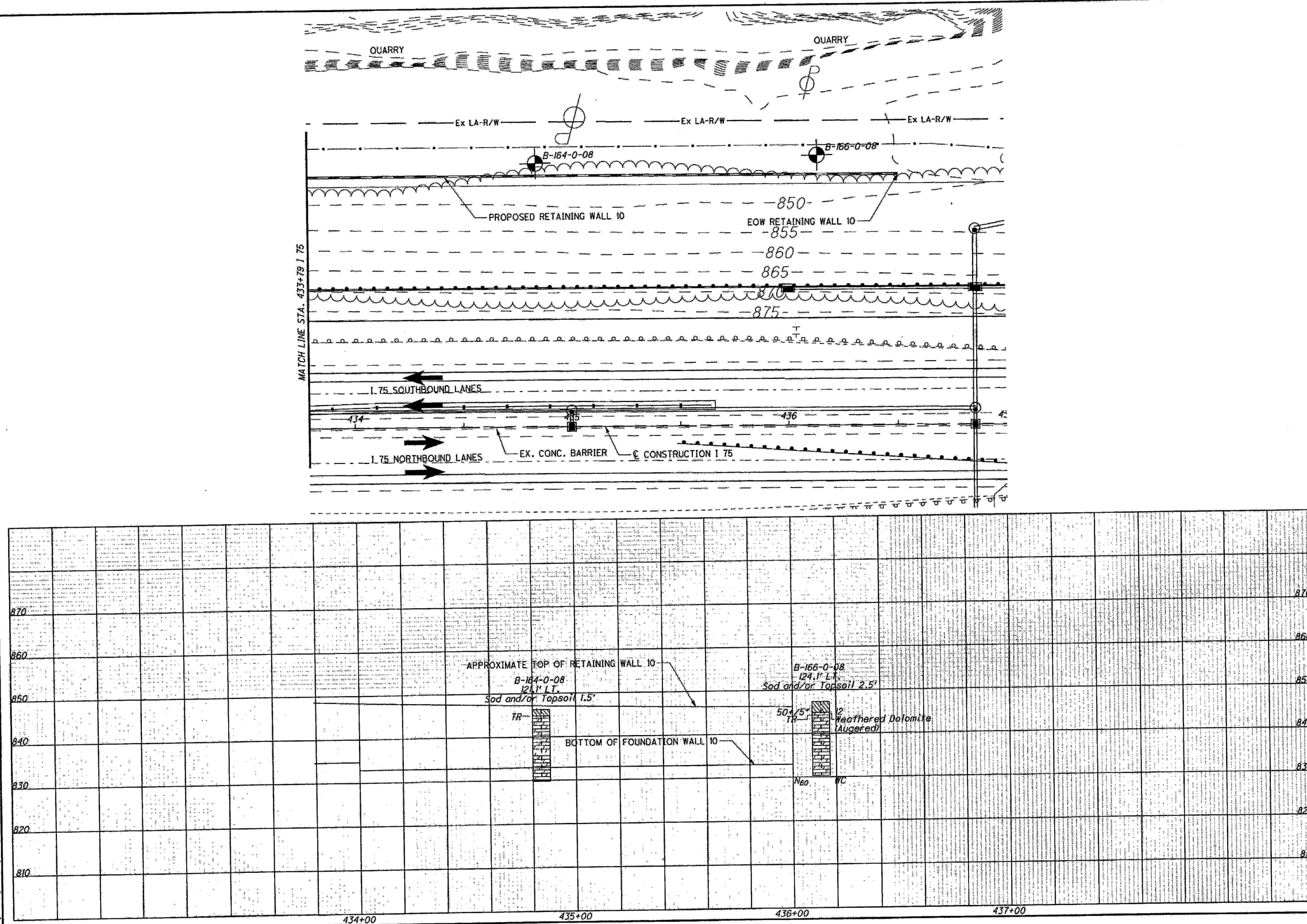

V:\1755\active\175530002\geotechnical\drawing\ODOTPlans\projects\ALL\76691\structures\Retaining Walls\SHEETS\766912P011.dgn

N

HORIZONTAL SCALE IN FEET
0 10 20 30

DRAWN MSJ
CHECKED RJK

STRUCTURE FOUNDATION EXPLORATION
RETAINING WALL 10 STA. 433+79 TO E.O.W.

ALL-75-0.21

12/34

94/157

I 75 SOUTHBOUND LANES

I 75 NORTHBOUND LANES

EX. CONC. BARRIER

℄ CONSTRUCTION I 75

BEGIN RETAINING WALL 11

PROPOSED RETAINING WALL 11

EOW RETAINING WALL 11

B-157-0-08

B-159-0-08

B-161-0-08

B-163-0-08

Ex LA-R/W

QUARRY

NOTE: BORINGS B-165-0-08 AND B-167-0-08 WERE PREFORMED BASED ON PRELIMINARY WALL LOCATION. NOT SHOWN SINCE OUTSIDE CURRENT WALL LOCATION.

APPROXIMATE TOP OF RETAINING WALL 11

BOTTOM OF FOUNDATION WALL 11

B-157-0-08
106.0' RT.
6
6
34
21
TR
N_{60}
WC

B-159-0-08
103.4' RT.
10
8
1/50+/5"
TR
21
22
31
N_{60}
WC

B-161-0-08
101.2' RT.
12
11
8
TR
24
21
20
N_{60}
WC

B-163-0-08
100.0' RT.
10
41
48
TR
19
12
14
N_{60}
WC

429+00 430+00 431+00 432+00 433+00 434+00

HORIZONTAL SCALE IN FEET
0 10 20 40

DRAWN MSJ
CHECKED RJK

STRUCTURE FOUNDATION EXPLORATION
RETAINING WALL 11 STA. 428+70 TO E.O.W.

ALL-75-0.21

13 / 34

95 / 157

\\Us1268-f01\workgroup\1755\active\175530002\geotechnical\drawing\ODOTSubmittal\projects\ALL\76691\geotechnical\sheets\Retaining Walls\76691ZP012.dgn

PROJECT: ALL-75-0.21
TYPE: RETAINING WALL
PID: 76691 BR ID:
START: 5/26/10 END: 5/26/10

DRILLING FIRM / OPERATOR: MID-OHIO / P.T.
SAMPLING FIRM / LOGGER: STANTEC / J.M.
DRILLING METHOD: 3.25" HSA / NQ
SAMPLING METHOD: SPT

DRILL RIG: CME 550 ATV
HAMMER: CME AUTOMATIC
CALIBRATION DATE: 10/10/08
ENERGY RATIO (%): 83.1

STATION / OFFSET: 423+17 114.0 LT
ALIGNMENT:
ELEVATION: 855.0 (MSL) EOB: 13.5 ft.
LAT / LONG: Not Recorded

EXPLORATION ID B-148-0-08
PAGE 1 OF 1

MATERIAL DESCRIPTION AND NOTES	ELEV. 855.0	DEPTHS	SPT/ RQD	N60	REC (%)	SAMPLE ID	HP (tsf)	GRADATION (%) GR	CS	FS	SI	CL	ATTERBERG LL	PL	PI	WC	ODOT CLASS (GI)	INST.
STIFF TO VERY STIFF, BROWN, SILT AND CLAY, TRACE TO LITTLE GRAVEL, LITTLE TO SOME SAND, DAMP			4 5 6	15	100	SS-1	–	11	15	17	25	32	33	19	14	16	A-6a (6)	
	850.0		6 8 11	26	100	SS-2	–	4	5	11	39	41	30	19	11	17	A-6a (8)	
VERY STIFF, BROWN, SILTY CLAY, TRACE GRAVEL, LITTLE SAND, DAMP			8 9 12	29	100	SS-3	–	2	4	7	33	54	38	21	17	21	A-6b (11)	
	846.5	TR																
INTERBEDDED DOLOMITE (90%) AND SHALE (10%), ROD 0%, REC. 76%; DOLOMITE, GRAY, UNWEATHERED, STRONG, VERY THIN TO THIN BEDDED, VERTICAL JOINTING @ ELEVATION 839.9' TO 840.1'; SHALE, BLACK, UNWEATHERED TO HIGHLY WEATHERED, SLIGHTLY STRONG, LAMINATED.			0		76	NQ2-4											CORE	
	841.5	EOB																

NOTES: NONE
ABANDONMENT METHODS, MATERIALS, QUANTITIES: PLACED AUGER CUTTINGS

PROJECT: ALL-75-0.21
TYPE: RETAINING WALL
PID: 76691 BR ID:
START: 5/26/10 END: 5/26/10

DRILLING FIRM / OPERATOR: MID-OHIO / P.T.
SAMPLING FIRM / LOGGER: STANTEC / J.M.
DRILLING METHOD: 3.25" HSA / NQ
SAMPLING METHOD: SPT

DRILL RIG: CME 550 ATV
HAMMER: CME AUTOMATIC
CALIBRATION DATE: 10/10/08
ENERGY RATIO (%): 83.1

STATION / OFFSET: 424+27 114.0 LT
ALIGNMENT:
ELEVATION: 853.0 (MSL) EOB: 13.6 ft.
LAT / LONG: Not Recorded

EXPLORATION ID B-150-0-08
PAGE 1 OF 1

MATERIAL DESCRIPTION AND NOTES	ELEV. 853.0	DEPTHS	SPT/ RQD	N60	REC (%)	SAMPLE ID	HP (tsf)	GRADATION (%) GR	CS	FS	SI	CL	ATTERBERG LL	PL	PI	WC	ODOT CLASS (GI)	INST.
STIFF, BROWN, SILT AND CLAY, LITTLE GRAVEL, SOME SAND, DAMP			3 3 6	12	73	SS-1	–	11	8	13	35	33	31	17	14	16	A-6a (8)	
	849.5																	
MEDIUM STIFF, MOTTLED BROWN AND GRAY, CLAY, TRACE GRAVEL, SOME SAND AND SILT, MOIST			WOH 2 4	8	100	SS-2	–	3	7	19	29	42	48	22	26	26	A-7-6 (15)	
	847.0																	
MEDIUM STIFF, MOTTLED BROWN AND GRAY, SILTY CLAY, TRACE GRAVEL, SOME SAND, MOIST		W	2 3 3	8	80	SS-3	–	1	6	29	32	32	34	18	16	21	A-6b (8)	
	844.4	TR	50/1"	–	100	SS-4	–	–	–	–	–	–	–	–	–	27	A-6b (V)	
INTERBEDDED DOLOMITE (90%) AND SHALE (10%), ROD 26%, REC. 96%; DOLOMITE, GRAY, UNWEATHERED, STRONG, VERY THIN TO THIN BEDDED; SHALE, BLACK, UNWEATHERED TO SLIGHTLY WEATHERED, SLIGHTLY STRONG, LAMINATED.			26		96	NQ2											CORE	
	839.4	EOB																

NOTES: NONE
ABANDONMENT METHODS, MATERIALS, QUANTITIES: PLACED AUGER CUTTINGS

PROJECT: ALL-75-0.21
TYPE: RETAINING WALL
PID: 76691 BR ID:
START: 5/26/10 END: 5/26/10

DRILLING FIRM / OPERATOR: MID-OHIO / P.T.
SAMPLING FIRM / LOGGER: STANTEC / J.M.
DRILLING METHOD: 3.25" HSA / NQ
SAMPLING METHOD: SPT

DRILL RIG: CME 550 ATV
HAMMER: CME AUTOMATIC
CALIBRATION DATE: 10/10/08
ENERGY RATIO (%): 83.1

STATION / OFFSET: 425+38 114.0 LT
ALIGNMENT:
ELEVATION: 852.0 (MSL) EOB: 13.7 ft.
LAT / LONG: Not Recorded

EXPLORATION ID B-152-0-08
PAGE 1 OF 1

MATERIAL DESCRIPTION AND NOTES	ELEV.	DEPTHS	SPT/RQD	N60	REC (%)	SAMPLE ID	HP (tsf)	GR	CS	FS	SI	CL	LL	PL	PI	WC	ODOT CLASS (GI)	INST.
STIFF, MOTTLED BROWN AND GRAY, SILTY CLAY, TRACE GRAVEL, LITTLE SAND, MOIST	852.0		4 5 6	15	100	SS-1	–	2	4	13	41	40	39	21	18	23	A-6b (11)	
MEDIUM STIFF, BROWN, SILT AND CLAY, AND SAND, TRACE GRAVEL, MOIST	848.5		2 1 3	6	100	SS-2	–	1	5	36	33	25	30	16	14	24	A-6a (6)	
LOOSE, BROWN AND GRAY, GRAVEL WITH SAND AND SILT, TRACE CLAY, WET	846.0	W	1 2 4	8	53	SS-3	–	37	14	14	32	3	23	17	6	18	A-2-4 (0)	
INTERBEDDED DOLOMITE (90%) AND SHALE (10%), RQD 0%, REC. 100%; DOLOMITE, GRAY, UNWEATHERED, STRONG, VERY THIN TO THIN BEDDED; SHALE, BLACK, UNWEATHERED TO SLIGHTLY WEATHERED, SLIGHTLY STRONG, LAMINATED.	843.5	TR	0		100	NQ2-4											CORE	
	838.3	EOB																

NOTES: NONE
ABANDONMENT METHODS, MATERIALS, QUANTITIES: PLACED AUGER CUTTINGS

PROJECT: ALL-75-0.21
TYPE: RETAINING WALL
PID: 76691 BR ID:
START: 4/2/09 END: 4/2/09

DRILLING FIRM / OPERATOR: STANTEC / M.W.
SAMPLING FIRM / LOGGER: STANTEC / J.M.
DRILLING METHOD: 3.25" HSA / NQ
SAMPLING METHOD: SPT

DRILL RIG: CME 55T
HAMMER: CME AUTOMATIC
CALIBRATION DATE: 10/16/08
ENERGY RATIO (%): 82.5

STATION / OFFSET: 428+93 140.8 LT
ALIGNMENT:
ELEVATION: 847.8 (MSL) EOB: 16.4 ft.
LAT / LONG: Not Recorded

EXPLORATION ID B-156-0-08
PAGE 1 OF 1

MATERIAL DESCRIPTION AND NOTES	ELEV.	DEPTHS	SPT/RQD	N60	REC (%)	SAMPLE ID	HP (tsf)	GR	CS	FS	SI	CL	LL	PL	PI	WC	ODOT CLASS (GI)	INST.
MEDIUM STIFF, BROWN, SILTY CLAY, TRACE GRAVEL AND SAND, MOIST (VISUAL)	847.8		9 50/1"	–	83	SS-1	–	–	–	–	–	–	–	–	–	16	A-6b (V)	
INTERBEDDED DOLOMITE (90%) AND SHALE (10%), RQD 3%, REC. 99%; DOLOMITE, GRAY, SLIGHTLY WEATHERED, STRONG, VERY THIN BEDDED, VUGGY; SHALE, DARK GRAY TO BLACK, MODERATELY WEATHERED, MODERATELY STRONG, LAMINATED, CARBONACEOUS.	844.6	TR	0		97	NQ2-2											CORE	
			0		100	NQ2-3											CORE	
			8		100	NQ2-4											CORE	
	831.4	EOB																

NOTES: NONE
ABANDONMENT METHODS, MATERIALS, QUANTITIES: PLACED AUGER CUTTINGS

PROJECT: ALL-75-0.21	DRILLING FIRM / OPERATOR: STANTEC / M.W.	DRILL RIG: CME 55T	STATION / OFFSET: 429+17 106.0 RT	EXPLORATION ID B-157-0-08
TYPE: RETAINING WALL	SAMPLING FIRM / LOGGER: STANTEC / J.M.	HAMMER: CME AUTOMATIC	ALIGNMENT:	
PID: 76691 BR ID:	DRILLING METHOD: 3.25" HSA / NQ	CALIBRATION DATE: 10/16/08	ELEVATION: 853.4 (MSL) EOB: 17.0 ft.	PAGE 1 OF 1
START: 4/7/09 END: 4/7/09	SAMPLING METHOD: SPT	ENERGY RATIO (%): 82.5	LAT / LONG: Not Recorded	

MATERIAL DESCRIPTION AND NOTES	ELEV. 853.4	DEPTHS	SPT/RQD	N60	REC (%)	SAMPLE ID	HP (tsf)	GRADATION (%) GR	CS	FS	SI	CL	ATTERBERG LL	PL	PI	WC	ODOT CLASS (GI)	INST.
MEDIUM STIFF, BROWN, SILTY CLAY, TRACE GRAVEL, SOME SAND, MOIST		1 2 3 4	2 2 2	6	67	SS-1	–	3	7	14	43	33	38	21	17	34	A-6b (11)	
	848.4	5																
LOOSE, BROWN, COARSE AND FINE SAND, TRACE GRAVEL, LITTLE SILT, TRACE CLAY, WET	846.4	TR 6	2 2 2	6	67	SS-2	–	10	12	55	15	8	NP	NP	NP	21	A-3a (0)	
INTERBEDDED DOLOMITE (95%) AND SHALE (5%), RQD 9%, REC. 100%; DOLOMITE, GRAY TO BROWN GRAY, SLIGHTLY WEATHERED, STRONG, VERY THIN TO THIN BEDDED; SHALE, DARK GRAY TO BLACK, MODERATELY WEATHERED, MODERATELY STRONG, LAMINATED.		7 8 9 10 11 12 13 14 15 16	9		100	NQ-3												CORE
	836.4	EOB 17																

NOTES: NONE

ABANDONMENT METHODS, MATERIALS, QUANTITIES: PLACED AUGER CUTTINGS

PROJECT: ALL-75-0.21	DRILLING FIRM / OPERATOR: STANTEC / M.W.	DRILL RIG: CME 55T	STATION / OFFSET: 430+71 117.3 LT	EXPLORATION ID B-158-0-08
TYPE: RETAINING WALL	SAMPLING FIRM / LOGGER: STANTEC / J.M.	HAMMER: CME AUTOMATIC	ALIGNMENT:	
PID: 76691 BR ID:	DRILLING METHOD: 3.25" HSA / NQ	CALIBRATION DATE: 10/16/08	ELEVATION: 848.4 (MSL) EOB: 16.0 ft.	PAGE 1 OF 1
START: 4/2/09 END: 4/2/09	SAMPLING METHOD: SPT	ENERGY RATIO (%): 82.5	LAT / LONG: Not Recorded	

MATERIAL DESCRIPTION AND NOTES	ELEV. 848.4	DEPTHS	SPT/RQD	N60	REC (%)	SAMPLE ID	HP (tsf)	GRADATION (%) GR	CS	FS	SI	CL	ATTERBERG LL	PL	PI	WC	ODOT CLASS (GI)	INST.
MEDIUM STIFF, MOTTLED BROWN AND GRAY, SILTY CLAY, TRACE GRAVEL AND SAND, MOIST (VISUAL)		1 2																
	845.4	TR 3	50/5"	–	100	SS-1	–	–	–	–	–	–	–	–	–	–		
INTERBEDDED DOLOMITE (90%) AND SHALE (10%), RQD 0%, REC. 6%; DOLOMITE, GRAY, SLIGHTLY WEATHERED, STRONG, THIN BEDDED, VUGGY; SHALE, DARK GRAY TO BLACK, MODERATELY TO SLIGHTLY WEATHERED, MODERATELY STRONG, LAMINATED, CARBONACEOUS.		4 5 6 7 8 9 10 11 12 13 14 15 16	0		83	NQ-2												CORE
			0		94	NQ-3												CORE
			0		100	NQ-4												CORE
	832.4	EOB																

NOTES: NONE

ABANDONMENT METHODS, MATERIALS, QUANTITIES: PLACED AUGER CUTTINGS

PROJECT: ALL-75-0.21
TYPE: RETAINING WALL
PID: 76691 BR ID:
START: 4/7/09 END: 4/7/09

DRILLING FIRM / OPERATOR: STANTEC / M.W.
SAMPLING FIRM / LOGGER: STANTEC / J.M.
DRILLING METHOD: 3.25" HSA / NQ
SAMPLING METHOD: SPT

DRILL RIG: CME 55T
HAMMER: CME AUTOMATIC
CALIBRATION DATE: 10/16/08
ENERGY RATIO (%): 82.5

STATION / OFFSET: 430+65 103.4 RT
ALIGNMENT:
ELEVATION: 854.8 (MSL) EOB: 19.0 ft.
LAT / LONG: Not Recorded

EXPLORATION ID B-159-0-08
PAGE 1 OF 1

MATERIAL DESCRIPTION AND NOTES	ELEV. 854.8 / DEPTHS	SPT/RQD	N60	REC (%)	SAMPLE ID	HP (tsf)	GRADATION (%) GR	CS	FS	SI	CL	ATTERBERG LL	PL	PI	WC	ODOT CLASS (GI)	INST.
MEDIUM STIFF TO STIFF, BROWN, SILT AND CLAY, TRACE GRAVEL, SOME SAND, MOIST		3 3 4	10	100	SS-1	–	10	10	20	38	22	34	20	14	21	A-6a (7)	
		3 3 3	8	67	SS-2	–	–	–	–	–	–	–	–	–	22	A-6a (V)	
		4 50/5"	–	20	SS-3	–	–	–	–	–	–	–	–	–	31	A-6a (V)	
	845.8 TR																
INTERBEDDED DOLOMITE (95%) AND SHALE (5%), RQD 0%, REC. 100%; DOLOMITE, GRAY TO BROWN GRAY, SLIGHTLY WEATHERED, STRONG, VERY THIN TO THIN BEDDED; SHALE, DARK GRAY TO BLACK, MODERATELY WEATHERED, MODERATELY STRONG, LAMINATED, CARBONACEOUS.		0		100	NQ-4												CORE
	835.8 EOB																

NOTES: NONE
ABANDONMENT METHODS, MATERIALS, QUANTITIES: PLACED AUGER CUTTINGS

PROJECT: ALL-75-0.21
TYPE: RETAINING WALL
PID: 76691 BR ID:
START: 4/2/09 END: 4/2/09

DRILLING FIRM / OPERATOR: STANTEC / M.W.
SAMPLING FIRM / LOGGER: STANTEC / J.M.
DRILLING METHOD: 3.25" HSA / NQ
SAMPLING METHOD: SPT

DRILL RIG: CME 55T
HAMMER: CME AUTOMATIC
CALIBRATION DATE: 10/16/08
ENERGY RATIO (%): 82.5

STATION / OFFSET: 432+30 109.5 LT
ALIGNMENT:
ELEVATION: 848.3 (MSL) EOB: 16.2 ft.
LAT / LONG: Not Recorded

EXPLORATION ID B-160-0-08
PAGE 1 OF 1

MATERIAL DESCRIPTION AND NOTES	ELEV. 848.3 / DEPTHS	SPT/RQD	N60	REC (%)	SAMPLE ID	HP (tsf)	GRADATION (%) GR	CS	FS	SI	CL	ATTERBERG LL	PL	PI	WC	ODOT CLASS (GI)	INST.
STIFF, MOTTLED BROWN AND GRAY, SILTY CLAY, LITTLE GRAVEL, SOME SAND, DAMP TO MOIST		3 4 5	12	80	SS-1	–	12	7	17	36	28	34	18	16	17	A-6b (8)	
		3 4 50/2"	–	83	SS-2	–	–	–	–	–	–	–	–	–	24		
	842.1 TR																
INTERBEDDED DOLOMITE (90%) AND SHALE (10%), RQD 17%, REC. 100%; DOLOMITE, GRAY, SLIGHTLY WEATHERED, STRONG, THIN BEDDED, VUGGY; SHALE, BLACK, MODERATELY TO SLIGHTLY WEATHERED, MODERATELY STRONG, LAMINATED.		17		100	NQ-3												CORE
	832.1 EOB																

NOTES: NONE
ABANDONMENT METHODS, MATERIALS, QUANTITIES: PLACED AUGER CUTTINGS

\\Us1268-f01\workgroup\1755\active\175530002\geotechnical\drawing\ODOTSubmittal\projects\ALL\76691\geotechnical\sheets\Retaining Walls\76691ZL015.dgn

PROJECT: ALL-75-0.21
TYPE: RETAINING WALL
PID: 76691 BR ID:
START: 4/7/09 END: 4/7/09

DRILLING FIRM / OPERATOR: STANTEC / M.W.
SAMPLING FIRM / LOGGER: STANTEC / J.M.
DRILLING METHOD: 3.25" HSA / NQ
SAMPLING METHOD: SPT

DRILL RIG: CME 55T
HAMMER: CME AUTOMATIC
CALIBRATION DATE: 10/16/08
ENERGY RATIO (%): 82.5

STATION / OFFSET: 432+02 101.2 RT
ALIGNMENT:
ELEVATION: 854.9 (MSL) EOB: 18.7 ft.
LAT / LONG: Not Recorded

EXPLORATION ID B-161-0-08
PAGE 1 OF 1

MATERIAL DESCRIPTION AND NOTES	ELEV. 854.9	DEPTHS	SPT/RQD	N60	REC (%)	SAMPLE ID	HP (tsf)	GRADATION (%) GR	CS	FS	SI	CL	ATTERBERG LL	PL	PI	WC	ODOT CLASS (GI)	INST.
MEDIUM STIFF TO STIFF, MOTTLED BROWN AND GRAY, SILT AND CLAY, TRACE GRAVEL, SOME SAND, MOIST			3 3 6	12	100	SS-1	–	5	8	15	36	36	34	19	15	24	A-6a (9)	
			5 4 4	11	20	SS-2	–	–	–	–	–	–	–	–	–	21	A-6a (V)	
			3 3 3	8	27	SS-3	–	–	–	–	–	–	–	–	–	20	A-6a (V)	
	845.6	TR																
INTERBEDDED DOLOMITE (95%) AND SHALE (5%), RQD 0%, REC. 100%; DOLOMITE, GRAY TO BROWN GRAY, SLIGHTLY WEATHERED, STRONG, VERY THIN TO THIN BEDDED, VUGGY; SHALE, DARK GRAY TO BLACK, MODERATELY WEATHERED, MODERATELY STRONG, LAMINATED, CARBONACEOUS.			0		100	NQ-4											CORE	
	836.2	EOB																

NOTES: NONE
ABANDONMENT METHODS, MATERIALS, QUANTITIES: PLACED AUGER CUTTINGS

PROJECT: ALL-75-0.21
TYPE: RETAINING WALL
PID: 76691 BR ID:
START: 4/2/09 END: 4/2/09

DRILLING FIRM / OPERATOR: STANTEC / M.W.
SAMPLING FIRM / LOGGER: STANTEC / J.M.
DRILLING METHOD: 3.25" HSA / NQ
SAMPLING METHOD: SPT

DRILL RIG: CME 55T
HAMMER: CME AUTOMATIC
CALIBRATION DATE: 10/16/08
ENERGY RATIO (%): 82.5

STATION / OFFSET: 433+54 112.3 LT
ALIGNMENT:
ELEVATION: 848.3 (MSL) EOB: 17.3 ft.
LAT / LONG: Not Recorded

EXPLORATION ID B-162-0-08
PAGE 1 OF 1

MATERIAL DESCRIPTION AND NOTES	ELEV. 848.3	DEPTHS	SPT/RQD	N60	REC (%)	SAMPLE ID	HP (tsf)	GRADATION (%) GR	CS	FS	SI	CL	ATTERBERG LL	PL	PI	WC	ODOT CLASS (GI)	INST.
MEDIUM STIFF, BROWN, SILTY CLAY, TRACE GRAVEL AND SAND, MOIST (Visual)																		
	845.8	TR																
DENSE, GRAY, STONE FRAGMENTS, (WEATHERED DOLOMITE), MOIST	845.3		50+/1"	–	60	SS-1	–	–	–	–	–	–	–	–	–	13		
INTERBEDDED DOLOMITE (90%) AND SHALE (10%), RQD 1%, REC. 97%; DOLOMITE, GRAY, SLIGHTLY WEATHERED, STRONG, VERY THIN TO THIN BEDDED, VUGGY; SHALE, DARK GRAY TO BLACK, MODERATELY WEATHERED, MODERATELY STRONG, LAMINATED, CARBONACEOUS.			0		91	NQ											CORE	
			10		100	NQ											CORE	
			0		100	NQ											CORE	
	831.0	EOB																

NOTES: NONE
ABANDONMENT METHODS, MATERIALS, QUANTITIES: PLACED AUGER CUTTINGS

PROJECT: ALL-75-0.21	DRILLING FIRM / OPERATOR: STANTEC / M.W.	DRILL RIG: CME 55T	STATION / OFFSET: 433+45 100.0 RT	EXPLORATION ID B-163-0-08
TYPE: RETAINING WALL	SAMPLING FIRM / LOGGER: STANTEC / J.M.	HAMMER: CME AUTOMATIC	ALIGNMENT:	
PID: 76691 BR ID:	DRILLING METHOD: 3.25" HSA / NQ	CALIBRATION DATE: 10/16/08	ELEVATION: 854.0 (MSL) EOB: 19.2 ft.	PAGE 1 OF 1
START: 4/7/09 END: 4/7/09	SAMPLING METHOD: SPT	ENERGY RATIO (%): 82.5	LAT / LONG: Not Recorded	

MATERIAL DESCRIPTION AND NOTES	ELEV. 854.0	DEPTHS	SPT/ RQD	N60	REC (%)	SAMPLE ID	HP (tsf)	GRADATION (%) GR	CS	FS	SI	CL	ATTERBERG LL	PL	PI	WC	ODOT CLASS (GI)	INST.
HARD, MOTTLED BROWN AND GRAY, SILT AND CLAY, SOME GRAVEL AND SAND, DAMP TO MOIST @ 2.5' - stiff			4 4 3	10	40	SS-1	-	-	-	-	-	-	-	-	-	19	A-6a (V)	
			7 14 16	41	67	SS-2	-	21	11	21	28	19	28	15	13	12	A-6a (3)	
			9 17 18	48	33	SS-3	-	-	-	-	-	-	-	-	-	14	A-6a (V)	
	844.8	TR																
INTERBEDDED DOLOMITE (95%) AND SHALE (5%), RQD 0%, REC. 100%; DOLOMITE, GRAY TO BROWN GRAY, SLIGHTLY WEATHERED, STRONG, VERY THIN TO THIN BEDDED, VUGGY; SHALE, DARK GRAY TO BLACK, MODERATELY WEATHERED, MODERATELY STRONG, LAMINATED, CARBONACEOUS.			0		100	NQ-4											CORE	
	834.8	EOB																

NOTES: NONE

ABANDONMENT METHODS, MATERIALS, QUANTITIES: PLACED AUGER CUTTINGS

PROJECT: ALL-75-0.21	DRILLING FIRM / OPERATOR: STANTEC / M.W.	DRILL RIG: CME 55T	STATION / OFFSET: 434+84 121.1 LT	EXPLORATION ID B-164-0-08
TYPE: RETAINING WALL	SAMPLING FIRM / LOGGER: STANTEC / J.M.	HAMMER: CME AUTOMATIC	ALIGNMENT:	
PID: 76691 BR ID:	DRILLING METHOD: 3.25" HSA / NQ	CALIBRATION DATE: 10/16/08	ELEVATION: 846.3 (MSL) EOB: 16.5 ft.	PAGE 1 OF 1
START: 4/2/09 END: 4/2/09	SAMPLING METHOD: SPT	ENERGY RATIO (%): 82.5	LAT / LONG: Not Recorded	

MATERIAL DESCRIPTION AND NOTES	ELEV. 846.3	DEPTHS	SPT/ RQD	N60	REC (%)	SAMPLE ID	HP (tsf)	GRADATION (%) GR	CS	FS	SI	CL	ATTERBERG LL	PL	PI	WC	ODOT CLASS (GI)	INST.
SOD AND TOPSOIL																		
	844.8	TR																
INTERBEDDED DOLOMITE (90%) AND SHALE (10%), RQD 8%, REC. 96%; DOLOMITE, GRAY, SLIGHTLY WEATHERED, STRONG, VERY THIN TO THIN BEDDED, VUGGY; SHALE, DARK GRAY TO BLACK, MODERATELY WEATHERED, MODERATELY STRONG, LAMINATED, CARBONACEOUS.			0		92	NQ-1											CORE	
			8		96	NQ-2											CORE	
			14		100	NQ-3											CORE	
	829.8	EOB																

NOTES: NONE

ABANDONMENT METHODS, MATERIALS, QUANTITIES: PLACED AUGER CUTTINGS

PROJECT: ALL-75-0.21	DRILLING FIRM / OPERATOR: STANTEC / M.W.	DRILL RIG: CME 55T	STATION / OFFSET: 434+84 96.3 RT	EXPLORATION ID B-165-0-08
TYPE: RETAINING WALL	SAMPLING FIRM / LOGGER: STANTEC / J.M.	HAMMER: CME AUTOMATIC	ALIGNMENT:	
PID: 76691 BR ID:	DRILLING METHOD: 3.25" HSA / NQ	CALIBRATION DATE: 10/16/08	ELEVATION: 854.5 (MSL) EOB: 19.2 ft.	PAGE 1 OF 1
START: 4/7/09 END: 4/7/09	SAMPLING METHOD: SPT	ENERGY RATIO (%): 82.5	LAT / LONG: Not Recorded	

MATERIAL DESCRIPTION AND NOTES	ELEV.	DEPTHS	SPT/RQD	N60	REC (%)	SAMPLE ID	HP (tsf)	GRADATION (%) GR	CS	FS	SI	CL	ATTERBERG LL	PL	PI	WC	ODOT CLASS (GI)	INST.
STIFF TO VERY STIFF, GRAY, CLAY, AND SILT, TRACE GRAVEL, SOME SAND, DAMP	854.5		4 4 7	15	40	SS-1	–	–	–	–	–	–	–	–	–	21	A-7-6 (V)	
			8 7 6	18	100	SS-2	–	6	9	15	37	33	42	23	19	21	A-7-6 (11)	
	848.0																	
STIFF, MOTTLED BROWN AND GRAY, CLAY, SOME GRAVEL, LITTLE SAND, SOME SILT, DAMP			4 3 6	12	67	SS-3	–	24	7	11	29	29	41	21	20	19	A-7-6 (9)	
	845.3	TR																
INTERBEDDED DOLOMITE (95%) AND SHALE (5%), RQD 7%, REC. 100%; DOLOMITE, GRAY TO GRAY BROWN, SLIGHTLY WEATHERED, STRONG, VERY THIN TO THIN BEDDED, VUGGY; SHALE, DARK GRAY TO BLACK, MODERATELY WEATHERED, MODERATELY STRONG, LAMINATED, CARBONACEOUS.			7		100	NQ-4											CORE	
	835.3	EOB																

NOTES: NONE

ABANDONMENT METHODS, MATERIALS, QUANTITIES: PLACED AUGER CUTTINGS

PROJECT: ALL-75-0.21	DRILLING FIRM / OPERATOR: STANTEC / M.W.	DRILL RIG: CME 55T	STATION / OFFSET: 436+13 124.1 LT	EXPLORATION ID B-166-0-08
TYPE: RETAINING WALL	SAMPLING FIRM / LOGGER: STANTEC / J.M.	HAMMER: CME AUTOMATIC	ALIGNMENT:	
PID: 76691 BR ID:	DRILLING METHOD: 3.25" HSA / NQ	CALIBRATION DATE: 10/16/08	ELEVATION: 847.3 (MSL) EOB: 17.0 ft.	PAGE 1 OF 1
START: 4/2/09 END: 4/2/09	SAMPLING METHOD: SPT	ENERGY RATIO (%): 82.5	LAT / LONG: Not Recorded	

MATERIAL DESCRIPTION AND NOTES	ELEV.	DEPTHS	SPT/RQD	N60	REC (%)	SAMPLE ID	HP (tsf)	GRADATION (%) GR	CS	FS	SI	CL	ATTERBERG LL	PL	PI	WC	ODOT CLASS (GI)	INST.
SOD AND TOPSOIL	847.3																	
	844.8	TR																
VERY DENSE, GRAY, STONE FRAGMENTS, (WEATHERED DOLOMITE), MOIST	844.2		50	–	100	SS-1	–	–	–	–	–	–	–	–	–	12	Rock (V)	
INTERBEDDED DOLOMITE (90%) AND SHALE (10%), RQD 0%, REC. 94%; DOLOMITE, GRAY, SLIGHTLY WEATHERED, STRONG, VERY THIN TO THIN BEDDED, VUGGY; SHALE, DARK GRAY TO BLACK, MODERATELY WEATHERED, MODERATELY STRONG, LAMINATED, CARBONACEOUS.			0		82	NQ-2											CORE	
			0		96	NQ-3											CORE	
			0		100	NQ-4											CORE	
	830.3	EOB																

NOTES: NONE

ABANDONMENT METHODS, MATERIALS, QUANTITIES: PLACED AUGER CUTTINGS

PROJECT: ALL-75-0.21	DRILLING FIRM / OPERATOR: STANTEC / M.W.	DRILL RIG: CME 55T	STATION / OFFSET: 436+29 95.5 RT	EXPLORATION ID B-157-0-08
TYPE: RETAINING WALL	SAMPLING FIRM / LOGGER: STANTEC / J.M.	HAMMER: CME AUTOMATIC	ALIGNMENT:	
PID: 76691 BR ID:	DRILLING METHOD: 3.25" HSA / NQ	CALIBRATION DATE: 10/16/08	ELEVATION: 853.6 (MSL) EOB: 19.3 ft.	PAGE 1 OF 1
START: 4/2/09 END: 4/2/09	SAMPLING METHOD: SPT	ENERGY RATIO (%): 82.5	LAT / LONG: Not Recorded	

MATERIAL DESCRIPTION AND NOTES	ELEV.	DEPTHS	SPT/RQD	N60	REC (%)	SAMPLE ID	HP (tsf)	GRADATION (%) GR	CS	FS	SI	CL	ATTERBERG LL	PL	PI	WC	ODOT CLASS (GI)	INST.
MEDIUM DENSE, MOTTLED BROWN AND GRAY, GRAVEL WITH SAND, SILT, AND CLAY, MOIST	853.6																	
		1																
		2																
		3	3 4 3	10	80	SS-1	–	24	15	26	22	13	30	18	12	18	A-2-6 (0)	
		4																
		5	1 2 6	11	27	SS-2	–	–	–	–	–	–	–	–	–	18	A-2-6 (V)	
		6																
		7																
	845.1	8	4 5 50	76	27	SS-3	–	–	–	–	–	–	–	–	–	18	A-2-6 (V)	
VERY DENSE, GRAY, STONE FRAGMENTS, (WEATHERED DOLOMITE)	844.3	9																
INTERBEDDED DOLOMITE (90%) AND SHALE (10%), RQD 11%, REC. 2%; DOLOMITE, GRAY, SLIGHTLY WEATHERED, STRONG, VERY THIN TO THIN BEDDED, VUGGY; SHALE, DARK GRAY TO BLACK, MODERATELY WEATHERED, MODERATELY STRONG, LAMINATED, CARBONACEOUS.		10																
		11	11		98	NQ-4											CORE	
		12																
		13																
		14																
		15																
		16																
		17																
		18																
	834.3	19																
	EOB																	

NOTES: NONE

ABANDONMENT METHODS, MATERIALS, QUANTITIES: PLACED AUGER CUTTINGS

PROJECT DESCRIPTION

CONSTRUCT NOISE BARRIERS ALONG THE EAST AND WEST SIDES OF I-75 FROM APPROXIMATE STATIONS 377+50 TO 410+50.

HISTORIC RECORDS

HISTORIC BORING RECORDS FOR THE PROJECT LOCATION WERE REQUESTED FROM THE ODOT OFFICE OF GEOTECHNICAL ENGINEERING AND THE DISTRICT. NO SIGNIFICANT HISTORICAL DATA WAS FOUND FOR THIS STRUCTURE LOCATION.

GEOLOGY

THE PROJECT SITE IS LOCATED IN THE CENTRAL OHIO CLAYEY TILL PLAIN. THIS REGION IS COMPRISED OF GROUND MORAINE AND END MORAINE TILL DEPOSITS OVERLYING DOLOMITE WITH INTERBEDDED SHALE. CAVES AND OTHER KARST FEATURES MAY BE PRESENT ACCORDING TO THE PHYSIOGRAPHIC REGION OF OHIO MAP (ODNR, 1998), BUT NO KNOW FEATURES WERE IDENTIFIED IN THE OHIO KARST AREAS MAP (ODNR, 2007).

RECONNAISSANCE

A FIELD RECONNAISSANCE WAS COMPLETED ON MARCH 13, 2007, FOCUSING MAINLY ON PAVEMENT CONDITIONS AND SITE TOPOGRAPHY AND DRAINAGE. THE MAINLINE SHOULDER PAVEMENTS SHOW EXTENSIVE "ALLIGATOR" CRACKING AND THE MAINLINE PAVEMENTS SHOW REFLECTIVE CRACKING AT THE EXPANSION JOINT LOCATIONS.

THE SURROUNDING AREA IS DESCRIBED AS GENTLY UNDULATING WITH MOST OF THE SURROUNDING AREA CONSISTING OF OPEN FIELD OR LIGHTLY DEVELOPED COMMERCIAL AND RESIDENTIAL DISTRICTS. DRAINAGE ALONG THE ALIGNMENT IS DESCRIBED AS SLUGGISH WITH AREAS OF STANDING WATER, AND FLOWING WATER IN DRAINAGE DITCHES AND NATURAL STREAMS GENERALLY CREATING STEEP TO VERTICAL CUT BANKS IN THE SOIL PROFILE.

SUBSURFACE EXPLORATION

28 BORINGS WERE ADVANCED ALONG I-75 BETWEEN SR 309 AND THE RESERVOIR ROAD BRIDGE. SEVENTEEN BORINGS WERE ADVANCED ALONG THE EAST SIDE OF I-75 BETWEEN STATIONS 378+00 AND 410+50. ELEVEN BORINGS WERE ADVANCED ALONG THE WEST SIDE OF I-75 BETWEEN STATIONS 377+00 AND 398+00. THE BORINGS WERE ADVANCED USING 3.25-INCH I.D. HOLLOW-STEM AUGERS. STANDARD PENETRATION TEST (SPT) SAMPLES WERE OBTAINED AT 2.5-FOOT INTERVALS TO A MINIMUM DEPTH OF 25 FEET. SPT SAMPLES WERE OBTAINED USING TWO SEPERATE DRILL RIGS WITH CALIBRATED AUTOMATIC HAMMERS WITH ENERGY RATIOS (ER) OF 81.9% AND 83.1%. AT THE CONCLUSION OF DRILLING OPERATIONS, BOREHOLES WERE BACKFILLED WITH AUGER SOIL CUTTINGS.

EXPLORATION FINDINGS

FINE GRAINED GLACIAL SOILS CLASSIFYING AS MEDIUM STIFF TO HARD SILT AND CLAY (A-6A), SILTY CLAY (A-6B), CLAY (A-7-6), SANDY SILT (A-4A) AND SILT (A-4B) WERE ENCOUNTERED IN ALL BORINGS. FEW LAYERS OF COARSE GRAINED SOILS CLASSIFYING AS LOOSE TO MEDIUM DENSE GRAVEL WITH SAND (A-1-B) AND GRAVEL WITH SAND AND SILT (A-2-4) WERE ENCOUNTERED AT VARIOUS DEPTHS ACROSS THE PROJECT LOCATION. IN ONE BORING, COBBLES AND BOULDERS WERE ENCOUNTERED AT ELEVATION 851.5 FEET, AND NQ SIZED CORING EQUIPMENT WAS USED TO SAMPLE THE REMAINING 4.5 FEET TO REACH MINIMUM REQUIRED DEPTH. NO BEDROCK WAS ENCOUNTERED IN THE BORINGS ADVANCED AT THE PROJECT LOCATION.

NO STATIC WATER LEVEL WAS OBSERVED IN THE BORINGS PRIOR TO BORING TERMINATION.

SPECIFICATIONS

THIS GEOTECHNICAL EXPLORATION WAS PERFORMED IN ACCORDANCE WITH THE STATE OF OHIO, DEPARTMENT OF TRANSPORTATION, OFFICE OF GEOTECHNICAL ENGINEERING, SPECIFICATIONS FOR GEOTECHNICAL EXPLORATIONS, DATED JANUARY 2009.

AVAILABLE INFORMATION

ALL AVAILABLE SOIL AND BEDROCK INFORMATION THAT CAN BE CONVENIENTLY SHOWN ON THE PROFILE SHEETS HAS BEEN SO REPORTED. ADDITIONAL SUBSURFACE EXPLORATIONS MAY HAVE BEEN MADE TO STUDY SOME SPECIAL ASPECT OF THE PROJECT. COPIES OF THIS DATA, IF ANY, MAY BE INSPECTED IN THE DISTRICT DEPUTY DIRECTOR'S OFFICE, THE OFFICE OF GEOTECHNICAL ENGINEERING AT 1600 WEST BROAD STREET OR THE OFFICE OF STRUCTURAL ENGINEERING AT 1980 WEST BROAD STREET.

LEGEND

DESCRIPTION	ODOT CLASS	CLASSIFIED MECH./VISUAL	
GRAVEL AND/OR STONE FRAGMENTS WITH SAND	A-1-b	2	1
GRAVEL AND/OR STONE FRAGMENTS WITH SAND AND SILT	A-2-4	1	2
SANDY SILT	A-4a	10	15
SILT	A-4b	5	2
SILT AND CLAY	A-6a	74	141
SILTY CLAY	A-6b	12	29
CLAY	A-7-6	5	7
	TOTAL	109	195
BOULDERY ZONE	*VISUAL*		
SOD AND TOPSOIL = X = APPROXIMATE THICKNESS	*VISUAL*		

EXPLORATION LOCATION - PLAN VIEW

DRIVE SAMPLE AND/OR ROCK CORE BORING PLOTTED TO VERTICAL SCALE ONLY. HORIZONTAL BAR INDICATES A CHANGE IN STRATIGRAPHY.

WC INDICATES WATER CONTENT IN PERCENT.

N_{60} INDICATES CORRECTED STANDARD PENETRATION RESISTANCE FOR 60% EFFICIENCY.

● PLASTIC SOIL WITH MOISTURE CONTENT EQUAL TO OR GREATER THAN THE LIQUID LIMIT MINUS THREE.

⊖ NON-PLASTIC SOIL WITH MOIUSTURE CONTENT GREATER THAN OR EQUAL TO 25%, OR GREATER THAN 19% WITH A WET APPEARANCE.

NP INDICATES A NON-PLASTIC SAMPLE.

SS INDICATES A SPLIT SPOON SAMPLE, STANDARD PENETRATION TEST.

NQ CORE SAMPLE.

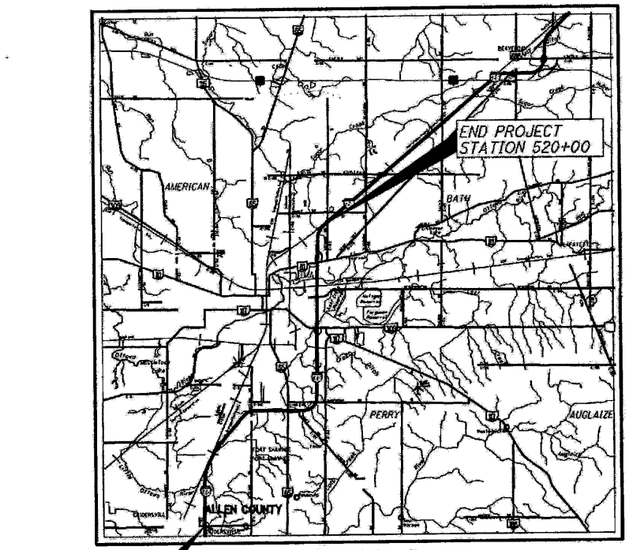

PARTICLE SIZE DEFINITIONS

12"	3"	2.0 mm	0.42 mm	0.074 mm	0.005 mm
BOULDERS |	COBBLES |	GRAVEL |	COARSE SAND |	FINE SAND |	SILT | CLAY
		No. 10 SIEVE	No. 40 SIEVE	No. 200 SIEVE	

RECON. - MMF 3/07
DRILLING - MID OHIO 1/25/10-1/27/10, M.M. - 1/28/10-2/24/10
DRAWN - MJ 1/10-4/10
REVIEWED - JMM 4/10

DESIGN AGENCY
STANTEC CONSULTING SERVICES INC.
CINCINNATI, OHIO

PID NO. 76691

STRUCTURE FOUNDATION EXPLORATION
NOISE BARRIER WALLS ALONG I-75

ALL-75-0-21

1/26

10f 157

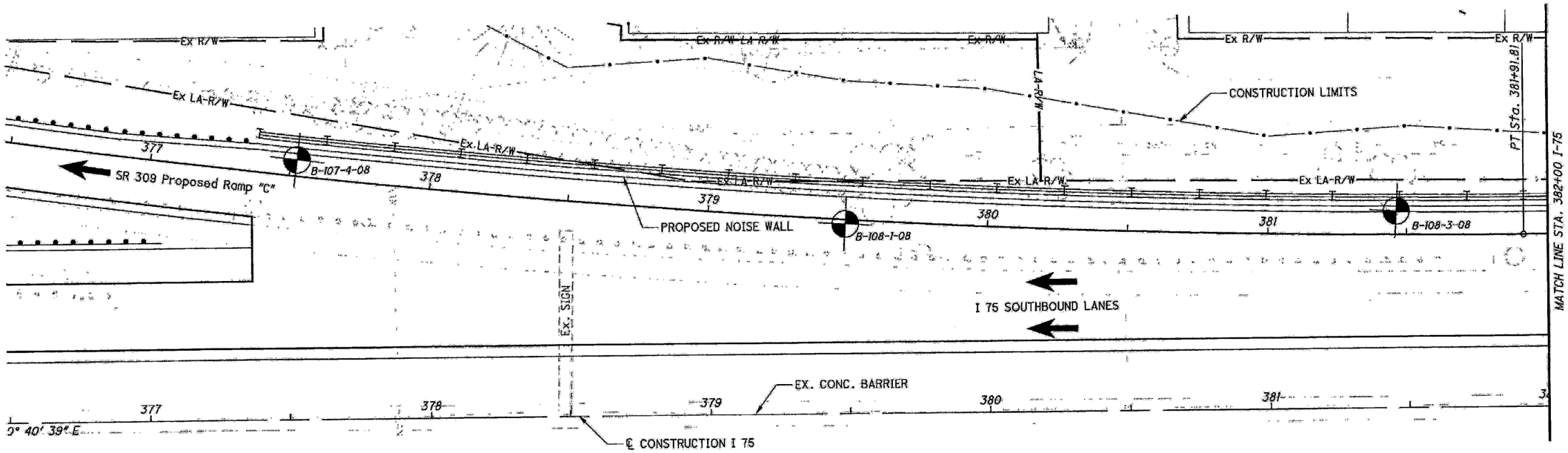

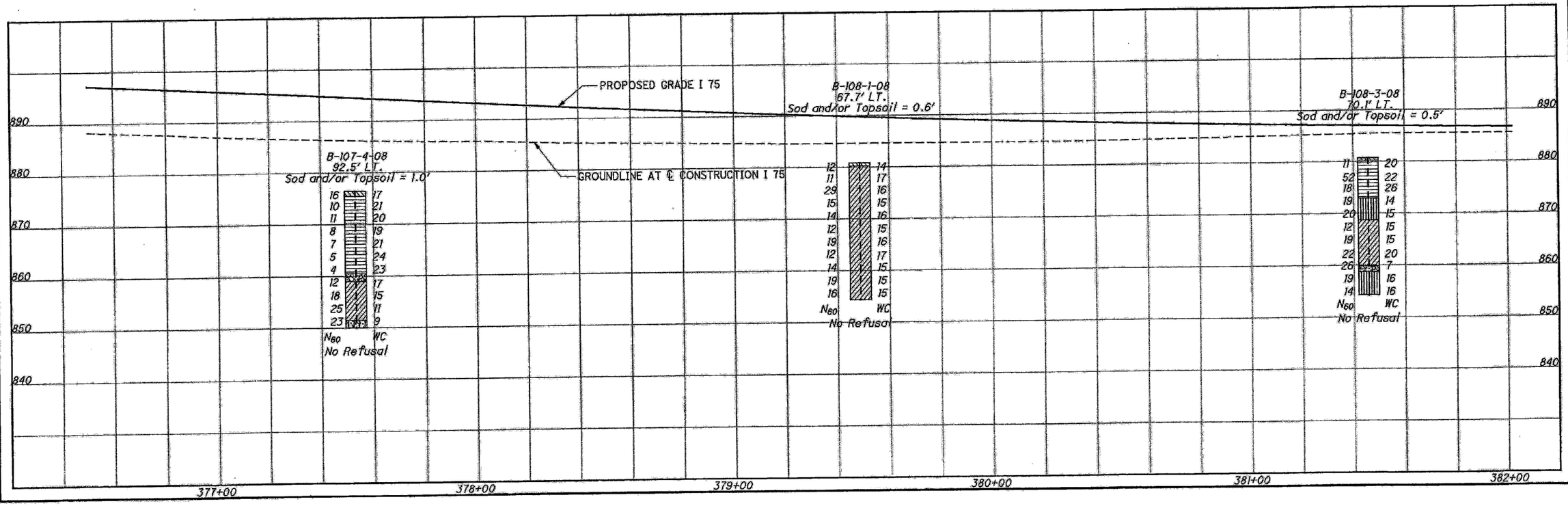

N

0 10 20 40 HORIZONTAL SCALE IN FEET

DRAWN MSJ CHECKED RJK

STRUCTURE FOUNDATION EXPLORATION
WEST NOISE WALL STA. 377+38 TO 382+00

ALL-75-0.21

2 / 26

105 / 157

V:\1755\active\175530002\geotechnical\drawing\ODOTPlans\projects\ALL\76691\structures\Noise Walls\SHEETS\76691ZP001.dgn 5/4/2010 10:46:55 AM mjennings

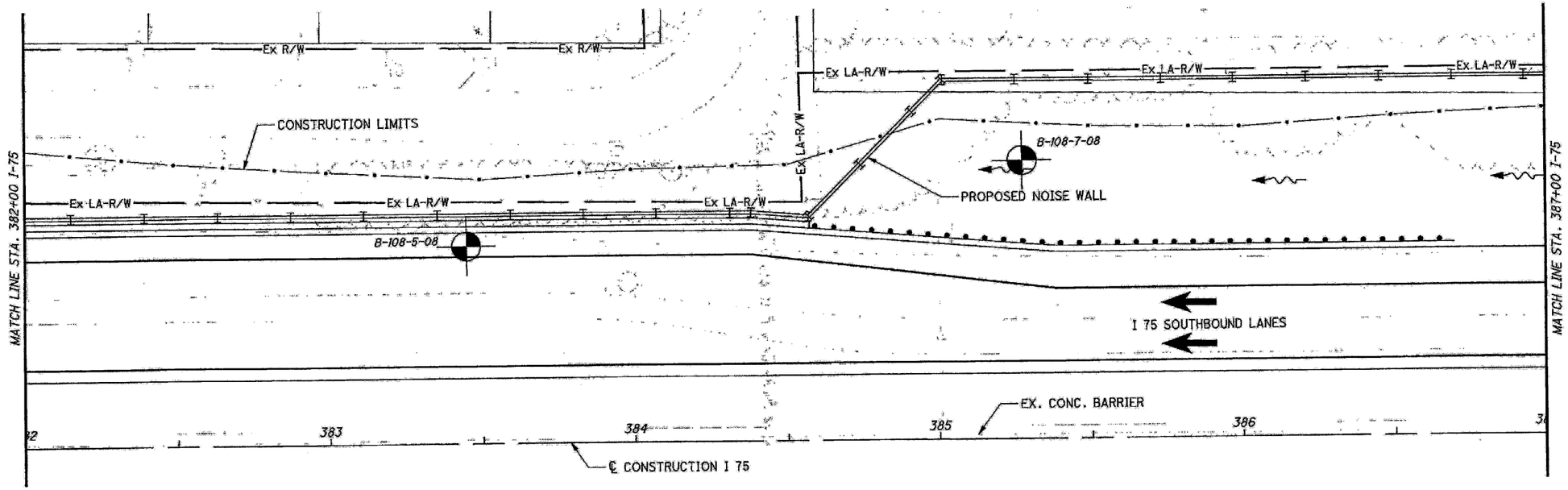

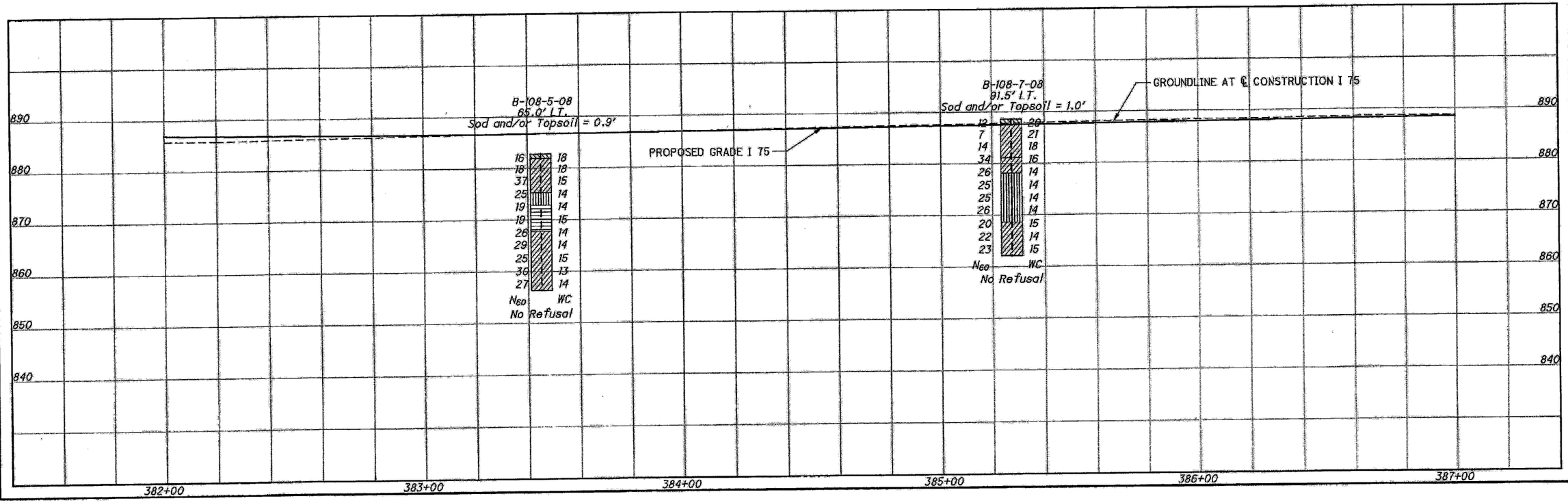

N

HORIZONTAL SCALE IN FEET
0 10 20 40

DRAWN MSJ
CHECKED RJK

STRUCTURE FOUNDATION EXPLORATION
WEST NOISE WALL STA. 382+00 TO 387+00

ALL-75-0.21

3 / 26

106 / 157

V:\1755\active\175530002\geotechnical\drawing\ODOT\Plans\projects\ALL\76691\structures\Noise Walls\SHEETS\766917P002.dgn 5/4/2010 10:48:13 AM mjennings

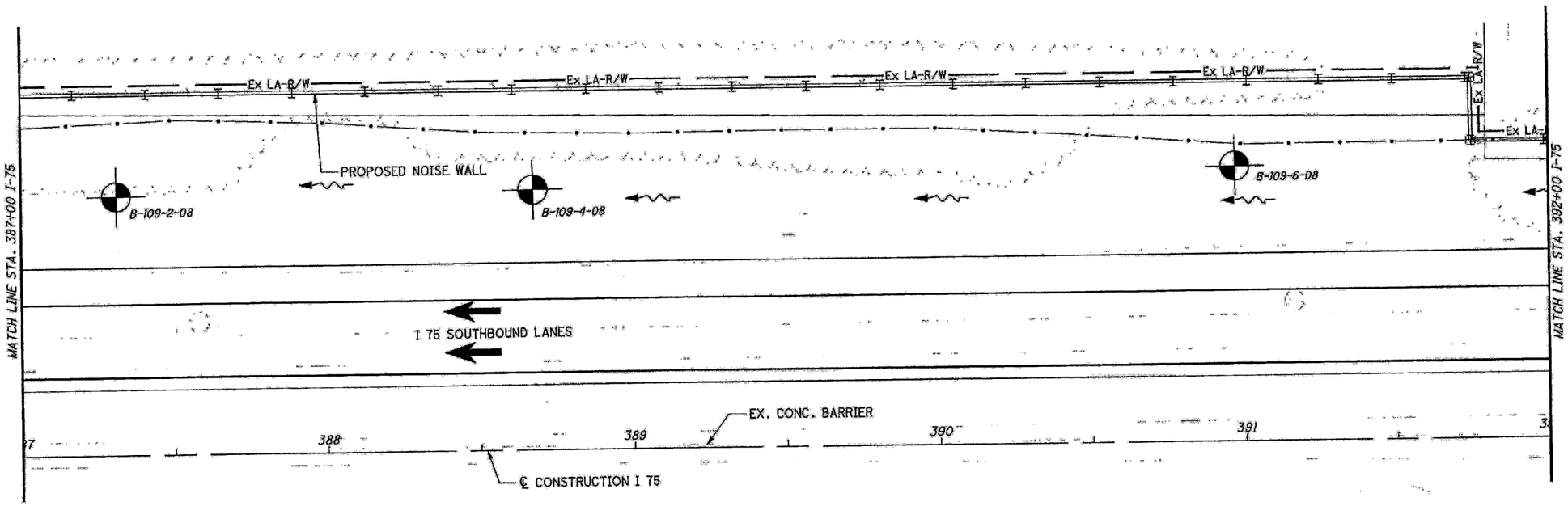

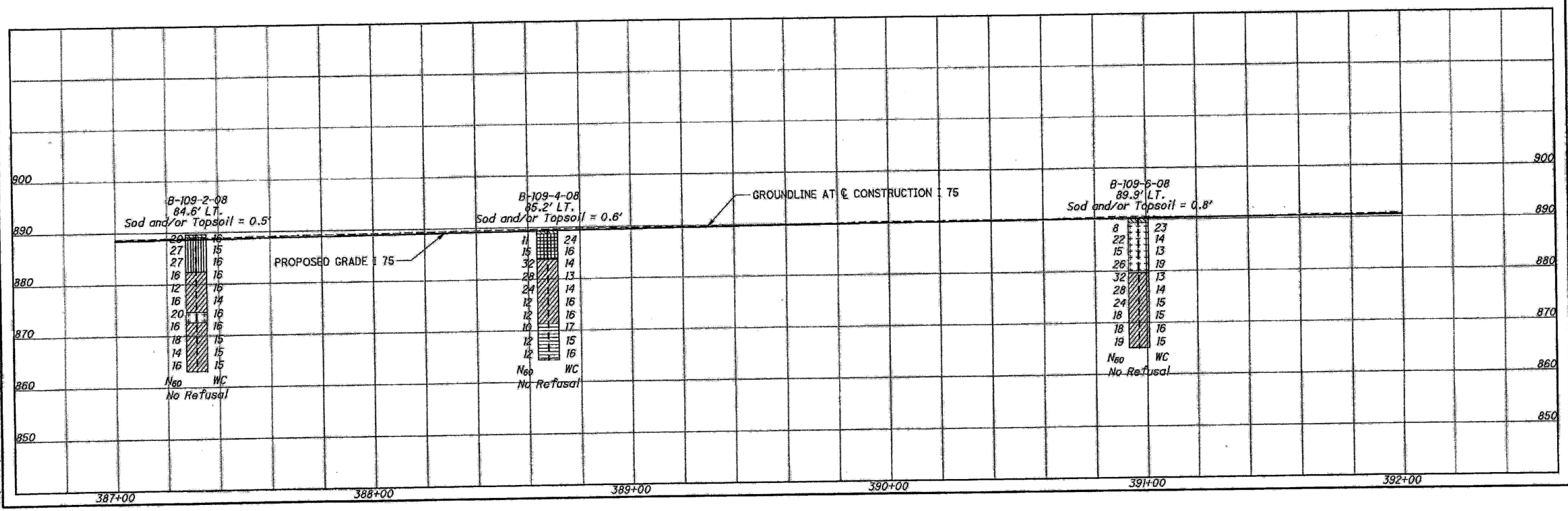

HORIZONTAL SCALE IN FEET

DRAWN MSJ
CHECKED RJK

STRUCTURE FOUNDATION EXPLORATION
WEST NOISE WALL STA. 387+00 TO 392+00

ALL-75-0.21

4 / 26

107 / 157

V:\1755\active\1755300002\geotechnical\drawing\ODOTPlans\projects\ALL\76691\structures\Noise Walls\SHEETS\76691ZP003.dgn 5/4/2010 10:49:24 AM mjennings

V:\1755\active\175530002\geotechnical\drawing\ODOTPlans\projects\ALL\76691\structures\Noise Walls\SHEETS\766912P004.dgn 5/4/2010 10:51:57 AM mjennings

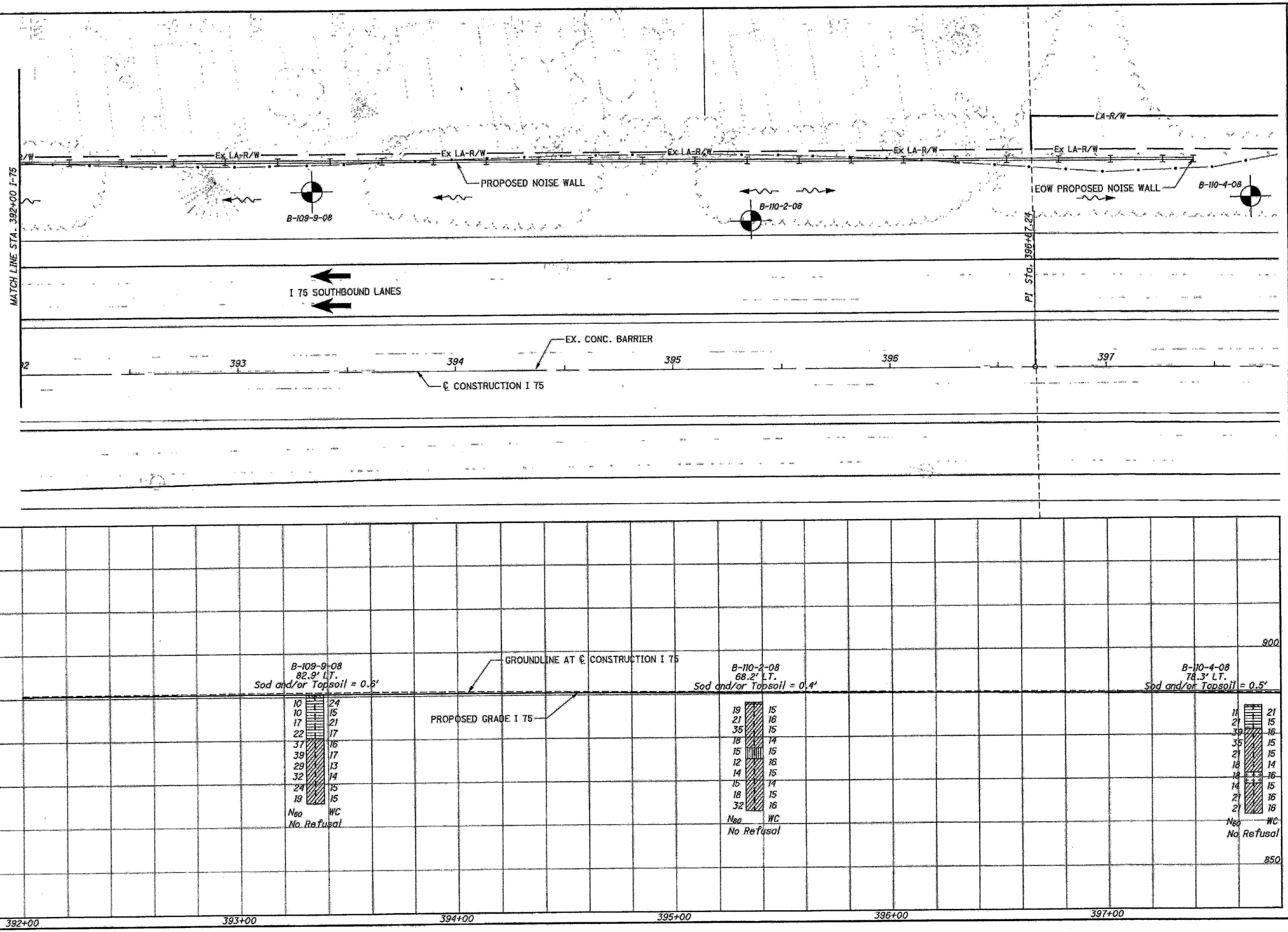

STRUCTURE FOUNDATION EXPLORATION
WEST NOISE WALL STA. 392+00 TO E.O.W.

ALL-75-0.21

5 / 26

108 / 157

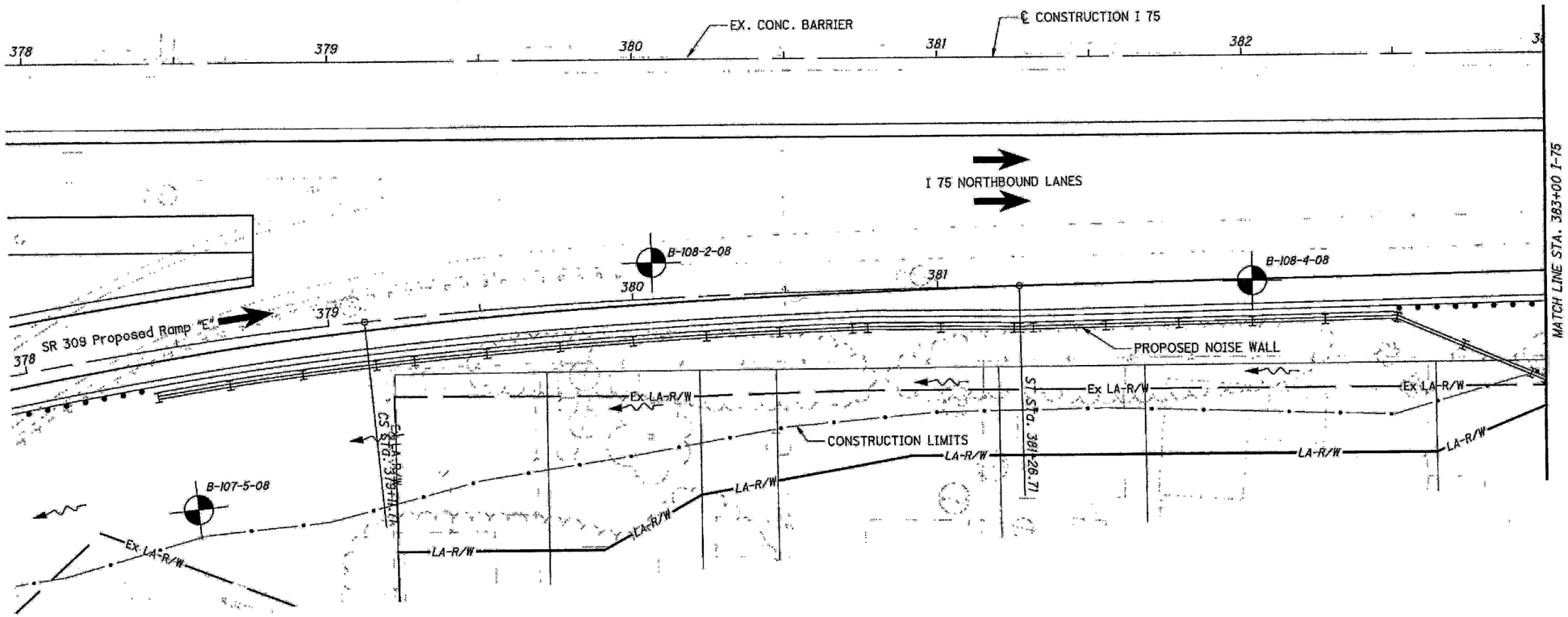

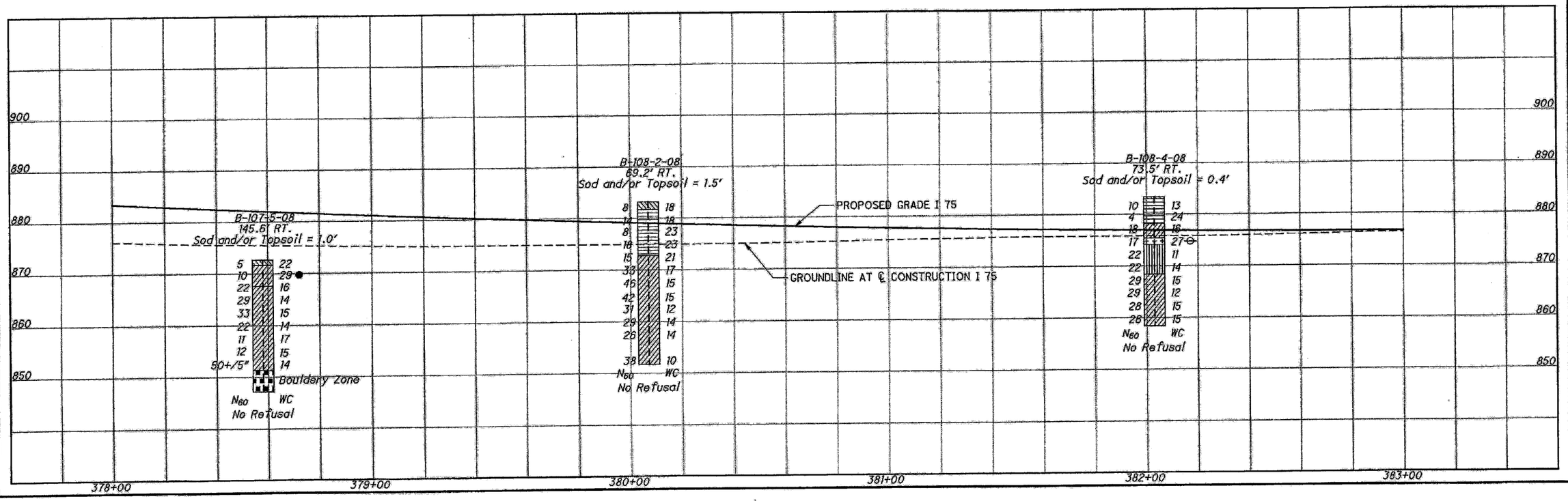

HORIZONTAL SCALE IN FEET

DRAWN MSJ
CHECKED RJK

STRUCTURE FOUNDATION EXPLORATION
EAST NOISE WALL STA. 378+44 TO 383+00

ALL-75-0.21

6 / 26

109 / 157

V:\1755\active\175530002\geotechnical\drawing\ODOTPlans\projects\ALL\76691\structures\Noise Walls\SHEETS\76691ZP005.dgn 5/4/2010 10:53:32 AM mjennings

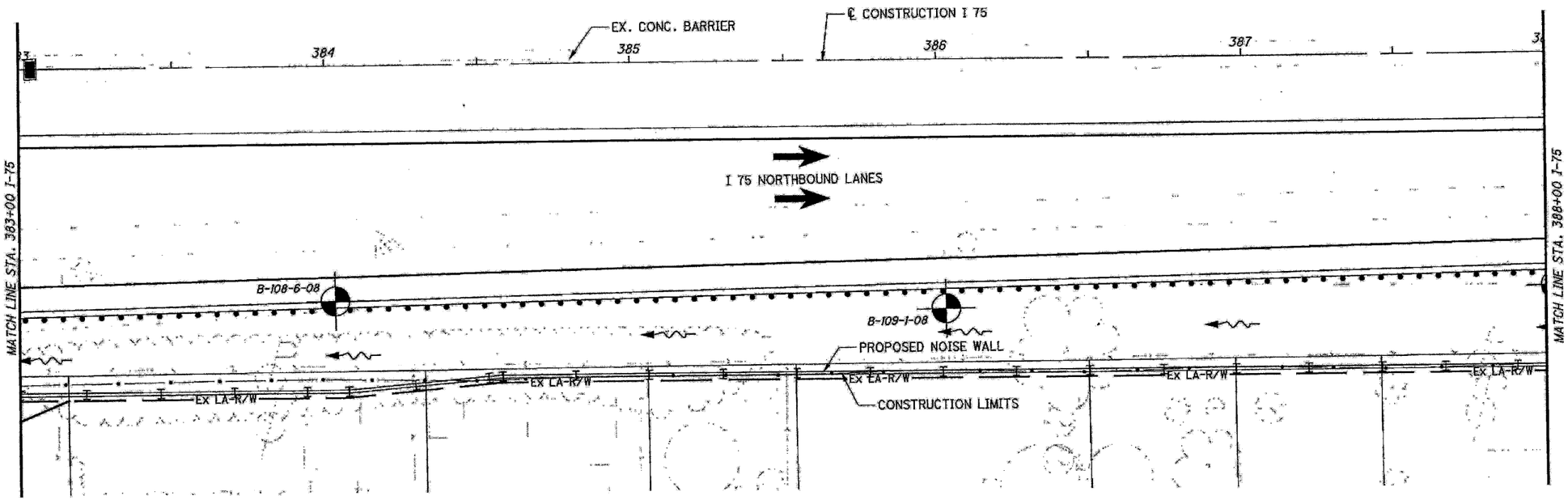

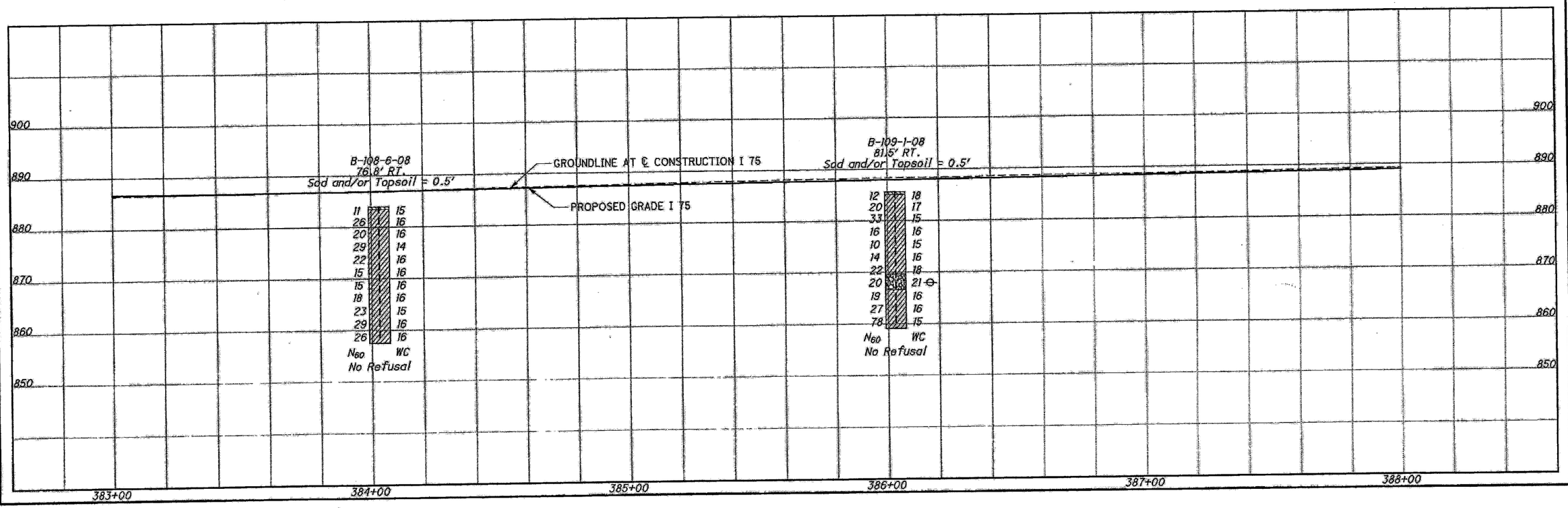

HORIZONTAL SCALE IN FEET
0 10 20 30
DRAWN MSJ
CHECKED RJK

STRUCTURE FOUNDATION EXPLORATION
EAST NOISE WALL STA. 383+00 TO 388+00

ALL-75-0.21

7 / 26

110 / 157

V:\1755\active\1755300002\geotechnical\drawing\ODOTPlans\projects\ALL\76691\structures\Noise Walls\SHEETS\766912P006.dgn 5/4/2010 10:54:42 AM mjennings

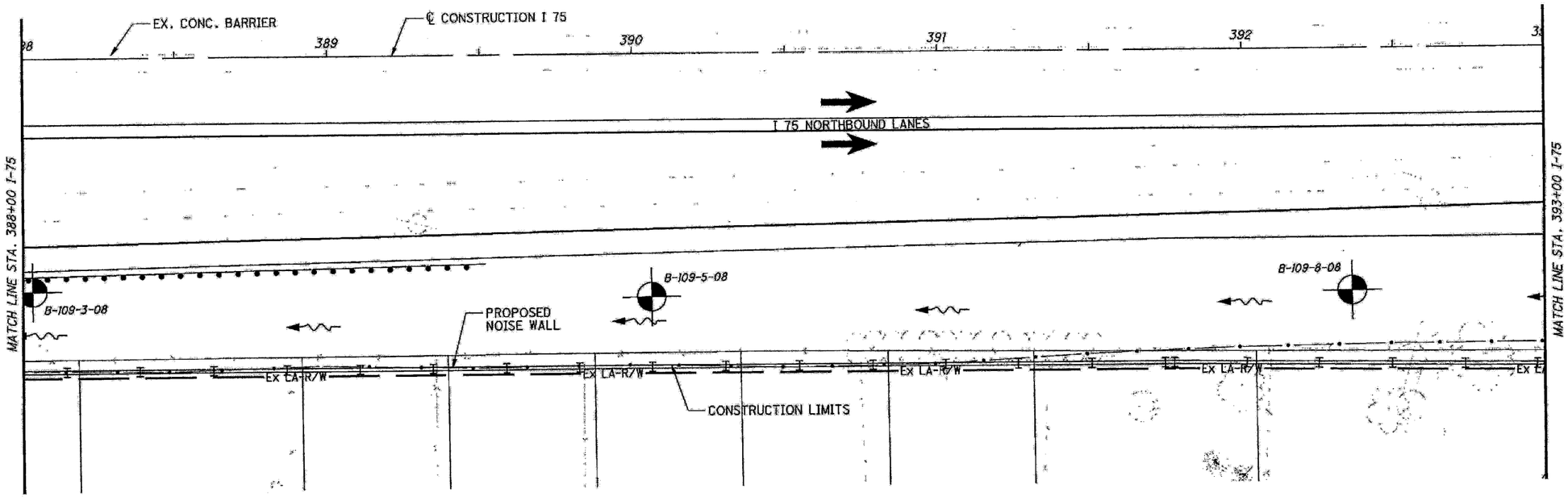

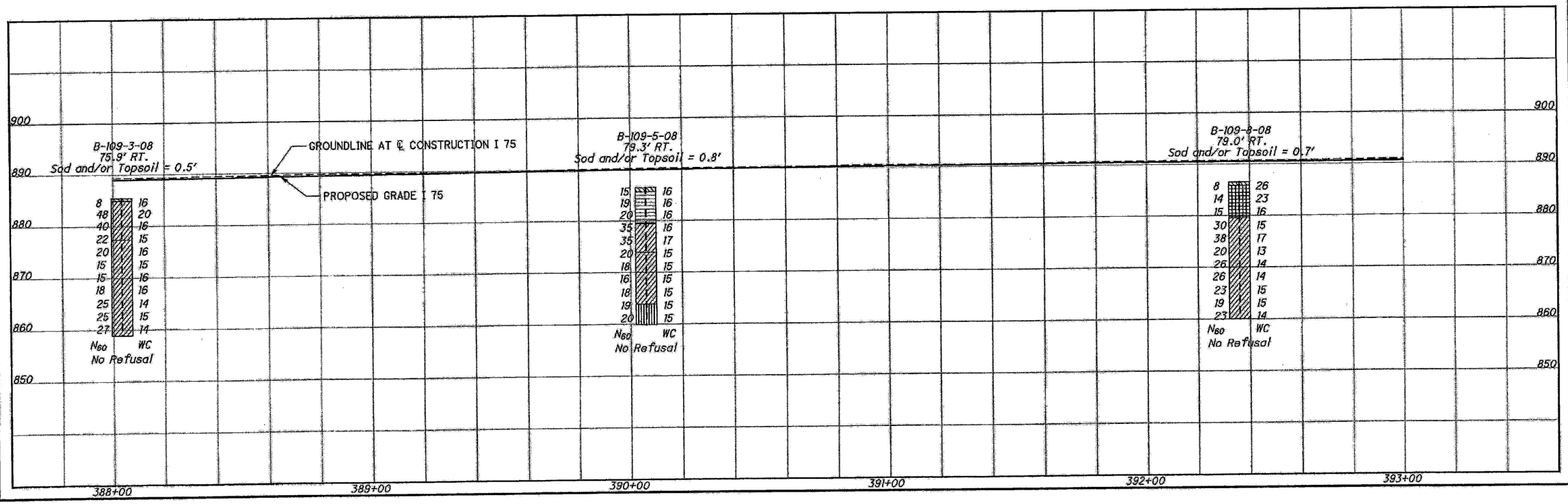

V:\1755\active\175530002\geotechnical\drawing\ODOTPlans\projects\ALL\76691\structures\Noise Walls\SHEETS\76691ZP007.dgn 5/4/2010 10:56:04 AM mjennings

HORIZONTAL SCALE IN FEET

DRAWN MSJ
CHECKED RJK

STRUCTURE FOUNDATION EXPLORATION
EAST NOISE WALL STA. 388+00 TO 393+00

ALL-75-0.21

8 / 26

111 / 157

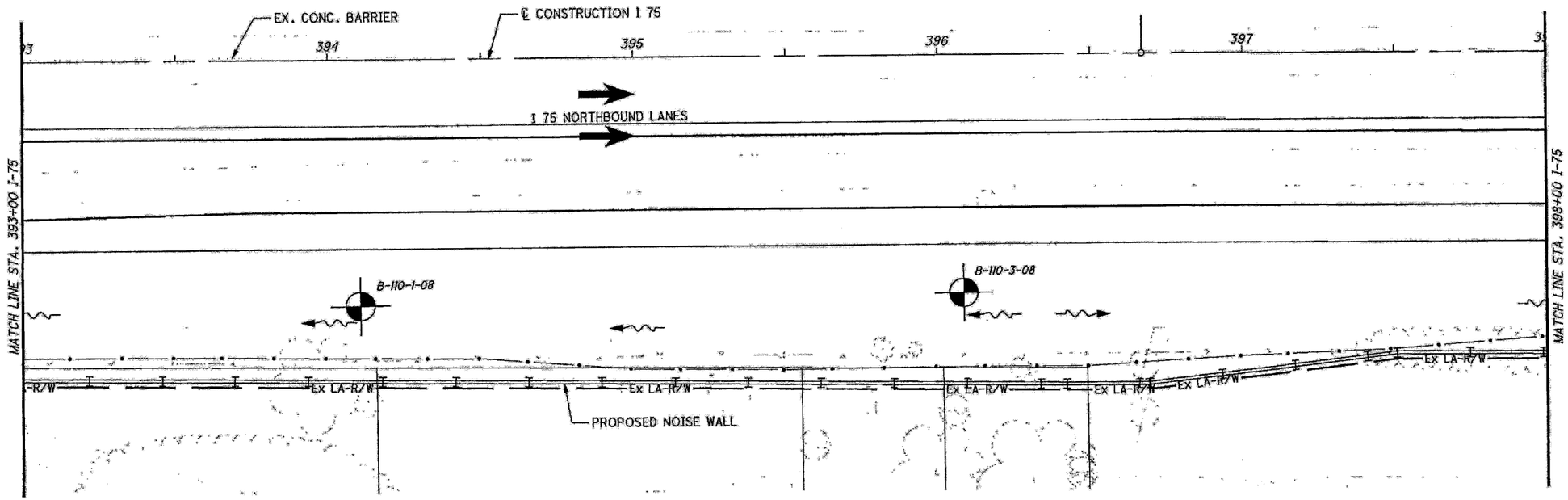

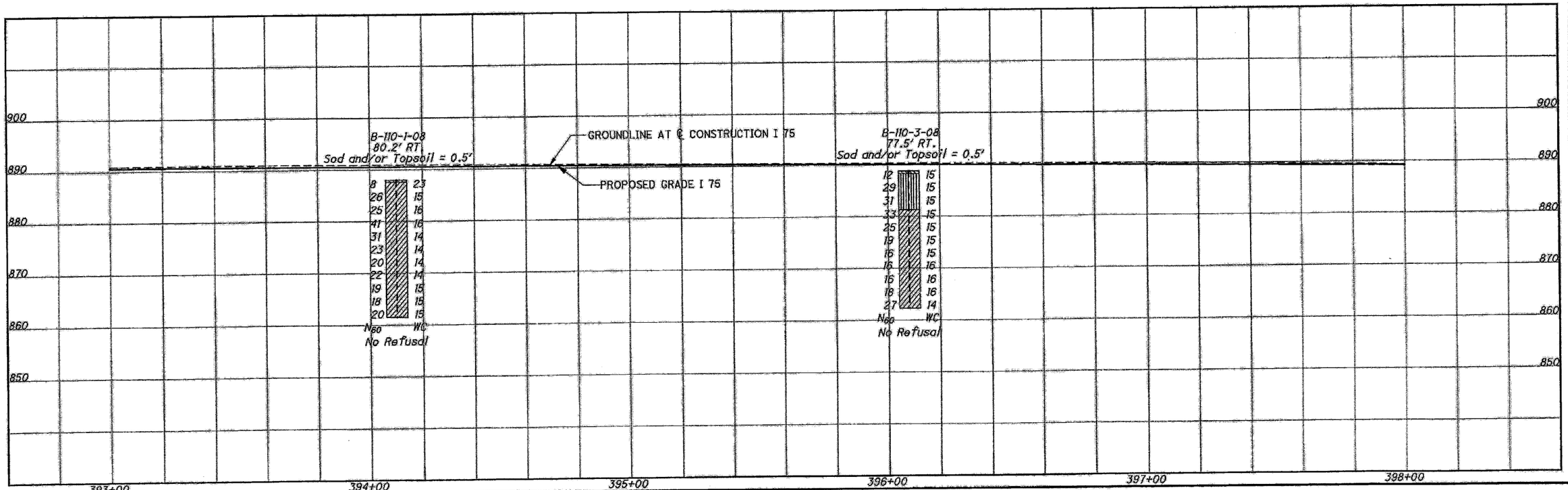

STRUCTURE FOUNDATION EXPLORATION
EAST NOISE WALL STA. 393+00 TO 398+00

ALL-75-0.21

9 / 26

112 / 157

DRAWN MSJ
CHECKED RJK

HORIZONTAL SCALE IN FEET
0 10 20 30

V:\1755\active\175530002\geotechnical\drawing\ODOTPlans\projects\ALL_76691\structures\Noise Walls\SHEETS\76691ZP008.dgn 5/4/2010 10:57:12 AM mjennings

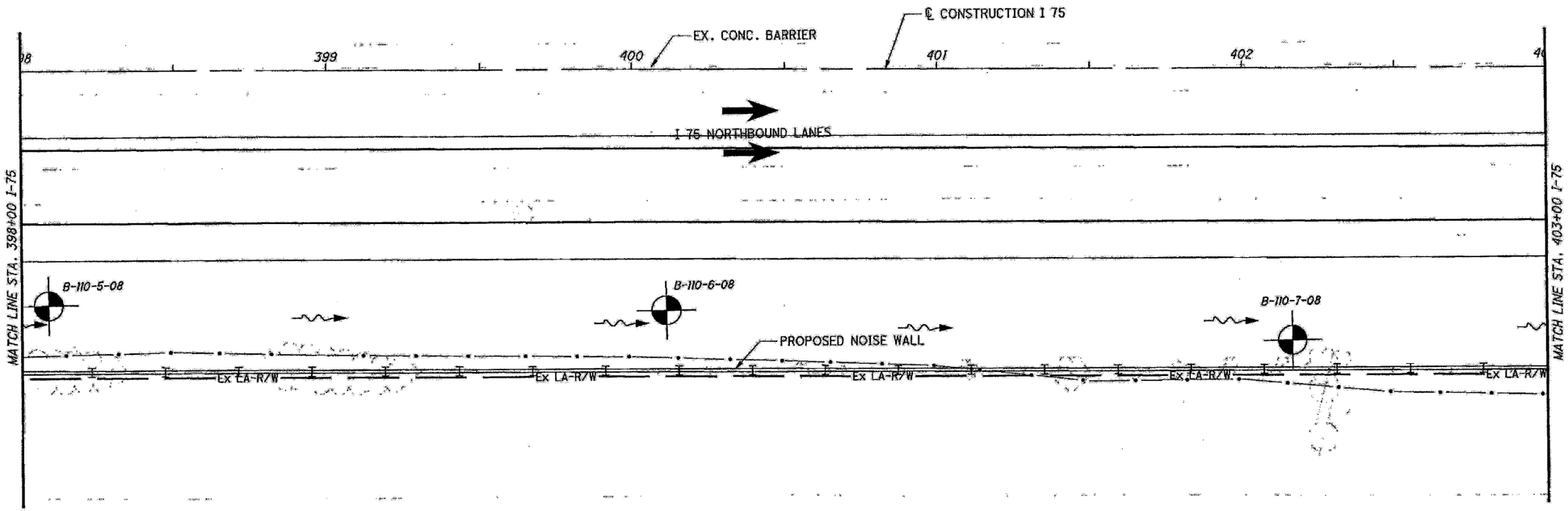

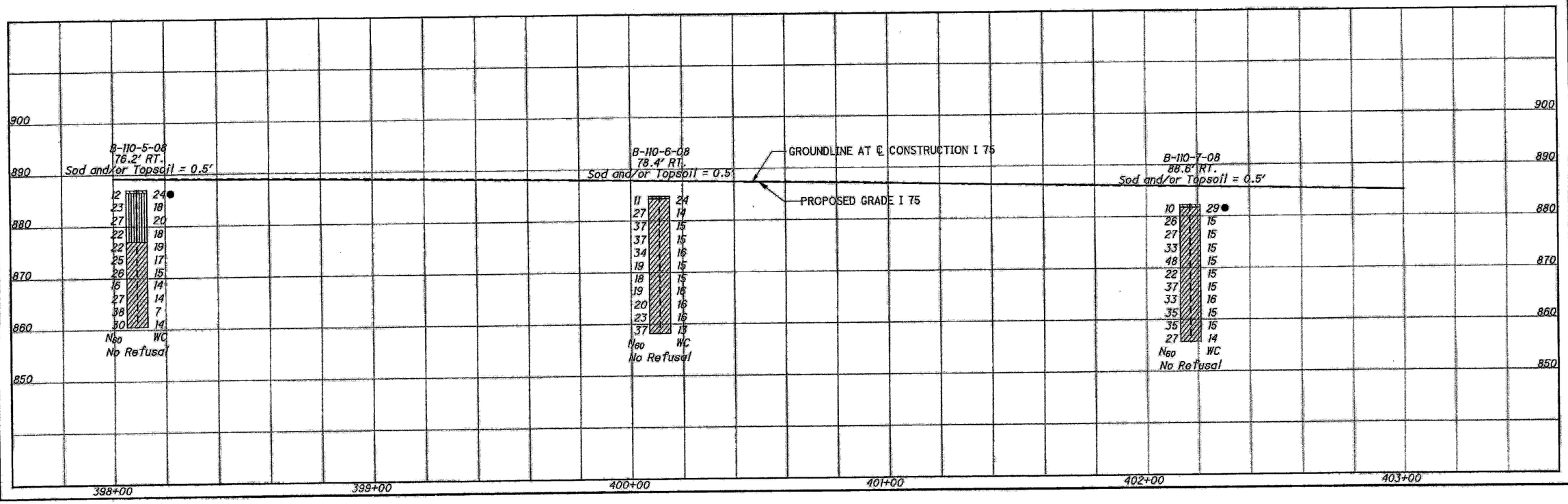

STRUCTURE FOUNDATION EXPLORATION
EAST NOISE WALL STA. 398+00 TO 403+00

ALL-75-0.21

10 / 26

113 / 157

DRAWN MSJ
CHECKED RJK

HORIZONTAL SCALE IN FEET

V:\1755\active\175530002\geotechnical\drawing\ODOTPlans\projects\ALL\76691\structures\Noise Walls\SHEETS\76691ZP009.dgn 5/4/2010 10:58:19 AM mjennings

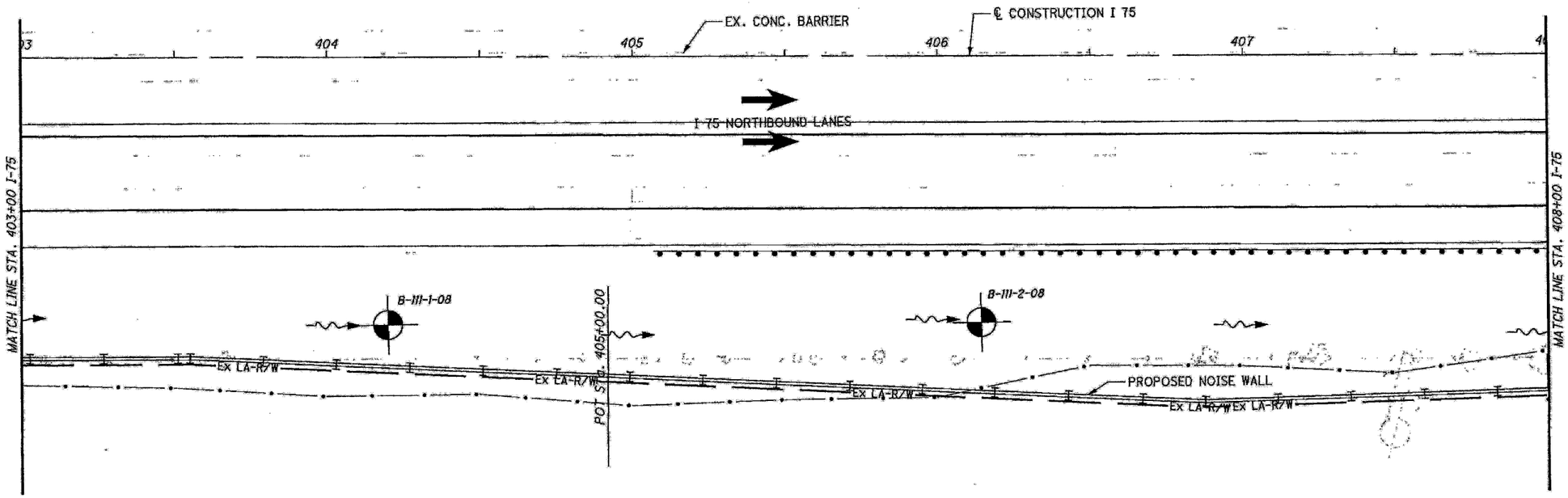

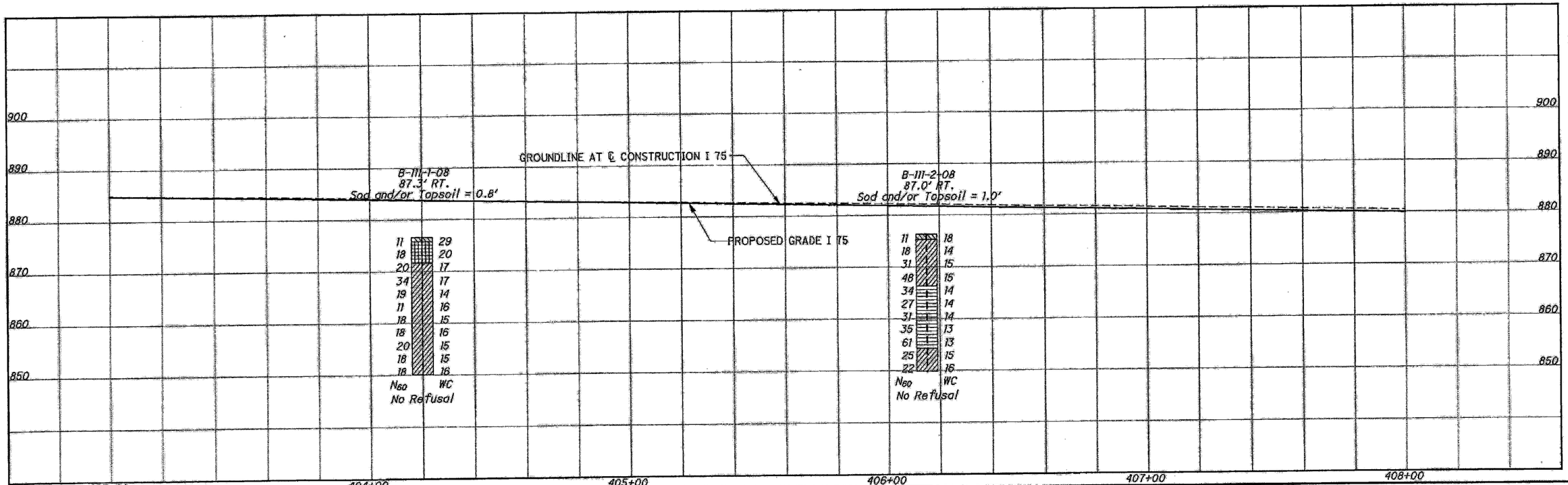

V:\1755\active\175530002\geotechnical\drawing\ODOTPlans\projects\ALL\76691\structures\Noise Walls\SHEETS\766912P010.dgn 5/4/2010 11:01:34 AM mjennings

N

HORIZONTAL SCALE IN FEET
0 10 20 40

DRAWN MSJ
CHECKED RJK

STRUCTURE FOUNDATION EXPLORATION
EAST NOISE WALL STA. 403+00 TO 408+00

ALL-75-0.21

11 / 26

114 / 157

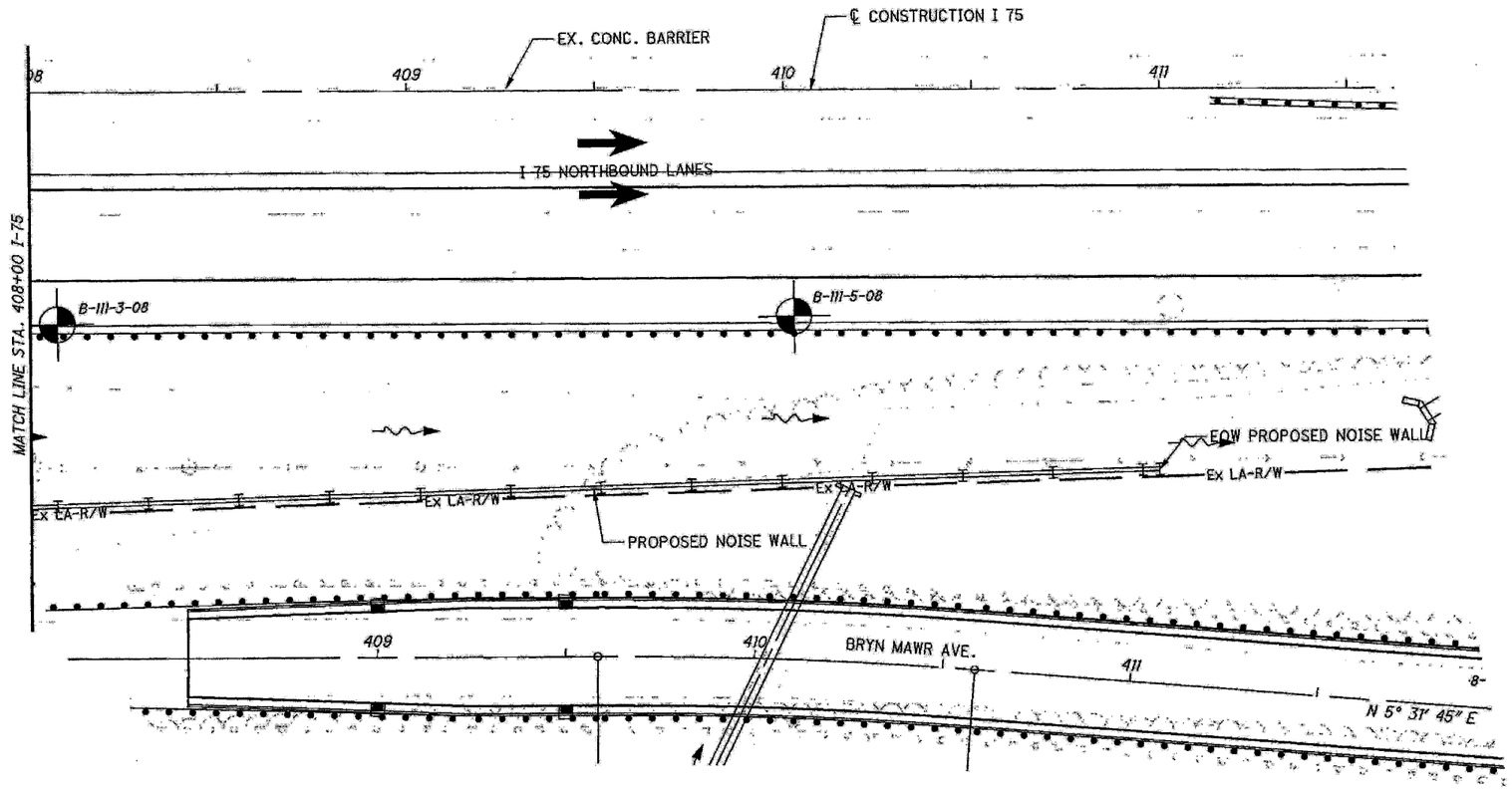

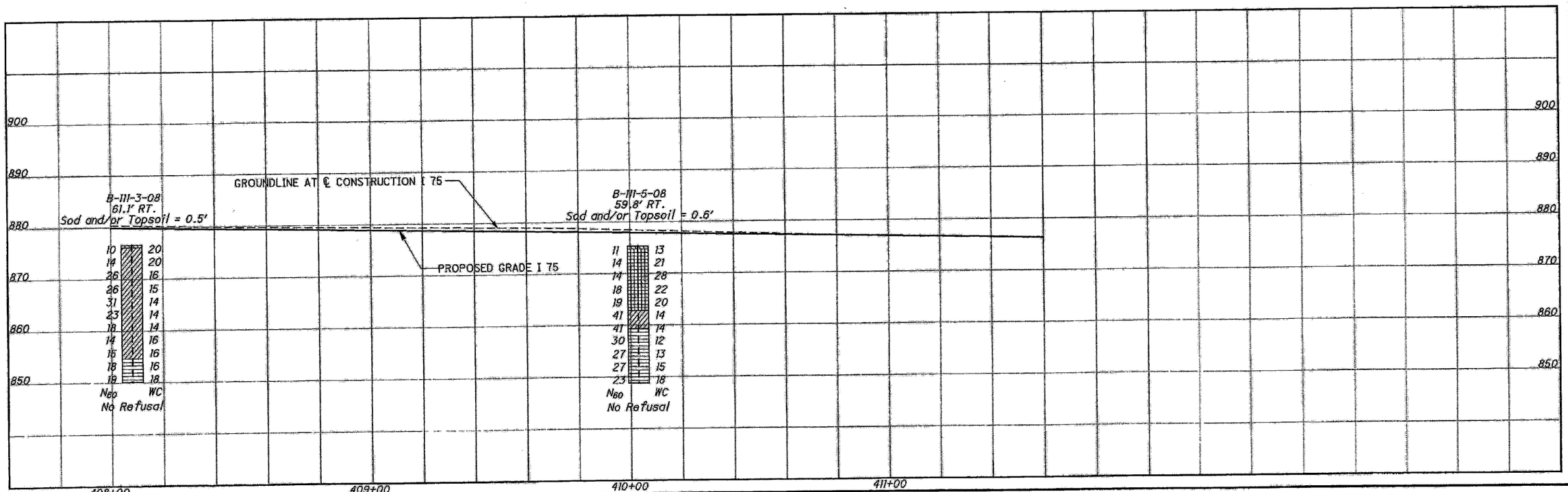

V:\1755\active\175530002\geotechnical\drawing\ODOTPlans\projects\ALL\76691\structures\Noise Walls\SHEETS\76691ZP011.dgn 5/4/2010 11:04:28 AM mjennings

HORIZONTAL SCALE IN FEET
0 10 20 50

DRAWN MSJ
CHECKED RJK

STRUCTURE FOUNDATION EXPLORATION
EAST NOISE WALL STA. 408+00 TO E.O.W.

ALL-75-0.21

12/26

115/157

PROJECT: ALL-75-0.21 | DRILLING FIRM / OPERATOR: STANTEC / M.M. | DRILL RIG: CME 45T | STATION / OFFSET: 377+53 92.5 LT | EXPLORATION ID B-107-4-08

TYPE: NOISE WALL | SAMPLING FIRM / LOGGER: STANTEC / J.M. | HAMMER: CME AUTOMATIC | ALIGNMENT: | PAGE 1 OF 1

PID: 76691 BR ID: | DRILLING METHOD: 3.25" HSA | CALIBRATION DATE: 2/24/10 | ELEVATION: 876.2 (MSL) EOB: 26.5 ft.

START: 1/28/10 END: 1/28/10 | SAMPLING METHOD: SPT | ENERGY RATIO (%): 81.9 | LAT / LONG: Not Recorded

MATERIAL DESCRIPTION AND NOTES	ELEV. 876.2	DEPTHS	SPT/RQD	N60	REC (%)	SAMPLE ID	HP (tsf)	GRADATION (%) GR	CS	FS	SI	CL	ATTERBERG LL	PL	PI	WC	ODOT CLASS (GI)	INST.
TOPSOIL	875.2		3 4 8	16	78	SS-1	-	-	-	-	-	-	-	-	-	17	A-6b (V)	
MEDIUM STIFF TO STIFF, BROWN, SILTY CLAY, TRACE GRAVEL, LITTLE SAND, MOIST		1																
		2																
		3	3 3 4	10	67	SS-2	-	-	-	-	-	-	-	-	-	21	A-6b (V)	
		4																
		5	4 4 4	11	78	SS-3	-	4	6	12	39	39	32	15	17	20	A-6b (11)	
		6																
		7																
		8	3 3 3	8	67	SS-4	-	-	-	-	-	-	-	-	-	19	A-6b (V)	
		9																
		10																
		11	2 3 3	7	61	SS-5	-	-	-	-	-	-	-	-	-	21	A-6b (V)	
		12																
		13	WOH 2 2	5	33	SS-6	-	-	-	-	-	-	-	-	-	24	A-6b (V)	
		14																
		15																
	860.2	16	1 1 2	-	58	SS-7A	-	-	-	-	-	-	-	-	-	23	A-6b (V)	
					67	SS-7B	-	-	-	-	-	-	-	-	-	17	A-1-b (V)	
LOOSE, BROWN, GRAVEL WITH SAND, WET (VISUAL)	858.7	17																
STIFF TO VERY STIFF, GRAY, SILT AND CLAY, TRACE GRAVEL, SOME SAND, DAMP TO MOIST		18	3 4 5	12	67	SS-8	-	-	-	-	-	-	-	-	-	17	A-6a (V)	
		19																
		20																
		21	5 6 7	18	100	SS-9	-	5	8	15	41	31	26	15	11	15	A-6a (8)	
		22																
		23	6 8 10	25	100	SS-10	-	-	-	-	-	-	-	-	-	11	A-6a (V)	
	851.2	24																
MEDIUM DENSE, GRAY, GRAVEL WITH SAND AND SILT, LITTLE CLAY, DAMP	849.7	25	7 8 9	23	78	SS-11	-	48	9	11	20	12	20	13	7	9	A-2-4 (0)	
	EOB	26																

NOTES: NONE

ABANDONMENT METHODS, MATERIALS, QUANTITIES: PLACED AUGER CUTTINGS

PROJECT: ALL-75-0.21 | DRILLING FIRM / OPERATOR: STANTEC / M.M. | DRILL RIG: CME 45T | STATION / OFFSET: 378+58 145.6 RT | EXPLORATION ID B-107-5-08

TYPE: NOISE WALL | SAMPLING FIRM / LOGGER: STANTEC / J.M. | HAMMER: CME AUTOMATIC | ALIGNMENT: | PAGE 1 OF 1

PID: 76691 BR ID: | DRILLING METHOD: 3.25" HSA | CALIBRATION DATE: 2/24/10 | ELEVATION: 872.7 (MSL) EOB: 25.5 ft.

START: 2/3/10 END: 2/3/10 | SAMPLING METHOD: SPT | ENERGY RATIO (%): 81.9 | LAT / LONG: Not Recorded

MATERIAL DESCRIPTION AND NOTES	ELEV. 872.7	DEPTHS	SPT/RQD	N60	REC (%)	SAMPLE ID	HP (tsf)	GRADATION (%) GR	CS	FS	SI	CL	ATTERBERG LL	PL	PI	WC	ODOT CLASS (GI)	INST.
TOPSOIL	871.7		2 2 2	5	56	SS-1	-	-	-	-	-	-	-	-	-	22	A-6a (V)	
MEDIUM STIFF TO STIFF, BROWN, SILT AND CLAY, AND SAND, MOIST TO WET		1																
		2																
		3	1 2 5	10	67	SS-2	-	0	7	51	18	24	29	17	12	29	A-6a (2)	
	867.7	4																
STIFF TO VERY STIFF, GRAY, SILT AND CLAY, TRACE TO LITTLE GRAVEL, LITTLE SAND, DAMP TO MOIST		5																
		6	3 7 9	22	100	SS-3	-	4	6	11	37	42	31	16	15	16	A-6a (10)	
		7																
		8	7 9 12	29	100	SS-4	-	4	5	11	39	41	28	16	12	14	A-6a (9)	
		9																
		10																
		11	7 10 14	33	100	SS-5	-	-	-	-	-	-	-	-	-	15	A-6a (V)	
		12																
		13	7 7 9	22	100	SS-6	-	-	-	-	-	-	-	-	-	14	A-6a (V)	
		14																
		15																
		16	3 3 5	11	100	SS-7	-	11	6	13	34	36	26	15	11	17	A-6a (7)	
		17																
		18	3 4 5	12	67	SS-8	-	-	-	-	-	-	-	-	-	15	A-6a (V)	
		19																
		20																
	851.4	21	7 50/5"	-	56	SS-9	-	-	-	-	-	-	-	-	-	14	A-6a (V)	
GRAY, BOULDERY ZONE, WITH SAND, SILT AND CLAY (VISUAL)		22					-	-	-	-	-	-	-	-	-	-		
		23			71	NQ-10												
		24																
	847.2	25																
	EOB																	

NOTES: NONE

ABANDONMENT METHODS, MATERIALS, QUANTITIES: PLACED AUGER CUTTINGS

PROJECT: ALL-75-0.21	DRILLING FIRM / OPERATOR: STANTEC / M.M.	DRILL RIG: CME 45T	STATION / OFFSET: 379+49 67.7 LT	EXPLORATION ID B-108-1-08
TYPE: NOISE WALL	SAMPLING FIRM / LOGGER: STANTEC / J.M.	HAMMER: CME AUTOMATIC	ALIGNMENT:	
PID: 76691 BR ID:	DRILLING METHOD: 3.25" HSA	CALIBRATION DATE: 2/24/10	ELEVATION: 880.8 (MSL) EOB: 26.5 ft.	PAGE 1 OF 1
START: 1/28/10 END: 1/28/10	SAMPLING METHOD: SPT	ENERGY RATIO (%): 81.9	LAT / LONG: Not Recorded	

MATERIAL DESCRIPTION AND NOTES	ELEV. 880.8	DEPTHS	SPT/RQD	N60	REC (%)	SAMPLE ID	HP (tsf)	GRADATION (%) GR	CS	FS	SI	CL	ATTERBERG LL	PL	PI	WC	ODOT CLASS (GI)	INST.
TOPSOIL	880.2																	
STIFF TO VERY STIFF, BROWN GRADING TO GRAY, SILT AND CLAY, TRACE GRAVEL, LITTLE TO SOME SAND, DAMP TO MOIST		1	4 5	12	67	SS-1	-	-	-	-	-	-	-	-	-	14	A-6a (V)	
		2																
		3	3 5	11	72	SS-2	-	-	-	-	-	-	-	-	-	17	A-6a (V)	
		4																
		5	10 11	29	100	SS-3	-	5	6	12	41	36	28	13	15	16	A-6a (10)	
		6																
		7																
		8	5 6	15	100	SS-4	-	-	-	-	-	-	-	-	-	15	A-6a (V)	
		9																
		10																
		11	3 7	14	89	SS-5	-	5	5	12	41	37	27	14	13	16	A-6a (9)	
		12																
		13	4 5	12	94	SS-6	-	-	-	-	-	-	-	-	-	15	A-6a (V)	
		14																
		15	6 8	19	89	SS-7	-	-	-	-	-	-	-	-	-	16	A-6a (V)	
		16																
		17																
		18	4 5	12	78	SS-8	-	-	-	-	-	-	-	-	-	17	A-6a (V)	
		19																
		20																
		21	4 6	14	89	SS-9	-	-	-	-	-	-	-	-	-	15	A-6a (V)	
		22																
		23	7 7	19	100	SS-10	-	8	15	11	26	40	28	16	12	15	A-6a (7)	
		24																
		25																
	854.3	26 EOB	5 7	16	89	SS-11	-	-	-	-	-	-	-	-	-	15	A-6a (V)	

NOTES: NONE

ABANDONMENT METHODS, MATERIALS, QUANTITIES: PLACED AUGER CUTTINGS

PROJECT: ALL-75-0.21	DRILLING FIRM / OPERATOR: STANTEC / M.M.	DRILL RIG: CME 45T	STATION / OFFSET: 380+07 69.2 RT	EXPLORATION ID B-108-2-08
TYPE: NOISE WALL	SAMPLING FIRM / LOGGER: STANTEC / K.B.	HAMMER: CME AUTOMATIC	ALIGNMENT:	
PID: 76691 BR ID:	DRILLING METHOD: 3.25" HSA	CALIBRATION DATE: 2/24/10	ELEVATION: 883.3 (MSL) EOB: 31.5 ft.	PAGE 1 OF 1
START: 2/24/10 END: 2/24/10	SAMPLING METHOD: SPT	ENERGY RATIO (%): 81.9	LAT / LONG: Not Recorded	

MATERIAL DESCRIPTION AND NOTES	ELEV. 883.3	DEPTHS	SPT/RQD	N60	REC (%)	SAMPLE ID	HP (tsf)	GRADATION (%) GR	CS	FS	SI	CL	ATTERBERG LL	PL	PI	WC	ODOT CLASS (GI)	INST.
TOPSOIL	881.8																	
MEDIUM STIFF TO STIFF, GRAY, SILTY CLAY, TRACE GRAVEL, SOME SAND, MOIST		1	2 4	8	56	SS-1	-	-	-	-	-	-	-	-	-	18	A-6b (V)	
		2.5	4 6	14	83	SS-2	-	-	-	-	-	-	-	-	-	18	A-6b (V)	
		5.0	3 3	8	83	SS-3	-	9	7	15	34	35	34	16	18	23	A-6b (10)	
@ 8' – very stiff		7.5	5 8	18	100	SS-4	-	-	-	-	-	-	-	-	-	23	A-6b (V)	
	872.8	10.0	5 6	15	100	SS-5	-	-	-	-	-	-	-	-	-	21	A-6a (V)	
VERY STIFF TO HARD BROWN GRADING TO GRAY, SILT AND CLAY, TRACE GRAVEL, LITTLE SAND, DAMP TO MOIST		12.5	10 14	33	100	SS-6	-	3	6	13	37	41	31	18	13	17	A-6a (9)	
		15.0	13 21	46	100	SS-7	-	7	7	12	36	38	31	17	14	15	A-6a (9)	
		17.5	13 18	42	100	SS-8	-	-	-	-	-	-	-	-	-	15	A-6a (V)	
		20.0	10 13	31	100	SS-9	-	-	-	-	-	-	-	-	-	12	A-6a (V)	
		22.5	8 13	29	100	SS-10	-	-	-	-	-	-	-	-	-	14	A-6a (V)	
		25.0	8 11	26	100	SS-11	-	6	6	11	36	41	28	15	13	14	A-6a (9)	
		27.5																
	851.8	30.0 EOB	8 20	38	100	SS-12	-	-	-	-	-	-	-	-	-	10	A-6a (V)	

NOTES: NONE

ABANDONMENT METHODS, MATERIALS, QUANTITIES: PLACED AUGER CUTTINGS

PROJECT: ALL-75-0.21	DRILLING FIRM / OPERATOR: STANTEC / M.M.	DRILL RIG: CME 45T	STATION / OFFSET: 381+46 70.1 LT	EXPLORATION ID B-108-3-08
TYPE: NOISE WALL	SAMPLING FIRM / LOGGER: STANTEC / J.M.	HAMMER: CME AUTOMATIC	ALIGNMENT:	
PID: 76691 BR ID:	DRILLING METHOD: 3.25" HSA	CALIBRATION DATE: 2/24/10	ELEVATION: 880.7 (MSL) EOB: 26.5 ft.	PAGE 1 OF 1
START: 1/27/10 END: 1/27/10	SAMPLING METHOD: SPT	ENERGY RATIO (%): 81.9	LAT / LONG: Not Recorded	

MATERIAL DESCRIPTION AND NOTES	ELEV. 880.7	DEPTHS	SPT/RQD	N60	REC (%)	SAMPLE ID	HP (tsf)	GRADATION (%) GR	CS	FS	SI	CL	ATTERBERG LL	PL	PI	WC	ODOT CLASS (GI)	INST.
TOPSOIL	880.2		3 4 4	11	67	SS-1	–	–	–	–	–	–	–	–	–	20	A-6b (V)	
STIFF TO VERY STIFF, BROWN, SILTY CLAY, TRACE GRAVEL, LITTLE SAND, MOIST @ 2.5' – hard		2.5	21 16 22	52	100	SS-2	–	2	4	13	39	42	36	20	16	22	A-6b (10)	
		5.0	5 4 9	18	100	SS-3	–	–	–	–	–	–	–	–	–	26	A-6b (V)	
	872.9	7.5	5 6 8	19	89	SS-4	–	–	–	–	–	–	–	–	–	14	A-4a (V)	
STIFF, GRAY, SANDY SILT, AND CLAY, TRACE GRAVEL, DAMP TO MOIST		10.0	5 6 9	20	72	SS-5	–	4	6	14	40	36	25	15	10	15	A-4a (8)	
	868.7	12.5	3 3 6	12	100	SS-6	–	–	–	–	–	–	–	–	–	15	A-6a (V)	
STIFF TO VERY STIFF, GRAY, SILT AND CLAY, TRACE GRAVEL, LITTLE SAND, DAMP TO MOIST		15.0	4 6 8	19	100	SS-7	–	3	5	14	57	21	27	16	11	15	A-6a (8)	
		17.5	6 7 9	22	22	SS-8	–	–	–	–	–	–	–	–	–	20	A-6a (V)	
	859.8	20.0	8 – 11 8	–	100	SS-9A	–	–	–	–	–	–	–	–	–	14	A-6a (V)	
MEDIUM DENSE, GRAY, GRAVEL WITH SAND, LITTLE SILT, TRACE CLAY, MOIST	858.7				100	SS-9B	–	35	36	12	11	6	NP	NP	NP	7	A-1-b (0)	
STIFF TO VERY STIFF, GRAY, SANDY SILT, LITTLE GRAVEL, SOME CLAY, MOIST		22.5	6 6 8	19	100	SS-10	–	–	–	–	–	–	–	–	–	16	A-4a (V)	
	854.2 EOB	25.0	4 5 5	14	100	SS-11	–	11	11	13	36	29	26	16	10	16	A-4a (6)	

NOTES: NONE

ABANDONMENT METHODS, MATERIALS, QUANTITIES: PLACED AUGER CUTTINGS

PROJECT: ALL-75-0.21	DRILLING FIRM / OPERATOR: MID-OHIO / P.T.	DRILL RIG: CME 550 ATV	STATION / OFFSET: 382+03 73.5 RT	EXPLORATION ID B-108-4-08
TYPE: NOISE WALL	SAMPLING FIRM / LOGGER: MID-OHIO / B.W.	HAMMER: CME AUTOMATIC	ALIGNMENT:	
PID: 76691 BR ID:	DRILLING METHOD: 3.25" HSA	CALIBRATION DATE: 10/10/08	ELEVATION: 883.4 (MSL) EOB: 25.0 ft.	PAGE 1 OF 1
START: 1/25/10 END: 1/25/10	SAMPLING METHOD: SPT	ENERGY RATIO (%): 83.1	LAT / LONG: Not Recorded	

MATERIAL DESCRIPTION AND NOTES	ELEV. 883.4	DEPTHS	SPT/RQD	N60	REC (%)	SAMPLE ID	HP (tsf)	GRADATION (%) GR	CS	FS	SI	CL	ATTERBERG LL	PL	PI	WC	ODOT CLASS (GI)	INST.
TOPSOIL	883.0		4 4 3	10	72	SS-1	–	10	9	16	36	29	37	18	19	13	A-6b (10)	
MEDIUM STIFF TO STIFF, BROWN AND GRAY, SILTY CLAY, LITTLE GRAVEL, SOME SAND, DAMP TO MOIST		2.5	1 1 2	4	44	SS-2	–	–	–	–	–	–	–	–	–	24	A-6b (V)	
	878.2	5.0																
VERY STIFF, MOTTLED BROWN AND GRAY, SILT AND CLAY, TRACE GRAVEL, LITTLE SAND, MOIST		7.5	3 6 7	18	89	SS-3	–	4	6	14	44	32	28	16	12	16	A-6a (9)	
	875.4																	
MEDIUM DENSE, BROWN, SILT, LITTLE SAND, TRACE CLAY, WET	873.9	10.0	1 4 5	–	100	SS-4A	–	0	1	14	77	8	NP	NP	NP	27	A-4b (8)	
					67	SS-4B	–	–	–	–	–	–	–	–	–	16	A-4a (V)	
DENSE, BROWN GRADING TO GRAY, SANDY SILT, TRACE GRAVEL, SOME CLAY, MOIST		12.5	5 6 10	22	100	SS-5	–	3	5	20	48	24	NP	NP	NP	11	A-4a (7)	
	868.4	15.0	5 7 9	22	100	SS-6	–	–	–	–	–	–	–	–	–	14	A-4a (V)	
VERY STIFF, GRAY, SILT AND CLAY, TRACE GRAVEL, LITTLE SAND, DAMP TO MOIST		17.5	5 8 13	29	100	SS-7	–	–	–	–	–	–	–	–	–	15	A-6a (V)	
		20.0	7 11 10	29	100	SS-8	–	–	–	–	–	–	–	–	–	12	A-6a (V)	
		22.5	6 8 12	28	100	SS-9	–	6	5	11	41	37	28	13	15	15	A-6a (10)	
	858.4 EOB	25.0	6 9 10	26	100	SS-10	–	–	–	–	–	–	–	–	–	15	A-6a (V)	

NOTES: NONE

ABANDONMENT METHODS, MATERIALS, QUANTITIES: PLACED AUGER CUTTINGS

PROJECT: ALL-75-0.21
TYPE: NOISE WALL
PID: 76691 BR ID:
START: 1/27/10 END: 1/27/10

DRILLING FIRM / OPERATOR: STANTEC / M.M.
SAMPLING FIRM / LOGGER: STANTEC / J.M.
DRILLING METHOD: 3.25" HSA
SAMPLING METHOD: SPT

DRILL RIG: CME 45T
HAMMER: CME AUTOMATIC
CALIBRATION DATE: 2/24/10
ENERGY RATIO (%): 81.9

STATION / OFFSET: 383+45 65.0 LT
ALIGNMENT:
ELEVATION: 882.8 (MSL) EOB: 26.5 ft.
LAT / LONG: Not Recorded

EXPLORATION ID B-108-5-08
PAGE 1 OF 1

MATERIAL DESCRIPTION AND NOTES	ELEV. 882.8	DEPTHS	SPT/RQD	N60	REC (%)	SAMPLE ID	HP (tsf)	GR	CS	FS	SI	CL	LL	PL	PI	WC	ODOT CLASS (GI)	INST.
TOPSOIL	881.9		5 7	16	94	SS-1	–	–	–	–	–	–	–	–	–	18	A-6a (V)	
VERY STIFF TO HARD, BROWN, SILT AND CLAY, TRACE GRAVEL, LITTLE SAND, DAMP TO MOIST		2.5	5 7	18	72	SS-2	–	–	–	–	–	–	–	–	–	18	A-6a (V)	
		5.0	7 17	37	100	SS-3	–	5	7	12	40	36	29	16	13	15	A-6a (9)	
	875.3	7.5	4 10	25	72	SS-4	–	2	6	11	44	37	NP	NP	NP	14	A-4a (8)	
MEDIUM DENSE, GRAY, SANDY SILT, AND CLAY, TRACE GRAVEL, MOIST	872.8	10.0	4 8	19	100	SS-5	–	4	6	12	41	37	28	11	17	14	A-6b (11)	
VERY STIFF, GRAY, SILTY CLAY, TRACE GRAVEL, LITTLE SAND, MOIST		12.5	4 8	19	100	SS-6	–	–	–	–	–	–	–	–	–	15	A-6b (V)	
	867.8	15.0	5 11	26	100	SS-7	–	3	6	13	43	35	25	14	11	14	A-6a (8)	
VERY STIFF, GRAY, SILT AND CLAY, TRACE GRAVEL, LITTLE SAND, DAMP TO MOIST		17.5	7 11	29	89	SS-8	–	–	–	–	–	–	–	–	–	14	A-6a (V)	
		20.0	6 11	25	100	SS-9	–	–	–	–	–	–	–	–	–	15	A-6a (V)	
		22.5	6 12	30	100	SS-10	–	–	–	–	–	–	–	–	–	13	A-6a (V)	
	856.3	EOB 25.0	6 11	27	100	SS-11	–	5	6	11	39	39	27	16	11	14	A-6a (8)	

NOTES: NONE
ABANDONMENT METHODS, MATERIALS, QUANTITIES: PLACED AUGER CUTTINGS

PROJECT: ALL-75-0.21
TYPE: NOISE WALL
PID: 76691 BR ID:
START: 1/27/10 END: 1/27/10

DRILLING FIRM / OPERATOR: STANTEC / M.M.
SAMPLING FIRM / LOGGER: STANTEC / J.M.
DRILLING METHOD: 3.25" HSA
SAMPLING METHOD: SPT

DRILL RIG: CME 45T
HAMMER: CME AUTOMATIC
CALIBRATION DATE: 2/24/10
ENERGY RATIO (%): 81.9

STATION / OFFSET: 384+03 76.8 RT
ALIGNMENT:
ELEVATION: 883.9 (MSL) EOB: 26.5 ft.
LAT / LONG: Not Recorded

EXPLORATION ID B-108-6-08
PAGE 1 OF 1

MATERIAL DESCRIPTION AND NOTES	ELEV. 883.9	DEPTHS	SPT/RQD	N60	REC (%)	SAMPLE ID	HP (tsf)	GR	CS	FS	SI	CL	LL	PL	PI	WC	ODOT CLASS (GI)	INST.
TOPSOIL	883.4		3 5	11	89	SS-1	–	–	–	–	–	–	–	–	–	15	A-6a (V)	
STIFF TO VERY STIFF, BROWN GRADING TO GRAY, SILT AND CLAY, TRACE GRAVEL, LITTLE TO SOME SAND, DAMP TO MOIST		2.5	10 10	25	78	SS-2	–	–	–	–	–	–	–	–	–	16	A-6a (V)	
		5.0	4 9	20	89	SS-3	–	4	8	13	40	35	29	17	12	16	A-6a (9)	
		7.5	8 12	29	100	SS-4	–	–	–	–	–	–	–	–	–	14	A-6a (V)	
		10.0	4 10	22	100	SS-5	–	–	–	–	–	–	–	–	–	16	A-6a (V)	
		12.5	3 7	15	100	SS-6	–	4	6	13	39	38	26	15	11	16	A-6a (8)	
		15.0	4 6	15	100	SS-7	–	–	–	–	–	–	–	–	–	16	A-6a (V)	
		17.5	5 8	18	72	SS-8	–	–	–	–	–	–	–	–	–	16	A-6a (V)	
		20.0	5 9	23	100	SS-9	–	–	–	–	–	–	–	–	–	15	A-6a (V)	
		22.5	7 13	29	100	SS-10	–	3	5	11	39	42	29	15	14	16	A-6a (10)	
	857.4	EOB 25.0	7 11	26	100	SS-11	–	–	–	–	–	–	–	–	–	16	A-6a (V)	

NOTES: NONE
ABANDONMENT METHODS, MATERIALS, QUANTITIES: PLACED AUGER CUTTINGS

STRUCTURE FOUNDATION EXPLORATION
NOISE BARRIER WALL

DRAWN M.S.J.
CHECKED R.J.K.

PROJECT: ALL-75-0.21	DRILLING FIRM / OPERATOR: STANTEC / M.M.	DRILL RIG: CME 45T	STATION / OFFSET: 385+27 91.5 LT	EXPLORATION ID B-108-7-08
TYPE: NOISE WALL	SAMPLING FIRM / LOGGER: STANTEC / J.M.	HAMMER: CME AUTOMATIC	ALIGNMENT:	
PID: 76691 BR ID:	DRILLING METHOD: 3.25" HSA	CALIBRATION DATE: 2/24/10	ELEVATION: 888.7 (MSL) EOB: 26.5 ft.	PAGE 1 OF 1
START: 1/27/10 END: 1/27/10	SAMPLING METHOD: SPT	ENERGY RATIO (%): 81.9	LAT / LONG: Not Recorded	

MATERIAL DESCRIPTION AND NOTES	ELEV. 888.7	DEPTHS	SPT/ RQD	N60	REC (%)	SAMPLE ID	HP (tsf)	GRADATION (%) GR	CS	FS	SI	CL	ATTERBERG LL	PL	PI	WC	ODOT CLASS (GI)	INST.
TOPSOIL	887.7		3 4 5	12	67	SS-1	–	–	–	–	–	–	–	–	–	20	A-6a (V)	
MEDIUM STIFF TO STIFF, BROWN, SILT AND CLAY, AND SAND, MOIST		2.5	4 2 3	7	100	SS-2	–	0	5	34	39	22	30	17	13	21	A-6a (6)	
		5.0	3 5 5	14	100	SS-3	–	–	–	–	–	–	–	–	–	18	A-6a (V)	
	881.2	7.5	6 8 17	34	100	SS-4	–	3	8	15	41	33	29	15	14	16	A-6a (9)	
HARD, BROWN, SILT AND CLAY, TRACE GRAVEL, SOME SAND, MOIST	878.2	10.0	8 9 10	26	100	SS-5	–	–	–	–	–	–	–	–	–	14	A-4a (V)	
VERY STIFF, GRAY, SANDY SILT, TRACE GRAVEL, SOME CLAY, DAMP		12.5	7 8 10	25	89	SS-6	–	5	6	13	43	33	25	15	10	14	A-4a (8)	
		15.0	8 8 10	25	89	SS-7	–	–	–	–	–	–	–	–	–	14	A-4a (V)	
	868.7	17.5	8 8 11	26	100	SS-8	–	–	–	–	–	–	–	–	–	14	A-4a (V)	
VERY STIFF, GRAY, SILT AND CLAY, TRACE GRAVEL, LITTLE SAND, MOIST		20.0	3 7 8	20	78	SS-9	–	–	–	–	–	–	–	–	–	15	A-6a (V)	
		22.5	5 6 10	22	100	SS-10	–	3	6	11	42	38	27	14	13	14	A-6a (9)	
	862.2 EOB	25.0	5 7 10	23	100	SS-11	–	–	–	–	–	–	–	–	–	15	A-6a (V)	

NOTES: NONE

ABANDONMENT METHODS, MATERIALS, QUANTITIES: PLACED AUGER CUTTINGS

PROJECT: ALL-75-0.21	DRILLING FIRM / OPERATOR: STANTEC / M.M.	DRILL RIG: CME 45T	STATION / OFFSET: 386+03 81.5 RT	EXPLORATION ID B-109-1-08
TYPE: NOISE WALL	SAMPLING FIRM / LOGGER: STANTEC / J.M.	HAMMER: CME AUTOMATIC	ALIGNMENT:	
PID: 76691 BR ID:	DRILLING METHOD: 3.25" HSA	CALIBRATION DATE: 2/24/10	ELEVATION: 885.6 (MSL) EOB: 26.5 ft.	PAGE 1 OF 1
START: 1/28/10 END: 1/28/10	SAMPLING METHOD: SPT	ENERGY RATIO (%): 81.9	LAT / LONG: Not Recorded	

MATERIAL DESCRIPTION AND NOTES	ELEV. 885.6	DEPTHS	SPT/ RQD	N60	REC (%)	SAMPLE ID	HP (tsf)	GRADATION (%) GR	CS	FS	SI	CL	ATTERBERG LL	PL	PI	WC	ODOT CLASS (GI)	INST.
TOPSOIL	885.1		2 3 6	12	67	SS-1	–	–	–	–	–	–	–	–	–	18	A-6a (V)	
VERY STIFF TO HARD, BROWN GRADING TO GRAY, SILT AND CLAY, TRACE GRAVEL, LITTLE SAND, DAMP TO MOIST		2.5	5 6 9	20	89	SS-2	–	4	6	12	41	37	32	17	15	17	A-6a (10)	
		5.0	8 12 12	33	100	SS-3	–	–	–	–	–	–	–	–	–	15	A-6a (V)	
		7.5	4 5 7	16	67	SS-4	–	–	–	–	–	–	–	–	–	16	A-6a (V)	
stiff from 10.0' to 14.0'		10.0	3 3 4	10	72	SS-5	–	4	6	13	42	35	25	12	13	15	A-6a (9)	
		12.5	4 4 6	14	100	SS-6	–	–	–	–	–	–	–	–	–	16	A-6a (V)	
	869.6	15.0	4 7 9	22	100	SS-7	–	–	–	–	–	–	–	–	–	18	A-6a (V)	
MEDIUM DENSE, GRAY, GRAVEL WITH SAND, TRACE SILT AND CLAY, WET	866.6	17.5	5 7 8	20	100	SS-8	–	8	65	21	5	1	NP	NP	NP	21	A-1-b (0)	
VERY STIFF TO HARD, GRAY, SILT AND CLAY, AND SAND, TRACE GRAVEL, MOIST		20.0	4 6 8	19	67	SS-9	–	–	–	–	–	–	–	–	–	16	A-6a (V)	
		22.5	5 9 11	27	100	SS-10	–	3	27	8	33	29	27	14	13	16	A-6a (7)	
	859.1 EOB	25.0	15 27 30	78	89	SS-11	–	–	–	–	–	–	–	–	–	15	A-6a (V)	

NOTES: NONE

ABANDONMENT METHODS, MATERIALS, QUANTITIES: PLACED AUGER CUTTINGS

PROJECT: ALL-75-0.21	DRILLING FIRM / OPERATOR: STANTEC / M.M.	DRILL RIG: CME 45T	STATION / OFFSET: 387+31 84.6 LT	EXPLORATION ID B-109-2-08
TYPE: NOISE WALL	SAMPLING FIRM / LOGGER: STANTEC / J.M.	HAMMER: CME AUTOMATIC	ALIGNMENT:	
PID: 76691 BR ID:	DRILLING METHOD: 3.25" HSA	CALIBRATION DATE: 2/24/10	ELEVATION: 889.7 (MSL) EOB: 26.5 ft.	PAGE 1 OF 1
START: 1/27/10 END: 1/27/10	SAMPLING METHOD: SPT	ENERGY RATIO (%): 81.9	LAT / LONG: Not Recorded	

MATERIAL DESCRIPTION AND NOTES	ELEV.	DEPTHS	SPT/ RQD	N60	REC (%)	SAMPLE ID	HP (tsf)	GRADATION (%) GR	CS	FS	SI	CL	ATTERBERG LL	PL	PI	WC	ODOT CLASS (GI)	INST.
TOPSOIL	889.2																	
VERY STIFF, BROWN, SANDY SILT, TRACE GRAVEL, SOME CLAY, DAMP		2.5	4 6 9	20	78	SS-1	–	–	–	–	–	–	–	–	–	16	A-4a (V)	
		5.0	8 9 11	27	100	SS-2	–	6	26	10	31	27	26	17	9	15	A-4a (5)	
	882.5	7.5	9 9 11	27	100	SS-3	–	–	–	–	–	–	–	–	–	16	A-4a (V)	
STIFF TO VERY STIFF, GRAY, SILT AND CLAY, TRACE GRAVEL, SOME SAND, MOIST		10.0	4 6 6	16	100	SS-4	–	–	–	–	–	–	–	–	–	16	A-6a (V)	
		12.5	3 4 5	12	100	SS-5	–	9	20	9	34	28	27	12	15	16	A-6a (7)	
	874.7	15.0	5 5 7	16	100	SS-6	–	–	–	–	–	–	–	–	–	14	A-6a (V)	
VERY STIFF, GRAY, SILT, LITTLE SAND, SOME CLAY, MOIST	872.7		5 7 8	20	100	SS-7	–	0	4	11	60	25	23	15	8	16	A-4b (8)	
STIFF TO VERY STIFF, GRAY, SILT AND CLAY, TRACE GRAVEL, SOME SAND, MOIST		17.5	4 5 7	16	100	SS-8	–	–	–	–	–	–	–	–	–	16	A-6a (V)	
		20.0	4 5 8	18	100	SS-9	–	–	–	–	–	–	–	–	–	15	A-6a (V)	
		22.5	5 5 5	14	100	SS-10	–	4	22	8	35	31	27	15	12	15	A-6a (7)	
	863.2 EOB	25.0	3 5 7	16	100	SS-11	–	–	–	–	–	–	–	–	–	15	A-6a (V)	

NOTES: NONE

ABANDONMENT METHODS, MATERIALS, QUANTITIES: PLACED AUGER CUTTINGS

PROJECT: ALL-75-0.21	DRILLING FIRM / OPERATOR: STANTEC / M.M.	DRILL RIG: CME 45T	STATION / OFFSET: 388+03 75.9 RT	EXPLORATION ID B-109-3-08
TYPE: NOISE WALL	SAMPLING FIRM / LOGGER: STANTEC / J.M.	HAMMER: CME AUTOMATIC	ALIGNMENT:	
PID: 76691 BR ID:	DRILLING METHOD: 3.25" HSA	CALIBRATION DATE: 2/24/10	ELEVATION: 885.4 (MSL) EOB: 26.5 ft.	PAGE 1 OF 1
START: 1/29/10 END: 1/29/10	SAMPLING METHOD: SPT	ENERGY RATIO (%): 81.9	LAT / LONG: Not Recorded	

MATERIAL DESCRIPTION AND NOTES	ELEV.	DEPTHS	SPT/ RQD	N60	REC (%)	SAMPLE ID	HP (tsf)	GRADATION (%) GR	CS	FS	SI	CL	ATTERBERG LL	PL	PI	WC	ODOT CLASS (GI)	INST.
TOPSOIL	885.4 884.9																	
HARD, BROWN, SILT AND CLAY, TRACE GRAVEL, SOME SAND, MOIST			3 3	8	67	SS-1	–	–	–	–	–	–	–	–	–	16	A-6a (V)	
		2.5	14 23 12	48	67	SS-2	–	2	13	11	39	35	30	15	15	20	A-6a (10)	
		5.0	6 13 16	40	100	SS-3	–	–	–	–	–	–	–	–	–	16	A-6a (V)	
	877.4	7.5	4 7 9	22	78	SS-4	–	–	–	–	–	–	–	–	–	15	A-6a (V)	
STIFF TO VERY STIFF, GRAY, SILT AND CLAY, TRACE GRAVEL, LITTLE TO SOME SAND, DAMP TO MOIST		10.0	4 7 8	20	100	SS-5	–	4	6	11	38	41	27	12	15	16	A-6a (10)	
		12.5	4 5 6	15	78	SS-6	–	–	–	–	–	–	–	–	–	15	A-6a (V)	
		15.0	4 4 7	15	100	SS-7	–	–	–	–	–	–	–	–	–	16	A-6a (V)	
		17.5	3 5 8	18	61	SS-8	–	–	–	–	–	–	–	–	–	16	A-6a (V)	
		20.0	6 7 11	25	100	SS-9	–	3	5	11	43	38	26	15	11	14	A-6a (8)	
		22.5	5 9 9	25	100	SS-10	–	–	–	–	–	–	–	–	–	15	A-6a (V)	
	858.9 EOB	25.0	8 10 10	27	100	SS-11	–	3	25	9	34	29	25	13	12	14	A-6a (6)	

NOTES: NONE

ABANDONMENT METHODS, MATERIALS, QUANTITIES: PLACED AUGER CUTTINGS

PROJECT: ALL-75-0.21	DRILLING FIRM / OPERATOR: MID-OHIO / P.T.	DRILL RIG: CME 550 ATV	STATION / OFFSET: 388+67 85.2 LT	EXPLORATION ID B-109-4-08
TYPE: NOISE WALL	SAMPLING FIRM / LOGGER: MID-OHIO / B.W.	HAMMER: CME AUTOMATIC	ALIGNMENT:	
PID: 76691 BR ID:	DRILLING METHOD: 3.25" HSA	CALIBRATION DATE: 10/10/08	ELEVATION: 889.3 (MSL) EOB: 25.0 ft.	PAGE 1 OF 1
START: 1/26/10 END: 1/26/10	SAMPLING METHOD: SPT	ENERGY RATIO (%): 83.1	LAT / LONG: Not Recorded	

MATERIAL DESCRIPTION AND NOTES	ELEV. 889.3	DEPTHS	SPT/RQD	N60	REC (%)	SAMPLE ID	HP (tsf)	GRADATION (%) GR	CS	FS	SI	CL	ATTERBERG LL	PL	PI	WC	ODOT CLASS (GI)	INST.
TOPSOIL	888.7																	
STIFF, MOTTLED BROWN AND GRAY, CLAY, AND SILT, SOME SAND, MOIST	883.8	2.5	4 4	11	94	SS-1	–	0	1	25	41	33	43	14	29	24	A-7-6 (16)	
		5.0	6 5	15	94	SS-2	–	–	–	–	–	–	–	–	–	16	A-7-6 (V)	
VERY STIFF TO HARD, BROWN GRADING TO GRAY, SILT AND CLAY, TRACE GRAVEL, SOME SAND, DAMP TO MOIST		7.5	10 13	32	100	SS-3	–	7	8	13	38	34	29	14	15	14	A-6a (9)	
		10.0	8 12	28	89	SS-4	–	–	–	–	–	–	–	–	–	13	A-6a (V)	
		12.5	8 9	24	100	SS-5	–	7	6	12	42	33	27	15	12	14	A-6a (9)	
stiff from 14' to 18'		15.0	4 5	12	100	SS-6	–	–	–	–	–	–	–	–	–	16	A-6a (V)	
	871.3	17.5	4 5	12	100	SS-7	–	–	–	–	–	–	–	–	–	16	A-6a (V)	
STIFF, GRAY, SILTY CLAY, TRACE GRAVEL, LITTLE SAND, MOIST		20.0	3 4	10	100	SS-8	–	4	7	10	42	37	28	12	16	17	A-6b (10)	
		22.5	3 6	12	100	SS-9	–	–	–	–	–	–	–	–	–	15	A-6b (V)	
	864.3 EOB	25.0	4 5	12	100	SS-10	–	–	–	–	–	–	–	–	–	16	A-6b (V)	

NOTES: NONE

ABANDONMENT METHODS, MATERIALS, QUANTITIES: PLACED AUGER CUTTINGS

PROJECT: ALL-75-0.21	DRILLING FIRM / OPERATOR: STANTEC / M.M.	DRILL RIG: CME 45T	STATION / OFFSET: 390+06 79.3 RT	EXPLORATION ID B-109-5-08
TYPE: NOISE WALL	SAMPLING FIRM / LOGGER: STANTEC / J.M.	HAMMER: CME AUTOMATIC	ALIGNMENT:	
PID: 76691 BR ID:	DRILLING METHOD: 3.25" HSA	CALIBRATION DATE: 2/24/10	ELEVATION: 886.2 (MSL) EOB: 26.5 ft.	PAGE 1 OF 1
START: 1/29/10 END: 1/29/10	SAMPLING METHOD: SPT	ENERGY RATIO (%): 81.9	LAT / LONG: Not Recorded	

MATERIAL DESCRIPTION AND NOTES	ELEV. 886.2	DEPTHS	SPT/RQD	N60	REC (%)	SAMPLE ID	HP (tsf)	GRADATION (%) GR	CS	FS	SI	CL	ATTERBERG LL	PL	PI	WC	ODOT CLASS (GI)	INST.
TOPSOIL	885.4																	
VERY STIFF, MOTTLED BROWN AND GRAY, SILTY CLAY, TRACE GRAVEL, SOME SAND, MOIST	879.2	2.5	WOH 5 6	15	100	SS-1	–	–	–	–	–	–	–	–	–	16	A-6b (V)	
		5.0	5 6 8	19	89	SS-2	–	2	6	15	41	36	30	14	16	16	A-6b (10)	
		7.5	4 6 9	20	94	SS-3	–	–	–	–	–	–	–	–	–	16	A-6b (V)	
HARD, BROWN WITH SOME GRAY, SILT AND CLAY, TRACE GRAVEL, SOME SAND, DAMP	873.7	10.0	7 9 17	35	100	SS-4	–	3	7	13	42	35	30	18	12	16	A-6a (9)	
		12.5	11 11 15	35	11	SS-5	–	–	–	–	–	–	–	–	–	17	A-6a (V)	
VERY STIFF, GRAY, SILT AND CLAY, TRACE GRAVEL, LITTLE SAND, DAMP TO MOIST	863.7	15.0	6 7 8	20	67	SS-6	–	–	–	–	–	–	–	–	–	15	A-6a (V)	
		17.5	5 6 7	18	89	SS-7	–	6	6	11	39	38	27	15	12	15	A-6a (9)	
		20.0	4 4 8	16	100	SS-8	–	–	–	–	–	–	–	–	–	15	A-6a (V)	
		22.5	4 5 8	18	100	SS-9	–	–	–	–	–	–	–	–	–	15	A-6a (V)	
VERY STIFF, GRAY, SANDY SILT, AND CLAY, TRACE GRAVEL, DAMP	859.7 EOB	25.0	4 6 8	19	100	SS-10	–	3	5	11	43	38	25	16	9	15	A-4a (8)	
			6 6 9	20	100	SS-11	–	–	–	–	–	–	–	–	–	15	A-4a (V)	

NOTES: NONE

ABANDONMENT METHODS, MATERIALS, QUANTITIES: PLACED AUGER CUTTINGS

PROJECT: ALL-75-0.21	DRILLING FIRM / OPERATOR: MID-OHIO / P.T.	DRILL RIG: CME 550 ATV	STATION / OFFSET: 390+97 89.9 LT	EXPLORATION ID B-109-6-08
TYPE: NOISE WALL	SAMPLING FIRM / LOGGER: MID-OHIO / B.W.	HAMMER: CME AUTOMATIC	ALIGNMENT:	
PID: 76691 BR ID:	DRILLING METHOD: 3.25" HSA	CALIBRATION DATE: 10/10/08	ELEVATION: 890.1 (MSL) EOB: 25.0 ft.	PAGE 1 OF 1
START: 1/26/10 END: 1/26/10	SAMPLING METHOD: SPT	ENERGY RATIO (%): 83.1	LAT / LONG: Not Recorded	

MATERIAL DESCRIPTION AND NOTES	ELEV. 890.1	DEPTHS	SPT/RQD	N60	REC (%)	SAMPLE ID	HP (tsf)	GRADATION (%) GR	CS	FS	SI	CL	ATTERBERG LL	PL	PI	WC	ODOT CLASS (GI)	INST.
TOPSOIL	889.3																	
STIFF TO VERY STIFF, MOTTLED BROWN AND GRAY, SILT, TRACE GRAVEL, LITTLE SAND, SOME CLAY, DAMP medium stiff from 1.0' to 2.5'			3 2 4	8	78	SS-1	–	–	–	–	–	–	–	–	–	23	A-4b (V)	
		2.5	4 6 10	22	100	SS-2	–	–	–	–	–	–	–	–	–	14	A-4b (V)	
		5.0	5 4 7	15	100	SS-3	–	5	5	11	53	26	26	16	10	13	A-4b (8)	
		7.5	4 8 11	26	100	SS-4	–	3	4	15	58	20	NP	NP	NP	19	A-4b (8)	
	879.6	10.0																
VERY STIFF TO HARD, GRAY, SILT AND CLAY, TRACE GRAVEL, LITTLE SAND, DAMP TO MOIST			7 11 12	32	100	SS-5	–	–	–	–	–	–	–	–	–	13	A-6a (V)	
		12.5	6 9 11	28	100	SS-6	–	4	7	12	44	33	25	14	11	14	A-6a (8)	
		15.0	5 7 10	24	100	SS-7	–	–	–	–	–	–	–	–	–	15	A-6a (V)	
		17.5	3 5 8	18	100	SS-8	–	–	–	–	–	–	–	–	–	15	A-6a (V)	
		20.0	4 5 8	18	100	SS-9	–	–	–	–	–	–	–	–	–	16	A-6a (V)	
	865.1	22.5																
	EOB	25.0	4 5 9	19	100	SS-10	–	5	5	11	40	39	28	15	13	15	A-6a (9)	

NOTES: NONE

ABANDONMENT METHODS, MATERIALS, QUANTITIES: PLACED AUGER CUTTINGS

PROJECT: ALL-75-0.21	DRILLING FIRM / OPERATOR: STANTEC / M.M.	DRILL RIG: CME 45T	STATION / OFFSET: 392+36 79.0 RT	EXPLORATION ID B-109-8-08
TYPE: NOISE WALL	SAMPLING FIRM / LOGGER: STANTEC / J.M.	HAMMER: CME AUTOMATIC	ALIGNMENT:	
PID: 76691 BR ID:	DRILLING METHOD: 3.25" HSA	CALIBRATION DATE: 2/24/10	ELEVATION: 886.5 (MSL) EOB: 26.5 ft.	PAGE 1 OF 1
START: 2/3/10 END: 2/3/10	SAMPLING METHOD: SPT	ENERGY RATIO (%): 81.9	LAT / LONG: Not Recorded	

MATERIAL DESCRIPTION AND NOTES	ELEV. 886.5	DEPTHS	SPT/RQD	N60	REC (%)	SAMPLE ID	HP (tsf)	GRADATION (%) GR	CS	FS	SI	CL	ATTERBERG LL	PL	PI	WC	ODOT CLASS (GI)	INST.
TOPSOIL	885.8																	
MEDIUM STIFF TO STIFF, BROWN, CLAY, AND SILT, TRACE GRAVEL, LITTLE SAND, DAMP TO MOIST			3 3	8	67	SS-1	–	–	–	–	–	–	–	–	–	26	A-7-6 (V)	
		2.5	4 3 7	14	78	SS-2	–	1	3	12	40	44	42	18	24	23	A-7-6 (14)	
		5.0	4 5 6	15	94	SS-3	–	–	–	–	–	–	–	–	–	16	A-7-6 (V)	
	879.5	7.5																
VERY STIFF TO HARD, BROWN GRADING TO GRAY, SILT AND CLAY, TRACE GRAVEL, LITTLE SAND, DAMP TO MOIST			6 7 15	30	100	SS-4	–	3	7	13	38	39	30	17	13	15	A-6a (9)	
		10.0	13 13 15	38	78	SS-5	–	–	–	–	–	–	–	–	–	17	A-6a (V)	
		12.5	6 6 9	20	100	SS-6	–	–	–	–	–	–	–	–	–	13	A-6a (V)	
		15.0	6 8 11	26	89	SS-7	–	5	6	13	38	38	26	14	12	14	A-6a (9)	
		17.5	7 8 11	26	100	SS-8	–	–	–	–	–	–	–	–	–	14	A-6a (V)	
		20.0	5 7 10	23	100	SS-9	–	–	–	–	–	–	–	–	–	15	A-6a (V)	
		22.5	4 6 8	19	100	SS-10	–	6	5	11	41	37	28	15	13	15	A-6a (9)	
	860.0	25.0																
	EOB		5 7 10	23	100	SS-11	–	–	–	–	–	–	–	–	–	14	A-6a (V)	

NOTES: NONE

ABANDONMENT METHODS, MATERIALS, QUANTITIES: PLACED AUGER CUTTINGS

PROJECT: ALL-75-0.21	DRILLING FIRM / OPERATOR: MID-OHIO / P.T.	DRILL RIG: CME 550 ATV	STATION / OFFSET: 393+34 82.9 LT	EXPLORATION ID B-109-9-08
TYPE: NOISE WALL	SAMPLING FIRM / LOGGER: MID-OHIO / B.W.	HAMMER: CME AUTOMATIC	ALIGNMENT:	
PID: 76691 BR ID:	DRILLING METHOD: 3.25" HSA	CALIBRATION DATE: 10/10/08	ELEVATION: 890.4 (MSL) EOB: 25.0 ft.	PAGE 1 OF 1
START: 1/26/10 END: 1/26/10	SAMPLING METHOD: SPT	ENERGY RATIO (%): 83.1	LAT / LONG: Not Recorded	

MATERIAL DESCRIPTION AND NOTES	ELEV. 890.4	DEPTHS	SPT/RQD	N60	REC (%)	SAMPLE ID	HP (tsf)	GRADATION (%) GR	CS	FS	SI	CL	ATTERBERG LL	PL	PI	WC	ODOT CLASS (GI)	INST.
TOPSOIL	889.8																	
STIFF TO VERY STIFF, MOTTLED BROWN AND GRAY, SILTY CLAY, TRACE GRAVEL, LITTLE SAND, MOIST		2.5	3	10	72	SS-1	–	–	–	–	–	–	–	–	–	24	A-6b (V)	
		5.0	3	10	67	SS-2	–	–	–	–	–	–	–	–	–	15	A-6b (V)	
		7.5	5	17	100	SS-3	–	4	6	12	40	38	35	17	18	21	A-6b (11)	
	880.4	10.0	7	22	100	SS-4	–	–	–	–	–	–	–	–	–	17	A-6b (V)	
VERY STIFF TO HARD, MOTTLED BROWN AND GRAY GRADING TO GRAY, SILT AND CLAY, TRACE GRAVEL, LITTLE SAND, DAMP TO MOIST		12.5	11	37	100	SS-5	–	–	–	–	–	–	–	–	–	16	A-6a (V)	
		15.0	11	39	100	SS-6	–	6	7	13	41	33	31	17	14	17	A-6a (9)	
		17.5	9	29	100	SS-7	–	–	–	–	–	–	–	–	–	13	A-6a (V)	
		20.0	9	32	100	SS-8	–	7	7	11	40	35	26	14	12	14	A-6a (9)	
		22.5	7	24	100	SS-9	–	–	–	–	–	–	–	–	–	15	A-6a (V)	
	865.4	EOB 25.0	5	19	100	SS-10	–	–	–	–	–	–	–	–	–	15	A-6a (V)	

NOTES: NONE

ABANDONMENT METHODS, MATERIALS, QUANTITIES: PLACED AUGER CUTTINGS

PROJECT: ALL-75-0.21	DRILLING FIRM / OPERATOR: STANTEC / M.M.	DRILL RIG: CME 45T	STATION / OFFSET: 394+10 80.2 RT	EXPLORATION ID B-110-1-08
TYPE: NOISE WALL	SAMPLING FIRM / LOGGER: STANTEC / J.M.	HAMMER: CME AUTOMATIC	ALIGNMENT:	
PID: 76691 BR ID:	DRILLING METHOD: 3.25" HSA	CALIBRATION DATE: 2/24/10	ELEVATION: 888.0 (MSL) EOB: 26.5 ft.	PAGE 1 OF 1
START: 2/3/10 END: 2/3/10	SAMPLING METHOD: SPT	ENERGY RATIO (%): 81.9	LAT / LONG: Not Recorded	

MATERIAL DESCRIPTION AND NOTES	ELEV. 888.0	DEPTHS	SPT/RQD	N60	REC (%)	SAMPLE ID	HP (tsf)	GRADATION (%) GR	CS	FS	SI	CL	ATTERBERG LL	PL	PI	WC	ODOT CLASS (GI)	INST.
TOPSOIL	887.5																	
VERY STIFF TO HARD, BROWN GRADING TO GRAY, SILT AND CLAY, TRACE TO LITTLE GRAVEL, LITTLE SAND, DAMP TO MOIST		2.5	2	8	67	SS-1	–	–	–	–	–	–	–	–	–	23	A-6a (V)	
		5.0	9	26	100	SS-2	–	14	6	11	31	38	28	17	11	15	A-6a (7)	
		7.5	8	25	100	SS-3	–	–	–	–	–	–	–	–	–	16	A-6a (V)	
		10.0	13	41	100	SS-4	–	7	6	13	31	43	31	17	14	16	A-6a (9)	
		12.5	9	31	100	SS-5	–	–	–	–	–	–	–	–	–	14	A-6a (V)	
		15.0	7	23	100	SS-6	–	6	6	12	35	41	27	15	12	14	A-6a (9)	
		17.5	6	20	100	SS-7	–	–	–	–	–	–	–	–	–	14	A-6a (V)	
		20.0	6	22	100	SS-8	–	–	–	–	–	–	–	–	–	14	A-6a (V)	
		22.5	5	19	100	SS-9	–	13	6	11	33	37	28	15	13	15	A-6a (8)	
		25.0	6	18	100	SS-10	–	–	–	–	–	–	–	–	–	15	A-6a (V)	
	861.5	EOB	6	20	100	SS-11	–	–	–	–	–	–	–	–	–	15	A-6a (V)	

NOTES: NONE

ABANDONMENT METHODS, MATERIALS, QUANTITIES: PLACED AUGER CUTTINGS

PROJECT: ALL-75-0.21
TYPE: NOISE WALL
PID: 76691 BR ID:
START: 1/26/10 END: 1/26/10

DRILLING FIRM / OPERATOR: MID-OHIO / P.T.
SAMPLING FIRM / LOGGER: MID-OHIO / B.W.
DRILLING METHOD: 3.25" HSA
SAMPLING METHOD: SPT

DRILL RIG: CME 550 ATV
HAMMER: CME AUTOMATIC
CALIBRATION DATE: 10/10/08
ENERGY RATIO (%): 83.1

STATION / OFFSET: 395+36 68.2 LT
ALIGNMENT:
ELEVATION: 888.0 (MSL) EOB: 25.0 ft.
LAT / LONG: Not Recorded

EXPLORATION ID B-110-2-08
PAGE 1 OF 1

MATERIAL DESCRIPTION AND NOTES	ELEV. 888.0	DEPTHS	SPT/ RQD	N60	REC (%)	SAMPLE ID	HP (tsf)	GR	CS	FS	SI	CL	LL	PL	PI	WC	ODOT CLASS (GI)	INST.
TOPSOIL	887.6																	
VERY STIFF TO HARD, MOTTLED BROWN AND GRAY, SILT AND CLAY, TRACE GRAVEL, LITTLE SAND, DAMP TO MOIST		2.5	4 6 8	19	100	SS-1	-	-	-	-	-	-	-	-	-	15	A-6a (V)	
		5.0	4 6 9	21	100	SS-2	-	3	6	12	38	41	29	16	13	16	A-6a (9)	
brown @ 5.5'		7.5	7 11 14	35	100	SS-3	-	2	7	13	42	36	28	16	12	15	A-6a (9)	
grading to gray @ 8.0'		10.0	5 6 7	18	100	SS-4	-	-	-	-	-	-	-	-	-	14	A-6a (V)	
	877.5																	
STIFF, GRAY, SANDY SILT, TRACE GRAVEL, SOME CLAY, MOIST		12.5	3 4 7	15	100	SS-5	-	3	6	15	45	31	24	14	10	15	A-4a (8)	
	875.0																	
STIFF TO VERY STIFF, GRAY, SILT AND CLAY, TRACE GRAVEL, LITTLE SAND, DAMP TO MOIST		15.0	3 3 6	12	100	SS-6	-	-	-	-	-	-	-	-	-	16	A-6a (V)	
		17.5	3 4 6	14	100	SS-7	-	-	-	-	-	-	-	-	-	15	A-6a (V)	
		20.0	3 4 7	15	100	SS-8	-	6	5	12	41	36	27	14	13	14	A-6a (9)	
		22.5	3 5 8	18	100	SS-9	-	-	-	-	-	-	-	-	-	15	A-6a (V)	
hard from 23.5' to 25'	863.0 EOB	25.0	6 10 13	32	22	SS-10	-	-	-	-	-	-	-	-	-	16	A-6a (V)	

NOTES: NONE

ABANDONMENT METHODS, MATERIALS, QUANTITIES: PLACED AUGER CUTTINGS

PROJECT: ALL-75-0.21
TYPE: NOISE WALL
PID: 76691 BR ID:
START: 2/2/10 END: 2/2/10

DRILLING FIRM / OPERATOR: STANTEC / M.M.
SAMPLING FIRM / LOGGER: STANTEC / J.M.
DRILLING METHOD: 3.25" HSA
SAMPLING METHOD: SPT

DRILL RIG: CME 45T
HAMMER: CME AUTOMATIC
CALIBRATION DATE: 2/24/10
ENERGY RATIO (%): 81.9

STATION / OFFSET: 396+08 77.5 RT
ALIGNMENT:
ELEVATION: 888.7 (MSL) EOB: 26.5 ft.
LAT / LONG: Not Recorded

EXPLORATION ID B-110-3-08
PAGE 1 OF 1

MATERIAL DESCRIPTION AND NOTES	ELEV. 888.7	DEPTHS	SPT/ RQD	N60	REC (%)	SAMPLE ID	HP (tsf)	GR	CS	FS	SI	CL	LL	PL	PI	WC	ODOT CLASS (GI)	INST.
TOPSOIL	888.2																	
VERY STIFF TO HARD, BROWN, SANDY SILT, TRACE GRAVEL, SOME CLAY, DAMP		2.5	2 3 6	12	72	SS-1	-	-	-	-	-	-	-	-	-	15	A-4a (V)	
		5.0	7 9 12	29	89	SS-2	-	5	5	9	47	34	27	19	8	15	A-4a (8)	
		7.5	5 10 13	31	100	SS-3	-	-	-	-	-	-	-	-	-	15	A-4a (V)	
	881.2																	
VERY STIFF TO HARD, BROWN GRADING TO GRAY, SILT AND CLAY, TRACE TO LITTLE GRAVEL, LITTLE SAND, DAMP TO MOIST		10.0	8 11 13	33	100	SS-4	-	11	6	12	35	36	30	16	14	15	A-6a (9)	
		12.5	6 10 8	25	100	SS-5	-	-	-	-	-	-	-	-	-	15	A-6a (V)	
		15.0	6 7 7	19	67	SS-6	-	-	-	-	-	-	-	-	-	15	A-6a (V)	
		17.5	3 5 7	16	100	SS-7	-	6	6	12	36	40	28	15	13	15	A-6a (9)	
		20.0	4 4 8	16	89	SS-8	-	-	-	-	-	-	-	-	-	16	A-6a (V)	
		22.5	3 4 8	16	94	SS-9	-	-	-	-	-	-	-	-	-	16	A-6a (V)	
		25.0	3 5 8	18	100	SS-10	-	-	-	-	-	-	-	-	-	16	A-6a (V)	
	862.2 EOB		5 8 12	27	100	SS-11	-	20	5	9	32	34	27	16	11	14	A-6a (7)	

NOTES: NONE

ABANDONMENT METHODS, MATERIALS, QUANTITIES: PLACED AUGER CUTTINGS

PROJECT: ALL-75-0.21	DRILLING FIRM / OPERATOR: MID-OHIO / P.T.	DRILL RIG: CME 550 ATV	STATION / OFFSET: 397+67 78.3 LT	EXPLORATION ID B-110-4-08
TYPE: NOISE WALL	SAMPLING FIRM / LOGGER: MID-OHIO / B.W.	HAMMER: CME AUTOMATIC	ALIGNMENT:	
PID: 76691 BR ID:	DRILLING METHOD: 3.25" HSA	CALIBRATION DATE: 10/10/08	ELEVATION: 886.6 (MSL) EOB: 25.0 ft.	PAGE 1 OF 1
START: 1/26/10 END: 1/26/10	SAMPLING METHOD: SPT	ENERGY RATIO (%): 83.1	LAT / LONG: Not Recorded	

MATERIAL DESCRIPTION AND NOTES	ELEV. 886.6	DEPTHS	SPT/ RQD	N60	REC (%)	SAMPLE ID	HP (tsf)	GRADATION (%) GR	CS	FS	SI	CL	ATTERBERG LL	PL	PI	WC	ODOT CLASS (GI)	INST.
TOPSOIL	886.1																	
STIFF TO VERY STIFF, MOTTLED BROWN AND GRAY, SILTY CLAY, TRACE GRAVEL, LITTLE SAND, DAMP			3 5	11	89	SS-1	–	–	–	–	–	–	–	–	–	21	A-6b (V)	
		2.5	5 8	21	78	SS-2	–	3	6	12	36	43	33	16	17	15	A-6b (11)	
	881.1	5.0																
VERY STIFF TO HARD, BROWN GRADING TO GRAY, SILT AND CLAY, TRACE GRAVEL, LITTLE SAND, DAMP TO MOIST			8 17	39	100	SS-3	–	3	6	13	40	38	30	17	13	16	A-6a (9)	
		7.5	9 14	35	100	SS-4	–	–	–	–	–	–	–	–	–	15	A-6a (V)	
		10.0	3 9	21	100	SS-5	–	5	6	14	41	34	25	13	12	15	A-6a (9)	
		12.5	3 8	18	100	SS-6	–	–	–	–	–	–	–	–	–	14	A-6a (V)	
	871.1	15.0																
MEDIUM DENSE, GRAY, SILT, TRACE GRAVEL, SOME SAND, LITTLE CLAY, MOIST	868.6		6 7	18	89	SS-7	–	2	8	13	61	16	NP	NP	NP	16	A-4b (8)	
		17.5																
STIFF TO VERY STIFF, GRAY, SILT AND CLAY, TRACE GRAVEL, LITTLE SAND, MOIST			3 6	14	100	SS-8	–	–	–	–	–	–	–	–	–	15	A-6a (V)	
		20.0	4 8	21	100	SS-9	–	4	6	11	41	38	28	14	14	16	A-6a (10)	
		22.5																
	861.6	EOB 25.0	4 8	21	100	SS-10	–	–	–	–	–	–	–	–	–	16	A-6a (V)	

NOTES: NONE

ABANDONMENT METHODS, MATERIALS, QUANTITIES: PLACED AUGER CUTTINGS

PROJECT: ALL-75-0.21	DRILLING FIRM / OPERATOR: STANTEC / M.M.	DRILL RIG: CME 45T	STATION / OFFSET: 398+09 76.2 RT	EXPLORATION ID B-110-5-08
TYPE: NOISE WALL	SAMPLING FIRM / LOGGER: STANTEC / J.M.	HAMMER: CME AUTOMATIC	ALIGNMENT:	
PID: 76691 BR ID:	DRILLING METHOD: 3.25" HSA	CALIBRATION DATE: 2/24/10	ELEVATION: 886.9 (MSL) EOB: 26.5 ft.	PAGE 1 OF 1
START: 2/2/10 END: 2/2/10	SAMPLING METHOD: SPT	ENERGY RATIO (%): 81.9	LAT / LONG: Not Recorded	

MATERIAL DESCRIPTION AND NOTES	ELEV. 886.9	DEPTHS	SPT/ RQD	N60	REC (%)	SAMPLE ID	HP (tsf)	GRADATION (%) GR	CS	FS	SI	CL	ATTERBERG LL	PL	PI	WC	ODOT CLASS (GI)	INST.
TOPSOIL	886.4																	
STIFF TO VERY STIFF, BROWN, SANDY SILT, LITTLE GRAVEL, SOME CLAY, MOIST			3 5	12	67	SS-1	–	–	–	–	–	–	–	–	–	24	A-4a (V)	
		2.5	5 10	23	100	SS-2	–	12	16	10	31	31	25	17	8	18	A-4a (5)	
		5.0	3 11	27	100	SS-3	–	–	–	–	–	–	–	–	–	20	A-4a (V)	
		7.5	5 10	22	89	SS-4	–	–	–	–	–	–	–	–	–	18	A-4a (V)	
	876.9	10.0																
VERY STIFF TO HARD, GRAY, SILT AND CLAY, TRACE TO LITTLE GRAVEL, LITTLE TO SOME SAND, DAMP TO MOIST			6 9	22	89	SS-5	–	4	6	11	35	44	32	17	15	19	A-6a (10)	
		12.5	5 11	25	100	SS-6	–	–	–	–	–	–	–	–	–	17	A-6a (V)	
		15.0	5 11	26	39	SS-7	–	–	–	–	–	–	–	–	–	15	A-6a (V)	
		17.5	4 7	16	100	SS-8	–	11	6	10	35	38	26	15	11	14	A-6a (8)	
		20.0	6 13	27	100	SS-9	–	–	–	–	–	–	–	–	–	14	A-6a (V)	
		22.5	12 14 14	38	78	SS-10	–	18	12	12	27	31	25	14	11	7	A-6a (5)	
	860.4	EOB 25.0	7 13	30	94	SS-11	–	–	–	–	–	–	–	–	–	14	A-6a (V)	

NOTES: NONE

ABANDONMENT METHODS, MATERIALS, QUANTITIES: PLACED AUGER CUTTINGS

PROJECT: ALL-75-0.21
TYPE: NOISE WALL
PID: 76691 BR ID:
START: 2/2/10 END: 2/2/10

DRILLING FIRM / OPERATOR: STANTEC / M.M.
SAMPLING FIRM / LOGGER: STANTEC / J.M.
DRILLING METHOD: 3.25" HSA
SAMPLING METHOD: SPT

DRILL RIG: CME 45T
HAMMER: CME AUTOMATIC
CALIBRATION DATE: 2/24/10
ENERGY RATIO (%): 81.9

STATION / OFFSET: 400+11 78.4 RT
ALIGNMENT:
ELEVATION: 884.7 (MSL) EOB: 26.5 ft.
LAT / LONG: Not Recorded

EXPLORATION ID B-110-6-08
PAGE 1 OF 1

MATERIAL DESCRIPTION AND NOTES	ELEV. 884.7	DEPTHS	SPT/RQD	N60	REC (%)	SAMPLE ID	HP (tsf)	GRADATION (%) GR	CS	FS	SI	CL	ATTERBERG LL	PL	PI	WC	ODOT CLASS (GI)	INST.
TOPSOIL	884.2																	
VERY STIFF TO HARD, BROWN GRADING TO GRAY, SILT AND CLAY, TRACE GRAVEL, LITTLE SAND, DAMP TO MOIST			3 4 4	11	67	SS-1	–	–	–	–	–	–	–	–	–	24	A-6a (V)	
		2.5	6 8 12	27	100	SS-2	–	–	–	–	–	–	–	–	–	14	A-6a (V)	
		5.0	8 11 16	37	100	SS-3	–	7	6	12	35	40	29	18	11	15	A-6a (8)	
		7.5	11 11 16	37	100	SS-4	–	–	–	–	–	–	–	–	–	15	A-6a (V)	
		10.0	9 11 14	34	100	SS-5	–	–	–	–	–	–	–	–	–	16	A-6a (V)	
		12.5	4 6 8	19	78	SS-6	–	5	6	14	37	38	25	13	12	15	A-6a (9)	
		15.0	4 6 7	18	89	SS-7	–	–	–	–	–	–	–	–	–	15	A-6a (V)	
		17.5	5 5 9	19	11	SS-8	–	–	–	–	–	–	–	–	–	16	A-6a (V)	
		20.0	3 6 9	20	100	SS-9	–	–	–	–	–	–	–	–	–	16	A-6a (V)	
		22.5	8 8 9	23	100	SS-10	–	3	6	11	38	42	27	13	14	16	A-6a (10)	
	858.2	EOB 25.0	7 10 17	37	100	SS-11	–	–	–	–	–	–	–	–	–	13	A-6a (V)	

NOTES: NONE
ABANDONMENT METHODS, MATERIALS, QUANTITIES: PLACED AUGER CUTTINGS

PROJECT: ALL-75-0.21
TYPE: NOISE WALL
PID: 76691 BR ID:
START: 2/2/10 END: 2/2/10

DRILLING FIRM / OPERATOR: STANTEC / M.M.
SAMPLING FIRM / LOGGER: STANTEC / J.M.
DRILLING METHOD: 3.25" HSA
SAMPLING METHOD: SPT

DRILL RIG: CME 45T
HAMMER: CME AUTOMATIC
CALIBRATION DATE: 2/24/10
ENERGY RATIO (%): 81.9

STATION / OFFSET: 402+17 88.6 RT
ALIGNMENT:
ELEVATION: 882.2 (MSL) EOB: 26.5 ft.
LAT / LONG: Not Recorded

EXPLORATION ID B-110-7-08
PAGE 1 OF 1

MATERIAL DESCRIPTION AND NOTES	ELEV. 882.2	DEPTHS	SPT/RQD	N60	REC (%)	SAMPLE ID	HP (tsf)	GRADATION (%) GR	CS	FS	SI	CL	ATTERBERG LL	PL	PI	WC	ODOT CLASS (GI)	INST.
TOPSOIL	881.7																	
VERY STIFF TO HARD, BROWN GRADING TO GRAY, SILT AND CLAY, TRACE TO LITTLE GRAVEL, LITTLE SAND, DAMP TO MOIST			2 3 4	10	72	SS-1	–	–	–	–	–	–	–	–	–	29	A-6a (V)	
		2.5	4 7 12	26	100	SS-2	–	–	–	–	–	–	–	–	–	15	A-6a (V)	
		5.0	7 9 11	27	100	SS-3	–	5	7	13	35	40	30	18	12	15	A-6a (9)	
		7.5	7 11 13	33	100	SS-4	–	–	–	–	–	–	–	–	–	15	A-6a (V)	
		10.0	12 14 21	48	100	SS-5	–	–	–	–	–	–	–	–	–	15	A-6a (V)	
		12.5	5 7 9	22	78	SS-6	–	–	–	–	–	–	–	–	–	15	A-6a (V)	
		15.0	9 12 15	37	100	SS-7	–	12	6	11	38	33	27	14	13	15	A-6a (8)	
		17.5	8 11 13	33	100	SS-8	–	–	–	–	–	–	–	–	–	16	A-6a (V)	
		20.0	7 11 15	35	67	SS-9	–	–	–	–	–	–	–	–	–	15	A-6a (V)	
		22.5	8 12 14	35	78	SS-10	–	6	6	11	36	41	27	16	11	15	A-6a (8)	
	855.7	EOB 25.0	7 9 11	27	22	SS-11	–	–	–	–	–	–	–	–	–	14	A-6a (V)	

NOTES: NONE
ABANDONMENT METHODS, MATERIALS, QUANTITIES: PLACED AUGER CUTTINGS

STRUCTURE FOUNDATION EXPLORATION
NOISE BARRIER WALL

DRAWN M.S.J.
CHECKED R.J.K.

PROJECT: ALL-75-0.21	DRILLING FIRM / OPERATOR: STANTEC / M.M.	DRILL RIG: CME 45T	STATION / OFFSET: 404+20 87.3 RT	EXPLORATION ID B-111-1-08
TYPE: NOISE WALL	SAMPLING FIRM / LOGGER: STANTEC / J.M.	HAMMER: CME AUTOMATIC	ALIGNMENT:	
PID: 76691 BR ID:	DRILLING METHOD: 3.25" HSA	CALIBRATION DATE: 2/24/10	ELEVATION: 876.6 (MSL) EOB: 26.5 ft.	PAGE 1 OF 1
START: 2/2/10 END: 2/2/10	SAMPLING METHOD: SPT	ENERGY RATIO (%): 81.9	LAT / LONG: Not Recorded	

MATERIAL DESCRIPTION AND NOTES	ELEV. 876.6	DEPTHS	SPT/RQD	N60	REC (%)	SAMPLE ID	HP (tsf)	GRADATION (%) GR	CS	FS	SI	CL	ATTERBERG LL	PL	PI	WC	ODOT CLASS (GI)	INST.
TOPSOIL	875.8		3 3 5	11	78	SS-1	–	–	–	–	–	–	–	–	–	29	A-7-6 (V)	
VERY STIFF, BROWN, CLAY, AND SILT, TRACE GRAVEL, LITTLE SAND, MOIST		2.5	4 5 8	18	72	SS-2	–	1	4	12	35	48	43	20	23	20	A-7-6 (14)	
	871.6	5.0	6 6 9	20	100	SS-3	–	13	5	11	34	37	32	18	14	17	A-6a (9)	
VERY STIFF TO HARD, GRAY, SILT AND CLAY, TRACE TO LITTLE GRAVEL, LITTLE SAND, DAMP		7.5	6 9 16	34	100	SS-4	–	6	6	12	38	38	30	17	13	17	A-6a (9)	
		10.0	5 6 8	19	89	SS-5	–	–	–	–	–	–	–	–	–	14	A-6a (V)	
@ 13' – stiff		12.5	3 3 5	11	78	SS-6	–	–	–	–	–	–	–	–	–	16	A-6a (V)	
		15.0	6 6 7	18	100	SS-7	–	7	5	10	41	37	27	16	11	15	A-6a (8)	
		17.5	4 6 7	18	100	SS-8	–	–	–	–	–	–	–	–	–	16	A-6a (V)	
		20.0	4 7 8	20	100	SS-9	–	–	–	–	–	–	–	–	–	15	A-6a (V)	
		22.5	4 5 8	18	100	SS-10	–	–	–	–	–	–	–	–	–	15	A-6a (V)	
		25.0	4 5 8	18	100	SS-11	–	–	–	–	–	–	–	–	–	16	A-6a (V)	
	850.1	EOB																

NOTES: NONE

ABANDONMENT METHODS, MATERIALS, QUANTITIES: PLACED AUGER CUTTINGS

PROJECT: ALL-75-0.21	DRILLING FIRM / OPERATOR: STANTEC / M.M.	DRILL RIG: CME 45T	STATION / OFFSET: 406+15 87.0 RT	EXPLORATION ID B-111-2-08
TYPE: NOISE WALL	SAMPLING FIRM / LOGGER: STANTEC / J.M.	HAMMER: CME AUTOMATIC	ALIGNMENT:	
PID: 76691 BR ID:	DRILLING METHOD: 3.25" HSA	CALIBRATION DATE: 2/24/10	ELEVATION: 876.3 (MSL) EOB: 26.5 ft.	PAGE 1 OF 1
START: 2/2/10 END: 2/2/10	SAMPLING METHOD: SPT	ENERGY RATIO (%): 81.9	LAT / LONG: Not Recorded	

MATERIAL DESCRIPTION AND NOTES	ELEV. 876.3	DEPTHS	SPT/RQD	N60	REC (%)	SAMPLE ID	HP (tsf)	GRADATION (%) GR	CS	FS	SI	CL	ATTERBERG LL	PL	PI	WC	ODOT CLASS (GI)	INST.
TOPSOIL	875.3		3 3 5	11	67	SS-1	–	–	–	–	–	–	–	–	–	18	A-6a (V)	
VERY STIFF TO HARD, BROWN, SILT AND CLAY, LITTLE GRAVEL AND SAND, DAMP		2.5	3 5 8	18	100	SS-2	–	–	–	–	–	–	–	–	–	14	A-6a (V)	
		5.0	7 9 14	31	100	SS-3	–	10	7	11	34	38	29	17	12	15	A-6a (8)	
	866.3	7.5	7 15 20	48	100	SS-4	–	–	–	–	–	–	–	–	–	15	A-6a (V)	
VERY STIFF TO HARD, GRAY, SILTY CLAY, LITTLE GRAVEL AND SAND, DAMP		10.0	10 13 12	34	78	SS-5	–	–	–	–	–	–	–	–	–	14	A-6b (V)	
		12.5	8 9 11	27	89	SS-6	–	13	5	10	34	38	31	14	17	14	A-6b (10)	
		15.0	8 10 13	31	89	SS-7	–	–	–	–	–	–	–	–	–	14	A-6b (V)	
		17.5	12 12 14	35	11	SS-8	–	–	–	–	–	–	–	–	–	13	A-6b (V)	
	854.3	20.0	20 21 24	61	6	SS-9	–	–	–	–	–	–	–	–	–	13	A-6b (V)	
VERY STIFF, GRAY, SILT AND CLAY, TRACE GRAVEL, LITTLE SAND, MOIST		22.5	4 7 11	25	100	SS-10	–	7	7	13	29	44	28	15	13	15	A-6a (9)	
		25.0	5 6 10	22	67	SS-11	–	–	–	–	–	–	–	–	–	16	A-6a (V)	
	849.8	EOB																

NOTES: NONE

ABANDONMENT METHODS, MATERIALS, QUANTITIES: PLACED AUGER CUTTINGS

PROJECT: ALL-75-0.21	DRILLING FIRM / OPERATOR: STANTEC / M.M.	DRILL RIG: CME 45T	STATION / OFFSET: 408+08 61.1 RT	EXPLORATION ID B-111-3-08
TYPE: NOISE WALL	SAMPLING FIRM / LOGGER: STANTEC / J.M.	HAMMER: CME AUTOMATIC	ALIGNMENT:	
PID: 76691 BR ID:	DRILLING METHOD: 3.25" HSA	CALIBRATION DATE: 2/24/10	ELEVATION: 876.6 (MSL) EOB: 26.5 ft.	PAGE 1 OF 1
START: 2/2/10 END: 2/2/10	SAMPLING METHOD: SPT	ENERGY RATIO (%): 81.9	LAT / LONG: Not Recorded	

MATERIAL DESCRIPTION AND NOTES	ELEV. 876.6	DEPTHS	SPT/RQD	N60	REC (%)	SAMPLE ID	HP (tsf)	GRADATION (%) GR	CS	FS	SI	CL	ATTERBERG LL	PL	PI	WC	ODOT CLASS (GI)	INST.
TOPSOIL	876.1		3 3 4	10	67	SS-1	–	–	–	–	–	–	–	–	–	20	A-6a (V)	
STIFF TO VERY STIFF, BROWN GRADING TO GRAY, SILT AND CLAY, TRACE GRAVEL, LITTLE SAND, DAMP TO MOIST		2.5	3 3 7	14	78	SS-2	–	–	–	–	–	–	–	–	–	20	A-6a (V)	
		5.0	6 8 11	26	94	SS-3	–	4	6	12	34	44	30	18	12	16	A-6a (9)	
		7.5	6 8 11	26	100	SS-4	–	–	–	–	–	–	–	–	–	15	A-6a (V)	
		10.0	7 10 13	31	89	SS-5	–	6	5	12	41	36	27	15	12	14	A-6a (9)	
		12.5	5 7 10	23	78	SS-6	–	–	–	–	–	–	–	–	–	14	A-6a (V)	
		15.0	5 6 7	18	72	SS-7	–	–	–	–	–	–	–	–	–	14	A-6a (V)	
		17.5	3 4 6	14	94	SS-8	–	7	6	10	38	39	27	15	12	16	A-6a (9)	
		20.0	3 5 6	15	100	SS-9	–	–	–	–	–	–	–	–	–	16	A-6a (V)	
	854.6																	
VERY STIFF, GRAY, SILTY CLAY, TRACE GRAVEL, LITTLE SAND, MOIST		22.5	4 5 8	18	100	SS-10	–	–	–	–	–	–	–	–	–	16	A-6b (V)	
		25.0	4 6 8	19	78	SS-11	–	4	5	9	38	44	32	16	16	18	A-6b (10)	
	850.1	EOB																

NOTES: NONE

ABANDONMENT METHODS, MATERIALS, QUANTITIES: PLACED AUGER CUTTINGS

PROJECT: ALL-75-0.21	DRILLING FIRM / OPERATOR: STANTEC / M.M.	DRILL RIG: CME 45T	STATION / OFFSET: 410+03 59.8 RT	EXPLORATION ID B-111-5-08
TYPE: NOISE WALL	SAMPLING FIRM / LOGGER: STANTEC / J.M.	HAMMER: CME AUTOMATIC	ALIGNMENT:	
PID: 76691 BR ID:	DRILLING METHOD: 3.25" HSA	CALIBRATION DATE: 2/24/10	ELEVATION: 875.3 (MSL) EOB: 26.5 ft.	PAGE 1 OF 1
START: 2/2/10 END: 2/2/10	SAMPLING METHOD: SPT	ENERGY RATIO (%): 81.9	LAT / LONG: Not Recorded	

MATERIAL DESCRIPTION AND NOTES	ELEV. 875.3	DEPTHS	SPT/RQD	N60	REC (%)	SAMPLE ID	HP (tsf)	GRADATION (%) GR	CS	FS	SI	CL	ATTERBERG LL	PL	PI	WC	ODOT CLASS (GI)	INST.
TOPSOIL	874.7		3 4 4	11	67	SS-1	–	–	–	–	–	–	–	–	–	13	A-7-6 (V)	
STIFF TO VERY STIFF, BROWN GRADING TO GRAY, CLAY, TRACE GRAVEL, LITTLE SAND, SOME SILT, MOIST		2.5	3 4 6	14	67	SS-2	–	8	5	13	35	39	42	18	24	21	A-7-6 (14)	
		5.0	3 4 6	14	89	SS-3	–	–	–	–	–	–	–	–	–	28	A-7-6 (V)	
		7.5	4 5 8	18	89	SS-4	–	3	3	10	32	52	58	18	40	22	A-7-6 (20)	
		10.0	3 5 9	19	100	SS-5	–	–	–	–	–	–	–	–	–	20	A-7-6 (V)	
	862.8																	
HARD, BROWN, SILT AND CLAY, TRACE GRAVEL, LITTLE SAND, DAMP		12.5	9 12 18	41	100	SS-6	–	8	5	11	35	41	29	18	11	14	A-6a (8)	
	859.3	15.0	10 13 17	41	100	SS-7	–	–	–	–	–	–	–	–	–	14	A-6a (V)	
VERY STIFF TO HARD, GRAY, SILTY CLAY, TRACE GRAVEL, LITTLE SAND, DAMP TO MOIST		17.5	8 9 13	30	100	SS-8	–	–	–	–	–	–	–	–	–	12	A-6b (V)	
		20.0	5 7 13	27	100	SS-9	–	–	–	–	–	–	–	–	–	13	A-6b (V)	
		22.5	7 8 12	27	100	SS-10	–	4	6	10	38	42	31	15	16	15	A-6b (10)	
	848.8	25.0 EOB	5 6 11	23	100	SS-11	–	–	–	–	–	–	–	–	–	18	A-6b (V)	

NOTES: NONE

ABANDONMENT METHODS, MATERIALS, QUANTITIES: PLACED AUGER CUTTINGS

PROJECT DESCRIPTION

REPLACE THE EXISTING I-75 FOUR-SPAN REINFORCED CONCRETE BRIDGE OVER STATE ROUTE 117/309.

HISTORIC RECORDS

HISTORIC BORING RECORDS FOR THE EXISITNG BRIDGE WERE REQUESTED FROM THE ODOT OFFICE OF GEOTECHNICAL ENGINEERING AND THE DISTRICT. HISTORIC SOUNDING RECORDS EXIST AND ARE DISCUSSED IN THE FOUNDATION EXPLORATION REPORT. DUE TO CHANGES IN STATIONING, LOCATIONS FOR THE SOUNDINGS ARE NOT CERTAIN AND ARE NOT SHOWN ON THE FOUNDATION EXPLORATION DRAWINGS.

GEOLOGY

THE STRUCTURE SITE IS LOCATED IN THE CENTRAL OHIO CLAYEY TILL PLAIN. THIS REGION IS COMPRISED OF GROUND MORAINE AND END MORAINE TILL DEPOSITS OVERLYING DOLOMITE WITH INTERBEDDED SHALE. CAVES AND OTHER KARST FEATURES MAY BE PRESENT ACCORDING TO THE PHYSIOGRAPHIC REGION OF OHIO MAP (ODNR, 1998), BUT NO KNOWN FEATURES WERE IDENTIFIED IN THE OHIO KARST AREAS MAP (ODNR, 2007).

RECONNAISSANCE

A FIELD RECONNAISSANCE WAS COMPLETED ON MARCH 13, 2007, FOCUSING MAINLY ON PAVEMENT CONDITIONS AND SITE TOPOGRAPHY AND DRAINAGE. THE MAINLINE SHOULDER PAVEMENTS SHOW EXTENSIVE "ALLIGATOR" CRACKING AND THE MAINLINE PAVEMENTS SHOW REFLECTIVE CRACKING AT THE EXPANSION JOINT LOCATIONS. THE SURROUNDING AREA IS DESCRIBED AS GENTLY UNDULATING WITH MOST OF THE SURROUNDING AREA CONSISTING OF OPEN FIELD OR LIGHTLY DEVELOPED COMMERCIAL AND RESIDENTIAL DISTRICTS. DRAINAGE ALONG THE ALIGNMENT IS DESCRIBED AS SLUGGISH WITH AREAS OF STANDING WATER, AND FLOWING WATER IN DRAINAGE DITCHES AND NATURAL STREAMS GENERALLY CREATING STEEP TO VERTICAL CUT BANKS IN THE SOIL PROFILE.

SUBSURFACE EXPLORATION

SIX BORINGS WERE ADVANCED AT THE I-75 BRIDGE OVER STATE ROUTE 309/117. THE ABUTMENT BORINGS (B-094 AND B-101) WERE ADVANCED AT THE SOUTH AND NORTH SIDES OF THE STRUCTURE ALONG I-75, RESPECTIVELY. BORINGS B-095 AND B-097 WERE ADVANCED ON THE WEST SIDE OF THE STRUCTURE ON THE SHOULDER AREA OF STATE ROUTE 309/117 NEAR EXISTING PIER LOCATIONS, WHILE B-098 AND B-100 WERE ADVANCED ON THE EAST SIDE. THE BORINGS WERE ADVANCED USING 3.25-INCH INSIDE DIAMETER HOLLOW-STEM AUGERS. STANDARD PENETRATION TEST (SPT) AND UNDISTURBED SHELBY TUBE (ST) SAMPLES WERE OBTAINED FOR THE UPPER 30 FEET AT 2.5-FOOT INTERVALS AND AT 5-FOOT INTERVALS BELOW THIS DEPTH FOR EACH SUBSTRUCTURE. SPT SAMPLES WERE OBTAINED USING TWO SEPARATE RIGS WITH CALIBRATED AUTOMATIC HAMMERS WITH ENERGY RATIOS (ER) OF 80% AND 82.5% AS SHOWN ON THE BORING LOGS. UPON ENCOUNTERING BEDROCK, NQ-SIZED ROCK CORING EQUIPMENT WAS USED TO OBTAIN 10 FEET OF ROCK CORE SAMPLE. AT THE CONCLUSION OF DRILLING OPERATIONS, BOREHOLES WERE BACKFILLED WITH AUGER SOIL CUTTINGS

EXPLORATION FINDINGS

MEDIUM STIFF TO HARD FINE-GRAINED GLACIAL TILL SOILS CLASSIFYING PREDOMINANTLY AS SILT AND CLAY (A-6a), BUT ALSO AS SILTY CLAY (A-6b) AND SANDY SILT (A-4a), ALL WITH VARYING AMOUNTS OF SANDS AND GRAVELS, WERE ENCOUNTERED IN ALL BORINGS. THE SOILS RANGED IN THICKNESS FROM 30 FEET IN BORING B-097 TO 51.5 FEET IN BORING B-094. UNCONFINED COMPRESSIVE STRENGTH TESTING WAS PERFORMED ON UNDISTURBED ST SAMPLES FROM THREE OF THE BORINGS WITH RESULTS OF THE THREE TESTS BEING 2.94, 3.23 AND 1.91 TONS PER SQUARE FOOT.

A LAYER OF LOOSE TO MEDIUM DENSE GRAVEL WITH SAND (A-1-b) WAS ENCOUNTERED DIRECTLY BELOW THE TOPSOIL IN BORING B-100 WITH A LAYER THICKNESS OF 6.5 FEET.

BEDROCK WAS ENCOUNTERED IN ALL BORINGS AT ELEVATIONS RANGING FROM 847.7 FEET (B-094) TO 852.6 FEET (B-097). THE BEDROCK WAS GENERALLY DESCRIBED AS DOLOMITE (95 TO 100 PERCENT OF THE UNIT) WITH INTERBEDDED SHALE (0 TO 5 PERCENT OF THE UNIT). THE DOLOMITE WAS DESCRIBED AS GRAY TO GRAY BROWN, SLIGHTLY TO MODERATELY WEATHERED, AND STRONG WITH VERY THIN TO THIN BEDDING AND A VUGGY APPEARANCE. THE SHALE WAS DESCRIBED AS BLACK, MODERATELY WEATHERED, AND MODERATELY STRONG WITH LAMINATED BEDDING. A ZONE OF SEVERELY WEATHERED ROCK WAS ENCOUNTERED IN BORINGS B-095, B-097, B-098 AND B-100 RANGING IN THICKNESS FROM 2 TO 5 FEET.

NO STATIC WATER LEVEL WAS OBSERVED IN THE BORINGS PRIOR TO ROCK CORING.

SPECIFICATIONS

THIS GEOTECHNICAL EXPLORATION WAS PERFORMED IN ACCORDANCE WITH THE STATE OF OHIO, DEPARTMENT OF TRANSPORTATION, OFFICE OF GEOTECHNICAL ENGINEERING, SPECIFICATIONS FOR GEOTECHNICAL EXPLORATIONS, DATED APRIL 2010.

AVAILABLE INFORMATION

ALL AVAILABLE SOIL AND BEDROCK INFORMATION THAT CAN BE CONVENIENTLY SHOWN ON THE SOIL PROFILE SHEETS HAS BEEN SO REPORTED. ADDITIONAL SUBSURFACE EXPLORATIONS MAY HAVE BEEN MADE TO STUDY SOME SPECIAL ASPECT OF THE PROJECT. COPIES OF THIS DATA, IF ANY, MAY BE INSPECTED IN THE DISTRICT DEPUTY DIRECTOR'S OFFICE, THE OFFICE OF GEOTECHNICAL ENGINEERING AT 1600 WEST BROAD STREET OR THE OFFICE OF STRUCTURAL ENGINEERING AT 1980 WEST BROAD STREET, COLUMBUS OHIO.

LEGEND

DESCRIPTION	ODOT CLASS	CLASSIFIED MECH./VISUAL	
GRAVEL AND/OR STONE FRAGMENTS WITH SAND	A-1-b	1	1
GRAVEL AND/OR STONE FRAGMENTS	A-1-a	0	1
SANDY SILT	A-4a	4	6
SILT AND CLAY	A-6a	12	46
SILTY CLAY	A-6b	4	5
	TOTAL	21	59
SHALE	VISUAL		
DOLOMITE	VISUAL		
WEATHERED DOLOMITE	VISUAL		
PAVEMENT OR BASE = X = APPROXIMATE THICKNESS	VISUAL		
SOD AND TOPSOIL = X = APPROXIMATE THICKNESS	VISUAL		

EXPLORATION LOCATION - PLAN VIEW.

DRIVE SAMPLE AND/OR ROCK CORE BORING PLOTTED TO VERTICAL SCALE ONLY. HORIZONTAL BAR INDICATES A CHANGE IN STRATIGRAPHY.

WC INDICATES WATER CONTENT IN PERCENT.

N_{60} INDICATES STANDARD PENETRATION RESISTANCE NORMALIZED TO 60% DRILL ROD ENERGY RATIO.

SS INDICATES A SPLIT-SPOON SAMPLE.

ST INDICATES A SHELBY TUBE SAMPLE.

NP INDICATES A NON-PLASTIC SAMPLE.

TR INDICATES TOP OF ROCK.

q_u INDICATES UNCONFINED COMPRESSIVE STRENGTH IN TONS PER SQUARE FOOT (TSF).

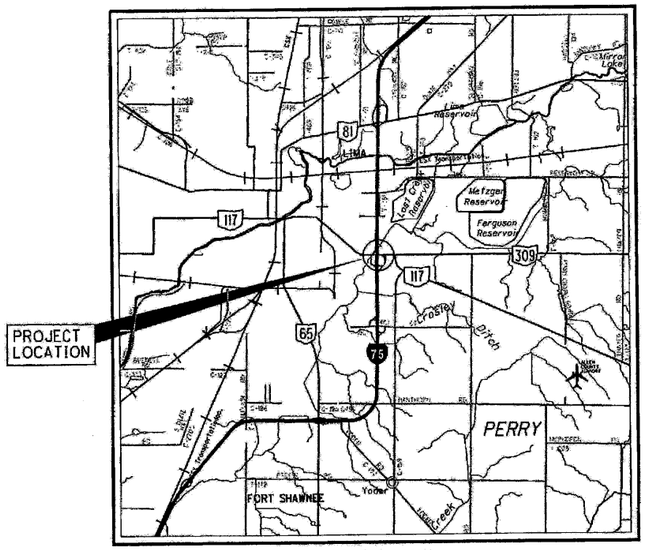

LOCATION MAP
SCALE IN MILES
0 1 2 3 4

N

PARTICLE SIZE DEFINITIONS

12"	3"	2.0 mm	0.42 mm	0.074 mm	0.005 mm
BOULDERS |	COBBLES |	GRAVEL |	COARSE SAND |	FINE SAND |	SILT | CLAY
		No. 10 SIEVE	No. 40 SIEVE	No. 200 SIEVE	

RECON. - DR/JM 03/07, 01/09
DRILLING - JM/MW/LW 3/17-3/27/09
DRAWN - MJ/CW 5/09-7/09, SLP 12/11
REVIEWED - JMM 10/09, RJK 12/11, 5/12

DESIGN AGENCY
STANTEC CONSULTING SERVICES INC.
CINCINNATI, OHIO

PID NO. 76691

STRUCTURE FOUNDATION EXPLORATION
BRIDGE NO. ALL-75-0703 L&R OVER S.R. 117/309

ALL-75-5.53

1 / 10

130/157

\\Us1268-f01\workgroup\1755\active\175530002\geotechnical\drawing\ODOTSubmittal\projects\ALL\76691\geotechnical\sheets\ALL-75-07.03 (S.R.117-S.R.309)\76691ZC001.dgn

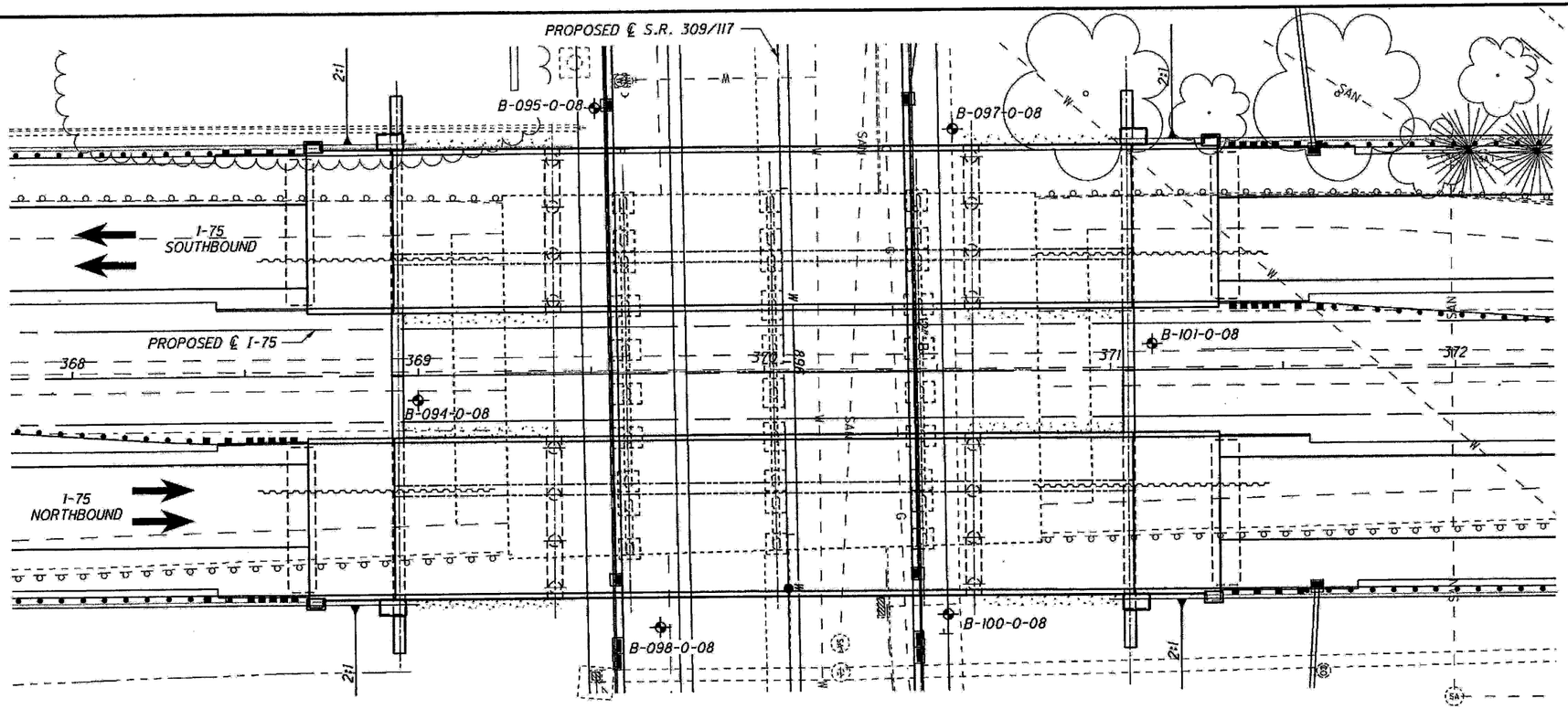

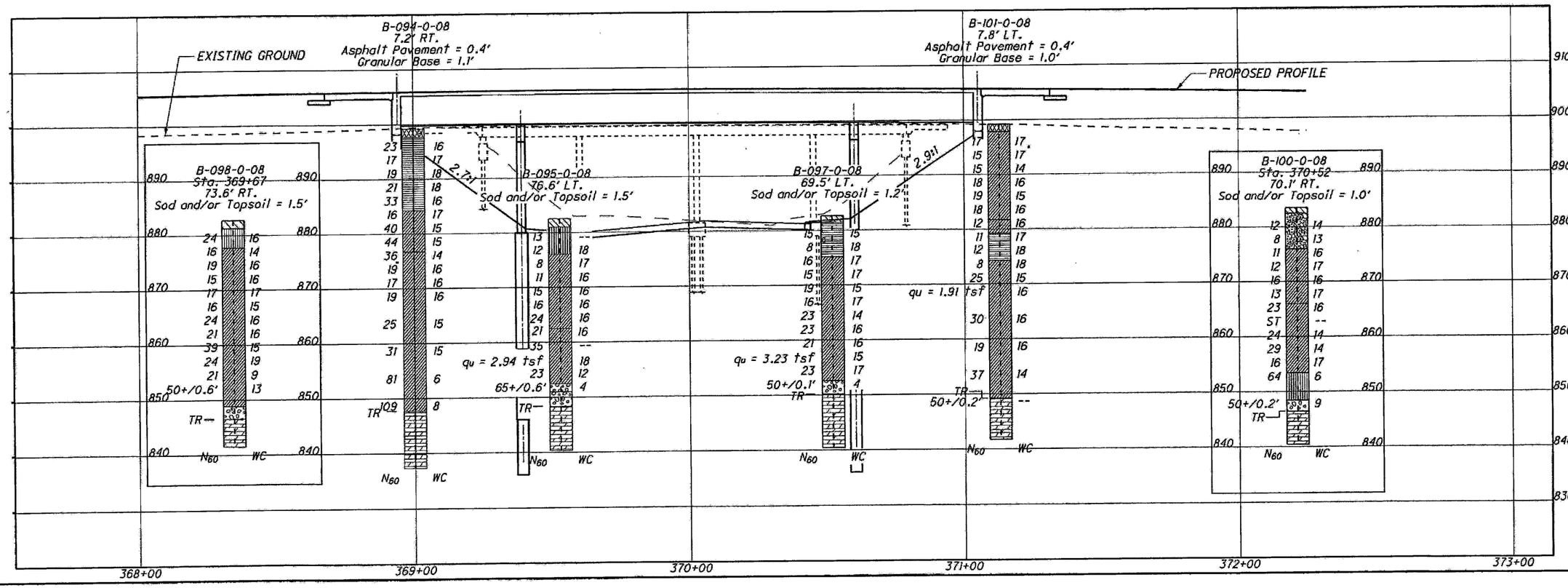

\\Us1268-f01\workgroup\1755\active\175530002\geotechnical\drawing\ODOTSubmittal\projects\ALL\76691\geotechnical\sheets\ALL-75-07.03 (S.R.117-S.R.309)\766912P001.dgn

N

0 10 20 40
HORIZONTAL SCALE IN FEET

DRAWN C.W.
CHECKED R.J.K.

STRUCTURE FOUNDATION EXPLORATION
BRIDGE NO. ALL-75-0703 L&R OVER S.R. 117/309

ALL-75-5.53

2 / 10

131
157

\\Us1268-f01\workgroup\1755\active\175530002\geotechnical\drawing\ODOTSubmittal\projects\ALL\76691\geotechnical\sheets\ALL-75-07.03 (S.R.117-S.R.309)\76691ZL001.dgn

STANTEC CONSULTING SERVICES INC.

LOG OF BORING

BORING NO: B-094-0-08 BASELINE, STATION & OFFSET: STA 368+99, 7.2' RT. SURFACE ELEV.: 899.2 PROJECT IDENTIFICATION: ALL-75-07.03 BRIDGE REPLACEMENT
DATE STARTED: 03/23/09 DATE COMPLETED: 03/24/09 METHOD: 3¼" HSA/NQ WATER ELEV.: -
NORTHING: 391503.7 EASTING: 1532022 SEALING/BACKFILLING TYPE: CUTTINGS HAMMER SYSTEM TYPE: CME AUTOMATIC
QUANTITY: N/A CALIBRATION DATE: 7/17/07 ER: 80%

ELEV.	DEPTH	STD. PEN./ RQD	N_{60}	REC. FT	LOSS FT	DESCRIPTION	SAMPLE TYPE & NO.	% REC.	PHYSICAL CHARACTERISTICS % AGG	% C.S.	% F.S.	% SILT	% CLAY	LL	PL	PI	WC	ODOT CLASS
899.2	0																	VISUAL
897.2	2					ASPHALT PAVEMENT (0.4') AND GRAVEL BASE (1.1') 1.5'												
895.2	4	8/8/9	23			VERY STIFF TO HARD, GRAY SILTY CLAY, SOME SAND, TRACE GRAVEL, DAMP TO MOIST	SS-1	67			COMBINED WITH SS-2						16	A-6b(10)
893.2	6	4/6/7	17				SS-2	67	5	8	19	33	35	35	17	18	17	A-6b(10)
891.2	8	4/5/9	19				SS-3	80			SAME AS SS-2						18	A-6b (VISUAL)
889.2	10	6/7/9	21				SS-4	73			SAME AS SS-2						18	A-6b (VISUAL)
887.2	12	5/8/17	33				SS-5	100			SAME AS SS-2						16	A-6b (VISUAL)
885.2	14					15.0'												
883.2	16	3/4/8	16			VERY STIFF TO HARD, MOTTLED BROWN AND GRAY SILT AND CLAY AND SAND, TRACE GRAVEL, MOIST	SS-6	100	2	16	32	24	26	29	15	14	17	A-6a(5)
881.2	18	9/12/18	40				SS-7	100			SAME AS SS-6						15	A-6a (VISUAL)
879.2	20	13/14/19	44				SS-8	100			SAME AS SS-6						15	A-6a (VISUAL)
877.2	22					22.5'												
875.2	24	7/11/16	36			VERY STIFF TO HARD, MOTTLED BROWN AND GRAY SILT AND CLAY, LITTLE SAND, TRACE GRAVEL, DRY TO MOIST	SS-9	100	5	6	12	38	39	26	14	12	14	A-6a(9)
873.2	26	4/5/9	19				SS-10	100			SAME AS SS-9						16	A-6a (VISUAL)
871.2	28	3/5/8	17				SS-11	100			SAME AS SS-9						16	A-6a (VISUAL)
869.2	30	3/5/9	19				SS-12	100			SAME AS SS-9						16	A-6a (VISUAL)
867.2	32																	
865.2	34	5/8/11	25				SS-13	100			SAME AS SS-9						15	A-6a (VISUAL)
863.2	36																	
861.2	38																	
859.2	40	6/10/13	31				SS-14	100			SAME AS SS-9						15	A-6a (VISUAL)
857.2	42																	
855.2	44																	
853.2	46	10/25/36	81				SS-15	100									6	A-6a (VISUAL)
851.2	48																	
849.2	50	38/37/45	109			TOP OF ROCK BEGIN CORE 51.5'	SS-16	100			SAME AS SS-9						8	A-6a (VISUAL)
847.2	52																	
845.2	54	9		3.7	3.2	DOLOMITE (95%) INTERBEDDED WITH SHALE (5%) UNIT ROD = 3%, LOSS = 31%; DOLOMITE: GRAY-BROWN, MODERATELY WEATHERED, STRONG, THIN TO VERY THIN, VUGGY. SHALE: BLACK, MODERATELY WEATHERED, MODERATELY STRONG, LAMINATED.												
843.2	56																	
841.2	58	0		3.5	0													
839.2	60																	

BOTTOM OF BORING = 61.9'

STANTEC CONSULTING SERVICES INC.

LOG OF BORING

BORING NO: B-095-0-08 BASELINE, STATION & OFFSET: STA 369+53, 76.6' LT. SURFACE ELEV.: 882.5 PROJECT IDENTIFICATION: ALL-75-07.03 BRIDGE REPLACEMENT
DATE STARTED: 03/18/09 DATE COMPLETED: 03/18/09 METHOD: 3¼" HSA/NQ WATER ELEV.: -
NORTHING: 391558.7 EASTING: 1531938 SEALING/BACKFILLING TYPE: CUTTINGS HAMMER SYSTEM TYPE: CME AUTOMATIC
QUANTITY: N/A CALIBRATION DATE: 7/17/07 ER: 80%

ELEV.	DEPTH	STD. PEN./ ROD	N_{60}	REC. FT	LOSS FT	DESCRIPTION	SAMPLE TYPE & NO.	% REC.	PHYSICAL CHARACTERISTICS % AGG	% C.S.	% F.S.	% SILT	% CLAY	LL	PL	PI	WC	ODOT CLASS
882.5	0																	
						SOD AND/OR TOPSOIL 1.5'												VISUAL
880.5	2	5/5/5	13			STIFF, BROWN SANDY SILT, LITTLE CLAY, TRACE GRAVEL, MOIST	SS-1	0			SAME AS SS-2						NR	A-4a (VISUAL)
878.5	4																	
876.5	6	4/4/5	12			6.5'	SS-2	80	5	15	28	32	20	NP	NP	NP	18	A-4a(3)
874.5	8	2/2/4	8			MEDIUM TO VERY STIFF, GRAY SILT AND CLAY AND SAND, TRACE GRAVEL, MOIST	SS-3	67			SAME AS SS-4						17	A-6a (VISUAL)
872.5	10																	
		2/3/5	11				SS-4	100	5	23	30	27	15	27	15	12	16	A-6a(2)
870.5	12																	
868.5	14	2/4/7	15				SS-5	100			SAME AS SS-4						16	A-6a (VISUAL)
866.5	16	2/5/7	16				SS-6	100			SAME AS SS-4						16	A-6a (VISUAL)
864.5	18	4/7/11	24				SS-7	100			SAME AS SS-4						16	A-6a (VISUAL)
862.5	20					20.0'												
		4/7/9	21			VERY STIFF TO HARD, GRAY SILT AND CLAY, LITTLE SAND, TRACE GRAVEL, DAMP TO MOIST	SS-8	100	4	5	11	41	39	27	15	12	16	A-6a(9)
860.5	22																	
858.5	24	4/9/17	35				SS-9	87			SAME AS SS-8						-	A-6a (VISUAL)
856.5	26	q_u=2.94 tsf	-				ST-10	80			SAME AS SS-8						18	A-6a (VISUAL)
854.5	28	5/7/10	23				SS-11	100			SAME AS SS-8						12	A-6a (VISUAL)
852.5	30					30.0'												
		18/15/50+/0.1'	50+			COBBLES AND GRAVEL, INTERBEDDED DOLOMITE AND SHALE (AUGERED) BEGIN CORE 31.5'	SS-12	53									4	A-1-a (VISUAL)
850.5	32																	
		0		1.2	2.0	COBBLES, COARSE GRAVEL, INTERBEDDED WEATHERED DOLOMITE AND SHALE UNIT ROD = 0%, LOSS = 63%												
848.5	34					TOP OF ROCK												
846.5	36																	
844.5	38	0		5.8	1.7	DOLOMITE (95%) INTERBEDDED WITH SHALE (5%) UNIT ROD = 0%, LOSS = 23% DOLOMITE: GRAY, SLIGHTLY WEATHERED, STRONG, THIN TO VERY THIN, VUGGY SHALE: BLACK, SLIGHTLY WEATHERED, MODERATELY STRONG, LAMINATED.												
842.5	40																	
840.5	42					BOTTOM OF BORING = 42.2'												

STANTEC CONSULTING SERVICES INC.

LOG OF BORING

BORING NO: B-097-0-08 BASELINE, STATION & OFFSET: STA 370+50, 69.5' LT. SURFACE ELEV.: 882.6 PROJECT IDENTIFICATION: ALL-75-07.03 BRIDGE REPLACEMENT
DATE STARTED: 03/18/09 DATE COMPLETED: 03/18/09 METHOD: 3¼" HSA/NO WATER ELEV.: -
NORTHING: 391654.9 EASTING: 1531947 SEALING/BACKFILLING TYPE: CUTTINGS HAMMER SYSTEM TYPE: CME AUTOMATIC
QUANTITY: N/A CALIBRATION DATE: 7/17/07 ER: 80%

ELEV.	DEPTH	STD. PEN./ RQD	N_{60}	REC. FT	LOSS FT	DESCRIPTION	SAMPLE TYPE & NO.	% REC.	% AGG	% C.S.	% F.S.	% SILT	% CLAY	LL	PL	PI	WC	ODOT CLASS
882.6	0					SOD AND/OR TOPSOIL 1.2'												VISUAL
880.6	2	5/5/6	15			STIFF, DARK BROWN SILTY CLAY AND SAND, LITTLE GRAVEL, MOIST	SS-1	87			SAME AS SS-2						15	A-6b (VISUAL)
878.6	4																	
876.6	6	2/2/4	8			7.5'	SS-2	93	17	20	23	18	22	37	15	22	18	A-6b(4)
874.6	8	4/5/7	16			STIFF TO VERY STIFF, GRAY SILT AND CLAY, LITTLE SAND, TRACE GRAVEL, DAMP TO MOIST	SS-3	87			SAME AS SS-4						17	A-6a (VISUAL)
872.6	10	4/5/6	15				SS-4	100	5	6	11	40	38	27	16	11	17	A-6a(8)
870.6	12																	
868.6	14	4/6/8	19				SS-5	100			SAME AS SS-4						15	A-6a (VISUAL)
864.6	16	4/5/7	16				SS-6	100			SAME AS SS-4						17	A-6a (VISUAL)
862.6	18	5/7/10	23				SS-7	100			SAME AS SS-4						14	A-6a (VISUAL)
860.6	20	4/7/10	23				SS-8	100			SAME AS SS-4						16	A-6a (VISUAL)
858.6	22																	
856.6	24	6/7/9	21				SS-9	100	6	6	11	38	39	27	16	11	16	A-6a(8)
854.6	26	q_u=3.23 tsf	-				ST-10	100			SAME AS SS-9						15	A-6a (VISUAL)
852.6	28	8/6/11	23			30.0'	SS-11	100			SAME AS SS-9						17	A-6a (VISUAL)
850.6	30	39/50+/0.1'	50+			COBBLES AND GRAVEL, INTERBEDDED DOLOMITE AND SHALE (AUGERED)	SS-12	47			SAME AS SS-9						4	(VISUAL)
848.6	32					TOP OF ROCK BEGIN CORE 32.5'												
846.6	34	13		8.5	1.5	DOLOMITE; LIGHT GRAY TO GRAY, SLIGHTLY WEATHERED, STRONG, THIN TO VERY THIN, VUGGY UNIT RQD = 13%, LOSS = 15%												
844.6	36																	
842.6	38																	
840.6	40																	
838.6	42																	

BOTTOM OF BORING = 42.5'

STANTEC CONSULTING SERVICES INC.

LOG OF BORING

BORING NO: B-098-0-08 BASELINE, STATION & OFFSET: STA 369+67, 73.6' RT. SURFACE ELEV.: 882.7 PROJECT IDENTIFICATION: ALL-75-07.03 BRIDGE REPLACEMENT
DATE STARTED: 03/18/09 DATE COMPLETED: 03/18/09 METHOD: 3¼" HSA/NQ WATER ELEV.: -
NORTHING: 391570.2 EASTING: 1532089 SEALING/BACKFILLING TYPE: CUTTINGS HAMMER SYSTEM TYPE: CME AUTOMATIC
QUANTITY: N/A CALIBRATION DATE: 7/17/07 ER: 80%

ELEV.	DEPTH	STD. PEN./ ROD	N_{60}	REC. FT	LOSS FT	DESCRIPTION	SAMPLE TYPE & NO.	% REC.	% AGG	% C.S.	% F.S.	% SILT	% CLAY	LL	PL	PI	WC	ODOT CLASS
882.7	0																	
						SOD AND/OR TOPSOIL 1.5'												VISUAL
880.7	2	5/7/11	24			STIFF, BROWN SANDY SILT, SOME CLAY, LITTLE GRAVEL, SAND SEAMS, MOIST	SS-1	100	12	8	20	35	25	25	15	10	16	A-4a(5)
878.7	4					5.0'												
876.7	6	2/5/7	16			STIFF TO HARD, GRAY SILT AND CLAY, LITTLE SAND, TRACE GRAVEL, DAMP TO MOIST	SS-2	100			SAME AS SS-3						14	A-6a (VISUAL)
874.7	8	4/6/8	19				SS-3	100	4	6	12	40	38	26	15	11	16	A-6a(8)
872.7	10																	
		3/5/6	15				SS-4	100			SAME AS SS-3						16	A-6a (VISUAL)
870.7	12																	
		4/6/7	17				SS-5	100			SAME AS SS-3						17	A-6a (VISUAL)
868.7	14																	
866.7	16	3/5/7	16				SS-6	100			SAME AS SS-3						15	A-6a (VISUAL)
864.7	18	6/7/11	24				SS-7	100			SAME AS SS-3						16	A-6a (VISUAL)
862.7	20																	
		5/7/9	21				SS-8	100			SAME AS SS-3						16	A-6a (VISUAL)
860.7	22																	
858.7	24	5/13/16	39				SS-9	100	5	6	11	38	40	27	15	12	15	A-6a(9)
856.7	26	6/7/11	24				SS-10	100			SAME AS SS-9						19	A-6a (VISUAL)
854.7	28	10/8/8	21				SS-11	100			SAME AS SS-9						9	A-6a (VISUAL)
852.7	30																	
		50+/0.6'	50+				SS-12	7			SAME AS SS-9						13	A-6a (VISUAL)
850.7	32																	
848.7	34					BEGIN CORE 33.9'												
846.7	36	0		1.7 TOP OF ROCK	0.6	COBBLES, COARSE GRAVEL, INTERBEDDED WEATHERED DOLOMITE AND SHALE UNIT ROD = 0%, LOSS = 26%												
844.7	38	18		5.0	0.0	DOLOMITE: GRAY, SLIGHTLY WEATHERED, STRONG, THIN TO VERY THIN, VUGGY, (INTERSPERSED VERTICAL JOINTING PRESENT) UNIT ROD = 18%, LOSS = 0%												
842.7	40																	

BOTTOM OF BORING = 41.2'
NOTE: DRILL RIG BROKE DOWN, TERMINATING BORING PRIOR TO REACHING NECESSARY DEPTH.

STRUCTURE FOUNDATION EXPLORATION
BRIDGE NO. ALL-75-0703 L&R OVER S.R. 117/309

DRAWN M.S.J. CHECKED R.J.K.

\\Us1268-f01\workgroup\1755\active\175530002\geotechnical\drawing\ODOTSubmittal\projects\ALL\76691\geotechnical\sheets\ALL-75-07.03 (S.R.117-S.R.309)\76691ZL005.dgn

STANTEC CONSULTING SERVICES INC.

LOG OF BORING

BORING NO: B-100-0-08 BASELINE, STATION & OFFSET: STA 370+52, 70.1' RT. SURFACE ELEV.: 883.4 PROJECT IDENTIFICATION: ALL-75-07.03 BRIDGE REPLACEMENT
DATE STARTED: 03/17/09 DATE COMPLETED: 03/17/09 METHOD: 3¼" HSA/NQ WATER ELEV.: -
NORTHING: 391656 EASTING: 1532086 SEALING/BACKFILLING TYPE: CUTTINGS HAMMER SYSTEM TYPE: CME AUTOMATIC
QUANTITY: N/A CALIBRATION DATE: 7/17/07 ER: 80%

ELEV.	DEPTH	STD. PEN./ ROD	N_{60}	REC. FT	LOSS FT	DESCRIPTION	SAMPLE TYPE & NO.	% REC.	% AGG	% C.S.	% F.S.	% SILT	% CLAY	LL	PL	PI	WC	ODOT CLASS
883.4	0					SOD AND/OR TOPSOIL 1.0'												VISUAL
881.4	2	6/5/4	12			LOOSE TO MEDIUM DENSE, BROWN GRAVEL WITH SAND, LITTLE SILT, TRACE CLAY, MOIST	SS-1	67			SAME AS SS-2						14	A-1-b (VISUAL)
879.4	4																	
877.4	6	3/3/3	8				SS-2	80	22	36	20	13	9	NP	NP	NP	13	A-1-b(0)
875.4	8	2/3/5	11			7.5'	SS-3	67			SAME AS SS-4						16	A-6a (VISUAL)
873.4	10					STIFF TO VERY STIFF, GRAY SILT AND CLAY, LITTLE SAND AND GRAVEL, MOIST												
871.4	12	3/3/6	12				SS-4	100	11	5	10	36	38	28	13	15	17	A-6a(10)
869.4	14	3/5/7	16				SS-5	100			SAME AS SS-4						16	A-6a (VISUAL)
867.4	16	3/4/6	13				SS-6	100			SAME AS SS-4						17	A-6a (VISUAL)
865.4	18	4/7/10	23			17.5' VERY STIFF, GRAY SANDY SILT AND CLAY, TRACE GRAVEL, MOIST	SS-7	67			SAME AS SS-9						16	A-4a (VISUAL)
863.4	20																	
861.4	22	ST	-				ST-8	87			SAME AS SS-9						NR	A-4a (VISUAL)
859.4	24	3/5/13	24				SS-9	100	6	6	11	37	40	26	16	10	14	A-4a(8)
857.4	26	7/9/13	29				SS-10	100			SAME AS SS-9						14	A-4a (VISUAL)
855.4	28	3/3/9	16				SS-11	100			SAME AS SS-9						17	A-4a (VISUAL)
853.4	30					30.0'												
851.4	32	9/21/27	64			HARD, GRAY SANDY SILT AND GRAVEL, TRACE CLAY, MOIST	SS-12	80	53	3	6	32	6	NP	NP	NP	6	A-4a(1)
849.4	34	24/50+/0.2'	50+			BEGIN CORE 35.0'	SS-13	47			SAME AS SS-9						9	A-4a (VISUAL)
847.4	36				TOP OF ROCK	COBBLES, COARSE GRAVEL, INTERBEDDED WEATHERED DOLOMITE AND SHALE UNIT RQD = 0%, LOSS = 50%												
845.4	38	16		7.0	1.0	DOLOMITE (95%) INTERBEDDED WITH SHALE (5%) UNIT RQD = 18%, LOSS = 0% DOLOMITE: GRAY, SLIGHTLY WEATHERED, STRONG, THIN TO VERY THIN, VUGGY SHALE: BLACK, SLIGHTLY WEATHERED, MODERATELY STRONG, LAMINATED.												
843.4	40																	
841.4	42																	

BOTTOM OF BORING = 43.0'
NOTE: DRILL RIG BROKE DOWN, TERMINATING BORING PRIOR TO REACHING NECESSARY DEPTH.

\\Us1268-f01\workgroup\1755\active\175530002\geotechnical\drawing\ODOTSubmittal\projects\ALL\76691\geotechnical\sheets\ALL-75-07.03 (S.R.117-S.R.309)\76691ZL006.dgn

STANTEC CONSULTING SERVICES INC.

LOG OF BORING

BORING NO: B-101-0-08 BASELINE, STATION & OFFSET: STA 371+13, 7.8' LT. SURFACE ELEV.: 899.2 PROJECT IDENTIFICATION: ALL-75-07.03 BRIDGE REPLACEMENT
DATE STARTED: 03/27/08 DATE COMPLETED: 03/27/08 METHOD: 3¼" HSA/NQ WATER ELEV.: -
NORTHING: 391717.1 EASTING: 1532009 SEALING/BACKFILLING TYPE: CUTTINGS HAMMER SYSTEM TYPE: CME AUTOMATIC
QUANTITY: N/A CALIBRATION DATE: 10/16/08 ER: 82.5%

ELEV.	DEPTH	STD. PEN./ ROD	N_{60}	REC. FT	LOSS FT	DESCRIPTION	SAMPLE TYPE & NO.	% REC.	% AGG	% C.S.	% F.S.	% SILT	% CLAY	LL	PL	PI	WC	ODOT CLASS
899.2	0					ASPHALT PAVEMENT (0.4') AND GRAVEL BASE (1.0') 1.4'												VISUAL
897.2	2	7/6/6	17			STIFF TO VERY STIFF, BROWN SILT AND CLAY, LITTLE SAND, TRACE GRAVEL, DAMP TO MOIST	SS-1	67			SAME AS SS-2						17	A-6a (VISUAL)
895.2	4																	
893.2	6	6/5/6	15				SS-2	80	5	6	12	38	39	31	17	14	17	A-6a(10)
891.2	8	4/5/6	15				SS-3	100			SAME AS SS-2						14	A-6a (VISUAL)
889.2	10	4/6/7	18				SS-4	100			SAME AS SS-2						16	A-6a (VISUAL)
887.2	12	5/7/7	19				SS-5	100			SAME AS SS-2						15	A-6a (VISUAL)
885.2	14	3/5/8	18				SS-6	100			SAME AS SS-2						16	A-6a (VISUAL)
883.2	16					17.5'												
881.2	18	3/4/5	12			STIFF, GRAY SILT AND CLAY AND SAND, TRACE GRAVEL, MOIST	SS-7	100	4	12	32	27	25	30	16	14	16	A-6a(5)
879.2	20					20.0'												
877.2	22	3/4/4	11			STIFF, MOTTLED BROWN AND GRAY SILTY CLAY, SOME SAND, SOME GRAVEL, MOIST	SS-8	100	21	19	14	23	23	32	16	16	17	A-6b(5)
875.2	24	3/5/4	12				SS-9	100			SAME AS SS-8						18	A-6b (VISUAL)
873.2	26					25.0'												
871.2	28	1/3/3	8			MEDIUM STIFF TO HARD, GRAY SILT AND CLAY, LITTLE SAND, TRACE GRAVEL, SAND SEAMS, MOIST	SS-10	67			SAME AS SS-11						18	A-6a (VISUAL)
869.2	30	4/8/10	25				SS-11	100	4	7	11	39	39	26	14	12	15	A-6a(9)
867.2	32	q_u=1.81 tsf	-				ST-12	100			SAME AS SS-11						16	A-6a (VISUAL)
865.2	34	3/8/14	30				SS-13	100			SAME AS SS-11						16	A-6a (VISUAL)
863.2	36																	
861.2	38																	
859.2	40	3/6/8	19				SS-14	100			SAME AS SS-11						16	A-6a (VISUAL)
857.2	42																	
855.2	44																	
853.2	46	8/11/16	37				SS-15	100			SAME AS SS-11						14	A-6a (VISUAL)
851.2	48																	
849.2	50	50+/0.2'	50+			TOP OF ROCK BEGIN CORE 50.0'	SS-16	NR			SAME AS SS-11						NR	A-6a (VISUAL)
847.2	52																	
845.2	54	31		7.0	0.5	DOLOMITE: BROWN-GRAY, MODERATELY WEATHERED, STRONG, THIN TO VERY THIN, VUGGY UNIT ROD = 31%, LOSS = 6%												
843.2	56																	

BOTTOM OF BORING = 57.5'
NOTE: DRILL RIG BROKE DOWN, TERMINATING BORING PRIOR TO REACHING NECESSARY DEPTH.

UNCONFINED COMPRESSION STRENGTH OF COHESIVE SOIL (ASTM D 2166)

Project Name ALL-75 — Project Number 175506027
Source B-095, 25.0'-27.0' — Lab ID 701
Visual Description Very stiff, gray silt and clay, damp
Recovered 1.1'
Test Interval 25.5' - 26.1'

Specimen Type: Undisturbed
LL N/A
PL N/A
PI N/A
Date Extruded 04/15/2009
Date Tested 04/15/2009

Initial Wet Density (pcf)	136.5
Initial Dry Density (pcf)	115.9
Initial Moisture Content (%)	17.7
Specific Gravity	N/A
Degree of Saturation (%)	N/A
Average Height (in)	6.063
Average Diameter (in)	2.827
Height to Diameter Ratio	2.1

MC Taken Before Test, From Trimmings

Unconfined Compressive Strength (tsf)	2.94
Undrained Shear Strength (tsf)	1.47
Strain at Maximum Stress (%)	11.38
Strain rate to failure (% / min.)	0.76

Stress vs. Strain

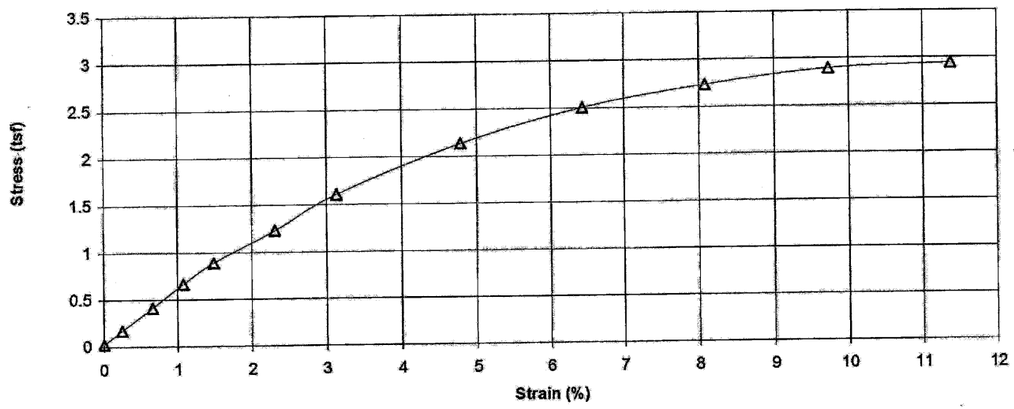

Failure Sketch

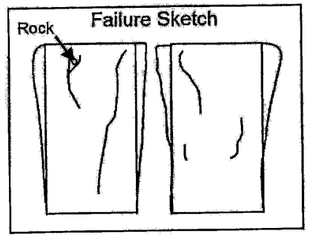

Pocket Penetrometer Reading (tsf) N/A
Torvane Reading (kg/cm²) N/A

Comments

UNCONFINED COMPRESSION STRENGTH OF COHESIVE SOIL (ASTM D 2166)

Project Name ALL-75 — Project Number 175506027
Source B-097, 25.0'-27.0' — Lab ID 713
Visual Description Very stiff, gray silt and clay, damp
Recovered 1.8'
Test Interval 25.5' - 26.1'

Specimen Type: Undisturbed
LL N/A
PL N/A
PI N/A
Date Extruded 04/15/2009
Date Tested 04/15/2009

Initial Wet Density (pcf)	137.6
Initial Dry Density (pcf)	119.4
Initial Moisture Content (%)	15.3
Specific Gravity	N/A
Degree of Saturation (%)	N/A
Average Height (in)	6.420
Average Diameter (in)	2.833
Height to Diameter Ratio	2.3

MC Taken Before Test, From Trimmings

Unconfined Compressive Strength (tsf)	3.23
Undrained Shear Strength (tsf)	1.62
Strain at Maximum Stress (%)	13.86
Strain rate to failure (% / min.)	0.99

Stress vs. Strain

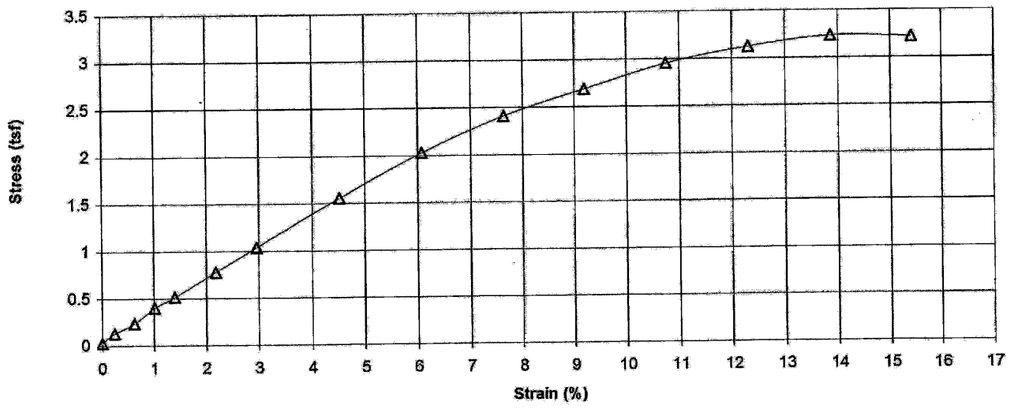

Failure Sketch

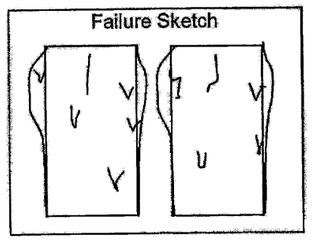

Pocket Penetrometer Reading (tsf) N/A
Torvane Reading (kg/cm²) N/A

Comments

DRAWN C.W. CHECKED R.J.K.

STRUCTURE FOUNDATION EXPLORATION
BRIDGE NO. ALL-75-0703 L&R OVER S.R. 117 / 309

ALL-75-5.53

\\Us1268-f01\workgroup\1755\active\175530002\geotechnical\drawing\ODOTSubmittal\projects\ALL\7669\geotechnical\sheets\ALL-75-07.03 (S.R.117-S.R.309)\766912D001.dgn

UNCONFINED COMPRESSION STRENGTH OF COHESIVE SOIL
(ASTM D 2166)

Project Name ALL-75 Project Number 175506027
Source B-101, 30.0'-32.0' Lab ID 904
Visual Description Stiff gray clay, moist

Recovered 2'
Test Interval 30.2' - 30.8'

Specimen Type: Undisturbed

LL N/A
PL N/A
PI N/A

Date Extruded 05/02/2009
Date Tested 05/02/2009

Initial Wet Density (pcf)	135.7
Initial Dry Density (pcf)	116.9
Initial Moisture Content (%)	16.1
Specific Gravity	N/A
Degree of Saturation (%)	N/A
Average Height (in)	6.047
Average Diameter (in)	2.827
Height to Diameter Ratio	2.1

MC Taken Before Test, From Trimmings

Unconfined Compressive Strength (tsf)	1.91
Undrained Shear Strength (tsf)	0.96
Strain at Maximum Stress (%)	14.72
Strain rate to failure (% / min.)	0.85

Stress vs. Strain

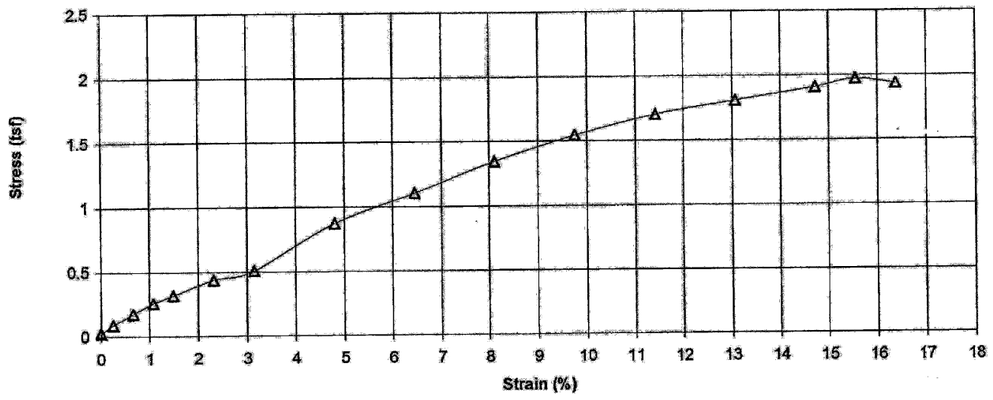

Failure Sketch

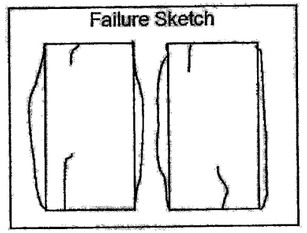

Pocket Penetrometer Reading (tsf) N/A
Torvane Reading (kg/cm^2) N/A

Comments

DRAWN C.W. CHECKED R.J.K.

STRUCTURE FOUNDATION EXPLORATION
BRIDGE NO. ALL-75-0703 L&R OVER S.R. 117 / 309

ALL-75-5.53

10 / 10

139 / 157

\\Us1268-f01\workgroup\1755\active\175530002\geotechnical\drawing\ODOTSubmittal\projects\ALL\7669\geotechnical\sheets\ALL-75-07.03 (S.R.117-S.R.309)\7669IZD002.dgn

PROJECT DESCRIPTION

REPLACE THE EXISTING I-75 REINFORCED CONCRETE BRIDGE OVER THE CHICAGO FT. WAYNE & EASTERN RAILWAY.

HISTORIC RECORDS

HISTORIC BORING RECORDS FOR THE EXISITNG BRIDGE WERE REQUESTED FROM THE ODOT OFFICE OF GEOTECHNICAL ENGINEERING AND THE DISTRICT. THE INFORMATION PROVIDED FROM THE EXPLORATION FOR THE ORIGINAL BRIDGE SHOWED THAT BEDROCK WAS ENCOUNTERED BETWEEN ELEVATIONS 844 AND 847.5 FEET. THE BEDROCK WAS DESCRIBED AS HAVING A COVERING OF BROWN SILT.

GEOLOGY

THE STRUCTURE SITE IS LOCATED IN THE CENTRAL OHIO CLAYEY TILL PLAIN. THIS REGION IS COMPRISED OF GROUND MORAINE AND END MORAINE TILL DEPOSITS OVERLYING DOLOMITE WITH INTERBEDDED SHALE. CAVES AND OTHER KARST FEATURES MAY BE PRESENT ACCORDING TO THE PHYSIOGRAPHIC REGION OF OHIO MAP (ODNR, 1998), BUT NO KNOW FEATURES WERE IDENTIFIED IN THE OHIO KARST AREAS MAP (ODNR, 2007).

RECONNAISSANCE

A FIELD RECONNAISSANCE WAS COMPLETED ON MARCH 13, 2007, FOCUSING MAINLY ON PAVEMENT CONDITIONS AND SITE TOPOGRAPHY AND DRAINAGE. THE MAINLINE SHOULDER PAVEMENTS SHOW EXTENSIVE "ALLIGATOR" CRACKING AND THE MAINLINE PAVEMENTS SHOW REFLECTIVE CRACKING AT THE EXPANSION JOINT LOCATIONS.

THE SURROUNDING AREA IS DESCRIBED AS GENTLY UNDULATING WITH MOST OF THE SURROUNDING AREA CONSISTING OF OPEN FIELD OR LIGHTLY DEVELOPED COMMERCIAL AND RESIDENTIAL DISTRICTS. DRAINAGE ALONG THE ALIGNMENT IS DESCRIBED AS SLUGGISH WITH AREAS OF STANDING WATER, AND FLOWING WATER IN DRAINAGE DITCHES AND NATURAL STREAMS GENERALLY CREATING STEEP TO VERTICAL CUT BANKS IN THE SOIL PROFILE.

SUBSURFACE EXPLORATION

THREE BORINGS WERE ADVANCED AT THE I-75 BRIDGE OVER THE CHICAGO FT. WAYNE & EASTERN RAILROAD. ONE BORING WAS ADVANCED NEAR EACH ABUTMENT AND AN INTERIOR PIER OF THE EXISTING STRUCTURE. THE ABUTMENT BORINGS (B-114 AND B-117) WERE LOCATED ON I-75, WHILE THE PIER BORING (B-116) WAS ADVANCED BENEATH THE BRIDGE ALONG THE RAILROAD. THE BORINGS WERE ADVANCED USING 3.25-INCH I.D. HOLLOW-STEM AUGERS. STANDARD PENETRATION TEST (SPT) AND UNDISTURBED SHELBY TUBE (ST) SAMPLES WERE OBTAINED FOR THE UPPER 30 FEET AT 2.5-FOOT INTERVALS AND AT 5-FOOT INTERVALS BELOW THIS DEPTH FOR EACH SUBSTRUCTURE. SPT SAMPLES WERE OBTAINED USING A TWO SEPERATE DRILL RIGS WITH CALIBRATED AUTOMATIC HAMMERS WITH ENERGY RATIOS (ER) OF 82.5% (CALIBRATED ON 10/16/2008) AND 78.5%CALIBRATED ON 6/4/2009). UPON ENCOUNTERING BEDROCK, NQ-SIZED ROCK CORING EQUIPMENT WAS USED TO OBTAIN 10 FEET OF ROCK CORE SAMPLE. AT THE CONCLUSION OF DRILLING OPERATIONS, BOREHOLES WERE BACKFILLED WITH AUGER SOIL CUTTINGS.

EXPLORATION FINDINGS

FINE GRAINED GLACIAL SOILS CLASSIFYING AS MEDIUM STIFF TO HARD SILT AND CLAY (A-6a) AND SILTY CLAY (A-6b) WERE ENCOUNTERED IN ALL BORINGS.

BEDROCK WAS ENCOUNTERED IN ALL BORINGS AT ELEVATIONS RANGING FROM 844.7 (B-114) TO 846.0 (B-116). THE BEDROCK WAS DESCRIBED AS DOLOMITE (95 PERCENT OF THE UNIT) WITH INTERBEDDED SHALE (5 PERCENT OF THE UNIT). THE DOLOMITE WAS DESCRIBED AS GRAY TO GRAY-BROWN, SLIGHTLY WEATHERED, AND STRONG WITH LAMINATED TO THIN BEDDING AND A VUGGY APPEARANCE IN PLACES. THE SHALE WAS DESCRIBED AS BLACK, SLIGHTLY TO MODERATELY WEATHERED, AND MODERATELY STRONG WITH LAMINATED BEDDING.

NO STATIC WATER LEVEL WAS OBSERVED IN THE BORINGS PRIOR TO BORING TERMINATION.

SPECIFICATIONS

THIS GEOTECHNICAL EXPLORATION WAS PERFORMED IN ACCORDANCE WITH THE STATE OF OHIO, DEPARTMENT OF TRANSPORTATION, OFFICE OF GEOTECHNICAL ENGINEERING, SPECIFICATIONS FOR GEOTECHNICAL EXPLORATIONS, DATED JANUARY 2009.

AVAILABLE INFORMATION

ALL AVAILABLE SOIL AND BEDROCK INFORMATION THAT CAN BE CONVENIENTLY SHOWN ON THE PROFILE SHEETS HAS BEEN SO REPORTED. ADDITIONAL SUBSURFACE EXPLORATIONS MAY HAVE BEEN MADE TO STUDY SOME SPECIAL ASPECT OF THE PROJECT. COPIES OF THIS DATA, IF ANY, MAY BE INSPECTED IN THE DISTRICT DEPUTY DIRECTOR'S OFFICE, THE OFFICE OF GEOTECHNICAL ENGINEERING AT 1600 WEST BROAD STREET COLUMBUS, OHIO OR THE OFFICE OF STRUCTURAL ENGINEERING AT 1980 WEST BROAD STREET COLUMBUS, OHIO.

LEGEND

DESCRIPTION	ODOT CLASS	CLASSIFIED MECH./VISUAL	
SILT AND CLAY	A-6a	4	15
SILTY CLAY	A-6b	5	6
	TOTAL	9	21
SHALE	*VISUAL*		
DOLOMITE	*VISUAL*		

EXPLORATION LOCATION - PLAN VIEW

DRIVE SAMPLE AND/OR ROCK CORE BORING PLOTTED TO VERTICAL SCALE ONLY. HORIZONTAL BAR INDICATES A CHANGE IN STRATIGRAPHY.

N_{60} INDICATES CORRECTED STANDARD PENETRATION RESISTANCE FOR 60% EFFICIENCY.

WC INDICATES WATER CONTENT IN PERCENT.

NP INDICATES A NON-PLASTIC SAMPLE.

TR INDICATES TOP OF ROCK.

BC INDICATES BEGIN CORE.

SS INDICATES A SPLIT SPOON SAMPLE, STANDARD PENETRATION TEST.

ST INDICATES A SHELBY TUBE SAMPLE.

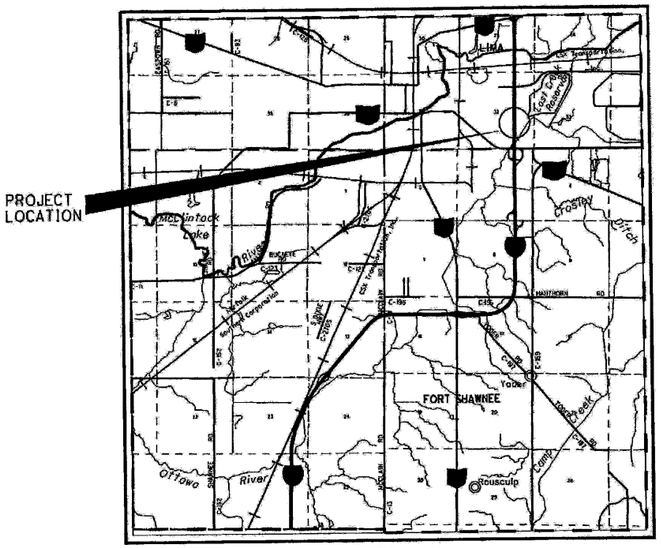

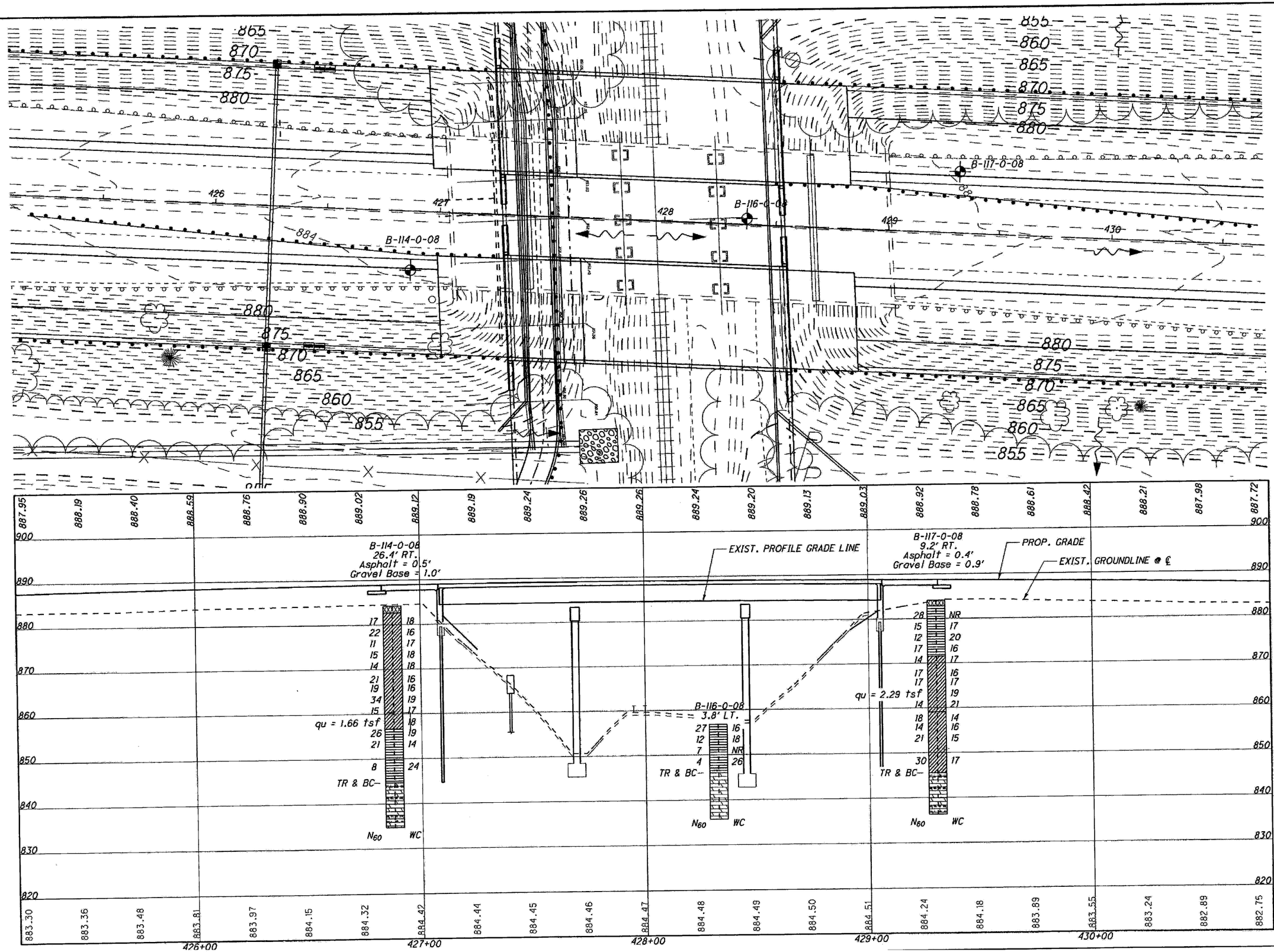

HORIZONTAL SCALE IN FEET

DRAWN M.J.
CHECKED J.M.M.

STRUCTURE FOUNDATION EXPLORATION
I-75 OVER CHICAGO-FT WAYNE & EASTERN RAILWAY

ALL-75-08.13

2 / 5

14
159

OHIO DEPARTMENT OF TRANSPORTATION
OFFICE OF GEOTECHNICAL ENGINEERING

LOG OF BORING

BORING NO: B-114-0-08 BASELINE, STATION & OFFSET: STA. 426+87.7, 26.4' RT. SURFACE ELEV.: 884.1 PROJECT IDENTIFICATION: ALL-75-08.13
DATE STARTED: 03/25/09 DATE COMPLETED: 03/25/09 METHOD: 3¼" HSA/NQ WATER ELEV.: – BRIDGE WIDENING
NORTHING: 397289.8 EASTING: 1532127.7 SEALING/BACKFILLING TYPE: CUTTINGS HAMMER SYSTEM TYPE: CME AUTOMATIC
QUANTITY: N/A CALIBRATION DATE: 10/16/08 ER: 82.5%

ELEV.	DEPTH	STD. PEN./ RQD	N_{60}	REC. FT	LOSS FT	DESCRIPTION	SAMPLE TYPE & NO.	% REC.	% AGG	% C.S.	% F.S.	% SILT	% CLAY	LL	PL	PI	WC	ODOT CLASS
884.1	0					ASPHALT PAVEMENT (0.4') AND GRAVEL BASE (1.1') 1.5'												VISUAL
882.1	2	7/5/7	17			STIFF TO HARD, MOTTLED BROWN AND GRAY SILT AND CLAY, LITTLE SAND, TRACE GRAVEL, DAMP TO MOIST	SS-1	67			SAME AS SS-2						18	A-6a (VISUAL)
880.1	4						SS-2	80	3	6	13	37	41	30	17	13	16	A-6a(9)
878.1	6	4/7/9	22				SS-3	100			SAME AS SS-2						17	A-6a (VISUAL)
876.1	8	3/3/5	11				SS-4	80			SAME AS SS-2						18	A-6a (VISUAL)
874.1	10	5/5/6	15				SS-5	100			SAME AS SS-2						18	A-6a (VISUAL)
872.1	12	4/5/5	14				SS-6	100	5	7	13	37	38	30	16	14	16	A-6a(10)
870.1	14	5/7/8	21				SS-7	100			SAME AS SS-6						16	A-6a (VISUAL)
868.1	16	3/5/9	19				SS-8	100			SAME AS SS-6						19	A-6a (VISUAL)
866.1	18	7/12/13	34				SS-9	100			SAME AS SS-6						17	A-6a (VISUAL)
864.1	20	5/5/6	15				ST-10	67			SAME AS SS-6						18	A-6a (VISUAL)
862.1	22																	
860.1	24																	
858.1	26	q_u=1.66 tsf	–			27.5'												
856.1	28	6/8/11	26			VERY STIFF, GRAY SILTY CLAY, LITTLE SAND, TRACE GRAVEL, DAMP TO MOIST	SS-11	100	2	6	13	35	44	36	18	18	18	A-6b(11)
854.1	30																	
852.1	32	7/8/7	21				SS-12	100			SAME AS SS-11						14	A-6b (VISUAL)
850.1	34					35.0'												
848.1	36	2/2/4	8			MEDIUM STIFF, MOTTLED GRAY AND BROWN SILTY CLAY, SOME SAND, TRACE GRAVEL, MOIST	SS-13	100	6	9	17	32	36	38	18	20	24	A-6b(11)
846.1	38																	
844.1	40					TOP OF ROCK BEGIN CORE 39.4'												
842.1	42					DOLOMITE (95%) INTERBEDDED WITH SHALE (5%) UNIT RQD = 0%, LOSS = 0%; DOLOMITE: GRAY TO BROWN-GRAY, SLIGHTLY WEATHERED, STRONG, THIN TO VERY THIN, VUGGY. SHALE: BLACK TO DARK BROWN, SLIGHTLY TO MODERATELY WEATHERED, MODERATELY STRONG, LAMINATED												
840.1	44																	
838.1	46	0		10.0	0.0													
836.1	48																	

BOTTOM OF BORING = 49.4'

OHIO DEPARTMENT OF TRANSPORTATION
OFFICE OF GEOTECHNICAL ENGINEERING

LOG OF BORING

BORING NO: B-116-0-08 BASELINE, STATION & OFFSET: STA. 428+32.4, 3.8' LT. SURFACE ELEV.: 856.8 PROJECT IDENTIFICATION: ALL-75-08.13 BRIDGE WIDENING
DATE STARTED: 09/23/09 DATE COMPLETED: 09/23/09 METHOD: 3¼" HSA/NQ WATER ELEV.: -
NORTHING: 397435.0 EASTING: 1532100.2 SEALING/BACKFILLING TYPE: CUTTINGS HAMMER SYSTEM TYPE: CME AUTOMATIC
QUANTITY: N/A CALIBRATION DATE: 06/04/09 ER: 78.5%

ELEV.	DEPTH	STD. PEN./ RQD	N_{60}	REC. FT	LOSS FT	DESCRIPTION	SAMPLE TYPE & NO.	% REC.	PHYSICAL CHARACTERISTICS % AGG	% C.S.	% F.S.	% SILT	% CLAY	LL	PL	PI	WC	ODOT CLASS
856.8	0																	
854.8	2	7/9/12	27			STIFF TO VERY STIFF, BROWN SILTY CLAY, LITTLE GRAVEL, TRACE SAND, DAMP	SS-1	67	17	10	21	31	21	32	13	19	16	A-6b(7)
852.8	4																	
		3/4/5	12				SS-2	33			SAME AS SS-1						18	A-6b (VISUAL)
850.8	6																	
		2/2/3	7				SS-3	0			SAME AS SS-1						-	A-6b (VISUAL)
848.8	8																	
		1/2/1	4				SS-4	67			SAME AS SS-1						26	A-6b (VISUAL)
846.8	10					TOP OF ROCK BEGIN CORE 10.8'												
844.8	12					DOLOMITE (95%) INTERBEDDED WITH SHALE (5%) UNIT RQD = 15%, LOSS = 4%; DOLOMITE: GRAY, UNWEATHERED, STRONG, THIN TO VERY THIN. SHALE: BLACK, SLIGHTLY WEATHERED, MODERATELY STRONG, LAMINATED. HIGHLY FRACTURED HORIZONTAL, VERTICAL JOINTING AT 840.8'.												
842.8	14																	
840.8	16																	
838.8	18																	
836.8	20					BOTTOM OF BORING = 21.1'												
		15		10.0	0.4													

LOG OF BORING

BORING NO: B-117-0-08 BASELINE, STATION & OFFSET: STA. 429+30.4, 28.7' LT. SURFACE ELEV.: 884.0 PROJECT IDENTIFICATION: ALL-75-08.13 BRIDGE WIDENING
DATE STARTED: 03/26/09 DATE COMPLETED: 03/26/09 METHOD: 3¼" HSA/NQ WATER ELEV.: -
NORTHING: 397675.5 EASTING: 1532077.0 SEALING/BACKFILLING TYPE: CUTTINGS HAMMER SYSTEM TYPE: CME AUTOMATIC
QUANTITY: N/A CALIBRATION DATE: 10/16/08 ER: 82.5%

ELEV.	DEPTH	STD. PEN./ RQD	N_{60}	REC. FT	LOSS FT	DESCRIPTION	SAMPLE TYPE & NO.	% REC.	PHYSICAL CHARACTERISTICS % AGG	% C.S.	% F.S.	% SILT	% CLAY	LL	PL	PI	WC	ODOT CLASS
884.0	0					ASPHALT PAVEMENT (0.4') AND GRAVEL BASE (0.9') 1.3'												VISUAL
882.0	2																	
880.0	4	8/9/11	28			STIFF TO VERY STIFF, BROWN GRADING TO GRAY SILTY CLAY, TRACE SAND, TRACE GRAVEL, DAMP TO MOIST	SS-1	0			SAME AS SS-2						-	A-6b (VISUAL)
878.0	6	3/5/6	15				SS-2	100	14	12	12	30	32	35	17	18	17	A-6b(9)
876.0	8	5/4/5	12				SS-3	100	9	5	15	37	34	38	19	19	20	A-6b(11)
874.0	10																	
		3/5/7	17				SS-4	80			SAME AS SS-3						16	A-6b (VISUAL)
872.0	12					12.5'												
870.0	14	3/5/5	14			STIFF TO VERY STIFF, MOTTLED BROWN AND GRAY SILT AND CLAY, LITTLE SAND, TRACE GRAVEL, DAMP TO MOIST	SS-5	100	4	6	12	37	41	31	18	13	17	A-6a(9)
868.0	16	3/6/6	17				SS-6	100			SAME AS SS-5						16	A-6a (VISUAL)
866.0	18	4/6/6	17				SS-7	100			SAME AS SS-5						17	A-6a (VISUAL)
864.0	20																	
		q_u=2.29 tsf	-				ST-8	65			SAME AS SS-5						19	A-6a (VISUAL)
862.0	22																	
		3/3/7	14				SS-9	100			SAME AS SS-5						21	A-6a (VISUAL)
860.0	24					25.0'												
858.0	26	7/5/8	18			STIFF TO VERY STIFF, GRAY SILT AND CLAY AND SAND, TRACE GRAVEL, DAMP TO MOIST	SS-10	67			SAME AS SS-6						14	A-6a (VISUAL)
856.0	28																	
		3/4/6	14				SS-11	100	5	12	31	31	21	29	17	12	16	A-6a(4)
854.0	30																	
		9/12/3	21				SS-12	20			SAME AS SS-11						15	A-6a (VISUAL)
852.0	32																	
850.0	34																	
848.0	36	10/10/12	30				SS-13	67			SAME AS SS-11						17	A-6a (VISUAL)
846.0	38					TOP OF ROCK BEGIN CORE 38.5'												
844.0	40					DOLOMITE (95%) INTERBEDDED WITH SHALE (5%) UNIT RQD = 0%, LOSS = 0%; DOLOMITE: GRAY TO BROWN-GRAY, SLIGHTLY WEATHERED, STRONG, THIN TO VERY THIN, VUGGY. SHALE: BLACK TO DARK BROWN, SLIGHTLY TO MODERATELY WEATHERED, MODERATELY STRONG, LAMINATED												
842.0	42																	
		0		9.2	0.0													
840.0	44																	
838.0	46					BOTTOM OF BORING = 47.7'												

UNCONFINED COMPRESSION STRENGTH OF COHESIVE SOIL
(ASTM D 2166)

Project Name ALL-75
Project Number 175506027
Source B-114, 25.0'-27.0'
Lab ID 938
Visual Description Stiff, gray-brown silt and clay, moist
Recovered 1.5'
Test Interval 25.5' - 26.0'

Specimen Type: Undisturbed
LL N/A
PL N/A
PI N/A
Date Extruded 05/02/2009
Date Tested 05/02/2009

Initial Wet Density (pcf)	131.6
Initial Dry Density (pcf)	111.4
Initial Moisture Content (%)	18.2
Specific Gravity	N/A
Degree of Saturation (%)	N/A
Average Height (in)	6.317
Average Diameter (in)	2.847
Height to Diameter Ratio	2.2

MC Taken Before Test, From Trimmings

Unconfined Compressive Strength (tsf)	1.66
Undrained Shear Strength (tsf)	0.83
Strain at Maximum Stress (%)	12.51
Strain rate to failure (% / min.)	0.91

Stress vs. Strain

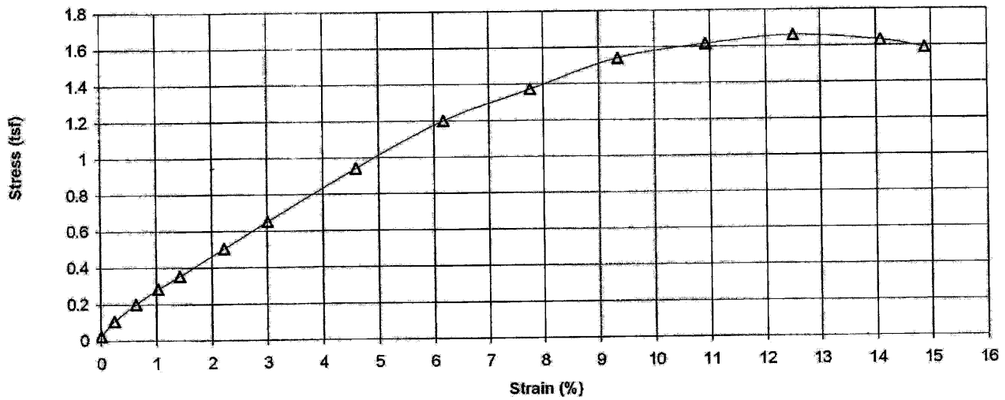

Failure Sketch

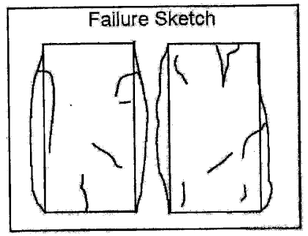

Pocket Penetrometer Reading (tsf) N/A
Torvane Reading (kg/cm^2) N/A

Comments

UNCONFINED COMPRESSION STRENGTH OF COHESIVE SOIL
(ASTM D 2166)

Project Name ALL-75
Project Number 175506027
Source B-117, 20.0'-22.0'
Lab ID 949
Visual Description Very stiff, brown-gray silt and clay, moist
Recovered 1.4'
Test Interval 20.5' - 21.0'

Specimen Type: Undisturbed
LL N/A
PL N/A
PI N/A
Date Extruded 05/02/2009
Date Tested 05/02/2009

Initial Wet Density (pcf)	136.6
Initial Dry Density (pcf)	114.9
Initial Moisture Content (%)	18.9
Specific Gravity	N/A
Degree of Saturation (%)	N/A
Average Height (in)	6.157
Average Diameter (in)	2.803
Height to Diameter Ratio	2.2

MC Taken Before Test, From Trimmings

Unconfined Compressive Strength (tsf)	2.29
Undrained Shear Strength (tsf)	1.15
Strain at Maximum Stress (%)	14.46
Strain rate to failure (% / min.)	0.95

Stress vs. Strain

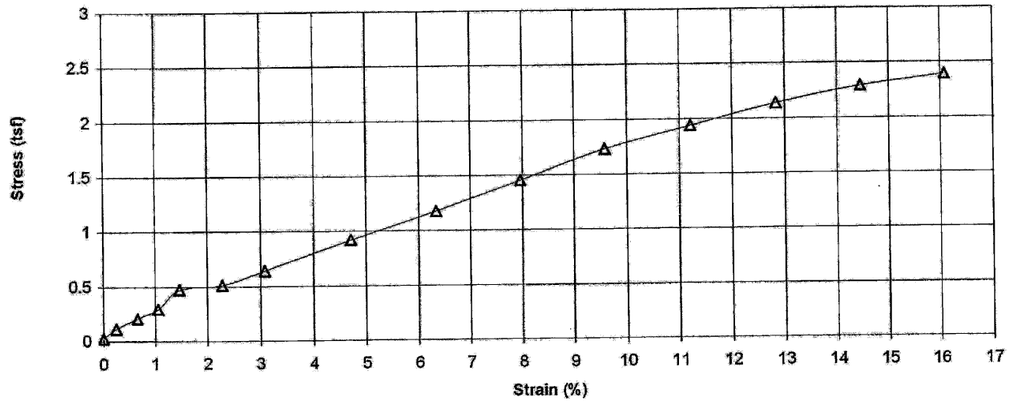

Failure Sketch

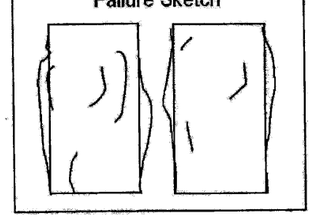

Pocket Penetrometer Reading (tsf) N/A
Torvane Reading (kg/cm^2) N/A

Comments

DRAWN M.J.
CHECKED J.M.M.

STRUCTURE FOUNDATION EXPLORATION
I-75 OVER CHICAGO-FT WAYNE & EASTERN RAILWAY

ALL-75-08.13

5/5

144/157

\1755\active\175506027\DRAWINGS 09 (STRUCTURAL)\ALL-75-08.13 (CHICAGO-FT-WAYNE EASTERN RR)\dgn\76691ZD001.dgn 10/27/2009 4:06:06 PM mjennings

PROJECT DESCRIPTION

REPLACE THE EXISTING I-75 THREE-SPAN REINFORCED CONCRETE BRIDGE OVER THE OTTAWA RIVER.

HISTORIC RECORDS

HISTORIC BORING RECORDS FOR THE EXISTING BRIDGE WERE REQUESTED FROM THE ODOT OFFICE OF GEOTECHNICAL ENGINEERING AND THE DISTRICT. HISTORIC SOUNDING RECORDS EXIST AND ARE DISCUSSED IN THE FOUNDATION EXPLORATION REPORT. DUE TO CHANGES IN STATIONING, LOCATIONS FOR THE SOUNDINGS ARE NOT CERTAIN AND ARE NOT SHOWN ON THE FOUNDATION EXPLORATION DRAWINGS.

GEOLOGY

THE STRUCTURE SITE IS LOCATED IN THE CENTRAL OHIO CLAYEY TILL PLAIN. THIS REGION IS COMPRISED OF GROUND MORAINE AND END MORAINE TILL DEPOSITS OVERLYING DOLOMITE WITH INTERBEDDED SHALE. CAVES AND OTHER KARST FEATURES MAY BE PRESENT ACCORDING TO THE PHYSIOGRAPHIC REGION OF OHIO MAP (ODNR, 1998), BUT NO KNOWN FEATURES WERE IDENTIFIED IN THE OHIO KARST AREAS MAP (ODNR, 2007).

RECONNAISSANCE

A FIELD RECONNAISSANCE WAS COMPLETED ON MARCH 13, 2007, FOCUSING MAINLY ON PAVEMENT CONDITIONS AND SITE TOPOGRAPHY AND DRAINAGE. THE MAINLINE SHOULDER PAVEMENTS SHOW EXTENSIVE "ALLIGATOR" CRACKING AND THE MAINLINE PAVEMENTS SHOW REFLECTIVE CRACKING AT THE EXPANSION JOINT LOCATIONS. THE SURROUNDING AREA IS DESCRIBED AS GENTLY UNDULATING WITH MOST OF THE SURROUNDING AREA CONSISTING OF OPEN FIELD OR LIGHTLY DEVELOPED COMMERCIAL AND RESIDENTIAL DISTRICTS. DRAINAGE ALONG THE ALIGNMENT IS DESCRIBED AS SLUGGISH WITH AREAS OF STANDING WATER, AND FLOWING WATER IN DRAINAGE DITCHES AND NATURAL STREAMS GENERALLY CREATING STEEP TO VERTICAL CUT BANKS IN THE SOIL PROFILE.

SUBSURFACE EXPLORATION

FOUR BORINGS WERE ADVANCED AT THE I-75 BRIDGE OVER THE OTTAWA RIVER. THE BORINGS WERE ADVANCED AT THE PIERS AND ABUTMENTS OF THE EXISTING STRUCTURE. THE ABUTMENT BORINGS (B-118 AND B-121) WERE LOCATED IN THE SHOULDER AREA OF I-75, WHILE THE PIER BORINGS (B-119 AND B-120) WERE ADVANCED ON THE RIVER BANKS ON EITHER SIDE OF THE INTERSTATE. THE BORINGS WERE ADVANCED USING 3.25-INCH I.D. HOLLOW-STEM AUGERS. STANDARD PENETRATION TEST (SPT) SAMPLES WERE OBTAINED AT 2.5-FOOT INTERVALS TO A DEPTH OF 30 FEET, THEN AT 5-FOOT INTERVALS BELOW THIS DEPTH USING A TRACK MOUNTED RIG EQUIPPED WITH A CALIBRATED AUTOMATIC HAMMER HAVING A ENERGY RATIO (ER) OF 82.5%. UPON ENCOUNTERING BEDROCK, NQ-SIZED ROCK CORING EQUIPMENT WAS USED TO OBTAIN 10 FEET OF ROCK CORE SAMPLE IN EACH BORING. AT THE CONCLUSION OF DRILLING OPERATIONS, BOREHOLES WERE BACKFILLED WITH AUGER SOIL CUTTINGS.

EXPLORATION FINDINGS

STIFF TO HARD FINE-GRAINED SOILS CLASSIFIED AS SILTY CLAY (A-6b), SILT AND CLAY (A-6a) AND SANDY SILT (A-4a) WERE ENCOUNTERED AT THE SURFACE OF THREE BORINGS, AND RANGED IN THICKNESS FROM 17.5 TO 34.5 FEET. A LAYER OF MEDIUM DENSE COARSE-GRAINED SOIL CLASSIFIED AS SAND (A-1-b), WITH A THICKNESS OF 7.5 FEET WAS ENCOUNTERED IN B-120 AT A DEPTH OF 17.5 FEET. A LAYER OF HARD SILT AND CLAY WAS ENCOUNTERED BELOW THIS HORIZON EXTENDING TO BEDROCK. IN BORING B-119 A 2.5 FOOT THICK LAYER OF RIVER SEDIMENT CONSISTING OF SANDS, GRAVELS AND COBBLES WAS ENCOUNTERED AT THE GROUND SURFACE AND EXTENDED TO BEDROCK. BEDROCK WAS ENCOUNTERED IN ALL BORINGS AT ELEVATIONS RANGING FROM 843.3 FEET TO 843.9 FEET. THE BEDROCK WAS DESCRIBED AS DOLOMITE (90 %-95%) WITH INTERBEDDED SHALE (5%-10%). THE DOLOMITE WAS DESCRIBED AS GRAY TO BROWN-GRAY, SLIGHTLY WEATHERED AND STRONG WITH VERY THIN BEDDING. THE SHALE WAS DESCRIBED AS BLACK TO DARK BROWN, MODERATELY WEATHERED, MODERATELY STRONG AND LAMINATED.

NO STATIC WATER LEVEL WAS OBSERVED IN THE BORINGS PRIOR TO ROCK CORING.

SPECIFICATIONS

THIS GEOTECHNICAL EXPLORATION WAS PERFORMED IN ACCORDANCE WITH THE STATE OF OHIO, DEPARTMENT OF TRANSPORTATION, OFFICE OF GEOTECHNICAL ENGINEERING, SPECIFICATIONS FOR GEOTECHNICAL EXPLORATIONS, DATED JANUARY 2009.

AVAILABLE INFORMATION

ALL AVAILABLE SOIL AND BEDROCK INFORMATION THAT CAN BE CONVENIENTLY SHOWN ON THE PROFILE SHEETS HAS BEEN SO REPORTED. ADDITIONAL SUBSURFACE EXPLORATIONS MAY HAVE BEEN MADE TO STUDY SOME SPECIAL ASPECT OF THE PROJECT. COPIES OF THIS DATA, IF ANY, MAY BE INSPECTED IN THE DISTRICT DEPUTY DIRECTOR'S OFFICE, THE OFFICE OF GEOTECHNICAL ENGINEERING AT 1600 WEST BROAD STREET OR THE OFFICE OF STRUCTURAL ENGINEERING AT 1980 WEST BROAD STREET, COLUMBUS, OHIO.

LEGEND

DESCRIPTION	ODOT CLASS	CLASSIFIED MECH./VISUAL	
GRAVEL AND/OR STONE FRAGMENTS	A-1-b	1	2
SANDY SILT	A-4a	1	4
SILT AND CLAY	A-6a	7	16
SILTY CLAY	A-6b	2	4
	TOTAL	11	26
BOULDERY ZONE	*VISUAL*		
SHALE	*VISUAL*		
DOLOMITE	*VISUAL*		
PAVEMENT OR BASE = X = APPROXIMATE THICKNESS	*VISUAL*		
SOD AND TOPSOIL = X = APPROXIMATE THICKNESS	*VISUAL*		

EXPLORATION LOCATION - PLAN VIEW

DRIVE SAMPLE AND/OR ROCK CORE BORING PLOTTED TO VERTICAL SCALE ONLY. HORIZONTAL BAR INDICATES A CHANGE IN STRATIGRAPHY.

N_{60} INDICATES CORRECTED STANDARD PENETRATION RESISTANCE FOR 60% EFFICIENCY.

WC INDICATES WATER CONTENT IN PERCENT.

NP INDICATES A NON-PLASTIC SAMPLE.

SS INDICATES A SPLIT SPOON SAMPLE, STANDARD PENETRATION TEST.

TR INDICATES TOP OF ROCK.

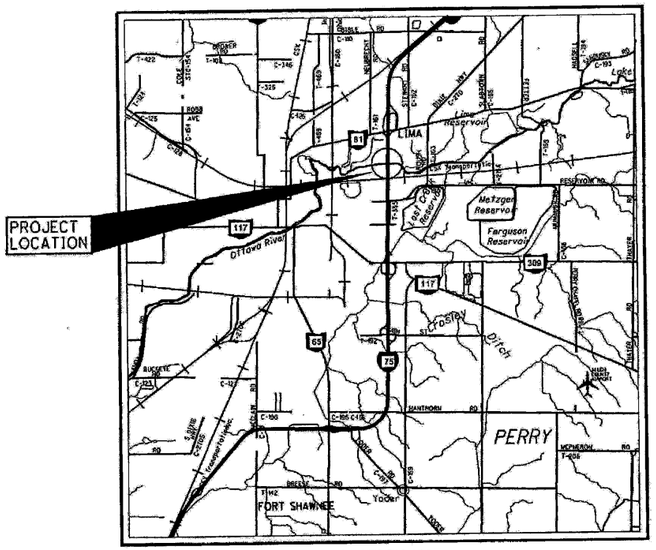

LOCATION MAP

SCALE IN MILES

0 1 2 3 4

N

PARTICLE SIZE DEFINITIONS

12"	3"	2.0 mm	0.42 mm	0.074 mm	0.005 mm
BOULDERS	COBBLES	GRAVEL	COARSE SAND	FINE SAND	SILT	CLAY
		No. 10 SIEVE	No. 40 SIEVE	No. 200 SIEVE		

D_{50} VALUES			
BORING NO.	SAMPLE NO.	ELEVATION	D_{50} VALUE
B-120-0-08	SS-8 SS-10	852.9'-851.4' 847.9'-846.4'	1.600 mm 0.009 mm

RECON. - DR/JM 01/09
DRILLING - JM/MW/LW 2/09-3/31/09
DRAWN - MJ/CW 5/09-7/09, MJ 5/11
REVIEWED - JM 10/19, RLW 5/11

DESIGN AGENCY
STANTEC CONSULTING SERVICES INC.
CINCINNATI, OHIO

PID NO. 76691

STRUCTURE FOUNDATION EXPLORATION
I-75 OVER OTTAWA RIVER

ALL-75-08.32

1 / 6

145 / 157

\\Us1268-f01\workgroup\1755\active\175530002\geotechnical\drawing\ODOTSubmittal\projects\ALL\76691\geotechnical\sheets\ALL-75-08.32 (OTTAWA RIVER)\76691ZC001.dgn

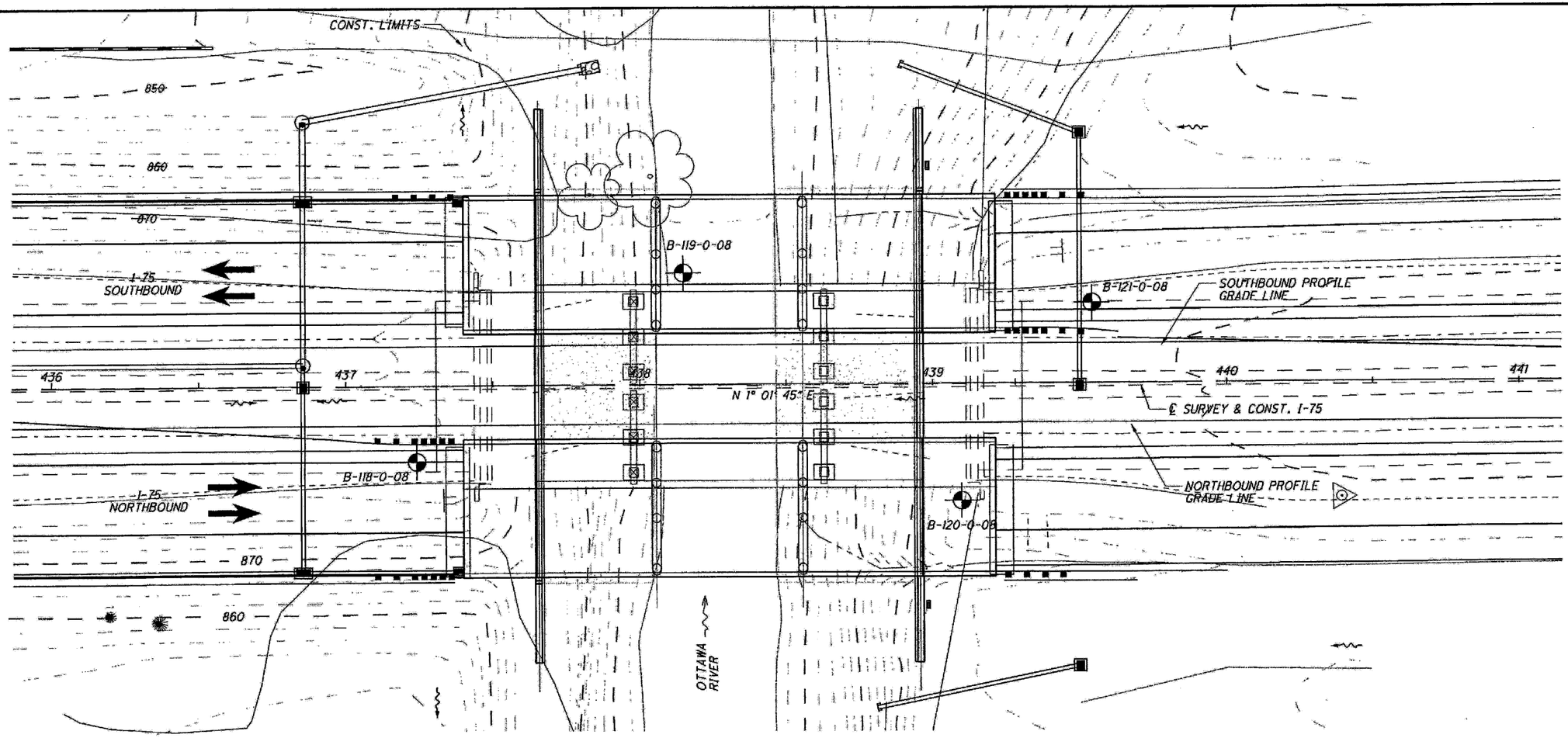

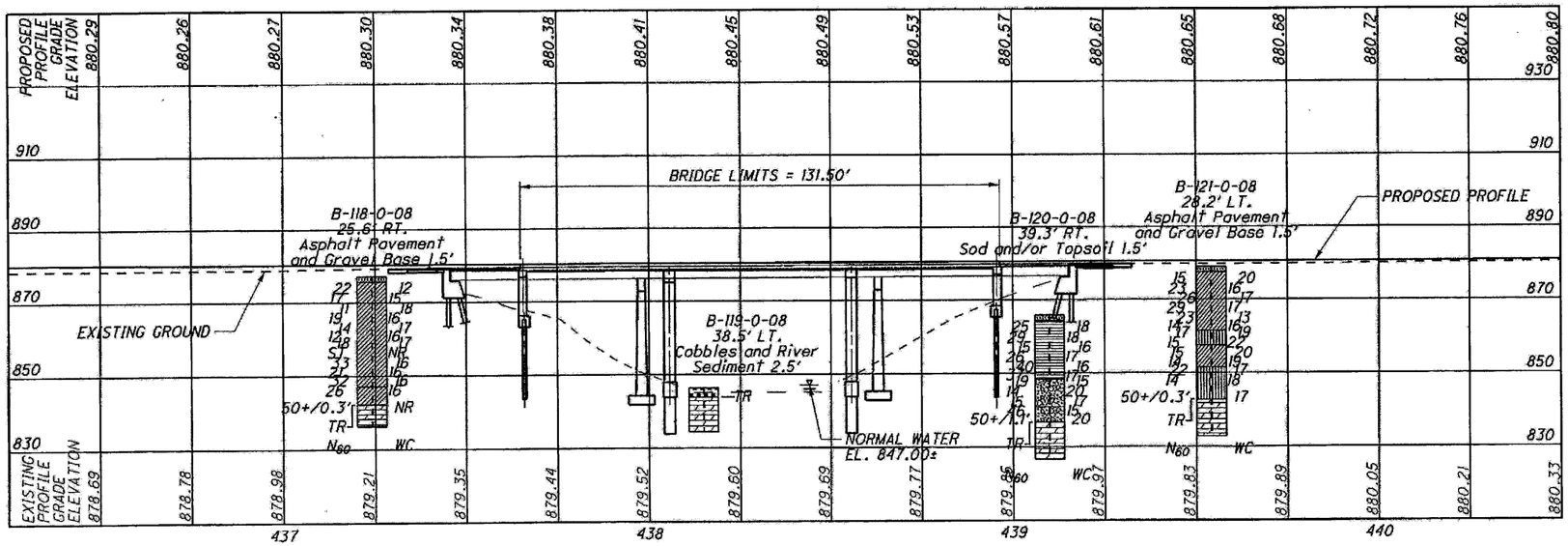

PROFILE

(ALONG NORTHBOUND PROPOSED PROFILE GRADE LINE)

N

HORIZONTAL SCALE IN FEET
0 10 20 40

DRAWN M.S.J.
CHECKED R.J.K.

STRUCTURE FOUNDATION EXPLORATION
I-75 OVER OTTAWA RIVER

ALL-75-08.32

2 / 6

146 / 157

OHIO DEPARTMENT OF TRANSPORTATION
OFFICE OF GEOTECHNICAL ENGINEERING

LOG OF BORING

BORING NO: B-118-0-08 BASELINE, STATION & OFFSET: STA 437+24.1, 25.6' RT. SURFACE ELEV.: 878.6 PROJECT IDENTIFICATION: ALL-75-08.32
DATE STARTED: 03/26/09 DATE COMPLETED: 03/26/09 METHOD: 3¼" HSA/NQ WATER ELEV.: - BRIDGE WIDENING
NORTHING: 398318.17 EASTING: 1532145.39 SEALING/BACKFILLING TYPE: CUTTINGS HAMMER SYSTEM TYPE: CME AUTOMATIC
QUANTITY: N/A CALIBRATION DATE: 10/16/08 ER: 82.5%

ELEV.	DEPTH	STD. PEN./ ROD	N_{60}	REC. FT	LOSS FT	DESCRIPTION	SAMPLE TYPE & NO.	% REC.	PHYSICAL CHARACTERISTICS % AGG	% C.S.	% F.S.	% SILT	% CLAY	LL	PL	PI	WC	ODOT CLASS
878.6	0																	
876.6	2					ASPHALT PAVEMENT (0.4') AND GRAVEL BASE (1.1') 1.5'												VISUAL
874.6	4	14/9/7	22			STIFF TO HARD, MOTTLED BROWN AND GRAY TO GRAY, SILT AND CLAY, LITTLE SAND, TRACE GRAVEL, DAMP TO MOIST	SS-1	13			SAME AS SS-2						12	A-6a (VISUAL)
872.6	6	7/6/6	17				SS-2	80	7	6	12	36	39	28	15	13	15	A-6a(9)
870.6	8	3/4/4	11				SS-3	47			SAME AS SS-2						18	A-6a (VISUAL)
868.6	10	5/7/7	19				SS-4	100	7	5	11	38	39	31	17	14	16	A-6a(10)
866.6	12	3/4/6	14				SS-5	100			SAME AS SS-4						17	A-6a (VISUAL)
864.6	14	4/4/5	12				SS-6	100			SAME AS SS-4						16	A-6a (VISUAL)
862.6	16	2/6/7	18				SS-7	100	4	6	12	37	41	32	17	15	17	A-6a(10)
860.6	18	ST	-				ST-8	67			SAME AS SS-7						-	A-6a (VISUAL)
858.6	20	8/12/12	33				SS-9	20			SAME AS SS-7						16	A-6a (VISUAL)
856.6	22	8/6/9	21				SS-10	40			SAME AS SS-7						16	A-6a (VISUAL)
854.6	24	12/12/11	32				SS-11	80			SAME AS SS-7						16	A-6a (VISUAL)
852.6	26					30.0'												
850.6	28	5/9/10	28			VERY STIFF, MOTTLED BROWN AND GRAY SILT AND CLAY, SOME GRAVEL AND SAND, MOIST	SS-12	100	24	10	19	28	19	31	16	15	16	A-6a(4)
848.6	30																	
846.6	32																	
844.6	34	50+/0.3'	-			TOP OF ROCK BEGIN CORE 35.0'	SS-13	NR			SAME AS SS-12						NR	A-6a (VISUAL)
842.6	36																	
840.6	38	0		5.5	0.5	DOLOMITE (90%) INTERBEDDED WITH SHALE (10%) UNIT RQD = 0%, LOSS = 8%; DOLOMITE: GRAY, SLIGHTLY WEATHERED, STRONG, VERY THIN, SHALE: BLACK, MODERATELY WEATHERED, MODERATELY STRONG, LAMINATED													
838.6	40																	

BOTTOM OF BORING = 41.0'
NOTE: DRILL RIG BROKE DOWN, TERMINATING BORING PRIOR TO REACHING NECESSARY DEPTH.

OHIO DEPARTMENT OF TRANSPORTATION
OFFICE OF GEOTECHNICAL ENGINEERING

LOG OF BORING

BORING NO: B-119-0-08 BASELINE, STATION & OFFSET: STA 438+14.9, 38.5' LT. SURFACE ELEV.: 846.4 PROJECT IDENTIFICATION: ALL-75-08.32
DATE STARTED: 04/02/09 DATE COMPLETED: 04/02/09 METHOD: 3¼" HSA/NQ WATER ELEV.: - BRIDGE WIDENING
NORTHING: 398410.12 EASTING: 1532082.95 SEALING/BACKFILLING TYPE: CUTTINGS HAMMER SYSTEM TYPE: CME AUTOMATIC
QUANTITY: N/A CALIBRATION DATE: 10/16/08 ER: 82.5%

ELEV.	DEPTH	STD. PEN./ RQD	N_{60}	REC. FT	LOSS FT	DESCRIPTION	SAMPLE TYPE & NO.	% REC.	PHYSICAL CHARACTERISTICS % AGG	% C.S.	% F.S.	% SILT	% CLAY	LL	PL	PI	WC	ODOT CLASS
846.4	0																	
844.4	2					COBBLES AND RIVER SEDIMENT TOP OF ROCK BEGIN CORE 2.5'												VISUAL
842.4	4	0		3.9	0.4	DOLOMITE (90%) INTERBEDDED WITH SHALE (10%) UNIT RQD = 3%, LOSS = 4%; DOLOMITE: GRAY, SLIGHTLY WEATHERED, STRONG, VERY THIN, SHALE: BLACK, MODERATELY WEATHERED, MODERATELY STRONG, LAMINATED												
840.2	6																	
838.2	8	6		5.2	0.0													
836.2	10																	
834.2	12																	

BOTTOM OF BORING = 12.0'

OHIO DEPARTMENT OF TRANSPORTATION
OFFICE OF GEOTECHNICAL ENGINEERING

LOG OF BORING

BORING NO: B-120-0-08 BASELINE, STATION & OFFSET: STA 439+10.0, 39.3' RT. SURFACE ELEV.: 872.9 PROJECT IDENTIFICATION: ALL-75-08.32
DATE STARTED: 04/01/09 DATE COMPLETED: 04/01/09 METHOD: 3¼" HSA/NQ WATER ELEV.: - BRIDGE WIDENING
NORTHING: 398503.81 EASTING: 1532162.47 SEALING/BACKFILLING TYPE: CUTTINGS HAMMER SYSTEM TYPE: CME AUTOMATIC
QUANTITY: N/A CALIBRATION DATE: 10/16/08 ER: 82.5%

ELEV.	DEPTH	STD. PEN./ ROD	N_{60}	REC. FT	LOSS FT	DESCRIPTION	SAMPLE TYPE & NO.	% REC.	PHYSICAL CHARACTERISTICS % AGG	% C.S.	% F.S.	% SILT	% CLAY	LL	PL	PI	WC	ODOT CLASS
872.9	0																	
						SOD AND/OR TOPSOIL 1.5'												VISUAL
870.9	2																	
		6/7/11	25			VERY STIFF TO HARD, MOTTLED BROWN AND GRAY SILTY CLAY, LITTLE SAND, TRACE GRAVEL, DAMP TO MOIST	SS-1	100	3	7	11	34	45	34	18	16	18	A-6b(10)
868.9	4																	
		4/8/13	29				SS-2	100			SAME AS SS-1						18	A-6b (VISUAL)
866.9	6																	
		4/4/7	15				SS-3	100			SAME AS SS-1						16	A-6b (VISUAL)
864.9	8																	
		5/7/12	26				SS-4	100			SAME AS SS-1						17	A-6b (VISUAL)
862.9	10																	
		9/12/17	40				SS-5	100	4	7	10	34	45	34	18	16	16	A-6b(10)
860.9	12																	
		6/12/15	37				SS-6	100			SAME AS SS-5						17	A-6b (VISUAL)
858.9	14					17.5'												
		4/5/9	19			MEDIUM DENSE, GRAY GRAVEL WITH SAND, TRACE SILT AND CLAY, WET	SS-7	67			SAME AS SS-8						15	A-1-b (VISUAL)
856.9	16																	
		3/4/6	14				SS-8	87	46	37	11	5	1	NP	NP	NP	20	A-1-b(0)
854.9	18																	
		6/5/6	15				SS-9	100			SAME AS SS-8						17	A-1-b (VISUAL)
852.9	20					25.0'												
		6/15/19	46			HARD, GRAY SILT AND CLAY, LITTLE SAND, TRACE GRAVEL, DAMP TO MOIST	SS-10	100	4	7	11	37	41	29	16	13	15	A-6a(9)
850.9	22																	
		13/18/50+/1.1'	50+			TOP OF ROCK BEGIN CORE 29.2'	SS-11	73			SAME AS SS-10						20	A-6a (VISUAL)
848.9	24																	
846.9	26																	
844.9	28																	
842.9	30																	
						DOLOMITE (95%) INTERBEDDED WITH SHALE (5%) ROD = 4%, LOSS = 0%													
840.9	32					DOLOMITE: GRAY TO BROWN-GRAY, SLIGHTLY WEATHERED, STRONG, VERY THIN, VUGGY;													
						SHALE: BLACK TO DARK BROWN, MODERATELY WEATHERED, MODERATELY STRONG, LAMINATED.													
838.9	34	4		10.0	0													
836.9	36																	
834.9	38																	

BOTTOM OF BORING = 39.2'

OHIO DEPARTMENT OF TRANSPORTATION
OFFICE OF GEOTECHNICAL ENGINEERING

LOG OF BORING

BORING NO: B-121-0-08 BASELINE, STATION & OFFSET: STA 439+54.1, 28.2' LT. SURFACE ELEV.: 879.5 PROJECT IDENTIFICATION: ALL-75-08.32
DATE STARTED: 03/26/09 DATE COMPLETED: 03/26/09 METHOD: 3¼" HSA/NQ WATER ELEV.: - BRIDGE WIDENING
NORTHING: 398549.04 EASTING: 1532095.73 SEALING/BACKFILLING TYPE: CUTTINGS HAMMER SYSTEM TYPE: CME AUTOMATIC
QUANTITY: N/A CALIBRATION DATE: 10/16/08 ER: 82.5%

ELEV.	DEPTH	STD. PEN./ RQD	N_{60}	REC. FT	LOSS FT	DESCRIPTION	SAMPLE TYPE & NO.	% REC.	% AGG	% C.S.	% F.S.	% SILT	% CLAY	LL	PL	PI	WC	ODOT CLASS
879.5	0																	
						ASPHALT PAVEMENT (0.4') AND GRAVEL BASE (1.1') 1.5'												VISUAL
877.5	2																	
875.5	4	5/5/6	15			STIFF TO VERY STIFF, BROWN SILT AND CLAY, LITTLE SAND, TRACE GRAVEL, DAMP TO MOIST	SS-1	27			SAME AAS SS-2						20	A-6a (VISUAL)
873.5	6	8/9/8	23				SS-2	100	6	8	11	34	41	32	17	15	16	A-6a(10)
871.5	8	7/9/10	26				SS-3	100			SAME AS SS-2						17	A-6a (VISUAL)
869.5	10	8/9/12	29				SS-4	100			SAME AS SS-2						17	A-6a (VISUAL)
867.5	12	3/9/8	23				SS-5	100			SAME AS SS-2						13	A-6a (VISUAL)
865.5	14	5/5/5	14				SS-6	100			SAME AS SS-2						16	A-6a (VISUAL)
863.5	16					17.5'												
861.5	18	4/6/6	17			STIFF TO VERY STIFF, BROWN SANDY SILT, WET (VISUAL)	SS-7	80	0	2	37						19	A-4a (VISUAL)
859.5	20	6/5/6	15			21.5'	ST-8	100			SAME AS SS-7						22	A-4a (VISUAL)
857.5	22	3/4/7	15			STIFF TO VERY STIFF, GRAY SILT AND CLAY, LITTLE SAND, TRACE GRAVEL, MOIST	SS-9	80	3	6	11	36	44	29	16	13	20	A-6a(9)
855.5	24	3/4/6	14				SS-10	100			SAME AS SS-9						19	A-6a (VISUAL)
853.5	26					27.5'												
851.5	28	6/7/9	22			STIFF TO VERY STIFF, GRAY SANDY SILT, LITTLE CLAY, TRACE GRAVEL, MOIST	SS-11	100	3	6	41	32	18	NP	NP	NP	17	A-4a(3)
849.5	30	3/5/5	14				SS-12	67			SAME AS SS-11						18	A-4a (VISUAL)
847.5	32																	
845.5	34	4/5/50+/0.3'	50+				SS-13	NR			SAME AS SS-11						17	A-4a (VISUAL)
843.5	36			TOP OF ROCK		BEGIN CORE 36.2'												
841.5	38					DOLOMITE (95%) INTERBEDDED WITH SHALE (5%) UNIT RQD = 11%, LOSS = 2%; DOLOMITE: GRAY TO BROWN-GRAY, SLIGHTLY WEATHERED, STRONG, VERY THIN, VUGGY; SHALE: BLACK, SLIGHTLY TO MODERATELY WEATHERED, MODERATELY STRONG, LAMINATED												
839.5	40	11		9.8	0.2													
837.5	42																	
835.5	44																	
833.5	46																	

BOTTOM OF BORING = 46.2'

150 157 | 6/6 | ALL-75-08.32 | STRUCTURE FOUNDATION EXPLORATION I-75 OVER OTTAWA RIVER | DRAWN M.S.J. CHECKED R.J.K.

PROJECT DESCRIPTION

REPLACE THE EXISTING I-75 SEVEN-SPAN REINFORCED CONCRETE BRIDGE OVER STATE ROUTE 81 WITH A SINGLE-SPAN OR FOUR-SPAN STRUCTURE.

HISTORIC RECORDS

HISTORIC BORING RECORDS FOR THE EXISITNG BRIDGE WERE REQUESTED FROM THE ODOT OFFICE OF GEOTECHNICAL ENGINEERING AND THE DISTRICT. HISTORIC SOUNDING RECORDS EXIST AND ARE DISCUSSED IN THE FOUNDATION EXPLORATION REPORT. DUE TO CHANGES IN STATIONING, LOCATIONS FOR THE SOUNDINGS ARE NOT CERTAIN AND ARE NOT SHOWN ON THE FOUNDATION EXPLORATION DRAWINGS.

GEOLOGY

THE STRUCTURE SITE IS LOCATED IN THE CENTRAL OHIO CLAYEY TILL PLAIN. THIS REGION IS COMPRISED OF GROUND MORAINE AND END MORAINE TILL DEPOSITS OVERLYING DOLOMITE WITH INTERBEDDED SHALE. CAVES AND OTHER KARST FEATURES MAY BE PRESENT ACCORDING TO THE PHYSIOGRAPHIC REGION OF OHIO MAP (ODNR, 1998), BUT NO KNOWN FEATURES WERE IDENTIFIED IN THE OHIO KARST AREAS MAP (ODNR, 2007).

RECONNAISSANCE

A FIELD RECONNAISSANCE WAS COMPLETED ON MARCH 13, 2007, FOCUSING MAINLY ON PAVEMENT CONDITIONS AND SITE TOPOGRAPHY AND DRAINAGE. THE MAINLINE SHOULDER PAVEMENTS SHOW EXTENSIVE "ALLIGATOR" CRACKING AND THE MAINLINE PAVEMENTS SHOW REFLECTIVE CRACKING AT THE EXPANSION JOINT LOCATIONS.

THE SURROUNDING AREA IS DESCRIBED AS GENTLY UNDULATING WITH MOST OF THE SURROUNDING AREA CONSISTING OF OPEN FIELD OR LIGHTLY DEVELOPED COMMERCIAL AND RESIDENTIAL DISTRICTS. DRAINAGE ALONG THE ALIGNMENT IS DESCRIBED AS SLUGGISH WITH AREAS OF STANDING WATER, AND FLOWING WATER IN DRAINAGE DITCHES AND NATURAL STREAMS GENERALLY CREATING STEEP TO VERTICAL CUT BANKS IN THE SOIL PROFILE.

SUBSURFACE EXPLORATION

FOUR BORINGS WERE ADVANCED AT THE I-75 BRIDGE OVER STATE ROUTE 81. BORINGS WERE ADVANCED AT THE PROPOSED LOCATIONS FOR THE NEW ABUTMENTS AND PIERS. THE BORINGS WERE ADVANCED USING 3.25-INCH INSIDE DIAMETER HOLLOW-STEM AUGERS. STANDARD PENETRATION TEST (SPT) AND UNDISTURBED SHELBY TUBE (ST) SAMPLES WERE OBTAINED FOR THE UPPER 30 FEET AT 2.5-FOOT INTERVALS AND AT 5-FOOT INTERVALS BELOW THIS DEPTH FOR EACH BORING. SPT SAMPLES WERE OBTAINED USING TWO SEPARATE RIGS EQUIPPED WITH CALIBRATED AUTOMATIC HAMMERS HAVING ENERGY RATIOS (ER) OF 80% AND 82.5% AS SHOWN ON THE BORING LOGS. UPON ENCOUNTERING BEDROCK, NQ-SIZED ROCK CORING EQUIPMENT WAS USED TO OBTAIN 10 FEET OF ROCK CORE SAMPLE IN EACH BORING. AT THE CONCLUSION OF DRILLING OPERATIONS, BOREHOLES WERE BACKFILLED WITH AUGER SOIL CUTTINGS.

EXPLORATION FINDINGS

STIFF TO HARD FINE-GRAINED GLACIAL TILL SOILS CLASSIFYING PREDOMINANTLY AS SILT AND CLAY (A-6a), BUT ALSO AS SILTY CLAY (A-6b) AND SANDY SILT (A-4a), ALL WITH VARYING AMOUNTS OF SANDS AND GRAVELS, WERE ENCOUNTERED IN ALL BORINGS. THE SOILS RANGED IN THICKNESS FROM 34.5 TO 36.5 FEET. UNCONFINED COMPRESSIVE STRENGTH TESTING WAS PERFORMED ON UNDISTURBED ST SAMPLES FROM TWO OF THE BORINGS WITH RESULTS OF THE TWO TESTS BEING 4.71 AND 3.38 TONS PER SQUARE FOOT.

A LAYER OF VERY LOOSE GRAVEL WITH SAND AND SILT (A-2-4) WAS ENCOUNTERED AT A DEPTH OF 7.6 FEET IN BORING B-144 HAVING A LAYER THICKNESS OF 2.8 FEET.

BEDROCK WAS ENCOUNTERED IN ALL BORINGS AT ELEVATIONS RANGING FROM 839.5 (B-146) TO 840.8 (B-145). THE BEDROCK WAS DESCRIBED AS DOLOMITE (90 PERCENT OF THE UNIT) WITH INTERBEDDED SHALE (10 PERCENT OF THE UNIT). THE DOLOMITE WAS DESCRIBED AS GRAY, SLIGHTLY WEATHERED, AND STRONG WITH LAMINATED TO THIN BEDDING AND A VUGGY APPEARANCE. THE SHALE WAS DESCRIBED AS BLACK, SLIGHTLY TO MODERATELY WEATHERED, AND MODERATELY STRONG WITH LAMINATED BEDDING.

NO STATIC WATER LEVEL WAS OBSERVED IN THE BORINGS PRIOR TO ROCK CORING.

SPECIFICATIONS

THIS GEOTECHNICAL EXPLORATION WAS PERFORMED IN ACCORDANCE WITH THE STATE OF OHIO, DEPARTMENT OF TRANSPORTATION, OFFICE OF GEOTECHNICAL ENGINEERING, SPECIFICATIONS FOR GEOTECHNICAL EXPLORATIONS, DATED JANUARY 2009.

AVAILABLE INFORMATION

ALL AVAILABLE SOIL AND BEDROCK INFORMATION THAT CAN BE CONVENIENTLY SHOWN ON THE PROFILE SHEETS HAS BEEN SO REPORTED. ADDITIONAL SUBSURFACE EXPLORATIONS MAY HAVE BEEN MADE TO STUDY SOME SPECIAL ASPECT OF THE PROJECT. COPIES OF THIS DATA, IF ANY, MAY BE INSPECTED IN THE DISTRICT DEPUTY DIRECTOR'S OFFICE, THE OFFICE OF GEOTECHNICAL ENGINEERING AT 1600 WEST BROAD STREET OR THE OFFICE OF STRUCTURAL ENGINEERING AT 1980 WEST BROAD STREET, COLUMBUS, OHIO.

LEGEND

DESCRIPTION	ODOT CLASS	CLASSIFIED MECH./VISUAL	
GRAVEL AND/OR STONE FRAGMENTS WITH SAND AND SILT	A-2-4	1	0
SANDY SILT	A-4a	5	7
SILT AND CLAY	A-6a	9	25
SILTY CLAY	A-6b	1	1
	TOTAL	16	33
SHALE	*VISUAL*		
DOLOMITE	*VISUAL*		
PAVEMENT OR BASE = X = APPROXIMATE THICKNESS	*VISUAL*		
SOD AND TOPSOIL = X = APPROXIMATE THICKNESS	*VISUAL*		

EXPLORATION LOCATION - PLAN VIEW

DRIVE SAMPLE AND/OR ROCK CORE BORING PLOTTED TO VERTICAL SCALE ONLY. HORIZONTAL BAR INDICATES A CHANGE IN STRATIGRAPHY.

N_{60} INDICATES CORRECTED STANDARD PENETRATION RESISTANCE FOR 60% EFFICIENCY.

WC INDICATES WATER CONTENT IN PERCENT.

NP INDICATES A NON-PLASTIC SAMPLE.

SS INDICATES A SPLIT SPOON SAMPLE, STANDARD PENETRATION TEST.

ST INDICATES A SHELBY TUBE SAMPLE.

TR INDICATES TOP OF ROCK.

q_u INDICATES UNCONFINED COMPRESSIVE STRENGTH IN TONS PER SQUARE FOOT.

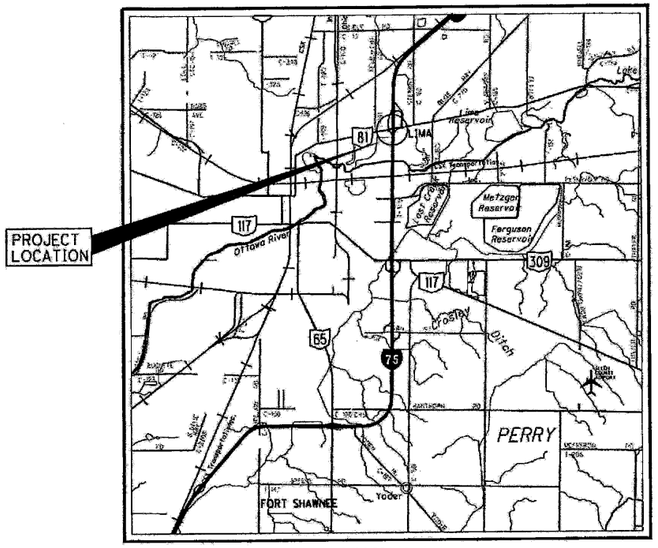

LOCATION MAP

SCALE IN MILES

0 1 2 3 4

PARTICLE SIZE DEFINITIONS

BOULDERS	COBBLES	GRAVEL	COARSE SAND	FINE SAND	SILT	CLAY
12"	3"	2.0 mm (No. 10 SIEVE)	0.42 mm (No. 40 SIEVE)	0.074 mm (No. 200 SIEVE)		0.005 mm

RECON. - DR/JM 01/09
DRILLING - MJW 2/29/09-3/31/09
DRAWN - MJ/CW 5/09-7/09, MJ 5/11
REVIEWED - JMM 10/09, RLW 5/11, RJK 5/12

DESIGN AGENCY
STANTEC CONSULTING SERVICES INC.
CINCINNATI, OHIO

PID NO. 76691

STRUCTURE FOUNDATION EXPLORATION
BRIDGE NO. ALL-75-0875 L&R OVER S.R. 81

ALL-75-5.53

1/7

(151)
(197)

\\Us1268-f01\workgroup\1755\active\175530002\geotechnical\drawing\ODOTSubmittal\projects\ALL\7669\geotechnical\sheets\ALL-75-08.75 (S.R.81)\76691ZC001.dgn

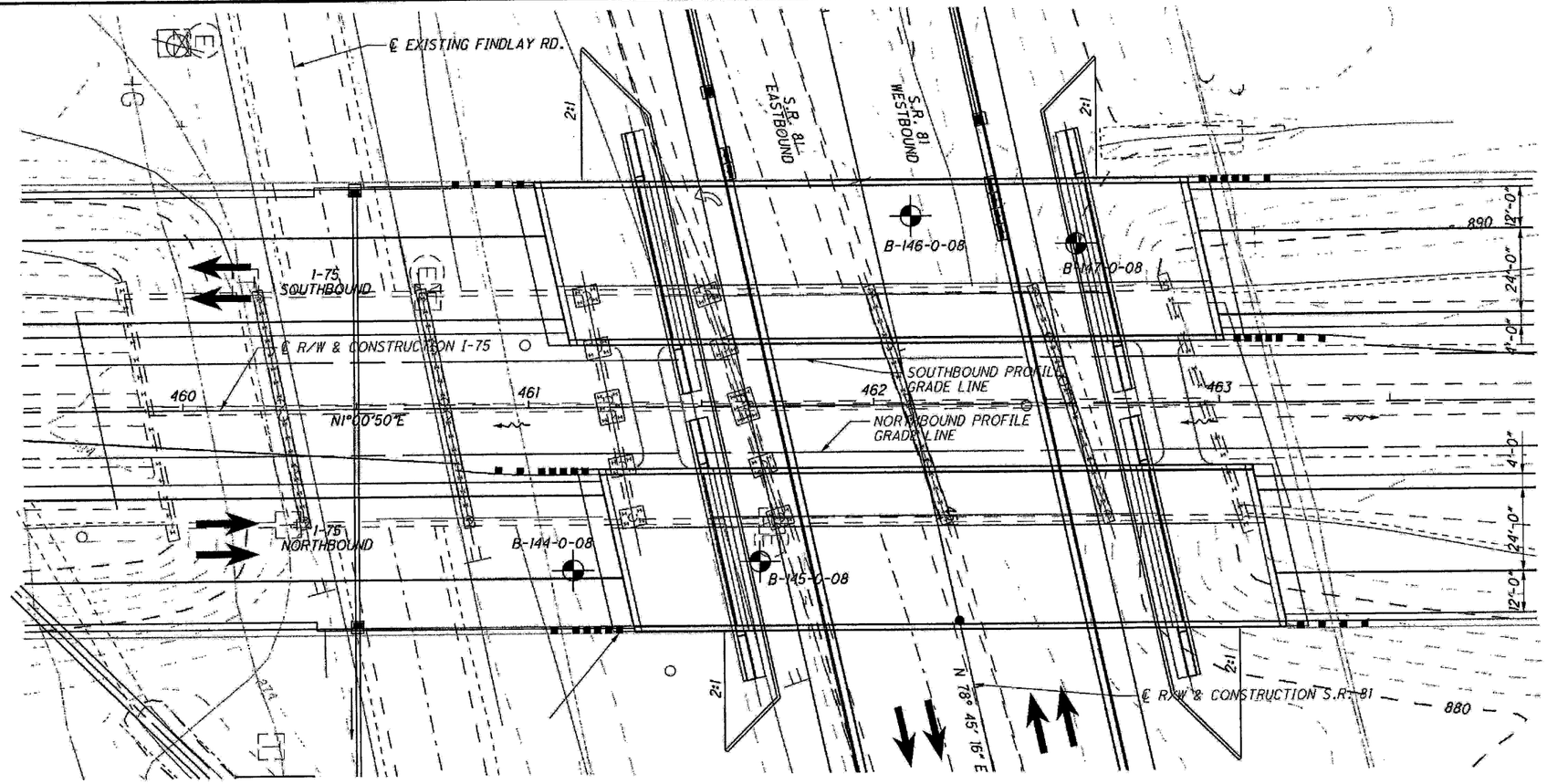

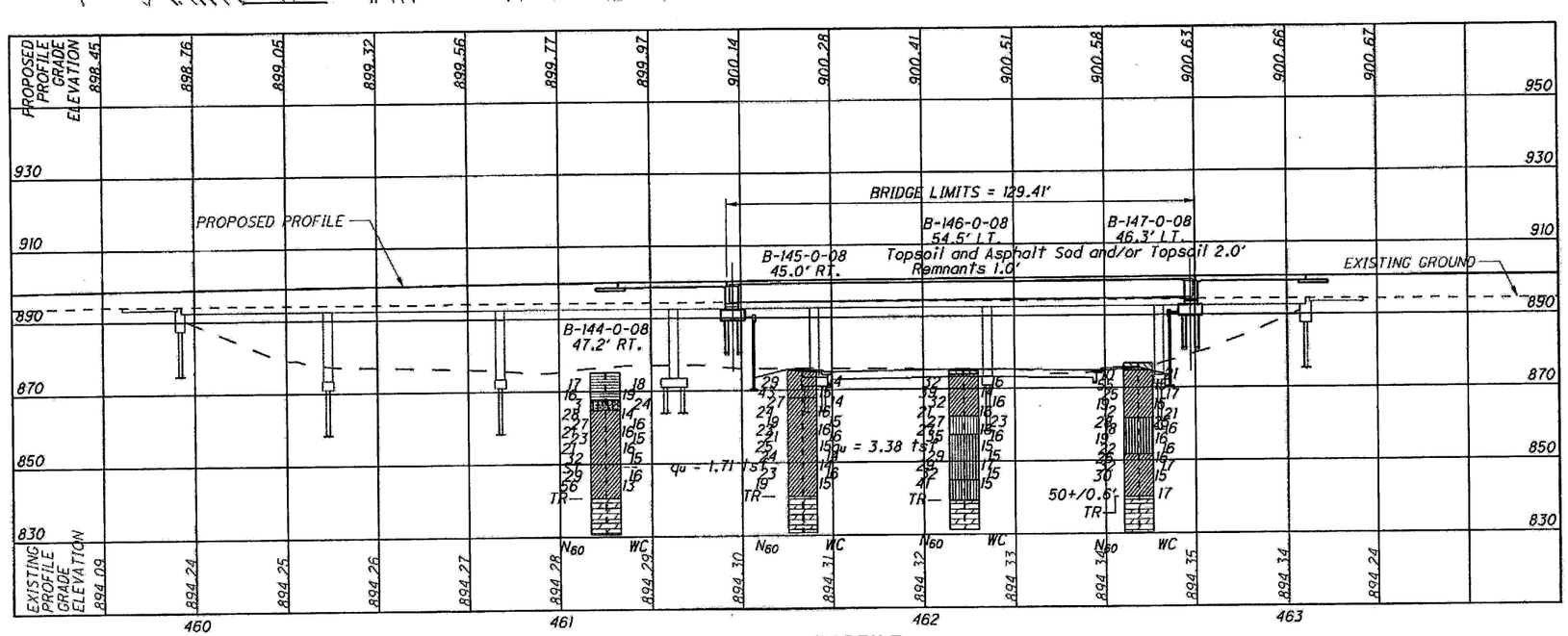

PROFILE

ALONG NORTHBOUND PROFILE GRADE LINE

HORIZONTAL SCALE IN FEET
0 10 20 40

DRAWN M.S.J.
CHECKED R.J.K.

STRUCTURE FOUNDATION EXPLORATION
BRIDGE NO. ALL-75-0875 L&R OVER S.R. 81

ALL-75-5.53

2 / 7

152
157

\\Us1268-f01\workgroup\1755\active\175530002\geotechnical\drawing\ODOTSubmittal\projects\ALL\76691\geotechnical\sheets\ALL-75-08.75 (S.R.81)\766917P001.dgn

\\Us1268-f01\workgroup\1755\active\175530002\geotechnical\drawing\ODOTSubmittal\projects\ALL\76691\geotechnical\sheets\ALL-75-08.75 (S.R.81)\76691ZL001.dgn

OHIO DEPARTMENT OF TRANSPORTATION
OFFICE OF GEOTECHNICAL ENGINEERING

LOG OF BORING

BORING NO: B-144-0-08 BASELINE, STATION & OFFSET: STA 461+12.5, 47.2' RT. SURFACE ELEV.: 875.1 PROJECT IDENTIFICATION: ALL-75-0875
DATE STARTED: 03/19/09 DATE COMPLETED: 03/19/09 METHOD: 3¼" HSA/NO WATER ELEV.: - BRIDGE REPLACEMENT
NORTHING: 400705.81 EASTING: 1532209.61 SEALING/BACKFILLING TYPE: CUTTINGS HAMMER SYSTEM TYPE: CME AUTOMATIC
QUANTITY: N/A CALIBRATION DATE: 7/17/07 ER: 80%

ELEV.	DEPTH	STD. PEN./ RQD	N_{60}	REC. FT	LOSS FT	DESCRIPTION	SAMPLE TYPE & NO.	% REC.	% AGG	% C.S.	% F.S.	% SILT	% CLAY	LL	PL	PI	WC	ODOT CLASS
875.1	0																	
873.1	2																	
		5/5/8	17			VERY STIFF, BROWN SILTY CLAY, SOME SAND, TRACE GRAVEL, MOIST	SS-1	93	1	5	21	36	37	33	17	16	18	A-6b(10)
871.1	4																	
869.1	6	8/6/6	16				SS-2	20			SAME AS SS-1						19	A-6b (VISUAL)
						7.5'												
867.1	8	1/1/1	3			VERY LOOSE, BROWN GRAVEL WITH SAND AND SILT, LITTLE CLAY, WET	SS-3	53	25	23	17	17	18	NP	NP	NP	24	A-2-4(0)
865.1	10					10.3'												
		6/9/12	28			VERY STIFF TO HARD, GRAY SILT AND CLAY, SOME SAND, TRACE GRAVEL, DAMP TO MOIST	SS-4	80			SAME AS SS-5						14	A-6a (VISUAL)
863.1	12																	
861.1	14	8/9/11	27				SS-5	100	6	7	11	40	36	28	16	12	16	A-6a(9)
859.1	16	5/8/8	21				SS-6	100			SAME AS SS-5						16	A-6a (VISUAL)
857.1	18	5/7/10	23				SS-7	13			SAME AS SS-5						15	A-6a (VISUAL)
855.1	20																	
		4/6/10	21				SS-8	100			SAME AS SS-5						16	A-6a (VISUAL)
853.1	22																	
851.1	24	6/11/13	32				SS-9	100	5	11	10	36	38	27	16	11	15	A-6a(8)
849.1	26	ST	-				ST-10	80			SAME AS SS-9						-	A-6a (VISUAL)
847.1	28	5/8/14	29				SS-11	100			SAME AS SS-9						16	A-6a (VISUAL)
845.1	30																	
		15/22/20	56				SS-12	100			SAME AS SS-9						13	A-6a (VISUAL)
843.1	32																	
841.1	34			TOP OF ROCK		BEGIN CORE 34.5'												
839.1	36					DOLOMITE (90%) INTERBEDDED WITH SHALE (10%) UNIT RQD = 14%, LOSS = 0%; DOLOMITE: GRAY, SLIGHTLY WEATHERED, STRONG, THIN TO VERY THIN, VUGGY; SHALE: BLACK, SLIGHTLY WEATHERED, MODERATELY STRONG, LAMINATED.												
837.1	38																	
835.1	40	14		10.0	0.0													
833.1	42																	
831.1	44																	

BOTTOM OF BORING = 44.5'

\\Us1268-f01\workgroup\1755\active\175530002\geotechnical\drawing\ODOTSubmittal\projects\ALL\76691\geotechnical\sheets\ALL-75-08.75 (S.R.81)\76691ZL002.dgn

OHIO DEPARTMENT OF TRANSPORTATION
OFFICE OF GEOTECHNICAL ENGINEERING

LOG OF BORING

BORING NO: B-145-0-08 BASELINE, STATION & OFFSET: STA 461+66.7, 45.0' RT. SURFACE ELEV.: 875.3 PROJECT IDENTIFICATION: ALL-75-0875 BRIDGE REPLACEMENT
DATE STARTED: 03/19/09 DATE COMPLETED: 03/19/09 METHOD: 3½" HSA/NQ WATER ELEV.: -
NORTHING: 400760.06 EASTING: 1532208.32 SEALING/BACKFILLING TYPE: CUTTINGS HAMMER SYSTEM TYPE: CME AUTOMATIC
QUANTITY: N/A CALIBRATION DATE: 7/17/07 ER: 80%

ELEV.	DEPTH	STD. PEN./ RQD	N_{60}	REC. FT	LOSS FT	DESCRIPTION	SAMPLE TYPE & NO.	% REC.	% AGG	% C.S.	% F.S.	% SILT	% CLAY	LL	PL	PI	WC	ODOT CLASS
875.3	0																	
873.3	2																	
		6/9/13	29			VERY STIFF TO HARD, BROWN SILT AND CLAY, SOME SAND, TRACE GRAVEL, DAMP	SS-1	100			SAME AS SS-2						14	A-6a (VISUAL)
871.3	4																	
869.3	6	8/13/19	43				SS-2	100	2	11	11	36	40	31	17	14	15	A-6a(10)
						7.5'												
867.3	8	6/9/11	27			VERY STIFF, GRAY SILT AND CLAY, LITTLE TO SOME SAND, TRACE GRAVEL, DAMP TO MOIST	SS-3	100			SAME AS SS-5						14	A-6a (VISUAL)
865.3	10																	
		6/7/11	24				SS-4	100			SAME AS SS-5						16	A-6a (VISUAL)
863.3	12																	
861.3	14	5/6/8	19				SS-5	100	3	11	11	39	36	26	15	11	15	A-6a(8)
859.3	16	5/7/10	23				SS-6	33			SAME AS SS-5						16	A-6a (VISUAL)
857.3	18	5/7/9	21				SS-7	100			SAME AS SS-5						16	A-6a (VISUAL)
855.3	20																	
		5/8/11	25				SS-8	100			SAME AS SS-5						15	A-6a (VISUAL)
853.3	22																	
851.3	24	6/6/12	24				SS-9	100	5	5	10	39	41	27	16	11	14	A-6a(8)
849.3	26	q_u=4.71 tsf	-				ST-10	95			SAME AS SS-9						14	A-6a (VISUAL)
847.3	28	6/7/10	23				SS-11	100			SAME AS SS-9						16	A-6a (VISUAL)
845.3	30																	
		8/7/7	19				SS-12	67			SAME AS SS-9						15	A-6a (VISUAL)
843.3	32																	
841.3	34			TOP OF ROCK		BEGIN CORE 34.5'												
839.3	36					DOLOMITE (90%) INTERBEDDED WITH SHALE (10%) UNIT RQD = 19%, LOSS = 4%; DOLOMITE: GRAY, SLIGHTLY WEATHERED, STRONG, THIN TO VERY THIN, VUGGY; SHALE: BLACK, SLIGHTLY WEATHERED, MODERATELY STRONG, LAMINATED.												
837.3	38																	
835.3	40	19		9.6	0.4													
833.3	42																	
831.3	44																	

BOTTOM OF BORING = 44.5'

\\Us1268-f01\workgroup\1755\active\175530002\geotechnical\drawing\ODOTSubmittal\projects\ALL\76691\geotechnical\sheets\ALL-75-08.75 (S.R.81)\76691ZL003.dgn

OHIO DEPARTMENT OF TRANSPORTATION
OFFICE OF GEOTECHNICAL ENGINEERING

LOG OF BORING

BORING NO: B-146-0-08 BASELINE, STATION & OFFSET: STA 462+11.0, 54.5' LT. SURFACE ELEV.: 875.0 PROJECT IDENTIFICATION: ALL-75-0875
DATE STARTED: 03/17/09 DATE COMPLETED: 03/18/09 METHOD: 3¼" HSA/NQ WATER ELEV.: - BRIDGE REPLACEMENT
NORTHING: 400806.09 EASTING: 1532109.65 SEALING/BACKFILLING TYPE: CUTTINGS HAMMER SYSTEM TYPE: CME AUTOMATIC
QUANTITY: N/A CALIBRATION DATE: 7/17/07 ER: 80%

ELEV.	DEPTH	STD. PEN./ ROD	N_{60}	REC. FT	LOSS FT	DESCRIPTION	SAMPLE TYPE & NO.	% REC.	PHYSICAL CHARACTERISTICS % AGG	% C.S.	% F.S.	% SILT	% CLAY	LL	PL	PI	WC	ODOT CLASS
875.0	0					TOPSOIL AND ASPHALT REMNANTS 1.0'												VISUAL
873.0	2	11/12/12	32			VERY STIFF TO HARD, MOTTLED ORANGE-BROWN AND GRAY SILT AND CLAY, SOME SAND, TRACE GRAVEL, DAMP	SS-1	100			SAME AS SS-2							16	A-6a (VISUAL)
871.0	4																	
869.0	6	5/11/18	39				SS-2	100	4	7	14	36	39	29	17	12	14	A-6a(9)
867.0	8	10/12/12	32				SS-3	100			SAME AS SS-2						16	A-6a (VISUAL)
865.0	10	7/7/9	21				SS-4	80			SAME AS SS-2						16	A-6a (VISUAL)
863.0	12					12.5'												
861.0	14	7/10/10	27			VERY STIFF, GRAY SANDY SILT, LITTLE CLAY, MOIST	SS-5	80	0	3	37	45	15	NP	NP	NP	23	A-4a(5)
859.0	16	5/8/12	27				SS-6	100			SAME AS SS-5						16	A-4a (VISUAL)
857.0	18					17.5'												
855.0	20	6/11/15	35			VERY STIFF TO HARD, GRAY SANDY SILT AND CLAY, TRACE GRAVEL, DAMP TO MOIST	SS-7	100	5	6	11	40	38	26	16	10	16	A-4a(8)
853.0	22	q_u=3.38 tsf	-				ST-8	90			SAME AS SS-7						14	A-4a (VISUAL)
851.0	24	6/11/11	29				SS-9	100			SAME AS SS-7						15	A-4a (VISUAL)
849.0	26	7/9/13	29				ST-10	100			SAME AS SS-7						17	A-4a (VISUAL)
847.0	28	7/11/13	32				SS-11	100			SAME AS SS-7						15	A-4a (VISUAL)
845.0	30					30.0'												
843.0	32	8/15/16	41			HARD, GRAY SANDY SILT, LITTLE CLAY AND GRAVEL AND SAND SEAMS, WET	SS-12	80	12	8	18	48	14	NP	NP	NP	15	A-4a(5)
841.0	34																	
839.0	36					TOP OF ROCK BEGIN CORE 35.5'												
837.0	38	7		8.2	0.0	DOLOMITE (90%) INTERBEDDED WITH SHALE (10%) UNIT ROD = 7%, LOSS = 0%; DOLOMITE: GRAY, SLIGHTY WEATHERED, STRONG, THIN TO VERY THIN, VUGGY; SHALE: BLACK, SLIGHTLY WEATHERED, MODERATELY STRONG, LAMINATED.													
835.0	40																	
833.0	42																	

BOTTOM OF BORING = 43.7'
NOTE: BROKEN ROCK CORING EQUIPMENT PREVENTED ADVANCING BORING FURTHER.

@@Us1268-f01@workgroup@1755@active@1755300028@geotechnical@drawing@ODOTSubmittal@projects@ALL@76691@geotechnical@sheets@ALL-75-08.75 (S.R.81)@76691ZL004.dgn

OHIO DEPARTMENT OF TRANSPORTATION
OFFICE OF GEOTECHNICAL ENGINEERING

LOG OF BORING

BORING NO: B-147-0-08 BASELINE, STATION & OFFSET: STA 462+59.1, 46.3' LT. SURFACE ELEV.: 876.7 PROJECT IDENTIFICATION: ALL-75-0875
DATE STARTED: 03/30/09 DATE COMPLETED: 03/30/09 METHOD: 3¼" HSA/NQ WATER ELEV.: - BRIDGE REPLACEMENT
NORTHING: 400854.28 EASTING: 1532117.38 SEALING/BACKFILLING TYPE: CUTTINGS HAMMER SYSTEM TYPE: CME AUTOMATIC
QUANTITY: N/A CALIBRATION DATE: 10/16/08 ER: 82.5%

ELEV.	DEPTH	STD. PEN./ ROD	N_{60}	REC. FT	LOSS FT	DESCRIPTION	SAMPLE TYPE & NO.	% REC.	% AGG	% C.S.	% F.S.	% SILT	% CLAY	LL	PL	PI	WC	ODOT CLASS
876.7	0																	
874.7	2					SOD AND/OR TOPSOIL 2.0'												VISUAL
872.7	4	2/2/5	10			STIFF TO HARD, MOTTLED BROWN AND GRAY SILT AND CLAY, LITTLE SAND, TRACE GRAVEL, DAMP TO MOIST	SS-1	80			SAME AS SS-2						21	A-6a (VISUAL)
870.7	6	8/15/25	55				SS-2	100	2	6	13	38	41	32	18	14	15	A-6a(10)
868.7	8	7/7/11	25				SS-3	100	3	6	12	38	41	28	17	11	17	A-6a(8)
866.7	10	5/6/8	19				SS-4	100			SAME AS SS-3						15	A-6a (VISUAL)
864.7	12	5/4/5	12				SS-5	100			SAME AS SS-3						21	A-6a (VISUAL)
862.7	14					15.0'												
860.7	16	8/11/9	28			VERY STIFF, GRAY SANDY SILT, LITTLE TO SOME CLAY, TRACE GRAVEL, DAMP TO MOIST	SS-6	100	8	21	33	24	14	NP	NP	NP	25	A-4a(1)
858.7	18	3/5/8	18				SS-7	80	4	6	29	35	26	19	13	6	16	A-4a(5)
856.7	20	4/6/8	19				SS-8	100			SAME AS SS-7						16	A-4a (VISUAL)
854.7	22	5/6/10	22				SS-9	100			SAME AS SS-7						16	A-4a (VISUAL)
852.7	24					25.0'												
850.7	26	4/8/11	26			VERY STIFF TO HARD, GRAY SILT AND CLAY, LITTLE SAND, TRACE GRAVEL, DAMP TO MOIST	SS-10	100	3	5	11	43	38	27	16	11	16	A-6a(8)
848.7	28	6/10/13	32				SS-11	80			SAME AS SS-10						17	A-6a (VISUAL)
846.7	30	8/9/13	30				SS-12	100			SAME AS SS-10						15	A-6a (VISUAL)
844.7	32																	
842.7	34																	
840.7	36	7/9/50+/0.1'	50+			TOP OF ROCK BEGIN CORE 36.5'	SS-13	67			SAME AS SS-10						17	A-6a (VISUAL)
838.7	38					DOLOMITE (90%) INTERBEDDED WITH SHALE (10%) UNIT ROD = 15%, LOSS = 0%												
836.7	40					DOLOMITE: GRAY, SLIGHTLY WEATHERED, STRONG, THIN TO LAMINATED, VUGGY;												
834.7	42	15		10.0	0.0	SHALE: BLACK, MODERATELY WEATHERED, MODERATELY STRONG, LAMINATED.												
832.7	44																	
830.7	46					BOTTOM OF BORING = 46.5'												

STRUCTURE FOUNDATION EXPLORATION
BRIDGE NO. ALL-75-0875 L&R OVER S.R. 81

DRAWN M.S.J.
CHECKED R.J.K.

UNCONFINED COMPRESSION STRENGTH OF COHESIVE SOIL
(ASTM D 2166)

Project Name ALL-75 — Project Number 175506027
Source B-145, 25.0'-27.0' — Lab ID 845
Visual Description Very stiff, gray silt and clay, damp

Recovered 1.6'
Test Interval 25.5' - 26.0'

Specimen Type: Undisturbed

LL N/A
PL N/A
PI N/A

Date Extruded 04/15/2009
Date Tested 04/15/2009

Initial Wet Density (pcf)	141.9
Initial Dry Density (pcf)	124.0
Initial Moisture Content (%)	14.4
Specific Gravity	N/A
Degree of Saturation (%)	N/A
Average Height (in)	6.257
Average Diameter (in)	2.793
Height to Diameter Ratio	2.2

MC Taken Before Test, From Trimmings

Unconfined Compressive Strength (tsf)	4.71
Undrained Shear Strength (tsf)	2.35
Strain at Maximum Stress (%)	15.02
Strain rate to failure (% / min.)	0.96

Stress vs. Strain

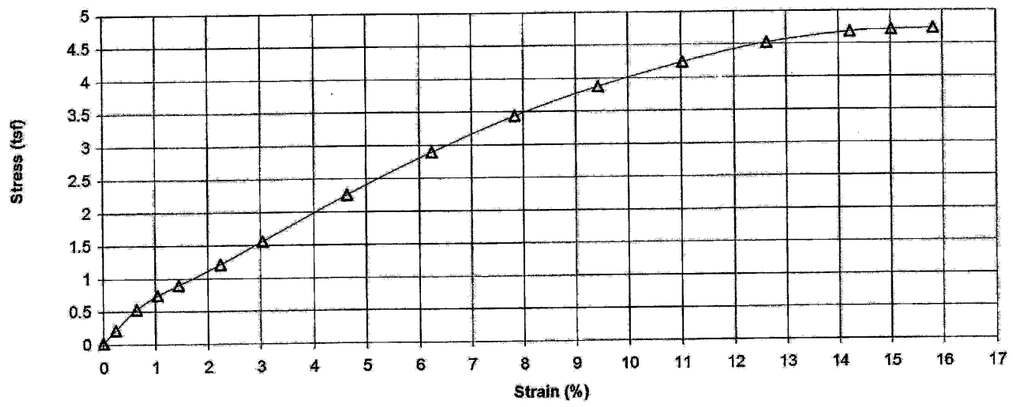

Failure Sketch

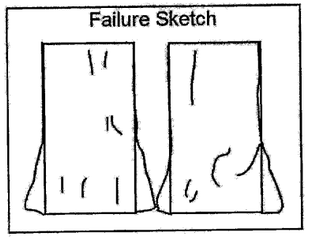

Pocket Penetrometer Reading (tsf) N/A
Torvane Reading (kg/cm^2) N/A

Comments

UNCONFINED COMPRESSION STRENGTH OF COHESIVE SOIL
(ASTM D 2166)

Project Name ALL-75 — Project Number 175506027
Source B-146, 20.0'-22.0' — Lab ID 855
Visual Description Very stiff, gray sandy silt, damp

Recovered 1.4'
Test Interval 20.5' - 21.0'

Specimen Type: Undisturbed

LL N/A
PL N/A
PI N/A

Date Extruded 04/15/2009
Date Tested 04/15/2009

Initial Wet Density (pcf)	138.7
Initial Dry Density (pcf)	122.0
Initial Moisture Content (%)	13.7
Specific Gravity	N/A
Degree of Saturation (%)	N/A
Average Height (in)	6.000
Average Diameter (in)	2.827
Height to Diameter Ratio	2.1

MC Taken Before Test, From Trimmings

Unconfined Compressive Strength (tsf)	3.38
Undrained Shear Strength (tsf)	1.69
Strain at Maximum Stress (%)	14.83
Strain rate to failure (% / min.)	1.02

Stress vs. Strain

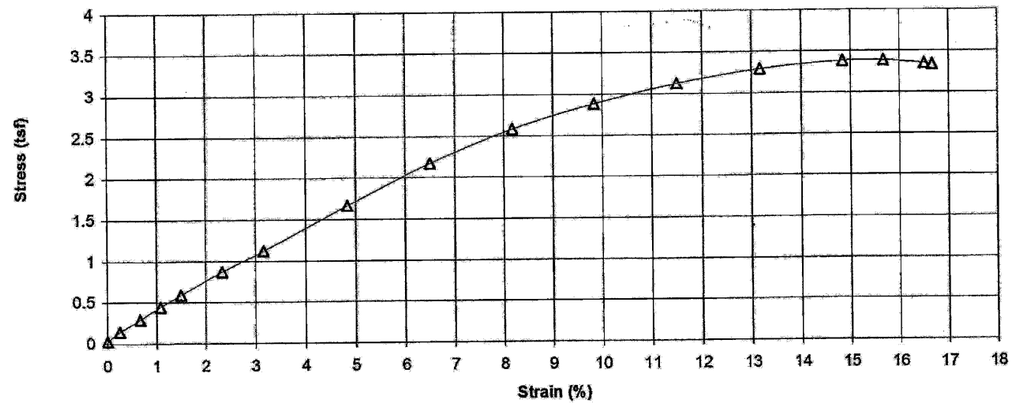

Failure Sketch

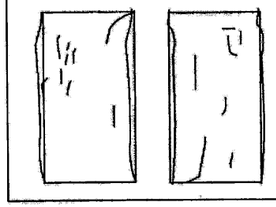

Pocket Penetrometer Reading (tsf) N/A
Torvane Reading (kg/cm^2) N/A

Comments

STRUCTURE FOUNDATION EXPLORATION
BRIDGE NO. ALL-75-0875 L&R OVER S.R. 81

DRAWN M.J.
CHECKED R.J.K.

ALL-75-5.53

7 / 7

157 / 157

\\Us1268-f01\workgroup\1755\active\1755300002\geotechnical\drawing\ODOTSubmittal\projects\ALL\76691\geotechnical\sheets\ALL-75-08.75 (S.R.81)\76691ZD001.dgn

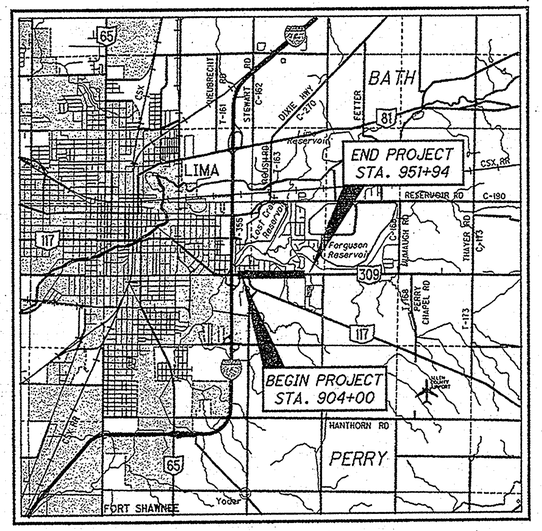

LOCATION MAP

LATITUDE: N40°43'50" LONGITUDE: W84°03'50"

SCALE IN MILES

0 1 2 3 4

N

PORTION TO BE IMPROVED

INTERSTATE HIGHWAY

STATE & FEDERAL ROUTES

COUNTY & TOWNSHIP ROADS

OTHER ROADS

DESIGN DESIGNATION

CURRENT ADT (2013)	32,100
DESIGN YEAR ADT (2033)	35,300
DESIGN HOURLY VOLUME (2033)	3530
DIRECTIONAL DISTRIBUTION	60%
TRUCKS (24 HOUR B&C)	6%
DESIGN SPEED	40 MPH
LEGAL SPEED	40 MPH
DESIGN FUNCTIONAL CLASSIFICATION: URBAN PRINCIPAL ARTERIAL	
NHS PROJECT	NO

DESIGN EXCEPTIONS

DESIGN FEATURE	APPROVAL DATE	SEE SHEET
HORIZONTAL ALIGNMENT	9-06-11	2

UNDERGROUND UTILITIES

CONTACT BOTH SERVICES
CALL TWO WORKING DAYS
BEFORE YOU DIG

CALL
1-800-362-2764
(TOLL FREE)
OHIO UTILITIES PROTECTION SERVICE
NON-MEMBERS
MUST BE CALLED DIRECTLY

OIL & GAS PRODUCERS PROTECTIVE SERVICE CALL: **1-800-929-0988**

PLAN PREPARED BY:
DISTRICT NO. 1
OHIO DEPARTMENT OF TRANSPORTATION

ENGINEERS SEAL:

STATE OF OHIO
ERIC RYAN PFENNING
E-61657
REGISTERED PROFESSIONAL ENGINEER

TRAFFIC SIGNALS

SIGNED: Eric R. Pfenning
DATE: 9/17/2012

ENGINEERS SEAL:

STATE OF OHIO
Eric J. Schockhoff
E-63555
REGISTERED PROFESSIONAL ENGINEER

SIGNED: Eric J. Schockhoff
DATE: September 13th 2012

STATE OF OHIO
DEPARTMENT OF TRANSPORTATION

ALL-117/309-18.65/15.17 PART 2

BATH TOWNSHIP
PERRY TOWNSHIP
ALLEN COUNTY

FOR PART 1, SEE ALL-75-5.53

INDEX OF SHEETS:

TITLE SHEET	1
SCHEMATIC PLAN	2
TYPICAL SECTIONS	3-6
GENERAL NOTES	7-9
MAINTENANCE OF TRAFFIC	10-12
GENERAL SUMMARY	13-17
SUBSUMMARIES	18-24
PROJECT SITE PLAN	25
PLAN AND PROFILE - SR 309	26-45
CROSS SECTIONS - SR 309	46-77
PLAN AND PROFILE - WILLARD AVE./SR 117	78-79
CROSS SECTIONS - WILLARD AVE./SR 117	80-83
INTERSECTION DETAILS	84-90
CURB RAMP DETAILS	91
DRIVEWAY SUBSUMMARY	92
DRIVEWAY DETAILS	93-99
TRAFFIC CONTROL	100-120
TRAFFIC SIGNALS	121-142
RIGHT OF WAY	143-173
SOIL PROFILE	

PROJECT DESCRIPTION

RESURFACING AND WIDENING WITH CURB AND GUTTER OF 0.91 MILES OF SR 117/309 INCLUDING RAISED CONCRETE MEDIANS, SIDEWALKS, A NEW STORM SEWER SYSTEM, SECTIONS OF TOTAL PAVEMENT REPLACEMENT AND MODIFICATION OF DRIVES AND ACCESS POINTS FOR ACCESS MANAGEMENT.

EARTH DISTURBED AREAS

PROJECT EARTH DISTURBED AREA: 12.7 ACRES
ESTIMATED CONTRACTOR EARTH DISTRUBED AREA: 0.7 ACRES
NOTICE OF INTENT EARTH DISTRUBED AREA: 13.4 ACRES

2010 SPECIFICATIONS

THE STANDARD SPECIFICATIONS OF THE STATE OF OHIO, DEPARTMENT OF TRANSPORTATION, INCLUDING CHANGES AND SUPPLEMENTAL SPECIFICATIONS LISTED IN THE PROPOSAL SHALL GOVERN THIS IMPROVEMENT.

I HEREBY APPROVE THESE PLANS AND DECLARE THAT THE MAKING OF THIS IMPROVEMENT WILL NOT REQUIRE THE CLOSING TO TRAFFIC OF THE HIGHWAY EXCEPT FOR THE SIDE ROADS AS DESCRIBED ON SHEETS 10-12 AND THAT PROVISIONS FOR THE MAINTENANCE AND SAFETY OF TRAFFIC WILL BE AS SET FORTH ON THE PLANS AND ESTIMATES.

STANDARD CONSTRUCTION DRAWINGS	SUPPLEMENTAL SPECIFICATIONS
SEE PART 1	SEE PART 1
	SPECIAL PROVISIONS
	Waterway Permit Conditions 1-07-11

APPROVED _____
DATE 9/11/12 *DISTRICT DEPUTY DIRECTOR*

APPROVED _____
DATE 10-3-12 *DIRECTOR, DEPARTMENT OF TRANSPORTATION*

FEDERAL PROJECT NO. E 036 (702)
PID NO. 76691
CONSTRUCTION PROJECT NO.
RAILROAD INVOLVEMENT NONE
ALL-117/309-18.65/15.17
1/173

i:\Pd\75467\roadway\sheets\75467GT001.dgn 11-SEP-2012 11:26AM eschecke

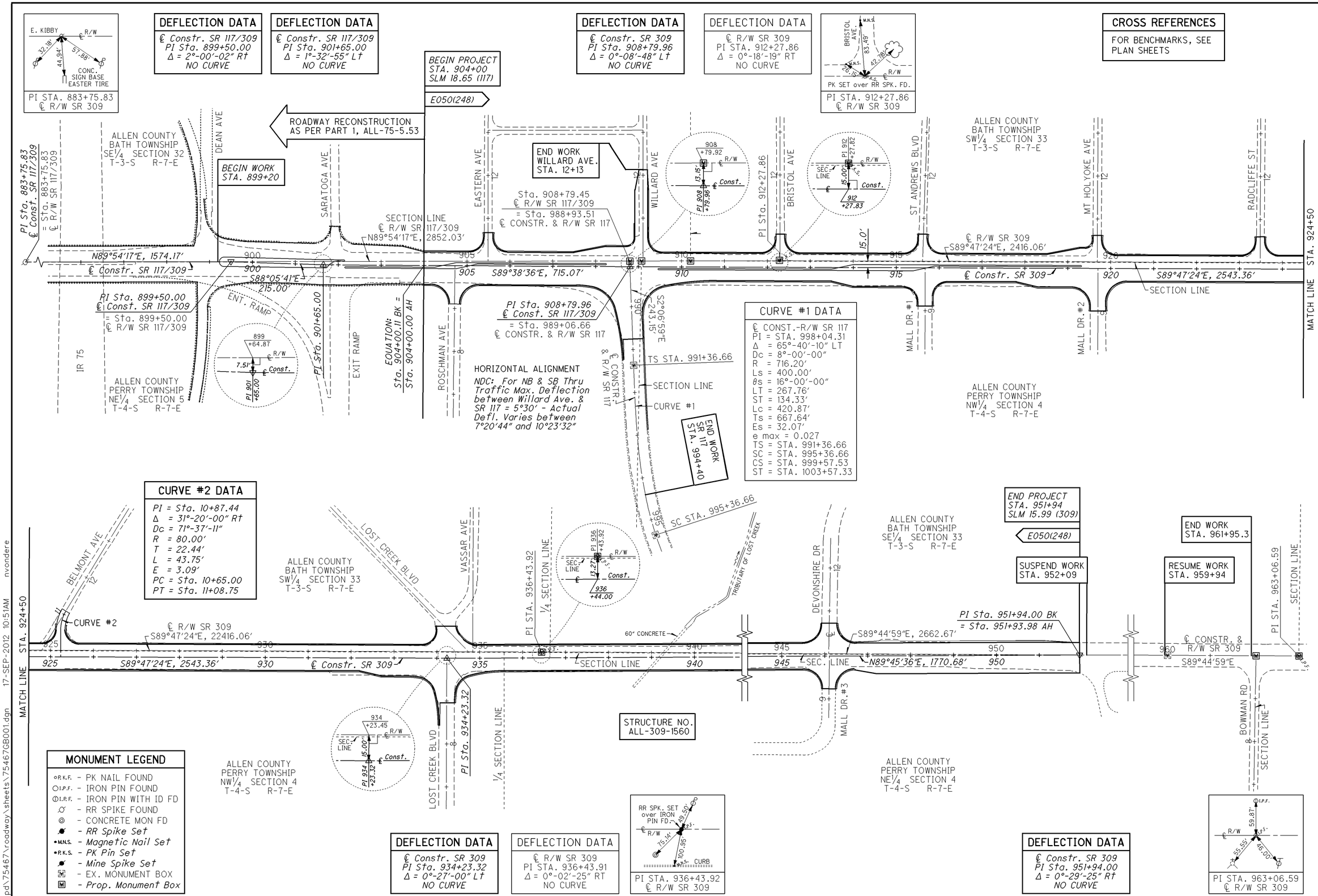
E. KIBBY
℄ R/W
32.18'
44.94'
57.88'
CONC. SIGN BASE EASTER TIRE
PI STA. 883+75.83
℄ R/W SR 309
DEFLECTION DATA
℄ Constr. SR 117/309
PI Sta. 899+50.00
Δ = 2°-00'-02" Rt
NO CURVE
DEFLECTION DATA
℄ Constr. SR 117/309
PI Sta. 901+65.00
Δ = 1°-32'-55" Lt
NO CURVE
BEGIN PROJECT
STA. 904+00
SLM 18.65 (117)
E050(248)
DEFLECTION DATA
℄ Constr. SR 309
PI Sta. 908+79.96
Δ = 0°-08'-48" Lt
NO CURVE
DEFLECTION DATA
℄ R/W SR 309
PI STA. 912+27.86
Δ = 0°-18'-19" RT
NO CURVE
BRISTOL AVE
M.N.S.
83.49'
42.78'
R/W
PK SET over RR SPK. FD.
PI STA. 912+27.86
℄ R/W SR 309
CROSS REFERENCES
FOR BENCHMARKS, SEE PLAN SHEETS
HORIZONTAL SCALE IN FEET
0
50
100
200
ROADWAY RECONSTRUCTION AS PER PART 1, ALL-75-5.53
BEGIN WORK STA. 899+20
END WORK WILLARD AVE. STA. 12+13
PI Sta. 883+75.83 ℄ Constr. SR 117/309 = Sta. 883+75.83 ℄ R/W SR 117/309
ALLEN COUNTY BATH TOWNSHIP SE¼ SECTION 32 T-3-S R-7-E
DEAN AVE
SARATOGA AVE
EASTERN AVE
WILLARD AVE
BRISTOL AVE
ST ANDREWS BLVD
MT HOLYOKE AVE
RADCLIFFE ST
ALLEN COUNTY BATH TOWNSHIP SW¼ SECTION 33 T-3-S R-7-E
SECTION LINE ℄ R/W SR 117/309 N89°54'17"E, 2852.03'
Sta. 908+79.45 ℄ R/W SR 117/309 = Sta. 988+93.51 ℄ CONSTR. & R/W SR 117
908 +79.92 R/W ℄ Const. PI 908 +79.96 13.15'
PI 912 +27.82 SEC. LINE 15.00' R/W ℄ Const. 912 +27.83
PI Sta. 912+27.86
15.0'
℄ R/W SR 309 S89°47'24"E, 2416.06'
N89°54'17"E, 1574.17'
℄ Constr. SR 117/309
S88°05'41"E 215.00'
S89°38'36"E, 715.07'
℄ Constr. SR 309
S89°47'24"E, 2543.36'
SECTION LINE
MATCH LINE STA. 924+50
PI Sta. 899+50.00 ℄ Const. SR 117/309 = Sta. 899+50.00 ℄ R/W SR 117/309
PI Sta. 908+79.96 ℄ Const. SR 117/309 = Sta. 989+06.66 ℄ CONSTR. & R/W SR 117
S20°59'59"E 2343.15'
TS STA. 991+36.66
SECTION LINE
CURVE #1
END WORK SR 117 STA. 994+40
℄ CONSTR. & R/W SR 117
ENT. RAMP
899 +64.87 R/W ℄ Const. 7.51' PI 901 +65.00
PI Sta. 901+65.00
EXIT RAMP
EQUATION: Sta. 904+00.11 BK = Sta. 904+00.00 AH
ROSCHMAN AVE
IR 75
ALLEN COUNTY PERRY TOWNSHIP NE¼ SECTION 5 T-4-S R-7-E
MALL DR.#1
MALL DR.#2
ALLEN COUNTY PERRY TOWNSHIP NW¼ SECTION 4 T-4-S R-7-E
HORIZONTAL ALIGNMENT
NDC: For NB & SB Thru Traffic Max. Deflection between Willard Ave. & SR 117 = 5°30' - Actual Defl. Varies between 7°20'44" and 10°23'32"
CURVE #1 DATA
℄ CONST.-R/W SR 117
PI = STA. 998+04.31
Δ = 65°-40'-10" LT
Dc = 8°-00'-00"
R = 716.20'
Ls = 400.00'
θs = 16°-00'-00"
LT = 267.76'
ST = 134.33'
Lc = 420.87'
Ts = 667.64'
Es = 32.07'
e max = 0.027
TS = STA. 991+36.66
SC = STA. 995+36.66
CS = STA. 999+57.53
ST = STA. 1003+57.33
CURVE #2 DATA
PI = Sta. 10+87.44
Δ = 31°-20'-00" Rt
Dc = 71°-37'-11"
R = 80.00'
T = 22.44'
L = 43.75'
E = 3.09'
PC = Sta. 10+65.00
PT = Sta. 11+08.75
BELMONT AVE
CURVE #2
MATCH LINE STA. 924+50
℄ R/W SR 309 S89°47'24"E, 22416.06'
S89°47'24"E, 2543.36'
℄ Constr. SR 309
LOST CREEK BLVD
VASSAR AVE
ALLEN COUNTY BATH TOWNSHIP SW¼ SECTION 33 T-3-S R-7-E
PI STA. 936+43.92
¼ SECTION LINE
SEC. LINE 13.27' R/W ℄ Const. PI 936 +43.92 936 +44.00
60" CONCRETE
TRIBUTARY OF LOST CREEK
DEVONSHIRE DR
ALLEN COUNTY BATH TOWNSHIP SE¼ SECTION 33 T-3-S R-7-E
END PROJECT STA. 951+94 SLM 15.99 (309)
E050(248)
SUSPEND WORK STA. 952+09
RESUME WORK STA. 959+94
END WORK STA. 961+95.3
PI Sta. 951+94.00 BK = Sta. 951+93.98 AH
S89°44'59"E, 2662.67'
N89°45'36"E, 1770.68'
SEC. LINE
℄ CONSTR. & R/W SR 309 S89°44'59"E
PI STA. 963+06.59
SECTION LINE
BOWMAN RD
MALL DR.#3
STRUCTURE NO. ALL-309-1560
934 +23.45 R/W SEC. LINE 15.00' ℄ Const. PI 934 +23.32
PI Sta. 934+23.32
¼ SECTION LINE
ALLEN COUNTY PERRY TOWNSHIP NW¼ SECTION 4 T-4-S R-7-E
ALLEN COUNTY PERRY TOWNSHIP NE¼ SECTION 4 T-4-S R-7-E
MONUMENT LEGEND
P.K.F. - PK NAIL FOUND
I.P.F. - IRON PIN FOUND
I.P.F. - IRON PIN WITH ID FD
- RR SPIKE FOUND
- CONCRETE MON FD
- RR Spike Set
M.N.S. - Magnetic Nail Set
P.K.S. - PK Pin Set
- Mine Spike Set
- EX. MONUMENT BOX
- Prop. Monument Box
DEFLECTION DATA
℄ Constr. SR 309
PI Sta. 934+23.32
Δ = 0°-27'-00" Lt
NO CURVE
DEFLECTION DATA
℄ R/W SR 309
PI STA. 936+43.91
Δ = 0°-02'-25" RT
NO CURVE
RR SPK. SET over IRON PIN FD. 49.50' R/W ℄ 75.14' 100.95' CURB
PI STA. 936+43.92
℄ R/W SR 309
DEFLECTION DATA
℄ Constr. SR 309
PI Sta. 951+94.00
Δ = 0°-29'-25" Rt
NO CURVE
I.P.F. 59.87' R/W ℄ 55.55' 46.00'
PI STA. 963+06.59
℄ R/W SR 309
SCHEMATIC PLAN
ALL-117/309-18.65/15.17
2
173
17-SEP-2012 10:51AM nvondere
I:\pd\75467\roadway\sheets\75467GB001.dgn

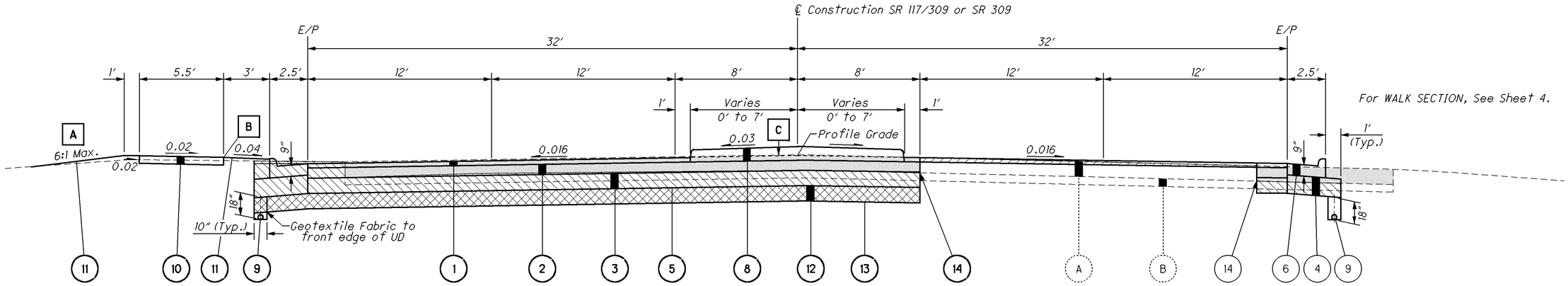

NOTE: PAVEMENT REMOVED and BUILDUPS apply Either Side. See PLAN Sheets for Limits.

NORMAL SECTION

APPLIES

Sta. 904+25.00 to Sta. 905+25.00	=	100.00 Ft
Sta. 913+50.00 to Sta. 915+90.00	=	240.00 Ft
Total Length	=	340.00 Ft

A — See CROSS SECTIONS

B — Elev = 0.12′ above Top of Curb

C — Projected Top of Surface Course

D — For Pavement Surface Elevations at Outside Edges of Concrete, Median, See TABLE on Sheet 6.

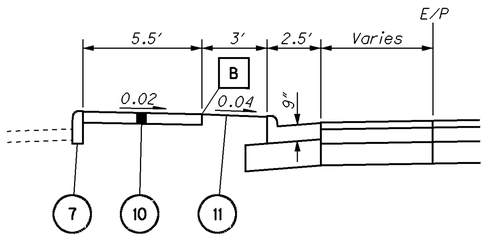

CONCRETE WALK SECTION

APPLIES

Sta. 907+48.41 Lt to Sta. 908+75.40 Lt

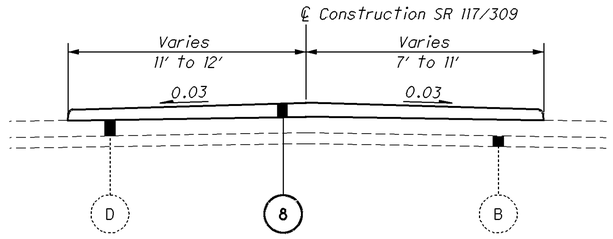

MEDIAN SECTION

APPLIES

Sta. 899+23 to Sta. 902+00

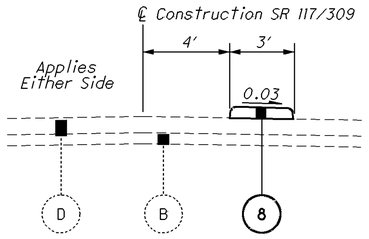

MEDIAN SECTION

APPLIES

Sta. 902+00 to Sta. 904+00

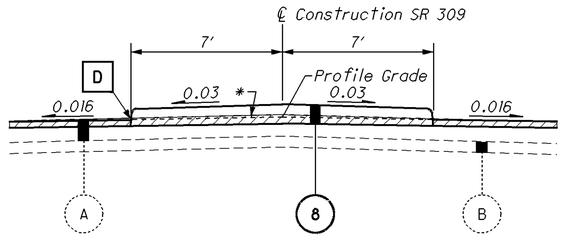

NORMAL SECTION

APPLIES

Sta. 912+40 to Sta. 915+80

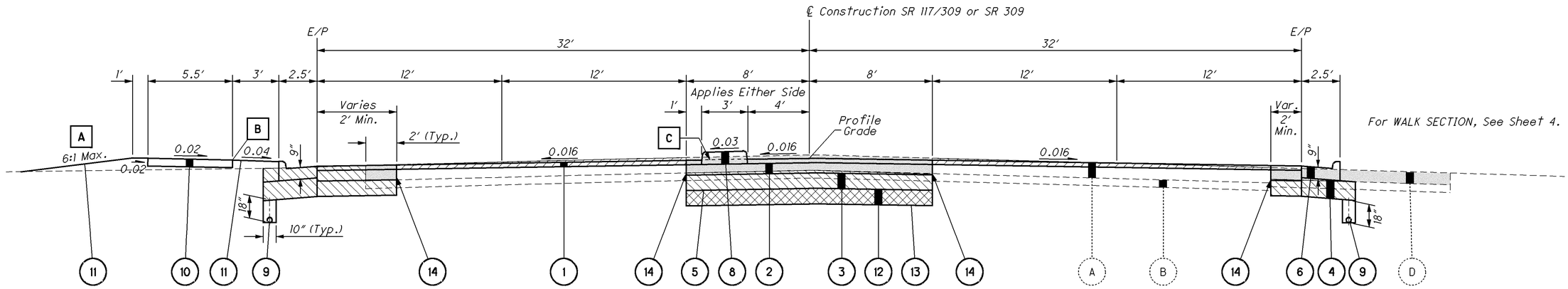

NOTE: PAVEMENT REMOVED and BUILDUPS apply Either Side. See PLAN Sheets for Limits.

NORMAL SECTION

APPLIES

Sta. 904+00.00 to Sta. 904+25.00	=	25.00 Ft
Sta. 905+25.00 to Sta. 908+23.50	=	298.50 Ft
Sta. 909+46.50 to Sta. 913+50.00	=	403.50 Ft
Sta. 915+90.00 to Sta. 919+30.50	=	340.50 Ft
Total Length	=	1067.50 Ft

NOTES: For PAVEMENT LEGENDS, See Sheet 4.
For CONCRETE MEDIAN DETAILS, See Sheet 8.

TYPICAL SECTIONS - SR 117/309 & SR 309

ALL-117/309-18.65/15.17

I:\pd\75467\roadway\sheets\75467GY001.dgn 17-SEP-2012 10:51AM nvondere

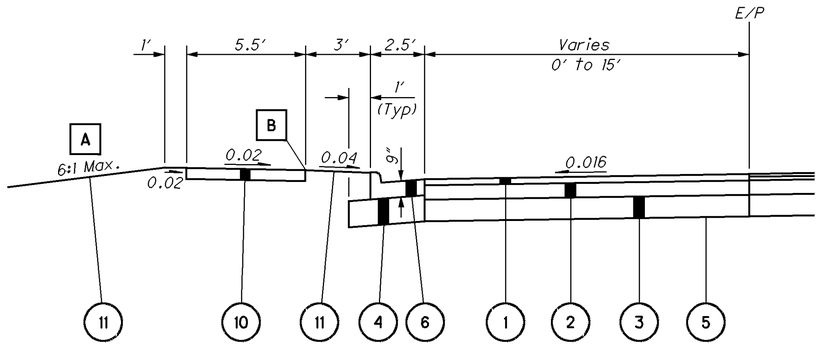

U-TURN SECTION

APPLIES

Sta. 907+49.00 Lt to Sta. 908+70.90 Lt = 121.90 Ft
Sta. 918+52.00 Lt to Sta. 919+38.63 Lt = 86.63 Ft

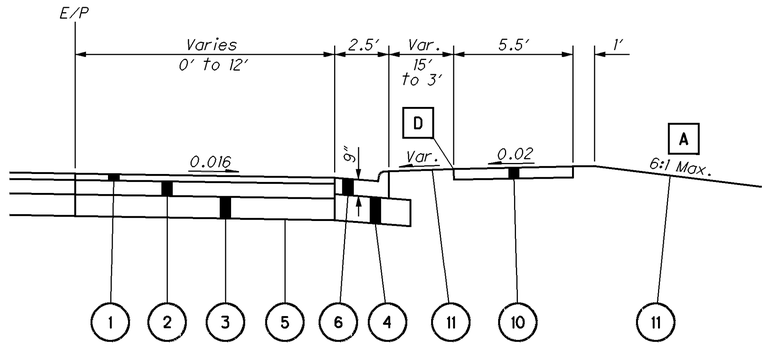

RIGHT TURN LANE SECTION

APPLIES

Sta. 904+00.00 Rt to Sta. 907+55.56 Rt = 355.56 Ft
Sta. 913+55.00 Rt to Sta. 915+16.38 Rt = 161.38 Ft
Sta. 917+80.00 Rt to Sta. 919+07.60 Rt = 127.60 Ft
Sta. 932+20.00 Rt to Sta. 933+31.11 Rt = 111.11 Ft

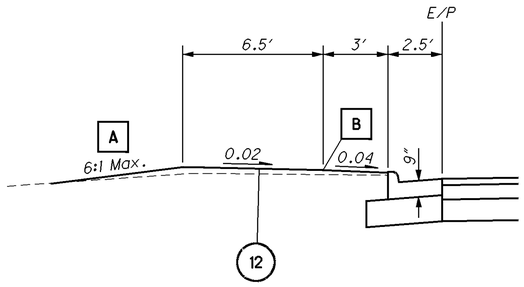

GRASS WALK SECTION

APPLIES

Sta. 909+56.1 Lt to Sta. 911+85.2 Lt
Sta. 912+75.2 Lt to Sta. 915+17.1 Lt
Sta. 916+07.1 Lt to Sta. 917+00.0 Lt

A	See CROSS SECTIONS
B	Elev = 0.12' above Top of Curb
C	Elev = 0.12' below Top of Curb
D	Elev = Varies: 0.12' above Top of Curb @ 3' to 0.07' below Top of Curb @ 15'

E Thickness Varies at the following Locations:

1-¾" to 2-¾" along E/P Sta. 904+00 Lt to Sta. 905+88 Lt
1-¾" to 4-½" along Eastern Ave.

1-¾" to 2-⅛" along Willard Ave.

1-¾" to 4-¾" along E/P Sta. 924+61 Lt to Sta. 925+68 Lt
1-¾" to 6" along Belmont Ave.

1-¾" to 3-¾" along E/P Sta. 926+50 Lt to Sta. 929+00 Lt

1-¾" to 3-½" along E/P Sta. 932+20 Rt to Sta. 933+50 Rt

1-¾" to 2-⅝" along E/P Sta. 934+78 Rt to Sta. 936+45 Rt

1-¾" to 2-¼" along E/P Sta. 935+25 Lt to Sta. 936+00 Lt

1-¾" to 2-⅝" along E/P Sta. 944+00 Rt to Sta. 945+25 Rt

1-¾" to 3-½" along E/P Sta. 949+00 Rt to Sta. 950+92 Rt

1-¾" to 2" along E/P Sta. 949+50 Lt to Sta. 950+13 Lt

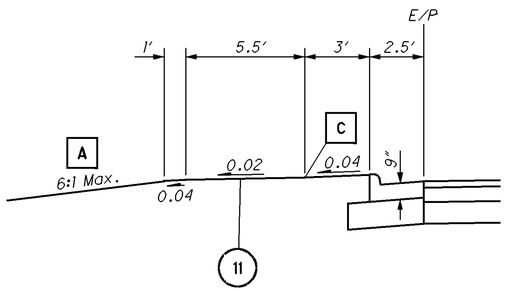

GRASS WALK SECTION

APPLIES

Sta. 917+00.0 Lt to Sta. 919+38.6 Lt
Sta. 920+14.5 Lt to Sta. 923+03.3 Lt
Sta. 923+93.3 Lt to Sta. 924+78.4 Lt
Sta. 925+68.4 Lt to Sta. 933+64.9 Lt

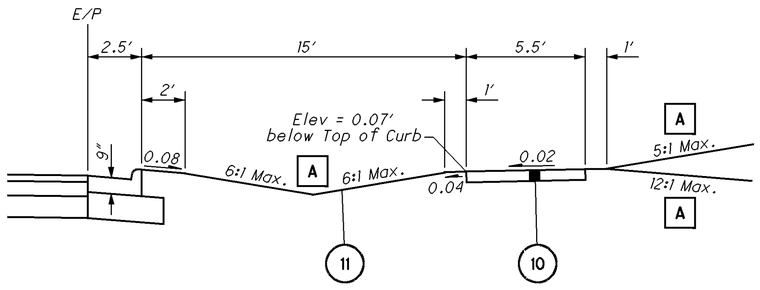

CONCRETE WALK SECTION

APPLIES

Sta. 911+22.3 Rt to Sta. 913+55.0 Rt
Sta. 916+19.4 Rt to Sta. 917+80.0 Rt

PROPOSED LEGEND

1	ITEM 442 - 1-½" ASPHALT CONCRETE SURFACE COURSE, 12.5 MM, TYPE A (448) ITEM 407 - TACK COAT FOR INTERMEDIATE COURSE (0.075 Gallons per Sq Yd) ITEM 448 - ASPHALT CONCRETE INTERMEDIATE COURSE, TYPE 2, PG64-22 (T=1-¼") **E** ITEM 407 - TACK COAT (0.075 Gallons per Sq Yd)
2	ITEM 301 - 8" ASPHALT CONCRETE BASE, PG64-22
3	ITEM 304 - 12" AGGREGATE BASE
4	ITEM 304 - 14" AGGREGATE BASE
5	ITEM 204 - SUBGRADE COMPACTION
6	ITEM 609 - COMBINATION CURB AND GUTTER, TYPE 2
7	ITEM 609 - CURB, TYPE 6
8	ITEM 609 - CONCRETE MEDIAN
9	ITEM 605 - 4" BASE PIPE UNDERDRAINS
10	ITEM 608 - 6" CONCRETE WALK
11	ITEM 659 - SEEDING AND MULCHING
12	ITEM 204 - 12" GRANULAR MATERIAL, TYPE B
13	ITEM 204 - GEOTEXTILE FABRIC
14	Sawcut as per CMS 202.05
	ITEM 202 - PAVEMENT REMOVED
	ITEM 203 - EXCAVATION
	ITEM 204 - EXCAVATION OF SUBGRADE (Thickness =12")
	ITEM 254 - PAVEMENT PLANING, ASPHALT CONCRETE (Variable Thickness - ±3" Max.)

EXISTING LEGEND

A	±12" ASPHALT CONCRETE
B	AGGREGATE BASE
C	CURB AND GUTTER
D	9" REINFORCED CONCRETE

TYPICAL SECTIONS - SR 117/309 & SR 309

ALL-117/309-18.65/15.17

I:\pd\75467\roadway\sheets\75467GY002.dgn 17-SEP-2012 10:51AM nvondere

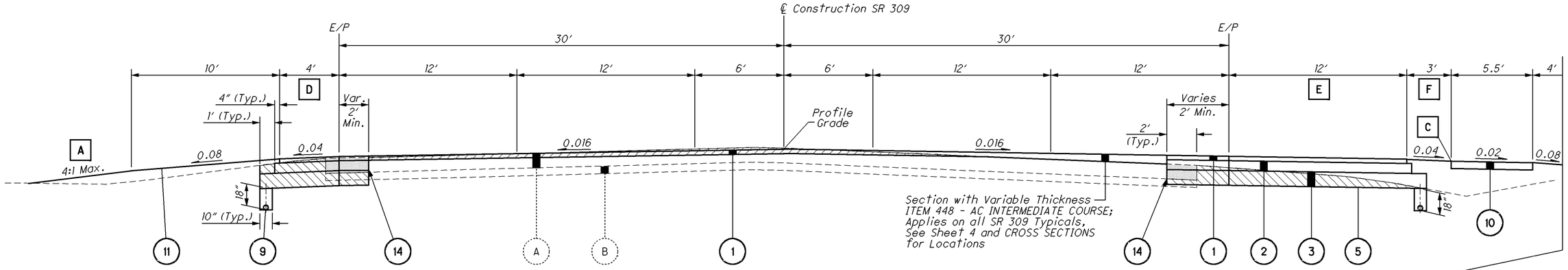

NOTE: PAVEMENT REMOVED and BUILDUPS apply Either Side. See PLAN Sheets for Limits.

NORMAL SECTION

APPLIES

Sta. 946+70.39 to Sta. 951+94.00 = 523.61 Ft

Total Length = 523.61 Ft

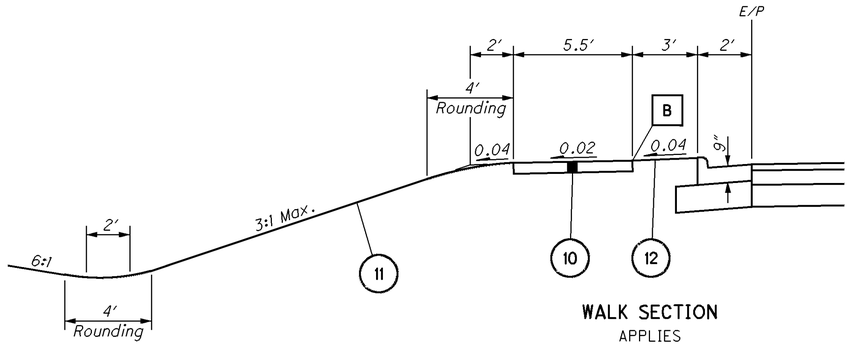

WALK SECTION

APPLIES

Sta. 938+00.0 Lt to Sta. 941+50.0 Lt

NOTE: For PAVEMENT LEGENDS, See Sheet 4.

A	See CROSS SECTIONS
B	Elev = 0.12′ below Top of Curb
C	Elev = 0.12′ below Edge of Shoulder
D	Varies from 2.5′ to 4′ Sta. 946+74.10 to Sta. 947+20 Varies from 4′ to 0′ Sta. 951+10 to Sta. 951+94
E	Varies from 2.5′ to 12′ Sta. 946+70.39 to Sta. 947+20
F	Varies from 12.5′ to 3′ Sta. 946+70.39 to Sta. 947+20

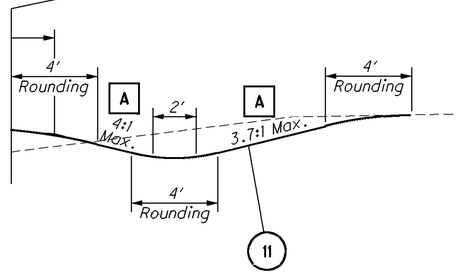

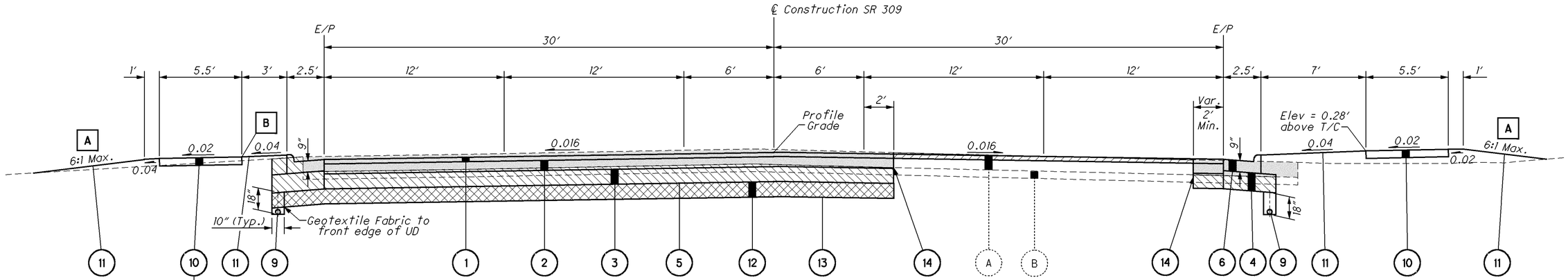

APPLIES
Sta. 934+83.5 Lt to Sta. 945+48.37 Lt

NOTE: PAVEMENT REMOVED and BUILDUPS apply Either Side. See PLAN Sheets for Limits.

NORMAL SECTION

APPLIES

Sta. 920+38.60 to Sta. 945+48.37 = 2509.77 Ft

Total Length = 2509.77 Ft

TYPICAL SECTIONS - SR 309

ALL-117/309-18.65/15.17

I:\pd\75467\roadway\sheets\75467GY003.dgn 17-SEP-2012 10:51AM nvondere

CONCRETE MEDIAN ELEVATIONS

STATION	PAVEMENT SURFACE ELEVATION						
	7′ RT	4′ RT	OFFSET	℄	OFFSET	4′ LT	7′ LT
904+00	890.19	890.24		890.30			
+25	890.23	890.28		890.34			
+50	890.27			890.38	890.36 1.5′ LT		
+75	890.31			890.42			890.31
905+00			890.47 1.5′ RT	890.49			890.38
+25				890.57		890.51	890.46
+50				890.67		890.61	890.56
906+00				890.93		890.87	890.82
+50				891.25		891.19	891.14
907+00				891.61		891.55	891.50
+50				891.97		891.91	891.86
908+00				892.33		892.27	892.22
+23.5				892.50		892.44	892.39
909+46.5	893.27	893.32		893.38			
909+50	893.30	893.35		893.41			
910+00	893.66	893.71		893.77			
+50	894.02	894.07		894.13			
911+00	894.38	894.43		894.49			
+50	894.74	894.79		894.85			
912+00	895.10	895.15		895.21			
+50	895.46	895.51		895.57			
913+00	895.75	895.80		895.86			
+50	895.90	895.95		896.01			
914+00	895.92			896.03			895.92
+50	895.79			895.90			895.79
915+00	895.53			895.64			895.53
+40	895.26			895.37			895.26
+50			895.26 4.8′ RT	895.30			895.19
+90				895.04		894.98	894.93
916+00				894.97		894.91	894.86
+50				894.63		894.57	894.52
917+00				894.30		894.24	894.19
+50				893.97		893.91	893.86
918+00				893.63		893.57	893.52
+50				893.30		893.24	893.19
919+00				893.05		892.99	892.94
+30.5				892.89		892.83	892.78

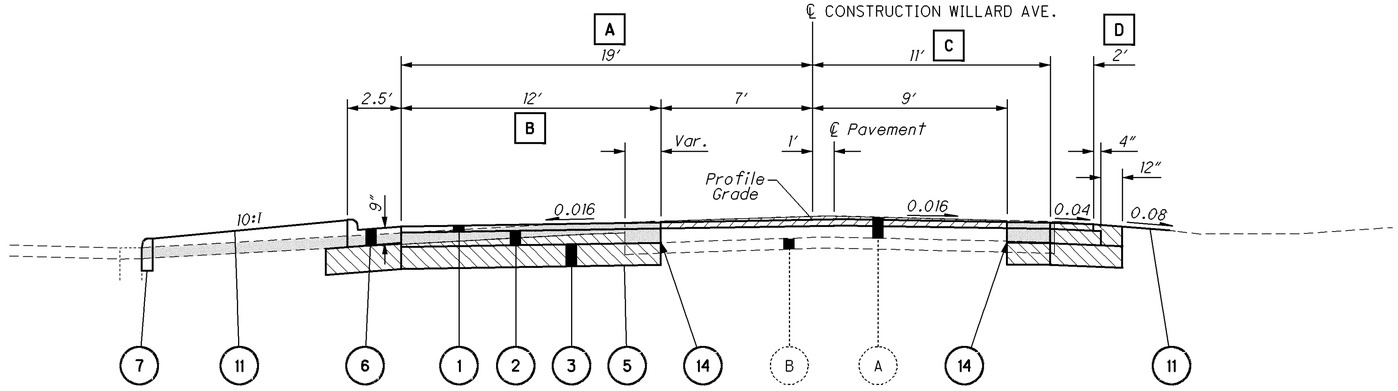

NORMAL SECTION

APPLIES

Sta. 10+53.51 to Sta. 12+13.00 = 159.49 Ft

Total Length = 159.49 Ft

NOTE: PAVEMENT REMOVED and BUILDUPS apply Either Side. See PLAN Sheets for Limits.

NOTE: For PAVEMENT LEGENDS, See Sheet 4.

- A — *Varies from 19′ to 9.6′ Sta. 11+66 to Sta. 12+13*
- B — *Varies from 12′ to 2.6′ Sta. 11+66 to Sta. 12+13*
- C — *Varies from 11′ to 10′ Sta. 11+66 to Sta. 12+13*
- D — *Varies from 2′ to 0′ Sta. 11+66 to Sta. 12+13*
- E — *Varies from 0′ to 6′ Sta. 960+00 to Sta. 960+25*

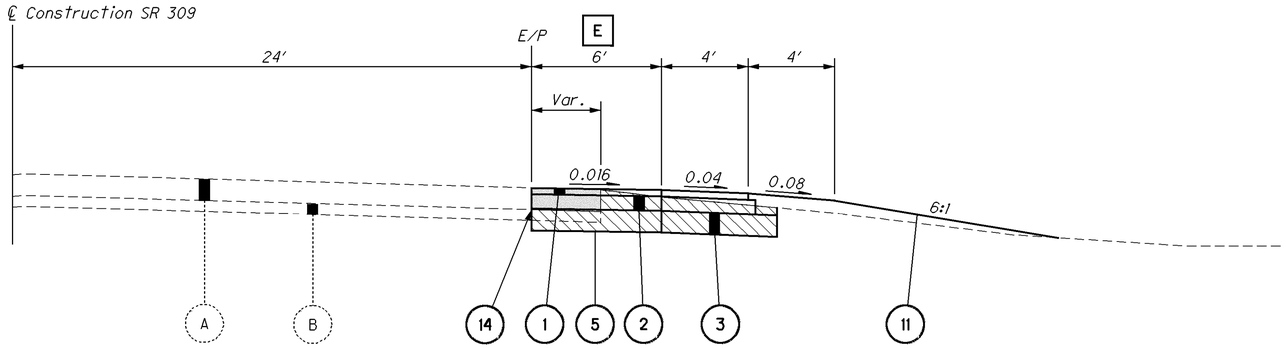

NORMAL SECTION

APPLIES

Sta. 960+00.00 to Sta. 961+43.10 = 143.10 Ft

Total Length = 143.10 Ft

TYPICAL SECTIONS - SR 309 & WILLARD AVE.

ALL-117/309-18.65/15.17

6
173

I:\pd\75467\roadway\sheets\75467GY004.dgn 17-SEP-2012 10:51AM nvondere

ROUNDING

THE ROUNDING AT SLOPE BREAKPOINTS SHOWN ON THE TYPICAL SECTIONS APPLY TO ALL CROSS-SECTIONS EVEN THOUGH OTHERWISE SHOWN.

UTILITIES

LISTED BELOW ARE ALL UTILITIES LOCATED WITHIN THE PROJECT CONSTRUCTION LIMITS TOGETHER WITH THEIR RESPECTIVE OWNERS:

TELEPHONE

EMBARQ
122 S Elizabeth Street
Lima, Ohio 45801
419-228-1660

ELECTRIC

American Electric Power
430 Emma Street
Findlay, Ohio 45840
419-420-3576

CABLE

Time Warner Cable
3100 Elida Road
Lima, Ohio 45805
419-331-1111

GAS

East Ohio Gas
150 S Jackson Street
Lima, Ohio 45801
419-226-4700

WATER & SEWER

City of Lima
50 Town Square
Lima, Ohio 45801
419-228-5462

OIL

BP Pipeline
4421 Bradley Rd
Cleveland, Ohio 44109

SEWER

Allen County Sanitary Engineer
204 N Main Street Suite 301
Lima, Ohio 45801
419-228-3700

THE LOCATION OF THE UNDERGROUND UTILITIES SHOWN ON THE PLANS ARE AS OBTAINED FROM THE OWNERS AS REQUIRED BY SECTION 153.64 O.R.C.

ELEVATION DATUM

ALL ELEVATIONS ARE ORTHOMETRIC HEIGHTS USING THE NORTH AMERICAN VERTICAL DATUM OF 1988 (NAVD 88) AND THE GEOID03 GEOID. HORIZONTAL POSITIONS ARE BASED ON THE OHIO STATE PLANE NORTH ZONE, A LAMBERT CONFORMAL CONIC MAP PROJECTION, THE NORTH AMERICAN DATUM OF 1983 ADJUSTED TO THE NATIONAL SPATIAL REFERENCE SYSTEM OF 2007 (NAD 83 (NSRS 2007)), AND THE GRS80 ELLIPSOID.

WORK LIMITS

THE WORK LIMITS SHOWN ON THESE PLANS ARE FOR PHYSICAL CONSTRUCTION ONLY. PROVIDE THE INSTALLATION AND OPERATION OF ALL WORK ZONE TRAFFIC CONTROL AND WORK ZONE TRAFFIC CONTROL DEVICES REQUIRED BY THESE PLANS WHETHER INSIDE OR OUTSIDE THESE WORK LIMITS.

EXISTING PLANS

EXISTING PLANS ENTITLED ALL-30S-(16.73-18.81) HAR-30S-0.00 AND ALL-117-18.74 MAY BE INSPECTED IN THE ODOT DISTRICT ONE OFFICE IN LIMA, OHIO.

CLEARING AND GRUBBING

REMOVE ALL TREES AND STUMPS SPECIFICALLY MARKED FOR REMOVAL WITHIN THE CONSTRUCTION LIMITS UNDER THE LUMP SUM BID FOR ITEM 201, CLEARING AND GRUBBING. THE FOLLOWING IS AN APPROXIMATE ESTIMATE OF THE NUMBER OF TREES AND STUMPS TO BE REMOVED.

SIZES	NO. TREES	NO. STUMPS	TOTAL
18"	20	1	21
30"	0	1	1
48"	1	0	1

SEEDING AND MULCHING

SEEDING AND MULCHING SHALL BE APPLIED TO ALL AREAS OF EXPOSED SOIL BETWEEN THE RIGHT-OF-WAY LINES, AND WITHIN THE CONSTRUCTION LIMITS FOR AREAS OUTSIDE THE RIGHT-OF-WAY LINES COVERED BY WORK AGREEMENT OR SLOPE EASEMENT. QUANTITY CALCULATIONS FOR SEEDING AND MULCHING ARE BASED ON THESE LIMITS.

CONSTRUCTION NOISE

BETWEEN THE HOURS OF 9:00 PM AND 6:00 AM THE CONTRACTOR SHALL TAKE MEASURES TO CONTROL THE NOISE INTENSITY CAUSED BY HIS CONSTRUCTION OPERATIONS AND EQUIPMENT INCLUDING, BUT NOT LIMITED TO, EQUIPMENT USED FOR EXCAVATION, HAULING AND PAVING. THE CONTRACTOR SHALL EMPLOY METHODS AND DEVICES TO MINIMIZE CONSTRUCTION NOISE. THESE METHODS AND DEVICES SHALL BE APPROVED BY THE PROJECT ENGINEER PRIOR TO IMPLEMENTATION. IF THE PROJECT ENGINEER DETERMINES ANY CONSTRUCTION OPERATION EXCEEDS ACCEPTABLE NOISE LEVELS, THE OPERATION WILL CEASE UNTIL A DIFFERENT CONSTRUCTION METHODDOLOGY IS DEVELOPED AND APPROVED TO ALLOW THE WORK TO PROCEED AT A MORE ACCEPTABLE NOISE LEVEL.

ENVIRONMENTAL COMMITMENTS

THE ENVIRONMENTAL DOCUMENT WAS APPROVED 2/09/11 AND CONTAINED THE FOLLOWING CONSTRUCTION RELATED ITEMS THAT THE CONTRACTOR AND PROJECT ENGINEER ARE TO ENSURE ARE CARRIED OUT. IF THEY CANNOT BE FOLLOWED, THE DISTRICT PLANNING AND PROGRAM ADMINISTRATOR SHOULD BE NOTIFIED IMMEDIATELY.

1. ACCESS TO ADJACENT PROPERTY WITHIN THE WORK LIMITS WILL BE MAINTAINED BY THE CONTRACTOR AT ALL TIMES DURING CONSTRUCTION.
2. THE CONTRACTOR SHALL ADVISE THE PROJECT ENGINEER A MINIMUM OF FOURTEEN (14) DAYS PRIOR TO THE FOLLOWING: THE START OF CONSTRUCTION ACTIVITIES, LANE CLOSURES AND ROAD CLOSURES. THE PROJECT ENGINEER WILL NOTIFY THE PROPER EMERGENCY SERVICES, SCHOOLS AND ANY IMPACTED LOCAL PUBLIC AGENCY. THE PROJECT ENGINEER WILL ALSO FORWARD THIS INFORMATION TO THE DISTRICT PUBLIC INFORMATION OFFICER (PIO) BY EMAIL AT RHONDA.PEES@DOT.STATE.OH.US WHO WILL, IN TURN, DISSEMINATE THE INFORMATION TO THE PUBLIC VIA THE LOCAL MEDIA OUTLETS.
3. WATERWAY IMPACTS FOR THE PROJECT ARE PERMITTED UNDER A REGIONAL GENERAL PERMIT (RGP) B-MAINTENANCE. PERMIT INFORMATION IS INCLUDED IN THE SPECIAL PROVISIONS NOTED ON THE TITLE SHEET. TEMPORARY FILL IS NOT PERMITTED.

PAVEMENT RESTORATION FOR PIPE INSTALLATIONS

THE FOLLOWING QUANTITY HAS BEEN PROVIDED FOR PAVEMENT RESTORATION FOLLOWING INSTALLATION OF PIPES UNDER ITEM 603 AND UNDERDRAINS UNDER ITEM 605.

ITEM 301 - ASPHALT CONCRETE BASE, PG64-22 = 240 CU YD

ITEM 304 - AGGREGATE BASE = 30 CU YD

THE ABOVE QUANTITY IS BASED ON A 301 THICKNESS OF 9 INCHES FOR SIDE STREETS AND A 301 THICKNESS OF 8 INCHES AND A 304 THICKNESS OF 12 INCHES FOR SR 309 AND A PAVEMENT RESTORATION WIDTH THAT INCLUDES THE TRENCH WIDTH PLUS TWO FEET ON EACH SIDE OF THE TRENCH. SEE STANDARD CONSTRUCTION DRAWING DM-1.4 FOR TRENCH WIDTH FORMULA AND CALCULATION.

PROVIDE ANY MATERIALS USED OUTSIDE THE LIMITS STATED ABOVE AT NO ADDITIONAL COST.

PAVEMENT RESTORATION FOR DRAINAGE STRUCTURE INSTALLATIONS

THE FOLLOWING QUANTITY IS PROVIDED FOR PAVEMENT RESTORATION FOLLOWING INSTALLATION OF ITEM 604 DRAINAGE STRUCTURES.

ITEM 301 - ASPHALT CONCRETE BASE, PG64-22 = 2 CU YD

THE ABOVE QUANTITY IS BASED ON A 301 THICKNESS OF 9 INCHES AND A WIDTH OF TWO FEET AROUND THE PERIMETER OF THE DRAINAGE STRUCTURE.

PROVIDE ANY MATERIALS USED OUTSIDE THE LIMITS STATED ABOVE AT NO ADDITIONAL COST.

PAVEMENT RESTORATION FOR CURB AND GUTTER INSTALLATIONS

THE FOLLOWING QUANTITY IS PROVIDED FOR PAVEMENT RESTORATION FOLLOWING INSTALLATION OF ITEM 609 COMBINATION CURB AND GUTTER, TYPE 2 IN THE PAVED PARKING AREAS ALONG EASTERN AVENUE.

ITEM 301 - ASPHALT CONCRETE BASE, PG64-22 = 2 CU YD

THE ABOVE QUANTITY IS BASED ON A 301 THICKNESS OF 8 INCHES AND A WIDTH OF TWO FEET ALONG THE BACK OF THE CURB AND GUTTER.

PROVIDE ANY MATERIALS USED OUTSIDE THE LIMITS STATED ABOVE AT NO ADDITIONAL COST.

ITEM 204 - PROOF ROLLING

THE FOLLOWING QUANTITY IS PROVIDED IN THE GENERAL SUMMARY TO ADDRESS LOCATIONS REQUIRING PROOF ROLLING.

ITEM 204 - PROOF ROLLING = 5 HOUR

POST CONSTRUCTION STORM WATER TREATMENT

THIS PLAN UTILIZES STRUCTURAL BEST MANAGEMENT PRACTICES (BMP'S) FOR POST CONSTRUCTION STORM WATER TREATMENT.

ITEM SPECIAL - MAILBOX SUPPORT

THIS WORK SHALL CONSIST OF FURNISHING AND ERECTING MAILBOX SUPPORTS AND ANY ASSOCIATED MOUNTING HARDWARE IN ACCORDANCE WITH PLAN DETAILS, AND ATTACHING AN OWNER-SUPPLIED MAILBOX AT LOCATIONS SPECIFIED IN THE PLAN, OR OTHERWISE ESTABLISHED BY THE ENGINEER.

WOOD POSTS SHALL BE NOMINAL 4" BY 4" SQUARE OR 4 1/2" DIAMETER ROUND, AND CONFORM TO 710.14.

STEEL POSTS SHALL BE NOMINAL PIPE SIZE 2" I.D. O.D., AND CONFORM TO AASHTO M 181.

HARDWARE (PLATES, SCREWS, BOLTS, ETC.) SHALL BE COMMERCIAL-GRADE GALVANIZED STEEL.

POSTS SHALL BE SET PER THE FIRST PARAGRAPH OF 606.03, AND SHALL IN NO INSTANCE BE ENCASED IN CONCRETE.

SUPPORT HARDWARE SHALL ACCOMMODATE EITHER A SINGLE OR A DOUBLE MAILBOX INSTALLATION, AND NO MORE THAN TWO BOXES MAY BE MOUNTED ON A SINGLE POST.

THE MAILBOX SHALL BE SECURELY AND NEATLY ATTACHED BY THE CONTRACTOR TO THE NEW SUPPORT. THE CONTRACTOR SHALL FURNISH ALL NECESSARY ATTACHMENT HARDWARE (NUTS, BOLTS, PLATES, SPACERS, AND WASHERS) AS NECESSARY TO ACCOMMODATE THE COMPLETE INSTALLATION.

IN THE ABSENCE OF A NEW BOX SUPPLIED BY THE OWNER, THE CONTRACTOR SHALL SALVAGE THE EXISTING BOX AND PLACE IT ON THE NEW SUPPORT. DUE CARE SHALL BE EXERCISED IN SUCH AN OPERATION, AND THE CONTRACTOR SHALL BE RESPONSIBLE FOR REPAIRING OR REPLACING ANY BOX DAMAGED BY IMPROPER HANDLING ON HIS PART, AS JUDGED AND DIRECTED BY THE ENGINEER.

THE CONTRACTOR SHALL BE RESPONSIBLE FOR COORDINATING WITH THE LOCAL POST MASTER REGARDING THE TIMING OF THE MOVEMENT OF ANY MAILBOX TO A NEW LOCATION.

PAYMENT UNDER THIS ITEM SHALL BE LIMITED TO FINAL PERMANENT INSTALLATIONS. TEMPORARY INSTALLATIONS SHALL BE IN ACCORDANCE WITH 107.10. HOWEVER, THE SAME MATERIAL AND SIZE LIMITATIONS AS FOR PERMANENT INSTALLATIONS SHALL APPLY.

MAILBOX SUPPORTS, COMPLETE IN PLACE, WILL BE PAID FOR AT THE CONTRACT UNIT PRICE PER EACH, FOR ITEM SPECIAL-MAILBOX SUPPORT SYSTEM, SINGLE.

ITEM SPECIAL - MAILBOX REMOVED AND RESET

THIS WORK SHALL CONSIST OF REMOVING MAILBOXES, MAILBOX SUPPORTS AND ANY ASSOCIATED MOUNTING HARDWARE IN ACCORDANCE WITH PLAN DETAILS.

IN THE ABSENCE OF A NEW BOX SUPPLIED BY THE OWNER, THE CONTRACTOR SHALL SALVAGE THE EXISTING BOX FOR PLACEMENT ON A NEW SUPPORT. DUE CARE SHALL BE EXERCISED IN SUCH AN OPERATION, AND THE CONTRACTOR SHALL BE RESPONSIBLE FOR REPAIRING OR REPLACING ANY BOX DAMAGED BY IMPROPER HANDLING ON HIS PART, AS JUDGED AND DIRECTED BY THE ENGINEER.

THE CONTRACTOR SHALL BE RESPONSIBLE FOR DISPOSAL OF THE REMOVED MAILBOX SUPPORTS AND ANY MAILBOXES AND ASSOCIATED MOUNTING HARDWARE THAT ARE NOT RESET.

THE ABOVE REMOVAL AND ANY SALAVAGING FOR RESET WILL BE PAID FOR AT THE CONTRACT UNIT PRICE PER EACH, FOR ITEM SPECIAL - MAILBOX REMOVED AND RESET.

CALCULATED NJV
CHECKED EJS

GENERAL NOTES

ALL-117/309-
18.65/15.17

I:\pd\75467\roadway\sheets\75467GN001.dgn 17-SEP-2012 10:52AM nvondere

REVIEW OF DRAINAGE FACILITIES

BEFORE ANY WORK IS STARTED ON THE PROJECT AND AGAIN BEFORE FINAL ACCEPTANCE BY THE STATE, REPRESENTATIVES OF THE STATE AND THE CONTRACTOR, ALONG WITH LOCAL REPRESENTATIVES, SHALL MAKE AN INSPECTION OF ALL EXISTING SEWERS WHICH ARE TO REMAIN IN SERVICE AND WHICH MAY BE AFFECTED BY THE WORK. THE CONDITION OF THE EXISTING CONDUITS AND THEIR APPURTENANCE SHALL BE DETERMINED FROM FIELD OBSERVATIONS. RECORDS OF THE INSPECTION SHALL BE KEPT IN WRITING BY THE STATE.

ALL NEW CONDUITS, INLETS, CATCH BASINS, AND MANHOLES CONSTRUCTED AS A PART OF THE PROJECT SHALL BE FREE OF ALL FOREIGN MATTER AND IN A CLEAN CONDITION BEFORE THE PROJECT WILL BE ACCEPTED BY THE STATE.

ALL EXISTING SEWERS INSPECTED INITIALLY BY THE ABOVE MENTIONED PARTIES SHALL BE MAINTAINED AND LEFT IN A CONDITION REASONABLY COMPARABLE TO THAT DETERMINED BY THE ORIGINAL INSPECTION. ANY CHANGE IN THE CONDITION RESULTING FROM THE CONTRACTOR'S OPERATIONS SHALL BE CORRECTED BY THE CONTRACTOR TO THE SATISFACTION OF THE ENGINEER.

PAYMENT FOR ALL OPERATIONS DESCRIBED ABOVE SHALL BE INCLUDED IN THE CONTRACT PRICE FOR THE PERTINENT 603 CONDUIT ITEMS.

CROSSINGS AND CONNECTIONS TO EXISTING PIPES AND UTILITIES

WHERE PLANS PROVIDE FOR A PROPOSED CONDUIT TO BE CONNECTED TO, OR CROSS OVER OR UNDER AN EXISTING SEWER OR UNDERGROUND UTILITY, THE CONTRACTOR SHALL LOCATE THE EXISTING PIPES OR UTILITIES BOTH AS TO LINE AND GRADE BEFORE STARTING TO LAY THE PROPOSED CONDUIT.

IF IT IS DETERMINED THAT THE ELEVATION OF THE EXISTING CONDUIT, OR EXISTING APPURTENANCE TO BE CONNECTED, DIFFERS FROM THE PLAN ELEVATION OR RESULTS IN A CHANGE IN THE PLAN CONDUIT SLOPE, THE ENGINEER SHALL BE NOTIFIED BEFORE STARTING CONSTRUCTION OF ANY PORTION OF THE PROPOSED CONDUIT WHICH WILL BE AFFECTED BY THE VARIANCE IN THE EXISTING ELEVATIONS.

IF IT IS DETERMINED THAT THE PROPOSED CONDUIT WILL INTERSECT AN EXISTING SEWER OR UNDERGROUND UTILITY IF CONSTRUCTED AS SHOWN ON THE PLAN, THE ENGINEER SHALL BE NOTIFIED BEFORE STARTING CONSTRUCTION OF ANY PORTION OF THE PROPOSED CONDUIT WHICH WOULD BE AFFECTED BY THE INTERFERENCE WITH AN EXISTING FACILITY.

PAYMENT FOR ALL THE OPERATIONS DESCRIBED ABOVE SHALL BE INCLUDED IN THE CONTRACT PRICE FOR THE PERTINENT 603 CONDUIT ITEM.

PRE-CONSTRUCTION PUBLIC INVOLEMENT MEETING

THE DISTRICT HAS MADE A COMMITMENT TO THE PUBLIC THAT A MEETING WILL BE HELD PRIOR TO CONSTRUCTION TO INFORM THEM OF THE UPCOMING PROJECT, THE SCHEDULE OF WORK AND ANTICIPATED IMPACTS TO THE AREA DURING CONSTRUCTION. THE CONTRACTOR IS BEING ASKED TO ATTEND THE MEETING TO INTRODUCE THEMSELVES TO THE PUBLIC IN ATTENDANCE AND TO POSSIBLY ANSWER ANY QUESTIONS THAT MAY ARISE. THIS MEETING IS TO BE HELD PRIOR TO ANY WORK BEGINNING ON THE PROJECT SITE. THE DISTRICT WILL MAKE ARRANGEMENTS FOR A MEETING LOCATION ONCE A DATE AND TIME FOR THE MEETING IS AGREED TO BETWEEN THE CONTRACTOR AND THE DISTRICT CONSTRUCTION ENGINEER.

ITEM 608 - CURB RAMP, TYPE B1, B2 & B3, AS PER PLAN

IN ADDITION TO THR REQUIREMENTS OF STANDARD DRAWING BP-7.1, THE CONTRACTOR SHALL INSTALL ITEM 608, CURB RAMP, B1, B2 OR B3, AS PER PLAN IN ACCORDANCE WITH THE DETAILS SHOWN ON SHEET 91.

ALL MATERIALS, LABOR, EQUIPMENT & INCIDENTALS REQUIRED TO COMPLETE THE CURB RAMPS AS PER THE ABOVE DETAILS SHALL BE INCLUDED IN THE UNIT BID PRICE PER SQUARE FOOT FOR THE PERTINANT ITEM 608, CURB RAMP, B1, B2 OR B3, AS PER PLAN.

ITEM 609 - CONCRETE MEDIAN, AS PER PLAN

THIS ITEM SHALL BE CONSTRUCTED AS PER ITEM 609 & ROADWAY STANDARD CONSTRUCTION DRAWING, RM-3.1, WITH THE FOLLOWING ADDITIONAL CONDITIONS.

AS SHOWN BELOW, THE CONCRETE MEDIAN SECTIONS, WITH WIDTHS GREATER THAN 3 FEET, SHALL BE CONSTRUCTED IN TWO STAGES.

THE INTERIOR PORTION OF THESE MEDIAN SECTIONS SHALL CONTAIN INTEGRALLY COLORED CONCRETE USING CHROMIX ADMIXTURES, AS PROVIDED BY L.M. SCOFIELD COMPANY, DOUGLASVILLE, GEORGIA (800) 800-9900, OR AN APPROVED EQUAL MATCHING FEDERAL COLOR NUMBER 30076.

IN ADDITION, THESE INTERIOR PORTIONS OF THE CONCRETE MEDIAN SHALL HAVE A STAMPED SURFACE AND SEALED WITH A NON-EPOXY SEALER AS PER CMS ITEM 512. THE STAMPED SURFACE SHALL CONFORM TO THE FOLLOWING PATTERN OR AN APPROVED EQUAL:

BRICK - RUNNING BOND (ORDER NUMBER 2500) BY LITHOTEX PAVECRAFTERS, OR EQUIVALENT.

THE OUTER 9" ON EACH SIDE OF THE MEDIAN SHALL NOT BE STAMPED AND SHALL NOT CONTAIN INTERGRALLY COLORED CONCRETE. AN INDENTED GROOVE 1/4" DEEP SHALL BE IMPRESSED ON THE CONCRETE MEDIAN ALONG THE CONCRETE CURB TO DELINEATE BETWEEN THE CONCRETE CURB AND THE STAMPED SECTIONS. SEE DETAILS BELOW.

THE CONCRETE STAMP MANUFACTURER SHALL SUBMIT EVIDENCE OF AT LEAST TWO SIMILAR STAMPED CONCRETE CONSTRUCTION PROJECTS WITHIN THE LAST FIVE YEARS FOR REVIEW AND APPROVAL BY THE ENGINEER. THE CONTRACTOR SHALL COORDINATE WITH THE CONCRETE STAMP PANEL MANUFACTURER TO ASSURE UNDERSTANDING OF THE PANEL USE, TEST STAMPING REQUIREMENTS, AND FINAL CONSTRUCTION PROCEDURES.

THE CONTRACTOR SHALL CONSTRUCT ON-SITE, OR AT A LOCATION APPROVED BY THE ENGINEER, A 4'x4'x8" FINISHED SAMPLE (INCLUDING CONCRETE SEALANT) OF THE STAMPED CONCRETE MEDIAN FOR APPROVAL BY THE ENGINEER PRIOR TO CONSTRUCTION OF THE CONCRETE MEDIAN IN THE ROADWAY. THE APPROVED SAMPLE SHALL SERVE AS THE STANDARD FOR THE FINISH OF THE CONCRETE MEDIAN. THE SAMPLE SHALL BE DISPOSED OF BY THE CONTRACTOR AT THE DIRECTION OF THE ENGINEER.

THE CONCRETE MEDIA END SECTIONS, WITH WIDTHS EQUAL TO OR LESS THAN 3 FEET, DO NOT NEED TO BE CONSTRUCTED IN TWO STAGES, SHALL NOT CONTAIN INTERGRALLY COLORED CONCRETE, AND SHALL NOT BE STAMPED AS NOTED. THEY SHALL BE CONSTRUCTED AS PER ROADWAY STANDARD CONSTRUCTION DRAWING, RM-3.1. THESE END SECTIONS SHALL BE PAID FOR UNDER ITEM 609 - CONCRETE MEDIAN.

ALL EXPOSED CONCRETE SURFACES SHALL BE SEALED WITH A CLEAR CONCRETE SEALANT PER ITEM 512.

AS PER THE ABOVE DETAILS, ALL MATERIALS, LABOR, EQUIPMENT, AND INCIDENTALS REQUIRED FOR THE CONSTRUCTION OF THE CONCRETE MEDIAN, AS PER PLAN (INCLUDING THE SAMPLE) SHALL BE INCLUDED IN ITEM 609 - CONCRETE MEDIAN, AS PER PLAN.

ITEM 609 - CONCRETE MEDIAN, APP (CONTINUED)

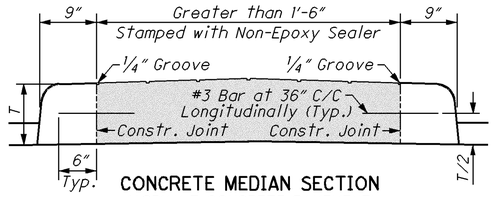

CONCRETE MEDIAN SECTION
(ASPHALT CONCRETE PAVEMENT)

- Integrally Colored Concrete

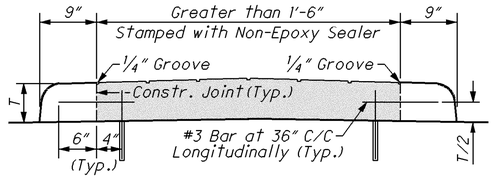

CONCRETE MEDIAN SECTION
(CONCRETE PAVEMENT)

NOTE: For Further Details, See STD. DWG. RM-3.1

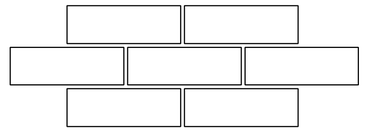

BRICK - RUNNING BOND

ITEM 604 - MANHOLE ADJUSTED TO GRADE, AS PER PLAN

IN ADDITION TO CMS SPECIFICATION 604, THE CONTRACTOR IS TO PAVE OVER EXISTING MANHOLES, TO REMAIN IN PLACE, WITH ITEM 301 - ASPHALT CONCRETE BASE, ITEM 448 - ASPHALT CONCRETE INTERMEDIATE COURSE AND ITEM 488 - ASPHALT CONCRETE SURFACE COURSE. THE CONTRACTOR SHALL REMOVE THE EXISTING FRAMES AND COVERS OR GATES FROM THE EXISTING MANHOLES, TO REMAIN IN PLACE, AND SHALL INSTALL NEW FRAMES AND COVERS OR GRATES AS PER ROADWAY STANDARD CONSTRUCTION DRAWING MH-1.1 . THE CONTRACTOR SHALL DISPOSE OF REMOVED FRAMES AND COVERS OR GRATES UNLESS OTHERWISE NOTED.

FURTHERMORE, ALL FRAMES AND COVERS REMOVED FROM SANITARY MANHOLES SHALL BE REPLACED WITH FRAMES & COVERS MEETING THE REQUIREMENTS OF THE CITY OF LIMA, OHIO SANITARY DEPARTMENT. THE FRAMES AND COVERS SHALL BE PRODUCT NUMBER R-1668, MANHOLE FRAME, VENTED LID FROM NEEHAH FOUNDRY. THE FRAMES AND COVERS REMOVED FROM THE SANITARY MANHOLES SHALL BE STORED ON THE PROJECT SITE FOR PICK UP BY THE CITY OF LIMA, OHIO SANITARY DEPARTMENT.

THE CONTRACTOR SHALL ADJUST THE ALL EXISTING MANHOLES, TO REMAIN IN PLACE, TO GRADE AND PLACE 12" WIDE CIRCULAR CONCRETE COLLARS UP TO THE TOP OF THE FINAL SURFACE. THE CONCRETE COLLARS SHALL BE COLORED TO MATCH THE SURROUNDING ASPHALT CONCRETE.

PAYMENT FOR THIS WORK SHALL BE INCIDENTAL TO ITEM 604 - MANHOLE ADJUSTED TO GRADE, AS PER PLAN.

ITEM 604 - MANHOLE, NO. 3, AS PER PLAN

IN ADDITION TO CMS SPECIFICATION 604, THE CONTRACTOR IS TO PAVE OVER PROPOSED MANHOLES WITH ITEM 301 - ASPHALT CONCRETE BASE, ITEM 448 - ASPHALT CONCRETE INTERMEDIATE COURSE AND ITEM 488 - ASPHALT CONCRETE SURFACE COURSE. THE CONTRACTOR SHALL ADJUST THE PROPOSED MANHOLES TO GRADE AND PLACE 12" WIDE CIRCULAR CONCRETE COLLARS UP TO THE TOP OF THE FINAL SURFACE. THE CONCRETE COLLARS SHALL BE COLORED TO MATCH THE SURROUNDING ASPHALT CONCRETE. PAYMENT FOR THIS WORK SHALL BE INCIDENTAL TO ITEM 604, MANHOLE, NO. 3, AS PER PLAN.

ITEM 604 - MONUMENT ASSEMBLY, AS PER PLAN

IN ADDITION TO CMS SPECIFICATION 604 AND STANDARD DRAWING RM-1.1, THE CONTRACTOR SHALL COMPLETE ALL PROPOSED PAVEMENT WORK AT THE LOCATIONS OF PROPOSED MONUMENT ASSEMBLIES PRIOR TO INSTALLING THEM. THE CONTRACTOR SHALL INSTALL THE MONUMENT ASSEMBLY TO GRADE AND PLACE A 28" DIAMETER CIRCULAR CONCRETE COLLAR, WITH THE MONUMENT ASSEMBLY IN THE CENTER, UP TO THE TOP OF THE FINAL SURFACE. THE CONCRETE COLLAR SHALL BE COLORED TO MATCH THE SURROUNDING ASPHALT CONCRETE. PAYMENT FOR THIS WORK SHALL BE INCLUDED IN ITEM 604 - MONUMENT ASSEMBLY, AS PER PLAN.

FOR LOCATIONS OF MONUMENT ASSEMBLIES TO BE INSTALLED, SEE SHEET NOS. 21 & 144.

AIRWAY/HIGHWAY CLEARANCE

THIS PROJECT HAS BEEN IDENTIFIED AS BEING WITHIN THE INFLUENCE AREA OF A PUBLIC USE AIRPORT OR HELIPORT. NO TEMPORARY STRUCTURES OR CONSTRUCTION EQUIPMENT AT MAXIMUM OPERATING HEIGHT SHALL EXCEED A HEIGHT OF 60 FT. IF ANY TEMPORARY STRUCTURES OR CONSTRUCTION EQUIPMENT WILL EXCEED THIS HEIGHT, FURTHER COORDINATION WITH THE FEDERAL AVIATION ADMINISTRATION (FAA), AND ODOT OFFICE OF AVIATION, WILL BE NECESSARY PRIOR TO ERECTING SUCH TEMPORARY STRUCTURES OR OPERATING SUCH EQUIPMENT ON THE PROJECT. THE CONTRACTOR WILL BE REQUIRED TO SUBMIT FORM 7460-1 TO THE FAA. A COPY OF THE SUBMISSION AND TWO COPIES OF FORM 7460-1 SHALL BE FORWARDED TO THE TO THE ODOT OFFICE OF AVIATION.

NO TEMPORARY STRUCTURES OR CONSTRUCTION EQUIPMENT SHALL EXCEED THE PERMISSIBLE HEIGHT, UNTIL A COPY OF THE FAA APPROVAL AND ODOT OFFICE OF AVIATION PERMIT HAS BEEN FURNISHED TO THE PROJECT ENGINEER.

Express Processing Center
The Federal Aviation Administration
Southwest Regional Office
Air Traffic Airspace Branch ASW-520
2601 Meachan Blvd.
Fort Worth, TX 76137-4298

Ohio Department of Transportation
Office of Aviation
2829 West Dublin-Granville Road
Columbus, Ohio 43235
614-387-2346

PART-WIDTH CONSTRUCTION

BECAUSE OF THE NECESSITY TO BUILD THIS PROJECT UNDER TRAFFIC AND TO CONSTRUCT THE FULL PAVEMENT WIDTH IN STAGES, EXERCISE CARE TO PREVENT THE CONSTRUCTION OF A BUTT JOINT IN THE BASE COURSES. LAP LONGITUDINAL JOINTS AS SHOWN ON STANDARD CONSTRUCTION DWG. BP-3.1.

CALCULATED NJV CHECKED EJS

GENERAL NOTES

ALL-117/309-18.65/15.17

I:\pd\75467\roadway\sheets\75467GN002.dgn 17-SEP-2012 10:52AM nvondere

UNRECORDED UNTREATED NON-STORMWATER DRAINAGE

FURNISH NO CONTINUANCE FOR ANY UNRECORDED UNTREATED NON-STORMWATER DRAINAGE SUCH AS UNTREATED SEPTIC, UNTREATED WASTEWATER, UNTREATED CURTAIN/GRADIENT DRAINS, AND UNTREATED FOUNDATION FLOOR DRAINS DISTURBED BY THE WORK. PLUG ANY UNRECORDED UNTREATED NON-STORMWATER DRAINAGE WITH CLASS C CONCRETE AT THE RIGHT OF WAY LINE. PAYMENT FOR PLUGGING SHALL BE INCLUDED IN THE CONTRACT PRICE FOR THE PERTINENT 202, 203 OR 603 ITEM.

UNRECORDED TREATED NON-STORMWATER DRAINAGE

FURNISH A CONTINUANCE FOR ALL UNRECORDED TREATED NON-STORMWATER DRAINAGE, SUCH AS TREATED SEPTIC, TREATED WASTEWATER, TREATED CURTAIN/GRADIENT DRAINS & TREATED FOUNDATION FLOOR DRAINS DISTURBED BY THE WORK. FURNISH EITHER AN OPEN CONTINUANCE OR AN UNOBSTRUCTED CONTINUANCE BY CONNECTING A CONDUIT THROUGH THE CURB OR INTO A DRAINAGE STRUCTURE. THE LOCATION, TYPE, SIZE AND GRADE OF THE NEEDED CONDUIT TO REPLACE OR EXTEND AN EXISTING DRAIN WILL BE DETERMINED BY THE ENGINEER. ALL SUCH CONTINUANCE REQUIRES A RIGHT OF WAY USE PERMIT. A CONTINUANCE MAY ALSO REQUIRE A NPDES PERMIT FROM THE OHIO ENVIRONMENTAL PROTECTION AGENCY. REPORT ALL CONTINUANCE TO THE LOCAL HEALTH DEPARTMENT.

WHERE MAKING A CONNECTION INTO A HIGHWAY DRAINAGE CONDUIT, AN INSPECTION WELL SHALL BE PROVIDED IN ACCORDANCE WITH STANDARD CONSTRUCTION DRAWING DM-3.1.

THE FOLLOWING ESTIMATED QUANTITIES HAVE BEEN INCLUDED IN THE GENERAL SUMMARY FOR USE AS DIRECTED BY THE ENGINEER IN MAKING THE ABOVE CONTINUANCE:

ITEM 603 - 6" CONDUIT, TYPE C = 40 FT
ITEM 604 - INSPECTION WELL = 4 EACH

UNRECORDED STORM WATER DRAINAGE

FURNISH A CONTINUANCE FOR ALL UNRECORDED STORM WATER DRAINAGE, SUCH AS ROOF DRAINS, FOOTER DRAINS, OR YARD DRAINS, DISTURBED BY THE WORK. FURNISH EITHER AN OPEN CONTINUANCE OR AN UNOBSTRUCTED CONTINUANCE BY CONNECTING A CONDUIT THROUGH THE CURB OR INTO A DRAINAGE STRUCTURE. THE LOCATION, TYPE, SIZE AND GRADE OF THE NEEDED CONDUIT TO REPLACE OR EXTEND AN EXISTING DRAIN WILL BE DETERMINED BY THE ENGINEER. ALL SUCH CONTINUANCE REQUIRES A RIGHT OF WAY USE PERMIT.

THE FOLLOWING CONDUIT TYPES MAY BE USED: 707.33, 707.41 NON-PERFORATED, 707.42, 707.43, 707.45, 707.46, 707.47, 707.51, 707.52 SDR35.

THE FOLLOWING ESTIMATED QUANTITIES HAVE BEEN INCLUDED IN THE GENERAL SUMMARY FOR USE AS DIRECTED BY THE ENGINEER FOR THE WORK NOTED ABOVE:

ITEM 603 - 6" CONDUIT, TYPE C = 80 FT
ITEM 603 - 8" CONDUIT, TYPE B = 80 FT

UNRECORDED ABANDONED EXISTING PIPES AND UTILITIES

WHEN UNRECORDED ABANDONED EXISTING PIPES OR UTILITIES ARE ENCOUNTERED BY THE CONTRACTOR'S WORK, THE ENGINEER SHALL BE NOTIFIED BEFORE PROCEEDING WITH CONSTRUCTION OF ANY PORTION OF THE PROPOSED WORK WHICH WOULD BE AFFECTED BY THE INTERFERENCE WITH THE EXISTING FACILITY. UPON DIRECTION FROM THE ENGINEER, THE CONTRACTOR SHALL REMOVE AND PLUG THE UNRECORDED ABANDONED EXISTING PIPE OR UTILITY OR WORK AROUND IT.

PAYMENT FOR ALL THE OPERATIONS DESCRIBED ABOVE SHALL BE INCLUDED IN THE CONTRACT PRICE FOR THE PERTINENT 202, 203 OR 603 ITEM. NO ADDITIONAL PAYMENT WILL BE MADE FOR THE REMOVAL OF UNRECORDED ABANDONED EXISTING PIPES AND UTILITIES.

ITEM 603 - CONDUIT, MISC.: SANITARY SEWER SERVICE CONNECTIONS

FURNISH A CONTINUANCE FOR ALL UNRECORDED ACTIVE SANITARY SEWER CONNECTIONS SUCH AS SANITARY, WASTEWATER, CURTAIN/GRADIENT DRAINS, AND FOUNDATION FLOOR DRAINS DISTURBED BY THE WORK. FURNISH AN UNOBSTRUCTED CONTINUANCE OF THE UNRECORDED ACTIVE SANITARY SEWER CONNECTIONS TO THE SATISFACTION OF THE ENGINEER.

ALL WORK SHALL CONFORM TO THE SANITARY SEWER SPECIFICATIONS OF THE CITY OF LIMA, DEPARTMENT OF UTILITIES.

IN ADDITION, ALL SUCH CONTINUANCE REQUIRES A RIGHT OF WAY USE PERMIT. ALL SANITARY AND SANITARY WASTEWATER CONTINUANCE MAY ALSO REQUIRE A NPDES PERMIT FROM THE OHIO ENVIRONMENTAL PROTECTION AGENCY. REPORT ALL CONTINUANCE TO THE LOCAL HEALTH DEPARTMENT.

EXISTING UNRECORDED ACTIVE SANITARY SEWER CONNECTIONS ARE ANTICIPATED TO BE LOCATED BELOW THE PROPOSED WORK. UNLESS NOTED OTHERWISE ON THE PLANS, EXISTING UNRECORDED ACTIVE SANITARY SEWER CONNECTIONS DISTURBED BY THE PROPOSED WORK SHALL BE RELOCATED BELOW THE PROPOSED WORK A MINIMUM OF 6.5 FEET BELOW SURFACE AND 1.5 FEET BELOW THE BOTTOM OF THE PROPOSED WORK.

THE REPLACEMENT SEWER CONNECTION PIPE SHALL BE POLY-VINYLE CHLORIDE (PVC) MEETING ASTM-D-3034 SDR 35 & SHALL BE EITHER 4" OR 6" IN DIAMETER. CONNECTIONS BETWEEN EXISTING AND PROPOSED PIPE SHALL BE MADE UTILIZING FERNCO SHEAR PROOF COUPLINGS OR ANOTHER EQUIVALENT.

THE FOLLOWING ESTIMATED QUANTITIES HAVE BEEN INCLUDED IN THE GENERAL SUMMARY FOR USE AS DIRECTED BY THE ENGINEER FOR THE WORK NOTED ABOVE.

ITEM 603, CONDUIT, MISC.: SANITARY SEWER = 250 FT
SERVICE CONNECTIONS

THE WORK ITEM SHALL ALSO INCLUDE OBTAINING ALL NECESSARY PERMITS, EXPOSING THE SEWER LINES, BACKFILLING THE SEWER LINES AND ANY OTHER INCIDENTIAL WORK AS PER THE REQUIREMENTS OF THE CITY OF LIMA, DEPARTMENT OF UTILITIES. ALL MATERIALS, LABOR, EQUIPMENT AND INCIDENTIALS REQUIRED TO THE COMPLETE THE CONNECTIONS AS PER THE ABOVE DETAILS SHALL BE INCLUDED IN ITEM 603, CONDUIT, MISC.: SANITARY SEWER SERVICE CONNECTIONS.

ITEM 638 - VALVE BOX AND SERVICE BOX ADJUSTED TO GRADE, AS PER PLAN

WHEN A VALVE BOX IS LOCATED WITHIN THE ROADWAY, THE CONTRACTOR IS TO PAVE OVER THE VALVE BOX WITH ITEM 301 - ASPHALT CONCRETE BASE, ITEM 448 - ASPHALT CONCRETE INTERMEDIATE COURSE AND ITEM 488 - ASPHALT CONCRETE SURFACE COURSE. THE CONTRACTOR SHALL ADJUST THE VALVE BOX TO GRADE AND PLACE A 28" DIAMETER CIRCULAR CONCRETE COLLAR, WITH THE VALVE BOX IN THE CENTER, UP TO THE TOP OF THE FINAL SURFACE. THE CONCRETE COLLAR SHALL BE COLORED TO MATCH THE SURROUNDING ASPHALT CONCRETE.

IN ADDITION TO O.D.O.T SPECIFICATIONS 638 AND THE ABOVE, THIS WORK SHALL BE COMPLETED IN ACCORDANCE WITH THE REQUIREMENTS OF THE CITY OF LIMA, WATER DISTRIBUTION OFFICE.

THE FOLLOWING ESTIMATED QUANTITIES HAVE BEEN INCLUDED IN THE GENERAL SUMMARY FOR THE WORK ABOVE.

ITEM 638 - VALVE BOX ADJUSTED TO GRADE, = 50 EACH
AS PER PLAN
ITEM 638 - SERVICE BOX ADJUSTED TO GRADE = 20 EACH
AS PER PLAN

AS PER THE ABOVE DETAILS, ALL LABOR, MATERIALS, EQUIPMENT AND INCIDENTALS REQUIRED FOR ADJUSTING THE VALVE OR SERVICE BOXES TO GRADE SHALL BE INCLUDED IN THE UNIT PRICE FOR ITEM 638, VALVE BOX ADJUSTED TO GRADE, AS PER PLAN OR ITEM 638, SERVICE BOX ADJUSTED TO GRADE, AS PER PLAN.

WATER SERVICE CONNECTIONS

ALL WORK SHALL CONFORM TO THE SPECIFICATIONS OF THE CITY OF LIMA, WATER DISTRIBUTION OFFICE.

THE EXISTING SERVICE CONNECTIONS ARE ANTICIPATED TO BE LOCATED BELOW THE PROPOSED WORK, UNLESS NOTED OTHERWISE ON THE PLANS. HOWEVER, EXISTING WATER SERVICE CONNECTIONS DISTURBED BY THE PRPOSED WORK SHALL BE RELOCATED BELOW THE PROPOSED WORK A MINIMUM OF 5 FEET BELOW SURFACE AND 1.5 FEET BELOW THE BOTTOM OF THE PROPOSED WORK.

THE FOLLOWING ESTIMATED QUANTITIES HAVE BEEN INCLUDED IN THE GENERAL SUMMARY FOR USE AS DIRECTED BY THE ENGINEER FOR THE WORK NOTED ABOVE.

ITEM 638 - ¾" COPPER SERVICE BRANCH = 100 FT
ITEM 638 - 1-½" COPPER SERVICE BRANCH = 100 FT

THE WORK ITEM SHALL ALSO INCLUDE EXPOSING THE SERVICE LINE CORPORATION STOP, SHUTTING IT OFF DURING RELOCATION WORK, AND TURNING IT BACK ONFOLLOWING THE COMPLETION. THIS WORK SHALL BE IN ACCORDANCE WITH O.D.O.T. SPECIFICATIONS 638.16 AND THE PER THE REQUIREMENTS OF THE CITY OF LIMA, WATER DISTRIBUTION OFFICE.

PERSONAL PROTECTION EQUIPMENT (PPE)

THE CONTRACTOR SHALL FOLLOW ALL REQUIREMENTS OF SECTIONS III AND X OF THE OHIO DEPARTMENT OF TRANSPORTATION SAFETY &HEALTH STANDARD OPERATING PROCEDURE 220-006(SP) EFFECTIVE: JUNE 1, 2009 (EXCEPT AS AMENDED BELOW) AND ALL SUBSEQUENT UPDATES POSTED AT THE FOLLOWING WEBSITE:

HTTP://WWW.DOT.STATE.OH.US/POLICY/POLICIESANDSOPS/POLICIES/220-006(SP).PDF

AMENDMENTS TO THE REQUIREMENTS OF THIS DOCUMENT ARE:

III. HEAD PROTECTION (HARD HATS)
ALL PERSONS WITHIN THE RIGHT-OF-WAY OF ANY HIGHWAY OR ANY OTHER TYPE OF ROADWAY OR CONSTRUCTION SITE WHO ARE EXPOSED TO EITHER TRAFFIC (VEHICLES USING THE HIGHWAY FOR PURPOSES OF TRAVEL) OR CONSTRUCTION EQUIPMENT WITHIN THE WORK AREA, REGARDLESS OF JOB TYPE, SHALL WEAR APPROPRIATE HEAD PROTECTION. ALL HARD HATS MUST MEET OR EXCEED ANSI Z89.1-2003 TYPE I CLASS E-G REQUIREMENTS.

X. HIGH VISIBILITY SAFETY APPAREL
ALL PERSONS WITHIN THE RIGHT-OF-WAY OF ANY HIGHWAY OR ANY OTHER TYPE OF ROADWAY OR CONSTRUCTION SITE WHO ARE EXPOSED TO EITHER TRAFFIC (VEHICLES USING THE HIGHWAY FOR PURPOSES OF TRAVEL) OR CONSTRUCTION EQUIPMENT WITHIN THE WORK AREA, REGARDLESS OF JOB TYPE, SHALL WEAR A HIGH-VISIBILITY SAFETY VEST THAT MEETS THE PERFORMANCE CLASS 2 OR CLASS 3 REQUIREMENTS OF THE ANSI/ISEA 107-2004 PUBLICATION ENTITLED "AMERICAN NATIONAL STANDARD FOR HIGH-VISIBILITY SAFETY APPAREL AND HEADWEAR."

WORKERS MAY WEAR AN ANSI CLASS II OR ANSI CLASS III APPROVED RAIN SUIT OR JACKET WITHOUT A SAFETY VEST OVER IT. HIGH-VISIBILITY T-SHIRTS, SWEATSHIRTS, OR ZIP UP HOODIES ARE NOT ACCEPTABLE. ALL WORKERS SHALL WEAR A SAFETY VEST OVER THE T-SHIRTS, SWEATSHIRTS, AND ZIP-UP HOODIES, REGARDLESS OF THEIR ANSI RATING.

CALCULATED NJV
CHECKED EJS

GENERAL NOTES

ALL-117/309-
18.65/15.17

9
173

I:\Pd\75467\roadway\sheets\75467GN003.dgn 17-SEP-2012 10:52AM nvondere

ITEM 614 - MAINTAINING TRAFFIC, AS PER PLAN

1) CONTRACTOR STIPULATIONS:

A MINIMUM OF ONE LANE OF TRAFFIC IN EACH DIRECTION AND ALSO INCLUDING A LANE TO ACCOMMODATE LEFT HAND TURN MOVEMENTS SHALL BE MAINTAINED AT ALL TIMES; EXCEPT FOR WHEN THE RASIED MEDIAN IS BEING INSTALLED ALONG SR 117 AND SR 309 BY USE OF THE EXISTING PAVEMENT AND THE COMPLETED PAVEMENT. IN ADDITION, LANE CLOSURES SHALL BE COORDINATED WITH THE WORK AND MAINTENANCE OF TRAFFIC FOR PROJECT ALL-75-5.53.

THE FOLLOWING IS A LIST OF STIPULATIONS, INTERIM COMPLETION DATES AND ASSOCIATED DISINCENTIVES. THE LISTED DISINCENTIVES ARE COST PER CALENDAR DAY BEYOND THE INTERIM COMPLETION DATE THAT THE STIPULATION IS NOT MET. IN ADDITION THE CONTRACTOR SHALL COMPLY WITH PN 130.

DESCRIPTION OR LOCATION OF CRITICAL WORK	COMPL. DATE	DISINCENTIVE
PROPOSED SHOULDER WIDENING ALONG SR 309 NEAR BOWMAN RD. COMPLETED	5-23-13	$4500
ALL OTHER WORK, NOTED IN THE ALL-117/309-18.65/15.17 PLANS, COMPLETED	10-31-13	$750

THE TWO WAY LEFT TURN LANE IS PERMITTED TO BE USED FOR THROUGH TRAFFIC AND MAY BE CLOSED FOR PROPOSED WORK. CLOSURE OF THE TWO WAY LEFT TURN LANE SHALL BE LIMITED TO THE DISTANCE AS APPROVED BY THE ENGINEER NEEDED TO COMPLETE THE ACTIVE WORK.

LANE CLOSURES AND CLOSURES OF THE TWO WAY LEFT TURN LANE SHALL BE IN ACCORDANCE WITH STANDARD CONSTRUCTION DRAWINGS MT-95.31, MT-95.32, MT-95.50, MT-95.60, MT-95.61, MT-97.10 AND MT-97.11, THE REQUIREMENTS OF SPEC. 614, THESE MAINTAINANCE OF TRAFFIC NOTES & DETAILS AND THE TRAFFIC CONTROL DETAILS DESCRIBED IN THESE PLANS.

THE LENGTHS OF WORK ZONES SHALL BE LIMITED TO A DISTANCE APPROVED BY THE ENGINEER NECESSARY TO COMPLETE THE ACTIVE WORK. WITHIN THESE WORK ZONES, EXISTING AND PROPOSED LEFT TURN LANES SHALL BE OPEN UNLESS ACTIVE CONSTRUCTION PROHIBITS THEIR USE.

LENGTH AND DURATION OF LANE CLOSURES AND RESTRICTIONS SHALL BE AT THE APPROVAL OF THE ENGINEER. IT IS THE INTENT TO MINIMIZE THE IMPACT TO THE TRAVELING PUBLIC. LANE CLOSURES OR RESTRICTIONS OVER SEGMENTS OF THE PROJECT IN WHICH NO WORK IS ANTICIPATED WITHIN A REASONABLE TIME FRAME, AS DETERMINED BY THE ENGINEER, SHALL NOT BE PERMITTED. THE LEVEL OF UTILIZATION OF MAINTENANCE OF TRAFFIC DEVICES SHALL BE COMMENSRATE WITH THE WORK IN PROGRESS.

THE MINIMUM LANE WIDTH FOR TRAFFIC CONTROL SHALL BE 10 FEET AT ALL TIMES.

NO DETOURS OR ROADWAY CLOSURES WILL BE ALLOWED ALONG SR 117 OR SR 309. NO DETOUR ROUTES WILL BE PROVIDED FOR PERMITTED CLOSURES OF LOCAL ROADWAYS. HOWEVER, A DESIGNATED ALTERNATE ROUTE FOR WESTBOUND SR 309 TRAFFIC TO IR 75 WILL BE PROVIDED. SIGNING FOR THIS DESIGNATED ALTERNATIVE ROUTE WILL BE PROVIDED BY ODOT, DISTRICT ONE. THE DESIGNATED ALTERNATIVE ROUTE WILL BE PROVIDED AS INDICATED ON SHEET 12 AND SHALL BE COORDINATED WITH THE FOURTH STREET INTERCHANGE RAMP CLOSURES.

THE CONTRACTOR SHALL ADVISE THE PROJECT ENGINEER A MINIMUM OF FOURTEEN (14) DAYS PRIOR TO THE FOLLOWING: THE START OF CONSTRUCTION ACTIVITIES AND ALL LANE CLOSURES. THE PROJECT ENGINEER WILL CONTACT THE DISTRICT TRAFFIC MANAGER TO INITIATE THE DETOUR SETUP AND WILL ALSO NOTIFY THE PROPER EMERGENCY SERVICES, SCHOOLS AND ANY IMPACTED LOCAL PUBLIC AGENCY OF THE DETOUR AND LANE CLOSURES. THE PROJECT ENGINEER WILL ALSO FOWARD THIS INFORMATION TO THE DISTRICT PUBLIC INFORMATION OFFICER (PIO) BY E-MAIL. THE PIO WILL DISSEMINATE THE INFORMATION TO THE PUBLIC VIA THE LOCAL MEDIA OUTLETS.

THE CONTRACTOR SHALL MAINTAIN A MINIMUM OF ONE LANE OF TRAFFIC IN EACH DIRECTION ON EASTERN AVENUE, WILLARD AVENUE, BRISTOL AVENUE, ST. ANDREWS BOULEVARD, MT. HOLYOKE AVE., RADCLIFFE STREET, BELMOUNT AVENUE, LOST CREEK BOULEVARD AND BOWMAN ROAD, EXCEPT FOR NOTED PERIODIC CLOSURES AND RESTRICTIONS.

INTERSECTION RECONSTRUCTION AND INSTALLATION OF CONDUIT PLACEMENT ACROSS EASTERN AVENUE, BRISTOL AVENUE, ST. ANDREWS BOULEVARD, MT. HOLYOKE AVENUE, RADCLIFFE STREET, BELMOUNT AVENUE, AND LOST CREEK BOULEVARD WILL REQUIRE THESE INTERSECTIONS TO BE CLOSED FOR NO MORE THAN A MAXIMUM OF 7 CONSECUTIVE CALENDAR DAYS, AT WHICH TIME THE INTERSECTION BEING RECONSTRUCTED SHALL BE OPEN TO TRAFFIC IN BOTH DIRECTIONS. LOST CREEK BOULEVARD SHALL NOT BE CLOSED WHILE IT IS SIGNED AS THE DESIGNATED ALTERNATIVE ROUTE AND DURING THE COUNTY FAIR. NO TWO CONSECUTIVE INTERSECTIONS SHALL BE CLOSED AT THE SAME TIME. NO DESIGNATED DETOUR WILL BE PROVIDED.

INTERSECTION RECONSTRUCTION AND INSTALLATION OF CONDUIT PLACEMENT ACROSS DEVONSHIRE DRIVE WILL REQUIRE PART-WIDTH CONSTRUCTION. THE CONTRACTOR SHALL MAINTAIN A MINIMUM OF ONE LANE OF TRAFFIC IN EACH DIRECTION ON DEVONSHIRE DRIVE. PART-WIDTH CONSTRUCTION OF THE DEVONSHIRE DRIVE LEG OF THE INTERSECTION SHALL BE COMPLETED IN 14 CONSECUTIVE CALENDAR DAYS OR DISINCENTIVES SPECIFIED IN THE "DISCENTIVES - SUMMARY OF CONSTRUCTION DURATION STIPULATIONS" NOTE WILL APPLY.

DRIVE RECONSTRUCTION AND CONDUIT PLACEMENT ACROSS ROSCHMAN AVENUE WILL REQUIRE PART-WIDTH CONSTRUCTION USING NORTHBOUND LANE CLOSURE. THE NORTHBOUND LANE SHALL BE CLOSED FOR NO MORE THAN A MAXIMUM OF 14 CONSECUTIVE CALENDAR DAYS, AT WHICH TIME ROSCHMAN AVENUE SHALL BE OPEN TO TRAFFIC IN BOTH DIRECTIONS. A SOUTHBOUND LANE ALONG ROSHCMAN AVENUE SHALL REMAIN OPEN AT ALL TIMES TO ALLOW VEHICLES TO ENTER ONTO ROSCHMAN AVENUE FROM SR 117/309. NO DESIGNATED DETOUR WILL BE PROVIDED.

THE EASTGATE MALL DRIVES INCLUDING DRIVES 20-DR & 40-DR SHALL BE CLOSED FOR NO MORE THAN A MAXIMUM OF 14 CONSECUTIVE CALENDAR DAYS AT WHICH TIME THE DRIVE BEING CONSTRUCTED SHALL BE OPEN TO TRAFFIC. NO TWO EASTGATE MALL DRIVES SHALL BE CLOSED AT THE SAME TIME. THE REMAINDER OF THE WORK, BOTH IN THE TEMPORARY R/W AND IN ANY WORK AGREEMENT AREA (WA), SHALL ALL BE COMPLETED IN A MAXIMUM OF 30 CONSECUTIVE CALENDER DAYS AND THIS DURATION INCLUDES THE 14 DAY CLOSURE PERIOD. SEE DISINCENTIVES SUMMARY TABLE ON SHEET 11 FOR FURTHER DETAILS.

THE CONTRACTOR SHALL MAINTAIN A MINIMUM OF ONE LANE OF TRAFFIC IN EACH DIRECTION OF THE EASTERN WALMART DRIVE OFF SR 309 (MALL DR. #3). THE MINIMUM LANE WIDTH FOR TRAFFIC CONTROL SHALL BE 10 FEET AT ALL TIMES. BEFORE THE CONTRACTOR BEGINS WORK NEAR AND ON THIS WALMART DRIVE (MALL DR. #3), THE CONTRACTOR SHALL COORDINATE THE WORK AND THE MAINTENANCE OF TRAFFIC AND ACCESS THROUGH THE WALMART DRIVE WITH THE MURPHY USA GAS STATION AND WALMART. THIS COORDINATION EFFORT SHALL ALLOW FOR ALL NECESSARY ARRANGEMENTS TO FACILITATE FUEL DELIVERIES (SEMI-TRAILOR TANKER TRUCKS) THROUGH THIS WALMART DRIVE (MALL DR. #3) TO THE MURPHY USA GAS STATION.

CONSTRUCTION OF THE RAISED CURB MEDIAN IN THE EXISTING MIDDLE LANE OF SR 117 AND/OR SR 309 SHALL ESSENTIALLY BE THE LAST PHASE OF WORK TO BE PREFORMED ON THIS PROJECT. EXCEPT WHEN THESE MAINTENANCE OF TRAFFIC NOTES/PLANS ALLOW, THE EXISTING TWO WAY LEFT TURN LANE ON SR 117 AND/OR SR 309 SHALL REMAIN OPEN TO TRAFFIC UNTIL THE RAISED CURB IS CONSTRUCTED.

THE NOSE SECTIONS OF THE RAISED CURB MEDIAN SHALL BE CONSTRUCTED FIRST. ONCE THE NOSE SECTIONS ARE COMPLETE, U-TURNS SHALL BE PERMITTED UTILIZING THE FULLY ACTIVATED PROPOSED TRAFFIC SIGNALS AND PROPOSED U-TURN BUMP OUTS. ALL NECESSARY AND/OR TEMPORARY SIGNING SHALL BE PROVIDED. NO OTHER PORTION OF THE RAISED CURB MEDIAN CAN BE INSTALLED UNTIL PROPOSED U-TURNS ARE PERMITTED AT THE APPROVAL OF THE ENGINEER.

IT IS THE RESPONSIBILITY OF THE CONTRACTOR TO ORGANIZE HIS WORK IN SUCH A MANNER TO PROVIDE THE MOST SAFETY WITH THE LEAST INCONVENIENCE TO THE TRAVELING PUBLIC.

LENGTH AND DURATION OF LANE CLOSURES AND RESTRICTIONS SHALL BE AT THE APPROVAL OF THE ENGINEER. IT IS THE INTENT TO MINIMIZE THE IMPACT TO THE TRAVELING PUBLIC. LANE CLOSURES OR RESTRICTIONS OVER SEGMENTS OF THE PROJECT IN WHICH NO WORK IS ANTICIPATED WITHIN A REASONABLE TIME FRAME, AS DETERMINED BY THE ENGINEER, SHALL NOT BE PERMITTED. THE LEVEL OF UTILIZATION OF MAINTENANCE OF TRAFFIC DEVICES SHALL BE COMMENSRATE WITH THE WORK IN PROGRESS.

THE CONTRACTOR SHALL SUBMIT, IN WRITING, A SCHEDULE OF OPERATIONS TO THE ENGINEER AND RECEIVE APPROVAL BEFORE WORK IS STARTED ON THE PROJECT.

NO EXTENSIONS OF TIME SHALL BE GRANTED FOR DELAYS IN MATERIAL DELIVERIES, UNLESS SUCH DELAYS ARE INDUSTRY-WIDE, OR FOR LABOR STRIKES, UNLESS SUCH STRIKES ARE AREA-WIDE.

THE CONTRACTOR SHALL ALSO FURNISH, INSTALL, MAINTAIN AND REMOVE ALL ADDITIONAL SIGNS OR TRAFFIC CONTROL DEVICES DEEMED NECESSARY BY THE ENGINEER WITH ALL ASSOCIATED COSTS INCLUDED IN THE LUMP SUM PRICE BID ITEM 614 MAINTAINING TRAFFIC, AS PER PLAN.

THE CONTRACTOR SHALL BE RESPONSIBLE FOR DESIGNING AND MAINTAINING SAFE AND EFFECTIVE TRAFFIC CONTROL 24-HOURS A DAY FOR THE DURATION OF THIS PROJECT. ALL TRAFFIC CONTROL DEVICES SHALL BE FURNISHED, ERECTED, MAINTAINED AND REMOVED BY THE CONTRACTOR.

THE CONTRACTOR SHALL DEVISE A MAINTENANCE OF TRAFFIC SCHEME/PLAN WHICH SHALL BE SEALED BY A REGISTERED PROFESSIONAL ENGINEER, AND PRESENT IT TO THE ENGINEER FOR APPROVAL. THE MAINTENANCE OF TRAFFIC SCHEME SHALL PROVIDE, IN GENERAL, THE METHOD FOR CONDUCTING THE REQUIRED WORK IN A SAFE AND EFFICIENT MANNER.

THE PLANS SHALL INCLUDE THE FOLLOWING COMPONENTS:

THE PLAN VIEW AT AN APPROPRIATE SCALE TO SHOW:

- *WORK AREA*
- *BEGIN/END STATIONING OF TAPERS, TEMPORARY MARKINGS, ETC.*
- *TEMPORARY PAVEMENT*
- *LOCATION OF SIGNS (EXISTING OVERHEAD SIGNS AND ALL PROPOSED, COVERED, OR MODIFIED SIGNS)*
- *LOCATION OF TYPICAL SECTIONS*
- *REFERENCES TO APPLICABLE STANDARD DRAWINGS*

TYPICAL SECTIONS SHOWING:

- *LANE WIDTHS, PAVEMENT MARKINGS, DRUMS, PCB, ETC.*
- *LIMITING STATIONS*
- *WORK AREA AND DROPOFFS*

SIGN DETAILS FOR PROPOSED SIGNS AND OVERLAYS/MODIFICATIONS

THE MAINTENANCE OF TRAFFIC SCHEME SHALL BE IN CONFORMANCE WITH THE OHIO MANUAL OF UNIFORM TRAFFIC CONTROL DEVICES, LATEST REVISION. THE REFERENCED STANDARD CONSTRUCTION DRAWINGS INCLUDING DESIGNER NOTES, THE CONSTRUCTION AND MATERIAL SPECIFICATIONS (CMS), ODOT LOCATION AND DESIGN MANUAL, VOLUME 1, AND ALL REQUIREMENTS DETAILED IN THESE PLANS. THIS SUBMITTAL SHALL CONSIST OF THREE COPIES OF THE PLANS FOR REVIEW AND DISTRIBUTION. NO WORK SHALL BEGIN AT THE LOCATION UNTIL THE MAINTENANCE OF TRAFFIC PLANS HAVE BEEN APPROVED BY THE OHIO DEPARTMENT OF TRANSPORTATION.

IF IN THE OPINION OF THE ENGINEER, THE CONTRACTOR FAILS TO COMPLY WITH THESE REQUIREMENTS AND THE PROVISIONS OF THE APPROVED MAINTENANCE OF TRAFFIC PLAN, THE ENGINEER SHALL SUSPEND WORK UNTIL ALL REQUIREMENTS ARE MET. ANY COST OR DELAYS INCURRED AS A RESULT OF THE FAILURE SHALL BE THE FULL RESPONSIBILITY OF THE CONTRACTOR.

2) LANES OPEN DURING HOLIDAYS OR SPECIAL EVENTS BETWEEN WILLARD AVE. AND BOWMAN RD.

BETWEEN THE HOURS OF 7 AM THROUGH 12 AM, NO WORK SHALL BE PERFORMED, ALL EQUIPMENT SHALL BE OFF THE ROADWAYS AND ALL EXISTING LANES (THROUGH & TWO WAY LEFT TURN) SHALL BE OPEN TO TRAFFIC DURING THE FOLLOWING DESIGNATED EVENTS:

ALLEN CO. FAIR - AUGUST 16-24, 2013

IN ADDITION, NO WORK & EQUIPMENT SHALL BE ON THE ROADWAYS DURING THE FOLLOWING DESIGNATED HOLIDAYS:

CHRISTMAS - NEW YEARS - LABOR DAY - THANKSGIVING

THE PERIOD OF TIME THAT NO WORK AND EQUIPMENT SHALL BE ON THE ROADWAYS DEPENDS ON THE DAY OF THE WEEK ON WHICH THE HOLIDAY OR EVENT FALLS. THE FOLLOWING SCHEDULE SHALL BE USED TO DETERMINE THIS PERIOD:

DAY OF WEEK	*TIME OF NO WORK & EQUIPMENT ON ROADWAYS*
SUNDAY	*12:00 NOON FRIDAY THROUGH 6:00 AM MONDAY*
MONDAY	*12:00 NOON FRIDAY THROUGH 6:00 AM TUESDAY*
TUESDAY	*12:00 NOON MONDAY THROUGH 6:00 AM WEDNESDAY*
WEDNESDAY	*12:00 NOON TUESDAY THROUGH 6:00 AM THURSDAY*
THURSDAY	*12:00 NOON WEDNESDAY THROUGH 6:00 AM MONDAY*
FRIDAY	*12:00 NOON THURSDAY THROUGH 6:00 AM MONDAY*
SATURDAY	*12:00 NOON FRIDAY THROUGH 6:00 AM MONDAY*

NO EXTENSIONS OF TIME SHALL BE GRANTED FOR DELAYS IN MATERIAL DELIVERIES, UNLESS SUCH DELAYS ARE INDUSTRY-WIDE, OR FOR LABOR STRIKES, UNLESS SUCH STRIKES ARE AREA-WIDE.

SHOULD THE CONTRACTOR FAIL TO MEET ANY OF THESE REQUIREMENTS, THE CONTRACTOR SHALL BE ASSESSED A DISINCENTIVE IN THE AMOUNT OF $50 FOR EACH MINUTE THE ABOVE DESCRIBED LANE CLOSURE RESTRICTIONS ARE VIOLATED.

3) MAINTENANCE OF TRAFFIC SIGNAL INSTALLATION

THE CONTRACTOR SHALL BE RESPONSIBLE FOR MAINTAINING THE OPERATIONS OF ALL TRAFFIC SIGNALS AT ALL TIMES AND AND WITHIN THE WORK LIMITS OF THE PROJECT THROUGH THE USE OF THE EXISTING SIGNALS, PROPOSED SIGNALS, AND/OR A COMBINATION OF EXISTING SIGNALS ON TEMPORARY POLES.

THE CONTRACTOR SHALL CORRECT AS QUICKLY AS POSSIBLE ALL OUTAGE MALFUNCTIONS, FROM THE EXISTING AND NEW TRAFFIC SIGNAL INSTALLATIONS FROM THE START OF PROJECT UNTIL THE WORK IS ACCEPTED. THE CONTRACTOR SHALL PROVIDE THE MAINTAINING AGENCY AND THE ENGINEER SUCH ADDRESSES AND PHONE NUMBERS WHERE HIS MAINTENANCE FORCE CAN BE CONTACTED. THE CONTRACTOR SHALL PROVIDE ONE OR MORE PERSONS TO RECEIVE ALL CALLS AND DISPATCH THE NECESSARY MAINTENANCE FORCES TO CORRECT OUTAGES. SUCH A PERSON OR PERSONS MAY BE USED TO PERFORM OTHER DUTIES AS LONG AS PROMPT ATTENTION IS GIVEN TO THESE CALLS AND A PERSON IS READILY AVAILABLE CONTINUOUSLY 24 HOURS A DAY, 7 DAYS A WEEK. ALL LAMP OUTAGES, CABLE OUTAGES, ELECTRICAL FAILURES, EQUIPMENT MALFUNCTIONS AND MISALIGNED SIGNAL HEADS SHALL BE CORRECTED TO THE SATISFACTION OF THE ENGINEER WITH THE SIGNAL BACK TO SERVICE WITHIN FOUR HOURS AFTER THE CONTRACTOR HAS BEEN NOTIFIED OF THE OUTAGE.

IN THE EVENT NEW SIGNALS ARE DAMAGED PRIOR TO ACCEPTANCE, ALL DAMAGED EQUIPMENT EXCEPT POLES AND CONTROL EQUIPMENT SHALL BE REPLACED BY THE CONTRACTOR TO THE SATISFACTION OF THE ENGINEER WITH THE SIGNAL BACK IN SERVICE WITHIN 8 HOURS AFTER THE CONTRACTOR'S NOTIFICATION OF THE OUTAGE. THE CONTRACTOR SHALL ARRANGE FOR FULL TRAFFIC CONTROL UNTIL THE SIGNAL IS BACK IN OPERATION.

IF POLES AND/OR CONTROL EQUIPMENT ARE DAMAGED AND MUST BE REPLACED, THE CONTRACTOR SHALL MAKE TEMPORARY REPAIRS AS NECESSARY TO BRING THE SIGNAL BACK INTO FULL OPERATION WITHIN THE ALLOWED 8-HOUR PERIOD, AND SHALL MAKE PERMANENT REPAIRS OR REPLACEMENT AS SOON THEREAFTER AS POSSIBLE.

CALCULATED EJS CHECKED NJV

MAINTENANCE OF TRAFFIC GENERAL NOTES

ALL-117/309-18.65/15.17

I:\pd\75467\roadway\sheets\75467MN001.dgn 11-DEC-2012 10:53AM jclark1

NONE OF THE ABOVE SHALL BE CONSTRUED AS COLLECTIVE OR CONSECUTIVE OUTAGE TIME PERIODS AT ANY ONE LOCATION. THAT IS WHERE MORE THAN ONE OUTAGE OCCURS AT ANY ONE LOCATION, THEN THE ALLOTTED TIME LIMIT SHALL BE FOR THE WORST SINGLE OUTAGE.

WHERE OUTAGES ARE THE DIRECT RESULT OF A VEHICLE ACCIDENT, THE RESPONSE OF THE CONTRACTOR SHALL BE AS OUTLINED ABOVE. THE CONTRACTOR SHALL BE RESPONSIBLE FOR COLLECTION OF ANY COMPENSATION FOR THIS WORK FROM THOSE PARTIES RESPONSIBLE FOR THE DAMAGE.

WHERE THE CONTRACTOR HAS FAILED TO OR CANNOT RESPOND TO AN OUTAGE OR SIGNAL EQUIPMENT MALFUNCTION, WITHIN PERIODS AS SPECIFIED ABOVE, THE ENGINEER MAY INVOKE THE PROVISIONS OF SECTION 105.15 AND ANY SUBSEQUENT BILLINGS TO THE STATE FOR POLICE SERVICES AND MAINTENANCE SERVICES INCLUDING THE INITIAL FOUR (4) HOUR PERIOD BY ODOT FORCES SHALL BE DEDUCTED FROM MONIES DUE OR TO BECOME DUE THE CONTRACTOR IN ACCORDANCE WITH PROVISIONS OF SECTION 105.15.

THE CONTRACTOR SHALL MAINTAIN SIGNAL OPERATIONS ENTIRELY WITH HIS FORCES.

THE CONTRACTOR SHALL BE RESPONSIBLE FOR ANY DAMAGE TO ANY TRAFFIC SIGNAL COMPONENTS REQUIRED TO BE HANDLED DURING THE REVISIONS TO THE SIGNAL SYSTEM. ODOT DISTRICT ONE TRAFFIC, THE CONTRACTOR AND THE PROJECT ENGINEER SHALL HOLD A PRE-WORK REVIEW OF ALL THE EXISTING TRAFFIC SIGNAL COMPONENTS TO IDENTIFY AND NOTE ANY EXISTING PROBLEMS. ANYTHING NOT NOTED IS THE CONTRACTORS RESPONSIBILITY.

WHEN A TRAFFIC SIGNAL IS TAKEN OUT OF SERVICE BY THE CONTRACTOR, DUE TO CONSTRUCTION PROCEDURES, THIS OUTAGE SHALL NOT EXCEED FOUR HOURS AND SHALL NOT INCLUDE THE HOURS OF 7 AM TO 9 AM, 11:30 AM TO 1:00 PM AND 2 PM TO 7 PM - MONDAY THROUGH FRIDAY. WHERE THE SIGNAL IS OUT OF SERVICE DUE TO CONSTRUCTION PROCEDURES, OR DUE TO AN OUTAGE OR MALFUNCTION OF EQUIPMENT AS DESCRIBED ABOVE, IT SHALL BE PROTECTED BY OFF-DUTY LAW ENFORCEMENT OFFICERS WITH PATROL CAR FROM THE PERRY TOWNSHIP POLICE DEPARTMENT, ALLEN COUNTY SHERIFF'S OFFICE OR OHIO STATE HIGHWAY PATROL, HIRED BY THE CONTRACTOR UNTIL THE TRAFFIC SIGNAL IS OPERATING AGAIN.

ALL COST INCURRED IN USING POLICE OFFICERS, AS STIPULATED IN THESE PLANS, SHALL BE PAID FOR UNDER THE LAW ENFORCEMENT OFFICER (LEO) PAY ITEM PROVIDED WITH THESE MAINTENANCE OF TRAFFIC PLANS AND/OR NOTES. THE CONTRACTOR SHALL MAINTAIN COMPLETE RECORDS OF MALFUNCTIONS INCLUDING:

- TIME OF NOTIFICATION OF MALFUNCTION;
- TIME OF WORK CREWS ARRIVAL TO CORRECT THE MALFUNCTION;
- ACTIONS TAKEN TO CORRECT THE MALFUNCTION, INCLUDING A LIST OF PARTS REPAIRED OR REPLACED;
- A DIAGNOSIS OF REASON FOR THE MALFUNCTION AND PROBABILITY OF REOCCURRENCE;
- TIME OF COMPLETION OF THE REPAIR AND SYSTEM RESTORED TO FULL SERVICE.

A COPY OF THESE RECORDS SHALL BE PROVIDED TO THE ENGINEER WITHIN THREE (3) WORKING DAYS FOLLOWING COMPLETION OF EACH REPAIR.

ANY VEHICULAR OR PEDESTRIAN TRAFFIC SIGNAL HEAD, EITHER NEW OR EXISTING, WHICH WILL BE OUT OF OPERATION OR DEEMED NOT NEEDED BY THE ENGINEER FOR DIFFERENT PHASING OF THE MAINTENANCE OF TRAFFIC SHALL BE COVERED IN THE MANNER DESCRIBED IN SPECIFICATION 632.25 AND PER THE ENGINEER'S APPROVAL. COST OF COVERING AND UNCOVERING SHALL BE INCLUDED IN THE LUMP SUM ITEM BID FOR ITEM 614 - MAINTAINING TRAFFIC, AS PER PLAN.

4) MAINTAINING ACCESS TO ALL PROPERTIES:

ACCESS TO ALL ADJACENT PROPERTIES AND THEIR DRIVES WITHIN THE WORK LIMITS SHALL BE MAINTAINED TO SR 117 AND SR 309 BY THE CONTRACTOR AT ALL TIMES, AS PER 614.02(A). SEE "MAINTAINING ACCESS AT EXISTING DRIVES" NOTE BELOW FOR ADDITIONAL STIPULATIONS. THE ONLY EXCEPTION IS FOR THE EASTGATE MALL DRIVES. SEE SECTION I) 'CONTRACTOR STIPULATIONS' FOR FURTHER DETAILS.

5) MAINTAINING ACCESS AT EXISTING DRIVES:

CONSTRUCTION OF COMMERCIAL DRIVES SHALL NOT BEGIN UNTIL AFTER MARCH 31, 2013 AND SHALL BE COMPLETED BY OCTOBER 31, 2013.

RECONSTRUCTION OF THE DRIVES AND PLACEMENT OF CONDUITS ACROSS DRIVES AT THE BUSINESS PARCELS WITHIN THE WORK LIMITS OF THE PROJECT SHALL BE PERFORMED PART-WIDTH.

AT PROPERTIES WITH MULTIPLE DRIVES, PROPOSED DRIVES SHALL BE RECONSTRUCTED PRIOR TO THE REMOVAL OF THE EXISTING DRIVES. VEHICLES SHALL HAVE ACCESS TO/FROM THE PROPERTY VIA A MINIMUM 15 FOOT WIDE DRIVE AT EACH DRIVE LOCATION AT ALL TIMES, UNLESS NOTED OTHERWISE IN THESE PLANS.

CONSTRUCTION OF ALL NEW DRIVES SHALL BE COMPLETED WITHIN THE MAXIMUM NOTED DURATION.

AGGREGATE DRIVES OR STEEL PLATES ARE PERMITTED DURING CONSTRUCTION. IT IS PERMISSIBLE TO TEMPORARILY WIDEN A DRIVE ONE OR BOTH WAYS DURING CONSTRUCTION IN ORDER TO COMPLY WITH THIS STIPULATION. ALL AREAS DISTURBED BY THE TEMPORARY WIDENING SHALL BE RESTORED TO THEIR PRIOR CONDITIONS.

THE CONTRACTOR SHALL PROVIDE A PROCEDURE FOR MAINTAINING ACCESS DURING THE RECONSTRUCTION OF DRIVES FOR EACH PROPERTY TO THE ENGINEER FOR APPROVAL, IN WRITING.

THE CONTRACTOR SHALL ALSO COORDINATE THIS WORK WITH THE RESPECTIVE PROPERTY OWNER AND BUSINESS MANAGER A MINIMUM OF FOURTEEN (14) DAYS PRIOR TO BEGINNING ANY WORK.

6) PARKING DISRUPTION LIMITATIONS:

THE CONTRACTOR IS TO KEEP ANY DISRUPTION OF PARKING AND BUSINESS TRAFFIC FLOW WITHIN THE TEMPORARY RIGHT-OF-WAY TO A MINIMUM. PARKING/TRAFFIC FLOW DISRUPTION WILL BE ALLOWED ONLY ONCE AND WILL BE LIMITED TO THE MAXIMUM DURATION OF FOURTEEN (14) CALENDAR DAYS. THE CONTRACTOR SHALL ALSO COORDINATE THIS WORK WITH THE RESPECTIVE PROPERTY OWNER AND BUSINESS MANAGER A MINIMUM OF FOURTEEN (14) DAYS PRIOR TO BEGINNING ANY WORK.

ALL WORK WITHIN THE TEMPORARY RIGHT OF WAY ON PARCEL 115 (TACO BELL) SHALL BE PERFORMED WHILE THE TACO BELL BUSINESS IS NOT OPEN FOR BUSINESS. NO PARKING SHALL BE AFFECTED DURING BUSINESS HOURS. NO EQUIPMENT CAN OCCUPY THE TEMPORARY RIGHT-OF-WAY DURING TACO BELL'S BUSINESS HOURS. A MINIMUM OF ONE LANE OF TRAFFIC SHALL BE MAINTAINED IN THE PARKING LOT WITHIN THIS TEMPORARY RIGHT-OF-WAY DURING BUSINESS HOURS. THE DRIVE ON SR 309 FOR THIS PARCEL SHALL REMAIN OPEN DURING THE DURATION THAT THE CONTRACTOR IS WORKING WITHIN THE TEMPORARY RIGHT-OF-WAY.

7) PAYMENT

ALL WORK AND TRAFFIC CONTROL DEVICES SHALL BE IN ACCORDANCE WITH CMS 614 AND OTHER APPLICABLE PORTIONS OF THE SPECIFICATIONS, AS WELL AS THE OHIO MANUAL OF UNIFORM TRAFFIC CONTROL DEVICES. PAYMENT FOR FURNISHING, ERECTING, MAINTAINING & REMOVING SIGNS, BARRICADES, CONES, MARKERS, ALL WORK ZONE PAVEMENT MARKINGS,WORK ZONE RAISED PAVEMENT MARKERS, PORTABLE CONCRETE BARRIER, PORTABLE CONCRETE BARRIER END TREATMENTS, OBJECT MARKERS, MAINTAINING ACCESS TO PROPERTIES/DRIVES, PROVIDING SIGNING AND MAINTAINING ALTERNATE ROUTES, STEEL PLATE, TEMPORARY AGGREGATE, ETC... SHALL BE INCLUDED IN THE LUMP SUM ITEM BID FOR ITEM 614 - MAINTAINING TRAFFIC, AS PER PLAN, UNLESS ITEMIZED ELSEWHERE IN THE PLANS.

DISINCENTIVES - SUMMARY OF CONSTRUCTION DURATION STIPULATIONS

THE FOLLOWING LIST SUMMARIZES THE VARIOUS PLAN STIPULATIONS RELATED TO CONSTRUCTION DURATIONS. IT ALSO INCLUDES A COLUMN THAT DESIGNATES THE DISINCENTIVE VALUE APPLICABLE TO EACH STIPULATION. IN THE EVENT THE STIPULATED TIME DURATION DATE IS EXCEEDED THE CONTRACTOR SHALL BE ASSESSED A DISINCENTIVE AMOUNT EQUAL TO THAT SHOWN IN THE TABLE FOR EACH DAY THE STIPULATED DURATION/DATE IS EXCEEDED.

CONSTRUCTION DURATION STIPULATIONS

CORRESPONDING NOTE	SHEET	GENERAL STIPULATION	RESRICTION/ COMPLETION TIME	DISINCENTIVE AMOUNT
ITEM 614 MAINTAINING TRAFFIC, AS PER PLAN	10	EASTGATE MALL DRIVES 20 & 40-DR CLOSURES	14 CALENDAR DAYS	$4000 PER DAY
		SR 117 & SR 309 LANE CLOSURES	HOLIDAY PERIODS*	$50 PER MINUTE
		ROSCHMAN AVENUE PART-WIDTH CONSTRUCTION	14 CALENDAR DAYS	$4000 PER DAY
		DEVONSHIRE DRIVE PART-WIDTH CONSTRUCTION	14 CALENDAR DAYS	$4000 PER DAY
PARKING DISRUPTION LIMITATIONS	11	KEEP ANY DISRUPTION OF PARKING AND BUSINESS TRAFFIC FLOW WITHIN THE TEMPORARY RIGHT OF WAY TO A MINIMUM.	14 CALENDAR DAYS	$4000 PER DAY
	10	NO WORK AND OR EQUIPMENT PARKING WITHIN TEMP. R/W DURING BUSINESS HOURS AT TACO BELL.	BUSINESS HOURS	$50 PER MINUTE
MAINTAINING ACCESS AT EXISTING DRIVES	11	ALL DRIVES SHALL BE CONSTRUCTED WITHIN A MAXIMUM DURATION, EXCEPT AS NOTED IN THIS TABLE.	14 CALENDAR DAYS	$4000 PER DAY

* SEE SHEET 10 FOR SCHEDULES FOR HOLIDAY PERIODS

ITEM 614 - LAW ENFORCEMENT OFFICER WITH PATROL CAR FOR ASSISTANCE DURING CONSTRUCTION OPERATIONS

USE OF LAW ENFORCEMENT OFFICERS (LEOS) BY CONTRACTORS OTHER THAN THE USES SPECIFIED BELOW WILL NOT BE PERMITTED AT PROJECT COST. LEOS SHOULD NOT BE USED WHERE THE OMUTCD INTENDS THAT FLAGGERS BE USED.

IN ADDITION TO THE REQUIREMENTS OF CMS 614 AND THE OMUTCD, A UNIFORMED LEO WITH AN OFFICIAL PATROL CAR (CAR WITH TOP-MOUNTED EMERGENCY FLASHING LIGHTS AND COMPLETE MARKINGS OF THE APPROPRIATE LAW ENFORCEMENT AGENCY) SHALL BE PROVIDED FOR THE FOLLOWING TRAFFIC CONTROL TASKS:

- DURING THE ENTIRE ADVANCE PREPARATION AND CLOSURE SEQUENCE WHERE COMPLETE BLOCKAGE OF TRAFFIC IS REQUIRED.
- DURING A TRAFFIC SIGNAL INSTALLATION WHEN IMPACTING THE NORMAL FUNCTION OF THE SIGNAL OR THE FLOW OF TRAFFIC OR WHEN TRAFFIC NEEDS TO BE DIRECTED THROUGH AN ENERGIZED TRAFFIC SIGNAL CONTRARY TO THE SIGNAL DISPLAY (E.G., DIRECTING MOTORISTS THROUGH A RED LIGHT).

IN ADDITION TO THE REQUIREMENT OF CMS 614 & THE OMUTCD, A UNIFORMED LEO WITH AN OFFICIAL PATROL CAR (CAR WITH TOP-MOUNTED EMERGENCY FLASHING LIGHTS AND COMPLETE MARKINGS OF THE APPROPRIATE LAW ENFORCEMENT AGENCY) SHOULD BE PROVIDED FOR THE FOLLOWING TRAFFIC CONTROL TASKS:

- FOR LANE CLOSURES: DURING INITIAL SET-UP PERIODS, TEAR DOWN PERIODS, SUBSTANTIAL SHIFTS OF A CLOSURE POINT OR WHEN NEW LANE CLOSURE ARRANGEMENTS ARE INITIATED FOR LONG-TERM LANE CLOSURES/SHIFTS (FOR THE FIRST AND LAST DAY OF MAJOR CHANGES IN TRAFFIC CONTROL SETUP). IN GENERAL, LEOS SHOULD BE POSITIONED AT THE POINT OF LANE RESTRICTION OR ROAD CLOSURE AND TO MANUALLY CONTROL TRAFFIC MOVEMENTS THROUGH INTERSECTIONS IN WORK ZONES.
- WHEN CONSTRUCTION VEHICLES ARE ENTERING/EXITING THE ZONE DIRECTLY FROM/INTO AN OPEN LANE OF TRAFFIC. IF A LANE HAS BEEN CLOSED TO PROVIDE AN ACCELERATION/ DECELERATION LANE FOR THE VEHICLE, THE LEO WILL NOT BE REQUIRED.
- WHEN SIGNAL IS TAKEN OUT OF SERVICE.

LEOS SHOULD NOT FORGO THEIR TRAFFIC CONTROL RESPONSIBILITIES TO APPREHEND MOTORISTS FOR ROUTINE TRAFFIC VIOLATIONS. HOWEVER, IF A MOTORIST'S ACTIONS ARE CONSIDERED TO BE RECKLESS, THEN PURSUIT OF THE MOTORIST IS APPROPRIATE.

THE LEOS WORK AT THE DIRECTION OF THE CONTRACTOR. THE CONTRACTOR IS RESPONSIBLE FOR SECURING THE SERVICES OF THE LEOS WITH THE APPROPRIATE AGENCIES AND COMMUNICATING THE INTENTIONS OF THE PLANS WITH RESPECT TO DUTIES OF THE LEOS. THE ENGINEER SHALL HAVE FINAL CONTROL OVER THE LEOS' DUTIES AND PLACEMENT, AND WILL RESOLVE ANY ISSUES THAT MAY ARISE BETWEEN THE TWO PARTIES.

THE LEO SHALL REPORT IN TO THE CONTRACTOR PRIOR TO THE START OF THE SHIFT, IN ORDER TO RECEIVE INSTRUCTIONS REGARDING SPECIFIC WORK ASSIGNMENTS DURING HIS/HER SHIFT. THE LEO IS EXPECTED TO STAY AT THE PROJECT SITE FOR THE ENTIRE DURATION OF HIS/HER SHIFT. THE LEO SHALL REPORT TO THE CONTRACTOR AT THE END OF HIS/HER SHIFT. ONCE THE LEO HAS COMPLETED THE DUTIES DESCRIBED ABOVE AND STILL HAS TIME REMAINING ON HIS/HER SHIFT, THE LEO

MAY BE ASKED TO PATROL THROUGH THE WORK ZONE (WITH FLASHING LIGHTS OFF) OR BE PLACED AT A LOCATION TO DETER MOTORISTS FROM SPEEDING. SHOULD IT BE NECESSARY TO LEAVE THE PROJECT SITE, THE LEO SHALL NOTIFY THE ENGINEER. THE CONTRACTOR SHALL PROVIDE THE LEO WITH A TWO-WAY COMMUNICATION DEVICE WHICH SHALL BE RETURNED TO THE CONTRACTOR AT THE END OF HIS/HER SHIFT.

LEOS (WITH PATROL CAR) REQUIRED BY THE TRAFFIC MAINTENANCE TASKS ABOVE SHALL BE PAID FOR ON A UNIT PRICE (HOURLY) BASIS UNDER ITEM 614, LAW ENFORCEMENT OFFICER WITH PATROL CAR FOR ASSISTANCE. THE FOLLOWING ESTIMATED QUANTITIES HAVE BEEN CARRIED TO THE GENERAL SUMMARY.

ITEM 614 - LAW ENFORCEMENT OFFICER WITH PATROL CAR FOR ASSISTANCE = 144 HOURS

THE HOURS PAID SHALL INCLUDE ANY MINIMUM SHOW-UP TIME REQUIRED BY THE LAW ENFORCEMENT AGENCY INVOLVED.

ANY ADDITIONAL COSTS (ADMINISTRATIVE OR OTHERWISE) INCURRED BY THE CONTRACTOR TO OBTAIN THE SERVICES OF AN LEO ARE INCLUDED WITH THE BID UNIT PRICE FOR ITEM 614 - LAW ENFORCEMENT OFFICER WITH PATROL CAR FOR ASSISTANCE.

ITEM 614 - WORK ZONE PAVEMENT MARKING

WORK ZONE PAVEMENT MARKING SHALL BE COMPLETE AND IN PLACE ON ALL NEW PAVEMENT PRIOR TO EXPOSING IT TO TRAFFIC. THE FOLLOWING ESTIMATED QUANTITY FOR THIS ITEM HAS BEEN PROVIDED FOR USE AS DIRECTED BY THE ENGINEER.

ITEM 614 - WORK ZONE LANE LINE, CLASS II = 1.69 MILE
ITEM 614 - WORK ZONE CENTER LINE, CLASS II = 0.95 MILE
ITEM 614 - WORK ZONE CHANNELIZING LINE, CLASS II = 3563 FT

CALCULATED E.J.S. CHECKED N.J.V.

MAINTENANCE OF TRAFFIC GENERAL NOTES

ALL-117/309-18.65/15.17

I:\pd\75467\roadway\sheets\75467MN002.dgn 17-SEP-2012 10:52AM nvondere

ITEM 614 - REPLACEMENT SIGN

FLATSHEET SIGNS FURNISHED BY THE CONTRACTOR IN ACCORDANCE WITH THE REQUIREMENTS OF THE PLANS, SPECIFICATIONS AND PROPOSAL WHICH BECOME DAMAGED BEYOND USEFULNESS AS DETERMINED BY THE ENGINEER BY TRAFFIC FOR REASONS BEYOND THE CONTROL OF THE CONTRACTOR SHALL BE REPLACED IN KIND WHEN ORDERED BY THE ENGINEER. REPLACEMENT SIGNS SHALL BE NEW. OTHER MATERIALS MAY BE IN USED, BUT GOOD, CONDITION SUBJECT TO APPROVAL BY THE ENGINEER.

PAYMENT FOR THE NEW SIGNS SHALL BE MADE AT THE CONTRACT PRICE PER EACH FOR ITEM 614 - REPLACEMENT SIGN, AND SHALL INCLUDE THE COST OF REMOVING AND DISPOSING OF DAMAGED SIGNS, HARDWARE AND SUPPORTS, AND PROVIDING THE NECESSARY REPLACEMENT HARDWARE, SUPPORTS, ETC.

AN ESTIMATED QUANTITY OF 12 EACH HAS BEEN PROVIDED IN THE GENERAL SUMMARY.

ITEM 614 - REPLACEMENT DRUM

DRUMS FURNISHED BY THE CONTRACTOR IN ACCORDANCE WITH THE REQUIREMENTS OF THE PLANS, SPECIFICATIONS AND PROPOSAL WHICH BECOME DAMAGED BEYOND USEFULNESS AS DETERMINED BY THE ENGINEER BY TRAFFIC FOR REASONS BEYOND THE CONTROL OF THE CONTRACTOR SHALL BE REPLACED IN KIND WHEN ORDERED BY THE ENGINEER. REPLACEMENT DRUMS SHALL BE NEW.

PAYMENT FOR THE NEW DRUMS SHALL BE MADE AT THE CONTRACT PRICE PER EACH FOR ITEM 614 - REPLACEMENT DRUM, AND SHALL INCLUDE THE COST OF REMOVING AND DISPOSING OF THE DAMAGED DRUM, AND PROVIDING AND MAINTAINING THE REPLACEMENT DRUM IN ACCORDANCE WITH THE CONTRACT REQUIREMENTS FOR THE ORIGINAL DRUM.

AN ESTIMATED QUANTITY OF 100 EACH HAS BEEN PROVIDED IN THE GENERAL SUMMARY.

TRENCH FOR WIDENING

TRENCH EXCAVATION FOR BASE WIDENING SHALL BE ONLY ON ONE SIDE OF THE PAVEMENT AT A TIME PER ODOT STANDARDS AND SPECIFICATIONS. THE OPEN TRENCH SHALL BE ADEQUATELY MAINTAINED AND PROTECTED WITH DRUMS OR BARRICADES AT ALL TIMES. PLACEMENT OF PROPOSED SUBBASE AND BASE MATERIAL SHALL FOLLOW AS CLOSELY AS POSSIBLE BEHIND EXCAVATION OPERATIONS. THE LENGTH OF WIDENING TRENCH WHICH IS OPEN AT ANY ONE TIME SHALL BE HELD TO A MINIMUM AND SHALL AT ALL TIMES BE SUBJECT TO APPROVAL OF THE ENGINEER.

FLOODLIGHTING

FLOODLIGHTING OF THE WORK SITE FOR OPERATIONS CONDUCTED DURING NIGHTTIME PERIODS SHALL BE ACCOMPLISHED SO THAT THE LIGHTS DO NOT CAUSE GLARE TO THE DRIVERS ON THE ROADWAY. TO ENSURE THE ADEQUACY OF THE FLOODLIGHT PLACEMENT, THE CONTRACTOR AND THE ENGINEER SHALL DRIVE THROUGH THE WORK SITE EACH NIGHT WHEN THE LIGHTING IS IN PLACE AND OPERATIVE PRIOR TO COMMENCING ANY WORK. IF GLARE IS DETECTED, THE LIGHT PLACEMENT AND SHIELDING SHALL BE ADJUSTED TO THE SATISFACTION OF THE ENGINEER BEFORE WORK PROCEEDS.

PAYMENT FOR ALL LABOR, EQUIPMENT AND MATERIALS SHALL BE INCLUDED IN THE LUMP SUM CONTRACT PRICE FOR ITEM 614 - MAINTAINING TRAFFIC, AS PER PLAN.

ITEM 614 - PORTABLE CHANGEABLE MESSAGE SIGN, AS PER PLAN

THE CONTRACTOR SHALL FURNISH, INSTALL, MAINTAIN AND REMOVE, WHEN NO LONGER NEEDED, CHANGEABLE MESSAGE SIGNS, ON SITE, FOR THE DURATION OF THE PROJECT. THE SIGNS SHALL BE OF A TYPE SHOWN ON A LIST OF APPROVED PCMS UNITS MAINTAINED BY THE DIRECTOR (OFFICE OF MATERIALS MANAGEMENT). THE APPROVED LIST OF PORTABLE CHANGEABLE MESSAGE SIGNS CAN BE FOUND ON THE ODOT WEBSITE BY CLICKING ON THE SERVICES MENU, THEN CLICKING ON MATERIALS MANAGEMENT. THE LIST CONTAINS CLASS A AND B UNITS WITH MINIMUM LEGIBILITY DISTANCES OF 650 FT. AND 475 FT., RESPECTIVELY.

EACH SIGN SHALL BE TRAILER-MOUNTED AND EQUIPPED WITH A FUNCTIONAL DIMMING MECHANISM, TO DIM THE SIGN DURING DARKNESS, AND A TAMPER AND VANDAL PROOF ENCLOSURE. EACH SIGN SHALL BE PROVIDED WITH APPROPRIATE TRAINING AND OPERATION INSTRUCTIONS TO ENABLE ON-SITE PERSONNEL TO OPERATE AND TROUBLESHOOT THE UNIT. EACH SIGN SHALL ALSO BE CAPABLE OF BEING POWERED BY AN ELECTRICAL SERVICE DROP FROM A LOCAL UTILITY COMPANY. PCMS TRAILERS SHOULD BE DELINEATED ON A PERMANENT BASIS BY AFFIXING RETROREFLECTIVE MATERIAL, IN A CONTINUOUS LINE ON THE FACE OF THE TRAILER AS SEEN BY ONCOMING ROAD USERS.

PLACEMENT, OPERATION, MAINTENANCE AND ALL ACTIVATION OF THE SIGNS BY THE CONTRACTOR SHALL BE AS DIRECTED BY THE ENGINEER. THE PCMS SHALL BE LOCATED IN A HIGHLY VISIBLE POSITION YET PROTECTED FROM TRAFFIC. THE CONTRACTOR SHALL, AT THE DIRECTION OF THE ENGINEER, RELOCATE THE PCMS TO IMPROVE VISIBILITY OR ACCOMMODATE CHANGED CONDITIONS. WHEN NOT IN USE, THE PCMS SHALL BE TURNED OFF. ADDITIONALLY, WHEN NOT IN USE FOR EXTENDED PERIODS OF TIME, THE PCMS SHALL BE TURNED, FACING AWAY FROM ALL TRAFFIC, AND SHALL DISPLAY ONE OR MORE YELLOW RETROREFLECTIVE SHEETING SURFACES OF 9-INCH BY 15-INCH MINIMUM SIZE FACING TRAFFIC.

THE ENGINEER SHALL BE PROVIDED ACCESS TO EACH SIGN UNIT AND SHALL BE PROVIDED WITH APPROPRIATE TRAINING AND OPERATION INSTRUCTIONS TO ENABLE ODOT PERSONNEL TO OPERATE AND TROUBLESHOOT THE UNIT, AND TO REVISE SIGN MESSAGES, IF NECESSARY.

THE CONTRACTOR SHALL IMPLEMENT A SYSTEM WHEREBY CHANGEABLE MESSAGES WILL BE IMPLEMENTED WITHIN 2 HOURS FOLLOWING TELEPHONE NOTIFICATION FROM THE PROJECT ENGINEER TO A DESIGNATED CONTACT PERSON.

ALL MESSAGES TO BE DISPLAYED ON THE SIGNS WILL BE PROVIDED BY THE ENGINEER. A LIST OF ALL REQUIRED PREPROGRAMMED MESSAGES WILL BE GIVEN TO THE CONTRACTOR AT THE PROJECT PRECONSTRUCTION CONFERENCE. EACH SIGN SHALL HAVE THE CAPABILITY TO STORE UP TO 99 MESSAGES. MESSAGE MEMORY OR PRE-PROGRAMMED DISPLAYS SHALL NOT BE LOST AS A RESULT OF POWER FAILURES TO THE ON-BOARD COMPUTER. EACH SIGN LEGEND SHALL BE CAPABLE OF BEING CHANGED IN THE FIELD. THREE-LINE PRESENTATION FORMATS WITH UP TO SIX MESSAGE PHASES SHALL BE SUPPORTED. PCMS FORMAT SHALL PERMIT THE COMPLETE MESSAGE FOR EACH PHASE TO BE READ AT LEAST TWICE.

THE PCMS SHALL CONTAIN AN ACCURATE CLOCK AND PROGRAMMING LOGIC WHICH WILL ALLOW THE SIGNS TO BE ACTIVATED, DEACTIVATED OR MESSAGES CHANGED AUTOMATICALLY AT DIFFERENT TIMES OF THE DAY FOR DIFFERENT DAYS OF THE WEEK.

THE PCMS UNITS SHALL BE MAINTAINED IN GOOD WORKING ORDER BY THE CONTRACTOR IN ACCORDANCE WITH THE PROVISIONS OF CMS 614.07. THE CONTRACTOR SHALL, PRIOR TO ACTIVATING THE UNITS, MAKE ARRANGEMENTS, WITH AN AUTHORIZED SERVICE AGENT FOR THE PCMS, TO ASSURE PROMPT SERVICE IN THE EVENT OF FAILURE. ANY FAILURE SHALL NOT RESULT IN THE SIGN BEING OUT OF SERVICE FOR MORE THAN 12 HOURS, INCLUDING WEEKENDS. FAILURE TO COMPLY MAY RESULT IN AN ORDER TO STOP WORK AND OPEN ALL TRAFFIC LANES AND/OR IN THE DEPARTMENT TAKING APPROPRIATE ACTION TO SAFELY CONTROL TRAFFIC. THE ENTIRE COST TO CONTROL TRAFFIC, ACCRUED BY THE DEPARTMENT DUE TO THE CONTRACTOR'S NONCOMPLIANCE, WILL BE DEDUCTED FROM MONEYS DUE, OR TO BECOME DUE THE CONTRACTOR ON HIS CONTRACT.

THE CONTRACTOR SHALL BE RESPONSIBLE FOR 24-HOUR-PER-DAY OPERATION AND MAINTENANCE OF THESE SIGNS ON THE PROJECT FOR THE DURATION OF THE PHASES WHEN THE PLAN REQUIRES THEIR USE.

PAYMENT FOR THE ABOVE DESCRIBED ITEM SHALL BE AT THE CONTRACT UNIT PRICE. PAYMENT SHALL INCLUDE ALL LABOR, MATERIALS, EQUIPMENT, FUELS, LUBRICATING OILS, SOFTWARE, HARDWARE AND INCIDENTALS TO PERFORM THE ABOVE DESCRIBED WORK.

THE FOLLOWING ITEM AND QUANTITY HAS BEEN CARRIED TO THE GENERAL SUMMARY FOR THE ABOVE.

ITEM 614 - PORTABLE CHANGEABLE MESSAGE SIGN, AS PER PLAN = 735 DAYS

TEMPORARY DRIVE ACCESS UTILIZING STEEL PLATE BRIDGING

TO ACCOMMODATE THE ROADWAY WORK AND RECONSTRUCTION OF DRIVES, STEEL PLATE BRIDGING MAY BE USED AT THE DRIVES. ALL CONDITIONS FOR USE OF STEEL PLATE BRIDGING SHOULD BE SET FORTH AS NOTED BELOW.

STEEL PLATE BRIDGING WITH A NON-SKID SURFACE SHALL BE REQUIRED TO PRESERVE UNOBSTRUCTED TRAFFIC FLOW. IN SUCH CASES, THE FOLLOWING CONDITIONS SHALL APPLY:

1) STEEL PLATES USED FOR BRIDGING MUST EXTEND A MINIMUM OF 18 INCHES BEYOND THE EDGES OF CUTS OR VOIDS.

2) STEEL PLATE BRIDGING SHALL BE INSTALLED TO OPERATE WITH MINIMUM NOISE.

3) ENDS OF THE PLATING SHALL BE ANCHORED.

4) NO MORE THAN TWO HUNDRED (200) LINEAR FEET OF PLATES SHALL BE PERMITTED IN PLACE AT ANY ONE TIME.

THE CONTRACTOR IS RESPONSIBLE FOR MAINTENANCE OF THE STEEL PLATES AND ENSURING THAT THEY MEET MINIMUM SPECIFICATIONS. UNLESS APPROVED BY THE PROJECT ENGINEER, USE OF STEEL PLATE BRIDGING SHOULD NOT EXCEED THE NOTED DURATION TO COMPLETE EACH RESPECTIVE DRIVE.

THE ADVISORY MINIMAL THICKNESS OF STEEL PLATE BRIDGING REQUIRED IS 1" MINIMUM.

ALL STEEL PLATE BRIDGING WITHIN THE RIGHT OF WAY, WHETHER USED IN OR OUT OF THE TRAVELED WAY, SHALL BE WITHOUT DEFORMATION. INSPECTION CAN DETERMINE THE TRUENESS OF STEEL PLATES BY USING A STRAIGHT EDGE AND SHOULD REJECT ANY PLATE THAT IS PERMANENTLY DEFORMED.

STEEL PLATES USED IN THE TRAVELED PORTION OF THE HIGHWAY SHALL HAVE A NON-SKID SURFACE AND MAINTAIN A NON-SKID SURFACE THAT WAS MANUFACTURED WITH A NOMINAL COEFFICIENT OF FRICTION (COF) OF 0.35.

THE PROJECT ENGINEER WILL NOT ENFORCE PLATE REMOVAL UNLESS IT IS PERMANENTLY DEFORMED OR DELIVERED WITHOUT THE REQUIRED SURFACING.

PAVEMENT TAPERS SHALL BE PROVIDED AT THE EDGES WHERE VEHICLES CROSS THE STEEL PLATE BRIDGING. THE PAVEMENT TAPERS SHALL BE CONSTRUCTED SO THE PLATE(S) EDGE ARE RECESSED.

WHEN SNOW AND/OR ICE EVENTS ARE FORECASTED, THE CONTRACTOR SHALL REMOVE STEEL PLATES AND BACKFILL ALL EXCAVATION TO THE SATISFACTION OF THE PROJECT ENGINEER.

PAYMENT FOR USING STEEL PLATE BRIDGING CALLED FOR IN THIS NOTE SHALL BE INCLUDED IN THE LUMP SUM PRICE FOR ITEM 614, MAINTAINING TRAFFIC, AS PER PLAN.

DUST CONTROL

THE CONTRACTOR SHALL FURNISH AND APPLY WATER FOR DUST CONTROL AS DIRECTED BY THE ENGINEER. THE FOLLOWING ESTIMATED QUANTITIES HAVE BEEN INCLUDED FOR DUST CONTROL PURPOSES:

ITEM 616 - WATER = 98 M GAL

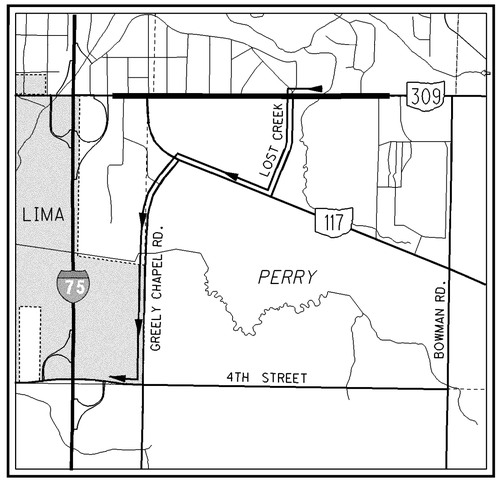

DESIGNATED ALTERNATIVE ROUTE MAP

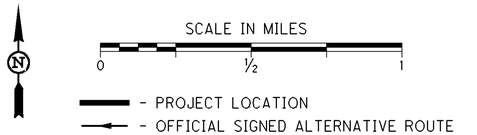

DESIGNATED ALTERNATIVE ROUTE TO IR 75

A DESIGNATED ALTERNATIVE ROUTE HAS BEEN ESTABLISHED AND IS SHOWN ON THIS SHEET. THE DESIGNATED ALTERNATIVE ROUTE WILL BE SIGNED BY ODOT, DISTRICT ONE. DURING THE TIME THAT TRAFFIC IS REROUTED, THE CONTRACTOR SHALL MAINTAIN THE ALTERNATIVE ROUTE IN A CONDITION WHICH IS REASONABLY SMOOTH AND FREE FROM HOLES, RUTS, RIDGES, BUMPS, DUST & STANDING WATER. ONCE THE SIGNING FOR THE DESIGNATED ALTERNATIVE ROUTE IS REMOVED AND TRAFFIC RETURNED TO ITS NORMAL PATTERN, THE DESIGNATED ALTERNATIVE ROUTE SHALL BE RESTORED TO A CONDITION THAT IS EQUIVALENT TO THAT WHICH EXISTED PRIOR TO ITS USE FOR THIS PURPOSE. ALL SUCH WORK SHALL BE PERFORMED WHEN AND AS DETERMINED BY THE ENGINEER. THE REPLACEMENT PAVEMENT FOR ITEM 253 PAVEMENT REPAIR SHALL CONSIST OF 1-¼" ITEM 448, ASPHALT CONCRETE SURFACE COURSE, TYPE 1, PG64-22 AND ITEM 407, TACK COAT PLACED ON 5" OF ITEM 301, ASPHALT CONCRETE BASE, PG64-22.

THE FOLLOWING ESTIMATED QUANTITIES ARE PROVIDED FOR USE AS DETERMINED BY THE ENGINEER TO MAINTAIN AND SUBSEQUENTLY RESTORE THE DESIGNATED ALTERNATIVE ROUTE.

ITEM 253 - PAVEMENT REPAIR = 80 CU YD
ITEM 407 - TACK COAT = 80 GALLON
ITEM 448 - ASPHALT CONCRETE SURFACE COURSE, TYPE 1, PG64-22 = 40 CU YD
ITEM 617 - COMPACTED AGGREGATE = 50 CU YD

CALCULATED E.J.S. CHECKED N.J.V.

MAINTENANCE OF TRAFFIC GENERAL NOTES

ALL-117/309-18.65/15.17

I:\pd\75467\roadway\sheets\75467MN003.dgn 17-SEP-2012 10:52AM nvondere

SHEET NUMBER										PLAN SPLITS		ITEM	ITEM EXT	GRAND TOTAL	UNIT	DESCRIPTION	SEE SHEET NO.
		7	19	20	21	22	24	25	92	06/SAF/ OT/	07/CMQ/ OT/						
																ROADWAY	
		LUMP								LUMP		201	11000	LUMP		CLEARING AND GRUBBING	
			17,679							17,679		202	23000	17,679	SQ YD	PAVEMENT REMOVED	
					2					2		202	23900	2	SQ YD	CONCRETE BASE REMOVED	
				320						320		202	30000	320	SQ FT	WALK REMOVED	
					20					20		202	30800	20	SQ YD	TRAFFIC ISLAND REMOVED	
				938					818	1756		202	32000	1756	FT	CURB REMOVED	
				882					202	1084		202	32500	1084	FT	CURB AND GUTTER REMOVED	
						2448				2448		202	35100	2448	FT	PIPE REMOVED, 24" AND UNDER	
						20				20		202	35200	20	FT	PIPE REMOVED, OVER 24"	
					264					264		202	38000	264	FT	GUARDRAIL REMOVED	
						2				2		202	58000	2	EACH	MANHOLE REMOVED	
						27				27		202	58100	27	EACH	CATCH BASIN REMOVED	
						10				10		202	58200	10	EACH	INLET REMOVED	
					622					622		202	75000	622	EACH	FENCE REMOVED	
					8					8		202	98100	8	EACH	REMOVAL MISC: BUSINESS SIGN REMOVED	
					3					3		202	98100	3	EACH	REMOVAL MISC: INFORMATION SIGN REMOVED	
					2					2		202	98100	2	EACH	REMOVAL MISC: LIGHT POLE REMOVED	
					2					2		202	98100	2	EACH	REMOVAL MISC: WOOD POST REMOVED	
					7					7		202	98100	7	EACH	REMOVAL MISC: STEEL POST REMOVED	
					2					2		202	98100	2	EACH	REMOVAL MISC: BRICK POST REMOVED	
					2					2		202	98100	2	EACH	REMOVAL MISC: YARD LAMP REMOVED	
					1					1		202	98100	1	EACH	REMOVAL MISC: AIR PUMP REMOVED	
					1					1		202	98100	1	EACH	REMOVAL MISC: CONCRETE FOUNDATION REMOVED	
					56					56		202	98200	56	FT	REMOVAL MISC: TIMBER REMOVED	
							9840			9840		203	10000	9840	CU YD	EXCAVATION	
							8406			8406		203	20000	8406	CU YD	EMBANKMENT	
			16,515						4982	21,497		204	10000	21,497	SQ YD	SUBGRADE COMPACTION	
							3484			3484		204	13000	3484	CU YD	EXCAVATION OF SUBGRADE	
							3484			3484		204	30010	3484	CU YD	GRANULAR MATERIAL, TYPE B	
		5								5		204	45000	5	HOUR	PROOF ROLLING	
							10,452			10,452		204	50000	10,452	SQ YD	GEOTEXTILE FABRIC	
					7					7		604	38501	7	EACH	MONUMENT ASSEMBLY, AS PER PLAN	8
				26,751							26,751	608	13000	26,751	SQ FT	6" CONCRETE WALK	
				983							983	608	52030	983	SQ FT	CURB RAMP, TYPE B1	
				130							130	608	52031	130	SQ FT	CURB RAMP, TYPE B1, AS PER PLAN	91
				1174							1174	608	52041	1174	SQ FT	CURB RAMP, TYPE B2, AS PER PLAN	91
				673							673	608	52045	673	SQ FT	CURB RAMP, TYPE B3, AS PER PLAN	91
					18					18		SPECIAL	69050000	18	EACH	MAILBOX SUPPORT	7
					18					18		SPECIAL	69050350	18	EACH	MAILBOX REMOVED AND RESET	7
																EROSION CONTROL	
						2				2		601	21050	2	SQ YD	TIED CONCRETE BLOCK MAT, TYPE 1	
							18			18		601	32100	18	CU YD	ROCK CHANNEL PROTECTION, TYPE B WITH FILTER	
							22,342			22,342		659	10000	22,342	SQ YD	SEEDING AND MULCHING	
							3.02			3.02		659	20000	3.02	TON	COMMERCIAL FERTILIZER	
							121			121		659	35000	121	M GAL	WATER	
								LUMP		LUMP		832	15000	LUMP		STORM WATER POLLUTION PREVENTION PLAN	
								65,000		65,000		832	30000	65,000	EACH	EROSION CONTROL	

CALCULATED NJV
CHECKED EJS

GENERAL SUMMARY

ALL-117/309-
18.65/15.17

13
173

I:\Pd\75467\roadway\sheets\75467GG001.dgn 09-OCT-2012 1:09PM nvondere

SHEET NUMBER										PLAN SPLITS		ITEM	ITEM EXT	GRAND TOTAL	UNIT	DESCRIPTION	SEE SHEET NO.
			7	9	19	22	23	24	92	06/SAF/ OT/	07/CMQ/ OT/						
																DRAINAGE	
								14.8		14.8		602	20000	14.8	CU YD	CONCRETE MASONRY	
						371				371		603	00100	371	FT	4" CONDUIT, TYPE B	
						410				410		603	00410	410	FT	4" CONDUIT, TYPE F FOR UNDERDRAIN OUTLET	
				120		45				165		603	01100	165	FT	6" CONDUIT, TYPE C	
				80						80		603	01800	80	FT	8" CONDUIT, TYPE B	
						18				18		603	02000	18	FT	8" CONDUIT, TYPE C	
						14				14		603	03300	14	FT	10" CONDUIT, TYPE C	
						2154				2154		603	04400	2154	FT	12" CONDUIT, TYPE B	
						3327				3327		603	04600	3327	FT	12" CONDUIT, TYPE C	
						35				35		603	04600	35	FT	12" CONDUIT, TYPE C, 706.02	
						150				150		603	04900	150	FT	12" CONDUIT, TYPE D	
						10				10		603	05200	10	FT	12" CONDUIT, TYPE F	
						41				41		603	05200	41	FT	12" CONDUIT, TYPE F, 707.05, TYPE C OR 707.21	
						562				562		603	05900	562	FT	15" CONDUIT, TYPE B	
							310			310		603	06100	310	FT	15" CONDUIT, TYPE C	
							10			10		603	06700	10	FT	15" CONDUIT, TYPE F	
							780			780		603	07400	780	FT	18" CONDUIT, TYPE B	
							33			33		603	07600	33	FT	18" CONDUIT, TYPE C	
							37			37		603	07600	37	FT	18" CONDUIT, TYPE C, 706.02	
							387			387		603	08900	387	FT	21" CONDUIT, TYPE B	
							266			266		603	10400	266	FT	24" CONDUIT, TYPE B	
							266			266		603	11900	266	FT	27" CONDUIT, TYPE B	
							147			147		603	12100	147	FT	27" CONDUIT, TYPE C	
							20			20		603	13600	20	FT	30" CONDUIT, TYPE C, 706.02	
							180			180		603	14900	180	FT	33" CONDUIT, TYPE B	
								16		16		603	24000	16	FT	60" CONDUIT, TYPE C, 706.02	
							22			22		604	00400	22	EACH	CATCH BASIN, NO. 3	
							25			25		604	00800	25	EACH	CATCH BASIN, NO. 3A	
							13			13		604	02000	13	EACH	CATCH BASIN, NO. 6	
							19			19		604	04500	19	EACH	CATCH BASIN, NO. 2-2B	
							3			3		604	04900	3	EACH	CATCH BASIN, NO. 2-3	
							2			2		604	09000	2	EACH	CATCH BASIN ADJUSTED TO GRADE	
							5			5		604	10100	5	EACH	INLET, SIDE DITCH	
							20			20		604	31500	20	EACH	MANHOLE, NO. 3	
							7			7		604	31501	7	EACH	MANHOLE, NO. 3, AS PER PLAN	8
							3			3		604	34500	3	EACH	MANHOLE ADJUSTED TO GRADE	
							23			23		604	34501	23	EACH	MANHOLE ADJUSTED TO GRADE, AS PER PLAN	8
							1			1		604	36600	1	EACH	PRECAST REINFORCED CONCRETE OUTLET	
				4						4		604	37000	4	EACH	INSPECTION WELL	
								9358		9358		605	06000	9358	FT	4" BASE PIPE UNDERDRAINS	
							160			160		835	10000	160	FT	EXFILTRATION TRENCH, TYPE A	
																PAVEMENT	
					25,870					25,870		254	01000	25,870	SQ YD	PAVEMENT PLANING, ASPHALT CONCRETE	
			244		3040				326	3,610		301	46000	3,610	CU YD	ASPHALT CONCRETE BASE, PG64-22	
			30		6050				794	6,874		304	20000	6,874	CU YD	AGGREGATE BASE	

CALCULATED NJV
CHECKED EJS

GENERAL SUMMARY

ALL-117/309-
18.65/15.17

I:\pd\75467\roadway\sheets\75467GG002.dgn 17-SEP-2012 10:52AM nvondere

SHEET NUMBER										PLAN SPLITS		ITEM	ITEM EXT	GRAND TOTAL	UNIT	DESCRIPTION	SEE SHEET NO.
		7	9	19	20	92	100	105	120	06/SAF/ OT/	07/CMQ/ OT/						
																PAVEMENT (CONTINUED)	
				2974		204				3178		407	10000	3178	GALLON	TACK COAT	
				2974		248				3222		407	14000	3222	GALLON	TACK COAT FOR INTERMEDIATE COURSE	
				1653		114				1767		442	20000	1767	CU YD	ASPHALT CONCRETE SURFACE COURSE, 12.5 MM, TYPE A (448)	
				1964		163				2127		448	46050	2127	CU YD	ASPHALT CONCRETE INTERMEDIATE COURSE, TYPE 2, PG64-22	
						20				20		448	47020	20	CU YD	ASPHALT CONCRETE SURFACE COURSE, TYPE 1, PG64-22	
						290				290		452	10000	290	SQ YD	6" NON-REINFORCED CONCRETE PAVEMENT	
						1089				1089		452	12000	1089	SQ YD	8" NON-REINFORCED CONCRETE PAVEMENT	
					9464					9464		609	12000	9464	FT	COMBINATION CURB AND GUTTER, TYPE 2	
					130	1566				1696		609	26000	1696	FT	CURB, TYPE 6	
						225				225		609	54000	225	SQ YD	6" CONCRETE TRAFFIC ISLAND	
					442					442		609	72000	442	SQ YD	CONCRETE MEDIAN	
					998					998		609	72001	998	SQ YD	CONCRETE MEDIAN, AS PER PLAN	8
																WATER WORK	
			100							100		638	04800	100	FT	¾" COPPER SERVICE BRANCH	
			100							100		638	05000	100	FT	1-½" COPPER SERVICE BRANCH	
			50							50		638	10801	50	EACH	VALVE BOX ADJUSTED TO GRADE, AS PER PLAN	9
			20							20		638	10901	20	EACH	SERVICE BOX ADJUSTED TO GRADE, AS PER PLAN	9
																SANITARY SEWER	
			250							250		603	98300	250	FT	CONDUIT, MISC.: SANITARY SEWER SERVICE CONNECTIONS	
																TRAFFIC CONTROL	
							350			350		621	00100	350	EACH	RPM	
							240			240		621	54000	240	EACH	RAISED PAVEMENT MARKER REMOVED	
									9	9		625	32000	9	EACH	GROUND ROD	
								795.0		795.0		630	03100	795.0	FT	GROUND MOUNTED SUPPORT, NO. 3 POST	
								30.1		30.1		630	06400	30.1	FT	GROUND MOUNTED STRUCTURAL BEAM SUPPORT, S4X7.7	
								80.5		80.5		630	08520	80.5	FT	STREET NAME SIGN SUPPORT, NO. 3 POST	
								10		10		630	08600	10	EACH	SIGN POST REFLECTOR	
								2		2		630	09000	2	EACH	BREAKAWAY STRUCTURAL BEAM CONNECTION	
								2		2		630	11103	2	EACH	OVERHEAD SIGN SUPPORT, TYPE TC-16.21, DESIGN 11, AS PER PLAN	120
								5		5		630	11203	5	EACH	OVERHEAD SIGN SUPPORT, TYPE TC-16.21, DESIGN 12, AS PER PLAN	120
								2		2		630	11208	2	EACH	OVERHEAD SIGN SUPPORT, TYPE TC-16.21, DESIGN 13, AS PER PLAN	120
								1		1		630	74500	1	EACH	OVERHEAD SIGN SUPPORT, MISC.: MECHANICAL DAMPER	122
								20		20		630	79100	20	EACH	SIGN HANGER ASSEMBLY, MAST ARM	
								12		12		630	79500	12	EACH	SIGN SUPPORT ASSEMBLY, POLE MOUNTED	
								1077.4		1077.4		630	80100	1077.4	SQ FT	SIGN, FLAT SHEET	
								36.0		36.0		630	80200	36.0	SQ FT	SIGN, GROUND MOUNTED EXTRUSHEET	
								1077.4		1077.4		630	81100	1077.4	SQ FT	SIGN ERECTED, FLAT SHEET	
								36.0		36.0		630	81200	36.0	SQ FT	SIGN ERECTED, EXTRUSHEET	
								3		3		630	82000	3	EACH	SIGN BACKING ASSEMBLY	
								2		2		630	84500	2	EACH	GROUND MOUNTED STRUCTURAL BEAM SUPPORT FOUNDATION	
								9		9		630	84510	9	EACH	RIGID OVERHEAD SIGN SUPPORT FOUNDATION	
								54		54		630	84900	54	EACH	REMOVAL OF GROUND MOUNTED SIGN AND DISPOSAL	
								6		6		630	85100	6	EACH	REMOVAL OF GROUND MOUNTED SIGN AND REERECTION	
								52		52		630	86002	52	EACH	REMOVAL OF GROUND MOUNTED POST SUPPORT AND DISPOSAL	
								2		2		630	89703	2	EACH	REMOVAL OF OVERHEAD SIGN SUPPORT AND DISPOSAL, AS PER PLAN	120

CALCULATED NJV
CHECKED EJS

GENERAL SUMMARY

ALL-117/309-
18.65/15.17

I:\pd\75467\roadway\sheets\75467GG003.dgn 17-SEP-2012 10:52AM nvondere

SHEET NUMBER										PLAN SPLITS		ITEM	ITEM EXT	GRAND TOTAL	UNIT	DESCRIPTION	SEE SHEET NO.
							100	125	126	06/SAF/ OT/	07/CMQ/ OT/						
																TRAFFIC CONTROL (CONTINUED)	
							2.78			2.78		642	00100	2.78	MILE	EDGE LINE, 4", TYPE 1	
							1.68			1.68		642	00200	1.68	MILE	LANE LINE, 4", TYPE 1	
							0.95			0.95		642	00300	0.95	MILE	CENTER LINE, TYPE 1	
							313			313		642	00900	313	SQ FT	ISLAND MARKING, TYPE 1	
							0.04			0.04		642	30030	0.04	MILE	REMOVAL OF PAVEMENT MARKING	
							3523			3523		647	18012	3523	FT	CHANNELIZING LINE, 8", TYPE B125	
							690			690		647	18062	690	FT	STOP LINE, TYPE B125	
							3227				3227	647	20012	3227	FT	CROSSWALK LINE, TYPE B125	
							45			45		647	20112	45	FT	TRANSVERSE/DIAGONAL LINE, TYPE B125	
							59			59		647	20612	59	EACH	LANE ARROW, TYPE B125	
							383			383		647	20812	383	FT	DOTTED LINE, 4", TYPE B125	
																TRAFFIC SIGNALS	
								14		14		625	00450	14	EACH	CONNECTION, FUSED PULL APART	
								3432		3432		625	23200	3432	FT	NO. 4 AWG 5000 VOLT DISTRIBUTION CABLE	
								842		842		625	23400	842	FT	NO. 10 AWG POLE AND BRACKET CABLE	
								79		79		625	25307	79	FT	CONDUIT, 1-½", 725.052, AS PER PLAN	121
								322		322		625	25507	322	FT	CONDUIT, 3", 725.052, AS PER PLAN	121
								100		100		625	25902	100	FT	CONDUIT, JACKED OR DRILLED, 725.04, 1-½"	
								1060		1060		625	25902	1060	FT	CONDUIT, JACKED OR DRILLED, 725.04, 3"	
								7		7		625	26251	7	EACH	LUMINAIRE, CONVENTIONAL, 250W HPS, 120 VOLT, AS PER PLAN	121
								295		295		625	29002	295	FT	TRENCH, 24" DEEP	
								20		20		625	30706	20	EACH	PULL BOX, 725.08, 24"	
								24		24		625	32000	24	EACH	GROUND ROD	
								38		38		632	05007	38	EACH	VEHICULAR SIGNAL HEAD, (LED), BLACK, 3 SECTION, 12" LENS, 1-WAY,	123
																POLYCARBONATE, WITH BLACKPLATE, AS PER PLAN	
								2		2		632	05067	2	EACH	VEHICULAR SIGNAL HEAD, (LED), BLACK, 4 SECTION, 12" LENS, 1-WAY,	123
																POLYCARBONATE, WITH BLACKPLATE, AS PER PLAN	
								1		1		632	05087	1	EACH	VEHICULAR SIGNAL HEAD, (LED), BLACK, 5 SECTION, 12" LENS, 1-WAY,	123
																POLYCARBONATE, WITH BLACKPLATE, AS PER PLAN	
								28		28		632	20731	28	EACH	PEDESTRIAN SIGNAL HEAD (LED), (COUNTDOWN), TYPE D2, AS PER PLAN	123
								41		41		632	25000	41	EACH	COVERING OF VEHICULAR SIGNAL HEAD	
								28		28		632	25010	28	EACH	COVERING OF PEDESTRIAN SIGNAL HEAD	
								28		28		632	26001	28	EACH	PEDESTRIAN PUSHBUTTON, AS PER PLAN	123
								1571		1571		632	40200	1571	FT	SIGNAL CABLE, 2 CONDUCTOR, NO. 14 AWG	
								644		644		632	40300	644	FT	SIGNAL CABLE, 3 CONDUCTOR, NO. 14 AWG	
								3804		3804		632	40500	3804	FT	SIGNAL CABLE, 5 CONDUCTOR, NO. 14 AWG	
								6065		6065		632	40700	6065	FT	SIGNAL CABLE, 7 CONDUCTOR, NO. 14 AWG	
								14		14		632	64010	14	EACH	SIGNAL SUPPORT FOUNDATION	
								6		6		632	64020	6	EACH	PEDESTAL FOUNDATION	
								264		264		632	69300	264	FT	POWER CABLE, 3 CONDUCTOR, NO. 4 AWG	
								190		190		632	69800	190	FT	SERVICE CABLE, 3 CONDUCTOR, NO. 6 AWG	
									4	4		632	70001	4	EACH	POWER SERVICE, AS PER PLAN	124
									4	4		632	70200	4	EACH	CONDUIT RISER, 1" DIAMETER	
									1	1		632	75481	1	EACH	SIGNAL SUPPORT, TYPE TC 12.30, DESIGN 10 POLE,	122
																WITH MAST ARMS TYPE TC-81.21 DESIGN 14 AND DESIGN 11, AS PER PLAN	
									1	1		632	76401	1	EACH	COMBINATION SIGNAL SUPPORT, TYPE TC-12.30, DESIGN 8 POLE,	122
																WITH MAST ARMS TYPE TC-81.21 DESIGN 13 AND DESIGN 4, AS PER PLAN	

CALCULATED NJV
CHECKED EJS

GENERAL SUMMARY

ALL-117/309-
18.65/15.17

I:\pd\75467\roadway\sheets\75467GG004.dgn 17-SEP-2012 10:52AM nvondere

SHEET NUMBER										PLAN SPLITS		ITEM	ITEM EXT	GRAND TOTAL	UNIT	DESCRIPTION	SEE SHEET NO.
						11	12	24	126	06/SAF/ OT/	07/CMQ/ OT/						
																TRAFFIC SIGNALS (CONTINUED)	
									1	1		632	80103	1	EACH	SIGNAL SUPPORT, TYPE TC-81.21, DESIGN 1, AS PER PLAN	122
									1	1		632	80203	1	EACH	SIGNAL SUPPORT, TYPE TC-81.21, DESIGN 2, AS PER PLAN	122
									3	3		632	80503	3	EACH	SIGNAL SUPPORT, TYPE TC-81.21, DESIGN 11, AS PER PLAN	122
									1	1		632	80621	1	EACH	SIGNAL SUPPORT, TYPE TC-81.21, DESIGN 13, AS PER PLAN	122
									7	7		632	80700	7	EACH	SIGNAL SUPPORT, MISC.: MECHANICAL DAMPER	122
									1	1		632	81071	1	EACH	COMBINATION SIGNAL SUPPORT, TYPE TC-81.21, DESIGN 11, AS PER PLAN	122
									1	1		632	81081	1	EACH	COMBINATION SIGNAL SUPPORT, TYPE TC-81.21, DESIGN 12, AS PER PLAN	122
									4	4		632	81091	4	EACH	COMBINATION SIGNAL SUPPORT, TYPE TC-81.21, DESIGN 13, AS PER PLAN	122
									6	6		632	89901	6	EACH	PEDESTAL, 8', TRANSFORMER BASE, AS PER PLAN	123
									4	4		632	90101	4	EACH	REMOVAL OF TRAFFIC SIGNAL INSTALLATION, AS PER PLAN	121
									3	3		632	90400	3	EACH	SIGNALIZATION MISC.: LED, NO RIGHT TURN SIGN, SYMBOL TYPE	
									4	4		633	01681	4	EACH	CONTROLLER UNIT, TYPE 2070L, WITH CABINET, TYPE 332, AS PER PLAN	123
									4	4		633	67000	4	EACH	CABINET RISER	
									4	4		633	67001	4	EACH	CABINET RISER, AS PER PLAN	123
									4	4		633	67100	4	EACH	CABINET FOUNDATION	
									4	4		633	67200	4	EACH	CONTROLLER WORK PAD	
									4	4		633	67501	4	EACH	UNINTERRUPTIBLE POWER SUPPLY (UPS), BATTERY REPLACEMENT, AS PER PLAN	123
									4	4		633	99000	4	EACH	CONTROLLER ITEM, MISC.: REUSE OF UNINTERRUPTIBLE POWER SUPPLY (UPS)	123
									4	4		633	99000	4	EACH	CONTROLLER ITEM, MISC.: UNINTERRUPTIBLE POWER SUPPLY (UPS), STATUS INDICATOR LAMPS	
									5	5		816	30000	5	EACH	VIDEO DETECTION SYSTEM	
																ALTERNATE BID ITEMS	
									4	4		633	01681	4	EACH	CONTROLLER UNIT, TYPE 2070L, WITH CABINET, TYPE 332, AS PER PLAN (EAGLE)	121
									5	5		816	30000	5	EACH	VIDEO DETECTION SYSTEM (ITERIS)	121
									5	5		816	30000	5	EACH	VIDEO DETECTION SYSTEM (TRAVIS)	121
																STRUCTURES	
								6		6		512	33000	6	SQ YD	TYPE 2 WATERPROOFING	
																MAINTENANCE OF TRAFFIC	
							80			80		253	02000	80	CU YD	PAVEMENT REPAIR	
							80			80		407	10000	80	GALLON	TACK COAT	
							40			40		448	47020	40	CU YD	ASPHALT CONCRETE SURFACE COURSE, TYPE I, PG64-22	
						144				144		614	11110	144	HOUR	LAW ENFORCEMENT OFFICER WITH PATROL CAR FOR ASSISTANCE	
							12			12		614	12500	12	EACH	REPLACEMENT SIGN	
							100			100		614	12600	100	EACH	REPLACEMENT DRUM	
							735			735		614	18401	735	DAY	PORTABLE CHANGEABLE MESSAGE SIGN, AS PER PLAN	12
						1.69				1.69		614	20400	1.69	MILE	WORK ZONE LANE LINE, CLASS II	
						0.95				0.95		614	21400	0.95	MILE	WORK ZONE CENTER LINE, CLASS II	
						3563				3563		614	23650	3563	FT	WORK ZONE CHANNELIZING LINE, CLASS II	
							98			98		616	10000	98	M GAL	WATER	
							50			50		617	10100	50	CU YD	COMPACTED AGGREGATE	
						LUMP				LUMP		SPECIAL	10810000	LUMP		CPM PROGRESS SCHEDULE	
						LUMP				LUMP		614	11001	LUMP		MAINTAINING TRAFFIC, AS PER PLAN	10-11
										LUMP	LUMP	823	10000	LUMP		CONSTRUCTION LAYOUT STAKES	
										LUMP	LUMP	624	10000	LUMP		MOBILIZATION	

CALCULATED NJV CHECKED EJS

GENERAL SUMMARY

ALL-117/309-
18.65/15.17

17
173

I:\pd\75467\roadway\sheets\75467GG005.dgn 17-SEP-2012 10:52AM nvondere

PAVEMENT				202	204	254		301	304			407		442	448	
LOCATION	STATION		CADD AREA	PAVEMENT REMOVED *	SUBGRADE COMPACTION	PAVEMENT PLANING, ASPHALT CONCRETE		ASPHALT CONCRETE BASE, PG64-22 (T=8")	AGGREGATE BASE (T=12")	AGGREGATE BASE (T=14")		TACK COAT (0.075 Gal/Sq Yd)	TACK COAT FOR INTERMEDIATE COURSE (0.075 Gal/Sq Yd)	ASPHALT CONCRETE SURFACE COURSE, (2.5 MM, TYPE A (448) (T=1-1/2")	ASPHALT CONCRETE INTERMEDIATE COURSE, TYPE 2, PG64-22 (T=1-3/4")	ASPHALT CONCRETE INTERMEDIATE COURSE, TYPE 2, PG64-22 (T=Var.)
	FROM	TO	SQ YD	SQ YD	SQ YD	SQ YD		CU YD	CU YD	CU YD		GALLON	GALLON	CU YD	CU YD	CU YD
SR 117/309	904+00	907+49	3146.3									236.0	236.0	131.1	152.9	5.9
			2546.5					565.9	848.8							
			294.4							114.5						
			2757.7		2757.7											
			598.0			598.0										
			3028.3	2921.0												
INTERSECTION	907+49	911+22.32	4395.0									329.6	329.6	183.1	213.6	0.3
	10+53.87 (Willard)	992+87.5 Lt (SR 117)	3380.9					751.3	1127.0							
			437.4							170.1						
			3694.3		3694.3											
			1017.0			1017.0										
			3905.3	3905.3												
Willard Ave	10+53.87	12+13	533.4									40.0	40.0	22.2	25.9	
			258.2					57.4								
			281.2						93.7							
			13.3							5.2						
			294.5		294.5											
			282.9			282.9										
			311.7	311.7												
SR 117	991+54.3 Rt	994+40 Rt	38.5							15.0						
			27.5		27.5											
			451.9	451.9												
SR 309	911+22.32	917+80	4796.9									359.8	359.8	199.9	233.2	
			1600.3					355.6	533.4							
			552.5							214.9						
			1996.7		1996.7											
			3892.5			3892.5										
			2885.9	2885.9												
INTERSECTION	917+80	921+10	3108.4									233.1	233.1	129.5	151.1	
			1080.3					240.1	360.1							
			283.9							110.4						
			1284.1		1284.1											
			2074.6			2074.6										
			1308.3	1308.3												
SR 309	921+10	932+20	7791.9									584.4	584.4	324.7	378.8	22.4
			2162.9					480.6	721.0							
			891.1							346.5						
			2800.5		2800.5											
			5169.6			5169.6										
			4006.7	4006.7												
SUBTOTALS TO SHEET 19				15,790.8	12,855.3	13,034.6		2450.9	3684.0	976.6		1782.9	1782.9	990.5	1155.5	28.6

* Includes Driveway and Parking Lot Areas

CALCULATED NJV
CHECKED MCR

PAVEMENT SUBSUMMARY

ALL-117/309-18.65/15.17

I:\pd\75467\roadway\sheets\75467G0001.dgn 17-SEP-2012 10:52AM nvondere

PAVEMENT (CONTINUED)

LOCATION	STATION FROM	STATION TO	CADD AREA	202 PAVEMENT REMOVED*	204 SUBGRADE COMPACTION	254 PAVEMENT PLANING, ASPHALT CONCRETE		301 ASPHALT CONCRETE BASE, PG64-22 (T=8")	304 AGGREGATE BASE (T=12")	304 AGGREGATE BASE (T=14")		407 TACK COAT @ 0.075 GALLON per SQ YD	407 TACK COAT FOR INTERMEDIATE COURSE @ 0.075 GALLON per SQ YD	442 ASPHALT CONCRETE SURFACE COURSE, 12.5 MM, TYPE A (448) (T=1-1/2")	448 ASPHALT CONCRETE INTERMEDIATE COURSE, TYPE 2, PG64-22 (T=1-3/4")	448 ASPHALT CONCRETE INTERMEDIATE COURSE, TYPE 2, PG64-22 (T=Var.)
			SQ YD	SQ YD	SQ YD	SQ YD		CU YD	CU YD	CU YD		GALLON	GALLON	CU YD	CU YD	CU YD
INTERSECTION	932+20	935+55	3318.4									248.9	248.9	138.3	161.3	2.1
			329.3					73.2	109.8							
			296.8							115.4						
			542.1		542.1											
			2864.0			2864.0										
			223.8	223.8												
SR 309	935+55	945+48.57	6623.8									496.8	496.8	276.0	322.0	0.4
			820.0					182.2	273.3							
			772.8							300.5						
			1372.0		1372.0											
			5733.7			5733.7										
			903.1	903.1												
INTERSECTION	945+48.57	946+74.10	1372.5									102.9	102.9	57.2	66.7	
			89.0					19.8	29.7							
			107.8							41.9						
			167.5		167.5											
			1288.2			1288.2										
			77.8	77.8												
SR 309	946+74.10	951+94	4338.5									325.4	325.4	180.8	210.9	5.2
			1174.6					261.0								
			1290.2						430.1							
			1309.5		1309.5											
			2949.4			2949.4										
			609.5	609.5												
SR 309	959+94 Rt	961+95.3 Rt	231.7									17.4	17.4	9.7	11.3	
			240.0					53.3								
			264.7						88.2							
			268.8		268.8											
			74.2	74.2												
SUBTOTALS (THIS SHEET)				1888.4	3659.9	12,835.3		589.5	931.1	457.8		1191.4	1191.4	662.0	772.2	7.7
SUBTOTALS (SHEET 18)				15,790.8	12,855.3	13,034.6		2450.9	3684.0	976.6		1782.9	1782.9	990.5	1155.5	28.6
TOTALS				17,679.2	16,515.2	25,869.9		3040.4	4615.1	1434.4		2974.3	2974.3	1652.5	1927.7	36.3
TOTALS CARRIED TO GENERAL SUMMARY				17,679	16,515	25,870		3040	6050			2974	2974	1653	1964	

*Includes Driveway and Parking Lot Areas

CALCULATED NJV
CHECKED MCR

PAVEMENT SUBSUMMARY

ALL-117/309-18.65/15.17

I:\pd\75467\roadway\sheets\75467GQ002.dgn 17-SEP-2012 10:52AM nvondere

CURB-C

REFERENCE	SHEET	STATION		202		609	
				CURB REMOVED	CURB AND GUTTER REMOVED	COMBINATION CURB AND GUTTER, TYPE 2	CURB, TYPE 6
NO.	NO.	FROM	TO	FT	FT	FT	FT
1-C	27	904+00 Lt	10+66.79 Lt (Eastern)			167.5	
2-C	27,29	10+66.79 Rt (Eastern)	10+88 Lt (Willard)	123		402.0	117.0
3-C	27	904+00 Rt	904+72 Rt	133		82.6	
4-C	27,29	904+72 Rt	991+22.7 Rt (SR 117)	658	46	526.9	
5-C	29	9+53.51 Rt (Willard)	10+56.17 Lt (Bristol)			336.8	
6-C	29,31	10+62.17 Rt (Bristol)	10+63.30 Lt (St Andrews)			367.8	
7-C	79,29,31	992+87.5 Lt (SR 117)	9+11.06 Lt (Mall Dr #1)		365	971.7	
8-C	31,33	10+63.30 Rt (St Andrews)	10+61.93 Lt (Holyoke)			434.3	
9-C	31,33	9+11.06 Rt (Mall Dr #1)	9+01.0 Lt (Mall Dr #2)	24		441.2	12.5
10-C	33	10+61.93 Rt (Holyoke)	10+60.01 Lt (Radcliff)			413.7	
11-C	33,35	10+60.01 Rt (Radcliff)	10+75.0 Lt (Belmont)			210.5	
12-C	33,35,37	9+01.0 Rt (Mall Dr #2)	8+43.84 Lt (Lost Creek)		61	1542.5	
13-C	35,37	10+75.0 Rt (Belmont)	933+99.9 Lt			918.7	
14-C	37,39,41	934+44.6 Lt	10+71.35 Lt (Devonshire)		68	1192.7	
15-C	37,39,41	8+96.09 Rt (Lost Creek)	9+24.03 Lt (Mall Dr #3)		125	1218.3	
16-C	41	10+71.35 Rt (Devonshire)	946+74.10 Lt		65	68.5	
17-C	41	9+24.03 Rt (Mall Dr #3)	946+70.39 Rt		53	68.8	
18-C	79	991+54.3 Rt (SR 117)	991+63.4 Rt (SR 117)		9.1	9.1	
19-C	79	992+11.9 Rt (SR 117)	992+49.5 Rt (SR 117)		37.9	37.9	
20-C	79	993+34.0 Rt (SR 117)	993+61.8 Rt (SR 117)		28.5	28.5	
21-C	79	994+16.8 Rt (SR 117)	994+40.0 Rt (SR 117)		23.5	23.5	
			TOTALS CARRIED TO GENERAL SUMMARY	938	882	9464	130

CONCRETE MEDIAN-CM

REFERENCE	SHEET	STATION		609			
				CONCRETE MEDIAN	CONCRETE MEDIAN, AS PER PLAN		
NO.	NO.	FROM	TO	SQ YD	SQ YD		
1-CM	26-27	899+23 ℄	902+15 Lt	23.6	571.3		
2-CM	27,29	902+15 Rt	908+25 Lt	169.9	94.4		
3-CM	29,31,33	909+45 Rt	919+32 Lt	248.9	312.2		
			TOTALS CARRIED TO GENERAL SUMMARY	442	998		

WALK-W

REFERENCE	SHEET	STATION (ALONG FACE OF CURB WHERE APPLIES)		202	608				
				WALK REMOVED	6" CONCRETE WALK	CURB RAMP, TYPE B1	CURB RAMP, TYPE B1, AS PER PLAN	CURB RAMP, TYPE B2, AS PER PLAN	CURB RAMP, TYPE B3, AS PER PLAN
NO.	NO.	FROM	TO	SQ FT	SQ FT	SQ FT	SQ FT	SQ FT	SQ FT
1-W	27	904+00 Lt	905+28.6 Lt		466.7				74.5
2-W	27,29	905+71.6 Lt	908+87.2 Lt		1375.0				137.4
3-W	27	904+00 Rt	904+42.4 Rt		134.7				80.5
4-W	27,29	905+01.2 Rt	908+22.4 Rt		1345.1	108.8			80.5
5-W	29	10+45.6 Rt (Willard)	909+45.1 Lt			80.5		133.3	
6-W	29,31	909+33.6 Rt	915+40.0 Rt		2648.3	100.5			74.5
7-W	31	917+77.5 Lt	917+81.8 Lt	7	6.8				
8-W	31,33	915+88.2 Rt	919+35.2 Rt		1250.4				162.5
9-W	33	919+36.5 Lt	919+54.8 Lt		32.6				62.9
10-W	33	10+44.0 Rt (Holyoke)	920+14.5 Lt			80.0		233.2	
11-W	33	919+98.4 Rt	921+69.3 Rt		822.2	146.8			
12-W	33,35	922+72.4 Rt	924+44.7 Rt		886.8				
13-W	35,37	925+47.8 Rt	931+64.9 Rt		2234.9				
14-W	37	933+69.7 Lt	933+88.2 Lt			158.0			
15-W	37,39,41	934+68.4 Lt	9+58.7 Lt (Devonshire)	53	5498.3	97.9		263.4	
16-W	37	932+02.5 Rt	8+86.2 Lt (Lost Creek)	120	1212.2			138.2	
17-W	37,39,41	9+23.8 Rt (Lost Creek)	945+81.7 Rt	88	6008.7	124.6		260.5	
18-W	41	10+59.8 Rt (Devonshire)	946+56.4 Lt	52	6.0	86.3		145.2	
19-W	41-43	946+38.9 Rt	949+03.8 Rt		1376.4		129.9		
20-W	43	949+39.2 Rt	952+09.0 Rt		1446.2				
			TOTALS CARRIED TO GENERAL SUMMARY	320	26,751	983	130	1174	673

CALCULATED NJV
CHECKED MCR

CURB AND WALK SUBSUMMARIES

ALL-117/309-18.65/15.17

I:\pd\75467\roadway\sheets\75467G0003.dgn 17-SEP-2012 10:52AM nvondere

ROADWAY-R

REFERENCE NO.	SHEET NO.	STATION FROM	STATION TO	202 CONCRETE BASE REMOVED SQ YD	202 TRAFFIC ISLAND REMOVED SQ YD	202 GUARDRAIL REMOVED FT	202 FENCE REMOVED FT	202 REMOVAL MISC.: BUSINESS SIGN REMOVED EACH	202 REMOVAL MISC.: INFORMATION SIGN REMOVED EACH	202 REMOVAL MISC.: LIGHT POLE REMOVED* EACH	202 REMOVAL MISC.: WOOD POST REMOVED EACH	202 REMOVAL MISC.: STEEL POST REMOVED EACH	202 REMOVAL MISC.: BRICK POST REMOVED EACH	202 REMOVAL MISC.: YARD LAMP REMOVED EACH	202 REMOVAL MISC.: AIR PUMP REMOVED EACH	202 REMOVAL MISC.: CONCRETE FOUNDATION REMOVED EACH	202 REMOVAL MISC.: TIMBER REMOVED FT	604 MONUMENT ASSEMBLY, AS PER PLAN EACH
1-R	27	904+59.2 Lt						1										
2-R	27	906+10.3 Lt															5	
3-R	27	904+39.0 Rt	904+56.8 Rt														32	
4-R	29	907+39.4 Lt								1								
5-R	29	907+87.3 Lt	908+07.2 Lt	1								4			1			
6-R	29	908+55.6 Lt	908+79.39 Lt							1		1						1
7-R	29	909+06.58 Lt	909+44.7 Lt								2							1
8-R	29	910+20.76 Lt																1
9-R	29	912+27.82 Lt																1
10-R	31	917+72.8 Lt														1		
11-R	31	912+83.5 Rt						1										
12-R	31	913+43.8 Rt						1										
13-R	31	914+40.6 Rt	914+77.3 Rt					2										
14-R	31	916+02.3 Rt						1										
15-R	31	916+93.6 Rt						1										
16-R	33	921+89.4 Rt										1						
17-R	35	929+35.7 Lt	929+46.8 Lt				22											
18-R	37	933+75.6 Lt							1									
19-R	37	931+76.9 Rt	931+94.9 Rt		20													
20-R	39	936+44.0 Lt																1
21-R	39	936+82.2 Lt										1						
22-R	39	936+75.3 Lt	937+07.3 Lt				31						1					
23-R	39,41	937+26.8 Lt	942+75.2 Lt				546						1					
24-R	39	938+32.3 Lt	940+96.4 Lt			264												
25-R	41	942+86.9 Lt	943+32.9 Lt				9							2				
26-R	41	943+05.4 Lt	943+33.2 Lt														17	
27-R	41	944+95.2 Lt	944+99.07 Lt	1														
28-R	43	949+90.5 Rt							1									
29-R	43	951+26.9 Rt							1									
30-R	45	962+06.64 ℄																1
31-R	45	963+06.59 ℄																1
32-R	79	992+19.8 Lt						1										
TOTALS CARRIED TO GENERAL SUMMARY				2	20	264	622	8	3	2	2	7	2	2	1	1	54	7

* Includes Removal of Pole, Lamp, Wire & Foundation

MAILBOX-M

REFERENCE NO.	SHEET NO.	PROPOSED LOCATION STATION	690 MAILBOX SUPPORT EACH	690 MAILBOX REMOVED AND RESET EACH
1-M	27	906+26.6 Rt	1	1
2-M	29	909+67.0 Lt	1	1
3-M	29	910+82.3 Lt	1	1
4-M	31	916+15.0 Lt	1	1
5-M	31	918+03.7 Lt	1	1
		918+10.3 Lt	1	1
6-M	31	914+98.0 Rt	1	1
7-M	31	916+83.9 Rt	1	1
8-M	33	922+12.4 Lt	1	1
9-M	33	918+95.0 Rt	1	1
10-M	35	927+21.9 Lt	1	1
11-M	35	927+82.9 Lt	1	1
12-M	35	928+33.8 Lt	1	1
13-M	35	929+38.8 Lt	1	1
14-M	37	930+59.9 Lt	1	1
15-M	37	931+53.5 Lt	1	1
16-M	39	937+02.5 Lt	1	1
17-M	41	942+67.7 Lt	1	1
TOTALS TO GENERAL SUMMARY			18	18

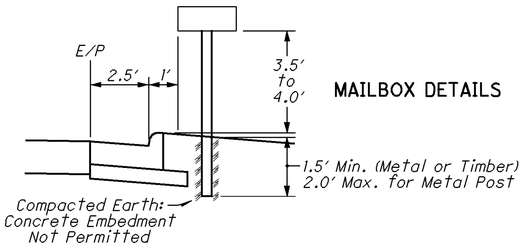

MAILBOX DETAILS

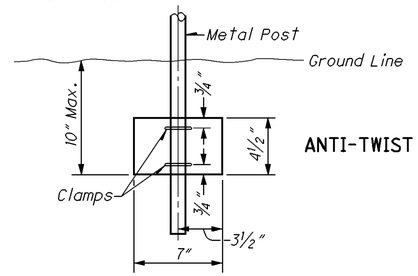

ANTI-TWIST PLATE

CALCULATED NJV
CHECKED MCR

ROADWAY SUBSUMMARY

ALL-117/309-18.65/15.17

I:\pd\75467\roadway\sheets\75467GQ004.dgn 17-SEP-2012 10:52AM nvondere

DRAINAGE-D				202						601		603														FOR INFO ONLY
REFERENCE	SHEET	STATION *SR 117 Stationing		PIPE REMOVED, 24" AND UNDER	PIPE REMOVED, OVER 24"	MANHOLE REMOVED	CATCH BASIN REMOVED	INLET REMOVED		TIED CONCRETE BLOCK MAT, TYPE 1		4" CONDUIT, TYPE B		4" CONDUIT, TYPE F FOR UNDERDRAIN OUTLET	6" CONDUIT, TYPE C		8" CONDUIT, TYPE C		10" CONDUIT, TYPE C	12" CONDUIT, TYPE B	12" CONDUIT, TYPE C	12" CONDUIT, TYPE C, 706.02	12" CONDUIT, TYPE D	12" CONDUIT, TYPE F	12" CONDUIT, TYPE F, 707.05, TYPE C OR 707.21	15" CONDUIT, TYPE B	BENDS AND BRANCHES
NO.	NO.	FROM	TO	FT	FT	EACH	EACH	EACH		SQ YD		FT		FT	FT		FT		FT	FT	FT	FT	FT	FT	FT	FT	SIZE-TYPE
1-D	27	904+00 Lt	906+04 Lt																	53						204	
2-D	27,29	906+04 Lt	908+80 Lt									15		20							6					276	
3-D	27	904+25 Rt	904+87.9 Rt	23			1													34	28						
4-D	27	905+34 Rt	905+57 Rt	21			2					15		10							9						
5-D	27	906+63 Rt																		20							
6-D	29	908+80 Lt	909+60 Lt	10										17						140							6"x30°
7-D	29	909+60 Lt	912+15 Lt									15		10						255	6						
8-D	29,31	912+15 Lt	913+08 Lt									15		10						135							
9-D	29	907+05 Rt												10							11						
10-D	29	907+53 Rt	990+56 Rt*	142			5					15		20							55						
11-D	29	990+15 Lt*	990+37.5 Lt*	7	10		1					24		20							8						
12-D	29,31	909+13 Rt	913+15 Rt	372			3	1				15		20						225	177	14					
13-D	31	914+74.7 Lt	915+77 Lt	35			1					20		10			5			120							4"x45°
14-D	31	915+77 Lt	917+66 Lt									15		10						189							
15-D	31,33	917+66 Lt	919+30 Lt																	164	6						12"x45°
16-D	31	913+94 Rt	915+06 Rt	112				2												133							12"x12"x12"x45° Wye
17-D	31,33	915+06 Rt	919+02 Rt	390			5	3				57									25					82	4"x45°
18-D	33	919+30 Lt	922+03 Lt									15		10						32	102						
19-D	33	922+03 Lt	923+49 Lt	4			1													19	42						
20-D	33,35	923+49 Lt	924+89	115		1														18		16					
21-D	33	919+02 Rt	922+20 Rt	315			1	1													9						
22-D	33,35	922+20 Rt	924+89 Rt	264		1	1					15		10						25	24						
23-D	35	924+89 Lt	925+79 Lt											10						23	50						
24-D	35	925+79 Lt	928+54 Lt									15		10							9						
25-D	35,37	928+54 Lt	931+20 Lt									15		20							272						
26-D	35	924+89 Rt	928+50 Rt	226			1					15		40						37	64						
27-D	35,37	928+50 Rt	930+59 Rt	105			1					15		10	28		8		14	186	33						6"x45° 8"x45° 10"x10"x8"x45° Wye
28-D	37	932+91.8 Lt	936+34 Lt	6				2						10						48	214						12"x15°
29-D	37	931+54 Rt	932+14 Rt	88																			60				
30-D	37	933+93 Rt	935+60 Rt	2			1							10						170							
31-D	37,39	935+60 Rt	938+60 Rt									15		30							419						
32-D	39	936+34 Lt	939+94.4 Lt	46				1				30		30						90	338				41		
33-D	39,41	939+95 Lt	946+31 Lt	52			1					15		20						38	640			10			12"x30°
34-D	39,41	938+60 Rt	945+84 Rt									15		20							768						12"x15°
35-D	43	949+95 Lt								2				20													4"x4"x4" Tee
36-D	43	948+96 Rt	949+86.5 Rt	109			1							20			5						90				4"x4"x4" Tee
37-D	45	960+40.9 Rt																									
38-D	79	991+95 Lt*	992+05 Lt*		10																12						
39-D	79	992+42.5 Lt*		4			1															5					
TOTALS CARRIED TO GENERAL SUMMARY				2448	20	2	27	10		2		371		410	45		18		14	2154	3327	35	150	10	41	562	

CALCULATED NJV
CHECKED MCR

DRAINAGE SUBSUMMARY

ALL-117/309-
18.65/15.17

I:\pd\75467\roadway\sheets\75467GQ005.dgn 17-SEP-2012 10:52AM nvondere

DRAINAGE-D (CONTINUED)

REFERENCE	SHEET	STATION		603												604												835
		*SR 117 Stationing		15" CONDUIT, TYPE C	15" CONDUIT, TYPE F	18" CONDUIT, TYPE B	18" CONDUIT, TYPE C	18" CONDUIT, TYPE C, 706.02	21" CONDUIT, TYPE B	24" CONDUIT, TYPE B	27" CONDUIT, TYPE B	27" CONDUIT, TYPE C	30" CONDUIT, TYPE C, 706.02	33" CONDUIT, TYPE B		CATCH BASIN, NO. 3	CATCH BASIN, NO. 3A	CATCH BASIN, NO. 6	CATCH BASIN, NO. 2-2B	CATCH BASIN, NO. 2-3	CATCH BASIN ADJUSTED TO GRADE	INLET, SIDE DITCH	MANHOLE, NO. 3	MANHOLE, NO. 3, AS PER PLAN	MANHOLE ADJUSTED TO GRADE	MANHOLE ADJUSTED TO GRADE, AS PER PLAN	PRECAST REINFORCED CONCRETE OUTLET	EXFILTRATION TRENCH, TYPE A
NO.	NO.	FROM	TO	FT	FT	FT	FT	FT	FT	FT	FT	FT	FT	FT		EACH	EACH	EACH	EACH	EACH	EACH	EACH	EACH	EACH	EACH	EACH	EACH	FT
1-D	27	904+00 Lt	906+04 Lt															2						1		1		
2-D	27,29	906+04 Lt	908+80 Lt														2						1			1		8
3-D	27	904+25 Rt	904+87.9 Rt					10									2						1			2		
4-D	27	905+34 Rt	905+57 Rt					10								1							1					8
5-D	27	906+63 Rt																	1		1							
6-D	29	908+80 Lt	909+60 Lt														1							1		2		
7-D	29	909+60 Lt	912+15 Lt														1						1			1		8
8-D	29,31	912+15 Lt	913+08 Lt														1	1	1					1				8
9-D	29	907+05 Rt														1									1			
10-D	29	907+53 Rt	990+56 Rt*													1												8
11-D	29	990+15 Lt*	990+37.5 Lt*										10			1							1					8
12-D	29,31	909+13 Rt	913+15 Rt			48											2		3							1		8
13-D	31	914+74.7 Lt	915+77 Lt														3		1							1		
14-D	31	915+77 Lt	917+66 Lt																					1		1		8
15-D	31,33	917+66 Lt	919+30 Lt													1							1			1		
16-D	31	913+94 Rt	915+06 Rt																1									
17-D	31,33	915+06 Rt	919+02 Rt			98	33		68	120						1		1	2	1		1						8
18-D	33	919+30 Lt	922+03 Lt			273										1		2	1			1		1		2		8
19-D	33	922+03 Lt	923+49 Lt							146							2					1	1			1		
20-D	33,35	923+49 Lt	924+89			140					95						1						1	1		1		
21-D	33	919+02 Rt	922+20 Rt								171	147				1		1		1			1			1		
22-D	33,35	922+20 Rt	924+89 Rt						89					180		1		1		1			1			1		8
23-D	35	924+89 Lt	925+79 Lt			90										1	1											
24-D	35	925+79 Lt	928+54 Lt	275												1							1			2		8
25-D	35,37	928+54 Lt	931+20 Lt													1	1					1	2			1		8
26-D	35	924+89 Rt	928+50 Rt			131			230							2		2	1					1				8
27-D	35,37	928+50 Rt	930+59 Rt													1			2				1					8
28-D	37	932+91.8 Lt	936+34 Lt													1		1				1				3		
29-D	37	931+54 Rt	932+14 Rt																									
30-D	37	933+93 Rt	935+60 Rt														1								1			
31-D	37,39	935+60 Rt	938+60 Rt													2	1						2					8
32-D	39	936+34 Lt	939+94.4 Lt	35	10											2	1		2				1		1			16
33-D	39,41	939+95 Lt	946+31 Lt														4		3									8
34-D	39,41	938+60 Rt	945+84 Rt													2	1						2					8
35-D	43	949+95 Lt																									1	
36-D	43	948+96 Rt	949+86.5 Rt					17											1									
37-D	45	960+40.9 Rt																			1							
38-D	79	991+95 Lt*	992+05 Lt*										10					1					1					
39-D	79	992+42.5 Lt*																1								1		
TOTALS CARRIED TO GENERAL SUMMARY				310	10	780	33	37	387	266	266	147	20	180		22	25	13	19	3	2	5	20	7	3	23	1	160

CALCULATED NJV
CHECKED MCR

DRAINAGE SUBSUMMARY

ALL-117 / 309-
18.65 / 15.17

I:\pd\75467\roadway\sheets\75467G0006.dgn 17-SEP-2012 10:52AM nvondere

EARTHWORK

SHEET	LOCATION	203 EXCAVATION	203 EMBANKMENT	204 EXCAVATION OF SUBGRADE	204 GRANULAR MATERIAL, TYPE B	204 GEOTEXTILE FABRIC	690 SEEDING AND MULCHING
NO.	ROUTE	CU YD	CU YD	CU YD	CU YD	SQ YD	SQ YD
46	SR 117/SR 309	114	15	84	84	252	75
47	SR 117/SR 309	620	120	370	370	1110	360
48	SR 117/SR 309	421	82	344	344	1031	310
49	SR 117/SR 309	1086	134	1044	1044	3133	430
50	SR 309	226	154	87	87	260	684
51	SR 309	221	203	80	80	241	881
52	SR 309	115	73	75	75	225	275
53	SR 309	322	108	182	182	546	743
54	SR 309	188	161	58	58	171	407
55	SR 309	194	209	81	81	245	527
56	SR 309	340	97	182	182	545	718
57	SR 309	305	80	209	209	628	670
58	SR 309	287	53	172	172	515	347
59	SR 309	109	245				648
60	SR 309	122	202				696
61	SR 309	139	350				897
62	SR 309	50	229				439
63	SR 309	95	286				613
64	SR 309	296	179	213	213	638	585
65	SR 309	234	156	129	129	388	606
66	SR 309	184	72				616
67	SR 309	133	373				867
68	SR 309	316	765				1080
69	SR 309	694	1778				1318
70	SR 309	470	1365				1499
71	SR 309	159	103				668
72	SR 309	160	265				1114
73	SR 309	153	74				609
74	SR 309	656	41				915
75	SR 309	218	228				909
76	SR 309	290	30				590
77	SR 309	115	39				303
80	Willard Ave	121	15				116
81	SR 117	245	26	174	174	524	282
82	SR 117	404	26				191
83	SR 117	38	70				354
TOTALS TO GEN SUM		9840	8406	3484	3484	10,452	22,342

CULVERT-CV

REFERENCE	SHEET	STATION FROM	STATION TO	512 TYPE 2 WATERPROOFING	601 ROCK CHANNEL PROTECTION, TYPE B, W/FILTER	602 CONCRETE MASONRY	603 60" CONDUIT, TYPE C, 706.02
NO.	NO.			SQ YD	CU YD	CU YD	FT
1-CV	39	939+81.5 Lt	940+08 Lt	6	18	14.8	16
TOTALS CARRIED TO GENERAL SUMMARY				6	18	14.8	16

ITEM 512 - TYPE 2 WATERPROOFING

TYPE 2 WATERPROOFING SHALL BE APPLIED AND CENTERED ALONG THE JOINTS BETWEEN THE PROPOSED AND EXISTING CULVERT SECTIONS AND SHALL EXTEND AROUND ALL SIDES FOR THE PORTIONS OF THE CULVERT WHICH SHALL BE IN CONTACT WITH THE BACKFILL. THE EXTERIOR JOINT GAP AROUND THE CULVERT SECTIONS SHALL BE FILLED WITH PORTLAND CEMENT MORTAR PRIOR TO INSTALLING THE TYPE 2 WATERPROOFING. JOINT WRAP AS SPECIFIED IN 603.08 AND 603.09 AND CONCRETE SEALING AS SPECIFIED IN 603.08 ARE NOT REQUIRED UNDER THE LIMITS OF THE TYPE 2 WATERPROOFING.

PAYMENT WILL BE AT THE CONTRACT BID PRICE PER SQUARE YARD FOR ITEM 512 - TYPE 2 WATERPROOFING.

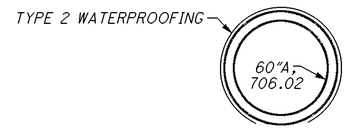

CALCULATIONS

SEEDING AND MULCHING = 22,342 SQ YD

659 COMMERCIAL FERTILIZER
(22,342)(9)(1/1000)(30)(1/2000) = 3.02 TON

659 WATER
(2)(22,342)(9)(1/1000)(300)(1/1000) = 121 M GAL

TOTALS CARRIED TO GENERAL SUMMARY

SHALLOW PIPE UNDERDRAINS

SHEET	STATION FROM *SR 117 Stationing	STATION TO *SR 117 Stationing	DEPTH	605 4" BASE PIPE UNDERDRAINS
NO.			INCH	FT
27	904+00 Lt	905+99 Lt	18	199
27,29	906+14 Lt	909+55 Lt	18	341
29	907+89.6 Lt	908+52 Lt	18	63
29,31	909+70 Lt	912+80 Lt	18	310
31	912+95 Lt	914+97 Lt	18	202
31	915+12 Lt	917+56 Lt	18	244
31,33	917+71 Lt	921+93 Lt	18	422
33,35	922+08 Lt	925+69 Lt	18	361
35	925+89 Lt	928+49 Lt	18	260
35,37	928+64 Lt	930+92 Lt	18	228
37,39	931+07 Lt	936+24 Lt	18	517
39	936+39 Lt	938+50 Lt	18	211
39	938+70 Lt	939+45 Lt	18	75
39,41	939+60 Lt	941+95 Lt	18	235
41	942+10 Lt	943+55 Lt	18	145
41,43	943+70 Lt	951+10 Lt	18	740
27	904+00 Rt	905+34 Rt	18	134
27,29	905+49 Rt	907+00 Rt	18	151
27,68	907+15 Rt	990+00.4 Rt*	18	147
68	990+20 Rt*	991+22.7 Rt*	18	104
68	990+25.1 Lt*	991+95 Lt*	18	170
29,68	990+05.3 Lt*	909+55.5 Rt	18	63
29	909+70.1 Rt	912+27 Rt	18	258
29,31,33	912+42 Rt	922+19 Rt	18	977
33	922+34 Rt	923+90 Rt	18	156
33,35	924+05 Rt	924+95 Rt	18	90
35	925+20 Rt	926+15 Rt	18	100
35	926+30 Rt	928+13 Rt	18	183
35,37	928+28 Rt	930+31 Rt	18	203
37	930+46 Rt	935+50 Rt	18	504
37,39	935+65 Rt	937+60 Rt	18	195
39	937+75 Rt	938+50 Rt	18	75
39	938+70 Rt	939+45 Rt	18	75
39,41	939+60 Rt	942+45 Rt	18	285
41,43	942+60 Rt	951+94 Rt	18	935
TOTALS CARRIED TO GENERAL SUMMARY				9358

CALCULATED NJV
CHECKED MCR

MISCELLANEOUS SUBSUMMARIES

ALL-117/309-18.65/15.17

I:\pd\75467\roadway\sheets\75467G0007.dgn 17-SEP-2012 10:52AM nvondere

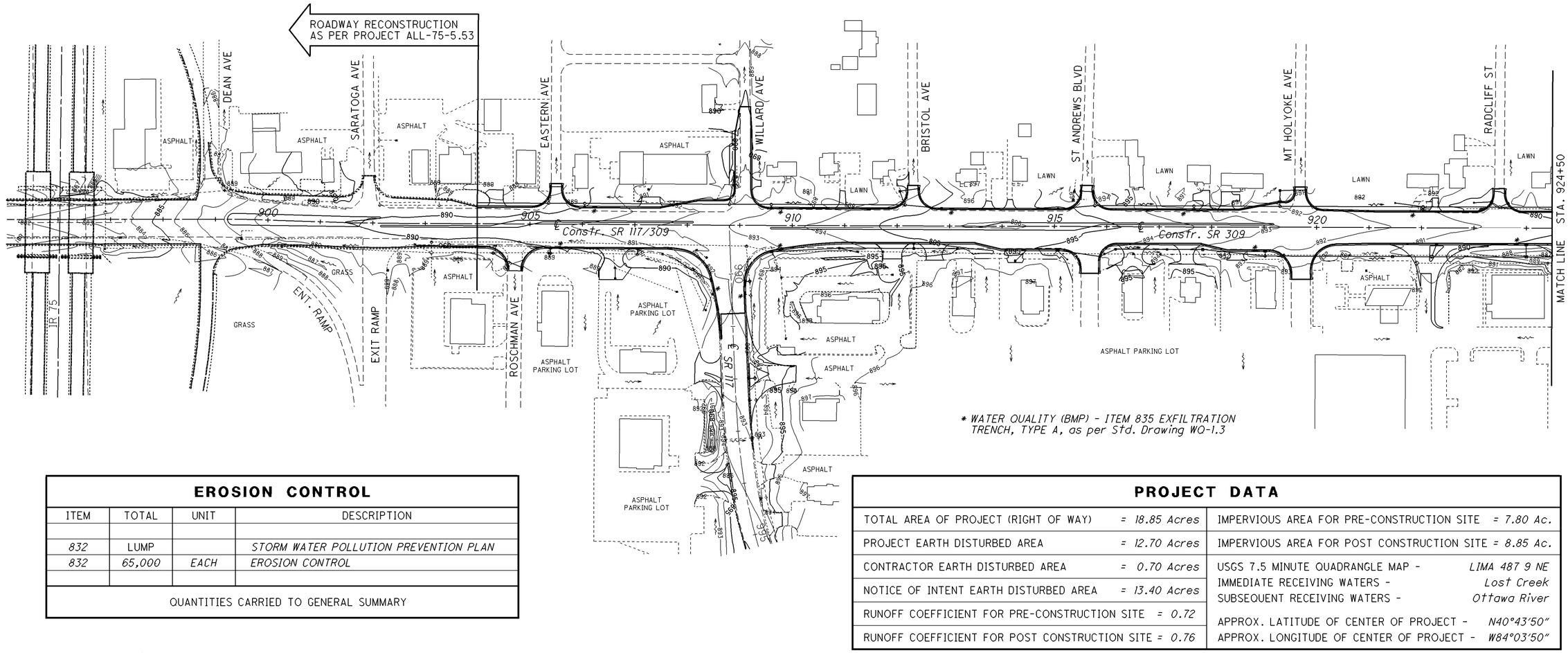

* WATER QUALITY (BMP) - ITEM 835 EXFILTRATION TRENCH, TYPE A, as per Std. Drawing WQ-1.3

EROSION CONTROL

ITEM	TOTAL	UNIT	DESCRIPTION
832	LUMP		STORM WATER POLLUTION PREVENTION PLAN
832	65,000	EACH	EROSION CONTROL

QUANTITIES CARRIED TO GENERAL SUMMARY

PROJECT DATA

TOTAL AREA OF PROJECT (RIGHT OF WAY) = 18.85 Acres	IMPERVIOUS AREA FOR PRE-CONSTRUCTION SITE = 7.80 Ac.
PROJECT EARTH DISTURBED AREA = 12.70 Acres	IMPERVIOUS AREA FOR POST CONSTRUCTION SITE = 8.85 Ac.
CONTRACTOR EARTH DISTURBED AREA = 0.70 Acres	USGS 7.5 MINUTE QUADRANGLE MAP - LIMA 487 9 NE
NOTICE OF INTENT EARTH DISTURBED AREA = 13.40 Acres	IMMEDIATE RECEIVING WATERS - Lost Creek
RUNOFF COEFFICIENT FOR PRE-CONSTRUCTION SITE = 0.72	SUBSEQUENT RECEIVING WATERS - Ottawa River
RUNOFF COEFFICIENT FOR POST CONSTRUCTION SITE = 0.76	APPROX. LATITUDE OF CENTER OF PROJECT - N40°43'50"
	APPROX. LONGITUDE OF CENTER OF PROJECT - W84°03'50"

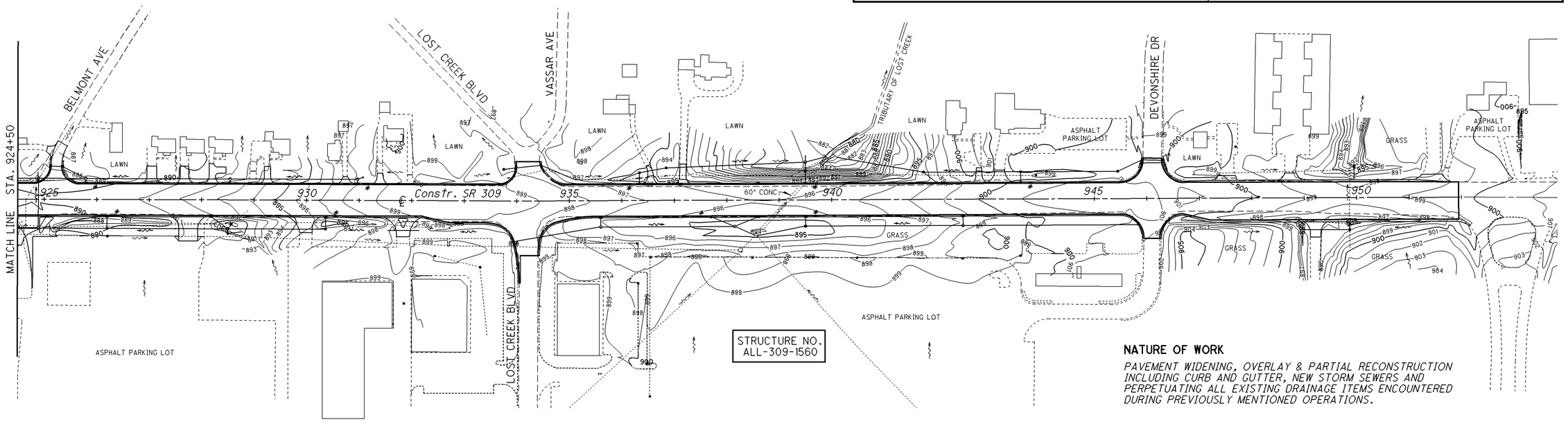

NATURE OF WORK

PAVEMENT WIDENING, OVERLAY & PARTIAL RECONSTRUCTION INCLUDING CURB AND GUTTER, NEW STORM SEWERS AND PERPETUATING ALL EXISTING DRAINAGE ITEMS ENCOUNTERED DURING PREVIOUSLY MENTIONED OPERATIONS.

HORIZONTAL SCALE IN FEET
0 50 100 200

PROJECT SITE PLAN

ALL-117/309-18.65/15.17

25
173

I:\pd\75467\roadway\sheets\75467DE001.dgn 17-SEP-2012 10:52AM nvondere

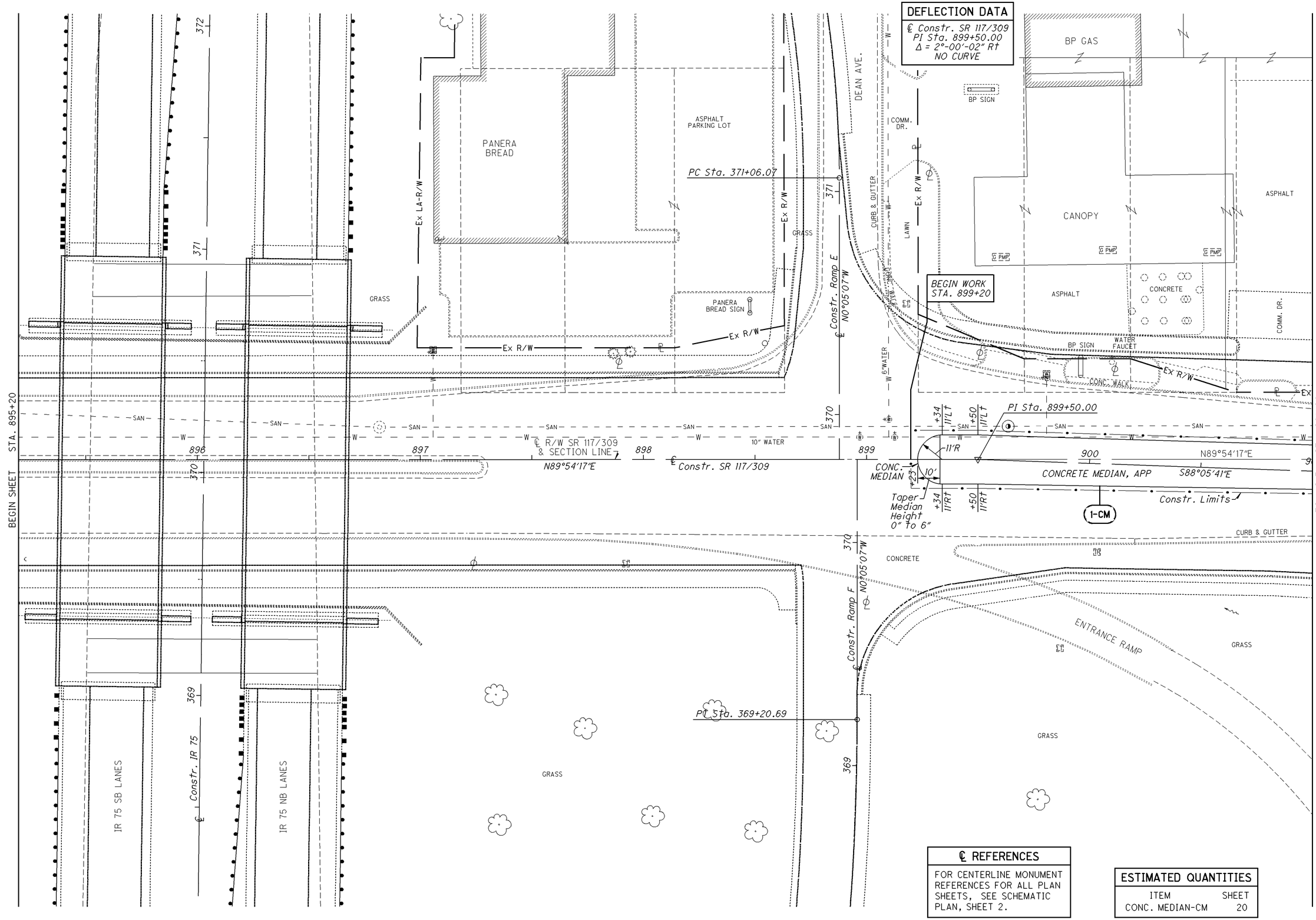

℄ REFERENCES

FOR CENTERLINE MONUMENT REFERENCES FOR ALL PLAN SHEETS, SEE SCHEMATIC PLAN, SHEET 2.

ESTIMATED QUANTITIES

ITEM	SHEET
CONC. MEDIAN-CM	20

HORIZONTAL SCALE IN FEET
0 10 20 40

CALCULATED NJV
CHECKED EJS

PLAN - SR 117/309
STA. 895+20 TO STA. 901+00

ALL-117/309-18.65/15.17

I:\pd\75467\roadway\sheets\75467GP001.dgn 17-SEP-2012 10:52AM nvondere

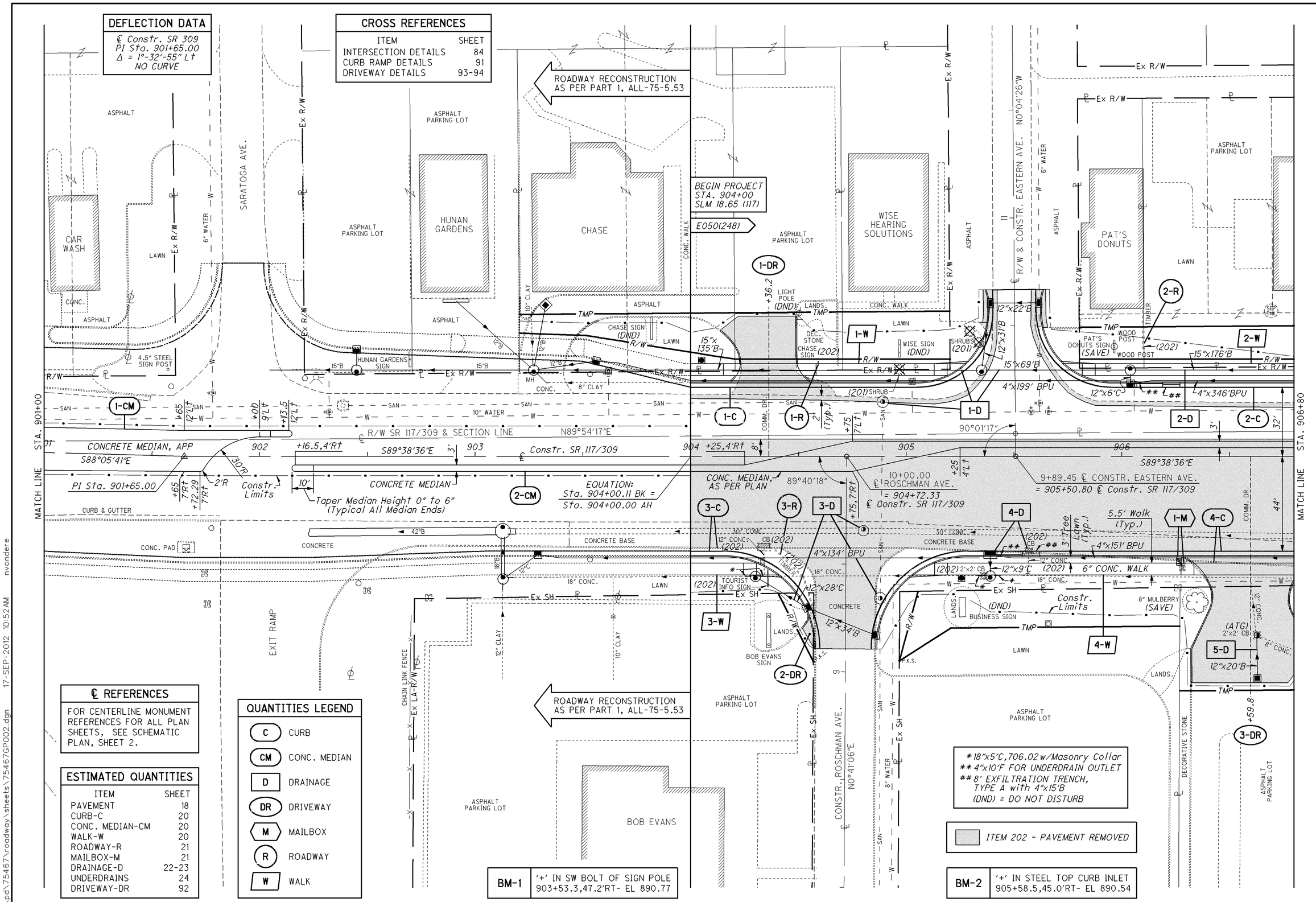

DEFLECTION DATA

℄ Constr. SR 309
PI Sta. 901+65.00
Δ = 1°-32'-55" Lt
NO CURVE

CROSS REFERENCES

ITEM	SHEET
INTERSECTION DETAILS	84
CURB RAMP DETAILS	91
DRIVEWAY DETAILS	93-94

℄ REFERENCES

FOR CENTERLINE MONUMENT REFERENCES FOR ALL PLAN SHEETS, SEE SCHEMATIC PLAN, SHEET 2.

ESTIMATED QUANTITIES

ITEM	SHEET
PAVEMENT	18
CURB-C	20
CONC. MEDIAN-CM	20
WALK-W	20
ROADWAY-R	21
MAILBOX-M	21
DRAINAGE-D	22-23
UNDERDRAINS	24
DRIVEWAY-DR	92

QUANTITIES LEGEND

C	CURB
CM	CONC. MEDIAN
D	DRAINAGE
DR	DRIVEWAY
M	MAILBOX
R	ROADWAY
W	WALK

BM-1 '+' IN SW BOLT OF SIGN POLE 903+53.3,47.2'RT- EL 890.77

BM-2 '+' IN STEEL TOP CURB INLET 905+58.5,45.0'RT- EL 890.54

* 18"x5'C,706.02w/Masonry Collar
** 4"x10'F FOR UNDERDRAIN OUTLET
\#\# 8' EXFILTRATION TRENCH, TYPE A with 4"x15'B
(DND) = DO NOT DISTURB

ITEM 202 - PAVEMENT REMOVED

HORIZONTAL SCALE IN FEET 0 10 20 40

CALCULATED NJV
CHECKED EJS

PLAN - SR 117/309 STA. 901+00 TO STA. 906+80

ALL-117/309-18.65/15.17

I:\pd\75467\roadway\sheets\75467GP002.dgn 17-SEP-2012 10:52AM nvondere

PROFILE - LEFT SIDE

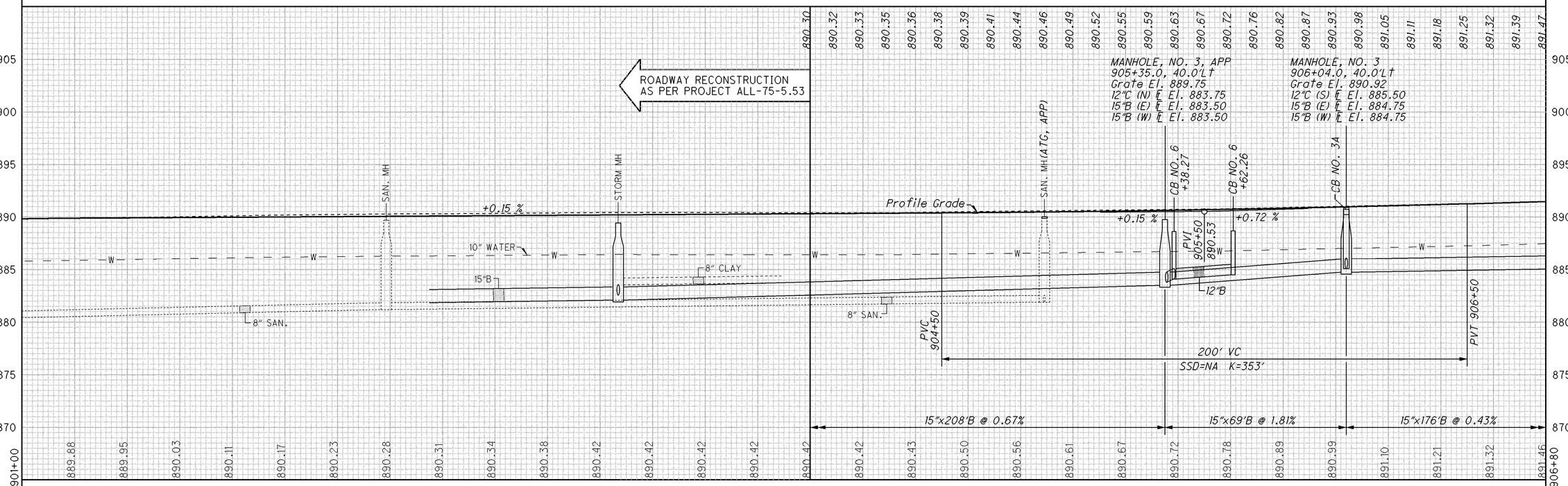

NOTE: For Proposed Drainage Callouts, See CROSS SECTIONS

PROFILE - RIGHT SIDE

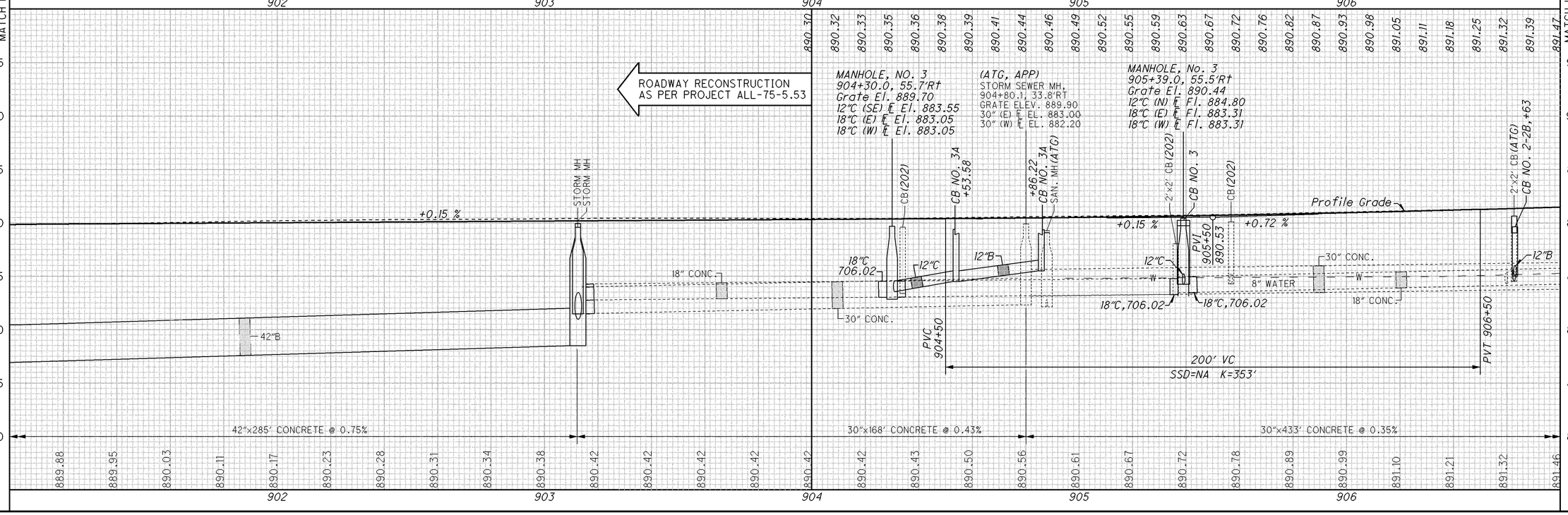

CALCULATED NJV
CHECKED EJS

PROFILE - SR 117/309 STA. 901+00 TO STA. 906+80

ALL-117/309-18.65/15.17

28
173

I:\pd\75467\roadway\sheets\75467GF002.dgn 17-SEP-2012 10:52AM nvondere

DEFLECTION DATA

℄ Constr. SR 309
PI Sta. 908+79.96
Δ = 0°-08'-48" Lt
NO CURVE

CROSS REFERENCES

ITEM	SHEET
INTERSECTION DETAILS	84-86
CURB RAMP DETAILS	91
DRIVEWAY DETAILS	93-95

ESTIMATED QUANTITIES

ITEM	SHEET
PAVEMENT	18
CURB-C	20
CONC. MEDIAN-CM	20
WALK-W	20
ROADWAY-R	21
MAILBOX-M	21
DRAINAGE-D	22-23
UNDERDRAINS	24
DRIVEWAY-DR	92

HORIZONTAL SCALE IN FEET
0 10 20 40

CALCULATED NJV
CHECKED EJS

PLAN - SR 117/309
STA. 906+80 TO STA. 912+60

ALL-117/309-
18.65/15.17

29
173

\\pd\75467\roadway\sheets\75467GP003.dgn 17-SEP-2012 10:52AM nvondere

* Masonry Collar ₸12"x6'C
\# Coupling Band
** 4"x10'F FOR UNDERDRAIN OUTLET
\## 8' EXFILTRATION TRENCH, TYPE A with 4"x15'B
\### 8' EXF, TYPE A with 4"x24'B
(DND) = DO NOT DISTURB

BM-3	PK NAIL SET IN PAVEMENT 908+03.1,35.8'RT - EL 891.94

ITEM 202 - PAVEMENT REMOVED

PROFILE - LEFT SIDE

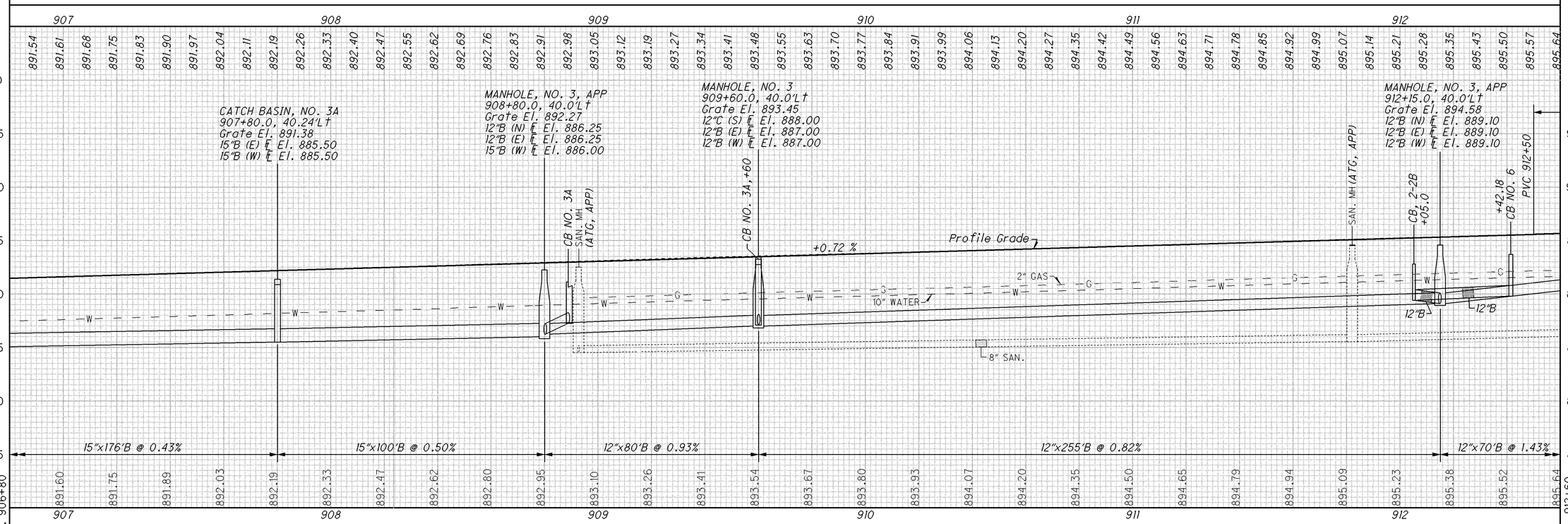

NOTE: For Proposed Drainage Callouts, See CROSS SECTIONS

PROFILE - RIGHT SIDE

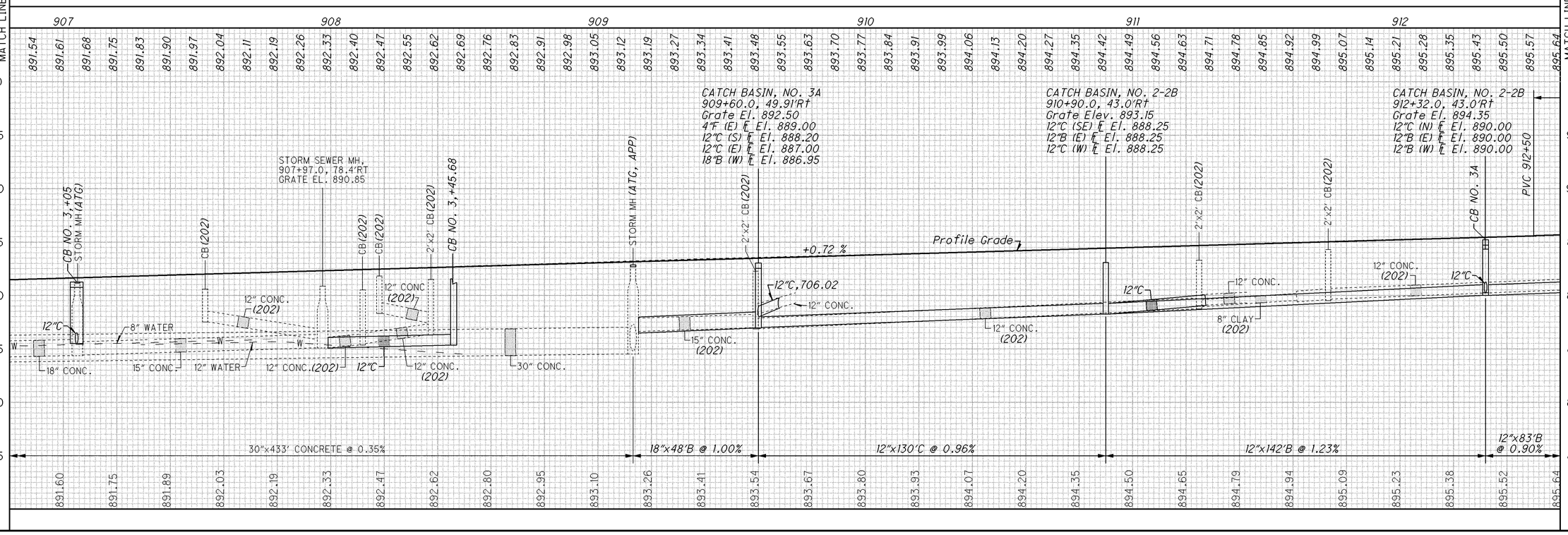

CALCULATED NJV
CHECKED EJS

PROFILE - SR 117 / 309
STA. 906+80 TO STA. 912+60

ALL-117 / 309-
18.65 / 15.17

30
173

I:\pd\75467\roadway\sheets\75467GF003.dgn 17-SEP-2012 10:52AM nvondere

BM-5	IRON PIN SET 915+34.9, 35.5'LT- EL 894.94

CROSS REFERENCES

ITEM	SHEET
INTERSECTION DETAILS	86
CURB RAMP DETAILS	91
DRIVEWAY DETAILS	93,95-96

ESTIMATED QUANTITIES

ITEM	SHEET
PAVEMENT	18
CURB-C	20
CONC. MEDIAN-CM	20
WALK-W	20
ROADWAY-R	21
MAILBOX-M	21
DRAINAGE-D	22-23
UNDERDRAINS	24
DRIVEWAY-DR	92

HORIZONTAL SCALE IN FEET (0, 10, 20, 40)

CALCULATED NJV CHECKED EJS

PLAN - SR 309
STA. 912+60 TO STA. 918+40

ALL-117/309-18.65/15.17

31/173

MATCH LINE STA. 912+60

MATCH LINE STA. 918+40

GARAGE; GARAGE; RESIDENCE; CONC.; ASPHALT; RES.; WALK; LAWN; 6" WATER; Ex R/W; 2" GAS; 8" PLASTIC; R/W & CONSTR. ST. ANDREWS BLVD.; N01°53'04"E; LANDSCAPING; LANDS.; RESIDENCE; RES.; 14" BLUE SPRUCE (201); 18" ELM (201); 24" MAPLE (201); 2'x21 CB (202); 3" IRON STUB (202); 10" WATER; R/W SR 309; S89°47'24"E; SECTION LINE; CONCRETE MEDIAN; CONCRETE MEDIAN, APP; Constr. SR 309; Constr. Limits; 9+84.99 ℄ CONSTR. ST. ANDREWS BLVD. = 915+61.13 ℄ Constr. SR 309; 10+00.00 = 915+67.79; 89°19'32"; 89°56'05"; CONSTR. MALL DR. #1 ℄ N0°08'41"E; 8"x5'C with Coupling Band; 12"x23'B; 4"x45°; 4" PLAS.; 12"x27'B; 12"x70'B; 4"x202' BPU; 4"x244' BPU; 4"x422' BPU; 4"x977' BPU; 12"x189'B; 12"x164'B; 12"x83'B; 12"x114'B; 12"x45°; 12"x25'C; 18"X98'B; 21"X68'B; 24"X120'B; 15"X82'B; 2'x2' CB (202); 12" PVC; 12" CLAY; 12" INLET (202); 24"CB (202); 30"CB (202); 6" CONC. WALK; Plug; ENTER SIGN (202); EXIT SIGN (202); CAPTAIN D'S SIGN (DND); SKYLINE CHILI SIGN (DND); EASTSIDE SIGN (DND); TACO BELL SIGN; EASTGATE PLAZA SIGN (DND); STEEL POSTS (DND); (DND) LIGHT POLE; SIGN (SAVE); STONE; ASPHALT; ASPHALT PARKING LOT; CONCRETE PARKING LOT; SKYLINE CHILI; CAPTAIN D'S; WENDY'S; EASTSIDE INS. AGENCY; CONCRETE; 2' (Typ.); 2'x33'C; 2'x2' CB (202); 12"x6'C; 12"x12"x12"x45° Wye; 4"x10'F FOR UNDERDRAIN OUTLET; 8' EXFILTRATION TRENCH, TYPE A with 4"x15'B; $ 4"X42'B,706.02 with 4"X45° & Concrete Masonry; (DND) = DO NOT DISTURB; ITEM 202 - PAVEMENT REMOVED; 10-DR; 11-DR; 12-DR; 13-DR; 14-DR; 15-DR; 16-DR; 17-DR; 10-R; 11-R; 12-R; 13-R; 14-R; 15-R; 16-D; 17-D; 8-D; 12-D; 13-D; 14-D; 15-D; 6-C; 7-C; 8-C; 9-C; 3-CM; 4-M; 5-M; 6-M; 7-M; 6-W; 7-W; 8-W; +74.6; +15.0; +00; +35; +00,7'Lt; +50,4'Rt; +55 32'Rt; +05 44'Rt; +70.7; +25.7; +80; +90,4'Lt; +40,7'Rt; +90.0; +28.0; +30; +50.6; +52.9; 912; 913; 914; 915; 916; 917; 918; 32'; 44'; 15'; 5.5'; 8'; 3'; 2'

BM-4	MINE SPIKE IN POWER POLE 913+06.0, 58.8'RT- EL 896.12

I:\pd\75467\roadway\sheets\75467GP004.dgn 17-SEP-2012 10:52AM nvondere

PROFILE - LEFT SIDE

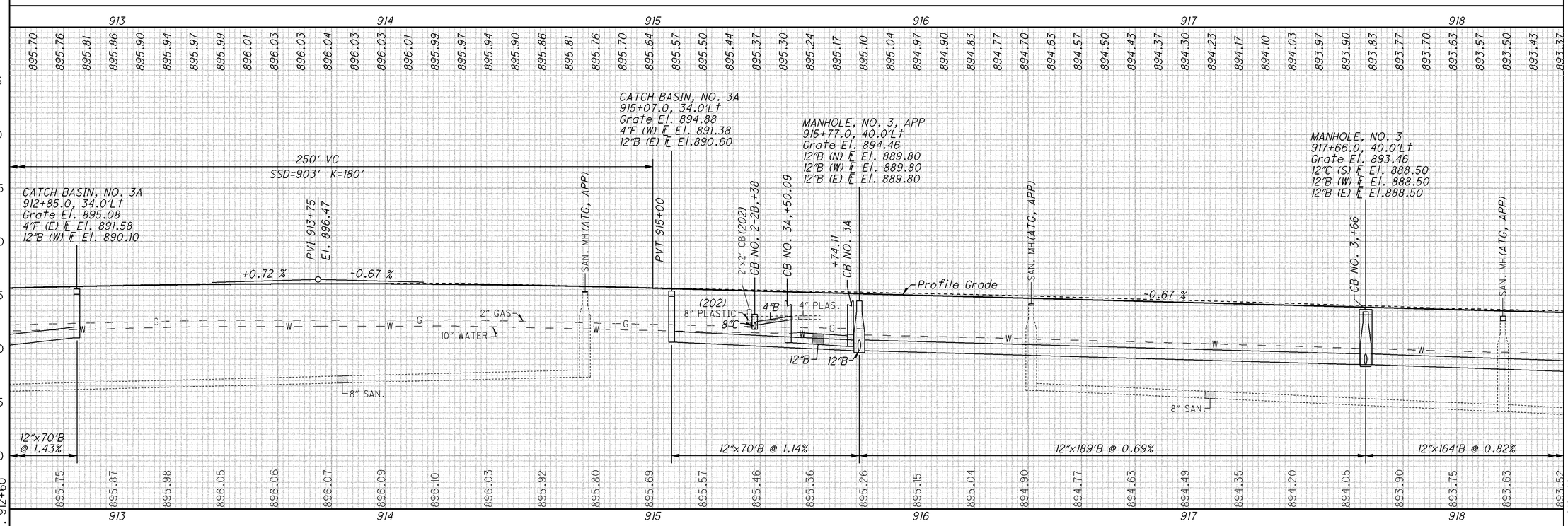

NOTE: For Proposed Drainage Callouts, See CROSS SECTIONS

PROFILE - RIGHT SIDE

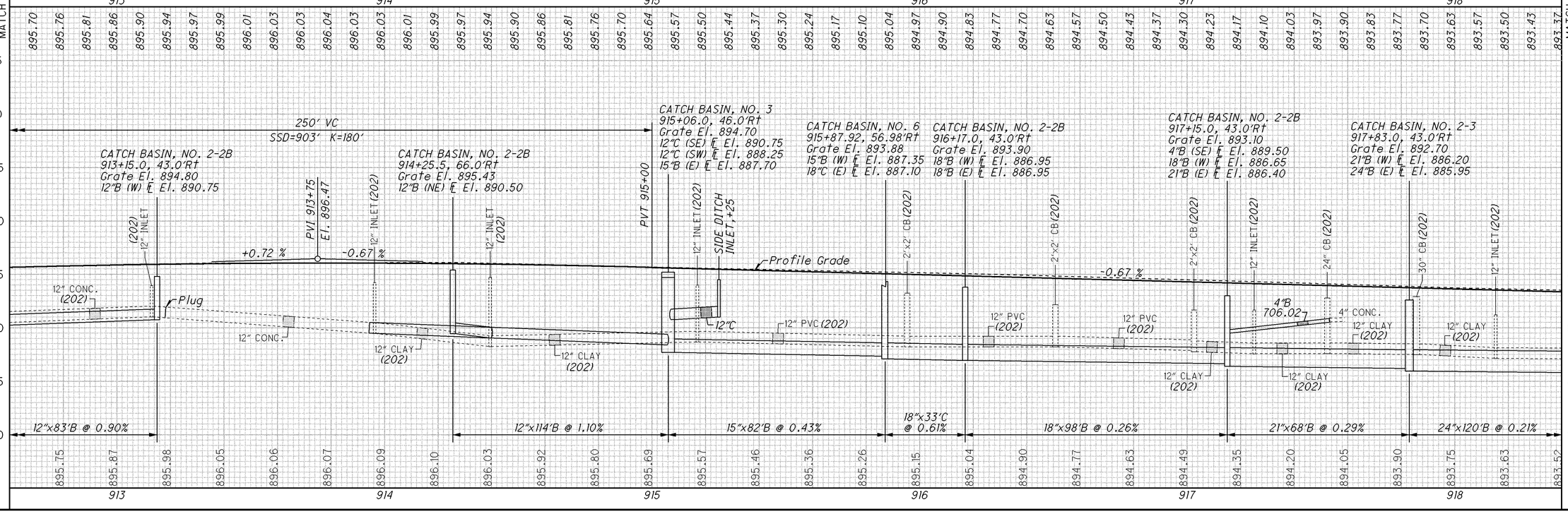

MATCH LINE STA. 912+60

MATCH LINE STA. 918+40

CALCULATED NJV
CHECKED EJS

PROFILE
STA. 912+60 TO STA. 918+40

ALL-117/309-18.65/15.17

32
173

I:\pd\75467\roadway\sheets\75467GF004.dgn 17-SEP-2012 10:52AM nvondere

ESTIMATED QUANTITIES

ITEM	SHEET
PAVEMENT	18-19
CURB-C	20
CONC. MEDIAN-CM	20
WALK-W	20
ROADWAY-R	21
MAILBOX-M	21
DRAINAGE-D	22-23
UNDERDRAINS	24
DRIVEWAY-DR	92

CROSS REFERENCES

ITEM	SHEET
INTERSECTION DETAILS	87
CURB RAMP DETAILS	91
DRIVEWAY DETAILS	93,96-97

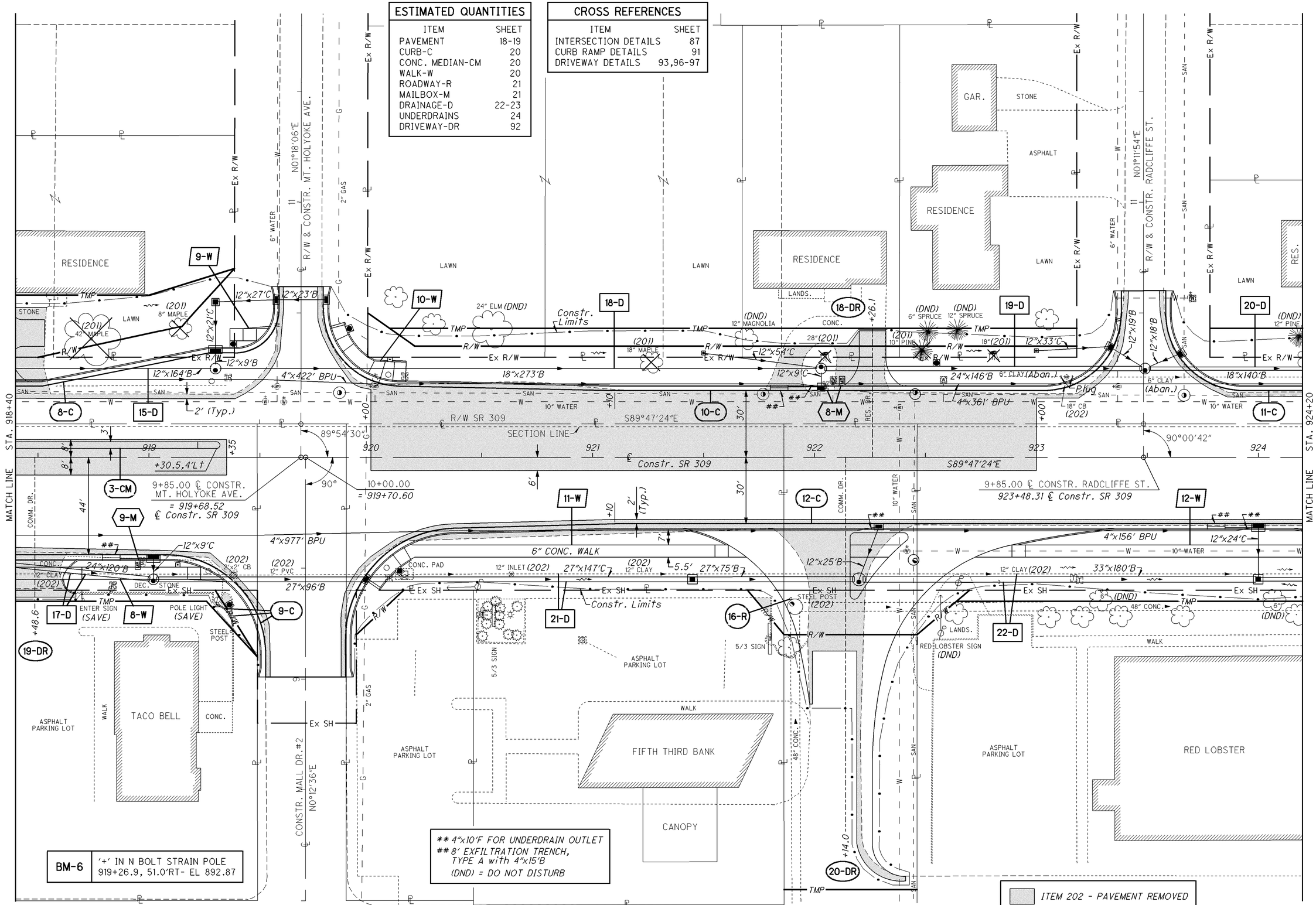

BM-6	'+' IN N BOLT STRAIN POLE 919+26.9, 51.0'RT- EL 892.87

** 4"x10'F FOR UNDERDRAIN OUTLET
8' EXFILTRATION TRENCH, TYPE A with 4"x15'B
(DND) = DO NOT DISTURB

ITEM 202 - PAVEMENT REMOVED

HORIZONTAL SCALE IN FEET
0 10 20 40

CALCULATED NJV
CHECKED EJS

PLAN - SR 309
STA. 918+40 TO STA. 924+20

ALL-117/309-18.65/15.17

33
173

I:\pd\75467\roadway\sheets\75467GP005.dgn 17-SEP-2012 10:52AM nvondere

PROFILE - LEFT SIDE

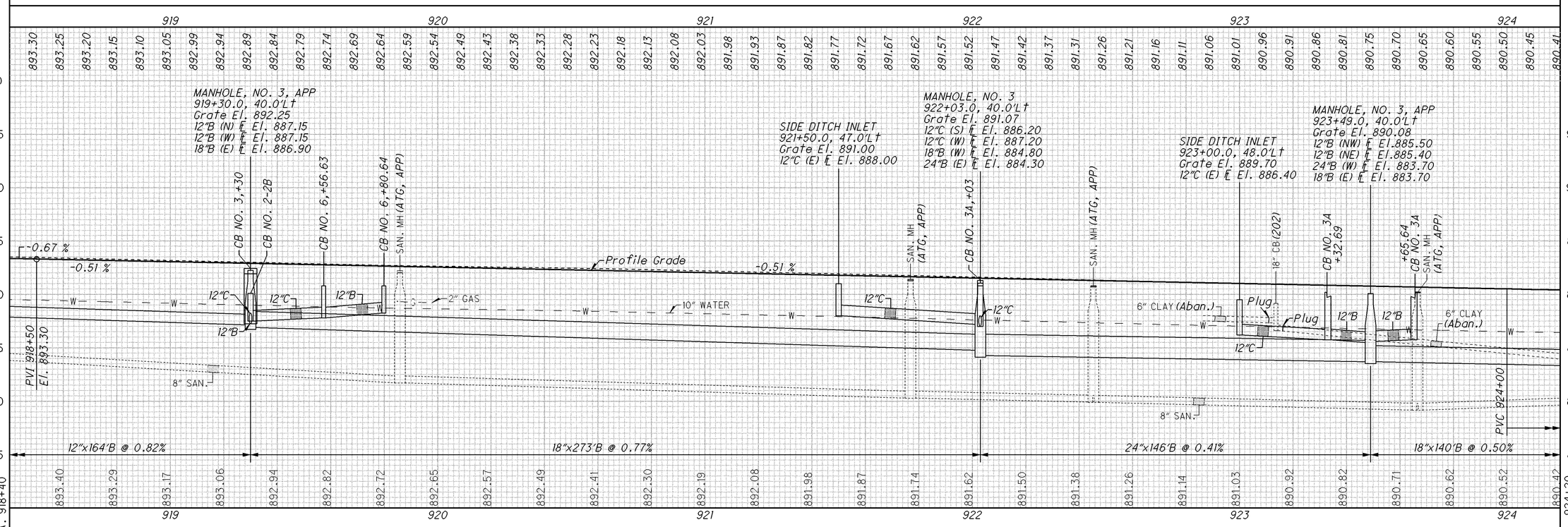

NOTE: For Proposed Drainage Callouts, See CROSS SECTIONS

PROFILE - RIGHT SIDE

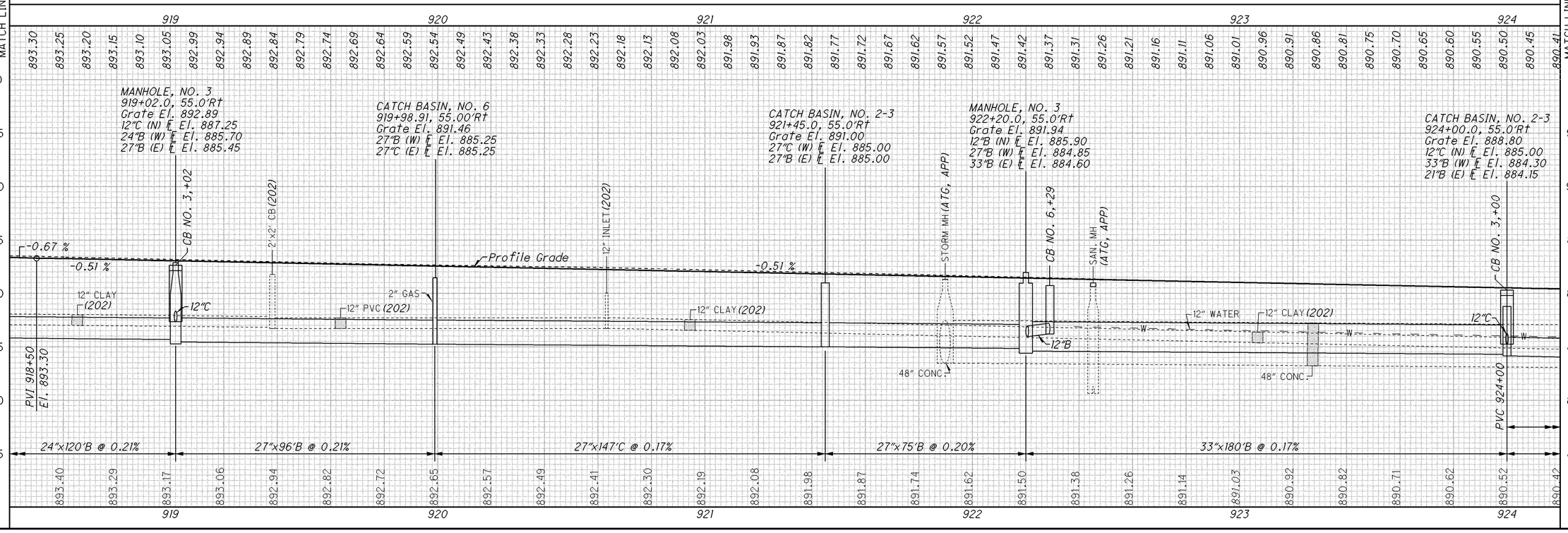

CALCULATED NJV
CHECKED EJS

PROFILE - SR 309
STA. 918+40 TO STA. 924+20

ALL-117/309-18.65/15.17

34
173

I:\pd\75467\roadway\sheets\75467GF005.dgn 17-SEP-2012 10:52AM nvandere

CURVE #2 DATA

PI = Sta. 10+87.44
Δ = 31°-20'-00" Rt
Dc = 71°-37'-11"
R = 80.00'
T = 22.44'
L = 43.75'
E = 3.09'
PC = Sta. 10+65.00
PT = Sta. 11+08.75

CROSS REFERENCES

ITEM	SHEET
INTERSECTION DETAILS	88
CURB RAMP DETAILS	91
DRIVEWAY DETAILS	93,97-98

ESTIMATED QUANTITIES

ITEM	SHEET
PAVEMENT	19
CURB-C	20
WALK-W	20
ROADWAY-R	21
MAILBOX-M	21
DRAINAGE-D	22-23
UNDERDRAINS	24
DRIVEWAY-DR	92

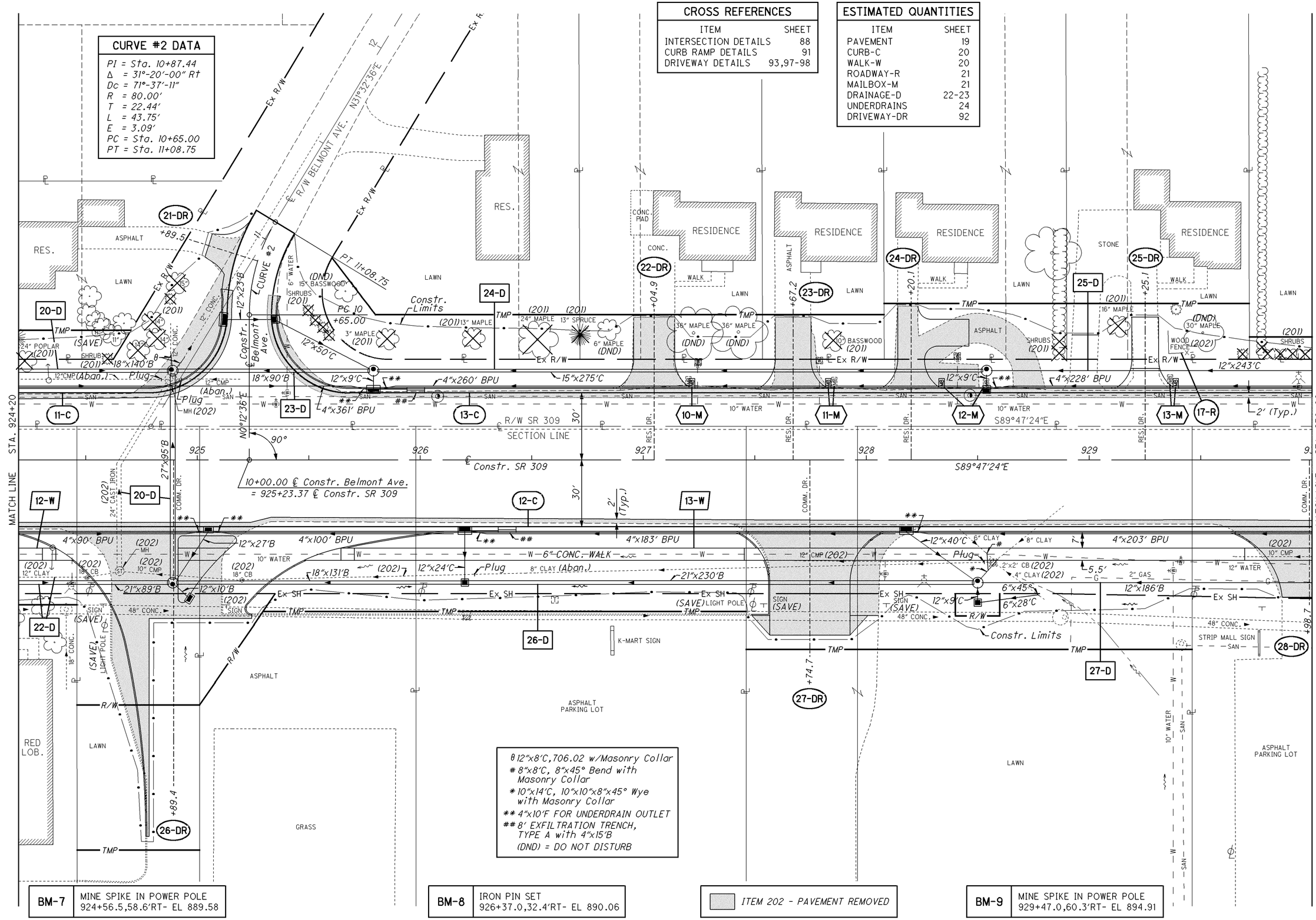

θ 12"x8'C,706.02 w/Masonry Collar
8"x8'C, 8"x45° Bend with Masonry Collar
* 10"x14'C, 10"x10"x8"x45° Wye with Masonry Collar
** 4"x10'F FOR UNDERDRAIN OUTLET
8' EXFILTRATION TRENCH, TYPE A with 4"x15'B
(DND) = DO NOT DISTURB

BM-7	MINE SPIKE IN POWER POLE 924+56.5,58.6'RT- EL 889.58
BM-8	IRON PIN SET 926+37.0,32.4'RT- EL 890.06
	ITEM 202 - PAVEMENT REMOVED
BM-9	MINE SPIKE IN POWER POLE 929+47.0,60.3'RT- EL 894.91

HORIZONTAL SCALE IN FEET
0 10 20 40

CALCULATED NJV
CHECKED EJS

PLAN
STA. 924+20 TO STA. 930+00

ALL-117/309-18.65/15.17

I:\pd\75467\roadway\sheets\75467GP006.dgn 17-SEP-2012 10:52AM nvondere

PROFILE - LEFT SIDE

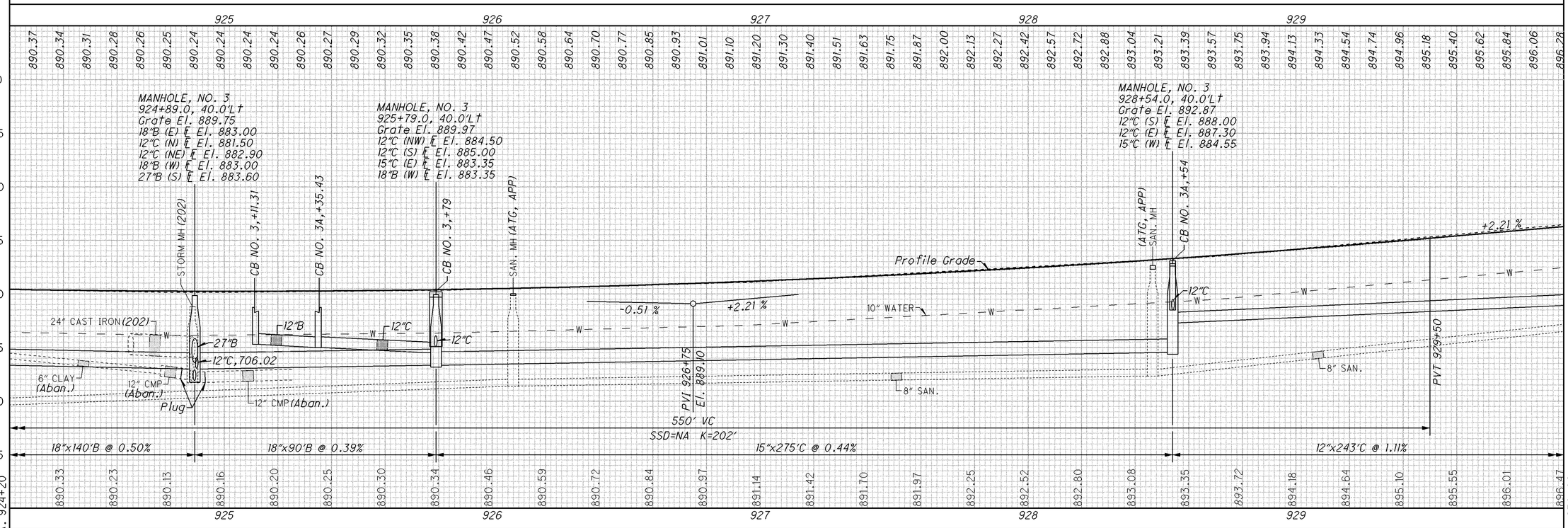

NOTE: For Proposed Drainage Callouts, See CROSS SECTIONS

PROFILE - RIGHT SIDE

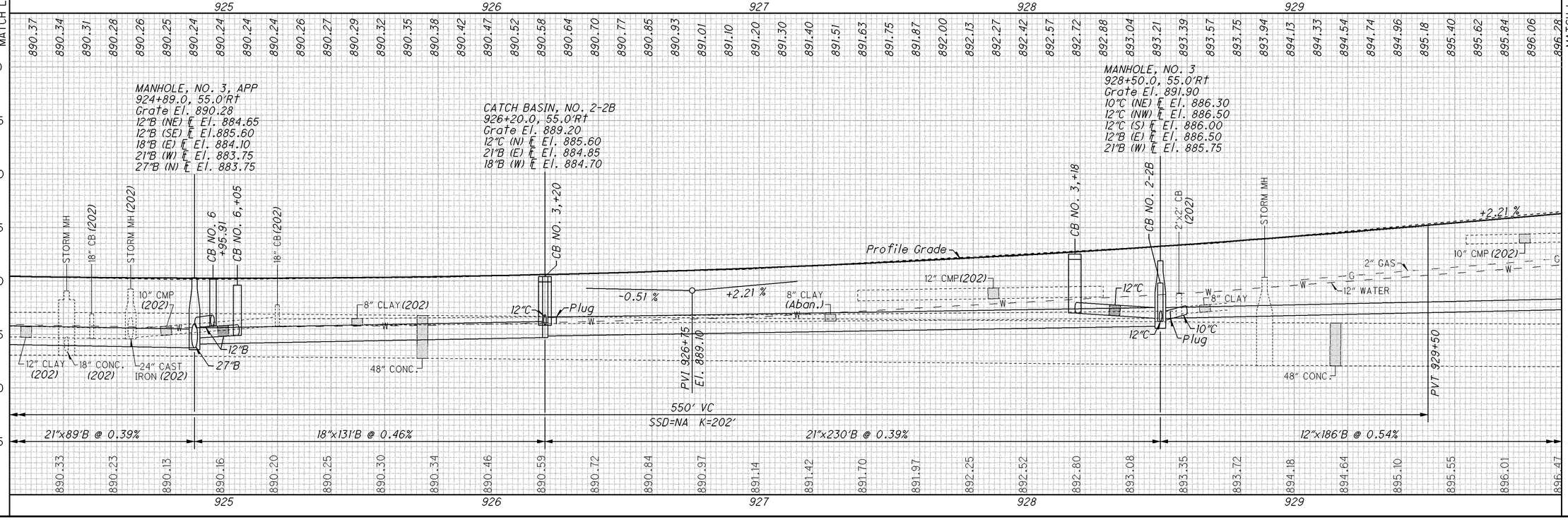

MATCH LINE STA. 924+20

MATCH LINE STA. 930+00

CALCULATED NJV
CHECKED EJS

PROFILE - SR 309
STA. 924+20 TO STA. 930+00

ALL-117/309-18.65/15.17

I:\pd\75467\roadway\sheets\75467GF006.dgn 17-SEP-2012 10:52AM nvondere

CROSS REFERENCES

ITEM	SHEET
INTERSECTION DETAILS	89
CURB RAMP DETAILS	91
DRIVEWAY DETAILS	93,98

ESTIMATED QUANTITIES

ITEM	SHEET
PAVEMENT	19
CURB-C	20
WALK-W	20
ROADWAY-R	21
MAILBOX-M	21
DRAINAGE-D	22-23
UNDERDRAINS	24
DRIVEWAY-DR	92

DEFLECTION DATA

℄ Constr. SR 309
PI Sta. 934+23.32
Δ = 0°-27'-00" Lt
NO CURVE

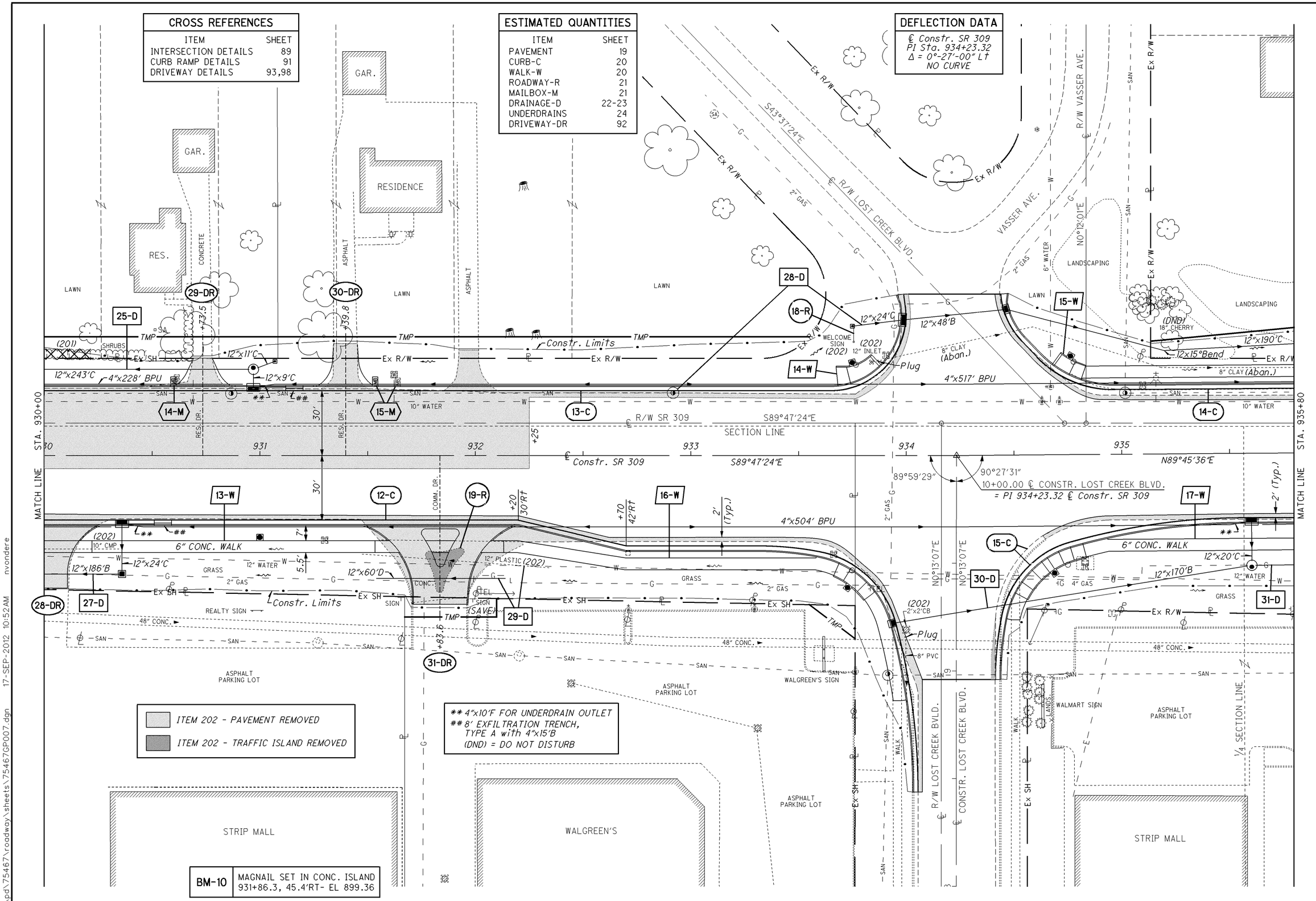

ITEM 202 - PAVEMENT REMOVED

ITEM 202 - TRAFFIC ISLAND REMOVED

** 4"x10'F FOR UNDERDRAIN OUTLET
8' EXFILTRATION TRENCH, TYPE A with 4"x15'B
(DND) = DO NOT DISTURB

BM-10	MAGNAIL SET IN CONC. ISLAND 931+86.3, 45.4'RT- EL 899.36

HORIZONTAL SCALE IN FEET 0 10 20 40

CALCULATED NJV
CHECKED EJS

PLAN - SR 309
STA. 930+00 TO STA. 935+80

ALL-117/309-
18.65/15.17

I:\pd\75467\roadway\sheets\75467GP007.dgn 17-SEP-2012 10:52AM nvondere

PROFILE - LEFT SIDE

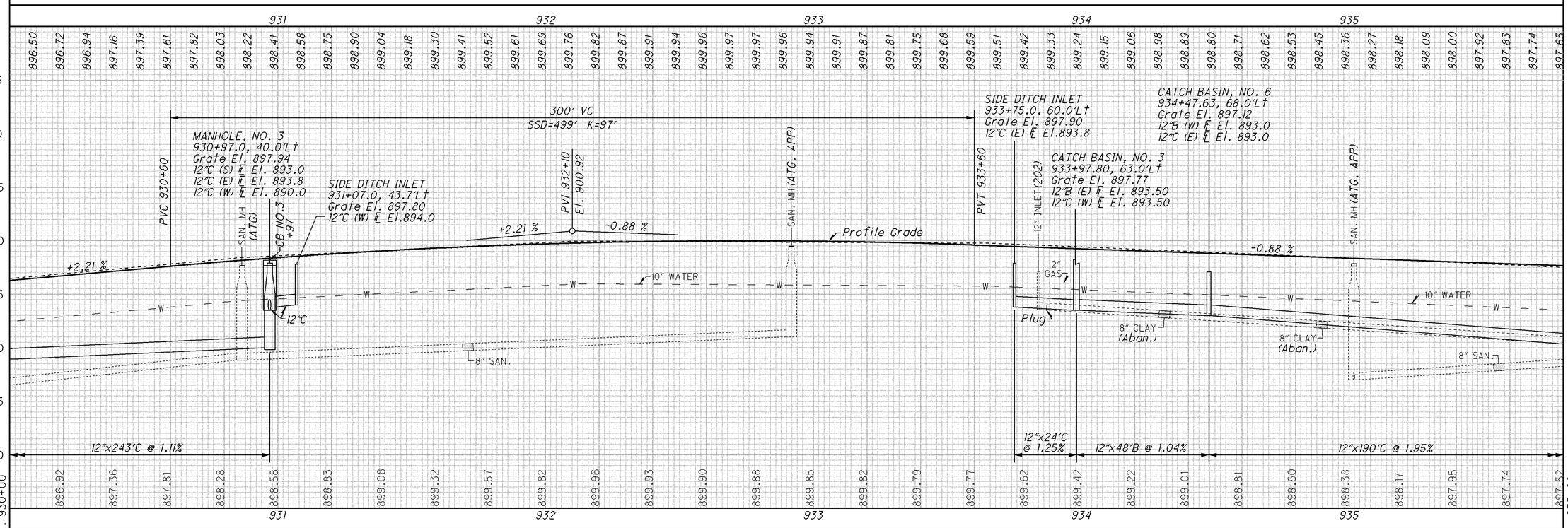

NOTE: For Proposed Drainage Callouts, See CROSS SECTIONS

PROFILE - RIGHT SIDE

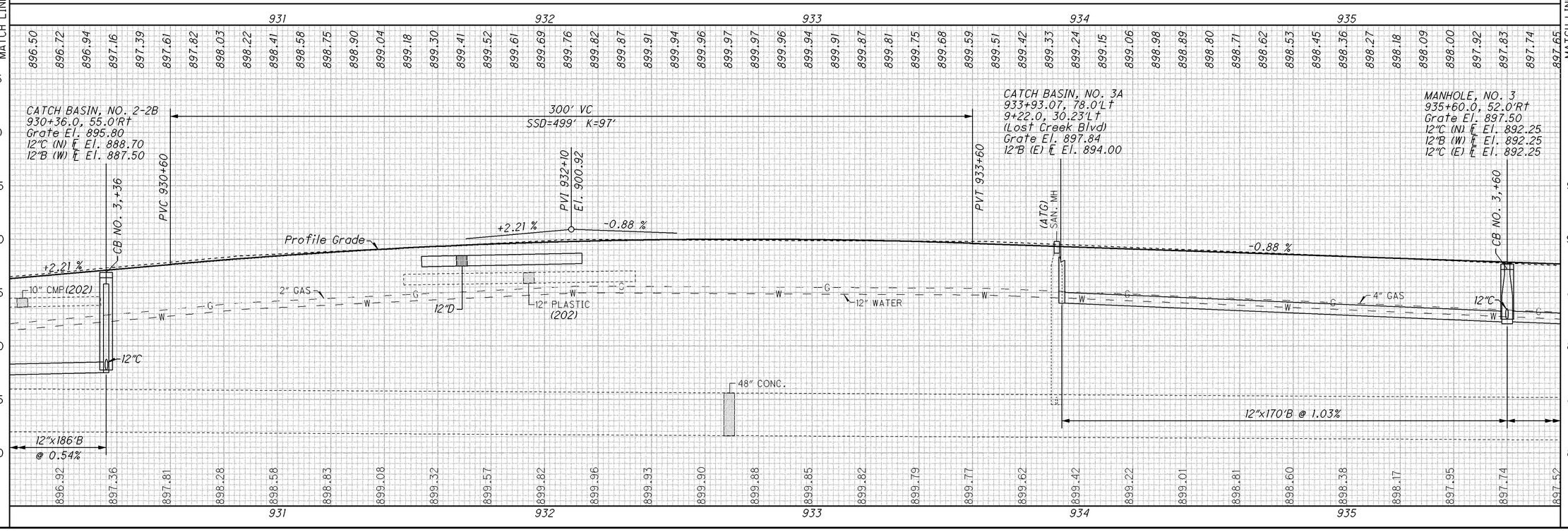

CALCULATED NJV
CHECKED EJS

PROFILE - SR 309
STA. 930+00 TO STA. 935+80

ALL-117/309-18.65/15.17

38
173

I:\pd\75467\roadway\sheets\75467GF007.dgn 17-SEP-2012 10:52AM nvondere

ESTIMATED QUANTITIES	
ITEM	SHEET
PAVEMENT	19
CURB-C	20
WALK-W	20
ROADWAY-R	21
MAILBOX-M	21
DRAINAGE-D	22-23
CULVERT-CV	24
UNDERDRAINS	24
DRIVEWAY-DR	92

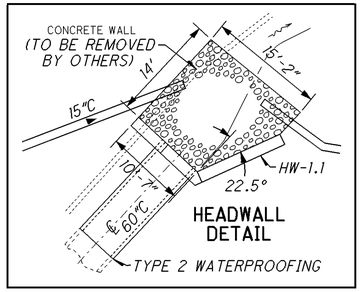

CROSS REFERENCES	
ITEM	SHEET
DRIVEWAY DETAILS	93,98

STRUCTURE NO.
ALL-309-1560

* 12"x21'C
** 4"x10'F FOR UNDERDRAIN OUTLET
8' EXFILTRATION TRENCH, TYPE A with 4"x15'B
(DND) = DO NOT DISTURB

BM-11	MAGNETIC NAIL SET IN CURB 936+08.4, 81.2'RT- EL 897.46

ITEM 202 - PAVEMENT REMOVED

BM-12	MINE SPIKE IN SIGN POLE 941+23.2, 42.1'RT- EL 897.41

HORIZONTAL SCALE IN FEET
0 10 20 40

CALCULATED NJV
CHECKED EJS

PLAN - SR 309 STA. 935+80 TO STA. 941+60

ALL-117/309-18.65/15.17

I:\pd\75467\roadway\sheets\75467GP008.dgn 17-SEP-2012 10:52AM nvondere

PROFILE - LEFT SIDE

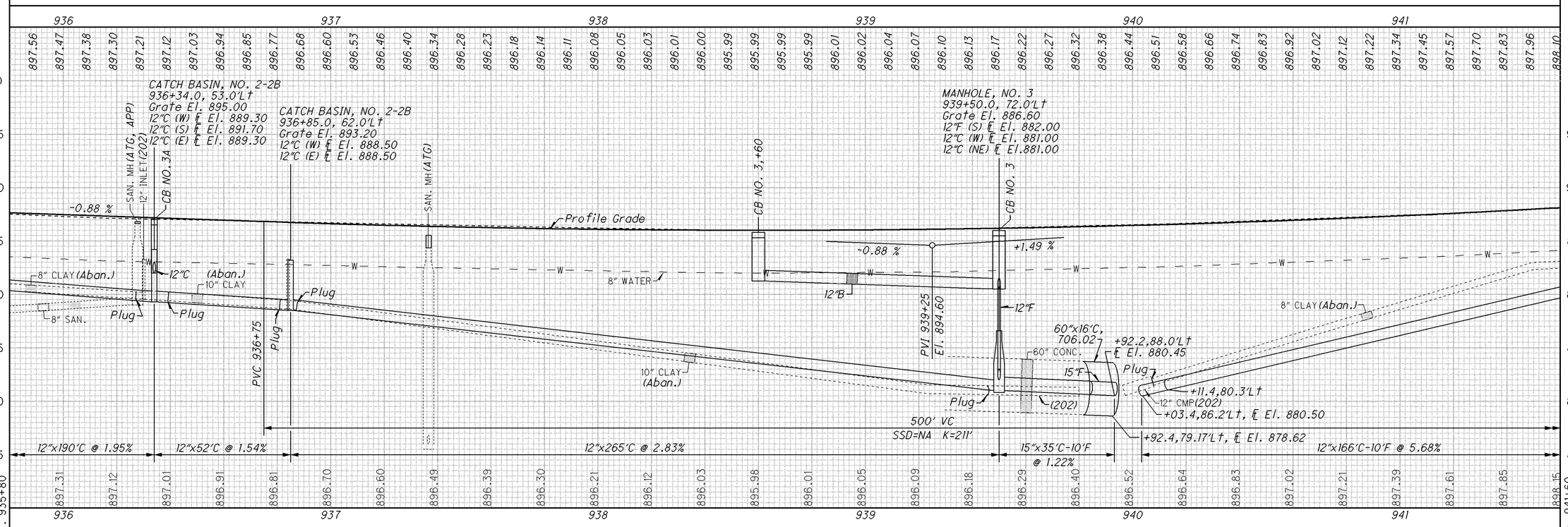

NOTE: For Proposed Drainage Callouts, See CROSS SECTIONS

PROFILE - RIGHT SIDE

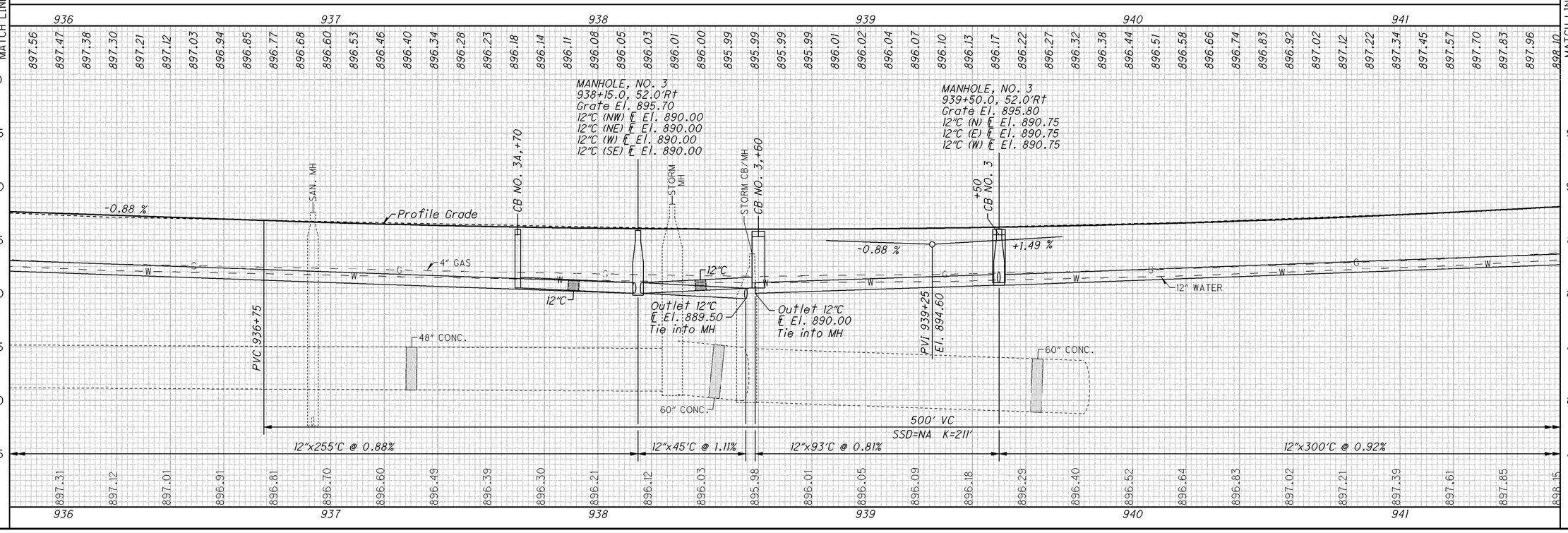

CALCULATED NJV
CHECKED EJS

PROFILE - SR 309
STA. 935+80 TO STA. 941+60

ALL-117/309-18.65/15.17

I:\pd\75467\roadway\sheets\75467GF008.dgn 17-SEP-2012 10:52AM nvandere

ITEM 202 - PAVEMENT REMOVED

RESIDENCE
CHURCH
ASPHALT PARKING LOT
WALK
LAWN
ASPHALT
SHRUBS
CHURCH SIGN
ACHESON REALTY
ACHESON REALTY SIGN
BRICK WALL
CONC. WALK
LANDS.
8" WATER
2" GAS
CONC. BASE (202)
CHAIN LINK FENCE (202)
8" CLAY (Aban.)
8" PLASTIC
2'x2' CB
LAMP (202)
TIMBER (202)
Constr. Limits
Ex SH
Ex R/W
Ex. SH
12"x185'C
12"x32'C
12"x20'C
12"x52'C
12"x38'B
4"x145' BPU
4"x235' BPU
4"x740' BPU
4"x285' BPU
4"x935' BPU
6" CONCRETE WALK
6" CONC. WALK
12" WATER
4" GAS
12" CMP
12"x300'C
12"x335'C
12"x15'
Plug
(202)
+80.8
+20.4
+74.10
+70.39
+20
5.5'
3'
7'
2' (Typ.)
30'
2' (Typ.)
GRASS
I.P.S.
CONC. PAD
TMP
LANDSCAPING
WALMART SIGN
CONCRETE
ASPHALT PARKING LOT
CANOPY - MURPHYS USA
TEL
AIR
SAN
W
G
TEL (BTA)

34-DR
35-DR
23-R
33-D
25-R
15-W
27-R
18-W
16-C
17-M
26-R
14-C
15-C
17-W
34-D
17-C
19-W

RES. DR.
COMM. DR.

** 4"x10'F FOR UNDERDRAIN OUTLET
8' EXFILTRATION TRENCH, TYPE A with 4"x15'B

ESTIMATED QUANTITIES

ITEM	SHEET
PAVEMENT	19
CURB-C	20
WALK-W	20
ROADWAY-R	21
MAILBOX-M	21
DRAINAGE-D	22-23
UNDERDRAINS	24
DRIVEWAY-DR	92

CROSS REFERENCES

ITEM	SHEET
INTERSECTION DETAILS	90
CURB RAMP DETAILS	91
DRIVEWAY DETAILS	93

MATCH LINE STA. 941+60
MATCH LINE STA. 947+40
SECTION LINE
℄ R/W SR 309
℄ Constr. SR 309
S89°44'59"E
N89°45'36"E
942
943
944
945
946
947
88°47'02"
90°54'22"
10+00.00 = 946+11.07
9+95.00 ℄ CONSTR. DEVONSHIRE AVE. = 946+09.49 ℄ Constr. SR 309
N0°58'34"E
℄ R/W & CONSTR. DEVONSHIRE DR.
N0°39'58"E
℄ CONSTR. MALL DR. #3

BM-13 | '+' IN N BOLT SIGNAL POLE 945+57.6,56.6'RT- EL 902.82

HORIZONTAL SCALE IN FEET
0 10 20 40
CALCULATED NJV
CHECKED EJS

PLAN
STA. 941+60 TO STA. 947+40
ALL-117/309-18.65/15.17

41
173

I:\pd\75467\roadway\sheets\75467GP009.dgn 17-SEP-2012 10:52AM nvondere

PROFILE - LEFT SIDE

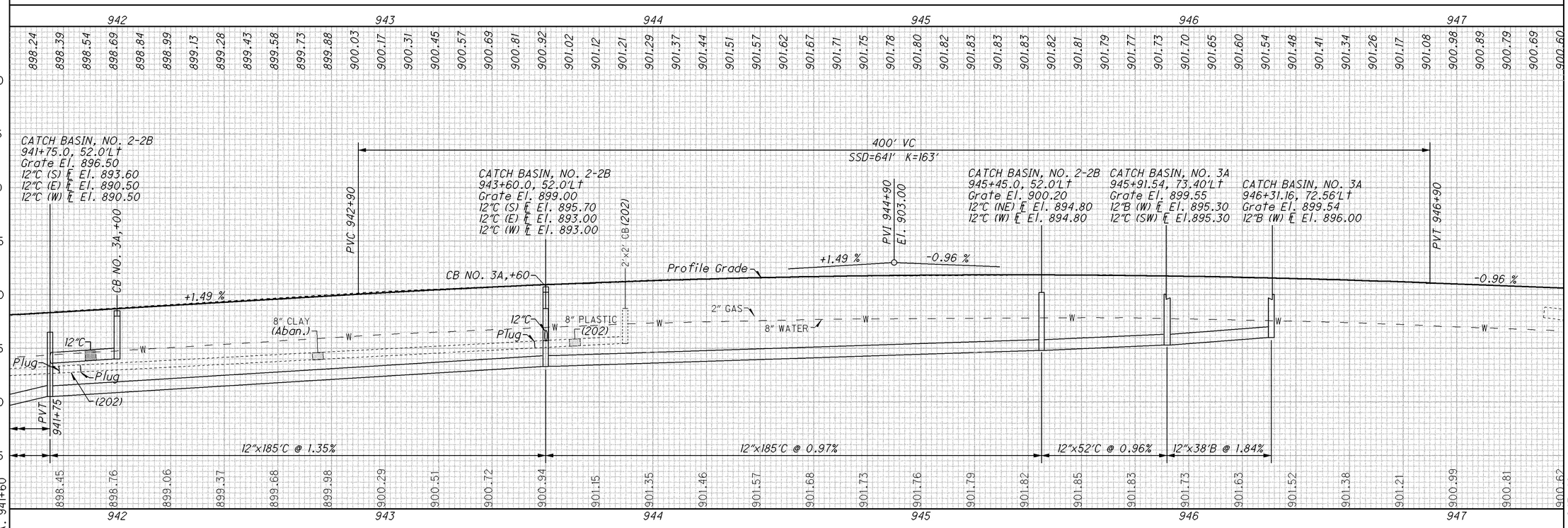

NOTE: For Proposed Drainage Callouts, See CROSS SECTIONS

PROFILE - RIGHT SIDE

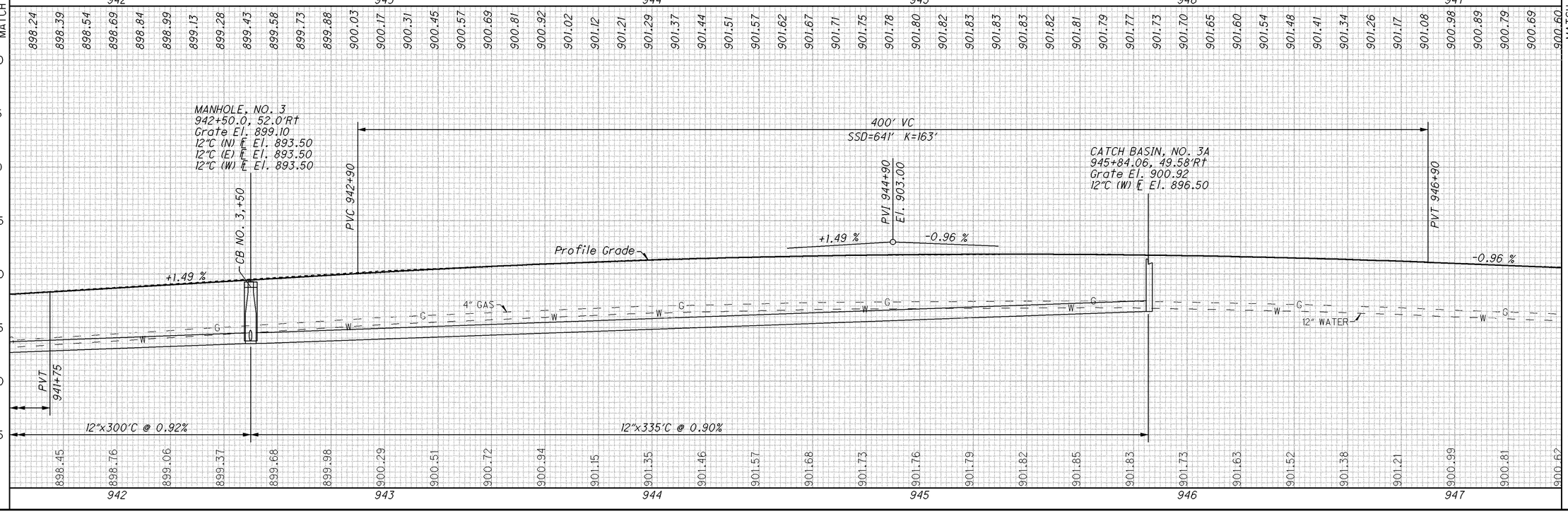

CALCULATED NJV
CHECKED EJS

PROFILE
STA. 941+60 TO STA. 947+40

ALL-117/309-
18.65/15.17

I:\pd\75467\roadway\sheets\75467GF009.dgn 17-SEP-2012 10:52AM nvondere

DEFLECTION DATA

℄ Constr. SR 309
PI Sta. 951+94.00
Δ = 0°-29'-25" Rt
NO CURVE

HORIZONTAL SCALE IN FEET
0 10 20 40

CALCULATED NJV
CHECKED EJS

PLAN - SR 309
STA. 947+40 TO STA. 953+20

ALL-117/309-18.65/15.17

I:\pd\75467\roadway\sheets\75467GP010.dgn 17-SEP-2012 10:52AM nvondere

APARTMENTS
APARTMENTS
ATTORNEY OFFICE
ASPHALT PARKING LOT
CONCRETE
ASPHALT
LAWN
STONE
GRASS
ASPHALT
GRASS
ATTORNEY OFFICE SIGN
WIRE FENCE
IRON POST
2" GAS
BRICK POSTS AND WALL
LAMP
BRICK POSTS AND WALL
LAMP
12" CMP
18" CMP
4"x740' BPU
4' Paved Shoulder
4"x20'F**
4"x4"x4" Tee
Constr. Limits
R/W
Ex SH
TMP
52'Lt
END PROJECT STA. 951+94 SLM 15.99 (309)
E050(248)
SUSPEND WORK STA. 952+09
PRECAST REINFORCED CONCRETE OUTLET with 4'x4' TIED CONCRETE BLOCK MAT, TYPE 1
35-D
36-DR
37-DR
38-DR
+54.0
+74.3
+47.5
+10
+94 28.5'Lt
8" WATER
COMM. DR.
SAN
948
949
950
951
952
R/W SR 309
℄ Constr. SR 309
SECTION LINE
S89°44'59"E
N89°45'36"E
℄ R/W & CONSTR. SR 309
PI Sta. 951+94.00 BK
= Sta. 951+93.98 AH
STA. 947+40
STA. 953+20
MATCH LINE
END SHEET
30'
42'
2' (Typ.)
6" WATER
18" CONC.
20-W
4" GAS
12" WATER
6" CONCRETE WALK
4"x4"x4" Tee
4"x935' BPU
10" PVC (202)
12" CONC (202)
4"x20'F**
2'x2' CB (202)
18"x17'C,706.02
8"x5'C,706.02*
12"x90'D
8" CONC.
3'
5.5'
3" GAS
FAIRGROUNDS GATE SIGN (202)
Constr. Limits
19-W
28-R
36-D
39-DR
29-R
ALLEN COUNTY FAIRGROUNDS SIGN (202)
ACF GOALS SIGN
ALLEN COUNTY FAIRGROUNDS SIGN
ASPHALT
+21.5

*Masonry Collar
**FOR UNDERDRAIN OUTLET

ESTIMATED QUANTITIES

ITEM	SHEET
PAVEMENT	19
ROADWAY-R	21
DRAINAGE-D	22-23
UNDERDRAINS	24
DRIVEWAY-DR	92

BM-14	MINE SPIKE IN POWER POLE 949+63.8, 61.4'RT- EL 896.19

CROSS REFERENCES

ITEM	SHEET
DRIVEWAY DETAILS	93,99

ITEM 202 - PAVEMENT REMOVED

PROFILE - LEFT SIDE

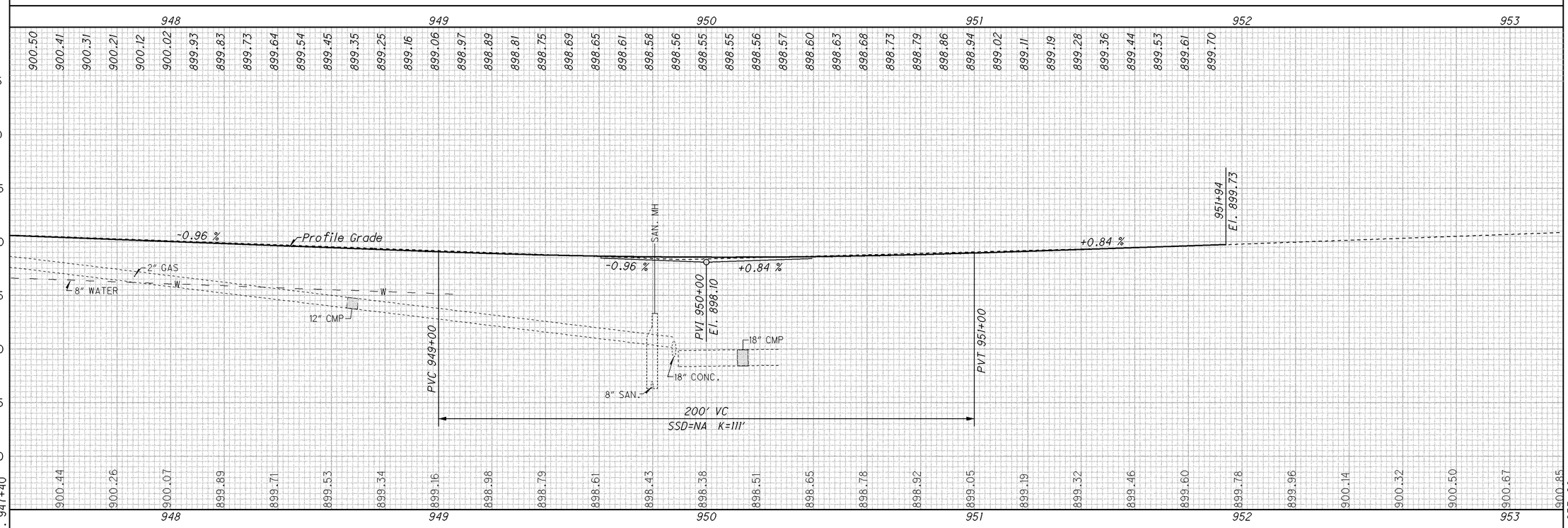

MATCH LINE STA. 947+40

END SHEET STA. 953+20

NOTE: For Proposed Drainage Callouts, See CROSS SECTIONS

PROFILE - RIGHT SIDE

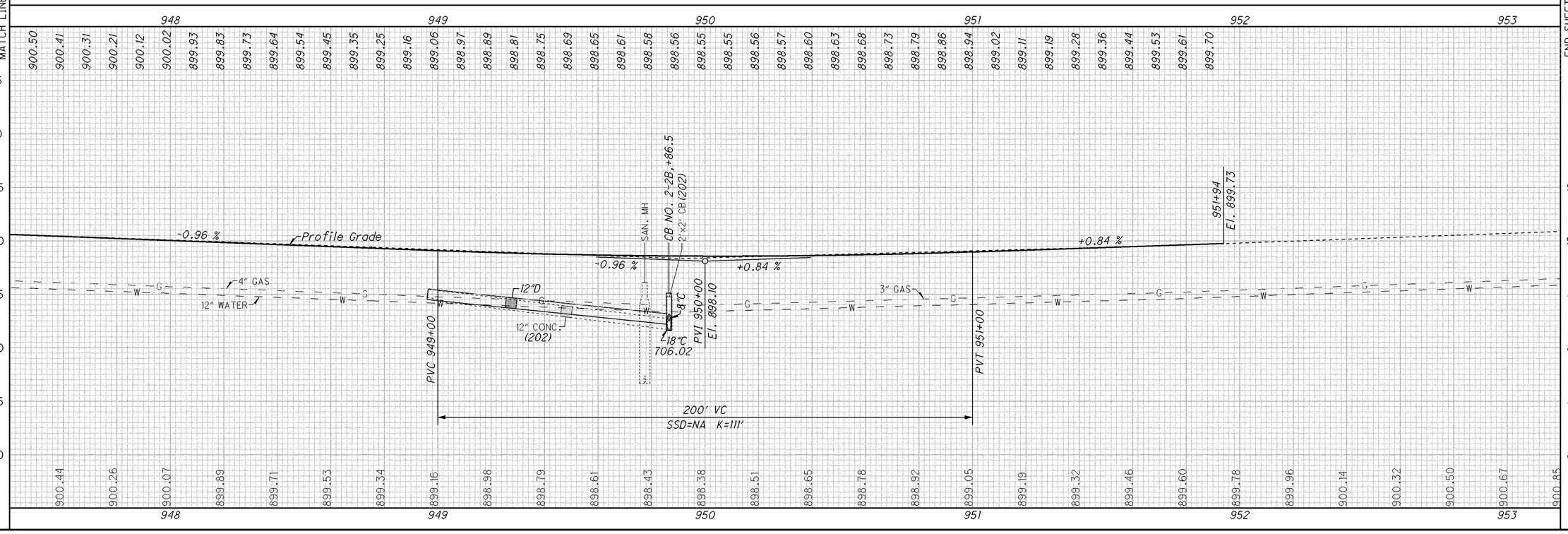

I:\pd\75467\roadway\sheets\75467GF010.dgn 17-SEP-2012 10:52AM nvondere

CALCULATED NJV
CHECKED EJS

PROFILE - SR 309
STA. 947+40 TO STA. 953+20

ALL-117/309-18.65/15.17

STORAGE UNIT

STOR. UNIT

RON SPENCER REALTY

ASPHALT

SECTION LINE

GRASS

STONE

RESUME WORK STA. 959+94

END WORK STA. 961+95.3

Ex SH

2'x2' CB

15" PLASTIC

36" CONC.

4" GAS

BEGIN SHEET STA. 958+00

END SHEET STA. 963+80

S89°44'59"E
℄ R/W & CONSTR. SR 309
SECTION LINE

958 959 960 961 962 963

30-R

31-R

PI Sta. 963+06.59

10+00.00 ℄ CONSTR. BOWMAN RD.
962+06.64 ℄ CONSTR. SR 309

89°13'22"

+94 +00 +25 +43.1 +21.3

30'

24'

2'

4' Paved Shoulder

Constr. Limits

(ATG)
2'x2' CB

8" PLASTIC

15" PLASTIC

12" CMP

8" CMP

12" WATER

3" GAS

37-D

50'R

PERRY SCHOOL SIGN

R/W BOWMAN RD.

N01°01'39"E

SECTION LINE

BM-15 | MINE SPK IN TELEPHONE POLE
959+13.3, 55.8'RT- EL 896.39

ITEM 202 - PAVEMENT REMOVED

ESTIMATED QUANTITIES

ITEM	SHEET
PAVEMENT	19
ROADWAY-R	21
DRAINAGE-D	22-23

HORIZONTAL SCALE IN FEET
0 10 20 40

CALCULATED

CHECKED

PLAN - SR 309
STA. 958+00 TO STA. 963+80

ALL-117/309-
18.65/15.17

45
173

I:\pd\75467\roadway\sheets\75467GP011.dgn 17-SEP-2012 10:52AM nvondere

SEEDING	
END WIDTH	SQ. YDS.
31	63
	-45
	120
	252
29	63

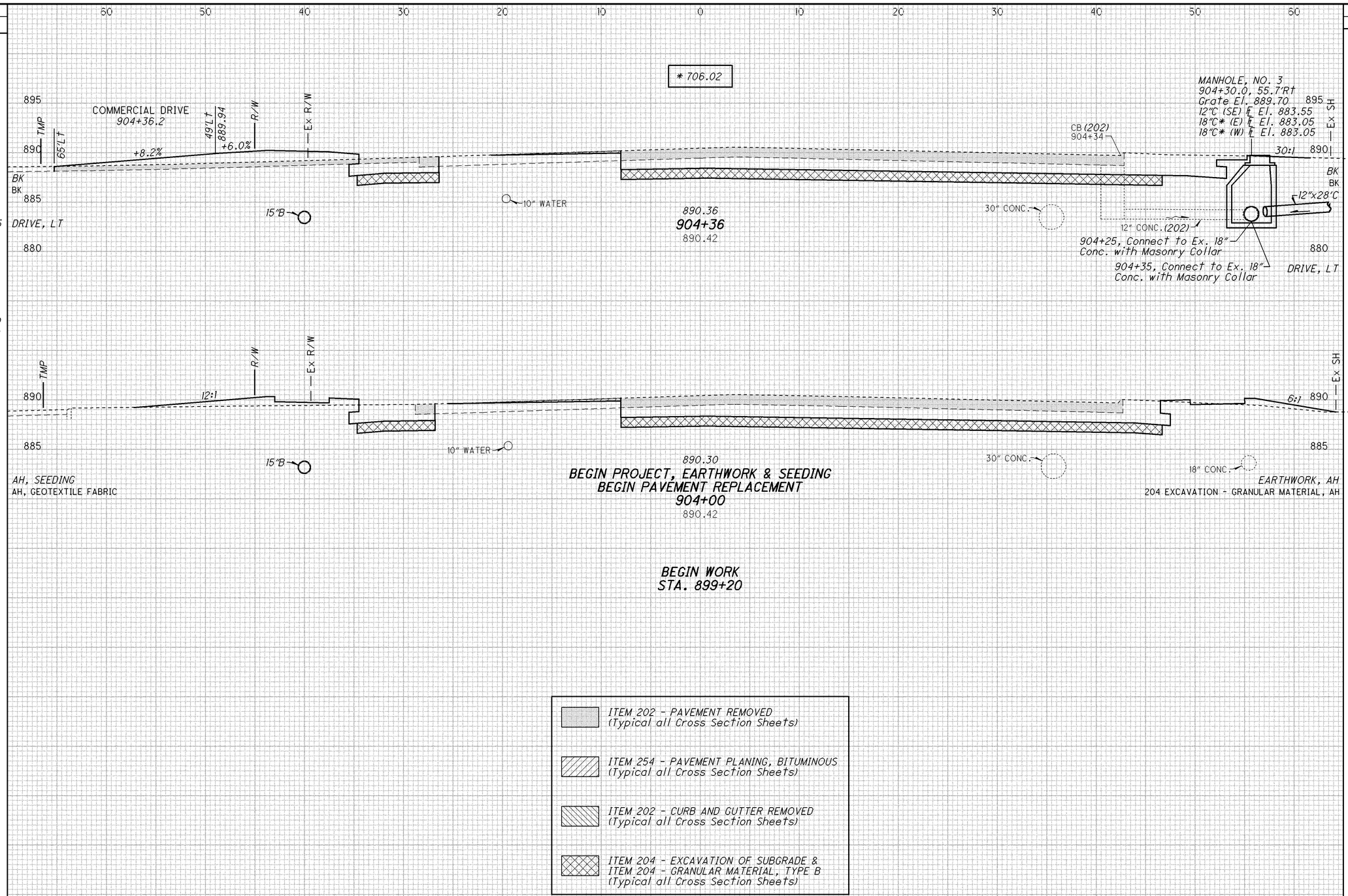

END AREA		VOLUME	
CUT	FILL	CUT	FILL
BK 89	21		
BK 63	63		
		3	-10
		111	25
		84	84
EARTHWORK, AH 78	17		
204 EXCAVATION - GRANULAR MATERIAL, AH 63	63		
		ITEM 203 114	15
		ITEM 204 84	84
		TOTALS	

S&M	75
GEO	252
	TOTAL

CALCULATED NJV
CHECKED GLW

CROSS SECTIONS - SR 117/SR 309
STA. 904+00 TO STA. 904+36

ALL-117/309-18.65/15.17

I:\pd\75467\roadway\sheets\75467XS001.dgn 17-SEP-2012 10:53AM nvondere

SEEDING	
END WIDTH	SQ. YDS.
26	
66	
S&M	360
GEO	1110
	TOTAL

END AREA	
CUT	FILL
AH	AH
77	36
66	66

SEEDING END WIDTH	SEEDING SQ. YDS.	END AREA CUT	END AREA FILL	VOLUME CUT	VOLUME FILL
29 / 67		72 / 67	20 / 67		
	-20			14	-5
87 / 290				108 / 97	17 / 97
11 / 67		78 / 67	4 / 67		
73 / 298				116 / 99	9 / 99
22 / 67		79 / 67	8 / 67		
	-30			173 / 148	49 / 148
200 / 443					
26 / 66		77 / 66	36 / 66		
S&M 310		ITEM 203		421	82
GEO 1031		ITEM 204		344	344
TOTAL				TOTALS	

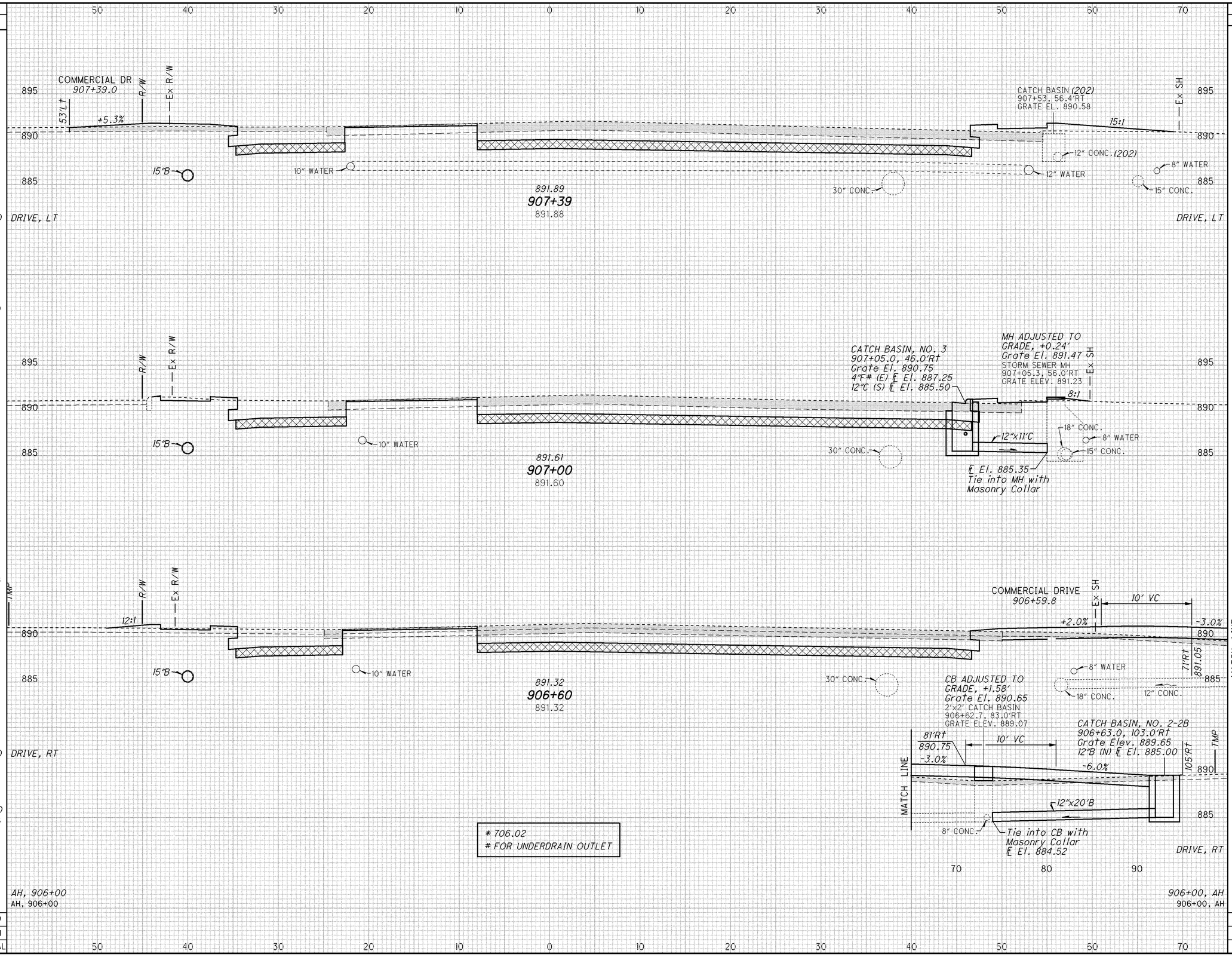

CALCULATED NJV
CHECKED GLW

CROSS SECTIONS - SR 117/SR 309
STA. 906+60 TO STA. 907+39

ALL-117/309-18.65/15.17

48
173

I:\pd\75467\roadway\sheets\75467XS003.dgn nvondere 17-SEP-2012 10:53AM

SEEDING	
END WIDTH	SQ. YDS.
	250
	2625
	24
	83
	180
	508
	29
	67
S&M	430
GEO	3133
	TOTAL

END AREA		VOLUME	
CUT	FILL	CUT	FILL
		880	65
		875	875
BK		110	41
BK		83	83
		206	69
		169	169
72		67	67
ITEM 203		1086	134
ITEM 204		1044	1044
		TOTALS	

CALCULATED NJV

CHECKED GLW

60 50 40 30 20 10 0 10 20 30 40 50 60

MATCH LINE

SEE WILLARD AVE. CROSS SECTIONS

SEE SR 117 CROSS SECTIONS

WILLARD AVE.
909+10.33

SR 117
908+79.96

MH ADJUSTED TO GRADE, APP +0.00'
Grate El. 892.52
SANITARY SEWER MH,
908+92.8, 27.1'LT
GRATE ELEV. 892.52

MH ADJUSTED TO GRADE, APP -0.17'
Grate El. 892.51
STORM SEWER MH
909+13.2, 39.4'RT
GRATE EL. 892.68

1⅛" GAS,+95.5
2" GAS
12"B
10" WATER
8" ABANDONED WATER,+18
Outlet 18"B, Tie into Ex. MH with Masonry Collar ℄ El. 886.47±
15" CONC. (202)
30" CONC.
30" CONC.

893.05
909+00
893.10

WILLARD AVE.

SR 117

MANHOLE, NO. 3, APP
908+80.0, 40.0'Lt
Grate El. 892.27
12"B (N) ℄ El. 886.25
12"B (E) ℄ El. 886.25
15"B (W) ℄ El. 886.00

TMP
R/W
Ex R/W

CATCH BASIN (202)
908+18.2, 48.5'RT
GRATE EL. 891.80

2'x2' CB (202)
908+37.5, 62'RT
GRATE EL. 891.47

10" WATER
12"x60'B
12" CONC. (202)
12" CONC. (202)
30" CONC.

892.69
908+50
892.72

INTERSECTION
INTERSECTION

CATCH BASIN, NO. 3A
907+80.0, 40.24'Lt
Grate El. 891.38
15"B (E) ℄ El. 885.50
15"B (W) ℄ El. 885.50

18:1

BK
BK

10" WATER
30" CONC.

892.33
908+00
892.33

CATCH BASIN, NO. 3
908+45.68, 104.91'Rt
990+10.0, 38.78'Rt
(℄ Constr. SR 117)
Grate Elev. 891.05
12"C (W) ℄ El. 885.35

STORM SEWER MH,
907+97.0, 78.4'RT
GRATE EL. 890.85

CATCH BASIN (202)
908+11.8, 85.0'RT
GRATE EL. 890.51

12" CONC. (202)
Plug
Plug
15" CONC.
12" CONC. (202)
12" WATER
12" CONC.
12"x55'C
℄ El. 885.08
Tie into MH with Masonry Collar
℄ El. 885.35

907+39
907+39

70 80 90 100

CROSS SECTIONS - SR 117/SR 309
STA. 908+00 TO STA. 909+00

ALL-117/309-18.65/15.17

I:\pd\75467\roadway\sheets\75467XS004.dgn 17-SEP-2012 10:53AM nvondere

SEEDING END WIDTH	SEEDING SQ. YDS.
55	16
-45	268 82
50	16
	253 89
41	16
	208 89
34	16
S&M	684
GEO	260
	TOTAL

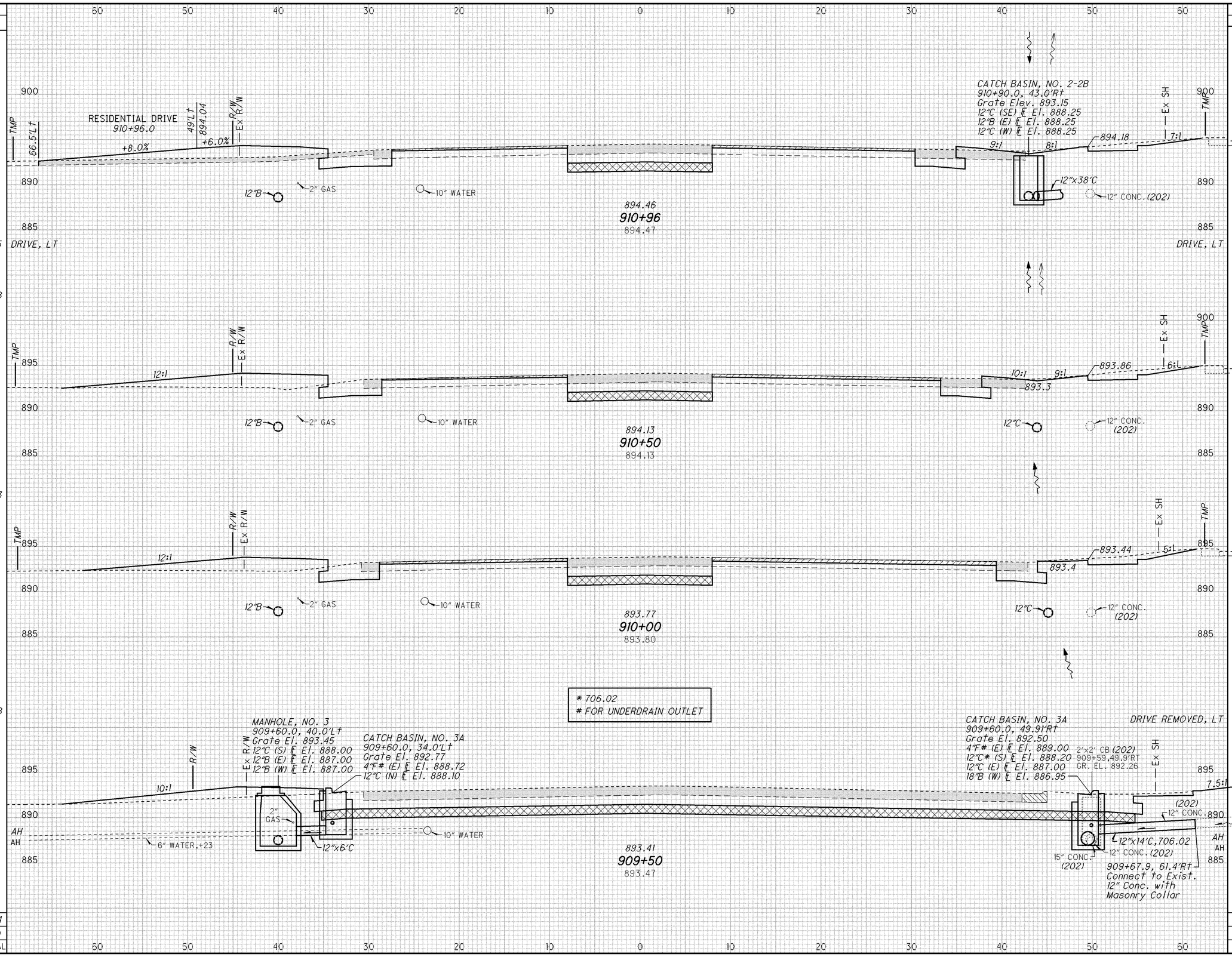

END AREA CUT	END AREA FILL	VOLUME CUT	VOLUME FILL
36 16	33 16		
		0	-5
		62 27	56 27
37 16	33 16		
		73 30	55 30
42 16	26 16		
		91 30	44 30
		0	4
56 16	22 16		
ITEM 203		226	154
ITEM 204		87	87
		TOTALS	

CALCULATED NJV
CHECKED GLW

CROSS SECTIONS - SR 309
STA. 909+50 TO STA. 910+96

ALL-117/309-
18.65/15.17

I:\pd\75467\roadway\sheets\75467XS005.dgn 17-SEP-2012 10:53AM nvondere

SEEDING END WIDTH	SEEDING SQ. YDS.

SEEDING END WIDTH	SEEDING SQ. YDS.
-20	
30	27
50	42
34	27
181	138
37	27
64	45
40	27

END AREA CUT	END AREA FILL	VOLUME CUT	VOLUME FILL
		3	0
42	12		
27	27		
		0	15
		22	8
		14	14
42	17		
27	27		
69	37		
46	46		
39	27		
27	27		
21	13		
15	15		
38	21		
27	27		
80	90		

CALCULATED NJV
CHECKED GLW

CROSS SECTIONS - SR 309
STA. 912+68 TO STA. 913+75

ALL-117/309-18.65/15.17

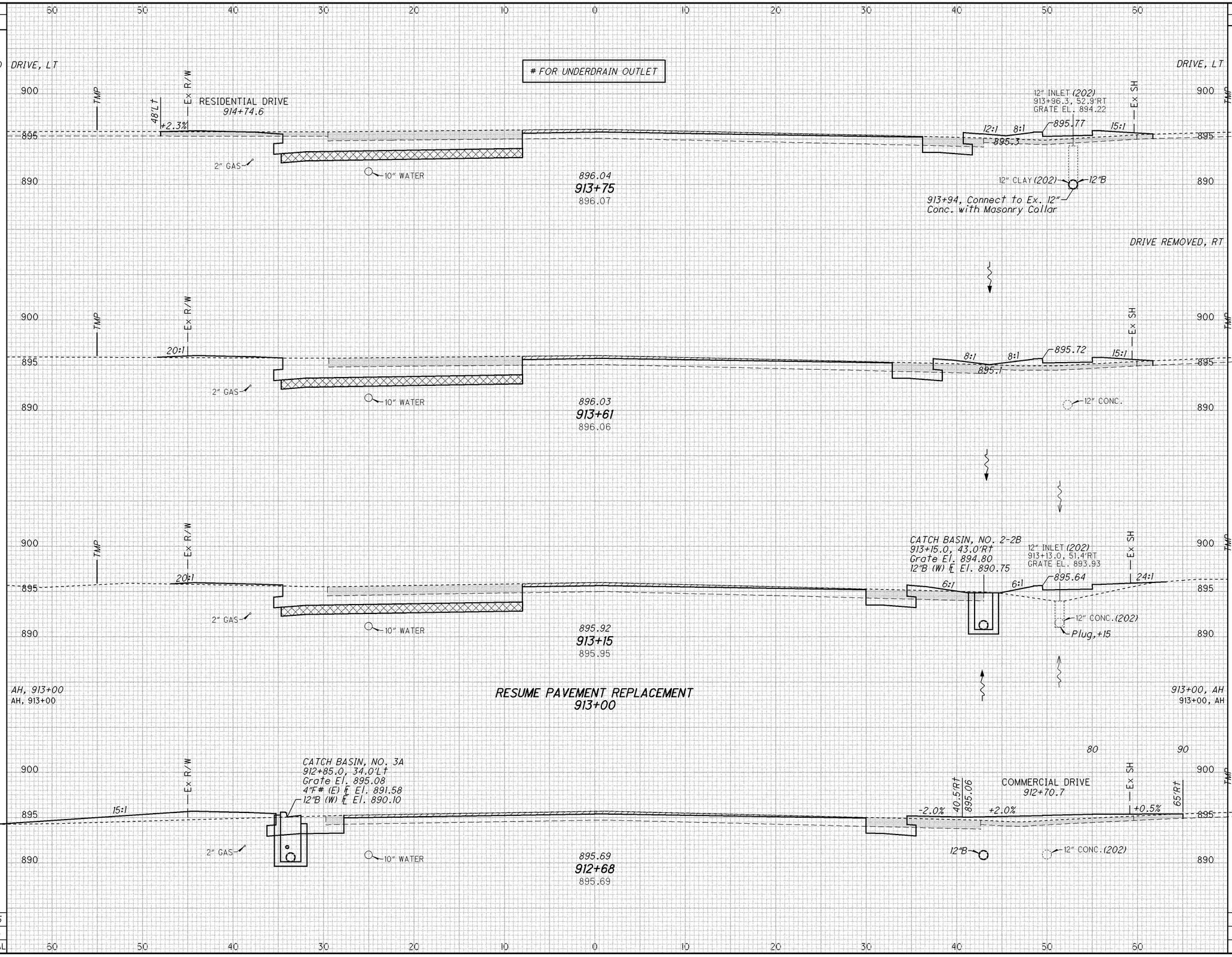

	S&M	GEO	TOTAL
	275	225	

	ITEM 203	ITEM 204	TOTALS
	115	75	
	73	75	

I:\pd\75467\roadway\sheets\75467XS007.dgn 17-SEP-2012 10:53AM nvondere

SEEDING END WIDTH	SEEDING SQ. YDS.
	425
	195
	43
	27
	156
	126
	24
	27
	-30
	95
	105
	-25
	25
	27
	122
	120
	30
	27
S&M	743
GEO	546
TOTAL	

50 50 40 30 20 10 0 10 20 30 40 50 50

INTERSECTION
INTERSECTION

ST. ANDREWS BLVD.
915+61.13

2'x2' CB (202)
915+36.1, 50.5'LT
GRATE EL. 893.63

MANHOLE, NO. 3, APP
915+77.0, 40.0'LT
Grate El. 894.46
12"B (N) ℄ El. 889.80
12"B (W) ℄ El. 889.80
12"B (E) ℄ El. 889.80

MATCH LINE
895
+1.0%
(202)
4"x20'B
12"x27'B
4"x45° Bend
2" GAS,+84
6" WATER,+27
6" WATER,+91
10" WATER
915+52, 51'Lt, Connect to Ex.
4" Plastic with Coupling Band

RESUME PAVEMENT REPLACEMENT
915+80

895.20
915+66
895.34

FOR UNDERDRAIN OUTLET

CB, NO. 2-2B
915+38.0, 67.0'Lt
Grate El. 893.30
4"B (SE) ℄ El.892.10
8"C (N) ℄ El. 891.80
67.2'Lt,894.31
-1.0%
8" PLASTIC
2" GAS,+84
8"x5'C
915+39, 72'Lt,
Connect to Ex.
8" Plastic with
Coupling Band

CB, NO. 3A
915+74.11, 66.65'Lt
10+52.0, 11.0'Rt
(St Andrews Blvd)
Grate El. 893.97
12"B (W) ℄ El. 890.20
12"B (S) ℄ El. 890.20

MATCH LINE

CB, NO. 3A
915+50.09, 67.36'Lt
10+52.0, 13.0'Lt
(St Andrews Blvd)
Grate El. 893.97
12"B (E) ℄ El. 890.55

80

SUSPEND PAVEMENT REPLACEMENT
915+35

CATCH BASIN, NO. 6
915+87.92, 56.98'Rt
9+43.0, 20.07'Rt
(Mall Drive #1)
Grate El. 893.88
15"B (W) ℄ El. 887.35
18"C (E) ℄ El. 887.10
-2.0%
59'Rt
894.19
Ex SH
900
MALL DRIVE #1
915+67.79
+1.0%
890
12" PVC (202)

MALL DRIVE #1
TMP
MATCH LINE
+1.0%
+0.5%

80 90

900
TMP
Ex R/W
895
10:1
BK
BK
2" GAS
10" WATER

MH ADJUSTED TO
GRADE, APP -0.05'
Grate El. 895.29
SANITARY SEWER MH
914+74.7, 30.4'LT
GRATE ELEV. 895.34

CATCH BASIN, NO. 3A
915+07.0, 34.0'Lt
Grate El. 894.88
4"F# (W) ℄ El. 891.38
12"B (E) ℄ El.890.60

895.69
914+92
895.74

CATCH BASIN, NO. 3
915+06.0, 46.0'Rt
Grate El. 894.70
12"C (SE) ℄ El. 890.75
12"C (SW) ℄ El. 888.25
15"B (E) ℄ El. 887.70

SIDE DITCH INLET
915+25.0, 63.0'Rt
Grate El. 894.50
12"C (N) ℄ El. 891.0
Ex SH
TMP
12" INLET (202)
915+17.0, 52.1'RT
GRATE EL. 893.99
100:1
12"x25'C
12" PVC (202)
12"x45°
915+00
52.1'RT
12"B

DRIVE REMOVED, RT

900
TMP
Ex R/W
15:1
895
2" GAS
10" WATER

895.90
914+50
895.98

12" INLET (202)
914+39.6, 52.4'RT
GRATE EL. 894.70
Ex SH
18:1
12"x12"x12"x45° Wye
12"B
12"x19'B
+39.5, 52.5'Rt
℄ El. 889.9

DRIVE, RT
DRIVE, LT

DRIVE, RT
TMP
Ex R/W
RESIDENTIAL DRIVE
914+15.0
51'Lt
+2.3%
895
2" GAS
10" WATER

896.00
914+15
896.10

CATCH BASIN, NO. 2-2B
914+25.5, 66.0'Rt
Grate El. 895.43
12"B (NE) ℄ El. 889.50
COMMERCIAL DRIVE
914+25.7
Ex SH
69'Rt
-3.0%
12"x19'B
12"B
12" CLAY (202)

885

913+75
913+75

END AREA CUT	END AREA FILL	VOLUME CUT	VOLUME FILL
		115	60
		65	65
BK		47	18
BK		27	27
		0	5
		73	22
		42	42
		47	10
		27	27
		8	-6
		1	0
		60	12
		35	35
		46	8
		27	27
		65	15
		40	40
913+75		42	12
913+75		27	27
ITEM 203		322	108
ITEM 204		182	182
		TOTALS	

CALCULATED NJV
CHECKED GLW

CROSS SECTIONS - SR 309
STA. 914+15 TO STA. 915+66

ALL-117/309-
18.65/15.17

53
173

I:\pd\75467\roadway\sheets\75467XS008.dgn 17-SEP-2012 10:53AM nvondere

I:\pd\75467\roadway\sheets\75467XS009.dgn 17-SEP-2012 10:53AM nvondere

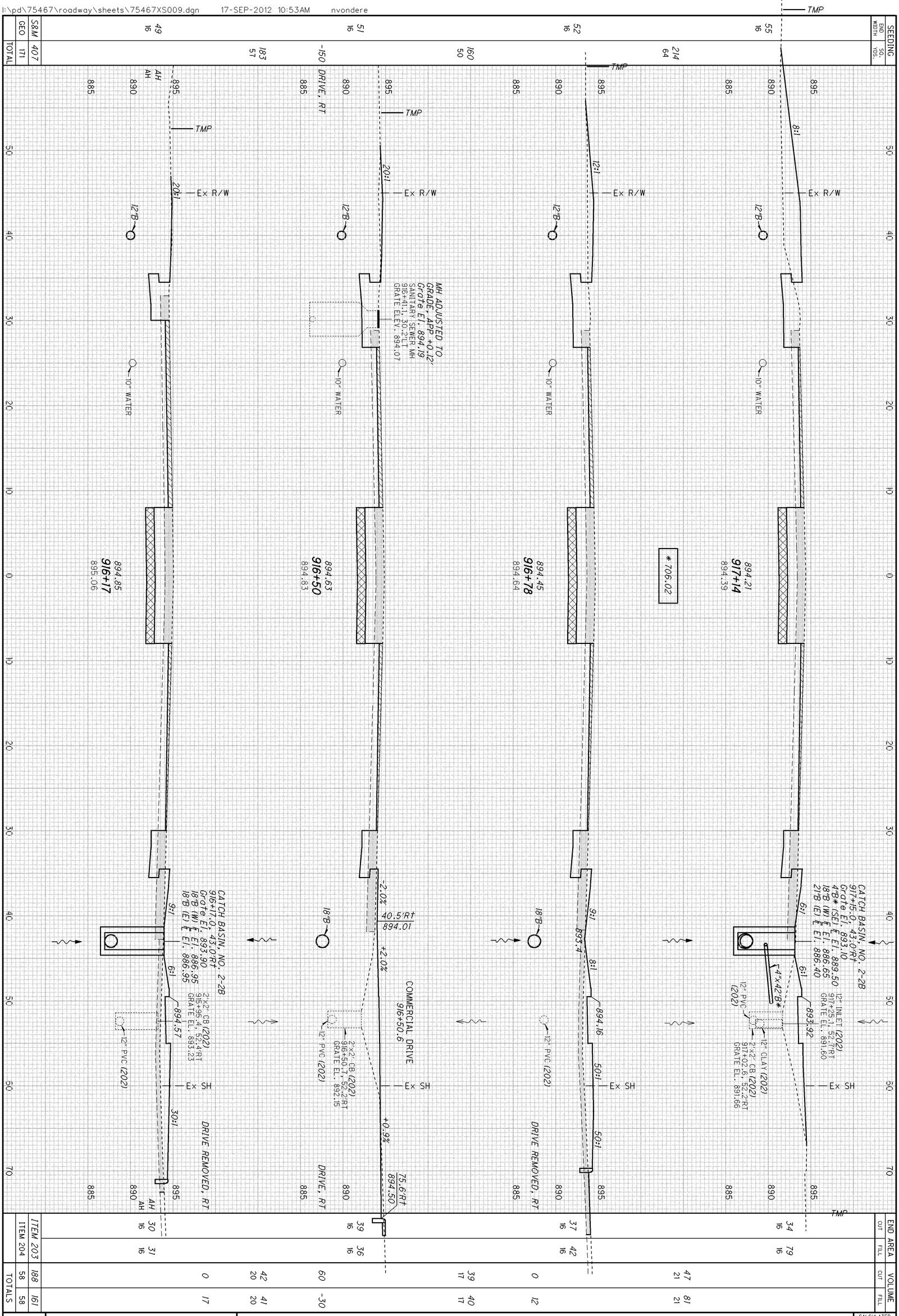

54
173

ALL-117/309-18.65/15.17

CROSS SECTIONS - SR 309
STA. 916+17 TO STA. 917+14

CALCULATED NJV
CHECKED GLW

SEEDING END WIDTH	SEEDING SQ. YDS.
-30	
44	108
24	43
16	
-205	
236	264
69	64
	-110
	264
	69
55	
16	
S&M	527
GEO	245
	TOTAL

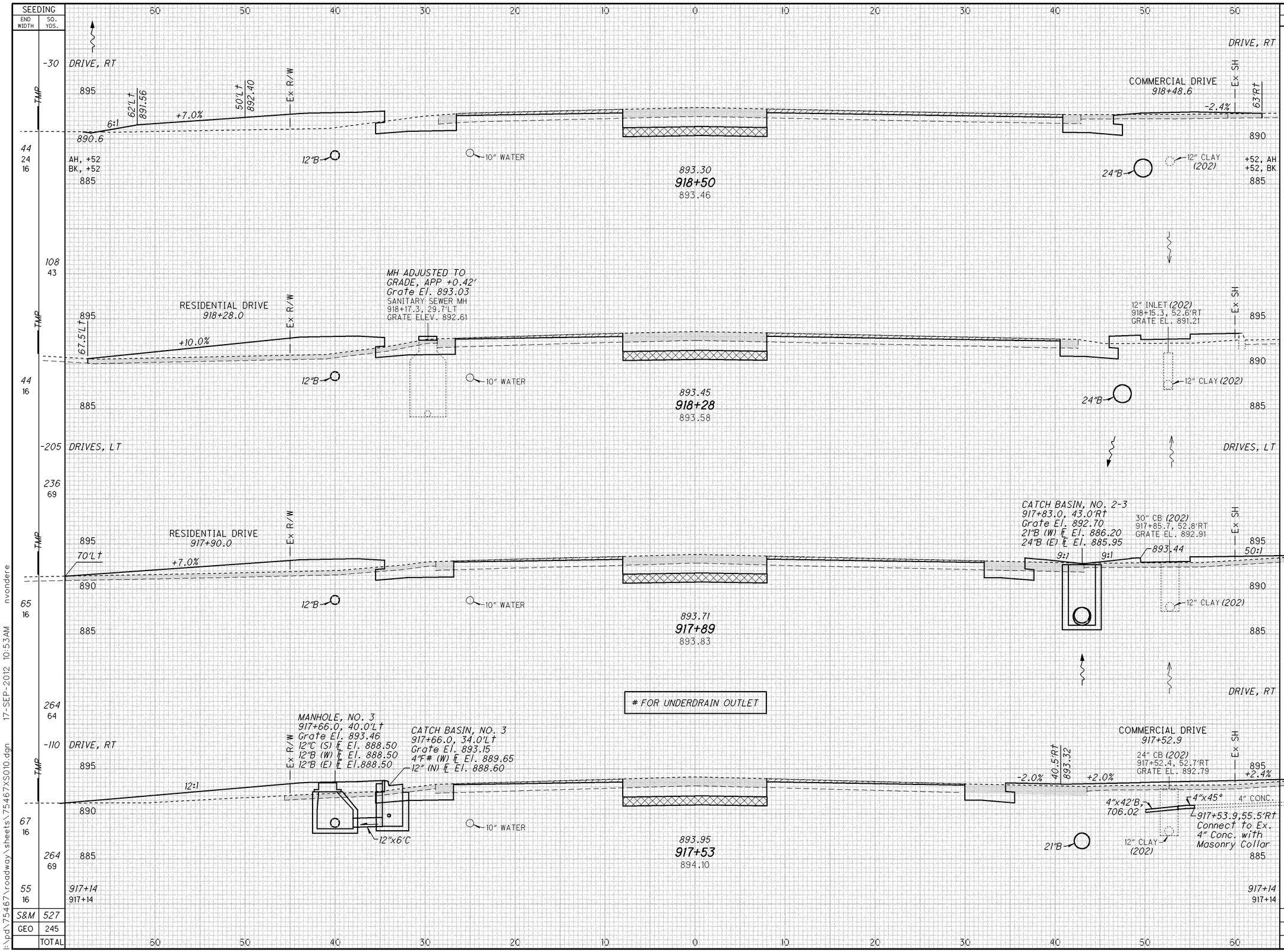

END AREA CUT	END AREA FILL	VOLUME CUT	VOLUME FILL
		12	-3
38	42		
24	24		
16	16		
		30	38
		14	14
36	51		
16	16		
		2	-50
		49	69
		23	23
		TMP	TMP
		10	-5
		43	65
		21	21
		TMP	TMP
32	45		
16	16		
32	52		
16	16		
		48	95
		23	23
34	79		
16	16		
ITEM 203		194	209
ITEM 204		81	81
		TOTALS	

CALCULATED NJV
CHECKED GLW

CROSS SECTIONS - SR 309
STA. 917+53 TO STA. 918+50

ALL-117/309-18.65/15.17

55
173

I:\pd\75467\roadway\sheets\75467XS010.dgn 17-SEP-2012 10:53AM nvondere

SEEDING END WIDTH	SEEDING SQ. YDS.
	350
	285
	43
	37
	137
	113
	39
	31
	231
	147
	44
	24
S&M	718
GEO	545
	TOTAL

RESUME PAVEMENT REPLACEMENT
920+00

MT. HOLYOKE AVE.
919+68.52

MH ADJUSTED TO GRADE, APP -0.17'
Grate El. 892.13
SANITARY SEWER MH
919+85.9, 29.1'LT
GRATE ELEV. 892.30

+2.7%

2" GAS,+98

6" WATER,+58

18"B

10" WATER

892.69
919+69
892.77

CATCH BASIN, NO. 6
919+98.91, 55.00'RT
9+45.00, 28.31'RT
(Mall Drive #2)
Grate El. 891.46
27"B (W) ℄ El. 885.25
27"C (E) ℄ El. 885.25

-1.6%

+1.7%

53.9'Rt, 891.83

2" GAS,+98

12" PVC (202)

CATCH BASIN, NO. 6
919+56.63, 71.02'Lt
10+56.0, 12.0'Lt
(Mt. Holyoke Ave)
Grate El. 890.80
12"B (E) ℄ El. 887.80
12"C (W) ℄ El. 887.80

CATCH BASIN, NO. 6
919+80.64, 70.98'Lt
10+56.0, 12.0'Rt
(Mt. Holyoke Ave)
Grate El. 890.80
12"B (W) ℄ El. 888.25

2" GAS,+85.5

MALL DRIVE #2
919+70.60

+1.7%

2" GAS,+98

INTERSECTION
INTERSECTION

INTERSECTION
INTERSECTION

SUSPEND PAVEMENT REPLACEMENT
919+35

CATCH BASIN, NO. 3
919+30.0, 49.0'Lt
Grate El. 891.94
12"C (N) ℄ El. 887.25
12"C (S) ℄ El. 887.25

MANHOLE, NO. 3, APP
919+30.0, 40.0'Lt
Grate El. 892.25
12"B (N) ℄ El. 887.15
12"B (W) ℄ El. 887.15
18"B (E) ℄ El. 886.90

Ex R/W

Ex SH

2'x2' CB (202)
919+38.2, 53.0'RT
GRATE EL. 891.77

5:1

24:1

24:1

12"x21'C

12"x9'B

10" WATER

892.89
919+30
893.00

12" CLAY (202)

27"B

12" PVC (202)

BK
BK

CATCH BASIN, NO. 2-2B
919+30.0, 70.0'Lt
Grate El. 890.10
12"C (E) ℄ El. 887.50
12"C (S) ℄ El. 887.50

R/W

TMP

10:1

MANHOLE, NO. 3
919+02.0, 55.0'Rt
Grate El. 892.89
12"C (N) ℄ El. 887.25
24"B (W) ℄ El. 885.70
27"B (E) ℄ El. 885.45

CATCH BASIN, NO. 3
919+02.0, 46.0'Rt
Grate El. 892.14
12"C (S) ℄ El. 887.35

30:1

TMP

R/W

Ex R/W

8:1

6:1

890.3

12"B

10" WATER

893.05
919+00
893.17

12"x9'C

12" CLAY (202)

918+50
AH, 918+52

918+50
918+52, AH

END AREA CUT	END AREA FILL	VOLUME CUT	VOLUME FILL
		170	20
		95	95
		76	18
BK		37	37
		77	21
		38	38
		62	19
		31	31
		93	56
		49	49
38	42		
24	24		
ITEM 203		340	97
ITEM 204		182	182
		TOTALS	

CALCULATED NJV
CHECKED GLW

CROSS SECTIONS - SR 309
STA. 919+00 TO STA. 919+69

ALL-117/309-18.65/15.17

I:\pd\75467\roadway\sheets\75467XS011.dgn 17-SEP-2012 10:53AM nvondere

SEEDING	
END WIDTH	SQ. YDS.
40	179
41	169
47	258
41	228
46	233
41	231
38	AH
42	AH
S&M	670
GEO	628
	TOTAL

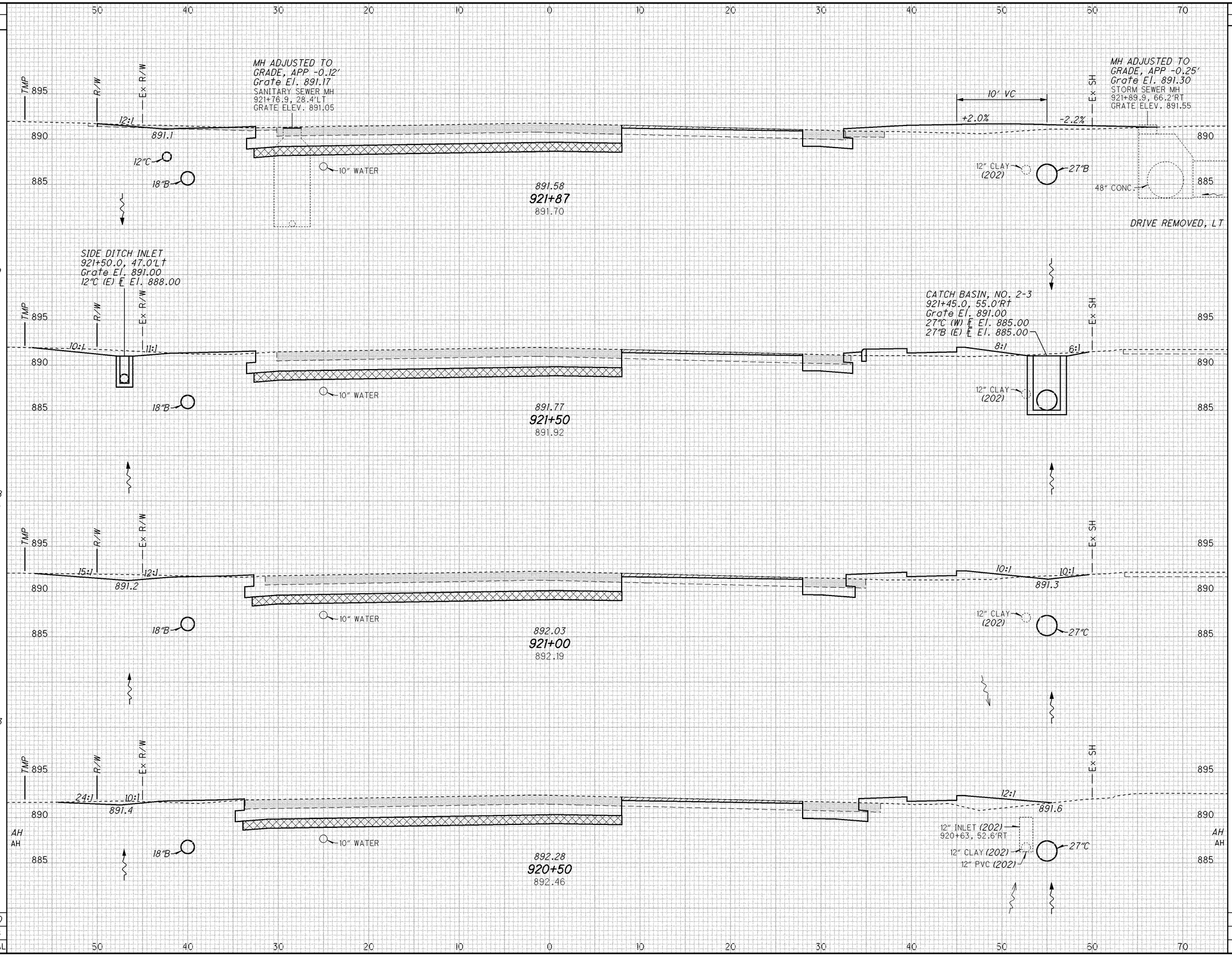

END AREA		VOLUME	
CUT	FILL	CUT	FILL
58	16		
41	41		
		0	1
		82	21
		56	56
61	14		
41	41		
		113	27
		76	76
61	15		
41	41		
		110	31
		77	77
58	19		
42	42		
ITEM 203		305	80
ITEM 204		209	209
		TOTALS	

CALCULATED NJV
CHECKED GLW

CROSS SECTIONS - SR 309
STA. 920+50 TO STA. 921+87

ALL-117/309-18.65/15.17

I:\pd\75467\roadway\sheets\75467XS012.dgn 17-SEP-2012 10:53AM nvondere

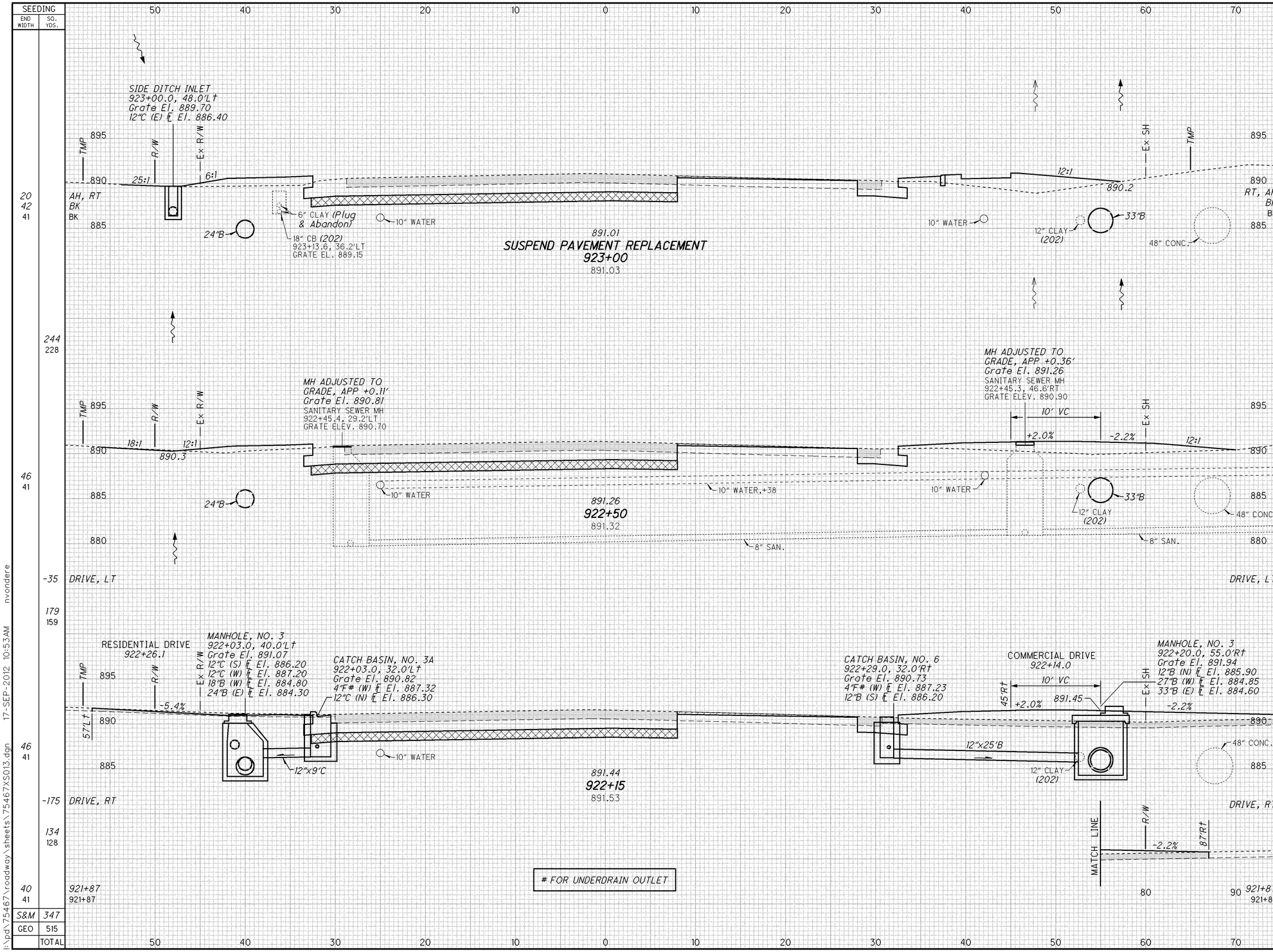

END AREA CUT	END AREA FILL	VOLUME CUT	VOLUME FILL
7	24		
51	38		
41	41		
		97	72
		76	76
54	40		
41	41		
		8	0
		72	52
		53	53
57	40		
41	41		
		50	-100
		60	29
		43	43
58	16		
41	41		
ITEM 203		287	53
ITEM 204		172	172
		TOTALS	

CALCULATED NJV
CHECKED GLW

CROSS SECTIONS - SR 309
STA. 922+15 TO STA. 923+00

ALL-117/309-18.65/15.17

I:\pd\75467\roadway\sheets\75467XS013.dgn 17-SEP-2012 10:53AM nvondere

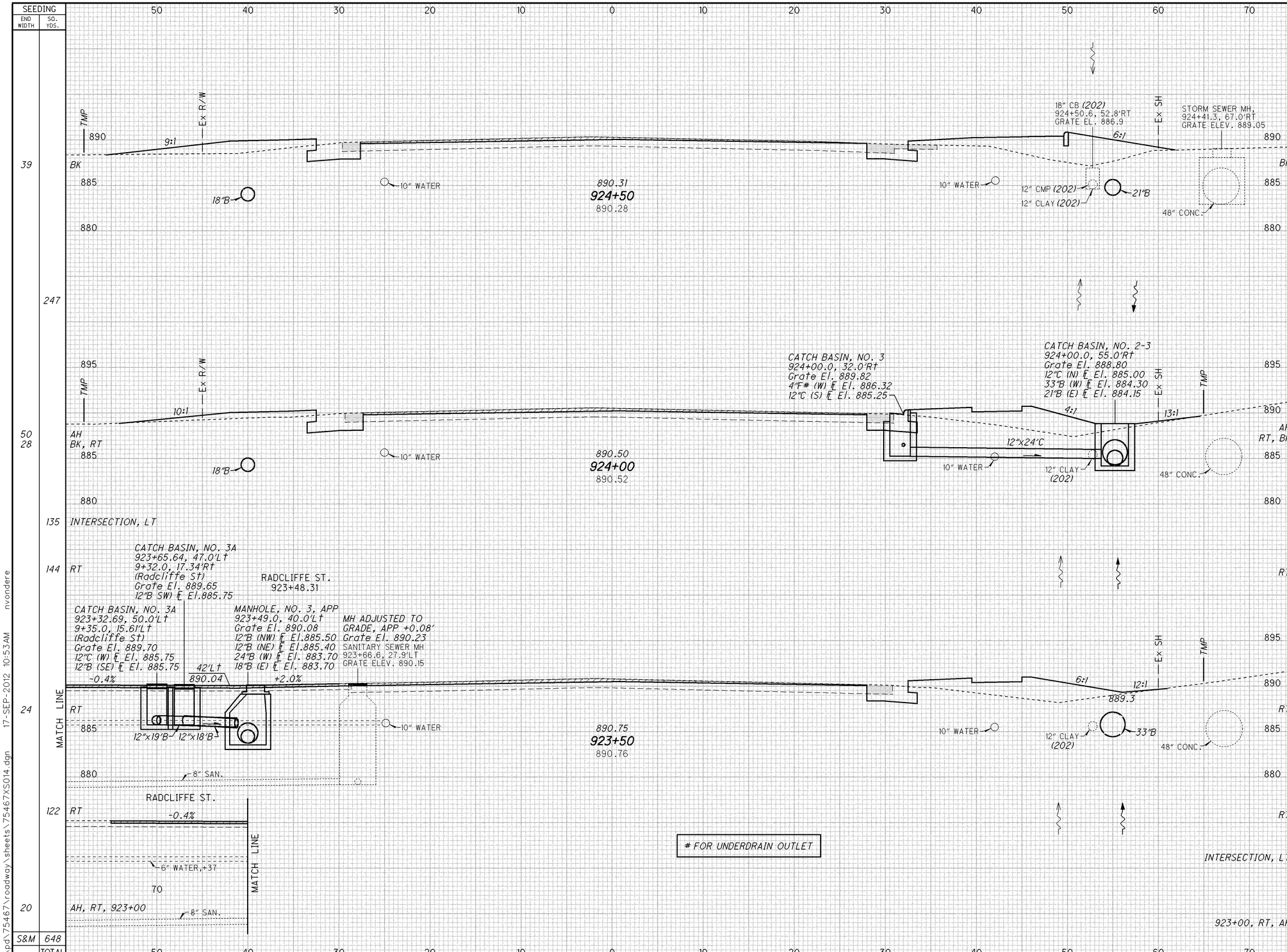

END AREA CUT	END AREA FILL	VOLUME CUT	VOLUME FILL
14	55		
		28	96
16	49		
7	39		
		13	69
7	35		
		13	55
		55	25
7	24		
ITEM 203		109	245
		TOTALS	

CALCULATED NJV
CHECKED GLW

CROSS SECTIONS - SR 309
STA. 923+50 TO STA. 924+50

ALL-117/309-18.65/15.17

I:\pd\75467\roadway\sheets\75467XS014.dgn 17-SEP-2012 10:53AM nvondere

SEEDING	
END WIDTH	SQ. YDS.
53	286
50	

END AREA	
CUT	FILL
20	65
15	45
15	55
75	45

VOLUME	
CUT	FILL
32	102
122	202
TOTALS	

CALCULATED NJV
CHECKED GLW

CROSS SECTIONS - SR 309
STA. 924+89 TO STA. 926+00

ALL-117/309-18.65/15.17

60
173

60 50 40 30 20 10 0 10 20 30 40 50 60

TMP

Ex R/W

MANHOLE, NO. 3
925+79.0, 40.0'Lt
Grate El. 889.97
12"C (NW) ℄ El. 884.50
12"C (S) ℄ El. 885.00
15"C (E) ℄ El. 883.35
18"B (W) ℄ El. 883.35

CATCH BASIN, NO. 3
925+79.0, 32.0'Lt
Grate El. 889.70
4"F# (W) ℄ El. 886.20
4"F# (E) ℄ El. 886.20
12"C (N) ℄ El. 885.10

SANITARY SEWER MH
926+07.9, 28.5'LT
GRATE ELEV. 889.89

MH ADJUSTED TO GRADE, APP +0.15'
Grate El. 890.04

890
885

10:1

12"x9'C

10" WATER

890.47
926+00
890.46

CATCH BASIN, NO. 3
926+20.0, 32.0'Rt
Grate El. 889.89
4"F# (E) ℄ El. 886.40
12"C (S) ℄ El. 885.85

CATCH BASIN, NO. 2-2B
926+20.0, 55.0'Rt
Grate El. 889.20
12"C (N) ℄ El. 885.60
21"B (E) ℄ El. 884.85
15"B (W) ℄ El. 884.70

Ex SH

7:1

12:1

12"x24'C

10" WATER

8" CLAY (202)

48" CONC.

AH

Var.

12"C

18"B

15:1

889.7

890.29
925+50
890.27

8" CLAY (202)

18"B

CATCH BASIN, NO. 3
925+11.31, 63.0'Lt
10+63.0, 12.06'Lt
(Belmont Ave)
Grate El. 888.25
12"B (E) ℄ El.885.30

CATCH BASIN, NO. 3A
925+35.43, 63.0'Lt
10+63.0, 12.06'Rt
(Belmont Ave)
Grate El. 888.25
12"B (W) ℄ El. 885.00
12"C (SE) ℄ El. 885.00

BELMONT AVE.
925+23.37

+3.5%

MATCH LINE

6" WATER, +40

18"B

890.25
925+24
890.21

BELMONT AVE.

+3.5%

MATCH LINE

10' VC

+2.0%

-1.0%

+1.0%

8" CLAY (202)

12" CMP (202)

18" CB (202)
925+20.54'RT
GR. EL. 887.75

INTERSECTION, LT
DRIVE, RT

100 90 80

290
120

INTERSECTION, LT
DRIVE, RT

* 706.02
# FOR UNDERDRAIN OUTLET

MANHOLE, NO. 3
924+89.0, 40.0'Lt
Grate El. 889.75
18"B (E) ℄ El. 883.00
12"C* (N) ℄ El. 881.50
12"C* (NE) ℄ El.882.90
18"B (W) ℄ El. 883.00
27"B (S) ℄ El. 883.60

STORM SEWER MH (202)
924+88.2, 36.2'LT
GRATE ELEV. 888.82

MANHOLE, NO. 3, APP
924+89.0, 55.0'Rt
Grate El. 890.28
12"B (NE) ℄ El. 884.65
12"B (SE) ℄ El. 885.60
18"B (E) ℄ El. 884.10
21"B (W) ℄ El. 883.75
27"B (N) ℄ El. 883.75

CATCH BASIN, NO. 6
924+95.9', 61.10'Rt
Grate El. 890.17
12"B (W) ℄ El. 885.8

CATCH BASIN, NO. 6
925+05.0, 32.0'Rt
Grate El. 889.60
4"F# (W) El. 886.10
4"F# (E) El. 886.10
12"B (S) ℄ El. 884.90

COMMERCIAL DRIVE
924+89.4

10' VC

45'Rt

64'Rt
890.22

71'Rt

+2.0%

890.31

-1.0%

+1.6%

924+94, 45.8'Lt, Connect to Ex.12" Conc. w/Masonry Collar

12"x8'C
706.02

924+88, 47.8'Lt, Connect to Exist. 12" Concrete with Masonry Collar

12"x8'C, 706.02

12" CMP (Plug & Abandon)

12" CMP (Plug & Abandon)

10" WATER

24" CAST IRON (202)

27"x95'B

890.24
924+89
890.13

12"x27'B

12"x10'B

10" CMP (202)

12" CMP (202)

STORM SEWER MH (202)
924+65.2, 49.9'RT
GRATE ELEV. 889.23

S&M	696
TOTAL	

ITEM 203

I:\pd\75467\roadway\sheets\75467XS015.dgn 17-SEP-2012 10:53AM nvondere

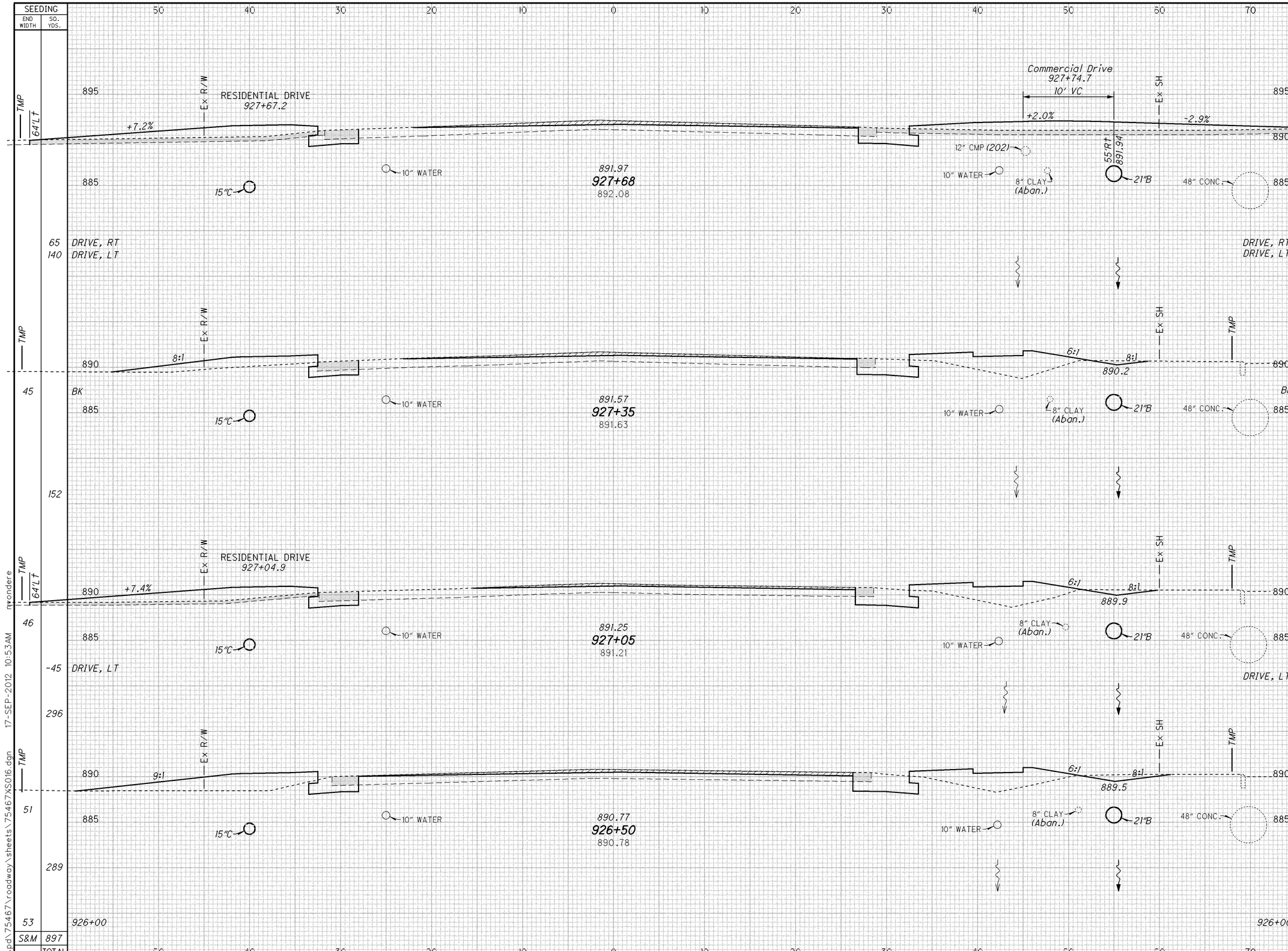

CALCULATED NJV
CHECKED GLW

CROSS SECTIONS - SR 309
STA. 926+50 TO STA. 927+68

ALL-117/309-
18.65/15.17

I:\pd\75467\roadway\sheets\75467XS016.dgn 17-SEP-2012 10:53AM nwondere

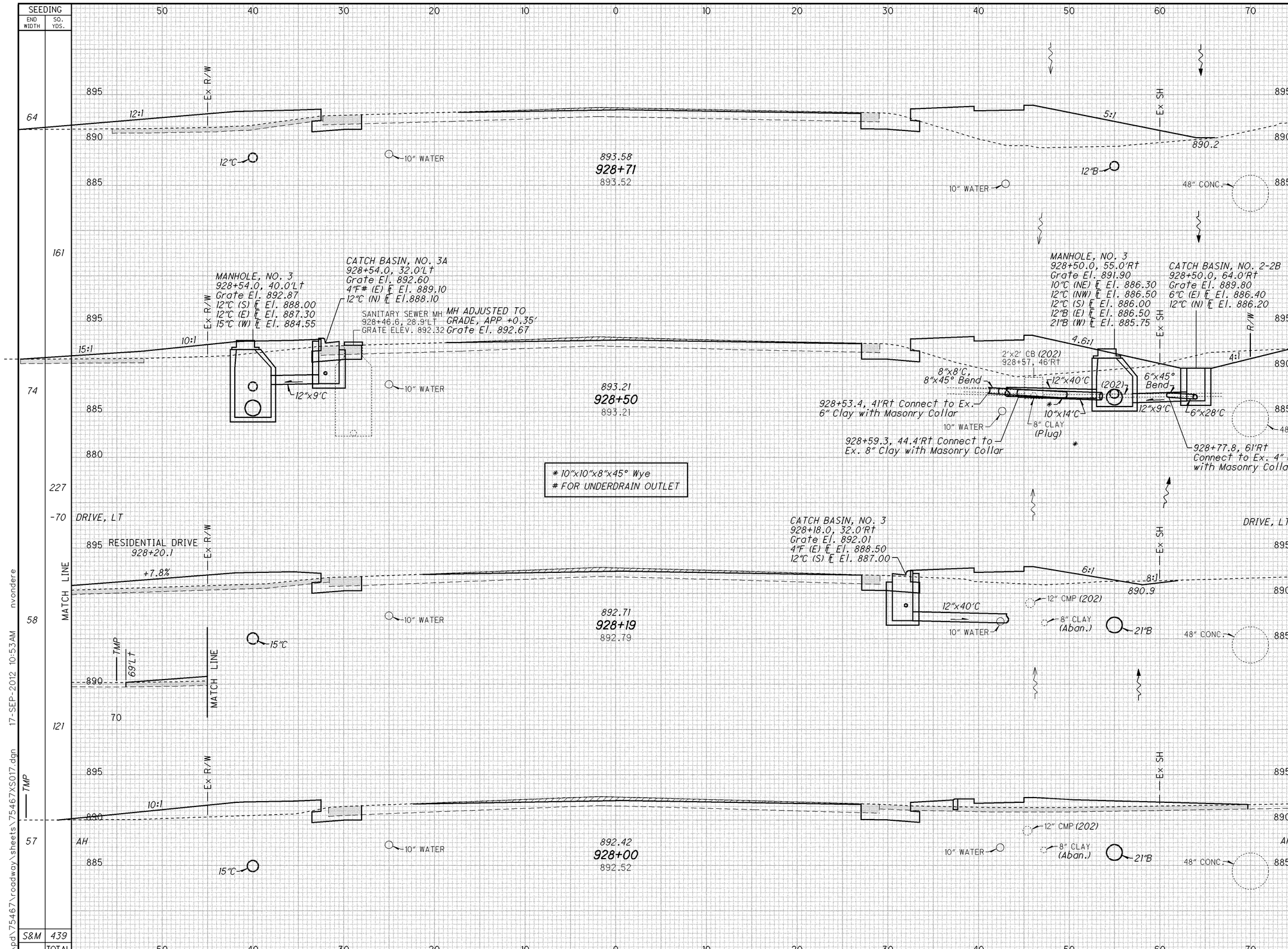

END AREA CUT	END AREA FILL	VOLUME CUT	VOLUME FILL
13	120		
		15	86
25	102		
		22	91
		3	15
14	56		
		10	37
13	50		
ITEM 203		50	229
		TOTALS	

CALCULATED NJV
CHECKED GLW

CROSS SECTIONS - SR 309
STA. 928+00 TO STA. 928+71

ALL-117/309-
18.65/15.17

I:\pd\75467\roadway\sheets\75467XS017.dgn 17-SEP-2012 10:53AM nvondere

SEEDING END WIDTH	SEEDING SQ. YDS.
42	
41	
-85	242
45	
	138
64' LT	
54	
-25	151
55	
	192
64	
S&M	613
	TOTAL

50 40 30 20 10 0 10 20 30 40 50 60 70

TMP — Ex R/W — 8:1 — AH — DRIVE, RT — 12"C — 10" WATER

896.28
RESUME PAVEMENT REPLACEMENT
930+00
896.47

COMMERCIAL DRIVE
929+98.7
10' VC
+2.0% -2.4%
61.5' Rt — Ex SH
55' Rt 896.28
10" CMP (202) — 2" GAS — 12" WATER — 12"B
AH — BK — AH — DRIVE, RT
48" CONC.

Ex R/W — 18:1 — 12"C — 10" WATER

895.18
929+50
895.32

Ex SH — 6:1 — 893.8
2" GAS — 12" WATER — 12"B — 10" WATER, +38
48" CONC.

RESIDENTIAL DRIVE
929+25.1
Ex R/W — +6.0% — 12"C — 10" WATER

894.64
929+25
894.75

Ex SH — 6:1 — 892.4
10" WATER — 2" GAS — 12"B — DRIVE, LT
48" CONC.

Ex R/W — 10:1 — 12"C — 10" WATER

894.13
929+00
894.18

DRIVE REMOVED, LT
Ex SH — 6:1 — 890.8
STORM SEWER MH, 928+89.0, 70.5' RT
GRATE ELEV. 890.34
2" GAS — 12"B — 10" WATER
2" GAS, +92
48" CONC.

928+71 928+71

50 40 30 20 10 0 10 20 30 40 50 60 70

END AREA CUT	END AREA FILL	VOLUME CUT	VOLUME FILL
AH 54	28		
BK 16	28		
AH 41	41		
		8	-30
		31	70
17	49		
		16	51
18	62		
		5	5
		15	71
		5	5
15	92		
		15	114
13	120		
ITEM 203		95	286
		TOTALS	

CALCULATED NJV
CHECKED GLW

CROSS SECTIONS - SR 309
STA. 929+00 TO STA. 930+00

ALL-117/309-18.65/15.17

63
173

I:\pd\75467\roadway\sheets\75467XS018.dgn 17-SEP-2012 10:53AM nvondere

CROSS SECTIONS - SR 309
STA. 930+50 TO STA. 931+40

ALL-117/309-18.65/15.17

CALCULATED NJV
CHECKED GLW

SEEDING END WIDTH	SEEDING SQ. YDS.	END AREA CUT	END AREA FILL	VOLUME CUT	VOLUME FILL
45		59	35		
41		41	41		
-30				-3	0
	198			91	53
	182			61	61
44		64	37		
41		41	41		
	114			58	34
	114			38	38
38		62	36		
41		41	41		
-20				-1	0
	104			53	33
	114			38	38
37		52	36		
41		41	41		
	219			98	59
	228			76	76
42		54	28		
41		41	41		
S&M	585	ITEM 203		296	179
GEO	638	ITEM 204		213	213
	TOTAL			TOTALS	

I:\pd\75467\roadway\sheets\75467XS019.dgn 17-SEP-2012 10:53AM nvondere

SEEDING END WIDTH	SEEDING SQ. YDS.
36	206
38	115
45 41	+25 BK, +25
	132 128
40 41	50'LT
	-115 DRIVE, RT
	63 64
41 41	
	205 196
45 41	931+40 931+40
S&M	606
GEO	388
	TOTAL

MH ADJUSTED TO GRADE, APP -0.04'
Grate El. 899.48
SANITARY SEWER MH
932+91.8, 29.1'LT
GRATE ELEV. 899.52

TMP — Ex R/W — 20:1 — 10" WATER — 899.94 — 933+00 — 899.85 — 8:1 — 8:1 — 898.9 — 2" GAS — 12" WATER — Ex SH

TMP — Ex R/W — 24:1 — 10" WATER — 899.94 — 932+50 — 899.92 — 6:1 — 6:1 — 898.4 — 2" GAS — 12" WATER — Ex SH

END PAVEMENT REPLACEMENT
STA. 932+25

TMP — Ex R/W — 25:1 — 15:1 — 899.0 — 10" WATER — 899.67 — 931+97 — 899.78 — 10' VC — +2.0% — -2.0% — 25:1 — 12" PLASTIC (202) — 2" GAS — Inlet 12"D 932+14, 57'Rt E El. 897.7 — 12" WATER — Ex SH

DRIVE REMOVED, LT

DRIVE, RT

COMMERCIAL DRIVE
931+83.6

TMP — Ex R/W — 25:1 — 15:1 — 898.9 — 10" WATER — 899.54 — 931+83 — 899.61 — 10' VC — +2.0% — -2.1% — 69'Rt — 55'Rt — 899.55 — 12" PLASTIC (202) — 2" GAS — 2" GAS,+76 — Outlet 12"D 931+54, 57'Rt E El. 897.4 — 12" WATER — Ex SH

END AREA CUT	END AREA FILL	VOLUME CUT	VOLUME FILL
24	20		
		39	50
18	34		
		15	25
+25, AH 15	20		
+25, BK 52	20		
+25, BK 41	41		
		54 43	17 43
53 41	13 41		
		3	3
		8	18
		27 21	6 21
51 41	12 41		
		88 65	37 65
931+40 59 41	931+40 37 41		
ITEM 203		234	156
ITEM 204		129	129
		TOTALS	

CALCULATED NJV
CHECKED GLW

CROSS SECTIONS - SR 309 STA. 931+83 TO STA. 933+00

ALL-117/309-18.65/15.17

65
173

I:\pd\75467\roadway\sheets\75467XS020.dgn 17-SEP-2012 10:53AM nvondere

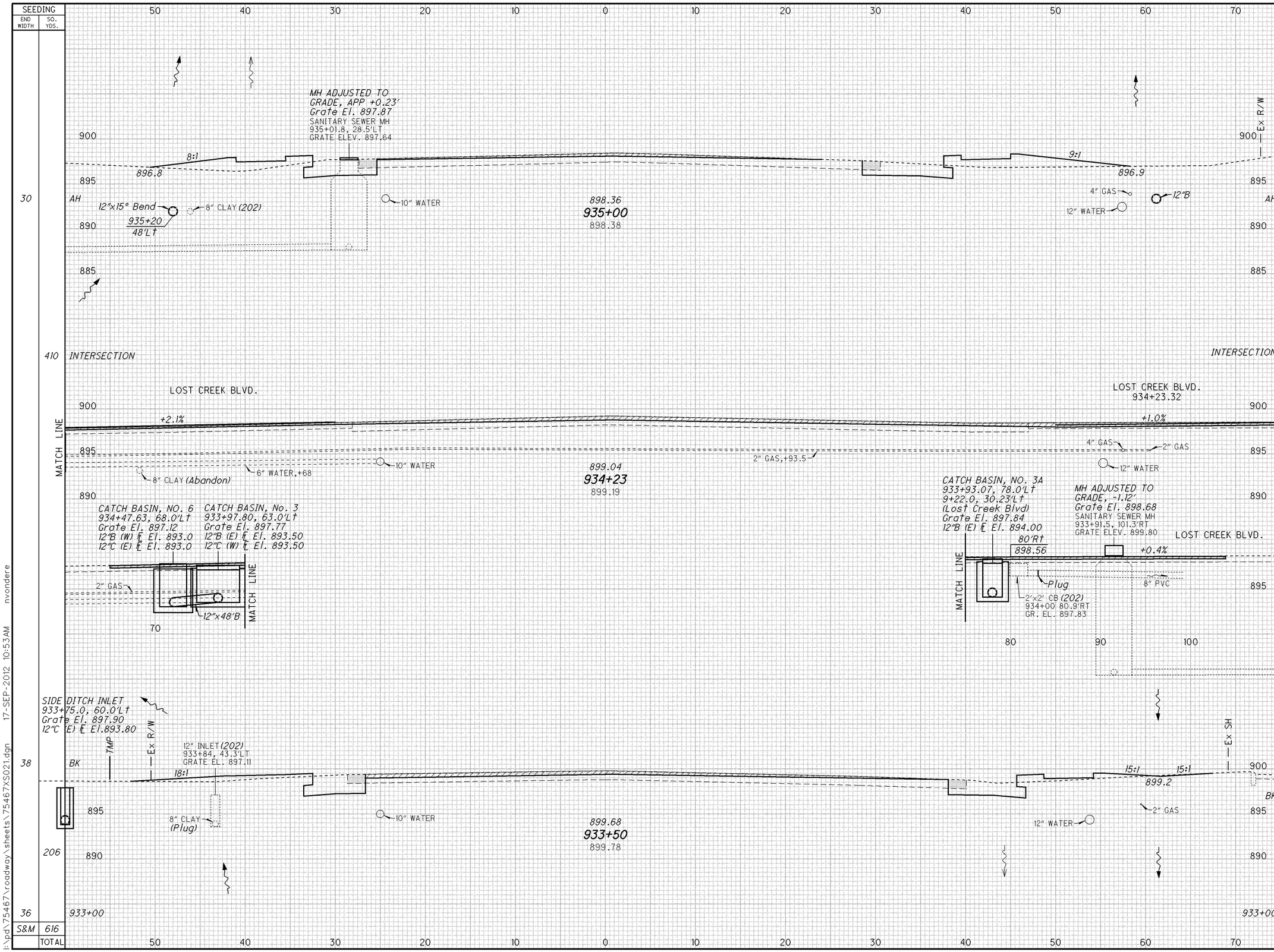

END AREA CUT	END AREA FILL	VOLUME CUT	VOLUME FILL
25	34		
		140	40
24	15		
		44	32
24	20		
ITEM 203		184	72
		TOTALS	

CALCULATED NJV
CHECKED GLW

CROSS SECTIONS - SR 309
STA. 933+50 TO STA. 935+00

ALL-117/309-18.65/15.17

I:\pd\75467\roadway\sheets\75467XS021.dgn 17-SEP-2012 10:53AM nvondere

SEEDING END WIDTH	SEEDING SQ. YDS.
52	463
-35	463
46	242
41	197
30	
S&M	867
TOTAL	

END AREA CUT	END AREA FILL	VOLUME CUT	VOLUME FILL
18	63		
		19	65
18	58		
		4	0
		37	125
18	63		
		33	105
18	50		
		40	78
25	34		
ITEM 203		133	373
		TOTALS	

CALCULATED NJV
CHECKED GLW

CATCH BASIN, NO. 2-2B
936+85.0, 62.0'Lt
Grate El. 893.20
12"C (W) E El. 888.50
12"C (E) E El. 888.50

12" INLET(202)
936+84.1, 46.7'LT
GRATE EL. 893.28

Ex SL — Ex R/W — R/W

12:1 — 6:1 — 9:1

895.4

10" CLAY (Plug & Aban.)

10" WATER

896.72
936+85
896.78

12"C — 4" GAS — 12" WATER

RESIDENTIAL DRIVE
936+55.2
+6.4%
67'LT

895.6

DRIVE, LT

10" CLAY

10" WATER

896.98
936+56
896.93

12"C — 4" GAS — 12" WATER

DRIVE, LT

CATCH BASIN, NO. 2-2B
936+34.0, 53.0'Lt
Grate El. 895.00
12"C (W) E El. 889.30
12"C (S) E El. 891.70
12"C (E) E El. 889.30

CATCH BASIN, NO. 3A
936+34.0, 32.0'Lt
Grate Elev. 896.47
4"F# (W) E El. 893.00
12"C (N) E El.892.00

MH ADJUSTED TO GRADE, APP +0.17'
Grate El. 896.81
SANITARY SEWER MH
936+27.8, 28.1'LT
GRATE ELEV. 896.64

895.2

12"x21'C

10" CLAY (Plug & Aban.)

8" CLAY (Plug & Aban.)

12" INLET(202)
936+30, 41.9'LT
GRATE EL. 893.83

10" WATER

897.47
936+00
897.31

12"C — 4" GAS — 12" WATER

896.0

FOR UNDERDRAIN OUTLET

CATCH BASIN, NO. 3
935+60.0, 32.0'Rt
Grate El. 897.15
4"F# (W) E El. 893.64
12"C (S) E El. 892.50

MANHOLE, NO. 3
935+60.0, 52.0'Rt
Grate El. 897.50
12"C (N) E El. 892.25
12"B (W) E El. 892.25
12"C (E) E El. 892.25

896.3

12"C

8" CLAY

10" WATER

897.92
935+50
897.85

12"x20'C

4" GAS

12" WATER

896.5

AH, 935+00

935+00, AH

CROSS SECTIONS - SR 309
STA. 935+50 TO STA. 936+85

ALL-117/309-
18.65/15.17

67
173

I:\pd\75467\roadway\sheets\75467XS022.dgn 17-SEP-2012 10:53AM nvondere

SEEDING END WIDTH	SEEDING SQ. YDS.
74	
	386
65	
	342
58	
	397
-45	
52	
S&M	1080
TOTAL	

CATCH BASIN, NO. 3
938+60.0, 32.0'Lt
Grate Elev. 895.31
4"F# (W) ℄ El. 891.80
4"F# (E) ℄ El. 891.80
12"B (E) ℄ El. 890.80

CATCH BASIN, NO. 3
938+60.0, 32.0'Rt
Grate Elev. 895.31
4"F# (W) ℄ El. 891.80
4"F# (E) ℄ El. 891.80
12"C (SW) ℄ El. 890.50

CB/MANHOLE,
938+57.7, 68.7'RT
GRATE EL. 893.70

Ex SH — 3:1 — 1:1 — 1:1 — 10" CLAY (Abandon)

8" WATER

895.99
938+50
896.00

4" GAS
Outlet 12"C (E) ℄ El. 890.00
Tie into MH with Masonry Collar
Outlet 12"C (NW) ℄ El. 889.50
Tie into MH w/Masonry Collar

9:1 — 894.2

60" CONC.

R/W — 6:1 — 884.8 — 3:1 — MATCH LINE — 12"C

FOR UNDERDRAIN OUTLET

MANHOLE, NO. 3
938+15.0, 52.0'Rt
Grate El. 895.70
12"C (NW) ℄ El. 890.00
12"C (NE) ℄ El. 890.00
12"C (W) ℄ El. 890.00
12"C (SE) ℄ El. 890.00

Ex SH — 3.8:1 — 1:1 — 10" CLAY (Abandon)

8" WATER

896.08
938+00
896.21

9:1 — 894.5

4" GAS

BEGIN BENCHING
STA. 937+90

R/W — 6:1 — 888.1 — 3.8:1 — MATCH LINE — 12"C

MH ADJUSTED TO
GRADE, +1.18'
Grate El. 895.55
SANITARY SEWER MH,
937+36.6, 45.2'LT
GRATE ELEV. 894.37

CATCH BASIN, NO. 3A
937+70.0, 32.0'Rt
Grate Elev. 895.50
4"F# (W) ℄ El. 892.00
12"C (SE) ℄ El. 890.50

Ex SH — 6:1

8" WATER

896.28
937+50
896.44

9:1 — 895.0

12"C — 4" GAS

10" CLAY (202)

R/W — 12:1 — 891.5 — MATCH LINE — 12"C

10" SAN.

10" SAN.

RESIDENTIAL DRIVE
937+14.9

R/W — 69'Lt — Ex SH — +5.2%

DRIVE, LT

8" WATER

896.49
937+16
896.62

9:1 — 895.2

DRIVE, LT

12"C — 4" GAS

12" WATER

10" CLAY (Abandon)

936+85

936+85

END AREA CUT	END AREA FILL	VOLUME CUT	VOLUME FILL
125	275		
		206	431
98	190		
		22	55
23	105		
		34	135
23	77		
		27	79
		5	1
20	48		
		22	64
18	63		
ITEM 203		316	765
		TOTALS	

CALCULATED NJV
CHECKED GLW

CROSS SECTIONS - SR 309 STA. 937+16 TO STA. 938+50

ALL-117/309-18.65/15.17

68
173

I:\pd\75467\roadway\sheets\75467XS023.dgn 17-SEP-2012 10:53AM nvondere

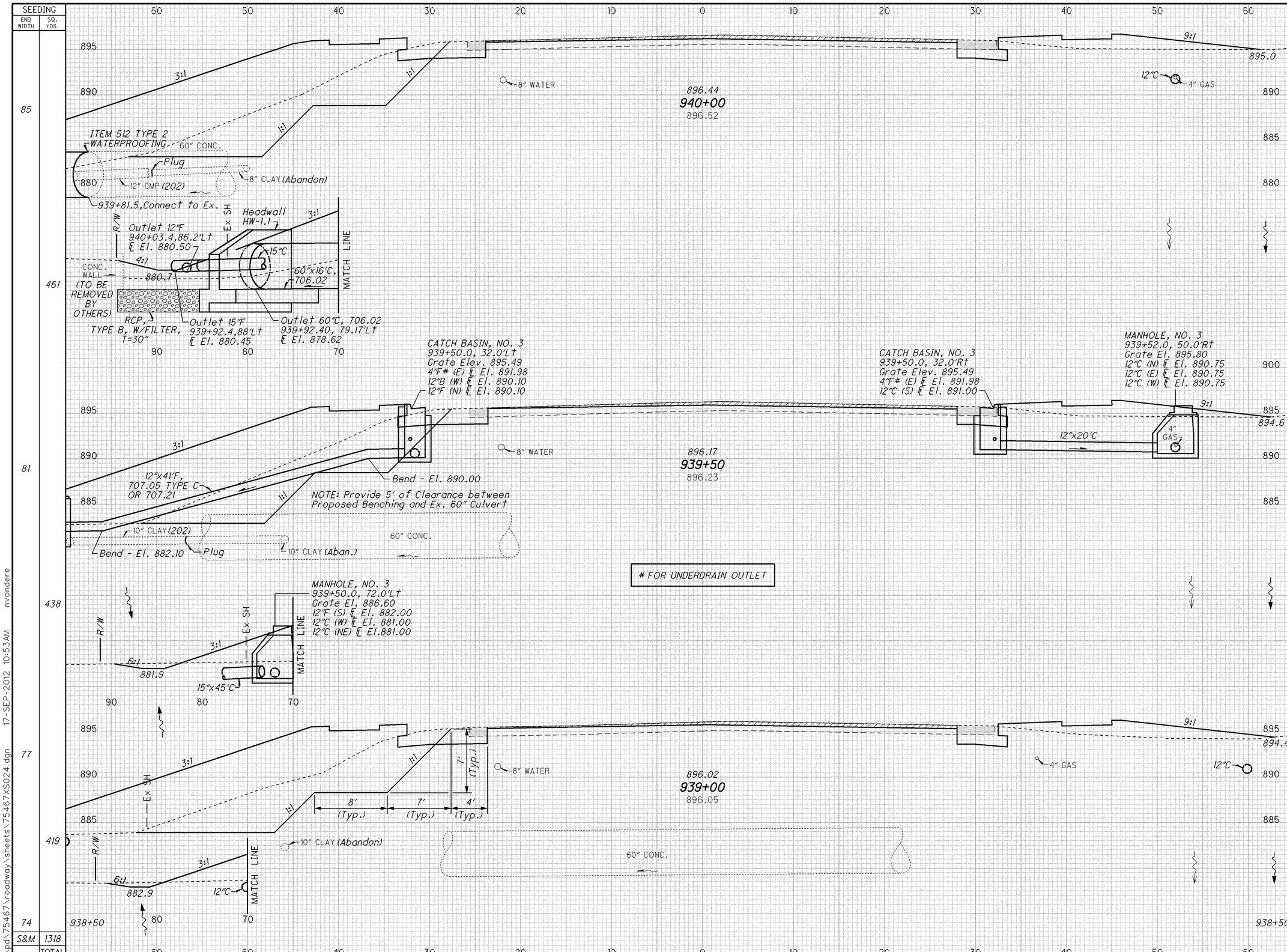

END AREA CUT	END AREA FILL	VOLUME CUT	VOLUME FILL
120	355		
		230	644
128	340		
		233	597
124	305		
		231	537
125	275		
ITEM 203		694	1778
		TOTALS	

CALCULATED NJV
CHECKED GLW

CROSS SECTIONS - SR 309
STA. 939+00 TO STA. 940+00

ALL-117/309-18.65/15.17

I:\pd\75467\roadway\sheets\75467XS024.dgn 17-SEP-2012 10:53AM nvondere

SEEDING END WIDTH	SEEDING SQ. YDS.
55	311
57	347
68	397
75	444
85	
S&M	1499
TOTAL	

CATCH BASIN, NO. 2-2B
941+75.0, 52.0'LT
Grate El. 896.50
12"C (S) IE El. 893.60
12"C (E) IE El. 890.50
12"C (W) IE El. 890.50

CATCH BASIN, NO. 3A
942+00.0, 32.0'LT
Grate Elev. 898.01
12"C (N) IE El. 894.00

Ex SH
15:1
10:1
897.4
12"x32'C
8" CLAY (202)
8" WATER
898.69
942+00
898.76
9:1
12:1
897.2
12"C
4" GAS
12" WATER

R/W
Ex SH
5:1
8" CLAY (Abandon)
8" WATER
897.96
941+50
897.98
9:1
12:1
896.3
12"C
4" GAS
12" WATER
12"C

END BENCHING
STA. 941+10

Ex SH
3.5:1
1:1
8" CLAY (202)
8" WATER
897.34
941+00
897.39
9:1
12:1
895.7
12"C
4" GAS
12" WATER
12"C

R/W
3.5:1
MATCH LINE
70

3:1
1:1
8" WATER
896.83
940+50
896.92
9:1
12:1
895.3
12"C
4" GAS
12" WATER

(Abandon)
8" CLAY
R/W
3:1
Ex SH
MATCH LINE
12"C
80
70

940+00

END AREA CUT	END AREA FILL	VOLUME CUT	VOLUME FILL
27	32		
		45	93
22	68		
		33	132
22	110		
		17	52
69	170		
		164	458
108	325		
		211	630
120	355		
ITEM 203		470	1365
		TOTALS	

CALCULATED NJV
CHECKED GLW

CROSS SECTIONS - SR 309
STA. 940+50 TO STA. 942+00

ALL-117/309-
18.65/15.17

70
173

I:\pd\75467\roadway\sheets\75467XS025.dgn 17-SEP-2012 10:53AM nvondere

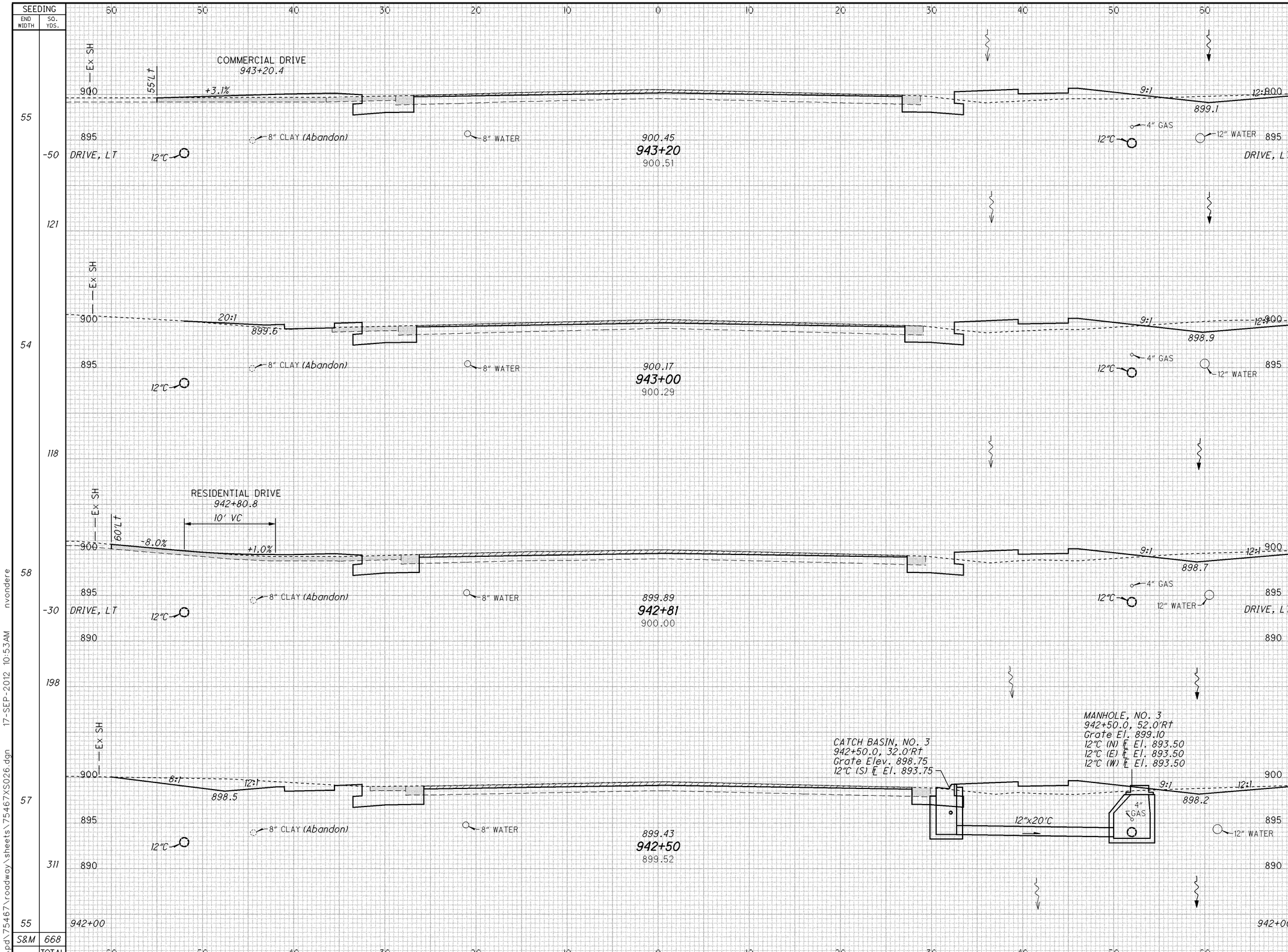

END AREA CUT	END AREA FILL	VOLUME CUT	VOLUME FILL
26	21		
		2	-3
		21	17
30	25		
		21	16
30	20		
		8	-1
		42	24
43	22		
		65	50
27	32		
ITEM 203		159	103
		TOTALS	

CALCULATED NJV
CHECKED GLW

CROSS SECTIONS - SR 309
STA. 942+50 TO STA. 943+20

ALL-117/309-
18.65/15.17

I:\pd\75467\roadway\sheets\75467XS026.dgn 17-SEP-2012 10:53AM nvondere

SEEDING END WIDTH	SEEDING SQ. YDS.
54	306
56	314
57	311
55	183
55	
S&M	1114
TOTAL	

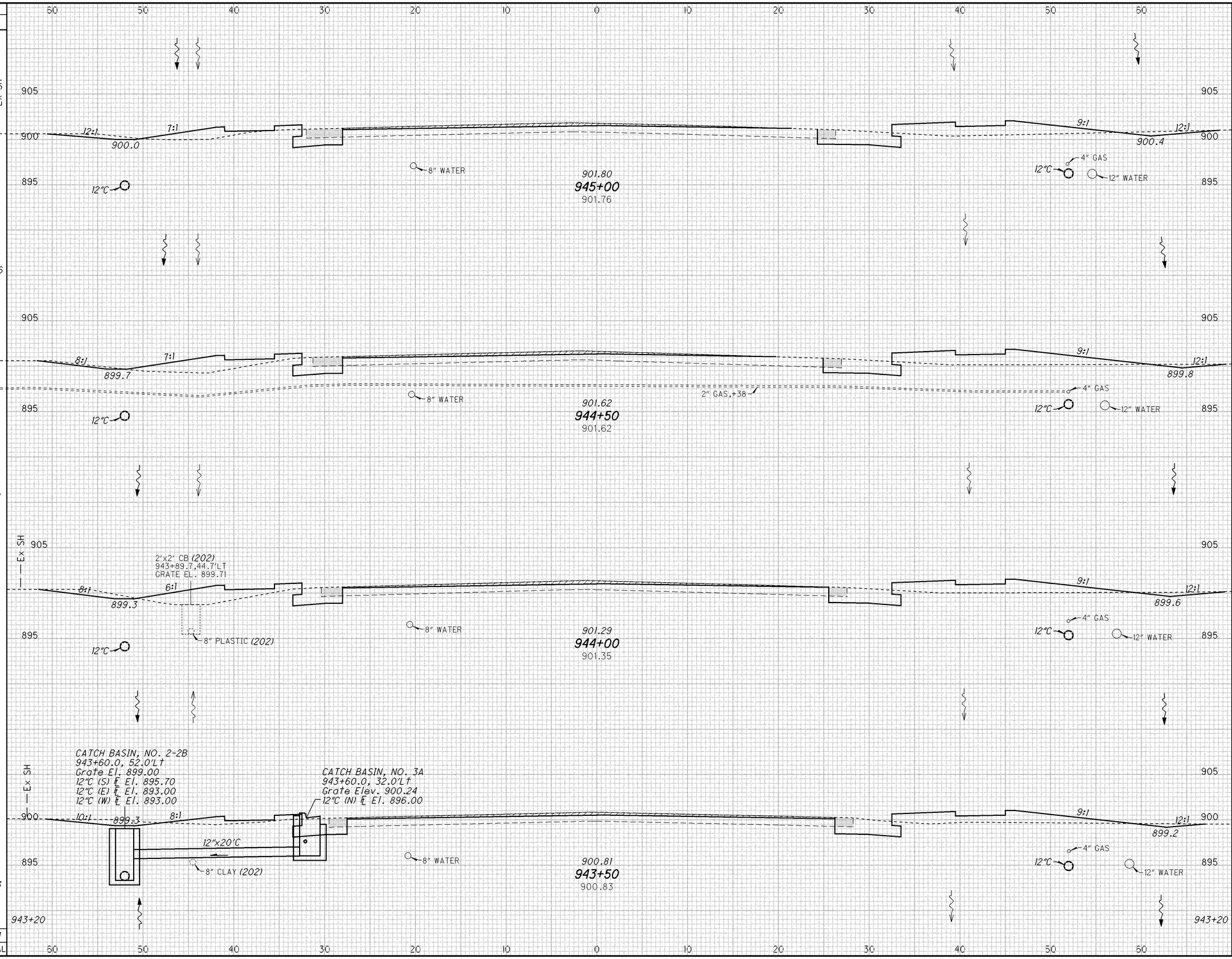

END AREA CUT	END AREA FILL	VOLUME CUT	VOLUME FILL
		42	80
23	36		
22	50		
		43	88
24	45		
		46	69
26	30		
		29	28
26	21		
ITEM 203		160	265
		TOTALS	

CALCULATED NJV
CHECKED GLW

CROSS SECTIONS - SR 309
STA. 943+50 TO STA. 945+00

ALL-117/309-
18.65/15.17

72
173

I:\pd\75467\roadway\sheets\75467XS027.dgn 17-SEP-2012 10:53AM nvondere

SEEDING END WIDTH	SEEDING SQ. YDS.	END AREA CUT	END AREA FILL	VOLUME CUT	VOLUME FILL
28	345	30	6	110	20
41	264	23	22	43	54
54		23	36		
S&M	609	ITEM 203		153	74
	TOTAL			TOTALS	

CALCULATED NJV
CHECKED GLW

CROSS SECTIONS - SR 309
STA. 945+50 TO STA. 946+50

ALL-117/309-18.65/15.17

73
173

I:\pd\75467\roadway\sheets\75467XS028.dgn 17-SEP-2012 10:53AM nvondere

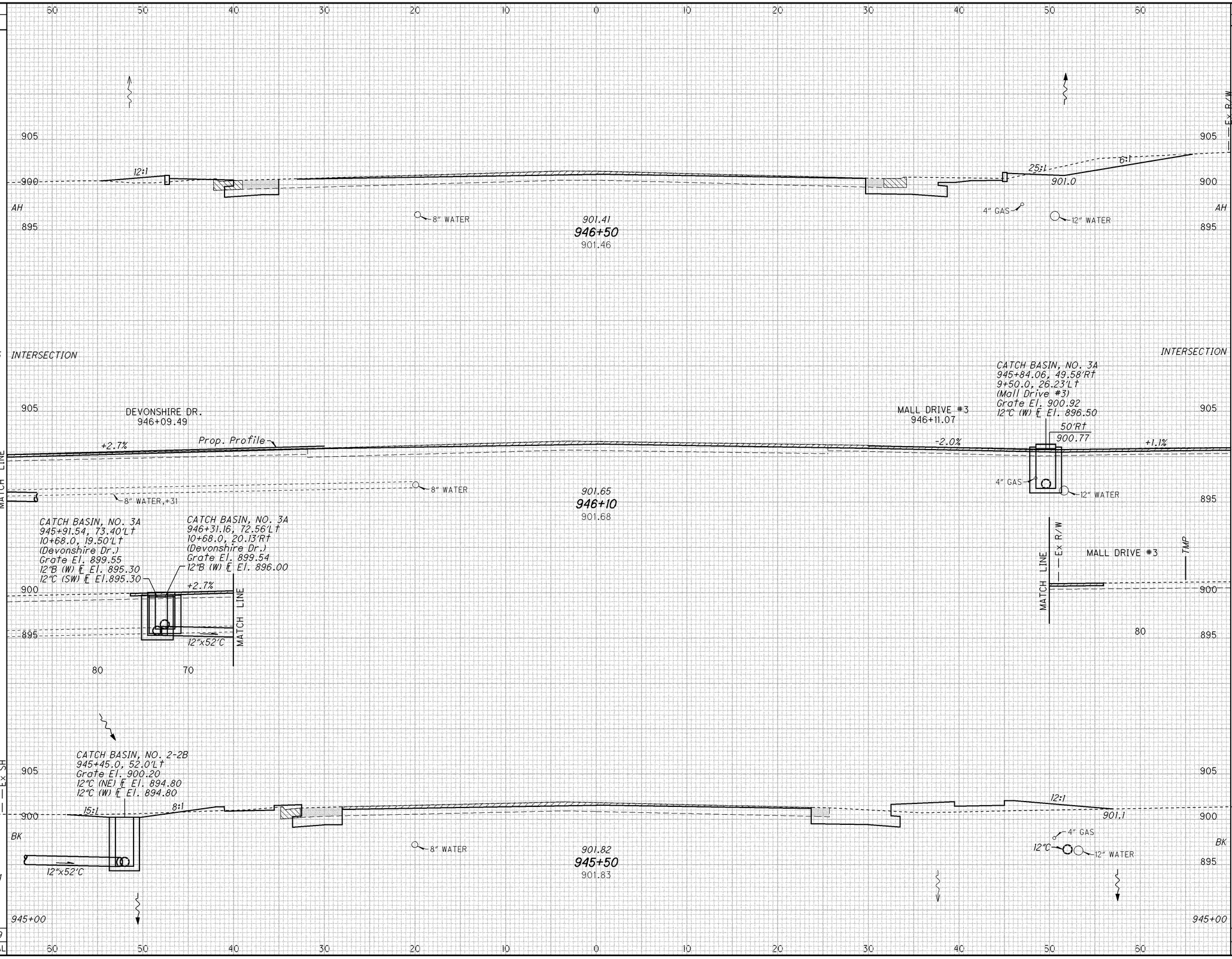

CROSS SECTIONS - SR 309
STA. 947+00 TO STA. 948+74

ALL-117/309-18.65/15.17

CALCULATED NJV | CHECKED GLW

SEEDING END WIDTH	SEEDING SQ. YDS.	END AREA CUT	END AREA FILL	VOLUME CUT	VOLUME FILL
42		55	10		
	-45			2	-2
	345			195	18
42		87	3		
	225			168	6
39		94	3		
	-35			4	0
	228			173	8
43		93	6		
	197			114	11
28		30	6		
S&M	915	ITEM 203		656	41
TOTAL				TOTALS	

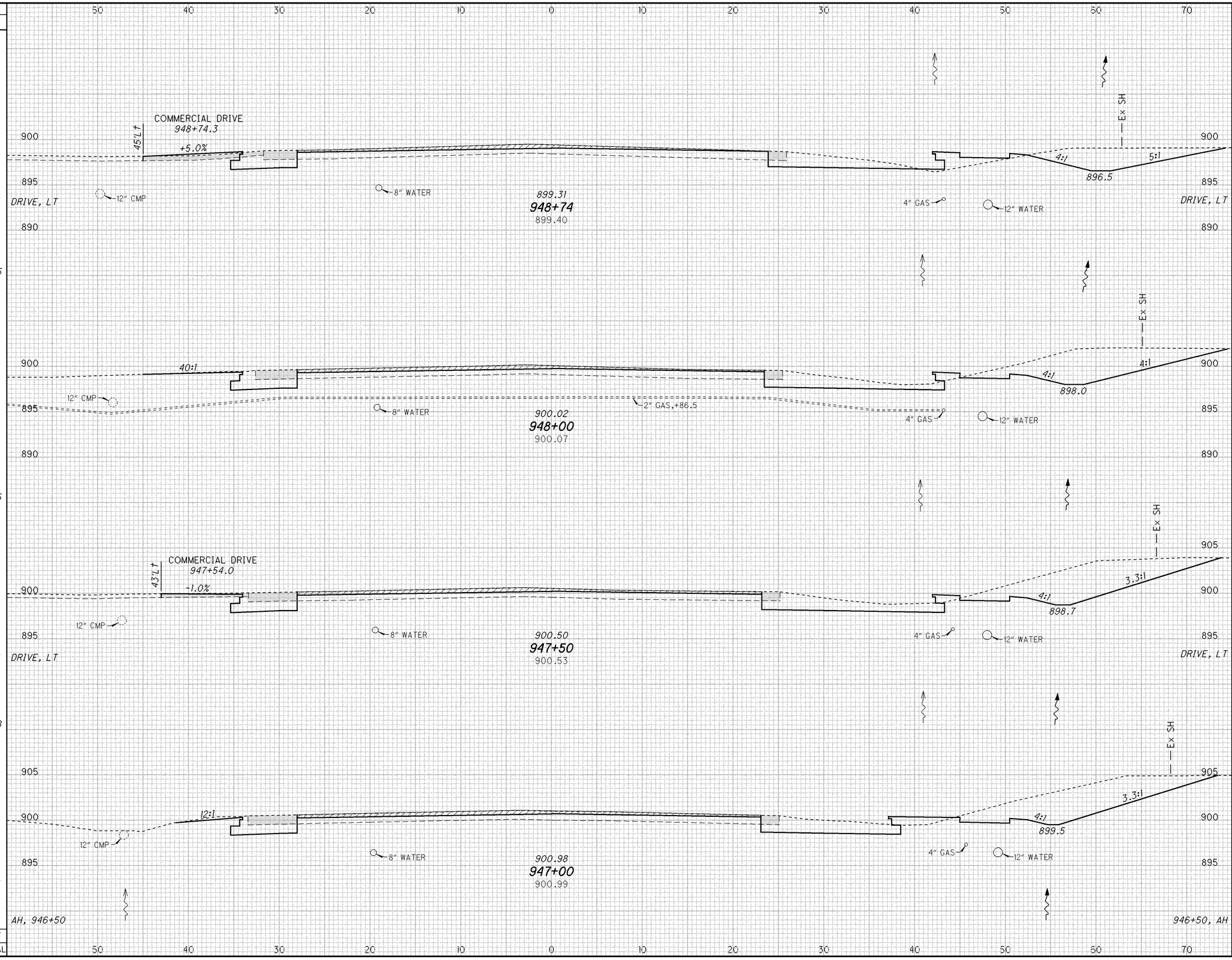

I:\pd\75467\roadway\sheets\75467XS029.dgn 17-SEP-2012 10:53AM nvondere

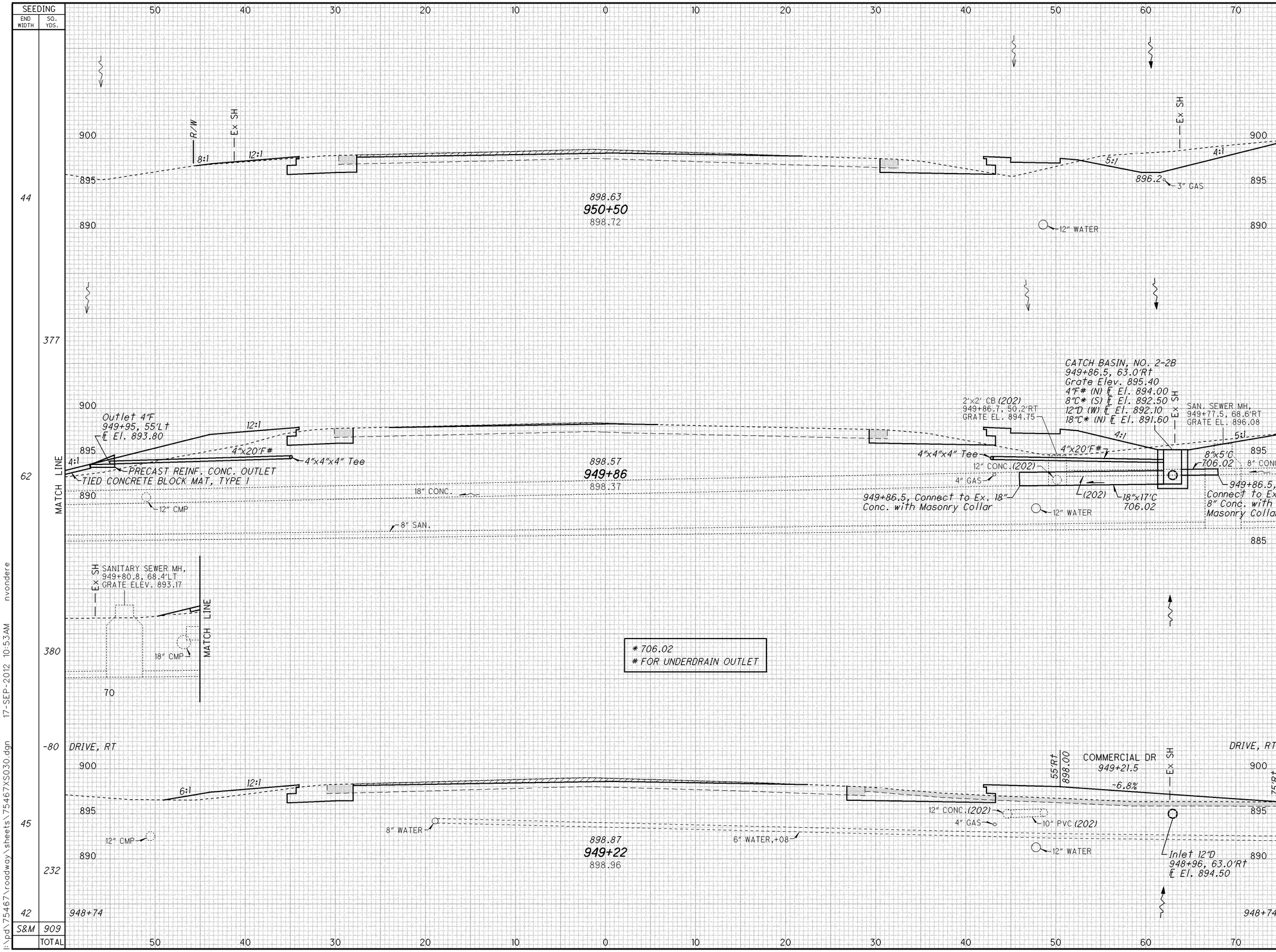

END AREA CUT	END AREA FILL	VOLUME CUT	VOLUME FILL
52	12		
		94	95
27	68		
		56	114
		2	-15
20	28		
		66	34
54	10		
ITEM 203		218	228
		TOTALS	

CALCULATED NJV
CHECKED GLW

CROSS SECTIONS - SR 309
STA. 949+22 TO STA. 950+50

ALL-117/309-18.65/15.17

I:\pd\75467\roadway\sheets\75467XS030.dgn 17-SEP-2012 10:53AM nvondere

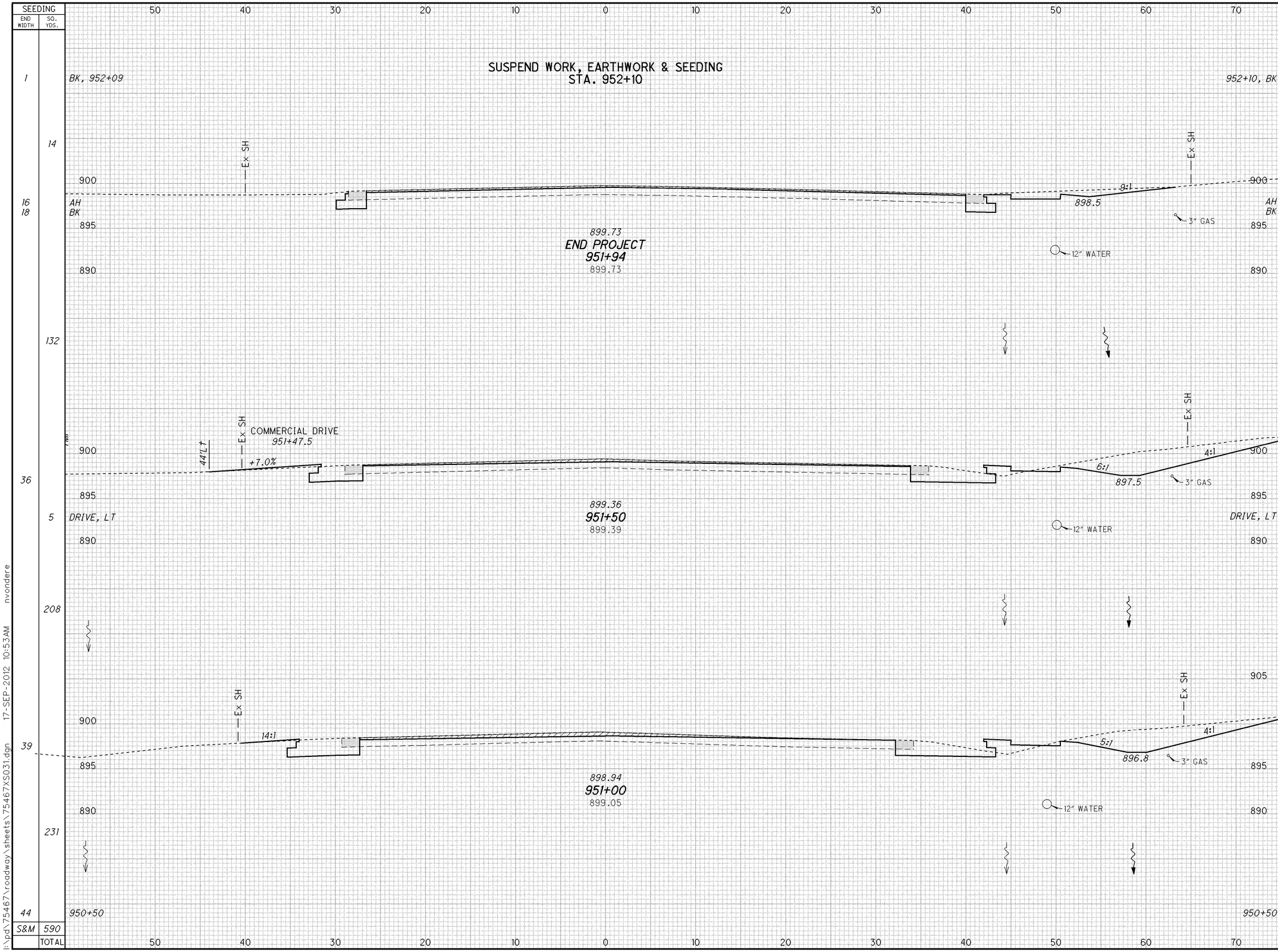

SEEDING END WIDTH	SEEDING SQ. YDS.	END AREA CUT	END AREA FILL	VOLUME CUT	VOLUME FILL
1		0	0		
	14			3	0
16		9	0		
18		17	2		
	132			61	6
36		58	5		
	5			15	3
	208			108	7
39		59	3		
	231			103	14
44		52	12		
S&M	590	ITEM 203		290	30
	TOTAL			TOTALS	

CALCULATED NJV
CHECKED GLW

CROSS SECTIONS - SR 309
STA. 951+00 TO STA. 951+94

ALL-117/309-18.65/15.17

I:\pd\75467\roadway\sheets\75467XS031.dgn 17-SEP-2012 10:53AM nvondere

SEEDING END WIDTH	SEEDING SQ. YDS.		END AREA CUT	END AREA FILL	VOLUME CUT	VOLUME FILL
	45	961+50 TO BOWMAN RD			30	6
		900 / 895 / 890 — Ex SH				
13		BK	17	5		
		961+50 897.08 — 4" GAS, +73.5 — 6:1 — 4" GAS				
	78				31	10
		900 / 895 / 890 — Ex SH				
15		961+00 896.75 — 6:1 — 3" GAS	16	6		
	89				29	14
		900 / 895 / 890 — Ex SH — 2'x2' CB, 960+41.1, 52.6'LT GRATE EL. 893.87				
17		CB ADJUSTED TO GRADE +0.60' Grate El. 894.25 — 2'x2' CATCH BASIN 960+40.9, 44.2'RT GRATE ELEV. 893.65 — 6:1 — 8" CMP — 3" GAS — 15" PLASTIC — 12" PLASTIC — 8" PLASTIC — 12" CMP	15	9		
	44	885 — 36" CONC. — 960+50 896.42			14	6
15		+25	15	5		
		900 / 895 / 890 — Ex SH				
	47	960+00 896.50 — 8:1 — 3" GAS	11	3		
12		AH, 959+94	5	1		
S&M	303		ITEM 203		115	39
TOTAL					TOTALS	

END WORK, EARTHWORK & SEEDING
STA. 961+95.3

RESUME WORK, EARTHWORK & SEEDING
STA. 959+94

CALCULATED NJV
CHECKED GLW

CROSS SECTIONS - SR 309
STA. 960+00 TO STA. 961+50

ALL-117/309-
18.65/15.17

77
173

I:\pd\75467\roadway\sheets\75467XS032.dgn 17-SEP-2012 10:53AM nvondere

DEFLECTION DATA

℄ Constr. SR 309
PI Sta. 908+79.96
Δ = 0°-08′-48″ Lt
NO CURVE

END WORK
WILLARD AVE.
STA. 12+13

BEGIN SHEET STA. 13+55

MATCH LINE STA. 991+20

* Masonry Collar
** 4″x10′F FOR UNDERDRAIN OUTLET
8′ EXFILTRATION TRENCH, TYPE A with 4″x15′B
8′ EXFILTRATION TRENCH, TYPE A with 4″x24′B
(DND) = DO NOT DISTURB

HORIZONTAL SCALE IN FEET
0 10 20 40

CALCULATED NJV
CHECKED EJS

ESTIMATED QUANTITIES

ITEM	SHEET
PAVEMENT	18
CURB-C	20
WALK-W	20
ROADWAY-R	21
MAILBOX-M	21
DRAINAGE-D	22-23
UNDERDRAINS	24
DRIVEWAY-DR	92

ITEM 202 - PAVEMENT REMOVED

CROSS REFERENCES

ITEM	SHEET
INTERSECTION DETAILS	85
CURB RAMP DETAILS	91
DRIVEWAY DETAILS	93,95

PLAN AND PROFILE - WILLARD AVE./SR 117
STA. 13+55 TO STA. 991+20

ALL-117/309-18.65/15.17

I:\pd\75467\roadway\sheets\75467GP012.dgn 17-SEP-2012 10:53AM nvondere

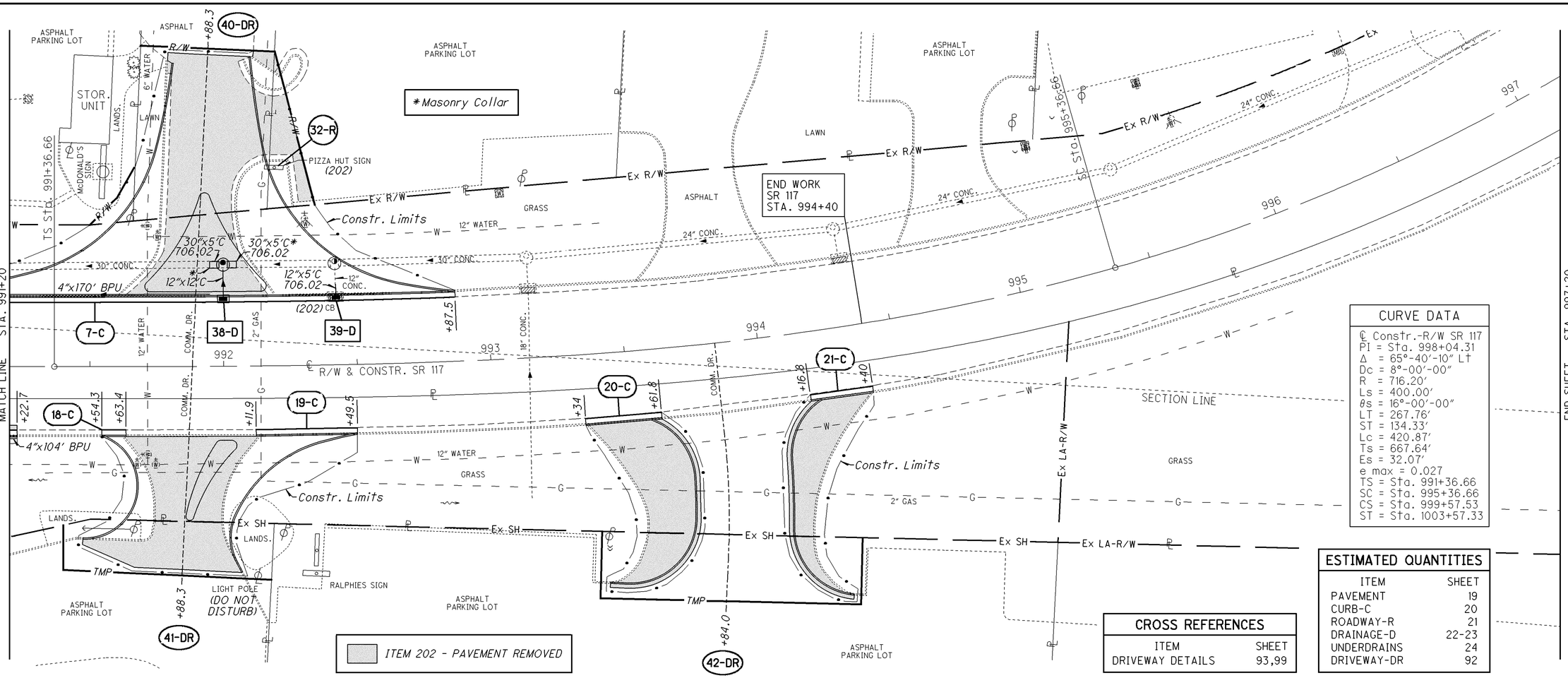

CURVE DATA

℄ Constr.-R/W SR 117
PI = Sta. 998+04.31
Δ = 65°-40'-10" Lt
Dc = 8°-00'-00"
R = 716.20'
Ls = 400.00'
θs = 16°-00'-00"
LT = 267.76'
ST = 134.33'
Lc = 420.87'
Ts = 667.64'
Es = 32.07'
e max = 0.027
TS = Sta. 991+36.66
SC = Sta. 995+36.66
CS = Sta. 999+57.53
ST = Sta. 1003+57.33

ESTIMATED QUANTITIES

ITEM	SHEET
PAVEMENT	19
CURB-C	20
ROADWAY-R	21
DRAINAGE-D	22-23
UNDERDRAINS	24
DRIVEWAY-DR	92

CROSS REFERENCES

ITEM	SHEET
DRIVEWAY DETAILS	93,99

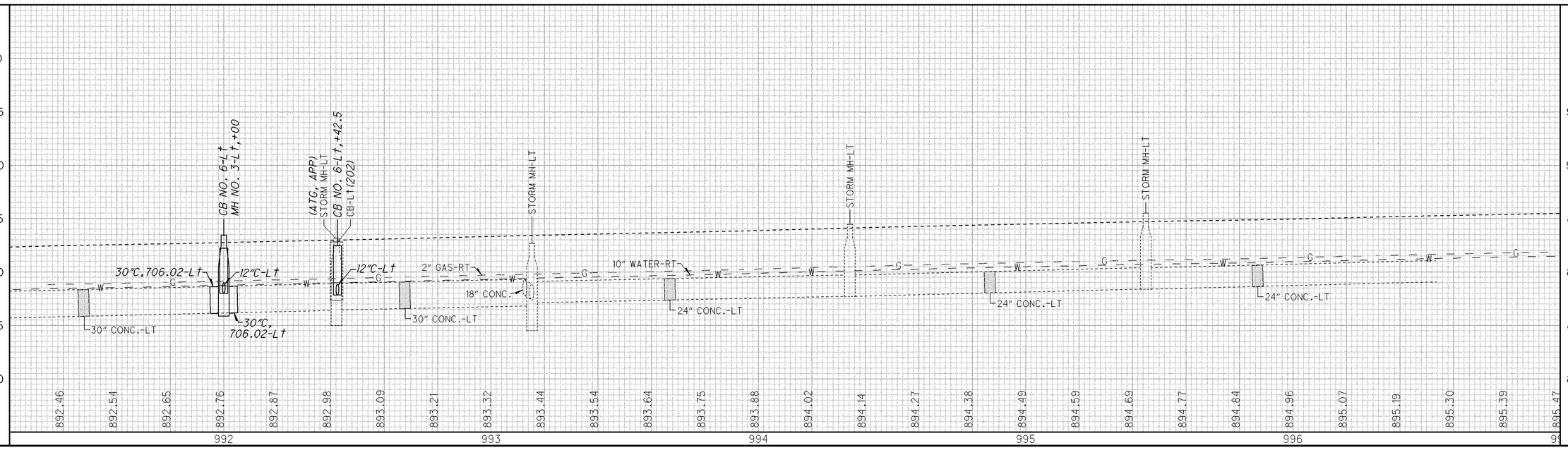

HORIZONTAL SCALE IN FEET
0 10 20 40
CALCULATED NJV
CHECKED EJS

PLAN AND PROFILE - SR 117 STA. 991+20 TO STA. 997+20

ALL-117/309-18.65/15.17

79
173

I:\Pdl\75467\roadway\sheets\75467GP013.dgn 10-OCT-2012 2:40PM eschecke

SEEDING	
END WIDTH	SQ. YDS.
4	9
8	26
6	31
5	50
S&M	116
	TOTAL

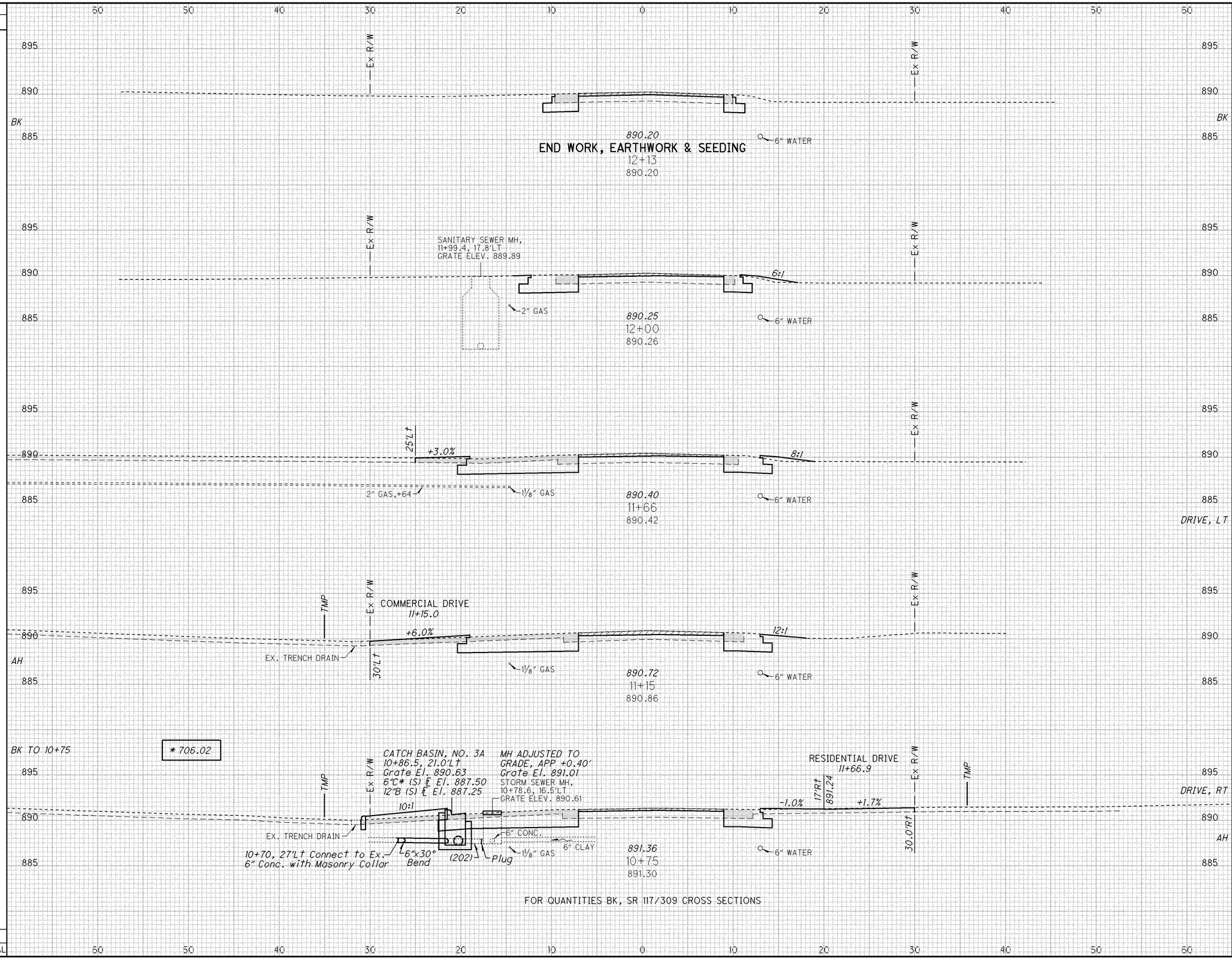

END AREA		VOLUME	
CUT	FILL	CUT	FILL
8	2		
		5	1
14	3		
		24	2
24	2		
		8	-2
		46	3
25	1		
		37	8
25	11	1	3
ITEM 203		121	15
		TOTALS	

CALCULATED NJV
CHECKED GLW

CROSS SECTIONS - WILLARD AVE. STA. 10+75 TO STA. 12+13

ALL-117/309-
18.65/15.17

I:\pd\75467\roadway\sheets\75467XS033.dgn 17-SEP-2012 10:53AM nvondere

SEEDING	
END WIDTH	SQ. YDS.
5	32
18	
56	
	64
	160
28	
59	
	186
	364
	39
	72
S&M	282
GEO	524
	TOTAL

60 50 40 30 20 10 0 10 20 30 40 50 60

Ex R/W

895 890 885

15:1

30" CONC.

991+00
892.21

12" WATER

+75
BK, +75

STORM SEWER MH,
990+42.3, 37.2'LT
GRATE ELEV. 892.91

10:1

CATCH BASIN (202)
990+37.5, 26.0'LT
GRATE ELEV. 891.47

30" CONC.

Plug

12" CONC. (202)

891.90
990+50
892.03

CATCH BASIN (202)
990+37.1, 36.9'RT
GRATE ELEV. 891.31

2'x2' CB (To Remain)
990+56.8, 50.9'Rt
Grate Elev. 889.0

889.5

Plug

12" WATER

12" CONC. (202)

12" CONC.

900 895 890 885

MANHOLE, NO. 3
990+15.0, 35.2'Lt
Grate El. 892.50
12"C (W) ℄ El. 886.50
30"C (S) ℄ El. 885.00
30"C (N) ℄ El. 885.00

12:1

CATCH BASIN, NO. 3
990+15.0, 27.44'Lt
Grate Elev. 891.23
4"F# (N) ℄ El. 887.74
4"F# (S) ℄ El. 887.74
12"C (E) ℄ El. 886.70

℄ 12"x8'C

891.87
990+00
892.12

990+10, Connect to Ex. 30" Conc. with Masonry Collar

990+20, Connect to Ex. 30" Conc. with Masonry Collar

CATCH BASIN, NO. 3
990+10.0, 38.78'Rt
Grate Elev. 891.05
4"F# (N) ℄ El. 887.55
4"F# (S) ℄ El. 887.55
12"C (W) ℄ El. 885.40

30:1

12"x55'C

MATCH LINE

STORM SEWER MH,
907+97.0, 78.4'RT
GRATE EL. 890.85

Ex SH

MATCH LINE

12" WATER

12"x55'C

Plug

12" CONC. (202)

Plug

15" CONC.

℄ El. 885.08
Tie into MH with Masonry Collar

70 90

FOR UNDERDRAIN OUTLET

FOR QUANTITIES BK, SR 117/309 CROSS SECTIONS

END AREA		VOLUME	
CUT	FILL	CUT	FILL
15	2		
		15	2
+75, AH	18	2	
+75, BK	68	2	
+75, BK	56	56	
		65	2
		53	53
	73	2	
	59	59	
		165	22
		121	121
AH	105	22	
AH	72	72	
ITEM 203	245	26	
ITEM 204	174	174	
	TOTALS		

CALCULATED NJV
CHECKED GLW

CROSS SECTIONS - SR 117
STA. 990+00 TO STA. 991+00

ALL-117/309-18.65/15.17

81
173

I:\pd\75467\roadway\sheets\75467XS034.dgn 17-SEP-2012 10:53AM nvondere

SEEDING END WIDTH	SEEDING SQ. YDS.
	50 DRIVE, RT
	100 DRIVE, LT
	8
	8
	33
S&M	191
TOTAL	

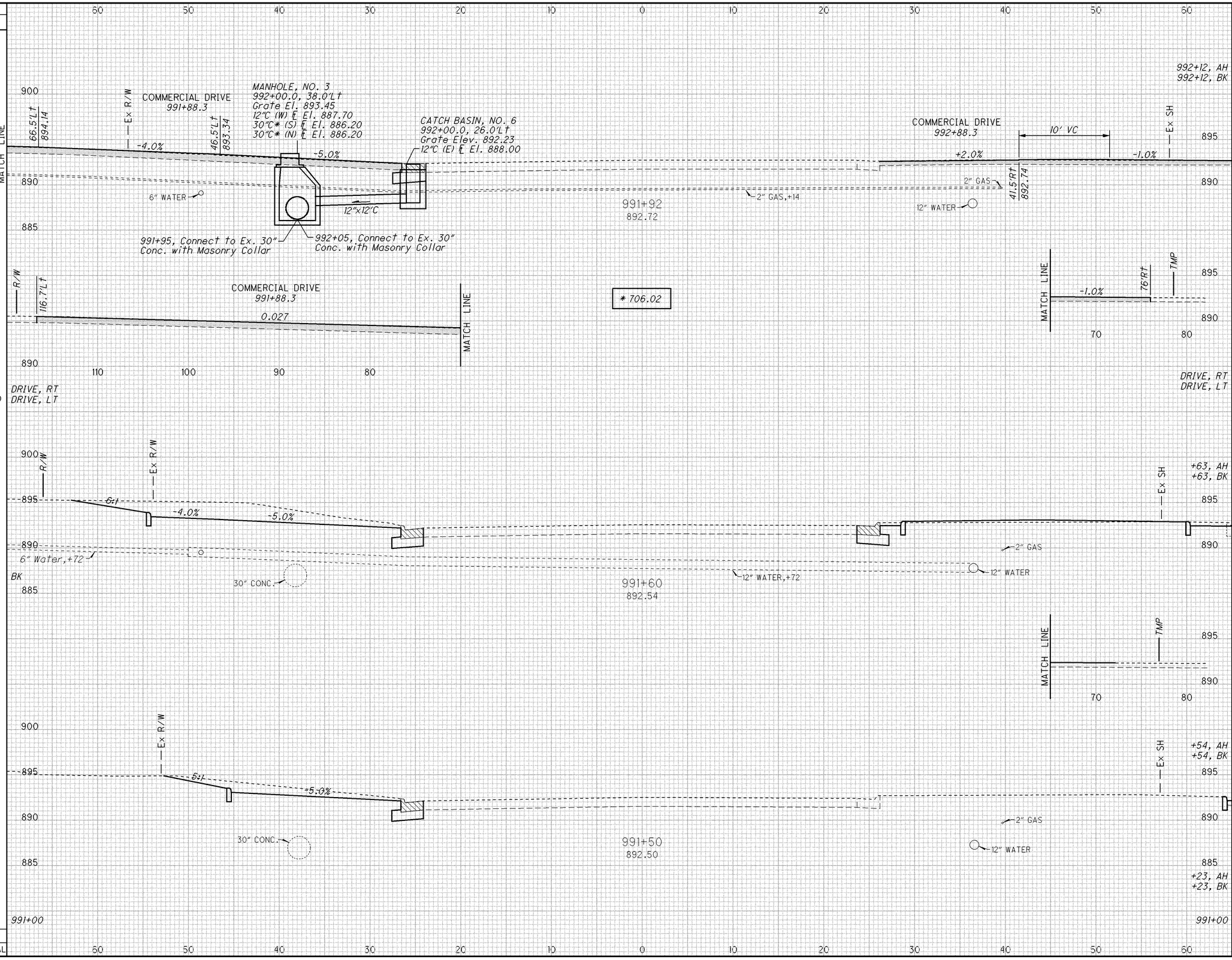

END AREA CUT	END AREA FILL	VOLUME CUT	VOLUME FILL
10	0		
5	0		
		9	0
		75	10
		300	15
5	0		
10	0		
		3	0
		6	0
5	0		
11	1		
		11	1
15	2		
ITEM 203		404	26
		TOTALS	

CALCULATED NJV
CHECKED GLW

CROSS SECTIONS - SR 117
STA. 991+50 TO STA. 991+92

ALL-117/309-18.65/15.17

82
173

I:\pd\75467\roadway\sheets\75467XS035.dgn 17-SEP-2012 10:53AM nvondere

END WORK, EARTHWORK & SEEDING
STA. 994+90

SEEDING END WIDTH	SEEDING SQ. YDS.	
	275	DRIVE, RT
	2	BK, +88
	19	
	7	AH
	14	BK
	60	
	40	AH
		S&M
	354	TOTAL

END AREA CUT	END AREA FILL	VOLUME CUT	VOLUME FILL	
4	0			+40, BK
		3	0	
4	0			+17, AH
		10	70	DRIVE, RT
4	0			+62, BK
		4	0	
4	0			+34, AH
		7	0	
5	0			+88, BK
		7	0	
5	0			AH
10	0			BK
		7	0	
10	0			
		7	0	
10	0			992+12, AH
ITEM 203		38	70	TOTALS

CALCULATED NJV
CHECKED GLW

CROSS SECTIONS - SR 117
STA. 992+30 TO STA. 994+20

ALL-117/309-18.65/15.17

83
173

i:\pd\75467\roadway\sheets\75467XS036.dgn 17-SEP-2012 10:53AM nvondere

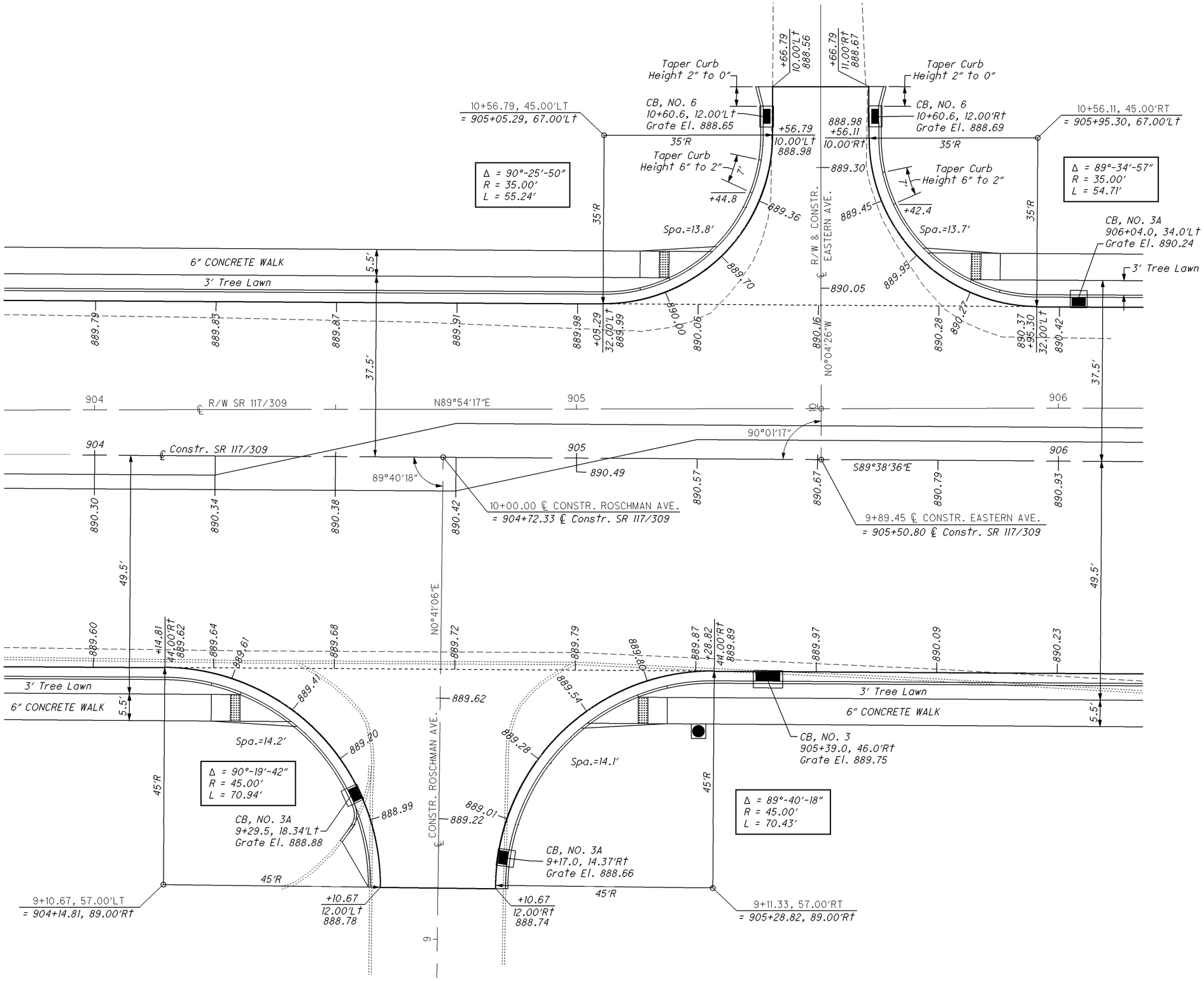

I:\pd\75467\roadway\sheets\75467G001.dgn 17-SEP-2012 10:53AM nvondere

0 5 10 20 HORIZONTAL SCALE IN FEET

CALCULATED NJV CHECKED EJS

INTERSECTION DETAILS ROSCHMAN AVE. - EASTERN AVE.

ALL-117/309-18.65/15.17

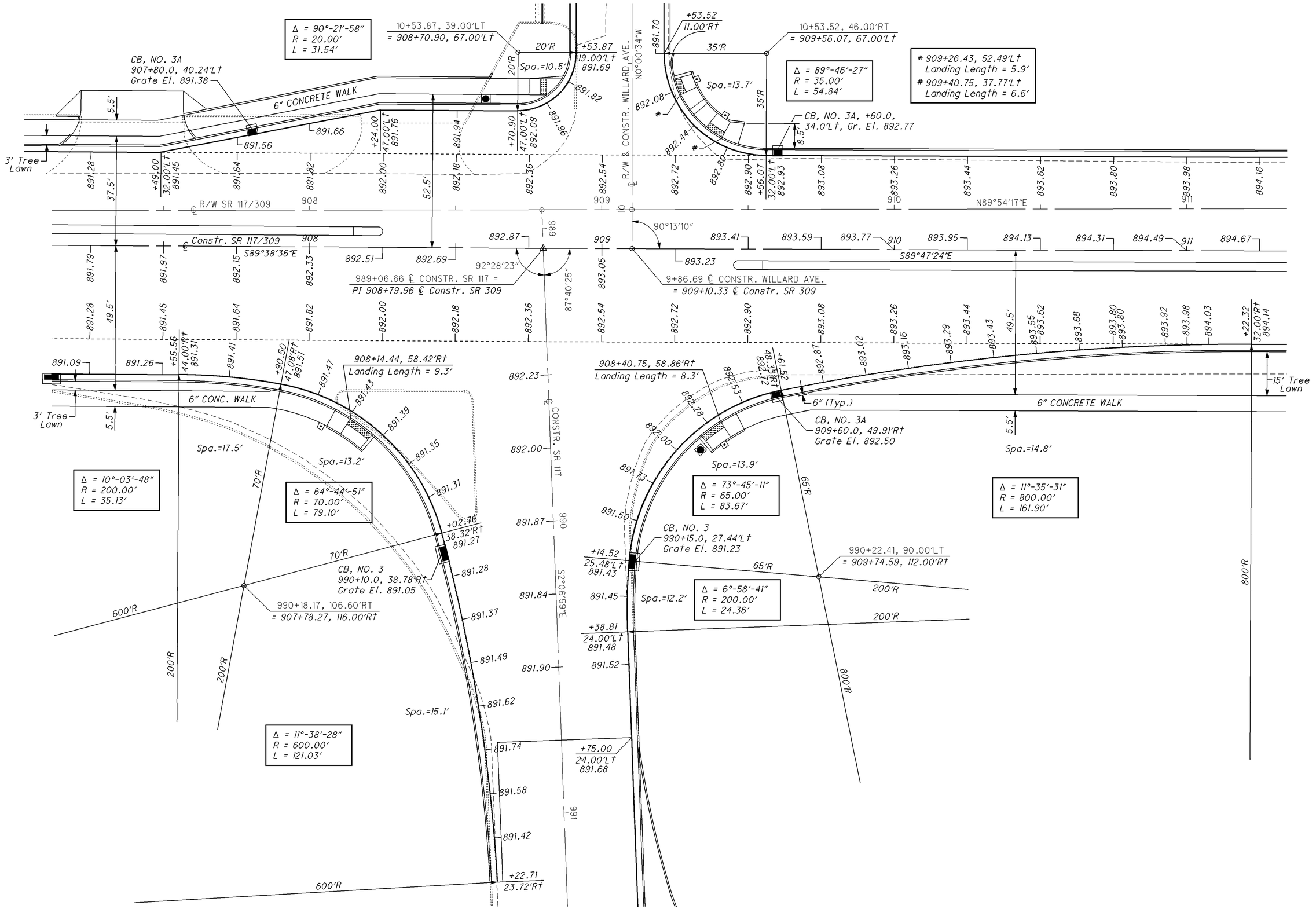
Δ = 90°-21'-58"
R = 20.00'
L = 31.54'
10+53.87, 39.00'LT
= 908+70.90, 67.00'Lt
CB, NO. 3A
907+80.0, 40.24'Lt
Grate El. 891.38
6" CONCRETE WALK
5.5'
3' Tree Lawn
891.56
891.66
891.28
37.5'
+49.00
32.00'Lt
891.45
891.64
891.82
892.00
52.5'
892.18
892.36
892.54
+24.00
47.00'Lt
891.76
891.94
+70.90
47.00'Lt
892.09
891.96
20'R
+53.87
19.00'Lt
891.69
891.82
Spa.=10.5'
R/W SR 117/309
908
909
910
N89°54'17"E
Constr. SR 117/309
S89°38'36"E
S89°47'24"E
891.79
891.97
892.15
892.33
892.51
892.69
892.87
893.05
893.23
893.41
893.59
893.77
893.95
894.13
894.31
894.49
894.67
686
989+06.66 ℄ CONSTR. SR 117 =
PI 908+79.96 ℄ Constr. SR 309
92°28'23"
87°40'25"
90°13'10"
9+86.69 ℄ CONSTR. WILLARD AVE.
= 909+10.33 ℄ Constr. SR 309
℄ R/W & CONSTR. WILLARD AVE.
N0°00'34"W
891.70
+53.52
11.00'Rt
10+53.52, 46.00'RT
= 909+56.07, 67.00'Lt
35'R
Spa.=13.7'
Δ = 89°-46'-27"
R = 35.00'
L = 54.84'
892.08
892.44
CB, NO. 3A, +60.0,
34.0'Lt, Gr. El. 892.77
8.5'
+56.07
32.00'Lt
892.93
892.72
892.80
892.90
893.08
893.26
893.44
893.62
893.80
893.98
894.16
* 909+26.43, 52.49'Lt
Landing Length = 5.9'
909+40.75, 37.77'Lt
Landing Length = 6.6'
49.5'
891.09
891.26
+55.56
44.00'Rt
891.31
891.41
891.64
891.82
892.00
892.18
892.36
892.54
892.72
892.90
893.08
893.26
893.16
893.29
893.44
893.43
893.55
893.62
893.68
893.80
893.92
893.98
894.03
+22.32
32.00'Rt
894.14
908+14.44, 58.42'Rt
Landing Length = 9.3'
908+40.75, 58.86'Rt
Landing Length = 8.3'
+90.50
47.08'Rt
891.51
891.47
891.43
891.39
891.35
891.31
892.23
892.87
893.02
+61.52
48.32'Rt
892.72
892.53
892.28
892.00
891.73
891.50
6" CONC. WALK
6" (Typ.)
6" CONCRETE WALK
15' Tree Lawn
CB, NO. 3A
909+60.0, 49.91'Rt
Grate El. 892.50
Spa.=17.5'
Spa.=13.2'
Spa.=13.9'
Spa.=14.8'
Δ = 10°-03'-48"
R = 200.00'
L = 35.13'
Δ = 64°-44'-51"
R = 70.00'
L = 79.10'
Δ = 73°-45'-11"
R = 65.00'
L = 83.67'
Δ = 11°-35'-31"
R = 800.00'
L = 161.90'
70'R
65'R
800'R
+02.76
38.32'Rt
891.27
CB, NO. 3
990+10.0, 38.78'Rt
Grate El. 891.05
891.28
891.37
891.49
891.62
990+18.17, 106.60'RT
= 907+78.27, 116.00'Rt
600'R
200'R
Spa.=15.1'
Δ = 11°-38'-28"
R = 600.00'
L = 121.03'
CONSTR. SR 117
S2°06'56"E
686
891.87
891.84
891.90
891.74
891.58
891.42
+22.71
23.72'Rt
+75.00
24.00'Lt
891.68
CB, NO. 3
990+15.0, 27.44'Lt
Grate El. 891.23
891.50
891.45
891.52
+14.52
25.48'Lt
891.43
+38.81
24.00'Lt
891.48
990+22.41, 90.00'LT
= 909+74.59, 112.00'Rt
Spa.=12.2'
Δ = 6°-58'-41"
R = 200.00'
L = 24.36'
200'R
991
HORIZONTAL SCALE IN FEET
0
7.5
15
30
CALCULATED NJV
CHECKED EJS
INTERSECTION DETAILS
WILLARD AVE./SR 117
ALL-117/309-
18.65/15.17
85
173
I:\pd\75467\roadway\sheets\75467GI002.dgn 17-SEP-2012 10:53AM nvondere

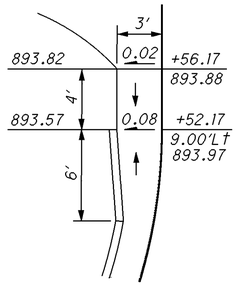

CURB END
SECTION DETAIL

*911+99.05, 37.05'Lt
10.7' Dropped Curve
**912+61.35, 37.05'Lt
10.7' Dropped Curve
##915+93.26, 37.15'Lt
10.7' Dropped Curve

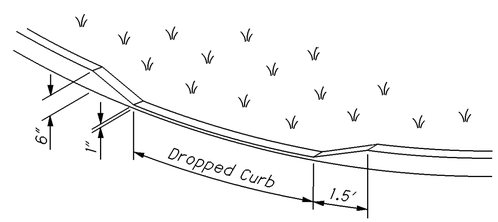

DROPPED CURB ON RADIUS DETAIL

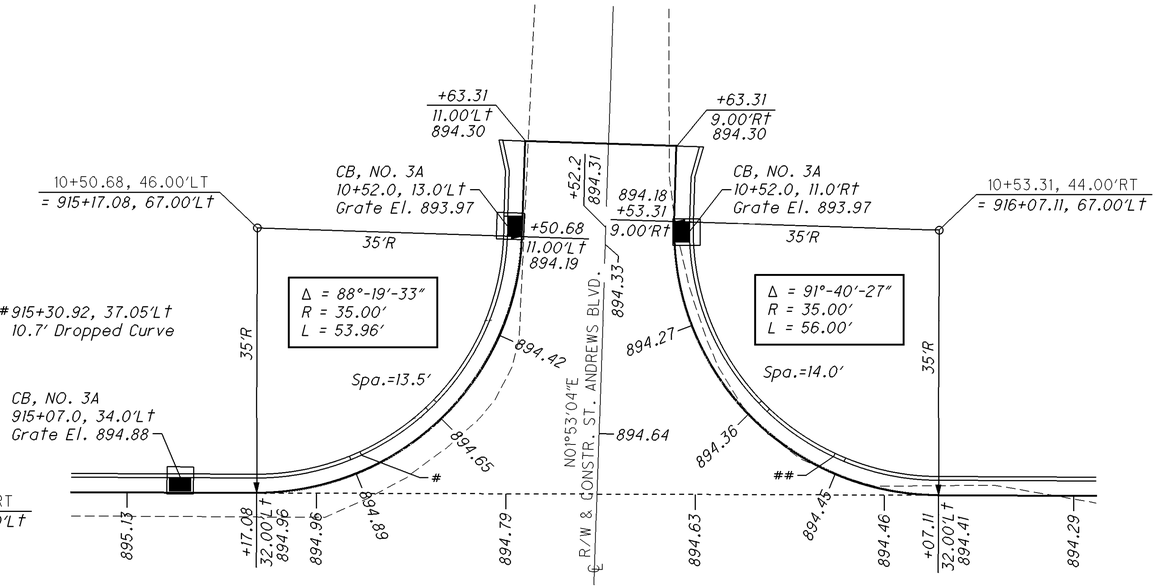

I:\pd\75467\roadway\sheets\75467GI003.dgn 17-SEP-2012 10:53AM nvondere

HORIZONTAL SCALE IN FEET
0 5 10 20

CALCULATED NJV
CHECKED EJS

INTERSECTION DETAILS
BRISTOL AVE. - ST. ANDREWS BVLD.

ALL-117/309-
18.65/15.17

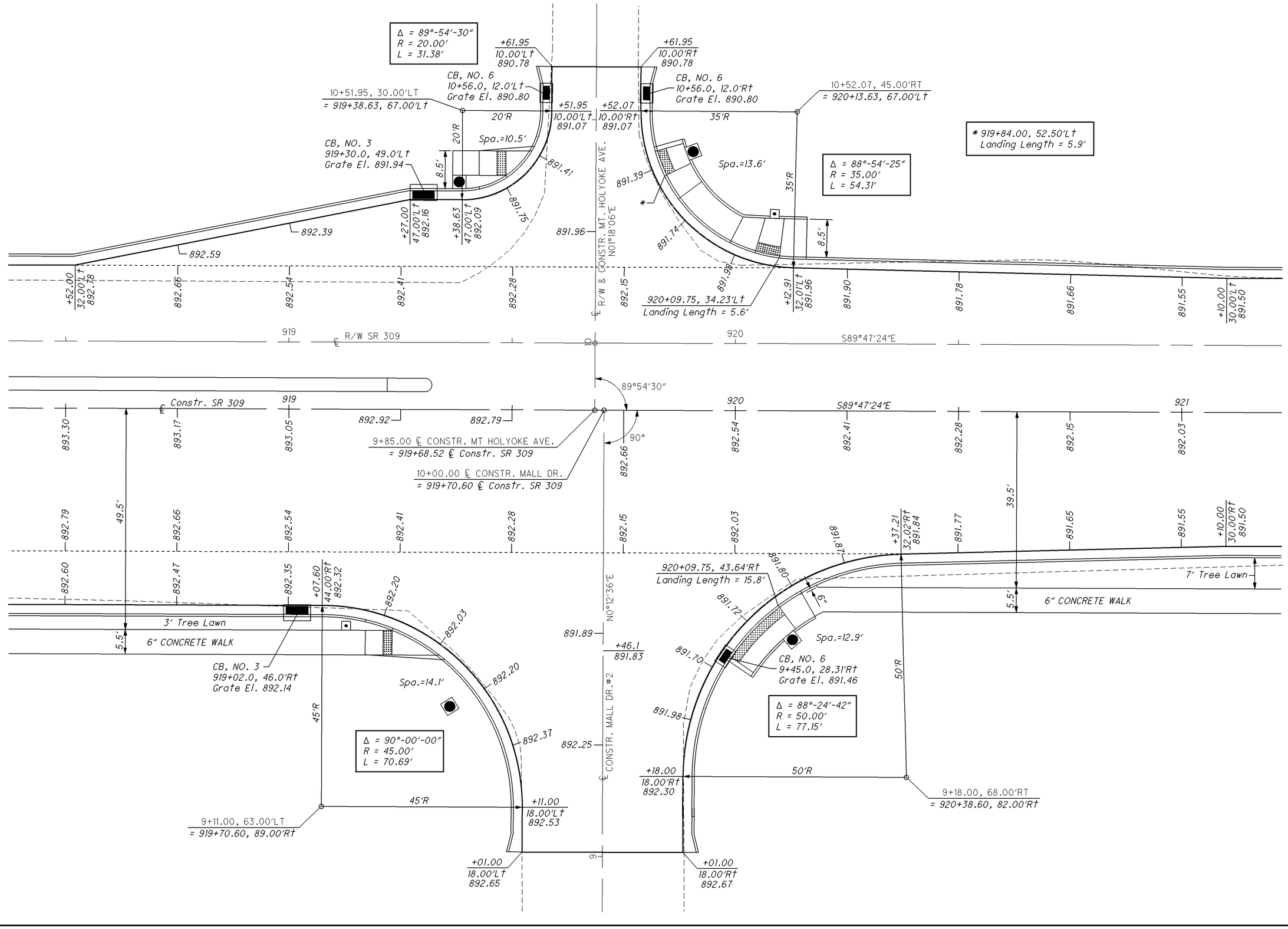
Δ = 89°-54′-30″
R = 20.00′
L = 31.38′
+61.95
10.00′Lt
890.78
+61.95
10.00′Rt
890.78
CB, NO. 6
10+56.0, 12.0′Lt
Grate El. 890.80
CB, NO. 6
10+56.0, 12.0′Rt
Grate El. 890.80
10+51.95, 30.00′LT
= 919+38.63, 67.00′Lt
10+52.07, 45.00′RT
= 920+13.63, 67.00′Lt
+51.95
10.00′Lt
891.07
+52.07
10.00′Rt
891.07
20′R
35′R
* 919+84.00, 52.50′Lt
Landing Length = 5.9′
CB, NO. 3
919+30.0, 49.0′Lt
Grate El. 891.94
20′R
Spa.=10.5′
8.5′
891.41
891.16
Spa.=13.6′
891.39
35′R
Δ = 88°-54′-25″
R = 35.00′
L = 54.31′
891.74
8.5′
+27.00
47.00′Lt
892.16
+38.63
47.00′Lt
892.09
892.39
892.59
891.96
℄ R/W & CONSTR. MT. HOLYOKE AVE.
N01°18′06″E
+52.00
32.00′Lt
892.18
892.66
892.54
892.41
892.28
892.15
891.98
920+09.75, 34.23′Lt
Landing Length = 5.6′
+12.91
32.01′Lt
891.96
891.90
891.78
891.66
891.55
+10.00
30.00′Lt
891.50
919
℄ R/W SR 309
10
920
S89°47′24″E
89°54′30″
Constr. SR 309
919
920
S89°47′24″E
921
893.30
893.17
893.05
892.92
892.79
892.54
892.41
892.28
892.15
892.03
9+85.00 ℄ CONSTR. MT HOLYOKE AVE.
= 919+68.52 ℄ Constr. SR 309
10+00.00 ℄ CONSTR. MALL DR.
= 919+70.60 ℄ Constr. SR 309
90°
892.66
892.79
49.5′
892.66
892.54
892.41
892.28
892.15
892.03
891.68
+37.21
32.02′Rt
891.84
891.77
39.5′
891.65
891.55
+10.00
30.00′Rt
891.50
892.60
892.47
892.35
+07.60
44.00′Rt
892.32
892.20
892.03
920+09.75, 43.64′Rt
Landing Length = 15.8′
891.80
891.72
6″
7′ Tree Lawn
5.5′
6″ CONCRETE WALK
3′ Tree Lawn
5.5′
6″ CONCRETE WALK
CB, NO. 3
919+02.0, 46.0′Rt
Grate El. 892.14
Spa.=14.1′
45′R
Δ = 90°-00′-00″
R = 45.00′
L = 70.69′
892.37
891.89
+46.1
891.83
NO°12′36″E
℄ CONSTR. MALL DR.#2
892.25
891.70
Spa.=12.9′
CB, NO. 6
9+45.0, 28.31′Rt
Grate El. 891.46
891.98
50′R
Δ = 88°-24′-42″
R = 50.00′
L = 77.15′
+18.00
18.00′Rt
892.30
50′R
45′R
+11.00
18.00′Lt
892.53
9+11.00, 63.00′LT
= 919+70.60, 89.00′Rt
9+18.00, 68.00′RT
= 920+38.60, 82.00′Rt
+01.00
18.00′Lt
892.65
+01.00
18.00′Rt
892.67
HORIZONTAL
SCALE IN FEET
0
5
10
20
CALCULATED
NJV
CHECKED
EJS
INTERSECTION DETAILS
MT. HOLYOKE AVE.
ALL-117/309-
18.65/15.17
87
173
I:\pd\75467\roadway\sheets\75467GI004.dgn 17-SEP-2012 10:53AM nvondere

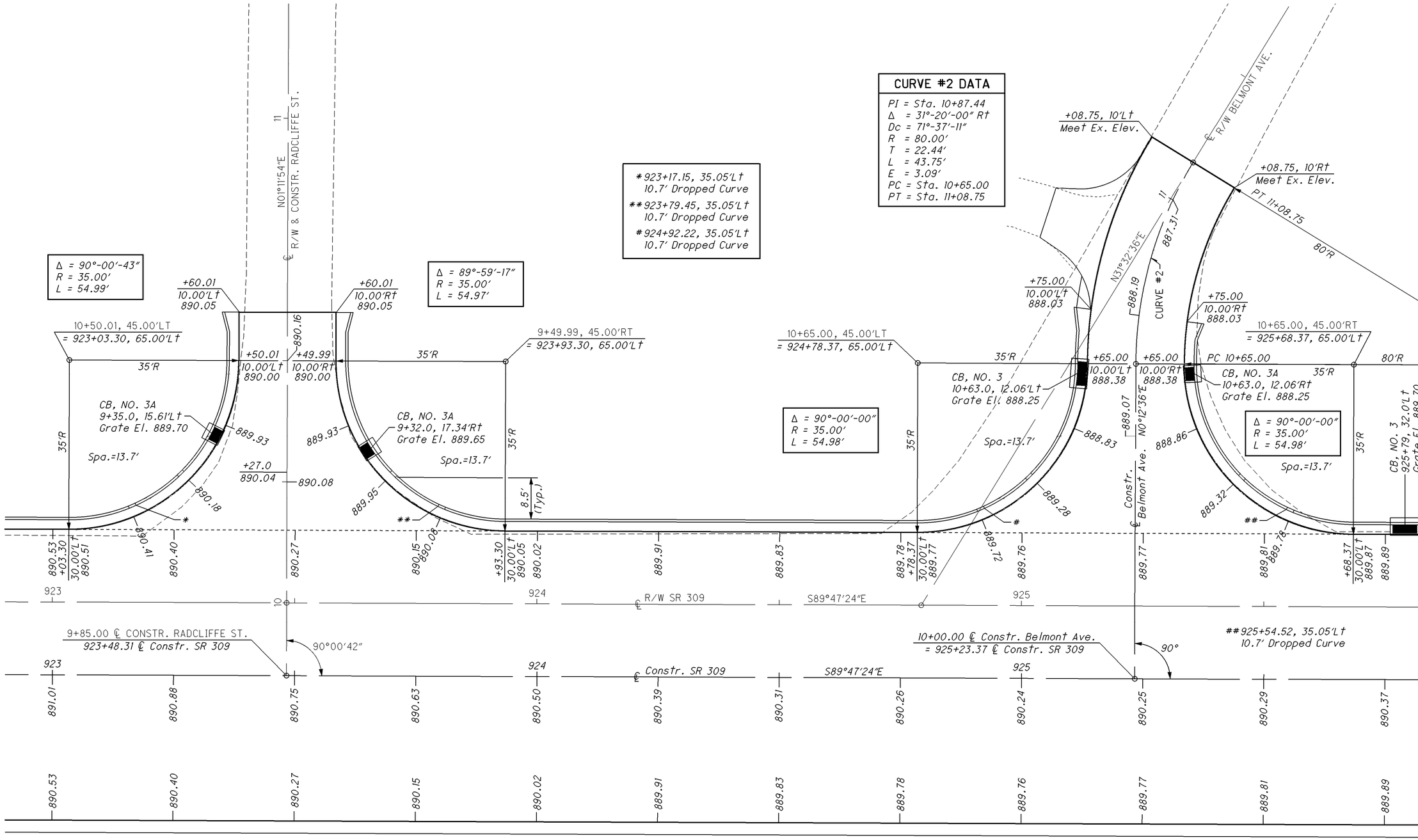

HORIZONTAL SCALE IN FEET
0 5 10 20

CALCULATED NJV
CHECKED EJS

INTERSECTION DETAILS
RADCLIFF AVE. - BELMONT AVE.

ALL-117/309-18.65/15.17

I:\pd\75467\roadway\sheets\75467GI005.dgn 17-SEP-2012 10:53AM nvondere

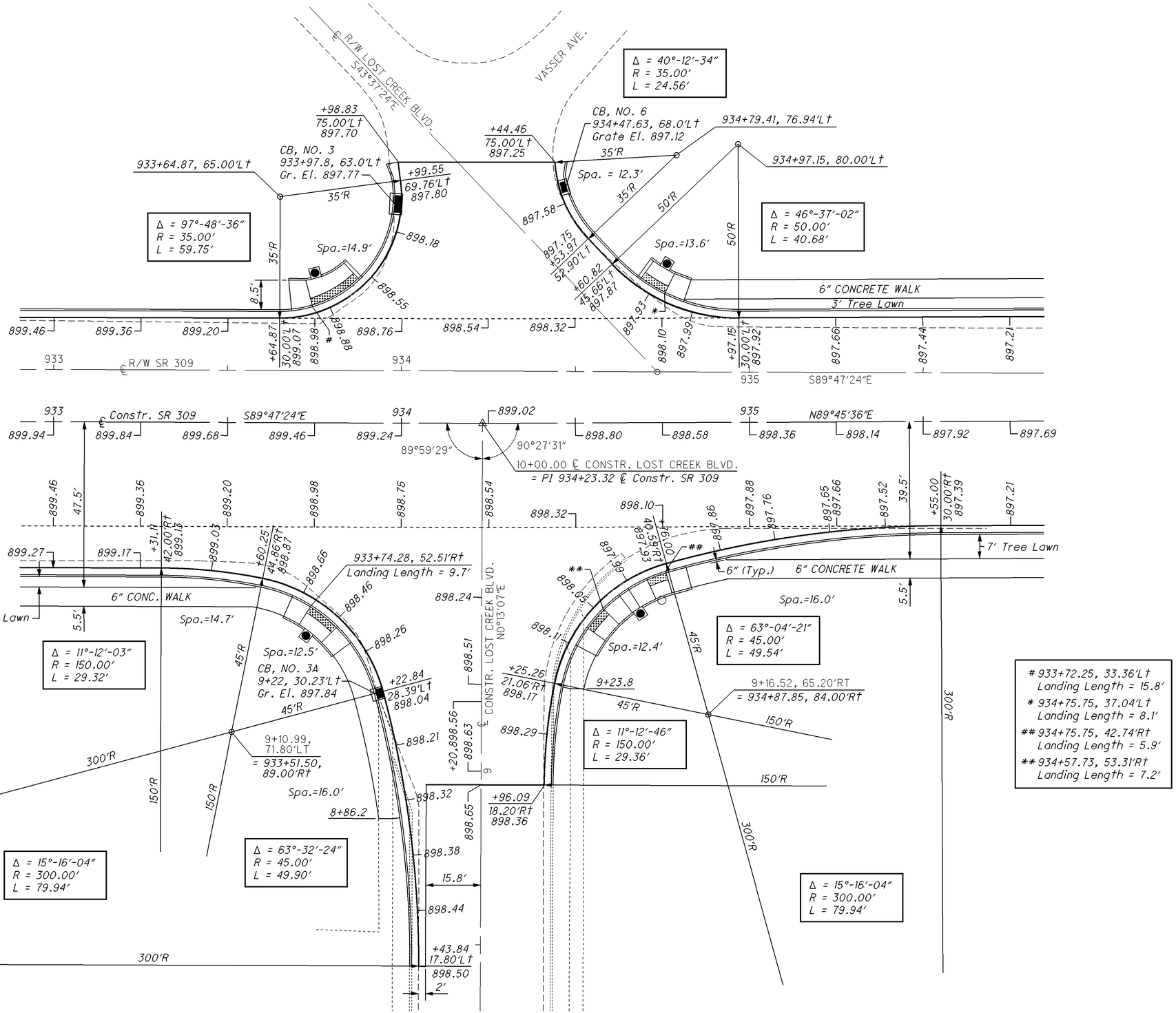

INTERSECTION DETAILS LOST CREEK BLVD.

ALL-117/309-18.65/15.17

CALCULATED NJV
CHECKED EJS

HORIZONTAL SCALE IN FEET
0 7.5 15 30

I:\pd\75467\roadway\sheets\75467G006.dgn 17-SEP-2012 10:53AM nvondere

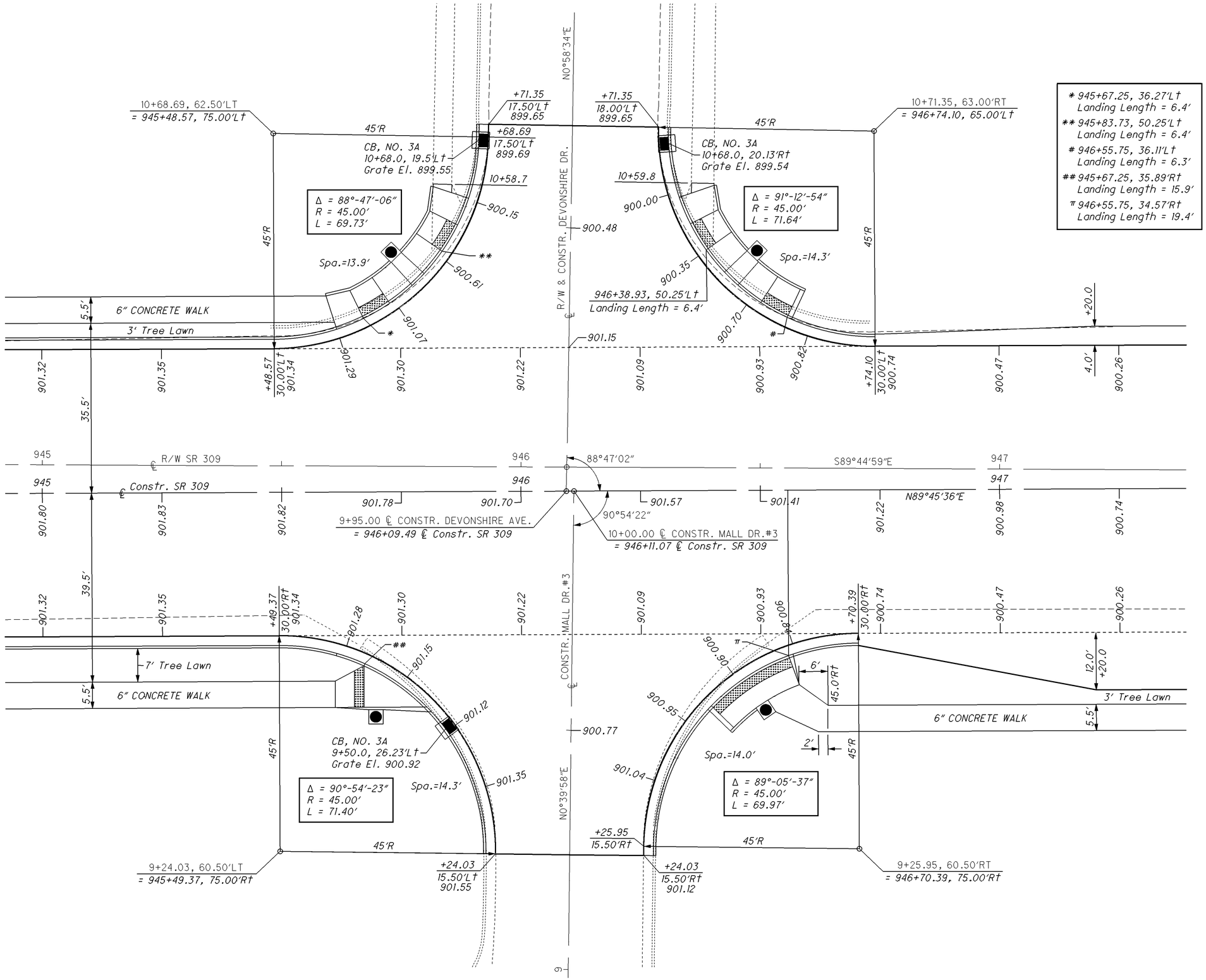

I:\pd\75467\roadway\sheets\75467GI007.dgn 17-SEP-2012 10:53AM nvondere

HORIZONTAL SCALE IN FEET
0 5 10 20

CALCULATED NJV
CHECKED EJS

INTERSECTION DETAILS DEVONSHIRE DR.

ALL-117/309-18.65/15.17

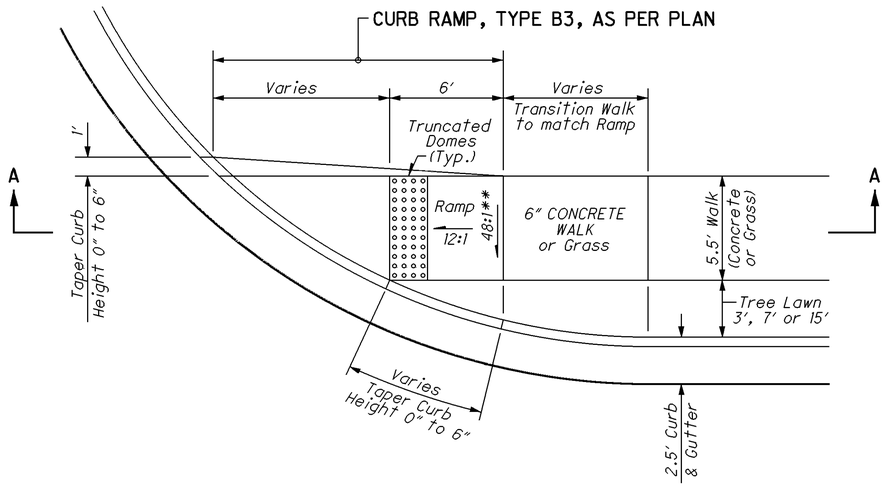

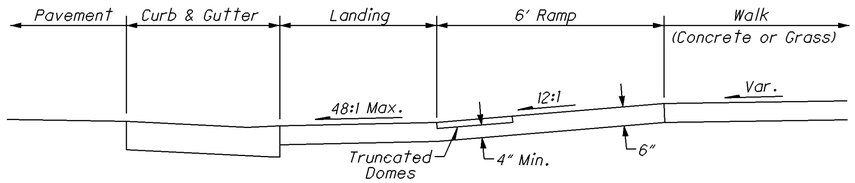

SECTION A-A
CURB RAMP, TYPE B3, AS PER PLAN PROFILE

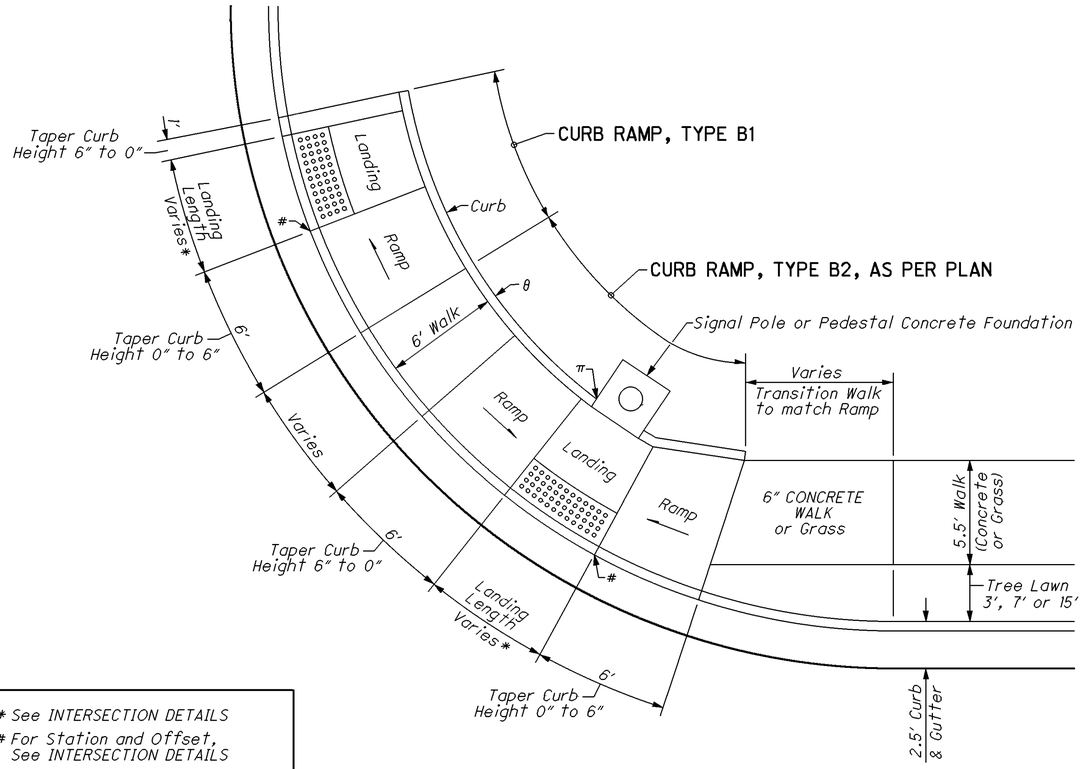

* See INTERSECTION DETAILS
\# For Station and Offset, See INTERSECTION DETAILS
π Match Top of Curb Elevation to Top of Concrete Foundation
θ Match Top of Curb Elevation to Top of Walk Foundation
** Grade is opposite direction for Mt. Holyoke, Radcliff St. and Belmont Ave. Intersections

NOTE: For Additional Curb Ramp Details, See STANDARD DRAWING BP-7.1

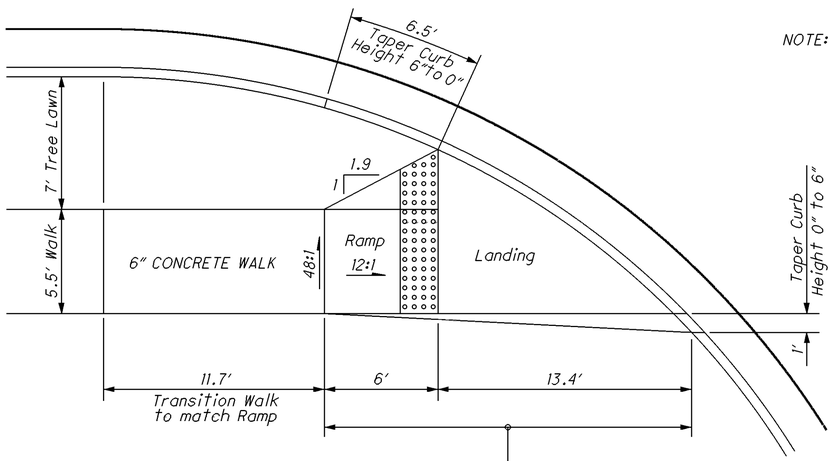

CURB RAMP, TYPE B3, AS PER PLAN
AT MALL DR. (DEVONSHIRE RD.)

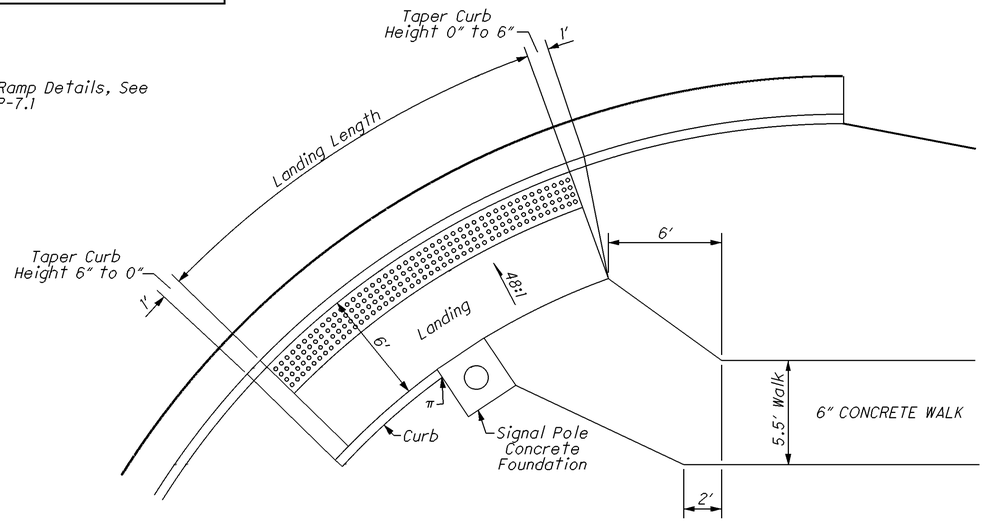

CURB RAMP, TYPE B1, AS PER PLAN
AT MALL DR. (DEVONSHIRE RD.)

HORIZONTAL SCALE IN FEET
0 2 4 10

CURB RAMP DETAILS

ALL-117/309-
18.65/15.17

I:\pd\75467\roadway\sheets\75467G1008.dgn 17-SEP-2012 10:53AM nvondere

DRIVEWAY-DR

REFERENCE	SHEET	LOCATION	DRIVE	ANGLE (A)	LENGTH (L)	WIDTH (W)	RADIUS (R1) (LEFT℄)	RADIUS (R2) (RIGHT)	DROPPED CURB LENGTH (D)	PAVEMENT (DRIVEWAY)	AREA	PAVEMENT (APRON)	AREA	202 CURB REMOVED	202 CURB AND GUTTER REMOVED	204 SUBGRADE COMPACTION	301 ASPHALT CONCRETE BASE, PG64-22 (T=4")	304 AGGREGATE BASE (T=6")	304 AGGREGATE BASE (T=8")	407 TACK COAT @ 0.075 GALLON per SQ YD	407 TACK COAT FOR INTERMEDIATE COURSE @ 0.075 GALLON per SQ YD	442 ASPHALT CONCRETE SURFACE COURSE, 12.5 MM, TYPE A (448) (T=1-1/2")	448 ASPHALT CONCRETE INTERMEDIATE COURSE, TYPE 2, PG64-22 (T=1-3/4")	448 ASPHALT CONCRETE SURFACE COURSE, TYPE 1, PG64-22 (T=1-1/4")	452 6" NON-REINFORCED CONCRETE PAVEMENT	452 8" NON-REINFORCED CONCRETE PAVEMENT	609 CURB, TYPE 6	609 6" CONCRETE TRAFFIC ISLAND
NO.	NO.	STATION-SIDE	TYPE	DEG.	FT	FT	FT	FT	FT	TYPE	SQ YD	TYPE	SQ YD	FT	FT	SQ YD	CU YD	CU YD	CU YD	GALLON	GALLON	CU YD	CU YD	CU YD	SQ YD	SQ YD	FT	SQ YD
1-DR	27	904+36.2 Lt	COMM.			See Sheet 94				A	71.5	B	28.4	44		99.9	7.9		15.9	5.4	5.4	3.0	3.5			28.4	49.5	
2-DR	27	8+97.7 Lt-Rt(Rosch.)	COMM.			See Sheet 94				A	14.9	–	–	6		3.7	0.4		0.8	0.3	0.3	0.2	0.2				6.1	
3-DR	27	906+59.8 Rt	COMM.			See Sheet 94				A	252.8	B	47.7	106		300.5	28.1		56.2	19.0	19.0	10.5	12.3			47.7	102.0	
4-DR	29	907+10.0 Lt	COMM.			See Sheet 95				A	46.3	B	38.3	19		84.6	5.1			3.5	3.5	1.9	2.3			38.3	9.8	
5-DR	29	11+15.0 Lt (Willard)	COMM.			See Sheet 95				B	59.2	–	–			59.2										59.2	40.1	
										A	17.3	–	–			17.3	1.9		3.8	1.3	1.3	0.7	0.8					
6-DR	29	10+66.9 Rt (Willard)	RES.			See Sheet 95				D	28.9	–	–			28.9		4.8			2.2		1.4	1.0				
7-DR	29	910+96.0 Lt	RES.	90	32.0	10.0	15	15	27.0	D	46.0	–	–			46.0		7.7			3.5		2.2	1.6				
8-DR	29	10+67.0 Lt (Bristol)	RES.			See Sheet 95				D	40.9	–	–			40.9		6.8			3.1		2.0	1.4				
9-DR	29	911+91.0 Rt	COMM.			See Sheet 94				A	31.8	B	101.5	6		133.3	3.5		7.1	2.4	2.4	1.3	1.5			101.5	37.3	
10-DR	31	913+74.6 Lt	RES.	90	13.5	10.7	15	15	27.0	D	23.3	–	–			23.3		3.9			1.7		1.1	0.8				
11-DR	31	914+15.0 Lt	RES.	90	16.5	9.5	15	15	27.0	D	26.7	–	–			26.7		4.5			2.0		1.3	0.9				
12-DR	31	917+90.0 Lt	RES.			See Sheet 96				E	107.6	–	–			107.6									107.6			
13-DR	31	918+28.0 Lt	RES.			See Sheet 96				D	100.2	–	–			100.2		16.7			7.5		4.9	3.5				
14-DR	31	912+70.7 Rt	COMM.			See Sheet 94				A	33.5	B	88.3	16		121.8	3.7		7.4	2.5	2.5	1.4	1.6			88.3	31.5	
15-DR	31	914+25.7 Rt	COMM.			See Sheet 94				A	45.2	B	30.9			76.1	5.0		10.0	3.4	3.4	1.9	2.2			30.9	9.0	
16-DR	31	916+50.6 Rt	COMM.			See Sheet 96				B	149.8	B	97.5	123		247.3										247.3	149.5	
17-DR	31	917+52.9 Rt	COMM.			See Sheet 96				A	53.2	B	74.6			127.8	5.9		11.8	4.0	4.0	2.2	2.6			74.6	21.2	
18-DR	33	922+26.1 Lt	RES.			See Sheet 97				E	40.1	–	–			40.1									40.1			
19-DR	33	918+48.6 Rt	COMM.			See Sheet 96				A	26.5	B	27.3	3		53.8	2.9		5.9	2.0	2.0	1.1	1.3			27.3	29.0	
20-DR	33	922+14.0 Rt	COMM.			See Sheet 97				A	586.6	–	–			586.6	65.2		130.4	40.4	40.4	22.4	26.2				62.2	48.0
21-DR	35	10+89.5 Lt (Belmont)	RES.			See Sheet 97				D	26.0	–	–			26.0		36.0			2.0		1.3	0.9				
22-DR	35	927+04.9 Lt	RES.	90	31.5	18.5	15	15	33.5	E	70.2	–	–			70.2									70.2			
23-DR	35	927+67.2 Lt	RES.	90	31.5	18.0	15	15	33.0	D	61.5	–	–			61.5		10.3			4.6		3.0	2.1				
24-DR	35	928+20.1 Lt	RES.			See Sheet 98				D	80.6	–	–			80.6		13.4			6.0		3.9	2.8				
25-DR	35	929+25.1 Lt	RES.	90	31.5	12.0	15	15	27.0	F	30.8	D	16.7			47.5		2.8	6.8		1.3		0.8	0.6				
26-DR	35	924+89.4 Rt	COMM.			See Sheet 97				A	458.7	–	–	110		458.7	51.0		101.9	30.8	30.8	17.1	22.3				233.6	48.0
27-DR	35	927+74.7 Rt	COMM.			See Sheet 98				A	143.3	B	68.5			211.8	15.9		31.8	10.7	10.7	6.0	7.0			68.5	55.6	
28-DR	35	929+98.7 Rt	COMM.			See Sheet 98				A	49.2	B	60.0	56		109.2	5.5		10.9	3.7	3.7	2.1	2.4			60.0	24.3	
29-DR	37	930+73.5 Lt	RES.	90	12.7	8.8	15	15	27.0	E	21.7	–	–			21.7									21.7			
30-DR	37	931+39.8 Lt	RES.	90	19.5	11.0	15	15	27.0	D	31.1	–	–			31.1		5.2			2.3		1.5	1.1				
31-DR	37	931+83.6 Rt	COMM.			See Sheet 98				B	145.3	–	–	31		145.3										145.3	78.4	20.2
32-DR	39	936+55.2 Lt	RES.			See Sheet 98				D	29.0	E	16.7			45.7		4.8			2.2		1.4	1.0	16.7		9.0	
33-DR	39	937+14.9 Lt	RES.	88	36.5	12.4	15	15	27.5	D	38.8	E	17.1			55.9		6.5			2.9		1.9	1.3	17.1		9.0	
34-DR	41	942+80.8 Lt	RES.	90	27.5	10.0	15	15	27.0	D	23.8	E	16.7			40.5		4.0			1.8		1.2	0.8	16.7		9.0	
35-DR	41	943+20.4 Lt	COMM.	90	22.5	19.0	25	25	49.4	A	33.8	B	33.7			67.5	3.8		7.5	2.5	2.5	1.4	1.6			33.7	11.2	
36-DR	43	947+54.0 Lt	COMM.			See Sheet 98				B	37.8	–	–			37.8										37.8		
37-DR	43	948+74.3 Lt	COMM.	90	13.5	22.2	25	25	–	A	44.9	–	–			44.9	5.0		10.0	3.4	3.4	1.9	2.2					
38-DR	43	951+47.5 Lt	COMM.			See Sheet 99				C	68.5	–	–	13	202	68.5			19.0*									
39-DR	43	949+21.5 Rt	COMM.	90	33.0	20.0	25	25	–	A	108.7	–	–			108.7	12.1		24.2	8.1	8.1	4.5	5.3					
40-DR	79	991+88.3 Lt (SR 117)	COMM.			See Sheet 99				A	620.1	–	–			620.1	68.9		137.8	39.7	39.7	22.1	25.7				276.9	90.7
41-DR	79	991+88.3 Rt (SR 117)	COMM.			See Sheet 99				A	273.2	–	–	123		273.2	30.4		60.7	19.1	19.1	10.6	12.4				132.9	18.3
42-DR	79	993+84.0 Rt (SR 117)	COMM.			See Sheet 99				A	29.9	–	–	162		29.9	3.3		6.6	2.2	2.2	1.2	1.5				178.4	
													SUBTOTALS	818	202	4981.9	325.5	127.4	666.5	204.4	247.5	113.5	162.8	19.8	290.1	1088.8	1565.5	225.2
													TOTALS CARRIED TO GENERAL SUMMARY	818	202	4982	327	794		204	248	114	163	20	290	1089	1566	225

NOTE: For Dimensions not listed on DRIVEWAY TABLE, See Details on Sheets 93-99.

NOTE: For Proposed Driveway Pavement LEGEND and TYPES, See Sheet 95.

* Thickness=10"

NOTE: Drive Pavement & Earthwork Removal Quantities are included in PAVEMENT TABLE (202 Pavement Removed) & CROSS SECTIONS.

CALCULATED NJV
CHECKED EJS

DRIVEWAY SUBSUMMARY

ALL-117/309-18.65/15.17

I:\pd\75467\roadway\sheets\75467GD001.dgn 17-SEP-2012 10:53AM nvondere

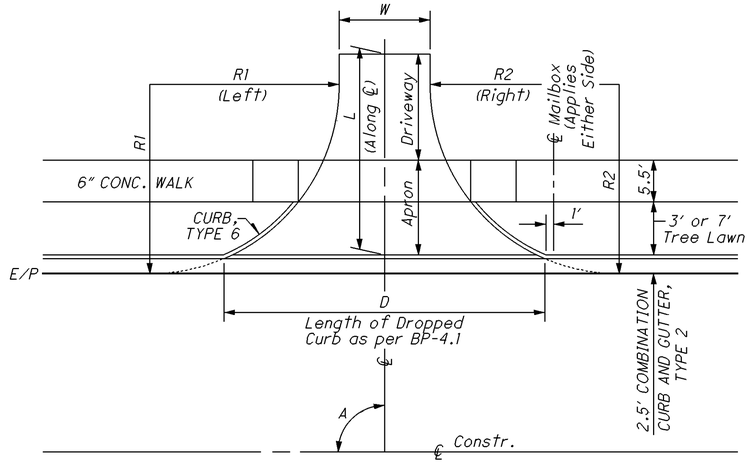

DRIVEWAY PLAN - 3' OR 7' TREE LAWN

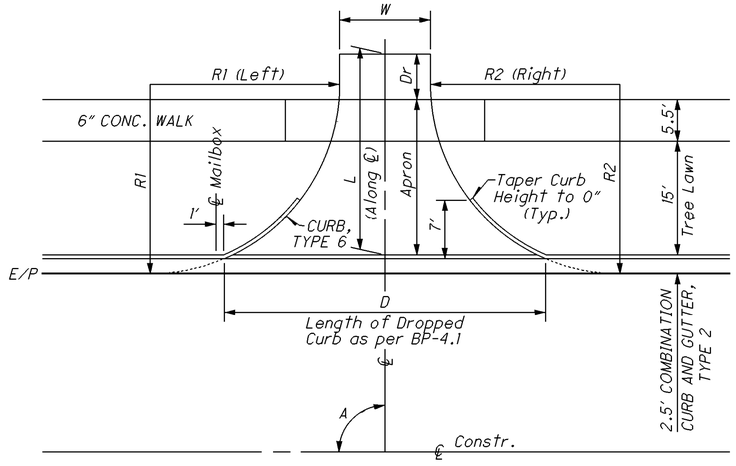

DRIVEWAY PLAN - 15' TREE LAWN

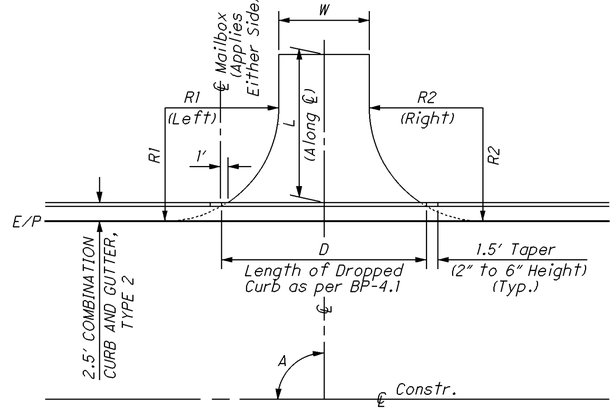

DRIVEWAY PLAN - WITHOUT SIDEWALK

NOTE: For Additional Driveway Details, See STANDARD DRAWINGS BP-2.1, BP-2.2 & BP-4.1

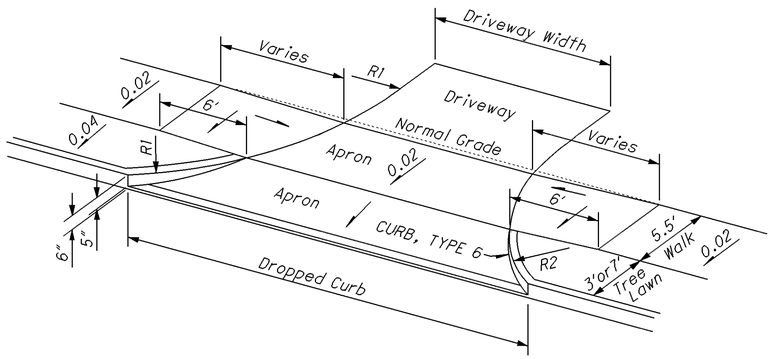

DRIVEWAY ISOMETRIC - 3' OR 7' TREE LAWN

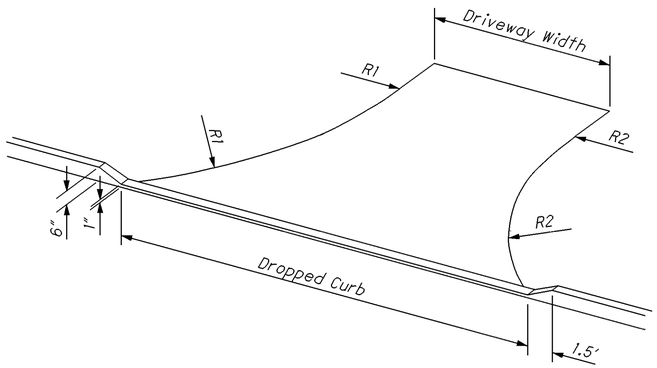

DRIVEWAY ISOMETRIC - WITHOUT SIDEWALK

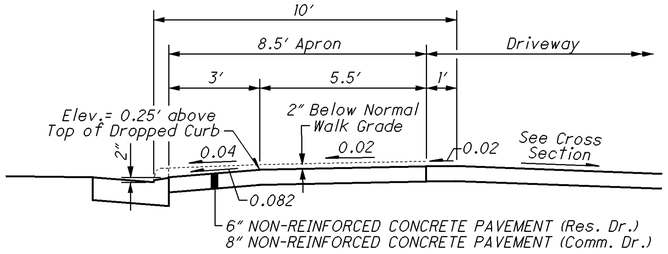

DRIVEWAY PROFILE - 8.5' APRON

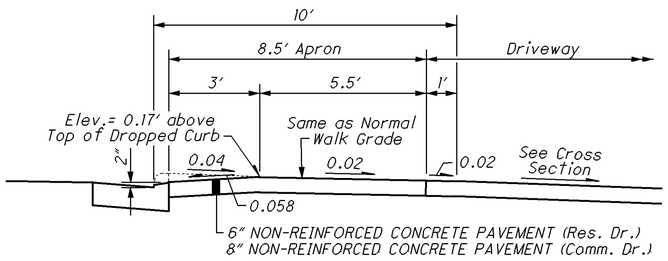

DRIVEWAY PROFILE - 8.5' APRON
(LEFT SIDE - EAST OF ST. ANDREWS BVLD)

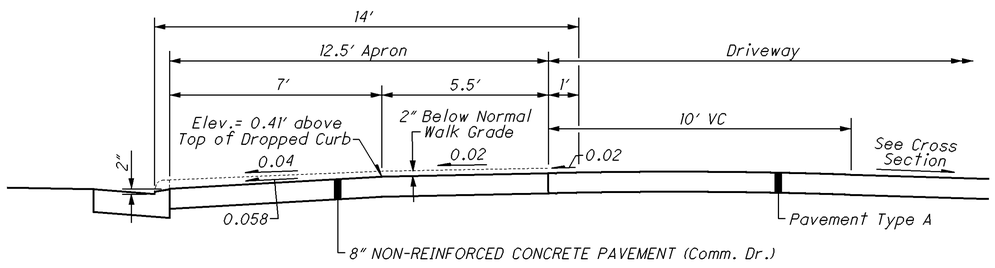

DRIVEWAY PROFILE - 12.5' APRON

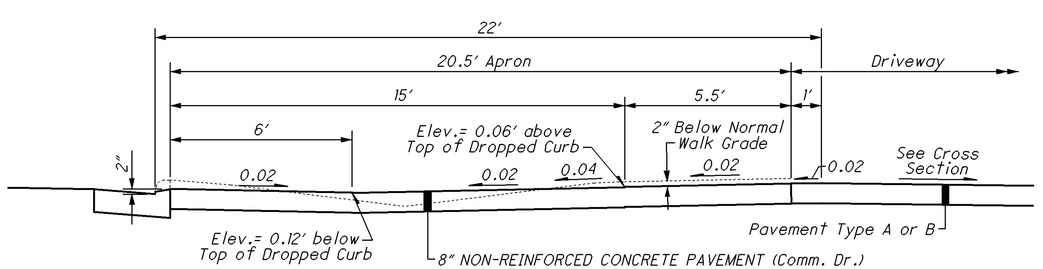

DRIVEWAY PROFILE - 20.5' APRON

HORIZONTAL SCALE IN FEET
0 5 10 20

DRIVEWAY DETAILS

ALL-117/309-18.65/15.17

93
173

I:\pd\75467\roadway\sheets\75467GD002.dgn 17-SEP-2012 10:53AM nvondere

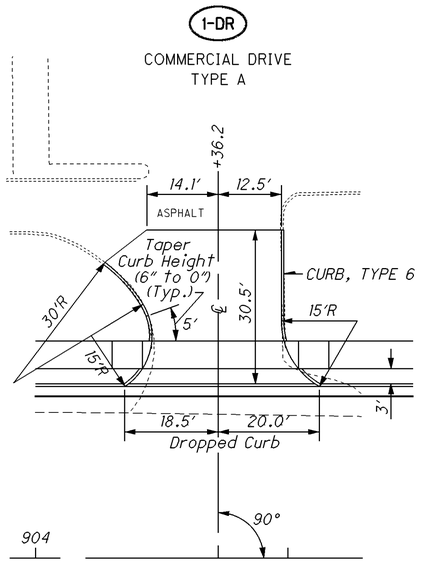

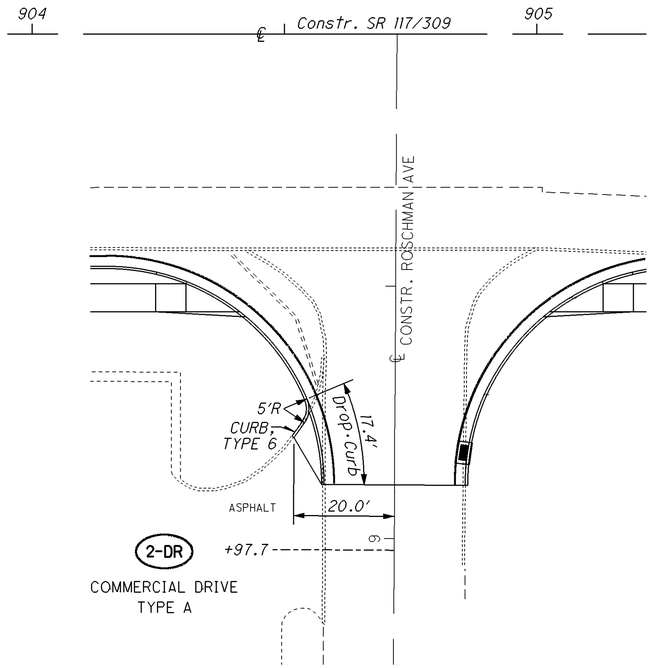

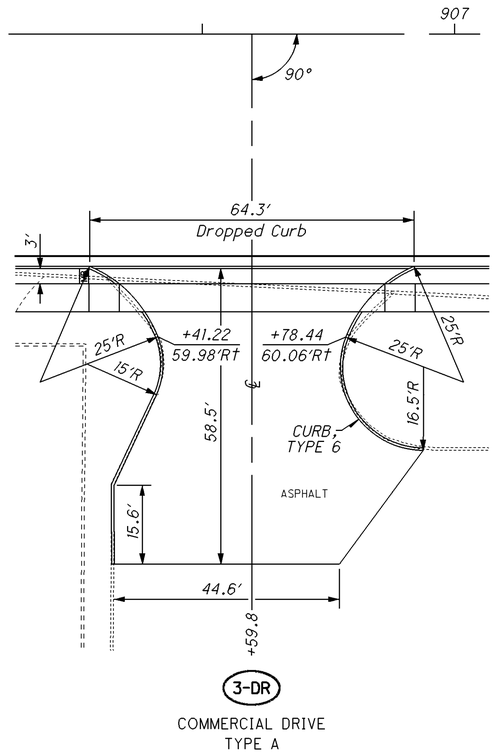

NOTE: For DRIVEWAY PAVEMENT BUILDUP, See Sheet 95.

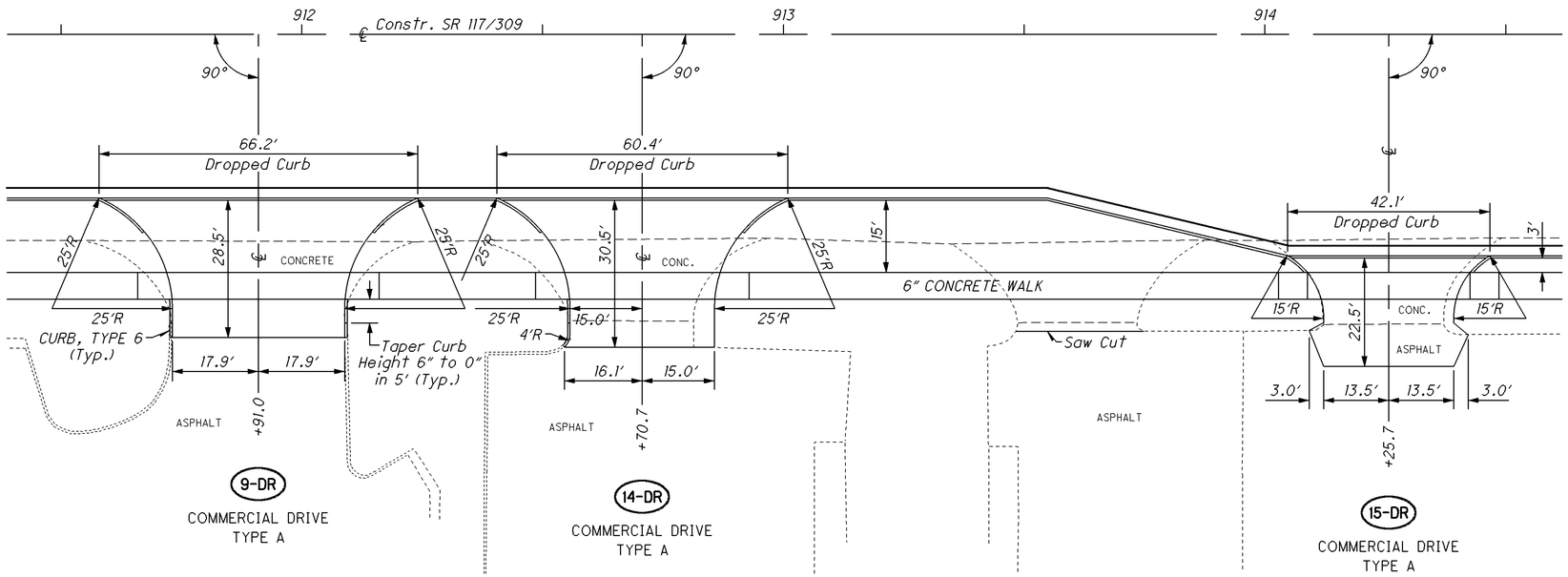

HORIZONTAL SCALE IN FEET
0 7.5 15 30

DRIVEWAY DETAILS

ALL-117/309-18.65/15.17

I:\pd\75467\roadway\sheets\75467GD003.dgn 17-SEP-2012 10:53AM nvondere

PROPOSED LEGEND

1. ITEM 448 - 1-¼" ASPHALT CONCRETE SURFACE COURSE, TYPE 1, PG64-22
2. ITEM 442 - 1-½" ASPHALT CONCRETE SURFACE COURSE, 12.5 MM, TYPE A (448)
3. ITEM 407 - TACK COAT FOR INTERMEDIATE COURSE at 0.075 Gal/Sq Yd
4. ITEM 448 - 1-¾" ASPHALT CONCRETE INTERMEDIATE COURSE, TYPE 2, PG64-22
5. ITEM 407 - TACK COAT at 0.075 Gal/Sq Yd
6. ITEM 301 - 4" ASPHALT CONCRETE BASE, PG64-22
7. ITEM 304 - 6" AGGREGATE BASE
8. ITEM 304 - 8" AGGREGATE BASE
9. ITEM 304 - 10" AGGREGATE BASE
10. ITEM 204 - SUBGRADE COMPACTION
11. ITEM 452 - 6" NON-REINFORCED CONCRETE PAVEMENT
12. ITEM 452 - 8" NON-REINFORCED CONCRETE PAVEMENT

PAVEMENT BUILDUP

COMMERCIAL DRIVES

TYPE A	TYPE B	TYPE C
2	12	9
3	10	10
4		
5		
6		
8		
10		

RESIDENTIAL DRIVES

TYPE D	TYPE E	TYPE F
1	11	8
3	10	10
4		
7		
10		

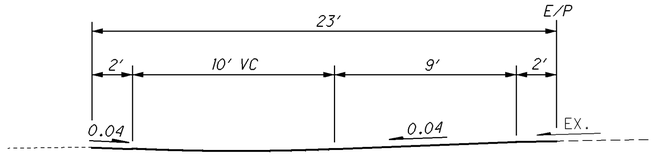

DRIVEWAY 8-DR PROFILE

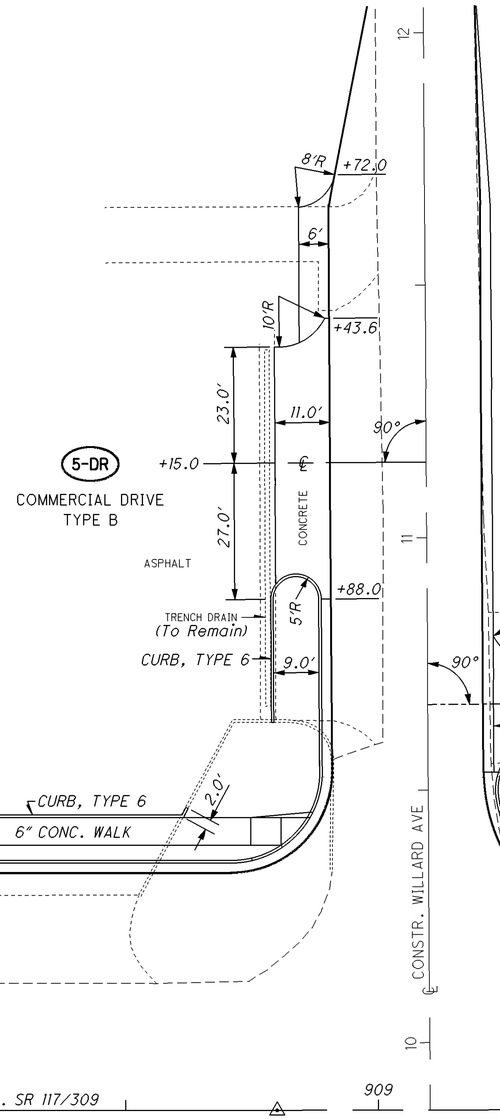

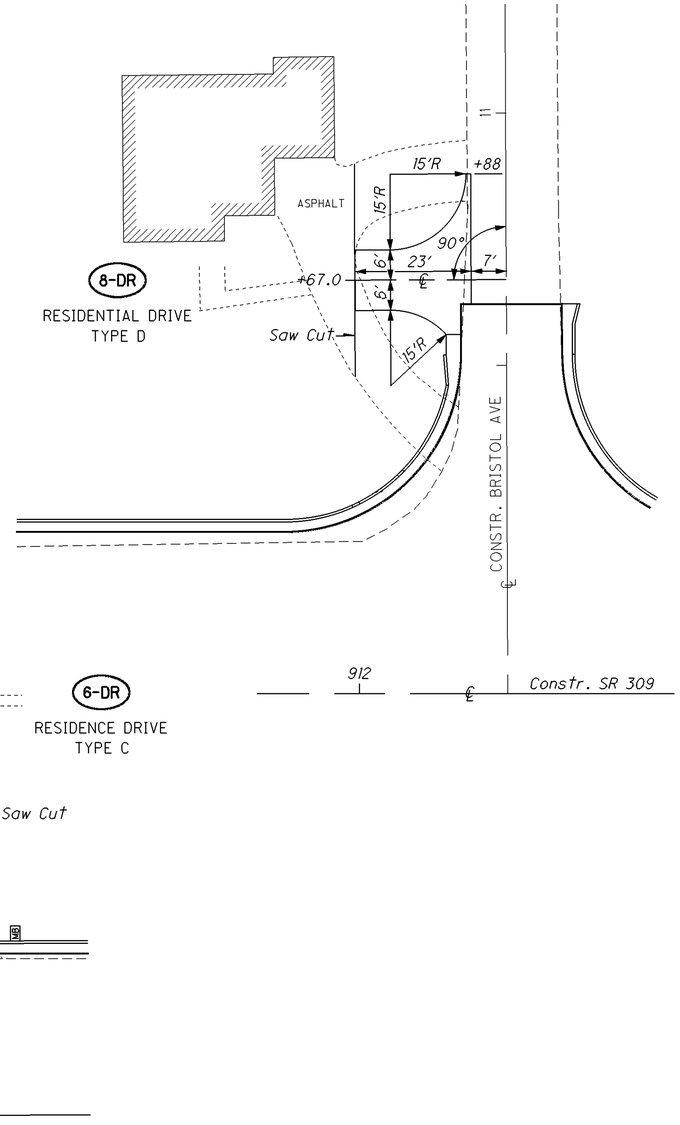

HORIZONTAL SCALE IN FEET
0 7.5 15 30

DRIVEWAY DETAILS

ALL-117/309-18.65/15.17

95
173

I:\pd\75467\roadway\sheets\75467GD004.dgn 17-SEP-2012 10:53AM nvondere

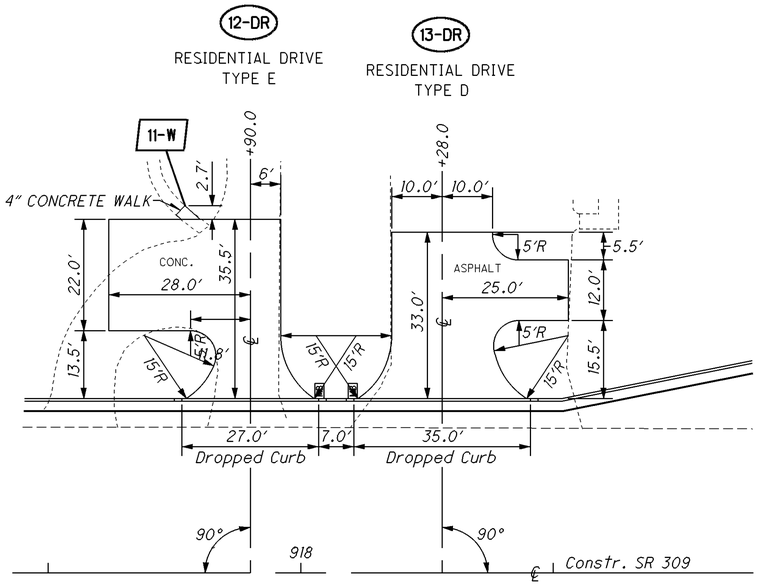

NOTE: For DRIVEWAY PAVEMENT BUILDUP, See Sheet 95.

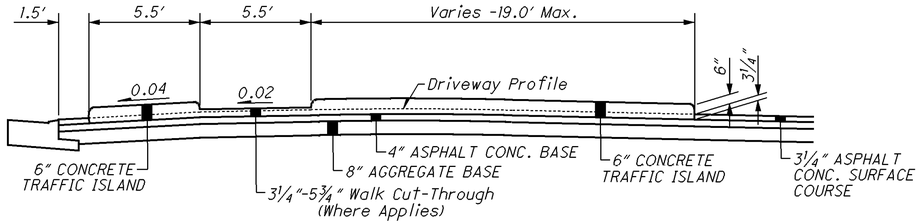

ASPHALT CONCRETE DRIVEWAY PROFILE - TRAFFIC ISLAND SECTION

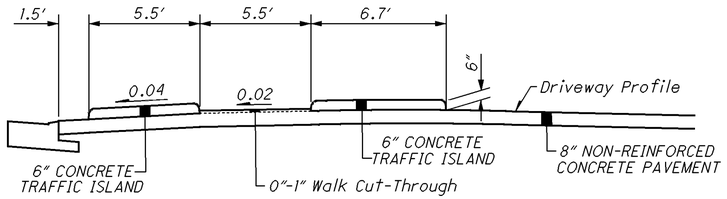

CONCRETE DRIVEWAY PROFILE - TRAFFIC ISLAND SECTION

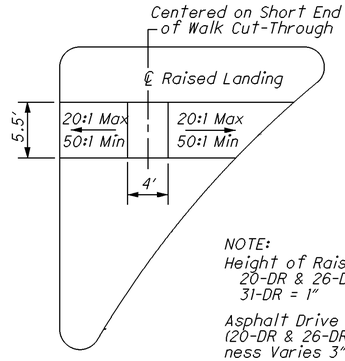

WALK CUT-THROUGH DETAIL AT TRAFFIC ISLANDS

NOTE:
Height of Raised Landings:
20-DR & 26-DR = 2½"
31-DR = 1"

Asphalt Drive Cut-Throughs (20-DR & 26-DR) Walk Thickness Varies 3" to 5½":

Concrete Drive Cut-Through (31-DR) Walk Thickness Varies 0" to 1" and shall be Cast-In-Place with Drive

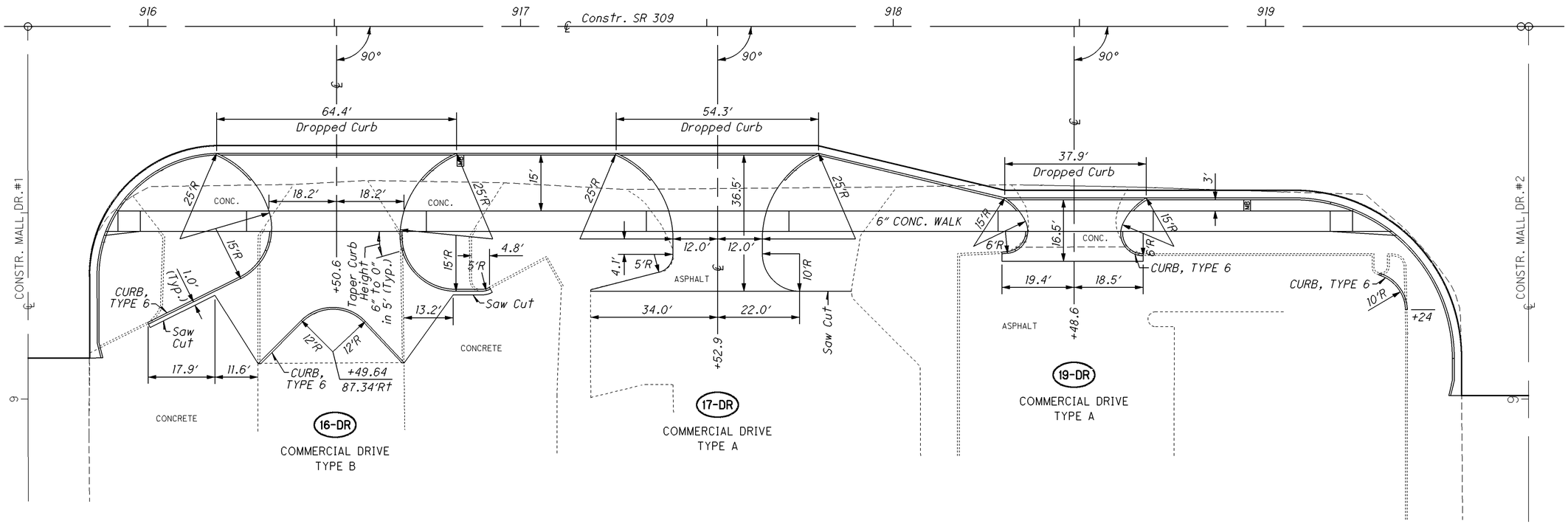

I:\pd\75467\roadway\sheets\75467GD005.dgn 17-SEP-2012 10:53AM nvondere

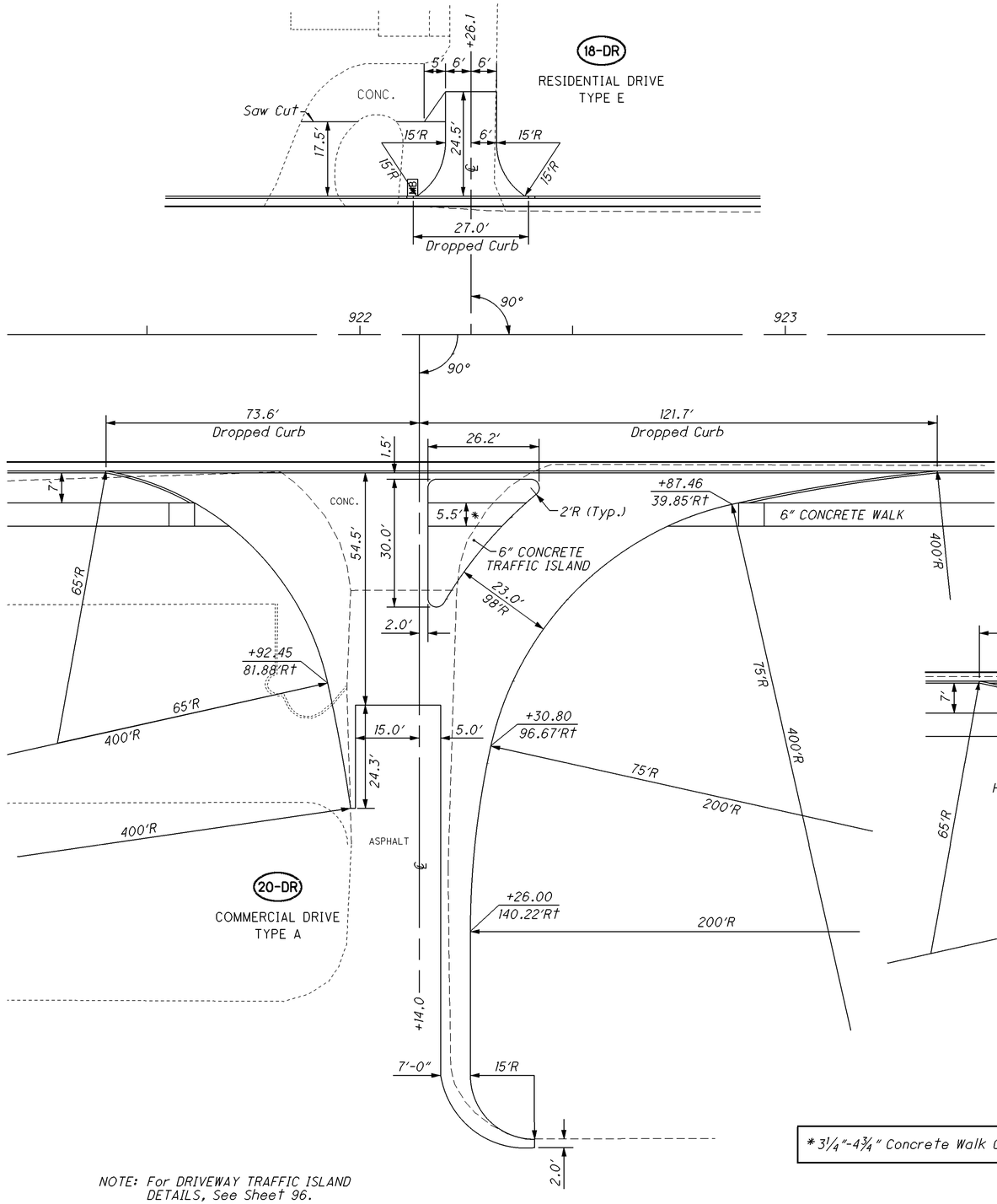

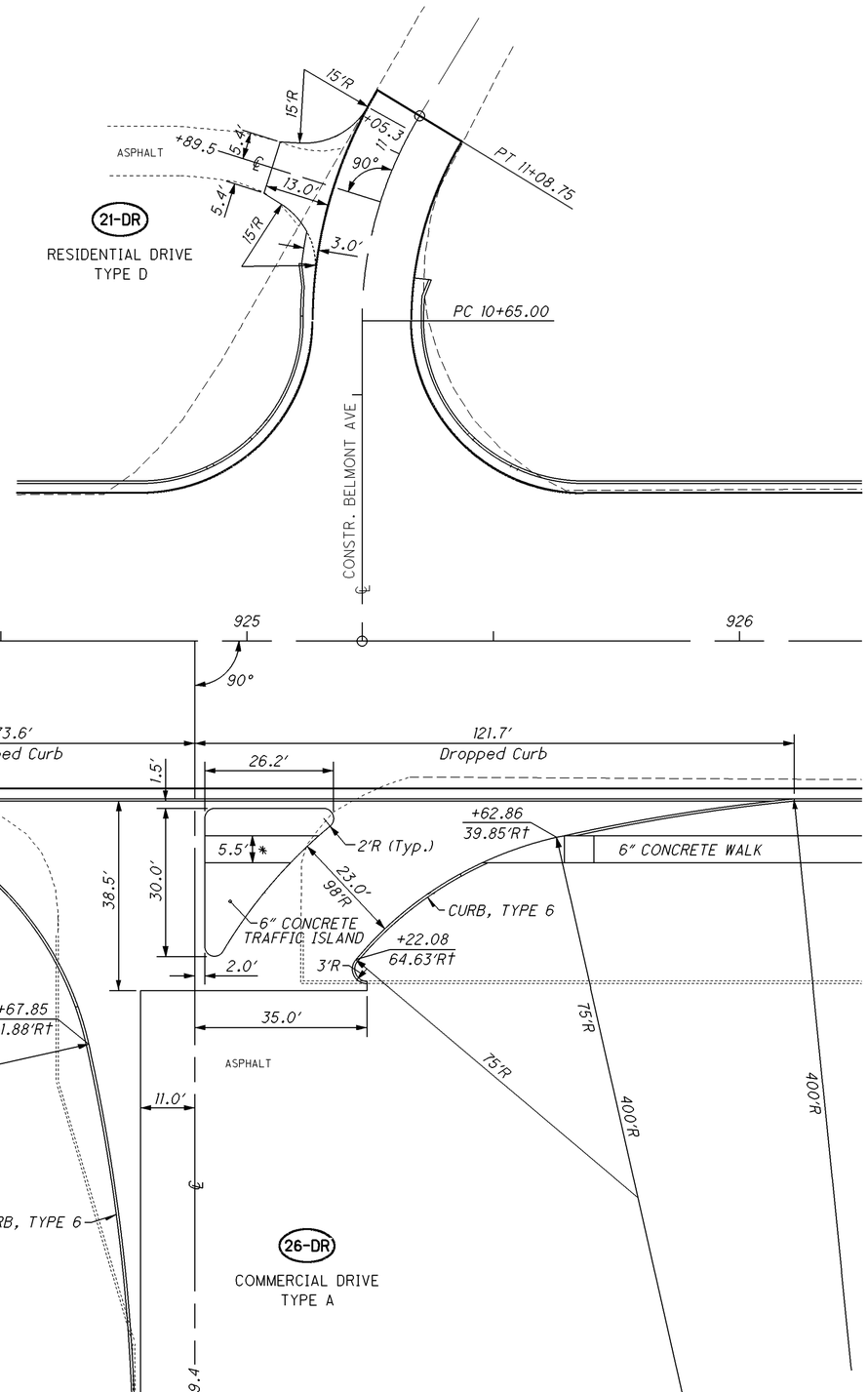

*3¼"-4¾" Concrete Walk Cut-Through

NOTE: For DRIVEWAY TRAFFIC ISLAND DETAILS, See Sheet 96.

NOTE: For DRIVEWAY PAVEMENT BUILDUP, See Sheet 95.

HORIZONTAL SCALE IN FEET
0 7.5 15 30

DRIVEWAY DETAILS

ALL-117/309-18.65/15.17

97
173

I:\pd\75467\roadway\sheets\75467GD006.dgn 17-SEP-2012 10:53AM nvondere

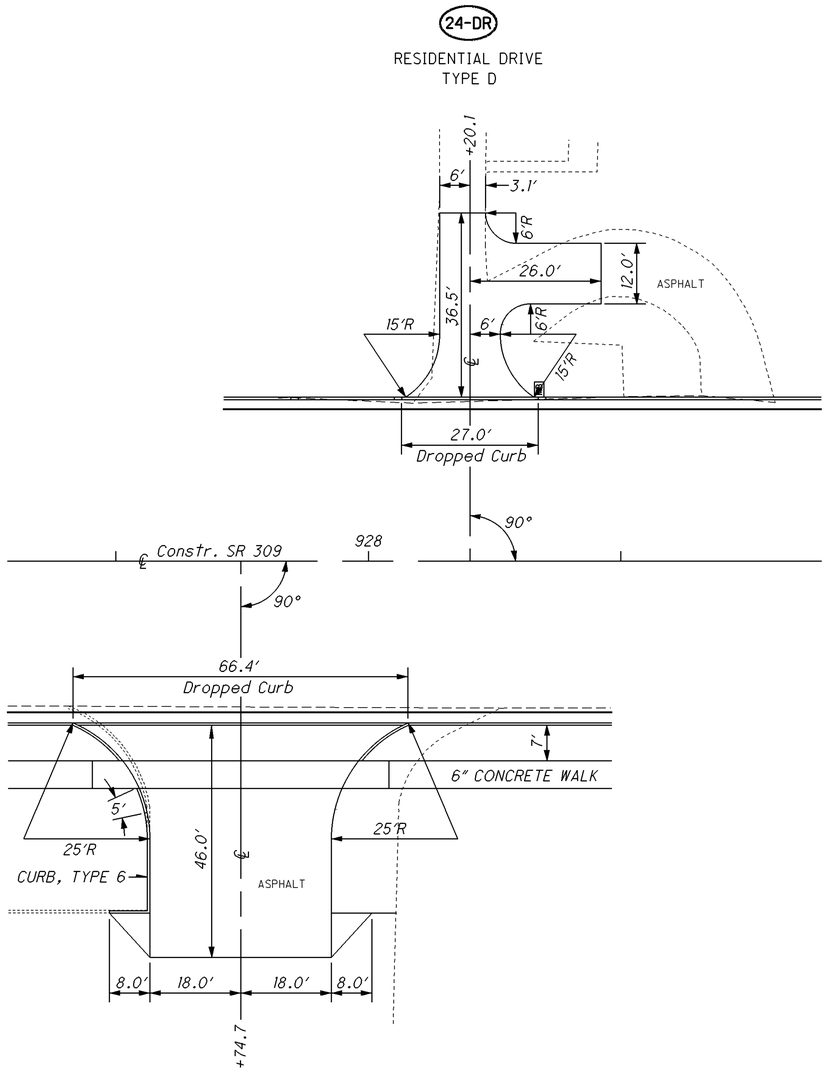

27-DR
COMMERCIAL DRIVE
TYPE A

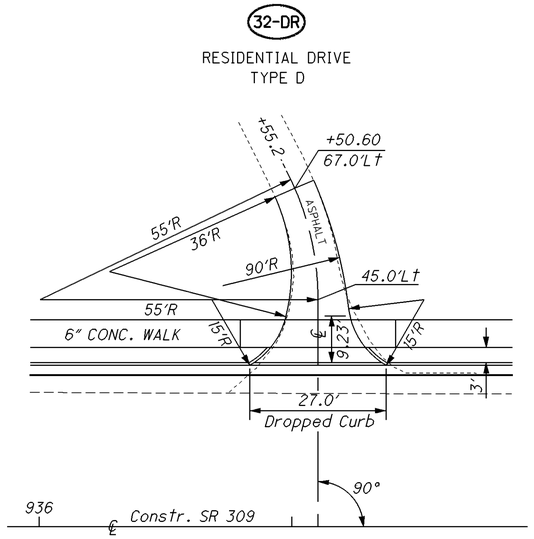

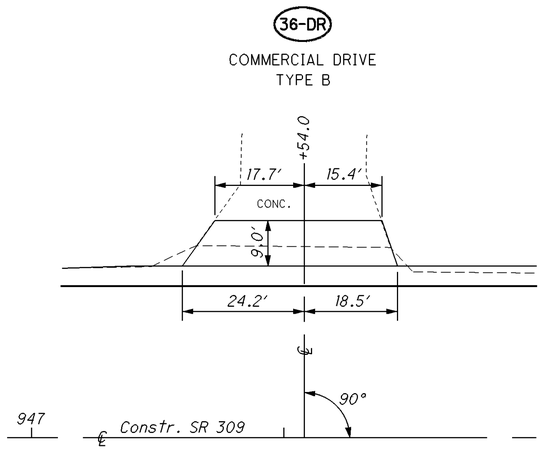

NOTE: For DRIVEWAY PAVEMENT BUILDUP, See Sheet 95.

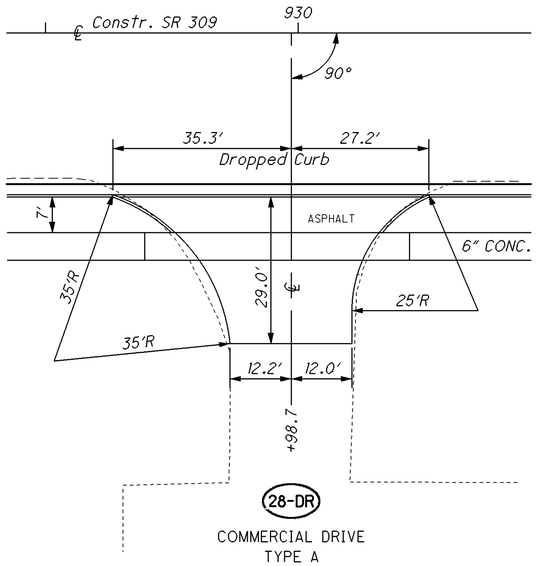

28-DR
COMMERCIAL DRIVE
TYPE A

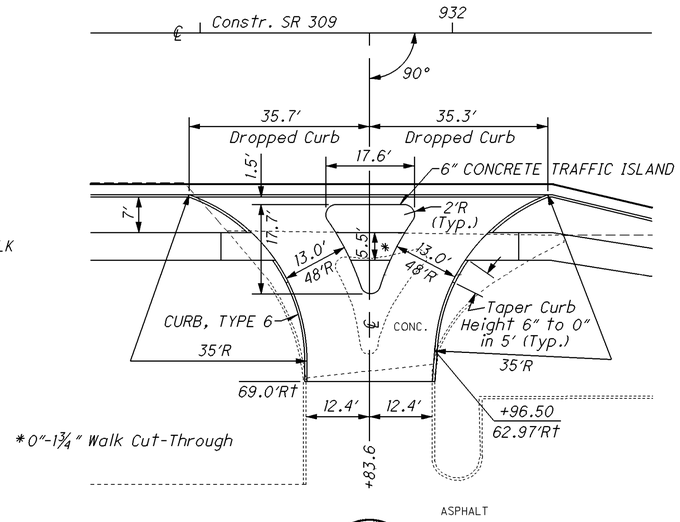

31-DR
COMMERCIAL DRIVE
TYPE B

NOTE: For DRIVEWAY TRAFFIC ISLAND DETAILS, See Sheet 96.

N

0 7.5 15 30
HORIZONTAL SCALE IN FEET

DRIVEWAY DETAILS

ALL-117/309-
18.65/15.17

98
173

I:\pd\75467\roadway\sheets\75467GD007.dgn 17-SEP-2012 10:53AM nvondere

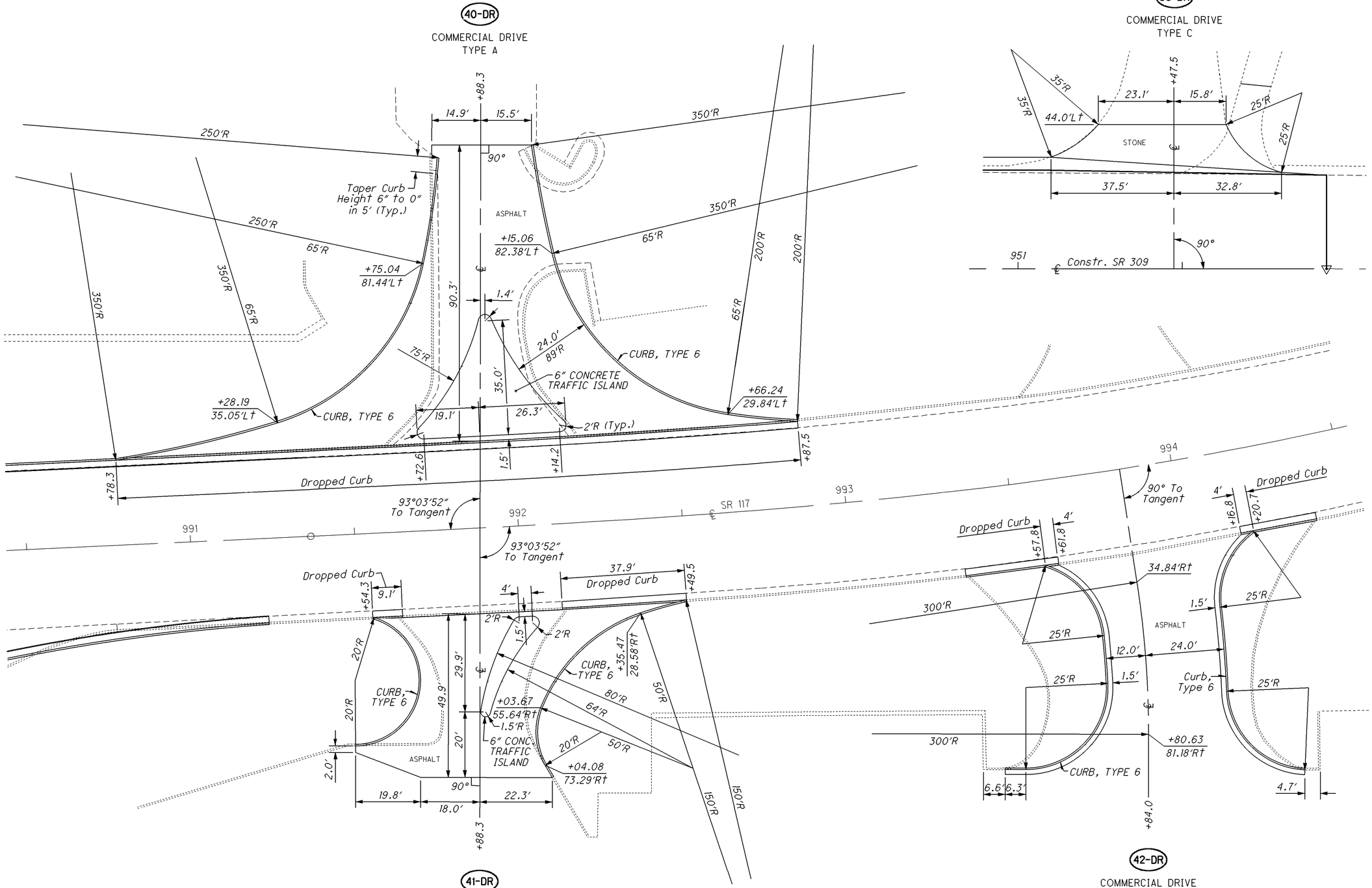

NOTE: For DRIVEWAY PAVEMENT BUILDUP, See Sheet 95.
NOTE: For DRIVEWAY TRAFFIC ISLAND PROFILE, See Sheet 96.

DRIVEWAY DETAILS

ALL-117/309-
18.65/15.17

I:\pd\75467\roadway\sheets\75467GD008.dgn 17-SEP-2012 10:53AM nvondere

PAVEMENT MARKING-PM

REFERENCE	SHEET	STATION		621				642						647					
				RPM		RAISED PAVEMENT MARKER REMOVED		EDGE LINE, 4", TYPE 1	LANE LINE, 4", TYPE 1	CENTER LINE, TYPE 1	ISLAND MARKING, TYPE 1	REMOVAL OF PAVEMENT MARKING		CHANNELIZING LINE, 8", TYPE B125	STOP LINE, TYPE B125	CROSSWALK LINE, TYPE B125	TRANSVERSE/ DIAGONAL LINE, TYPE B125	LANE ARROW, TYPE B125	DOTTED LINE, 4", TYPE B125
				2-WAY W/R	2-WAY Y/Y														
NO.	NO.	FROM	TO	EACH	EACH	EACH		MILE	MILE	MILE	SQ FT	MILE		FT	FT	FT	FT	EACH	FT
1-PM	106-108	899+23 Mid	908+94 Mid	35	31	31		0.339	0.164		255			891	55		27	11	124
2-PM	106-108	904+00 Lt	11+669 Lt (Willard)					0.119							16	106			147
3-PM	106-108,117	904+00 Rt	994+40 Rt (SR 117)					0.172							22	142			
4-PM	108	10+39 Mid (Willard)	11+66 Mid (Willard)							0.022				115	21	82		4	
5-PM	108	989+64 Mid (SR 117)	990+75 Mid (SR 117)	5	3	5			0.019	0.019				98	44	233		2	
6-PM	108-110	11+66 Rt (Willard)	10+56 Lt (Mt Holyoke)					0.230							30	210			112
7-PM	108-110	909+35 Mid	919+32 Mid	50	36	61		0.373	0.373		58			878	89	196		12	
8-PM	108-110,117	992+88 Lt (SR 117)	9+01 Lt (Mall Dr)					0.263							17	110			
9-PM	110-112	10+38 Mid (Mt Holyoke)	10+49 Mid (Mt Holyoke)												10	62			
10-PM	110-112	9+01 Mid (Mt Holyoke)	9+50 Mid (Mt Holyoke)							0.007				38	32	145		2	
11-PM	110-112	10+62 Rt (Mt Holyoke)	934+00 Lt					0.283							30	210			
12-PM	110-112	920+04 Mid	933+80 Mid	49	35	73			0.512	0.414				638	94	336	18	12	
13-PM	110-112	9+01 Rt (Mt Holyoke)	8+44 Lt (Lost Creek)					0.288								382			
14-PM	112	933+80 Lt	934+70 Lt												28	170			
15-PM	112	8+96 Mid (Lost Creek)	9+47 Mid (Lost Creek)							0.004				39	31	149			
16-PM	112-114	934+44 Lt	10+71 Lt (Devonshire)					0.222											
17-PM	112-114	933+80 Mid	945+73 Mid	39	29	48			0.409	0.314				439	77	311		8	
18-PM	112-114	8+96 Rt (Lost Creek)	9+24 Lt (Mall Dr)					0.226											
19-PM	114	10+45 Mid (Devonshire)	11+37 Mid (Devonshire)							0.003				15	26	104			
20-PM	114	9+24 Mid (Mall Dr)	9+61 Mid (Mall Dr)							0.005				24	28	132		1	
21-PM	114-115	10+71 Rt (Devonshire)	951+94 Lt					0.110											
22-PM	114-115	946+50 Mid	951+94 Mid	20	14	22			0.202	0.157				213	39	147		5	
23-PM	114-115	9+24 Rt (Mall Dr)	951+94 Rt					0.110											
24-PM	116	959+75 Rt	9+21 Lt (Bowman)	4				0.047				0.038		135				2	
			SUBTOTALS	202	148														
			TOTALS CARRIED TO GENERAL SUMMARY	350		240		2.78	1.68	0.95	313	0.04		3523	690	3227	45	59	383

CALCULATED NJV
CHECKED GLW

PAVEMENT MARKING SUBSUMMARY

ALL-117/309-
18.65/15.17

100
173

I:\pd\75467\traffic\sheets\75467TQ001.dgn 17-SEP-2012 10:54AM nvondere

SIGNING-S

REFERENCE	SHEET	LOCATION		SIGN			630																				
							GROUND MOUNTED SUPPORT, NO. 3 POST	GROUND MOUNTED STRUCTURAL BEAM SUPPORT, S4X7.7	STREET NAME SIGN SUPPORT, NO. 3 POST	SIGN POST REFLECTOR	BREAKAWAY STRUCTURAL BEAM CONNECTOR	OVERHEAD SIGN SUPPORT, TYPE TC-16.21, DESIGN 11, AS PER PLAN	OVERHEAD SIGN SUPPORT, TYPE TC-16.21, DESIGN 12, AS PER PLAN	OVERHEAD SIGN SUPPORT, TYPE TC-16.21, DESIGN 13, AS PER PLAN	OVERHEAD SIGN SUPPORT, MISC.: MECHANICAL DAMPER	SIGN HANGER ASSEMBLY, MAST ARM,	SIGN SUPPORT ASSEMBLY, POLE MOUNTED	SIGN, FLAT SHEET	SIGN, GROUND MOUNTED EXTRUSHEET	SIGN ERECTED, FLAT SHEET	SIGN ERECTED, EXTRUSHEET	SIGN BACKING ASSEMBLY	STRUCTURAL BEAM SUPPORT FOUNDATION	RIGID OVERHEAD SIGN SUPPORT FOUNDATION	REMOVAL OF GROUND MOUNTED SIGN AND DISPOSAL	REMOVAL OF GROUND MOUNTED SIGN AND REERECTION	REMOVAL OF GROUND MOUNTED POST SUPPORT AND DISPOSAL	REMOVAL OF OVERHEAD SIGN SUPPORT AND DISPOSAL, APP
NO.	NO.	ROUTE/POLE	STATION	CODE NO.	DESCRIPTION	SIZE	FT	FT	FT	EACH	EACH	EACH	EACH	EACH	EACH	EACH	EACH	SQ FT	SQ FT	SQ FT	SQ FT	EACH	EACH	EACH	EACH	EACH	EACH	EACH
1-S	106	SR 117/309	899+34 ℄	R4-7-24	KEEP RIGHT	24"x30"	12											5.0		5.0								
				R3-4-24	NO U-TURN	24"x24"												4.0		4.0								
2-S	107	Sign Pole	905+05 Lt	M3-4-30	WEST	30"x15"											1	3.1		3.1		1		1				
				M1-5-24-3	STATE ROUTE (117)	30"x24"												5.0		5.0								
				M3-4-30	WEST	30"x15"												3.1		3.1								
				M1-5-24-3	STATE RT (309)	30"x24"							1					5.0		5.0								
3-S	107	Mast Arm	905+05 Lt	R3-5R-30	RT ONLY ARROW	30"x36"												7.5		7.5								
				R3-5a-30	THRU ONLY ARROW	30"x36"												7.5		7.5								
				R3-5a-30	THRU ONLY ARROW	30"x36"												7.5		7.5								
				R10-H12a-30	LT/U-TURN ARROW	30"x36"												7.5		7.5								
4-S	107	SR 117/309	904+90 Lt	R2-1-24	SPEED LIMIT	24"x30"	13											5.0		5.0					1		1	
5-S	107	SR 117/309	905+21 Lt	D1-H6A-120	DESTINATION	120"x48"		14.8-15.3			2								36.0		36.0		2					
6-S	107	Eastern	10+41 Lt	R1-1-30	STOP	30"x30"	13			1								6.3		6.3					1		1	
7-S	107	Eastern	10+41 Rt	D3-1-30	STREET (Eastern)	30"x8"			11.5									1.7		1.7					1		1	
				D3-1-30	STREET (Harding)	30"x8"												1.7		1.7								
8-S	107	SR 117/309	908+50 Lt	M2-1-21	JUNCTION	21"x15"	14.5											2.2		2.2					2		1	
				M1-1-30-2	INTERSTATE (75)	24"x24"												4.0		4.0								
9-S	107	SR 117/309	901+52 Rt	R3-2-24	NO LEFT TURN	24"x24"	11.5											4.0		4.0								
10-S	107	SR 117/309	901+91 Lt	R6-1R-36	ONE WAY	36"x12"	12.5											3.0		3.0								
				R3-2-24	NO LEFT TURN	24"x24"												4.0		4.0								
11-S	107	SR 117/309	904+78 ℄	R6-1R-36	ONE WAY	36"x12"	12.5											3.0		3.0					1		1	
				R3-2-24	NO LEFT TURN	24"x24"												4.0		4.0								
12-S	107	SR 117/309	905+43 Lt	R6-1R-36	ONE WAY	36"x12"	12.5											3.0		3.0								
				R3-2-24	NO LEFT TURN	24"x24"												4.0		4.0								
13-S	107	Roschman	9+36 Lt	D3-1-36	STREET (Rosch.)	36"x8"			11.5									2.0		2.0								
				D3-1-30	STREET (Harding)	30"x8"												1.7		1.7								
14-S	107	Roschman	9+36 Rt	R1-1-30	STOP	30"x30"	13			1								6.3		6.3					2		1	
15-S	107	Sign Pole	905+25 Rt	R3-7R-30	MUST TURN ONLY	30"x30"											1	6.3		6.3					1		1	
16-S	107	Mast Arm	905+25 Rt	R10-H12a-30	LT/U-TURN ARROW	30"x36"								1	1			7.5		7.5								
				R3-5a-30	THRU ONLY ARROW	30"x36"												7.5		7.5								
				R3-5a-30	THRU ONLY ARROW	30"x36"												7.5		7.5								
				R3-5R-30	RT ONLY ARROW	30"x36"												7.5		7.5								
				D3-2-108	NEXT SIGNAL	108"x42"												31.5		31.5								
					SUBTOTALS TO SHEET 105		114.5	30.1	23.0	2	2	-	1	1	1	-	2	181.1	36.0	181.1	36.0	1	2	2	9	-	7	-

CALCULATED NJV
CHECKED GLW

SIGNING SUBSUMMARY

ALL-117/309-18.65/15.17

I:\pd\75467\traffic\sheets\75467TQ002.dgn 17-SEP-2012 10:54AM nvondere

SIGNING-S (CONTINUED)

REFERENCE	SHEET	LOCATION		SIGN			630																			
							GROUND MOUNTED SUPPORT, NO. 3 POST	GROUND MOUNTED STRUCTURAL BEAM SUPPORT, S4X7.7	STREET NAME SIGN SUPPORT, NO. 3 POST	SIGN POST REFLECTOR	BREAKAWAY STRUCTURAL BEAM CONNECTOR	OVERHEAD SIGN SUPPORT, TYPE TC-16.21, DESIGN 11, AS PER PLAN	OVERHEAD SIGN SUPPORT, TYPE TC-16.21, DESIGN 12, AS PER PLAN	OVERHEAD SIGN SUPPORT, TYPE TC-16.21, DESIGN 13, AS PER PLAN	OVERHEAD SIGN SUPPORT, MISC.: MECHANICAL DAMPER	SIGN HANGER ASSEMBLY, MAST ARM	SIGN SUPPORT ASSEMBLY, POLE MOUNTED	SIGN, FLAT SHEET	SIGN, GROUND MOUNTED EXTRUSHEET	SIGN ERECTED, FLAT SHEET	SIGN ERECTED, EXTRUSHEET	SIGN BACKING ASSEMBLY	STRUCTURAL BEAM SUPPORT FOUNDATION	RIGID OVERHEAD SIGN SUPPORT FOUNDATION	REMOVAL OF GROUND MOUNTED SIGN AND DISPOSAL	REMOVAL OF GROUND MOUNTED SIGN AND REERECTION	REMOVAL OF GROUND MOUNTED POST SUPPORT AND DISPOSAL	REMOVAL OF OVERHEAD SIGN SUPPORT AND DISPOSAL, APP
NO.	NO.	ROUTE/POLE	STATION	CODE NO.	DESCRIPTION	SIZE	FT	FT	FT	EACH	EACH	EACH	EACH	EACH	EACH	EACH	EACH	SQ FT	SQ FT	SQ FT	SQ FT	EACH	EACH	EACH	EACH	EACH	EACH	EACH
17-S	108	SR 117/309	908+14 Lt	R4-7-18	KEEP RIGHT	18"x24"	11.5											3.0		3.0								
18-S	108	SR 117/309	907+92 Lt																						4		2	
19-S	108	Mast Arm	908+48 Lt	R10-H12a-30	LT/U-TURN ARROW	30"x36"										1		7.5		7.5								1
20-S	108	Mast Arm	908+48 Lt	D3-1-84	STREET (Willard)	84"x18"										1		10.5		10.5								
21-S	108	Signal Pole	908+48 Lt	M4-5-24	TO	24"x12"											2	2.0		2.0		2						
				M1-1-30-2	INTERSTATE (75)	24"x24"												4.0		4.0								
				M6-1L-21	LEFT ARROW	21"x15"												2.2		2.2								
				M3-4-30	WEST	30"x15"												3.1		3.1								
				M1-5-24-3	STATE ROUTE (117)	30"x24"												5.0		5.0								
				M6-1L-21	LEFT ARROW	21"x15"												2.2		2.2								
				M1-5-24-3	STATE RT (309)	30"x24"												5.0		5.0								
				M6-4-21	LT/RT ARROW	21"x15"												2.2		2.2								
				M1-5-24-3	STATE ROUTE (117)	30"x24"											2	5.0		5.0								
				M6-6L-21	LT/AHEAD ARROW	21"x15"												2.2		2.2								
				R9-3a-18	NO PED CROSS	18"x18"											1	2.3		2.3								
22-S	108	Mast Arm	10+38.44 Lt	D3-1-84	STREET (Harding)	84"x18"										1		10.5		10.5								
23-S	108	Willard	10+54 Lt	R10-H6bL-24	STOP TO ACTUATE	24"x30"	13											5.0		5.0								
24-S	108	Willard	11+85 Rt				12.5																			1	1	
25-S	108	Willard	11+10 Rt				13																			2	1	
26-S	108	Willard	10+32 Rt																						1		1	
27-S	108	SR 309	911+90 Lt	D1-H4a-72	DEST. (Airport)	72"x12"	14-14											6.0		6.0								
				D1-H4a-72	DEST. (Belle.)	72"x12"												6.0		6.0								
				D9-H14a-72	DEST. (HWY PAT.)	72"x12"												6.0		6.0								
28-S	108	Bristol	10+33 Lt	R1-1-30	STOP	30"x30"	13			1								6.3		6.3					1		1	
29-S	108	Bristol	10+33 Rt	D3-1-30	STREET (Bristol)	30"x8"			11.5									1.7		1.7					1		1	
				D3-1-30	STREET (Harding)	30"x8"												1.7		1.7								
30-S	108	SR 309	909+56 Rt	R4-7-18	KEEP RIGHT	18"x24"	11.5											3.0		3.0								
31-S	108	SR 309	912+25 ℄	R6-1R-36	ONE WAY	36"x12"	12.5											3.0		3.0								
				R3-2-24	NO LEFT TURN	24"x24"												4.0		4.0								
32-S	108	SR 117/309	907+30 Rt	D1-H4a-72	DEST. (Airport)	72"x12"	13.5											6.0		6.0								
				D1-H4a-72	DEST. (Belle.)	72"x12"	13.5											6.0		6.0								
				D9-H14-72	DEST. (HWY PAT.)	72"x12"												6.0		6.0								
33-S	108	SR 117/309	907+80 Rt	M3-2-30	EAST	30"x15"	14.5											3.1		3.1								
				M1-5-24-3	STATE ROUTE (117)	30"x24"												5.0		5.0								
				M6-1R-21	RIGHT ARROW	21"x15"												2.2		2.2								
34-S	108	Ped Pole	908+04.24R	R9-3a-18	NO PED CROSS	18"x18"											1	2.3		2.3								
35-S	108	SR 117	989+85 Rt																						1		1	
36-S	108	SR 117	990+48 Rt																						2		1	
37-S	108	SR 309	909+25 Rt																						2		1	
38-S	108	Mast Arm	989+77.57L	D3-1-84	STREET (Harding)	84"x18"										1		10.5		10.5								
39-S	108	Mast Arm	909+34 Rt	R10-H12a-30	LT/U-TURN ARROW	30"x36"										1		7.5		7.5								
40-S	108	Mast Arm	909+34 Rt	D3-1-108	STREET (Belle.)	108"x18"										1		13.5		13.5								
41-S	108	SR 309	910+16 Rt																						1		1	
42-S	108	SR 309	910+60 Rt	M3-2-30	EAST	30"x15"	13.5											3.1		3.1								
				M1-5-24-2	STATE RT (309)	30"x24"												5.0		5.0								
43-S	108	SR 309	911+25 Rt	R2-1-24	SPEED LIMIT	24"x30"	13											3.0		3.0								
						SUBTOTALS TO SHEET 105	183.0	-	11.5	1	-	-	-	-	-	6	6	182.6	-	182.6	-	2	-	-	13	3	11	1

CALCULATED NJV
CHECKED GLW

SIGNING SUBSUMMARY

ALL-117/309-18.65/15.17

I:\pd\75467\traffic\sheets\75467TQ003.dgn 17-SEP-2012 10:54AM nvondere

SIGNING-S (CONTINUED)

REFERENCE	SHEET	LOCATION		SIGN			630 GROUND MOUNTED SUPPORT, NO. 3 POST	630 GROUND MOUNTED STRUCTURAL BEAM SUPPORT, S4X7.7	630 STREET NAME SIGN SUPPORT, NO. 3 POST	630 SIGN POST REFLECTOR	630 BREAKAWAY STRUCTURAL BEAM CONNECTOR	630 OVERHEAD SIGN SUPPORT, TYPE TC-16.21, DESIGN 11, AS PER PLAN	630 OVERHEAD SIGN SUPPORT, TYPE TC-16.21, DESIGN 12, AS PER PLAN	630 OVERHEAD SIGN SUPPORT, TYPE TC-16.21, DESIGN 13, AS PER PLAN	630 OVERHEAD SIGN SUPPORT, MISC.: MECHANICAL DAMPER	630 SIGN HANGER ASSEMBLY, MAST ARM	630 SIGN SUPPORT ASSEMBLY, POLE MOUNTED	630 SIGN, FLAT SHEET	630 SIGN, GROUND MOUNTED EXTRUSHEET	630 SIGN ERECTED, FLAT SHEET	630 SIGN ERECTED, EXTRUSHEET	630 SIGN BACKING ASSEMBLY	630 STRUCTURAL BEAM SUPPORT FOUNDATION	630 RIGID OVERHEAD SIGN SUPPORT FOUNDATION	630 REMOVAL OF GROUND MOUNTED SIGN AND DISPOSAL	630 REMOVAL OF GROUND MOUNTED SIGN AND REERECTION	630 REMOVAL OF GROUND MOUNTED POST SUPPORT AND DISPOSAL	630 REMOVAL OF OVERHEAD SIGN SUPPORT AND DISPOSAL, APP
NO.	NO.	ROUTE/POLE	STATION	CODE NO.	DESCRIPTION	SIZE	FT	FT	FT	EACH	EACH	EACH	EACH	EACH	EACH	EACH	EACH	SQ FT	SQ FT	SQ FT	SQ FT	EACH	EACH	EACH	EACH	EACH	EACH	EACH
44-S	109	Mast Arm	913+50 Lt	D3-2-108	NEXT SIGNAL	108"x42"							1					31.5		31.5				1					
				R3-6R-30	THRU/RT ARROW	30"x36"												7.5		7.5									
				R3-5a-30	THRU ONLY ARROW	30"x36"												7.5		7.5									
				R10-H12a-30	LT/U-TURN ARROW	30"x36"												7.5		7.5									
45-S	109	SR 309	913+92 Lt																						1		1		
46-S	109	SR 309	915+13 Lt																						4		2		
47-S	109	St Andrews	9+38 Lt	R1-1-30	STOP	30"x30"	13			1								6.3		6.3					1		1		
48-S	109	St Andrews	9+38 Rt	D3-1-36	STREET (St Andr.)	36"x8"			11.5									2.0		2.0					1		1		
				D3-1-30	STREET (Harding)	30"x8"												1.7		1.7									
49-S	109	SR 309	917+00 Lt	M2-1-21	JUNCTION	21"x15"	14.5											2.2		2.2					2		1		
				M1-5-24-3	STATE ROUTE (117)	30"x24"												5.0		5.0									
				M6-6L-21	LT/RIGHT ARROW	21"x15"												2.2		2.2									
50-S	109	SR 309	917+40 Lt	R2-1-24	SPEED LIMIT	24"x30"	13											5.0		5.0									
51-S	109	SR 309	915+55 ℄	R6-1R-36	ONE WAY	36"x12"	12.5											3.0		3.0									
				R3-2-24	NO LEFT TURN	24"x24"												4.0		4.0									
52-S	109	SR 309	915+86 ℄	R6-1R-36	ONE WAY	36"x12"	12.5											3.0		3.0									
				R3-2-24	NO LEFT TURN	24"x24"												4.0		4.0									
53-S	109	SR 309	912+80 Rt																						1		1		
54-S	109	SR 309	913+96 Rt	R3-5R-30	RT ONLY ARROW	30"x36"	13.5											7.5		7.5									
55-S	109	SR 309	914+58 Rt																						1		1		
56-S	109	Mall Dr#1	9+30 Rt	R1-1-30	STOP	30"x30"	13			1								6.3		6.3									
57-S	109	Mast Arm	916+00 Rt	R10-H12a-30	LT/U-TURN ARROW	30"x36"							1					7.5		7.5				1					
				R3-5a-30	THRU ONLY ARROW	30"x36"												7.5		7.5									
				R3-5a-30	THRU ONLY ARROW	30"x36"												7.5		7.5									
				D3-2-84	NEXT SIGNAL	84"x30"												17.5		17.5									
58-S	109	SR 309	918+23 Rt	R3-5R-30	RT ONLY ARROW	30"x36"	13.5											7.5		7.5					1		1		
59-S	110	SR 309	919+21 Lt	R4-7-18	KEEP RIGHT	18"x24"	11.5											3.0		3.0									
60-S	110	Mast Arm	919+38.0 Lt	R3-4-24	NO U-TURN	24"x24"										1		4.0		4.0									
61-S	110	Mast Arm	919+38.0 Lt	D3-1-108	STREET (Holyoke)	108"x18"										1		13.5		13.5									
				D3-1-108	STREET (Holyoke)	108"x18"										1		13.5		13.5									
62-S	110	Signal Pole	919+38.0 Lt	R9-3a-18		18"x18"											1	2.3		2.3									
63-S	110	Holyoke	10+50 Lt	R10-H6bL-24	STOP TO ACTUATE	24"x30"	13											5.0		5.0					1		1		
64-S	110	SR 309	919+99	D3-1-84	STREET (Harding)	84"x18"										1		10.5		10.5					1		1		
65-S	110	Sign Pole	922+55 Lt	R3-H9k-30	END	30"x12"											1	2.5		2.5									
				R3-9b-30	CENTERLANE ONLY	30"x36"											1	7.5		7.5									
66-S	110	Mast Arm	922+55 Lt	D3-2-84	NEXT SIGNAL	84"x30"							1					17.5		17.5				1					
				R3-6R-30	THRU/RT ARROW	30"x36"												7.5		7.5									
				R3-5a-30	THRU ONLY ARROW	30"x36"												7.5		7.5									
				R3-5L-30	LEFT ONLY ARROW	30"x36"												7.5		7.5									
				R3-9a-30	2-WAY LEFT TURN	30"x36"												7.5		7.5									
				R3-H9j-30	BEGIN	30"x12"												2.5		2.5									
67-S	110	Radcliffe	10+35 Lt	R1-1-30	STOP	30"x30"	13			1								6.3		6.3					1		1		
68-S	110	Radcliffe	10+35 Rt	D3-1-36	STREET (Rad.)	36"x8"			11.5									2.0		2.0					1		1		
				D3-1-30	STREET (Harding)	30"x8"												1.7		1.7									
69-S	110	Signal Pole	919+36.3 Rt	R9-3a-18	NO PED CROSS	18"x18"											1	2.3		2.3									
70-S	110	Mast Arm	9+33.50 Lt	D3-1-84	STREET (Harding)	84"x18"										1		10.5		10.5									
71-S	110	Holyoke	9+36 Rt	R10-H6bL-24	STOP TO ACTUATE	24"x30"	13											5.0		5.0					1		1		
					SUBTOTALS TO SHEET 105		156.0	-	23.0	3	-	-	2	1	-	5	4	293.3	-	293.3	-	-	-	3	17	-	14	-		

CALCULATED NJV CHECKED GLW

SIGNING SUBSUMMARY

ALL-117/309-18.65/15.17

I:\pd\75467\traffic\sheets\75467TQ004.dgn 17-SEP-2012 10:54AM nvondere

SIGNING-S (CONTINUED)

REFERENCE	SHEET	LOCATION		SIGN			630																				
							GROUND MOUNTED SUPPORT, NO. 3 POST	GROUND MOUNTED STRUCTURAL BEAM SUPPORT, S4X7.7	STREET NAME SIGN SUPPORT, NO. 3 POST	SIGN POST REFLECTOR	BREAKAWAY STRUCTURAL BEAM CONNECTOR	OVERHEAD SIGN SUPPORT, TYPE TC-16.21, DESIGN 11, AS PER PLAN	OVERHEAD SIGN SUPPORT, TYPE TC-16.21, DESIGN 12, AS PER PLAN	OVERHEAD SIGN SUPPORT, TYPE TC-16.21, DESIGN 13, AS PER PLAN	OVERHEAD SIGN SUPPORT, MISC.: MECHANICAL DAMPER	SIGN HANGER ASSEMBLY, MAST ARM	SIGN SUPPORT ASSEMBLY, POLE MOUNTED	SIGN, FLAT SHEET	SIGN, GROUND MOUNTED EXTRUSHEET	SIGN ERECTED, FLAT SHEET	SIGN ERECTED, EXTRUSHEET	SIGN BACKING ASSEMBLY	STRUCTURAL BEAM SUPPORT FOUNDATION	RIGID OVERHEAD SIGN SUPPORT FOUNDATION	REMOVAL OF GROUND MOUNTED SIGN AND DISPOSAL	REMOVAL OF GROUND MOUNTED SIGN AND REERECTION	REMOVAL OF GROUND MOUNTED POST SUPPORT AND DISPOSAL	REMOVAL OF OVERHEAD SIGN SUPPORT AND DISPOSAL, APP
NO.	NO.	ROUTE/POLE	STATION	CODE NO.	DESCRIPTION	SIZE	FT	FT	FT	EACH	EACH	EACH	EACH	EACH	EACH	EACH	EACH	SQ FT	SQ FT	SQ FT	SQ FT	EACH	EACH	EACH	EACH	EACH	EACH	EACH
72-S	110	Mast Arm	920+13.0 Rt	R10-H12a-30	LT/U-TURN ARROW	30"x36"										1		7.5		7.5								
73-S	110	SR 309	922+25 Rt	R3-2-24	NO LEFT TURN	24"x24"	12.5											4.0		4.0								
74-S	110	SR 309	922+75 Rt	R1-1-30	STOP	30"x30"	13			1								6.3		6.3					1		1	
75-S	110	SR 309	923+18 Rt	R9-3a-18	NO PED CROSS	18"x18"	12.0											2.3		2.3								
76-S	110	SR 309	923+50 Rt	R2-1-24	SPEED LIMIT	24"x30"	13											5.0		5.0					1		1	
77-S	110	SR 309	923+79 Rt	R9-3a-18	NO PED CROSS	18"x18"	12.0											2.3		2.3								
78-S	111	SR 309	924+34																									1
79-S	111	Belmont	10+50 Lt	R1-1-30	STOP	30"x30"	13			1								6.3		6.3					1		1	
80-S	111	Belmont	10+50 Rt	D3-1-30	STREET (Belmont)	30"x8"			11.5									1.7		1.7					1		1	
				D3-1-30	STREET (Harding)	30"x8"												1.7		1.7								
81-S	111	SR 309	924+94 Rt	R9-3a-18	NO PED CROSS	18"x18"	12.0											2.3		2.3								
82-S	111	SR 309	925+01 Rt	R3-2-24	NO LEFT TURN	24"x24"	12.5											4.0		4.0								
83-S	111	SR 309	925+54 Rt	R9-3a-18	NO PED CROSS	18"x18"	12.0											2.3		2.3								
84-S	112	SR 309	932+50 Lt	R2-1-24	SPEED LIMIT	24"x30"	13											5.0		5.0								
85-S	112	Mast Arm	932+50 Lt	D3-1-108	STREET (Lost Cr.)	108"x18"										1		13.5		13.5								
86-S	112	SR 309	933+82 Lt																						1		1	
87-S	112	SR 309	933+90,47'L	R10-H6bL-24	STOP TO ACTUATE	24"x30"	13											5.0		5.0					1		1	
88-S	112	Mast Arm	934+76.6 Lt	D3-1-84	STREET (Harding)	84"x18"										1		10.5		10.5								
89-S	112	Mast Arm	931+00 Rt	R3-9a-30	2-WAY LEFT TURN	30"x36"						1						7.5		7.5				1				
				R3-5L-30	LEFT ONLY ARROW	30"x36"												7.5		7.5								
				R3-5a-30	THRU ONLY ARROW	30"x36"												7.5		7.5								
				R3-5a-30	THRU ONLY ARROW	30"x36"												7.5		7.5								
				D3-2-84	NEXT SIGNAL	84"x30"												17.5		17.5								
90-S	112	SR 309	931+84, Rt	R3-2-24	NO LEFT TURN	24"x24"	12.5											4.0		4.0								
91-S	112	SR 309	931+84, Rt	R3-2-24	NO LEFT TURN	24"x24"	12.5											4.0		4.0								
92-S	112	SR 309	932+63 Rt	R3-5R-30	RT ONLY ARROW	30"x36"	13.5											7.5		7.5								
93-S	112	Mast Arm	9+52.81 Lt	D3-1-84	STREET (Harding)	84"x18"										1		10.5		10.5								
94-S	112	Lost Creek	9+33 Rt	R10-H6bL-24	STOP TO ACTUATE	24"x30"	13											5.0		5.0								
95-S	112	Mast Arm	934+68.5 Rt	D3-1-108	STREET (Lost Cr.)	108"x18"										1		13.5		13.5								
96-S	112	SR 309	915+30 Rt																						1		2	
97-S	113	Mast Arm	937+50 Lt	D3-2-84	NEXT SIGNAL	84"x30"						1						17.5		17.5				1				
				R3-6R-30	THRU/RT ARROW	30"x36"												7.5		7.5								
				R3-5a-30	THRU ONLY ARROW	30"x36"												7.5		7.5								
				R3-5L-30	LEFT ONLY ARROW	30"x36"												7.5		7.5								
				R3-9a-30	2-WAY LEFT TURN	30"x36"												7.5		7.5								
98-S	113	SR 309	937+00 Rt	R2-1-24	SPEED LIMIT	24"x30"	13											5.0		5.0								
SUBTOTALS TO SHEET 105							202.5	-	11.5	2	-	1	1	-	-	5	-	224.2	-	224.2	-	-	-	2	7	-	8	1

CALCULATED NJV
CHECKED GLW

SIGNING SUBSUMMARY

ALL-117/309-18.65/15.17

I:\pd\75467\traffic\sheets\75467TQ005.dgn 17-SEP-2012 10:54AM nvondere

SIGNING-S (CONTINUED)

REFERENCE		LOCATION		SIGN			630																				
	SHEET						GROUND MOUNTED SUPPORT, NO. 3 POST	GROUND MOUNTED STRUCTURAL BEAM SUPPORT, S4X7.7	STREET NAME SIGN SUPPORT, NO. 3 POST	SIGN POST REFLECTOR	BREAKAWAY STRUCTURAL BEAM CONNECTOR	OVERHEAD SIGN SUPPORT, TYPE TC-16.21, DESIGN 11, AS PER PLAN	OVERHEAD SIGN SUPPORT, TYPE TC-16.21, DESIGN 12, AS PER PLAN	OVERHEAD SIGN SUPPORT, TYPE TC-16.21, DESIGN 13, AS PER PLAN	OVERHEAD SIGN SUPPORT, MISC.: MECHANICAL DAMPER	SIGN HANGER ASSEMBLY, MAST ARM	SIGN SUPPORT ASSEMBLY, POLE MOUNTED	SIGN, FLAT SHEET	SIGN, GROUND MOUNTED EXTRUSHEET	SIGN ERECTED, FLAT SHEET	SIGN ERECTED, EXTRUSHEET	SIGN BACKING ASSEMBLY	STRUCTURAL BEAM SUPPORT FOUNDATION	RIGID OVERHEAD SIGN SUPPORT FOUNDATION	REMOVAL OF GROUND MOUNTED SIGN AND DISPOSAL	REMOVAL OF GROUND MOUNTED SIGN AND REERECTION	REMOVAL OF GROUND MOUNTED POST SUPPORT AND DISPOSAL	REMOVAL OF OVERHEAD SIGN SUPPORT AND DISPOSAL, APP
NO.	NO.	ROUTE/POLE	STATION	CODE NO.	DESCRIPTION	SIZE	FT	FT	FT	EACH	EACH	EACH	EACH	EACH	EACH	EACH	EACH	SQ FT	SQ FT	SQ FT	SQ FT	EACH	EACH	EACH	EACH	EACH	EACH	EACH
99-S	114	*SR 309*	*944+25 Lt*	R2-1-24	SPEED LIMIT	24"x30"	*13*											5.0		5.0					1		1	
100-S	114	*Mast Arm*	*945+73.1 Lt*	D3-1-96	STREET (Devon.)	96"x18"										1		12.0		12.0								
				D3-1-96	STREET (Devon.)	96"x18"										1		12.0		12.0								
101-S	114	*Devonshire*	*10+63 Lt*	R10-H6bL-24	STOP TO ACTUATE	24"x30"	*13*											5.0		5.0					1		1	
102-S	114	*Devonshire*	*10+55 Rt*																						1		1	
103-S	114	*Mast Arm*	*0+45.93 Rt*	D3-1-84	STREET (Harding)	84"x18"										1		10.5		10.5								
104-S	114	*SR 309*	*924+00 Rt*																						2		1	
105-S	114	*Mast Arm*	*943+10 Rt*	R3-9a-30	2-WAY LEFT TURN	30"x36"												7.5		7.5								
				R3-5L-30	LEFT ONLY ARROW	30"x36"												7.5		7.5								
				R3-5a-30	THRU ONLY ARROW	30"x36"						1						7.5		7.5				1				
				R3-6R-30	THRU/RT ARROW	30"x36"												7.5		7.5								
				D3-2-84	NEXT SIGNAL	84"x30"												17.5		17.5								
106-S	114	*SR 309*	*944+40 Rt*																						1		2	
107-S	114	*Mast Arm*	*9+52.81 Lt*	D3-1-84	STREET (Harding)	84"x18"										1		10.5		10.5								
108-S	114	*Mall Dr#3*	*9+45 Rt*	R10-H6bL-24	STOP TO ACTUATE	24"x30"	*13*											5.0		5.0					1		1	
109-S	115	*SR 309*	*948+10 Lt*																						1		2	
110-S	115	*Mast Arm*	*949+30 Lt*	R3-9a-30	2-WAY LEFT TURN	30"x36"												7.5		7.5								
				R3-5L-30	LEFT ONLY ARROW	30"x36"												7.5		7.5								
				R3-5a-30	THRU ONLY ARROW	30"x36"							1					7.5		7.5				1				
				R3-6R-30	THRU/RT ARROW	30"x36"												7.5		7.5								
				D3-2-84	NEXT SIGNAL	84"x30"												17.5		17.5								
111-S	115	*SR 309*	*950+35 Rt*	W4-2R-30	RIGHT LANE ENDS	30"x30"	*13-13*			2								6.3		6.3						1	2	
112-S	116	*SR 309*	*960+20 Rt*	R3-5R-30	RT ONLY ARROW	30"x36"	*11.5*											7.5		7.5								
113-S	116	*SR 309*	*961+63 Rt*	D3-1-30	STREET (Bowman)	30"x8"			11.5									1.7		1.7						2	1	
				D3-1-30	STREET (Harding)	30"x8"												1.7		1.7								
114-S	117	*SR 117*	*991+86 Lt*	R3-2-24	NO LEFT TURN	24"x24"	*12.5*											4.0		4.0								
115-S	117	*SR 117*	*991+93 Lt*	R3-2-24	NO LEFT TURN	24"x24"	*12.5*											4.0		4.0								
116-S	117	*SR 117*	*993+00 Lt*	D1-H4a-72	DEST. (Lima)	72"x12"	*12.5*											6.0		6.0								
				D1-H4a-72	DEST. (Kenton)	72"x12"	*12.5*											6.0		6.0								
117-S	117	*SR 117*	*991+92 Rt*	R3-2-24	NO LEFT TURN	24"x24"	*12.5*											4.0		4.0								
SUBTOTALS (THIS SHEET)							*139.0*	-	*11.5*	*2*	-	*1*	*1*	-	-	*4*	-	*196.2*	-	*196.2*	-	-	-	*2*	*8*	*3*	*12*	-
SUBTOTALS (SHEET 101)							*114.5*	*30.1*	*23.0*	*2*	*2*	-	*1*	*1*	*1*	-	*2*	*181.1*	*36.0*	*181.1*	*36.0*	*1*	*2*	*2*	*9*	-	*7*	-
SUBTOTALS (SHEET 102)							*183.0*	-	*11.5*	*1*	-	-	-	-	-	*6*	*6*	*182.6*	-	*182.6*	-	*2*	-	-	*13*	*3*	*11*	*1*
SUBTOTALS (SHEET 103)							*156.0*	-	*23.0*	*3*	-	-	*2*	*1*	-	*5*	*4*	*293.3*	-	*293.3*	-	-	-	*3*	*17*	-	*14*	-
SUBTOTALS (SHEET 104)							*202.5*	-	*11.5*	*2*	-	*1*	*1*	-	-	*5*	-	*224.2*	-	*224.2*	-	-	-	*2*	*7*	-	*8*	*1*
TOTALS CARRIED TO GENERAL SUMMARY							*795.0*	*30.1*	*80.5*	*10*	*2*	*2*	*5*	*2*	*1*	*20*	*12*	*1077.4*	*36.0*	*1077.4*	*36.0*	*3*	*2*	*9*	*54*	*6*	*52*	*2*

CALCULATED | CHECKED

SIGNING SUBSUMMARY

ALL-117/309-18.65/15.17

I:\pd\75467\traffic\sheets\75467TQ006.dgn 17-SEP-2012 10:54AM nvondere

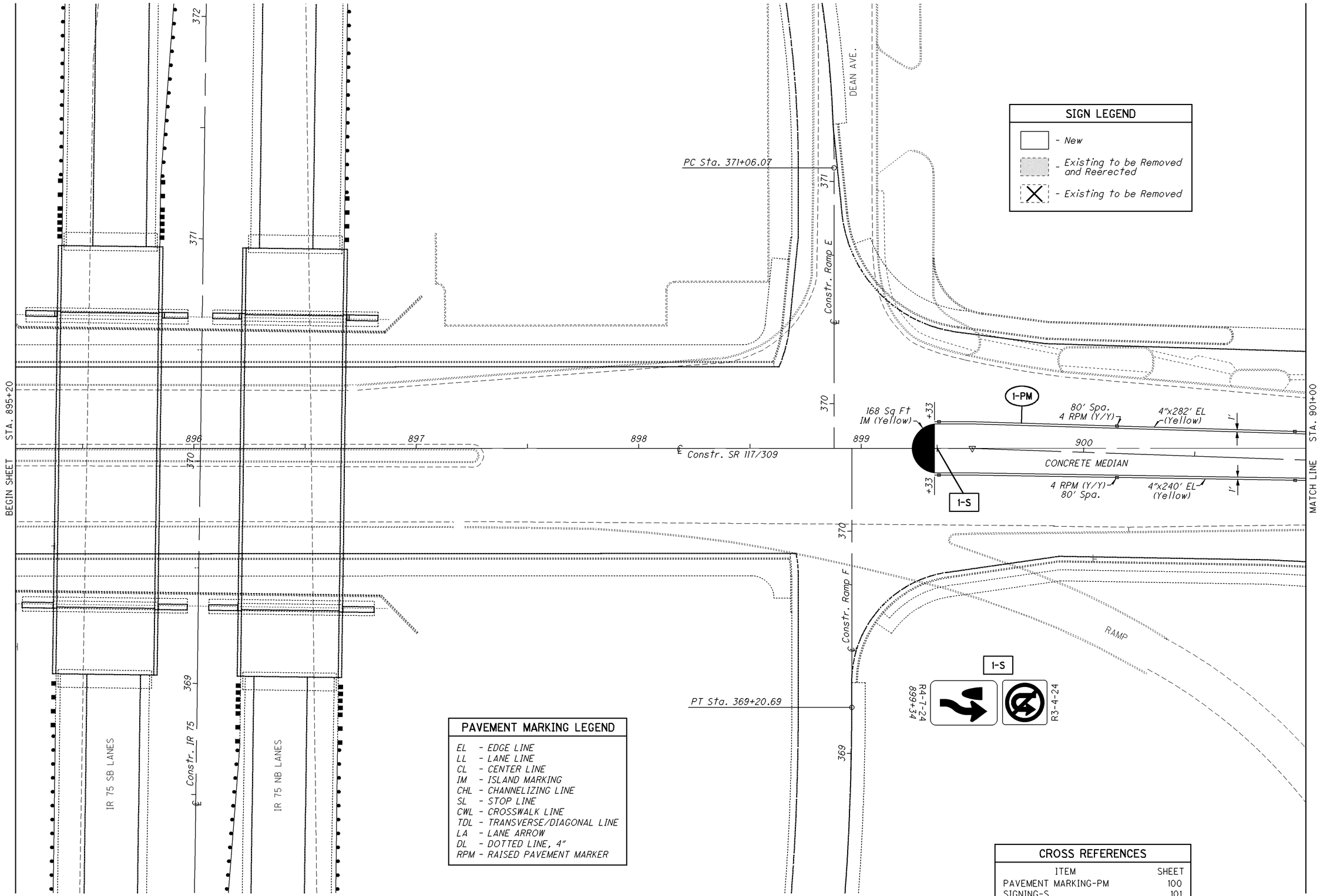

PAVEMENT MARKING LEGEND

EL	- EDGE LINE
LL	- LANE LINE
CL	- CENTER LINE
IM	- ISLAND MARKING
CHL	- CHANNELIZING LINE
SL	- STOP LINE
CWL	- CROSSWALK LINE
TDL	- TRANSVERSE/DIAGONAL LINE
LA	- LANE ARROW
DL	- DOTTED LINE, 4"
RPM	- RAISED PAVEMENT MARKER

CROSS REFERENCES

ITEM	SHEET
PAVEMENT MARKING-PM	100
SIGNING-S	101

HORIZONTAL SCALE IN FEET
0 10 20 40

CALCULATED NJV
CHECKED GLW

TRAFFIC CONTROL PLAN - SR 117/309
STA. 895+20 TO STA. 901+00

ALL-117/309-18.65/15.17

106
173

I:\pd\75467\traffic\sheets\75467TP001.dgn 17-SEP-2012 10:54AM nvondere

I:\pd\75467\traffic\sheets\75467TP002.dgn 17-SEP-2012 10:54AM nvondere

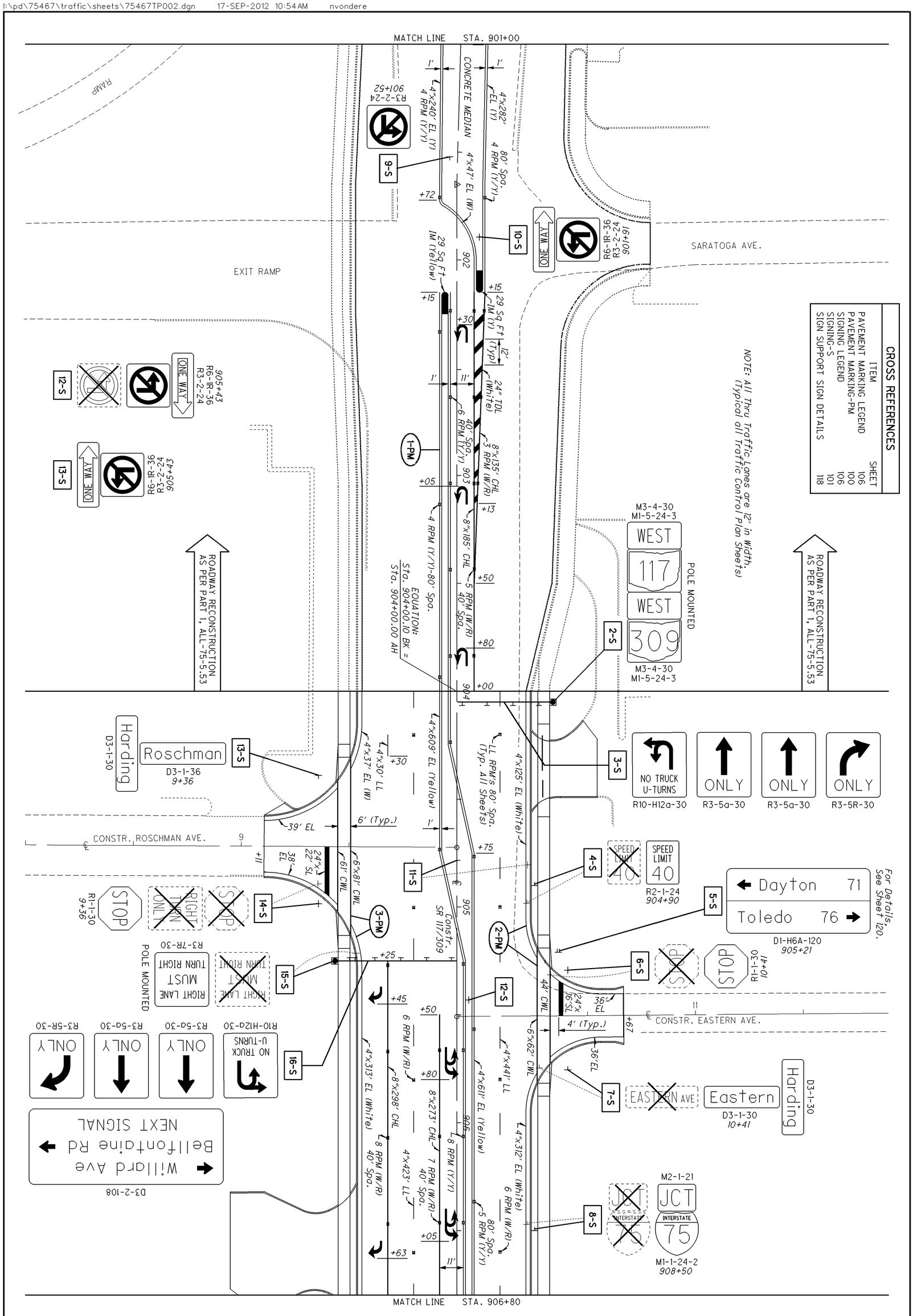

107 / 173	ALL-117/309-18.65/15.17	TRAFFIC CONTROL PLAN STA. 901+00 TO STA. 906+80	CALCULATED NJV CHECKED GLW	HORIZONTAL SCALE IN FEET

I:\pd\75467\traffic\sheets\75467TP003.dgn 17-SEP-2012 10:54 AM nvondere

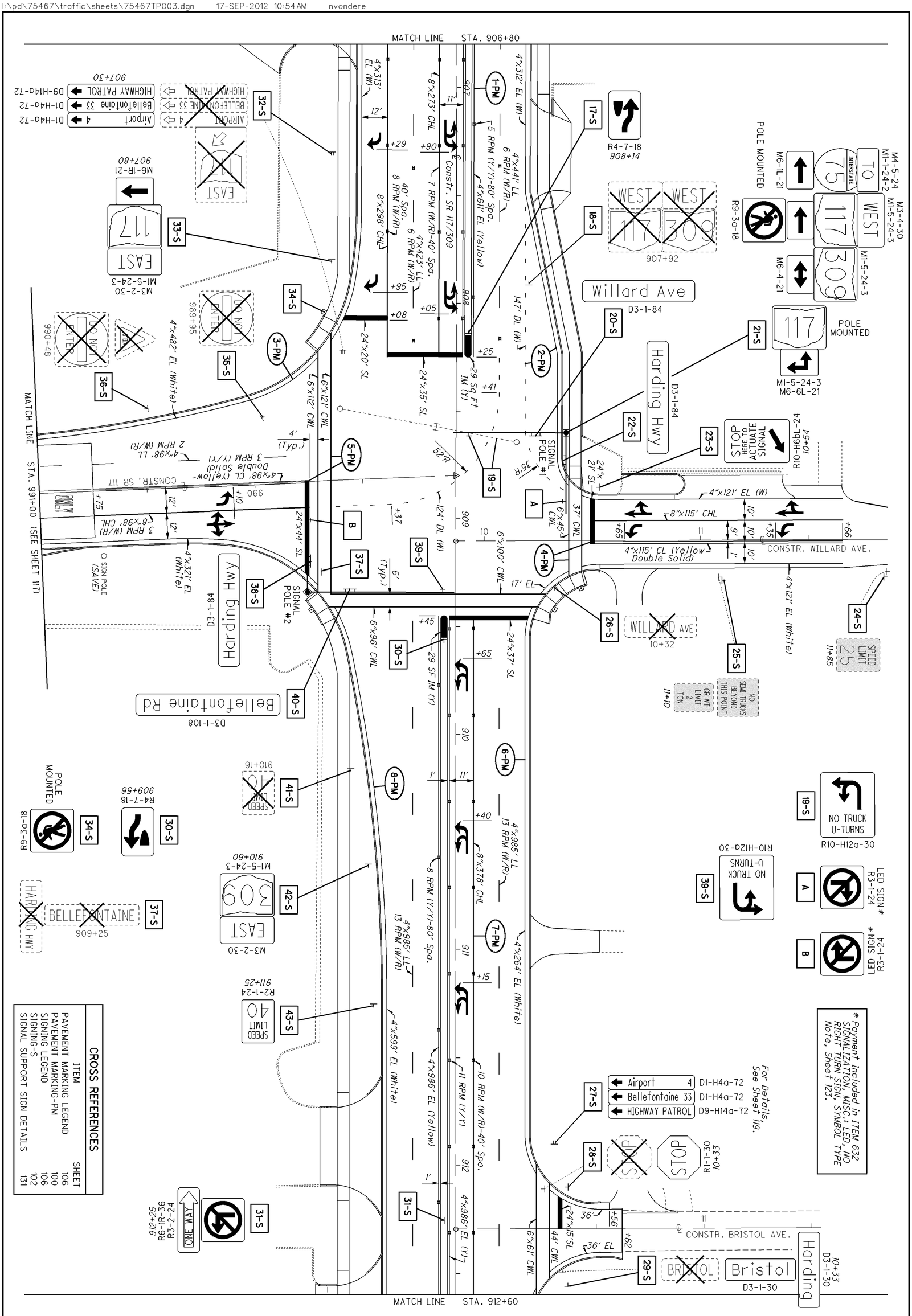

108 / 173	ALL-117/309-18.65/15.17	TRAFFIC CONTROL PLAN - SR 117/309 STA. 906+80 TO STA. 912+60	CALCULATED NJV / CHECKED GLW / HORIZONTAL SCALE IN FEET

I:\pd\75467\traffic\sheets\75467TP004.dgn 17-SEP-2012 10:54AM nvondere

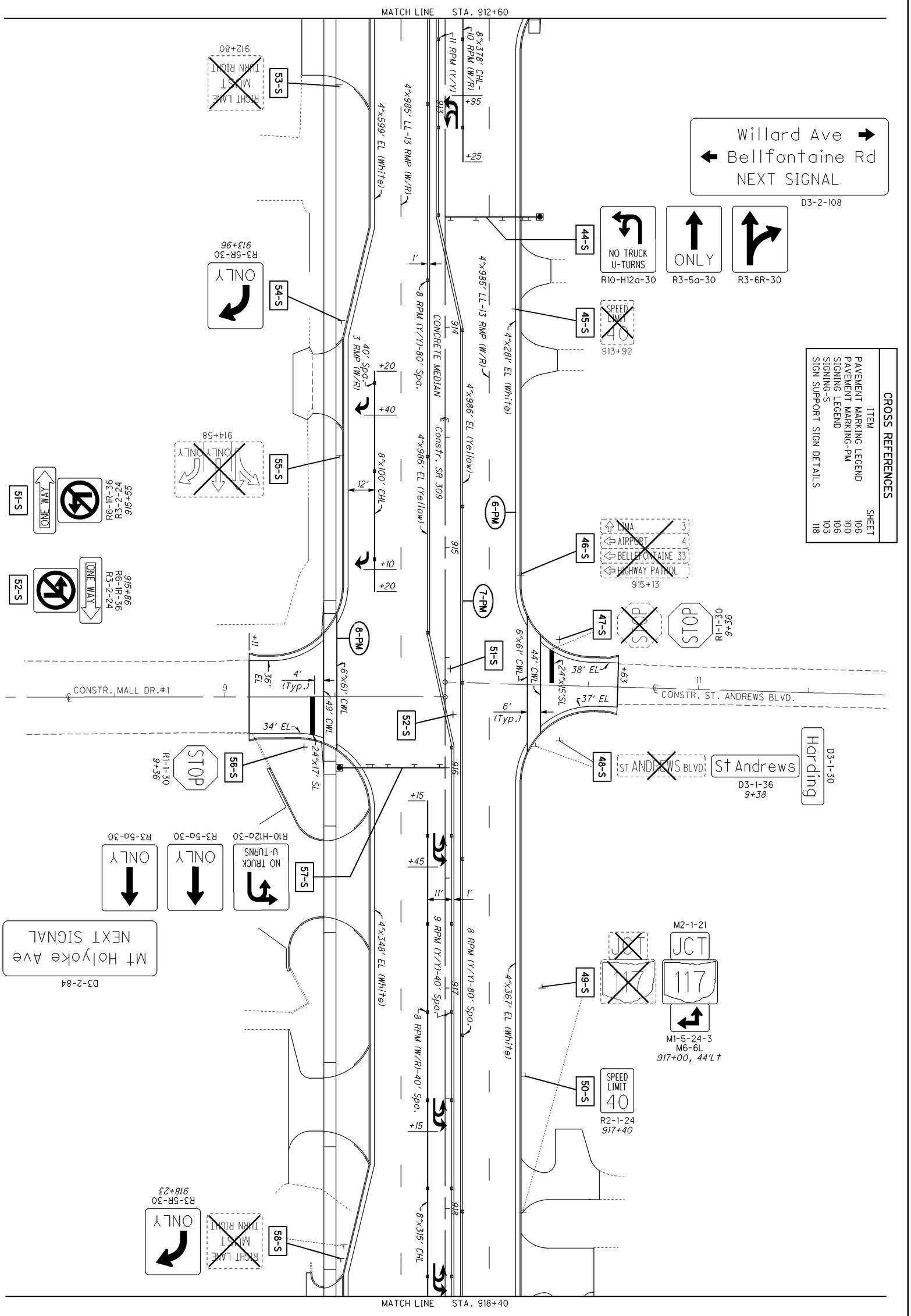

109 / 173	ALL-117/309-18.65/15.17	TRAFFIC CONTROL PLAN - SR 309 STA. 912+60 TO STA. 918+40	CALCULATED NJV / CHECKED GLW	HORIZONTAL SCALE IN FEET

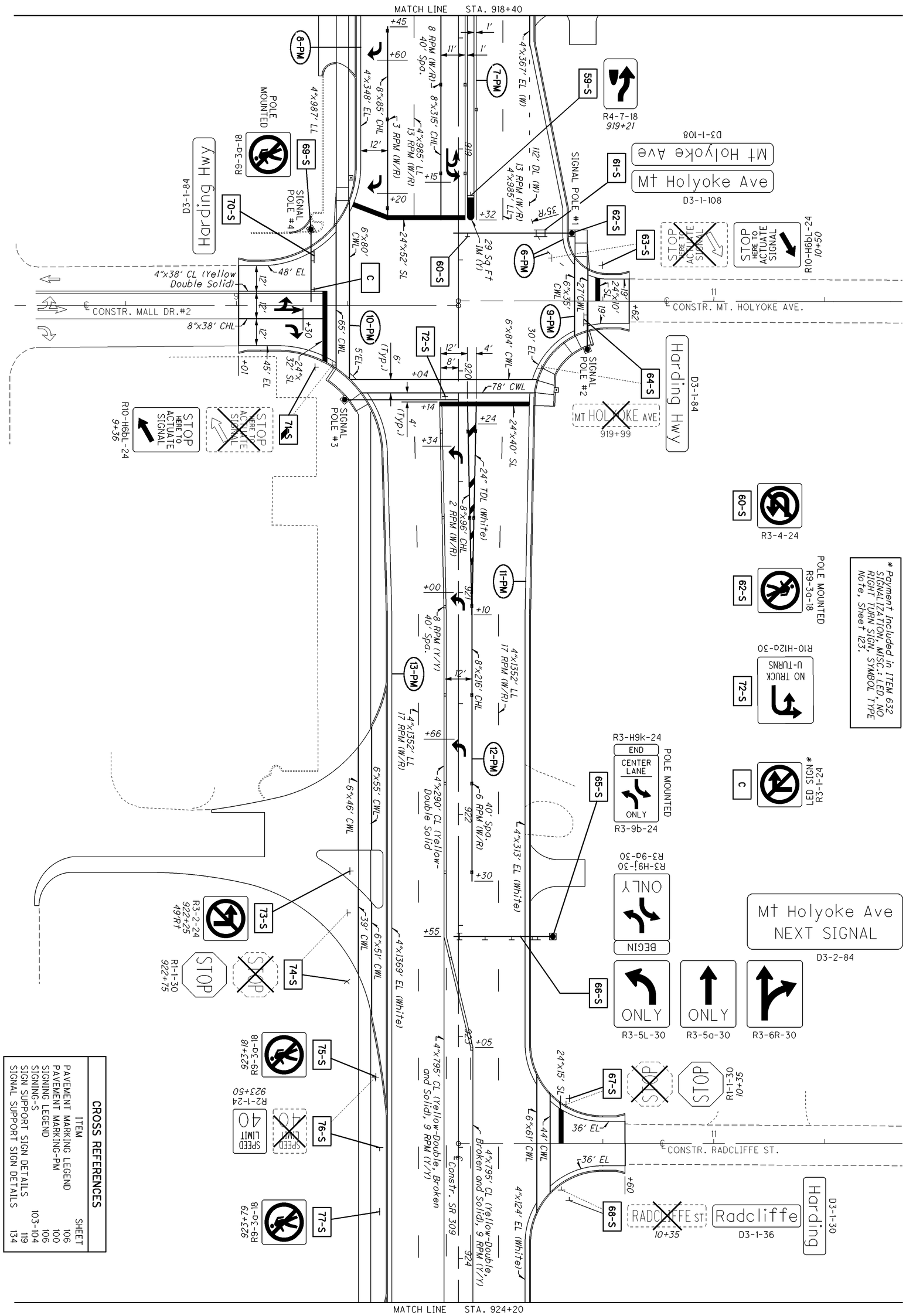

110
173

ALL-117/309-18.65/15.17

TRAFFIC CONTROL PLAN - SR 309 STA. 918+40 TO STA. 924+20

CALCULATED NJV
CHECKED GLW

HORIZONTAL SCALE IN FEET
0 10 20 40

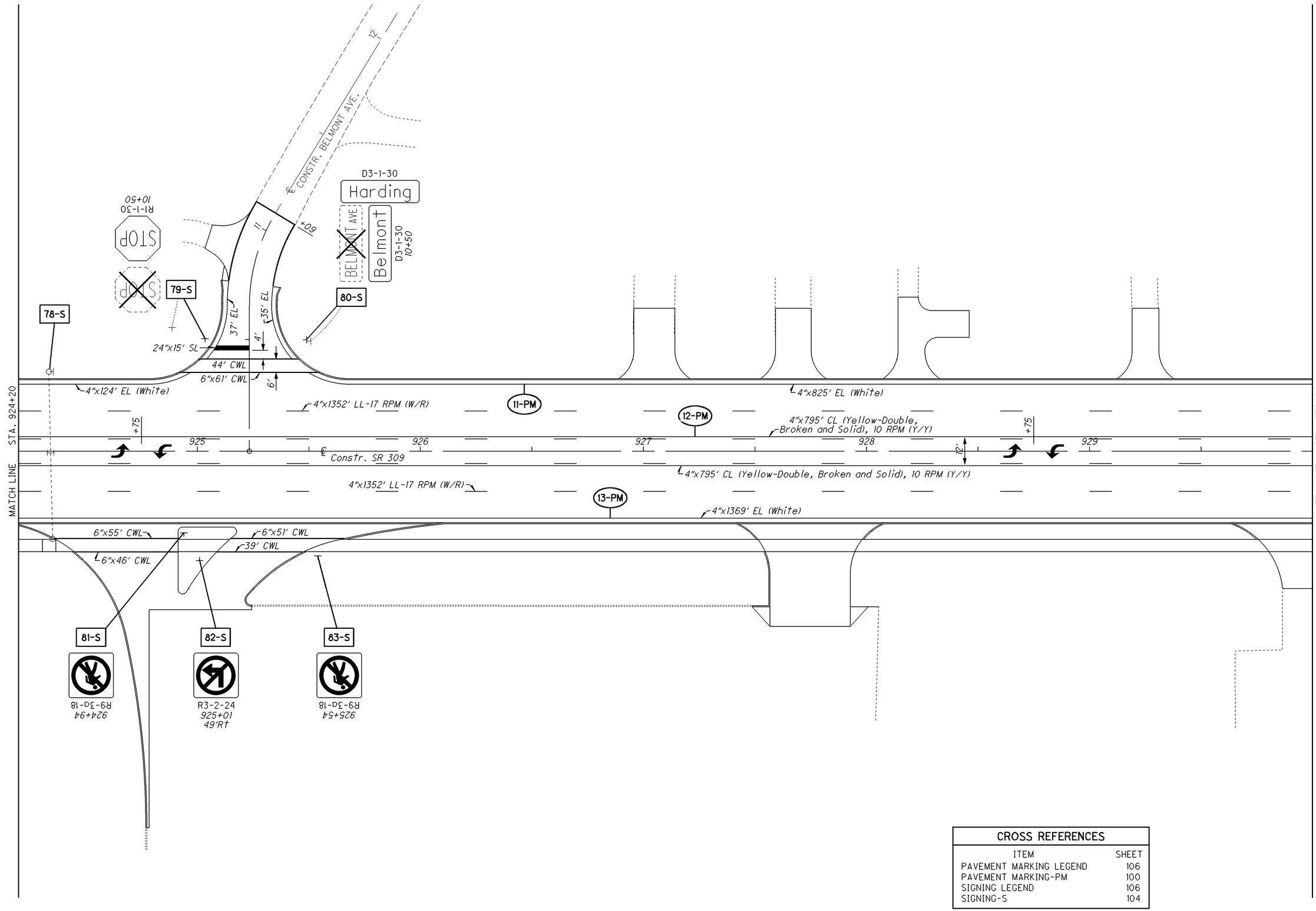

CROSS REFERENCES	
ITEM	SHEET
PAVEMENT MARKING LEGEND	106
PAVEMENT MARKING-PM	100
SIGNING LEGEND	106
SIGNING-S	104

HORIZONTAL SCALE IN FEET
0 10 20 40

CALCULATED NJV
CHECKED GLW

TRAFFIC CONTROL PLAN - SR 309 STA. 924+20 TO STA. 930+00

ALL-117/309-18.65/15.17

I:\pd\75467\traffic\sheets\75467TP006.dgn 17-SEP-2012 10:54AM nvondere

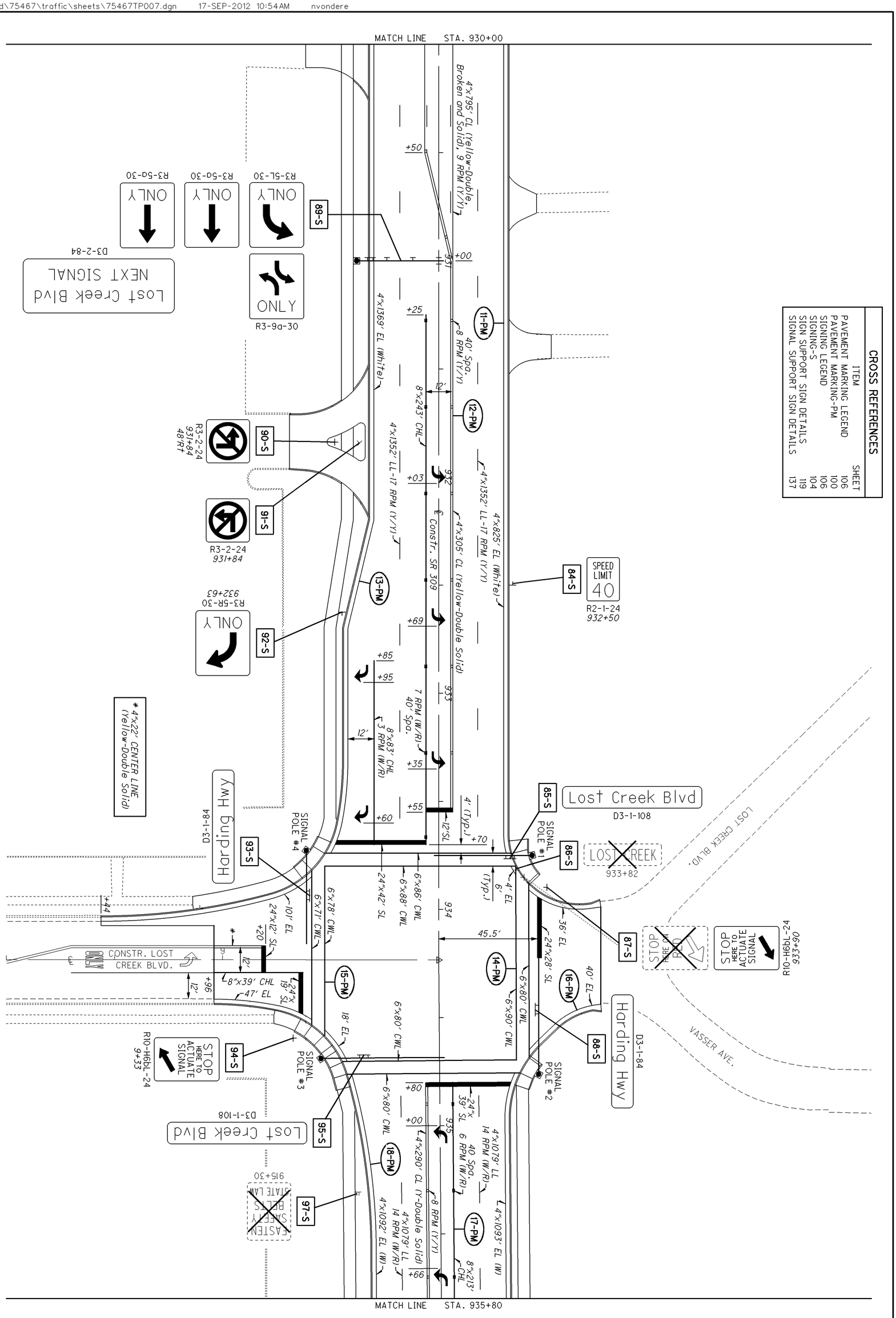

CROSS REFERENCES	
ITEM	SHEET
PAVEMENT MARKING LEGEND	106
PAVEMENT MARKING-PM	100
SIGNING LEGEND	106
SIGNING-S	104
SIGN SUPPORT SIGN DETAILS	119
SIGNAL SUPPORT SIGN DETAILS	137

112 / 173	ALL-117 / 309-18.65 / 15.17	TRAFFIC CONTROL PLAN - SR 309 STA. 930+00 TO STA. 935+80	CALCULATED NJV / CHECKED GLW	HORIZONTAL SCALE IN FEET 0 10 20 40

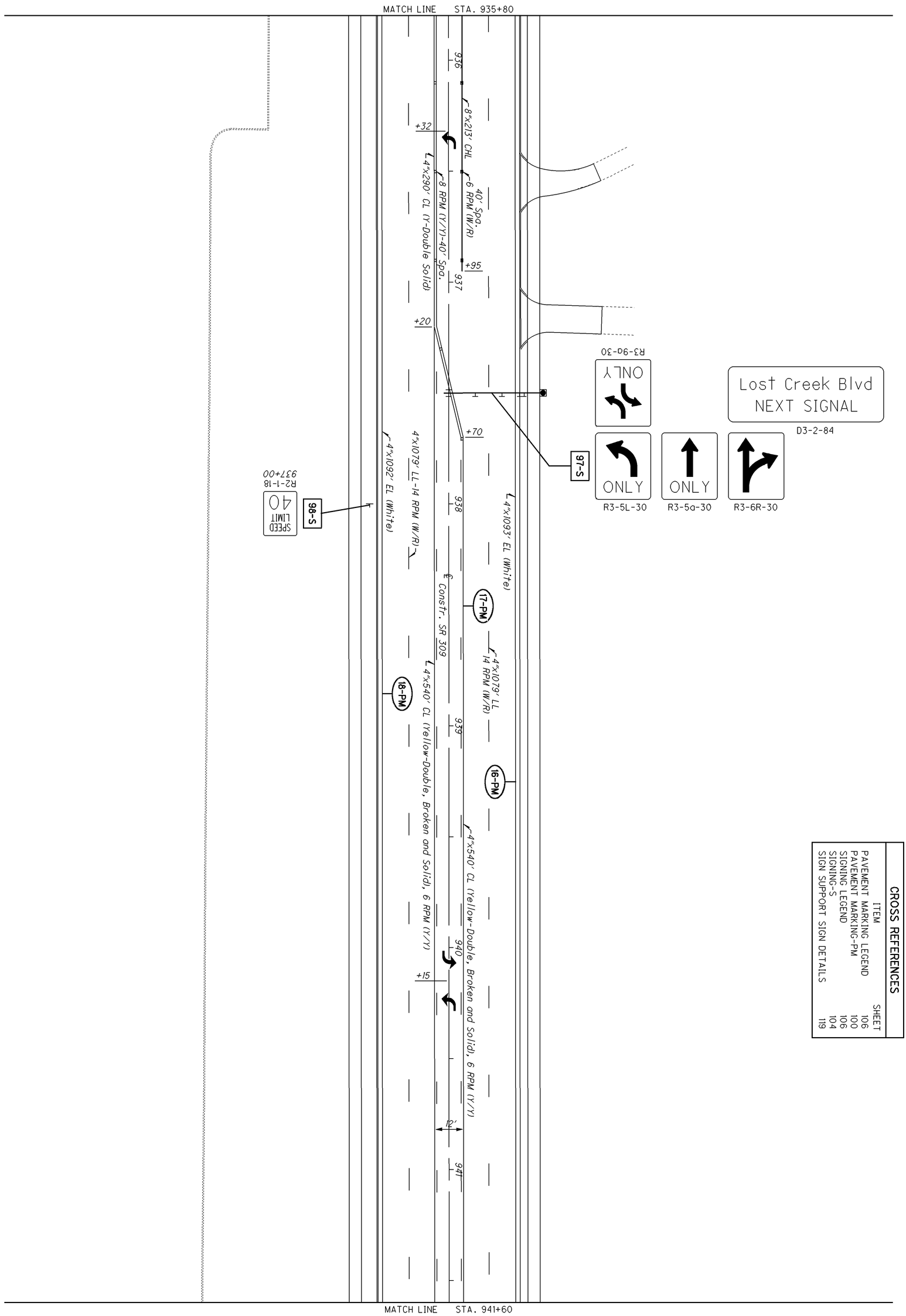

CROSS REFERENCES	
ITEM	SHEET
PAVEMENT MARKING LEGEND	106
PAVEMENT MARKING-PM	100
SIGNING LEGEND	106
SIGNING-S	104
SIGN SUPPORT SIGN DETAILS	119

113 / 173	ALL-117/309-18.65/15.17	TRAFFIC CONTROL PLAN - SR 309 STA. 935+80 TO STA. 941+60	CALCULATED NJV / CHECKED GLW	0 10 20 40 HORIZONTAL SCALE IN FEET	N

I:\pd\75467\traffic\sheets\75467TP009.dgn 17-SEP-2012 10:54AM nvondere

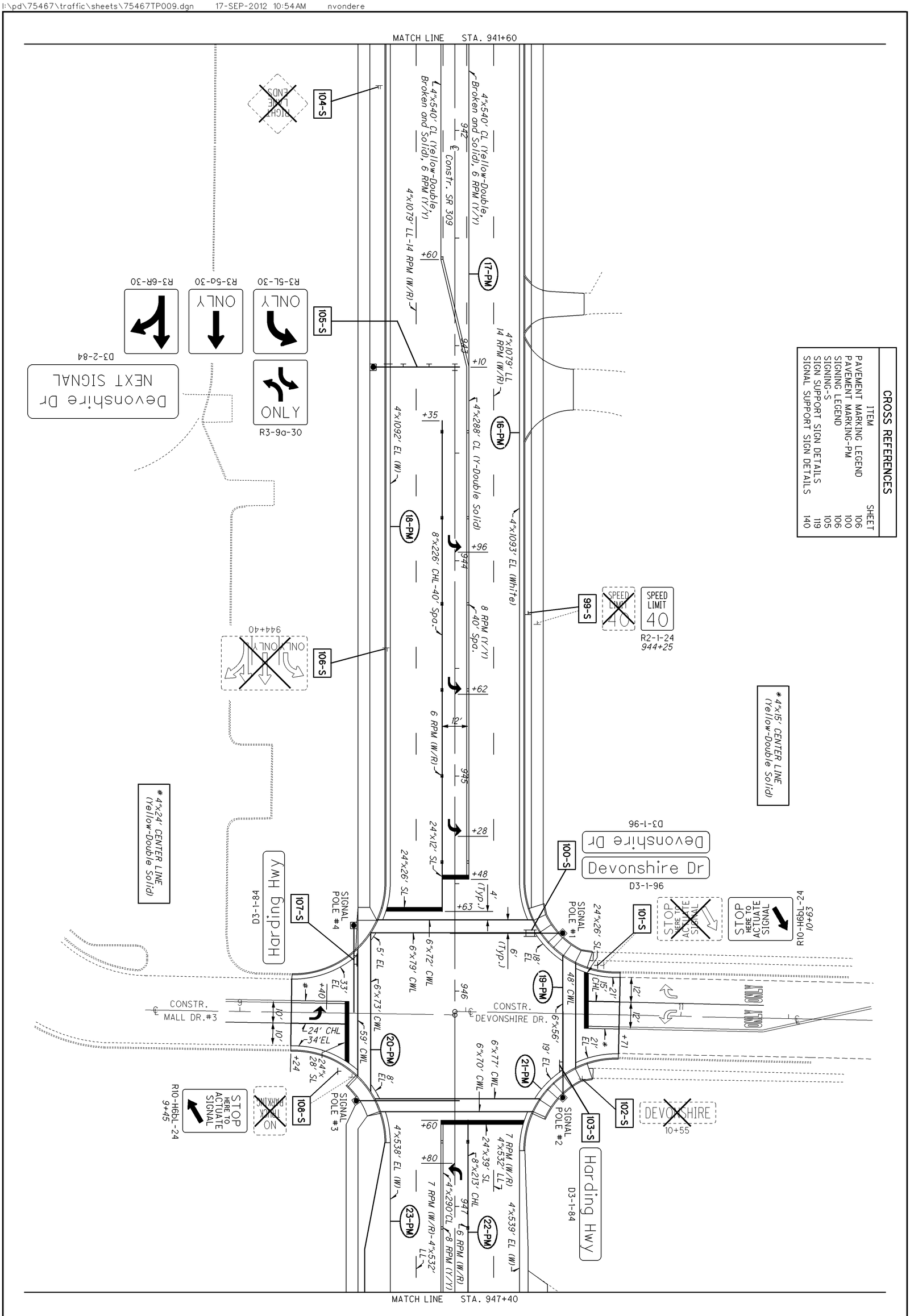

114 / 173	ALL-117/309-18.65/15.17	TRAFFIC CONTROL PLAN - SR 309 STA. 941+60 TO STA. 947+40	CALCULATED NJV / CHECKED GLW	HORIZONTAL SCALE IN FEET

I:\pd\75467\traffic\sheets\75467TP010.dgn 17-SEP-2012 10:54AM nvondere

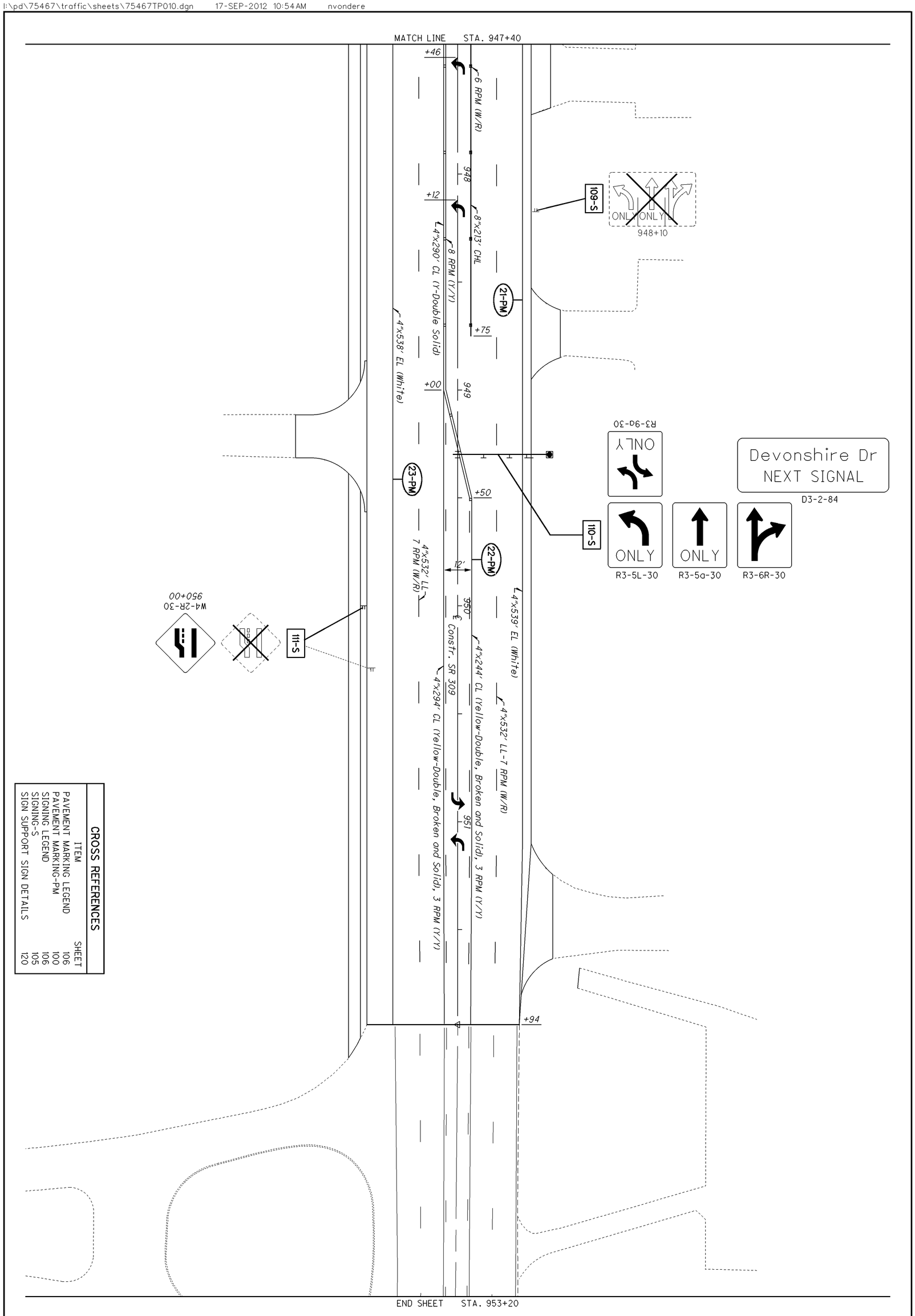

CROSS REFERENCES	
ITEM	SHEET
PAVEMENT MARKING LEGEND	106
PAVEMENT MARKING-PM	100
SIGNING LEGEND	106
SIGNING-S	105
SIGN SUPPORT SIGN DETAILS	120

115 / 173	ALL-117/309-18.65/15.17	TRAFFIC CONTROL PLAN - SR 309 STA. 947+40 TO STA. 953+20	CALCULATED NJV	0 20	N
			CHECKED GLW	10 40 HORIZONTAL SCALE IN FEET	

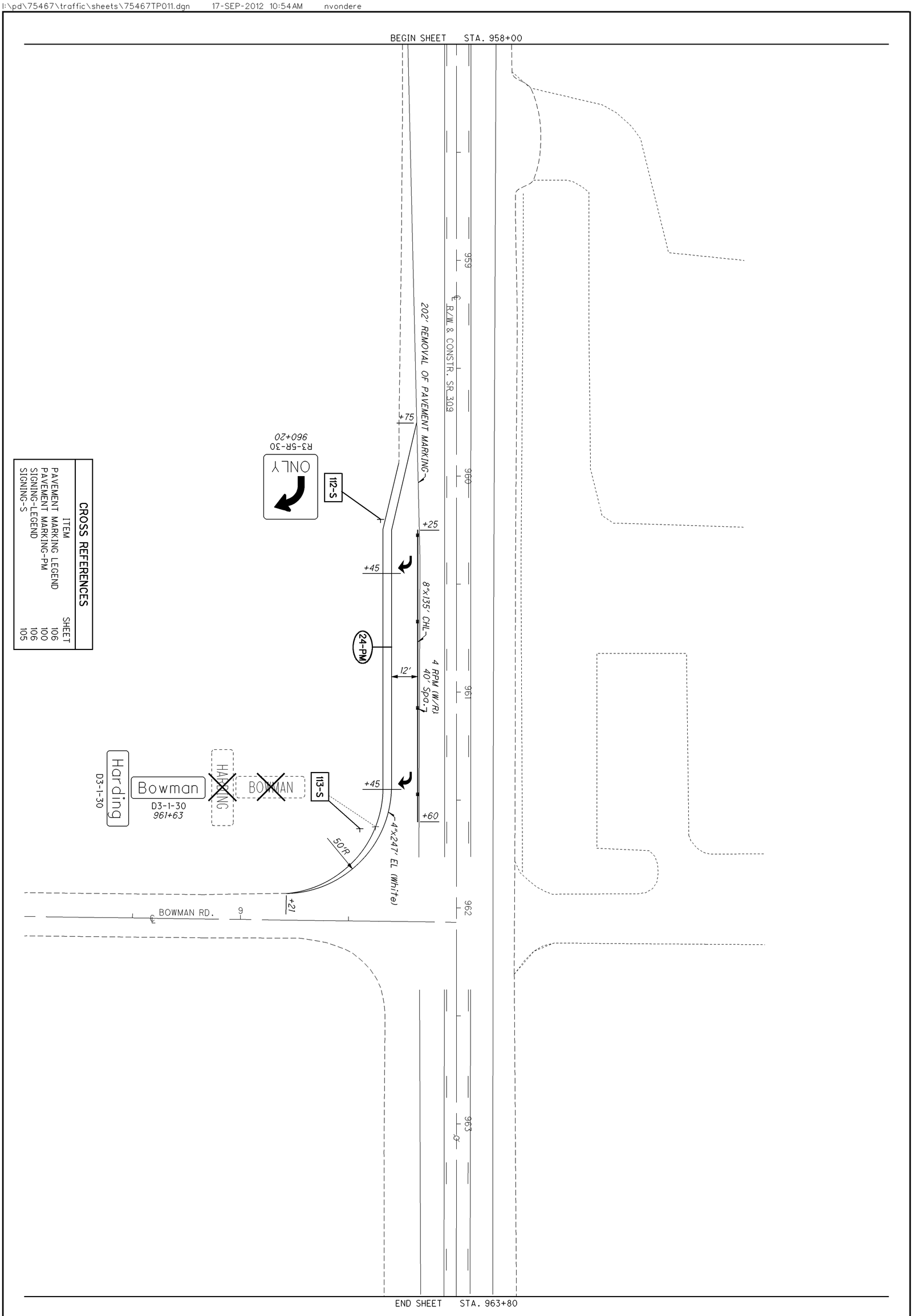

CROSS REFERENCES	
ITEM	SHEET
PAVEMENT MARKING LEGEND	106
PAVEMENT MARKING-PM	100
SIGNING-LEGEND	106
SIGNING-S	105

116 / 173	ALL-117/309-18.65/15.17	TRAFFIC CONTROL PLAN - SR 309 STA. 958+00 TO STA. 963+80	CALCULATED NJV / CHECKED GLW; 0 20 10 40 HORIZONTAL SCALE IN FEET; N

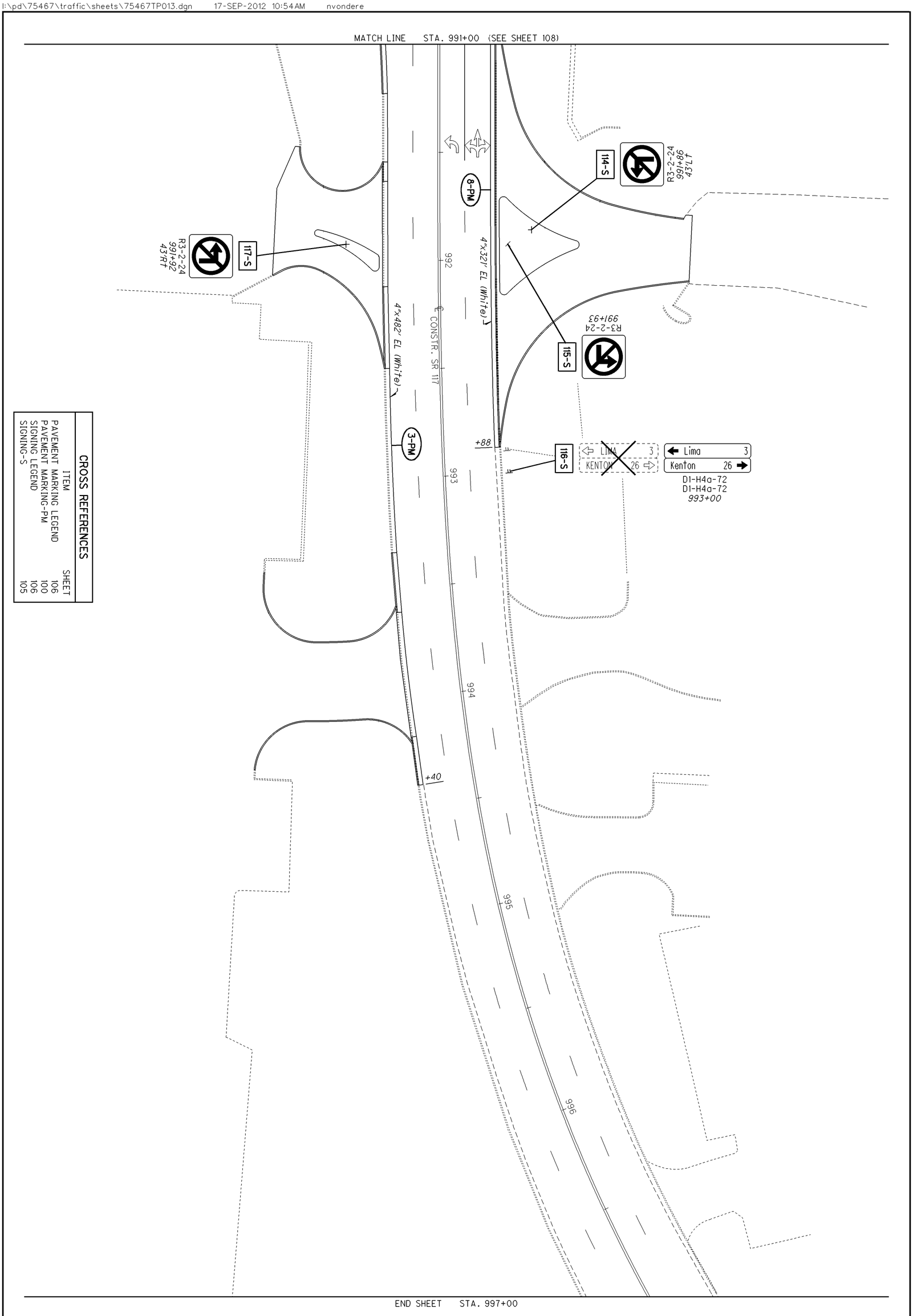

CROSS REFERENCES

ITEM	SHEET
PAVEMENT MARKING LEGEND	106
PAVEMENT MARKING-PM	100
SIGNING LEGEND	106
SIGNING-S	105

117 173	ALL-117/309-18.65/15.17	TRAFFIC CONTROL PLAN - SR 117 STA. 991+00 TO STA. 997+00	CALCULATED NJV / CHECKED GLW	0 20 / 10 40 HORIZONTAL SCALE IN FEET

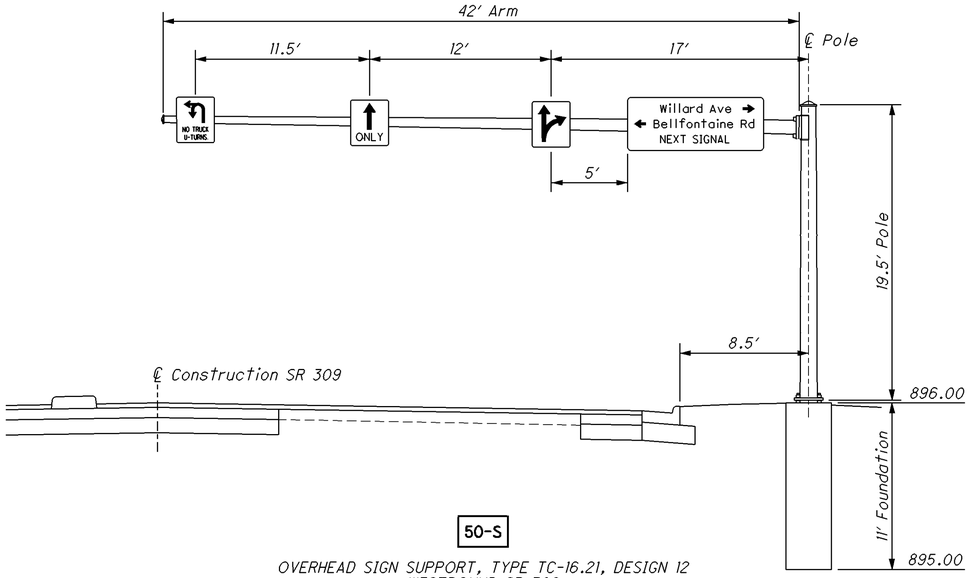

50-S

OVERHEAD SIGN SUPPORT, TYPE TC-16.21, DESIGN 12
WESTBOUND SR 309
Sta. 913+50.0, 43.0′Lt

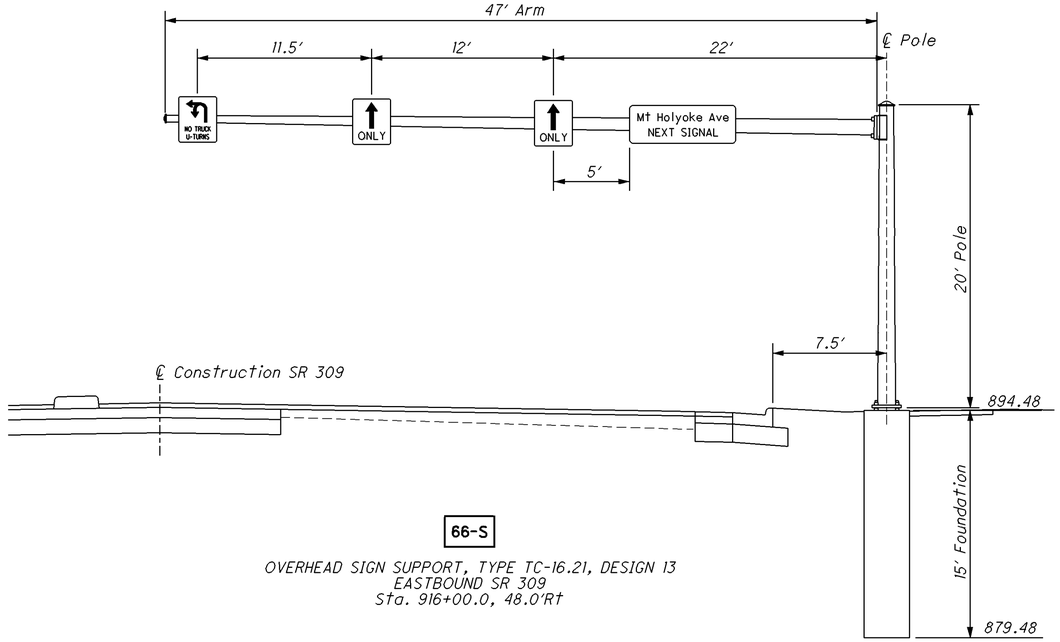

66-S

OVERHEAD SIGN SUPPORT, TYPE TC-16.21, DESIGN 13
EASTBOUND SR 309
Sta. 916+00.0, 48.0′Rt

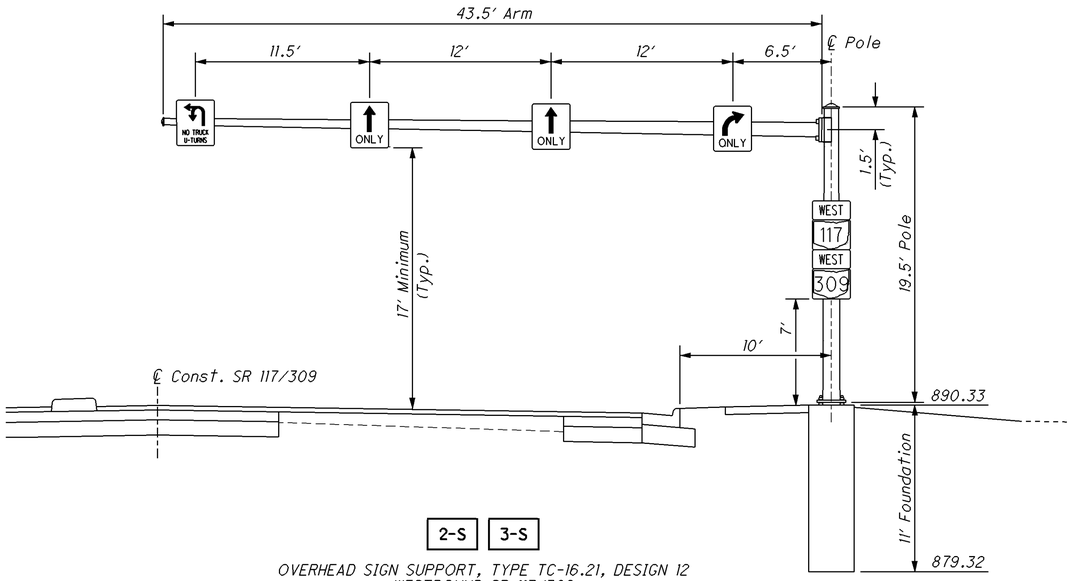

2-S **3-S**

OVERHEAD SIGN SUPPORT, TYPE TC-16.21, DESIGN 12
WESTBOUND SR 117/309
Sta. 904+05.0, 44.5′Lt

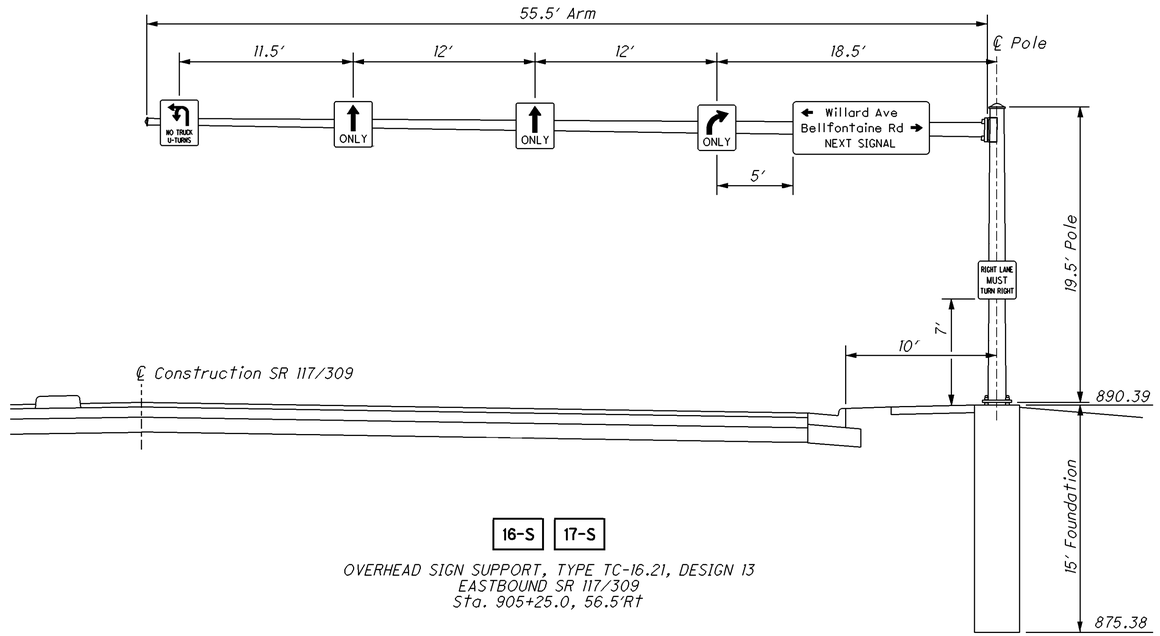

16-S **17-S**

OVERHEAD SIGN SUPPORT, TYPE TC-16.21, DESIGN 13
EASTBOUND SR 117/309
Sta. 905+25.0, 56.5′Rt

HORIZONTAL SCALE IN FEET
0 2.5 5 10

CALCULATED NJV
CHECKED GLW

SIGN SUPPORT DETAILS

ALL-117/309-18.65/15.17

I:\pd\75467\traffic\sheets\75467TE001.dgn 17-SEP-2012 10:54AM nvondere

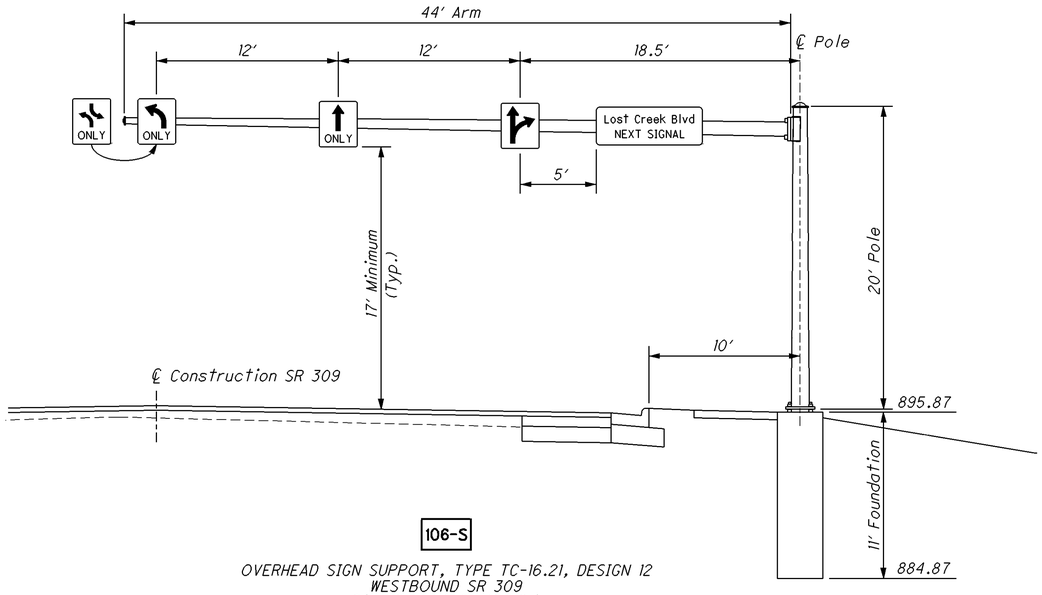

106-S

OVERHEAD SIGN SUPPORT, TYPE TC-16.21, DESIGN 12
WESTBOUND SR 309
Sta. 937+50.0, 42.5′Lt

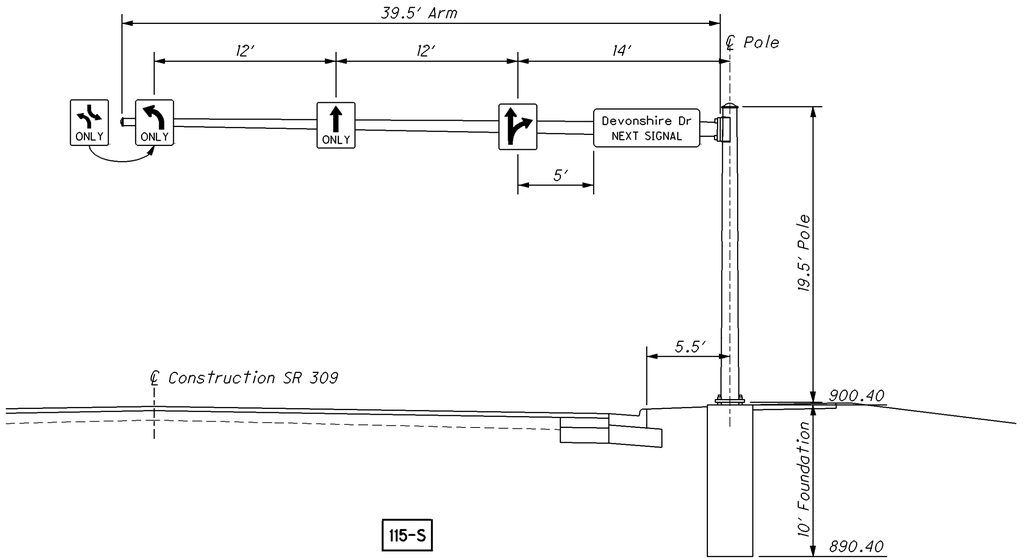

115-S

OVERHEAD SIGN SUPPORT, TYPE TC-16.21, DESIGN 11
EASTBOUND SR 309
Sta. 943+10.0, 38.0′Rt

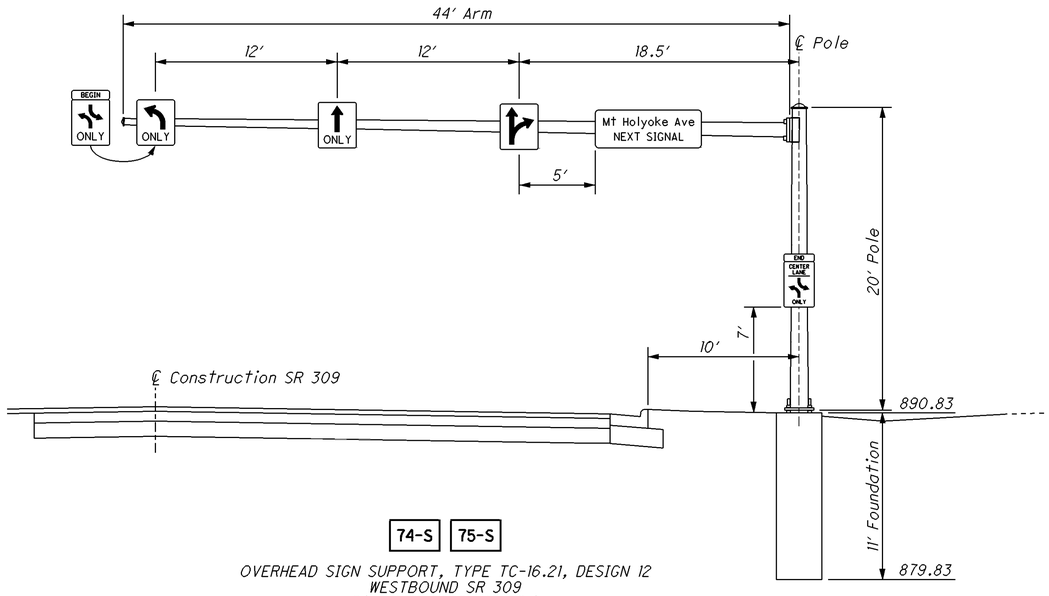

74-S 75-S

OVERHEAD SIGN SUPPORT, TYPE TC-16.21, DESIGN 12
WESTBOUND SR 309
Sta. 922+55.0, 42.5′Lt

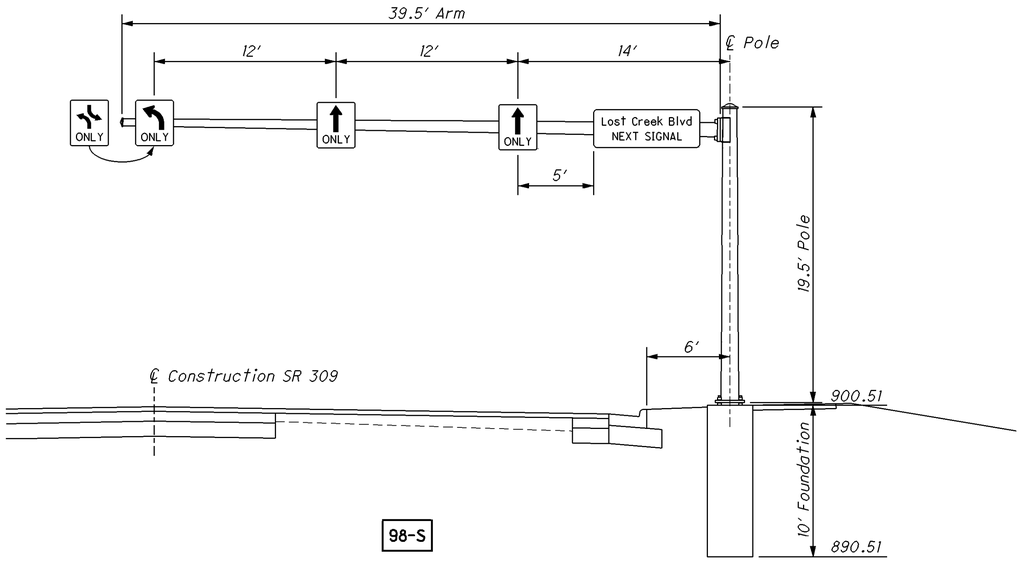

98-S

OVERHEAD SIGN SUPPORT, TYPE TC-16.21, DESIGN 11
EASTBOUND SR 309
Sta. 931+00.0, 38.0′Rt

HORIZONTAL SCALE IN FEET
0 2.5 5 10

CALCULATED NJV
CHECKED GLW

SIGN SUPPORT DETAILS

ALL-117/309-
18.65/15.17

I:\pd\75467\traffic\sheets\75467TE002.dgn 17-SEP-2012 10:54 AM nvondere

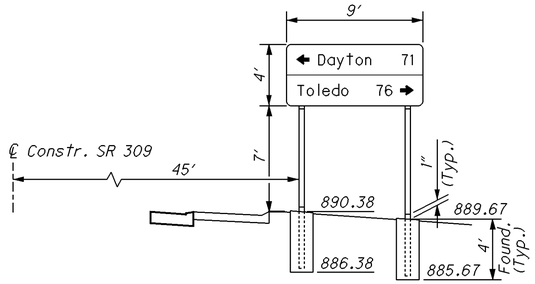

5-S

GROUND MOUNTED STRUCTURAL
BEAM SUPPORT, S4X7.7
WESTBOUND SR 117/309
Sta. 905+22 Lt

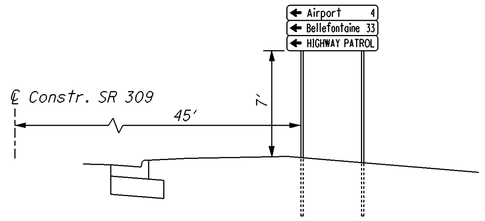

30-S

GROUND MOUNTED SIGN SUPPORT
WESTBOUND SR 309
Sta. 911+90 Lt

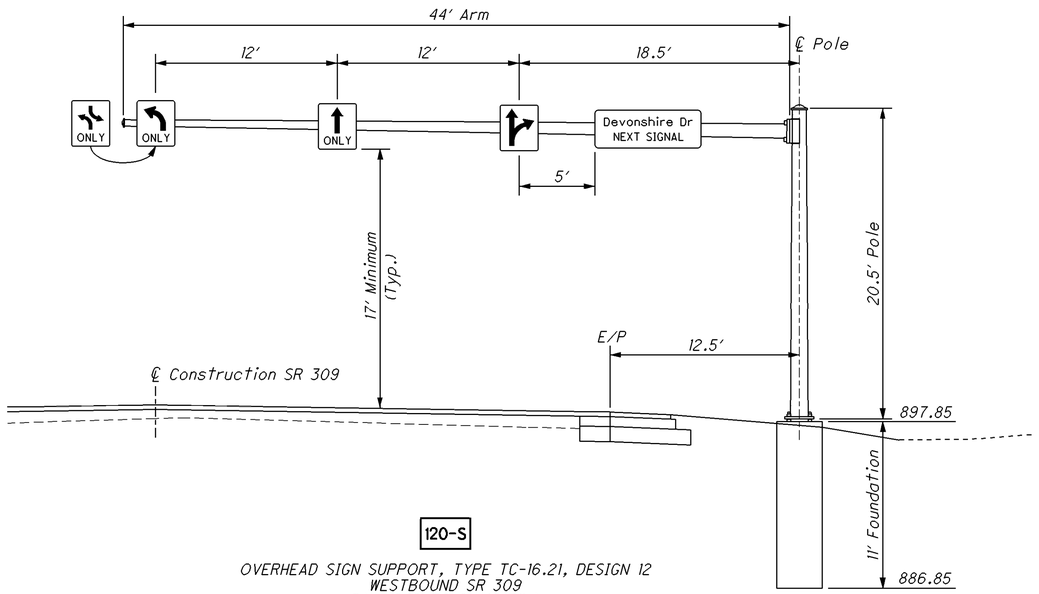

120-S

OVERHEAD SIGN SUPPORT, TYPE TC-16.21, DESIGN 12
WESTBOUND SR 309
Sta. 949+30.0, 42.5'Lt

SIGNING-S			625
REFERENCE NO.	SHEET NO.	LOCATION STATION	GROUND ROD EACH
2-S	118	904+05 Lt	1
16-S	118	905+25 Rt	1
50-S	118	913+50 Lt	1
66-S	118	916+00 Rt	1
74-S	119	922+55 Lt	1
98-S	119	931+00 Rt	1
106-S	119	937+50 Lt	1
115-S	119	943+10 Rt	1
120-S	120	949+30 Lt	1
TOTALS TO GENERAL SUMMARY			9

ITEM 630 - OVERHEAD SIGN SUPPORT, BY DESIGN, AS PER PLAN

IN ADDITION TO THE REQUIREMENTS OF CMS 630 ALL POLES, ARMS AND ASSOCIATED MOUNTING HARDWARE, SIGN BACKING ASSEMBLIES, SIGN SUPPORT ASSEMBLIES AND DAMPERS SHALL BE FACTORY PAINTED GLOSSY BLACK IN CONCORDANCE WITH THE REQUIREMENTS SHOWN ON SHEET 125.

PAYMENT FOR THE PAINTING OF THE ABOVE ITEMS SHALL BE INCLUDED IN THE UNIT BID PRICE FOR EACH ITEM 630 - OVERHEAD SIGN SUPPORT, TYPE TC-16.20, BY DESIGN, AS PER PLAN.

ITEM 630 - OVERHEAD SIGN SUPPORT, MISC.: MECHANICAL DAMPER

THIS ITEM SHALL CONSIST OF THE CONTRACTOR INSTALLING A MASS-SPRING TYPE DAMPER ON A MAST ARM OVERHEAD SIGN SUPPORT TO REDUCE THE POSSIBILITY OF HARMONIC VIBRATIONS CAUSED BY WIND LOADS. A MECHANICAL DAMPER SHALL BE APPLIED TO ALL MAST ARMS OVER FORTY-EIGHT (48) FEET IN LENGTH. MAST ARMS FORTY-EIGHT (48) FEET OR LESS SHALL REQUIRE A MECHANICAL DAMPER ONLY IF REQUIRED BY THE ENGINEER OR PLANS, OR IF THE OBSERVED VERTICAL OSCILLATION OF THE LOADED ARM IS GREATER THAN EIGHT INCHES (8") MEASURED FROM THE HIGHEST TO THE LOWEST POINT OF DEFLECTION AT WIND SPEEDS OF FIVE TO TWENTY MILES-PER-HOUR (5-20 MPH). THE INSTALLED DAMPER SHALL BE CAPABLE OF REDUCING THE LOADED MAXIMUM VERTICAL MOVEMENT AT THE TIP OF THE ARM TO EIGHT INCHES (8") MEASURED FROM THE HIGHEST TO THE LOWEST POINT OF DEFLECTION AT WIND SPEEDS OF FIVE TO TWENTY MILES-PER-HOUR (5-20 MPH).

ALL ATTACHMENT HARDWARE CONNECTIONS SHALL BE STAINLESS STEEL. THE DAMPER SHALL BE ATTACHED TO THE ARM WITHIN EIGHT FEET (8') OF MAST ARM TIP. INSTALLATION SHALL BE PER THE MANUFACTURER'S GUIDELINES. ACCEPTABLE DEVICES INCLUDE THE FOLLOWING OR APPROVED EQUAL:

1. FLORIDA DOT SPRING-MASS DAMPER - DWG. INDEX NO. 17749

THE DAMPER AND MOUNTING HARDWARE SHALL BE FACTORY PAINTED GLOSSY BLACK TO MATCH THE POLE AND MAST ARM.

PAYMENT FOR THIS ITEM WILL BE AT THE CONTRACT PRICE BID PER EACH COMPLETE AND IN PLACE AND INCLUDE ALL LABOR, MATERIALS & EQUIPMENT NECESSARY TO COMPLETE THE WORK.

REMOVAL OF OVERHEAD SIGN SUPPORT AND DISPOSAL, AS PER PLAN

IN ADDITION TO THE REQUIREMENTS OF ITEM 630 IN THE CMS, THE CONTRACTOR SHALL REMOVE AND DISPOSE OF ALL ATTACHED COMPONENTS OF THE NOTED OVERHEAD SIGN SUPPORT, INCLUDING BUT NOT LIMITED TO ALL SUPPORT POLES, FOUNDATIONS, SPAN WIRES, SIGN HANGERS, MESSENGER WIRE ASSEMBLIES AND SIGNS.

THE CONTRACTOR SHALL BACKFILL AND RESTORE SURFACES TO A CONDITION SATISFACTORY TO THE PROJECT ENGINEER.

THE DEPARTMENT WILL MEASURE REMOVAL OF OVERHEAD SIGN SUPPORT AND DISPOSAL, AS PER PLAN, BY THE NUMBER OF EACH REMOVED AND DISPOSED OF AS NOTED ABOVE. THE UNIT PRICE BID SHALL INCLUDE ALL MATERIALS, EQUIPMENT AND LABOR NECESSARY TO COMPLETE THE ABOVE WORK.

HORIZONTAL SCALE IN FEET
0 2.5 5 10

CALCULATED NJV CHECKED GLW

SIGN SUPPORT DETAILS

ALL-117/309-
18.65/15.17

120
173

I:\pd\75467\traffic\sheets\75467TE003.dgn 17-SEP-2012 10:54AM nvondere

COORDINATION OF ACTIVITIES

ALL WORK SHALL BE COORDINATED WITH THE OHIO DEPARTMENT OF TRANSPORTATION (ODOT) AND AMERICAN ELECTRIC POWER FOR ALL TRAFFIC CONTROL PRODUCTS AND ANY OTHER UTILITIES IMPACTED ON THE PROJECT. NOTIFICATION SHALL BE GIVEN TO ODOT AT LEAST 24 HOURS PRIOR TO ANY AND ALL SCHEDULED WORK AND TESTING ON THIS PROJECT REQUIRING THEIR INSPECTION. IT SHALL BE THE RESPONSIBILITY OF THE CONTRACTOR TO COORDINATE THE UNDERGROUND CONSTRUCTION ACTIVITIES ON A CONTINUING BASIS WITH EACH OF THE UTILITY AGENCIES THAT HAVE FACILITIES IN THE IMMEDIATE VICINITY OF THE PROJECT AREA. ODOT SHALL BE CONTACTED REGARDING COORDINATION OF EXISTING SIGNAL REMOVALS AND PROPOSED SIGNAL INSTALLATIONS.

OPERATION OF EXISTING TRAFFIC SIGNALS

THE CONTRACTOR SHALL ENSURE CONTINUED OPERATION OF THE EXISTING TRAFFIC SIGNALS AT ALL TIMES. THIS SHALL INCLUDE MAINTAINING EXISTING SIGNAL CONDUIT DURING CONSTRUCTION OF THE PROPOSED SIGNAL ITEMS, AND MAY INCLUDE HAND EXCAVATING WHERE NECESSARY OR TEMPORARY RUN AROUNDS. ANY DISRUPTION TO THE OPERATION OF ANY TRAFFIC SIGNAL OR EXISTING TRAFFIC SIGNAL HARDWARE SHALL BE RESTORED BY THE CONTRACTOR OR HIS AGENT (SUB-CONTRACTOR) AT NO COST TO ODOT. THE CONTRACTOR SHALL NOTIFY ODOT IMMEDIATELY OF ANY DISRUPTION TO THE OPERATION OF ANY EXISTING TRAFFIC SIGNAL.

MISCELLANEOUS CONSTRUCTION NOTES

1) ALL PULL BOXES AND DRAINAGE CONDUIT SHALL DRAIN TOWARD THE ROADWAY RIGHT-OF-WAY, AS APPROPRIATE OR AS INDICATED IN THE PLANS.

2) CONTRACTOR SHALL HAVE AN IMSA LEVEL 2 CERTIFIED TRAFFIC SIGNAL TECHNICIAN ON THE JOB SITE DURING PERFORMANCE OF ANY SIGNAL RELATED CONSTRUCTION OPERATIONS.

INSPECTION

THE SIGNALS SHALL BE INSPECTED JUST PRIOR TO THE START OF THE TEN (10) DAY PERFORMANCE TEST SPECIFIED IN CMS 632.28(G). ALL OTHER CONSTRUCTION PAY ITEMS SHALL BE COMPLETED INCLUDING THE ELECTRICAL TESTS SPECIFIED IN 632.28(A-E) AND FUNCTIONAL TEST SPECIFIED IN 632.28(F).

THE PROJECT ENGINEER SHALL NOTIFY THE APPROPRIATE ROADWAY SERVICES PERSONNEL AT ODOT DISTRICT ONE (1) OF THE COMPLETION OF SIGNAL CONSTRUCTION PRIOR TO THE TEN DAY (10) PERFORMANCE TEST. TWO (2) WEEKS NOTICE SHOULD BE GIVEN. THE DISTRICT ONE (1) CONSTRUCTION DEPARTMENT SHALL FOLLOW ALL PROCEDURES SET FORTH IN THE STANDARD OPERATING PROCEDURE OPS-211 SECTION D, PARAGRAPH 3 AND THE DIVISION OF CONSTRUCTION STANDARD OPERATING PROCEDURE PH-C-104. ALL DEFICIENCIES FOUND DURING THE FINAL INSPECTION SHALL BE CORRECTED BEFORE THE COMPLETION OF THE TEN DAY (10) BURN TEST. ANY MAJOR DEFICIENCIES WHICH MAY EFFECT THE OPERATION OF THE SYSTEM SHALL CONSTITUTE A RE-START OF THE TEN (10) DAY BURN TEST AFTER CORRECTIONS ARE COMPLETED. THE TEN (10) DAY BURN TEST MUST BE SUCCESSFULLY COMPLETED BEFORE THE SYSTEM WILL BE ACCEPTED.

TRAFFIC SIGNAL LANE CLOSURE LIMITATIONS

ALL LANE CLOSURES SHALL BE PER THE MAINTENANCE OF TRAFFIC PLANS AND GENERAL NOTES, SHEETS 10-12.

MAINTAINING TRAFFIC

ALL TRAFFIC SIGNAL WORK SHALL CONFORM TO THE MAINTENANCE OF TRAFFIC PLANS AND GENERAL NOTES PROVIDED WITHIN THE PLANS. (SEE SHEETS 10 TO 12.) IN ADDITION, THE FOLLOWING SHALL BE REQUIRED AS IT PERTAINS TO TRAFFIC SIGNAL CONSTRUCTION ACTIVITIES.

THE EXISTING TRAFFIC SIGNAL OPERATIONS FOR ALL PROJECT INTERSECTIONS SHALL BE MAINTAINED OPERATIONAL UNTIL THE NEW SIGNAL OPERATIONS HAVE BEGUN. THIS REQUIREMENT SHALL BE PERFORMED WITH EITHER THE EXISTING INSTALLATION OR WITH A PORTION OF THE NEW INSTALLATION.

ANY CONFLICTS WITH THE VISIBILITY OF EXISTING SIGNAL HEAD(S) FROM NEW SIGNAL INSTALLATIONS SHALL BE REMEDIED BY:

1) LASHING PROPOSED VEHICULAR SIGNAL HEAD(S) IN CONFLICT WITH EXISTING SIGNAL HEAD(S) HORIZONTALLY ALONG MAST ARM, OR

2) NOT INSTALLING PROPOSED VEHICULAR SIGNAL HEAD(S) IN CONFLICT WITH EXISTING SIGNAL HEAD(S) UNTIL IMMEDIATELY PRIOR TO THE TURN ON OF THE NEW SIGNAL.

ANY VEHICULAR TRAFFIC SIGNAL HEAD, EITHER NEW OR EXISTING, WHICH WILL VISIBLE TO DRIVERS WHILE OUT OF OPERATION SHALL BE COVERED IN THE MANNER DESCRIBED IN 632.25.

ALL ADDITIONAL COSTS ASSOCIATED WITH THE ABOVE SHALL BE INCLUDED IN ITEM 614 - MAINTAIING TRAFFIC, AS PER PLAN.

GUARANTEE

THE CONTRACTOR SHALL GUARANTEE THAT THE TRAFFIC CONTROL SYSTEM INSTALLED AS PART OF THIS CONTRACT SHALL OPERATE SATISFACTORILY FOR A PERIOD OF 180 DAYS FOLLOWING COMPLETION OF THE 10-DAY PERFORMANCE TEST. IN THE EVENT OF UNSATISFACTORY OPERATION THE CONTRACTOR SHALL CORRECT FAULTY INSTALLATIONS, MAKE REPAIRS AND REPLACE DEFECTIVE PARTS WITH NEW PARTS OF EQUAL OR BETTER QUALITY. EQUIPMENT, MATERIAL AND LABOR COSTS INCURRED IN CORRECTING AN UNSATISFACTORY OPERATION SHALL BE BORNE BY THE CONTRACTOR.

THE GUARANTEE SHALL COVER THE FOLLOWING ITEMS OF THE TRAFFIC CONTROL SYSTEM: CONTROLLERS AND ASSOCIATED EQUIPMENT, DETECTOR UNITS, INTERCONNECT ITEMS (RADIO COMMUNICATION), AND VIDEO DETECTORS AND THEIR SATISFACTORY OPERATION IN BOTH SUMMER AND WINTER MONTHS.

CUSTOMARY MANUFACTURER'S GUARANTEES FOR THE FOREGOING ITEMS SHALL BE TURNED OVER TO THE THE MAINTAINING AGENCY FOLLOWING ACCEPTANCE OF THE EQUIPMENT.

THE COST OF GUARANTEEING THE TRAFFIC CONTROL EQUIPMENT WILL BE INCIDENTAL TO AND INCLUDED IN THE CONTRACT UNIT PRICE OF THE VARIOUS ITEMS MAKING UP THE SYSTEM.

ITEM 625 - TRENCH

IN LIEU OF TRENCHING, THE CONTRACTOR MAY USE ITEM 625.14 - JACKING AND BORING AS AN ALTERNATIVE METHOD TO TRENCHING. IF JACKING AND BORING IS USED, THE CONTRACTOR SHALL FOLLOW ALL SPECIFICATIONS AND PROCEDURES FOR SUCH AS OUTLINED BY CMS 625.14. IF JACKING AND BORING IS USED, ONLY RIGID GALVANIZED STEEL CONDUIT OR POLYETHYLENE EPEC-80-HDPE CONDUIT MAY BE USED AS PER CMS 625.14. NO ADDITIONAL COMPENSATION SHALL BE PROVIDED FOR ELECTIVE USE OF JACKING AND BORING METHODS IN LIEU OF TRENCH, AS INDICATED IN THE PLANS.

ITEM 625 - LUMINAIRE, CONVENTIONAL, 250W HPS, 120 VOLT, AS PER PLAN

IN ADDITION TO THE REQUIREMENTS OF ODOT'S CONSTRUCTION AND MATERIAL SPECIFICATIONS, LUMINAIRES FOR CONVENTIONAL LIGHTING UNITS SHALL BE AS FOLLOWS:

LUMINAIRES FOR CONVENTIONAL LIGHTING UNITS WITH AN IES II-M-SC DISTRIBUTION AND 250 WATT HIGH PRESSURE SODIUM LAMPS SHALL BE AMERICAN ELECTRIC 'SERIES 125' WITH PHOTOMETRIC DISTRIBUTION AE38491, COOPER 'OVD' WITH PHOTOMETRIC DISTRIBUTION OVD2S2F, GENERAL ELECTRIC 'M-400' WITH PHOTOMETRIC DISTRIBUTION 1014 OR EQUAL AS APPROVED BY THE ENGINEER. PAYMENT WILL BE MADE AT THE UNIT BID PRICE FOR EACH CMS ITEM 625 - LUMINAIRES, CONVENTIONAL, 250W HPS, 120 VOLT, AS PER PLAN FOR EACH LUMINAIRE WHICH SHALL BE FULL COMPENSATION FOR ALL LABOR, MATERIALS AND INCIDENTALS REQUIRED TO COMPLETE THIS ITEM IN A SATISFACTORY AND WORKMANLIKE MANNER.

LAMPS

HIGH PRESSURE SODIUM LAMPS SHALL BE GENERAL ELECTRIC 'LUCALOX', OSRAM SYLVANIA 'LUMALUX', PHILIPS 'CERAMALUX' OR EQUAL APPROVED BY THE ENGINEER FOR EACH LUMINAIRE.

625 CONDUIT, 1½" OR 3", 725.052, AS PER PLAN

IN ADDITION TO THE REQUIREMENTS OF 625 THE CONDUIT SHALL ALSO MEET THE FOLLOWING MATERIAL SPECIFICATIONS FOR 725.052 POLYETHYLENE CONDUITS AND FITTINGS. FURNISH POLYETHYLENE CONDUIT EPEC-80-HDPE CONFORMING WITH NEMA STANDARD TC 7 FOR BELOW GROUND ONLY, WHETHER CONCRETE ENCASED OR DIRECT BURIAL. USE FITTINGS CONFORMING TO ASTM D3350.

FURNISH MATERIALS ACCORDING TO THE DEPARTMENT'S QUALIFIED PRODUCTS LIST (OPL).

ITEM 632 - REMOVAL OF TRAFFIC SIGNAL INSTALLATION, AS PER PLAN

TRAFFIC SIGNAL INSTALLATIONS, INCLUDING SIGNAL HEADS, CABLE, MESSENGER WIRE, STRAIN POLES, MAST ARMS, PEDESTALS, CABINET, CONTROLLER, VIDEO DETECTION CAMERAS, ETC., SHALL BE REMOVED IN ACCORDANCE WITH CMS 632.26 AND AS INDICATED ON THE PLANS. REMOVED ITEMS SHALL BE REUSED AS PART OF A NEW INSTALLATION ON THE PROJECT OR STORED ON THE PROJECT FOR SALVAGE BY DISTRICT ONE TRAFFIC SIGNAL SHOP IN ACCORDANCE WITH THE LISTING GIVEN HEREIN.

ITEMS TO BE REUSED:

THE UNINTERRUPTIBLE POWER SUPPLY (UPS) SHALL BE REUSED AS A PART OF THE NEW TRAFFIC SIGNAL INSTALLATIONS ON THE PROJECT.

ITEMS TO BE STORED:

ITEMS TO BE SALVAGED PER COORDINATION WITH THE DISTRICT ONE TRAFFIC SIGNAL SHOP (CONTACT CURT SYBERT AT 419-999-6926) INCLUDE:
STRAIN POLES, SIGNS, CONTROLLERS AND CABINETS SHALL BE SALVAGED FOR THIS PROJECT.

IN THE EVENT THE ITEMS STORED ON THE PROJECT FOR SALVAGE BY THE LOCAL AGENCY ARE NOT REMOVED, THE CONTRACTOR SHALL, WHEN DIRECTED BY THE ENGINEER IN WRITING, REMOVE AND DISPOSE OF THE ITEMS AT NO ADDITIONAL COST TO THE PROJECT.

CONTRACTOR SHALL PERFORM ALL WORK AGREEMENTS AS INDICATED IN PLANS AND THIS COST SHALL BE INCLUDED IN THE BID PRICE FOR ITEM 632 - REMOVAL OF TRAFFIC SIGNAL INSTALLATION, AS PER PLAN.

ITEM 816 - VIDEO DETECTION SYSTEM

THIS ITEM CONSISTS OF FURNISHING AND INSTALLING VIDEO DETECTION CAMERA(S) SYSTEM IN CONFORMANCE WITH SUPPLEMENTAL SPECIFICATION 816 & 907 FOR USE IN LIEU OF A CONVENTIONAL VEHICLE DETECTOR LOOP INSTALLATION. THE CAMERA SYSTEM SHALL INCLUDE THE CAMERA, ALL CABINET HARDWARE COMPONENTS, THE COMMUNICATION CABLES, CONNECTORS, MOUNTING HARDWARE, PC SOFTWARE AND ALL OTHER NECESSARY COMPONENTS TO INSTALL A VIDEO DETECTION CAMERA COMPLETE IN PLACE, THAT IS FULLY FUNCTIONAL WITH THE TRAFFIC SIGNAL CONTROLLER. THE VIDEO DETECTION CABINET HARDWARE SHALL BE CAPABLE OF RUNNING ALL THE DESIGNATED CAMERAS SHOWN IN THE PLANS AT THE INTERSECTION. THE CAMERAS SHALL BE CONFIGURED TO PERFORM VEHICLE COUNTS AND CLASSIFICATIONS AT EACH DETECTION LOCATION SPECIFIED IN THE PLANS.

TEN (10) BUSINESS DAYS PRIOR TO INSTALLATION OF THE VIDEO DETECTION CABINET SYSTEM, THE CONTRACTOR SHALL CONTACT ODOT IN THE EVENT THAT A REPRESENTATIVE WISHES TO BE PRESENT DURING THE INSTALLATION AND CONFIGURATION OF THE VIDEO DETECTION SYSTEM.

INSTALLATION OF THE VIDEO DETECTION SYSTEM SHALL INCLUDE TESTING AND VERIFICATION OF THE DETECTION FIELD TO ASSURE DETECTION NEEDS ARE MET. SHOULD THE DETECTION FIELD BE INADEQUATELY COVERED DUE TO OCCLUSION OR OTHER REASONS, AN ALTERNATIVE CAMERA MOUNTING ON THE MAST ARM OR LUMINAIRE BRACKET SHALL BE EMPLOYED. A MAST ARM ALTERNATE MOUNTING LOCATION SHOULD INCLUDE A FOUR (4) FOOT EXTENSION. THE FINAL CAMERA MOUNTING LOCATION SHALL BE APPROVED BY ODOT.

PAYMENT SHALL BE FULL COMPENSATION FOR ALL LABOR, MATERIALS, TOOLS, EQUIPMENT, CABINET AND MOUNTING HARDWARE, AND OTHER INCIDENTALS NECESSARY FOR EACH VIDEO DETECTION SYSTEM, COMPLETE IN PLACE, ALL CONNECTIONS MADE AND WIRING COMPLETED, TESTED, AND ACCEPTED.

ALTERNATE BIDS

THE CONTRACTOR WILL IDENTIFY WHAT THE GENERIC BID IS BEFORE THE ALTERNATE BID CAN BE ADWARDED.

ITEM 816 - VIDEO DETECTION SYSTEM (ITERIS) - ALTERNATE BID

THIS ITEM OF WORK SHALL BE IN CONFORMANCE WITH ODOT SPECIFICATION 816 EXCEPT THE DETECTION SYSTEM SHALL BE AN ITERIS "VANTAGE" MODEL AND SHALL BE THE MOST CURRENT VERSION MANUFACTURED, INCLUDING THE VANTAGE EDGE 2 PROCESSOR AND RZ-4 ADVANCED CAMERA.

ITEM 816 - VIDEO DETECTION SYSTEM (TRAVIS) - ALTERNATE BID

THIS ITEM OF WORK SHALL BE IN CONFORMANCE WITH ODOT SPECIFICATIONS 816 EXCEPT THE DETECTIOBN SYSTEM SHALL BE A RYTHMN ENGINEERING, INC. "INSYNC" MODEL AND SHALL BE THE MOST CURRENT VERSION MANUFACTURED, INCLUDING THE INSYNC PROCESSOR AND SAMSUNG SNZ-5200 DIGITAL IP CAMERA.

ITEM 632 SIGNAL SUPPORT LOCATIONS

PRIOR TO ORDERING THE SIGNAL SUPPORTS THE CONTRACTOR SHALL CONTACT OUPS TO HAVE ALL THE UTILITIES LOCATED IN THE FIELD THEN MEET WITH THE PROJECT ENGINEER TO LOCATE THE PROPOSED SUPPORT LOCATIONS TO INSURE THERE ARE NO CONFLICTS WITH UTILITIES. IF THERE ARE ISSUES THE PROJECT ENGINEER SHALL CONTACT THE DISTRICT ONE PLANNING AND ENGINEERING DEPARTMENT TO RELOCATE THE SUPPORT POLES.

CALCULATED | CHECKED

TRAFFIC SIGNAL GENERAL NOTES

ALL-117/309-18.65/15.17

I:\Pd\75467\signals\sheets\75467CN001.dgn 17-SEP-2012 10:54AM nvondere

GROUNDING AND BONDING

THE REQUIREMENTS OF THE CONSTRUCTION AND MATERIAL SPECIFICATIONS (CMS) AND THE HL AND TC SERIES OF STANDARD CONSTRUCTION DRAWINGS ARE MODIFIED AS FOLLOWS:

1) ALL METALLIC PARTS CONTAINING ELECTRICAL CONDUCTORS SHALL BE PERMANENTLY JOINED TO FORM AN EFFECTIVE GROUND FAULT CURRENT PATH BACK TO THE GROUNDED CONDUCTOR IN THE POWER SERVICE DISCONNECT SWITCH.

A. PROVIDE AN EQUIPMENT GROUNDING CONDUCTOR IN METALLIC CONDUITS (725.04) IN ADDITION TO THE CONDUCTORS SPECIFIED AND BOND THE CONDUIT TO THIS GROUNDING CONDUCTOR.

B. WHEN AN EQUIPMENT GROUNDING CONDUCTOR IS REQUIRED IN PLASTIC CONDUIT (725.05), THE INSTALLATION SHALL INCLUDE A SEPARATE EQUIPMENT GROUNDING CONDUCTOR IN ADDITION TO THE CONDUCTORS SPECIFIED.

C. METALLIC CONDUIT CARRYING THE LOOP WIRES FROM IN THE PAVEMENT TO THE PULL BOX SPLICE LOCATION WILL ONLY BE BONDED AT THE PULL BOX END, AND WILL NOT CONTAIN AN EQUIPMENT GROUNDING CONDUCTOR.

D. METAL PULL BOX LIDS SHALL BE BONDED BY ATTACHMENT OF THE EQUIPMENT GROUNDING CONDUCTOR TO THE FRAME DIAGONAL AS PROVIDED ON HL-30.11.

E. IF MULTIPLE CONDUIT RUNS BEGIN AND END AT THE SAME POINTS, ONLY ONE EQUIPMENT GROUNDING CONDUCTOR IS REQUIRED.

F. IF AN EQUIPMENT GROUNDING CONDUCTOR IS NEEDED IN CONDUIT BETWEEN SIGNALIZED INTERSECTIONS FOR UNDERGROUND INTERCONNECT CABLE, THE GROUNDING SYSTEM FOR EACH SIGNALIZED INTERSECTION WILL BE SEPARATED ABOUT MIDWAY BETWEEN THE INTERSECTIONS.

G. THE MESSENGER WIRE AT SIGNALIZED INTERSECTIONS WILL BE USED AS THE CONDUCTIVE PATH FROM CORNER TO CORNER IF CONDUIT IS NOT PROVIDED UNDER THE ROADWAY. WHEN CONDUIT CONNECTS THE CORNERS OF AN INTERSECTION, AN EQUIPMENT GROUNDING CONDUCTOR SHALL BE USED IN THE CONDUIT.

2) CONDUITS.

A. THE 725.04 CONDUIT SHALL HAVE GROUNDING BUSHINGS INSTALLED AT ALL TERMINATION POINTS. THE BUSHING MATERIAL SHALL BE COMPATIBLE WITH GALVANIZED STEEL CONDUIT AND THE GROUNDING LUG MATERIAL SHALL BE COMPATIBLE FOR USE WITH COPPER WIRE. THREADED OR COMPRESSION TYPE BUSHINGS MAY BE USED.

B. THE 725.05 CONDUIT SHALL HAVE THE INSIDE AND OUTSIDE DIAMETERS OF THE CONDUIT DEBURRED AT ALL TERMINATION POINTS.

C. BOTH ENDS OF METALLIC CONDUIT SHALL BE BONDED TO THE EQUIPMENT GROUNDING CONDUCTOR.

D. METALLIC CONDUIT MAY BE BONDED TO METALLIC BOXES THROUGH THE USE OF CONDUIT FITTINGS UL APPROVED FOR THIS TYPE OF CONNECTION, WITH THE BOX BONDED TO THE EQUIPMENT GROUNDING CONDUCTOR.

3) WIRE FOR GROUNDING AND BONDING.

A. USE INSULATED, COPPER WIRE FOR THE EQUIPMENT GROUNDING CONDUCTOR. BONDING JUMPERS IN BOXES AND ENCLOSURES MAY BE BARE OR INSULATED COPPER WIRE. WIRE SIZE SHALL BE AS FOLLOWS:

I. USE 4 AWG BETWEEN THE POWER SERVICE AND SUPPORTS, POLES, PEDESTALS, CONTROLLER OR FLASHER CABINETS.

II. USE A MINIMUM 8 AWG BETWEEN LOOP DETECTOR PULL BOXES AND THE FIRST CONDUIT THAT REQUIRES A LARGER SIZE AS SPECIFIED IN 3.A.I ABOVE.

III. USE A MINIMUM 8 AWG BETWEEN THE "PREPARE TO STOP WHEN FLASHING" INSTALLATION (INCLUDING SUPPORT) AND THE FIRST CONDUIT THAT REQUIRES A LARGER SIZE AS SPECIFIED IN 3.A.I ABOVE.

GROUNDING AND BONDING (CONT'D)

IV. THE INSULATION SHALL BE GREEN OR GREEN WITH YELLOW STRIPE(S). FOR 4 AWG OR LARGER, INSULATION MAY ALSO BE BLACK WITH GREEN TAPE/LABELS INSTALLED AT ALL ACCESS POINTS.

B. IN A HIGHWAY LIGHTING SYSTEM, THE EQUIPMENT GROUNDING CONDUCTOR SHALL BE THE SAME WIRE SIZE AS THE DUCT CABLE OR DISTRIBUTION CABLE CIRCUIT CONDUCTORS, WITH THE MINIMUM CONDUCTOR SIZE OF 4 AWG. BONDING JUMPERS WILL BE MINIMUM SIZE 4 AWG.

4) GROUND ROD.

A. A ¾" SCHEDULE 40 PVC CONDUIT WILL BE USED IN FOUNDATIONS AND CONCRETE WALLS FOR THE GROUNDING CONDUCTOR (GROUND WIRE) RACEWAY TO THE GROUND ROD. SHOULD METALLIC CONDUIT BE USED, BOTH ENDS OF THE CONDUIT SHALL BE BONDED TO THE GROUNDING CONDUCTOR.

B. THE TYPICAL GROUNDING CONDUCTOR (GROUND WIRE) SHALL BE 4 AWG INSULATED, COPPER.

5) THE GREEN CONDUCTOR IN SIGNAL CABLES (CONDUCTOR #4) SHALL NOT BE USED TO SUPPLY POWER TO A SIGNAL INDICATION. IT WILL BE CONNECTED TO THE SIGNAL BODY AS AN EQUIPMENT GROUND IN ALUMINUM HEADS AND IT WILL BE UNUSED IN PLASTIC HEADS. UNUSED CONDUCTORS SHALL BE GROUNDED IN THE CABINET. TYPICAL USE OF CONDUCTORS IS AS FOLLOWS:

COND.	COLOR	VEHICLE SIGNAL	PEDESTRIAN SIGNAL
1	BLACK	GREEN BALL #1	WALK
2	WHITE	AC NEUTRAL	AC NEUTRAL
3	RED	RED BALL #1	DW/FDW
4	GREEN	EQUIP. GROUND	EQUIP. GROUND
5	ORANGE	YELLOW BALL #2	DW/FDW
6	BLUE	GREEN ARROW #2	WALK
7	WHITE/BLACK STRIPE	YELLOW ARROW	NOT USED

6) POWER SERVICE AND DISCONNECT SWITCH.

A. AT THE POWER SERVICE LOCATION, THE GROUNDING CONDUCTOR (GROUND WIRE) FROM THE DISCONNECT SWITCH NEUTRAL (AC-) BAR TO THE GROUND ROD SHALL BE A CONTINUOUS, UNSPLICED CONDUCTOR. IF SPLICED, IT SHALL BE AN EXOTHERMIC WELD BUTT SPLICE.

B. THE SERVICE NEUTRAL (AC-) SHALL ONLY BE CONNECTED TO GROUND AT THE PRIMARY POWER SERVICE DISCONNECT SWITCH.

I. NEMA CONTROLLER CABINETS: IF A POWER SERVICE DISCONNECT SWITCH IS LOCATED BEFORE THE CONTROLLER CABINET, THE NEUTRAL (AC-) AND THE GROUNDING BARS IN THE CONTROLLER CABINET SHALL NOT BE CONNECTED TOGETHER AS SHOWN IN NEMA TS-2, FIGURE 5-4.

II. IF SECONDARY DISCONNECT SWITCHES ARE CONNECTED AFTER THE PRIMARY DISCONNECT SWITCH, THE NEUTRAL (AC-) SHALL ONLY BE GROUNDED AT THE PRIMARY SWITCH. EQUIPMENT GROUNDING CONDUCTORS SHALL BE BROUGHT TO THE PRIMARY SWITCH, BUT SHALL BE GROUNDED AT BOTH SECONDARY AND PRIMARY SWITCHES.

7) STRUCTURE GROUNDING: HL-50.21 SHOWS A 1/0 AWG STRANDED COPPER CABLE USED FOR STRUCTURE GROUNDING. ADDITIONALLY, THIS SAME CABLE SHALL BE INSULATED AND ANY CONNECTIONS AND BARE COPPER STRANDS EXPOSED TO CONCRETE SHALL BE COVERED WITH MASTIC TO PREVENT CONTACT WITH THE CONCRETE.

8) PAYMENT.

A. ALL MATERIALS AND WORK REQUIRED TO COMPLETE THE EFFECTIVE GROUND FAULT CURRENT PATH SYSTEM ARE INCIDENTAL TO THE CONDUCTORS INSTALLED BY CONTRACT.

B. WORK ON BRIDGES MAY BE INCLUDED IN THE BID ITEM FOR "ITEM 625, STRUCTURE GROUNDING."

C. IN A 3-WIRE HIGHWAY LIGHTING SYSTEM, THE THIRD CONDUCTOR OF THE DUCT CABLE OR DISTRIBUTION CABLE WILL BE USED AS THE EQUIPMENT GROUNDING CONDUCTOR AND MAY AS SUCH BE PART OF THE CABLE BID ITEM.

ITEM 632 - SIGNAL SUPPORT, TYPE TC-81.21, (ALL DESIGNS)

IN ADDITION TO ODOT C&MS 632.15 AND 732.11, FURNISH AND INSTALL SIGNAL POLES AS SPECIFIED ON THE TRAFFIC SIGNAL PLAN AND DETAIL SHEETS.

THE SIGNAL POLE DESIGNER SHALL PROVIDE DRAWINGS OF A STEEL TAPERED TUBE SIGNAL POLE WITH STRUCTURAL ASPECTS OF THE DESIGN AND MATERIALS IN COMPLIANCE WITH THE 2001 AASHTO STANDARD SPECIFICATIONS, WITH 2006 INTERIM REVISIONS, FOR STRUCTURAL SUPPORTS FOR HIGHWAY SIGNS, LUMINAIRES AND TRAFFIC SIGNALS. THE SIGNAL POLE SHALL BE ASTM A595 GRADE A WITH A MINIMUM YIELD STRENGTH OF 55 KSI . THE FOLLOWING DESIGN PARAMETERS SHALL BE USED:

1. BASIC WIND SPEED = 90 MPH
2. DESIGN LIFE = 25 YEARS
3. FATIGUE CATEGORY = III
4. GALLOPING: NO
5. TRUCK INDUCED GUST: NO

SUBMIT, TO THE ENGINEER PRIOR TO INCORPORATION: TWO COPIES OF THE SIGNAL POLE DRAWINGS AND SHOP DRAWINGS, WHICH IDENTIFY AND DESCRIBE EACH MANUFACTURED SIGNAL POLE AND SIGNAL POLE ITEM WHICH IS BEING INCORPORATED INTO THE CONSTRUCTION. THE SIGNAL POLE DRAWINGS AND SHOP DRAWINGS SHALL EACH BE REVIEWED, SEALED, STAMPED AND DATED BY TWO OHIO REGISTERED PROFESSIONAL ENGINEERS. PAYMENT WILL BE MADE AT THE CONTRACT UNIT PRICE BID PER EACH OF ITEM 632, SIGNAL SUPPORT, TYPE TC-81.21, DESIGN (ALL), AS PER PLAN.

ITEM 632 - SIGNAL SUPPORT, TYPE TC-12.30, DESIGN 9 POLE, WITH MAST ARMS TC-81.21 DESIGN 14 AND DESIGN 4, AS PER PLAN

ALL NEW POLES AND ARMS SHALL BE FACTORY PAINTED GLOSSY BLACK. ALL ATTACHMENTS ON NEW POLES SUCH AS DAMPERS, MOUNTING BRACKETS, BANDING, WEATHERHEADS AND RISERS ON POLES SHALL BE PAINTED GLOSSY BLACK TO MATCH POLES AND ARMS. THIS SUPPORT SHALL CONSIST OF A TC-12.30 DESIGN 8 POLE WITH MAST ARMS TC-81.21 DESIGN 14 AND DESIGN 4. ALL SIGNAL SUPPORT ITEMS REQUIRED BY CMS ITEM 632 SHALL BE INCLUDED AS PART OF THIS SUPPORT.

SUPPORT POLES WITH ARM SHALL BE DESIGNED IN ACCORDANCE WITH ODOT STANDARD DRAWINGS TC-12.30 AND TC-81.21. DESIGN CALCULATIONS AND SHOP DRAWINGS OF THE PROPOSED MAST ARMS SHALL BE STAMPED BY TWO ENGINEERS AND SUBMITTED TO ODOT FOR REVIEW AND PRIOR TO DESIGN ACCEPTANCE AND ORDERING.

PAYMENT WILL BE AT THE CONTRACT UNIT PRICE FOR ITEM 632 - SIGNAL SUPPORT, TYPE TC-12.30, DESIGN 9 POLE, WITH MAST ARMS TC-81.21 DESIGN 14 AND DESIGN 4, AS PER PLAN AND WILL BE FULL COMPENSATION FOR ALL LABOR, MATERIALS, TOOLS, EQUIPMENT AND OTHER INCIDENTALS NECESSARY FOR EACH SUPPORT FURNISHED, IN PLACE, COMPLETE & ACCEPTED.

ITEM 632 - COMBINATION SIGNAL SUPPORT, TYPE TC-12.30, DESIGN 8 POLE, WITH MAST ARMS TC-81.21 DESIGN 13 AND DESIGN 4, AS PER PLAN

ALL SIGNAL SUPPORTS SHALL INCLUDE LUMINAIRE BRACKETS AS PROVIDED IN PLANS. ALL NEW POLES, ARMS AND LUMINAIRE BRACKETS SHALL BE FACTORY PAINTED GLOSSY BLACK. ALL ATTACHMENTS ON NEW POLES SUCH AS MOUNTING BRACKETS, BANDING, WEATHERHEADS AND RISERS ON POLES SHALL BE PAINTED GLOSSY BLACK TO MATCH POLES AND ARMS.

THIS SUPPORT SHALL CONSIST OF A TC- 12.30 DESIGN 8 POLE WITH MAST ARMS TC-81.21 DESIGN 13 AND DESIGN 4 AND A 10' LIGHT POLE EXTENSION AS SPECIFIED IN THE PLANS. ALL SIGNAL SUPPORT ITEMS REQUIRED BY CMS ITEM 632 & ALL SIGN SUPPORT ITEMS REQUIRED BY CMS ITEM 630 SHALL BE INCLUDED AS PART OF THIS SUPPORT.

SUPPORT POLES SHALL BE DESIGNED IN ACCORDANCE WITH ODOT STANDARD DRAWINGS TC-12.30 AND TC-81.21. DESIGN CALCULATIONS AND SHOP DRAWINGS OF THE PROPOSED MAST ARMS SHALL BE STAMPED BY TWO ENGINEERS AND SUBMITTED TO ODOT FOR REVIEW PRIOR TO DESIGN ACCEPTANCE AND ORDERING.

PAYMENT WILL BE AT THE CONTRACT UNIT PRICE FOR ITEM 632 - COMBINATION SIGNAL SUPPORT, TYPE TC-12.30, DESIGN 8 POLE, WITH MAST ARMS TC-81.21 DESIGN 13 AND DESIGN 4, AS PER PLAN & WILL BE FULL COMPENSATION FOR ALL LABOR, MATERIALS, TOOLS,EQUIPMENT AND OTHER INCIDENTALS NECESSARY FOR EACH SUPPORT FURNISHED, IN PLACE, COMPLETE AND ACCEPTED.

ITEM 632 - SIGNAL SUPPORT, TYPE TC-81.21, (ALL DESIGNS), AS PER PLAN

ALL NEW POLES AND ARMS SHALL BE FACTORY PAINTED GLOSSY BLACK. ALL ATTACHMENTS ON NEW POLES SUCH AS MOUNTING BRACKETS, BANDING, WEATHERHEADS, AND RISERS ON POLES SHALL BE PAINTED GLOSSY BLACK TO MATCH POLES AND ARMS.

THIS SUPPORT SHALL CONSIST OF A TC-81.21 DESIGN MAST ARM AS SPECIFIED IN THE PLANS. ALL SIGNAL SUPPORT ITEMS REQUIRED BY CMS ITEM 632 SHALL BE INCLUDED AS PART OF THIS SUPPORT. SUPPORT POLES SHALL BE DESIGNED IN ACCORDANCE WITH ODOT STANDARD DRAWING TC-81.21. DESIGN CALCULATIONS AND SHOP DRAWINGS OF THE PROPOSED MAST ARMS SHALL BE STAMPED BY TWO ENGINEERS AND SUBMITTED TO ODOT FOR REVIEW PRIOR TO DESIGN ACCEPTANCE AND ORDERING.

PAYMENT WILL BE AT THE CONTRACT UNIT PRICE FOR ITEM 632 - SIGNAL SUPPORT, TYPE TC-81.21, DESIGN (ALL), AS PER PLAN AND WILL BE FULL COMPENSATION FOR ALL LABOR, MATERIALS, TOOLS, EQUIPMENT AND OTHER INCIDENTALS NECESSARY FOR EACH SUPPORT FURNISHED, IN PLACE, COMPLETE AND ACCEPTED.

ITEM 632 - COMBINATION SIGNAL SUPPORT, TYPE TC-81.21, (ALL DESIGN), AS PER PLAN

ALL SIGNAL SUPPORTS SHALL INCLUDE LUMINAIRE BRACKETS AS PROVIDED IN PLANS. ALL NEW POLES, ARMS AND LUMINAIRE BRACKETS SHALL BE FACTORY PAINTED GLOSSY BLACK. ALL ATTACHMENTS ON NEW POLES SUCH AS MOUNTING BRACKETS, BANDING, WEATHERHEADS AND RISERS ON POLES SHALL BE PAINTED GLOSSY BLACK TO MATCH POLES AND ARMS.

THIS SUPPORT SHALL CONSIST OF A TC-81.21 DESIGN POLE INCLUDING A 10' LIGHT POLE EXTENSION AS SPECIFIED IN THE PLANS. ALL SIGNAL SUPPORT ITEMS REQUIRED BY CMS ITEM 632 SHALL BE INCLUDED AS PART OF THIS SUPPORT.

SUPPORT POLES SHALL BE DESIGNED IN ACCORDANCE WITH ODOT STANDARD DRAWING TC-81.10. DESIGN CALCULATIONS AND SHOP DRAWINGS OF THE PROPOSED MAST ARMS SHALL BE STAMPED BY TWO ENGINEERS AND SUBMITTED TO ODOT FOR REVIEW PRIOR TO DESIGN ACCEPTANCE AND ORDERING.

PAYMENT WILL BE AT THE CONTRACT UNIT PRICE FOR ITEM 632 - COMBINATION SIGNAL SUPPORT, TYPE TC-81.21, DESIGN (ALL), AS PER PLAN AND WILL BE FULL COMPENSATION FOR ALL LABOR, MATERIALS, TOOLS, EQUIPMENT AND OTHER INCIDENTALS NECESSARY FOR EACH SUPPORT FURNISHED, IN PLACE, COMPLETE AND ACCEPTED.

ELEVATION OF FOUNDATIONS AND PULLBOXES

ANY SIGNAL SUPPORT BASE FOUNDATION OR PULL BOX WITHIN OR ADJACENT TO A SIDEWALK AREA SHALL BE FLUSH WITH THE TOP OF THE SIDEWALK OR CURB IN BACK OF SIDEWALK, WHICHEVER APPLIES.

CALCULATED | CHECKED

TRAFFIC SIGNAL GENERAL NOTES

ALL-117/309-18.65/15.17

122
173

I:\Pd\75467\signals\sheets\75467CN002.dgn 17-SEP-2012 10:54AM nvondere

ITEM 632 - VEHICULAR SIGNAL HEAD, (LED), BLACK, BY TYPE, WITH BACKPLATE, AS PER PLAN

IN ADDITION TO THE REQUIREMENTS OF CMS 632 AND 732 FOR 3, 4, AND 5 SECTION SIGNAL HEADS, THE FOLLOWING REQUIREMENTS SHALL ALSO APPLY:

LAMPS:
LED, LIGHT EMITTING DIODE, SIGNAL LAMP UNITS SHALL MEET THE REQUIREMENTS OF CMS 732.04(C). ALL LAMP UNITS SHALL BE THE 12 INCH SIZE. LED SIGNAL LAMP UNITS SHALL BE PROVIDED FOR ALL SIGNAL LENS TYPES.

SIGNAL SECTIONS:
1) SIGNAL HEADS & VISORS SHALL BE CONSTRUCTED OF BLACK POLYCARBONATE PLASTIC AND MEET ITE SPECIFICATIONS.

2) PIPE, SPACERS AND FITTINGS CONSTRUCTED OF BLACK POLYCARBONATE PLASTIC MAY BE USED IN LIEU OF GALVANIZED STEEL OR ALUMINUM.

3) BLACK EXTERIOR COLOR SHALL BE OBTAINED BY USE OF COLORED PLASTIC MATERIAL RATHER THAN PAINTING.

4) REFLECTIVE BACKPLATES PER CMS 732.22.

MOUNTING HARDWARE:
1) ALL SIGNAL HEADS SHALL BE RIGIDLY MOUNTED TO THE MAST ARM WITH THE RED LENS CENTERED ON OR NEAR THE MAST ARM. THE BOTTOMS OF EACH SIGNAL HEAD SHALL BE LEVEL TO WITHIN 6 INCHES OF OTHER WHILE MAINTAINING A CLEARANCE OF 16'-18' ABOVE THE PAVEMENT.

2) ALL UPPER SIGNAL SUPPORT HARDWARE AND PIPING UP TO AND INCLUDING THE WIRE INLET FITTING SHALL BE FERROUS METAL FOR SIGNAL DISPLAYS OF TWO OR MORE SECTIONS.

3) THE ENTRANCE FITTING SHALL BE OF THE TRI-STUD DESIGN WITH SERRATED RINGS IN ORDER TO ACHIEVE POSITIVE LOCKING.

THE CONTRACTOR SHALL PROVIDE TO ODOT, IN WRITING, THE LED MANUFACTURER'S NAME, SERIAL NUMBER, PART NUMBER, DESCRIPTION OF LAMP, AND DATE OF MANUFACTURE FOR ALL LED UNITS TO BE USED IN THE TRAFFIC SIGNAL HEADS PRIOR TO INSTALLATION, FOR ACCEPTANCE AND WARRANTY PURPOSES. THE INFORMATION SHALL BE SENT TO THE OHIO DEPARTMENT OF TRANSPORTATION (ATTN: CURT SYBERT) AT 2000 N. WEST STREET, LIMA, OHIO 45801.

ODOT WILL MEASURE ITEM 632 - VEHICULAR SIGNAL HEAD,(LED), BLACK, BY TYPE, WITH BACKPLATE, AS PER PLAN BY THE NUMBER OF COMPLETE UNITS FURNISHED AND INSTALLED, WHICH SHALL INCLUDE ALL SUPPORT & MOUNTING HARDWARE, DISCONNECT HANGERS, CLOSURE CAPS, DIMMERS, AND LAMPS AS SPECIFIED.

ITEM 632 - PEDESTRIAN PUSHBUTTON, AS PER PLAN

IN ORDER TO CONFORM TO THE AMERICAN WITH DISABILITIES ACT (ADA), THE REQUIREMENTS OF 632.09 AND 732.06 ARE MODIFIED AS FOLLOWS:

A) THE MAXIMUM FORCE REQUIRED TO OPERATE THE PUSHBUTTON SHALL BE 5 POUNDS PER FOOT.

B) THE PUSHBUTTON SHALL BE RAISED OR FLUSH AND SHALL BE A MINIMUM OF 2 INCHES AT ITS SMALLEST DIMENSION.

ITEM 632 - PEDESTAL, 8', TRANSFORMER BASE, AS PER PLAN

ALL NEW PEDESTALS SHALL BE FACTORY PAINTED GLOSSY BLACK FOR ALL LOCATIONS.

ITEM 632 - PEDESTRIAN SIGNAL HEAD (LED), (COUNTDOWN), TYPE D2, AS PER PLAN

IN ADDITION TO THE REQUIREMENTS OF CMS 632 AND 732, THE FOLLOWING REQUIREMENTS SHALL ALSO APPLY:

1) LED, LIGHT EMITTING DIODE, SIGNAL LAMP UNITS SHALL MEET THE REQUIREMENTS OF CMS 732.04(C). ALL LAMP UNITS SHALL BE THE 12 INCH SIZE.

2) THE LED LAMP UNIT SHALL DISPLAY SOLID FILLED SYMBOLS FOR THE UPRAISED HAND OR THE WALKING PERSON.

3) SIGNAL HEADS & VISORS SHALL BE CONSTRUCTED OF BLACK POLYCARBONATE PLASTIC AND MEET ITE SPECIFICATIONS.

4) PIPE, SPACERS AND FITTINGS CONSTRUCTED OF BLACK POLYCARBONATE PLASTIC MAY BE USED IN LIEU OF GALVANIZED STEEL OR ALUMINUM.

5) BLACK EXTERIOR COLORS SHALL BE OBTAINED BY USE OF COLORED PLASTIC MATERIAL RATHER THAN PAINTING.

6) PEDESTRIAN SIGNAL HEADS SHALL BE COUNTDOWN TYPE MEETING CMS 732.05(D) SPECIFICATIONS.

THE CONTRACTOR SHALL PROVIDE TO ODOT, IN WRITING, THE LED MANUFACTURER'S NAME, SERIAL NUMBER, PART NUMBER, DESCRIPTION OF LAMP, AND DATE OF MANUFACTURE FOR ALL LED UNITS TO BE USED IN THE TRAFFIC SIGNAL HEADS PRIOR TO INSTALLATION, FOR ACCEPTANCE AND WARRANTY PURPOSES. THE INFORMATION SHALL BE SENT TO THE OHIO DEPARTMENT OF TRANSPORTATION (ATTN: CURT SYBERT) AT 2000 N. WEST STREET, LIMA, OHIO 45801.

ODOT WILL MEASURE ITEM 632 - PEDESTRIAN SIGNAL HEAD (LED), (COUNTDOWN), TYPE D2, AS PER PLAN BY THE NUMBER OF COMPLETE UNITS FURNISHED AND INSTALLED, AND WILL INCLUDE ALL SUPPORT AND MOUNTING HARDWARE, CLOSURE CAPS AND LAMPS AS SPECIFIED.

ITEM 630 - OVERHEAD SIGN SUPPORT, MISC.: MECHANICAL DAMPER

THIS ITEM SHALL CONSIST OF THE CONTRACTOR INSTALLING A MASS-SPRING TYPE DAMPER ON A MAST ARM SIGNAL SUPPORT TO REDUCE THE POSSIBILITY OF HARMONIC VIBRATIONS CAUSED BY WIND LOADS. A MECHANICAL DAMPER SHALL BE APPLIED TO ALL MAST ARMS OVER FORTY-EIGHT (48) FEET IN LENGTH. MAST ARMS FORTY-EIGHT (48) FEET OR LESS SHALL REQUIRE A MECHANICAL DAMPER ONLY IF REQUIRED BY THE ENGINEER OR PLANS, OR IF THE OBSERVED VERTICAL OSCILLATION OF THE LOADED ARM IS GREATER THAN EIGHT INCHES (8") MEASURED FROM THE HIGHEST TO THE LOWEST POINT OF DEFLECTION AT WIND SPEEDS OF FIVE TO TWENTY MILES-PER-HOUR (5-20 MPH). THE INSTALLED DAMPER SHALL BE CAPABLE OF REDUCING THE LOADED MAXIMUM VERTICAL MOVEMENT AT THE TIP OF THE ARM TO EIGHT INCHES (8") MEASURED FROM THE HIGHEST TO THE LOWEST POINT OF DEFLECTION AT WIND SPEEDS OF FIVE TO TWENTY MILES-PER-HOUR (5-20 MPH).

ALL ATTACHMENT HARDWARE CONNECTIONS SHALL BE STAINLESS STEEL. THE DAMPER SHALL BE ATTACHED TO THE ARM WITHIN EIGHT FEET (8') OF MAST ARM TIP. INSTALLATION SHALL BE PER THE MANUFACTURER'S GUIDELINES. ACCEPTABLE DEVICES INCLUDE THE FOLLOWING OR APPROVED EQUAL:

1. FLORIDA DOT SPRING-MASS DAMPER - DWG. INDEX NO. 17749

THE DAMPER AND MOUNTING HARDWARE SHALL BE FACTORY PAINTED GLOSSY BLACK TO MATCH THE POLE AND MAST ARM.

PAYMENT FOR THIS ITEM WILL BE AT THE CONTRACT PRICE BID PER EACH COMPLETE AND IN PLACE AND INCLUDE ALL LABOR, MATERIALS & EQUIPMENT NECESSARY TO COMPLETE THE WORK.

ITEM 633 - CONTROLLER UNIT. TYPE 2070L, WITH CABINET, TYPE 332, AS PER PLAN

THE CONTROLLER UNIT SHALL BE EQUIPMENT MANUFACTURED IN CONFORMANCE TO THE CALIFORNIA DEPARTMENT OF TRANSPORTATION (CALTRANS) SPECIFICATIONS TITLES "TRANSPORTATION ELECTRICAL EQUIPMENT SPECIFICATIONS (TEES)." THE CONTROLLER UNIT, MODEL 2070L, SHALL BE AN ECONOLITE MODEL 2070L, BUILD: 1.01.08.02B, SIEMENS MODEL 2070L, BUILD: 6.2.0.0.0.81, OR APPROVED EQUAL.

THE 2070L CONTROLLER UNIT SHALL INCLUDE THE FOLLOWING:
1. UNIT CHASSIS
2. 2070-1B CPU MODULE
3. 2070-2A FIELD I/O MODULE
4. 2070-3B FRONT PANEL
5. 2070-4A POWER SUPPLY
6. 2070-7A SERIAL COMMUNICATION MODULE

THE CONTROLLER SHALL BE SUPPLIED WITHOUT TRAFFIC SIGNAL INTERSECTION CONTROL SOFTWARE. THE CONTROLLER SHALL BE SUPPLIED WITH MICROWARE EMBEDDED OS-9 RELEASE 1.3 OR LATER WITH KERNEL EDITION #376 OR LATER, AS REQUIRED BY CALTRANS TEES. FOR WARRANTY PURPOSES, A VENDOR-SPECIFIC DECAL, AS PER ODOT CMS 733.02 SHALL BE APPLIED TO EACH CONTROLLER UNIT AT TIME OF DELIVERY TO THE PROJECT.

CONTROLLERS SHALL BE SHIPPED TO THE ODOT SIGNAL SHOP, 1606 WEST BROAD STREET, COLUMBUS, OHIO 43223, EITHER DIRECTLY OR VIA THE ODOT DISTRICT OFFICE A MINIMUM OF 14 DAYS IN ADVANCE OF WHEN THE SOFTWARE IS NEEDED. ODOT WILL INSTALL THE LOCAL INTERSECTION CONTROL SOFTWARE. THE CONTROLLER WILL THEN BE PERFORMANCE TESTED BY THE ODOT SIGNAL SHOP. EVERY EFFORT SHALL BE MADE TO HAVE LOADING AND PERFORMANCE TESTING COMPLETED BY THE ODOT SIGNAL SHOP WITHIN 2 WEEKS OF RECEIPT OF AN INDIVIDUAL CONTROLLER; LARGER GROUPS OF CONTROLLERS SUBMITTED AT THE SAME TIME MAY TAKE LONGER. SHOULD ANY CONTROLLER FAIL THIS PERFORMANCE TEST AFTER BEING LOADED WITH ODOT-LICENSED SOFTWARE, THE SOFTWARE WILL BE REMOVED BY THE ODOT SIGNAL SHOP AND THE CONTROLLER REJECTED. REJECTED CONTROLLERS WILL BE RETURNED, EITHER DIRECTLY TO THE CONTRACTOR OR TO THE ODOT DISTRICT OFFICE.

AFTER THE SOFTWARE IS INSTALLED AND TESTED BY ODOT, THE CONTRACTOR SHALL PICK UP THE CONTROLLER UNIT FROM THE ODOT SIGNAL SHOP. IT SHALL BE THE CONTRACTOR'S RESPONSIBILITY TO PROGRAM THE TYPE 2070L SIGNAL CONTROLLER AS PER THE PLANS.

CONTROLLERS PASSING THE PERFORMANCE TEST WILL BE LABELED BY THE ODOT SIGNAL SHOP WITH THE OS IMAGE NUMBER, CPU SERIAL NUMBER, SOFTWARE REVISION NUMBER, & UPLOAD DATE. THIS LABEL IS NOT TO BE REMOVED BY THE CONTRACTOR AND SERVES AS PROOF THAT THE CONTROLLER HAS BEEN LOADED, TESTED AND APPROVED FOR INITIAL INSTALLATION ON THE PROJECT. SUCH PROOF DOES NOT ALTER THE REQUIRED 10-DAY PERFORMANCE TEST OUTLINED IN CMS SECTIONS 632 AND 633.

THE CONTRACTOR SHALL NOT REASSIGN THE CABINET DETECTOR INPUTS IN ORDER TO REDUCE THE NUMBER OF 2-CHANNEL DETECTOR UNITS SUPPLIED, BUT SHALL USE THE STANDARD CALTRANS INPUT FILE DESIGNATIONS.

ITEM 633 - CONTROLLER UNIT. TYPE 2070L- WITH CABINET TYPE 332. AS PER PLAN (EAGLE) - ALTERNATIVE BID

THE CONTROLLER SHALL BE A MODEL AS MANUFACTURED BY EAGLE TRAFFIC CONTROL SYSTEMS, AND SHALL INCORPORATE OR BE FURNISHED WITH ALL THE DESIGN FEATURES, AUXILIARY EQUIPMENT, ACCESSORIES, AND PREWIRED CABINET FEATURES AS REQUIRED IN THE STANDARD BID ITEM.

PAYMENT WILL BE AT THE CONTRACT UNIT PRICE FOR EACH, IN PLACE. ALL CONNECTIONS MADE AND WIRING COMPLETED, TESTED AND ACCEPTED.

ITEM 633 - CONTROLLER ITEM, MISC.: REUSE OF UNINTERRUPTIBLE POWER SUPPLY (UPS)

THIS ITEM SHALL CONSIST OF THE FOLLOWING :
PRIOR TO REMOVAL CONTRACTOR AND ODOT DISTRICT 1 SIGNAL SHOP PERSONNEL SHALL VERIFY UPS OPERATION. CAREFULLY REMOVE EXISTING UPS AND CABINET FROM THE EXISTING CONTROLLER AND REMOUNT TO NEW CONTROLLER CABINET, INCLUDING ALL NECESSARY WIRING AND CONNECTIONS FOR AN OPERATIONAL SYSTEM. AFTER RE-INSTALLATION AND BATTERY REPLACEMENT CONTRACTOR AND ODOT SIGNAL SHOP PERSONNEL SHALL AGAIN VERIFY UPS OPERATION. CONTROLLER AND CABINET SHALL BE WIRED INTO UPS OUTPUT ALARMS FOR SPECIAL STATUS ALARMS; ON BATTERY, LOW BATTERY & 2 HOUR TIMER.

ITEM 633 - UNINTERRUPTIBLE POWER SUPPLY (UPS), BATTERY REPLACEMENT, AS PER PLAN

IN ADDITION TO THE REQUIREMENTS OF 733.09, PROVIDE FOUR (4) BATTERIES FOR EACH EXISTING UNINTERRUPTIBLE POWER SUPPLY (UPS) CABINET LOCATION SELECTED.

BATTERIES SHALL BE PROVIDED FROM THE DEPARTMENT'S QUALIFIED PRODUCT LIST.

FURNISH BATTERIES CERTIFIED BY THE MANUFACTURER TO OPERATE OVER A TEMPERATURE RANGE OF -13 DEGREE F TO +165 DEGREE F.

PLACE ALL BATTERIES ON BATTERY HEATER MATS IN THE ENCLOSURE.

BATTERIES SHALL BE WARRANTED FOR FULL REPLACEMENT FOR TWO (2) YEARS FROM DATE OF PURCHASE.

THE DEPARTMENT WILL PAY FOR ITEM - 633 UNINTERRUPTIBLE POWER SUPPLY (UPS), BATTERY REPLACEMENT, AS PER PLAN AT THE CONTRACT PRICE BID FOR EACH UPS LOCATION WHERE THE FOUR (4) EXISTING BATTERIES ARE REPLACED. PAYMENT SHALL BE FULL COMPENSATION FOR ALL LABOR, MATERIALS, TOOLS, EQUIPMENT, DISPOSAL AND OTHER INCIDENTALS NECESSARY TO REPLACE THE UPS BATTERIES COMPLETE, IN PLACE, AND ACCEPTED.

ITEM 633 - CABINET RISER, AS PER PLAN (UPS)

THIS ITEM OF WORK SHALL BE IN CONFORMANCE WITH ODOT SPECIFICATION 633.09 EXCEPT IT SHALL BE INSTALLED FOR THE UPS CABINET. USE A TYPE (SIZE AND SHAPE) OF CABINET RISER COMPATIBLE WITH THE TYPE OF UPS CABINET SPECIFIED FOR THE PROJECT. THE DEPARTMENT WILL MEASURE ITEM 633 - CABINET RISER, AS PER PLAN (UPS) BY THE NUMBER OF EACH UNIT AND WILL INCLUDE MATERIALS, MOUNTING HARDWARE AND INSTALLATION.

ITEM 630 - SIGN HANGER ASSEMBLY, MAST ARM

IN ADDITION TO THE REQUIREMENTS OF ITEM 630 IN THE CMS, THE CONTRACTOR SHALL ATTACH FLAT SHEET SIGNS TO THE MAST ARM OF ALL TRAFFIC SIGNAL SUPPORTS UTILIZING THE SIGN BRACKET ASSEMBLIES DETAILED IN STANDARD CONSTRUCTION DWG TC-16.21. ALL ASSEMBLIES WILL BE PAID FOR AT THE CONTRACT UNIT PRICE PER EACH FOR ITEM 630 - SIGN HANGER ASSEMBLY, MAST ARM.

PAINTING REQUIREMENTS

ALL POLES, MAST ARMS, PEDESTALS AND ASSOCIATED ITEMS SPECIFIED IN THESE PLANS TO BE FACTORY PAINTED GLOSSY BLACK SHALL BE COATED IN CONCORDANCE WITH THE REQUIREMENTS SHOWN ON SHEET 125.

CALCULATED | CHECKED

TRAFFIC SIGNAL GENERAL NOTES

ALL-117/309-
18.65/15.17

I:\Pd\75467\signals\sheets\75467CN003.dgn 17-SEP-2012 10:54AM nvondere

ITEM 632 - POWER SERVICE, AS PER PLAN

ELECTRIC POWER SHALL BE OBTAINED FROM THE AMERICAN ELECTRIC COMPANY (800-672-2231) AT THE LOCATIONS INDICATED IN THE PLANS. POWER SUPPLIED SHALL BE 120/240 VOLTS.

POWER SERVICE SHALL BE AS PER CMS ITEM 632 AND SCD TC-83.10 WITH THE FOLLOWING EXCEPTIONS:

1) THE METER BASE MOUNTING HEIGHT SHALL BE NO MORE THAN 5 FEET HIGH TO THE CENTER OF THE METER BASE FROM THE GROUND.

2) THE CONTRACTOR SHALL SUPPLY THE NECESSARY METER BASES.

3) ALL POWER SERVICES SHALL BE METERED. THE METER SHALL HAVE A LEVER OPERATED BYPASS.

4) ALL METER BASE HARDWARE (INCLUDING RISER AND BANDING) SHALL BE PAINTED GLOSSY BLACK TO MATCH POLES.

5) USE TWO SEPARATE DISCONNECTS, ONE FOR SIGNALS AND ONE FOR LIGHTING LABELLED ACCORDINGLY.

DISCONNECT SWITCH ENCLOSURES FURNISHED IN ACCORDANCE WITH CMS ITEM 632 - POWER SERVICE, AS PER PLAN, SHALL INCLUDE A PADLOCK EQUAL TO MASTER NO. 4BKA OR WILSON BOHANNON 660, WITH LOCK BODY OF BRONZE OR BRASS AND KEYING SHALL BE TO THE STATE MASTER.

THE CONTRACTOR SHALL CONTACT THE METER SECTION OF THE POWER COMPANY FOR INFORMATION REGARDING THE METER BASE INSTALLATION PRIOR TO ORDERING POLES. THE CONTRACTOR WILL BE RESPONSIBLE FOR REQUESTING AND SCHEDULING ANY INSPECTIONS THE POWER COMPANY MAY REQUIRE FOR THE POWER SERVICE HOOK UP. THE CONTRACTOR SHALL BE RESPONSIBLE TO CONTACT THE POWER COMPANY FOR THE ELECTRICAL SERVICE CONNECTION. UNDER NO CIRCUMSTANCES SHALL THE CONTRACTOR SPLICE POWER CABLE INTO THE POWER COMPANY'S CIRCUITS. THE VOLTAGE SUPPLIED SHALL BE NOMINALLY 120/240 VOLTS. THE CONTRACTOR IS RESPONSIBLE FOR OBTAINING ANY NECESSARY PERMITS AND THE PAYING OF ALL FEES. THE CONTRACTOR SHALL PAY ALL POWER CHARGES UNTIL THE SIGNAL IS ACCEPTED BY THE MAINTAINING AGENCY.

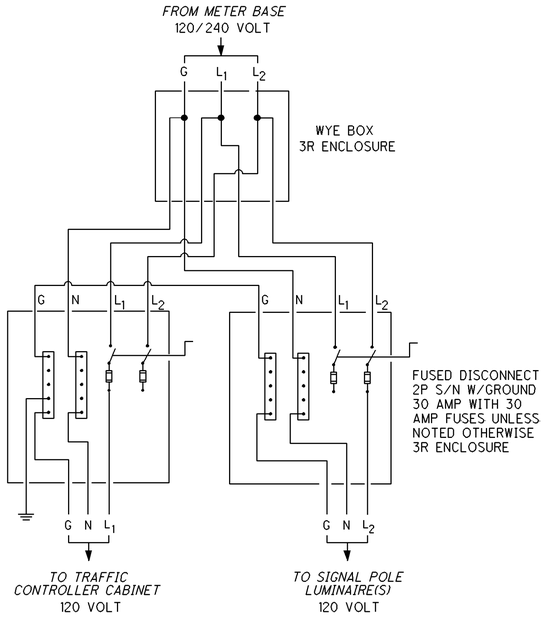

TRAFFIC SIGNAL AND LIGHTING
POWER SERVICE DIAGRAM

COORDINATION TIMING CHART - WILLARD AVE.

PLAN (CYCLE-SECS.)	SPLITS (G+Y+AR) IN SECONDS PHASE 1	2	3	4	5	6	7	8	OFFSET *
CYCLE 1 (110 SEC.) SPLIT 1	15	45	18	32	15	45			0
CYCLE 1 (110 SEC.) SPLIT 2	15	45	18	32	15	45			0
CYCLE 1 (110 SEC.) SPLIT 3	15	50	18	27	15	50			0
CYCLE 2 (120 SEC.) SPLIT 1	15	54	18	33	15	54			0
CYCLE 3 (140 SEC.) SPLIT 1	16	60	18	46	16	60			0

TCB PLAN EVENTS	HOURS	CYCLE/SPLIT/OFFSET
PLAN 1 - (MON - FRI)	0000 - 0530	FREE
PLAN 1 - (MON - FRI)	0530 - 1000	1/1/1
PLAN 1 - (MON - FRI)	1000 - 1400	1/2/1
PLAN 1 - (MON - FRI)	1400 - 1800	2/1/1
PLAN 1 - (MON - FRI)	1800 - 2200	1/3/1
PLAN 1 - (MON - FRI)	2200 - 2400	FREE
PLAN 2 - (SAT - SUN)	0000 - 0800	FREE
PLAN 2 - (SAT - SUN)	0800 - 1000	1/3/1
PLAN 2 - (SAT - SUN)	1000 - 1800	1/2/1
PLAN 2 - (SAT - SUN)	1800 - 2200	1/3/1
PLAN 2 - (SAT - SUN)	2200 - 2400	FREE

COORDINATION TIMING CHART - MT. HOLYOKE AVE.

PLAN (CYCLE-SECS.)	SPLITS (G+Y+AR) IN SECONDS PHASE 1	2	3	4	5	6	7	8	OFFSET *
CYCLE 1 (110 SEC.) SPLIT 1	18	72		20	18	72		20	19
CYCLE 1 (110 SEC.) SPLIT 2	18	64		28	14	68		28	15
CYCLE 1 (110 SEC.) SPLIT 3	15	65		30	15	65		30	26
CYCLE 2 (120 SEC.) SPLIT 1	16	79		25	15	80		25	16
CYCLE 3 (140 SEC.) SPLIT 1	20	85		35	14	91		35	19

TCB PLAN EVENTS	HOURS	CYCLE/SPLIT/OFFSET
PLAN 1 - (MON - FRI)	0000 - 0530	FREE
PLAN 1 - (MON - FRI)	0530 - 1000	1/1/1
PLAN 1 - (MON - FRI)	1000 - 1400	1/2/1
PLAN 1 - (MON - FRI)	1400 - 1800	2/1/1
PLAN 1 - (MON - FRI)	1800 - 2200	1/3/1
PLAN 1 - (MON - FRI)	2200 - 2400	FREE
PLAN 2 - (SAT - SUN)	0000 - 0800	FREE
PLAN 2 - (SAT - SUN)	0800 - 1000	1/3/1
PLAN 2 - (SAT - SUN)	1000 - 1800	1/2/1
PLAN 2 - (SAT - SUN)	1800 - 2200	1/3/1
PLAN 2 - (SAT - SUN)	2200 - 2400	FREE

** Offsets measured from Coordinated ϕ2 & ϕ6 End of Green/Beginning of Yellow.*

COORDINATION TIMING CHART - LOST CREEK BLVD.

PLAN (CYCLE-SECS.)	SPLITS (G+Y+AR) IN SECONDS PHASE 1	2	3	4	5	6	7	8	OFFSET *
CYCLE 1 (110 SEC.) SPLIT 1	18	72		20	15	75		20	55
CYCLE 1 (110 SEC.) SPLIT 2	15	55		40	15	55		40	43
CYCLE 1 (110 SEC.) SPLIT 3	15	67		28	15	67		28	16
CYCLE 2 (120 SEC.) SPLIT 1	17	58		45	15	60		45	46
CYCLE 3 (140 SEC.) SPLIT 1	18	80		42	15	83		42	44

TCB PLAN EVENTS	HOURS	CYCLE/SPLIT/OFFSET
PLAN 1 - (MON - FRI)	0000 - 0530	FREE
PLAN 1 - (MON - FRI)	0530 - 1000	1/1/1
PLAN 1 - (MON - FRI)	1000 - 1400	1/2/1
PLAN 1 - (MON - FRI)	1400 - 1800	2/1/1
PLAN 1 - (MON - FRI)	1800 - 2200	1/3/1
PLAN 1 - (MON - FRI)	2200 - 2400	FREE
PLAN 2 - (SAT - SUN)	0000 - 0800	FREE
PLAN 2 - (SAT - SUN)	0800 - 1000	1/3/1
PLAN 2 - (SAT - SUN)	1000 - 1800	1/2/1
PLAN 2 - (SAT - SUN)	1800 - 2200	1/3/1
PLAN 2 - (SAT - SUN)	2200 - 2400	FREE

COORDINATION TIMING CHART - DEVONSHIRE DR.

PLAN (CYCLE-SECS.)	SPLITS (G+Y+AR) IN SECONDS PHASE 1	2	3	4	5	6	7	8	OFFSET *
CYCLE 1 (110 SEC.) SPLIT 1	18	67		25	15	70		25	75
CYCLE 1 (110 SEC.) SPLIT 2	25	59		26	21	63		26	66
CYCLE 1 (110 SEC.) SPLIT 3	29	48		33	28	49		33	36
CYCLE 2 (120 SEC.) SPLIT 1	22	68		30	20	70		30	63
CYCLE 3 (140 SEC.) SPLIT 1	25	75		40	20	80		40	65

TCB PLAN EVENTS	HOURS	CYCLE/SPLIT/OFFSET
PLAN 1 - (MON - FRI)	0000 - 0530	FREE
PLAN 1 - (MON - FRI)	0530 - 1000	1/1/1
PLAN 1 - (MON - FRI)	1000 - 1400	1/2/1
PLAN 1 - (MON - FRI)	1400 - 1800	2/1/1
PLAN 1 - (MON - FRI)	1800 - 2200	1/3/1
PLAN 1 - (MON - FRI)	2200 - 2400	FREE
PLAN 2 - (SAT - SUN)	0000 - 0800	FREE
PLAN 2 - (SAT - SUN)	0800 - 1000	1/3/1
PLAN 2 - (SAT - SUN)	1000 - 1800	1/2/1
PLAN 2 - (SAT - SUN)	1800 - 2200	1/3/1
PLAN 2 - (SAT - SUN)	2200 - 2400	FREE

CALCULATED RJL CHECKED MLF

TRAFFIC SIGNAL GENERAL NOTES

ALL-117/309-
18.65/15.17

I:\Pd\75467\signals\sheets\75467CN004.dgn 17-SEP-2012 10:54AM nvondere

GENERAL

OVERHEAD SIGN SUPPORTS CAN BE SEPARATED INTO MAJOR SECTIONS SUCH AS END FRAMES, TRUSSES, VERTICAL POLES AND CANTILEVER ARMS. FOR THE IMPLEMENTATION OF THIS WORK ITEM IT WILL BE BENEFICIAL TO REFER TO THE MAJOR SECTIONS OF THE OVERHEAD SIGN SUPPORTS RATHER THAN THE WHOLE SUPPORT. MORE SPECIFIC INSTRUCTIONS AND FLEXIBILITY CAN BE GIVEN BASED UPON THE UNIT OF MEASURE AND PAYMENT PER MAJOR SUPPORT SECTION.

THE PROTECTIVE COATING OF OVERHEAD SIGN SUPPORT SECTIONS SHALL BE A FOUR PART PROCESS TO INCLUDE SURFACE PREPARATION FOLLOWED BY A THREE COAT PAINT SYSTEM. THIS THREE COAT SYSTEM SHALL CONSIST OF AN ORGANIC ZINC PRIME COAT, AN EPOXY INTERMEDIATE COAT AND A URETHANE FINISH COAT, WITH EACH COAT BEING A DIFFERENT COLOR. THE PURPOSE OF THIS COATING IS TO PROVIDE PROTECTION FOR NEW (UNWEATHERED) AND OLDER (WEATHERED) GALVANIZED STEEL SUPPORT SECTIONS FROM CORROSIVE ELEMENTS IN THE ATMOSPHERE. COATING AND SURFACE PREPARATION OF NEW GALVANIZED SUPPORT SECTIONS SHOULD BE DONE BY THE MANUFACTURER.

IN THE FIELD, THE CONTRACTOR SHALL TAKE ALL NECESSARY PRECAUTIONS TO COMPLY WITH POLLUTION LAWS, RULES OR REGULATIONS OF FEDERAL, STATE OR LOCAL AGENCIES. THE COATING MATERIALS SPECIFIED FOR THE WORK CAN BE HAZARDOUS TO THE HEALTH OF THE APPLICATOR IF NOT APPLIED AS PER MANUFACTURER'S INSTRUCTION. THE CONTRACTOR SHALL FOLLOW THE DATA SHEET AND THE LABEL ON THE PAINT CONTAINERS. THESE PRECAUTIONS SHALL INCLUDE THE USE OF RESPIRATORS AND EYE AND SKIN PROTECTION AS SPECIFIED. THE CONTRACTOR SHALL ALSO INSURE THAT HIS PAINTING OPERATIONS AND LOCATIONS WILL NOT ENDANGER OR ADVERSELY AFFECT THE PUBLIC IN GENERAL.

THE PROPOSED CLEANING AND COATING OPERATIONS SHALL BE PERFORMED ONLY WHEN THE AMBIENT TEMPERATURE IS 50 DEGREES F (10° C) OR ABOVE.

PAINT SHALL NOT BE APPLIED DURING RAIN, FOG OR MIST, OR WHEN THE STEEL SURFACE TEMPERATURE IS LESS THAN 5 DEGREES F (3° C) ABOVE THE DEW POINT. PAINT SHALL NOT BE APPLIED TO WET OR DAMP SURFACES OR ON FROSTED OR ICE-COATED SURFACES. PAINT SHALL NOT BE APPLIED WHEN THE RELATIVE HUMIDITY IS GREATER THAN 85%. ALL STEEL SURFACES OF TRUSSES AND END FRAMES INCLUDING THE WELDED AREAS, BALLAST ENCLOSURE MOUNTING BRACKET AND BASE PLATES ARE TO BE CLEANED AND COATED. BEFORE EACH COATING IS APPLIED, IT SHALL BE MIXED WITH AN APPROVED POWER MECHANICAL MIXER TO A UNIFORM CONSISTENCY WHICH SHALL BE MAINTAINED DURING ITS APPLICATION. EACH COAT SHALL BE APPLIED IN A WORKMANLIKE MANNER AS A CONTINUOUS FILM OF UNIFORM THICKNESS WHICH IS FREE OF HOLIDAYS, PORES, RUNS OR SAGS. ALL COATS SHALL BE APPLIED BY BRUSH OR ROLLER. THINNING OF PAINT IS STRICTLY PROHIBITED. PAINT NOT CAPABLE OF BEING APPLIED AS SPECIFIED SHALL NOT BE USED. THE COATING SHALL PENETRATE ALL JOINTS AND CONNECTIONS. THE ENGINEER SHALL BE NOTIFIED 24 HOURS PRIOR TO ANY CLEANING OR COATING OPERATIONS SO THAT INSPECTION SERVICES CAN BE PROVIDED.

COATING SYSTEM

THE COATING SYSTEM SHALL BE A THREE COAT PAINT SYSTEM CONFORMING TO 708.02. SUPPLY THE PRIMER, INTERMEDIATE AND FINISH COATS FROM THE SAME MANUFACTURER.

SURFACE PREPARATION, EXISTING SUPPORT SECTIONS

EXISTING, WEATHERED GALVANIZED SUPPORT SECTIONS SHOULD HAVE THEIR SURFACE PREPARATION AS WELL AS THEIR PROTECTIVE COATING DONE UNDER CONDITIONS OF TEMPERATURE AND HUMIDITY WITHIN THE SAME RANGE AS SPECIFIED BY THE MANUFACTURER OF THE ORGANIC ZINC PRIME COAT MATERIAL TO BE USED IMMEDIATELY AFTER THIS CLEANING OPERATION. THE SUPPORT SECTIONS SHALL BE PREPARED FOR COATING BY SSPC-SP1 (SOLVENT CLEANING) FOLLOWED BY SSPC-SP10 (NEAR WHITE BLAST CLEANING). BEFORE THE PREPARED SURFACE DEGRADES FROM THE PRESCRIBED STANDARDS, THE PRIME COAT SHALL BE APPLIED. IN EVERY CASE, THE SURFACE SHALL BE COATED WITH ORGANIC ZINC PRIME COAT ON THE SAME DAY AS THE SURFACE PREPARATION. CAREFUL HANDLING AND STORAGE WILL BE REQUIRED TO PREVENT ANY SCRAPING, MARRING, OR OTHER DAMAGE TO THE PREPARED SURFACE.
PAYMENT SHALL INCLUDE ALL LABOR, EQUIPMENT, HANDLING, TRANSPORTATION COSTS AND MATERIALS NECESSARY TO ACCOMPLISH THIS ITEM OF WORK PER MAJOR SUPPORT SECTION.

BASIS OF PAYMENT WILL BE AS FOLLOWS:

ITEM 630 SURFACE PREPARATION, EXISTING SUPPORT SECTION AT CONTRACT BID PRICE PER EACH MAJOR SUPPORT SECTION.

SURFACE PREPARATION, NEW SUPPORT SECTIONS

NEW, UNWEATHERED GALVANIZED SUPPORT SECTIONS SHOULD HAVE THEIR SURFACE PREPARATION AS WELL AS THEIR PROTECTIVE COATING DONE AT THE MANUFACTURER OF THE SUPPORT SECTIONS.

THE SUPPORT SECTIONS SHALL BE PREPARED FOR COATING BY SSPC-SP1 (SOLVENT CLEANING) (DO NOT USE ALKALINE CLEANERS) FOLLOWED BY SSPC-SP7 (100% BRUSH-OFF BLAST OF SURFACE).
BEFORE THE PREPARED SURFACE DEGRADES FROM THE PRESCRIBED STANDARDS, THE PRIME COAT SHALL BE APPLIED. IN EVERY CASE, THE SURFACE SHALL BE COATED WITH THE ORGANIC ZINC PRIME COAT ON THE SAME DAY OF SURFACE PREPARATION. CAREFUL HANDLING AND STORAGE WILL BE REQUIRED TO PREVENT ANY SCRAPING, MARRING, OR OTHER DAMAGE TO THE PREPARED SURFACE.
PAYMENT SHALL INCLUDE ALL LABOR, EQUIPMENT, HANDLING, TRANSPORTATION COSTS AND MATERIALS NECESSARY TO ACCOMPLISH THIS ITEM OF WORK PER MAJOR SUPPORT SECTION.

BASIS OF PAYMENT WILL BE AS FOLLOWS:

ITEM 630 SURFACE PREPARATION, NEW SUPPORT SECTION AT CONTRACT BID PRICE PER EACH MAJOR SUPPORT SECTION.

COATING, ORGANIC ZINC PRIME COAT, SUPPORT SECTIONS

THIS ITEM SHALL CONSIST OF THE APPLICATION OF ONE (1) COAT OF AN ORGANIC ZINC PRIMER TO SUPPORT SECTIONS. THE TOTAL DRY FILM THICKNESS OF THIS COAT SHALL BE BETWEEN 1.5 TO 2.0 MILS (38 TO 51 MICROMETERS).
IF MORE THAN ONE PASS IS NECESSARY TO OBTAIN THE REQUIRED THICKNESS, THAT COST SHALL BE BORNE BY THE CONTRACTOR.
THE COLOR OF THIS COAT SHALL BE NOTICEABLY DIFFERENT FROM THE BASE MATERIAL AND OTHER PROPOSED COATS.
THIS COAT SHALL IN ALL CASES BE APPLIED OVER SURFACES THAT WERE PREPARED EARLIER THAT SAME DAY. THE THINNING OF THE MATERIAL IS STRICTLY PROHIBITED. MATERIAL NOT CAPABLE OF BEING APPLIED AS SPECIFIED SHALL NOT BE USED.

WHEN THE AVERAGE DRY FILM THICKNESS OF THIS COAT OVER THE ENTIRE SUPPORT SECTION IS LESS THAN THE SPECIFIED 1.5 TO 2.0 MILS (38 TO 51 MICROMETERS) BUT IS AT LEAST 1.25 MILS (32 MICROMETERS), THE CONTRACT BID PRICE FOR THIS ITEM SHALL BE REDUCED IN DIRECT PROPORTION TO THE PERCENT DEFICIENCY OF COATING UP TO 16-2/3%. IF THE DEFICIENCY OF COATING IS MORE THAN THAT 16-2/3% [I.E., THE AVERAGE DRY FILM THICKNESS IS LESS THAN 1.25 MILS (32 MICROMETERS)] THE WORK FOR THIS ITEM SHALL BE CONSIDERED UNSATISFACTORY AND SHALL BE RECOATED AT THE FULL EXPENSE OF THE CONTRACTOR, INCLUDING ALL LABOR, EQUIPMENT AND MATERIAL.

FOR NEW SUPPORT SECTIONS THE PRIME COAT SHOULD BE DONE AT THE MANUFACTURER OF THE SUPPORT SECTIONS. VERIFICATION BY THE MANUFACTURER OF THE COATING MATERIAL FOR THE PRIME COAT WILL BE REQUIRED. CAREFUL HANDLING AND STORAGE WILL BE REQUIRED TO PREVENT ANY SCRAPING, MARRING OR OTHER SURFACE DAMAGE TO THE PRIME COAT.

PAYMENT SHALL INCLUDE ALL LABOR, EQUIPMENT, HANDLING COSTS AND MATERIALS NECESSARY TO ACCOMPLISH THIS ITEM OF WORK.
THIS PRIME COAT SHALL BE MANUFACTURED BY THE SAME COMPANY SUPPLYING THE INTERMEDIATE AND TOP COATS. A PROPERLY CALIBRATED DRY FILM THICKNESS INSTRUMENT WILL BE USED TO CHECK THE COATING.

BASIS OF PAYMENT WILL BE AS FOLLOWS:

ITEM 630 COATING, ORGANIC ZINC PRIME COAT, SUPPORT SECTION AT CONTRACT BID PRICE PER EACH MAJOR SUPPORT SECTION.

COATING, EPOXY INTERMEDIATE COAT, SUPPORT SECTIONS

THIS ITEM SHALL CONSIST OF THE APPLICATION OF ONE (1) COAT OF EPOXY TO SUPPORT SECTIONS. THE TOTAL DRY FILM THICKNESS OF THIS COAT SHALL NOT BE LESS THAN SIX (6.0) MILS (152 MICROMETERS). IF MORE THAN ONE PASS IS NECESSARY TO OBTAIN THE REQUIRED THICKNESS, THAT COST SHALL BE BORNE BY THE CONTRACTOR. THINNING OF THE MATERIAL IS STRICTLY PROHIBITED. MATERIAL NOT CAPABLE OF BEING APPLIED AS SPECIFIED SHALL NOT BE USED.

WHEN THE AVERAGE DRY FILM THICKNESS OF THIS COAT OVER THE ENTIRE SUPPORT SECTION IS LESS THAN THE SPECIFIED 6.0 MILS (152 MICROMETERS), BUT IS AT LEAST 5.0 MILS (127 MICROMETERS), THE CONTRACT PRICE FOR THIS ITEM SHALL BE REDUCED IN DIRECT PROPORTION TO THE PERCENT DEFICIENCY OF COATING UP TO 16-2/3%. IF THE DEFICIENCY OF COATING IS MORE THAN 16-2/3%, [I.E. THE AVERAGE DRY FILM THICKNESS IS LESS THAN 5.0 MILS (127 MICROMETERS)], THE WORK FOR THIS ITEM SHALL BE CONSIDERED UNSATISFACTORY AND SHALL BE RECOATED AT THE FULL EXPENSE OF THE CONTRACTOR, INCLUDING ALL LABOR, EQUIPMENT AND MATERIAL.

AT LEAST 24 HOURS BUT NO MORE THAN THREE (3) DAYS SHALL ELAPSE AFTER THE APPLICATION OF THE ORGANIC ZINC PRIME COAT AND BEFORE THE APPLICATION OF THE EPOXY INTERMEDIATE COAT.
SURFACES SHALL IN ALL CASES BE CLEAN BEFORE THE INTERMEDIATE COAT IS APPLIED.

FOR NEW SUPPORT SECTIONS, THIS INTERMEDIATE COAT SHOULD BE DONE AT THE MANUFACTURER OF THE SUPPORT SECTIONS.
VERIFICATION BY THE MANUFACTURER FOR THE INTERMEDIATE COAT WILL BE REQUIRED. CAREFUL HANDLING AND STORAGE WILL BE REQUIRED TO PREVENT ANY SCRAPING, MARRING OR OTHER SURFACE DAMAGE TO THE INTERMEDIATE COAT.

PAYMENT SHALL INCLUDE ALL LABOR, EQUIPMENT, HANDLING COST AND MATERIAL NECESSARY TO ACCOMPLISH THIS ITEM OF WORK. THIS INTERMEDIATE COAT SHALL BE MANUFACTURED BY THE SAME COMPANY SUPPLYING THE PRIME AND TOP COATS. A PROPERLY CALIBRATED DRY FILM THICKNESS INSTRUMENT WILL BE USED TO CHECK THE COATING.

BASIS OF PAYMENT WILL BE AS FOLLOWS:

ITEM 630 COATING, EPOXY INTERMEDIATE COAT, SUPPORT SECTION AT CONTRACT BID PRICE PER EACH MAJOR SUPPORT SECTION.

COATING, URETHANE FINISH COAT, SUPPORT SECTIONS

THIS ITEM SHALL CONSIST OF THE APPLICATION OF ONE (1) COAT OF URETHANE TO SUPPORT SECTIONS. THE TOTAL DRY FILM THICKNESS OF THIS COAT SHALL NOT BE LESS THAN 1.5 MILS (38 MICROMETERS). IF MORE THAN ONE PASS IS NECESSARY TO OBTAIN THE REQUIRED THICKNESS, THAT COST SHALL BE BORNE BY THE CONTRACTOR. THINNING OF THE MATERIAL IS STRICTLY PROHIBITED. MATERIAL NOT CAPABLE OF BEING APPLIED AS SPECIFIED SHALL NOT BE USED.THE COLOR OF THIS COAT SHALL BE MEDIUM GREY.

WHEN THE AVERAGE DRY FILM THICKNESS OF THIS COAT OVER THE ENTIRE SUPPORT SECTION IS LESS THAN THE SPECIFIED 1.5 MILS(38 MICROMETERS) BUT IS AT LEAST 1.0 MIL (25 MICROMETERS), THE CONTRACT PRICE FOR THIS ITEM SHALL BE REDUCED IN DIRECT PROPORTION TO THE PERCENT DEFICIENCY OF COATING UP TO 33-1/3%. IF THE DEFICIENCY OF COATING IS MORE THAN 33-1/3%, [I.E. THE AVERAGE DRY FILM THICKNESS IS LESS THAN 1.0 MIL(25 MICROMETERS)], THE WORK FOR THIS ITEM SHALL BE CONSIDERED UNSATISFACTORY AND SHALL BE RECOATED AT THE FULL EXPENSE OF THE CONTRACTOR, INCLUDING ALL LABOR, EQUIPMENT AND MATERIAL.

AT LEAST 24 HOURS BUT NO MORE THAN THREE (3) DAYS SHALL ELAPSE AFTER THE APPLICATION OF THE EPOXY INTERMEDIATE COAT AND BEFORE THE APPLICATION OF THE URETHANE FINISH COAT.
SURFACES SHALL IN ALL CASES BE CLEAN BEFORE THE FINISH COAT IS APPLIED.

FOR NEW SUPPORT SECTIONS, THIS FINISH COAT SHOULD BE DONE BY THE MANUFACTURER OF THE SUPPORT SECTIONS. VERIFICATION BY THE MANUFACTURER FOR THE FINISH COAT WILL BE REQUIRED.
CAREFUL HANDLING AND STORAGE WILL BE REQUIRED TO PREVENT ANY SCRAPING, MARRING OR OTHER SURFACE DAMAGE TO THE FINISH COAT.

PAYMENT SHALL INCLUDE ALL LABOR, EQUIPMENT, HANDLING COST AND MATERIALS NECESSARY TO ACCOMPLISH THIS ITEM OF WORK. THIS FINISH COAT SHALL BE MANUFACTURED BY THE SAME COMPANY SUPPLYING THE PRIME AND INTERMEDIATE COATS. A PROPERLY CALIBRATED, DRY FILM THICKNESS INSTRUMENT WILL BE USED TO CHECK THE COATING.

BASIS OF PAYMENT WILL BE AS FOLLOWS:

ITEM 630 COATING, URETHANE FINISH COAT, SUPPORT SECTION AT CONTRACT BID PRICE PER EACH MAJOR SUPPORT SECTION.

I:\Pdt\75467\signals\sheets\75467CN005.dgn 17-SEP-2012 10:54AM nvondere

OFFICE OF TRAFFIC ENGINEERING

DESIGNED | REVIEWED LAM
REVISION DATE 01/21/11 | CHECKED

PIS NUMBER 202310

PLAN INSERT SHEET

PROTECTIVE COATING OF OVERHEAD SIGN SUPPORT SECTIONS

ALL-117/309-
18.65/15.17

TRAFFIC SIGNALS

SHEET NO.	LOCATION LOCATION TO LOCATION	625 CONNECTION, FUSED PULL APART EACH	625 NO. 4 AWG 5000 VOLT DISTRIBUTION CABLE FT	625 NO. 10 AWG POLE AND BRACKET CABLE FT	625 CONDUIT, 1-1/2", 725.052, AS PER PLAN FT	625 CONDUIT, 3", 725.052, AS PER PLAN FT	625 CONDUIT, JACKED OR DRILLED, 725.04, 1-1/2" FT	625 CONDUIT, JACKED OR DRILLED, 725.04, 3" FT	625 LUMINAIRE, CONVENTIONAL, 250W HPS, 120 VOLT, AS PER PLAN EACH	625 TRENCH, 24" DEEP FT	625 PULL BOX, 725.08, 24" EACH	625 GROUND ROD EACH	632 VEHICULAR SIGNAL HEAD, (LED), BLACK, 3 SEC., 12" LENS, 1-WAY, POLY., WITH BACKPLATE, APP EACH	632 VEHICULAR SIGNAL HEAD, (LED), BLACK, 4 SEC., 12" LENS, 1-WAY, POLY., WITH BACKPLATE, APP EACH	632 VEHICULAR SIGNAL HEAD, (LED), BLACK, 5 SEC., 12" LENS, 1-WAY, POLY., WITH BACKPLATE, APP EACH	632 PEDESTRIAN SIGNAL HEAD (LED), (COUNTDOWN), TYPE D2, AS PER PLAN EACH	632 COVERING OF VEHICULAR SIGNAL HEAD EACH	632 COVERING OF PEDESTRIAN SIGNAL HEAD EACH	632 PEDESTRIAN PUSHBUTTON, AS PER PLAN EACH	632 SIGNAL CABLE, 2 CONDUCTOR, NO. 14 AWG FT	632 SIGNAL CABLE, 3 CONDUCTOR, NO. 14 AWG FT	632 SIGNAL CABLE, 5 CONDUCTOR, NO. 14 AWG FT	632 SIGNAL CABLE, 7 CONDUCTOR, NO. 14 AWG FT	632 SIGNAL SUPPORT FOUNDATION EACH	632 PEDESTAL FOUNDATION EACH	632 POWER CABLE, 3 CONDUCTOR, NO. 4 AWG FT	632 SERVICE CABLE, 3 CONDUCTOR, NO. 6 AWG FT
130	SR 117/WILLARD AVE. INTERSECTION																											
	SIGNAL POLE #1 to PULLBOX #1	2	54	116		6			1	6		1	4	1		1	5	1	1	22	75	141	157	1			
	PULLBOX #1 to PULLBOX #2		249					73			1									78	78	156	156				
	PEDESTAL #1 to PULLBOX #2				9					9		1				1		1	1	30		35			1		
	PEDESTAL #2 to PULLBOX #2				6					6		1				1		1	1	27		32			1		
	PULLBOX #2 to PULLBOX #3		405					125			1									390	130	520	260				
	POWER SOURCE to SIGNAL POLE #2																											21
	SIGNAL POLE #2 to PULLBOX #3		108			12				6		1	4	1	1		6				75	198	140	1		43		
	PEDESTAL #3 to PULLBOX #3				7					7		1				2		2	2				28		1		
	PEDESTAL #4 to PULLBOX #4				37					37		1				1		1	1	53		58			1		
	PULLBOX #4 to CONTROLLER						100				1									105		105					
	PULLBOX #3 to CONTROLLER					42				21	2	1								132	66	231	165			28	
133	MT. HOLYOKE AVE. INTERSECTION																											
	SIGNAL POLE #1 to PULLBOX #1	2	48	116		4			1	4		1	3			1	3	1	1	20		47	158	1			
	PULLBOX #1 to PULLBOX #2		207					59			1									64		64	128				
	SIGNAL POLE #2 to PULLBOX #2					12				12		1	2			1	2	1	1	55		55	56	1			
	PEDESTAL #1 to PULLBOX #2				11					11		1				1		1	1			30			1		
	PULLBOX #2 to PULLBOX #3		360					110			1									345		345	345				
	POWER SOURCE to SIGNAL POLE #3																											46
	SIGNAL POLE #3 to PULLBOX #3	2	105	126		16			1	8		1	3			2	3	2	2			46	164	1		39		
	PEDESTAL #2 to PULLBOX #4				9					9		1				1		1	1						1		
	SIGNAL POLE #4 to PULLBOX #4					25				25		1	2				2			23	88	48	113	1			
	PULLBOX #4 to PULLBOX #3							96			1									101	101	101	101				
	PULLBOX #3 to CONTROLLER					38				19	2	1								126	31	155	217			26	
136	LOST CREEK BLVD. INTERSECTION																											
	SIGNAL POLE #1 to PULLBOX #1	2	69	116		11			1	11		1	3			2	3	2	2			49	190	1			
	PULLBOX #1 to PULLBOX #2		330					100			1											105	315				
	SIGNAL POLE #2 to PULLBOX #2					8				8		1	2			2	2	2	2			46	114	1			
	PULLBOX #2 to PULLBOX #3		363					111			1											232	580				
	POWER SOURCE to SIGNAL POLE #3																											28
	SIGNAL POLE #3 to PULLBOX #3	2	126	126		30			1	15		1	3			2	3	2	2			53	224	1		46		
	SIGNAL POLE #4 to PULLBOX #4					9				9		1	2			2	2	2	2			43	114	1			
	PULLBOX #4 to PULLBOX #3							108			1											113	226				
	PULLBOX #3 to CONTROLLER					30				15	2	1										108	270			22	
139	DEVONSHIRE DR. INTERSECTION																											
	SIGNAL POLE #2 to PULLBOX #2					8				8		1	2			2	2	2	2			44	101	1			
	PULLBOX #2 to PULLBOX #1							80			1											85	170				
	SIGNAL POLE #1 to PULLBOX #1	2	66	126		10			1	10		1	3			2	3	2	2			48	201	1			
	PULLBOX #1 to PULLBOX #4		363					111			1											232	580				
	POWER SOURCE to SIGNAL POLE #4																											95
	SIGNAL POLE #4 to PULLBOX #4		228			22				11		1	2			2	2	2	2			49	101	1		42		
	SIGNAL POLE #3 to PULLBOX #3	2	60	116		8			1	8		1	3			2	3	2	2			46	185	1			
	PULLBOX #3 to PULLBOX #4		291					87			1											92	276				
	PULLBOX #4 to CONTROLLER					22				11	2	1										92	230			18	
142	GREELY CHAPEL RD. INTERSECTION					9				9																		
	TOTALS CARRIED TO GENERAL SUMMARY	14	3432	842	79	322	100	1060	7	295	20	24	38	2	1	28	41	28	28	1571	644	3804	6065	14	6	264	190

CALCULATED NJV
CHECKED MLF

TRAFFIC SIGNAL SUBSUMMARY

ALL-117/309-
18.65/15.17

I:\Pd\75467\signals\sheets\75467C0001.dgn 17-SEP-2012 10:54AM nvondere

TRAFFIC SIGNALS (CONT.)

SHEET NO.	LOCATION LOCATION TO LOCATION	632 POWER SERVICE, AS PER PLAN EACH	632 CONDUIT RISER, 1" DIAMETER EACH	632 SIGNAL SUPPORT, TYPE TC-12.30, DESIGN 10 POLE, WITH MAST ARMS TYPE TC-81.21 DESIGN 14 AND DESIGN 11, AS PER PLAN EACH	632 COMBINATION SIGNAL SUPPORT, TYPE TC-12.30, DESIGN 8 POLE, WITH MAST ARMS TYPE TC-81.21 DESIGN 13 AND DESIGN 4, AS PER PLAN EACH	632 SIGNAL SUPPORT, TYPE TC-81.21, DESIGN 1, APP EACH	632 SIGNAL SUPPORT, TYPE TC-81.21, DESIGN 2, APP EACH	632 SIGNAL SUPPORT, TYPE TC-81.21, DESIGN 11, APP EACH	632 SIGNAL SUPPORT, TYPE TC-81.21, DESIGN 13, APP EACH	632 SIGNAL SUPPORT, MISC.: MECHANICAL DAMPER EACH	632 COMBINATION SIGNAL SUPPORT, TYPE TC-81.21, DESIGN 11, APP EACH	632 COMBINATION SIGNAL SUPPORT, TYPE TC-81.21, DESIGN 12, APP EACH	632 COMBINATION SIGNAL SUPPORT, TYPE TC-81.21, DESIGN 13, APP EACH	632 PEDESTAL, 8', TRANSFORMER BASE, AS PER PLAN EACH	632 REMOVAL OF TRAFFIC SIGNAL INSTALLATION, AS PER PLAN EACH	632 SIGNALIZATION MISC.: LED, NO RIGHT TURN SIGN, SYMBOL TYPE EACH	633 CONTROLLER UNIT, TYPE 2070L, WITH CABINET, TYPE 332, AS PER PLAN EACH	633 CABINET RISER EACH	633 CABINET RISER, AS PER PLAN EACH	633 CABINET FOUNDATION EACH	633 CONTROLLER WORK PAD EACH	633 UNINTERRUPTIBLE POWER SUPPLY (UPS), BATTERY REPLACEMENT, AS PER PLAN EACH	633 CONTROLLER ITEM, MISC.: REUSE OF UNINTERRUPTIBLE POWER SUPPLY (UPS) EACH	633 CONTROLLER ITEM, MISC.: UNINTERRUPTIBLE POWER SUPPLY (UPS), STATUS INDIC. LAMPS EACH	816 VIDEO DETECTION SYSTEM EACH
130	SR 117/WILLARD AVE. INTERSECTION														1											1
	SIGNAL POLE #1 to PULLBOX #1				1					1						1										
	PULLBOX #1 to PULLBOX #2													1												
	PEDESTAL #1 to PULLBOX #2													1												
	PULLBOX #2 to PULLBOX #3																									
	POWER SOURCE to SIGNAL POLE #2		1																							
	SIGNAL POLE #2 to PULLBOX #3	1		1						1						1										
	PEDESTAL #3 to PULLBOX #3													1												
	PEDESTAL #4 to PULLBOX #4													1												
	PULLBOX #4 to PULLBOX #3																									
	PULLBOX #3 to CONTROLLER																	1	1	1	1	1	1	1	1	
133	MT. HOLYOKE AVE. INTERSECTION														1											1
	SIGNAL POLE #1 to PULLBOX #1									1			1													
	PULLBOX #1 to PULLBOX #2																									
	SIGNAL POLE #2 to PULLBOX #2					1																				
	PEDESTAL #1 to PULLBOX #2													1												
	PULLBOX #2 to PULLBOX #3																									
	POWER SOURCE to SIGNAL POLE #3		1																							
	SIGNAL POLE #3 to PULLBOX #3	1								1			1													
	PEDESTAL #2 to PULLBOX #4													1												
	SIGNAL POLE #4 to PULLBOX #4						1									1										
	PULLBOX #4 to PULLBOX #3																									
	PULLBOX #3 to CONTROLLER																	1	1	1	1	1	1	1	1	
136	LOST CREEK BLVD. INTERSECTION														1											1
	SIGNAL POLE #1 to PULLBOX #1										1															
	PULLBOX #1 to PULLBOX #2																									
	SIGNAL POLE #2 to PULLBOX #2								1	1																
	PULLBOX #2 to PULLBOX #3																									
	POWER SOURCE to SIGNAL POLE #3		1																							
	SIGNAL POLE #3 to PULLBOX #3	1								1			1													
	SIGNAL POLE #4 to PULLBOX #4							1																		
	PULLBOX #4 to PULLBOX #3																									
	PULLBOX #3 to CONTROLLER																	1	1	1	1	1	1	1	1	
139	DEVONSHIRE DR. INTERSECTION														1											1
	SIGNAL POLE #2 to PULLBOX #2							1																		
	PULLBOX #2 to PULLBOX #1																									
	SIGNAL POLE #1 to PULLBOX #1									1			1													
	PULLBOX #1 to PULLBOX #4																									
	POWER SOURCE to SIGNAL POLE #4		1																							
	SIGNAL POLE #4 to PULLBOX #4	1						1																		
	SIGNAL POLE #3 to PULLBOX #3											1														
	PULLBOX #3 to PULLBOX #4																									
	PULLBOX #4 to CONTROLLER																	1	1	1	1	1	1	1	1	
142	GREELY CHAPEL RD. INTERSECTION																									1
	TOTALS CARRIED TO GENERAL SUMMARY	4	4	1	1	1	1	3	1	7	1	1	4	6	4	3	4	4	4	4	4	4	4	4	5	

CALCULATED NJV
CHECKED MLF

TRAFFIC SIGNAL SUBSUMMARY

ALL-117/309-18.65/15.17

I:\Pd\75467\signals\sheets\75467C0002.dgn 17-SEP-2012 10:54AM nvondere

SIGNAL CABLE LENGTHS

FOR INFORMATION ONLY

WILLARD AVE./SR 117	CABLE	LENGTH
LOCATION TO LOCATION	NO.	FT
SIGNAL POLE #1		
SIGNAL HEAD #1 to CONTROLLER	*5/C*	*333*
SIGNAL HEAD #2 to SIGNAL HEAD #3	*5/C*	*22*
SIGNAL HEAD #3 to CONTROLLER	*7/C*	*309*
SIGNAL HEAD #4 to CONTROLLER	*7/C*	*308*
SIGNAL HEAD #5 to SIGNAL HEAD #4	*7/C*	*22*
LED SIGN to CONTROLLER	*3/C*	*316*
VDC #1 to CONTROLLER		*323*
VDC #2 to CONTROLLER		*310*
PED HEAD A to CONTROLLER	*5/C*	*268*
PUSHBUTTON A to CONTROLLER	*2/C*	*261*
PEDESTAL #1		
PED HEAD B to CONTROLLER	*5/C*	*198*
PUSHBUTTON B to CONTROLLER	*2/C*	*191*
PEDESTAL #2		
PED HEAD C to CONTROLLER	*5/C*	*195*
PUSHBUTTON C to CONTROLLER	*2/C*	*188*
SIGNAL POLE #2		
SIGNAL HEAD #6 to CONTROLLER	*5/C*	*142*
SIGNAL HEAD #7 to SIGNAL HEAD #8	*5/C*	*22*
SIGNAL HEAD #8 to SIGNAL HEAD #9	*5/C*	*22*
SIGNAL HEAD #9 to CONTROLLER	*7/C*	*106*
SIGNAL HEAD #11 to SIGNAL HEAD #10	*5/C*	*22*
SIGNAL HEAD #10 to CONTROLLER	*7/C*	*100*
LED SIGN to CONTROLLER	*3/C*	*108*
VDC #3 to CONTROLLER		*132*
VDC #4 to CONTROLLER		*102*
PEDESTAL #3		
PED HEADS D & E to CONTROLLER	*7/C*	*61*
PUSHBUTTONS D & E to CONTROLLER	*5/C*	*56*
PEDESTAL #4		
PED HEAD F to CONTROLLER	*5/C*	*199*
PUSHBUTTON F to CONTROLLER	*2/C*	*192*

MT. HOLYOKE AVE.	CABLE	LENGTH
LOCATION TO LOCATION	NO.	FT
SIGNAL POLE #1		
SIGNAL HEAD #1 to CONTROLLER	*7/C*	*302*
SIGNAL HEAD #2 to SIGNAL HEAD #3	*5/C*	*22*
SIGNAL HEAD #3 to CONTROLLER	*7/C*	*276*
VDC #1 to CONTROLLER		*292*
PED HEAD A to CONTROLLER	*5/C*	*235*
PUSHBUTTON A to CONTROLLER	*2/C*	*230*
SIGNAL POLE #2		
SIGNAL HEAD #5 to CONTROLLER	*7/C*	*202*
SIGNAL HEAD #4 to SIGNAL HEAD #5	*5/C*	*22*
VDC #2 to CONTROLLER		*210*
PED HEAD B to CONTROLLER	*5/C*	*179*
PUSHBUTTON B to CONTROLLER	*2/C*	*174*
PEDESTAL #1		
PED HEAD C to CONTROLLER	*5/C*	*178*
PUSHBUTTON C to CONTROLLER	*2/C*	*173*
SIGNAL POLE #3		
SIGNAL HEAD #6 to CONTROLLER	*7/C*	*125*
SIGNAL HEAD #8 to CONTROLLER	*7/C*	*101*
SIGNAL HEAD #7 to SIGNAL HEAD #8	*5/C*	*22*
VDC #3 to CONTROLLER		*117*
PED HEADS D & E to CONTROLLER	*7/C*	*60*
PUSHBUTTONS D & E to CONTROLLER	*5/C*	*55*
SIGNAL POLE #4		
SIGNAL HEAD #10 to CONTROLLER	*7/C*	*216*
SIGNAL HEAD #9 to SIGNAL HEAD #10	*5/C*	*18*
LED SIGN to CONTROLLER	*3/C*	*220*
VDC #4 to CONTROLLER		*212*
PEDESTAL #2		
PED HEAD F to CONTROLLER	*5/C*	*162*
PUSHBUTTON F to CONTROLLER	*2/C*	*157*

LOST CREEK BLVD.	CABLE	LENGTH
LOCATION TO LOCATION	NO.	FT
SIGNAL POLE #1		
SIGNAL HEAD #1 to CONTROLLER	*7/C*	*339*
SIGNAL HEAD #2 to SIGNAL HEAD #3	*5/C*	*22*
SIGNAL HEAD #3 to CONTROLLER	*7/C*	*315*
VDC #1 to CONTROLLER		*331*
PED HEADS A & B to CONTROLLER	*7/C*	*280*
PUSHBUTTONS A & B to CONTROLLER	*5/C*	*275*
SIGNAL POLE #2		
SIGNAL HEAD #5 to CONTROLLER	*7/C*	*228*
SIGNAL HEAD #4 to SIGNAL HEAD #5	*5/C*	*22*
VDC #2 to CONTROLLER		*232*
PED HEADS C & D to CONTROLLER	*7/C*	*172*
PUSHBUTTONS C & D to CONTROLLER	*5/C*	*167*
SIGNAL POLE #3		
SIGNAL HEAD #6 to CONTROLLER	*7/C*	*133*
SIGNAL HEAD #8 to CONTROLLER	*7/C*	*109*
SIGNAL HEAD #7 to SIGNAL HEAD #8	*5/C*	*22*
VDC #3 to CONTROLLER		*125*
PED HEADS E & F to CONTROLLER	*7/C*	*63*
PUSHBUTTONS E & F to CONTROLLER	*5/C*	*58*
SIGNAL POLE #4		
SIGNAL HEAD #10 to CONTROLLER	*7/C*	*224*
SIGNAL HEAD #9 to SIGNAL HEAD #10	*5/C*	*18*
VDC #4 to CONTROLLER		*228*
PED HEADS G & H to CONTROLLER	*7/C*	*170*
PUSHBUTTONS G & H to CONTROLLER	*5/C*	*165*

DEVONSHIRE DR.	CABLE	LENGTH
LOCATION TO LOCATION	NO.	FT
SIGNAL POLE #1		
SIGNAL HEAD #1 to CONTROLLER	*7/C*	*236*
SIGNAL HEAD #2 to SIGNAL HEAD #3	*5/C*	*22*
SIGNAL HEAD #3 to CONTROLLER	*7/C*	*212*
VDC #1 to CONTROLLER		*228*
PED HEADS A & B to CONTROLLER	*7/C*	*170*
PUSHBUTTONS A & B to CONTROLLER	*5/C*	*165*
SIGNAL POLE #2		
SIGNAL HEAD #5 to CONTROLLER	*7/C*	*296*
SIGNAL HEAD #4 to SIGNAL HEAD #5	*5/C*	*20*
VDC #2 to CONTROLLER		*300*
PED HEADS C & D to CONTROLLER	*7/C*	*253*
PUSHBUTTONS C & D to CONTROLLER	*5/C*	*248*
SIGNAL POLE #3		
SIGNAL HEAD #6 to CONTROLLER	*7/C*	*205*
SIGNAL HEAD #8 to CONTROLLER	*7/C*	*181*
SIGNAL HEAD #7 to SIGNAL HEAD #8	*5/C*	*22*
VDC #3 to CONTROLLER		*197*
PED HEADS E & F to CONTROLLER	*7/C*	*144*
PUSHBUTTONS E & F to CONTROLLER	*5/C*	*139*
SIGNAL POLE #4		
SIGNAL HEAD #10 to CONTROLLER	*7/C*	*92*
SIGNAL HEAD #9 to SIGNAL HEAD #10	*5/C*	*22*
VDC #4 to CONTROLLER		*96*
PED HEADS G & H to CONTROLLER	*7/C*	*55*
PUSHBUTTONS G & H to CONTROLLER	*5/C*	*50*

GREELY CHAPEL RD.

SIGNAL POLE #1		
VDC #1 to CONTROLLER		*310*
SIGNAL POLE #2		
VDC #2 to CONTROLLER		*125*
SIGNAL POLE #3		
VDC #3 to CONTROLLER		*215*
SIGNAL POLE #4		
VDC #4 to CONTROLLER		*210*

CALCULATED MLF
CHECKED NJV

SIGNAL CABLE LENGTHS

ALL-117/309-
18.65/15.17

I:\Pdv\75467\signals\sheets\75467C0003.dgn 17-SEP-2012 10:54AM nvondere

SIGNAL SUPPORT ORIENTATION DATA

POLE LOCATION				POLE SIZE						ORIENTATION ANGLES (DEG.)						
INTERSECTION	SHEET	STATION & OFFSET	POLE NO.	TC DESIGN NO.	DESIGN NO.	TOP OF FOUND EL.	POLE HEIGHT	ARM HEIGHT	ARM LENGTH	INDEX ANGLE	POWER SERVICE	HANDHOLE /DOOR	PED SIGNAL	PED PUSH -BUTTON	LUMINAIRE	CONDUIT ELL.
WILLARD AVE./ SR 117	130	909+32.22, 58.02'L†	PED 1	-	-	892.44	-	-	-	90	-	155	0	270	-	224
		908+60.00, 51.00'L†	1	12.30	8	892.45	33'	19.5'	50'	0	-	180	180	180	0	265
								19.5'	37.25'	270	-	-	-	-	-	-
		909+42.01, 45.75'L†	PED 2	-	-	892.74	-	-	-	0	-	220	0	90	-	152
		909+42.19, 66.94'R†	PED 3	-	-	892.70	-	-	-	0	-	145	0/270	0/270	-	208
		908+09.00, 61.36'R†	PED 4	-	-	891.87	-	-	-	90	-	115	0	270	-	38
		909+34.00, 68.77'R†	2	12.30	10	892.70	21'	19.5'	68'	0	155	180	-	-	0	130
								19.5'	39.75'	270	-	-	-	-	-	-
MT. HOLYOKE AVE.	133	919+38.00, 51.00'L†	1	81.21	13	892.52	33'	19.5'	54.5'	0	-	180	180	180	0	263
		919+90.36, 57.97'L†	2	81.21	1	891.80	20.5'	19'	21'	90	-	180	270	270	-	211
		920+08.65, 44.10'L†	PED 1	-	-	892.43	-	-	-	0	-	180	0	0	-	134
		920+13.00, 51.30'R†	3	81.21	13	892.17	33'	19.5'	50.25'	0	101	180	180/270	180/270	0	210
		919+36.30, 66.50'R†	4	81.21	2	892.70	20.5'	19'	32'	90	-	180	0	0	-	200
		919+13.00, 48.50'R†	PED 2	-	-	892.61	-	-	-	90	-	180	0	90	-	90
LOST CREEK BLVD.	136	933+75.00, 43.11'L†	1	81.21	11	899.33	33'	19.5'	44.5'	90	-	180	0/270	0/270	0	221
		934+76.59, 45.73'L†	2	81.21	13	898.35	20.5'	19'	54'	90	-	180	0/270	0/270	-	140
		934+68.50, 54.87'R†	3	81.21	13	898.42	33'	19.5'	56.25'	0	196	180	90/180	90/180	0	110
		933+72.79, 61.26'R†	4	81.21	11	898.95	20.5'	19'	42.75'	90	-	180	0/270	0/270	-	61
DEVONSHIRE DR.	139	945+73.10, 50.08'L†	1	81.21	13	901.32	33'	19.5'	51.5'	0	-	180	90/180	90/180	0	143
		946+49.55, 50.10'L†	2	81.21	11	901.00	20.5'	19'	39'	90	-	180	90/180	90/180	-	72.5
		946+51.00, 45.90'R†	3	81.21	12	901.32	33'	19.5'	47.5'	0	-	180	0/90	0/90	0	209
		945+67.00, 47.00'R†	4	81.21	11	901.67	20.5'	19'	40.25'	90	170.5	180	270/360	270/360	-	146.5

ORIENTATION PLAN

1. ALL ANGLES MEASURED CLOCKWISE FROM THE INDEX LINE.
2. INDEX LINE GOES THROUGH THE CENTER OF THE MAST ARM ON SIGNAL SUPPORTS OR FACE OF PEDESTRIAN SIGNAL HEAD ON PEDESTALS.
3. WHEN PEDESTRIAN SIGNALS ARE LOCATED ON NEW STEEL POLES, 1-½" BLIND HALF COUPLINGS SHALL BE PROVIDED IN THE POLE AS PER TC-85.10 AND THE ORIENTATION NOTED IN THE TABLE.
4. 1-½" B.H.C. LOCATED 27" ABOVE BASE OF POLE.
5. CABLE ENTRANCE FOR POWER SERVICE SHALL BE LOCATED 12" ABOVE CENTER LINE OF MAST ARM.

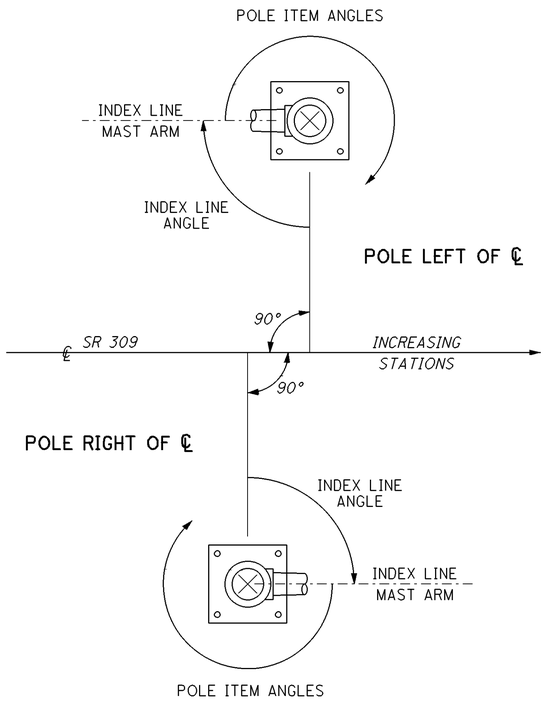

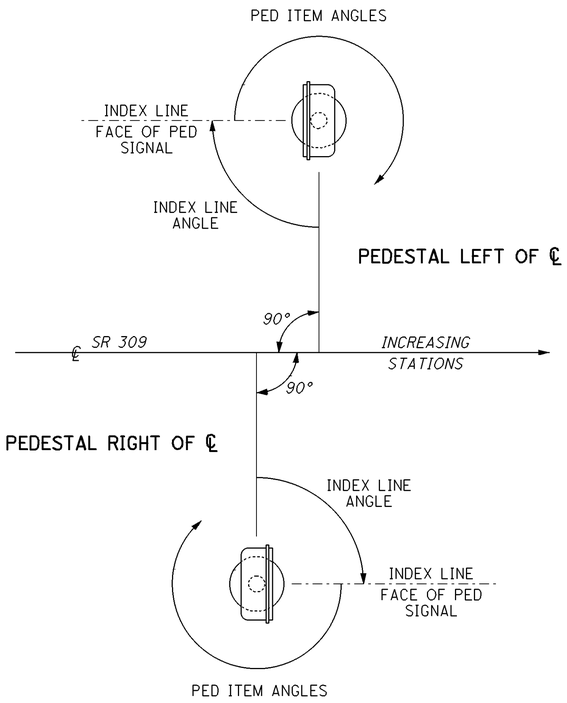

CALCULATED NJV
CHECKED MLF

SIGNAL SUPPORT ORIENTATION DATA

ALL-117/309-
18.65/15.17

I:\Pd\75467\signals\sheets\75467PD001.dgn 17-SEP-2012 10:54AM nvondere

ITEM 632 - REMOVAL OF TRAFFIC SIGNAL INSTALLATION, AS PER PLAN		
ITEM TO BE SALVAGED	SALVAGE FOR STORAGE	SALVAGE FOR RE-USE
CABINET & ACCESSORIES	✓	
CONTROLLER UNIT	✓	
SIGNAL SUPPORTS	✓	
UPS & CABINET		✓

NOTE:
Video detection zone at the stop line should be kept small so that motorcycles and bicycles will impact a larger percentage of the detection zone. (Typical at all Intersections)

PULLBOX #1
Sta. 908+66, 51.5'Lt

SIGNAL POLE #1
COMBINATION SIGNAL SUPPORT, TYPE TC-12.30, DESIGN 8 POLE, WITH MAST ARMS TYPE TC-81.21 DESIGN 13 (50.0') AND DESIGN 4 (37.25') with Light Pole Extension, 20' Bracket Arm, 250W HPS, PEDESTRIAN SIGNAL HEAD and PEDESTRIAN PUSHBUTTON
Sta. 908+60.00, 51.00'Lt
Sta. 10+37.94, 50.00'Lt (Willard)

PEDESTAL #1
PEDESTAL, 8' with PEDESTRIAN SIGNAL HEAD & PEDESTRIAN PUSHBUTTON
Sta. 909+32.22, 58.02'Lt
Sta. 10+44.62, 22.12'Rt (Willard Ave.)

9'x1-½" CONDUIT, 725.052 in TRENCH

PULLBOX #2
Sta. 909+39, 51.5'Lt

PEDESTAL #2
PEDESTAL, 8' with PEDESTRIAN SIGNAL HEAD & PEDESTRIAN PUSHBUTTON
Sta. 909+42.01, 45.75'Lt

6'x1-½" CON., 725.052 in TRENCH

6'x3" CONDUIT, 725.052 in TRENCH

73' CON., JACKED OR DRILLED, 725.04, 3"

125' CONDUIT, JACK OR DRILLED, 725.04, 3"

37'x1-½" CONDUIT, 725.052 in TRENCH

100' CONDUIT, JACK OR DRILLED 725.04, 1-½"

PEDESTAL #4
PEDESTAL, 8' with PEDESTRIAN SIGNAL HEAD & PEDESTRIAN PUSHBUTTON
Sta. 908+04.24, 61.36'Rt

PULLBOX #4
Sta. 989+94, 56'Lt (SR 117)

7'x1½" CONDUIT, 725.052 in TRENCH

PEDESTAL #3
PEDESTAL, 8' with (2) PEDESTRIAN SIGNAL HEADS & (2) PEDESTRIAN PUSHBUTTONS
Sta. 909+42.19, 66.94'Rt
Sta. 989+76.08, 59.36'Rt (SR 117)

PULLBOX #3
Sta. 909+39, 73'Rt

SIGNAL POLE #2
COMBINATION SIGNAL SUPPORT, TYPE TC-12.30, DESIGN 10 POLE, WITH MAST ARMS TYPE TC-81.21 DESIGN 14 (67.75') AND DESIGN 11 (39.75') and POWER SERVICE, AS PER PLAN
Sta. 909+34.00, 68.77'Rt
Sta. 989+77.57, 51.20'Lt (SR 117)

CONTROLLER WITH PULLBOX AND WORK PAD
Sta. 989+99, 47'Lt (SR 117)

Tele. Pole (By Others) Power Source

2-6'x3" CONDUIT, 725.052 in TRENCH - SERVICE CABLE

2-21'x3" CONDUIT, 725.052 in TRENCH

VDC #1
VDC #2
VDC #3
VDC #4

Constr. SR 117/309
CONSTR. WILLARD AVE.
CONSTR. SR 117
Ex R/W
Ex SH
R/W
(REMOVE)
ONLY

SIGNS

PUSHBUTTON SIGN DISPLAY
R10-3E-9 — S1 (4)
R10-3E-9 — S2 (2)

LED DISAPPEARING LEGEND NO TURN ON RED
R10-3E-9 — S3 (2)

PROPOSED LEGEND

- 3-SECTION VEHICULAR SIGNAL HEAD
- 3-SECTION VEHICULAR SIGNAL HEAD
- 4 OR 5-SECTION VEH. SIGNAL HEAD
- PEDESTRIAN SIGNAL HEAD
- CONTROLLER WITH PULLBOX & WORK PAD
- PED PUSH BUTTON
- STRAIN POLE
- PED SUPPORT POLE
- TRAFFIC PULLBOX
- VIDEO CAMERA
- LUMINAIRE
- X — APPROACH VIDEO DETECTION ZONE
- X — LEFT TURN VIDEO DETECTION ZONE
- COUNT VIDEO DETECTION ZONE

EXISTING LEGEND

- CONTROLLER/WORK PAD
- STRAIN POLE
- PED SUPPORT POLE
- TRAFFIC PULLBOX

SIGNAL HEADS

12" LED VEHICULAR SIGNAL DISPLAY
COUNTDOWN PEDESTRIAN SIGNAL DISPLAY

1 6 — 2 3 5 7 8 11 — 4 10 — 9 — A B C D E F

HORIZONTAL SCALE IN FEET: 0, 10, 20, 40
CALCULATED: NJV
CHECKED: MLF

TRAFFIC SIGNAL PLAN
WILLARD AVE./SR 117

ALL-117/309-18.65/15.17

130
173

I:\pd\75467\signals\sheets\75467CP001.dgn 17-SEP-2012 10:54AM nvondere

SIGNAL CONTROLLER TIMING CHART

START UP
START IN: *Yellow/Red Flash*
TIME FOR FLASH OR ALL RED: *5 Sec.*
FIRST PHASE(S): *2 & 6*

COLOR DISPLAYED: *Green*
DUAL ENTRY: *Yes ϕ2 & ϕ6* REST IN RED:

		OVERLAP	A	B	C	D
		PHASES				

INTERVAL OR FEATURE		CONTROLLER MOVEMENT NUMBER							
		1	2	3 (LAG)	4 (LAG)	5	6	7	8
INTERSECTION MOVEMENT		*WB Lt*	*EB*	*SB*	*NB*	*EB Lt*	*WB*		
MINIMUM GREEN (INITIAL)	(SEC.)	*7*	*20*	*10*	*15*	*7*	*20*		
ADDED INITIAL	(SEC./ACTUATION)								
MAXIMUM INITIAL	(SEC.)								
PASSAGE TIME (PRESET GAP)	(SEC.)	*3*	*4*	*4*	*4*	*3*	*4*		
TIME BEFORE REDUCTION	(SEC.)								
MINIMUM GAP	(SEC.)								
TIME TO REDUCE	(SEC.)								
MAXIMUM GREEN 1	(SEC.)	*20*	*55*	*30*	*35*	*20*	*55*		
MAXIMUM GREEN 2	(SEC.)	*20*	*55*	*30*	*35*	*20*	*55*		
YELLOW CHANGE	(SEC.)	*4*	*4*	*4*	*4*	*4*	*4*		
ALL RED CLEARANCE	(SEC.)	*3*	*2*	*3*	*3*	*3*	*2*		
WALK	(SEC.)		*8*		*8*		*4*		
PEDESTRIAN CLEARANCE	(SEC.)		*30*		*26*		*9*		
RECALL MAXIMUM	(ON/OFF)	*OFF*	*OFF*	*OFF*	*OFF*	*OFF*	*OFF*		
RECALL MINIMUM	(ON/OFF)	*OFF*	*ON*	*OFF*	*OFF*	*OFF*	*ON*		
RECALL PEDESTRIAN	(ON/OFF)	*OFF*	*OFF*	*OFF*	*OFF*	*OFF*	*OFF*		
MEMORY	(ON/OFF)	*OFF*	*OFF*	*OFF*	*OFF*	*OFF*	*OFF*		
CALL FOR NON-ACTUATED	NO. 1		*X*				*X*		
	NO. 2								

VIDEO DETECTION CHART

VIDEO DETECTION CAMERA NO.	VIDEO DETECTION ZONE NO.	MOVEMENT	PULSE OR PRESENCE	SIZE	DELAY (SEC.) CAMERA	DELAY (SEC.) SIGNAL CONTROLLER	DELAY INHIBIT (SEC.)	ASSOCIATED CONTROLLER PHASE	OVERRIDE PHASE	INPUT FILE *	TERMINAL NO.
1	1	*WB*	*PRES*	*6'x8'*	*0*	-		*ϕ1*		*I*	*I-D,E*
1	1A	*WB*	*PRES*	*6'x20'*	*0*	-		*ϕ1*		*I*	*I-J,K*
2	3	*NB*	*PRES*	*6'x8'*	*0*	-		*ϕ3*		*I*	*5-D,E*
2	3A	*NB*	*PRES*	*6'x20'*	*0*	-		*ϕ3*		*I*	*5-J,K*
2	8	*NB*	*PRES*	*6'x8'*	*0*	*10*		*ϕ8*		*J*	*6-D,E*
2	8A	*NB*	*PRES*	*6'x20'*	*0*	*10*		*ϕ8*		*J*	*6-J,K*
3	5	*EB*	*PRES*	*6'x8'*	*0*	-		*ϕ5*		*J*	*1-D,E*
3	5A	*EB*	*PRES*	*6'x20'*	*0*	-		*ϕ5*		*J*	*1-J,K*
4	4	*SB*	*PRES*	*6'x8'*	*0*	-		*ϕ4*		*I*	*6-D,E*
4	4A	*SB*	*PRES*	*6'x20'*	*0*	-		*ϕ4*		*I*	*6-J,K*
4	7	*SB*	*PRES*	*6'x8'*	*0*	-		*ϕ7*		*J*	*5-D,E*
4	7A	*SB*	*PRES*	*6'x20'*	*0*	-		*ϕ7*		*J*	*5-J,K*

NOTE:
For COORDINATION TIMING CHART, See Sheet 124.

WIRING DIAGRAM

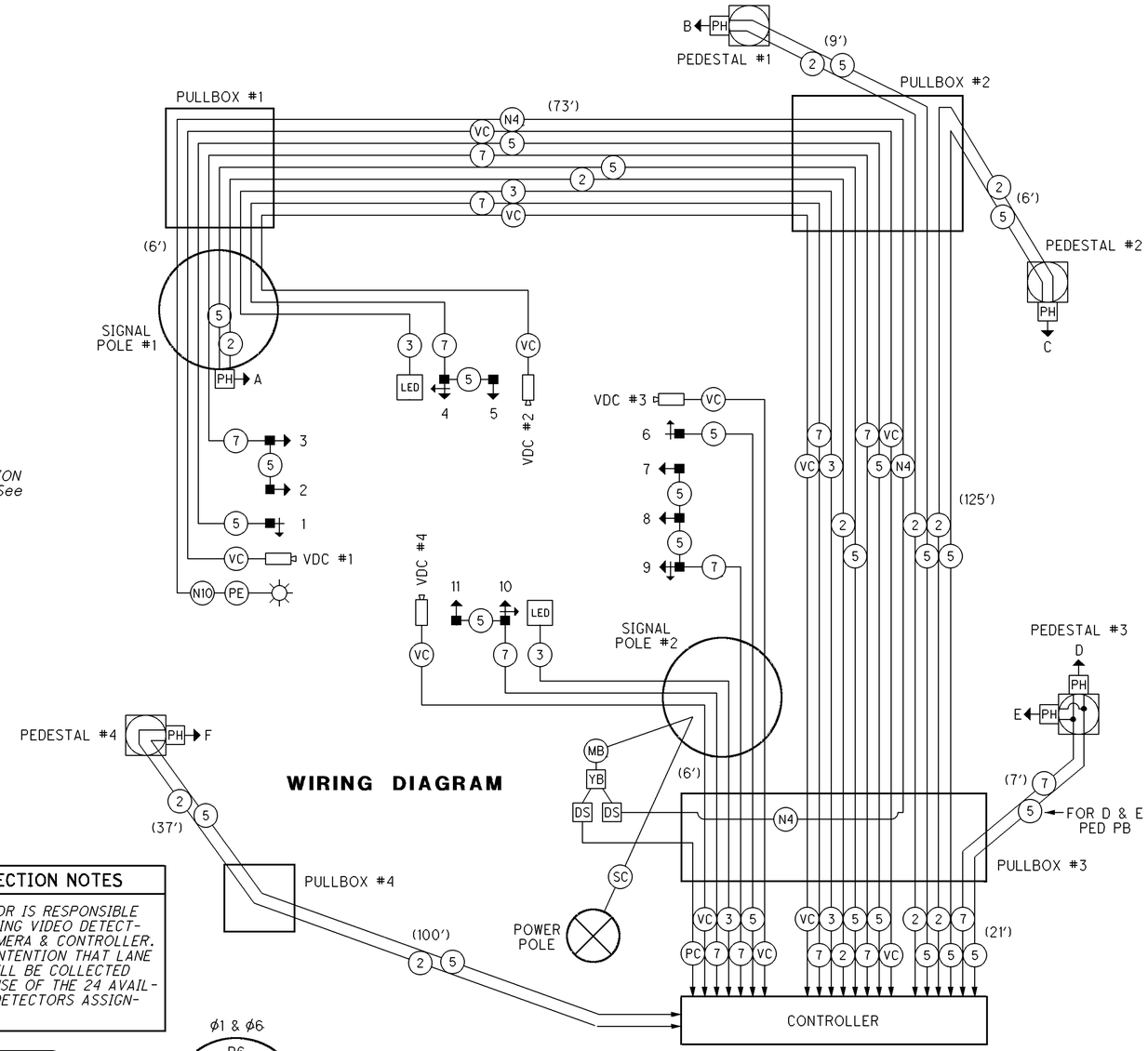

VIDEO DETECTION NOTES

1. *THE CONTRACTOR IS RESPONSIBLE FOR PROGRAMMING VIDEO DETECTORS IN THE CAMERA & CONTROLLER.*
2. *IT IS ODOT'S INTENTION THAT LANE COUNT DATA WILL BE COLLECTED THROUGH THE USE OF THE 24 AVAILABLE VOLUME DETECTORS ASSIGNMENTS.*

* *I = UPPER INPUT FILE*
J = LOWER IMPUT FILE

SIGNAL PHASING

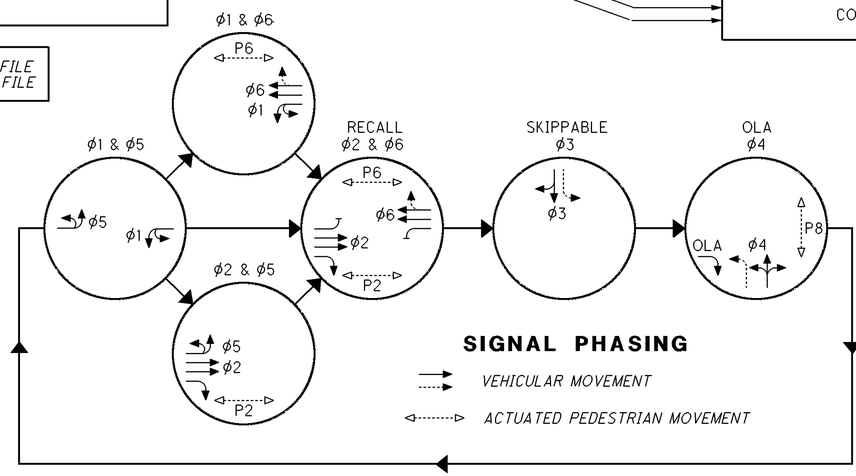

PHASING NOTES

1. *OMIT CALLS to ϕ1 during ϕ2 GREEN*
2. *OMIT CALLS to ϕ5 during ϕ6 GREEN*
3. *PHASES 1,3,4,5,7 & 8 are ACTUATED*
4. *PHASES 2 and 6 are COORDINATED*
5. *WILLARD AVE. INTERSECTION is the MASTER CONTROLLER LOCATION.*
6. *OVERLAP A (OLA) = OVERLAP of ϕ4*

SIGNAL LEGEND

(2) 2/C #14 AWG (PED PB)	(MB) METER BASE		VIDEO DETECTION CAMERA
(3) 3/C #14 AWG (LED)	[DS] DISCONNECT SWITCH	(VC)	VIDEO CABLE
(5) 5/C #14 AWG	(N4) NO. 4 AWG 600 VOLT DISTRIBUTION CABLE	[PH]	PEDESTRIAN SIGNAL HEAD WITH PED PUSHBUTTON
(7) 7/C #14 AWG	(N10) NO. 10 AWG POLE AND BRACKET CABLE	[YB]	WYE BOX
(SC) SERVICE CABLE, 3/C NO. 6 AWG			PEDESTAL
(PC) POWER CABLE, 2/C, NO. 6 AWG			LUMINAIRE, CONVENTIONAL, 250 WATT HPS, 120 VOLT, APP
(PE) PHOTOELECTRIC CELL		[LED]	LED DISAPPEARING LEGEND SIGN

CALCULATED RJL
CHECKED MLF

SIGNAL WIRING DETAIL
WILLARD AVE./ SR 117

ALL-117/309-
18.65/15.17

I:\Pid\75467\signals\sheets\75467CD001.dgn 17-SEP-2012 10:54:AM nvondere

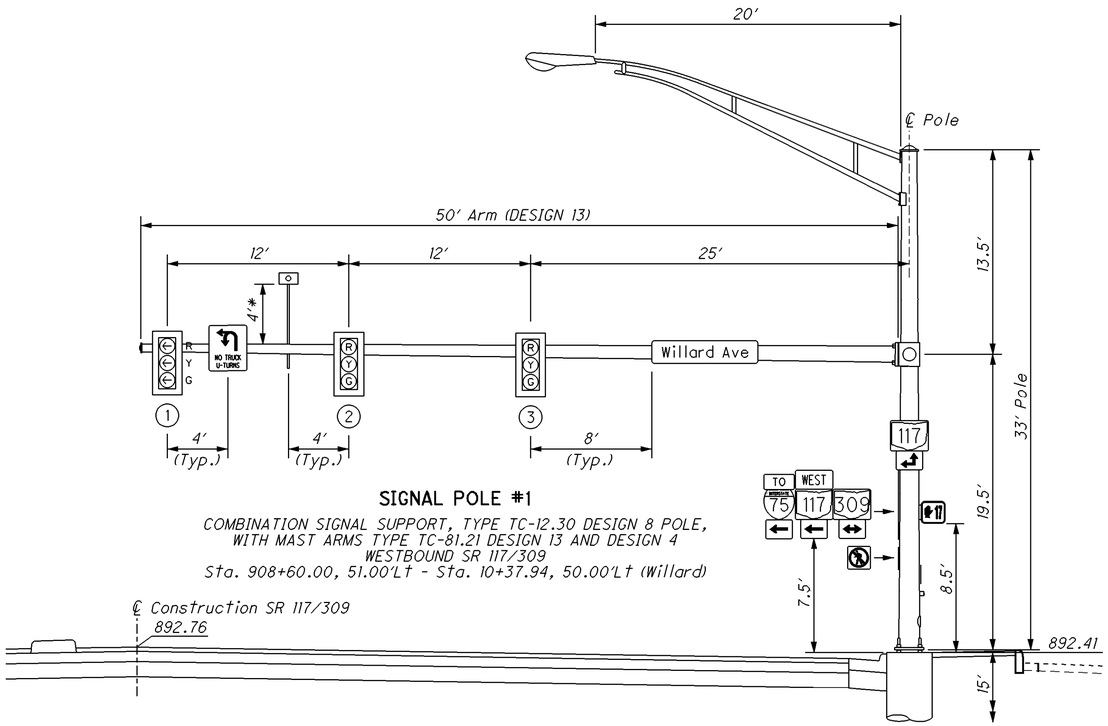

SIGNAL POLE #1

COMBINATION SIGNAL SUPPORT, TYPE TC-12.30 DESIGN 8 POLE, WITH MAST ARMS TYPE TC-81.21 DESIGN 13 AND DESIGN 4 WESTBOUND SR 117/309
Sta. 908+60.00, 51.00'Lt - Sta. 10+37.94, 50.00'Lt (Willard)

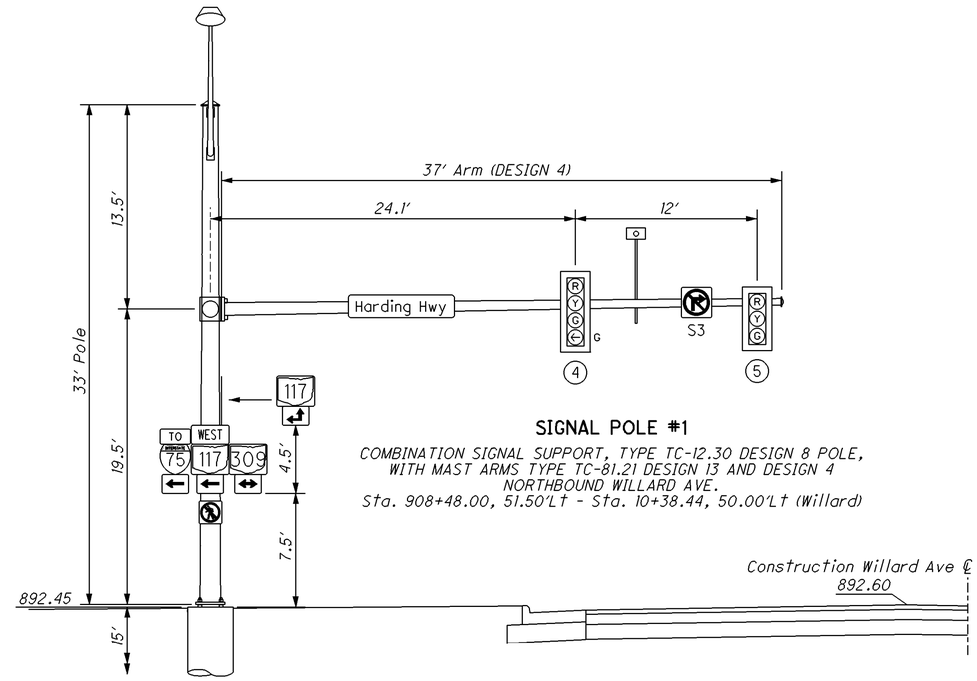

SIGNAL POLE #1

COMBINATION SIGNAL SUPPORT, TYPE TC-12.30 DESIGN 8 POLE, WITH MAST ARMS TYPE TC-81.21 DESIGN 13 AND DESIGN 4 NORTHBOUND WILLARD AVE.
Sta. 908+48.00, 51.50'Lt - Sta. 10+38.44, 50.00'Lt (Willard)

* *Typical for all SIGN SUPPORTS at all Intersections.*

NOTE: VEHICULAR SIGNAL HEADS shall be mounted vertically as shown on this Sheet.

NOTE: For SIGNING REFERENCE NOS., See Sheet 108.

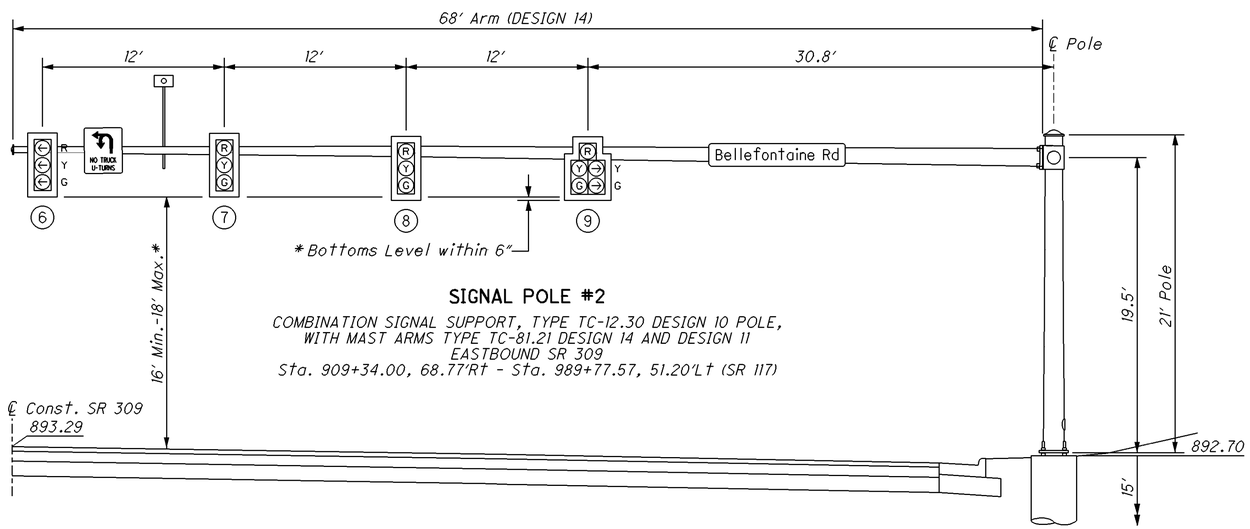

SIGNAL POLE #2

COMBINATION SIGNAL SUPPORT, TYPE TC-12.30 DESIGN 10 POLE, WITH MAST ARMS TYPE TC-81.21 DESIGN 14 AND DESIGN 11 EASTBOUND SR 309
Sta. 909+34.00, 68.77'Rt - Sta. 989+77.57, 51.20'Lt (SR 117)

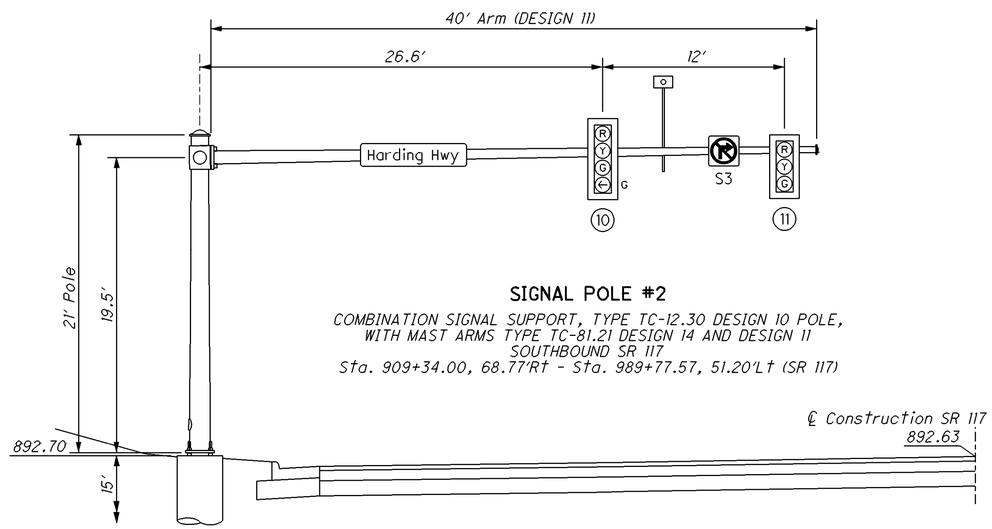

SIGNAL POLE #2

COMBINATION SIGNAL SUPPORT, TYPE TC-12.30 DESIGN 10 POLE, WITH MAST ARMS TYPE TC-81.21 DESIGN 14 AND DESIGN 11 SOUTHBOUND SR 117
Sta. 909+34.00, 68.77'Rt - Sta. 989+77.57, 51.20'Lt (SR 117)

HORIZONTAL SCALE IN FEET
0 2.5 5 10

CALCULATED NJV
CHECKED MLF

SIGNAL SUPPORT DETAILS WILLARD AVE./ SR 117

ALL-117/309-18.65/15.17

I:\pd\75467\signals\sheets\75467CE001.dgn 17-SEP-2012 10:55AM nvondere

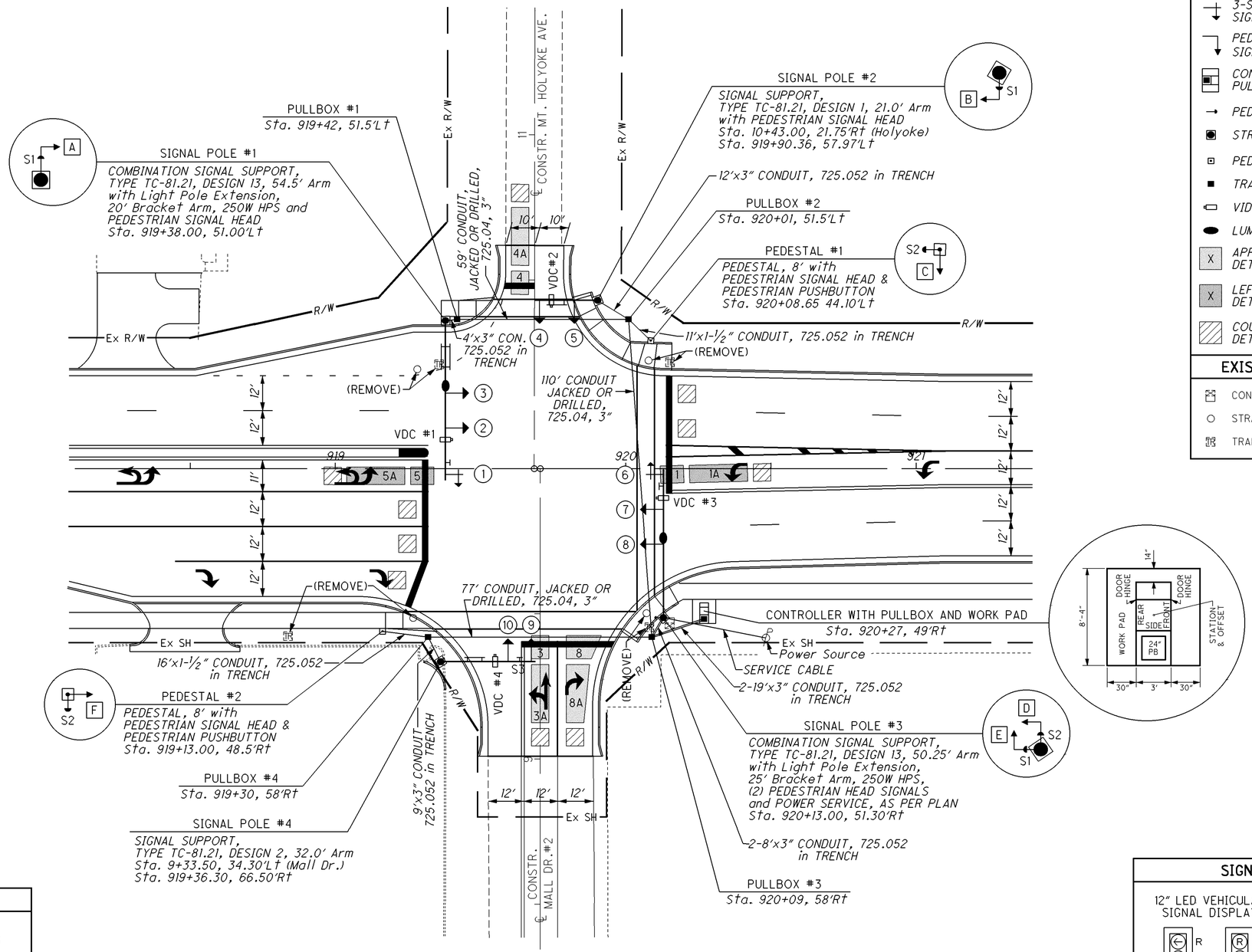

ITEM 632 - REMOVAL OF TRAFFIC SIGNAL INSTALLATION, AS PER PLAN

ITEM TO BE SALVAGED	SALVAGE FOR STORAGE	SALVAGE FOR RE-USE
CABINET & ACCESSORIES	✓	
CONTROLLER UNIT	✓	
SIGNAL SUPPORTS	✓	
UPS & CABINET		✓

PROPOSED LEGEND

- 3-SECTION VEHICULAR SIGNAL HEAD
- 3-SECTION VEHICULAR SIGNAL HEAD
- PEDESTRIAN SIGNAL HEAD
- CONTROLLER WITH PULLBOX & WORK PAD
- PED PUSH BUTTON
- STRAIN POLE
- PED SUPPORT POLE
- TRAFFIC PULLBOX
- VIDEO CAMERA
- LUMINAIRE
- X APPROACH VIDEO DETECTION ZONE
- X LEFT TURN VIDEO DETECTION ZONE
- COUNT VIDEO DETECTION ZONE

EXISTING LEGEND

- CONTROLLER/WORK PAD
- STRAIN POLE
- TRAFFIC PULLBOX

SIGNS

PUSHBUTTON SIGN DISPLAY

R10-3E-9



S1 (3)

R10-3E-9



S2 (3)

LED DISAPPEARING LEGEND NO TURN ON RED

R10-3E-9



S3 (1)

SIGNAL HEADS

12" LED VEHICULAR SIGNAL DISPLAY



1 2 3 4 5 6 7 8 9 10

COUNTDOWN PEDESTRIAN SIGNAL DISPLAY



A B C D E F

HORIZONTAL SCALE IN FEET
0 10 20 40

CALCULATED NJV CHECKED MLF

TRAFFIC SIGNAL PLAN
MT. HOLYOKE AVE.

ALL-117/309-18.65/15.17

133/173

I:\pd\75467\signals\sheets\75467CP002.dgn 17-SEP-2012 10:55AM nvondere

SIGNAL CONTROLLER TIMING CHART

START UP
START IN: *Yellow/Red Flash*
TIME FOR FLASH OR ALL RED: *5 Sec.*
FIRST PHASE(S): *2 & 6*

COLOR DISPLAYED: *Green* REST IN RED:
DUAL ENTRY: *Yes ϕ2 & ϕ6, ϕ4 & ϕ8*

INTERVAL OR FEATURE			OVERLAP PHASES	1	2	3	4	5	6	7	8
				CONTROLLER MOVEMENT NUMBER							
INTERSECTION MOVEMENT				*WB L†*	*EB*		*SB*	*EB L†*	*WB*		*NB*
MINIMUM GREEN (INITIAL)		(SEC.)		*7*	*20*		*10*	*7*	*20*		*10*
ADDED INITIAL		(SEC./ACTUATION)									
MAXIMUM INITIAL		(SEC.)									
PASSAGE TIME (PRESET GAP)		(SEC.)		*3*	*4*		*4*	*3*	*4*		*4*
TIME BEFORE REDUCTION		(SEC.)									
MINIMUM GAP		(SEC.)									
TIME TO REDUCE		(SEC.)									
MAXIMUM GREEN 1		(SEC.)		*20*	*65*		*35*	*20*	*65*		*35*
MAXIMUM GREEN 2		(SEC.)		*20*	*65*		*35*	*20*	*65*		*35*
YELLOW CHANGE		(SEC.)		*3*	*4*		*4*	*3*	*4*		*4*
ALL RED CLEARANCE		(SEC.)		*3*	*2*		*3*	*3*	*2*		*3*
WALK		(SEC.)			*6*				*4*		*6*
PEDESTRIAN CLEARANCE		(SEC.)			*17*				*6*		*21*
RECALL	MAXIMUM	(ON/OFF)		*OFF*	*OFF*		*OFF*	*OFF*	*OFF*		*OFF*
	MINIMUM	(ON/OFF)		*OFF*	*ON*		*OFF*	*OFF*	*ON*		*OFF*
	PEDESTRIAN	(ON/OFF)		*OFF*	*OFF*		*OFF*	*OFF*	*OFF*		*OFF*
MEMORY		(ON/OFF)		*OFF*	*OFF*		*OFF*	*OFF*	*OFF*		*OFF*
CALL FOR NON-ACTUATED		NO. 1			*X*				*X*		
		NO. 2									

SIGNAL LEGEND

- (2) 2/C #14 AWG (PED PB)
- (3) 3/C #14 AWG (LED)
- (5) 5/C #14 AWG
- (7) 7/C #14 AWG
- (SC) SERVICE CABLE, 3/C NO. 6 AWG
- (PC) POWER CABLE, 2/C, NO. 6 AWG
- (PE) PHOTOELECTRIC CELL
- (MB) METER BASE
- DS DISCONNECT SWITCH
- (N4) NO. 4 AWG 600 VOLT DISTRIBUTION CABLE
- (N10) NO. 10 AWG POLE AND BRACKET CABLE
- VEHICULAR SIGNAL HEAD
- VEHICULAR SIGNAL HEAD WITH TURN ARROW (5-SECTION)
- VEHICULAR SIGNAL HEAD WITH TURN ARROW (3-SECTION)
- VIDEO DETECTION CAMERA
- (VC) VIDEO CABLE
- PH PEDESTRIAN SIGNAL HEAD WITH PED PUSHBUTTON
- YB WYE BOX
- PEDESTAL
- LUMINAIRE, CONVENTIONAL, 250 WATT HPS, 120 VOLT, APP
- LED LED DISAPPEARING LEGEND SIGN

NOTE:
For COORDINATION TIMING CHART, See Sheet 124.

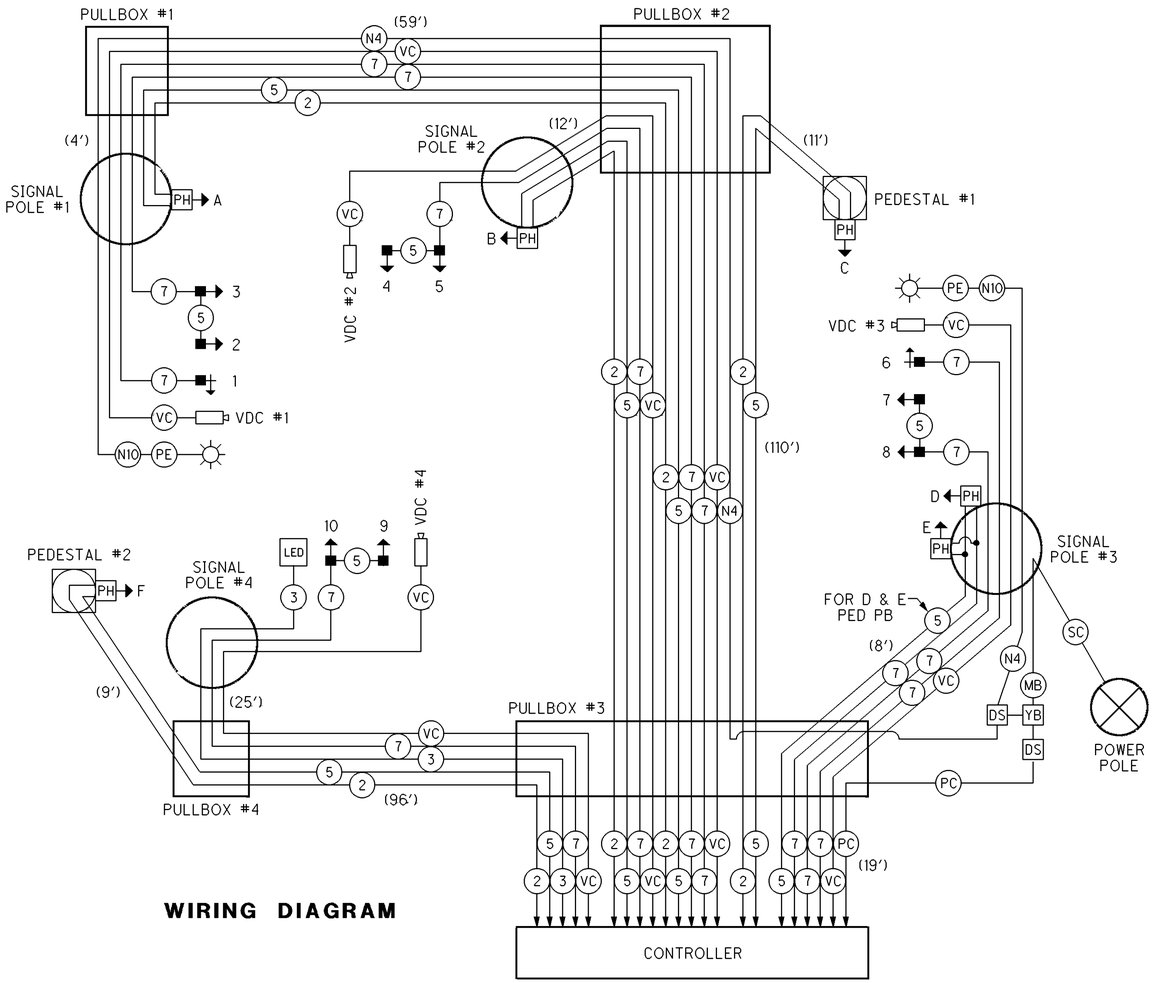

WIRING DIAGRAM

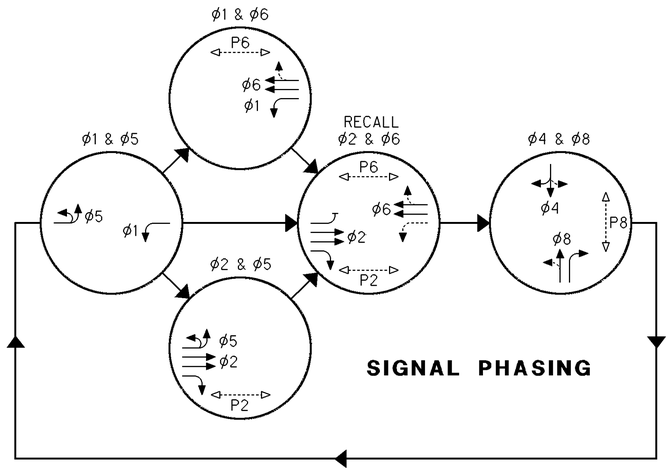

SIGNAL PHASING

- VEHICULAR MOVEMENT
- ACTUATED PEDESTRIAN MOVEMENT

VIDEO DETECTION NOTES

1. THE CONTRACTOR IS RESPONSIBLE FOR PROGRAMMING VIDEO DETECTORS IN THE CAMERA AND CONTROLLER.
2. IT IS ODOT'S INTENTION THAT LANE COUNT DATA WILL BE COLLECTED THROUGH THE USE OF THE 24 AVAILABLE VOLUME DETECTORS ASSIGNMENTS.

* I = UPPER INPUT FILE
J = LOWER IMPUT FILE

PHASING NOTES

1. OMIT CALLS to ϕ1 during ϕ2 GREEN
2. OMIT CALLS to ϕ5 during ϕ6 GREEN
3. PHASES 1,3,4,5,7 & 8 are ACTUATED
4. PHASES 2 and 6 are COORDINATED
5. WILLARD AVE. INTERSECTION is the MASTER CONTROLLER LOCATION.

VIDEO DETECTION CHART

VIDEO DETECTION CAMERA NO.	VIDEO DETECTION ZONE NO.	MOVEMENT	PULSE OR PRESENCE	SIZE	DELAY (SEC.) CAMERA	DELAY (SEC.) SIGNAL CONTROLLER	DELAY INHIBIT (SEC.)	ASSOCIATED CONTROLLER PHASE	OVERRIDE PHASE	INPUT FILE *	TERMINAL NO.
1	1	WB	PRES	6′x8′	0	-		ϕ1		I	1-D,E
1	1A	WB	PRES	6′x20′	0	-		ϕ1		I	1-J,K
2	3	NB	PRES	6′x8′	0	-		ϕ3		I	5-D,E
2	3A	NB	PRES	6′x20′	0	-		ϕ3		I	5-J,K
2	8	NB	PRES	6′x8′	0	10		ϕ8		J	6-D,E
2	8A	NB	PRES	6′x20′	0	10		ϕ8		J	6-J,K
3	5	EB	PRES	6′x8′	0	-		ϕ5		J	1-D,E
3	5A	EB	PRES	6′x20′	0	-		ϕ5		J	1-J,K
4	4	SB	PRES	6′x8′	0	-		ϕ4		I	6-D,E
4	4A	SB	PRES	6′x20′	0	-		ϕ4		I	6-J,K

CALCULATED RJL
CHECKED MLF

SIGNAL WIRING DETAIL
MT. HOLYOKE AVE.

ALL-117/309-18.65/15.17

I:\Pd\75467\signals\sheets\75467CD002.dgn 17-SEP-2012 10:55AM nvondere

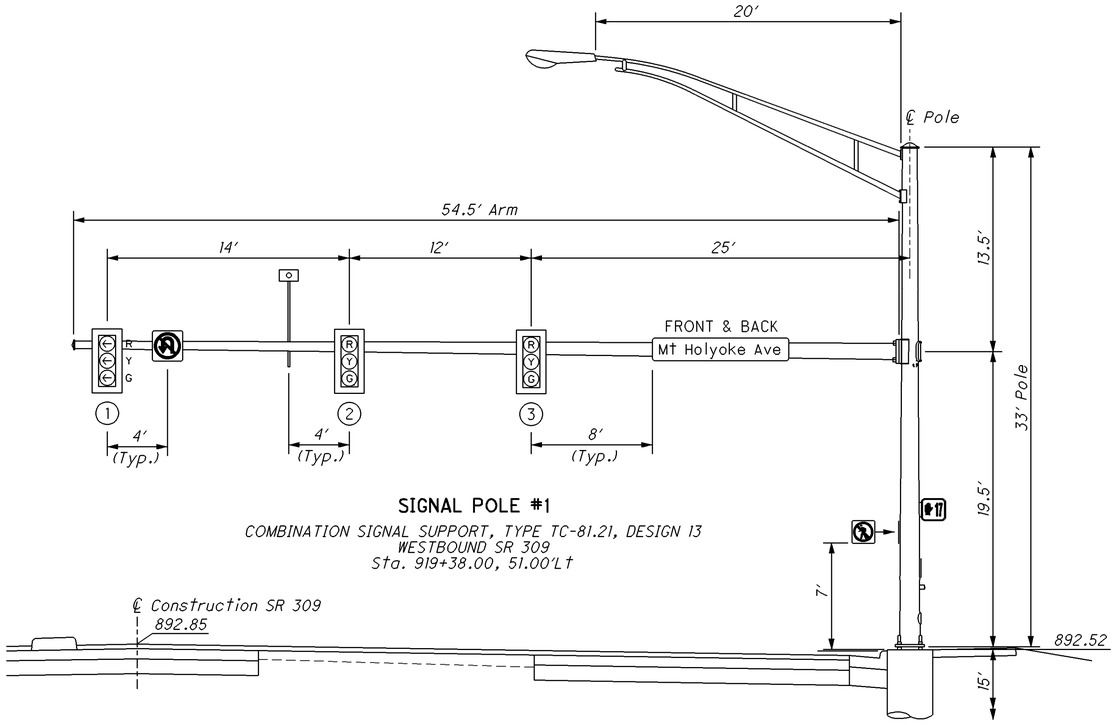

SIGNAL POLE #1

COMBINATION SIGNAL SUPPORT, TYPE TC-81.21, DESIGN 13
WESTBOUND SR 309
Sta. 919+38.00, 51.00'Lt

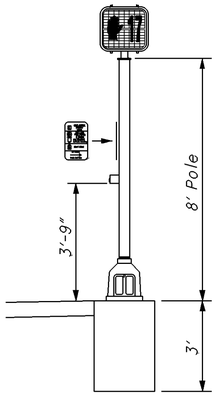

PEDESTAL, 8',
TRANSFORMER BASE,
AS PER PLAN

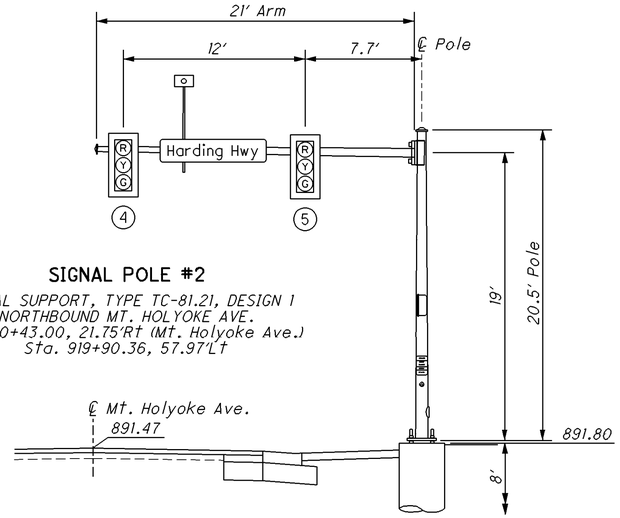

SIGNAL POLE #2

SIGNAL SUPPORT, TYPE TC-81.21, DESIGN 1
NORTHBOUND MT. HOLYOKE AVE.
Sta. 10+43.00, 21.75'Rt (Mt. Holyoke Ave.)
Sta. 919+90.36, 57.97'Lt

NOTE: VEHICULAR SIGNAL HEADS shall be mounted vertically as shown on this Sheet.

NOTE: For SIGNING REFERENCE NOS., See Sheet 110.

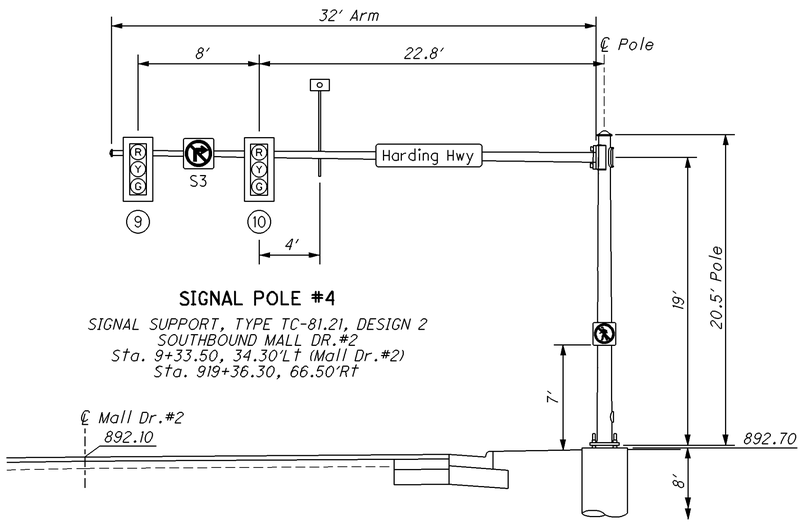

SIGNAL POLE #4

SIGNAL SUPPORT, TYPE TC-81.21, DESIGN 2
SOUTHBOUND MALL DR.#2
Sta. 9+33.50, 34.30'Lt (Mall Dr.#2)
Sta. 919+36.30, 66.50'Rt

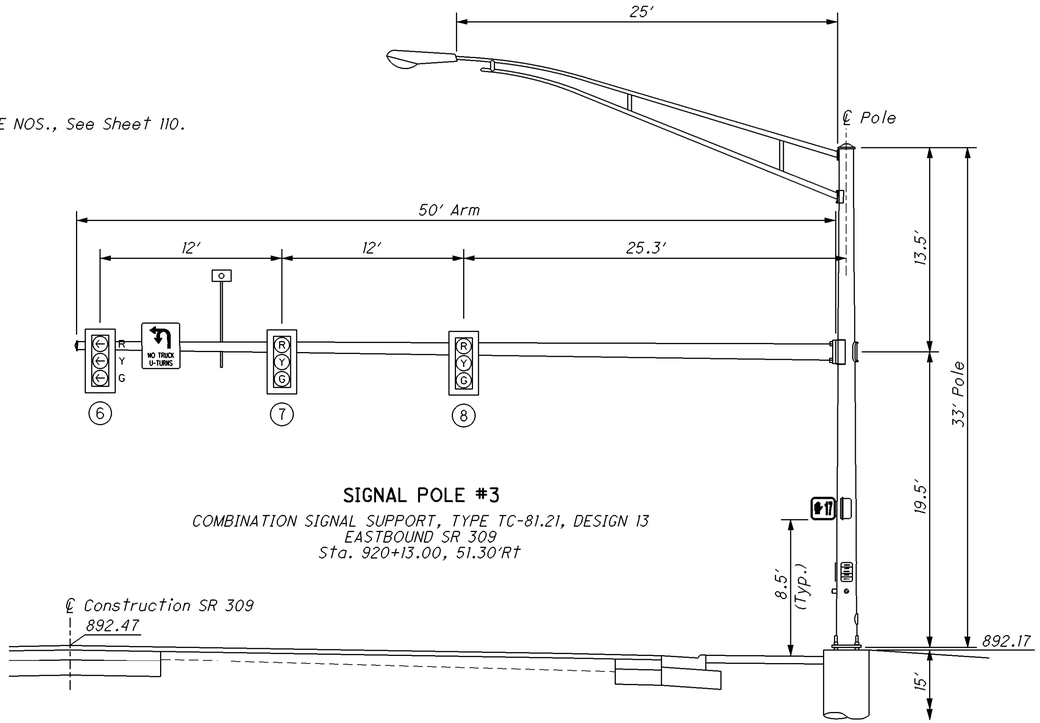

SIGNAL POLE #3

COMBINATION SIGNAL SUPPORT, TYPE TC-81.21, DESIGN 13
EASTBOUND SR 309
Sta. 920+13.00, 51.30'Rt

HORIZONTAL SCALE IN FEET
0 2.5 5 10

CALCULATED NJV
CHECKED MLF

SIGNAL SUPPORT DETAILS MT. HOLYOKE AVE.

ALL-117/309-
18.65/15.17

135
173

I:\pd\75467\signals\sheets\75467CE002.dgn 17-SEP-2012 10:55AM nvondere

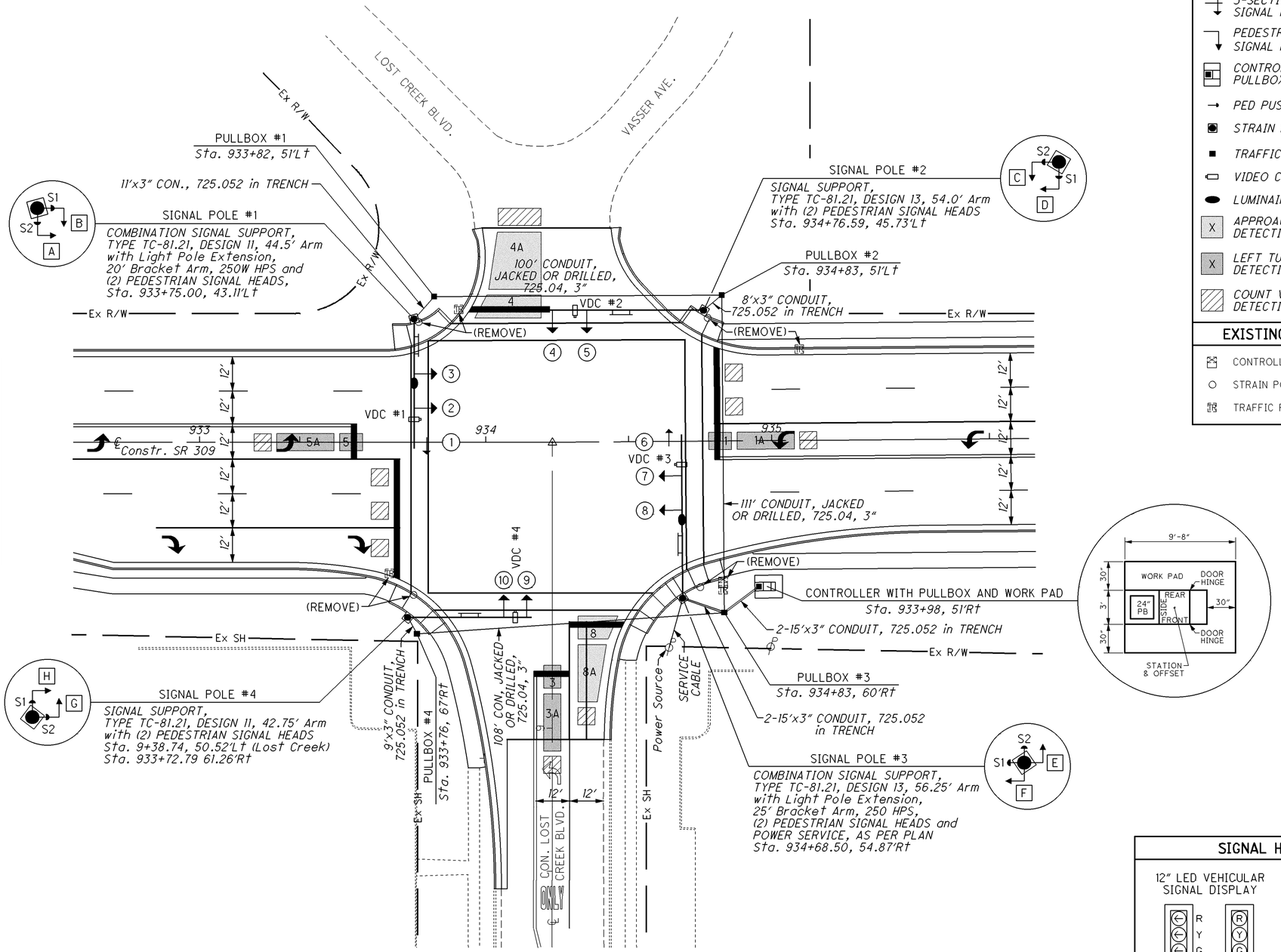

ITEM 632 - REMOVAL OF TRAFFIC SIGNAL INSTALLATION, AS PER PLAN

ITEM TO BE SALVAGED	SALVAGE FOR STORAGE	SALVAGE FOR RE-USE
CABINET & ACCESSORIES	✓	
CONTROLLER UNIT	✓	
SIGNAL SUPPORTS	✓	
UPS & CABINET		✓

SIGNS

PUSHBUTTON SIGN DISPLAY

R10-3E-9 — S1 (4)



R10-3E-9 — S2 (4)



PROPOSED LEGEND

- 3-SECTION VEHICULAR SIGNAL HEAD
- 3-SECTION VEHICULAR SIGNAL HEAD
- PEDESTRIAN SIGNAL HEAD
- CONTROLLER WITH PULLBOX & WORK PAD
- PED PUSH BUTTON
- STRAIN POLE
- TRAFFIC PULLBOX
- VIDEO CAMERA
- LUMINAIRE
- X — APPROACH VIDEO DETECTION ZONE
- X — LEFT TURN VIDEO DETECTION ZONE
- COUNT VIDEO DETECTION ZONE

EXISTING LEGEND

- CONTROLLER/WORK PAD
- STRAIN POLE
- TRAFFIC PULLBOX

SIGNAL HEADS

12" LED VEHICULAR SIGNAL DISPLAY

1 6 — 2 3 — 4 5 — 7 8 — 9 10

COUNTDOWN PEDESTRIAN SIGNAL DISPLAY



A B
C D
E F
G H

HORIZONTAL SCALE IN FEET
0 10 20 40

CALCULATED NJV
CHECKED MLF

TRAFFIC SIGNAL PLAN
LOST CREEK BLVD.

ALL-117/309-
18.65/15.17

136
173

I:\pd\75467\signals\sheets\75467CP003.dgn 17-SEP-2012 10:55AM nvondere

SIGNAL CONTROLLER TIMING CHART

START UP
START IN: *Yellow/Red Flash*
TIME FOR FLASH OR ALL RED: *5 Sec.*
FIRST PHASE(S): *2 & 6*

COLOR DISPLAYED: *Green* REST IN RED:
DUAL ENTRY: *Yes ϕ2 & ϕ6, ϕ4 & ϕ8*

INTERVAL OR FEATURE			OVERLAP PHASES							
			CONTROLLER MOVEMENT NUMBER							
			1	2	3	4	5	6	7	8
INTERSECTION MOVEMENT			*WB Lt*	*EB*		*SB*	*EB Lt*	*WB*		*NB*
MINIMUM GREEN (INITIAL)		(SEC.)	*7*	*20*		*10*	*7*	*20*		*10*
ADDED INITIAL		(SEC./ACTUATION)								
MAXIMUM INITIAL		(SEC.)								
PASSAGE TIME (PRESET GAP)		(SEC.)	*3*	*4*		*4*	*3*	*4*		*4*
TIME BEFORE REDUCTION		(SEC.)								
MINIMUM GAP		(SEC.)								
TIME TO REDUCE		(SEC.)								
MAXIMUM GREEN 1		(SEC.)	*20*	*55*		*45*	*20*	*55*		*45*
MAXIMUM GREEN 2		(SEC.)	*20*	*55*		*45*	*20*	*55*		*45*
YELLOW CHANGE		(SEC.)	*3.5*	*4*		*3.5*	*3.5*	*4*		*3.5*
ALL RED CLEARANCE		(SEC.)	*3*	*2.5*		*3*	*3*	*2.5*		*3*
WALK		(SEC.)		*6*		*6*		*6*		*6*
PEDESTRIAN CLEARANCE		(SEC.)		*19*		*23*		*22*		*21*
RECALL	MAXIMUM	(ON/OFF)	*OFF*	*OFF*		*OFF*	*OFF*	*OFF*		*OFF*
	MINIMUM	(ON/OFF)	*OFF*	*ON*		*OFF*	*OFF*	*ON*		*OFF*
	PEDESTRIAN	(ON/OFF)	*OFF*	*OFF*		*OFF*	*OFF*	*OFF*		*OFF*
MEMORY		(ON/OFF)	*OFF*	*OFF*		*OFF*	*OFF*	*OFF*		*OFF*
CALL FOR NON-ACTUATED		NO. 1		*X*				*X*		
		NO. 2								

NOTE:
For COORDINATION TIMING CHART, See Sheet 124.

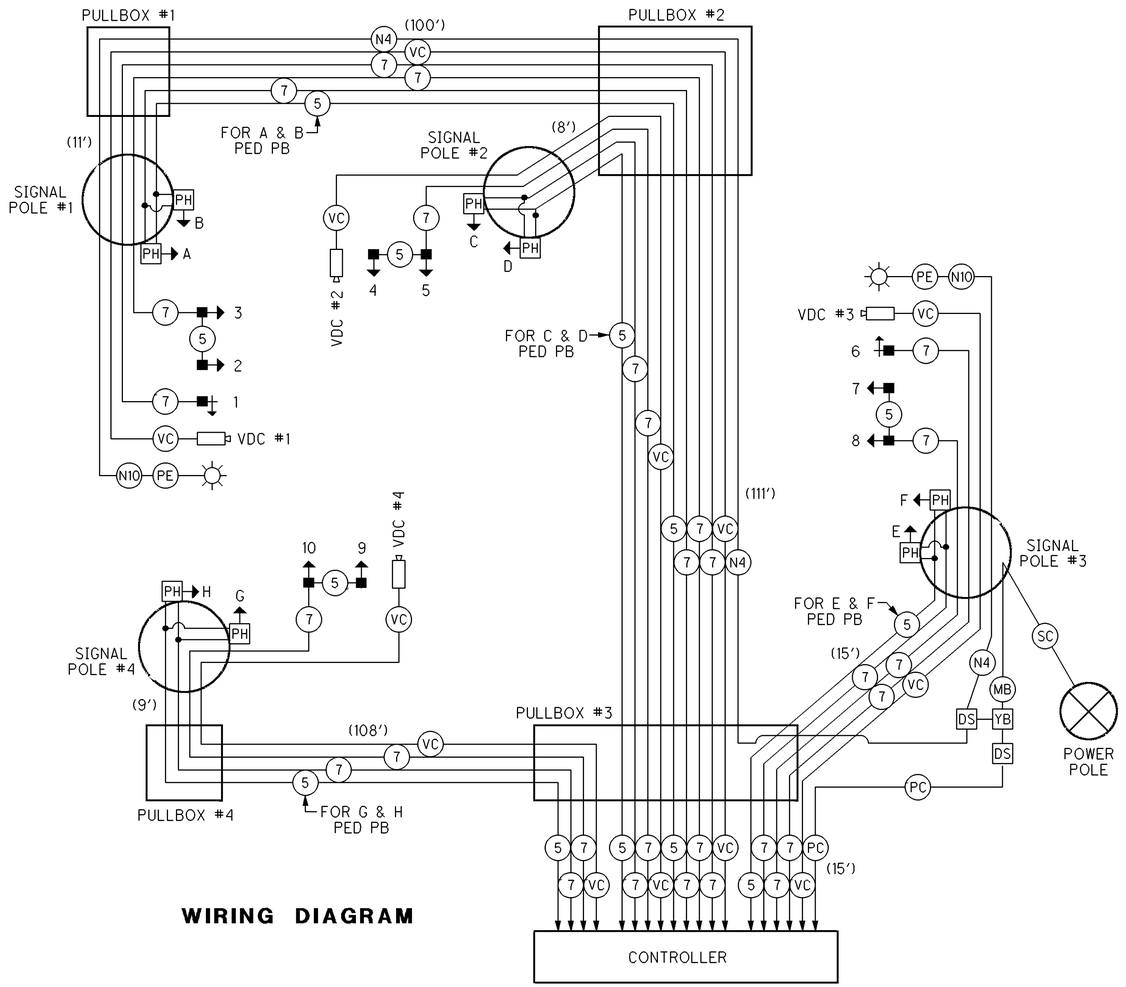

WIRING DIAGRAM

SIGNAL LEGEND

2 — 2/C #14 AWG (PED PB)	MB — METER BASE		VIDEO DETECTION CAMERA
3 — 3/C #14 AWG (LED)	DS — DISCONNECT SWITCH	VC —	VIDEO CABLE
5 — 5/C #14 AWG	N4 — NO. 4 AWG 600 VOLT DISTRIBUTION CABLE	PH —	PEDESTRIAN SIGNAL HEAD WITH PED PUSHBUTTON
7 — 7/C #14 AWG	N10 — NO. 10 AWG POLE AND BRACKET CABLE	YB —	WYE BOX
SC — SERVICE CABLE, 3/C NO. 6 AWG			PEDESTAL
PC — POWER CABLE, 2/C, NO. 6 AWG			LUMINAIRE, CONVENTIONAL, 250 WATT HPS, 120 VOLT, APP
PE — PHOTOELECTRIC CELL		LED —	LED DISAPPEARING LEGEND SIGN

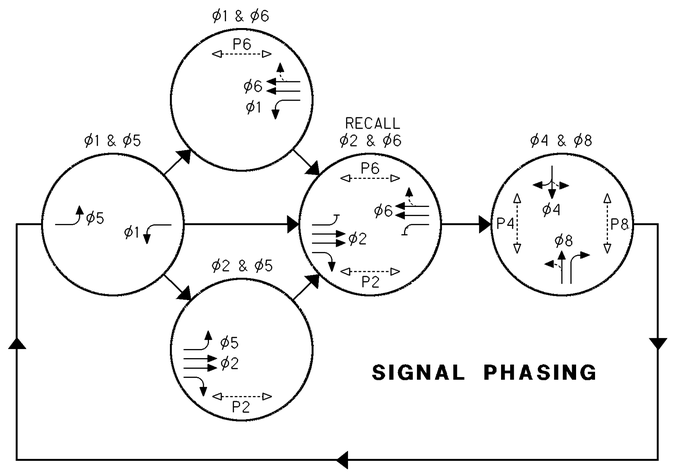

SIGNAL PHASING

VEHICULAR MOVEMENT

ACTUATED PEDESTRIAN MOVEMENT

VIDEO DETECTION NOTES

1. *THE CONTRACTOR IS RESPONSIBLE FOR PROGRAMMING VIDEO DETECTORS IN THE CAMERA AND CONTROLLER.*
2. *IT IS ODOT'S INTENTION THAT LANE COUNT DATA WILL BE COLLECTED THROUGH THE USE OF THE 24 AVAILABLE VOLUME DETECTORS ASSIGNMENTS.*

** I = UPPER INPUT FILE*
J = LOWER IMPUT FILE

PHASING NOTES

1. *OMIT CALLS to ϕ1 during ϕ2 GREEN*
2. *OMIT CALLS to ϕ5 during ϕ6 GREEN*
3. *PHASES 1,3,4,5,7 & 8 are ACTUATED*
4. *PHASES 2 and 6 are COORDINATED*
5. *WILLARD AVE. INTERSECTION is the MASTER CONTROLLER LOCATION.*

VIDEO DETECTION CHART

VIDEO DETECTION CAMERA NO.	VIDEO DETECTION ZONE NO.	MOVEMENT	PULSE OR PRESENCE	SIZE	DELAY (SEC.) CAMERA	DELAY (SEC.) SIGNAL CONTROLLER	DELAY INHIBIT (SEC.)	ASSOCIATED CONTROLLER PHASE	OVERRIDE PHASE	INPUT FILE *	TERMINAL NO.
1	1	*WB*	*PRES*	*6'x8'*	*0*	-		*ϕ1*		*I*	*1-D,E*
1	1A	*WB*	*PRES*	*6'x20'*	*0*	-		*ϕ1*		*I*	*1-J,K*
2	3	*NB*	*PRES*	*6'x8'*	*0*	-		*ϕ3*		*I*	*5-D,E*
2	3A	*NB*	*PRES*	*6'x20'*	*0*	-		*ϕ3*		*I*	*5-J,K*
2	8	*NB*	*PRES*	*6'x8'*	*0*	*10*		*ϕ8*		*J*	*6-D,E*
2	8A	*NB*	*PRES*	*6'x20'*	*0*	*10*		*ϕ8*		*J*	*6-J,K*
3	5	*EB*	*PRES*	*6'x8'*	*0*	-		*ϕ5*		*J*	*1-D,E*
3	5A	*EB*	*PRES*	*6'x20'*	*0*	-		*ϕ5*		*J*	*1-J,K*
4	4	*SB*	*PRES*	*6'x8'*	*0*	-		*ϕ4*		*I*	*6-D,E*
4	4A	*SB*	*PRES*	*6'x20'*	*0*	-		*ϕ4*		*I*	*6-J,K*

CALCULATED RJL
CHECKED MLF

SIGNAL WIRING DETAIL
LOST CREEK BLVD.

ALL-117/309-
18.65/15.17

137
173

I:\Pd\75467\signals\sheets\75467CD003.dgn 17-SEP-2012 10:55AM nvondere

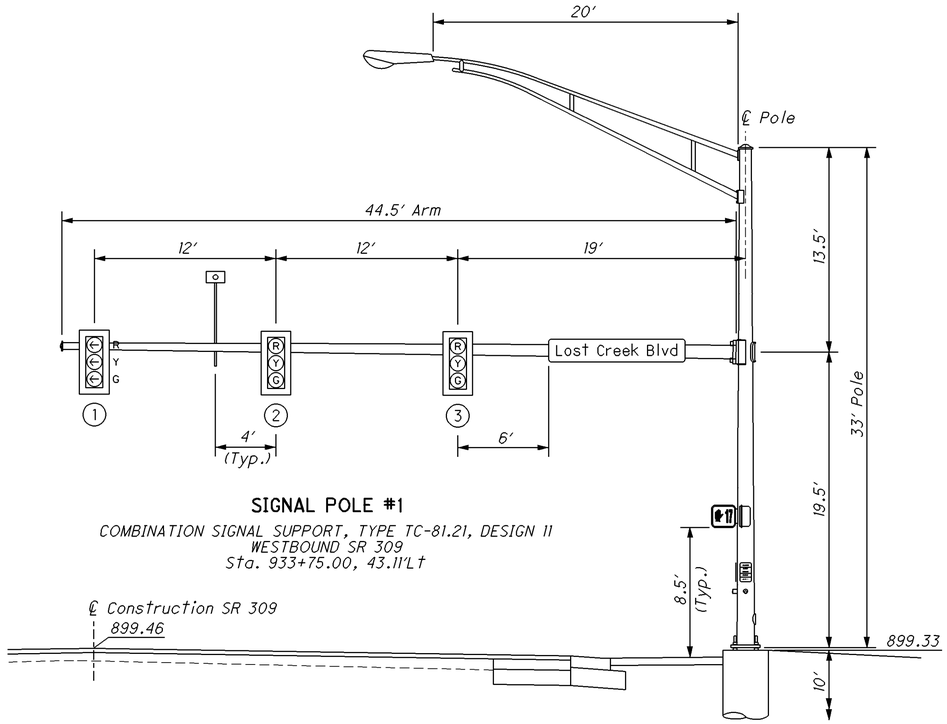

SIGNAL POLE #1

COMBINATION SIGNAL SUPPORT, TYPE TC-81.21, DESIGN 11
WESTBOUND SR 309
Sta. 933+75.00, 43.11'Lt

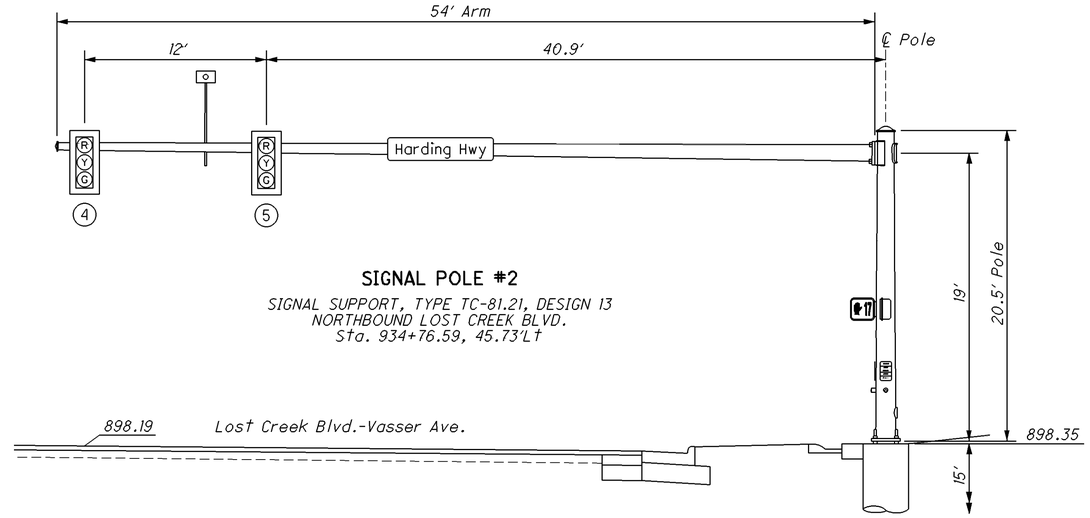

SIGNAL POLE #2

SIGNAL SUPPORT, TYPE TC-81.21, DESIGN 13
NORTHBOUND LOST CREEK BLVD.
Sta. 934+76.59, 45.73'Lt

NOTE: VEHICULAR SIGNAL HEADS shall be mounted vertically as shown on this Sheet.

NOTE: For SIGNING REFERENCE NOS., See Sheet 112.

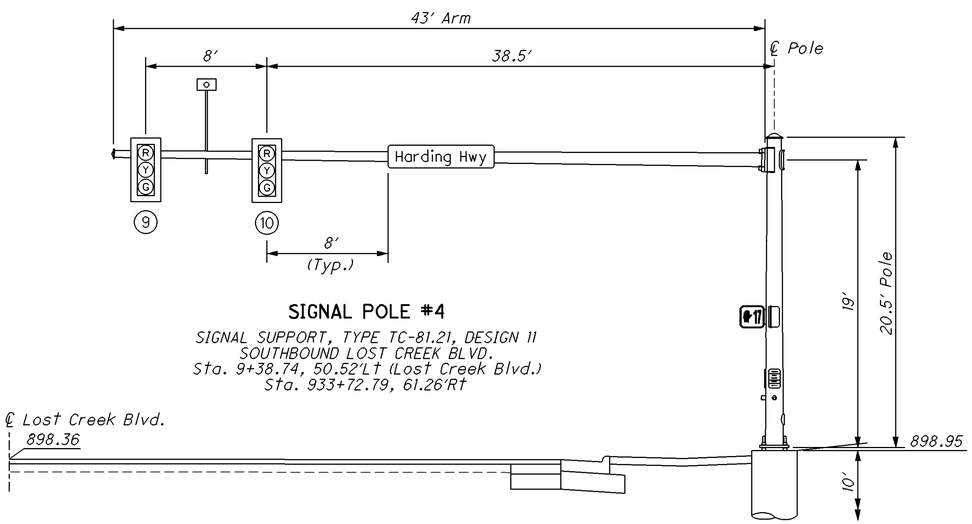

SIGNAL POLE #4

SIGNAL SUPPORT, TYPE TC-81.21, DESIGN 11
SOUTHBOUND LOST CREEK BLVD.
Sta. 9+38.74, 50.52'Lt (Lost Creek Blvd.)
Sta. 933+72.79, 61.26'Rt

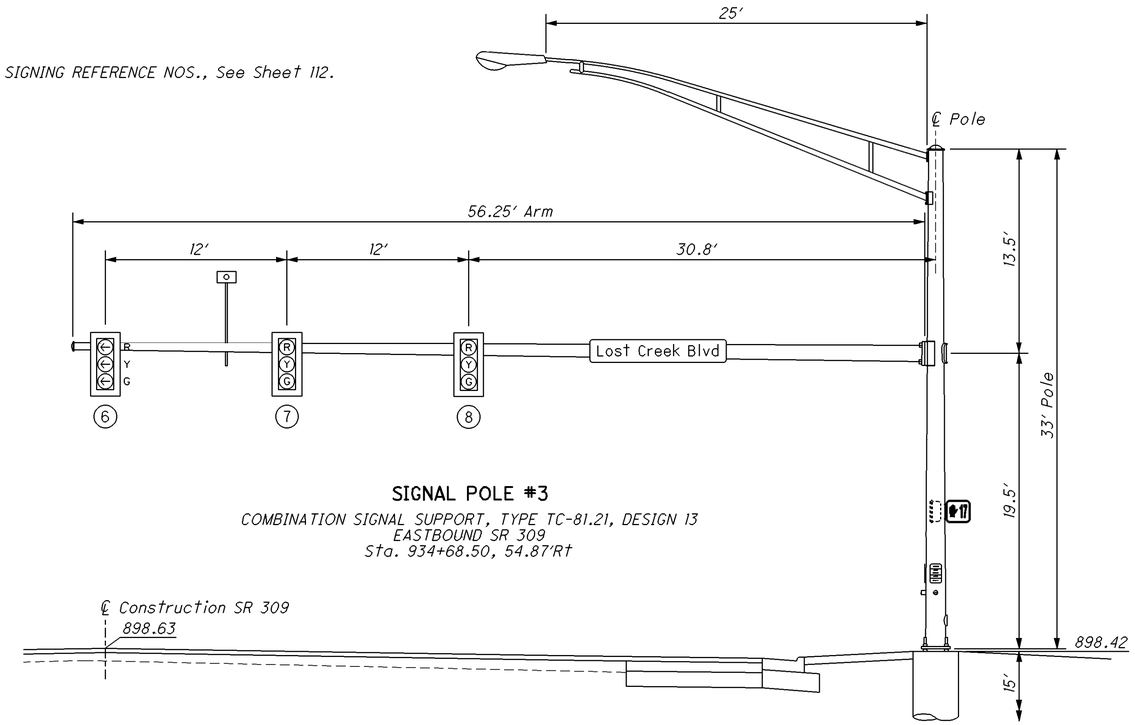

SIGNAL POLE #3

COMBINATION SIGNAL SUPPORT, TYPE TC-81.21, DESIGN 13
EASTBOUND SR 309
Sta. 934+68.50, 54.87'Rt

HORIZONTAL SCALE IN FEET
0 2.5 5 10

CALCULATED NJV
CHECKED MLF

SIGNAL SUPPORT DETAILS LOST CREEK BLVD.

ALL-117/309-18.65/15.17

I:\pd\75467\signals\sheets\75467CE003.dgn 17-SEP-2012 10:55AM nvondere

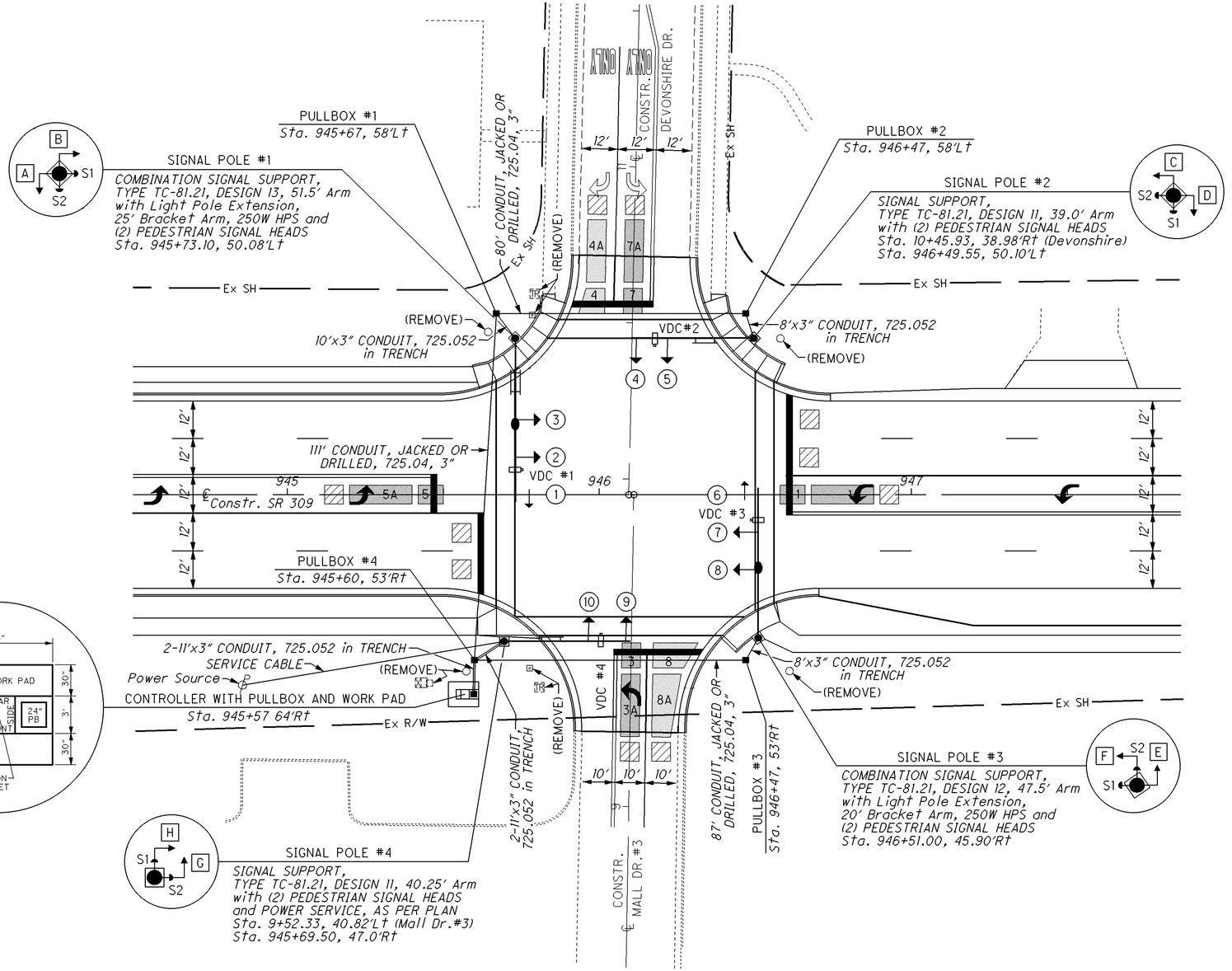

ITEM 632 - REMOVAL OF TRAFFIC SIGNAL INSTALLATION, AS PER PLAN		
ITEM TO BE SALVAGED	SALVAGE FOR STORAGE	SALVAGE FOR RE-USE
CABINET & ACCESSORIES	✓	
CONTROLLER UNIT	✓	
SIGNAL SUPPORTS	✓	
UPS & CABINET		✓

PROPOSED LEGEND

- 3-SECTION VEHICULAR SIGNAL HEAD
- 3-SECTION VEHICULAR SIGNAL HEAD
- PEDESTRIAN SIGNAL HEAD
- CONTROLLER WITH PULLBOX & WORK PAD
- PED PUSH BUTTON
- STRAIN POLE
- TRAFFIC PULLBOX
- VIDEO CAMERA
- LUMINAIRE
- APPROACH VIDEO DETECTION ZONE
- LEFT TURN VIDEO DETECTION ZONE
- COUNT VIDEO DETECTION ZONE

EXISTING LEGEND

- CONTROLLER/WORK PAD
- STRAIN POLE
- PED SUPPORT POLE
- TRAFFIC PULLBOX

SIGNS

PUSHBUTTON SIGN DISPLAY

R10-3E-9 — S1 (4)

R10-3E-9 — S2 (2)

SIGNAL HEADS

12" LED VEHICULAR SIGNAL DISPLAY

COUNTDOWN PEDESTRIAN SIGNAL DISPLAY

HORIZONTAL SCALE IN FEET 0 10 20 40

CALCULATED NJV CHECKED MLF

TRAFFIC SIGNAL PLAN DEVONSHIRE DR.

ALL-117/309-18.65/15.17

I:\pd\75467\signals\sheets\75467CP004.dgn 17-SEP-2012 10:55AM nvondere

SIGNAL CONTROLLER TIMING CHART

START UP
START IN: *Yellow/Red Flash*
TIME FOR FLASH OR ALL RED: *5 Sec.*
FIRST PHASE(S): *2 & 6*

COLOR DISPLAYED: *Green* REST IN RED:
DUAL ENTRY: *Yes ϕ2 & ϕ6, ϕ4 & ϕ8*

INTERVAL OR FEATURE			OVERLAP PHASES							
			CONTROLLER MOVEMENT NUMBER							
			1	2	3	4	5	6	7	8
INTERSECTION MOVEMENT			*WB Lt*	*EB*		*SB*	*EB Lt*	*WB*		*NB*
MINIMUM GREEN (INITIAL)		(SEC.)	*7*	*20*		*10*	*7*	*20*		*10*
ADDED INITIAL		(SEC./ACTUATION)								
MAXIMUM INITIAL		(SEC.)								
PASSAGE TIME (PRESET GAP)		(SEC.)	*3*	*4*		*4*	*3*	*4*		*4*
TIME BEFORE REDUCTION		(SEC.)								
MINIMUM GAP		(SEC.)								
TIME TO REDUCE		(SEC.)								
MAXIMUM GREEN 1		(SEC.)	*30*	*60*		*35*	*30*	*60*		*35*
MAXIMUM GREEN 2		(SEC.)	*30*	*60*		*35*	*30*	*60*		*35*
YELLOW CHANGE		(SEC.)	*3.5*	*4*		*4*	*3.5*	*4*		*4*
ALL RED CLEARANCE		(SEC.)	*3*	*2*		*3*	*3*	*2*		*3*
WALK		(SEC.)		*6*		*6*		*5*		*6*
PEDESTRIAN CLEARANCE		(SEC.)		*15*		*19*		*12*		*18*
RECALL	MAXIMUM	(ON/OFF)	*OFF*	*OFF*		*OFF*	*OFF*	*OFF*		*OFF*
	MINIMUM	(ON/OFF)	*OFF*	*ON*		*OFF*	*OFF*	*ON*		*OFF*
	PEDESTRIAN	(ON/OFF)	*OFF*	*OFF*		*OFF*	*OFF*	*OFF*		*OFF*
MEMORY		(ON/OFF)	*OFF*	*OFF*		*OFF*	*OFF*	*OFF*		*OFF*
CALL FOR NON-ACTUATED		NO. 1		*X*				*X*		
		NO. 2								

NOTE:
For COORDINATION TIMING CHART, See Sheet 124.

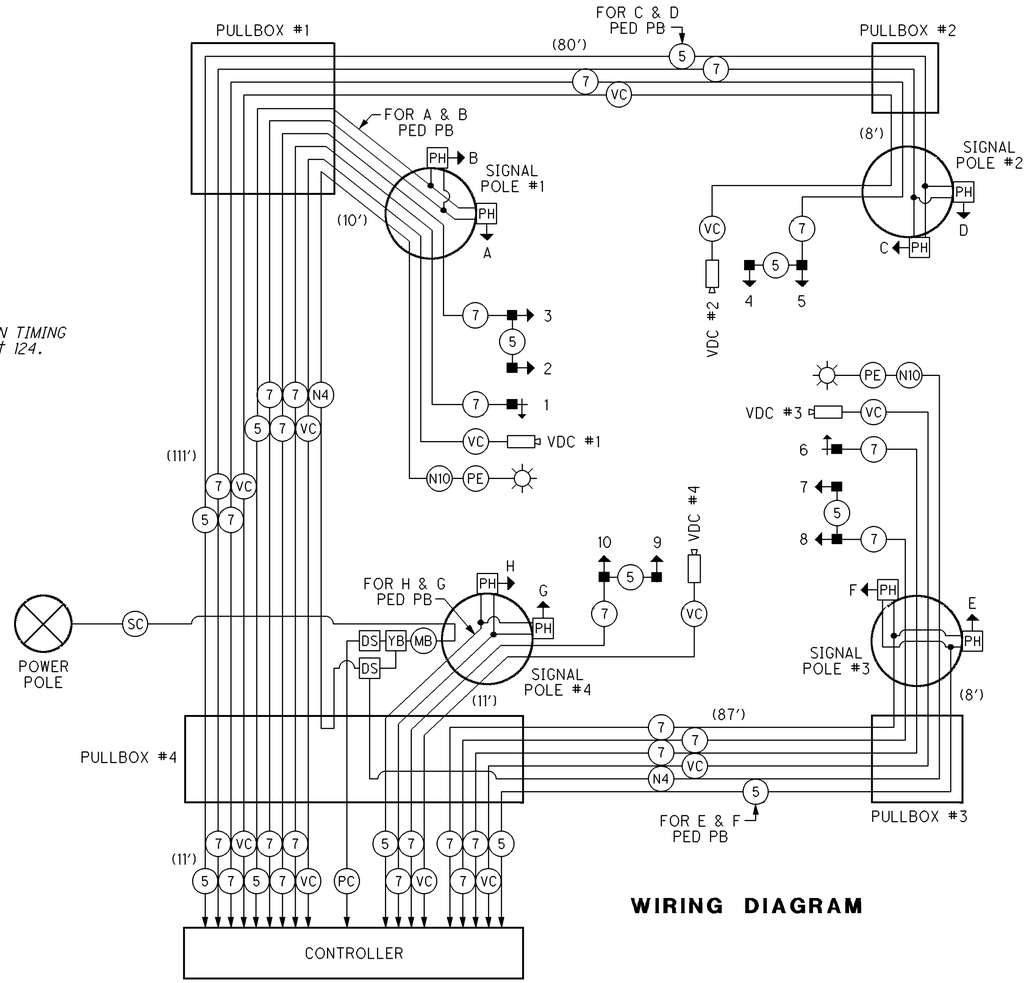

WIRING DIAGRAM

SIGNAL LEGEND

- (2) 2/C #14 AWG (PED PB)
- (3) 3/C #14 AWG (LED)
- (5) 5/C #14 AWG
- (7) 7/C #14 AWG
- (SC) SERVICE CABLE, 3/C NO. 6 AWG
- (PC) POWER CABLE, 2/C, NO. 6 AWG
- (PE) PHOTOELECTRIC CELL
- (MB) METER BASE
- [DS] DISCONNECT SWITCH
- (N4) NO. 4 AWG 600 VOLT DISTRIBUTION CABLE
- (N10) NO. 10 AWG POLE AND BRACKET CABLE
- VEHICULAR SIGNAL HEAD
- VEHICULAR SIGNAL HEAD WITH TURN ARROW (5-SECTION)
- VEHICULAR SIGNAL HEAD WITH TURN ARROW (3-SECTION)
- VIDEO DETECTION CAMERA
- (VC) VIDEO CABLE
- [PH] PEDESTRIAN SIGNAL HEAD WITH PED PUSHBUTTON
- [YB] WYE BOX
- PEDESTAL
- LUMINAIRE, CONVENTIONAL, 250 WATT HPS, 120 VOLT, APP
- [LED] LED DISAPPEARING LEGEND SIGN

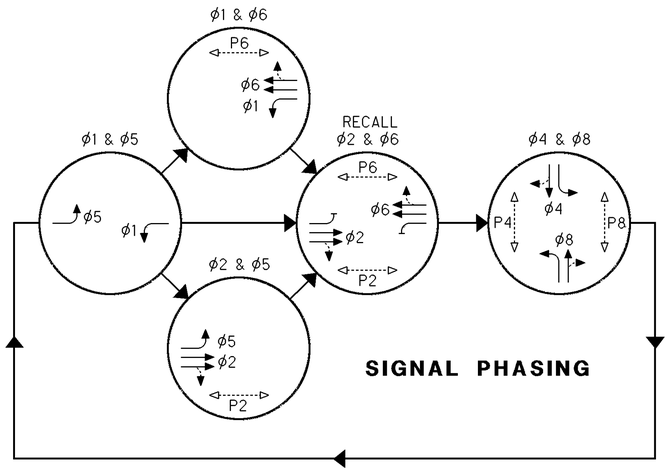

SIGNAL PHASING

VIDEO DETECTION NOTES

1. THE CONTRACTOR IS RESPONSIBLE FOR PROGRAMMING VIDEO DETECTORS IN THE CAMERA AND CONTROLLER.
2. IT IS ODOT'S INTENTION THAT LANE COUNT DATA WILL BE COLLECTED THROUGH THE USE OF THE 24 AVAILABLE VOLUME DETECTORS ASSIGNMENTS.

VEHICULAR MOVEMENT

ACTUATED PEDESTRIAN MOVEMENT

* I = UPPER INPUT FILE
J = LOWER IMPUT FILE

PHASING NOTES

1. OMIT CALLS to ϕ1 during ϕ2 GREEN
2. OMIT CALLS to ϕ5 during ϕ6 GREEN
3. PHASES 1,3,4,5,7 & 8 are ACTUATED
4. PHASES 2 and 6 are COORDINATED
5. WILLARD AVE. INTERSECTION is the MASTER CONTROLLER LOCATION.

VIDEO DETECTION CHART

VIDEO DETECTION CAMERA NO.	VIDEO DETECTION ZONE NO.	MOVEMENT	PULSE OR PRESENCE	SIZE	DELAY (SEC.) CAMERA	DELAY (SEC.) SIGNAL CONTROLLER	DELAY INHIBIT (SEC.)	ASSOCIATED CONTROLLER PHASE	OVERRIDE PHASE	INPUT FILE *	TERMINAL NO.
1	1	*WB*	*PRES*	*6'x8'*	*0*	-		*ϕ1*		*I*	*1-D,E*
1	1A	*WB*	*PRES*	*6'x20'*	*0*	-		*ϕ1*		*I*	*1-J,K*
2	3	*NB*	*PRES*	*6'x8'*	*0*	-		*ϕ3*		*I*	*5-D,E*
2	3A	*NB*	*PRES*	*6'x20'*	*0*	-		*ϕ3*		*I*	*5-J,K*
2	8	*NB*	*PRES*	*6'x8'*	*0*	*10*		*ϕ8*		*J*	*6-D,E*
2	8A	*NB*	*PRES*	*6'x20'*	*0*	*10*		*ϕ8*		*J*	*6-J,K*
3	5	*EB*	*PRES*	*6'x8'*	*0*	-		*ϕ5*		*J*	*1-D,E*
3	5A	*EB*	*PRES*	*6'x20'*	*0*	-		*ϕ5*		*J*	*1-J,K*
4	4	*SB*	*PRES*	*6'x8'*	*0*	-		*ϕ4*		*I*	*6-D,E*
4	4A	*SB*	*PRES*	*6'x20'*	*0*	-		*ϕ4*		*I*	*6-J,K*
4	7	*SB*	*PRES*	*6'x8'*	*0*	-		*ϕ7*		*J*	*5-D,E*
4	7A	*SB*	*PRES*	*6'x20'*	*0*	-		*ϕ7*		*J*	*5-J,K*

CALCULATED RJL
CHECKED MLF

SIGNAL WIRING DETAIL
DEVONSHIRE DR.

ALL-117/309-
18.65/15.17

I:\Pdl\75467\signals\sheets\75467CD004.dgn 17-SEP-2012 10:55AM nvondere

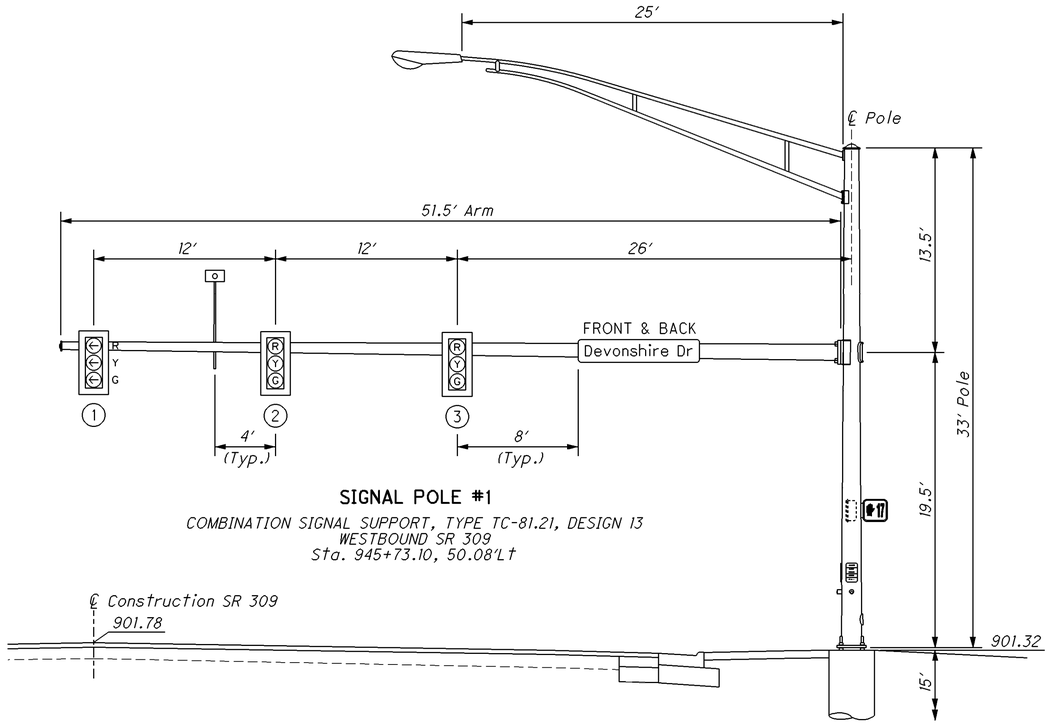

SIGNAL POLE #1

COMBINATION SIGNAL SUPPORT, TYPE TC-81.21, DESIGN 13
WESTBOUND SR 309
Sta. 945+73.10, 50.08'Lt

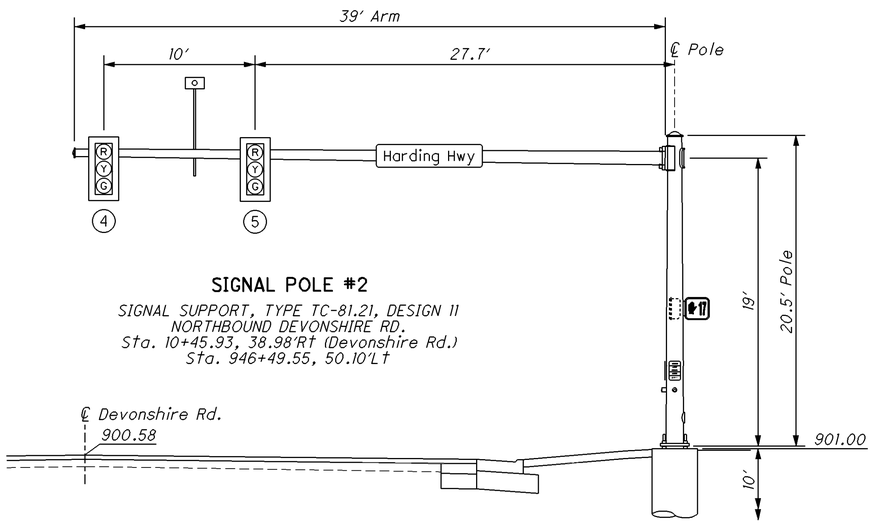

SIGNAL POLE #2

SIGNAL SUPPORT, TYPE TC-81.21, DESIGN 11
NORTHBOUND DEVONSHIRE RD.
Sta. 10+45.93, 38.98'Rt (Devonshire Rd.)
Sta. 946+49.55, 50.10'Lt

NOTE: VEHICULAR SIGNAL HEADS shall be mounted vertically as shown on this Sheet.

NOTE: For SIGNING REFERENCE NOS., See Sheet 114.

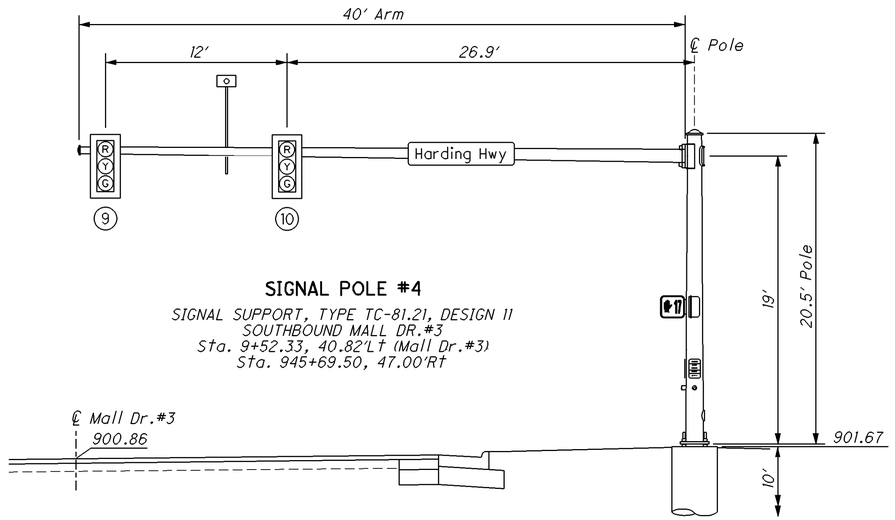

SIGNAL POLE #4

SIGNAL SUPPORT, TYPE TC-81.21, DESIGN 11
SOUTHBOUND MALL DR.#3
Sta. 9+52.33, 40.82'Lt (Mall Dr.#3)
Sta. 945+69.50, 47.00'Rt

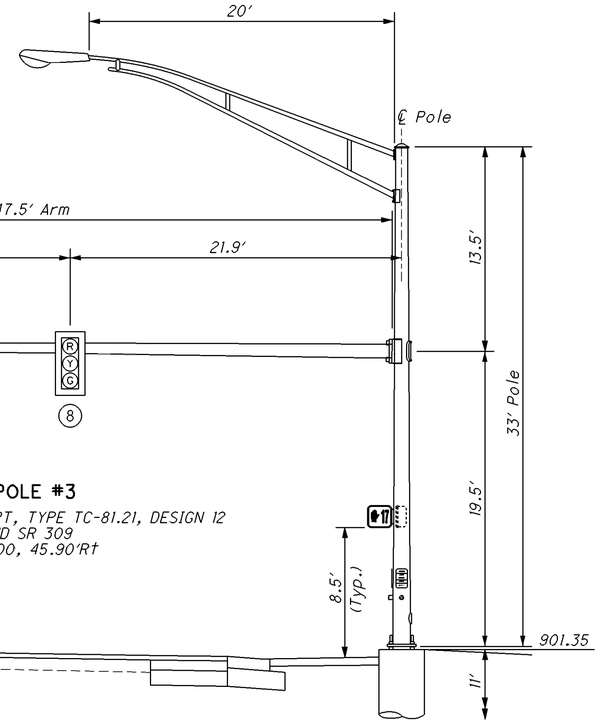

SIGNAL POLE #3

COMBINATION SIGNAL SUPPORT, TYPE TC-81.21, DESIGN 12
EASTBOUND SR 309
Sta. 946+51.00, 45.90'Rt

CALCULATED NJV
CHECKED MLF

HORIZONTAL SCALE IN FEET
0 2.5 5 10

SIGNAL SUPPORT DETAILS DEVONSHIRE DR.

ALL-117/309-18.65/15.17

I:\pd\75467\signals\sheets\75467CE004.dgn 17-SEP-2012 10:55AM nvondere

SIGNAL CONTROLLER TIMING CHART

START UP
START IN: *Yellow/Red Flash*
TIME FOR FLASH OR ALL RED: *5 Sec.*
FIRST PHASE(S): *2 & 6*

COLOR DISPLAYED: *Green* REST IN RED:
DUAL ENTRY: *Yes ϕ2 & ϕ6, ϕ4 & ϕ8*

			OVERLAP	A	B	C	D
			PHASES	3			
INTERVAL OR FEATURE			CONTROLLER MOVEMENT NUMBER				
			1	2	3	4	5	6	7	8
INTERSECTION MOVEMENT			WB Lt	EB	NB Lt	SB	EB Lt	WB	SB Lt	NB
MINIMUM GREEN (INITIAL)		(SEC.)	7	24	7	10	7	20	7	10
ADDED INITIAL		(SEC./ACTUATION)								
MAXIMUM INITIAL		(SEC.)								
PASSAGE TIME (PRESET GAP)		(SEC.)	4	3	2.5	3.5	4	3	2.5	2.5
TIME BEFORE REDUCTION		(SEC.)								
MINIMUM GAP		(SEC.)								
TIME TO REDUCE		(SEC.)								
MAXIMUM GREEN 1		(SEC.)	25	50	25	40	20	50	20	45
MAXIMUM GREEN 2		(SEC.)	25	50	25	40	20	50	20	45
YELLOW CHANGE		(SEC.)	3.5	4	3	3.5	3.5	4	3	3.5
ALL RED CLEARANCE		(SEC.)	3	2.5	3	3	3	2.5	3	3
WALK		(SEC.)								
PEDESTRIAN CLEARANCE		(SEC.)								
RECALL	MAXIMUM	(ON/OFF)	OFF	OFF		OFF	OFF	OFF		OFF
	MINIMUM	(ON/OFF)	OFF	ON		OFF	OFF	ON		OFF
	PEDESTRIAN	(ON/OFF)	OFF	OFF		OFF	OFF	OFF		OFF
MEMORY		(ON/OFF)	OFF	OFF		OFF	OFF	OFF		OFF
CALL FOR NON-ACTUATED		NO. 1		X				X		
		NO. 2								

COORDINATION TIMING CHART

PLAN (CYCLE-SECS.)	SPLITS (G+Y+AR) IN SECONDS PHASE 1	2	3	4	5	6	7	8	OFFSET *
CYCLE 1 (110 SEC.) SPLIT 1	17	47	26	20	15	49	15	31	84
CYCLE 1 (110 SEC.) SPLIT 2	17	40	25	28	15	42	15	38	109
CYCLE 1 (110 SEC.) SPLIT 3	20	40	18	32	15	45	15	35	95
CYCLE 2 (120 SEC.) SPLIT 1	22	40	24	34	15	47	15	43	4
CYCLE 3 (140 SEC.) SPLIT 1	22	48	32	38	15	55	15	56	15

** Offsets measured from Coordinated ϕ2 & ϕ6 End of Green/Beginning of Yellow.*

TCB PLAN EVENTS	HOURS	CYCLE/SPLIT/OFFSET
PLAN 1 - (MON - FRI)	0000 - 0530	FREE
PLAN 1 - (MON - FRI)	0530 - 1000	1/1/1
PLAN 1 - (MON - FRI)	1000 - 1400	1/2/1
PLAN 1 - (MON - FRI)	1400 - 1800	2/1/1
PLAN 1 - (MON - FRI)	1800 - 2200	1/3/1
PLAN 1 - (MON - FRI)	2200 - 2400	FREE
PLAN 2 - (SAT - SUN)	0000 - 0800	FREE
PLAN 2 - (SAT - SUN)	0800 - 1000	1/3/1
PLAN 2 - (SAT - SUN)	1000 - 1800	1/2/1
PLAN 2 - (SAT - SUN)	1800 - 2200	1/3/1
PLAN 2 - (SAT - SUN)	2200 - 2400	FREE

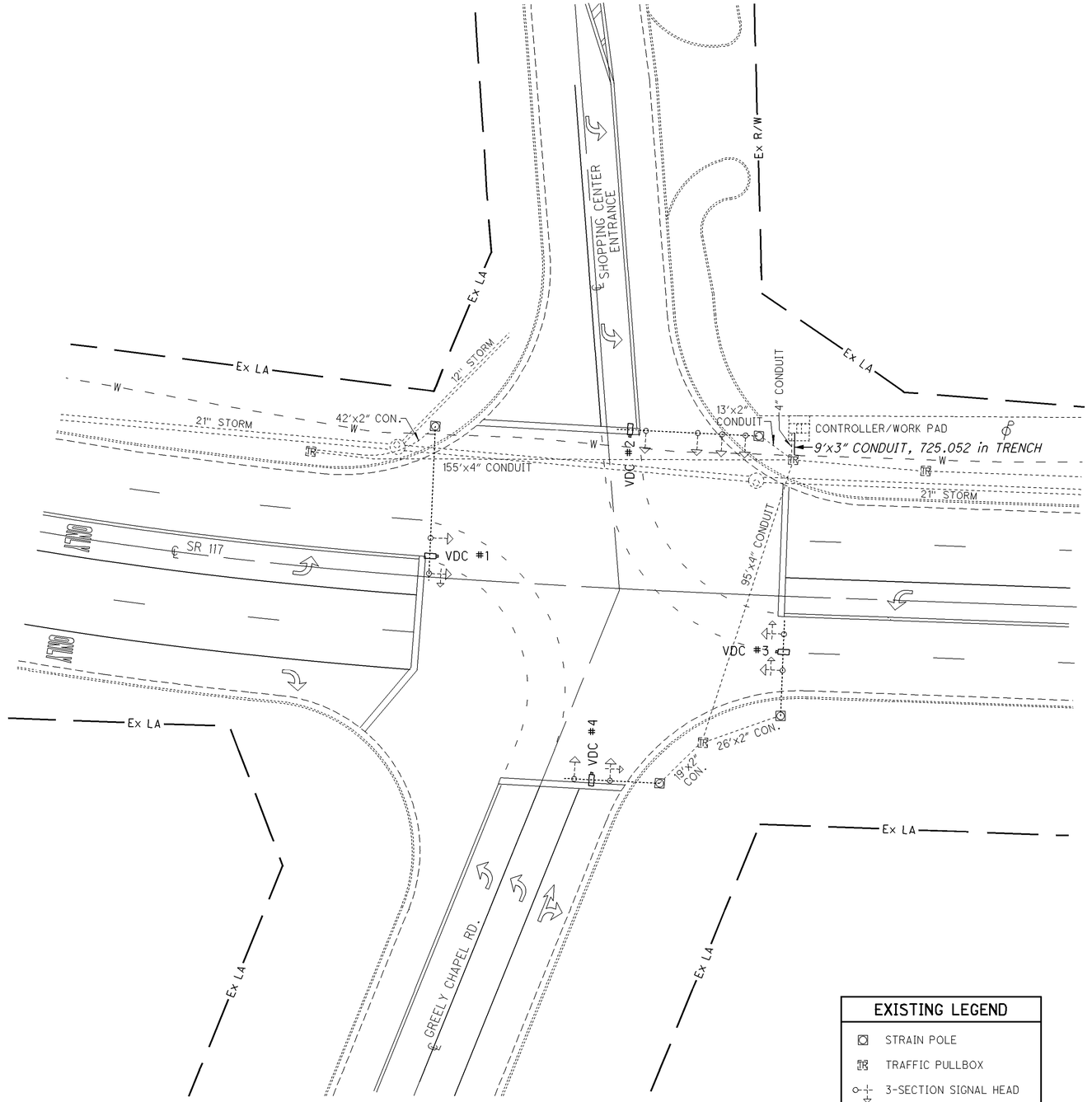

CALCULATED NJV CHECKED MLF

HORIZONTAL SCALE IN FEET 0 10 20 40

TRAFFIC SIGNAL PLAN
GREELY CHAPEL RD.

ALL-117/309-18.65/15.17

142
173

I:\Pd\75467\signals\sheets\75467CP005.dgn 17-SEP-2012 10:55AM nvondere

RIGHT OF WAY LEGEND SHEET ALL-117/309-18.65/15.17

ALLEN COUNTY
BATH TOWNSHIP
SEC. 32 & 33, T-3-S, R-7-E
PERRY TOWNSHIP
SEC. 4 & 5, T-4-S, R-7-E

UTILITY OWNERSHIP	
TYPE	NAME & ADDRESS
ELECTRIC	AMERICAN ELECTRIC POWER 430 EMMA STREET FINDLAY, OHIO 45840 419-420-3576
TELEPHONE	EMBARQ 122 S ELIZABETH STREET LIMA, OHIO 45801 419-228-1660
CABLE	TIME WARNER CABLE 3100 ELIDA ROAD LIMA, OHIO 45805 419-331-1111
GAS	EAST OHIO GAS 150 S JACKSON STREET LIMA, OHIO 45801 419-226-4700
WATER & SEWER	CITY OF LIMA 50 TOWN SQUARE LIMA, OHIO 45801 419-228-5462
SEWER	ALLEN COUNTY SANITARY ENGINEER 204 N MAIN STREET SUITE 301 LIMA, OHIO 45801 419-228-3700
OIL	BP PIPELINE 4421 BRADLEY RD CLEVELAND, OHIO 44109

NOTE: THE LOCATION OF THE UNDERGROUND UTILITIES SHOWN ON THE PLANS ARE OBTAINED FROM THE OWNER OF THE UTILITIES AS REQUIRED BY SECTION 153.64 O.R.C.

LEGEND

WD = WARRANTY DEED
SH = STANDARD HIGHWAY EASEMENT
LA = LIMITED ACCESS EASEMENT
T = TEMPORARY EASEMENT
SL = SLOPE EASEMENT
S = SEWER EASEMENT

CONVENTIONAL SYMBOLS

County Line
Township Line
Section Line
Corporation Line or
Fence Line (Ex) (Pr)
Center Line
Right of Way (Ex) Ex R/W
Right of Way (Pr) R/W
Standard Highway Ease.(Ex) Ex SH
Temporary Right of Way TMP
Channel Ease. (Pr) CH
Utility Ease. (Ex) Ex U
Railroad or
Guardrail (Ex) (Pr)
Construction Limits
Edge of Pavement (Ex)
Edge of Pavement (Pr)
Edge of Shoulder (Ex)
Edge of Shoulder (Pr)

Ditch / Creek (Ex)
Ditch / Creek (Pr)
Tree Line (Ex)
Ownership Hook Symbol , Example
Property Line Symbol , Example
Break Line Symbol , Example
Tree (Pr) , Tree (Ex) , Shrub (Ex)
Tree (Remove) , Shrub (Remove)
Evergreen (Ex) , Stump
Evergreen (Remove) , Stump (Remove)
Wetland (Pr) , Grass (Pr) , Aerial Target
Post (Ex) , Mailbox (Ex) , Mailbox (Pr)
Light (Ex) , Telephone Marker (Ex)
Fire Hydrant (Ex) , Water Meter (Ex)
Water Valve (Ex) , Utility Valve Unknown (Ex.)
Telephone Pole (Ex) , Power Pole (Ex)
Light Pole (Ex)

INDEX OF SHEETS

LEGEND SHEET	1
CENTERLINE PLAT	2-3
PROPERTY MAP	4-6
EASEMENT LIST	7-8
SUMMARY OF ADDITIONAL R/W	9-13
R/W DETAIL	14-31

PROJECT DESCRIPTION

RESURFACING AND WIDENING WITH CURB AND GUTTER OF 1.05 MILES OF SR 117/309 INCLUDING RAISED CONCRETE MEDIANS, SIDEWALKS, A NEW STORM SEWER SYSTEM, SECTIONS OF TOTAL PAVEMENT REPLACEMENT AND MODIFICATION OF DRIVES AND ACCESS POINTS FOR ACCESS MANAGEMENT.

PROJECT CONTROL

STATE PLANE GRID - OHIO NORTH ZONE
NAD83, 2003 ADJUSTMENT
PROJECT ADJUSTMENT FACTOR - 0.99989813
ALL DIMENSIONS SHOWN ARE GROUND DISTANCES.

PLANS PREPARED BY:

FIRM NAME : OHIO DEPARTMENT OF TRANSPORTATION - DISTRICT ONE

PLANS PREPARED BY: Nick Vonderembse

FIELD REVIEW BY: Larry Flippin
DATE COMPLETED: 7-7-10

OWNERSHIP VERIFIED BY: Larry Flippin
DATE COMPLETED: 1-27-11

DATE COMPLETED: 2-09-11

I HEREBY CERTIFY THAT THIS PLAT IS A TRUE DELINEATION OF A SURVEY MADE FOR THE OHIO DEPARTMENT OF TRANSPORTATION IN LIMA, OHIO BY THE ODOT DISTRICT 1 SURVEY DEPARTMENT.

THE ESTABLISHMENT OF THE PROPERTY LINES AND EXISTING RIGHT OF WAY LINES SHOWN ON THIS PLAN AS OF THIS DATE WERE PERFORMED BY ME OR UNDER MY DIRECT SUPERVISION.

BY _____
KEVIN CANAVAN
SURVEYOR NO. 7448 DATE _____

SURVEYOR'S SEAL

STATE OF OHIO
KEVIN CANAVAN
S-7448
REGISTERED
PROFESSIONAL SURVEYOR

SIGNED _____
DATE _____

FEDERAL PROJECT NO. E050(248)
PID NO. 75467
R/W DESIGNER NJV
R/W REVIEWER DJS

RIGHT OF WAY LEGEND SHEET
ALL-117/309-18.65/15.17

1 / 31
143 / 173

I:\Pd\75467\Right-of-Way\sheets\75467RL001.dgn 17-SEP-2012 10:55AM nvondere

ALL-117/309-18.65/15.17

ALLEN COUNTY
BATH TOWNSHIP
SEC. 32 & 33 T-3-S R-7-E
PERRY TOWNSHIP
SEC. 4 & 5 T-4-S R-7-E

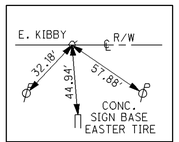

PI STA. 883+75.83
℄ R/W SR 309

DEFLECTION DATA
℄ Constr. SR 117/309
PI Sta. 899+50.00
Δ = 2°-00'-02" Rt
NO CURVE

DEFLECTION DATA
℄ Constr. SR 117/309
PI Sta. 901+65.00
Δ = 1°-32'-55" Lt
NO CURVE

DEFLECTION DATA
℄ Constr. SR 309
PI Sta. 908+79.96
Δ = 0°-08'-48" Lt
NO CURVE

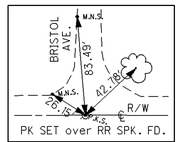

PK SET over RR SPK. FD.
PI STA. 912+27.86
℄ R/W SR 309

DEFLECTION DATA
℄ R/W SR 309
PI Sta. 912+27.86
Δ = 0°-18'-19" Rt
NO CURVE

COORDINATE TABLE
CENTER LINE OF R/W MONUMENTS

Station (℄ R/W)	Offset	Northing	Easting	Feature
POT 908+79.45	0.00'	391579.6543	1533167.8322	MONBOX SET
PI 912+27.86	0.00'	391580.2338	1533516.2339	MONBOX SET
PT 936+43.96	0.00'	391571.3757	1535932.2800	MONBOX SET
PI 963+06.59	0.00'	391559.7448	1538594.9201	MONBOX SET

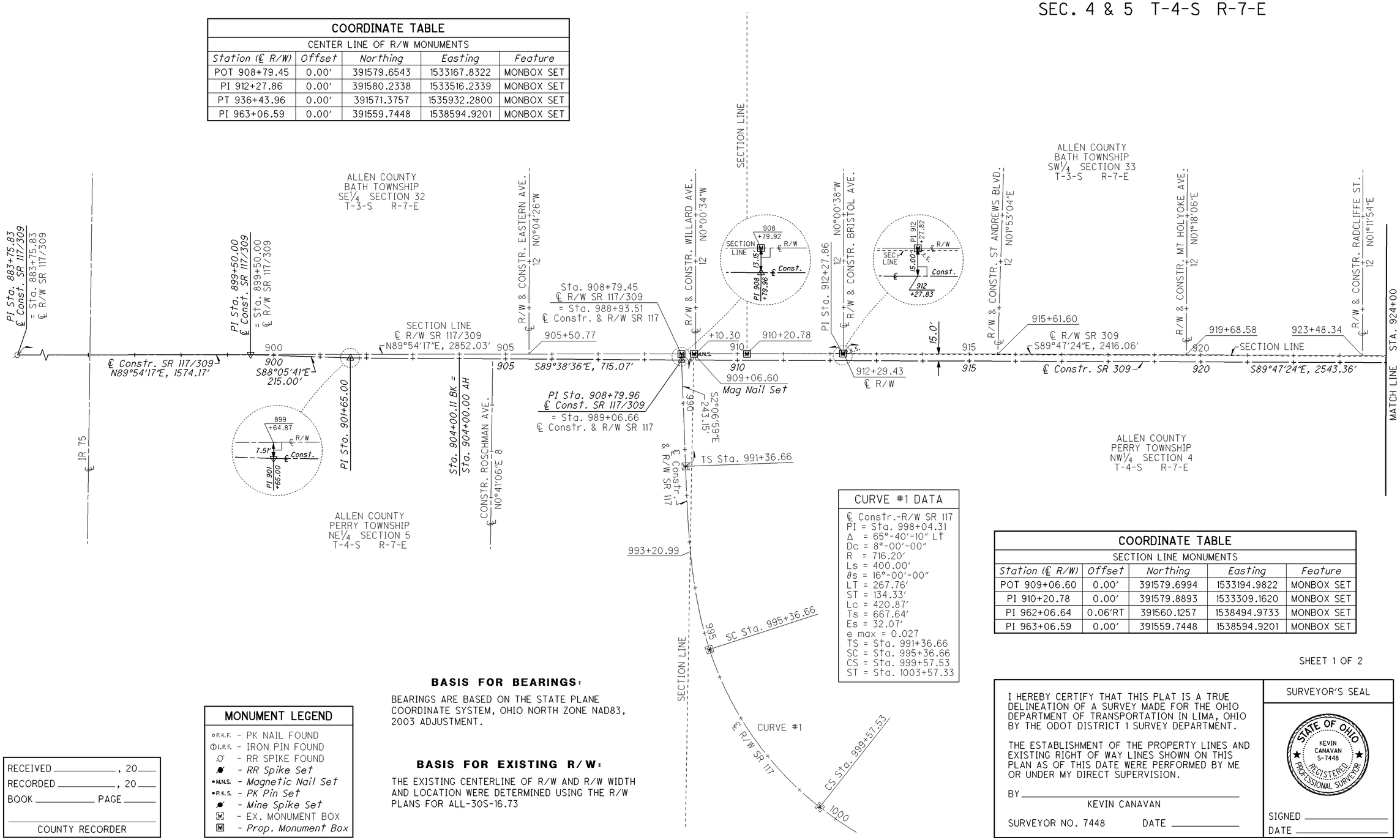

CURVE #1 DATA
℄ Constr.-R/W SR 117
PI = Sta. 998+04.31
Δ = 65°-40'-10" LT
Dc = 8°-00'-00"
R = 716.20'
Ls = 400.00'
θs = 16°-00'-00"
LT = 267.76'
ST = 134.33'
Lc = 420.87'
Ts = 667.64'
Es = 32.07'
e max = 0.027
TS = Sta. 991+36.66
SC = Sta. 995+36.66
CS = Sta. 999+57.53
ST = Sta. 1003+57.33

COORDINATE TABLE
SECTION LINE MONUMENTS

Station (℄ R/W)	Offset	Northing	Easting	Feature
POT 909+06.60	0.00'	391579.6994	1533194.9822	MONBOX SET
PI 910+20.78	0.00'	391579.8893	1533309.1620	MONBOX SET
PI 962+06.64	0.06'RT	391560.1257	1538494.9733	MONBOX SET
PI 963+06.59	0.00'	391559.7448	1538594.9201	MONBOX SET

MONUMENT LEGEND
- ○P.K.F. - PK NAIL FOUND
- ⓘI.R.F. - IRON PIN FOUND
- ℄ - RR SPIKE FOUND
- - *RR Spike Set*
- •M.N.S. - *Magnetic Nail Set*
- •P.K.S. - *PK Pin Set*
- - *Mine Spike Set*
- Ⓜ - EX. MONUMENT BOX
- Ⓜ - *Prop. Monument Box*

BASIS FOR BEARINGS:

BEARINGS ARE BASED ON THE STATE PLANE COORDINATE SYSTEM, OHIO NORTH ZONE NAD83, 2003 ADJUSTMENT.

BASIS FOR EXISTING R/W:

THE EXISTING CENTERLINE OF R/W AND R/W WIDTH AND LOCATION WERE DETERMINED USING THE R/W PLANS FOR ALL-30S-16.73

RECEIVED _____, 20____
RECORDED _____, 20____
BOOK _____ PAGE _____
_____
COUNTY RECORDER

SHEET 1 OF 2

I HEREBY CERTIFY THAT THIS PLAT IS A TRUE DELINEATION OF A SURVEY MADE FOR THE OHIO DEPARTMENT OF TRANSPORTATION IN LIMA, OHIO BY THE ODOT DISTRICT 1 SURVEY DEPARTMENT.

THE ESTABLISHMENT OF THE PROPERTY LINES AND EXISTING RIGHT OF WAY LINES SHOWN ON THIS PLAN AS OF THIS DATE WERE PERFORMED BY ME OR UNDER MY DIRECT SUPERVISION.

BY _____
KEVIN CANAVAN
SURVEYOR NO. 7448 DATE _____

SURVEYOR'S SEAL

STATE OF OHIO
KEVIN CANAVAN
S-7448
REGISTERED PROFESSIONAL SURVEYOR

SIGNED _____
DATE _____

HORIZONTAL SCALE IN FEET
0 50 100 200

PID NO. 75467

R/W DESIGNER NJV
R/W REVIEWER DJS

CENTERLINE PLAT

ALL-117/309-18.65/15.17

2 / 31
144
173

I:\Pd\75467\Right-of-Way\sheets\75467RC001.dgn 17-SEP-2012 10:55AM nvondere

ALL-117 / 309-18.65 / 15.17

ALLEN COUNTY
BATH TOWNSHIP
SEC. 32 & 33 T-3-S R-7-E
PERRY TOWNSHIP
SEC. 4 & 5 T-4-S R-7-E

CURVE #2 DATA

PI = Sta. 10+87.44
Δ = 31°-20′-00″ Rt
Dc = 71°-37′-11″
R = 80.00′
T = 22.44′
L = 43.75′
E = 3.09′
PC = Sta. 10+65.00
PT = Sta. 11+08.75

DEFLECTION DATA

℄ Constr. SR 309
PI Sta. 934+23.32
Δ = 0°-27′-00″ Lt
NO CURVE

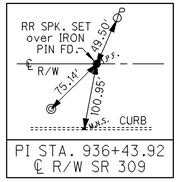

PI STA. 936+43.92
℄ R/W SR 309

DEFLECTION DATA

℄ R/W SR 309
PI Sta. 936+43.91
Δ = 0°-02′-25″ Rt
NO CURVE

DEFLECTION DATA

℄ Constr. SR 309
PI Sta. 951+94.00
Δ = 0°-29′-25″ Rt
NO CURVE

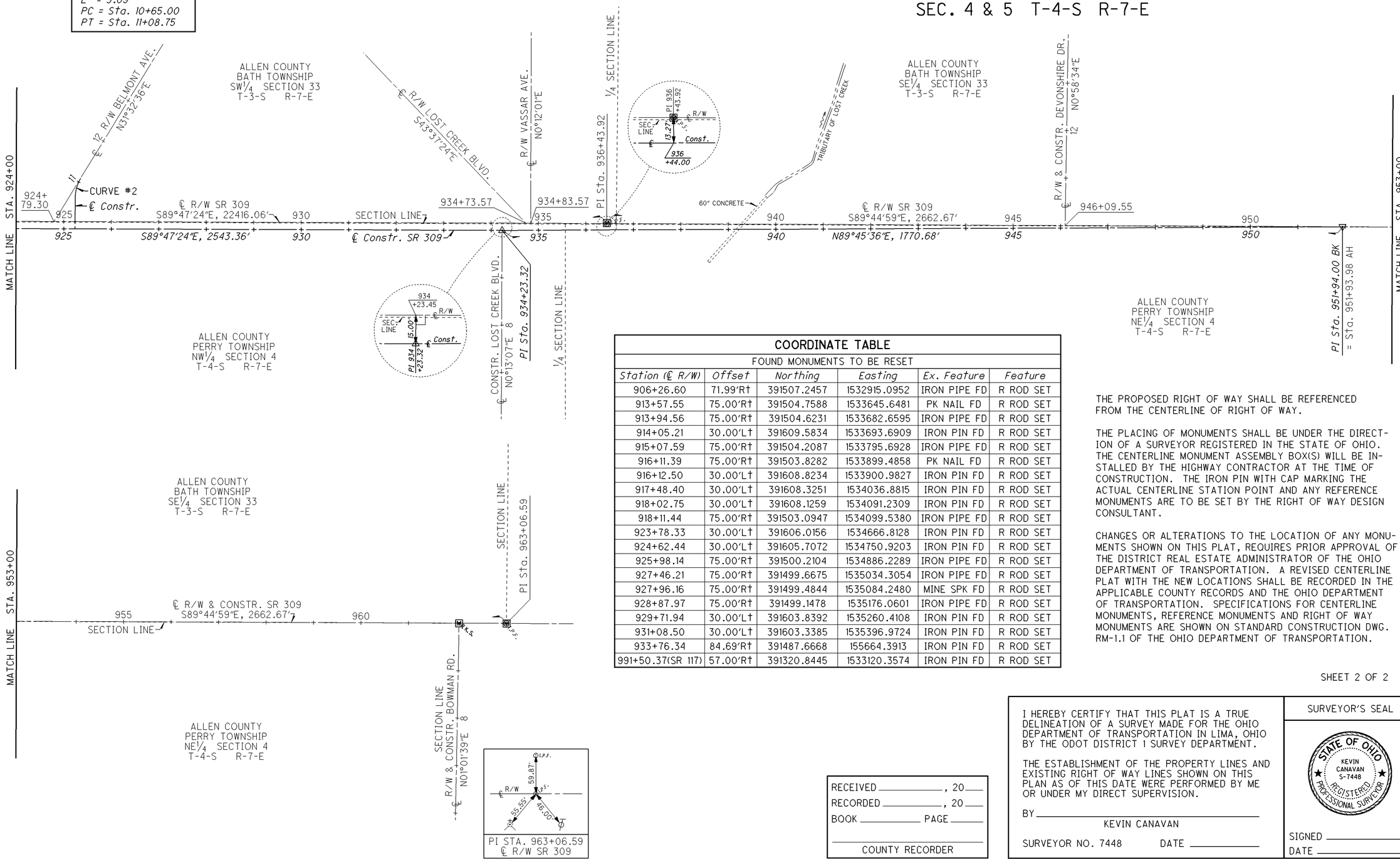

COORDINATE TABLE

FOUND MONUMENTS TO BE RESET

Station (℄ R/W)	Offset	Northing	Easting	Ex. Feature	Feature
906+26.60	71.99′Rt	391507.2457	1532915.0952	IRON PIPE FD	R ROD SET
913+57.55	75.00′Rt	391504.7588	1533645.6481	PK NAIL FD	R ROD SET
913+94.56	75.00′Rt	391504.6231	1533682.6595	IRON PIPE FD	R ROD SET
914+05.21	30.00′Lt	391609.5834	1533693.6909	IRON PIN FD	R ROD SET
915+07.59	75.00′Rt	391504.2087	1533795.6928	IRON PIPE FD	R ROD SET
916+11.39	75.00′Rt	391503.8282	1533899.4858	PK NAIL FD	R ROD SET
916+12.50	30.00′Lt	391608.8234	1533900.9827	IRON PIN FD	R ROD SET
917+48.40	30.00′Lt	391608.3251	1534036.8815	IRON PIN FD	R ROD SET
918+02.75	30.00′Lt	391608.1259	1534091.2309	IRON PIN FD	R ROD SET
918+11.44	75.00′Rt	391503.0947	1534099.5380	IRON PIPE FD	R ROD SET
923+78.33	30.00′Lt	391606.0156	1534666.8128	IRON PIN FD	R ROD SET
924+62.44	30.00′Lt	391605.7072	1534750.9203	IRON PIN FD	R ROD SET
925+98.14	75.00′Rt	391500.2104	1534886.2289	IRON PIPE FD	R ROD SET
927+46.21	75.00′Rt	391499.6675	1535034.3054	IRON PIPE FD	R ROD SET
927+96.16	75.00′Rt	391499.4844	1535084.2480	MINE SPK FD	R ROD SET
928+87.97	75.00′Rt	391499.1478	1535176.0601	IRON PIPE FD	R ROD SET
929+71.94	30.00′Lt	391603.8392	1535260.4108	IRON PIN FD	R ROD SET
931+08.50	30.00′Lt	391603.3385	1535396.9724	IRON PIN FD	R ROD SET
933+76.34	84.69′Rt	391487.6668	155664.3913	IRON PIN FD	R ROD SET
991+50.37(SR 117)	57.00′Rt	391320.8445	1533120.3574	IRON PIN FD	R ROD SET

THE PROPOSED RIGHT OF WAY SHALL BE REFERENCED FROM THE CENTERLINE OF RIGHT OF WAY.

THE PLACING OF MONUMENTS SHALL BE UNDER THE DIRECTION OF A SURVEYOR REGISTERED IN THE STATE OF OHIO. THE CENTERLINE MONUMENT ASSEMBLY BOX(S) WILL BE INSTALLED BY THE HIGHWAY CONTRACTOR AT THE TIME OF CONSTRUCTION. THE IRON PIN WITH CAP MARKING THE ACTUAL CENTERLINE STATION POINT AND ANY REFERENCE MONUMENTS ARE TO BE SET BY THE RIGHT OF WAY DESIGN CONSULTANT.

CHANGES OR ALTERATIONS TO THE LOCATION OF ANY MONUMENTS SHOWN ON THIS PLAT, REQUIRES PRIOR APPROVAL OF THE DISTRICT REAL ESTATE ADMINISTRATOR OF THE OHIO DEPARTMENT OF TRANSPORTATION. A REVISED CENTERLINE PLAT WITH THE NEW LOCATIONS SHALL BE RECORDED IN THE APPLICABLE COUNTY RECORDS AND THE OHIO DEPARTMENT OF TRANSPORTATION. SPECIFICATIONS FOR CENTERLINE MONUMENTS, REFERENCE MONUMENTS AND RIGHT OF WAY MONUMENTS ARE SHOWN ON STANDARD CONSTRUCTION DWG. RM-1.1 OF THE OHIO DEPARTMENT OF TRANSPORTATION.

SHEET 2 OF 2

RECEIVED _____, 20__
RECORDED _____, 20__
BOOK _____ PAGE _____

COUNTY RECORDER

I HEREBY CERTIFY THAT THIS PLAT IS A TRUE DELINEATION OF A SURVEY MADE FOR THE OHIO DEPARTMENT OF TRANSPORTATION IN LIMA, OHIO BY THE ODOT DISTRICT 1 SURVEY DEPARTMENT.

THE ESTABLISHMENT OF THE PROPERTY LINES AND EXISTING RIGHT OF WAY LINES SHOWN ON THIS PLAN AS OF THIS DATE WERE PERFORMED BY ME OR UNDER MY DIRECT SUPERVISION.

BY _____
KEVIN CANAVAN

SURVEYOR NO. 7448 DATE _____

SURVEYOR'S SEAL

STATE OF OHIO
KEVIN CANAVAN
S-7448
REGISTERED PROFESSIONAL SURVEYOR

SIGNED _____
DATE _____

HORIZONTAL SCALE IN FEET
0 50 100 200

PID NO. 75467

R/W DESIGNER NJV
R/W REVIEWER DJS

CENTERLINE PLAT

ALL-117 / 309-18.65 / 15.17

3 / 31

145 / 173

I:\Pid\75467\Right-of-Way\sheets\75467RC002.dgn 17-SEP-2012 10:55AM nvondere

NOTE: FOR EASEMENT LIST, SEE SHEETS 7/31 AND 8/31.

STRUCTURE KEY

- RESIDENTIAL
- COMMERCIAL
- OUT-BUILDING

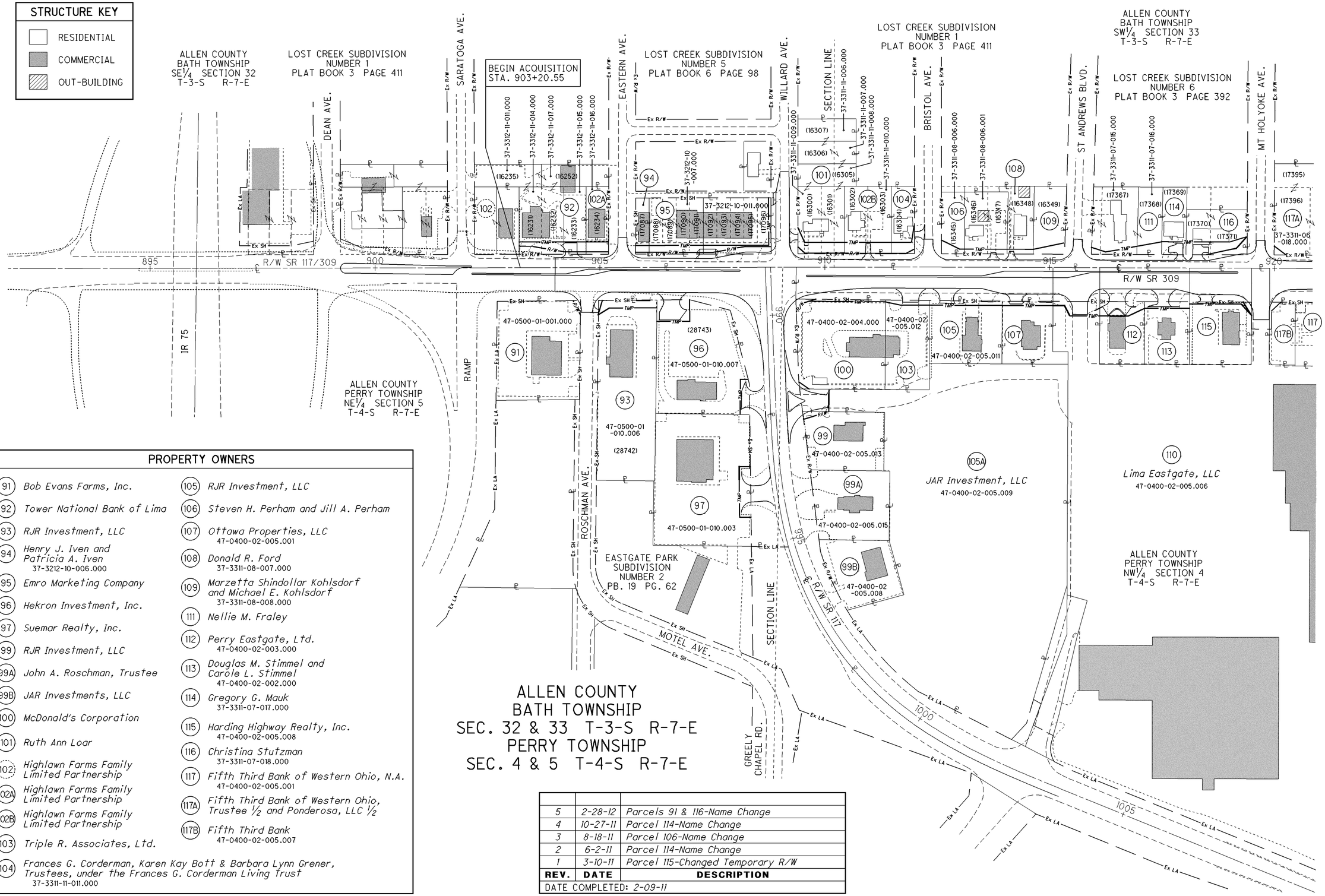

PROPERTY OWNERS

(91) *Bob Evans Farms, Inc.*

(92) *Tower National Bank of Lima*

(93) *RJR Investment, LLC*

(94) *Henry J. Iven and Patricia A. Iven*
37-3212-10-006.000

(95) *Emro Marketing Company*

(96) *Hekron Investment, Inc.*

(97) *Suemar Realty, Inc.*

(99) *RJR Investment, LLC*

(99A) *John A. Roschman, Trustee*

(99B) *JAR Investments, LLC*

(100) *McDonald's Corporation*

(101) *Ruth Ann Loar*

(102) *Highlawn Farms Family Limited Partnership*

(102A) *Highlawn Farms Family Limited Partnership*

(102B) *Highlawn Farms Family Limited Partnership*

(103) *Triple R. Associates, Ltd.*

(104) *Frances G. Corderman, Karen Kay Bott & Barbara Lynn Grener, Trustees, under the Frances G. Corderman Living Trust*
37-3311-11-011.000

(105) *RJR Investment, LLC*

(106) *Steven H. Perham and Jill A. Perham*

(107) *Ottawa Properties, LLC*
47-0400-02-005.001

(108) *Donald R. Ford*
37-3311-08-007.000

(109) *Marzetta Shindollar Kohlsdorf and Michael E. Kohlsdorf*
37-3311-08-008.000

(111) *Nellie M. Fraley*

(112) *Perry Eastgate, Ltd.*
47-0400-02-003.000

(113) *Douglas M. Stimmel and Carole L. Stimmel*
47-0400-02-002.000

(114) *Gregory G. Mauk*
37-3311-07-017.000

(115) *Harding Highway Realty, Inc.*
47-0400-02-005.008

(116) *Christina Stutzman*
37-3311-07-018.000

(117) *Fifth Third Bank of Western Ohio, N.A.*
47-0400-02-005.001

(117A) *Fifth Third Bank of Western Ohio, Trustee ½ and Ponderosa, LLC ½*

(117B) *Fifth Third Bank*
47-0400-02-005.007

REV.	DATE	DESCRIPTION
5	2-28-12	Parcels 91 & 116-Name Change
4	10-27-11	Parcel 114-Name Change
3	8-18-11	Parcel 106-Name Change
2	6-2-11	Parcel 114-Name Change
1	3-10-11	Parcel 115-Changed Temporary R/W

DATE COMPLETED: 2-09-11

HORIZONTAL SCALE IN FEET: 0, 50, 100, 200

PID NO. 75467

R/W DESIGNER NJV
R/W REVIEWER DJS

PROPERTY MAP

ALL-117/309-18.65/15.17

4 / 31

146 / 173

I:\Pid\75467\Right-of-Way\sheets\75467RM001.dgn 17-SEP-2012 10:55AM nvondere

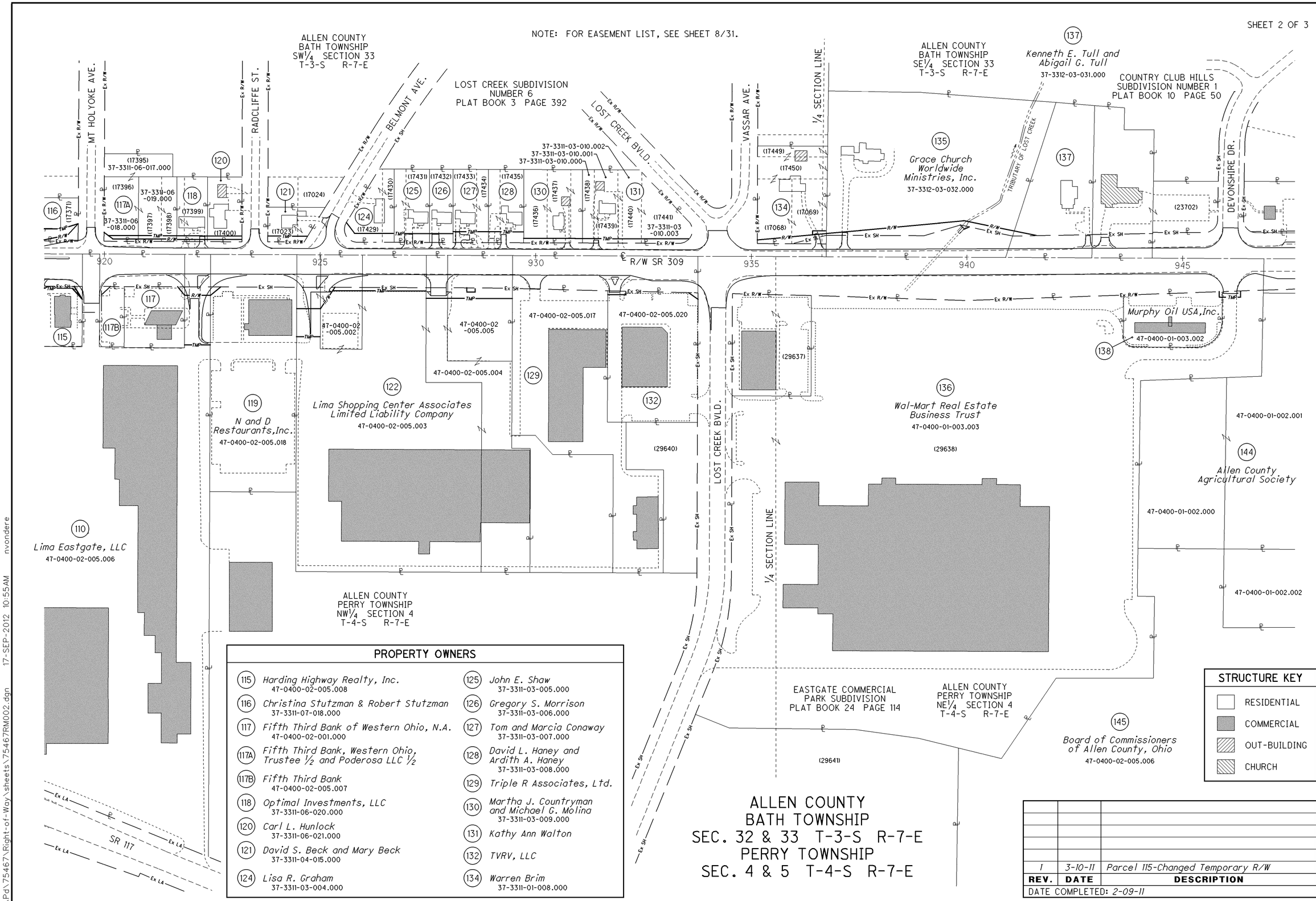

PROPERTY OWNERS

115	Harding Highway Realty, Inc. 47-0400-02-005.008	125	John E. Shaw 37-3311-03-005.000
116	Christina Stutzman & Robert Stutzman 37-3311-07-018.000	126	Gregory S. Morrison 37-3311-03-006.000
117	Fifth Third Bank of Western Ohio, N.A. 47-0400-02-001.000	127	Tom and Marcia Conaway 37-3311-03-007.000
117A	Fifth Third Bank, Western Ohio, Trustee 1/2 and Poderosa LLC 1/2	128	David L. Haney and Ardith A. Haney 37-3311-03-008.000
117B	Fifth Third Bank 47-0400-02-005.007	129	Triple R Associates, Ltd.
118	Optimal Investments, LLC 37-3311-06-020.000	130	Martha J. Countryman and Michael G. Molina 37-3311-03-009.000
120	Carl L. Hunlock 37-3311-06-021.000	131	Kathy Ann Walton
121	David S. Beck and Mary Beck 37-3311-04-015.000	132	TVRV, LLC
124	Lisa R. Graham 37-3311-03-004.000	134	Warren Brim 37-3311-01-008.000

STRUCTURE KEY

- RESIDENTIAL
- COMMERCIAL
- OUT-BUILDING
- CHURCH

REV.	DATE	DESCRIPTION
1	3-10-11	Parcel 115-Changed Temporary R/W

DATE COMPLETED: 2-09-11

HORIZONTAL SCALE IN FEET 0 50 100 200

PID NO. 75467

R/W DESIGNER NJV
R/W REVIEWER DJS

PROPERTY MAP

ALL-117/309-18.65/15.17

I:\Pd\75467\Right-of-Way\sheets\75467RM002.dgn 17-SEP-2012 10:55AM nvondere

ALLEN COUNTY
BATH TOWNSHIP
SEC. 32 & 33 T-3-S R-7-E
PERRY TOWNSHIP
SEC. 4 & 5 T-4-S R-7-E

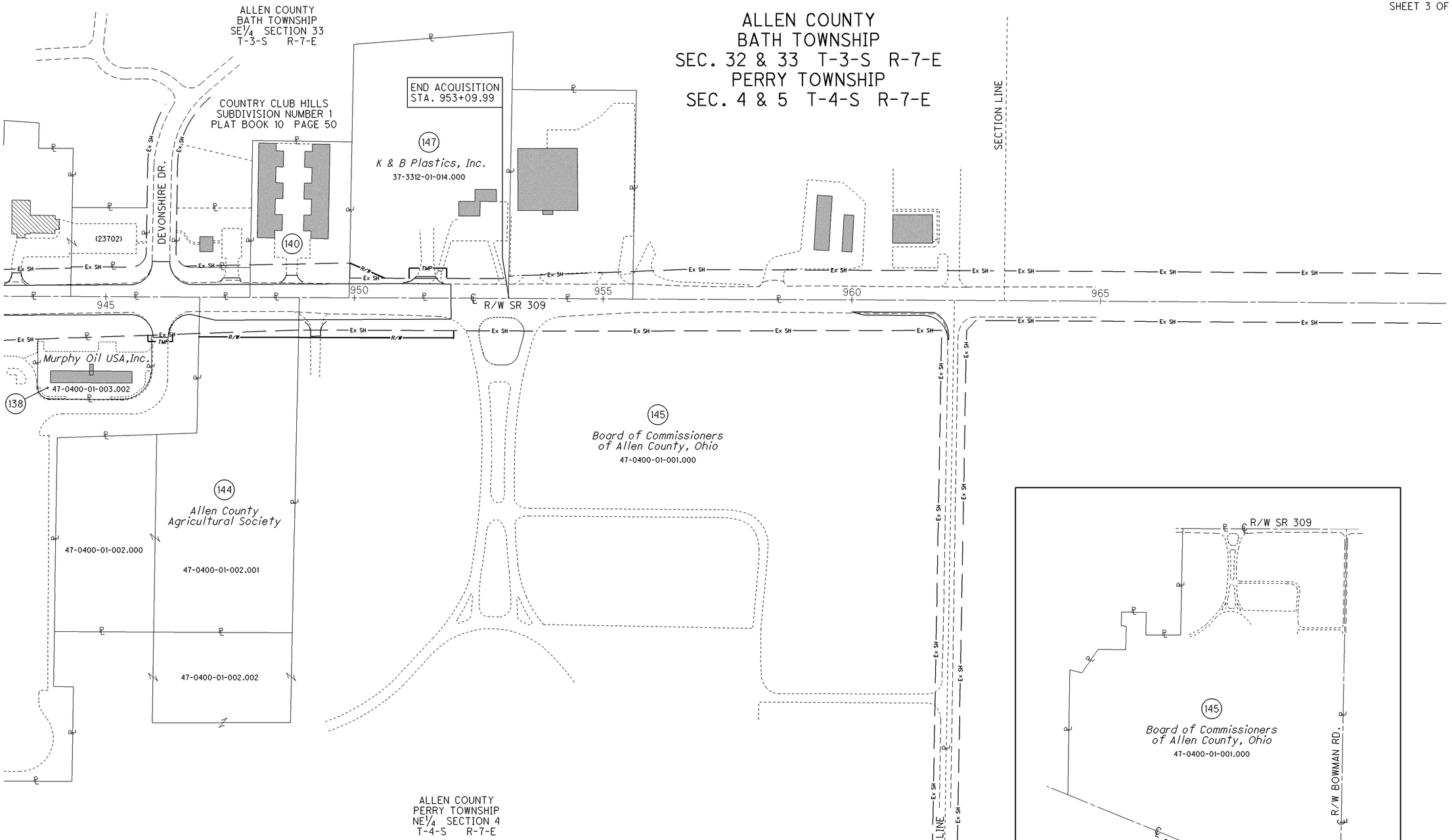

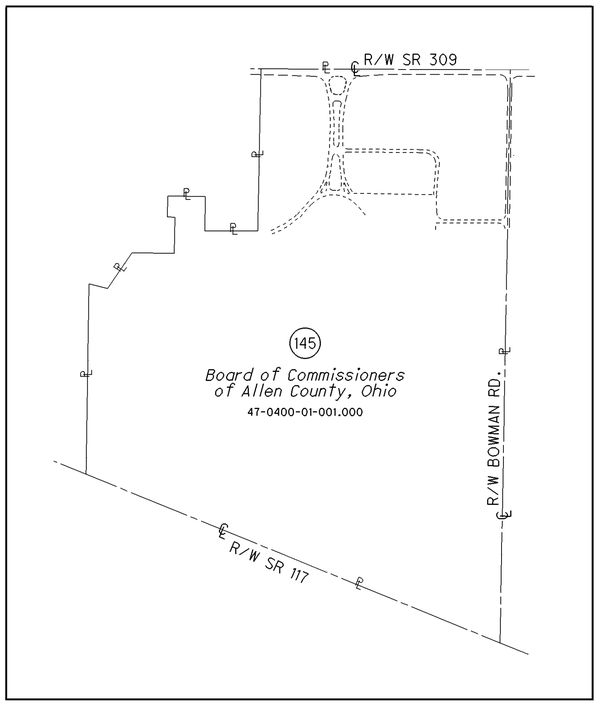

NOTE: FOR EASEMENT LIST, SEE SHEET 8/31.

REV.	DATE	DESCRIPTION
1	3-10-11	Added Parcel 147 R/W and Temp R/W

DATE COMPLETED: 2-09-11

PROPERTY OWNERS

140 Contini Enterprises, Ltd.
37-3312-01-015.000

STRUCTURE KEY

- COMMERCIAL
- CHURCH

HORIZONTAL SCALE IN FEET 0 50 100 200

PID NO. 75467

R/W DESIGNER NJV
R/W REVIEWER DJS

PROPERTY MAP

ALL-117/309-18.65/15.17

I:\Pd\75467\Right-of-Way\sheets\75467RM003.dgn 17-SEP-2012 10:55AM nvondere

PAR NO.	NAME	TYPE	DATE	BOOK	PAGE
91	United Telephone Company	Utility	11-29-73	545	216
	John Roschman	Roadway/Parking	1-27-76	573	595
	Ohio Power Company	Utility	5-18-76	579	265
92	John A. Roschman & Bennett Ent.	Ingress/Egress	8-19-83	655	781
93	Ohio Power Company	Utility	4-01-39	225	494
	United Telephone Company of Ohio	Utility	11-29-73	545	216
96	The Ohio Bell Telephone Company	Utility	3-22-30	42	567
	Ohio Power Company	Utility	4-22-39	225	494
	Ohio Power Company	Utility	7-10-73	539	369
	United Telephone Company of Ohio	Utility	11-29-73	545	216
	Ohio Power Company	Utility	11-16-79	621	829
	AT&T Communications	Assignment	1-05-84	659	538
	Ohio Power Company	Utility	1-09-92	759	744
97	The Ohio Bell Telephone Company	Utility	3-22-30	42	567
	Ohio Power Company	Utility	4-22-39	225	494
	United Telephone Company of Ohio	Utility	11-29-73	545	216
	Ohio Power Company	Utility	11-08-79	621	549
	Ohio Power Company	Driveway	11-16-79	621	829
	John A. Roschman & Bennett Ent.	Ingress/Egress	8-19-83	655	781
	Regency Motel/Allen Schmidthorst	Fence/Barrier	8-19-83	655	783
	AT&T Communications	Assignment	1-05-84	659	538
99	Ohio Power Company	Utility	3-15-74	548	420
	Central Savings Association	Ingress/Egress	6-19-74	552	566
	Central Savings Association	Ingress/Egress	6-26-74	553	106
	The Metropolitan Bank of Lima	Ingress/Egress	7-17-74	664	764
	The Metropolitan Bank	Ingress/Egress	7-24-74	554	294
	Franchise Realty Interstate Corp.	Ingress/Egress	4-29-75	563	173
	United Telephone Company	Utility	8-22-75	567	569
	Allen County	Sewer	10-20-83	657	541
100	City of Lima	Water/Sewer	6-25-74	553	55
	Allen County	Sewer	10-20-83	657	541
	Allen County	Water/Sewer	10-20-83	657	546
	Franchise Realty Interstate Corp.	Parking/Ingress		563	173
	West Ohio Gas Company	Pipeline	10-30-84	668	9
	Kimco Development of Lima, Inc.	Sewer/Sign	7-6-88	671	854

PAR NO.	NAME	TYPE	DATE	BOOK	PAGE
103	City of Lima	Water/Sewer	6-25-74	553	55
	West Ohio Gas Company	Pipeline	10-30-84	668	9
	Allen County	Sewer	10-20-83	657	541
	Allen County	Water/Sewer	10-20-83	657	546
105	Ohio Power Company	Utility	3-15-74	548	420
	City of Lima	Water/Sewer	6-25-74	553	55
	The Metropolitan Bank of Lima	Ingress/Egress	7-17-74	664	764
	Central Savings Association	Ingress/Egress	6-26-74	553	106
	The Metropolitan Bank	Ingress/Egress	7-24-74	554	294
	Franchise Realty Interstate Corp.	Ingress/Egress	4-29-75	563	173
	United Telephone Company	Utility	8-22-75	567	569
	John H. Romey, Trustee	Ingress/Egress	4-07-78	590	244
	Carl Earl & Wanda Ruth Akers	Ingress/Egress	2-25-80	624	544
	Allen County	Sewer	10-20-83	657	541
	Allen County	Water/Sewer	10-20-83	657	546
	West Ohio Gas Company	Utility	10-30-84	668	9
	Kimco Development of Lima, Inc.	Ingress/Egress	4-16-85	671	854
	Kimco Development of Lima, Inc.	Over & Across	4-16-85	671	876
107	Ohio Power Company	Utility	3-15-74	548	420
	City of Lima	Water/Sewer	6-25-74	553	55
	Ohio Power Company	Utility	7-25-74	554	360
	Carl Akers and Wanda Akers	Right of Way	2-28-80	624	624
	Allen County	Sewer	10-20-83	657	541
	West Ohio Gas Company	Utility	10-30-84	668	9
	Kimco Development of Lima, Inc.	Ingress/Egress	4-16-85	671	854
109	Lost Creek Subdivision Agreement	Amend Restrict.	9-23-47	299	63
110	Ohio Power Company	Utility	3-15-74	548	420
	Ohio Power Company	Utility	4-25-74	548	420
	Central Savings Association	Ingress/Egress	6-19-74	552	566
	City of Lima	Water/Sewer	6-25-74	553	55
	Central Savings Association	Ingress/Egress	6-26-74	553	106
	The Metropolitan Bank of Lima	Ingress/Egress	7-17-74	664	764
	The Metropolitan Bank	Ingress/Egress	7-24-74	554	294
	Ohio Power Company	Utility	7-25-74	554	360
	Franchise Realty Interstate Corp.	Rest. Cov.	4-29-75	563	173
	United Telephone Company	Utility	8-22-75	567	569
	John H. Romey, Trustee	Ingress/Egress	6-6-77	590	244
	Wen-Ham Food Services, Inc.	Ingress/Egress	7-15-77	591	762
	John H. Romey, Trustee	Ingress/Egress	4-7-78	601	309
	West Ohio Gas Company	Utility	11-28-79	622	163
	Carl Earl & Wanda Ruth Akers	Ingress/Egress	2-25-80	624	544
	Carl Akers and Wanda Akers	Right of Way	2-28-80	624	622

PAR NO.	NAME	TYPE	DATE	BOOK	PAGE
110	Carl Akers and Wanda Akers	Right of Way	2-28-80	624	624
	Lima Shopping Center Associates	Cross/Parking	11-23-82	649	68
	West Ohio Gas Company	Utility	10-02-80	630	598
	West Ohio Gas Company	Utility	10-30-84	668	9
	Kimco Development of Lima, Inc.	Ingress/Egress	4-16-85	671	854
	West Ohio Gas Company	Utility	6-06-88	712	627
111	Ohio Power Company	Electrical	8-06-38	225	400
	Lost Creek Subdivision Agreement	Amend Restrict.	9-23-47	299	63
112	Ohio Power Company	Utility	3-15-74	548	420
	Wen-Ham Food Services, Inc.	Ingress/Egress	6-29-77	591	672
113	City of Lima	Water/Sewer	6-25-74	553	55
	Ohio Power Company	Utility	7-25-74	554	360
	Central Savings Association	Ingress/Egress	6-26-74	553	106
	Ohio Power Company	Utility	2-22-74	548	422
	United Telephone Company	Utility	8-22-75	567	569
	Wen-Ham Food Services, Inc.	Ingress/Egress	7-15-77	591	762
	Franchise Realty Interstate Corp.	Rest. Cov. Mod.	10-20-77	595	829
	Wendy's Management Services, Inc.	Assignment	5-15-78	602	600
	West Ohio Gas Company	Utility	11-28-79	622	163
	West Ohio Gas Company	Utility	10-02-90	630	598
	Carl Akers and Wanda Akers	Ingress/Egress	2-28-80	624	622
	Carl Akers and Wanda Akers	Right of Way	2-28-80	624	624
	Allen County	Sewer	10-20-83	657	541
	Allen County	Water/Sewer	10-20-83	657	546
	West Ohio Gas Company	Utility	10-30-84	668	9
	Kimco Development of Lima, Inc.	Ingress/Egress	4-16-85	671	854
	West Ohio Gas Company	Utility	6-06-88	712	627
115	Ohio Power Company	Utility	3-15-74	548	420
	City of Lima	Water/Sewer	6-25-74	553	55
	Ohio Power Company	Utility	7-25-74	554	360
	Kimco Development of Lima, Inc.	Ingress/Egress	4-16-85	671	854
117	City of Lima	Water/Sewer	6-25-74	553	55
	Kimco Development of Lima, Inc.	Access/Utility	7-06-88	671	854
117B	Kimco Development of Lima, Inc.	Access/Utility	7-06-88	671	854
	City of Lima	Water/Sewer	7-06-88	671	854

REV.	DATE	DESCRIPTION

FIELD REVIEW BY: Larry Flippin DATE: 7-7-10

OWNERSHIP VERIFIED BY: Larry Flippin DATE: 1-27-11

DATE COMPLETED: 2-09-11

FEDERAL PROJECT NO. E050(248)

PID NO. 75467

STATE JOB NO. 416336

R/W DESIGNER NJV

R/W REVIEWER KCC

EASEMENT LIST

ALL-117/309-18.65/15.17

I:\Pd\75467\Right-of-Way\sheets\75467EL001.dgn 17-SEP-2012 10:56AM nvondere

PAR NO.	NAME	TYPE	DATE	BOOK	PAGE
119	Kimco Development of Lima, Inc.	Access/Utility	7-06-88	671	854
	John Roschman	Utility	8-07-90	741	374
121	Ohio Power Company	Electrical	6-11-48	285	177
122	Ohio Power Company	Utility	4-22-39	225	494
	Ohio Power Company	Utility	3-15-74	548	420
	City of Lima	Water/Sewer	6-25-74	553	55
	Central Savings Association	Ingress/Egress	6-26-74	553	106
	The Metropolitan Bank	Ingress/Egress	7-24-74	554	294
	Ohio Power Company	Utility	6-25-74	554	360
	Franchise Realty Interstate Corp.	Ingress/Egress	4-29-75	563	173
	United Telephone Company	Utility	8-22-75	567	569
	Wen-Ham Food Services, Inc.	Ingress/Egress	7-15-77	591	762
	John H. Romey, Trustee	Ingress/Egress	4-07-78	590	244
	West Ohio Gas Company	Utility	11-28-79	622	163
	Carl Earl & Wanda Ruth Akers	Billboard	2-28-80	624	622
	Carl Earl & Wanda Ruth Akers	Ingress/Egress	2-28-80	624	624
	Carl Earl & Wanda Ruth Akers	Right of Way	2-28-80	624	544
	West Ohio Gas Company	Utility	10-02-80	630	598
	Lima Shopping Center Associates	Cross/Parking	11-23-82	649	68
	Ohio Power Company	Utility	3-28-83	651	702
	Ohio Power Company	Utility	3-28-83	651	708
123	Ohio Power Company	Utility	4-22-39	225	494
	Ohio Power Company	Utility	4-25-74	548	420
	Ohio Power Company	Utility	6-25-74	554	360
	Central Savings Association	Ingress/Egress	6-26-74	553	106
	City of Lima	Water/Sewer	6-25-74	553	55
	The Metropolitan Bank of Lima	Ingress/Egress	7-24-74	554	294
	Franchise Realty Interstate Corp.	Ingress/Egress	4-29-75	563	173
	United Telephone Company	Utility	8-22-75	567	569
	Wen-Ham Food Services, Inc.	Ingress/Egress	7-15-77	591	762
	John H. Romey, Trustee	Ingress/Egress	4-07-78	590	244
	West Ohio Gas Company	Utility	11-28-79	622	163
	Carl Earl & Wanda Ruth Akers	Billboard	2-28-80	624	622
	Carl Earl & Wanda Ruth Akers	Ingress/Egress	2-28-80	624	624
	Carl Earl & Wanda Ruth Akers	Right of Way	2-28-80	624	544
	West Ohio Gas Company	Utility	10-02-80	630	598
	Lima Shopping Center Associates	Cross/Parking	11-23-82	649	68
	Ohio Power Company	Utility	3-28-83	651	702

PAR NO.	NAME	TYPE	DATE	BOOK	PAGE
123A	Ohio Power Company	Utility	2-22-39	225	494
	Ohio Power Company	Utility	4-25-74	548	420
	Central Savings Association	Ingress/Egress	6-19-74	552	566
	City of Lima	Water/Sewer	6-25-74	553	55
	Lima Shopping Center Associates	Cross/Parking	11-23-82	649	68
	Lima Shopping Center Associates	Utility	3-28-83	651	702
	Ohio Power Company	Utility	3-28-83	651	702
	Ohio Power Company	Utility	3-28-83	651	708
	Lima Shopping Center Associates	Water/Sewer	10-11-83	657	305
132	Ohio Power Company	Utility	3-15-74	548	420
	Lima Shopping Center Associates	Cross/Parking	11-23-82	649	68
	Allen County	Sewer	11-30-82	649	300
	West Ohio Gas Company	Utility	4-15-83	652	633
	Allen County	Sewer	10-11-83	657	287
	Kimco Development of Lima, Inc.	Ingress/Egress	4-16-85	671	854
	Kimco Development of Lima, Inc.	Ingress/Egress	4-16-85	671	876
	Ohio Power Company	Utility	9-25-87	704	211
	Ohio Power Company	Utility	3-04-03	909	143
	Ohio Power Company	Utility	4-04-03	909	145
	Ohio Power Company	Utility	6-06-03	911	546
	Roschman Family Part/Triple R Ass.	Dec. E,C,C,&R	2-27-04	922	603
	Walgreen Co.	Commercial	2-27-04	82	64
	East Ohio Gas Company	Utility	7-19-04	928	643
	Ohio Power Company	Utility	12-20-04	935	386
	TVRV, LLC	Commercial	6-28-07	2007	9919
135	Allen County	Sewer	9-28-82	647	549
136	Century Link, Inc.	R/W Permit	8-10-61	406	719
	Ohio Power Company	Utility	3-15-74	548	418
	Ohio Power Company	Utility	3-15-74	548	420
	Ohio Power Company	Utility	4-25-74	550	251
	Lima Shopping Center Associates	Cross/Parking	11-23-82	649	68
	Allen County	Sewer	11-30-82	649	300
	West Ohio Gas Company	Utility	4-26-83	652	633
	Allen County	Sewer	10-11-83	657	287
	Ohio Power Company	Utility	9-25-87	704	211
	West Ohio Gas Company	Utility	6-22-92	765	761
	Sprint	Utility	12-23-97	835	802
	Sprint	Utility	12-23-97	835	806
	Sprint	Utility	10-18-01	888	590
	Sprint	Utility	10-18-01	888	594
	Allen County Agricultural Society	Construction	12-11-01	890	659
	Ohio Power Company	Utility	5-08-02	896	288
	Murphy Oil, USA, Inc.	Utility	1-29-03	906	713
	Lima Ohio Associates, Inc.	Access	12-22-03	920	20
	Wal-Mart Real Estate Bus. Trust	Access	12-20-07	2007	19234
	Wal-Mart Real Estate Bus. Trust	Enviromental	12-20-07	2007	19235

PAR NO.	NAME	TYPE	DATE	BOOK	PAGE
138	Century Link, Inc.	R/W Permit	8-10-61	406	719
	Ohio Power Company	Utility	3-15-74	548	418
	Ohio Power Company	Utility	3-15-74	548	420
	Ohio Power Company	Utility	4-25-74	550	251
	Lima Shopping Center Associates	Cross/Parking	11-23-82	649	68
	Allen County	Sewer	11-30-82	649	300
	West Ohio Gas Company	Utility	4-26-83	652	633
	Allen County	Sewer	10-11-83	657	287
	Ohio Power Company	Utility	9-25-87	704	211
	West Ohio Gas Company	Utility	6-22-92	765	761
	Sprint	Utility	12-23-97	835	802
	Sprint	Utility	12-23-97	835	806
	Sprint	Utility	10-18-01	888	590
	Sprint	Utility	10-18-01	888	594
	Allen County Agricultural Society	Construction	12-11-01	890	659
	Ohio Power Company	Utility	5-08-02	896	288
	Murphy Oil, USA, Inc.	Utility	1-29-03	906	713
	Lima Ohio Associates, Inc.	Access	12-22-03	920	20
	Wal-Mart Real Estate Bus. Trust	Access	12-20-07	2007	19234
	Wal-Mart Real Estate Bus. Trust	Enviromental	12-20-07	2007	19235
144	Century Link, Inc.	R/W Permit	8-10-61	406	719
	The Standard Oil Company	Pipeline	6-16-38	239	57
	Island Corporation	Pipeline	2-23-51	319	108
145	United Telephone Company	Utility	10-18-01	888	594
	United Telephone Company	Utility	12-23-97	835	810
	Inland Corporation	Pipeline	8-14-78	608	637
	Ohio Power Company	Utility	1-23-74	548	418
	Ohio Power Company	Utility	1-23-74	550	246
	Ohio Power Company	Utility	3-15-74	548	420
147	United Telephone Company	Utility	12-17-04	935	358
	T.S.C. Realty, Inc.	Sewer	8-19-75	568	65
	The Ohio Bell Telephone Co.	Utility	1-03-39	239	149

REV.	DATE	DESCRIPTION
1	4-05-11	Added Parcel 147

FIELD REVIEW BY: Larry Flippin DATE: 7-7-10
OWNERSHIP VERIFIED BY: Larry Flippin DATE: 1-27-11
DATE COMPLETED: 2-09-11

FEDERAL PROJECT NO. E050(248)
PID NO. 75467
STATE JOB NO. 416336
R/W DESIGNER NJV
R/W REVIEWER KCC

EASEMENT LIST

ALL-117/309-18.65/15.17

8 / 31

150 / 173

I:\Pd\75467\Right-of-Way\sheets\75467EL002.dgn 17-SEP-2012 10:56AM nvondere

TOTAL NUMBER OF:
51 OWNERSHIPS 0 TOTAL TAKES
76 PARCELS 0 OWNERSHIPS W/ STRUCTURES INVOLVED

NET RESIDUE = RECORD AREA - TOTAL PRO - NET TAKE

ALL AREAS IN ACRES

* DENOTES RIGHT OF WAY ENCROACHMENT

PARCEL NO.	OWNER	SHEET NO.	OWNER'S REC. BOOK	OWNER'S REC. PAGE	AUDITOR'S PARCEL	RECORD AREA	TOTAL P.R.O.	GROSS TAKE	P.R.O. IN TAKE	NET TAKE	STRUC -TURE	NET RESIDUE LEFT	NET RESIDUE RIGHT	TYPE FUND	REMARKS	AS ACQUIRED BOOK	AS ACQUIRED PAGE
1-90	Not Used																
91-WD	Bob Evans Farms, Inc.	14-15	813	582	47-0500-01-001.000	0.941	0	0.006	0	0.006	Yes(2)		0.935	State	Landscaping, * Timber		
92-WD	Tower National Bank of Lima	14-15	587	205	37-3212-11-011.000	0.172	0	0	0	0		0.172					
	nka Bank One of Lima, NA		489	75	37-3212-11-014.000	0.344	0	0.030	0	0.030		0.314					
	(Successor by unrecorded merger)		598	170	37-3212-11-015.000	0.172	0	0.006	0	0.006	S	0.166			1 Post Business Sign		
			770	390	37-3212-11-017.000	0.172	0	0	0	0		0.172					
	TOTAL					0.860	0	0.036	0	0.036		0.824					
92-T								0.056		0.056					For Drive Construction and Grading		
93-WD	RJR Investment, LLC, a Florida	14-15	953	791	47-0500-01-010.006	1.198	0	0.003	0	0.003			1.195				
93-T	limited liability company							0.053		0.053					For Drive Removal and Grading		
94-WD	Henry J. Iven and Patricia A. Iven	14-15	834	114	37-3212-10-006.000	0.086	0	0.003	0	0.003		0.083					
94-T								0.010		0.010					For Grading		
95-WD	Emro Marketing Company,	14-17	739	689	37-3212-10-007.000	0.344	0	0.010	0	0.010	Yes(7)	0.334			Light Pole, Telephone Booth/2 Steel Posts,		
	a Delaware Corporation		764	663	37-3212-10-011.000	0.430	0	0.038	0	0.038		0.392			Air Pump/2 Steel Posts		
	TOTAL		723	205		0.774	0	0.048	0	0.048		0.726					
95-T								0.082		0.082					For Drive Construction and Grading		
96-T1	Hekron Investment, Inc.,	14-17	777	262	47-0500-01-010.007	1.082	0	0.081		0.081					For Drive Construction and Grading		
96-T2	an Ohio Corporation	30-31						0.036		0.036					For Drive Construction and Grading		
	TOTAL							0.117		0.117							
97-T	Suemar Realty, Inc.,	30-31	811	279	47-0500-01-010.003	1.44	0	0.056		0.056					For Drive Construction and Grading		
	an Ohio Corporation																
98	Not Used																
99-WD	RJR Investment, LLC, a Florida	30-31	953	798	47-0400-02-005.013	0.520	0	0.012	0	0.012	S	0.508			1 Post Business Sign		
	limited liability company																
99A	John A. Roschman, Trustee		533	623	47-0400-02-005.015	0.510									No Take		
99B	JAR Investments, LLC		819	838	47-0500-01-010.008	1.033									No Take		
100-WD1	McDonald's Corporation,	16-17	811	303	47-0400-02-004.000	0.90	0	0.010	0	0.010							
100-WD2	a Delaware Corporation	30-31					0	0.004	0	0.004							
	TOTAL					0.90	0	0.014	0	0.014			0.886				
100-T								0.018		0.018				State	For Drive Construction and Grading		

LEGEND

WD = WARRANTY DEED
SH = STANDARD HIGHWAY EASEMENT
T = TEMPORARY EASEMENT
SL = SLOPE EASEMENT
S = SEWER EASEMENT

NOTE: ALL TEMPORARY PARCELS TO BE OF 12 MONTH DURATION.

NOTE: UNDER NO CIRCUMSTANCES ARE TEMPORARY EASEMENTS TO BE USED FOR STORAGE OF MATERIAL OR EQUIPMENT BY THE CONTRACTOR UNLESS NOTED OTHERWISE.

NOTE: RECORD AREAS SHOWN ARE FROM COUNTY AUDITOR'S RECORDS.

GRANTEE:

ALL RIGHT OF WAY ACQUIRED IN THE NAME OF STATE OF OHIO UNLESS OTHERWISE SHOWN.

REV.	DATE	DESCRIPTION
2	2-28-12	Parcel 91 - Name Change
1	3-10-11	Changed Total Ownership and Parcel Nos.

FIELD REVIEW BY: Larry Flippin DATE: 7-7-10
OWNERSHIP VERIFIED BY: Larry Flippin DATE: 1-27-11
DATE COMPLETED: 2-09-11

FEDERAL PROJECT NO. E050(248)
PID NO. 75467
STATE JOB NO. 416336
R/W DESIGNER NJV
R/W REVIEWER DJS

SUMMARY OF ADDITIONAL RIGHT OF WAY
PARCELS 91-100

ALL-117/309-18.65/15.17

I:\Pdv\75467\Right-of-Way\sheets\75467RS001.dgn 17-SEP-2012 10:56AM nvondere

NET RESIDUE = RECORD AREA - TOTAL PRO - NET TAKE

ALL AREAS IN ACRES

* DENOTES RIGHT OF WAY ENCROACHMENT

PARCEL NO.	OWNER	SHEET NO.	OWNER'S REC. BOOK	OWNER'S REC. PAGE	AUDITOR'S PARCEL	RECORD AREA	TOTAL P.R.O.	GROSS TAKE	P.R.O. IN TAKE	NET TAKE	STRUC -TURE	NET RESIDUE LEFT	NET RESIDUE RIGHT	TYPE FUND	REMARKS	AS ACQUIRED BOOK	AS ACQUIRED PAGE
101-WD	Ruth Ann Loar	16-17	572	370	37-3311-11-006.000	0.148	0	0	0	0		0.148		State			
					37-3311-11-007.000	0.148	0	0	0	0		0.148					
					37-3311-11-008.000	0.148	0	0	0	0		0.148					
					37-3311-11-009.000	0.358	0	0.005	0	0.005		0.353					
	TOTAL					0.802	0	0.005	0	0.005		0.797					
101-T								0.060		0.060					For Drive Construction and Grading		
102	Highlawn Farms Family Limited Partnership		850	710	37-3212-11-012.000	0.172									No Take		
					37-3212-11-013.000	0.172											
102A-WD	Highlawn Farms Family Limited Partnership	14-15	850	710	37-3212-11-016.000	0.172	0	0.006	0	0.006		0.166					
102A-T								0.025		0.025	S				2 Post Business Sign; For Grading		
102B-WD	Highlawn Farms Family Limited Partnership	16-17	850	710	37-3311-11-010.000	0.358	0	0.002	0	0.002		0.356					
102B-T								0.058		0.058					For Drive Construction and Grading		
103-T	Triple R. Associates, Ltd.	16-17	937	644	47-0400-02-005.012	0.45	0	0.023		0.023	Yes(2)				Landscaping (2); For Drive Construction and Grading		
			888	724													
104-WD	Frances G. Corderman, Karen Kay Bott and	16-17	892	220	37-3311-11-011.000	0.179	0	0.003	0	0.003		0.176					
104-T	Barbara Lynn Grener, Trustees, or their successors in trust, under the Frances G. Corderman Living Trust, dated Jan. 10, 2002							0.030		0.030					For Drive Construction and Grading		
105-T	RJR Investment, LLC, a Florida limited liability company	16-19	953	804	47-0400-02-005.011	0.72	0	0.039		0.039	S(2) Yes				1 Post Business Sign (2); * Landscaping For Drive Construction and Grading		
105A-WD	RJR Investment, LLC, a Florida limited liability company	30-31	953	787	47-0400-02-005.009	6.58	0	0.072	0	0.072		6.508					
106-T	Steven H. Perham and Jill A. Perham	16-19			37-3311-08-006.000		0	0.043		0.043					For Drive Construction and Grading		
					37-3311-08-006.001												
107-T	Ottawa Properties, LLC, an Ohio Limited Liability Company, successer by merger to Ottawa Properties LTD., aka Ottawa Properties, LLC, a Tennessee Limited Liability Company, fka Ottawa Properties, LTD, a Tennessee Limited Partnership	18-19	OR 2006 865 655	6811 876 350	47-0400-02-005.001	0.590	0	0.026		0.026	S(2)				1 Post Business Sign (2) For Drive Construction and Grading		
108-T	Donald R. Ford	18-19	934 773	323 712	37-3311-08-007.000	0.178	0	0.013		0.013				State	For Drive Construction and Grading		

LEGEND

WD = WARRANTY DEED
SH = STANDARD HIGHWAY EASEMENT
T = TEMPORARY EASEMENT
SL = SLOPE EASEMENT
S = SEWER EASEMENT

NOTE: ALL TEMPORARY PARCELS TO BE OF 12 MONTH DURATION.

NOTE: UNDER NO CIRCUMSTANCES ARE TEMPORARY EASEMENTS TO BE USED FOR STORAGE OF MATERIAL OR EQUIPMENT BY THE CONTRACTOR UNLESS NOTED OTHERWISE.

NOTE: RECORD AREAS SHOWN ARE FROM COUNTY AUDITOR'S RECORDS.

GRANTEE:

ALL RIGHT OF WAY ACQUIRED IN THE NAME OF STATE OF OHIO UNLESS OTHERWISE SHOWN.

REV.	DATE	DESCRIPTION
3	9-10-12	Parcel 102A-Moved S to Temporary
2	1-17-12	Parcel 107-Name Change
1	8-18-11	Parcel 106-Name Change

FIELD REVIEW BY: Larry Flippin DATE: 7-7-10
OWNERSHIP VERIFIED BY: Larry Flippin DATE: 1-27-11
DATE COMPLETED: 2-09-11

FEDERAL PROJECT NO. E050(248)
PID NO. 75467
STATE JOB NO. 416336
R/W DESIGNER NJV
R/W REVIEWER DJS

SUMMARY OF ADDITIONAL RIGHT OF WAY PARCELS 101-108

ALL-117/309-18.65/15.17

I:\Pid\75467\Right-of-Way\sheets\75467RS002.dgn 17-SEP-2012 10:56AM nvondere

NET RESIDUE = RECORD AREA - TOTAL PRO - NET TAKE

* DENOTES RIGHT OF WAY ENCROACHMENT

ALL AREAS IN ACRES

PARCEL NO.	OWNER	SHEET NO.	OWNER'S REC. BOOK	OWNER'S REC. PAGE	AUDITOR'S PARCEL	RECORD AREA	TOTAL P.R.O.	GROSS TAKE	P.R.O. IN TAKE	NET TAKE	STRUC-TURE	NET RESIDUE LEFT	NET RESIDUE RIGHT	TYPE FUND	REMARKS	AS ACQUIRED BOOK	AS ACQUIRED PAGE
109-T	Marzetta Shindollar Kohlsdorf and	18-19	758	32	37-3311-08-008.000	0.241	0	0.028		0.028				State	For Grading		
	Michael E. Kohlsdorf																
110-WD	Lima Eastgate, LLC, a Michigan	20-21	950	773	47-0400-02-005.006	17.82	0.406	0.131	0.103	0.028	Yes		17.386		0.103 Acres of P.R.O. Converted to WD; Steel Post		
	limited liability company																
110-T1		18-19						0.061		0.061	S				1 Post Bus. Sign; For Drive Construction and Grading		
110-T2		20-21						0.158		0.158					For Drive Construction and Grading		
	TOTAL							0.219		0.219							
111-T	Nellie M. Fraley aka Nellie Fraley	18-19	648	132	37-3311-07-015.000	0.351	0	0.026		0.026					For Grading		
			803	183	37-3311-07-016.000	0.186	0	0.028		0.028							
	TOTAL		845	577				0.054		0.054							
112-T	Perry Eastgate, Ltd.	18-19	602	511	47-0400-02-003.000	0.321	0	0.067		0.067	S				1 Post Bus. Sign; For Drive Relocation and Grading		
113-T	Douglas M. Stimmel and Carole L. Stimmel	18-19	800	94	47-0400-02-002.000	0.321	0	0.034		0.034	Yes				* Landscaping; For Drive Construction and Grading		
114-T	Gregory G. Mauk	18-19	OR 2011	09424	37-3311-07-017.000	0.186	0	0.035		0.035					For Drive Construction and Grading		
115-WD	Harding Highway Realty, Inc.	18-21	733	545	47-0400-02-005.008	0.44	0.236	0.243	0.236	0.007	Yes(2)		0.197		0.236 Acres of P.R.O. Converted to WD; * Decorative		
115-T	an Ohio Corporation							0.016		0.016					Stone (2); For Drive and Curb Construction and Grading		
116-WD	Christina Stutzman	18-21	819	120	37-3311-07-018.000	0.297	0	0.025	0	0.025		0.272					
116-T								0.068		0.068					For Drive Construction and Grading		
117-WD	Fifth Third Bank of Western Ohio, N.A.	20-21	790	689	47-0400-02-001.000	0.46	0	0.004	0	0.004			0.456				
117A-WD	Fifth Third Bank Western Ohio,	20-21	872	530	37-3311-06-017.000	0.195	0	0	0	0		0.195					
	Trustee ½ and Ponderosa LLC ½		888	154	37-3311-06-018.000	0.274	0	0.013	0	0.013		0.261					
			890	195	37-3311-06-019.000	0.304	0	0.010	0	0.010		0.294					
	TOTAL					0.773	0	0.023	0	0.023		0.750					
117A-T								0.028		0.028					For Grading		
117B-WD	Fifth Third Bank	20-21	894	787	47-0400-02-005.007	0.18	0.006	0.011	0.006	0.005			0.169				
118-WD	Optimal Investments, LLC	20-21	2009	12345	37-3311-06-020.000	0.244	0	0.008	0	0.008		0.236					
118-T								0.013		0.013				State	For Drive Construction and Grading		

LEGEND

WD = WARRANTY DEED
SH = STANDARD HIGHWAY EASEMENT
T = TEMPORARY EASEMENT
SL = SLOPE EASEMENT
S = SEWER EASEMENT

NOTE: ALL TEMPORARY PARCELS TO BE OF 12 MONTH DURATION.

NOTE: UNDER NO CIRCUMSTANCES ARE TEMPORARY EASEMENTS TO BE USED FOR STORAGE OF MATERIAL OR EQUIPMENT BY THE CONTRACTOR UNLESS NOTED OTHERWISE.

NOTE: RECORD AREAS SHOWN ARE FROM COUNTY AUDITOR'S RECORDS.

GRANTEE:

ALL RIGHT OF WAY ACQUIRED IN THE NAME OF STATE OF OHIO UNLESS OTHERWISE SHOWN.

REV.	DATE	DESCRIPTION
4	2-28-12	Parcel 116 - Name Change
3	10-27-11	Parcel 114-T - Name Change
2	6-2-11	Parcel 114-T - Name Change
1	3-10-11	Parcel 115-T - Changed Gross Take

FIELD REVIEW BY: Larry Flippin DATE: 7-7-10
OWNERSHIP VERIFIED BY: Larry Flippin DATE: 1-27-11
DATE COMPLETED: 2-09-11

FEDERAL PROJECT NO. E050(248)

PID NO. 75467

STATE JOB NO. 416336

R/W DESIGNER NJV
R/W REVIEWER DJS

SUMMARY OF ADDITIONAL RIGHT OF WAY PARCELS 109-118

ALL-117/309-18.65/15.17

I:\Pid\75467\Right-of-Way\sheets\75467RS003.dgn 17-SEP-2012 10:56AM nvondere

NET RESIDUE = RECORD AREA - TOTAL PRO - NET TAKE

* DENOTES RIGHT OF WAY ENCROACHMENT

ALL AREAS IN ACRES

PARCEL NO.	OWNER	SHEET NO.	OWNER'S REC. BOOK	OWNER'S REC. PAGE	AUDITOR'S PARCEL	RECORD AREA	TOTAL P.R.O.	GROSS TAKE	P.R.O. IN TAKE	NET TAKE	STRUC-TURE	NET RESIDUE LEFT	NET RESIDUE RIGHT	TYPE FUND	REMARKS	AS ACQUIRED BOOK	AS ACQUIRED PAGE
119-WD	N and D Restaurants, Inc.,	20-23	2009	2526	47-0400-02-005.018	2.53	0.344	0.349	0.344	0.005			2.181	State	0.344 Acres of P.R.O. Converted to WD		
119-T	a Florida Corporation							0.021		0.021					For Grading		
120-WD	Carl L. Hunlock	20-21	947	59	37-3311-06-021.000	0.275	0	0.009	0	0.009		0.266					
120-T								0.015		0.015					For Grading		
121-T	David S. Beck and Mary Beck	20-23	918	320	37-3311-04-015.000	0.197	0	0.026		0.026					For Grading		
122-WD1	Lima Shopping Center Associates	22-23	2009	1574	47-0400-02-005.002	0.490	0.167	0.186	0.167	0.019			0.304		0.167 Acres of P.R.O. Converted to WD		
	Limited Liability Company, as successor		649	118	47-0400-02-005.003	5.89	0.350	0.413	0.350	0.063			5.477		0.350 Acres of P.R.O. Converted to WD		
	by merger with Lima Shopping Associates,		815	642	47-0400-02-005.004	1.510	0.086	0.086	0.086	0			1.424		0.086 Acres of P.R.O. Converted to WD		
122-WD2	Ltd., an Ohio Limited Partnership		649	114	47-0400-02-005.005	0.840	0.259	0.264	0.259	0.005			0.576		0.259 Acres of P.R.O. Converted to WD		
	TOTAL					8.730	0.862	0.949	0.862	0.087			7.781				
122-T1								0.082		0.082					For Drive Construction and Grading		
122-T2								0.149		0.149					For Drive Construction and Grading		
	TOTAL							0.231		0.231							
123	Not Used																
124-T	Lisa R. Graham	22-23	2009	6061	37-3311-03-004.000	0.382	0	0.056		0.056					For Grading		
125-T	John E. Shaw	22-23	908	243	37-3311-03-005.000	0.32	0	0.038		0.038					For Drive Construction and Grading		
			906	360													
			853	638													
126-T	Gregory S. Morrison	22-23	901	760	37-3311-03-006.000	0.215	0	0.025		0.025					For Drive Construction and Grading		
127-T	Tom Conaway and Marcia Conaway	22-23	2007	1655	37-3311-03-007.000	0.32	0	0.047		0.047					For Drive Construction and Grading		
128-T	David L. Haney and Ardith A. Haney	22-23	932	791	37-3311-03-008.000	0.32	0	0.047		0.047	Yes				11' of Wood Fence; For Drive Construction and Grading		
129	Triple R Associates, Ltd.		889	552	47-0400-02-005.017	2.63									No Take		
130-T	Martha J. Countryman and Michael G. Molina	22-25	2008	925	37-3311-03-009.000	0.531	0	0.031		0.031				State	For Drive Construction		

LEGEND

WD = WARRANTY DEED
SH = STANDARD HIGHWAY EASEMENT
T = TEMPORARY EASEMENT
SL = SLOPE EASEMENT
S = SEWER EASEMENT

NOTE: ALL TEMPORARY PARCELS TO BE OF 12 MONTH DURATION.

NOTE: UNDER NO CIRCUMSTANCES ARE TEMPORARY EASEMENTS TO BE USED FOR STORAGE OF MATERIAL OR EQUIPMENT BY THE CONTRACTOR UNLESS NOTED OTHERWISE.

NOTE: RECORD AREAS SHOWN ARE FROM COUNTY AUDITOR'S RECORDS.

GRANTEE:

ALL RIGHT OF WAY ACQUIRED IN THE NAME OF STATE OF OHIO UNLESS OTHERWISE SHOWN.

REV.	DATE	DESCRIPTION

FIELD REVIEW BY: Larry Flippin DATE: 7-7-10
OWNERSHIP VERIFIED BY: Larry Flippin DATE: 1-27-11
DATE COMPLETED: 2-09-11

FEDERAL PROJECT NO. E050(248)
PID NO. 75467
STATE JOB NO. 416336
R/W DESIGNER NJV
R/W REVIEWER DJS

SUMMARY OF ADDITIONAL RIGHT OF WAY
PARCELS 119-130

ALL-117/309-18.65/15.17

12/31

154/173

I:\Pdv\75467\Right-of-Way\sheets\75467RS004.dgn 17-SEP-2012 10:56AM nvondere

NET RESIDUE = RECORD AREA - TOTAL PRO - NET TAKE

* DENOTES RIGHT OF WAY ENCROACHMENT

ALL AREAS IN ACRES

PARCEL NO.	OWNER	SHEET NO.	OWNER'S REC. BOOK	OWNER'S REC. PAGE	AUDITOR'S PARCEL	RECORD AREA	TOTAL P.R.O.	GROSS TAKE	P.R.O. IN TAKE	NET TAKE	STRUC-TURE	NET RESIDUE LEFT	NET RESIDUE RIGHT	TYPE FUND	REMARKS	AS ACQUIRED BOOK	AS ACQUIRED PAGE
131-T	Kathy Ann Walton	24-25	790	484	37-3311-03-010.000	0.105	0	0.006		0.006	S			State	* 2 Post Welcome Sign		
			613	085	37-3311-03-010.001	0.215	0	0.013		0.013					For Drive Construction and Grading		
					37-3311-03-010.002	0.215	0	0.013		0.013							
					37-3311-03-010.003	0.264	0	0.023		0.023							
	TOTAL							0.055		0.055							
132-T1	TVRV, LLC, a Delaware	24-25	2007	9916	47-0400-02-005.020	1.45	0	0.009		0.009					For Drive Construction and Grading		
132-T2	limited liability company							0.004		0.004					For Grading		
	TOTAL							0.013		0.013							
133	Not Used																
134-WD	Warren Brim	24-27	795	55	37-3311-01-008.000	0.834	0	0.058	0	0.058#		0.776			# 0.018 Acres of Slope Easement Converted to WD		
134-T								0.006		0.006					For Drive Construction and Grading		
135-WD	Grace Church Worldwide Ministries, Inc.	26-27	2008	7649	37-3312-03-032.000	4.03	0.545	0.689	0.545	0.144		3.341			0.545 Acres of P.R.O. Converted to WD		
											Yes(4)				31' of Chain Link Fence, Brick Post (2),		
															174' of Chain Link Fence - * 202' of Chain Link Fence		
136-T	Wal-Mart Real Estate Business Trust,	28	919	256	47-0400-01-003.003	21.643	0	0.014		0.014					For Grading		
	a Delaware Business Trust		890	648													
137-WD	Kenneth E. Tull and Abigail G. Tull	26-28	709	261	37-3312-03-031.000	1.19	0.230	0.237	0.230	0.007		0.953			0.230 Acres of P.R.O. Converted to WD		
											Yes(2)				* 169' of Chain Link Fence, * 9' of Chain Link Fence		
138-T	Murphy Oil USA, Inc.,	28	2007	19233	47-0400-01-003.002	0.637	0	0.002		0.002					For Grading		
	a Delaware Corporation																
139	Not Used																
140	Contini Enterprises, Ltd.	29	877	419	37-3312-01-015.000	1.46					Yes(4)				No Take - * Brick Posts & Wall (2), Permitted		
															* Yard Lamps (2), Permitted		
141-143	Not Used																
144-WD	Allen County Agricultural Society	28-29	889	810	47-0400-01-002.000	1.660	0	0	0	0			1.660				
					47-0400-01-002.001	3.850	0.316	0.367	0.316	0.051			3.483		0.316 Acres of P.R.O. Converted to WD		
	TOTAL					5.510	0.316	0.367	0.316	0.051			5.143				
145-WD	Board of Commissioners of Allen	29	311	40	47-0400-01-001.000	108.220	6.136	0.573	0.465	0.108	S(2)		101.976		0.465 Acres of P.R.O. Converted to WD;		
	County, Ohio		545	666	47-0400-01-002.002	1.150	0	0	0	0	Yes		1.150		1 Post Bus. Sign (2), 238' of Guardrail		
	TOTAL					109.370	6.136	0.573	0.465	0.108			103.126				
146	Not Used																
147-WD	K & B Plastics, Inc.	29	747	117	37-3312-01-014.000	3.880	0.294	0.318	0.294	0.024		3.562			0.294 Acres of P.R.O. Converted to WD		
147-T								0.034		0.034				State	For Drive Construction and Grading		

LEGEND

WD = WARRANTY DEED
SH = STANDARD HIGHWAY EASEMENT
T = TEMPORARY EASEMENT
SL = SLOPE EASEMENT
S = SEWER EASEMENT

NOTE: ALL TEMPORARY PARCELS TO BE OF 12 MONTH DURATION.

NOTE: UNDER NO CIRCUMSTANCES ARE TEMPORARY EASEMENTS TO BE USED FOR STORAGE OF MATERIAL OR EQUIPMENT BY THE CONTRACTOR UNLESS NOTED OTHERWISE.

NOTE: RECORD AREAS SHOWN ARE FROM COUNTY AUDITOR'S RECORDS.

GRANTEE:

ALL RIGHT OF WAY ACQUIRED IN THE NAME OF STATE OF OHIO UNLESS OTHERWISE SHOWN.

REV.	DATE	DESCRIPTION
3	9-10-12	Changed Structures to Permitted
2	9-09-11	Changed Net Residue for Parcel 147
1	3-10-11	Added Parcel 147

FIELD REVIEW BY: Larry Flippin DATE: 7-7-10
OWNERSHIP VERIFIED BY: Larry Flippin DATE: 1-27-11
DATE COMPLETED: 2-09-11

FEDERAL PROJECT NO. E050(248)
PID NO. 75467
STATE JOB NO. 416336
R/W DESIGNER NJV
R/W REVIEWER DJS

SUMMARY OF ADDITIONAL RIGHT OF WAY
PARCELS 131-145

ALL-117/309-18.65/15.17

13 / 31

155
173

nvondere 17-SEP-2012 10:56AM I:\Pdv\75467\Right-of-Way\sheets\75467RS005.dgn

ROADWAY RECONSTRUCTION AS PER PART 1, ALL-75-5.53

LOST CREEK SUBDIVISION NUMBER 1 PLAT BOOK 3 PAGE 411

LOST CREEK SUBDIVISION NUMBER 5 PLAT BOOK 6 PAGE 98

ALLEN COUNTY BATH TOWNSHIP SE¼ SECTION 32 T-3-S R-7-E

ALLEN COUNTY PERRY TOWNSHIP NE¼ SECTION 5 T-4-S R-7-E

BEGIN ACQUISITION STA. 903+20.55

BEGIN SHEET STA. 901+00

MATCH LINE STA. 906+80

PI Sta. 901+65.00

EQUATION: Sta. 904+00.11 BK = Sta. 904+00.00 AH

10+00.00 ℄ ROSCHMAN AVE. = 904+72.33 ℄ Constr. SR 117/309

9+89.45 ℄ CONSTR. EASTERN AVE. = 905+50.80 ℄ Constr. SR 117/309

10+00.00 = 905+49.05

R/W SR 117/309 & SECTION LINE

CONCRETE MEDIAN

Constr. SR 117/309

Constr. Limits

CONSTR. ROSCHMAN AVE. N0°41'06"E

CONSTR. EASTERN AVE. N0°04'26"W

(DND) = DO NOT DISTURB

* DENOTES RIGHT OF WAY ENCROACHMENT

ITEM 202, PAVEMENT REMOVED

MONUMENT LEGEND

● - ¾"x30" Reinforcing Rod with Aluminum Cap stamped "ODOT R/W District 1" to be set by ODOT after Construction.

REV.	DATE	DESCRIPTION
2	2-28-12	Changed Walk to 5.5'; Par 91-Name Change
1	3-10-11	Parcels 92,94,95 & 102A-Changed Property
		Lines; 92-Added DND, 102A-Name change

DATE COMPLETED: 2-09-11

ALLEN COUNTY
BATH TOWNSHIP
SEC. 32 T-3-S R-7-E
PERRY TOWNSHIP
SEC. 5 T-4-S R-7-E

91 Bob Evans Farms, Inc. 47-0500-01-001.000

92 Tower National Bank of Lima

93 RJR Investment, LLC 47-0500-01-010.006 (28742)

94 Henry J. Iven and Patricia A. Iven

95 Emro Marketing Company 37-3212-10-007.000

96 Hekron Investments, Inc. 47-0500-01-010.007

102A Highlawn Farms Family Limited Partnership 37-3212-11-016.000

37-3212-11-015.000

37-3212-11-014.000

EASTGATE PARK SUBDIVISION NO. 2 PB. 19 PG. 62

HUNAN GARDENS

CHASE (16231)

HUGHES-MAICO (16234)

PAT'S DONUTS (17087)

(17088) (17089) (17090)

CAR WASH

BOB EVANS

EXIT RAMP

HORIZONTAL SCALE IN FEET 0 10 20 40

PID NO. 75467

R/W DESIGNER NJV

R/W REVIEWER DJS

RIGHT OF WAY TOPO SHEET
STA. 901+00 TO STA. 906+80

ALL-117/309-18.65/15.17

14/31

156/173

I:\Pd\75467\Right-of-Way\sheets\75467RP002.dgn 17-SEP-2012 10:56AM nvondere

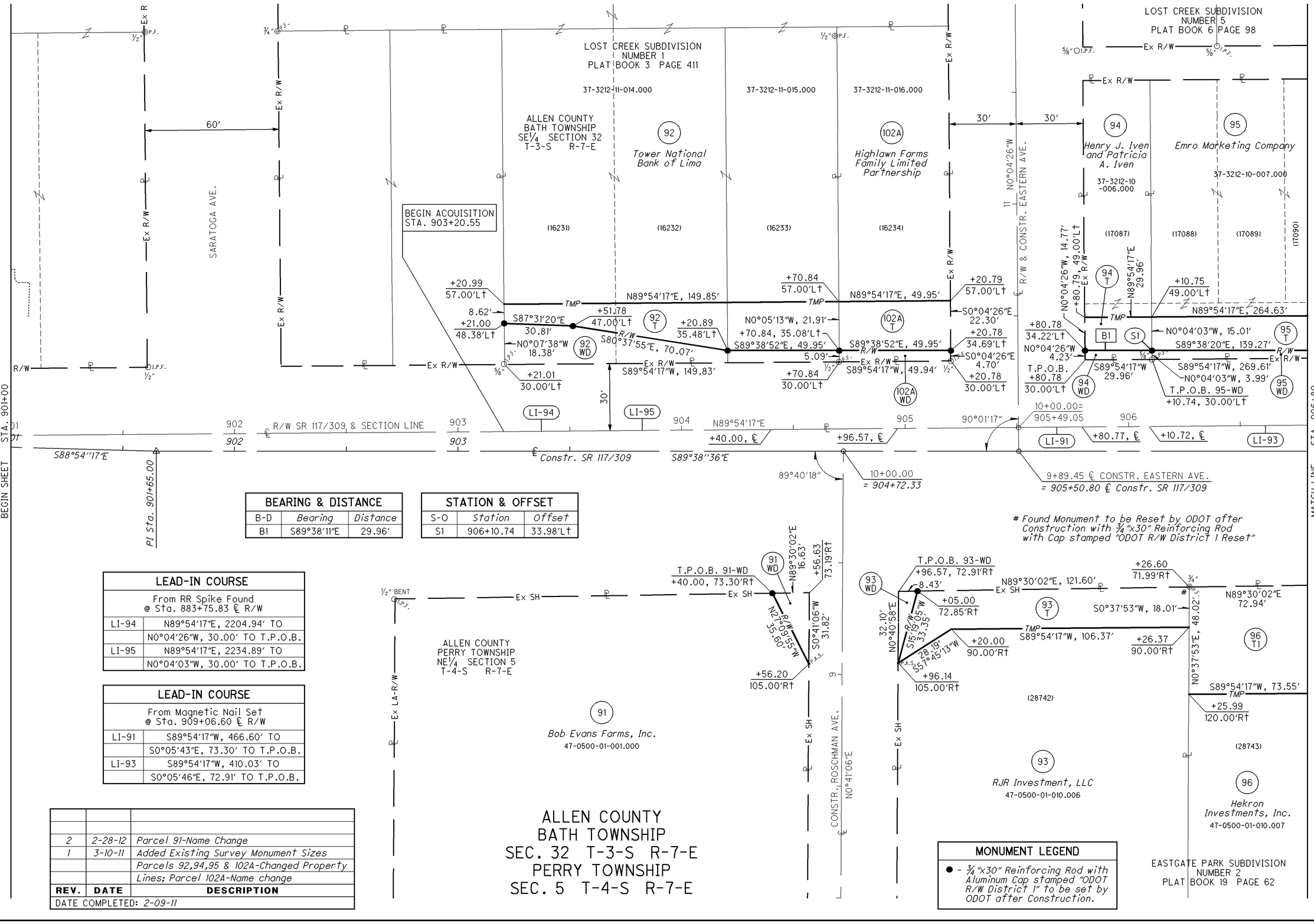

BEARING & DISTANCE		
B-D	*Bearing*	*Distance*
B1	S89°38'11"E	29.96'

STATION & OFFSET		
S-O	*Station*	*Offset*
S1	906+10.74	33.98'Lt

LEAD-IN COURSE	
From RR Spike Found @ Sta. 883+75.83 ℄ R/W	
LI-94	N89°54'17"E, 2204.94' TO
	N0°04'26"W, 30.00' TO T.P.O.B.
LI-95	N89°54'17"E, 2234.89' TO
	N0°04'03"W, 30.00' TO T.P.O.B.

LEAD-IN COURSE	
From Magnetic Nail Set @ Sta. 909+06.60 ℄ R/W	
LI-91	S89°54'17"W, 466.60' TO
	S0°05'43"E, 73.30' TO T.P.O.B.
LI-93	S89°54'17"W, 410.03' TO
	S0°05'46"E, 72.91' TO T.P.O.B.

MONUMENT LEGEND
● - 3/4"x30" Reinforcing Rod with Aluminum Cap stamped "ODOT R/W District 1" to be set by ODOT after Construction.

REV.	DATE	DESCRIPTION
2	2-28-12	Parcel 91-Name Change
1	3-10-11	Added Existing Survey Monument Sizes
		Parcels 92,94,95 & 102A-Changed Property
		Lines; Parcel 102A-Name change

DATE COMPLETED: 2-09-11

HORIZONTAL SCALE IN FEET
0 10 20 40

PID NO. 75467

R/W DESIGNER NJV
R/W REVIEWER DJS

RIGHT OF WAY BOUNDRY SHEET
STA. 901+00 TO STA. 906+80

ALL-117/309-18.65/15.17

15 / 31

157 / 173

I:\Pid\75467\Right-of-Way\sheets\75467RD002.dgn 17-SEP-2012 10:56AM nvondere

ALLEN COUNTY
BATH TOWNSHIP
SEC. 32 & 33 T-3-S R-7-E
PERRY TOWNSHIP
SEC. 4 & 5 T-4-S R-7-E

ALLEN COUNTY
BATH TOWNSHIP
SE¼ SECTION 32
T-3-S R-7-E

LOST CREEK SUBDIVISION
NUMBER 5
PLAT BOOK 6 PAGE 98

ALLEN COUNTY
BATH TOWNSHIP
SW¼ SECTION 33
T-3-S R-7-E

LOST CREEK SUBDIVISION
NUMBER 1
PLAT BOOK 3 PAGE 411

DEFLECTION DATA
℄ R/W SR 309
PI Sta. 912+27.86
Δ = 0°-18'-19" Rt
NO CURVE

95 — Emro Marketing Company — CANOPY — 37-3212-10-011.000
37-3212-10-007.000
SPEEDWAY
(17090) (17091) (17092) (17093) (17094) (17095) (17096)

101 — Ruth Ann Loar — 37-3311-11-009.000
102B — Highlawn Farms Family Limited Partnership — 37-3311-11-010.000
104 — Frances G. Corderman, Karen Kay Bott and Barbara Lynn Grener, Trustees, under the Frances G. Corderman Living Trust — 37-3311-11-011.000
(16300) (16301) (16302) (16303) (16304)
RESIDENCE
ASPHALT
LAWN
STONE
WALK
RES. DR.
SECTION LINE

Ex R/W
℄ R/W & CONSTR. WILLARD AVE. N0°00'34"W
℄ R/W & CONSTR. BRISTOL AVE. N0°00'38"W
6" WATER
7'
9'
COMM. DR.
TRENCH DRAIN
CONC.
6" CONC.
6" CLAY
LIGHT POLE (DND)
(DND) SPEEDWAY SIGN
KEROSENE PUMP
6" STEEL POSTS (SAVE)
SHRUB (201)
6" CONC. WALK
CONCRETE
CONC. PAD
AIR PUMP
6" STEEL POSTS (202)
3" STEEL POST (202)
WOOD POSTS (202)
Plug (202)
TMP
Constr. Limits
(DND) 24" CHERRY
(201) 12" MAPLE
(DND) 12" MAPLE
(201) 24" MAPLE
(201) 24" CHERRY
(DND)
SAN
W
10" WATER
RES. DR.
+10.0
+15.0
+55
+34
+66.9
+67.0
+96.0
+50
+40
+90
+60
+91.0
+75
+88
32.0'
36.8'
50.7'
42.7'
62'LT
2' (Typ.)
44'
30' CONC.
8' ABAN. WATER W

8"x17'C 706.02
8"x30'
12"x60'B
15"x 176'B
15"x100'B
12"x80'B
4"x346' BPU
*12"x6'C
12"x240'C
12"x37'B
12"x70'B
12"x 15'B
907 908 909 910 911 912
909+10.30
10+00.00= 912+29.43
Pi Sta. 912+27.86
N89°54'17"E ℄ R/W SR 309
S89°47'24"E
90°13'10"
89°46'46"
℄ Constr. SR 309
℄ Constr. SR 117/309 S89°38'36"E
92°28'23"
87°40'25"
989+06.66 ℄ CONSTR. SR 117 = PI 908+79.96 ℄ Constr. SR 309
9+86.69 ℄ CONSTR. WILLARD AVE. = 909+10.33 ℄ Constr. SR 309
9+85.00 ℄ CON. BRISTOL AVE. = 912+29.46 ℄ Constr. SR 309
686
990
991
S20°06'59"E
CONCRETE MEDIAN
4"x987' BPU
4"x263' BPU
12"x130'C
12"x38'C,707.32
12"x67'C
12"x75'B
12"x9'C
4"x5'E
8" CLAY (202)
12" PLASTIC
ENTER SIGN (SAVE)
EXIT SIGN (SAVE)
LIGHT POLE (SAVE)
12"x14'C,706.02
15"x5'B 706.02
12"x55'C
12"x8'C
4"x175' BPU
4"x68' BPU
4"x109' BPU
4"x156' BPU
4"x157' BPU
12"x11'C
CB (202)
2'x2' CB (202)
12" CONC. (202)
15" CONC.
W 12" WATER
8" WATER
CONCRETE BASE
ROCK
CONC. SLAB
LANDS.
BURGER KING SIGN
McDONALD'S SIGN
(DND) LINDEN
(DND) = DO NOT DISTURB
McDONALD'S
ASPHALT
CONCRETE

MATCH LINE STA. 906+80
MATCH LINE STA. 912+60

96 — Hekron Investments, Inc. — 47-0500-01-010.007
100 — McDonald's Corporation — 47-0400-02-004.000
103 — Triple R. Associates, Ltd. — 47-0400-02-005.012
105 — RJR Investment, LLC — 47-0400-02-005.011

EASTGATE PARK SUBDIVISION
NUMBER 2
PLAT BOOK 19 PAGE 62
(28743)

ALLEN COUNTY
PERRY TOWNSHIP
NE¼ SECTION 5
T-4-S R-7-E

ALLEN COUNTY
PERRY TOWNSHIP
NW¼ SECTION 4
T-4-S R-7-E

MONUMENT LEGEND
● - ¾"x30" Reinforcing Rod with Aluminum Cap stamped "ODOT R/W District 1" to be set by ODOT after Construction.

REV.	DATE	DESCRIPTION
3	2-28-12	Changed Sidewalk to 5.5'
2	10-27-11	Removed Sidewalk in Parcels 101,102B & 104
1	3-10-11	Parcel 95-Changed Property Lines
		Parcel 102B-Name change, 104-Changed Dr.

DATE COMPLETED: 2-09-11

ITEM 202, PAVEMENT REMOVED

HORIZONTAL SCALE IN FEET
0 10 20 40

PID NO. 75467

R/W DESIGNER NJV
R/W REVIEWER DJS

RIGHT OF WAY TOPO SHEET
STA. 906+80 TO STA. 912+60

ALL-117/309-18.65/15.17

16 / 31
158 / 173

I:\Pd\75467\Right-of-Way\sheets\75467RP003.dgn 17-SEP-2012 10:56AM nvondere

ALLEN COUNTY
BATH TOWNSHIP
SEC. 32 & 33 T-3-S R-7-E
PERRY TOWNSHIP
SEC. 4 & 5 T-4-S R-7-E

ALLEN COUNTY
BATH TOWNSHIP
SE¼ SECTION 32
T-3-S R-7-E

LOST CREEK SUBDIVISION
NUMBER 5
PLAT BOOK 6 PAGE 98

ALLEN COUNTY
BATH TOWNSHIP
SW¼ SECTION 33
T-3-S R-7-E

LOST CREEK SUBDIVISION
NUMBER 1
PLAT BOOK 3 PAGE 411

DEFLECTION DATA

℄ R/W SR 309
PI Sta. 912+27.86
Δ = 0°-18'-19" Rt
NO CURVE

95 — Emro Marketing Company — 37-3212-10-007.000 — 37-3212-10-011.000

101 — Ruth Ann Loar — 37-3311-11-009.000

102B — Highlawn Farms Family Limited Partnership — 37-3311-11-010.000

104 — Frances G. Corderman, Karen Kay Bott and Barbara Lynn Grener, Trustees, under the Frances G. Corderman Living Trust — 37-3311-11-011.000

(17090) (17091) (17092) (17093) (17094) (17095) (17096) (16300) (16301) (16302) (16303) (16304)

N89°56'14"E, 5.00'
+54.80 30.00'Lt
I.P.F. 5/8"
11+54.80 35.00'Lt
N0°00'34"W, 105.85' TMP
S0°00'34"E, 109.00'
11 N0°00'34"W R/W & CONSTR. WILLARD AVE.
30' 30'
Ex R/W
Ex R/W ℄
+75.38 49.00'Lt
+80.37 45.85'Lt
N89°54'17"E, 264.63' TMP
139.27' S89°38'20"E
95 T
+50.00 32.88'Lt
N79°29'04"E, 74.22' R/W
95 WD
S89°38'36"E, 57.37'
+23.00, 46.31'Lt
S0°00'34"E 15.85'
+80.35 30.00'Lt
Ex R/W S89°54'17"W, 269.61'
30'

10+88.00 30.00'Rt
S23°56'28"E 36.03'
42.96' N0°00'34"W
+55.00 55.00'Lt
+44.06 55.00'Lt
N89°54'17"E, 89.06' TMP
+47.63 55.00'Lt
N89°54'17"E, 103.57' TMP
+93.00 55.00'Lt
45.37' N89°54'17"E TMP
39.59' N9°27'39"E
10+94.00 30.00'Lt
S0°00'38"E, 54.04'
11 N0°00'38"W R/W & CONSTR. BRISTOL AVE.
+59.20, 60.00'Lt
N0°00'38"W, 30.00'
Ex R/W

+40.37 45.00'Lt
S47°18'05"E, 19.94'
N0°00'34"W 15.00'
+40.35 30.00'Lt
+55.00, 31.45'Lt
101 T
89.02' S89°47'24"E R/W
Ex R/W
S89°54'17"W, 103.67'
N0°00'35"W, 0.98'
101 WD
N0°00'35"W 24.02'
+44.02 30.98'Lt
+44.02 30.00'Lt
102B T
102B WD
S89°47'24"E, 103.57' R/W
Ex R/W
S89°54'17"W, 103.57'
S0°00'38"E, 0.43'
+47.59 30.43'Lt
24.57' N0°00'38"W
+47.59 30.00'Lt
104 T
32.41' S89°47'24"E
+80.00 30.26'Lt
B2
104 WD
Ex R/W
S89°54'17"W, 51.89'
+99.49 40.00'Lt
+99.48 30.00'Lt
S0°00'38"E 10.00'
106 T
+59.32 30.00'Lt
P.I. Sta. 912+27.86

907 908 909 910 911 912
R/W SR 117/309 SECTION LINE
N89°54'17"E
988+93.51= 908+79.45
10+00.00= 909+10.30
10+00.00= 912+29.43 S89°47'24"E
℄ Constr. SR 117/309 — S89°38'36"E
92°28'23" 87°40'25"
90°13'10" +36.61, ℄ R/W
℄ Constr. SR 309 — S89°47'24"E
89°46'46"
989+06.66 ℄ CONSTR. SR 117 = PI 908+79.96 ℄ Constr. SR 309
9+86.69 ℄ CONSTR. WILLARD AVE. = 909+10.33 ℄ Constr. SR 309
9+85.00 ℄ CON. BRISTOL AVE. = 912+29.46 ℄ Constr. SR 309
℄ CONSTR. SR 117 990 991
SECTION LINE

MATCH LINE STA. 906+80
MATCH LINE STA. 912+60

BEARING & DISTANCE

B-D	Bearing	Distance
B2	N63°20'34"E	21.79'

LEAD-IN COURSE

From Magnetic Nail Set @ Sta. 909+06.60 ℄ R/W

LI-100	N89°54'17"E, 30.01' TO
-WD1	S1°02'23"W, 70.32' TO T.P.O.B.

LI-100WD1
T.P.O.B. 100-WD1 +35.22 70.30'Rt
¾" I.P.F.
44.78' S89°21'50"E
+80.00 70.88'Rt
17.61'
Ex SH
+63.15, 76.00'Rt
S72°59'13"W, 31.36'
+50.00, 80.00'Rt
100 WD1
29.26' N2°02'15"W R/W
989+95.00 53.21'Lt
S35°05'56"W 23.92'
Ex R/W
S89°21'50"E, 155.22'
N89°45'44"W, 172.02'
100 T
+35.20 72.86'Rt
S0°25'38"W, 4.14'
+35.17 77.00'Rt
35.74' N77°09'38"W
+70.00 85.00'Rt
103 T
S89°21'50"E, 96.96'
S0°00'29"E, 10.93'
+32.55 74.07'Rt
+32.59 85.00'Rt
S89°55'37"W, 62.14'
125.00' S89°21'50"E
½" I.P.F. ½"
N89°47'24"W 161.98'
105 T

N89°30'02"E 72.94'
+99.53 71.47'Rt
96 T1
TMP S0°05'43"E, 48.53'
+99.54 120.00'Rt
S89°54'17"W 73.55'
Ex SH
5/8" I.P.F.
(28743)
96
Hekron Investments, Inc.
47-0500-01-010.007

EASTGATE PARK SUBDIVISION
NUMBER 2
PLAT BOOK 19 PAGE 62

ALLEN COUNTY
PERRY TOWNSHIP
NE¼ SECTION 5
T-4-S R-7-E

100 — McDonald's Corporation — 47-0400-02-004.000

ALLEN COUNTY
PERRY TOWNSHIP
NW¼ SECTION 4
T-4-S R-7-E

103 — Triple R. Associates, Ltd. — 47-0400-02-005.012

105 — RJR Investment, LLC — 47-0400-02-005.011

REV.	DATE	DESCRIPTION
1	3-10-11	Added Existing Survey Monument Sizes
		Parcel 95-Changed Property Lines
		Parcel 102B-Name change

DATE COMPLETED: 2-09-11

MONUMENT LEGEND

● - ¾"x30" Reinforcing Rod with Aluminum Cap stamped "ODOT R/W District 1" to be set by ODOT after Construction.

N
HORIZONTAL SCALE IN FEET
0 10 20 40

PID NO. 75467

R/W DESIGNER NJV
R/W REVIEWER DJS

RIGHT OF WAY BOUNDRY SHEET
STA. 906+80 TO STA. 912+60

ALL-117/309-18.65/15.17

17 / 31
159 / 173

I:\Pdt\75467\Right-of-Way\sheets\75467RD003.dgn 17-SEP-2012 10:56AM nvondere

REV.	DATE	DESCRIPTION
6	2-28-12	Changed Walk to 5.5'; Par 116-Name Change
5	11-04-11	Parcel 114-Revised Drive
4	10-27-11	130,131-Removed Sidewalk; 114-Name Change
3	8-18-11	Parcel 106-Name Change
2	6-2-11	Parcel 114-Name Change
1	3-10-11	Parcel 115-Changed Temporary R/W

DATE COMPLETED: 2-09-11

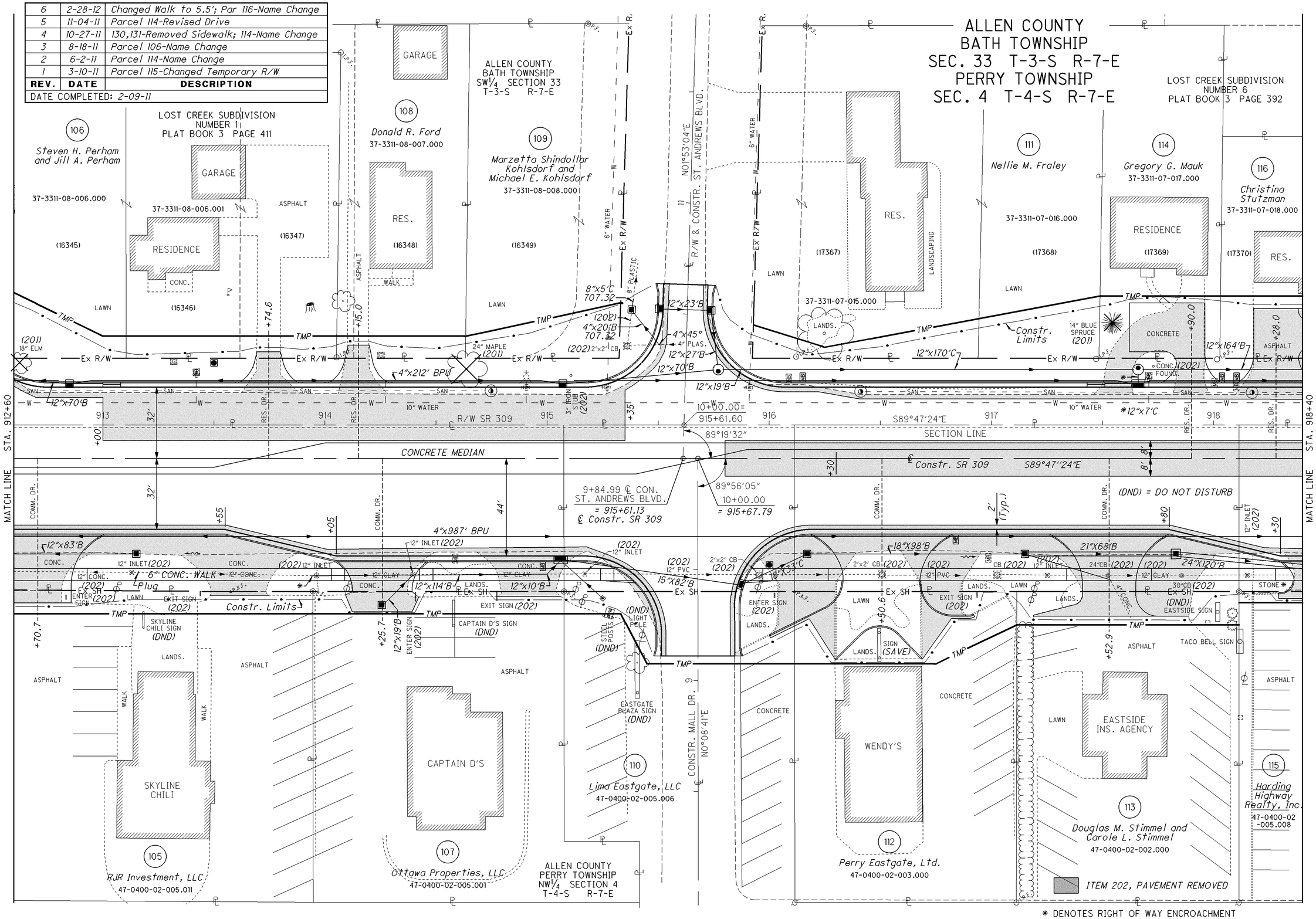

HORIZONTAL SCALE IN FEET

PID NO. 75467

R/W DESIGNER NJV
R/W REVIEWER DJS

RIGHT OF WAY TOPO SHEET
STA. 912+60 TO STA. 918+40

ALL-117/309-
18.65/15.17

I:\Pd\75467\Right-of-Way\sheets\75467RP004.dgn 17-SEP-2012 10:56AM nvondere

ALLEN COUNTY
BATH TOWNSHIP
SEC. 32 & 33 T-3-S R-7-E
PERRY TOWNSHIP
SEC. 4 & 5 T-4-S R-7-E

LOST CREEK SUBDIVISION NUMBER 1
PLAT BOOK 3 PAGE 411

ALLEN COUNTY
BATH TOWNSHIP
SW¼ SECTION 33
T-3-S R-7-E

LOST CREEK SUBDIVISION NUMBER 6
PLAT BOOK 3 PAGE 392

37-3311-08-006.000 — 106 — Steven H. Perham and Jill A. Perham
37-3311-08-006.001
37-3311-08-007.000 — 108 — Donald R. Ford
37-3311-08-008.000 — 109 — Marzetta Shindollar Kohlsdorf and Michael E. Kohlsdorf
37-3311-07-015.000 — 111 — Nellie M. Fraley
37-3311-07-016.000
37-3311-07-017.000 — 114 — Gregory G. Mauk
37-3311-07-018.000 — 116 — Christina Stutzman

(16345) (16346) (16347) (16348) (16349) (17367) (17368) (17369) (17370)

Ex R/W 30′ 30′ — ℄ R/W & CONSTR. ST. ANDREWS BLVD. — N01°53′04″E

S63°40′30″E, TMP, 45.44′
+00.00 40.00′Lt
S89°47′24″E, 105.35′
+05.35 40.00′Lt
TMP
S1°01′04″W, 10.00′
N89°47′24″W, 145.89′
+05.21 30.00′Lt
S89°47′24″E, 58.00′
S0°58′46″W, 10.00′
N89°47′24″W, 58.01′
+63.22 30.00′Lt
+63.35 40.00′Lt
N78°05′21″E, 71.44′ TMP
N89°47′24″W, 69.25′
+33.20 55.00′Lt
25.01′ S1°53′04″W
+32.46 30.00′Lt
+92.93 45.00′Lt
N1°53′04″E 15.01′
+92.49 30.00′Lt
33.69′ S72°28′20″E
+25.00 35.00′Lt
N79°41′35″E, TMP, 126.01′
N89°47′24″W, 155.91′
+48.89 58.00′Lt
S89°47′24″E, TMP, 54.22′
N1°13′13″E 28.00′
+48.40 30.00′Lt
N89°47′24″W, 54.35′
+03.11 58.00′Lt
S89°47′24″E 96.89′
N0°57′39″E 28.00′
+02.75 30.00′Lt
N89°47′24″W 47.25′

106 T — 108 T — 109 T — 111 T — 114 T — 116 T

30′

913 — 914 — R/W SR 309 — 915 — 916 — 917 — 918

SECTION LINE

MATCH LINE STA. 912+60

10+00.00= 915+61.60
S89°47′24″E
LI-115
89°19′32″
89°56′05″
10+00.00 = 915+67.79
9+84.99 ℄ CON. ST. ANDREWS BLVD. = 915+61.13 ℄ Constr. SR 309
℄ Constr. SR 309 S89°47′′24″E
T.P.O.B. 115-WD +11.43, ℄ R/W
S89°47′24″E 137.45′
75′
75.00′
N0°12′20″E, 75.00′
115 WD
MATCH LINE STA. 918+40

LEAD-IN COURSE	
From Magnetic Nail Set @ Sta. 909+06.60 ℄ R/W	
LI-115	N89°54′17″E, 321.25′ TO
	S89°47′24″E, 583.58′ TO T.P.O.B.

Found Monument to be Reset by ODOT after Construction with ¾″x30″ Reinforcing Rod with Cap stamped "ODOT R/W District 1 Reset"

S89°21′50″E, 125.00′ Ex SH
+57.55 75.00′Rt
37.01′
S89°47′24″E
+94.56 75.00′Rt
S0°08′41″W, 10.00′
N89°47′24″W, 161.98′ TMP
+94.57 85.00′Rt
S89°47′24″E, 113.03′ Ex SH
+07.59 75.00′Rt
S0°08′41″W, 10.00′
N89°47′24″W, 113.03′ TMP
+07.60 85.00′Rt
S89°47′24″E, 103.79′ Ex SH
N89°47′24″W, 25.40′
+33.00 85.00′Rt
N27°51′45″W 25.50′
+45.00 107.50′Rt
N89°47′24″W, 66.42′ TMP
+11.39 75.00′Rt
S89°47′24″E, 100.03′ Ex SH
S0°08′41″W 32.50′
+11.42 107.50′Rt
N89°47′24″W, 63.58′
+11.41 75.00′Rt
S89°47′24″E, 100.03′ Ex SH
S0°16′34″W, 15.00′
S6°31′49″W TMP 40.38′
+11.40 90.00′Rt
N89°47′24″W, 100.05′ TMP
+75.00 107.50′Rt
+11.44 75.00′Rt
S89°47′24″E 118.56′
5.00′
S0°12′20″W, 15.00′
N89°47′24″W 114.56′
+11.44 90.00′Rt
+11.44, 80.00′Rt

105 T — 107 T — 110 T1 — 112 T — 113 T — 115 T

105 — RJR Investment, LLC — 47-0400-02-005.011
107 — Ottawa Properties, LLC — 47-0400-02-005.001
110 — Lima Eastgate, LLC — 47-0400-02-005.006
CONSTR. MALL DR. ℄ N0°08′41″E
112 — Perry Eastgate, Ltd. — 47-0400-02-003.000
113 — Douglas M. Stimmel and Carole L. Stimmel — 47-0400-02-002.000
115 — Harding Highway Realty, Inc. — 47-0400-02 -005.008

ALLEN COUNTY
PERRY TOWNSHIP
NW¼ SECTION 4
T-4-S R-7-E

REV.	DATE	DESCRIPTION
5	2-28-12	Parcel 116-Name Change
4	10-27-11	Parcel 114-Name Change
3	8-18-11	Parcel 106-Name Change
2	6-2-11	Parcel 114-Name Change
1	3-10-11	Added Existing Survey Monument Sizes
		Parcel 115-Changed Temporary R/W

DATE COMPLETED: 2-09-11

I:\Pid\75467\Right-of-Way\sheets\75467RD004.dgn 17-SEP-2012 10:56AM nvondere

HORIZONTAL SCALE IN FEET
0 10 20 40

PID NO. 75467

R/W DESIGNER NJV
R/W REVIEWER DJS

RIGHT OF WAY BOUNDRY SHEET STA. 912+60 TO STA. 918+40

ALL-117/309-18.65/15.17

19 / 31

161 / 173

ALLEN COUNTY
BATH TOWNSHIP
SEC. 32 & 33 T-3-S R-7-E
PERRY TOWNSHIP
SEC. 4 & 5 T-4-S R-7-E

REV.	DATE	DESCRIPTION
3	2-28-12	Changed Walk to 5.5'; Par 116-Name Change
2	10-27-11	Removed Sidewalk in Par. 121,117A,118,120,121
1	3-10-11	Parcel 115-Changed Temporary R/W

DATE COMPLETED: 2-09-11

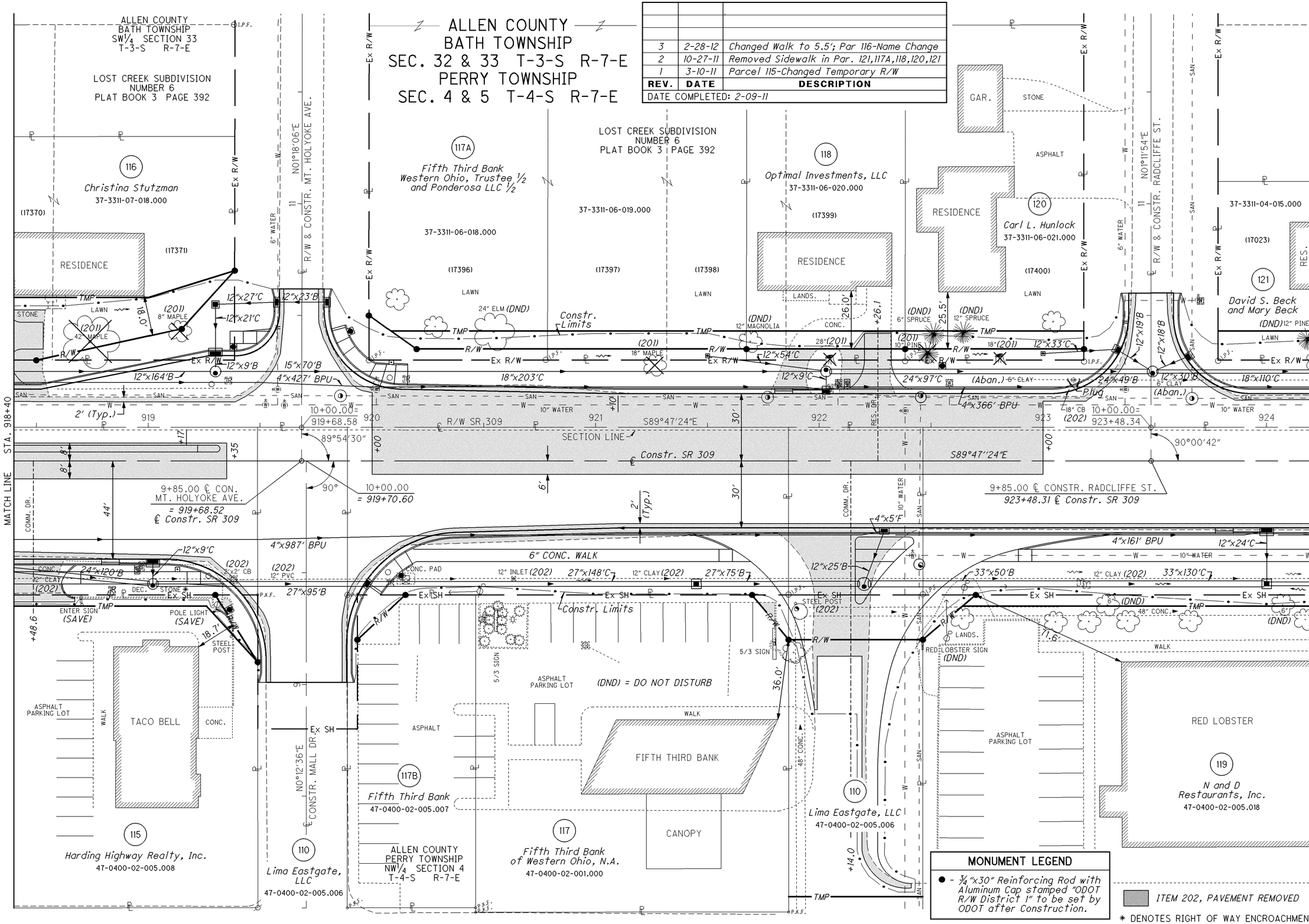

MONUMENT LEGEND

● - 3/4"x30" Reinforcing Rod with Aluminum Cap stamped "ODOT R/W District 1" to be set by ODOT after Construction.

ITEM 202, PAVEMENT REMOVED

* DENOTES RIGHT OF WAY ENCROACHMENT

HORIZONTAL SCALE IN FEET 0 10 20 40

PID NO. 75467

R/W DESIGNER NJV
R/W REVIEWER DJS

RIGHT OF WAY TOPO SHEET
STA. 918+40 TO STA. 924+20

ALL-117/309-
18.65/15.17

I:\Pd\75467\Right-of-Way\sheets\75467RP005.dgn 17-SEP-2012 10:56AM nvondere

ALLEN COUNTY
BATH TOWNSHIP
SEC. 33 T-3-S R-7-E
PERRY TOWNSHIP
SEC. 4 T-4-S R-7-E

LOST CREEK SUBDIVISION NUMBER 6 PLAT BOOK 3 PAGE 392

ALLEN COUNTY BATH TOWNSHIP SW¼ SECTION 33 T-3-S R-7-E

LOST CREEK SUBDIVISION NUMBER 6 PLAT BOOK 3 PAGE 392

116 *Christina Stutzman* 37-3311-07-018.000

117A *Fifth Third Bank Western Ohio, Trustee ½ and Ponderosa LLC ½* 37-3311-06-018.000

37-3311-06-019.000

118 *Optimal Investments, LLC* 37-3311-06-020.000

120 *Carl L. Hunlock* 37-3311-06-021.000

121 *David S. Beck and Mary Beck* 37-3311-04-015.000

(17370) (17371) (17396) (17397) (17398) (17399) (17400) (17023)

Ex R/W 30′ 30′ Ex R/W

℄ R/W & CONSTR. MT. HOLYOKE AVE. 11 N01°18′06″E

℄ R/W & CONSTR. RADCLIFFE ST. 11 N01°11′54″E

+00.00 58.00′Lt — S89°47′24″E TMP 96.89′ — 10+70.00 30.00′Lt — N72°54′52″E 40.52′ — 35.21′ N42°29′52″E — S0°18′06″W 40.05′

116 T — +15.00 44.00′Lt — N78°03′18″E, 66.49′ — 116 WD — 47.25′

+50.00 30.00′Lt — R/W — N89°47′24″W, 88.63′ — Ex R/W — +38.63 30.00′Lt

+98.66 50.00′Lt — S54°41′13″E, 26.08′ — +08.62, 43.00′Lt — TMP — S89°47′24″E, 158.84′ — TMP — +67.46, 43.00′Lt — N0°14′29″E, 8.00′ — +67.46, 35.00′Lt — S89°47′24″E, 70.95′ — +38.41, 43.00′Lt — S0°13′26″W, 8.00′ — +38.41, 35.00′Lt — S89°47′24″E, 79.92′ — +18.33 43.00′Lt — 8.00′ — S0°11′54″W — +18.33 35.00′Lt

117A WD — 117A T — 118 T — 118 WD — 120 T — 120 WD

N0°18′06″E 20.00′ — ½″ I.P.S. — +98.63 30.00′Lt — N54°41′13″W, 13.91′ — R/W — Ex R/W — N89°47′24″W, 168.83′ — 5.00′ — +67.46 30.00′Lt — N89°47′24″W, 70.95′ — 5.00′ — ⅝″ I.P.F. — +38.41 30.00′Lt — N89°47′24″W, 79.93′ — 5.00′ — ⅝″ I.P.F. — +18.33 30.00′Lt

+20.00 35.00′Lt

+78.33 43.00′Lt — 92.03′ S89°47′24″E — N0°11′54″E 13.00′ — ½″ I.P.S. # — +78.33 30.00′Lt — 121 T — Ex R/W N89°47′24″W 84.11′

LI-117B — LI-117 — LI-110 — LI-119

919 — 10+00.00= 919+68.58 — 920 — 921 — 922 — 923 — 10+00.00= 923+48.34 — 924

S89°47′24″E, 137.45′ — +48.89 ℄ R/W — 89°54′30″ — +89.07 ℄ R/W — SECTION LINE — R/W SR 309 S89°47′24″E — T.P.O.B. 110-WD +86.24, ℄ R/W — S89°47′24″E, 60.10′ — T.P.O.B. 119-WD +46.34, ℄ R/W — S89°47′24″E, 199.81′ — 90°00′42″

℄ Constr. SR 309 — S89°47′24″E

MATCH LINE STA. 918+40

9+85.00 ℄ CON. MT. HOLYOKE AVE. = 919+68.52 ℄ Constr. SR 309

90° — 10+00.00 = 919+70.60

9+85.00 ℄ CONSTR. RADCLIFFE ST. 923+48.31 ℄ Constr. SR 309

MATCH LINE STA. 924+20

#Found Monument to be Reset by ODOT after Construction with ¾″x30″ Reinforcing Rod with Cap stamped "ODOT R/W District 1 Reset"

75′

115 WD — S0°10′17″W 105.00′ — T.P.O.B. 117B WD +89.04, 75.00′Rt — 1″ K&K P.K.F. — CONSTR. MALL DR. 9 ℄ N0°12′36″E — N0°13′49″E, 60.00′ — N0°12′36″E 40.00′ — 117B WD — S47°14′49″W 29.35′ — +93.52 95.00′Rt — +93.52 135.00′Rt — N89°47′24″W, 4.50′ — +89.02 135.00′Rt

+30.00 75.00′Rt — S89°47′24″E, 118.56′ — Ex SH — P.K.F. — S89°47′24″E 25.96′ — +15.00 75.00′Rt — Ex SH — Ex SH — T.P.O.B. 117-WD +86.28, 75.00′Rt — S89°47′24″E, 16.28′ — +70.00 75.00′Rt — 117 WD — R/W — N38°57′14″W, 25.80′ — +86.29 95.00′Rt — R/W — N89°47′24″W, 60.03′ — 20.00′ — ½″ I.P.S. — Ex SH — ⅝″ I.P.S. — +70.00, 75.00′Rt — 7.75′ — Ex SH — N89°47′24″W, 176.16′ — Ex SH — +64.08, 80.00′Rt — S50°01′45″W, 31.00′ — +46.32 95.00′Rt — N89°47′24″W, 182.08′ TMP

N89°47′24″W, 114.56′ TMP — +26.00 80.00′Rt — N42°21′00″W 33.94′ — +48.96 105.00′Rt — S32°04′41″E 35.49′

115 T — 115 — *Harding Highway Realty, Inc.* 47-0400-02-005.008

110 — *Lima Eastgate, LLC* 47-0400-02-005.006

117B — *Fifth Third Bank* 47-0400-02-005.007

117 — *Fifth Third Bank of Western Ohio, N.A.* 47-0400-02-001.000

110 WD — N0°10′36″E, 75.00′ — N0°10′36″E, 115.00′ — 110 T2 — 110 — *Lima Eastgate, LLC* 47-0400-02-005.006

119 WD — N0°13′22″E, 95.00′ — S0°13′22″W, 115.00′

119 — *N and D Restaurants, Inc.* 47-0400-02-005.018

+86.36 210.00′Rt — TMP N89°47′24″W, 59.93′ — +46.29 210.00′Rt — P.K.F.

MONUMENT LEGEND

● - ¾″x30″ Reinforcing Rod with Aluminum Cap stamped "ODOT R/W District 1" to be set by ODOT after Construction.

LEAD-IN COURSE

From Magnetic Nail Set @ Sta. 909+06.60 ℄ R/W

LI-117B	N89°54′17″E, 321.25′ TO
	S89°47′24″E, 761.21′ TO T.P.O.B.
	S0°13′49″W, 75.00′ TO T.P.O.B.
LI-117	N89°54′17″E, 321.25′ TO
	S89°47′24″E, 958.34′ TO
	S0°10′36″W, 75.00′ TO T.P.O.B.

ALLEN COUNTY PERRY TOWNSHIP NW¼ SECTION 4 T-4-S R-7-E

LEAD-IN COURSE

From Magnetic Nail Set @ Sta. 909+06.60 ℄ R/W

LI-110	N89°54′17″E, 321.25′ TO
	S89°47′24″E, 958.38′ TO T.P.O.B.
LI-119	N89°54′17″E, 321.25′ TO
	S89°47′24″E, 1018.48′ TO T.P.O.B.

REV.	DATE	DESCRIPTION
2	2-28-12	*Parcel 116-Name Change*
1	3-10-11	*Added Existing Survey Monument Sizes*
		Parcel 115-Changed Temporary R/W

DATE COMPLETED: *2-09-11*

HORIZONTAL SCALE IN FEET 0 10 20 40

PID NO. 75467

R/W DESIGNER NJV R/W REVIEWER DJS

RIGHT OF WAY BOUNDRY SHEET STA. 918+40 TO STA. 924+20

ALL-117/309-18.65/15.17

21 / 31

163 / 173

I:\Pd\75467\Right-of-Way\sheets\75467RD005.dgn 17-SEP-2012 10:56AM nvondere

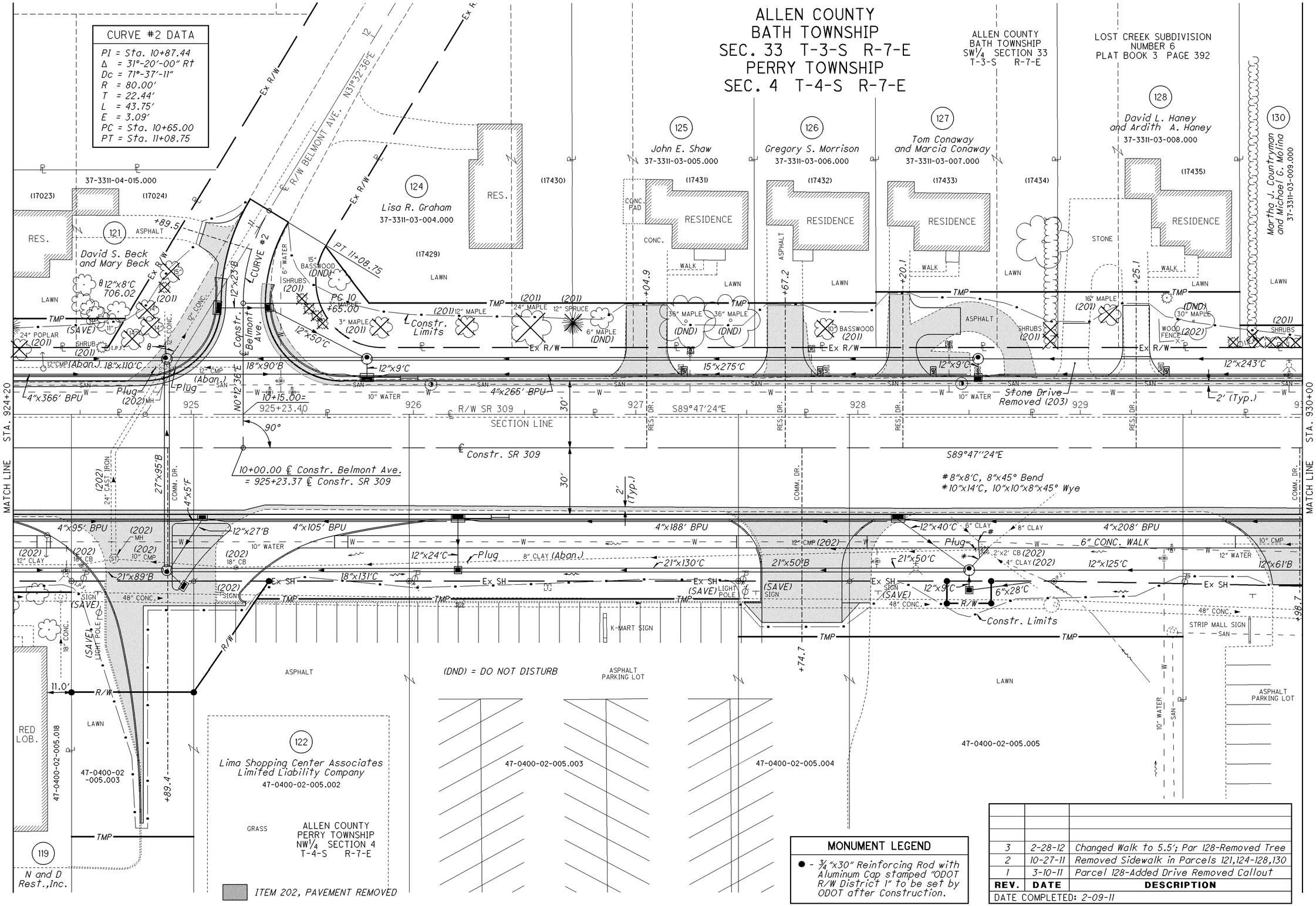

REV.	DATE	DESCRIPTION
3	2-28-12	Changed Walk to 5.5'; Par 128-Removed Tree
2	10-27-11	Removed Sidewalk in Parcels 121,124-128,130
1	3-10-11	Parcel 128-Added Drive Removed Callout

DATE COMPLETED: 2-09-11

HORIZONTAL SCALE IN FEET

PID NO. 75467

R/W DESIGNER NJV
R/W REVIEWER DJS

RIGHT OF WAY TOPO SHEET
STA. 924+20 TO STA. 930+00

ALL-117/309-18.65/15.17

22 / 31

164 / 173

I:\Pd\75467\Right-of-Way\sheets\75467RP006.dgn 17-SEP-2012 10:56AM nvondere

CURVE TABLE						
Curve	Delta	Radius	Tangent	Length	Chord	Bearing
C1	121°20'00"	30.00'	53.39'	63.53'	52.31'	N29°07'24"W

CURVE #2 DATA
PI = Sta. 10+87.44
Δ = 31°-20'-00" Rt
Dc = 71°-37'-11"
R = 80.00'
T = 22.44'
L = 43.75'
E = 3.09'
PC = Sta. 10+65.00
PT = Sta. 11+08.75

ALLEN COUNTY
BATH TOWNSHIP
SEC. 33 T-3-S R-7-E
PERRY TOWNSHIP
SEC. 4 T-4-S R-7-E

ALLEN COUNTY
BATH TOWNSHIP
SW1/4 SECTION 33
T-3-S R-7-E

LOST CREEK SUBDIVISION
NUMBER 6
PLAT BOOK 3 PAGE 392

121 David S. Beck and Mary Beck 37-3311-04-015.000
124 Lisa R. Graham 37-3311-03-004.000
125 John E. Shaw 37-3311-03-005.000
126 Gregory S. Morrison 37-3311-03-006.000
127 Tom Conaway and Marcia Conaway 37-3311-03-007.000
128 David L. Haney and Ardith A. Haney 37-3311-03-008.000
130 Martha J. Countryman & Michael G. Molina 37-3311-03-009.000
(17023) (17024) (17429) (17430) (17431) (17432) (17433) (17434) (17435)

Ex R/W 30' N31°32'36"E 30' ℄ R/W BELMONT AVE. Ex R/W ℄
℄ CURVE #2 11
+60.45 75.60'Lt PT 11+08.75 S37°9'35"E 32.21'
+80.00 50.00'Lt PC 10 +65.00 C1
91.62' S89°47'24"E TMP
+71.62 50.00'Lt
+53.50 50.00'Lt
+08.10 50.00'Lt
+08.08 55.00'Lt
+89.97 55.00'Lt
+71.87 55.00'Lt
+71.91, 40.00'Lt
S89°47'24"E, 81.89' TMP
S89°47'24"E, 81.89' TMP
S89°47'24"E, 54.59' TMP
S89°47'24"E, 81.90' TMP
92.03' S89°47'24"E TMP
+70.36 43.00'Lt
S31°32'36"W 15.22'
½" I.P.F.
+62.44 30.00'Lt
N89°47'24"W 84.11'
+86.07 30.00'Lt
N89°47'24"W, 85.60'
Ex R/W +71.67 30.00'Lt
N0°02'35"E 20.00'
N89°47'24"W 81.89'
+53.56 30.00'Lt
N0°03'02"E 20.00'
N89°47'24"W 54.59'
Ex R/W +08.15 30.00'Lt
S0°03'20"W 20.00'
N0°03'20"E 25.00'
N89°47'24"W, 81.89'
+90.04 30.00'Lt
S0°03'47"W 25.00'
N89°47'24"W, 81.90'
Ex R/W
S0°04'02"W 25.00'
5/8" I.P.S.
+71.94 30.00'Lt
10.00'
121 T 124 T 125 T 126 T 127 T 128 T 130 T

LI-122WD1 925 LI-122WD2 926 927 928 929 930
STA. 924+20 STA. 930+00
T.P.O.B. 122-WD1 +46.15, ℄ R/W
10+15.00= 925+23.40
N0°12'36"E Constr. ℄ Belmont Ave.
90°
10+00.00 ℄ Constr. Belmont Ave.
10+00.00 ℄ Constr. Belmont Ave.
= 925+23.37 ℄ Constr. SR 309
R/W SR 309 S89°47'24"E, 349.98'
℄ Constr. SR 309
S89°47'24"E
T.P.O.B. 122-WD2 +96.13, ℄ R/W
30'
SECTION LINE
S89°47'24"E, 150.12'
+46.25 ℄ R/W
75'
MATCH LINE MATCH LINE

119 WD 122 WD1 122 WD2
N0°12'04"E, 75.00'
N0°11'08"E, 75.00'
S0°12'52"W, 76.16'

Found Monument to be Reset by ODOT after Construction with ¾"x30" Reinforcing Rod with Cap stamped "ODOT R/W District 1 Reset"

+46.16 75.00'Rt ½" I.P.F. 5.00'
+35.00 75.00'Rt Ex SH 9.66' TMP +29.59 83.00'Rt
Ex SH S89°47'24"E, 261.16' Ex SH
1" # O.P.S.
TMP N89°47'24"W, 216.63' TMP
+46.22 83.00'Rt
+96.16 75.00'Rt
S89°47'24"E, 43.84' Ex SH
N0°12'36"E, 10.00'
+40.00 75.00'Rt +60.00 75.00'Rt 27.97' +87.97 75.00'Rt
R/W 20.00'
+40.00 85.00'Rt N89°47'24"W +60.00 85.00'Rt
S0°12'36"W, 10.00'
+46.24 76.16'Rt
S88°39'11"E, 58.28'
Ex SH
S0°12'52"W, 23.84'
N0°12'04"E, 17.00'
TMP N89°47'24"W, 200.02' TMP
+46.22 100.00'Rt
+46.24 100.00'Rt
119 T +46.16 80.00'Rt N0°12'04"E, 50.00'
S34°17'29"W, 60.37' R/W
+46.16 125.00'Rt R/W S89°47'24"E, 55.01' +01.17 125.00'Rt
122 T2

119 N and D Rest., Inc. 47-0400-02-005.018
47-0400-02-005.003
N0°12'04"E, 65.00'
122 T1
S0°12'04"W, 65.00'
47-0400-02-005.002
122 Lima Shopping Center Associates Limited Liability Company 47-0400-02-005.003
47-0400-02-005.004
47-0400-02-005.005

+46.17 190.00'Rt TMP N89°47'24"W, 55.01' +01.18 190.00'Rt

ALLEN COUNTY
PERRY TOWNSHIP
NW1/4 SECTION 4
T-4-S R-7-E

LEAD-IN COURSE	
From Magnetic Nail Set @ Sta. 909+06.60 ℄ R/W	
LI-122	N89°54'17"E, 321.25' TO
WD1	S89°47'24"E, 1218.29' TO T.P.O.B.
LI-122	N89°54'17"E, 321.25' TO
WD2	S89°47'24"E, 1568.27' TO T.P.O.B.

MONUMENT LEGEND
● - ¾"x30" Reinforcing Rod with Aluminum Cap stamped "ODOT R/W District 1" to be set by ODOT after Construction.

REV.	DATE	DESCRIPTION
1	3-10-11	Added Existing Survey Monument Sizes

DATE COMPLETED: 2-09-11

HORIZONTAL SCALE IN FEET 0 10 20 40

PID NO. 75467

R/W DESIGNER NJV R/W REVIEWER DJS

RIGHT OF WAY BOUNDRY SHEET STA. 924+20 TO STA. 930+00

ALL-117/309-18.65/15.17

23 / 31

165 / 173

I:\Pd\75467\Right-of-Way\sheets\75467RD006.dgn 17-SEP-2012 10:56AM nvondere

REV.	DATE	DESCRIPTION
2	2-28-12	Changed Sidewalk to 5.5'
1	10-27-11	Widened Sidewalk to 7' in Parcel 136
		Removed Sidewalk in Parcels 130 & 131

DATE COMPLETED: 2-09-11

ALLEN COUNTY
BATH TOWNSHIP
SEC. 33 T-3-S R-7-E
PERRY TOWNSHIP
SEC. 4 T-4-S R-7-E

ALLEN COUNTY
BATH TOWNSHIP
SW1/4 SECTION 33
T-3-S R-7-E

130
Martha J. Countryman
and Michael G. Molina
37-3311-03-009.000

131
Kathy Ann Walton
37-3311-03-010.003

132
TVRV, LLC
47-0400-02-005.020

134
Warren Brim
37-3311-01-008.000

LOST CREEK SUBDIVISION
NUMBER 6
PLAT BOOK 3 PAGE 392

ALLEN COUNTY
PERRY TOWNSHIP
NW1/4 SECTION 4
T-4-S R-7-E

EASTGATE COMMERCIAL
PARK SUBDIVISION
PLAT BOOK 24 PAGE 114

* DENOTES RIGHT OF WAY ENCROACHMENT
(OWNER UNKNOWN)

(DND) = DO NOT DISTURB

ITEM 202, PAVEMENT REMOVED

MATCH LINE STA. 930+00

MATCH LINE STA. 935+80

S43°37'24"E

N89°45'36"E

S89°47'24"E

NO°12'01"E

NO°13'07"E

89°59'29"

90°27'31"

10+00.00 ℄ CONSTR. LOST CREEK BLVD.
= PI 934+23.32 ℄ Constr. SR 309

934+16.35

934+73.57

934+83.57

931

932

933

934

935

R/W, SR 309

SECTION LINE

1/4 SECTION LINE

℄ Constr. SR 309

℄ R/W LOST CREEK BLVD.

℄ CONSTR. LOST CREEK BLVD.

VASSER AVE.

℄ R/W VASSER AVE.

Ex R/W

30'

40'

Constr. Limits

TMP

Ex SH

Ex R/W

12"x243'C

12"x11'C

4"x233' BPU

4"x527' BPU

4"x514' BPU

12"x24'C

12"x61'B

12"x60'D

12"x60'B

12"x48'B

12"x24'C

12"x190'C

12"x20'C

12"x110'C

12" PLASTIC (202)

10" CMP

6" CONC. WALK

10" WATER

12" WATER

8" PVC

8" CLAY (Aban.)

18" CHERRY (DND)

WELCOME SIGN

REALTY SIGN

WALGREEN'S SIGN

WALMART SIGN

(SAVE)

(201)

(202)

(17936)

(17937)

(17938)

(17939)

(17940)

(17941)

(17068)

(29640)

37-3311-03-010.000

37-3311-03-010.001

37-3311-03-010.002

+73.5

+39.8

+83.6

+25

+20

+70

2' (Typ.)

RES.

GAR.

RESIDENCE

LAWN

GRASS

LANDSCAPING

ASPHALT

CONCRETE

ASPHALT PARKING LOT

STRIP MALL

WALGREEN'S

RES. DR.

COMM. DR.

SAN

W

G

T

SA

I.P.F.

I.P.S.

48" CONC.

R/W DESIGNER NJV
R/W REVIEWER DJS

PID NO. 75467

RIGHT OF WAY TOPO SHEET
STA. 930+00 TO STA. 935+80

ALL-117/309-
18.65/15.17

24/31

166/173

HORIZONTAL SCALE IN FEET
0 10 20 40

I:\Pd\75467\Right-of-Way\sheets\75467RP007.dgn 17-SEP-2012 10:56AM nvondere

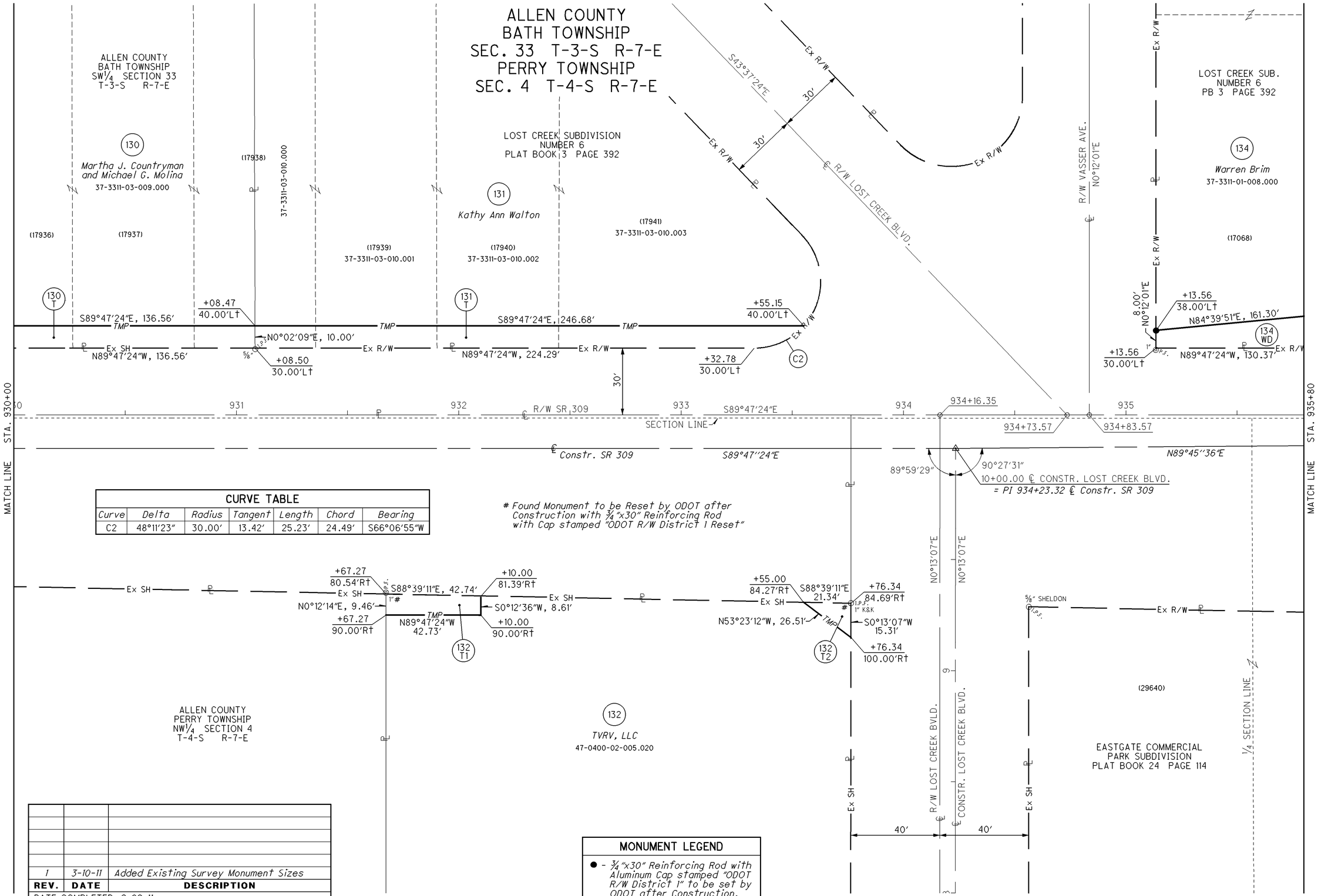

CURVE TABLE

Curve	Delta	Radius	Tangent	Length	Chord	Bearing
C2	48°11'23"	30.00'	13.42'	25.23'	24.49'	S66°06'55"W

MONUMENT LEGEND

● - 3/4"x30" Reinforcing Rod with Aluminum Cap stamped "ODOT R/W District 1" to be set by ODOT after Construction.

REV.	DATE	DESCRIPTION
1	3-10-11	Added Existing Survey Monument Sizes

DATE COMPLETED: 2-09-11

HORIZONTAL SCALE IN FEET 0 10 20 40

PID NO. 75467

R/W DESIGNER NJV
R/W REVIEWER DJS

RIGHT OF WAY BOUNDRY SHEET STA. 930+00 TO STA. 935+80

ALL-117/309-18.65/15.17

I:\Pd\75467\Right-of-Way\sheets\75467RD007.dgn 17-SEP-2012 10:56AM nvondere

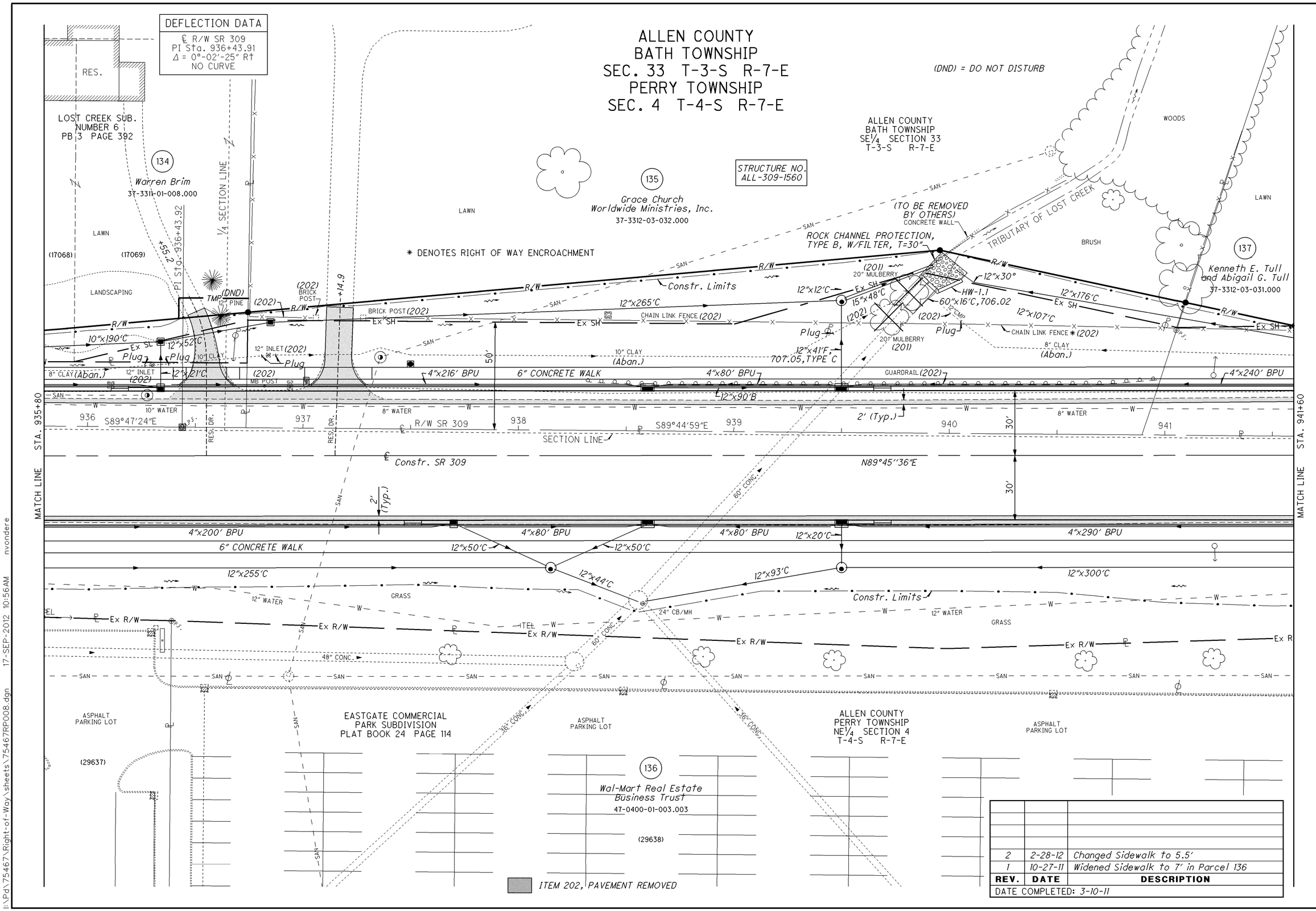

REV.	DATE	DESCRIPTION
2	2-28-12	Changed Sidewalk to 5.5'
1	10-27-11	Widened Sidewalk to 7' in Parcel 136

DATE COMPLETED: 3-10-11

HORIZONTAL SCALE IN FEET 0 10 20 40

PID NO. 75467

R/W DESIGNER NJV
R/W REVIEWER DJS

RIGHT OF WAY TOPO SHEET
STA. 935+80 TO STA. 941+60

ALL-117/309-
18.65/15.17

I:\Pd\75467\Right-of-Way\sheets\75467RP008.dgn 17-SEP-2012 10:56AM nvondere

ALLEN COUNTY
BATH TOWNSHIP
SEC. 33 T-3-S R-7-E
PERRY TOWNSHIP
SEC. 4 T-4-S R-7-E

DEFLECTION DATA
℄ R/W SR 309 PI Sta. 936+43.91 Δ = 0°-02′-25″ Rt NO CURVE

BEARING & DISTANCE		
B-D	*Bearing*	*Distance*
B3	S84°39′51″W	32.25′

STATION & OFFSET		
S-O	*Station*	*Offset*
S2	936+42.00	50.47′Lt

LEAD-IN COURSE	
From RR Spike Found @ Sta. 963+06.59 ℄ R/W	
LI-135	N89°44′59″W, 2217.19′ TO T.P.O.B.

LOST CREEK SUB.
NUMBER 6
PB 3 PAGE 392

(134)
Warren Brim
37-3311-01-008.000

ALLEN COUNTY
BATH TOWNSHIP
SE¼ SECTION 33
T-3-S R-7-E

(135)
Grace Church Worldwide Ministries, Inc.
37-3312-03-032.000

(137)
Kenneth E. Tull and Abigail G. Tull
37-3312-03-031.000

(17068) (17069)

PI Sta. 936+43.92

¼ SECTION LINE

(134 T) S89°45′08″E 32.16′ TMP

+74.12, 60.00′Lt
S0°46′04″W, 6.39′

+42.00
60.00′Lt

N0°12′36″E
9.53′

N84°39′51″E
161.30′

(134 WD)

(S2)

Ex SL

N89°47′24″W
130.37′

+43.93 BK
+43.91 AH
30.00′Lt

B3

N89°44′59″W
29.94′
+73.85
30.00′Lt

23.61′
53.61′

N0°46′04″E, 53.61′

+74.06
53.61′Lt

+74.58
℄ R/W

R/W N84°39′51″E, 322.47′ R/W

+95.00
85.00′Lt

R/W S78°11′02″E, 116.57′

+09.20
61.63′Lt

S78°11′02″E, 51.85′

+60.00
51.23′Lt

Ex SH

(135 WD)

50′

N18°03′39″E, 64.73′

(137 WD)

936 S89°47′24″E 937 ℄ R/W SR 309 938 S89°44′59″E 939 N89°44′59″W, 415.82′ 940 941 N89°44′59″W 200.04′

T.P.O.B. 135-WD
+89.40, ℄ R/W

LI-135

SECTION LINE

℄ Constr. SR 309 N89°45′36″E

MATCH LINE STA. 935+80

MATCH LINE STA. 941+60

Ex R/W

(29637)

EASTGATE COMMERCIAL
PARK SUBDIVISION
PLAT BOOK 24 PAGE 114

(136)
Wal-Mart Real Estate Business Trust
47-0400-01-003.003

(29638)

ALLEN COUNTY
PERRY TOWNSHIP
NE¼ SECTION 4
T-4-S R-7-E

MONUMENT LEGEND
● - ¾″x30″ Reinforcing Rod with Aluminum Cap stamped "ODOT R/W District 1" to be set by ODOT after Construction.

REV.	DATE	DESCRIPTION
1	3-10-11	Added Existing Survey Monument Sizes

DATE COMPLETED: 2-09-11

HORIZONTAL SCALE IN FEET
0 10 20 40

PID NO. 75467

R/W DESIGNER NJV
R/W REVIEWER DJS

RIGHT OF WAY BOUNDRY SHEET
STA. 935+80 TO STA. 941+60

ALL-117/309-18.65/15.17

27/31

169/173

I:\Pid\75467\Right-of-Way\sheets\75467RD008.dgn 17-SEP-2012 10:56AM nvondere

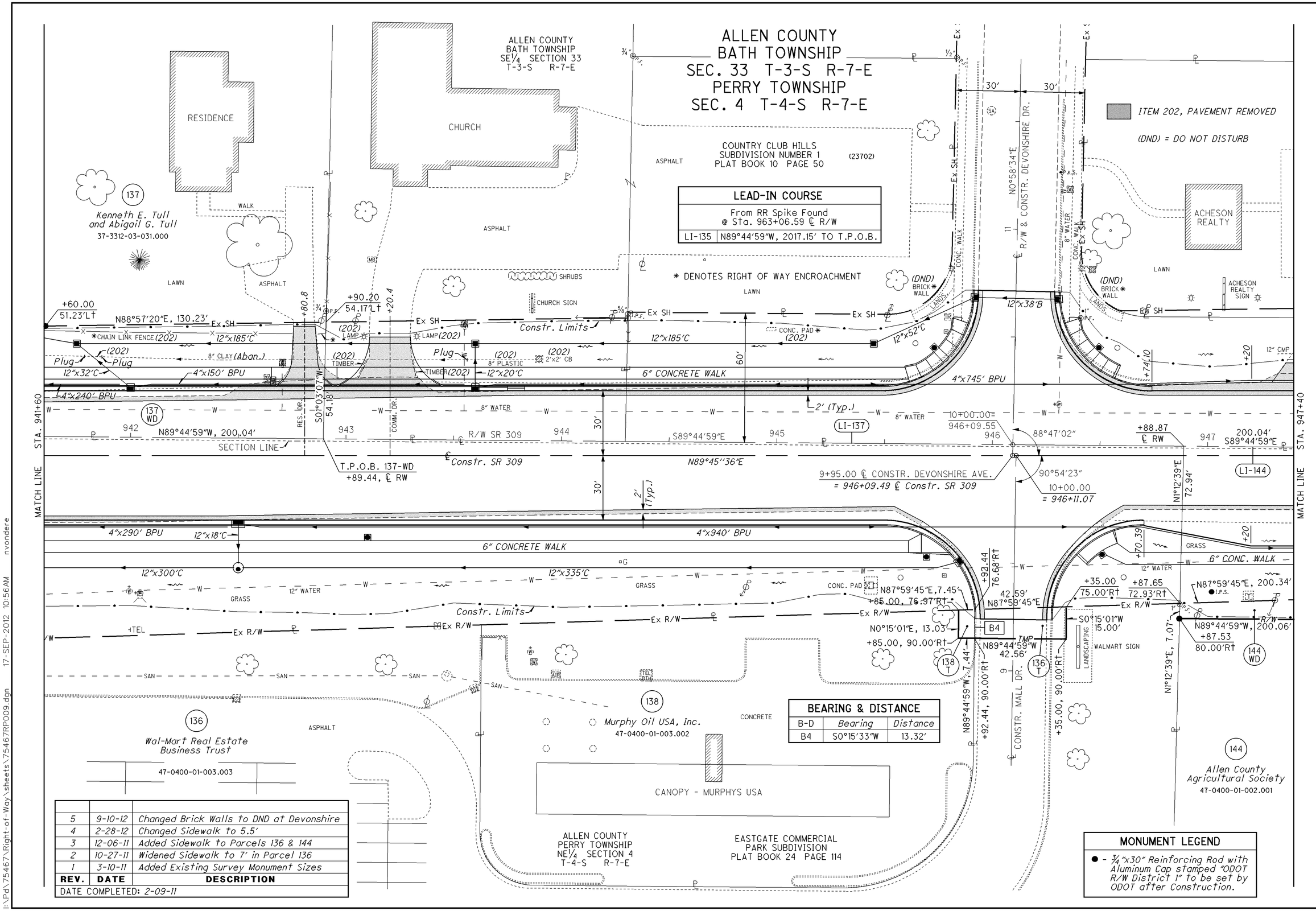

LEAD-IN COURSE	
From RR Spike Found @ Sta. 963+06.59 ℄ R/W	
LI-135	N89°44'59"W, 2017.15' TO T.P.O.B.

BEARING & DISTANCE		
B-D	Bearing	Distance
B4	S0°15'33"W	13.32'

REV.	DATE	DESCRIPTION
5	9-10-12	Changed Brick Walls to DND at Devonshire
4	2-28-12	Changed Sidewalk to 5.5'
3	12-06-11	Added Sidewalk to Parcels 136 & 144
2	10-27-11	Widened Sidewalk to 7' in Parcel 136
1	3-10-11	Added Existing Survey Monument Sizes

DATE COMPLETED: 2-09-11

MONUMENT LEGEND

● - 3/4"x30" Reinforcing Rod with Aluminum Cap stamped "ODOT R/W District 1" to be set by ODOT after Construction.

HORIZONTAL SCALE IN FEET 0 10 20 40

PID NO. 75467

R/W DESIGNER NJV
R/W REVIEWER DJS

RIGHT OF WAY PLAN
STA. 941+60 TO STA. 947+40

ALL-117/309-18.65/15.17

I:\Pd\75467\Right-of-Way\sheets\75467RP009.dgn 17-SEP-2012 10:56AM nvondere

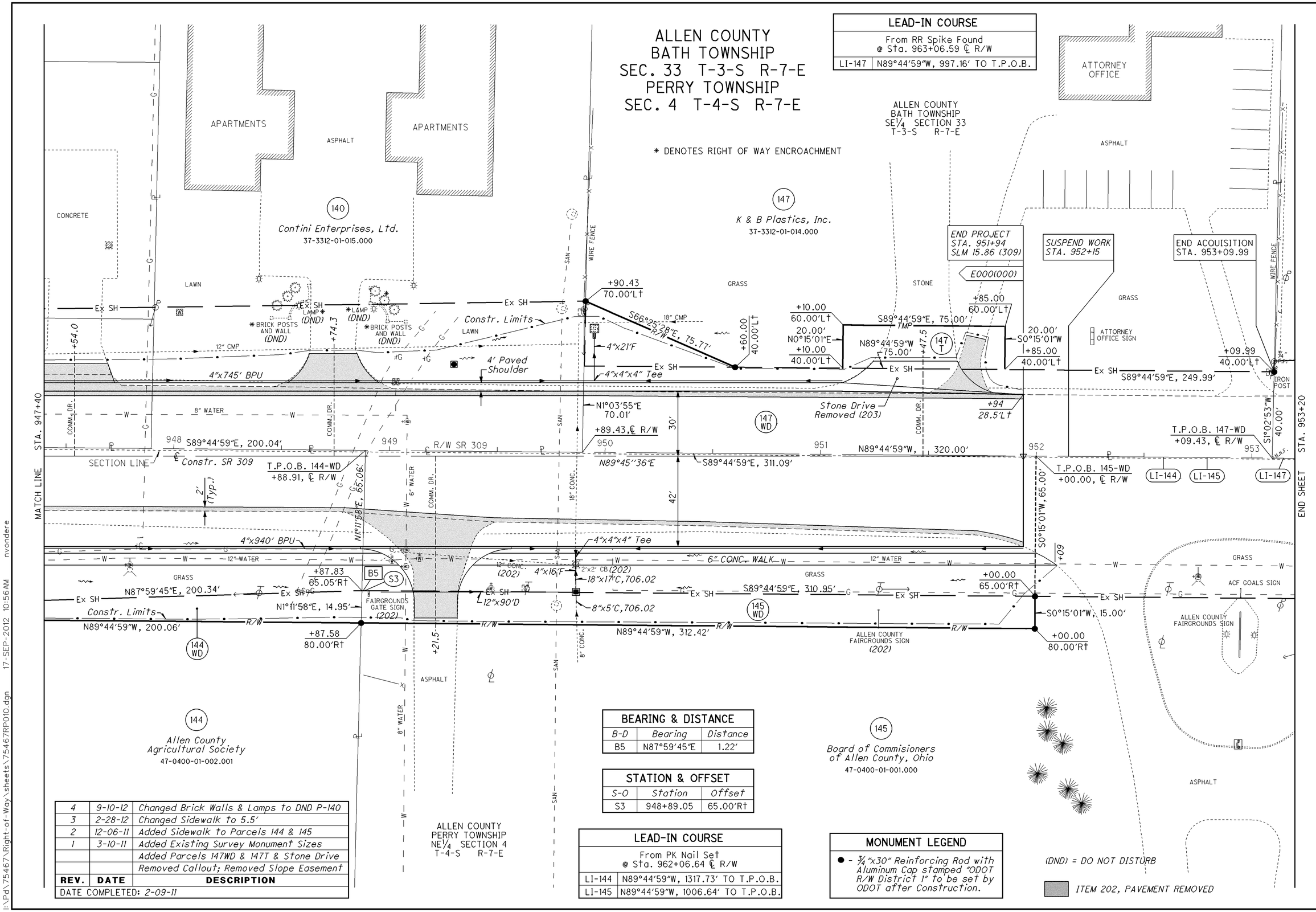

LEAD-IN COURSE	
From RR Spike Found @ Sta. 963+06.59 ℄ R/W	
LI-147	N89°44'59"W, 997.16' TO T.P.O.B.

BEARING & DISTANCE		
B-D	Bearing	Distance
B5	N87°59'45"E	1.22'

STATION & OFFSET		
S-O	Station	Offset
S3	948+89.05	65.00'Rt

LEAD-IN COURSE	
From PK Nail Set @ Sta. 962+06.64 ℄ R/W	
LI-144	N89°44'59"W, 1317.73' TO T.P.O.B.
LI-145	N89°44'59"W, 1006.64' TO T.P.O.B.

REV.	DATE	DESCRIPTION
4	9-10-12	Changed Brick Walls & Lamps to DND P-140
3	2-28-12	Changed Sidewalk to 5.5'
2	12-06-11	Added Sidewalk to Parcels 144 & 145
1	3-10-11	Added Existing Survey Monument Sizes
		Added Parcels 147WD & 147T & Stone Drive
		Removed Callout; Removed Slope Easement

DATE COMPLETED: 2-09-11

MONUMENT LEGEND

● - 3/4"x30" Reinforcing Rod with Aluminum Cap stamped "ODOT R/W District 1" to be set by ODOT after Construction.

(DND) = DO NOT DISTURB

ITEM 202, PAVEMENT REMOVED

HORIZONTAL SCALE IN FEET 0 10 20 40

PID NO. 75467

R/W DESIGNER NJV
R/W REVIEWER DJS

RIGHT OF WAY PLAN
STA. 947+40 TO STA. 953+20

ALL-117/309-18.65/15.17

I:\Pd\75467\Right-of-Way\sheets\75467RP010.dgn 17-SEP-2012 10:56AM nvondere

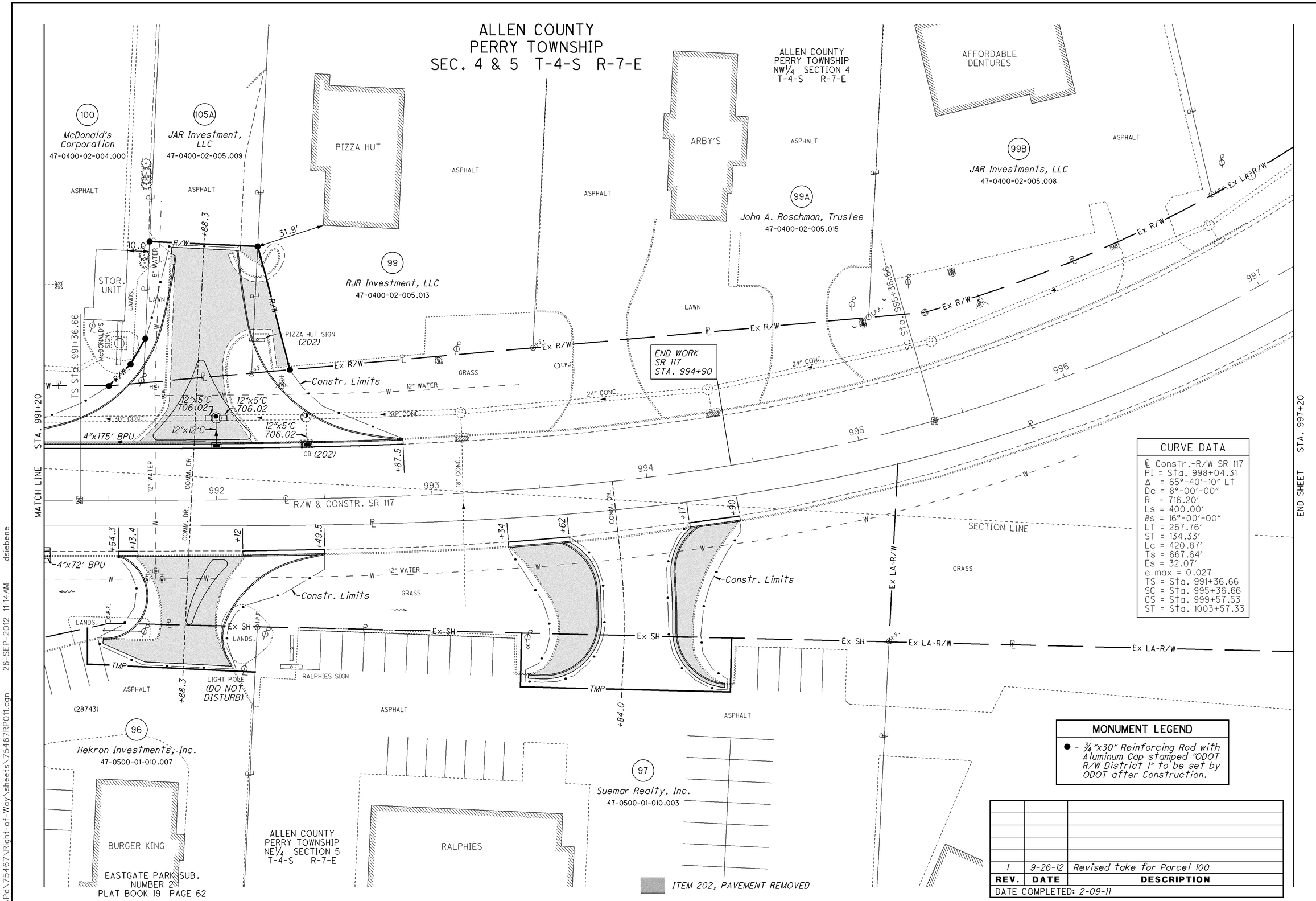

CURVE DATA

℄ Constr.-R/W SR 117
PI = Sta. 998+04.31
Δ = 65°-40'-10" Lt
Dc = 8°-00'-00"
R = 716.20'
Ls = 400.00'
θs = 16°-00'-00"
LT = 267.76'
ST = 134.33'
Lc = 420.87'
Ts = 667.64'
Es = 32.07'
e max = 0.027
TS = Sta. 991+36.66
SC = Sta. 995+36.66
CS = Sta. 999+57.53
ST = Sta. 1003+57.33

MONUMENT LEGEND

● - 3/4"x30" Reinforcing Rod with Aluminum Cap stamped "ODOT R/W District 1" to be set by ODOT after Construction.

REV.	DATE	DESCRIPTION
1	9-26-12	Revised take for Parcel 100

DATE COMPLETED: 2-09-11

HORIZONTAL SCALE IN FEET 0 10 20 40

PID NO. 75467

R/W DESIGNER NJV
R/W REVIEWER DJS

RIGHT OF WAY TOPO SHEET
STA. 991+20 TO STA. 997+20

ALL-117/309-18.65/15.17

I:\Pd\75467\Right-of-Way\sheets\75467RP011.dgn 26-SEP-2012 11:14AM dsiebene

ALLEN COUNTY
PERRY TOWNSHIP
SEC. 4 & 5 T-4-S R-7-E

ALLEN COUNTY
PERRY TOWNSHIP
NW1/4 SECTION 4
T-4-S R-7-E

100
McDonald's Corporation
47-0400-02-004.000

105A
JAR Investment, LLC
47-0400-02-005.009

99
RJR Investment, LLC
47-0400-02-005.013

99A
John A. Roschman, Trustee
47-0400-02-005.015

99B
JAR Investments, LLC
47-0400-02-005.008

96
Hekron Investments, Inc.
47-0500-01-010.007

97
Suemar Realty, Inc.
47-0500-01-010.003

EASTGATE PARK SUBDIVISION
NUMBER 2
PLAT BOOK 19 PAGE 62

ALLEN COUNTY
PERRY TOWNSHIP
NE1/4 SECTION 5
T-4-S R-7-E

BEARING & DISTANCE		
B-D	*Bearing*	*Distance*
B6	S47°09'05"E	14.28'
B7	S62°14'57"E	13.74'
B8	N89°34'19"W	20.59'

LEAD-IN COURSE	
From Magnetic Nail Set @ Sta. 909+06.60 ℄ R/W	
LI-100	N89°54'17"E, 30.01' TO
-WD2	S1°02'23"W, 70.32' TO
	S2°02'15"E, 184.23' TO T.P.O.B.
LI-105A	N89°54'17"E, 30.01' TO
	S1°02'23"W, 70.32' TO
	S2°02'15"E, 184.23' TO
	S7°16'01"E, 16.09' TO T.P.O.B.
LI-99	N89°54'17"E, 30.01' TO
	S1°02'23"W, 70.32' TO
	S2°02'15"E, 184.23' TO
	S7°16'01"E, 66.49' TO T.P.O.B.

CURVE DATA
℄ Constr.-R/W SR 117
PI = Sta. 998+04.31
Δ = 65°-40'-10" Lt
Dc = 8°-00'-00"
R = 716.20'
Ls = 400.00'
θs = 16°-00'-00"
LT = 267.76'
ST = 134.33'
Lc = 420.87'
Ts = 667.64'
Es = 32.07'
e max = 0.027
TS = Sta. 991+36.66
SC = Sta. 995+36.66
CS = Sta. 999+57.53
ST = Sta. 1003+57.33

BEGIN SHEET STA. 991+20

END SHEET STA. 997+20

TS Sta. 991+36.66

SC Sta. 995+36.66

+69.12 120.00'Lt

S0°25'41"W, 50.22'

+20.51 117.46'Lt

+67.02 75.00'Lt

S89°34'19"E, 65.64'

+60.12 63.10'Lt

B7

B8

B6

100 WD2

105A WD

99 WD

S89°19'10"E, 58.89'

S73°16'17"W, 59.13'

+35.00 60.03'Lt

N7°16'01"W, 17.86'

1" LEANING

N7°16'01"W, 50.41'

T.P.O.B. 105A-WD
+66.07, 54.43'Lt

T.P.O.B. 99-WD
+16.85, 58.67'Lt

N7°16'01"W 16.09'

T.P.O.B. 100-WD2
+49.98, 53.00'Lt

LI-99

LI-105A

LI-100WD2

Ex R/W

5/8" O I.P.F.

1" K&K

Ex LA-R/W

END WORK
SR 117
STA. 994+90

992 993 994 995 996 997

℄ R/W & CONSTR. SR 117

SECTION LINE

+40.00 59.28'Rt

S14°29'15"E 10.64'

+50.37 57.00'Rt

S0°44'22"E, 68.57'

Ex SH

+18.26 58.97'Rt

N89°15'46"W, 21.07'

+17.00 80.00'Rt

N87°52'57"E 16.72'

TMP N0°35'54"E, 77.98'

+40.00 76.00'Rt

(28743)

+37.00 66.43'Rt

S0°44'22"E, 97.52'

+28.00 79.17'Rt

N89°15'38"E 25.00'

TMP N0°44'22"W, 97.52'

S89°15'38"W 25.00'

+34.79 91.33'Rt

+24.12 103.81'Rt

(28744)

Ex LA-R/W

\# Found Monument to be Reset by ODOT after Construction with ¾"x30" Reinforcing Rod with Cap stamped "ODOT R/W District 1 Reset"

MONUMENT LEGEND
● - ¾"x30" Reinforcing Rod with Aluminum Cap stamped "ODOT R/W District 1" to be set by ODOT after Construction.

REV.	DATE	DESCRIPTION
2	9-26-12	Revised take for Parcel 100-WD2
1	3-10-11	Added Existing Survey Monument Sizes

DATE COMPLETED: 2-09-11

HORIZONTAL SCALE IN FEET
0 10 20 40

PID NO. 75467

R/W DESIGNER NJV
R/W REVIEWER DJS

RIGHT OF WAY BOUNDRY SHEET
STA. 991+20 TO STA. 997+20

ALL-117/309-18.65/15.17

31/31

173/173

I:\Pd\75467\Right-of-Way\sheets\75467RD011.dgn 26-SEP-2012 11:13AM dsiebene

PROJECT DESCRIPTION

RESURFACING AND WIDENING WITH CURB AND GUTTER OF 1.05 MILES OF SR 117/309 INCLUDING RAISED CONCRETE MEDIANS, SIDEWALKS, A NEW STORM SEWER SYSTEM AND SECTIONS OF TOTAL PAVEMENT REPLACEMENT.

HISTORIC RECORDS

NO HISTORICAL BORINGS RECORDS WERE FOUND FOR THIS PROJECT.

GEOLOGY

THE PROJECT IS LOCATED WITHIN THE GLACIATED CENTRAL OHIO CLAYEY TILL PLAIN. THIS AREA IS CHARACTERIZED BY FLAT LYING GROUND MORAINE WITH WELL DEFINED END MORAINE DEPOSITS GENERALLY COMPOSED OF COHESIVE SOILS AND OCCASIONAL GRANULAR OUTWASH DEPOSITS ALONG STREAM CHANNELS. THE GLACIAL DEPOSITS ARE UNDERLAIN BY DOLOMITE AND SHALE LAYERS OF SILURIAN AGED TYMOCHTEE AND GREENFIELD FORMATIONS.

SUBSURFACE EXPLORATION

SIXTEEN (16) BORINGS, B-001 THROUGH B-014, WERE DRILLED BETWEEN OCTOBER 4 AND 11, 2006. THE BORINGS WERE DRILLED USING A TRUCK MOUNTED ROTARY DRILL RIG USING 3¼-INCH I.D. HOLLOW STEM AUGERS TO ADVANCE THE BORINGS THROUGH SOIL. DISTURBED SAMPLES WERE CONTINUOUSLY COLLECTED IN ACCORDANCE WITH THE STANDARD PENETRATION TEST (AASHTO T206) FOR THE DEPTH OF THE BORING.

EXPLORATION FINDINGS

THE BORINGS DRILLED ENCOUNTERED HIGHLY VARIABLE MATERIALS GENERALLY COMPRISED OF COHESIVE SOILS. MATERIALS TESTED RANGED FROM SANDY SILT (A-4a) TO CLAY (A-7-6) WITH CONSISTENCIES RANGING FROM STIFF TO VERY STIFF. OCCASIONAL LAYERS OF GRANULAR MATERIALS WERE NOTED RANGING FROM GRAVEL WITH SAND (A-1-b) TO GRAVEL WITH SAND, SILT AND CLAY (A-2-6). MOISTURES WERE GENERALLY AT OR BELOW THE PLASTIC LIMIT OF THE SAMPLES TESTED.

NO FREE WATER WAS NOTED DURING OR AT COMPLETION OF THE DRILLING.

AVAILABLE INFORMATION

ALL AVAILABLE SOIL AND BEDROCK INFORMATION THAT CAN BE CONVENIENTLY SHOWN ON THE GEOTECHNICAL EXPLORATION SHEETS HAS BEEN SO REPORTED. ADDITIONAL EXPLORATIONS MAY HAVE BEEN MADE TO STUDY SOME SPECIAL ASPECT OF THE PROJECT. COPIES OF THIS DATA, IF ANY, MAY BE INSPECTED IN THE DISTRICT DEPUTY DIRECTOR'S OFFICE, THE OFFICE OF GEOTECHNICAL ENGINEERING AT 1600 WEST BROAD STREET OR THE OFFICE OF STRUCTURAL ENGINEERING AT 1980 WEST BROAD STREET.

LEGEND

DESCRIPTION	ODOT CLASS	CLASSIFIED MECH./VISUAL	
GRAVEL AND/OR STONE FRAGMENTS	*A-1-a (0)*	*2*	*1*
GRAVEL AND/OR STONE FRAGMENTS WITH SAND	*A-1-b (0)*	*4*	*1*
GRAVEL AND/OR ST. FRAGS. WITH SAND AND SILT	*A-2-4 (0)*	*4*	*-*
GR. AND/OR ST. FRAGS. WITH SAND, SILT & CLAY	*A-2-6 (1)*	*2*	*-*
COARSE AND FINE SAND	*A-3a (0)*	*1*	*-*
SANDY SILT	*A-4a (3)*	*9*	*2*
SILT AND CLAY	*A-6a (8)*	*22*	*-*
SILTY CLAY	*A-6b (10)*	*8*	*3*
CLAY	*A-7-6 (14)*	*5*	*-*
	TOTAL	*57*	*7*

PAVEMENT OR BASE = X = APPROXIMATE THICKNESS *VISUAL*

SOD AND TOPSOIL = X = APPROXIMATE THICKNESS *VISUAL*

BORING LOCATION - PLAN VIEW

DRIVE SAMPLE AND/OR ROCK CORE BORING PLOTTED TO VERTICAL SCALE ONLY. HORIZONTAL BAR INDICATES A CHANGE IN STRATIGRAPHY.

WC INDICATES WATER CONTENT IN PERCENT.

X/Y/Z NUMBER OF BLOWS FOR STANDARD PENETRATION TEST
X= NUMBER OF BLOWS FOR FIRST 6 INCHES
Y= NUMBER OF BLOWS FOR SECOND 6 INCHES
Z= NUMBER OF BLOWS FOR THIRD 6 INCHES

NP INDICATES A NON-PLASTIC SAMPLE.

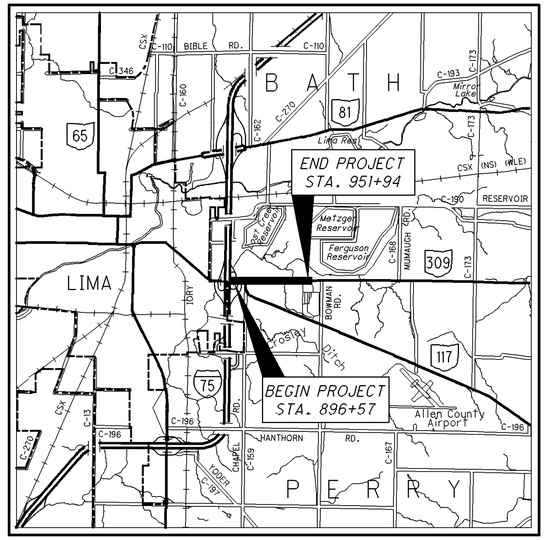

LOCATION MAP

SCALE IN MILES

0 1 2 3 4

N

PARTICLE SIZE DEFINITIONS

12"	3"	2.0 mm	0.42 mm	0.074 mm	0.005 mm
BOULDERS	COBBLES	GRAVEL	COARSE SAND	FINE SAND	SILT	CLAY
		No. 10 SIEVE	No. 40 SIEVE	No. 200 SIEVE		

RECON. - ES, D-01 09/06/06
DRILLING - DML 10/4-11/06
DRAWN - JAG 11/07
REVIEWED - MRS 12/05/07

DESIGN AGENCY
OHIO DEPARTMENT OF TRANSPORTATION
OFFICE OF GEOTECHNICAL ENGINEERING
1600 W. BROAD ST. COLUMBUS, OH 43223

PID NO. 75467

SOIL PROFILE

ALL-117/309-18.65/15.17

I:\Pd\75467\geotechnical\sheets\75467C001.dgn 17-SEP-2012 8:21AM eschecke

SUMMARY OF SOIL TEST DATA

SR 309/117

STATION & OFFSET	FROM	TO	SAMPLE TYPE	% AGG	% CS	% FS	% SILT	% CLAY	LL	PL	PI	% WC	OHIO CLASS
B-001	01.00	02.50	SS-1	35	17	22	18	8	NP	NP	NP	13	A-2-4 (0)
898+00, 6′ Rt	02.50	04.00	SS-2	28	13	18	23	18	29	16	13	15	A-6a (2)
	04.00	05.50	SS-3	27	7	11	33	22	35	20	15	19	A-6a (6)
	05.50	07.00	SS-4	11	9	23	40	17	21	15	6	14	A-4a (4)
B-001A	01.00	02.50	SS-1	31	13	34	14	8	NP	NP	NP	14	A-2-4 (0)
900+00, 5′ Lt	02.50	04.00	SS-2	2	3	46	31	18	26	14	12	19	A-6a (3)
	04.00	05.50	SS-3	24	25	17	19	15	37	18	19	28	A-2-6 (2)
	05.50	07.00	SS-4	BROWN SAND & GRAVEL, WITH STONE FRAGMENTS								12	A-1-b (VISUAL)
B-002	01.00	02.50	SS-1	5	4	44	30	17	NP	NP	NP	10	A-4a (2)
901+65, 50′ Lt	02.50	04.00	SS-2	0	4	52	26	18	23	15	8	11	A-4a (2)
	04.00	05.50	SS-3	0	3	54	34	9	NP	NP	NP	11	A-4a (2)
	05.50	07.00	SS-4	0	4	68	27	1	NP	NP	NP	15	A-3a (0)
B-003	01.00	02.50	SS-1	37	13	15	21	14	30	19	11	10	A-2-6 (0)
905+26, 35′ Lt	02.50	04.00	SS-2	4	2	9	43	42	41	22	19	17	A-7-6 (12)
	04.00	05.50	SS-3	0	4	14	36	46	42	18	24	17	A-7-6 (14)
	05.50	07.00	SS-4	0	3	12	35	50	44	19	25	21	A-7-6 (15)
B-004	01.00	02.50	SS-1	26	8	16	29	21	32	20	12	24	A-6a (4)
908+00, 22′ Lt	02.50	04.00	SS-2	20	8	12	31	29	29	21	8	16	A-4a (5)
	04.00	05.50	SS-3				SAME AS SS-2					16	A-4a (VISUAL)
	05.50	07.00	SS-4				SAME AS SS-2					16	A-4a (VISUAL)
B-005	01.00	02.50	SS-1	5	4	18	38	35	31	16	15	15	A-6a (10)
908+50, 100′ Rt	02.50	04.00	SS-2	0	2	10	48	40	33	18	15	23	A-6a (10)
	04.00	05.50	SS-3	5	6	11	40	38	30	19	11	17	A-6a (8)
	05.50	07.00	SS-4	19	4	11	33	33	30	17	13	16	A-6a (7)

SUMMARY OF SOIL TEST DATA

SR 309

STATION & OFFSET	FROM	TO	SAMPLE TYPE	% AGG	% CS	% FS	% SILT	% CLAY	LL	PL	PI	% WC	OHIO CLASS
B-006	01.00	02.50	SS-1	42	12	15	24	7	NP	NP	NP	10	A-2-4 (0)
911+00, 11′ Lt	02.50	04.00	SS-2	0	5	12	39	44	41	20	21	23	A-7-6 (13)
	04.00	05.50	SS-3	0	3	15	38	44	37	19	18	15	A-6b (11)
	05.50	07.00	SS-4	7	5	11	42	35	29	19	10	17	A-4a (8)
B-007	01.00	02.50	SS-1	47	20	13	16	4	NP	NP	NP	14	A-1-b (0)
915+00, 11′ Lt	02.50	04.00	SS-2	6	4	10	38	42	35	18	17	16	A-6b (11)
	04.00	05.50	SS-3	6	6	10	37	41	30	17	13	15	A-6a (9)
	05.50	07.00	SS-4	14	5	10	34	37	30	18	12	15	A-6a (8)
B-008	01.00	02.50	SS-1	34	18	17	24	7	24	17	7	13	A-2-4 (0)
919+38, 23′ Lt	02.50	04.00	SS-2	0	3	11	34	52	44	21	23	24	A-7-6 (14)
	04.00	05.50	SS-3	22	5	10	30	33	31	17	14	15	A-6a (7)
	05.50	07.00	SS-4	12	5	10	35	38	29	18	11	16	A-6a (8)
B-009	01.00	02.50	SS-1	62	16	9	10	3	NP	NP	NP	6	A-1-a (0)
924+00, 10′ Rt	02.50	04.00	SS-2	STONE FRAGMENTS, TRACE OF SILT & CLAY								3	A-1-a (VISUAL)
	04.00	05.50	SS-3	GRAYISH-BROWN SILTY CLAY								23	A-6b (VISUAL)
	05.50	07.00	SS-4	46	4	11	17	22	NP	NP	NP	17	A-4a (1)
B-010	01.00	02.50	SS-1	31	13	13	28	15	27	17	10	15	A-4a (2)
929+00, 11′ Lt	02.50	04.00	SS-2	20	9	14	29	28	28	15	13	20	A-6a (6)
	04.00	05.50	SS-3	11	4	10	35	40	32	18	14	17	A-6a (10)
	05.50	07.00	SS-4	4	6	11	39	40	30	17	13	15	A-6a (9)
B-011	01.00	02.50	SS-1	64	15	7	12	2	NP	NP	NP	10	A-1-a (0)
933+50, 10′ Rt	02.50	04.00	SS-2	11	5	10	35	39	35	18	17	16	A-6b (11)
	04.00	05.50	SS-3	0	6	12	37	45	32	18	14	14	A-6a (10)
	05.50	07.00	SS-4	8	6	11	48	27	32	18	14	15	A-6a (10)
B-011A	01.00	02.50	SS-1	51	21	10	15	3	NP	NP	NP	6	A-1-b (0)
937+50, 12′ Lt	02.50	04.00	SS-2	15	7	27	31	20	27	15	12	17	A-6a (4)
	04.00	05.50	SS-3	17	3	9	32	39	37	17	20	21	A-6b (11)
	05.50	07.00	SS-4	18	6	11	31	34	35	18	17	24	A-6b (9)
B-012	01.00	02.50	SS-1	57	16	10	13	4	NP	NP	NP	7	A-1-b (0)
941+50, 10′ Rt	02.50	04.00	SS-2	16	4	9	36	35	36	19	17	20	A-6b (10)
	04.00	05.50	SS-3	32	7	15	27	19	NP	NP	NP	15	A-4a (2)
	05.50	07.00	SS-4	29	7	10	33	21	37	20	17	13	A-6b (7)
B-013	01.00	02.50	SS-1	8	5	11	39	37	29	17	12	16	A-6a (9)
945+50, 29′ Lt	02.50	04.00	SS-2	6	5	10	38	41	31	17	14	15	A-6a (10)
	04.00	05.50	SS-3	BROWN SILTY CLAY, TRACE OF STONE FRAGMENTS								16	A-6b (VISUAL)
	05.50	07.00	SS-4	SAME AS SS-3								15	A-6b (VISUAL)
B-014	01.00	02.50	SS-1	45	22	15	15	3	NP	NP	NP	10	A-1-b (0)
948+55, 10′ Lt	02.50	04.00	SS-2	5	6	11	37	41	36	18	18	18	A-6b (11)
	04.00	05.50	SS-3	5	5	10	41	39	33	18	15	15	A-6a (10)
	05.50	07.00	SS-4	9	5	10	37	39	33	18	15	16	A-6a (10)

DRAWN JAG | CHECKED MRS

SOIL PROFILE
SUMMARY OF SOIL TEST DATA

ALL-117/309-18.65/15.17

2 / 6

I:\Pd\75467\geotechnical\sheets\75467ID001.dgn 17-SEP-2012 8:23AM eschecke

I:\Pd\75467\geotechnical\sheets\75467IP001.dgn 17-SEP-2012 8:29AM eschecke

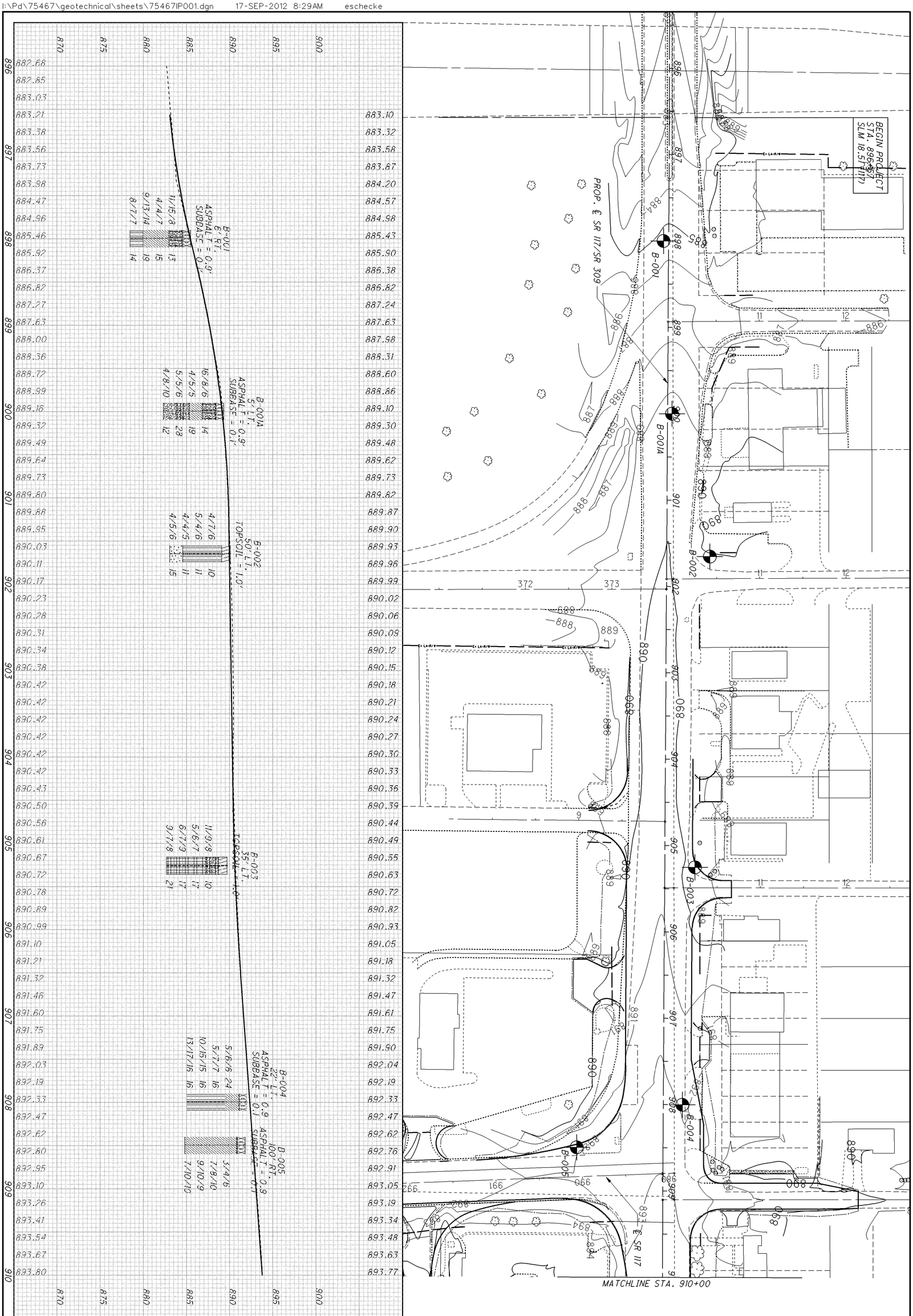

3/6	ALL-117/309-18.65/15.17	SOIL PROFILE STA. 896+57 TO STA. 910+00	DRAWN JAG	0 50 25 100 HORIZONTAL SCALE IN FEET	N
			CHECKED MRS		

I:\Pd\75467\geotechnical\sheets\75467IP002.dgn 17-SEP-2012 8:30AM eschecke

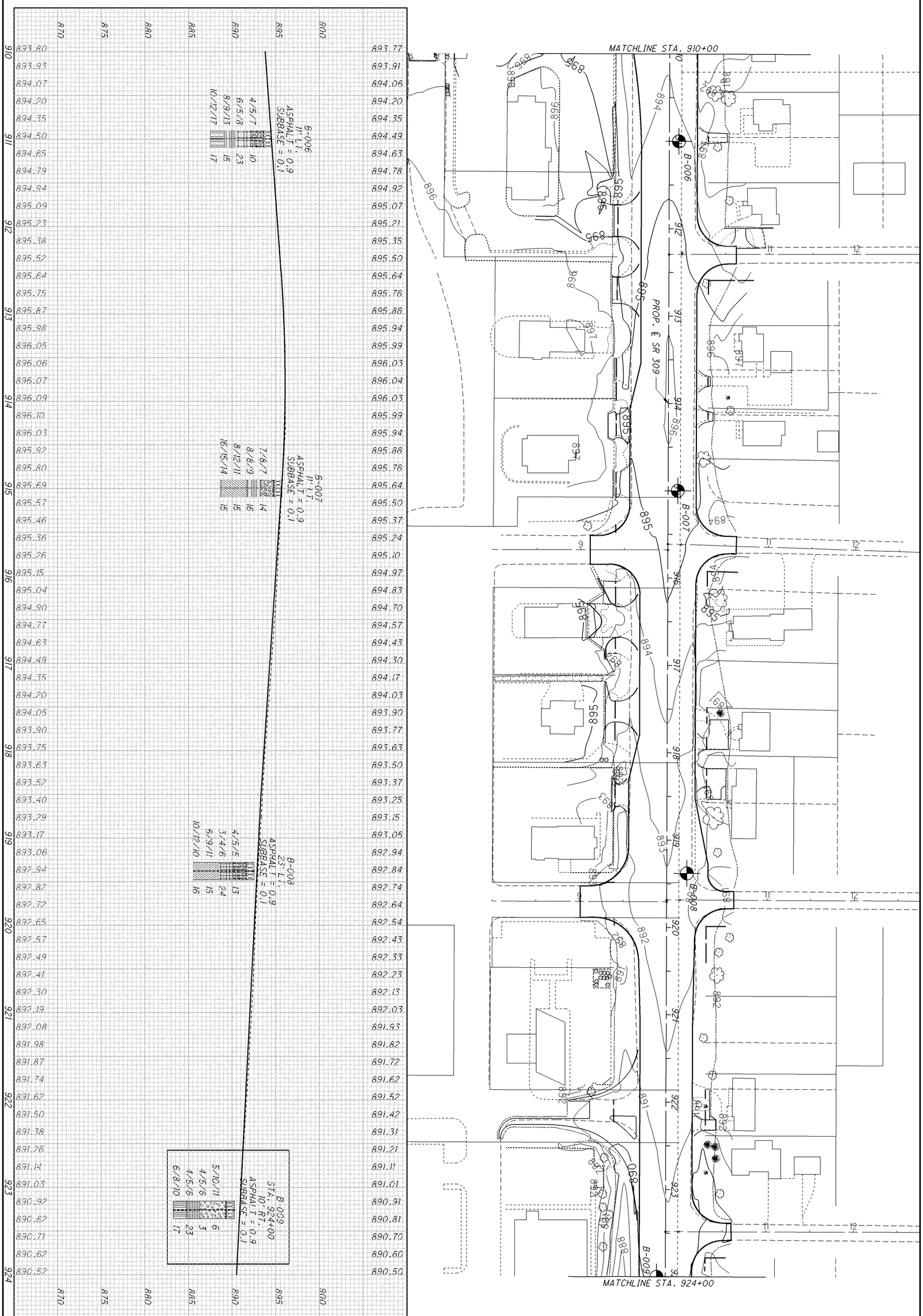

4/6	ALL-117/309-18.65/15.17	SOIL PROFILE STA. 910+00 TO STA. 924+00	DRAWN JAG	0 50	N
			CHECKED MRS	25 100 HORIZONTAL SCALE IN FEET	

I:\Pd\75467\geotechnical\sheets\75467IP003.dgn 17-SEP-2012 8:40AM eschecke

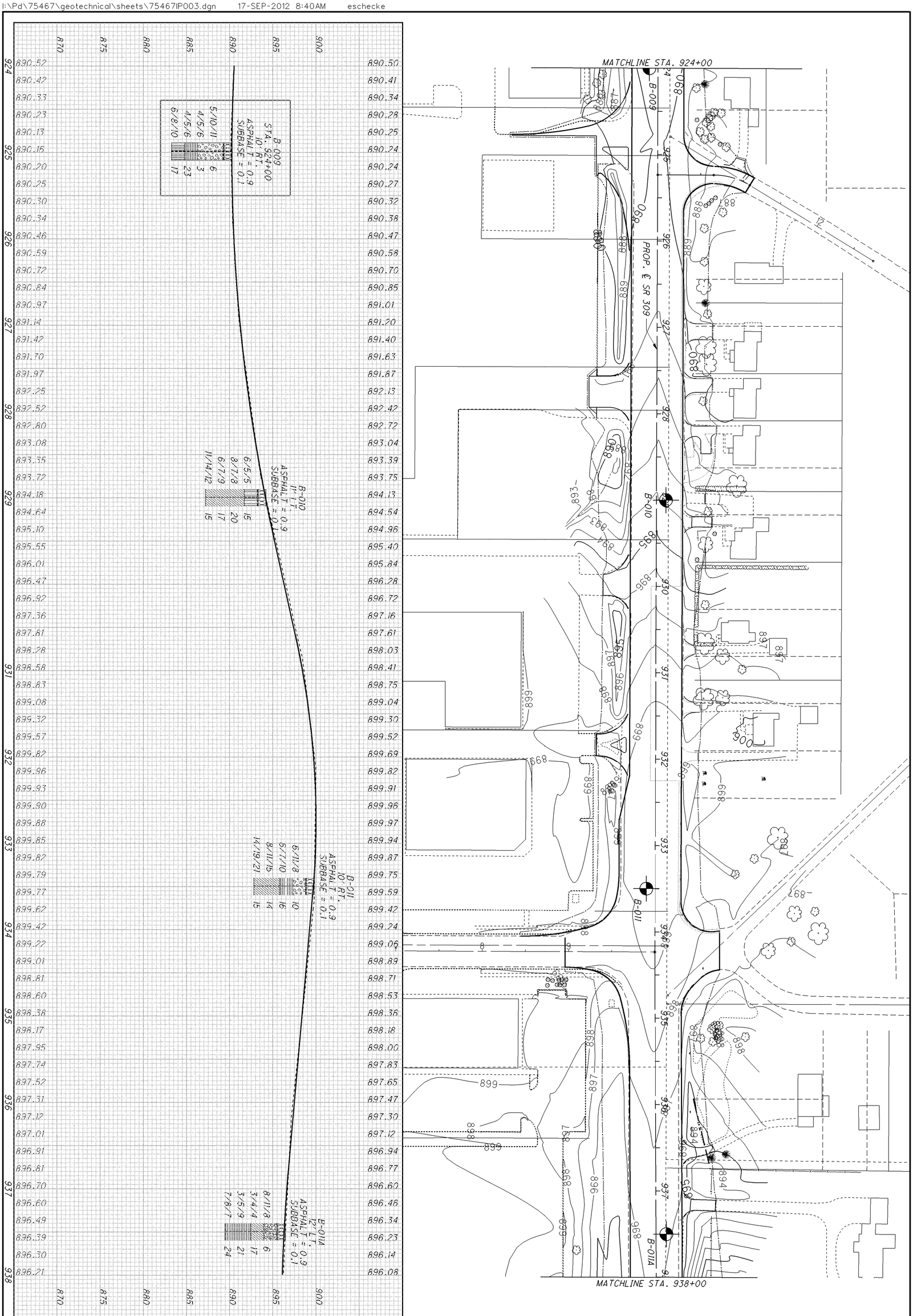

5/6	ALL-117/309-18.65/15.17	SOIL PROFILE STA. 924+00 TO STA. 938.00	DRAWN JAG	0 50 25 100 HORIZONTAL SCALE IN FEET	N
			CHECKED MRS		

I:\Pd\75467\geotechnical\sheets\75467IP004.dgn 17-SEP-2012 8:32AM eschecke

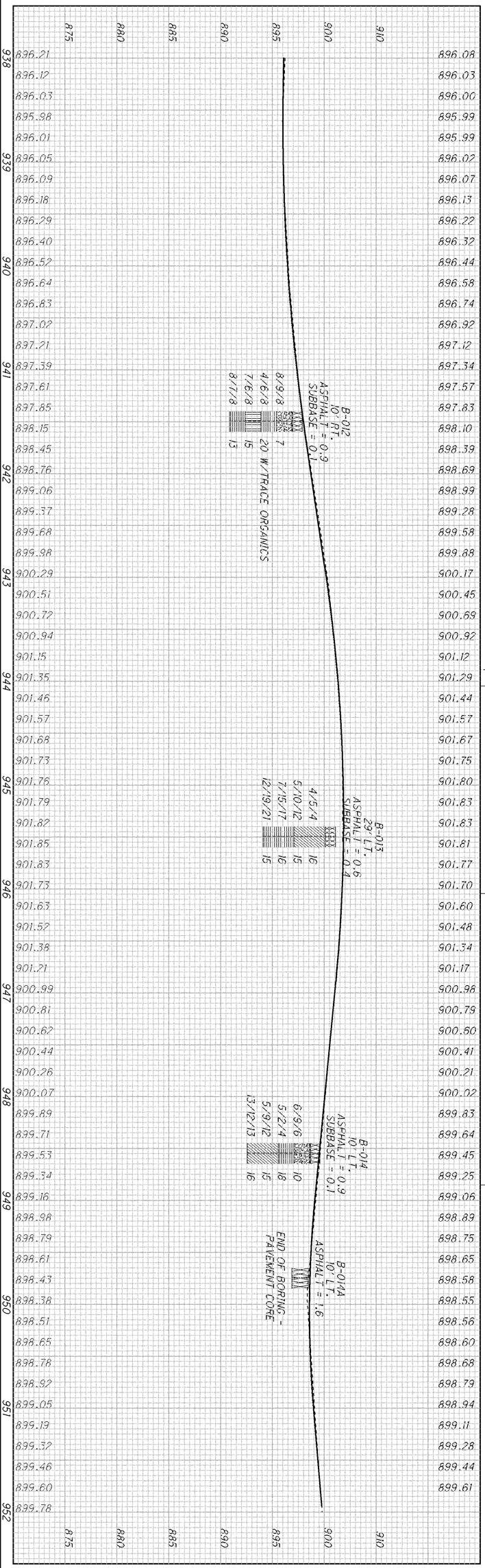

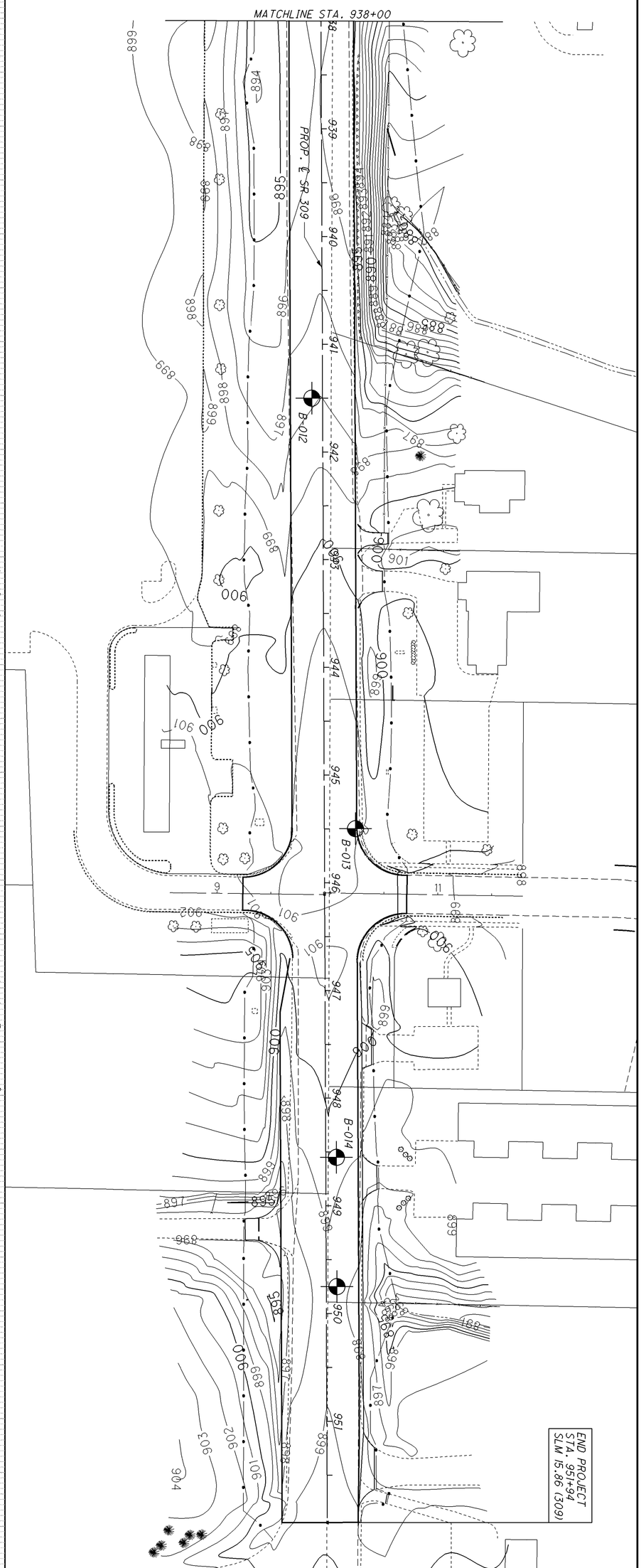

6/6	ALL-117/309-18.65/15.17	SOIL PROFILE STA. 938+00 TO STA. 951+94	DRAWN JAG	0 50 25 100 HORIZONTAL SCALE IN FEET	N
			CHECKED MRS		

SPECIAL PROVISIONS

WATERWAY PERMITS

CONDITIONS

C-R-S: ALL-117/309-18.65/15.17

PID: 76691

DATE: 09-13-12

1. Waterway Permit Time Restrictions:

Complete all work in streams depicted in the plans, Special Provisions, and/or working drawings for temporary fill by 10-23-2014.

For work in streams, the Department will consider the Contractor's submission of an extension to the waterway permit end date based on project constraints. In order to be considered, the Contractor must submit a justification to the Engineer at least two months prior to the waterway permit end date.

The Engineer will submit the request for a time extension to ODOT- Office of Environmental Services- Waterway Permits Unit (614-466-7100) for consideration and coordination with the USACE and/or Ohio EPA.

2. Deviations from Permitted Construction Activities

No deviation from the requirements for work in streams depicted in the plans, Special Provisions, and/or working drawings may be made unless a modification has been submitted to ODOT and approved by the appropriate agencies (i.e., USACE, Ohio EPA, USCG, ODNR, and USFWS).

For emergency situations resulting in unanticipated impacts to streams or wetlands, provide notification (verbal or written) to the Engineer as soon as possible following discovery of the situation. Written notification to the Engineer and notification to the ODOT- Office of Environmental Services- Waterway Permits Unit must be made within 24 hours.

For non-emergency situations, notify the Engineer in writing for submission to the ODOT- Office of Environmental Services- Waterway Permits Unit (614-466-7100) for consideration and coordination with the appropriate agencies. Notification must be made at least two months prior to planned non-permitted activities. Consideration of the requested deviation is at the discretion of the Director and must be coordinated with the appropriate regulatory agencies.

3. In-Stream Work Restrictions

Work in the following sensitive streams is further restricted as follows

Steam Name /Description	Location	Work restriction dates (No in-stream work permitted)
Unnamed Tributary to Lost Creek	Sta. 939+50	None

In-stream work has been defined as the placement and/or removal of fill materials (temporary or permanent) below ordinary high water of a stream. Examples of "fill" include (but are not limited to) bridge piers, abutments, culverts, rock channel protection, scour protection, and temporary work pads.

Fills (such as temporary work pads) placed within a stream identified in the above table outside of the work restriction dates can continue to be worked from during the work restriction dates, but cannot be expanded, removed, or otherwise modified (below ordinary high water) until once again outside of the work restriction dates. ***Temporary fill is not permitted for ALL-117/309-18.65/15.17, PID 75467.***

The Engineer will submit the request for a time extension to ODOT- Office of Environmental Services- Waterway Permits Unit (614-466-7100) for consideration and coordination with the USACE and/or Ohio EPA.

4. Materials:

Materials utilized in or adjacent to streams and wetlands on this project for permanent fill or bank protection shall consist of suitable material free from toxic contaminants in other than trace quantities. Broken asphalt is specifically excluded.

Cadmium, chromium, arsenate (CCA), creosote, and other pressure treated lumber shall not be used in structures that are placed in wetlands and streams.

5. Cultural Resources

If archeological sites or human remains are discovered, cease all work in the immediate area and notify the Engineer who will immediately contact the Office of Environmental Services – Cultural Resource Section (614-466-7100) and the Ohio Historic Preservation Office.

In the event of human remains are discovered the Engineer shall also contact the Allen County Sherriff's Office at (419-993-1400).

6. Water Resource Demarcation:

All streams, wetlands, lakes, and ponds indicated on the plans shall be demarcated in the field as per SS 832 prior to site disturbance. The fence shall remain in place and be maintained throughout the construction process. Following the completion of the project, the fence and posts shall be removed.

7. Spill containment:

Provide and Maintain an Oil Spill Kit with a minimum capacity of 65 gallons. The Spill Kit shall contain:

- 6 - 3 in. X 8 ft. Oil only socks
- 4 - 18 in. X18 in. Oil only pillows
- 2 - 5 in. X 10ft. Booms
- 50 - 16in. X 20 in. Oil only pads
- 10- Disposable Bags
- 1- 65 Gallon drum with lid
- 25 pounds of Granular Oil Absorbent

The Oil Spill Kit shall be located within 150 feet of any equipment working in a stream or wetland. The oil Spill Kit shall be maintained for the life of the contract. Any materials utilized during the project will be replaced within 48 hours.

All costs associated with furnishing and maintaining the above referenced spill containment kit is incidental to work.

8. Blasting:

State law requires notification to the Ohio Department of Natural Resources should blasting be required within or near stream channels (See ORC 1533.58 & CMS 107.09).

Notify Engineer, in writing, for submission to ODOT Office of Environmental Services – Waterway Permits Unit (614-466-7100) for coordination with the Ohio Department of Natural Resources.

Special Provisions: ALL-117/309-18.65/15.17, PID 75467

9. Waterway Permits:

A Regional General Permit (RGP) Section B is authorized for ALL-117/309-18.65/15.17 (PID 75467). The RGP authorization includes a total of 75 feet (from upstream to downstream) of permanent stream impact for rock channel protection and culvert construction.

No other impacts to streams or wetlands are authorized for this project. A copy of the RGP shall be kept at the work site at all times and made available to all contractors and subcontractors. The Permit is effective starting: 9-13-2012 . The Permit expires: 10-23-2014 .

10. Project Inspection:

Inspection of Work may include inspection by representatives of other government agencies or railroad corporations that pay a portion of the cost of the Work or regulate the Work through State and Federal law. Comments from the representatives of these agencies shall be directed to the Engineer. Please forward a copy to ODOT Office of Environmental Services. Waterway Permits Unit (614-466-7100).

11. Temporary Access Fills (Stream and River Crossings and Fills)

Temporary impacts to streams are not authorized for this project. Temporary fill activities can include, but are not limited to, causeways, work pads, coffer dams, sheet piling, and construction equipment. Operating equipment in or across the stream is not authorized. Any unauthorized temporary impacts that occur will be in violation of Section 404 and 401 of the Clean Water Act.