ASD - SR-3-6.08;ASD-60-0.68
090005 PID - 80173
Dist 3 1/14/2009

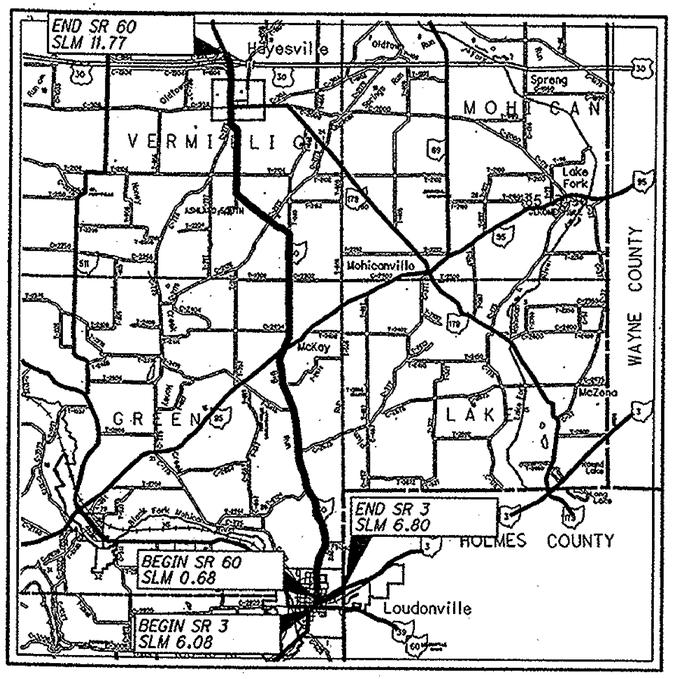

LOCATION MAP

LATITUDE: 40 °42'53" LONGITUDE: 82 °14'26"

SCALE IN MILES

0 1 2 3 4

N

PORTION TO BE IMPROVED
INTERSTATE & DIVIDED HIGHWAY
UNDIVIDED STATE & FEDERAL ROUTES
OTHER ROADS

DESIGN DESIGNATION SEE SHEET 2.

NHS PROJECT___NO
3R PROJECT

STATE OF OHIO

DEPARTMENT OF TRANSPORTATION

ASD-3-6.08

ASD-60-0.68

VILLAGE OF LOUDONVILLE
VILLAGE OF HAYESVILLE
HANOVER TOWNSHIP
GREEN TOWNSHIP
VERMILLION TOWNSHIP

INDEX OF SHEETS:

TITLE	1
STRAIGHT LINE DIAGRAM	2
GENERAL NOTES	3-5
DROP OFFS IN WORK ZONES	6
MAILBOX FACILITIES	7
GENERAL SUMMARY	8, 9
PAVEMENT & SHOULDER DATA	10, 11
TYPICAL SECTIONS	12
GUARDRAIL GENERAL NOTES	13, 14
GUARDRAIL SUB-SUMMARY	15
GUARDRAIL DETAILS	16-29 SHEETS 26 & 27 NOT USED
PARKING STALL MARKINGS	30, 31
CURB RAMPS	32-34
MAIN ST. & S.R. 3 PAVEMENT MARKINGS	35
PAVEMENT MARKINGS & RPM INFORMATION	36
STRUCTURES	37-47

PROJECT DESCRIPTION

THIS PROJECT IS 11.81 MILES LONG AND WILL INCLUDE PAVEMENT PLANING, PAVEMENT REPAIR, RESURFACING WITH ASPHALT CONCRETE, GUARDRAIL WORK AND PAVEMENT MARKINGS.

PROJECT EARTH DISTURBED AREA:	N/A ACRES
ESTIMATED CONTRACTOR EARTH DISTRUBED AREA:	N/A ACRES
NOTICE OF INTENT EARTH DISTURBED AREA:	N/A ACRES

CONVERSION OF METRIC STANDARD DRAWINGS

THE METRIC STANDARD DRAWINGS REFERENCED IN THIS PLAN SHALL BE CONVERTED TO ENGLISH UNITS USING THE SI (METRIC) TO ENGLISH CONVERSION FACTORS PROVIDED IN SECTION 109.02 OF THE 2008 CMS. CONVERSIONS SHALL BE APPROXIMATELY PRECISE AND SHALL REFLECT STANDARD INDUSTRY ENGLISH VALUES WHERE SUITABLE.

2008 SPECIFICATIONS

THE STANDARD SPECIFICATIONS OF THE STATE OF OHIO, DEPARTMENT OF TRANSPORTATION, INCLUDING CHANGES AND SUPPLEMENTAL SPECIFICATIONS LISTED IN THE PROPOSAL SHALL GOVERN THIS IMPROVEMENT.

I HEREBY APPROVE THESE PLANS AND DECLARE THAT THE MAKING OF THIS IMPROVEMENT WILL NOT REQUIRE THE CLOSING TO TRAFFIC OF THE HIGHWAY AND THAT PROVISIONS FOR THE MAINTENANCE AND SAFETY OF TRAFFIC WILL BE AS SET FORTH ON THE PLANS AND ESTIMATES.

APPROVED John Hart, P.E.
DATE 9/23/08 DISTRICT DEPUTY DIRECTOR

APPROVED James G. Beasley
DATE 10-21-08 DIRECTOR, DEPARTMENT OF TRANSPORTATION

FEDERAL PROJECT NO. E070(690)
PID NO. 80173
CONSTRUCTION PROJECT NO.
RAILROAD INVOLVEMENT NORFOLK SOUTHERN
ASD-3-6.08
ASD-60-0.68
1/47

STRUCTURE/CULVERT ENGINEERS SEAL:

STATE OF OHIO
DAVID C. MOLLENSHOTT
E-50210
REGISTERED
PROFESSIONAL ENGINEER

SIGNED: David C. Mollenshott
DATE: 9/8/08

ROADWAY ENGINEERS SEAL:

STATE OF OHIO
AHAD D. BARATY
E-53234
REGISTERED
PROFESSIONAL ENGINEER

SIGNED: Ahad D. Baraty
DATE: 9/8/08

STANDARD CONSTRUCTION DRAWINGS

BP-1.1	7/28/00	GR-1.1	7/16/04	MT-96.10	4/19/02	TC-41.20	1/19/01		
BP-3.1	3/10/08	GR-2.1	1/16/04	MT-96.20	4/19/02	TC-42.20	7/16/04		
BP-4.1	7/16/04	GR-2.2	1/20/06	MT-96.25	4/20/01	TC-52.10	1/19/07		
BP-7.1	1/19/07	GR-3.4	1/20/06	MT-97.10	9/05/06	TC-52.20	1/19/07		
BP-7.2	1/19/07	GR-4.1	4/18/03	MT-97.12	9/05/06	TC-65.10	1/21/05		
		GR-4.2	1/19/07	MT-99.20m	1/30/95	TC-65.11	1/21/05		
DM-4.3	7/19/02			MT-105.10	10/18/02	TC-71.10	1/19/07		
DM-4.4	7/19/02	RM-1.1	7/18/08	MT-105.11	10/18/02	TC-72.20	1/21/06		
						TC-73.10	1/19/01		

SUPPLEMENTAL SPECIFICATIONS

800	10/17/08
832	04/25/06

SPECIAL PROVISIONS

NWP#3	09/09/08
SP832	05/20/08

UNDERGROUND UTILITIES
TWO WORKING DAYS
BEFORE YOU DIG
CALL 1-800-362-2764 (TOLL FREE)
OHIO UTILITIES PROTECTION SERVICE
NON-MEMBERS
MUST BE CALLED DIRECTLY

PLAN PREPARED BY:

DISTRICT THREE PRODUCTION DEPARTMENT

DESIGN FILE: I:\projects\80173\roadway\sheets\80173GT000.dgn
WORKSTATION: mrobins1 DATE: 9/8/2008

DESIGN FILE: I:\projects\80173\roadway\sheets\80173GB001.dgn
WORKSTATION: mrobins1 DATE: 8/22/2008

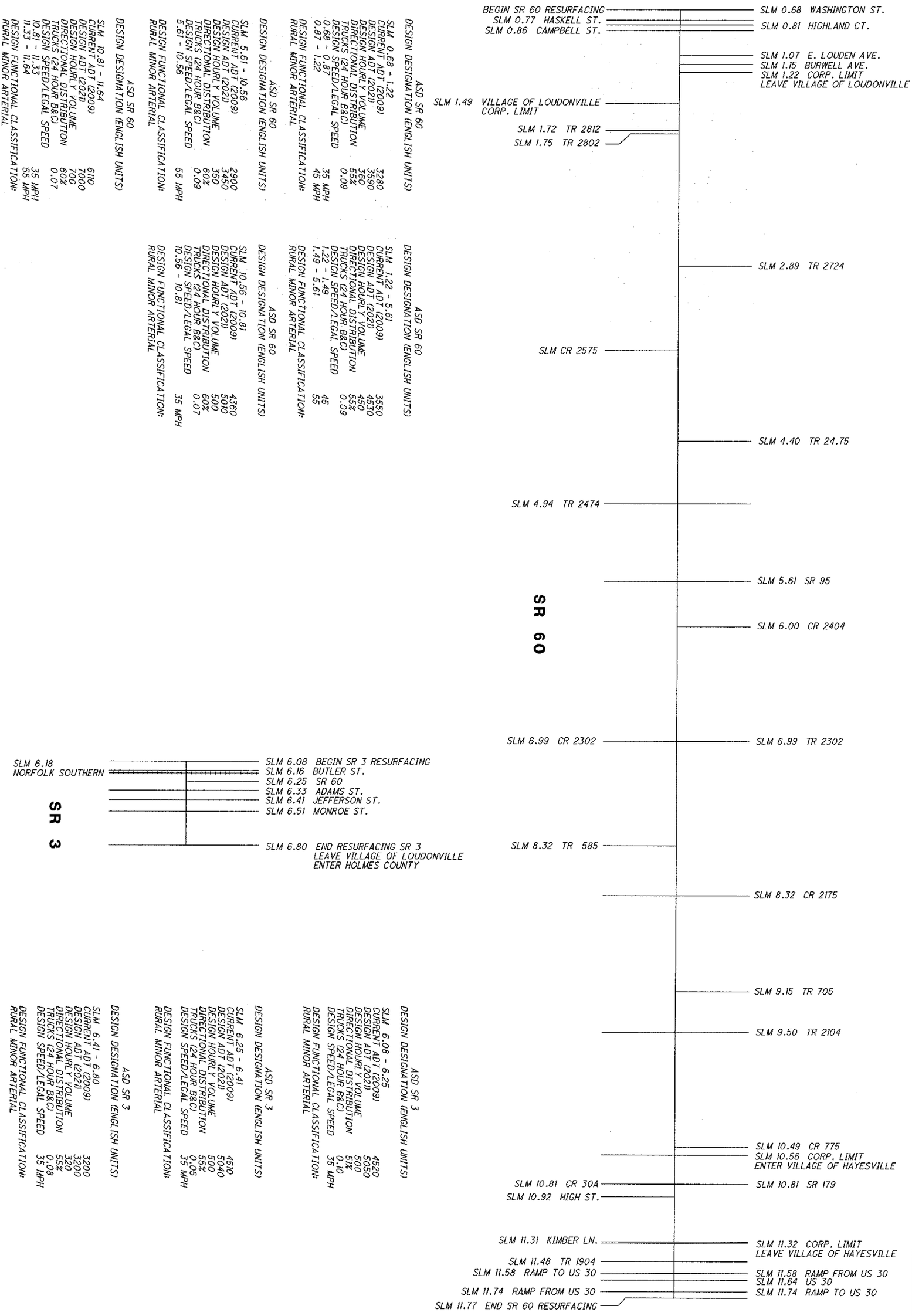

2/47	ASD-3-6.08 ASD-60-0.68	STRAIGHT LINE DIAGRAM	CALCULATED MER CHECKED ADB

GENERAL

UTILITIES

LISTED BELOW ARE ALL UTILITIES LOCATED WITHIN THE PROJECT CONSTRUCTION LIMITS TOGETHER WITH THEIR RESPECTIVE OWNERS.

THE LOCATION OF THE UNDERGROUND UTILITIES SHOWN ON THE PLANS ARE AS OBTAINED FROM THE OWNERS AS REQUIRED BY SECTION 153.64 O.R.C.

TELEPHONE
Embarq (formerly Sprint)
175 Ashland Rd.
P.O. Box 3555
Mansfield, Ohio 44907
419-755-7956

TELEPHONE
Sprint - Fiber
769 Brooksedge Blvd.
Westerville, Ohio 43081
513-254-4348

TELEPHONE
Verizon
1534 S.R. 511 South
Ashland, Ohio 44805
419-282-6551

TELEPHONE
AT&T (Consultant)
HLG Engineering & Surveying
5980-G Wilcox
Dublin, Ohio 43106
614-760-8320

GAS
Columbia Gas Transmission
589 North State Rd.
Medina, Ohio 44256
419-512-4145 cell

GAS
Dominion East Ohio
7015 Freedom Ave. N.W.
North Canton, Ohio 44720
330-266-2041

GAS
Gatherco Inc.
5772 Dressler Rd. N.W.
North Canton, Ohio 44720
330-498-9553

GAS
Ohio Cumberland Gas Co.
20718 Danville Amity Rd.
Mt. Vernon, Ohio 43050
740-392-2941

GAS
Columbia Gas of Ohio
920 West Goodale Blvd.
Columbus, Ohio 43212
614-460-2120

GAS/OIL
Marathon Ashland Pipeline
539 South Main St., Rm 193M
Findlay, Ohio 45840
419-421-2211

CABLE
Armstrong Utilities
100 East 2nd St.
Ashland, Ohio 44805
419-289-0161

CABLE
Time Warner Cable
1575 Lexington Avenue
Mansfield, Ohio 44901
419-756-6091

ELECTRIC
Ohio Edison Co.
1717 Ashland Rd.
Mansfield, Ohio 44905
419-521-6213

ELECTRIC
Fireland Electric Co-Op Inc.
One Energy Place
New London, Ohio 44851
419-929-1571

VILLAGE
Village of Hayesville
5 South Mechanic St.
P.O. Box 246
Hayesville, Ohio 44838
419-368-3818

VILLAGE
Village of Loudonville
156 N. Water St.
P.O.Box 150
Loudonville, Ohio 44842
419-994-3270

THE AFOREMENTIONED UTILITY COMPANIES AND AGENCIES HAVE VARIOUS FACILITIES IN THE AREA THAT WILL REMAIN IN PLACE DURING CONSTRUCTION.

PROGRESSION OF WORK

1) WHEN REPLACING, ADJUSTING, OR RECONSTRUCTING, GUARDRAIL SHALL BE REMOVED PRIOR TO ANY EMBANKMENT WORK AT THE GUARDRAIL RUN.
2) GUARDRAIL WORK SHALL BE DONE AFTER, RESURFACING AND BERM WORK SO AS TO ESTABLISH PROPER GRADES FROM WHICH TO CONSTRUCT THE RAIL.

WORK UNDER STRUCTURE OVER THE RAILROAD

PRIOR TO ANY WORK AT RAILROAD OVERPASS (STRUCTURE ASD-60-0484) THE CONTRACTOR SHALL CONTACT THE AFFECTED RAILROAD AUTHORITY SO AS TO MAKE THEM AWARE OF THE PROGRESS AND SCHEDULE OF WORK. THE CONTRACTOR SHALL COOPERATE WITH THE RAILROAD SO AS TO ELIMINATE ANY SAFETY CONCERNS. FLAGGING WILL BE REQUIRED BY THE RAILROAD. ODOT WILL BE RESPONSIBLE FOR PAYING THE RAILROAD FOR ALL FLAGGING COSTS. REFER TO THE RAILROAD SPECIAL CLAUSES IN THE PROPOSAL.

GENERAL

WORK LIMITS

THE WORK LIMITS SHOWN ON THESE PLANS ARE FOR PHYSICAL CONSTRUCTION ONLY. THE INSTALLATION AND OPERATION OF ALL TEMPORARY TRAFFIC CONTROL AND TEMPORARY TRAFFIC CONTROL DEVICES REQUIRED BY THESE PLANS SHALL BE PROVIDED BY THE CONTRACTOR WHETHER INSIDE OR OUTSIDE THESE WORK LIMITS.

ROUTINE MAINTENANCE

BETWEEN THE TIME THAT BIDS ARE TAKEN AND THE START OF CONSTRUCTION, THE MAINTAINING AGENCY MAY ENTER UPON THE PROJECT AND PERFORM ROUTINE MAINTENANCE SUCH AS CRACK SEALING, PATCHING, AND BERM AND SHOULDER REPAIR. THE EFFECTS, IF ANY, OF THE PERFORMANCE OF ROUTINE MAINTENANCE SHALL BE CONSIDERED AS INHERENT IN WORK OF THE CHARACTER PROVIDED FOR IN THE PLAN AND THE RESULTING CONDITIONS SHALL NOT BE CONSIDERED AS DIFFERING MATERIALLY FROM THOSE EXISTING AT THE TIME BIDS WERE TAKEN.

ROADWAY

ITEM 209 - LINEAR GRADING

THE CONTRACTOR IS REQUIRED TO PERFORM LINEAR GRADING ON THE GRADED SHOULDER. IT IS ANTICIPATED THAT THERE ARE AREAS WHERE THE GRADED SHOULDER IS AT A HIGHER ELEVATION THAN THE ADJACENT PROPOSED PAVEMENT. A 10:1 SLOPE SHALL BE ESTABLISHED, OR AS DIRECTED BY THE ENGINEER, WHEN PERFORMING ITEM 209 LINEAR GRADING. THE INTENT IS TO PROVIDE AN UNOBSTRUCTED AND POSITIVE FLOW OF STORM WATER FROM THE PAVEMENT TO THE DITCH. THE LINEAR GRADING SHALL BE PERFORMED BEFORE THE SURFACE COURSE IS PLACED. ALL LABOR AND EQUIPMENT NECESSARY TO PERFORM THE ABOVE WORK SHALL BE INCLUDED IN THE UNIT PRICE BID PER MILE FOR ITEM 209 LINEAR GRADING.

ITEM 604 - CASTINGS ADJUSTED TO GRADE
ITEM 638 - VALVE BOX ADJUSTED TO GRADE

ALL ADJUSTING RINGS SHALL HAVE THE ENGINEER'S APPROVAL BEFORE USING, HOWEVER, IF A UNIT IS THE ADJUSTABLE FRAME TYPE AND CAN BE ADJUSTED USING THE EXISTING FRAME, THEN THE CONTRACTOR IS ONLY ALLOWED TO ADJUST THE FRAME.

UNDER ITEM 604.03, ADJUSTMENT TO GRADE, PARAGRAPH (I), THE CASTING TO BE ADJUSTED MAY OR MAY NOT HAVE AN EXISTING FRAME. THE WORK SHALL CONSIST OF ADJUSTING THE EXISTING CASTING OR GRATE TO THE SATISFACTION OF THE ENGINEER. THE CONTRACTOR IS REMINDED TO FIELD CHECK ALL ADJUSTMENT TO GRADE ITEMS PRIOR TO BIDDING, AS NO ADDITIONAL COMPENSATION WILL BE GRANTED FOR LABOR AND MATERIALS REQUIRED TO SATISFACTORILY ADJUST CASTINGS WITHOUT FRAMES.

ADJUST VALVE BOXES TO GRADE AS PER ITEM 638.18 IN THE CMS.

PAVEMENT

ITEMS 253 PAVEMENT REPAIR & PAVEMENT REPAIR, MISC.: PARTIAL DEPTH

THESE ITEMS OF WORK SHALL CONSIST OF THE REMOVAL OF THE EXISTING PAVEMENT OR PAVED BERM WHICH MAY BE ASPHALT, BRICK, CONCRETE, OR A COMBINATION OF EACH, IN AREAS OF EXISTING PAVEMENT FAILURE. CORING HAS BEEN PERFORMED TO HELP DETERMINE THE COMPONENTS THAT MAY BE ENCOUNTERED DURING THIS ITEM OF WORK. THE PAVEMENT CORING INFORMATION IS SHOWN ON THIS PLAN SHEET.

THE ENGINEER SHALL DESIGNATE THE LOCATIONS AND LIMITS OF THE AREAS TO BE REPAIRED. PAVEMENT REPAIR SHALL BE PERFORMED AFTER PAVEMENT PLANING AND BEFORE PLACEMENT OF THE INTERMEDIATE AND/OR SURFACE COURSE. THE REPAIR AREAS SHALL BE SAW CUT AND EXCAVATED TO PROVIDE STRAIGHT AND VERTICAL SURFACES AROUND THE PERIMETER OF THE REPAIR AREA. PAVEMENT PLANING MAY BE USED AS AN ALTERNATIVE TO SAW CUTTING AND EXCAVATING. THE PAVEMENT SHALL BE REMOVED WITHIN THE DESIGNATED AREAS BY METHODS WHICH WILL NOT DAMAGE ADJACENT PAVEMENT. THE DEPTH OF REMOVAL SHALL BE SUFFICIENT TO REMOVE ALL DETERIORATED PAVEMENT WITH A MAXIMUM DEPTH OF 8", BASED ON THE PAVEMENT DESIGN AND AN AVERAGE DEPTH OF 4". THE MATERIALS REMOVED SHALL BE DISPOSED OF IN ACCORDANCE WITH 105.16 AND 105.17.

THE CONTRACTOR SHALL BE CAPABLE OF PERFORMING PAVEMENT REPAIRS 2 FEET WIDE.

REPLACEMENT MATERIAL SHALL BE ITEM 301 OR ITEM 448 TYPE 2 MATERIAL AND SHALL BE PLACED AND COMPACTED TO FINISH FLUSH WITH THE ADJACENT PAVEMENT SURFACE. ITEM 301 CAN BE USED WHEN THE DEPTH OF THE REPAIR IS BETWEEN 3" AND 12" WITH A MAXIMUM PAVEMENT LIFT OF 6". ITEM 448 TYPE 2 CAN BE USED WHEN THE DEPTH OF THE REPAIR IS BETWEEN 0" AND 5" WITH A MAXIMUM PAVEMENT LIFT OF 3". ALL EXISTING PAVEMENT AREAS WHICH WILL BE IN CONTACT WITH THE PAVEMENT REPAIR SHALL BE CLEANED AND COATED PER CMS 401.14, USING AN ASPHALT MATERIAL COMPLYING WITH 407.02. ALL COMPACTION SHALL BE ACHIEVED BY MECHANICAL METHODS TO THE SATISFACTION OF THE ENGINEER.

PAYMENT SHALL INCLUDE ALL LABOR, EQUIPMENT, AND MATERIALS NECESSARY TO COMPLETE THE PAVEMENT REPAIR. FOR PAYMENT PURPOSES ITEM 253 PAVEMENT REPAIR, MISC.: PARTIAL DEPTH IS TO BE A MAXIMUM OF 4" DEEP AND ITEM 253 PAVEMENT REPAIR IS FOR DEPTHS GREATER THAN 4". PAYMENT WILL BE MADE AT THE UNIT BID PRICE PER CUBIC YARD, (BY TICKET WEIGHT CONVERSION), OF ITEM 253, PAVEMENT REPAIR OR ITEM 253 PAVEMENT REPAIR, MISC.: PARTIAL DEPTH. THE FOLLOWING ESTIMATED QUANTITIES ARE PROVIDED IN THE GENERAL SUMMARY TO BE USED AS DIRECTED BY THE ENGINEER:

SR 3 ITEM 253 PAVEMENT REPAIR, MISC.: PARTIAL DEPTH	100 CU. YD.
SR 60 ITEM 253 PAVEMENT REPAIR, MISC.: PARTIAL DEPTH	1305 CU. YD.
SR 60 ITEM 253 PAVEMENT REPAIR	145 CU. YD.

ITEM 254 PATCHING PLANED SURFACE

AN ESTIMATED QUANTITY OF ITEM 254, PATCHING PLANED SURFACE HAS BEEN SET UP TO BE USED AS DIRECTED BY THE ENGINEER AS DESCRIBED IN CMS 254.04. THE LIMIT OF THE PATCHING DEPTH IS 0 TO 2 IN.

PAVEMENT CORING INFORMATION

NB LANE

CO/ROUTE/SLM	DEPTH & MATERIAL	WHEEL TRACK/SHOULDER (LT, MIDDLE, RT, OR SHLD)
ASD-60-1.80	3.00" ASPHALT, 4.00" BRICK	(MIDDLE)

SB LANE

CO/ROUTE/SLM	DEPTH & MATERIAL	WHEEL TRACK/SHOULDER (LT, Middle, RT, OR SHLD)
ASD-60-3.70	11.00" ASPHALT	(LT)
ASD-60-3.70	8.50" ASPHALT	(RT)
ASD-60-5.50	13.50" ASPHALT	(LT)
ASD-60-5.50	13.00" ASPHALT	(RT)
ASD-60-5.50	6.50" ASPHALT	(SHOULDER)
ASD-60-8.60	12.00" ASPHALT	(LT)
ASD-60-8.60	10.00" ASPHALT	(RT)
ASD-60-9.90	9.50" ASPHALT	(LT)
ASD-60-9.90	9.50" ASPHALT	(RT)
ASD-60-9.90	6.25" ASPHALT	(SHOULDER)
ASD-60-10.90	9.00" ASPHALT, 5.00" CONC., 3.5" BRICK	(LT)
ASD-60-10.90	5.50" ASPHALT	(RT)
ASD-60-10.90	5.50" ASPHALT	(SHOULDER)

NB LANE

CO/ROUTE/SLM	DEPTH & MATERIAL	WHEEL TRACK/SHOULDER (LT, MIDDLE, RT, OR SHLD)
ASD-3-6.30	6.50" ASPHALT, 3.00" BRICK	(RT)
ASD-3-6.30	7.00" ASPHALT, 3.00" BRICK	(LT)

CALCULATED MER CHECKED ADB

GENERAL NOTES

ASD-3-6.08
ASD-60-0.68

DESIGN FILE: I:\projects\80173\roadway\sheets\80173GN001.dgn
WORKSTATION: mrobins1 DATE: 9/10/2008

PAVEMENT

ITEM 254, PAVEMENT PLANING, ASPHALT CONCRETE (1.25")

THE INTENT OF THE PLANING IS TO MILL 1.25 INCHES AT THE CENTER OF PAVEMENT AT NON-CURBED AREAS. THE PAVEMENT SLOPE SHALL BE 0.016 PREFERRED AND 0.010 MINIMUM, CONTINUOUS BETWEEN THE CROWN AND THE PROPOSED EDGELINE/SHOULDER, WITH A MAXIMUM DEPTH AT THE EDGELINE/ SHOULDER BEING 2.00". THE MILLING DEPTH SHALL BE CONTROLLED FROM THE CENTER OF PAVEMENT IN CONFORMANCE WITH THE ABOVE GUIDELINES.

SPECIAL ATTENTION SHALL BE GIVEN TO SUPERELEVATED CURVES. THE SUPERELEVATION SHALL BE MAINTAINED AND/OR RESTORED, IF NECESSARY, AS DIRECTED BY THE ENGINEER. IF THERE IS NO INFORMATION IN THE PLANS TO CHANGE THE SUPERELEVATION, THE INTENT IS TO MAINTAIN THE EXISTING SUPERELEVATION.

THE CONTRACTOR SHALL MAINTAIN POSITIVE DRAINAGE TO ALL CATCH BASINS AND INLETS.

THE PROGRESSION OF THE PLANING SHALL PROCEED IN SUCH A MANNER THAT NORMAL TRAFFIC WILL NOT BE REQUIRED TO RUN OVER THE PLANED ROADWAY SURFACE MORE THAN FOURTEEN (14) CALENDAR DAYS. THE 14 CALENDAR DAYS SHALL BE CONSIDERED AN INTERIM COMPLETION DATE (SECTION 108), AND FOR EACH CALENDAR DAY BEYOND THE 14 DAYS THAT THE ROADWAY REMAINS EXPOSED TO THE PLANED SURFACE, THE CONTRACTOR WILL BE ASSESSED LIQUIDATED DAMAGES AS PER 108.07.

PAYMENT SHALL INCLUDE ALL LABOR, EQUIPMENT, AND MATERIALS NECESSARY TO COMPLETE THE PAVEMENT PLANING, ASPHALT CONCRETE. PAYMENT WILL BE MADE AT THE UNIT BID PRICE PER SQUARE YARD OF PAVEMENT PLANING, ASPHALT CONCRETE.

ITEM 254, PAVEMENT PLANING, ASPHALT CONCRETE (2.00")

THE INTENT OF THE PLANING IS TO MILL 2.00 INCHES AT THE CENTER OF PAVEMENT AT NON-CURBED AREAS. THE PAVEMENT SLOPE SHALL BE 0.016 PREFERRED AND 0.010 MINIMUM, CONTINUOUS BETWEEN THE CROWN AND THE PROPOSED EDGELINE/SHOULDER. THE MILLING DEPTH SHALL BE CONTROLLED FROM THE CENTER OF PAVEMENT IN CONFORMANCE WITH THE ABOVE GUIDELINES.

SPECIAL ATTENTION SHALL BE GIVEN TO SUPERELEVATED CURVES. THE SUPERELEVATION SHALL BE MAINTAINED AND/OR RESTORED, IF NECESSARY, AS DIRECTED BY THE ENGINEER. IF THERE IS NO INFORMATION IN THE PLANS TO CHANGE THE SUPERELEVATION, THE INTENT IS TO MAINTAIN THE EXISTING SUPERELEVATION.

THE CONTRACTOR SHALL MAINTAIN POSITIVE DRAINAGE TO ALL CATCH BASINS AND INLETS.

THE PROGRESSION OF THE PLANING SHALL PROCEED IN SUCH A MANNER THAT NORMAL TRAFFIC WILL NOT BE REQUIRED TO RUN OVER THE PLANED ROADWAY SURFACE MORE THAN FOURTEEN (14) CALENDAR DAYS. THE 14 CALENDAR DAYS SHALL BE CONSIDERED AN INTERIM COMPLETION DATE (SECTION 108), AND FOR EACH CALENDAR DAY BEYOND THE 14 DAYS THAT THE ROADWAY REMAINS EXPOSED TO THE PLANED SURFACE, THE CONTRACTOR WILL BE ASSESSED LIQUIDATED DAMAGES AS PER 108.07.

PAYMENT SHALL INCLUDE ALL LABOR, EQUIPMENT, AND MATERIALS NECESSARY TO COMPLETE THE PAVEMENT PLANING, ASPHALT CONCRETE. PAYMENT WILL BE MADE AT THE UNIT BID PRICE PER SQUARE YARD OF PAVEMENT PLANING, ASPHALT CONCRETE.

ITEM 617, COMPACTED AGGREGATE, AS PER PLAN

THIS ITEM OF WORK SHALL CONFORM TO ITEM 617 IN THE CONSTRUCTION AND MATERIALS SPECIFICATIONS BOOK WITH EXCEPTION OF 617.02 (MATERIALS).

THE MATERIAL ON THIS PROJECT SHALL BE THE ASPHALT CONCRETE GRINDINGS RESULTING FROM ITEM 254. THE GRINDINGS USED FOR THIS WORK ARE TO BE PLACED AND COMPACTED AS DESCRIBED IN 617.05 WITH SPECIAL CARE TO CREATE PROPER COMPACTION. 100% OF THIS MATERIAL SHALL PASS A 1.5 INCH SIEVE. THE CONTRACTOR SHALL TAKE SPECIAL CARE TO MEET THE TYPICAL SECTIONS SHOWN IN THE PLANS AND AS DIRECTED BY THE ENGINEER. THE CONTRACTOR IS REQUIRED TO APPLY THE ITEM 408 PRIME COAT WITHIN 5 CALENDAR DAYS OF PLACING THE COMPACTED AGGREGATE, AS PER PLAN.

PAYMENT FOR ALL THE ABOVE SHALL BE INCLUDED IN THE UNIT PRICE BID PER CU. YD. OF ITEM 617 COMPACTED AGGREGATE, AS PER PLAN.

PAVEMENT

ITEM 254, PAVEMENT PLANING, ASPHALT CONCRETE (CURBED SECTION)

THE INTENT OF THE PLANING IS TO MILL THE SPECIFIED DEPTH ALONG THE CURB CONTINGENT ON THE FOLLOWING: THE PAVEMENT SLOPE SHALL BE CONTINUOUS BETWEEN THE CROWN AND THE CURB WHILE TRYING TO ACHIEVE THE TYPICAL CROSS SLOPE OF 0.016. THE MAXIMUM CROSS SLOPE SHALL BE 0.02 WHILE THE MINIMUM CROSS SLOPE SHALL BE 0.01. THE CROWN OF THE PAVEMENT SHALL BE LOCATED BETWEEN THE TRAVELED LANES, OR AS DIRECTED BY THE ENGINEER. THE MILLING DEPTH SHALL BE CONTROLLED FROM THE CURB, TO PRODUCE A CROSS SLOPE IN CONFORMANCE WITH THE ABOVE GUIDELINES.

SPECIAL ATTENTION SHALL BE GIVEN TO SUPERELEVATED CURVES. THE SUPERELEVATION SHALL BE MAINTAINED AND/OR RESTORED, IF NECESSARY, AS DIRECTED BY THE ENGINEER. IF THERE IS NO INFORMATION IN THE PLANS TO CHANGE THE SUPERELEVATION, THE INTENT IS TO MAINTAIN THE EXISTING SUPERELEVATION.

THE CONTRACTOR SHALL MAINTAIN POSITIVE DRAINAGE INTO ALL CATCH BASINS AND INLETS.

THE PROGRESSION OF THE PLANING SHALL PROCEED IN SUCH A MANNER THAT NORMAL TRAFFIC WILL NOT BE REQUIRED TO RUN OVER THE PLANED ROADWAY SURFACE MORE THAN FOURTEEN (14) CALENDAR DAYS. THE 14 CALENDAR DAYS SHALL BE CONSIDERED AN INTERIM COMPLETION DATE (SECTION 108) AND FOR EACH CALENDAR DAY BEYOND THE 14 DAYS THAT THE ROADWAY REMAINS EXPOSED TO THE PLANED SURFACE, THE CONTRACTOR WILL BE ASSESSED LIQUIDATED DAMAGES AS PER 108.07.

PAYMENT SHALL INCLUDE ALL LABOR, EQUIPMENT, AND MATERIALS NECESSARY TO COMPLETE THE PAVEMENT PLANING, ASPHALT CONCRETE. PAYMENT WILL BE MADE AT THE UNIT BID PRICE PER SQUARE YARD OF PAVEMENT PLANING, ASPHALT CONCRETE.

INTERSECTIONS AND DRIVES

RURAL-INTERSECTIONS SHALL BE PLANED AND PAVED TO THE END OF THE RADII OR AS DIRECTED BY THE ENGINEER. (TO PROVIDE A SMOOTH TRANSITION BETWEEN THE TWO HIGHWAYS, AND TO ELIMINATE WATER POCKETS).

URBAN-INTERSECTIONS SHALL BE PLANED AND PAVED TO THE BACK OF CROSSWALKS OR AS DIRECTED BY THE ENGINEER. (TO PROVIDE A SMOOTH TRANSITION BETWEEN THE TWO HIGHWAYS, AND TO ELIMINATE WATER POCKETS).

EXISTING PAVED DRIVES SHALL BE PAVED SO AS TO PROVIDE A SMOOTH TRANSITION BETWEEN THE HIGHWAY AND THE DRIVE, (DISTANCE FROM EDGE OF ROADWAY MAY VARY AT EACH DRIVE) AS DIRECTED BY THE ENGINEER.

EXISTING AGGREGATE DRIVES SHALL BE PAVED WITH AN APRON AN AVERAGE WIDTH OF 4 FT. THE SLOPE OF THIS APRON SHALL BE THE SAME AS THE ADJACENT PAVEMENT SLOPE OR AS DIRECTED BY THE ENGINEER. ANY GRADING NEEDED TO PAVE THE APRON SHALL BE INCLUDED IN THE RELATED ASPHALT ITEM FOR PAYMENT. ITEM 617 AGGREGATE SHALL BE PLACED ADJACENT TO THIS APRON TO PROVIDE A SMOOTH TRANSITION FROM THE APRON TO THE EXISTING DRIVE, (WIDTH OF THIS 617 APPLICATION MAY VARY) AS DIRECTED BY THE ENGINEER. AN ADDITIONAL QUANTITY OF ITEM 617 HAS BEEN ESTIMATED TO COMPLETE THIS WORK AND IS SHOWN AS AN EXTRA AREA ON THE PAVEMENT & SHOULDER DATA SHEET.

ANY HAZARD OR UNSAFE CONDITION RESULTING FROM THE ABOVE WORK MUST BE CORRECTED IMMEDIATELY, AS DIRECTED BY THE ENGINEER. THE CONTRACTOR IS REMINDED OF SECTIONS 105.01, 107.07 & 614.02A OF THE CONSTRUCTION AND MATERIALS SPECIFICATIONS.

ITEM 442, ASPHALT CONCRETE SURFACE COURSE, 9.5 MM, TYPE A (448) (DRIVEWAYS), AS PER PLAN

THIS ITEM IS TO BE USED TO CREATE A SMOOTH TRANSITION FROM THE COMPLETED SURFACE COURSE OF THE PAVED SHOULDER TO THE EXISTING PAVED AND AGGREGATE DRIVEWAYS. THIS ITEM SHALL BE AS DIRECTED BY THE ENGINEER. ALL LABOR, EQUIPMENT, AND MATERIALS REQUIRED TO CREATE A SMOOTH TRANSITION SHALL BE INCLUDED IN THE UNIT PRICE BID FOR ITEM 442 ASPHALT CONCRETE SURFACE COURSE, 9.5 MM, TYPE A (448) (DRIVEWAYS), AS PER PLAN.

REQUIREMENTS OF 442 APPLY EXCEPT AS FOLLOWS:
MIX DESIGN: FOR Ndes USE 50 GYRATIONS, FOR Nmax USE 75 GYRATIONS.
MINIMUM TOTAL PG BINDER CONTENT IS 6.0 PERCENT.
USE A PG 64-22 BINDER.
MAXIMUM RECLAIMED ASPHALT CONCRETE PAVEMENT IS 20 PERCENT.
QUALITY CONTROL: DO NOT PERFORM Nmax IN QUALITY CONTROL TESTING. DO NOT TAKE EXTRA ASPHALT BINDER SAMPLES AS OUTLINED IN CMS 442.05.

PAVEMENT

ITEM 442, ASPHALT CONCRETE SURFACE COURSE, 9.5 MM, TYPE A (446), AS PER PLAN

ALL OPEN TRANSVERSE JOINTS SHALL BE TAPERED TO MEET EXISTING PAVEMENT BEFORE INTRODUCING TRAFFIC. A "BUMP" SIGN (W8-1-36) SHALL BE ERECTED ON EACH SIDE OF TRANSVERSE JOINTS LEFT OPEN OVER NIGHT, INCLUDING A SPEED ADVISORY SIGN. THESE SIGNS SHALL BE REMOVED IMMEDIATELY AFTER JOINT HAS BEEN CLOSED. PLACEMENT OF SIGNS SHALL BE INCLUDED IN THE UNIT PRICE BID FOR ITEM 614 MAINTAINING TRAFFIC.

CARE SHALL BE TAKEN TO MATCH EXISTING PAVEMENT ELEVATIONS AT EXISTING PAVED BERMS, DRIVES, INTERSECTIONS, ETC.

REQUIREMENTS OF 442 APPLY EXCEPT AS FOLLOWS:
MIX DESIGN: FOR Ndes USE 50 GYRATIONS, FOR Nmax USE 75 GYRATIONS.
MINIMUM TOTAL PG BINDER CONTENT IS 6.0 PERCENT.
USE A PG 64-22 BINDER.
MAXIMUM RECLAIMED ASPHALT CONCRETE PAVEMENT IS 20 PERCENT.
WHEN AN AGGREGATE SOURCE IS SPECIALLY DESIGNATED WITH AN SR ON THE AGGREGATE SOURCE GROUP LIST DO NOT USE THE AGGREGATE EXCEPT AS ALLOWED FOR MEDIUM TRAFFIC IN THE GUIDELINES FOR MAINTAINING ADEQUATE PAVEMENT FRICTION IN SURFACE PAVEMENT.
QUALITY CONTROL: DO NOT PERFORM Nmax IN QUALITY CONTROL TESTING. DO NOT TAKE EXTRA ASPHALT BINDER SAMPLES AS OUTLINED IN CMS 442.05.

ITEM 442, ASPHALT CONCRETE INTERMEDIATE COURSE, 19MM, TYPE A (448), AS PER PLAN

THIS ITEM SHALL BE USED FOR CORRECTION OF CROWN, PROFILE AND ANY OTHER IRREGULARITIES.

ALL OPEN TRANSVERSE JOINTS SHALL BE TAPERED TO MEET EXISTING PAVEMENT BEFORE INTRODUCING TRAFFIC. A "BUMP" SIGN (W8-1-36) SHALL BE ERECTED ON EACH SIDE OF TRANSVERSE JOINTS LEFT OPEN OVER NIGHT, INCLUDING A SPEED ADVISORY SIGN. THESE SIGNS SHALL BE REMOVED IMMEDIATELY AFTER JOINT HAS BEEN CLOSED. PLACEMENT OF SIGNS SHALL BE INCLUDED IN THE UNIT PRICE BID FOR ITEM 614 MAINTAINING TRAFFIC.

REQUIREMENTS OF 442 APPLY EXCEPT AS FOLLOWS:
MIX DESIGN: FOR Ndes USE 50 GYRATIONS, FOR Nmax USE 75 GYRATIONS.
USE A PG 64-22 BINDER.
MAXIMUM RECLAIMED ASPHALT CONCRETE PAVEMENT IS 30 PERCENT.
DO NOT APPLY TABLE 442.02-1 EXCEPT SAND EQUIVALENT OF 45 APPLIES.
APPLY 703.05 FOR COURSE AND FINE AGGREGATE EXCEPT GRADATION FOR FINE AGGREGATE DOES NOT APPLY.
QUALITY CONTROL: DO NOT PERFORM Nmax IN QUALITY CONTROL TESTING. DO NOT TAKE EXTRA ASPHALT BINDER SAMPLES AS OUTLINED IN CMS 442.05.

ITEM 442, ASPHALT CONCRETE INTERMEDIATE COURSE, 9.5MM, TYPE A (448), AS PER PLAN

THIS ITEM SHALL BE USED FOR CORRECTION OF CROWN, PROFILE AND ANY OTHER IRREGULARITIES.

ALL OPEN TRANSVERSE JOINTS SHALL BE TAPERED TO MEET EXISTING PAVEMENT BEFORE INTRODUCING TRAFFIC. A "BUMP" SIGN (W8-1-36) SHALL BE ERECTED ON EACH SIDE OF TRANSVERSE JOINTS LEFT OPEN OVER NIGHT, INCLUDING A SPEED ADVISORY SIGN. THESE SIGNS SHALL BE REMOVED IMMEDIATELY AFTER JOINT HAS BEEN CLOSED. PLACEMENT OF SIGNS SHALL BE INCLUDED IN THE UNIT PRICE BID FOR ITEM 614 MAINTAINING TRAFFIC.

REQUIREMENTS OF 442 APPLY EXCEPT AS FOLLOWS:
MIX DESIGN: FOR Ndes USE 50 GYRATIONS, FOR Nmax USE 75 GYRATIONS.
MINIMUM TOTAL PG BINDER CONTENT IS 6.0 PERCENT.
USE A PG 64-22 BINDER.
MAXIMUM RECLAIMED ASPHALT CONCRETE PAVEMENT IS 20 PERCENT.
QUALITY CONTROL: DO NOT PERFORM Nmax IN QUALITY CONTROL TESTING. DO NOT TAKE EXTRA ASPHALT BINDER SAMPLES AS OUTLINED IN CMS 442.05.

ITEM 407, TACK COAT
ITEM 407, TACK COAT FOR INTERMEDIATE COURSE

AS PER 407.06 THE APPLICATION RATES SHALL BE 0.08 GAL. PER SQ. YD. PRIOR TO THE INTERMEDIATE COURSE AND SHALL BE 0.03 GAL PER SQ. YD. PRIOR TO THE SURFACE COURSE FOR ESTIMATING PURPOSES ONLY. THE RATE OF APPLICATION SHALL BE SUBJECT TO ADJUSTMENT AS DIRECTED BY THE ENGINEER. A COMPLETE PAVEMENT SURFACE COVERAGE SHALL BE REQUIRED. AREAS OF TACK STRIPPED BY CONSTRUCTION EQUIPMENT OR TRAFFIC SHALL BE RE-COATED PRIOR TO PLACING ASPHALT CONCRETE. ALL COSTS AS DESCRIBED ABOVE SHALL BE INCLUDED IN THE UNIT PRICE BID PER GALLON FOR ITEM 407, TACK COAT AND ITEM 407 TACK COAT FOR INTERMEDIATE COURSE.

CALCULATED MER
CHECKED ADB

GENERAL NOTES

ASD-3-6.08
ASD-60-0.68

DESIGN FILE: I:\projects\80173\roadway\sheets\80173GN002.dgn
WORKSTATION: mrobins1 DATE: 9/16/2008

PAVEMENT

PLANING AND PAVEMENT TREATMENT FOR STR. ASD-60-1164 APPROACH SLABS

THE THICKNESS OF THE EXISTING ASPHALT ON THE STR. ASD-60-1164 APPROACH SLABS IS APPROXIMTELY 1.5". THE PLANING DEPTH SHALL BE ADJUSTED TO REMOVE ALL EXISTING ASPHALT ON THE APPROACH SLABS UP TO THE END DAMS. THE APPROACH SLABS SHALL THEN BE PAVED WITH ITEM 442 ASPHALT SURFACE COURSE, 9.5MM, TYPE A (448), AS PER PLAN (SAME THICKNESS AS REMOVED).

APPROXIMATE LOCATIONS OF KNOWN CASTINGS

MANHOLE	CATCH BASIN	VALVE	MONUMENT BOX
SLM	SLM	SLM	SLM
10.56	10.77	10.63	
10.68	10.77	10.63	
10.73	10.83	10.80	
10.78	10.86	10.80	
10.79		10.80	
10.80		10.80	
10.88		10.92	
10.92		10.92	
10.94			
11.00			
11.05			
11.07			
11.11			
11.16			
11.23			
11.31			

ENVIRONMENTAL

ENVIRONMENTAL COMMITMENTS

1) ANY UNAVOIDABLE CUTTING OF TREES WITH SUITABLE ROOSTING AND BROOD REARING HABITAT FOR THE INDIANS BAT (LIVING OR STANDING DEAD TREES OR SNAGS WITH EXFOLIATING, PEELING OR LOOSE BARK, SPLIT TRUNKS AND/OR BRANCHES, OR CAVITIES) WILL BE PERFORMED ONLY BEFORE APRIL 15TH OR AFTER SEPTEMBER 15TH WHEN THE SPECIES WOULD NOT BE USING SUCH HABITAT.

2) THE SPECIFICATIONS IN THE MOST CURRENT VERSION OF ODOT's CONSTRUCTION AND MATERIALS SPECIFICATIONS, LOCATION AND DESIGN MANUAL, AND STANDARD DRAWINGS WILL BE USED TO ENSURE ADEQUATE EROSION AND SEDIMENT CONTROL DURING CONSTRUCTION.

3) WRITTEN PERMISSION WILL BE OBTAINED FOR ANY IN-STREAM BLASTING FROM THE CHIEF OF ODNR's DIVISION OF WILDLIFE IN ACCORDANCE WITH OHIO REVISED CODE (ORC) SECTION 1533.58 SHOULD IN-STREAM BLASTING BECOME NECESSARY.

4) ANY DISTURBANCES WHICH RESULT IN THE EXPOSURE OF SOILS WILL BE RESEEDED AS SOON AS PRACTICAL.

SPECIAL CONDITIONS OF NWP#3 FOR STRUCTURE OVER BIG RUN (STR. ASD-60-0594)

SEE NOTES IN THE SPECIAL PROVISIONS.

MAINTENANCE OF TRAFFIC

BUTT JOINTS

BUTT JOINTS SHALL NOT BE CUT AND LEFT OPEN TO TRAFFIC. THEY SHALL BE FILLED IN WITH A TEMPORARY ASPHALT CONCRETE WEDGE.

CONSTRUCTION "BUMP" (W8-1-36) AND "ADVISORY SPEED" (W13-1-24) SIGNS SHALL BE ERECTED AND MAINTAINED DURING THE PERIOD THE BUTT JOINT IS LEFT OPEN. THESE SIGNS SHALL BE PAID FOR UNDER THE LUMP SUM ITEM FOR ITEM 614 MAINTAINING TRAFFIC.

ITEM 614, ASPHALT CONCRETE FOR MAINTAINING TRAFFIC

THE FOLLOWING ESTIMATED QUANTITY HAS BEEN CARRIED TO THE GENERAL SUMMARY TO CONSTRUCT A TEMPORARY ASPHALT WEDGE FROM THE EXISTING PAVEMENT TO THE PLANED SURFACE AT BUTT JOINTS AND OTHER LOCATIONS THAT RESULT IN A DROP-OFF IN EXCESS OF 1.5 INCHES, AS DIRECTED BY THE ENGINEER. THIS QUANTITY SHALL ALSO BE USED AT PLANED SURFACES WHERE A TEMPORARY ASPHALT WEDGE IS NEEDED AROUND CASTINGS, AS DIRECTED BY THE ENGINEER. BEFORE THE ASPHALT CONCRETE RESURFACING IS PLACED, THE TEMPORARY WEDGE SHALL BE REMOVED AND THE COST SHALL BE CONSIDERED INCIDENTAL TO ITEM 614 ASPHALT CONCRETE FOR MAINTAINING TRAFFIC.

ITEM 614, ASPHALT CONCRETE FOR MAINTAINING TRAFFIC 100 CU YD

PLACEMENT OF ASPHALT CONCRETE

TWO-WAY TRAFFIC SHALL BE MAINTAINED AT ALL TIMES EXCEPT THAT ONE-WAY TRAFFIC WILL BE PERMITTED FOR MINIMUM PERIODS OF TIME CONSISTENT WITH THE REQUIREMENTS OF THE SPECIFICATIONS FOR PROTECTION OF COMPLETED ASPHALT CONCRETE COURSES.

ITEM 614, MAINTAINING TRAFFIC (LANES OPEN DURING HOLIDAYS OR SPECIAL EVENTS)

NO WORK SHALL BE PERFORMED AND ALL EXISTING LANES SHALL BE OPEN TO TRAFFIC DURING THE FOLLOWING DESIGNATED HOLIDAYS OR EVENTS:

CHRISTMAS	FOURTH OF JULY
NEW YEARS	LABOR DAY
MEMORIAL DAY	THANKSGIVING

THE PERIOD OF TIME THAT THE LANES ARE TO BE OPEN DEPENDS ON THE DAY OF THE WEEK ON WHICH THE HOLIDAY OR EVENT FALLS. THE FOLLOWING SCHEDULE SHALL BE USED TO DETERMINE THIS PERIOD:

DAY OF THE WEEK	TIME ALL LANES MUST BE OPEN TO TRAFFIC
SUNDAY	12:00N FRIDAY THROUGH 6:00 AM MONDAY
MONDAY	12:00N FRIDAY THROUGH 6:00 AM TUESDAY
TUESDAY	12:00N MONDAY THROUGH 6:00 AM WEDNESDAY
WEDNESDAY	12:00N TUESDAY THROUGH 6:00 AM THURSDAY
THURSDAY	12:00N WEDNESDAY THROUGH 6:00 AM MONDAY
FRIDAY	12:00N THURSDAY THROUGH 6:00 AM MONDAY
SATURDAY	12:00N FRIDAY THROUGH 6:00 AM MONDAY

NO WORK SHAL BE PERFORMED IN LOUDONVILLE DURING THE LOUDONVILLE STREET FAIR. DATES, INCLUDING SETTING UP AND REMOVAL OF FAIR ITEMS WILL BE SEPTEMBER 25 THROUGH OCTOBER 6.

SHOULD THE CONTRACTOR FAIL TO MEET ANY OF THESE REQUIREMENTS, THE CONTRACTOR SHALL BE ASSESSED LIQUIDATED DAMAGES IN ACCORDANCE WITH CMS 108.07.

ITEM 614, WORK ZONE MARKING SIGN

THE FOLLOWING ESTIMATED QUANTITY HAS BEEN CARRIED TO THE GENERAL SUMMARY FOR USE AS DIRECTED BY THE ENGINEER FOR TEMPORARY WORK ZONE MARKING SIGNS PER THE REQUIREMENTS OF THE CONSTRUCTION AND MATERIALS SPECIFICATIONS, 614.04.

WORK ZONE MARKING SIGN: (W8-H13-36) NO EDGE LINE = 44 EACH
WORK ZONE MARKING SIGN: (R4-1-24) DO NOT PASS = 22 EACH
WORK ZONE MARKING SIGN: (R4-2-24) PASS WITH CARE = 21 EACH
TOTAL = 87 EACH

CALCULATED MER
CHECKED ADB

GENERAL NOTES

ASD-3-6.08
ASD-60-0.68

DESIGN FILE: I:\projects\80173\roadway\sheets\80173GN003.dgn
WORKSTATION: mrobins1 DATE: 9/29/2008

GENERAL NOTES

1. It is intended that this drawing be used for treatment of drop-offs that develop during construction operations, and that are not otherwise provided for in the construction plans. The suggested treatments are intended for high volume projects that will last at least seven days and have an active work zone 1 mile [1.6 km] or less in length. For guidance on the use of this sheet, see L&D Manual Volume One, Section 500. Where the plans do not provide specific items for labor, equipment, or materials to implement the drop-off treatments specified hereon, they shall be included for payment in the lump sum bid for Item 614 - Maintaining Traffic.
2. While the need for certain advisory signing is noted hereon, it is not intended that this be indicative of all signing that may be required to advise or warn motorists, and all requirements of the Ohio Manual of Uniform Traffic Control Devices (OMUTCD) must be fulfilled.
3. In urban or otherwise heavily developed areas where pedestrians and/or bicyclists may be present in significant numbers, additional signing and protective measures other than those shown hereon may be required.
4. The drop-off treatment selected for use at any given location shall be as appropriate for the prevailing conditions at the site.
5. Where concrete barrier is specified, it shall be in accordance with Standard Construction Drawing RM-4.2 and Item 622.
6. When drums are specified for a drop-off condition, a minimum number of four drums shall be used. Spacing shall be as indicated in the plans or as specified in the OMUTCD.
7. When W8-9 (Low Shoulder) signs or W8-9a (Shoulder Drop-Off) signs or W8-11 (Uneven Lanes) signs are required, they shall be placed 750 feet [230 m] in advance of the condition, on all intersecting entrance ramps within the limits of the condition and immediately beyond all inter secting roadways within the limits of the condition. When the drop-off condition extends more than 0.5 mile [800 m], additional signs should be erected at intervals of 1.0 mile [1600 m] or less.
8. For locations, such as at ramps, lane shifts, lane closures, etc., where traffic is required to negotiate a difference in elevation between pavements, a 3:1 slope treatment similar to the Optional Wedge Treatment shall be provided.
9. Portable concrete barrier shall be placed on the same level as the traffic surface and shall not encroach on lane width(s) designated as the minimum required for traffic use. Where drums are used, and their presence would reduce traveled lane widths to less than 10 feet [3.0 m], drums may be placed on the opposite level from that of traffic provided the dropoff depth does not exceed 5 inches [125] and approval is granted by the Project Engineer.
10. Pavement Repairs (or similar work):
    a. Lengths greater than 60 feet [18 m] - utilize appropriate treatment from Condition I.
    b. Lengths of 60 feet [18 m] or less - repairs shall be effected in accordance with CMS 255.08. Drums may be used as a separtor adjacent to the traveled lane.

OPTIONAL WEDGE TREATMENT
(MILLING OR RESURFACING)

1. This treatment may be used when permitted for Condition I only.
2. W8-11 sign required.

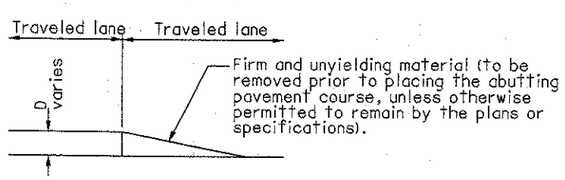

CONDITION I
DROP-OFFS BETWEEN TRAVELED LANES

1. These treatments are to be used for resurfacing, pavement planing, excavation, etc. between or within traveled lanes.

D - inches (mm)	Treatment
<1-1/2 [<40]	Erect W8-11 sign.
1-1/2 - 3 [40-75]	1) Lane closure utilizing drums* as shown below OR 2) Optional Wedge Treatment
> 3 - 5 [>75-125]	Lane closure utilizing drums as shown below.
> 5 [>125]	Lane closure utilizing portable concrete barrier as shown below.

* Cones may be used for daytime only conditions.

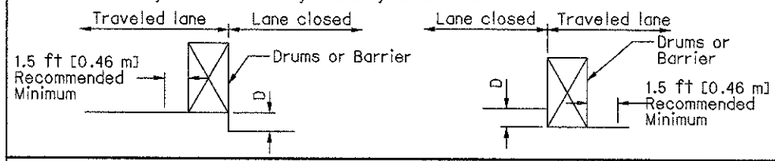

CONDITION II
DROP-OFFS WITHIN GRADED SHOULDER AREA

1. The treatments indicated below are for use in conjunction with resurfacing, planing, or excavations within the graded shoulder area.
2. The graded shoulder area is that flat or gradually sloping area between the edge of a normally traveled lane and the more steeply sloping ditch foreslope or embankment slope. Its surface may be soil or turf, and/or it may be inclusive of a "treated" area (improved with aggregates, asphaltic materials or concrete). For the purpose herein, its maximum width shall be considered to be 12 feet [3.6 m].

D - inches (mm)	Treatment
< 1-1/2 [<40]	1) Erect W8-9a signs.
> 1-1/2 - 5 [>40-125]	1) If minimum lane width* requirements can be met, maintain lanes utilizing drums as shown below OR 2) If minimum. lane width* requirements cannot be met, close adjacent lane utilizing drums OR 3) Optional Shoulder Treatment.
> 5 -12 [125-305] Daylight only	If minimum lane width* requirements can be met, maintain lanes utilizing drums as shown below.
> 5 - 24 [>125-610]	1) If minimum lane width* requirements can be met, maintain lanes utilizing portable concrete barrier as shown below. OR 2) If minimum lane width* requirements cannot be met, close adjacent lane utilizing drums.
> 24 [> 610]	Lane closure utilizing portable concrete barrier as shown below.

* Minimum lane widths shall be 10 ft [3.0 m] unless otherwise specified in the plans.

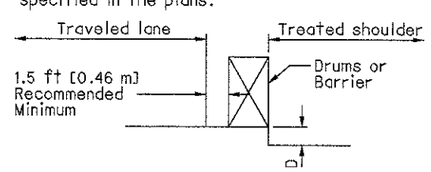

OPTIONAL SHOULDER TREATMENT

1. This treatment may not be used within a bitumunos shoulder where a hot longitudnal joint per CMS 401.15 is required.
2. W8-9 signs required.

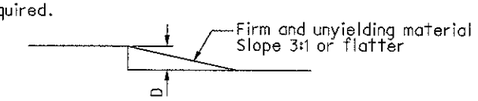

CONDITION III
DROP-OFFS BEYOND GRADED SHOULDER OR BACK OF CURB

1. See Note 2 under Condition II.
2. Use Chart A or B below, as applicable.

CHART A

USE FOR: 1. Uncurbed Facilities
2. Curbed Facilities, where:
   a. Curbs are less than 6 inch [150] in height
   b. Curbs are 6 inch [150] or greater in height and the legal speed is greater than 40 mph [70 km/hr].

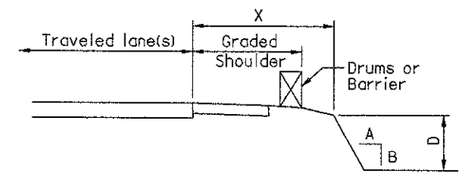

X feet (m)	D inch (mm)	A/B	Treatment Required Day	Treatment Required Night
0 - 4 [0 - 1.2]	Any	Any	(a)	(a)
4 - 30 [1.2 - 9.1]	Any	3:1 or Flatter	None	None
4 - 12 [1.2 - 3.6]	< 3 [< 75]	Steeper than 3:1	None	None
4 - 12 [1.2 - 3.6]	> 3 - < 12 [> 75 - < 305]	Steeper than 3:1	Drums	Drums
4 - 12 [1.2 - 3.6]	> 12 [> 305]	Steeper than 3:1	Drums	Barrier
> 12 - 20 [> 3.6 - 6.1]	< 12 [< 305]	Steeper than 3:1	None	None
> 12 - 20 [> 3.6 - 6.1]	> 12 - 24 [> 305 - < 610]	Steeper than 3:1	Drums	Drums
> 12 - 20 [> 3.6 - 6.1]	> 24 [> 610]	Steeper than 3:1	Drums	Barrier
> 20 - 30 [> 6.1 - 9.1]	< 24 [< 610]	Steeper than 3:1	None	None
> 20 - 30 [> 6.1 - 9.1]	> 24 [> 610]	Steeper than 3:1	Drums	Barrier
> 30 [> 9.1 m]	Any	Any	None	None
(a) Use treatment specified under Condition II.				

CHART B

USE FOR: Curbed facilities, where the curb is 6 inches [150 mm] or greater in height and the legal speed is 40 mph [70 km/h] or less.

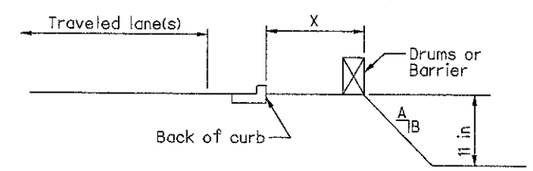

X feet (m)	D inch (mm)	A/B	Treatment Required Day	Treatment Required Night
0 - 10 [0-3.0 m]	< 12 [< 305]	Any	None	Drums
0 - 10 [0-3.0 m]	> 12 [> 305]	Any	Drums	Drums
> 10 [> 3.0 m]	Any	Any	None	None

DESIGN FILE: I:\projects\80173\roadway\sheets\80173GN004.dgn
WORKSTATION: mrobins1 DATE: 8/22/2008

OFFICE OF TRAFFIC ENGINEERING
DESIGNED | REVIEWED LAM
REVISION DATE 11/27/06 | CHECKED
PYS NUMBER 2010190
PLAN INSERT SHEET
DROP OFFS IN WORK ZONES
ASD-3-6.08
ASD-60-0.68
1/1
6/47

MAILBOX APPROACHES

THE MAILBOX APPROACHES SHALL BE PAVED WITH 1.00" ITEM 442 INTERMEDIATE COURSE AND 1.25" ITEM 442 SURFACE COURSE. THEY SHALL CONFORM AS MUCH AS PRACTICAL TO STANDARD DRAWING BP-4.1 OR AS DIRECTED BY THE ENGINEER.

GRADING SHALL BE PERFORMED IN THESE AREAS TO OBTAIN A BASE WHICH WILL ALLOW THE FINISHED GRADE TO BE FLUSH WITH ADJACENT PAVEMENT. A QUANTITY OF ITEM 617 COMPACTED AGGREGATE, AS PER PLAN HAS BEEN PROVIDED FOR AREAS WHERE THE SHOULDER IS LOW PRIOR TO GRADING AND/OR LOW AREAS CAUSED BY THE REMOVAL OF UNSUITABLE MATERIAL. QUANTITIES TO PERFORM THIS WORK HAVE BEEN INCLUDED IN THE GENERAL SUMMARY AND ARE ESTIMATED AS FOLLOWS.

ITEM 209 - GRADING MAILBOX APPROACHES:
S.R. 60 ..... 60 EACH

ITEM 617 - COMPACTED AGGREGATE, AS PER PLAN
S.R. 60 ..... 120 CU.YD

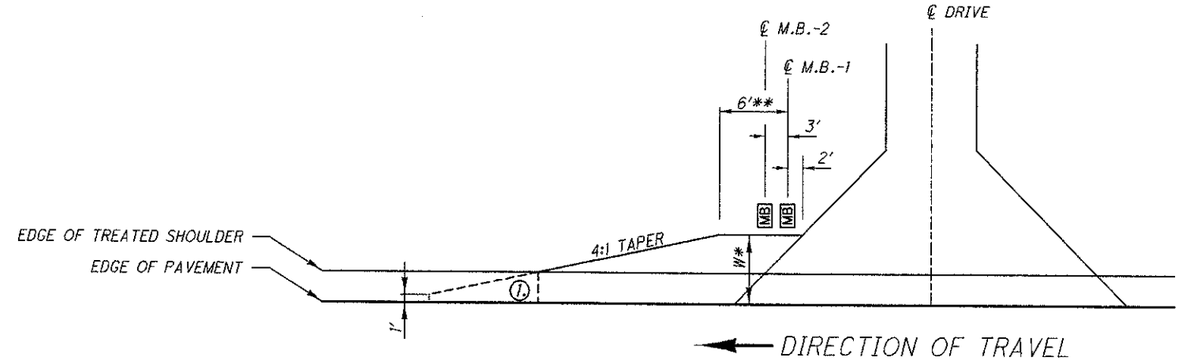

1. END MAILBOX TURNOUT AT EDGE OF ASPHALT SHOULDER OR 1' FROM THE EDGE OF PAVEMENT IF TREATED SHOULDER IS AGGREGATE.

W* NOTES
1) WHERE EXISTING STANDARD MAILBOX POSTS ARE BEHIND GUARDRAIL AND ARE TO REMAIN IN PLACE, TURNOUT WIDTH SHALL EXTEND TO FACE OF GUARDRAIL.
2) WHERE NO GUARDRAIL IS REQUIRED, TURNOUT WIDTH SHALL EXTEND 6' MAXIMUM OR TO FACE OF EXISTING STANDARD MAILBOX IF IT IS LESS THAN 6 FEET.
3) IF THE MAILBOX SUPPORT IS SPECIFIED TO BE REMOVED AND REERECTED OR REPLACED, WHERE GUARDRAIL IS REQUIRED, TURNOUT WIDTH SHALL EXTEND TO FACE OF GUARDRAIL AND MAILBOX SHALL BE INSTALLED BEHIND THE GUARDRAIL.
4) IF THE MAILBOX SUPPORT IS SPECIFIED TO BE REMOVED AND REERECTED OR REPLACED, WHERE NO GUARDRAIL IS REQUIRED, TURNOUT WIDTH SHALL BE 6 FT. MAXIMUM.

** NOTE
1) 6' FOR SINGLE MAILBOX SUPPORT, ADD 3 FT. FOR EACH ADDITIONAL MAILBOX.

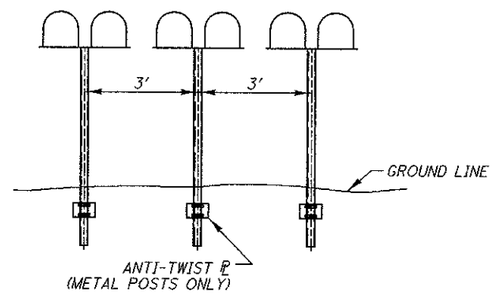

GROUP MAILBOX INSTALLATION

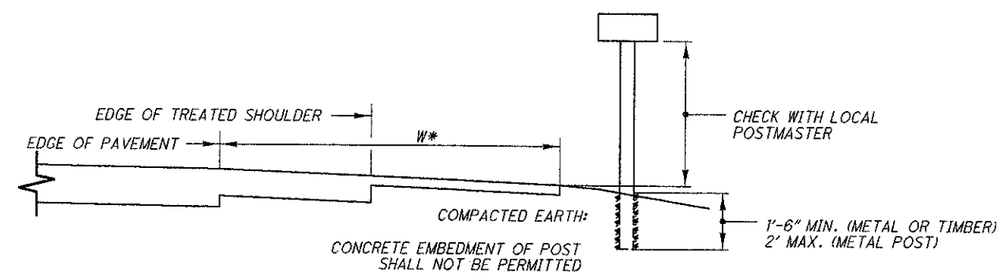

CROSS SECTION / ELEVATION VIEW

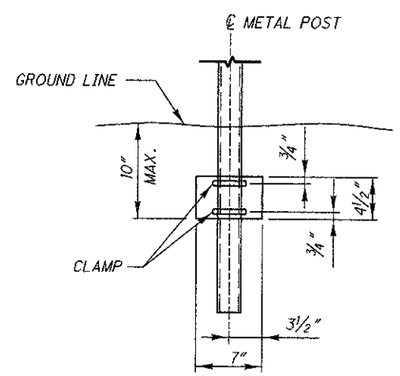

ANTI-TWIST PLATE

CALCULATED MER
CHECKED ADB

MAILBOX FACILITIES

ASD-3-6.08
ASD-60-0.68

DESIGN FILE: I:\projects\80173\roadway\sheets\80173GN005.dgn
WORKSTATION: mrobins1 DATE: 9/4/2008

SHEET NUMBER 3	7		10	11			15		32		ITEM	ITEM EXT.	TOTAL	UNIT	DESCRIPTION	REF. SHEET
															ROADWAY	
									1921		202	30000	1921	SQ FT	WALK REMOVED	
									132		202	32000	132	FT	CURB REMOVED	
							37.50				202	38000	37.50	FT	GUARDRAIL REMOVED	
							1137.50				202	38200	1137.50	FT	GUARDRAIL REMOVED FOR REUSE	
							225.00				202	38201	225.00	FT	GUARDRAIL REMOVED FOR REUSE, AS PER PLAN	14
							18				202	42000	18	EACH	ANCHOR ASSEMBLY REMOVED, TYPE A	
							2				202	42806	2	EACH	ANCHOR ASSEMBLY REMOVED FOR REUSE	
							680				203	20001	680	CU YD	EMBANKMENT, AS PER PLAN	13
							18				209	15001	18	STATION	RESHAPING UNDER GUARDRAIL, AS PER PLAN	13
			1.10	21.73							209	60500	22.83	MILE	LINEAR GRADING	
	60										209	80000	60	EACH	GRADING MAILBOX APPROACHES	
							337.50				606	13000	337.50	FT	GUARDRAIL, TYPE 5	
							2212.50				606	13030	2212.50	FT	GUARDRAIL, TYPE 5, USING 9 FOOT POSTS	
							1037.50				606	13031	1037.50	FT	GUARDRAIL, TYPE 5, USING 9 FOOT POSTS, AS PER PLAN	14
							400.00				606	16500	400.00	FT	GUARDRAIL REBUILT, TYPE 5	
							35				606	22010	35	EACH	ANCHOR ASSEMBLY, TYPE E-98	
							2				606	27900	2	EACH	ANCHOR ASSEMBLY REBUILT, TYPE T	
							112.50				606	98000	112.50	FT	GUARDRAIL, MISC.: ADJUST HEIGHT, EXISTING GUARDRAIL	
									154		608	52011	154	SQ FT	CURB RAMP, TYPE A1, AS PER PLAN	32
									1088		608	52021	1088	SQ FT	CURB RAMP, TYPE A2, AS PER PLAN	32
									737		608	52071	737	SQ FT	CURB RAMP, TYPE D, AS PER PLAN	32
									151		609	26000	151	FT	CURB, TYPE 6	
															DRAINAGE	
							80				603	04900	80	FT	12" CONDUIT, TYPE D	
							6				604	09000	6	EACH	CATCH BASIN ADJUSTED TO GRADE	
							19				604	34500	19	EACH	MANHOLE ADJUSTED TO GRADE	
															PAVEMENT	
145											253	02000	145	CU YD	PAVEMENT REPAIR	3
1405											253	90000	1405	CU YD	PAVEMENT REPAIR, MISC.: PARTIAL DEPTH	3
				146363							254	01000	146363	SQ YD	PAVEMENT PLANING, ASPHALT CONCRETE, (1.25" DEEP)	
			11303	28092							254	01000	39395	SQ YD	PAVEMENT PLANING, ASPHALT CONCRETE, (2.00" DEEP)	
			113	1696							254	01600	1809	SQ YD	PATCHING PLANED SURFACE	
			905	14179							407	10000	15084	GALLON	TACK COAT	
			339	5252							407	14000	5591	GALLON	TACK COAT FOR INTERMEDIATE COURSE	
			517	10649							408	10000	11166	GALLON	PRIME COAT	
			391	6076							442	00201	6467	CU YD	ASPHALT CONCRETE SURFACE COURSE, 9.5 MM, TYPE A (446), AS PER PLAN	4
				123							442	10511	123	CU YD	ASPHALT CONCRETE SURFACE COURSE, 9.5 MM, TYPE A (448) (DRIVEWAYS), AS PER PLAN	4
			236	590							442	20101	826	CU YD	ASPHALT CONCRETE INTERMEDIATE COURSE, 9.5 MM, TYPE A (448), AS PER PLAN	4
				8158							442	20201	8158	CU YD	ASPHALT CONCRETE INTERMEDIATE COURSE, 19 MM, TYPE A (448), AS PER PLAN	4
	120		45	1414							617	10101	1579	CU YD	COMPACTED AGGREGATE, AS PER PLAN	4
			1291	26634							617	20000	27925	SQ YD	SHOULDER PREPARATION	

CALC'D MER
CHECKED ADB

GENERAL SUMMARY

ASD-3-6.08
ASD-60-0.68

SHEET NUMBER 5	13	15	36	ITEM	ITEM EXT.	TOTAL	UNIT	DESCRIPTION	REF. SHEET
								WATER WORK	
		8		638	10800	8	EACH	VALVE BOX ADJUSTED TO GRADE	
								TRAFFIC CONTROL	
			737	621	00100	737	EACH	RPM	
			737	621	54000	737	EACH	RAISED PAVEMENT MARKER REMOVED	
	6	92		626	00100	98	EACH	BARRIER REFLECTOR	
		2		630	85100	2	EACH	REMOVAL OF GROUND MOUNTED SIGN AND REERECTION	
		2		630	86010	2	EACH	REMOVAL OF GROUND MOUNTED POST SUPPORT AND REERECTION	
			22.89	642	00100	22.89	MILE	EDGE LINE, TYPE 1	
			11.84	642	00300	11.84	MILE	CENTER LINE, TYPE 1	
			134	644	00400	134	FT	CHANNELIZING LINE	
			1180	644	00500	1180	FT	STOP LINE	
			1117	644	00600	1117	FT	CROSSWALK LINE	
			270	644	00601	270	FT	CROSSWALK LINE, AS PER PLAN	32
			444	644	01200	444	FT	PARKING LOT STALL MARKING	
			4	644	01300	4	EACH	LANE ARROW	
								MAINTENANCE OF TRAFFIC	
87				614	12460	87	EACH	WORK ZONE MARKING SIGN	
100				614	13000	100	CU YD	ASPHALT CONCRETE FOR MAINTAINING TRAFFIC	
			35.43	614	21500	35.43	MILE	WORK ZONE CENTER LINE, CLASS II, 642 PAINT	
			402	614	23200	402	FT	WORK ZONE CHANNELIZING LINE, CLASS I, 642 PAINT	
			377	614	26200	377	FT	WORK ZONE STOP LINE, CLASS I, 642 PAINT	
								STRUCTURES	
								ASD-3-0618 (0300179)	39
								ASD-60-0594 (0302015)	39
								ASD-60-1164 (0302074)	39
				614	11000	LUMP		MAINTAINING TRAFFIC	
				619	16010	4	MONTH	FIELD OFFICE, TYPE B	
				624	10000	LUMP		MOBILIZATION	

CALC'D MER CHECKED ADB

GENERAL SUMMARY

ASD-3-6.08
ASD-60-0.68

* - FOR TYPICALS, SEE SHEET 12

CALC BY: MER
CHKD BY: ADB

COUNTY	ROUTE	LOG POINT TO LOG POINT (STRAIGHT LINE MILEAGE)		LENGTH MILE	LENGTH FEET	WIDTH FEET AVG.	* TYPICAL	PAVEMENT AREA (SQ YD)	254 PAVEMENT PLANING, ASPHALT CONCRETE (2.00") (SQ.YD)	254	254 PATCHING PLANED SURFACE (SQ.YD)	407 TACK COAT @ 0.08 GAL/SY (GALLON)	407 TACK COAT FOR INTERM. COURSE @ 0.03 GAL/SY (GALLON)	442 ASPHALT CONCRETE SURFACE COURSE, 9.5 MM, TYPE A (446), AS PER PLAN (INCH)	442 (CU.YD.)	442 ASPHALT CONCRETE INTERMEDIATE COURSE, 9.5 MM, TYPE A (448), AS PER PLAN (0" MIN.) (INCH AVG.)	442 (CU.YD.)	442 ASPHALT CONCRETE SURFACE COURSE, 9.5MM, TYPE A (448) (DRIVEWAYS), AS PER PLAN (INCH)	442 (CU.YD.)				AGGREGATE SHOULDER PROPOSED WIDTH SL (FT)	AGGREGATE SHOULDER PROPOSED WIDTH SR (FT)	AGGREGATE SHOULDER AREA (SQ YD)	209 LINEAR GRADING (MILE)	408 PRIME COAT @ 0.40 GAL/SY (GALLON)	617 COMPACTED AGGREGATE, AS PER PLAN 1.25 INCHES AVG. THICKNESS (CU YD)	617 SHOULDER PREPARATION (SQ.YD)
ASD	3	6.08	6.09	0.01	53	41.25	1	243	243		2	19	7	1.25	8	0.75	5													
ASD	3	6.09	6.13	0.04	211	35.00	1	821	821		8	66	25	1.25	28	0.75	17													
ASD	3	6.13	6.14	0.01	53	31.25	1	184	184		2	15	6	1.25	6	0.75	4													
ASD	3	6.14	6.23	0.09	475	28.50	1	1,504	1,504		15	120	45	1.25	52	0.75	31													
ASD	3	6.23	6.24	0.01	53	30.00	1	177	177		2	14	5	1.25	6	0.75	4													
ASD	3	6.24	6.25	0.01	53	29.25	1	172	172		2	14	5	1.25	6	0.75	4													
ASD	3	6.25	6.38	0.13	686	27.00	3	2,058	2,058		21	165	62	1.25	71	0.75	43						2.0	2.0	305	0.26	122	11	305
ASD	3	6.38	6.50	0.12	634	26.00	3	1,832	1,832		18	147	55	1.25	64	0.75	38						2.0	2.0	282	0.24	113	10	282
ASD	3	6.50	6.80	0.30	1584	24.50	3	4,312	4,312		43	345	129	1.25	150	0.75	90						2.0	2.0	704	0.60	282	24	704
TOTALS				0.72	3801.6			11303	11,303		113	905	339		391		236								1,291	1.10	517	45	1,291

FOR SR 60 & EXTRA AREA QUANTITIES, SEE SHEET 11.

PAVEMENT & SHOULDER DATA

ASD-3-6.08
ASD-60-0.68

* - FOR TYPICALS, SEE SHEET 12

CALC BY MER

CHKD BY ADB

COUNTY	ROUTE	LOG POINT TO LOG POINT (STRAIGHT LINE MILEAGE)		LENGTH MILE	LENGTH FEET	WIDTH FEET AVG.	* TYPICAL	PAVEMENT AREA SQ YD	254 PAVEMENT PLANING, ASPHALT CONCRETE (2.00") SQ.YD	254 PAVEMENT PLANING, ASPHALT CONCRETE (1.25") SQ. YD.	254 PATCHING PLANED SURFACE SQ.YD	407 TACK COAT @ 0.08 GAL/SY GALLON	407 TACK COAT FOR INTERM. COURSE @ 0.03 GAL/SY GALLON		442 ASPHALT CONCRETE SURFACE COURSE, 9.5 MM, TYPE A (446), AS PER PLAN INCH	442 ASPHALT CONCRETE SURFACE COURSE, 9.5 MM, TYPE A (446), AS PER PLAN CU.YD.	442 ASPHALT CONCRETE INTERMEDIATE COURSE, 19MM, TYPE A (448), AS PER PLAN INCH AVG.	442 ASPHALT CONCRETE INTERMEDIATE COURSE, 19MM, TYPE A (448), AS PER PLAN CU. YD.	442 ASPHALT CONCRETE INTERMEDIATE COURSE, 9.5 MM, TYPE A (448), AS PER PLAN (0" MIN) INCH AVG.	442 ASPHALT CONCRETE INTERMEDIATE COURSE, 9.5 MM, TYPE A (448), AS PER PLAN (0" MIN) CU.YD.	442 ASPHALT CONCRETE SURFACE COURSE, 9.5MM, TYPE A (448) (DRIVEWAYS), AS PER PLAN INCH	442 ASPHALT CONCRETE SURFACE COURSE, 9.5MM, TYPE A (448) (DRIVEWAYS), AS PER PLAN CU.YD.	AGREGATE SHOULDER PROPOSED WIDTH SL FT	AGREGATE SHOULDER PROPOSED WIDTH SR FT	AGREGATE SHOULDER AREA SQ. YD.	209 LINEAR GRADING MILE	408 PRIME COAT @ 0.40 GAL/SY GALLON	617 COMPACTED AGGREGATE, AS PER PLAN AVG. THICKNESS 2.00 INCHES # 1.25 INCHES * CU YD	617 SHOULDER PREPARATION SQ.YD
ASD	60	0.68	0.681	0.00	5	66.00	1	37	37		1	3	1		1.25	1			0.75	1									
ASD	60	0.681	0.689	0.01	42	47.25	1	221	221		2	18	7		1.25	8			0.75	5									
ASD	60	0.689	0.86	0.17	903	28.50	1	2,860	2,860		29	229	86		1.25	99			0.75	60									
ASD	60	0.86	0.87	0.01	53	26.75	2	158		158	2	13	5		1.25	5	2.00	9					2	2	24	0.02	9	1 #	24
ASD	60	0.87	1.00	0.13	686	24.50	2	1,867		1,867	19	149	56		1.25	65	2.00	104					2	2	305	0.26	122	17 #	305
ASD	60	1.00	1.50	0.50	2640	24.38	2	7,151		7,151	72	572	215		1.25	248	2.00	397					2	2	1,173	1.00	469	65 #	1,173
ASD	60	1.50	2.00	0.50	2640	24.88	2	7,298		7,298	73	584	219		1.25	253	2.00	405					2	2	1,173	1.00	469	65 #	1,173
ASD	60	2.00	2.50	0.50	2640	24.50	2	7,187		7,187	72	575	216		1.25	250	2.00	399					2	2	1,173	1.00	469	65 #	1,173
ASD	60	2.50	3.00	0.50	2640	24.00	2	7,040		7,040	70	563	211		1.25	244	2.00	391					2	2	1,173	1.00	469	65 #	1,173
ASD	60	3.00	3.50	0.50	2640	24.75	2	7,260		7,260	73	581	218		1.25	252	2.00	403					2	2	1,173	1.00	469	65 #	1,173
ASD	60	3.50	4.00	0.50	2640	25.63	2	7,518		7,518	75	601	226		1.25	261	2.00	418					2	2	1,173	1.00	469	65 #	1,173
ASD	60	4.00	4.50	0.50	2640	25.75	2	7,553		7,553	76	604	227		1.25	262	2.00	420					2	2	1,173	1.00	469	65 #	1,173
ASD	60	4.50	5.00	0.50	2640	25.88	2	7,591		7,591	76	607	228		1.25	264	2.00	422					2	2	1,173	1.00	469	65 #	1,173
ASD	60	5.00	5.50	0.50	2640	25.92	2	7,603		7,603	76	608	228		1.25	264	2.00	422					2	2	1,173	1.00	469	65 #	1,173
ASD	60	5.50	6.00	0.50	2640	26.50	2	7,773		7,773	78	622	233		1.25	270	2.00	432					2	2	1,173	1.00	469	65 #	1,173
ASD	60	6.00	6.50	0.50	2640	26.63	2	7,811		7,811	78	625	234		1.25	271	2.00	434					2	2	1,173	1.00	469	65 #	1,173
ASD	60	6.50	7.00	0.50	2640	25.50	2	7,480		7,480	75	598	224		1.25	260	2.00	416					2	2	1,173	1.00	469	65 #	1,173
ASD	60	7.00	7.50	0.50	2640	25.25	2	7,407		7,407	74	593	222		1.25	257	2.00	411					2	2	1,173	1.00	469	65 #	1,173
ASD	60	7.50	8.00	0.50	2640	25.75	2	7,553		7,553	76	604	227		1.25	262	2.00	420					2	2	1,173	1.00	469	65 #	1,173
ASD	60	8.00	10.00	2.00	10560	26.00	2	30,507		30,507	305	2,441	915		1.25	1,059	2.00	1,695					2	2	4,693	4.00	1,877	261 #	4,693
ASD	60	10.00	10.42	0.42	2218	25.75	2	6,346		6,346	63	508	190		1.25	220	2.00	353					2	2	986	0.84	394	55 #	986
ASD	60	10.42	10.56	0.14	739	26.25	3	2,155	2,155		22	172	65		1.25	75			0.75	45			2	2	328	0.28	131	11 *	328
ASD	60	10.56	10.77	0.21	1109	27.00	3	3,327	3,327		33	266	100		1.25	116			0.75	69			2	2	493	0.42	197	17 *	493
ASD	60	10.77	10.78	0.01	53	46.00	1	271	271		3	22	8		1.25	9			0.75	6									
ASD	60	10.78	10.80	0.02	106	43.50	1	512	512		5	41	15		1.25	18			0.75	11									
ASD	60	10.80	10.83	0.03	158	43.50	4	764	764		8	61	23		1.25	27			0.75	16				2	35	0.03	14	1 *	35
ASD	60	10.83	11.00	0.17	896	28.75	3	2,869	2,869		29	229	86		1.25	100			0.75	60			2	2	399	0.34	160	14 *	399
ASD	60	11.00	11.32	0.32	1690	28.75	3	5,399	5,399		54	432	162		1.25	187			0.75	112			2	2	751	0.64	300	26 *	751
ASD	60	11.32	11.50	0.18	950	28.50	3	3,008	3,008		30	241	90		1.25	104			0.75	63			2	2	422	0.36	169	15 *	422
ASD	60	11.50	11.64	0.14	739	29.75	3	2,443	2,443		24	195	73		1.25	85			0.75	51			2	2	328	0.28	131	11 *	328
ASD	60	11.64	11.77	0.13	686	30.25	3	2,306	2,306		23	184	69		1.25	80			0.75	48			2	2	305	0.26	122	11 *	305
	EXTRA AREA FOR INTERSECTIONS + MAILBOXES					SR60 & SR3		5760	1920	3260		461	173		1.25	200	2.00	207	0.75	43									
	EXTRA AREA FOR PAVED & AGGREGATE DRIVES					SR60 & SR3		2214				177									2	123			1143		457	64	1143
	TOTALS			11.09	58555.2			169275	28,092	146,363	1,696	14,179	5,252			6,076		8,158		590		123				21.73	10,649	1,414	26,634

PAVEMENT & SHOULDER DATA

ASD-3-6.08
ASD-60-0.68

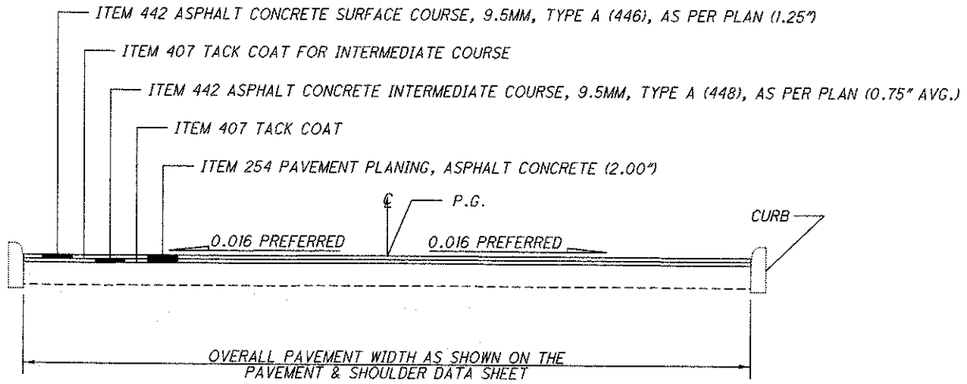

TYPICAL 1

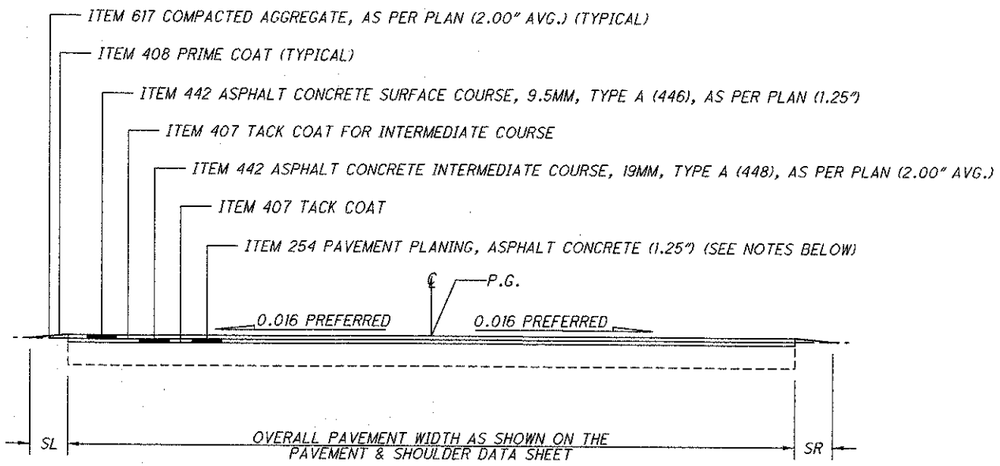

TYPICAL 2

NOTES:

1. STARTING AT SLM 0.86 PLANE A DEPTH OF 3.25" GRADUALLY DECREASING THE DEPTH AT A STEADY RATE TO REACH THE TYPICAL PLANING DEPTH OF 1.25" OVER 200'.
2. 200' PRIOR TO SLM 10.42 GRADUALLY INCREASE THE TYPICAL 1.25" PLANING DEPTH AT A STEADY RATE TO REACH A DEPTH OF 3.25" AT SLM 10.42.

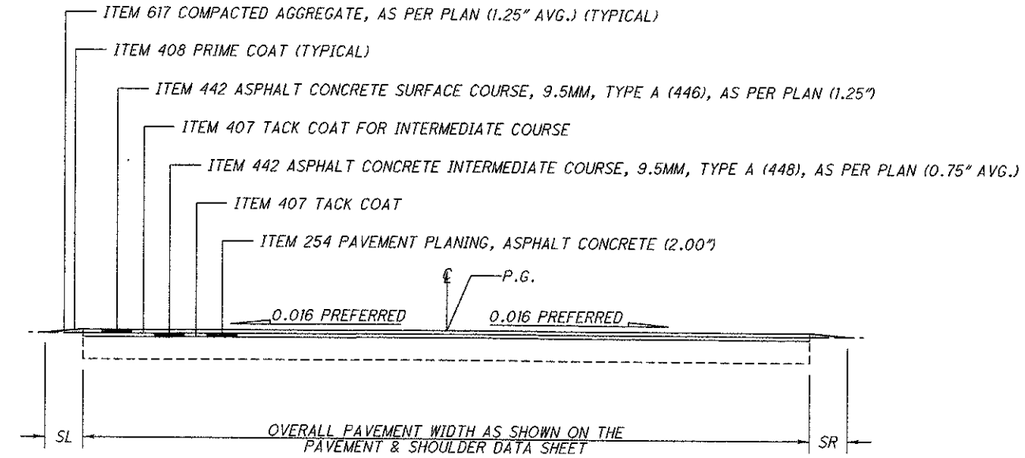

TYPICAL 3

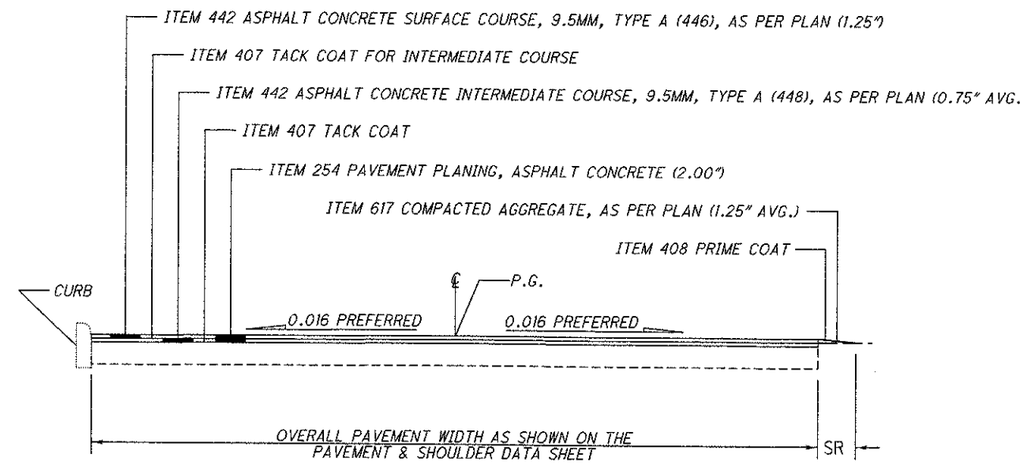

TYPICAL 4

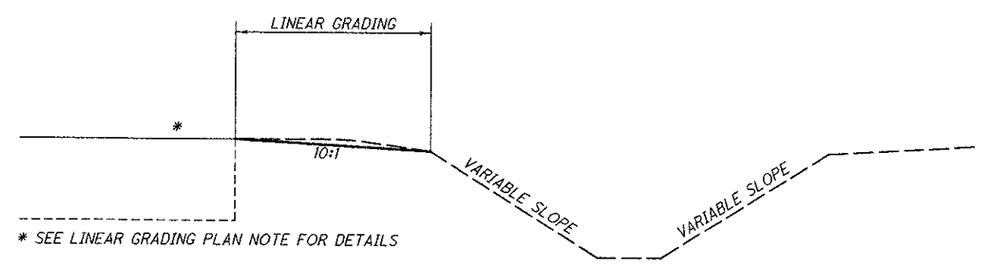

* SEE LINEAR GRADING PLAN NOTE FOR DETAILS

LINEAR GRADING DETAIL

CALCULATED MER
CHECKED ADB

TYPICAL SECTIONS

ASD-3-6.08
ASD-60-0.68

DESIGN FILE: I:\projects\80173\roadway\sheets\80173GY001.dgn
WORKSTATION: mrobins1 DATE: 8/22/2008

ITEM 202 - ANCHOR ASSEMBLY REMOVED, TYPE A

THIS ITEM SHALL INCLUDE THE REMOVAL OF THE EXISTING TYPE A, ANCHOR ASSEMBLY INCLUDING ALL POSTS, HARDWARE, RAIL ELEMENTS, AND CONCRETE ANCHORS. ALL ITEMS REMOVED SHALL BECOME THE PROPERTY OF THE CONTRACTOR AND SHALL BE PROPERLY DISPOSED OF.

THE EXISTING CONCRETE ANCHOR AND CONCRETE AT POSTS SHALL BE REMOVED ENTIRELY. ALL HOLES REMAINING AFTER REMOVAL SHALL BE FILLED WITH GRANULAR MATERIAL OR EXCESS MATERIAL RESULTING FROM GUARDRAIL CONSTRUCTION. ALL FILL MATERIAL SHALL BE THOROUGHLY COMPACTED AND LEVELED, AS DIRECTED BY THE ENGINEER.

PAYMENT FOR ALL OF THE ABOVE SHALL BE INCLUDED IN THE UNIT BID PRICE FOR ITEM 202, ANCHOR ASSEMBLY REMOVED, TYPE A.

ITEM 203 - EMBANKMENT, AS PER PLAN

AT SPECIFIED LOCATIONS AND LOCATIONS AS DIRECTED BY THE ENGINEER, EMBANKMENT SHALL BE PLACED AS TO PROVIDE A SUITABLE AREA TO CONSTRUCT GUARDRAIL AND TO PROVIDE STRUCTURAL INTEGRITY OF THE ROADWAY SHOULDER.

EMBANKMENT MATERIAL SHALL BE LIMITED TO CMS ITEM 304 LIMESTONE.

AREAS WHERE EMBANKMENT MATERIAL IS TO BE PLACED SHALL BE SCALPED. THE REQUIREMENTS FOR BENCHING SHALL BE WAIVED. THE DEPTH OF LAYERS IN WHICH THE EMBANKMENT IS PLACED SHALL BE LIMITED TO EIGHT (8) INCHES IN THICKNESS. THE METHOD OF COMPACTION AND EQUIPMENT USED SHALL BE SUFFICIENT TO COMPACT 95% OF STANDARD PROCTOR TO THE SATISFACTION OF THE ENGINEER.

THE METHOD OF MEASUREMENT FOR EMBANKMENT MATERIAL SHALL BE BY THE NUMBER OF CUBIC YARDS CONVERTED BY TICKET WEIGHT IN THE CARRIER AT THE WORK SITE, IN LIEU OF THE REQUIREMENTS OF 203.09. PAYMENT FOR ACCEPTED QUANTITIES WILL BE MADE AT THE CONTRACT UNIT BID PRICE PER CUBIC YARD FOR ITEM 203 - EMBANKMENT, AS PER PLAN AND SHALL INCLUDE ALL WORK DESCRIBED ABOVE.

ITEM 606 - GUARDRAIL, MISC.: ADJUST HEIGHT, EXISTING GUARDRAIL, TYPE 5

WHERE DESIGNATED ON THE PLAN, THE EXISTING GUARDRAIL, TYPE 5 SHALL BE RAISED OR LOWERED ON THE EXISTING WOOD POSTS AS PER STANDARD DRAWING GR-2.1 SO AS TO OBTAIN THE STANDARD 27.75 IN. HEIGHT. THE RAIL SHALL BE REATTACHED TO THE POSTS USING NEW POST BOLTS. FOR RAIL THAT REQUIRES BEING LOWERED THE POSTS SHALL BE CUT OR TRIMMED AND THE TOPS SHALL BE TREATED.

THE RAIL SHALL BE DISMANTLED ONLY TO THE EXTENT NECESSARY TO FIELD BORE NEW BOLT HOLES IN THE WOOD POSTS, AND TO RECONNECT THE RAIL AND BLOCK TO EXISTING POSTS.

PAYMENT FOR ALL OF THE ABOVE SHALL BE AT THE UNIT PRICE BID FOR ITEM 606, GUARDRAIL MISC.: ADJUST HEIGHT, EXISTING GUARDRAIL, TYPE 5, WHICH WILL INCLUDE ALL LABOR, EQUIPMENT, MATERIALS AND INCIDENTALS NECESSARY TO COMPLETE THE ABOVE WORK.

CONNECTING GUARDRAIL TO EXISTING RAIL

IN LOCATIONS WHERE TYPE 5 GUARDRAIL, TERMINAL ASSEMBLIES, ETC. ARE TO BE CONNECTED TO EXISTING RAIL SOME MODIFICATIONS MAY BE REQUIRED, INCLUDING EXTRA POSTS, DRILLING HOLES AND POSSIBLY PARTIAL SECTIONS OF ADDITIONAL RAIL ELEMENTS. THE COST OF THIS ADDITIONAL WORK SHALL BE INCLUDED IN THE UNIT BID PRICE FOR TYPE 5 GUARDRAIL. IF ADDITIONAL PORTIONS OF RAIL ELEMENT ARE USED THE LINEAL MEASUREMENT OF THIS ADDITIONAL PORTION SHALL BE ADDED FOR PAYMENT.

LOCATIONS OF GUARDRAIL

THE GUARDRAIL PROTECTION PROVIDED IN THIS PLAN SHALL BE LOCATED IN THE FIELD TO ASSURE THAT THE INSTALLATION WILL AFFORD THE MAXIMUM PROTECTION FOR TRAFFIC. THIS LOCATION SHALL BE POSITIONED AS FAR AS POSSIBLE FROM THE EDGE OF PAVEMENT WHILE MAINTAINING PROPER GRADE IN FRONT OF GUARDRAIL AS PER STANDARD DRAWINGS AND PLAN DETAILS.

ITEM 209 - RESHAPING UNDER GUARDRAIL, AS PER PLAN

THIS ITEM SHALL BE USED AT LOCATIONS INDICATED IN THE PLANS.

THIS WORK SHALL BE COMPLETED AT LOCATIONS SPECIFIED FOR WORK AS WELL AS PER CMS 209.05 AND AS DESCRIBED HEREIN, AND SHALL AT ALL TIMES BE AS DIRECTED BY THE ENGINEER.

THE AREA IN FRONT OF, UNDER, AND BEHIND THE GUARDRAIL SHALL BE GRADED AND RESHAPED TO PROVIDE AN AREA THAT HAS A SLOPE OF 10:1 MAXIMUM (SEE DETAIL BELOW AS WELL AS THE GUARDRAIL DETAIL SHEETS FOR FURTHER DETAILS AND INFORMATION OF THE LIMITS OF THIS WORK).

EXCESS MATERIAL RESULTING SHALL BE USED ELSEWHERE FOR THIS ITEM IF SO DIRECTED OR DISPOSED OF PROPERLY. IF EXTRA MATERIAL IS REQUIRED IT SHALL BE PAID FOR WITH ITEM 203 - EMBANKMENT, AS PER PLAN. THIS WORK SHALL NOT BE STARTED UNTIL AFTER THE RESURFACING AND BERM WORK HAS BEEN COMPLETED.

THE ABOVE WORK SHALL BE PAID FOR PER STATION WITH ITEM 209, RESHAPING UNDER GUARDRAIL, AS PER PLAN WITH THE EXCEPTION OF ANY EXTRA MATERIAL REQUIRED TO MEET THE SLOPE REQUIREMENTS WHICH SHALL BE PAID BY ITEM 203 - EMBANKMENT, AS PER PLAN.

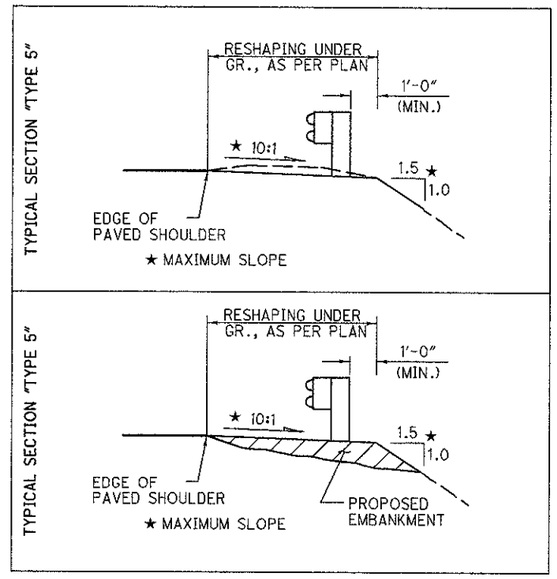

CONNECTION BETWEEN EXISTING AND PROPOSED GUARDRAIL

WHEN IT IS NECESSARY TO SPLICE PROPOSED GUARDRAIL TO EXISTING GUARDRAIL, ONLY THE EXISTING GUARDRAIL SHALL BE CUT, DRILLED, OR PUNCHED. THE CONNECTION SHALL BE MADE USING A "W-BEAM RAIL SPLICE" AS SHOWN ON STANDARD CONSTRUCTION DRAWING GR-1.1. PAYMENT SHALL BE INCLUDED IN THE CONTRACT PRICE FOR THE RESPECTIVE GUARDRAIL ITEMS.

ITEM 606 - GUARDRAIL REBUILT, TYPE 5

THIS ITEM SHALL BE USED WHEN GUARDRAIL REQUIRES REPAIRS IN WHICH THE RAIL ELEMENT IS REUSABLE. ALSO, THIS ITEM WILL BE USED TO RE-ALIGN GUARDRAIL RUNS, AS DIRECTED BY THE ENGINEER.

PAYMENT SHALL INCLUDE ALL LABOR, MATERIALS AND EQUIPMENT, AS DESCRIBED IN 606.05 AND TO INCLUDE REMOVAL AND REPLACEMENT OF ANY AND ALL DAMAGED MATERIAL, (REUSING THE RAIL ELEMENT), INCLUDING REPLACEMENT OF ANY MATERIALS DAMAGED DURING DISMANTLING OR ANY MATERIALS WHICH MAY HAVE DETERIORATED TO THE POINT THEY CANNOT BE REUSED.

ITEM 606 - ANCHOR ASSEMBLY, TYPE E-98

THIS ITEM SHALL CONSIST OF FURNISHING AND INSTALLING EITHER OF THE FOLLOWING GUARDRAIL END TERMINALS.

1) THE ET-2000 (1997) MANUFACTURED BY TRINITY INDUSTRY, 1170 N. STATE ST., GIRARD, OHIO 44420 (TELEPHONE: 330-545-4373).

THE LENGTH OF THE ET-2000 (1997) SYSTEM IS CONSIDERED TO BE 50 FEET (15.24 m), INCLUSIVE OF TWO 25 FOOT (7.62 m) LONG RAIL ELEMENTS. INSTALLATION SHALL BE AT THE LOCATIONS SPECIFIED IN THE PLANS, IN ACCORDANCE WITH THE MANUFACTURER'S SPECIFICATIONS AS DETAILED ON THE FOLLOWING PRE-APPROVED SHOP DRAWINGS:

DWG. #	DRAWING NAME	DWG./REV. DATE	ODOT APPROVAL DATE
SS265M	ET-2000 (1997) PLAN, ELEVATION AND SECTIONS	6/20/97	3/6/98
SS142	ET2000 PLUS 50'-0" PLAN, ELEVATION AND SECTION 25'-0" RAIL, SLEEVE W/PL POSTS 1-4	4/12/00	7/31/00
SS141	ET-2000 PLUS PLAN, ELEVATION & SECTION 25'-0" RAIL, HBA POSTS 1-4	2/29/00	7/31/00
SS158	ET-2000 PLUS 50'-0" WITH 12'-6" PANELS & HBA POSTS 1-4 PLAN, ELEVATION & SECTION	5/22/00	7/31/00

2) THE SKT-350 MANUFACTURED BY ROAD SYSTEMS, INC., 2516 MALLORY LANE, STOW, OHIO 44224 (TELEPHONE: 330-346-0721)

THE LENGTH OF THE SKT-350 SYSTEM IS CONSIDERED TO BE 50'-0" (15.24 m), INCLUSIVE OF FOUR 12'-6" (3.81m) LONG RAIL ELEMENTS. INSTALLATION SHALL BE AT THE LOCATIONS SPECIFIED IN THE PLANS, IN ACCORDANCE WITH THE MANUFACTURER'S SPECIFICATIONS AS DETAILED ON THE FOLLOWING PRE-APPROVED SHOP DRAWINGS:

DWG. #	DRAWING NAME	DWG./REV. DATE	ODOT APPROVAL DATE
SKT-4M	SEQUENTIAL KINKING TERMINAL (SKT-350) ASSEMBLY WITH 4 FOUNDATION TUBES	12/11/97	3/6/98

THE FACE OF THE TYPE E-98 IMPACT HEAD SHALL BE COVERED WITH A SHEET OF TYPE G REFLECTIVE SHEETING, PER CMS 730.19, APPROXIMATELY 18" x 18" (450mm X 450mm).

THE CONTRACTOR MAY USE A SALVAGED EXTRUDER WHEN ASSEMBLING THE ITEM 606 ANCHOR ASSEMBLY, TYPE E-98. ALL WELDS ON THE EXTERIOR OF THE SALVAGED EXTRUDER SHALL NOT BE DAMAGED AND THE FEEDER SHUTE SHALL NOT BE BENT.

REFER TO THE MANUFACTURER'S INSTRUCTION REGARDING THE INSTALLATION OF, AND THE GRADING AROUND, THE FOUNDATION TUBES AND GROUND STRUT. THE TOP OF ANY FOUNDATION TUBE SHOULD BE LESS THAN 4 INCHES (100mm) ABOVE THE GROUND. THE PLACEMENT OF THE FOUNDATION TUBES SHOULD BE AN APPROPRIATE DEPTH BELOW THE LEVEL LINE IN ORDER TO MAINTAIN THE FINISHED GUARDRAIL HEIGHT OF 27¾ INCHES (706mm) FROM THE EDGE OF THE SHOULDER.

ON SITE GRADING IS REQUIRED IF THE TOP OF THE FOUNDATION TUBES OR TOP OF THE GROUND STRUT DOES NOT PROJECT MORE THAN 4 INCHES (100mm) ABOVE THE GROUND LINE.

PAYMENT FOR THE ABOVE WORK SHALL BE MADE AT THE UNIT PRICE BID FOR ITEM 606, ANCHOR ASSEMBLY, TYPE E-98, EACH, AND SHALL INCLUDE ALL LABOR, TOOLS, EQUIPMENT AND MATERIALS NECESSARY TO CONSTRUCT A COMPLETE AND FUNCTIONAL ANCHOR ASSEMBLY SYSTEM, INCLUDING ALL RELATED TRANSITIONS, REFLECTIVE SHEETING, HARDWARE, GRADING, EMBANKMENT AND EXCAVATION NOT SEPARATELY SPECIFIED, AS REQUIRED BY THE MANUFACTURER.

BARRIER REFLECTORS AT BRIDGE OVER US 30

BARRIER REFLECTORS SHALL BE PROVIDE ON THE PARAPETS FOR THE BRIDGE OVER US 30. THE FOLLOWING ESTIMATED QUANTITY HAS BEEN CARRIED TO THE GENERAL SUMMARY.

ITEM 626 BARRIER REFLECTOR, TYPE B2 6 EACH

ITEM 202 - GUARDRAIL REMOVED FOR REUSE, AS PER PLAN

THIS ITEM SHALL CONSIST OF THE REMOVAL OF THE EXISTING GUARDRAIL AS PER 202.09. THE TOP RAIL ELEMENT SHALL BE SALVAGED BY THE CONTRACTOR FOR REUSE IN ITEM 606 - GUARDRAIL TYPE 5, USING 9' POSTS, AS PER PLAN OR ITEM 606 - GUARDRAIL REBUILT, TYPE 5, AS PER PLAN.

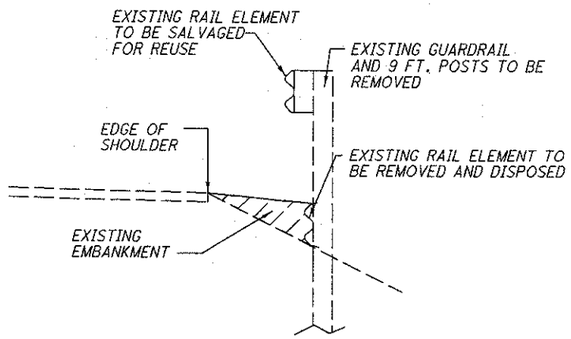

ITEM 606 - GUARDRAIL TYPE 5, USING 9' POSTS, AS PER PLAN

THE EXISTING RAIL ELEMENT REMOVED BY THE CONTRACTOR UNDER ITEM 202 - GUARDRAIL REMOVED FOR REUSE OR ITEM 202 - GUARDRAIL REMOVED FOR REUSE, AS PER PLAN SHALL BE PLACED ON THE GROUND ADJACENT TO NEW GUARDRAIL POST. THE RAIL ELEMENT MAY REQUIRE TO BE FASTENED TO THE POST TO FACILITATE PLACEMENT OF EMBANKMENT. THE CONTRACTOR MAY DETERMINE THIS METHOD OF FASTENING. THE ITEMS DESCRIBED ABOVE AND SHOWN BELOW INCLUDING NEW RAIL AND 9 FOOT POSTS SHALL BE PAID FOR UNDER THE UNIT BID PRICE FOR ITEM 606 - GUARDRAIL TYPE 5, AS PER PLAN.

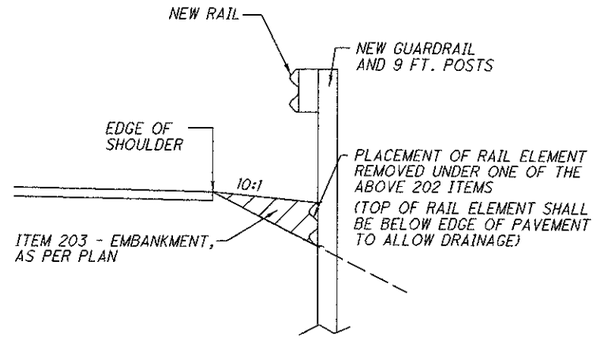

CALCULATED MER
CHECKED BAD

GUARDRAIL NOTES

ASD-6-6.08
ASD-60-0.68

DESIGN FILE: I:\projects\80173\roadway\sheets\80173GN007.dgn
WORKSTATION: mrobins1 DATE: 8/22/2008

SHEET	ITEM 202 GUARDRAIL REMOVED FT	202 GUARDRAIL REMOVED FOR REUSE FT	202 GUARDRAIL REMOVED FOR REUSE, AS PER PLAN FT	202 ANCHOR ASSEMBLY REMOVED, TYPE A EACH	202 ANCHOR ASSEMBLY REMOVED FOR REUSE EACH		203 EMBANKMENT, AS PER PLAN CU YD	209 RESHAPING UNDER GUARDRAIL, AS PER PLAN STATION		603 12" CONDUIT, TYPE D FT		604 CATCH BASIN ADJUSTED TO GRADE EACH	604 MANHOLE ADJUSTED TO GRADE EACH			606 GUARDRAIL, TYPE 5 FT	606 GUARDRAIL, TYPE 5, USING 9' POSTS FT	606 GUARDRAIL, TYPE 5, USING 9' POSTS, AS PER PLAN FT	606 GUARDRAIL REBUILT, TYPE 5 FT			606 GUARDRAIL, MISC.: ADJUST HEIGHT, EXISTING GUARDRAIL, TYPE 5 FT	606 ANCHOR ASSEMBLY, TYPE E-98 EACH		606 ANCHOR ASSEMBLY REBUILT, TYPE T EACH		626 BARRIER REFLECTOR, TYPE A2 EACH	630 REMOVAL OF GROUND MOUNTED SIGN AND REERECTION EACH	630 REMOVAL OF GROUND MOUNTED POST SUPPORT AND REERECTION EACH		638 VALVE BOX ADJUSTED TO GRADE EACH
16							45										337.5						2				5				
17							35										200						2				4				
18							35										713						2				9				
19				3			90									12.50	225.00						3				10				
20		25.00		4			40	1.63								37.50			100.00				3				9				
21	37.50			3	1			2.26								37.50						112.50	3		1		8	1	1		
22							165										225.00						4				6				
23		162.50	225.00	1	1		10	4.50										225.00	162.50				1		1		5				
24				3												25.00							3				9				
25							105									175.00	237.50						4				8				
28							55										275.00						4				7				
29		950.00		4			100	10.00		80						50.00		812.50	137.50				4				12	1	1		
TOTAL	37.50	1137.50	225.00	18	2		680	18		80		6	19			337.50	2212.50	1037.50	400.00			112.50	35		2		92	2	2		8

CALCD
MISS
CHECKED
BAD

ROADWAY SUB-SUMMARY

ASD-3-6.08
ASD-60-0.68

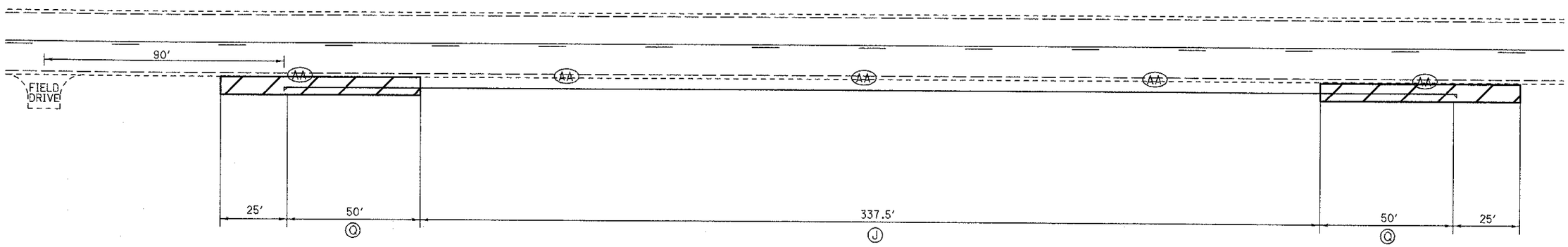

OFFSET GUARDRAIL 4'.

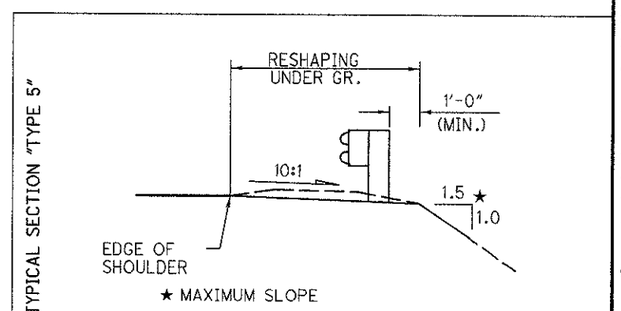

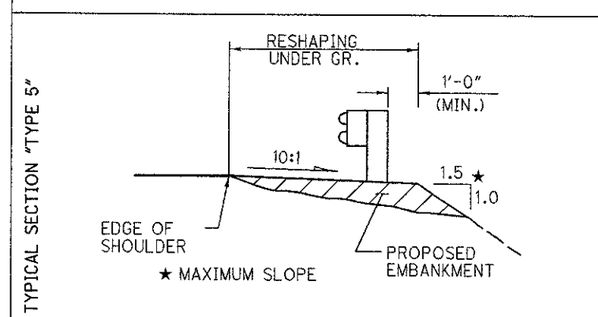

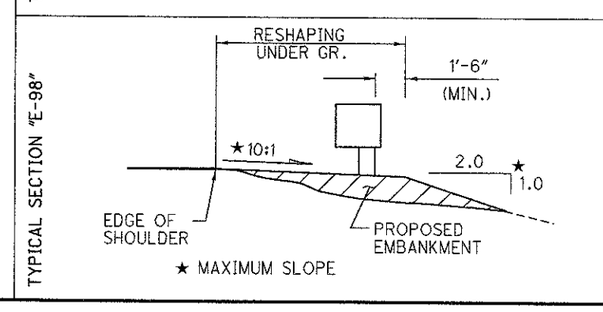

LOCATION	ITEM	DESCRIPTION	UNIT	QUANTITY		TOTAL
				LEFT	RIGHT	
▨	203	EMBANKMENT, AS PER PLAN	CU YD		45	45
J	606	GUARDRAIL, TYPE 5, USING 9 FOOT POSTS	FT		337.5	337.5
Q	606	ANCHOR ASSEMBLY, TYPE E-98	EACH		2	2
AA	626	BARRIER REFLECTOR, TYPE A2	EACH		5	5

ALL QUANTITIES CARRIED TO GENERAL SUMMARY SHEET, SHEET 15.

HORIZONTAL SCALE IN FEET 0 20 40

CALCULATED MER
CHECKED BAD

GUARDRAIL LOCATION
SLM 2.56

ASD-3-6.08
ASD-60-0.68

DESIGN FILE: I:\projects\80173\roadway\sheets\80173GR001.dgn
WORKSTATION: mrobins1 DATE: 8/22/2008

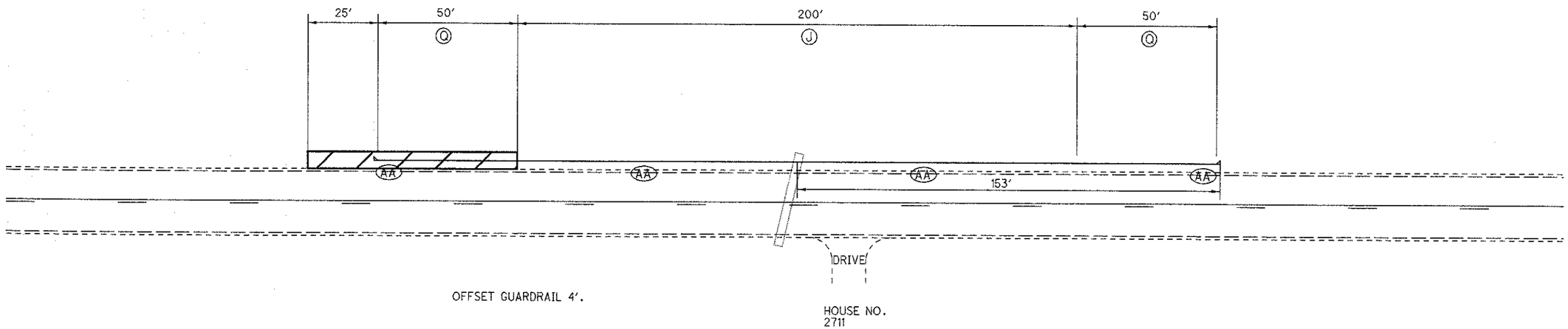

LOCATION	ITEM	DESCRIPTION	UNIT	QUANTITY		TOTAL
				LEFT	RIGHT	
	203	EMBANKMENT, AS PER PLAN	CU YD	35		35
J	606	GUARDRAIL, TYPE 5, USING 9 FOOT POSTS	FT	200		200
Q	606	ANCHOR ASSEMBLY, TYPE E-98	EACH	2		2
AA	626	BARRIER REFLECTOR, TYPE A2	EACH	4		4

ALL QUANTITIES CARRIED TO GENERAL SUMMARY SHEET, SHEET 15.

TYPICAL SECTION "TYPE 5"

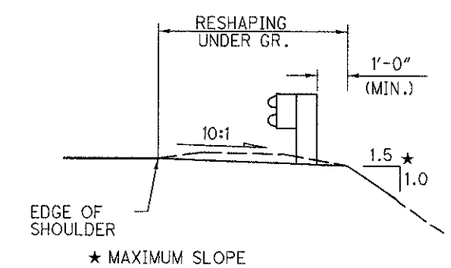

TYPICAL SECTION "TYPE 5"

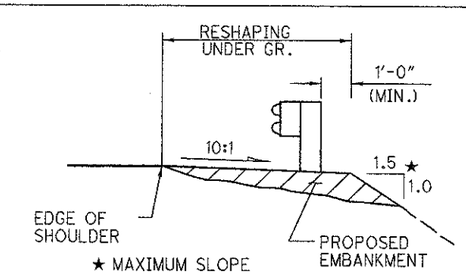

TYPICAL SECTION "E-98"

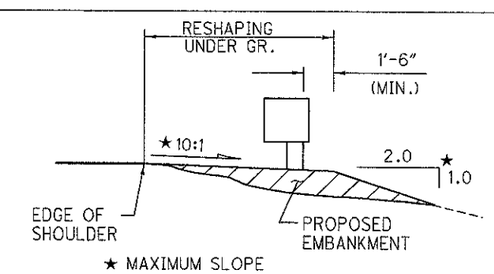

HORIZONTAL SCALE IN FEET 0 20 40

CALCULATED MER
CHECKED BAD

GUARDRAIL LOCATION
SLM 2.75

ASD-3-6.08
ASD-60-0.68

DESIGN FILE:I:\projects\80173\roadway\sheets\80173GR002.dgn
WORKSTATION:mrobins1 DATE:8/22/2008

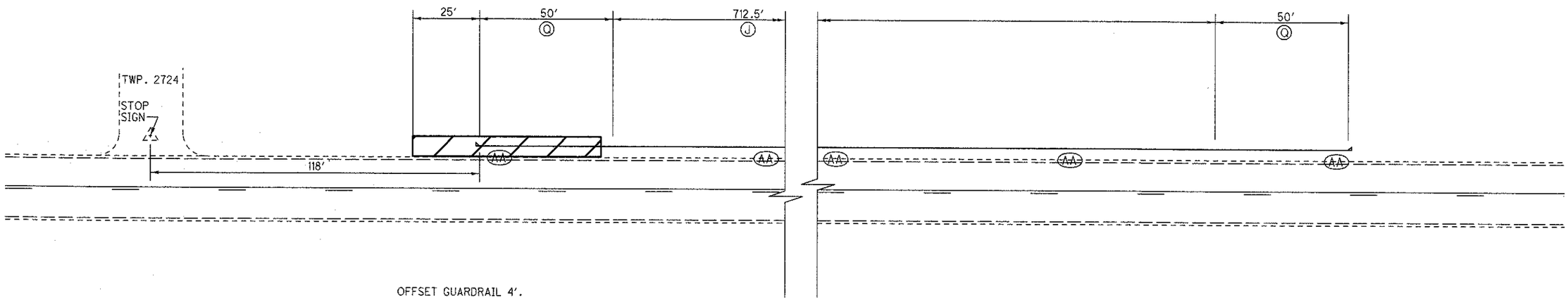

LOCATION	ITEM	DESCRIPTION	UNIT	QUANTITY		TOTAL
				LEFT	RIGHT	
	203	EMBANKMENT, AS PER PLAN	CU YD	35		35
J	606	GUARDRAIL, TYPE 5, USING 9 FOOT POSTS	FT	712.5'		712.5'
Q	606	ANCHOR ASSEMBLY, TYPE E-98	EACH	2		2
AA	626	BARRIER REFLECTOR, TYPE A2	EACH	9		9

ALL QUANTITIES CARRIED TO GENERAL SUMMARY SHEET, SHEET 15.

TYPICAL SECTION "TYPE 5"

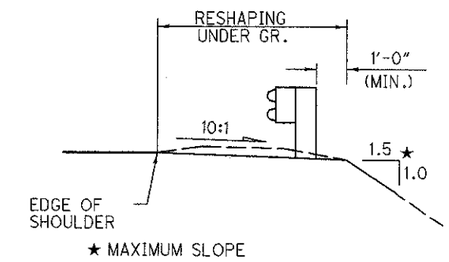

TYPICAL SECTION "TYPE 5"

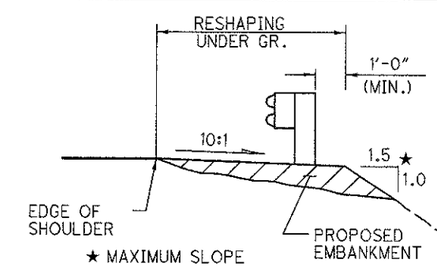

TYPICAL SECTION "E-98"

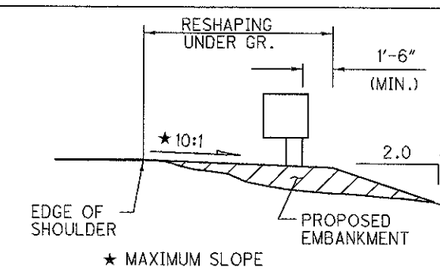

HORIZONTAL SCALE IN FEET 0 20 40

CALCULATED MER
CHECKED BAD

GUARDRAIL LOCATION
SLM 2.91

ASD-3-6.08
ASD-60-0.68

DESIGN FILE: I:\projects\80173\roadway\sheets\80173GR003.dgn
WORKSTATION:mrobins1 DATE: 8/22/2008

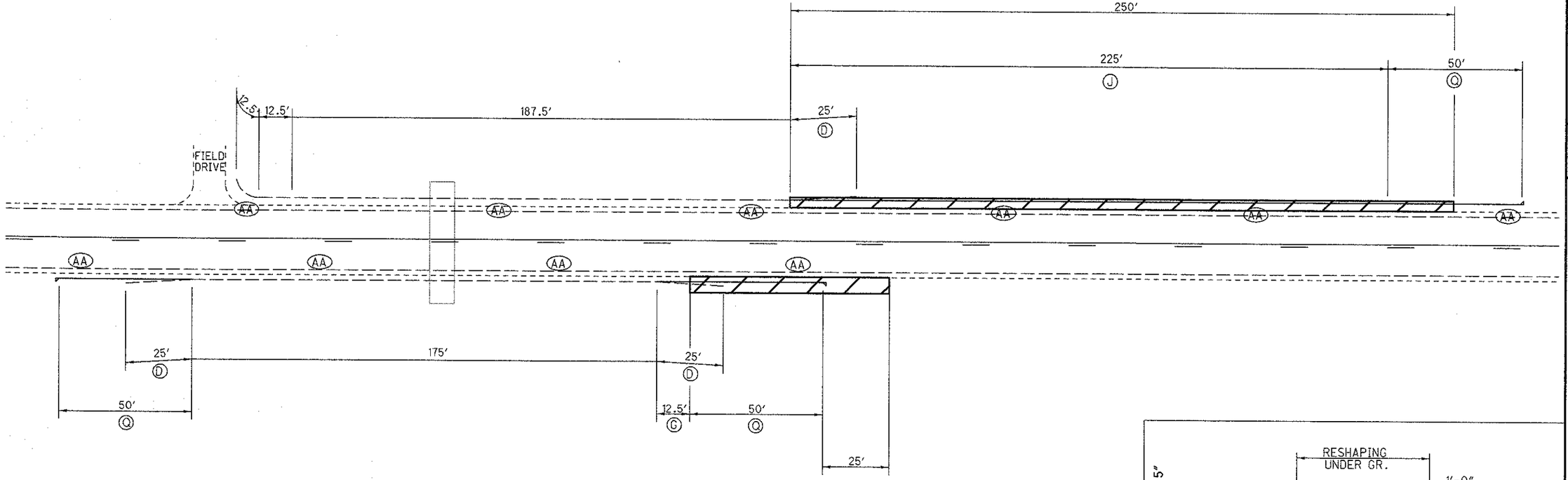

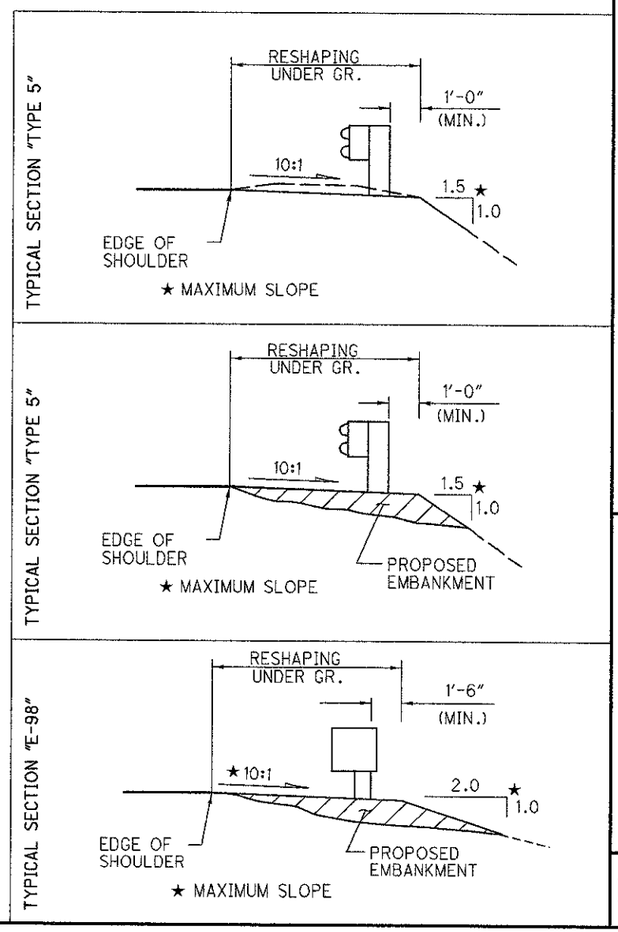

LOCATION	ITEM	DESCRIPTION	UNIT	QUANTITY		TOTAL
				LEFT	RIGHT	
D	202	ANCHOR ASSEMBLY REMOVED, TYPE A	EACH	1	2	3
	203	EMBANKMENT, AS PER PLAN	CU YD	70	20	90
G	606	GUARDRAIL, TYPE 5	FT		12.5	12.5
J	606	GUARDRAIL, TYPE 5, USING 9 FOOT POSTS	FT	225		225
Q	606	ANCHOR ASSEMBLY, TYPE E-98	EACH	1	2	3
AA	626	BARRIER REFLECTOR, TYPE A2	EACH	6	4	10

ALL QUANTITIES CARRIED TO GENERAL SUMMARY SHEET, SHEET 15.

HORIZONTAL SCALE IN FEET 0 20 40

CALCULATED MER CHECKED BAD

GUARDRAIL LOCATION
SLM 4.00

ASD-3-6.08
ASD-60-0.68

DESIGN FILE: I:\projects\80173\roadway\sheets\80173GR004.dgn
WORKSTATION:mrobins1 DATE:8/22/2008

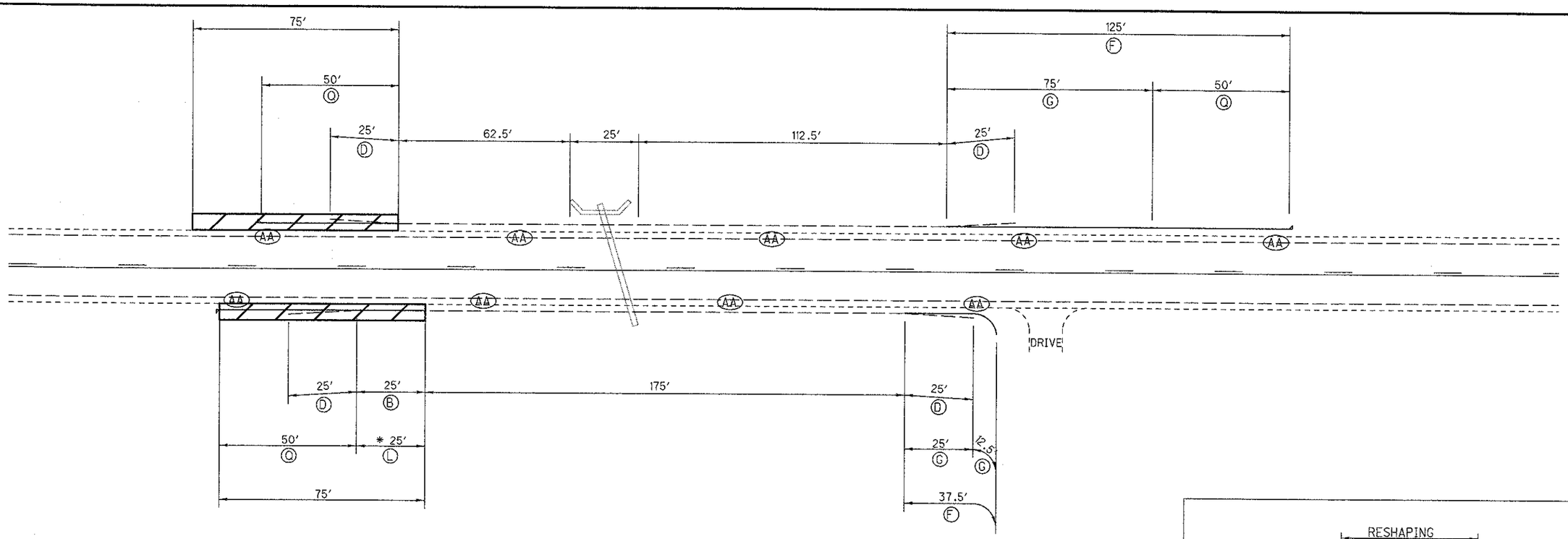

* REBUILD TO STRAIGHTEN RUN

LOCATION	ITEM	DESCRIPTION	UNIT	QUANTITY		TOTAL
				LEFT	RIGHT	
B	203	GUARDRAIL REMOVED FOR REUSE	FT		25	25
D	202	ANCHOR ASSEMBLY REMOVED, TYPE A	EACH	2	2	4
	203	EMBANKMENT, AS PER PLAN	CU YD	20	20	40
F	209	RESHAPING UNDER GUARDRAIL, AS PER PLAN	STA	1.25	0.38	1.63
G	606	GUARDRAIL, TYPE 5	FT	75	37.5	112.5
L	606	GUARDRAIL REBUILT, TYPE 5	FT		25	25
Q	606	ANCHOR ASSEMBLY, TYPE E-98	EACH	2	1	3
AA	626	BARRIER REFLECTOR, TYPE A2	EACH	5	4	9

ALL QUANTITIES CARRIED TO GENERAL SUMMARY SHEET, SHEET 15 .

TYPICAL SECTION "TYPE 5"

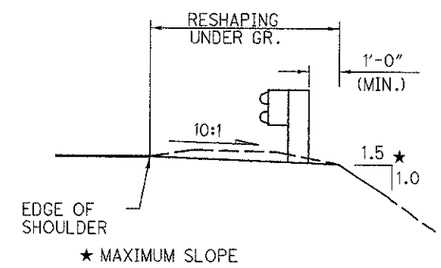

TYPICAL SECTION "TYPE 5"

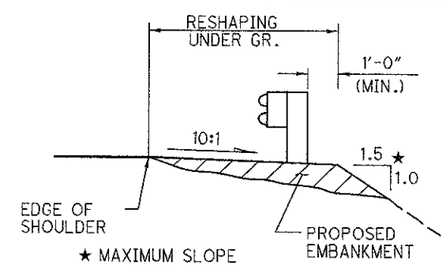

TYPICAL SECTION "E-98"

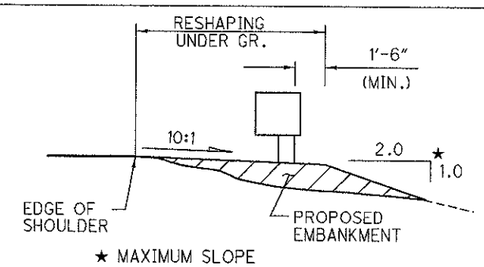

HORIZONTAL SCALE IN FEET
0 20 40

CALCULATED MER
CHECKED BAD

GUARDRAIL LOCATION
SLM 4.63

ASD-3-6.08
ASD-60-0.68

DESIGN FILE: I:\projects\80173\roadway\sheets\80173GR005.dgn
WORKSTATION:mrobins1 DATE: 8/22/2008

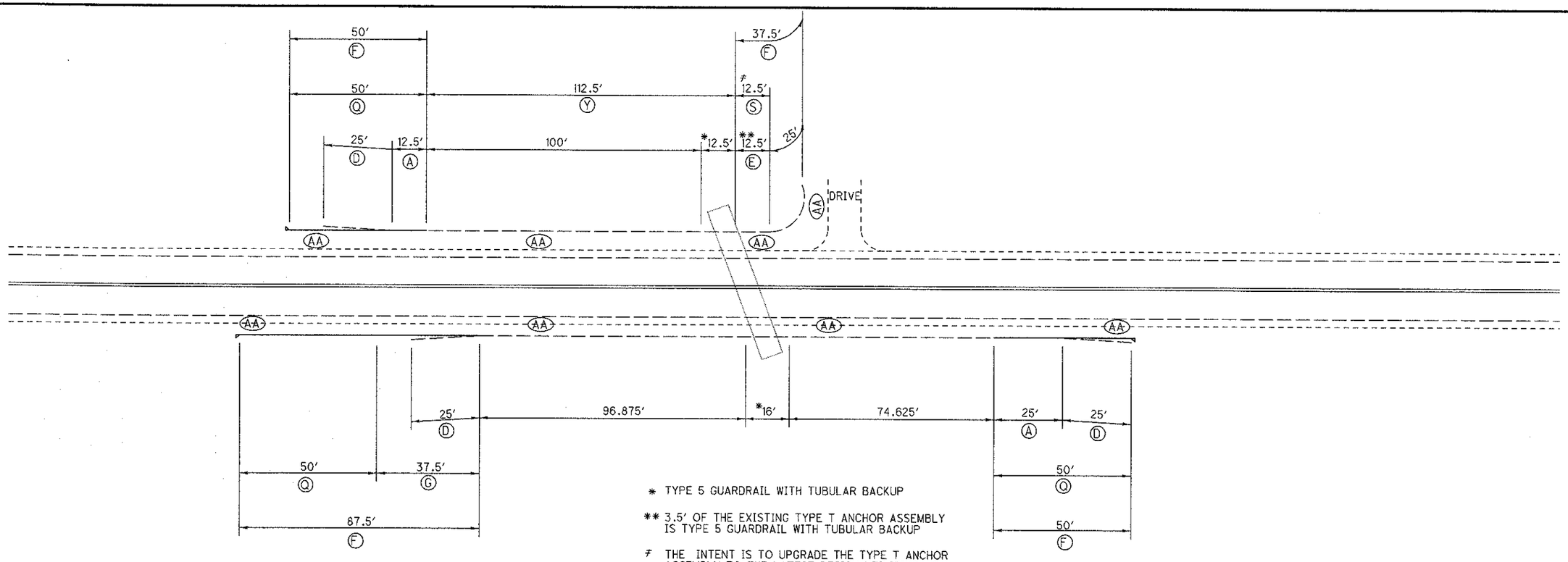

* TYPE 5 GUARDRAIL WITH TUBULAR BACKUP

** 3.5′ OF THE EXISTING TYPE T ANCHOR ASSEMBLY IS TYPE 5 GUARDRAIL WITH TUBULAR BACKUP

≠ THE INTENT IS TO UPGRADE THE TYPE T ANCHOR ASSEMBLY TO THE LATEST DESIGN UTILIZING AS MUCH OF THE EXISTING TYPE T ANCHOR ASSEMBLY AS POSSIBLE

LOCATION	ITEM	DESCRIPTION	UNIT	QUANTITY		TOTAL
				LEFT	RIGHT	
A	202	GUARDRAIL REMOVED	FT	12.5	25	37.5
D	202	ANCHOR ASSEMBLY REMOVED, TYPE A	EACH	1	2	3
E	202	ANCHOR ASSEMBLY REMOVED FOR REUSE	EACH	1		1
F	209	RESHAPING UNDER GUARDRAIL, AS PER PLAN	STA	0.88	1.38	2.26
G	606	GUARDRAIL, TYPE 5	FT		37.5	37.5
Q	606	ANCHOR ASSEMBLY, TYPE E-98	EACH	1	2	3
S	606	ANCHOR ASSEMBLY REBUILT, TYPE T	EACH	1		1
Y	606	GUARDRAIL, MISC.: ADJUST HEIGHT, EXISTING GUARDRAIL, TYPE 5	FT	112.5		112.5
AA	626	BARRIER REFLECTOR, TYPE A2	EACH	4	4	8

ALL QUANTITIES CARRIED TO GENERAL SUMMARY SHEET, SHEET 15.

TYPICAL SECTION "TYPE 5"

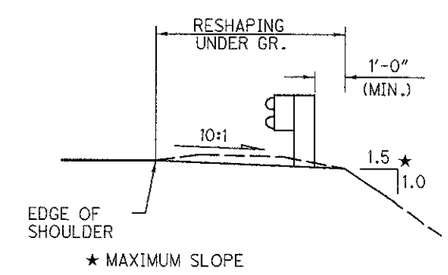

N

HORIZONTAL SCALE IN FEET 0 20 40

CALCULATED MER
CHECKED BAD

GUARDRAIL LOCATION
SLM 4.80

ASD-3-6.08
ASD-60-0.68

DESIGN FILE: I:\projects\80173\roadway\sheets\80173GR006.dgn
WORKSTATION:mrobins1 DATE:8/22/2008

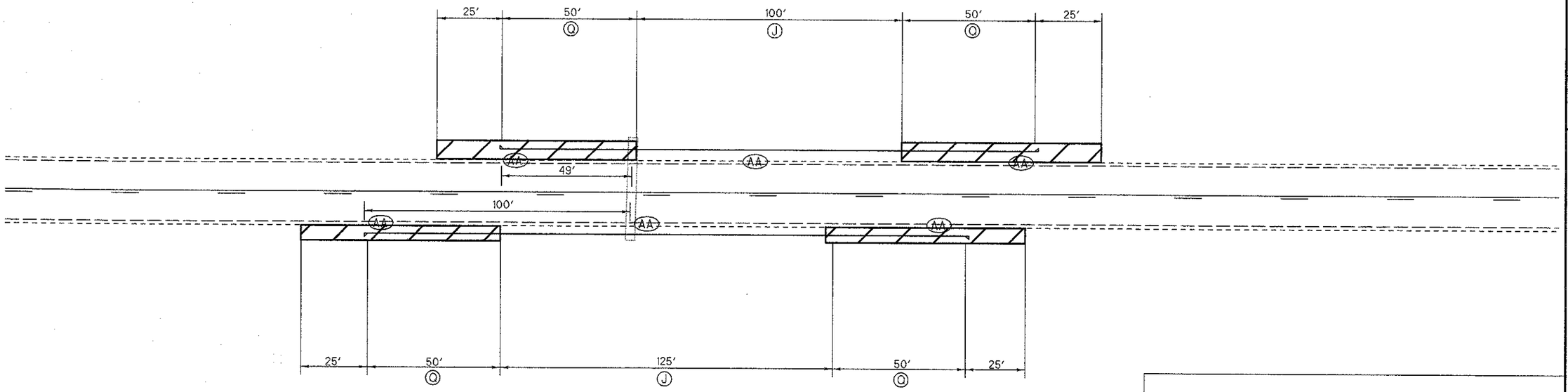

OFFSET GUARDRAIL 3′.

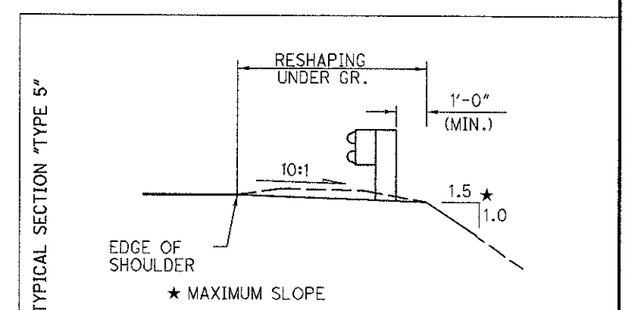

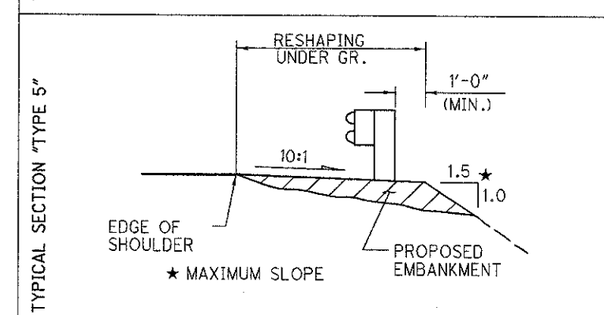

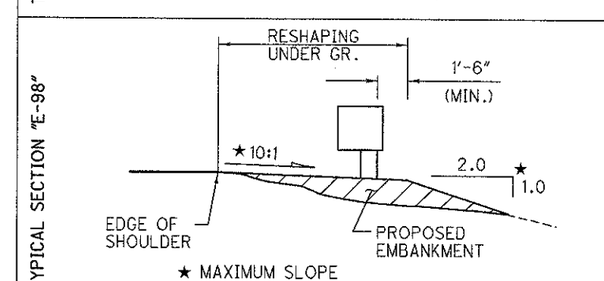

LOCATION	ITEM	DESCRIPTION	UNIT	QUANTITY		TOTAL
				LEFT	RIGHT	
▨	203	EMBANKMENT, AS PER PLAN	CU YD	130	35	165
J	606	GUARDRAIL, TYPE 5, USING 9 FOOT POSTS	FT	100	125	225
Q	606	ANCHOR ASSEMBLY, TYPE E-98	EACH	2	2	4
AA	626	BARRIER REFLECTOR, TYPE A2	EACH	3	3	6

ALL QUANTITIES CARRIED TO GENERAL SUMMARY SHEET, SHEET 15.

N

HORIZONTAL SCALE IN FEET 0 20 40

CALCULATED MER
CHECKED BAD

GUARDRAIL LOCATION
SLM 5.10

ASD-3-6.08
ASD-60-0.68

DESIGN FILE: I:\projects\80173\roadway\sheets\80173GR007.dgn
WORKSTATION:mrobins1 DATE: 8/22/2008

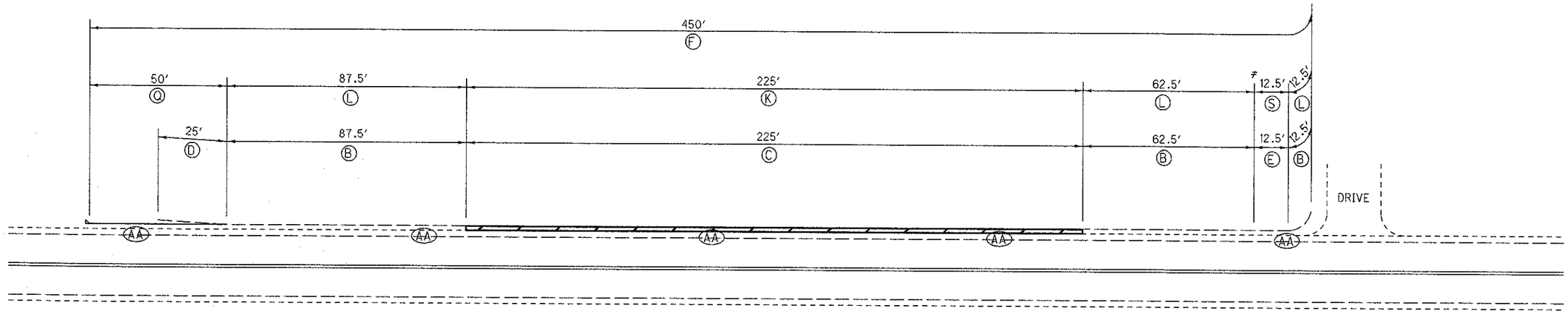

THE INTENT IS TO UPGRADE THE TYPE T ANCHOR ASSEMBLY TO THE LATEST DESIGN UTILIZING AS MUCH OF THE EXISTING TYPE T ANCHOR ASSEMBLY AS POSSIBLE

LOCATION	ITEM	DESCRIPTION	UNIT	QUANTITY		TOTAL
				LEFT	RIGHT	
B	202	GUARDRAIL REMOVED FOR REUSE	FT	162.5		162.5
C	202	GUARDRAIL REMOVED FOR REUSE, AS PER PLAN	FT	225		225
D	202	ANCHOR ASSEMBLY REMOVED, TYPE A	EACH	1		1
E	202	ANCHOR ASSEMBLY REMOVED FOR REUSE	EACH	1		1
	203	EMBANKMENT, AS PER PLAN	CU YD	10		10
F	209	RESHAPING UNDER GUARDRAIL, AS PER PLAN	STA	4.50		4.50
K	606	GUARDRAIL, TYPE 5, USING 9′ POSTS, AS PER PLAN	FT	225		225
L	606	GUARDRAIL REBUILT, TYPE 5	FT	162.5		162.5
Q	606	ANCHOR ASSEMBLY, TYPE E-98	EACH	1		1
S	606	ANCHOR ASSEMBLY REBUILT, TYPE T	EACH	1		1
AA	626	BARRIER REFLECTOR, TYPE A2	EACH	5		5

ALL QUANTITIES CARRIED TO GENERAL SUMMARY SHEET, SHEET 15.

TYPICAL SECTION "TYPE 5"

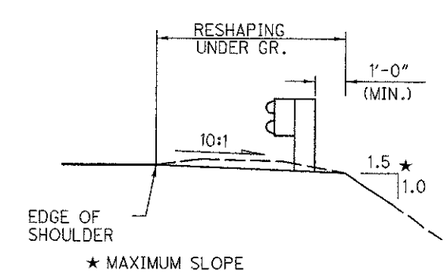

HORIZONTAL SCALE IN FEET
0 20 40

CALCULATED MER
CHECKED BAD

GUARDRAIL LOCATION
SLM 5.38

ASD-3-6.08
ASD-60-0.68

DESIGN FILE: I:\projects\80173\roadway\sheets\80173GR008.dgn
WORKSTATION:mrobins1 DATE:8/22/2008

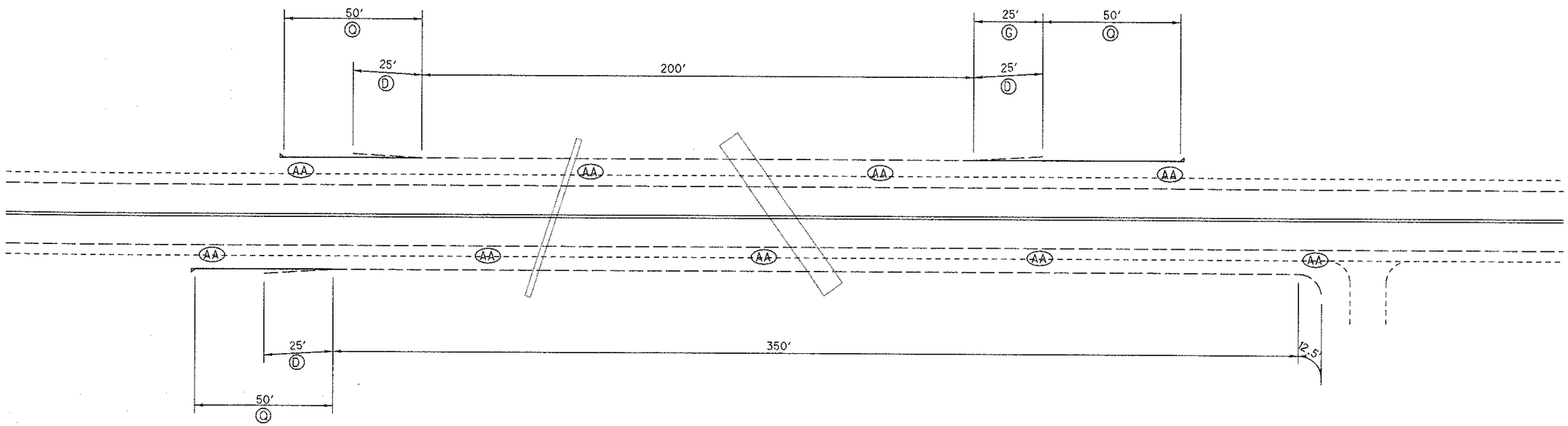

LOCATION	ITEM	DESCRIPTION	UNIT	QUANTITY		TOTAL
				LEFT	RIGHT	
Ⓓ	202	ANCHOR ASSEMBLY REMOVED, TYPE A	EACH	2	1	3
Ⓖ	606	GUARDRAIL, TYPE 5	FT	25		25
Ⓠ	606	ANCHOR ASSEMBLY, TYPE E-98	EACH	2	1	3
AA	626	BARRIER REFLECTOR, TYPE A2	EACH	4	5	9

ALL QUANTITIES CARRIED TO GENERAL SUMMARY SHEET, SHEET 15.

TYPICAL SECTION "TYPE 5"

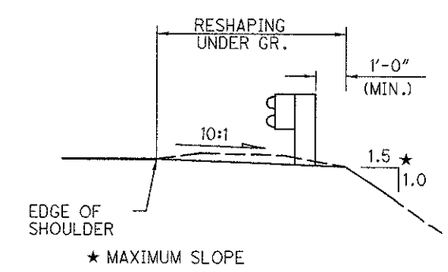

HORIZONTAL SCALE IN FEET
0 20 40

CALCULATED MER
CHECKED BAD

GUARDRAIL LOCATION
SLM 5.90

ASD-3-6.08
ASD-60-0.68

DESIGN FILE: I:\projects\80173\roadway\sheets\80173GR009.dgn
WORKSTATION:mrobins1 DATE:8/22/2008

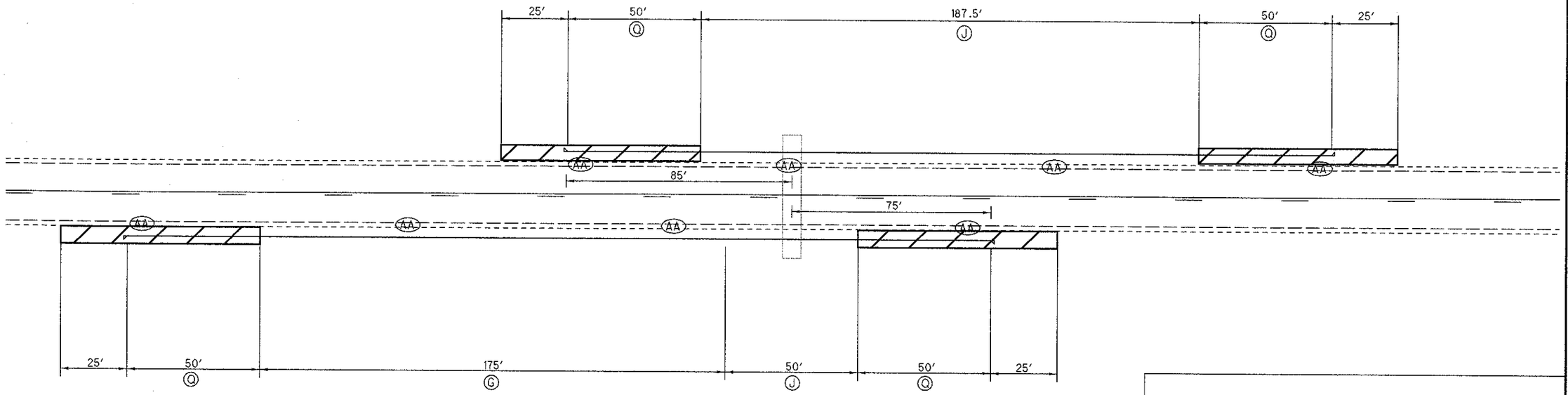

OFFSET GUARDRAIL 4′.

LOCATION	ITEM	DESCRIPTION	UNIT	QUANTITY		TOTAL
				LEFT	RIGHT	
	203	EMBANKMENT, AS PER PLAN	CU YD	85	20	105
G	606	GUARDRAIL, TYPE 5	FT		175	175
J	606	GUARDRAIL, TYPE 5, USING 9 FOOT POSTS	FT	187.5	50	237.5
Q	606	ANCHOR ASSEMBLY, TYPE E-98	EACH	2	2	4
AA	626	BARRIER REFLECTOR, TYPE A2	EACH	4	4	8

ALL QUANTITIES CARRIED TO GENERAL SUMMARY SHEET, SHEET 15.

TYPICAL SECTION "TYPE 5"

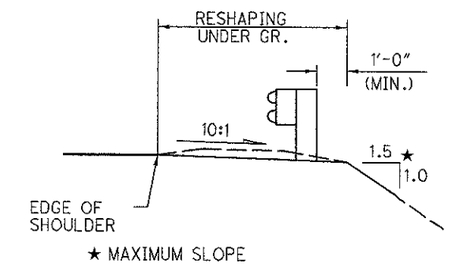

TYPICAL SECTION "TYPE 5"

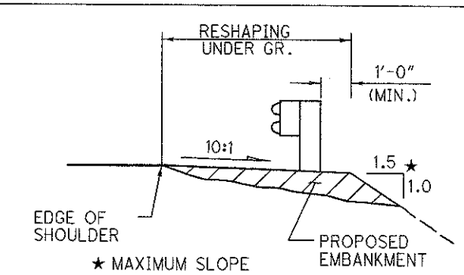

TYPICAL SECTION "E-98"

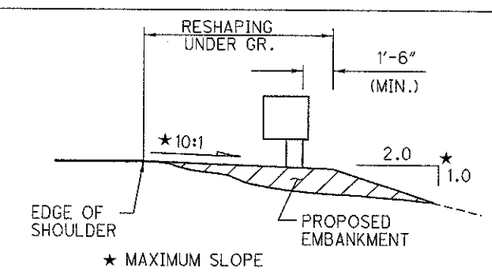

HORIZONTAL SCALE IN FEET 0 20 40

CALCULATED MER
CHECKED BAD

GUARDRAIL LOCATION
SLM 6.76

ASD-3-6.08
ASD-60-0.68

DESIGN FILE: I:\projects\80173\roadway\sheets\80173GR010.dgn
WORKSTATION:mrobins1 DATE:8/22/2008

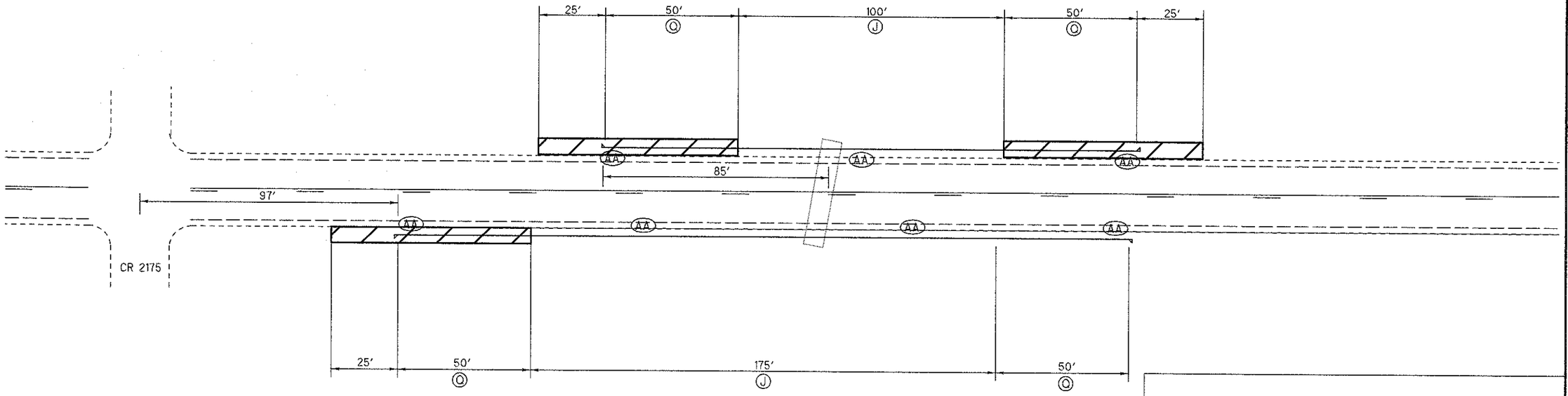

OFFSET GUARDRAIL 3'.

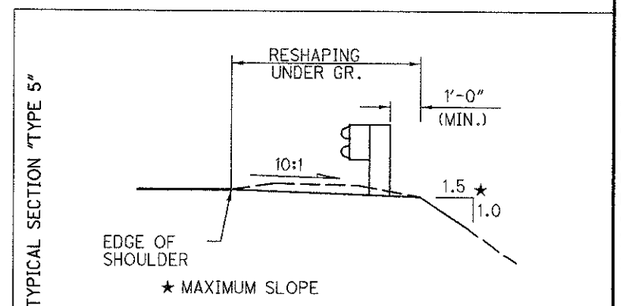

TYPICAL SECTION "TYPE 5"

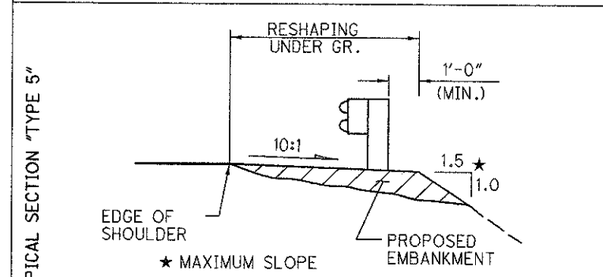

TYPICAL SECTION "TYPE 5"

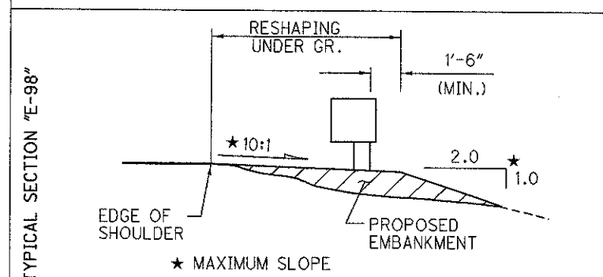

TYPICAL SECTION "E-98"

LOCATION	ITEM	DESCRIPTION	UNIT	QUANTITY		TOTAL
				LEFT	RIGHT	
▨	203	EMBANKMENT, AS PER PLAN	CU YD	45	10	55
J	606	GUARDRAIL, TYPE 5, USING 9 FOOT POSTS	FT	100	175	275
Q	606	ANCHOR ASSEMBLY, TYPE E-98	EACH	2	2	4
AA	626	BARRIER REFLECTOR, TYPE A2	EACH	3	4	7

ALL QUANTITIES CARRIED TO GENERAL SUMMARY SHEET, SHEET 15.

N

HORIZONTAL SCALE IN FEET 0 20 40

CALCULATED MER
CHECKED BAD

GUARDRAIL LOCATION
SLM 8.32

ASD-3-6.08
ASD-60-0.68

DESIGN FILE: I:\projects\80173\roadway\sheets\80173GR013.dgn
WORKSTATION: mrobins1 DATE: 8/22/2008

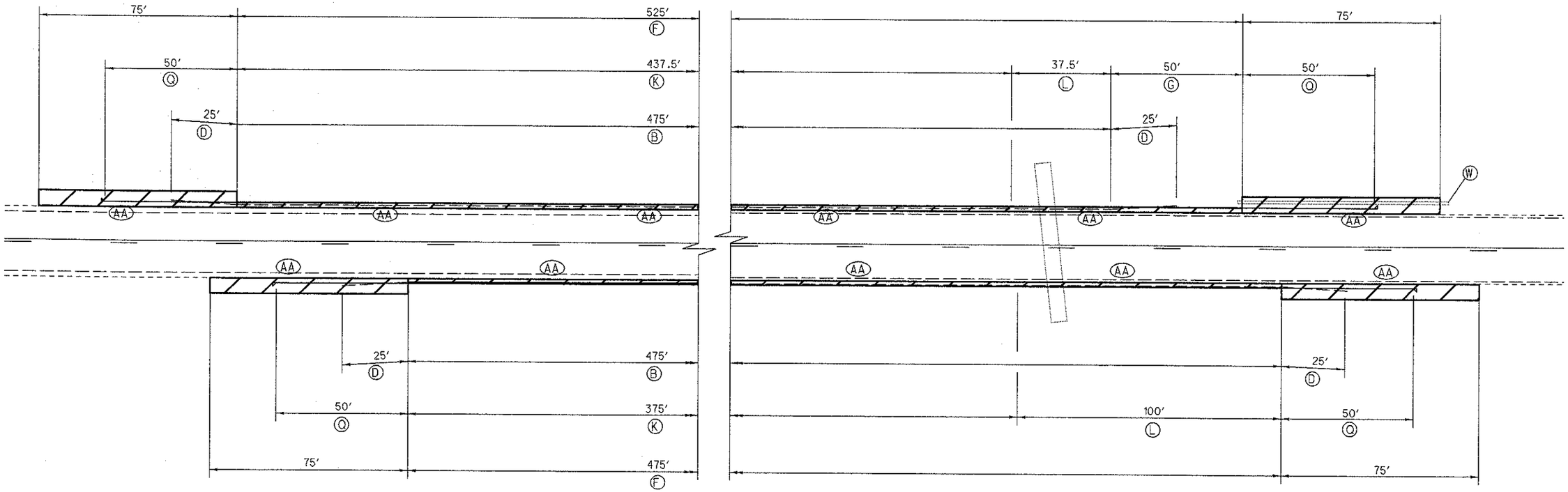

PROVIDE 4′ OFFSET FROM EDGELINE TO FACE OF GUARDRAIL.

TYPICAL SECTION "TYPE 5"

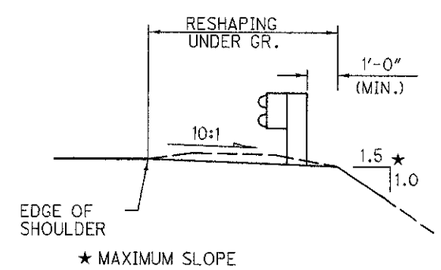

TYPICAL SECTION "TYPE 5"

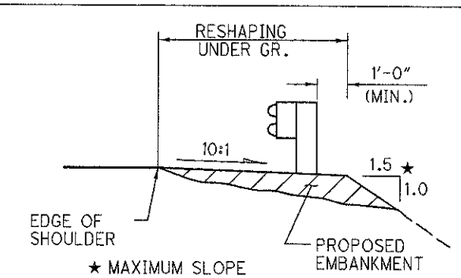

TYPICAL SECTION "E-98"

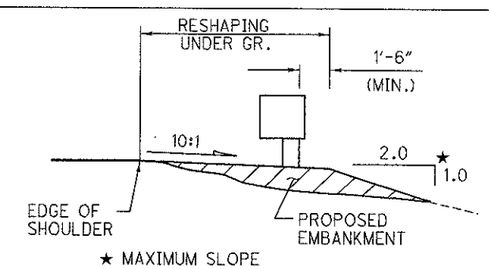

LOCATION	ITEM	DESCRIPTION	UNIT	QUANTITY		TOTAL
				LEFT	RIGHT	
Ⓑ	202	GUARDRAIL REMOVED FOR REUSE	FT	475	475	950
Ⓓ	202	ANCHOR ASSEMBLY REMOVED, TYPE A	EACH	2	2	4
	203	EMBANKMENT, AS PER PLAN	CU YD	65	35	100
Ⓕ	209	RESHAPING UNDER GUARDRAIL, AS PER PLAN	STA	5.25	4.75	10.00
Ⓦ	603	12″ CONDUIT, TYPE D	FT	80		80
Ⓖ	606	GUARDRAIL, TYPE 5	FT	50		50
Ⓚ	606	GUARDRAIL, TYPE 5, USING 9′ POSTS, AS PER PLAN	FT	437.5	375	812.5
Ⓛ	606	GUARDRAIL REBUILT, TYPE 5	FT	37.5	100	137.5
Ⓠ	606	ANCHOR ASSEMBLY, TYPE E-98	EACH	2	2	4
AA	626	BARRIER REFLECTOR, TYPE A2	EACH	6	6	12

ALL QUANTITIES CARRIED TO GENERAL SUMMARY SHEET, SHEET 15.

HORIZONTAL SCALE IN FEET 0 20 40

CALCULATED MER
CHECKED MER

GUARDRAIL LOCATION
SLM 9.60

ASD-3-6.08
ASD-60-0.68

DESIGN FILE: I:\projects\80173\roadway\sheets\80173GR014.dgn
WORKSTATION: mrobins1
DATE: 8/22/2008

LEGEND & NOTES

1) "*" MINIMUM "NO PARKING ZONE" DISTANCE FROM CROSS STREET, DRIVEWAY, ALLEY, OR FIRE HYDRANT.

2) "++" ONE PARKING STALL AT EACH END OF PARALLEL PARKING STALLS SHALL BE 20' IN LENGTH.

3) "**" INTERIOR PARKING STALLS, BETWEEN END STALLS, SHALL BE EQUAL IN LENGTH (22' TO 26').

4) MAXIMIZE THE NUMBER OF PARKING STALLS DURING INSTALLATION.

5) PARALLEL PARKING STALLS SHALL BE 8' WIDE UNLESS OTHERWISE SHOWN.

6) WHEEL CHAIR SYMBOL (40" WIDE x 40" HEIGHT), AS SHOWN TO THE RIGHT, SHALL BE MARKED IN ALL DISABILITY PARKING STALLS.

7) CURB ALONG "NO PARKING ZONES" SHALL BE PAINTED YELLOW BY CITY OR VILLAGE.

8) SEE STANDARD DRAWING BP-7.2 RETROFITTED CURB RAMPS (WITH TRUNCATED DOMES) FOR ADDITIONAL DETAILS. NOTE: TRUNCATED DOMES ARE ONLY NEEDED AT CROSSING LOCATIONS.

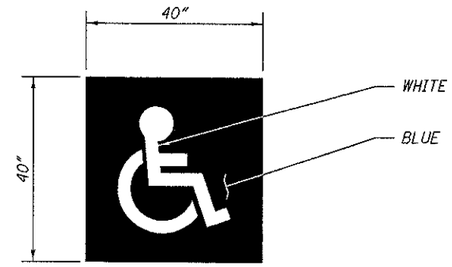

(OPTIONAL 45" x 45")

PARALLEL PARKING LOT STALL MARKINGS

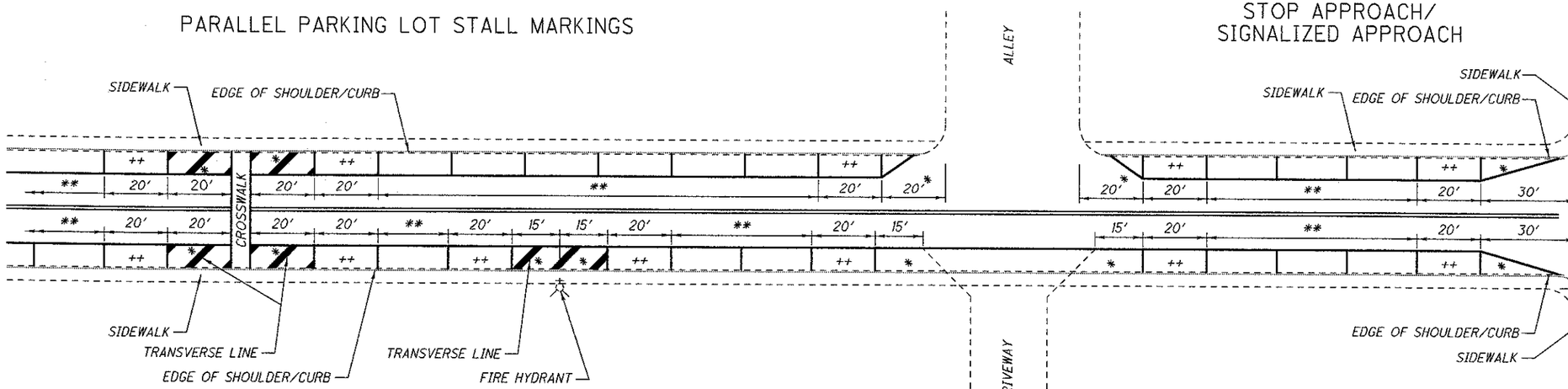

THROUGH APPROACH/ STOP APPROACH/ SIGNALIZED APPROACH

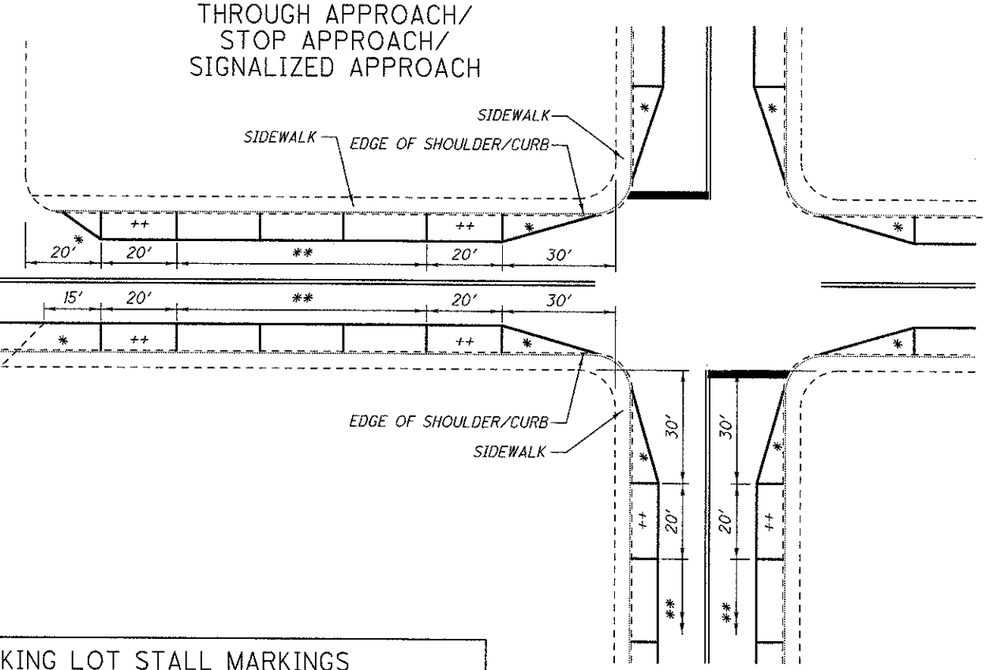

ANGLE PARKING LOT STALL MARKINGS (ORC 4511.69)

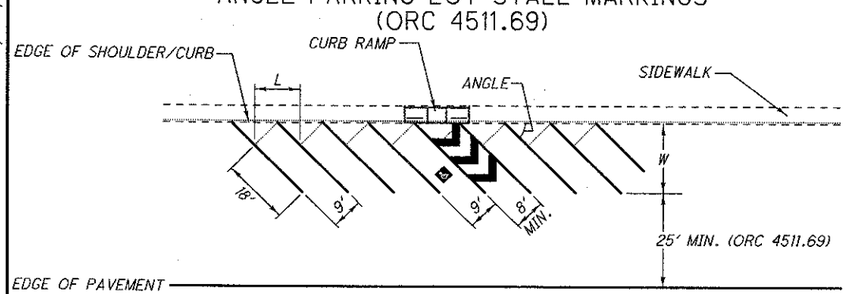

30° ANGLE	45° ANGLE	60° ANGLE
L = 17' W = 16.5'	L = 12' W = 18.75'	L = 10' W = 20'

PERPENDICULAR PARKING LOT STALL MARKINGS (ORC 4511.69)

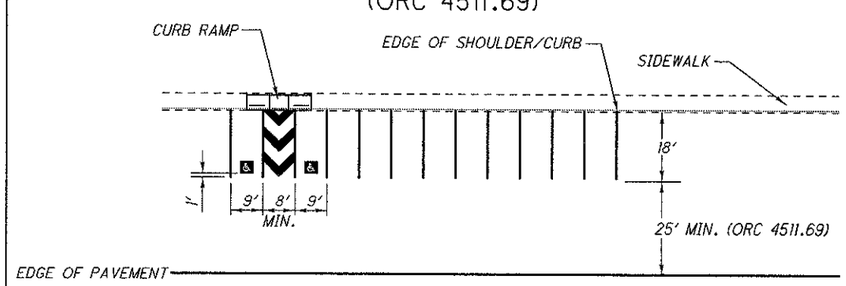

CALCULATED MER
CHECKED ADB

STANDARD PARKING LOT STALL MARKINGS

ASD-3-6.08
ASD-60-0.68

DESIGN FILE: I:\projects\80173\roadway\sheets\80173GA001.dgn
WORKSTATION: mrobinsl DATE: 8/22/2008

C-30-A (MAINST.)

CALCULATED MER
CHECKED ADB

STANDARD PARKING STALL MARKINGS

ASD-3-6.08
ASD-60-0.68

ITEM 608, CURB RAMP, TYPE A1, AS PER PLAN
ITEM 608, CURB RAMP, TYPE A2, AS PER PLAN
ITEM 608, CURB RAMP, TYPE D, AS PER PLAN

ITEM 608, CURB RAMP IS INTENDED TO REPLACE THE EXISTING WALK, PAVEMENT, EMBANKMENT, AND CURB RAMPS WITH TRUNCATED DOMES AND CURB (IF APPLICABLE). PAYMENT SHALL INCLUDE ALL LABOR, EQUIPMENT, EMBANKMENT OR EXCAVATION, GRADING, SEEDING, AND MATERIALS NECESSARY TO COMPLETE THE IMPROVEMENT EXCEPT WALK REMOVED, CURB REMOVED, AND CURB WILL BE PAID FOR SEPARATELY. THE FOLLOWING ESTIMATED QUANTITIES ARE PROVIDED IN THE GENERAL SUMMARY TO BE USED AS DIRECTED BY THE ENGINEER.

CROSSWALK LINE, AS PER PLAN

THE MARKING DETAIL SHOWN BELOW SHALL ONLY BE APPLIED TO THE INTERSECTIONS SHOWN TO IMPROVE DRIVER AWARENESS OF THE PEDESTRIAN CROSSINGS.

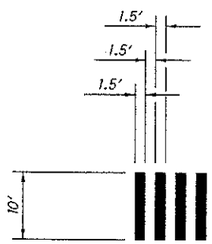

LOCATION	202		202		608		608		608		609	
	WALK REMOVED, AS PER PLAN		CURB REMOVED		CURB RAMP, TYPE A1, AS PER PLAN		CURB RAMP, TYPE A2, AS PER PLAN		CURB RAMP, TYPE D, AS PER PLAN		CURB, TYPE 6	
	LEFT	RIGHT	LEFT	RIGHT	LEFT	RIGHT	LEFT	RIGHT	LEFT	RIGHT	LEFT	RIGHT
	SQ FT		FT		SQ FT		SQ FT		SQ FT		FT	
SR 3 & BUTLER ST.	199	162	53.2	42.5	154				79	162	53.2	42.5
SR 3, WASHINGTON ST. & SR 60	218.5	362.5	10	26.5			225.5	186		161	10	45
SR 3 & ADAMS ST.	54	80					60.75	90				
SR 3 & JEFFERSON ST.	76	26					79	29.5				
SR 60 & HASKELL ST.	155	125					155	125				
SR 60 & CAMPBELL ST.		37.2						41.75				
SR 60, SR 179 & CR30A	181.5	153							181.5	153		
SR 60 & HIGH ST.		91						95.5				
TOTAL	1920.7		132.2		154		1088		736.5		150.7	

QUANTITIES CARRIED TO GENERAL SUMMARY, SHEET 8.

HORIZONTAL SCALE IN FEET 0 10 20

CALCULATED MER
CHECKED ADB

CURB RAMPS WITH TRUNCATED DOMES

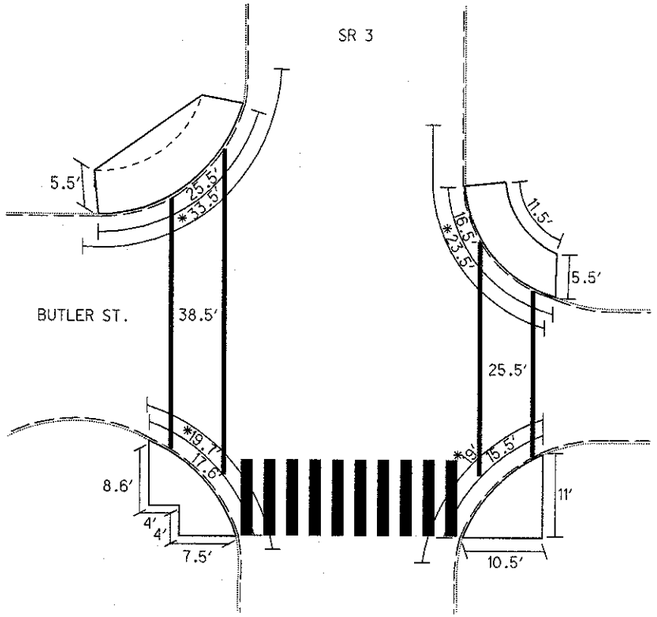

* CURB REMOVED AND CURB, TYPE 6 PROVIDED

** CURB, TYPE 6 PROVIDED

NOTE:
NO WORK SHALL BE PERFORMED
OUTSIDE OF THE RIGHT OF WAY.

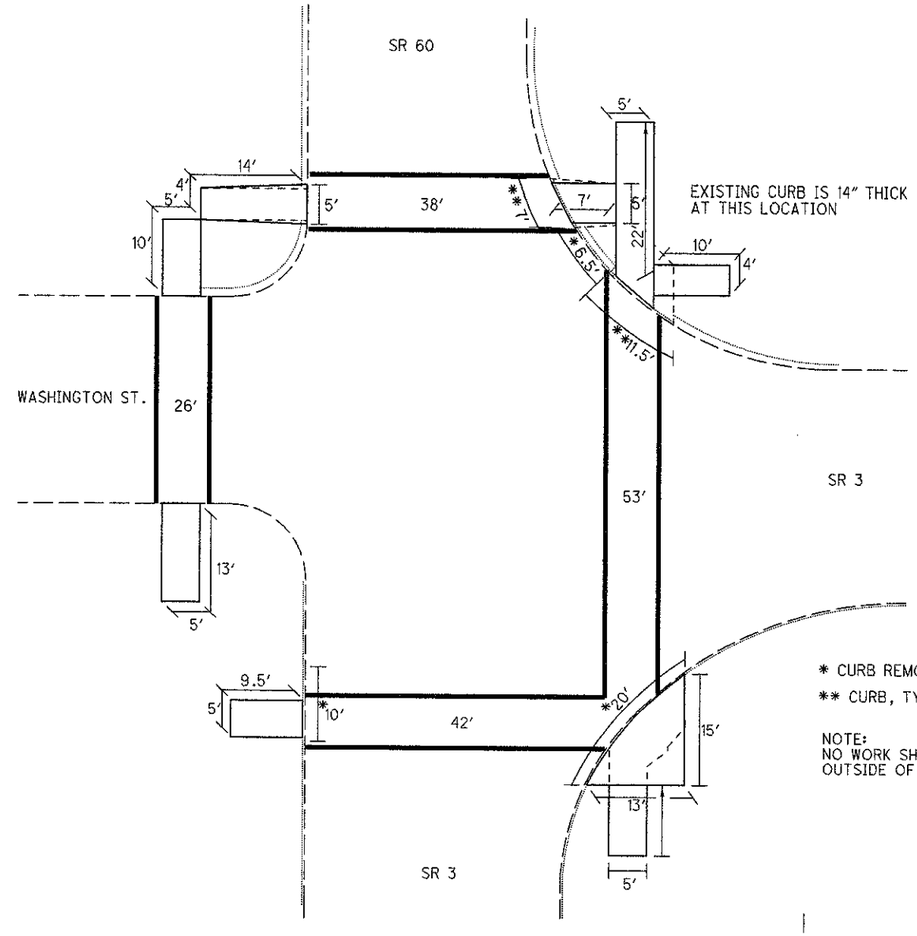

* CURB REMOVED AND CURB, TYPE 6 PROVIDED

** CURB, TYPE 6 PROVIDED

NOTE:
NO WORK SHALL BE PERFORMED
OUTSIDE OF THE RIGHT OF WAY.

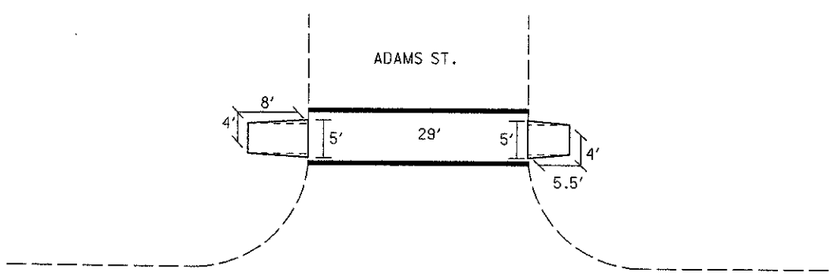

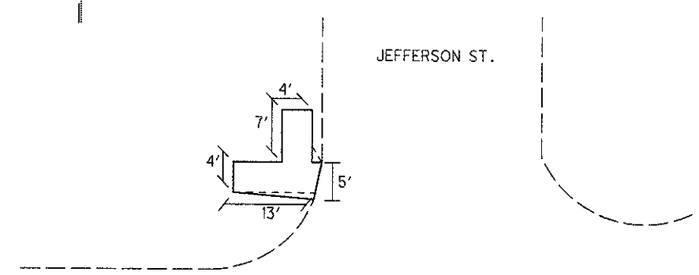

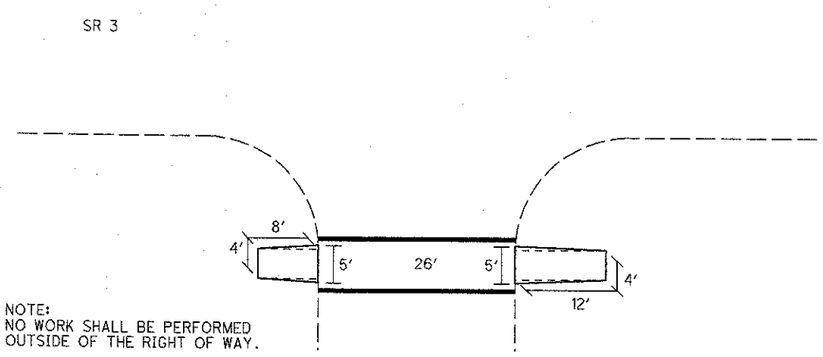

NOTE:
NO WORK SHALL BE PERFORMED
OUTSIDE OF THE RIGHT OF WAY.

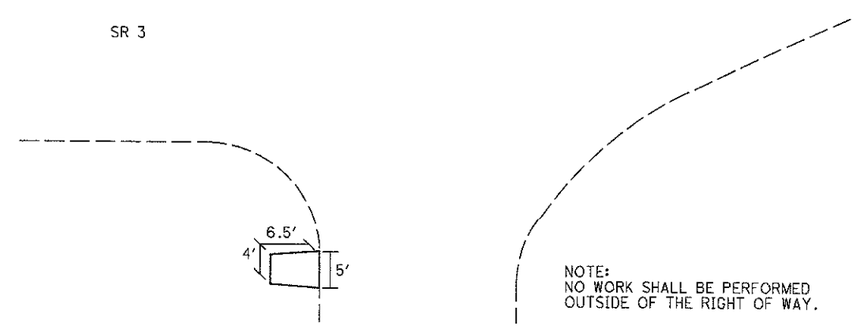

NOTE:
NO WORK SHALL BE PERFORMED
OUTSIDE OF THE RIGHT OF WAY.

N

HORIZONTAL SCALE IN FEET
0 10 20

CALCULATED MER
CHECKED ADB

CURB RAMPS WITH TRUNCATED DOMES

ASD-60-0.68
ASD-3-6.08

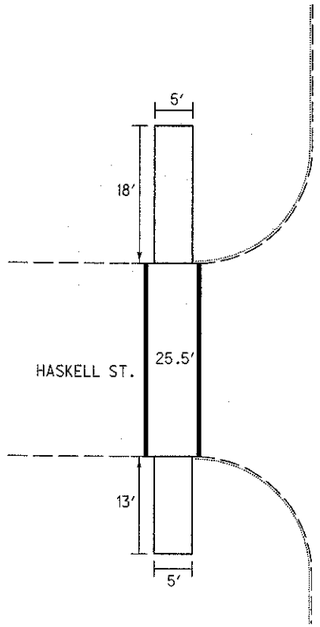

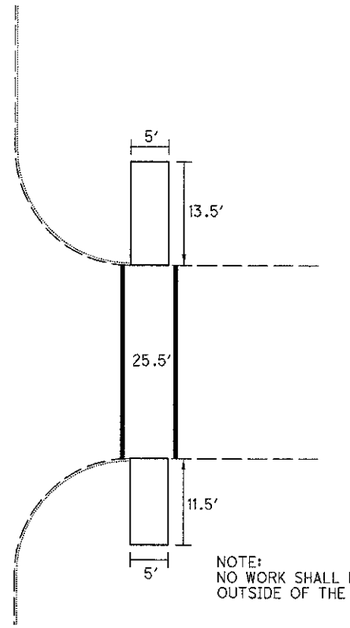

NOTE:
NO WORK SHALL BE PERFORMED
OUTSIDE OF THE RIGHT OF WAY.

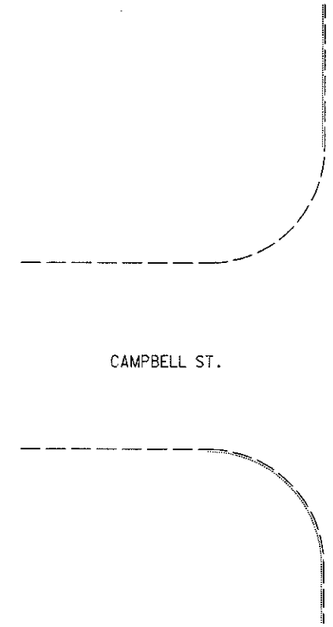

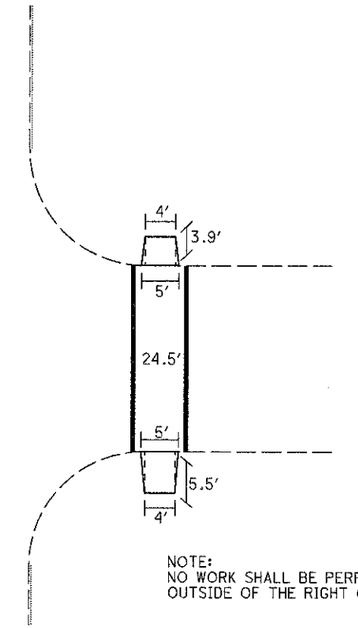

NOTE:
NO WORK SHALL BE PERFORMED
OUTSIDE OF THE RIGHT OF WAY.

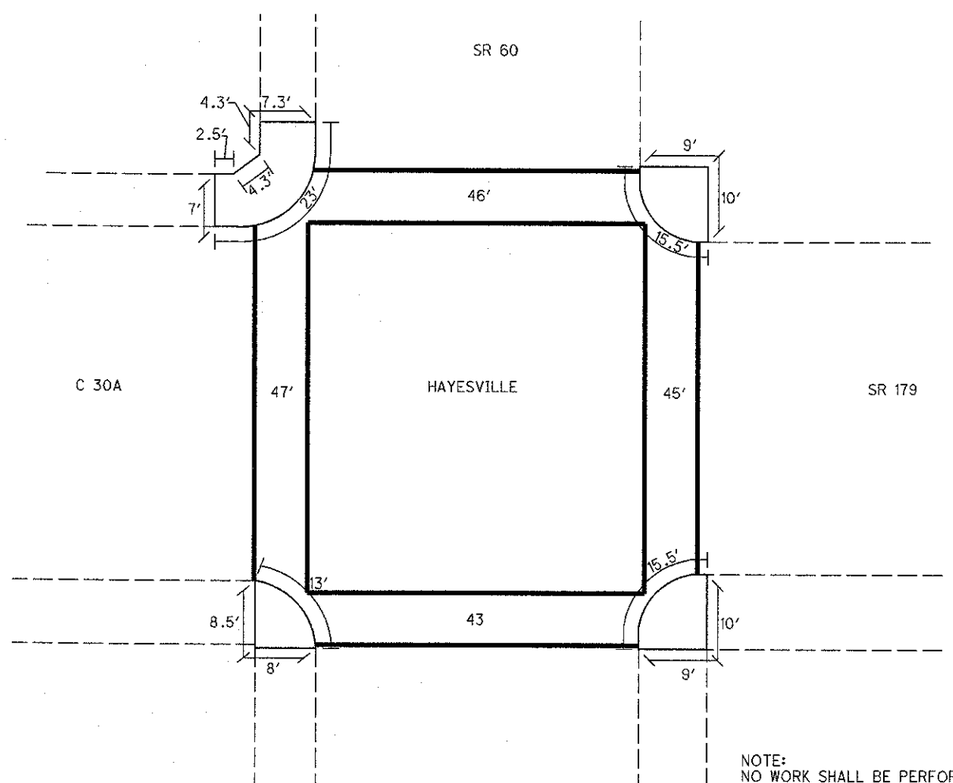

NOTE:
NO WORK SHALL BE PERFORMED
OUTSIDE OF THE RIGHT OF WAY.

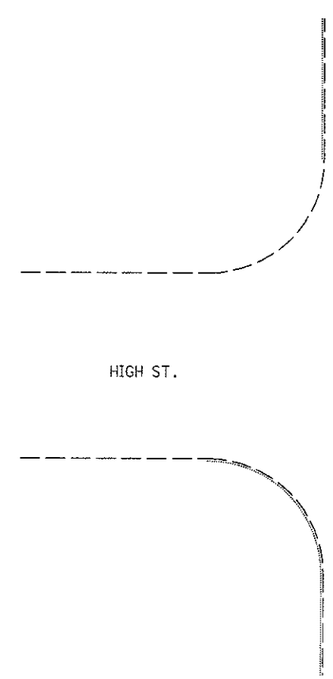

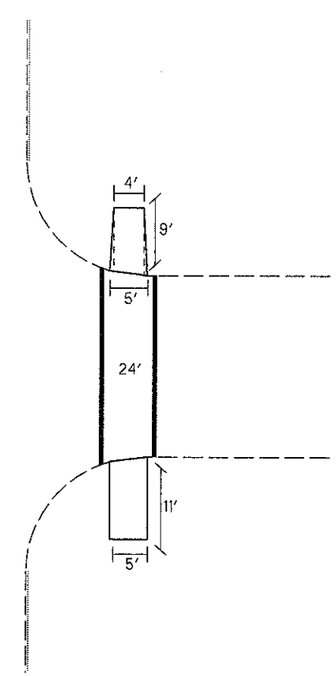

NOTE:
NO WORK SHALL BE PERFORMED
OUTSIDE OF THE RIGHT OF WAY.

N

HORIZONTAL SCALE IN FEET
0 10 20

CALCULATED MER
CHECKED ADB

CURB RAMPS WITH TRUNCATED DOMES

ASD-60-0.68
ASD-3-6.08

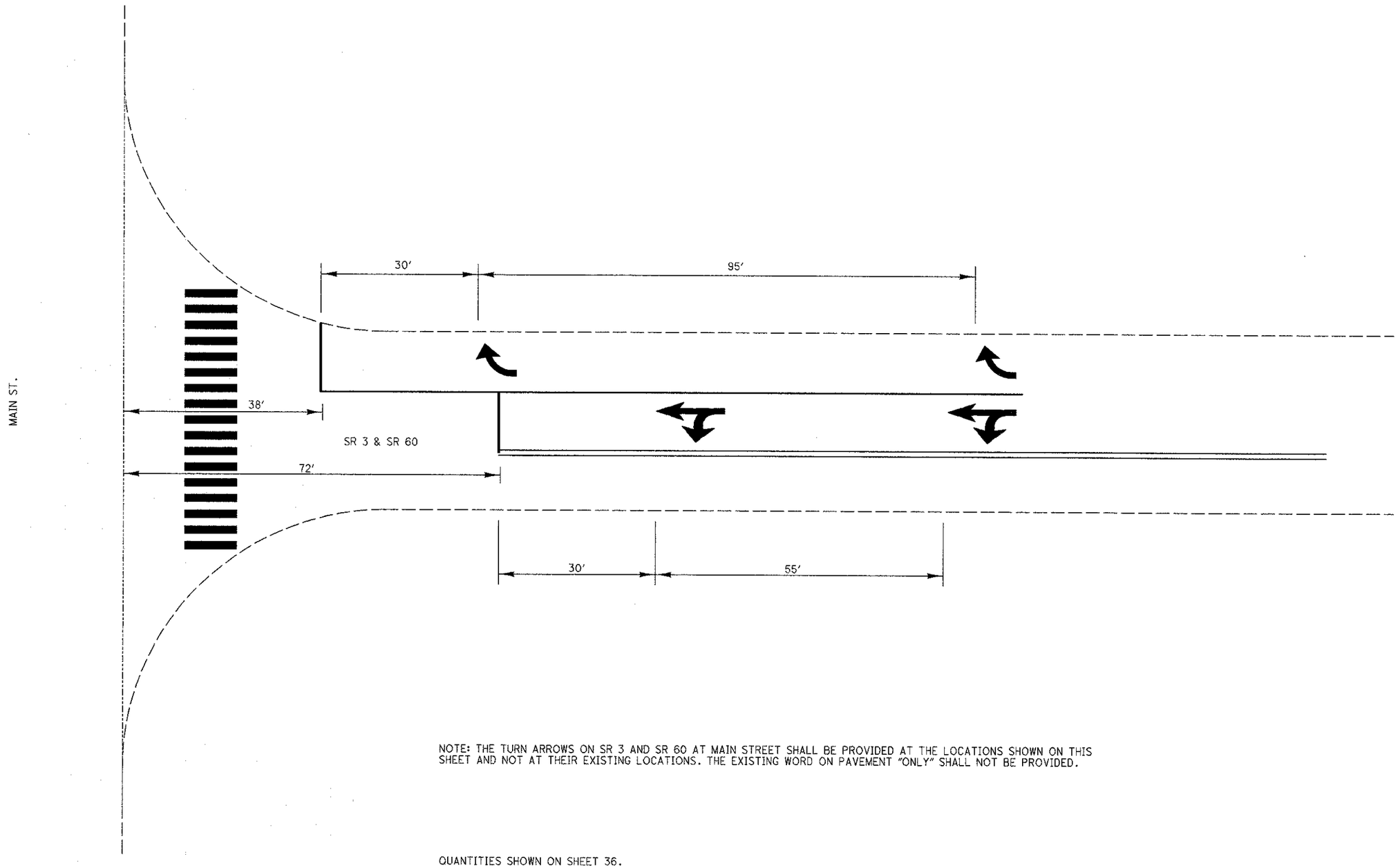

NOTE: THE TURN ARROWS ON SR 3 AND SR 60 AT MAIN STREET SHALL BE PROVIDED AT THE LOCATIONS SHOWN ON THIS SHEET AND NOT AT THEIR EXISTING LOCATIONS. THE EXISTING WORD ON PAVEMENT "ONLY" SHALL NOT BE PROVIDED.

QUANTITIES SHOWN ON SHEET 36.

N

0 10 20
HORIZONTAL SCALE IN FEET

CALCULATED MER
CHECKED BAD

MAIN ST. & S.R.3
PAVEMENT MARKINGS

ASD-3-6.08
ASD-60-0.68

CALC BY MER
CHKD BY ADB

AUXILIARY & LONG LINE MARKINGS

ROUTE	COUNTY	STATION / SLM FROM	STATION / SLM TO	HIGHWAY MILES	614 WORK ZONE LANE LINE, CLASS I, 642 PAINT	614 WORK ZONE CENTER LINE, CLASS II, 642 PAINT	614 WORK ZONE CHANNELIZING LINE, CLASS I, 642 PAINT	614 WORK ZONE STOP LINE, CLASS I, 642 PAINT	642, TYPE 1 EDGE LINE TOTAL (PAY QUANTITY) (WHITE)	642, TYPE 1 EDGE LINE TOTAL (PAY QUANTITY) (YELLOW)	642, TYPE 1 LANE LINE	642, TYPE 1 CENTER LINE SOLID LINE EQUIVALENT	642, TYPE 1 CENTER LINE TOTAL (PAY QUANTITY)	644 AUXILIARY MARKINGS (740.04) CHANNELIZING LINE 8"	STOP LINE 24"	CROSSWALK LINE 12"	CROSSWALK LINE, AS PER PLAN 18"	TRANSVERSE/ DIAGONAL LINE (YELLOW) 24"	ISLAND MARKING	RAILROAD SYMBOL MARKING	SCHOOL SYMBOL MARKING 72 INCH	SCHOOL SYMBOL MARKING 96 INCH	PARKING LOT STALL MARKING	LANE ARROW LEFT	LANE ARROW RIGHT	LANE ARROW THROUGH	LANE ARROW COMBINATION	WORD ON PAVEMENT "ONLY" 72 INCH	WORD ON PAVEMENT "ONLY" 96 INCH	DOTTED LINE, 4"	HANDICAP SYMBOL MARKING	SPECIAL AIR SPEED ZONE MARKING
					MILE	MILE	FT	FT	MILE	MILE	MILE	MILE	MILE	FT	FT	FT	FT	FT	SQ FT	EACH	EACH		FT	EACH				EACH		FT	EACH	EACH
SR 3	ASHLAND	6.08	6.25	0.17		0.51							0.17	134											2		2					
SR 3	ASHLAND	6.25	6.80	0.55		1.65			1.10			1.392	0.55																			
SR 60	ASHLAND	0.68	0.86	0.18		0.54							0.18																			
SR 60	ASHLAND	0.86	10.77	9.91		29.73			19.82				9.91																			
SR 60	ASHLAND	10.77	10.80	0.03		0.09							0.03									444										
SR 60	ASHLAND	10.80	10.83	0.03		0.09			0.03				0.03																			
SR 60	ASHLAND	10.83	11.77	0.94		2.82			1.88			18.438	0.94																			
ADDITIONAL FOR SIDE ROADS & RAMPS									0.04	0.02		0.060	0.03																			
			TOTAL	11.81		35.43	402	377	22.89			19.890	11.84	134	1,180	1,117	270					444		2		2					

RAISED PAVEMENT MARKERS

ROUTE	COUNTY	STATION/SLM FROM	STATION/SLM TO	DETAIL	202 RAISED PAVEMENT MARKER REMOVED	621 RPM	PRISMATIC RETRO-REFLECTOR TYPES ONE-WAY WHITE	TWO-WAY YELLOW / YELLOW	TWO-WAY WHITE / RED	TWO-WAY YELLOW / RED	TWO-WAY BLUE / BLUE	REMARKS
					EACH	EACH	EACH					
SR 60	ASHLAND	1.22	3.37	GAP	153	153		153				
SR 60	ASHLAND	3.37	3.60	15	28	28		28				
SR 60	ASHLAND	3.60	5.31	GAP	111	111		111				
SR 60	ASHLAND	5.31	5.78	8	36	36		36				
SR 60	ASHLAND	5.78	7.78	GAP	129	129		129				
SR 60	ASHLAND	7.78	8.21	15	56	56		56				
SR 60	ASHLAND	8.21	9.05	GAP	55	55		55				
SR 60	ASHLAND	9.05	9.27	15	28	28		28				
SR 60	ASHLAND	9.27	10.19	GAP	60	60		60				
SR 60	ASHLAND	10.19	10.56	15	51	51		51				
SR 60	ASHLAND	11.32	11.77	GAP	30	30		30				
			TOTAL		737	737		737				

DETAIL	DESCRIPTION
1	MULTILANE UNDIVIDED TYPICAL SPACING
2	TAPERED ACCEL. LANE
3	DECELERATION LANE
4	PARALLEL ACCEL LANE
5	MULTILANE DIVIDED/EXPRESSWAY
6	STOP APPROACH
7	2 LANE APPR. WITH TURN LANE
8	THROUGH APPROACH
9	3 LANE APPR. WITH TURN LANE
10	3 LANE DIVIDED TO 2 LANE TRANSITION
11	3 LANE UNDIVIDED TO 2 LANE TRANSITION
12	TWO LANE NARROW BRIDGE
13	TWO WAY LEFT TURN LANE
14	ONE LANE BRIDGE
15	HORIZONTAL CURVE
16	HORIZONTAL CURVE ALT.
17	STOP APPROACH ALT.
18	FIRE HYDRANT
GAP	CENTER LINE AT 80 FT. TYP.

NOTES:

1) THE FOLLOWING ROADS SHALL BE STRIPED WITH A 20' DOUBLE SOLID YELLOW CENTERLINE: CR2575, SR95, CR2404, CR2302, CR2175 & CR775.

2) SR 95 SHALL BE STRIPED WITH 20' WHITE EDGE LINES.

3) THE RAMPS AT US30 SHALL BE STRIPED WITH 20' WHITE AND YELLOW EDGE LINES.

4) THRU LANES SHALL BE STRIPED AT 11'

5) FOR ALL WORK ZONE MARKINGS, THE 642 PAINT USED SHALL BE TYPE 1.

PAVEMENT MARKING / RPM SUB-SUMMARY

ASD-3-6.08
ASD-60-0.68

DESIGN SPECIFICATIONS:

THIS STRUCTURE CONFORMS TO "STANDARD SPECIFICATIONS FOR HIGHWAY BRIDGES" ADOPTED BY THE AMERICAN ASSOCIATION OF STATE HIGHWAY AND TRANSPORTATION OFFICIALS, 2002, INCLUDING THE 2003, 2004, 2005 AND 2006 SPECIFICATIONS AND THE ODOT BRIDGE DESIGN MANUAL.

EXISTING STRUCTURE VERIFICATION:

DETAILS AND DIMENSIONS SHOWN ON THESE PLANS PERTAINING TO THE EXISTING STRUCTURES HAVE BEEN OBTAINED FROM PLANS OF THE EXISTING STRUCTURES AND FROM FIELD OBSERVATIONS AND MEASUREMENTS. CONSEQUENTLY, THEY ARE INDICATIVE OF THE EXISTING STRUCTURES AND THE PROPOSED WORK BUT THEY SHALL BE CONSIDERED TENTATIVE AND APPROXIMATE. THE CONTRACTOR IS REFERRED TO CMS SECTIONS 102.05 AND 105.02.

BASE CONTRACT BID PRICES UPON A RECOGNITION OF THE UNCERTAINTIES DESCRIBED ABOVE AND UPON A PRE BID EXAMINATION OF THE EXISTING STRUCTURES. HOWEVER, THE DEPARTMENT WILL PAY FOR ALL PROJECT WORK BASED UPON ACTUAL DETAILS AND DIMENSIONS THAT HAVE BEEN VERIFIED IN THE FIELD.

EXISTING PLANS:

THE ORIGINAL CONSTRUCTION PLANS OF THE EXISTING BRIDGES ARE AVAILABLE UPON REQUEST AT THE DISTRICT 3 OFFICE OF THE OHIO DEPARTMENT OF TRANSPORTATION, ASHLAND, OH.

STRUCTURE #	PLAN NAME	DATE
ASD- 3-0642	ASD-03-6.38	1985
ASD-60-0594	ASD-60-5.31 & ASD-89-5.91	1960
ASD-60-1164	ASD-30-6.14	1964

DESIGN DATA:

CONCRETE CLASS C - COMPRESSIVE STRENGTH 4,000 PSI
CONCRETE CLASS S - COMPRESSIVE STRENGTH 4,500 PSI

DECK PROTECTION METHOD:

WATERPROOFING AND ASPHALT CONCRETE OVERLAY

SEALING CONCRETE BRIDGE DECKS WITH HMWM RESIN

PLACING ASPHALT CONCRETE FEATHERING ON APPROACHES TO BRIDGES:

SPECIAL CARE SHALL BE TAKEN, WHEN PLACING THE ASPHALT CONCRETE FEATHERING TO CREATE A SMOOTH TRANSITION FROM THE EXISTING APPROACH PAVEMENT TO THE BRIDGE DECK OR APPROACH SLAB. THE CONTRACTOR'S ATTENTION IS CALLED TO STANDARD DRAWING BP-3.1 FOR REQUIRED TOLERANCES; SPECIFICALLY, THE CONTRACTOR SHALL PROVIDE A 600:1 TAPER RATE FOR PLANING OPERATIONS.

CUT LINE CONSTRUCTION JOINT PREPARATION:

SAW CUT BOUNDARIES OF PROPOSED CONCRETE REMOVALS 1 INCH DEEP. REMOVE CONCRETE TO A ROUGH SURFACE. LEAVE THE EXISTING REINFORCING STEEL IN PLACE. PRIOR TO CONCRETE PLACEMENT ABRASIVELY CLEAN JOINT SURFACES AND EXISTING EXPOSED REINFORCEMENT TO REMOVE LOOSE AND DISINTEGRATED CONCRETE AND LOOSE RUST. THOROUGHLY CLEAN THE JOINT SURFACE AND EXPOSED REINFORCEMENT OF ALL DIRT, DUST, RUST OR OTHER FOREIGN MATERIAL BY THE USE OF WATER, AIR UNDER PRESSURE, OR OTHER METHODS THAT PRODUCE SATISFACTORY RESULTS. EXISTING REINFORCING STEEL DOES NOT HAVE TO HAVE A BRIGHT STEEL FINISH, BUT REMOVE ALL PACK AND LOOSE RUST. THOROUGHLY DRENCH EXISTING CONCRETE SURFACES WITH CLEAN WATER AND ALLOW TO DRY TO A DAMP CONDITION BEFORE PLACING CONCRETE.

ITEM 201 - CLEARING AND GRUBBING:

THIS ITEMS SHALL BE USED AT STRUCTURE ASD-3-0618 TO REMOVE THE BRUSH ALONG THE MSE WALLS AND PARAPETS. ONLY REMOVE ENOUGH BRUSH TO ALLOW ACCESS FOR THE SEALING OF THE WALLS AND PARAPETS.

PAYMENT FOR ALL OF THE ABOVE SHALL BE AT THE LUMP SUM PRICE BID FOR THE ABOVE ITEM, WHICH WILL INCLUDE ALL LABOR, EQUIPMENT, MATERIALS AND INCIDENTALS NECESSARY TO COMPLETE THE ABOVE WORK.

ITEM 202 - PORTIONS OF STRUCTURE REMOVED, AS PER PLAN:

THIS ITEM SHALL BE USED AT LOCATIONS IN THE PLAN.

THE EXISTING REINFORCING STEEL SHALL BE PRESERVED AS INDICATED IN THE PLANS. EXISTING CONCRETE SHALL BE REMOVED IN A MANNER THAT WILL NOT CUT, ELONGATE, OR DAMAGE THE EXISTING REINFORCING STEEL TO BE PRESERVED.

THE USE OF EXPLOSIVES, HEADACHE BALLS AND/OR HOE-RAMS WILL NOT BE PERMITTED. CHIPPING HAMMERS SHALL BE LIMITED TO THE 90 POUND CLASS.

IF ANY REINFORCING STEEL IS DAMAGED BY THE CONTRACTOR, THE CONTRACTOR SHALL REPLACE THE REINFORCING STEEL AT NO COST TO THE STATE.

PAYMENT FOR ALL OF THE ABOVE SHALL BE AT THE UNIT PRICE BID PER CUBIC YARD FOR THE ABOVE ITEMS, WHICH WILL INCLUDE ALL LABOR, EQUIPMENT, MATERIALS AND INCIDENTALS NECESSARY TO COMPLETE THE ABOVE WORK.

ITEM 254 - PAVEMENT PLANING, ASPHALT CONCRETE, AS PER PLAN:

THIS ITEM SHALL BE USED TO PLANE THE REMAINING ASPHALT TO WITHIN 1/2" OF THE TOP OF THE BEAMS, THEN THE REMAINING 1/2" OF ASPHALT AND EXISTING WATERPROOFING SHALL BE REMOVED WITH HAND TOOLS. CARE SHALL BE TAKEN NOT TO GRIND INTO OR DAMAGE THE PRESTRESSED BEAMS.

TRAFFIC SHALL NOT BE ALLOWED ON THE SURFACE OF THE BARE CONCRETE BEAMS OR ON THE WATERPROOFING.

PAYMENT FOR ALL OF THE ABOVE SHALL BE AT THE UNIT PRICE BID PER SQUARE YARD WHICH WILL INCLUDE ALL LABOR, EQUIPMENT, MATERIALS AND INCIDENTALS NECESSARY TO COMPLETE THE ABOVE WORK.

CALCULATED DCM
CHECKED DJV

STRUCTURE NOTES

ASD-3-6.08
ASD-60-0.68

DESIGN FILE: I:\projects\80173\structures\strnotes.dgn
WORKSTATION: dmollens DATE: 8/22/2008

ITEM 442, ASPHALT CONCRETE INTERMEDIATE COURSE, 19MM, TYPE A (448), AS PER PLAN

REQUIREMENTS OF 442 APPLY EXCEPT AS FOLLOWS:
MIX DESIGN: FOR Ndes USE 50 GYRATIONS, FOR Nmax USE 75 GYRATIONS.
USE A PG 64-22 BINDER.
MAXIMUM RECLAIMED ASPHALT CONCRETE PAVEMENT IS 30 PERCENT.
DO NOT APPLY TABLE 442.02-1 EXCEPT SAND EQUIVALENT OF 45 APPLIES.
APPLY 703.05 FOR COURSE AND FINE AGGREGATE EXCEPT GRADATION FOR FINE AGGREGATE DOES NOT APPLY. QUALITY CONTROL: DO NOT PERFORM Nmax IN QUALITY CONTROL TESTING. DO NOT TAKE EXTRA ASPHALT BINDER SAMPLES AS OUTLINED IN CMS 442.05.

ITEM 511 - CLASS S CONCRETE, MISC.: CURB

THIS ITEM SHALL BE USED AT LOCATIONS INDICATED IN THE PLAN.

THE COARSE AGGREGATE SHALL BE LIMESTONE.

ALL EXISTING SURFACES TO WHICH THE CONCRETE IS TO BOND SHALL BE CLEANED BY ABRASIVE BLASTING. THESE SURFACES SHALL BE MADE FREE OF SPALLS, LAITANCE, AND OTHER CONTAMINANTS DETRIMENTAL TO ACHIEVING AN ADEQUATE BOND.

PAYMENT FOR ALL OF THE ABOVE SHALL BE AT THE UNIT PRICE BID PER CUBIC YARD FOR THE ABOVE WHICH WILL INCLUDE ALL LABOR, EQUIPMENT, MATERIALS AND INCIDENTALS NECESSARY TO COMPLETE THE ABOVE WORK.

ITEM 511 - CLASS C CONCRETE, ABUTMENT, AS PER PLAN:

THIS ITEM SHALL BE USED AT LOCATIONS INDICATED IN THE PLAN.

THE COARSE AGGREGATE SHALL BE LIMESTONE.

TYPE A WATERPROOFING SHALL BE INCIDENTAL TO THIS ITEM.

ALL EXISTING SURFACES TO WHICH THE CONCRETE IS TO BOND SHALL BE CLEANED BY ABRASIVE BLASTING. THESE SURFACES SHALL BE MADE FREE OF SPALLS, LAITANCE, AND OTHER CONTAMINANTS DETRIMENTAL TO ACHIEVING AN ADEQUATE BOND.

PAYMENT FOR ALL OF THE ABOVE SHALL BE AT THE UNIT PRICE BID PER CUBIC YARD FOR THE ABOVE WHICH WILL INCLUDE ALL LABOR, EQUIPMENT, MATERIALS AND INCIDENTALS NECESSARY TO COMPLETE THE ABOVE WORK.

ITEM 603 - FIELD PAVING OF EXISTING PIPE, AS PER PLAN (12'-6" X 7'-11" CORR. METAL PIPE ARCH)

THIS ITEM SHALL BE USED TO REMOVE ALL DEBRIS AND SEDIMENT LOCATED IN THE PIPE AND THEN FIELD PAVE AS PER CMS 603.

PAYMENT FOR ALL OF THE ABOVE SHALL BE AT THE UNIT PRICE BID PER FOOT FOR THE ABOVE ITEM WHICH SHALL INCLUDE ALL LABOR, EQUIPMENT, MATERIALS AND INCIDENTALS NECESSARY TO COMPLETE THE ABOVE WORK.

ITEM 614 - MAINTAINING TRAFFIC:

TWO WAY TRAFFIC ON STRUCTURE ASD-60-1164 SHALL BE MAINTAINED AT ALL TIMES EXCEPT THAT THROUGH TRAFFIC ON THIS STRUCTURE SHALL HAVE A SIGNALIZED CLOSURE AS SHOWN ON SHEET 47 FOR A MAXIMUM OF 20 CONSECUTIVE CALENDAR DAYS (TOTAL BOTH PHASES). THE 20 CONSECUTIVE DAYS SHALL BE CONSIDERED AS AN INTERIM COMPLETION DATE (SECTION 108) AND FOR EACH CALENDAR DAY BEYOND THE 20 CALENDAR DAYS THAT THE HIGHWAY REMAINS IN A SIGNALIZED CLOSURE, THE CONTRACTOR WILL BE ASSESSED LIQUIDATED DAMAGES AS PER 108.07.

AT STRUCTURE ASD-60-1164:
ON ALL AREAS OF REMOVAL AT BACKWALL/APPROACH SLAB DEEPER THAN 2 INCHES, STEEL PLATES SHALL BE PLACED OVER THE REMOVAL AREAS WHEN NO WORK IS BEING PERFORMED AT THOSE AREAS.

ON ALL OTHER STRUCTURES TWO WAY TRAFFIC SHALL BE MAINTAINED AT ALL TIMES EXCEPT DURING WORKING HOURS WHEN ONE LANE MAY BE CLOSED USING FLAGGERS, AS PER STANDARD DRAWING MT-97.10.

NO EQUIPMENT OR MATERIAL SHALL BE LOCATED OTHER THAN BEHIND THE DRUMS.

ALL WORK AND TRAFFIC CONTROL DEVICES SHALL BE IN ACCORDANCE WITH 614 AND OTHER APPLICABLE PORTIONS OF THE CONSTRUCTION AND MATERIAL SPECIFICATIONS AS WELL AS IN ACCORDANCE WITH THE OMUTCD.
PAYMENT FOR ALL LABOR, EQUIPMENT, MATERIALS, AND INCIDENTALS NECESSARY TO PROVIDE THESE METHODS OF TRAFFIC CONTROL SHALL BE INCLUDED IN THE LUMP SUM BID FOR ITEM 614 MAINTAINING TRAFFIC, UNLESS SEPARATELY ITEMIZED IN THE PLAN.

ASD - 3 - 0618 SFN 0300179

ITEM	EXTENSION	QUANTITY	UNIT	DESCRIPTION	REFERENCE SHEET
201	11000	LUMP		CLEARING AND GRUBBING	37
254	01001	175	SQ YD	PAVEMENT PLANING, ASPHALT CONCRETE, AS PER PLAN	37
407	10000	15	GALLON	TACK COAT	
442	20201	12	CU YD	ASPHALT CONCRETE INTERMEDIATE COURSE, 19mm, TYPE A (448), AS PER PLAN	38
512	10100	705	SQ YD	SEALING OF CONCRETE SURFACES (EPOXY-URETHANE)	
512	10300	86	SQ YD	SEALING CONCRETE BRIDGE DECKS WITH HMWM RESIN	
512	33010	188	SQ YD	TYPE 3 WATERPROOFING	
SPECIAL	51631200	59	FT	SAWING AND SEALING BITUMINOUS CONCRETE JOINTS	44

ASD - 60 - 0594 SFN 0302015

ITEM	EXTENSION	QUANTITY	UNIT	DESCRIPTION	REFERENCE SHEET
503	11100	LUMP		COFFERDAMS, CRIBS AND SHEETING	
601	25000	34	CU YD	DUMPED ROCK FILL, TYPE A	
603	96551	110	FT	FIELD PAVING OF EXISTING PIPE, AS PER PLAN (12'-6" X 7'-11" CORR. METAL PIPE ARCH)	38

ASD - 60 - 1164 SFN 0302074

ITEM	EXTENSION	QUANTITY	UNIT	DESCRIPTION	REFERENCE SHEET
202	11300	5	CU YD	PORTIONS OF STRUCTURE REMOVED (CURB)	
202	11301	3	CU YD	PORTIONS OF STRUCTURE REMOVED, AS PER PLAN	37
511	34450	5	CU YD	CLASS S CONCRETE, MISC.:CURB	38
511	45701	4	CU YD	CLASS C CONCRETE, ABUTMENT, AS PER PLAN (REPAIR)	38
512	10300	1007	SQ YD	SEALING CONCRETE BRIDGE DECKS WITH HMWM RESIN	
614	12800	620	EACH	WORK ZONE RAISED PAVEMENT MARKER	
614	13202	16	EACH	BARRIER REFLECTOR, TYPE A2	
614	13302	14	EACH	BARRIER REFLECTOR, TYPE B2	
614	21000	.06	MILE	WORK ZONE CENTER LINE, CLASS I (SOLID DOUBLE)	
614	22000	.04	MILE	WORK ZONE EDGE LINE, CLASS I (WHITE)	
614	26000	24	FT	WORK ZONE STOP LINE, CLASS I	

DESIGN FILE: I:\projects\880173\structures\strsum.dgn
WORKSTATION: dmollens DATE: 8/22/2008

DESIGN AGENCY
DISTRICT THREE
OFFICE OF PRODUCTION

DESIGNED	DRAWN	REVIEWED	DATE
GTS	GTS	RDN	8/08
CHECKED	REVISED		
DJV			

STRUCTURE SUMMARY

ASD-3-6.08
ASD-60-0.68

	BRIDGE DECK DATA								ROADWAY DATA		
COUNTY, ROUTE, BRIDGE NO.	LOCATION	STRUCTURE TYPE	LENGTH (BRIDGE DECK)	WIDTH	BRIDGE DECK AREA	SKEW	EXISTING WEARING SURFACE	EXISTING PAVEMENT WIDTH	EXISTING APPROACH SLAB WIDTH	EXISTING APPROACH SLAB LENGTH
			FT.	FT.	SQ.YD.			FT.	FT.	FT.
** ASD-3-0618	OVER NORFOLK AND SOUTHERN R.R.	SINGLE SPAN PRESTRESS BEAM	56'-3"	28	175	18° 10' 00" LF	ASPHALT	28	28	25
* ASD-60-0484	OVER BRANCH OF HONEY CREEK	CORRIGATED METAL PIPE ARCH				20° RF	ASPHALT			
+ ASD-60-0594	OVER BIG RUN	CORRIGATED METAL PIPE ARCH				45° RF	ASPHALT			
++ ASD-60-1164	OVER U.S. 30	4 SPAN STEEL BEAM	256'-9"	30	856	18° 30' 15" LF	CONCRETE	30	30	25

* PLANE AND PAVE OVER STRUCTURE (NO STRUCTURE WORK). (SEE ROADWAY PLANS FOR PLANING AND PAVING QUANTITIES)

** PLANE AND PAVE OVER STRUCTURE (SEE DETAILS IN PLAN FOR STRUCTURE WORK AND ADDITIONAL PLANING). (SEE ROADWAY PLANS FOR PLANING AND PAVING QUANTITIES)

\+ PLANE AND PAVE OVER STRUCTURE (SEE DETAILS IN PLAN FOR STRUCTURE WORK). (SEE ROADWAY PLANS FOR PLANING AND PAVING QUANTITIES)

++ BUTT JOINT AT BRIDGE DECK. OMIT RESURFACING ON THE BRIDGE DECK. (SEE DETAILS IN THE PLAN FOR STRUCTURE WORK). (SEE ROADWAY PLANS FOR PLANING AND PAVING QUANTITIES)

DESIGN FILE: I:\projects\801730\structures\brtreat.dgn
WORKSTATION: dmollens DATE: 8/21/2008

DESIGN AGENCY
DISTRICT THREE
OFFICE OF PRODUCTION

REVIEWED RDN DATE 8/08 STRUCTURE FILE NUMBER

DRAWN GTS REVISED

DESIGNED GTS CHECKED DJV

BRIDGE TREATMENT

ASD-3-6.08
ASD-60-0.68

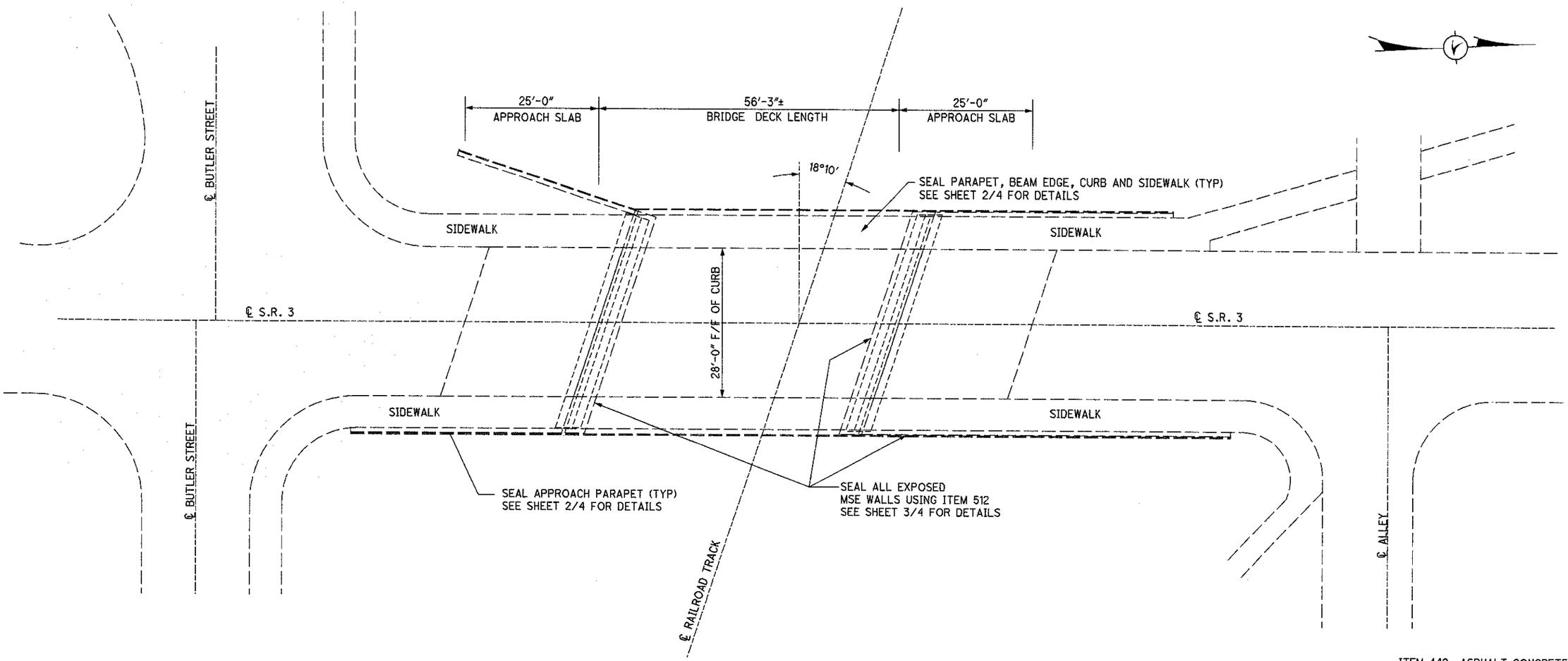

PLAN VIEW

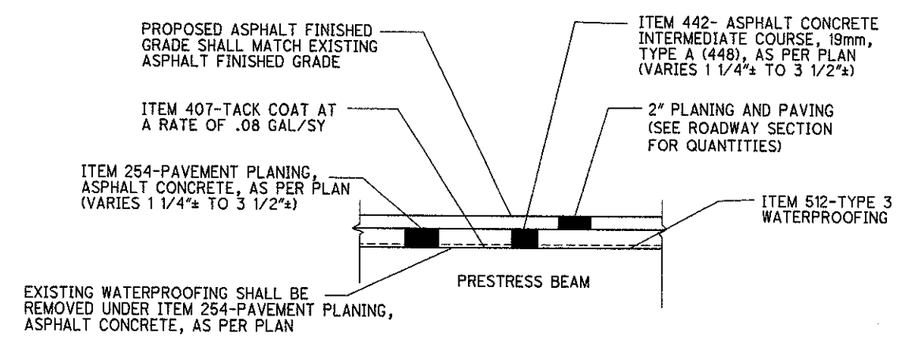

TYPICAL PLANING AND PAVING DETAIL

ITEM	QUANTITY	UNIT	DESCRIPTION
201	LUMP		CLEARING AND GRUBBING
254	175	SQ YD	PAVEMENT PLANING, ASPHALT CONCRETE, AS PER PLAN
407	15	GAL	TACK COAT
442	12	CU YD	ASPHALT CONCRETE INTERMEDIATE COURSE, 19mm, TYPE A (448), AS PER PLAN
512	705	SQ YD	SEALING OF CONCRETE SURFACES (EPOXY-URETHANE)
512	86	SQ YD	SEALING CONCRETE BRIDGE DECKS WITH HMWM RESIN
512	188	SQ YD	TYPE 3 WATERPROOFING
SPECIAL	59	FT	SAWING AND SEALING BITUMINOUS CONCRETE JOINTS

ALL QUANTITIES CARRIED TO STRUCTURE SUMMARY SHEET

NOTES:

1) GUARDRAIL NOT SHOWN.
2) SEE ROADWAY SECTION FOR PLANING AND PAVING TOP 2".
3) PLANE REMAINING ASPHALT AND WATERPROOFING USING ITEM 254-PAVEMENT PLANING ASPHALT CONCRETE, AS PER PLAN.
4) SEE SHEET 2/4 FOR ABUTMENT SEAT SEALING
5) SEE SHEET 2/4 FOR PARAPET, CURB, SIDEWALK AND BEAM SEALING.
6) SEE SHEET 2/4 FOR PARAPET SEALING ON APPROACHES.
7) SEE SHEET 3/4 FOR SEALING ALL EXPOSED AREAS OF THE MSE WALLS.

DESIGN FILE: I:\projects\80173\structures\asd30618.dgn
WORKSTATION:dmollens DATE:8/22/2008

DESIGN AGENCY
DISTRICT THREE
OFFICE OF PRODUCTION

REVIEWED RDN DATE 8/08
STRUCTURE FILE NUMBER 0300179

DRAWN GTS REVISED
DESIGNED GTS CHECKED DJV

PLAN VIEW
ASD-3-0618 OVER
NORFOLK SOUTHERN R.R.

ASD-3-6.08
ASD-60-0.68

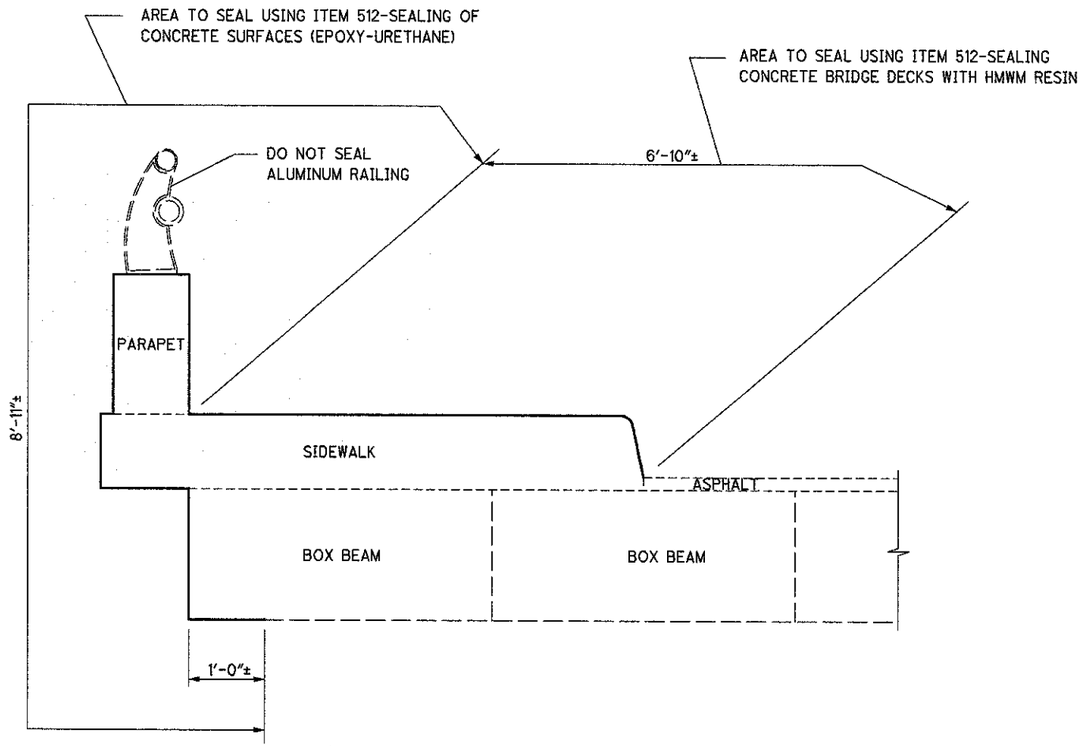

TYPICAL PARAPET, CURB AND SIDEWALK SEALING DETAIL ON STRUCTURE

SEALING LENGTH 56'-3"± PER SIDE

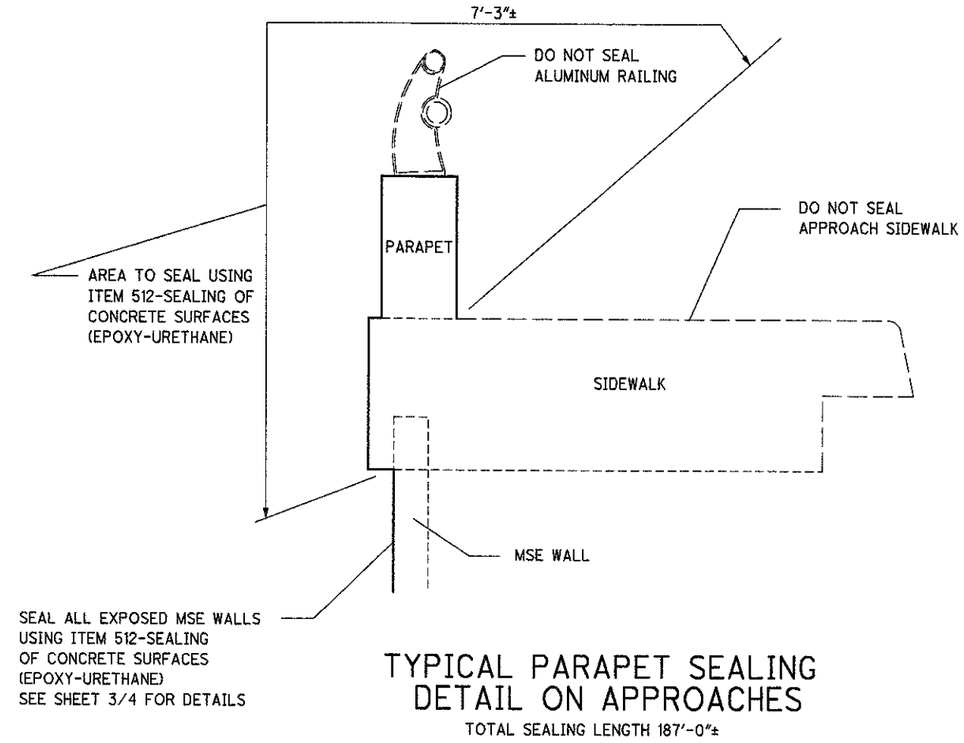

TYPICAL PARAPET SEALING DETAIL ON APPROACHES

TOTAL SEALING LENGTH 187'-0"±

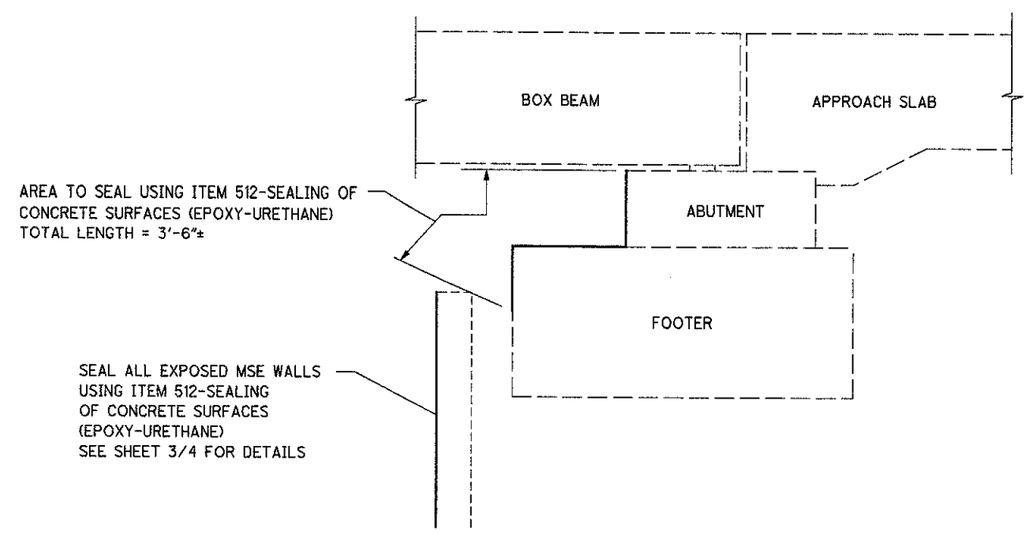

TYPICAL ABUTMENT SEALING DETAIL

SEALING LENGTH 43'-6"± PER ABUTMENT

NOTES:

1) SEAL ABUTMENT SEATS, PARAPETS AND BEAM EDGES ON DECK, PARAPETS ON APPROACHES AND ALL EXPOSED AREAS OF THE MSE WALLS WITH ITEM 512- SEALING OF CONCRETE SURFACES (EPOXY-URETHANE).

2) SEAL CURB AND SIDEWALK ON DECK ONLY WITH ITEM 512-SEALING CONCRETE BRIDGE DECKS WITH HMWM RESIN.

ITEM	QUANTITY	UNIT	DESCRIPTION
512	86	SQ YD	SEALING CONCRETE BRIDGE DECKS WITH HMWM RESIN
512	296	SQ YD	SEALING OF CONCRETE SURFACES (EPOXY-URETHANE)

ALL QUANTITIES CARRIED TO SHEET 1/4.

DESIGN FILE: I:\projects\80173\structures\asd30618.dgn
WORKSTATION: dmollens DATE: 8/22/2008

DESIGN AGENCY
DISTRICT THREE
OFFICE OF PRODUCTION

DESIGNED	DRAWN	REVIEWED	DATE
GTS	GTS	RDN	8/08
CHECKED	REVISED	STRUCTURE FILE NUMBER	
DJV		0300179	

SEALING DETAILS
ASD-3-0618 OVER
NORFOLK SOUTHERN R.R.

ASD-3-6.08
ASD-60-0.68

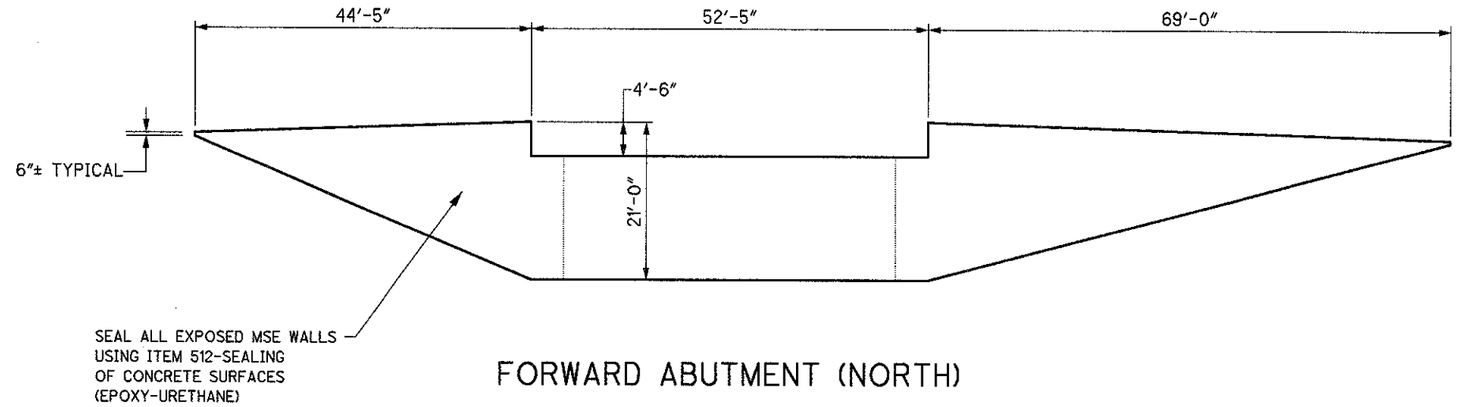

FORWARD ABUTMENT (NORTH)

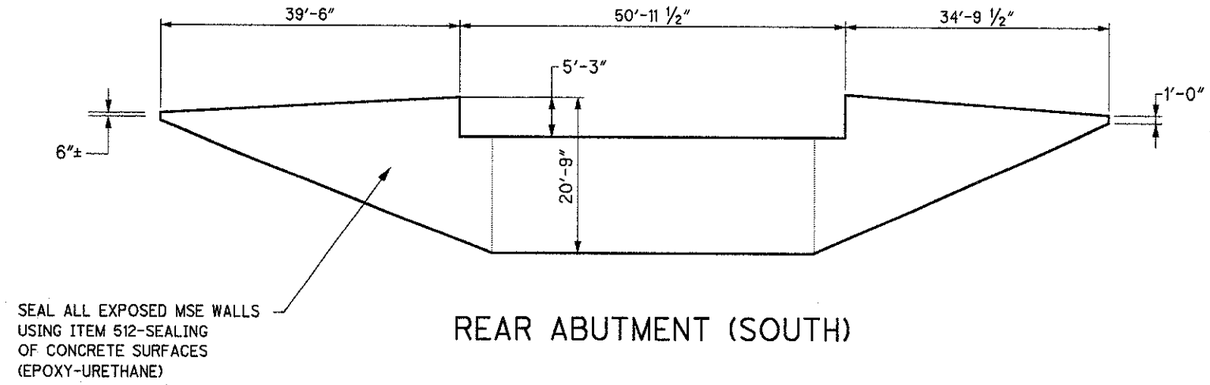

REAR ABUTMENT (SOUTH)

ITEM	QUANTITY	UNIT	DESCRIPTION
512	409	SQ YD	SEALING OF CONCRETE SURFACES (EPOXY-URETHANE)

ALL QUANTITIES CARRIED TO SHEET 1/4.

DESIGN FILE: I:\projects\80173\structures\asd30618.dgn
WORKSTATION: dmollens DATE: 8/22/2008

DESIGN AGENCY
DISTRICT THREE
OFFICE OF PRODUCTION

DESIGNED	DRAWN	REVIEWED	DATE
GTS	GTS	RDN	8/08
CHECKED	REVISED	STRUCTURE FILE NUMBER	
DJV		0300179	

SEALING DETAILS MSE WALLS
ASD-3-0618 OVER
NORFOLK SOUTHERN R.R.

ASD-3-6.08
ASD-60-0.68

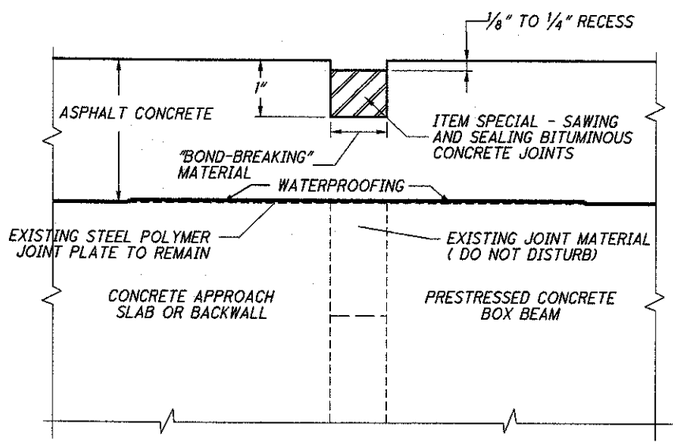

SEALING OF JOINTS AT ABUTMENTS

ITEM SPECIAL-SAWING AND SEALING BITUMINOUS CONCRETE JOINTS

1) DESCRIPTION:

THIS WORK SHALL CONSIST OF CUTTING AND SEALING TRANSVERSE JOINTS IN THE NEW BITUMINOUS CONCRETE OVERLAY OF BOX BEAM BRIDGES. BITUMINOUS CONCRETE JOINTS SHALL BE CONSTRUCTED DIRECTLY OVER, AND IN LINE WITH, THE EXISTING UNDERLYING TRANSVERSE ABUTMENT JOINT OF THE BOX BEAMS.

2) MATERIALS:

THE JOINT SEALANT SHALL MEET THE REQUIREMENTS OF ITEM 705.04, JOINT SEALANTS, HOT-POURED, FOR CONCRETE AND ASPHALT PAVEMENTS. ACCEPTABLE ALTERNATE MATERIALS ARE:

A SILICONE SEALANT MEETING FEDERAL SPECIFICATIONS TT-S-001543A CLASS A (ONE-PART SILICONE SEALANTS) AND TT-S-00230C CLASS A (ONE-COMPONENT SEALANTS), SUCH AS THOSE MANUFACTURED BY GENERAL ELECTRIC, SILICONE PRODUCTS DIVISION, 4015 EXECUTIVE PARK DRIVE, CINCINNATI, OHIO 45242 (513-243-1953)OR DOW CORNING, 400 TECHNE CENTER, SUITE 103, MILFORD, OHIO 45150 (513-831-3586); OR SOF-SEAL,A COLD-APPLIED, LOW-MODULUS,TWO-COMPONENT POLYMERIC COMPOUND HORIZONTAL SEALANT AS MANUFACTURED BY W.R.MEADOWS, INC., P.O.BOX 543,ELGIN,ILLINOIS 60121 (800-342-5976).

3) CONSTRUCTION DETAILS:

A) GENERAL: THE CONTRACTOR SHALL CONDUCT HIS OPERATION SO THAT THE CUTTING, CLEANING AND SEALING OF TRANSVERSE JOINTS IS A CONTINUOUS OPERATION THAT WILL BE PERFORMED AS SOON AS PRACTICAL AFTER THE PAVING, BUT NO LATER THAN FOUR (4) DAYS AFTER PLACEMENT OF THE ASPHALT CONCRETE SURFACE COURSE. TRAFFIC SHALL NOT BE ALLOWED TO KNEAD TOGETHER OR DAMAGE JOINT CUT PRIOR TO SEALING.

B) CUTTING OF TRANSVERSE JOINTS: THE CONTRACTOR SHALL SAW OR ROUT TRANSVERSE JOINTS TO THE DIMENSIONS SHOWN IN THE DETAILS ON THIS SHEET. THE CUT JOINTS SHALL LIE DIRECTLY ABOVE EACH BOX BEAM ABUTMENT JOINT.

THE BLADE OR BLADES SHALL BE OF SUCH SIZE THAT THE FULL WIDTH AND DEPTH OF THE CUT CAN BE MADE WITH ONE PASS. DRY OR WET CUTTING WILL BE ALLOWED. JOINTS SHALL EXTEND THE FULL WIDTH OF THE BRIDGE.

C) CLEANING JOINTS: DRY SAWED JOINTS SHALL BE THOROUGHLY CLEANED WITH A SUFFICIENT AMOUNT OF COMPRESSED AIR TO REMOVE ANY DIRT, DUST, OR DELETERIOUS MATTER. WET SAWED JOINTS SHALL BE WASHED CLEAN OF ALL CUTTINGS BY FLUSHING WITH A JET OF WATER AND WITH OTHER TOOLS AS NECESSARY. AFTER FLUSHING, THE JOINT SHALL BE BLOWN OUT WITH COMPRESSED AIR. WHEN THE SURFACES ARE THOROUGHLY CLEAN AND DRY, AND JUST PRIOR TO PLACING THE JOINT SEALER, COMPRESSED AIR HAVING A PRESSURE OF AT LEAST 90 P.S.I. SHALL BE USED TO BLOW OUT THE JOINT AND REMOVE ALL TRACES OF DUST.

IN THE EVENT FRESHLY CUT JOINTS BECOME CONTAMINATED BEFORE THEY ARE SEALED, THEY SHALL BE RECLEANED OF ALL FOREIGN MATERIAL BY HIGH PRESSURE WATER JET.

D) SEALING JOINTS: THE JOINT SHALL BE THOROUGHLY DRY WHEN THE SEALANT IS PLACED. AFTER CLEANING AND DRYING, A BOND-BREAKER MATERIAL SHALL BE APPLIED TO THE BOTTOM OF THE GROOVE.

HOT-POURED JOINT SEALANT MATERIAL SHALL BE HEATED IN A KETTLE OR MELTER CONSTRUCTED AS A DOUBLE BOILER, WITH THE SPACE BETWEEN THE INNER AND OUTER SHELLS FILLED WITH OIL OR OTHER HEAT TRANSFER MEDIUM. POSITIVE TEMPERATURE CONTROL AND MECHANICAL AGITATION SHALL BE PROVIDED. HEATING MUST BE IN STRICT ACCORDANCE WITH THE MANUFACTURER'S RECOMMENDATION. JOINT SEALER MATERIAL SHALL NEVER BE KEPT HEATED AT THE POURING TEMPERATURE FOR MORE THAN FOUR (4) HOURS AND SHALL NEVER BE REHEATED.SEALER LEFT IN THE APPLICATOR AT THE END OF A DAY'S WORK SHALL NOT BE USED.

HOT-POURED SEALANT SHALL BE APPLIED IMMEDIATELY THROUGH A NOZZLE, WHICH MUST PROJECT INTO THE SAWED JOINT, FILLING FROM THE BOTTOM UP.THE SEALANT SHALL COMPLETELY FILL THE JOINT IN SUCH A MANNER THAT, AFTER COOLING, THE LEVEL OF THE SEALANT WILL NOT BE HIGHER THAN 1/8" BELOW THE PAVEMENT SURFACE. ANY DEPRESSION IN THE COOLED SEAL GREATER THAN 3/16" SHALL BE BROUGHT UP TO THE SPECIFIED LIMIT BY FURTHER ADDITION OF HOT-POURED SEALANT. CARE SHALL BE TAKEN IN THE SEALING OF THE JOINTS SO THAT THE FINAL APPEARANCE WILL PRESENT A NEAT FINE LINE.

THE COLD APPLIED SEALANT MATERIALS (POLYURETHANE, SILICONE, AND POLYMERIC COMPOUNDS) SHALL BE INSTALLED AS PER MANUFACTURERS' RECOMMENDATIONS, EXCEPT AS MODIFIED BY THIS DRAWING. THE SEALANT SHALL BE INSTALLED WHEN THE AMBIENT TEMPERATURE IS 40 DEGREES F OR HIGHER. TRAFFIC SHALL NOT BE ALLOWED ON THE JOINT FOR ONE HOUR AFTER APPLICATION OF THE SEALANT.

4) METHOD OF MEASUREMENT:

THE QUANTITY TO BE PAID FOR UNDER THIS ITEM WILL BE THE NUMBER OF FEET OF JOINTS SAWED AND SEALED AS PER THE ABOVE REQUIREMENTS.

5) BASIS OF PAYMENT:

THE UNIT PRICE PER FOOT FOR ITEM SPECIAL-"SAWING AND SEALING BITUMINOUS CONCRETE JOINTS" SHALL INCLUDE THE COST OF ALL LABOR, MATERIALS, AND EQUIPMENT NECESSARY TO COMPLETE THE WORK, INCLUDING THE FURNISHING AND PLACING OF THE JOINT SEALER MATERIAL.

OFFICE OF STRUCTURAL ENGINEERING

CHECKED DJV REVIEWED RDN DESIGNED GTS

PLAN INSERT SHEET

Abutment Joints in Bituminous Concrete Box Beam Bridges
ASD-3-0618 OVER NORFLOK SOUTHERN R.R.

ASD-3-6.08
ASD-60-0.68

DESIGN FILE:I:\projects\80173\structures\insertsht.dgn
WORKSTATION:dmoliens DATE:8/21/2008

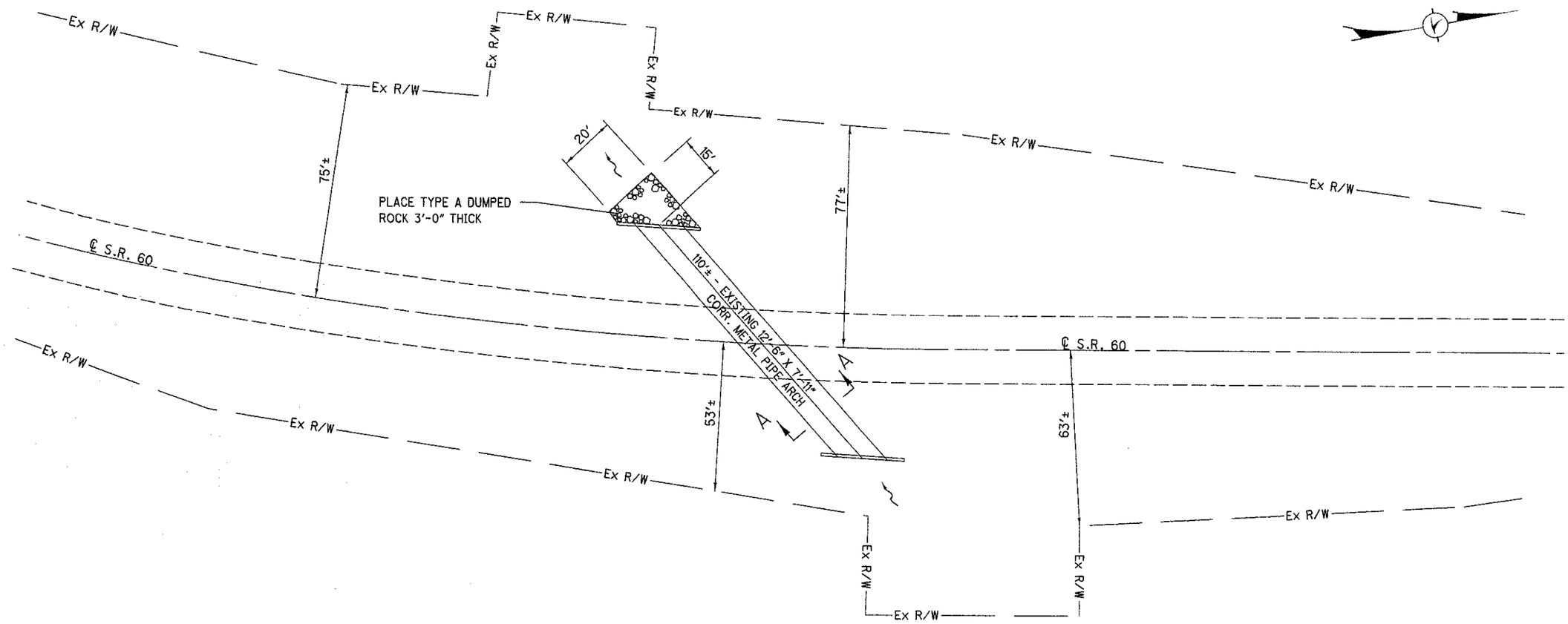

PLAN VIEW

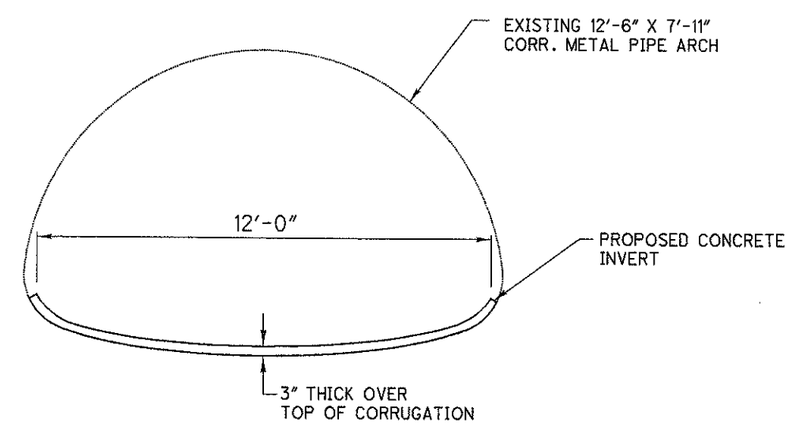

SECTION A-A

NOTES:

1) GUARDRAIL NOT SHOWN.

ITEM	QUANTITY	UNIT	DESCRIPTION
503	LUMP		COFFERDAMS, CRIBS AND SHEETING
601	34	CU YD	DUMPED ROCK FILL, TYPE A
603	110	FT	FIELD PAVING OF EXISTING PIPE, AS PER PLAN (12'-6" X 7'-11" CORR. METAL PIPE ARCH)

ALL QUANTITIES CARRIED TO STRUCTURE SUMMARY SHEET

DESIGN AGENCY
DISTRICT THREE
OFFICE OF PRODUCTION

REVIEWED RDN
DATE 8/08
STRUCTURE FILE NUMBER 0302015

DRAWN GTS
REVISED

DESIGNED GTS
CHECKED DJV

PLAN VIEW
ASD-60-0594 OVER BIG RUN

ASD-3-6.08
ASD-60-0.68

1/1

45/47

DESIGN FILE: I:\projects\80173\structures\asd600594.dgn
WORKSTATION:dmoliens
DATE:8/21/2008

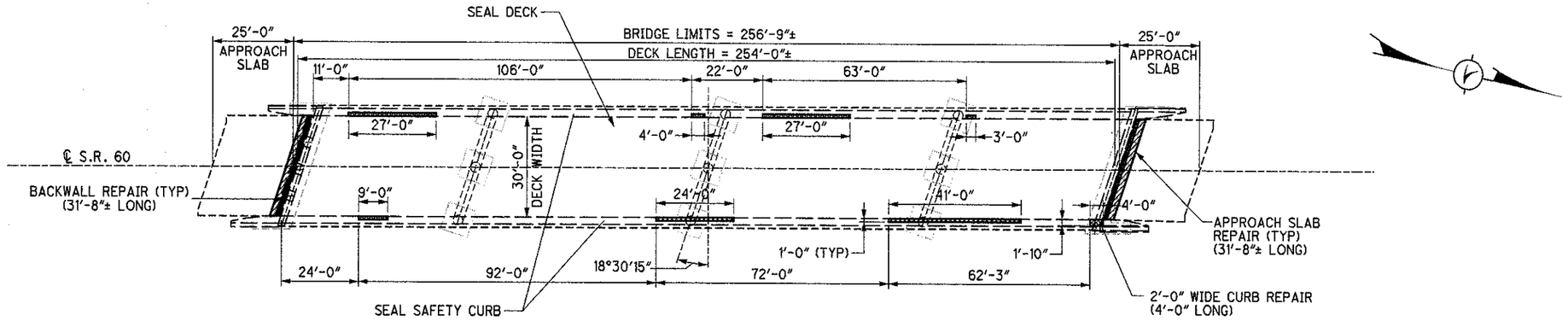

LEGEND
- CURB REPAIR
- APPROACH SLAB REPAIR
- BACKWALL REPAIR

PLAN VIEW

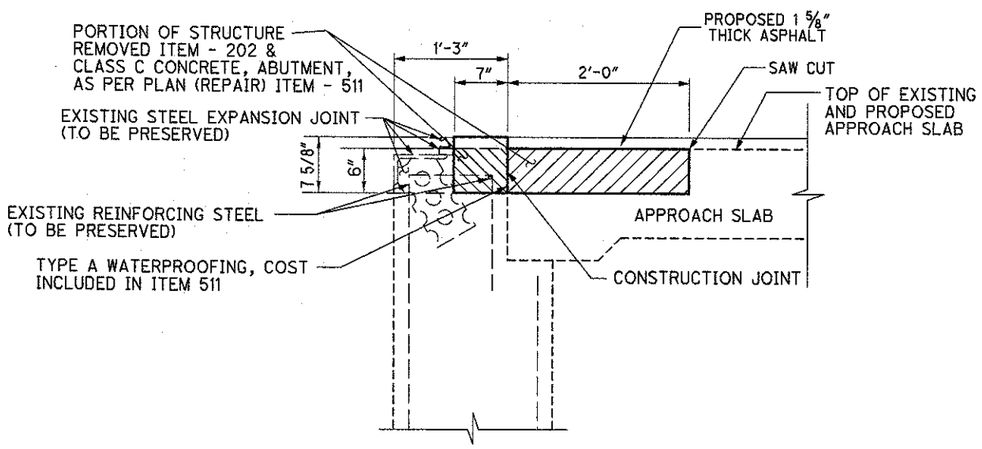

TYPICAL BACKWALL/APPROACH SLAB SECTION

REPAIR LENGTH = 31'-8"± PER ABUTMENT

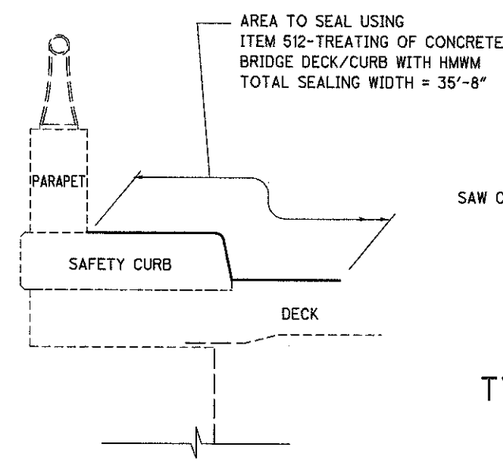

TYPICAL SAFETY CURB AND DECK SEALING SECTION

SEALING LENGTH 254'-0"±

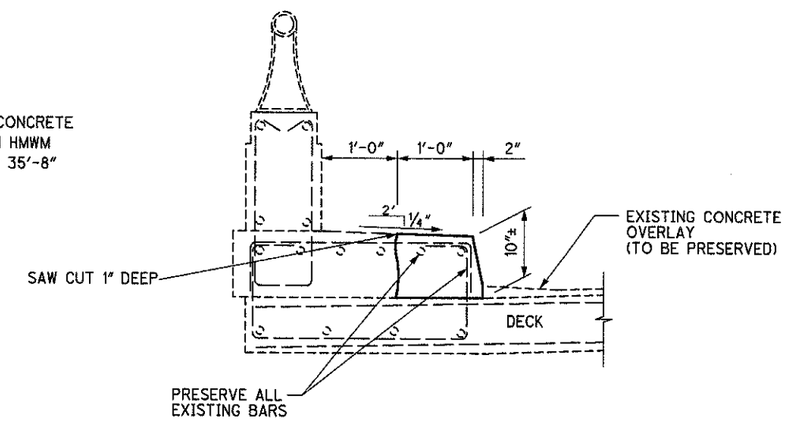

TYPICAL CURB REPAIR SECTION (1'-2" WIDE)

TOTAL LENGTH OF CURB REPAIR = 135'-0"±

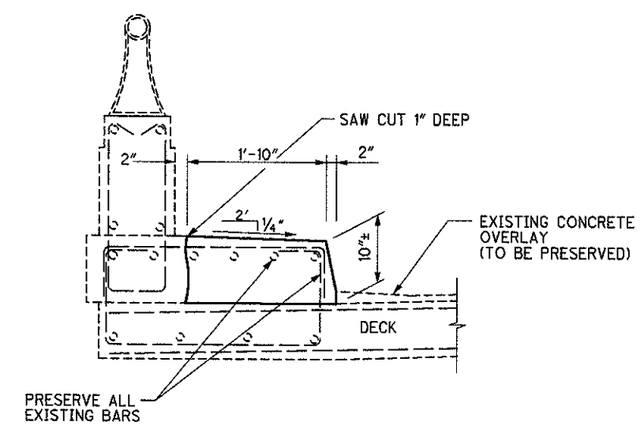

TYPICAL CURB REPAIR SECTION (2'-0" WIDE)

TOTAL LENGTH OF CURB REPAIR = 4'-0"±

ITEM	QUANTITY	UNIT	DESCRIPTION
202	5	CU YD	PORTIONS OF STRUCTURE REMOVED (CURB)
202	3	CU YD	PORTIONS OF STRUCTURE REMOVED, AS PER PLAN
511	5	CU YD	CLASS S CONCRETE, MISC.: CURB
511	4	CU YD	CLASS C CONCRETE, ABUTMENT, AS PER PLAN (REPAIR)
512	1007	SQ YD	SEALING CONCRETE BRIDGE DECKS WITH HMWM RESIN

QUANTITIES CARRIED TO STRUCTURE SUMMARY SHEET

NOTES:

1) THE EXISTING GUARDRAIL IS NOT SHOWN.

2) THE CURB ON THE BRIDGE DECK SHALL BE REPAIRED AS DETAILED ABOVE USING ITEMS 202 AND 511.

3) THE BACKWALLS AND APPROACH SLABS SHALL BE REPAIRED AS DETAILED ABOVE USING ITEMS 202 AND 511.

4) THE DECK AND CURB AREA SHALL BE SEALED AS DETAILED ABOVE USING ITEM 512.

DESIGN AGENCY
DISTRICT THREE
OFFICE OF PRODUCTION

DESIGNED	DRAWN	REVIEWED	DATE
GTS	GTS	RDN	8/08
CHECKED	REVISED	STRUCTURE FILE NUMBER	
DJV		0302074	

PLAN VIEW
ASD-60-1164 OVER U.S. 30

ASD-3-6.08
ASD-60-0.68

DESIGN FILE: I:\projects\80173\structures\asd601164.dgn
WORKSTATION:dmollens
DATE:8/22/2008

SIGNAL TIMING

A TWO PHASE CONTROLLER WITH CABINET CAPABLE OF BEING SET WITH THE FOLLOWING SPLITS SHALL BE FURNISHED

CYCLE LENGTH: 90 SECONDS

	GREEN	AMBER	RED
PHASE A	25	5	15
PHASE B	25	5	15

THE ABOVE TIMING MAYBE CHANGED WITH THE APPROVAL OF THE ENGINEER

FOR DETAILS NOT SHOWN SEE STANDARD DRAWINGS MT-96.10, MT-96.20, MT-96.25

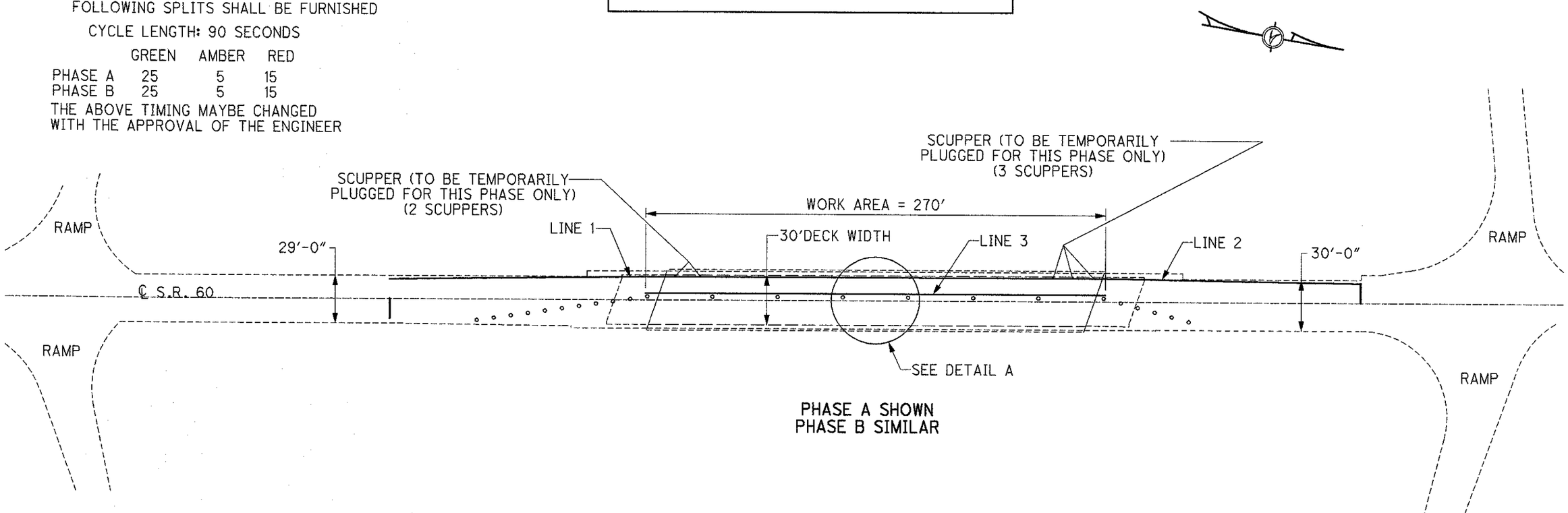

PHASE A SHOWN
PHASE B SIMILAR

WORK ZONE RAISED PAVEMENT MARKERS (TYPE A)				
		SPACING	QTY. (WHITE)	QTY. (YELLOW)
PHASE A	LINE 1= 420'	5'-0"	85	85
	LINE 2= 150'	5'-0"	30	
	LINE 3= 270'	5'-0"	55	55
PHASE B	LINE 1= 420'	5'-0"	85	85
	LINE 2= 150'	5'-0"	30	
	LINE 3= 270'	5'-0"	55	55
		TOTAL	340	280

ITEM	QUANTITY	UNIT	DESCRIPTION
614	620	EACH	WORK ZONE RAISED PAVEMENT MARKER
614	16	EACH	BARRIER REFLECTOR, TYPE A2
614	14	EACH	BARRIER REFLECTOR, TYPE B2
614	.06	MILE	WORK ZONE CENTER LINE, CLASS I (SOLID DOUBLE)
614	.04	MILE	WORK ZONE EDGE LINE, CLASS I (WHITE)
614	24	FT.	WORK ZONE STOP LINE, CLASS I

ALL QUANTITIES CARRIED TO STRUCTURE SUMMARY SHEET

NOTES:

1) THE EXISTING BRIDGE RAILING AND GUARDRAIL ARE NOT SHOWN IN THE PLAN VIEW

2) TEMPORARILY PLUG SCUPPERS IN PHASE A TO PROVIDE A SMOOTH SURFACE FOR TRAFFIC TO RUN OVER AND UNPLUG THEM WHEN PHASE A IS FINISHED.

3) PLACE TEMPORARY WEDGES AT APPROACH SLAB/BACKWALL JUNCTION AS PER NOTE ON SHEET 5/47 TITLED " ITEM 614, ASPHALT CONCRETE FOR MAINTAINING TRAFFIC" PRIOR TO SWITCHING PHASES.

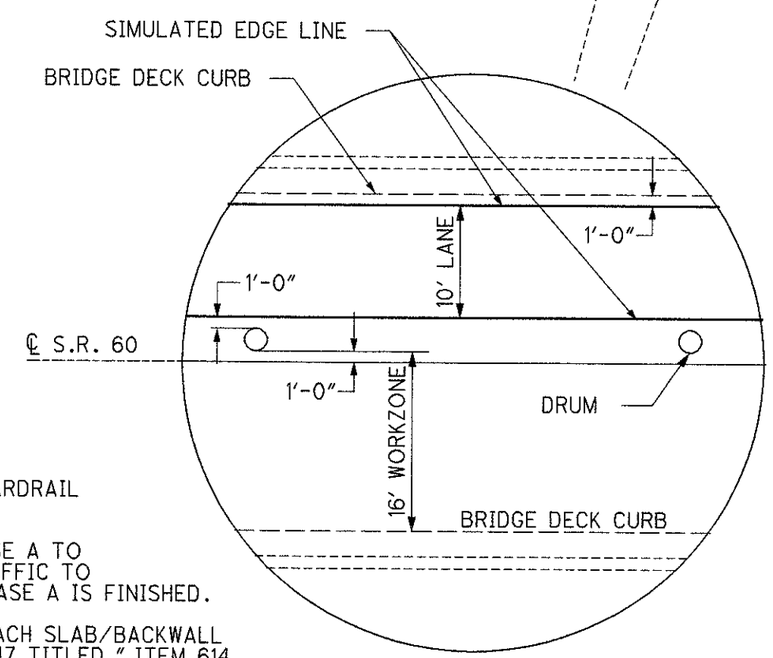

DETAIL A

DESIGN AGENCY: DISTRICT 3 OFFICE OF PRODUCTION

DESIGNED GTS | DRAWN GTS | REVISED RDN | DATE 8/08
CHECKED DJV | REVISED | STRUCTURAL FILE NUMBER 0302074

PLAN VIEW
ASD-60-1164 OVER U.S.R. 30

ASD-3-6.08
ASD-60-0.68

2/2

47/47

DESIGN FILE: I:\projects\801738\structures\asd601164.dgn
WORKSTATION: dmoliens DATE: 8/21/2008