ASD - SR 39-0.00/Various(Villages of P
040500 PID - 23578
Dist 3 9/22/2004

OHIO DEPARTMENT OF TRANSPORTATION

ASD - 39 - 0.00

LOCATION MAP

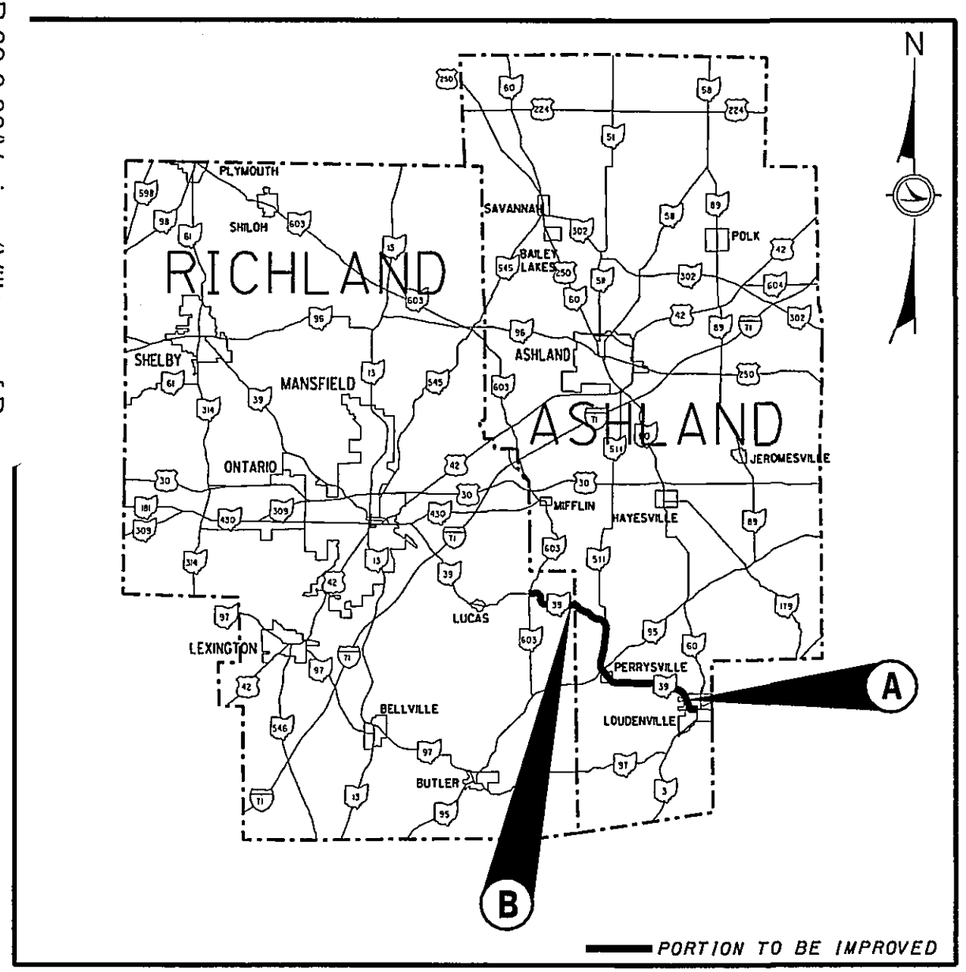

82° 20′ 20″ W LONGITUDE 40° 42′ 16″ N LATITUDE

PART	COUNTY	ROUTE	PROJECT TERMINI (STRAIGT LINE MILEAGE) BEGIN	END	NET LENGTH (MILES)	CITY	VILLAGE
A	ASHLAND	SR 39	0.00	9.27	9.27	N/A	PERRYSVILLE, LOUDONVILLE
B	RICHLAND	SR 39	24.95	27.40	2.45	N/A	N/A

INDEX OF SHEETS:

1 - TITLE SHEET
2 - DESIGN DESIGNATIONS
3 - STRAIGHT LINE DIAGRAM
4 - PAVEMENT TYPICAL SECTIONS
5-9 - GENERAL NOTES
10-11 - GENERAL SUMMARY
12 - PAVEMENT DATA
13 - SHOULDER DATA
14 - MAILBOX DETAIL
15 - DROP OFF IN WORK ZONE DETAILS
16-18 - CURB RAMP PLAN INSERT SHEETS
19-20 - GUARDRAIL GENERAL NOTES
21 - GUARDRAIL ESTIMATED QUANTITIES
22-35 - GUARDRAIL DETAILS
36 - PAVEMENT MARKING INFORMATION
37-38 - PARKING LOT STALL MARKINGS
39-41 - STRUCTURE SUMMARY
42-43 - STRUCTURE GENERAL NOTES
44 - BRIDGE TREATMENT
45 - STRUCTURE (ASD-39-0133)
46 - STRUCTURE (ASD-39-0162)
47-48 - STRUCTURE (ASD-39-0360)
49 - STRUCTURE (ASD-39-0491)
50-53 - STRUCTURE (ASD-39-0725)
54-56 - STRUCTURE (ASD-39-0897)
57-60 - STRUCTURE (RIC-39-2677)

PROJECT EARTH DISTURBED AREA = N/A (MAINTENANCE PROJECT)
ESTIMATED CONTRACTOR EARTH DISTURBED AREA = N/A (MAINTENANCE PROJECT)
NOTICE OF INTENT EARTH DISTURBED AREA = N/A (MAINTENANCE PROJECT)

PROJECT DESCRIPTION:

THIS PROJECT WILL INCLUDE PAVEMENT PLANING, PAVEMENT REPAIR, PAVEMENT WIDENING, RESURFACING WITH ASPHALT CONCRETE, ADJUSTMENT OF CASTINGS WHERE NECESSARY, GUARDRAIL RECONSTRUCTION, PAVEMENT MARKINGS, AND VARIOUS STRUCTURE WORK AS DETAILED IN THE PLANS.

CONVERSION OF METRIC STANDARD DRAWINGS

THE METRIC STANDARD DRAWINGS REFERENCED IN THIS PLAN SHALL BE CONVERTED TO ENGLISH UNITS USING THE SI (METRIC) TO ENGLISH CONVERSION FACTORS PROVIDED IN SECTION 109.02 OF THE 2002 CMS. CONVERSIONS SHALL BE APPROXIMATELY PRECISE AND SHALL REFLECT STANDARD INDUSTRY ENGLISH VALUES WHERE SUITABLE.

2002 SPECIFICATIONS

THE STANDARD 2002 SPECIFICATIONS OF THE STATE OF OHIO DEPARTMENT OF TRANSPORTATION, INCLUDING CHANGES AND SUPPLEMENTAL SPECIFICATIONS LISTED IN THE PLANS AND THE PROPOSAL SHALL GOVERN THESE IMPROVEMENTS

I HEREBY APPROVE THESE PLANS AND DECLARE THAT THE MAKING OF THESE IMPROVEMENTS WILL NOT REQUIRE THE CLOSING OF THE HIGHWAY AND PROVISIONS FOR THE MAINTENANCE AND SAFETY OF TRAFFIC WILL BE AS INDICATED IN THE PLAN AND PROPOSAL.

2/25/04 — APPROVED DATE — Thomas M. Ong — DISTRICT DEPUTY DIRECTOR OF TRANSPORTATION

6-16-04 — APPROVED DATE — Gordon Proctor — DIRECTOR, DEPARTMENT OF TRANSPORTATION

TWO WORKING DAYS BEFORE YOU DIG
Call- 800-362-2764
TOLL FREE
OHIO UTILITIES PROTECTION SERVICE
NON-MEMBERS MUST BE CALLED DIRECTLY

DISTRICT THREE PRODUCTION DEPARTMENT

ROADWAY ENGINEER'S SEAL	STRUCTURAL ENGINEER'S SEAL
STATE OF OHIO MICHAEL JOSEPH SCHAFRATH 57843 REGISTERED PROFESSIONAL ENGINEER	STATE OF OHIO DAVID C. MOLLENSHOTT E-50210 REGISTERED PROFESSIONAL ENGINEER
SIGNED: Michael J. Schafrath	SIGNED: David C. Mollenshott
DATE: 2/25/04	DATE: 3/

FOR DESIGN DESIGNATIONS SEE SHEET 2

STANDARD CONSTRUCTION DRAWINGS								SUPPLEMENTAL SPECIFICATIONS	
BP-3.1	7-28-00	PCB-91	7-19-02	TC-41.20	1-19-01	MT-96.10	4-19-02	832	2-12-03
BP-4.1	7-28-00			TC-65.10	10-19-01	MT-96.11	4-19-02	833	2-12-03
		RM-4.2	4-18-03	TC-65.12	10-19-01	MT-96.20	4-19-02	841	4-19-02
GR-1.1	4-18-03			TC-71.10	4-19-02	MT-96.25	4-20-01	848	2-8-02
GR-2.1	1-16-04			TC-73.10	1-19-01	MT-96.26	4-20-01	864	7-11-00
GR-3.1	4-18-03					MT-97.10	4-19-02	902	7-19-02
GR-3.4	4-18-03					MT-97.12	4-19-02	908	4-18-03
GR-4.1	4-18-03	DM-4.3	7-19-02			MT-99.20M	1-30-95		
GR-4.2	10-17-03	DM-4.4	7-19-02			MT-101.20	10-18-02		
GR-5.3	1-16-04					MT-101.70	10-18-02		
						MT-105.10	10-18-02		
						MT-105.11	10-18-02		

FEDERAL PROJECT NO. E034(143)
PID NO. 23578
CONSTRUCTION PROJECT NO.
RAILROAD INVOLVEMENT NONE
ASD-39-0.00

DESIGN FILE: I:\projects\23578\GT100.dgn DATE: 02/25/04
WORKSTATION: jfinch

PART A - ASD - SR 39
DESIGN DESIGNATION (ENGLISH UNITS)

S.L.M.	0.00-3.98	3.98-8.13	8.13-8.47	8.47-8.88	8.88-9.27
CURRENT ADT (2004)	2460	3870	7480	7480	7480
DESIGN YEAR ADT (2016)	2750	4320	8340	8340	8340
DESIGN HOURLY VOLUME (2016)	280	430	830	830	830
DIRECTIONAL DISTRIBUTION	55%	55%	55%	55%	55%
TRUCKS (24 HOUR B&C)	10%	05%	04%	04%	04%
DESIGN SPEED	55 MPH	55 MPH	55 MPH	40 MPH	35 MPH
LEGAL SPEED	55 MPH	55 MPH	55 MPH	40 MPH	35 MPH
DESIGN FUNCTIONAL CLASSIFICATION: RURAL MAJOR COLLECTOR					
NHS PROJECT	NO	NO	NO	NO	NO

DESIGN FOR 3R STANDARDS

PART B - RIC - SR 39
DESIGN DESIGNATION (ENGLISH UNITS)

S.L.M.	24.95-27.40
CURRENT ADT (2004)	2460
DESIGN YEAR ADT (2016)	2750
DESIGN HOURLY VOLUME (2016)	280
DIRECTIONAL DISTRIBUTION	55%
TRUCKS (24 HOUR B&C)	10%
DESIGN SPEED	55 MPH
LEGAL SPEED	55 MPH
DESIGN FUNCTIONAL CLASSIFICATION: RURAL MAJOR COLLECTOR	
NHS PROJECT	NO

DESIGN FOR 3R STANDARDS

DESIGN DESIGNATIONS

ASD-39-0.00

DESIGN FILE: i:\projects\23578\GM100.dgn
WORKSTATION: jfinch DATE: 02/23/04

DESIGN FILE: i:\projects\23578\GBI00.dgn
WORKSTATION: jfinch DATE: 02/24/04

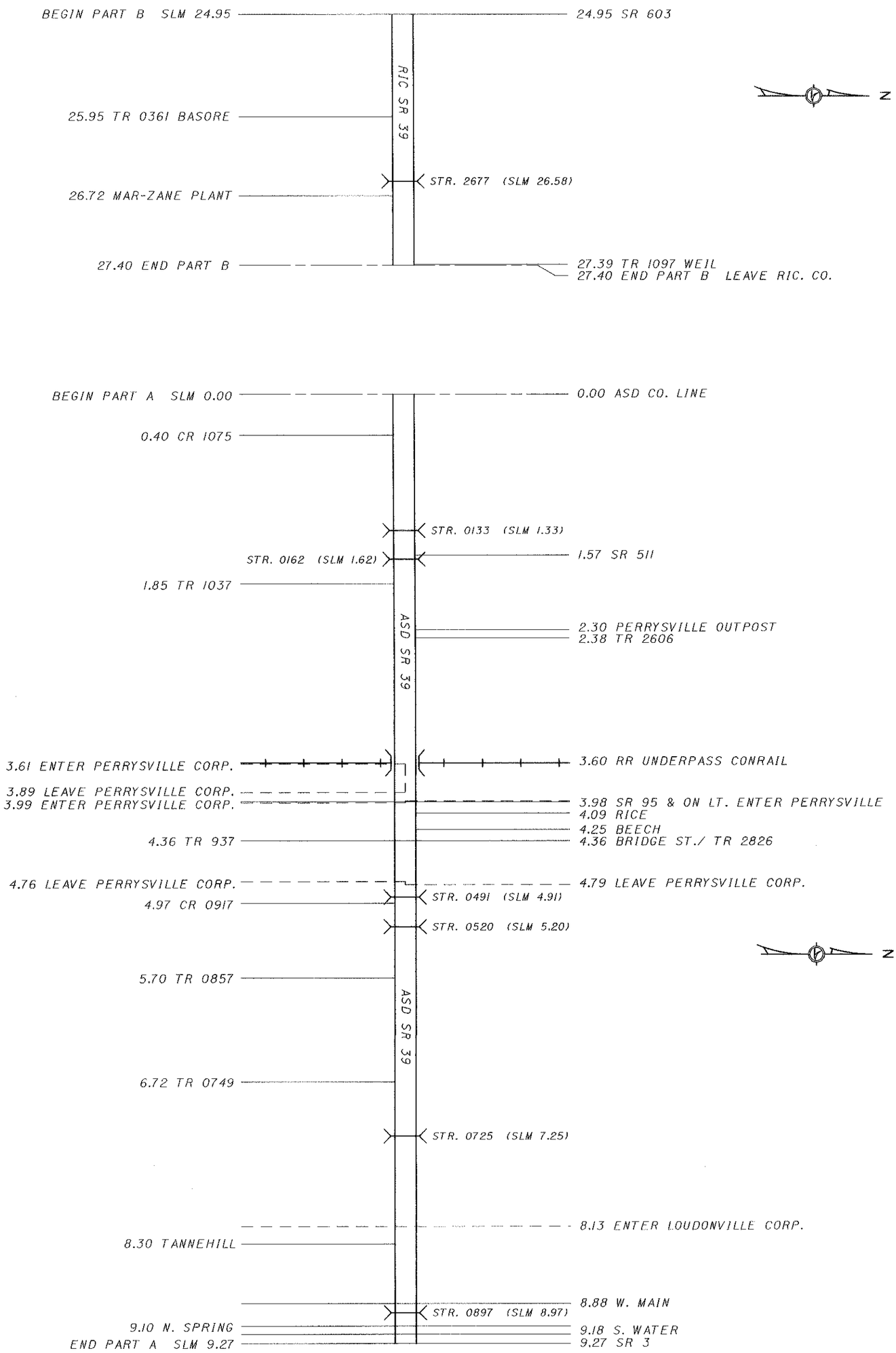

NOTE:
BASED ON UTILITY COMPANY RESPONSE, UTILITY MAPS ARE AVAILABLE FROM THE DISTRICT OFFICE.

3/60	**ASD-39-0.00**	**STRAIGHT LINE DIAGRAM**

CALCULATED JPF
CHECKED MJS

TYPICAL 1

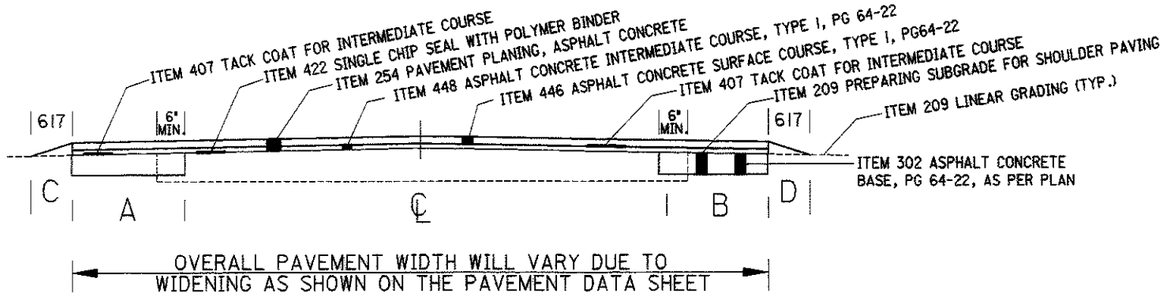

NOTE:
ASPHALT CONCRETE WIDENING SHALL BE 2' WIDE, CUTTING A MINIMUM OF 6" AND A MAXIMUM OF 12" INTO THE EXISTING PAVEMENT. WHERE THERE IS MINIMAL SHOULDER AREA, CUT 12" INTO THE EXISTING PAVEMENT.

TYPICAL 2

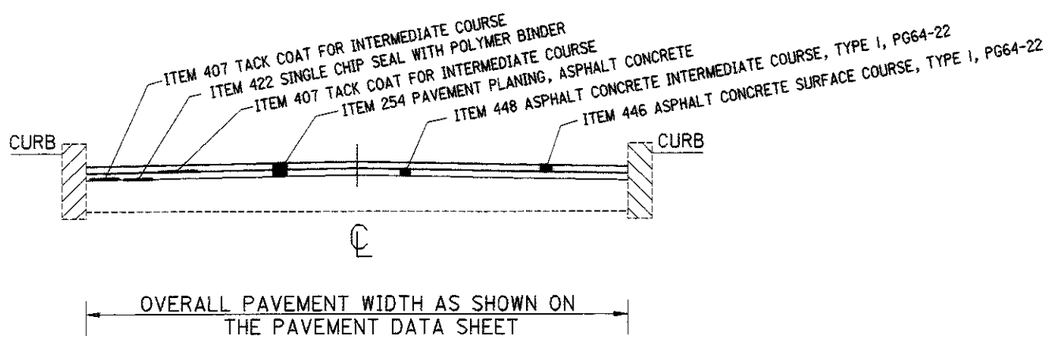

TYPICAL 3

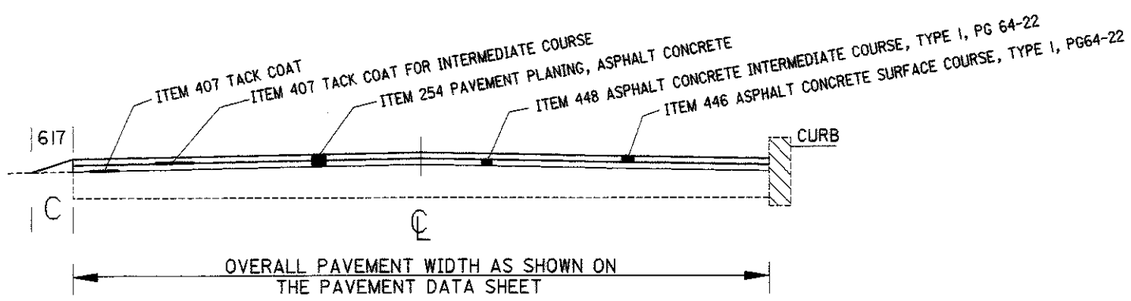

TYPICAL 4

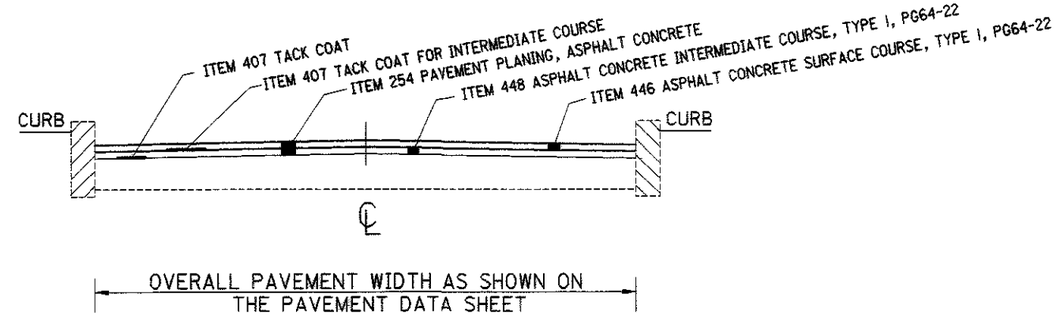

TYPICAL 5

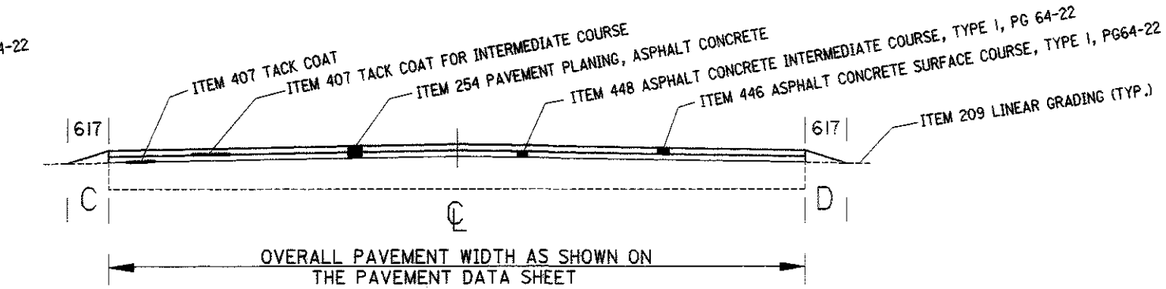

TYPICAL 6

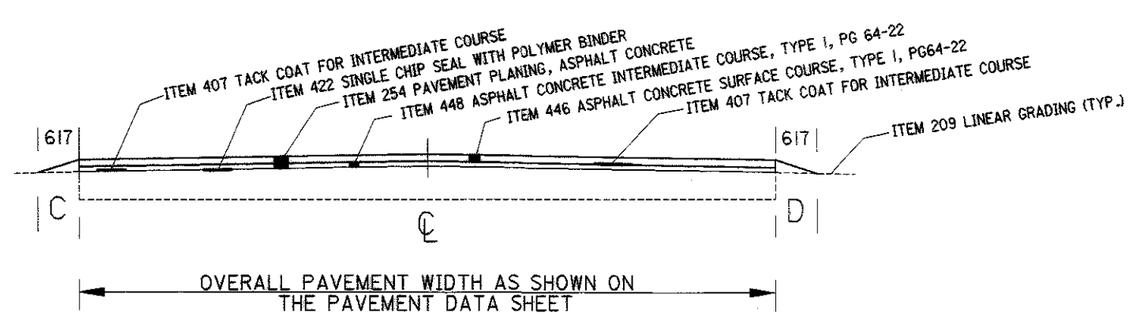

NOTE:
PAVEMENT PLANING TO BE THE SAME THICKNESS AS THE PROPOSED INTERMEDIATE AND SURFACE COURSE, EXCEPT OVER STR. ASD-39-0162.

CALCULATED JPF CHECKED MJS

PAVEMENT TYPICAL SECTIONS

ASD-39-0.00

DESIGN FILE: I:\projects\23578\GY100.dgn
WORKSTATION: sdeer
DATE: 2/24/2004

ROUTINE MAINTENANCE

BETWEEN THE TIME THAT BIDS ARE TAKEN AND THE START OF CONSTRUCTION, THE MAINTAINING AGENCY MAY ENTER UPON THE PROJECT AND PERFORM ROUTINE MAINTENANCE SUCH AS CRACK SEALING, PATCHING, AND BERM AND SHOULDER REPAIR. THE EFFECTS, IF ANY, OF THE PERFORMANCE OF ROUTINE MAINTENANCE SHALL BE CONSIDERED AS INHERENT IN WORK OF THE CHARACTER PROVIDED FOR IN THE PLAN AND THE RESULTING CONDITIONS SHALL NOT BE CONSIDERED AS DIFFERING MATERIALLY FROM THOSE EXISTING AT THE TIME BIDS WERE TAKEN.

PROGRESSION OF WORK

GUARDRAIL SHALL BE REMOVED PRIOR TO ANY EMBANKMENT WORK AT THE GUARDRAIL RUN. GUARDRAIL WORK SHALL BE DONE AFTER RESURFACING AND BERM WORK SO AS TO ESTABLISH PROPER GRADES FROM WHICH TO CONSTRUCT THE RAIL.

PAVEMENT CONTROL

AN AUTOMATIC SCREED CONTROL, HAVING A 20FT. MINIMUM SKI-ARM, SHALL BE USED FOR PLACING THE INTERMEDIATE COURSE AND SURFACE COURSE ON EXISTING PAVEMENT WIDTHS OF 20 FT. AND OVER.

SPECIAL ATTENTION SHALL BE GIVEN TO SUPER-ELEVATED CURVES. THE SUPER-ELEVATION SHALL BE MAINTAINED AND/OR RESTORED, IF NECESSARY, AS DIRECTED BY THE ENGINEER.

THE CONTRACTOR SHALL MAINTAIN POSITIVE DRAINAGE INTO ALL CATCH BASINS AND INLETS.

BUTT JOINTS

BUTT JOINTS SHALL NOT BE CUT AND LEFT OPEN TO TRAFFIC. THEY SHALL BE FILLED IN WITH A TEMPORARY ASPHALT CONCRETE WEDGE OF SUFFICIENT LENGTH, AS DIRECTED BY THE ENGINEER.

CONSTRUCTION "BUMP" (OW-62) AND "ADVISORY SPEED" (OW-143) SIGNS SHALL BE ERECTED AND MAINTAINED DURING THE PERIOD THE BUTT JOINT IS LEFT OPEN. THESE SIGNS SHALL BE PAID FOR UNDER THE LUMP SUM ITEM FOR ITEM 614 MAINTAINING TRAFFIC.

INTERSECTIONS AND DRIVES:

RURAL-INTERSECTIONS SHALL BE PAVED TO THE END OF THE RADII OR AS DIRECTED BY THE ENGINEER. (TO PROVIDE A SMOOTH TRANSITION BETWEEN THE TWO HIGHWAYS, AND TO ELIMINATE WATER POCKETS).

URBAN-INTERSECTIONS SHALL BE PAVED STRAIGHT THROUGH THE INTERSECTIONS OR AS DIRECTED BY THE ENGINEER. (TO PROVIDE A SMOOTH TRANSITION BETWEEN THE TWO HIGHWAYS, AND TO ELIMINATE WATER POCKETS).

EXISTING PAVED DRIVES SHALL BE PAVED SO AS TO PROVIDE A SMOOTH TRANSITION BETWEEN THE HIGHWAY AND THE DRIVE, (DISTANCE FROM EDGE OF ROADWAY MAY VARY - AT EACH DRIVE) AS DIRECTED BY THE ENGINEER.

EXISTING AGGREGATE DRIVES SHALL BE PAVED WITH AN APRON THE WIDTH OF THE 617 BERM OR 2 FT. MINIMUM. THE SLOPE OF THIS APRON SHALL BE THE SAME AS THE ADJACENT PAVEMENT SLOPE OR AS DIRECTED BY THE ENGINEER. ITEM 617 AGGREGATE SHALL BE PLACED ADJACENT TO THIS APRON TO PROVIDE A SMOOTH TRANSITION FROM THE APRON TO THE EXISTING DRIVE, (WIDTH OF THIS 617 APPLICATION MAY VARY) AS DIRECTED BY THE ENGINEER. AN ADDITIONAL QUANTITY HAS BEEN ESTIMATED TO COMPLETE THIS WORK AND IS SHOWN ON THE "SHOULDER DATA" SHEET.

ANY HAZARD OR UNSAFE CONDITION RESULTING FROM THE ABOVE WORK MUST BE CORRECTED IMMEDIATELY, AS DIRECTED BY THE ENGINEER. THE CONTRACTOR IS REMINDED OF SECTIONS 105.01, 107.07 & 614.02A.

UTILITIES

EXTREME CAUTION SHOULD BE EXERCISED IN AREAS WITH UTILITIES. THE CONTRACTOR IS FULLY RESPONSIBLE FOR ALL DAMAGE INFLICTED ON UTILITIES IN THE EXECUTION OF THIS CONTRACT.

LISTED BELOW ARE ALL UTILITIES LOCATED WITHIN THE PROJECT CONSTRUCTION LIMITS TOGETHER WITH THEIR RESPECTIVE OWNERS. THE OHIO DEPARTMENT OF TRANSPORTATION DOES NOT GUARANTEE THE COMPLETENESS OF THIS LIST.

THE LOCATION OF THE UNDERGROUND UTILITIES SHOWN ON THE PLANS ARE AS OBTAINED FROM THE OWNERS AS REQUIRED BY SECTION 153.64 O.R.C.

TELEPHONE:

VERIZON.
1534 STATE ROUTE 511, SOUTH
ASHLAND, OHIO 44805
(419) 289-6616

SPRINT
P.O. BOX 3555
MANSFIELD, OHIO 44907
(419) 755-7135

GAS:

COLUMBIA GAS OF OHIO INC.
1120 WEST 4th STREET
MANSFIELD, OHIO 44901
(419) 528-1114

COLUMBIA GAS TRANSMISSION CORP.
2385 COTTER ROAD
MANSFIELD, OHIO 44903
(419) 521-2846

DOMINION EAST OHIO
1000 WEST WILBETH ROAD
AKRON, OHIO 44314
(330) 798-7104

MARATHON ASHLAND PIPELINE
539 SOUTH MAIN ST., ROOM 193M
FINDLAY, OHIO 45840
(419) 421-2211

OHIO CUMBERLAND GAS CO.
20718 DANVILLE-AMITY ROAD
MT. VERNON, OHIO 43050
(740) 392-2941

SOUTH EASTERN NATURAL GAS
P.O. BOX 391
LOGAN, OHIO 43138-0391
(740) 385-8583

ELECTRIC:

LICKING RURAL ELECTRIC CO-OP
P.O. BOX 455
UTICA, OHIO 43080
(614) 892-2791

WATER:

VILLAGE OF LOUDONVILLE
156 NORTH WALTER STREET
LOUDONVILLE, OHIO 44842
(419) 994-4200

VILLAGE OF PERRYSVILLE
P.O. BOX 389
PERRYSVILLE, OHIO 44864
(419) 938-6078

CABLE:

TIME WARNER CABLE
1575 LEXINGTON AVENUE
MANSFIELD, OHIO 44901
(419) 756-6091, EXT. 5109

PLACEMENT OF ASPHALT CONCRETE

TWO-WAY TRAFFIC SHALL BE MAINTAINED AT ALL TIMES EXCEPT THAT ONE-WAY TRAFFIC WILL BE PERMITTED FOR MINIMUM PERIODS OF TIME CONSISTENT WITH THE REQUIREMENTS OF THE SPECIFICATIONS FOR PROTECTION OF COMPLETED ASPHALT CONCRETE COURSES.

PROFILE AND ALIGNMENT

THE PROPOSED PAVEMENT RESURFACING SHALL FOLLOW THE ALIGNMENT AND PROFILE OF THE EXISTING PAVEMENT.

703.05 AGGREGATE FOR ASPHALT CONCRETE (INTERMEDIATE AND SURFACE COURSES)

REMOVE THE PHRASE "THAT WILL BE EXPOSED TO TRAFFIC OVER THE WINTER MONTHS" FROM ITEMS b. AND c. OF C. GENERAL REQUIREMENTS FOR COURSE AND FINE AGGREGATE OF 703.05 (PAGE 767 OF THE 2002 CONSTRUCTION AND MATERIAL SPECIFICATIONS).

703.05 AGGREGATE FOR ITEM 422 CHIP SEAL WITH POLYMER BINDER

REMOVE THE PHRASE "THAT WILL BE EXPOSED TO TRAFFIC OVER THE WINTER MONTHS" FROM ITEMS b. AND c. OF C. GENERAL REQUIREMENTS FOR COURSE AND FINE AGGREGATE OF 703.05 (PAGE 767 OF THE 2002 CONSTRUCTION AND MATERIAL SPECIFICATIONS).

PAVED BERM AND/OR BASE WIDENING

PAVEMENT AND BERM QUANTITIES ARE CALCULATED THROUGH ALL INTERSECTIONS AND DRIVES. ANY PORTION MAY BE NON-PERFORMED IF SO DIRECTED BY THE ENGINEER.

OVERNIGHT TRENCH CLOSING

BASE WIDENING SHALL BE COMPLETED TO A DEPTH OF NO MORE THAN 1.5" BELOW THE EXISTING PAVEMENT BY THE END OF EACH WORK DAY. NO TRENCH SHALL BE LEFT OPEN OVERNIGHT EXCEPT FOR A SHORT LENGTH (25' OR LESS) OF A WORK SECTION AT THE END OF THE TRENCH. IN CASE WORK MUST BE SUSPENDED BECAUSE OF INCLEMENT WEATHER OR OTHER REASONS, THE TRENCH FOR THE UNCOMPLETED BASE WIDENING SHALL BE BACKFILLED AT THE DIRECTION OF THE ENGINEER.

TRENCH FOR WIDENING

TRENCH EXCAVATION FOR BASE AND BERM WIDENING SHALL BE PERFORMED ONLY ON ONE SIDE OF THE PAVEMENT AT A TIME. THE OPEN TRENCH SHALL BE ADEQUATELY MAINTAINED AND PROTECTED AT ALL TIMES WITH DRUMS OR BARRICADES.

PLACEMENT OF THE PROPOSED BASE MATERIAL SHALL FOLLOW AS CLOSELY AS POSSIBLE BEHIND THE EXCAVATION. THE LENGTH OF WIDENING TRENCH WHICH IS OPEN AT ANY ONE TIME SHALL BE HELD TO A MINIMUM AND SHALL AT ALL TIMES BE SUBJECT TO APPROVAL BY THE ENGINEER.

ITEM 209, PREPARING SUBGRADE FOR SHOULDER PAVING

THIS WORK SHALL CONSIST OF PREPARING A SUBGRADE FOR THE SHOULDER PAVING BY EXCAVATING THE EXISTING SHOULDER MATERIAL, AS DESCRIBED IN THE "TRENCH FOR WIDENING" NOTE TO THE DEPTH SHOWN IN THE PLANS OR AS DIRECTED BY THE ENGINEER. THIS OPERATION SHALL INCORPORATE TRIMMING A MINIMUM SIX INCHES FROM THE EDGE OF THE EXISTING PAVEMENT TO FACILITATE THE WIDENING WITHIN THE OVERALL PAVEMENT WIDTHS SHOWN. SEE TYPICALS ON SHEET 4 FOR ADDITIONAL DETAILS. COMPACTION SHALL BE CARRIED OUT BY MEANS OF TRENCH ROLLER, 401.13. AREAS GRADED IN EXCESS OF THE DEPTHS REQUIRED SHALL BE BACKFILLED TO THE DESIRED GRADE USING 617 AGGREGATE AT THE CONTRACTOR'S EXPENSE. THE EXCAVATED MATERIAL SHALL BE USED TO BACKUP THE SHOULDER WHERE NECESSARY AS DIRECTED BY THE ENGINEER (THIS MATERIAL SHALL BE GRADED AND COMPACTED). THE EXCAVATED MATERIAL NOT REQUIRED FOR BACKUP SHALL BE DISPOSED OF WITHIN FIVE WORK DAYS, OR THE ENGINEER SHALL STOP WORK.

DESIGN FILE: i:\projects\23578\GN00.dgn
WORKSTATION: jfinch DATE: 02/23/04

SEQUENCE OF WORK OPERATIONS

THE CONTRACTOR IS REQUIRED TO PERFORM ITEM 254 PAVEMENT PLANING, ASPHALT CONCRETE PRIOR TO PERFORMING THE PAVEMENT REPAIRS AND THE MINOR WIDENING.

ITEM 202, RPM REMOVED AND DISPOSED

ALL RAISED PAVEMENT MARKERS REMOVED SHALL BE PERFORMED AS PER CMS 202.10. THE CONTRACTOR SHALL DISPOSE OF ALL RPM CASTINGS ON THE PROJECT ACCORDING TO CMS 105.17. PAYMENT SHALL INCLUDE ALL LABOR, MATERIAL, AND EQUIPMENT NECESSARY TO PERFORM THE WORK AND SHALL BE PAID FOR AT THE CONTRACT PRICE EACH FOR ITEM 202, RPM REMOVED AND DISPOSED.

ITEM 209, LINEAR GRADING

THE CONTRACTOR IS REQUIRED TO PERFORM LINEAR GRADING ON THE GRADED SHOULDER IN AREAS WHERE THE GRADED SHOULDER IS AT A HIGHER ELEVATION THAN THE ADJACENT PAVEMENT. A 10:1 SLOPE SHALL BE ESTABLISHED, OR AS DIRECTED BY THE ENGINEER, WHEN PERFORMING ITEM 209 LINEAR GRADING. ALL LABOR AND EQUIPMENT NECESSARY TO PERFORM THE ABOVE WORK SHALL BE INCLUDED IN THE UNIT PRICE BID PER MILE FOR ITEM 209 LINEAR GRADING.

ITEM 253, PAVEMENT REPAIR:

THIS ITEM OF WORK SHALL CONSIST OF THE REMOVAL OF THE EXISTING PAVEMENT OR PAVED BERM WHICH MAY BE ASPHALT, BRICK, CONCRETE, OR A COMBINATION OF EACH, IN AREAS OF EXISTING PAVEMENT FAILURE.

THE ENGINEER SHALL DESIGNATE THE LOCATIONS AND LIMITS OF THE AREAS TO BE REPAIRED. PAVEMENT REPAIR SHALL BE PERFORMED AFTER PAVEMENT PLANING. THE REPAIR AREAS SHALL BE ROUGHLY RECTANGULAR IN SHAPE AND CUT OR SAWED TO A NEAT LINE. THE PAVEMENT SHALL BE REMOVED WITHIN THE DESIGNATED AREAS BY METHODS WHICH WILL NOT DAMAGE THE ADJACENT PAVEMENT. THE DEPTH OF REMOVAL, AS DIRECTED BY THE ENGINEER, SHALL BE SUFFICIENT TO REMOVE ALL DETERIORATED PAVEMENT (ESTIMATED DEPTH MAY VARY FROM 2 INCHES TO 12 INCHES). THE MATERIALS SO REMOVED SHALL BE DISPOSED OF IN ACCORDANCE WITH 105.16 AND 105.17.

REPLACEMENT MATERIAL SHALL BE ITEM 301 OR ITEM 448, TYPE 2 MATERIAL AND SHALL BE PLACED AND COMPACTED TO FINISH FLUSH WITH THE ADJACENT PAVEMENT SURFACE. THE REPAIR AREAS SHALL BE PAINTED WITH ASPHALT MATERIAL (SIDES AND BOTTOM) AT AN APPLICATION RATE OF 0.25 GAL. PER SQ. YD. ALL COMPACTION SHALL BE ACHIEVED BY MECHANICAL METHODS TO THE SATISFACTION OF THE ENGINEER. MAXIMUM LIFT THICKNESS SHALL BE 3 INCHES.

PAYMENT SHALL INCLUDE ALL LABOR, EQUIPMENT, AND MATERIALS NECESSARY TO COMPLETE THE PAVEMENT REPAIR. THE FOLLOWING ESTIMATED QUANTITY IS PROVIDED IN THE GENERAL SUMMARY TO BE USED AS DIRECTED BY THE ENGINEER. PAYMENT WILL BE MADE AT THE UNIT BID PRICE PER CUBIC YARD, (BY TICKET WEIGHT CONVERSION), OF ITEM 253, PAVEMENT REPAIR.

PART A ..... 600 CU. YD.
PART B ..... 150 CU. YD.

ITEM 254, PATCHING PLANED SURFACE

AN ESTIMATED QUANTITY OF ITEM 254, PATCHING PLANED SURFACE HAS BEEN SET UP TO BE USED AS DIRECTED BY THE ENGINEER AS DESCRIBED IN THE CONSTRUCTION AND MATERIALS SPECIFICATIONS MANUAL 254.04. PATCHING DEPTH IS 0 TO 2 IN.

ITEM 254, PAVEMENT PLANING, ASPHALT CONCRETE

THE INTENT OF THE PLANING IS TO MILL 2.00 INCHES ON S.R. 39. THE ABOVE DEPTH IS THE MINIMUM DEPTH AT THE CENTERLINE AND/OR EDGE OF PAVEMENT AND 1/4 INCH MINIMUM DEPTH IN BOTTOM OF WHEEL RUTS. THE PAVEMENT SLOPE MAY VARY BETWEEN 3/16 INCH AND 3/8 INCH PER FOOT, CONTINUOUS FOR PAVEMENT WIDTH. THE MILLING DEPTH SHALL BE CONTROLLED FROM THE CENTER LINE OR EDGE OF PAVEMENT, TO PRODUCE THE LEAST AMOUNT OF MILLING IN CONFORMANCE WITH ABOVE LIMITS. FIELD WORK NECESSARY FOR PROPER CONTROL WITHIN PLAN INTENT SHALL BE THE RESPONSIBILITY OF THE CONTRACTOR.

AN AUTOMATIC MILLING HEAD PROFILE CONTROL HAVING A MINIMUM 30 FT. SKI-ARM SHALL BE USED DURING PLANING OPERATION.

ABOVE CONDITIONS DO NOT APPLY TO PLANING PERFORMED IN AREAS AS DIRECTED BY THE ENGINEER TO ELIMINATE ADVERSE SURFACE DISTORTION, OR TO PROVIDE A SATISFACTORY GRADE AT CASTINGS. THESE AREAS INCLUDE MATERIAL DISPLACED BY RUTTING OR SHOVING ASPHALT. SURFACE PATCHES, CONCRETE PATCHING, TRANSVERSE BUMPS, PAVEMENT AT RAILROADS, CASTINGS, ETC. PLANING OF THESE AREAS SHALL BE PERFORMED THROUGHOUT THE PROJECT PRIOR TO PAVING. AREAS TO BE PLANED WILL BE DESIGNATED BY THE ENGINEER.

THE PROGRESSION OF THE PLANING SHALL PROCEED IN SUCH A MANNER THAT NORMAL TRAFFIC WILL NOT BE REQUIRED TO RUN OVER THE PLANED ROADWAY SURFACE MORE THAN TWENTY-ONE (21) CALENDAR DAYS. THE 21 CALENDAR DAYS SHALL BE CONSIDERED AN INTERIM COMPLETION DATE (SECTION 108) AND FOR EACH CALENDAR DAY BEYOND THE 21 DAYS THAT THE ROADWAY REMAINS EXPOSED TO THE PLANED SURFACE, THE CONTRACTOR WILL BE ASSESSED LIQUIDATED DAMAGES AS PER 108.07. PLANED AREAS WHICH CREATE A LONGITUDINAL JOINT BETWEEN TRAVELED LANES SHALL BE COMPLETED IN SUCH A MANNER SO AS TO REMOVE THE JOINT BEFORE THE END OF EACH DAY'S WORK. BEFORE THIS JOINT IS EXPOSED TO TRAFFIC, THE CONTRACTOR SHALL ERECT OW-171 SIGNS (UNEVEN PAVEMENT). THESE SIGNS SHALL REMAIN ONLY WHEN THE CONDITION EXISTS.

ITEM 302, ASPHALT CONCRETE BASE, PG64-22, AS PER PLAN

WHERE 302 ASPHALT CONCRETE BASE, PG64-22, AS PER PLAN MATERIAL MEETS EXISTING ASPHALT OR CONCRETE PAVEMENT, PG GRADE LIQUID ASPHALT SHALL BE USED TO COAT THE VERTICAL FACE INSTEAD OF TACK COAT MATERIAL.

ALL COSTS TO BE INCLUDED IN ITEM 302 ASPHALT CONCRETE BASE, PG64-22, AS PER PLAN.

ITEM 407, TACK COAT
ITEM 407, TACK COAT FOR INTERMEDIATE COURSE

AS PER 407.06 THE APPLICATION RATES SHALL BE 0.08 GAL. PER SQ. YD. AFTER PLANING AND PRIOR TO THE LEVELING COURSE AND SHALL BE 0.03 GAL PER SQ. YD. AFTER CHIP SEALING AND PRIOR TO THE SURFACE COURSE FOR ESTIMATING PURPOSES ONLY. THE RATE OF APPLICATION SHALL BE SUBJECT TO ADJUSTMENT AS DIRECTED BY THE ENGINEER. A COMPLETE PAVEMENT SURFACE COVERAGE SHALL BE REQUIRED. AREAS OF TACK STRIPPED BY CONSTRUCTION EQUIPMENT OR TRAFFIC SHALL BE RE-COATED PRIOR TO PLACING ASPHALT CONCRETE. ALL COST AS DESCRIBED ABOVE SHALL BE INCLUDED IN THE UNIT PRICE BID PER GALLON FOR ITEM 407, TACK COAT AND ITEM 407 TACK COAT FOR INTERMEDIATE COURSE.

ITEM 446, ASPHALT CONCRETE SURFACE COURSE, TYPE 1, PG 64-22

IN ADDITION TO ITEM 401.14 AND STANDARD DRAWING BP-3.1, TRANSVERSE, FEATHERED OR BUTT JOINTS SHALL BE SEALED WITH A 6 INCH WIDE BAND OF ASPHALT CEMENT ACROSS THE TOP SURFACE. THE COST OF THIS WORK SHALL BE INCLUDED IN THE UNIT PRICE BID FOR THIS ITEM.

BEFORE THE LONGITUDINAL JOINT IS EXPOSED TO TRAFFIC, THE CONTRACTOR SHALL ERECT OWP-171 (UNEVEN PAVEMENT) SIGNS. THESE SIGNS SHALL ONLY REMAIN WHILE THE CONDITION EXISTS.

ALL OPEN TRANSVERSE JOINTS SHALL BE TAPERED TO MEET EXISTING PAVEMENT BEFORE INTRODUCING TRAFFIC. A "BUMP" SIGN (OW-62) SHALL BE ERECTED ON EACH SIDE OF TRANSVERSE JOINTS LEFT OPEN OVER NIGHT, INCLUDING A SPEED ADVISORY SIGN, AS DIRECTED BY THE ENGINEER. THESE SIGNS SHALL BE REMOVED IMMEDIATELY AFTER JOINT HAS BEEN CLOSED. PLACEMENT OF SIGNS SHALL BE INCLUDED IN THE UNIT PRICE BID FOR ITEM 614 MAINTAINING TRAFFIC.

ITEM 448, ASPHALT CONCRETE INTERMEDIATE COURSE, TYPE 1, PG 64-22

THIS ITEM SHALL BE USED FOR CORRECTION OF CROWN, PROFILE AND ANY OTHER IRREGULARITIES.

BEFORE THE LONGITUDINAL JOINT IS EXPOSED TO TRAFFIC, THE CONTRACTOR SHALL ERECT OWP-171 (UNEVEN PAVEMENT) SIGNS. THESE SIGNS SHALL ONLY REMAIN WHILE THE CONDITION EXISTS.

ALL OPEN TRANSVERSE JOINTS SHALL BE TAPERED TO MEET EXISTING PAVEMENT BEFORE INTRODUCING TRAFFIC. A "BUMP" SIGN (OW-62) SHALL BE ERECTED ON EACH SIDE OF TRANSVERSE JOINTS LEFT OPEN OVER NIGHT, INCLUDING A SPEED ADVISORY SIGN, AS DIRECTED BY THE ENGINEER. THESE SIGNS SHALL BE REMOVED IMMEDIATELY AFTER JOINT HAS BEEN CLOSED. PLACEMENT OF SIGNS SHALL BE INCLUDED IN THE UNIT PRICE BID FOR ITEM 614 MAINTAINING TRAFFIC.

ITEM 604, CASTINGS ADJUSTED TO GRADE
ITEM 638, VALVE BOX ADJUSTED TO GRADE

ANY UNIT OF THIS ITEM MAY BE NON-PERFORMED IF SO DIRECTED BY THE ENGINEER AND THE SURFACE SHALL BE FEATHERED TO MEET THE EXISTING CASTING OR INLET IN A MANNER ACCEPTABLE TO THE ENGINEER. ALL ADJUSTING RINGS SHALL HAVE THE ENGINEER'S APPROVAL BEFORE USING.

UNDER ITEM 604.03, ADJUSTMENT TO GRADE, PARAGRAPH (A), THE CASTING TO BE ADJUSTED MAY OR MAY NOT HAVE AN EXISTING FRAME. THE WORK SHALL CONSIST OF ADJUSTING THE EXISTING CASTING OR GRATE TO THE SATISFACTION OF THE ENGINEER. THE CONTRACTOR IS REMINDED TO FIELD CHECK ALL ADJUSTMENT TO GRADE ITEMS PRIOR TO BIDDING, AS NO ADDITIONAL COMPENSATION WILL BE GRANTED FOR LABOR AND MATERIALS REQUIRED TO SATISFACTORILY ADJUST CASTINGS WITHOUT FRAMES.

ADJUST VALVE BOXES TO GRADE AS PER ITEM 638.18 IN THE CMS.

PART A - ITEM 604 CATCH BASIN ADJUSTED TO GRADE
6 EACH
PART A - ITEM 604 MANHOLE ADJUSTED TO GRADE
4 EACH
PART A - ITEM 604 MONUMENT BOX ADJUSTED TO GRADE
5 EACH
PART A - ITEM 638 VALVE BOX ADJUSTED TO GRADE
2 EACH

CALCULATED JPF CHECKED MJS

GENERAL NOTES

ASD-39-0.00

DESIGN FILE: I:\projects\23578\GN100.dgn
WORKSTATION: jfinch DATE: 02/25/04

ITEM 608, - WALKWAY, MISC.: TRUNCATED DOMES

RETROFIT EXISTING CURB RAMPS WITH ADA COMPLIANT DETECTABLE WARNING SYSTEMS, WHICH USE AN "IN-LINE TRUNCATED DOME PATTERN", ARE SURFACE APPLIED, AND ARE SAFETY YELLOW IN COLOR. INSTALL TRUNCATED DOMES FOR A DISTANCE OF 24" FROM THE BACK OF THE CURB FOR THE ENTIRE WIDTH OF THE RAMP OPENING. USE THE INFORMATION ON SHEETS 16-18 (CURB RAMPS WITH TRUNCATED DOMES) FOR THE LAYOUT OF THE DETECTABLE WARNINGS.

PROVIDE MATERIAL FEATURING TRUNCATED DOMES WITH A DIAMETER OF 0.9" AT THE BOTTOM, A DIAMETER OF 0.4" AT THE TOP, A HEIGHT OF 0.2" AND A CENTER-TO-CENTER SPACING OF 2.35" MEASURED ALONG ONE SIDE IN A SQUARE ARRANGEMENT, BEGINNING NO MORE THAN 2" FROM THE EDGE OF THE MAT. ALIGN THE DOMES IN A SQUARE GRID IN THE PREDOMINANT DIRECTION OF TRAVEL TO PERMIT WHEELS TO ROLL BETWEEN THE DOMES. A GRAPHIC REPRESENTATION OF THE APPROVED PATTERN IS SHOWN BELOW.

PROVIDE A SYSTEM MANUFACTURED BY ONE OF THE FOLLOWING COMPANIES, OR AN APPROVED EQUAL:

1. ADA FABRICATORS, INC.
   P.O. BOX 179
   N. BILLERICA, MA 01862
   PHONE: (978) 262-9900 OR (800) 372-0519
   WEB: HTTP://WWW.ADAFABRICATORS.COM
   PRODUCT: COMPOSITE "RETROFIT" TACTILE WARNING SYSTEM PANEL
   (GLASS AND CARBON REINFORCED COMPOSITE MAT WITH TRUNCATED DOMES , URETHANE ADHESIVE AND STAINLESS STEEL ANCHORS)

2. COTE-L INDUSTRIES INC.
   1542 JEFFERSON ST., TEANECK, NJ 07666
   PHONE: (201) 836-0733
   WEB: HTTP://WWW.COTELIND.COM
   PRODUCT: SAFTI-TRAX DETECTABLE WARNING SYSTEMS (OR SAFTI-TRAX MATS)
   (APPLIED RUBBER DOMES & DURABACK POLYURETHANE COATING)

3. DETECTABLE WARNING SYSTEMS, INC.
   6435 JOSHUA TREE AVENUE,
   ORANGE, CA 92867
   PHONE: (866) 999-7452, OR (714) 974-3566
   WEB: HTTP://WWW.DETECTABLE-WARNING.COM
   PRODUCT: DETECTABLE WARNING MAT, IN-LINE (SQUARE) PATTERN
   (POLYURETHANE MAT WITH TRUNCATED DOMES, TWO-PART ADHESIVE SYSTEM AND NYLON ANCHORS)

4. STRONGWALL INDUSTRIES, INC.
   107 CHESTNUT STREET
   RIDGEWOOD, NJ 07450
   PHONE: (201) 445-4633 or (800) 535-0668
   WEB: HTTP://WWW.STRONGWALL.COM
   PRODUCT: SWADA-2000 WHEELCHAIR ACCESS
   (APPLIED LATEX-MODIFIED MORTAR DOMES AND TRAFFIC DECK MEMBRANE SYSTEM)

INSTALL THE SELECTED PRODUCT ACCORDING TO THE MANUFACTURER'S INSTRUCTIONS, INCLUDING SURFACE PREPARATION, ADHESIVE (CHEMICAL AND/OR MECHANICAL) AND PRODUCT APPLICATION, AND CURING.

THE DEPARTMENT WILL PAY FOR ACCEPTED QUANTITIES OF ITEM 608 - WALKWAY, MISC.: TRUNCATED DOMES AT THE CONTRACT UNIT PRICE BID PER SQUARE FOOT.

ITEM 608 - WALKWAY, MISC.: TRUNCATED DOMES CONTINUED

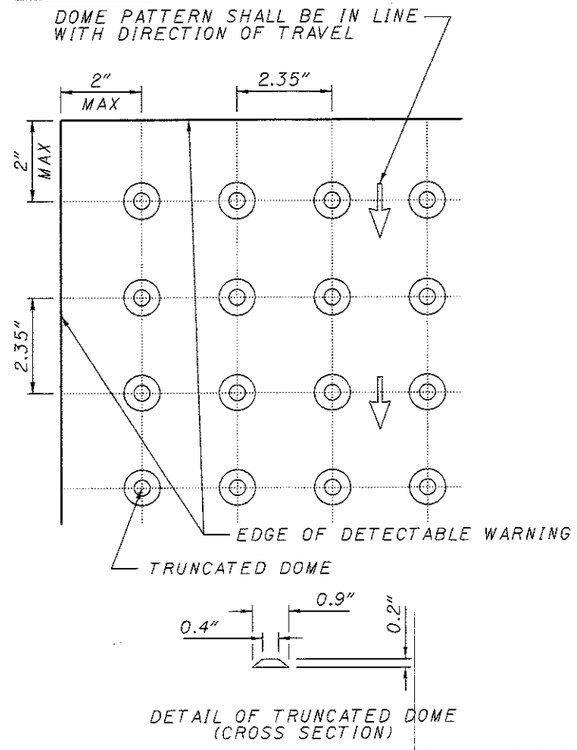

DETAIL OF TRUNCATED DOME (CROSS SECTION)

QUANTITIES: THE FOLLOWING ESTIMATED QUANTITIES HAVE BEEN CARRIED TO THE GENERAL SUMMARY:

ITEM 608, WALKWAY, MISC.: TRUNCATED DOMES

LOUDONVILLE: LOCATION	CROSS STREET	CORNER	QUANTITY
SR 39	MT. VERNON	NW	10 SQ FT
SR 39	MT. VERNON	SE	10 SQ FT
SR 39	MT. VERNON	SW	14 SQ FT
SR 39	WALLEY	SE	13 SQ FT
SR 39	WALLEY	SW	13 SQ FT
SR 39	SPRING	NE	11 SQ FT
SR 39	SPRING	NW	10 SQ FT
SR 39	SPRING	SE	36 SQ FT
SR 39	ALLEY	NE	39 SQ FT
SR 39	ALLEY	NW	10 SQ FT
SR 39	ALLEY	NW	8 SQ FT
SR 39	ALLEY	SE	11 SQ FT
SR 39	ALLEY	SE	14 SQ FT
SR 39	ALLEY	SW	11 SQ FT
SR 39	ALLEY	SW	11 SQ FT
SR 39	WATER	NE	12 SQ FT
SR 39	WATER	SW	12 SQ FT
SR 39	BRENTWOOD	NE	12 SQ FT
SR 39	BRENTWOOD	NW	32 SQ FT
SR 39	BRENTWOOD	SE	6 SQ FT
SR 39	BRENTWOOD	SW	13 SQ FT
SR 39	BRENTWOOD	SW	13 SQ FT
SR 39	MARKET	NE	10 SQ FT
SR 39	MARKET	NE	12 SQ FT
SR 39	MARKET	NW	12 SQ FT
SR 39	MARKET	SE	11 SQ FT
SR 39	MARKET	SE	13 SQ FT
SR 39	MARKET	SW	13 SQ FT
SR 39	MARKET	SW	11 SQ FT

ITEM 608, CURB RAMP, AS PER PLAN

THE FOLLOWING ITEMS ARE INTENDED TO REPLACE THE EXISTING WALK AND NON-ADA COMPLIANT CURB RAMPS WITH CURB RAMPS WITH TRUNCATED DOMES. PAYMENT SHALL INCLUDE ALL LABOR, EQUIPMENT, AND MATERIALS NECESSARY TO COMPLETE THE IMPROVEMENT. THE FOLLOWING ESTIMATED QUANTITIES ARE PROVIDED IN THE GENERAL SUMMARY TO BE USED AS DIRECTED. SEE SHEETS 16-18 FOR ADDITIONAL DETAILS ON CURB RAMPS WITH TRUNCATED DOMES.

ITEM 608, CURB RAMP, AS PER PLAN

PERRYSVILLE LOCATION	CROSS STREET	CORNER	QUANTITY
SR 39	BRIDGE	NE	30 SQ FT
SR 39	BRIDGE	NE	70 SQ FT
SR 39	BRIDGE	NW	36 SQ FT
SR 39	BRIDGE	NW	36 SQ FT
SR 39	BRIDGE	SE	66 SQ FT
SR 39	BRIDGE	SE	70 SQ FT
SR 39	BRIDGE	SW	81 SQ FT
SR 39	SCHOOL CROSSING	N	30 SQ FT
SR 39	SCHOOL CROSSING	S	30 SQ FT

ITEM 202, WALK REMOVED

PERRYSVILLE LOCATION	CROSS STREET	CORNER	QUANTITY
SR 39	BRIDGE	NE	24 SQ FT
SR 39	BRIDGE	NW	36 SQ FT
SR 39	BRIDGE	NW	36 SQ FT
SR 39	BRIDGE	SE	33 SQ FT
SR 39	BRIDGE	SE	36 SQ FT
SR 39	BRIDGE	SW	81 SQ FT

ITEM 202, CURB REMOVED, AS PER PLAN

AT THE FOLLOWING LOCATIONS, EXISTING CURB SHALL BE GROUND DOWN FLUSH WITH THE NEW ASPHALT IN ORDER TO INSTALL CURB RAMPS. THE CURB TRANSITION SHALL BE GROUND TO A 45° ANGLE, TRANSITION LENGTH TO DEPEND ON CURB HEIGHT.

PERRYSVILLE LOCATION	CROSS STREET	CORNER	QUANTITY
SR 39	BRIDGE	NE	6 FT
SR 39	BRIDGE	NW	6 FT
SR 39	BRIDGE	NW	6 FT
SR 39	BRIDGE	SE	6 FT
SR 39	BRIDGE	SE	6 FT
SR 39	BRIDGE	SW	6 FT

THE REMOVAL OF THE EXISTING CURB SHALL BE PAID FOR UNDER THE UNIT BID PRICE PER FT OF ITEM 202 CURB REMOVED, AS PER PLAN.

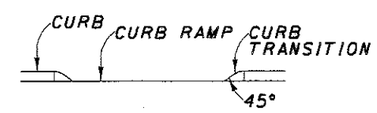

ITEM 608, 4" CONCRETE WALK

PERRYSVILLE LOCATION	CROSS STREET	SIDE	QUANTITY
SR 39	SCHOOL CROSSING	S	20 SQ FT
SR 39	SCHOOL CROSSING	N	15 SQ FT

CALCULATED SJD CHECKED MJS

GENERAL NOTES

ASD-39-0.00

DESIGN FILE: I:\projects\23578\GN00.dgn
WORKSTATION: jfinch DATE: 02/27/04

ITEM 608, CURB RAMP, AS PER PLAN CONT.

ITEM 608, CURB RAMP, AS PER PLAN

LOUDONVILLE LOCATION	CROSS STREET	CORNER	QUANTITY
SR 39	MT VERNON	NE	99 SQ FT
SR 39	RIVERSIDE	NE	28 SQ FT
SR 39	RIVERSIDE	NW	30 SQ FT
SR 39	SPRING	NE	30 SQ FT
SR 39	SPRING	NW	30 SQ FT
SR 39	SPRING	SW	33 SQ FT
SR 39	SPRING	SW	36 SQ FT
SR 39	WATER	NE	49 SQ FT
SR 39	WATER	NW	117 SQ FT
SR 39	WATER	SE	33 SQ FT
SR 39	WATER	SE	36 SQ FT
SR 39	WATER	SW	39 SQ FT
SR 39	MARKET	SW	72 SQ FT

ITEM 202, WALK REMOVED

LOUDONVILLE LOCATION	CROSS STREET	CORNER	QUANTITY
SR 39	MT VERNON	NE	99 SQ FT
SR 39	RIVERSIDE	NW	28 SQ FT
SR 39	RIVERSIDE	NW	30 SQ FT
SR 39	SPRING	SE	30 SQ FT
SR 39	SPRING	SE	30 SQ FT
SR 39	SPRING	SW	33 SQ FT
SR 39	SPRING	SW	36 SQ FT
SR 39	WATER	SW	49 SQ FT
SR 39	WATER	SW	117 SQ FT
SR 39	WATER	SW	33 SQ FT
SR 39	WATER	SW	36 SQ FT
SR 39	WATER	SW	39 SQ FT
SR 39	MARKET	SW	72 SQ FT

ITEM 202, CURB REMOVED, AS PER PLAN

AT THE FOLLOWING LOCATIONS, EXISTING CURB SHALL BE GROUND DOWN FLUSH WITH THE NEW ASPHALT IN ORDER TO INSTALL CURB RAMPS. THE CURB TRANSITION SHALL BE GROUND TO A 45° ANGLE, TRANSITION LENGTH TO DEPEND ON CURB HEIGHT.

LOUDONVILLE LOCATION	CROSS STREET	CORNER	QUANTITY
SR 39	MT VERNON	NE	19 FT
SR 39	RIVERSIDE	NE	5 FT
SR 39	RIVERSIDE	NE	5 FT
SR 39	ALLEY	NE	8 FT
SR 39	ALLEY	NE	8 FT

THE REMOVAL OF THE EXISTING CURB SHALL BE PAID FOR UNDER THE UNIT BID PRICE PER FT OF ITEM 202 CURB REMOVED, AS PER PLAN.

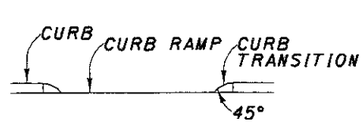

ITEM 614, WORK ZONE MARKING SIGN

THE FOLLOWING ESTIMATED QUANTITY HAS BEEN CARRIED TO THE GENERAL SUMMARY FOR USE AS DIRECTED BY THE ENGINEER FOR TEMPORARY WORK ZONE MARKING SIGNS PER THE REQUIREMENTS OF THE CONSTRUCTION AND MATERIALS SPECIFICATIONS, 614.04, AND THE APPROPRIATE PROPOSAL NOTE.

PART A - SR 39

WORK ZONE MARKING SIGN: (OW-167-36) NO EDGE LINE = 25 EACH

WORK ZONE MARKING SIGN: (R-33-24) DO NOT PASS = 34 EACH

WORK ZONE MARKING SIGN: PASS WITH CARE = 24 EACH

TOTAL = 83 EACH

PART B - SR 39

WORK ZONE MARKING SIGN: (OW-167-36) NO EDGE LINE = 4 EACH

WORK ZONE MARKING SIGN: (R-33-24) DO NOT PASS = 7 EACH

WORK ZONE MARKING SIGN: PASS WITH CARE = 5 EACH

TOTAL = 16 EACH

ITEM 614, ASPHALT CONCRETE FOR MAINTAINING TRAFFIC

THE FOLLOWING ESTIMATED QUANTITY HAS BEEN CARRIED TO THE GENERAL SUMMARY TO CONSTRUCT A TEMPORARY ASPHALT WEDGE FROM THE EXISTING PAVEMENT TO THE PLANED SURFACE AT BUTT JOINTS AND OTHER LOCATIONS THAT RESULT IN A DROP-OFF IN EXCESS OF 1.5 INCHES, AS DIRECTED BY THE ENGINEER. THIS QUANTITY SHALL ALSO BE USED AT PLANED SURFACES WHERE A TEMPORARY ASPHALT WEDGE IS NEEDED AROUND CASTINGS, AS DIRECTED BY THE ENGINEER.

75 CU. YD. ITEM 614, ASPHALT CONCRETE FOR MAINTAINING TRAFFIC

ITEM 617, COMPACTED AGGREGATE, TYPE A, AS PER PLAN

THIS ITEM OF WORK SHALL CONFORM TO ITEM 617 IN THE CONSTRUCTION AND MATERIALS SPECIFICATIONS BOOK WITH EXCEPTION OF 617.02 (MATERIALS).

THE MATERIAL ON THIS PROJECT SHALL BE THE ASPHALT CONCRETE GRINDINGS RESULTING FROM ITEM 254. THE GRINDINGS USED FOR THIS WORK ARE TO BE PLACED AND COMPACTED AS DESCRIBED IN 617.05 WITH SPECIAL CARE TO CREATE PROPER COMPACTION. 100% OF THIS MATERIAL SHALL PASS A 1.5 INCH SIEVE AS JUDGED BY THE ENGINEER. THE CONTRACTOR SHALL TAKE SPECIAL CARE TO MEET THE TYPICAL SECTIONS SHOWN IN THE PLANS AND AS DIRECTED BY THE ENGINEER.

PAYMENT FOR ALL THE ABOVE SHALL BE INCLUDED IN THE UNIT PRICE BID PER CU. YD. OF ITEM 617 COMPACTED AGGREGATE, TYPE A, AS PER PLAN.

BRIDGE LOCATION MARKER SIGN

THE BRIDGE LOCATION MARKER SIGN INDICATES THE COUNTY, THE ROUTE, AND THE STRAIGHT LINE MILEAGE OF THE STRUCTURE. THE CONTRACTOR SHALL REMOVE THE EXISTING BRIDGE LOCATION MARKER SIGNS AND REERECT THE SIGNS IN KIND. IF THERE ARE ANY QUESTIONS ON THE LOCATION, PLEASE CONTACT THE DISTRICT BRIDGE ENGINEER.

ALL COSTS, INCLUDING THE SIGN REMOVAL, SIGN RE-ERECTION, POST REMOVAL, AND POST INSTALLATION SHALL BE INCLUDED IN THE FOLLOWING PAY ITEMS:

ITEM 630 GROUND MOUNTED SUPPORT, NO.2, POST 52.5 FT.
ITEM 630 REMOVAL OF GROUND MOUNTED SIGN AND REERECTION 7 EACH

ITEM SPECIAL - MISC.: ASPHALT GRINDINGS

FROM THE ASPHALT GRINDINGS GENERATED ON THIS PROJECT, 1000 CU YDS SHALL BE DELIVERED BY THE CONTRACTOR TO THE PERRYSVILLE OUTPOST ODOT PROPERTY LOCATED AT 2595 SR 39, PERRYSVILLE, OH (419) 938-7292. ODOT WILL STOCKPILE THE DUMPED MATERIAL. ODOT WILL PROVIDE THE EXACT LOCATION OF THE STORAGE AREA ON THE PROPERTY TO THE CONTRACTOR AT THE PRECONSTRUCTION MEETING. THE GRINDINGS ARE NOT TO BE DELIVERED WET AND THEY ARE TO BE DELIVERED DIRECTLY FROM THE PROJECT. THE GRINDINGS ARE TO BE DELIVERED BETWEEN THE HOURS OF 8:00 AM AND 3:30 PM. BEFORE DELIVERY, THE CONTRACTOR SHALL CONTACT THE ASHLAND COUNTY GARAGE AT (419) 281-6501.

THE MATERIAL IN THIS ITEM WILL BE PAID FOR BY THE CU YD.

ALL ASSOCIATED COSTS TO LOAD AND DELIVER TO THE SITE THE ASPHALT GRINDINGS ARE TO BE INCLUDED FOR PAYMENT BY THE CU YD PER ITEM SPECIAL, MISC.: ASPHALT GRINDINGS.

CONTRACTOR WORK RESTRICTIONS

THE CONTRACTOR SHALL HAVE **ALL WORK** COMPLETED FROM SLM 8.00 TO SLM 9.27 (INCLUDES THE VILLAGE OF LOUDONVILLE) BY MAY 21, 2005. THIS WILL BE CONSIDERED AN INTERIM COMPLETION DATE. FAILURE OF THE CONTRACTOR TO MEET THESE REQUIREMENTS WILL RESULT IN THE CONTRACTOR BEING ASSESSED LIQUIDATED DAMAGES AS PER 108.07 OF THE CMS.

ITEM 614, MAINTAINING TRAFFIC (LANES OPEN DURING HOLIDAYS OR SPECIAL EVENTS)

NO WORK SHALL BE PERFORMED AND ALL EXISTING LANES SHALL BE OPEN TO TRAFFIC DURING THE FOLLOWING DESIGNATED HOLIDAYS OR EVENTS:

CHRISTMAS	FOURTH OF JULY
NEW YEARS	LABOR DAY
MEMORIAL DAY	THANKSGIVING
(OTHER HOLIDAY OR EVENT)	

THE PERIOD OF TIME THAT THE LANES ARE TO BE OPEN DEPENDS ON THE DAY OF THE WEEK ON WHICH THE HOLIDAY OR EVENT FALLS. THE FOLLOWING SCHEDULE SHALL BE USED TO DETERMINE THIS PERIOD:

DAY OF THE WEEK	TIME ALL LANES MUST BE OPEN TO TRAFFIC
SUNDAY	12:00N FRIDAY THROUGH (12:00N OR 6:00 AM) MONDAY
MONDAY	12:00N FRIDAY THROUGH (12:00N OR 6:00 AM) TUESDAY
TUESDAY	12:00N MONDAY THROUGH (12:00N OR 6:00 AM) WEDNESDAY
WEDNESDAY	12:00N TUESDAY THROUGH (12:00N OR 6:00 AM) THURSDAY
THURSDAY	12:00N WEDNESDAY THROUGH (12:00N OR 6:00 AM) MONDAY
FRIDAY	12:00N THURSDAY THROUGH (12:00N OR 6:00 AM) MONDAY
SATURDAY	12:00N FRIDAY THROUGH (12:00N OR 6:00 AM) MONDAY

NO EXTENSIONS OF TIME SHALL BE GRANTED FOR DELAYS IN MATERIAL DELIVERIES, UNLESS SUCH DELAYS ARE INDUSTRY-WIDE, OR FOR LABOR STRIKES, UNLESS SUCH STRIKES ARE AREA-WIDE.

SHOULD THE CONTRACTOR FAIL TO MEET ANY OF THESE REQUIREMENTS, THE CONTRACTOR SHALL BE ASSESSED LIQUIDATED DAMAGES IN ACCORDANCE WITH CMS 108.07.

ITEM 614 - MAINTAINING TRAFFIC (STRUCTURES ASD-39-0360, RIC-39-26.77)

DURING REPLACEMENT OF THE CONCRETE OVERLAY, TWO WAY, ONE LANE TRAFFIC WITH TRAFFIC SIGNALS SHALL BE MAINTAINED FOR A MAXIMUM OF 28 CONSECUTIVE CALENDAR DAYS (TOTAL BOTH PHASES). THE 28 CONSECUTIVE DAYS SHALL BE CONSIDERED AS AN INTERIM COMPLETION DATE (SECTION 108) AND FOR EACH CALENDAR DAY BEYOND THE 28 CALENDAR DAYS THAT THE HIGHWAY REMAINS IN A SIGNALIZED CLOSURE, THE CONTRACTOR WILL BE ASSESSED LIQUIDATED DAMAGES AS PER 108.07.

THE LOCATION OF THE ADVANCE WARNING SIGNS SHOULD BE ADJUSTED TO PROVIDE FOR ADEQUATE SIGHT DISTANCE FOR THE EXISTING VERTICAL AND HORIZONTAL ROADWAY ALIGNMENT.

THE SPACING BETWEEN PROPOSED SIGNS SHOULD BE ADJUSTED TO NOT CONFLICT WITH AND TO PROVIDE A MINIMUM OF 200 FEET CLEARANCE TO EXISTING SIGNS.

NO EQUIPMENT OR MATERIAL SHALL BE LOCATED OTHER THAN BEHIND THE PORTABLE CONCRETE BARRIER.

FOR ADDITIONAL MAINTENANCE OF TRAFFIC FOR THESE STRUCTURES, SEE SHEETS 48 AND 60.

ITEM 614 - MAINTAINING TRAFFIC (STRUCTURE ASD-39-0725)

DURING THE REPAIR OF THE ARCH, TWO WAY, ONE LANE TRAFFIC WITH TRAFFIC SIGNALS SHALL BE MAINTAINED FOR A MAXIMUM OF 19 CONSECUTIVE CALENDAR DAYS. THE 19 CONSECUTIVE DAYS SHALL BE CONSIDERED AS AN INTERIM COMPLETION DATE (SECTION 108) AND FOR EACH CALENDAR DAY BEYOND THE 19 CALENDAR DAYS THAT THE HIGHWAY REMAINS IN A SIGNALIZED CLOSURE, THE CONTRACTOR WILL BE ASSESSED LIQUIDATED DAMAGES AS PER 108.07.

THE LOCATION OF THE ADVANCE WARNING SIGNS SHOULD BE ADJUSTED TO PROVIDE FOR ADEQUATE SIGHT DISTANCE FOR THE EXISTING VERTICAL AND HORIZONTAL ROADWAY ALIGNMENT.

THE SPACING BETWEEN PROPOSED SIGNS SHOULD BE ADJUSTED TO NOT CONFLICT WITH AND TO PROVIDE A MINIMUM OF 200 FEET CLEARANCE TO EXISTING SIGNS.

NO EQUIPMENT OR MATERIAL SHALL BE LOCATED OTHER THAN BEHIND THE PORTABLE CONCRETE BARRIER.

FOR ADDITIONAL MAINTENANCE OF TRAFFIC FOR THIS STRUCTURE, SEE SHEET 53.

GENERAL SUMMARY

CALC BY: JPF
CHK'D BY: MJS

SHEET NUMBER 6	7	8	12	13	14		21		36					ITEM	ITEM EXT.	TOTAL	UNIT	DESCRIPTION	REF. SHEET
																		ROADWAY	
	246	632												202	30000	878	SQ FT	WALK REMOVED	
	36	45												202	32001	81	FT	CURB REMOVED, AS PER PLAN	7,8
							7387.5							202	38200	7387.5	FT	GUARDRAIL REMOVED FOR REUSE	
							2250							202	38201	2250	FT	GUARDRAIL REMOVED FOR REUSE, AS PER PLAN	19
							23							202	42000	23	EACH	ANCHOR ASSEMBLY REMOVED, TYPE A	
							9							202	42040	9	EACH	ANCHOR ASSEMBLY REMOVED, TYPE T	
							4598							203	20001	4598	CU YD	EMBANKMENT, AS PER PLAN	19
							14325							209	15060	14325	FT	RESHAPING UNDER GUARDRAIL	
				21.28										209	60500	21.3	MILE	LINEAR GRADING	
				19.88										209	72050	19.9	MILE	PREPARING SUBGRADE FOR SHOULDER PAVING	
					75									209	80000	75	EACH	GRADING MAILBOX APPROACHES	
5														604	39500	5	EACH	MONUMENT BOX ADJUSTED TO GRADE	
							1287.5							606	13000	1287.5	FT	GUARDRAIL, TYPE 5	
							4450							606	13030	4450	FT	GUARDRAIL, TYPE 5, USING 9 FOOT POSTS	
							2212.5							606	16500	2212.5	FT	GUARDRAIL REBUILT, TYPE 5	
							5137.5							606	16501	5137.5	FT	GUARDRAIL REBUILT, TYPE 5, AS PER PLAN	19
							8							606	22010	8	EACH	ANCHOR ASSEMBLY, TYPE E-98	
							16							606	25000	16	EACH	ANCHOR ASSEMBLY, TYPE A	
							12							606	26500	12	EACH	ANCHOR ASSEMBLY, TYPE T	
							8							606	35000	8	EACH	BRIDGE TERMINAL ASSEMBLY, TYPE 1	
							16							606	35140	16	EACH	BRIDGE TERMINAL ASSEMBLY, TYPE 4	
							55							606	98100	55	EACH	GUARDRAIL, MISC.: RAIL ELEMENT	19
	35													608	10000	35	SQ FT	4" CONCRETE WALK	
	449	632												608	52001	1081	SQ FT	CURB RAMP, AS PER PLAN	
	403													608	98000	403	SQ FT	WALKWAY, MISC.: TRUNCATED DOMES	
					4									SPECIAL	69050100	4	EACH	MAILBOX SUPPORT SYSTEM, SINGLE	14
																		DRAINAGE	
6														604	09000	6	EACH	CATCH BASIN ADJUSTED TO GRADE	
4														604	34500	4	EACH	MANHOLE ADJUSTED TO GRADE	
2														638	10800	2	EACH	VALVE BOX ADJUSTED TO GRADE	
																		PAVEMENT	
750														253	02000	750	CU YD	PAVEMENT REPAIR	
			177716											254	01000	177716	SQ YD	PAVEMENT PLANING, ASPHALT CONCRETE	
			8887											254	01600	8887	SQ YD	PATCHING PLANED SURFACE	
				5184										302	46001	5184	CU YD	ASPHALT CONCRETE BASE, PG64-22, AS PER PLAN	6
			1913											407	10000	1913	GALLON	TACK COAT	
			10140											407	14000	10140	GALLON	TACK COAT FOR INTERMEDIATE COURSE	
				10159										408	10000	10159	GALLON	PRIME COAT	
			155372											422	10000	155372	SQ YD	SINGLE CHIP SEAL WITH POLYMER BINDER	
			6225											446	47020	6225	CU YD	ASPHALT CONCRETE SURFACE COURSE, TYPE 1, PG64-22	
			3735											448	46020	3735	CU YD	ASPHALT CONCRETE INTERMEDIATE COURSE, TYPE 1, PG64-22	
				1060	150									617	10101	1210	CU YD	COMPACTED AGGREGATE, TYPE A, AS PER PLAN	8
				25394										617	20000	25394	SQ YD	SHOULDER PREPARATION	
		1000												SPECIAL	69098700	1000	CU YD	MISC.: ASPHALT GRINDINGS	8

GENERAL SUMMARY

ASD-39-0.00

GENERAL SUMMARY

CALC BY: JPF
CHK'D BY: MJS

SHEET NUMBER 6	7	8	12	13	14		21		36					ITEM	ITEM EXT.	TOTAL	UNIT	DESCRIPTION	REF. SHEET
																		MAINTENANCE OF TRAFFIC	
		99												614	12460	99	EACH	WORK ZONE MARKING SIGN	
		75												614	13000	75	CU YD	ASPHALT CONCRETE FOR MAINTAINING TRAFFIC	
									46.67					614	21500	46.67	MILE	WORK ZONE CENTER LINE, CLASS II, 642 PAINT	
									1254					614	23200	1254	FT	WORK ZONE CHANNELIZING LINE, CLASS I, 642 PAINT	
																		TRAFFIC CONTROL	
									831					202	54000	831	EACH	RPM REMOVED AND DISPOSED	6
									831					621	00100	831	EACH	RPM	
							186							626	00100	186	EACH	BARRIER REFLECTOR, TYPE A	
							5							626	00200	5	EACH	BARRIER REFLECTOR, TYPE B	
		52.5												630	02100	52.5	FT	GROUND MOUNTED SUPPORT, NO. 2 POST	
		7												630	85100	7	EACH	REMOVAL OF GROUND MOUNTED SIGN AND REERECTION	
									21.28					642	00102	21.28	MILE	EDGE LINE, TYPE 2	
									12.00					642	00302	12	MILE	CENTER LINE, TYPE 2	
									418					644	00400	418	FT	CHANNELIZING LINE	
									358					644	00500	358	FT	STOP LINE	
									981					644	00600	981	FT	CROSSWALK LINE	
									2					644	01110	2	EACH	SCHOOL SYMBOL MARKING, 96"	
									954					644	01200	954	FT	PARKING LOT STALL MARKING	
									16					644	01300	16	EACH	LANE ARROW	
																		STRUCTURES	
																		BRIDGE NO. ASD-39-0133 (SLM) SFN 0300799	
																		SEE STRUCTURE SUMMARY ON SHEET NO. 39	
																		BRIDGE NO. ASD-39-0162 (SLM) SFN 0300829	
																		SEE STRUCTURE SUMMARY ON SHEET NO. 39	
																		BRIDGE NO. ASD-39-0360 (SLM) SFN 0300845	
																		SEE STRUCTURE SUMMARY ON SHEET NO. 39	
																		BRIDGE NO. ASD-39-0491 (SLM) SFN 0300926	
																		SEE STRUCTURE SUMMARY ON SHEET NO. 40	
																		BRIDGE NO. ASD-39-0725 (SLM) SFN 0300993	
																		SEE STRUCTURE SUMMARY ON SHEET NO. 40	
																		BRIDGE NO. ASD-39-0897 (SLM) SFN 0300942	
																		SEE STRUCTURE SUMMARY ON SHEET NO. 41	
																		BRIDGE NO. RIC-39-2677 (SLM) SFN 7002556	
																		SEE STRUCTURE SUMMARY ON SHEET NO. 41	
														614	11000	LUMP		MAINTAINING TRAFFIC	
														619	16010	4	MONTH	FIELD OFFICE, TYPE B	
														624	10000	LUMP		MOBILIZATION	

GENERAL SUMMARY

ASD-39-0.00

SEE BRIDGE TREATMENT SHEET FOR PLANING AND PAVING DETAILS AT THE STRUCTURES.

* - FOR TYPICALS, SEE SHEET 4

** REFER TO SHEET 46 FOR VARIABLE DEPTH PAVEMENT PLANING AT STR. ASD-39-0162

NOTE: USE BUTT JOINTS THROUGHOUT THE PROJECT

PART	ROUTE	LOG POINT TO LOG POINT (STRAIGHT LINE MILEAGE)		LENGTH MILE	LENGTH FEET	WIDTH FEET AVG.	* TYPICAL	EXISTING PAVEMENT TYPE	PAVEMENT AREA SQ YD	254 PAVEMENT PLANING, ASPHALT CONCRETE SQ YD	254 PATCHING PLANED SURFACE SQ YD	407 TACK COAT FOR INTERMEDIATE COURSE @ 0.03 GAL/SY GALLON	407 TACK COAT FOR INTERMEDIATE COURSE @ 0.03 GAL/SY (OVER CHIP SEAL) GALLON	407 TACK COAT @ 0.08 GAL/SY GALLON	422 SINGLE CHIP SEAL WITH POLYMER BINDER SQ YD			446 ASPHALT CONCRETE SURFACE COURSE, TYPE 1, PG64-22 THICK AVG. INCH	446 CU YD	448 ASPHALT CONCRETE INTERMEDIATE COURSE, TYPE 1, PG64-22 THICK AVG. INCH	448 CU YD			
A	SR 39	0.00	2.90	2.90	15312	23.0	1	404	39131	39131 **	1957	1174	1174		39131			1.25	1359	0.75	815			
A	SR 39	2.90	4.08	1.18	6230.4	27.0 ±	1	404	18691	18691	935	561	561		18691			1.25	649	0.75	389			
A	SR 39	4.08	4.68	0.60	3168	28.0	2	404	9856	9856	493	296	296		9856			1.25	342	0.75	205			
A	SR 39	4.68	5.18	0.50	2640	27.0 ±	1	404	7920	7920	396	238	238		7920			1.25	275	0.75	165			
A	SR 39	5.18	5.22	0.04	211.2	24.0	6	404	563	563	28	17	17		563			1.25	20	0.75	12			
A	SR 39	5.22	8.13	2.91	15364.8	27.0 ±	1	404	46094	46094	2305	1383	1383		46094			1.25	1600	0.75	960			
A	SR 39	8.13	8.78	0.65	3432	23.0	5	404	8771	8771	439	263		702				1.25	305	0.75	183			
A	SR 39	8.78	8.80	0.02	105.6	24.0	3	404	282	282	14	8		23				1.25	10	0.75	6			
A	SR 39	8.80	8.87	0.07	369.6	37.0	4	404	1519	1519	76	46		122				1.25	53	0.75	32			
A	SR 39	8.87	8.88	0.01	52.8	38.0	4	404	223	223	11	7		18				1.25	8	0.75	5			
A	SR 39	8.88	9.09	0.21	1108.8	37.0	4	404	4558	4558	228	137		365				1.25	158	0.75	95			
A	SR 39	9.09	9.22	0.13	686.4	54.0	4	404	4118	4118	206	124		329				1.25	143	0.75	86			
A	SR 39	9.22	9.27	0.05	264	40.0	4	404	1173	1173	59	35		94				1.25	41	0.75	24			
	EXTRA AREA FOR INTERS., DRIVES, + M.B.								2690	1400	70	81	81	215				1.25	93	0.75	56			
	SUB-TOTAL SR 39			**9.27**	**48945.6**				**145589**	**144299**	**7217**	**4370**	**3750**	**1868**	**122255**				**5056**		**3033**			
B	SR 39	24.95	25.05	0.10	528	24.0	1	404	1408	1408	70	42	42		1408			1.25	49	0.75	29			
B	SR 39	25.05	27.40	2.35	12408	23.0	1	404	31709	31709	1585	951	951		31709			1.25	1101	0.75	661			
	EXTRA AREA FOR INTERS., DRIVES, + M.B.								558	300	15	17	17	45				1.25	19	0.75	12			
	SUB-TOTAL SR 39			**2.45**	**12936.0**				**33675**	**33417**	**1670**	**1010**	**1010**	**45**	**33117**				**1169**		**702**			
	TOTALS			**11.72**	**61881.6**				**179264**	**177716**	**8887**	**5380**	**4760**	**1913**	**155372**				**6225**		**3735**			

CALC BY: JPF
CHK'D BY: MJS

PAVEMENT DATA

ASD-39-0.00

* - FOR TYPICALS, SEE SHEET 4

** CUT 6" MIN. INTO EXISTING PAVEMENT

NOTE: STOP WIDENING 100' EACH DIRECTION OF 5.20 CULVERT

PART	ROUTE	LOG POINT TO LOG POINT (STRAIGHT LINE MILEAGE)		LENGTH MILE	LENGTH FEET	* TYPICAL	PAVED SHOULDER PROPOSED WIDTH FEET (AVG.) A	PAVED SHOULDER PROPOSED WIDTH FEET (AVG.) B	PAVED SHOULDER AREA SQ YD	209 LINEAR GRADING MILE	209 ** PREPARING SUBGRADE FOR SHOULDER PAVING INCH	209 ** PREPARING SUBGRADE FOR SHOULDER PAVING MILE	302 ASPHALT CONCRETE BASE, PG64-22, AS PER PLAN INCH	302 ASPHALT CONCRETE BASE, PG64-22, AS PER PLAN CU YD	AGGREGATE SHOULDER PROPOSED WIDTH FEET (AVG.) C	AGGREGATE SHOULDER PROPOSED WIDTH FEET (AVG.) D	AGGREGATE SHOULDER AREA SQ YD	617 SHOULDER PREPARATION SQ YD	617 COMPACTED AGGREGATE, TYPE A, AS PER PLAN 1.50 IN. AVG. THICKNESS CU YD			408 PRIME COAT @ 0.40 GAL/SY GALLON	
A	SR 39	0.00	2.90	2.90	15312	1	2.0	2.0	6805		5.80	8	5.80	8	1512	2.0	2.0	6805	6805	284			2722
A	SR 39	2.90	4.08	1.18	6230.4	1	2.0	2.0	2769		2.36	8	2.36	8	615	2.0	2.0	2769	2769	115			1108
A	SR 39	4.68	5.18	0.50	2640	1	2.0	2.0	1173		1.00	8	1.00	8	261	2.0	2.0	1173	1173	49			469
A	SR 39	5.18	5.22	0.04	211.2	6					0.08					2.0	2.0	94	94	4			38
A	SR 39	5.22	8.13	2.91	15364.8	1	2.0	2.0	6829		5.82	8	5.82	8	1518	2.0	2.0	6829	6829	285			2732
A	SR 39	8.13	8.78	0.65	3432	5					1.30					2.0	2.0	1525	1525	64			610
A	SR 39	8.78	8.80	0.02	105.6	3					0.02					2.0		23	23	1			9
	EXTRA AREA FOR INTERS., DRIVES, + M.B.																	354	354	15			142
	SUB-TOTAL SR 39			**8.20**	**43296**						**16.38**		**14.98**		**3906**				**19572**	**817**			**7830**
B	SR 39	24.95	25.05	0.10	528	1	2.0	2.0	235		0.20	8	0.20	8	52	2.0	2.0	235	235	10			94
B	SR 39	25.05	27.40	2.35	12408	1	2.0	2.0	5515		4.70	8	4.70	8	1226	2.0	2.0	5515	5515	230			2206
	EXTRA AREA FOR INTERS., DRIVES, + M.B.																	72	72	3			29
	SUB-TOTAL SR 39			**2.45**	**12936**						**4.90**		**4.90**		**1278**				**5822**	**243**			**2329**
	TOTALS			**10.65**	**56232**						**21.28**		**19.88**		**5184**				**25394**	**1060**			**10159**

CALC BY: JPF
CHK'D BY: MJS

SHOULDER DATA

ASD-39-0.00

ITEM SPECIAL, MAILBOX SUPPORT SYSTEM

THIS ITEM OF WORK SHALL CONSIST OF THE REMOVAL OF EXISTING NON-STANDARD MAILBOX SUPPORTS AND FURNISHING AND ERECTING MAILBOX SUPPORTS AND ANY ASSOCIATED HARDWARE IN ACCORDANCE WITH THE DETAILS SHOWN, AND ATTACHING AN OWNER SUPPLIED MAILBOX, AT LOCATIONS DETERMINED BY THE ENGINEER.

IN ABSENCE OF A NEW BOX SUPPLIED BY THE OWNER THE CONTRACTOR SHALL SALVAGE THE EXISTING BOX AND PLACE IT ON THE NEW SUPPORT. DUE CARE SHALL BE EXERCISED IN SUCH AN OPERATION, THE CONTRACTOR SHALL BE RESPONSIBLE FOR REPAIRING OR REPLACING ANY BOX DAMAGED BY IMPROPER HANDLING, AS JUDGED AND DIRECTED BY THE ENGINEER.

THE BOX SHALL BE SECURELY AND NEATLY ATTACHED BY THE CONTRACTOR TO THE NEW SUPPORT. THE CONTRACTOR SHALL SUPPLY ALL NECESSARY ATTACHMENT HARDWARE (NUTS, BOLTS, PLATES, SPACERS AND WASHERS) AS NECESSARY TO ACCOMODATE THE COMPLETE INSTALLATION. SUPPORT HARDWARE SHALL ACCOMODATE EITHER A SINGLE OR A DOUBLE MAILBOX INSTALLATION, AND NO MORE THAN TWO MAILBOXES MAY BE MOUNTED ON A SINGLE POST. [HARDWARE SHALL BE COMMERCIAL GRADE GALVANIZED STEEL.]

WOOD POSTS SHALL BE NOMINAL 4 IN. x 4 IN. (S4S) OR 4½ IN. DIAMETER ROUND, AND CONFORM TO 710.14. STEEL POSTS SHALL BE NOMINAL PIPE SIZE 2 IN. I.D., AND CONFORM TO AASHTO M 181.

POSTS SHALL BE SET AS PER THE FIRST PARAGRAPH OF 606.03, AND SHALL IN NO INSTANCE BE ENCASED IN CONCRETE.

THE CONTRACTOR SHALL BE RESPONSIBLE FOR COORDINATING WORK WITH THE LOCAL POST MASTER AND NOTIFYING THE PROPERTY OWNERS PRIOR TO WORK.

GROUP MAILBOX SUPPORTS SHALL BE PLACED ON 3 FT. CENTERS AND THE TURNOUT LENGTHENED TO ACCOMODATE THE GROUPING.

WHERE GUARDRAIL EXISTS, MAILBOXES AND THEIR SUPPORTS SHALL BE PLACED BEHIND THE GUARDRAIL. SUPPORTS MUST STILL MEET THE BREAKAWAY REQUIREMENTS LISTED ABOVE.

THE FOLLOWING ESTIMATED QUANTITIES HAVE BEEN CARRIED TO THE GENERAL SUMMARY TO BE USED AS DESCRIBED ABOVE.

ITEM SPECIAL-MAILBOX SUPPORT SYSTEM, SINGLE	
PART A - S.R. 39	1 EACH
PART B - S.R. 39	3 EACH

MAILBOXES

THE MAILBOX APPROACHES SHALL BE PAVED WITH ¾ IN. OF ITEM 448 INTERMEDIATE COURSE AND 1¼ IN. OF ITEM 446 SURFACE COURSE. THEY SHALL CONFORM AS MUCH AS PRACTICAL TO STANDARD DRAWING BP-4.1 OR AS DIRECTED BY THE ENGINEER.

GRADING SHALL BE PERFORMED IN THESE AREAS TO OBTAIN A BASE WHICH WILL ALLOW THE FINISHED GRADE TO BE FLUSH WITH ADJACENT PAVEMENT. A QUANTITY OF ITEM 617 COMPACTED AGGREGATE, TYPE A, AS PER PLAN HAS BEEN PROVIDED FOR AREAS WHERE THE SHOULDER IS LOW PRIOR TO GRADING AND/OR LOW AREAS CAUSED BY THE REMOVAL OF UNSUITABLE MATERIAL. QUANTITIES TO PERFORM THIS WORK HAVE BEEN INCLUDED IN THE GENERAL SUMMARY AND ARE ESTIMATED AS FOLLOWS.

ITEM 209 - GRADING MAILBOX APPROACHES:	
PART A - S.R. 39	61 EACH
PART B - S.R. 39	14 EACH
ITEM 617 - COMPACTED AGGREGATE, TYPE A, AS PER PLAN	
PART A - S.R. 39	122 CU YD
PART B - S.R. 39	28 CU YD

FOR DETAILS NOT SHOWN SEE STANDARD DRAWING BP-4.1

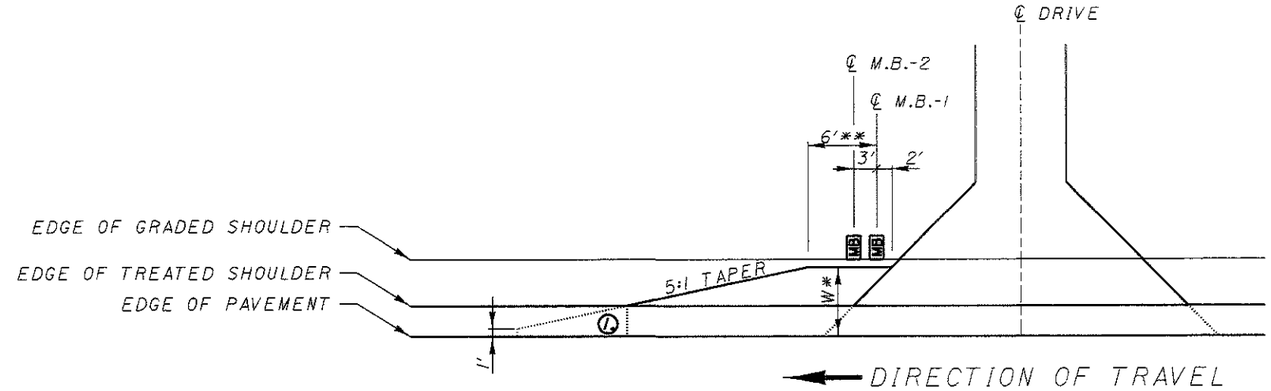

(1) END MAILBOX TURNOUT AT EDGE OF TREATED SHOULDER OR 1' WHICH EVER IS GREATER.

* WHERE MAILBOX POSTS ARE BEHIND GUARDRAIL, TURNOUT WIDTH SHALL EXTEND TO FACE OF GUARDRAIL. WHERE NO GUARDRAIL IS REQUIRED, TURNOUT WIDTH SHALL BE 6 FT. MINIMUM, EXCEPT WHERE FIELD CONDITIONS WILL NOT PERMIT.

** 6' FOR SINGLE MAILBOX SUPPORT, ADD 3 FT. FOR EACH ADDITIONAL MAILBOX

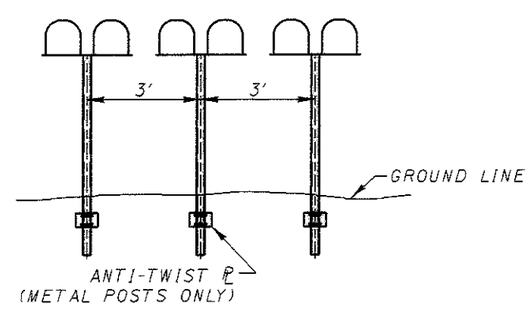

GROUP MAILBOX INSTALLATION

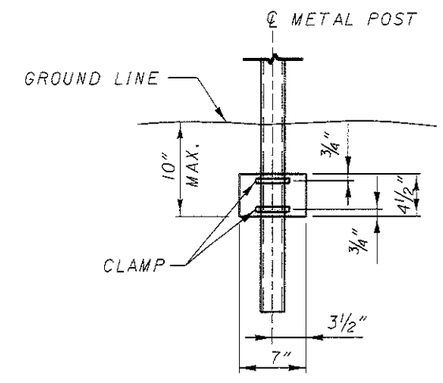

ANTI-TWIST PLATE

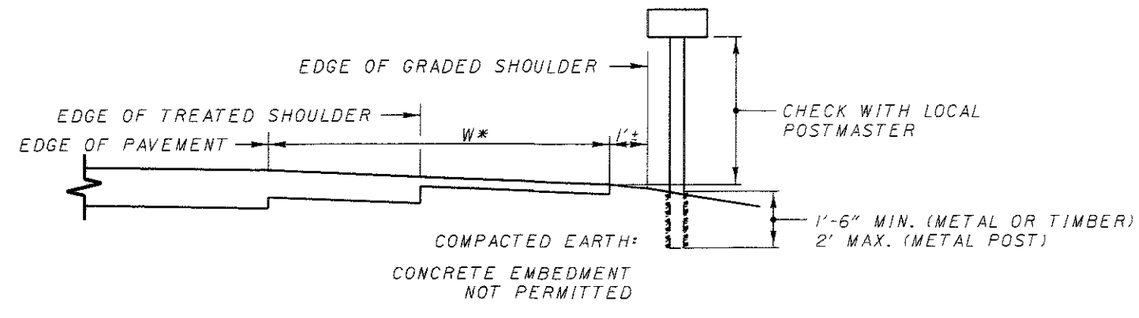

CROSS SECTION / ELEVATION VIEW

CALCULATED JPF CHECKED MJS

MAILBOX FACILITIES

ASD-39-0.00

DESIGN FILE: i:\projects\23578\GN00.dgn
WORKSTATION: jfinch DATE: 02/23/04

GENERAL NOTES

1. IT IS INTENDED THAT THIS DRAWING BE USED FOR TREATMENT OF DROP-OFFS THAT DEVELOP DURING CONSTRUCTION OPERATONS, AND THAT ARE NOT OTHERWISE PROVIDED FOR IN THE CONSTRUCTION PLANS. THE SUGGESTED TREATMENTS ARE INTENDED FOR HIGH VOLUME PROJECTS THAT WILL LAST AT LEAST SEVEN DAYS AND HAVE AN ACTIVE WORK ZONE 1 MILE (1.6 KM) OR LESS IN LENGTH. FOR GUIDANCE ON THE USE OF THIS SHEET, SEE L&D MANUAL VOLUME ONE, SECTION 500. WHERE THE PLANS DO NOT PROVIDE SPECIFIC ITEMS FOR LABOR, EQUIPMENT, OR MATERIALS TO IMPLEMENT THE DROP-OFF TREATMENTS SPECIFIED HERON, THEY SHALL BE INCLUDED FOR PAYMENT IN THE LUMP SUM BID FOR ITEM 614-MAINTAINING TRAFFIC.
2. WHILE THE NEED FOR CERTAIN ADVISORY SIGNING IS NOTED HERON, IT IS NOT INTENDED THAT THIS BE INDICATIVE OF ALL SIGNING THAT MAY BE REQUIRED TO ADVISE OR WARN MOTORISTS. ALL REQUIREMENTS OF THE OHIO MANUAL OF UNIFORM TRAFFIC CONTROL DEVICES (OMUTCD) MUST BE FULFILLED.
3. IN URBAN OR OTHERWISE HEAVILY DEVELOPED AREAS WHERE PEDESTRIANS AND/OR BICYCLISTS MAY BE PRESENT IN SIGNIFICANT NUMBERS, ADDITIONAL SIGNING AND PROTECTIVE MEASURES OTHER THAN THOSE SHOWN HEREON MAY BE REQUIRED.
4. THE DROP-OFF TREATMENT SELECTED FOR USE AT ANY GIVEN LOCATION SHALL BE AS APPROPRIATE FOR THE PREVAILING CONDITIONS AT THE SITE.
5. WHERE CONCRETE BARRIER IS SPECIFIED, IT SHALL BE IN ACCORDANCE WITH SCD RM-4.2 AND ITEM 622.
6. WHEN DRUMS ARE SPECIFIED FOR A DROP-OFF CONDITION, A MINIMUM NUMBER OF FOUR DRUMS SHALL BE USED. SPACING SHALL BE AS INDICATED IN THE PLANS OR AS SPECIFIED IN THE OMUTCD.
7. WHEN OW-151 (LOW SHOULDER) SIGNS OR OW-155 (SHOULDER DROP-OFF) SIGNS OR OW-171 (UNEVEN LANES) SIGNS ARE REQUIRED, THEY SHALL BE PLACED 750' (250 M) IN ADVANCE OF THE CONDITION, ON ALL INTERSECTING ENTRANCE RAMPS WITHIN THE LIMITS OF THE CONDITION AND IMMEDIATELY BEYOND ALL INTERSECTING ROADWAYS WITHIN THE LIMITS OF THE CONDITION. WHEN THE DROP-OFF CONDITION EXTENDS MORE THAN 0.5 MILE (800M), ADDITIONAL SIGNS SHOULD BE ERECTED AT INTERVALS OF 1.0 MILE (1600 M) OR LESS.
8. FOR LOCATIONS, SUCH AS AT RAMPS, LANE SHIFTS, LANE CLOSURES, ETC., WHERE TRAFFIC IS REQUIRED TO NEGOTIATE A DIFFERENCE IN ELEVATION BETWEEN PAVEMENTS, A 3:1 SLOPE TREATMENT SIMILAR TO THE OPTIONAL WEDGE TREATMENT SHALL BE PROVIDED.
9. PORTABLE CONCRETE BARRIER SHALL BE PLACED ON THE SAME LEVEL AS THE TRAFFIC SURFACE AND SHALL NOT ENCROACH ON LANE WIDTH(S) DESIGNATED AS THE MINIMUM REQUIRED FOR TRAFFIC USE. WHERE DRUMS ARE USED, AND THEIR PRESENCE WOULD REDUCE TRAVELED LANE WIDTHS TO LESS THAN 10' (3.0M), DRUMS MAY BE PLACED ON THE OPPOSITE LEVEL FROM THAT OF TRAFFIC PROVIDED THE DROP-OFF DEPTH DOES NOT EXCEED 5" (125) AND APPROVAL IS GRANTED BY THE PROJECT ENGINEER.
10. PAVEMENT REPAIRS (OR SIMILAR WORK):
    A. LENGTHS GREATER THAN 60' (18 M) - UTILIZE APPROPRIATE TREATMENT FROM CONDITION 1.
    B. LENGTHS OF 60' (18 M) OR LESS - REPAIRS SHALL BE EFFECTED IN ACCORDANCE WITH CMS 255.08. DRUMS MAY BE USED AS A SEPARATOR ADJACENT TO THE TRAVELED LANE.

OPTIONAL WEDGE TREATMENT

(MILLING OR RESURFACING)

1. THIS TREATMENT MAY BE USED WHEN PERMITTED FOR CONDTION 1 ONLY.
2. OW-171 SIGN REQUIRED

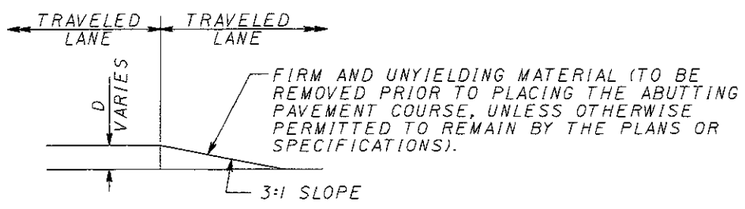

CONDITION I

DROP-OFFS BETWEEN TRAVELED LANES

1. THESE TREATMENTS ARE TO BE USED FOR RESURFACING, PAVEMENT PLANING, EXCAVATION, ETC. BETWEEN OR WITHIN TRAVELED LANES.

D	TREATMENT
≤1½" (≤40)	ERECT OW-171 SIGN
>1½"-3" (40-75)	1. LANE CLOSURE UTILIZING DRUMS* AS SHOWN BELOW OR 2. OPTIONAL WEDGE TREATMENT
>3"-5" (>75-125)	LANE CLOSURE UTILIZING DRUMS AS SHOWN BELOW
>5" (>125)	LANE CLOSURE UTILIZING PORTABLE CONCRETE BARRIER AS SHOWN BELOW

* CONES MAY BE USED FOR DAYTIME ONLY CONDITIONS

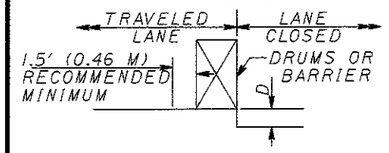

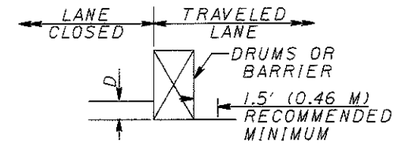

CONDITION II

DROP-OFFS WITHIN GRADED SHOULDER AREA

THE TREATMENTS INDICATED BELOW ARE FOR USE IN CONJUNCTION WITH RESURFACING, PLANING, OR EXCAVATIONS WITHIN THE GRADED SHOULDER AREA.

THE GRADED SHOULDER AREA IS THAT FLAT OR GRADUALLY SLOPING AREA BETWEEN THE EDGE OF A NORMALLY TRAVELED LANE AND THE MORE STEEPLY SLOPING DITCH FORESLOPE OR EMBANKMENT SLOPE. ITS SURFACE MAY BE SOIL OR TURF, AND/OR IT MAY BE INCLUSIVE OF A "TREATED" AREA (IMPROVED WITH MAXIMUM WIDTH SHALL BE CONSIDERED TO BE 12' (3.6 M).

D	TREATMENT
≤1½" (≤40)	ERECT OW-155 SIGNS
>1½"-5" (>40-125)	1. IF MINIMUM LANE WIDTH* REQUIREMENTS CAN BE MET, MAINTAIN LANES UTILZING DRUMS AS SHOWN BELOW OR 2. IF MINIMUM LANE WIDTH* REQUIREMENTS CANNOT BE MET, CLOSE ADJACENT LANE UTILIZING DRUMS OR 3. OPTIONAL SHOULDER TREATMENT
>5"-12" (>125-305) DAYLIGHT ONLY	IF MINIMUM LANE WIDTH* REQUIREMENTS CAN BE MET, MAINTAIN LANES UTILIZING DRUMS AS SHOWN BELOW.
>5"-24" (>125-610)	1. IF MINIMUM LANE WIDTH* REQUIREMENTS CAN BE MET, MAINTAIN LANES UTILIZING PORTABLE CONCRETE BARRIER AS SHOWN BELOW. OR 2. IF MINIMUM LANE WIDTH* REQUIREMENTS CANNOT BE MET, CLOSE ADJACENT LANE UTILIZING DRUMS.
>5"-24" (>125-610)	LANE CLOSURE UTILIZING PORTABLE CONCRETE BARRIER AS SHOWN BELOW

*MINIMUM LANE WIDTHS SHALL BE 10' (3.0 M) UNLESS OTHERWISE SPECIFIED IN THE PLANS.

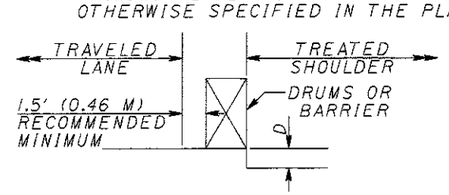

OPTIONAL SHOULDER TREATMENT

1. THIS TREATMENT MAY NOT BE USED WITHIN A BITUMINOUS SHOULDER WHERE A HOT LONGITUDINAL JOINT PER CMS 401.15 IS REQUIRED.
2. OW-151 SIGNS REQUIRED.

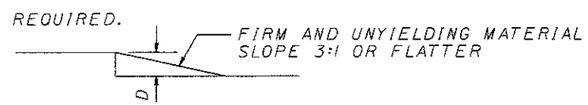

CONDITION III

DROP-OFFS BEYOND GRADED SHOULDER OR BACK OF CURB

1. SEE NOTE 2 UNDER CONDITION II.
2. USE CHART A OR B BELOW, AS APPLICABLE.

CHART A

USE FOR: 1. UNCURBED FACILITIES.
2. CURBED FACILITIES, WHERE:
   A. CURBS ARE LESS THAN 6" (150) IN HEIGHT.
   B. CURBS ARE 6" (150) OR GREATER IN HEIGHT AND THE LEGAL SPEED IS GREATER THAN 40 MPH (70 KM/H)

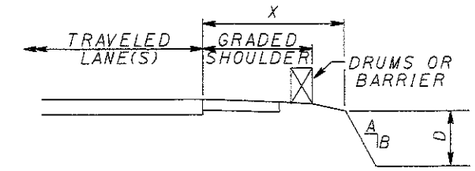

X	D	A/B	Treatment Required	
			Day	Night
0-4' (0-1.2 M)	ANY	ANY	(A)	(A)
4'-30' (1.2 M-9.1 M)	ANY	3:1 OR FLATTER	NONE	NONE
4'-12' (1.2 M-3.6 M)	≤3" (≤75)	STEEPER THAN 3:1	NONE	NONE
4'-12' (1.2 M-3.6 M)	>3"-≤12" (>75-≤305)	STEEPER THAN 3:1	DRUMS	DRUMS
4'-12' (1.2 M-3.6 M)	>12" (>305)	STEEPER THAN 3:1	DRUMS	BARRIER
>12'-20' (>3.6 M-6.1 M)	>12" (>305)	STEEPER THAN 3:1	NONE	NONE
>12'-20' (>3.6 M-6.1 M)	>12"-<24" (>305-<610)	STEEPER THAN 3:1	DRUMS	DRUMS
>12'-20' (>3.6 M-6.1 M)	>24" (>610)	STEEPER THAN 3:1	DRUMS	BARRIER
>20'-30' (>6.1 M-9.1 M)	<24" (<610)	STEEPER THAN 3:1	NONE	NONE
>20'-30' (>6.1 M-9.1 M)	>24" (>610)	STEEPER THAN 3:1	DRUMS	BARRIER
>30' (>9.1 M)	ANY	ANY	NONE	NONE
(A) USE TREATMENT SPECIFIED UNDER CONDITION II				

CHART B

USE FOR: CURBED FACILITIES, WHERE THE CURB IS 6" (150) OR GREATER IN HEIGHT AND THE LEGAL SPEED IS 40 MPH (70 KM/H) OR LESS.

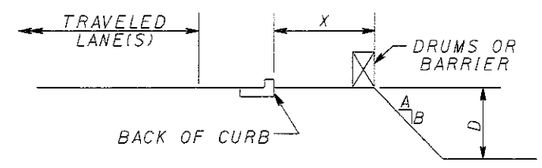

X	D	A/B	TREATMENT REQUIRED	
			DAY	NIGHT
0-10' (0-3.0 M)	<12" (<305)	ANY	NONE	DRUMS
0-10' (0-3.0 M)	>12" (>305)	ANY	DRUMS	DRUMS
>10' (>3.0 M)	ANY	ANY	NONE	NONE

NOTE: ALL METRIC DIMENSIONS (IN BRACKETS ( )) ARE IN MILLIMETERS UNLESS OTHERWISE NOTED.

08-07-01

DROP-OFFS IN WORK ZONES

OFFICE OF TRAFFIC ENGINEERING

ASD-39-0.00

15/60

DESIGN FILE: i:\projects\23578\GN00.dgn
WORKSTATION: jfinch
DATE: 02/23/04

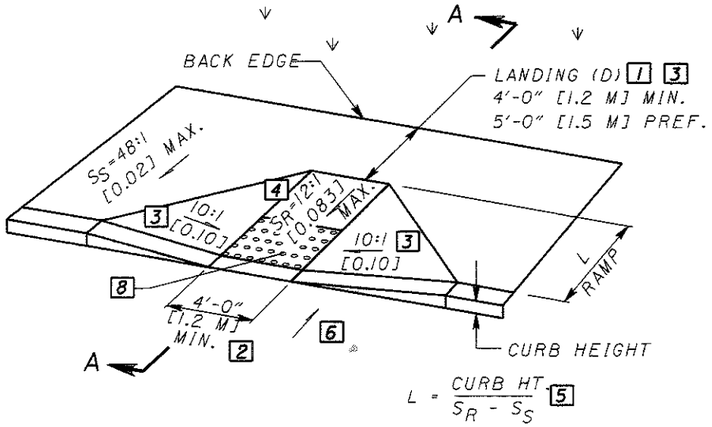

$$L = \frac{\text{CURB HT.}}{S_R - S_S}$$ 5

SEE SHT. 3/3 FOR SECTION A-A

PERPENDICULAR CURB RAMP DETAIL

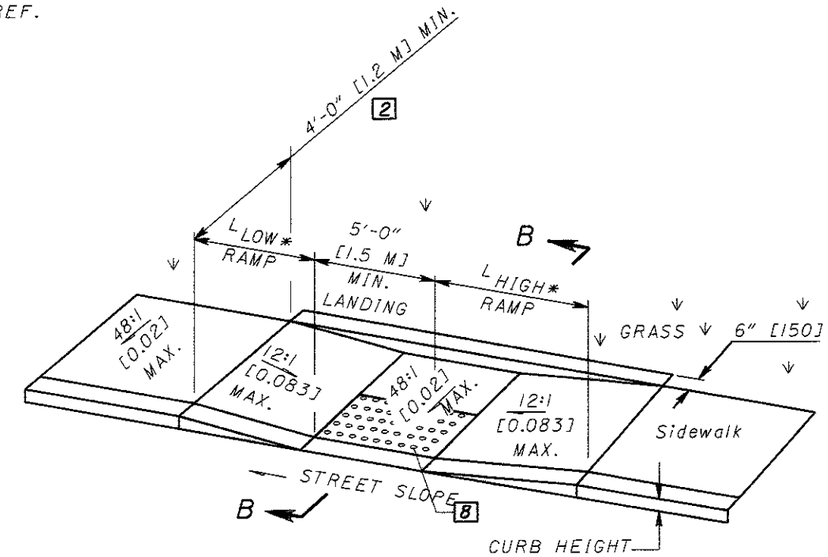

SEE SHT. 3/3 FOR SECTION B-B

PARALLEL CURB RAMP DETAIL (DOUBLE)

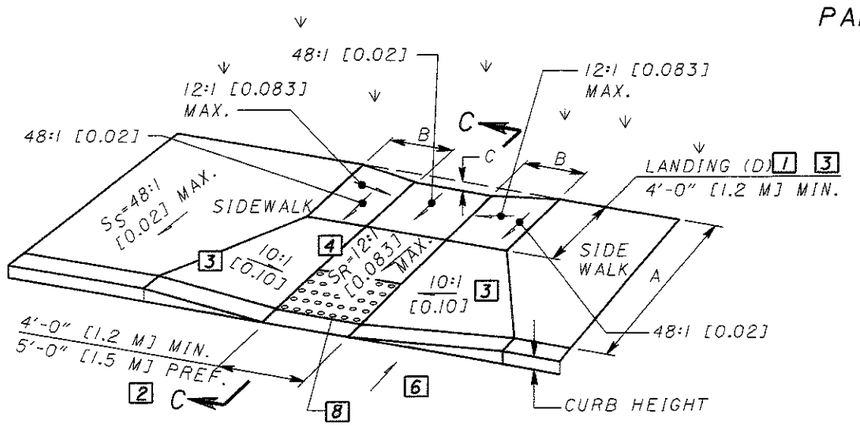

SEE SHT. 3/3 FOR SECTION C-C

COMBINED CURB RAMP DETAIL

$B = C / 0.083$

$C = [\text{CURB HT.} + A(S_S)] - [(A-D)S_R + D(0.02)]$

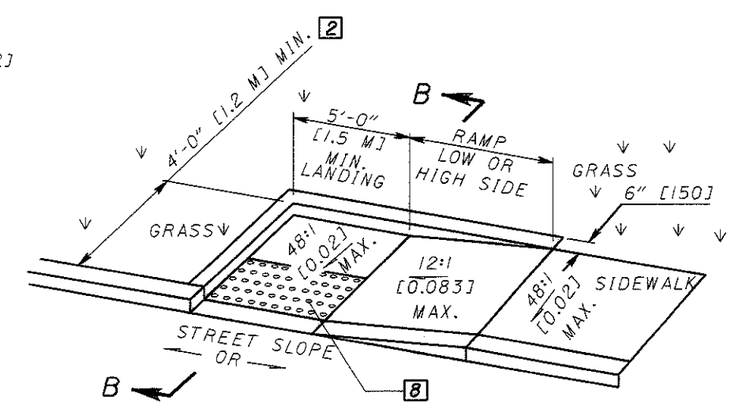

SEE SHT. 3/3 FOR SECTION B-B

PARALLEL CURB RAMP DETAIL (SINGLE)

STREET SLOPE	RAMP LENGTH @ 1"/FT [0.083]	
	$L_{LOW\ SIDE}$ *	$L_{HIGH\ SIDE}$ *
0.01	5'-5" [1.6 m]	6'-10" [2.1 m]
0.02	4'-10" [1.5 m]	7'-11" [2.4 m]
0.03	4'-5" [1.3 m]	9'-5" [2.9 m]
0.04	4'-1" [1.2 m]	11'-8" [3.6 m]
0.05	3'-9" [1.1 m]	15'-2" [4.6 m]

* MEASURED ALONG THE BACK OF A 6" [150] HIGH CURB.

$$L_{HIGH} = \frac{\text{CURB HT.}}{0.083 - \text{STREET SLOPE}}$$ 7

$$L_{LOW} = \frac{\text{CURB HT.}}{0.083 + \text{STREET SLOPE}}$$ 7

LEGEND

1. MAY BE REDUCED TO 3'-0" [915] IN EXISTING SIDEWALKS IF THE LANDING IS UNCONSTRAINED ALONG THE BACK EDGE.

2. MAY BE REDUCED TO 3'-4" [1.02 M] IN EXISTING SIDEWALKS TO BETTER FIT THE WALK CONFIGURATION OR WHERE SITE CONDITIONS ARE RESTRICTED BY NARROW WALKS, POLE FOUNDATIONS, DRAINAGE INLETS, ETC. THE WIDTH MAY BE TAPERED.

3. WHERE LANDING WIDTH (D) HAS BEEN REDUCED TO 3'-0" [915] THE FLARED SIDES SHALL HAVE A MAXIMUM SLOPE OF 12:1 [0.083].

   FLARED SIDES ARE NOT REQUIRED WHERE THE EDGES OF A CURB RAMP ARE PROTECTED BY LANDSCAPING OR OTHER BARRIERS TO TRAVEL BY WHEEL CHAIR USERS OR PEDESTRIANS ACROSS THE EDGE OF THE CURB RAMP. HOWEVER, IF THE FLARED SIDES ARE USED IN THESE AREAS, THEY MAY BE OF ANY SLOPE.

4. THE SLOPE OF THE RAMP TOWARD THE CURB IS PREFERRED TO BE 12:1 [0.083] OR FLATTER RELATED TO THE HORIZONTAL, BUT THE MAXIMUM SLOPE SHALL BE 12:1 [0.083] RELATIVE TO THE EXISTING OR PROPOSED WALK SLOPE.

   IN EXISTING SIDEWALKS, WHERE THE MAXIMUM RAMP SLOPE (S) IS NOT FEASIBLE, IT MAY BE REDUCED AS FOLLOWS:

   A) 10:1 [0.10] FOR A MAX. RISE OF 6" [150],
   B) 8:1 [0.125] FOR A MAX. RISE OF 3" [75],
   C) 6:1 [0.167] OVER A MAX. RUN OF 2'-0" [610] FOR HISTORIC AREAS WHERE A FLATTER SLOPE IS NOT FEASIBLE.

5. THE MINIMUM LENGTH OF A PERPENDICULAR RAMP IS 6' [2.0 M] FROM THE BACK OF A 6" [150] CURB AND MAY BE INCREASED WHERE FEASIBLE TO OBTAIN A FLATTER RAMP SLOPE OR TO BETTER BLEND WITH THE WALK CONFIGURATION.

6. GUTTER COUNTER SLOPES AT THE FOOT OF PERPENDICULAR CURB RAMPS SHOULD NOT EXCEED 20:1 [0.05] OVER A DISTANCE OF 2'-0" [610] FROM THE CURB.

7. DIMENSIONS DERIVED BY EQUATION ARE NOMINAL. CONSTRUCT RAMPS TO MEET REQUIRED SLOPES AND EXISTING CONDITIONS.

8. DETECTABLE WARNINGS (TRUNCATED DOMES) ARE TO BE INSTALLED IN THE LOCATION SHOWN. DIMENSIONS OF THE DOMES ARE 24" [610] FROM THE BACK OF THE CURB BY THE WIDTH OF THE RAMP. SEE NOTES ON SHEET 3/3.

7-12-02

CURB RAMPS WITH TRUNCATED DOMES

ASD-39-0.00

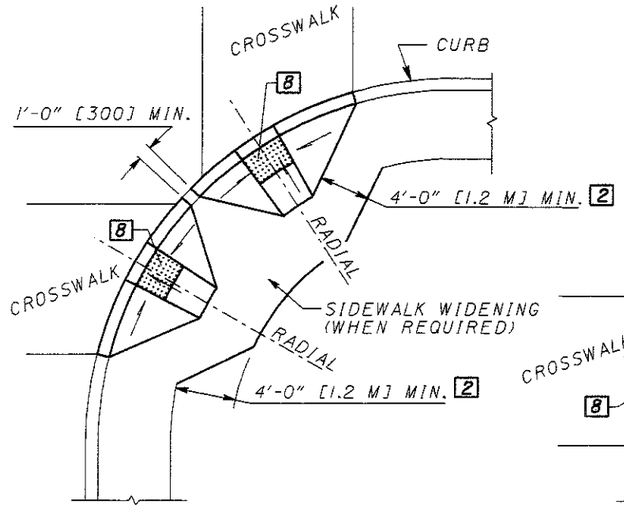

DESIGN A
PERPENDICULAR RAMP

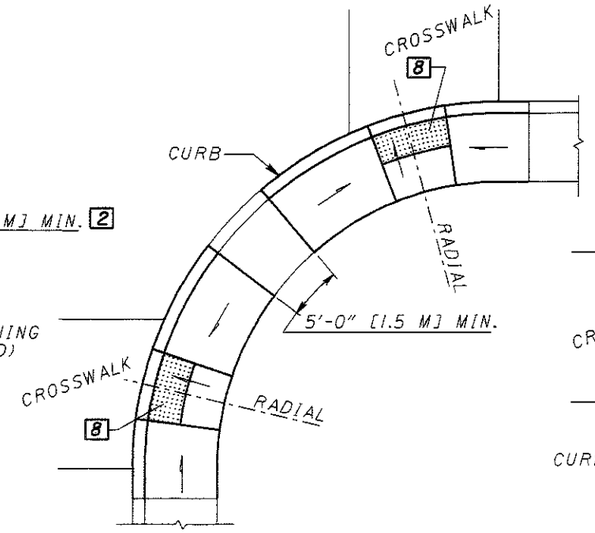

DESIGN B
PARALLEL RAMP

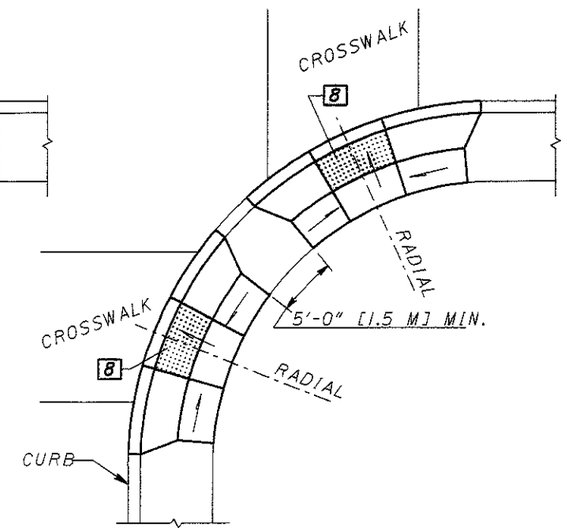

DESIGN C
COMBINATION RAMP

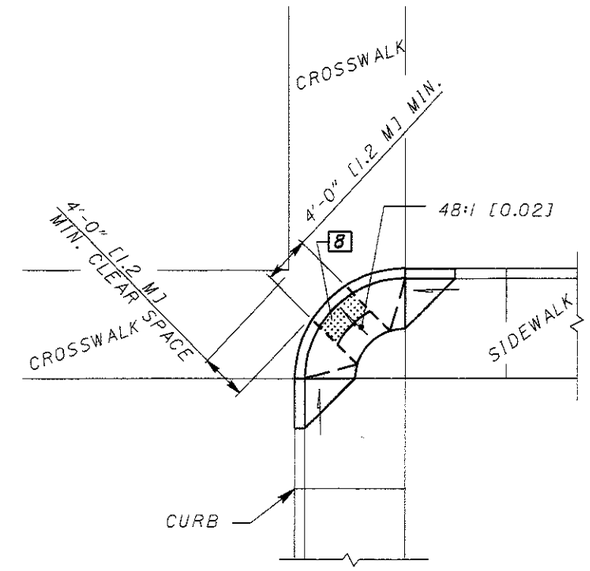

DESIGN D
DIAGONAL RAMP

USE IN EXISTING WALKS ONLY AND WHEN SITE CONSTRAINTS PROHIBIT OTHER DESIGNS. THE DIAGONAL RAMP MAY BE PERPENDCULAR, PARALLEL OR COMBINATION.

AVOID USING WHERE CURB RADII ARE LESS THAN 20'-0" [6.0 M].

CORNER CURB RAMP DESIGNS

(SEE CURB RAMP DETAILS ON SHT. 1/3 FOR ADDITIONAL REQUIREMENTS.)

FOR LEGEND, SEE SHEET 1.

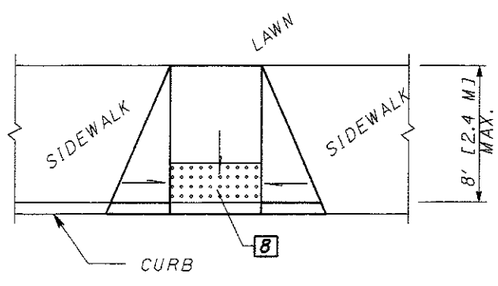

DESIGN E
PERPENDICULAR RAMP

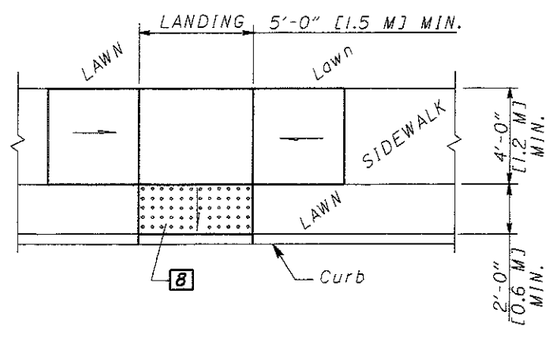

DESIGN F
PARALLEL RAMP

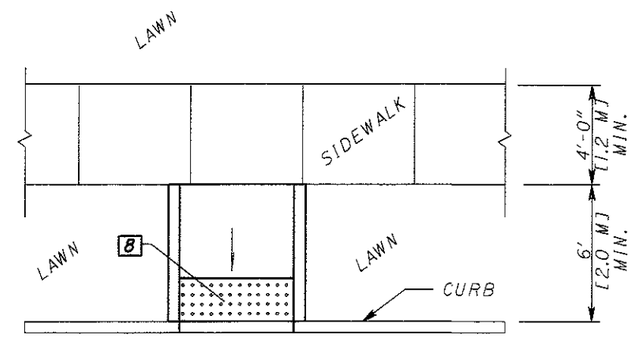

DESIGN G
PERPENDICULAR RAMPS
W/O FLARES

MID BLOCK CURB RAMP DESIGNS

(SEE CURB RAMP DETAILS ON SHT. 1/3 FOR ADDITIONAL REQUIREMENTS.)

7-12-02

CURB RAMPS WITH TRUNCATED DOMES

ASD-39-0.00

NOTES

SURFACE TEXTURE: TEXTURE OF CONCRETE SURFACES SHALL BE OBTAINED BY COARSE BROOMING TRANSVERSE TO THE RAMP SLOPES AND SHALL BE ROUGHER THAN ADJACENT WALK.

TRUNCATED DOMES: INSTALL DETECTABLE WARNINGS (TRUNCATED DOMES) FOR A DISTANCE OF 24" [610] FROM THE BACK OF THE CURB FOR THE ENTIRE WIDTH OF THE RAMP OPENING AS SHOWN ON DETAILS ON SHEET 1.

PAVERS WILL MEET ASTM C 902 CLASS SX, TYPE 1, OR C 936, OR C 1272 TYPE R.

ACCEPTABLE MANUFACTURERS AND PRODUCTS ARE:

1) WHITACRE-GREER FIREPROOFING COMPANY, 1400 S. MAHONING AVE, ALLIANCE, OH, 44601, (800) WG PAVER ADA PAVER, 4"X8"X2-1/4", CLEAR RED (RUSTIC) #30.

2) HANOVER ARCHITECTURAL PRODUCTS, 240 BENDER RD., HANOVER, PA. 17331, (717) 637-0500 DETECTABLE WARNING PAVER, 12"X12"X2", OR 24"X24"X2", RED OR QUARRY RED.

3) ENDICOTT CLAY PRODUCTS, PO BOX 17, FAIRBURY, NE, 68352, (402) 729-5804 HANDICAP DETECTABLE WARNING PAVER, 4"X8"X2-1/4", RED BLEND.

PAVERS WILL LAID ON TOP OF A 4" [100] UNREINFORCED CONCRETE BASE. SETTING BED AND JOINTS TO BE MORTARED IN ACCORDANCE WITH MANUFACTURER'S INSTRUCTION, OR WITH A MAXIMUM 1/2" [13] THICK BED OF LATEX MODIFIED CEMENT MORTAR. MORTAR JOINTS TO A WIDTH NOT GREATER THAN 5/32" [4] AND NOT LESS THAN 1/16" [1.5]. PAVERS SHALL NOT BE DIRECTLY TOUCHING EACH OTHER UNLESS THEY HAVE SPACING BARS.

MORTARED JOINTS ARE TO BE FLUSH WITH TOP SURFACE AND STRUCK SO AS TO GIVE A SMOOTH SURFACE. PAVERS SHALL BE LAID SUCH THAT JOINTS ARE LEVEL WITH ADJOINING JOINTS SO AS TO PROVIDE A SMOOTH TRANSITION FROM BRICK TO BRICK AND BRICK TO CONCRETE SURFACE.

THE SURFACE OF ANY TWO ADJACENT UNITS SHOULD NOT DIFFER BY MORE THAN 1/8" [3] IN HEIGHT. BRICKS SHALL BE PLACED IN A RUNNING BOND PATTERN. FACE OF ALL BRICK SHALL BE CLEAN OF CEMENT AND PROTECTED SO AS TO AVOID CHIPPING DURING CONSTRUCTION.

EXPANSION JOINTS: SHALL BE PROVIDED IN THE CURB RAMP AS EXTENSIONS OF WALK JOINTS AND CONSISTENT WITH ITEM 608.03 REQUIREMENTS FOR A NEW CONCRETE WALK. A 1/2" [13] ITEM 705.03 EXPANSION JOINT FILLER SHALL BE PROVIDED AROUND THE EDGE OF RAMPS BUILT IN EXISTING CONCRETE WALK. LINES SHOWN ON THIS DRAWING INDICATE THE RAMP EDGE AND SLOPE CHANGES AND ARE NOT NECESSARILY JOINT LINES.

PAYMENT: WALK AND CURB, ITEMS 608 AND 609, SHALL BE MEASURED THROUGH THE CURB RAMP AREA PAID FOR UNDER THEIR RESPECTIVE ITEMS. ITEM 608 - CURB RAMP, AS PER PLAN, EACH CONSTRUCTED IN NEW CURB AND WALK SHALL INCLUDE THE COST OF ANY ADDITIONAL MATERIALS AND INSTALLATION (INCLUDING TRUNCATED DOMES), GRADING, FORMING AND FINISHING. ITEM 608-CURB RAMP. AS PER PLAN, SQUARE FOOT [METER], CONSTRUCTED IN EXISTING CURB AND WALK SHALL INCLUDE THE COST OF FURNISHING AND INSTALLING ALL MATERIALS (INCLUDING TRUNCATED DOMES), GRADING, FORMING, AND FINISHING OF THE CURB AND WALK OF THE CURB RAMP. REMOVAL OF EXISTING CURB AND WALK SHALL BE PAID FOR UNDER ITEM 202.

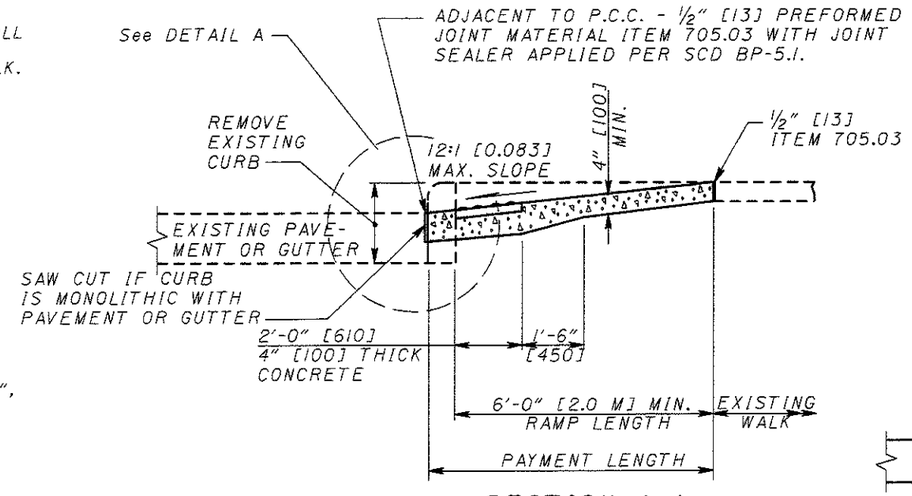

SECTION A-A
EXISTING WALK DETAIL
SEE SHEET 1 OF 3.

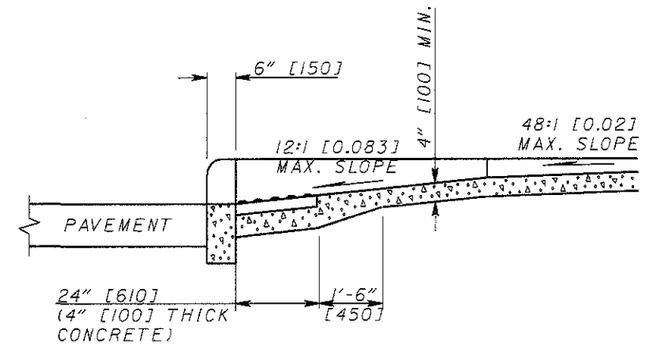

SECTION C-C
SEE SHEET 1 OF 3.

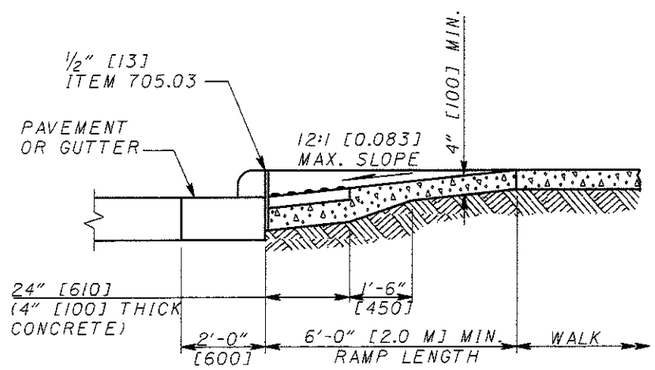

SECTION A-A
NORMAL DETAIL
SEE SHEET 1 OF 3.
(GUTTER SHOWN)

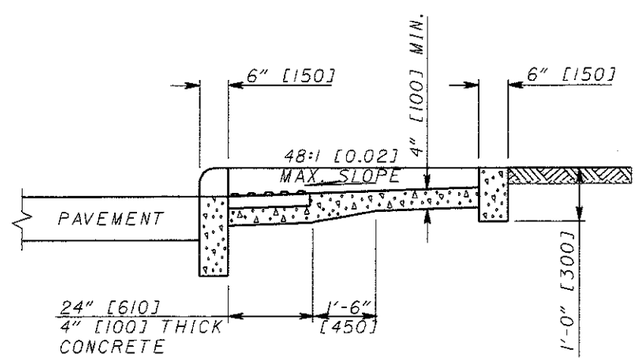

SECTION B-B
SEE SHEET 1 OF 3.

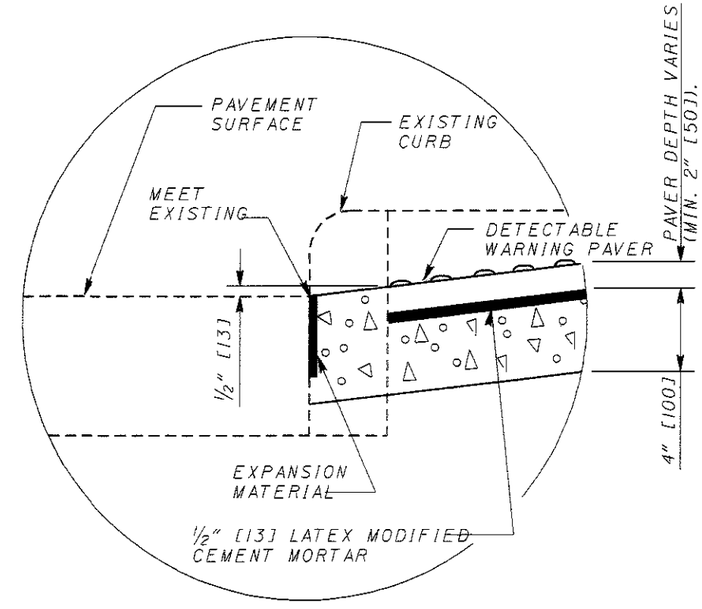

DETAIL A

7-12-02

CURB RAMPS WITH TRUNCATED DOMES

ASD-39-0.00

3/3

18/60

CONNECTING GUARDRAIL TO EXISTING RAIL

IN LOCATIONS WHERE TYPE 5 GUARDRAIL, TERMINAL ASSEMBLIES, ETC. ARE TO BE CONNECTED TO EXISTING RAIL SOME MODIFICATIONS MAYBE REQUIRED, INCLUDING EXTRA POSTS, DRILLING HOLES AND POSSIBLY ADDITIONAL WORK SHALL BE INCLUDED IN THE UNIT BID PRICE FOR TYPE 5 GUARDRAIL. IF ADDITIONAL PORTIONS OF RAIL ELEMENT ARE PARTIAL SECTIONS OF ADDITIONAL RAIL ELEMENTS. THE COST OF THIS USED THE LINEAL MEASUREMENT OF THIS ADDITIONAL PORTION SHALL BE ADDED FOR PAYMENT.

CONNECTION BETWEEN EXISTING AND PROPOSED GUARDRAIL

WHEN IT IS NECESSARY TO SPLICE PROPOSED GUARDRAIL TO EXISTING GUARDRAIL, ONLY THE EXISTING GUARDRAIL SHALL BE CUT, DRILLED, OR PUNCHED. THE CONNECTION SHALL BE MADE USING A "W-BEAM RAIL SPLICE" AS SHOWN ON STANDARD CONSTRUCTION DRAWING GR-1.1. PAYMENT SHALL BE INCLUDED IN THE CONTRACT PRICE FOR THE RESPECTIVE GUARDRAIL ITEMS.

GUARDRAIL REPLACEMENT

NO HAZARD SHALL BE LEFT UNPROTECTED EXCEPT FOR THE ACTUAL TIME NECESSARY TO REMOVE GUARDRAIL, INSTALL EMBANKMENT, GRADE AND REINSTALL GUARDRAIL IN A CONTINUOUS OPERATION. THE REMOVAL OF ALL GUARDRAIL SHALL AT ALL TIMES BE AS DIRECTED BY THE ENGINEER. NO GUARDRAIL SHALL BE REMOVED UNTIL THE REPLACEMENT MATERIAL IS ON SITE, READY FOR INSTALLATION. FAILURE TO COMPLY WITH THIS REQUIREMENT SHALL BE DEEMED SUFFICIENT CAUSE TO ORDER WORK SUSPENDED ON THIS PROJECT UNTIL SUCH TIME THAT THE ENGINEER IS ASSURED OF SAID COMPLIANCE.

LOCATIONS OF GUARDRAIL

THE GUARDRAIL PROTECTION PROVIDED IN THIS PLAN SHALL BE LOCATED IN THE FIELD TO ASSURE THAT THE INSTALLATION WILL AFFORD THE MAXIMUM PROTECTION FOR TRAFFIC. THIS LOCATION SHALL BE POSITIONED AS FAR AS POSSIBLE FROM THE EDGE OF PAVEMENT WHILE MAINTAINING PROPER GRADE IN FRONT OF GUARDRAIL AS PER STANDARD DRAWINGS AND PLAN DETAILS.

ITEM 202 - GUARDRAIL REMOVED FOR REUSE, AS PER PLAN:

THIS ITEM SHALL CONSIST OF THE REMOVAL OF THE EXISTING GUARDRAIL AS PER 202.09. THE RAIL ELEMENT SHALL BE STORED BY THE CONTRACTOR FOR REUSE, AS SHOWN BELOW.

THE EXISTING RAIL ELEMENT SHALL BE PLACED ON THE GROUND ADJACENT TO NEW GUARDRAIL POST. THE RAIL ELEMENT MAY REQUIRE TO BE FASTENED TO THE POST TO FACILITATE PLACEMENT OF EMBANKMENT. THE CONTRACTOR MAY DETERMINE THIS METHOD OF FASTENING. THE ITEMS DESCRIBED ABOVE AND SHOWN BELOW (NOT INCLUDING NEW RAIL, 9 FOOT POSTS, AND EMBANKMENT) SHALL BE PAID FOR UNDER THE UNIT BID PRICE FOR ITEM 202 - GUARDRAIL REMOVED FOR REUSE, AS PER PLAN.

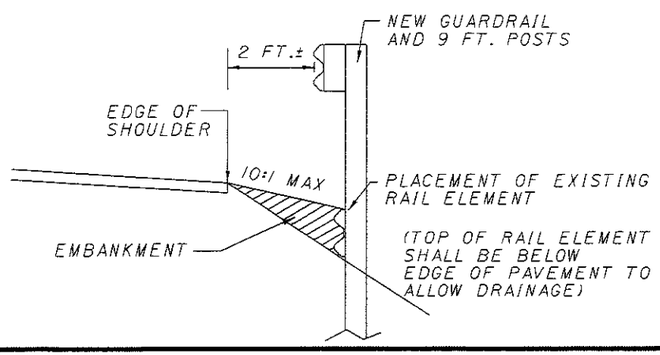

ITEM 202 - ANCHOR ASSEMBLY REMOVED, TYPE A

THIS ITEM SHALL INCLUDE THE REMOVAL OF THE EXISTING TYPE A, ANCHOR ASSEMBLY INCLUDING ALL POSTS, HARDWARE, RAIL ELEMENTS, AND CONCRETE ANCHORS. ALL ITEMS REMOVED SHALL BECOME THE PROPERTY OF THE CONTRACTOR AND SHALLBE PROPERLY DISPOSED OF.

THE EXISTING CONCRETE ANCHOR AND CONCRETE AT POSTS SHALL BE REMOVED ENTIRELY. ALL HOLES REMAINING AFTER REMOVAL SHALL BE FILLED WITH GRANULAR MATERIAL OR EXCESS MATERIAL RESULTING FROM GUARDRAIL CONSTRUCTION. ALL FILL MATERIAL SHALL BE THOROUGHLY COMPACTED AND LEVELED, AS DIRECTED BY THE ENGINEER.

PAYMENT FOR ALL OF THE ABOVE SHALL BE INCLUDED IN THE UNIT BID PRICE FOR ITEM 202, ANCHOR ASSEMBLY REMOVED, TYPE A.

ITEM 203 - EMBANKMENT, AS PER PLAN

AT SPECIFIED LOCATIONS AND LOCATIONS AS DIRECTED BY THE ENGINEER, EMBANKMENT SHALL BE PLACED AS TO PROVIDE A SUITABLE AREA TO CONSTRUCT GUARDRAIL AND TO PROVIDE FOR THE STRUCTURAL INTEGRITY OF THE ROADWAY SHOULDER.

AREAS WHERE EMBANKMENT MATERIALS ARE TO BE PLACED SHALL BE SCALPED. THE REQUIREMENTS FOR BENCHING SHALL BE WAIVED. THE DEPTH OF LAYERS IN WHICH THE EMBANKMENTS ARE PLACED SHALL BE LIMITED TO EIGHT (8) INCHES IN THICKNESS. THE METHOD OF COMPACTION AND EQUIPMENT USED SHALL BE SUFFICIENT TO PROVIDE A MINIMUM OF 60 PERCENT RELATIVE COMPACTION.

AFTER THE EMBANKMENT HAS BEEN PLACED, THE AREAS SHALL BE FERTILIZED, SEEDED, MULCHED, AND WATERED AS PER ITEM 659. THE COST SHALL BE INCLUDED IN THIS ITEM FOR PAYMENT.

THE METHOD OF MEASUREMENT FOR EMBANKMENT MATERIAL SHALL BE THE NUMBER OF CUBIC YARDS MEASURED BY LOOSE VOLUME IN THE CARRIER AT THE WORK SITE, IN LIEU OF THE REQUIREMENTS OF 203.09, AND PAYMENT FOR ACCEPTED QUANTITIES WILL BE MADE AT THE CONTRACT UNIT BID PRICE PER CUBIC YARD FOR ITEM 203 - EMBANKMENT, AS PER PLAN AND SHALL INCLUDE ALL WORK DESCRIBED ABOVE AND AT ALL TIMES BE AS DIRECTED BY THE ENGINEER.

ITEM 209 - RESHAPING UNDER GUARDRAIL:

THIS ITEM SHALL BE USED AT LOCATIONS INDICATED IN THE PLANS.

THIS WORK SHALL BE COMPLETED AS PER CMS 209.05 AND AS DESCRIBED HEREIN, AND SHALL AT ALL TIMES BE AS DIRECTED BY THE ENGINEER.

THE AREA IN FRONT OF THE GUARDRAIL SHALL BE GRADED AND RESHAPED TO PROVIDE AN AREA THAT HAS A SLOPE OF 10:1 MAX.

EXCESS MATERIAL RESULTING SHALL BE USED ELSEWHERE FOR THIS ITEM IF SO DIRECTED OR DISPOSED OF PROPERLY. IF EXTRA MATERIAL IS REQUIRED IT SHALL BE PAID FOR WITH ITEM 203 - EMBANKMENT, AS PER PLAN. THIS WORK SHALL NOT BE STARTED UNTIL AFTER THE RESURFACING AND BERM WORK HAS BEEN COMPLETED.

THE ABOVE WORK SHALL BE PAID FOR PER FT. WITH ITEM 209, RESHAPING UNDER GUARDRAIL, WITH THE EXCEPTION OF ANY EXTRA MATERIAL REQUIRED TO MEET THE SLOPE REQUIREMENTS WHICH SHALL BE PAID BY ITEM 203 - EMBANKMENT, AS PER PLAN.

ITEM 606 - GUARDRAIL, MISC.: GUARDRAIL RAIL ELEMENT

THIS ITEM SHALL BE USED IN CONJUNCTION WITH ITEMS 606 - GUARDRAIL, MISC.: ADJUST HEIGHT, EXISTING TYPE 5 GUARDRAIL, AND ITEM 606 - GUARDRAIL REBUILT, TYPE 5, AND AS DIRECTED BY THE ENGINEER. IT SHALL CONSIST OF REPLACING EXISTING GUARDRAIL RAIL ELEMENTS DEEMED BY THE ENGINEER TO BE INSUFFICIENT. THE RAIL ELEMENTS SHALL BE OF THE SAME TYPE, AND SIZE OF THE EXISTING GUARDRAIL RUN. THEY SHALL BE PLACED IN ACCORDANCE WITH STANDARD CONSTRUCTION DRAWING GR-1.1.

ITEM 606 - GUARDRAIL REBUILT, TYPE 5, AS PER PLAN

THIS ITEM SHALL BE USED WHEN GUARDRAIL REQUIRES REPAIRS IN WHICH THE RAIL ELEMENT IS REUSABLE, ALSO THIS ITEM WILL BE USED TO RE-ALIGN GUARDRAIL RUNS, AS DIRECTED BY THE ENGINEER. THE CONTRACTOR SHALL USE NEW 9 FOOT POSTS FOR ALL POSTS TO BE REPLACED.

PAYMENT SHALL INCLUDE ALL LABOR, MATERIALS AND EQUIPMENT, AS DESCRIBED IN 606.05 AND TO INCLUDE REMOVAL AND REPLACEMENT OF ANY AND ALL DAMAGED MATERIAL, (REUSING THE RAIL ELEMENT), INCLUDING REPLACEMENT OF ANY MATERIALS DAMAGED DURING DISMANTLING OR ANY MATERIALS WHICH MAY HAVE DETERIORATED TO THE POINT THEY CANNOT BE REUSED.

CALCULATED JPF CHECKED MJS

GUARDRAIL GENERAL NOTES

ASD-39-0.00

DESIGN FILE: i:\projects\23578\GR100GN.dgn
WORKSTATION: jfinch DATE: 02/27/04

ITEM 606 - ANCHOR ASSEMBLY, TYPE E-98

THIS ITEM SHALL CONSIST OF FURNISHING AND INSTALLING EITHER OF THE FOLLOWING GUARDRAIL END TERMINALS.

1) THE ET-2000 (1997) MANUFACTURED BY TRINITY INDUSTRY, 1170 N. STATE STREET, GIRARD, OHIO 44420 (TELEPHONE: 330-545-4373).

THE LENGTH OF THE ET-2000 (1997) SYSTEM IS CONSIDERED TO BE 50 FEET (15.24 m), INCLUSIVE OF TWO 25 FOOT (7.62 m) LONG RAIL ELEMENTS. INSTALLATION SHALL BE AT THE LOCATIONS SPECIFIED IN THE PLANS, IN ACCORDANCE WITH THE MANUFACTURER'S SPECIFICATIONS AS DETAILED ON THE FOLLOWING PRE-APPROVED SHOP DRAWINGS:

DWG. #	DRAWING NAME	DWG./REV. DATE	ODOT APPROVAL DATE
SS265M	SRT-350 (12.5, 8 Post) Slotted Rail Terminal Post Layout and Erection Details	6/20/97	3/6/98
SS142	Slotted Rail Terminal SRT-350 Post Layout and Erection Details (12.5, 9 Post)	4/12/00	7/31/00
SS141	ET-2000 PLUS PLAN, ELEVATION & SECTION 25'-0" RAIL, HBA POSTS 1-4	2/29/00	7/31/00
SS158	ET-2000 PLUS 50'-0" WITH 12'-6" PANELS & HBA POSTS 1-4 PLAN, ELEVATION & SECTION	5/22/00	7/31/00

2) THE SKT-350 MANUFACTURED BY ROAD SYSTEMS, INC., 2516 MALLORY LANE, STOW, OHIO 44224 (TELEPHONE: 330-346-0721)

THE LENGTH OF THE SKT-350 SYSTEM IS CONSIDERED TO BE 50'-0" (15.24 m), INCLUSIVE OF FOUR 12'-6" (3.81m) LONG RAIL ELEMENTS. INSTALLATION SHALL BE AT THE LOCATIONS SPECIFIED IN THE PLANS, IN ACCORDANCE WITH THE MANUFACTURER'S SPECIFICATIONS AS DETAILED ON THE FOLLOWING PRE-APPROVED SHOP DRAWINGS:

DWG. #	DRAWING NAME	DWG./REV. DATE	ODOT APPROVAL DATE
SKT-4M	FOUNDATION TUBES SEQUENTIAL KINKING TERMINAL (SKT-350) ASSEMBLY WITH 4	12/11/97	3/6/98

THE FACE OF THE TYPE E-98 IMPACT HEAD SHALL BE COVERED WITH A SHEET OF TYPE G REFLECTIVE SHEETING, PER CMS 730.19, APPROXIMATELY 18" x 18" (450mm X 450mm).

THE CONTRACTOR MAY USE A SALVAGED EXTRUDER WHEN ASSEMBLING THE ITEM 606 ANCHOR ASSEMBLY, TYPE E-98. ALL WELDS ON THE EXTERIOR OF THE SALVAGED EXTRUDER SHALL NOT BE DAMAGED AND THE FEEDER SHUTE SHALL NOT BE BENT.

REFER TO THE MANUFACTURER'S INSTRUCTION REGARDING THE INSTALLATION OF, AND THE GRADING AROUND, THE FOUNDATION TUBES AND GROUND STRUT. THE TOP OF ANY FOUNDATION TUBE SHOULD BE LESS THAN 4 INCHES (100mm) ABOVE THE GROUND. THE PLACEMENT OF THE FOUNDATION TUBES SHOULD BE AN APPROPRIATE DEPTH BELOW THE LEVEL LINE IN ORDER TO MAINTAIN THE FINISHED GUARDRAIL HEIGHT OF 27¾ INCHES (706mm) FROM THE EDGE OF THE SHOULDER.

ON SITE GRADING IS REQUIRED IF THE TOP OF THE FOUNDATION TUBES OR TOP OF THE GROUND STRUT DOES NOT PROJECT MORE THAN 4 INCHES (100mm) ABOVE THE GROUND LINE.

PAYMENT FOR THE ABOVE WORK SHALL BE MADE AT THE UNIT PRICE BID FOR ITEM 606, ANCHOR ASSEMBLY, TYPE E-98, EACH, AND SHALL INCLUDE ALL LABOR, TOOLS, EQUIPMENT AND MATERIALS NECESSARY TO CONSTRUCT A COMPLETE AND FUNCTIONAL ANCHOR ASSEMBLY SYSTEM, INCLUDING ALL RELATED TRANSITIONS, REFLECTIVE SHEETING, HARDWARE, GRADING, EMBANKMENT AND EXCAVATION NOT SEPARATELY SPECIFIED, AS REQUIRED BY THE MANUFACTURER.

PART	LOCATION	SHEET NUMBER	202 GUARDRAIL REMOVED FOR REUSE	202 GUARDRAIL REMOVED FOR REUSE, AS PER PLAN	202 ANCHOR ASSEMBLY REMOVED, TYPE A	202 ANCHOR ASSEMBLY REMOVED, TYPE T	203 EMBANKMENT, AS PER PLAN	209 RESHAPING UNDER GUARDRAIL		606 GUARDRAIL, TYPE 5	606 GUARDRAIL, TYPE 5, USING 9 FOOT POSTS	606 GUARDRAIL REBUILT, TYPE 5	606 GUARDRAIL REBUILT, TYPE 5, AS PER PLAN	606 ANCHOR ASSEMBLY, TYPE E-98	606 ANCHOR ASSEMBLY, TYPE A	606 ANCHOR ASSEMBLY, TYPE T	606 BRIDGE TERMINAL ASSEMBLY, TYPE 1	606 BRIDGE TERMINAL ASSEMBLY, TYPE 4	606 GUARDRAIL, MISC.: RAIL ELEMENT	626 BARRIER REFLECTOR, TYPE A	626 BARRIER REFLECTOR, TYPE B
			FT	FT	EACH	FT	CU YD	FT		FT	FT	FT	FT	EACH	EACH	EACH	EACH	EACH	EACH	EACH	EACH
A	ASD-39-0.64 S.L.M.	22																		3	
A	ASD-39-1.33 S.L.M.	23	237.5		2	2	438	700		362.5		237.5			3	2		4		12	
A	ASD-39-1.62 S.L.M.	24	225		1	1	264	462.5		112.5		212.5			1	2		4		10	
A	ASD-39-1.81 S.L.M.	25	100				50	150				100								3	
A	ASD-39-3.25 S.L.M.	26	4,350		1		1731	4500			50		4,350		1		4		33	48	5
A	ASD-39-4.91 S.L.M.	27	312.5		4		175	475		50		300		2		2		4		12	
A	ASD-39-6.83 S.L.M.	28	512.5		2		243	812.5		200		512.5		2						10	
A	ASD-39-7.25 S.L.M.	29	375		3	1	257	837.5			350		362.5	2		2				11	
A	ASD-39-7.98 S.L.M.	30	100		2		56	250		50		100		2						4	
A	ASD-39-8.12 S.L.M.	31	750	2,250	5		663	3525		225	2,400	325	425		3				22	39	
A	ASD-39-8.97 S.L.M.	32	150			4	2	200				150				4	4				
B	RIC-39-25.77 S.L.M.	33					233	825			775				2					10	
B	RIC-39-26.77 S.L.M.	34	275		3	1	190	637.5		287.5		275			3			4		12	
B	RIC-39-26.85 S.L.M.	35					296	950			875				3					12	
	TOTAL		7,387.5	2,250	23	9	4,598	14,325		1,287.5	4,450	2,212.5	5,137.5	8	16	12	8	16	55	186	5

CALC BY: JPF
CHK'D BY: MJS

GUARDRAIL ESTIMATED QUANTITIES

ASD-39-0.00

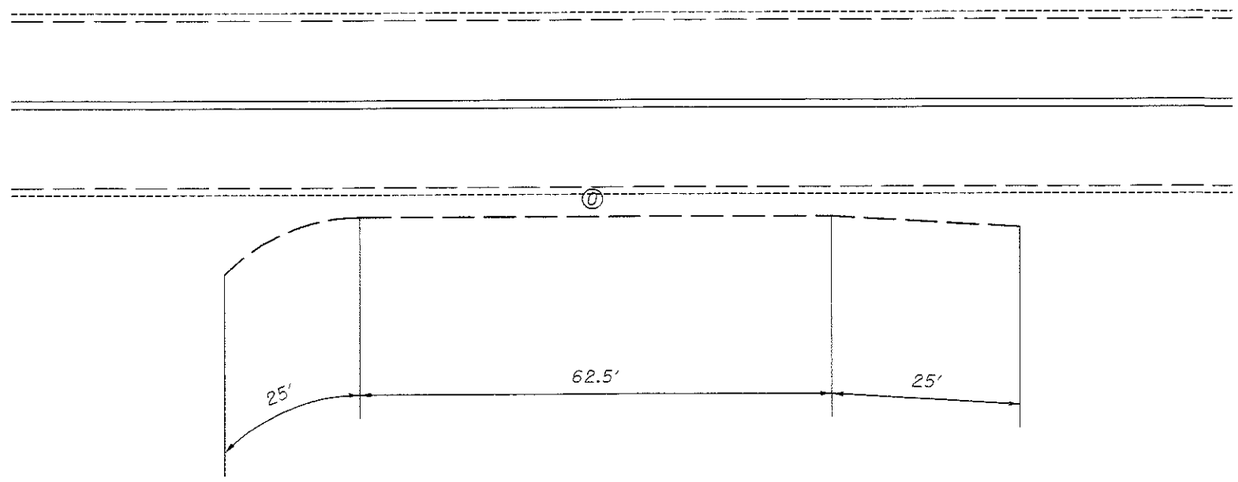

LOCATION	ITEM	DESCRIPTION	UNIT	QUANTITIY		TOTAL
				LEFT	RIGHT	
0	626	BARRIER REFLECTOR, TYPE A	EACH	0	3	3

ALL QUANTITIES CARRIED TO GUARDRAIL ESTIMATED QUANTITIES, SHEET 21

DESIGN FILE: I:\projects\23578\GR100.dgn
WORKSTATION: sdeer DATE: 2/24/2004

HORIZONTAL SCALE IN FEET 0 5 10 20

CALCULATED SJD
CHECKED BAD

GUARDRAIL DETAIL
ASD-39-0.64

ASD-39-0.00

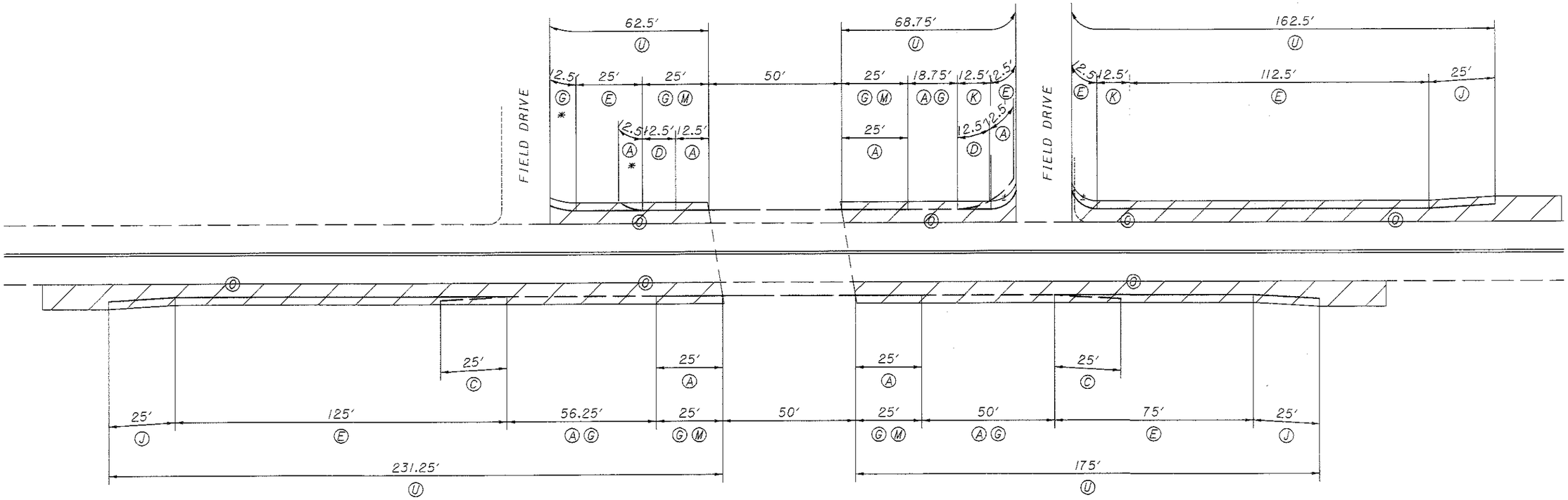

NOTES

1) * THIS LOCATION GUARDRAIL REMOVED FOR REUSE SHALL BE RELOCATED TO THE NEW LOCATION GUARDRAIL REBUILT, TYPE 5

2) ± = 10' RADIUS

LOCATION	ITEM	DESCRIPTION	UNIT	QUANTITIY		TOTAL
				LEFT	RIGHT	
A	202	GUARDRAIL REMOVED FOR REUSE	FT	81.25	156.25	237.5
C	202	ANCHOR ASSEMBLY REMOVED, TYPE A	EACH	0	2	2
D	202	ANCHOR ASSEMBLY REMOVED, TYPE T	EACH	2	0	2
	203	EMBANKMENT, AS PER PLAN	CU YD	180	258	438
U	209	RESHAPING UNDER GUARDRAIL	FT	293.75	406.25	700
E	606	GUARDRAIL, TYPE 5	FT	162.5	200	362.5
G	606	GUARDRAIL REBUILT, TYPE 5	FT	81.25	156.25	237.5
J	606	ANCHOR ASSEMBLY, TYPE A	EACH	1	2	3
K	606	ANCHOR ASSEMBLY, TYPE T	EACH	2	0	2
M	606	BRIDGE TERMINAL ASSEMBLY, TYPE 4	EACH	2	2	4
O	626	BARRIER REFLECTOR, TYPE A	EACH	6	6	12

ALL QUANTITIES CARRIED TO GUARDRAIL ESTIMATED QUANTITIES, SHEET 21

TYPICAL SECTION "TYPE 5"

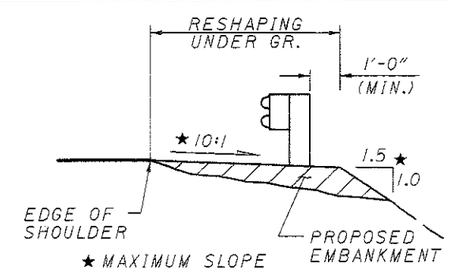

TYPICAL SECTION "TYPE 5"

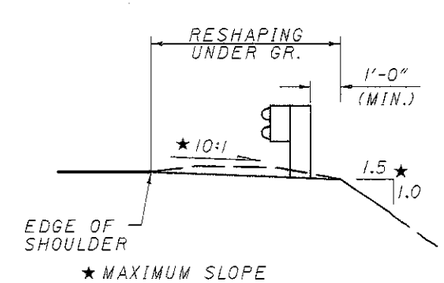

HORIZONTAL SCALE IN FEET 0 10 20 40

CALCULATED SJD
CHECKED BAD

GUARDRAIL DETAIL
ASD-39-1.33

ASD-39-0.00

DESIGN FILE: I:\projects\23578\GR100.dgn
WORKSTATION: sdeer
DATE: 2/24/2004

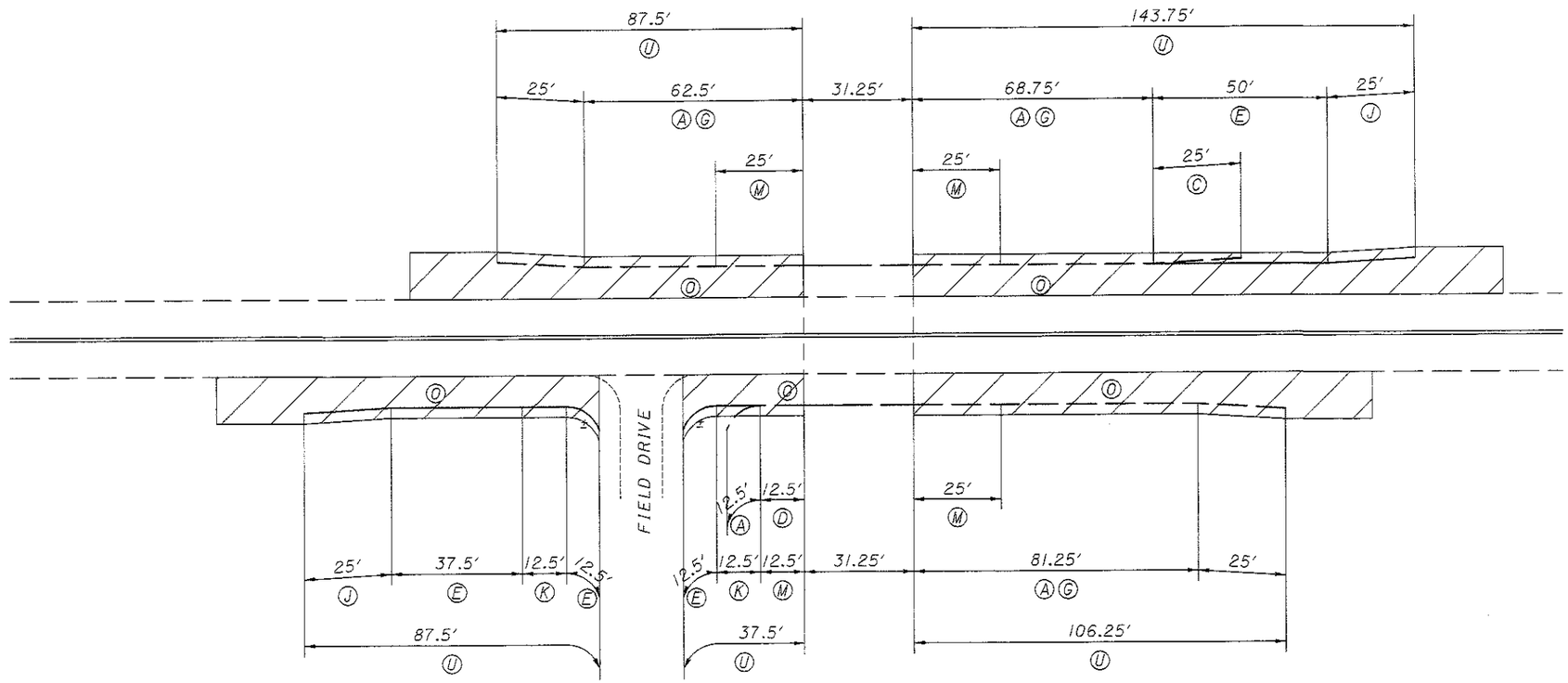

NOTES

1) ± = 10' RADIUS

LOCATION	ITEM	DESCRIPTION	UNIT	QUANTITIY		TOTAL
				LEFT	RIGHT	
A	202	GUARDRAIL REMOVED FOR REUSE	FT	131.25	93.75	225
C	202	ANCHOR ASSEMBLY REMOVED, TYPE A	EACH	1	0	1
D	202	ANCHOR ASSEMBLY REMOVED, TYPE T	EACH	0	1	1
	203	EMBANKMENT, AS PER PLAN	CU YD	132	132	264
U	209	RESHAPING UNDER GUARDRAIL	FT	231.25	231.25	462.5
E	606	GUARDRAIL, TYPE 5	FT	50	62.5	112.5
G	606	GUARDRAIL REBUILT, TYPE 5	FT	131.25	81.25	212.5
J	606	ANCHOR ASSEMBLY, TYPE A	EACH	1	0	1
K	606	ANCHOR ASSEMBLY, TYPE T	EACH	0	2	2
M	606	BRIDGE TERMINAL ASSEMBLY, TYPE 4	EACH	2	2	4
O	626	BARRIER REFLECTOR, TYPE A	EACH	4	6	10

ALL QUANTITIES CARRIED TO GUARDRAIL ESTIMATED QUANTITIES, SHEET 21

TYPICAL SECTION "TYPE 5"

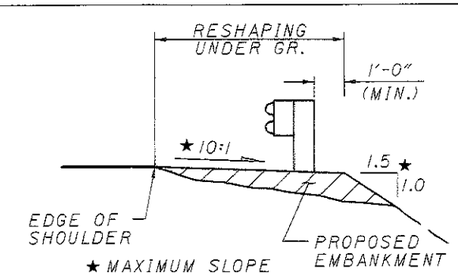

TYPICAL SECTION "TYPE 5"

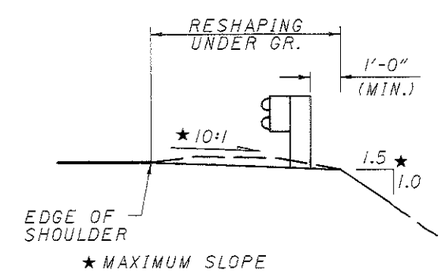

HORIZONTAL SCALE IN FEET
0 10 20 40

CALCULATED SJD
CHECKED BAD

GUARDRAIL DETAIL
ASD-39-1.62

ASD-39-0.00

DESIGN FILE: I:\projects\23578\GR100.dgn
WORKSTATION: sdeer
DATE: 2/24/2004

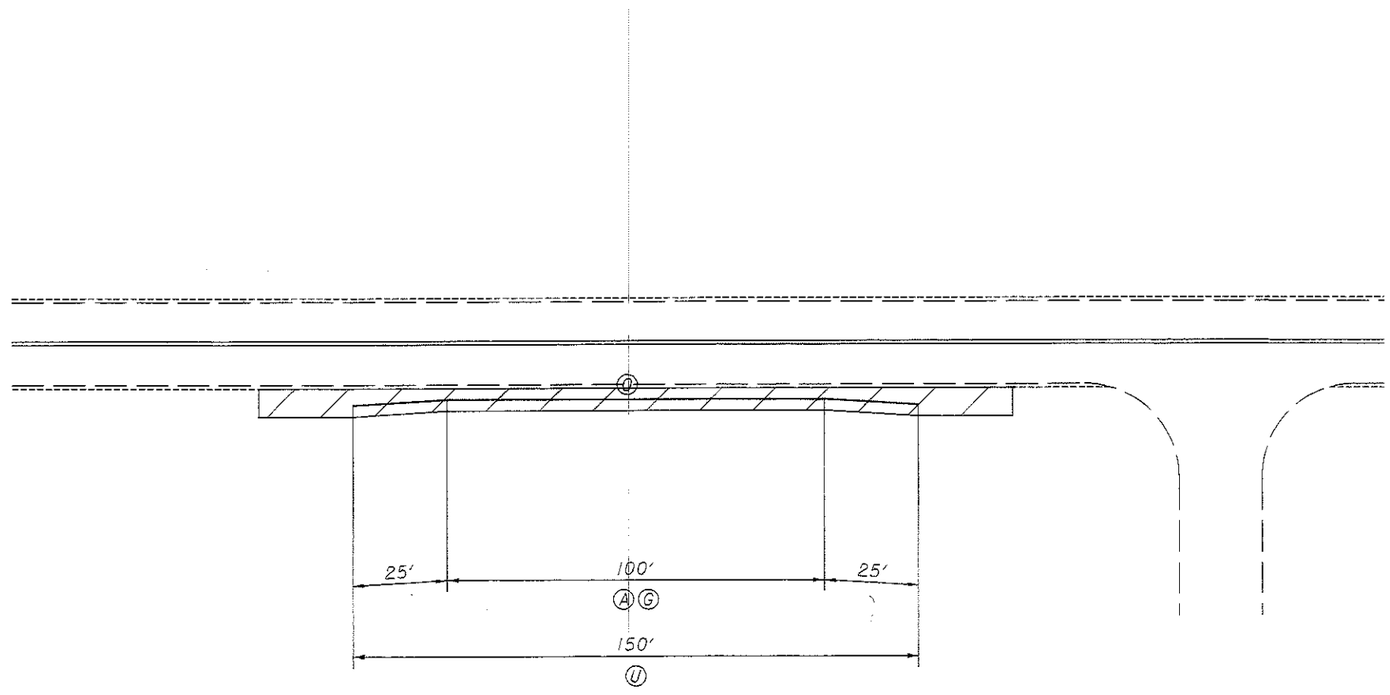

LOCATION	ITEM	DESCRIPTION	UNIT	QUANTITIY		TOTAL
				LEFT	RIGHT	
Ⓐ	202	GUARDRAIL REMOVED FOR REUSE	FT	0	100	100
▨	203	EMBANKMENT, AS PER PLAN	CU YD	0	38	50
Ⓤ	209	RESHAPING UNDER GUARDRAIL	FT	0	150	150
Ⓖ	606	GUARDRAIL REBUILT, TYPE 5	FT	0	100	100
Ⓞ	626	BARRIER REFLECTOR, TYPE A	EACH	0	3	3

ALL QUANTITIES CARRIED TO GUARDRAIL ESTIMATED QUANTITIES, SHEET 21

TYPICAL SECTION "TYPE 5"

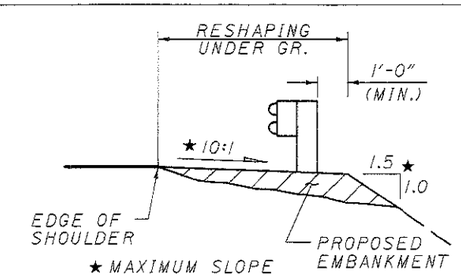

TYPICAL SECTION "TYPE 5"

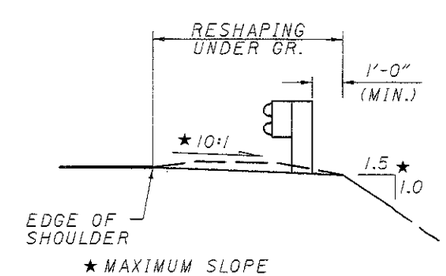

HORIZONTAL SCALE IN FEET
0 10 20 40

CALCULATED SJD
CHECKED BAD

GUARDRAIL DETAIL
ASD-39-1.81

ASD-39-0.00

DESIGN FILE: I:\projects\23578\GR100.dgn
WORKSTATION: sdeer
DATE: 2/24/2004

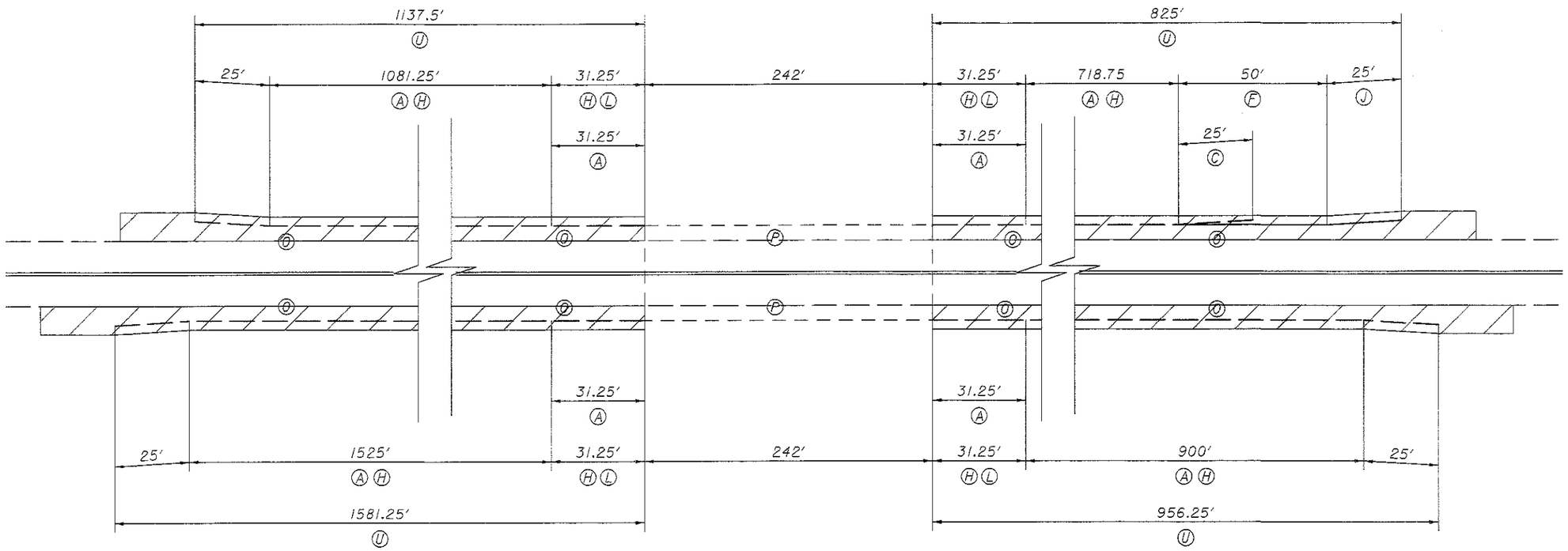

LOCATION	ITEM	DESCRIPTION	UNIT	QUANTITIY		TOTAL
				LEFT	RIGHT	
A	202	GUARDRAIL REMOVED FOR REUSE	FT	1,862.5	2,487.5	4,350
C	202	ANCHOR ASSEMBLY REMOVED, TYPE A	EACH	1	0	1
	203	EMBANKMENT, AS PER PLAN	CU YD	757	974	1,731
U	209	RESHAPING UNDER GUARDRAIL	FT	1,962.5	2,537.5	4500
F	606	GUARDRAIL, TYPE 5, USING 9 FOOT POSTS	FT	50	0	50
H	606	GUARDRAIL REBUILT, TYPE 5, AS PER PLAN	FT	1,862.5	2,487.5	4,350
J	606	ANCHOR ASSEMBLY, TYPE A	EACH	1	0	1
L	606	BRIDGE TERMINAL ASSEMBLY, TYPE 1	EACH	2	2	4
	606	GUARDRAIL, MISC.: RAIL ELEMENT	EACH	14	19	33
O	626	BARRIER REFLECTOR, TYPE A	EACH	22	26	48
P	626	BARRIER REFLECTOR, TYPE B	EACH	2	3	5

ALL QUANTITIES CARRIED TO GUARDRAIL ESTIMATED QUANTITIES, SHEET 21

TYPICAL SECTION "TYPE 5"

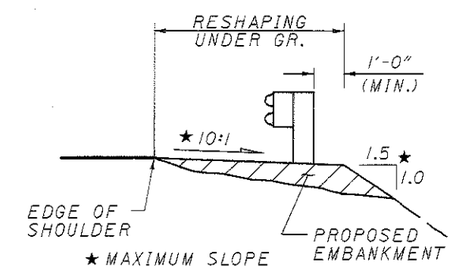

TYPICAL SECTION "TYPE 5"

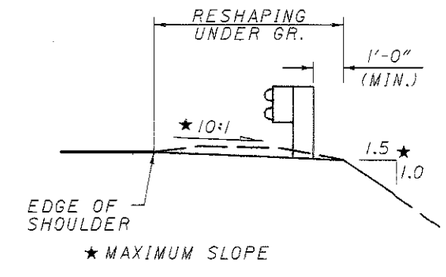

HORIZONTAL SCALE IN FEET
0 10 20 40

CALCULATED SJD
CHECKED BAD

GUARDRAIL DETAIL
ASD-39-3.25

ASD-39-0.00

DESIGN FILE: I:\projects\23578\GR100.dgn
WORKSTATION: sdeer DATE: 2/24/2004

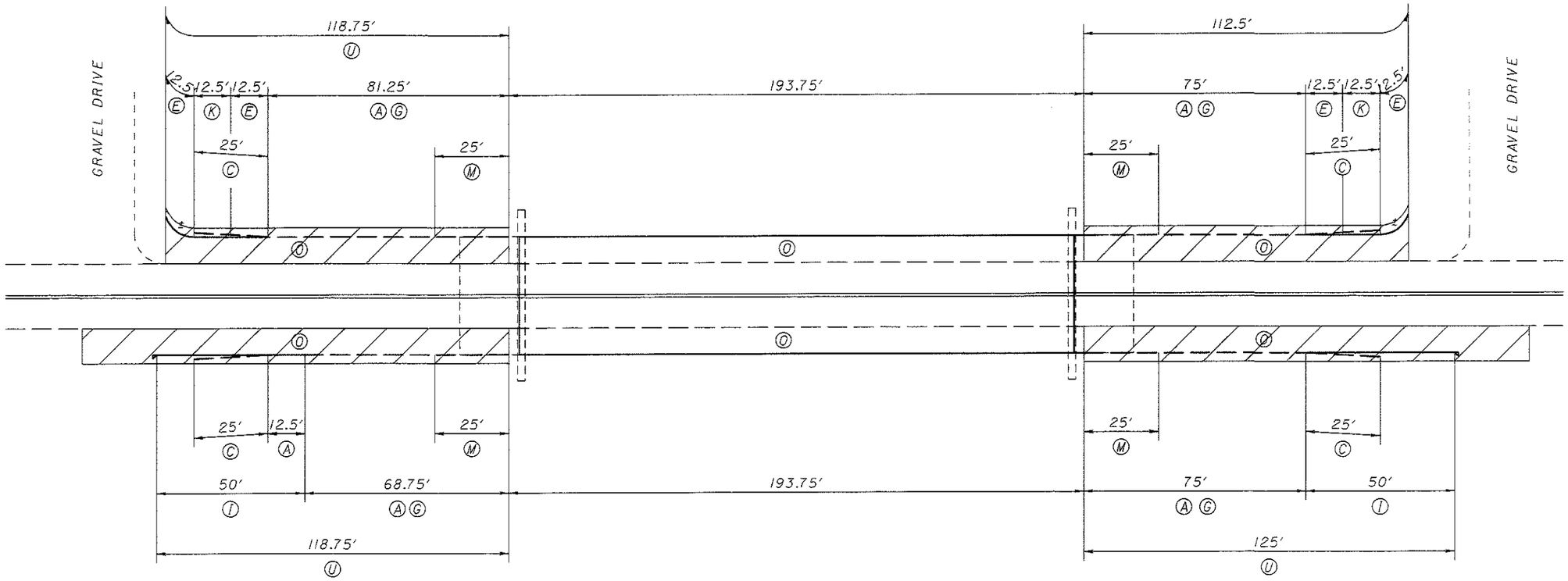

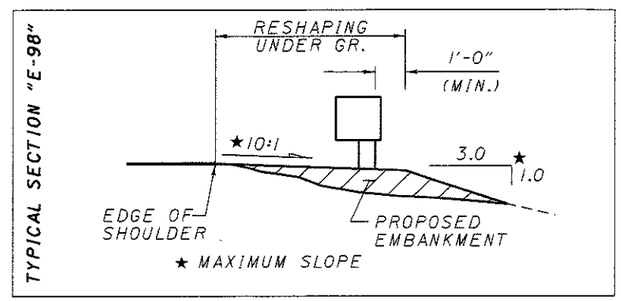

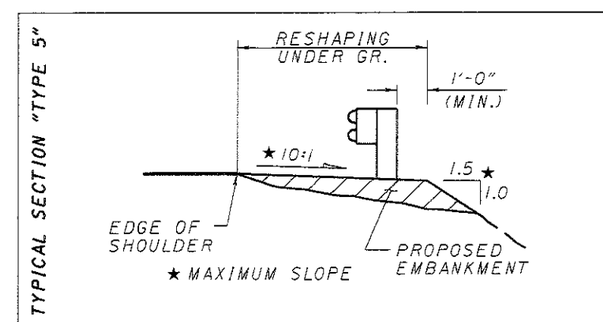

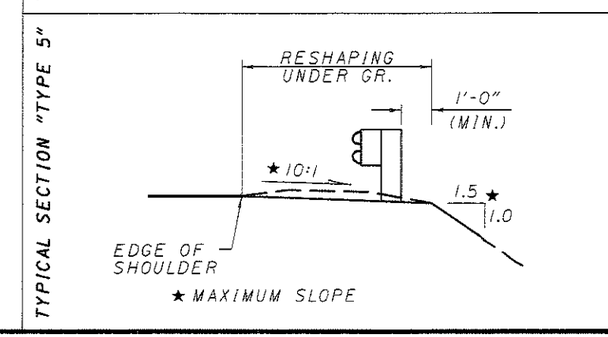

NOTES

1) ± = 10′ RADIUS

LOCATION	ITEM	DESCRIPTION	UNIT	QUANTITIY		TOTAL
				LEFT	RIGHT	
Ⓐ	202	GUARDRAIL REMOVED FOR REUSE	FT	156.25	156.25	312.5
Ⓒ	202	ANCHOR ASSEMBLY REMOVED, TYPE A	EACH	2	2	4
	203	EMBANKMENT, AS PER PLAN	CU YD	51	124	175
Ⓤ	209	RESHAPING UNDER GUARDRAIL	FT	231.25	243.75	475
Ⓔ	606	GUARDRAIL, TYPE 5	FT	50	0	50
Ⓖ	606	GUARDRAIL REBUILT, TYPE 5	FT	156.25	143.75	300
Ⓘ	606	ANCHOR ASSEMBLY, TYPE E-98	EACH	0	2	2
Ⓚ	606	ANCHOR ASSEMBLY, TYPE T	EACH	2	0	2
Ⓜ	606	BRIDGE TERMINAL ASSEMBLY, TYPE 4	EACH	2	2	4
Ⓞ	626	BARRIER REFLECTOR, TYPE A	EACH	6	6	12

ALL QUANTITIES CARRIED TO GUARDRAIL ESTIMATED QUANTITIES, SHEET 21

HORIZONTAL SCALE IN FEET 0 10 20 40

CALCULATED SJD CHECKED BAD

GUARDRAIL DETAIL
ASD-39-4.91

ASD-39-0.00

DESIGN FILE: I:\projects\23578\CR100.dgn
WORKSTATION: sdeer DATE: 2/27/2004

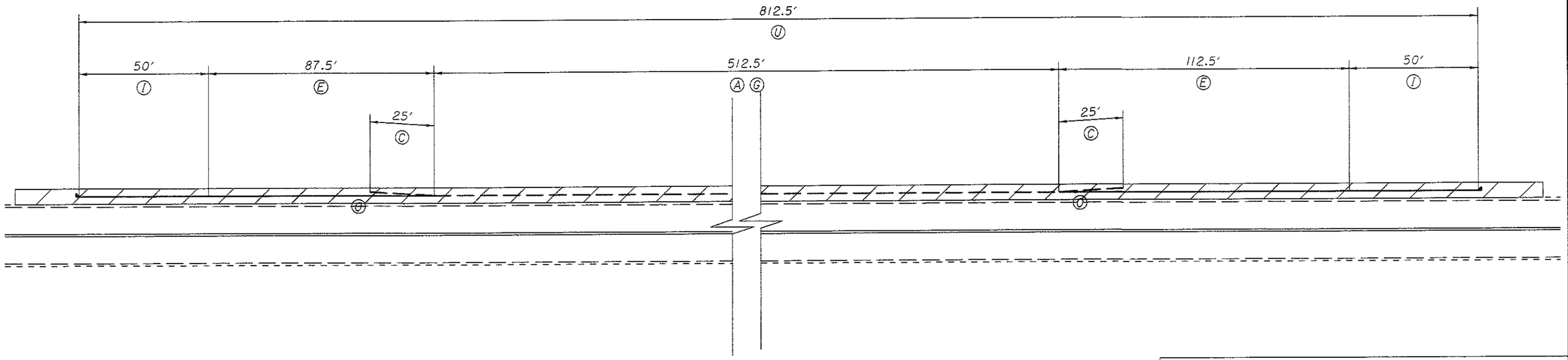

NOTE

1) THE CONTRACTOR IS RESPONSIBLE TO NOTE THE EXISTING TYPE A ANCHOR ASSEMBLY LOCATION AS A REFERENCE FOR THE LAYOUT OF THE PROPOSED GUARDRAIL.

LOCATION	ITEM	DESCRIPTION	UNIT	QUANTITIY		TOTAL
				LEFT	RIGHT	
A	202	GUARDRAIL REMOVED FOR REUSE	FT	512.5	0	512.5
C	202	ANCHOR ASSEMBLY REMOVED, TYPE A	EACH	2	0	2
	203	EMBANKMENT, AS PER PLAN	CU YD	243	0	243
U	209	RESHAPING UNDER GUARDRAIL	FT	812.5	0	812.5
E	606	GUARDRAIL, TYPE 5	FT	200	0	200
G	606	GUARDRAIL REBUILT, TYPE 5	FT	512.5	0	512.5
I	606	ANCHOR ASSEMBLY, TYPE E-98	EACH	2	0	2
O	626	BARRIER REFLECTOR, TYPE A	EACH	10	0	10

ALL QUANTITIES CARRIED TO GUARDRAIL ESTIMATED QUANTITIES, SHEET 21

TYPICAL SECTION "E-98"

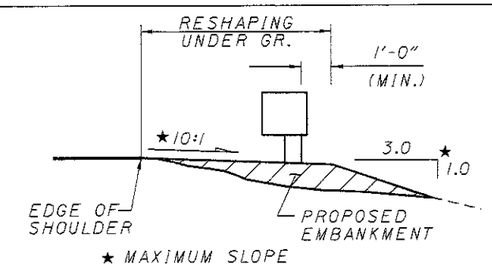

TYPICAL SECTION "TYPE 5"

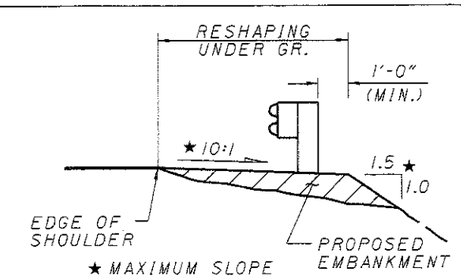

TYPICAL SECTION "TYPE 5"

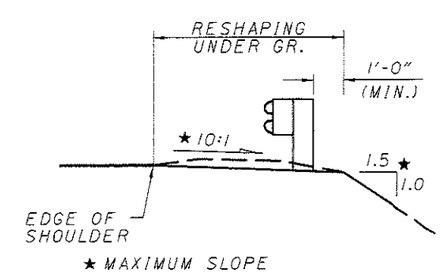

HORIZONTAL SCALE IN FEET 0 10 20 40

CALCULATED SJD
CHECKED BAD

GUARDRAIL DETAIL
ASD-39-6.83

ASD-39-0.00

DESIGN FILE: h:\projects\23578\GR100.dgn
WORKSTATION: sdeer
DATE: 2/27/2004

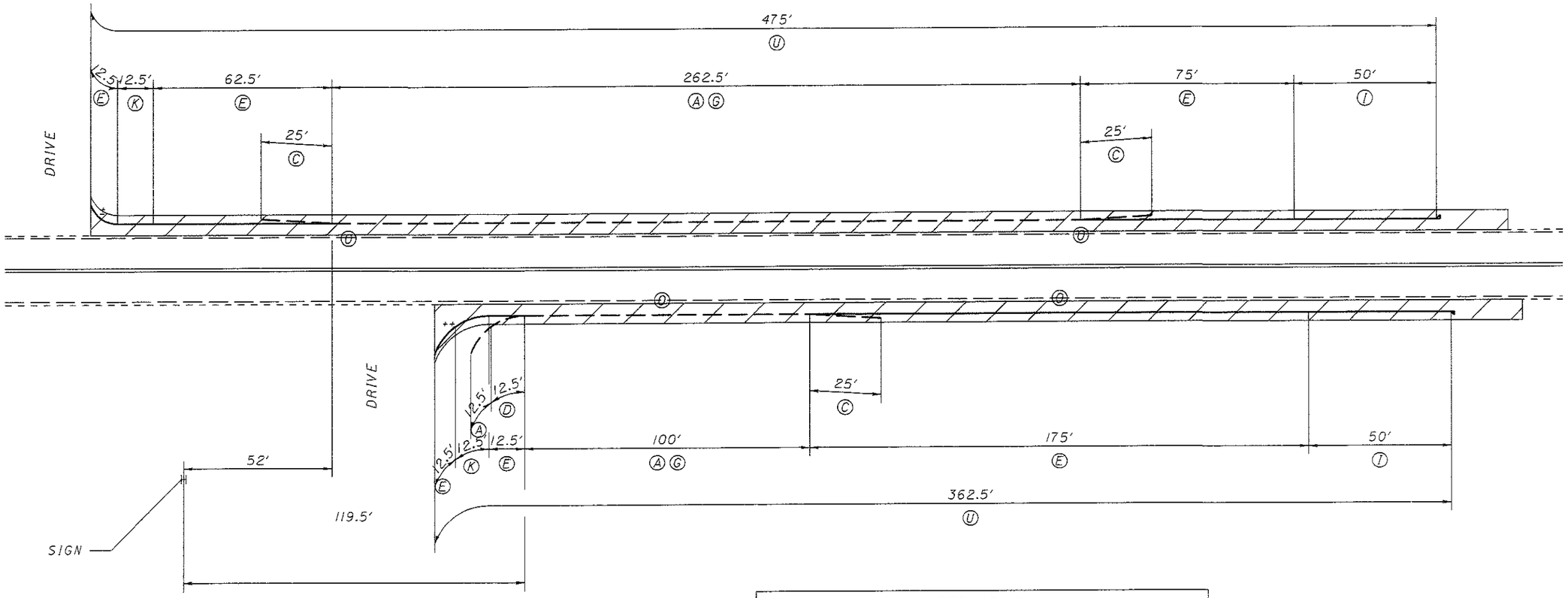

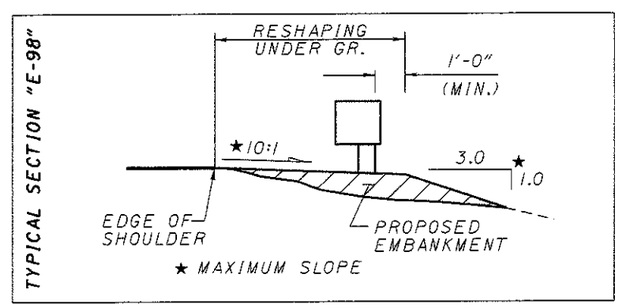

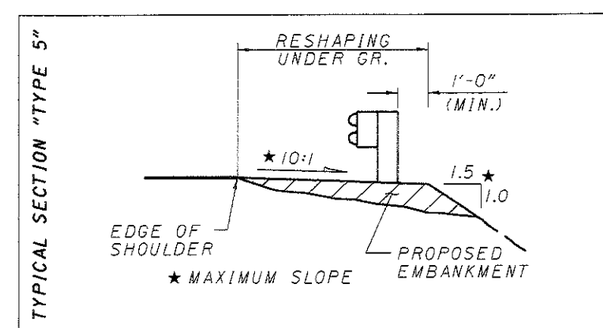

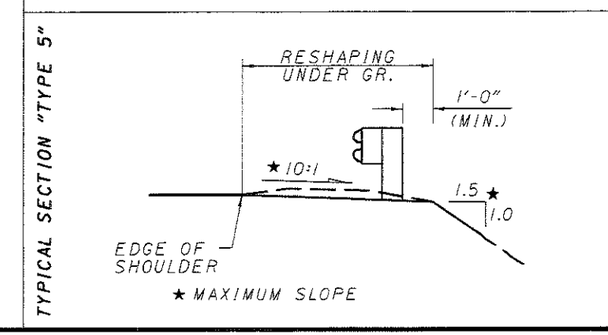

NOTES

1) ± = 10' RADIUS

2) ++ = 20' RADIUS

LOCATION	ITEM	DESCRIPTION	UNIT	QUANTITY		TOTAL
				LEFT	RIGHT	
Ⓐ	202	GUARDRAIL REMOVED FOR REUSE	FT	262.5	112.5	375
Ⓒ	202	ANCHOR ASSEMBLY REMOVED, TYPE A	EACH	2	1	3
Ⓓ	202	ANCHOR ASSEMBLY REMOVED, TYPE T	EACH	0	1	1
▨	203	EMBANKMENT, AS PER PLAN	CU YD	148	109	257
Ⓤ	209	RESHAPING UNDER GUARDRAIL	FT	475	362.5	837.5
Ⓕ	606	GUARDRAIL, TYPE 5, USING 9 FOOT POSTS	FT	150	200	350
Ⓗ	606	GUARDRAIL REBUILT, TYPE 5, AS PER PLAN	FT	262.5	100	362.5
Ⓘ	606	ANCHOR ASSEMBLY, TYPE E-98	EACH	1	1	2
Ⓚ	606	ANCHOR ASSEMBLY, TYPE T	EACH	1	1	2
Ⓞ	626	BARRIER REFLECTOR, TYPE A	EACH	6	5	11

ALL QUANTITIES CARRIED TO GUARDRAIL ESTIMATED QUANTITIES, SHEET 21

HORIZONTAL SCALE IN FEET 0 10 20 40

CALCULATED SJD CHECKED BAD

GUARDRAIL DETAIL
ASD-39-7.25

ASD-39-0.00

DESIGN FILE: I:\projects\23578\GR100.dgn
WORKSTATION: sdeer
DATE: 2/27/2004

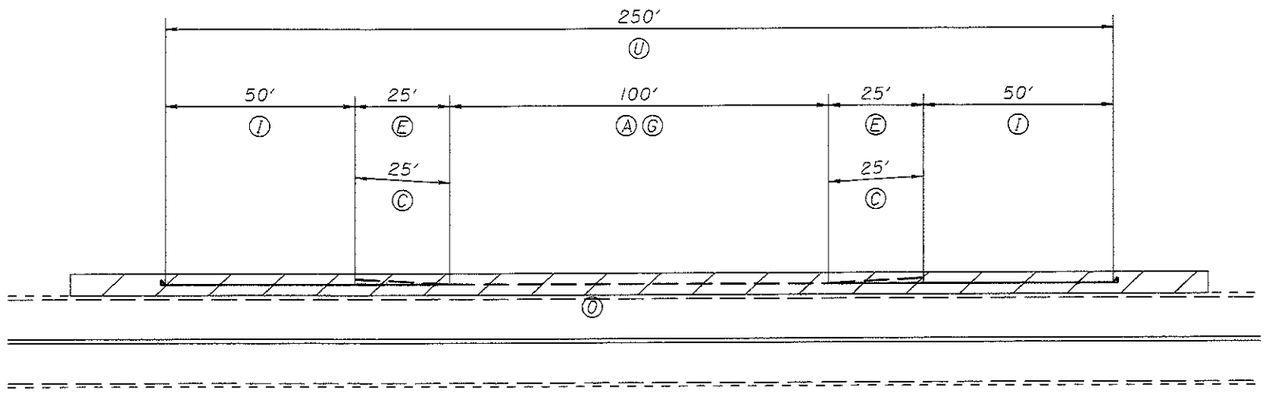

NOTE

1) THE CONTRACTOR IS RESPONSIBLE TO NOTE THE EXISTING TYPE A ANCHOR ASSEMBLY LOCATION AS A REFERENCE FOR THE LAYOUT OF THE PROPOSED GUARDRAIL.

LOCATION	ITEM	DESCRIPTION	UNIT	QUANTITIY		TOTAL
				LEFT	RIGHT	
Ⓐ	202	GUARDRAIL REMOVED FOR REUSE	FT	100	0	100
Ⓒ	202	ANCHOR ASSEMBLY REMOVED, TYPE A	EACH	2	0	2
▱	203	EMBANKMENT, AS PER PLAN	CU YD	56	0	56
Ⓤ	209	RESHAPING UNDER GUARDRAIL	FT	250	0	250
Ⓔ	606	GUARDRAIL, TYPE 5	FT	50	0	50
Ⓖ	606	GUARDRAIL REBUILT, TYPE 5	FT	100	0	100
Ⓘ	606	ANCHOR ASSEMBLY, TYPE E-98	EACH	2	0	2
Ⓞ	626	BARRIER REFLECTOR, TYPE A	EACH	4	0	4

ALL QUANTITIES CARRIED TO GUARDRAIL ESTIMATED QUANTITIES, SHEET 21

TYPICAL SECTION "E-98"

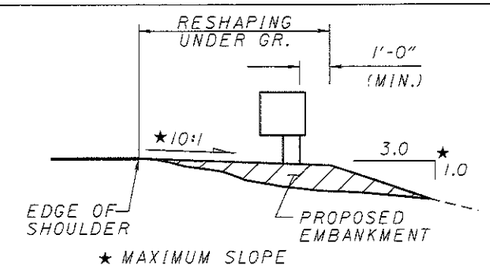

TYPICAL SECTION "TYPE 5"

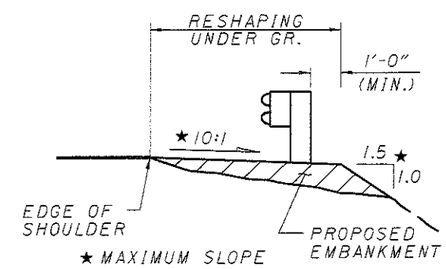

TYPICAL SECTION "TYPE 5"

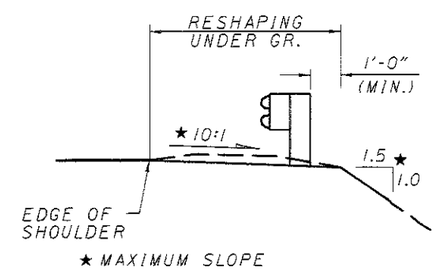

HORIZONTAL SCALE IN FEET
0 10 20 40

CALCULATED SJD
CHECKED BAD

GUARDRAIL DETAIL
ASD-39-7.98

ASD-39-0.00

DESIGN FILE: I:\projects\23578\GR100.dgn
WORKSTATION: sdeer
DATE: 2/27/2004

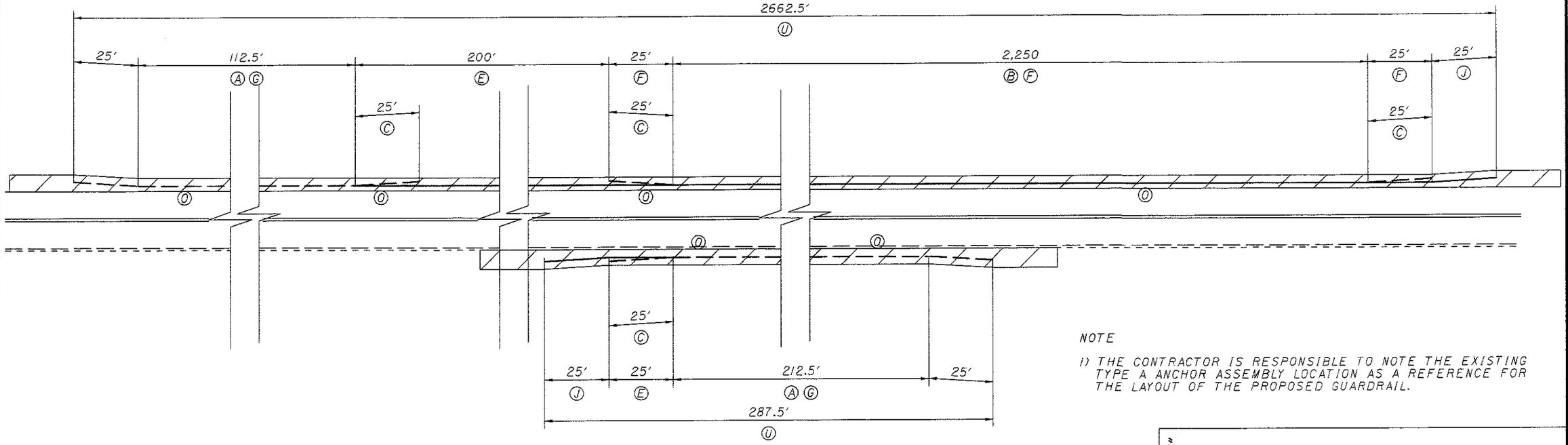

NOTE

1) THE CONTRACTOR IS RESPONSIBLE TO NOTE THE EXISTING TYPE A ANCHOR ASSEMBLY LOCATION AS A REFERENCE FOR THE LAYOUT OF THE PROPOSED GUARDRAIL.

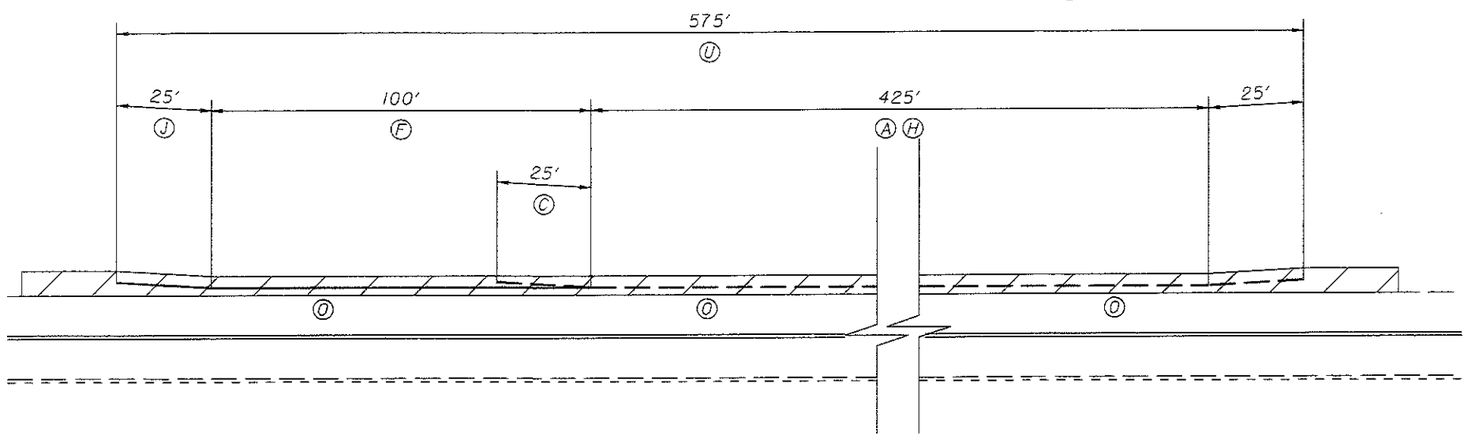

LOCATION	ITEM	DESCRIPTION	UNIT	QUANTITIY		TOTAL
				LEFT	RIGHT	
Ⓐ	202	GUARDRAIL REMOVED FOR REUSE	FT	537.5	212.5	750
Ⓑ	202	GUARDRAIL REMOVED FOR REUSE, AS PER PLAN	FT	2,250	0	2250
Ⓒ	202	ANCHOR ASSEMBLY REMOVED, TYPE A	EACH	4	1	5
	203	EMBANKMENT, AS PER PLAN	CU YD	609	54	663
Ⓤ	209	RESHAPING UNDER GUARDRAIL	FT	3,237.5	287.5	3,525
Ⓔ	606	GUARDRAIL, TYPE 5	FT	200	25	225
Ⓕ	606	GUARDRAIL, TYPE 5, USING 9 FOOT POSTS	FT	2400	0	2400
Ⓖ	606	GUARDRAIL REBUILT, TYPE 5	FT	112.5	212.5	325
Ⓗ	606	GUARDRAIL REBUILT, TYPE 5, AS PER PLAN	FT	425	0	425
Ⓙ	606	ANCHOR ASSEMBLY, TYPE A	EACH	2	1	3
Ⓝ	606	GUARDRAIL, MISC.: RAIL ELEMENT	EACH	20	2	22
Ⓞ	626	BARRIER REFLECTOR, TYPE A	EACH	35	4	39

ALL QUANTITIES CARRIED TO GUARDRAIL ESTIMATED QUANTITIES, SHEET 21

TYPICAL SECTION "TYPE 5"

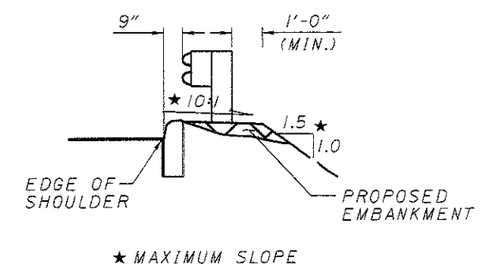

TYPICAL SECTION "TYPE 5"

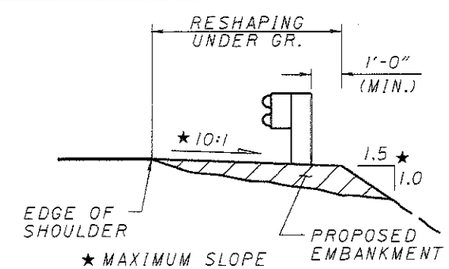

TYPICAL SECTION "TYPE 5"

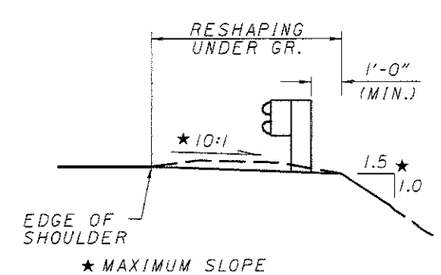

N

HORIZONTAL SCALE IN FEET 0 10 20 40

CALCULATED SJD CHECKED BAD

GUARDRAIL DETAIL
ASD-39-8.12

ASD-39-0.00

DESIGN FILE: I:\projects\23578\GR100.dgn
WORKSTATION: sdeer
DATE: 2/27/2004

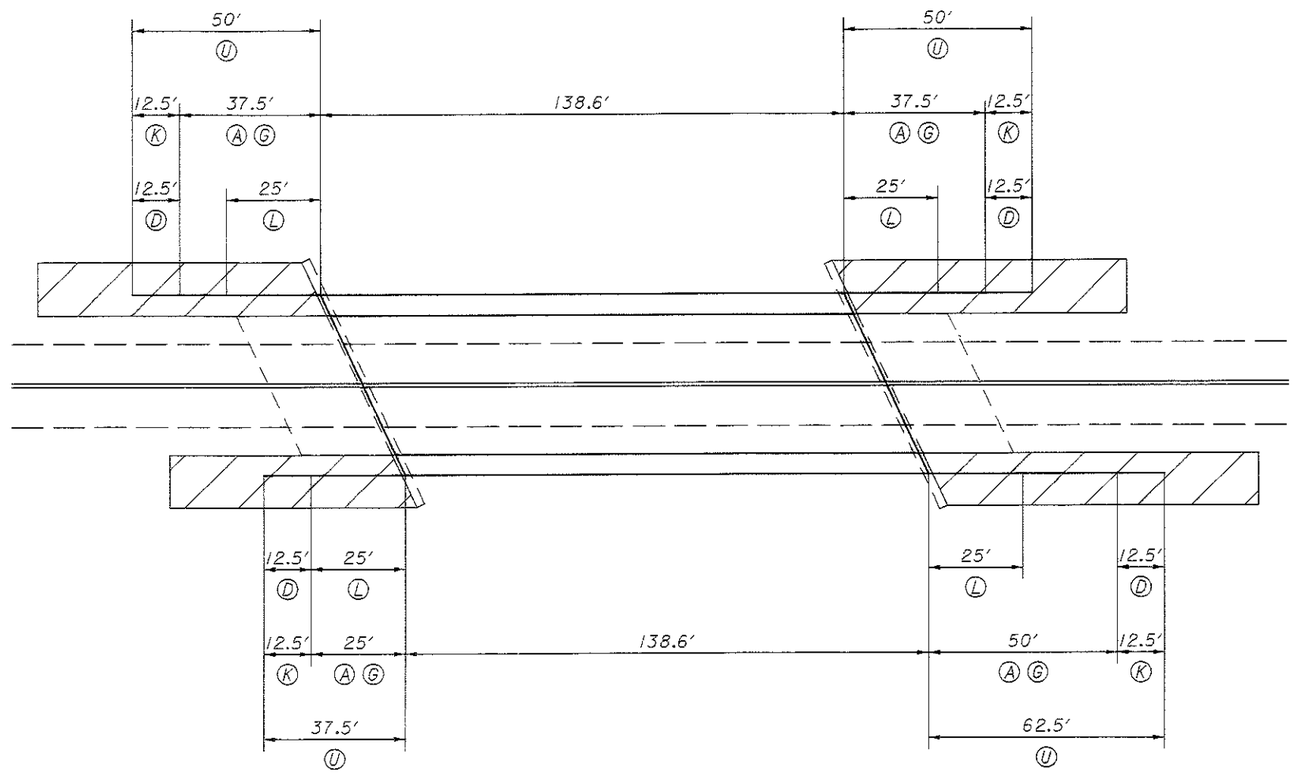

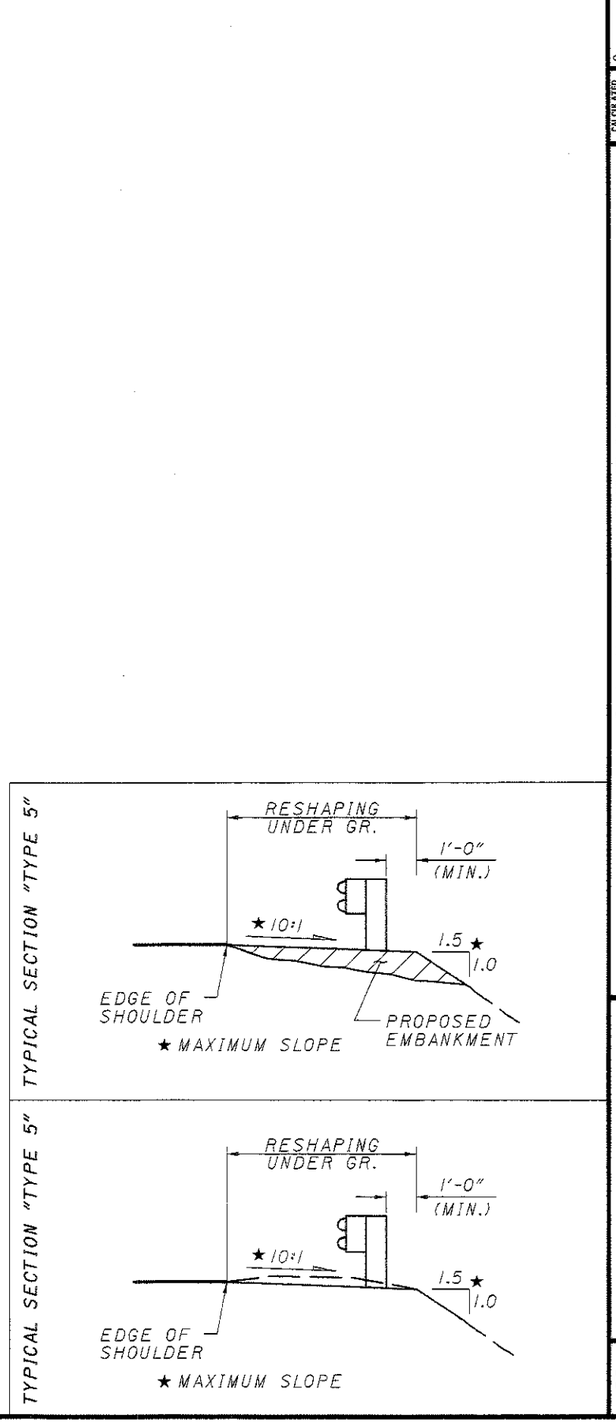

LOCATION	ITEM	DESCRIPTION	UNIT	QUANTITIY		TOTAL
				LEFT	RIGHT	
A	202	GUARDRAIL REMOVED FOR REUSE	FT	75	75	150
D	202	ANCHOR ASSEMBLY REMOVED, TYPE T	EACH	2	2	4
	203	EMBANKMENT, AS PER PLAN	CU YD	1	1	2
U	209	RESHAPING UNDER GUARDRAIL	FT	100	100	200
G	606	GUARDRAIL REBUILT, TYPE 5	FT	75	75	150
K	606	ANCHOR ASSEMBLY, TYPE T	EACH	2	2	4
L	606	BRIDGE TERMINAL ASSEMBLY, TYPE 1	EACH	2	2	4

ALL QUANTITIES CARRIED TO GUARDRAIL ESTIMATED QUANTITIES, SHEET 21

HORIZONTAL SCALE IN FEET 0 10 20 40

CALCULATED SJD
CHECKED BAD

GUARDRAIL DETAIL
ASD-39-8.97

ASD-39-0.00

DESIGN FILE: I:\projects\23578\GR100.dgn
WORKSTATION: sdeer DATE: 2/24/2004

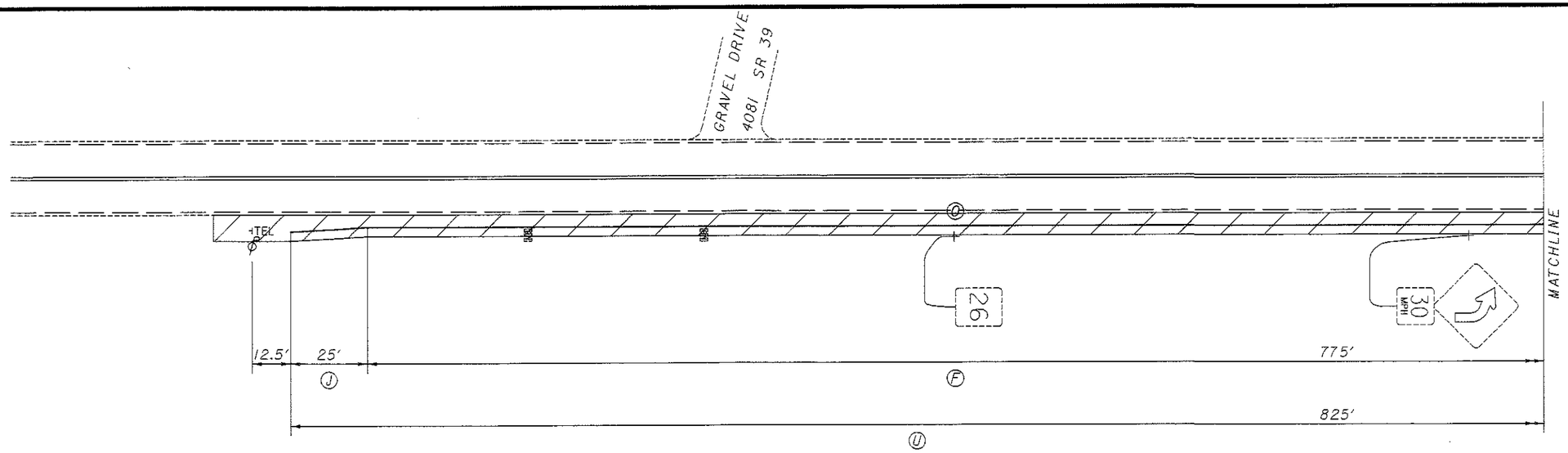

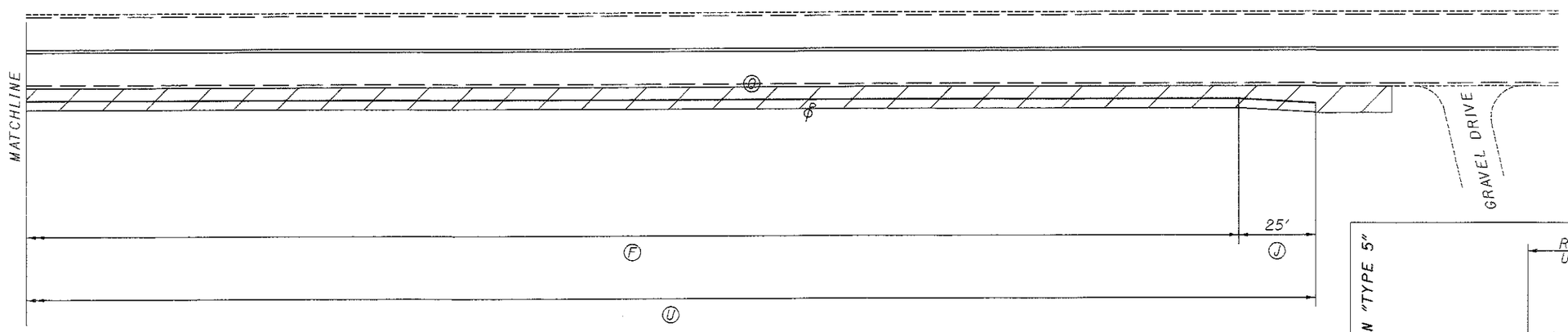

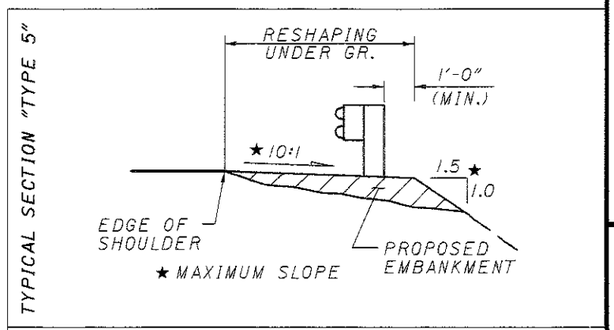

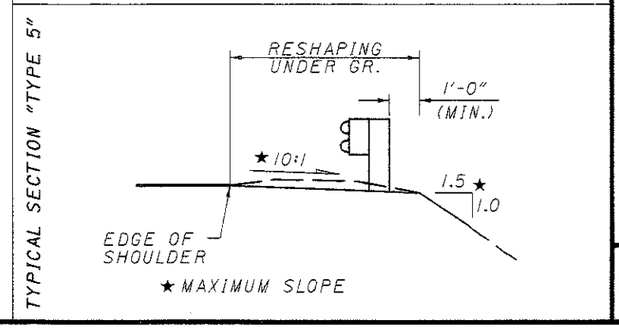

LOCATION	ITEM	DESCRIPTION	UNIT	QUANTITIY		TOTAL
				LEFT	RIGHT	
	203	EMBANKMENT, AS PER PLAN	CU. YD.	0	233	233
U	209	RESHAPING UNDER GUARDRAIL	FT	0	825	825
F	606	GUARDRAIL, TYPE 5, USING 9 FOOT POSTS	FT	0	775	775
J	606	ANCHOR ASSEMBLY, TYPE A	EACH	0	2	2
O	626	BARRIER REFLECTOR, TYPE A	EACH	0	10	10

ALL QUANTITIES CARRIED TO GUARDRAIL ESTIMATED QUANTITIES, SHEET 21

HORIZONTAL SCALE IN FEET 0 10 20 40

CALCULATED SJD
CHECKED BAD

GUARDRAIL DETAIL
RIC-39-25.77

ASD-39-0.00

DESIGN FILE: h:\projects\23578\GR100.dgn
WORKSTATION: sdeer
DATE: 2/24/2004

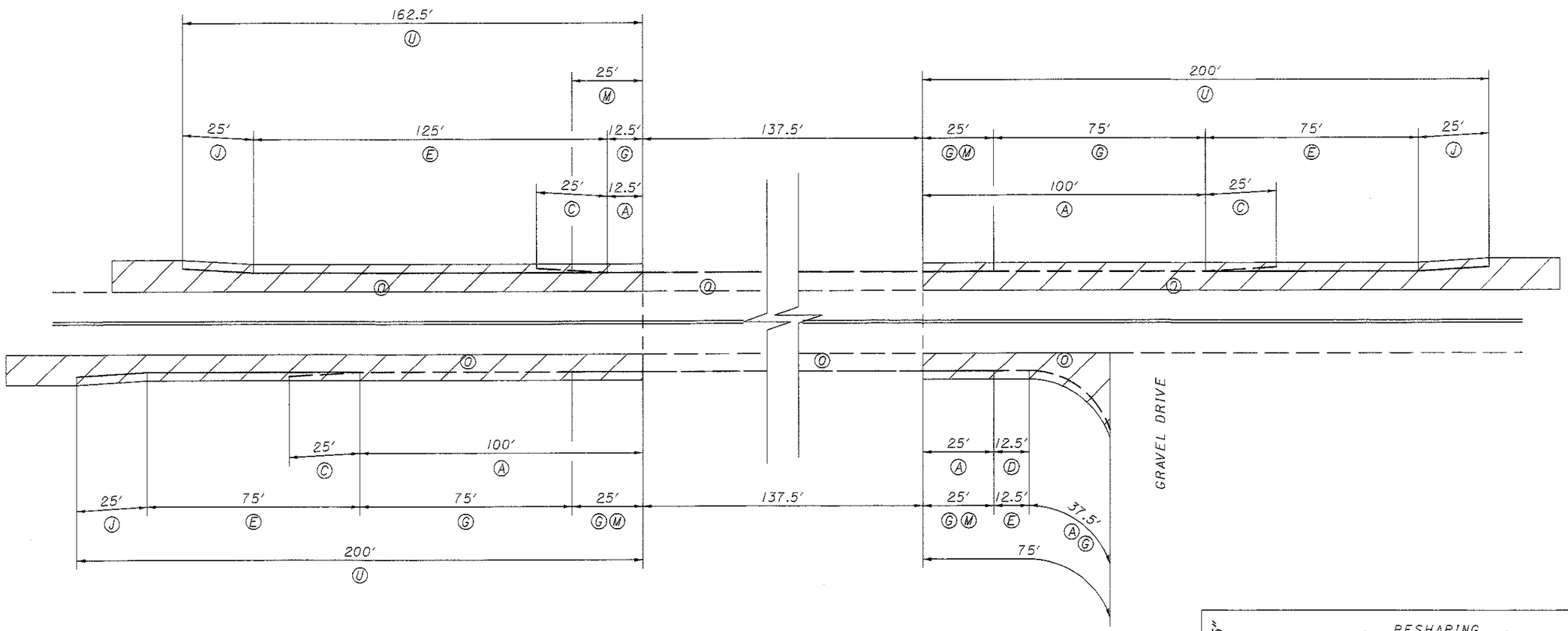

LOCATION	ITEM	DESCRIPTION	UNIT	QUANTITIY		TOTAL
				LEFT	RIGHT	
A	202	GUARDRAIL REMOVED FOR REUSE	FT	112.5	162.5	275
C	202	ANCHOR ASSEMBLY REMOVED, TYPE A	EACH	2	1	3
D	202	ANCHOR ASSEMBLY REMOVED, TYPE T	EACH	0	1	1
	203	EMBANKMENT, AS PER PLAN	CU YD	116	74	190
U	209	RESHAPING UNDER GUARDRAIL	FT	362.5	275	637.5
E	606	GUARDRAIL, TYPE 5	FT	200	87.5	287.5
G	606	GUARDRAIL REBUILT, TYPE 5	FT	112.5	162.5	275
J	606	ANCHOR ASSEMBLY, TYPE A	EACH	2	1	3
M	606	BRIDGE TERMINAL ASSEMBLY, TYPE 4	EACH	2	2	4
O	626	BARRIER REFLECTOR, TYPE A	EACH	6	6	12

ALL QUANTITIES CARRIED TO GUARDRAIL ESTIMATED QUANTITIES, SHEET 21

TYPICAL SECTION "TYPE 5"

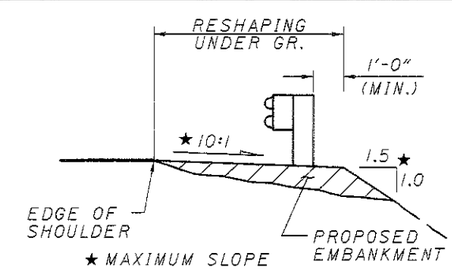

TYPICAL SECTION "TYPE 5"

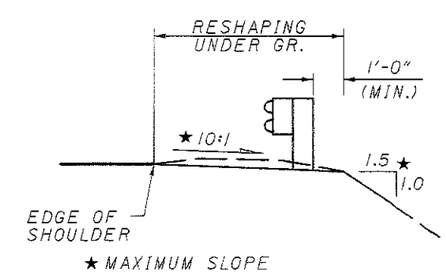

HORIZONTAL SCALE IN FEET
0 10 20 40

CALCULATED SJD
CHECKED BAD

GUARDRAIL DETAIL
RIC-39-26.77

ASD-39-0.00

DESIGN FILE: I:\projects\23578\GR100.dgn
WORKSTATION: sdeer
DATE: 2/24/2004

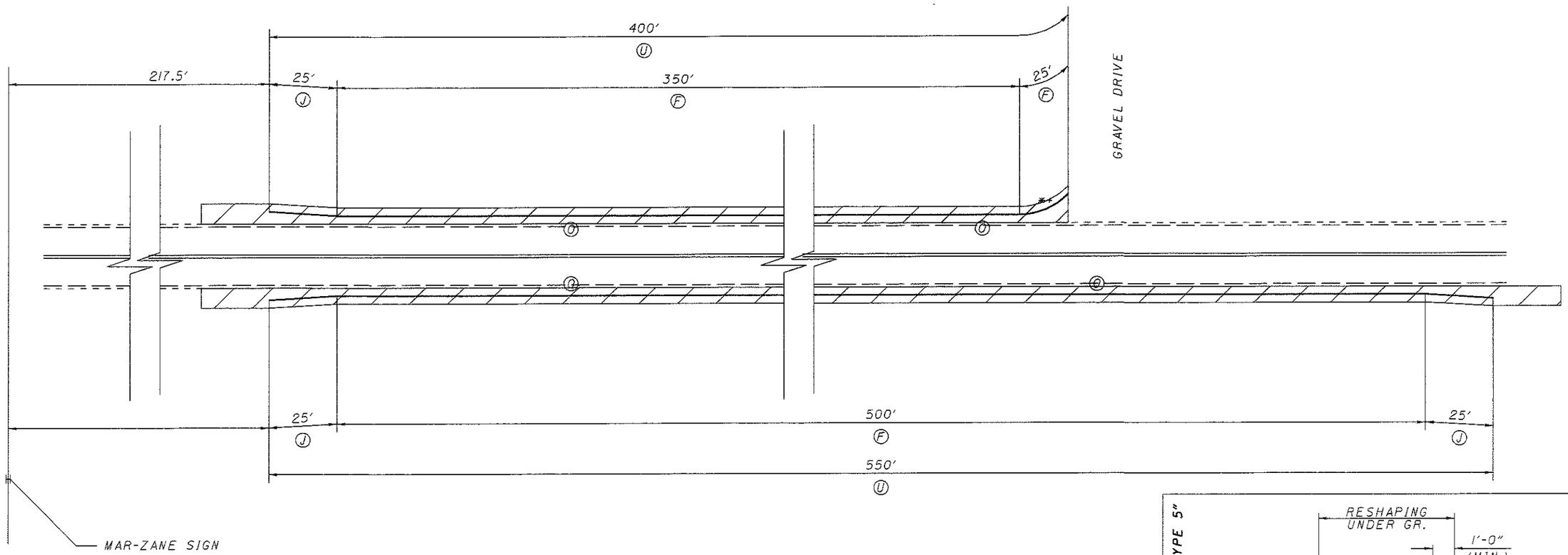

NOTE

1) THE CONTRACTOR IS RESPONSIBLE TO NOTE THE EXISTING TYPE A ANCHOR ASSEMBLY LOCATION AS A REFERENCE FOR THE LAYOUT OF THE PROPOSED GUARDRAIL.

2) *+ = 25' RADIUS

NOTES

LOCATION	ITEM	DESCRIPTION	UNIT	QUANTITIY		TOTAL
				LEFT	RIGHT	
▨	203	EMBANKMENT, AS PER PLAN	CU YD	127	169	296
Ⓤ	209	RESHAPING UNDER GUARDRAIL	FT	400	550	950
Ⓕ	606	GUARDRAIL, TYPE 5, USING 9 FOOT POSTS	FT	375	500	875
Ⓙ	606	ANCHOR ASSEMBLY, TYPE A	EACH	1	2	3
Ⓞ	626	BARRIER REFLECTOR, TYPE A	EACH	5	7	12

ALL QUANTITIES CARRIED TO GUARDRAIL ESTIMATED QUANTITIES, SHEET 21

TYPICAL SECTION "TYPE 5"

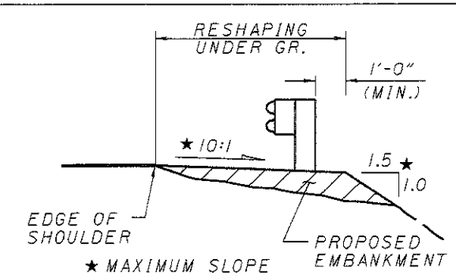

TYPICAL SECTION "TYPE 5"

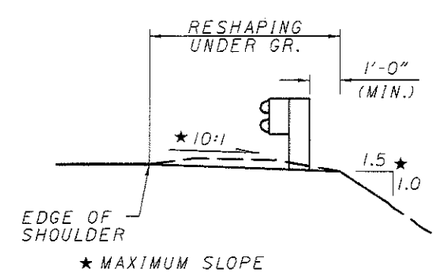

HORIZONTAL SCALE IN FEET 0 10 20 40

CALCULATED SJD
CHECKED BAD

GUARDRAIL DETAIL
RIC-39-26.85

ASD-39-0.00

35/60

DESIGN FILE: I:\projects\23578\GR100.dgn
WORKSTATION: sdeer
DATE: 2/27/2004

AUXILIARY & LONG LINE MARKINGS

PART	ROUTE	FROM SLM	FROM DESCRIPTION	TO SLM	TO DESCRIPTION	202 RPM REMOVED	LANE WIDTH	642, TYPE 2 EDGE LINE HIGHWAY MILES	642, TYPE 2 EDGE LINE TOTAL (PAY QUANTITY)	642, TYPE 2 LANE LINE	642, TYPE 2 CENTER LINE SOLID LINE EQUIVALENT	642, TYPE 2 CENTER LINE TOTAL (PAY QUANTITY)	644 AUXILIARY MARKINGS (740.04) CHANNELIZING LINE 8 IN	STOP LINE 24 IN	CROSSWALK LINE 12 IN	TRANSVERSE LINE 24 IN	RAILROAD SYMBOL MARKING	SCHOOL SYMBOL MARKING 72 in	SCHOOL SYMBOL MARKING 96 in	PARKING LOT STALL MARKING	LANE ARROW LEFT	LANE ARROW RIGHT	LANE ARROW THRU	LANE ARROW COMBINATION	WORD ON PAVEMENT "ONLY" 72 in	WORD ON PAVEMENT "ONLY" 96 in	HANDICAP SYMBOL MARKING	SPECIAL AIR SPEED ZONE MARKING	614 WORK ZONE CENTER LINE, CLASS II, 642 PAINT	614 WORK ZONE CHANNELIZING LINE, CLASS I, 642 PAINT
						EACH	FT	MI	MI	MI	MI	MI	FT	FT	FT	FT	EACH	EACH	EACH	FT	EACH	EACH	EACH	EACH	EACH	EACH	EACH	FT	FT
A	SR 39	0.00	RIC/ASD CO. LINE	9.27	S.R. 3	610	11	8.18	16.38		15.179	9.55	418	322	981				2	954	10	2		4				36.87	1254
B	SR 39	24.95	S.R. 603	27.40	RIC/ASD CO. LINE	221	11	2.45	4.90		4.218	2.45		36														9.80	
					TOTAL	831			21.28			12.00	418	358	981				2	954	10	2		4				46.67	1254

SEE PAVEMENT MARKING DETAIL SHEET
SUPPLIED AT THE PRECONSTRUCTION MEETING

ALL QUANTITIES CARRIED TO GENERAL SUMMARY SHEET # 11.

RAISED PAVEMENT MARKERS

LOCATION PART	COUNTY	ROUTE	SLM SECTION FROM	SLM SECTION TO	DETAIL	621 RPM EACH	PRISMATIC RETRO-REFLECTOR TYPES ONE - WAY WHITE	TWO - WAY YELLOW/ YELLOW	TWO - WAY WHITE/ RED	TWO - WAY YELLOW/ RED	REMARKS
A	ASHLAND	SR 39	0.00	0.37	16	44		44			REVERSE CURVE SIGN W/30 MPH SPEED ADVANCE
A	ASHLAND	SR 39	0.37	0.61	GAP	16		16			CONTINUOUS ROUTE TREATMENT
A	ASHLAND	SR 39	0.61	0.89	15	37		37			CURVE SIGN W/40 MPH SPEED ADVANCE
A	ASHLAND	SR 39	0.89	1.40	GAP	34		34			CONTINUOUS ROUTE TREATMENT
A	ASHLAND	SR 39	1.40	1.74	8	22		22			THRU APPROACHES @ SR 511
A	ASHLAND	SR 39	1.74	2.43	GAP	46		46			CONTINUOUS ROUTE TREATMENT
A	ASHLAND	SR 39	2.43	2.71	16	50		50			CURVE SIGN W/40 MPH SPEED ADVANCE
A	ASHLAND	SR 39	2.71	3.81	GAP	73		73			CONTINUOUS ROUTE TREATMENT
A	ASHLAND	SR 39	3.81	3.98	8	27	16	11			THRU APPROACH @ SR 95 (N. APPROACH)
A	ASHLAND	SR 39	4.79	6.53	GAP	122		122			CONTINUOUS ROUTE TREATMENT
A	ASHLAND	SR 39	6.53	7.04	15	67		67			TWO CURVES, FIRST W/ NO SPEED ADVANCE
A	ASHLAND	SR 39	7.04	8.13	GAP	72		72			CONTINUOUS ROUTE TREATMENT
				SUB-TOTAL		610	16	594			
B	RICHLAND	SR 39	24.96	25.13	8	11		11			THRU APPROACH @ SR 603 (W. APPROACH)
B	RICHLAND	SR 39	25.13	25.25	GAP	8		8			CONTINUOUS ROUTE TREATMENT
B	RICHLAND	SR 39	25.25	26.09	15	111		111			CURVE
B	RICHLAND	SR 39	26.09	27.34	GAP	83		83			CONTINUOUS ROUTE TREATMENT
B	RICHLAND	SR 39	27.34	27.40	15	8		8			PART OF CURVE
				SUB-TOTAL		221		221			
					TOTAL	831	16	815			

DETAIL	DESCRIPTION
1	MULTILANE UNDIVIDED TYPICAL SPACING
2	TAPERED ACCEL LANE
3	DECELERATION LANE
4	PARALLEL ACEL LANE
5	MULTILANE DIVIDED/ EXPRESSWAY
6	STOP APPROACH
7	1 LANE APPR. W/ TURN LANE
8	THROUGH APPROACH
9	2 LANE APPR. W/ TURN LANE
10	4 LANE DIVIDED TO 2 LANE TRANSITION
11	4 LANE UNDIVIDED TO 2 LANE TRANSITION
12	TWO LANE NARROW BRIDGE
13	TWO WAY LEFT TURN LANE
14	ONE LANE BRIDGE
15	HORIZONTAL CURVE
16	HORIZONTAL CURVE ALT.
17	STOP APPROACH ALT.
GAP	CENTER LINE AT 80 FT TYP

CALCULATED JPF
CHECKED MJS

PAVEMENT MARKING DATA

ASD-39-0.00

DESIGN FILE: I:\projects\23578\TC100.dgn
WORKSTATION: jfinch
DATE: 02/25/04

STANDARD PARKING LOT STALL MARKINGS

PARALLEL STALL MARKINGS

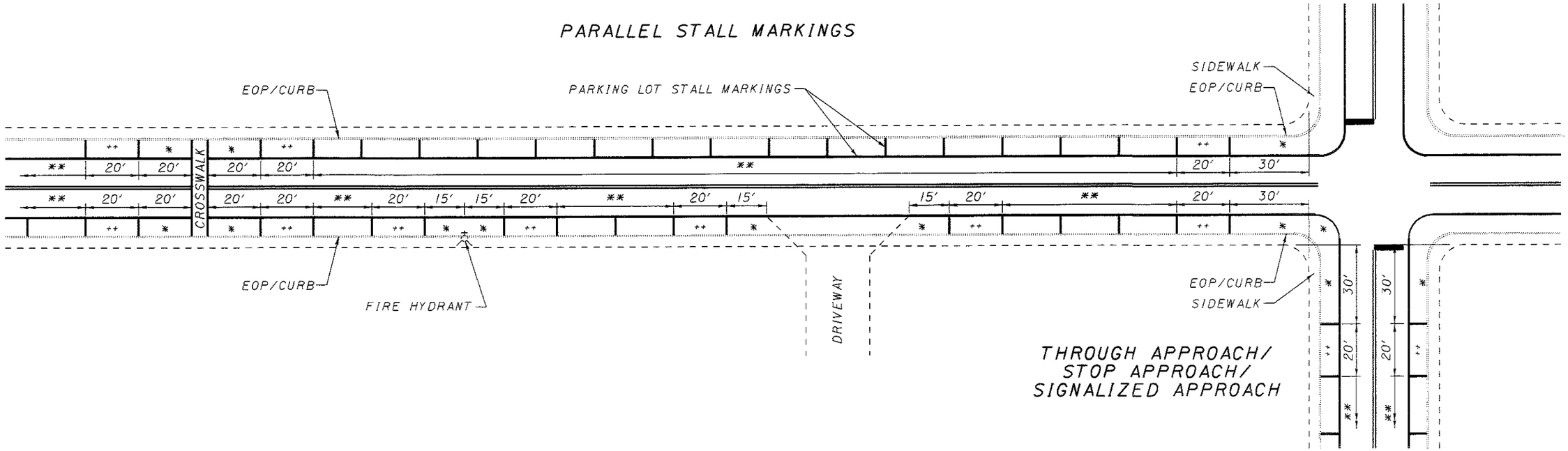

ANGLE STALL MARKINGS

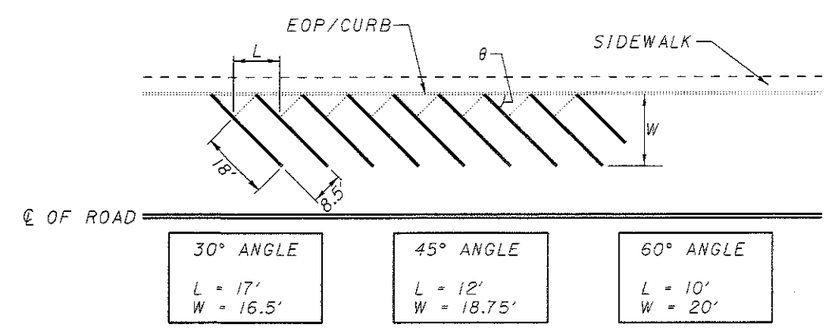

PERPENDICULAR STALL MARKINGS

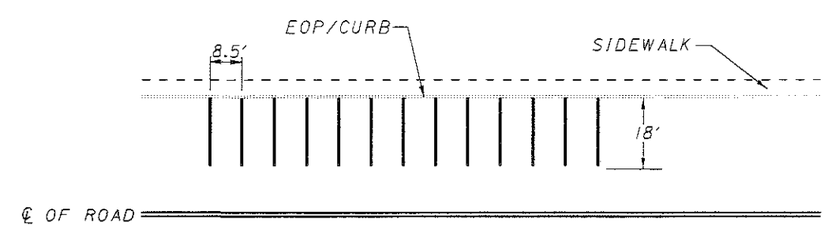

NOTES

1) * - NO PARKING ZONE (PAINTED YELLOW CURB), DIMENSIONS SHOWN DEFINES THE MINIMUM DISTANCE.
2) PARKING LOT STALL WIDTH = 8.0', UNLESS OTHERWISE SHOWN.
3) ++ - END STALLS SHALL BE 20' IN LENGTH, PARALLEL STALLS ONLY.
4) ** - INTERIOR STALLS SHALL BE 22' TO 26' IN LENGTH, PARALLEL STALLS ONLY, WITH ALL INTERIOR STALLS BEING THE SAME LENGTH BETWEEN TWO END STALLS.
5) WHEN LAYING OUT THE STALLS, THE CONTRACTOR SHALL MAXIMIZE THE AMOUNT OF PARKING STALLS.
6) ANY DISABILITY PARKING SPACES SHALL BE DELINEATED WITH BLUE LINES INSTEAD OF WHITE LINES.
7) ITEM 642 - PARKING LOT STALL MARKING, TYPE 2 SHALL BE 4" WIDE.
8) STALLS SHALL BE 20' FROM THE NEAREST EDGE OF A ALLEY.
9) ALL "NO PARKING ZONES" SHOWN ABOVE APPLY TO THE ALTERNATIVE ON STREET PARKING SHOWN ON THIS SHEET.

PAYMENT FOR THE LABOR, MATERIALS, AND EQUIPMENT NECESSARY TO PERFORM THE WORK WHICH INCLUDES LAYING OUT THE PARKING SPACES AS WELL AS THE NO PARKING ZONES SHALL BE INCLUDED IN THE COST OF ITEM 642 - PARKING LOT STALL MARKING, TYPE 2. THE DEPARTMENT WILL NOT PAY FOR COST ASSOCIATED WITH CORRECTING IMPROPERLY LOCATED LINES OR REPLACING UNSATISFACTORY PAVEMENT MARKINGS.

LOUDONVILLE TENATIVE LAYOUT IS SHOWN ON SHEET 38.

DESIGN FILE: i:\projects\23578\TD100Lod.dgn
WORKSTATION: jfinch DATE: 02/23/04

NOTES

1) TOTAL ITEM 644 PARKING LOT STALL MARKING = 954'

2) QUANTITY CARRIED TO PAVEMENT MARKING DATA SHEET 36

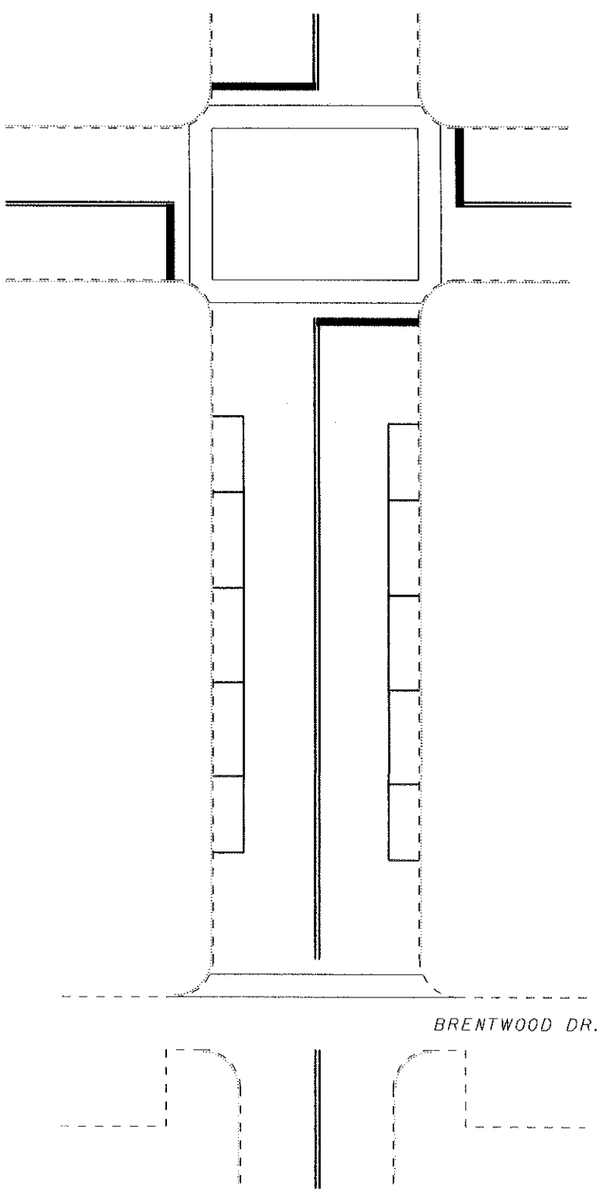

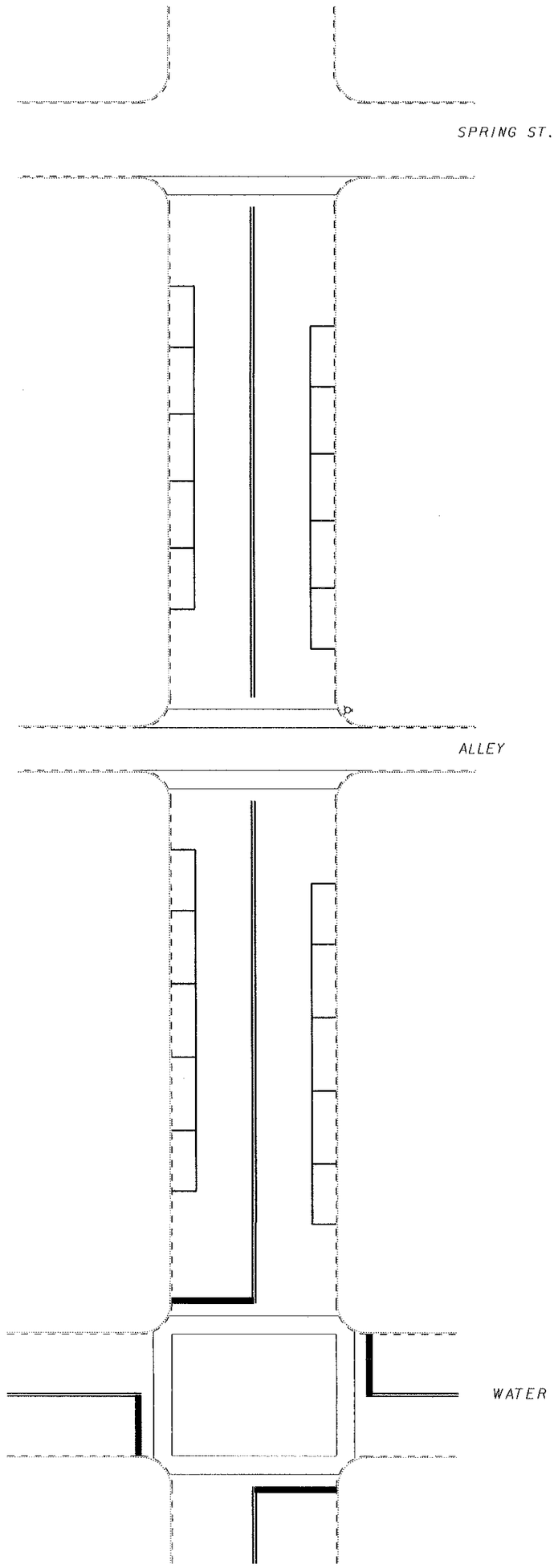

38
60

ASD-39-0.00

PARKING LOT STALL MARKINGS

CALCULATED SJD
CHECKED JPF

BRIDGE NUMBER ASD-39-0133 SFN 0300799

ITEM	EXTENSION	QUANTITY	UNIT	DESCRIPTION
841	10000	168	SQ YD	TREATING OF CONCRETE SURFACES WITH SRS
864	10100	104	SQ YD	SEALING OF CONCRETE SURFACES (EPOXY-URETHANE)

BRIDGE NUMBER ASD-39-0162 SFN 0300829

ITEM	EXTENSION	QUANTITY	UNIT	DESCRIPTION
864	10100	10	SQ YD	SEALING OF CONCRETE SURFACES (EPOXY-URETHANE)

BRIDGE NUMBER ASD-39-0360 SFN 0300845

ITEM	EXTENSION	QUANTITY	UNIT	DESCRIPTION
614	12800	652	EACH	WORK ZONE RAISED PAVEMENT MARKER
614	13202	16	EACH	BARRIER REFLECTOR, TYPE A2
614	13302	10	EACH	BARRIER REFLECTOR, TYPE B2
614	21000	.06	MILE	WORK ZONE CENTER LINE, CLASS 1
614	22000	.04	MILE	WORK ZONE EDGE LINE, CLASS 1
614	26000	24	FT	WORK ZONE STOP LINE, CLASS 1
848	10001	810	SQ YD	MICRO SILICA MODIFIED CONCRETE OVERLAY USING HYDRODEMOLITION, AS PER PLAN (3 INCH THICK)
848	20000	810	SQ YD	SURFACE PREPARATION USING HYDRODEMOLITION
848	30001	21	CU YD	MICRO SILICA MODIFIED CONCRETE OVERLAY (VARIABLE THICKNESS), MATERIAL ONLY, AS PER PLAN
848	50000	24	SQ YD	HAND CHIPPING
848	50100	lump		TEST SLAB
848	50200	1	CU YD	FULL-DEPTH REPAIR
848	50320	810	SQ YD	EXISTING CONCRETE OVERLAY REMOVED (2 INCH NOMINAL THICKNESS)
848	50340	41	SQ YD	REMOVAL OF DEBONDED OR DETERIORATED EXISTING VARIABLE THICKNESS CONCRETE OVERLAY
864	10100	377	SQ YD	SEALING OF CONCRETE SURFACES (EPOXY-URETHANE)

DESIGN FILE: I:\projects\23578\Struct\str-sum.dgn
WORKSTATION: dmollens DATE: 02/25/04

DESIGN AGENCY: DISTRICT THREE
DATE: 2-04
REVIEWED: RDN
STRUCTURAL FILE NUMBER
DRAWN: DCM
REVISED
DESIGNED: DCM
CHECKED: BAD

STRUCTURE SUMMARY

ASD-39-0.00

BRIDGE NUMBER ASD-39-0491 SFN 0300926

ITEM	EXTENSION	QUANTITY	UNIT	DESCRIPTION
841	10000	859	SQ YD	TREATING OF CONCRETE SURFACES WITH SRS
864	10100	245	SQ YD	SEALING OF CONCRETE SURFACES (EPOXY-URETHANE)

BRIDGE NUMBER ASD-39-0725 SFN 0300993

ITEM	EXTENSION	QUANTITY	UNIT	DESCRIPTION
202	11301	2	CU YD	PORTIONS OF STRUCTURE REMOVED, AS PER PLAN
503	11100	LUMP		COFFERDAMS, CRIBS AND SHEETING
503	21300	LUMP		UNCLASSIFIED EXCAVATION
509	10000	584	POUND	EPOXY COATED REINFORCING STEEL
510	09950	48	EACH	DOWEL HOLES WITH CEMENT GROUT
511	46001	3	CU YD	CLASS C CONCRETE, AS PER PLAN
614	12800	126	EACH	WORK ZONE RAISED PAVEMENT MARKER
614	13202	4	EACH	BARRIER REFLECTOR, TYPE A2
614	13302	5	EACH	BARRIER REFLECTOR, TYPE B2
614	13360	4	EACH	OBJECT MARKER, TWO WAY
614	21000	.06	MILE	WORK ZONE CENTER LINE, CLASS I
614	22000	.02	MILE	WORK ZONE EDGE LINE, CLASS I
614	26000	24	FT	WORK ZONE STOP LINE, CLASS I
622	40020	110	FT	PORTABLE CONCRETE BARRIER, 32"
622	40040	40	FT	PORTABLE CONCRETE BARRIER, 32", BRIDGE MOUNTED (UNANCHORED)
864	10100	40	SQ YD	SEALING OF CONCRETE SURFACES (EPOXY-URETHANE)

BRIDGE NUMBER ASD-39-0897 SFN 0300942

ITEM	EXTENSION	QUANTITY	UNIT	DESCRIPTION
254	01001	570	SQ YD	PAVEMENT PLANING, ASPHALT CONCRETE, AS PER PLAN
407	10000	46	GAL	TACK COAT
448	46020	20	CU YD	ASPHALT CONCRETE INTERMEDIATE COURSE, TYPE 1, PG 64-22
512	33010	570	SQ YD	TYPE 3 WATERPROOFING
SPECIAL	51631300	82	FT	POLYMER MODIFIED ASPHALT EXPANSION JOINT SYSTEM
601	34100	13	CU YD	ROCK CHANNEL PROTECTION, TYPE B WITHOUT FILTER
864	10050	195	SQ YD	SEALING OF CONCRETE SURFACES (NON-EPOXY)
864	10100	386	SQ YD	SEALING OF CONCRETE SURFACES (EPOXY-URETHANE)

BRIDGE NUMBER RIC-39-2677 SFN 7002556

ITEM	EXTENSION	QUANTITY	UNIT	DESCRIPTION
202	11300	1	CU YD	PORTIONS OF STRUCTURE REMOVED (ABUTMENT)
509	10000	8	POUND	EPOXY COATED REINFORCING STEEL
511	45701	1	CU YD	CLASS C CONCRETE, ABUTMENT, AS PER PLAN (REPAIR OR RECONSTRUCTION)
SPECIAL	51822300	307	FT	STEEL DRIP STRIP
614	12800	468	EACH	WORK ZONE RAISED PAVEMENT MARKER
614	13202	10	EACH	BARRIER REFLECTOR, TYPE A2
614	21000	.06	MILE	WORK ZONE CENTER LINE, CLASS 1
614	22000	.04	MILE	WORK ZONE EDGE LINE, CLASS 1
614	26000	24	FT	WORK ZONE STOP LINE, CLASS 1
615	10000	lump		ROADS FOR MAINTAINING TRAFFIC
615	25001	305	SQ YD	PAVEMENT FOR MAINTAINING TRAFFIC, CLASS B, AS PER PLAN
848	10001	520	SQ YD	MICRO SILICA MODIFIED CONCRETE OVERLAY USING HYDRODEMOLITION, AS PER PLAN (3 INCH THICK)
848	20000	520	SQ YD	SURFACE PREPARATION USING HYDRODEMOLITION
848	30001	13	CU YD	MICRO SILICA MODIFIED CONCRETE OVERLAY (VARIABLE THICKNESS), MATERIAL ONLY, AS PER PLAN
848	50000	16	SQ YD	HAND CHIPPING
848	50100	lump		TEST SLAB
848	50200	1	CU YD	FULL-DEPTH REPAIR
848	50320	520	SQ YD	EXISTING CONCRETE OVERLAY REMOVED (2 INCH NOMINAL THICKNESS)
848	50340	26	SQ YD	REMOVAL OF DEBONDED OR DETERIORATED EXISTING VARIABLE THICKNESS CONCRETE OVERLAY
864	10100	104	SQ YD	SEALING OF CONCRETE SURFACES (EPOXY-URETHANE)

DESIGN FILE: I:\projects\23578\Struct\strsum.dgn
WORKSTATION: dmollens DATE: 02/25/04

DESIGN AGENCY: DISTRICT THREE
DESIGNED DCM | DRAWN DCM | REVIEWED RDN | DATE 2-04
CHECKED BAD | REVISED | STRUCTURAL FILE NUMBER
STRUCTURE SUMMARY
ASD-39-0.00

STRUCTURE GENERAL NOTES

REFERENCES SHALL BE MADE TO STANDARD DRAWINGS:

BP-3.1	DATED	7/28/00
RM-4.2	DATED	4/18/03
MT-96.10	DATED	4/19/02
MT-96.11	DATED	4/19/02
MT-96.20	DATED	4/19/02
MT-96.25	DATED	4/20/01
MT-96.26	DATED	4/20/01
MT-97.10	DATED	4/19/02
MT-101.20	DATED	10/18/02
MT-101.70	DATED	10/18/02
MT-105.10	DATED	10/18/02
MT-105.11	DATED	10/18/02

AND TO SUPPLEMENTAL SPECIFICATIONS:

841	DATED	4/19/02
848	DATED	2/08/02
864	DATED	7/11/00

EXISTING STRUCTURE VERIFICATION:

DETAILS AND DIMENSIONS SHOWN ON THESE PLANS PERTAINING TO THE EXISTING STRUCTURES HAVE BEEN OBTAINED FROM PLANS OF THE EXISTING STRUCTURES AND FROM FIELD OBSERVATION AND MEASUREMENTS. CONSEQUENTLY, THEY ARE INDICATIVE OF THE EXISTING STRUCTURES AND THE PROPOSED WORK BUT THEY SHALL BE CONSIDERED TENTATIVE AND APPROXIMATE. THE CONTRACTOR IS REFERRED TO CMS SECTIONS 102.05, 105.02 AND 513.02. THE ORIGINAL CONSTRUCTION PLANS OF THE EXISTING BRIDGES ARE AVAILABLE UPON REQUEST AT THE DISTRICT 3 OFFICE OF THE OHIO DEPARTMENT OF TRANSPORTATION, ASHLAND, OHIO.

CONTRACT BID PRICES SHALL BE BASED UPON A RECOGNITION OF THE UNCERTAINTIES DESCRIBED ABOVE AND UPON A PRE-BID EXAMINATION OF THE EXISTING STRUCTURES BY THE CONTRACTOR. HOWEVER, ALL PROJECT WORK SHALL BE BASED ON ACTUAL DETAILS AND DIMENSIONS WHICH HAVE BEEN VERIFIED BY THE CONTRACTOR IN THE FIELD.

DESIGN SPECIFICATIONS:

THIS STRUCTURE CONFORMS TO "STANDARD SPECIFICATIONS FOR HIGHWAY BRIDGES" ADOPTED BY THE AMERICAN ASSOCIATION OF STATE HIGHWAY AND TRANSPORTATION OFFICIALS, 2002 AND THE ODOT BRIDGE DESIGN MANUAL.

PLACING ASPHALT CONCRETE FEATHERING ON APPROACHES TO BRIDGES:

SPECIAL CARE SHALL BE TAKEN, WHEN PLACING THE ASPHALT CONCRETE FEATHERING TO EFFECT A SMOOTH TRANSITION FROM THE EXISTING APPROACH PAVEMENT TO THE BRIDGE DECK OR APPROACH SLAB. THE CONTRACTOR'S ATTENTION IS CALLED TO STANDARD DRAWING BP-3.1 FOR REQUIRED TOLERANCES.

ITEM 202- PORTIONS OF STRUCTURE REMOVED, AS PER PLAN:

THIS ITEM SHALL BE USED TO REMOVE A PORTION OF THE WINGWALLS AS DETAILED IN THE PLAN. THE WINGWALLS SHALL BE REMOVED BY SAW CUTING AND/OR WITH APPROVED PNEUMATIC HAMMERS. THE WEIGHT OF THE HAMMERS SHALL BE LIMITED TO 35 POUND.

PAYMENT FOR ALL OF THE ABOVE SHALL BE AT THE UNIT PRICE BID PER CUBIC YARD FOR ALL OF THE ABOVE WHICH SHALL INCLUDE ALL LABOR, EQUIPMENT, MATERIALS AND INCIDENTALS NECESSARY TO COMPLETE THE ABOVE WORK.

ITEM 254- PAVEMENT PLANING, BITUMINOUS, AS PER PLAN:

PLANE THE REMAINING ASPHALT TO WITHIN A ½" OF THE DECK. THEN REMOVE THE REMAINING ASPHALT AND EXISTING WATERPROOFING WITH HAND TOOLS. CARE SHALL BE TAKEN NOT TO GRIND INTO OR DAMAGE THE PRESTRESSED BEAMS. TRAFFIC SHALL NOT BE ALLOWED ON THE SURFACE OF THE BARE CONCRETE BEAMS.

PAYMENT FOR ALL OF THE ABOVE SHALL BE AT THE UNIT PRICE BID PER SQUARE YARD FOR ALL OF THE ABOVE WHICH SHALL INCLUDE ALL LABOR, EQUIPMENT, MATERIALS AND INCIDENTALS NECESSARY TO COMPLETE THE ABOVE WORK.

ITEM 511- CLASS C CONCRETE, ABUTMENT, AS PER PLAN
ITEM 511- CLASS C CONCRETE, AS PER PLAN

THE COARSE AGGREGATE SHALL BE LIMESTONE.

PAYMENT FOR ALL OF THE ABOVE SHALL BE AT THE UNIT PRICE BID PER CUBIC YARD FOR EACH OF THE ABOVE ITEMS WHICH SHALL INCLUDE ALL LABOR, EQUIPMENT, MATERIALS AND INCIDENTALS NECESSARY TO COMPLETE THE ABOVE WORK.

ITEM 615-PAVEMENT FOR MAINTAINING TRAFFIC, CLASS B, AS PER PLAN:

THIS ITEM SHALL BE AS CMS 615, EXCEPT THAT THE PAVEMENT SHALL BE LEFT IN PLACE.

PAYMENT FOR ALL OF THE ABOVE SHALL BE AT THE UNIT PRICE BID PER SQUARE YARD FOR ITEM 615 - PAVEMENT FOR MAINTAINING TRAFFIC, CLASS B, AS PER PLAN, WHICH SHALL INCLUDE ALL LABOR, EQUIPMENT, MATERIALS, AND INCIDENTALS NECESSARY TO COMPLETE THE ABOVE WORK. ALL EARTHWORK RELATED ITEMS SHALL BE INCLUDED IN ITEM 615 LUMP ROADS FOR MAINTAINING TRAFFIC.

STRUCTURE GENERAL NOTES

ITEM 841 - TREATING OF CONCRETE SURFACES WITH SRS:

THIS ITEM SHALL BE USED AT LOCATIONS INDICATED IN THE PLAN.

SEE THE SUPPLEMENTAL SPECIFICATIONS FOR APPLICATION RATES, MATERIALS REQUIRED, AND APPLICATION PROCEDURES.

THIS TREATMENT CONSISTS OF TWO (2) SEPARATE APPLICATIONS.

PAYMENT FOR ALL OF THE ABOVE SHALL BE AT THE UNIT PRICE BID PER SQUARE YARD FOR ITEM 841 - TREATING OF CONCRETE SURFACES WITH SRS, WHICH SHALL INCLUDE ALL LABOR, EQUIPMENT, MATERIALS, AND INCIDENTALS NECESSARY TO COMPLETE THE ABOVE TWO SEPARATE APPLICATION WORK.

ITEM 848 - MICRO SILICA MODIFIED CONCRETE OVERLAY USING HYDRODEMOLITION, AS PER PLAN (3 INCH THICK):

THESE ITEMS SHALL BE USED AT LOCATIONS INDICATED IN THE PLAN.

THE COARSE AGGREGATE SHALL BE LIMESTONE.

THE SURFACE FINISH REQUIREMENTS SHALL BE AS PER CMS 511.19 AND 511.20 IN LIEU OF THAT WHICH IS SPECIFIED IN SUPPLEMENTAL SPECIFICATION 848.

SEE THE SUPPLEMENTAL SPECIFICATION FOR DETAILS.

PAYMENT FOR ALL OF THE ABOVE SHALL BE AT THE UNIT PRICE BID PER SQUARE YARD FOR THE ABOVE ITEMS WHICH SHALL INCLUDE ALL LABOR, EQUIPMENT, MATERIALS, AND INCIDENTALS NECESSARY TO COMPLETE THE ABOVE WORK.

ITEM 848 - MICRO SILICA MODIFIED CONCRETE OVERLAY (VARIABLE THICKNESS), MATERIAL ONLY, AS PER PLAN:

THE COARSE AGGREGATE SHALL BE LIMESTONE.

PAYMENT FOR ALL OF THE ABOVE SHALL BE AT THE UNIT PRICE BID PER SQUARE YARD FOR THE ABOVE ITEMS WHICH SHALL INCLUDE ALL LABOR, EQUIPMENT, MATERIALS, AND INCIDENTALS NECESSARY TO COMPLETE THE ABOVE WORK.

BRIDGE DECK DATA								ROADWAY DATA		
PART	COUNTY, ROUTE, BRIDGE NO.	STRUCTURE TYPE	LENGTH (BRIDGE DECK LIMITS)	WIDTH	BRIDGE DECK AREA	SKEW	EXISTING WEARING SURFACE	EXISTING PAVEMENT WIDTH	EXISTING APPROACH SLAB WIDTH	EXISTING APPROACH SLAB LENGTH
			FT.	FT.	SQ.YD.			FT.	FT.	FT.
A	* ASD-39-0000	TWIN CORR. METAL PIPES					ASPHALT			
A	** ASD-39-0133	SINGLE-SPAN STEEL BEAM	47.1	32.0	168	15° RF	CONCRETE		32.0	15.0
A	++ ASD-39-0162	3-SIDED CONCRETE CULVERT					ASPHALT			
A	+ ASD-39-0360	3-SPAN STEEL BEAM	237.5	30.7	810	56° LF	CONCRETE		24.0	25.0
A	** ASD-39-0491	3-SPAN STEEL BEAM	187.0	41.3	859	0°	CONCRETE		40.0	20.0
A	* ASD-39-0520	2-SPAN WOOD BOX					ASPHALT			
A	*** ASD-39-0725	CONCRETE ARCH					ASPHALT			
A	*** ASD-39-0897	3-SPAN PRESTRESS BOX BEAM	138.6	37.0	570	25° RF	ASPHALT		37.0	25.0
B	+ RIC-39-2677	3-SPAN STEEL BEAM	132.2	34.75	507	20° LF	CONCRETE			

* PLAN AND PAVE OVER STRUCTURE (NO STRUCTURE WORK). (SEE ROADWAY PLANS FOR PLANING AND PAVING QUANTITIES)

** OMIT PLANING AND RESURFACING ON BRIDGE DECK, BUTT JOINT AT APPROACH SLABS, (SEE DETAILS IN PLAN FOR STRUCTURE WORK). (SEE ROADWAY PLANS FOR PLANING AND PAVING QUANTITIES)

*** PLAN AND PAVE OVER STRUCTURE (SEE DETAILS IN PLAN FOR STRUCTURE WORK). (SEE ROADWAY PLANS FOR PLANING AND PAVING QUANTITIES)

+ OMIT PLANING AND RESURFACING ON BRIDGE DECK, BUTT JOINT AT BRIDGE DECK, (SEE DETAILS IN PLAN FOR STRUCTURE WORK). (SEE ROADWAY PLANS FOR PLANING AND PAVING QUANTITIES)

++ TAPER THE PLANING FROM 2" DEEP TO 1" DEEP IN 50' FOR A 22' WIDTH AT THE APPROACH TO THE BRIDGE DECK. PLANE 1" DEEP ACROSS THE BRIDGE DECK FOR A 22' WIDTH. TAPER THE PLANING FROM 1" DEEP TO 2" DEEP IN 50' FOR A 22' WIDTH BEYOND THE BRIDGE DECK. PAVE FULL WIDTH FOR BOTH OF THE COURSES OVER THE STRUCTURE (SEE DETAILS IN THE PLAN FOR STRUCTURE WORK). (SEE ROADWAY PLANS FOR PLANING AND PAVING QUANTITIES).

DESIGN FILE: i:\projects\23578\Struct\brtreat.dgn
WORKSTATION: dmollens DATE: 02/27/04

DESIGN AGENCY: DISTRICT THREE

DESIGNED DCM | DRAWN DCM | REVIEWED RDN | DATE
CHECKED CAL | REVISED | STRUCTURAL FILE NUMBER

BRIDGE TREATMENT

ASD-39-0.00

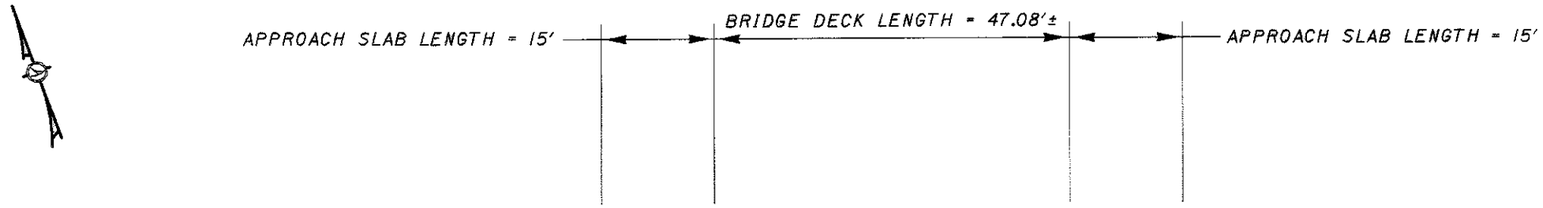

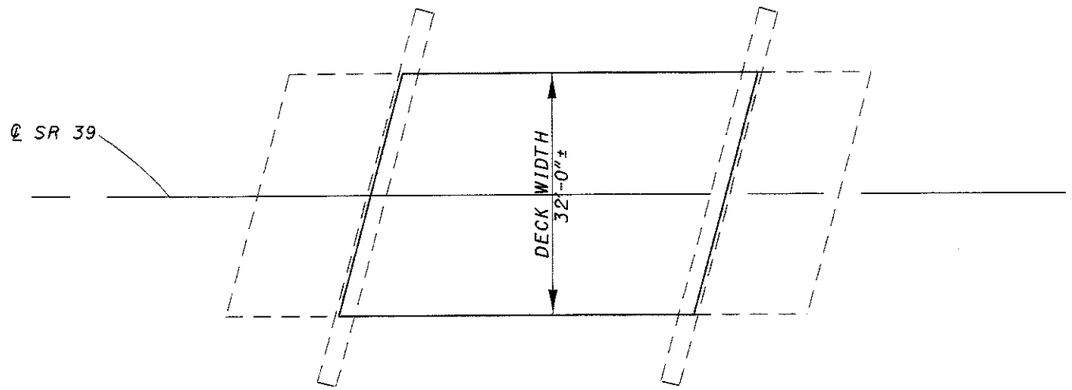

PLAN VIEW

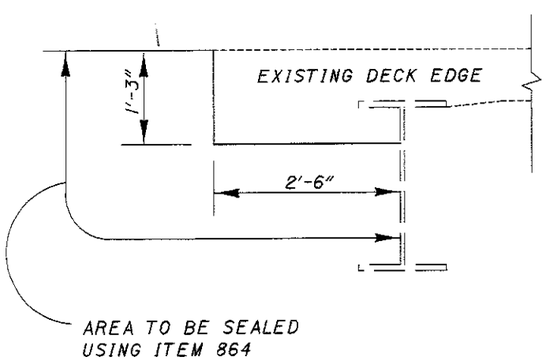

DECK SEALING LENGTH = 43'±

TYPICAL DECK EDGE SEALING

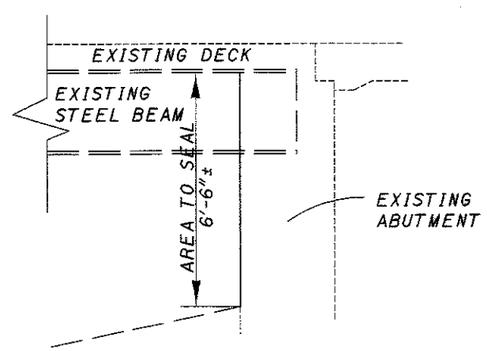

ABUTMENT WIDTH = 33.1'±

TYPICAL ABUTMENT SEALING

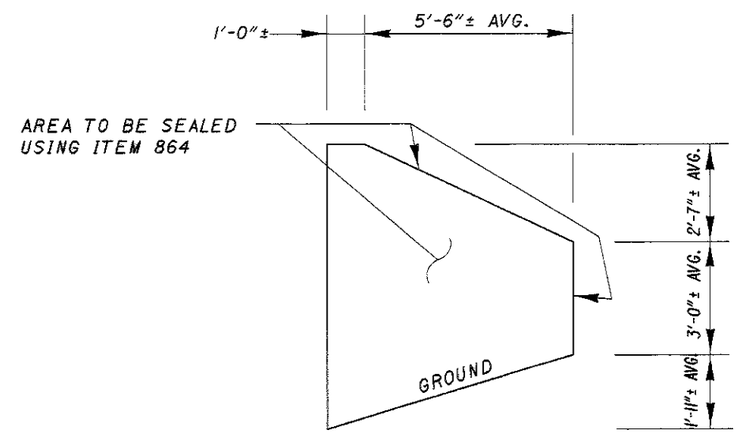

WINGWALL WIDTH = 2'-6"±

TYPICAL WINGWALL SEALING

ITEM	QUANTITY	UNIT	DESCRIPTION
841	168	SQ YD	TREATING OF CONCRETE SURFACES WITH SRS
864	104	SQ YD	SEALING OF CONCRETE SURFACES (EPOXY - URETHANE)

ALL QUANTITIES CARRIED TO STRUCTURE SUMMARY SHEET NO. 39

NOTES:

1) THE EXISTING APPROACH RAIL AND BRIDGE RAIL ARE NOT SHOWN.

2) THE DECK SHALL BE SEALED USING ITEM 841 - TREATING OF CONCRETE SURFACES WITH SRS.

3) THE DECK EDGES AND ALL EXPOSED AREAS OF THE ABUTMENTS AND WINGWALLS SHALL BE SEALED WITH ITEM 864.

DESIGN FILE: i:\projects\23578\Struct\details.dgn
WORKSTATION: dmaltens DATE: 02/25/04

DESIGN AGENCY: DISTRICT THREE

DESIGNED	DRAWN	REVISED	DATE
DCM	DCM	RDN	2-04
CHECKED	REVISED	STRUCTURE FILE NUMBER	
BAD		0300799	

PLAN VIEW
ASD-39-0133
OVER FEIGHTNER RUN

ASD-39-0.00

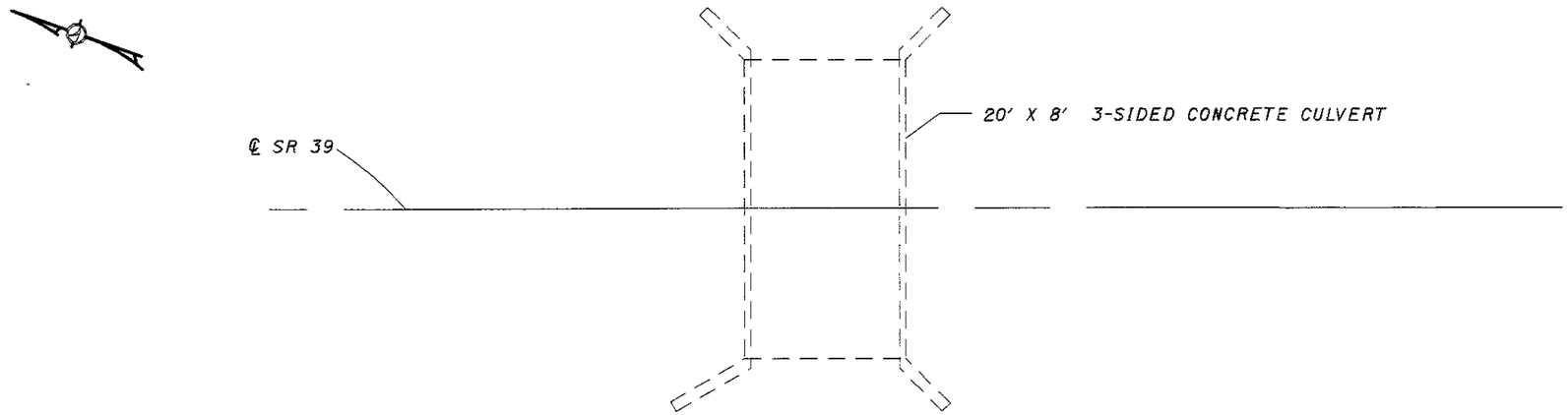

PLAN VIEW

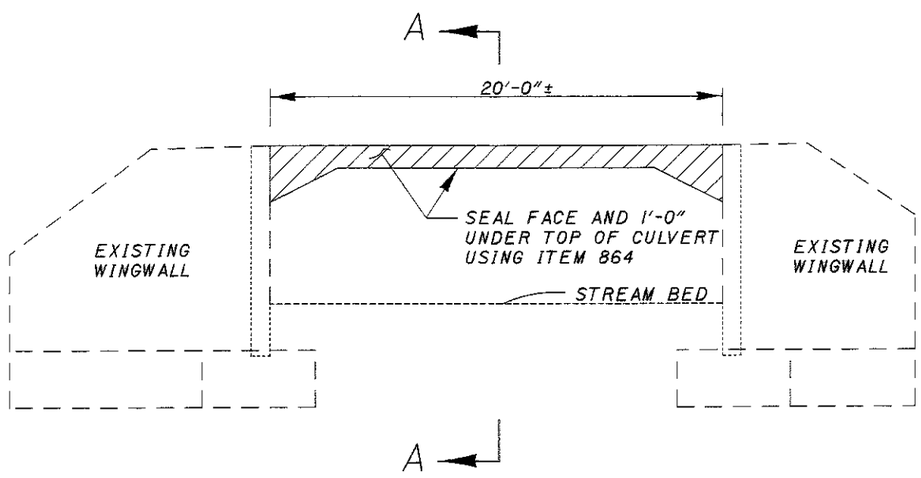

ELEVATION VIEW

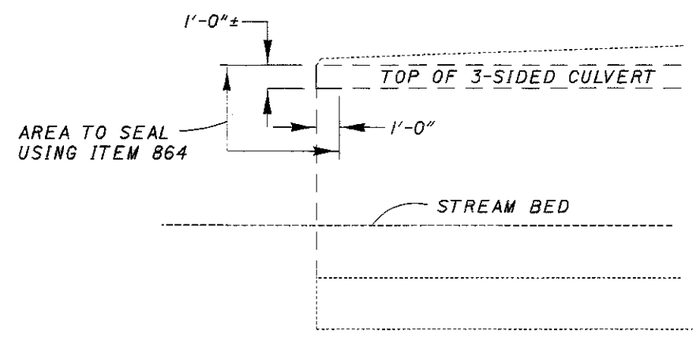

SECTION A-A

AREA TO SEAL USING ITEM 864

ITEM	QUANTITY	UNIT	DESCRIPTION
864	10	SQ YD	SEALING OF CONCRETE SURFACES (EPOXY - URETHANE)

ALL QUANTITIES CARRIED TO STRUCTURE SUMMARY SHEET NO. 39

NOTES:

1) THE EXISTING APPROACH RAIL AND BRIDGE RAIL ARE NOT SHOWN.

2) THE FACE AND 1'-0" UNDER TOP OF CULVERT SHALL BE SEALED WITH ITEM 864.

DESIGN FILE: i:\projects\23578\Struct\details.dgn
WORKSTATION: dmollens DATE: 02/25/04

DESIGN AGENCY: DISTRICT THREE

DESIGNED	DRAWN	REVIEWED	DATE
DCM	DCM	RDN	2-04
CHECKED	REVISED	STRUCTURE FILE NUMBER	
BAD		0300829	

PLAN VIEW
ASD-39-0162
OVER BUDDS CREEK

ASD-39-0.00

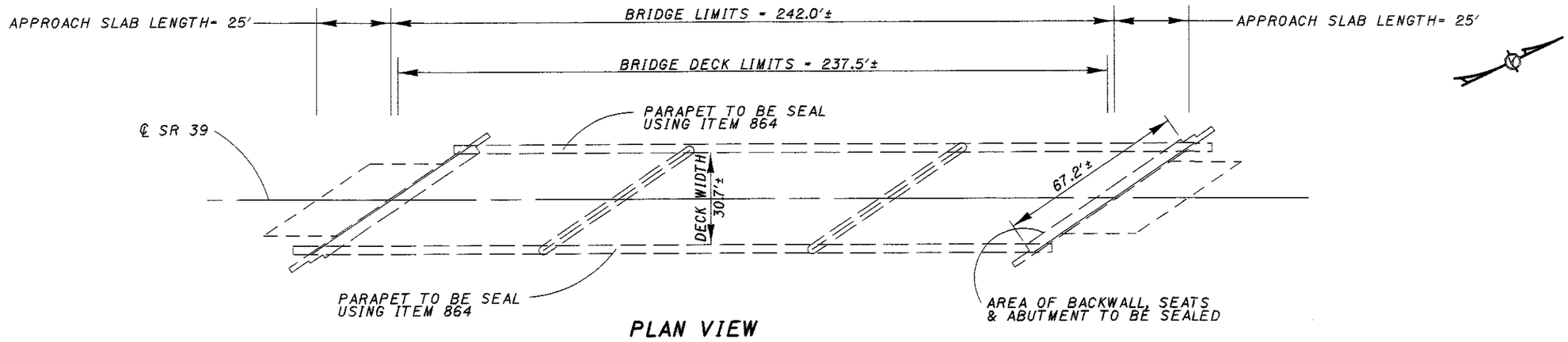

PLAN VIEW

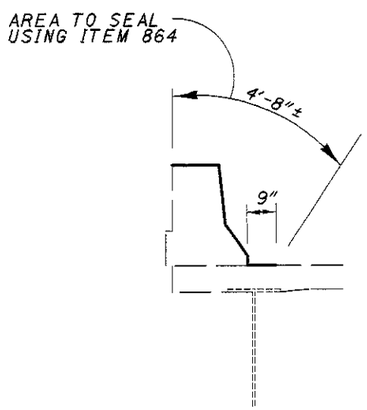

LENGTH OF PARAPET TO BE SEALED = 249'±

TYPICAL PARAPET SEALING

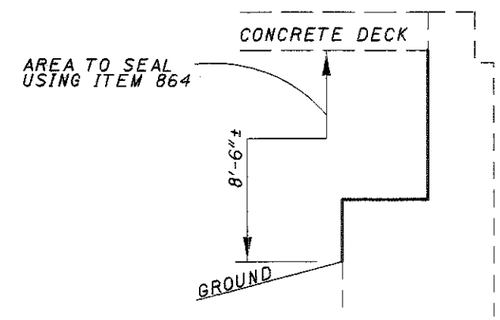

WIDTH OF ABUTMENT AREA TO BE SEALED = 62.7'±

TYPICAL ABUTMENT SEALING

ITEM	QUANTITY	UNIT	DESCRIPTION
848	810	SQ YD	MICRO SILICA MODIFIED CONCRETE OVERLAY USING HYDRODEMOLITION, AS PER PLAN (3 INCH THICK)
848	810	SQ YD	SURFACE PREPARATION USING HYDRODEMOLITION
848	21	CU YD	MICRO SILICA MODIFIED CONCRETE OVERLAY(VARIABLE THICKNESS), MATERIAL ONLY, AS PER PLAN
848	24	SQ YD	HAND CHIPPING
848	lump		TEST SLAB
848	1	CU YD	FULL-DEPTH REPAIR
848	810	SQ YD	EXISTING CONCRETE OVERLAY REMOVED (2 INCH NOMINAL THICKNESS)
848	41	SQ YD	REMOVAL OF DEBONDED OR DETERIORATED EXISTING VARIABLE THICKNESS CONCRETE OVERLAY
864	377	SQ YD	SEALING OF CONCRETE SURFACE (EPOXY-URETHANE)

ALL QUANTITIES CARRIED TO STRUCTURE SUMMARY SHEET NO. 39

NOTES:

1) THE WORK SHALL BE PERFORMED IN 2 PHASES. SEE SHEET 48 FOR MOT DETAILS.

2) THE EXISTING CONCRETE OVERLAY ON THE ENTIRE BRIDGE DECK SHALL BE REMOVED USING ITEM 848-EXISTING CONCRETE OVERLAY REMOVED (2" NOMINAL THICKNESS) AN ADDITIONAL 1" OF EXISTING CONCRETE DECK SHALL BE REMOVED USING ITEM 848- SURFACE PREPARATION USING HYDRODEMOLITION.

3) THE ENTIRE BRIDGE DECK SHALL BE OVERLAYED USING ITEM 848- MICRO SILICA MODIFIED CONCRETE OVERLAY USING HYDRODEMOLITION (3" THICKNESS)

4) A PORTION OF THE PARAPET, BACKWALLS, BEAM SEATS AND ABUTMENT FACES SHALL BE SEALED USING ITEM 864 AS PER DETAILS ABOVE.

DESIGN AGENCY: DISTRICT THREE

DESIGNED	DRAWN	REVIEWED	DATE
DCM	DCM	RDW	2-04
CHECKED	REVISED	STRUCTURE FILE NUMBER	
BAD		0300845	

PLAN VIEW
ASD-39-0360
OVER RAILROAD

ASD-39-0.00

DESIGN FILE: i:\projects\23578\Struct\details.dgn
WORKSTATION: dmollens DATE: 02/25/04

SIGNAL TIMING

A TWO PHASE CONTROLLER WITH CABINET CAPABLE OF BEING SET WITH THE FOLLOWING SPLITS SHALL BE FURNISHED

CYCLE LENGTH: 70 SECONDS

	GREEN	AMBER	RED
PHASE A	15	5	15
PHASE B	15	5	15

THE ABOVE TIMING MAYBE CHANGED WITH THE APPROVAL OF THE ENGINEER

FOR DETAILS NOT SHOWN SEE STANDARD DRAWINGS MT-96.10, MT-96.20, MT-96.25, MT-101.20

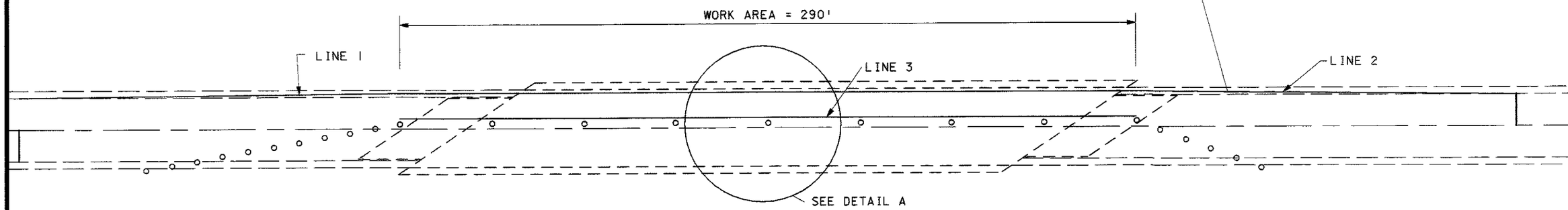

PHASE A SHOWN
PHASE B SIMILAR

WORK ZONE RAISED PAVEMENT MARKERS (TYPE A)				
		SPACING	QTY. (WHITE)	QTY. (YELLOW)
PHASE A	LINE 1= 440'	5'-0"	89	89
	LINE 2= 150'	5'-0"	30	
	LINE 3= 290'	5'-0"	59	59
PHASE B	LINE 1= 440'	5'-0"	89	89
	LINE 2= 150'	5'-0"	30	
	LINE 3= 290'	5'-0"	59	59
		TOTAL	356	296

ITEM	QUANTITY	UNIT	DESCRIPTION
614	652	EACH	WORK ZONE RAISED PAVEMENT MARKER
614	16	EACH	BARRIER REFLECTOR, TYPE A2
614	10	EACH	BARRIER REFLECTOR, TYPE B2
614	.06	MILE	WORK ZONE CENTER LINE, CLASS I (SOLID DOUBLE)
614	.04	MILE	WORK ZONE EDGE LINE, CLASS I (WHITE)
614	24	FT.	WORK ZONE STOP LINE, CLASS I

ALL QUANTITIES CARRIED TO STRUCTURE SUMMARY SHEET NO. 39

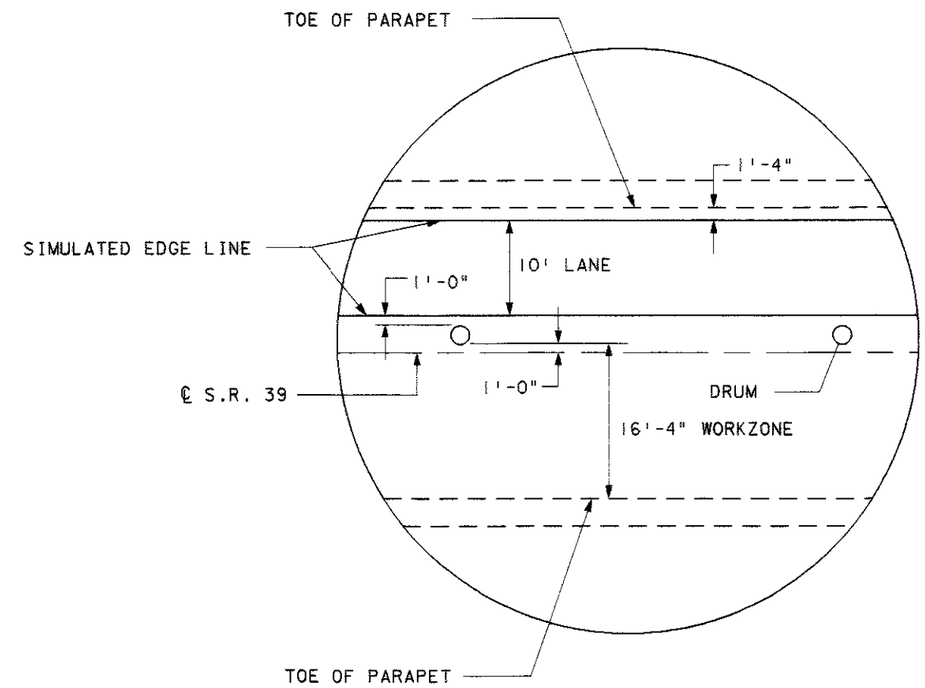

DETAIL A

NOTES:

1) THE EXISTING APPROACH GUARDRAIL IS NOT SHOWN IN THE PLAN VIEW

DESIGN AGENCY: DISTRICT THREE

DESIGNED dom | CHECKED BAD | DRAWN dom | REVISED | REVIEWED RDN | DATE 2-04 | STRUCTURAL FILE NUMBER 0300845

MAINTENANCE OF TRAFFIC
ASD-39-0360
OVER RAILROAD

ASD-39-0.00

48/60

DESIGN FILE: I:\projects\23578\Struct\strmot.dgn
WORKSTATION: dmollens DATE: 02/25/04

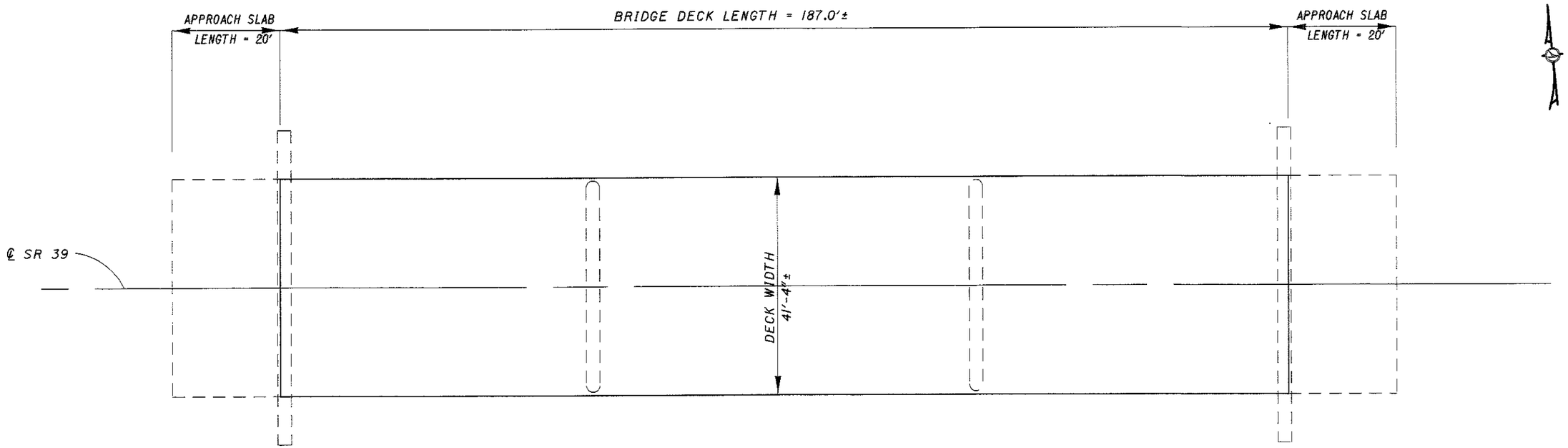

PLAN VIEW

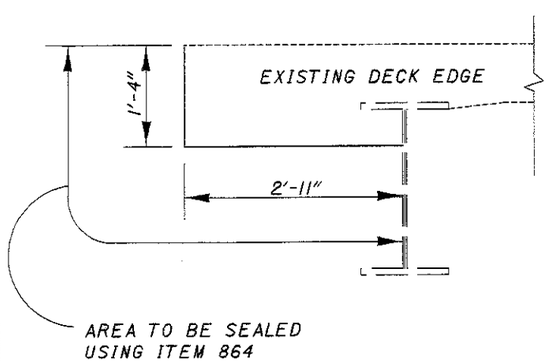

DECK SEALING LENGTH = 183'±

TYPICAL DECK EDGE SEALING

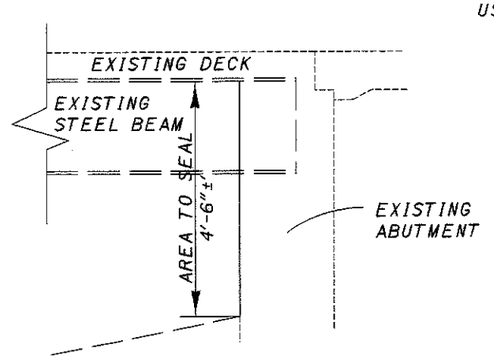

ABUTMENT WIDTH = 43.33'±

TYPICAL ABUTMENT SEALING

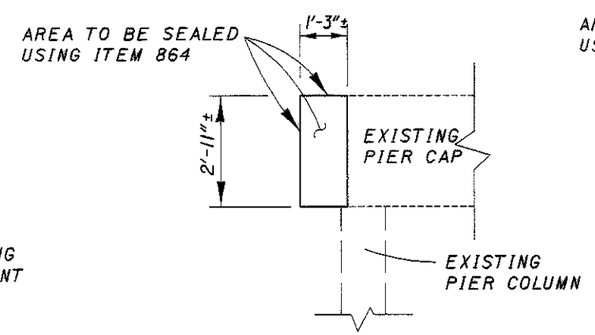

PIER CAP WIDTH = 2'-6"±

TYPICAL PIER CAP END SEALING

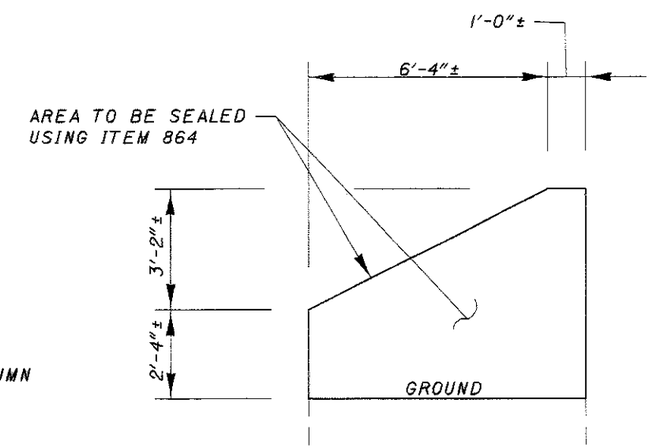

WINGWALL WIDTH = 2'-6"±

TYPICAL WINGWALL SEALING

ITEM	QUANTITY	UNIT	DESCRIPTION
841	859	SQ YD	TREATING OF CONCRETE SURFACES WITH SRS
864	245	SQ YD	SEALING OF CONCRETE SURFACES (EPOXY - URETHANE)

ALL QUANTITIES CARRIED TO STRUCTURE SUMMARY SHEET NO. 40

NOTES:

1) THE EXISTING APPROACH RAIL, BRIDGE RAIL AND STEEL BEAMS ARE NOT SHOWN.

2) THE DECK SHALL BE SEALED USING ITEM 841 - TREATING OF CONCRETE SURFACES WITH SRS.

3) THE DECK EDGES, ENDS OF PIER CAP AND ALL EXPOSED AREAS OF THE ABUTMENTS AND WINGWALLS SHALL BE SEALED WITH ITEM 864.

DESIGN FILE: i:\projects\23578\Struct\details.dgn
WORKSTATION: dmollens DATE: 02/25/04

DESIGN AGENCY: DISTRICT THREE

DESIGNED	DRAWN	REVIEWED	DATE
DCM	DCM	RDN	2-04
CHECKED	REVISED	STRUCTURE FILE NUMBER	
BAD		0300926	

PLAN VIEW
ASD-39-0491
OVER BLACK FORK OF MOHICAN RIVER

ASD-39-0.00

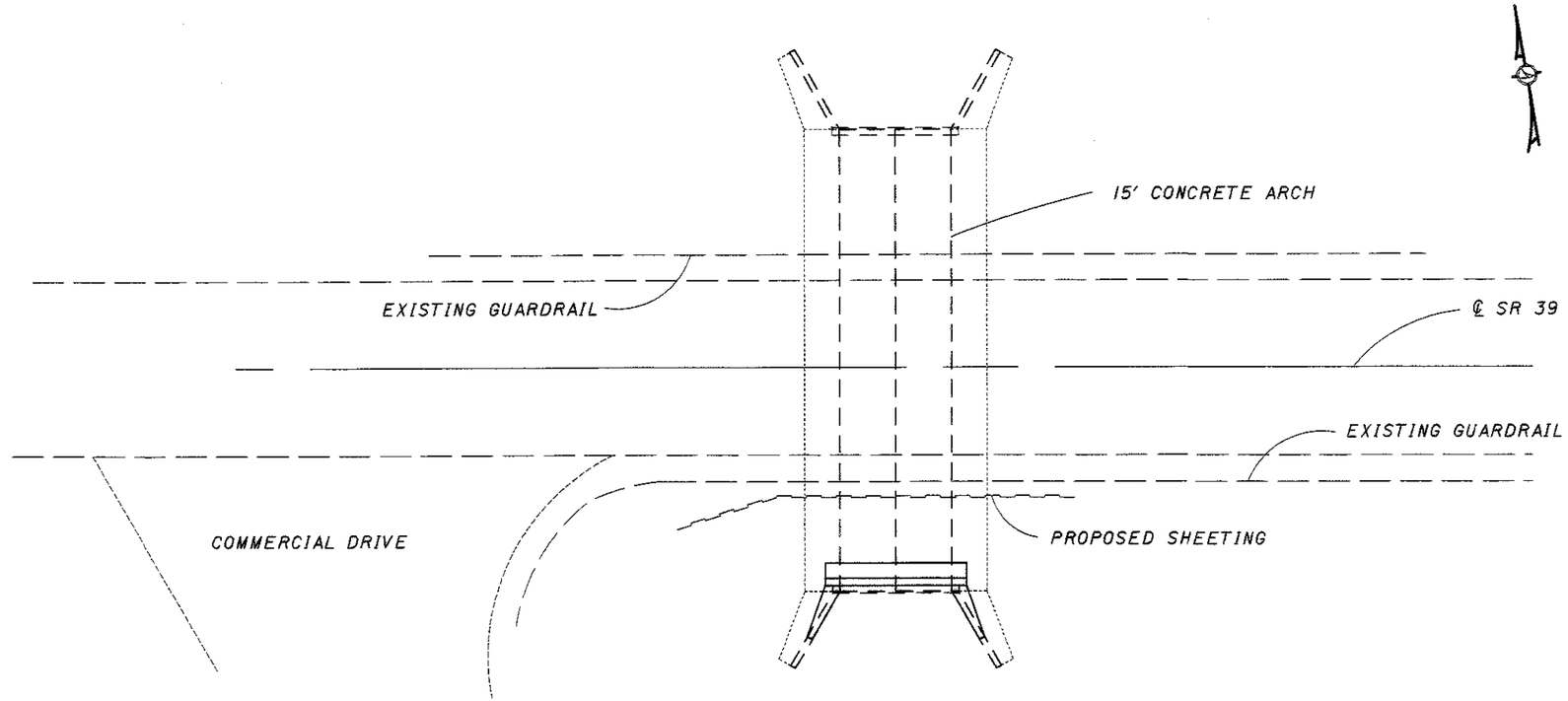

PLAN VIEW

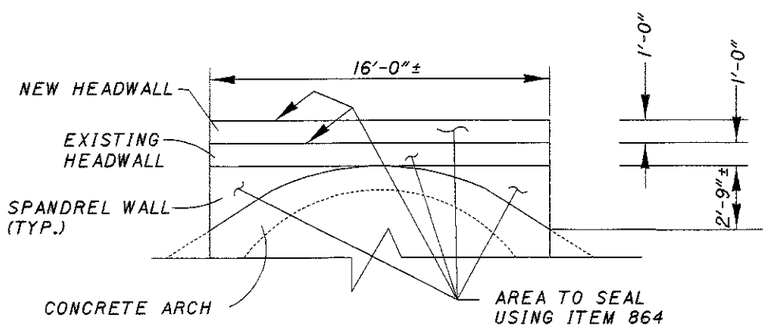

EXISTING HEADWALLS IS 10" WIDE ON TOP
NEW HEADWALLS IS 12" WIDE ON TOP

HEADWALL AND SPANDREL WALL SEALING

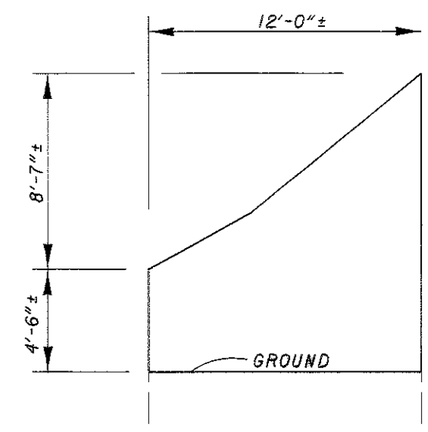

WINGWALLS VARY FROM 9" TO 2'-0" WIDE ON TOP

WINGWALL SEALING

ITEM	QUANTITY	UNIT	DESCRIPTION
202	2	CU YD	PORTION OF STRUCTURE REMOVED, AS PER PLAN
503	LUMP		COFFERDAMS, CRIBS AND SHEETING
503	LUMP		UNCLASSIFIED EXCAVATION
509	584	POUND	EPOXY COATED REINFORCING STEEL
510	48	EACH	DOWEL HOLES WITH CEMENT GROUT
511	3	CU YD	CLASS C CONCRETE, AS PER PLAN
864	40	SQ YD	SEALING OF CONCRETE SURFACES (EPOXY - URETHANE)

ALL QUANTITIES CARRIED TO STRUCTURE SUMMARY SHEET NO. 40

NOTES:

1) PLACE SHEETING OUTSIDE OF EXISTING GUARDRAIL TO PROTECT ROADWAY
2) RECONSTRUCT TOP 4' OF WINGWALLS, POUR NEW HEADWALL BEHIND EXISTING HEADWALL ON RIGHT SIDE. SEE SHEETS 51 & 52 FOR DETAILS.
3) SEAL ALL EXPOSED AREAS OF THE HEADWALLS AND WINGWALLS WITH ITEM 864 AS DETAILED ABOVE.

DESIGN FILE: I:\projects\23578\Struct\details.dgn
WORKSTATION: dmollens DATE: 02/27/04

DESIGN AGENCY: DISTRICT THREE

DESIGNED	DRAWN	REVIEWED	DATE
DCM	DCM	RDN	2-04
CHECKED	REVISED	STRUCTURE FILE NUMBER	
BAD		0300993	

PLAN VIEW
ASD-39-0725
OVER SMALL CREEK

ASD-39-0.00

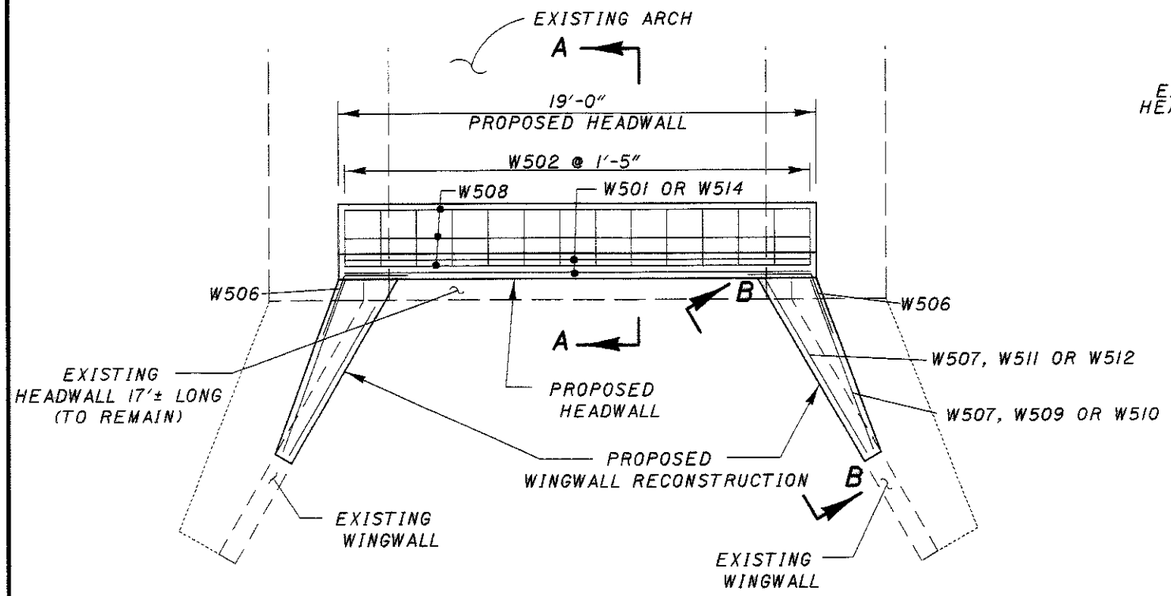

PLAN VIEW AT INLET
(RIGHT SIDE)

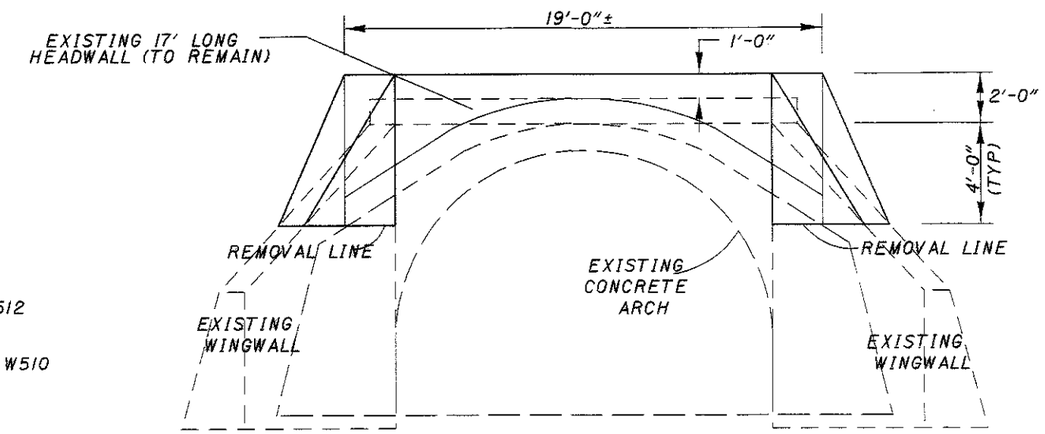

ELEVATION VIEW AT INLET
(RIGHT SIDE)

ITEM	QUANTITY	UNIT	DESCRIPTION
202	2	CU YD	PORTION OF STRUCTURE REMOVED, AS PER PLAN
509	584	POUND	EPOXY COATED REINFORCING STEEL
510	48	EACH	DOWEL HOLES WITH CEMENT GROUT
511	3	CU YD	CLASS C CONCRETE, AS PER PLAN

ALL QUANTITIES CARRIED TO SHEET NO. 50

1) SEE SHEET 52 FOR SECTIONS A-A AND B-B

DESIGN FILE: i:\projects\23578\Struct\details.dgn
WORKSTATION: dmollens DATE: 02/27/04

DESIGN AGENCY
DISTRICT THREE

DESIGNED DCM | DRAWN DCM | REVIEWED RDN | DATE 2-04
CHECKED BAD | REVISED | STRUCTURE FILE NUMBER 0300993

WINGWALL AND HEADWALL REPAIR DETAIL
ASD-39-0725
OVER SWALL CREEK

ASD-39-0.00

REINFORCING TABLE								
MARK	NUMBER	LENGTH	WEIGHT (LBS.)	TYPE	DIMENSIONS A	B	C	BENDING DIAGRAM
W501	4	18'-6"	77	STR.				
W502	14	4'-6"	66	2	1'-3"	1'-3"	2'-3"	
W503	14	2'-6"	37	STR.				
W504	14	1'-8"	24	STR.				
W505	14	1'-9"	26	2	9"	6"	9"	
W506	4	4'-10"	20	1	2'-6"	2'-6"		
W507	2	8'-9"	18	STR.				
W508	6	19'-9"	124	STR.				
W509	2	3'-2"	7	STR.				
W510	2	6'-10"	14	STR.				
W511	2	6'-3"	13	STR.				
W512	2	4'-4"	9	STR.				
W513	20	**	75	STR.	4 SERIES OF 5 BARS			
W514	4	3'-0"	13	STR.				
W515	2	5'-0"	11	STR.				
W516	20	*	50	STR.	4 SERIES OF 5 BARS			
TOTAL			584					

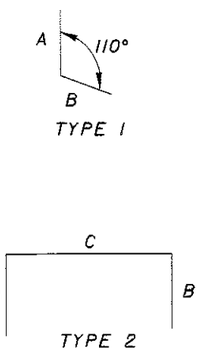

* VARIES FROM 9" TO 4'-1" AT 10" INCREMENTS
** VARIES FROM 1'-5" TO 5'-9" AT 1'-1" INCREMENTS

TOTAL CARRIED TO SHEET 51

LEGEND:

BF - BOTH FACES
FF - FRONT FACE
RF - REAR FACE

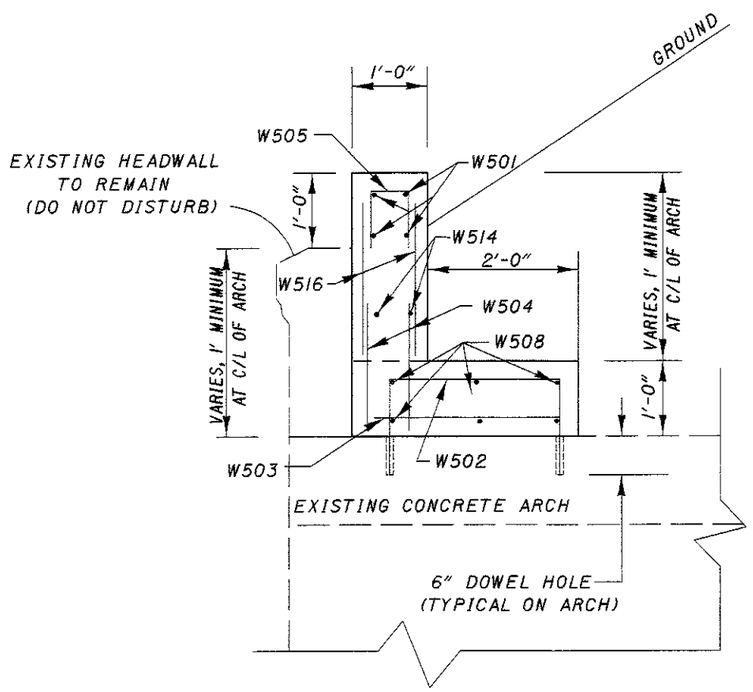

SECTION A-A

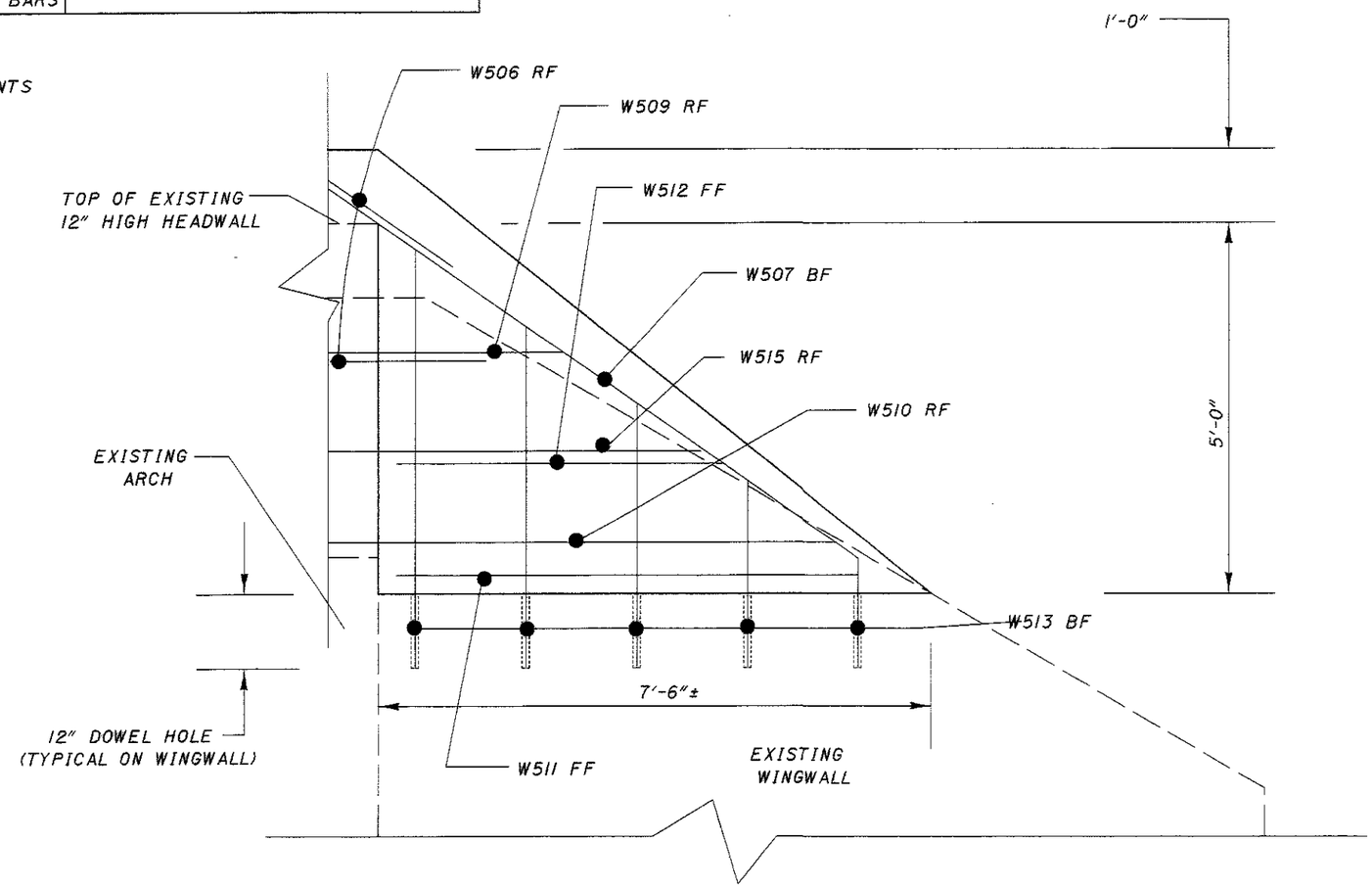

ELEVATION VIEW B-B

DESIGN AGENCY
DISTRICT THREE

DATE 2-04
REVIEWED RDN
STRUCTURE FILE NUMBER 0300993

DRAWN DCM
REVISED

DESIGNED DCM
CHECKED BAD

WINGWALL AND HEADWALL REPAIR
ASD-39-0725
OVER SWALL CREEK

DETAIL

ASD-39-0.00

52
60

DESIGN FILE: I:\projects\23578\Struct\details.dgn
WORKSTATION: dmollens DATE: 02/27/04

SIGNAL TIMING

A TWO PHASE CONTROLLER WITH CABINET CAPABLE OF BEING SET WITH THE FOLLOWING SPLITS SHALL BE FURNISHED

CYCLE LENGTH: 60 SECONDS

	GREEN	AMBER	RED
PHASE A	15	5	10
PHASE B	15	5	10

THE ABOVE TIMING MAYBE CHANGED WITH THE APPROVAL OF THE ENGINEER

FOR DETAILS NOT SHOWN SEE STANDARD DRAWINGS
MT-96.11, MT-96.20, MT-96.25, MT-101.20

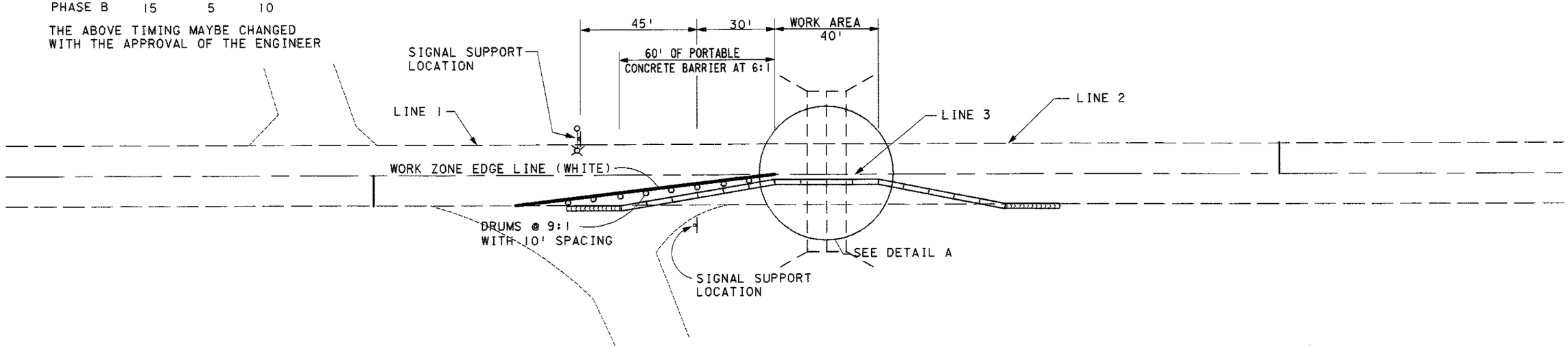

WORK ZONE RAISED PAVEMENT MARKERS (TYPE A)			
	SPACING	QTY. (WHITE)	QTY. (YELLOW)
LINE 1= 190'	5'-0"	39	39
LINE 2= 150'	5'-0"	30	
LINE 3= 40'	5'-0"	9	9
	TOTAL	78	48

ITEM	QUANTITY	UNIT	DESCRIPTION
614	126	EACH	WORK ZONE RAISED PAVEMENT MARKER
614	4	EACH	BARRIER REFLECTOR, TYPE A2
614	5	EACH	BARRIER REFLECTOR, TYPE B2
614	4	EACH	OBJECT MARKER, TWO WAY
614	.06	MILE	WORK ZONE CENTER LINE, CLASS I (SOLID DOUBLE)
614	.02	MILE	WORK ZONE EDGE LINE, CLASS I (WHITE)
614	24	FT.	WORK ZONE STOP LINE, CLASS I
622	110	FT.	PORTABLE CONCRETE BARRIER, 32"
622	40	FT.	PORTABLE CONCRETE BARRIER, 32", BRIDGE MOUNTED (UNANCHORED)

ALL QUANTITIES CARRIED TO STRUCTURE SUMMARY SHEET NO. 40.

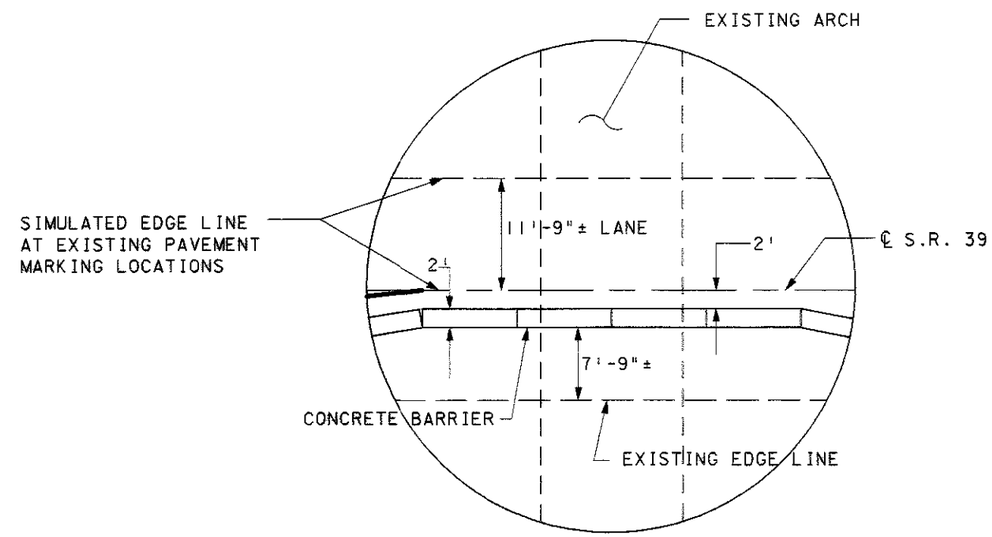

DETAIL A

NOTES:

1) THE EXISTING BRIDGE RAILING AND GUARDRAIL ARE NOT SHOWN IN THE PLAN VIEW

DESIGN FILE: I:\projects\23578\Struct\strmot.dgn
WORKSTATION: claughre DATE: 02/26/04

DESIGN AGENCY: DISTRICT THREE

DESIGNED	DRAWN	REVIEWED	DATE
dom	dom	RDN	2-04
CHECKED	REVISED	STRUCTURAL FILE NUMBER	
BAD		0300993	

MAINTENANCE OF TRAFFIC
ASD-39-0725
OVER SMALL CREEK

ASD-39-0.00

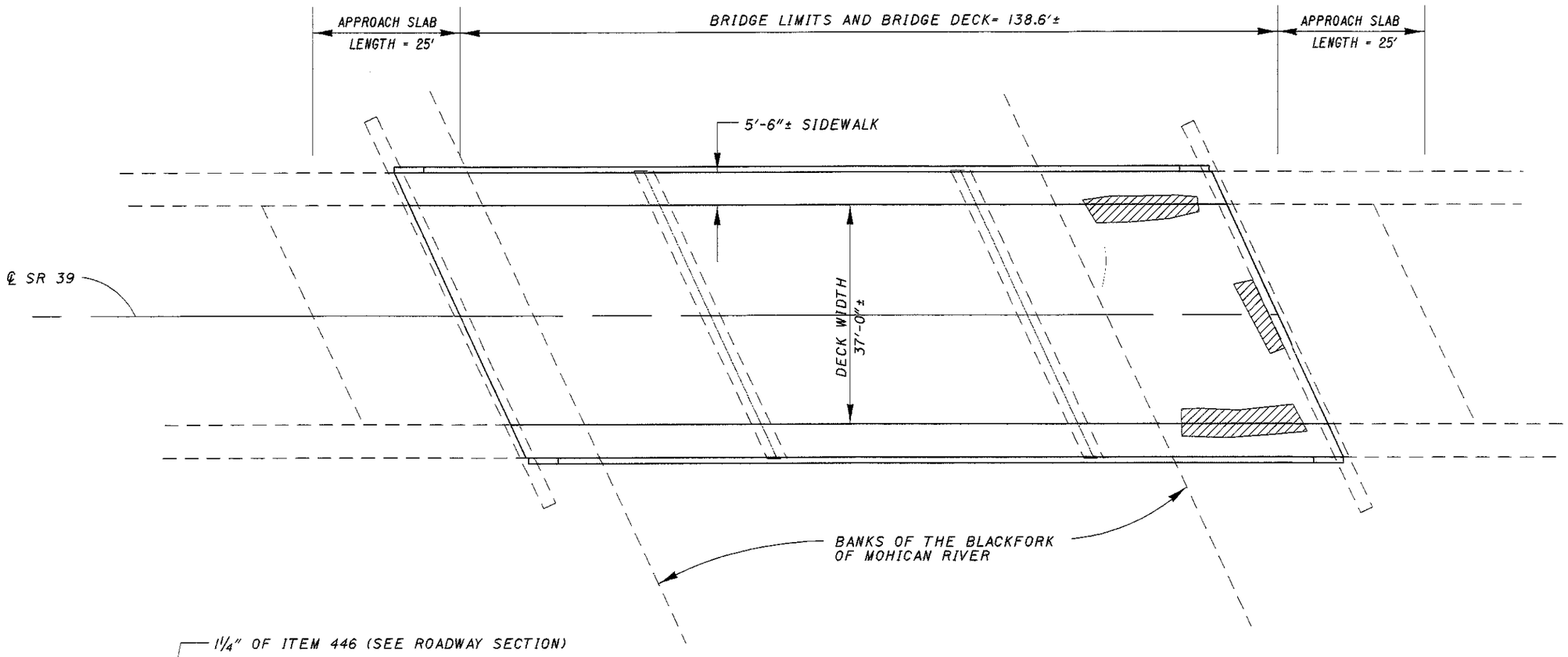

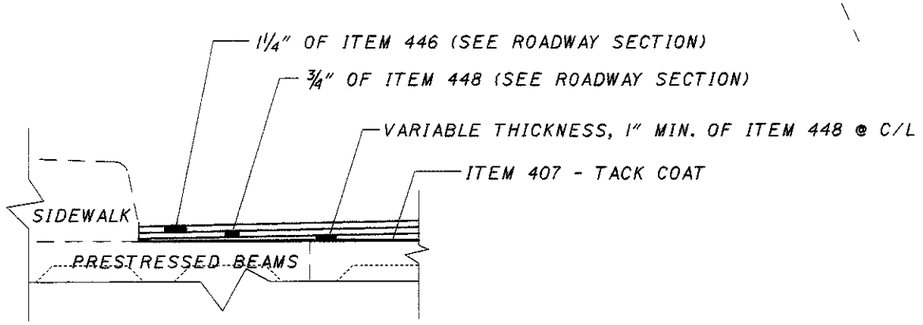

TYPICAL DECK
SECTION AT SIDEWALK

ITEM	QUANTITY	UNIT	DESCRIPTION
254	570	SQ YD	PAVEMENT PLANING, ASPHALT CONCRETE, AS PER PLAN
407	46	GAL	TACK COAT
448	20	CU YD	ASPHALT CONCRETE INTERMEDIATE COURSE, TYPE 1, PG 64-22
512	570	SQ YD	TYPE 3 WATERPROOFING
SPECIAL	82	FT	POLYMER MODIFIED ASPHALT EXPANSION JOINT SYSTEM
601	13	CU YD	ROCK CHANNEL PROTECTION, TYPE B WITHOUT FILTER
864	195	SQ YD	SEALING OF CONCRETE SURFACES (NON-EPOXY)
864	386	SQ YD	SEALING OF CONCRETE SURFACES (EPOXY - URETHANE)

ALL QUANTITIES CARRIED TO STRUCTURE SUMMARY SHEET NO. 41

PLAN VIEW

AREA TO BE FILLED WITH ROCK CHANNEL PROTECTION, TYPE B WITHOUT FILTER

NOTES:

1) THE PARAPETS, SIDE OF DECK, BEAM EDGE, EXPOSED AREAS OF THE WINGWALLS AND ABUTMENTS SHALL BE SEALED WITH ITEM 864- SEALING OF CONCRETE SURFACES (EPOXY-URETHANE) SEE SHEET 55 FOR DETAILS.

2) THE SIDEWALK AND CURBS SHALL BE SEALED WITH ITEM 864 - SEALING OF CONCRETE SURFACES (NON-EPOXY). SEE SHEET 55 FOR DETAILS.

3) THE DECK SHALL BE PLANED 2" DEEP (SEE ROADWAY SECTION FOR QUANTITIES), THEN THE REMAINING ASPHALT AND WATERPROOFING SHALL BE REMOVED USING ITEM 254- PAVEMENT PLANING, BITUMINOUS AS PER PLAN.

4) THE DECK SHALL BE WATERPROOFED USING ITEM 512- TYPE 3 WATERPROOFING. THE DECK SHALL THEN BE PAVED USING ITEM 448 WITH A 1" MINIMUM LEVELING COURSE. (SEE ROADWAY SECTION FOR QUANTITIES FOR THE FINAL 2 COURSES).

5) THE JOINTS AT THE ABUTMENTS SHALL BE SEALED WITH A POLYMER MODIFIED ASPHALT EXPANSION JOINT SYSTEM. SEE SHEET 56 FOR DETAILS.

6) UNDER THE STRUCTURE AT THE FORWARD ABUTMENT TYPE B ROCK CHANNEL PROTECTION SHALL BE INSTALLED IN THE LOW AREAS UNDER THE SCUPPERS AND ALONG THE EXPOSED PORTION OF THE FOOTER.

7) REFERENCE STANDARD DRAWING MT-97.10 FOR MAINTANENCE OF TRAFFIC

DESIGN FILE: i:\projects\23578\Struct\details.dgn
WORKSTATION: dmollens DATE: 02/25/04

DESIGN AGENCY
DISTRICT THREE

DESIGNED	DRAWN	REVIEWED	DATE
DCM	DCM	RDN	2-04
CHECKED	REVISED	STRUCTURE FILE NUMBER	
BAD		0300942	

PLAN VIEW
ASD-39-0897
OVER BLACK FORK OF MOHICAN RIVER

ASD-39-0.00

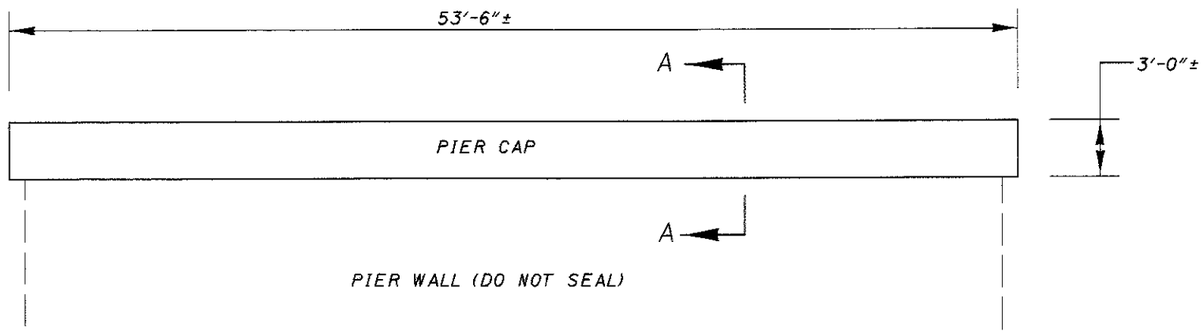

TYPICAL PIER CAP SEALING ELEVATION VIEW

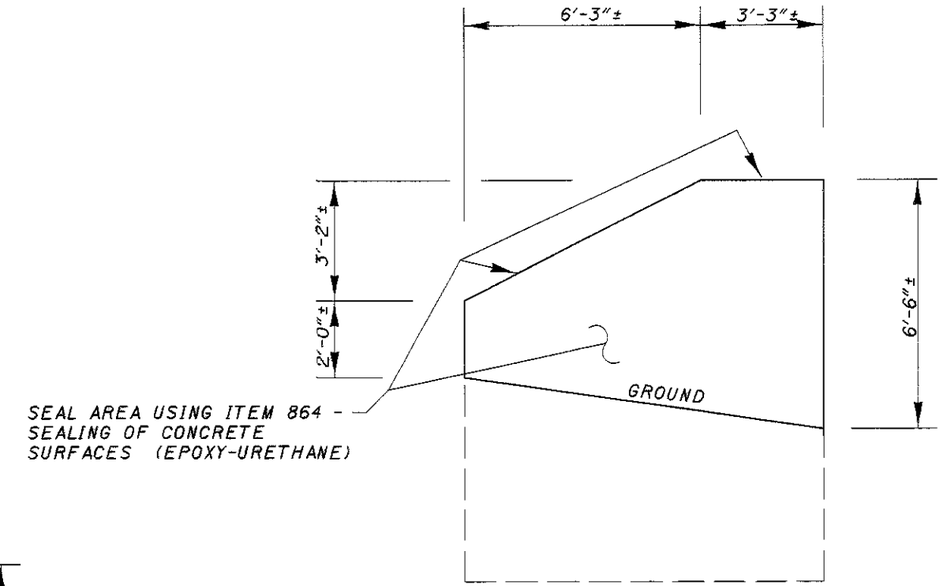

WINGWALLS ARE 1'-6"± WIDE

TYPICAL WINGWALL SEALING

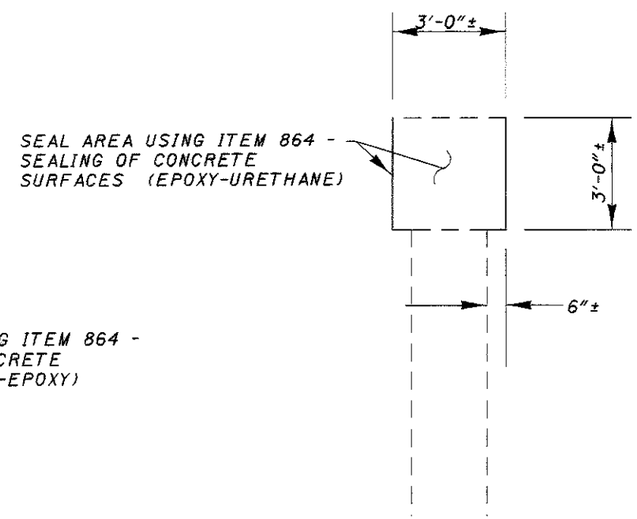

SECTION A-A

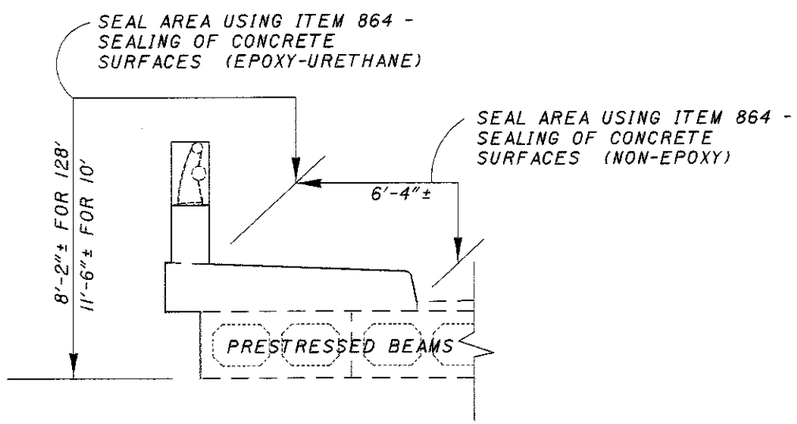

SIDEWALK LENGTH = 138.6'±

TYPICAL PARAPET-SIDEWALK SEALING

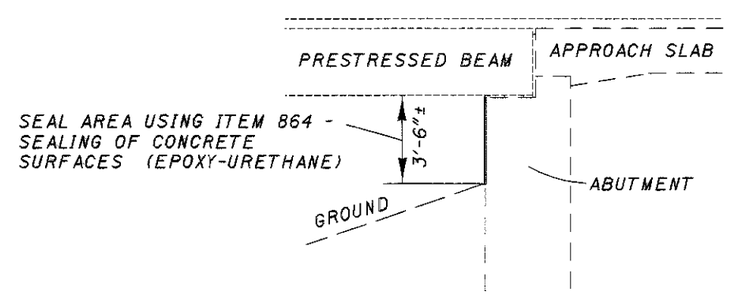

ABUTMENT LENGTH = 53'±

TYPICAL ABUTMENT SEALING

ITEM	QUANTITY	UNIT	DESCRIPTION
864	195	SQ YD	SEALING OF CONCRETE SURFACES (NON-EPOXY)
864	386	SQ YD	SEALING OF CONCRETE SURFACES (EPOXY-URETHANE)

ALL QUANTITIES CARRIED TO SHEET NO. 54

DESIGN AGENCY: DISTRICT THREE

DESIGNED	DRAWN	REVIEWED	DATE
DCM	DCM	RDN	2-04
CHECKED	REVISED	STRUCTURE FILE NUMBER	
BAD		0300942	

SEALING DETAIL
ASD-39-0897
OVER BLACK FORK OF MOHICAN RIVER

ASD-39-0.00

55
60

DESIGN FILE: i:\projects\23578\Struct\details.dgn
WORKSTATION: dmollens DATE: 02/25/04

GENERAL NOTES AND DETAILS FOR POLYMER MODIFIED ASPHALT EXPANSION JOINT SYSTEM

ITEM SPECIAL - POLYMER-MODIFIED ASPHALT EXPANSION JOINT SYSTEM

THIS ITEM WILL BE USED TO SEAL THE EXPANSION/CONTRACTION JOINTS AS PER THESE DETAILS AND THE MANUFACTURER'S REQUIREMENTS USING A POLYMER-MODIFIED ASPHALT SYSTEM. THE PRIME CONTRACTOR WILL OBTAIN THE SERVICES OF ONE OF THE FOLLOWING APPROVED APPLICATORS WHO WILL FURNISH AND INSTALL THE NEW BRIDGE EXPANSION JOINT SYSTEM AFTER ALL PAVING ON THE AFFECTED BRIDGE(S) HAS BEEN COMPLETED.

PAVETECH INTERNATIONAL
4650 DUKE DRIVE
SUITE 390
MASON, OHIO 45040
TEL: (513) 770-3122

LINEAR DYNAMICS, INC.
79 MONTGOMERY ST.
MONTGOMERY, PA 17752
TEL: (570) 547-1621

WATSON-BOWMAN ACME
95 PINEVIEW DR.
AMHERST, NY 14228
TEL (716) 691-7566 OR
TEL (800) 253-9226

MATERIALS:

BRIDGING PLATE:

MILD STEEL 1/8" OR 1/4" THICK PLATE, 8" WIDE OR 18 GAUGE ALUMINUM, 8" WIDE.

BINDER:

TYPE:	POLYMER MODIFIED ASPHALT
SOFTENING POINT:	180 DEGREES F. MIN.
FLOW:	3 mm. MAX. AT 140 DEGREES F.
PENETRATION:	9 mm. MAX. AT 77 DEGREES F. 1 mm. MIN AT 0 DEGREES F. ASTM D 3407
DUCTILITY:	40 cm. MIN. ASTM D 113
RESILIENCE:	60% MIN. AT 77 DEGREES F.
TENSILE ADHESION:	700% MIN.
SPECIFIC GRAVITY:	1.10 * 0.05
POURING TEMP:	350 - 390 DEGREES F.

AGGREGATE:

TYPE:	CRUSHED, DOUBLE WASHED, AND DRIED GRANITE OR BASALT
GRADATION	THE GRADATION OF THE AGGREGATE VARIES BY MANUFACTURER AND WILL BE AS PER THE MANUFACTURER'S RECOMMENDATIONS FOR THE SYSTEM BEING USED ON THIS PROJECT.

BACKER ROD:

THE BACKER SHALL BE A CLOSED CELL FOAM EXPANSION JOINT FILLER CAPABLE OF WITHSTANDING THE PLACEMENT TEMPERATURE OF THE POLYMER MODIFIED ASPHALT.

NOTE: PRIOR TO PLACEMENT OF ANY PORTION OF THE JOINT SYSTEM, THE PROJECT ENGINEER MUST HAVE CERTIFIED TEST DATA MEETING ALL THE MINIMUM REQUIREMENTS OF ALL THE MATERIALS OF THE JOINT SYSTEM.

INSTALLATION PROCEDURES:

SAWING AND SURFACE PREPARATION:

AFTER ALL PAVING OPERATIONS ARE COMPLETE, THE OVERLAY IS TO BE TRANSVERSELY SAW CUT FULL DEPTH NO LESS THAN TWO INCHES DEEP (20" CENTERED OVER JOINT OPENING, UNLESS OTHERWISE NOTED). REMOVE ALL MATERIAL, INCLUDING WATER-PROOFING MATERIAL, BETWEEN SAW CUTS. THOROUGHLY CLEAN AND DRY EXPOSED CONCRETE, STEEL, AND CUT SURFACES USING COMPRESSED AIR AND A HOT COMPRESSED AIR (HCA) LANCE. THE LANCE MUST PRODUCE A FLAME RETARDED AIR STREAM TEMPERATURE OF 3000 DEGREES F. AT A VELOCITY OF 3,000 FEET PER SECOND WITH 15 PSIG CHAMBER PRESSURE. IF THERE IS AN INTERRUPTION DUE TO WEATHER OR OTHER CAUSES, THE OPERATION WILL BE REPEATED WITH THE HCA LANCE IMMEDIATELY BEFORE THE BINDER COAT OPERATION. ALSO, 6 INCHES OF THE ROAD SURFACE ON EITHER SIDE OF THE JOINT WILL BE DRIED SO THAT A SUITABLE SURFACE FOR BITUMEN ADHESION IS OBTAINED.

SEALING OF EXPANSION JOINT: (PRE-STRESSED BOX OR CONCRETE SLAB)

THE EXPANSION JOINT GAP IS TO BE SEALED AND A BRIDGING PLATE CENTERED ALONG IT. A VERY NARROW GAP WILL BE SEALED BY POURING HOT BINDER INTO THE GAP. GAPS OF 1/8" OR MORE WILL FIRST BE FILLED WITH AN APPROPRIATELY SIZED BACKER ROD. THE BACKER ROD WILL BE INSTALLED SO THAT IT IS BETWEEN 1/8" AND 1-1/8" BELOW THE TOP OF THE EXISTING GAP. THE GAP WILL THEN BE FILLED WITH BINDER.

BOND BREAKER:

SPREAD BINDER OVER SURFACE AREA WHERE THE METAL BRIDGING PLATE WILL BE PLACED. CENTER THE BRIDGING PLATE OVER THE EXISTING JOINT AND BED INTO THE HOT BINDER. BUTT JOINT THE BRIDGING PLATES TO ACCOMODATE THE ENTIRE JOINT LENGTH. SPIKE HOLES WILL BE DRILLED AT 1 FOOT INTERVALS ALONG THE LONGITUDINAL CENTERLINE OF THE PLATES. SECURE BRIDGING PLATE WITH NAILS OR SPIKES. SEAL BUTT JOINTS WITH HOT BINDER AND ALLOW BINDER TO SETUP BEFORE NEXT OPERATION. WHEN ALUMINUM BRIDGING PLATES ARE USED, ONLY THE BINDER IS REQUIRED TO SECURE THE INDIVIDUAL PLATES.

BINDER COAT:

SEAL ALL PREPARED, EXPOSED SURFACES OF THE JOINT WITH BINDER. POUR THE HOT BINDER OVER THE FLOOR AREA OF THE JOINT AND SPREAD TO COAT ALL EXPOSED SURFACES. THE BINDER WILL BE A MINIMUM OF 1/32" THICK ON THE BOTTOM OF THE JOINT CAVITY, WITH POOLS OF GREATER THICKNESS WHERE SURFACE IRREGULARITIES EXIST. THE BINDER APPLICATION TEMPERATURE WILL BE BETWEEN 350 AND 390 DEGREES F. THE BINDER WILL NOT BE ALLOWED TO BE HEATED ABOVE 410 DEGREES F. NOR ALLOWED TO EXCEED 390 DEGREES F. FOR MORE THAN 1 HOUR. A DOUBLE JACKETED OIL MELTER WILL BE USED TO HEAT THE BINDER. THE MELTER WILL BE EQUIPPED WITH A CONTINUOUS AGITATION SYSTEM, TEMPERATURE CONTROLS, AND A CALIBRATED THERMOMETER. ALSO A SYSTEM FOR ACCURATELY MEASURING THE WEIGHTS OF THE BINDER AND THE AGGREGATE WILL BE REQUIRED.

BUILD-UP OF JOINT LAYERS:

AGGREGATE PREPARATION:

HEAT THE AGGREGATE TO A TEMPERATURE OF 275 TO 325 DEGREES F., WITH A SUITABLE ROTATING DRUM WITH ATTACHED HEAT SOURCE OR A HOT COMPRESSED AIR LANCE, TO REMOVE DUST AND MOISTURE.

AGGREGATE PROPORTION AND LAYER THICKNESS:

MIX THE AGGREGATE WITH THE BINDER SUCH THAT THE MINIMUM AGGREGATE CONTENT BY WEIGHT WILL BE 68%. THE HEATED AGGREGATE AND BINDER WILL BE COMBINED IN LAYERS, UNLESS PATENTED INSTALLATION REQUIRES DIFFERENTLY, NOT LESS THAN 3/4 OF AN INCH NOR EXCEEDING 2-1/2 INCHES. THE THICKNESS OF EACH LAYER CAN BE VARIED WITHIN THESE LIMITS, TO ACHIEVE THE REQUIRED JOINT THICKNESS (MIN. 2 INCHES). THE OBJECTIVE IS TO COAT EACH STONE AND FILL THE VOIDS WHILE AVOIDING AN EXCESS OF BINDER. THIS WILL ACHIEVE THE MAXIMUM CONTENT OF STONE CONSISTENT WITH ALL STONES BEING COATED WITH BINDER. RAKE THE MIXTURE TO MIX AND LEVEL.

THE TOP LAYER THICKNESS WILL VARY BETWEEN 1/2 INCH AND ONE (1) INCH. IN PREPARING THE TOP LAYER, THE RATIO OF AGGREGATE TO BINDER WILL BE APPROXIMATELY 6:1 BY WEIGHT. OVERFILL THE TOP LAYER AND COMPACT TO THE LEVEL OF THE ADJACENT SURFACES USING A ROLLER OR VIBRATORY PLATE COMPACTOR. IMMEDIATELY AFTER COMPLETION OF THE COMPACTION, POUR SUFFICIENT BINDER OVER THE JOINT TO FILL THE SURFACE VOIDS AND COAT THE SURFACE STONE. DUST THE FINISHED JOINT WITH A FINE, DRY AGGREGATE TO PREVENT TACKINESS.

MAINTENANCE OF TRAFFIC:

IF NECESSARY TO FACILITATE TRAFFIC MAINTENANCE, THE JOINT WILL BE INSTALLED IN TWO (2) HALF-WIDTH PHASES. DURING PHASE 1 APPROXIMATELY HALF OF THE TOTAL JOINT WILL BE INSTALLED. DURING PHASE 2, A MINIMUM OF TWO (2) INCHES OF THE PHASE 1 JOINT WILL BE REMOVED, AT OR NEAR THE CENTERLINE, WITH THE REMAINDER OF THE JOINT INSTALLED. IN ALL CASES, OPERATIONS WILL BE SCHEDULED SO THAT ALL LANES CAN BE OPEN TO TRAFFIC DURING ALL NON-WORKING HOURS.

TESTING:

CERTIFICATION WILL BE SUPPLIED FOR EACH PROJECT SHOWING BINDER COMPLIANCE WITH REQUIRED PROPERTIES. A ONE QUART SAMPLE OF BINDER WILL BE RETRIEVED FROM EACH BRIDGE FOR FURTHER TESTING BY THE O.D.O.T OFFICE OF MATERIALS MANAGEMENT.

METHOD OF MEASUREMENT AND BASIS OF PAYMENT:

THE DEPARTMENT WILL MEASURE THE JOINT BY THE NUMBER OF FEET AND WILL PAY FOR ACCEPTED QUANTITIES AT THE CONTRACT PRICE AS : ITEM SPECIAL, FEET, POLYMER MODIFIED ASPHALT EXPANSION JOINT SYSTEM.

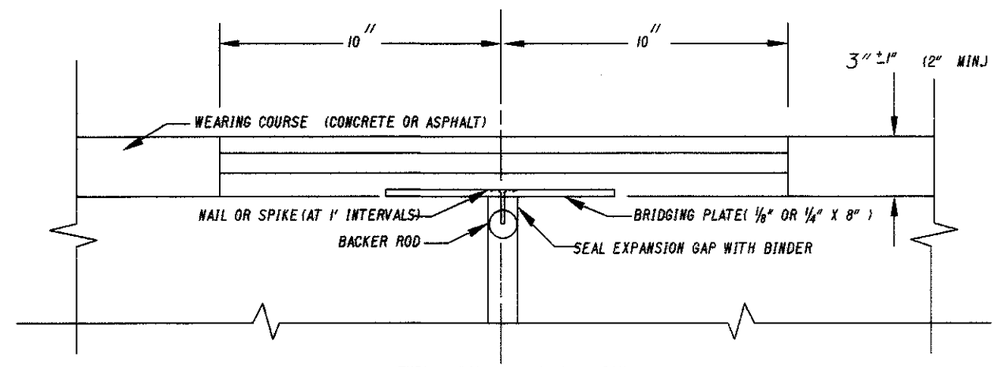

TYPICAL PRESTRESSED BOX BEAM
OR
CONCRETE SLAB JOINT

ASD-39-0897 SFN 0300942

ITEM	DESCRIPTION	UNIT	QUANTITY
SPECIAL	POLYMER MODIFIED ASPHALT EXPANSION JOINT SYSTEM	FT	82

QUANTITY CARRIED TO SHEET NO. 54

CALCULATED	CHECKED
DATE REVISED	
10-28-96	
10-17-03	
DESIGNED MAM	
DRAWN MAM	

POLYMER MODIFIED ASPHALT EXPANSION JOINT SYSTEM
ASD-39-0897 OVER BLACK FORK OF MOHICAN RIVER

ASD-39-0.00

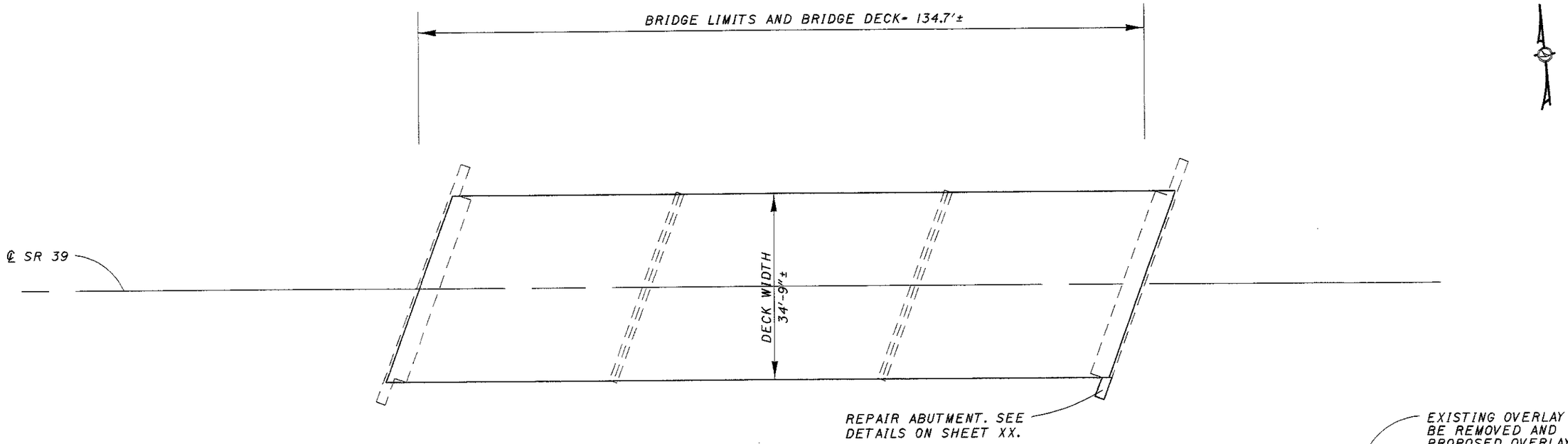

PLAN VIEW

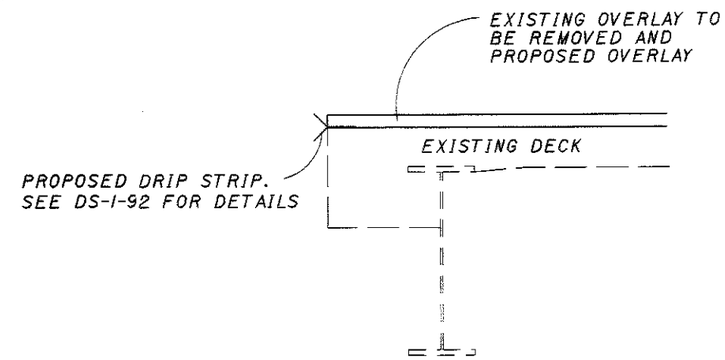

TYPICAL EDGE DETAIL

ITEM	QUANTITY	UNIT	DESCRIPTION
202	1	CU YD	PORTION OF STRUCTURE REMOVED (ABUTMENT)
509	8	POUND	EPOXY COATED REINFORCING STEEL
511	1	CU YD	CLASS C CONCRETE, ABUTMENT, AS PER PLAN
SPECIAL	307	FT	STEEL DRIP STRIP
848	520	SQ YD	MICRO SILICA MODIFIED CONCRETE OVERLAY USING HYDRODEMOLITION, AS PER PLAN (3 INCH THICK)
848	520	SQ YD	SURFACE PREPARATION USING HYDRODEMOLITION
848	13	CU YD	MICRO SILICA MODIFIED CONCRETE OVERLAY (VARIABLE THICKNESS), MATERIAL ONLY, AS PER PLAN
848	16	SQ YD	HAND CHIPPING
848	lump		TEST SLAB
848	1	CU YD	FULL-DEPTH REPAIR
848	520	SQ YD	EXISTING CONCRETE OVERLAY REMOVED (2 INCH NOMINAL THICKNESS)
848	26	SQ YD	REMOVAL OF DEBONDED OR DETERIORATED EXISTING VARIABLE THICKNESS CONCRETE OVERLAY
864	104	SQ YD	SEALING OF CONCRETE SURFACE (EPOXY-URETHANE)

ALL QUANTITIES CARRIED TO STRUCTURE SUMMARY SHEET NO. 41

NOTES:

1) THE EXISTING APPROACH RAIL AND BRIDGE RAIL ARE NOT SHOWN.

2) THE EXISTING CONCRETE OVERLAY ON THE ENTIRE BRIDGE DECK SHALL BE REMOVED USING ITEM 848-EXISTING CONCRETE OVERLAY REMOVED (2" NOMINAL THICKNESS) AN ADDITIONAL 1" OF EXISTING CONCRETE DECK SHALL BE REMOVED USING ITEM 848- SURFACE PREPARATION USING HYDRODEMOLITION.

3) A DRIP STRIP SHALL BE PLACED ALONG BOTH DECKS EDGES PRIOR TO PLACING THE NEW OVERLAY. SEE STD DRW. DS-1-92 FOR ADDITIONAL DETAILS.

4) THE ENTIRE BRIDGE DECK SHALL BE OVERLAYED USING ITEM 848-MICRO SILICA MODIFIED CONCRETE OVERLAY USING HYDRODEMOLITION (3" THICKNESS)

5) THE RIGHT FORWARD WINGWALL SHALL BE REPAIRED AS PER DETAILS ON SHEET 58.

6) THE DECK EDGES, EXPOSED AREAS OF THE WINGWALLS AND PIER CAP ENDS SHALL BE SEALED WITH ITEM 864 AS PER DETAILS ON SHEET 59.

7) THE WORK SHALL BE PERFORMED IN 2 PHASES. SEE SHEET 60 FOR MOT DETAILS.

DESIGN FILE: h:\projects\23578\Struct\details.dgn
WORKSTATION: dmoltens DATE: 02/25/04

DESIGN AGENCY: DISTRICT THREE

DESIGNED	DRAWN	REVIEWED	DATE
DCM	DCM	RDN	2-04
CHECKED	REVISED	STRUCTURE FILE NUMBER	
BAD		7002556	

PLAN VIEW
RIC-39-2677
OVER BLACK FORK OF MOHICAN RIVER

ASD-39-0.00

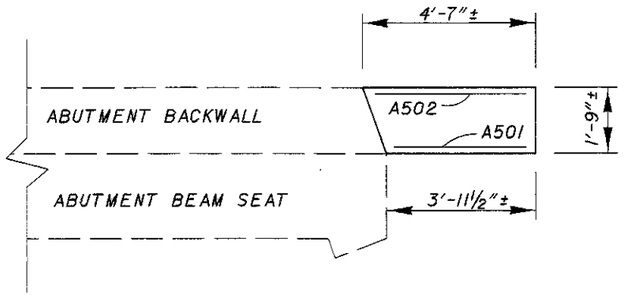

PLAN VIEW FORWARD ABUTMENT

REINFORCING TABLE							
MARK	NUMBER	LENGTH	WEIGHT (LBS.)	TYPE	DIMENSIONS		
					A	B	C
A501	1	3'-6"	4	STRAIGHT			
A502	1	4'-0"	4	STRAIGHT			
		TOTAL	8				

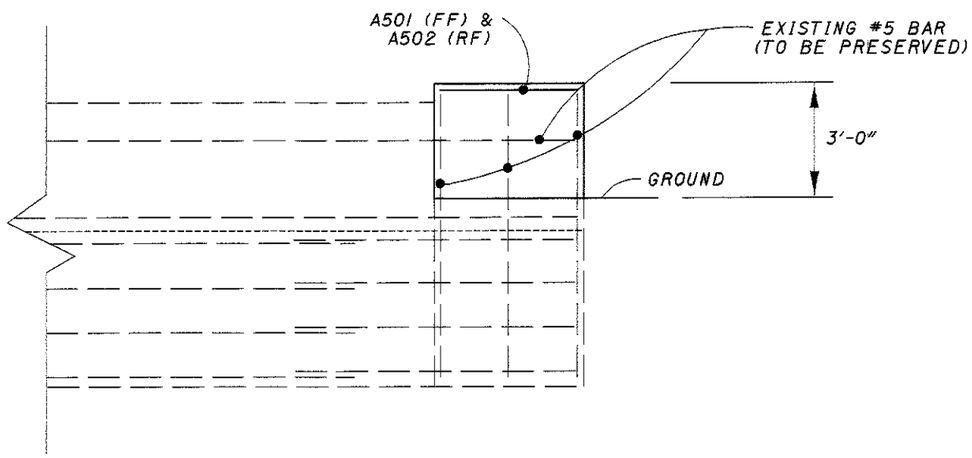

ELEVATION VIEW FORWARD ABUTMENT

ITEM	QUANTITY	UNIT	DESCRIPTION
202	1	CU YD	PORTIONS OF STRUCTURE REMOVED (ABUTMENT)
509	8	POUND	EPOXY COATED REINFORCING STEEL
511	1	CU YD	CLASS C CONCRETE, ABUTMENT, AS PER PLAN

ALL QUANTITIES CARRIED TO SHEET NO. 57

DESIGN FILE: i:\projects\23578\Struct\details.dgn
WORKSTATION: dmollens DATE: 02/25/04

DESIGN AGENCY DISTRICT THREE
REVIEWED RDN DATE 2-04 STRUCTURE FILE NUMBER 7002556
DRAWN DCM REVISED
DESIGNED DCM CHECKED BAD

WINGWALL REPAIR (RIGHT FORWARD)
RIC-39-2677
OVER BLACK FORK OF MOHICAN RIVER

ASD-39-0.00

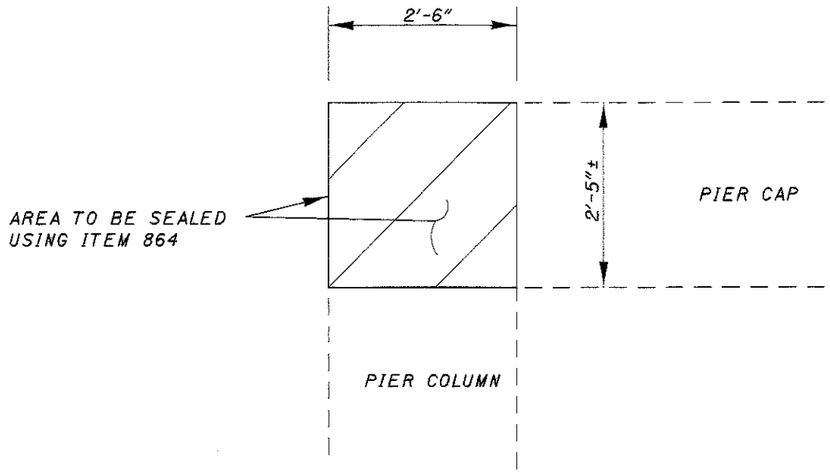

PIER CAP WIDTH = 1'-6"±

TYPICAL PIER CAP END SEALING ELEVATION VIEW

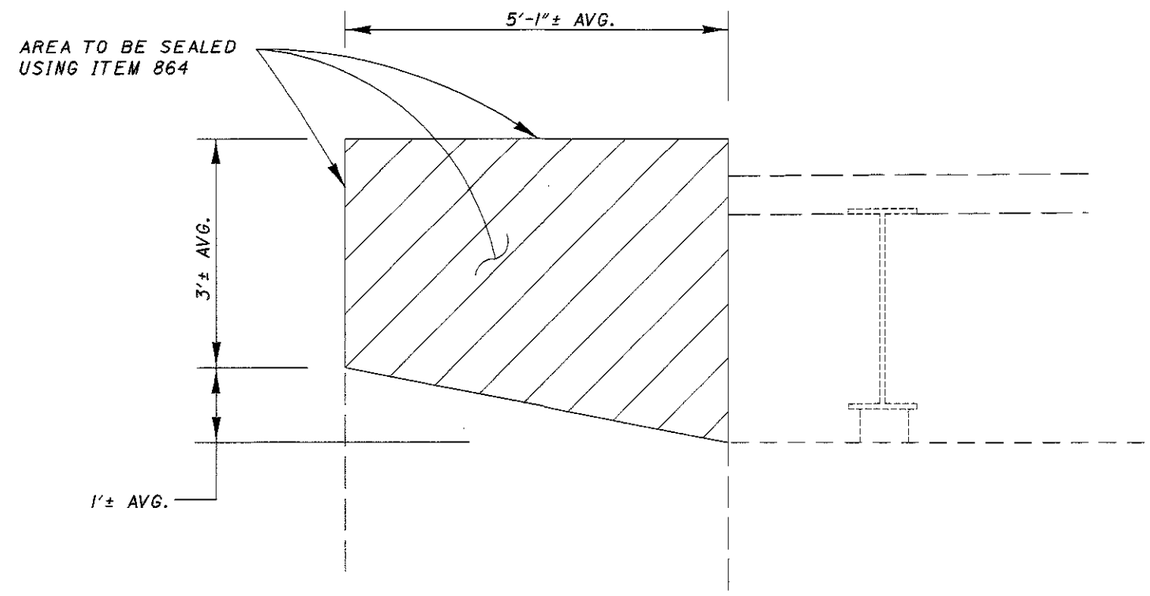

WINGWALL WIDTH = 1'-9"±

TYPICAL WINGWALL SEALING

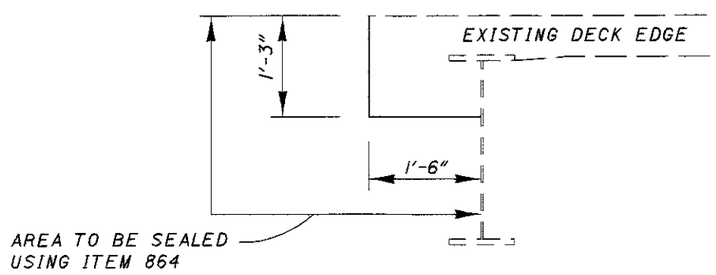

DECK EDGE SEALING LENGTH = 132'-2"±

TYPICAL DECK EDGE SEALING

ITEM	QUANTITY	UNIT	DESCRIPTION
864	104	SQ YD	SEALING OF CONCRETE SURFACES (EPOXY-URETHANE)

ALL QUANTITIES CARRIED TO SHEET NO. 57

DESIGN FILE: i:\projects\23578\Struct\details.dgn
WORKSTATION: dmollens DATE: 02/25/04

DESIGN AGENCY: DISTRICT THREE

DESIGNED	DRAWN	REVIEWED	DATE
DCM	DCM	RDN	2-04
CHECKED	REVISED	STRUCTURE FILE NUMBER	
BAD		7002556	

SEALING DETAIL
RIC-39-2677
OVER BLACK FORK OF MOHICAN RIVER

ASD-39-0.00

SIGNAL TIMING

A TWO PHASE CONTROLLER WITH CABINET CAPABLE OF BEING SET WITH THE FOLLOWING SPLITS SHALL BE FURNISHED

CYCLE LENGTH: 60 SECONDS

	GREEN	AMBER	RED
PHASE A	15	5	10
PHASE B	15	5	10

THE ABOVE TIMING MAYBE CHANGED WITH THE APPROVAL OF THE ENGINEER

FOR DETAILS NOT SHOWN SEE STANDARD DRAWINGS MT-96.10, MT-96.20, MT-96.25, MT-101.20

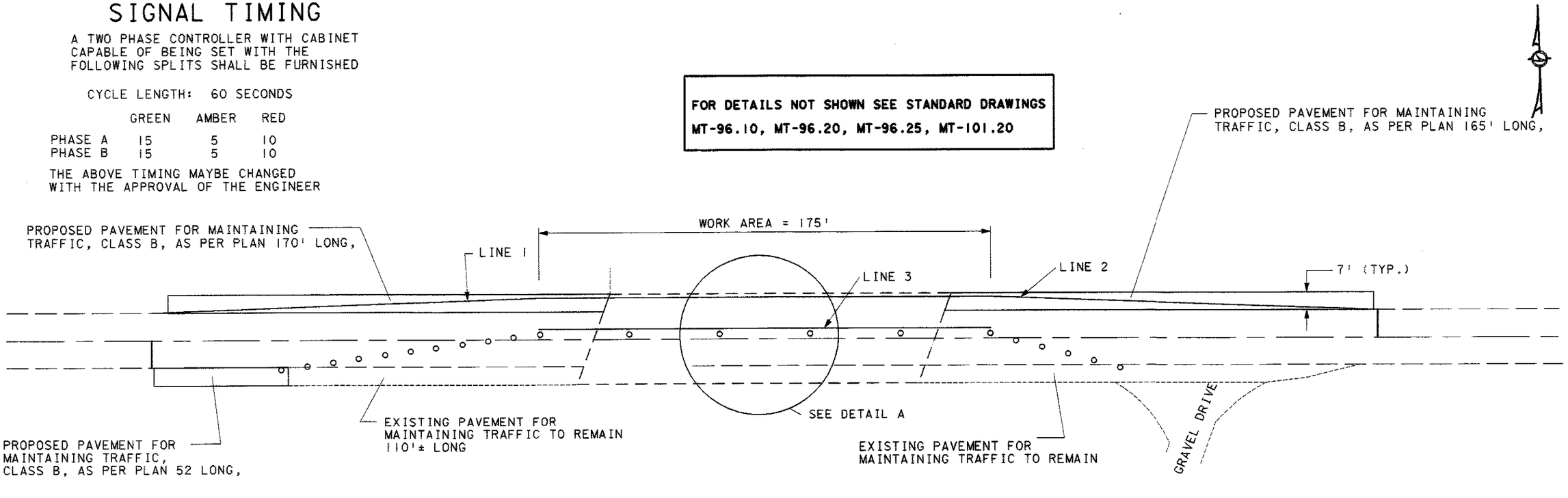

PHASE A SHOWN
PHASE B SIMILAR

WORK ZONE RAISED PAVEMENT MARKERS (TYPE A)				
		SPACING	QTY. (WHITE)	QTY. (YELLOW)
PHASE A	LINE 1= 325'	5'-0"	66	66
	LINE 2= 150'	5'-0"	30	
	LINE 3= 175'	5'-0"	36	36
PHASE B	LINE 1= 325'	5'-0"	66	66
	LINE 2= 150'	5'-0"	30	
	LINE 3= 175'	5'-0"	36	36
		TOTAL	264	204

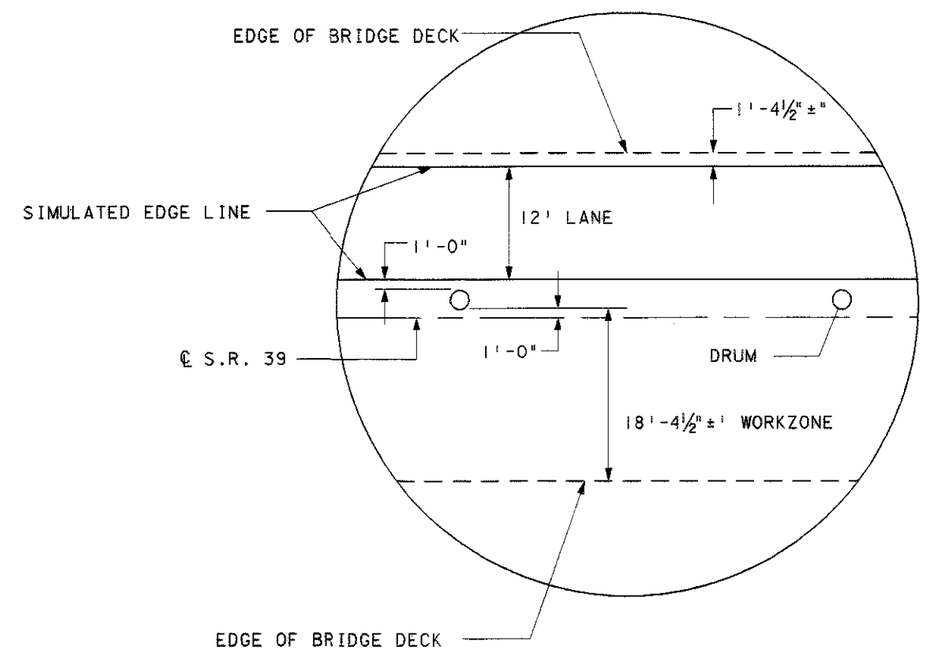

DETAIL A

ITEM	QUANTITY	UNIT	DESCRIPTION
614	468	EACH	WORK ZONE RAISED PAVEMENT MARKER
614	10	EACH	BARRIER REFLECTOR, TYPE A2
614	.06	MILE	WORK ZONE CENTER LINE, CLASS 1 (SOLID DOUBLE)
614	.04	MILE	WORK ZONE EDGE LINE, CLASS 1 (WHITE)
614	24	FT.	WORK ZONE STOP LINE, CLASS 1
615	LUMP		ROADS FOR MAINTAINING TRAFFIC
615	305	SQ.YD.	PAVEMENT FOR MAINTAINING TRAFFIC, CLASS B, AS PER PLAN

ALL QUANTITIES CARRIED TO STRUCTURE SUMMARY SHEET NO. 41

NOTES:

1) THE EXISTING BRIDGE RAILING AND GUARDRAIL ARE NOT SHOWN IN THE PLAN VIEW

DESIGN FILE: I:\projects\23578\Struct\strmot.dgn
WORKSTATION: dmollens DATE: 02/25/04

DESIGN AGENCY: DISTRICT THREE
DESIGNED dgm | DRAWN dgm | REVIEWED RDN | DATE 2-04
CHECKED BAD | REVISED | STRUCTURAL FILE NUMBER 7002556

MAINTENANCE OF TRAFFIC
RIC-39-2677
OVER BLACK FORK OF MOHICAN RIVER

ASD-39-0.00

60/60