PRM PS3 500 6-76 62754.

MICROFILMED
JUL 26 1990

OHIO	FHWA REGION 5
BRF-83(17)	FEDERAL PROJECT

1/13

ATB - 322 - 9.67 (PART 1)

STATE OF OHIO
DEPARTMENT OF TRANSPORTATION
ATB-322-9.67 (PART 1)
SR-322 OVER ROCK CREEK
ORWELL TOWNSHIP
ASHTABULA COUNTY

MICROFILMED
SEP 23 1992

BRF-83(17)

PART 1
FOR PART 2
SEE ATB-322-5.28

CONVENTIONAL SIGNS

County Line
Township Line
Section Line
Corporation Line or
Fence Line (existing) (proposed)
Center Line
Trees, Stumps, (to be removed)
Utility Poles: Telephone, Power, Light

Limited Access (only) — LA
Right of Way (only) — RW
Limited Access & Right of Way — LA & RW
Existing Right of Way
Property Line (in existing fence)
Railroad or
Guardrail (existing) (proposed)

INDEX OF SHEETS

Title Sheet	1
Typical Sections and General Notes	2
Computations and General Summary	3
Plan and profile	4
Cross Sections	5-6
Structure over 20' span	7-13

UNDERGROUND UTILITIES
TWO WORKING DAYS
BEFORE YOU DIG
Call··· 800-362-2764 (Toll free)
OHIO UTILITIES PROTECTION SERVICE
NON-MEMBERS
MUST BE CALLED DIRECTLY

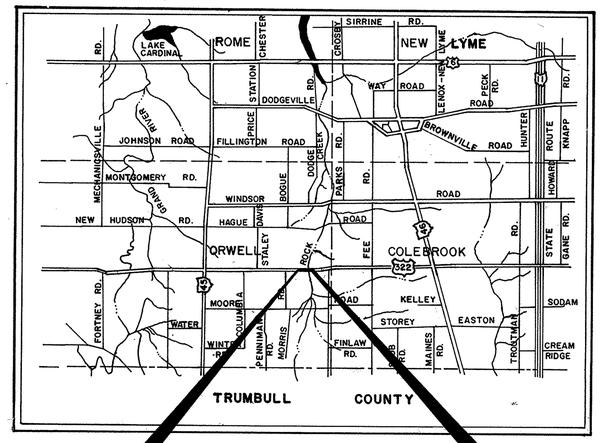

BEGIN PROJECT
STA. 9+54.50

END PROJECT
STA. 10+70.00

LOCATION MAP

SCALE IN MILES
0 1 2 3 4 5 6 7

Portion to be improved
State & Federal Routes
Other Roads

SCALES

Plan 10 5 0 10
Profile: Horizontal 10 5 0 10, Vertical 10 5 0 10
Cross Section: Horizontal 5 4 3 2 1 0 5, Vertical 5 4 3 2 1 0 5

1987 SPECIFICATIONS

The standard specifications of the State of Ohio, Department of Transportation, including changes and supplemental specifications listed in the proposal shall govern this improvement.

I hereby approve these plans and declare that the making of this improvement will require the closing to traffic of the highway, and that detours will provided as indicated on sheet 3 of the plans.

PART 1 & PART 2
SUPPLEMENTAL SPECIFICATIONS

824	10-8-82	
836	11-12-85	
847	10-17-83	
947	10-17-83	
924	9-23-74	
903	1-1-69	

Approved Francis V. Fischer
Date 4-9-87 District Deputy Director of Transportation

B&N
Approved Walter J. Jastrzebski
Date 4-22-87 Engineer, Bureau of Bridges and Structural Design

Approved Wayne H. Kauble
Date 7/22/87 Chief Engineer, Planning and Design

Approved Warren J. Smith
Date 7-22-87 Director, Department of Transportation

LINE DATA

Begin Project Sta.	=	9+54.50
End Project Sta.	=	10+70.00
Length of Project	=	115.50 l.f. or 0.022 mi.
Begin Work Sta.	=	8+35
End Work Sta.	=	11+87
Length of Work	=	352 l.f. or 0.067 mi.

TRAFFIC DESIGN DESIGNATION

Current A.D.T. (1986)	= 4190
Design Year A.D.T. (2006)	= 5450
D.H.V.	= 490
D (Directional Distribution)	= 55%
T (Percentage of B and C Trucks)	= 5 %
V (Design. Speed)	= 55 mph

SUPPLEMENTAL PRINTS OF STANDARD CONSTRUCTION DRAWINGS PT. 1 & PT. 2

		AS-1-81	11-27-81				
		DBR-2-73	4-10-73	LA-2	6-1-79		
GR-1	1-11-85						
GR-2B	2-5-82	MT-99.10	11-14-86				
GR-3	1-21-85						
GR-4	2-5-82	BP-1	6-1-65				
GR-4B	2-5-82						
		BP-3	12-6-76				
		BP-4	1-11-85				
		BP-5	1-11-85				
MC-9A	1-11-85						
		BP-10	1-30-84				

Rev. 10-6-87

GLAUS, PYLE, SCHOMER, BURNS, & DEHAVEN
AKRON, OHIO — YOUNGSTOWN, OHIO

FILE Nº

DATE OF LETTING _____ 198
CONTRACT Nº _____

Plan prepared by:
W. K. DeHaven
W. K. DEHAVEN, P.E.
REG. PROF. ENGINEER
Nº 20877
10/10/86
DATE

DEPARTMENT OF TRANSPORTATION
FEDERAL HIGHWAY ADMINISTRATION

APPROVED:

DIVISION ADMINISTRATOR — DATE

TYPICAL SECTIONS & GENERAL NOTES

CALC. BY L.K. DATE 6-25-86	OHIO	2
CHKD. BY B.L. DATE 6-25-86	FHWA REGION 5	13

ATB-322-9.67

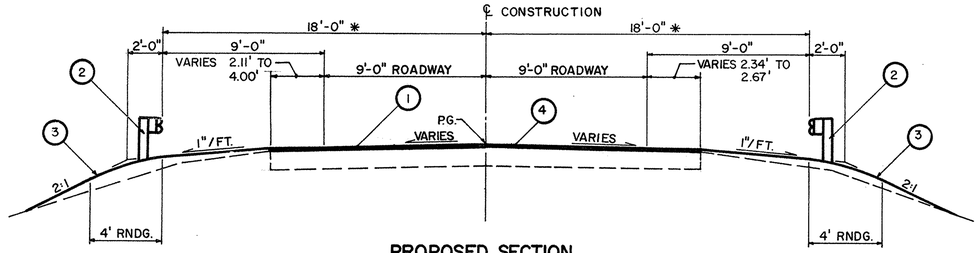

PROPOSED SECTION

4 3 2 1 0 2 4

* STA. 8+40.38 TO 9+65.38
10+59.13 TO 11+84.13

LIMITING STATIONS
9+24.50 TO 9+54.50
10+70.00 TO 11+00.00

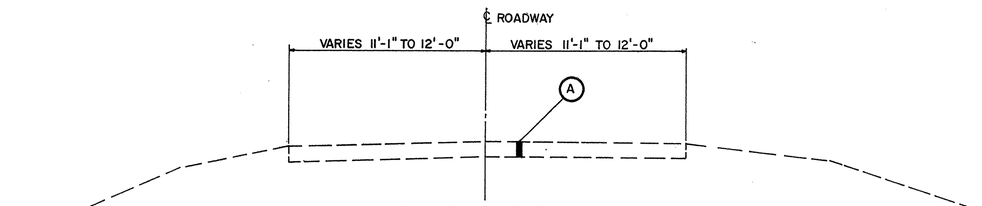

EXISTING SECTION

4 3 2 1 0 2 4

PROPOSED LEGEND

1. ITEM 404 VARIABLE THICKNESS ASPHALT CONCRETE (1¼" MINIMUM)
2. ITEM 606 GUARDRAIL, STD. TYPE 5
3. ITEM 659 SEEDING AND MULCHING
4. ITEM 407 TACK COAT

EXISTING LEGEND

A 8" THICK ASPHALT

DETOUR LIMITATIONS-PART 1

THE DETOUR FOR THIS PROJECT SHALL NOT BE PLACED INTO EFFECT PRIOR TO APRIL 1, 1988. UNTIL THE DETOUR IS PLACED INTO EFFECT, TWO WAY TRAFFIC SHALL BE MAINTAINED AT ALL TIMES.

THE COMPLETION OF THIS STRUCTURE AND THE REMOVAL OF THIS DETOUR HAS A DIRECT EFFECT ON THE COMPLETION OF THE ATB-322-5.28 PORTION OF THIS PROJECT. THE CONTRACTOR IS ADVISED TO REVIEW THE DETOUR LIMITATION NOTE ON THE ATB-322-5.28 PART 2 PORTION.

GENERAL NOTES

FIELD OFFICE: THE CONTRACTOR SHALL PROVIDE A SUITABLE FIELD OFFICE HAVING A MINIMUM OF 300 SQ. FT. OF FLOOR SPACE. PAYMENT SHALL BE INCLUDED IN THE LUMP SUM PRICE BID FOR ITEM 619, FIELD OFFICE.
(THIS ITEM IS FOR BOTH PART 1 & PART 2

ROUNDING OF CORNERS SHOWN ON CROSS SECTIONS: THE ROUNDED CORNERS SHOWN ON THE TYPICAL SECTIONS, APPLY TO ALL CROSS SECTIONS EVEN THOUGH OTHERWISE SHOWN ON THESE PLANS.

UNDERGROUND UTILITIES: THE LOCATIONS OF THE UNDERGROUND UTILITIES SHOWN ON THE PLANS ARE AS OBTAINED FROM THE OWNERS OF THE UTILITY AS REQUIRED BY SECTION 153.64 ORC.

UTILITY OWNERSHIP: THE FOLLOWING UTILITIES AND OWNERS ARE LOCATED WITHIN THE WORK LIMITS OF THIS PROJECT:

CLEVELAND ELECTRIC ILL. CO.
2210 SOUTH RIDGE ROAD WEST
P. O. BOX 668
ASHTABULA, OHIO 44044
ATTENTION: MR. P. R. MULLET, SUPV. & COST UNITS
PHONE (216) 998-3131

ORWELL TELEPHONE COMPANY
70 SOUTH MAPLE STREET
ORRWELL, OHIO 44076
ATTENTION: MR. DONALD POKORNY, MGR.
PHONE (216) 437-6111

VILLAGE OF ORWELL WATER
RIAKIE ASSOCIATES, INC.
207 EAST LIBERTY STREET
P. O. BOX 207
ASHLAND, OHIO
ATTENTION: MR. DON VERMYLA
PHONE: (419) 289-1555

LOCATION OF GUARDRAIL: THE LOCATIONS OF GUARDRAIL RUNS, AS SHOWN IN THESE PLANS, ARE SUBJECT TO ADJUSTMENT PRIOR TO FINAL ACCEPTANCE. THE ENGINEER SHALL BE SATISFIED THAT ALL INSTALLATIONS WILL AFFORD MAXIMUM PROTECTION FOR TRAFFIC.

TEMPORARY SOIL EROSION AND SEDIMENT CONTROL:
THE FOLLOWING ESTIMATED QUANTITIES ARE TO BE USED AS DIRECTED BY THE ENGINEER, FOR TEMPORARY EROSION AND SEDIMENT CONTROL MEASURES:

207 TEMPORARY SEEDING AND MULCHING	134	SQ. YD.
659 COMMERCIAL FERTILIZER	0.01	TON
659 REPAIR SEEDING AND MULCHING	33.7	SQ. YD.
659 WATER	1.	M GAL.

407 TACK COAT: THE TACK COAT OPERATION SHALL BE AS DETERMINED PER SEC. 407.05. PLAN QUANTITIES INDICATE AVERAGE APPLICATIONS RATES OF 0.10 GALLONS PER SQUARE YARD OF TACK COAT FOR ESTIMATING PURPOSES ONLY.

PAVEMENT MARKING: THE FOLLOWING ESTIMATED QUANTITIES ARE FOR THE PAINTING OF CENTER LINES AND EDGE LINES IN THIS PROJECT FROM STA. 9+24.50 TO STA. 11 + 00. CENTER AND EDGE LINES SHOULD COINCIDE WITH EXISTING LINES OUTSIDE WORK LIMITS.

621 CENTER LINE	0.033 MILES
621 EDGE LINE (WHITE)	0.067 MILES
614 TEMPORARY CENTER LINES, CLASS II	0.03 MILES

MAINTAINING TRAFFIC
THE CONTRACTOR SHALL, IN ADDITION TO THE GENERAL REQUIREMENTS OF ITEM 614 ON THIS PROJECT, PERFORM THE FOLLOWING:

PROVIDE, ERECT AND MAINTAIN STANDARD 48" X 30" SIZE "ROAD CLOSED" SIGNS, BARRICADES AND LIGHTS AT THE BEGINNING AND END OF THE WORK AND AT THE FOLLOWING LOCATIONS:

1. US 322 JUST EAST OF STALEY ROAD
2. US 322 JUST WEST OF FEE ROAD
3.
4.

TYPE III BARRICADES AND LIGHTS SHALL BE AS DETAILED IN THE OHIO MANUAL OF UNIFORM TRAFFIC CONTROL DEVICES. PAYMENT FOR PROVIDING, ERECTING, MAINTAINING, REMOVING LIGHTS, SIGNS AND BARRICADES SHALL BE INCLUDED IN THE LUMP SUM PRICE BID FOR ITEM 614 MAINTAINING TRAFFIC.

DETOUR SIGNING
DETOUR SIGNAGE SHALL BE PROVIDED BY ODOT TRAFFIC ENGINEER. THE CONTRACTOR SHALL ADVISE DISTRICT TRAFFIC ENGINEER 5 WORKING DAYS PRIOR TO COMMENCING ANY CONSTRUCTION TO COORDINATE DETOUR SIGNING. FOR DETOUR PLAN SEE SHEET NO. 3.

ITEM 404 ASPHALT CONCRETE AC-20 (30' FEATHER)

STA. 9 + 24.50 TO 9 + 54.50 (L/R)
(30.00') [(22.61' + 22.20')/2] [(0 + 0.10')/2]+(22.61')(2.00')(0.10')= 1.41. C.Y. 27

STA. 10 + 70 TO 11 + 00 (L/R)
(30.00')[24.00' + 24.00')/2] [(0 + 0.10')/2]+[(24.00')(2.00')(0.10') = 1.57 C.Y. 27

TOTAL = 2.98 C.Y.

ITEM 407 TACK COAT

STA. 9 + 24.50 TO 9 + 54.50 (L/R)
(30.00')(22.41')(1/9)(0.10') = 7.47 GAL.

STA. 10 + 70.00 TO 11 + 00 (L/R)
(30.00')(24.00')(1/9)(0.10" = 8.00 GAL.

TOTAL = 15.5 GAL.

ITEM 203 SUBGRADE COMPACTION (APPROACH SLABS)

STA. 9 + 54.50 TO 9 + 69.50 (L/R/)
(15.00')(36.00')(1/9) = 60.00 S.Y.

STA. 10 + 50.00 TO 10 + 70.00 (L/R)
(15.00')(36.00')(1/9) = 60.00 S.Y.

TOTAL = 120.00 S.Y.

ITEM 659 COMMERCIAL FERTILIZER

(670 S.Y.)(9)(20/1000)(1/2000) = 0.06 TONS

ITEM 659 AGRICULTURAL LINING

(670 S.Y.)(9)(100/1000)(1/2000)= 0.30 TONS

Rev. 10-6-87

GENERAL NOTES & TYPICAL SECTIONS

AA B/P

COMPUTATIONS & GENERAL SUMMARY

CALC. BY	L.K.
DATE	5-23-86
CHKD. BY	B.L.
DATE	6-25-86

OHIO

FHWA REGION 5

ATB - 322 - 9.67

ITEM	SHEET NUMBER 2				3		4				TOTAL ITEM	QUAN.	UNIT	DESCRIPTION
														ROADWAY
201											201	LUMP		CLEARING & GRUBBING
202					180.5						202	180.5	L.F.	GUARDRAIL REMOVED
203							174				203	174	C.Y.	EXCAVATION NOT INCLUDING EMBANKMENT CONSTRUCTION
203							245				203	245	C.Y.	EMBANKMENT
203	120										203	120	S.Y.	SUBGRADE COMPACTION
606					350						606	350	L.F.	GUARDRAIL, TYPE 5
606					3						606	3	EACH	ANCHOR ASSEMBLY STANDARD TYPE A
606					1						606	1	EACH	ANCHOR ASSEMBLY STANDARD TYPE B
606					4						606	4	EACH	BRIDGE TERMINAL ASSEMBLY STANDARD TYPE B
604					2						604	2	EACH	WATER MANHOLE ADJUSTED TO GRADE
604					1						604	1	EACH	WATER SERVICE BOX ADJUSTED TO GRADE
														EROSION CONTROL
207	134										207	134	S.Y.	TEMPORARY SEEDING & MULCHING
659	1										659	1	M.GAL.	WATER
659							670				659	670	S.Y.	SEEDING & MULCHING
659	34										659	34	S.Y.	REPAIR SEEDING & MULCHING
659	0.07										659	0.07	TON	COMMERCIAL FERTILIZER
659	0.03										659	0.30	TON	AGRICULTURAL LIMING
														PAVEMENT
403	3										404	3	C.Y.	ASPHALT CONCRETE AC - 20
407	16										407	16	GAL.	TACK COAT
611					120						611	120	S.Y.	REINFORCED CONCRETE APPROACH SLAB (T = 12")
														TRAFFIC CONTROL
621	0.07										621	0.07	MILES	EDGE LINE
621	0.03										621	0.03	MILES	CENTER LINE
614	0.03										614	0.03	MILE	TEMPORARY CENTER LINES, CLASS II
														MISCELLANEOUS
614	LUMP										614	LUMP		MAINTAINING TRAFFIC
619	LUMP										619	LUMP		FIELD OFFICE
623											623	LUMP		CONSTRUCTION LAYOUT STAKES
624											624	LUMP		MOBILIZATION
														FOR STRUCTURE QUANTITIES SEE SHEET 8

ESTIMATED QUANTITIES

CODE	LOCATION FROM	LOCATION TO	SIDE	202 GUARDRAIL REMOVED L.F.	606 GUARDRAIL TYPE 5 L.F.	606 ANCHOR ASSEMBLY TYPE A EACH	606 BRIDGE TERMINAL ASSEMBLY TYPE B EACH	606 ANCHOR ASSEMBLY TYPE B EACH	611 REINFORCED CONCRETE APPROACH SLAB T = 12" S.Y.	604 WATER M.H. ADJUSTED TO GRADE EACH	604 WATER SERV.BX. ADJUSTED TO GRADE EACH
G-1	9 + 22.07	9+48.66	LT.	26.6							
G-2	10 + 51.57	10+90.60	LT.	39.0							
G-3	8+60.04	9+48.53	RT.	88.5							
G-4	10+51.00	10+77.38	RT.	26.4							
G-5	8+40.38	9+65.38	LT.		100	1	1				
G-6	10+59.13	11+84.13	LT.		100	1	1				
G-7	8+40.38	9+65.38	RT.		100	1	1				
G-8	10+65.38	11+27.38	RT.		50		1	1			
AS-1	9+54.50	9+69.50	L/R						60		
AS-2	10+55.50	10+70.50	L/R						60		
W-1	10+55.50	24'	RT.							1	
W-2	10+74.08	36'	RT.								1
W-3	9+42	24'	RT.							1	
TOTALS				180.50	350	3	4	1	120	2	1

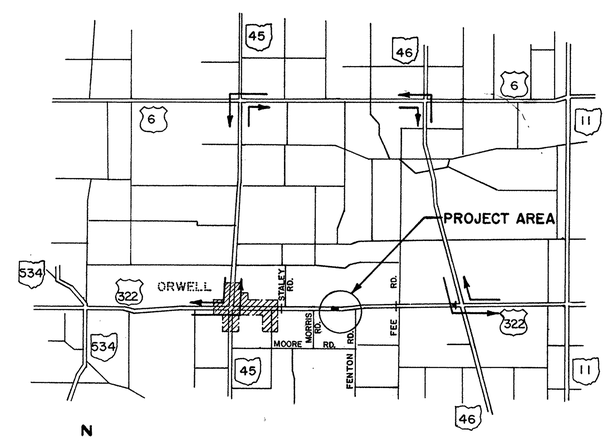

N

DETOUR PLAN

SCALE IN MILES
0 1 2 3

LEGEND
PORTION TO BE IMPROVED
STATE & FEDERAL ROUTES
OTHER ROADS
DETOUR

DETOUR PLAN
COMPUTATIONS
& GENERAL SUMMARY

A.A. BLUE Print, Akron

MICROFILMED
JUL 26 1990

CALC BY L.K. DATE 8-22-86	OHIO	4
CHKD. BY B.O.L. DATE 8-24-86	FHWA REGION 5	13

ATB-322-9.67

SCALE IN FEET 0 5 10 20

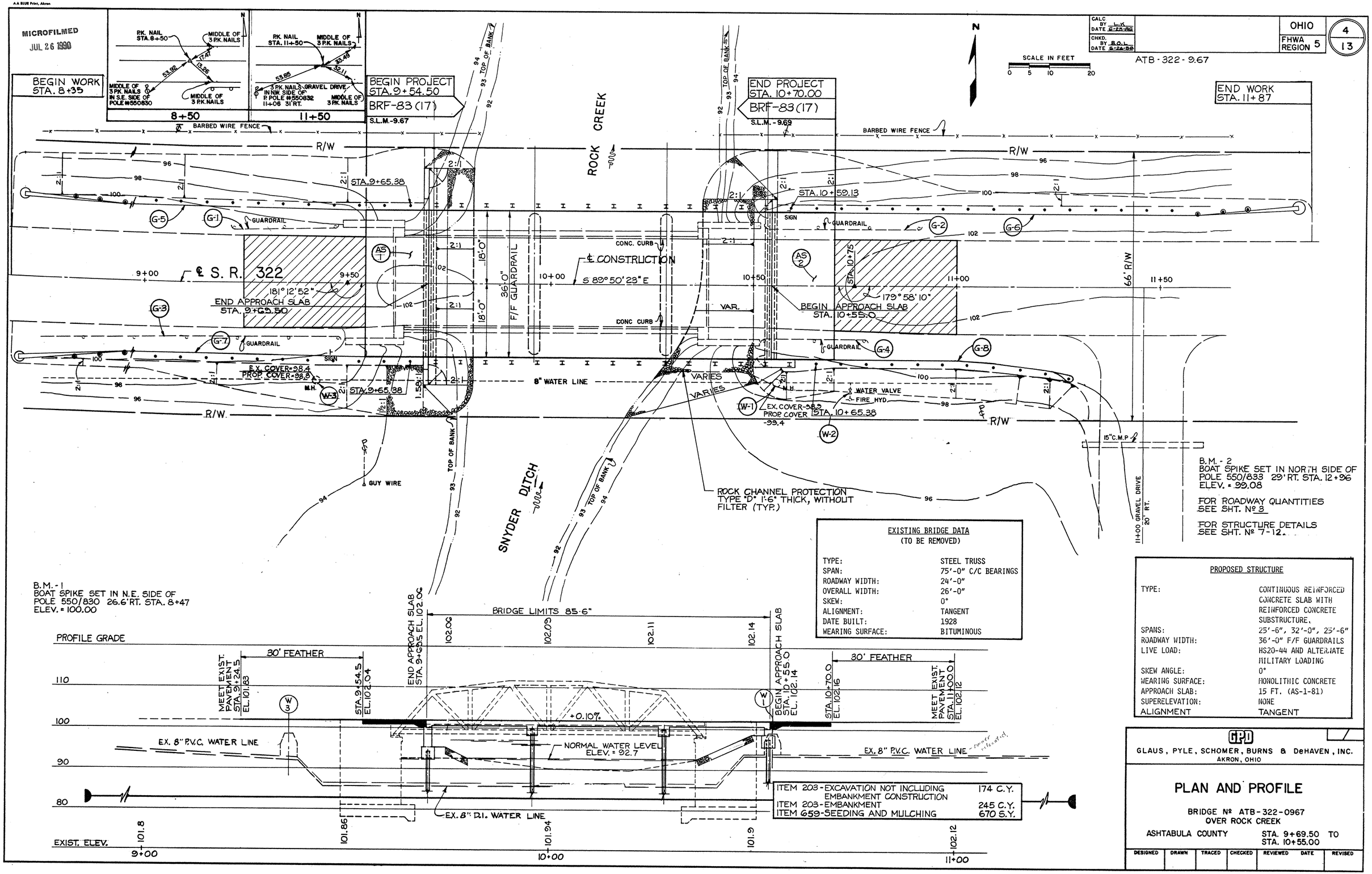

EXISTING BRIDGE DATA
(TO BE REMOVED)

TYPE:	STEEL TRUSS
SPAN:	75'-0" C/C BEARINGS
ROADWAY WIDTH:	24'-0"
OVERALL WIDTH:	26'-0"
SKEW:	0°
ALIGNMENT:	TANGENT
DATE BUILT:	1928
WEARING SURFACE:	BITUMINOUS

PROPOSED STRUCTURE

TYPE:	CONTINUOUS REINFORCED CONCRETE SLAB WITH REINFORCED CONCRETE SUBSTRUCTURE.
SPANS:	25'-6", 32'-0", 25'-6"
ROADWAY WIDTH:	36'-0" F/F GUARDRAILS
LIVE LOAD:	HS20-44 AND ALTERNATE MILITARY LOADING
SKEW ANGLE:	0°
WEARING SURFACE:	MONOLITHIC CONCRETE
APPROACH SLAB:	15 FT. (AS-1-81)
SUPERELEVATION:	NONE
ALIGNMENT	TANGENT

ITEM 203-EXCAVATION NOT INCLUDING EMBANKMENT CONSTRUCTION	174 C.Y.
ITEM 203-EMBANKMENT	245 C.Y.
ITEM 659-SEEDING AND MULCHING	670 S.Y.

GPD
GLAUS, PYLE, SCHOMER, BURNS & DeHAVEN, INC.
AKRON, OHIO

PLAN AND PROFILE

BRIDGE Nº ATB-322-0967
OVER ROCK CREEK

ASHTABULA COUNTY STA. 9+69.50 TO STA. 10+55.00

DESIGNED	DRAWN	TRACED	CHECKED	REVIEWED	DATE	REVISED

ORIGINAL SURVEY		BY	DATE
NOTE BOOK NO.	SURVEYED		
	PLOTTED		
	TEMPLATE		
	AREAS		
	AREAS CHECKED		

FINAL SURVEY		BY	DATE
NOTE BOOK NO.	SURVEYED		
	PLOTTED		
	TEMPLATE		
	AREAS		
	AREAS CHECKED		

N71176

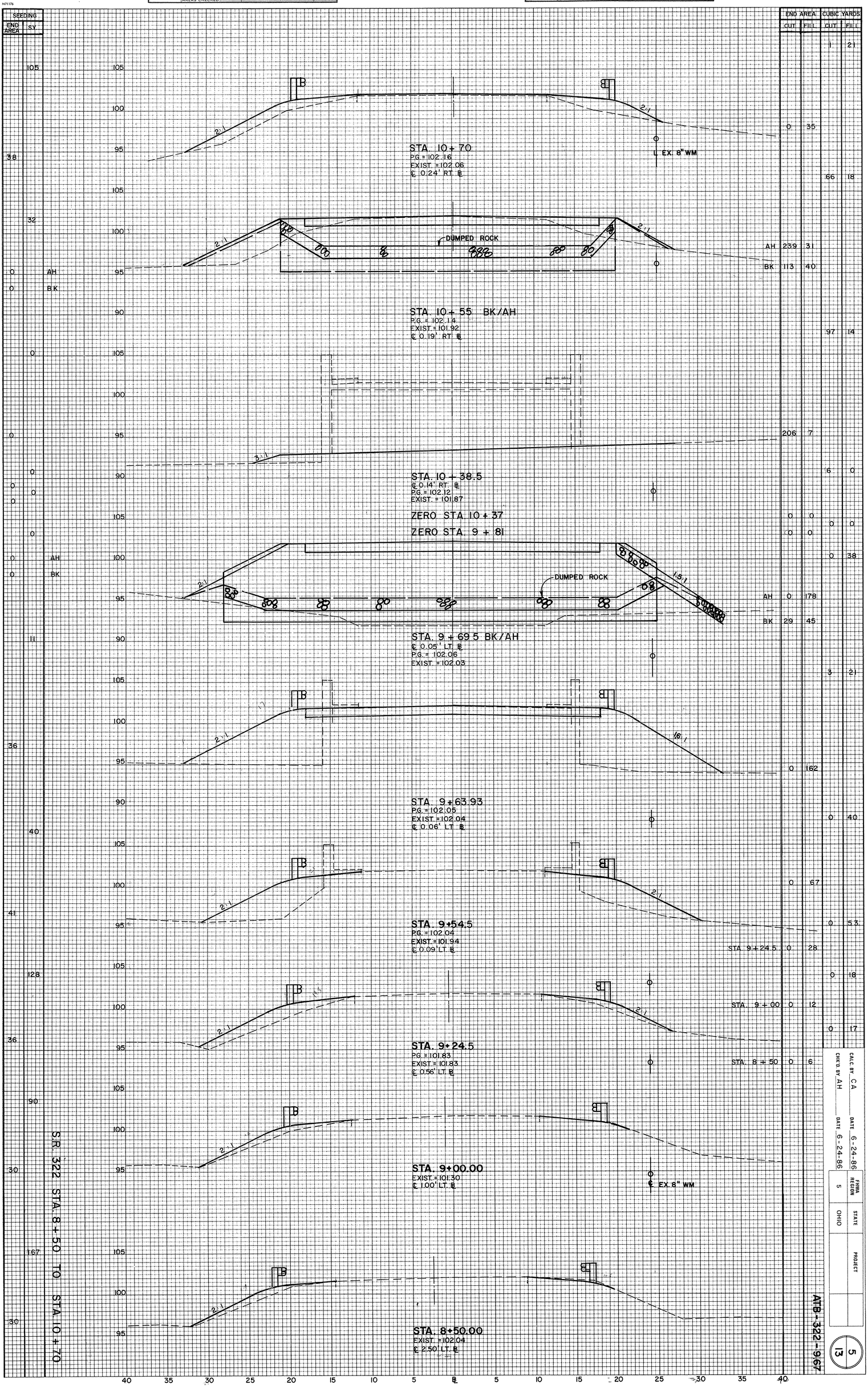

	CUT	FILL	CUT	FILL
			1	21
	0	35		
			66	18
AH	239	31		
BK	113	40		
			97	14
	206	7		
			6	0
	0	0		
	0	0	0	0
			0	38
AH	0	178		
BK	29	45		
			3	21
	0	162		
			0	40
	0	67		
			0	53
STA. 9+24.5	0	28		
			0	18
STA. 9+00	0	12		
			0	17
STA. 8+50	0	6		

CALC. BY C.A. DATE 6-24-86
CK'D. BY A.H. DATE 6-24-86

FHWA REGION	STATE	PROJECT
5	OHIO	

5
13

MICROFILMED
JUL 26 1990

CALC. BY CA	DATE 6-23-86	FHWA REGION	STATE	PROJECT	
CHK'D. BY AH	DATE 6-24-86	5	OHIO		

6
13

ATB-322-9.67

CUBIC YARDS	
FILL	6
CUT	1

END AREA	
FILL	3
CUT	0

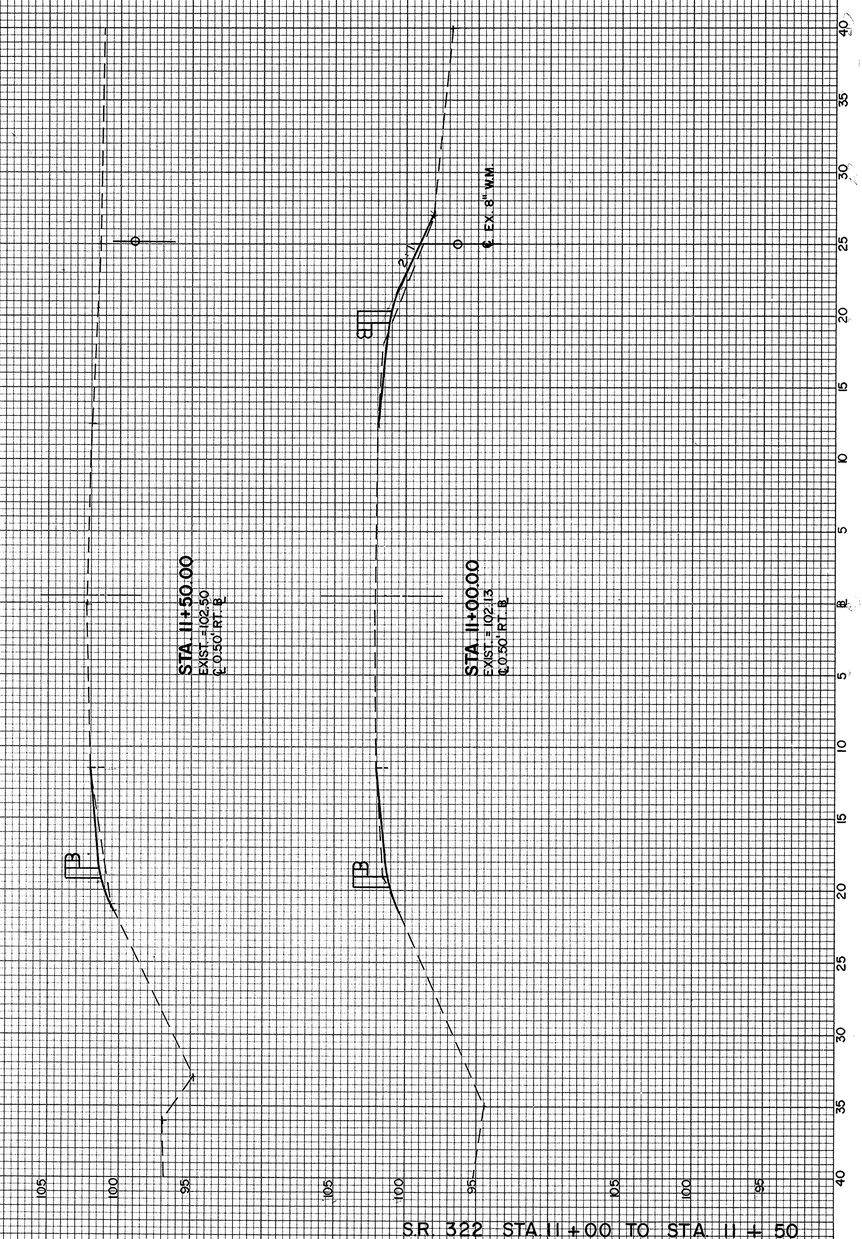

S.R. 322 STA. 11+00 TO STA. 11+50

SEEDING	
END WIDTH	S.Y.
10	97
25	

FINAL SURVEY	BY	DATE
SURVEYED		
PLOTTED		
TRANSFER		
NOTE BOOK		
NO.	AREAS	
	AREAS CHECKED	

ORIGINAL SURVEY	BY	DATE
SURVEYED		
PLOTTED		
TRANSFER		
NOTE BOOK		
NO.	AREAS	
	AREAS CHECKED	

N71376

A A BLUE Print, Akron

MICROFILMED
JUL 26 1990

ATB-322-9.67

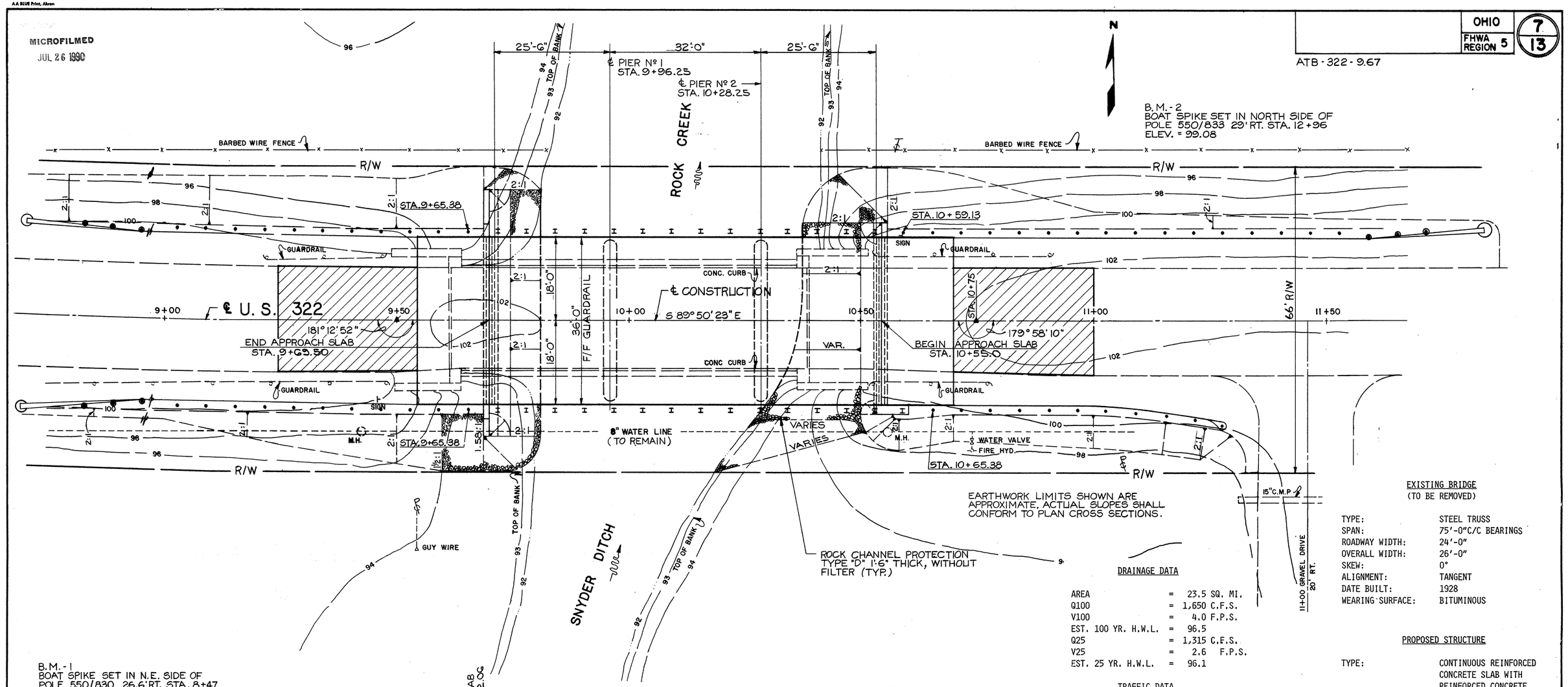

B.M.-1
BOAT SPIKE SET IN N.E. SIDE OF
POLE 550/830 26.6' RT. STA. 8+47
ELEV. = 100.00

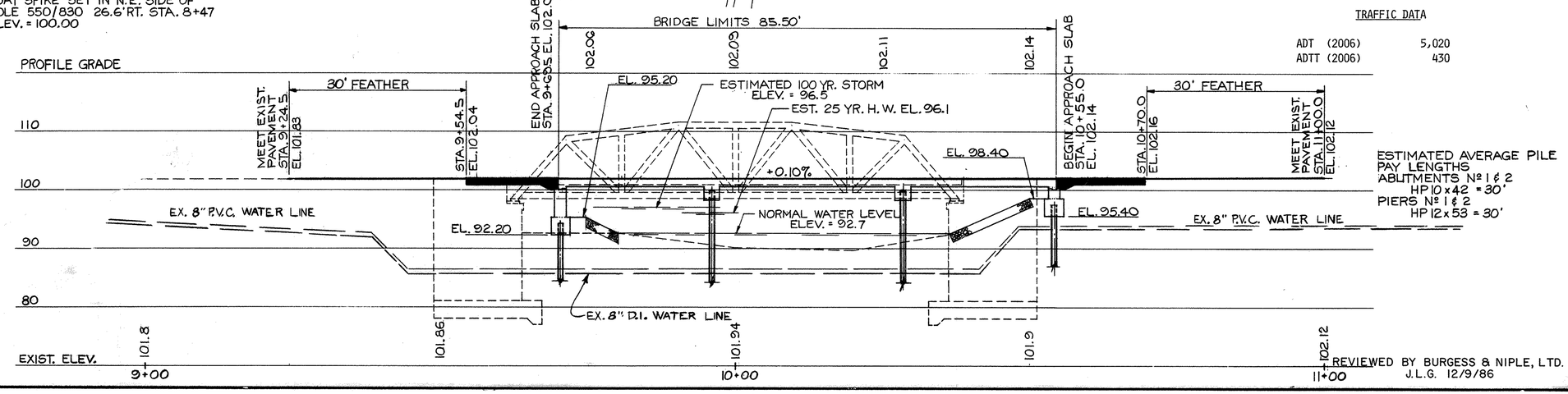

ESTIMATED AVERAGE PILE
PAY LENGTHS
ABUTMENTS Nº 1 & 2
HP 10 x 42 = 30'
PIERS Nº 1 & 2
HP 12 x 53 = 30'

DRAINAGE DATA

AREA	=	23.5 SQ. MI.
Q100	=	1,650 C.F.S.
V100	=	4.0 F.P.S.
EST. 100 YR. H.W.L.	=	96.5
Q25	=	1,315 C.F.S.
V25	=	2.6 F.P.S.
EST. 25 YR. H.W.L.	=	96.1

TRAFFIC DATA

ADT (2006)	5,020
ADTT (2006)	430

EXISTING BRIDGE
(TO BE REMOVED)

TYPE:	STEEL TRUSS
SPAN:	75'-0" C/C BEARINGS
ROADWAY WIDTH:	24'-0"
OVERALL WIDTH:	26'-0"
SKEW:	0°
ALIGNMENT:	TANGENT
DATE BUILT:	1928
WEARING SURFACE:	BITUMINOUS

PROPOSED STRUCTURE

TYPE:	CONTINUOUS REINFORCED CONCRETE SLAB WITH REINFORCED CONCRETE SUBSTRUCTURE.
SPANS:	25'-6", 32'-0", 25'-6"
ROADWAY WIDTH:	36'-0" F/F GUARDRAILS
LIVE LOAD:	HS20-44 AND ALTERNATE MILITARY LOADING
SKEW ANGLE:	0°
WEARING SURFACE:	MONOLITHIC CONCRETE
APPROACH SLAB:	15 FT. (AS-1-81)
UPERELEVATION:	NONE
IGNMENT:	TANGENT

REVIEWED BY BURGESS & NIPLE, LTD.
J.L.G. 12/9/86

GPD 1/7
GLAUS, PYLE, SCHOMER, BURNS & DeHAVEN, INC.
AKRON, OHIO

SITE PLAN

BRIDGE Nº ATB-322-0967
OVER ROCK CREEK
ASHTABULA COUNTY STA. 9+69.50 TO STA. 10+55.00

DESIGNED	DRAWN	TRACED	CHECKED	REVIEWED	DATE	REVISED
JRS	R.L.W		DBG	RAH	3-13-86	

MICROFILMED
JUL 26 1990

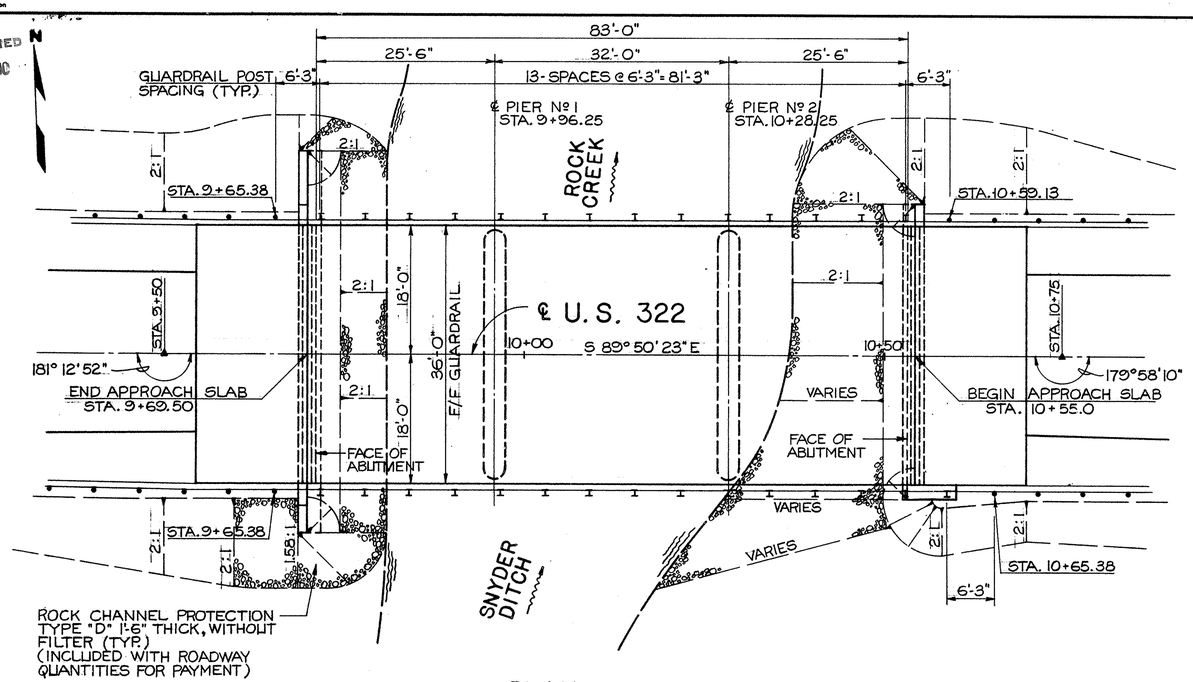

PLAN

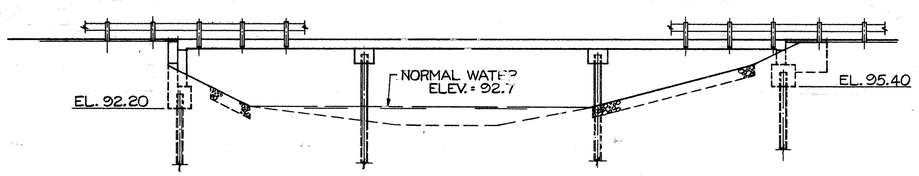

ELEVATION

CALC. BY	DATE	CKD. BY	DATE
B.W.L.	8-29-86	RZM	12-30-86

ESTIMATED QUANTITIES

ITEM	TOTAL	UNIT	DESCRIPTION	SUPER	ABUT	PIER	GENERAL			
202	LUMP	L.S.	STRUCTURE REMOVED				LUMP			
503	LUMP	L.S.	COFFERDAMS, CRIBS AND SHEETING				LUMP			
503	81	C.Y.	UNCLASSIFIED EXCAVATION		81					
505	LUMP	L.S.	PILE DRIVING EQUIPMENT MOBILIZATION				LUMP			
507	450	L.F.	STEEL PILES, HP 10 X 42 (AS PER PLAN)		450					
507	420	L.F.	STEEL PILES, HP 12 X 53 (AS PER PLAN)			420				
507	8	L.F.	PREBORED HOLES		8					
509	8,527	LB.	REINFORCING STEEL, GRADE 60		6,801	1,726				
511	61	C.Y.	CLASS C CONCRETE, ABUTMENTS (SEE PROPOSAL NOTE)		61					
511	13	C.Y.	CLASS G CONCRETE, PIER CAPS (SEE PROPOSAL NOTE)			13				
511	166	C.Y.	CLASS S CONCRETE, SUPERSTRUCTURE (SEE PROPOSAL NOTE)	166						
517	193.75	L.F.	RAILING (DEEP BEAM RAIL WITH TUBULAR BACKUP, TYPE 2							
			STEEL POSTS AND BOLTS)	187.5	6.25					
518	21	C.Y.	POROUS BACKFILL		21					
523	3	HR.	DYNAMIC LOAD TESTING				3			
824	36,576	LB.	EPOXY COATED REINFORCING STEEL, GRADE 60	35,348		1,228				
SPECIAL	74	S.Y.	SEALING OF CONCRETE SURFACES (SEE PROPOSAL NOTE)	46	21	7				
601	87	C.Y.	ROCK CHANNEL PROTECTION, TYPE D WITHOUT FILTER				87			

REFERENCE

REFERENCE SHALL BE MADE TO THE FOLLOWING:
STANDARD DRAWING NO. AS-1-81 DATED 11-27-81
STANDARD DRAWING NO. DBR-2-73 DATED 04-10-73
SUPPLEMENTAL SPECIFICATION 824 DATED 10-08-82
SUPPLEMENTAL SPECIFICATION 836 DATED 11-12-85

DESIGN SPECIFICATIONS

THIS STRUCTURE CONFORMS TO "STANDARD SPECIFICATIONS FOR HIGHWAY BRIDGES" ADOPTED BY THE AMERICAN ASSOCIATION OF STATE HIGHWAY AND TRANSPORTATION OFFICIALS, 1983, THE 1984 AND 1985 INTERIM SPECIFICATIONS AND THE OHIO "SUPPLEMENT" TO THESE SPECIFICATIONS.

DESIGN DATA

DESIGN LOADING: HS20-44 AND THE ALTERNATE MILITARY LOADING
CONCRETE CLASS S: COMPRESSIVE STRENGTH 4500 PSI FOR SUPERSTRUCTURE
CONCRETE CLASS C: COMPRESSIVE STRENGTH 4000 PSI FOR SUBSTRUCTURE
REINFORCING STEEL: ASTM A615, A616, OR A617 - GRADE 60, MINIMUM YIELD STRENGTH 60,000 PSI
DECK PROTECTION METHOD: EPOXY-COATED REINFORCING STEEL, BOTH MATS

NOTE: MONOLITHIC WEARING SURFACE IS ASSUMED, FOR DESIGN PURPOSES, TO BE 1" THICK.

REMOVAL OF EXISTING STRUCTURE

WHEN NO LONGER NEEDED TO MAINTAIN TRAFFIC THE EXISTING STRUCTURE SHALL BE REMOVED.

STEEL H-PILES

THE DESIGN LOAD FOR THE ABUTMENT PILES IS 43 TONS PER PILE, AND THE DESIGN LOAD FOR THE PIER PILES IS 45 TONS PER PILE.
THE PILE HAMMER USED TO INSTALL THE STEEL "H" BEARING PILES SHALL HAVE A STATE ENERGY RATING OF NOT LESS THAN 15,000 FOOT-POUNDS. THIS REQUIREMENT DOES NOT RELIEVE THE CONTRACTOR FROM 108.05 WHICH STATES THAT THE CONTRACTOR IS TO PROVIDE SUFFICIENT EQUIPMENT FOR PROSECUTING THE REQUIRED WORK.

ITEM SPECIAL, SEALING OF CONCRETE SURFACES

A CONCRETE SEALER SHALL BE APPLIED TO THE FOLLOWING SURFACES:
A) DECK SURFACE AS SHOWN IN TYPICAL TRANSVERSE SECTION, SHEET NO. 6/7.
B) EXPOSED SURFACES OF ABUTMENTS AND PIERS, AS SHOWN ON * SEE THE PROPOSAL FOR SURFACE PREPARATION REQUIREMENTS, APPLICATION RATES, MATERIAL REQUIREMENTS AND APPLICATION PROCEDURES.

ABUTMENT PILING

ABUTMENT PILING BENDING STRESS MAY APPROACH, REACH OR EXCEED YIELD STRESS.

REFERENCE SHALL BE MADE TO ROADWAY PLANS AND GENERAL NOTES FOR TRAFFIC MAINTENANCE.

* SHEETS NO'S 3,4 AND 5 OF 7.

ITEM 202, STRUCTURE REMOVED

EXISTING STRUCTURE SHALL BE REMOVED AS NEATLY AS POSSIBLE TO THE LIMITS INDICATED BELOW, OR AS AUTHORIZED BY THE ENGINEER.
SUPERSTRUCTURE: TOTAL REMOVAL
EAST AND WEST ABUTMENTS: REMOVAL TO 2' BELOW FINISH GRADE.
ALL WORK REQUIRED TO ACCOMPLISH THIS REMOVAL, INCLUDING THE EXCAVATION AND ITS DISPOSAL, SHALL BE INCLUDED IN THE LUMP SUM PRICE BID FOR ITEM 202, STRUCTURE REMOVED.

UTILITY LINES

ALL EXPENSE INVOLVED IN RELOCATING THE AFFECTED UTILITY LINES SHALL BE BORNE BY THE OWNERS. THE CONTRACTOR AND OWNERS ARE REQUESTED TO COOPERATE BY ARRANGING THEIR WORK IN SUCH A MANNER THAT INCONVENIENCE TO EITHER WILL BE HELD TO A MINIMUM.

FIELD VERIFICATION OF EXISTING WATER MAIN

PRIOR TO DRIVING PILES, OR PREBORING HOLE FOR THE PILE WHERE SPECIFIED IN THE PLAN, THE CONTRACTOR SHALL VERIFY THE LOCATION OF THE 8" WATER MAIN AT THE SITE. IN CASE THE ACTUAL LOCATION IS DIFFERENT THAN THAT SHOWN ON THE PLANS, THE CONTRACTOR SHALL NOTIFY THE DIRECTOR. THE DIRECTOR WILL THEN MAKE SUCH CORRECTIONS IN THE PLANS AS ARE DEEMED NECESSARY. VERIFYING THE LOCATION OF WATER MAIN AND THE TIME REQUIRED TO REVISE THE PLANS (IF NECESSARY) SHALL BE INCLUDED IN ITEM 505.

EMBANKMENT CONSTRUCTION

THE EMBANKMENT AT ABUTMENT NO. 1 SHALL BE CONSTRUCTED TO THE LEVEL OF THE SUBGRADE BETWEEN THE EXISTING AND PROPOSED ABUTMENTS. EXCAVATION MAY THEN BE MADE FOR THE ABUTMENT AND PILES DRIVEN.

PILE PENETRATIONS

IN THE AREA OF THIS STRUCTURE, THERE IS A AQUIFER WITH SCREENS FOR A WATER SUPPLY. IF THE PILES REQUIRE PENETRATIONS GREATER THAN THE ESTIMATED LENGTH TO OBTAIN THE REQUIRED DESIGN LOADS, THE DIRECTOR SHALL BE NOTIFIED PRIOR TO DRIVING ANY PILES MORE THAN THE ESTIMATED PILE LENGTH. THE DIRECTOR MAY INCREASE THE NUMBER OF PILES IN THE ABUTMENTS AND PIERS, REDUCE THE DESIGN LOAD PER PILE AND REEVALUATE THE ESTIMATED PILE LENGTHS.

GPD 2/7
GLAUS, PYLE, SCHOMER, BURNS & DeHAVEN, INC.
AKRON, OHIO

GENERAL PLAN, ELEVATION, NOTES & ESTIMATED QUANTITIES

BRIDGE Nº ATB-322-0967
OVER ROCK CREEK

ASHTABULA COUNTY STA. 9+69.50 TO STA. 10+55.0

DESIGNED	DRAWN	TRACED	CHECKED	REVIEWED	DATE	REVISED
BWL	R.L.W.		KJJ	RAH	10-30-86	

A A BLUE Print, Akron

MICROFILMED
JUL 26 1990

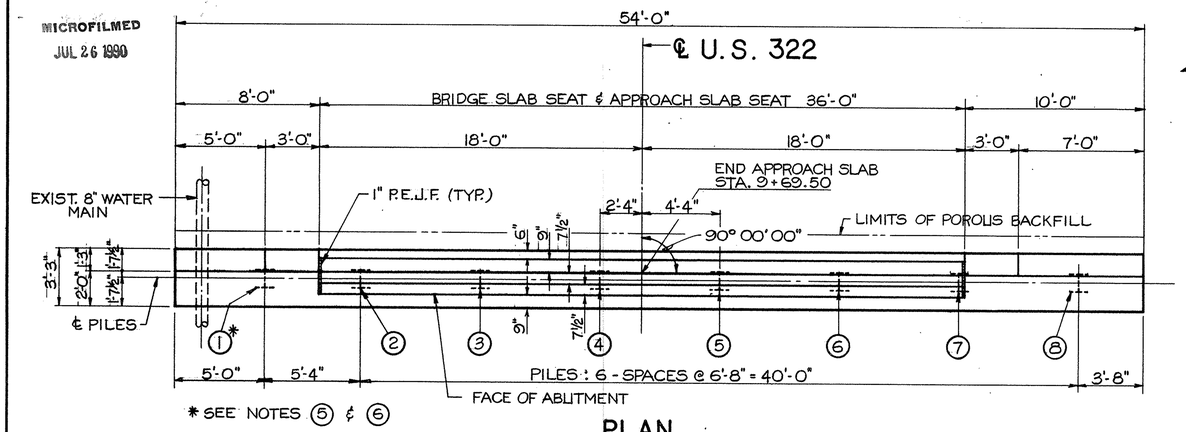

PLAN

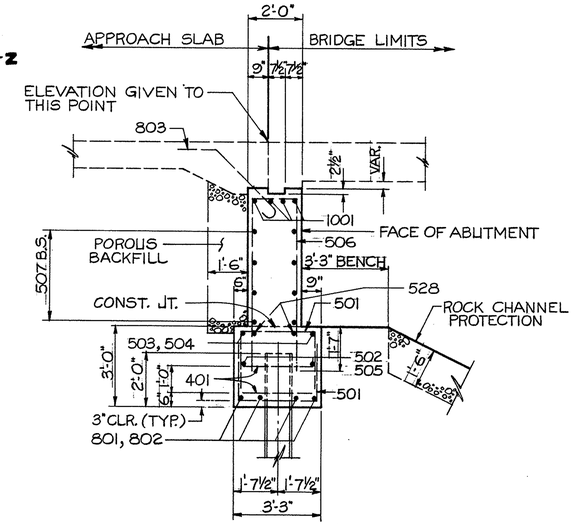

SECTION A-A

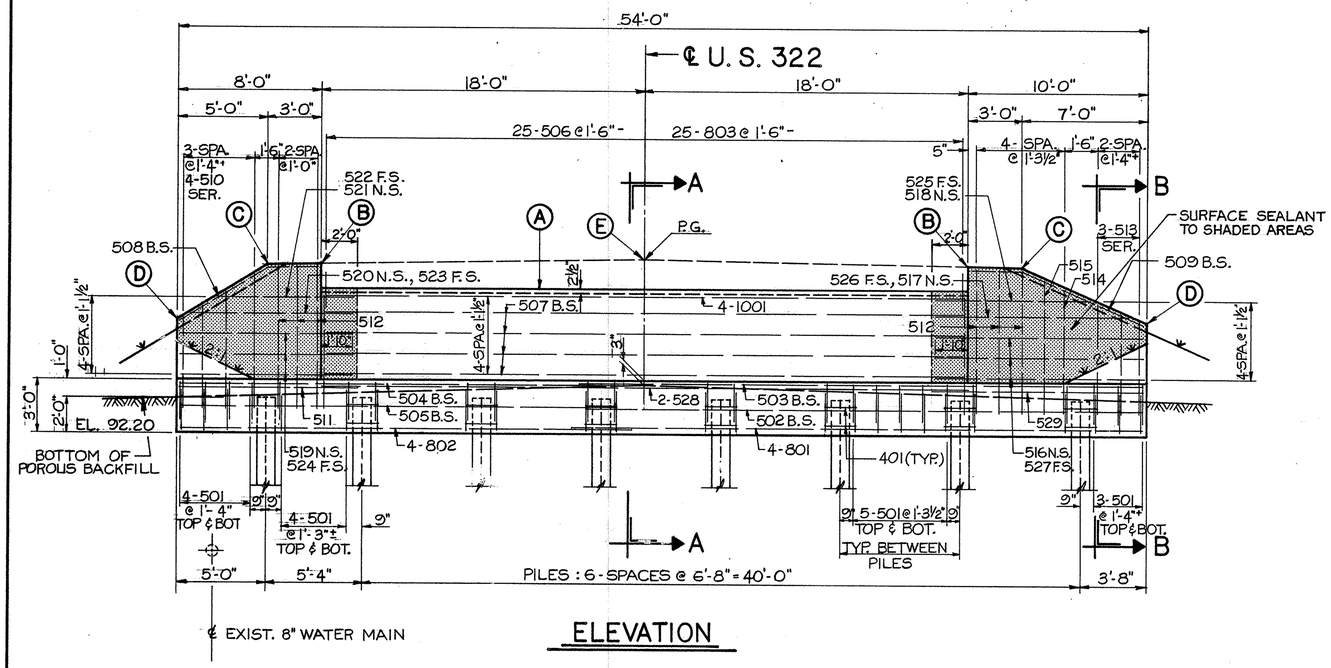

ELEVATION

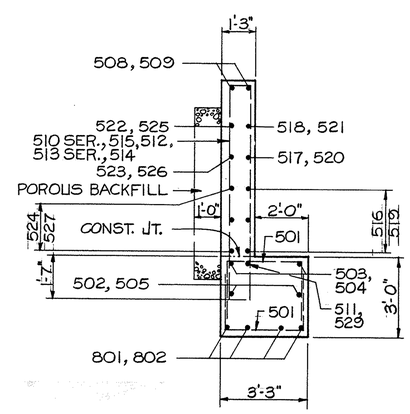

SECTION B-B

NOTES

1. PREFIX "1A" WILL BE ADDED TO ALL REBAR MARKS SHOWN FOR ABUTMENT NO. 1. SEE REINFORCING SCHEDULE.
2. MINMUM CLEARANCE TO REBARS SHALL BE 2" UNLESS NOTED OTHERWISE.
3. POROUS BACKFILL SHALL EXTEND UPWARD TO THE PLANE OF THE SUBGRADE, AND LATERALLY TO THE SURFACE OF THE EMBANKMENT SLOPES.
4. ABBREVIATIONS:
   B.S. = BOTH SIDES
   N.S. = NEAR SIDE
   F.S. = FAR SIDE
5. FOR NOTE ON VERIFICATION OF EXIST. WATER MAIN, SEE SHT. NO. 2/7
6. PILE NO. 1 SHALL BE LOCATED IN PREBORED HOLE AUGERED TO EL. 84.6 PRIOR TO DRIVING.

ELEVATIONS				
A	B	C	D	E
100.34	101.78	101.72	98.58	102.06

GPD
GLAUS, PYLE, SCHOMER, BURNS & DeHAVEN, INC.
AKRON, OHIO

3 / 7

ABUTMENT Nº 1

BRIDGE Nº ATB-322-0967
OVER ROCK CREEK

ASHTABULA COUNTY

STA. 9+69.50 TO STA. 10+55.0

DESIGNED	DRAWN	TRACED	CHECKED	REVIEWED	DATE	REVISED
BWL	R.L.W.		KSJ	RAH	10-30-86	

A A BLUE Print, Akron

MICROFILMED
JUL 26 1990

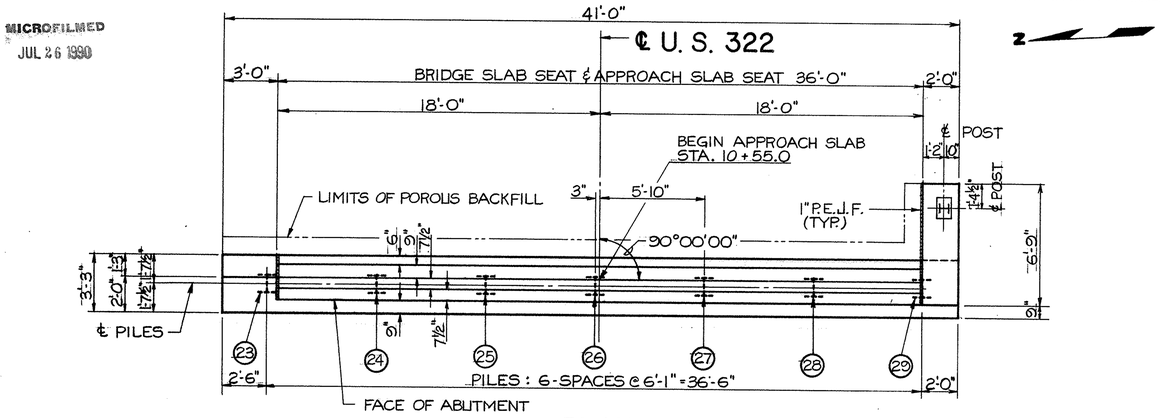

PLAN

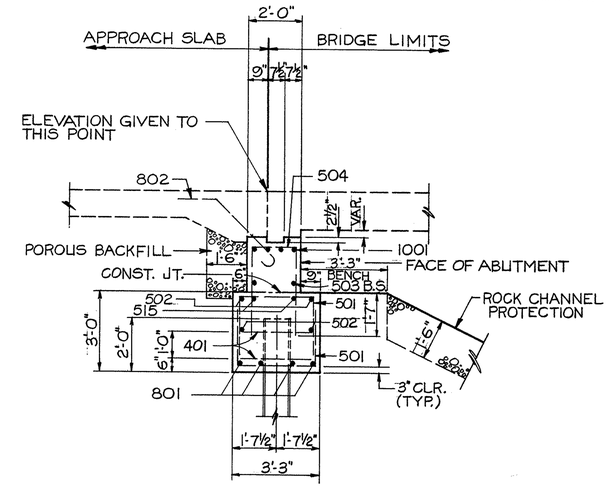

SECTION A-A

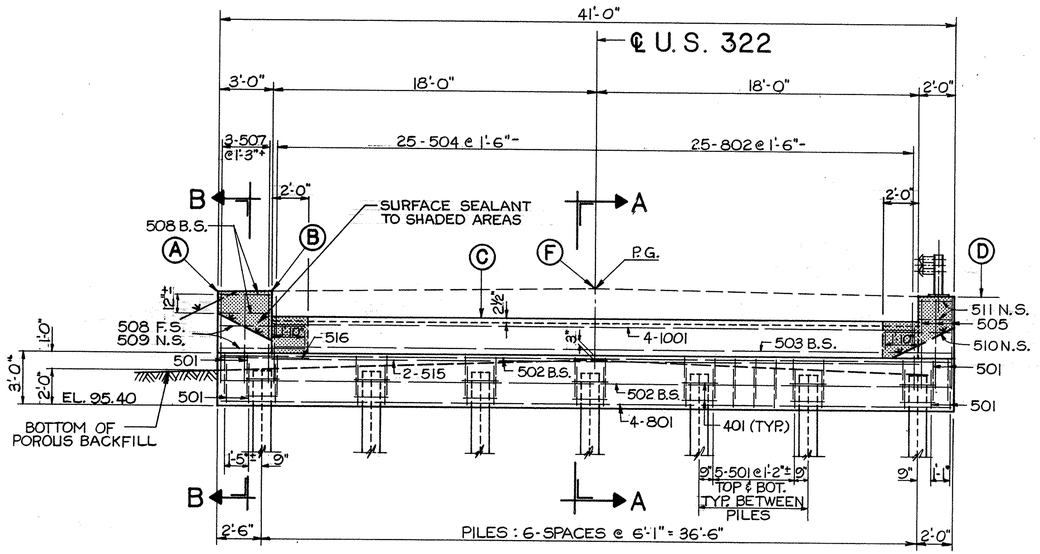

ELEVATION

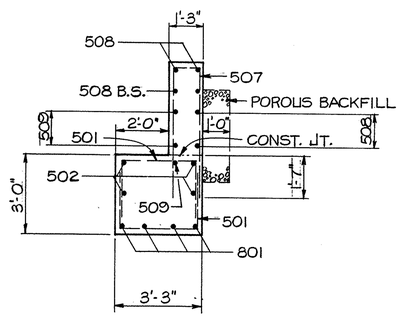

SECTION B-B

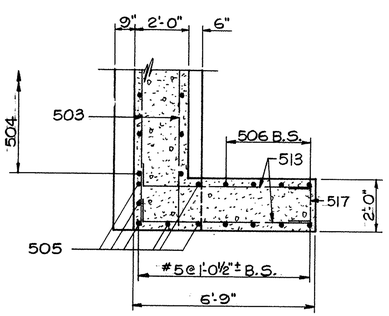

SECTION E-E

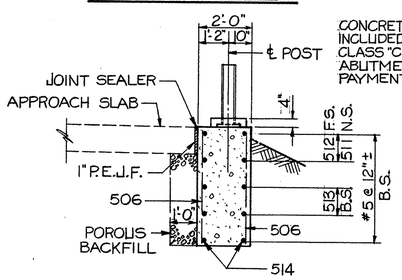

SECTION C-C

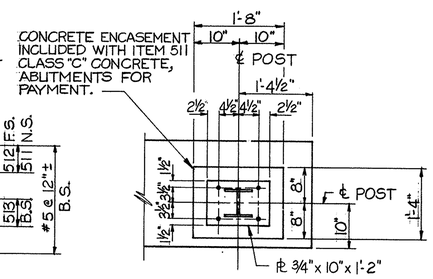

VIEW D-D

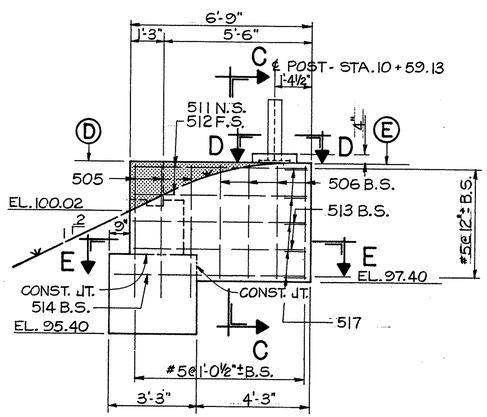

ELEVATION-SOUTH WINGWALL

ELEVATIONS					
A	B	C	D	E	F
101.80	101.86	100.42	101.86	101.87	102.14

NOTES

1. PREFIX "2A" WILL BE ADDED TO ALL REBAR MARKS SHOWN FOR ABUTMENT NO. 2. SEE REINFORCING SCHEDULE.
2. MINIMUM CLEARANCE TO REBARS SHALL BE 2" UNLESS NOTED OTHERWISE.
3. POROUS BACKFILL SHALL EXTEND UPWARD TO THE PLANE OF THE SUBGRADE, AND LATERALLY TO THE SURFACE OF THE EMBANKMENT SLOPES.
4. ABBREVIATIONS:
   B.S. = BOTH SIDES
   N.S. = NEAR SIDE
   F.S. = FAR SIDE

GPD
GLAUS, PYLE, SCHOMER, BURNS & DeHAVEN, INC.
AKRON, OHIO

4/7

ABUTMENT Nº 2

BRIDGE Nº ATB-322-0967
OVER ROCK CREEK

ASHTABULA COUNTY

STA. 9+69.50 TO STA. 10+55.0

DESIGNED	DRAWN	TRACED	CHECKED	REVIEWED	DATE	REVISED
BWL	R.L.W.		KJJ	RAH	10-30-82	

MICROFILMED
JUL 26 1990

ATB-322-0.67

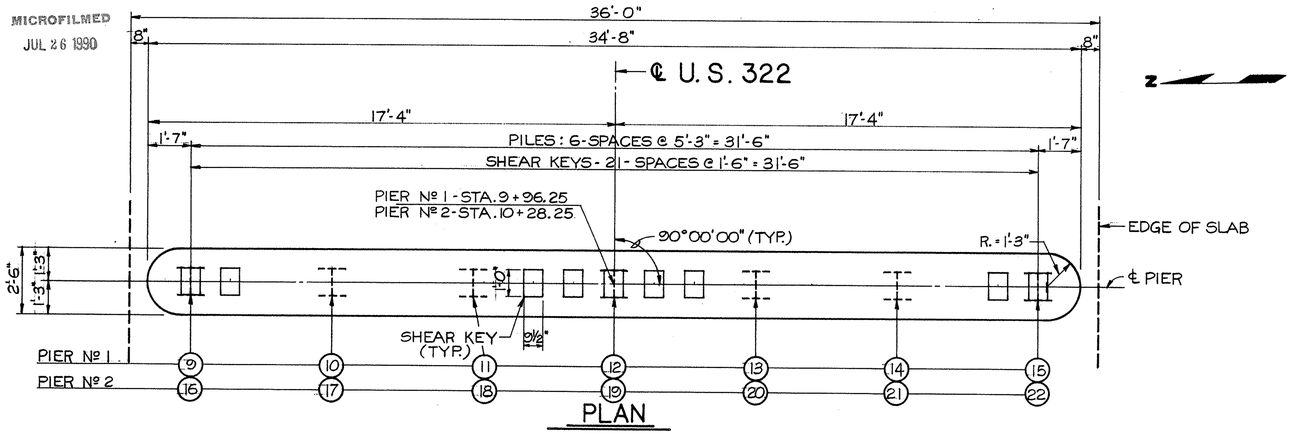

PLAN

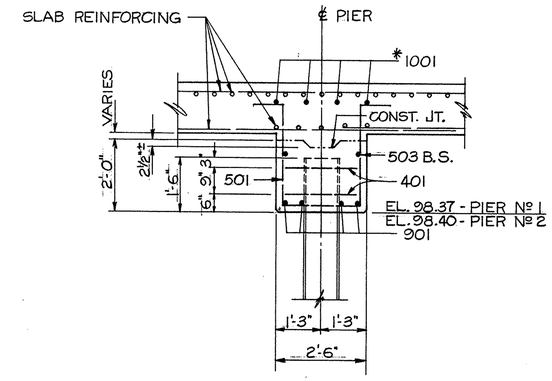

SECTION A-A

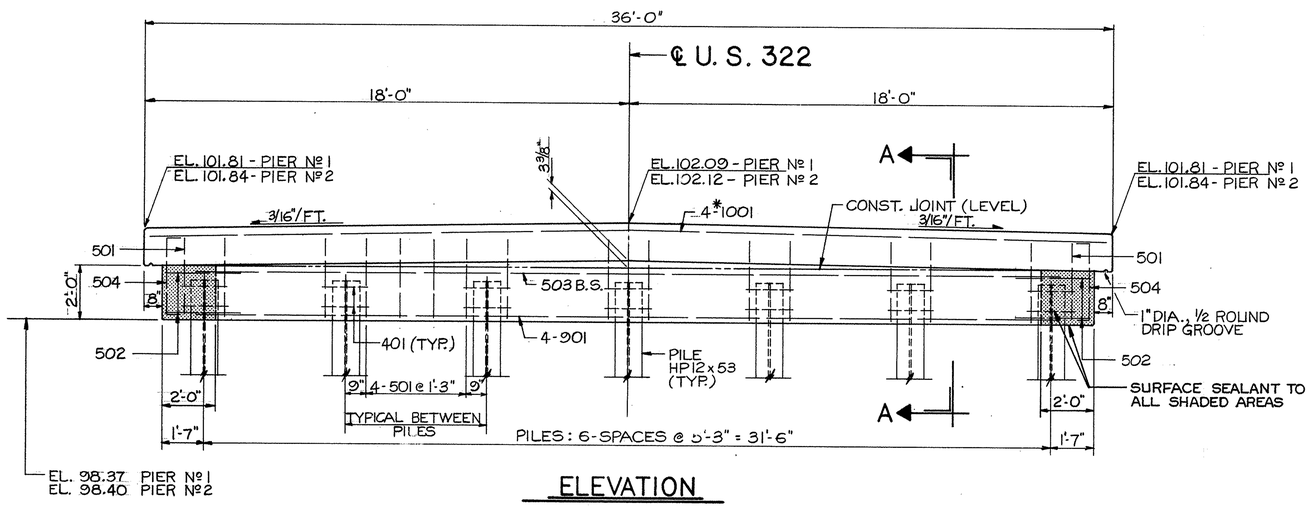

ELEVATION

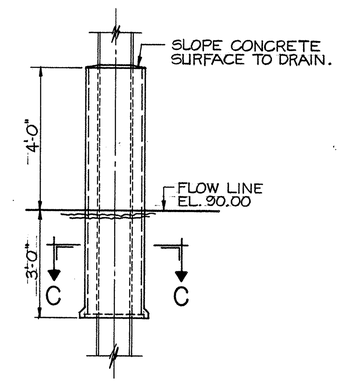

DETAIL "A"
PILE ENCASEMENT
SEE NOTE (5)

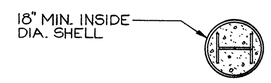

SECTION C-C

NOTES

1. PREFIXES "1P" AND "2P" WILL BE ADDED TO ALL REBAR MARKS SHOWN FOR PIER NO. 1 AND PIER NO. 2 RESPECTIVELY. SEE REINFORCING SCHEDULE.
2. REINFORCING STEEL SHOWN THUS (*) TO BE EPOXY-COATED.
3. MINIMUM COVER TO REBARS SHALL BE 2" UNLESS NOTED OTHERWISE.
4. ATTACHMENT OF FALSEWORK SUPPORT MEMBERS TO PIER PILES WILL BE PERMITTED IF THE ATTACHMENT IS MADE TO THAT PORTION OF PILE ENCASED IN THE PIER CAP.
5. PILE ENCASEMENT: EXPOSED STEEL PILES IN PIERS SHALL HAVE PILE ENCASEMENT AS SHOWN IN DETAIL "A". THE ENCASEMENT SHALL CONSIST OF CLASS C CONCRETE PLACED WITHIN A SHELL OF EXTRA-STRENGTH VITRIFIED CLAY PIPE, GALVANIZED CORRUGATED STEEL PIPE, OR PLAIN OR CORRUGATED PLASTIC PIPE ALL HAVING A MINIMUM INSIDE DIAMETER OF APPROXIMATELY 18 INCHES FOR HP12 X 53 PILES.

   COST OF ENCASEMENT SHALL BE INCLUDED WITH THE PILES FOR PAYMENT.

GPD 5/7
GLAUS, PYLE, SCHOMER, BURNS & DeHAVEN, INC.
AKRON, OHIO

PIERS Nº 1 & 2

BRIDGE Nº ATB-322-0967
OVER ROCK CREEK

ASHTABULA COUNTY — STA. 9+69.50 TO STA. 10+55.0

DESIGNED	DRAWN	TRACED	CHECKED	REVIEWED	DATE	REVISED
BWL	R.L.W.		KSJ	RAH	10-30-86	

MICROFILMED
JUL 26 1990

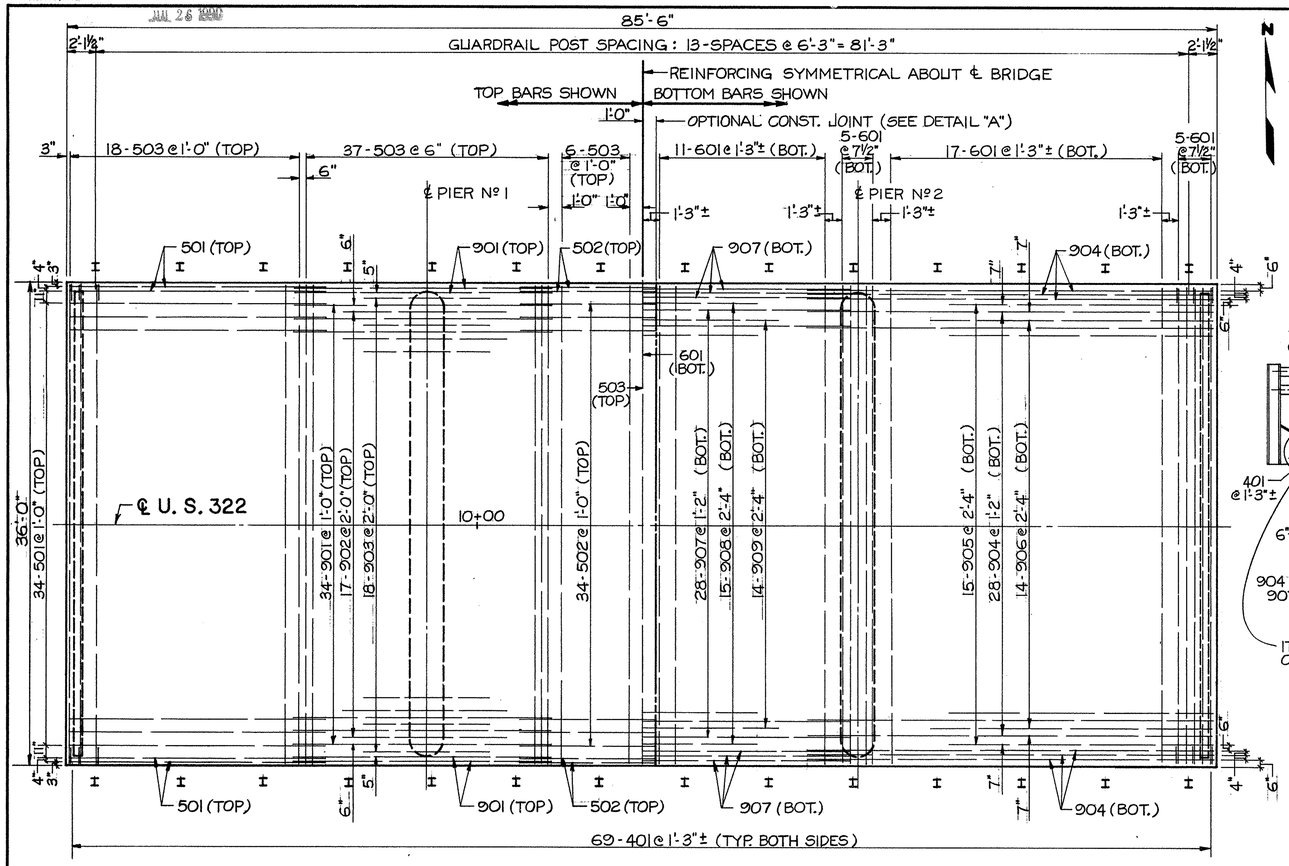

PLAN

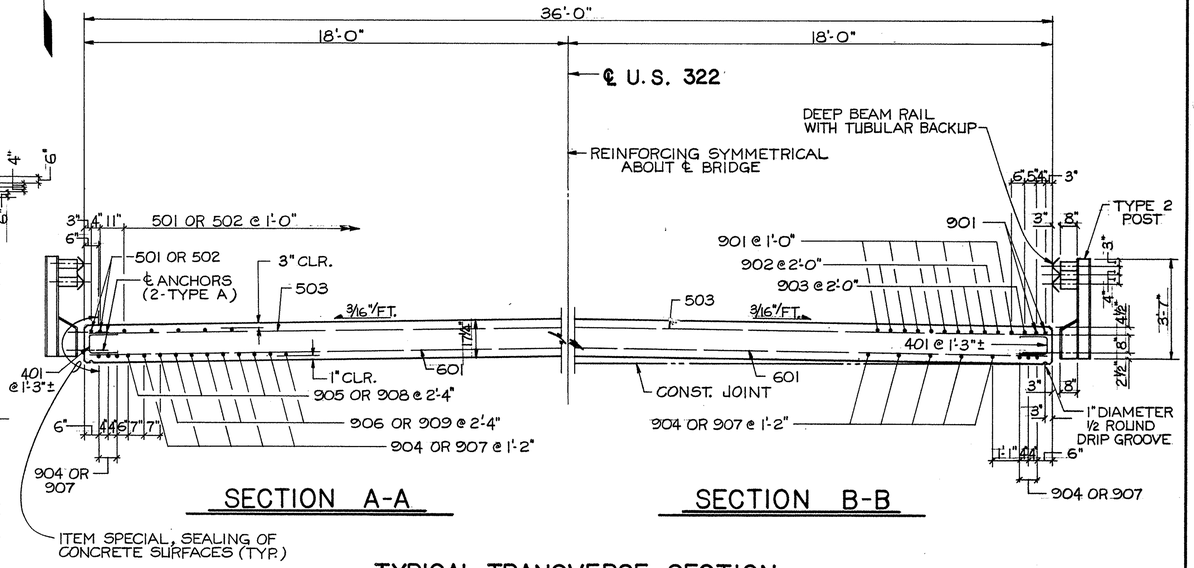

TYPICAL TRANSVERSE SECTION

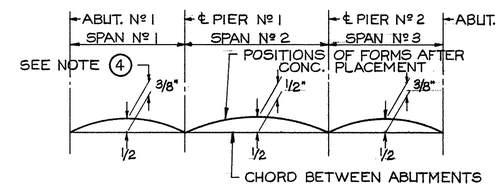

CAMBER DIAGRAM

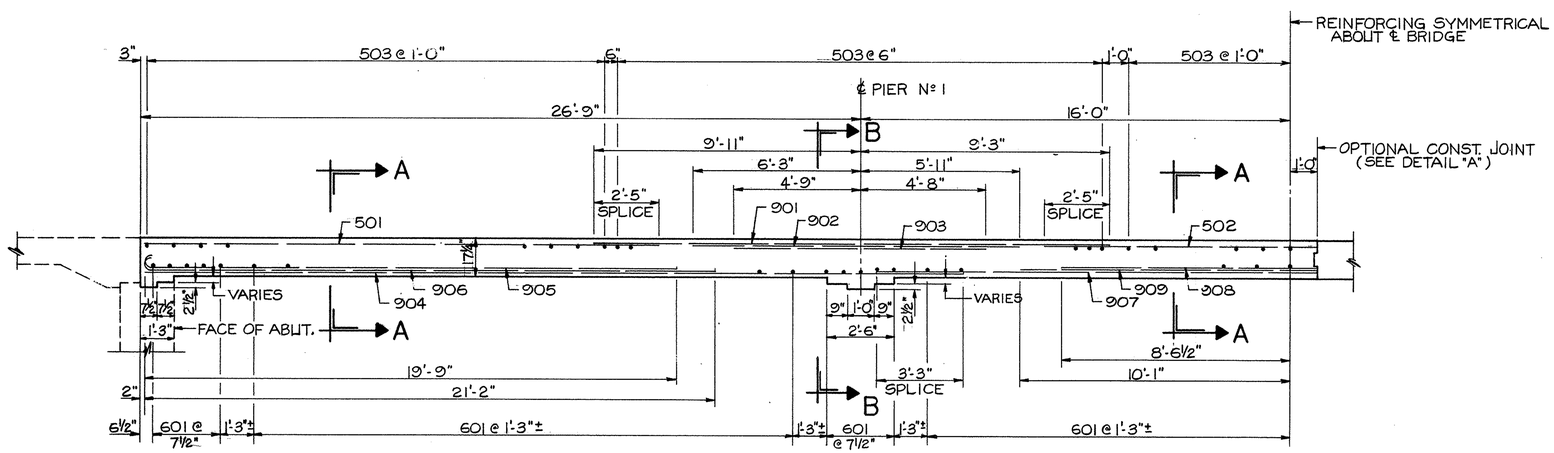

LONGITUDINAL SECTION
(HALF SECTION)

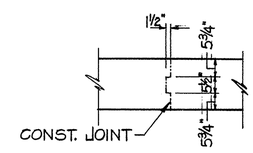

DETAIL "A"

NOTES

1. PREFIX "S" WILL BE ADDED TO ALL REBAR MARKS SHOWN FOR DECK SLAB. SEE REINFORCING SCHEDULE.
2. ALL REINFORCING STEEL SHOWN FOR DECK SLAB SHALL BE EPOXY-COATED.
3. FOR DETAILS OF GUARDRAIL, SEE STD. DRWG. NO. DBR-2-73.
4. THIS IS THE AMOUNT OF CAMBER REQUIRED BEFORE FALSEWORK IS RELEASED. TO OBTAIN THIS, PROPER ALLOWANCE SHALL BE MADE FOR THE DEFLECTION OF FALSEWORK MEMBERS.

GPD — 6/7
GLAUS, PYLE, SCHOMER, BURNS & DeHAVEN, INC.
AKRON, OHIO

SLAB PLAN

BRIDGE Nº ATB-322-0967
OVER ROCK CREEK
ASHTABULA COUNTY — STA. 9+69.50 TO STA. 10+55.0

DESIGNED	DRAWN	TRACED	CHECKED	REVIEWED	DATE	REVISED
BWL	R.L.W.		KJS	RAH	10-30-86	

A A BLUE Print, Akron

MICROFILMED
JUL 26 1990

ABUTMENT NO.1

MARK	NUMBER	LENGTH	TYPE	DIMENSIONS A	DIMENSIONS B	DIMENSIONS C	SERIES INCREMENT	WEIGHT POUNDS
1A401	16	9' 3"	107	2' 7 1/2"	1' 9"			99
1A501	82	6'11"	103	2'11"	2' 1"			592
1A502	2	31' 0"	ST					65
1A503	2	31' 5"	ST					65
1A504	2	24' 9"	ST					52
1A505	2	24' 4"	ST					51
1A506	25	14' 5"	103	1' 8"	6' 5 1/2"			376
1A507	8	35' 8"	ST					298
1A508	2	8' 6"	105	2'10"	5' 8 1/2"	3' 0"		18
1A509	2	10' 4"	105	2'10"	7' 6"	3' 2"		22
1A510S	1 SET OF 4	10' 5" TO 15' 6"	103	0'11" TO 0'11"	4'10 1/2" TO 7' 4 1/2"		0' 0"	54
1A511	1	8' 0"	ST					8
1A512	6	16' 9"	103	0'11"	8' 0"			105
1A513S	1 SET OF 3	10' 7" TO 13' 0"	103	0'11" TO 0'11"	4'11 1/2" TO 6' 2"		0' 0"	37
1A514	1	14' 5"	103	0'11"	6'10"			15
1A515	1	15' 7"	103	0'11"	7' 5"			16
1A516	3	11' 8"	ST					37
1A517	1	10'11"	ST					11
1A518	1	8' 5"	ST					9
1A519	3	9' 8"	ST					30
1A520	1	9' 2"	ST					10
1A521	1	7' 5"	ST					8
1A522	1	5' 5"	ST					6
1A523	1	7' 2"	ST					7
1A524	3	7' 8"	ST					24
1A525	1	6' 5"	ST					7
1A526	1	8'11"	ST					9
1A527	3	9' 8"	ST					30
1A528	2	36' 0"	ST					75
1A529	1	10' 0"	ST					10
1A801	4	31'11"	ST					340
1A802	4	25' 3"	ST					269
1A803	25	7'10"	116	3' 3"	1' 1"	1' 6"		523
1A1001	4	35' 8"	ST					614
							TOTAL	3,892

ABUTMENT NO.2

MARK	NUMBER	LENGTH	TYPE	DIMENSIONS A	DIMENSIONS B	DIMENSIONS C	SERIES INCREMENT	WEIGHT POUNDS
2A401	14	9' 3"	107	2' 7 1/2"	1' 9"			87
2A501	68	6'11"	103	2'11"	2' 1"			491
2A502	4	40' 8"	ST					170
2A503	2	37' 8"	ST					79
2A504	25	8' 0"	103	1' 8"	3' 3"			209
2A505	6	4'11"	ST					31
2A506	8	4' 2"	ST					35
2A507	3	10' 7"	103	0'11"	4'11"			33
2A508	6	2' 8"	ST					17
2A509	2	4' 8"	ST					10
2A510	1	3' 8"	ST					4
2A511	2	8' 0"	102	6' 5"	1' 8"			17
2A512	2	6' 5"	ST					13
2A513	4	7' 2"	102	6' 5"	0'10"			30
2A514	2	7'11"	102	7' 2"	0'10"			17
2A515	2	36' 0"	ST					75
2A516	1	3' 0"	ST					3
2A517	5	3' 2"	103	1' 8"	0'10"			17
2A801	4	40' 8"	ST					434
2A802	25	7'10"	116	3' 3"	1' 1"	1' 6"		523
2A1001	4	35' 8"	ST					614
							TOTAL	2,909

PIER NO.1

MARK	NUMBER	LENGTH	TYPE	DIMENSIONS A	DIMENSIONS B	DIMENSIONS C	SERIES INCREMENT	WEIGHT POUNDS
1P401	14	8' 0"	107	1' 9"	2' 0"			75
1P501	26	9' 2"	108	2' 2"	2'10"	0'10"		249
1P502	4	6' 4"	119	0'11 1/2"	1' 8"	3' 1/8"		26
1P503	2	32' 2"	ST					67
1P504	2	4' 4"	103	2'10"	0'10"			9
1P901	4	32' 2"	ST					437
							TOTAL	863

PIER NO.2

MARK	NUMBER	LENGTH	TYPE	DIMENSIONS A	DIMENSIONS B	DIMENSIONS C	SERIES INCREMENT	WEIGHT POUNDS
2P401	14	8' 0"	107	1' 9"	2' 0"			75
2P501	26	9' 2"	108	2' 2"	2'10"	0'10"		249
2P502	4	6' 4"	119	0'11 1/2"	1' 8"	3' 1/8"		26
2P503	2	32' 2"	ST					67
2P504	2	4' 4"	103	2'10"	0'10"			9
2P901	4	32' 2"	ST					437
							TOTAL	863

PIER NO.1 EPOXY COATED BARS

MARK	NUMBER	LENGTH	TYPE	DIMENSIONS A	DIMENSIONS B	DIMENSIONS C	SERIES INCREMENT	WEIGHT POUNDS
1P1001	4	35' 8"	ST					614
							TOTAL	614

PIER NO.2 EPOXY COATED BARS

MARK	NUMBER	LENGTH	TYPE	DIMENSIONS A	DIMENSIONS B	DIMENSIONS C	SERIES INCREMENT	WEIGHT POUNDS
2P1001	4	35' 8"	ST					614
							TOTAL	614

SLAB EPOXY COATED BARS

MARK	NUMBER	LENGTH	TYPE	DIMENSIONS A	DIMENSIONS B	DIMENSIONS C	SERIES INCREMENT	WEIGHT POUNDS
S401	138	2' 1"	103	1' 0"	0' 8"			192
S501	76	19' 1"	ST					1,513
S502	38	18' 4"	ST					727
S503	123	35' 8"	ST					4,576
S601	77	35' 8"	ST					4,125
S901	76	19' 2"	ST					4,953
S902	34	12' 2"	ST					1,406
S903	36	9' 5"	ST					1,153
S904	68	30' 5"	ST					7,032
S905	30	21' 0"	101	19' 9"				2,142
S906	28	22' 5"	101	21' 2"				2,134
S907	34	30'10"	ST					3,564
S908	15	17' 1"	ST					871
S909	14	20' 2"	ST					960
							TOTAL	35,348

SUMMARY AND GRAND TOTAL OF BAR WEIGHTS

ABUTMENT NO.1	3,892
ABUTMENT NO.2	2,909
PIER NO.1	863
PIER NO.2	863
GRAND TOTAL	8,527

SUMMARY AND GRAND TOTAL OF BAR WEIGHTS

PIER NO.1 EPOXY COATED BARS	614
PIER NO.2 EPOXY COATED BARS	614
SLAB EPOXY COATED BARS	35,348
GRAND TOTAL	36,576

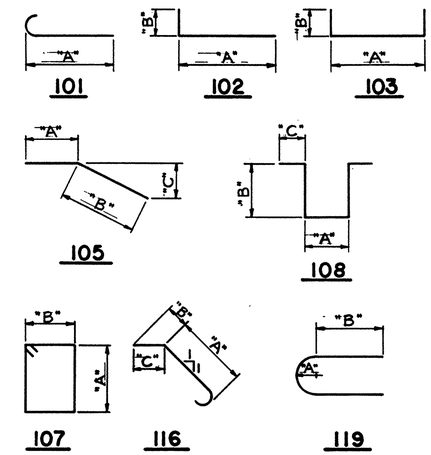

REINFORCED SCHEDULE

BAR SIZE AND LOCATION ARE INDICATED IN THE BAR MARK. THE FIRST DIGIT (IF PRESENT) AND ALPHABETICAL LETTER INDICATE LOCATION. THE NEXT DIGIT OF A THREE DIGIT SERIES, OR THE NEXT TWO DIGITS OF A FOUR DIGIT SERIES INDICATE BAR SIZE NUMBER.

EXAMPLES: 1A501
- NO. 5 SIZE BAR
- LOCATION = ABUT. NO. 1

S908
- NO. 9 SIZE BAR
- LOCATION = DECK SLAB

ALL BAR DIMENSIONS ARE GIVEN OUT TO OUT.

REINFORCING STEEL SAMPLES

REFER TO CMS SECTIONS 106.03, 700, 709.01 THROUGH 709.05 AND 709.08. SUFFICIENT ADDITIONAL REINFORCING STEEL SHALL BE PROVIDED FOR SAMPLING. RANDOM SAMPLES SHALL BE REPLACED IN THE STRUCTURES BY THE ADDITIONAL STEEL, SPLICED IN ACCORDANCE WITH 509.08.

GPD
GLAUS, PYLE, SCHOMER, BURNS & DeHAVEN, INC.
AKRON, OHIO

REINFORCING SCHEDULE

BRIDGE № ATB-322-0967
OVER ROCK CREEK

ASHTABULA COUNTY — STA. 9+69.50 TO STA. 10+55.0

DESIGNED	DRAWN	TRACED	CHECKED	REVIEWED	DATE	REVISED
BWL	R.L.W.		KJJ	RAH	10-30-86	

MICROFILMED
JUL 26 1990

FHWA REGION	STATE	PROJECT		1/3
5	OHIO			

ATB-322-9.67

GEOLOGY OF THE SITE

THE BRIDGE SITE IS LOCATED IN A ROLLING AREA OF THE GLACIATED SECTION OF THE ALLEGHENY PLATEAU IN SOUTHERN ASHTABULA COUNTY. THE STRUCTURE CROSSES ROCK CREEK IN A WIDE, LEVEL SECTION OF THE FLOODPLAIN WITHIN A FORMER GLACIAL LAKEBED WHICH EXTENDS IN A NORTH-SOUTH DIRECTION FOR SEVERAL MILES. GLACIO-LACUSTRINE DEPOSITS OVERLIE PENNSYLVANIAN AGE SHALES AND SANDSTONES IN THE AREA. ROCK IS AT A CONSIDERABLE DEPTH.

EXPLORATION

THE EXPLORATION STUDY HAS INCLUDED TWO (2) DRIVE SAMPLE BORINGS AT THE BRIDGE ABUTMENTS, PERFORMED BY MEANS OF A TRUCK-MOUNTED ROTARY-DRIVE DRILL RIG EQUIPPED WITH HOLLOW-STEM, CONTINUOUS-FLIGHT AUGERS. BORINGS WERE COMPLETED ON FEBRUARY 12 AND 13, 1986.

EXPLORATION FINDINGS

TEST BORINGS SHOW APPROXIMATELY EIGHT (8) INCHES OF ASPHALT CONCRETE PAVEMENT, UNDERLAIN BY COMPACTED GRANULAR BASE COURSE MATERIALS TO A DEPTH OF THREE (3) FEET BELOW SURFACE GRADES. THE BASE COURSE IS UNDERLAIN BY STIFF GRAY TO DARK GRAY SILTY CLAY WITH TRACES OF SAND AND ROOT CHANNELS TO DEPTHS OF SEVEN (7) TO EIGHT (8) FEET. THIS STRATUM IS MOST PROBABLY A FILL ZONE.

MEDIUM TO STIFF BROWN AND/OR GRAY SILTY CLAYS WITH TRACES OF SAND AND GRAVEL WERE THEN NOTED AND EXTEND TO DEPTHS OF SIXTEEN (16) AND THIRTEEN (13) FEET AT B-1 AND B-2, RESPECTIVELY.

GRAY SANDY SILTS WERE THEN ENCOUNTERED, AND AT B-1 THESE SILTS GRADE TO A HARD GRAY SILTY CLAY WITH FINE SAND LAYERS AT THE APPROXIMATE TWENTY-SEVEN (27) FOOT DEPTH. THIS FORMATION EXTENDS TO THE TERMINAL DEPTH OF B-1 AT FIFTY-ONE (51) FEET. AT B-2, THE SILTS GRADE TO A HARD GRAY SILT-CLAY MIXTURE WITH SIMILAR SAND SEAMS AT A DEPTH OF TWENTY-EIGHT (28) FEET. AT THE FORTY-THREE (43) FOOT DEPTH IN B-2, GRAY SANDY SILTS WERE AGAIN NOTED AND EXTEND TO THE TERMINAL DEPTH OF THE BORING AT FIFTY (50) FEET.

WATER WAS NOTED AT DEPTHS OF TWELVE (12) AND FIFTEEN AND ONE-HALF (15-1/2) FEET AT B-1 AND B-2, RESPECTIVELY, AT THE COMPLETION OF DRILLING. WATER LEVELS WILL FLUCTUATE WITH THE SURFACE LEVEL IN THE CREEK.

LEGEND

PRESS AND/OR DRIVE SAMPLE AND/OR CORE BORING LOCATION - PLAN VIEW.

FOOTING ON PILE.

HORIZONTAL BAR ON BORING LOG INDICATES THE DEPTH THE SAMPLE WAS TAKEN.

X/Y/Z — FIGURES BESIDE THE BORING LOG IN PROFILE INDICATE THE NUMBER OF BLOWS FOR STANDARD PENETRATION TEST.
X = NUMBER OF BLOWS FOR FIRST 6 INCHES.
Y = NUMBER OF BLOWS FOR SECOND 6 INCHES.
Z = NUMBER OF BLOWS FOR THIRD 6 INCHES.

W — INDICATES FREE WATER ELEVATION.

PARTICLE SIZE DEFINITIONS

BOULDERS	COBBLES	GRAVEL	COARSE SAND	FINE SAND	SILT	CLAY
	12" – 3"	3" – 2.0mm (No. 10 sieve)	2.0mm – 0.42mm (No. 40 sieve)	0.42mm – 0.074mm (No. 200 sieve)	0.074mm – 0.005mm	0.005mm

GENERAL INFORMATION

DRIVE SAMPLE/PRESS SAMPLE/CORE BORINGS

DRIVE SAMPLE BORINGS ARE MADE BY MEANS OF A MECHANICALLY-POWERED ROTARY-TYPE DRILLING MACHINE, EMPLOYING A 2" O.D., 1-3/8" I.D. SPLIT-SPOON SAMPLING DEVICE, AT 2-1/2 AND/OR 5-FOOT DEPTH INTERVALS, DRIVEN BY MEANS OF A 140-POUND DROP-HAMMER WITH A FREE FALL OF 30 INCHES. THE NUMBER OF BLOWS REQUIRED TO DRIVE THE SAMPLING DEVICE TWELVE (12) INCHES, AFTER AN INITIAL SIX (6) INCH SEATING PENETRATION, IS TERMED THE STANDARD PENETRATION RESISTANCE, "N".

DRIVE/PRESS SAMPLE BORINGS ARE MADE BY MEANS OF A MECHANICALLY-POWERED ROTARY-TYPE DRILLING MACHINE, EMPLOYING A 2" O.D., 1-3/8" I.D. SPLIT-SPOON SAMPLING DEVICE, AND 3" O.D. THIN-WALL PRESS SAMPLING DEVICE. THE PRESS SAMPLER IS ADVANCED BY CONTINUOUS UNIFORM PRESSURE, APPLIED BY THE DRILLING MACHINE.

CORE BORINGS ARE MADE BY MEANS OF A MECHANICALLY-POWERED ROTARY-TYPE DRILLING MACHINE, EMPLOYING A NMX CORE BARREL WITH INDUSTRIAL DIAMOND CUTTING HEAD.

THE BORING LOG SHEETS DISPLAY A GRAPHIC PLOT OF THE INFORMATION OBTAINED, INCLUDING DEPTH AND ELEVATION OF THE SAMPLE, TYPE OF SAMPLE, THE STANDARD PENETRATION TEST READINGS IN THREE 6-INCH INCREMENTS, DEPTH AND ELEVATION OF PRESS SAMPLES, FIELD NUMBER ASSIGNED TO SAMPLE, AND THE SAMPLE DESCRIPTION. ROCK SAMPLES ARE DISPLAYED ON THE LOG SHEETS INCLUDING DEPTH AND ELEVATION OF THE SAMPLE, AND A VISUAL CLASSIFICATION BASED ON TYPE, COLOR, DEGREE OF HARDNESS, GRAIN SIZE, DETERIORATION, BEDDING, ACID REACTION, AND OTHER QUALIFYING FACTORS.

NOTE - ALL AVAILABLE SOIL AND BEDROCK INFORMATION WHICH CAN BE CONVENIENTLY SHOWN ON THE STRUCTURE FOUNDATION INVESTIGATION SHEETS HAS BEEN SO REPORTED. ADDITIONAL SUBSURFACE INVESTIGATIONS MAY HAVE BEEN MADE TO STUDY SOME SPECIAL ASPECT OF THE PROJECT. COPIES OF THIS DATA, IF ANY, MAY BE INSPECTED IN THE DISTRICT DEPUTY DIRECTOR'S OFFICE, THE BUREAU OF TESTS AT 1600 WEST BROAD STREET, THE PAVEMENT AND SOILS SECTION OF THE BUREAU OF LOCATION AND DESIGN OR IN THE BRIDGE BUREAU AT 25 SOUTH FRONT STREET.

BRIDGE NO. ATB-322-967
U.S.R. 322 OVER ROCK CREEK

BRIDGE FOUNDATION INVESTIGATION
TITLE SHEET

SCALE: —	PROJECT NUMBER: CS-2125.15	DRAWN BY: DWP
DATE: Sept 30 '88		

HERRON CONSULTANTS INC.

4616 NAVARRE S.W., CANTON, OHIO — DRAWING NUMBER: 2125-C

MICROFILMED
JUL 26 1990

FHWA REGION	STATE	PROJECT		2/3
5	OHIO			

ASHTABULA COUNTY
ATB - 322 - 9.67

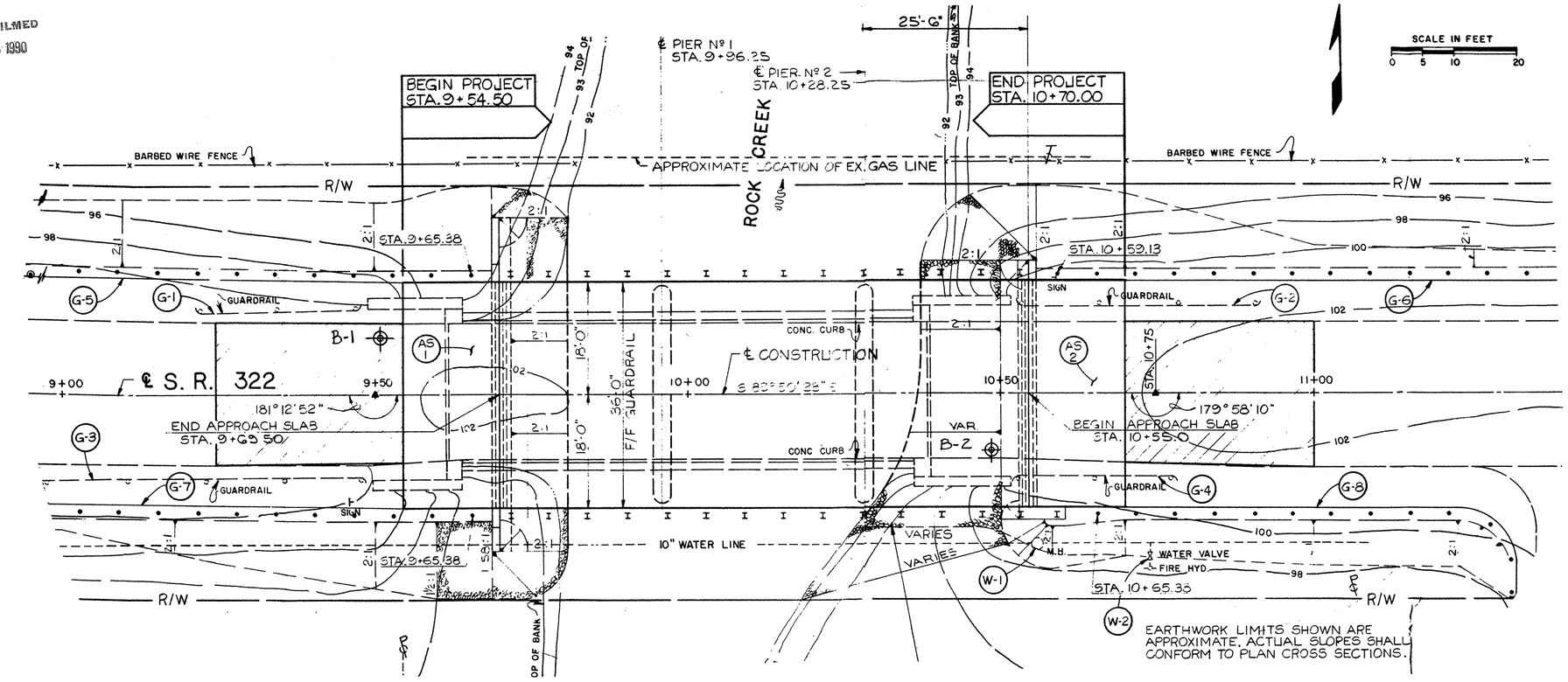

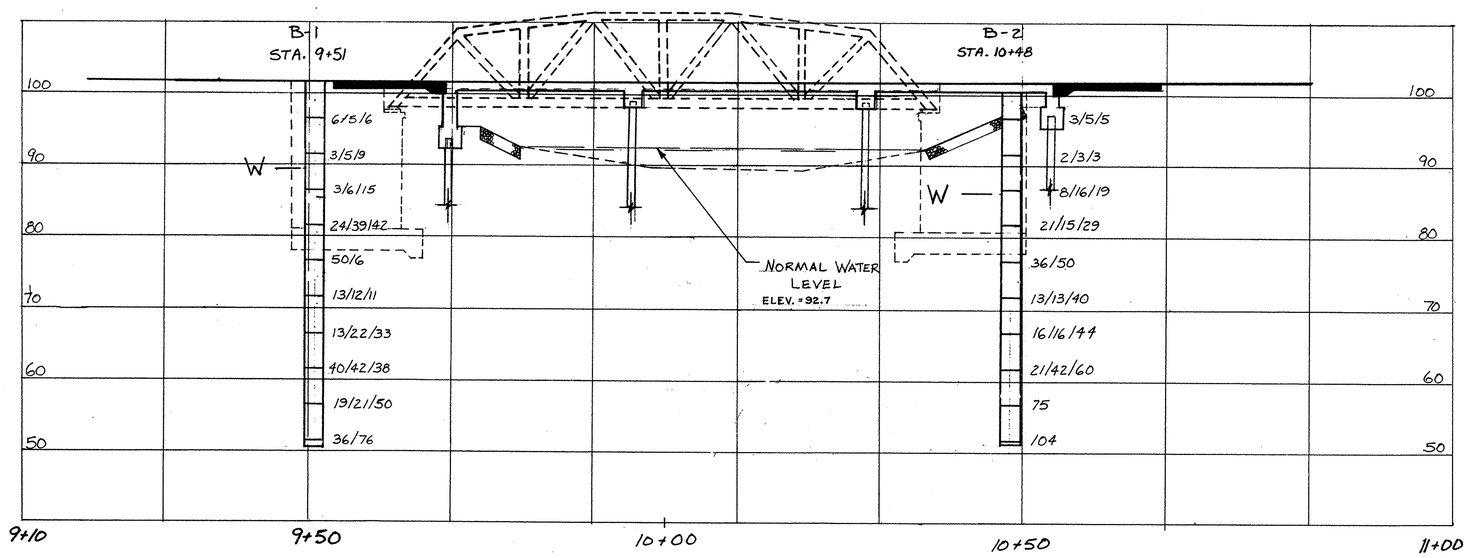

BRIDGE NO. ATB - 322 - 967
U.S.R. 322 OVER ROCK CREEK

BRIDGE FOUNDATION INVESTIGATION
PLAN AND PROFILE

SCALE: 1" = 10'
DATE: SEPT. 86
PROJECT NUMBER:
DRAWN BY: MRB

HERRON CONSULTANTS INC.

4616 NAVARRE S.W., CANTON, OHIO

DRAWING NUMBER:

MICROFILMED
JUL 26 1990

FHWA REGION	STATE	PROJECT		3
5	OHIO			3

ASHTABULA COUNTY
ATB - 322 - 9.67

TEST BORING LOG

TEST HOLE: B-1
FILE NO.: C5-2125

PROJECT: PROPOSED BRIDGE REPLACEMENT, ATB US 322 9.67, PF 1343, ASHTABULA COUNTY
FOR: GLAUS, PYLE & DEHAVEN, INC., AKRON, OHIO
ELEV. DATUM: DRILLED: 2/13/86 J. TOSATTO

ELEV. (FT.)	DEPTH (FT.)	LOG	SAMPLE NO.	SAMPLE TYPE	BLOW COUNT	CLASSIFICATION
	0					7.5" ASPHALT.
						COMPACTED GRAVEL, SLAG, AND SAND. FILL.
	5		1	SS	6-5-6	GRAY SILTY CLAY, TRACE FINE SAND, TRACE ORGANICS AND ROOT FIBERS. STIFF. MOIST. (CL) A-6A
	10		2	SS	3-5-9	BROWN SILTY CLAY, TRACE SAND AND GRAVEL. STIFF. MOIST. (CL) A-6A
	15		3	SS	3-6-15	
	20		4	SS	24-33-42	GRAY SANDY SILT, SOME CLAY, SOME SHALE FRAGMENTS AND GRAVEL. VERY DENSE. MOIST. (ML) A-4B
	25		5	SS	50/6"	
	30		6	SS	13-12-11	GRAY SILTY CLAY, TRACE GRAVEL WITH SOME FINE SAND LAYERS OF 6"±. HARD. MOIST. (CL) A-6A
	35		7	SS	13-22-33	
	40		8	SS	40-42-38	GRAY SILTY CLAY, TRACE GRAVEL WITH SOME FINE SAND LAYERS OF 6"±. HARD. MOIST. (CL) A-6A
	45		9	SS	13-21-30	
	50		10	SS	36-76	GRAY SILTY MEDIUM SAND WITH SOME GRAVEL AND SHALE FRAGMENTS. VERY DENSE. MOIST. (SM) A-3A

GROUNDWATER: ENCOUNTER: 13.5' AT COMPLETION: 12.0' AFTER ___ AT ___
TERMINAL DEPTH: 51.0'

HERRON CONSULTANTS INC. ENGINEERING • TESTING • INSPECTION

TEST BORING LOG

TEST HOLE: B-2
FILE NO.: C5-2125

PROJECT: PROPOSED BRIDGE REPLACEMENT, ATB US 322 9.67, PF 1343, ASHTABULA COUNTY
FOR: GLAUS, PYLE & DEHAVEN, INC., AKRON, OHIO
ELEV. DATUM: DRILLED: 2/12/86 J. TOSATTO

ELEV. (FT.)	DEPTH (FT.)	LOG	SAMPLE NO.	SAMPLE TYPE	BLOW COUNT	CLASSIFICATION
	0					8.0" ASPHALT.
						TIGHTLY COMPACTED CINDERS, GRAVEL, AND SLAG. FILL.
	5		1	SS	3-5-5	DARK GRAY SILTY CLAY, TRACE SAND, SOME ORGANICS. STIFF. MOIST. (CL) A-6A
	10		2	SS	2-3-3	GRAY SILTY CLAY, TRACE FINE SAND. MEDIUM. MOIST. (CL) A-6A
	15		3	SS	8-16-13	
	20		4	SS	21-15-29	GRAY FINE SANDY SILT, TRACE GRAVEL, SHALE FRAGMENTS, AND CLAY. DENSE TO VERY DENSE. MOIST. (ML) A-4B
	25		5	SS	36-50/4"	
	30		6	SS	13-13-40	GRAY SILT-CLAY WITH FINE SAND LAYERS OF 6"±. HARD. MOIST. (CL-ML) A-4B
	35		7	SS	16-16-44	GRAY SILT-CLAY WITH FINE SAND LAYERS OF 6"±. HARD. MOIST. (CL-ML) A-4B
	40		8	SS	21-42-60	
	45		9	SS	75	GRAY SANDY SILT, SOME GRAVEL AND SHALE FRAGMENTS. TRACE CLAY. HARD. MOIST. (ML) A-4B
	50		10	SS	104	

GROUNDWATER: ENCOUNTER: 17.0' AT COMPLETION: 15.5' AFTER ___ AT ___
TERMINAL DEPTH: 50.5'

HERRON CONSULTANTS INC. ENGINEERING • TESTING • INSPECTION

BRIDGE NO. ATB - 322 - 967
U.S.R. 322 OVER ROCK CREEK

BRIDGE FOUNDATION INVESTIGATION
LOGS OF BORINGS

SCALE: | PROJECT NUMBER: | DRAWN BY:
DATE: SEPT. 86

HERRON CONSULTANTS INC.
4616 NAVARRE S.W., CANTON, OHIO
DRAWING NUMBER: