COL-30-32.19	OHIO
	FHWA REGION 5
NH-78(32)	FEDERAL PROJECT

1 / 77

NH-78(32)

STATE OF OHIO
DEPARTMENT OF TRANSPORTATION
COL-30-32.19
CITY OF EAST LIVERPOOL
LIVERPOOL & ST. CLAIR TOWNSHIPS
COLUMBIANA COUNTY

DESIGN DESIGNATION

CURRENT ADT (1993)	= 15,120
DESIGN YEAR ADT (2003)	= 18,140
D. H. V. (2003)	= 1,814
D	= 55%
T	= 8.0%
DESIGN SPEED	= 55 MPH & 50 MPH
LEGAL SPEED	= 55 MPH & 50 MPH
FUNCTIONAL CLASSIFICATION	= FREEWAY (URBAN)
DESIGN EXCEPTIONS	APPROVAL DATE
SHOULDER WIDTH	10-19-92
BRIDGE WIDTH	10-19-92
HORIZONTAL ALIGNMENT	10-19-92
STRUCTURAL CAPACITY	10-19-92

MICROFILMED
OCT 6 1995

LIMITED ACCESS

This improvement is especially designed for through traffic and has been declared a limited access highway or freeway by action of the Director in accordance with the provisions of Section 5511.02 of the Revised Code of Ohio.

CONVENTIONAL SIGNS

COUNTY LINE
TOWNSHIP LINE
SECTION LINE
CORPORATION LINE OR
FENCE (EXISTING) —X— —X— (PROPOSED) —X— —X—
CENTERLINE
TREES STUMPS (TO BE REMOVED)
UTILITY POLES: TELEPHONE POWER LIGHT

LIMITED ACCESS (ONLY) L/A
RIGHT OF WAY (ONLY) R/W
LIMITED ACCESS & RIGHT OF WAY L/A & R/W
EXISTING RIGHT OF WAY R/W
PROPERTY LINE (IN EXISTING FENCE) —X— —X—
RAILROAD OR
GUARDRAIL (EXISTING) (PROPOSED)

INDEX OF SHEETS

TITLE SHEET	1
SCHEMATIC	2-4
TYPICAL SECTIONS	5-7
CALCULATIONS	8-18
GENERAL NOTES	19-22
TRAFFIC MAINTENANCE PLAN	23-26
GENERAL SUMMARY	27-28
PLAN SHEETS	29-34
QUANTITIES	35-36
CROSS SECTIONS	36A-36E
MISCELLANEOUS DETAILS	37-49
PAVEMENT REPAIR	50-54
TRAFFIC CONTROL PLAN	55-67, 67A & 67B
STRUCTURES, 20' SPAN AND OVER	68-77

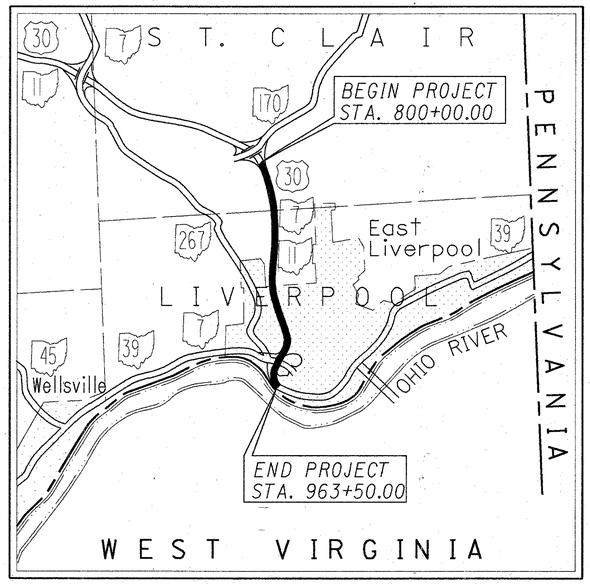

LOCATION MAP

SCALE IN MILES
0 1 2 3 4

1991 SPECIFICATIONS

The standard specifications of the State of Ohio, Department of Transportation, including changes and supplemental specifications listed in the proposal shall govern this improvement.

I hereby approve these plans and declare that the making of this improvement will not require the closing to traffic of the highway and that provisions for the maintenance and safety of traffic will be as set forth on the plans and estimates.

DISTRICT CERTIFIED PLAN

APPROVED John H. McClain
DATE 11-19-92 DISTRICT DEPUTY DIRECTOR OF TRANSPORTATION

"UNDER AUTHORITY OF SECTION 4511.21, DIVISION (I) OF THE REVISED CODE OF OHIO, THE REVISED PRIMA FACIE SPEED LIMITS AS INDICATED HEREIN ARE DETERMINED TO BE REASONABLE AND SAFE, AND ARE HEREBY ESTABLISHED FOR THE DURATION OF THIS PROJECT. THE PRIMA FACIE SPEED LIMIT OR LIMITS HEREBY ESTABLISHED SHALL BECOME EFFECTIVE WHEN APPROPRIATE SIGNS GIVING NOTICE THEREOF ARE ERECTED."

APPROVED B.D. Hanhilammi/dch
DATE 11-25-92 ENGINEER, BUREAU OF BRIDGES AND STRUCTURAL DESIGN

APPROVED
DATE 12/15/92 DEPUTY DIRECTOR, PLANNING & DESIGN

APPROVED
DATE 12-15-92 DIRECTOR, DEPARTMENT OF TRANSPORTATION

REVISED 2-18-93

DEPARTMENT OF TRANSPORTATION
FEDERAL HIGHWAY ADMINISTRATION

APPROVED

DIVISION ADMINISTRATOR — DATE

LINE DATA

BEGIN PROJECT = STA. 800+00.00
END PROJECT = STA. 963+50.00
NET LENGTH OF PROJECT = 16,350.00 LIN.FT. OR 3.097 MILE

BEGIN WORK = 787+97.00
END WORK = 967+80.58

NET LENGTH OF WORK = 17,983.58 LIN. FT. OR 3.406 MILE

UNDERGROUND UTILITIES

2 WORKING DAYS
BEFORE YOU DIG
CALL 800-362-2764 (TOLL FREE)
OHIO UTILITIES PROTECTION SERVICE

NON-MEMBERS
MUST BE CALLED DIRECTLY

PORTION TO BE IMPROVED
STATE & FEDERAL ROUTES
OTHER ROADS

SCALES

PLAN 0' 100' 200'

SUPPLEMENTAL SPECIFICATIONS

802	4-13-90	931	3-18-92
820	3-18-92	933	2-10-87
852	6-10-87	942	3-18-92
862	12-16-88	944	3-18-92
		952	12-14-88
		962	1-23-90

SUPPLEMENTAL PRINTS OF STANDARD CONSTRUCTION DRAWINGS

BP-2.1	2-21-92	F-5	5-1-76	GR-4.3	2-21-92	MT-98.14	8-25-89	TBR-91	4-24-92			TC-41.50	3-26-79
BP-2.2	2-21-92	F-6	5-1-76	GR-4.4	2-21-92	MT-98.15	8-25-89					TC-42.10	8-19-77
BP-2.5	2-21-92			GR-8	10-25-90	MT-99.10	11-14-86	HL-50.11	5-1-87			TC-42.20	3-26-79
BP-3.1	2-21-92	GR-1.1	5-6-91			MT-99.20	4-29-88					TC-51.10	1-20-84
BP-5.1	2-21-92	GR-1.2	10-30-92	MC-4	7-26-76							TC-51.11	1-20-84
BP-7.1	10-30-92	GR-1.3	2-21-92	MC-6	1-30-84	MC-11	8-1-78					TC-52.10	4-3-79
BP-8.1	2-21-92	GR-2.1	5-6-91	MC-9.3	10-30-92					TC-41.10	8-29-84	TC-52.20	4-3-79
		GR-3.1	5-6-91	MC-9.2	5-6-91	TC-35.10	8-29-84			TC-7.65	3-1-79	TC-61.10	4-5-82
CB-6	5-1-79	GR-3.2	5-6-91	MC-9A	1-11-85					TC-21.10	9-01-92	TC-65.10	2-1-90
CB-8	11-10-83	GR-3.3	5-6-91	MT-95.30	10-10-88					TC-22.20	9-01-92	TC-65.11	2-1-90
F-1	11-10-83	GR-4.1	5-6-91	MT-98.12	8-25-89					TC-35.10	8-29-84	TC-72.20	2-26-82
F-3	5-1-76	GR-4.2	5-6-91	MT-98.13	8-25-89					TC-41.20	3-26-79	VPF-1-90	2-1-92

PLAN PREPARED BY:
OHIO DEPARTMENT OF TRANSPORTATION
DISTRICT 11
NEW PHILADELPHIA

PROJECT: COL-30-32.19
DATE OF LETTING ____ 19__ , CONTRACT NO. ____

FHWA REGION	STATE	PROJECT	
5	OHIO		

2/77

COL-30-32.19

SCHEMATIC PLAN

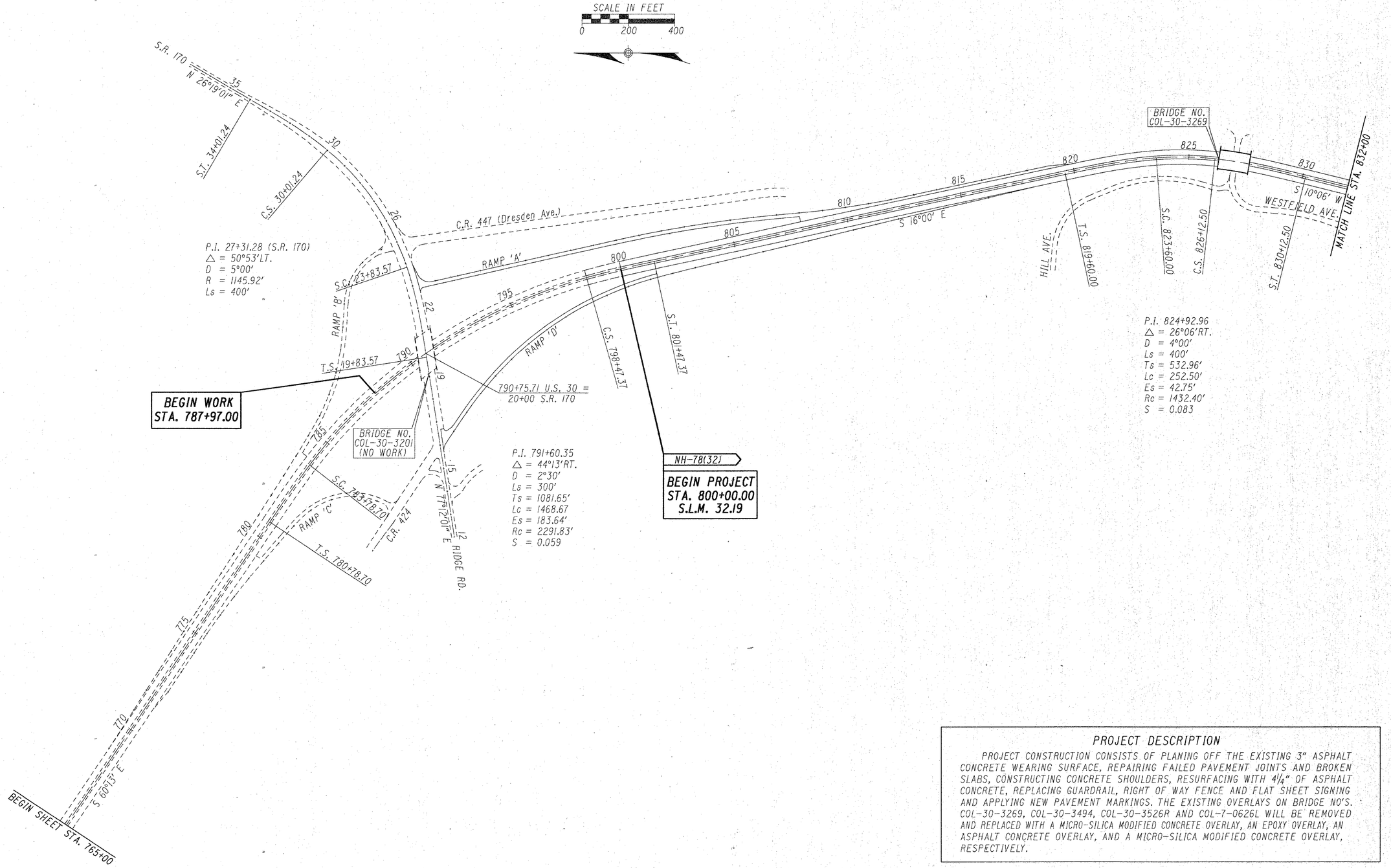

PROJECT DESCRIPTION

PROJECT CONSTRUCTION CONSISTS OF PLANING OFF THE EXISTING 3" ASPHALT CONCRETE WEARING SURFACE, REPAIRING FAILED PAVEMENT JOINTS AND BROKEN SLABS, CONSTRUCTING CONCRETE SHOULDERS, RESURFACING WITH 4¼" OF ASPHALT CONCRETE, REPLACING GUARDRAIL, RIGHT OF WAY FENCE AND FLAT SHEET SIGNING AND APPLYING NEW PAVEMENT MARKINGS. THE EXISTING OVERLAYS ON BRIDGE NO'S. COL-30-3269, COL-30-3494, COL-30-3526R AND COL-7-0626L WILL BE REMOVED AND REPLACED WITH A MICRO-SILICA MODIFIED CONCRETE OVERLAY, AN EPOXY OVERLAY, AN ASPHALT CONCRETE OVERLAY, AND A MICRO-SILICA MODIFIED CONCRETE OVERLAY, RESPECTIVELY.

FHWA REGION	STATE	PROJECT	
5	OHIO		

3
77

COL-30-32.19

SCHEMATIC PLAN

SCALE IN FEET
0 200 400

P.I. 837+59.71
△ = 7°32' LT.
D = 1°00'
T = 377.21'
L = 753.33'
E = 12.40'
R = 5729.58'
S = 0.024

P.I. 860+38.82
△ = 24°00'30" LT.
D = 4°00'
Ls = 400'
Ts = 505.43'
Lc = 200.21'
Es = 36.78'
Rc = 1432.40'
S = 0.083

P.I. 871+70.31
△ = 10°48' RT.
D = 1°20'
T = 406.20'
L = 810.00'
E = 19.16'
R = 4297.18'
S = 0.032

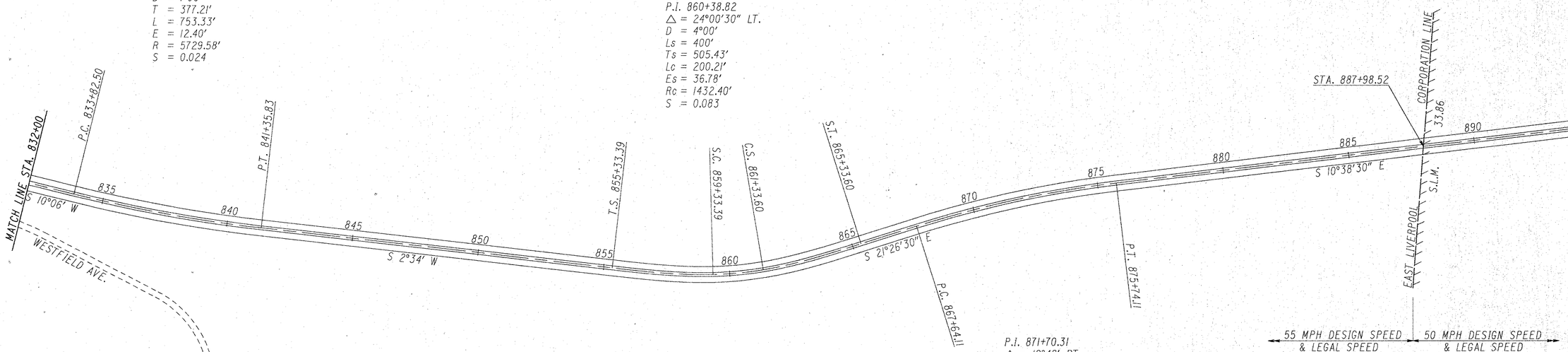

SCHEMATIC PLAN

FHWA REGION	STATE	PROJECT	
5	OHIO		

4 / 77

COL-30-32.19

SCHEMATIC PLAN

SCALE IN FEET
0 200 400

P.I. 903+41.90
△ = 18°15'47"LT.
D = 4°00'
Ls = 400.00'
R = 1432.40'
θs = 8°00'
P = 4.65'
K = 199.87'
L.T.= 266.94'
S.T.= 133.58'
L.C.= 399.65'
Ts = 430.86'
Es = 23.10'
Lc = 56.58'
Xc = 399.22'
Yc = 18.59'
S = 0.083

P.I. 918+47.45
△ = 28°06'45"RT.
D = 4°00'
Ls = 400.00'
R = 1432.40'
θs = 8°00'
P = 4.65'
K = 199.87'
L.T.= 266.94'
S.T.= 133.58'
L.C.= 399.65'
Ts = 559.67'
Es = 49.01'
Lc = 302.81'
Xc = 399.22'
Yc = 18.59'
S = 0.083

P.I. 937+74.75
△ = 45°58'30" RT.
D = 3°30'00"
Ls = 400.00'
R = 1637.02'
θs = 7°00'
P = 4.07'
K = 199.90'
L.T.= 266.88'
S.T.= 133.52'
L.C.= 399.73'
Ts = 896.08'
Es = 145.64'
Lc = 913.57'
Xc = 399.40'
Yc = 16.27'
S = 0.083

P.I. 174+50.52
△ = 2°57' RT.
D = 0°40'
T = 221.30'
L = 442.50'
R = 8594.37'
E = 2.85'

P.I. 186+11.56
△ = 10°53' LT.
D = 3°56'
T = 138.76'
L = 276.69'
R = 1456.67'
E = 6.59'

P.I. 182+81.58
△ = 2°33' LT.
D = 0°40'
T = 191.28'
L = 382.50'
R = 8594.37'
E = 2.13'

P.I. 961+30.24
△ = 90°00'00" LT.
D = 8°30'00"
Ls = 400.00'
R = 674.07'
θs = 17°00'
P = 9.86'
K = 199.41'
L.T.= 267.91'
S.T.= 134.46'
L.C.= 398.44'
Ts = 883.34'
Es = 293.15'
Lc = 658.82'
Xc = 396.48'
Yc = 39.31'
S = 0.083

MATCH LINE STA. 895+00

T.S. 899+11.04
C.S. 903+10.04
S.C. 903+67.62
S.T. 907+67.62
S.C. 916+87.78
C.S. 919+90.59
S.T. 923+90.59
T.S. 928+78.67
S.C. 932+78.67
T.S. 912+87.78

S 10°38'30" E
S 28°54'16" E
S 00°47'31" E

BRIDGE NO. COL-30-3494
BRIDGE NO. COL-30-3500
BRIDGE NO. COL-7-0643 (NO WORK)
BRIDGE NO. COL-7-0626L
BRIDGE NO. COL-30-3526 R

C.S. 941+92.24
949+40.65 U.S. 30 = 175+89.03 S.R. 7
S.T. 945+92.24
P.I. 176+71.72
T.S. 952+46.90
S.C. 956+46.90
C.S. 963+05.72
S.T. 967+05.72
P.C. 172+29.22
P.T. 163+55.21

RAMP 'C'
RAMP 'A'
RAMP 'B'
RAMP 'D'
S.T. CONN.
W. 9th. STREET
W. 8th. STREET
WEBBERWAY
JEFFERSON ST.
P.C.C. 184+72.80
P.C. 180+90.30
P.T. 187+49.49
W. FOURTH ST. EXT.
S.R. 267 (LISBON RD.)
TINEWELL BRIDGE
NH-78(32)

S 62°23'47" E
S 75°49' E
S 65°20' E
S 45°10'38" E

END PROJECT
STA. 963+50.00
S.L.M. 35.29

END WORK
STA. 967+80.58

TYPICAL SECTION

TYPE 446

Scale In Feet: 0 4 8

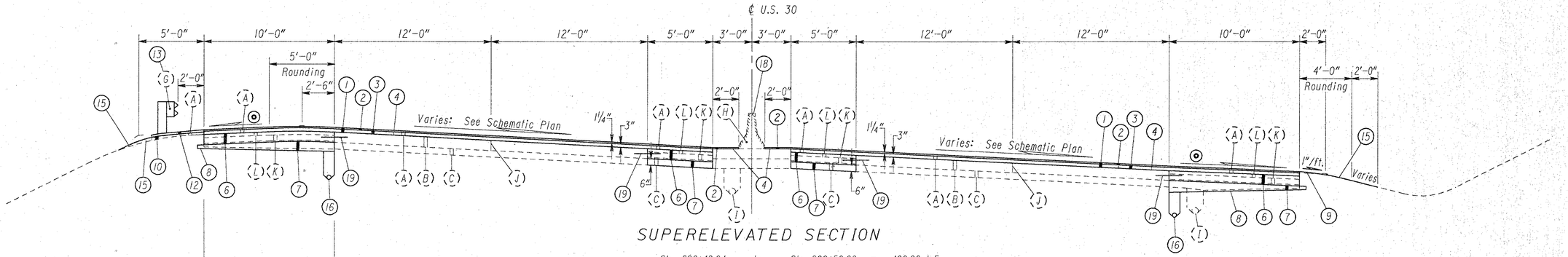

SUPERELEVATED SECTION

Sta. 896+49.04	to	Sta. 900+50.00	=	400.96 L.F.
Sta. 943+50.00	to	Sta. 947+72.24	=	422.24 L.F.
Sta. 952+00.05	to	Sta. 963+50.00	=	1,149.95 L.F.
		Total	=	1,973.15 L.F.

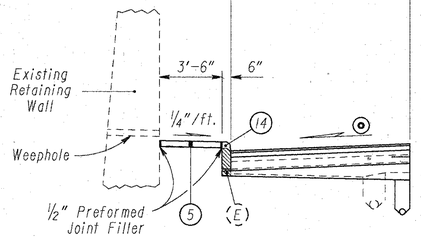

RETAINING WALL SECTION

Sta. 956+55 to Sta. 959+00
Sta. 960+50 to Sta. 962+22

NOTE: Curb is continuous between retaining walls.

Existing asphalt paving under guardrail to be removed with Item 202 – Excavation.

For Legend, See Sheet No. 7

For Asphalt Paving Under Guardrail Details, See Sheet No. 7

⊙ For Shoulder Details, See Sheet No. 7

✱✱ Same Slope As Pavement

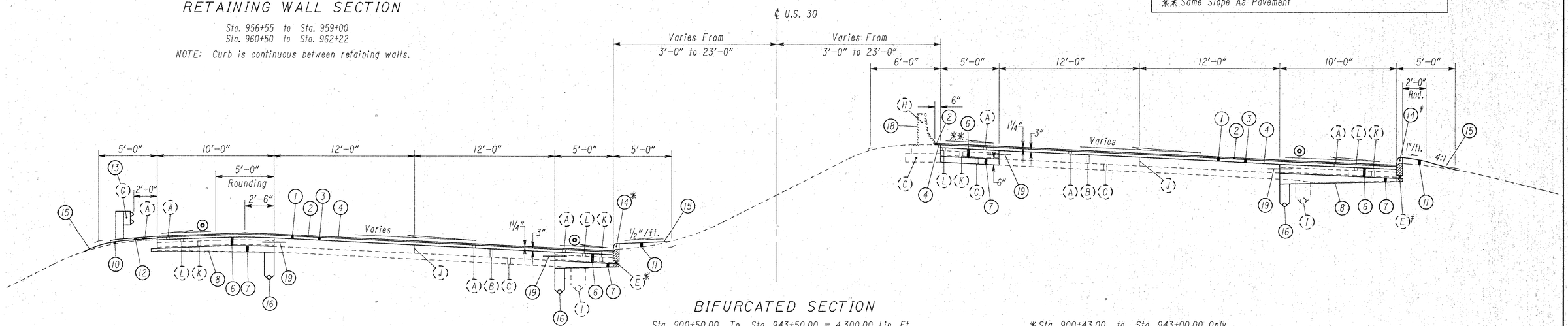

BIFURCATED SECTION

Sta. 900+50.00 To Sta. 943+50.00 = 4,300.00 Lin. Ft.

✱ Sta. 900+43.00 to Sta. 943+00.00 Only
♯ Sta. 916+87.78 to Sta. 945+00.00 Only

FHWA REGION	STATE	PROJECT	
5	OHIO		

5 / 77

COL-30-32.19

30303203 BLG V2

U.S. 30 TYPICAL SECTIONS

FHWA REGION	STATE	PROJECT	
5	OHIO		

6/77

COL-30-32.19

TYPICAL SECTION

TYPE 446

Scale In Feet: 0 4 8

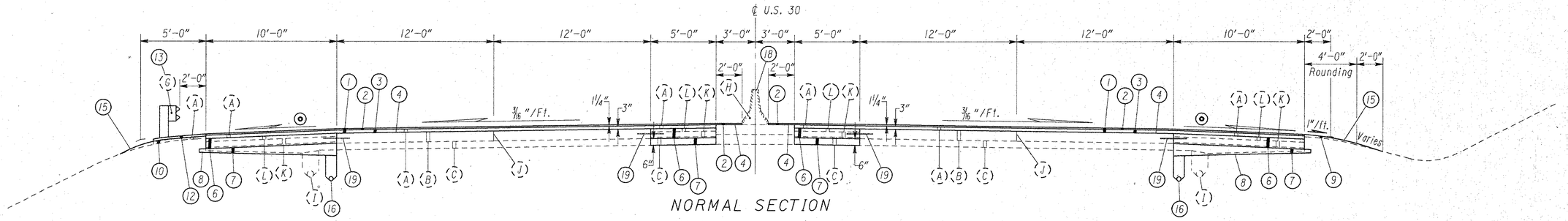

NORMAL SECTION

Sta. 888+00.00	to	Sta. 896+49.04	=	849.04 L.F.
Sta. 947+72.24	to	Sta. 947+96.97	=	24.73 L.F.
Sta. 947+96.97	to	Sta. 952+00.05	Bridge No. COL-30-3500 & Approach Slabs	
		Total	=	873.77 L.F.

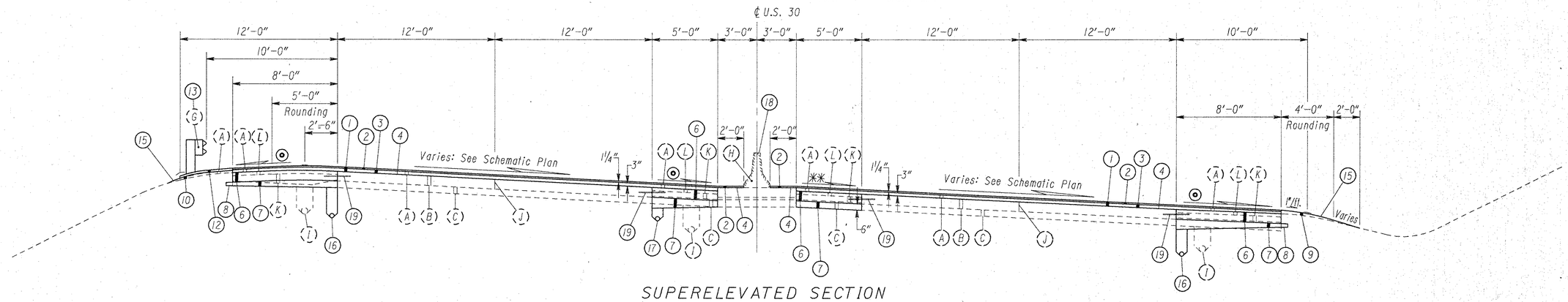

SUPERELEVATED SECTION

Sta. 800+00.00	To	Sta. 801+00.00	=	100.00 L.F.
Sta. 820+00.00	To	Sta. 826+04.25	=	604.25 L.F.
Sta. 826+04.25	To	Sta. 827+88.75	Br. No. Col-30-3269 & Approach Slabs	
Sta. 827+88.75	To	Sta. 830+00.00	=	211.25 L.F.
Sta. 833+00.00	To	Sta. 842+00.00	=	900.00 L.F.
Sta. 855+00.00	To	Sta. 877+00.00	=	2,200.00 L.F.
		TOTAL	=	4,015.50 L.F.

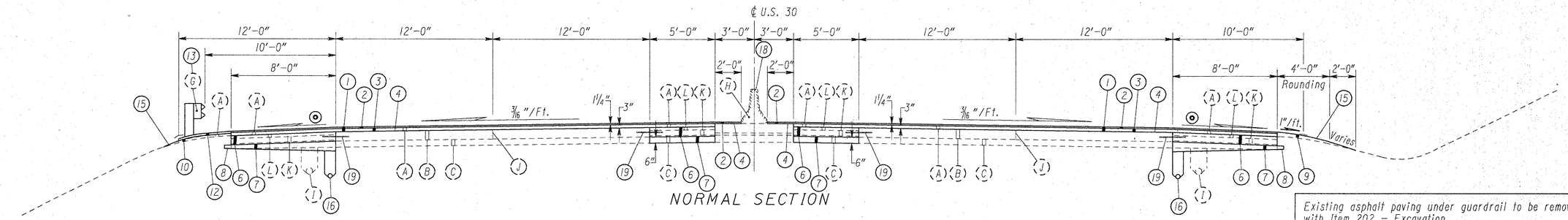

NORMAL SECTION

Sta. 801+00.00	to	Sta. 820+00.00	=	1,900.00 L.F.
Sta. 830+00.00	to	Sta. 833+00.00	=	300.00 L.F.
Sta. 842+00.00	to	Sta. 855+00.00	=	1,300.00 L.F.
Sta. 877+00.00	to	Sta. 888+00.00	=	1,100.00 L.F.
		Total	=	4,600.00 L.F.

Existing asphalt paving under guardrail to be removed with Item 202 – Excavation.

For Legend, See Sheet No. 7

For Asphalt Paving Under Guardrail Details, See Sheet No. 7

◎ For Shoulder Details, See Sheet No. 7

30303203 BLG VI

U.S. 30 TYPICAL SECTIONS

TYPICAL SECTION

FHWA REGION	STATE	PROJECT	
5	OHIO		

7 / 77

COL-30-32.19

PROPOSED LEGEND

1. Item 202 – Wearing Course Removed (3" Nominal Depth)
2. Item 446 – 1¼" Asphalt Concrete Surface Course, Type 1, AC-20, As Per Plan (See Note On Sheet No. 20)
3. Item 446 – 3" Asphalt Concrete Intermediate Course, Type 2, AC-20,
4. Item 407 – Tack Coat
5. Item 612 – 4" Concrete Median
6. Item 305 – 9" Concrete Base, As Per Plan (See Note On Sheet No. 20)
7. Item 304 – Aggregate Base, As Per Plan (See Note On Sheet No. 20)
8. Item 203 – Subgrade Compaction
9. Item 203 – Linear Grading, Method 1
10. Item 203 – Linear Grading, Method 2
11. Item 203 – Linear Grading, Method 3
12. Item 448 – 2" Asphalt Concrete Intermediate Course, Type 1, (Under Guardrail), As Per Plan (See Note On Sheet No. 20)
13. Item 606 – Guardrail, Type 5
14. Item 609 – Curb, Type 6
15. Item 659 – Seeding And Mulching And Water
16. Item 605 – 4" Shallow Pipe Underdrain, 707.15, As Per Plan (See Sheet No. 22)
17. Item 605 – 4" Shallow Pipe Underdrain, 707.15 (18"), As Per Plan (See Sheet No. 22)
18. Special – Sealing Of Concrete Surfaces (Epoxy) (See Proposal Note and Note On Sheet No. 19)
19. Type D Longitudinal Joint As Per Standard Drawing BP-2.1

To Be Removed

Surface To Be Sealed With Epoxy

EXISTING LEGEND

- (A) Existing Asphalt Concrete
- (B) Existing 9" Reinforced Concrete Pavement
- (C) Existing Subbase
- (D) Existing Concrete Median
- (E) Existing Type 6 Curb
- (G) Existing Type 5 Guardrail
- (H) Existing Concrete Barrier
- (I) Existing Underdrain (To Remain And Function)
- (J) Existing Longitudinal Joint
- (K) Existing Aggregate Base
- (L) Existing Bituminous Aggregate Base

NOTE: Left and Right Side Configuration on Ramps is referenced to the direction of travel.

◓ ½"/ft. or pavement slope, whichever is greater

‡ Shoulder slope varies from ½"/ft. away from pavement to same slope as pavement when pavement slope is 0.059 ft./ft. max. Shoulder slope remains the same slope as pavement when pavement slope exceeds 0.059 ft./ft.

Existing asphalt paving under guardrail to be removed with Item 202 – Excavation.

TYPE 446

Scale In Feet: 0 4 8

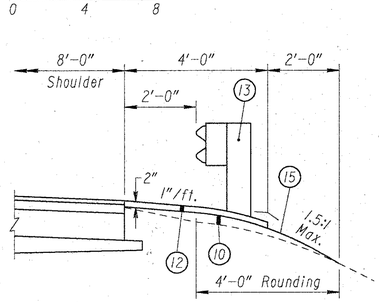

U.S. 30 Sta. 800+00 to Sta. 888+00

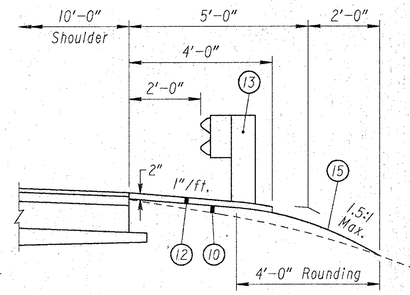

U.S. 30 Sta. 888+00 to Sta. 963+50

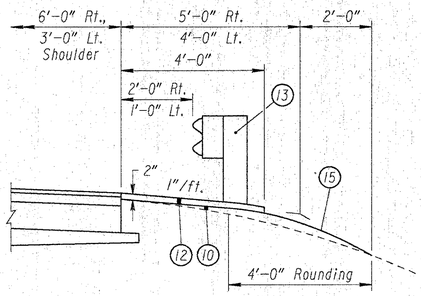

Interchange Ramps

ASPHALT PAVING & ROUNDING DETAILS

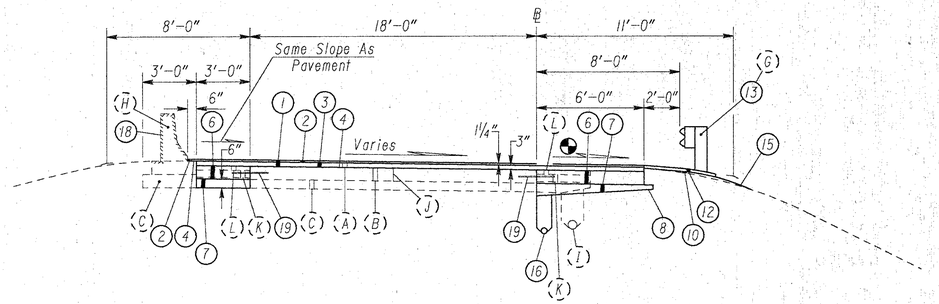

S.R. 7 INTERCHANGE

Ramp 'D' Sta. 1+51.00 To Sta. 3+13.81 = 162.81 Lin. Ft.

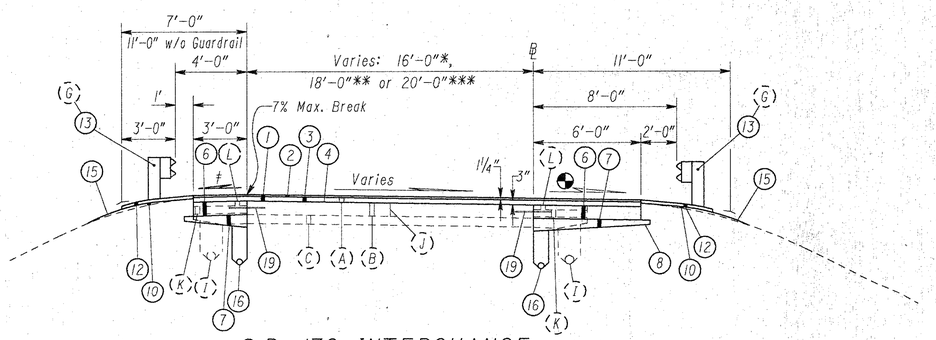

S.R. 170 INTERCHANGE

* Ramp 'A' Sta. 0+26.50 to Sta. 16+84.22 = 1,657.72 L.F.
* Ramp 'D' Sta. 0+21.43 to Sta. 16+96.58 = 1,675.15 L.F.

S.R. 7 INTERCHANGE

*** Ramp 'A' Sta. 0+45.54 to Sta. 7+00.00 = 654.46 L.F.
* Ramp 'B' Sta. 0+79.24 to Sta. 10+33.00 = 953.76 L.F.
*** Ramp 'C' Sta. 1+15.68 to Sta. 6+00.00 = 484.32 L.F.
** Ramp 'D' Sta. 1+22.05 to Sta. 1+51.00 = 28.95 L.F.
** Ramp 'D' Sta. 3+13.81 to Sta. 5+55.14 Br. No. COL-7-0626 L & Approach Slabs
** Ramp 'D' Sta. 5+55.14 to Sta. 10+61.00 = 505.86 L.F.

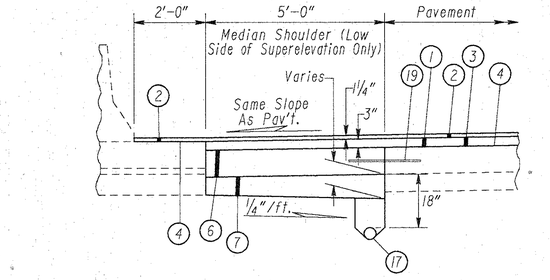

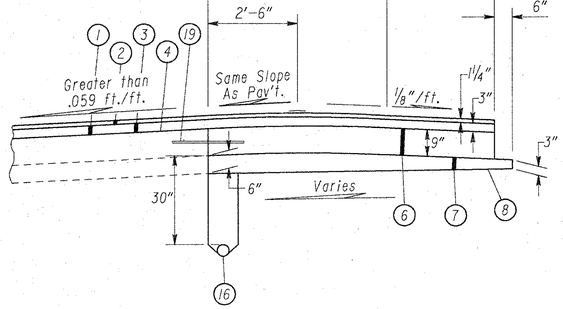

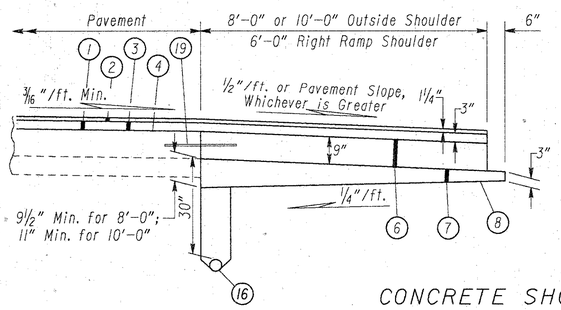

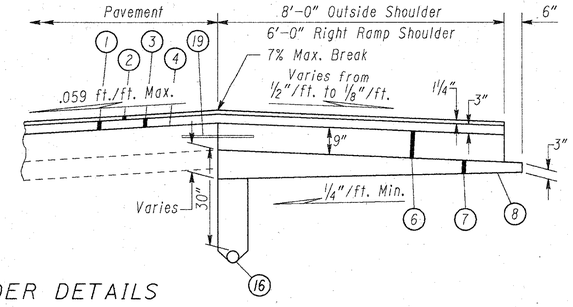

CONCRETE SHOULDER DETAILS

30303203 BLG V3

RAMP TYPICAL SECTIONS & DETAILS

NOTES:

1. Outlet into catch basin or inlet
2. Run continued from ramp
3. Run continued to/from mainline
4. Connect to existing underdrain
5. Wye connection

* 707.17 Non-perforated, ASTM D 3034 SDR 35, SS 931 or SS 944

UNDERDRAIN QUANTITIES

(For Notes And Details, See Sheet No. 22)

QUANTITIES	
Calc. TKR	Chkd. SHG
Date: 7-20-92	Date: 8-15-92

FHWA REGION	STATE	PROJECT		
5	OHIO			

COL-30-32.19

8 / 77

Station From	Station To	Lane Side	605 4" Shallow Pipe Underdrain, 707.15, (18") As Per Plan Lin.Ft.	605 4" Shallow Pipe Underdrain, 707.15, As Per Plan Lin.Ft.	Unclassified Underdrains Pipe Slope %	Begin Station From	Depth at Begin Station Feet	End Station To	Depth at End Station Feet	603 6" Conduit Type F, 707.17 Non-Perforated, ASTM D 3034 SDR 35, SS 931 or SS 944 Lin.Ft.	Special Precast Reinforced Concrete Outlet Each	Outlet Station	Plug Station	Outlet Fittings 90° Bend Ea.	Tee Ea.	45° Wye Ea.	See Note No.
800+05	804+50	EASTBOUND OUTSIDE		435						12+10*=22		804+50	800+05	1			1
										36		812+71			1		2, 1
806+15	826+05			1,980						17		819+00			1		
										19+10*=29		826+05		1			1
827+90	897+18			6,848						22+10*=32		837+35	827+90		1		1
										19+10*=29	1	852+00			1		
										19	1	857+00			1		
										27	1	866+16			1		
										17+10*=27		875+00			1		1
										17+40*=57		887+50			1		1
										23	1	892+86			1		1
										22+10*=32	1	897+18		1			
897+27	900+67			340						24	1	900+67	897+27	1			
900+75	944+90			4,305						22	1	903+07	900+75		1		
										23+10*=33	1	907+87			1		
										22+10*=22	1	912+65			1		
										22+10*=22	1	916+03			1		
										11+20*=31		921+10			1		1
										11		924+35			1		1
										12		929+52			1		1
										26+20*=46	1	934+37			1		
										11+30*=41		939+50			1		1
										9+10*=19		944+90		1			1
952+22	957+00			478						21	1	957+00	952+22	1			
960+05	962+04			199						37	1	962+04		1			2
800+00	806+50	WESTBOUND OUTSIDE		640						22+10*=32		806+50	800+00	1			1
808+00	826+00			1,790						32	1	813+00	808+00		1		
										31	1	818+00			1		
										21+10*=31	1	823+00			1		
										20	1	826+00		1			
827+89	923+07			9,348						19+10*=29	1	834+00	827+89		1		
										19	1	839+00			1		
										19	1	844+00			1		
										21	1	849+00			1		
										18	1	854+00			1		
										18	1	859+00			1		
										18	1	864+00			1		
										19+10*=29	1	869+00			1		
										17+20*=37		876+00			1		1
										18	1	880+00			1		
										18+10*=28	1	885+00			1		
										21+10*=31	1	892+00			1		
										22+10*=32	1	897+00			1		
										22+30*=52	1	903+11			1		
										30+10*=40	1	908+00			1		
										26+20*=46	1	913+68			1		
										25+10*=35	1	918+00			1		
										23+30*=53	1	923+07		1			
923+15	940+50			1,685						20+10*=30	1	928+79			1		
										21+10*=31	1	933+50			1		
										41+30*=71	1	940+50		1			

Station From	Station To	Lane Side	605 4" Shallow Pipe Underdrain, 707.15, (18") As Per Plan Lin.Ft.	605 4" Shallow Pipe Underdrain, 707.15, As Per Plan Lin.Ft.	Unclassified Underdrains Pipe Slope %	Begin Station From	Depth at Begin Station Feet	End Station To	Depth at End Station Feet	603 6" Conduit Type F, 707.17 Non-Perforated, ASTM D 3034 SDR 35, SS 931 or SS 944 Lin.Ft.	Special Precast Reinforced Concrete Outlet Each	Outlet Station	Plug Station	Outlet Fittings 90° Bend Ea.	Tee Ea.	45° Wye Ea.	See Note No.
952+00	960+34	W'BOUND OUTSIDE		814						30	1	956+06	952+00		1		
										15+20*=35		960+34		1			1
960+42	963+05			253						15+10*=25		963+05	960+42	1			1
819+60	826+00	WESTBOUND MEDIAN	630							5+10*=15		824+00	819+60		1		1
										5		826+00		1			1
827+90	829+50		150							5+10*=15		829+50	827+90	1			1
866+75	876+00		895							7+10*=17		870+50	866+75		1		1
										7+10*=17		874+50			1		1
										7+10*=17		876+00		1			1
912+95	923+10		965							7+10*=17		916+88	912+95		1		1
										7+10*=17		921+10			1		1
										7+30*=37		923+10		1			1
928+79	945+24		1,586							7+20*=27		932+75	928+79		1		1
										7+20*=27		936+10			1		1
										7+10*=17		939+50			1		1
										7+10*=17		943+25			1		1
										5		945+24		1			1
833+00	841+50	EASTBOUND MEDIAN	830							5		837+00	833+00		1		1
										5+10*=15		840+50			1		1
										5+10*=15		841+50		1			1
855+00	865+00		990							5		862+00	855+00		1		1
										5+10*=15		865+00		1			
898+25	907+75		910							5+10*=15		900+70	898+25		1		1
										4+20*=24		905+70			1		1
										4+10*=14		907+75		1			1
952+25	963+48		1,113							5		956+47	952+25		1		1
										5		960+50			1		1
										5+10*=15		963+48		1			1
S.R. 170 INTERCHANGE																	
1+25 "A"	6+00 "A"	RT	475							20	1	6+00	1+25	1			
8+00 "A"	15+45"A"	LT	745							17	1	13+00	8+00		1		
										20		15+45		1			1
0+50"D"	16+97"D"	RT	1,627							20	1	5+00	0+50		1		
										18+10*=28	1	9+50			1		
										20+10*=30	1	15+82			1		3
S.R. 7 INTERCHANGE																	
0+50 "A"	7+00 "A"	RT	650													1	4, 5
0+00 "C"	6+00 "C"	RT	590							*10						1	4, 5
TOTALS			12,156	29,115						2,130	43			24	61	2	

Carried To General Summary

30303224 TKR

UNDERDRAIN QUANTITIES

EASTBOUND MAINLINE OUTSIDE CONCRETE SHOULDER CONSTRUCTION QUANTITIES

QUANTITIES	
Calc. TKR	Chkd. SHG
Date: 7 - 29 - 92	Date: 9 - 1 - 92

FHWA REGION	STATE	PROJECT	
5	OHIO		

COL-30-32.19

Location	Station From	Station To	Length	Width	Area	End Area Detail No.	203 Average End Area	203 Excavation	203 Subgrade Compaction	304 Average Thickness	304 Aggregate Base As Per Plan	305 9" Concrete Base, As Per Plan
			Lin. Ft.	Lin. Ft.	Sq. Yd.		Sq. Ft.	Cu. Yd.	Sq. Yd.	Inch	Cu. Yd.	Sq. Yd.
	800+00	801+11	111.0	8	97.8	1	10.4	42.8	97.8	6.25	17.0	97.8
	801+11	806+15	504.0	17 avg	952.0	7	21.3	397.6	952.0	6.00	158.7	952.0
	806+15	821+12.50	1497.5	8	1331.1	1	10.4	576.8	1331.1	6.25	231.1	1331.1
	821+12.50	823+75	262.5	8	233.3	1 to 5	11.1	107.9	233.3	7.25	47.0	233.3
	823+75	825+75	200.0	8	177.8	5	11.9	8.1	177.8	8.25	40.7	177.8
	825+75	826+29.25	54.25	8	48.2	5 to 1	11.7	23.5	48.2	8.00	10.7	48.2
Br. No. COL-30-3269	826+29.25	827+63.75	No Work									
	827+63.75	828+01	37.25	8	33.1	5 to 1	10.5	14.5	33.1	6.38	5.9	33.1
	828+01	856+58.79	2857.79	8	2540.3	1	10.4	1100.8	2540.3	6.25	441.0	2540.3
	856+58.79	858+18	159.21	8	141.5	1 to 2	9.9	58.4	141.5	5.44	21.4	141.5
	858+18	859+50	132.0	8	117.3	2 to 6	9.9	48.4	117.3	4.94	16.1	117.3
	859+50	861+00	150.0	8	133.3	6	10.4	57.8	133.3	5.25	19.4	133.3
	861+00	862+48.61	148.61	8	132.1	6 to 2	9.9	54.5	132.1	4.94	18.1	132.1
	862+48.61	864+15.38	166.77	8	148.2	2 to 1	9.9	61.1	148.2	5.44	22.4	148.2
	864+15.38	887+00	2284.62	8	2030.8	1	10.4	80.0	2030.8	6.25	352.6	2030.8
	887+00	888+00	100.0	9 avg	100.0	1	12.0	44.4	100.0	6.63	18.4	100.0
	888+00	899+80.53	1180.53	10	1311.7	1	13.6	594.6	1311.7	7.00	255.1	1311.7
	899+80.53	901+72.07	191.54	10	212.8	1 to 2	12.7	90.1	212.8	6.00	35.5	212.8
	901+72.07	903+36.04	163.97	10	182.2	2 to 6	12.8	77.7	182.2	5.56	28.1	182.2
	903+36.04	903+67.62	31.58	10	35.1	6	13.8	16.1	35.1	6.13	6.0	35.1
	903+67.62	905+07.95	140.3	10	155.9	6 to 2	12.8	66.5	155.9	5.56	24.1	155.9
	905+07.95	906+98.85	190.9	10	212.1	2 to 1	12.7	89.8	212.1	6.00	35.4	212.1
	906+98.85	915+30.11	831.26	10	923.6	1	13.6	418.7	923.6	7.00	179.6	923.6
	915+30.11	917+69.78	239.67	10	266.3	1 to 5	14.7	130.5	266.3	8.25	61.0	266.3
	917+69.78	919+00	130.22	10	144.7	5	15.9	76.7	144.7	9.50	38.2	144.7
	919+00	921+50.59	250.59	10	278.4	5 to 1	14.7	136.4	278.4	8.25	63.8	278.4
	921+50.59	931+20.83	970.24	10	1078.0	1	13.6	488.7	1078.0	7.00	209.6	1078.0
	931+20.83	933+85.67	264.84	10	294.3	1 to 5	14.7	144.2	294.3	8.25	67.4	294.3
	933+85.67	939+00	514.33	10	571.5	5	15.9	302.9	571.5	9.50	150.8	571.5
	939+00	941+00	200.0	9.33 avg	207.3	5	14.5	107.4	207.3	9.13	52.6	207.3
	941+00	942+00	100.0	8.33 avg	92.6	5 to 3	12.6	46.7	92.6	8.50	21.9	92.6
	942+00	943+50	150.0	8	133.3	3 to 1	11.0	61.1	133.3	6.88	25.5	133.3
	943+50	945+92.24	242.24	8	215.3	1	10.4	93.3	215.3	6.25	37.4	215.3
	945+92.24	947+10.82	118.58	8	105.4	1 to 3	11.0	48.3	105.4	6.88	20.1	105.4
Br. No. COL-30-3500	947+10.82	952+24.27	No Work									
	952+24.27	952+65.13	40.86	8.02 avg	36.4	1	9.7	14.7	36.4	6.00	6.1	36.4
	952+65.13	953+96.73	131.6	10	146.2	1	13.6	66.3	146.2	7.00	28.4	146.2
	953+96.73	955+88.04	191.31	10	212.6	1 to 2	12.7	90.0	212.6	6.00	35.4	212.6
	955+88.04	957+50	161.96	10	180.0	2 to 6	12.8	76.8	180.0	5.56	27.8	180.0
	957+50	958+62.61	112.61	10	125.1	6	13.8	57.6	125.1	6.13	21.3	125.1
	958+62.61	960+07	144.39	15 avg	240.7	7	18.8	100.5	240.7	6.00	40.1	240.7
	960+07	962+29.83	222.83	8	198.1	6	10.4	85.8	198.1	5.25	28.9	198.1
Br. No. COL-30-3526	962+29.83	963+08.35	No Work									
	963+08.35	963+50	41.65	8	37.0	6	10.4	16.0	37.0	5.25	5.4	37.0
TOTALS (Carried To Sheet No. 11)								6,174.0	15,813.4		2,926.0	15,813.4

End Area Details

DETAIL (1)

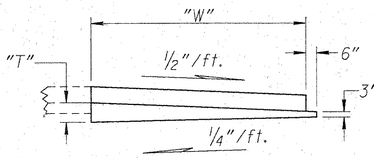

W	T	Exc. End Area (Sq. Ft.)
8'	9 1/2"	10.4
10'	11"	13.6
4.75'	7"	5.7

DETAIL (2)

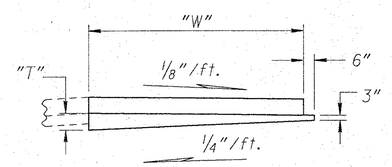

W	T	Exc. End Area (Sq. Ft.)
8'	6 1/4"	9.3
10'	7"	11.8

DETAIL (3)

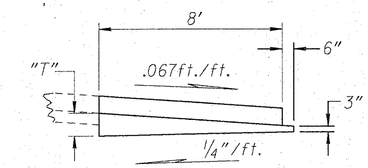

W	T	Exc. End Area (Sq. Ft.)
8'	12"	11.3

DETAIL (5)

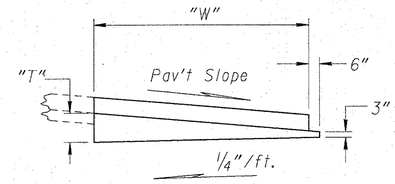

W	T	Exc. End Area (Sq. Ft.)
8'	13 1/2"	11.9
8.67'	14 1/2"	13.17
10'	16"	15.9

DETAIL (6)

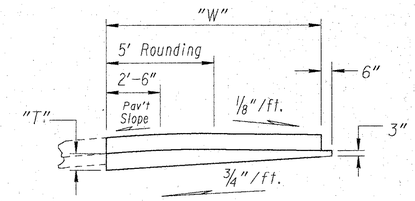

W	T	Exc. End Area (Sq. Ft.)
8'	7 1/2"	10.4
10'	9 1/4"	13.8

DETAIL (7)

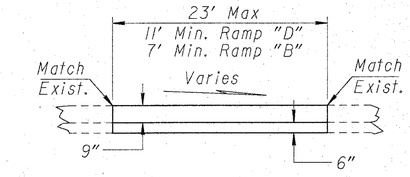

W	T	Exc. End Area (Sq. Ft.)
17'	6"	21.3
15'	6"	18.8

SHOULDER QUANTITIES

30303217.TKR

WESTBOUND MAINLINE OUTSIDE CONCRETE SHOULDER CONSTRUCTION QUANTITIES

QUANTITIES			
Calc.	TKR	Chkd.	SHG
Date:	7-29-92	Date:	8-26-92

FHWA REGION	STATE	PROJECT	
5	OHIO		

10/77

COL-30-32.19

Location	Station From	Station To	Length	Width "W"	Area	End Area Detail No.	203 Average End Area	203 Excavation	203 Subgrade Compaction	304 Average Thickness	304 Aggregate Base, As Per Plan	305 9" Concrete Base, As Per Plan
			Lin. Ft.	Lin. Ft.	Sq. Yd.		Sq. Ft.	Cu. Yd.	Sq. Yd.	Inch	Cu. Yd.	Sq. Yd.
	800+00	807+00	700.00	8	622.2	1	10.4	269.6	622.2	6.25	108.0	622.2
	807+00	808+02.72	NO WORK									
	808+02.72	820+99	1296.28	8	1152.2	1	10.4	499.3	1152.2	6.25	200.0	1152.2
	820+99	822+54.16	155.16	8	137.9	1 to 2	9.9	56.9	137.9	5.44	20.8	137.9
	822+54.16	823+75	120.84	8	107.4	2 to 6	9.9	44.3	107.4	4.94	14.7	107.4
	823+75	825+75	200.00	8	177.8	6	10.4	77.0	177.8	5.25	25.9	177.8
	825+75	826+29.25	54.25	8	48.2	6 to 2	9.9	19.9	48.2	4.94	6.6	48.2
Br. No. COL-30-3269	826+29.25	827+63.75	NO WORK									
	827+63.75	828+77.77	114.02	8	101.4	2 to 1	9.9	41.8	101.4	5.44	15.3	101.4
	828+77.77	857+33	2855.23	8	2538.0	1	10.4	1099.8	2538.0	6.25		2538.0
	857+33	859+50	217.00	8	192.9	1 to 5	11.1	89.2	192.9	7.25	38.8	192.9
	859+50	861+25	175.00	8	155.6	5	11.9	77.1	155.6	8.25	35.7	155.6
	861+25	863+33.50	208.50	8	185.3	5 to 1	11.1	85.7	185.3	7.25	37.3	185.3
	863+33.50	868+10.64	477.14	8	424.1	1	10.4	183.8	424.1	6.25	73.6	424.1
	868+10.64	868+75	64.36	8	57.2	1 to 4	10.2	24.3	57.2	5.93	9.4	57.2
	868+75	874+50	575.00	8	511.1	4	10.0	213.0	511.1	5.63	79.9	511.1
	874+50	875+77.71	127.71	8	113.5	4 to 1	10.2	48.2	113.5	5.93	18.7	113.5
	875+77.71	887+00	1122.29	8	997.6	1	10.4	432.3	997.6	6.25	173.2	997.6
	887+00	888+00	100.00	9 avg	100.0	1	12.0	44.4	100.0	6.63	18.4	100.0
	888+00	901+00	1300.00	10	1444.4	1	13.6	654.8	1444.4	7.00	280.9	1444.4
	901+00	903+11	211.00	10	234.4	1 to 5	14.7	114.9	234.4	8.25	53.7	234.4
	903+11	903+50	39.00	10	43.3	5	15.9	23.0	43.3	9.50	11.4	43.3
	903+50	906+07.83	257.83	10	286.5	5 to 1	14.7	140.4	286.5	8.25	65.7	286.5
	906+07.83	914+39.24	831.41	10	923.8	1	13.6	418.8	923.8	7.00	179.6	923.8
	914+39.24	916+30.29	191.05	10	212.3	1 to 2	12.7	89.9	212.3	6.00	35.4	212.3
	916+30.29	917+94.78	164.49	10	182.8	2 to 6	12.8	78.0	182.8	5.56	28.2	182.8
	917+94.78	918+83.59	88.81	10	98.7	6	13.8	45.4	98.7	6.13	16.8	98.7
	918+83.59	920+48.21	164.62	10	182.9	6 to 2	12.8	78.0	182.9	5.56	28.2	182.9
	920+48.21	922+39.15	190.94	10	212.2	2 to 1	12.7	89.8	212.2	6.00	35.4	212.2
	922+39.15	930+29.46	790.31	10	878.1	1	13.6	398.1	878.1	7.00	170.7	878.1
	930+29.46	932+20.68	191.22	10	212.5	1 to 2	12.7	89.9	212.5	6.00	35.4	212.5
	932+20.68	933+85.67	164.99	10	183.3	2 to 6	12.8	78.2	183.3	5.56	28.3	183.3
	933+85.67	940+50	664.33	10	738.1	6	13.8	339.6	738.1	6.13	125.7	738.1
	940+50	941+00	50.00	9 avg	50.0	6	12.1	22.3	50.0	5.69	7.9	50.0
	941+00	942+48.36	148.36	8	131.9	6 to 2	9.9	54.4	131.9	4.94	18.1	131.9
	942+48.36	944+41.12	192.76	8	171.3	2 to 1	9.9	70.7	171.3	5.44	25.9	171.3
	944+41.12	946+23	181.88	8	161.7	1	10.4	70.1	161.7	6.25	28.1	161.7
	946+34.5	946+92	63.51	8	56.5	1	10.4	24.5	56.5	6.25	9.8	56.5
	946+92	947+72.52	80.52	6.38 avg	57.1	1	8.1	24.2	57.1	5.63	8.9	57.1
Br. No. COL-30-3500	947+72.52	951+53	No Work									
	951+53	951+90.31	37.31	9.9 avg	41.0	7	9.3*	12.9	41.0	6.00	6.8	41.0
	951+90.31	954+88.58	298.27	8	265.1	1	10.4	114.9	265.1	6.25	46.0	265.1
	954+88.58	956+55	166.42	8	147.9	1 to 5	11.1	68.4	147.9	7.25	29.8	147.9
	956+55	959+00	245.00	7 avg	190.6	5	10.5	95.3	190.6	7.63	40.4	190.6
	959+00	963+50	450.00	10	500.0	5	15.9	265.0	500.0	9.50	131.9	500.0
TOTALS (Carried To Sheet No. 11)								6,768.1	15,228.8		2,765.9	15,228.8

*Includes a deduction of 3.1 sq. ft. to account for existing pavement to be removed (see sheet no. 39).

End Area Details

DETAIL (1)

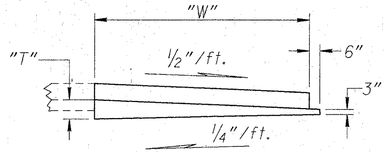

W	T	Exc. End Area (Sq. Ft.)
8'	9 1/2"	10.4
10'	11"	13.6
4.75'	7"	5.7

DETAIL (2)

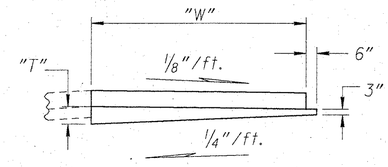

W	T	Exc. End Area (Sq. Ft.)
8'	6 1/4"	9.3
10'	7"	11.8

DETAIL (4)

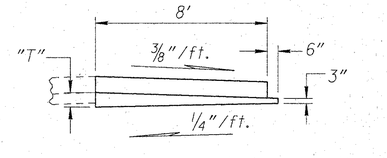

W	T	Exc. End Area (Sq. Ft.)
8'	8 1/4"	10.0

DETAIL (5)

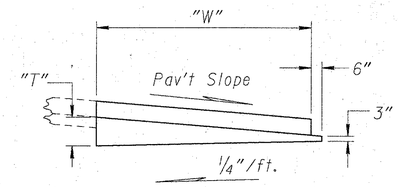

W	T	Exc. End Area (Sq. Ft.)
4'	8 1/2"	5.2
8'	13 1/2"	11.9
10'	16"	15.9

DETAIL (6)

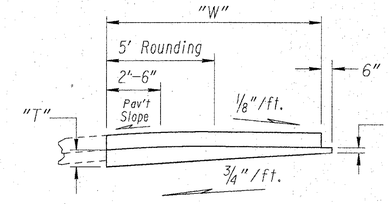

W	T	Exc. End Area (Sq. Ft.)
8'	7 1/2"	10.4
10'	9 1/4"	13.8

DETAIL (7)

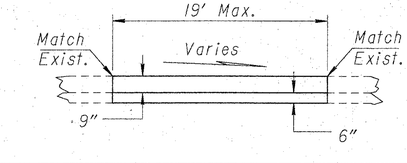

W	T	Exc. End Area (Sq. Ft.)
9.9'	6"	12.4

30303017.TKR

SHOULDER QUANTITIES

MEDIAN CONCRETE SHOULDER CONSTRUCTION QUANTITIES

QUANTITIES			
Calc. TKR		Chkd. SHG	
Date: 8-04-92		Date: 9-1-92	

FHWA REGION	STATE	PROJECT	
5	OHIO		

11
77

COL-30-32.19

	Location	Station From	Station To	Length	Width	Area	End Area Detail No.	203 Average End Area	203 Excavtion	203 Subgrade Compaction	304 Average Thickness	304 Aggregate Base, As Per Plan	305 9" Concrete Base, As Per Plan
		From	To	Lin. Ft.	Lin. Ft.	Sq. Yd.		Sq. Ft.	Cu. Yd.	Sq. Yd.	Inch	Cu. Yd.	Sq. Yd.
WESTBOUND MEDIAN		800+00	819+60	1960.00	5	1088.9	8	6.25	453.7		6.00	181.5	1088.9
		819+60	823+75	415.00	5	230.6	9 to 10	7.03	108.1		7.88	50.5	230.6
		823+75	825+75	200.00	5	111.1	10	7.55	55.9		9.13	28.2	111.1
		825+75	826+00	25.00	5	13.9	10 to 9	7.55	7.0		9.13	3.5	13.9
		826+00	826+29.25	29.25	5	16.3	8	6.25	6.8		6.00	2.7	16.3
	Br. No. COL-30-3269	826+29.25	827+63.75	No Work									
		827+63.75	827+90	26.25	5	14.6	8	6.25	6.1		6.00	2.4	14.6
		827+90	829+50	160.00	5	88.9	9	6.85	40.6		7.50	18.5	88.9
		829+50	866+75	3725.00	5	2069.4	8	6.25	862.3		6.00	344.9	2069.4
		866+75	868+75	200.00	5	111.1	9 to 10	7.03	52.1		7.88	24.3	111.1
		868+75	874+50	575.00	5	319.4	10	6.91	147.2		7.63	67.7	319.4
		874+50	876+00	150.00	5	83.3	10 to 9	6.78	37.7		7.31	16.9	83.3
		876+00	912+95	3695.00	5	2052.8	8	6.25	855.3		6.00	342.1	2052.8
		912+95	917+94.78	499.78	5	277.7	9 to 10	7.04	130.3		7.94	61.2	277.7
		917+94.78	918+83.59	88.81	5	49.3	10	7.55	24.8		9.13	12.5	49.3
		918+83.59	923+10	426.41	5	236.9	10 to 9	7.12	112.4		8.06	53.0	236.9
		923+10	928+79	569.00	5	316.1	8	6.25	131.7		6.00	52.7	316.1
		928+79	933+85.67	506.67	5	281.5	9 to 10	7.03	131.9		7.88	61.6	281.5
		933+85.67	941+00	714.33	5	396.9	10	7.55	199.7		9.13	100.7	396.9
		941+00	945+24	424.00	5	235.6	10 to 9	7.10	111.5		8.06	52.7	235.6
		945+24	948+21.97	297.97	5	165.5	8	6.25	69.0		6.00	27.6	165.5
	Br. No. COL-30-3500	948+21.97	952+00.05	No Work									
		952+00.05	963+50	1149.95	5	638.9	8	6.25	266.2		6.00	106.5	638.9
EASTBOUND MEDIAN		800+00	826+29.25	2629.25	5	1460.7	8	6.25	608.6		6.00	243.5	1460.7
	Br. No. COL-30-3269	826+29.25	827+63.75	No Work									
		827+63.75	833+00	536.25	5	297.9	8	6.25	124.1		6.00	49.7	297.9
		833+00	834+75	175.00	5	97.2	9 to 10	7.03	45.6		7.88	21.3	97.2
		834+75	840+50	575.00	5	319.4	10	6.81	145.0		7.38	65.5	319.4
		840+50	841+50	100.00	5	55.6	10 to 9	6.81	25.2		7.38	11.4	55.6
		841+50	855+00	1350.00	5	750.0	8	6.25	312.5		6.00	125.0	750.0
		855+00	859+50	450.00	5	250.0	9 to 10	7.03	117.2		7.88	54.7	250.0
		859+50	861+00	150.00	5	83.3	10	7.55	41.9		9.13	21.1	83.3
		861+00	865+00	400.00	5	222.2	10 to 9	7.07	104.9		8.00	49.4	222.2
		865+00	898+25	3325.00	5	1847.2	8	6.25	769.7		6.00	307.9	1847.2
		898+25	903+36.04	511.04	5	283.9	9 to 10	7.03	133.1		7.88	62.1	283.9
		903+36.04	903+67.62	31.58	5	17.5	10	7.55	8.8		9.13	4.4	17.5
		903+67.62	907+75	407.38	5	226.3	10 to 9	7.12	107.4		8.06	50.7	226.3
		907+75	948+21.97	4046.97	5	2248.3	8	6.25	936.8		6.00	374.7	2248.3
	Br. No. COL-30-3500	948+21.97	952+00.05	No Work									
		952+00.05	952+25	24.95	5	13.9	8	6.25	5.8		6.00	2.3	13.9
		952+25	957+50	525.00	5	291.7	9 to 10	7.04	136.9		7.88	63.8	291.7
		957+50	962+23.72	473.72	5	263.2	10	7.55	132.5		9.13	66.8	263.2
		962+23.72	963+50	126.28	5	70.2	10 to 9	7.42	34.7		8.81	17.2	70.2
TOTALS - (CARRIED BELOW)									7,600.8	- -		3,203.2	17,597.2
EASTBOUND MAINLINE QUANTITIES	From Sheet No. 9								6,174.0	15,813.4		2,926.0	15,813.4
WESTBOUND MAINLINE QUANTITIES	From Sheet No. 10								6,768.1	15,228.8		2,765.9	15,228.8
MEDIAN QUANTITIES	From This Sheet								7,600.8	- -		3,203.2	17,597.2
RAMP QUANTITIES	From Sheet No. 12								2,460.2	4,007.8		937.4	5,824.1
TOTALS (Carried To General Summary)									23,003.1	35,050.0		9,832.5	54,463.5

End Area Details

Detail (8)

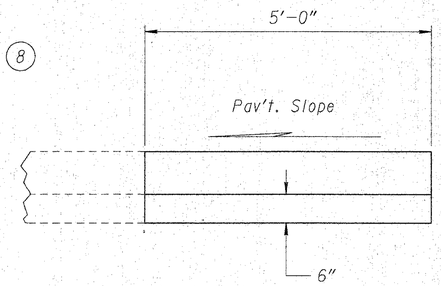

Exc. End Area = 6.25 s.f.

Detail (9)

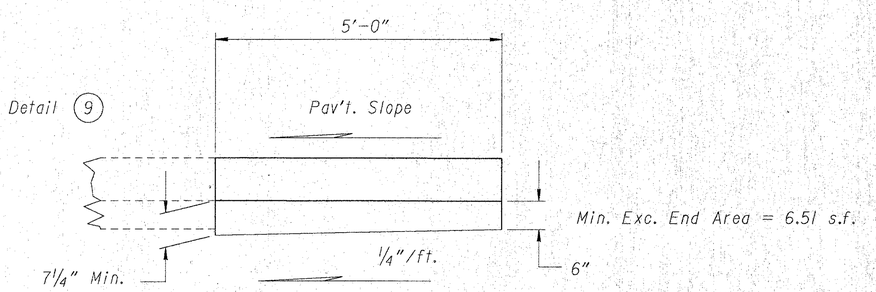

Detail (10)

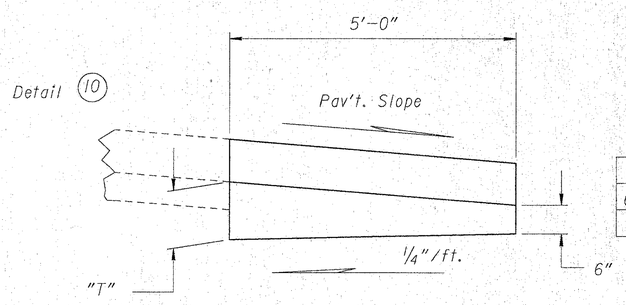

Pav't. Slope	T	Exc. End Area (Sq. Ft.)
0.024'/ft.	8 3/4"	6.81 s.f.
0.032'/ft.	9 1/4"	6.91 s.f.
1"/ft.	12 1/4"	7.55 s.f.

30303217.TKR

SHOULDER QUANTITIES

RAMP CONCRETE SHOULDER CONSTRUCTION QUANTITIES

* Corrected For Arc Length

** 1.5 Sq. Ft. Has Been Deducted Due To The Removal Of The Existing Concrete Shoulder

QUANTITIES	
Calc. TKR	Chkd. SHG
Date: 7-29-92	Date: 8-26-92

FHWA REGION	STATE	PROJECT	
5	OHIO		

12/77

COL-30-32.19

Location	Station From	Station To	Length	Width	Area	Side	End Area Detail No.	203 Average End Area	203 Excavation	203 Subgrade Compaction	304 Average Thickness	304 Aggregate Base, As Per Plan	305 9" Concrete Base, As Per Plan
			Lin. Ft.	Lin. Ft.	Sq. Yd.			Sq. Ft.	Cu. Yd.	Sq. Yd.	Inch	Cu. Yd.	Sq. Yd.
SR. 170 INTERCHANGE													
Ramp "D"	16+66.12 SR 170	0+83.0	10.39 *	5.5 avg	6.4	LT	– –	3.8	1.5	– –	6.00	1.1	6.4
	0+83.0	11+46.51	1077.23*	3	359.1	LT	– –	3.8	151.6	– –	6.00	59.9	359.1
	11+46.51	11+96.51	50.61*	2.5 avg	14.1	LT	– –	3.1	5.8	– –	6.00	2.4	14.1
	15+68.66 SR 170	0+15.9	15.13	7 avg	11.8	RT	– –	8.8	4.9	11.8	6.00	2.0	11.8
	0+15.9	1+99	183.1	6	122.1	RT	1	7.5	50.9	122.1	5.50	18.7	122.1
	1+99	4+00	201	6	134.0	RT	1 to 5	7.8	58.1	134.0	5.94	22.1	134.0
	4+00	9+50	550	6	366.7	RT	5	8.0	163.0	366.7	6.38	65.0	366.7
	9+50	10+98	148	6	98.7	RT	5 to 1	7.8	42.8	98.7	5.94	16.3	98.7
	10+98	13+46.51	248.51	6	165.7	RT	1	7.5	69.0	165.7	5.50	25.3	165.7
	13+46.51	13+96.51	50	7 avg	38.9	RT	1	9.0	16.7	38.9	5.88	6.4	38.9
	13+96.51	16+96.58	300.07	8	266.7	RT	1	10.4	115.6	266.7	6.25	46.3	266.7
Ramp "A"	16+98.94	16+84.86	14.08	8.27 avg	12.9	LT	– –	3.8	2.0	– –	6.00	2.2	12.9
	16+84.86	15+45	139.86	3	46.6	LT	– –	3.8	19.7	– –	6.00	7.8	46.6
	15+45	8+00	745	3	248.3	LT	11	3.6	99.3	– –	4.50	31.0	248.3
	8+00	0+33.1	766.9 *	3	255.6	LT	– –	3.8	107.9	– –	6.00	42.6	255.6
	0+33.1	22+66.39 SR 170	15.26	5.5 avg	9.3	LT	– –	3.8	2.2	– –	6.00	1.6	9.3
	16+98.94	16+84.86	14.08	8	12.5	RT	1	10.4	5.4	12.5	6.25	2.2	12.5
	16+84.86	16+34.86	50	7 avg	38.9	RT	1	9.0	16.7	38.9	5.88	6.4	38.9
	16+34.86	0+85.7	1549.16	6	1032.8	RT	1	7.5	430.3	1032.8	5.50	157.8	1032.8
	0+85.7	23+37.95 SR 170	68.08	6	45.4	RT	1	7.5	18.9	45.4	5.50	6.9	45.4
	23+37.95 SR 170	23+72.64 SR 170	36.11	6	24.1	RT	1	7.5	10.0	24.1	5.50	3.7	24.1
	23+72.64 SR 170	23+86.48 SR 170	13.84	7 avg	10.8	RT	– –	8.8	4.5	10.8	6.00	1.8	10.8
SR. 7 INTERCHANGE													
Ramp "A"	7+00	2+00	500	3	166.7	LT	– –	3.8	70.4	– –	6.00	27.8	166.7
	2+00	0+85.6	114.4	3	38.1	LT	– –	2.3**	9.7	– –	6.00	6.4	38.1
	7+00	6+85.15	14.85	6	9.9	RT	5 to 1	7.6	4.2	9.9	5.56	1.5	9.9
	6+85.15	4+39.41	245.74	6	163.8	RT	1	7.5	68.3	163.8	5.50	25.0	163.8
	4+39.41	3+25.79	113.62	6	75.8	RT	1 to 5	7.9	33.2	75.8	6.25	13.7	75.8
	3+25.79	1+95	130.79	6	87.2	RT	5	8.3	40.2	87.2	7.00	17.0	87.2
	1+95	1+15.23	79.77	6	53.2	RT	5	8.1	23.9	53.2	6.63	9.8	53.2
	1+15.23	0+40.23	75	4.5 avg	37.5	RT	5 to 11	5.8	16.1	– –	5.38	5.6	37.5
Ramp "B"	2+27	8+33	606	3	202.0	LT	– –	3.8	85.3	– –	6.00	33.7	202.0
	8+33	9+33	100	2.5 avg	27.8	LT	– –	3.1	11.5	– –	6.00	4.6	27.8
	2+42.5	3+63.10	120.6	6	80.4	RT	1	7.5	33.5	80.4	5.50	12.3	80.4
	3+63.10	4+41.78	78.68	6	52.5	RT	1 to 12	7.2	21.0	52.5	5.00	7.3	52.5
	4+41.78	5+00	58.22	6	38.8	RT	12 to 6	7.1	15.3	38.8	4.50	4.9	38.8
	5+00	7+50	250	6	166.7	RT	6	7.3	67.6	166.7	4.50	20.8	166.7
	7+50	7+70	20	6	13.3	RT	6	7.4	5.5	13.3	4.63	1.7	13.3
	7+70	8+50	80	6	53.3	RT	6	7.4	21.9	53.3	4.75	7.0	53.3
	8+50	9+83	133	6	88.7	RT	6	7.4	36.5	88.7	4.63	11.4	88.7
	9+83	10+33	50	7 avg	38.9	RT	6	8.9	16.5	38.9	4.88	5.3	38.9
Ramp "C"	1+15.7	1+44.8	29.1	11.61 avg	37.5	LT	– –	14.5	15.6	37.5	6.00	6.3	37.5
	1+44.8	6+00	455.2	3	151.7	LT	– –	3.8	64.1	– –	6.00	25.3	151.7
	1+44.8	1+94.8	50	7 avg	38.9	RT	5	9.8	18.2	38.9	6.88	7.4	38.9
	1+94.8	2+35	40.2	6	26.8	RT	5	8.2	12.2	26.8	6.81	5.1	26.8
	2+35	6+00	365	6	243.3	RT	5	8.3	112.2	243.3	7.00	47.3	243.3
Ramp "D"	1+ 22.5	1+84.9	62.4	3	20.8	LT	– –	3.8	8.8	– –	6.00	3.5	20.8
	1+84.9	2+31	46.1	3.5 avg	17.9	LT	– –	4.4	7.5	– –	6.00	3.0	17.9
	2+31	2+88.81	57.81	3	19.3	LT	– –	3.8	8.1	– –	6.00	3.2	19.3
Br. No. COL-7-0626 L	2+88.81	5+80.14	No Work										
Ramp "D"	5+80.14	9+10	329.86	3	110.0	LT	– –	3.8	46.4	– –	6.00	18.3	110.0
	9+10	10+10	100	2.5 avg	27.8	LT	– –	3.1	11.5	– –	6.00	4.6	27.8
	1+22.5	1+72.5	50	7 avg	38.9	RT	5	9.8	18.2	38.9	7.25	7.8	38.9
	1+72.5	2+38.55	66.05	6	44.0	RT	5	8.3	20.3	44.0	7.00	8.6	44.0
	2+38.55	3+13.81	75.26	6	50.2	RT	5	8.1	22.6	50.2	6.63	9.3	50.2
Br. No. COL-7-0626 L	3+13.81	5+55.14	No Work										
Ramp "D"	5+55.14	9+10	354.86	6	236.6	RT	1	7.5	98.6	236.6	5.50	36.2	236.6
	9+10	10+10	100	4 avg	44.4	RT	1	5.0	18.5	– –	5.00	6.2	44.4
TOTALS (Carried To Sheet No. 11)									2,460.2	4,007.8		937.4	5,824.1

End Area Details

DETAIL (1)

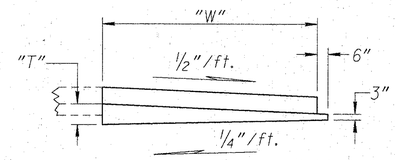

W	T	Exc. End Area (Sq. Ft.)
2'	6"	2.4
6'	8"	7.5
8'	9 1/2"	10.4

DETAIL (5)

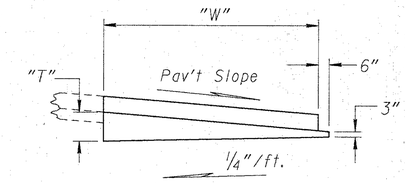

W	T	Exc. End Area (Sq. Ft.)
6'	8 1/4" to 11"	7.6 to 8.3
8'	11 1/4" to 12"	11.3 to 11.5

DETAIL (6)

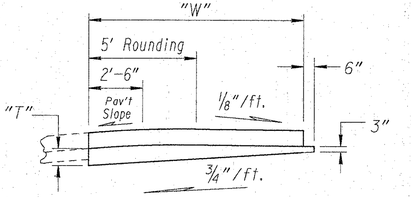

W	T	Exc. End Area (Sq. Ft.)
6'	6" to 6 1/2"	7.3 to 7.4
8'	7 1/2"	10.4

DETAIL (11)

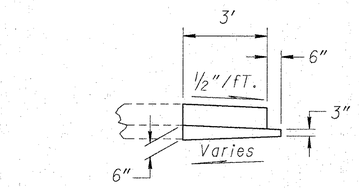

Exc. End Area = 3.6 Sq. Ft.

DETAIL (12)

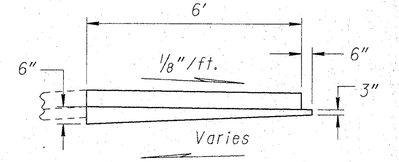

Exc. End Area = 6.9 Sq. Ft.

3030317.TKR

SHOULDER QUANTITIES

MAINLINE PAVEMENT RESURFACING QUANTITIES

QUANTITIES	
Calc. KFP	Chkd. SHG
Date: 7-23-92	Date: 9-31-92

FHWA REGION	STATE	PROJECT	
5	OHIO		

COL-30-32.19

13/77

Location	Station		Length	Width	Area	202	407	446			
						Wearing Course Removed	Tack Coat At 0.075 Gal./S.Y.	Thickness	Asph. Conc. Intermed Course, Type 2	Thickness	Asph. Conc. Surface Course Type 1
	From	To	Lin. Ft.	Lin. Ft.	Sq. Yd.	Sq. Yd.	Gal.	Inch	Cu. Yd.	Inch	Cu. Yd.
Feather	799+68.75	800+00.00	31.25	24	83.3	83.3	6.3	2.38 avg	5.51	1.25	2.89
Eastbound	800+00.00	825+23.00	2523.00	24	6728.0	6728.0	504.6	3.00	560.67	1.25	233.61
Feather	825+23.00	825+60.50	37.5	24	100.0	100.0	7.50	2.25 avg	6.25	1.25	3.47
	825+60.50	826+04.25	43.75	24	116.67	116.67	8.75			1.88 avg	6.08
Br. No. COL-30-3269											
Feather	827+88.75	828+32.50	43.75	24	116.67	116.67	8.75			1.88 avg	6.08
	828+32.50	828+70.00	37.50	24	100.0	100.0	7.50	2.25 avg	6.25	1.25	3.47
Eastbound	828+70.00	947+40.72	11870.72	24	31655.25	31655.25	2374.14	3.00	2637.94	1.25	1099.14
Feather	947+40.72	947+78.22	37.5	24	100.0	100.00	7.50	2.25 avg	6.25	1.25	3.47
	947+78.22	948+21.97	43.75	24	116.67	116.67	8.75			1.88 avg	6.08
Br. No. COL-30-3503											
Feather	951+75.05	952+18.80	43.75	24	116.67	116.67	8.75			1.88 av	6.08
	952+18.80	952+56.30	37.5	24	100.0	100.00	7.50	2.25 avg	6.25	1.25	3.47
Eastbound	952+56.30	963+50.00	1093.7	24	2916.53	2916.53	218.74	3.00	243.04	1.25	101.27
Feather	963+50.00	963+81.25	31.25	24	83.3	83.3	6.3	2.38 avg	5.51	1.25	2.89
Feather	799+68.75	800+00.00	31.25	24	83.3	83.3	6.3	2.38 avg	5.51	1.25	2.89
Westbound	800+00.00	825+23.00	2523.00	24	6728.0	6728.0	504.6	3.00	560.67	1.25	233.61
Feather	825+23.00	825+60.50	37.5	24	100.0	100.0	7.50	2.25 avg	6.25	1.25	3.47
	825+60.50	826+04.25	43.75	24	116.67	116.67	8.75			1.88 avg	6.08
Br. No. COL-30-3269											
Feather	827+88.75	828+32.50	43.75	24	116.67	116.67	8.75			1.88 avg	6.08
	828+32.50	828+70.00	37.5	24	100.0	100.0	7.50	2.25 avg	6.25	1.25	3.47
Westbound	828+70.00	947+40.72	11870.72	24	31655.25	31655.25	2374.14	3.00	2637.94	1.25	1099.14
Feather	947+40.72	947+78.22	37.5	24	100.0	100.0	7.50	2.25 avg	6.25	1.25	3.47
	947+78.22	948+21.97	43.75	24	116.67	116.67	8.75			1.88 avg	6.08
Br. No. COL-30-3503											
Feather	951+75.05	952+18.80	43.75	24	116.67	116.67	8.75			1.88 avg	6.08
	952+18.80	952+56.30	37.5	24	100.0	100.0	7.50	2.25 avg	6.25	1.25	3.47
Westbound	952+56.30	963+50.00	1093.7	24	2916.53	2916.53	218.74	3.00	243.04	1.25	101.27
Feather	963+50.00	963+81.25	31.25	24	83.3	83.3	6.3	2.38 avg	5.51	1.25	2.89
Speed Change Lanes											
SR 170 Interchange	808+02.72	812+54.73	452.0	24 avg	1205.33	1205.33	90.40	3.00	100.44	1.25	41.85
Ramp A	812+54.73	814+76.00	221.27	12	295.03	295.03	22.13	3.00	24.59	1.25	10.24
	814+76.00	815+76.00	100.0	6 avg	66.67	66.67	5.0	3.00	5.56	1.25	2.31
Ramp D	806+15.00	818+15.00	1200.0	12.5 avg	1666.67	1666.67	125.0	3.00	138.89	1.25	57.87
SR 7 Interchange	951+75.05	952+18.80	43.75	22	106.94	106.94	8.02			1.88 avg	5.58
Ramp C	952+18.08	952+56.30	37.5	22	91.67	91.67	6.88	2.25 avg	5.73	1.25	3.18
	952+56.30	959+50.00	693.7	11 avg	847.86	847.86	63.59	3.00	70.66	1.25	29.44
Ramp D	939+00.00	942+00.00	300.0	6 avg	200.0	200.0	15.0	3.00	16.67	1.25	6.94
	942+00.00	945+92.24	392.24	12	522.99	522.99	39.24	3.00	43.58	1.25	18.16
	945+92.24	947+40.72	148.48	29.5 avg	486.6	486.68	36.50	3.00	40.56	1.25	16.90
Ramp A	940+50.00	943+00.00	250.0	6 avg	166.67	166.67	12.50	3.00	13.89	1.25	5.79
	943+00.00	944+00.00	100.0	12	133.33	133.33	10.0	3.00	11.11	1.25	4.63
	944+00.00	945+47.40	147.40	16 avg	262.04	262.04	19.65	3.00	21.84	1.25	9.10
	945+47.40	946+40.00	92.6	18 avg	185.2	185.2	13.89	3.00	15.43	1.25	6.43
	946+40.00	947+40.72	100.72	35.8 avg	400.64	400.64	30.05	3.00	33.39	1.25	13.91
	947+40.72	947+78.22	37.5	27.5 avg	114.58	114.58	8.59	2.25 avg	7.16	1.25	3.98
	947+78.22	948+21.97	43.75	24	116.67	116.67	8.75			1.88 avg	6.09
Ramp B	960+33.00	961+68.00	135.0	16.5 avg	247.50	247.50	18.56	3.00	20.63	1.25	8.59
	961+68.00	963+50.00	182.0	12	242.67	242.67	18.20	3.00	20.22	1.25	8.43
	963+50.00	963+81.25	31.25	11.5 avg	39.93	39.93	2.99	2.38 avg	2.64	1.25	1.39
Ramp L	961+50.00	963+50.00	200.0	2.5 avg	55.56	55.56	4.17	3.00	4.63	1.25	1.93
	963+50.00	963+81.25	31.25	5.5 avg	19.10	19.10	1.43	2.38 avg	1.59	1.25	0.66
TOTALS (Carried To Sheet No. 15)						92,139.85	6,910.70		7,554.55		3,219.40

Remarks

30303221.TKR

RESURFACING CALCULATIONS

MAINLINE SHOULDER RESURFACING QUANTITIES

QUANTITIES	
Calc. KFP	Chkd. SHG
Date: 7-23-92	Date: 9-31-92

FHWA REGION	STATE	PROJECT	
5	OHIO		

14/77

COL-30-32.19

Location	Station		Length	Width	Area	446			
						Thickness	Asph. Conc. Intermed. Course, Type 2	Thickness	Asph. Conc. Surface Course, Type 1
	From	To	Lin. Ft.	Lin. Ft.	Sq. Yd.	Inch	Cu. Yd.	Inch	Cu. Yd.
Feather	799+68.75	800+00.00	31.25	13	45.14	2.38 avg	2.98	1.25	1.57
Eastbound	800+00.00	806+15.00	615	13	888.33	3	74.03	1.25	30.84
	806+15.00	818+15.00	1200	13	1733.33	3	144.44	1.25	60.19
	818+15.00	825+23.00	708	13	1022.67	3	85.22	1.25	35.51
Feather	825+23.00	825+60.50	37.5	13	54.17	2.25 avg	3.39	1.25	1.88
	825+60.50	826+04.25	43.75	13	63.19			1.88 avg	3.30
Br. No. COL-30-3269									
Feather	827+88.75	828+32.50	43.75	13	63.19			1.88 avg	3.30
	828+32.50	828+70.00	37.5	13	54.17	2.25 avg	3.39	1.25	1.88
Eastbound	828+70.00	887+00.00	5830	13	8421.11	3	701.76	1.25	292.40
	887+00.00	888+00.00	100	14 avg	155.56	3	12.96	1.25	5.40
	888+00.00	939+00.00	5100	15	8500.0	3	708.33	1.25	295.14
	939+00.00	942+00.00	300	14 avg	466.67	3	38.89	1.25	16.20
	942+00.00	945+92.24	392.24	13	566.57	3	47.21	1.25	19.67
	945+92.24	947+40.72	148.48	27 avg	445.44	3	37.12	1.25	15.47
Feather	947+40.72	947+78.22	37.5	12 avg	50	2.25 avg	3.13	1.25	1.74
	947+78.22	948+21.97	43.75	11 avg	53.47			1.88 avg	2.79
Br. No. COL-30-3503									
Feather	951+75.05	952+18.80	43.75	9 avg	43.75			1.88 avg	2.28
	952+18.80	952+56.30	37.5	12 avg	50	2.25 avg	3.13	1.25	1.74
Eastbound	952+56.30	958+51.00	594.7	15	991.17	3	82.60	1.25	34.42
	958+51.00	960+33.00	182	18 avg	364	3	30.33	1.25	12.64
	960+33.00	962+12.00	179	6.5 avg	129.28	3	10.77	1.25	4.89
	962+12.00	963+50.00	138	8	122.67	3	10.22	1.25	4.26
Feather	963+50.00	963+81.25	31.25	7.5 avg	26.04	2.38 avg	1.72	1.25	0.90
Feather	799+68.75	800+00.00	31.25	13	45.14	2.38 avg	2.98	1.25	1.57
Westbound	800+00.00	807+00.00	700	13	1011.11	3	84.26	1.25	35.11
	807+00.00	808+00.00	100	16 avg	177.78	3	14.82	1.25	6.17
	808+00.00	820+00.00	1200	13	1733.33	3	144.44	1.25	60.19
	820+00.00	825+23.00	523	13	755.44	3	62.95	1.25	26.23
Feather	825+23.00	825+60.50	37.5	13	54.17	2.25 avg	3.39	1.25	1.88
	825+60.50	826+04.25	43.75	13	63.19			1.88 avg	3.30
Br. No. COL-30-3269									
Feather	827+88.75	828+32.50	43.75	13	63.19			1.88 avg	3.30
	828+32.50	828+70.00	37.5	13	54.17	2.25 avg	3.39	1.25	1.88
Westbound	828+70.00	887+00.00	5830	13	8421.11	3	701.76	1.25	292.40
	887+00.00	888+00.00	100	14 avg	155.56	3	12.96	1.25	5.40
	888+00.00	940+50.00	5250	15	8750.0	3	729.17	1.25	303.82
	940+50.00	943+00.00	250	14 avg	388.87	3	32.41	1.25	13.50
	943+00.00	954+47.40	247.40	13	357.36	3	29.78	1.25	12.41
	945+47.40	946+40.00	92.6	9	92.6	3	7.72	1.25	3.22
	946+40.00	947+40.72	100.72	17	190.25	3	15.85	1.25	6.61
Feather	947+40.72	947+78.22	37.5	17	70.83	2.25 avg	4.43	1.25	1.84
	947+78.22	948+21.97	43.75	14	68.06			1.88 avg	3.55
Br. No. COL-30-3503									
Feather	951+75.05	951+83.00	7.95	5	4.42			1.16 avg	.14
	951+83.00	952+18.80	35.8	9.19 avg	36.56			1.54 avg	1.56
	952+18.80	952+51.00	32.2	11.69 avg	41.82	2.14 avg	2.49	1.25	1.45
	952+51.00	952+56.30	5.3	13	7.66	2.90 avg	.62	1.25	.27
Westbound	952+56.30	956+55.00	398.7	13	575.9	3	47.99	1.25	20.00
	956+55.00	959+50.00	295	12.5 avg	409.72	3	34.14	1.25	14.23
	959+50.00	963+50.00	400	14.0 avg	622.22	3	51.85	1.25	21.60
Feather	963+50.00	963+81.25	31.25	13	45.14	2.38 avg	2.98	1.25	1.57
TOTALS (Carried To Sheet No. 15)						X	3,992.0	X	1,691.61

Remarks

30303221.TKR

RESURFACING CALCULATIONS

RAMP RESURFACING QUANTITIES AND RESURFACING SUMMARY

QUANTITIES	
Calc. KFP	Chkd. SHG
Date: 7-23-92	Date: 9-31-92

FHWA REGION	STATE	PROJECT	
5	OHIO		

15
77

COL-30-32.19

Location	Station From	Station To	Length	Width	Area	202 Wearing Course Removed	407 Tack Coat At 0.075 Gal/S.Y.	446 Thickness	446 Asph. Conc. Intermed. Course, Type 2	446 Thickness	446 Asph. Conc. Surface Course Type 1	Remarks
			Lin. Ft.	Lin. Ft.	Sq. Yd.	Sq. Yd.	Gal.	Inch	Cu. Yd.	Inch	Cu. Yd.	
SR 170 Interchange												
Ramp A			Area 1		155.8	155.8	11.69	– –	– –	1.88 avg	8.14	
	See detail on sheet No. 40		Area 2		81.7	81.7	6.13	2.25 avg	5.11	1.25	2.84	
			Area 3			101.6	7.62	3	8.47	1.25	3.53	
	0+85.45	15+98.94	1513.49	25	4204.14	4204.14	315.31	3	350.35	1.25	145.98	
	15+98.94	16+98.94	100.0	26 avg	288.89	288.89	21.67	3	24.07	1.25	10.03	
Ramp D			Area 1		299.4	299.4	22.46	– –	– –	1.00	8.32	
	See detail on sheet No. 40		Area 2		44.21	44.21	3.32	– –	– –	1.88 avg	2.31	
			Area 3		45.9	45.9	3.44	2.25 avg	2.87	1.25	1.59	
			Area 4		39.5	39.5	2.96	3	3.29	1.25	1.37	
	1+27.20	11+46.51	1019.31	25	2831.42	2831.42	212.36	3	235.95	1.25	98.31	
	11+46.51	11+96.51	50.0	24.5 avg	136.11	136.11	10.21	3	11.34	1.25	4.73	
	11+96.51	15+96.58	400.07	22 avg	977.95	977.95	73.35	3	81.50	1.25	33.96	
	15+96.58	16+96.58	100.0	21 avg	233.33	233.33	17.50	3	19.44	1.25	8.10	
SR 7 Interchange												
Ramp A	0+53.00	1+53.00	100.0	25.5 avg	283.33	283.33	21.25	3	23.61	1.25	9.84	
	1+53.00	7+00.00	547.0	29	1762.56	1762.56	132.19	3	146.88	1.25	61.20	
	7+00.00	7+05.00	5.0	29	16.11	16.11	1.21	2.75 avg	1.23	1.25	0.56	
Ramp B			Area 1		11.9	11.9	.89	2.75 avg	.91	1.25	.41	
			Area 2		19.2	19.2	1.44	2.75 avg	1.47	1.25	.67	
			Area 3		42.4	42.4	3.18	2.25 avg	2.65	1.25	1.47	
			Area 4		74.9	74.9	5.62	– –	– –	1.88 avg	3.91	
			Area 5		61.7	61.7	4.63	3	5.14	1.25	2.14	
	2+51.64	8+33.00	581.36	25	1614.89	1614.89	121.12	3	134.57	1.25	56.07	
	8+33.00	9+33.00	100.0	23.5 avg	261.11	261.11	19.58	3	21.76	1.25	9.07	
	9+33.00	10+33.00	100.0	22.5 avg	250.0	250.0	18.75	3	20.83	1.25	8.68	
Ramp C	1+41.00	2+41.00	100.0	30 avg	333.33	333.33	25.0	3	27.78	1.25	11.57	
	2+41.00	6+00.00	359	29	1156.78	1156.78	86.76	3	96.40	1.25	40.17	
	6+00.00	6+05.00	5	29	16.11	16.11	1.21	2.75 avg	1.34	1.25	0.56	
Ramp D	1+53.00	2+53.00	100.0	28 avg	311.11	311.11	23.33	3	25.93	1.25	10.80	
	2+53.00	2+83.81	30.81	27	92.43	92.43	6.93	3	7.70	1.25	3.21	
	2+83.81	3+13.81	30	27	90.0	90.0	6.75	1.5 avg	3.75	1.25	3.13	
	5+55.14	5+85.14	30	27	90.0	90.0	6.75	1.5 avg	3.75	1.25	3.13	
	5+85.14	9+11.00	325.86	27	977.58	977.58	73.32	3	81.47	1.25	33.94	
	9+11.00	9+61.00	50.0	25.5 avg	141.67	141.67	10.63	3	11.81	1.25	4.92	
	9+61.00	10+10.00	49.0	21 avg	114.33	114.33	8.57	3	9.53	1.25	3.97	
	10+10.00	10+56.00	46	17.1 avg	87.40	87.40	6.56	3	7.28	1.25	3.03	
	10+56.00	10+61.00	5	16.10	8.94	8.94	0.75	2.75 avg	.68	1.25	0.31	
Totals–Carried Below						17,257.7	1,294.4	XX	1,378.9	XX	602.0	
Mainline Pavement	From Sheet No. 13					92,139.9	6,910.7	XX	7,554.6	XX	3,219.4	
Mainline Shoulder	From Sheet No. 14					XX	XX	XX	3,992.0	XX	1,691.6	
Mainline Ramps	From This Sheet					17,257.7	1,294.4	XX	1,378.9	XX	602.0	
TOTALS	(Carried To General Summary)					109,397.6	8,205.1		12,925.5		5,513.0	

30303221.TKR

RESURFACING CALCULATIONS

GUARDRAIL & BARRIER REFLECTOR QUANTITIES

QUANTITIES	
Calc. KFP	Chkd. SHG
Date: 8-31-92	Date: 8-31-92

FHWA REGION	STATE	PROJECT		
5	OHIO			

16
77

COL-30-32.19

Reference No.	Plan Sheet No.	Station (±) From	Station (±) To	Side	202 Guardrail Removed Lin. Ft.	202 Guardrail Removed For Storage Lin. Ft.	606 Guardrail, Type 5 Lin. Ft.	606 Anchor Assembly, Type A Ea.	606 Anchor Assembly, Type B Ea.	606 Anchor Assembly, Type E Ea.	606 Anchor Assembly, Type T Ea.	606 Bridge Terminal Assembly, Type 1 Ea.	606 Bridge Terminal Assembly, Type 2 Ea.	606 Bridge Terminal Assembly, Type 3 Ea.	802 Barrier Reflector, Type A Ea.	802 Barrier Reflector, Type B Ea.	Comments
1-GR	29	14+75 SR170	3+88.5 "D"	RT	487.5	25	475.0	1			1				8		See Detail on Sheet No. 40
2-GR	29	7+66 "D"	10+03.5 "D"	RT	212.5	25	212.5		1		1				4		
3-GR	29	1+15.5 "A"	12+28 "A"	LT	1087.5	25	1075.0			1	1				12		
4-GR	29 & 30	10+68 "A"	826+32.5	LT	2437.5		2425.0				1		1		70	1	
5-GR	29	14+50 "D"	16+00 "D"	RT	125.0	25	112.5			1	1				3		
6-GR	30	811+48	812+98	RT	125.0	25	112.5			1	1				3		
7-GR	30	824+00	826+37.5	RT	212.5	25											
		823+93.75	826+37.5				218.75			1		1			3	2	
8-GR	30	836+10	837+60	RT	125.0	25	112.5			1	1				3		
8A-GR	30	827+91	828+16	RT	25.0												
9-GR	30	840+00	841+50	RT	125.0	25	112.5			1	1				3		
10-GR	30 & 31	827+61.3	871+48.8	LT	4362.5	25											
		827+61.3	871+55.05				4368.75			1		1			Included with 4-GR		
11-GR	31	850+37	859+37	RT	875.0	25	862.5			1	1				10		
12-GR	31	864+90	866+40	RT	125.0	25	125.0	1			1				3		
13-GR	32	880+37.4	881+87.4	RT	125.0	25	112.5			1	1				3		
14-GR	32	891+66	893+41	RT	150.0	25	137.5			1	1				3		
15-GR	32	896+00	897+50	RT	125.0	25	112.5			1	1				3		
16-GR	32 & 33	875+87.5	905+75	LT	2962.5	25	2950.0			1	1				31		
17-GR	33	912+50.5	921+63	LT	887.5	25	875.0			1	1				10		
18-GR	33 & 34	924+75	941+25	LT	1625.0	25	1612.5			1	1				18		
19-GR	33	906+71	908+21	RT	125.0	25	112.5			1	1				3		
20-GR	33 & 34	934+12.5	937+12.5	RT	125.0	25	262.5			1	1				3		Place at Face of Curb
21-GR	34	936+87.5	940+00	LT	125.0	25	275.0				1				3		Place at Face of Curb
22-GR	34	944+22	946+09.5	RT	162.5	25											
		944+83.25	945+39.50				43.75			1		1			1	2	Flare at 11:1
23-GR	34	944+47.5	946+10	LT	137.5	25											
		945+24.22	945+80.47				43.75			1		1			1	2	Flare at 11:1
24-GR	34	952+64	956+64	LT	400.0												
		952+38	956+55				387.5				1		1		5		
25-GR	34	947+43.3	948+22.5	RT	81.25												
		947+43.7	948+24.6				68.75				1			1	4		See Detail on Sheet No. 39
26-GR	34	952+09	958+34	RT	625.0												
		951+22.6	958+38.2				643.75				1			1	7	4	See Detail on Sheet No. 39
27-GR	34	963+17	963+69	RT	52.0												
							218.75			1		1			3	2	
28-GR	34	2+87.5 "D"	3+37.5 "D"	RT	25.0	25											
		2+75 "D"	3+37.5 "D"				37.5			1			1		2		
29-GR	34	6+04 "D"	7+04 "D"	RT	100.0												
							87.5				1		1		2		
30-GR	34	5+58 "D"	8+58 "D"	LT	300.0												
							287.5				1		1		4		
31-GR	34	947+41.5	947+79	LT	37.5												
		947+37.1	947+80.4					31.25			1			1	5		See Detail on Sheet No. 39
32-GR	34	951+23	1+34 "A"	LT	62.5	25											
		951+22.6	1+23.1 "A"				81.25			1				1			See Detail on Sheet No. 39
33-GR	34	2+45 "B"	961+85.8	RT	962.5	25											
		3+04.5 "B"	962+24.2				956.25		1				1		10	2	See Detail on Sheet No. 38
34-GR	34	50+75 9th St.	52+62.5 9th St.	LT	162.5	25											
							162.5		1					1	3	3	
35-GR	34	50+50 9th St.	51+75 9th St.	RT	100.0	25											
							100.0		1					1	8	2	
36-GR	34	3+85.0 9th St. Conn.	48+53.9 9th St.	RT	450.0	25											
							450.0		1					1			See Detail on Sheet No. 38
37-GR	34	959+00	960+47.57	LT													
							100.0				1	1					Place at Face of Curb
		799+68.75	901+03	℄												204	Mount on Both Sides of Concrete Barrier
- -	- -	901+03	942+90	RT												42	Mount on Traffic Side of Concrete Barrier
		942+90	963+81.25	℄												42	Mount on Both Sides of Concrete Barrier
TOTALS		Quantities Carried To Sheet No. 55													253	306	
		Quantities Carried To General Summary			20,233.25	700.0	20,112.5	31.25	5	3	21	26	7	8	4		

3030314.TKR

CALCULATIONS

LINEAR GRADING QUANTITIES

QUANTITIES	
Calc. KFP	Chkd. SHG
Date: 9-10-92	Date: 9-10-92

FHWA REGION	STATE	PROJECT	
5	OHIO		

17/77

COL-30-32.19

LINEAR GRADING, METHOD 2 & ASPHALT PAVING UNDER GUARDRAIL

GUARDRAIL NO.	REF. NO.	STATIONS OF PAVING (±) FROM	TO	LANE	LENGTH	203 LINEAR GRADING, METHOD 2	203 EXCAVATION	448 2" ASPHALT CONCRETE INTERMEDIATE COURSE, TYPE 1, (UNDER GUARDRAIL) AS PER PLAN
					LIN.FT.	STA.	CU.YD.	CU.YD.
6-GR		811+48	812+98	EASTBOUND	150.0	1.50	3.70	3.70
7-GR		823+93.75	826+37.5		237.5	2.38	5.86	5.86
8-GR		836+10	837+60		150.0	1.50	3.70	3.70
9-GR		840+00	841+50		150.0	1.50	3.70	3.70
11-GR		850+37	859+37		900.0	9.0	22.22	22.22
12-GR		864+90	866+40		150.0	1.50	3.70	3.70
13-GR		880+37.4	881+87.4		150.0	1.50	3.70	3.70
14-GR		891+66	893+41		175.0	1.75	4.32	4.32
15-GR		896+00	897+50		150.0	1.50	3.70	3.70
19-GR		906+71	908+21		150.0	1.50	3.70	3.70
22-GR		945+00	945+37.4		37.4	0.37	0.92	0.92
25-GR		947+43.7	948+24.6		81.25	0.81	2.01	2.01
26-GR		951+22.6	958+38.2		656.25	6.56	16.20	16.20
4-GR		10+68 "A"	826+32.5	WESTBOUND	2437.5	24.38	60.19	60.19
10-GR		827+61.3	871+55.05		4393.8	43.94	108.49	108.49
16-GR		875+87.5	905+75		2987.5	29.88	73.77	73.77
17-GR		912+50.5	921+63		912.5	9.13	22.53	22.53
18-GR		924+75	941+25		1650.0	16.50	40.74	40.74
23-GR		945+26.32	945+80.47		162.5	1.63	4.01	4.01
31-GR		947+37.1	947+80.4		43.75	0.44	1.08	1.08
32-GR		951+22.6	1+23.1 "A"		93.75	0.94	2.31	2.31
24-GR		952+51	956+55		387.00	3.87	9.56	9.56
37-GR		959+00	960+47.57		137.50	1.38	3.40	3.40
3-GR		1+15.5 "A"	12+28 "A"	"A"	1112.5	11.13	27.47	27.47
1-GR		14+75 SR 170	3+88.5 "D"	"D"	512.5	5.13	12.65	12.65
2-GR		7+66 "D"	10+03.5 "D"	"D"	237.5	2.38	5.86	5.86
5-GR		14+50 "D"	16+00 "D"	"D"	150.0	1.50	3.70	3.70
28-GR		2+75 "D"	3+37.5 "D"	"D"	50.0	0.50	1.23	1.23
29-GR		6+04 "D"	7+04 "D"	"D"	100.0	1.00	2.47	2.47
30-GR		5+58 "D"	8+58 "D"	"D"	300.0	3.00	7.41	7.41
33-GR		3+04.5 "B"	962+22.1	"B"	954.15	9.54	23.56	*23.56
TOTALS- CARRIED TO GENERAL SUMMARY						197.64	487.86	487.86

ITEM 659

Seeding & Mulching

From Linear Grading, Method 1:
196.05 Sta. x 100 x 6' Avg. Width ÷ 9 = 13,070 S.Y.

From Linear Grading, Method 2:
487.86 Sta. x 100 x 2' Avg. Width ÷ 9 = 10,841 S.Y.

From Linear Grading, Method 3:
82.64 Sta x 100 x 4.5' Avg. Width ÷ 9 = 4,132 S.Y.

From Linear Grading (Ditch Cleanout), Method 1:
2.0 Sta. x 100 x 23' Avg. Width ÷ 9 = 511 S.Y.

From Linear Grading (Ditch Cleanout), Method 2:
4.0 Sta x 100 x 13' Avg. Width ÷ 9 = 578 S.Y.

From Linear Grading (Ditch Cleanout), Method 3:
1.50 Sta x 100 x 26' Avg. Width ÷ 9 = 433 S.Y.

TOTAL = 29,565 S.Y.
Use 29,600 SY

Commercial Fertilizer

$\frac{29{,}600 \text{ S.Y.} \times 9 \times 20}{1000 \times 2000}$ = 2.66 TON
Use 2.66 TON

Agricultural Liming

$\frac{29{,}600 \text{ S.Y.} \times 9 \times 100}{1000 \times 2000}$ = 13.32 TON
Use 13.32 TON

Water

$\frac{29{,}600 \text{ S.Y.} \times 9 \times 120}{1000 \times 1000}$ x 2 Applications = 63.94 M GAL.
USE 64 M GAL.

(Quantities Carried To General Summary)

LINEAR GRADING, METHOD 1

STATION FROM	TO	LANE	LENGTH	203 LINEAR GRADING, METHOD 1
			LIN.FT.	STA.
799+68.75	811+48	Eastbound	1179.25	11.79
812+98	823+93.75		1095.8	10.96
827+88.75	836+10		821.3	8.21
837+60	840+00		240.0	2.40
841+50	850+37		887.0	8.87
859+37	864+90		553.0	5.53
866+40	880+37.5		1397.5	13.98
881+87.4	891+66		978.6	9.79
893+41	896+00		259.0	2.59
897+50	906+71		921.0	9.21
908+21	916+87.78		866.8	8.67
945+87.40	947+02.5		115.1	1.15
958+38.2	958+62.7		24.50	0.25
799+68.75	808+02.72	Westbound	833.97	8.34
871+55.05	875+87.5		432.5	4.32
905+75	912+50.5		675.5	6.76
921+63	924+75		312.0	3.12
941+25	944+76.32		351.3	3.51
945+80.47	947+37.1		156.63	1.57

		Ramp	Side		
23+86.48 SR 170	10+68	A	LT	90.2	0.90
22+66.39 SR 170	1+15.5		RT	1084.4	10.84
12+28	16+98.94		RT	470.9	4.71
16+66.12 SR 170	16+96.58	D	LT	1616.1	16.16
3+88.5	7+66		RT	377.5	3.78
10+03.5	14+50		RT	446.5	4.47
16+00	16+96.58		RT	96.58	0.97
1+44.8	6+00	C	RT	455.20	4.55
1+44.8	6+00		LT	455.20	4.55
1+22.5	2+75	D	LT	152.50	1.53
7+04	9+61		LT	257.00	2.57
8+58	9+61		RT	103.00	1.03
1+23.1	7+00	A	RT	576.90	5.77
0+85.6	7+00		LT	614.40	6.14
2+45	3+04.5	B	LT	59.50	0.60
2+27	8+76.4		RT	649.40	6.49
TOTAL- CARRIED TO GENERAL SUMMARY					195.54

LINEAR GRADING, METHOD 3

STATION FROM	TO	LANE	LENGTH	203 LINEAR GRADING, METHOD 3
			LIN.FT.	STA.
916+87.78	945+00	East-Bound	2812.2	28.12
951+90.3	952+51	West-Bound	60.70	6.07
960+47.57	960+50		2.43	0.02
962+80	963+50		70.00	0.70
900+43	943+00		4257.0	42.57

		RAMP	SIDE		
Intersection, From Sheet No.		B		418.43	4.18
9+61	10+10	D	RT	49.00	0.49
9+61	10+10		LT	49.00	0.49
TOTAL- CARRIED TO GENERAL SUMMARY					82.64

LINEAR GRADING (DITCH CLEANOUT)

STATION FROM	TO	LANE	LENGTH	203 LINEAR GRADING (DITCH CLEANOUT), METHOD 1	2	3
			LIN.FT.	STA.	STA.	
875+50	877+50	Eastbound	200.0	2.0		
877+50	878+50		100.0		1.0	
909+50	912+50		300.0		3.0	
926+00	927+50		150.0			1.50
TOTAL- CARRIED TO GENERAL SUMMARY				2.0	4.0	1.50

For A Description Of Each Linear Grading Method, See Sheet No. 19

Excavation where necessary.

The details for methods 1, 2, and 3 are intended to show the proposed ground line only. The hatched areas do not represent actual field conditions and shall not be used to calculate excavation volume.

DITCH CLEANOUT DETAILS

Method 1

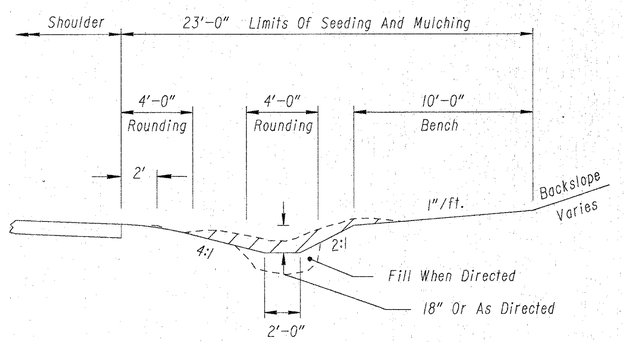

Method 2

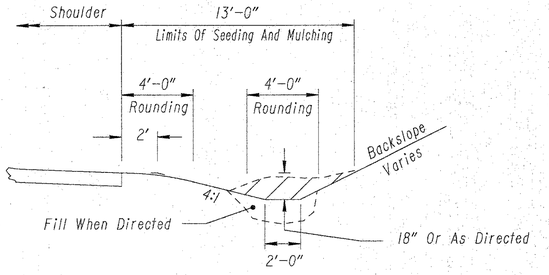

Method 3

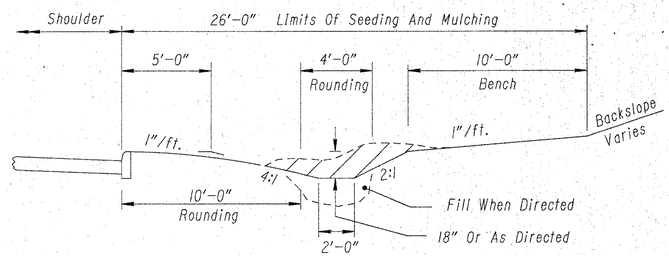

30303222.TKR

CALCULATIONS

FENCE AND PIPE CLEAN QUANTITIES

QUANTITIES	
Calc. RDA	Chkd. SHG
Date: 10-2 -92	Date: 11-18-92

FHWA REGION	STATE	PROJECT	
5	OHIO		

COL-30-32.19

18
77

FENCE QUANTITIES

REF. NO.	PLAN SHEET NO.	202 FENCE REMOVED	FENCE TYPE CLT	FENCE TYPE CL	607 POST ASSEMBLY (C)	607 POST ASSEMBLY (E)	607 POST ASSEMBLY (I)	607 FENCE TERMINAL (TD)	607 FENCE TERMINAL (A)	607 STREAM CROSSING (T2)	607 STREAM CROSSING (T3)	625 GROUND ROD
		LIN. FT.	LIN. FT.	LIN. FT.	EACH	EACH	EACH	EACH	EACH	EACH	EACH	EACH
1-F	29	897	1147		2	2						1
2-F	29	---	1451		2	1	1					
2-F	30	---	1804		14				1			
3-F	29	---	82		1	1			1			
4-F	29	---	942		4			1	2	1	1	
5-F	29	615	1134		2		1	1	1		2	
5-F	30	---	1668		4		1		1			
6-F	30	---	1507		3		1		1			
7-F	30	---	1506		11				1			
6-F	31	---	1314		2		1	1	1			
8-F	31	---	1913		3		1	1	1		1	
7-F	31	450	2479		15			1	1			1
9-F	31	---	617		1		1	1	1			
8-F	32	---	3169		8		2					
9-F	32	---	312			1	1					
10-F	32	---	1180		5	1			1			1
11-F	32	---	1335		8			1	1	1		
12-F	32	---	280		1			1				
8-F	33	---	3212		11							
12-F	33	---	3309		17						1	
8-F	34	733	1055		15				1			
12-F	34	---	1100		10				1			
13-F	34	340		607	6				1			1
14-F	34	---		794	13	1			1			1
15-F	34	---		735	2	1			1			
16-F	34	175		500	3				1			1
17-F	34	332		332	2	2			1			1
18-F	34	440		440	1	1			1			1
19-F	34	150		150		2						1
20-F	34	1090		1590	7	1			1		1	2
SUB-TOTALS		5222	32,516	5148	173	14	10	8	23	2	6	11
TOTALS		5222	32,516	5148								11

(CARRIED TO GENERAL SUMMARY)

FENCE LEGEND

- (C) — CORNER POST ASSEMBLY
- (E) — END POST ASSEMBLY
- (I) — INTERMEDIATE ANCHOR POST ASSEMBLY
- (TD) — FENCE TERMINAL (TYPE D)
- (A) — ABUTMENT CONNECTION
- (T2) — CROSSING, TYPE 2
- (T3) — CROSSING, TYPE 3
- ⏚ — GROUND ROD
- ▨ — ROCK CHANNEL PROTECTION

FOR DETAILS SEE STANDARD DRAWINGS F-1, F-3, F-5, AND F-6.

PIPE CLEANOUT QUANTITIES

Station From	Station To	Pipe Offset	Item Special Pipe Cleanout 12" Lin. Ft.	Item Special Pipe Cleanout 15" Lin. Ft.
800+00		Rt	49	
800+00	800+75	℄	75	
800+75	802+00	Rt		137
802+00	804+50	Rt		250
804+50	804+91	Rt		58
806+50	807+98	Lt	148	
824+00	526+00	℄	200	
826+00	826+05	Rt	53	
828+50	829+50	℄	100	
829+50		Lt	122	
837+00	837+35	℄	36	
840+50	841+25	℄	76	
841+25	841+50	℄	26	
874+50	875+00	Rt	70	
905+70		Lt	98	
907+75	908+17	Lt	48	
921+10		Rt	28	
921+10	921+50	Lt	28	
923+10		Lt	58	
924+35		Rt	48	
932+75		Lt/Rt	188	
936+10		Lt/Rt	148	
944+90	I-79 Ramp C	Lt/Rt	164	
I-79 Ramp C	948+00	Lt/Rt	266	
956+09	956+46.90	Lt	76	
960+25	960+34	Lt	6	
960+34	960+50	Lt	50	
963+48		Lt	44	
963+05	963+48	Lt	38	
TOTALS			2,243	442
Carried to General Summary			2,685	

CALCULATIONS

QUANTITIES	
Calc. SHG	Chkd. KFP
Date: 10 - 5 - 92	Date: 11 - 10 - 92

FHWA REGION	STATE	PROJECT	
5	OHIO		

COL-30-32.19

GENERAL NOTES

UNDERGROUND UTILITIES

The locations of underground utilities shown in the plan are as obtained from the owners of the utilities as required by ORC Section 153.64.

UTILITY OWNERSHIP

The following utilities and owners are located within the project work limits:

OHIO POWER COMPANY
301 Cleveland Ave. S.W.
Canton, Ohio 44701
Phone (216) 438-7040

TCI CABLEVISION OF OHIO, INC.
415 Market Street
East Liverpool, Ohio 43920
Phone (216) 385-4854

COLUMBIA GAS OF OHIO, INC.
P.O. Box 250
216 Highland Ave.
Cambridge, Ohio 43725
Phone (614) 432-8225

COLUMBIANA COUNTY WATER
& SEWER DISTRICT #2
315 South Market Street
Lisbon, Ohio 44432
Phone (216) 424-1459

OHIO BELL TELEPHONE
P.O. Box 1587
Youngstown, Ohio 44501
Phone (216) 744-6571

CONTINGENCY QUANTITIES

Do not order materials or perform work listed in the General Summary for items designated by plan note to be used "as directed by the Engineer" unless authorized by the Engineer. The Engineer shall record the actual work locations and quantities used at the Engineer's discretion into the final change order governing completion of this project.

ALIGNMENT AND PROFILE

The proposed work for this project is for the milling and resurfacing of the existing pavement. The alignment and superelevation rates of the existing pavement will not be changed. The profile will be raised an amount equal to the thickness of the resurfacing courses.

PREVIOUS CONSTRUCTION PLANS

The following construction plans are available for reference at the District 11 office in New Philadelphia, Ohio:

COL-30-33.86	Original construction plan, 1960
COL-30-32.19	Original construction plan, 1962
COL-30-34.95	Ninth Street bridge, 1967
COL-30-(32.19)-(33.86)	Resurfacing, 1981
COL-30-32.19	Safety upgrading, 1983
COL-7-5.52	Safety upgrading, 1991
COL-30-35.29	Original construction plan, 1992

ITEM 304 - AGGREGATE BASE, AS PER PLAN

Exclude all slag, except for granulated slag or crushed air-cooled blast furnace slag, for materials furnished for this item. The maximum total percent passing the No. 200 sieve shall be 8 percent instead of 13 percent shown in Section 304.02 of the CMS.

ITEM 407 - TACK COAT

Adjust the rate of application of tack coat as directed by the Engineer. Plan quantities indicate an average application rate of 0.075 gallons of tack coat per square yard for estimating purposes only.

ITEM 202 - RAISED PAVEMENT MARKER REMOVED FOR STORAGE

Remove existing raised pavement markers per Section 202.071. The following quantity is included in the General Summary for this item:

Item 202 - Raised Pavement Marker Removed For Storage - - - 285 Each

ITEM 201 - CLEARING AND GRUBBING, AS PER PLAN

Perform the following work within one (1) foot on each side of the new Type CL and Type CLT fence limits:

1. Remove all trees, stumps, and brush to ground level.
2. Remove all litter.
3. Mow all vegetation to a height of 3 to 5 inches.
4. Treat the removal area with the following herbicides within 24 hours after mowing: one gallon Dow "Tordon K" combined with two quarts of 2, 4 D-amine or an approved equal in sufficient water to make 50 gallons of spray mix per acre. The estimated treated area is 1.7 acres.

Obtain a commercial applicator license from the Ohio Department of Agriculture. All persons involved in the actual herbicidal spraying shall be properly licensed as required by the ORC.

The following is an estimate of the number of trees and stumps to be removed:

Size	No. of Trees	No. of Stumps
18"	100	- -

Remove all trees and stumps outside the limits of the new fence when directed by the Engineer. The Enginner shall not order trees or stumps to be removed outside the limits of the right of way or easement lines.

Payment for the above, including the removal of additional trees and stumps, will be made at the Lump Sum bid price for Item 201 - Clearing and Grubbing, As Per Plan.

ITEM 202 - LINEAR GRADING, METHODS 1 & 3

Excavate topsoil and place granular material according to the following:

Remove and dispose of all collected debris and topsoil, including rhizomes, roots, and other vegetative material, within the linear grading limits according to Section 203.05

Apply this work to the following areas:

1. Item 203 - Linear Grading, Method 1: Mainline outside shoulders and ramp shoulders without asphalt paving under guardrail.
2. Item 203 - Linear Grading, Method 3: Curbed mainline outside and median shoulders and curbed ramp shoulders.

Replace the removed material with compactable granular material conforming to Section 203.02, and place the material to grade as shown on the Typical Sections.

Payment to perform this work will be made at the unit price bid per Station for Item 203 - Linear Grading, Method 1, and Item 203 - Linear Grading, Method 3. Include the cost of all labor, equipment, materials, and incidentals necessary to complete the work.

ITEM 203 - LINEAR GRADING, METHOD 2

Excavate topsoil, place granular material, and apply herbicide according to the following:

Remove and dispose of all collected debris and topsoil, including rhizomes, roots, and other vegetative plant material, within the linear grading limits according to Section 203.05.

Replace the removed material with compactable granular material conforming to Section 203.02, and place the material to grade as shown on the Typical Sections.

Apply the herbicide on the area to be paved after completing the final leveling and grading prior to paving. Herbicide shall be Treflan E.C., Spike, or an approved equal. All persons involved in the actual herbicidal spraying shall be properly licensed as required by the ORC.

Payment to perform this work will be made at the unit price bid per Station for Item 203 - Linear Grading, Method 2. Include the cost of all labor, equipment, materials, and incidentals necessary to complete the work.

ITEM 203 - LINEAR GRADING (DITCH CLEANOUT)

Excavate material buildup to reconstruct the cut section ditch, rock fall bench and backslopes as shown on sheet no. 17 and according to the following:

Remove and dispose of all collected material within the linear grading limits according to Section 203.05

Apply this work to the following areas:

1. Item 203 - Linear Grading (Ditch Cleanout), Method 1: Mainline outside shoulders with a ten foot wide rock fall bench.
2. Item 203 - Linear Grading (Ditch Cleanout), Method 2: Mainline outside shoulders.
3. Item 203 - Linear Grading (Ditch Cleanout), Method 3: Mainline outside curbed shoulders with a ten foot wide rock fall bench.

Place granular material in ditches when directed by the Engineer to fill in eroded ditch bottoms, previously cleaned out ditch bottoms, or both. The granular material shall conform to Section 203.02.

Payment to perform this work, including furnishing and placing embankment material, will be made at the unit price bid per Station for Item 203 - Linear Grading (Ditch Cleanout), Method 1, Item 203 - Linear Grading (Ditch Cleanout), Method 2, and Item 203 - Linear Grading (Ditch Cleanout), Method 3. Include the cost of all labor, equipment, materials, and incidentals necessary to complete the work.

LOCATION OF GUARDRAIL

Adjust the location of any guardrail run when directed by the Engineer. The Engineer shall be satisfied that all guardrail installations will provide maximum protection for the traffic.

GUARDRAIL REPLACEMENT

Remove existing guardrail, grade, pave where called for, install guardrail, and install and attach anchor assemblies in a continuous operation. Consider a run of guardrail complete when the anchor assemblies are attached.

Remove 4000 linear feet maximum of guardrail at a time per directional roadway, including ramps. Keep the guardrail down-time a minimum.

Begin guardrail removal after the replacement material is on the site and ready for installation. The Engineer shall suspend work if the Contractor fails to comply with this requirement.

CONNECTIONS BETWEEN EXISTING AND PROPOSED GUARDRAIL

When it is necessary to splice proposed guardrail to existing guardrail, only the existing guardrail shall be cut, drilled, or punched. Make the connection using a "W-Beam Rail Splice" according to Standard Drawings GR-1.1 and GR 1.2. Include payment in the unit price bid of the pertinent guardrail item.

GUARDRAIL REMOVED FOR STORAGE

This item pertains to the existing 25 foot Type A anchor assembly rail elements.

The Engineer shall notify the District Maintenance Engineer ten (10) working days prior to the start of guardrail removal.

ITEM SPECIAL - SEALING OF CONCRETE SURFACES (EPOXY)

See Proposal Note. Apply an epoxy sealer to the exposed surfaces of the existing concrete barrier as shown in the Typical Sections and to the new concrete barrier, reference no's. 1-B, 2-B, 3-B, and 4-B.

Repair the surface of the concrete according to Section 520 prior to sealing.

The following quantities are included in the General Summary for the purpose of repairing and sealing the concrete barrier:

Item 520 - Pneumatically Placed Mortar - - - - - - - 5,225 Sq. Ft.
Item Special - Sealing of Concrete Surfaces - - - - - 11,770 Sq. Yd.

QUANTITIES	
Calc. SHG	Chkd. KFP
Date: 10-7-92	Date: 11-10-92

FHWA REGION	STATE	PROJECT	
5	OHIO		

COL-30-32.19

GENERAL NOTES

ITEM 606 – ANCHOR ASSEMBLY, TYPE E

Furnish and install an ET-2000 Option 'C' guardrail end terminal which is manufactured by SYRO Steel Company, 1170 N. State Street, Girard, Ohio 44420, phone 216-545-4373.

Place the anchor assembly according to the manufacturer's specifications and at the locations shown on sheet no. 16.

Install Type 1 breakaway posts per Standard Drawing GR-1.3 at the point where the anchor assembly and the guardrail run meet, and at the next three (3) post locations into the guardrail run.

Payment for the above work, including all related hardware not separately specified, and installing the Type 1 breakaway posts, will be made at the unit price bid per Each for Item 606 – Anchor Assembly, Type E. Include the cost of all labor, materials, equipment, and incidentals necessary to construct a complete and functional 25 feet long anchor assembly.

FENCE GROUNDING

Ground all right of way fence which crosses under overhead power lines or transmission lines according to Standard Drawing HL-50.11.

See sheet no. 18 for locations and quantities.

LOCATION OF FENCE IN SPIRALED HORIZONTAL CURVES

The stations and offsets are located on the extension of the tangent from the T.S. forward or the S.T. rearward.

ITEM 251 – PARTIAL DEPTH PAVEMENT REPAIR

An estimated quantity for this item is included in the General Summary which is calculated from 10 percent of the mainline, speed change lane, and ramp pavement area:

Item 251 – Partial Depth Pavement Repair – – – – – – 10,000 Sq. Yd.

FULL DEPTH PAVEMENT REPAIR

Approximately 47,000 square feet of reinforcement and 25 joint assemblies per Standard Drawing BP-2.5 will be required for full depth pavement repairs.

TRAFFIC CONTROL STANDARD CONSTRUCTION DRAWINGS

References to Supplemental Specifications 857, 858, 861, 957, 958, and 961 on the Traffic Control Standard Construction Drawings in these plans shall be considered to read as respective references to Items 630, 631, 633, 730, 731, and 733.

ITEM 202 – CURB REMOVED, AS PER PLAN

Remove all existing Type 2-A curb to be flush with the surface of the existing concrete pavement. See sheet no. 41 for details, quantities, and locations.

ITEM 609 – CURB, TYPE 2-B, AS PER PLAN

Drill vertical 5/8" holes at 12 inch centers into the existing concrete pavement, anchor the No. 4 bars with epoxy, polyester, or vinylester mortar per SS 852 and 952, and construct Type 2-B curb according to Standard Drawing BP-5.1. See sheet no. 41 for details, quantities, and locations.

Payment for the above work, including drilling and installing the No. 4 bars, will be made at the unit price bid per Linear Feet for Item 609 – Curb, Type 2-B, As Per Plan. Include the cost of all labor, materials, equipment, and incidentals necessary to complete the work.

ITEM 609 – CURB, TYPE 3-B, AS PER PLAN

Construct Type 3-B curb according to the dimensions shown in the detail on sheet no. 47. Apply all other notes in Standard Drawing BP-5.1 and the requirements of Section 609 of the CMS.

SAME SEASON COMPLETION OF THE RESURFACING COURSES

Place and complete the resurfacing courses in the same season.

ITEM 446 – ASPHALT CONCRETE SURFACE COURSE, TYPE 1, AC-20, AS PER PLAN

Exclude all stone and crushed carbonate stone for fine and coarse aggregates used in this item.

ITEM 448 – ASPHALT CONCRETE INTERMEDIATE COURSE, TYPE 1, (UNDER GUARDRAIL), AS PER PLAN

Pave under the proposed guardrail as shown in the Typical Sections and according to the following:

1. Place the 448 asphalt concrete.
2. Bore through the asphalt at the post locations (see note 1).
3. Set the guardrail posts.
4. Patch around the posts (see note 2).

Note 1: Do not bore through the asphalt if using steel posts.

Note 2: Use bituminous material for patching. The material shall be approved by the Engineer. Compact the material until it is smooth using hand or mechannical methods. Slope the finish surface to drain away from the posts.

Payment for the above work, excluding setting the guardrail posts, will be made at the unit price bid per Cubic Yard for Item 448 – Asphalt Concrete Intermediate Course, Type 1, (Under Guardrail), As Per Plan. Include the cost of all labor, materials, equipment, and incidentals necessary to complete the work.

SEEDING

Quantities for seeding are calculated for the bare soil areas from Linear Grading, Methos 1, 2, and 3, Linear Grading (Ditch Cleanout), Methods 1, 2, and 3, and the area designated to be seeded on sheet no. 41.

ITEM 305 – CONCRETE BASE, AS PER PLAN

Construct this item as per Standard Drawing BP-8.1, but omit the rumble strips.

TEMPORARY SOIL EROSION AND SEDIMENT CONTROL

Use the following quantity, when directed by the Engineer, for temporary erosion and sediment control measures:

Item 207 – Straw or Hay Bales – – – – – – – – – – – – 112 Each

RIGHT OF WAY ENCROACHMENT

During preparation of the plan, a right of way encroachment was discovered on the left side between Sta. 870+00± and Sta. 873+00± consisting of the adjacent property owner placing random embankment material within the existing Limited Access right of way.

If the encroachment situation has been resolved prior to the time of construction, no work will be required of the Contractor. However, if the encroachment situation has not been resolved at the time of construction, the Engineer shall order the Contractor to perform the following work:

Clear and grub the area within the work limits shown in the cross sections on sheet no's. 36A thru 36E, construct the overflow ditch, place rock channel protection, and seed the soil areas between the L/A line and the work limits. Approximately 600 cubic yards of Item 601 Rock Channel Protection, Type C, Without Filter, 4,352 square yards of Item 659 Seeding and Mulching, 2.00 tons of Item 659 Agricultural Liming, 0.40 tons of Item 659 Commercial Fertilizer, 74 cubic yards of 203 Embankment and 9.4 M gallons of Item 659 Water will be required. Do not remove rock of a stable nature in order to place Item 601.

Payment for the above work, including Items 201, 203, 601, and 659, will be made at the unit price bid per Cubic Yard for Item 203 – Excavation Not Including Embankment Construction, As Per Plan. Include the cost of all labor, materials, equipment, and incidentals necessary to complete the work.

ITEM SPECIAL – PIPE CLEANOUT & ITEM 202 – INLET CLEANOUT

Remove and dispose all foreign material and material buildup from the inside of existing conduits, existing median inlets, and existing curb inlets per Section 203.05.

Use high pressure water, vacu-jet, or any other acceptable method to accomplish the cleanout.

See sheet no. 18 for pipe cleanout locations and quantities. See sheet no. 36 for inlet cleanout locations and quantities.

Payment for the above work will be made at the unit price bid per Linear Feet for Item Special – Pipe Cleanout, and the unit price bid per Each for Item 202 – Inlet Cleanout. Include the cost of all labor, materials, equipment, and incidentals necessary to complete the work

EXISTING CENTERLINE REFERENCE MONUMENTS

The following existing centerline reference monuments were found within the project limits:

Station		Offset (Feet)		Station		Offset (Feet)	
		Lt.	Rt.			Lt.	Rt.
ST	801+47.37	44	74	CS	861+33.60	44	44
POT	805+00	43	70	ST	865+33.60	44	44
POT	810+00	--	60	PC	867+64.11	44	44
POT	815+00	55	48	POC	873+00	43	43
TS	819+60	44	42	PT	875+74.11	44	--
SC	823+60	44	43	POT	882+00	44	43
CS	826+12.50	44	44	POT	887+98.52	46	44
ST	830+12.50	44	44	TS	899+11.04	46	44
PC	833+82.50	44	43	POT	907+67.62*	60	--
POC	837+50	43	43	POT	912+87.73*	59	--
PT	841+35.83	44	44	POT	922+90.50*	66	--
POT	846+00	44	44	POT	928+78.67*	67	--
POT	851+00	44	44	POT	945+92.24	61	--
TS	855+33.39	44	44				
SC	859+33.39	44	44				

* Existing ℄ monument

ITEM 511 – RETAINING WALL REFACED, AS PER PLAN

Reconstruct the existing retaining wall end transition as shown in the detail on sheet no. 46 and according to the following:

Remove concrete from the existing transition to provide a 2 inch minimum thicknes of new concrete. Scabble the front face and top surfaces.

Drill the holes, anchor the reinforcing steel into the existing concrete, and place the new concrete.

Payment for the above work, including excavation, backfill, and furnishing the reinforcing steel, excluding Item 510 – Dowel Holes, will be made at the unit price bid per Cubic Yard for Item 511 – Retaining Wall Refaced, As Per Plan. Include the cost of all labor, materials, equipment, and incidentals necessary to complete the work.

CATCH BASIN RECONSTRUCTED TO GRADE, AS PER PLAN A, B, OR C

Remove the existing catch basin tops per Section 604.03, paragraph 6, and reconstruct the new tops according to Standard Drawing CB-8.

Construct and place the 8 inch reinforced concrete adapter slab as shown in the details on sheet no's. 42, 43, and 44.

Payment for the above work, including furnishing the reinforcing steel and constructing the adapter slab, will be made at the unit price bid per Each for Item 604 – Catch Basin Reconstructed To Grade, As Per Plan A, Item 604 – Catch Basin Reconstructed To Grade, As Per Plan B, or Item 604 – Catch Basin Reconstructed To Grade, As Per Plan C. Include the cost of all labor, materials, equipment, and incidentals necessary to complete the work.

QUANTITIES	
Calc. SHG	Chkd. KFP
Date: 10-7-92	Date: 11-10-92

FHWA REGION	STATE	PROJECT	
5	OHIO		

COL-30-32.19

GENERAL NOTES

ITEM 202 – IMPACT ATTENUATOR REMOVED, AS PER PLAN

Remove and dispose of the existing array of 13 sand-filled plastic containers at SR 7 Interchange Ramp D according to the following:

Remove all scattered debris, including sand, plastic container parts, and lids. Also remove all intact sand-filled plastic containers. Dispose of all collected material per Section 203.05.

Payment for the above work shall be included in the Lump Sum price bid for Item 202 – Impact Attenuator Removed, As Per Plan.

ITEM SPECIAL – IMPACT ATTENUATOR, HEX FOAM SANDWICH SYSTEM

Construct a reinforced concrete backup wall, a 6" reinforced concrete pad, and a reinforced concrete front cable anchor, and furnish and install a Hex-Foam Sandwich System impact attenuator according to details shown on sheet no's. 47, 48, 49, and the manufacturer's specifications.

The impact attenuator shall be manufactured by Energy Absorption Systems, Inc., and is distributed by Baldwin & Sours, 5263 Traube Road, Columbus, Ohio 43228, phone 614-851-8800.

Place the attenuator in reasonably close conformity with the details shown on sheet no. 47.

The nose of the impact attenuator shall be yellow. Mark the nose with three evenly spaced, four inch wide horizontal stripes of white reflective material per Section 730.19.

Payment for the above work, including constructing the reinforced concrete backup wall, 6" reinforced concrete pad, and reinforced front cable anchor, will be made at the unit price bid per Each for Item Special – Impact Attenuator, Hex-Foam Sandwich System, Model No. 209800H8S, Uni-directional. Include the cost of all labor, materials, equipment, and incidentals necessary to complete the work.

ITEM SPECIAL – SAWING & SEALING ASPHALT CONCRETE PAVEMENT JOINTS, 705.04

See Proposal Note. Saw and seal the joints according to the dimensions shown in the detail below. Saw the joint within 24 hours after placement of the surface course.

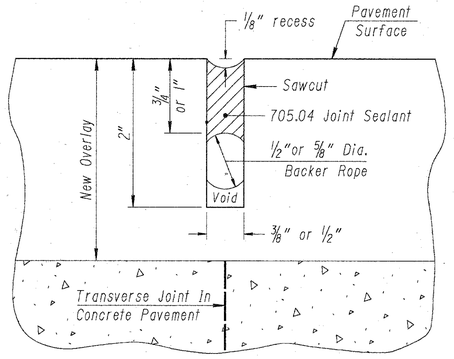

DETAIL FOR TRANSVERSE JOINT IN NEW ASPHALT CONCRETE OVERLAY

MAINTAINING TRAFFIC

MAINLINE

Maintain at least one lane of traffic in each direction at all times per Standard Drawing MT-95.30. Keep the limits and duration of the lane closures to a minimum.

Work on one side at a time of a directional roadway or ramp. Protect all open trenches and pavement repair areas as shown on sheet no. 25.

Begin a transition taper at least two miles from the end of an active lane closure when it is in the opposite lane.

Perform full depth pavement repair in one directional roadway at a time. Keep the full depth repair work zone to 15,000 feet maximum.

RAMPS

Maintain ramp traffic by using portions of the existing pavement, the existing or widened shoulders, or both.

Use a flagger or flaggers to stop traffic, if necessary, for periods not to exceed ten minutes. Allow traffic to proceed when a queue forms onto the mainline, speed change lane, or crossroad pavement.

SPEED CHANGE LANES

Maintain speed change lane traffic at all times per Standard Drawings MT-98.12, MT-98.13, MT-98.14, MT-98.15, and sheet no's. 23 and 26. Use portions of the existing pavement, the existing or widened shoulders, or both.

BRIDGES

Maintain at least one lane of traffic in each direction per Standard Drawing MT-95.30. Keep the lane closed until the completion of the bridge work in that lane.

CONTRACTOR'S OPERATION AND EQUIPMENT

Operate the equipment in the same direction as the traffic. Use a flagger or flaggers when construction equipment must merge with the traffic stream. Equip the equipment which are capable of driving in traffic with at least one (1) amber flashing light or strobe light.

Park equipment along the highway per Section 614.03, paragraph 6, when using the equipment the next working day. Otherwise, store the equipment at a pre-approved storage area. Park private vehicles at the pre-approved storage area.

Designate an individual, other than the Superintendant, to inspect all traffic control devices at the start and end of each work day.

GENERAL

Saw only the full depth pavement repairs which can be completed before winter.

Payment for the above work, unless separately itemized, shall be included in the Lump Sum bid price for Item 614 – Maintaining Traffic.

ITEM SPECIAL – REPLACEMENT DRUM

Drums furnished by the Contractor according to the requirements of the plans, specifications and proposal which become damaged by traffic for reasons beyond the control of the Contractor shall be replaced in kind by the Contractor when ordered by the Engineer. Replacement drums shall be new.

Payment for the new drums will be made at the unit price bid per Each for Item Special – Replacement Drum. Include the cost of removing and disposing of the damaged drum, and providing and maintaining the replacement drum according to the contract requirements for the original drum.

An estimated quantity of 100 each has been provided in the Traffic Control General Summary on sheet no. 55.

ITEM SPECIAL – REPLACEMENT SIGN

Flat sheet signs furnished by the Contractor according to the requirements of the plans, specifications and proposal which become damaged by traffic for reasons beyond the control of the Contractor shall be replaced in kind by the Contractor when ordered by the Engineer. Replacement signs shall be new. Other materials may be in used but good condition subject to approval by the Engineer.

Payment for the new signs will be made at the unit price bid per Square Feet for Item Special – Replacement Sign. Include the cost of removing and disposing of the damaged signs, hardware and supports, and providing the necessary replacement hardware, supports, etc.

An estimated quantity of 192 square feet has been provided in the Traffic Control General Summary on sheet no. 55.

ITEM 614 – WORK ZONE SPEED LIMIT SIGN

Furnish, install, maintain, cover during suspension of work, and remove work zone speed limit signs and supports (R-10-48) (45 MPH) within the work limits according to the following requirements:

Cover or remove any existing speed limit or minimum speed signs within the reduced speed zone. Restore these signs during suspension or termination of the reduced speed limit. The expense of covering or removal and restoration of existing speed limit or minimum speed signs is incidental to the pay item for the work zone speed limit signs.

Erect and cover the work zone speed limit signs prior to starting work or erect uncovered no more than 4 hours before the actual start of work. Remove or cover the signs no later than 4 hours following restoration of all lanes of traffic with no restrictions, or sooner as directed by the Engineer.

Erect a work zone speed limit sign in advance of any lane restriction which is ½ mile or more in length and which is expected to last at least 30 consecutive calendar days, or as directed by the Engineer. Mount the sign on both sides of divided highways, 500 feet in advance of the lane reduction taper. Also mount the sign on the right side, 250 feet in advance of the lane reduction taper on undivided highways. Repeat the sign, on the side nearest traffic, every 1 mile for 55 MPH zones and every ½ mile for 45 MPH zones. Also erect these signs immediately after each open entrance ramp within the zone. Erect an R-8A sign at the end of any reduced speed zone to indicate the resumption of the statutory speed limit.

The Contractor may use signs and supports in used but good condition provided the signs meet current ODOT specifications. Sign faces shall be reflectorized with Type G sheeting complying with the requirements of 730.19 and U.S. Department of Transportation Supplemental Specification for Type III-C sheeting, FP-85. Mount the work zone speed limit signs on two (2) Item 630 Ground Mounted Supports, No. 4 posts.

Work zone speed limit sign and supports will be measured as the number of sign installations, including the sign and necessary supports. Consider as another unit a sign and support combination which is removed and reerected at another location within the project due to changes in the speed zone directed by the Engineer.

Payment for accepted quantities, complete in place, will be made at the contract price bid per Each for Item 614 – Work Zone Speed Limit Sign. Include the cost of all materials, labor, incidentals and equipment for furnishing, erecting, maintaining, covering during suspension of work, and removing the signs and supports.

The following quantity has been carried to the Traffic Control General Summary on sheet no. 55:

Item 614 – Work Zone Speed Limit Sign – – – – – 35 Each

ITEM 622 – PORTABLE CONCRETE BARRIER

Utilize portable concrete barrier to protect full depth pavement repair areas as per General Note No. 10 on sheet no. 25. Position the portable concrete barrier as shown on sheet no. 24. See sheet no. 52 for specific locations which are greater than 60 feet in length.

The following quantity is included in the Genereral Summary for this item:

Item 622 – Portable Concrete Barrier, 32" – – – – – – 740 Lin. Ft.

FHWA REGION	STATE	PROJECT		22 / 77
5	OHIO			

COL-30-32.19

ITEM SPECIAL - PRECAST REINFORCED CONCRETE OUTLET

The Concrete outlet shall meet the requirements of Item 604 in the Construction & Materials Specifications. Payment shall be made on an Each basis. Payment shall include the cost of the Sod & Wire Cloth.

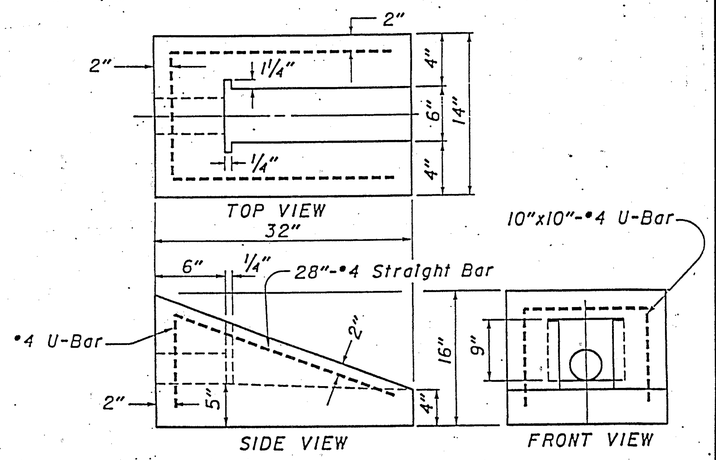

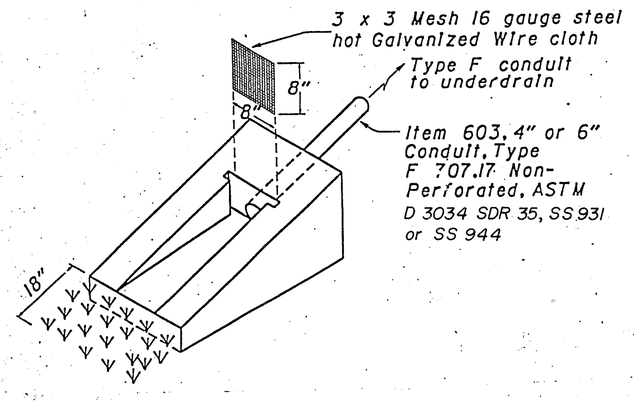

NOTE: The Sod shall be in accordance with Item 660 and staked at each corner approximately 3 inches in from the edge.

OUTLET DETAIL

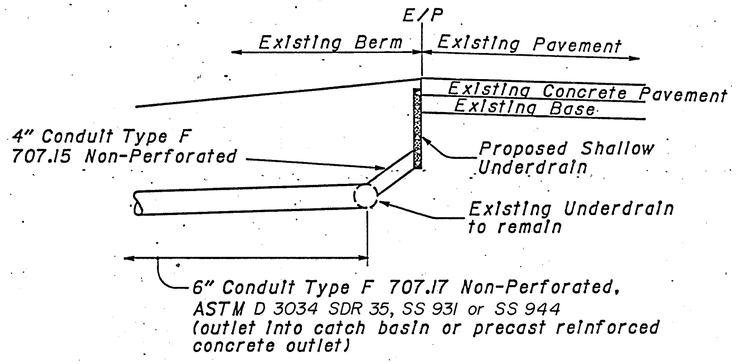

NOTE: The cost of the 4" conduit Type F 707.15 Non-perforated, and necessary pipe bends and branches needed to connect the existing and proposed underdrains shall be included with the cost of the 6" conduit Type F beyond the existing underdrain.

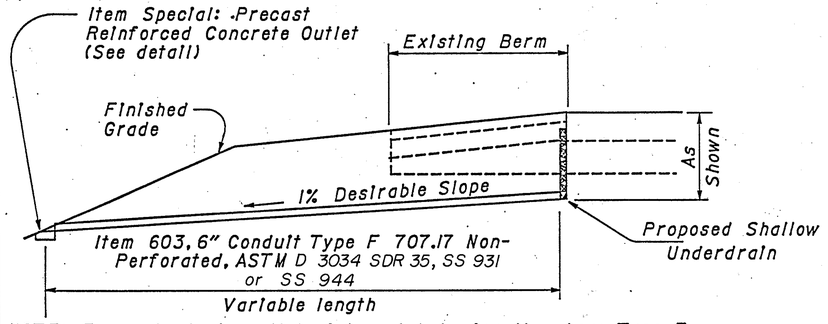

NOTE: For underdrain outlets into catch basins the above Type F Conduit shall be used entirely between the underdrain & catch basin.

DESCRIPTION: The Item shall consist of furnishing and installing a pipe underdrain system in accordance with the specifications, details as shown on the plans, and as directed by the Engineer.

MATERIALS: The underdrain shall be a pipe underdrain system per Item 605.

The outlets for the underdrain system shall be constructed as soon as possible after placement of the underdrain to drain the subbase & subgrade. All pipe bends & branches needed to connect the proposed underdrain to the proposed outlet or to an existing underdrain shall be manufactured fittings.

METHOD OF MEASUREMENT: Completed and accepted underdrains will be measured by the linear foot in place.

BASIS OF PAYMENT: Work completed and accepted under this Item and measured will be paid for at the contract unit price bid per linear foot for Item 605 4" Shallow Pipe Underdrain 707.15, as per plan.

The price shall be full compensation for excavation and backfill; for furnishing materials, including material for outlet fittings for all labor, tools equipment, and incidentals necessary to complete the work.

PIPE UNDERDRAIN DETAIL FOR CONCRETE SHOULDERS

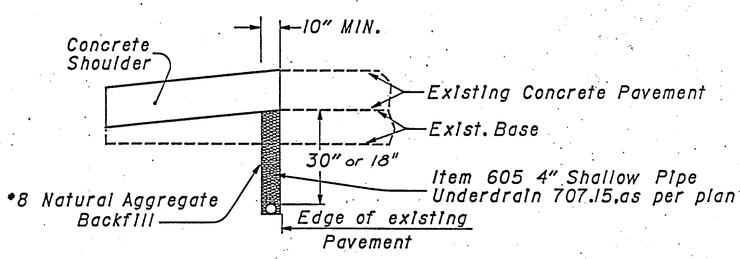

ITEM 605 4" SHALLOW PIPE UNDERDRAIN 707.15, AS PER PLAN

DATE 12-7-88

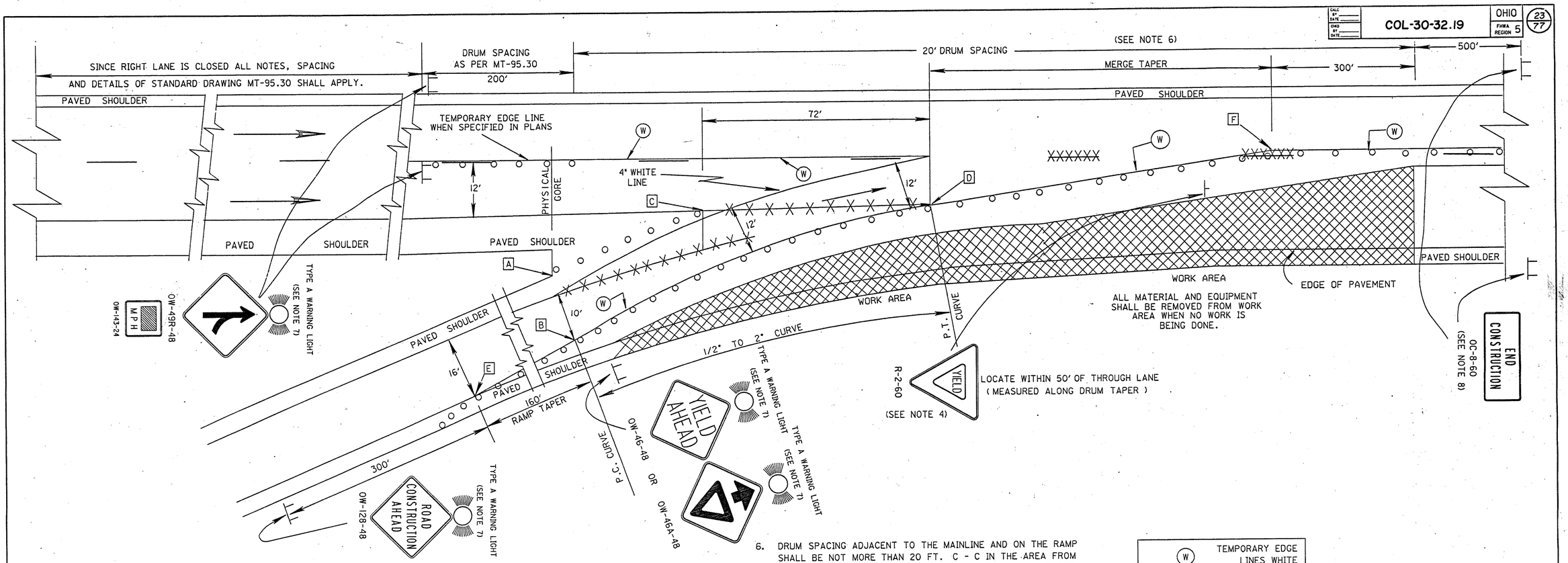

GENERAL NOTES

1. THIS WORK AREA TRAFFIC CONTROL APPLICATION SHALL BE EMPLOYED WHEN: (1) THE LATERAL CLEARANCE BETWEEN CHANNELIZING DEVICES AT THE RIGHT EDGE OF THE WORK AREA AND THE EDGE OF PAVEMENT IS LESS THAN 10 FT. (12 FT. IF THE SHOULDER PAVEMENT IS USED) AS SHOWN ON DRAWING MT-98.15, AND (2) THE REQUIRED RAMP TAPERS AND CURVES CAN BE PROVIDED AS SHOWN. IN THE EVENT THE WORK ZONE CONDITION WOULD PERMIT THE USE OF EITHER MT-98.15 OR MT-98.16, MT-98.16 SHALL BE USED. THIS TRAFFIC CONTROL MEASURE SHALL NOT BE PLACED IN EFFECT UNTIL IMMEDIATELY BEFORE THE CONTRACTOR IS FULLY PREPARED TO PERFORM THE WORK ON THE RAMP OR LANE ADJACENT TO IT. ONCE THIS MEASURE IS PLACED INTO EFFECT THE CONTRACTOR SHALL EXPEDITIOUSLY PURSUE THE WORK (WORKING CONTINUOUSLY WITH FULL CREW IN THE RAMP AREA ON ALL NORMAL WORKING DAYS) UNTIL IT IS COMPLETED AND SHALL IMMEDIATELY OPEN THE AREA TO NORMAL TRAFFIC OR, AS A MINIMUM, REVERT TO THE METHODS SHOWN ON MT-98.15. IT IS THE INTENT THAT THE LONGEST MERGING TAPER LENGTH POSSIBLE SHALL BE CHOSEN, COMMENSURATE WITH THE REQUIREMENTS OF CONSTRUCTION.

2. THE RAMP TAPER SHALL DESIRABLY BE LOCATED TO PROVIDE A 10' MINIMUM PATH BETWEEN DRUMS AND THE PAVED SHOULDER IN THE GORE. THE RAMP TRAFFIC MAY BE PLACED ON THE PAVED GORE AS SHOWN ABOVE ONLY IF (1) THE TRAFFIC WILL USE THE PAVED SHOULDER PAVEMENT LESS THAN ONE DAY AND THE SHOULDER PAVEMENT IS IN GOOD CONDITION AND IS LEVEL AND SMOOTH OR (2) IF THE SHOULDER PAVEMENT IS ADEQUATELY STRENGTHENED, LEVELED AND SMOOTHED TO CARRY THE ANTICIPATED LOAD. A MINIMUM OF 3 DRUMS SHALL BE USED IN THE RAMP SHOULDER TAPER.

3. RAMP SIGNS SHALL BE DUAL MOUNTED ON MULTI-LANE RAMPS. WHEN THE RAMP IS NOT LONG ENOUGH TO ALLOW PLACEMENT AS SPECIFIED ABOVE, THE SIGNS MAY BE SPACED PROPORTIONATELY WITHIN THE SPACE AVAILABLE AS DETERMINED BY THE ENGINEER (A 200 FOOT MINIMUM SPACING MUST BE MAINTAINED).

4. IT WILL BE NECESSARY TO MOVE THE LOCATION OF ANY EXISTING YIELD CONDITION. IN THESE CASES, THE PERMANENT R-2 SIGN INSTALLATION SHALL BE COVERED AND THE TEMPORARY INSTALLATION SHALL BE MOUNTED APPROPRIATELY. IF THE REQUIRED DISTANCES (RAMP TAPER, CURVE AND MERGE TAPER) CANNOT BE OBTAINED, THE ENGINEER MAY APPROVE SLIGHTLY LOWER VALUES FOR A SHORT TIME, IN WHICH CASE THE YIELD SIGN SHALL BE REMOVED AND A 36" STOP SIGN PLACED APPROPRIATELY TO BE VISIBLE TO RAMP TRAFFIC BUT NOT BE OBTRUSIVE TO MAINLINE TRAFFIC.

5. IF THE CONSTRUCTION OPERATION REQUIRES THE LANE CLOSURE FOR MORE THAN ONE DAY THEN THE EXISTING CONFLICTING PAVEMENT MARKINGS AND REFLECTORS FROM THE RAISED PAVEMENT MARKERS (RPM'S) SHALL BE REMOVED AND THE APPROPRIATE COLOR TEMPORARY EDGE LINES SHALL BE APPLIED ALONG THE TAPER. TEMPORARY EDGE LINES WHICH WOULD CONFLICT WITH FINAL TRAFFIC LANES SHALL BE REMOVABLE (947.03 TYPE-C) TAPE UNLESS THE AREA WILL BE RESURFACED IN THE NEXT WORK PHASE. AFTER COMPLETION OF THE WORK, TEMPORARY MARKINGS SHALL BE REMOVED IN ACCORDANCE WITH 621.134 AND THE ORIGINAL MARKINGS AND RAISED PAVEMENT MARKERS REFLECTORS SHALL BE RESTORED.

6. DRUM SPACING ADJACENT TO THE MAINLINE AND ON THE RAMP SHALL BE NOT MORE THAN 20 FT. C - C IN THE AREA FROM THE PHYSICAL GORE TO 300 FT. BEYOND THE MERGE TAPER. CONES HAVING A MINIMUM HEIGHT OF 28 INCHES MAY BE SUBSTITUTED FOR DRUMS FOR DAYTIME LANE CLOSURES. PROVISIONS SHALL BE MADE TO SAFELY STABILIZE THE CONES TO PREVENT THEM FROM BLOWING OVER. IF THIS CANNOT BE ACHIEVED, DRUMS SHALL BE USED. TYPE C STEADY BURNING WARNING LIGHTS SHALL BE ERECTED ON EACH DRUM FOR NIGHT LANE CLOSURE.

7. TYPE A FLASHING WARNING LIGHTS ARE REQUIRED ON THE ROAD CONSTRUCTION AHEAD (OW-128-48), MERGE (OW-49R-48), AND THE YIELD AHEAD (OW-46-48) SIGNS WHEN NIGHT LANE CLOSURE IS NECESSARY.

8. THE OC-8 SIGNS ARE ONLY REQUIRED FOR LANE CLOSURES OF MORE THAN ONE DAY AND MAY BE OMITTED IF THEY FALL WITHIN THE LIMITS OF A CONSTRUCTION PROJECT.

9. FROM THE END OF THE GORE AREA GRADED SHOULDER (POINT A), LOCATE THE PC OF THE CURVE BY MEASURING PERPINDICULAR TO THE RAMP CENTERLINE 10' OF RAMP PAVEMENT, NOT INCLUDING PAVED SHOULDER WIDTH (POINT B). FROM THE END OF THE GORE AREA PAVED SHOULDER (POINT C), LOCATE THE PT OF THE CURVE BY MEASURING 72' FROM POINT C ALONG THE EDGE OF PAVEMENT EXTENDED (POINT D).

10. PLACEMENT OF DRUMS SHALL BEGIN AT (POINT E) 160' UP THE RAMP FROM THE PREVIOUSLY LOCATED PC (POINT B) AND AT THE RIGHT EDGE OF RAMP PAVEMENT. FROM THIS POINT A DRUM TAPER SHALL BE PLACED TO THE PC (POINT B) AND THEN ALONG A CURVE AS SHOWN TO THE PT (POINT D) WHERE A 48:1 (MIN.) MERGE TAPER SHALL MEET MAINLINE TRAFFIC CONTROL (POINT F).

(W)	TEMPORARY EDGE LINES WHITE
[A]	LAYOUT POINTS
XXXXXXXXX	MARKINGS REMOVED

PRELIMINARY
PREPARED BY
TECHNICAL SUPPORT SECTION
ALF H. HANSEN P.E.
WALTER C. CHADWICK D.S.

ALL WORK AND TRAFFIC CONTROL DEVICES SHALL BE IN ACCORDANCE WITH 614 AND OTHER APPLICABLE PORTIONS OF THE C & M SPECIFICATIONS AS WELL AS IN ACCORDANCE WITH PART 7 OF OMUTCD. PAYMENT FOR ALL LABOR, EQUIPMENT AND MATERIALS TO PROVIDE THIS METHOD OF TRAFFIC CONTROL SHALL BE INCLUDED IN THE LUMP SUM BID FOR 614 MAINTAINING TRAFFIC, UNLESS SEPARATELY ITEMIZED IN THE PLAN.

REVISED BY:	DATE:
209816	DATE 04/03/90
LANE CLOSURE AT ENTRANCE RAMP PLAN B	
PLAN INSERT SHEET	

WCC

CALC BY	DATE		OHIO	24
CHKD BY	DATE	COL-30-32.19	FHWA REGION 5	77

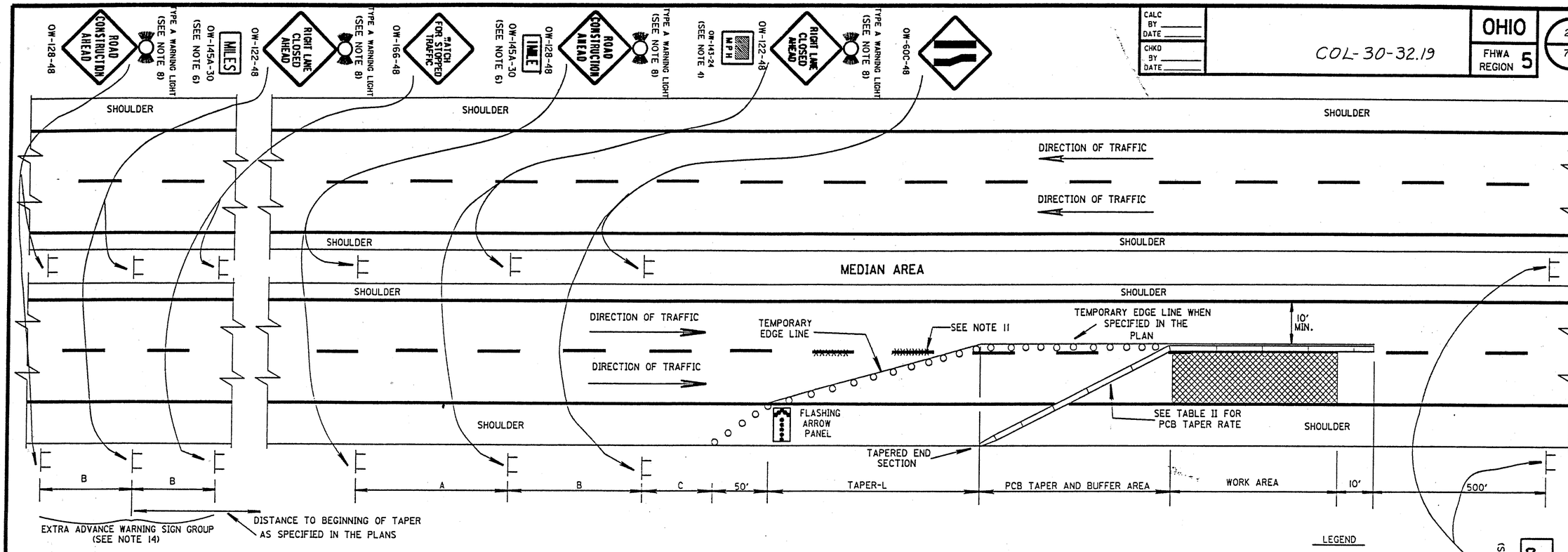

LEGEND

DRUMS ○○○○○○

PORTABLE CONCRETE BARRIER (PCB)

REMOVE EXISTING MARKINGS XXXXXXXXX

GENERAL NOTES:

1. THE LOCATION OF THE TRANSITION TAPER AND THE ADVANCE WARNING SIGNS SHOULD BE ADJUSTED TO PROVIDE FOR ADEQUATE SIGHT DISTANCE FOR THE EXISTING VERTICAL AND HORIZONTAL ROADWAY ALIGNMENT.

2. THE SPACING BETWEEN PROPOSED SIGNS SHOULD BE ADJUSTED TO NOT CONFLICT WITH AND TO PROVIDE A MINIMUM OF 200 FEET CLEARANCE TO EXISTING SIGNS.

3. THE TAPER LENGTH (L), NUMBER (N), AND SPACING (S) OF DRUMS SHALL CONFORM TO TABLE II. DRUM SPACING (S) SHALL BE USED FOR THE PAVEMENT TAPER AND THE BUFFER AREA. A MINIMUM OF 5 DRUMS SHALL BE USED IN THE SHOULDER TAPER.

4. THE ADVISORY SPEED SIGN OW-143-24 SHALL BE USED WHEN SPECIFIED IN THE PLAN OR AS DIRECTED BY THE ENGINEER. THE ADVISORY SPEED SHALL BE AS SPECIFIED IN THE PLAN OR AS DIRECTED BY THE ENGINEER.

5. TYPE C STEADY BURNING WARNING LIGHTS SHALL BE ERECTED ON EACH DRUM, AND ON PCB PARALLEL TO THE EDGE OF PAVEMENT. THE SPACING ON PCB SHALL BE FROM THE "MAXIMUM SPACING (S) COLUMN" SHOWN IN TABLE II.

6. THE DISTANCE PLATE OW-145A-30 SHALL INDICATE THE DISTANCE TO THE BEGINNING OF THE PAVEMENT TAPER (L). DISTANCES LESS THAN ONE MILE MAY BE EXPRESSED IN FEET. THE PLAQUE MAY BE OMITTED IF EXTRA ADVANCE SIGN GROUPS ARE NOT USED.

7. THE FLASHING ARROW PANEL SHALL MEET REQUIREMENTS OF STANDARD CONSTRUCTION DRAWING TC-35.10.

8. TYPE A FLASHING WARNING LIGHTS SHOWN ON THE "ROAD CONSTRUCTION AHEAD" AND "RIGHT (OR LEFT) LANE CLOSED AHEAD" SIGNS ARE REQUIRED.

9. WHEN WORK IS BEING PERFORMED IN THE LANE ADJACENT TO THE MEDIAN ON A DIVIDED HIGHWAY, OW-123-48 SIGNS SHALL BE SUBSTITUTED FOR THE OW-122-48 SIGNS AND OW-60D-48 SIGNS SHALL BE SUBSTITUTED FOR THE OW-60C-48 SIGNS.

10. 36" WARNING SIGN SIZES MAY BE USED ON DIVIDED ROADWAYS THAT ARE NOT CLASSIFIED AS FREEWAYS OR EXPRESSWAYS.

11. THE EXISTING CONFLICTING PAVEMENT MARKINGS AND REFLECTORS FROM THE RAISED PAVEMENT MARKERS (RPMS) SHALL BE REMOVED AND THE APPROPRIATE COLOR TEMPORARY EDGE LINES SHALL BE APPLIED ALONG THE TAPER. TEMPORARY EDGE LINES WHICH WOULD CONFLICT WITH FINAL TRAFFIC LANES SHALL BE REMOVABLE (947.03 TYPE-C) TAPE UNLESS THE AREA WILL BE RESURFACED IN THE NEXT WORK PHASE AFTER COMPLETION OF THE WORK. TEMPORARY MARKINGS SHALL BE REMOVED IN ACCORDANCE WITH 621.134 AND THE ORIGINAL MARKINGS AND PAVEMENT MARKER REFLECTORS SHALL BE RESTORED.

12. THE OC-8 SIGNS MAY BE OMITTED IF THEY FALL WITHIN THE LIMITS OF A CONSTRUCTION PROJECT.

13. BARRIER REFLECTORS (1-WAY WHITE FOR RIGHT LANE CLOSURES; 1-WAY YELLOW FOR LEFT LANE CLOSURE) SHALL BE PROVIDED AT 50' SPACING ON THE PARALLEL PORTIONS ONLY OF THE PCB. NONE SHALL BE VISIBLE ON THE TAPER SECTION OF PCB.

14. EXTRA ADVANCE WARNING SIGN GROUPS CONSISTING OF OW-128, OW-122 AND OW-166 SIGNS PLUS DISTANCE PLATES MAY BE SPECIFIED IN THE PLANS OR REQUIRED TO BE ERECTED AT THE DIRECTION OF THE ENGINEER.

15. THE SPEED LIMIT CHOSEN FOR DESIGN OF TAPERS SHALL BE THE NORMAL LEGAL SPEED EXCEPT WHERE THE LEGAL SPEED LIMIT IS REDUCED DUE TO THE CONSTRUCTION AND THE SUBJECT LANE CLOSURE IS NOT THE FIRST ACTIVE CONSTRUCTION AREA ENCOUNTERED BY TRAFFIC WITHIN THE PROJECT.

16. NO EQUIPMENT OR MATERIAL SHALL BE LOCATED OTHER THAN BEHIND THE PCB.

TABLE I

MINIMUM DISTANCE	A	B	C
MAJOR STANDARD	500'	500'	500'
URBAN FREEWAY & EXPRESSWAY	500' TO 1000'	500' TO 1000'	500' TO 1000'
RURAL FREEWAY & EXPRESSWAY	2600'	1600'	1000'

✳ SEE NOTE (15)

TABLE II

SPEED LIMIT MPH✳	MINIMUM DRUM TAPER (L) IN FEET	MINIMUM NUMBER (N) OF DRUMS	MAXIMUM SPACING (S) OF DRUMS	PCB TAPER RATE
30-40	320	9	40	11 : 1
45-55	660	12	60	16 : 1
60-65	780	14	60	19 : 1

ALL WORK AND TRAFFIC CONTROL DEVICES SHALL BE IN ACCORDANCE WITH 614 AND OTHER APPLICABLE PORTIONS OF THE C & M SPECIFICATIONS AS WELL AS IN ACCORDANCE WITH PART 7 OF THE OMUTCD. PAYMENT FOR ALL LABOR, EQUIPMENT AND MATERIALS TO PROVIDE THIS METHOD OF TRAFFIC CONTROL SHALL BE INCLUDED IN THE LUMP SUM BID FOR 614 MAINTAINING TRAFFIC, UNLESS SEPARATELY ITEMIZED IN THE PLAN.

REVISED BY:	DATE:

209540	DATE 11/05/90
CLOSING RIGHT OR LEFT LANE OF A MULTI-LANE DIVIDED HIGHWAY WITH PORTABLE CONCRETE BARRIER	
PLAN INSERT SHEET	

WCC

GENERAL NOTES

1. It is intended that this drawing be used for treatment of drop-offs that develop during construction operations, and that are not otherwise provided for in the construction plans. Where the plans do not provide specific items for labor, equipment, or materials to implement the drop-off treatments specified hereon, they shall be included for payment in the lump sum bid for Item 614 - Maintaining Traffic.
2. While the need for certain advisory signing is noted hereon, it is not intended that this be indicative of all signing that may be required to advise or warn motorists, and all requirements of the Ohio Manual of Uniform Traffic Control Devices (OMUTCD) must be fulfilled.
3. In urban or otherwise heavily developed areas where pedestrians and/or bicyclists may be present in significant numbers, additional signing and protective measures other than those shown hereon may be required.
4. The drop-off treatment selected for use at any given location shall be as appropriate for the prevailing conditions at the site.
5. Where concrete barrier is specified, it shall be in accordance with Standard Construction Drawing MC-9.2 and Item 622.
6. When drums are specified for a dropoff condition, a minimum number of four drums shall be used. Spacing shall be as indicated in the plans or as specified in the OMUTCD.
7. When OW-151 (Low Shoulder) signs or OW-171 (Uneven Lanes) and OWP-171 signs are required, they shall be placed 750' in advance of the condition, on all intersecting entrance ramps within the limits of the condition and immediately beyond all intersecting roadways within the limits of the condition. When the dropoff condition extends more than one-half mile, additional signs should be erected at intervals of one mile or less.
8. For locations, such as at ramps, lane shifts, lane closures, etc., where traffic is required to negotiate any difference in elevation between pavements, a 3:1 slope treatment similar to the Optional Wedge Treatment shall be provided.
9. Portable concrete barrier shall be placed on the same level as the traffic surface and shall not encroach on lane width(s) designated as the minimum required for traffic use. Where drums are used, and their presence would reduce traveled lane widths to less than 10', drums may be placed on the opposite level from that of traffic provided the dropoff depth does not exceed 5" and approval is granted by the Project Engineer.
10. Pavement Repairs (or similar work):
    a. Lengths greater than 60 feet - utilize appropriate treatment from Condition I.
    b. Lengths of 60 feet or less - repairs shall be effected in accordance with 255.08. Drums may be used as a separator adjacent to the traveled lane.

OPTIONAL WEDGE TREATMENT
(MILLING OR RESURFACING)

1. This treatment may be used when permitted for Condition I only.
2. OW-171 and OWP-171 signs required.

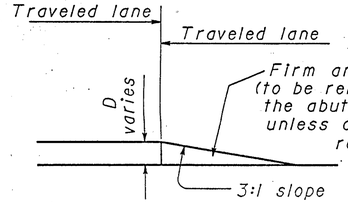

CONDITION I
DROPOFFS BETWEEN TRAVELED LANES

1. These treatments are to be used for resurfacing, pavement planing, excavation, etc. between or within traveled lanes.

D (In.)	Treatment
≤1½	Erect OW-171 and OWP-171 signs.
>1½-3	1) Lane closure utilizing drums* as shown below OR 2) Optional Wedge Treatment
>3-5	Lane closure utilizing drums as shown below.
>5	Lane closure utilizing portable concrete barrier as shown below.

*Cones may be used for daytime only conditions.

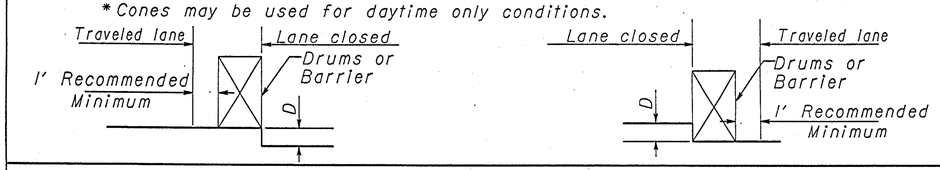

CONDITION II
DROPOFFS WITHIN GRADED SHOULDER AREA

1. The treatments indicated below are for use in conjunction with resurfacing, planing, or excavations within the graded shoulder area.
2. The graded shoulder area is that flat or gradually sloping area between the edge of a normally traveled lane and the more steeply sloping ditch foreslope or embankment slope. Its surface may be soil or turf, and/or it may be inclusive of a "treated" area (improved with aggregates, asphaltic materials, or concrete). For the purposes herein, its maximum width shall be considered to be twelve (12) feet.

D (In.)	Treatment
≤1½	1) If edgelines are present, no treatment necessary OR 2) Erect OW-171 and OWP-171 signs.
>1½-5	1) If min. lane width* requirements can be met, maintain lanes utilizing drums as shown below OR 2) If min. lane width* requirements cannot be met, close adjacent lane utilizing drums OR 3) Optional Shoulder Treatment.
>5-12 Daylight only	If min. lane width* requirements can be met, maintain lanes utilizing drums as shown below.
>5-24	1) If min. lane width* requirements can be met, maintain lanes utilizing portable concrete barrier as shown below. OR 2) If min. lane width* requirements cannot be met, close adjacent lane utilizing drums.
>24	Lane closure utilizing portable concrete barrier as shown below.

*Minimum lane widths shall be 10' unless otherwise specified in the plans.

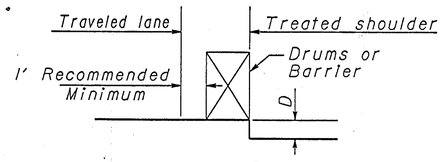

OPTIONAL SHOULDER TREATMENT

1. This treatment may not be used within a bituminous shoulder where a hot longitudnal joint per 401.15 is required.
2. OW-151 signs required.

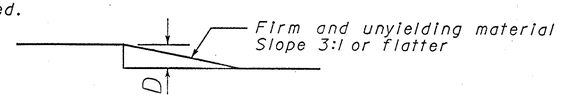

CONDITION III
DROPOFFS BEYOND GRADED SHOULDER OR BACK OF CURB

1. See Note 2 under Condition II.
2. Use Chart A or B below, as applicable.

CHART A

USE FOR:
1. Uncurbed Facilities.
2. Curbed Facilities, where:
   a. Curbs are less than 6" in height.
   b. Curbs are 6" or greater in height and the legal speed is greater than 40 mph.

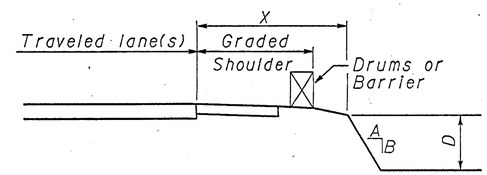

X (Ft.)	D (In.)	A/B	Treatment Required: Day	Treatment Required: Night
0-4	Any	Any	(a)	(a)
4-30	Any	3:1 or Flatter	None	None
4-12	≤3	Steeper than 3:1	None	None
4-12	>3-≤12	Steeper than 3:1	Drums	Drums
4-12	>12	Steeper than 3:1	Drums	Barrier
>12-20	≤12	Steeper than 3:1	None	None
>12-20	>12-≤24	Steeper than 3:1	Drums	Drums
>12-20	>24	Steeper than 3:1	Drums	Barrier
>20-30	≤24	Steeper than 3:1	None	Drums
>20-30	>24	Steeper than 3:1	Drums	Barrier
>30	Any	Any	None	None

(a) Use treatment specified under Condition II.

CHART B

USE FOR: Curbed facilities, where the curb is 6" or greater in height and the legal speed is 40 mph or less.

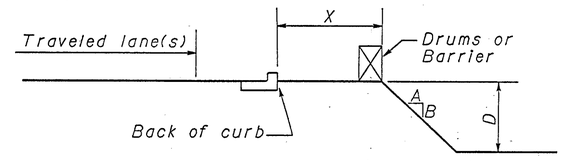

X (Ft.)	D (In.)	A/B	Treatment Required: Day	Treatment Required: Night
0-10	≤12	Any	None	Drums
0-10	>12	Any	Drums	Drums
>10	Any	Any	None	None

STATE OF OHIO
DEPARTMENT OF TRANSPORTATION
BUREAU OF LOCATION AND DESIGN

DROPOFFS IN WORK ZONES

DESIGNED	DRAWN	TRACED	CHECKED	REVIEWED	DATE	REVISED

FHWA REGION	STATE	PROJECT	
5	OHIO		

26
77

COL-30-32.19

ENTRANCE GORE TRAFFIC CONTROL

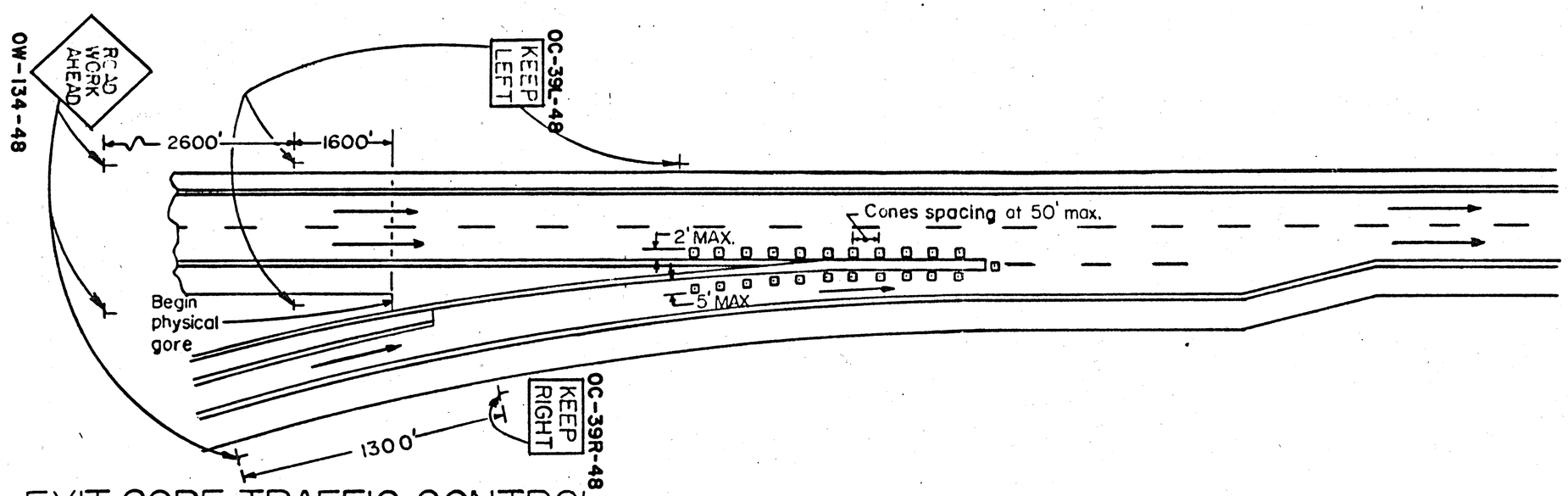

EXIT GORE TRAFFIC CONTROL

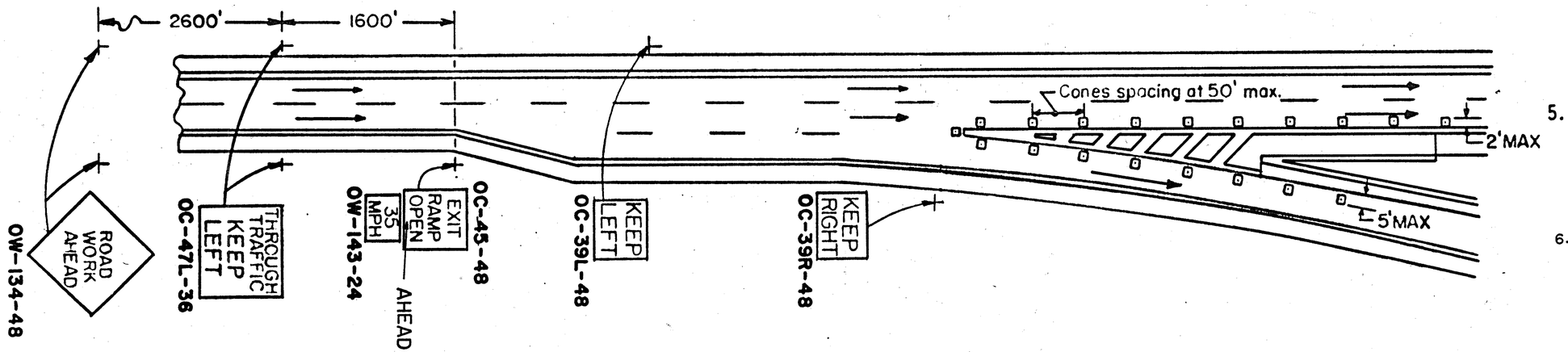

GENERAL NOTES

1. WHERE THE ONLY WORK IN THE GORE AREA CONSISTS OF APPLICATION OF EDGELINE MARKINGS WITH FAST DRY PAVEMENT MARKING MATERIALS, THE TRAFFIC CONTROL FOR "EDGELINE PAVEMENT MARKING OPERATIONS" SHOULD BE EMPLOYED.
2. WHERE THE WORK IN THE GORE AREA REQUIRES MORE POSITIVE TRAFFIC CONTROL OR OVERNIGHT WORK AREA PROTECTION, THE TRAFFIC CONTROL FOR "LANE CLOSURE AT THE ENTRANCE RAMP" OR "LANE CLOSURE AT EXIT GORE" SHOULD BE EMPLOYED.
3. THE SPACING BETWEEN SIGNS SHOWN ON THIS DETAIL MAY BE ADJUSTED (INCREASED OR DECREASED) WITH THE APPROVAL OF THE ENGINEER TO POSITION THEM NO CLOSER THAN 200 FEET TO EXISTING SIGNS WHICH MUST REMAIN IN USE.
4. AT AN ISOLATED ENTRANCE GORE AREA, A FLASHING ARROW PANEL CONFORMING TO REQUIREMENTS IN TC-35.10 MAY BE SUBSTITUTED FOR THE ADVANCE OC-39-48 SIGNS.
5. AT AN INTERCHANGE WHERE BOTH EXITS AND ENTRANCES ARE MARKED WITH TRAFFIC CONTROL IN PLACE AT THE SAME TIME, THE OW-134-48 SIGN ON THE ENTRANCE RAMP IS NOT REQUIRED.
6. FOR NIGHT CLOSURES, EACH OF THE FIRST TWO SIGNS IN THE SEQUENCE (ROAD WORK AHEAD AND THROUGH TRAFFIC KEEP LEFT) IS REQUIRED TO BE SUPPLEMENTED BY A TYPE A FLASHING BARRICADE WARNING LIGHT.

OHIO DEPARTMENT OF TRANSPORTATION

TRAFFIC CONTROL FOR WORK IN GORE AREAS

DATE 1/81

DR. | CK.

GENERAL SUMMARY

COL-30-32.19

* 100% STATE

ITEM	SHEET NUMBER 8	11	16	17	18	19	20	35	36	36E	41	ITEM	ITEM EXT.	GRAND TOTAL	UNIT	DESCRIPTION
																ROADWAY
201						Lump						201	11001	Lump		Clearing and Grubbing, As Per Plan (See Note On Sheet No. 19)
202											Lump	202	00200	Lump		Railroad Crossing Removed
202								107	1		28	202	23000	136	Sq. Yd.	Pavement Removed
202											157	202	30000	157	Sq. Ft.	Walk Removed
202								35				202	30700	35	Lin. Ft.	Concrete Barrier Removed
202								8,235				202	32000	8,235	Lin. Ft.	Curb Removed
202											655	202	32001	655	Lin. Ft.	Curb Removed, As Per Plan (See Note on Sheet No. 20)
202									130			202	32600	130	Lin. Ft.	Gutter Removed
202			20,233									202	38000	20,233	Lin. Ft.	Guardrail Removed
202			700									202	38100	700	Lin. Ft.	Guardrail Removed For Storage
202						285						202	54100	285	Each	Raised Pavement Marker Removed For Storage
202									2			202	58100	2	Each	Catch Basin Removed
Special					2,685							Special	202 70100	2,685	Lin. Ft.	Pipe Cleanout (See Note on Sheet No. 20)
202					5,222							202	75000	5,222	Lin. Ft.	Fence Removed
202								Lump				202	98000	Lump		Removal Miscellaneous: Impact Attenuator Removed, As Per Plan (See Note on Sheet No. 21)
202									38			202	98100	38	Each	Removal Miscellaneous: Inlet Cleanout (See Note on Sheet No. 20)
203		23,003		488								203	12000	23,491	Cu. Yd.	Excavation Not Including Embankment Construction
203										10,586		203	12001	10,586 *	Cu. Yd.	Excavation Not Including Embankment Construction, As Per Plan (See Note on Sheet No. 20)
203											32	203	20000	32	Cu. Yd.	Embankment
203		35,050										203	50000	35,050	Sq. Yd.	Subgrade Compaction
203				196								203	60200	196	Station	Linear Grading, Method 1
203				198								203	60204	198	Station	Linear Grading, Method 2
203				83								203	60300	83	Station	Linear Grading, Method 3
203				2								203	60408	2	Station	Linear Grading, (Ditch Cleanout), Method 1
203				4								203	60408	4	Station	Linear Grading, (Ditch Cleanout), Method 2
203				2								203	60408	2	Station	Linear Grading, (Ditch Cleanout), Method 3
510								12				510	11100	12	Each	Dowel Hole
511								1				511	71100	1	Cu. Yd.	Concrete, Misc.: Retaining Wall Refaced, As Per Plan (See Note on Sheet No. 20)
Special						11,770						Special	512 67502	11,770	Sq. Yd.	Sealing of Concrete Surfaces (Epoxy) (See Note in Proposal and Note on Sheet No. 19)
516								9				516	13600	9	Sq. Ft.	1" Preformed Expansion Joint Filler
520						5,225						520	11100	5,225	Sq. Ft.	Pneumatically Placed Mortar
606			20,112.5									606	13000	20,112.5	Lin. Ft.	Guardrail, Type 5
606			31.25									606	13050	31.25	Lin. Ft.	Guardrail, Type 5A
606			5									606	25000	5	Each	Anchor Assembly, Type A
606			3									606	26000	3	Each	Anchor Assembly, Type B
606			26									606	26500	26	Each	Anchor Assembly, Type T
606			21									606	26100	21	Each	Anchor Assembly, Type E (See Note on Sheet No. 20)
606			7									606	35000	7	Each	Bridge Terminal Assembly, Type 1
606			8									606	35100	8	Each	Bridge Terminal Assembly, Type 2
606			4									606	35120	4	Each	Bridge Terminal Assembly, Type 3
607					5,148							607	20000	5,148	Lin. Ft.	Fence, Type CL
607					32,516							607	23000	32,516	Lin. Ft.	Fence, Type CLT
608											157	608	10000	157	Sq. Ft.	4" Concrete Walk
608											2	608	51000	2	Each	Curb Ramp, Type 2
625					11							625	32000	11	Each	Ground Rod
Special								1				Special	690 10400	1	Each	Impact Attenuator, Hex-Foam Sandwich System, Model No. 209800H8S, Uni-Directional (See Note on Sheet No. 21)
																EROSION CONTROL
207							112					207	70000	112	Each	Straw or Hay Bales
659				29,600								659	10000	29,600	Sq. Yd.	Seeding and Mulching
659				2.66								659	20000	2.66	Ton	Commercial Fertilizer
659				13.32								659	30000	13.32	Ton	Agricultural Liming
659				64								659	35000	64	M Gal	Water
																DRAINAGE
603	2,130											603	01500	2,130	Lin. Ft.	6" Conduit Type F, 707.17 Non-Perforated ASTM D 3034 SDR 35, SS 931 or SS 944
603									12			603	04400	12	Lin. Ft.	12" Conduit, Type B
604									2			604	02000	2	Each	Catch Basin, No. 6
604									2		2	604	09000	4	Each	Catch Basin Adjusted to Grade
604									5			604	09501	5	Each	Catch Basin Reconstructed to Grade, As Per Plan A (See Note on Sheet No. 20)
604									8			604	09501	8	Each	Catch Basin Reconstructed to Grade, As Per Plan B (See Note on Sheet No. 20)
604									1			604	09501	1	Each	Catch Basin Reconstructed to Grade, As Per Plan C (See Note on Sheet No. 20)
604									17			604	20600	17	Each	Inlet Adjusted to Grade
Special	43											Special	604 36600	43	Each	Precast Reinforced Concrete Outlet (See Sheet No. 22)
605	12,156											605	05101	12,156	Lin. Ft.	4" Shallow Pipe Underdrain, 707.15, (18") As Per Plan (See Sheet No. 22)
605	29,115											605	05101	29,115	Lin. Ft.	4" Shallow Pipe Underdrain, 707.15, As Per Plan (See Sheet No. 22)

REVISED 1-26-93

GENERAL SUMMARY

CALC BY	KFP
DATE	10-1-92
CHKD BY	SHG
DATE	10-8-92

OHIO
FHWA REGION 5

COL-30-32.19

ITEM	SHEET NUMBER 11	15	17	20	21	35	41	54	ITEM	ITEM EXT.	GRAND TOTAL	UNIT	DESCRIPTION
													PAVEMENT
202		109,398							202	23500	109,398	Sq. Yd.	Wearing Course Removed
251				10,000					251	01000	10,000	Sq. Yd.	Partial Depth Pavement Repair
255								21,000	255	10000	21,000	Sq. Yd.	Full Depth Rigid Pavement Removal and Rigid Replacement, Class C
255								55,900	255	20000	55,900	Lin. Ft.	Full Depth Pavement Sawing
301						8			301	10002	8	Cu. Yd.	Bituminous Aggregate Base, AC-20
304	9,833						21		304	20001	9,854	Cu. Yd.	Aggregate Base, As Per Plan (See Note on Sheet No. 20)
305							64		305	13000	64	Sq. Yd.	9" Concrete Base
305	54,464								305	13001	54,464	Sq. Yd.	9" Concrete Base, As Per Plan (See Note on Sheet No. 20)
407		8,205							407	10000	8,205	Gallon	Tack Coat
446		12,926				3			446	01200	12,929	Cu. Yd.	Asphalt Concrete Intermediate Course, Type 2, AC-20
446		5,513				1			446	01401	5,514	Cu. Yd.	Asphalt Concrete Surface Course, Type 1, AC-20, As Per Plan (See Note on Sheet No. 20)
448			488						448	14101	488	Cu. Yd.	Asphalt Concrete Intermediate Course, Type 1, (Under Guardrail), As Per Plan (See Note on Sheet No. 20)
Special								73,350	Special	450 14000	73,350	Lin. Ft.	Sawing and Sealing Asphalt Concrete Pavement Joints, 705.04 (See Note in Proposal and Note Sheet No. 21)
Special								1,550	Special	450 35000	1,550	Lin. Ft.	Crack Cleaning And Sealing, Class I, 705.04 (See Note in Proposal)
609							655		609	16001	655	Lin. Ft.	Curb, Type 2-B, As Per Plan (See Note on Sheet No. 20)
609						59			609	22001	59	Lin. Ft.	Curb, Type 3-B, As Per Plan (See Note on Sheet No. 20)
609						7,862			609	26000	7,862	Lin. Ft.	Curb, Type 6
612						177			612	40000	177	Sq. Yd.	4" Concrete Median
612						22			612	42100	22	Cu. Yd.	Concrete Median
622						199			622	24000	199	Lin. Ft.	Concrete Barrier, Type D
													MAINTENANCE OF TRAFFIC
													For Maintenance of Traffic General Summary, See Sheet No. 55
													TRAFFIC CONTROL
													For Traffic Control General Summary, See Sheet No. 55
													STRUCTURES, 20' SPAN AND OVER
													For Structures, 20' Span and Over General Summary, See Sheet No. 68
614					Lump				614	11000	Lump		Maintaining Traffic
619									619	15020	Lump		Field Office, Type C
623									623	10000	Lump		Construction Layout Stakes
624									624	10000	Lump		Mobilization

FHWA REGION	STATE	PROJECT	
5	OHIO		

COL-30-32.19

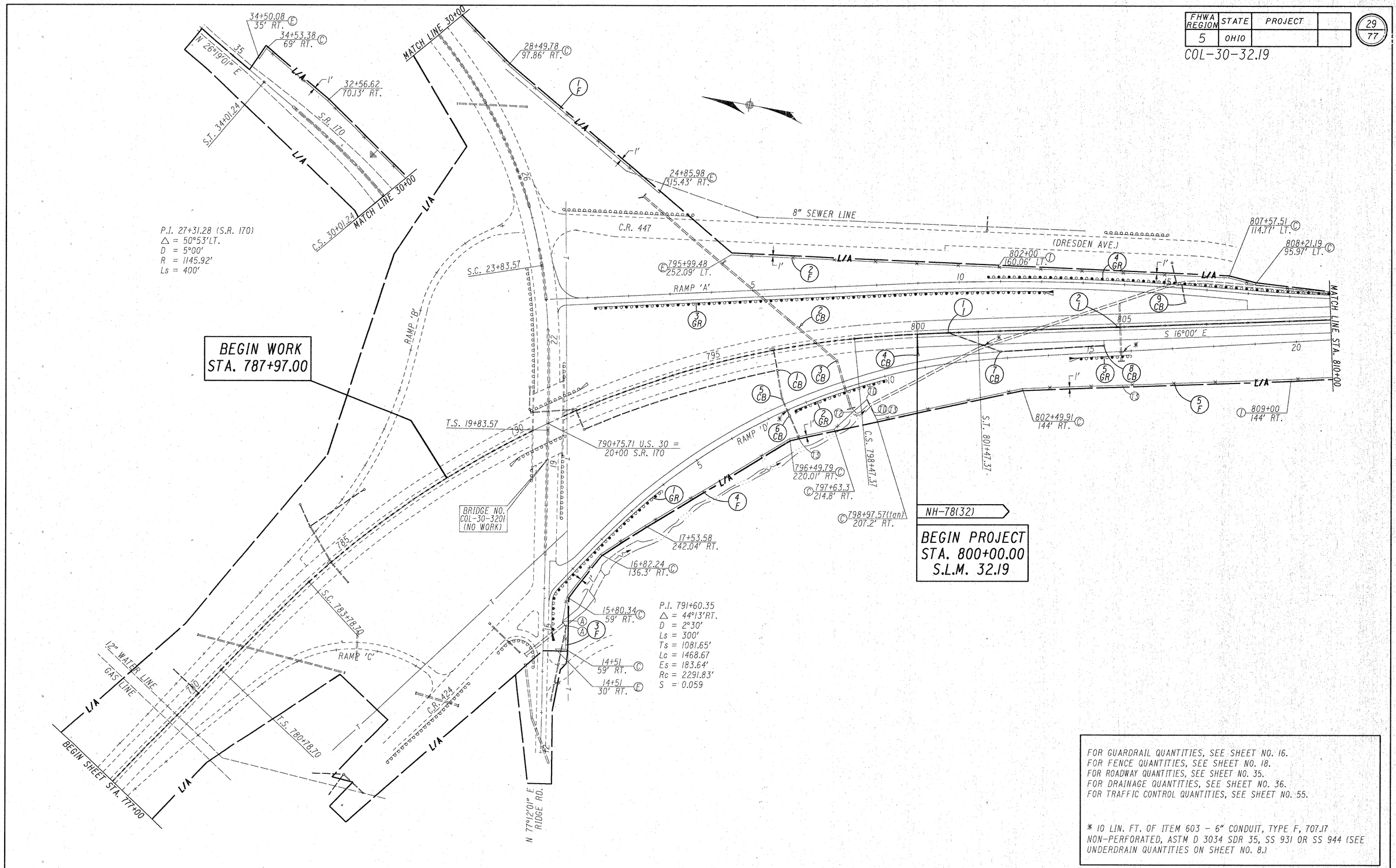

FOR GUARDRAIL QUANTITIES, SEE SHEET NO. 16.
FOR FENCE QUANTITIES, SEE SHEET NO. 18.
FOR ROADWAY QUANTITIES, SEE SHEET NO. 35.
FOR DRAINAGE QUANTITIES, SEE SHEET NO. 36.
FOR TRAFFIC CONTROL QUANTITIES, SEE SHEET NO. 55.

* 10 LIN. FT. OF ITEM 603 - 6" CONDUIT, TYPE F, 707.17 NON-PERFORATED, ASTM D 3034 SDR 35, SS 931 OR SS 944 (SEE UNDERDRAIN QUANTITIES ON SHEET NO. 8.)

STA. 777+00 TO STA. 810+00

FHWA REGION	STATE	PROJECT		
5	OHIO			

COL-30-32.19

FOR GUARDRAIL QUANTITIES, SEE SHEET NO. 16.
FOR FENCE QUANTITIES, SEE SHEET NO. 18.
FOR ROADWAY QUANTITIES, SEE SHEET NO. 35.
FOR DRAINAGE QUANTITIES, SEE SHEET NO. 36.
FOR TRAFFIC CONTROL QUANTITIES, SEE SHEET NO. 55.

* 10 LIN. FT. OF ITEM 603 – 6″ CONDUIT, TYPE F, 707.17 NON-PERFORATED, ASTM D 3034 SDR 35, SS 931 OR SS 944 (SEE UNDERDRAIN QUANTITIES ON SHEET NO. 8.)

FHWA REGION	STATE	PROJECT		31 / 77
5	OHIO			

COL-30-32.19

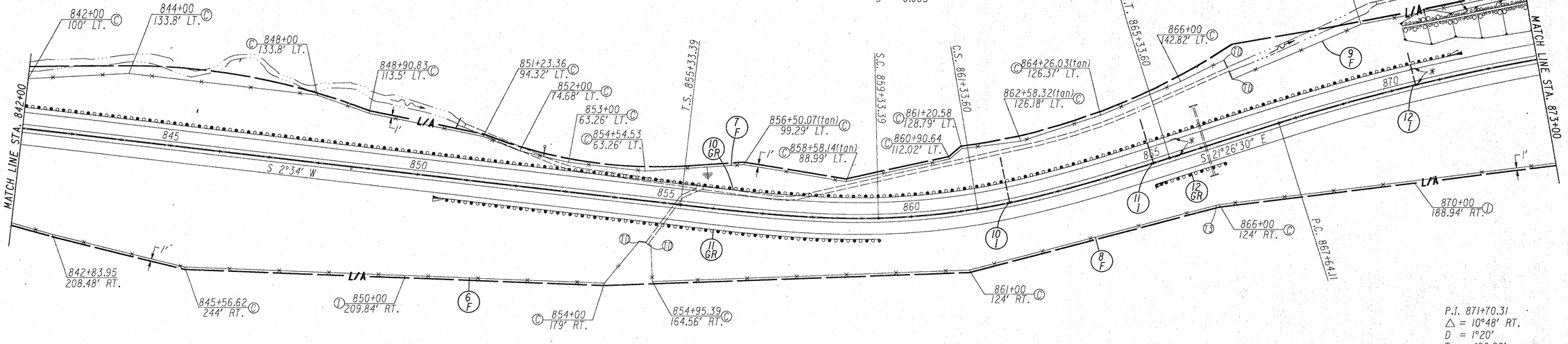

P.I. 860+38.82
△ = 24°00'30" LT.
D = 4°00'
Ls = 400'
Ts = 505.43'
Lc = 200.21'
Es = 36.78'
Rc = 1432.40'
S = 0.083

SEE NOTE: "RIGHT OF WAY ENCROACHMENT" ON SHEET NO. 20.

P.I. 871+70.31
△ = 10°48' RT.
D = 1°20'
T = 406.20'
L = 810.00'
E = 19.16'
R = 4297.18'
S = 0.032

FOR GUARDRAIL QUANTITIES, SEE SHEET NO. 16.
FOR FENCE QUANTITIES, SEE SHEET NO. 18.
FOR ROADWAY QUANTITIES, SEE SHEET NO. 35.
FOR DRAINAGE QUANTITIES, SEE SHEET NO. 36.
FOR TRAFFIC CONTROL QUANTITIES, SEE SHEET NO. 55.

* 10 LIN. FT. OF ITEM 603 - 6" CONDUIT, TYPE F, 707.17 NON-PERFORATED, ASTM D 3034 SDR 35, SS 931 OR SS 944 (SEE UNDERDRAIN QUANTITIES ON SHEET NO. 8.)

STA. 842+00 TO STA. 873+00

FHWA REGION	STATE	PROJECT	
5	OHIO		

COL-30-32.19

P.I. 903+41.90
△ = 18°15'47"LT.
D = 4°00'
Ls = 400.00'
R = 1432.40'
θs = 8°00'
P = 4.65'
K = 199.87'
L.T.= 266.94'
S.T.= 133.58'
L.C.= 399.65'
Ts = 430.86'
Es = 23.10'
Lc = 56.58'
Xc = 399.22'
Yc = 18.59'
S = 0.083

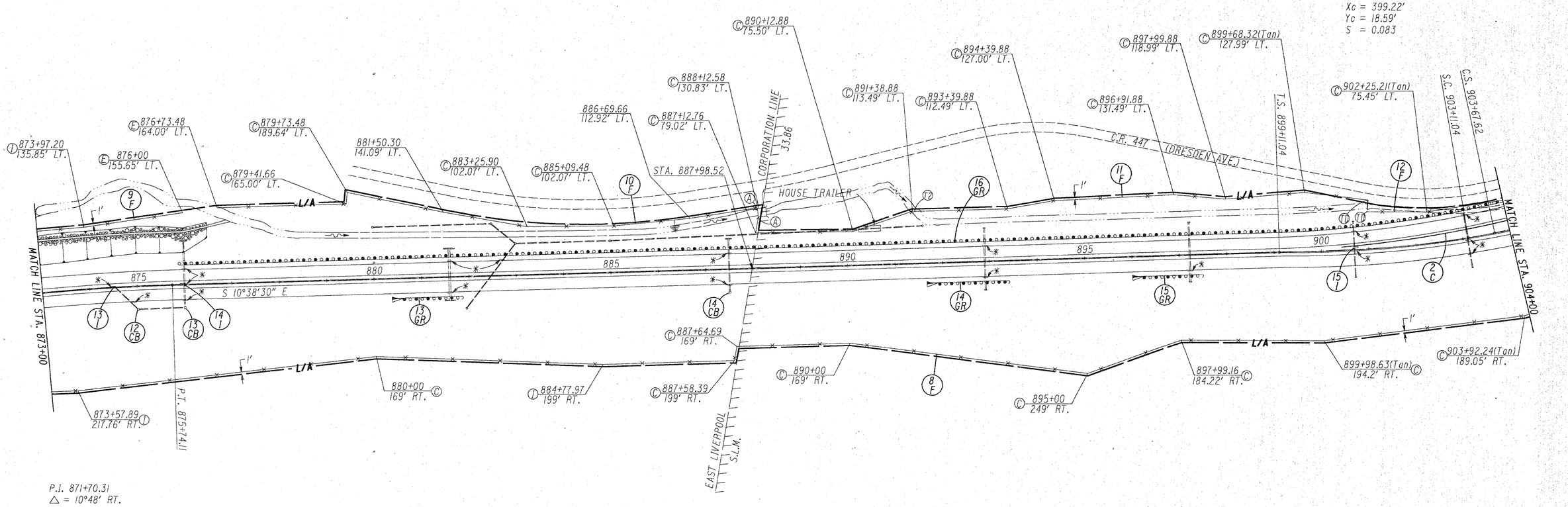

P.I. 871+70.31
△ = 10°48' RT.
D = 1°20'
T = 406.20'
L = 810.00'
E = 19.16'
R = 4297.18'
S = 0.032

FOR GUARDRAIL QUANTITIES, SEE SHEET NO. 16.
FOR FENCE QUANTITIES, SEE SHEET NO. 18.
FOR ROADWAY QUANTITIES, SEE SHEET NO. 35.
FOR DRAINAGE QUANTITIES, SEE SHEET NO. 36.
FOR TRAFFIC CONTROL QUANTITIES, SEE SHEET NO. 55.

* 10 LIN. FT. OF ITEM 603 - 6" CONDUIT, TYPE F, 707.17 NON-PERFORATED, ASTM D 3034 SDR 35, SS 931 OR SS 944 (SEE UNDERDRAIN QUANTITIES ON SHEET NO. 8.)

STA. 873+00 TO STA. 904+00

FHWA REGION	STATE	PROJECT		33 / 77
5	OHIO			

COL-30-32.19

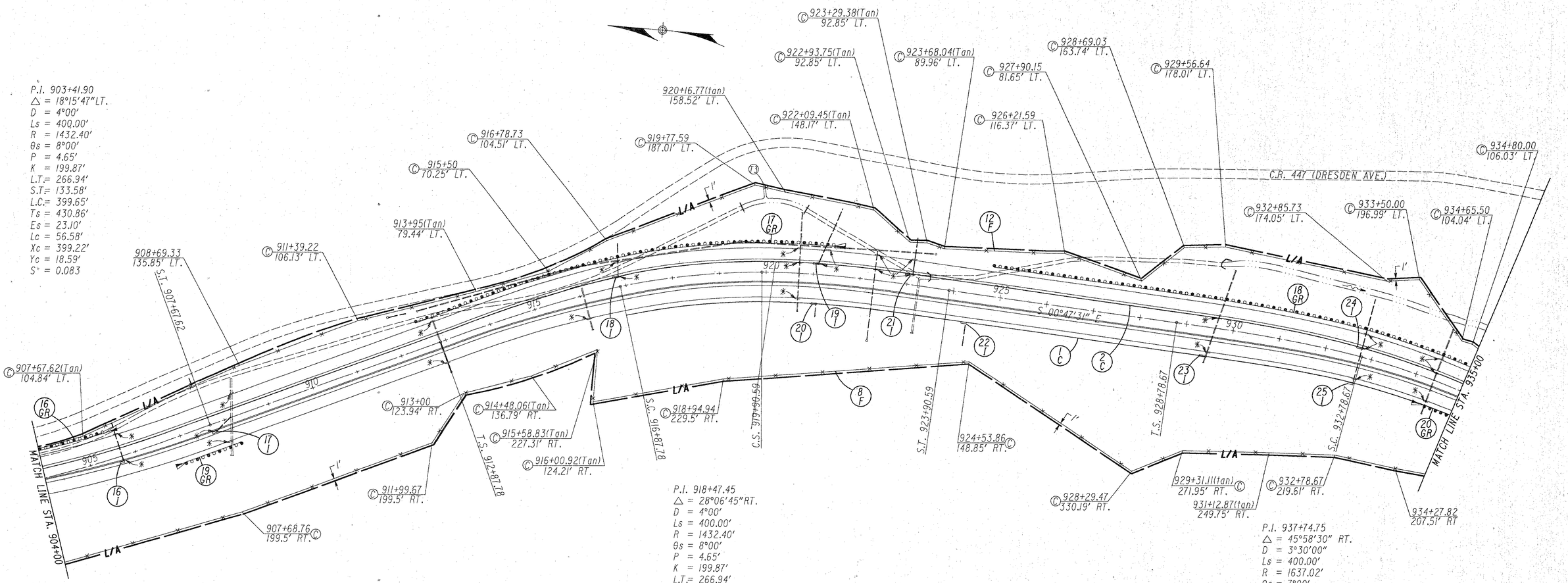

P.I. 918+47.45
△ = 28°06'45"RT.
D = 4°00'
Ls = 400.00'
R = 1432.40'
θs = 8°00'
P = 4.65'
K = 199.87'
L.T.= 266.94'
S.T.= 133.58'
L.C.= 399.65'
Ts = 559.67'
Es = 49.01'
Lc = 302.81'
Xc = 399.22'
Yc = 18.59'
S = 0.083

P.I. 937+74.75
△ = 45°58'30" RT.
D = 3°30'00"
Ls = 400.00'
R = 1637.02'
θs = 7°00'
P = 4.07'
K = 199.90'
L.T.= 266.88'
S.T.= 133.52'
L.C.= 399.73'
Ts = 896.08'
Es = 145.64'
Lc = 913.57'
Xc = 399.40'
Yc = 16.27'
S = 0.083

FOR GUARDRAIL QUANTITIES, SEE SHEET NO. 16.
FOR FENCE QUANTITIES, SEE SHEET NO. 18.
FOR ROADWAY QUANTITIES, SEE SHEET NO. 35.
FOR DRAINAGE QUANTITIES, SEE SHEET NO. 36.
FOR TRAFFIC CONTROL QUANTITIES, SEE SHEET NO. 55.

* 10 LIN. FT. OF ITEM 603 – 6" CONDUIT, TYPE F, 707.17 NON-PERFORATED, ASTM D 3034 SDR 35, SS 931 OR SS 944 (SEE UNDERDRAIN QUANTITIES ON SHEET NO. 8.)

STA. 904+00 TO STA. 935+00

FHWA REGION	STATE	PROJECT	
5	OHIO		

34
77

COL-30-32.19

END SHEET STA. 968+00

Connect To Exist. Fence
967+80.58, 139.00' Lt.

S.T. 967+05.72

Connect To Exist. Fence
966+77, 66.83' Rt.

Remove Fence at Retaining Wall

**END WORK
STA. 967+80.58**

EXISTING
RETAINING WALL

965+49.71
143.19' Lt.

965+05.40
133.88' Lt.

Remove Fence

962+28.30
53.41' Lt.

C.S. 963+05.72

BRIDGE NO.
COL-30-3526R

962+28.95
68.28' Lt.

963+03.88
47.18' Rt.

NEWELL BRIDGE 962+63.77
94.16' Rt.

EXISTING
RETAINING WALLS

NH-78(32)

**END PROJECT
STA. 963+50.00
S.L.M. 35.29**

962+22.36
109.01' Rt.

961+00
124.02' Rt.

960+00
141.00' Rt.

957+68.17
172.69' Rt.

956+71.41(Tan)
139.88' Rt.

953+09.63(Tan)
190.85' Rt.

952+70.77(Tan)
211.55' Rt.

951+39.54
284.25' Lt.

P.I. 174+50.52
△ = 2°57' Rt.
D = 0°40'
T = 221.30'
L = 442.50'
R = 8594.37'
E = 2.85'

P.I. 961+30.24
△ = 90°00'00" Lt.
D = 8°30'00"
Ls = 400.00'
R = 674.07'
θs = 17°00'
P = 9.86'
K = 199.41'
L.T.= 267.91'
S.T.= 134.46'
L.C.= 398.44'
Ts = 883.34'
Es = 293.15'
Lc = 658.82'
Xc = 396.48'
Yc = 39.31'
S = 0.083

P.I. 186+11.56
△ = 10°53' Lt.
D = 3°56'
T = 138.76'
L = 276.69'
R = 1456.67'
E = 6.59'

P.I. 182+81.58
△ = 2°33' Lt.
D = 0°40'
T = 191.28'
L = 382.50'
R = 8594.37'
E = 2.13'

P.I. 937+74.75
△ = 45°58'30" Rt.
D = 3°30'00"
Ls = 400.00'
R = 1637.02'
θs = 7°00'
P = 4.07'
K = 199.90'
L.T.= 266.88'
S.T.= 133.52'
L.C.= 399.73'
Ts = 896.08'
Es = 145.64'
Lc = 913.57'
Xc = 399.40'
Yc = 16.27'
S = 0.083

STA. 186+00

P.C.C. 184+72.80

JEFFERSON ST.

W. 9th. STREET

W. 8th. STREET

WEBBER WAY

949+68.41
682.90' Lt.

949+12.34
661.58' Lt.

944+57.17(Tan)
588.52' Lt.

945+08.52(Tan)
Connect To Exist. Fence

943+89.67(Tan)
522.59' Lt.

943+82.75(Tan)
439.10' Lt.

944+01.75(Tan)
414.12' Lt.

943+93.79(Tan)
292.99' Lt.

945+04.14(Tan)
119.14' Lt.

943+73.77(Tan)
129.18' Lt.

942+78.39(Tan)
106.12' Lt.

942+72.24(Tan)
125.12' Lt.

940+51.76
85.41' Lt.

941+10.25
93.02' Lt.

BRIDGE NO.
COL-7-3500

BRIDGE NO.
COL-30-3494

BRIDGE NO.
COL-7-0626L

BRIDGE NO.
COL-7-0643
(NO WORK)

950+68.94
615.15' Lt.

950+96.06
603.60' Lt.

950+36.40
645.18' Lt.

951+36.66
582.79' Lt.

952+68.29(Tan)
477.86' Lt.

952+86.90(Tan)
463.10' Lt.

952+99.72(Tan)
427.51' Lt.

953+49.61(Tan)
415.67' Lt.

953+63.36(Tan)
295.44' Lt.

953+49.61(Tan)
415.67' Lt.

955+92.97(Tan)
112.39' Lt.

958+00
88.97' Lt.

Existing Fence

Existing Fence

Existing Stone Abutment

P.C. 180+90.30

P.T. 176+71.72

T.S. 952+46.90

S.C. 956+46.90

RAMP 'A'

RAMP 'C'

RAMP 'B'

RAMP 'D'

S 62°09'37" E

S 45°10'59" W

Overhead Sign

Overhead Sign

937+13.56
141.93' Lt.

937+06.65
82.82' Lt.

936+16.13
94.79' Lt.

935+78.09
82.44' Lt.

940+27.76
112.9' Lt.

938+99.93
103' Lt.

937+99.64
118.02' Lt.

MATCH LINE STA. 935+00

936+01.92
174.49' Rt.

936+70.04
180' Rt.

937+09.08
180' Rt.

937+51.38
191.56' Rt.

937+84.92
203.72' Rt.

941+27.46
182.98' Rt.

940+07.59
204.97' Rt.

939+77.28
195.87' Rt.

939+56.59
210.17' Rt.

939+16.93
174.96' Rt.

938+49.67
180' Rt.

938+05.43
164.21' Rt.

C.S. 941+92.24

945+03(Tan)
138.22' Rt.

944+16.85(Tan)
138.48' Rt.

942+93.78(Tan)
161.42' Rt.

942+10.7(Tan)
193.99' Rt.

947+22.77
326.78' Rt.

947+40.48
389.35' Rt.

948+84.84
554.83' Rt.

947+40.48
546.67' Rt.

949+86.41
445.62' Rt.

952+05.04
788.76' Rt.

S.T. 945+92.24

S.R. 267

(LISBON RD.)

910' ST. CONN.

W. 8th. STREET (TR)

W. FOURTH ST. EXT.

P.C. 172+28.22

STA. 165+00

FOR GUARDRAIL QUANTITIES, SEE SHEET NO. 16.
FOR FENCE QUANTITIES, SEE SHEET NO. 18.
FOR ROADWAY QUANTITIES, SEE SHEET NO. 35.
FOR DRAINAGE QUANTITIES, SEE SHEET NO. 36.
FOR TRAFFIC CONTROL QUANTITIES, SEE SHEET NO. 55.

* 10 LIN. FT. OF ITEM 603 - 6" CONDUIT, TYPE F, 707.17 NON-PERFORATED, ASTM D 3034 SDR 35, SS 931 OR SS 944 (SEE UNDERDRAIN QUANTITIES ON SHEET NO. 8.)

STA. 935+00 TO STA. 968+00

ROADWAY QUANTITIES

QUANTITIES	
Calc. KFP	Chkd. SHG
Date: 9-21-92	Date: 9-30-92

FHWA REGION	STATE	PROJECT	
5	OHIO		

35/77

COL-30-32.19

Reference No.	Plan Sheet No.	Stations		202 Concrete Barrier Removed	202 Curb Removed	202 Impact Attenuator Removed, As Per Plan	202 Pavement Removed	301 Bituminous Aggregate Base	446 Asphalt Concrete Surface Course, Type 1, AC-20	446 Asphalt Concrete Intermediate Course, Type 2, AC-20	510 Dowel Hole	511 Retaining Wall Refaced, As Per Plan	516 1" Preformed Expansion Joint Filler	609 Curb, Type 6	609 Curb, Type 3-B, As Per Plan	612 4" Concrete Median	612 Concrete Median	622 Concrete Barrier, Type D	Special Impact Attenuator, Hex Foam Sandwich System	See Sheet No. Or Standard Drawing
		From	To	Lin. Ft.	Lin. Ft.	Lump Sum	Sq. Yd.	Cu. Yd.	Cu. Yd.	Cu. Yd.	Each	Cu. Yd.	Sq. Ft.	Lin. Ft.	Lin. Ft.	Sq. Yd.	Cu. Yd.	Lin. Ft.	Each	
1-B	34	945+37.4	945+87.4															50.0		GR-8
2-B	34	944+76.32	945+26.32															50.0		GR-8
3-B	34	1+51.1 "D"	1+84.9 "D"	35.0																
		1+48.9 "D"	1+84.9 "D"															37.2		47
4-B	34	963+16.6	963+82.4								12	0.6	8.4					62.0		46
1-C	33 & 34	916+87.78	945+00		2812.22									2812.22						
2-C	32 & 34	900+43	943+00		4257									4257						
3-C	34	956+55	963+50		695									695						
4-C	34	9+61"D"	10+10"D"		49									49						
5-C	34	9+61"D"	10+10"D"		49									49						
1-CM	34	945+47	946+25		78			2.2												45
		946+25	947+82.8		157.8												21.7			
2-CM	34	956+55	959+00													89.1				
		960+50	962+00													54.5				
3-CM	34	961+90	962+22													11.1				
		962+22	962+80													21.1				
1-R	34	0+45.5"A"	2+00"A"				61.6													39
2-R	34	951+83	952+40				31.1													39
3-R	34	951+56	952+51		95															39
4-R	34	963+08.35	963+50		41.65															
1-1A	34	947+11.7	947+42.6			1	14.2	5.8	1.2	2.9					59.2	0.7			1	47, 48 & 49
TOTALS - Carried To General Summary				35.0	8,234.67	Lump	106.9	8.0	1.2	2.9	12	0.6	8.4	7,862.22	59.2	176.5	21.7	199.2	1	

30303229.TKR

DRAINAGE QUANTITIES

* Sag Location

QUANTITIES	
Calc. KFP	Chkd. SHG
Date: 9-21-92	Date: 9-30-92

FHWA REGION	STATE	PROJECT	
5	OHIO		

COL-30-32.19

36/77

Reference No.	Plan Sheet No.	Station	202 Catch Basin Removed (Each)	202 Gutter Removed (Lin. Ft.)	202 Pavement Removed (Sq. Yd.)	603 Conduit Type B, 12" (Lin. Ft.)	603 Bends & Branches 30° Bend (Each)	604 Inlet Adjusted To Grade (Each)	604 Catch Basin, No. 6 (Each)	604 Catch Basin Adjusted To Grade (Each)	604 Catch Basin Reconstructed To Grade, As Per Plan A (Each)	604 Catch Basin Reconstructed To Grade, As Per Plan B (Each)	604 Catch Basin Reconstructed To Grade, As Per Plan C (Each)	Special Inlet Cleanout (Each)	See Sheet No. Or Standard Drawing
1-CB	29	796+50		10								1			43
2-CB	29	797+16		10							1				42
3-CB	29	797+97		10									1		44
4-CB	29	800+00		20							1*				42
5-CB	29	7+50 "D"		10								1			43
6-CB	29	7+50 "D"		10								1			43
7-CB	29	802+00								1					
8-CB	29	804+50								1					
9-CB	29	806+50		10								1			
10-CB	30	819+00		10								1			43
11-CB	30	819+50		10								1			43
12-CB	31	875+00		10								1			43
13-CB	32	876+00		10								1			43
14-CB	32	887+50		10							1				43
15-CB	34	2+02 "C"									1*				42
16-CB	34	947+15	1		0.41	8	2		1						42
17-CB	34	947+78	1		0.41	4	1		1						45
18-CB	34	2+53 "B"									1*				45
															42
1-I	29	800+75												1	
2-I	29	804+91												1	
3-I	30	824+00												1	
4-I	30	826+00												1	
5-I	30	828+50												1	
6-I	30	829+50												1	
7-I	30	837+00												1	
8-I	30	840+50												1	
9-I	30	841+50												1	
10-I	31	862+00												1	
11-I	31	865+00												1	
12-I	31	870+50												1	
13-I	32	874+50												1	
14-I	32	876+00												1	
15-I	32	900+70												1	
16-I	33	905+70												1	
17-I	33	907+75												1	
18-I	33	916+88						1						1	
19-I	33	921+10						1						1	
20-I	33	921+10						1						1	
21-I	33	923+10						1						1	
22-I	33	924+35						1						1	
23-I	33	929+52						1						1	
24-I	33	932+75						1						1	
25-I	33	932+75						1						1	
26-I	34	936+10						1						1	
27-I	34	936+10						1						1	
28-I	34	939+50						1						1	
29-I	34	939+50						1						1	
30-I	34	943+25						1						1	
31-I	34	943+25						1						1	
32-I	34	944+90						1						1	
33-I	34	945+24												1	
34-I	34	956+47												1	
35-I	34	960+25						1						1	
36-I	34	960+50												1	
37-I	34	963+48						1						1	
38-I	34	963+48												1	
TOTALS - Carried To General Summary			2	130	0.82	12		17	2	2	5	8	1	38	

30303229.TKR

DRAINAGE QUANTITIES

CALC BY TKR	COL-30-32.19	OHIO	36A
DATE 11/10/92		FHWA REGION 5	77
CHKD BY SHG			
DATE 11/13/92			

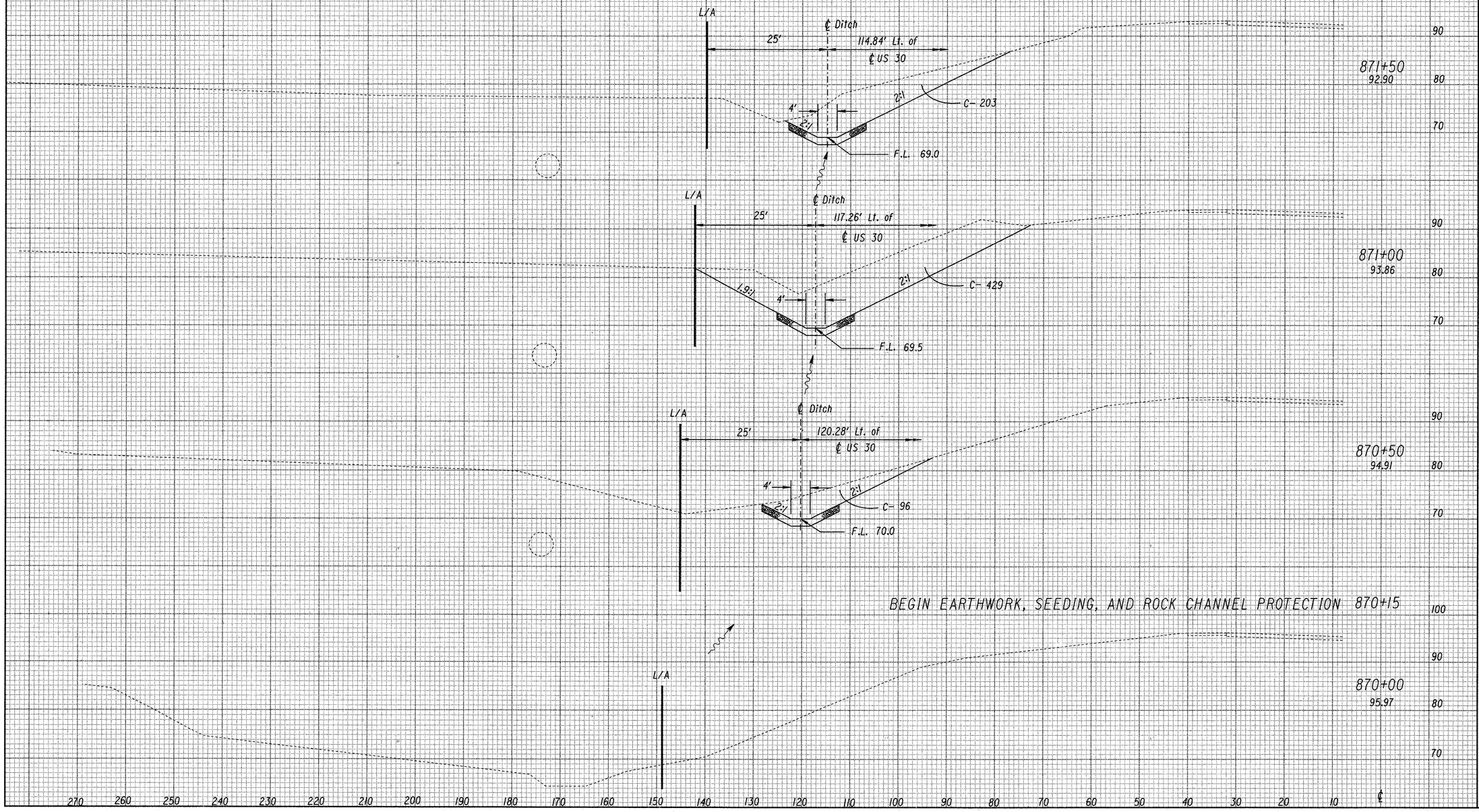

		SEEDING	END AREA		VOLUME	
		END WIDTH	SQ. YDS.	CUT	FILL	CUT	FILL
871+50	92.90	51		203	0		
			308			585	0
871+00	93.86	60		429	0		
			269			486	0
870+50	94.91	37		96	0		
			72			62	0
870+15		0		0	0		
870+00	95.97						

303032XX.TKR

870+00 to 871+50

CALC BY TKR	DATE 11/10/92
CHKD BY SHG	DATE 11/13/92

COL-30-32.19

OHIO | FHWA REGION 5 | 36B 77

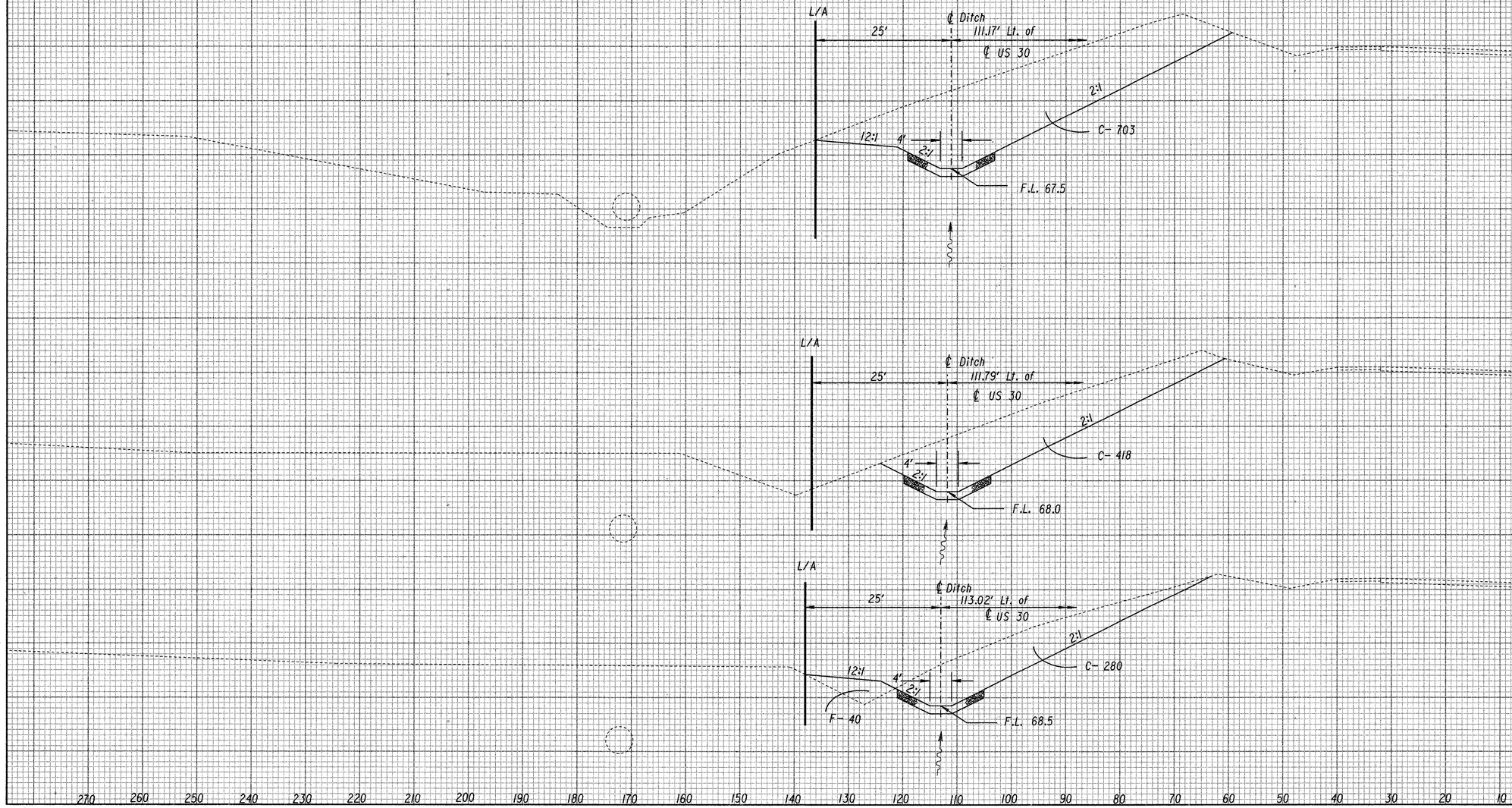

SEEDING END WIDTH	SEEDING SQ. YDS.	END AREA CUT	END AREA FILL	VOLUME CUT	VOLUME FILL
873+00 89.74					
66		703	0		
	369			1038	0
872+50 90.87					
67		418	0		
	364			646	37
872+00 91.89					
64		280	40		
	319			447	37

303032XX.TKR

872+00 to 873+00

CALC BY TKR	DATE 11/10/92	CHKD BY SHG	DATE 11/13/92	COL-30-32.19	OHIO	FHWA REGION 5	36C / 77

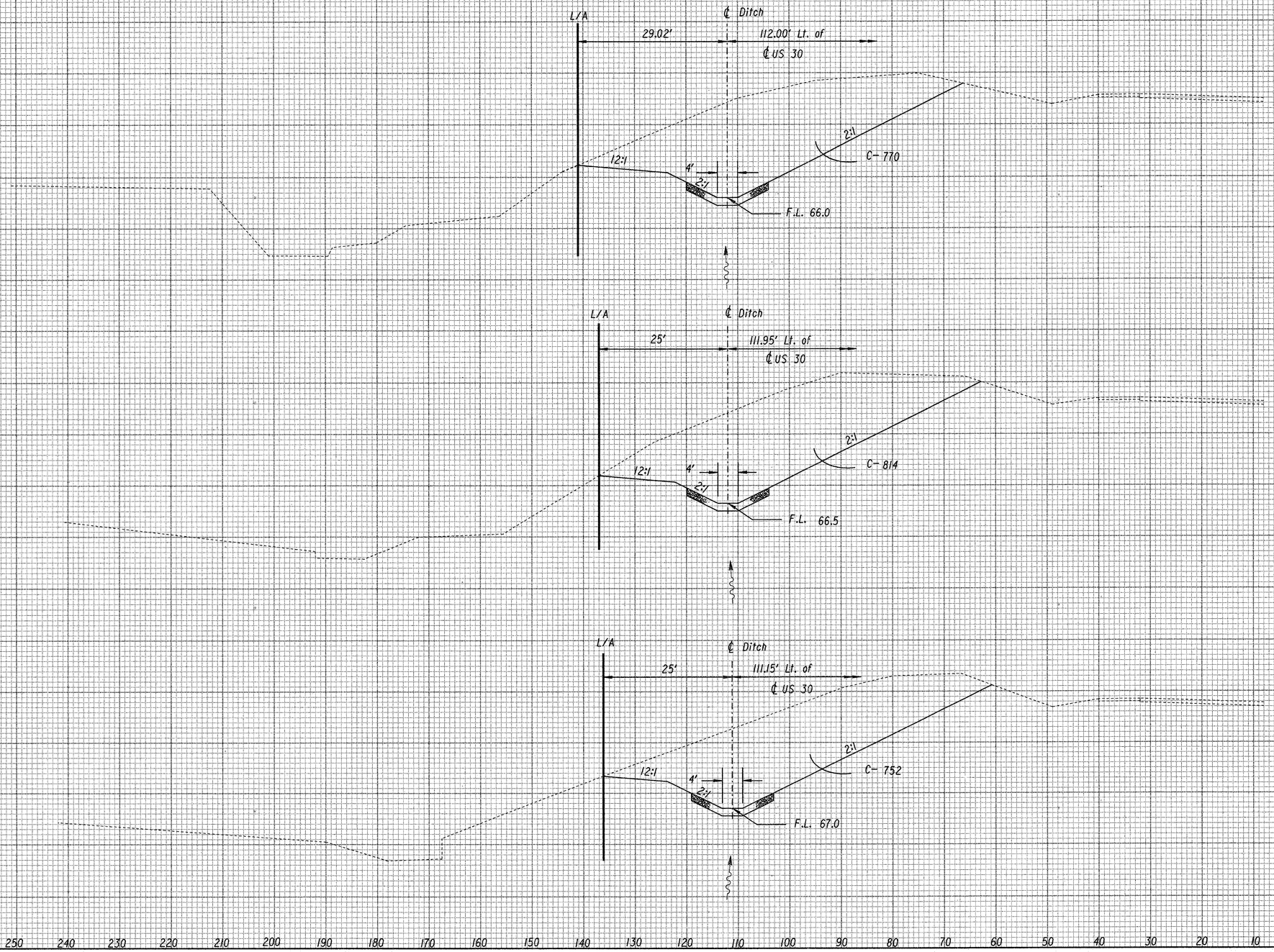

SEEDING END WIDTH	SEEDING SQ. YDS.	END AREA CUT	END AREA FILL	VOLUME CUT	VOLUME FILL
64		770	0		
	356			1467	0
64		814	0		
	358			1450	0
65		752	0		
	364			1347	0

303032XX.TKR

873+50 to 874+50

CALC BY TKR	COL-30-32.19	OHIO	36D
DATE 11/10/92		FHWA REGION 5	77
CHKD BY SHG			
DATE 11/13/92			

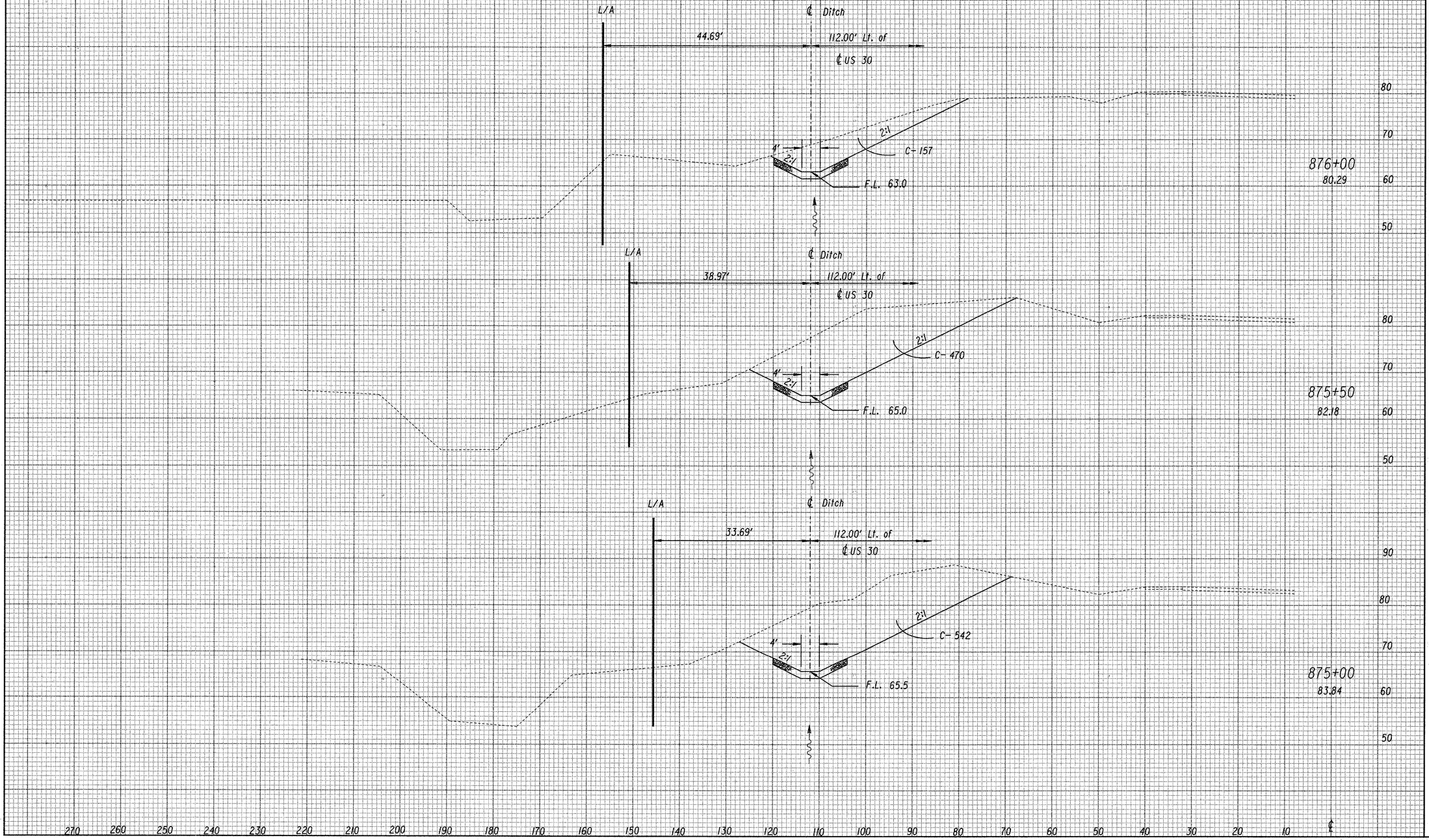

SEEDING		END AREA		VOLUME	
END WIDTH	SQ. YDS.	CUT	FILL	CUT	FILL
67		157	0		
	389			581	0
73		470	0		
	392			937	0
68		542	0		
	367			1215	0

303032XX.TKR

875+00 to 876+00

Quantity Carried to General Summary:

Item 203 - Excavation, As Per Plan ----10,586 Cu. Yd.

Item 203 - Embankment --------------- 74 Cu. Yd.*

Item 659 - Seeding And Mulching ----- 4,352 Sq. Yd.*

See General Note "Right of Way Encroachment" on Sheet No. 20.

* For Information Only

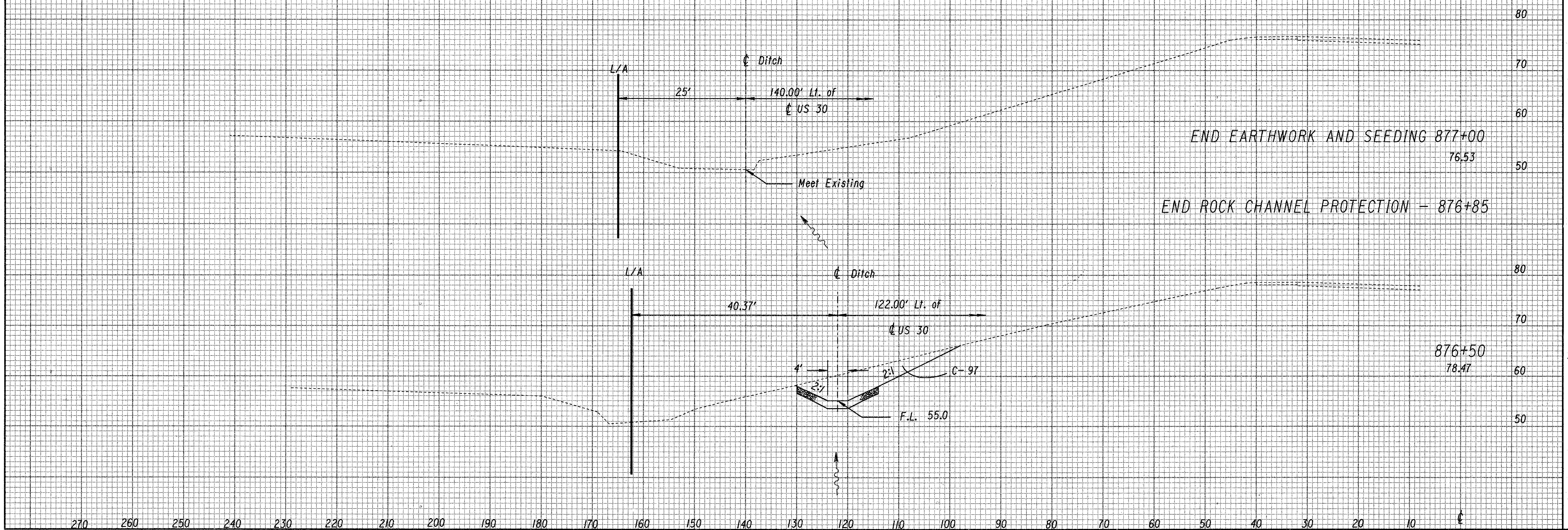

SEEDING		END AREA		VOLUME	
END WIDTH	SQ. YDS.	CUT	FILL	CUT	FILL
0		0	0		
	119			90	0
43		97	0		
	306			235	0

FHWA REGION	STATE	PROJECT		37
5	OHIO			77

COL-30-32.19

FEATHER DETAILS

(Not to Scale)

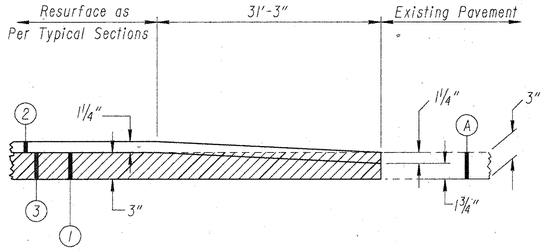

PAVEMENT TRANSITION AT EACH END OF PROJECT

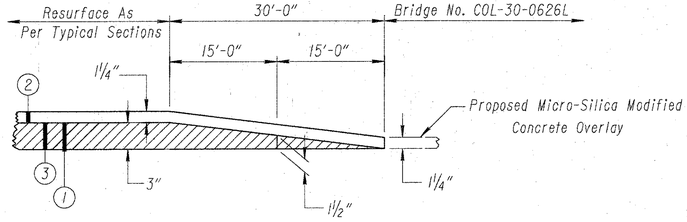

PAVEMENT TRANSITION AT BRIDGE NO. COL-7-0626L

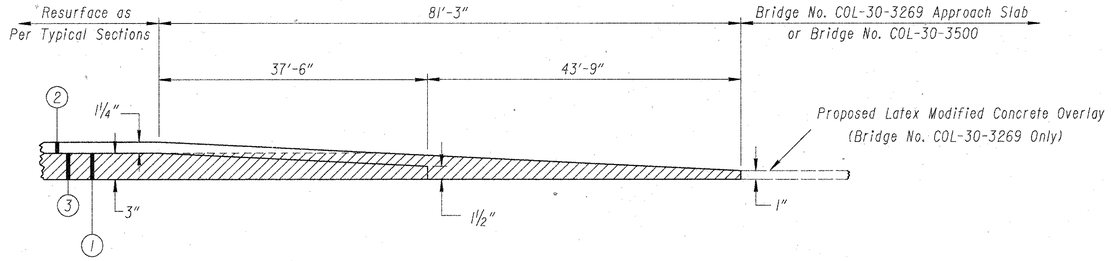

PAVEMENT TRANSITION AT BRIDGE NO.'S COL-30-3269 and COL-30-3500

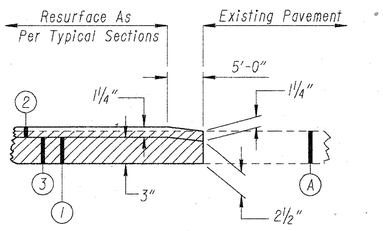

PAVEMENT TRANSITION AT S.R. 7 INTERCHANGE

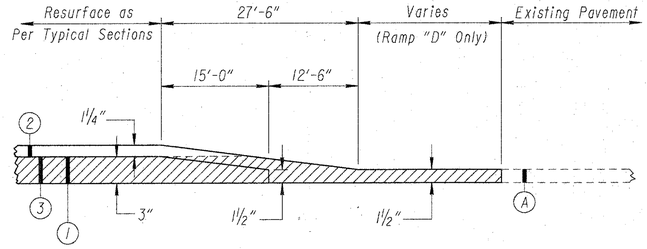

PAVEMENT TRANSITION AT S.R. 170 INTERCHANGE

LEGEND

- (A) Existing Asphalt Concrete
- (1) Item 202-Wearing Course Removed (3" Nominal Depth)
- (2) Item 446-1¼" Asphalt Concrete Surface Course, Type 1, AC-20, As Per Plan
- (3) Item 446-3" Asphalt Concrete Intermediate Course, Type 2, AC-20, As Per Plan
- Wearing Course Removed

For Ramp Intersection Details
See Sheet No.'s 40 & 41

30303223.TKR

FHWA REGION	STATE	PROJECT	
5	OHIO		

38
77

COL-30-32.19

GUARDRAIL DETAILS

B.T.A. = Bridge Terminal Assembly

For Details Not Shown, See Std. Dwgs. GR-1.1, GR-1.2, GR-2.1, GR-3.2, And GR-4.1

For Quantities See Sheet No. 16

Scale In Feet: 0 20 40

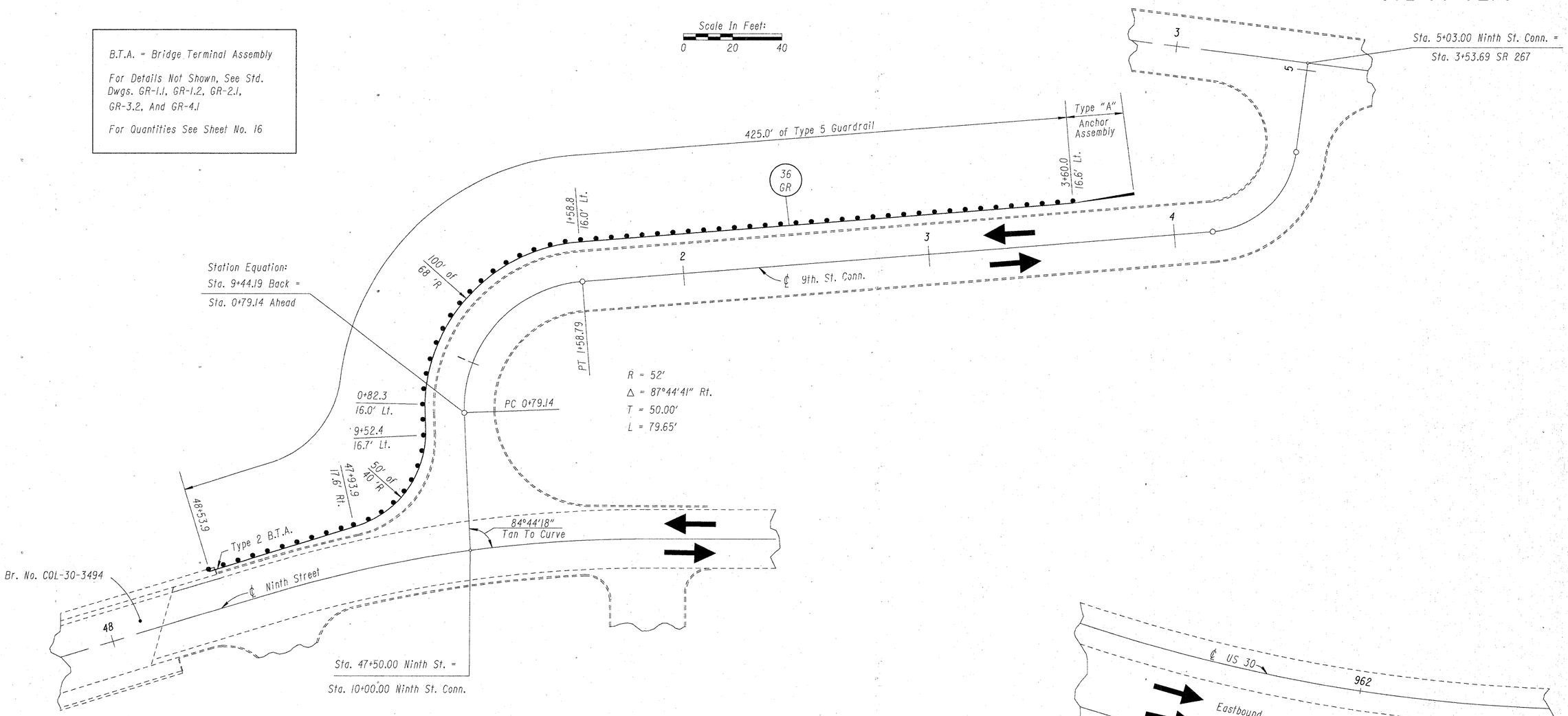

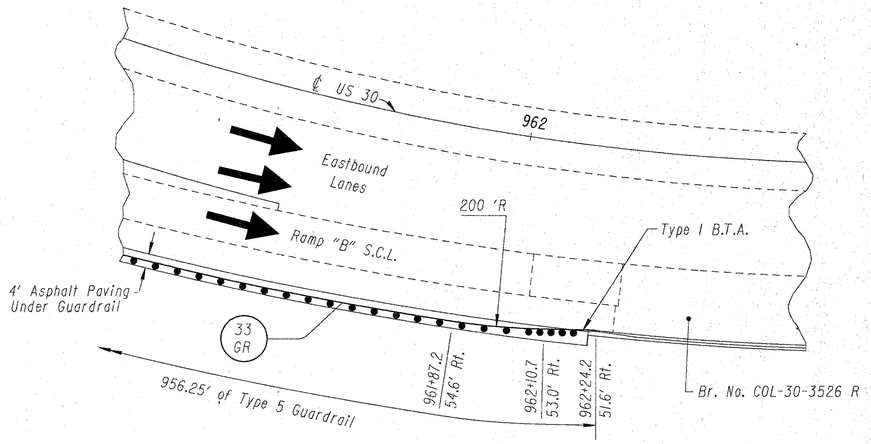

303032I9.TKR

GUARDRAIL DETAILS

GUARDRAIL DETAILS

FHWA REGION	STATE	PROJECT		39 / 77
5	OHIO			

COL-30-32.19

Scale In Feet: 0 10 20

≠ Type "B" Anchor Assembly

* Type "T" Anchor Assembly

B.T.A. = Bridge Terminal Assembly

For Details Not Shown, See Std. Dwgs. GR-1.1, GR-1.2, GR-2.1, GR-3.2, And GR- 4.1

For Quantities See Sheet No. 16, & 35

Item 202- Pavement Removed

Existing Sign Support

31.25' of Type 5A Guardrail

947+37.1 73.3' Lt.

947+61.7 69.1' Lt.

947+80.4 67.3' Lt.

Top Mounted Thrie Beam Bridge Railing (See Std. Dwg. TBR-91 and Sheet No. 75)

200 'R

4' Asphalt Paving Under Guardrail

31 GR

Type 3 B.T.A.

Sta. 947+63.15 US 30 = Sta 0+00.00 Ramp C

0

947

℄ US 30

948

947+43.7 42.7' Rt.

68.75' of Type 5 Guardrail

11:1 Flare

Type 3 B.T.A.

948+24.6 35.3' Rt.

4' Asphalt Paving Under Guardrail

25 GR

1 1A (See Sheet No. 47)

Ramp "D"

81.25' of Type 5 Guardrail

1+23.1 "A" 32.5' Rt.

0+79.0 "A" 24.4' Rt.

0+44.0 "A" 18.8' Rt.

0+30.3 "A" 16.7' Rt.

0+16.6 "A" 15.3' Rt.

32 GR

Ramp "A"

4' Asphalt Paving Under Guardrail

100' R

0+45.5 "A"

12.5' of 50 'R

Type 3 B.T.A.

0

Sta. 951+07.45 US 30 = Sta. 0+00.00 Ramp A

Br. No. COL-30-3500

Top Mounted Thrie Beam Bridge Railing (See Std. Dwg. TBR-91 and Sheet No. 75)

1 R

3 R

Existing Type 8 Curb To Be Removed

2 R

951+83 ±

952+40 ±

Westbound Lanes

952

℄ US 30

Eastbound Lanes

12.5' of 50 'R

Type 3 B.T.A.

26 GR

952+08.4 35.3' Rt.

952+20.8 36.9' Rt.

952+32.9 40.0' Rt.

130' R

952+65.1 44.0' Rt.

4' Asphalt Paving Under Guardrail

643.75' of Type 5 Guardrail

303032I9.TKR

GUARDRAIL DETAILS

FHWA REGION	STATE	PROJECT	
5	OHIO		

40
77

COL-30-32.19

RAMP INTERSECTION DETAILS

S.R. 170 INTERCHANGE

Scale In Feet
0 10 20

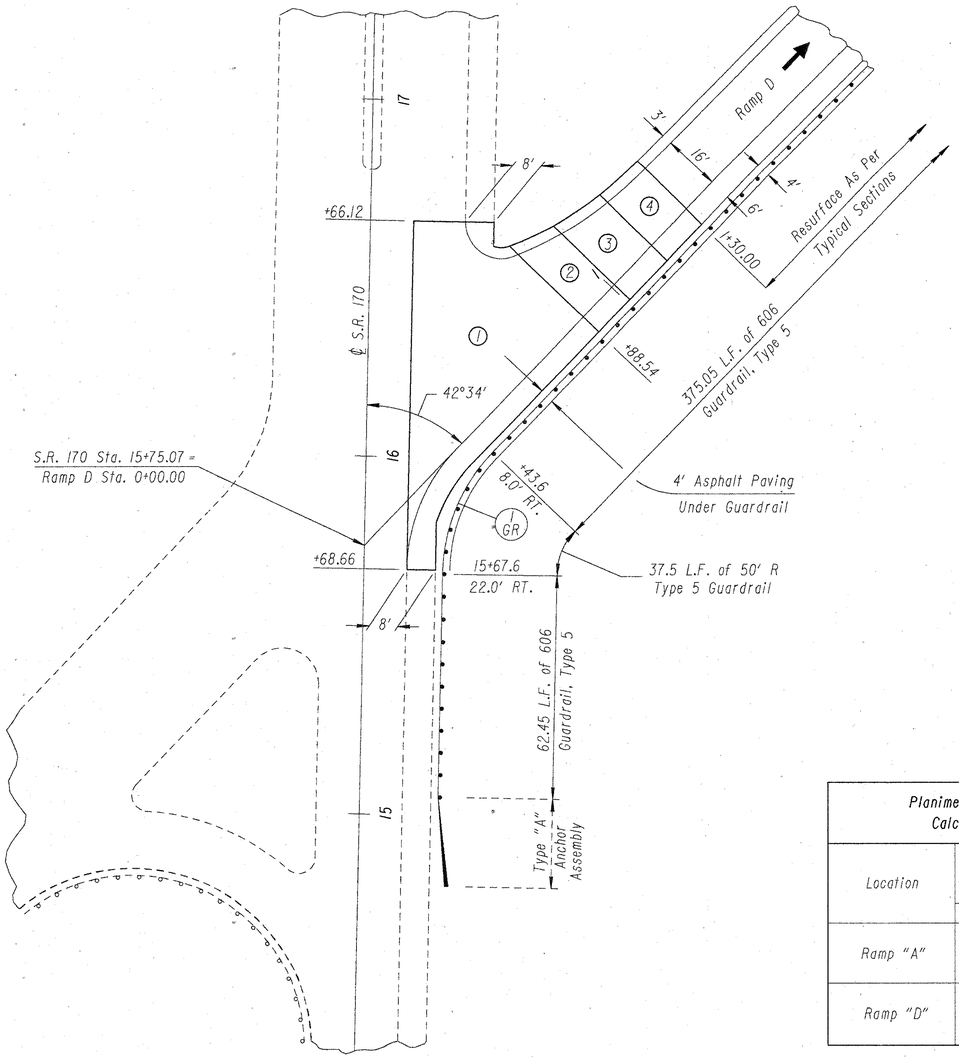

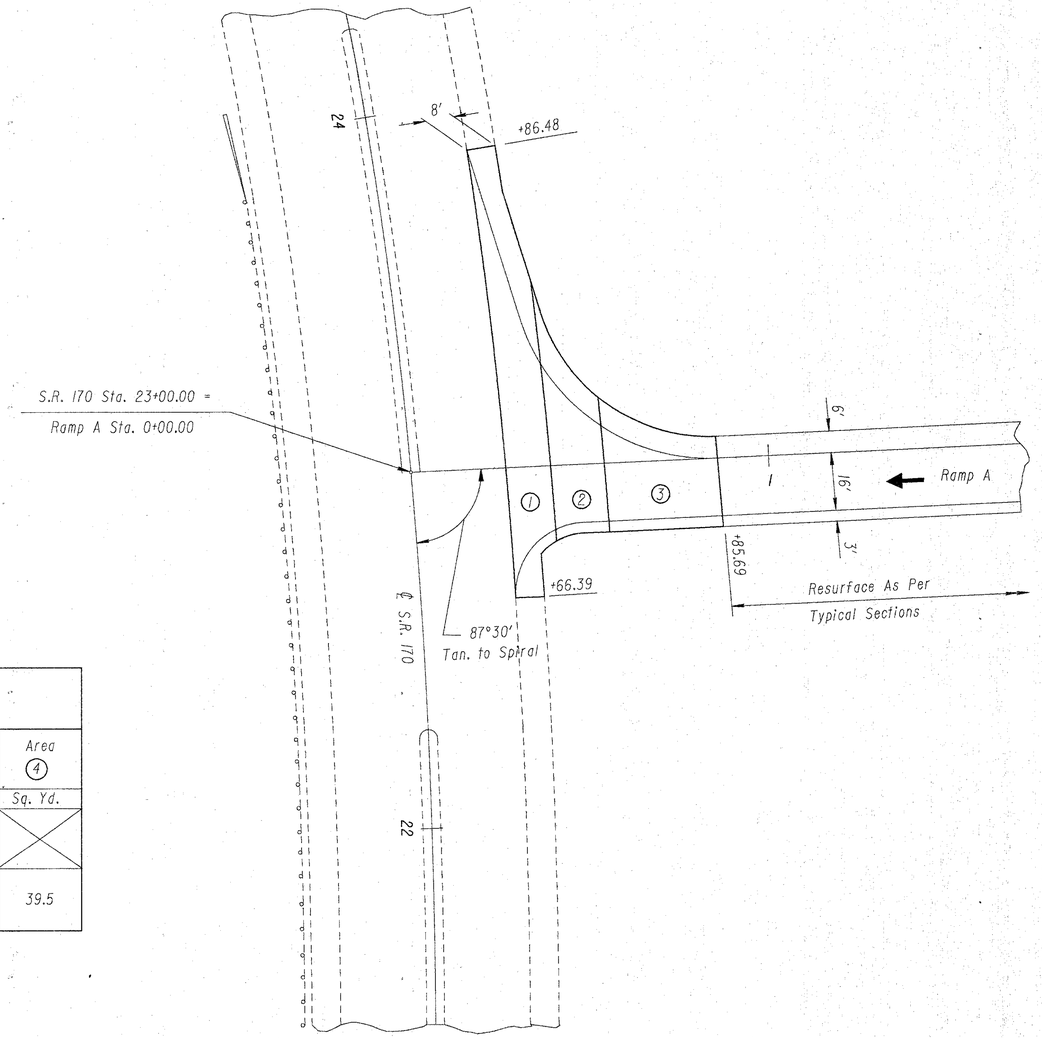

Planimetered Areas Used In Resurfacing Calculations On Sheet No. 15				
Location	Area (1)	Area (2)	Area (3)	Area (4)
	Sq. Yd.	Sq. Yd.	Sq. Yd.	Sq. Yd.
Ramp "A"	155.8	81.7	101.6	
Ramp "D"	299.4	44.21	45.9	39.5

For Resurfacing Quantities, See Sheet No. 15
For Concrete Shoulder Quantities, See Sheet No. 12
For Guardrail Quantities, See Sheet No. 16

30303209.TKR

INTERSECTION DETAILS

RAMP INTERSECTION DETAILS

S.R. 7 INTERCHANGE

QUANTITIES	
Calc. TKR	Chkd. SHG
Date: 9-21-92	Date: 10-1-92

FHWA REGION	STATE	PROJECT	
5	OHIO		

41/77

COL-30-32.19

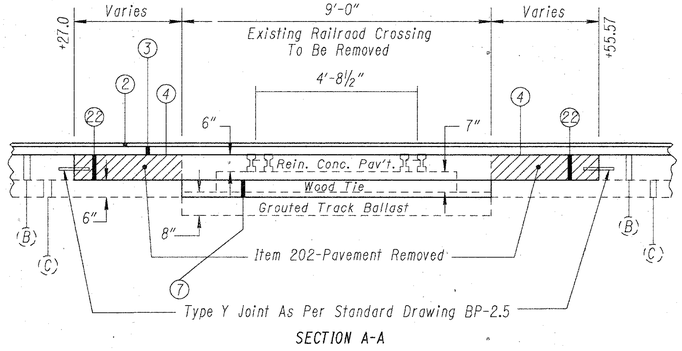

SECTION A-A

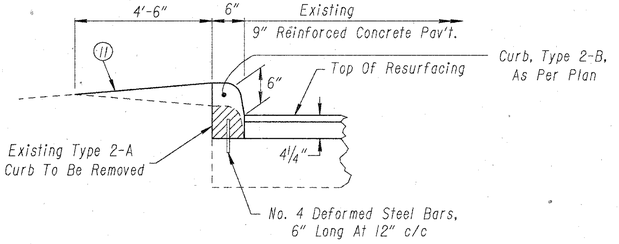

CURB REPLACEMENT DETAIL

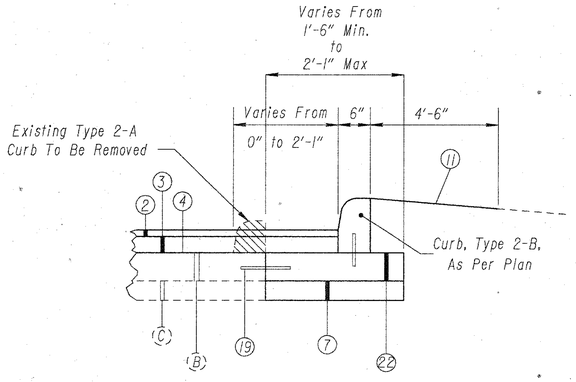

SECTION B-B

* Remove existing sidewalk and replace with new 4" concrete walk and a Type 2 Curb ramp.

† Carried to Sheet No. 17

For Feather Details See Sheet No. 37

For Details Not Shown, See Standard Drawings, BP-5.1 and BP-7.1

QUANTITIES

202				203	304	305	604	608		609	659
Curb Removed, As Per Plan	Walk Removed	Railroad Crossing Removed	Pavement Removed	Embank-ment	Aggregate Base, As Per Plan	9" Concrete Base	Catch Basin Adjusted To Grade	4" Concrete Walk	Curb Ramp, Type 2	Curb, Type 2-B, As Per Plan	Seeding And Mulching
Lin. Ft.	Sq. Ft.	Lump	Sq. Yd.	Cu. Yd.	Cu. Yd.	Sq. Yd.	Each	Sq. Ft.	Each	Lin. Ft.	Sq. Yd.
654.8	156.9	Lump	28.0	32.0	20.8	63.5	2	156.9	2	654.8	271.4 †

Quantities Carried To General Summary

Resurfacing Areas

Sq. Yd.

①	②	③	④	⑤
11.9	19.2	42.4	74.9	761.7

Carried To Sheet No. 15

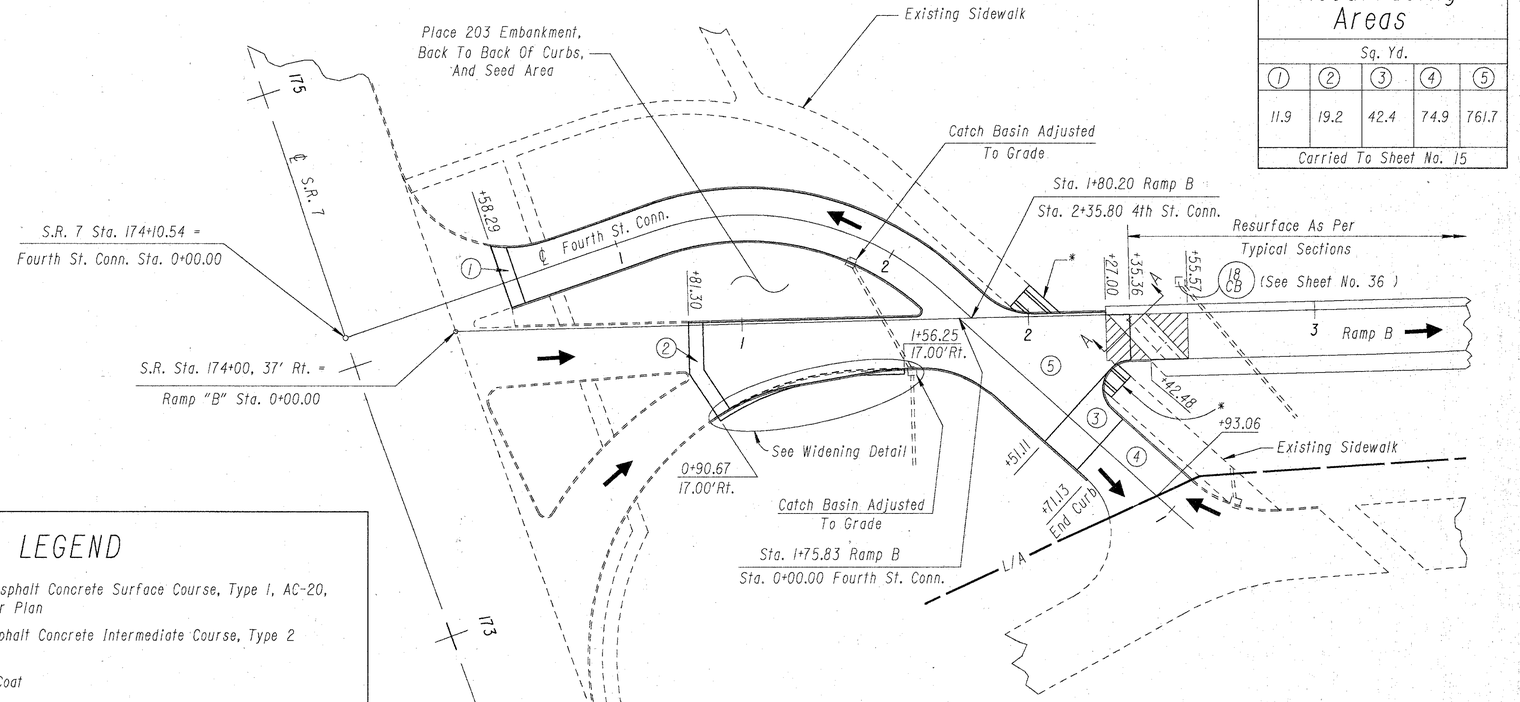

LEGEND

- (2) — Item 446 - 1¼" Asphalt Concrete Surface Course, Type 1, AC-20, As Per Plan
- (3) — Item 446 - 3" Asphalt Concrete Intermediate Course, Type 2
- (4) — Item 407 - Tack Coat
- (7) — Item 304 - Aggrgate Base, As Per Plan
- (11) — Item 203 - Linear Grading, Method 3
- (19) — Type D Longitudinal Joint As Per Standard Drawing BP-2.1
- (22) — Item 305 - 9" Concrete Base
- (B) — Existing 9" Reinforced Concrete Pavement
- (C) — Existing Subbase
- To Be Removed

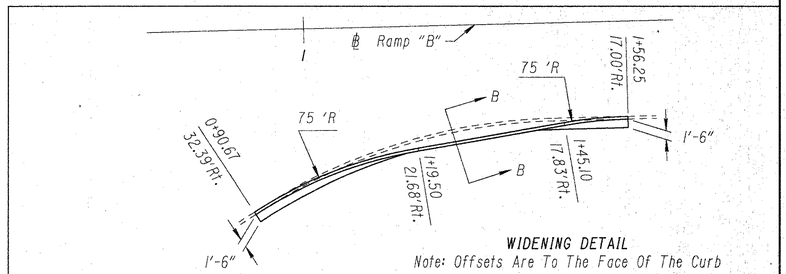

WIDENING DETAIL

Note: Offsets Are To The Face Of The Curb

30303209.TKR

INTERSECTION DETAILS

CATCH BASIN RECONSTRUCTED TO GRADE, AS PER PLAN A

QUANTITIES	
Calc. KFP	Chkd. SHG
Date: 8-31-92	Date: 8-31-92

FHWA REGION	STATE	PROJECT	
5	OHIO		

42/77

COL-30-32.19

(Existing No. 2-2-A Basin, New No 8 Top)

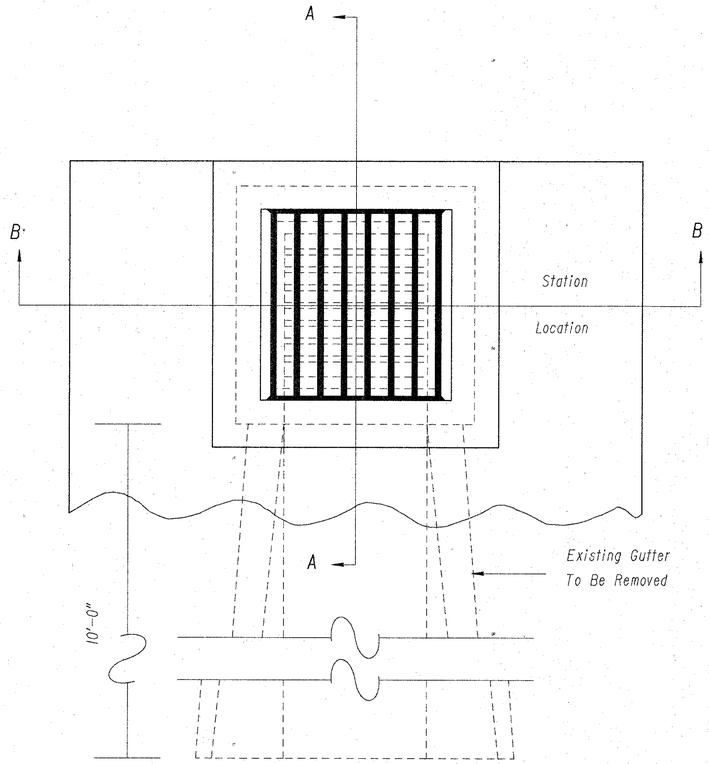

Plan

Scale In Feet:
0 1 2

Calculation

Concrete Slab: 4'-0" x 4'-0" x 8" / 27 = 0.40 Cu. Yd.

Deduct For Opening: 2'-4"(avg) x 2'-4"(avg) x / 27 = -0.13 Cu. Yd.

0.27 Cu. Yd.

For Details Not Shown See Std. Dwg. CB-8
For Quantities See Sheet No. 36
Note: Bar Clearence Shall Be 2"

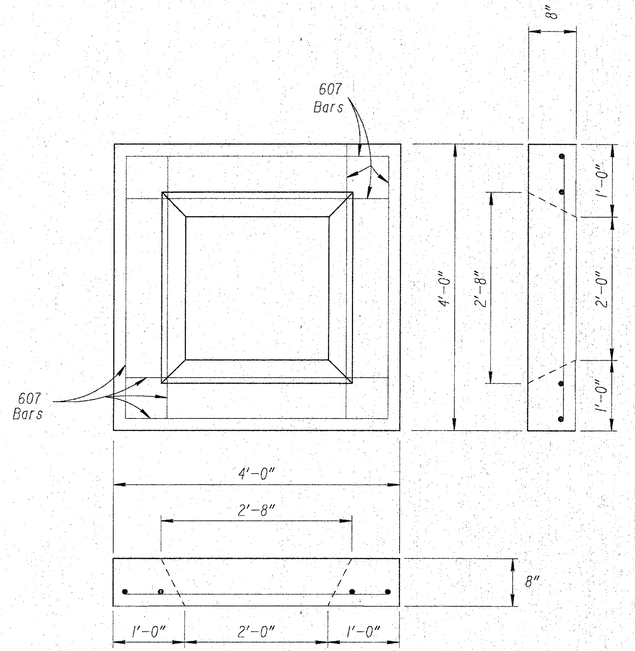

Adapter Slab Showing Reinf. Steel

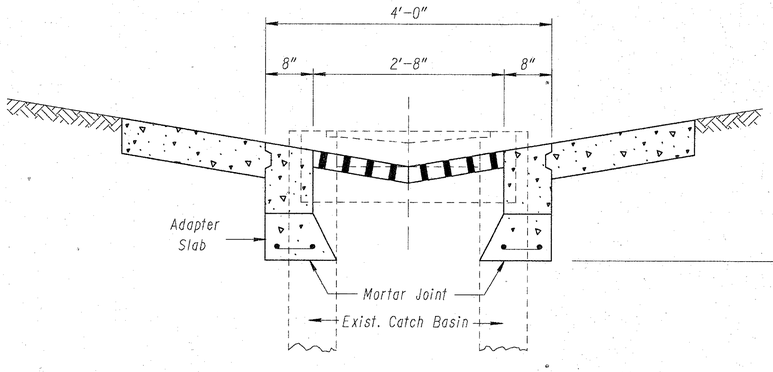

Section B-B

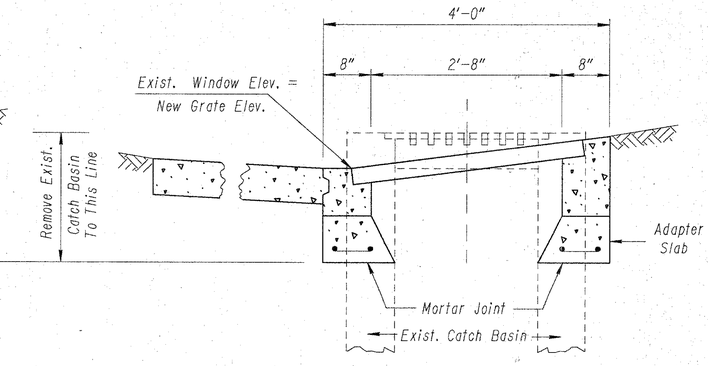

Section A-A

Steel List		
Mark	No.	Length
607	8	3'-8"
Total Length		29'-4"
Total Pounds		44

(For Information Only)

3030312.TKR

CATCH BASIN RECONSTRUCTION DETAILS

CATCH BASIN RECONSTRUCTED TO GRADE, AS PER PLAN B

(Existing No. 2-3 Basin, New No. 8 Top)

QUANTITIES			
Calc.	KFP	Chkd.	SHG
Date:	8 - 31 - 92	Date:	8 - 31 - 92

FHWA REGION	STATE	PROJECT	
5	OHIO		

43
77

COL 30-32.19

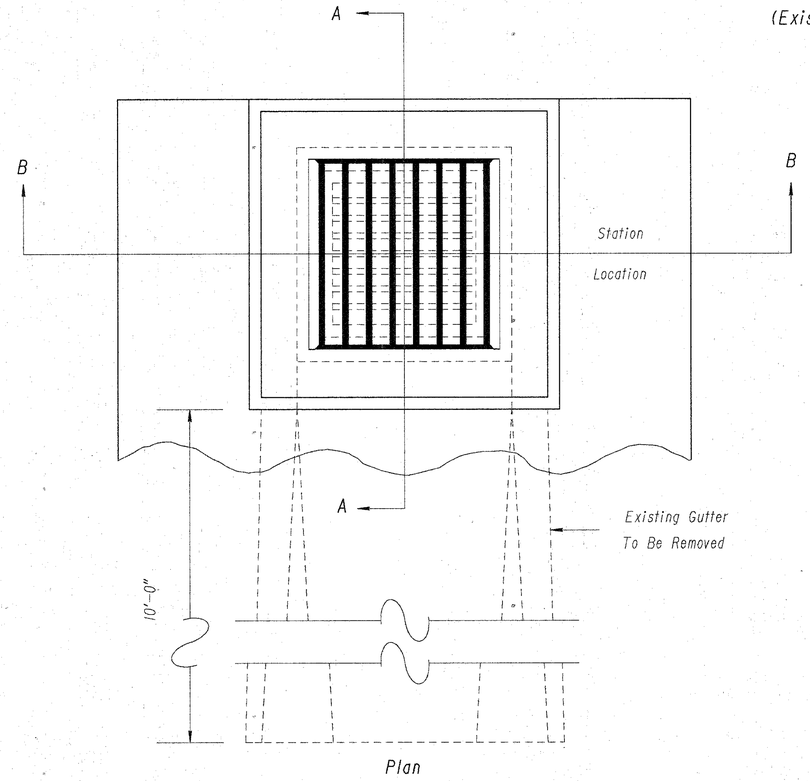

Plan

Scale In Feet: 0 1 2

Calculation

Concrete Slab: 4'-4" x 4'-4" x 8" / 27 = 0.46 Cu. Yd.

Deduct For Opening: 2'-8" x 2'-8" x / 27 = -0.18 Cu. Yd.

0.28 Cu. Yd.

For Details Not Shown See Std. Dwg. CB-8
For Quantities See Sheet No. 36
Note: Bar Clearance Shall Be 2"

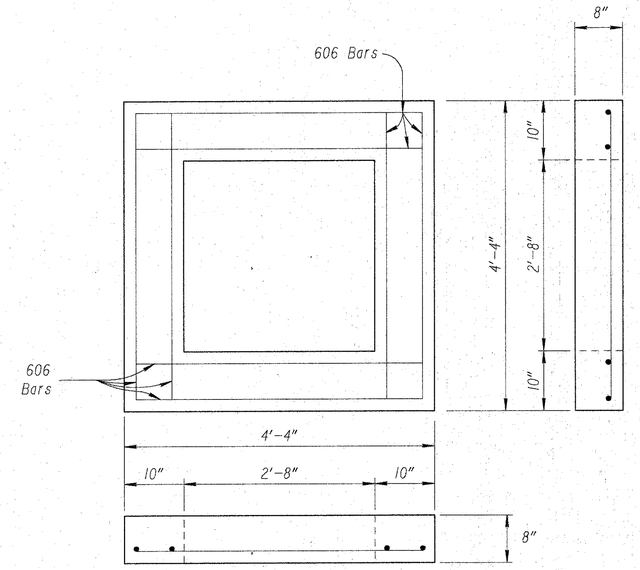

Adapter Slab Showing Reinf. Steel

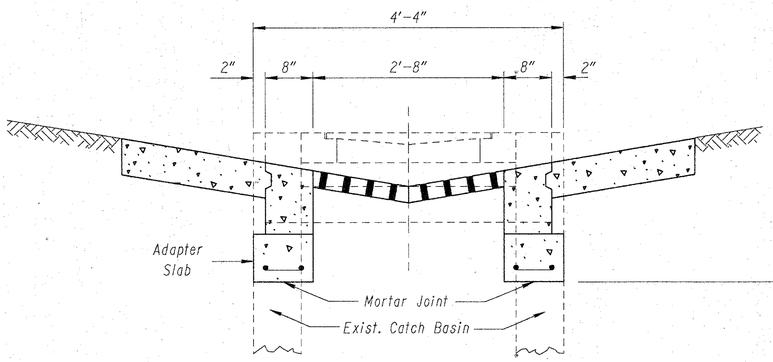

Section B-B

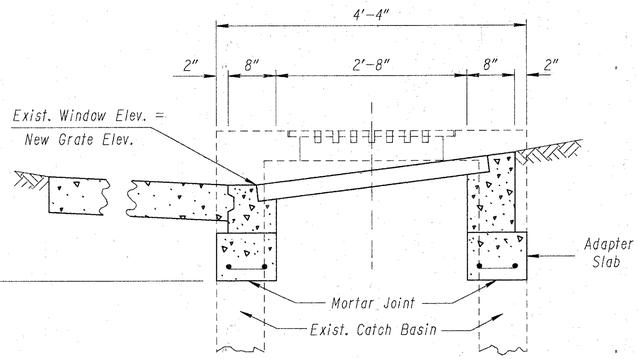

Section A-A

Remove Exist. Catch Basin To This Line

Steel List		
Mark	No.	Length
606	8	4'-0"
Total Length		32'-0"
Total Pounds		48

(For Information Only)

30303212.TKR

CATCH BASIN RECONSTRUCTION DETAILS

CATCH BASIN RECONSTRUCTED TO GRADE, AS PER PLAN C

(Existing No. 2-4 Basin, New No. 8 Top)

QUANTITIES	
Calc. KFP	Chkd. SHG
Date: 8-31-92	Date: 8-31-92

FHWA REGION	STATE	PROJECT	
5	OHIO		

44
77

COL-30-32.19

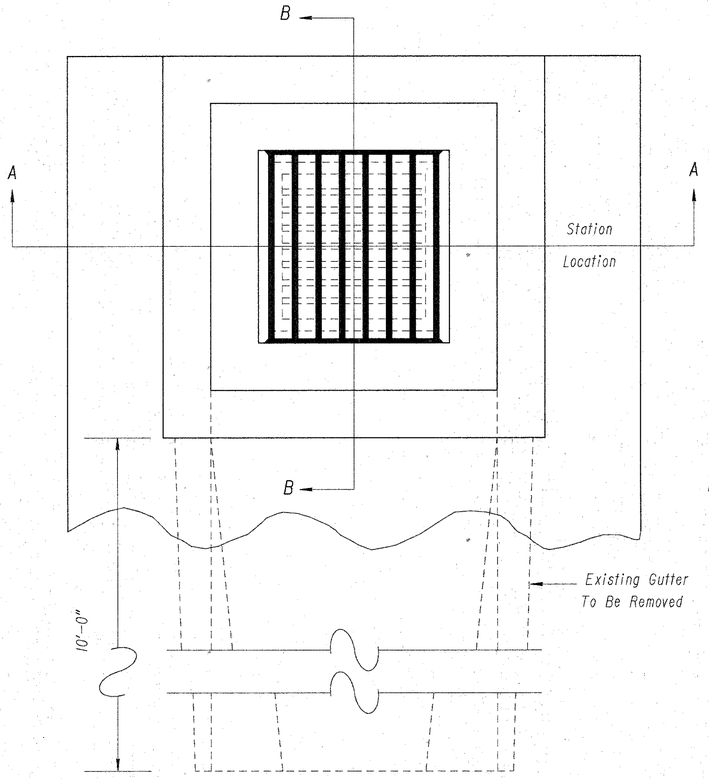

Plan

Scale In Feet:
0 1 2

Calculation

Concrete Slab: 5'-4" x 5'-4" x 8" / 27 = 0.70 Cu. Yd.

Deduct For Opening: 2'-8" x 2'-8" x / 27 = -0.18 Cu. Yd.

0.52 Cu. Yd.

For Details Not Shown See Std. Dwg. CB-8
For Quantities See Sheet No. 36
Note: Bar Clearence Shall Be 2"

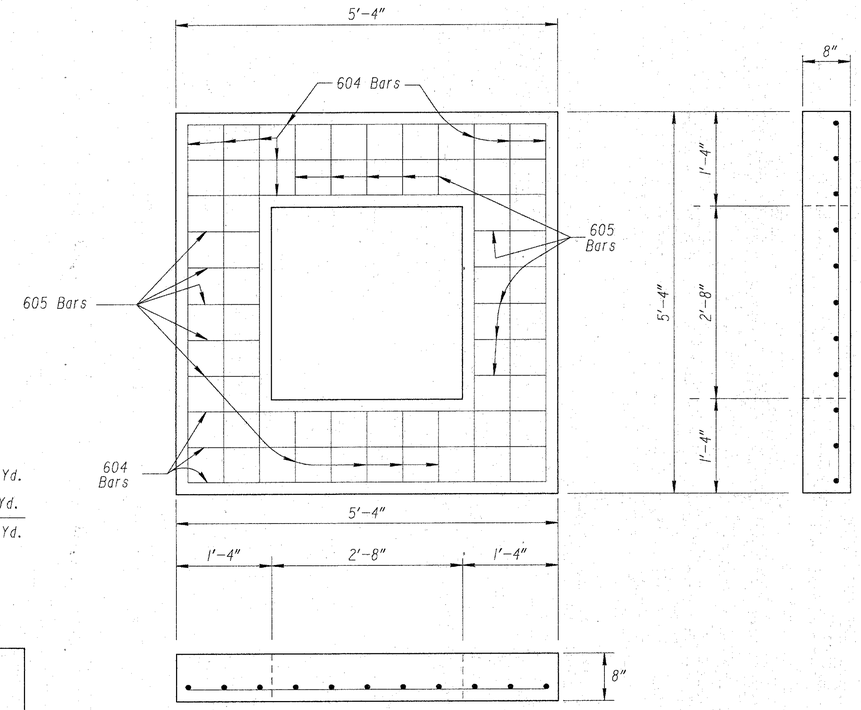

All Bars @ 6" c/c Spacing

Adapter Slab Showing Reinf. Steel

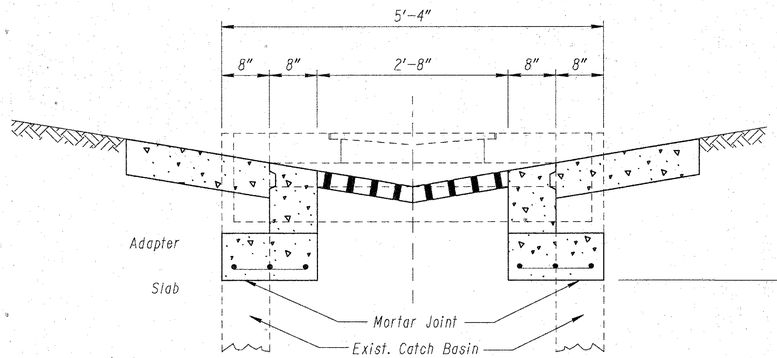

Section A-A

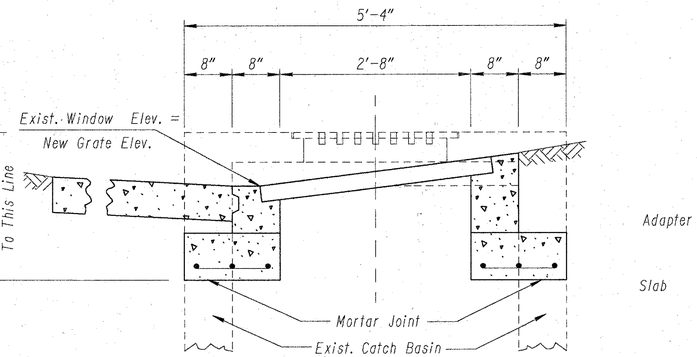

Section B-B

STEEL LIST		
Mark	No.	Length
604	12	5'-0"
605	20	1'-0"
Total Length		80'-0"
Total Pounds		121

(For Information Only)

30303212.TKR

CATCH BASIN RECONSTRUCTION DETAILS

CONCRETE MEDIAN & DRAINAGE DETAILS

QUANTITIES	
Calc. KFP	Chkd. SHG
Date 9-16-92	Date 9-30-92

FHWA REGION	STATE	PROJECT	
5	OHIO		

45
77

COL-30-32.19

NOTES

* Taper height from 6" to 2"

For details not shown, see Std. Dwg's. CB-6 and MC-6.

Quantities are shown on sheet no.'s 35 & 36

For resurfacing quantities, see sheet no.'s 13-15

Connect new conduit to existing using a masonry collar as per Std. Drwg. MC-4

Scale in Feet

0 20 40

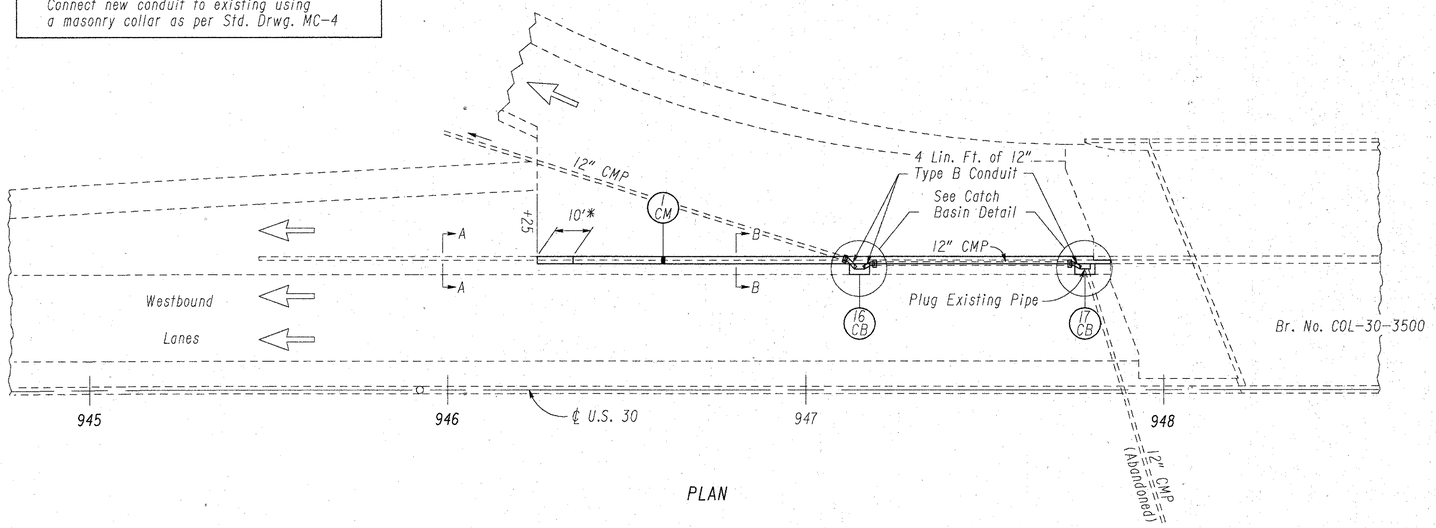

PLAN

CALCULATIONS

Item 612 - Concrete Median

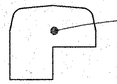

End Area = 2.48 Sq Ft
2.48 Sq.Ft. x 235.8' ÷ 27 = 21.7 Cu.Yd.

Item 301 - Bituminous Aggregate Base
78' x 1' x 9" ÷ 27 = 2.2 Cu.Yd.

Item 202 - Pavement Removed
Planimeter Area = 0.41 Sq.Yd. Each Basin

Item 202 - Curb Removed
Sta. 947+82.8 - Sta. 945+47.0 = 235.8 Lin.Ft.

Item 603 - 12" Conduit, Type B
4 Lin.Ft. x 3 (locations) = 12 Lin.Ft.

LEGEND

(2) Item 446 - 1¼" Asphalt Concrete Surface Course, Type 1, AC-20, As Per Plan
(3) Item 446 - 3" Asphalt Concrete Intermediate Course, Type 2, AC-20
(4) Item 407 - Tack Coat
(20) Item 301 - Bituminous Aggregate Base, AC-20
(21) Item 612 - Concrete Median
(B) Existing 9" Reinforced Concrete Pavement
To Be Removed

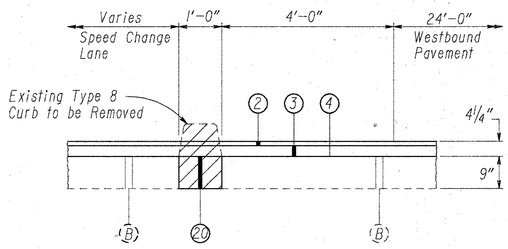

SECTION A-A

Sta. 945+47 to Sta. 946+25

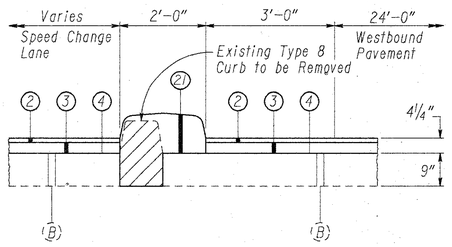

SECTION B-B

Sta. 946+25.00 to Sta. 947+82.8

Scale 1" = 1'

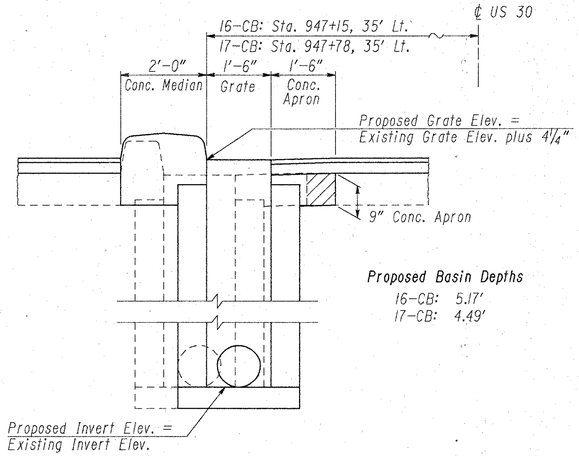

SECTION C-C

Scale 1" = 1'

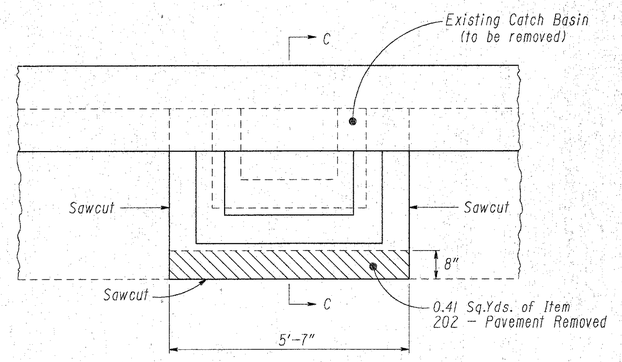

CATCH BASIN DETAIL

Scale 1" = 1'

1 CM

30303212 JM

CONCRETE BARRIER DETAILS

QUANTITIES	
Calc. SHG	Chkd. JEH
Date: 10- 1-92	Date: 10- 2-92

FHWA REGION	STATE	PROJECT	
5	OHIO		

COL-30-32.19

46
77

SCALE IN FEET

0 1 2

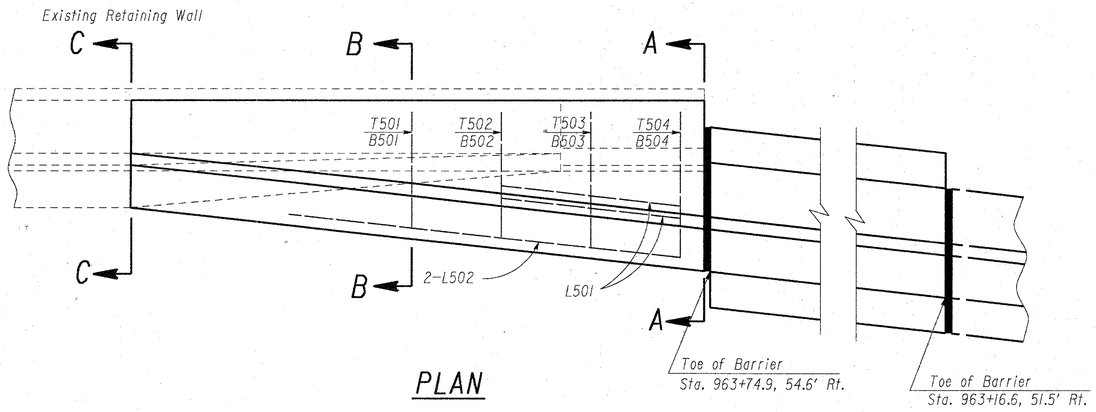

PLAN

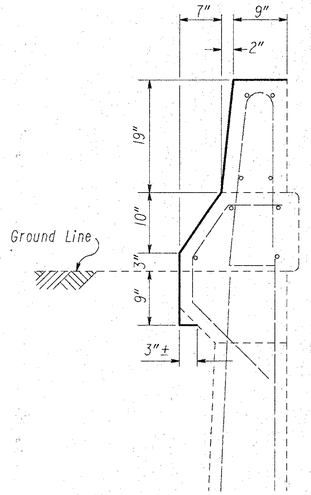

SEC. C-C

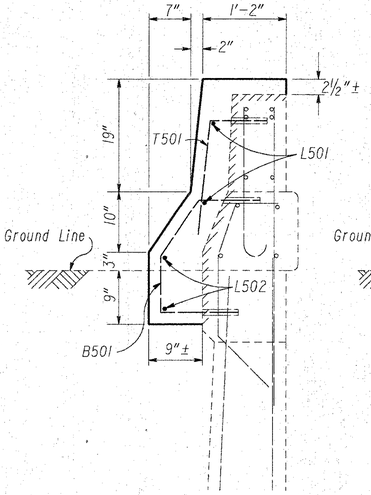

SEC. B-B

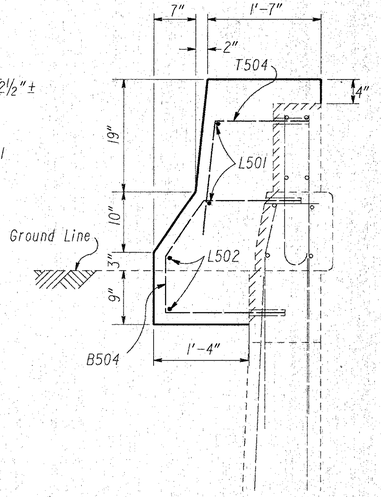

SEC. A-A

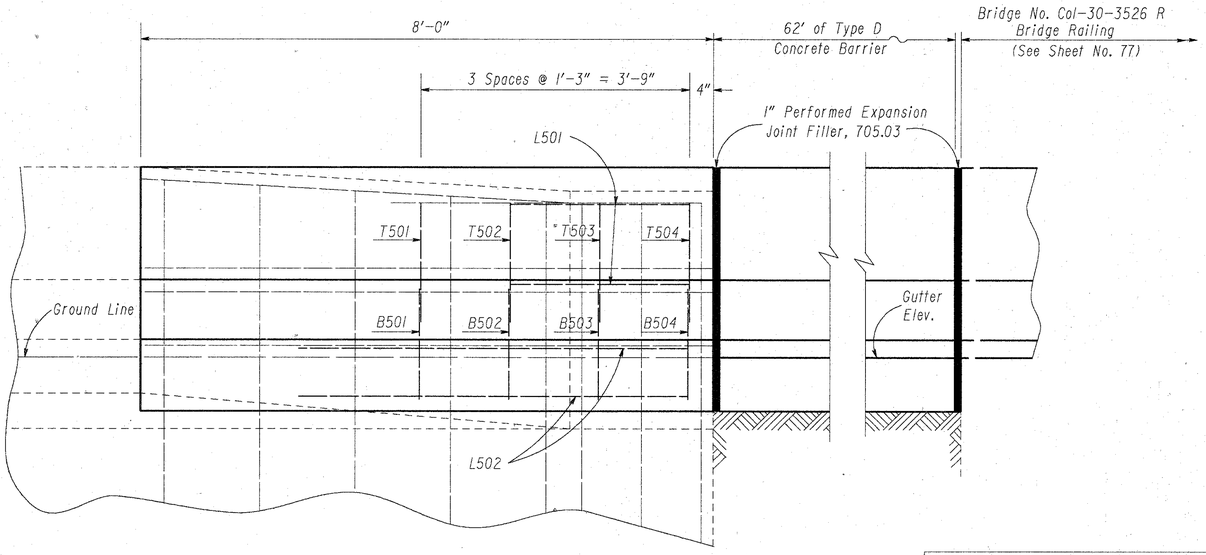

ELEVATION

STEEL LIST

Marked	Quantity	Shape	Length	Weight (Lbs.)
T501	1	Bent	2'-4½"	2.5
T502	1	Bent	2'-6½"	2.7
T503	1	Bent	2'-9¼"	2.9
T504	1	Bent	2'-10¾"	3.0
B501	1	Bent	3'-7¾"	3.8
B502	1	Bent	4'-1"	4.3
B503	1	Bent	4'-5¾"	4.7
B504	1	Bent	4'-8¾"	4.9
L501	2	St.	2'-6"	5.2
L502	2	St.	5'-6"	11.5
TOTAL (For Information Only)				45.5

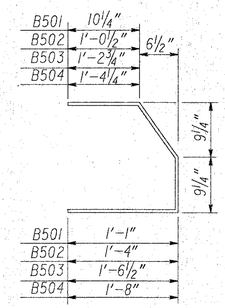

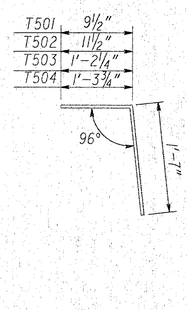

BENDING DIAGRAMS

CALCULATIONS

Item 511-Retaining Wall Refaced, As Per Plan:
Planimetered end area of new concrete at Sec. A-A = 4.3 Sq. Ft.
4.3 Sq. Ft. x 8'÷2÷27 = 0.6 Cu. Yd.

Item 516-1" Preformed Expansion Joint Filler:
Planimetered end area = 4.2 Sq. Ft.
4.2 Sq. Yd. x 2 Locations = 8.4 Sq. Ft.

NOTES

Dowel all TXXX and BXXX 6" into existing concrete.
Existing reinforced steel is no. 5 bars
Quantities are shown on sheet no.35.
For details not shown, see Std. Dwg. MC-9.

Surface to be scabbled.

See General Note "Item 511 - Retaining Wall Refaced, As Per Plan" On Sheet No. 20.

4
B

QUANTITIES	
Calc. SHG	Chkd. KFP
Date: 9 - 28 - 92	Date: 10 - 7 - 92

FHWA REGION	STATE	PROJECT	
5	OHIO		

47
77

COL-30-32.19

PLAN VIEW

Scale In Feet:
0 10 20

NOTES

* The Hex-Foam™ cartridges, diaphragms, fender panels, cables, hardware and reinforcing steel have been omitted for clarity.

Station Equation:
US 30 Sta. 945+92.24, 26.00' Rt. = Ramp 'D' Sta. 0+00.00

See General Note "Item Special - Impact Attenuator, Hex Foam Sandwich System" on sheet no. 21.

Quantities are shown on sheet no. 35.

For concrete shoulder quantities, see sheet no's. 9 thru 12.

For resurfacing quantities, see sheet no's. 13, 14, & 15.

For details not shown, see Std. Dwg's. BP-5.1 and MC-9.

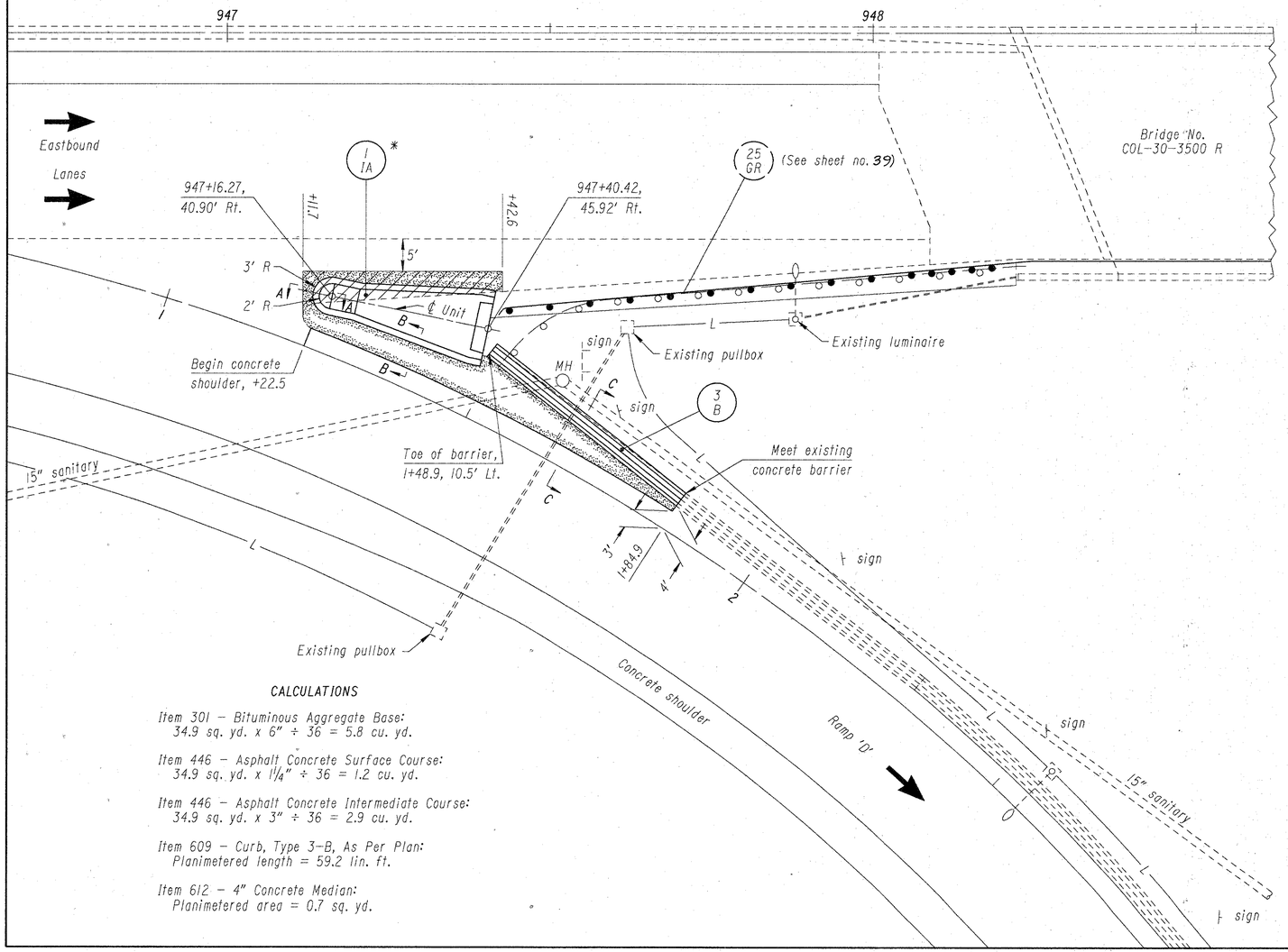

CALCULATIONS

Item 301 - Bituminous Aggregate Base:
34.9 sq. yd. x 6" ÷ 36 = 5.8 cu. yd.

Item 446 - Asphalt Concrete Surface Course:
34.9 sq. yd. x 1¼" ÷ 36 = 1.2 cu. yd.

Item 446 - Asphalt Concrete Intermediate Course:
34.9 sq. yd. x 3" ÷ 36 = 2.9 cu. yd.

Item 609 - Curb, Type 3-B, As Per Plan:
Planimetered length = 59.2 lin. ft.

Item 612 - 4" Concrete Median:
Planimetered area = 0.7 sq. yd.

LEGEND

(2) Item 446 - 1¼" Asphalt Concrete Surface Course, Type 1, AC-20
(3) Item 446 - 3" Asphalt Concrete Intermediate Course, Type 2, AC-20
(6) Item 305 - 9" Concrete Base
(7) Item 304 - Aggregate Base, As Per Plan
(19) Type D Longitudinal Joint As Per Standard Drawing BP-2.1
(20) Item 301 - Bituminous Aggregate Base, AC-20
(B) Existing 9" Reinforced Concrete Pavement

Item 202 - Pavement Removed.
Planimetered area = 14.2 sq. yd.

Place 1¼" 446 Asphalt Concrete Surface Course on 3" 446 Asphalt Concrete Intermediate Course on 6" 301 Bituminous Aggregate Base.
Planimetered area = 34.9 sq. yd.

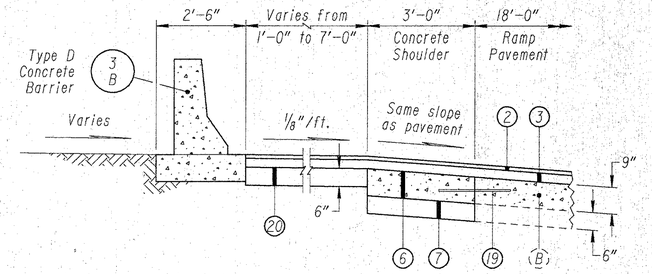

SEC. C-C

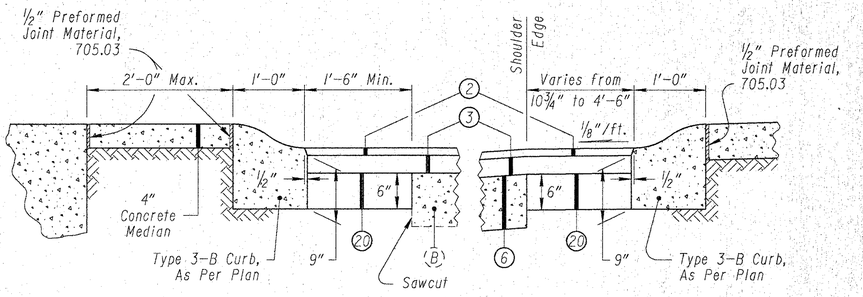

SEC. A-A SEC. B-B

1 1A

ATTENUATOR DETAILS

FHWA REGION	STATE	PROJECT	
5	OHIO		

COL-30-32.19

CONCRETE PAD DETAILS

Scale In Feet:
0 2 4

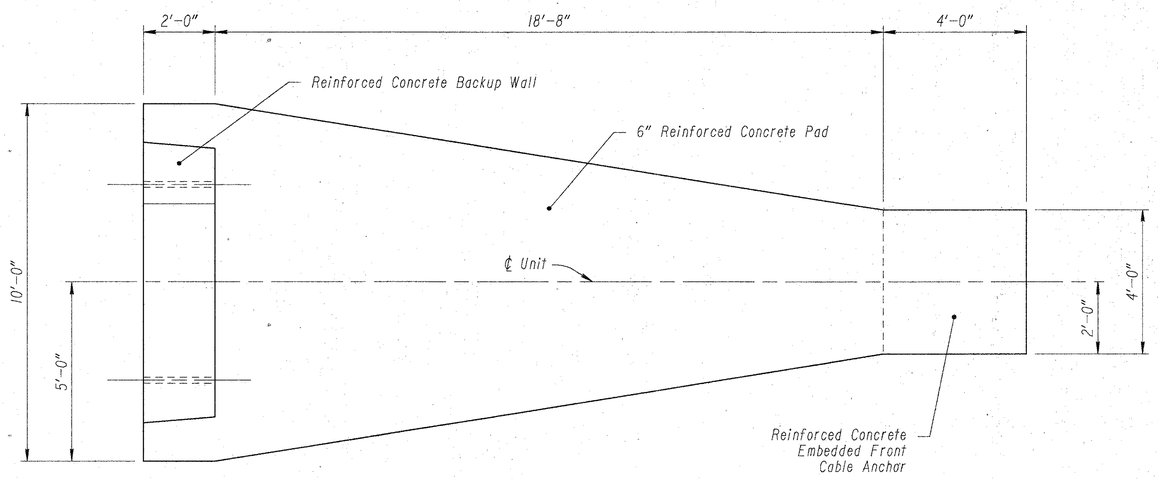

PLAN

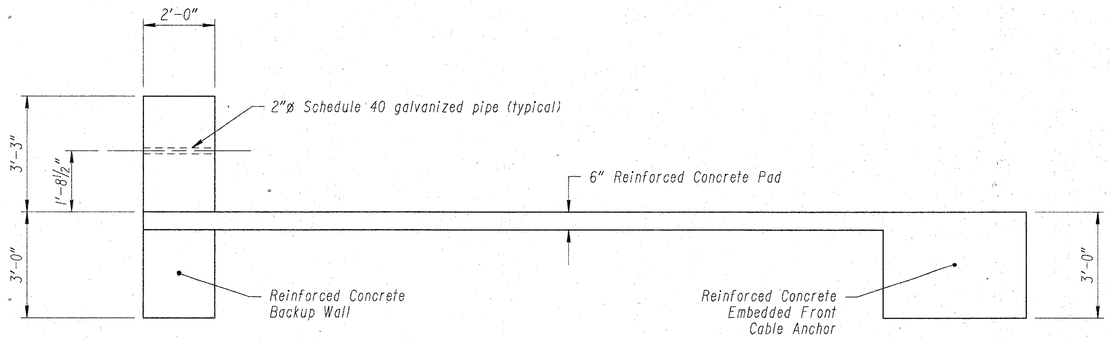

ELEVATION

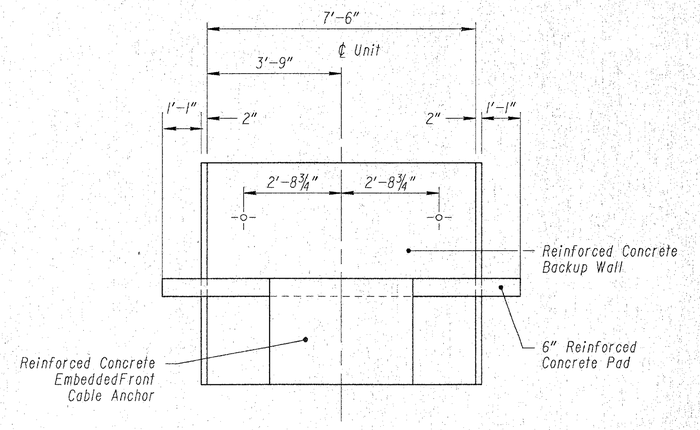

FRONT VIEW

NOTES

The Hex-Foam™ cartridges, diaphragms, fender panels, cables, hardware and reinforcing steel have been omitted for clarity.

For reinforcing steel details, see sheet no. 49.

For quantities, see sheet no. 35.

30303225 V2 SHG

ATTENUATOR DETAILS

REINFORCING STEEL DETAILS

QUANTITIES	
Calc. SHG	Chkd. SJB
Date: 1 - 22 - 92	Date: 3 - 26 - 92

FHWA REGION	STATE	PROJECT	
5	OHIO		

COL-30-32.19

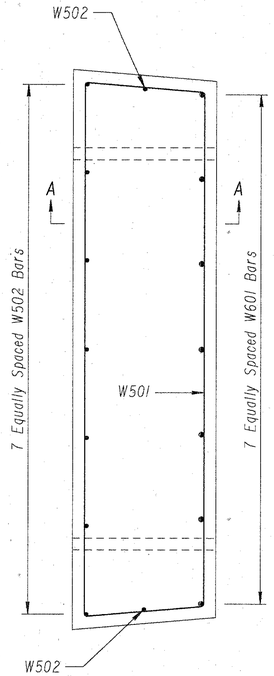

PLAN

Concrete Backup Wall
Scale: 1" = 1'

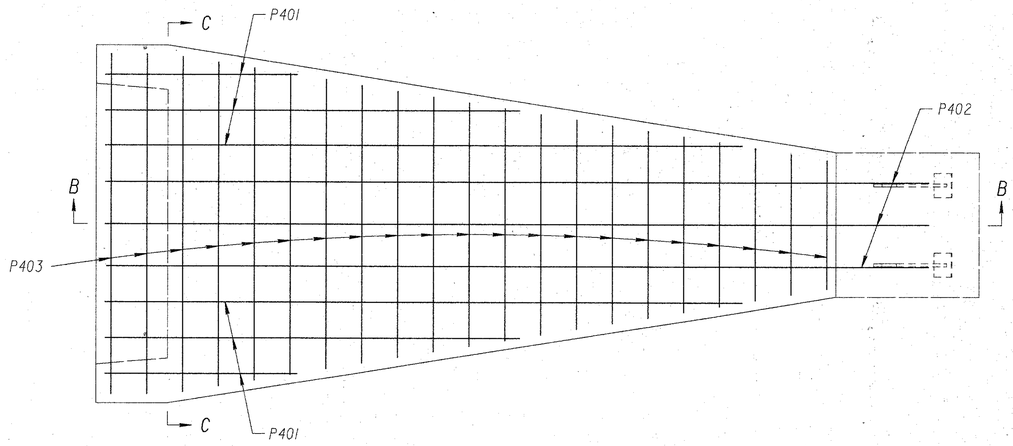

PLAN

6" Reinforced Concrete Pad
Scale: ½" = 1'

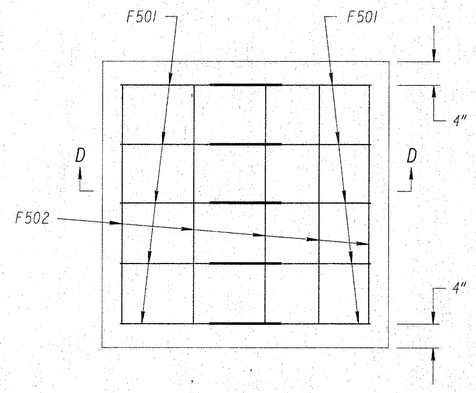

PLAN

Embedded Front Cable Anchor
Scale: 1" = 1'

STEEL REINFORCING LIST					
Mark	Length	Shape	Qty.	Sum Length	Weight (Lbs.)
P401	Varies	Str.	6	69'-5"	47
P402	24'-0"	Bent	3	72'-0"	48
P403	Varies	Str.	21	141'-10"	95
F501	6'-10"	Bent	10	68'-4"	71
F502	3'-4"	Str.	10	33'-4"	35
W501	17'-11"	Bent	7	125'-5"	131
W502	5'-10"	Str.	9	52'-6"	55
W601	5'-10"	Str.	7	40'-10"	61
Total Weight (For Information Only)					543

NOTE: Bar clearance shall be 2" unless otherwise shown.

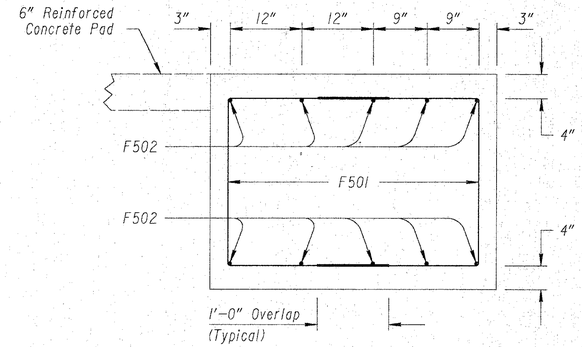

SEC. D-D

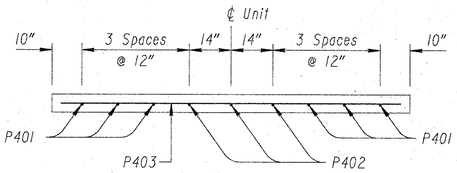

SEC. C-C

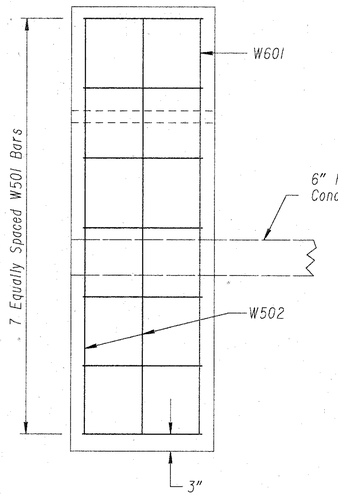

SEC. A-A

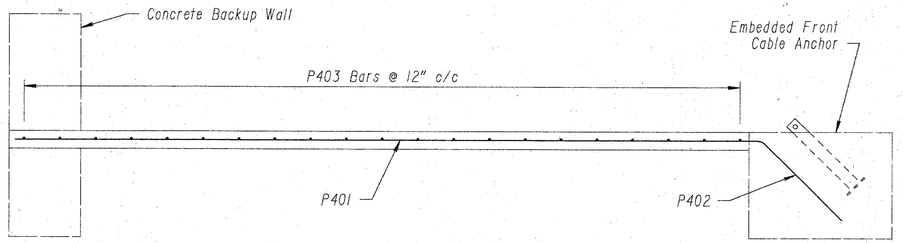

SEC. B-B

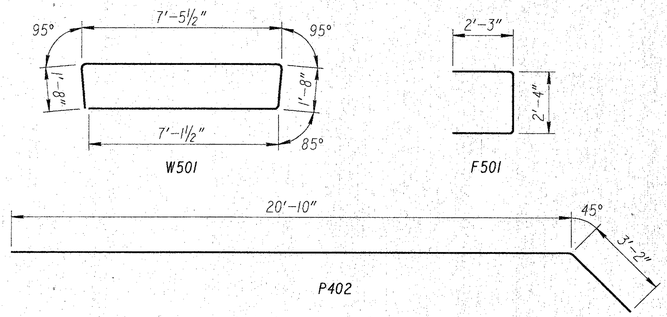

BENDING DIAGRAMS

Scale: ¾" = 1'

ATTENUATOR DETAILS

PAVEMENT REPAIR DETAILS

General Repair Details

Scale In Feet: 0 10 20

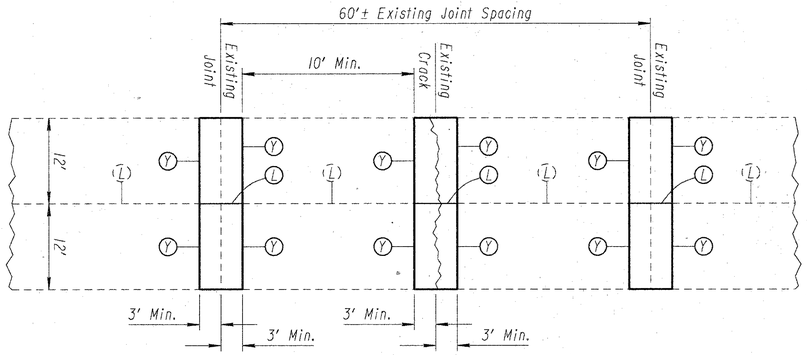

TYPICAL TYPE Y/Y JOINT & CRACK REPAIRS

NOTE: Crack may be in one lane only.

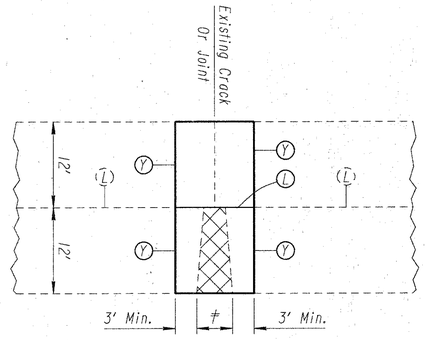

TYPICAL TYPE Y/Y FLEXIBLE PATCH REPAIR

NOTE: Flexible patch may be in the opposite lane of that shown or in both lanes.

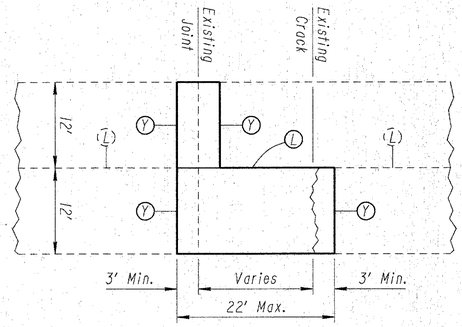

TYPICAL TYPE Y/Y JOINT/CRACK REPAIR

NOTE: Crack may be in the opposite lane of that shown.

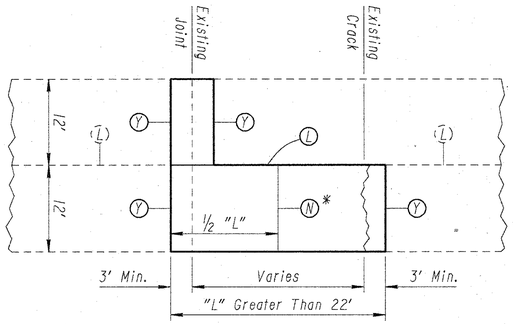

TYPICAL TYPE Y/N/Y JOINT/CRACK REPAIR

NOTE: Crack may be in the opposite lane of that shown.

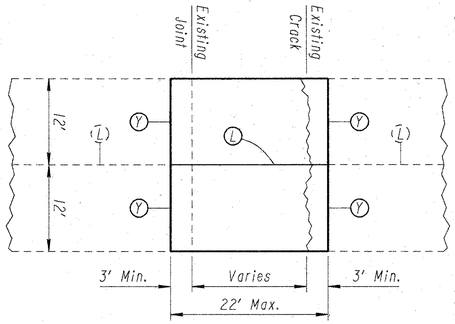

TYPICAL TYPE Y/Y JOINT/CRACK REPAIR

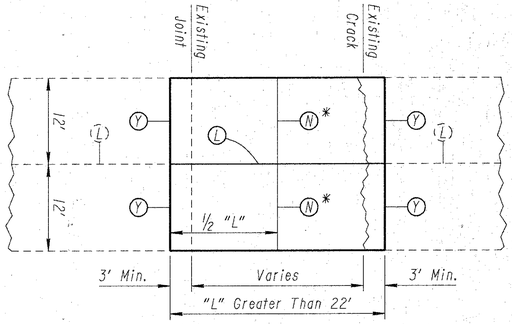

TYPICAL TYPE Y/N/Y JOINT/CRACK REPAIR

JOINT TYPE LEGEND	
(Y)	Type Y – Contraction
(N)	Type N – Contraction
(L)	Longitudinal Joint
($\bar{L}$)	Existing Longitudinal Joint

For Additional Details and Notes, See Standard Drawing BP-2.5.

For Quantities See Sheet No's. 53 & 54.

* When the (Y) joint spacing exceeds 42', then the (N) joints with a minimum spacing of 11' and a maximum spacing of 21' shall be equally spaced between the (Y) joints.

≠ Existing patch length varies from 4' to 17'.

Existing full depth flexible patch

Direction of Travel

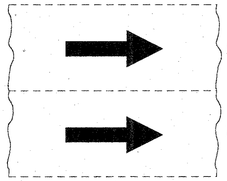

PAVEMENT REPAIR DETAILS
EASTBOUND LANES

0 10 20

For Joint Legend, See Sheet No. 50.
For Quantities, See Sheet No's. 53 & 54.
Note: Actual crack configuration may be different from that shown.

FHWA REGION	STATE	PROJECT	
5	OHIO		

COL-30-32.19

51/77

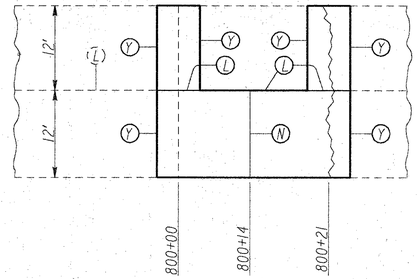

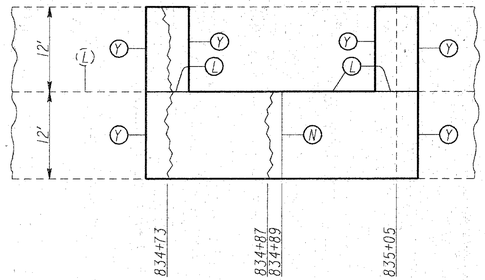

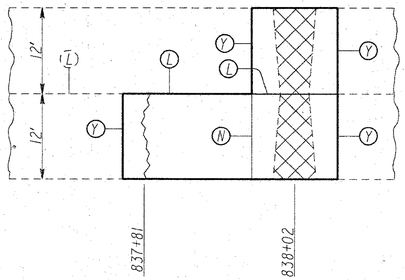

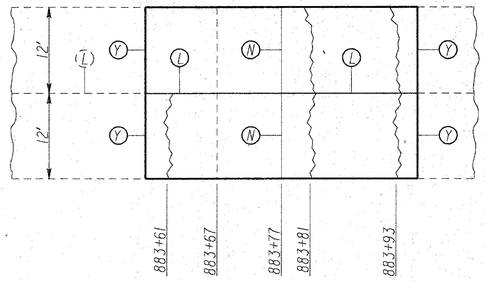

30303216 BLG V2

PAVEMENT REPAIR DETAILS
WESTBOUND LANES

Direction of Travel

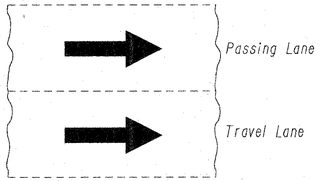

0 10 20

For Joint Legend, See Sheet No. 50.
For Quantities, See Sheet No's. 53 & 54.
Note: Actual crack configuration may be different from that shown.

FHWA REGION	STATE	PROJECT	
5	OHIO		

COL-30-32.19

52/77

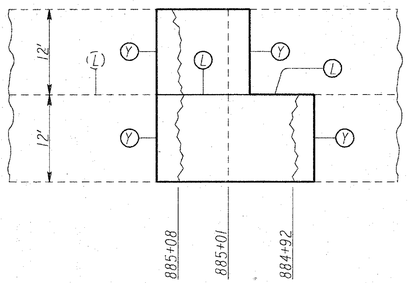

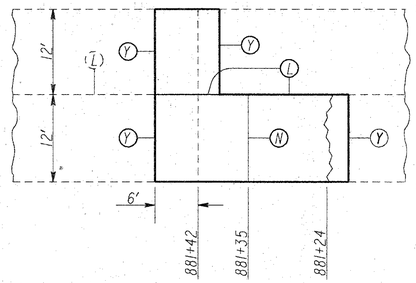

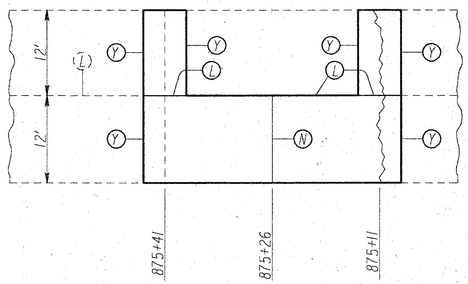

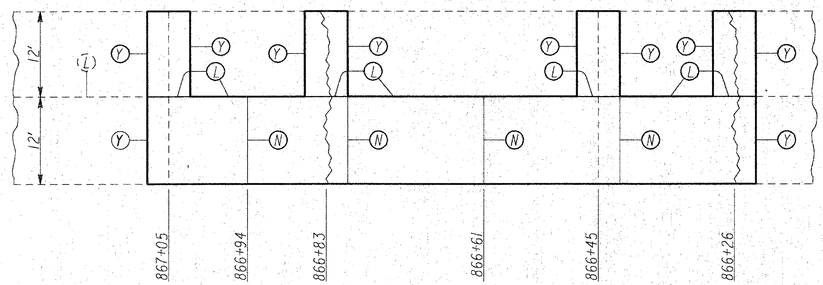

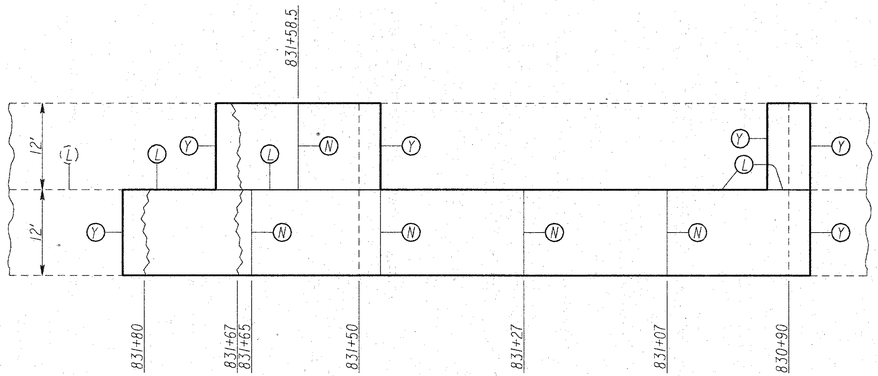

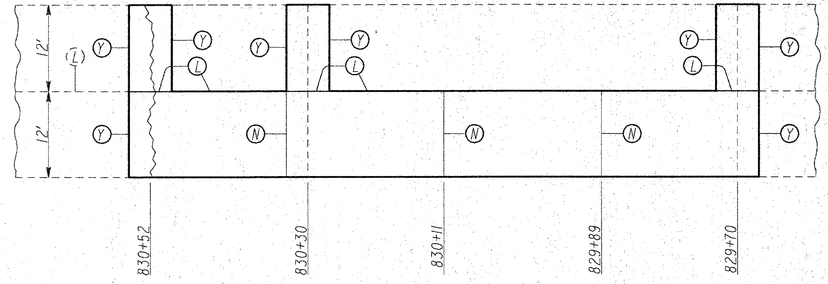

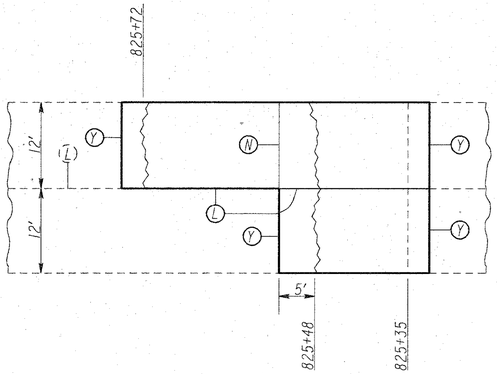

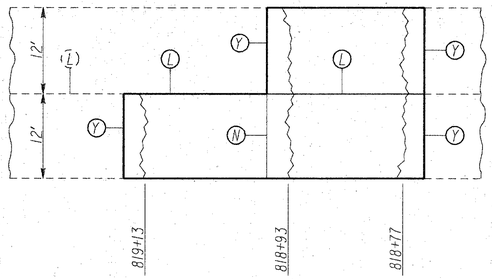

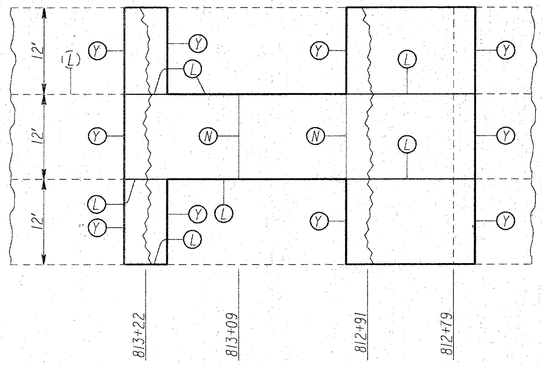

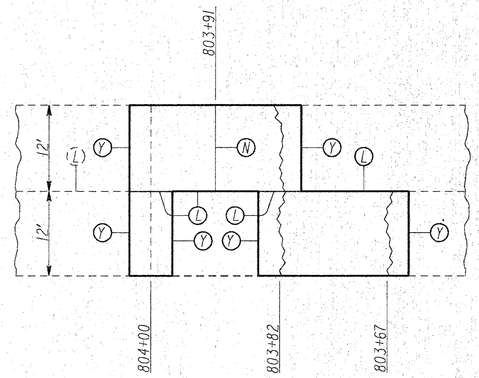

FULL DEPTH RIGID PAVEMENT REMOVAL & RIGID REPLACEMENT

Crack Repair & Expanded Repair Locations

QUANTITIES	
Calc. KFP	Chkd. SHG
Date: 9-21-92	Date: 9-28-92

FHWA REGION	STATE	PROJECT	
5	OHIO		

53/77

COL-30-32.19

Westbound

Existing Joint or Crack Station Location (±)	Lane	255 Full Depth Rigid Pavement Removal & Rigid Replacement, Class C — Type Y/Y Passing Lane Sq. Yd.	Type Y/Y Travel Lane Sq. Yd.	Type Y/N/Y Passing Lane Sq. Yd.	Type Y/N/Y Travel Lane Sq. Yd.	Full Depth Pavement Sawing Lin. Ft.	SPECIAL Sawing & Sealing Asph. Conc. Pavement Joints	See Detail On Sheet No.
929+45		– –	8.0			30	44	
929+23		– –	8.0			30	44	
924+10		– –	8.0			30	44	
923+42		– –	8.0			30	44	
916+08		21.3	24.0			70	78	
915+72		– –	16.0			36	44	
909+32		– –	8.0			30	44	
904+39		– –	8.0			30	44	
899+33		– –	8.0			30	44	
897+60		– –	8.0			30	44	
894+08		– –	8.0			30	44	
892+98		– –	8.0			30	44	
887+83		8.0	– –			30	34	
887+69		8.0	8.0			54	76	
887+55		8.0	8.0			54	74	
886+11 / 885+99		8.0	24.0			66	74	
885+08 / 884+92		17.3	29.3			70	74	52
883+97 / 883+83		26.7	26.7			68	74	
883+55		– –	8.0			30	40	
883+23		8.0	8.0			54	74	
882+82		8.0	8.0			54	74	
881+42 / 881+24				8.0	32.0	78.0	74	52
880+02		8.0	8.0			54	74	
879+28		8.0	8.0			54	74	
876+81		– –	8.0			30	40	
876+59 / 876+49		25.3	21.3			67	74	
875+79		8.0	8.0			54	74	
875+41 / 875+11				48.0	48.0	84	74	52
874+44		8.0	8.0			54	74	
873+90		8.0	8.0			54	74	
872+09		8.0	12.0			57	74	
870+46		8.0	8.0			54	74	
870+03 / 869+92		8.0	22.7			65	74	
868+63		8.0	8.0			54	74	
867+05 / 866+26				113.3	113.3	133	74	52
863+27		– –	8.0			30	40	
860+08		8.0	8.0			54	74	
859+51		8.0	– –			30	34	
859+35		8.0	– –			30	34	
859+00		8.0	– –			30	34	
858+88		8.0	– –			30	34	
858+24		8.0	– –			30	34	
854+13 / 853+97		21.3	21.3			70	74	
852+35		8.0	8.0			54	74	
849+68 / 849+54		26.7	30.7			71	74	
847+95		8.0	8.0			54	74	
846+74		8.0	8.0			54	74	
846+07 / 845+95		24.0	24.0			66	74	
845+00 / 844+86		26.7	– –			44	34	
844+54		8.0	– –			30	34	
841+97		8.0	8.0			54	74	
839+66		8.0	– –			30	34	
839+19		8.0	– –			30	34	
838+39		8.0	8.0			54	74	
833+06		– –	8.0			30	40	
831+80 / 830+90				38.7	128.0	168.0	98	
830+52 / 829+70				24.0	117.3	184.0	122	52
828+55		8.0	8.0			54.0	74	52
825+72 / 825+35				57.3	25.3	91.0	74	52
825+11		8.0	8.0			54	74	
824+52		8.0	8.0			54	74	
823+75		8.0	– –			30	34	
823+32		8.0	8.0			54	74	
822+70		8.0	8.0			54	74	
822+08		8.0	– –			30	34	
821+63		8.0	– –			30	34	
821+44		8.0	8.0			54	74	
821+00		8.0	– –			30	34	
820+70 / 820+56		26.7	26.7			68	74	

Eastbound

Existing Joint or Crack Station Location (±)	Lane	255 Full Depth Rigid Pavement Removal & Rigid Replacement, Class C — Type Y/Y Passing Lane Sq. Yd.	Type Y/Y Travel Lane Sq. Yd.	Type Y/N/Y Passing Lane Sq. Yd.	Type Y/N/Y Travel Lane Sq. Yd.	Full Depth Pavement Sawing Lin. Ft.	SPECIAL Sawing & Sealing Asph. Conc. Pavement Joints	See Detail On Sheet No.
819+13 / 818+77				29.3	56.0	90	74	52
818+45		8.0	8.0			54	74	
817+82		8.0	8.0			54	74	
817+38		– –	8.0			30	40	
817+24		8.0	8.0			54	74	
815+76		8.0	8.0			54	74	
815+39		8.0	8.0			54	58	
813+22 / 812+79				32.0	65.3	121	92	52
810+85 / 810+75		21.3	21.3			64	58	
808+87		8.0	– –			30	34	
808+70 / 808+60		21.3	8.0			64	58	
807+10 / 806+78				50.7	50.7	86	74	
805+02 / 804+61				62.7	62.7	95	74	
804+00 / 803+67				32.0	52	87	74	52
803+05		– –	8.0			30	40	
802+82 / 802+66		29.3	8.0			70	74	
801+86		8.0	8.0			54	74	
800+52 / 800+35				30.7	30.7	71	74	
800+00 / 800+21				16.0	36.0	99	98	51
802+18		8.0	8.0			57	74	
802+33		8.0	– –			30	34	
804+05		– –	8.0			30	24	
804+97 / 805+12		28.0	28.0			69	58	
807+33		8.0	8.0			54	58	
808+53 / 808+69				33	33	73	58	
809+73		8.0	8.0			54	58	
810+55		– –	8.0			30	24	
811+40		8.0	– –			30	34	
812+18		8.0	8.0			54	58	
813+67		8.0	8.0			54	58	
814+57 / 814+73		29.3	29.3			70	58	
815+40		8.0	8.0			54	58	
815+99		8.0	8.0			54	58	
816+98		8.0	8.0			54	58	
817+65		8.0	8.0			54	58	
818+06		8.0	8.0			54	74	
818+23		8.0	– –			30	34	
819+42		8.0	8.0			54	74	
820+25		8.0	8.0			54	74	
821+49		8.0	8.0			54	74	
822+08		8.0	8.0			54	74	
822+67		8.0	8.0			54	74	
823+42 / 823+53		20.0	20.0			65	74	
824+28		8.0	8.0			54	74	
825+41		– –	8.0			30	40	
827+80		8.0	8.0			54	74	
828+62		8.0	8.0			54	74	
829+82		8.0	8.0			54	74	
831+82		8.0	8.0			54	74	
833+54		8.0	8.0			54	74	
834+23		8.0	8.0			54	74	
834+73 / 835+05				16.0	50.7	110	98	51
835+83		8.0	8.0			54	74	
837+10		8.0	8.0			54	74	
837+67		8.0	– –			30	34	
837+81 / 838+02				8.0	36.0	78	74	51
838+39		8.0	8.0			54	74	
839+02		8.0	8.0			54	74	
840+02		8.0	8.0			54	74	
841+07		8.0	8.0			54	74	
841+40		8.0	8.0			54	74	
841+80		8.0	8.0			54	74	
842+40		8.0	8.0			54	74	
843+05		8.0	8.0			54	74	
844+07		– –	8.0			30	40	
844+24		8.0	8.0			54	74	
844+83		8.0	8.0			54	74	
846+09		8.0	8.0			54	74	

Speed Change Lanes

Existing Joint or Crack Station Location (±)	Lane	255 Full Depth Rigid Pavement Removal & Rigid Replacement, Class C — Type Y/Y Passing Lane Sq. Yd.	Type Y/Y Travel Lane Sq. Yd.	Type Y/N/Y Passing Lane Sq. Yd.	Type Y/N/Y Travel Lane Sq. Yd.	Full Depth Pavement Sawing Lin. Ft.	SPECIAL Sawing & Sealing Asph. Conc. Pavement Joints	See Detail On Sheet No.
848+09		8.0	8.0			54	74	
848+57		8.0	8.0			54	74	
849+23		8.0	8.0			54	74	
852+69		8.0	8.0			54	74	
856+88		8.0	8.0			54	74	
857+50		8.0	8.0			54	74	
858+75		8.0	8.0			54	74	
859+95		8.0	8.0			54	74	
860+36		8.0	8.0			54	74	
860+73		8.0	8.0			54	74	
861+30		8.0	8.0			54	74	
862+50		8.0	8.0			54	74	
863+17		8.0	8.0			54	74	
864+22		20.0	8.0			63	74	
864+80		8.0	8.0			54	74	
866+84		8.0	8.0			54	74	
867+72		8.0	8.0			54	74	
868+52		8.0	8.0			54	74	
869+97 / 870+10		16.0	25.3			67	74	
870+78		8.0	8.0			54	74	
872+03		8.0	8.0			54	74	
873+20		8.0	8.0			54	74	
874+00		8.0	8.0			54	74	
874+47		– –	8.0			30	40	
877+37		8.0	8.0			54	74	
877+54		8.0	8.0			54	74	
877+99		8.0	8.0			54	74	
878+63		8.0	8.0			54	74	
879+55 / 879+67		24.0	24.0			66	74	
880+34		8.0	– –			30	34	
880+80 / 880+92		24.0	24.0			66	74	
881+17		8.0	8.0			54	74	
882+16		8.0	– –			30	34	
882+80		8.0	8.0			54	74	
883+61 / 883+93				42.7	50.7	86	74	51
884+59		8.0	8.0			54	74	
885+96		8.0	8.0			54	74	
887+21 / 887+50				46.7	46.7	83	74	
887+83		8.0	8.0			54	74	
913+52		8.0	8.0			54	74	
815+39		5.4				20	25	
813+22 / 812+79		32.0				97	80	
810+75		11.7				41	51	
809+62		14.8				51	61	
808+70		21.7				71	81	
802+18		23.1				75	85	
802+95		22.3				73	83	
804+05		20.2				67	77	
804+97		18.4				62	72	
806+33		16.5				56	66	
807+19 / 807+33		50.4				66	62	
807+73		14.5				50	60	
808+53 / 808+69				55.3		65	56	
809+45 / 809+73				67.1		70	52	
810+55		10.7				38	48	
811+05		9.8				36	46	
811+40		9.3				34	44	
812+18		8.3				31	41	
812+67		7.7				29	39	
813+79		6.0				24	34	
814+57 / 814+73		17.7				37	31	
815+40		3.8				18	28	
815+99		3.0				15	25	
816+98		1.7				11	21	
817+65		0.7				8	18	
TOTALS		1,730.9	1438.6	934.5	998.7			
		3,169.5		1,933.2				
Carried To Sheet No. 54		5,102.7				10,804		12,728

30303215.TKR

PAVEMENT REPAIR QUANTITIES

CALC BY KFP DATE 9-28-92
CHKD BY SHG DATE 10-5-92

OHIO
FHWA REGION 5

54
77

COL-30-32.19

PAVEMENT REPAIR CALCULATIONS

1. TRANSVERSE JOINT CALCULATIONS

A) MAINLINE:

Sta. 800+00.00 to Sta. 888+00.00 = 8,800.00
Sta. 888+00.00 to 963+50.00 = 7,550.00

Deduct For Bridges and Approach Slabs
Bridge No. COL-30-3269: 134.50' + 50' = 184.50'
Bridge No. COL-30-3500: 353.08' +50' = 403.08'

Net Pavement Length:
(8800.00 − 184.50') = 8615.5
(7550.00 − 403.08') = 7146.92

8615.5 + 7146.92 = 15,762.42 L.F.

(8615.5' ÷ 60') + 1 = 145 Joints of 48' Width
(7146.92 ÷ 60') = 119 Joints of 48' Width

145 + 119 = 264 Joints of 48' Width

B) RAMPS
S.R. 170 Interchange
Ramp "A"
Sta. 0+26 "A" to Sta. 12+28 "D" = 1202.00
Ramp "D"
Sta. 0+48 "D" to Sta. 16+96.58 "D" = 1648.58
S.R. 7 Interchange
Ramp "A"
0+85.6 "A" to Sta. 7+00 "A" = 614.40
Ramp "B"
2+38.5 "B" to Sta. 8+76.4 "B" = 637.90
Ramp "C"
1+44.8 "C" to Sta. 6+00 "C" = 455.20
Ramp "D"
1+22.5 "D" to Sta. 9+61 "D" = 838.50

TOTAL = 5396.58

Deduct For Bridges and Approach Slabs
Bridge NO. COL-30-7-0626 L: 241.33' + 50' = 291.33

16' Width:

(1202.00' + 1648.58' + 637.90') = 3,488.48'

18' Width: 838.50

20' Width:

(614.40' + 455.20' − 291.33') = 778.27'

(3,488.48' ÷ 60) + 3 = 61 Joints of 16' Width

(838.50' ÷ 60) + 1 = 15 Joints of 18' Width

(778.27' ÷ 60) + 2 = 15 Jointd of 20' Width

C) SPEED CHANGE LANES
S.R. 170 Interchange
Ramp "A"
Sta. 808+02.72 TO Sta. 815+76.00 = 773.28
Ramp "D"
Sta. 806+15.00 to Sta. 818+15.00 = 1200.00
S.R. 7 Interchange
Ramp "A"
Sta. 940+50.00 to Sta. 948+21.97 = 771.97
Ramp "B"
Sta. 960+33.00 to Sta. 963+81.25 = 348.25
Ramp "C"
Sta. 951+75.05 to Sta. 959+50.00 = 774.95
Ramp "D"
Sta. 939+00.00 to Sta. 947+40.72 = 840.72

TOTAL = 4709.17

(4709.17 ÷ 60) + 6 = 84 Joints of 13.6' Avg. Width

2. FULL DEPTH PAVEMENT REPAIR

A). Transverse Joints
(264 Joints x 48') + (61 Joints x 16') + (15 Joints x 18') + (15 Joints x 20') + (84 Joints x 13.6') = 15,360.4'
15,360.4' x 6' Patch Length ÷ 9 = 10,240.2 Sq. Yd.

B). Add Area For Full Depth Flexible Patches:

Patch Length	Qty.	Total
4'	4	16'
5'	54	270'
6'	32	192'
8'	12	96'
10'	10	100'
11'	3	33'
12'	1	12'
14'	5	70'
17'	1	17'
Sum Length =		806'

806' x 24' Wide ÷ 9 = 2,149.3 Sq. Yd.

C). Midslab Cracks:
See Table on Sheet No.

Total Area = 10,240.2 Sq. Yd. + 2,149.3 Sq. Yd. = 12,389.5 Sq. Yd.

3. FULL DEPTH SAWING

(264 x (48' + 6') x 2) + (61 x (32' + 6')) + (15 x (36' + 6')) + (15 x (40' + 6')) + (84 x (27.2' + 6')) + 806' = 35,744.8'

4. ITEM SPECIAL − SAWING AND SEALING ASPHALT CONCRETE PAVEMENT JOINTS, 705.04:

(See Note in Proposal and General Note on Sheet No. 21)
145 Joints x 2 x (48' + 2 (5' + 8')) = 21,460'
119 Joints x 2 x (48' +2 (5' + 10')) = 18,564'
61 Joints x 2 x (16' + 3' + 6') = 3,050'
15 Joints x 2 x (18' + 3' + 6') = 810'
15 Joints x 2 x (20' + 3' + 6') = 870'
84 Joints x 2 x (13.6' + 8') = 3,629'

Total = (21,460' + 18,564' + 3,050' + 810' + 870' + 3,629') = 48,383'

5. ITEM SPECIAL − CRACK CLEANING AND SEALING, CLASS I, 705.04:

(See Note in Proposal)
15762.42' ÷ 500' = 32 Joints of 48' width
Estimate One (1) Crack Every 500':

32 Joints x 48' = 1536 L.F. USE 1,550 C.F.

PAVEMENT REPAIR SUMMARY

Totals From Sheet No.	255 Full Depth Ridgid Pavement Removal and Rigid Replacement, Class C (Sq. Yd.)	255 Full Depth Pavement Sawing (Lin. Ft.)	Special Sawing and Sealing Asphalt Concrete Pavement Joints, 705.04 (Lin. Ft.)	Special Crack Cleaning and Sealing, Class I, 705.04 (Lin. Ft.)
This Sheet	12,389.5	35,744.8	48,383	1550
53	5102.7	10,804.0	12,728.0	
Subtotals	17,492.2	46,548.8	61,111	1550

A 20% increase has been added to the following pavement repair items to account for further pavement deterioration from the time of inspection to the time of construction:

Item 255−Full Depth Rigid Pavement Removal and Replacement, Class C:
17,492.2 Sq. Yd. x 1.20 = 20,990.64 Sq. Yd. USE 21,000 Sq. Yd.

Item 255− Full Depth Pavement Sawing:
46,548.8 Lin. Ft. x 1.20 = 55,858.56 Lin. Ft. USE 55,900 Lin. Ft.

Item Special − Sawing and Sealing Asphalt Concrete Joints:
61,111 Lin. Ft. x 1.20 = 73,333.2 Lin. Ft. USE 73,350 Lin. Ft.

Totals	21,000	55,900	73,350	1,550

Carried to General Summary

QUANTITIES	
CALC. BY : J.C.N.	CHK'D. BY : SHG
DATE 10-16-92	DATE 10-20-92

FHWA REGION	STATE	PROJECT	
5	OHIO		

55
77

COL-30-32.19

GENERAL SUMMARY

SHEET NUMBER							ITEM	ITEM EXT.	GRAND TOTAL	UNIT	DESCRIPTION
16	21		57	65		67A					
											MAINTENANCE OF TRAFFIC
						18.89	614	20000	18.89	Mile	Temporary Lane Line, Class I
						37.78	614	22000	37.78	Mile	Temporary Edge Line, Class I
						1,800	614	28000	1,800	Lin Ft	Temporary Gore Marking, Class II
						3,001	614	23000	3,001	Lin Ft	Temporary Channelizing Line, Class I
	35						614	12470	35	Each	Work Zone Speed Limit Sign
	100						Special	61412600	100	Each	Replacement Drum
	192						Special	61412500	192	Sq Ft	Replacement Sign
	740						622	40020	740	Lin Ft	Portable Concrete Barrier, 32"
											TRAFFIC CONTROL
						115	620	10300	115	Each	Delineator, Type C, Post Mounted
						3	620	11000	3	Each	Delineator, Type C, Bracket Mounted
						36	620	15300	36	Each	Delineator, Type D, Post Mounted
				15.08			642	00102	15.08	Mile	Edge Line, Type 2
				6.56			642	00202	6.56	Mile	Lane Line, Type 2
				2,224			642	00402	2,224	Lin Ft	Channelizing Line, Type 2
				785			642	00702	785	Lin Ft	Transverse Line, Type 2
				63			642	00502	63	Lin Ft	Stop Line, Type 2
				314			642	01502	314	Lin Ft	Dotted Line, 4", Type 2
				36			642	00602	36	Lin Ft	Crosswalk Line, Type 2
			50				630	84900	50	Each	Removal Of Ground Mounted Sign And Disposal
			2				630	87400	2	Each	Removal Of Overhead Mounted Sign And Disposal
			48				630	86002	48	Each	Removal Of Ground Mounted Post Support And Disposal
			1				630	89702	1	Each	Removal Of Overhead Sign Support And Disposal, Type 7.3
			560				630	80102	560	Sq Ft	Sign, Flat Sheet, Type G
			350				630	80204	350	Sq Ft	Sign, Extrusheet, Type G
			48				630	02100	48	Lin Ft	Ground Mounted Support, No. 2 Post
			80				630	03100	80	Lin Ft	Ground Mounted Support, No. 3 Post
			763				630	04100	763	Lin Ft	Ground Mounted Support, No. 4 Post
			13				630	08100	13	Lin Ft	One Way Support, No. 4 Post
			42				630	07600	42	Lin Ft	Ground Mounted Support, W10x12 Beam
			1				630	35500	1	Each	Overhead Sign Support, Type TC-7.65, Design 6, 51' Span
			17				630	82500	17	Each	Existing Sign Revised With Demountable Copy
			3				630	82000	3	Each	Sign Backing Assembly
			2				630	09000	2	Each	Breakaway Beam Connection
			2.20				630	00100	2.20	Cu Yd	Concrete For Embedded Foundation
			8.82				630	00000	8.82	Cu Yd	Concrete For Anchor Base Foundation
253							802	00100	253	Each	Barrier Reflector, Type A
306							802	00200	306	Each	Barrier Reflector, Type B
						292	862	00100	292	Each	Raised Pavement Marker

TRAFFIC CONTROL QUANTITIES

QUANTITIES			
Calc.	J.C.N.	Chk'd.	SHG
Date	10-8-92	Date	10-20-92

FHWA REGION	STATE	PROJECT	
5	OHIO		

COL-30-32.19

SHEET NO.	REF. NO.	STATION	SIDE OF ℄	WORK REQUIRED * All copy on existing sign to be revised with demountable copy.	SIGN CODE	SIGN DIMENSION	SIGN CLEARANCE	SUPPORT LENGTHS			ITEM 630																				
											REMOVAL OF GROUND MOUNTED SIGN & DISPOSAL	REMOVAL OF GROUND MOUNTED SIGN & REERECTION	REMOVAL OF GROUND MOUNTED MAJOR SIGN & DISPOSAL	REMOVAL OF OVERHEAD MOUNTED SIGN & DISPOSAL	REMOVAL OF GROUND MOUNTED POST SUPPORT & DISPOSAL	REMOVAL OF GROUND MOUNTED BEAM SUPPORT & DISPOSAL	REMOVAL OF OVERHEAD SIGN SUPPORT & DISPOSAL, TYPE 7.3	SIGNS, FLAT SHEET	SIGNS, FLAT SHEET, TYPE G	SIGNS, EXTRUSHEET, TYPE G	GROUND MOUNTED SUPPORTS, NO.2 POST	GROUND MOUNTED SUPPORTS, NO.3 POST	GROUND MOUNTED SUPPORTS, NO.4 POST	ONE WAY SUPPORTS, NO.4 POST	GROUND MOUNTED SUPPORTS, W10x12	EXISTING SIGNS REVISED WITH DEMOUNTABLE COPY	SIGN BACKING ASSEMBLY	OVERHEAD SIGN SUPPORT, TYPE TC-7.65, DESIGN 6, 51' SPAN	BREAKAWAY BEAM CONNECTION	CONCRETE FOR EMBEDDED FOUNDATIONS	CONCRETE FOR ANCHOR BASE FOUNDATIONS
						INCHES	FEET	LT.	CNTR	RT.	EACH	EACH	EACH	EACH	EACH	EACH	EACH	SQ.FT.	SQ.FT.	SQ.FT.	LIN.FT.	LIN.FT.	LIN.FT.	LIN.FT.	LIN.FT.	EACH	EACH	EACH	EACH	CU.YD.	CU.YD.
58	1	801+27	Rt.	Remove Sign And Supports							1				2																
↑	"	801+20	"	Erect New Sign On New Supports	W-49R-48	48x48	16.0	15.8		16.5									16.0				32.3								
	2	0+59	Rt.	Remove Signs And Supports							2				2																
	"	"	"	Erect New Signs On New Supports	R-41B-36	36x36	12.0	13.0		13.5									9.0				13.5	13.0							
	"	"	"	Erect New Signs On New Supports	R-43L-48	48x18													6.0												
	"	"	"	Erect New Signs On New Supports	R-43R-48	48x18													6.0												
	3	0+59	Lt.	Remove Signs And Supports							4				2																
	"	"	"	Erect New Signs On New Supports	R-1-48	48x48	12.0	14.0		14.5									16.0				28.5								
	"	"	"	Erect New Signs On New Supports	R-41B-36	36x36													9.0												
	4	2+29	Lt.	Remove Sign And Support							1				1																
	"	3+50	"	Erect New Sign On New Support	R-41A-36	36x24	12.0		12.5										6.0			12.5									
	5	2+29	Rt.	Remove Sign And Support							1				1																
	"	3+50	"	Erect New Sign On New Support	R-41A-36	36x24	12.0		12.5										6.0			12.5									
	6	8+00	Lt.	Rmv. Route & Arrow Signs & * (See Note)							2															1					
	"	"	"	Erect New Signs On Existing Support	M-2-30-3	37.5x30													7.81								1				
	"	"	"	Erect New Signs On Existing Support	M-24-24	24x18													3.0												
	7	11+25	Lt.	Remove Sign And Supports							1				2																
	"	11+20	"	Erect New Sign On New Supports	W-45-48	48x48	12.0	15.8		16.5									16.0				32.3								
	8	0+53	Rt.	Remove Route And Arrow Signs Only							2																				
	"	"	"	Erect New Signs On Existing Support	M-2-30-3	37.5x30													7.81								1				
	"	"	"	Erect New Signs On Existing Support	M-24-24	24x18													3.0												
↓	"	"	"	* (See Note Above)																						3					
58	9	2+32	Rt.	Remove Sign And Support							1				1																
	"	2+36	"	Erect New Sign On New Support	R-15A-36	36x36	12.0		13.5										9.0				13.5								
59	10	820+00	Lt.	* (See Note Above)																						1					
↑	11	822+66	Rt.	Remove Signs And Supports							6				3																
	"	822+50	"	Erect New Signs On New Support	M-39-36	36x18	14.0		14.0										4.5				14.0								
	"	"	"	Erect New Signs On New Support	M-1-36	36x36													9.0												
	"	"	"	Erect New Signs On New Support	M-38-36	36x18	17.1		14.5										4.5				14.5								
	"	"	"	Erect New Signs On New Support	M-2-36	36x36													9.0												
	"	"	"	Erect New Signs On New Support	M-38-36	36x18	20.2		15.0										4.5				15.0								
	"	"	"	Erect New Signs On New Support	M-2-36	36x36													9.0												
	12	827+75	Rt.	Remove Sign And Support							1				1																
↓	"	832+50	"	Erect New Sign On New Supports	R-10-48	48x60	14.0	15.5		16.0									20.0				31.5								
59	13	830+00	Lt.	* (See Note Above)																						1					
60	14	842+59	Lt.	Remove Sign And Support							1				1																
↑	"	"	"	Erect New Sign On New Support	N-45-12	12x18	14.0		12.0										1.5		12.0										
	15	842+59	Rt.	Remove Sign And Support							1				1																
	"	"	"	Erect New Sign On New Support	N-45-12	12x18	14.0		12.0										1.5		12.0										
↓	16	843+00	Rt.	Erect New Sign On New Supports	GJ	228x60	18.0	21.8		20.2										95.0					42.0				2	2.20	
60	17	860+98	Lt.	* (See Note Above)																						1					
61	18	885+32	Lt.	Remove Sign And Supports							1				2																
↑	"	"	"	Erect New Sign On New Supports	R-159-36	36x48	14.0	15.0		16.0									12.0				31.0								
	19	887+36	Lt.	Remove Sign And Supports							1				2																
	"	887+98	"	Erect New Sign On New Supports	R-10-48	48x60	16.0	15.5		16.0									20.0				31.5								
	20	889+20	Rt.	Remove Sign And Support							1				1																
	"	889+25	"	Erect New Sign On New Supports	R-10-48	48x60	16.0	15.5		16.0									20.0				31.5								
↓	21	894+40	Lt.	Erect New Sign On New Support	N-45-12	12x18	14.0		12.0										1.5		12.0										
61	22	894+40	Rt.	Erect New Sign On New Support	N-45-12	12x18	14.0		12.0										1.5		12.0										
62	23	915+66	Rt.	Remove Sign And Support							1				1																
	"	915+71	"	Erect New Sign On New Supports	R-10-48	48x60	16.0	15.5		16.0									20.0				31.5								
62	24	926+00	Lt.	Remove Sign And Supports							1				2																
	"	925+50	"	Erect New Sign On New Supports	R-10-48	48x60	16.0	15.5		16.0									20.0				31.5								
63	25	936+00	Lt.	Remove Signs And Supports							6				3																
↑	"	935+50	"	Erect New Signs On New Support	M-40-36	36x18	14.0		14.0										4.5				14.0								
	"	"	"	Erect New Signs On New Support	M-1-36	36x36													9.0												
	"	"	"	Erect New Signs On New Support	M-37-36	36x18	17.1		14.5										4.5				14.5								
	"	"	"	Erect New Signs On New Support	M-2-36	36x36													9.0												
	"	"	"	Erect New Signs On New Support	M-37-36	36x18	20.2		15.0										4.5				15.0								
	"	"	"	Erect New Signs On New Support	M-2-36	36x36													9.0												
	26	937+00	Rt.	Remove Signs And Overhead Sign Support										2			1														
	"	936+90	"	Erect New Signs On New Overhead Supports	GC	180x84														105.0								1			8.82
	"	"	"	Erect New Signs On New Overhead Supports	GB	156x138														149.5											
	27	939+63	Rt.	Remove Sign And Supports							1				2																
	28	942+00	Rt.	Remove Sign And Supports							1				2																
	"	942+05	"	Erect New Sign On New Supports	R-97-48	48x60	16.0	15.5		16.0									20.0				31.5								
	29	943+31	Rt.	Remove Sign And Support							1				1																
↓	30	945+30	Rt.	* (See Note Above)																						1					
63	31	947+60	Lt.	* (See Note Above)																						1					

TRAFFIC CONTROL QUANTITIES

QUANTITIES			
Calc.	J.C.N.	Chk'd.	SHG
Date	10-8-92	Date	10-20-92

FHWA REGION	STATE	PROJECT	
5	OHIO		

COL-30-32.19

57/77

SHEET NO.	REF. NO.	STATION	SIDE OF ℄	WORK REQUIRED * All copy on existing sign to be revised with demountable copy.	SIGN CODE	SIGN DIMENSION	SIGN CLEARANCE	SUPPORT LENGTHS			ITEM 630																												
											REMOVAL OF GROUND MOUNTED SIGN & DISPOSAL	REMOVAL OF GROUND MOUNTED SIGN & RELOCATION	REMOVAL OF GROUND MOUNTED MAJOR SIGN & DISPOSAL	REMOVAL OF OVERHEAD MOUNTED SIGN & DISPOSAL	REMOVAL OF GROUND MOUNTED POST SUPPORT & DISPOSAL	REMOVAL OF GROUND MOUNTED BEAM SUPPORT & DISPOSAL	REMOVAL OF OVERHEAD SIGN SUPPORT & DISPOSAL, TYPE 7.3		SIGNS, FLAT SHEET	SIGNS, FLAT SHEET, TYPE G	SIGNS, EXTRUSHEET, TYPE G		GROUND MOUNTED SUPPORTS, NO.2 POST	GROUND MOUNTED SUPPORTS, NO.3 POST	GROUND MOUNTED SUPPORTS, NO.4 POST	ONE WAY SUPPORTS, NO.4 POST	GROUND MOUNTED SUPPORTS, W10x12			EXISTING SIGNS REVISED WITH DEMOUNTABLE COPY	SIGN BACKING ASSEMBLY	OVERHEAD SIGN SUPPORT, TYPE TC-7.85, DESIGN 6, 51' SPAN		BREAKAWAY BEAM CONNECTION	CONCRETE FOR EMBEDDED FOUNDATIONS	CONCRETE FOR ANCHOR BASE FOUNDATIONS	
						INCHES	FEET	LT.	CNTR	RT.	EACH	EACH	EACH	EACH	EACH	EACH	EACH		SQ.FT.	SQ.FT.	SQ.FT.		LIN.FT.	LIN.FT.	LIN.FT.	LIN.FT.	LIN.FT.			EACH	EACH	EACH		EACH	CU.YD.	CU.YD.	
63	32	1+70	Lt.	Remove Sign And Support							1				1																							
	"	"	"	Erect New Sign On New Support	W-33-30	30x36	10.0		13.0											7.5						13.0													
63	33	2+10	Lt.	Remove Sign And Support							1				1																							
	"	"	"	Erect New Sign On New Support	W-33-30	30x36	7.0		13.0											7.5						13.0													
63	34	2+50	Lt.	Remove Sign And Support							1				1																							
	"	"	"	Erect New Sign On New Support	W-33-30	30x36	7.0		13.0											7.5						13.0													
63	35	2+88	Lt.	Remove Sign And Support							1				1																							
	"	"	"	Erect New Sign On New Support	W-33-30	30x36	7.0		13.0											7.5						13.0													
63	36	0+49	Lt.	Remove Sign And Supports							1				2																							
	"	0+55	"	Erect New Sign On New Supports	R-2-48	48x48x48	14.0	13.5		14.0										6.93					27.5													
63	37	952+00	Lt.	Remove Sign And Supports							1				2																							
	"	952+05	"	Erect New Sign On New Supports	W-49R-48	48x48	14.0	16.0		17.0										16.0						33.0													
63	38	3+50	Rt.	Erect New Sign On New Support	R-15A-36	36x36	12.0		14.0											9.0						14.0													
63	39	954+00	Rt.	Erect New Sign On New Supports	R-10-48	48x60	16.0	15.5		16.0										20.0						31.5													
63	40	7+00	Rt.	Remove Sign And Supports							1				2																							
63	41	958+00	Rt.	Remove Sign And Supports							1				2																							
	"	958+05	"	Erect New Sign On New Supports	W-49R-48	48x48	14.0	16.0		17.0										16.0						33.0													
63	42	8+85	Rt.	Remove Sign And Supports							1				2																							
	"	8+90	"	Erect New Sign On New Supports	R-2-48	48x48x48	14.0	13.5		14.0										6.93					27.5													
63	43	8+65	Lt.	Remove Sign And Support							1				1																							
63	44	963+00	Lt.	* (See Note Above)																										2							
63	45	963+05	Lt.	Erect New Sign On New Supports	R-10-48	48x60	16.0	15.5		16.0										20.0						31.5													
63	46	963+50	Rt.	Erect New Sign On New Supports	R-10-48	48x60	16.0	15.5		16.0										20.0						31.5													
58	47	807+00	Lt.	* (See Note Above)																										1							
58	48	834+50	Lt.	* (See Note Above)																										1							
61	49	888+00	Rt.	* (See Note Above)																										1							
62	50	905+00	Lt.	Erect New Sign On New Supports	R-10-48	48x60	16.0	15.5		16.0										20.0						31.5													
62	51	916+00	Lt.	* (See Note Above)																										1							
62	52	932+00	Rt.	Erect New Sign On New Supports	R-10-48	48x60	16.0	15.5		16.0										20.0						31.5													
63	53	937+97	Rt.	Remove 'H' Sign And Arrow Sign							2																											
	"	"	"	Erect New Signs On Existing Support	N-29-24	24x24														4.0												1						
	"	"	"	Erect New Signs On Existing Support	IM-26-21	21x15														2.19																		
63	54	939+00	Lt.	Erect New Sign On New Supports	R-10-48	48x60	16.0	15.5		16.0										20.0						31.5													
63	55	946+10	Lt.	* (See Note Above)																										1							
63	56	947+55	Rt.	* (See Note Above)																										1							
63	57	8+00	Lt.	Erect New Sign On New Support	R-15A-36	36x36	12.0		14.0											9.0						14.0													
TOTALS (Carried To General Summary)											50			2	48		1			559.67	349.5		48.0	80.0	762.10	13.0	42.0			17.0	3.0	1		2	2.20	8.82	

TRAFFIC CONTROL QUANTITIES

FHWA REGION	STATE	PROJECT	
5	OHIO		

58
77

COL-30-32.19

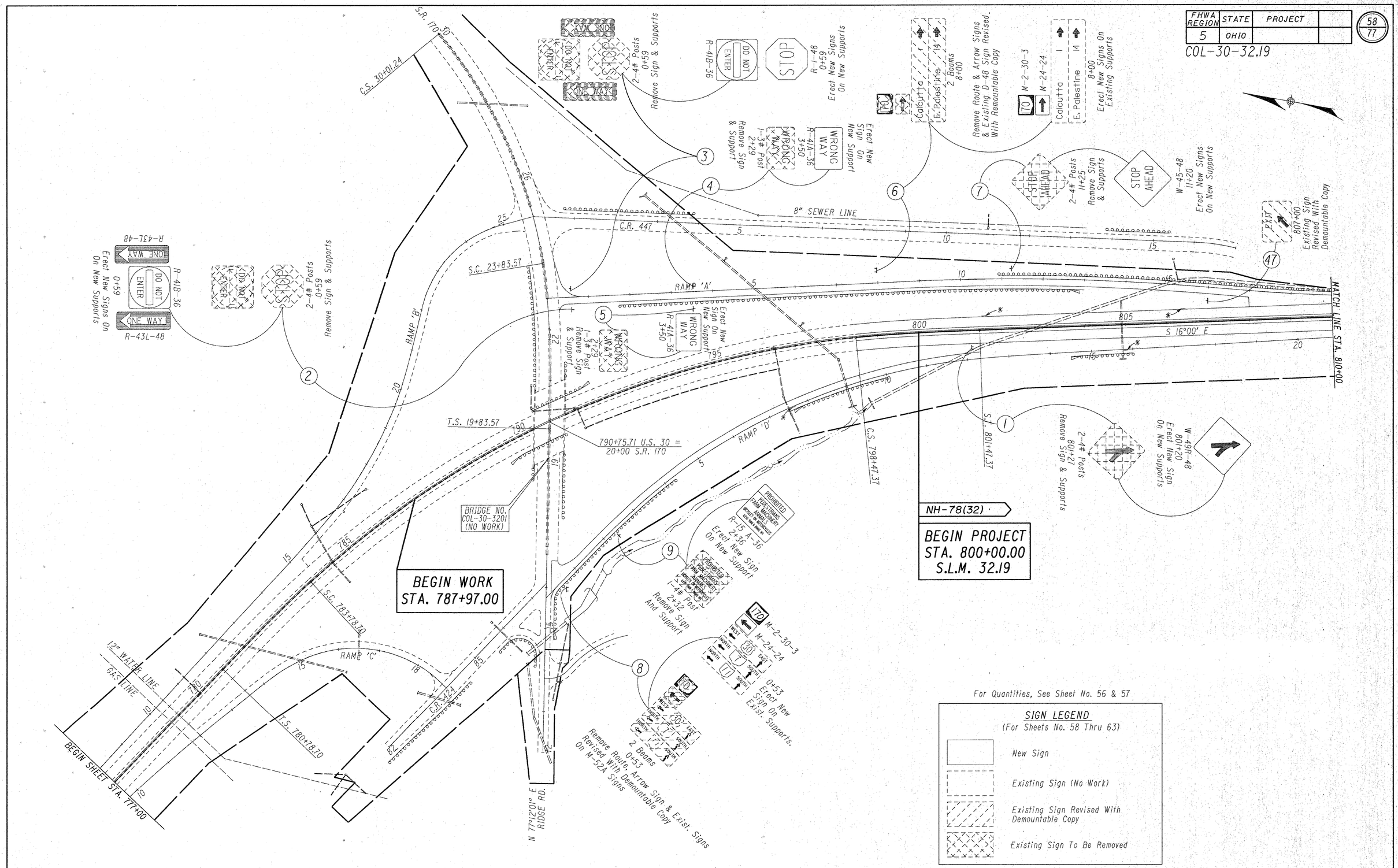

For Quantities, See Sheet No. 56 & 57

SIGN LEGEND
(For Sheets No. 58 Thru 63)

- New Sign
- Existing Sign (No Work)
- Existing Sign Revised With Demountable Copy
- Existing Sign To Be Removed

SIGNING PLAN-STA. 777+00 TO STA. 810+00

FHWA REGION	STATE	PROJECT		
5	OHIO			

COL-30-32.19

59
77

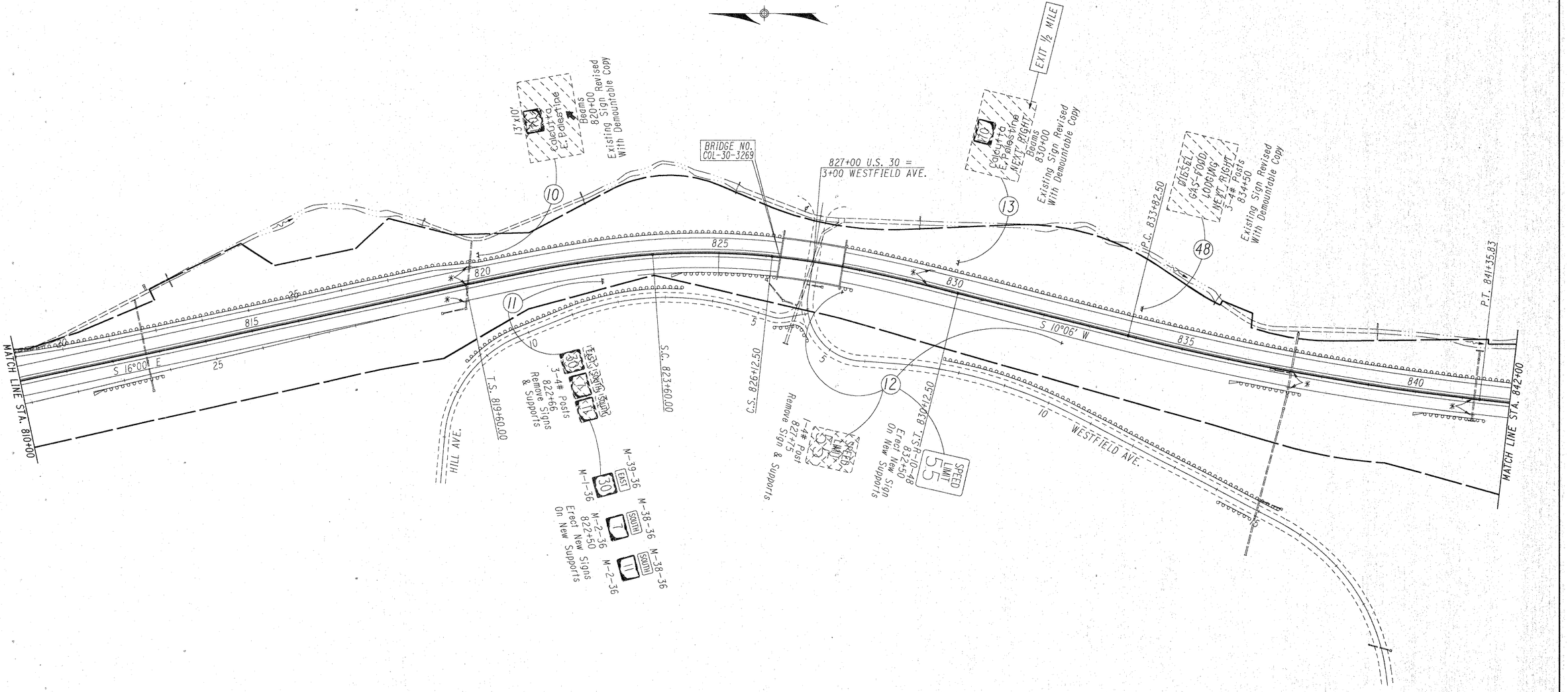

For Legend, See Sheet No. 58.
For Quantities, See Sheet No. 56 & 57.

SIGNING PLAN—STA. 810+00 TO STA. 842+00

FHWA REGION	STATE	PROJECT		
5	OHIO			

60
77

COL-30-32.19

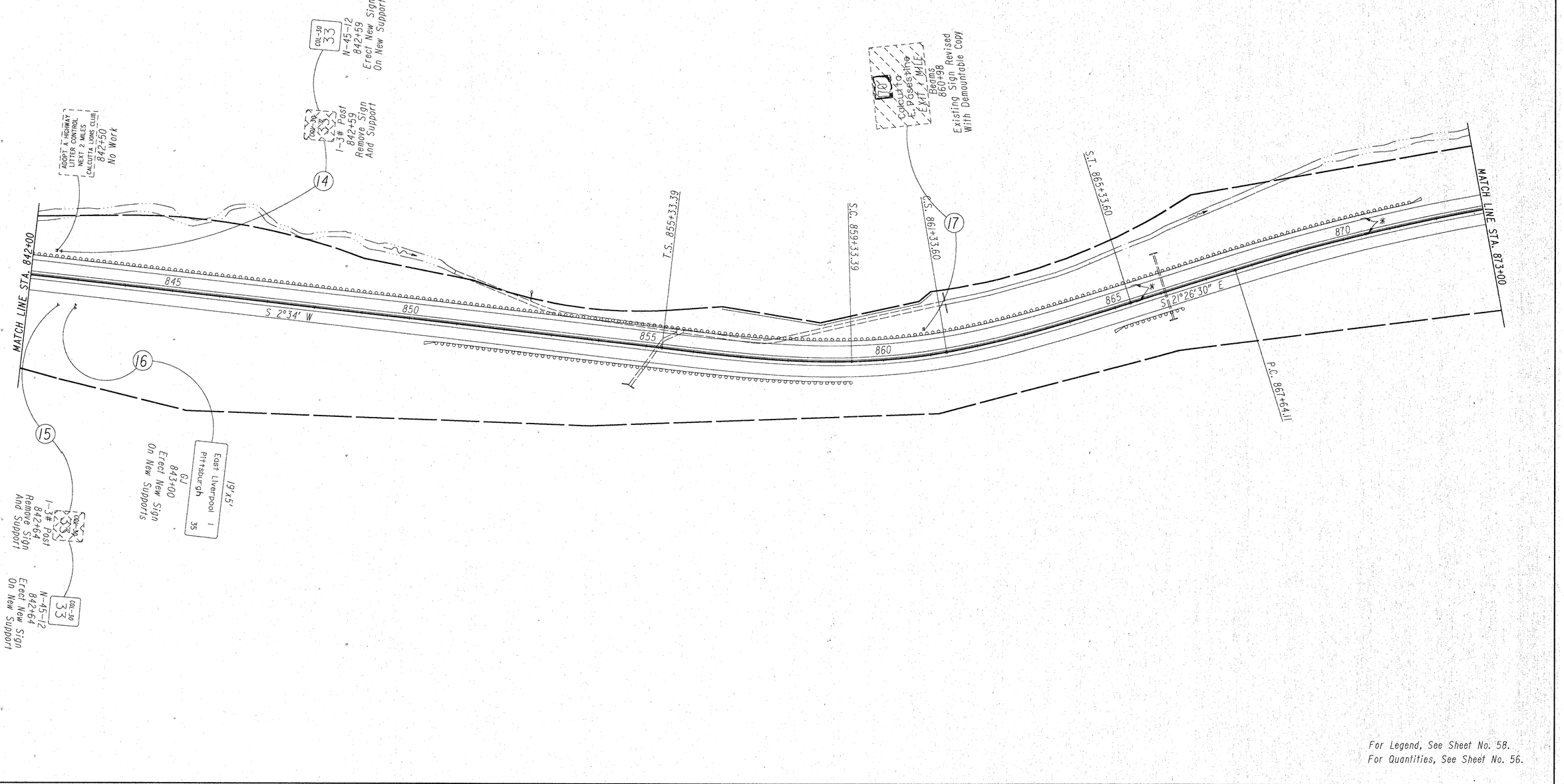

For Legend, See Sheet No. 58.
For Quantities, See Sheet No. 56.

SIGNING PLAN-STA.842+00 TO STA. 873+00

FHWA REGION	STATE	PROJECT	
5	OHIO		

61
77

COL-30-32.19

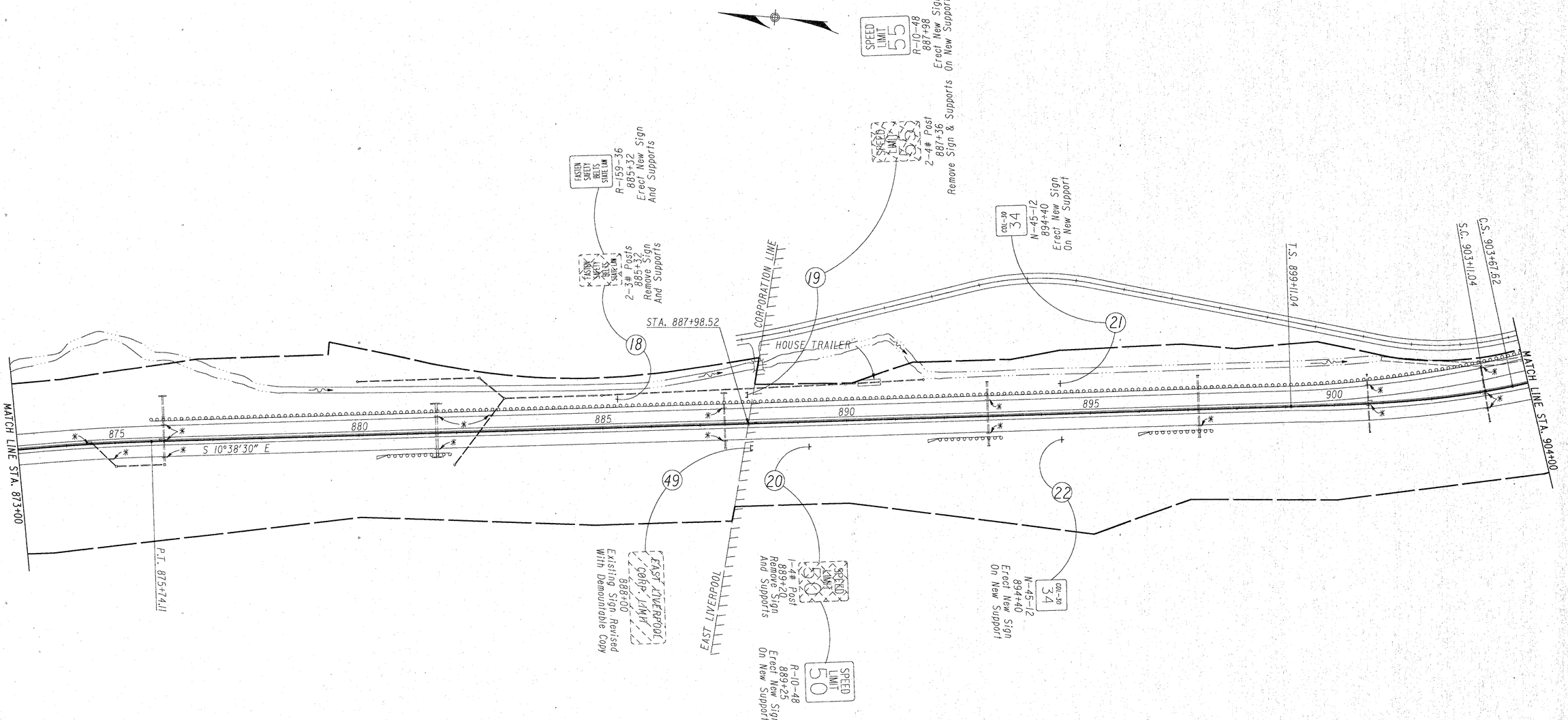

For Legend, See Sheet No. 58.
For Quantities, See Sheet No. 56 & 57.

SIGNING PLAN-STA.873+00 TO STA. 904+00

FHWA REGION	STATE	PROJECT	
5	OHIO		

62
77

COL-30-32.19

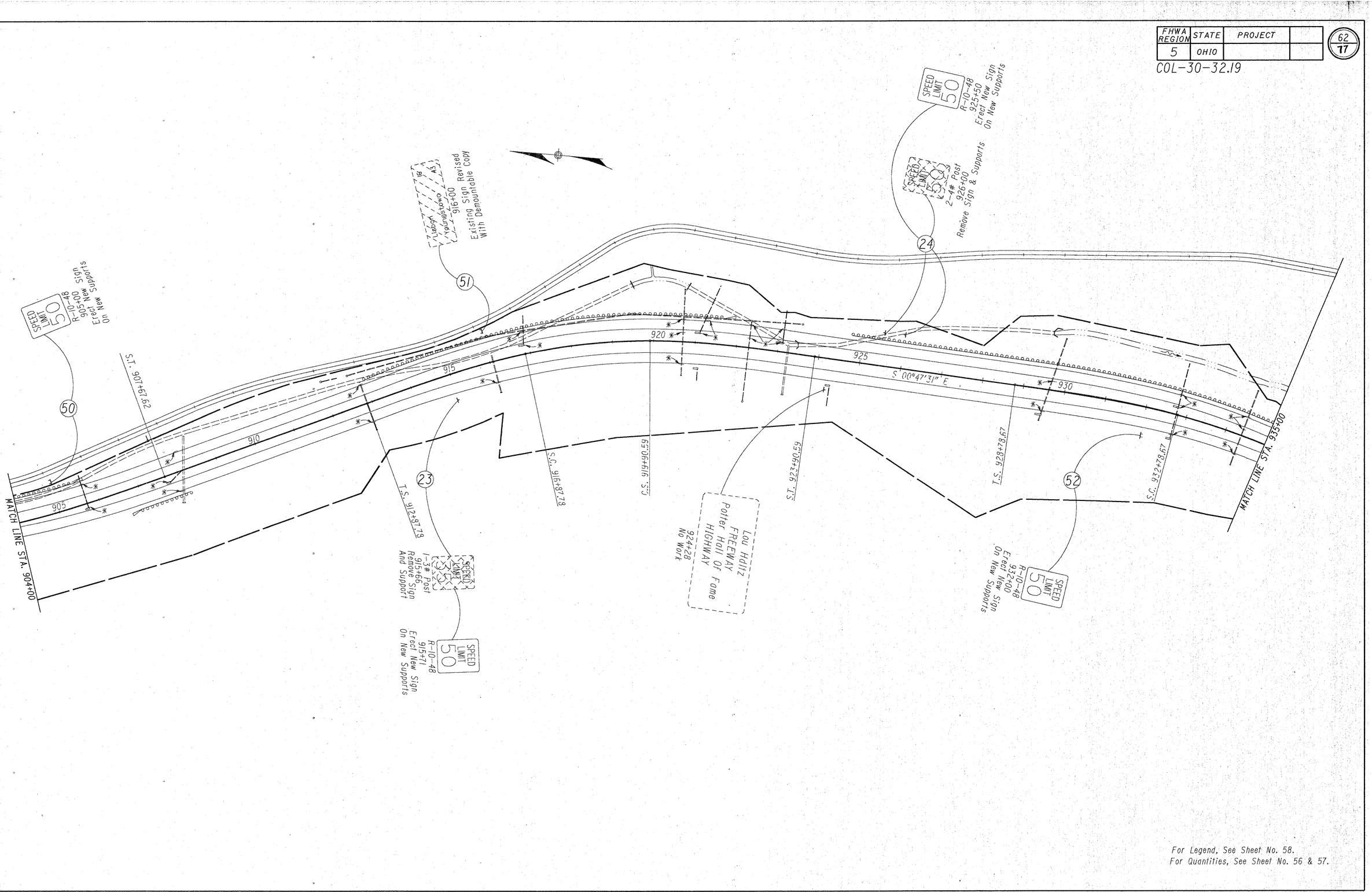

For Legend, See Sheet No. 58.
For Quantities, See Sheet No. 56 & 57.

SIGNING PLAN-STA. 904+00 TO STA. 935+00

FHWA REGION	STATE	PROJECT	
5	OHIO		

COL-30-32.19

END WORK
STA. 967+80.58

NH-78(32)

END PROJECT
STA. 963+50.00
S.L.M. 35.29

For Legend, See Sheet No. 58.
For Quantities, See Sheet No. 56 & 57.
For Overhead Sign Detail, See Sheet No. 64

SIGNING PLAN–STA. 935+00 TO STA. 968+00

FHWA REGION	STATE	PROJECT	
5	OHIO		

64
77

COL-30-32.19

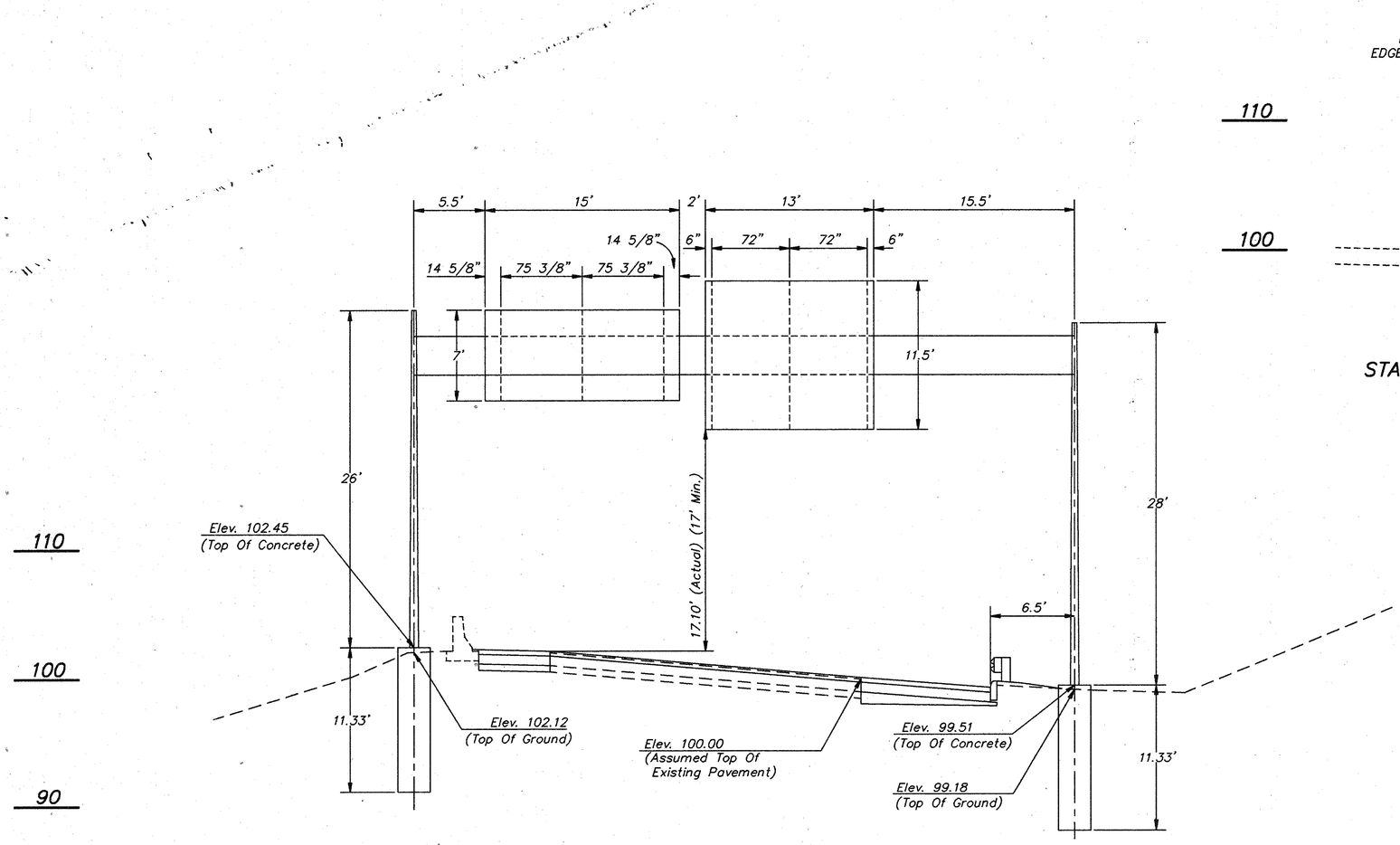

26

STA. 936+90

Erect New Signs On New
Type 7.65 Design 6, Overhead
Sign Support, 51' Span

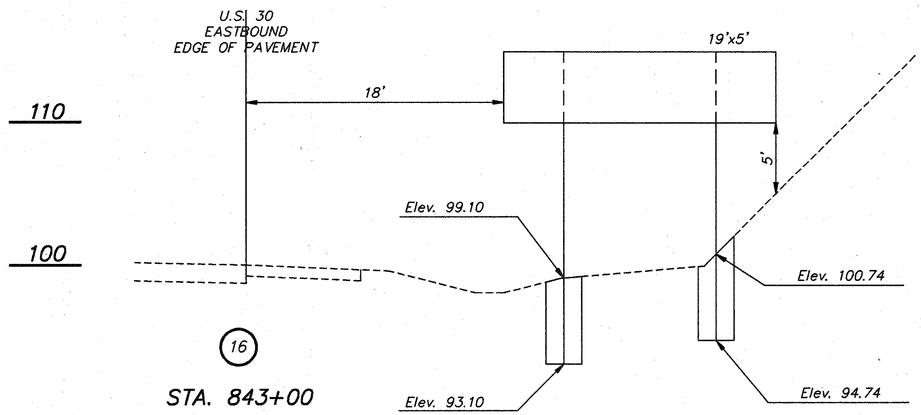

16

STA. 843+00

SIGN ELEVATION VIEW

QUANTITIES			
Calc.	J.C.N.	Chk'd.	
Date	10-16-92	Date	

FHWA REGION	STATE	PROJECT	
5	OHIO		

65
77

COL-30-32.19

ITEM 642 ~ PAVEMENT MARKING, TYPE 2

STATION FROM	STATION TO	LANE OR RAMP	SIDE OF LANE OR RAMP	Edge Line Yellow	Edge Line White	Lane Line	Channel-izing Line	Transverse Line (White)	Stop Line	Crosswalk Line	4" Dotted Line
				Lin. Ft.	Lin. Ft.	Lin. Ft.	Lin. Ft.	Lin. Ft.	Lin. Ft.	Lin. Ft.	Lin. Ft.
799+68.75	963+81.25	Eastbound	Lt.	16,412.5							
799+68.75	963+81.25		Ctr.			16,412.5					
799+68.75	808+55		Rt.		889.25						
806+15	960+54		Rt.		15,439.0						
958+50	963+81.25		Rt.		531.25						
799+68.75	963+81.25	Westbound	Rt.	16,412.5							
799+68.75	963+81.25		Ctr.			16,412.5					
799+68.75	951+85		Lt.		15,216.25						
951+07	963+81.25		Lt.		1,274.25						
944+00	945+23		Lt.			123					
945+23	951+47		Lt&Rt	624.0	624.0						
946+90	951+15		Ctr.			425					
951+47	955+66		Lt&Rt				831	300			
955+66	956+46		Lt&Rt				80				
956+46	959+60		Lt.								314
S.R. 170 INTERCHANGE											
0+36		Ramp "A"	Lt-Rt						45		
0+26	16+85		Lt.		1,721.0						
0+26	16+85		Rt.	1,668.0							
16+85	19+38		Rt.				520	327			
19+38	23+68		Rt.			430					
0+08	16+97	Ramp "D"	Rt.		1.697.0						
0+82	16+97		Lt.	1,634.0							
16+97	19+37		Lt.				240				
19+37	22+25		Lt.			288					
S.R. 7 INTERCHANGE											
0+00	0+90	Ramp "A"	Rt.				90				
0+00	7+00		Rt.	700.0							
0+00	7+00		Lt.		695.0						
2+27	8+66	Ramp "B"	Lt.	639.0							
2+42	8+66		Rt.		645.0						
8+66	960+54		Lt.				200				
960+54	963+81.25		Rt.			327.25					
0+75	1+42	Ramp "C"	Lt.				135	83			
1+42	6+00		Lt.	458.0							
1+42	6+00		Rt.		455.0						
944+20	946+50	Ramp "D"	Rt.			230					
0+58	1+22		Lt.				128	75			
1+22	10+61		Lt.	939.0							
1+22	10+61		Rt.		937.0						
0+62	0+68	4 Th St. Conn.	Lt-Rt							36	
0+75			Lt-Rt						18		
TOTALS	(Carried To General Summary)			39,487.0	40,121.0	34,648.25	2,224	785	63	36	314
				15.08 Miles		6.56					

FHWA REGION	STATE	PROJECT	
5	OHIO		

66
77

COL-30-32.19

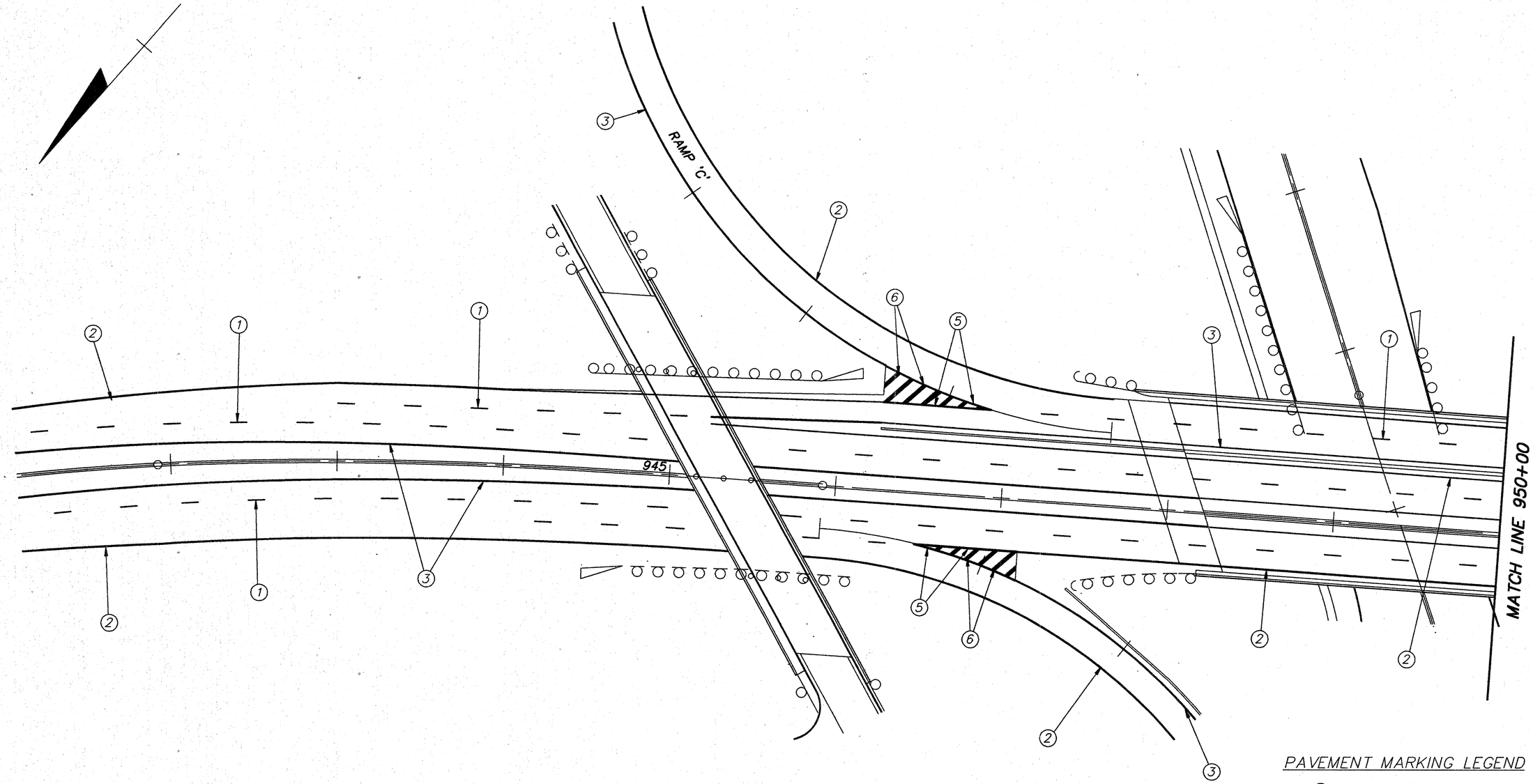

PAVEMENT MARKING LEGEND

1. Lane Line
2. Edge Line (White)
3. Edge Line (Yellow)
4. 4" Dotted Line
5. Channelizing Line
6. Transverse Line

For Pavement Marking Quantities, See Sheet No. 65

PAVEMENT MARKING DETAILS

FHWA REGION	STATE	PROJECT	
5	OHIO		

67
77

COL-30-32.19

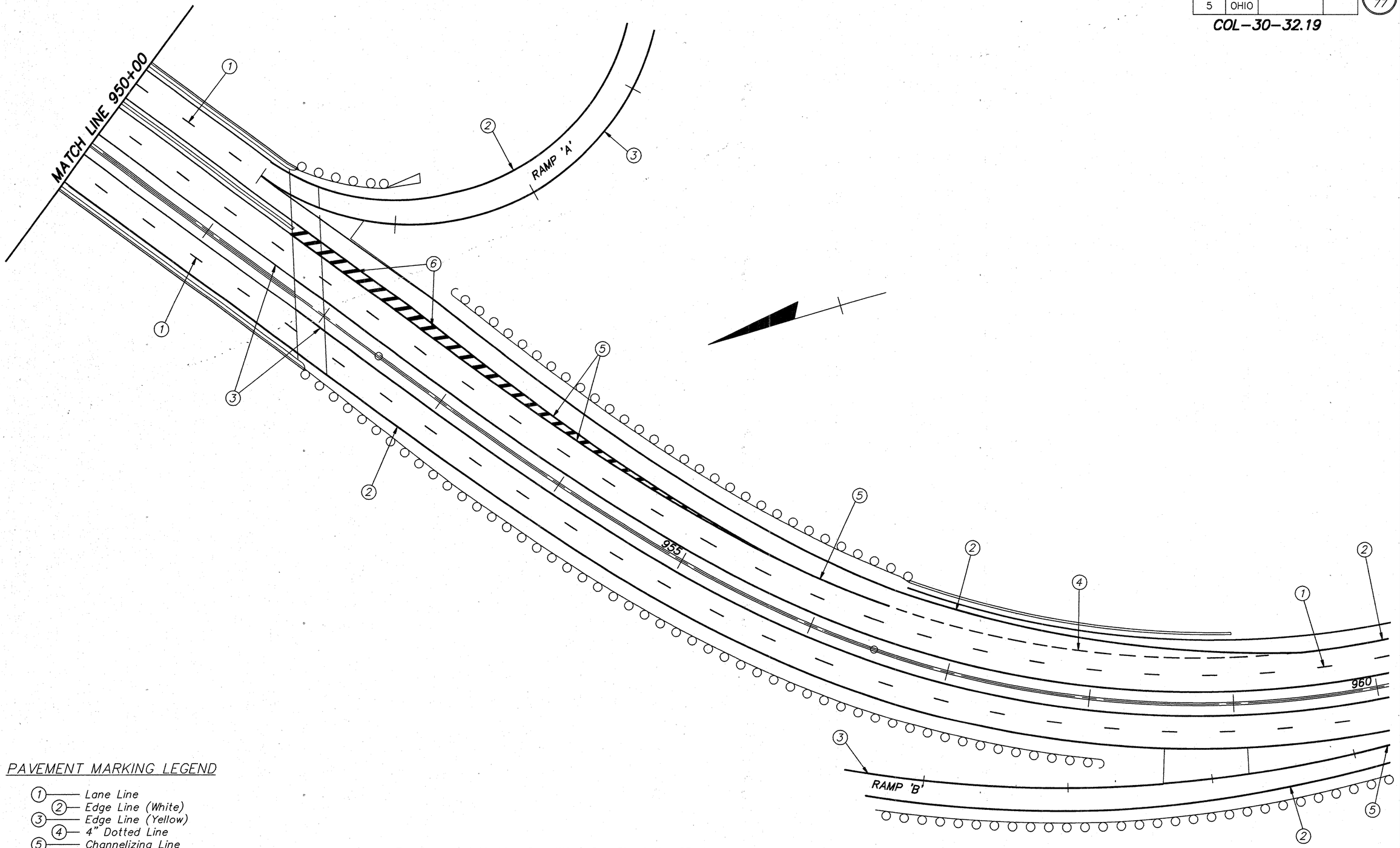

PAVEMENT MARKING LEGEND

1. Lane Line
2. Edge Line (White)
3. Edge Line (Yellow)
4. 4" Dotted Line
5. Channelizing Line
6. Transverse Line

For Pavement Marking Quantities, See Sheet No. 65

PAVEMENT MARKING DETAILS

QUANTITIES			
Calc.	J.C.N.	Chk'd.	SHG
Date	9-24-92	Date	11-20-92

FHWA REGION	STATE	PROJECT	
5	OHIO		

COL-30-32.19

67A
77

ITEM 620 ~ DELINEATORS

STATION FROM	STATION TO	LANE OR RAMP	SIDE	Type C Post Mounted	Type C Bracket Mounted	Type D Post Mounted	Type D Bracket Mounted	Spacing	Delineator Removed For Disposal
				Each	Each	Each	Each	Feet	Each
800+00	801+50	Eastbound	Rt.	2					
818+15	939+00		Rt.	31				400	
947+50	959+50		Rt.	4	1			400	
800+00	808+00	Westbound	Lt.	3				400	
820+00	940+00		Lt.	31				400	
940+00	946+00		Lt.	4				200	
947+50	951+50		Lt.	2	1			200	
952+00	959+50		Lt.	5				200	
959+50	963+50		Lt.	1				400	
S.R. 170 INTERCHANGE									
1+00	29+00	Ramp A	Lt.	14				200	
1+00	11+00	Ramp D	Lt.			11		100	
S.R. 7 INTERCHANGE									
1+00	5+00	Ramp A	Rt.			9		50	
5+00	7+00		Lt.	2				200	
3+00	14+00	Ramp B	Rt.	12	1			90	
1+50	6+00	Ramp C	Lt.			10		50	
1+50	4+00	Ramp D	Lt.			6		50	
4+00	10+00		Rt.	4				200	
TOTALS (Carried To General Summary)				115	3	36			

ITEM 862 ~ RAISED PAVEMENT MARKER

STATION FROM	STATION TO	LANE OR RAMP	LENGTH	Spacing	2-Way White/Red	1-Way Yellow	1-Way White	REMARKS
			Lin. Ft.	Feet	Each	Each	Each	
800+00	887+98.52	Eastbound	8,798.52	80	111			Lane Line
800+00	887+98.52	Westbound	8,798.52	80	111			Lane Line
S.R. 170 INTERCHANGE								
16+05	16+85	Ramp A	80	40		2		Yellow Edge Line (Ramp A)
16+85	19+38		520	20			26	Channelizing Line
807+07	807+87		80	40			2	White Edge Line (US 30)
800+55	808+55	Ramp D	800	40			20	White Edge Line (US 30)
11+37	16+97		560	40		14		Yellow Edge Line (Ramp D)
16+97	19+37		240	40			6	Channelizing Line
TOTAL (Carried to General Summary)					222	16	54	
					292			

ITEM 614 ~ TEMPORARY PAVEMENT MARKING

STATION FROM	STATION TO	LANE OR RAMP	No. Of Lane Lines	No. Of Applications	Temporary Lane Line, Class I	Temporary Edge Line, Class I Yellow	Temporary Edge Line, Class I White	Temporary Gore Marking, Class II	Temporary Channelizing Line, Class I
					Lin. Ft.	Lin. Ft.	Lin. Ft.	Lin. Ft.	Lin. Ft.
799+68.75	963+81.25		1	3	49,237.5	49,237.5	49,237.5		
799+68.75	963+81.25		1	3	49,237.5	49,237.5	49,237.5		
946+90	951+07.45		1	3	1,252.35	1,252.35	1,252.35		
951+07.45	954+70		1	3					* 2,176
954+70	957+45		1	3					825
S.R. 170 INTERCHANGE									
Ramp A			1	3				600	
S.R. 7 INTERCHANGE									
Ramp C			1	3				600	
Ramp D			1	3				600	
TOTALS (Carried To General Summary)					99,727.35	99,727.35	99,727.35	1,800	3,001
					1.88 Mi.	37.78 Mi.			

TEMPORARY PAVEMENT MARKING, RAISED PAVEMENT MARKERS AND DELINEATOR QUANTITIES

FHWA REGION	STATE	PROJECT	
5	OHIO		

67B 77

COL-30-32.19

PAVEMENT MARKING TYPICAL DETAILS

FREEWAY & EXPRESSWAY MAINLINE MARKINGS

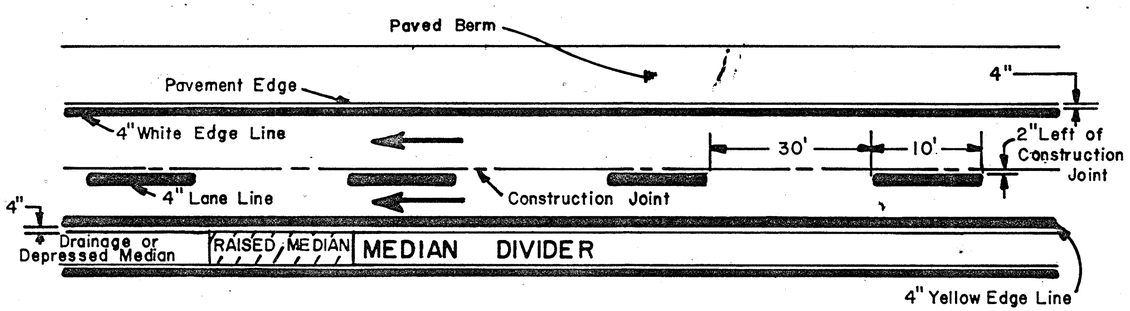

MULTILANE DIVIDED & UNDIVIDED HIGHWAY MARKINGS

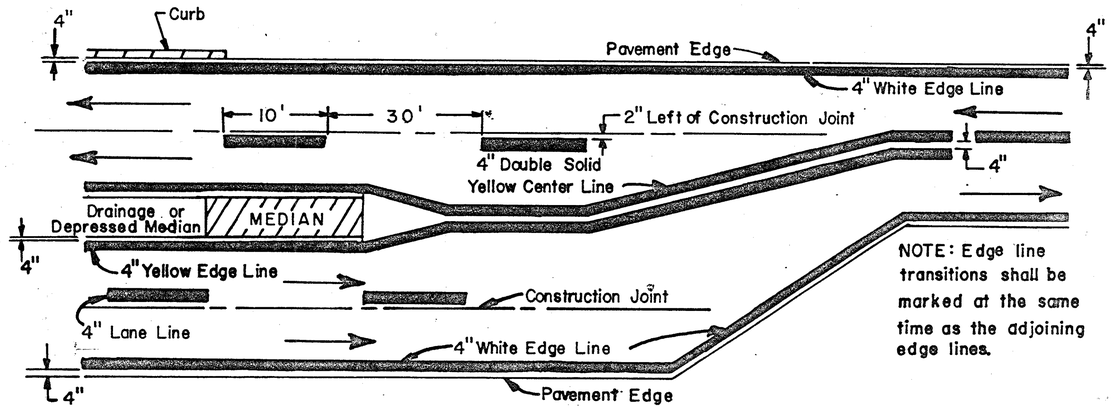

NOTE: Edge line transitions shall be marked at the same time as the adjoining edge lines.

TWO LANE MARKINGS

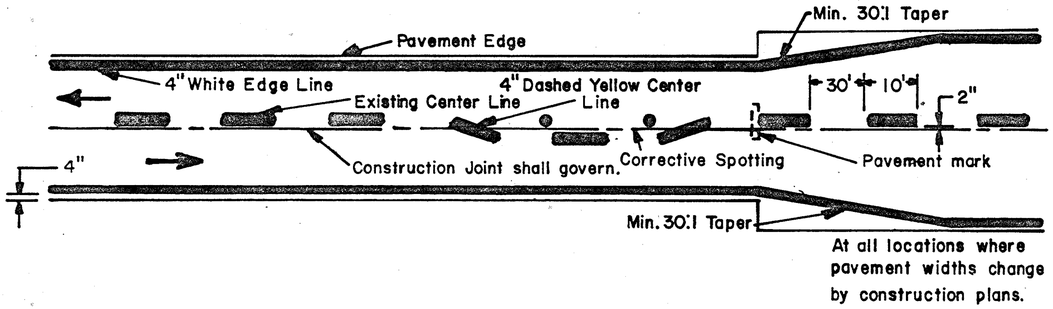

At all locations where pavement widths change by construction plans.

NOTES:

1. THE DISTANCE FROM THE PAVEMENT EDGE TO THE NEARSIDE EDGE OF THE EDGELINE MAY BE INCREASED WITH THE APPROVAL OF THE ENGINEER IN ORDER TO MAINTAIN UNIFORM LANE WIDTH.

2. SEE TC-72.20 FOR PAVEMENT MARKINGS ENTRANCE AND EXIT RAMP TERMINALS.

3. THE WIDTH OF LINE APPLIED SHALL BE THE WIDTH SPECIFIED PLUS OR MINUS 1/4".

OHIO DEPARTMENT OF TRANSPORTATION

PAVEMENT MARKING TYPICAL DETAILS

DATE 11/80

FHWA REGION	STATE	PROJECT		68 / 77
5	OHIO			

COL-30-32.19

CONTINGENCY QUANTITIES

Specific locations and usage of the estimated quantities set up on this plan to be used "As directed by the Engineer" shall be made a matter of record by incorporation into the final change order governing completion of this project. Estimated quantities of materials shall not be ordered for delivery to the project unless authorized by the Engineer.

EXISTING STRUCTURE VERIFICATION

Details and dimensions on these plans pertaining to the existing structure have been obtained from plans of the existing structure and/or from field observations and measurements. Consequently, they are indicative of the existing structure and the proposed work but they shall be considered tentative and approximate. The Contractor is referred to CMS sections 102.05, 105.02 and 513.02. Contract bid prices shall be based upon a prebid examination of the existing structure by the Contractor. However, all project work shall be based upon actual details and dimensions which have been verified by the Contractor in the field.

ITEM 517 - RAILING FACED, AS PER PLAN

The Contractor shall remove and dispose of the existing aluminum railing, portions of the concrete safety curb, parapet and/or deck, the protruding leg on the bulb angle and any existing reinforcing steel that will interfer with the facing shall be removed as directed by the Engineer. See plan details for specific reinforcing steel removal.

1" diameter holes, 6" deep (min) shall be drilled at 1'-6" c/c as shown on the drawing. the holes shall be thoroughly cleaned of all dust and other deleterious material.

Anchoring grout shall be vinylester resin or epoxy mortar as per SS852 and SS952. Anchor hole diameter shall be 1/2" larger in diameter than the anchor.

All loose and unsound concrete in the area of the parapet to be faced shall be removed. All remaining sound concrete shall then be scabbled or removed so that the minimum thickness for the proposed facing shall be 4". All resteel shall be epoxy coated. Concrete cover over all resteel shall be 2". The concrete surfaces to be faced shall be thoroughly drenched with clean water and allowed to dry to a damp condition just before placing the concrete.

A 1 1/2" deep deflection joint shall be sawcut into the proposed facing at each existing deflection joint within 3 days after pouring. The 1/4" joints shall be sealed 3/4" deep (min) with an impregnated precompressed expanding foam sealant tape known as will-seal, manufactured by Illbruck/USA Inc., Minneapolis or a low density, closed cell, crosslinked ethylene vinyl acetate foam known as Evazote 50, manufactured by E-poxy Industries, Inc, Ravena, New York or E.V.A. as manufactured by Thermal-Chem, Inc., Elk Grove, Illinois or an approved equal.

Materials shall be:
- Class S Concrete as per Item 511
- Epoxy Coated Reinforcing Steel as per Item 509

All of the above work and work indicated by relevant plan notes and details including new transition railing shall be included in the unit price bid for Item 517, Railing, Faced, as per plan.

ITEM 518 - SCUPPER LENGTHENING, AS PER PLAN

The Contractor shall remove a minimum of 6" of the bottom of each scupper downspout, unless otherwise directed by the Engineer.
The contractor shall then weld an extension to the existing scupper downspout. The downspout extension shall be in accordance with 518 and shall extend a minimum of 8" below the bottom flange of the adjacent beam. The material and the size of the extension shall be the same as that of the existing scupper downspout. Cleaning and painting of scuppers shall be included under OZEU painting items. Cost for all material, labor and incidentals for the above work shall be included under Item 518 - Scupper lengthening, as per plan.

ITEM SPECIAL - SEALING CONCRETE SURFACES (EPOXY)

An epoxy concrete sealer shall be applied to the surfaces as shown on the Typical Sections for the full length of the bridge including wingwalls.
Also seal backwalls and piers On Br. No. COL-30-3494 and Br. No. COL-30-3500CD L&R and backwalls only on Br. No. COL-7-0626L. See Proposal Note for the surface preparation requirements, application rates, material requirements and application procedures.

ITEM 202 - PORTIONS OF STRUCTURE REMOVED

This item shall cover the removal of the following:

Existing aluminmum railing and posts for the following bridges:
COL-30-3269, COL-30-3500, COL-30-3526 and COL-7-0626L.

CONCRETE REMOVAL

Concrete removal shall be by means of approved pneumatic hammers employing pointed and blunt chisel tools. Hydraulic hoe-ram type hammers will not be permitted. The weight of the hammer shall not be more than 35 pounds for removal within 18 inches of portions to be perserved.

ITEM 202 - WEARING COURSE REMOVED

This item shall cover the removal of the following:

Existing 1 1/4" deck overlay on Br. No. COL-30-3269
Existing 1 1/4" deck overlay on Br. No. COL-30-3500
Existing 2 1/2" deck overlay on Br. No. COL-7-0626L
Quantities for deck overlay on Br. No. COL-30-3526 will be carried on the Roadway Quantities.

ITEM SPECIAL - GRINDING FLANGE EDGES

This item shall consist of grinding the bottom flange edges of the beams within the spans directly over the pavement of Br. No. COL-30-3494 only.

ITEM SPECIAL - CAULKING

A quantity has been included for Br. No. COL-30-3500CD, L&R for filling gaps where overlapping structural steel members are not tight. The work shall be as directed by the Engineer.
Payment for all material, labor and equipment shall be at the unit price bid for lineal feet actually caulked.

ITEM 519 - PATCHING CONCRETE STRUCTURES

A quantity for patching has been set up for this project to be used to patch various areas of curb and parapet as detailed. All patching shall be approved by the Engineer prior to any work being performed.

BRIDGE SUMMARY

COL-30-3269	COL-30-3494	COL-30-3500CD,L&R	COL-30-3526	COL-7-0626L	ITEM	ITEM EXT.	TOTAL	UNIT	DESCRIPTION
LUMP	--	--	LUMP	--	202	11200	LUMP	LUMP	PORTIONS OF STRUCTURE REMOVED
1149	--	3806	--	689	202	23500	5644	SQ YD	WEARING COURSE REMOVED
--	--	--	174	--	512	55800	174	SQ YD	TYPE D WATERPROOFING
397	1127	2452	62	625	SPECIAL	51267502	4663	SQ YD	SEALING OF CONCRETE SURFACES (EPOXY) *
--	769	--	--	--	SPECIAL	51272000	769	SQ YD	EPOXY WATERPROOFING OVERLAY (1/4" THICK) *
15100	13500	87100	--	14200	SPECIAL	51400050	129900	SQ FT	SURFACE PREPARATION OF EXISTING STEEL, SYSTEM OZEU *
15100	13500	87100	--	14200	SPECIAL	51400056	129900	SQ FT	FIELD PAINTING OF EXISTING STEEL, PRIME COAT, SYSTEM OZEU *
15100	13500	87100	--	14200	SPECIAL	51400060	129900	SQ FT	FIELD PAINTING OF EXISTING STEEL, INTERMEDIATE COAT, SYSTEM OZEU *
15100	13500	87100	--	14200	SPECIAL	51400066	129900	SQ FT	FIELD PAINTING OF EXISTING STEEL, FINISH COAT, SYSTEM OZEU *
160	120	--	--	120	SPECIAL	51400504	400	MH	GRINDING FINS, TEARS, SLIVERS *
--	2600	--	--	--	SPECIAL	51400508	2600	LIN FT	GRINDING FLANGE EDGES *
--	--	2000	--	--	SPECIAL	51400500	2000	LIN FT	CAULKING *
264	--	--	101	--	517	76201	365	LIN FT	RAILING FACED, AS PER PLAN
--	--	726	--	526	517	**76300**	1252	LIN FT	TOP MOUNTED THRIE BEAM RAILING
18	4	21	--	4	518	12901	47	EACH	SCUPPER, LENGTHENING, AS PER PLAN
16	32	62	--	--	519	11100	110	SQ FT	PATCHING CONCRETE STRUCTURE
--	231	--	130	--	SPECIAL	51912300	361	SQ YD	PATCHING CONCRETE BRIDGE DECK - TYPE B *
1149	--	3806	--	--	SPECIAL	5192200**6**	4955	SQ YD	MICRO-SILICA MODIFIED CONCRETE OVERLAY (1½" THICK) *
--	--	--	--	689	SPECIAL	51922006	689	SQ YD	MICRO SILICA MODIFIED CONCRETE OVERLAY (2¾" THICK) *
96	--	318	--	58	SPECIAL	51922100	472	CU YD	MICRO-SILICA MODIFIED CONCRETE OVERLAY (VARIABLE THICKNESS) *
2	2	2	--	2	SPECIAL	51922200	8	CU YD	FULL DEPTH REPAIR *
LUMP	--	LUMP	--	LUMP	SPECIAL	51922300	LUMP	LUMP	TEST SLAB *
--	243.25	--	--	--	SPECIAL	60739910	243.25	LIN FT	VANDAL PROTECTION FENCE, 8' STRAIGHT, COATED FABRIC
--	243.25	--	--	--	SPECIAL	60739930	243.25	LIN FT	VANDAL PROTECTION FENCE, 12' CURVED, COATED FABRIC

* SEE PROPOSAL NOTE

STATE OF OHIO
DEPARTMENT OF TRANSPORTATION
DISTRICT 11 BRIDGE DEPARTMENT

1 / 10

BRIDGE NOTES & SUMMARY

Br. No. COL-30-3269
Br. No. COL-30-3494
Br. No. COL-30-3500CD L&R
Br. No. COL-30-3526
Br. No. COL-7-0626L

DESIGNED	CADD	CHECKED	REVIEWED	DATE	REVISED
JAS	JAS	WRG	LMW	10-23-92	

FHWA REGION	STATE	PROJECT	
5	OHIO		

69
77

COL-30-32.19

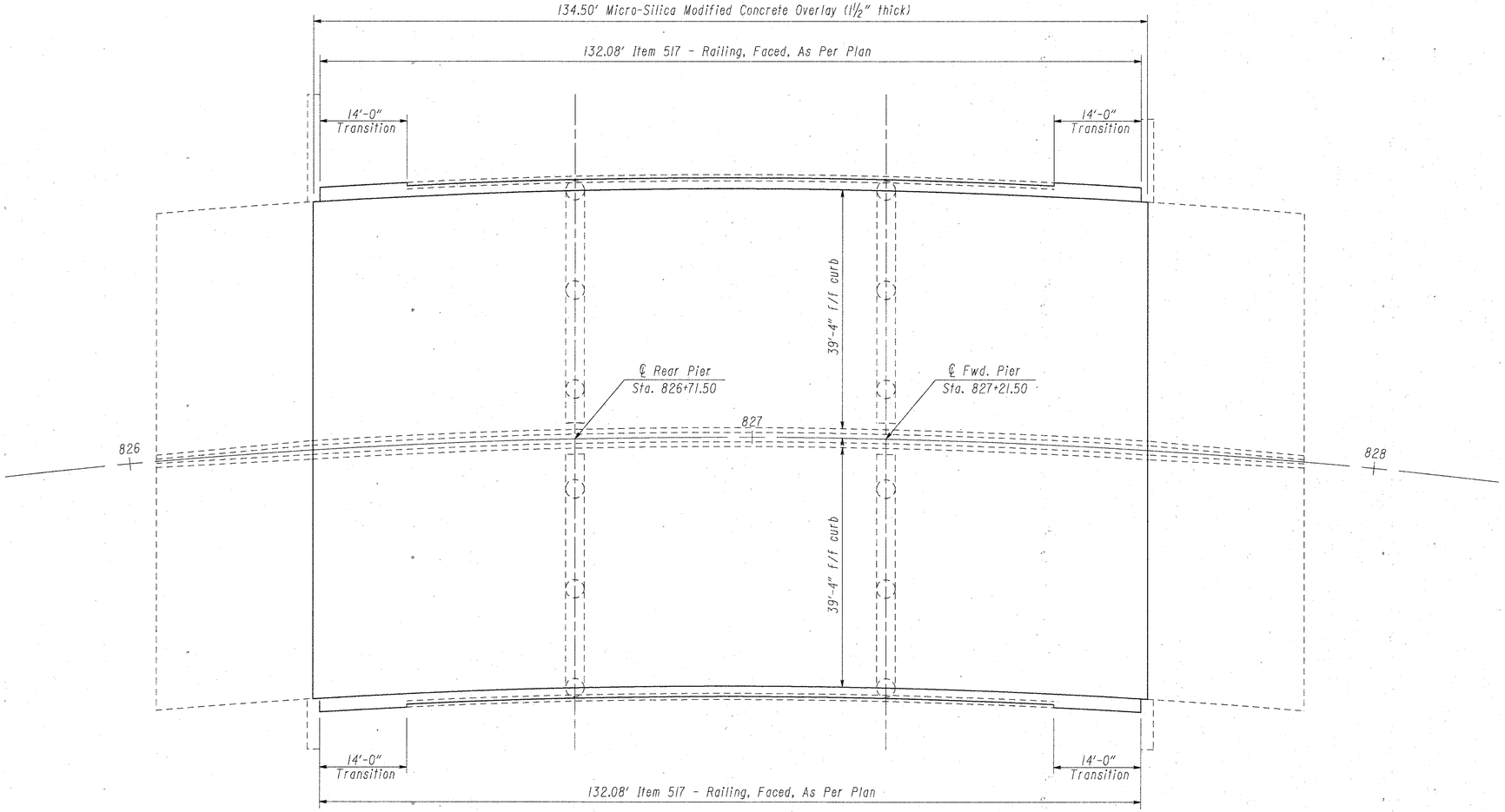

PLAN

EXISTING STRUCTURE
TYPE: Continuous steel beam w/integral abutments
SPANS: 40'-50'-40' c/c bearings
ROADWAY: 2 @ 39'-4" f/f curbs with 3' concrete median barrier
LOADING: CF-2000 (57)
ALIGNMENT: Spiral to 4° R.C.
SKEW: none
APPROACH SLAB: AS-1-54 (25'-0" long)
SUPERELEVATION: varies
WEARING COURSE: 1¼" L.M.C. Overlay

PROPOSED STRUCTURE
TYPE: Continuous steel beam w/integral abutments
SPANS: 40'-50'-40' c/c bearings
ROADWAY: 2 @ 39'-4" f/f curbs with 3' concrete median barrier
LOADING: CF-2000 (57)
ALIGNMENT: Spiral to 4° R.C.
SKEW: none
APPROACH SLAB: AS-1-54 (25'-0" long)
SUPERELEVATION: varies
WEARING COURSE: 1½" Micro-Silica Concrete

WORK REQUIRED:

1. Remove existing aluminum rail and portions of curb and parapet.
2. Face railing as per plan.
3. Remove existing wearing course.
4. Place new 1½" Micro-Silica concrete overlay.
5. Patch concrete as directed by the plan and Engineer.
6. Apply epoxy sealer as per plan.
7. Extend scuppers.
8. Clean and paint all structural steel.

STATE OF OHIO
DEPARTMENT OF TRANSPORTATION
DISTRICT 11 BRIDGE DEPARTMENT

2 / 10

SFN 15022550

GENERAL PLAN

Br. No. COL-30-3269
Over Hill Ave.

DESIGNED	CADD	CHECKED	REVIEWED	DATE	REVISED
JAS	JAS	WRG	LMW	10-23-92	

FHWA REGION	STATE	PROJECT	
5	OHIO		

70 / 77

COL-30-32.19

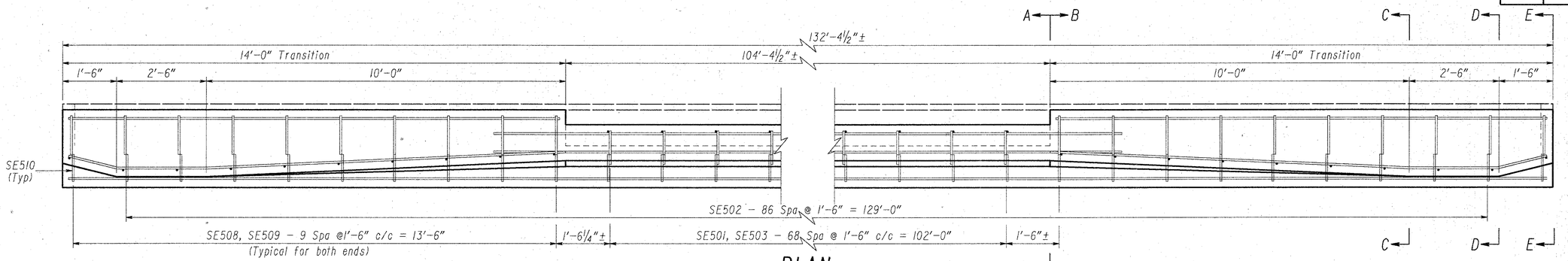

PLAN

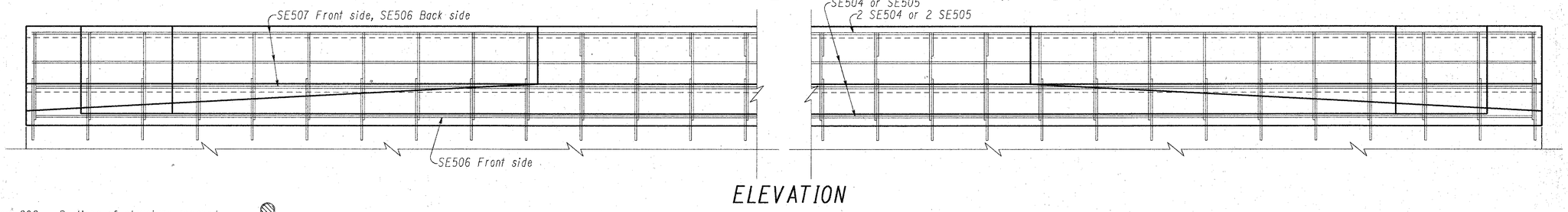

ELEVATION

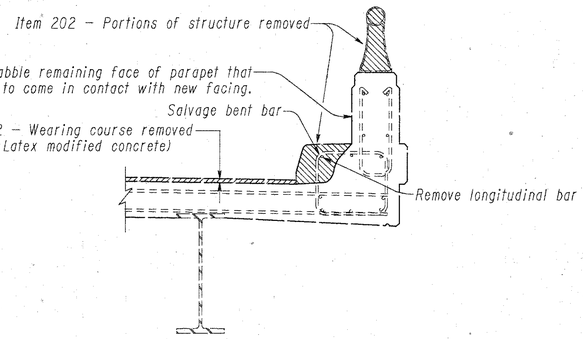

REMOVAL
AT SECTION A-A

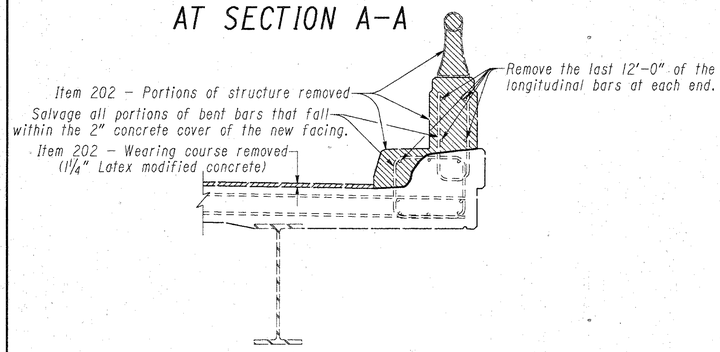

REMOVAL
AT SECTIONS B-B, C-C D-D & E-E

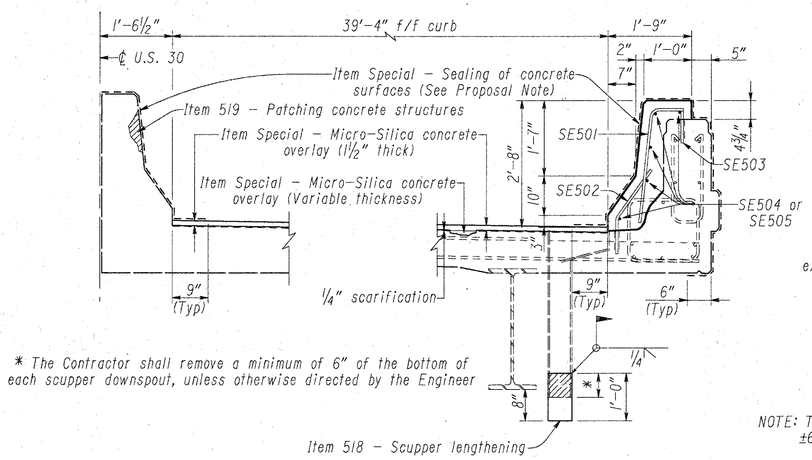

* The Contractor shall remove a minimum of 6" of the bottom of each scupper downspout, unless otherwise directed by the Engineer

SECTION A-A

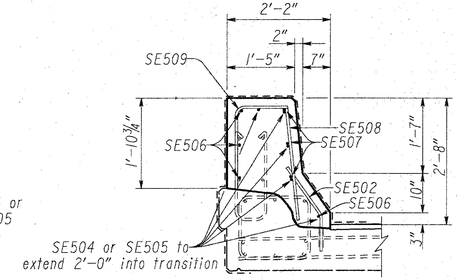

SECTION B-B

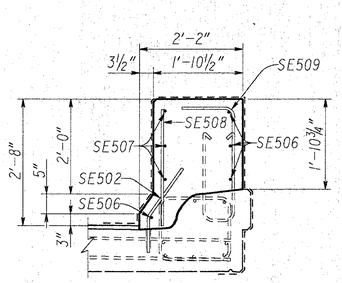

SECTION C-C

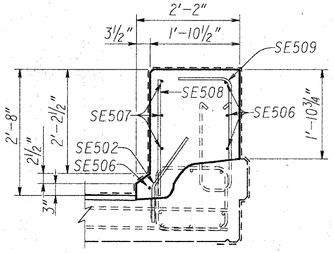

SECTION D-D

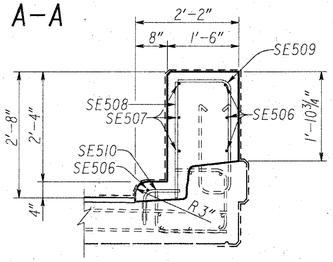

SECTION E-E

NOTE: The following bars will be dowelled ±6" into the existing concrete: SE502, SE503 and SE510

See sheet 10 / 10 for Reinforcing Steel List

STATE OF OHIO
DEPARTMENT OF TRANSPORTATION
DISTRICT 11 BRIDGE DEPARTMENT

3 / 10

SUPERSTRUCTURE DETAILS

BRIDGE NO. COL-30-3269
OVER HILL AVE.

DESIGNED	CADD	CHECKED	REVIEWED	DATE	REVISED
WRG	WRG	JLO	LMW	10/23/92	

FHWA REGION	STATE	PROJECT	
5	OHIO		

71/77

COL-30-32.19

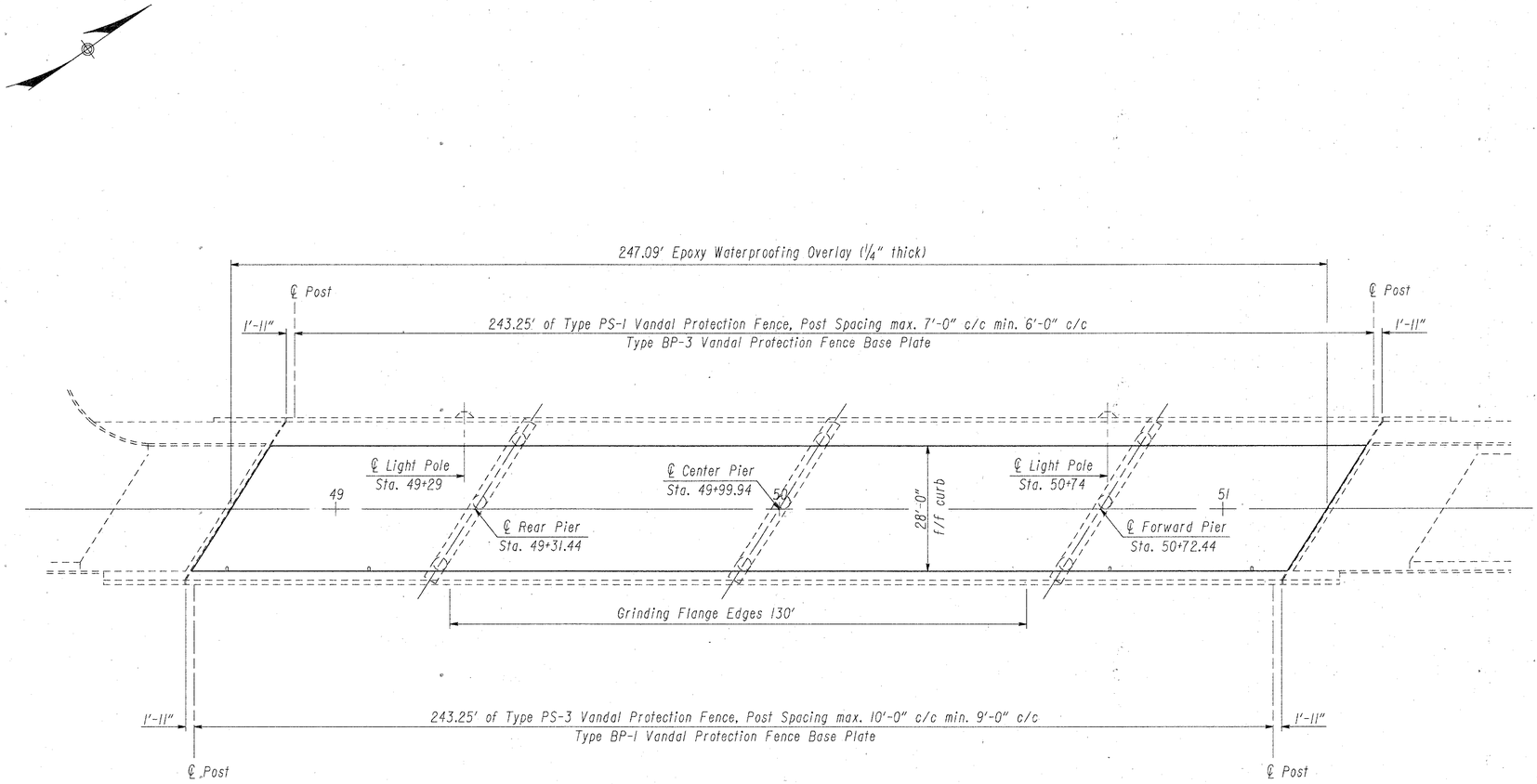

PLAN

EXISTING STRUCTURE
TYPE: Continuous steel beam w/reinforced concrete deck and substructure
SPANS: 50'-68.5'-72.5'-50.75' c/c bearings
ROADWAY: Rt. 28'-0 f/f curb 2' saftey curbs and Lt. 5'-6" sidewalk
LOADING: CF-130 (57)
ALIGNMENT: Tangent
SKEW: 32°-30' L.F.
APPROACH SLAB: AS-1-54 (25'-0" long)
WEARING COURSE: 1" Monolithic

PROPOSED STRUCTURE
TYPE: Continuous steel beam w/reinforced concrete deck and substructure
SPANS: 50'-68.5'-72.5'-50.75' c/c bearings
ROADWAY: Rt. 28'-0 f/f curb 2' saftey curbs and Lt. 5'-6" sidewalk
LOADING: CF-130 (57)
ALIGNMENT: Tangent
SKEW: 32°-30' L.F.
APPROACH SLAB: AS-1-54 (25'-0" long)
WEARING COURSE: 1/4" Epoxy Waterproofing Overlay

WORK REQUIRED:

1. Place new 1/4" Epoxy waterproofing overlay.
2. Patch concrete as directed by the plan and Engineer.
3. Apply epoxy sealer as per plan.
4. Erect vandal fence.
5. Extend scuppers.
6. Clean and paint all structural steel.

See Std. Drwg. VPF-1-90 dated 2-1-92 for Vandal Protection Fence details.

STATE OF OHIO
DEPARTMENT OF TRANSPORTATION
DISTRICT 11 BRIDGE DEPARTMENT

4 / 10

SFN 1502344

GENERAL PLAN

Br. No. COL-30-3494
Over US 30

DESIGNED	CADD	CHECKED	REVIEWED	DATE	REVISED
JAS	JAS	WRG	LMW	10-23-92	

FHWA REGION	STATE	PROJECT	
5	OHIO		

72/77

COL-30-32.19

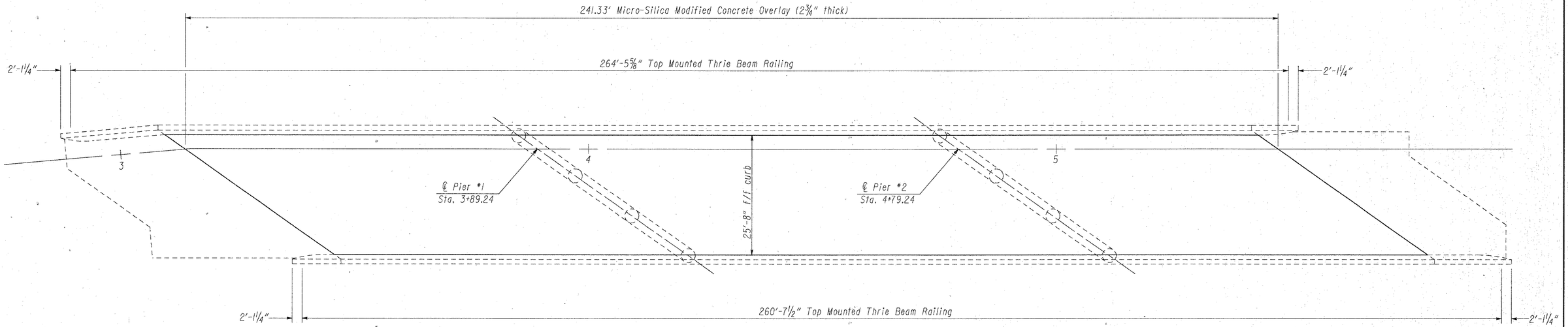

PLAN

EXISTING STRUCTURE
TYPE: Reinforced concrete slab on stub abutments(supported on all four sides)
SPANS: 76' clear (On survey ℄)
ROADWAY: Partial roadway width 20' edge of pavement to face of parapet including 14" curb
LOADING: CF-2000 (57)
ALIGNMENT: 8°30" curve lt. and spiral
SKEW: End walls radial
APPROACH SLAB: AS-1-54 (25'-0" long) ends Special (12' long) left side
SUPERELEVATION: variable
WEARING COURSE: 2½" Asphalt Concrete Wearing Surface

PROPOSED STRUCTURE
TYPE: Reinforced concrete slab on stub abutments(supported on all four sides)
SPANS: 76' clear (On survey ℄)
ROADWAY: Partial roadway width 20' edge of pavement to face of parapet including 14" curb
LOADING: CF-2000 (57)
ALIGNMENT: 8°30" curve lt. and spiral
SKEW: End walls radial
APPROACH SLAB: AS-1-54 (25'-0" long) ends Special (12' long) left side
SUPERELEVATION: variable
WEARING COURSE: 2¾" Micro-Silica Modified Concrete Overlay

WORK REQUIRED:

1. Remove existing aluminum rail on the right side.
2. Remove existing wearing course.
3. Place new 2 3/4" Micro-Silica concrete overlay.
4. Patch concrete as directed by the plan and Engineer.
5. Apply epoxy sealer as per plan.
6. Install top mounted thrie beam on right side.
7. Extend scuppers.
8. Clean and paint all structural steel.

For details on item 517 - Top Mounted Thrie Beam Railing see Std. Dwg. TBR-91 dated 4-24-92.

STATE OF OHIO
DEPARTMENT OF TRANSPORTATION
DISTRICT 11 BRIDGE DEPARTMENT

5 / 10

SFN 1504800

GENERAL PLAN

Br. No. COL-7-0626L
Over SR 267

DESIGNED	CADD	CHECKED	REVIEWED	DATE	REVISED
JAS	JAS	WRG	LMW	10-23-92	

FHWA REGION	STATE	PROJECT		73 / 77
5	OHIO			

COL-30-32.19

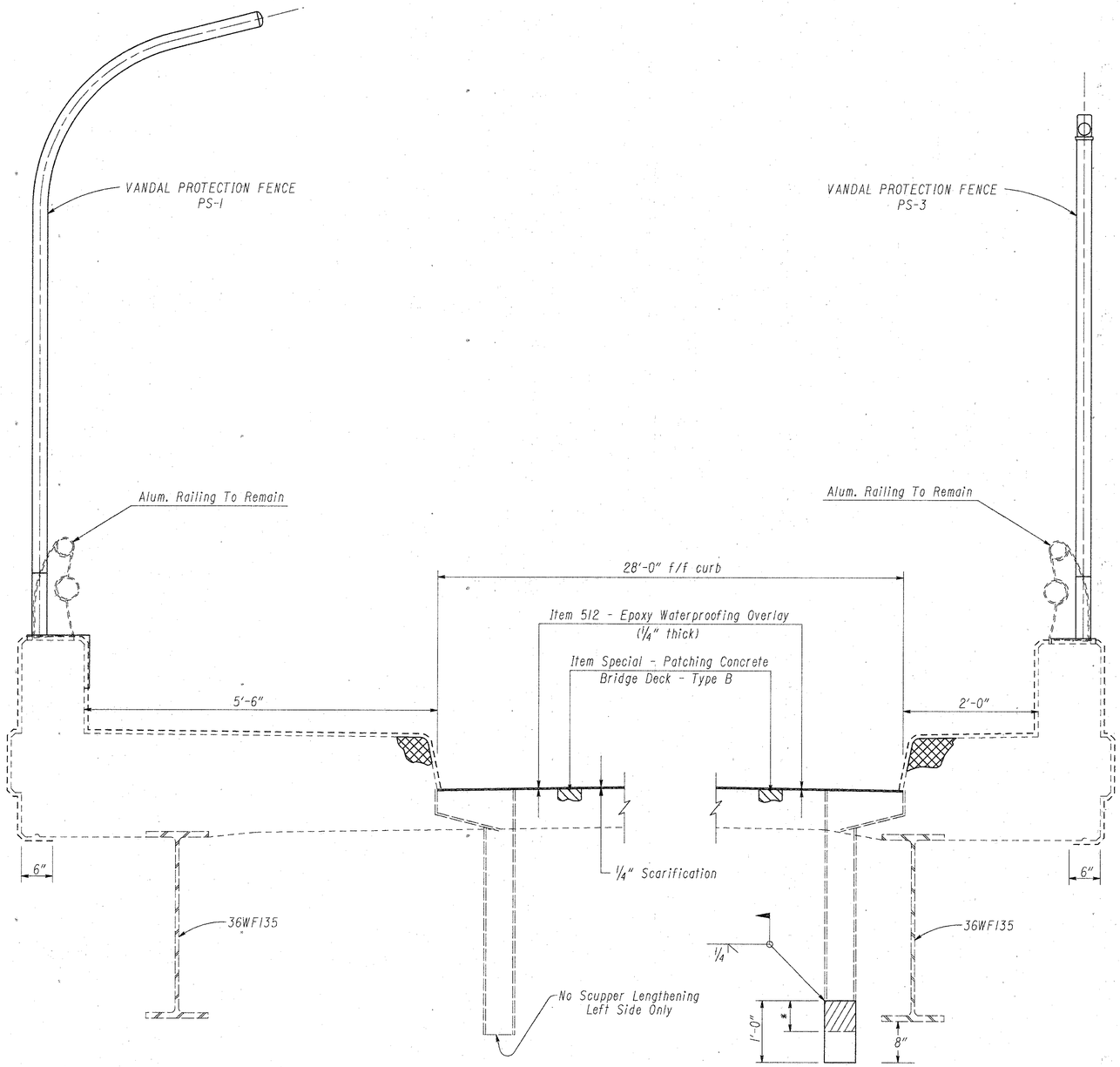

TYPICAL SECTION
(Br. No. COL-30-3494)

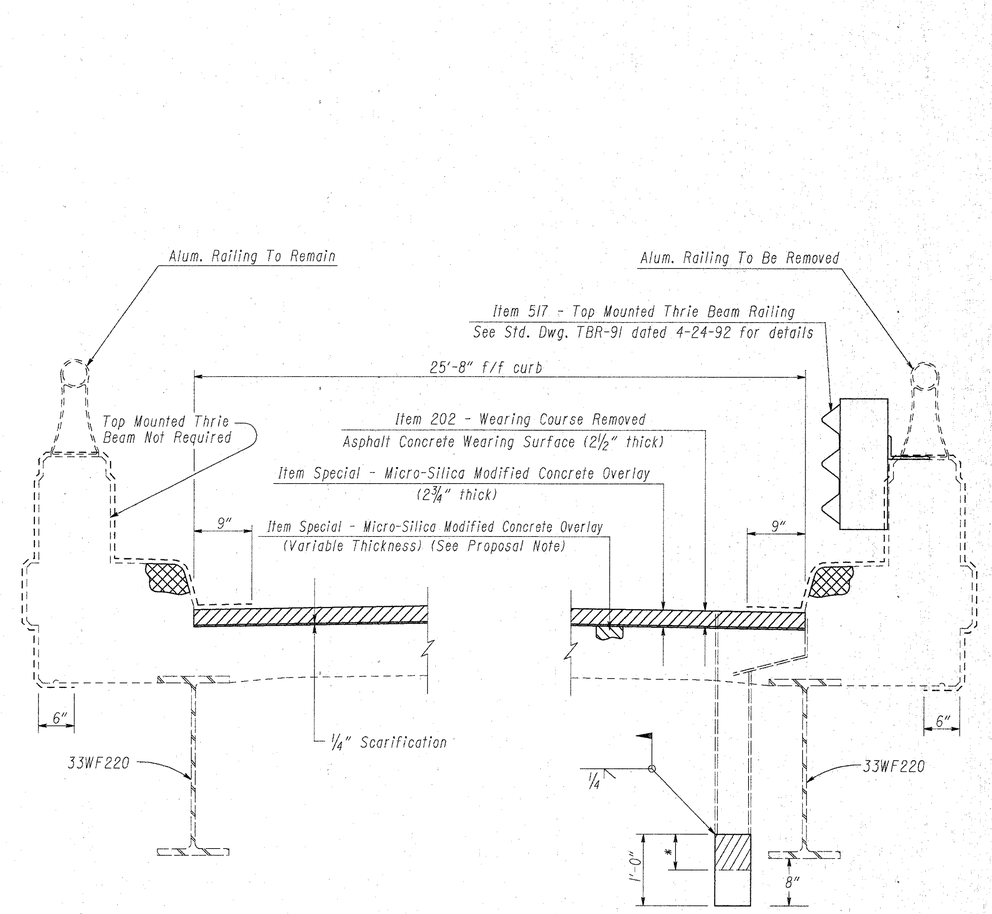

TYPICAL SECTION
(Br. No. COL-7-0626L)

Item 519 - Patching Concrete Structure

Item Special - Sealing of Concrete Surfaces (Epoxy)
(See Proposal Note)

* The Contractor shall remove a minimum of 6" of the bottom of each scupper downspout, unless otherwise directed by the Engineer

STATE OF OHIO
DEPARTMENT OF TRANSPORTATION
DISTRICT II BRIDGE DEPARTMENT

6 / 10

BRIDGE DETAILS

Br. No. COL-30-3494
Br. No. COL-7-0626L

DESIGNED	CADD	CHECKED	REVIEWED	DATE	REVISED
JAS	JAS	WRG	LMW	10-3-92	

FHWA REGION	STATE	PROJECT	
5	OHIO		

74
77

COL-30-32.19

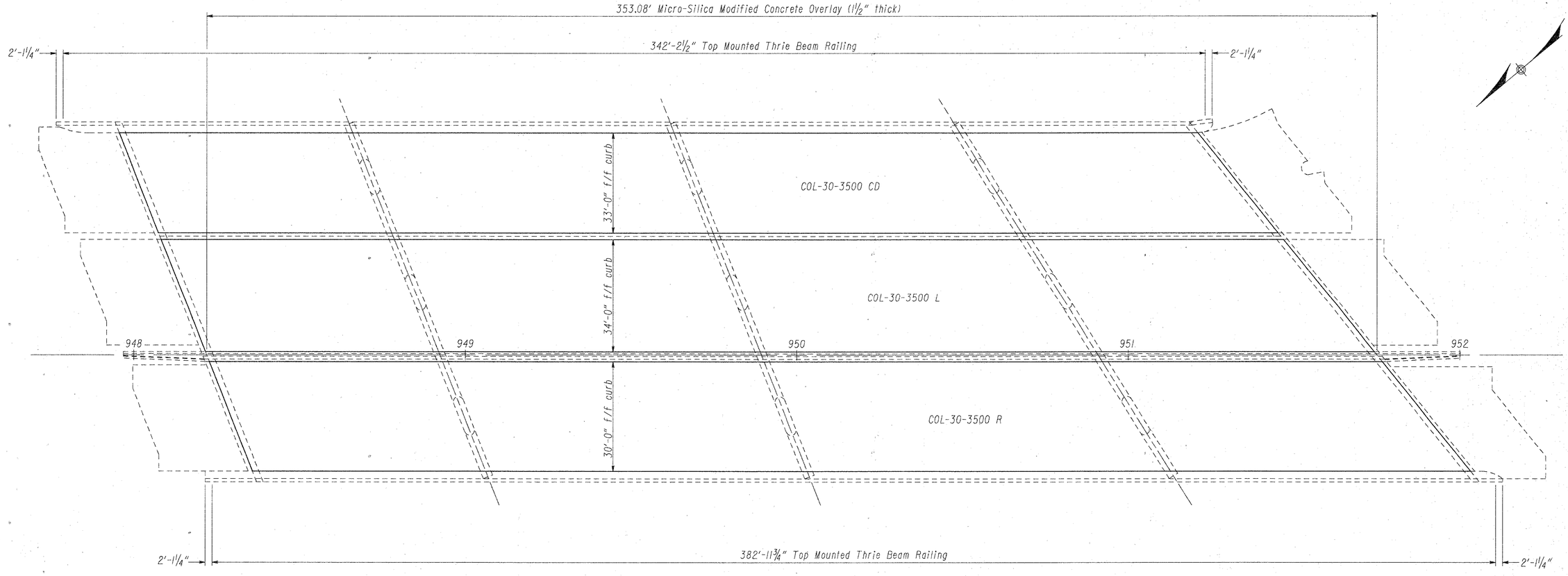

EXISTING STRUCTURE
TYPE: Continuous plate girders with reinforced concrete deck and substructure
SPANS: 68' - 97' - 101'-6½" - 81'- 2¾" c/c bearings
ROADWAY: 30' f/f curbs for structure CD 34' f/f curbs for left structure 33' f/f curbs for right structure with 3' concrete median barrier between left and right structures
LOADING: CF-2000 (57)
ALIGNMENT: Mainline on tangent Ramp A on vertical curve lt.
SKEW: Rear abutment, piers 1 & 2 21°30'50" rt. Pier 3 31°57'25" Forward abutment 38°55'18" rt. fwd.
APPROACH SLAB: Special (25' long)
SUPERELEVATION: Variable sta. 950+81.50 to end of bridge (Ramp A lane only)
WEARING COURSE: 1¼" L.C.M. Overlay

PROPOSED STRUCTURE
TYPE: Continuous plate girders with reinforced concrete deck and substructure
SPANS: 68' - 97' - 101'-6 1/2 " - 81'- 2 3/4 " c/c bearings
ROADWAY: 30' f/f curbs for structure CD 34' f/f curbs for left structure 33' f/f curbs for right structure with 3' concrete median barrier between left and right structures
LOADING: CF-2000 (57)
ALIGNMENT: Mainline on tangent Ramp A on vertical curve lt.
SKEW: Rear abutment, piers 1 & 2 21°30'50" rt. Pier 3 31°57'25" Forward abutment 38°55'18" rt. fwd.
APPROACH SLAB: Special (25' long)
SUPERELEVATION: Variable sta. 950+81.50 to end of bridge (Ramp A lane only)
WEARING COURSE: 1½" Micro-Silica Modified Concrete Overlay

PLAN

WORK REQUIRED:

1. Remove existing aluminum rail.
2. Remove existing wearing course.
3. Place new 1 1/2" Micro-Silica concrete overlay.
4. Patch concrete as directed by the plan and Engineer.
5. Apply epoxy sealer as per plan.
6. Install top mounted thrie beam.
7. Extend scuppers.
8. Clean and paint all structural steel.

For details on item 517 - Top Mounted Thrie Beam Railing see Std. Dwg. TBR-91 dated 4-24-92

STATE OF OHIO
DEPARTMENT OF TRANSPORTATION
DISTRICT 11 BRIDGE DEPARTMENT

7 / 10

SFN 1502298 (CD)
SFN 1502379 (Left)
SFN 1502328 (Right)

GENERAL PLAN

Br. No. COL-30-3500CD L&R
Over SR 7 & Conrail RR

DESIGNED	CADD	CHECKED	REVIEWED	DATE	REVISED
JAS	JAS	WRG	LMW	10-23-92	

FHWA REGION	STATE	PROJECT		
5	OHIO			

75/77

COL-30-32.19

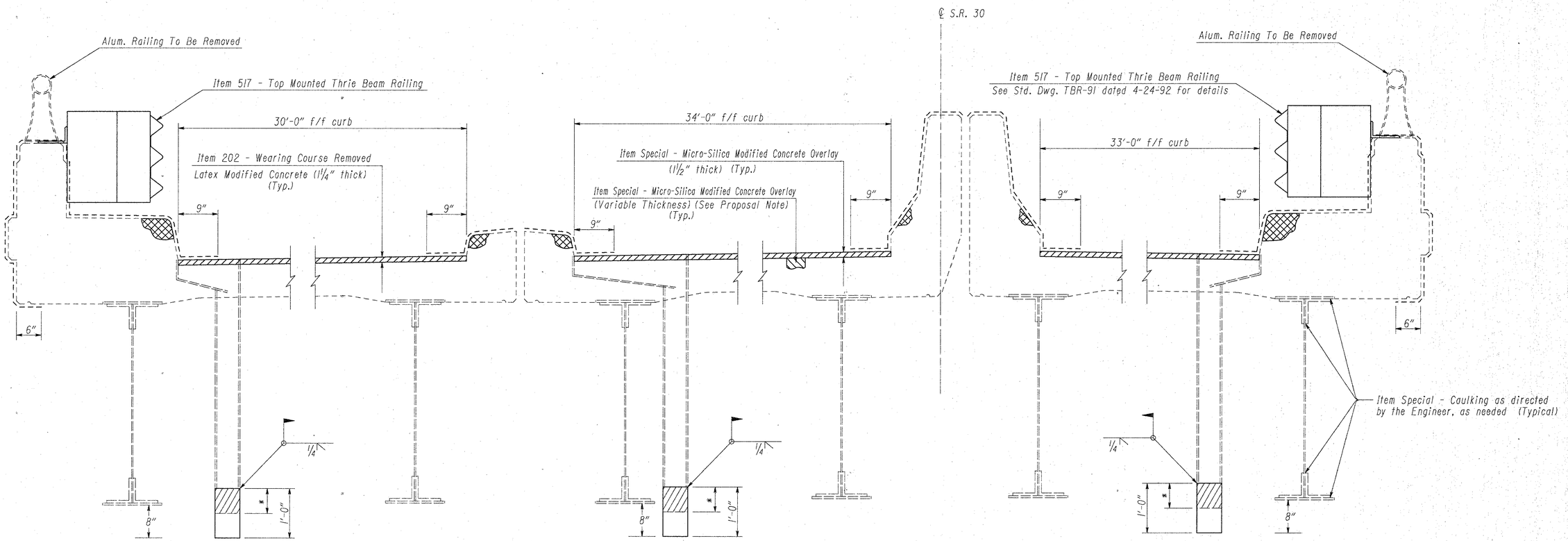

COL-30-3500CD

COL-30-3500L

COL 30-3500R

Item 519 - Patching Concrete Structure

Item Special - Sealing of Concrete Surfaces (Epoxy)
(See Proposal Note)

TYPICAL SECTION

(Br. No. COL-30-3500CD, L&R)

* The Contractor shall remove a minimum of 6" of the bottom of each scupper downspout, unless otherwise directed by the Engineer

STATE OF OHIO
DEPARTMENT OF TRANSPORTATION
DISTRICT 11 BRIDGE DEPARTMENT

8/10

BRIDGE DETAILS

Br. No. COL-30-3500CD, L&R
over S.R. 7 and Conrail R.R.

DESIGNED	CADD	CHECKED	REVIEWED	DATE	REVISED
JAS	JAS	WRG	LMW	10-23-92	

FHWA REGION	STATE	PROJECT	
5	OHIO		

76
77

COL-30-32.19

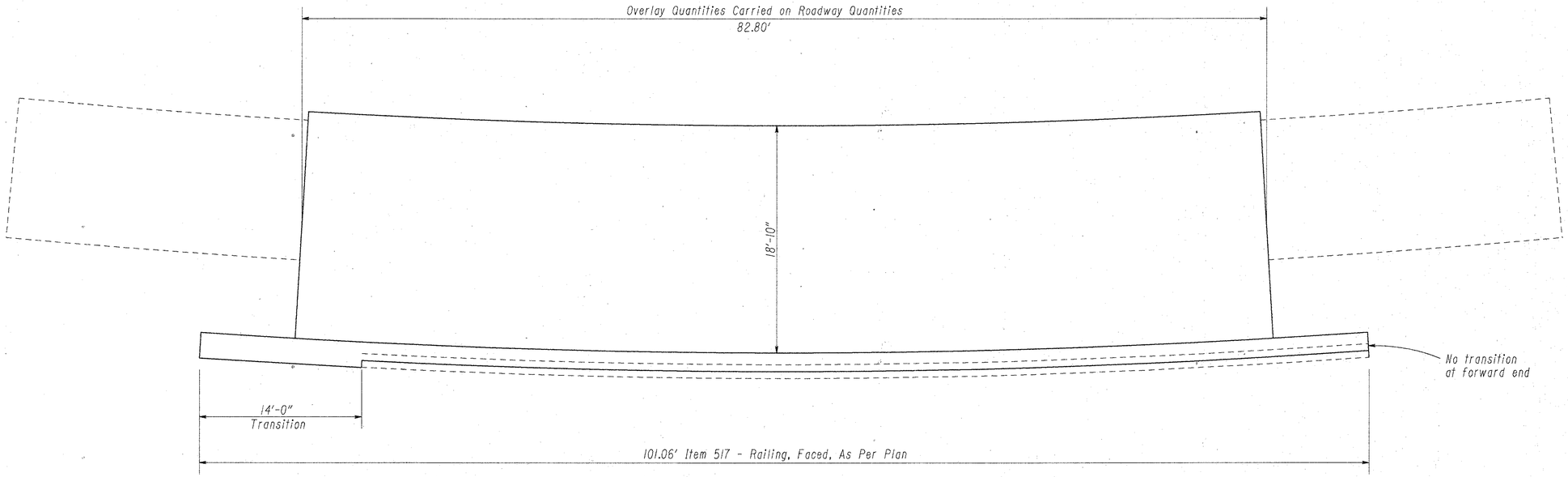

PLAN

EXISTING STRUCTURE
TYPE: Reinforced concrete slab on stub abutments(supported on all four sides)
SPANS: 76' clear (On survey ℄)
ROADWAY: Partial roadway width 20' edge of pavement to face of parapet including 14" curb
LOADING: CF-2000 (57)
ALIGNMENT: 8°30" curve lt. and spiral
SKEW: End walls radial
APPROACH SLAB: AS-1-54 (25'-0" long) ends Special (12' long) left side
SUPERELEVATION: variable
WEARING COURSE: 3" Asphalt Concrete Wearing Surface

PROPOSED STRUCTURE
TYPE: Reinforced concrete slab on stub abutments(supported on all four sides)
SPANS: 76' clear (On survey ℄)
ROADWAY: Partial roadway width 20' edge of pavement to face of parapet including 14" curb
LOADING: CF-2000 (57)
ALIGNMENT: 8°30" curve lt. and spiral
SKEW: End walls radial
APPROACH SLAB: AS-1-54 (25'-0" long) ends Special (12' long) left side
SUPERELEVATION: variable
WEARING COURSE: 4¼" Asphalt Concrete Wearing Surface

WORK REQUIRED:

1. Remove existing aluminum rail and portions of curb and parapet on the right side.
2. Face railing as per plan.
3. Remove existing wearing course. (Included under Roadway Items)
4. Patch concrete bridge deck.
5. Place Type D waterproofing
6. Place new 4¼" Asphalt concrete overlay. (Included under Roadway Items)
7. Apply epoxy sealer as per plan.

Quantities for existing deck overlay removal and new deck overlay on Br. No. COL-30-3526 will be carried on the Roadway Quantities.

STATE OF OHIO
DEPARTMENT OF TRANSPORTATION
DISTRICT 11 BRIDGE DEPARTMENT

9 / 10

SFN 1502409

GENERAL PLAN

Br. No. COL-30-3526
Over Side Hill

DESIGNED	CADD	CHECKED	REVIEWED	DATE	REVISED
JAS	JAS	WRG	LMW	10-23-92	

FHWA REGION	STATE	PROJECT	
5	OHIO		

77/77

COL-30-32.19

REINFORCING STEEL LIST

MARK	NUMBER LEFT	NUMBER RIGHT	NUMBER TOTAL	LENGTH	WEIGHT	TYPE	DIMENSIONS A	B	C	D	E	R
	BRIDGE NO. COL-30-3269											
SE501	69	69	138	3'-0"	432	20	2'-5"	8½"	1¼"			
SE502	87	87	174	2'-0"	363	3	9"	1'-0"	9"			
SE503	69	69	138	0'-8¾"	105	St.						
SE504	15	15	30	30'-0"	939	St.						
SE505	5	5	10	23'-1½"	241	St.						
SE506	8	8	16	13'-8"	228	St.						
SE507	6	6	12	13'-10"	173	19	10'-0"	2'-5½"	1'-4"	1½"	5"	
SE508	20	20	40	2'-5½"	103	ST.						
SE509	20	20	40	2'-9"	115	1	1'-9"	1'-1¼"				
SE510	2	2	4	1'-4"	6	1	8½"	9"				
	BRIDGE NO. COL-30-3526											
SE511	–	58	58	3'-3"	197	20	2'-8"	8½"	1¼"			
SE512	–	67	67	2'-3"	157	3	1'-0"	1'-0"	9"			
SE513	–	58	58	11¾"	59	St.						
SE514	–	15	15	30'-0"	469	St.						
SE515	–	5	5	3'-7"	19	St.						
SE516	–	4	4	13'-8"	57	St.						
SE517	–	3	3	13'-10"	43	19	10'-0"	2'-5½"	1'-4"	1½"	5"	
SE518	–	10	10	2'-8½"	28							
SE519	–	10	10	3'-0"	31	1	2'-0"	1'-1¼"				
SE520	–	1	1	1'-7"	2	1	11½"	9"				

NOTE: All reinforcing steel shall be epoxy coated.

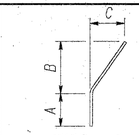

TYPE – 3

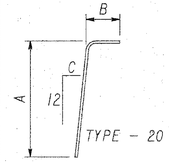

TYPE – 20

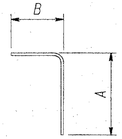

TYPE – 1

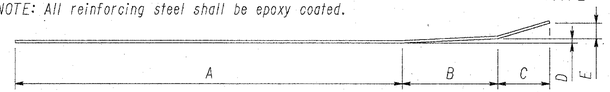

TYPE – 19

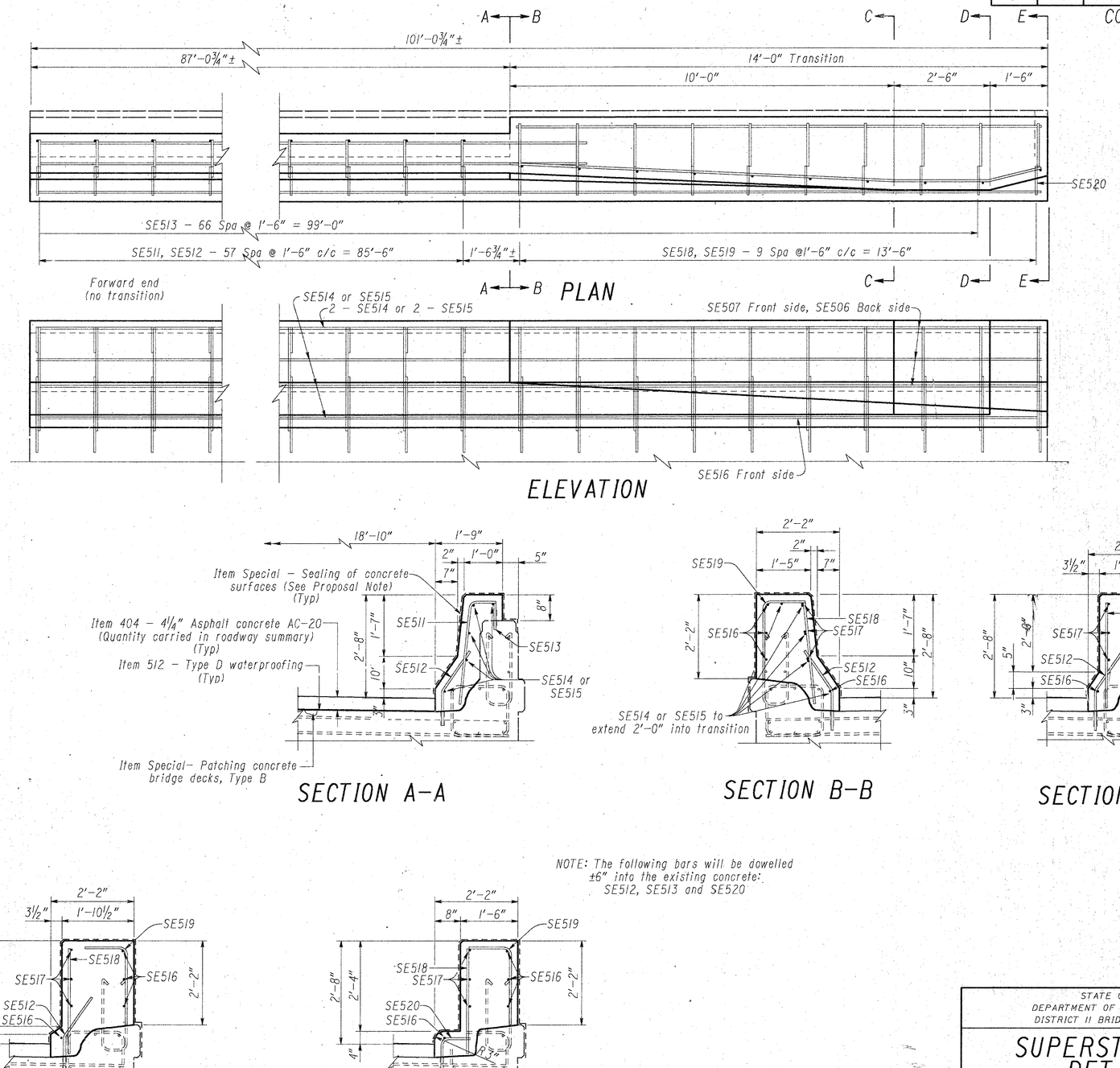

PLAN

ELEVATION

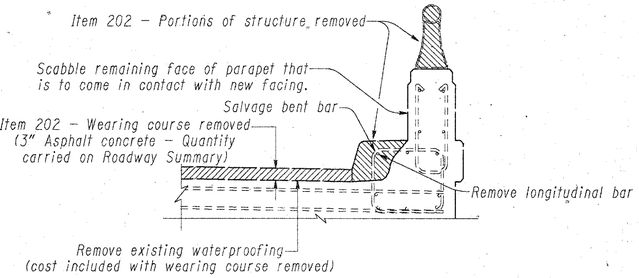

REMOVAL
AT SECTION A-A

SECTION A-A

SECTION B-B

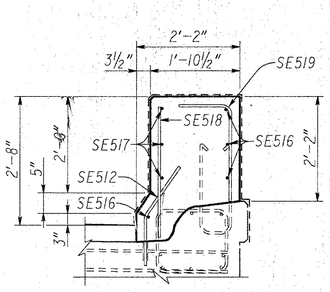

SECTION C-C

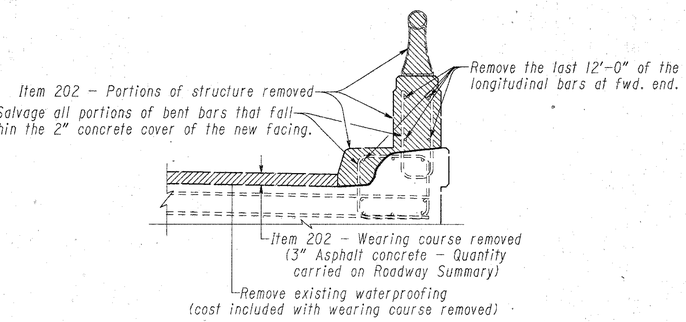

REMOVAL
AT SECTIONS B-B, C-C D-D & E-E

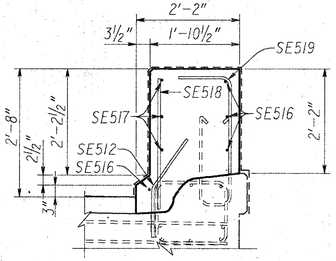

SECTION D-D

NOTE: The following bars will be dowelled ±6" into the existing concrete: SE512, SE513 and SE520

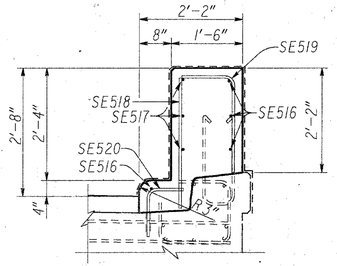

SECTION E-E

STATE OF OHIO
DEPARTMENT OF TRANSPORTATION
DISTRICT 11 BRIDGE DEPARTMENT

10 / 10

SUPERSTRUCTURE DETAILS

BRIDGE NO. COL-30-3526
OVER SIDE HILL

DESIGNED	CADD	CHECKED	REVIEWED	DATE	REVISED
WRG	WRG	JLO	LMW	10/23/92	