FINAL TRACINGS

REVISION RECORD:		
NO.	DATE	DESCRIPTION
1	11/1/22	MEDIAN CURB REMOVAL

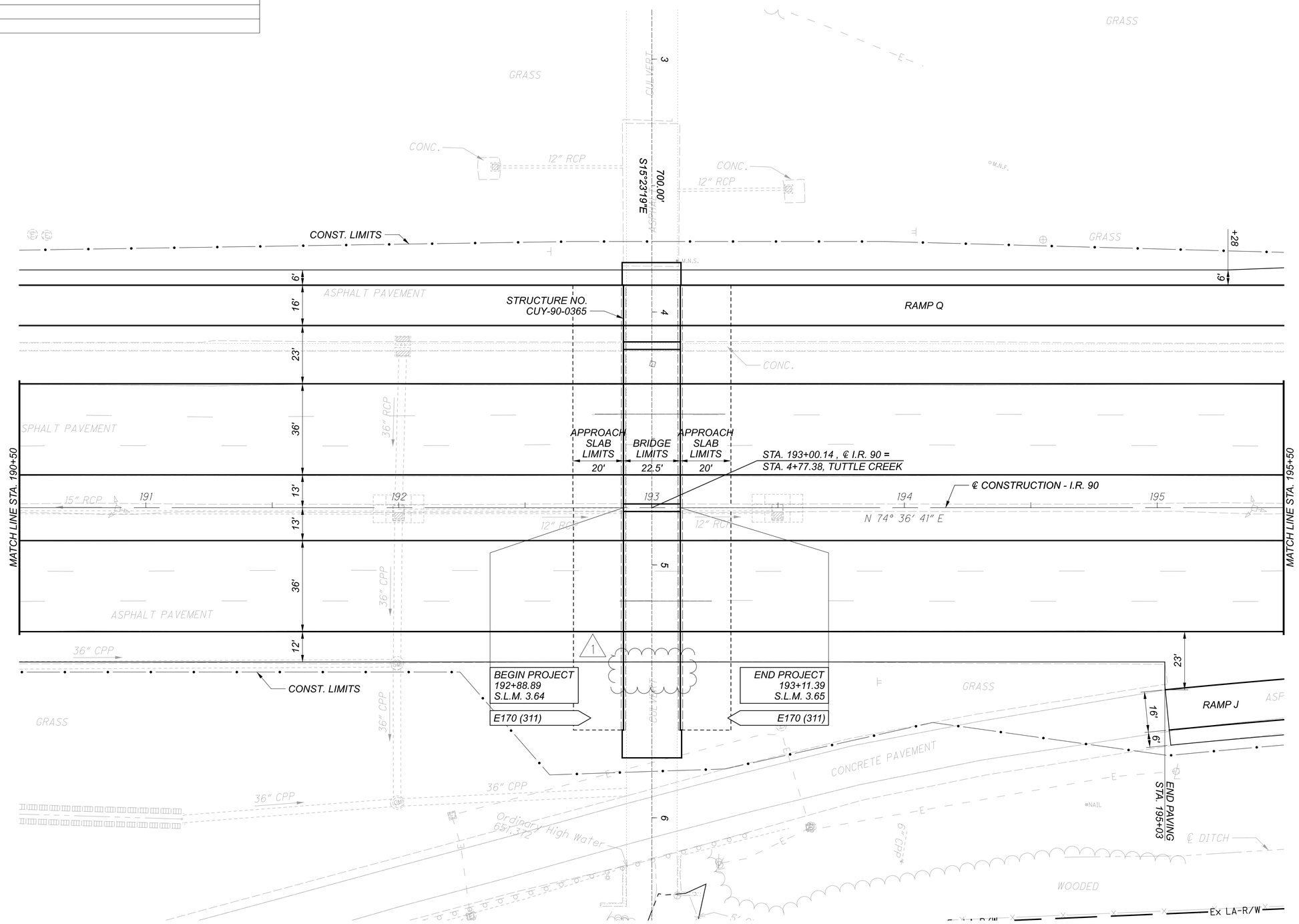

HORIZONTAL SCALE IN FEET
0 10 20 40

PLAN - I.R. 90
STA 190+50 TO STA 195+50

DESIGN AGENCY
PARSONS

DESIGNER
GF

REVIEWER
FR 01/15/21

PROJECT ID
102435

SHEET P.64 TOTAL 97

CUY-90-3.65

MODEL: Design PAPERSIZE: 34x22 (in.) DATE: 11/1/2022 TIME: 2:07:12 PM USER: p0003240
pw:\\VANVA01PWINT01.Parsons.com:Ohio State\Documents\CUY-90-3.65\99-Workset\102435\400-Engineering\Roadway\Sheets\102435_GP006.dgn

REVISION RECORD:		
NO.	DATE	DESCRIPTION
1	11/1/22	MEDIAN CURB REMOVAL

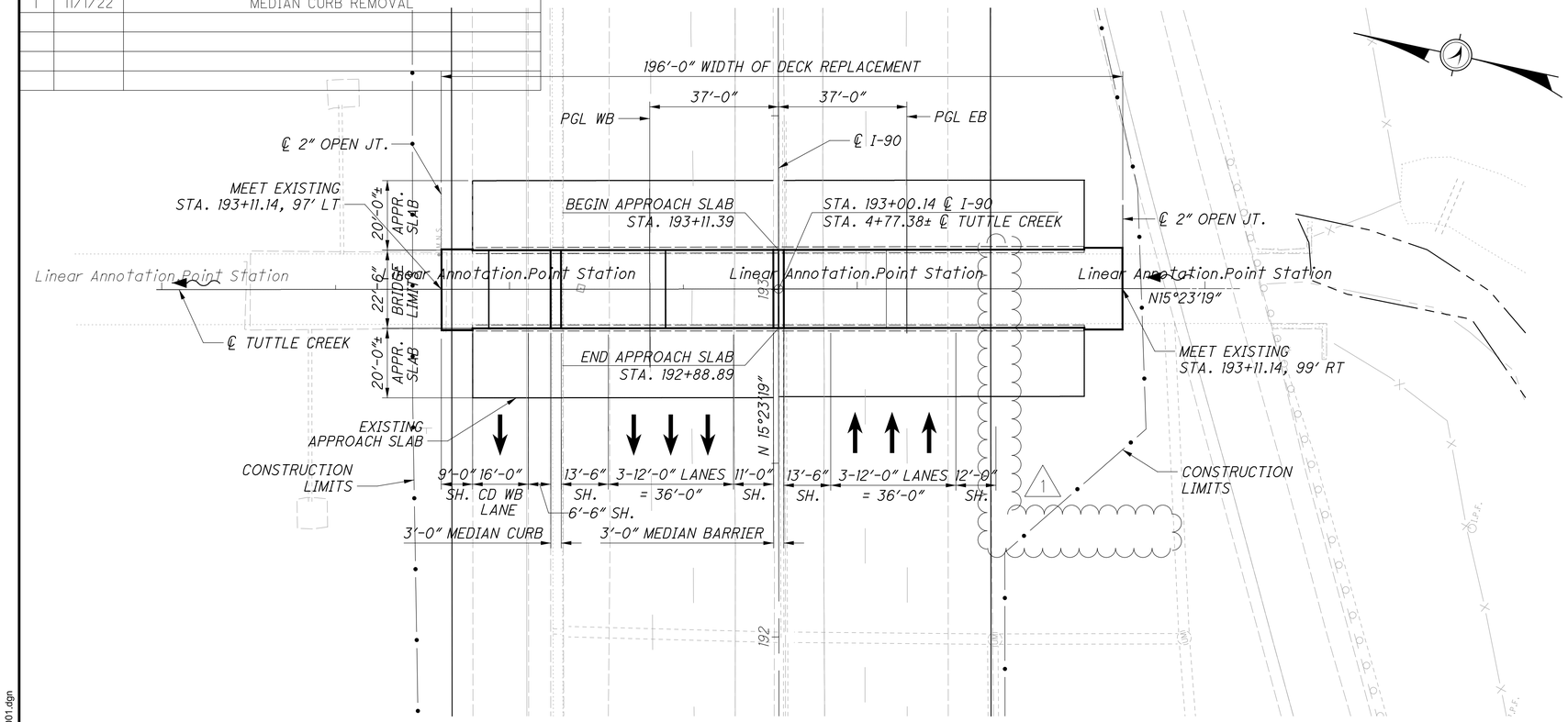

PLAN

NOTE:

SEE SHEET 2/19 FOR PHASE CONSTRUCTION DIMENSIONS.

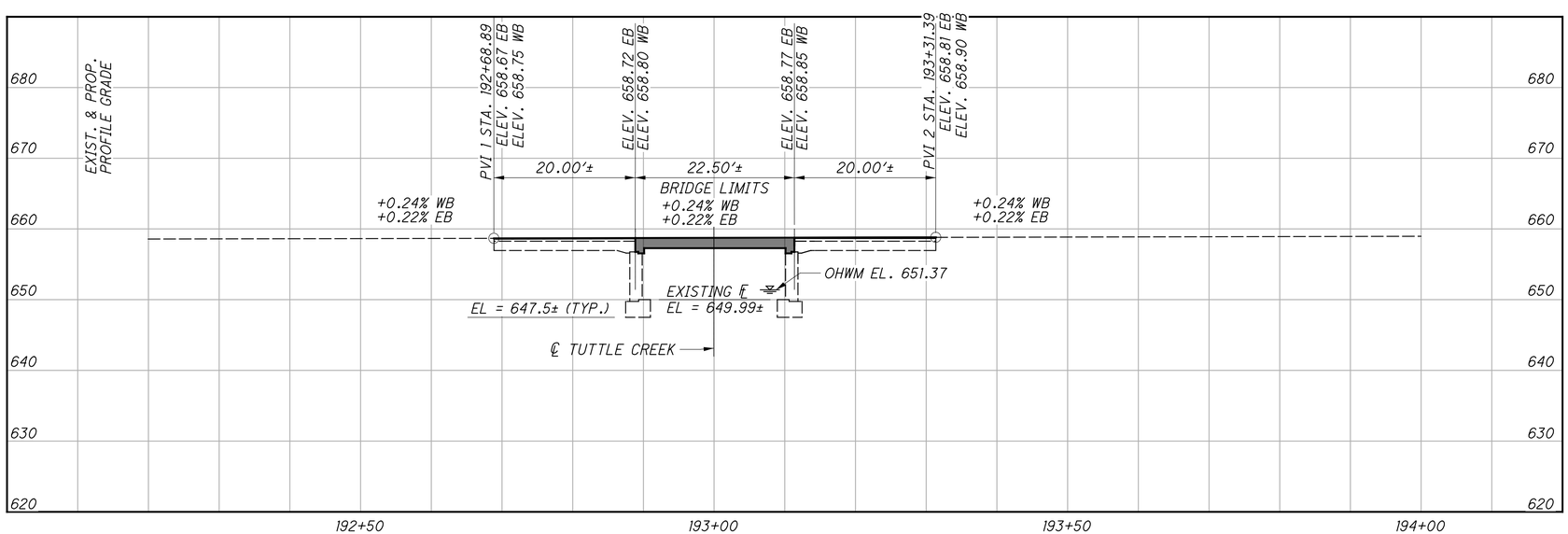

PROFILE

BENCHMARK DATA

BM -20001 STA. 193+10.24 ELEV. 656.06 OFFSET 153.3 RT

FOR ADDITIONAL BENCHMARK INFORMATION. SEE ROADWAY PLAN SHEET 4/97

NOTES

EARTHWORK LIMITS SHOWN ARE APPROXIMATE. ACTUAL SLOPES SHALL CONFORM TO PLAN CROSS SECTIONS.

DESIGN TRAFFIC:

2020 ADT = 95.192 2020 ADTT = 7,615
2040 ADT = 101,999 2040 ADTT = 8,160
DIRECTIONAL DISTRIBUTION = 53%

HYDRAULIC DATA

DRAINAGE AREA = 1.25 SQ. MILES
Q (50) = 489 CFS V (50) = 4.5 FT/S
Q (100) = 637 CFS V (100) = 5.9 FT/S
STRUCTURE CLEARS THE 100 YEAR
DESIGN HW BY 0.0 FEET.

EXISTING STRUCTURE

TYPE: SINGLE SPAN REINFORCED CONCRETE SLAB WITH REINFORCED CONCRETE ABUTMENTS

SPANS: 20'-0" ± F/F ABUTMENTS
ROADWAY: VARIES F/F SAFETY CURB
LOADING: HS-20-44 AND ALTERNATE MILITARY LOADING
SKEW: NONE
WEARING SURFACE: 3¼ " ASPHALT CONCRETE ON 3½" MSMC OVERLAY
APPROACH SLABS: 20" LONG (AS-I-81)
ALIGNMENT: TANGENT
CROWN: NONE
STRUCTURAL FILE NUMBER: 1807633
DATE BUILT: 1975
DISPOSITION: PARTIAL DECK REPLACEMENT

PROPOSED STRUCTURE

TYPE: SINGLE SPAN REINFORCED CONCRETE SLAB WITH REINFORCED CONCRETE ABUTMENTS

SPANS: 20'-0" ± F/F ABUTMENTS
ROADWAY: VARIES TOE/TOE PARAPET
LOADING: HL-93 AND 60 PSF FUTURE WEARING SURFACE
SKEW: NONE
WEARING SURFACE: 1" MONOLITHIC CONCRETE
APPROACH SLABS: 20" LONG (AS-I-81)
ALIGNMENT: TANGENT
CROWN: VARIES FT/FT
COORDINATES: LATITUDE 41° 28' 22.45"
LONGITUDE 81° 54' 00.14"

SITE PLAN
CUY-90-3.65
OVER TUTTLE CREEK

SFN	
1807633	
DESIGN AGENCY	
PARSONS	
DESIGNER	CHECKER
RWB	JLW
REVIEWER	
TES 11-25-20	
PROJECT ID	
102435	
SUBSET	TOTAL
1	19
SHEET	TOTAL
P.79	97

CUY-90-3.65

MODEL: Sheet PAPERSIZE: 34x22 (in.) DATE: 11/1/2022 TIME: 3:38:51 PM USER: p000324G
pw:\\VANVA01PWINT01.Parsons.com:Ohio State\Documents\CUY-90-3.65\99-Workset\102435\400-Engineering\Structures\Sheets\102435_SFN1807633_SP001.dgn

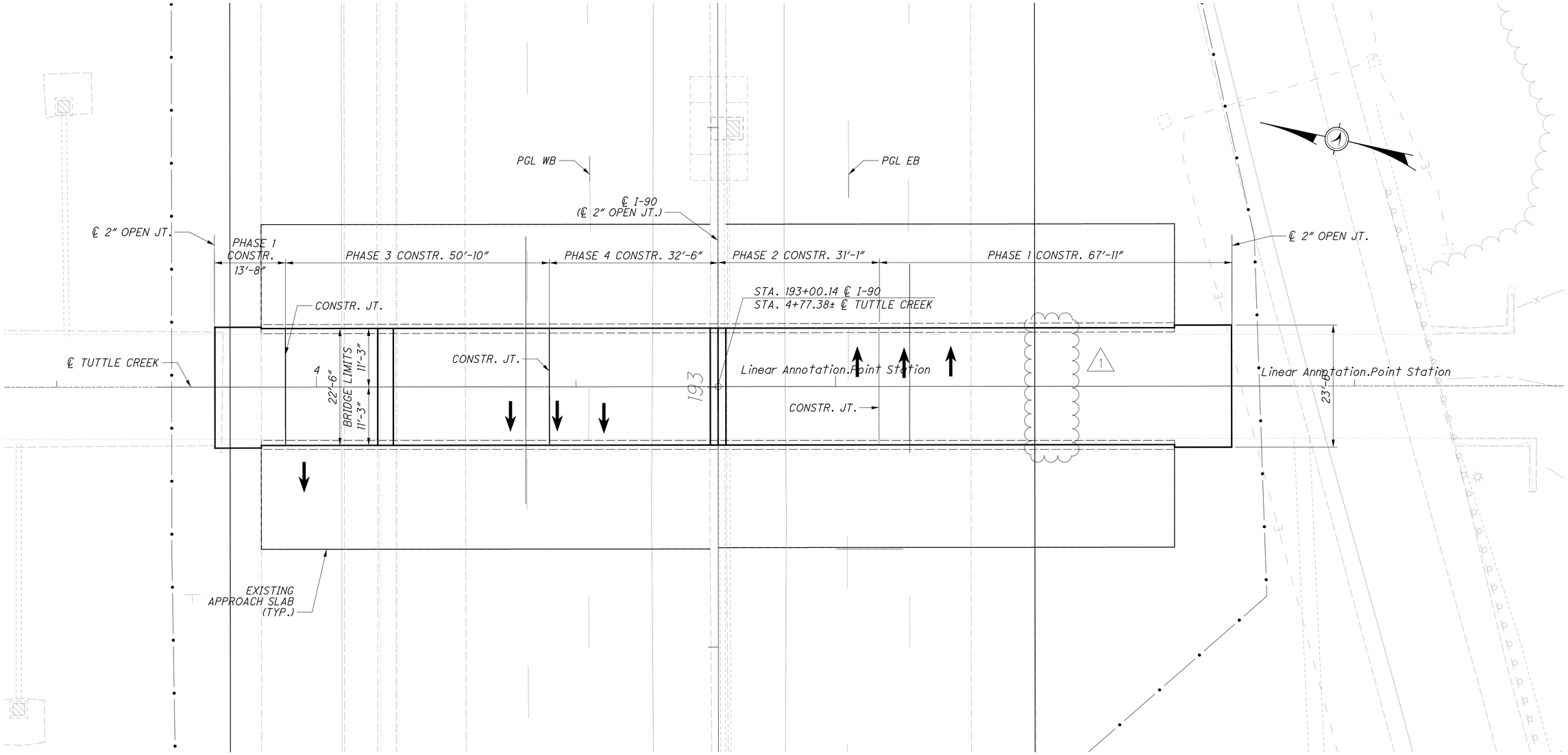

GENERAL PLAN

REVISION RECORD:		
NO.	DATE	DESCRIPTION
1	11/1/22	MEDIAN CURB REMOVAL

GENERAL PLAN
CUY-90-3.65
OVER TUTTLE CREEK

SFN 1807633

DESIGN AGENCY
PARSONS

DESIGNER	CHECKER
RWB	JLW

REVIEWER
TES 11-25-20

PROJECT ID
102435

SUBSET	TOTAL
2	19

SHEET	TOTAL
P.80	97

CUY-90-3.65

MODEL: Sheet PAPERSIZE: 34x22 (in.) DATE: 11/1/2022 TIME: 4:05:37 PM USER: p000324G
pw:\\VANVA01PWINT01.Parsons.com:Ohio State\Documents\CUY-90-3.65\99-Workset\102435\400-Engineering\Structures\Sheets\102435_SFN1807633_SG001.dgn

ESTIMATED QUANTITIES (01/NHS/BR)

ITEM	EXTENSION	TOTAL	UNIT	DESCRIPTION	ABUT.	SUPER.	GEN.	SEE SHEET
202	11203	LS		PORTIONS OF STRUCTURE REMOVED, OVER 20 FOOT SPAN, AS PER PLAN			1	3/19
202	23500	492	SY	WEARING COURSE REMOVED		492		
509	10000	41126	LB	EPOXY COATED REINFORCING STEEL		41070		
511	33414	6	CY	CLASS QC2 CONCRETE WITH QC/QA, SUPERSTRUCTURE (PARAPET)		6		
511	53014	262	CY	CLASS QC3 CONCRETE, MISC.: WITH QC/QA, BRIDGE DECK, AS PER PLAN		261	1	3/19
512	10050	45	SY	SEALING OF CONCRETE SURFACES (NON-EPOXY)		36		
516	13600	14	SF	1" PREFORMED EXPANSION JOINT FILLER		14		
516	14600	22.50	FT	STRUCTURAL JOINT OR JOINT SEALER, MISC.: POURED POLYURETHANE JOINT SEAL		22.50		
516	14600	22.50	FT	STRUCTURAL JOINT OR JOINT SEALER, MISC.: 5" x 5" PRECOMPRESSED BITUMEN IMPREGNATED FOAM JOINT SEAL		22.50		
519	11100	70	SF	PATCHING CONCRETE STRUCTURE	70			

REVISION RECORD:

NO.	DATE	DESCRIPTION
1	11/1/22	MEDIAN CURB REMOVAL

CUY-90-3.65

MODEL: Sheet PAPERSIZE: 34x22 (in.) DATE: 11/1/2022 TIME: 4:28:45 PM USER: p000324G
pw:\\WANVA01PWINT01.Parsons.com:Ohio State\Documents\CUY-90-3.65\99-Workset\102435\400-Engineering\Structures\Sheets\102435_SFN1807633_SQ001.dgn

ESTIMATED QUANTITIES TABLE
CUY-90-3.65
OVER TUTTLE CREEK

SFN 1807633

DESIGN AGENCY
PARSONS

DESIGNER	CHECKER
RWB	JLW

REVIEWER
TES 11-25-20

PROJECT ID 102435

SUBSET	TOTAL
4	19

SHEET	TOTAL
P.82	97

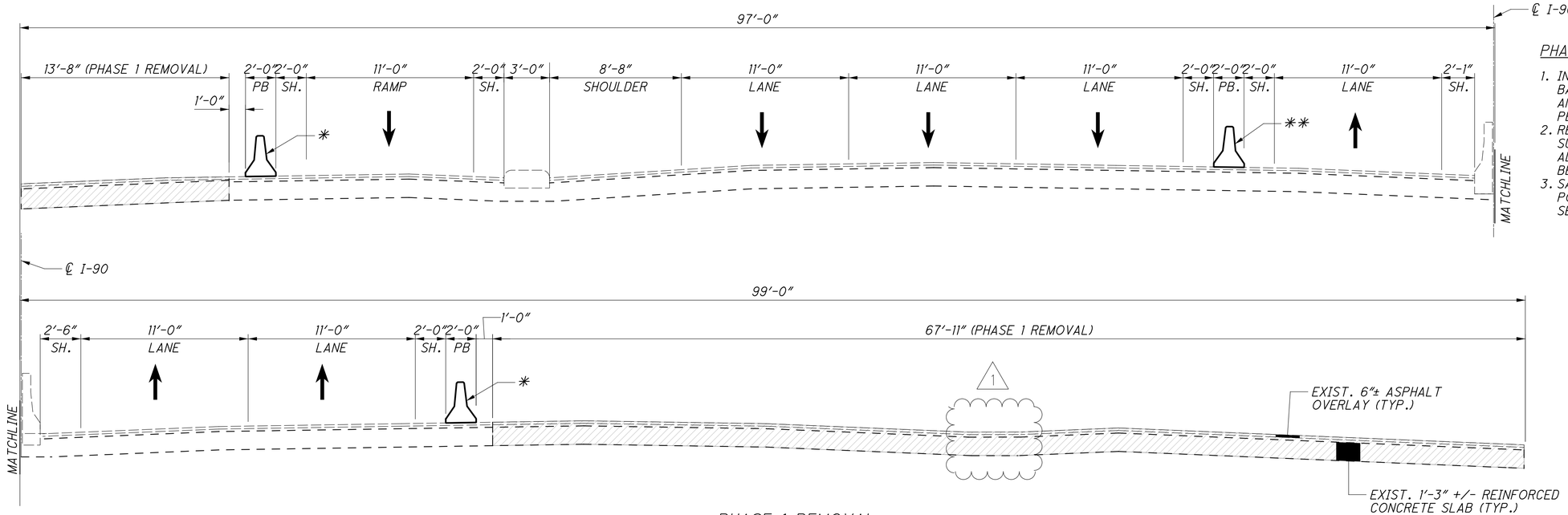

PHASE 1 REMOVAL

PHASE 1 REMOVAL:

1. INSTALL ANCHORED PORTABLE CONCRETE BARRIER AND MAINTAIN TRAFFIC FOR EB AND WB MAINLINE AND WB RAMP TRAFFIC PER THE MAINTENANCE OF TRAFFIC PLANS.
2. REMOVE 1 ½" OF ASPHALT WEARING SURFACE ON THE APPROACH SLABS ADJACENT TO THE DECK PORTIONS TO BE REMOVED.
3. SAW CUT AND REMOVE EXISTING DECK PORTIONS OF EB AND WB OUTSIDE SECTIONS.

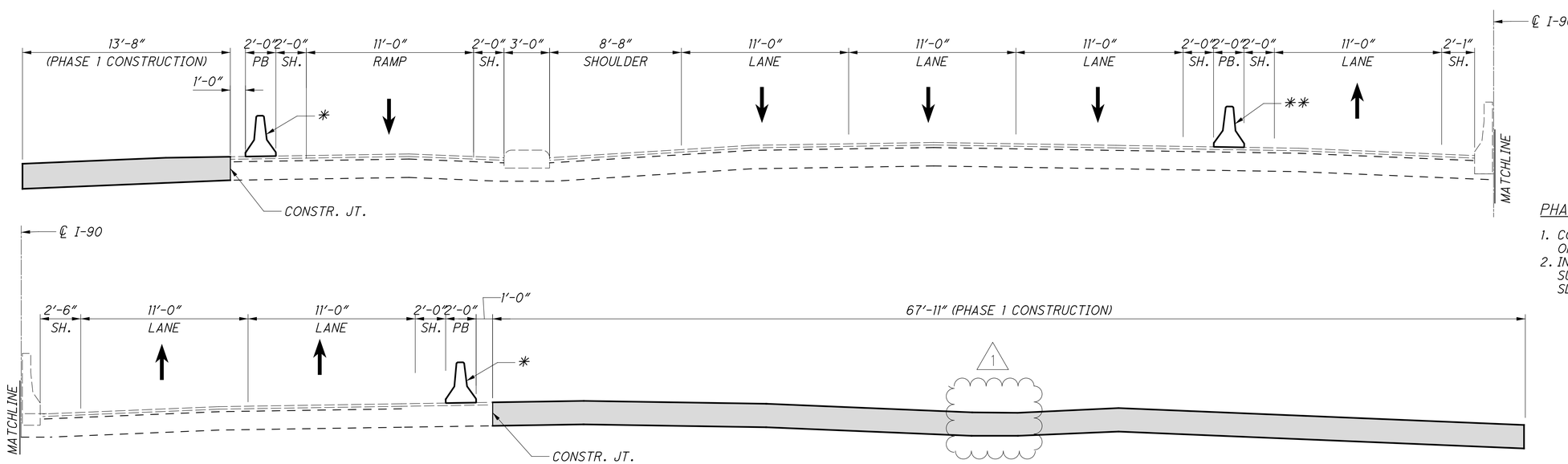

PHASE 1 CONSTRUCTION

PHASE 1 CONSTRUCTION:

1. CONSTRUCT THE EB AND WB PORTIONS OF THE PROPOSED DECK AS SHOWN.
2. INSTALL 1 ½" ASPHALT WEARING SURFACE ON THE ADJACENT APPROACH SLABS.

LEGEND:

DENOTES AREAS TO BE REMOVED PER ITEM 202 - PORTIONS OF STRUCTURE REMOVED, AS PER PLAN

DENOTES NEW CONSTRUCTION AREAS

* ANCHORED PORTABLE CONCRETE BARRIER (TYP.) (3 ANCHORS PER SEGMENT, TRAFFIC SIDE)

** UNANCHORED PORTABLE CONCRETE BARRIER

REVISION RECORD:

NO.	DATE	DESCRIPTION
1	11/1/22	MEDIAN CURB REMOVAL

PHASED CONSTRUCTION DETAILS - 1
CUY-90-3.65
OVER TUTTLE CREEK

SFN 1807633

DESIGN AGENCY
PARSONS

DESIGNER	CHECKER
RWB	JLW

REVIEWER
TES 11-25-20

PROJECT ID 102435

SUBSET	TOTAL
5	19

SHEET	TOTAL
P.83	97

CUY-90-3.65

MODEL: Sheet PAPERSIZE: 34x22 (in.) DATE: 11/1/2022 TIME: 4:47:58 PM USER: p000324G
pw:\\VANVA01PWINT01.Parsons.com:Ohio State\Documents\CUY-90-3.65\99-Workset\102435\400-Engineering\Structures\Sheets\102435_SFN1807633_SC001.dgn

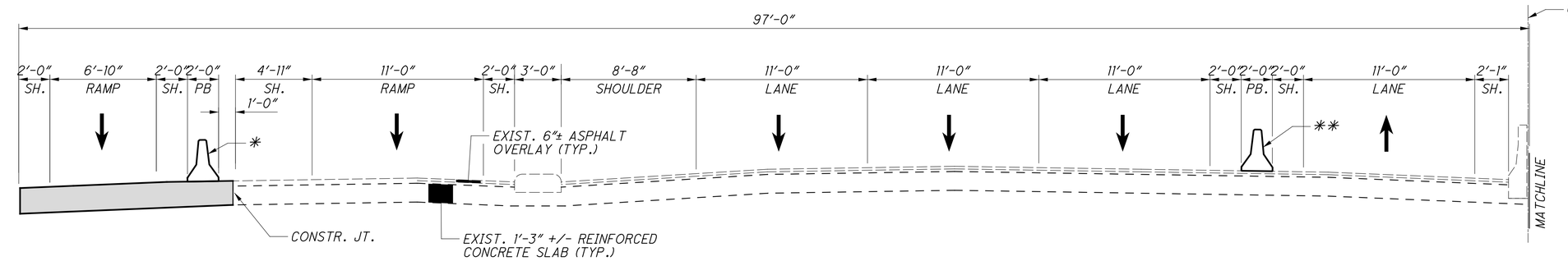

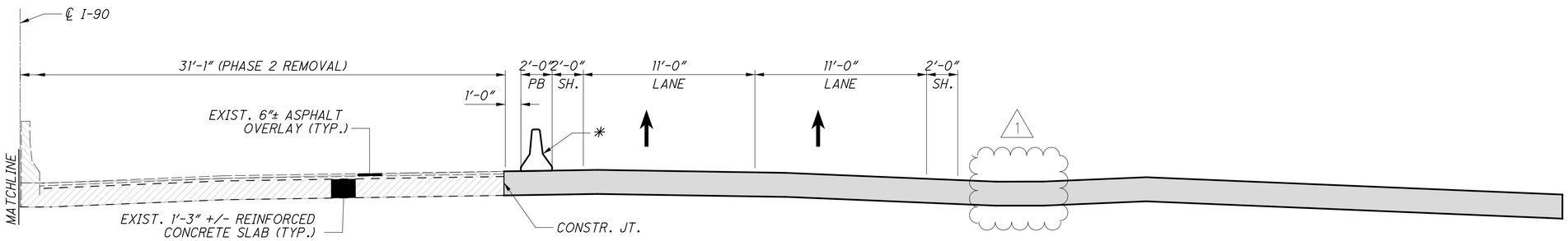

PHASE 2 REMOVAL

PHASE 2 REMOVAL:

1. RELOCATE UNANCHORED PORTABLE CONCRETE BARRIER FOR EB MAINLINE TRAFFIC AND SHIFT THE EB LANES OF TRAFFIC ON NEWLY CONSTRUCTED EB PORTION OF BRIDGE PER THE MAINTENANCE OF TRAFFIC PLANS.
2. REMOVE AND RE-INSTALL ANCHORED PORTABLE CONCRETE BARRIER ON WB RAMP AND SHIFT WB RAMP TRAFFIC ON THE NEWLY CONSTRUCTED PORTION OF BRIDGE PER THE MAINTENANCE OF TRAFFIC PLANS.
3. REMOVE 1 1/2" OF ASPHALT WEARING SURFACE ON THE APPROACH SLABS ADJACENT TO THE DECK PORTION TO BE REMOVED.
4. SAW CUT AND REMOVE EXISTING DECK PORTION OF EB SECTION AS SHOWN IN THE PLANS.

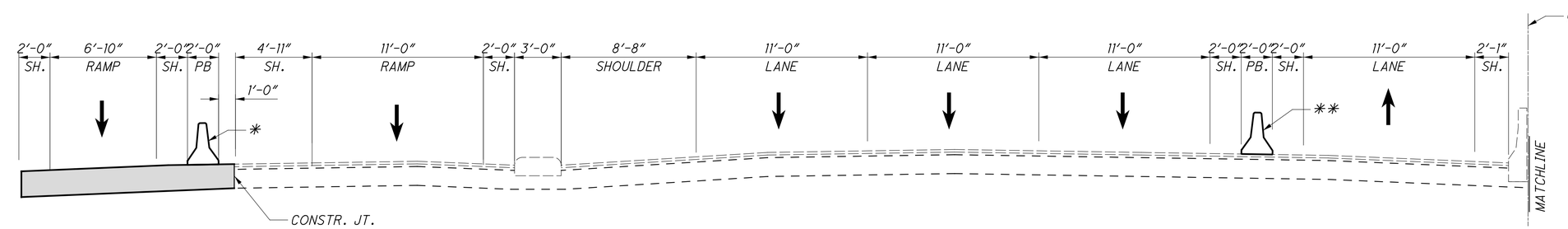

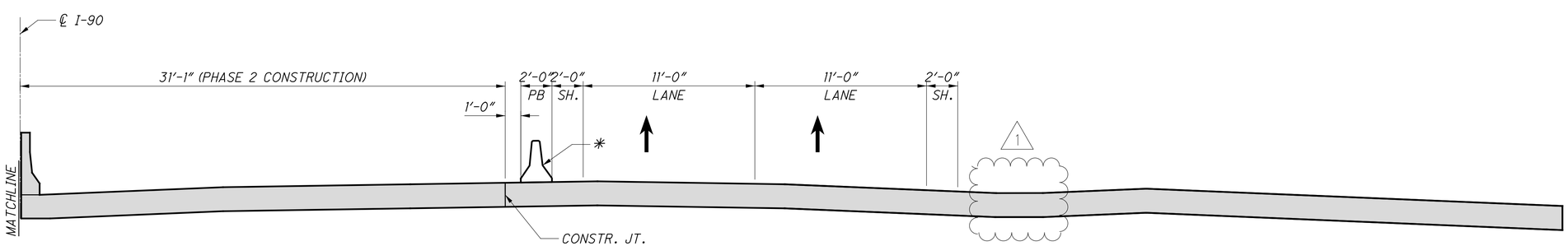

PHASE 2 CONSTRUCTION

PHASE 2 CONSTRUCTION:

1. CONSTRUCT THE REMAINING EB PORTION OF THE PROPOSED DECK AND MEDIAN BARRIER AS SHOWN.
2. INSTALL 1 1/2" ASPHALT WEARING SURFACE ON THE ADJACENT APPROACH SLABS.

LEGEND:

- DENOTES AREAS TO BE REMOVED PER ITEM 202 - PORTIONS OF STRUCTURE REMOVED, AS PER PLAN
- DENOTES NEW CONSTRUCTION AREAS
- * ANCHORED PORTABLE CONCRETE BARRIER (TYP.) (3 ANCHORS PER SEGMENT, TRAFFIC SIDE)
- ** UNANCHORED PORTABLE CONCRETE BARRIER

REVISION RECORD:

NO.	DATE	DESCRIPTION
1	11/1/22	MEDIAN CURB REMOVAL

PHASED CONSTRUCTION DETAILS - 2
CUY-90-3.65
OVER TUTTLE CREEK

SFN 1807633
DESIGN AGENCY
PARSONS

DESIGNER	CHECKER
RWB	JLW

REVIEWER TES 11-25-20
PROJECT ID 102435
SUBSET 6 TOTAL 19
SHEET P.84 TOTAL 97

CUY-90-3.65

MODEL: Sheet PAPERSIZE: 34x22 (in.) DATE: 11/1/2022 TIME: 5:00:58 PM USER: p000324G
pw:\\VANVA01PWINT01.Parsons.com:Ohio State\Documents\CUY-90-3.65\99-Workset\102435\400-Engineering\Structures\Sheets\102435_SFN1807633_SC002.dgn

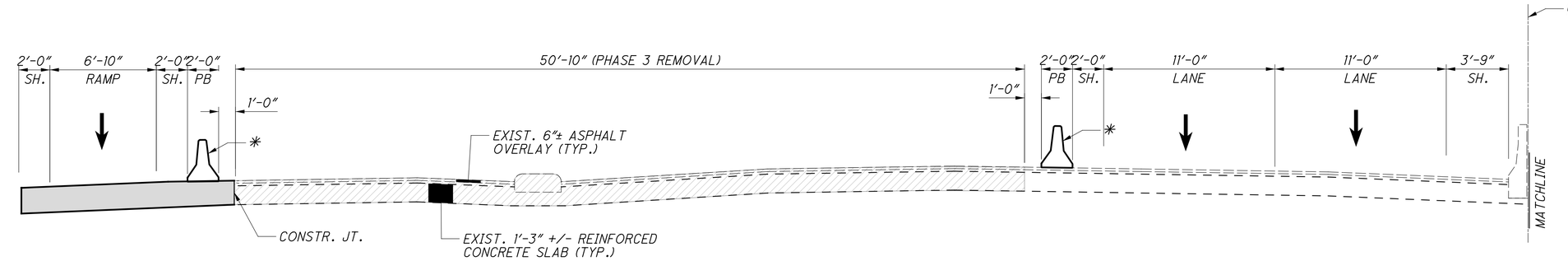

PHASE 3 REMOVAL:

1. REMOVE AND RE-INSTALL ANCHORED PORTABLE CONCRETE BARRIERS FOR EB AND WB MAINLINE TRAFFIC AND MAINTAIN TRAFFIC PER THE MAINTENANCE OF TRAFFIC PLANS.
2. REMOVE 1 ½" OF ASPHALT WEARING SURFACE ON THE APPROACH SLABS ADJACENT TO THE DECK PORTION TO BE REMOVED.
3. SAW CUT AND REMOVE EXISTING DECK PORTION OF WB SECTION AS SHOWN IN THE PLANS.

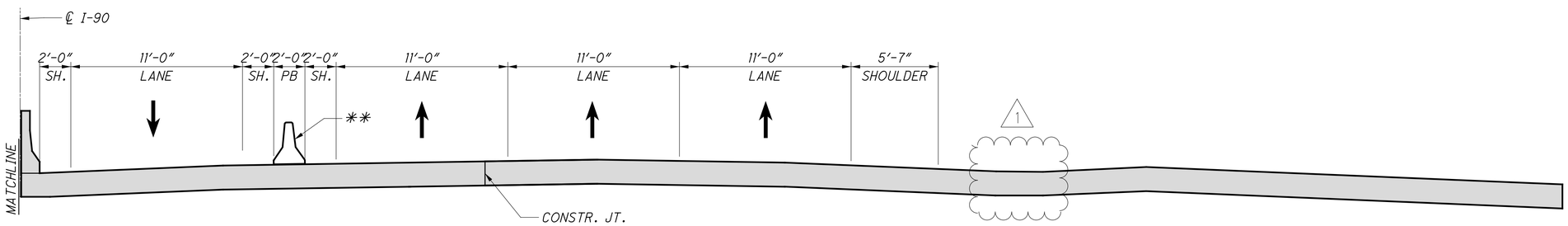

PHASE 3 REMOVAL

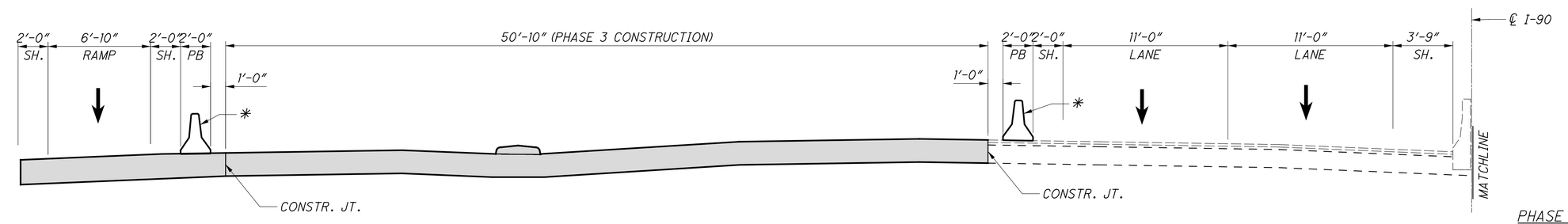

PHASE 3 CONSTRUCTION:

1. CONSTRUCT THE WB PORTION OF THE PROPOSED DECK AS SHOWN.
2. INSTALL 1 ½" ASPHALT WEARING SURFACE ON THE ADJACENT APPROACH SLABS.

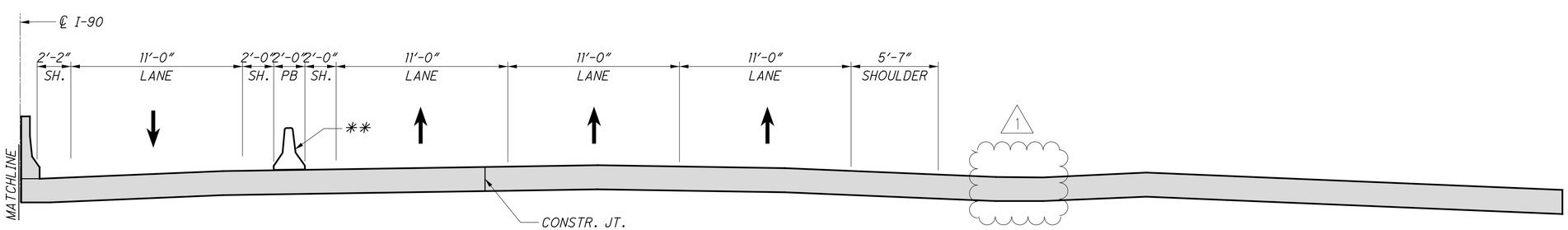

PHASE 3 CONSTRUCTION

LEGEND:

- DENOTES AREAS TO BE REMOVED PER ITEM 202 - PORTIONS OF STRUCTURE REMOVED, AS PER PLAN
- DENOTES NEW CONSTRUCTION AREAS
- * ANCHORED PORTABLE CONCRETE BARRIER (TYP.) (3 ANCHORS PER SEGMENT, TRAFFIC SIDE)
- ** UNANCHORED PORTABLE CONCRETE BARRIER

REVISION RECORD:

NO.	DATE	DESCRIPTION
1	11/1/22	MEDIAN CURB REMOVAL

PHASED CONSTRUCTION DETAILS - 3
CUY-90-3.65
OVER TUTTLE CREEK

SFN 1807633
DESIGN AGENCY PARSONS
DESIGNER RWB | CHECKER JLW
REVIEWER TES 11-25-20
PROJECT ID 102435
SUBSET 7 | TOTAL 19
SHEET P.85 | TOTAL 97

CUY-90-3.65

MODEL: Sheet PAPERSIZE: 34x22 (in.) DATE: 11/1/2022 TIME: 5:14:18 PM USER: p000324G
pw:\\VANVA01PWINT01.Parsons.com:Ohio State\Documents\CUY-90-3.65\99-Workset\102435\400-Engineering\Structures\Sheets\102435_SFN1807633_SC003.dgn

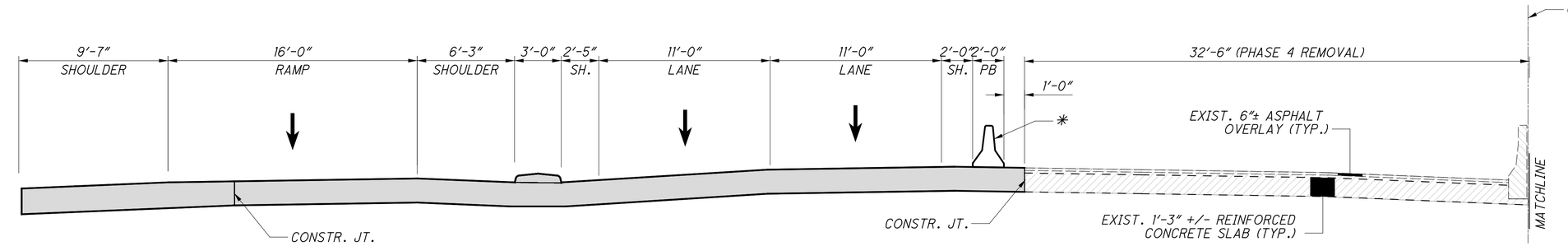

PHASE 4 REMOVAL:

1. REMOVE ANCHORED PORTABLE CONCRETE BARRIER FROM WB RAMP AND SHIFT WB RAMP TRAFFIC PER THE MAINTENANCE OF TRAFFIC PLANS.
2. REMOVE AND RE-INSTALL ANCHORED PORTABLE CONCRETE BARRIER ON WB SIDE AND SHIFT THE TWO WB LANES OF TRAFFIC ON THE NEWLY CONSTRUCTED PORTION OF BRIDGE PER THE MAINTENANCE OF TRAFFIC PLANS.
3. REMOVE 1 ½" OF ASPHALT WEARING SURFACE ON THE APPROACH SLABS ADJACENT TO THE DECK PORTION TO BE REMOVED.
4. SAW CUT AND REMOVE EXISTING DECK PORTION OF WB SECTION AS SHOWN IN THE PLANS.

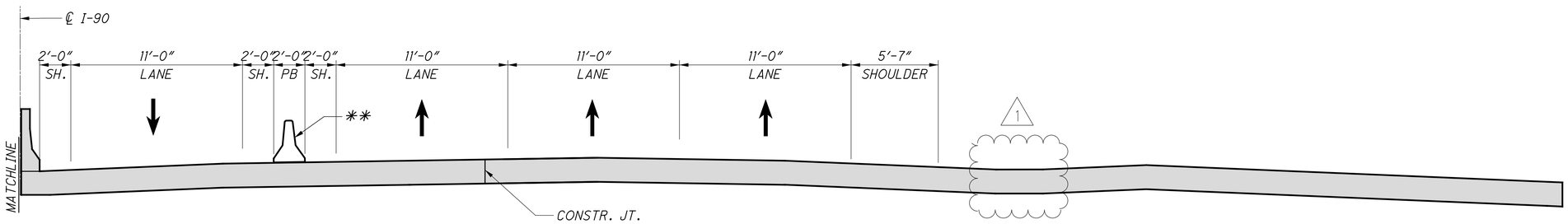

PHASE 4 REMOVAL

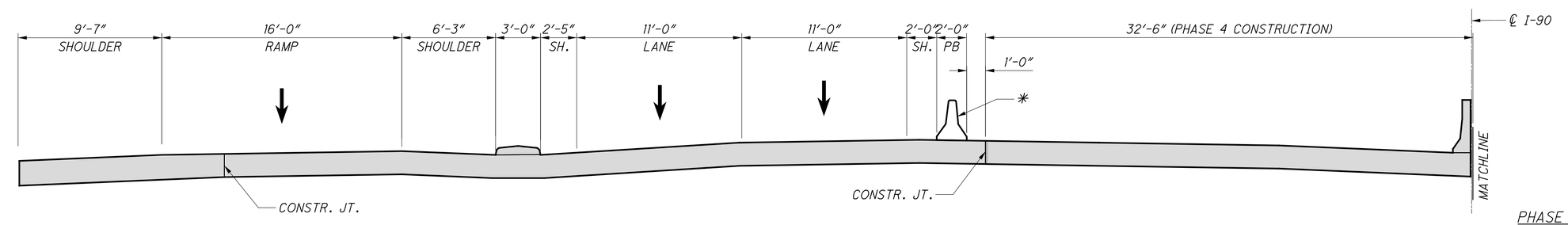

PHASE 4 CONSTRUCTION:

1. CONSTRUCT THE REMAINING WB PORTION OF THE PROPOSED DECK AND MEDIAN BARRIER AS SHOWN.
2. INSTALL 1 ½" ASPHALT WEARING SURFACE ON THE ADJACENT APPROACH SLABS.
3. REMOVE PORTABLE CONCRETE BARRIERS AND SHIFT EB AND WB MAINLINE TRAFFIC TO ORIGINAL LANE CONFIGURATION.

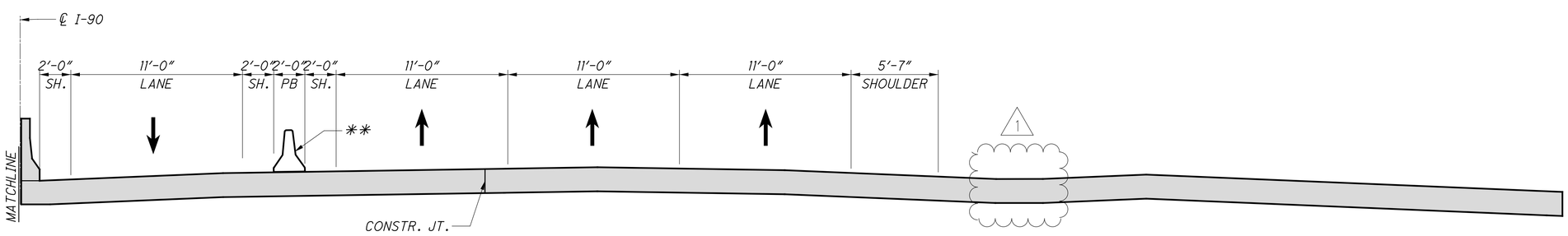

PHASE 4 CONSTRUCTION

LEGEND:

- DENOTES AREAS TO BE REMOVED PER ITEM 202 - PORTIONS OF STRUCTURE REMOVED, AS PER PLAN
- DENOTES NEW CONSTRUCTION AREAS
- * ANCHORED PORTABLE CONCRETE BARRIER (TYP.) (3 ANCHORS PER SEGMENT, TRAFFIC SIDE)
- ** UNANCHORED PORTABLE CONCRETE BARRIER

REVISION RECORD:

NO.	DATE	DESCRIPTION
1	11/1/22	MEDIAN CURB REMOVAL

PHASED CONSTRUCTION DETAILS - 4
CUY-90-3.65
OVER TUTTLE CREEK

SFN 1807633
DESIGN AGENCY PARSONS
DESIGNER RWB | CHECKER JLW
REVIEWER TES 11-25-20
PROJECT ID 102435
SUBSET 8 | TOTAL 19
SHEET P.86 | TOTAL 97

CUY-90-3.65

MODEL: Sheet PAPERSIZE: 34x22 (in.) DATE: 11/1/2022 TIME: 5:24:31 PM USER: p000324G
pw:\\VANVA01PWINT01.Parsons.com:Ohio State\Documents\CUY-90-3.65\99-Workset\102435\400-Engineering\Structures\Sheets\102435_SFN1807633_SC004.dgn

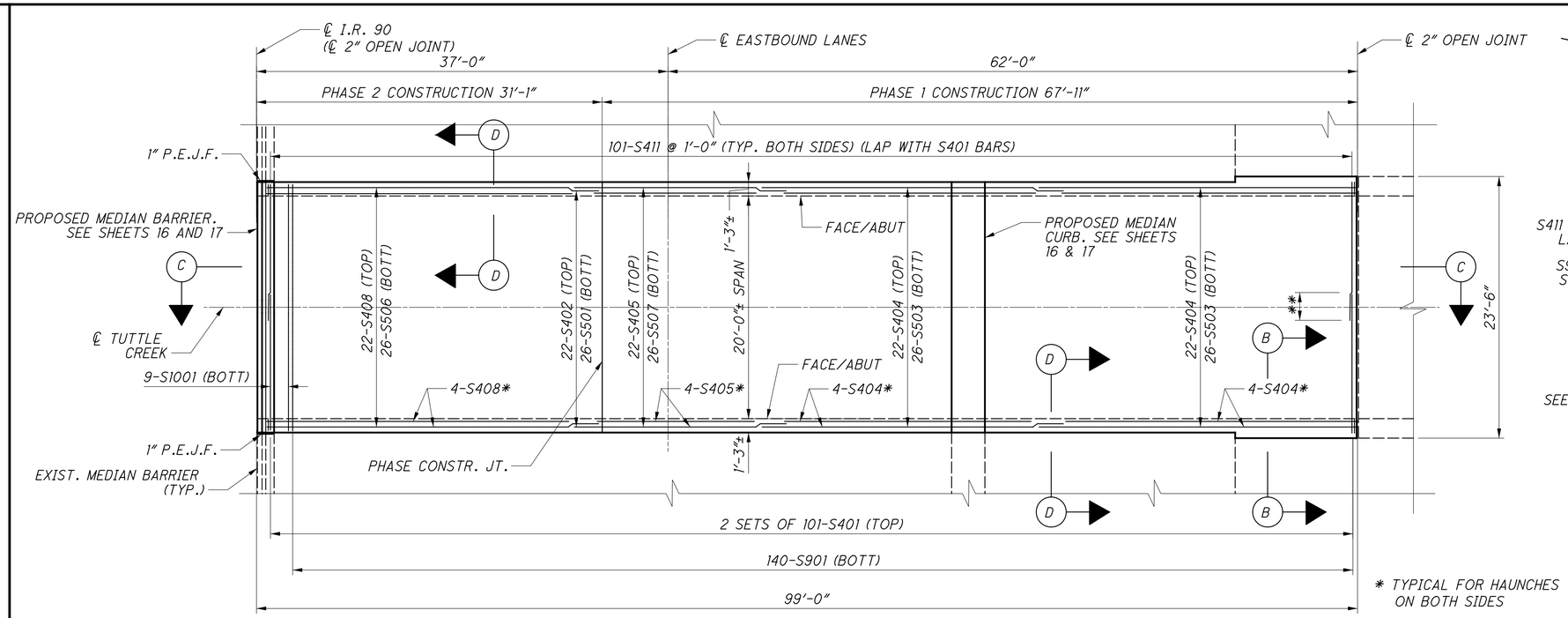

PLAN

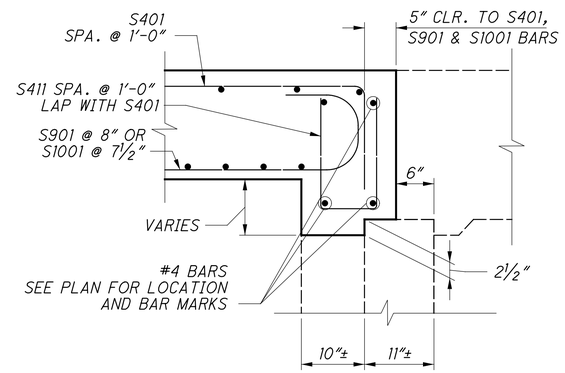

SECTION D-D

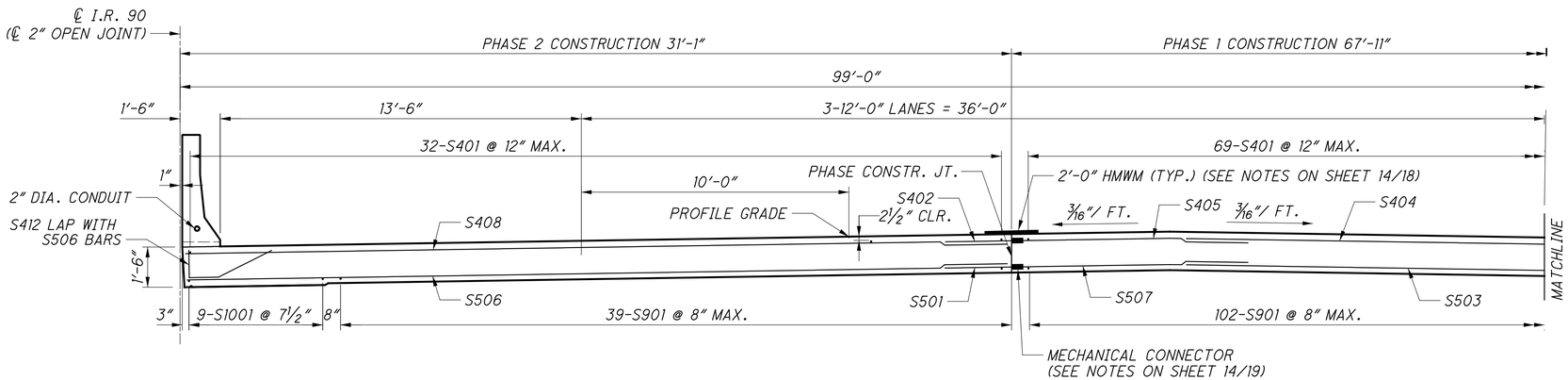

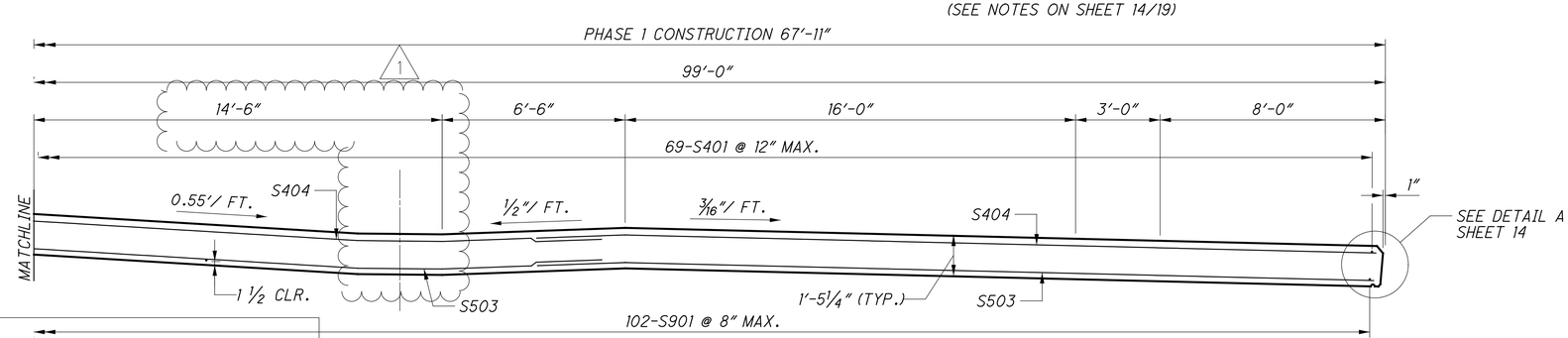

SECTION C-C

LOOKING STATION AHEAD

REQUIRED MIN. LAP LENGTHS (U.O.N.)	
NO. 4 BARS	2'-6"
NO. 5 BARS	2'-5"

NOTE:

SEE SHEET 14/19 FOR SECTION B-B AND DETAIL A.

REVISION RECORD:

NO.	DATE	DESCRIPTION
1	11/1/22	MEDIAN CURB REMOVAL

SUPERSTRUCTURE PLAN AND TRANSVERSE SECTION - 2
CUY-90-3.65
OVER TUTTLE CREEK

SFN 1807633

DESIGN AGENCY PARSONS

DESIGNER	CHECKER
RWB	JLW

REVIEWER TES 11-25-20

PROJECT ID 102435

SUBSET	TOTAL
15	19

SHEET	TOTAL
P.93	97

CUY-90-3.65

MODEL: Sheet PAPERSIZE: 34x22 (in.) DATE: 11/1/2022 TIME: 5:42:56 PM USER: p0003246
pw:\\WANVA01PWINT01.Parsons.com:Ohio State\Documents\CUY-90-3.65\99-Workset\102435\400-Engineering\Structures\Sheets\102435_SFN1807633_ST002.dgn

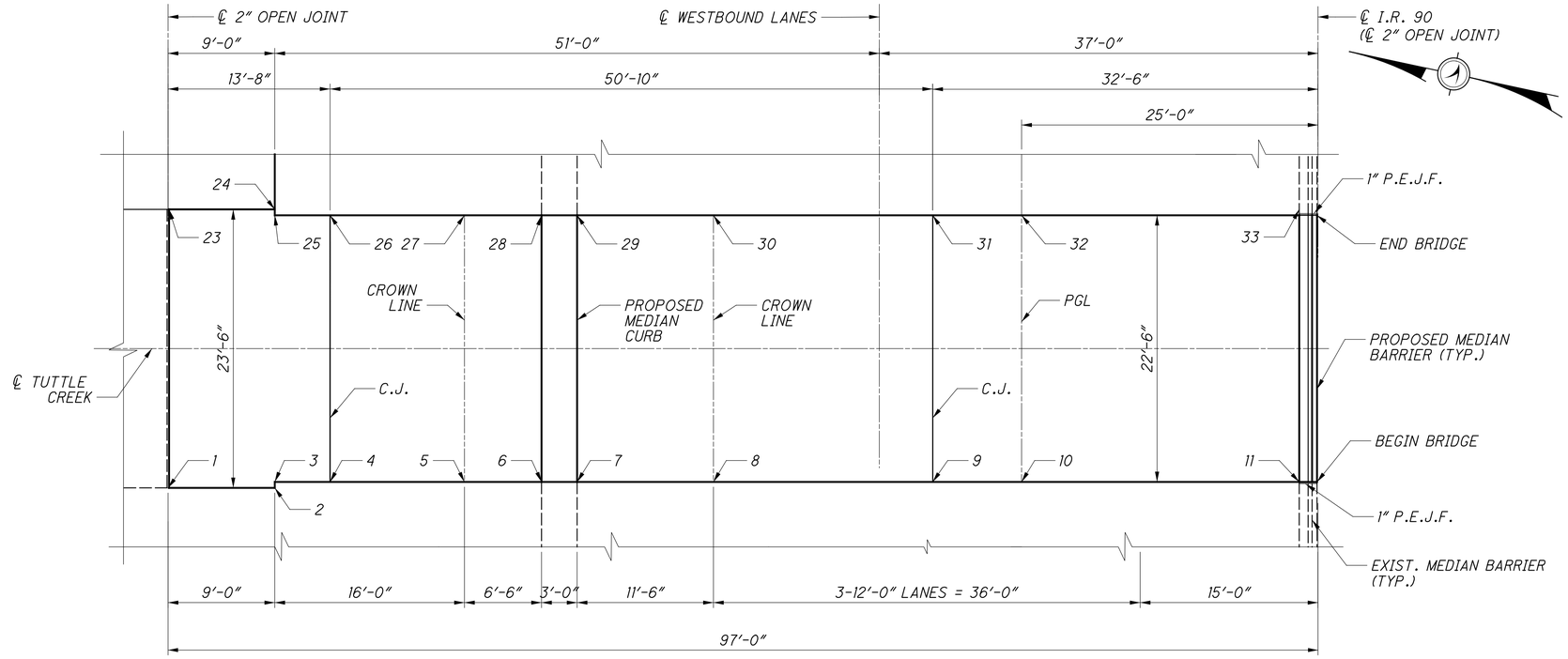

PLAN

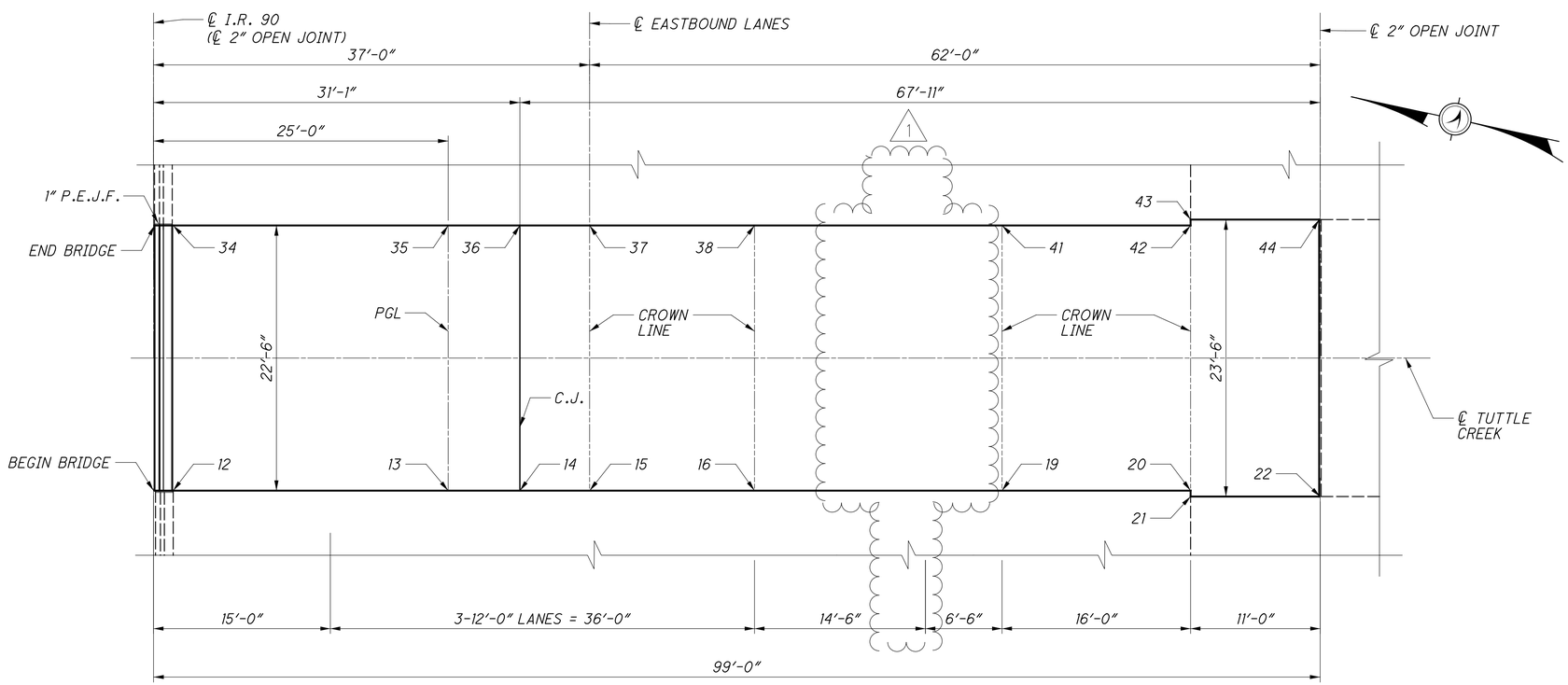

PLAN

FINAL DECK SURFACE ELEVATIONS			
BEGIN BRIDGE PTS.		END BRIDGE PTS.	
Pt.	Elev.	Pt.	Elev.
1	657.63	23	657.56
2	657.77	24	657.79
3	657.77	25	657.79
4	657.87	26	657.90
5	658.11	27	658.14
6	658.23	28	658.25
7	658.68	29	658.70
8	658.63	30	658.66
9	658.86	31	658.91
10	658.79	32	658.84
11	658.35	33	658.41
12	658.28	34	658.33
13	658.73	35	658.77
14	658.76	36	658.80
15	658.80	37	658.83
16	658.55	38	658.57
~~17~~	~~658.24~~	~~39~~	~~658.24~~
~~18~~	~~658.16~~	~~40~~	~~658.17~~
19	658.00	41	658.01
20	657.60	42	657.75
21	657.60	43	657.76
22	658.00	44	658.13

1

REVISION RECORD:

NO.	DATE	DESCRIPTION
1	11/1/22	MEDIAN CURB REMOVAL

FINAL DECK SURFACE ELEVATIONS
CUY-90-3.65
OVER TUTTLE CREEK

SFN 1807633
DESIGN AGENCY
PARSONS

DESIGNER	CHECKER
RWB	JLW

REVIEWER TES 11-25-20
PROJECT ID 102435
SUBSET 18 TOTAL 19
SHEET P.96 TOTAL 97

CUY-90-3.65

MODEL: Sheet PAPERSIZE: 34x22 (in.) DATE: 11/1/2022 TIME: 6:06:36 PM USER: p00032 4G
pw:\\VANVA01PWINT01.Parsons.com:Ohio State\Documents\CUY-90-3.65\99-Workset\102435\00-Engineering\Structures\Sheets\102435_SFN1807633_SD001.dgn

	MARK	NUMBER TOTAL	LENGTH	WEIGHT	TYPE	DIMENSIONS A	B	C	D	E	R	INC
	MEDIAN BARRIER											
	R501	10	22'-4"	233	STR							
	R502	46	8'-1"	388	100							
	R601	46	3'-6"	242	14	0'-10 1/2"	1'-2 1/2"	0'-8 1/2"	0'-6"	0'-9"		
	R602	46	2'-9"	190	1	0'-11"	2'-0"					
			SUBTOTAL	1053								
	SUPERSTRUCTURE											
	S401	398	14'-0"	3722	1	1'-8"	12'-5"					
**	S402	78	3'-0"	156	STR							
*	S403	30	13'-5"	269	STR							
	S404	90	30'-0"	1804	STR							
*	S405	30	12'-7"	252	STR							
*	S406	30	30'-0"	601	STR							
	S407	30	32'-2"	645	STR							
	S408	30	30'-9"	616	STR							
	S409	15	2'-3"	23	1	0'-9"	1'-7"					
	S410	2	26'-0"	35	STR							
	S411	398	4'-5"	1174	2	1'-9 3/4"	0'-11"					
	S412	52	4'-0"	139	10	1'-8 3/4"	1'-0"	1'-1"	1'-0"			
**	S501	90	3'-0"	282	STR							
*	S502	26	13'-6"	366	STR							
	S503	78	30'-0"	2441	STR							
*	S504	26	23'-1"	626	STR							
	S505	26	32'-2"	872	STR							
	S506	26	30'-9"	834	STR							
*	S507	26	12'-5"	337	STR							
	S901	279	24'-2"	22925	17	21'-8"						
	S1001	18	24'-6"	1898	17	21'-8"						
			SUBTOTAL	40017								
			TOTAL WEIGHT	41070								

1

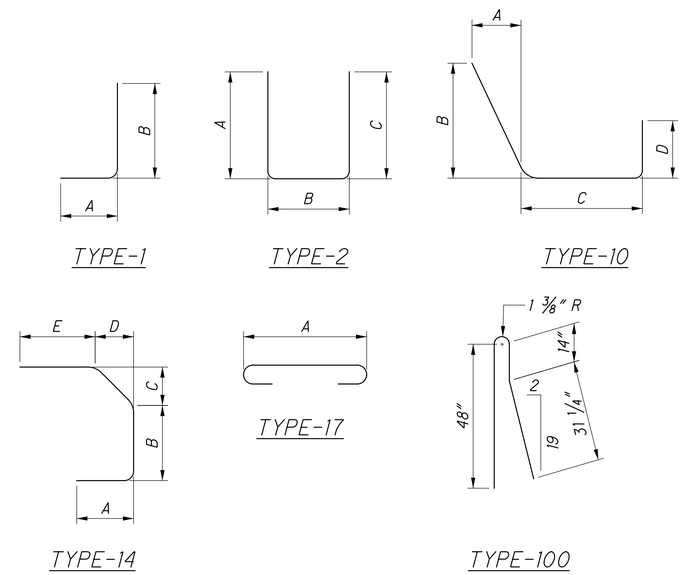

LEGEND:

* - BAR WITH MECHANICAL CONNECTOR

** - BAR WITH THREADED END

NOTES:

1. THE BAR SIZE NUMBER IS SPECIFIED ON THE PLANS IN THE BAR MARK COLUMN.
   THE FIRST DIGIT WHERE THREE DIGITS ARE USED, AND THE FIRST TWO DIGITS WHERE FOUR ARE USED INDICATES THE BAR SIZE NUMBER. FOR EXAMPLE, S601:

   S: LOCATION OF THE BAR IN THE STRUCTURE (SUPERSTRUCTURE)
   6: BAR SIZE DIMENSION NO. 6
   01: SEQUENCE NUMBER

2. BAR DIMENSIONS SHOWN ARE OUT TO OUT UNLESS OTHERWISE NOTED. STRAIGHT BARS ARE INDICATED BY "STR".

3. ALL REINFORCING IS TO BE EPOXY COATED.

REVISION RECORD:

NO.	DATE	DESCRIPTION
1	11/1/22	MEDIAN CURB REMOVAL

REINFORCING STEEL LIST
CUY-90-3.65
OVER TUTTLE CREEK

SFN 1807633
DESIGN AGENCY
PARSONS

DESIGNER	CHECKER
RWB	JLW

REVIEWER TES 11-25-20
PROJECT ID 102435
SUBSET 19 TOTAL 19
SHEET P.97 TOTAL 97

CUY-90-3.65

MODEL: Sheet PAPERSIZE: 34x22 (in.) DATE: 11/1/2022 TIME: 6:21:30 PM USER: p000324G
pw:\\VANVA01PWINT01.Parsons.com:Ohio State\Documents\CUY-90-3.65\99-Workset\102435\00-Engineering\Structures\Sheets\102435_SFN1807633_SL001.dgn