STATE OF OHIO
DEPARTMENT OF TRANSPORTATION

CUY-77-00.42
CITY OF BRECKSVILLE
CUYAHOGA COUNTY
PART 1

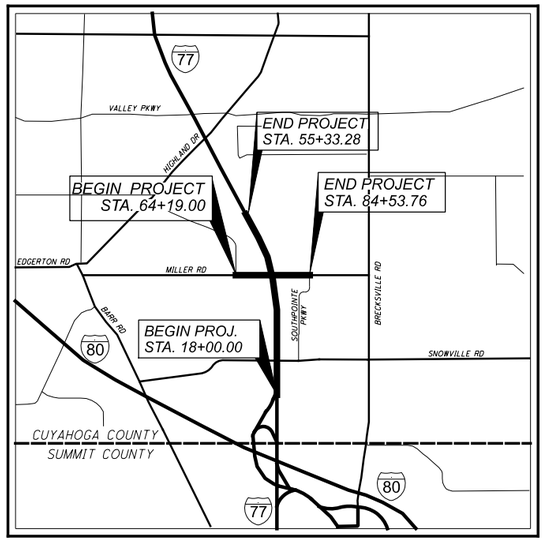

LOCATION MAP

LATITUDE: 41°17'22" N LONGITUDE: 81°38'13" W

PORTION TO BE IMPROVED
INTERSTATE HIGHWAY
FEDERAL ROUTES
STATE ROUTES
COUNTY & TOWNSHIP ROADS
OTHER ROADS

SEE SHEET P.3 FOR DESIGN DESIGNATION

INDEX OF SHEETS:

TITLE SHEET	P.1	SUPERELEVATION TABLE	P.200
SCHEMATIC PLAN	P.2	TERMINAL DETAILS	P.201 - P.203
DESIGN DESIGNATIONS	P.3	INTERSECTION DETAILS	P.204 - P.209
TYPICAL SECTIONS	P.4 - P.16	DRIVE APRON DETAIL	P.210
GENERAL NOTES	P.17 - P.22	WICK DRAIN DETAIL	P.211
MAINTENANCE OF TRAFFIC	P.23 - P.83	STORM SEWER PROFILES	P.212
GENERAL SUMMARY	P.84 - P.91	CULVERT DETAILS	P.213 - P.217
SUBSUMMARY	P.92 - P.94	SANITARY SEWER	P.218 - P.227
PROJECT SITE PLAN	P.95	WATER WORK	P.228 - P.270
PLAN AND PROFILE - MILLER ROAD	P.96 - P.106	SIGNING AND PAVEMENT MARKING	P.271 - P.287
PLAN AND PROFILE - SOUTHPOINTE PKWY	P.107	SIGN ELEVATIONS	P.288 - P.293
PLAN AND PROFILE - I.R. 77	P.108 - P.113	SIGNALS	P.294 - P.313
PLAN AND PROFILE - RAMP B-1	P.114 - P.117	LIGHTING	P.314- P.324
PLAN AND PROFILE - RAMP B-2	P.118 - P.119	STRUCTURES (OVER 20' SPAN)	P.325 - P.365
PLAN AND PROFILE - RAMP B-3	P.120 - P.122	FENCE PLAN	P.366 - P.368
PLAN AND PROFILE - RAMP B-4	P.123 - P.124	RIGHT OF WAY	P.369 - P.404
CROSS SECTION LAYOUT	P.125	SOIL PROFILES	P.405 - P.434
EARTHWORK SUBSUMMARY	P.126 - P.127	SHEETS NOT USED	P.397, P. 398
CROSS SECTIONS - MILLER ROAD	P.128 - P.147		
CROSS SECTIONS - SOUTHPOINTE PKWY	P.148 - P.150		
CROSS SECTIONS - I.R. 77	P.151 - P.173		
CROSS SECTIONS - RAMP B-1	P.174 - P.179		
CROSS SECTIONS - RAMP B-2	P.180 - P.187		
CROSS SECTIONS - RAMP B-3	P.188 - P.194		
CROSS SECTIONS - RAMP B-4	P.195 - P.199		

FEDERAL PROJECT NUMBER

NON-FEDERAL

RAILROAD INVOLVEMENT

NONE

PROJECT DESCRIPTION

THE PROJECT INVOLVES COMPLETING THE EXISTING PARTIAL DIAMOND INTERCHANGE AT I.R. 77 AND MILLER ROAD BY ADDING A NORTHBOUND (NB) EXIT RAMP AND A SOUTHBOUND (SB) ENTRANCE RAMP; ADDING AN AUXILIARY LANE BETWEEN NEW SB ENTRANCE RAMP AND THE I.R. 80 EXIT RAMP; WIDENING OF MILLER ROAD TO PROVIDE LEFT-TURN LANES INCLUDING STRUCTURE WIDENING; AND ADDING DUAL WESTBOUND (WB) RIGHT TURN LANES ONTO I.R. 77 NB ENTRANCE RAMP.

EARTH DISTURBED AREAS

PROJECT EARTH DISTURBED AREA:	17.52 ACRES
ESTIMATED CONTRACTOR EARTH DISTURBED AREA:	1.00 ACRES
NOTICE OF INTENT EARTH DISTURBED AREA:	18.52 ACRES

LIMITED ACCESS

THIS IMPROVEMENT IS ESPECIALLY DESIGNED FOR THROUGH TRAFFIC AND HAS BEEN DECLARED A LIMITED ACCESS HIGHWAY OR FREEWAY BY ACTION OF THE DIRECTOR IN ACCORDANCE WITH THE PROVISIONS OF SECTION 5511.02 OF THE OHIO REVISED CODE.

2019 SPECIFICATIONS

THE STANDARD SPECIFICATIONS OF THE STATE OF OHIO, DEPARTMENT OF TRANSPORTATION, INCLUDING SUPPLEMENTAL SPECIFICATIONS LISTED IN THE PLANS AND CHANGES LISTED IN THE PROPOSAL SHALL GOVERN THIS IMPROVEMENT.

I HEREBY APPROVE THESE PLANS AND DECLARE THAT THE MAKING OF THIS IMPROVEMENT WILL NOT REQUIRE THE CLOSING TO TRAFFIC OF THE HIGHWAY AND THAT PROVISIONS FOR THE MAINTENANCE AND SAFETY OF TRAFFIC WILL BE AS SET FORTH ON THE PLANS AND ESTIMATES.

APPROVED _____
DATE _____ DISTRICT DEPUTY DIRECTOR

APPROVED _____
DATE _____ DIRECTOR, DEPARTMENT OF TRANSPORTATION

DESIGN EXCEPTIONS

SHOULDER WIDTH - APPROVED 8/31/21

P.8, P.109

ADA DESIGN WAIVERS

NONE REQUIRED

UNDERGROUND UTILITIES
Contact Two Working Days Before You Dig
OHIO811.org Before You Dig
OHIO811, 8-1-1, or 1-800-362-2764
(Non members must be called directly)

PLAN PREPARED BY:
EUTHENICS
8235 Mohawk Dr. | Cleveland, OH 44136

ENGINEER'S SEAL:

SIGNED: _____
DATE: _____

ENGINEER'S SEAL:

SIGNED: _____
DATE: _____

DRAFT
STAGE 3

STANDARD CONSTRUCTION DRAWINGS

BP-1.1	07-28-00	F-3.3	07-19-13	GSD-1-19	01-15-21	HL-60.21	07-20-18	MT-102.20	04-19-19	TC-52.10	10-18-13
BP-2.1	01-21-22	F-3.4	07-19-13	PCB-91	07-17-20	HL-60.31	01-17-20	MT-102.30	10-16-15	TC-52.20	01-15-21
BP-2.2	01-15-21	MGS-1.1	07-16-21	SICD-1-21	01-21-22	ITS-60.10	01-15-21	MT-104.10	10-16-15	TC-61.30	07-19-19
BP-2.5	01-21-22	MGS-2.1	01-19-18	SICD-2-14	01-15-21	MT-95.30	07-19-19	MT-105.10	01-17-20	TC-65.10	01-17-14
BP-4.1	07-19-13	MGS-3.1	01-19-18	TVPF-1-18	07-20-18	MT-95.45	01-17-20	TC-12.31	01-21-22	TC-65.11	07-21-17
BP-5.1	01-21-22	MGS-4.1	01-20-17	VPF-1-90	07-20-18	MT-95.70	01-17-20	TC-15.116	07-16-21	TC-71.10	07-16-21
BP-6.1	07-19-13	MGS-4.2	07-19-13	HL-10.31	04-17-20	MT-97.10	04-19-19	TC-16.22	07-16-21	TC-72.20	07-20-18
BP-7.1	01-21-22	MH-3	07-16-21	HL-20.11	01-15-21	MT-98.22	01-17-20	TC-21.11	07-16-21	TC-73.20	01-17-20
BP-9.1	01-18-19	RM-1.1	01-15-21	HL-20.21	01-15-21	MT-98.29	01-17-20	TC-21.21	07-16-21	TC-74.10	01-21-22
CB-5	07-16-21	RM-3.1	07-20-18	HL-30.11	01-15-21	MT-99.20	04-19-19	TC-22.10	04-17-20	TC-81.22	07-16-21
DM-1.1	07-17-20	RM-4.2	04-17-20	HL-30.21	04-17-20	MT-99.30	01-17-20	TC-22.20	01-17-14	TC-83.10	01-17-20
DM-1.2	07-16-21	RM-4.5	07-21-17	HL-30.22	01-15-21	MT-99.60	07-15-16	TC-41.10	07-19-13	TC-83.20	07-21-17
DM-4.2	07-20-12	WQ-1.1	01-18-13	HL-40.20	07-17-20	MT-101.60	01-17-20	TC-41.20	10-18-13	TC-85.10	04-17-20
DM-4.4	01-15-16	WQ-1.2	01-15-16	HL-50.11	01-16-15	MT-101.70	01-17-20	TC-41.50	10-18-13	TC-85.20	07-20-18
F-1.1	07-19-13	AS-1-15	07-17-15	HL-50.21	01-15-21	MT-101.75	01-17-20	TC-42.10	10-18-13		
F-3.1	07-19-13	AS-2-15	01-18-19	HL-60.11	07-21-17	MT-101.90	07-17-20	TC-42.20	10-18-13		
F-3.2	07-18-14	BR-2-15	01-21-22	HL-60.12	07-16-21	MT-102.10	01-17-20	TC-51.11	01-15-16		

CUYAHOGA COUNTY ENGINEER CONSTRUCTION DRAWINGS

BP-2.8C	10-10-08
CB-3C	11-15-17
CB-3C2	10-31-13
MH-10C	03-01-21

SUPPLEMENTAL SPECIFICATIONS

800	01-21-22
805	07-16-10
807	01-21-22
809	01-21-22
813	10-19-18
824	01-18-19
832	10-19-18
836	01-19-18
846	04-17-15
847	01-15-21
850	01-21-22
895	04-18-14

TITLE SHEET

DESIGN AGENCY
EUTHENICS
8235 Mohawk Dr. | Cleveland, OH 44136

DESIGNER
ANC

REVIEWER
DTB 03/01/22

PROJECT ID
104983

SHEET P.1 TOTAL P.434

CUY-77-00.42 PART 1

MODEL: Sheet PAPERSIZE: 17x11 (in.) DATE: 04-Mar-22 TIME: 4:25:26 PM USER: comlink
F:\Jobs\11162-Miller Road Interchange\104983\400-Engineering\Roadway\Sheets\104983_GT001.dgn

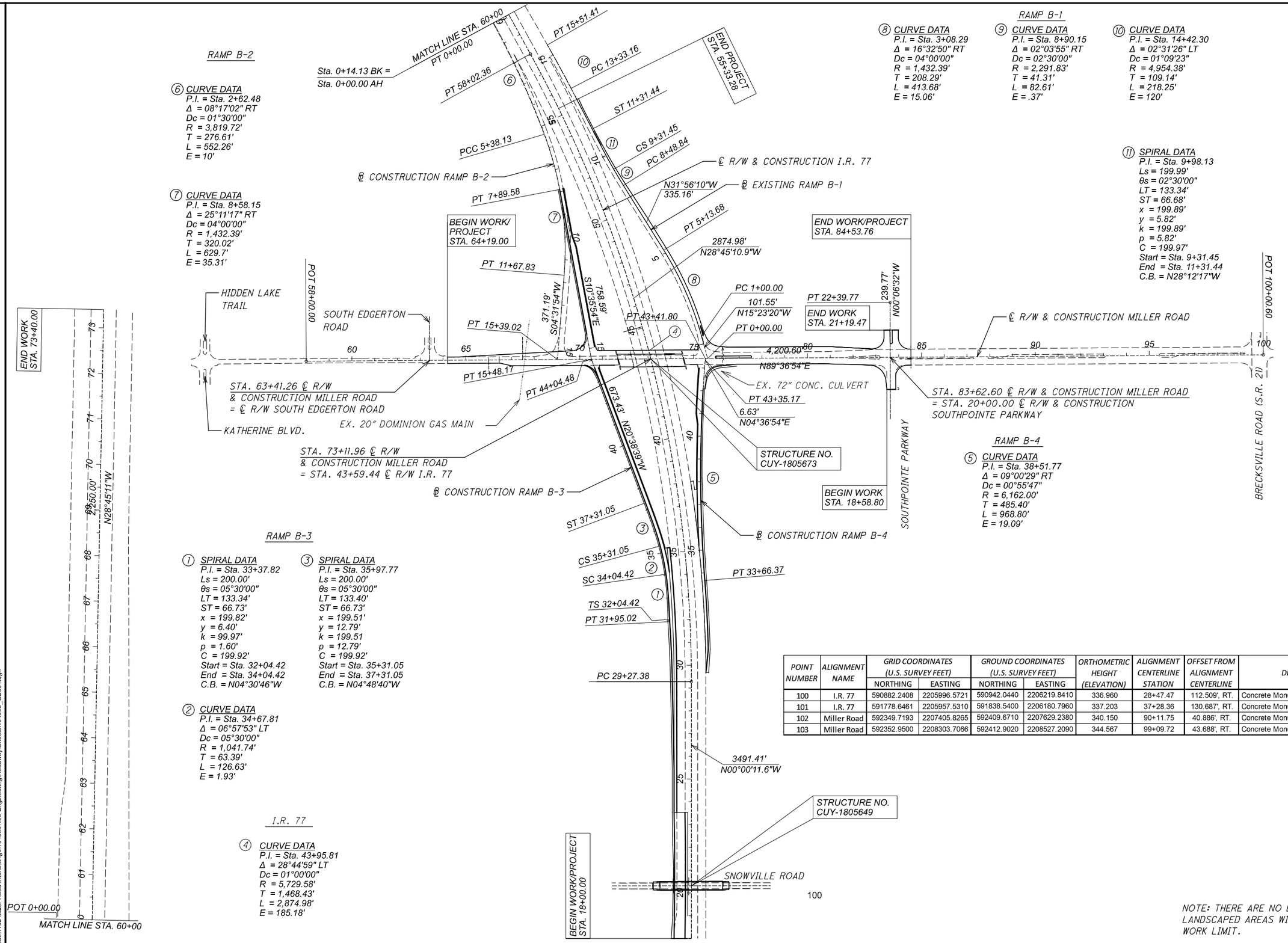

⑥ CURVE DATA
P.I. = Sta. 2+62.48
Δ = 08°17'02" RT
Dc = 01°30'00"
R = 3,819.72'
T = 276.61'
L = 552.26'
E = 10'

⑦ CURVE DATA
P.I. = Sta. 8+58.15
Δ = 25°11'17" RT
Dc = 04°00'00"
R = 1,432.39'
T = 320.02'
L = 629.7'
E = 35.31'

⑧ CURVE DATA
P.I. = Sta. 3+08.29
Δ = 16°32'50" RT
Dc = 04°00'00"
R = 1,432.39'
T = 208.29'
L = 413.68'
E = 15.06'

⑨ CURVE DATA
P.I. = Sta. 8+90.15
Δ = 02°03'55" RT
Dc = 02°30'00"
R = 2,291.83'
T = 41.31'
L = 82.61'
E = .37'

⑩ CURVE DATA
P.I. = Sta. 14+42.30
Δ = 02°31'26" LT
Dc = 01°09'23"
R = 4,954.38'
T = 109.14'
L = 218.25'
E = 120'

⑪ SPIRAL DATA
P.I. = Sta. 9+98.13
Ls = 199.99'
θs = 02°30'00"
LT = 133.34'
ST = 66.68'
x = 199.89'
y = 5.82'
k = 199.89'
p = 5.82'
C = 199.97'
Start = Sta. 9+31.45
End = Sta. 11+31.44
C.B. = N28°12'17"W

RAMP B-4

⑤ CURVE DATA
P.I. = Sta. 38+51.77
Δ = 09°00'29" RT
Dc = 00°55'47"
R = 6,162.00'
T = 485.40'
L = 968.80'
E = 19.09'

RAMP B-3

① SPIRAL DATA
P.I. = Sta. 33+37.82
Ls = 200.00'
θs = 05°30'00"
LT = 133.34'
ST = 66.73'
x = 199.82'
y = 6.40'
k = 99.97'
p = 1.60'
C = 199.92'
Start = Sta. 32+04.42
End = Sta. 34+04.42
C.B. = N04°30'46"W

③ SPIRAL DATA
P.I. = Sta. 35+97.77
Ls = 200.00'
θs = 05°30'00"
LT = 133.40'
ST = 66.73'
x = 199.51'
y = 12.79'
k = 199.51
p = 12.79'
C = 199.92'
Start = Sta. 35+31.05
End = Sta. 37+31.05
C.B. = N04°48'40"W

② CURVE DATA
P.I. = Sta. 34+67.81
Δ = 06°57'53" LT
Dc = 05°30'00"
R = 1,041.74'
T = 63.39'
L = 126.63'
E = 1.93'

I.R. 77

④ CURVE DATA
P.I. = Sta. 43+95.81
Δ = 28°44'59" LT
Dc = 01°00'00"
R = 5,729.58'
T = 1,468.43'
L = 2,874.98'
E = 185.18'

POINT NUMBER	ALIGNMENT NAME	GRID COORDINATES (U.S. SURVEY FEET)		GROUND COORDINATES (U.S. SURVEY FEET)		ORTHOMETRIC HEIGHT (ELEVATION)	ALIGNMENT CENTERLINE STATION	OFFSET FROM ALIGNMENT CENTERLINE	DESCRIPTION
		NORTHING	EASTING	NORTHING	EASTING				
100	I.R. 77	590882.2408	2205996.5721	590942.0440	2206219.8410	336.960	28+47.47	112.509', RT.	Concrete Monument with 3" Alum Disk
101	I.R. 77	591778.6461	2205957.5310	591838.5400	2206180.7960	337.203	37+28.36	130.687', RT.	Concrete Monument with 3" Alum Disk
102	Miller Road	592349.7193	2207405.8265	592409.6710	2207629.2380	340.150	90+11.75	40.886', RT.	Concrete Monument with 3" Alum Disk
103	Miller Road	592352.9500	2208303.7066	592412.9020	2208527.2090	344.567	99+09.72	43.688', RT.	Concrete Monument with 3" Alum Disk

NOTE: THERE ARE NO EXISTING LANDSCAPED AREAS WITHIN THE WORK LIMIT.

HORIZONTAL SCALE IN FEET
0 100 200 400

SCHEMATIC PLAN

CUY-77-00.42 PART 1

MODEL: Sheet PAPERSIZE: 17x11 (in.) DATE: 3/4/2022 TIME: 1:10:31 PM USER: esmcastlin
F:\Jobs\11162-Miller Road Interchange\104983\400-Engineering\Roadway\Sheets\104983_GB001.dgn

DESIGN AGENCY
EUTHENICS
8235 Mohawk Dr. | Cleveland, OH 44139

DESIGNER ANC
REVIEWER DTB 03/01/22
PROJECT ID 104983
SHEET P.2 TOTAL P.434

MILLER ROAD	SOUTH EDGERTON ROAD TO I.R. 77 SOUTHBOUND RAMPS	MILLER ROAD BETWEEN RAMPS	I.R. 77 NORTHBOUND RAMPS TO SOUTHPOINTE PARKWAY
CURRENT ADT (2020)	8,780	11,050	16,100
DESIGN YEAR ADT (2040)	8,780	11,050	16,100
DESIGN HOURLY VOLUME-AM (2040)	840	1,500	1,670
DESIGN HOURLY VOLUME-PM (2040)	960	990	2,220
DIRECTIONAL DISTRIBUTION	55%	65%	56%
TRUCKS (24 HOUR B&C)	5%	5%	6%
DESIGN SPEED	35 MPH	35 MPH	35 MPH
LEGAL SPEED	35 MPH	35 MPH	35 MPH
DESIGN FUNCTIONAL CLASS.:	URBAN MINOR ARTERIAL	URBAN MINOR ARTERIAL	URBAN MINOR ARTERIAL
NHS PROJECT:	NO	NO	NO

I.R. 77	NORTH OF RAMPS	BETWEEN RAMPS	SOUTH OF RAMPS
CURRENT ADT (2020)	103,020	87,620	95,280
DESIGN YEAR ADT (2040)	103,020	87,620	95,280
DESIGN HOURLY VOLUME-AM (2040)	8,130	6,560	7,120
DESIGN HOURLY VOLUME-PM (2040)	10,580	8,610	9,380
DIRECTIONAL DISTRIBUTION	51%	50%	50%
TRUCKS (24 HOUR B&C)	8%	8%	8%
DESIGN SPEED	65 MPH	65 MPH	65 MPH
LEGAL SPEED	60 MPH	60 MPH	60 MPH
DESIGN FUNCTIONAL CLASS.:	INTERSTATE	INTERSTATE	INTERSTATE
NHS PROJECT:	YES	YES	YES

DESIGN DESIGNATIONS

CUY-77-00.42 PART 1

MODEL: Sheet PAPERSIZE: 17x11 (in.) DATE: 3/4/2022 TIME: 1:10:57 PM USER: esmccaslin
F:\Jobs\1162\Miller Road Interchange\104983\400-Engineering\Roadway\Sheets\104983_GM001.dgn

DESIGN AGENCY
EUTHENICS
8235 Mohawk Dr. | Cleveland, OH 44129

DESIGNER JES

REVIEWER ANC 03/29/21

PROJECT ID 104983

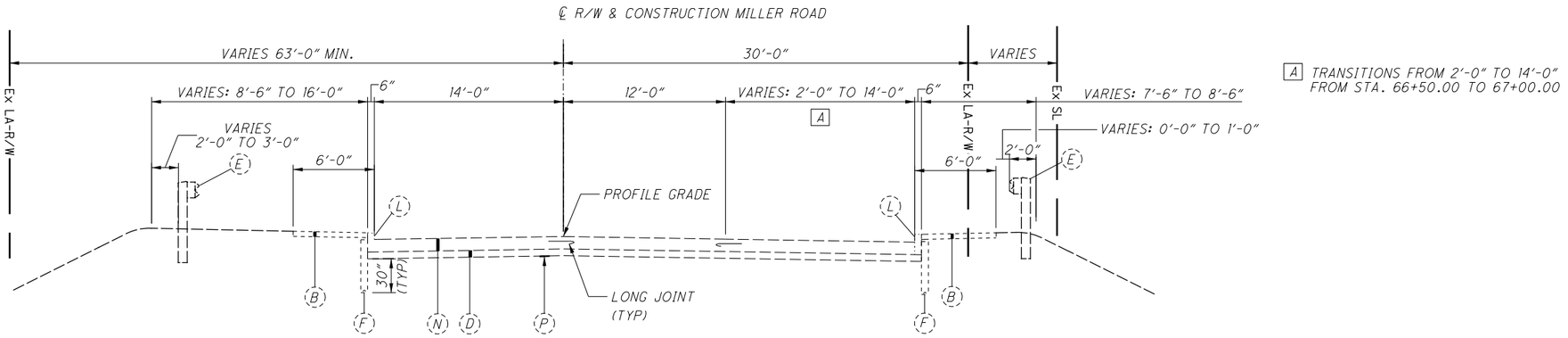

A TRANSITIONS FROM 2'-0" TO 14'-0" FROM STA. 66+50.00 TO 67+00.00

EXISTING NORMAL SECTION MILLER ROAD

STA. 64+19.00 TO STA. 71+46.54
STA. 74+77.52 TO STA. 75+60.03

EXISTING LEGEND

- (A) 3.25" ASPHALT CONCRETE
- (B) CONCRETE WALK
- (C) 7.5" ASPHALT CONCRETE BASE
- (D) 6" AGGREGATE BASE
- (E) GUARDRAIL, TYPE MGS
- (F) 6" UNDERDRAIN
- (G) 12" NON-REINFORCED CONCRETE PAVEMENT
- (H) CEMENT STABILIZED SUBGRADE, 12 INCHES DEEP
- (I) CEMENT STABILIZED SUBGRADE, 16 INCHES DEEP
- (J) 3" ASPHALT CONCRETE UNDER GUARDRAIL OR CABLE GUARDRAIL
- (K) GUARDRAIL, TENSIONED CABLE WITH CONCRETE FOUNDATION LINE POSTS (SOCKETED)
- (L) CONCRETE CURB
- (M) COMPACTED AGGREGATE
- (N) 11" REINFORCED CONCRETE PAVEMENT
- (O) REINFORCED CONCRETE APPROACH SLAB (T-13")
- (P) GEOTEXTILE FABRIC
- (Q) CONCRETE MEDIAN

PROPOSED LEGEND

1. ITEM 442 - 1.5" ASPHALT CONCRETE SURFACE COURSE, 12.5 MM, TYPE A (446), AS PER PLAN
2. ITEM 407 - TACK COAT
3. ITEM 442 - 1.75" ASPHALT CONCRETE INTERMEDIATE COURSE, 19 MM, TYPE A (446)
4. ITEM 302 - 7.5" ASPHALT CONCRETE BASE
5. ITEM 304 - 6" AGGREGATE BASE
6. ITEM 204 - SUBGRADE COMPACTION
7. ITEM 659 - SEEDING AND MULCHING
8. ITEM 606 - GUARDRAIL, TYPE MGS
9. ITEM 605 - 6" SHALLOW PIPE UNDERDRAIN, WITH GEOTEXTILE FABRIC, 30"
10. ITEM 605 - 6" BASE PIPE UNDERDRAINS WITH GEOTEXTILE FABRIC
11. ITEM 452 - 12" NON-REINFORCED CONCRETE PAVEMENT, CLASS QC 1P WITH QC/QA
12. ITEM 254 - PAVEMENT PLANING, (T=3.25")
13. ITEM 252 - FULL DEPTH PAVEMENT SAWING
14. ITEM 609 - CONCRETE MEDIAN
15. ITEM 204 - PROOF ROLLING
16. ITEM 659 - TOPSOIL (4" LIFT)
17. ITEM 209 - LINEAR GRADING, AS PER PLAN
18. ITEM 441 - 3" ASPHALT CONCRETE INTERMEDIATE COURSE, TYPE 1, (448), (UNDER GUARDRAIL)
19. ITEM 670 - EROSION PROTECTION
20. ITEM 609 - CURB, TYPE 6
21. ITEM 875 - LONGITUDINAL JOINT ADHESIVE
22. ITEM 836 - SEEDING AND EROSION CONTROL WITH TURF REINFORCING MAT, TYPE 1
23. ITEM 836 - SEEDING AND EROSION CONTROL WITH TURF REINFORCING MAT, TYPE 2
24. ITEM 606 - GUARDRAIL, TYPE MGS WITH LONG POSTS
25. ITEM 606 - GUARDRAIL, BARRIER DESIGN, TYPE MGS
26. TYPE D (DRILLED TIED LONGITUDINAL) JOINT, PER ODOT STD DWG BP-2.1
27. ITEM 526 - REINFORCED CONCRETE APPROACH SLAB (T-13")
28. ITEM 304 - 2" AGGREGATE BASE
29. ITEM 609 - CURB, TYPE 2-A
30. ITEM 608 - 4" CONCRETE WALK, AS PER PLAN
31. ITEM 209 - RESHAPING UNDER GUARDRAIL, AS PER PLAN
32. ITEM 451 - 11" REINFORCED CONCRETE PAVEMENT, CLASS QC 1P WITH QC/QA
33. ITEM 254 - PAVEMENT PLANING, AS PER PLAN NO. 1 (VARIABLE THICKNESS = 0" TO 3.25")
34. ITEM 622 - CONCRETE BARRIER, SINGLE SLOPE, TYPE D
35. ITEM 847 - 1.5" MICRO-SILICA MODIFIED CONCRETE OVERLAY (SEE SHEET P.326 FOR DETAILS)
36. ITEM 204 - EXCAVATION OF SUBGRADE
37. ITEM 204 - GRANULAR MATERIAL, TYPE B
38. ITEM 204 - GEOTEXTILE FABRIC

TYPICAL SECTIONS - MILLER ROAD

DESIGN AGENCY
EUTHENICS
8235 Mohawk Dr. | Cleveland, OH 44125
DESIGNER ANC
REVIEWER DTB 03/01/22
PROJECT ID 104983
SHEET P.4 TOTAL P.434

CUY-77-00.42 PART 1

MODEL: Sheet PAPERSIZE: 17x11 (in.) DATE: 3/4/2022 TIME: 1:11:01 PM USER: esmccaslin
F:\Jobs\11162-Miller Road Interchange\104983400-Engineering\Roadway\Sheets\104983_GY001.dgn

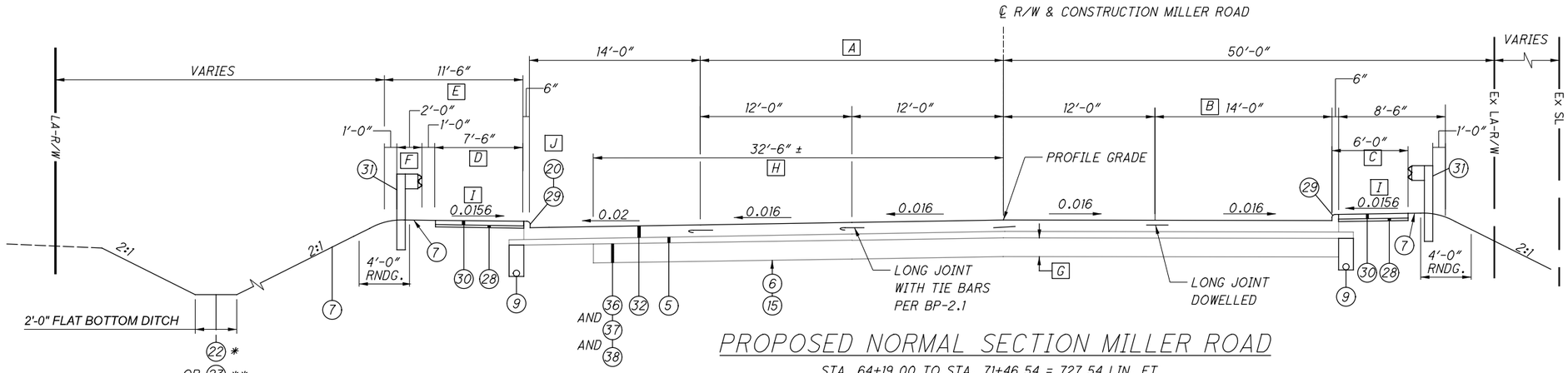

PROPOSED NORMAL SECTION MILLER ROAD

STA. 64+19.00 TO STA. 71+46.54 = 727.54 LIN. FT.
STA. 74+77.52 TO STA. 75+17.67 = 40.15 LIN. FT.

* - STA. 66+25 TO STA. 67+30
** - STA. 67+80 TO STA. 68+40

- A VARIES FROM 0'-0" TO 24'-0" FROM 64+70.00 TO 69+71.00
- B TRANSITIONS FROM 2'-0" TO 14'-0" FROM 66+50.00 TO 67+00.00
- C NO WALK FROM STA. 64+19.00 TO 70+90.47
- D SIDEWALK WIDTH VARIES:
  6'-0" FROM 64+19.00 TO 70+70.64
  7'-6" FROM 70+70.64 TO 71+46.54
  7'-6" FROM 74+77.52 TO 75+17.67
- E TOTAL WIDTH VARIES:
  13'-0" FROM 64+70 TO 70+70.64
  11'-6" FROM 70+70.64 TO 71+46.54
  11'-6" FROM 74+77.52 TO 75+17.67
  10'-0" FROM 64+19.00 TO 64+70.00
- F NO GUARDRAIL FROM STA. 64+19 TO 64+70
- G DEPTH = 24"
  STA. 66+12 TO STA. 69+19
  DEPTH = 15"
  STA. 69+19 TO STA. 70+80
  DEPTH = 12"
  STA. 70+80 TO STA. 71+46.54
  DEPTH = 24"
  STA. 74+77.52 TO STA. 75+17.67
- H VARIES FROM 21'-3"± AT STA. 66+12.00 TO 32'-6"± AT STA. 68+45.73
- I TRANSITION SIDEWALK CROSS-SLOPE FROM 0.020 (AT APPROACH SLAB) TO 0.0156 OVER A LENGTH OF 10 FT.
- J FOR CURB ALONG NORTH SIDE OF MILLER ROAD:
  TYPE 6 CURB FROM STA. 64+19.00 TO STA. 69+69.42 (P.C. OF RAMP B-2 CURB TURNOUT).
  TYPE 2-A CURB FROM STA. 69+69.42 TO END OF CURB AT STA. 14+36.85 (RAMP B-2).

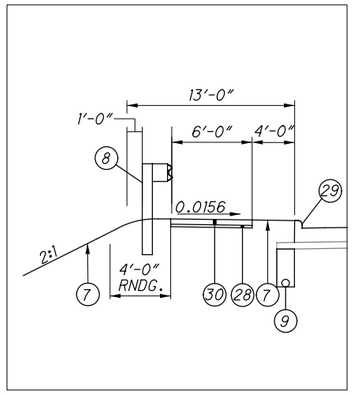

PROPOSED NORMAL SECTION W/TREELAWN MILLER ROAD

STA. 64+29.00 TO STA 69+69.42

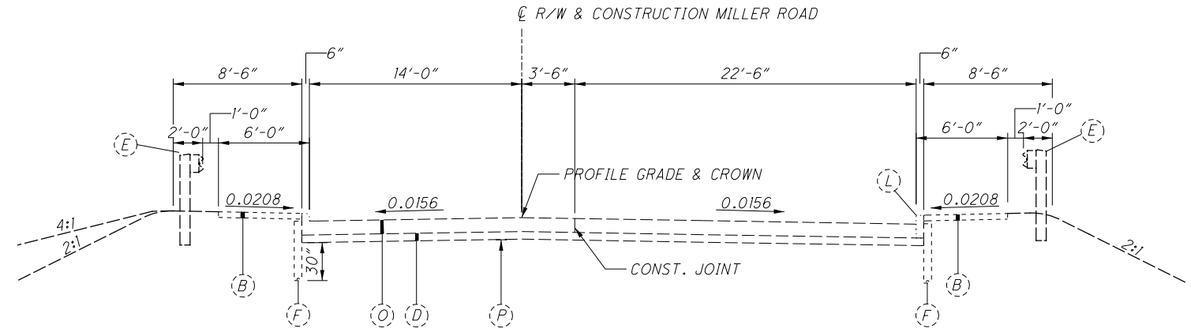

EXISTING APPROACH SLAB

STA. 71+46.54 TO STA. 71+66.54
STA. 74+57.52 TO STA. 74+77.52

STRUCTURE LIMITS: STA. 71+66.54 TO STA. 74+57.52 = 290.98 LIN. FT.

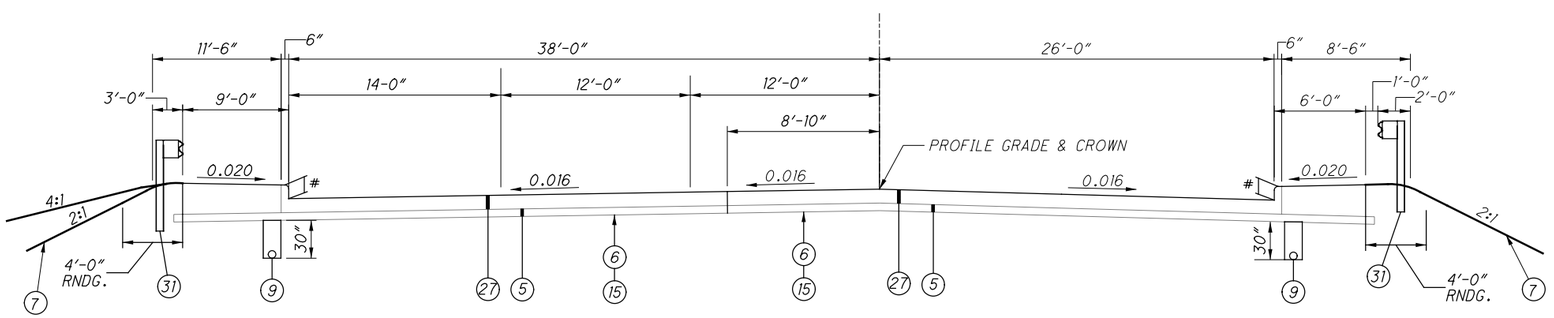

PROPOSED APPROACH SLAB

STA. 71+46.54 TO STA. 71+66.54 = 20.00 LIN. FT.
STA. 74+57.52 TO STA. 74+77.52 = 20.00 LIN. FT.
TOTAL LENGTH = 40.00 LIN. FT.

\# TRANSITION CURB HEIGHT FROM 8" (AT BRIDGE) TO 6" OVER LENGTH OF APPROACH SLAB

STRUCTURE LIMITS: STA. 71+66.54 TO STA. 74+57.52 = 290.98 LIN. FT.

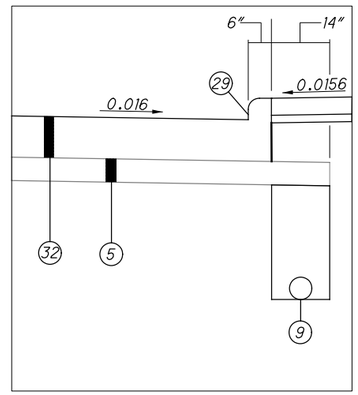

PROPOSED MILLER ROAD EDGE COURSE DETAIL

TYPICAL SECTIONS - MILLER ROAD

DESIGN AGENCY
EUTHENICS
8235 Mohawk Dr. | Cleveland, OH 44129

DESIGNER ANC
REVIEWER DTB 03/01/22
PROJECT ID 104983
SHEET P.5 TOTAL P.434

CUY-77-00.42 PART 1

MODEL: Sheet PAPERSIZE: 17x11 (in.) DATE: 3/4/2022 TIME: 1:11:04 PM USER: esmccaslin
F:\Jobs\11162-Miller Road Interchange\104983400-Engineering\Roadway\Sheets\104983_GY002.dgn

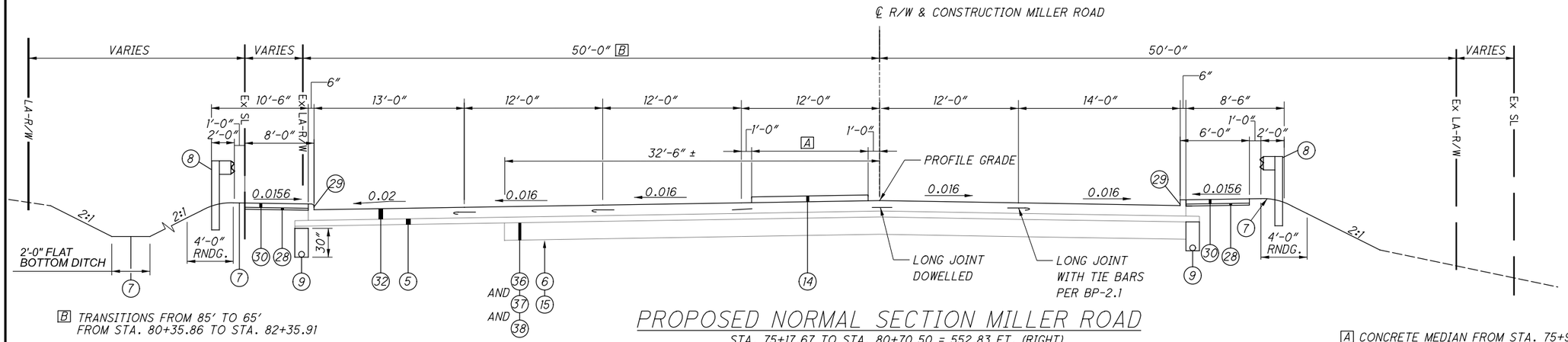

B TRANSITIONS FROM 85' TO 65' FROM STA. 80+35.86 TO STA. 82+35.91

PROPOSED NORMAL SECTION MILLER ROAD

STA. 75+17.67 TO STA. 80+70.50 = 552.83 FT. (RIGHT)
STA. 75+17.67 TO STA. 80+95.00 = 577.33 FT. (LEFT)

A CONCRETE MEDIAN FROM STA. 75+95 TO STA. 77+55

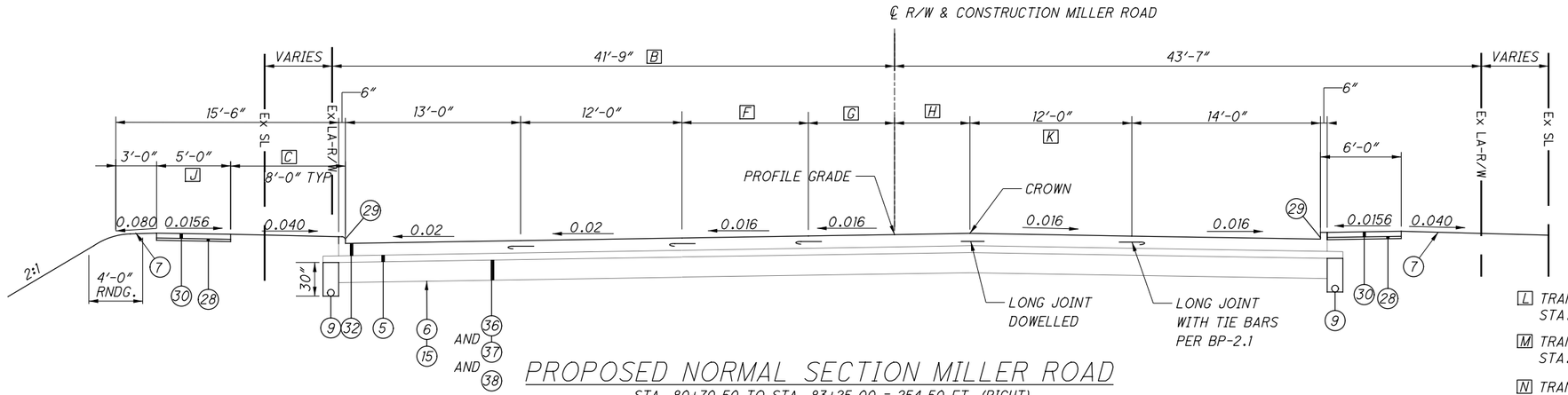

PROPOSED NORMAL SECTION MILLER ROAD

STA. 80+70.50 TO STA. 83+25.00 = 254.50 FT. (RIGHT)
STA. 80+95.00 TO STA. 83+25.25 = 230.25 FT. (LEFT)

L TRANSITIONS FROM 6'-11" TO 6'-5" FROM STA. 83+25.25 TO STA. 83+45.59

M TRANSITIONS FROM 3'-0" TO 2'-4" FROM STA. 83+25.25 TO STA. 83+45.59

N TRANSITIONS FROM 2'-4" (BK)/ 8'-9" (AHD) TO 8'-0" FROM STA. 83+45.59 TO STA. 83+62.59

O TRANSITIONS FROM 12'-11" TO 13'-0" FROM STA. 83+25.00 TO STA. 83+28.59

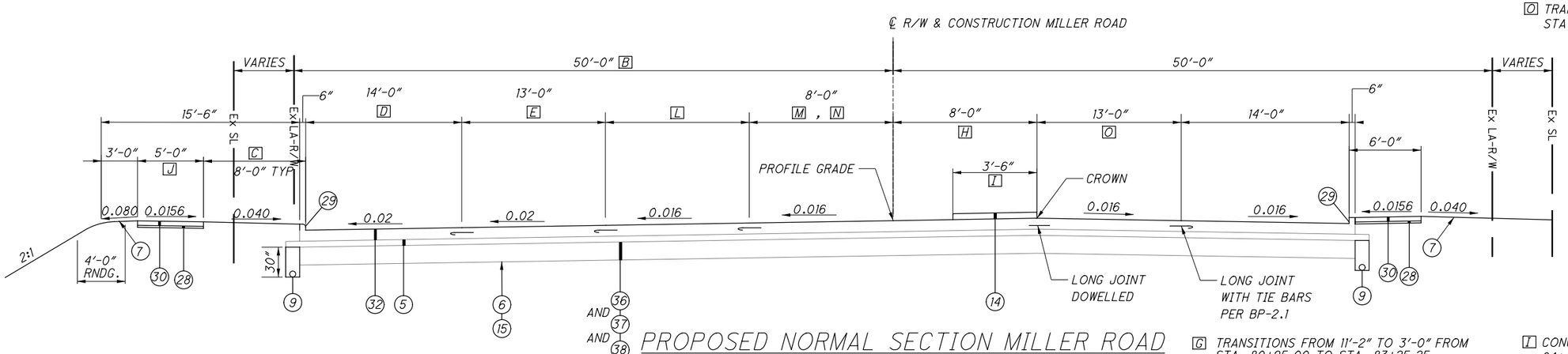

PROPOSED NORMAL SECTION MILLER ROAD

STA. 83+25.00 TO STA. 84+53.76 = 128.76 FT. (RIGHT)
STA. 83+25.25 TO STA. 84+53.76 = 128.51 FT. (LEFT)

C 0' FROM STA. 80+45.00 TO STA. 80+95.00 VARIES FROM 2'-6" TO 8'-0" FROM STA. 80+95.00 TO STA. 81+77.50

D TRANSITIONS FROM 13'-0" TO 14'-0" FROM STA. 83+25.25 TO STA. 83+45.59

E TRANSITIONS FROM 12'-0" TO 13'-0" FROM STA. 83+25.25 TO STA. 83+45.59

F TRANSITIONS FROM 12'-9" TO 6'-11" FROM STA. 80+95.00 TO STA. 83+25.25

G TRANSITIONS FROM 11'-2" TO 3'-0" FROM STA. 80+95.00 TO STA. 83+25.25

H TRANSITIONS FROM 0'-0" TO 7'-11" FROM STA. 80+70.50 TO STA. 82+94.59 FROM 7'-11" TO 8'-0" FROM STA. 82+94.59 TO STA. 83+11.59 WIDTH = 8'-0" FROM STA. 83+11.59 TO STA. 83+25.00

I CONCRETE MEDIAN FROM STA. 84+40.00 TO STA. 84+53.76

J 7'-6" FROM STA. 80+45.00 TO STA. 80+95.00

K TRANSITIONS FROM 12'-0" TO 12'-11" FROM STA. 82+97.18 TO STA. 83+25.00

TYPICAL SECTIONS - MILLER ROAD

DESIGN AGENCY
EUTHENICS
8235 Mohawk Dr. | Cleveland, OH 44130

DESIGNER ANC
REVIEWER DTB 03/01/22
PROJECT ID 104983
SHEET P.6 TOTAL P.434

CUY-77-00.42 PART 1

MODEL: Sheet PAPERSIZE: 17x11 (in.) DATE: 3/4/2022 TIME: 1:11:07 PM USER: esmccaslin
F:\Jobs\1162-Miller Road Interchange\104983\400-Engineering\Roadway\Sheets\104983_GY003.dgn

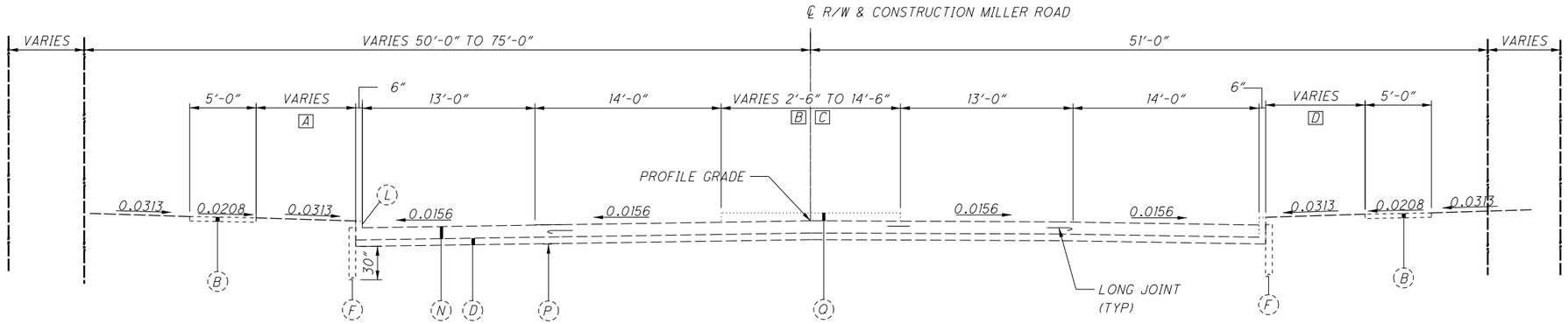

EXISTING NORMAL SECTION MILLER ROAD

STA. 80+90.00 TO STA. 84+53.76 (LEFT)
STA. 80+72.00 TO STA. 84+53.76 (RIGHT)

A TRANSITIONS FROM 0'-0" TO 7'-6" FROM STA. 82+15.83 TO STA. 82+95.61

B CONCRETE MEDIAN VARIES: FROM 0'-0" TO 14'-6" FROM STA. 81+75 TO STA. 83+18

C CONCRETE MEDIAN VARIES: FROM 0'-0" TO 2'-6", FROM STA. 84+04.60 TO STA. 84+53.76

D TRANSITIONS FROM 0'-0" TO 7'-6" FROM STA. 82+03.03 TO STA. 83+00.89

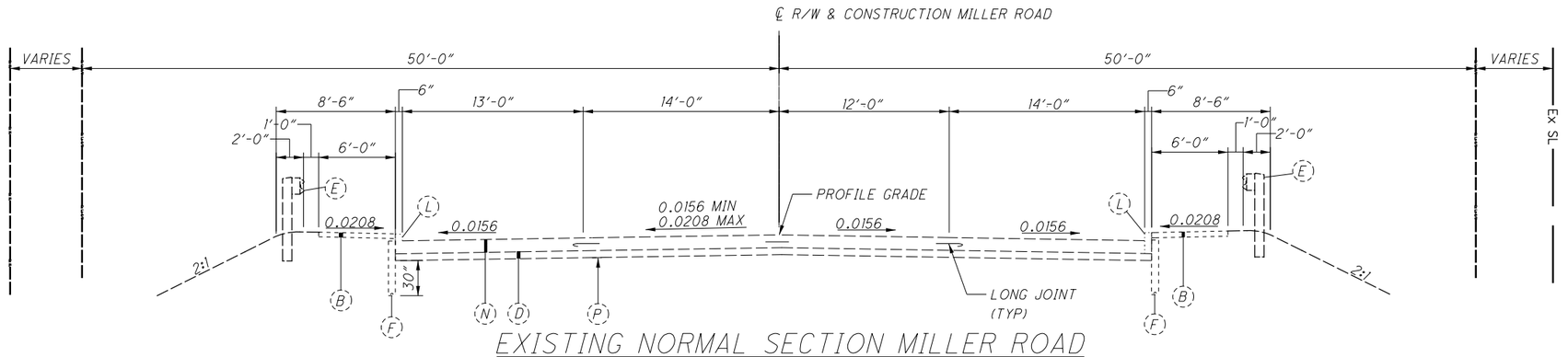

EXISTING NORMAL SECTION MILLER ROAD

STA. 75+60.03 TO STA. 80+90.00 (LEFT)
STA. 75+60.03 TO STA. 80+72.00 (RIGHT)

A CONCRETE MEDIAN FROM STA. 75+95 TO STA. 77+55

TYPICAL SECTIONS - MILLER ROAD

DESIGN AGENCY
EUTHENICS
8239 Midwest Dr. | Cleveland, OH 44125

DESIGNER
ANC

REVIEWER
DTB 03/01/22

PROJECT ID
104983

SHEET P.7 TOTAL P.434

CUY-77-00.42 PART 1

MODEL: 104983_GY004 PAPERSIZE: 17x11 (in.) DATE: 3/4/2022 TIME: 1:11:11 PM USER: esmccaslin
F:\Jobs\11162-Miller Road Interchange\104983\400-Engineering\Roadway\Sheets\104983_GY004.dgn

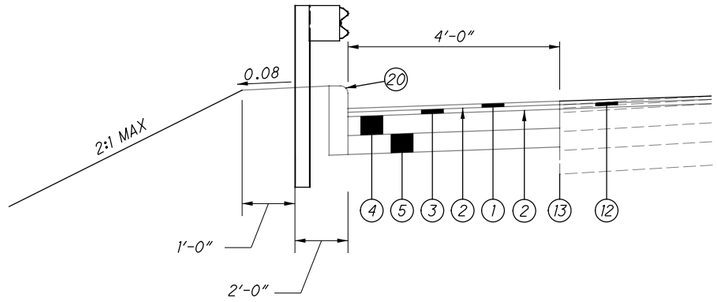

CURB DETAIL
STA. 20+60.81 TO STA. 21+11.00

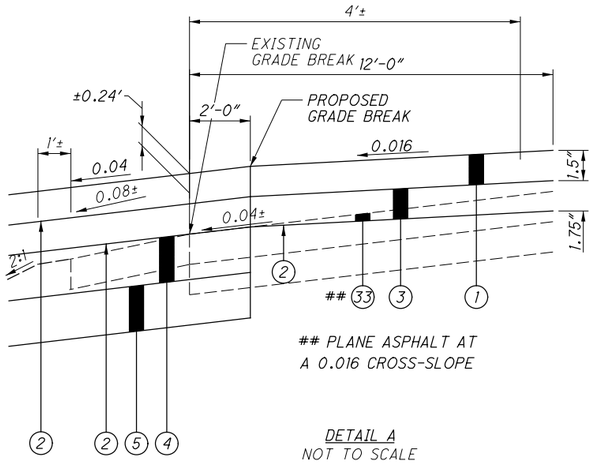

PLANE ASPHALT AT
A 0.016 CROSS-SLOPE

DETAIL A
NOT TO SCALE

NOTE: FOR PAVEMENT PLANING AND RESURFACING SECTIONS, EXISTING CROSS-SLOPES AND PAVEMENT DEPTHS ARE APPROXIMATE UNLESS OTHERWISE SHOWN.

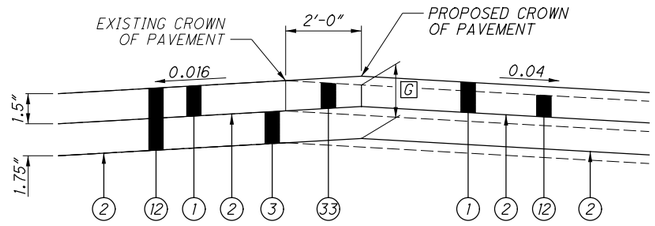

DETAIL B
NOT TO SCALE

G PLANE VARIES 0.07' MIN.
TO 0.27' MAX

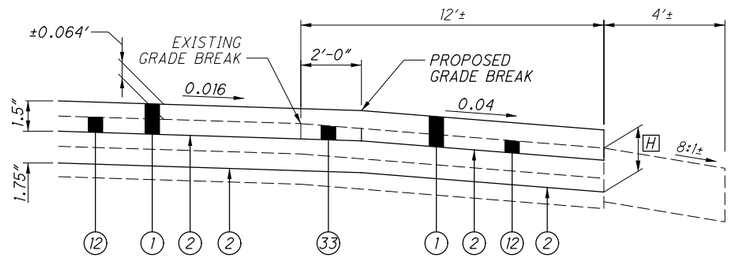

DETAIL C
NOT TO SCALE

H PLANE VARIES 0.10' MIN.
TO 0.27' MAX

℄ EX. PIERS I.R. 77

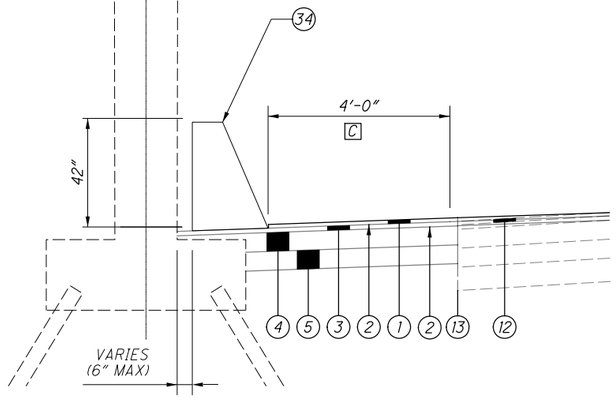

BARRIER DETAIL
STA. 20+03.00 TO STA. 20+60.81

PLANE ASPHALT (THICKNESS)					
STATION	A	B	C	D	E
18+00.00	0.27'	0.27'	0.27'	0.27'	0.27'
20+03.00	0.03'	0.27'	0.27'	0.19'	0.16'
22+03.00	0'	0.27'	0.27'	0.06'	0'
23+53.00	0'	0.27'	0.27'	0.27'	0.27'

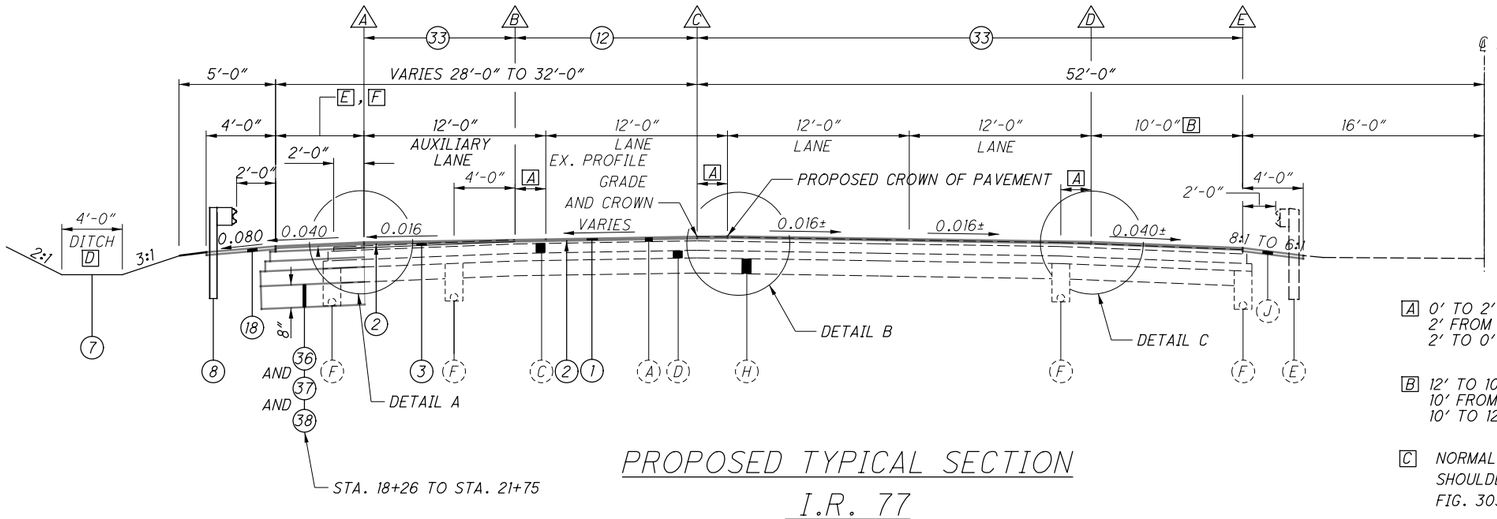

STA. 18+26 TO STA. 21+75

PROPOSED TYPICAL SECTION
I.R. 77

STA. 18+00.00 TO STA. 23+53.00
SEE SHEET P. 9 FOR NEXT SECTION

A 0' TO 2' FROM STA. 18+00.00 TO STA. 20+03.00
2' FROM STA. 20+03.00 TO STA. 22+03.00
2' TO 0' FROM STA. 22+03.00 TO STA. 23+53.00

B 12' TO 10' FROM STA. 18+00.00 TO STA. 20+03.00
10' FROM STA. 20+03.00 TO STA. 22+03.00
10' TO 12' FROM STA. 22+03.00 TO STA. 23+53.00

C NORMAL DESIGN CRITERIA
SHOULDER WIDTH IS 10' PER
FIG. 303-1, L&D VOL. 1.

D VEGETATED FILTER STRIP
STA. 22+25.00 TO 23+53.00

E 13' TO 6' FROM STA. 18+00.00
TO STA. 20+03.00

F 4' TO 8' FROM STA. 21+11.00
TO STA. 22+11.00

TYPICAL SECTIONS - I.R. 77

CUY-77-00.42 PART 1

MODEL: Sheet PAPERSIZE: 17x11 (in.) DATE: 3/4/2022 TIME: 1:11:14 PM USER: esmccaslin
F:\Jobs\1162-Miller Road Interchange\104983\400-Engineering\Roadway\Sheets\104983_GY100.dgn

DESIGN AGENCY
EUTHENICS
8235 Mohawk Dr. | Cleveland, OH 44125
DESIGNER
ANC
REVIEWER
DTB 03/01/22
PROJECT ID
104983
SHEET P.8 TOTAL P.434

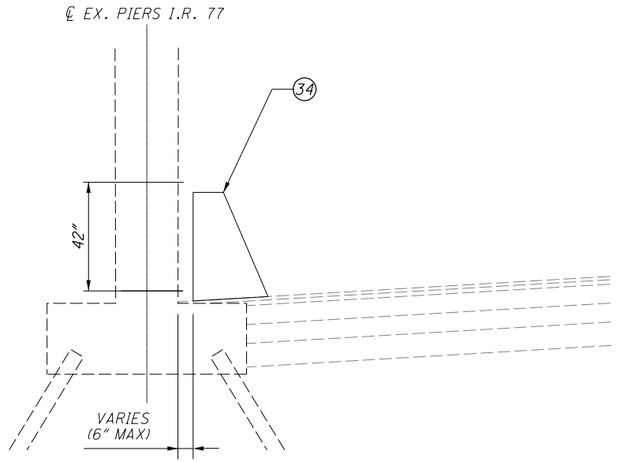

BARRIER DETAIL
STA. 43+43.36 TO STA. 44+32.00

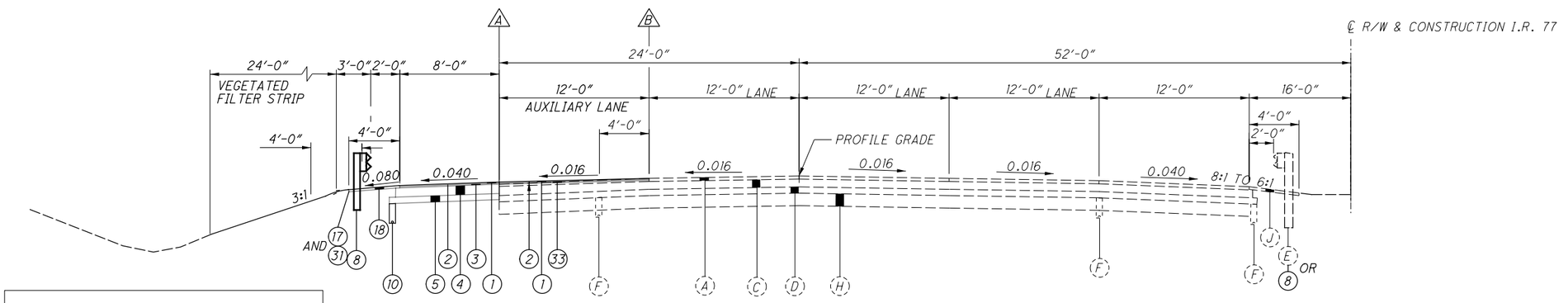

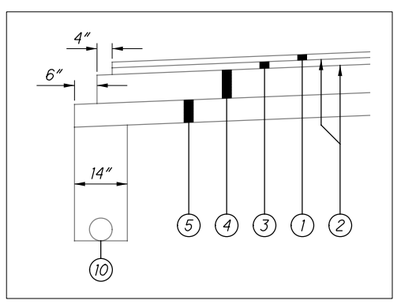

I.R. 77 EDGE COURSE DETAIL

PROPOSED NORMAL SECTION
I.R. 77

STA. 23+53.00 TO STA. 25+45.02 = 42.02 LIN. FT.

PLANE ASPHALT (THICKNESS)		
A	STATION	B
0'	23+53.00	0.27'
0'	25+45.02	0.27'

TYPICAL SECTIONS - I.R. 77

DESIGN AGENCY
EUTHENICS
8235 Mohawk Dr. | Cleveland, OH 44125

DESIGNER ANC
REVIEWER DTB 03/01/22
PROJECT ID 104983
SHEET P.9 TOTAL P.434

CUY-77-00.42 PART 1

MODEL: Sheet PAPERSIZE: 17x11 (In.) DATE: 3/4/2022 TIME: 1:11:17 PM USER: esmccaslin
F:\Jobs\11162-Miller Road Interchange\104983\400-Engineering\Roadway\Sheets\104983_GY101.dgn

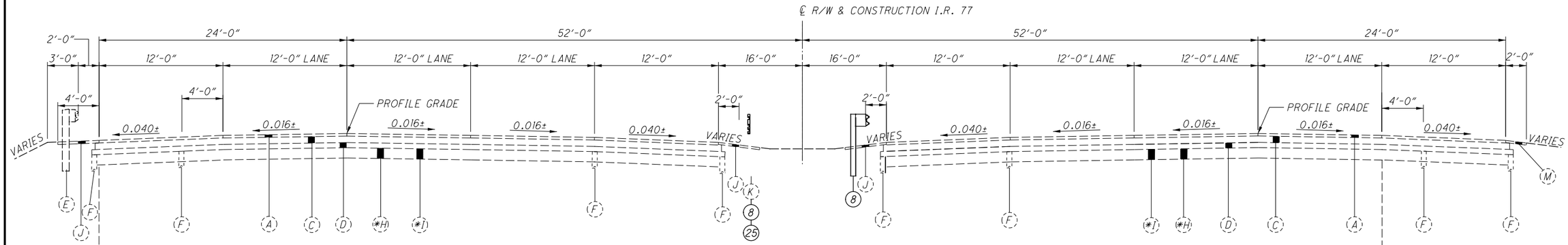

PROPOSED MATCH LINE
SPEED CHANGE LANE
SEE SHEET #P.11

*I FROM STA. 13+50.00
TO STA. 17+50.00

*H FROM STA. 0+00.00 TO STA. 13+50.00
STA. 17+50.00 TO STA. 27+26.05
STA. 60+03.69 TO STA. 93+50.00

EXISTING NORMAL SECTION
I.R. 77

STA. 00+00.00 TO STA. 27+26.05
STA. 60+03.69 TO STA. 93+50.00

*I FROM STA. 13+50.00
TO STA. 17+50.00

*H FROM STA. 0+00.00 TO STA. 13+50.00
STA. 17+50.00 TO STA. 27+26.05
STA. 60+03.69 TO STA. 93+50.00

PROPOSED MATCH LINE
SPEED CHANGE LANE
SEE SHEET #P.11

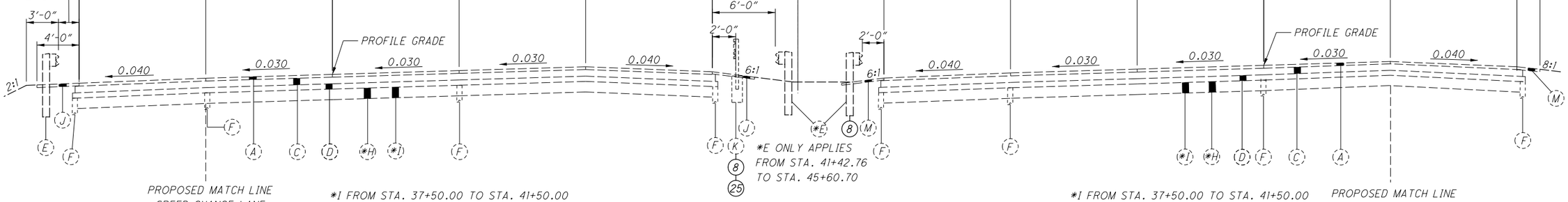

PROPOSED MATCH LINE
SPEED CHANGE LANE
SEE SHEET #P.11

*I FROM STA. 37+50.00 TO STA. 41+50.00

*H FROM STA. 27+26.05
TO STA. 37+50.00 AND
41+50.00 TO 60.03.69

EXISTING SUPERELEVATED SECTION
I.R. 77

STA. 27+26.05 TO STA. 60+03.69

*E ONLY APPLIES
FROM STA. 41+42.76
TO STA. 45+60.70

*I FROM STA. 37+50.00 TO STA. 41+50.00

*H FROM STA. 27+26.05
TO STA. 37+50.00 AND
41+50.00 TO 60.03.69

PROPOSED MATCH LINE
SPEED CHANGE LANE
SEE SHEET #P.11

GUARDRAIL DETAILS
ADD PROPOSED GUARDRAIL IN THE FOLLOWING RANGES
TO REPLACE EXISTING TENSIONED CABLE GUARDRAIL*:

(25) FROM STA. 24+33.5 TO STA. 43+24.2 (LT)
FROM STA. 58+86.0 TO STA. 74+47.2 (LT)

(8) FROM STA. 43+24.2 TO STA. 58+86.0 (LT)
FROM STA. 29+33.5 TO STA. 34+82.1 (RT)
FROM STA. 41+42.1 TO STA. 58+88.2 (RT)
FROM STA. 71+89.8 TO STA. 73+64.8 (RT)

*STATION RANGES DO NOT INCLUDE ANCHOR ASSEMBLIES

TYPICAL SECTIONS - I.R. 77

DESIGN AGENCY
EUTHENICS
8335 Hickman Rd. | Cleveland, OH 44125
DESIGNER ANC
REVIEWER DTB 03/01/22
PROJECT ID 104983
SHEET P.10 TOTAL P.434

CUY-77-00.42 PART 1
MODEL: Sheet PAPERSIZE: 17x11 (in.) DATE: 3/4/2022 TIME: 1:11:21 PM USER: esmccaslin
F:\Jobs\11162-Miller Road Interchange\104983\400-Engineering\Roadway\Sheets\104983_GY102.dgn

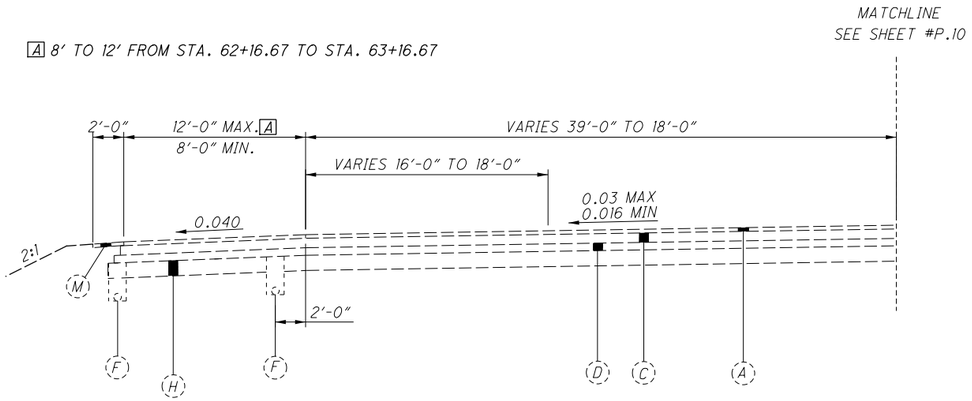

EXISTING SPEED CHANGE LANE

I.R. 77

SECTION APPLIES:
STA. 54+87.81 TO STA. 58+38.98

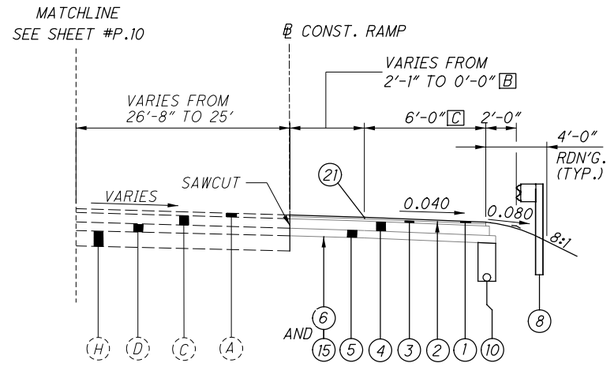

B TRANSITIONS FROM 2'-1" TO 0'-0" FROM STA. 52+63.48 TO STA. 53+56.15

C TRANSITIONS FROM 6'-0" TO 8'-0" FROM STA. 12+28.00 TO STA. 12+78.00

SPEED CHANGE LANE

I.R. 77

SECTION APPLIES:
STA. 52+63.48 TO STA. 55+33.28 = 269.80 LIN. FT.

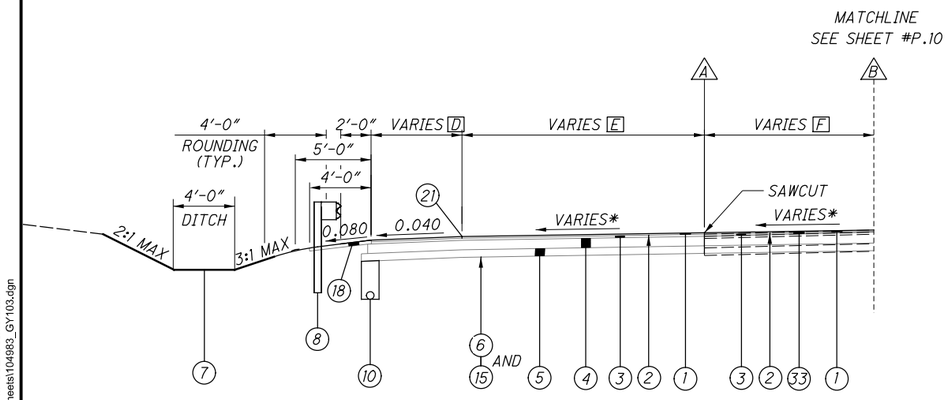

* SEE SHEET P.201 AND P.202 PAVEMENT CROSS SLOPES

SUPERELEVATED SPEED CHANGE LANE

I.R. 77

SECTION APPLIES:
STA. 25+45.02 TO STA. 35+23.87 = 978.85 LIN. FT.

D VARIES FROM 8'-0" TO 6'-0" FROM STA. 31+95.02 TO STA. 32+45.02

E VARIES FROM 0'-0" TO 16'-0" FROM STA. 25+45.02 TO STA. 34+16.19

F VARIES FROM 0'-0" TO 11'-2" FROM STA. 34+16.19 TO STA. 35+23.87

PLANE ASPHALT (THICKNESS)		
A	STATION	B
0'	25+45.02	0.27'
0'	28+85.44	0.27'
0.15'	30+02.87	0.27'
0.15'	32+04.42	0.27'
0.27'	32+71.09	0.27'
0.27'	35+24.07	0.27'

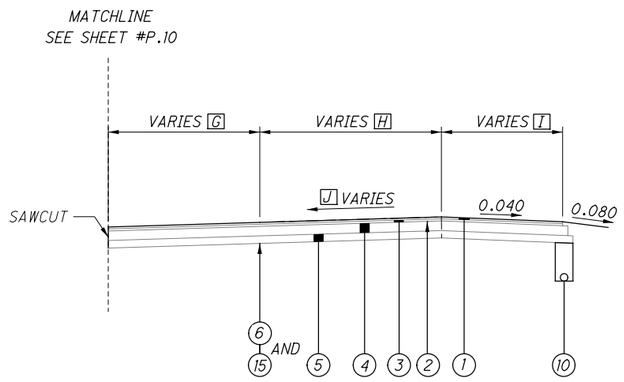

G VARIES FROM 0'-0" TO 22'-11" FROM STA. 35+20.10 TO STA. 37+62.67

H VARIES FROM 0'-0" TO 12'-0" FROM STA. 29+67.61 TO STA. 30+67.61

12'-0" FROM STA. 30+67.61 TO STA. 33+66.37

VARIES FROM 12'-0" TO 16'-0" FROM STA. 33+66.37 TO STA. 35+20.10

16'-0" FROM STA. 35+20.10 TO STA. 37+62.67

I VARIES FROM 12'-0" TO 8'-0" FROM STA. 29+67.58 TO STA. 30+67.61

J PAVEMENT CROSS SLOPE

VARIES: 0.019 TO 0.030
FROM STA. 29+67.61 TO STA. 30+02.87

0.030
FROM STA. 30+02.87 TO STA. 34+97.20

VARIES: 0.030 TO 0.023
FROM STA. 34+97.20 TO STA. 36+74.66

0.023
FROM STA. 36+74.66 TO STA. 37+62.67

SUPERELEVATED SPEED CHANGE LANE

I.R. 77

SECTION APPLIES:
STA. 29+67.61 TO STA. 37+62.67 = 795.06 LIN. FT.

TYPICAL SECTIONS - I.R. 77

CUY-77-00.42 PART 1

MODEL: Sheet PAPERSIZE: 17x11 (in.) DATE: 3/4/2022 TIME: 1:11:35 PM USER: esmccaslin
F:\Jobs\11162-Miller Road Interchange\104983\400-Engineering\Roadway\Sheets\104983_GY103.dgn

DESIGN AGENCY
EUTHENICS
8235 Mohawk Dr. | Cleveland, OH 44125
DESIGNER
ANC
REVIEWER
DTB 03/01/22
PROJECT ID
104983
SHEET P.11 TOTAL P.434

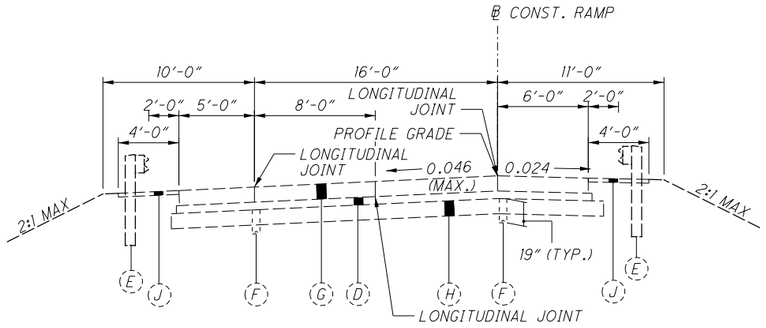

EXISTING SUPERELEVATED ON RAMP SECTION
MILLER ROAD - B-1

SECTION APPLIES:
STA. 1+12.62 TO STA. 7+00.00

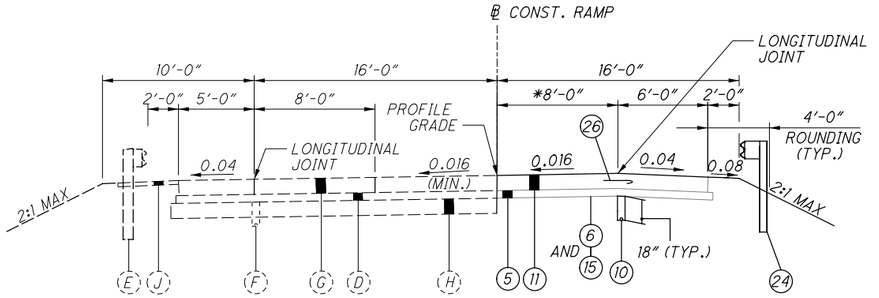

PROPOSED NORMAL ON RAMP SECTION
MILLER ROAD - B-1

SECTION APPLIES:
STA. 1+12.62 TO STA. 7+00.00 = 587.38 LIN. FT.

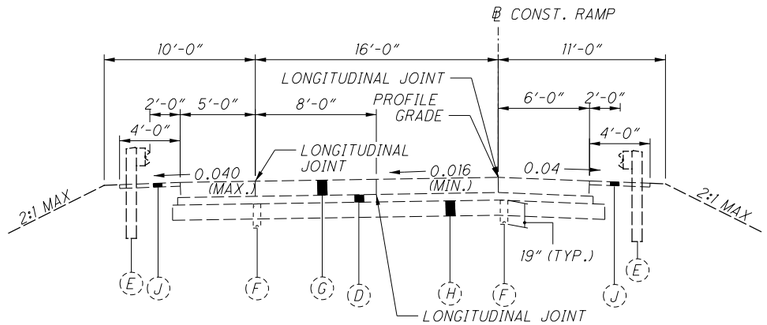

EXISTING NORMAL ON RAMP SECTION
MILLER ROAD - B-1

SECTION APPLIES:
STA. 7+00.00 TO STA. 8+01.13

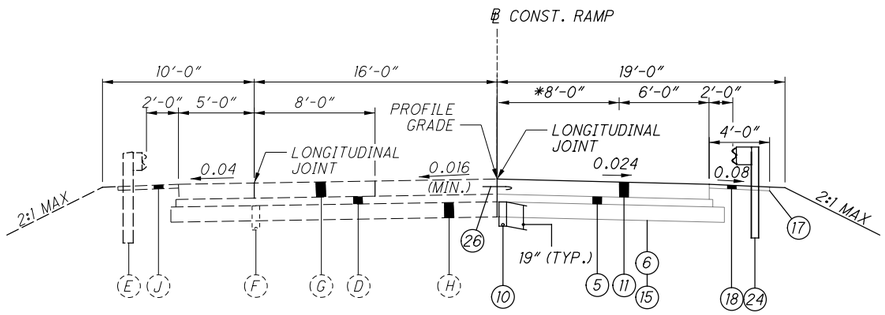

PROPOSED NORMAL ON RAMP SECTION
MILLER ROAD - B-1

SECTION APPLIES:
STA. 7+00.00 TO STA. 8+01.13 = 101.13 LIN. FT.

* 8'-0" FROM STA. 1+12.62
TO STA. 6+76.14
TRANSITIONS TO 0'-0" FROM
STA. 6+76.14 TO STA. 12+78.00

\# 6'-0" FROM STA. 1+12.62
TO STA. 12+28.00
TRANSITIONS TO 8'-0" FROM
STA. 12+28.00 TO STA. 12+78.00

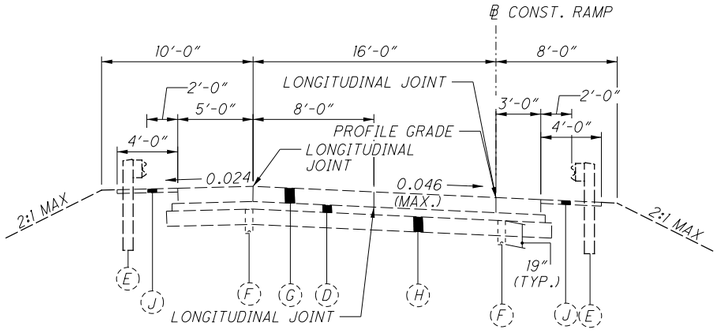

EXISTING SUPERELEVATED ON RAMP SECTION
MILLER ROAD - B-1

SECTION APPLIES:
STA. 8+01.13 TO STA. 10+03.17

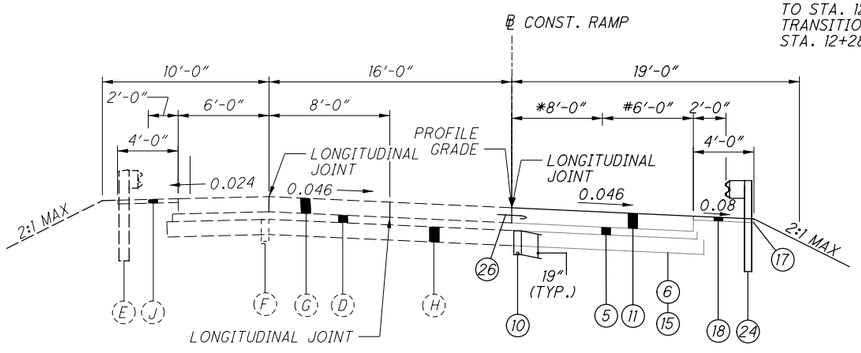

PROPOSED SUPERELEVATED ON RAMP SECTION
MILLER ROAD - B-1

SECTION APPLIES:
STA. 8+01.13 TO STA. 12+78.00 = 476.87 LIN. FT.

TYPICAL SECTIONS -RAMP B-1

DESIGN AGENCY	EUTHENICS 8235 Mohawk Dr. | Cleveland, OH 44105
DESIGNER	ANC
REVIEWER	DTB 03/01/22
PROJECT ID	104983
SHEET	P.12
TOTAL	P.434

CUY-77-00.42 PART 1

MODEL: Sheet PAPERSIZE: 17x11 (in.) DATE: 3/4/2022 TIME: 1:11:39 PM USER: esmccaslin
F:\Jobs\1162-Miller Road Interchange\104983\400-Engineering\Roadway\Sheets\104983_GY200.dgn

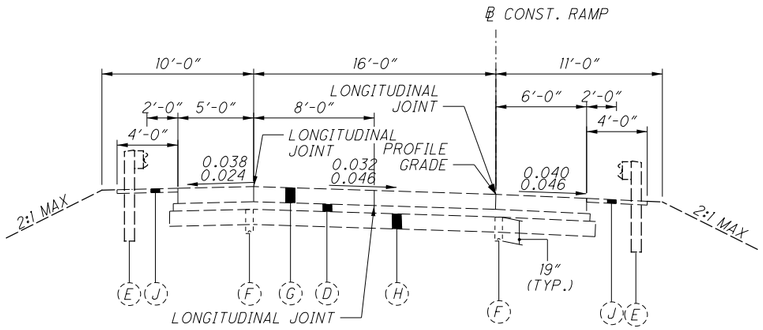

EXISTING NORMAL OFF RAMP SECTION
MILLER ROAD - B-2

SECTION APPLIES:
STA. 5+05.29 TO STA. 9+85.00

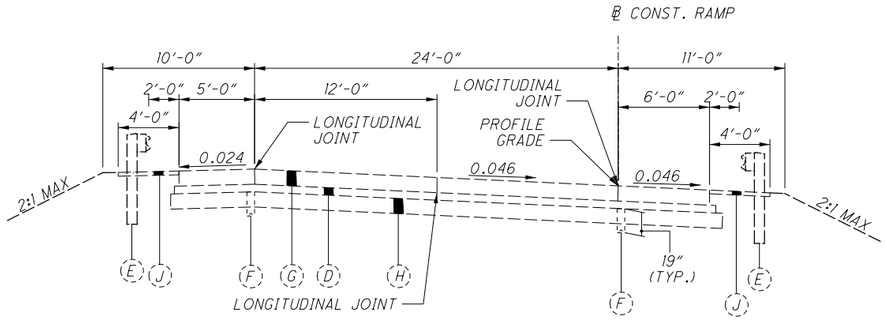

EXISTING SUPERELEVATED OFF RAMP SECTION
MILLER ROAD - B-2

SECTION APPLIES:
STA. 9+85.00 TO STA. 12+32.95

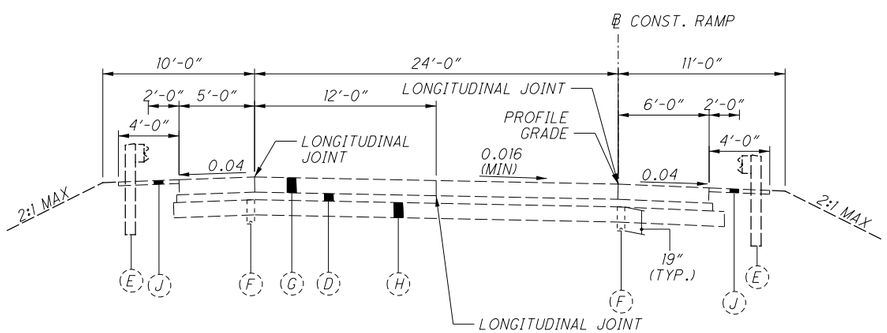

EXISTING SUPERELEVATED OFF RAMP SECTION
MILLER ROAD - B-2

SECTION APPLIES:
STA. 12+32.95 TO STA. 14+36.00

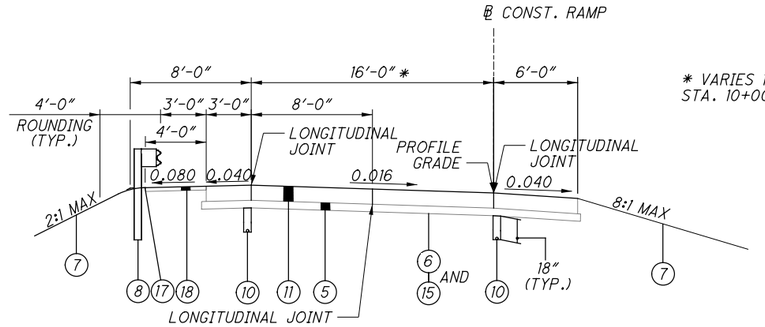

* VARIES 16'-0" TO 24'-0" FROM STA. 10+00 TO STA. 10+50

PROPOSED NORMAL OFF RAMP SECTION
MILLER ROAD - B-2

SECTION APPLIES:
STA. 7+89.58 TO STA. 10+50.00 = 260.42 LIN. FT.

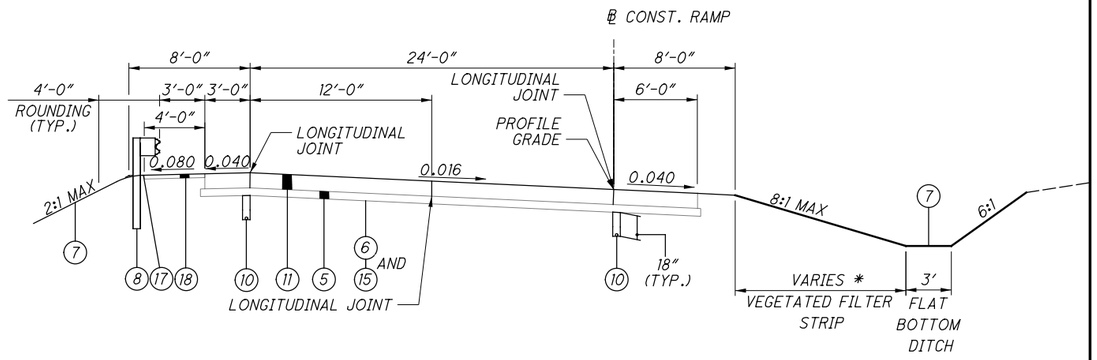

PROPOSED NORMAL OFF RAMP SECTION
MILLER ROAD - B-2

SECTION APPLIES:
STA. 10+50.00 TO STA. 15+09.07 = 459.07 LIN. FT.

* STA. 11+96 TO 14+37

TYPICAL SECTIONS -RAMP B-2

DESIGN AGENCY
EUTHENICS
8235 Mohawk Dr. | Cleveland, OH 44539

DESIGNER
ANC

REVIEWER
DTB 03/01/22

PROJECT ID
104983

SHEET P.13 | TOTAL P.434

CUY-77-00.42 PART 1

MODEL: Sheet PAPERSIZE: 17x11 (in.) DATE: 3/4/2022 TIME: 1:11:43 PM USER: esmccaslin
F:\Jobs\11162-Miller Road Interchange\104983\400-Engineering\Roadway\Sheets\104983_GY300.dgn

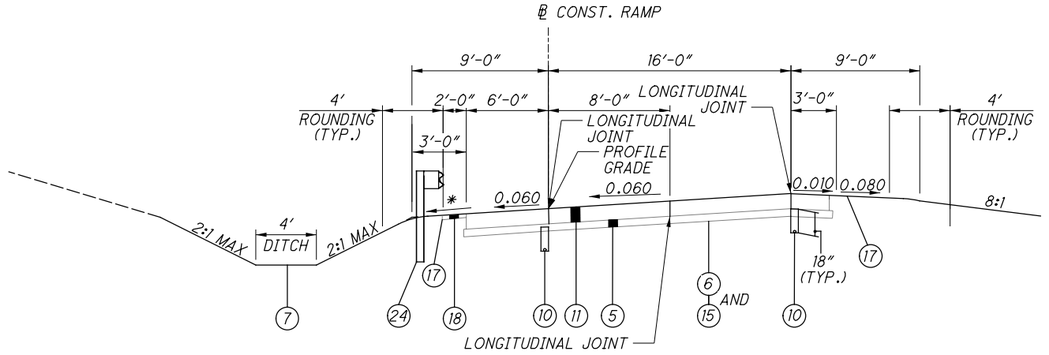

PROPOSED SUPERELEVATED ON RAMP SECTION

MILLER ROAD - B-3

SECTION APPLIES:
STA. 35+16.51 TO STA. 37+31.05 = 214.54 LIN. FT.

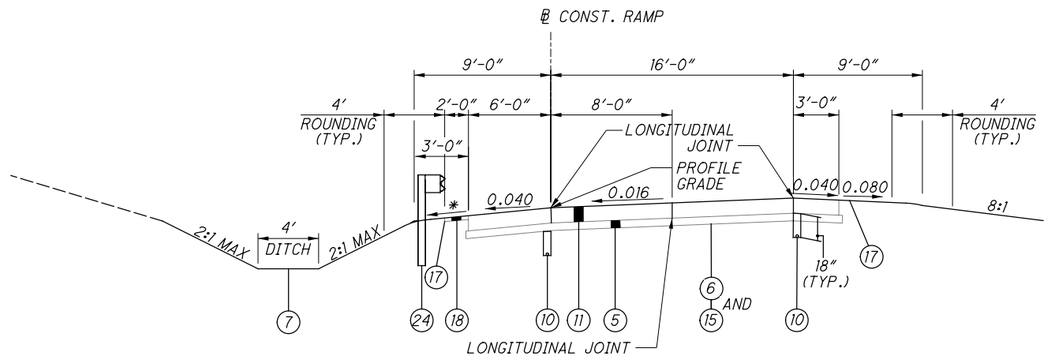

PROPOSED NORMAL ON RAMP SECTION

MILLER ROAD - B-3

SECTION APPLIES:
STA. 37+31.05 TO STA. 43+76.77 = 645.72 LIN. FT.

* 0.100 GRADE TO BE USED WHEN GUARDRAIL IS PRESENT.
OTHERWISE USE 0.080 GRADE.

TYPICAL SECTIONS -RAMP B-3

DESIGN AGENCY
EUTHENICS
8235 Mohawk Dr. | Cleveland, OH 44138

DESIGNER
ANC

REVIEWER
DTB 03/01/22

PROJECT ID
104983

SHEET P.14 | TOTAL P.434

CUY-77-00.42 PART 1

MODEL: Sheet PAPERSIZE: 17x11 (in.) DATE: 3/4/2022 TIME: 1:12:03 PM USER: esmccaslin
F:\Jobs\11662-Miller Road Interchange\104983\400-Engineering\Roadway\Sheets\104983_GY401.dgn

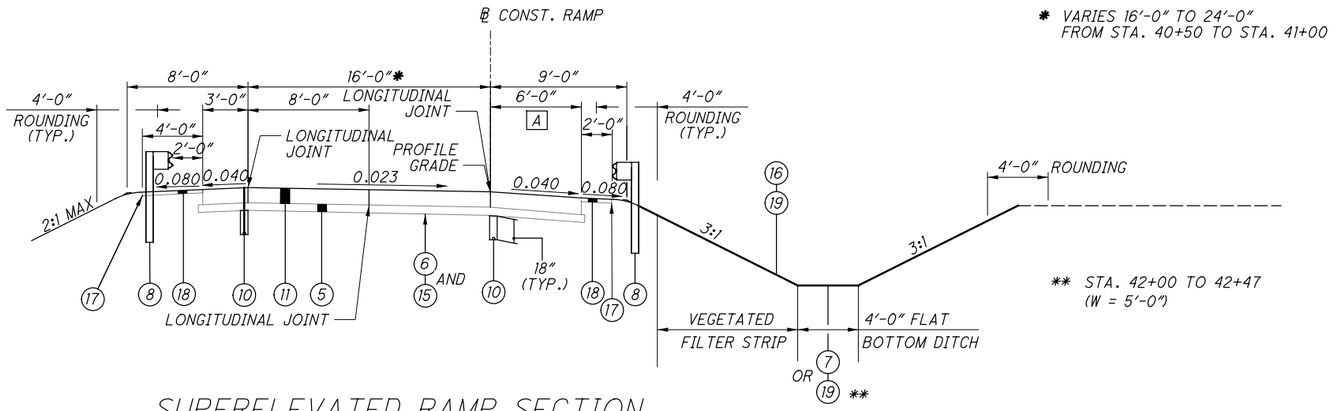

SUPERELEVATED RAMP SECTION
MILLER ROAD - B-4

SECTION APPLIES:
STA. 37+67.20 TO STA. 41+00.00 = 332.80 FT

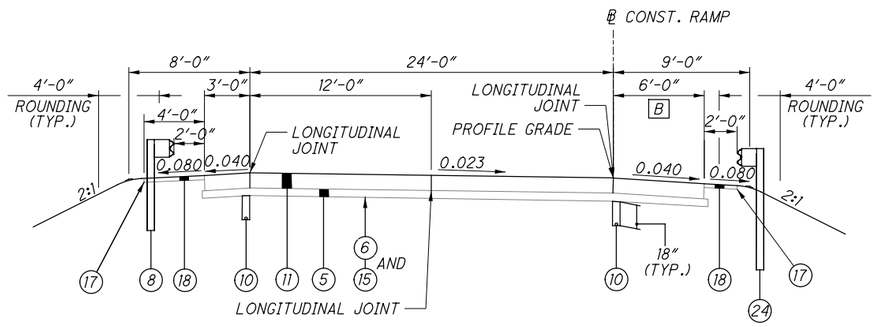

B VARIES: 6'-0" TO 11'-0" FROM STA. 42+08.78 TO STA. 42+58.78

SUPERELEVATED RAMP SECTION
MILLER ROAD - B-4

SECTION APPLIES:
STA. 41+00.00 TO STA. 43+15.20 = 215.20 FT

PROPOSED TYPICAL SECTIONS -RAMP B-4

DESIGN AGENCY
EUTHENICS
8235 Mohawk Dr. | Cleveland, OH 44138

DESIGNER
ANC

REVIEWER
DTB 07/19/21

PROJECT ID
104983

SHEET P.15 | TOTAL P.434

CUY-77-00.42 PART 1

MODEL: Sheet PAPERSIZE: 17x11 (in.) DATE: 3/4/2022 TIME: 1:12:06 PM USER: esmccaslin
F:\Jobs\11162-Miller Road Interchange\104983\400-Engineering\Roadway\Sheets\104983_GY501.dgn

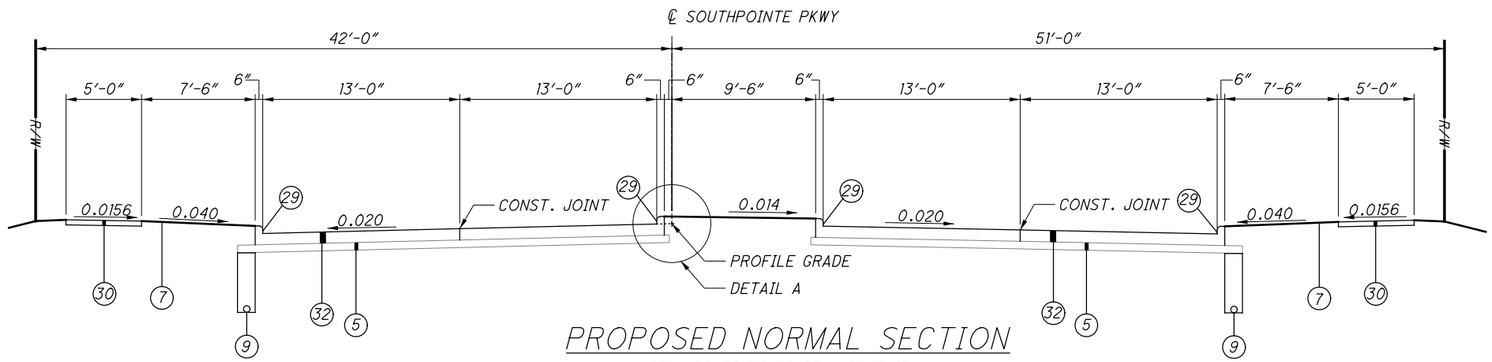

PROPOSED NORMAL SECTION

STA. 20+36.34 TO STA. 21+19.47

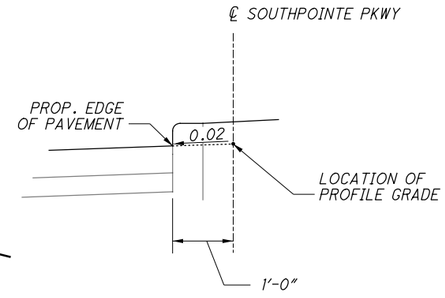

DETAIL A
P.G. LOCATION

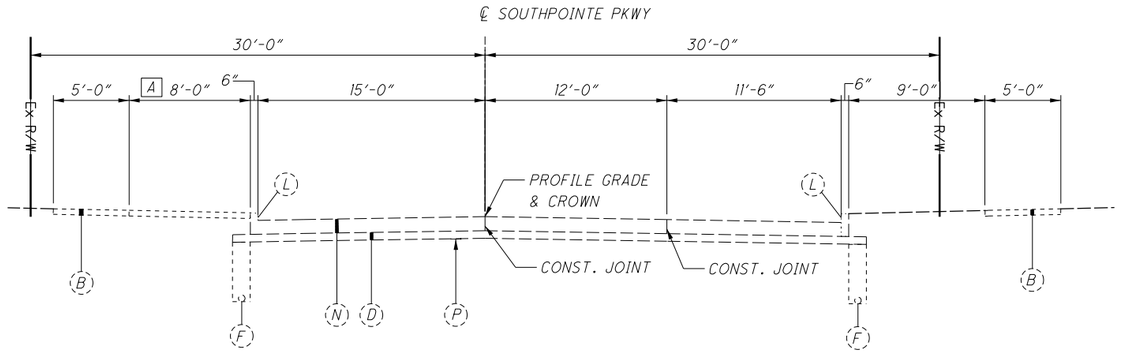

A THIS SECTION OF WALK BEGINS AT STA. 19+16.19

EXISTING NORMAL SECTION

STA. 18+57.13 TO STA. 19+65.85

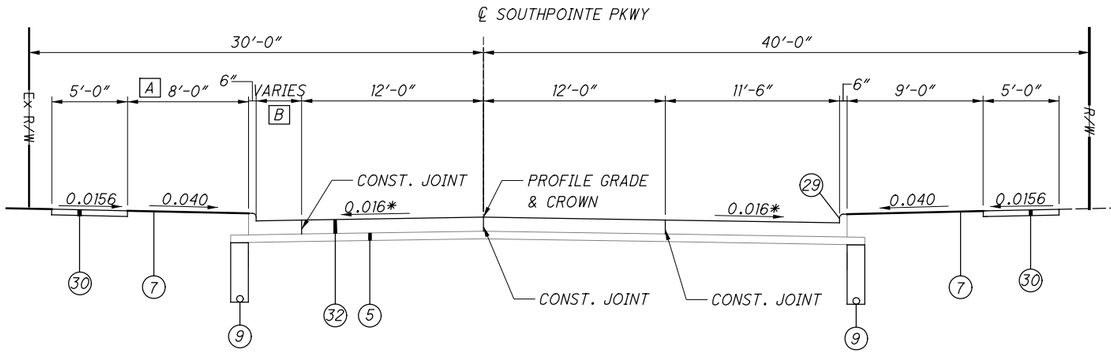

* TRANSITION TO MATCH EX. CROSS-SLOPE FROM STA. 18+57.13 TO STA. 18+67.13

PROPOSED NORMAL SECTION

STA. 18+58.80 TO STA. 19+65.85

A TRANSITIONS TO 6′-6″ AT CURB RAMP

B VARIES 2′-10″ TO 6′-10″ FROM STA. 18+58.80 TO STA. 18+98.81

CUY-77-00.42 PART 1

MODEL: 104983_GY601 PAPERSIZE: 17x11 (in.) DATE: 3/4/2022 TIME: 1:12:10 PM USER: esmccaslin
F:\Jobs\11162-Miller Road Interchange\104983400-Engineering\Roadway\Sheets\104983_GY601.dgn

TYPICAL SECTIONS - SOUTHPOINTE

DESIGN AGENCY
EUTHENICS
8235 Mohawk Dr. | Cleveland, OH 44130

DESIGNER	ANC
REVIEWER	DTB 03/01/22
PROJECT ID	104983
SHEET	P.16
TOTAL	P.434

UTILITIES

LISTED BELOW ARE ALL UTILITIES LOCATED WITHIN THE PROJECT CONSTRUCTION LIMITS TOGETHER WITH THEIR RESPECTIVE OWNERS:

AT&T OHIO
ATTN: ERIC JOHNSTON
PHONE: 216-476-6141
CELL: 412-680-9561
EMAIL: EJ1265@att.com

CEI FIRST ENERGY
6896 MILLER RD, SUITE 101
BRECKSVILLE, OH 44141
ATTN: JOHN M. ZASSICK
PHONE: 440-546-8706
EMAIL: jmzassick@firstenergycorp.com

CENTURYLINK
3801 ELM RD NE
WARREN, OH 44483
ATTN: DOUG HOLLOWAY
PHONE: 216-906-6284
EMAIL: relocations@lumen.com

CITY OF CLEVELAND WATER
1201 LAKESIDE AVENUE
CLEVELAND, OH 44114
ATTN: FRED ROBERTS
PHONE: 216-664-2444 EXT. 75590
EMAIL: fred_roberts@ClevelandWater.com

CUYAHOGA COUNTY DEPARTMENT OF PUBLIC WORKS
CUYAHOGA COUNTY ADMINISTRATIVE HEADQUARTERS
2079 E 9TH STREET, 5TH FLOOR
CLEVELAND, OH 44115
ATTN: LAURA WEBER
PHONE: 216-443-8205
EMAIL: laweber@cuyahogacounty.us

CUYAHOGA COUNTY DEPARTMENT OF PUBLIC WORKS
CUYAHOGA COUNTY PERMITS AND INSPECTION DEPARTMENT
2501 HARVARD AVENUE
NEWBURGH HEIGHTS, OH 44105
ATTN: JUSTIN PATRONITE
PHONE: 216-443-8209
EMAIL: jpatronite@cuyahogacounty.us

DOMINION ENERGY OHIO
320 SPRINGSIDE DRIVE, SUITE 320
AKRON, OHIO 44333
ATTN: MICAH J RISACHER @
2ND FLOOR RELOCATION DESIGN
PHONE: 330-664-2409
EMAIL: Relocation@dominionenergy.com,
Micah.J.Risacher@dominionenergy.com

DOMINION ENERGY TRANS
329 SPRINGSIDE DRIVE, SUITE 320
AKRON, OHIO 44333
ATTN: GILBERT ABI SALLOUM
PHONE: 330-351-7700
EMAIL: GilbertAbiSalloum@usicllc.com

SPECTRUM (CHARTER COMMUNICATIONS)
578 TERNES LN
ELYRIA, OH 44035
ATTN: JOSHUA CURTIS
PHONE: 440-343-2146
EMAIL: Joshua.Curtis@charter.com

VERIZON (MCI)
12300 RIDGE ROAD
NORTH ROYALTON, OHIO 44133
ATTN: DAN ARZ
OFFICE: 440-457-4832
CELL: 216-570-9343
EMAIL: daniel.arz@verizon.com

ZAYO FIBER SOLUTIONS
4199 KINROSS LAKES PARKWAY, SUITE 10
RICHFIELD, OH 44286
ATTN: DAVE GALUSKA
PHONE: 234-281-0025
EMAIL: dave.galuska@zayo.com

UTILITIES

THE LOCATION OF THE UNDERGROUND UTILITIES SHOWN ON THE PLANS ARE AS OBTAINED FROM THE OWNERS AS REQUIRED BY SECTION 153.64 O.R.C.

GENERAL

CONSTRUCTION NOTIFICATION

THE CONTRACTOR WILL ADVISE THE PROJECT ENGINEER A MINIMUM OF FOURTEEN (14) DAYS PRIOR TO THE FOLLOWING: THE START OF CONSTRUCTION ACTIVITIES, LANE CLOSURES, AND ROAD CLOSURES. THE PROJECT ENGINEER WILL FORWARD THIS INFORMATION TO THE CITY OF BRECKSVILLE AND ANY OTHER LOCAL OFFICIALS RESPONSIBLE FOR PUBLIC NOTIFICATION. THAT OFFICIAL WILL, IN TURN, NOTIFY THE PUBLIC, THE LOCAL EMERGENCY SERVICES, AFFECTED SCHOOLS AND BUSINESSES, AND ANY OTHER IMPACTED LOCAL PUBLIC AGENCY OF THE ABOVE MENTIONED ITEMS, VIA THE APPROPRIATE MEDIA SOURCES.

ROUNDING

THE ROUNDING AT SLOPE BREAKPOINTS SHOWN ON THE TYPICAL SECTIONS APPLIES TO ALL CROSS-SECTIONS, EVEN THOUGH OTHERWISE SHOWN.

EXISTING PLANS

EXISTING PLANS ENTITLED CUY-77-00.00/SUM-77-33.07 (PID 79671), CUY-77-00.82 (PID 19138), AND SUM-77-31.08/CUY-77-00.00 (I.R. 77 ORIGINAL CONSTRUCTION PLANS DATED 1965) MAY BE INSPECTED IN THE ODOT DISTRICT 12 OFFICE IN GARFIELD HEIGHTS.

CONSTRUCTION NOISE

ACTIVITIES AND LAND USE ADJACENT TO THIS PROJECT MAY BE AFFECTED BY CONSTRUCTION NOISE. IN ORDER TO MINIMIZE ANY ADVERSE CONSTRUCTION NOISE IMPACTS, NOISE SHALL BE RESTRICTED DURING THE FOLLOWING HOURS:

MONDAY - FRIDAY	9PM TO 7AM
SATURDAY	10PM TO 7AM
SUNDAY	9PM TO 7AM

AND ON CHRISTMAS, NEW YEAR'S DAY, MEMORIAL DAY, FOURTH OF JULY, LABOR DAY OR THANKSGIVING DAY. THE FOLLOWING ACTIVITIES SHALL NOT BE PERFORMED DURING THE RESTRICTED HOURS LISTED ABOVE:

PILE DRIVING
BRIDGE BEAM PAINT PREPARATION
HOE-RAMS
JACK HAMMERS
VIBRATORY ROLLER COMPACTING EARTH

IN ADDITION, DO NOT OPERATE AT ANY TIME ANY DEVICE IN SUCH A MANNER THAT THE NOISE CREATED SUBSTANTIALLY EXCEEDS THE NOISE CUSTOMARILY AND NECESSARILY ATTENDANT TO THE REASONABLE AND EFFICIENT PERFORMANCE OF SUCH EQUIPMENT.

SURVEYING PARAMETERS

PRIMARY PROJECT CONTROL MONUMENTS GOVERN ALL POSITIONING ON ODOT PROJECTS. SEE SHEET 3 OF 34 OF THE RIGHT OF WAY PLANS FOR A TABLE CONTAINING PROJECT CONTROL INFORMATION.

USE THE FOLLOWING PROJECT CONTROL, VERTICAL POSITIONING, AND HORIZONTAL POSITIONING PARAMETERS FOR ALL SURVEYING:
PROJECT CONTROL

POSITIONING METHOD: ODOT VRS
MONUMENT TYPE: TYPE A

VERTICAL POSITIONING

ORTHOMETRIC HEIGHT DATUM: NAVD 88
GEOID: 18

HORIZONTAL POSITIONING

REFERENCE FRAME: NAD83 (2011)
ELLIPSOID: GRS 80
MAP PROJECTION: LAMBERT CONFORMAL CONIC
COORDINATE SYSTEM: OHIO STATE PLANE - NORTH ZONE
COMBINED SCALE FACTOR: 1.0001012102
ORIGIN OF COORDINATE
SYSTEM: 0,0

USE THE POSITIONING METHODS AND MONUMENT TYPE USED IN THE ORIGINAL SURVEY TO RESTORE ALL MONUMENTS RELATED TO PRIMARY PROJECT CONTROL THAT ARE DAMAGED OR DESTROYED BY CONSTRUCTION ACTIVITIES. RESTORE THE DAMAGED OR DESTROYED MONUMENTS IN ACCORDANCE WITH CMS 623.

UNITS ARE IN U.S. SURVEY FEET.

WORK LIMITS

THE WORK LIMITS SHOWN ON THESE PLANS ARE FOR PHYSICAL CONSTRUCTION ONLY. PROVIDE THE INSTALLATION AND OPERATION OF ALL WORK ZONE TRAFFIC CONTROL AND WORK ZONE TRAFFIC CONTROL DEVICES REQUIRED BY THESE PLANS WHETHER INSIDE OR OUTSIDE THESE WORK LIMITS.

CLEARING AND GRUBBING

ALTHOUGH THERE ARE NO TREES OR STUMPS SPECIFICALLY MARKED FOR REMOVAL WITHIN THE LIMITS OF THE PROJECT, A LUMP SUM QUANTITY IS INCLUDED IN THE GENERAL SUMMARY FOR ITEM 201, CLEARING AND GRUBBING. ALL PROVISIONS AS SET FORTH IN THE SPECIFICATIONS UNDER THIS ITEM ARE INCLUDED IN THE LUMP SUM PRICE BID FOR ITEM 201, CLEARING AND GRUBBING.

MONUMENT ASSEMBLIES

CONSTRUCT MONUMENT ASSEMBLIES IN ACCORDANCE WITH THE DETAILS SHOWN ON THE STANDARD CONSTRUCTION DRAWINGS AND AT THE LOCATIONS SHOWN ON SHEET NOS. 3 OF 34 AND 4 OF 34 OF THE RIGHT OF WAY PLANS.

AIRWAY/HIGHWAY CLEARANCE FOR AIRPORTS AND HELIPORTS

THIS PROJECT HAS BEEN IDENTIFIED AS BEING WITHIN THE INFLUENCE AREA OF A PUBLIC USE AIRPORT OR HELIPORT. NO TEMPORARY STRUCTURES OR CONSTRUCTION EQUIPMENT AT MAXIMUM OPERATING HEIGHT SHALL EXCEED A HEIGHT OF 217 FT. IF ANY TEMPORARY STRUCTURES OR CONSTRUCTION EQUIPMENT WILL EXCEED THIS HEIGHT, FURTHER COORDINATION WITH THE FEDERAL AVIATION ADMINISTRATION (FAA), AND ODOT OFFICE OF AVIATION, WILL BE NECESSARY PRIOR TO ERECTING SUCH TEMPORARY STRUCTURES OR OPERATING SUCH EQUIPMENT ON THE PROJECT. THE CONTRACTOR WILL BE REQUIRED TO SUBMIT FORM 7460-1 TO THE FAA. NOTIFY THE ODOT OFFICE OF AVIATION WHEN SUBMITTING FAA FORM 7460-1.

NO TEMPORARY STRUCTURES OR CONSTRUCTION EQUIPMENT SHALL EXCEED THE PERMISSIBLE HEIGHT, UNTIL A COPY OF THE FAA APPROVAL AND THE ODOT OFFICE OF AVIATION PERMIT HAS BEEN FURNISHED TO THE PROJECT ENGINEER.

FEDERAL AVIATION ADMINISTRATION
SOUTHWEST REGIONAL OFFICE
OBSTRUCTION EVALUATION GROUP
10101 HILLWOOD PARKWAY
FORT WORTH, TX 76177
FAX: (817) 222-5920
HTTP://CEAAA.FAA.GOV

OHIO DEPARTMENT OF TRANSPORTATION
OFFICE OF AVIATION
2829 WEST DUBLIN-GRANVILLE ROAD
COLUMBUS, OHIO 43235
OHIO.AIRPORT.PROTECTION@DOT.OHIO.GOV

ROADWAY

ITEM 202 - REMOVAL MISC.: CONCRETE SLAB REMOVAL

THIS ITEM SHALL CONSIST OF REMOVING A PORTION OF A 12"± THICK CONCRETE SLAB LOCATED WITHIN A DEBRIS PILE. THE CONTRACTOR SHALL SAW CUT AND REMOVE AND DISPOSE OF THE PORTION OF THE CONCRETE SLAB WITHIN THE LIMITS OF PROPOSED RIGHT OF WAY.

PAYMENT FOR THE ABOVE WORK SHALL BE MADE AT THE UNIT PRICE BID FOR ITEM 202 - REMOVAL MISC.: CONCRETE SLAB REMOVAL, EACH, AND SHALL INCLUDE ALL LABOR, TOOLS, EQUIPMENT MATERIALS NECESSARY TO REMOVE AND DISPOSE OFFSITE PORTIONS OF A CONCRETE SLAB.

GENERAL NOTES

DESIGN AGENCY
EUTHENICS
8335 Hofstetter Dr. | Cleveland, OH 44129

DESIGNER ESM
REVIEWER DTB 03/01/22
PROJECT ID 104983
SHEET P.17 TOTAL P.434

CUY-77-00.42 PART 1

MODEL: Sheet PAPERSIZE: 17x11 (in.) DATE: 3/4/2022 TIME: 1:12:13 PM USER: esmcastlin
F:\Jobs\11162-Miller Road Interchange\104983\400-Engineering\Roadway\Sheets\104983_GN001.dgn

ROADWAY - CONT.

ITEM 203 - EXCAVATION, AS PER PLAN

THIS ITEM SHALL CONSIST OF REMOVING RANDOM FILL AND SOFT MANURE STOCKPILE ALONG RAMP B-3. THIS MATERIAL SHALL BE EXCAVATED AND HAULED OFFSITE TO AN APPROVED DUMPSITE THAT CAN DISPOSE OF THE MATERIAL IN ACCORDANCE WITH ALL REGULATIONS. REPLACEMENT MATERIAL WILL BE PAID FOR SEPARATELY UNDER ITEM 203 - EMBANKMENT.

PAYMENT FOR THE ABOVE WORK SHALL BE MADE AT THE UNIT PRICE BID FOR ITEM 203 - EXCAVATION, AS PER PLAN, CUBIC YARD, AND SHALL INCLUDE ALL LABOR, TOOLS, EQUIPMENT AND MATERIALS NECESSARY TO REMOVE AND DISPOSE OFFSITE RANDOM FILL AND SOFT MANURE STOCKPILE ALONG RAMP B-3.

ITEM 203 - SETTLEMENT PLATFORM

CONTRACTOR SHALL PROVIDE SETTLEMENT PLATFORMS TO BE PLACED IN HIGH FILL AREAS ON RAMPS B-3 AND B-4 AT 100 FOOT INTERVALS ALONG THE ROADWAY ALIGNMENT. THE FOLLOWING QUANTITY HAS BEEN CARRIED TO THE GENERAL SUMMARY:

ITEM 203 - SPECIAL SETTLEMENT PLATFORM ____6 EACH

ITEM 204 - PROOF ROLLING

THE FOLLOWING QUANTITY IS PROVIDED IN THE GENERAL SUMMARY TO ADDRESS LOCATIONS REQUIRING PROOF ROLLING.

ITEM 204 - PROOF ROLLING _____ 12 HOURS.

ITEM 204 - SUBGRADE COMPACTION AND PROOF ROLLING

CONSTRUCT THE SUBGRADE AS FOLLOWS AND IN THE FOLLOWING SEQUENCE:

1. SHAPE THE SUBGRADE TO WITHIN 0.2 FEET OF THE PLAN SUBGRADE ELEVATION.

2. EXCAVATE AND REPLACE UNSUITABLE SUBGRADE BEFORE PROOF ROLLING. THE EXCAVATION LIMITS ARE SHOWN AND LABELED ON THE CROSS SECTIONS AS UNSUITABLE SUBGRADE. UNSUITABLE SUBGRADE INCLUDES UNSUITABLE SOIL (A-4B, A-2-5, A-5, A-7-5, AND SOIL WITH A LIQUID LIMIT GREATER THAN 65) AND ANY COAL, SHALE, OR ROCK WHICH NEEDS TO BE REMOVED ACCORDING TO SECTION 204.05 OF THE CONSTRUCTION AND MATERIAL SPECIFICATIONS (C&MS).

   IF THERE IS UNSUITABLE SUBGRADE IN A SHALLOW FILL LOCATION, EXCAVATE AND REPLACE THE UNSUITABLE SUBGRADE BEFORE CONSTRUCTING THE SHALLOW FILL AND SHAPING THE SUBGRADE.

3. COMPACT THE SUBGRADE ACCORDING TO C&MS 204.03.

4. APPROXIMATE LIMITS FOR EXCAVATION OF UNSTABLE SUBGRADE ARE SHOWN AND LABELED ON THE CROSS SECTIONS AS UNSTABLE SUBGRADE. THE ENGINEER WILL IDENTIFY THE ACTUAL LIMITS OF EXCAVATION FOR UNSTABLE SUBGRADE BASED ON THE PROOF ROLLING RESULTS AND VISUAL OBSERVATIONS.

   PROOF ROLL THE COMPACTED SUBGRADE ACCORDING TO C&MS 204.06.

5. EXCAVATE UNSTABLE SUBGRADE AS DIRECTED BY THE ENGINEER AND STABILIZE BY REPLACING WITH THE SPECIFIED MATERIALS ACCORDING TO C&MS 204.07. EXCAVATIONS WILL EXTEND 18 INCHES BEYOND THE EDGE OF THE SURFACE OF THE PAVEMENT, PAVED SHOULDERS, OR PAVED MEDIANS.

6. PROOF ROLL THE STABILIZED AREAS ACCORDING TO C&MS 204.06 TO VERIFY STABILITY.

7. FINE GRADE THE SUBGRADE TO THE SPECIFIED GRADE.

THE QUANTITIES FOR EXCAVATING THE UNSUITABLE SUBGRADE AND UNSTABLE SUBGRADE ARE BOTH PAID UNDER ITEM 204, EXCAVATION OF SUBGRADE.

ITEM 209 – LINEAR GRADING, AS PER PLAN

THIS ITEM OF WORK SHALL CONSIST OF GRADING ALONG THE OUTSIDE EDGE OF THE PAVED SHOULDER TO ELIMINATE HIGH SPOTS AND PROVIDE POSITIVE SHEET FLOW OFF THE PAVEMENT AND SHOULDER INTO ROADSIDE DITCHES OR DRAINAGE STRUCTURES. THIS ITEM IS NOT INTENDED TO BE USED TO EXCAVATE A UNIFORM DEPTH TO PLACE ITEM 617 – COMPACTED AGGREGATE, AS PER PLAN.

ANY DEBRIS COLLECTED SHALL BE REMOVED AND DISPOSED OF AS SPECIFIED IN SECTION 105.16 & 105.17 OF THE CONSTRUCTION AND MATERIAL SPECIFICATIONS.

PAYMENT FOR THE ABOVE WORK SHALL BE MADE AT THE UNIT BID PRICE FOR ITEM 209, STATION, LINEAR GRADING, AS PER PLAN AND SHALL INCLUDE ALL LABOR, TOOLS, EQUIPMENT AND MATERIALS NECESSARY TO PERFORM THIS ITEM OF WORK.

THE FOLLOWING ESTIMATED QUANTITY HAS BEEN CARRIED TO THE GENERAL SUMMARY FOR USE AS DIRECTED BY THE ENGINEER:

ITEM 209 – LINEAR GRADING, AS PER PLAN _____ 152 STA.

ITEM 209 – RESHAPING UNDER GUARDRAIL, AS PER PLAN

THIS ITEM OF WORK SHALL BE USED TO PREPARE PROPOSED AND EXISTING GUARDRAIL RUNS FOR PAVING UNDER GUARDRAIL, INCLUDING THE REMOVAL AND DISPOSAL OF EXISTING ASPHALT UNDER GUARDRAIL.

FILL ALL HOLES REMAINING AFTER REMOVAL OF GUARDRAIL POSTS AND ANCHOR ASSEMBLIES WITH GRANULAR MATERIAL. DO NOT USE FILL MATERIAL CONTAINING SOD. ALL FILL MATERIAL SHALL BE APPROVED BY THE ENGINEER AND SHALL BE COMPACTED AS DIRECTED BY THE ENGINEER. PAYMENT FOR THE ABOVE IS INCLUDED IN THE APPLICABLE GUARDRAIL ITEM.

RESHAPE AND COMPACT SUBGRADE TO ENSURE POSITIVE DRAINAGE. ESTABLISH A CROSS SLOPE OF 0.042 (HALF INCH PER FOOT). GRADE TO A MAXIMUM WIDTH OF 6' TO PROVIDE POSITIVE DRAINAGE AWAY FROM THE TRAVEL LANES.

ALL COLLECTED DEBRIS AND TOPSOIL SHALL BE REMOVED AND DISPOSED OF AS SPECIFIED IN SECTION 105.17 OF THE CMS.

IN AREAS WHERE ASPHALT UNDER GUARDRAIL WILL NOT BE REPLACED, THE REMOVED MATERIAL SHALL BE REPLACED WITH COMPACTABLE GRANULAR MATERIAL CONFORMING TO 703.16 AND PLACED TO GRADE AS APPROVED BY THE ENGINEER. SEED AND MULCH THESE AREAS ACCORDING TO SECTION 659.

IN AREAS WHERE EXISTING PAVEMENT WILL NOT BE PLANED, AFTER THE EXISTING ASPHALT UNDER GUARDRAIL IS REMOVED, COMPACTED GRANULAR MATERIAL SHALL BE PLACED WITHIN 3" OF FINAL PAVEMENT ELEVATION IN PREPARATION OF THE ASPHALT UNDER GUARDRAIL.

PAYMENT FOR THE ABOVE WORK SHALL BE MADE AT THE UNIT BID PRICE FOR ITEM 209 – RESHAPING UNDER GUARDRAIL, AS PER PLAN AND SHALL INCLUDE ALL LABOR, TOOLS, EQUIPMENT AND MATERIALS NECESSARY TO PERFORM THE WORK.

ITEM 606 - ANCHOR ASSEMBLY, MGS TYPE B

THIS ITEM SHALL CONSIST OF FURNISHING AND INSTALLING ANY OF THE GUARDRAIL END TERMINALS FOR TYPE MGS GUARDRAIL AS LISTED ON ROADWAY ENGINEERING'S WEB PAGE UNDER ROADSIDE SAFETY DEVICES FOR APPROVED GUARDRAIL END TREATMENTS. INSTALLATION SHALL BE AT THE LOCATIONS SPECIFIED IN THE PLANS, IN ACCORDANCE WITH THE MANUFACTURER'S SPECIFICATIONS.

REFER TO THE MANUFACTURER'S INSTRUCTIONS REGARDING THE INSTALLATION OF, AND THE GRADING AROUND, THE FOUNDATION TUBES AND GROUND STRUT. THE TOP OF ANY FOUNDATION TUBE SHOULD BE LESS THAN 4 INCHES ABOVE THE GROUND. THE PLACEMENT OF THE FOUNDATION TUBES SHOULD BE AN APPROPRIATE DEPTH BELOW THE LEVEL LINE IN ORDER TO MAINTAIN THE FINISHED GUARDRAIL HEIGHT OF 31 INCHES FROM THE EDGE OF THE SHOULDER.

ON-SITE GRADING IS REQUIRED IF THE TOP OF THE FOUNDATION TUBES OR TOP OF THE GROUND STRUT DOES PROJECT MORE THAN 4 INCHES ABOVE THE GROUND LINE.

THE FACE OF THE TYPE B IMPACT HEAD SHALL BE COVERED WITH TYPE G REFLECTIVE SHEETING, PER CMS 730.19.

PAYMENT FOR THE ABOVE WORK SHALL BE MADE AT THE UNIT PRICE BID FOR ITEM 606, ANCHOR ASSEMBLY, MGS TYPE B, EACH, AND SHALL INCLUDE ALL LABOR, TOOLS, EQUIPMENT AND MATERIALS NECESSARY TO CONSTRUCT A COMPLETE AND FUNCTIONAL ANCHOR ASSEMBLY SYSTEM, INCLUDING REFLECTIVE SHEETING AND ALL RELATED HARDWARE, GRADING, EMBANKMENT AND EXCAVATION NOT SEPARATELY SPECIFIED, AS REQUIRED BY THE MANUFACTURER.

ITEM 606 - ANCHOR ASSEMBLY, MGS TYPE E (MASH 2016 OR NCHRP 350)

THIS ITEM SHALL CONSIST OF FURNISHING AND INSTALLING ANY OF THE GUARDRAIL END TERMINALS FOR TYPE MGS GUARDRAIL AS LISTED ON ROADWAY ENGINEERING'S WEB PAGE UNDER ROADSIDE SAFETY DEVICES FOR APPROVED GUARDRAIL END TREATMENTS. INSTALLATION SHALL BE AT THE LOCATIONS SPECIFIED IN THE PLANS, IN ACCORDANCE WITH THE MANUFACTURER'S SPECIFICATIONS.

THE FACE OF THE TYPE E IMPACT HEAD SHALL BE COVERED WITH A SHEET OF TYPE G REFLECTIVE SHEETING, PER CMS 730.19.

REFER TO THE MANUFACTURER'S INSTRUCTIONS REGARDING THE INSTALLATION OF, AND THE GRADING AROUND THE FOUNDATION TUBES AND GROUND STRUT. THE TOP OF ANY FOUNDATION TUBE SHOULD BE LESS THAN 4 INCHES ABOVE THE GROUND. THE PLACEMENT OF THE FOUNDATION TUBES SHOULD BE AN APPROPRIATE DEPTH BELOW THE LEVEL LINE IN ORDER TO MAINTAIN THE FINISHED GUARDRAIL HEIGHT OF 31 INCHES FROM THE EDGE OF THE SHOULDER.

ON-SITE GRADING IS REQUIRED IF THE TOP OF THE FOUNDATION TUBES OR TOP OF THE GROUND STRUT DOES PROJECT MORE THAN 4 INCHES ABOVE THE GROUND LINE.

PAYMENT FOR THE ABOVE WORK SHALL BE MADE AT THE UNIT PRICE BID FOR ITEM 606, ANCHOR ASSEMBLY, MGS TYPE E, EACH, AND SHALL INCLUDE ALL LABOR, TOOLS, EQUIPMENT AND MATERIALS NECESSARY TO CONSTRUCT A COMPLETE AND FUNCTIONAL ANCHOR ASSEMBLY SYSTEM, INCLUDING ALL RELATED TRANSITIONS, REFLECTIVE SHEETING, HARDWARE, GRADING, EMBANKMENT AND EXCAVATION NOT SEPARATELY SPECIFIED, AS REQUIRED BY THE MANUFACTURER.

ITEM 606 - IMPACT ATTENUATOR, TYPE 2 (UNIDIRECTIONAL OR BIDIRECTIONAL)

THIS ITEM SHALL CONSIST OF FURNISHING AND INSTALLING ANY OF THE TYPE 2 IMPACT ATTENUATORS AS LISTED ON THE OFFICE OF ROADWAY ENGINEERING'S WEB PAGE (REFER TO THE POSTED SHOP DRAWINGS FOR THE MOST CURRENT APPROVED PRODUCT MODELS). WHEN BI-DIRECTIONAL DESIGNS ARE SPECIFIED, THE CONTRACTOR SHALL SUPPLY APPROPRIATE TRANSITIONS.

PAYMENT FOR THE ABOVE WORK SHALL BE MADE AT THE UNIT PRICE BID FOR ITEM 606, IMPACT ATTENUATOR, TYPE 2 [(SPEED (IN MPH), HAZARD WIDTH (IN INCHES)), (UNIDIRECTIONAL OR BIDIRECTIONAL)], EACH, AND SHALL INCLUDE ALL LABOR, TOOLS, EQUIPMENT AND MATERIALS NECESSARY TO CONSTRUCT A COMPLETE AND FUNCTIONAL IMPACT ATTENUATOR SYSTEM, INCLUDING ALL RELATED BACKUPS/BACKSTOPS, TRANSITIONS, HARDWARE AND GRADING, NOT SEPARATELY SPECIFIED, AS REQUIRED BY THE MANUFACTURER. INSTALLATION SHALL BE AT THE LOCATIONS SPECIFIED IN THE PLANS, IN ACCORDANCE WITH THE MANUFACTURER'S SPECIFICATIONS.

ITEM 606 - CABLE GUARDRAIL

THIS ITEM SHALL CONSIST OF FURNISHING AND INSTALLING ANY ONE OF THE HIGH TENSION FOUR CABLE GUARDRAIL SYSTEMS AS LISTED ON THE OFFICE OF ROADWAY ENGINEERING'S WEB PAGE. PAYMENT FOR THE ABOVE WORK SHALL BE MADE AT THE UNIT PRICE BID FOR ITEM 606, CABLE BARRIER WITH CONCRETE LINE POST FOUNDATION, AND ITEM 606 CABLE BARRIER, ANCHOR ASSEMBLY AND SHALL INCLUDE ALL LABOR, TOOLS, EQUIPMENT AND MATERIALS NECESSARY TO CONSTRUCT A COMPLETE AND FUNCTIONAL HIGH TENSION CABLE GUARDRAIL SYSTEM NOT SEPARATELY SPECIFIED, AS REQUIRED BY THE MANUFACTURER. THE LENGTH OF THE TENSIONED CABLE NECESSARY TO INSTALL A FUNCTIONAL ANCHOR SYSTEM SHALL BE INCLUDED IN ITEM 606, CABLE BARRIER WITH CONCRETE LINE POST FOUNDATION.

INSTALLATION SHALL BE AT THE LOCATIONS SPECIFIED IN THE PLANS, IN ACCORDANCE WITH THE MANUFACTURER'S SPECIFICATIONS.

SYSTEMS SHALL HAVE A MAXIMUM DEFLECTION OF 8 FEET AND THE MAXIMUM LONGITUDINAL DISTANCE BETWEEN POSTS SHALL BE 15 FEET.

INSTALLATION WILL BE A FOUR CABLE HIGH TENSION SYSTEM INSTALLED IN SOCKETED POSTS FOUNDATION WITH A FOUR FOOT WIDE "NO MOW STRIP".

DELINEATE THE CABLE BARRIER USING TYPE 6 BARRIER REFLECTORS PER ITEM 626 OR USING FLEXIBLE POSTS PER ITEM 620 AS CALLED FOR IN THE PLANS OR DIRECTED BY THE ENGINEER.

ANCHOR TERMINAL STRUTS SHALL BE COVERED COMPLETELY ON BOTH SIDES WITH YELLOW TYPE J, ASTM D 4956 TYPE XI REFLECTIVE SHEETING, PER CMS 730.193.

TRANSITIONS TO W-BEAM GUARDRAIL ARE NOT ALLOWED.

REFER TO MANUFACTURER FOR MAXIMUM OFFSET FROM BREAK POINT.

GENERAL NOTES

MODEL: Sheet PAPERSIZE: 17x11 (in.) DATE: 3/4/2022 TIME: 1:12:17 PM USER: esmcastlin
F:\Jobs\11162-Miller Road Interchange\104983\400-Engineering\Roadway\Sheets\104983_GN002.dgn

DESIGN AGENCY
EUTHENICS
8235 Mohawk Dr. | Cleveland, OH 44539
DESIGNER
ESM
REVIEWER
DTB 03/01/22
PROJECT ID
104983
SHEET P.18 TOTAL P.434

ROADWAY CONT.

ITEM 606 - IMPACT ATTENUATOR, TYPE 2 (UNIDIRECTINAL OR BI-DIRECTIONAL), CONT.

TORPEDO OR BULLET SPLICES ARE NOT ALLOWED. ALL CABLE SPLICES SHALL BE A SWAGED OR OPEN BODY DESIGN THAT ALLOWS FOR ANNUAL INSPECTION BETWEEN THE WEDGE AND STRANDS OF CABLE.

POSTS ARE SET IN SOCKETED CONCRETE FOUNDATIONS AND SHALL NOT BE PERMANENTLY INSTALLED UNTIL THEIR RESPECTIVE RUNS OF TENSIONED CABLE GUARDRAIL ARE READY FOR FINAL CONNECTION TO THE END TERMINAL ASSEMBLY. THE CONTRACTOR SHALL REPLACE ANY POSTS DAMAGED DURING INSTALLATION AS DETERMINED BY THE ENGINEER AT NO ADDITIONAL COST TO THE STATE.

ITEM 608 - 4" CONCRETE WALK, AS PER PLAN

IN ADDITION TO THE REQUIREMENTS OF ODOT CMS ITEM 608, THE CONCRETE WALK SHALL HAVE 6" X 6" - W1.4x W1.4 WOVEN WIRE FABRIC.

PAYMENT SHALL INCLUDE ALL LABOR, MATERIAL, AND EQUIPMENT NECESSARY TO PERFORM THE WORK, INCLUDING THE WOVEN WIRE FABRIC, AND THIS ITEM SHALL BE PAID AT THE CONTRACT PRICE BID PER SQUARE YARD OF ITEM 608, 4" CONCRETE WALK, AS PER PLAN.

BENCHING OF FOUNDATION SLOPES

ALTHOUGH CROSS-SECTIONS INDICATE SPECIFIC DIMENSIONS FOR PROPOSED BENCHING OF THE EMBANKMENT FOUNDATIONS IN CERTAIN AREAS, NO WAIVER OF THE SPECIFICATIONS IS INTENDED. BENCH ALL OTHER SLOPED EMBANKMENT AREAS AS SET FORTH IN SECTION 203.05 OF THE CONSTRUCTION AND MATERIAL SPECIFICATIONS (C&MS) AND GEOTECHNICAL BULLETIN GB 2 AND AS DIRECTED BY THE ENGINEER. NO ADDITIONAL PAYMENT WILL BE MADE FOR BENCHING REQUIRED UNDER THE PROVISIONS OF SECTION 203.05.

REMOVAL AND REPLACEMENT OF SOFT SUBGRADE

WHERE SOFT SUBGRADE IS ENCOUNTERED UNDER EXISTING PAVEMENT TO BE REMOVED AND REPLACED AND DUE TO NO FAULT OR NEGLECT OF THE CONTRACTOR, IT SHALL BE EXCAVATED, REMOVED, AND REPLACED WITH SUITABLE MATERIAL IN ACCORDANCE WITH 204. THE FOLLOWING CONTINGENCY QUANTITIES HAVE BEEN ESTABLISHED FOR USE AS DIRECTED BY THE ENGINEER. ALTHOUGH THE ACTUAL QUANTITIES MAY VARY SIGNIFICANTLY, THE CONTRACTOR WILL BE PAID AT THE UNIT COST FOR THE ACTUAL QUANTITY OF THE PERTINENT BID ITEM INSTALLED COMPLETE:

ITEM 204 - EXCAVATION OF SUBGRADE, AS DIRECTED ____ CU. YD
ITEM 204 - GRANULAR MATERIAL, TYPE B, AS DIRECTED___ CU. YD
ITEM 204 - GEOTEXTILE FABRIC, AS DIRECTED _____ SQ. YD

LOCATION	APPROXIMATE STATION	RECOMMENDATIONS
MILLER ROAD	66+12 TO 69+19	UNDERCUT 24"
	69+19 TO 70+80	UNDERCUT 15"
	70+80 TO 74+41	UNDERCUT 12"
	74+41 TO 79+71	UNDERCUT 24"
	79+71 TO 81+73	UNDERCUT 15"
	81+73 TO 83+00	UNDERCUT 12"
IR-77	18+26 TO 21+75	UNDERCUT 18"

EROSION CONTROL

SEEDING AND MULCHING

THE FOLLOWING QUANTITIES ARE PROVIDED TO PROMOTE GROWTH AND CARE OF PERMANENT SEEDED AREAS:

ITEM 659 - SOIL ANALYSIS TEST _____ 2 EACH
ITEM 659 - TOPSOIL _____ 3,525 CU. YD.
ITEM 659 - SEEDING AND MULCHING _____ 31,760 SQ. YD.
ITEM 659 - REPAIR SEEDING AND MULCHING ___ 1,588 SQ. YD.
ITEM 659 - INTER-SEEDING _____ 1,588 SQ. YD.
ITEM 659 - COMMERCIAL FERTILIZER _____ 4 TON
ITEM 659 - LIME _____ 7 ACRES
ITEM 659 - WATER _____ 176 M. GAL.
ITEM 659 - MOWING _____ 71 M. SQ.FT.

SEEDING AND MULCHING SHALL BE APPLIED TO ALL AREAS OF EXPOSED SOIL BETWEEN THE RIGHT-OF-WAY LINES, AND WITHIN THE CONSTRUCTION LIMITS FOR AREAS OUTSIDE THE RIGHT-OF-WAY LINES COVERED BY WORK AGREEMENT OR SLOPE EASEMENT. QUANTITY CALCULATIONS FOR SEEDING AND MULCHING ARE BASED ON THESE LIMITS.

ENVIRONMENTAL COMMITMENTS

ASBESTOS NOTIFICATION

A CERTIFIED ASBESTOS HAZARD EVALUATION SPECIALIST SURVEYED THE BRIDGE STRUCTURE SCHEDULED FOR DEMOLTION AND/OR REHABILITATION; THE SURVEY DETERMINED THAT NO ASBESTOS IS PRESENT ON THE BRIDGE STRUCTURE.

ODOT SHALL PROVIDE A COPY OF THE OHIO ENVIRONMENTAL PROTECTION AGENCY (OEPA) NOTIFICATION OF DEMOLITION AND RENOVATION FORM, PARTIALLY COMPLETED AND SIGNED BY THE BRIDGE OWNER, TO THE SUCCESSFUL BIDDER.

THE CONTRACTOR SHALL COMPLETE THE FORM AND SUBMIT IT TO ONE OF THE ADDRESSES BELOW AT LEAST TEN (10) WORKING DAYS PRIOR TO THE START OF ANY DEMOLITION AND/OR RENOVATION.

ASBESTOS PROGRAM
OHIO EPA, DAPC
P.O. BOX 1049
COLUMBUS, OH 43216-1049
OR

ASBESTOS PROGRAM
OHIO EPA, DAPC
50 W. TOWN ST., SUITE 700
COLUMBUS, OH 43215

THE CONTRACTOR SHALL PROVIDE A COPY OF THE COMPLETED FORM TO THE ENGINEER AT LEAST TEN (10) WORKING DAYS PRIOR TO THE START OF ANY DEMOLITION AND/OR RENOVATION. THE FORM SHALL INCLUDE: 1) THE CONTRACTORS NAME AND ADDRESS, 2) THE SCHEDULED DATES FOR THE START AND COMPLETION OF THE BRIDGE REMOVAL AND 3) A DESCRIPTION OF THE PLANNED DEMOLITION WORK AND THE METHOD(S) TO BE USED. COPIES OF THE OEPA FORM AND BRIDGE INSPECTION REPORT ARE AVAILABLE FOR REVIEW AT THE ODOT DISTRICT 12 OFFICE, 5500 TRANSPORTATION BOULEVARD, GARFIELD HEIGHTS, OHIO 44125.

BASIS FOR PAYMENT THE CONTRACTOR SHALL FURNISH ALL FEES, LABOR, AND MATERIAL NECESSARY TO COMPLETE AND SUBMIT THEOEPA NOTIFICATION FORM. PAYMENT FOR THIS WORK SHALL BE INCLUDED IN ITEM 202 - PORTIONS OF STRUCTURE REMOVED, OVER 20 FOOT SPAN, AS PER PLAN.

ENDANGERED BAT SPECIES HABITAT REMOVAL

THE PROJECT IS LOCATED WITHIN THE KNOWN HABITAT RANGES OF THE FEDERALLY ENDANGERED NORTHERN LONG-EARED AND INDIANA BAT, AND THE STATE ENDANGERED LITTLE BROWN AND TRICOLORED BATS. NO TREES SHALL BE REMOVED UNDER THIS PROJECT FROM APRIL 1 THROUGH SEPTEMBER 30. ALL NECESSARY TREE REMOVAL SHALL OCCUR FROM OCTOBER 1 THROUGH MARCH 31. THIS REQUIREMENT IS NECESSARY TO AVOID AND MINIMIZE IMPACTS TO THESE SPECIES AS REQUIRED BY THE ENDANGERED SPECIES ACT AND ORC 1531.25. FOR THE PURPOSES OF THIS NOTE, A TREE IS DEFINED AS A LIVE, DYING, OR DEAD WOODY PLANT, WITH A TRUNK THREE INCHES OR GREATER IN DIAMETER AT A HEIGHT OF 4.5 FEET ABOVE THE GROUND SURFACE, AND WITH A MINIMUM HEIGHT OF 13 FEET.

DRAINAGE

CROSSINGS AND CONNECTIONS TO EXISTING PIPES AND UTILITIES

WHERE PLANS PROVIDE FOR A PROPOSED CONDUIT TO BE CONNECTED TO, OR CROSS OVER OR UNDER AN EXISTING SEWER OR UNDERGROUND UTILITY, THE CONTRACTOR SHALL LOCATE THE EXISTING PIPES OR UTILITIES BOTH AS TO LINE AND GRADE BEFORE STARTING TO LAY THE PROPOSED CONDUIT.

IF IT IS DETERMINED THAT THE ELEVATION OF THE EXISTING CONDUIT, OR EXISTING APPURTENANCE TO BE CONNECTED, DIFFERS FROM THE PLAN ELEVATION OR RESULTS IN A CHANGE IN THE PLAN CONDUIT SLOPE, THE ENGINEER SHALL BE NOTIFIED BEFORE STARTING CONSTRUCTION OF ANY PORTION OF THE PROPOSED CONDUIT WHICH WILL BE AFFECTED BY THE VARIANCE IN THE EXISTING ELEVATIONS.

IF IT IS DETERMINED THAT THE PROPOSED CONDUIT WILL INTERSECT AN EXISTING SEWER OR UNDERGROUND UTILITY IF CONSTRUCTED AS SHOWN ON THE PLAN, THE ENGINEER SHALL BE NOTIFIED BEFORE STARTING CONSTRUCTION OF ANY PORTION OF THE PROPOSED CONDUIT WHICH WOULD BE AFFECTED BY THE INTERFERENCE WITH AN EXISTING FACILITY.

PAYMENT FOR ALL THE OPERATIONS DESCRIBED ABOVE SHALL BE INCLUDED IN THE CONTRACT PRICE FOR THE PERTINENT 611 CONDUIT ITEM.

FARM DRAINS

ALL FARM DRAINS, WHICH ARE ENCOUNTERED DURING CONSTRUCTION, SHALL BE PROVIDED WITH UNOBSTRUCTED OUTLETS. EXISTING COLLECTORS WHICH ARE LOCATED BELOW THE ROADWAY DITCH ELEVATIONS, AND WHICH CROSS THE ROADWAY, SHALL BE REPLACED WITHIN THE RIGHT OF WAYS BY ITEM 611 CONDUIT, TYPE B, ONE COMMERCIAL SIZE LARGER THAN THE EXISTING CONDUIT.

EXISTING COLLECTORS AND ISOLATED FARM DRAINS, WHICH ARE ENCOUNTERED ABOVE THE ELEVATION OF ROADWAY DITCHES, SHALL BE OUTLETTED INTO THE ROADWAY DITCH BY 611 TYPE F CONDUIT. THE OPTIMUM OUTLET ELEVATION SHALL BE ONE FOOT ABOVE THE FLOWLINE ELEVATION OF THE DITCH. LATERAL FIELD TILES WHICH CROSS THE ROADWAY SHALL BE INTERCEPTED BY 611, TYPE E CONDUIT, AND CARRIED IN A LONGITUDINAL DIRECTION TO AN ADEQUATE OUTLET OR ROADWAY CROSSING.

THE LOCATION, TYPE, SIZE AND GRADE OF REPLACEMENTS SHALL BE DETERMINED BY THE ENGINEER AND PAYMENT SHALL BE MADE ON FINAL MEASUREMENTS.

EROSION CONTROL PADS SHALL BE PROVIDED AT THE OUTLET END OF ALL FARM DRAINS AS PER STANDARD CONSTRUCTION DRAWING DM-1.1, EXCEPT WHEN THEY OUTLET INTO A DRAINAGE STRUCTURE. PAYMENT FOR THE EROSION CONTROL PADS AND ANY NECESSARY BENDS OR BRANCHES SHALL BE INCLUDED FOR PAYMENT IN THE PERTINENT CONDUIT ITEMS.

THE FOLLOWING ESTIMATED QUANTITIES HAVE BEEN INCLUDED IN THE GENERAL SUMMARY FOR THE WORK NOTED ABOVE:

ITEM 611 - 6" CONDUIT, TYPE B _____ 200 FT.
ITEM 611 - 6" CONDUIT, TYPE E _____ 50 FT.
ITEM 611 - 6" CONDUIT, TYPE F _____100 FT.
ITEM 601 - ROCK CHANNEL PROTECTION TYPE C WITH FILTER 5 CU. YD.

REVIEW OF DRAINAGE FACILITIES

BEFORE ANY WORK IS STARTED ON THE PROJECT AND AGAIN BEFORE FINAL ACCEPTANCE BY THE STATE, REPRESENTATIVES OF THE STATE AND THE CONTRACTOR, ALONG WITH LOCAL REPRESENTATIVES, SHALL MAKE AN INSPECTION OF ALL EXISTING SEWERS WHICH ARE TO REMAIN IN SERVICE AND WHICH MAY BE AFFECTED BY THE WORK. THE CONDITION OF THE EXISTING CONDUITS AND THEIR APPURTENANCE SHALL BE DETERMINED FROM FIELD OBSERVATIONS. RECORDS OF THE INSPECTION SHALL BE KEPT IN WRITING BY THE STATE.

ALL NEW CONDUITS, INLETS, CATCH BASINS, AND MANHOLES CONSTRUCTED AS A PART OF THE PROJECT SHALL BE FREE OF ALL FOREIGN MATTER AND IN A CLEAN CONDITION BEFORE THE PROJECT WILL BE ACCEPTED BY THE STATE.

ALL EXISTING SEWERS INSPECTED INITIALLY BY THE ABOVE MENTIONED PARTIES SHALL BE MAINTAINED AND LEFT IN A CONDITION REASONABLY COMPARABLE TO THAT DETERMINED BY THE ORIGINAL INSPECTION. ANY CHANGE IN THE CONDITION RESULTING FROM THE CONTRACTOR'S OPERATIONS SHALL BE CORRECTED BY THE CONTRACTOR TO THE SATISFACTION OF THE ENGINEER.

PAYMENT FOR ALL OPERATIONS DESCRIBED ABOVE SHALL BE INCLUDED IN THE CONTRACT PRICE FOR THE PERTINENT 611 CONDUIT ITEMS.

ITEM 611 - MANHOLE, NO. 3, AS PER PLAN

STORM SEWER MANHOLES CONSTRUCTED WITHIN THE MILLER ROAD RIGHT OF WAY SHALL HAVE A CUYAHOGA COUNTY NO. 9 FRAME AND EITHER A NO. 28 COVER OR A NO. 37 COVER AS DETAILED ON THE CUYAHOGA COUNTY ENGINEER'S CONSTRUCTION DRAWINGS MH-10C AND MH-11C.

THE CONTRACTOR SHALL BE RESPONSIBLE FOR ENSURING THAT THE FINAL CASTING LOCATION FOR ANY MANHOLE LOCATED WITHIN A TRAVELLED LANE IS CENTERED WITHIN THE LANE. THIS COORDINATION WILL INCLUDE BOTH THE MANHOLE SUPPLIER AND ANY MINOR FIELD ADJUSTMENTS NECESSARY TO CENTER THE FINAL CASTING LOCATION BASED ON THE LOCATION OF THE MANHOLE STEPS.

POST CONSTRUCTION STORM WATER TREATMENT

THIS PLAN UTILIZES STRUCTURAL BEST MANAGEMENT PRACTICES (BMP'S) FOR POST CONSTRUCTION STORM WATER TREATMENT. BOTH VEGETATED FILTER STRIPS AND A MANUFACTURED WATER QUALITY STRUCTURE ARE UTILIZED ON THIS PROJECT.

VEGETATED FILTER STRIP

THIS PLAN UTILIZES VEGETATED FILTER STRIP(S) FOR POST CONSTRUCTION STORM WATER TREATMENT. PLACE EITHER ITEM 660 SODDING OR ITEM 659 SEEDING AND MULCHING WITH A 4-INCH LIFT OF TOPSOIL AND ITEM 670, SLOPE EROSION PROTECTION TO ALL DISTURBED AREAS DESIGNATED AS VEGETATED FILTER STRIPS, THE EDGE OF SHOULDER, AND THE FORESLOPE AS SPECIFIED IN THE PLANS.

GENERAL NOTES

DESIGN AGENCY
EUTHENICS
8333 Midwest Dr. | Cleveland, OH 44130

DESIGNER ESM
REVIEWER DTB 03/01/22
PROJECT ID 104983
SHEET P.19 TOTAL P.434

CUY-77-00.42 PART 1
MODEL: Sheet PAPERSIZE: 17x11 (in.) DATE: 3/4/2022 TIME: 1:12:21 PM USER: esmccastin
F:\Jobs\11162-Miller Road Interchange\104983\400-Engineering\Roadway\Sheets\104983_GN003.dgn

DRAINAGE CONT.

MANUFACTURED WATER QUALITY STRUCTURE

THIS PLAN UTILIZES MANUFACTURED WATER QUALITY STRUCTURES FOR WATER QUALITY TREATMENT. AREAS HAVE BEEN SHOWN IN THE PLANS FOR PLACEMENT OF AN OFF-LINE SYSTEM. PAYMENT FOR THESE DEVICES SHALL BE MADE AT THE CONTRACT UNIT PRICE FOR ITEM 895, MANUFACTURED WATER QUALITY STRUCTURE, TYPE 3.

MANHOLES, CATCH BASINS AND INLETS REMOVED OR ABANDONED

ALL CASTINGS SHALL BE CAREFULLY REMOVED AND STORED WITHIN THE RIGHT OF WAY FOR SALVAGE BY THE CITY OF BRECKSVILLE FORCES.

PAYMENT FOR ALL OF THE ABOVE SHALL BE INCLUDED IN THE CONTRACT PRICE FOR THE PERTINENT 202 ITEM.

ITEM SPECIAL - MISCELLANEOUS METAL

EXISTING CASTINGS MAY PROVE TO BE UNSUITABLE FOR REUSE, AS DETERMINED BY THE ENGINEER. IT SHALL BE THE CONTRACTOR'S RESPONSIBILITY TO PROVIDE THE CASTINGS OF THE REQUIRED TYPE, SIZE AND STRENGTH (HEAVY OR LIGHT DUTY) FOR THE PARTICULAR STRUCTURE IN QUESTION. ALL MATERIAL SHALL MEET ITEM 611 OF THE SPECIFICATIONS AND SHALL HAVE THE PRIOR APPROVAL OF THE ENGINEER.

THE FOLLOWING ESTIMATED QUANTITY HAS BEEN CARRIED TO THE GENERAL SUMMARY FOR USE AS DIRECTED BY THE ENGINEER.

ITEM SPECIAL - MISCELLANEOUS METAL _____ 2,000 POUNDS

THE CONTRACTOR IS CAUTIONED TO USE EXTREME CARE IN THE REMOVAL, STORAGE AND REPLACEMENT OF ALL EXISTING CASTINGS. CASTINGS DAMAGED BY THE NEGLIGENCE OF THE CONTRACTOR, AS DETERMINED BY THE ENGINEER, SHALL BE REPLACED WITH THE PROPER NEW CASTINGS AT THE EXPENSE OF THE CONTRACTOR.

EXISTING SUBSURFACE DRAINAGE

PROVIDE UNOBSTRUCTED OUTLETS FOR ALL EXISTING UNDERDRAINS OR AGGREGATE DRAINS ENCOUNTERED DURING CONSTRUCTION.

PROVIDE AN OUTLET PER STANDARD CONSTRUCTION DRAWING DM-1.1 FOR ALL UNDERDRAINS THAT OUTLET TO A SLOPE. UNDERDRAINS THAT CAN BE CONNECTED TO THE NEW OR EXISTING UNDERDRAINS AT THE END OF THE PROJECT LIMITS AS WELL AS ALL NECESSARY BENDS OR BRANCHES REQUIRED FOR CONNECTION ARE INCLUDED IN THE BASIS OF PAYMENT FOR UNCLASSIFIED PIPE UNDERDRAINS.

THE FOLLOWING ESTIMATED QUANTITIES HAVE BEEN INCLUDED IN THE GENERAL SUMMARY FOR THE WORK NOTED ABOVE:

ITEM 601 - TIED CONCRETE BLOCK MAT, TYPE 1 _____ 20 SQ. YD.
ITEM 605 - AGGREGATE DRAINS _____ 200 FT.
ITEM 611 - 6" CONDUIT, TYPE F _____ 100 FT.
ITEM 611 - PRECAST REINFORCED CONCRETE OUTLET __ 5 EACH
ITEM 605 - 6" UNCLASSIFIED PIPE UNDERDRAINS _____ 400 FT.

STORM SEWER WORK, AS PER PLAN

ALL STORM SEWER WORK SHALL BE CONSTRUCTED IN ACCORDANCE WITH THE LATEST ADDITION OF THE UNIFORM STANDARDS FOR SEWERAGE IMPROVEMENTS DATED 2019 AS ADOPTED BY THE CUYAHOGA COUNTY DEPARTMENT OF PUBLIC WORKS (CCDPW) AND UNIFORM STANDARD SEWER DETAILS. THE REFERENCES LISTED ABOVE CAN BE FOUND AT THE FOLLOWING LINK https://www.cuyahogacounty.us/publicworks/services/design-and-construction/sanitary-design. THE "AS PER PLAN" DESIGNATION FOR ALL STORM SEWER ITEMS INDICATES THE THE BID ITEM SHALL BE CONSTRUCTED IN ACCORDANCE WITH THE REQUIREMENTS OF THE CCDPW AND THE REQUIREMENTS LISTED IN THE GENERAL NOTES, OR SHOWN ON THE STORM DETAILS WITHIN THIS PLAN.

THE "AS PER PLAN" REQUIRES THE CONTRACTOR TO TEST THE SEWER PIPE AND MANHOLES PER THE REQUIREMENTS OF THE UNIFORM STANDARDS. ALL SEWER VIDEO SHALL BE REVIEWED AND APPROVED BY THE CITY ENGINEER AND THE CCDPW.

THE "AS PER PLAN" REQUIRES PREMIUM PIPE JOINTS FOR ALL STORM SEWER PIPING. ALL JOINTS ARE TO BE WATER-TIGHT JOINTS; SOIL-TIGHT JOINTS, ETC., ARE NOT ACCEPTABLE.

THE "AS PER PLAN" REQUIRES THE TRENCH BACKFILL BE PREMIUM BACKFILL, WHICH MAY BE ODOT 304 LS, ODOT 613 LSM, OR RECYCLED CONCRETE MEETING ODOT 304 GRADATION. RECYCLED CONCRETE SHALL NOT BE USED AS SEWER BEDDING OR COVER TO 12" MINIMUM OVER STORM SEWER PIPE AND ALL LATERALS IN ANY LOCATION. IN ADDITION:

A) WHETHER WITHIN OR OUTSIDE THE PUBLIC RIGHT-OF-WAY, ALL TRECHES UNDER PAVEMENT (INCLUDING DRIVEWAYS, PARKING AREAS, WALKS, OR OTHER HARD SURFACES) INCLUDING A POINT 5' BEYOND SUCH PAVEMENT SHALL BE BACKFILLED WITH PREMIUM BACKFILL.

B) ALL PREMIUM BACKFILL MATERIAL (WITH EXCEPTION OF LSM) SHALL BE COMPACTED TO MINIMUM 98% PROCTOR IN MAXIMUM 12-INCH LIFTS. COMPACTION METHODS SHALL BE CONFIRMED BY AN APPROVED TESTING COMPANY AND THE REPORTS PROVIDED TO THE CITY & COUNTY; UNLESS A TEST STRIP IS PREFORMED AND MEANS AND METHODS ARE ESTABLISHED AND APPROVED BY THE CITY & COUNTY. REGARDLESS IF SUCH MEANS AND METHODS ARE APPROVED, THE CITY AND/OR COUNTY RESERVE THE RIGHT TO REQUIRE ADDITIONAL TESTING TO SUBSTANTIATE COMPACTION. ALL TESTING AND INSPECTION, INCLUDING ADDITIONAL TESTING, SHALL BE AT THE SOLE COST OF THE CONTRACTOR AND SHALL BE PROVIDED AS REQUESTED.

C) MATERIALS FOR PIPE BEDDING AND BACKFILL SHALL BE LIMITED TO COARSE INTERLOCKING LIMESTONE AGGREGATE NO. 57,6,67,68, 7,78,8, ODOT CMS ITEM 304 LIMESTONE, OR LIMESTONE SCREENINGS, COMPACTED THE SAME AS ABOVE.

D) UTILITY BACKFILL IN OTHER AREAS MAY UTILIZE SUITABLE ON-SITE MATERIAL OF CONTRACTOR CAN ACHIEVE COMPACTION PER ODOT 203.07-1.

E) THE BACKFILL SHALL BE AS DIRECTED BY THE CITY OF BRECKSVILLE, THE CCDPW UNIFORM STANDARDS, AND/OR THE ODOT STANDARDS, ACCORDING TO THE MOST RESTRICTIVE OF THESE. REGARDING THE ODOT STANDARDS, THE BACKFILL SHALL CONFORM TO SECTION 603.08 BACKFILLING FOR CONDUIT AS SPECIFIED IN THE STATE OF OHIO DEPARTMENT OF TRANSPORTATION CONSTRUCTION AND MATERIAL SPECIFICATIONS (LATEST EDITION).

F) MATERIALS INCLUDING, BUT NOT LIMITED TO RECYCLED CONCRETE (OTHER THAN AS DESCRIBED ABOVE), SLAG (OF ANY KIND), SANDSTONE, RIVER GRAVEL, AND FOUNDRY SAND, SHALL NOT BE PERMITTED FOR BEDDING, COVER, OR BACKFILL. ALL OTHER BACKFILL SHALL BE SUBJECT TO THE REQUIREMENTS OF THE COUNTY AND CITY.

G) BENTONITE CLAY DAMS, PER THE UNIFORM STANDARD DETAIL SHALL BE REQUIRED AND INSTALLED WHERE SPECIFIED IN THE PLANS.

ITEM 611 - CONDUIT, 706.02, AS PER PLAN

THIS ITEM SHALL BE LIMITED TO CLASS III MINIMUM FOR REINFORCED CONCRETE CIRCULAR PIPE (706.02).

ITEM 611 - MANHOLE, NO. 3, AS PER PLAN 3

THIS ITEM SHALL CONFORM TO ODOT STANDARD CONSTRUCTION DRAWING MH-3 WITH THE FOLLOWING MODIFICATIONS:

STORM SEWER MANHOLES SHALL HAVE A CUYAHOGA COUNTY NO. 9 FRAME AND A NO. 28 COVER STAMPED "STORM" AS DETAILED ON THE CUYAHOGA COUNTY ENGINEER'S CONSTRUCTION DRAWING MH-10C.

THE CONTRACTOR SHALL BE RESPONSIBLE FOR ENSURING THAT THE FINAL CASTING LOCATION FOR ANY MANHOLE LOCATED WITHIN A TRAVELLED LANE IS CENTERED WITHIN THE LANE. THIS COORDINATION WILL INCLUDE BOTH THE MANHOLE SUPPLIER AND ANY MINOR FIELD ADJUSTMENTS NECESSARY TO CENTER THE FINAL CASTING LOCATION BASED ON THE LOCATION OF THE MANHOLE STEPS.

ITEM 611 - MANHOLE, NO. 3, AS PER PLAN 4

THIS ITEM SHALL CONFORM TO ITEM 611, MANHOLE, NO. 3, AS PER PLAN 3 WITH THE FOLLOWING ADDITION:

A HORIZONTAL BEND EXISTS ALONG THE 24" STORM SEWER AT STA. 83+91.55±, 24.20'± RT. CONTRACTOR SHALL FIELD VERIFY THE LOCATION OF BEND BOTH HORIZONTALLY AND VERTICALLY BEFORE ORDERING MATERIALS FOR THE MANHOLE. IF CONFLICT EXISTS BETWEEN PROPOSED STORM MANHOLE AND EXISTING UTILITIES TO REMAIN, THEN MANHOLE SHALL BE NON-PERFORMED AND BEND IN PIPE WILL REMAIN.

ITEM 611 - CATCH BASIN MISC.: CUYAHOGA COUNTY NO. 3C

THIS ITEM CONSISTS OF FURNISHING AND INSTALLING A CUYAHOGA COUNTY CB-3C CATCH BASIN IN ACCORDANCE WITH CUYAHOGA COUNTY STANDARD CONSTRUCTION DRAWING CB-3C, COMPLETE IN PLACE. NOTE THAT PRECAST BASINS WITH KNOCK-OUT PANELS WILL NOT BE PERMITTED.

PAYMENT FOR THE ABOVE WORK SHALL BE MADE AT THE CONTRACT UNIT PRICE BID FOR ITEM 611 - CATCH BASIN MISC.: CUYAHOGA COUNTY NO. 3C, EACH, AND SHALL INCLUDE ALL LABOR, TOOLS, EQUIPMENT AND MATERIALS NECESSARY TO CONSTRUCT A COMPLETE AND FUNCTIONAL CATCH BASIN IN ACCORDANCE WITH THE REQUIREMENTS OF THE CUYAHOGA COUNTY DEPARTMENT OF PUBLIC WORKS.

ITEM 611 - CATCH BASIN MISC.: CUYAHOGA COUNTY TWIN 3C

THIS ITEM CONSISTS OF FURNISHING AND INSTALLING A CUYAHOGA COUNTY TWIN 3C CATCH BASIN IN ACCORDANCE WITH CUYAHOGA COUNTY STANDARD CONSTRUCTION DRAWING CB-3C2, COMPLETE IN PLACE. THIS ITEM ALSO INCLUDES THE 12" TYPE B CONDUIT (706.02) NECESSARY TO CONNECT THE TWO CATCH BASINS. NOTE THAT PRECAST BASINS WITH KNOCK-OUT PANELS WILL NOT BE PERMITTED.

PAYMENT FOR THE ABOVE WORK SHALL BE MADE AT THE CONTRACT UNIT PRICE BID FOR ITEM 611 - CATCH BASIN MISC.: CUYAHOGA COUNTY TWIN 3C, EACH, AND SHALL INCLUDE ALL LABOR, TOOLS, EQUIPMENT AND MATERIALS NECESSARY TO CONSTRUCT A COMPLETE AND FUNCTIONAL CATCH BASIN IN ACCORDANCE WITH THE REQUIREMENTS OF THE CUYAHOGA COUNTY DEPARTMENT OF PUBLIC WORKS.

ITEM SPECIAL - FILL AND PLUG EXISTING CONDUIT

THIS ITEM SHALL CONSIST OF THE CONSTRUCTION OF BULKHEADS IN AN EXISTING CONDUIT AND FILLING THE AREA THUS SEALED OFF WITH ITEM 613 - LOW STRENGTH MORTAR BACKFILL, TYPE 3 OR OTHER MATERIAL APPROVED BY THE ENGINEER.

BULKHEADS SHALL BE LOCATED AT THE LIMITS OF THE AREA TO BE FILLED AS DETERMINED BY THE ENGINEER. THE BULKHEADS SHALL CONSIST OF BRICK OR CONCRETE MASONRY WITH A MINIMUM THICKNESS OF 12 INCHES.

THE FILL MATERIAL SHALL BE PUMPED INTO PLACE, OR PLACED BY OTHER MEANS APPROVED BY THE ENGINEER, SO THAT, AFTER SETTLEMENT, AT LEAST 90 PERCENT OF THE CROSS-SECTIONAL AREA OF THE CONDUIT, FOR ITS ENTIRE LENGTH, SHALL BE FILLED. THE LENGTH OF FILLED AND PLUGGED CONDUIT TO BE PAID FOR SHALL BE THE ACTUAL NUMBER OF FEET (MEASURED ALONG THE CENTERLINE OF EACH CONDUIT FROM THE OUTER FACE TO OUTER FACE OF BULKHEADS) FILLED AND PLUGGED AS DESCRIBED.

THE LENGTH, MEASURED AS PROVIDED ABOVE, SHALL BE PAID FOR AT THE CONTRACT PRICE PER FOOT FOR ITEM SPECIAL - FILL AND PLUG EXISTING CONDUIT. THE QUANTITY FOR PLUGGING AND FILLING THE EXISTING CONDUIT SHALL BE USED IN LIEU OF REMOVING THE EXISTING PIPE IN AREAS WHERE THE ENGINEER DEEMS IT APPROPRIATE.

THE FOLLING ESTIMATED QUANTITY HAS BEEN INCLUDED IN THE GENERAL SUMMARY TO BE USED AS DIRECTED BY THE ENGINEER.

ITEM SPECIAL - FILL AND PLUG EXISTING CONDUIT 50 LIN. FT.

PAVEMENT

PART-WIDTH CONSTRUCTION

BECAUSE OF THE NECESSITY TO BUILD THIS PROJECT UNDER TRAFFIC AND TO CONSTRUCT THE FULL PAVEMENT WIDTH IN STAGES, EXERCISE CARE TO PREVENT THE CONSTRUCTION OF A BUTT JOINT IN THE BASE COURSES. LAP LONGITUDINAL JOINTS AS SHOWN ON STANDARD CONSTRUCTION DRAWING BP-3.1.

MEDIAN AND/OR CURBING ON APPROACH SLABS

WITHIN THE LIMITS OF THE APPROACH SLAB, TRANSITION THE SHAPE OF THE MEDIAN AND/OR CURBING ON APPROACH SLABS FROM THE STANDARD SECTION ON THE APPROACHES TO THE SECTION USED ON THE BRIDGE.

GENERAL NOTES

DESIGN AGENCY
EUTHENICS
8235 Mohawk Dr. | Cleveland, OH 44035

DESIGNER ESM
REVIEWER DTB 03/01/22
PROJECT ID 104983
SHEET P.20 TOTAL P.434

CUY-77-00.42 PART 1

MODEL: Sheet PAPERSIZE: 17x11 (in.) DATE: 3/4/2022 TIME: 1:12:41 PM USER: esmccaslin
F:\Jobs\1162-Miller Road Interchange\104983\400-Engineering\Roadway\Sheets\104983_GN004.dgn

PAVEMENT CONT.

ASPHALT CONCRETE SURFACE COURSE SEALING REQUIREMENTS

IN ADDITION TO THE GUTTER SEALING REQUIREMENTS SPECIFIED IN SCD BP-3.1 AND C&MS 401.15, AFTER COMPLETION OF THE SURFACE COURSE, THE CONTRACTOR SHALL USE A CERTIFIED 702.01 PG BINDER TO SEAL THE FOLLOWING LOCATIONS:

- ALL CASTINGS INCLUDING BUT NOT LIMITED TO MONUMENTS, MANHOLES, WATER VALVES, CATCH BASINS, CURB INLETS.
- BUTT JOINTS AND FEATHER JOINTS INCLUDING BRIDGE APPROACHES.
- FORWARD JOINT FOR DRIVEWAY ASPHALT AND TRAILING JOINT WHEN BUTTING TO EXISTING ASPHALT DRIVE.
- PERIMETER OF ALL PAVEMENT REPAIRS OR OTHER ASPHALT INLAYS WHEN PAVEMENT REPAIRS/INLAYS ARE NOT OVERLAID WITH AN ASPHALT CONCRETE SURFACE COURSE.
- ALL COLD LONGITUDINAL JOINTS BETWEEN PAVED SHOULDERS AND GUARDRAIL ASPHALT.

THE MATERIAL USED SHALL BE A CERTIFIED 702.01 PG BINDER. THE WIDTH OF THE SEALER SHALL BE 2-3 INCHES.

ANY ADDITIONAL COSTS ASSOCIATED WITH THE WORK IDENTIFIED IN THIS NOTE SHALL BE INCLUDED IN THE APPROPRIATE ASPHALT CONCRETE SURFACE COURSE ITEM OF WORK.

ITEM 441 – ASPHALT CONCRETE INTERMEDIATE COURSE, TYPE 1, (448), (UNDER GUARDRAIL), AS PER PLAN

THIS OPERATION SHALL INCLUDE PREPARATION OF THE GRADED SHOULDER USING ITEM 209 – RESHAPING UNDER GUARDRAIL, AS PER PLAN AND PAVING UNDER THE GUARDRAIL USING ITEM 441 – ASPHALT CONCRETE INTERMEDIATE COURSE, TYPE 1, (448), (UNDER GUARDRAIL), AS PER PLAN.

HERBICIDE SHALL BE EPA APPROVED FOR PAVING UNDER GUARDRAIL. IT SHALL BE APPLIED TO THE PREPARED AREA AFTER FINAL LEVELING AND GRADING HAS BEEN COMPLETED. THE APPLICATION SHALL BE JUST PRIOR TO PAVING AND SHALL STRICTLY ADHERE TO THE MANUFACTURER'S INSTRUCTIONS. DO NOT SPRAY WITHIN 1000 FT. OF A STATE SCENIC RIVER.

EACH SUCCESSFUL BIDDER MUST BE LICENSED BY THE OHIO DEPARTMENT OF AGRICULTURE AS A COMMERCIAL APPLICATOR AND ALL PERSONS INVOLVED IN THE ACTUAL SPRAYING SHALL BE LICENSED AS COMMERCIAL OPERATORS IN THE APPROPRIATE SPRAY CATEGORY.

HERBICIDE LABEL, MATERIAL SAFETY DATA SHEET AND COPY OF APPLICATORS LICENSES SHALL BE SUBMITTED TO THE ENGINEER FOR VERIFICATION PRIOR TO COMMENCING WORK.

PAVING UNDER GUARDRAIL SHALL CONSIST OF PLACING ITEM 441 ASPHALT CONCRETE TO A DEPTH OF 3" AND A MAXIMUM WIDTH OF 4' USING ONE OF THE FOLLOWING METHODS:

METHOD A:
1. SET GUARDRAIL POSTS
2. PLACE ITEM 441

METHOD B:
1. PLACE ITEM 441
2. BORE ASPHALT AT POST LOCATIONS (MAY BE OMITTED IF STEEL POSTS ARE USED)
3. SET GUARDRAIL POSTS
4. PATCH AROUND POSTS. THE MATERIALS USED FOR PATCHING SHALL BE AN ASPHALT CONCRETE APPROVED BY THE ENGINEER. PATCHED AREAS SHALL BE COMPACTED USING EITHER HAND OR MECHANICAL METHODS. FINISHED SURFACES SHALL BE SMOOTH AND SLOPED TO DRAIN AWAY FROM THE POSTS.

ALL EQUIPMENT, MATERIALS AND LABOR REQUIRED TO PERFORM THE WORK OUTLINED ABOVE, WITH THE EXCEPTION OF SETTING GUARDRAIL POSTS, SHALL BE INCLUDED FOR PAYMENT UNDER ITEM 441 – ASPHALT CONCRETE, INTERMEDIATE COURSE, TYPE 1, (448), (UNDER GUARDRAIL), AS PER PLAN.

ITEM 442 – ASPHALT CONCRETE SURFACE COURSE, 12.5MM, TYPE A (446), AS PER PLAN, PG 76-22M

THE COARSE VIRGIN AGGREGATE FOR THIS ITEM SHALL BE LIMITED TO A BLEND OF AIR COOLED BLAST FURNACE SLAG (ACBFS) OR TRAP ROCK FROM ONTARIO AND LIMESTONE. THE CONTRACTOR SHALL USE A MINIMUM 60% OF ACBFS OR TRAP ROCK FROM ONTARIO WITH LIMESTONE COMPRISING THE REMAINING PERCENTAGE. AT LEAST 50% OF FINE VIRGIN AGGREGATE FOR THIS ITEM SHALL BE LIMITED TO ACBFS OR TRAP ROCK FROM ONTARIO.

TABLE 442.02-2 APPLIES EXCEPT NO. 4 SIEVE REQUIREMENTS ARE 52 TO 60 TOTAL PERCENT PASSING. FOR THE NO. 4 SIEVE DO NOT EXCEED 63 IN PRODUCTION.

WHEN ACBFS IS USED FOR A FRACTION OF THE COARSE AGGREGATE, PROVIDE A TOTAL ASPHALT BINDER CONTENT GREATER THAN OR EQUAL TO 6.2 PERCENT. IF ACBFS MAKES UP 100% OF THE COARSE AGGREGATE, APPLY THE BINDER CONTENT REQUIREMENTS OF C&MS 442.

USE A PG76-22M BINDER FOR THIS ITEM.

ITEM 618 – RUMBLE STRIPS, SHOULDER (ASPHALT CONCRETE), AS PER PLAN

FOR ALL FREEWAYS, THE LATERAL POSITION OF EDGE LINE RUMBLE STRIPS SHOWN IN SCD BP-9.1 IS REVISED AS FOLLOWS:

1. MEDIAN AND OUTSIDE SHOULDER OFFSET FOR SHOULDERS LESS THAN 6': DIMENSION A AND B ARE EQUAL TO 6".
2. MEDIAN AND OUTSIDE SHOULDER OFFSET FOR SHOULDERS 6' TO 12': DIMENSION A AND B ARE EQUAL TO HALF THE SHOULDER WIDTH MINUS 12".

THE FOLLOWING ESTIMATED QUANTITY SHALL BE USED TO CONSTRUCT ITEM 618 – RUMBLE STRIPS, SHOULDER (ASPHALT CONCRETE), AS PER PLAN:

ITEM 618 – RUMBLE STRIPS, SHOULDER
(ASPHALT CONCRETE), AS PER PLAN _____0.59 MILES

PLANING REQUIREMENTS

THE DURATION OF TIME BETWEEN PLANING THE ASPHALT AND PLACING THE ASPHALT OVERLAY SHALL BE KEPT TO A MINIMUM. IN NO INSTANCE SHALL THIS TIME EXCEED 7 CALENDAR DAYS. THE TIME LIMIT SHALL BEGIN ON THE FIRST DAY OF PLANING AND SHALL CONTINUE BASED ON CALENDAR DAYS, MINUS ANY WEATHER DAYS, UNTIL COMPLETION OF THE ASPHALT CONCRETE SURFACE COURSE. THIS IS TO ENSURE THAT THE POTENTIAL DEGRADATION OF THE EXPOSED PAVEMENT DUE TO TRAFFIC IS KEPT TO A MINIMUM. THIS REQUIREMENT APPLIES TO BOTH MAINLINE AND RAMP ALIKE.

IN THE EVENT THAT THE TIME BETWEEN EXPOSING THE EXISTING PAVEMENT AND PLACING THE ASPHALT SURFACE COURSE EXCEEDS 7 CALENDAR DAYS, LIQUIDATED DAMAGES AS PER 108.07 OF THE C&MS SHALL BE ASSESSED.

TRAFFIC CONTROL

SHOP DRAWINGS

THE CONTRACTOR SHALL SUBMIT A SET OF SIGN SHOP DRAWINGS TO THE PROJECT ENGINEER FOR ACCEPTANCE. THESE SIGN SHOP DRAWINGS AHALL BE FORWARDED TO THE ODOT DISTRCIT 12 PLANNING AND ENGINEERING DEPT. C/O FRANK KONOPKA FOR REVIEW AND APPROVAL.

INCIDENTALS

ITEM 619 – FIELD OFFICE, TYPE C, AS PER PLAN

IN ADDITION TO THE REQUIREMENTS OF CMS 619, THE CONTRACTOR SHALL FURNISH AND SET UP A WI-FI ROUTER MEETING THE REQUIREMENTS OF IEEE 802.11AC FOR THE EXCLUSIVE USE OF THE DEPARTMENT.

ALL OTHER FIELD OFFICE ITEMS SUPPLIED SHALL MEET THE REQUIREMENTS OF A TYPE C FIELD OFFICE.

ITEM 619 – FIELD OFFICE, TYPE C, AS PER PLAN ___ 9 MONTHS

ITEM 623 – CONSTRUCTION LAYOUT STAKES AND SURVEYING, AS PER PLAN

IN ADDITION TO THE REQUIREMENTS OF THE CMS, THIS ITEM OF WORK WILL INCLUDE THE FOLLOWING ADDITIONAL REQUIREMENTS.

AFTER COMPLETION OF ALL WORK, BUT PRIOR TO FINAL ACCEPTANCE OF THE PROJECT, AN OHIO PROFESSIONAL SURVEYOR SHALL DETERMINE THE MINIMUM VERTICAL CLEARANCES OF ALL EXISTING AND NEW BRIDGES WITHIN THE PROJECT LIMITS. AT A MINIMUM, MEASUREMENTS SHALL BE TAKEN ALONG THE CENTERLINE OF EACH FASCIA BEAM AT THE EDGE OF SHOULDERS, EDGE LINES, LANE LINES, AND CROWN OF THE ROADWAY BELOW. THE ODOT DISTRICT 12 VERTICAL CLEARANCE SURVEY FORM SHALL BE USED, WHERE APPLICABLE, TO DOCUMENT THE MEASUREMENTS. WHERE THE ODOT DISTRICT 12 VERTICAL CLEARANCE SURVEY FORM IS NOT APPLICABLE, THE MEASUREMENTS SHALL BE DOCUMENTED ON A CONTRACTOR-DEVELOPED FORM THAT CLOSELY RESEMBLES THE ODOT DISTRICT 12 VERTICAL CLEARANCE SURVEY FORM AND ACCURATELY DEPICTS THE BRIDGE AND BELOW LANE AND SHOULDER CONFIGURATION. THE COMPLETED FORM SHALL BEAR THE STAMP OR SEAL OF THE OHIO PROFESSIONAL SURVEYOR WHO HAS TAKEN THE MEASUREMENTS AND SHALL BE SUBMITTED TO THE PROJECT ENGINEER PRIOR TO FINAL ACCEPTANCE OF THE PROJECT.

THE ODOT DISTRICT 12 VERTICAL CLEARANCE SURVEY FORM CAN BE DOWNLOADED FROM THE FOLLOWING WEBSITE:

HTTP://WWW.DOT.STATE.OH.US/DISTRICTS/D12/HIGHWAYMANAGEMENT/PAGES/PERMITS.ASPX

PAYMENT FOR ALL OF THE ABOVE WORK SHALL BE AT THE UNIT PRICE BID FOR ITEM 623 – CONSTRUCTION LAYOUT STAKES, AS PER PLAN, WHICH SHALL INCLUDE ALL LABOR, EQUIPMENT, MATERIALS AND INCIDENTALS NECESSARY TO COMPLETE THE ABOVE WORK.

GENERAL NOTES

MODEL: Sheet PAPERSIZE: 17x11 (in.) DATE: 3/4/2022 TIME: 1:12:45 PM USER: esmccaslin
F:\Jobs\1162-Miller Road Interchange\104983\400-Engineering\Roadway\Sheets\104983_GN005.dgn

DESIGN AGENCY
EUTHENICS
8235 McEwen Dr. | Cleveland, OH 44125
DESIGNER
ESM
REVIEWER
DTB 03/01/22
PROJECT ID
104983
SHEET P.21 TOTAL P.434

DOMINION ENERGY

IT IS THE CONTRACTOR'S RESPONSIBILITY TO MAINTAIN THE LATERAL AND SUBJACENT SUPPORT OF DOMINION ENERGY'S PIPELINE(S), IN COMPLIANCE TO 29 CFR, PART 1926, SUBPART P, (SAFE EXCAVATION & SHORING). ONE- FOOT MINIMUM VERTICAL AND HORIZONTAL CLEARANCE MUST BE MAINTAINED BETWEEN DOMINION ENERGY OHIO'S (DEO) EXISTING PIPELINE(S) AND ALL OTHER IMPROVEMENTS. EXTREME CARE SHOULD BE TAKEN NOT TO HARM ANY DEO FACILITY (PIPELINES, ETC.) OR APPURTENANCE (PIPE COATING, TRACER WIRE, CATHODIC PROTECTION TEST STATION WIRES & DEVICES, VALVE BOXES, ETC.). DEO FACILITIES MUST BE PROTECTED WITH A TARP DURING BRIDGE CONSTRUCTION. THE CONTRACTOR WILL BE RESPONSIBLE AND LIABLE FOR ENSURING THAT ALL DEO EXISTING FACILITIES, ABOVE AND BELOW GROUND, REMAIN UNDAMAGED, ACCESSIBLE AND IN WORKING ORDER. THE CROSSING OF DEO'S PIPELINE WITH ANOTHER STEEL FACILITY MAY CREATE A POTENTIAL CORROSION ISSUE FOR THE PROPOSED FACILITY AND THE EXISTING DEO FACILITY. PLEASE CONTACT DOMINION ENERGY OHIO'S CORROSION DEPARTMENT: DAVE CUTLIP (330-266-2121), RICK MCDONALD (330-266-2122), OR AL HUMRICHOUSER (330-478-3757).

ALL LABOR AND MATERIALS REQUIRED TO PROTECT DOMINION FACILITIES WITHIN THE PROJECT LIMITS SHALL BE CONSIDERED INCIDENTAL TO THE PROJECT, NO ADDITIONAL COMPENSATION WILL BE MADE.

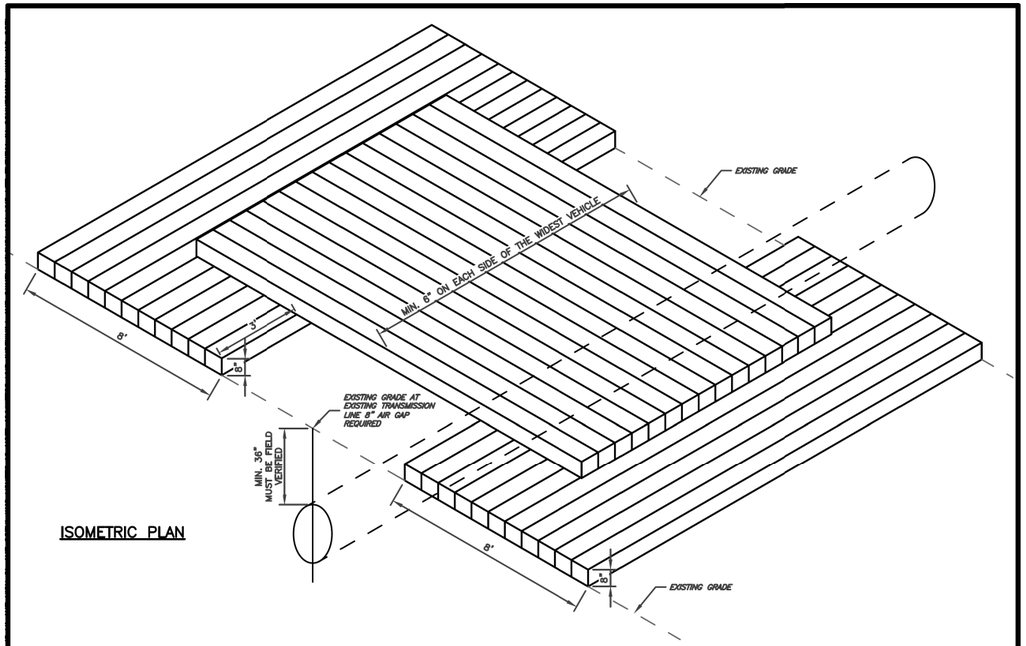

ISOMETRIC PLAN

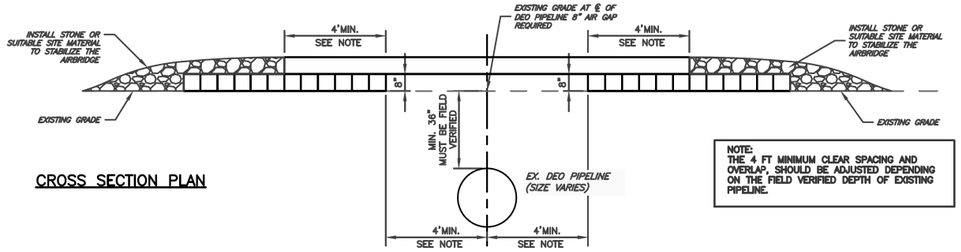

CROSS SECTION PLAN

NOTE:
THE 4 FT MINIMUM CLEAR SPACING AND OVERLAP, SHOULD BE ADJUSTED DEPENDING ON THE FIELD VERIFIED DEPTH OF EXISTING PIPELINE.

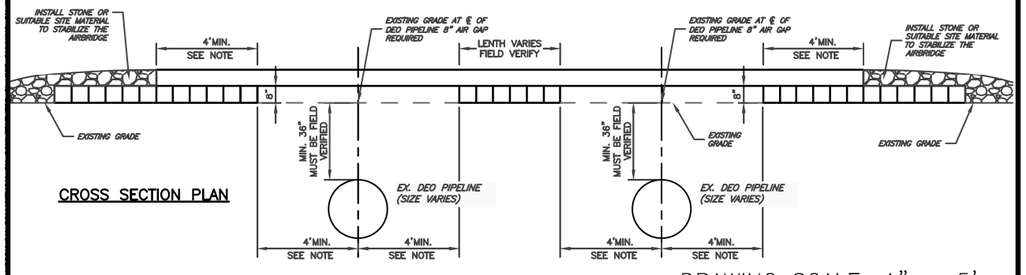

CROSS SECTION PLAN

DRAWING SCALE: 1" = 5'

Dominion Energy ®

STANDARD AIRBRIDGE DETAIL

REV.#		DESCRIPTION	DATE	BY
1		AIRBRIDGE DETAIL	4/21/20	MAS

GENERAL NOTES

DESIGN AGENCY
EUTHENICS
8235 Mohawk Dr. | Cleveland, OH 44125

DESIGNER
ESM

REVIEWER
DTB 03/01/22

PROJECT ID
104983

SHEET P.22 | TOTAL P.434

CUY-77-00.42 PART 1

MODEL: Sheet PAPERSIZE: 17x11 (in.) DATE: 3/4/2022 TIME: 1:12:49 PM USER: esmccaslin
F:\Jobs\1162-Miller Road Interchange\104983\400-Engineering\Roadway\Sheets\104983_GN006.dgn

ITEM 614 - MAINTAINING TRAFFIC

ALL WORK AND TRAFFIC CONTROL DEVICES SHALL BE IN ACCORDANCE WITH 614 AND OTHER APPLICABLE PORTIONS OF THE SPECIFICATIONS, AS WELL AS THE OHIO MANUAL OF UNIFORM TRAFFIC CONTROL DEVICES, CURRENT EDITION, LATEST REVISION.

LENGTH AND DURATION OF LANE CLOSURE AND RESTRICTIONS SHALL BE AT THE APPROVAL OF THE ENGINEER. IT IS THE INTENT TO MINIMIZE THE IMPACT TO THE TRAVELING PUBLIC. LANE CLOSURES OR RESTRICTIONS OVER SEGMENTS OF THE PROJECT IN WHICH NO WORK IS ANTICIPATED WITHIN A REASONABLE TIME FRAME, AS DETERMINED BY THE ENGINEER, SHALL NOT BE PERMITTED. THE LEVEL OF UTILIZATION OF MAINTENANCE OF TRAFFIC DEVICES SHALL BE COMMENSURATE WITH THE WORK IN PROGRESS.

IF IT IS NECESSARY TO STOP ALL TRAFFIC FOR THE ERECTION OF SPAN WIRE, THE WORK SHALL BE SO ARRANGED THAT THE STOPPAGE IS LESS THAN TEN (10) MINUTES IN ANY ONE (1) THIRTY (30) MINUTE PERIOD. TOTAL STOPPAGE OF TRAFFIC SHALL BE LIMITED BETWEEN THE HOURS OF 10:00pm AND 5:00am. NO STOPPAGE OF TRAFFIC SHALL OCCUR FOR THE ERECTION OF SIGNAL SUPPORTS, CUTTING AND INSTALLING LOOP DETECTOR WIRE, OR HANGING SPAN WIRE AND SIGNAL HEADS, WITHOUT A LAW ENFORCEMENT OFFICER WITH A PATROL CAR AT THE SITE FOR ASSISTANCE IN CONTROLLING TRAFFIC. IT SHALL BE THE CONTRACTOR'S RESPONSIBILITY TO PROVIDE THE SERVICES AND SCHEDULING OF SAID LAW ENFORCEMENT OFFICER WITH PATROL CAR.

THE CONTRACTOR SHALL FURNISH AND MAINTAIN ALL FLAGS, FLAGGERS, WATCHERS, BARRICADES, SIGNS, SIGN SUPPORTS AND INCIDENTALS RELATED TO TRAFFIC CONTROL.

SIGNS FURNISHED SHALL BE IN NEW OR LIKE NEW CONDITIONS. LIKE NEW SIGNS SHALL BE SUBJECT TO THE APPROVAL OF THE PROJECT ENGINEER. THE CONTRACTOR SHALL BE RESPONSIBLE AT ALL TIMES FOR PROVIDING AND MAINTAINING LIGHTS, SIGNS, AND BARRICADES FOR THE MAINTENANCE OF TRAFFIC AND SAFETY OF HIS/HER WORK AT THE LOCATIONS SHOWN ON THESE PLANS OR AS DIRECTED BY THE ENGINEER.

ALONG INTERSTATE 77 EXTENDED LANE CLOSURES ARE NOT PERMITTED. SHORT TERM LANE CLOSURES OF THE INTERSTATE WHEN REQUIRED FOR OVERPASS CONSTRUCTION SHALL CONFORM TO SCD MT-99.60.

SHOULDER CLOSURES SHALL ONLY BE IN PLACE WHEN WORK IS BEING PERFORMED. WHEN SETTING SHORT TERM WORK ZONES A TRUCK MOUNTED ATTENUATOR (TMA) SHALL TRAIL THE OPERATION OF PLACING OR REMOVING ADVANCED WARNING SIGNS. THE TMA MUST MEET NCHRP 350 TL-3 CRITERIA.

IF THE CONTRACTOR FAILS TO COMPLY WITH THE PROVISIONS FOR TRAFFIC CONTROL AS SET FORTH IN THESE PLANS AND PROVISIONS OF THE OMUTCD AND THE FAILURE RESULTS IN A CONDITION AT THE WORK SITE WHICH IS UNSAFE FOR TRAFFIC, THE ENGINEER SHALL SUSPEND WORK UNTIL THE CONTRACTOR COMPLIES WITH THE NECESSARY REQUIREMENTS.

ALL WORK AND TRAFFIC CONTROL DEVICES SHALL BE IN ACCORDANCE WITH CMS 614 AND OTHER APPLICABLE PORTIONS OF THE SPECIFICATIONS, AS WELL AS THE OHIO MANUAL OF UNIFORM TRAFFIC CONTROL DEVICES. PAYMENT FOR ALL LABOR, EQUIPMENT AND MATERIALS SHALL BE INCLUDED IN THE LUMP SUM CONTRACT PRICE FOR ITEM 614, MAINTAINING TRAFFIC, UNLESS SEPARATELY ITEMIZED IN THE PLAN.

1. A MINIMUM OF ONE ELEVEN FOOT LANE IN EACH DIRECTION SHALL BE MAINTAINED ON THE EXISTING PAVEMENT OR COMPLETED PAVEMENT DURING CONSTRUCTION OF THE WORK.

2. THE CONTRACTOR SHALL INFORM THE DISTRICT OFFICE (216) 581-2100, EIGHTEEN (18) DAYS PRIOR TO THE BEGINNING OF WORK.

3. ONLY DURING OFF-PEAK PERIODS (ie ANY PERIOD OTHER THAN 6-9AM AND 4-6PM) SHALL THE CONTRACTOR INSTALL AND SUBSEQUENTLY RESET ALL TRAFFIC CONTROL NECESSARY FOR THE WORK ZONE FOR EACH CONSTRUCTION PHASE.

4. A QUANTITY OF 15 CU. YDS. OF ITEM 614 ASPHALT CONCRETE FOR MAINTAINING TRAFFIC AND 15 CU. YDS. OF ITEM 410 TRAFFIC COMPACTED SURFACE, TYPE A SHALL BE PROVIDED FOR USE IN MAINTAINING PAVEMENT, SHOULDERS AND OTHER LOCATIONS AS DIRECTED BY THE ENGINEER. BOTH THESE ITEMS SHALL BE INCIDENTAL TO THE LUMP SUM ITEM 614 - MAINTAINING TRAFFIC.

5. PRIOR TO OPENING TO TRAFFIC EACH LANE SHALL BE IN A SAFE, PASSABLE CONDITION. ALL TRANSVERSE JOINTS SHALL EXTEND ACROSS THE FULL LANE AND SHOULDER WIDTH AND EACH LANE SHALL BE FREE FROM UNEVEN LONGITUDINAL JOINTS. THE CONTRACTOR SHALL PROVIDE ASPHALT WEDGES FOR TRANSVERSE JOINTS WHEREVER THERE ARE PAVEMENT ELEVATION DIFFERENCES.

ITEM 614 - MAINTAINING TRAFFIC (CONT.)

6. THE CONTRACTOR SHALL PLACE THE SIGNS: W8-1 [BUMP] PER OMUTCD 2C.28; W8-11 [UNEVEN LANES] PER OMUCTD 6F.45; AND W6-3 [TWO-WAY TRAFFIC] PER OMUTCD 6F.32. PAYMENT FOR THESE SIGNS SHALL BE INCIDENTAL TO THE LUMP SUM ITEM 614- MAINTAINING TRAFFIC. A QUANTITY OF ITEM 614 WORK ZONE MARKING SIGNS (4 EACH) HAS BEEN INCLUDED IN THE PLANS PER CMS 614.04.

ITEM 614 - MAINTAINING TRAFFIC (LANES OPEN DURING HOLIDAYS OR SPECIAL EVENTS)

NO WORK SHALL BE PERFORMED AND ALL EXISTING LANES SHALL BE OPEN TO TRAFFIC DURING THE FOLLOWING DESIGNATED HOLIDAYS OR EVENTS:

CHRISTMAS, FOURTH OF JULY, NEW YEAR'S EVE,
LABOR DAY, MEMORIAL DAY, AND THANKSGIVING.

THE PERIOD OF TIME THAT THE LANES ARE TO BE OPEN DEPENDS ON THE DAY OF THE WEEK ON WHICH THE HOLIDAY/EVENT FALLS. THE FOLLOWING SCHEDULE SHALL BE USED TO DETERMINE THIS PERIOD:

DAY OF HOLIDAY	TIME ALL LANES MUST BE OPEN TO TRAFFIC
SUNDAY	12:00N FRIDAY THROUGH 6:00 AM MONDAY
MONDAY	12:00N FRIDAY THROUGH 6:00 AM TUESDAY
TUESDAY	12:00N MONDAY THROUGH 6:00 AM WEDNESDAY
WEDNESDAY	12:00N TUESDAY THROUGH 6:00 AM THURSDAY
THURSDAY	12:00N WEDNESDAY THROUGH 6:00 AM FRIDAY
THURSDAY THANKSGIVING)	6:00 AM WEDNESDAY THROUGH 6:00 AM MONDAY
FRIDAY	12:00N THURSDAY THROUGH 6:00 AM MONDAY
SATURDAY	12:00N FRIDAY THROUGH 6:00 AM MONDAY

SHOULD THE CONTRACTOR FAIL TO MEET ANY OF THESE REQUIREMENTS, THE CONTRACTOR SHALL BE ASSESSED A DISINCENTIVE IN THE AMOUNT OF $240 FOR EACH MINUTE THE ABOVE DESCRIBED LANE CLOSURE RESTRICTIONS ARE VIOLATED ON ANY LOCAL ROAD OR RAMP.

STORM DRAIN CONSTRUCTION

THE CONTRACTOR IS RESPONSIBLE FOR MAINTAINING POSITIVE DRAINAGE THROUGHOUT CONSTRUCTION BY UTILIZING EXISTING, PERMANENT, AND TEMPORARY DRAINAGE STRUCTURES AND CONDUIT. FOR PROPOSED STORM PIPE RUNS THAT NEED TO BE INSTALLED IN SEPARATE PHASES AND STUBBED, TEMPORARILY PLUG THE PROTRUDING CONDUIT WITH A MANUFACTURED CAP.

ANY LANE CLOSURES REQUIRED FOR DRAINAGE CONSTRUCTION, IN ADDITION TO THOSE PROVIDED IN THE PLANS, SHALL BE IMPLEMENTED AS PER THE CURRENT EDITION OF THE OMUTCD AND THE CURRENT STANDARD CONSTRUCTION DRAWINGS, AND SHALL REQUIRE FINAL WRITTEN APPROVAL BY THE ENGINEER. NO LANES SHOWN AS OPEN IN THE PLANS ON MILLER ROAD MAY BE CLOSED BETWEEN THE HOURS OF 6-9 AM OR 4-6 PM. ANY TRAFFIC LANES REQUIRING TEMPORARY CLOSURE SHALL BE REOPENED AT THE END OF THE WORK DAY. NO ACTIVE LANES ON IR-77 MAY BE TEMPORARILY CLOSED FOR DRAINAGE INSTALLATIONS AT ANY TIME.

THE USE OF TEMPORARY PAVEMENT, OTHER THAN THE TEMPORARY PAVEMENT SHOWN IN THE PLAN SHEETS, IS NOT ANTICIPATED FOR THE CONSTRUCTION OF STORM SEWER SYSTEMS. ADDITIONAL TEMPORARY PAVEMENT, IF USED, IS THE RESPONSIBILITY OF THE CONTRACTOR.

TEMPORARY DRAINAGE CONNECTIONS ARE SHOWN IN THE PLANS FOR USE BY THE CONTRACTOR DURING CONSTRUCTION BASED UPON THE MAINTENANCE OF TRAFFIC PLANS. THE CONTRACTOR SHALL PROVIDE TEMPORARY FACILITIES TO ADEQUATELY DRAIN THE WORK SITE DURING ALL PHASES OF CONSTRUCTION. THE CONTRACTOR SHALL REFER TO PLAN SHEETS FOR DISPOSITION OF DRAINAGE FACILITIES AFFECTED BY TEMPORARY PAVEMENT INSTALLED AS PART OF THE MOT PHASING. ALL TEMPORARY DRAINAGE WORK SHALL BE INCLUDED UNDER:
ITEM 614 - MAINTAINING TRAFFIC.

NOTIFICATION OF TRAFFIC RESTRICTIONS

THROUGHOUT THE DURATION OF THE PROJECT, THE CONTRACTOR SHALL NOTIFY THE PROJECT ENGINEER IN WRITING OF ALL TRAFFIC RESTRICTIONS AND UPCOMING MAINTENANCE OF TRAFFIC CHANGES. THE CONTRACTOR SHALL ENSURE THE WRITTEN NOTIFICATION IS SUBMITTED IN A TIMELY MANNER TO ALLOW THE PROJECT ENGINEER TO MEET THE REQUIRED TIME FRAMES SET FORTH IN THE TABLE BELOW TO INFORM THE SPECIAL HAULING PERMITS SECTION (Hauling.Permits@dot.ohio.gov) AND THE DISTRICT PUBLIC INFORMATION OFFICE (PIO). THIS NOTIFICATION SHALL BE RECEIVED BY THE PROJECT ENGINEER PRIOR TO THE PHYSICAL SETUP OF ANY APPLICABLE SIGNS OR MESSAGE BOARDS.

INFORMATION SHOULD INCLUDE, BUT IS NOT LIMITED TO, ALL CONSTRUCTION ACTIVITIES THAT IMPACT OR INTERFERE WITH TRAFFIC AND SHALL LIST THE SPECIFIC LOCATION, TYPE OF WORK, ROAD STATUS, DATE AND TIME OF RESTRICTION, DURATION OF RESTRICTION, NUMBER OF LANES MAINTAINED, NUMBER OF LANES CLOSED, MINIMUM VERTICAL CLEARANCE, MINIMUM WIDTH OF DRIVABLE PAVEMENT, DETOUR ROUTES, IF APPLICABLE, AND ANY OTHER INFORMATION REQUESTED BY THE PROJECT ENGINEER.

NOTIFICATION TIME TABLE

ITEM	DURATION OF CLOSURE	NOTICE DUE TO PERMITS & PIO
RAMPS & ROAD CLOSURES	>= 2 WEEKS	21 CALENDAR DAYS PRIOR TO CLOSURE
	> 12 HOURS & < 2 WEEKS	14 CALENDAR DAYS PRIOR TO CLOSURE
	<= 12 HOURS	4 BUSINESS DAYS PRIOR TO CLOSURE
LANE CLOSURES & RESTRICTIONS	>= 2 WEEKS	14 CALENDAR DAYS PRIOR TO CLOSURE
	< 2 WEEKS	5 BUSINESS DAYS PRIOR TO CLOSURE
START OF CONSTRUCTION & TRAFFIC PATTERN CHANGES	N/A	14 CALENDAR DAYS PRIOR TO IMPLEMENTATION

ANTICIPATED SHORT DURATION ROAD AND/OR LANE CLOSURES SHALL BE STAGGERED TO THE EXTENT PRACTICABLE TO MINIMIZE DISRUPTION TO THE TRAVELING PUBLIC. ALL SHORT DURATION ROAD AND/OR LANE CLOSURES SHALL BE COORDINATED WITH AND APPROVED BY THE PROJECT ENGINEER.

NOTICE OF CLOSURE SIGNS (W20-H13) SHALL BE ERECTED BY THE CONTRACTOR PRIOR TO THE SCHEDULED ROAD OR RAMP CLOSURE IN ACCORDANCE WITH THE NOTICE OF CLOSURE TIME TABLE BELOW. AT THE APPROVAL OF THE ENGINEER, PORTABLE CHANGEABLE MESSAGE SIGNS MAY BE USED IN LIEU OF THE STANDARD FLATSHEET SIGN FOR CLOSURE DURATIONS OF LESS THAN 1 WEEK.

THE SIGNS SHALL BE ERECTED ON THE RIGHT-HAND SIDE OF THE ROAD/RAMP FACING TRAFFIC. THEY SHALL BE PLACED SO AS NOT TO INTERFERE WITH THE VISIBILITY OF ANY OTHER TRAFFIC CONTROL SIGNS. ON ROADWAYS, THEY SHOULD BE ERECTED AT OR NEAR THE POINT OF CLOSURE. THE SIGNS MAY BE ERECTED ANYWHERE ON RAMPS AS LONG AS THEY ARE VISIBLE TO THE MOTORISTS USING THE RAMP. ON ENTRANCE RAMPS, THE SIGN SHALL BE ERECTED WELL IN ADVANCE OF THE MERGE AREA TO AVOID DISTRACTING MOTORISTS.

THE SIGN SHALL DISPLAY THE DATE OF THE CLOSURE IN MM-DD FORMAT AND THE NUMBER OF DAYS OF THE CLOSURE. THE LAST LINE OF THE W20-H13 SIGN LISTS A PHONE NUMBER (TO BE PROVIDED BY THE ENGINEER) WHICH A MOTORIST MAY CALL FOR ADDITIONAL INFORMATION. THIS IS TO BE A SPECIFIC OFFICE WITHIN THE DISTRICT RATHER THAN THE GENERAL SWITCHBOARD NUMBER.

ANY UNFORESEEN CONDITIONS NOT SPECIFIED IN THE PLANS REQUIRING TRAFFIC RESTRICTIONS SHALL ALSO BE REPORTED TO THE PROJECT ENGINEER USING THE NOTIFICATION TIME TABLE.

WINTER TIME LIMITATIONS

ALL EXISTING LANES, INCLUDING RAMP B-1 AND RAMP B-2, RAMP B-3 AND RAMP B-4, ONCE OPEN TO TRAFFIC, SHALL REMAIN OPEN TO TRAFFIC, WITH EXCEPTION TO SHORT-TERM TEN (10) MINUTE STOPPAGES FOR THE ERECTION OF TRAFFIC SIGNAL EQUIPMENT. ALL LANES SHALL BE OPEN AND AVAILABLE TO TRAFFIC IN THE ORIGINAL OR PROPOSED FINAL ALIGNMENT BY OCTOBER 15, 2023. SHOULD THE CONTRACTOR FAIL TO MEET THESE REQUIREMENTS, A DISINCENTIVE SHALL BE ASSESSED IN THE AMOUNT SHOWN IN THE DISINCENTIVES NOTE BELOW.

DISINCENTIVES

DISINCENTIVES SHALL BE ASSESSED IN THE AMOUNT SHOWN FOR THE TIME DURATIONS FOR EACH CRITICAL SECTION AND/OR PHASE WORK OPERATION ARE OVERRAN. CRITICAL SECTIONS AND PHASE WORK OPERATIONS AND THEIR RESPECTIVE TIME DURATIONS ARE DEFINED IN VARIOUS PLAN NOTES.

DESCRIPTION OR LOCATION OF CRITICAL WORK	COMPLETION DATE	TIME UNIT	DISINCENTIVE $ PER TIME UNIT
COMPLETION OF PHASE 2 IN PART 1 (MILLER RD INTERCHANGE) AND PHASE 1 IN PART 2 (I-77 WIDENING)	10/15/2023	DAY	$3,000

DETOUR NOTIFICATION

THE CONTRACTOR SHALL ADVISE THE ODOT DISTRICT OFFICE (216-581-2100), CITY OF BRECKSVILLE (440-526-4351), AND THE GREATER CLEVELAND REGIONAL TRANSIT AUTHORITY (216-621-9500) EIGHTEEN (18) DAYS IN ADVANCE OF WHEN ANY DETOUR ROUTE SHOULD BE IN EFFECT. ALL WORK ZONE DEVICES REQUIRED SHALL BE FURNISHED, ERECTED, MAINTAINED, AND SUBSEQUENTLY REMOVED BY THE CONTRACTOR.

PN 127 - 01/18/2019 - LANE VALUE CONTRACT

THE CONTRACTOR SHALL BE ASSESSED DISINCENTIVES AS DESIGNATED IN THE LANE VALUE CONTRACT TABLE FOR EACH UNIT OF TIME THE DESCRIBED CRITICAL LANE/RAMP IS RESTRICTED FROM FULL USE BY THE TRAVELING PUBLIC WITHIN THE RESTRICTED TIME PERIOD. THE LANE VALUE CONTRACT TABLE IS LOCATED IN THE PLAN GENERAL NOTES. THE DISINCENTIVES WILL BE ASSESSED FOR ALL RESTRICTIONS OF THE CRITICAL WORK.

CRITICAL WORK IS SHOWN IN THE LANE VALUE CONTRACT TABLE.

CRITICAL WORK IS DEFINED AS HAVING THE DESIGNATED SECTIONS OPEN TO UNRESTRICTED TRAFFIC AS SHOWN IN THE TABLE, OR THE ENTIRE PROJECT IF NOT OTHERWISE LISTED.

UNRESTRICTED TRAFFIC IS DEFINED AS ALL TRAFFIC LANES BEING AVAILABLE FOR USE WITH SPECIFIED STRIPING AND SAFETY FEATURES IN PLACE.

LANE VALUE CONTRACT TABLE

DESCRIPTION OF CRITICAL LANE/RAMP TO BE MAINTAINED	RESTRICTED TIME PERIOD	TIME UNIT	DISINCENTIVE $ PER TIME UNIT
3 LANES OF CUY IR 77	6am-7pm Mon-Fri	HOUR	$10,000
RAMP FROM IR 77 SB TO MILLER ROAD	6am-7pm Mon-Fri	HOUR	$1,000
RAMP FROM MILLER ROAD IR 77 NB	6am-7pm Mon-Fri	HOUR	$1,000

MAINTENANCE OF TRAFFIC NOTES

MODEL: Sheet PAPERSIZE: 34x22 (in.) DATE: 3/1/2022 TIME: 4:48:52 PM USER: ssopraseuth
pw:\\hq-pwfn01.a-e.transystems.com:transystemscorp-pw1\Documents\Projects_2019\CO403\40319002\7\Agency_Folders\400-Engineering\MOT\Sheets\104983_MN001.dgn

DESIGN AGENCY
TranSystems
400 W. NATIONWIDE BLVD, SUITE 220
COLUMBUS, OHIO 43215
DESIGNER MSW
REVIEWER BBD 02/25/22
PROJECT ID 104983
SHEET P.23 TOTAL 434

SEQUENCE OF CONSTRUCTION

PRE-PHASE 1

A. CONSTRUCT TEMPORARY PAVEMENT SOUTH SIDE OF MILLER ROAD FROM STA. 61+44.94 TO STA. 67+03.53 AND INSTALL TEMPORARY CB-3 AND 12" STORM TO THE LIMITS SHOWN IN THE PLAN. PRIOR TO SETTING UP PHASE 1A WORKZONE.
B. CONSTRUCT TEMPORARY PAVEMENT WEST SIDE OF RAMP B-1 FROM STA. 0+25.96 TO STA. 1+16.17 TO THE LIMITS SHOWN IN THE PLAN. PRIOR TO SETTING UP PHASE 1A WORKZONE.

PHASE 1A

A. RECONSTRUCT AND WIDEN THE NORTH SIDE OF MILLER ROAD TO THE LIMITS SHOWN IN THE PLANS. MAINTAIN TWO-WAY TRAFFIC ON MILLER ROAD ON THE SOUTH SIDE OF THE EXISTING PAVEMENT USING PORTABLE BARRIER AND DRUMS. MAINTAIN ACCESS TO AFFECTED PROPERTIES AT ALL TIMES DURING CONSTRUCTION. INSTALL CONSTRUCTION SIGNING AS DETAILED IN THE PLANS AND SPECIFICATIONS.
B. CONSTRUCT TEMPORARY PAVEMENT ALONG THE SOUTH SIDE OF MILLER ROAD ON THE WEST END OF THE PROJECT.
C. WIDEN RAMP B-1 AND MAINTAIN ONE LANE ON THE EXISTING PAVEMENT AND SHOULDER USING PORTABLE BARRIER.
D. CONSTRUCT RELOCATED RAMP B-2 TO THE LIMITS SHOWN IN THE PLANS AND CONSTRUCT TEMPORARY PAVEMENT BETWEEN EXISTING AND PERMANENT PAVEMENT AS SHOWN. MAINTAIN ONE LANE OF TRAFFIC ON EXISTING RAMP PAVEMENT USING PORTABLE BARRIER.
E. CONSTRUCT NEW RAMPS B-3 AND B-4 FROM I-77 UP TO THE INTERSECTION WITH MILLER ROAD TO THE LIMITS SHOWN. INSTALL TRAFFIC CONTROL DEVICES AND SHIFT I-77 LANES TOWARD THE MEDIAN AS DETAILED IN THE PLANS. CLOSE BOTH MEDIAN SHOULDERS ALONG I-77 USING PORTABLE BARRIER TO PROTECT THE MEDIAN PIER CONSTRUCTION.
F. BEGIN BRIDGE CONSTRUCTION TO WIDEN BRIDGE ON THE NORTH SIDE OF MILLER ROAD. UTILIZE SHORT TERM FULL CLOSURES OF THE FREEWAY PER SCD MT-99.60 TO SET BEAMS OVER THE I-77 TRAVEL LANES.

PHASE 1B

A. CONTINUE CONSTRUCTION ON THE NORTH SIDE OF MILLER ROAD AS SHOWN IN THE PLANS. MAINTAIN TWO-WAY TRAFFIC ON EXISTING AND TEMPORARY PAVEMENT CONSTRUCTED IN PHASE 1A. INSTALL/MAINTAIN CONSTRUCTION SIGNING AS DETAILED IN THE PLANS AND SPECIFICATIONS. INSTALL PERMANENT MAST ARMS AND TEMPORARY SIGNAL AS DETAILED IN THE SIGNAL PLANS AND TEMPORARY SIGNAL PLANS. INSTALL/SHIFT PORTABLE PLASTIC DRUMS AND TEMPORARY BARRIER AS DETAILED IN THE PHASE 1B PLANS.
B. CONSTRUCT TEMPORARY PAVEMENT ON THE NORTH SIDE OF MILLER ROAD ON THE WEST END OF THE PROJECT.
C. SHIFT RAMP B-2 TRAFFIC ONTO THE TEMPORARY AND PERMANENT PAVEMENT CONSTRUCTED IN PHASE 1A. CONSTRUCT REMAINING PORTION OF PERMANENT RAMP PAVEMENT AND REMOVE EXISTING RAMP PAVEMENT.
D. MAINTAIN PHASE 1A LANE SHIFT ALONG I-77 TO COMPLETE RAMP AND AUXILARY LANE WORK AS DETAILED IN THE PLANS. RAMPS B-3 AND B-4 TO REMAIN CLOSED TO TRAFFIC. OPEN THE I-77 MEDIAN SHOULDERS ONCE MEDIAN PIER CONSTRUCTION IS COMPLETE.
F. COMPLETE BRIDGE CONSTRUCTION ON THE NORTH SIDE OF MILLER ROAD.

SEQUENCE OF CONSTRUCTION (CONTINUED)

PHASE 2

A. SHIFT TRAFFIC TO THE NORTH SIDE OF MILLER ROAD ON THE PERMANENT AND TEMPORARY PAVEMENT COMPLETED IN PHASE 1B. RECONSTRUCT THE SOUTH SIDE OF MILLER ROAD AND REMOVE REMAINING TEMPORARY PAVEMENT.
B. RECONSTRUCT AND WIDEN THE INTERSECTION OF MILLER ROAD AND SOUTHPOINT DRIVE USING A SHORT TERM 30-DAY CLOSURE AND DETOUR TRAFFIC USING BRECKSVILLE ROAD AND SNOWVILLE ROAD.
C. SHIFT TRAFFIC ALONG MILLER ROAD ONTO THE COMPLETED BRIDGE AS DETAILED IN THE PLANS AND SPECIFICATIONS. RAMP B-1 AND B-2 WILL BE FULLY OPENED TO TRAFFIC USING PERMANENT PAVEMENT. REMOVE TEMPORARY PAVEMENT ALONG RAMP B-2.
D. CONSTRUCT THE INTERSECTIONS WITH MILLER ROAD AND RAMPS B-3 AND B-4 WITHIN 30 DAYS OF THE START OF PHASE 2 WORK. OPEN INTERSECTIONS AND RAMPS TO TRAFFIC WHILE COMPLETING REMAINING PHASE 2 WORK. RAMPS B-3 AND B-4 SHALL BE OPEN TO TRAFFIC BY OCTOBER 15, 2023.
E. RAMPS B-3 AND B-4 SHALL BE CLOSED TO TRAFFIC UNTIL WORK AT THE INTERSECTIONS WITH MILLER ROAD IS COMPLETE AND INTERSECTIONS ARE FULLY FUNCTIONAL AND THE WIDENING WORK FOR IR-77 SB IN PART 2 FROM THE TURNPIKE TO SR-21 HAS BEEN COMPLETED.
F. COMPLETE RESURFACING FOR I-77 PAVEMENT CROWN SHIFT AS DETAILED IN THE PLANS USING TEMPORARY LANE CLOSURES.

PHASE 3

A. UPON THE COMPLETION OF ALL RAMPS AND THE NORTH SIDE OF MILLER ROAD FROM STA. 60+04.74 TO STA. 71+40.58. REMOVE TEMPORARY PAVEMENT AND COMPLETE CONSTRUCTION/REPLACEMENT OF SIDEWALK.
B. EXISTING STEEL BEAMS RETAINED ON MILLER ROAD BRIDGE OVER I-77 WILL BE PAINTED AS PART OF THIS PROJECT. MAINTAIN ALL LANES OF TRAFFIC ON I-77 USING SHOULDER CLOSURES AND CLOSE LANES WHEN NECESSARY FOLLOWING THE PLCS. ONCE PAINTING IS COMPLETE RESTORE ALL I-77 TRAVEL LANES TO ORIGINAL CONFIGURATION.
C. COMPLETE FINAL SURFACE COURSE ALONG I-77. ONCE PAVEMENT HAS FULLY CURED INSTALL PERMANENT PAVEMENT MARKINGS AND SIGNING AS DETAILED IN THE PLANS. ALL WORK IMPACTING ALL TRAVEL LANES SHALL BE COMPLETED AND ALL LANES SHALL BE OPEN TO TRAFFIC BY SPRING OF 2024.
D. COMPLETE ALL REMAINING LIGHTING WORK, FINAL SIGNAL INSTALLATION, AND FINAL SEEDING AND MULCHING.

ITEM 614 - BUSINESS ENTRANCE (M4-H15) SIGN, AS PER PLAN

THE BUSINESS ENTRANCE (M4-H15) SIGN SHOULD BE PROVIDED AT EACH TEMPORARILY RELOCATED COMMERCIAL DRIVEWAY FOR WHICH THE RELOCATION IS NOT OBVIOUS TO THE MOTORIST. THE PROJECT ENGINEER SHALL DETERMINE WHETHER OR NOT THE DRIVEWAY RELOCATION IS, OR IS NOT, OBVIOUS AND WHETHER OR NOT A SIGN SHOULD BE PROVIDED. ONLY ONE SIGN PER BUSINESS SHALL BE PERMITTED. THE SIGN SHALL BE 36 INCH X 48 INCH IN SIZE WITH TYPE G OR TYPE H ORANGE RETROREFLECTIVE SHEETING. THE SIGN LEGEND SHALL BE PLACED ON BOTH SIDES OF THE SIGN (BACK TO BACK). THE SIGN SHALL HAVE THE STANDARD M4-H15 LEGEND WITH THE WORD "BUSINESS" ON THE TOP LINE, EXCEPT UNDER UNUSUAL CIRCUMSTANCES WHERE IT MAY NOT BE INTUITIVE THAT A DRIVEWAY SERVES A SPECIFIC BUSINESS. IN SUCH UNUSUAL CASES, THE ACTUAL BUSINESS NAME MAY BE SUBSTITUTED FOR THE WORD "BUSINESS".

THE SIGN SHALL BE MOUNTED ON TWO #3 POSTS OR ON TEMPORARY POSTS IN ACCORDANCE WITH SCD MT-105.10 AND IN ACCORDANCE WITH THE OHIO MANUAL OF UNIFORM TRAFFIC CONTROL DEVICES, LATEST EDITION. THE SIGN SHALL BE CLEARLY VISIBLE AND SHALL CLEARLY IDENTIFY THE LOCATION OF THE DRIVEWAY. THE SIGN SHOULD BE POSITIONED AT 90° TO THE DIRECTION(S) OF TRAFFIC. THE SIGN MAY NEED TO BE MOVED FOR EACH PHASE OF THE MAINTENANCE OF TRAFFIC OPERATIONS.

PAYMENT FOR ALL COSTS ASSOCIATED WITH MANUFACTURING, MOUNTING, RELOCATING, AND REMOVING THE SIGN, INCLUDING ALL LABOR, MATERIALS AND EQUIPMENT SHALL BE INCLUDED IN THE CONTRACT PRICE PER EACH FOR ITEM 614-BUSINESS ENTRANCE SIGN, AS PER PLAN.

THE FOLLOWING ESTIMATED QUANTITY HAS BEEN CARRIED TO THE GENERAL SUMMARY FOR THIS ITEM.

ITEM 614, BUSINESS ENTRANCE SIGN, AS PER PLAN 1 EACH

LOCAL ACCESS

INGRESS AND EGRESS SHALL BE MAINTAINED TO ALL RESIDENTIAL AND COMMERCIAL PROPERTIES DURING CONSTRUCTION EXCEPT AS INDICATED HEREIN. DRIVEWAY CLOSURES MAY BE NECESSARY TO ENABLE WORK ON OR IN FRONT OF A DRIVE. THE CONTRACTOR WILL BE RESPONSIBLE FOR NOTIFYING OWNERS, RESIDENTS, OR BUSINESS OPERATORS IN WRITING AT LEAST 48 HOURS BUT NOT MORE THAN 72 HOURS PRIOR TO CLOSURE. THE ENGINEER SHALL BE GIVEN A LIST OF THE PERSONS THAT WERE GIVEN NOTICES WITH THE DATE OF NOTICE INCLUDED. CLOSURE IS PERMITTED ONLY DURING WORK HOURS AND ACCESS MUST BE RETURNED AT THE END OF EACH WORKING DAY. PROPERTIES WITH MULTIPLE DRIVES MAY HAVE ONE DRIVE CLOSED AT A TIME, WHILE WORK IS PERFORMED IN THE AREA OF THE CLOSED DRIVE.

INDIVIDUAL DRIVE CLOSURES SHALL BE KEPT TO THE MINIMUM TIME NEEDED FOR CONSTRUCTION ACTIVITIES. EVERY EFFORT MUST BE MADE TO ACCOMMODATE THE OWNER'S NEED FOR ACCESS. THE CONTRACTOR MAY UTILIZE PART WIDTH CONSTRUCTION OR CREATE TEMPORARY ACCESS USING GRAVEL TO MAINTAIN ACCESS WHEN NEEDED.

TRENCH FOR WIDENING [SPEED LIMIT < 45 MPH]

TRENCH EXCAVATION FOR BASE WIDENING SHALL BE ONLY ON ONE SIDE OF THE PAVEMENT AT A TIME. FROM THE TIME THE EXCAVATION BEGINS ON THE TRENCH WIDENING, THE OPEN TRENCH SHALL BE ADEQUATELY MAINTAINED AND PROTECTED WITH DRUMS PLACED AT TEN [10] FOOT INTERVALS. THE LENGTH OF WIDENING OPEN AT ANY ONE TIME SHALL NOT BE GREATER THAN WHICH CAN BE COMPLETED WITHIN 14 CALENDAR DAYS. ALL PROPOSED SUBBASE AND ITEM 302 ASPHALT CONCRETE BASE MATERIAL SHALL BE COMPLETED IN A CONTINUOUS OPERATION.

SCHEDULE OF THRU LANES TO BE MAINTAINED

THE DISTRICT 12 PERMITTED LANE CLOSURE TIMES ARE PROVIDED IN THE TABLE BELOW. FOR ANY SECTION OF FREEWAY OR INTERSTATE NOT COVERED BY THE DISTRICT 12 PERMITTED LANE CLOSURE TIMES, PERMISSION TO CLOSE THAT SECTION MUST BE OBTAINED FROM THE DISTRICT WORK ZONE TRAFFIC MANAGER

IR-77			WEEKDAYS		WEEKENDS	
LOCATION	DIRECTION	LANES	1 LANE CLOSED	2 LANES CLOSED	1 LANE CLOSED	2 LANES CLOSED
Oaks Rd to Cuy/Summit County Line	South	3	6pm-3pm (21 Hours)	8pm - 6am	7pm Fri-3pm Mon	8pm Fri – 11 am Sat 8pm Sat – 12pm Sun 8pm Sun-7am Mon
Cuy/Summit County Line to Oaks Rd	North	3	9am-6am (21 Hours)	8pm - 5am	9am Fri-6am Mon	8pm Fri-10am Sat 8pm Sat-12pm Sun 8pm Sun-5am Mon

PLCS NOTES:

1) LANE CLOSURE TIMES SHALL BE ADJUSTED FOR SPECIAL EVENTS THAT HAVE A SEATING CAPACITY OF 10,000 IN THE DOWNTOWN CLEVELAND AREA. THE CONTRACTOR SHALL NOT CLOSE A LANE(S) IN THE INBOUND DIRECTION 2 HOURS BEFORE AN EVENT AND IN THE OUTBOUND DIRECTION 2 HOURS AFTER AN EVENT ENDS. THIS NOTE ONLY APPLIES TO LOCATIONS WITHIN 8 MILES FROM DOWNTOWN CLEVELAND (PUBLIC SQUARE) EXCEPT FOR I-77. THIS NOTE APPLIES TO ALL OF I-77.

2) THERE SHALL BE NO LANE CLOSURES ON HOLIDAYS OR HOLIDAY WEEKENDS. THE FOLLOWING ARE CONSIDERED HOLIDAYS: MEMORIAL DAY, FOURTH OF JULY, LABOR DAY, THANKSGIVING, CHRISTMAS, NEW YEARS, AND EASTER. NO LANE CLOSURES ARE ALLOWED AFTER 12 NOON ON THE DAY PRECEDING A HOLIDAY. FOR HOLIDAY WEEKENDS NO LANE CLOSURES ARE ALLOWED AFTER 12 NOON ON THE DAY PRECEDING THE HOLIDAY WEEKEND (FRIDAY) UNTIL 12 AM THE DAY AFTER THE HOLIDAY WEEKEND. EXAMPLE: HOLIDAY FALLS ON A MONDAY THEN NO LANE CLOSURES FROM 12 NOON ON FRIDAY UNTIL 12 AM TUESDAY. DAY AFTER THANKSGIVING. NO TWO (2) LANE CLOSURES FROM 6AM TO 6PM, THIS NOTE OVER RIDES THE PERMITTED LANE CLOSURE SCHEDULE CLOSURE TIMES.

3) SHOULDER CLOSURES SHALL ONLY BE ALLOWED AT THE TIMES SPECIFIED FOR LANE CLOSURES, UNLESS PERMISSION IS GRANTED BY THE DISTRICT WORK ZONE TRAFFIC MANAGER OR PROJECT ENGINEER.

4) THE CONTRACTOR WILL BE ASSESSED DISINCENTIVES FOR NOT OPENING LANES ON TIME PER THE WORK ZONE USER COST CALCULATIONS AT A MAX DISINCENTIVE PER MINUTE PER LANE (DIRECTIONALLY) OF $25.

SEE DISTRICT WEBSITE FOR ADDITIONAL PERMITTED LANE CLOSURE TIMES NOTES.

WHEN THE WIDENDING WORK ON I-77 SB IS COMPLETE UP TO THE INTERMEDIATE COURSE, THE THIRD LANE SHALL BE OPEN TO TRAFFIC AND THE PLC FOR SB SHALL BE REVISED FROM "OAKS RD TO CUY/SUMMIT COUNTY LINE" TO "OAKS RD TO SR-21". THE PLC SHALL BE REVISED IN THE SAME WAY FOR I-77 NB WHEN THE WIDENING WORK IS COMPLETE UP TO THE INTERMEDIATE COURSE.

MAINTENANCE OF TRAFFIC NOTES

DESIGN AGENCY
TranSystems
400 W. NATIONWIDE BLVD. SUITE 225 COLUMBUS, OHIO 43215

DESIGNER MSW

REVIEWER BBD 02/25/22

PROJECT ID 104983

SHEET P.24 TOTAL 434

CUY-77-00.42 PART 1
MODEL: Sheet PAPERSIZE: 34x22 (in.) DATE: 3/1/2022 TIME: 4:49:10 PM USER: ssopraseuth
pw:\\hq-pwfn01.a-e.transystems.com:transystems-pw1\Documents\Projects_2019\CO403\403190027\Agency_Folders\400-Engineering\MOT\Sheets\104983_MN002.dgn

DUST CONTROL

THE CONTRACTOR SHALL FURNISH AND APPLY WATER FOR DUST CONTROL AS DIRECTED BY THE ENGINEER. THE FOLLOWING ESTIMATED QUANTITIES HAVE BEEN INCLUDED FOR DUST CONTROL PURPOSES:

ITEM 616, WATER - 325 MGAL

ITEM 614 - PORTABLE CHANGEABLE MESSAGE SIGNS, AS PER PLAN

THE CONTRACTOR SHALL FURNISH, INSTALL, MAINTAIN AND REMOVE, WHEN NO LONGER NEEDED, A CHANGEABLE MESSAGE SIGN. THE SIGN SHALL BE OF A TYPE SHOWN ON A LIST OF APPROVED PCMS UNITS AVAILABLE ON THE OFFICE OF MATERIALS MANAGEMENT WEB PAGE. THE LIST CONTAINS CLASS A AND B UNITS WITH MINIMUM LEGIBILITY DISTANCES OF 800 FEET AND 650 FEET, RESPECTIVELY.

EACH SIGN SHALL BE TRAILER-MOUNTED AND EQUIPPED WITH A FUNCTIONAL DIMMING MECHANISM, TO DIM THE SIGN DURING DARKNESS, AND A TAMPER AND VANDAL PROOF ENCLOSURE. EACH SIGN SHALL BE PROVIDED WITH APPROPRIATE TRAINING AND OPERATION INSTRUCTIONS TO ENABLE ON-SITE PERSONNEL TO OPERATE AND TROUBLESHOOT THE UNIT. THE SIGN SHALL ALSO BE CAPABLE OF BEING POWERED BY AN ELECTRICAL SERVICE DROP FROM A LOCAL UTILITY COMPANY. THE PCMS SHALL BE DELINEATED IN ACCORDANCE WITH C&MS 614.03.

THE PROBABLE PCMS LOCATIONS AND WORK LIMITS FOR THOSE LOCATIONS ARE SHOWN ON SHEETS __& __. PLACEMENT, OPERATION, MAINTENANCE AND ALL ACTIVATION OF THE SIGNS BY THE CONTRACTOR SHALL BE AS DIRECTED BY THE ENGINEER. THE PCMS SHALL BE LOCATED IN A HIGHLY VISIBLE POSITION YET PROTECTED FROM TRAFFIC. THE CONTRACTOR SHALL, AT THE DIRECTION OF THE ENGINEER, RELOCATE THE PCMS TO IMPROVE VISIBILITY OR ACCOMMODATE CHANGED CONDITIONS. WHEN NOT IN USE, THE PCMS SHALL BE TURNED OFF. ADDITIONALLY, WHEN NOT IN USE FOR EXTENDED PERIODS OF TIME, THE PCMS SHALL BE TURNED AWAY FROM ALL TRAFFIC.

THE ENGINEER SHALL BE PROVIDED ACCESS TO EACH SIGN UNIT AND SHALL BE PROVIDED WITH APPROPRIATE TRAINING AND OPERATION INSTRUCTIONS TO ENABLE ODOT PERSONNEL TO OPERATE AND TROUBLESHOOT THE UNIT, AND TO REVISE SIGN MESSAGES, IF NECESSARY.

ALL MESSAGES TO BE DISPLAYED ON THE SIGN WILL BE PROVIDED BY THE ENGINEER. THE SIGN SHALL HAVE THE CAPABILITY TO STORE UP TO 99 MESSAGES. MESSAGE MEMORY OR PRE-PROGRAMMED DISPLAYS SHALL NOT BE LOST AS A RESULT OF POWER FAILURES TO THE ON-BOARD COMPUTER. THE SIGN LEGEND SHALL BE CAPABLE OF BEING CHANGED IN THE FIELD. THREE-LINE PRESENTATION FORMATS WITH UP TO SIX MESSAGE PHASES SHALL BE SUPPORTED. PCMS FORMAT SHALL PERMIT THE COMPLETE MESSAGE FOR EACH PHASE TO BE READ AT LEAST TWICE.

THE PCMS SHALL CONTAIN AN ACCURATE CLOCK AND PROGRAMMING LOGIC WHICH WILL ALLOW THE SIGN TO BE ACTIVATED, DEACTIVATED OR MESSAGES CHANGED AUTOMATICALLY AT DIFFERENT TIMES OF THE DAY FOR DIFFERENT DAYS OF THE WEEK.

ITEM 614- PORTABLE CHANGEABLE MESSAGE SIGNS, AS PER PLAN (CONTINUED)

THE PCMS SHALL CONTAIN A CELLULAR TELEPHONE DATA LINK WHICH WILL (IN ACTIVE CELLULAR PHONE AREAS) ALLOW REMOTE SIGN ACTIVATION, MESSAGE CHANGES, MESSAGE ADDITIONS AND REVISIONS TO TIME OF DAY PROGRAMS. THE SYSTEM SHALL ALSO PERMIT VERIFICATION OF CURRENT AND PROGRAMMED MESSAGES. ONE REMOTE DATA INPUT DEVICE (LAPTOP COMPUTER PLUS MODEM OR EQUIVALENT) SHALL BE FURNISHED FOR USE BY THE DISTRICT TRAFFIC ENGINEER, OR EQUIVALENT, AND SHALL BE INSURED AGAINST THEFT.THE PCMS UNIT SHALL BE MAINTAINED IN GOOD WORKING ORDER BY THE CONTRACTOR IN ACCORDANCE WITH THE PROVISIONS OF C&MS 614.07. THE CONTRACTOR SHALL, PRIOR TO ACTIVATING THE UNIT, MAKE ARRANGEMENTS, WITH AN AUTHORIZED SERVICE AGENT FOR THE PCMS, TO ASSURE PROMPT SERVICE IN THE EVENT OF FAILURE. ANY FAILURE SHALL NOT RESULT IN THE SIGN BEING OUT OF SERVICE FOR MORE THAN 12 HOURS, INCLUDING WEEKENDS. FAILURE TO COMPLY MAY RESULT IN AN ORDER TO STOP WORK AND OPEN ALL TRAFFIC LANES AND/OR IN THE DEPARTMENT TAKING APPROPRIATE ACTION TO SAFELY CONTROL TRAFFIC. THE ENTIRE COST TO CONTROL TRAFFIC, ACCRUED BY THE DEPARTMENT DUE TO THE CONTRACTOR'S NONCOMPLIANCE, WILL BE DEDUCTED FROM MONEYS DUE, OR TO BECOME DUE THE CONTRACTOR ON HIS CONTRACT.

THE CONTRACTOR SHALL BE RESPONSIBLE FOR 24-HOUR-PER-DAY OPERATION AND MAINTENANCE OF THESE SIGNS ON THE PROJECT FOR THE DURATION OF THE PHASES WHEN THE PLAN REQUIRES THEIR USE.

PAYMENT FOR THE ABOVE DESCRIBED ITEM SHALL BE AT THE CONTRACT UNIT PRICE. PAYMENT SHALL INCLUDE ALL LABOR, MATERIALS, EQUIPMENT, FUELS, LUBRICATING OILS, SOFTWARE, HARDWARE AND INCIDENTALS TO PERFORM THE ABOVE DESCRIBED WORK.

ITEM 614, PORTABLE CHANGEABLE MESSAGE SIGN, AS PER PLAN, 72 SIGN MONTH
ASSUMING 4 PCMS SIGNS FOR 18 MONTHS

MAINTENANCE OF TRAFFIC SIGNAL/FLASHER INSTALLATION

THE CONTRACTOR SHALL BE RESPONSIBLE FOR MAINTAINING TRAFFIC SIGNAL/FLASHER INSTALLATIONS WITHIN THE PROJECT UNDER THE FOLLOWING CONDITIONS:

1. EXISTING SIGNAL/FLASHER INSTALLATIONS WHICH THE PLANS REQUIRE THE CONTRACTOR TO ADJUST, MODIFY, ADD ONTO OR REMOVE, OR WHICH THE CONTRACTOR ACTUALLY ADJUSTS, MODIFIES OR OTHERWISE DISTURBS. THE CONTRACTOR SHALL BE RESPONSIBLE FOR THE ENTIRE INSTALLATION (AT AN INTERSECTION) FROM THE TIME HIS OPERATIONS FIRST DISTURB THE INSTALLATION UNTIL THE INSTALLATION HAS BEEN SUBSEQUENTLY REMOVED OR MODIFIED AND THE WORK IS ACCEPTED.

2. NEW OR REUSED SIGNAL/FLASHER INSTALLATIONS OR DEVICES, INSTALLED BY THE CONTRACTOR. THE CONTRACTOR SHALL BE RESPONSIBLE FOR MAINTENANCE OF THESE FROM THE TIME OF INSTALLATION UNTIL THE WORK IS ACCEPTED.

THE CONTRACTOR SHALL CORRECT AS QUICKLY AS POSSIBLE ALL OUTAGES OR MALFUNCTIONS. HE SHALL PROVIDE THE MAINTAINING AGENCY AND THE ENGINEER SUCH ADDRESSES AND PHONE NUMBERS WHERE HIS MAINTENANCE FORCES CAN BE CONTACTED. THE CONTRACTOR SHALL PROVIDE ONE OR MORE PERSONS TO RECEIVE ALL CALLS AND DISPATCH THE NECESSARY MAINTENANCE FORCES TO CORRECT OUTAGES. SUCH A PERSON OR PERSONS MAY BE USED TO PERFORM OTHER DUTIES AS LONG AS PROMPT ATTENTION IS GIVEN TO THESE CALLS AND A PERSON IS READILY AVAILABLE CONTINUOUSLY 24 HOURS A DAY, 7 DAYS A WEEK. ALL LAMP OUTAGES, CABLE OUTAGES, ELECTRICAL FAILURES, EQUIPMENT MALFUNCTIONS AND MISALIGNED SIGNAL HEADS SHALL BE CORRECTED TO THE SATISFACTION OF THE ENGINEER WITH THE SIGNAL BACK TO SERVICE WITHIN FOUR HOURS AFTER THE CONTRACTOR HAS BEEN NOTIFIED OF THE OUTAGE.

IN THE EVENT NEW SIGNALS ARE DAMAGED PRIOR TO ACCEPTANCE, ALL DAMAGED EQUIPMENT EXCEPT POLES AND CONTROL EQUIPMENT SHALL BE REPLACED BY THE CONTRACTOR TO THE SATISFACTION OF THE ENGINEER WITH THE SIGNAL BACK IN SERVICE WITHIN 8 HOURS AFTER THE CONTRACTOR'S NOTIFICATION OF THE OUTAGE. THE CONTRACTOR SHALL ARRANGE FOR FULL TRAFFIC CONTROL UNTIL THE SIGNAL IS BACK IN OPERATION.

IF POLES AND/OR CONTROL EQUIPMENT ARE DAMAGED AND MUST BE REPLACED, THE CONTRACTOR SHALL MAKE TEMPORARY REPAIRS AS NECESSARY TO BRING THE SIGNAL BACK INTO FULL OPERATION WITHIN THE ALLOWED 8-HOUR PERIOD, AND SHALL MAKE PERMANENT REPAIRS OR REPLACEMENT AS SOON THEREAFTER AS POSSIBLE.

MAINTENANCE OF TRAFFIC SIGNAL/FLASHER INSTALLATION (CONTINUED)

NONE OF THE ABOVE SHALL BE CONSTRUED AS COLLECTIVE OR CONSECUTIVE OUTAGE TIME PERIODS AT ANY ONE LOCATION. THAT IS, WHERE MORE THAN ONE OUTAGE OCCURS AT ANY ONE LOCATION THEN THE ALLOTTED TIME LIMIT SHALL BE FOR THE WORST SINGLE OUTAGE.

WHERE OUTAGES ARE THE DIRECT RESULT OF A VEHICLE ACCIDENT THE RESPONSE OF THE CONTRACTOR SHALL BE AS OUTLINED ABOVE. THE CONTRACTOR SHALL BE RESPONSIBLE FOR COLLECTION OF ANY COMPENSATION FOR THIS WORK FROM THOSE PARTIES RESPONSIBLE FOR THE DAMAGE.

WHERE THE CONTRACTOR HAS FAILED TO, OR CANNOT RESPOND TO, AN OUTAGE OR SIGNAL EQUIPMENT MALFUNCTION, AT THESE LOCATIONS WITHIN HIS RESPONSIBILITY, WITHIN PERIODS AS SPECIFIED ABOVE, THE ENGINEER MAY INVOKE THE PROVISIONS OF SECTION 105.15 AND ANY SUBSEQUENT BILLINGS TO THE STATE OR THE CITY OF BRECKSVILLE FOR POLICE SERVICES AND MAINTENANCE SERVICES BY CITY FORCES SHALL BE DEDUCTED FROM MONIES DUE OR TO BECOME DUE THE CONTRACTOR IN ACCORDANCE WITH PROVISIONS OF SECTION 105.15.

THE CONTRACTOR SHALL PROVIDE THE MAINTENANCE SERVICE ENTIRELY WITH HIS FORCES OR HE MAY CHOOSE TO ENTER INTO A COOPERATIVE UNDERSTANDING WITH THE LOCAL MAINTAINING AGENCY TO PROVIDE THE MAINTENANCE. THE CONTRACTOR SHALL INFORM THE ENGINEER, IN WRITING, OF THE MAINTENANCE METHOD SELECTED.

THE CONTRACTOR SHALL BE RESPONSIBLE FOR ANY DAMAGE TO ANY TRAFFIC SIGNAL COMPONENTS REQUIRED TO BE HANDLED DURING THE RELOCATION OF POLES AND REVISIONS TO THE SIGNAL SYSTEM. WHEN A TRAFFIC SIGNAL MUST BE TAKEN OUT OF SERVICE BY THE CONTRACTOR, DUE TO CONSTRUCTION PROCEDURES, THIS OUTAGE SHALL NOT EXCEED 4 HOURS AND SHALL NOT INCLUDE THE HOURS OF 6 AM TO 9 AM AND 4 PM TO 6 PM. ANY SIGNALIZED INTERSECTION, WHERE THE SIGNAL IS OUT OF SERVICE DUE TO CONSTRUCTION PROCEDURES, OR DUE TO AN OUTAGE OR MALFUNCTION OF EQUIPMENT AS DESCRIBED ABOVE, SHALL BE PROTECTED BY THE CONTRACTOR, BY THE INSTALLATION OF TEMPORARY "STOP" SIGNS.

ANY VEHICULAR TRAFFIC SIGNAL HEAD, EITHER NEW OR EXISTING WHICH WILL BE OUT OF OPERATION SHALL BE COVERED IN THE MANNER DESCRIBED IN 632.25.

THE CONTRACTOR SHALL MAINTAIN COMPLETE RECORDS OF MALFUNCTIONS INCLUDING:

1. TIME OF NOTIFICATION OF MALFUNCTION;
2. TIME OF WORK CREWS ARRIVAL TO CORRECT THE MALFUNCTION;
3. ACTIONS TAKEN TO CORRECT THE MALFUNCTION, INCLUDING A LIST OF PARTS REPAIRED OR REPLACED;
4. A DIAGNOSIS OF REASON FOR THE MALFUNCTION AND PROBABILITY OF REOCCURRENCE;
5. TIME OF COMPLETION OF THE REPAIR AND SYSTEM RESTORED TO FULL SERVICE.

A COPY OF THESE RECORDS SHALL BE PROVIDED TO THE ENGINEER WITHIN THREE (3) WORKING DAYS FOLLOWING COMPLETION OF EACH REPAIR.

ALL COSTS RESULTING FROM THE ABOVE REQUIREMENTS SHALL BE CONSIDERED TO BE INCLUDED IN THE LUMP SUM PRICE BID FOR ITEM 614, MAINTAINING TRAFFIC.

SPECIAL - WORK ZONE TRAFFIC SIGNAL (614E11300)

THIS ITEM SHALL INCLUDE ALL WORK REQUIRED TO CONSTRUCT, POWER, OPERATE AND MAINTAIN THE TEMPORARY TRAFFIC SIGNALS PROPOSED FOR USE IN THESE PLANS. EACH LOCATION IS COUNTED AS ONE WORK ZONE TRAFFIC SIGNAL, REGARDLESS OF THE NUMBER OF MODIFICATIONS REQUIRED BY THE PLANS. THE CONTRACTOR SHALL BE RESPONSIBLE FOR ALL SPAN WIRE ANALYSIS REQUIRED TO INSTALL THE TEMPORARY TRAFFIC SIGNALS. THE CONTRACTOR SHALL SUBMIT THE ANALYSIS TO THE DISTRICT FOR APPROVAL PRIOR TO INSTALLATION.

PAYMENT SHALL BE MADE AT THE UNIT PRICE BID FOR EACH LOCATION AND SHALL INCLUDE ALL MATERIALS, LABOR, INCIDENTALS AND EQUIPMENT NECESSARY TO CONSTRUCT, OPERATE, MAINTAIN AND REMOVE THE WORK ZONE TRAFFIC SIGNAL.

ADVANCED NOTICE TO PAVE

THE CONTRACTOR SHALL SUBMIT FOR APPROVAL TO THE DISTRICT CONSTRUCTION ENGINEER A DETAILED SCHEDULE 15 DAYS PRIOR TO THE PLACEMENT OF THE OVERLAY COURSES, ON HOW THEY PROPOSE TO PROSECUTE THE PAVING OPERATIONS. THE DETAILS SHALL SHOW THE ORDER OF PERFORMANCE OF EACH STAGE (START TO FINISH) OF THE WORK INCLUDING THE MAINTENANCE OF TRAFFIC THAT WILL BE USED.

MAINTENANCE OF TRAFFIC NOTES

DESIGN AGENCY
TranSystems
400 W. NATIONWIDE BLVD.
SUITE 225
COLUMBUS, OHIO 43215

DESIGNER MSW
REVIEWER BBD 02/25/22
PROJECT ID 104983
SHEET P.25 TOTAL 434

CUY-77-00.42 PART 1
MODEL: Sheet PAPERSIZE: 34x22 (in.) DATE: 3/1/2022 TIME: 4:49:28 PM USER: ssopraseuth
pw:\\hq-pwint01.ae.transystems.com:transystems-pw1\Documents\Projects_2019\CO403\403190027\Agency_Folders\400-Engineering\MOT\Sheets\104983_MN003.dgn

WORKSITE TRAFFIC SUPERVISOR

SUBJECT TO APPROVAL OF THE ENGINEER, THE CONTRACTOR SHALL EMPLOY AND IDENTIFY (SOMEONE OTHER THAN THE SUPERINTENDENT) A PREQUALIFIED WORKSITE TRAFFIC SUPERVISOR (WTS) BEFORE STARTING WORK IN THE FIELD. THE WTS SHALL BE TRAINED IN ACCORDANCE WITH CMS 614.03, SHALL HAVE SUCCESSFULLY COMPLETED ODOT ADMINISTERED WTS TESTING (AND RE-TESTING WHEN APPLICABLE) AND BE LISTED ON THE ODOT PREQUALIFIED WTS ROSTER. PREQUALIFICATION EXPIRES EVERY 5 YEARS. RE-TESTING SHALL BE SUCCESSFULLY REPEATED EVERY 5 YEARS TO REMAIN PREQUALIFIED.

THE NAME OF THE PREQUALIFIED WTS AND RELATED 24-HOUR CONTACT INFORMATION SHALL BE PROVIDED TO THE ENGINEER AT THE PRECONSTRUCTION CONFERENCE. IF THE DESIGNATED WTS WILL NOT BE AVAILABLE FULL TIME (24/7), THE CONTRACTOR MAY DESIGNATE AN ALTERNATE (SECONDARY) WTS TO BE AVAILABLE WHEN THE PRIMARY IS OFF DUTY; HOWEVER THE PRIMARY WTS SHALL REMAIN THE POINT OF CONTACT AT ALL TIMES. ANY ALTERNATE (SECONDARY) WTS IS SUBJECT TO THE SAME TRAINING, PREQUALIFICATION AND OTHER REQUIREMENTS OUTLINED WITHIN THIS PLAN NOTE. AT ALL TIMES THE ENGINEER, OR ENGINEER'S REPRESENTATIVES, MUST BE INFORMED OF WHO THE PRIMARY WTS (AND SECONDARY WTS, IF APPLICABLE) IS AT THE CURRENT TIME.

THE WTS POSITION HAS THE PRIMARY RESPONSIBILITY OF IMPLEMENTING THE TRAFFIC MANAGEMENT PLAN (TMP), MONITORING THE SAFETY AND MOBILITY OF THE ENTIRE WORK ZONE, AND CORRECTING TEMPORARY TRAFFIC CONTROL (TTC) DEFICIENCIES FOR THE ENTIRE WORK ZONE. THE WTS, AND ALTERNATE WTS WHEN ON DUTY, SHALL HAVE SUFFICIENT AUTHORITY TO EFFECTIVELY CARRY OUT THE IDENTIFIED WTS RESPONSIBILITIES AND DUTIES. THE DUTIES OF THE WTS ARE AS FOLLOWS:

1. BE AVAILABLE ON A 24-HOUR PER DAY BASIS.

2. BE ON SITE FOR ALL EMERGENCY TTC NEEDS WITHIN ONE HOUR OF NOTIFICATION BY POLICE OR PROJECT STAFF, AND EFFECT CORRECTIVE MEASURES IMMEDIATELY ON EXISTING WORK ZONE TTC DEVICES.

3. ATTEND PRECONSTRUCTION MEETING AND ALL PROJECT MEETINGS WHERE TTC MANAGEMENT IS DISCUSSED.

4. BE AVAILABLE ON SITE FOR OTHER MEETINGS OR DISCUSSIONS WITH THE ENGINEER UPON REQUEST.

5. BE AWARE OF ALL EXISTING AND PROPOSED TTC OPERATIONS OF THE CONTRACTOR, SUBCONTRACTORS AND SUPPLIERS, AND ENSURE COORDINATION OCCURS BETWEEN THEM TO ELIMINATE CONFLICTING TEMPORARY AND/OR PERMANENT TRAFFIC CONTROL.

6. COORDINATE PROJECT ACTIVITIES WITH ALL LAW ENFORCEMENT OFFICERS (LEOs). THE WTS SHALL ALSO BE THE MAIN CONTACT PERSON WITH THE LEOS WHILE LEOS ARE ON THE PROJECT.

7. COORDINATE AND FACILITATE MEETINGS WITH ODOT PERSONNEL, LEOS AND OTHER APPLICABLE ENTITIES BEFORE EACH PLAN PHASE SWITCH TO DISCUSS THE WORK ZONE TTC FOR IMPLEMENTING THE PHASE SWITCH. SUBMIT A WRITTEN DETAIL OF MOT OPERATIONS AND SCHEDULE OF EVENTS TO IMPLEMENT THE SWITCH BETWEEN PHASE PLANS TO THE ENGINEER 5 CALENDAR DAYS PRIOR TO THIS MEETING.

8. BE PRESENT, ON SITE FOR, AND INVOLVED WITH, EACH TTC SET UP/TAKE DOWN AND EACH PHASE CHANGE IN ACCORDANCE WITH CMS 614.03.

9. ON A CONTINUAL BASIS ENSURE THAT THE TTC ZONE AND ALL RELATED DEVICES ARE INSTALLED, MAINTAINED AND REMOVED IN COMPLIANCE WITH THE CONTRACT DOCUMENTS.

10. ON A CONTINUAL BASIS FACILITATE CORRECTIVE ACTION(S) NECESSARY TO BRING DEFICIENT TTC ZONES AND ALL RELATED DEVICES INTO COMPLIANCE WITH CONTRACT DOCUMENTS IN THE TIMEFRAME DETERMINED BY THE ENGINEER.

11. INSPECT, EVALUATE, PROPOSE NECESSARY MODIFICATIONS TO, AND DOCUMENT THE EFFECTIVENESS OF, THE TTC DEVICES AND TRAFFIC OPERATIONS ON A DAILY BASIS (7 DAYS A WEEK). IN ADDITION, PERFORM ONE WEEKLY NIGHT INSPECTION OF THE WORK ZONE SETUP FOR DAYTIME WORK OPERATIONS; AND ONE DAYTIME INSPECTION PER WEEK FOR NIGHTTIME PROJECTS. THIS SHALL INCLUDE (BUT NOT BE LIMITED TO) DOCUMENTATION ON THE FOLLOWING PROJECT EVENTS:

A. INITIAL TTC SETUP (DAY AND NIGHT REVIEW).
B. DAILY TTC SETUP AND REMOVAL.
C. WHEN CONSTRUCTION STAGING CAUSES A CHANGE IN THE TTC SETUP.
D. CRASH OCCURRENCES WITHIN THE CONSTRUCTION AREA AND WITHIN THE INFLUENCE AREA(S) APPROACHING THE WORK ZONE.
E. REMOVAL OF TTC DEVICES AT THE END OF A PHASE OR PROJECT.
F. ALL OTHER EMERGENCY TTC NEEDS.

WORKSITE TRAFFIC SUPERVISOR (CONTINUED)

12. COMPLETE THE DEPARTMENT APPROVED LONG TERM INSPECTION FORM (CA-D-8) AFTER EACH INSPECTION AS REQUIRED IN #11 AND SUBMIT IT TO ELECTRONICALLY VIA GOFORMZ BY THE FOLLOWING WORKDAY.
THESE REPORTS SHALL INCLUDE A CHECKLIST OF ALL TTC MAINTENANCE ITEMS TO BE REVIEWED. A COPY OF THE FORM WILL BE PROVIDED AT THE PRE-CONSTRUCTION MEETING. ANY DEFICIENCIES OBSERVED SHALL BE NOTED, ALONG WITH RECOMMENDED OR COMPLETED CORRECTIVE ACTIONS AND THE DATES BY WHICH SUCH CORRECTIONS WERE, OR WILL BE, COMPLETED. ACCESS TO GOFORMZ WILL BE PROVIDED TO THE WTS AFTER THE PRECONSTRUCTION MEETING, PRIOR TO THE START OF WORK.

13. HAVE COPIES OF THE ODOT TEMPORARY TRAFFIC CONTROL MANUAL AND CONTRACT DOCUMENTS AVAILABLE AT ALL TIMES ON THE PROJECT.

THE DEPARTMENT WILL DEDUCT:

A. THE PRORATED DAILY AMOUNT OF ITEM 614 MAINTAINING TRAFFIC FOR ANY DAY IN WHICH THE WTS FAILS TO PERFORM THE DUTIES SET FORTH ABOVE. THE PRORATED DAILY AMOUNT WILL BE EQUAL TO THE ORIGINAL BID AMOUNT FOR ITEM 614 MAINTAINING TRAFFIC DIVIDED BY THE DIFFERENCE BETWEEN THE ORIGINAL COMPLETION DATE AND THE FIRST DAY OF WORK, IN CALENDAR DAYS.
B. 1% OF THE ORIGINAL BID AMOUNT FOR ITEM 614 MAINTAINING TRAFFIC FOR ANY DAY THAT A TTC ISSUE IS IDENTIFIED IN THE FIELD AND IS NOT CORRECTED IN THE GIVEN TIMEFRAME PER THE ENGINEER. DEDUCTION B SHALL NOT APPLY TO SITUATIONS COVERED BY DEDUCTION C.
C. 1% OF THE ORIGINAL BID AMOUNT FOR ITEM 614 MAINTAINING TRAFFIC FOR ANY DAY THAT A LANE OR RAMP IS BLOCKED (FULLY OR PARTIALLY) WITHOUT TTC, AS DETERMINED BY THE ENGINEER. THIS DEDUCTION SHALL BE IN ADDITION TO ANY OTHER DISINCENTIVES ESTABLISHED FOR UNAUTHORIZED LANE USE.

FOR DAYS IN WHICH MORE THAN ONE DEDUCTION LISTED ABOVE OCCUR, THE HIGHEST DEDUCTION AMOUNT WILL APPLY.

IF THREE OR MORE TOTAL DAYS RESULT IN TTC ISSUES DESCRIBED IN DEDUCTION B OR C ABOVE, THE PRIMARY WTS SHALL BE IMMEDIATELY REMOVED FROM THE WORK IN ACCORDANCE WITH C&MS 108.05. UPON REMOVAL THE ENGINEER SHALL NOTIFY ODOT CENTRAL OFFICE (WTSPrequalification@dot.ohio.gov) TO REGISTER A REMOVAL AGAINST THE STATEWIDE PREQUALIFICATION FOR THE PRIMARY WTS. THREE REMOVALS SHALL CAUSE STATEWIDE DISQUALIFICATION FOR ANY PREVIOUSLY PREQUALIFIED WTS.

PAYMENT FOR THE ABOVE REQUIREMENTS, RESPONSIBILITIES AND DUTIES SHALL BE INCLUDED IN THE LUMP SUM PRICE BID FOR ITEM 614, MAINTAINING TRAFFIC.

ITEM 622 - PORTABLE BARRIER PLACEMENT

DURING THE PLACEMENT OF THE PORTABLE BARRIER, TRAFFIC WILL BE PROHIBITED FROM OCCUPYING THE TRAVEL LANE ADJACENT TO THE BARRIER. THE BARRIER WILL BE PLACED AT NIGHT PER THE WORK HOUR RESTRICTION NOTE AND IN ACCORDANCE WITH THE PERMITTED LANE CLOSURE MAP. THE CLOSURE OF THE ADJACENT LANE WILL BE PER THE STANDARD DRAWING MT-95.30.

THE CONTRACTOR WILL SUBMIT A PLAN TO THE ENGINEER FOR APPROVAL SEVEN (7) DAYS IN ADVANCE OF THE PLANNED LANE CLOSURE. WORK WILL NOT BEGIN UNTIL APPROVAL OF THE PLANS HAS BEEN GRANTED.

ALL COSTS INVOLVED IN PLACING THE PORTABLE BARRIER WILL BE INCLUDED IN THE CONTRACT PRICE BID FOR ITEM 622 PORTABLE BARRIER.

DELINEATION OF PORTABLE AND PERMANENT BARRIER

BARRIER REFLECTORS AND OBJECT MARKERS SHALL BE INSTALLED ON ALL PORTABLE BARRIER (PB) USED FOR TRAFFIC CONTROL; AND, ON PERMANENT CONCRETE BARRIER (INCLUDING BRIDGE PARAPETS) LOCATED WITHIN 5 FEET OF THE EDGE OF THE ADJACENT TRAVEL LANE.

BARRIER REFLECTORS SHALL CONFORM TO C&MS 626, EXCEPT THAT THE SPACING SHALL BE AS PER TRAFFIC SCD MT-101.70. OBJECT MARKERS AND THEIR INSTALLATION SHALL CONFORM TO C&MS 614.03 AND SCD MT-101.70. WHEN THE PB CONTAINS GLARE SCREEN, ONE SET OF THREE VERTICAL STRIPES OF SHEETING SHALL BE CONSIDERED EQUIVALENT TO AN OBJECT MARKER, ONE-WAY.

INCREASED BARRIER DELINEATION, AS SPECIFIED HEREIN, SHALL BE INSTALLED ON ALL PB AND PERMANENT CONCRETE BARRIER LOCATED WITHIN 5 FEET OF THE EDGE OF THE TRAVELED LANE UNDER EITHER OF THE FOLLOWING CONDITIONS: ALONG TAPERS AND TRANSITION AREAS; OR ALONG CURVES (OUTSIDE ONLY) WITH DEGREE OF CURVATURE GREATER THAN OR EQUAL TO 3 DEGREES.

THE INCREASED BARRIER DELINEATION SHALL CONSIST OF EITHER DELINEATION PANELS OR THE TRIPLE STACKING OF WORK ZONE BARRIER REFLECTORS.

DELINEATION PANELS SHALL CONSIST OF PANELS OF DELINEATION, APPROXIMATELY 34 INCHES LONG AND 6 INCHES WIDE AND SHALL BE "CRIMPED." PANELS SHALL BE INSTALLED AND SPACED PER TRAFFIC SCD MT-101.70.

TRIPLE-STACKED BARRIER REFLECTORS SHALL CONSIST OF ALIGNING THREE BARRIER REFLECTORS VERTICALLY, AT LOCATIONS WHERE A SINGLE BARRIER REFLECTOR WOULD BE OTHERWISE ATTACHED. THERE SHALL BE NO OPEN SPACE BETWEEN THE ADJACENT BARRIER REFLECTORS. THE TRIPLESTACKED BARRIER REFLECTORS SHALL CONFORM TO C&MS 626, EXCEPT THAT THEY SHALL BE SPACED AND ALIGNED PER TRAFFIC SCD MT-101.70.

THE FOLLOWING ESTIMATED QUANTITIES HAVE BEEN INCLUDED IN THE PLANS AND CARRIED TO THE GENERAL SUMMARY:

ITEM 614, BARRIER REFLECTOR, TYPE 1 (ONE-WAY)
243 - EACH

ITEM 614, OBJECT MARKER, ONE-WAY 186 - EACH

ITEM 614, INCREASED BARRIER DELINEATION
1,206 - FEET

PAYMENT SHALL BE FULL COMPENSATION FOR ALL MATERIAL, LABOR, INCIDENTALS AND EQUIPMENT NECESSARY FOR FURNISHING, INSTALLING, MAINTAINING AND REMOVING EACH OF THE ABOVE ITEMS.

ALONG RUNS OF INCREASED BARRIER DELINEATION WHERE THIS ITEM IS PROVIDED, THE QUANTITY SHALL BE MEASURED AS THE ENTIRE LENGTH OF THE RUN OF INCREASED BARRIER DELINEATION, INCLUDING THE SPACES BETWEEN THE INDIVIDUAL DELINEATION PANELS OR STACKS OF BARRIER REFLECTORS.

DELINEATION OF TEMPORARY AND PERMANENT GUARDRAIL

BARRIER REFLECTORS SHALL BE INSTALLED ON ALL TEMPORARY GUARDRAIL USED FOR TRAFFIC CONTROL; AND, ON ALL PERMANENT GUARDRAIL LOCATED WITHIN 5 FEET OF THE EDGE OF THE ADJACENT TRAVEL LANE. BARRIER REFLECTORS SHALL CONFORM TO C&MS 626 AND THE SPACING SHALL BE APPROXIMATELY 50 FEET.

OBJECT MARKERS SHALL BE INSTALLED ON ALL TEMPORARY AND PERMANENT GUARDRAIL LOCATED WITHIN 5 FEET OF THE EDGE OF THE ADJACENT TRAVEL LANE. GUARDRAIL-MOUNTING OF OBJECT MARKERS SHALL BE MADE BY INSTALLING THE OBJECT MARKERS ON THE EXTENSION BLOCKS RATHER THAN DIRECTLY ONTO THE GUARDRAIL ITSELF. OBJECT MARKERS SHALL CONFORM TO C&MS 614.03 AND THE SPACING SHALL BE APPROXIMATELY 50 FEET WITH A 25 FOOT OFFSET FROM THE BARRIER REFLECTORS.

THE FOLLOWING ESTIMATED QUANTITIES HAVE BEEN INCLUDED IN THE PLANS AND CARRIED TO THE GENERAL SUMMARY:

ITEM 614, BARRIER REFLECTOR, TYPE 2
(ONE-WAY) 39 EACH

ITEM 614, OBJECT MARKER, ONE-WAY 37 EACH

PAYMENT SHALL BE FULL COMPENSATION FOR ALL MATERIAL, LABOR, INCIDENTALS AND EQUIPMENT NECESSARY FOR FURNISHING, INSTALLING, MAINTAINING AND REMOVING THE ABOVE ITEM(S).

MAINTENANCE OF TRAFFIC NOTES

DESIGN AGENCY
TranSystems
400 W. NATIONWIDE BLVD.
SUITE 225
COLUMBUS, OHIO 43215

DESIGNER MSW
REVIEWER BBD 02/25/22
PROJECT ID 104983
SHEET P.26 TOTAL 434

CUY-77-00.42 PART 1

MODEL: Sheet PAPERSIZE: 34x22 (in.) DATE: 3/1/2022 TIME: 4:49:48 PM USER: ssopraseuth
pw:\\hq-pwfn01.a-e.transystems.com:transystemscorp-pw1\Documents\Projects_2019\CO403\403190027\Agency_Folders\400-Engineering\MOT\Sheets\104983_MN004.dgn

ITEM 614 - LAW ENFORCEMENT OFFICER WITH PATROL CAR FOR ASSISTANCE, AS PER PLAN

USE OF LAW ENFORCEMENT OFFICERS (LEOs) BY CONTRACTORS OTHER THAN THE USES SPECIFIED BELOW WILL NOT BE PERMITTED AT PROJECT COST. LEOs SHOULD NOT BE USED WHERE THE OMUTCD INTENDS THAT FLAGGERS BE USED.

IN ADDITION TO THE REQUIREMENTS OF C&MS 614 AND THE OMUTCD, A UNIFORMED LEO WITH AN OFFICIAL PATROL CAR (CAR WITH TOP-MOUNTED EMERGENCY FLASHING LIGHTS AND COMPLETE MARKINGS OF THE APPROPRIATE LAW ENFORCEMENT AGENCY) SHALL BE PROVIDED FOR THE FOLLOWING TRAFFIC CONTROL TASKS:

- DURING THE ENTIRE ADVANCE PREPARATION AND CLOSURE SEQUENCE WHERE COMPLETE BLOCKAGE OF TRAFFIC IS REQUIRED.
- DURING A TRAFFIC SIGNAL INSTALLATION WHEN IMPACTING THE NORMAL FUNCTION OF THE SIGNAL OR THE FLOW OF TRAFFIC, OR WHEN TRAFFIC NEEDS TO BE DIRECTED THROUGH AN ENERGIZED TRAFFIC SIGNAL CONTRARY TO THE SIGNAL DISPLAY (E.G., DIRECTING MOTORISTS THROUGH A RED LIGHT).

IN ADDITION TO THE REQUIREMENT OF C&MS 614 AND THE OMUTCD, A UNIFORMED LEO WITH AN OFFICIAL PATROL CAR (CAR WITH TOP-MOUNTED EMERGENCY FLASHING LIGHTS AND COMPLETE MARKINGS OF THE APPROPRIATE LAW ENFORCEMENT AGENCY) MAY BE PROVIDED FOR THE FOLLOWING TRAFFIC CONTROL TASKS AS APPROVED BY THE ENGINEER:

- FOR LANE CLOSURES: DURING INITIAL SET-UP PERIODS, TEAR DOWN PERIODS, SUBSTANTIAL SHIFTS OF A CLOSURE POINT OR WHEN NEW LANE CLOSURE ARRANGEMENTS ARE INITIATED FOR LONG-TERM LANE CLOSURES/SHIFTS (FOR THE FIRST AND LAST DAY OF MAJOR CHANGES IN TRAFFIC CONTROL SETUP).

IN GENERAL, LEOs SHOULD BE POSITIONED IN ADVANCE OF AND ON THE SAME SIDE AS THE LANE RESTRICTION OR AT THE POINT OF ROAD CLOSURE, AND TO MANUALLY CONTROL TRAFFIC MOVEMENTS THROUGH SIGNALIZED INTERSECTIONS IN WORK ZONES.

LEOs SHOULD NOT FORGO THEIR TRAFFIC CONTROL RESPONSIBILITIES TO APPREHEND MOTORISTS FOR ROUTINE TRAFFIC VIOLATIONS. HOWEVER, IF A MOTORIST'S ACTIONS ARE CONSIDERED TO BE RECKLESS, THEN PURSUIT OF THE MOTORIST IS APPROPRIATE.

THE LEOs WORK AT THE DIRECTION OF THE CONTRACTOR. THE CONTRACTOR IS RESPONSIBLE FOR SECURING THE SERVICES OF THE LEOs WITH THE APPROPRIATE AGENCIES AND COMMUNICATING THE INTENTIONS OF THE PLANS WITH RESPECT TO DUTIES OF THE LEOs. THE ENGINEER SHALL HAVE FINAL CONTROL OVER THE LEOs' DUTIES AND PLACEMENT, AND WILL RESOLVE ANY ISSUES THAT MAY ARISE BETWEEN THE TWO PARTIES.

ENSURE PROVIDED LEOs HAVE BEEN TRAINED APPROPRIATE TO THE JOB DECISIONS THEY ARE REQUIRED TO MAKE WHILE ON THE PROJECT, IN ACCORDANCE WITH C&MS 614.03.

THE LEO SHALL REPORT IN TO THE CONTRACTOR PRIOR TO THE START OF THE SHIFT, IN ORDER TO RECEIVE INSTRUCTIONS REGARDING SPECIFIC WORK ASSIGNMENTS DURING HIS/HER SHIFT. THE LEO IS EXPECTED TO STAY AT THE PROJECT SITE FOR THE ENTIRE DURATION OF HIS/HER SHIFT. THE LEO SHALL REPORT TO THE CONTRACTOR AT THE END OF HIS/HER SHIFT. SHOULD IT BE NECESSARY TO LEAVE THE PROJECT SITE, THE LEO SHALL NOTIFY THE ENGINEER. THE CONTRACTOR SHALL PROVIDE THE LEO WITH A TWO-WAY COMMUNICATION DEVICE WHICH SHALL BE RETURNED TO THE CONTRACTOR AT THE END OF HIS/HER SHIFT.

LEOs (WITH PATROL CAR) REQUIRED BY THE TRAFFIC MAINTENANCE TASKS ABOVE SHALL BE PAID FOR ON A UNIT PRICE (HOURLY) BASIS UNDER ITEM 614, LAW ENFORCEMENT OFFICER (WITH PATROL CAR) FOR ASSISTANCE. THE FOLLOWING ESTIMATED QUANTITIES HAVE BEEN CARRIED TO THE GENERAL SUMMARY.

ITEM 614, LAW ENFORCEMENT OFFICER WITH PATROL CAR FOR ASSISTANCE, AS PER PLAN 500 HOURS

THE HOURS PAID SHALL INCLUDE ANY MINIMUM SHOW-UP TIME REQUIRED BY THE LAW ENFORCEMENT AGENCY INVOLVED.

ANY ADDITIONAL COSTS (ADMINISTRATIVE OR OTHERWISE) INCURRED BY THE CONTRACTOR TO OBTAIN THE SERVICES OF AN LEO ARE INCLUDED WITH THE BID UNIT PRICE FOR ITEM 614, LAW ENFORCEMENT OFFICER WITH PATROL CAR FOR ASSISTANCE.

ITEM 614 - WORK ZONE IMPACT ATTENUATOR FOR 24" WIDE HAZARDS (UNIDIRECTIONAL OR BIDIRECTIONAL)

THIS ITEM SHALL CONSIST OF FURNISHING AND INSTALLING A NON-GATING IMPACT ATTENUATOR. FURNISH AN IMPACT ATTENUATOR FROM THE OFFICE OF ROADWAY ENGINEERING'S APPROVED LIST FOR WORK ZONE IMPACT ATTENUATORS, FROM THE ROADWAY STANDARDS APPROVED PRODUCTS WEB PAGE.

INSTALLATION SHALL BE AT THE LOCATIONS SPECIFIED IN THE PLANS IN ACCORDANCE WITH THE MANUFACTURER'S SPECIFICATIONS.

THE CONTRACTOR SHALL REPAIR OR REPLACE A DAMAGED UNIT WITHIN 24 HOURS OF A DAMAGING IMPACT.

WHEN BIDIRECTIONAL DESIGNS ARE SPECIFIED, THE CONTRACTOR SHALL SUPPLY APPROPRIATE TRANSITIONS.

WHEN GATING IMPACT ATTENUATORS ARE DESIRED, THE CONTRACTOR SHALL SUBMIT DOCUMENTATION TO THE ENGINEER FOR ACCEPTANCE.

THE COST FOR THE ADDITIONAL BARRIER REQUIRED FOR A GATING IMPACT ATTENUATOR SHALL BE INCLUDED IN THE COST OF THE GATING IMPACT ATTENUATOR.

PAYMENT FOR THE ABOVE WORK SHALL BE MADE AT THE UNIT PRICE BID AND SHALL INCLUDE ALL LABOR, TOOLS, EQUIPMENT AND MATERIALS NECESSARY TO CONSTRUCT AND MAINTAIN A COMPLETE AND FUNCTIONAL IMPACT ATTENUATOR SYSTEM, INCLUDING ALL RELATED BACKUPS, TRANSITIONS, LEVELING PADS, HARDWARE AND GRADING, NOT SEPARATELY SPECIFIED, AS REQUIRED BY THE MANUFACTURER.

ITEM 614 - PAVEMENT FOR MAINTAINING TRAFFIC, CLASS A, AS PER PLAN

ON THIS PROJECT THE CLASS A PAVEMENT FOR MAINTAINING TRAFFIC SHALL BE 11 FEET WIDE AND THE ROADWAY WIDTH SHALL NOT BE LESS THAN 19 FEET OUT TO OUT OF SHOULDERS. THE ALIGNMENT AND PAVEMENT TYPICAL SECTION SHALL BE AS DETAILED ON SHEETS - . THE EXISTING PAVEMENT/ SHOULDER SHALL BE SAWCUT AS PER 203.04(E).

THE FOLLOWING ESTIMATED QUANTITIES HAVE BEEN INCLUDED IN THE GENERAL SUMMARY TO BE USED IN CONSTRUCTING THE PAVEMENT FOR MAINTAINING TRAFFIC, CLASS A, AS PER PLAN.
615, ROADS FOR MAINTAINING TRAFFIC, - LUMP SUM
615, PAVEMENT FOR MAINTAINING TRAFFIC, CLASS A, AS PER PLAN, - 1268 SQ YD
616, CALCIUM CHLORIDE, - 5 TONS
411, STABILIZED CRUSHED AGGREGATE, - 8 CU YD

UPON COMPLETION OF THE PROJECT, THE CONTRACTOR SHALL REMOVE THE PAVEMENT FOR MAINTAINING TRAFFIC INCLUDING ANY TEMPORARY DRAINAGE FACILITIES. THE AFFECTED EXISTING EARTH MEDIAN AND PAVED SHOULDERS SHALL BE RESTORED TO THEIR ORIGINAL CONDITION AS DIRECTED BY THE ENGINEER AND AS PER 615.08.

PAVEMENT FOR MAINTAINING TRAFFIC SHALL NOT BE OPENED TO TRAFFIC UNTIL ALL WORK ZONE TRAFFIC CONTROL DEVICES, SIGNS, PAVEMENT MARKINGS AND PORTABLE CONCRETE BARRIERS HAVE BEEN ERECTED AND APPROVED BY THE ENGINEER.

ALTHOUGH ESTIMATES FOR TEMPORARY EXCAVATION, EMBANKMENT AND TEMPORARY DRAINAGE FACILITIES MAY BE SHOWN ON THE PLAN DETAILS, THESE ITEMS SHALL BE CONSIDERED INCIDENTAL TO, AND INCLUDED WITH PAYMENT FOR ITEM 615 ROADS FOR MAINTAINING TRAFFIC.

ITEM 614 - WORK ZONE RAISED PAVEMENT MARKER, AS PER PLAN

WORK ZONE RAISED PAVEMENT MARKERS, AS PER PLAN, AND THEIR INSTALLATION SHALL CONFORM TO C&MS 614 OR C&MS 621 AS SPECIFIED HEREIN.

RAISED PAVEMENT MARKERS IN USE DURING THE SNOW-PLOWING SEASON SHALL CONFORM TO 621.

RAISED PAVEMENT MARKERS IN USE DURING THE NON-SNOW-PLOW SEASON SHALL CONFORM TO EITHER 614 OR TO 621.

THE SNOW-PLOWING SEASON SHALL RUN FROM OCTOBER 15 THROUGH APRIL 1.

IF PROJECT DELAYS, NOT THE FAULT OF ODOT, CAUSE THE WORK TO EXTEND INTO THE SNOW-PLOWING SEASON, THE CONTRACTOR SHALL BE RESPONSIBLE FOR REPLACING WORK ZONE RAISED PAVEMENT MARKERS (WZRPMS) CONFORMING TO C&MS 614, WITH RAISED PAVEMENT MARKERS CONFORMING TO 621, AS DETERMINED BY THE ENGINEER, AT THE CONTRACTOR'S EXPENSE.

THIS ITEM SHALL INCLUDE PURCHASE, INSTALLATION AND REMOVAL OF ITEM 614 WORK ZONE RAISED PAVEMENT MARKER, AS PER PLAN, INCLUDING FILLING OF ANY DEPRESSIONS CREATED IN THE PAVEMENT AS PER C&MS 621.08.

RESURFACING OF THE TRANSITION AREAS SHALL BE PERFORMED AT THE TIME THAT THE SURFACE COURSE IS BEING APPLIED TO THE ENTIRE PROJECT. PRIOR TO APPLICATION OF THE SURFACE COURSE ON THE PROJECT, THE EXISTING PAVEMENT WITHIN THE TRANSITION AREA SHALL BE REMOVED TO A DEPTH OF 1.5" TO REACH THE LEVEL OF THE INTERMEDIATE COURSE OF THE PAVEMENT, AS DETERMINED BY THE ENGINEER.

THE FOLLOWING BID ITEMS SHOULD BE INCLUDED IN THE PLANS:

ITEM 254 PAVEMENT PLANING, ASPHALT CONCRETE - 23.0 SQ YD
ITEM 442 - ASPHALT CONCRETE SURFACE COURSE, TYPE A (446), A.P.P., PG76-22M - 4.0 CU YD
ITEM 614 WORK ZONE RAISED PAVEMENT MARKER, A.P.P. - 735 EA

PAYMENT FOR RESURFACING WITHIN THE TRANSITION AREA SHALL BE PAID FOR UNDER THE APPROPRIATE BID ITEMS FOR THE WORK REQUIRED, AS PROVIDED FOR IN THE PLANS.

SPECIAL - WORK ZONE GUARDRAIL

THIS WORK AND MATERIALS SHALL COMPLY WITH ITEM 606 FOR PERMANENT GUARDRAIL, EXCEPT THAT USED TYPE 5 RAILS AND POSTS MAY BE USED IF IN GOOD CONDITION AND APPROVED BY THE ENGINEER. FOR EXISTING GUARDRAIL RUNS WHICH REQUIRE AN EXTENSION, THE EXISTING END TERMINAL ASSEMBLY SHALL BE REMOVED AND RESET TO THE NEW LOCATIONS, AS SHOWN ON THE PLANS. NEW RUNS, FOR BRIDGE PARAPET PROTECTION SHALL HAVE THE APPROPRIATE BRIDGE TERMINAL ASSEMBLIES INSTALLED. UPON COMPLETION OF THE PHASE WHICH REQUIRES THE TEMPORARY GUARDRAIL, ALL WORK ZONE GUARDRAIL SHALL BE REMOVED AND THE POST HOLES BACKFILLED (UNLESS PERMANENT GRADING TO BE PERFORMED LATER WOULD REPAIR THE HOLES), ALL TERMINAL ASSEMBLIES REMOVED, AND END TERMINAL ASSEMBLIES RESET TO THEIR ORIGINAL LOCATION

PAYMENT SHALL INCLUDE ALL WORK FOR PROVIDING AND/OR RESETTING TERMINAL ASSEMBLIES, NEW GUARDRAIL, GUARDRAIL EXTENSIONS, AND REMOVAL AND RESTORATION UPON COMPLETION OF THE PHASE WHICH REQUIRES THE TEMPORARY GUARDRAIL. THE LENGTH OF MEASUREMENT FOR PAYMENT SHALL BE PER ITEM 606 FOR PERMANENT GUARDRAIL, EXCLUDING THE LENGTH OF TERMINAL ASSEMBLIES AND END TREATMENTS. PAYMENT SHALL BE AT THE UNIT PRICE BID, PER FOOT FOR ITEM SPECIAL - WORK ZONE GUARDRAIL.

ITEM SPECIAL - WORK ZONE GUARDRAIL 875 FEET

MAINTENANCE OF TRAFFIC NOTES

MODEL: Sheet PAPERSIZE: 34x22 (in.) DATE: 3/1/2022 TIME: 4:50:19 PM USER: ssopraseuth
pw:\\hq-pwin101.a-e.transystems.com:transystemscorp-pw1\Documents\Projects_2019\CO40340319002?\Agency_Folders\400-Engineering\MOT\Sheets\104983_MN005.dgn

DESIGN AGENCY
TranSystems
400 W. NATIONWIDE BLVD. SUITE 225 COLUMBUS, OHIO 43215

DESIGNER MSW
REVIEWER BBD 02/25/22
PROJECT ID 104983
SHEET P.27 TOTAL 434

WORK ZONE SPEED ZONES (WZSZS)

THE FOLLOWING WORK ZONE SPEED ZONE (WZSZ) SPEED LIMIT REVISION(S) HAVE BEEN APPROVED FOR USE ON THIS PROJECT WHEN WORK ZONE CONDITIONS AND FACTORS ARE MET AS DESCRIBED BELOW:

WZSZ REVISION NUMBER(S) COUNTY-ROUTE-SECTION(S) DIRECTION(S)
WZ-65244 [CUY-77-00.07 NB]
WZ-65244 [CUY-77-00.59 NB]
WZ-65244 [CUY-77-00.57 SB]
WZ-65244 [CUY-77-01.22 SB]

POTENTIAL WZSZ LOCATIONS SHALL HAVE AN ORIGINAL (PRE-CONSTRUCTION) POSTED SPEED LIMIT OF 55 MPH OR GREATER, A QUALIFYING WORK ZONE CONDITION OF AT LEAST 0.5 MILE IN LENGTH, AN EXPECTED WORK DURATION OF AT LEAST THREE HOURS, AND A WORK ZONE CONDITION IN PLACE THAT REDUCES THE EXISTING FUNCTIONALITY OF THE TRAVEL LANES OR SHOULDERS (I.E., LANE CLOSURE, LANE SHIFT, CROSSOVER, CONTRAFLOW AND/OR SHOULDER CLOSURE). THE LENGTH OF THE WORK ZONE CONDITION IS MEASURED FROM THE BEGINNING OF THE TAPER FOR THE SUBJECT WORK ZONE CONDITION IMPACTING THE TRAVEL LANES AND/OR SHOULDER TO THE END OF THE DOWNSTREAM TAPER, WHERE DRIVERS ARE RETURNED TO TYPICAL ALIGNMENT. AN EXPECTED WORK DURATION OF AT LEAST THREE HOURS IS REQUIRED TO BALANCE THE ADDITIONAL EXPOSURE CREATED BY INSTALLING AND REMOVING WZSZ SIGNING WITH THE TIME NEEDED TO COMPLETE THE WORK.

IF THE WORK ZONE MEETS THESE MINIMUM CRITERIA, IT SHALL BE ANALYZED FURTHER USING TABLE 1 BELOW TO DETERMINE IF AND WHEN IT QUALIFIES FOR A SPEED LIMIT REDUCTION. DEPENDING ON THE ORIGINAL POSTED SPEED LIMIT, THE TYPE OF TEMPORARY TRAFFIC CONTROL USED, AND WHETHER OR NOT WORKERS ARE PRESENT, A WARRANTED WZSZ WILL VARY IN THE APPROVED SPEED LIMIT TO BE POSTED OVER TIME.

C&MS ITEM 614, PARAGRAPH 614.02(B), INDICATES THAT TWO DIRECTIONS OF A DIVIDED HIGHWAY ARE CONSIDERED SEPARATE HIGHWAY SECTIONS. THEREFORE, IF THE WORK ON A MULTI-LANE DIVIDED HIGHWAY IS LIMITED TO ONLY ONE DIRECTION, A SPEED LIMIT REDUCTION IN THE DIRECTION OF THE WORK DOES NOT AUTOMATICALLY CONSTITUTE A SPEED LIMIT REDUCTION IN THE OPPOSITE DIRECTION. EACH DIRECTION SHALL BE ANALYZED INDEPENDENTLY FROM EACH OTHER.

ALL WZSZS FLUCTUATE BETWEEN TWO APPROVED REDUCED SPEED LIMITS OR BETWEEN AN APPROVED REDUCED SPEED LIMIT AND THE ORIGINAL POSTED SPEED LIMIT. ONLY ONE OF TWO SIGNING STRATEGIES SHALL BE USED TO IMPLEMENT A WZSZ.

ONLY ONE WARRANTED SPEED LIMIT APPLIES AT ANY ONE TIME; SPEED LIMIT REDUCTIONS ARE NOT CUMULATIVE. WZSZS SHALL NOT BE USED FOR MOVING/MOBILE ACTIVITIES, AS DEFINED IN OMUTCD PART 6.

WORK ZONE SPEED ZONES (CONTINUED)

WHEN LOOKING UP THE WARRANTED WORK ZONE SPEED LIMITS, ALWAYS USE THE ORIGINAL, PRECONSTRUCTION, POSTED SPEED LIMIT. DO NOT USE A PRIOR OR CURRENT WORK ZONE SPEED LIMIT AS A LOOK UP VALUE IN THE TABLE. POSITIVE PROTECTION IS GENERALLY REGARDED AS PORTABLE BARRIER OR OTHER RIGID BARRIER IN USE ALONG THE WORK AREA WITHIN THE SUBJECT WARRANTED WORK ZONE CONDITION. WITHOUT POSITIVE PROTECTION IS GENERALLY REGARDED AS USING DRUMS, CONES, SHADOW VEHICLE, ETC., ALONG THE WORK AREA WITHIN THE SUBJECT WARRANTED WORK ZONE CONDITION. WORKERS ARE CONSIDERED AS BEING PRESENT WHEN ON-SITE, WORKING WITHIN THE SUBJECT WARRANTED WORK ZONE CONDITION. WHEN THE WORK ZONE CONDITION REDUCING THE EXISTING FUNCTIONALITY OF THE TRAVEL LANES OR SHOULDERS IS REMOVED, THE SPEED LIMIT DISPLAYED SHALL RETURN TO THE ORIGINAL POSTED SPEED LIMIT.

TABLE 1: WARRANTED WORK ZONE SPEED LIMITS (MPH) FOR WORK ZONES ON HIGH-SPEED (55 MPH OR GREATER) MULTI-LANE HIGHWAYS

	WITH POSITIVE PROTECTION		WITHOUT POSITIVE PROTECTION	
ORGINAL POSTED SPEED LIMIT	WORKERS PRESENT	WORKERS NOT PRESENT	WORKERS PRESENT	WORKERS NOT PRESENT
70	60	65	55	65
65	55	60	50	60
60	55	60	50	60
55	50	55	45	55

THE FOLLOWING ESTIMATED QUANTITY HAS BEEN CARRIED TO THE GENERAL SUMMARY.

ITEM 808, DIGITAL SPEED LIMIT (DSL) SIGN ASSEMBLY
4 SIGN MNTH

EARTHWORK FOR MAINTAINING TRAFFIC

THE FOLLOWING QUANTITIES HAVE BEEN INCLUDED IN THE PLAN FOR INFORMATION ONLY.

EXCAVATION FOR MAINTAINING TRAFFIC 1,010 CU. YD.
EMBANKMENT FOR MAINTAINING TRAFFIC 6,735 CU. YD.

WHEN UNDERCUTS ARE NECESSARY FOR MAINLINE PAVEMENT OR EMBANKMENT CONSTRUCTION, EVALUATE THE NEED FOR TEMPORARY ROAD UNDERCUTS IF WITHIN A CLOSE PROXIMITY TO THE MAINLINE UNDERCUTS. A GEOTECHNICAL EVALUATION SHOULD BE CONSIDERED TO DETERMINE IF THE EXISTING SOIL CONDITIONS ARE ADEQUATE TO SUPPORT THE TEMPORARY ROAD. ADDITIONAL SOIL BORINGS ALONG THE TEMPORARY ROAD ARE NOT NORMALLY REQUIRED.

WORK ZONE INCREASED PENALTIES SIGN (R11-H5A)

R11-H5A-48 SIGNS SHALL BE FURNISHED, ERECTED, AND MAINTAINED IN GOOD CONDITION AND/OR REPLACED AS NECESSARY AND SUBSEQUENTLY REMOVED BY THE CONTRACTOR. SIGNS SHALL BE MOUNTED AT THE APPROPRIATE OFFSETS AND ELEVATIONS AS PRESCRIBED BY THE OHIO MANUAL OF UNIFORM TRAFFIC CONTROL DEVICES. THEY SHALL BE MAINTAINED ON SUPPORTS MEETING CURRENT SAFETY CRITERIA.

THE SIGNS MAY BE ERECTED OR UNCOVERED NO MORE THAN FOUR HOURS BEFORE THE ACTUAL START OF WORK. THE SIGNS SHALL BE REMOVED OR COVERED NO LATER THAN FOUR HOURS FOLLOWING RESTORATION OF ALL LANES TO TRAFFIC WITH NO RESTRICTIONS, OR SOONER AS DIRECTED BY THE ENGINEER. TEMPORARY SIGN COVERING AND UNCOVERING DUE TO TEMPORARY LANE RESTORATIONS SHALL BE GUIDED BY THE FOUR-HOUR LIMITATIONS STATED ABOVE. SUCH LANE RESTORATIONS SHOULD BE EXPECTED TO REMAIN IN EFFECT FOR 30 OR MORE CONSECUTIVE CALENDAR DAYS, SUCH AS DURING WINTER SHUT-DOWNS.

(THE SIGNS ON THE MAINLINE SHALL BE DUAL MOUNTED UNLESS NOT PHYSICALLY POSSIBLE. THE FIRST SIGN SHALL BE PLACED BETWEEN THE ROAD WORK AHEAD (W20-1) SIGN AND THE NEXT SIGN IN THE SEQUENCE. SIGNS SHALL BE ERECTED ON EACH ENTRANCE RAMP AND EVERY 2 MILES THROUGH THE CONSTRUCTION WORK LIMITS. SIGNS ON THE MAINLINE SHALL BE R11-H5A-48. SIGNS USED ON THE RAMPS SHALL BE R11-H5A-24. R11-H5A-24 SIGNS MAY BE USED IN THE MEDIAN IN LIEU OF R11-H5A-48 SIGNS IF IT IS NOT PHYSICALLY POSSIBLE TO PROVIDE R11-H5A-48 SIGNS IN THE MEDIAN.)

THE R11-H5A-48 SIGNS SHALL BE MOUNTED ON 2 NO. 3 POSTS WHEN LOCATED WITHIN CLEAR ZONES.

THE CONTRACTOR MAY USE SIGNS AND SUPPORTS IN USED, BUT GOOD, CONDITION PROVIDED THE SIGNS MEET CURRENT ODOT SPECIFICATIONS. SIGN FACES SHALL BE RETROREFLECTORIZED WITH TYPE G SHEETING COMPLYING WITH THE REQUIREMENTS OF C&MS 730.19.

WORK ZONE INCREASED PENALTIES SIGNS AND SUPPORTS WILL BE MEASURED AS THE NUMBER OF SIGN INSTALLATIONS, INCLUDING THE SIGN AND NECESSARY SUPPORTS. IF A SIGN AND SUPPORT COMBINATION IS REMOVED AND REERECTED AT ANOTHER LOCATION AS DIRECTED BY THE ENGINEER, IT SHALL BE CONSIDERED ANOTHER UNIT.

PAYMENT FOR ACCEPTED QUANTITIES, COMPLETE, IN PLACE WILL BE MADE AT THE CONTRACT UNIT PRICE. PAYMENT SHALL BE FULL COMPENSATION FOR ALL MATERIALS, LABOR, INCIDENTALS AND EQUIPMENT FOR FURNISHING, ERECTING, MAINTAINING, COVERING DURING SUSPENSION OF WORK, AND REMOVAL OF THE SIGN AND SUPPORT.

ITEM 614, WORK ZONE INCREASED PENALTIES SIGN 2 EACH

WORK ZONE INCREASED PENALTIES SIGNS WILL BE PLACED AT THE FOLLOWING LOCATIONS:
[SUM-77-20.17 NB]
[CUY-77-01.95 SB]

MAINTENANCE OF TRAFFIC NOTES

MODEL: Sheet PAPERSIZE: 34x22 (in.) DATE: 3/1/2022 TIME: 4:50:39 PM USER: ssopraseuth
pw:\\hq-pwint01.a-e.transystems.com:transyscorp-pw1\Documents\Projects_2019\CO403\403190027\Agency_Folders\400-Engineering\MOT\Sheets\104983_MN006.dgn

DESIGN AGENCY
TranSystems
400 W. NATIONWIDE BLVD.
SUITE 225
COLUMBUS, OHIO 43215

DESIGNER
MSW

REVIEWER
BBD 02/25/22

PROJECT ID
104983

REF. NO.	SHEET NO.	STATION FROM	STATION TO	LENGTH	AVERAGE WIDTH	SIDE	GRAPHICAL GENERATED AREA	609	614																615	615	622
								CURB, TYPE 6	INCREASED BARRIER DELINEATION	WORK ZONE IMPACT ATTENUATOR, 24" WIDE HAZARDS, (BIDIRECTIONAL)	WORK ZONE IMPACT ATTENUATOR, 24" WIDE HAZARDS, (UNIDIRECTIONAL)	WORK ZONE CENTER LINE, CLASS I	WORK ZONE EDGE LINE, CLASS I, 4" (WHITE)	WORK ZONE EDGE LINE, CLASS I, 4" (YELLOW)	WORK ZONE CHANNELIZING LINE, CLASS I, 8"	WORK ZONE DOTTED LINE, CLASS I (WHITE)	WORK ZONE DOTTED LINE, CLASS I (YELLOW)	WORK ZONE TRANSVERSE/DIAGONAL LINE, CLASS I	WORK ZONE STOP LINE, CLASS I	WORK ZONE ARROW, CLASS I	SPECIAL - WORK ZONE TRAFFIC SIGNAL	SPECIAL - WORK ZONE GUARDRAIL	BARRIER REFLECTOR, TYPE 1 (1WAY)	OBJECT MARKER, ONE WAY	OBJECT MARKER, TWO WAY	PAVEMENT FOR MAINTAINING TRAFFIC, CLASS A	PAVEMENT FOR MAINTAINING TRAFFIC, CLASS A, AS PER PLAN	PORTABLE BARRIER, UNANCHORED
				FT	FT		SF	FT	FT	EACH	EACH	MILE	MILE	MILE	FT	FT	FT	FT	FT	FT	EACH	FT	EACH	EACH	EACH	SY	SY	FT
		PHASE 1A																										
		MILLER RD																										
PMT 1	36	61+44.64	67+03.53	558.89	9.53	RT	5326.22																			592		
C 1	37	63+11.70	67+03.53			RT		392																				
ELW 1	37-38	66+46.43	69+40.43			RT							0.06															
DYL 1	37-38	66+49.48	68+59.18			RT						0.04																
DLY 1	38	68+59.18	70+38.64			RT											180											
PMT 2	38	70+64.73	71+40.58	75.85	15.98	LT	1211.78																			135		
IA 1	38	70+00.00				CL				1																		
SL 1	38	70+38.64				RT													11									
TR 1	38	70+31.30	71+05.49			RT&LT															1							
PB 1	38-39	70+00.00	75+05.14			CL&LT			51														10		10			510
DYL 2	38-39	70+38.64	74+72.25			RT						0.08																
ELW 2	38-39	EX RAMP B-2 14+99.81	RAMP B-1 0+75.35			LT							0.13															
SL 2	39	74+72.25				RT													12									
ELW 3	39-44	RAMP B-1 0+35.58	99+31.69			RT&LT							0.46															
TR 2	39	75+07.09	76+09.50			RT&LT															1							
PB 2	39-41	RAMP B-1 0+35.58	84+53.76			RT&LT			92														18		18			920
SL 3	39	75+93.35				RT													11									
DYL 3	39-40	75+93.35	82+93.89			RT						0.13																
TR 3	41	83+04.10	84+30.16			RT&LT															1							
SL 4	41	84+03.42				RT													12									
DYL 4	41	84+03.42	84+60.00			RT						0.01																
IA 2	41	84+53.76				LT				1																		
ELY 1	41	84+60.00	87+10.00			RT&LT								0.05														
		I-77																										
CH 11	45-48	9+25.00	50+94.18			LT									4155													
CH 12	45-48	9+25.00	50+94.18			LT									4155													
CH 13	45	11+37.30	12+80.05			LT									145													
ELY 11	45-48	12+26.38	47+94.50			LT								0.67														
DLW 11	45	12+80.05	17+00.00			LT										473												
ELW 11	35-48	13+36.68	47+94.01			LT							0.65															
CH 14	35-47	16+93.13	45+56.41			RT									2874													
CH 15	35-47	16+93.13	45+56.41			RT									2874													
PB 11	35-47	17+00.00	45+10.20			LT			279														56	56				2790
ELY 12	35-47	19+92.76	42+56.82			RT								0.43														
ELW 12	35-47	19+93.32	42+56.22			RT							0.43															
IA 11	46	28+05.00				RT					1																	
PB 12	46-47	28+05.00	44+26.12			RT			164														33	33				1640
IA 12	47	42+24.63				RT					1																	
PB 13	47	42+24.63	44+35.74			RT			21														4	4				210
PB 14	47	43+00.93	45+14.27			LT			21														4	4				210
IA 13	47	45+10.20				LT					1																	
IA 14	47	45+14.27				LT					1																	
		RAMP B-1																										
PMT 11	47	00+25.96	01+16.17	90.21	5.88	LT	530.80																			59		
ELW 13	47-49	00+35.58	I-77 58+91.49			RT							0.30															
PB 15	47-48	00+35.58	I-77 55+33.00			LT			124														25	25				1240
SUBTOTALS THIS SHEET								392	752	2	4	0.27	2.02	1.15	14202	473	180	0	46	0	3	0	150	122	29	785	0.00	7520

CUY-77-00.42 PART 1

MAINTENANCE OF TRAFFIC SUBSUMMARY

DESIGN AGENCY
TranSystems
400 W. NATIONWIDE BLVD., STE 220
COLUMBUS, OHIO 43215

DESIGNER HB

REVIEWER BBD 02/25/22

PROJECT ID 104983

SHEET P.29 TOTAL 434

MODEL: Untitled Sheet PAPERSIZE: 34x22 (in.) DATE: 3/1/2022 TIME: 4:50:56 PM USER: ssopraseuth
pw:\\hq-pwin101.a-e.transystems.com:transystemscorp-pw1\Documents\Projects_2019\CO40\034031900027\Agency_Folders\400-Engineering\MOT\Sheets\104983_MS001.dgn

REF. NO.	SHEET NO.	STATION FROM	STATION TO	LENGTH	AVERAGE WIDTH	SIDE	GRAPHICAL GENERATED AREA	609	614																615	615	622
								CURB, TYPE 6	INCREASED BARRIER DELINEATION	WORK ZONE IMPACT ATTENUATOR, 24" WIDE HAZARDS, (BIDIRECTIONAL)	WORK ZONE IMPACT ATTENUATOR, 24" WIDE HAZARDS, (UNIDIRECTIONAL)	WORK ZONE CENTER LINE, CLASS I	WORK ZONE EDGE LINE, CLASS I, 4" (WHITE)	WORK ZONE EDGE LINE, CLASS I, 4" (YELLOW)	WORK ZONE CHANNELIZING LINE, CLASS I, 8"	WORK ZONE DOTTED LINE, CLASS I (WHITE)	WORK ZONE DOTTED LINE, CLASS I (YELLOW)	WORK ZONE TRANSVERSE/DIAGONAL LINE, CLASS I	WORK ZONE STOP LINE, CLASS I	WORK ZONE ARROW, CLASS I	SPECIAL - WORK ZONE TRAFFIC SIGNAL	SPECIAL - WORK ZONE GUARDRAIL	BARRIER REFLECTOR, TYPE 1 (1WAY)	OBJECT MARKER, ONE WAY	OBJECT MARKER, TWO WAY	PAVEMENT FOR MAINTAINING TRAFFIC, CLASS A	PAVEMENT FOR MAINTAINING TRAFFIC, CLASS A, AS PER PLAN	PORTABLE BARRIER, UNANCHORED
							SF	FT	FT	EACH	EACH	MILE	MILE	MILE	FT	FT	FT	FT	FT	FT	EACH	FT	EACH	EACH	EACH	SY	SY	FT
		PHASE 1A																										
		EX RAMP B-2																										
ELY 13	47	14+37.35	14+99.81			LT								0.01														
LA 11	47	14+26.87				RT														1								
LA 12	47	14+82.09				RT														1								
CH 16	48	01+59.58	05+38.13			LT									380													
IA 15	48	05+38.13									1																	
ELY 15	48	05+38.13	09+33.47			LT								0.08														
PB 16	48	05+38,13	08+73,94			LT			34														7	7				340
LA 13	48	12+94.02				RT														1								
LA 14	48	13+61.51				RT														1								
PMT 12	48	05+38.13	13+07.39	769.26	14.84	LT&RT	11413.51																			1268		
		PHASE 1B																										
		MILLER RD																										
ELW 21	50-51	60+04.82	63+19.87			LT							0.07															
ELW 22	50-51	61+44.64	64+70.00			RT							0.06															
DYL 21	50-51	61+60.97	62+81.42			RT						0.02																
PMT 21	50-51	60+04.82	63+03.18	298.36	7.92	LT	2364.20																			263		
PMT 22	51-52	63+74.88	69+69,44	594,56	12.29	LT	7307.38																			812		
ELW 23	51-52	63+63.29	REL R B-2 14+73.46			LT							0.15															
IA 21	51	64+34.02				LT				1																		
DYL 22	51	64+01.40	69+28.95			RT						0.10																
PB 21	51-52	64+34.02	69+53.19			LT&RT			52														10		10			520
SL 21	52	69+28.95				RT													11									
IA 22	52	69+53.19				CL				1																		
ELW 24	52	REL R B-2 15+01.21	71+30.52			LT							0.02															
TR 21	52	71+31.30	71+05,49			RT&LT																1						
IA 23	52	71+45.00				CL				1																		
SL 23	52	72+13.02				RT													11									
DYL 23	52	74+50.00	75+41.62			CL							0.02															
PB 22	53	74+50.00	75+41.62			CL																	2		2			90
ELW 25	53	74+50.00	RAMP B-1 0+67.33			LT							0.04															
IA 24	53	75+41.62				CL				1																		
SL 24	53	75+50.00				RT													11									
ELW 26	53	RAMP B-1 0+96.70	76+89.07			RT&LT							0.05															
ELW 27	53	RAMP B-1 1+11.62	76+36.38			RT&LT							0.03															
TL 21	53	RAMP B-1 0+96.70	76+36.38			RT&LT												95										
SL 25	53	76+61.46				RT&LT													15									
IA 25	53	77+11.21				CL				1																		
		RAMP B-1																										
ELW 31	61-62	01+11.62	03+50.00			RT							0.05															
		RAMP B-2																										
GR 31	61-62	MILLER 71+35.64	06+33.62			RT																875						
SL 31	61	15+03.94				RT&LT													32									
CH 31	61	14+36.85	15+03.94			LT									67													
LA 31	61	14+71.84																		1								
LA 32	61	14+71.84																		1								
SUBTOTALS THIS SHEET								0	86	5	1.00	0.12	0.47	0.09	447	0	0	95	80	6	1	875	19	7	12	1075	1268	950

CUY-77-00.42 PART 1

MODEL: Untitled Sheet PAPERSIZE: 34x22 (in.) DATE: 3/1/2022 TIME: 4:51:12 PM USER: ssopraseuth
pw:\\hq-pwint01.ae.transyscorp.com:transyscorp-pw1\Documents\Projects_2019\CO403\403190027\Agency_Folders\400-Engineering\MOT\Sheets\104983_MS002.dgn

MAINTENANCE OF TRAFFIC SUBSUMMARY

DESIGN AGENCY
TransSystems
400 W. NATIONWIDE BLVD., STE 225
COLUMBUS, OHIO 43215

DESIGNER HB

REVIEWER BBD 02/25/22

PROJECT ID 104983

REF. NO.	SHEET NO.	STATION FROM	STATION TO	LENGTH	AVERAGE WIDTH	SIDE	GRAPHICAL GENERATED AREA	609	614																615	615	622
								CURB, TYPE 6	INCREASED BARRIER DELINEATION	WORK ZONE IMPACT ATTENUATOR, 24" WIDE HAZARDS, (BIDIRECTIONAL)	WORK ZONE IMPACT ATTENUATOR, 24" WIDE HAZARDS, (UNIDIRECTIONAL)	WORK ZONE CENTER LINE, CLASS I	WORK ZONE EDGE LINE, CLASS I, 4" (WHITE)	WORK ZONE EDGE LINE, CLASS I, 4" (YELLOW)	WORK ZONE CHANNELIZING LINE, CLASS I, 8"	WORK ZONE DOTTED LINE, CLASS I (WHITE)	WORK ZONE DOTTED LINE, CLASS I (YELLOW)	WORK ZONE TRANSVERSE/DIAGONAL LINE, CLASS I	WORK ZONE STOP LINE, CLASS I	WORK ZONE ARROW, CLASS I	SPECIAL - WORK ZONE TRAFFIC SIGNAL	SPECIAL - WORK ZONE GUARDRAIL	BARRIER REFLECTOR, TYPE 1 (1WAY)	OBJECT MARKER, ONE WAY	OBJECT MARKER, TWO WAY	PAVEMENT FOR MAINTAINING TRAFFIC, CLASS A	PAVEMENT FOR MAINTAINING TRAFFIC, CLASS A, AS PER PLAN	PORTABLE BARRIER, UNANCHORED
				FT	FT		SF	FT	FT	EACH	EACH	MILE	MILE	MILE	FT	FT	FT	FT	FT	FT	EACH	FT	EACH	EACH	EACH	SY	SY	FT
		PHASE 1B																										
		RAMP B-2																										
ELY 32	61-62	15+03.94	EX R B-2 5+38.13			LT								0.18														
ELW 32	61-62	14+73.46	EX R B-2 4+45.34			RT&LT							0.20															
IA 31	62	EX R B-2 5+80.46				LT					1																	
PB 31	62	EX R B-2 5+80.46	12+08.43			RT&LT			63																13	13			630
		PHASE 2																										
		MILLER ROAD																										
ELW 41	64-65	60+04.82	63+03.82			LT							0.06															
DYL 41	64-65	60+39.94	63+03.82			LT						0.05																
ELW 42	64-69	60+69.72	87+25.00			RT&LT							0.50															
IA 41	64	62+33.28				RT				1																		
PB 41	64-69	62+33.28	84+53.76			RT&LT			222																44	44			2220
ELW 43	65-66	63+75.51	RAMP B-2 14+36.85			RT&LT							0.11															
DYL 42	65-66	63+75.51	69+45.00			LT						0.11																
SL 41	66	69+45.00				LT													11									
ELW 44	66	RAMP B-2 14+97.16	71+37.11			LT							0.02															
SL 42	66	71+65.09				LT													11									
DYL 43	66-67	71+65.09	74+74.47			LT						0.06																
SL 43	67	74+74.47				LT													11									
ELW 45	67-69	RAMP B-1 0+86.59	84+53.76			LT							0.17															
TR 41	67	75+07.09	75+96.74			RT&LT															1							
SL 44	67	76+36.07				LT													11									
DYL 44	67-69	76+36.07	85+08.09			RT&LT						0.17																
IA 42	69	84+53.76				LT				1																		
ELY 41	69	85+08.09	87+25.00			LT								0.04														
ELY 42	69	85+08.09	87+25.00			RT&LT								0.04														
DLY 41	69-70	87+25.00	89+00.00			LT										175												
ELY 43	70-71	89+00.00	93+10.00			LT								0.08														
DLY 42	71	93+10.00	95+60.00			LT										250												
ELY 44	71-72	95+60.00	99+18.81			LT								0.07														
		I-77																										
IA 52	74	29+50.00				RT					1																	
PB 51	74-75	29+50.00	37+70.00			RT			83																17		17		830
SUBTOTAL THIS SHEET								0	368	2	2	0.38	1.05	0.41	0	425	0	0	44	0	1	0	74	57	17	0	0	3680
SUBTOTAL FROM SHEET								392	752	2	4	0.27	2.02	1.15	14202	473	180	0	46	0	3	0	150	122	29	785	0	7520
SUBTOTAL FROM SHEET								0	86	5	1	0.12	0.47	0.09	447	0	0	95	80	6	1	875	19	7	12	1075	1268	950
TOTALS CARRIED TO GENERAL SUMMARY								392	1206	9	7	0.77	5.20		14649	1078		95	170	6	5	875	243	186	57	1860	1268	12150

MAINTENANCE OF TRAFFIC SUBSUMMARY

CUY-77-00.42 PART 1

MODEL: Untitled Sheet PAPERSIZE: 34x22 (in.) DATE: 3/1/2022 TIME: 4:51:30 PM USER: ssopraseuth
pw:\\hq-pwint01.a-e.transyscorp.com:transyscorp-pw1\Documents\Projects_2019\CO403\403190027\Agency_Folders\400-Engineering\MOT\Sheets\104983_MS003.dgn

DESIGN AGENCY
TranSystems
400 W. NATIONWIDE BLVD., STE 225
COLUMBUS, OHIO 43215

DESIGNER
HB

REVIEWER
BBD 02/25/22

PROJECT ID
104983

SHEET P.31 TOTAL 434

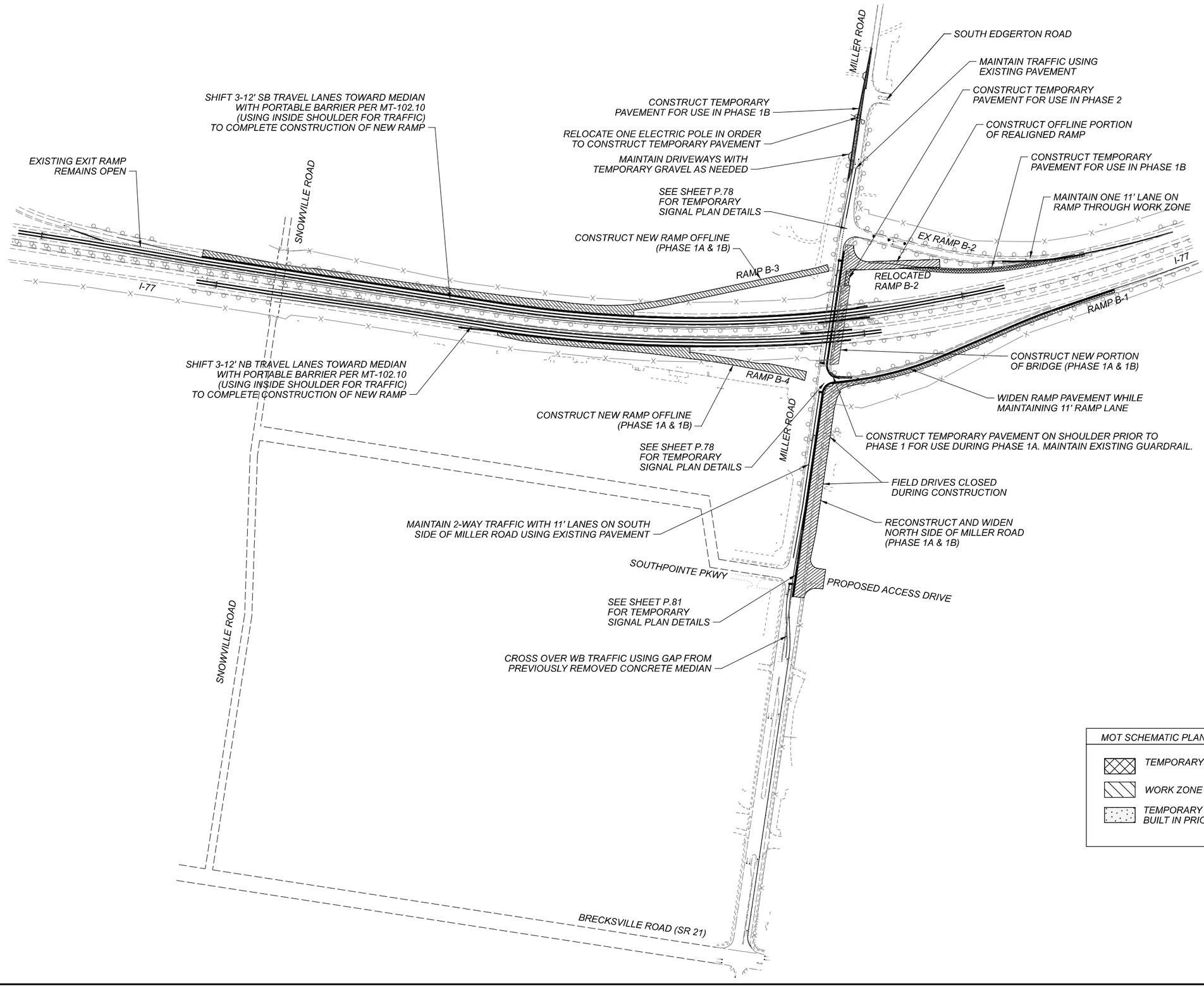

MOT SCHEMATIC PLAN PHASE 1A

CUY-77-00.42 PART 1

MODEL: CLX_I-77 - Phase 1Schematic [Sheet] PAPERSIZE: 34x22 (in.) DATE: 3/1/2022 TIME: 05:58 PM USER: ssopraseuth
pw:\\hq-pwInfo1.e.transystcorp.com:transystcorp-pw\Documents\Projects_2019\C0403\403190027\Agency_Folders\400-Engineering\MOT\Sheets\104983_MB001.dgn

DESIGN AGENCY
TranSystems
400 W. NATIONWIDE BLVD. SUITE 225 COLUMBUS, OHIO 43215

DESIGNER: MSW

REVIEWER: BBD 02/25/22

PROJECT ID: 104983

SHEET: P.32 TOTAL: 434

REMOVE EXISTING SIDEWALK/CURB AND CONSTRUCT TEMPORARY PAVEMENT FOR USE IN PHASE 2. DND ADA CURB RAMPS.

SOUTH EDGERTON ROAD

REMOVE EXISTING PAVEMENT BETWEEN WORK ZONES

MAINTAIN ONE 11' LANE (16' AT INTERSECTION) USING PERMANENT PAVEMENT CONSTRUCTED IN PHASE 1A

CONSTRUCT FINAL PORTION OF NEW RAMP REALIGNMENT

MAINTAIN ONE 11' LANE USING EXISTING AND TEMPORARY PAVEMENT

MAINTAIN 2-WAY TRAFFIC WITH 11' LANES ON SOUTH SIDE OF MILLER ROAD USING EXISTING AND TEMPORARY PAVEMENT

SHIFT 3-12' SB TRAVEL LANES TOWARD MEDIAN WITH PORTABLE BARRIER PER MT-102.10 (USING INSIDE SHOULDER FOR TRAFFIC) TO COMPLETE CONSTRUCTION OF NEW RAMP (MAINTAINS PATTERN SETUP IN PHASE 1A)

CONSTRUCT REMAINING PERMANENT PAVEMENT ALONG NORTH SIDE OF MILLER ROAD BUT DO NOT CONSTRUCT CURB OR PROPOSED SIDEWALK. ANCHOR PCB ALONG WORK ZONE FOR 1' OFFSET.

SEE SHEET P.79 FOR TEMPORARY SIGNAL PLAN DETAILS

EXISTING EXIT RAMP REMAINS OPEN

SNOWVILLE ROAD

CONSTRUCT NEW RAMP OFFLINE (PHASE 1A & 1B)

RAMP B-3

EX RAMP B-2

I-77

RELOCATED RAMP B-2

RAMP B-1

CONSTRUCT NEW PORTION OF BRIDGE (PHASE 1A & 1B)

SHIFT 3-12' NB TRAVEL LANES TOWARD MEDIAN WITH PORTABLE BARRIER PER MT-102.10 (USING INSIDE SHOULDER FOR TRAFFIC) TO COMPLETE CONSTRUCTION OF NEW RAMP (MAINTAINS PATTERN SETUP IN PHASE 1A)

RAMP B-4

CONSTRUCT NEW RAMP OFFLINE (PHASE 1A & 1B)

MILLER ROAD

COMPLETE FINAL PORTION OF RAMP INTERSECTION. KEEP RAMP OPEN BY UTILIZING EXISTING AND PROPOSED PAVEMENT CONSTRUCTED IN PHASE 1B.

SEE SHEET P.79 FOR TEMPORARY SIGNAL PLAN DETAILS

FIELD DRIVES CLOSED DURING CONSTRUCTION

MAINTAIN 2-WAY TRAFFIC WITH 11' LANES ON SOUTH SIDE OF MILLER ROAD USING EXISTING PAVEMENT

RECONSTRUCT AND WIDEN NORTH SIDE OF MILLER ROAD (PHASE 1A & 1B)

SOUTHPOINTE PKWY

PROPOSED ACCESS DRIVE

SEE SHEET P.82 FOR TEMPORARY SIGNAL PLAN DETAILS

MAINTAIN WB CROSS OVER ESTABLISHED IN PHASE 1A

SNOWVILLE ROAD

BRECKSVILLE ROAD (SR 21)

MOT SCHEMATIC PLAN LEGEND

- TEMPORARY PAVEMENT
- TEMPORARY PAVEMENT BUILT IN PRIOR PHASE
- WORK ZONE
- PERMANENT PAVEMENT BUILT IN PRIOR PHASE

HORIZONTAL SCALE IN FEET
0 100 200 400

MOT SCHEMATIC PLAN PHASE 1B

CUY-77-00.42 PART 1

MODEL: CLX_I-77 - Phase 1B Schematic [Sheet] PAPERSIZE: 34x22 (in) DATE: 3/1/2022 TIME: 4:52:24 PM USER: ssopraseuth
pw:\\hq-pwint01.ce.transystems.com:transystemscorp-pw\Documents\Projects_2019\C0403\40319002?\Agency_Folders\400-Engineering\MOT\Sheets\104983_MB002.dgn

DESIGN AGENCY
TranSystems
400 W. NATIONWIDE BLVD. SUITE 225
COLUMBUS, OHIO 43215

DESIGNER MSW
REVIEWER BBD 02/25/22
PROJECT ID 104983
SHEET P.33 TOTAL 434

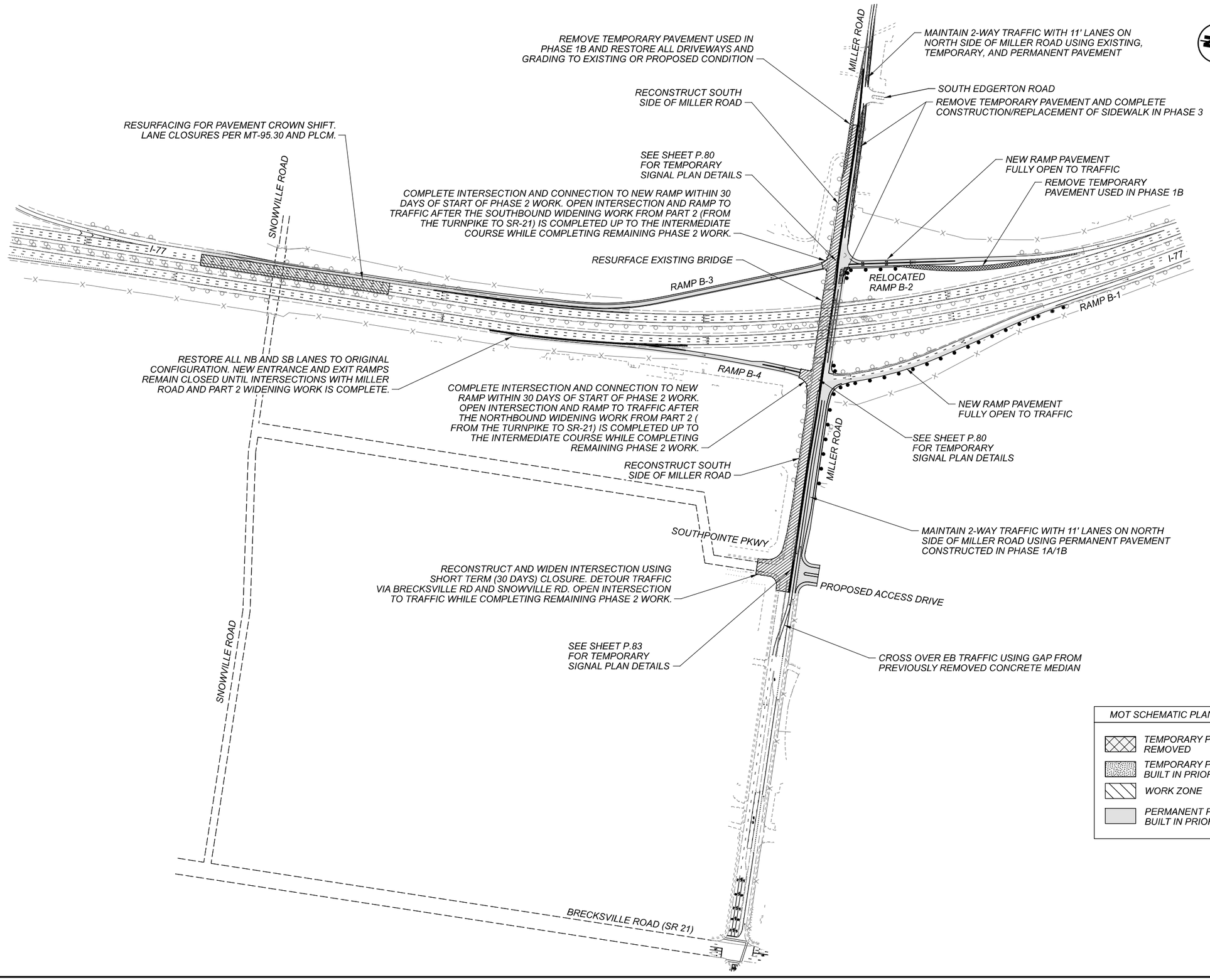

MOT SCHEMATIC PLAN PHASE 2

CUY-77-00.42 PART 1

MODEL: CLX_I-77 - Phase 2 Schematic [Sheet] PAPERSIZE: 34x22 (in.) DATE: 3/1/2022 TIME: 4:52:48 PM USER: ssopraseuth
pw:\\hq-pwInfo1.a-e.transystcorp.com:transystcorp-pw\Documents\Projects_2019\C0403\403190027\Agency_Folders\400-Engineering\MOT\Sheets\104983_MB003.dgn

DESIGN AGENCY
TranSystems
400 W. NATIONWIDE BLVD.
SUITE 225
COLUMBUS, OHIO 43215

DESIGNER: MSW

REVIEWER: BBD 02/25/22

PROJECT ID: 104983

SHEET: P.34 TOTAL: 434

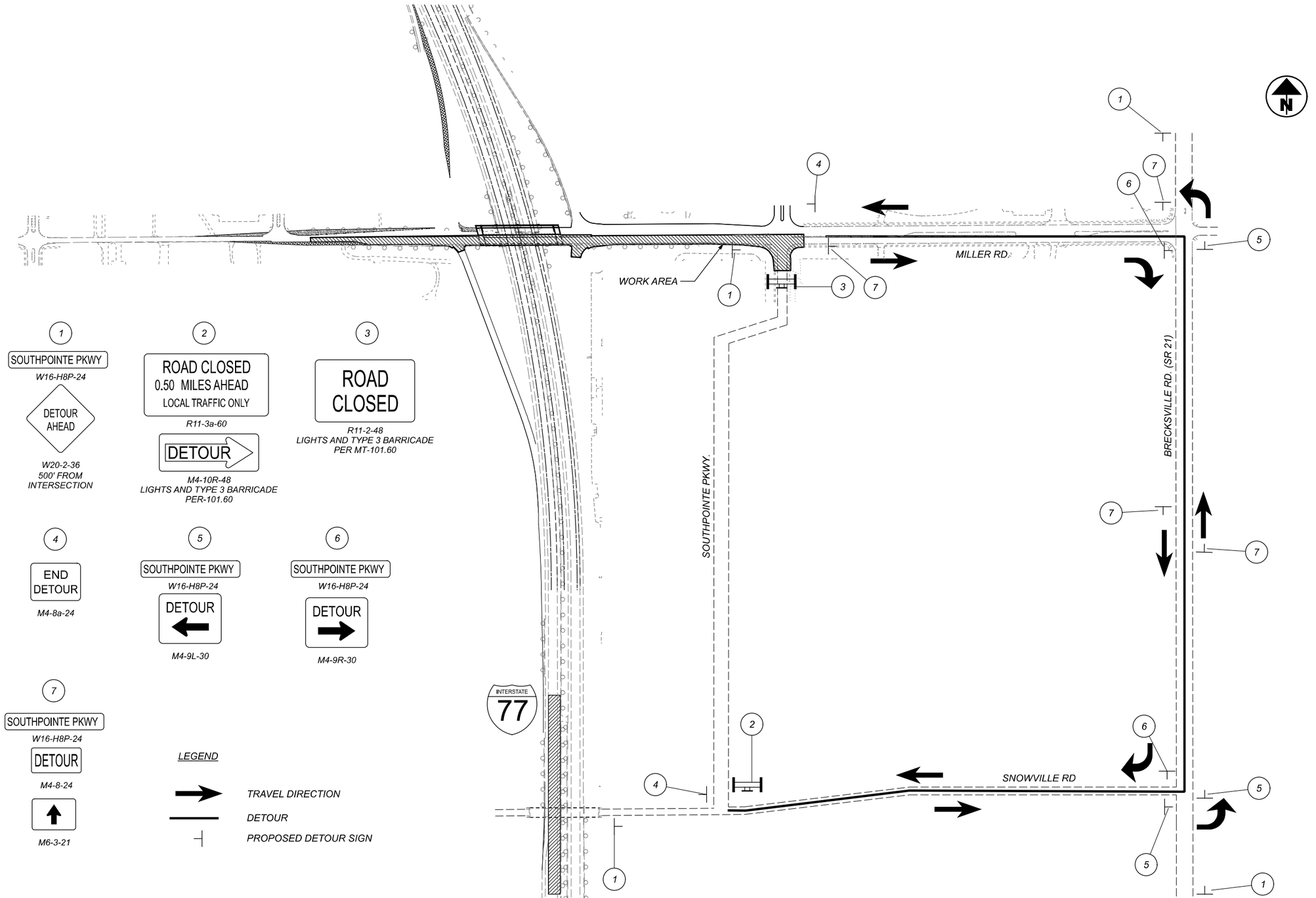

NOTES:

1. DETOUR FOR USE DURING PHASE 2 SHORT TERM CLOSURE OF SOUTHPOINTE PARKWAY & MILLER ROAD INTERSECTION CONSTRUCTION.
2. INSTALLATION, MAINTENANCE, AND REMOVAL OF THE DETOUR SIGNING IS INCLUDED IN THE LUMP SUM COST OF ITEM 614 - DETOUR SIGNING.

HORIZONTAL SCALE IN FEET
0 100 200 400

MAINTENANCE OF TRAFFIC DETOUR PLAN SOUTHPOINTE PARKWAY (PHASE 2)

CUY-77-00.42 PART 1

MODEL: Sheet PAPERSIZE: 34x22 (in.) DATE: 3/1/2022 TIME: 4:53:07 PM USER: ssopraseuth
pw:\\hq-pwint01.a-e.transystems.com:transystemscorp-pw\Documents\Projects_2019\C0403\40319002T\Agency_Folders\400-Engineering\MOT\Sheets\104983_MD001.dgn

DESIGN AGENCY
TranSystems
400 W. NATIONWIDE BLVD., STE 225
COLUMBUS, OHIO 43215

DESIGNER HB
REVIEWER BBD 02/25/22
PROJECT ID 104983
SHEET P.35 TOTAL 434

MODEL: Miller Rd Plan - Plan [Sheet] PAPERSIZE: 34x22 (In.) DATE: 3/1/2022 TIME: 4:53:29 PM USER: ssopraseuth
pw:\\hq-pwint01.a-e.transysocrp.com:transysocrp-pw1\Documents\Projects_2019\C0403\403190027\Agency_Folders\400-Engineering\MOT\Sheets\104983_TC_PhaseIA_20scale.dgn

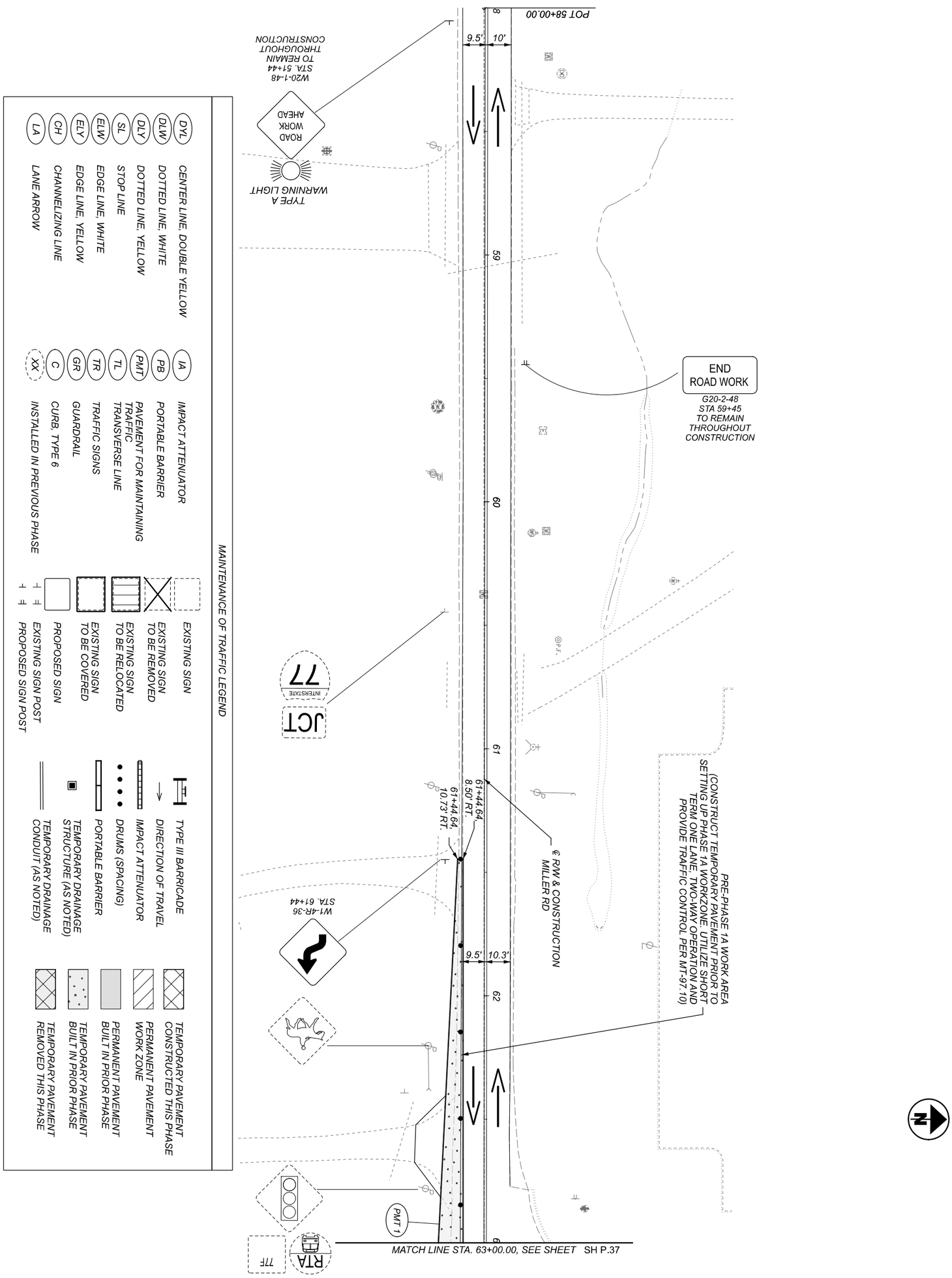

DESIGNER	DESIGN AGENCY
MSW	TranSystems, 400 W. NATIONWIDE BLVD. SUITE 225 COLUMBUS, OHIO 43215
REVIEWER	
BBD 02/25/22	
PROJECT ID	
104983	
SHEET	TOTAL
P. 36	434

MAINTENANCE OF TRAFFIC - PHASE 1A
MILLER ROAD STA. 58+00 TO 63+00

HORIZONTAL SCALE IN FEET
0 20
10 40

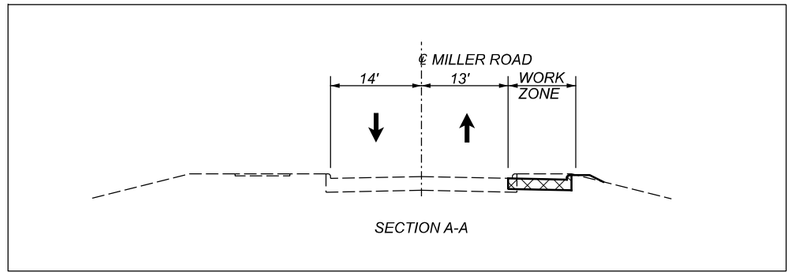

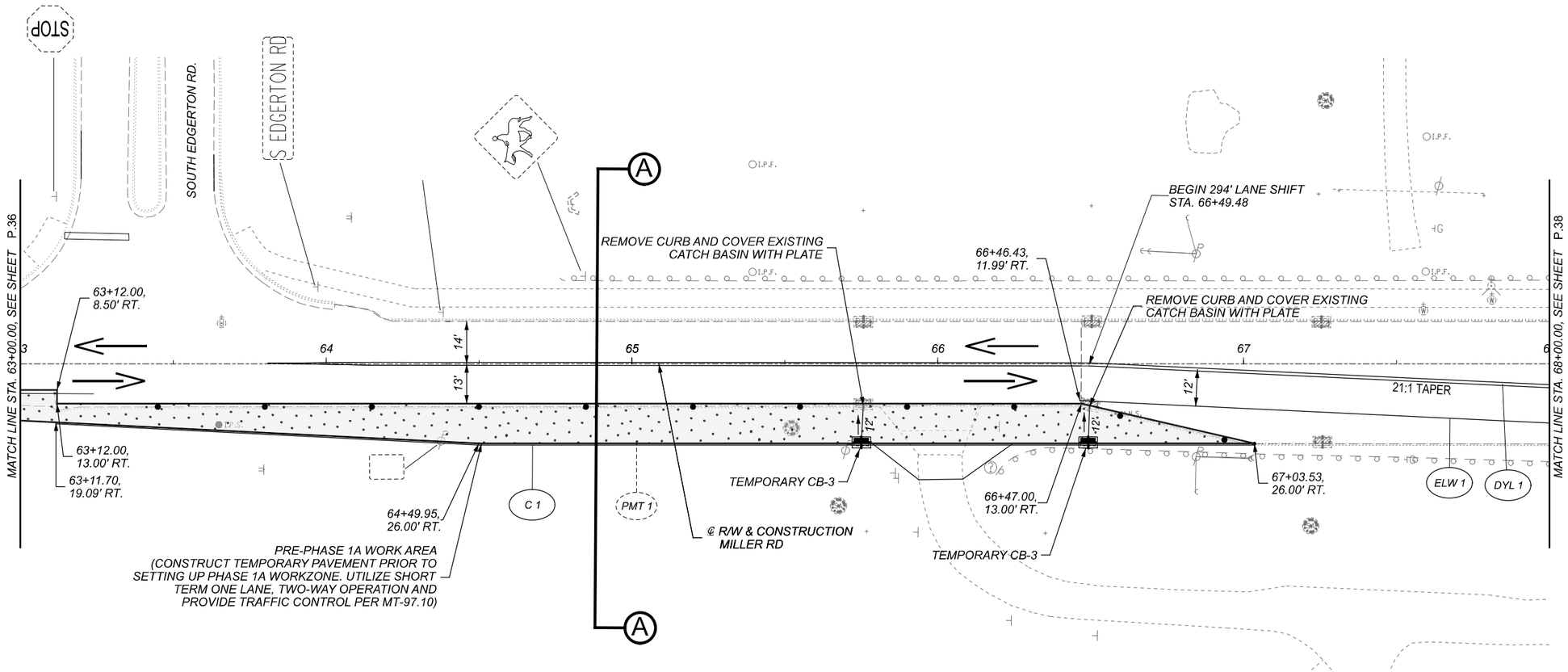

FOR LEGEND, SEE SHEET P.36

HORIZONTAL SCALE IN FEET
0 10 20 40

MAINTENANCE OF TRAFFIC - PHASE 1A
MILLER ROAD STA. 63+00 TO 68+00

DESIGN AGENCY
TranSystems
400 W. NATIONWIDE BLVD, SUITE 220
COLUMBUS, OHIO 43215

DESIGNER MSW
REVIEWER BBD 02/25/22
PROJECT ID 104983
SHEET P.37 TOTAL 434

CUY-77-00.42 PART 1

MODEL: Miller Rd Plan - Plan 2 [Sheet] PAPERSIZE: 34x22 (in.) DATE: 3/1/2022 TIME: 4:53:30 PM USER: ssoprasouth
pw:\\hq-pwint01.a-e.transystems.com:transystemscorp-pw\Documents\Projects.2019\C0403\403190027\Agency_Folders\400-Engineering\MOT\Sheets\104983_TC_PhaseIA_20scale.dgn

MODEL: Miller Rd Plan - Plan 3 (Sheet) PAPERSIZE: 34x22 (In.) DATE: 3/1/2022 TIME: 4:53:31 PM USER: ssopraseuth
pw:\\hq-pwint01.a-e.transyscorp.com:transyscorp-pw1\Documents\Projects_2019\C0403\403190027\Agency_Folders\400-Engineering\MOT\Sheets\104983_TC_PhaseIA_20scale.dgn

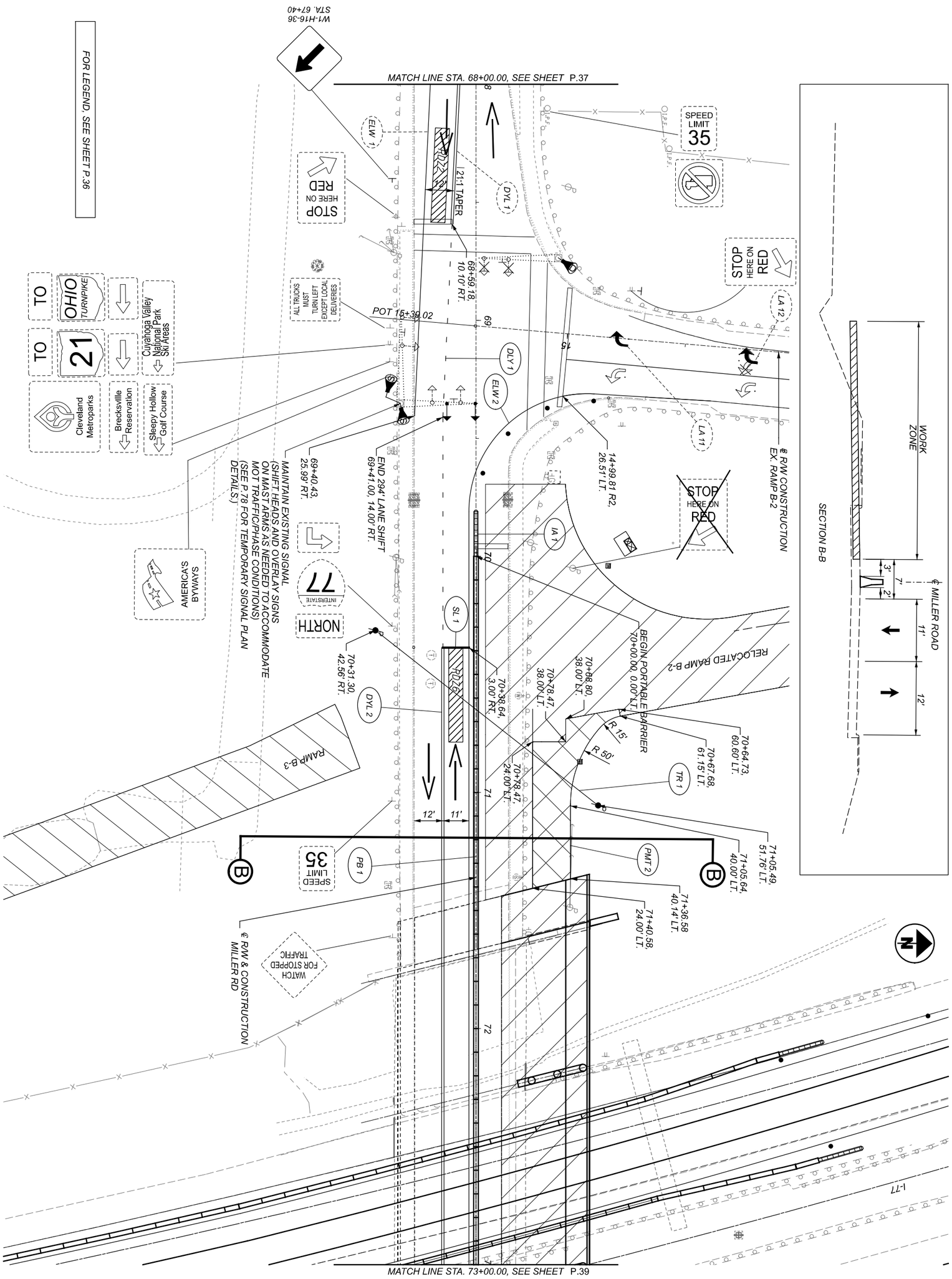

SHEET	TOTAL
P. 38	434

PROJECT ID: 104983

REVIEWER: BBD 02/25/22

DESIGNER: MSW

DESIGN AGENCY: TranSystems
400 W. NATIONWIDE BLVD. SUITE 225
COLUMBUS, OHIO 43215

MAINTENANCE OF TRAFFIC - PHASE 1A
MILLER ROAD STA. 68+00 TO 73+00

HORIZONTAL SCALE IN FEET
0 20
10 40

MAINTENANCE OF TRAFFIC - PHASE 1A
MILLER ROAD STA. 73+00 TO 78+00

HORIZONTAL SCALE IN FEET
0 10 20 40

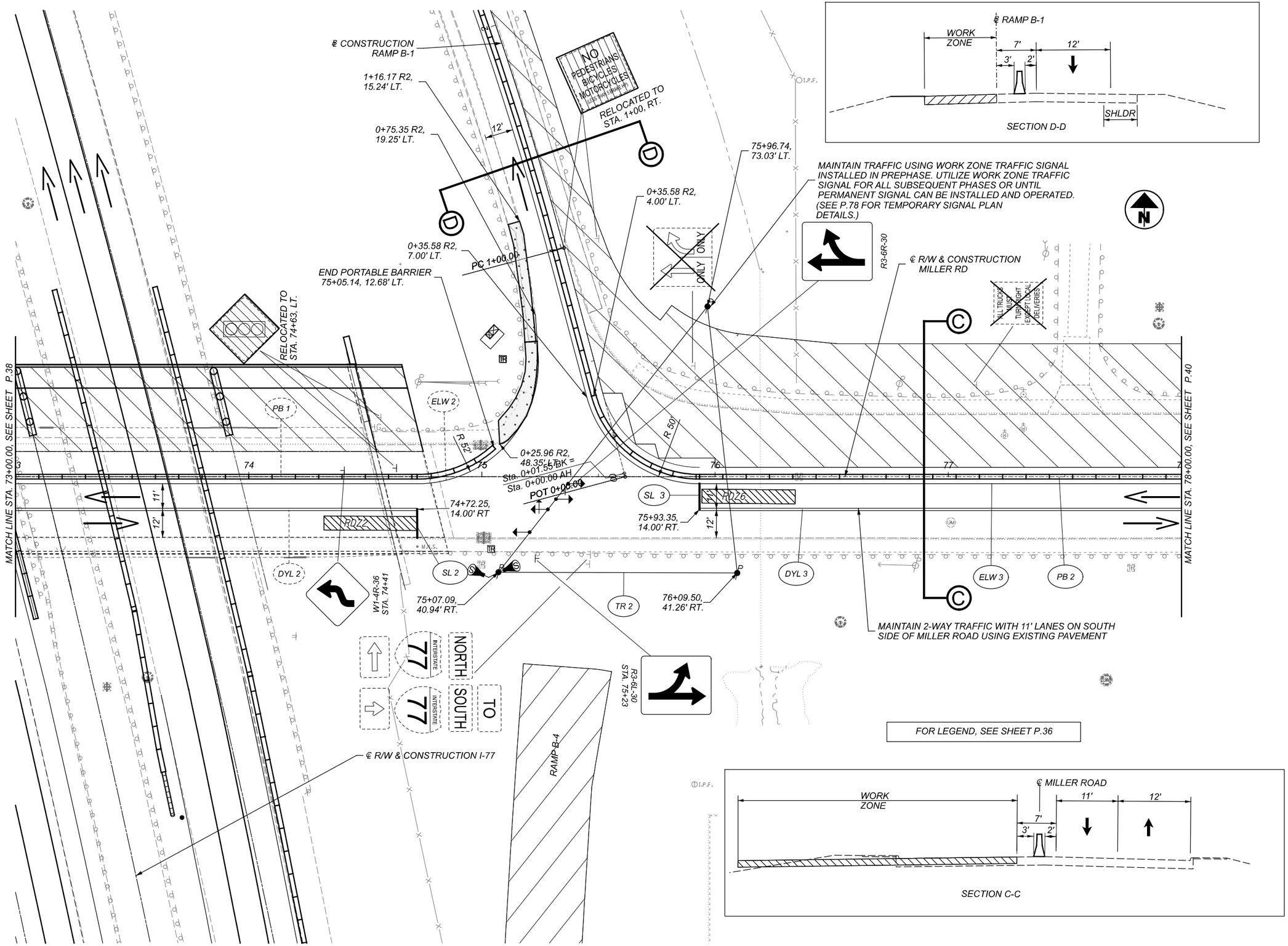

FOR LEGEND, SEE SHEET P.36

DESIGN AGENCY
TranSystems
400 W. NATIONWIDE BLVD. SUITE 225
COLUMBUS, OHIO 43215

DESIGNER MSW
REVIEWER BBD 02/25/22
PROJECT ID 104983
SHEET P.39 TOTAL 434

CUY-77-00.42 PART 1

MODEL: Miller Rd Plan - Plan 4 (Sheet) PAPERSIZE: 34x22 (In.) DATE: 3/1/2022 TIME: 4:53:31 PM USER: ssopraseuth
pw:\\hq-pwint01.g-6.transystems.com:transystemscorp-pw1\Documents\Projects_2019\C0403\40390027\Agency_Folders\400-Engineering\MOT\Sheets\104983_TC_PhaseIA_20scale.dgn

MODEL: Miller Rd Plan - Plan 5 (Sheet) PAPERSIZE: 34x22 (in.) DATE: 3/1/2022 TIME: 4:53:32 PM USER: ssoprasouth
pw:\\hq-pwint0la-e.transystems.com:transystemscorp-pw\Documents\Projects_2019\C00403\403190027\Agency_Folders\400-Engineering\MOT\Sheets\104983_TC_PhaseIA_20scale.dgn

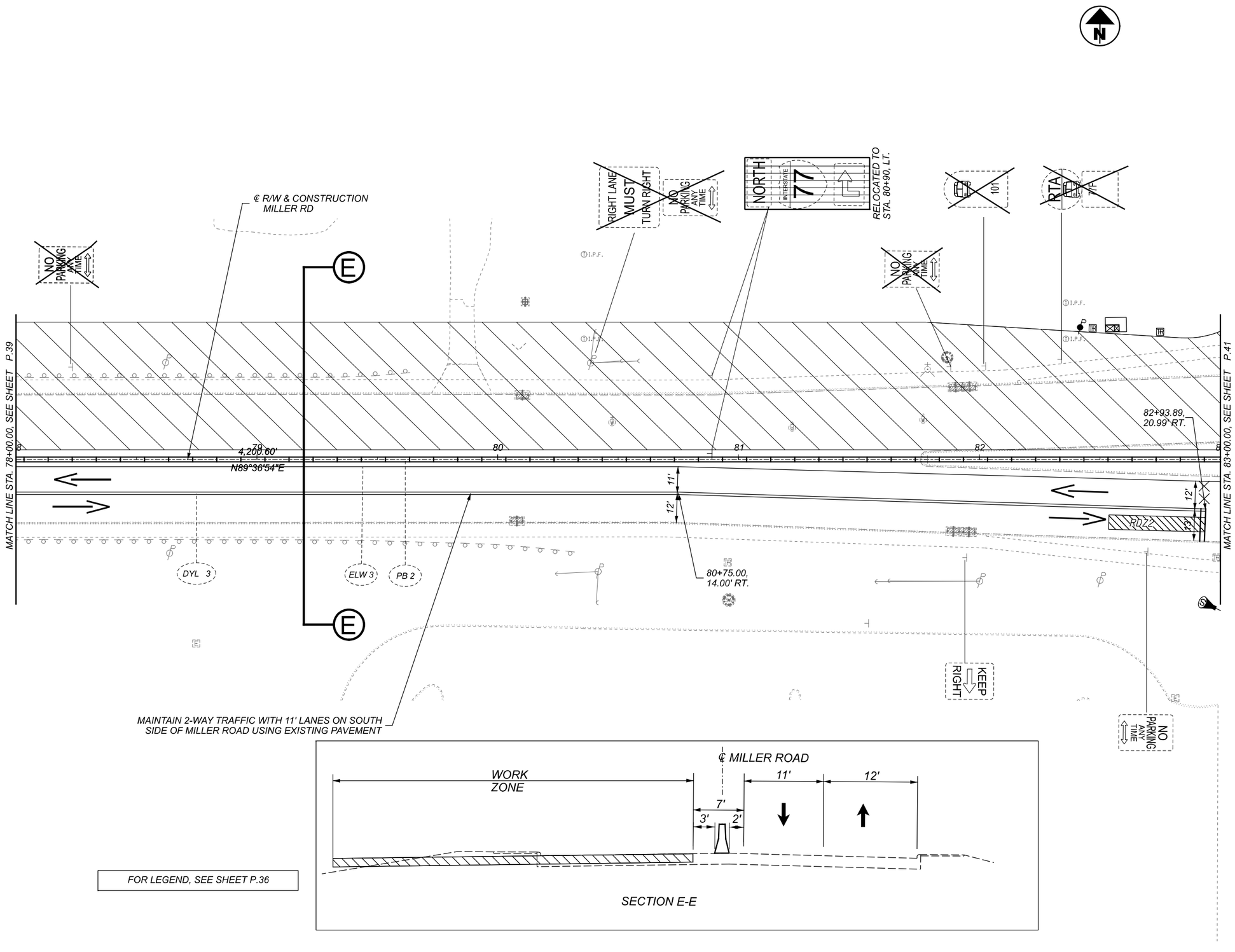

FOR LEGEND, SEE SHEET P.36

HORIZONTAL SCALE IN FEET
0 10 20 40

MAINTENANCE OF TRAFFIC - PHASE 1A
MILLER ROAD STA. 78+00 TO 83+00

DESIGN AGENCY
TranSystems
400 W. NATIONWIDE BLVD.
SUITE 225
COLUMBUS, OHIO 43215

DESIGNER MSW
REVIEWER BBD 02/25/22
PROJECT ID 104983
SHEET P.40 TOTAL 434

MODEL: Miller Rd Plan - Plan 6 (Sheet) PAPERSIZE: 34x22 (In.) DATE: 3/1/2022 TIME: 4:53:33 PM USER: ssopraseuth
pw:\\hq-pwint01.a-e.transystcorp.com:transystcorp-pwi\Documents\Projects_2019\C0403\403190027\Agency_Folders\400-Engineering\MOT\Sheets\104983_TC_PhaseIA_20scale.dgn

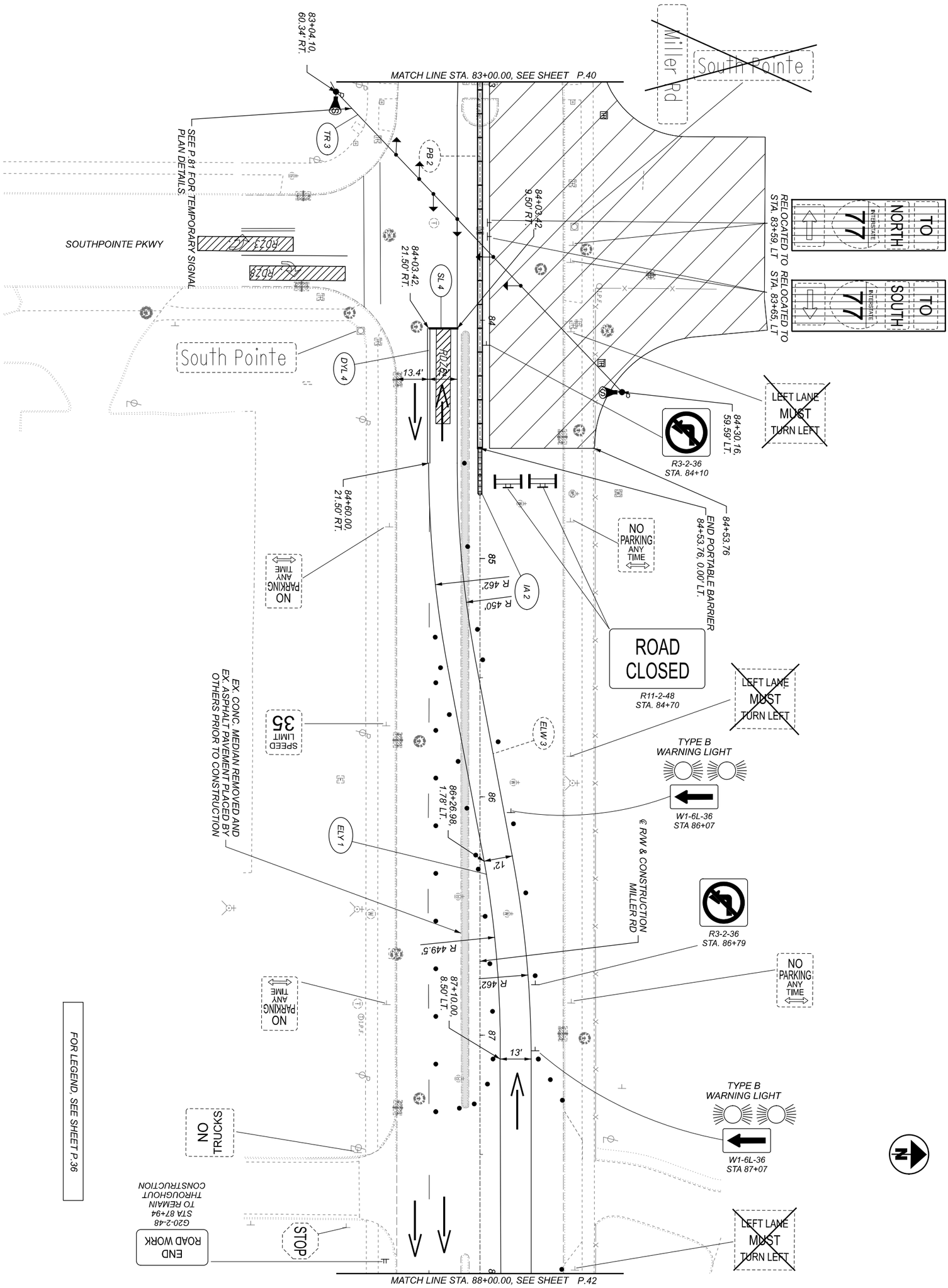

SHEET	TOTAL
P.41	434

PROJECT ID: 104983

REVIEWER: BBD 02/25/22

DESIGNER: MSW

DESIGN AGENCY: TranSystems
400 W. NATIONWIDE BLVD. SUITE 225
COLUMBUS, OHIO 43215

MAINTENANCE OF TRAFFIC - PHASE 1A
MILLER ROAD STA. 83+00 TO 88+00

HORIZONTAL SCALE IN FEET
0 20
10 40

MODEL: Miller Rd Plan - Plan 7 (Sheet) PAPERSIZE: 34x22 (In.) DATE: 3/1/2022 TIME: 4:53:34 PM USER: ssopraseuth
pw:\\hq-pwint01.a-e.transyscorp.com:transyscorp-pw1\Documents\Projects_2019\C0403\403190027\Agency_Folders\400-Engineering\MOT\Sheets\104983_TC_PhaseIA_20scale.dgn

FOR LEGEND, SEE SHEET P.36

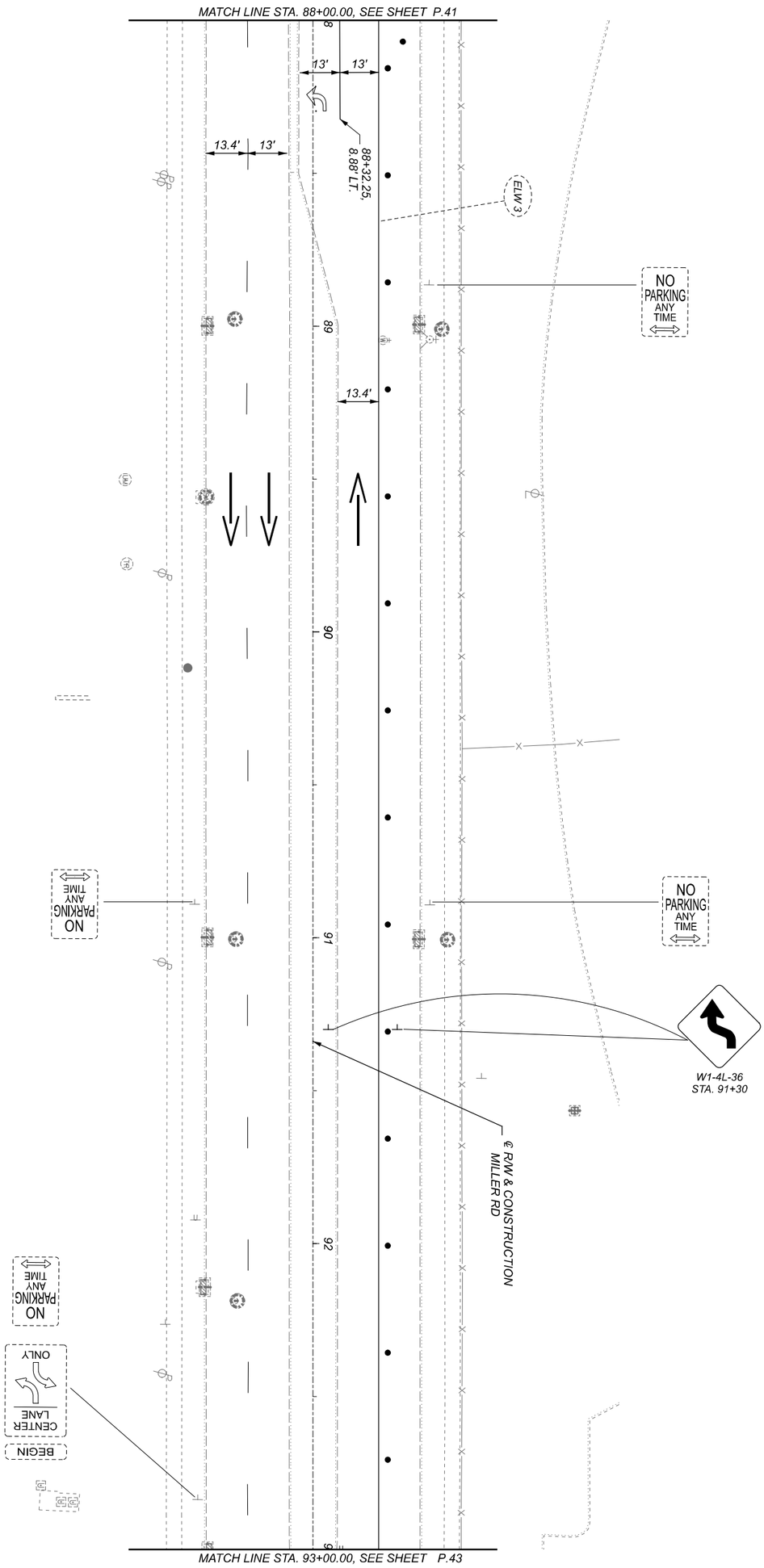

SHEET P.42 TOTAL 434	PROJECT ID 104983	REVIEWER BBD 02/25/22	DESIGNER MSW	DESIGN AGENCY TranSystems 400 W. NATIONWIDE BLVD. SUITE 225 COLUMBUS, OHIO 43215	MAINTENANCE OF TRAFFIC - PHASE 1A MILLER ROAD STA. 88+00 TO 93+00

HORIZONTAL SCALE IN FEET
0 20
10 40

MODEL: Miller Rd Plan - Plan 8 (Sheet) PAPERSIZE: 34x22 (In.) DATE: 3/1/2022 TIME: 4:53:34 PM USER: ssopraseuth
pw:\\hq-pwint01.a-e.transysCorp.com:transysCorp-pwi\Documents\Projects_2019\C0403\403190027\Agency_Folders\400-Engineering\MOT\Sheets\104983_TC_PhaseIA_20scale.dgn

MATCH LINE STA. 93+00.00, SEE SHEET P.42

FOR LEGEND, SEE SHEET P.36

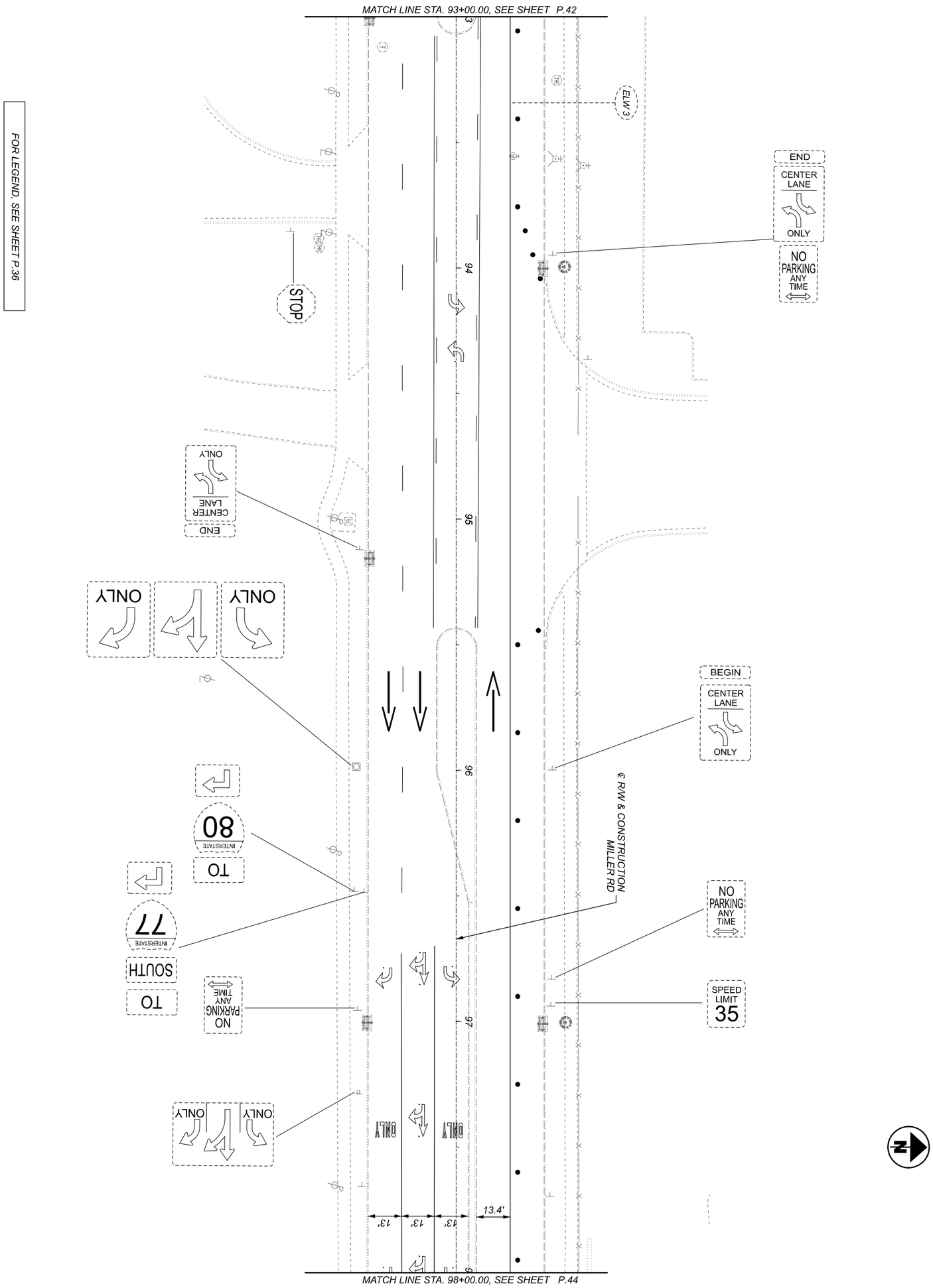

MATCH LINE STA. 98+00.00, SEE SHEET P.44

SHEET	TOTAL
P.43	434

PROJECT ID 104983

REVIEWER BBD 02/25/22

DESIGNER MSW

DESIGN AGENCY
TranSystems
400 W. NATIONWIDE BLVD. SUITE 225
COLUMBUS, OHIO 43215

MAINTENANCE OF TRAFFIC - PHASE 1A
MILLER ROAD STA. 93+00 TO 98+00

HORIZONTAL SCALE IN FEET
0 20
10 40

MODEL: Miller Rd Plan - Plan 9 [Sheet] PAPERSIZE: 34x22 (In.) DATE: 3/1/2022 TIME: 4:53:35 PM USER: ssopraseuth
pw:\\hq-pwint01.a-e.transyscorp.com:transyscorp-pw1\Documents\Projects_2019\C0403\403190027\Agency_Folders\400-Engineering\MOT\Sheets\104983_TC_PhaseIA_20scale.dgn

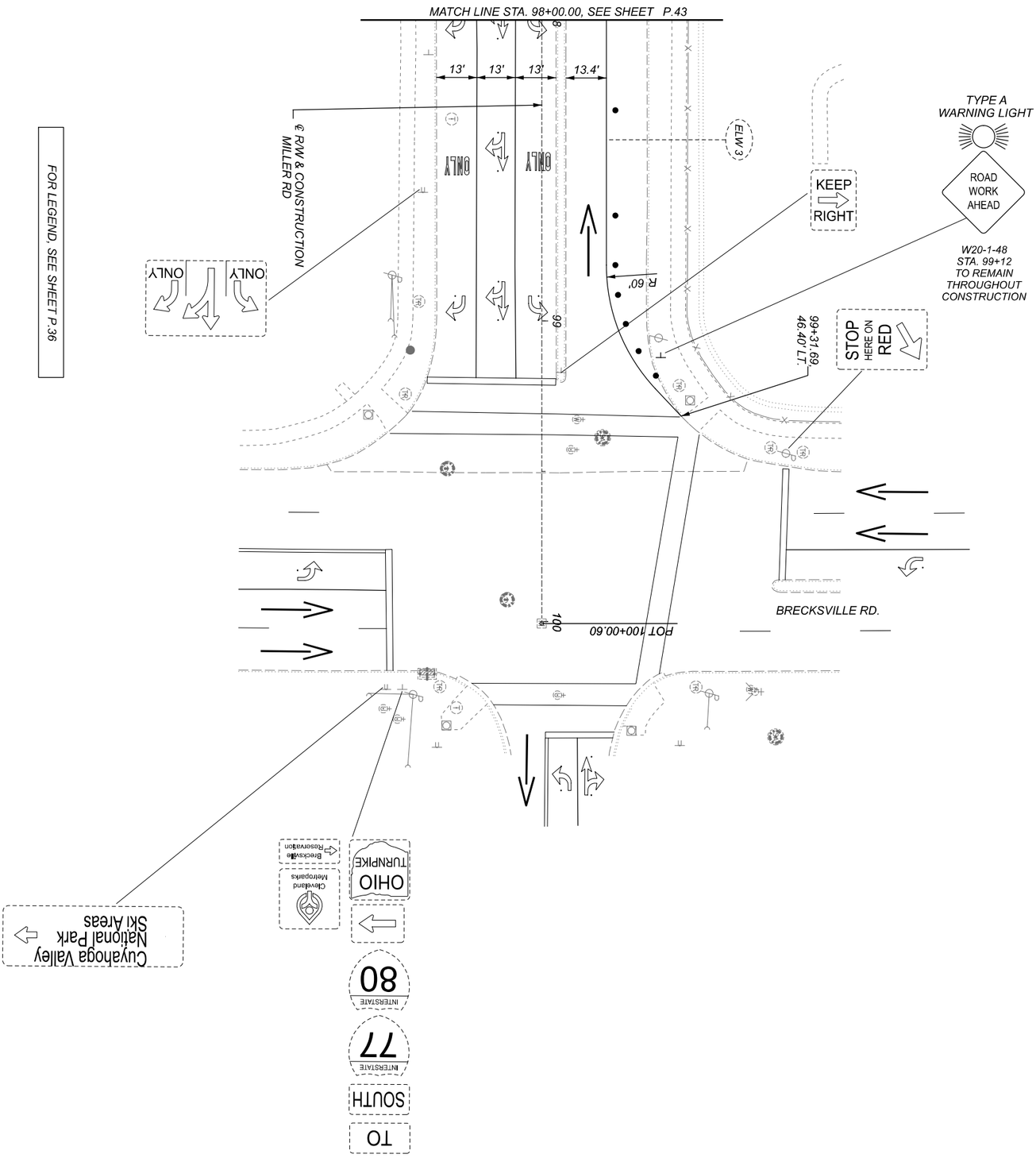

MAINTENANCE OF TRAFFIC - PHASE 1A
MILLER ROAD STA. 98+00 TO 100+00

HORIZONTAL
SCALE IN FEET
0 20
10 40

SHEET	TOTAL
P.44	434

PROJECT ID 104983

REVIEWER BBD 02/25/22

DESIGNER MSW

DESIGN AGENCY
TranSystems
400 W. NATIONWIDE BLVD.
SUITE 225
COLUMBUS, OHIO 43215

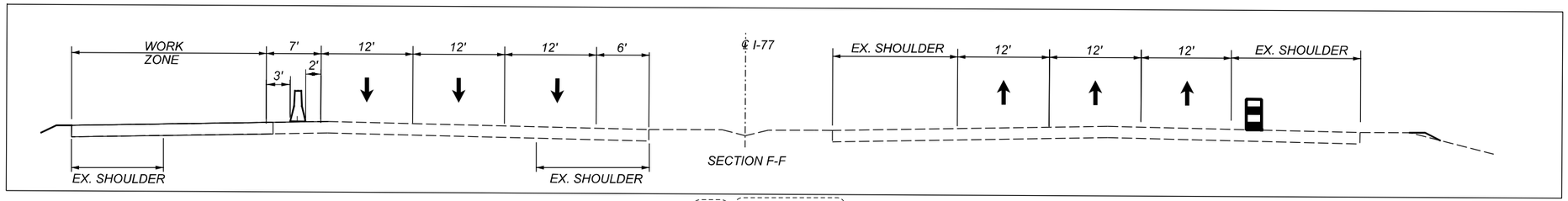

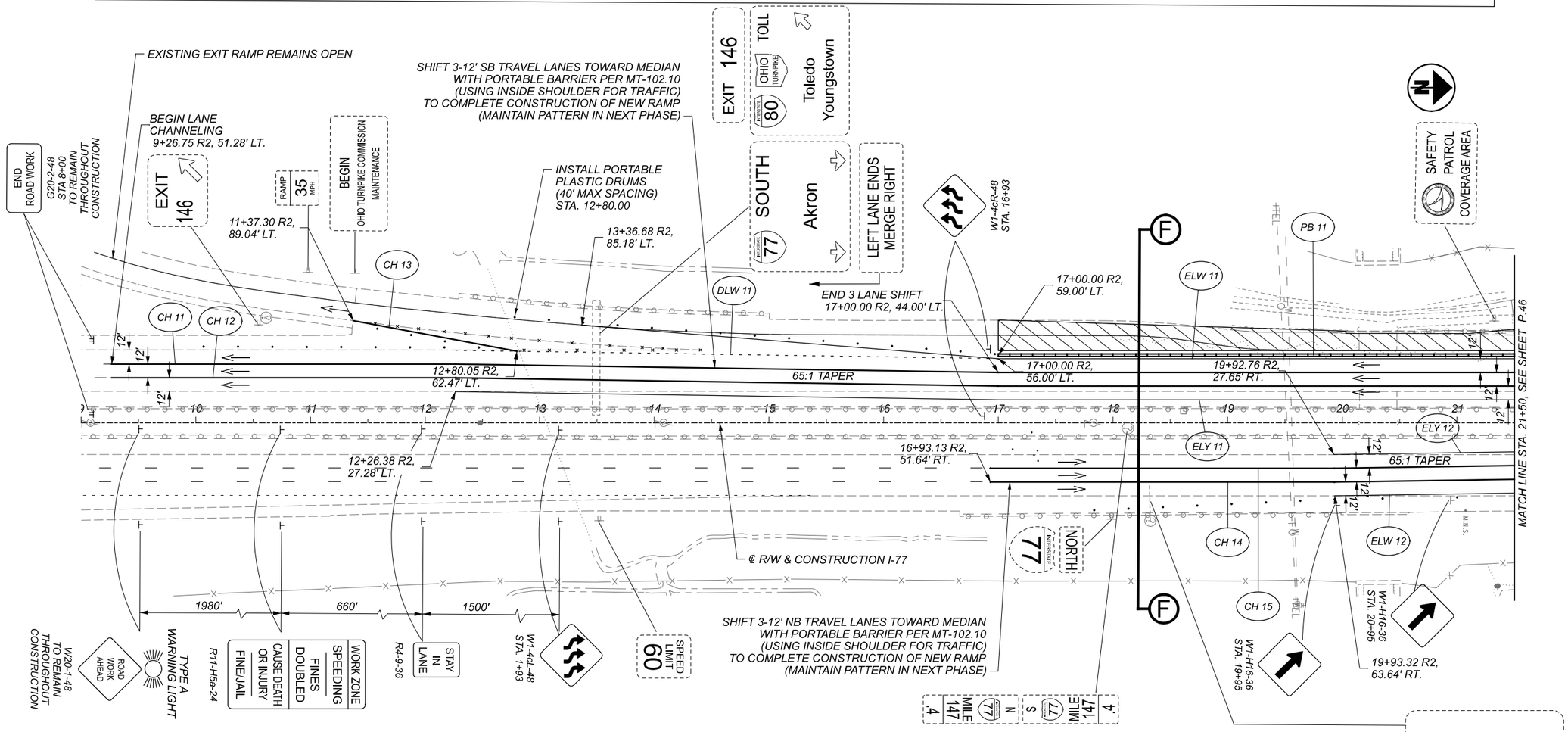

MAINTENANCE OF TRAFFIC LEGEND

DYL	CENTER LINE, DOUBLE YELLOW	IA	IMPACT ATTENUATOR		EXISTING SIGN
DLW	DOTTED LINE, WHITE	PB	PORTABLE BARRIER		EXISTING SIGN TO BE REMOVED
DLY	DOTTED LINE, YELLOW	PMT	PAVEMENT FOR MAINTAINING TRAFFIC		EXISTING SIGN TO BE RELOCATED
SL	STOP LINE	TL	TRANSVERSE LINE		EXISTING SIGN TO BE COVERED
ELW	EDGE LINE, WHITE	TR	TRAFFIC SIGNS		PROPOSED SIGN
ELY	EDGE LINE, YELLOW	GR	GUARDRAIL		EXISTING SIGN POST
CH	CHANNELIZING LINE	C	CURB, TYPE 6		PROPOSED SIGN POST
LA	LANE ARROW	XX	INSTALLED IN PREVIOUS PHASE		

	TYPE III BARRICADE
→	DIRECTION OF TRAVEL
	IMPACT ATTENUATOR
• • • •	DRUMS (SPACING)
	PORTABLE BARRIER
▣	TEMPORARY DRAINAGE STRUCTURE (AS NOTED)
	TEMPORARY DRAINAGE CONDUIT (AS NOTED)
	TEMPORARY PAVEMENT CONSTRUCTED THIS PHASE
	PERMANENT PAVEMENT WORK ZONE
	PERMANENT PAVEMENT BUILT IN PRIOR PHASE
	TEMPORARY PAVEMENT BUILT IN PRIOR PHASE
	TEMPORARY PAVEMENT REMOVED THIS PHASE

HORIZONTAL SCALE IN FEET
0 25 50 100

MAINTENANCE OF TRAFFIC - PHASE 1A
IR-77 STA. 9+00 TO 21+50

CUY-77-00.42 PART 1

DESIGN AGENCY
Tran Systems
400 W. NATIONWIDE BLVD., STE 225
COLUMBUS, OHIO 43215

DESIGNER MSW
REVIEWER BBD 02/25/22
PROJECT ID 104983
SHEET P.45 TOTAL 434

MODEL: Unnamed Plan - Plan [Sheet] PAPERSIZE: 34x22 (in.) DATE: 3/1/2022 TIME: 4:54:01 PM USER: ssoprasseuth
pw:\\hq-pwint01.ce.transystems.com:Transystems-pw\Documents\Projects_2019\C0403\403190027\Agency_Folders\400-Engineering\MOT\Sheets\104983_TC_PhaseIA_50scale.dgn

MODEL: CLX_I77_50sc - Plan 2-I(Sheet) PAPERSIZE: 34x22 (In.) DATE: 3/1/2022 TIME: 4:54:02 PM USER: ssopraseuth
pw:\\hq-pwint01.a-e.transyscorp.com:transyscorp-pw1\Documents\Projects_2019\C0403\403190027\Agency_Folders\400-Engineering\MOT\Sheets\104983_TC_PhaseIA_50scale.dgn

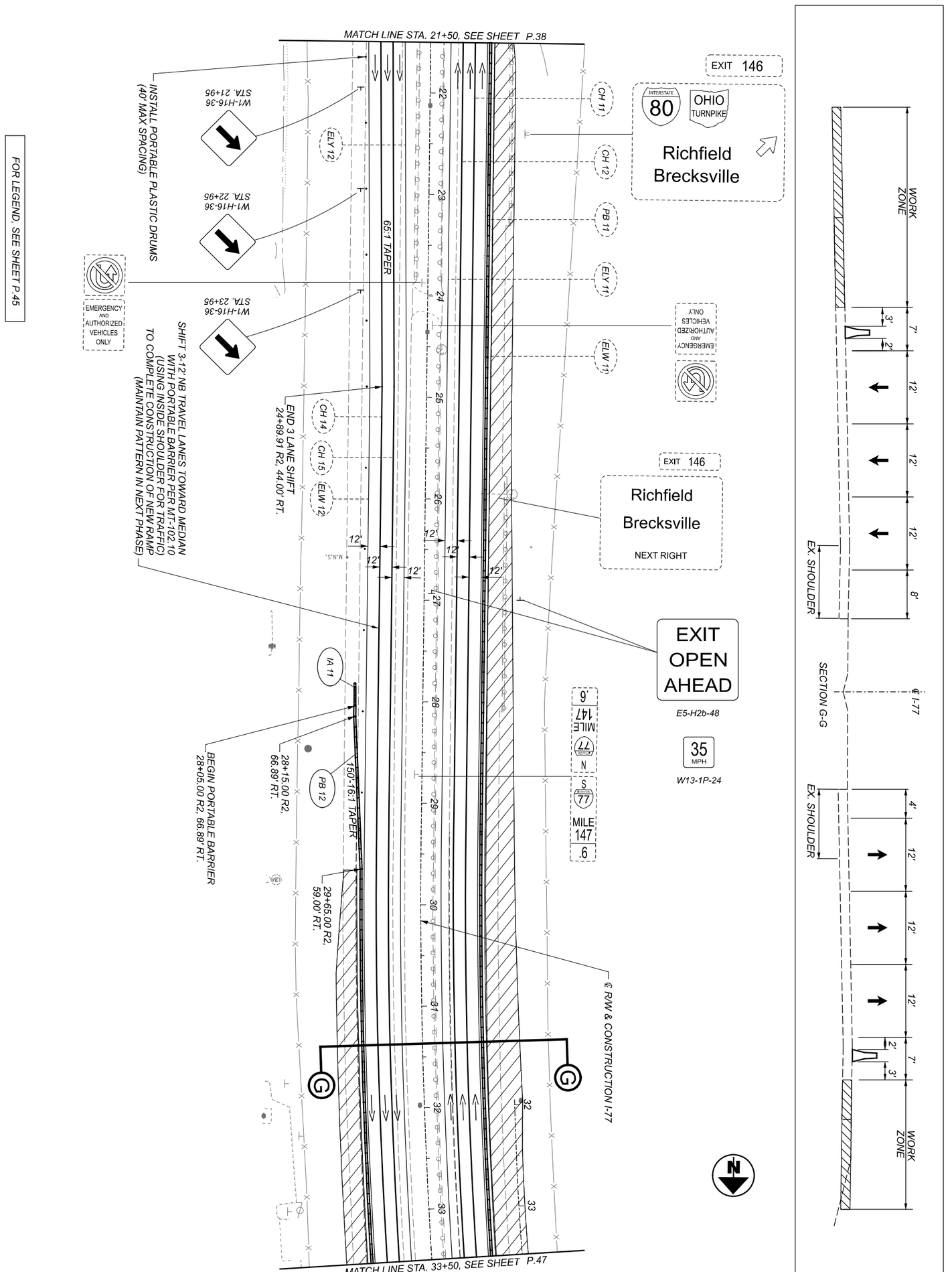

SHEET P.46 / TOTAL 434	PROJECT ID 104983	REVIEWER BBD 02/25/22	DESIGNER MSW	DESIGN AGENCY TranSystems, 400 W. NATIONWIDE BLVD., STE 225, COLUMBUS, OHIO 43215

MAINTENANCE OF TRAFFIC - PHASE 1A
IR-77 STA. 21+50 TO 33+50

HORIZONTAL SCALE IN FEET
0 50
25 100

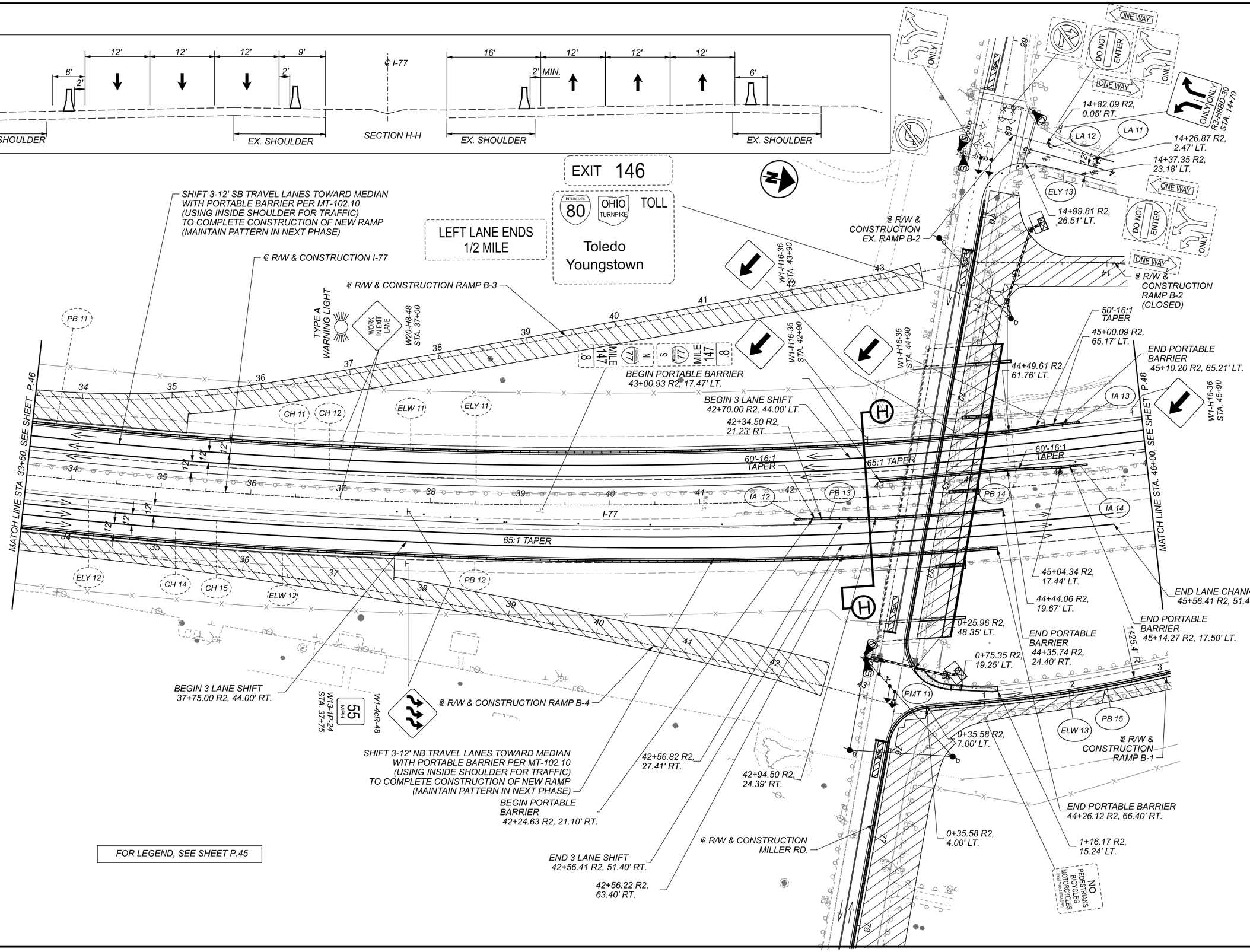

HORIZONTAL SCALE IN FEET
0 25 50 100

MAINTENANCE OF TRAFFIC - PHASE 1A
IR-77 STA. 33+50 TO 46+00

CUY-77-00.42 PART 1

DESIGN AGENCY
Trans Systems
400 W. NATIONWIDE BLVD., STE 225
COLUMBUS, OHIO 43215

DESIGNER	MSW
REVIEWER	BBD 02/25/22
PROJECT ID	104983
SHEET	P.47
TOTAL	434

MODEL: CLX_I77_50sc - Plan 3-1(Sheet) PAPERSIZE: 34x22 (In.) DATE: 3/1/2022 TIME: 4:54:03 PM USER: ssoprasouth
pw:\\hq-pwint01.ce.transysocorp.com:transysocorp-pw\Documents\Projects_2019\C0403\403900271\Agency_Folders\400-Engineering\MOT\Sheets\104983_TC_PhaseIA_50scale.dgn

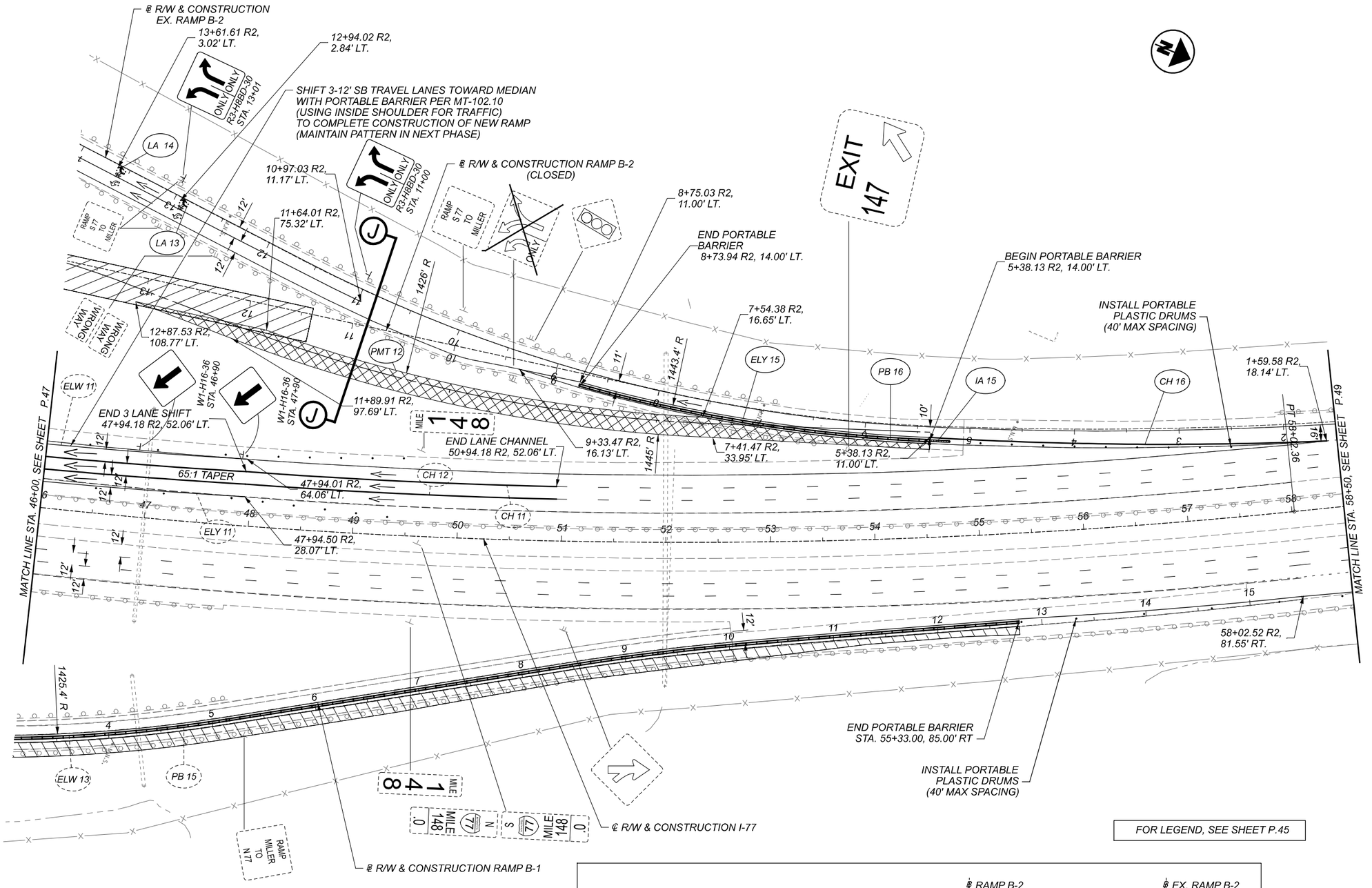

MAINTENANCE OF TRAFFIC - PHASE 1A
IR-77 STA. 46+00 TO 58+50

CUY-77-00.42 PART 1

DESIGN AGENCY
Tran Systems
400 W. NATIONWIDE BLVD., STE 225
COLUMBUS, OHIO 43215

DESIGNER
MSW

REVIEWER
BBD 02/25/22

PROJECT ID
104983

SHEET P.48 TOTAL 434

MODEL: CLX_I77_50sc - Plan 4-1(Sheet) PAPERSIZE: 34x22 (in.) DATE: 3/1/2022 TIME: 4:54:04 PM USER: ssoprasseuth
pw:\\hq-pwint0.ce.transystems.com:transystemscorp-pw\Documents\Projects_2019\C0403\403190027\Agency_Folders\400-Engineering\MOT\Sheets\104983_TC_PhaseIA_50scale.dgn

MODEL: Unnamed Plan - Plan 5 [Sheet] PAPERSIZE: 34x22 (In.) DATE: 3/1/2022 TIME: 4:54:05 PM USER: ssopraseuth
pw:\\hq-pwint01.a-e.transyscorp.com:transyscorp-pw1\Documents\Projects_2019\C0403\403190027\Agency_Folders\400-Engineering\MOT\Sheets\104983_TC_PhaseIA_50scale.dgn

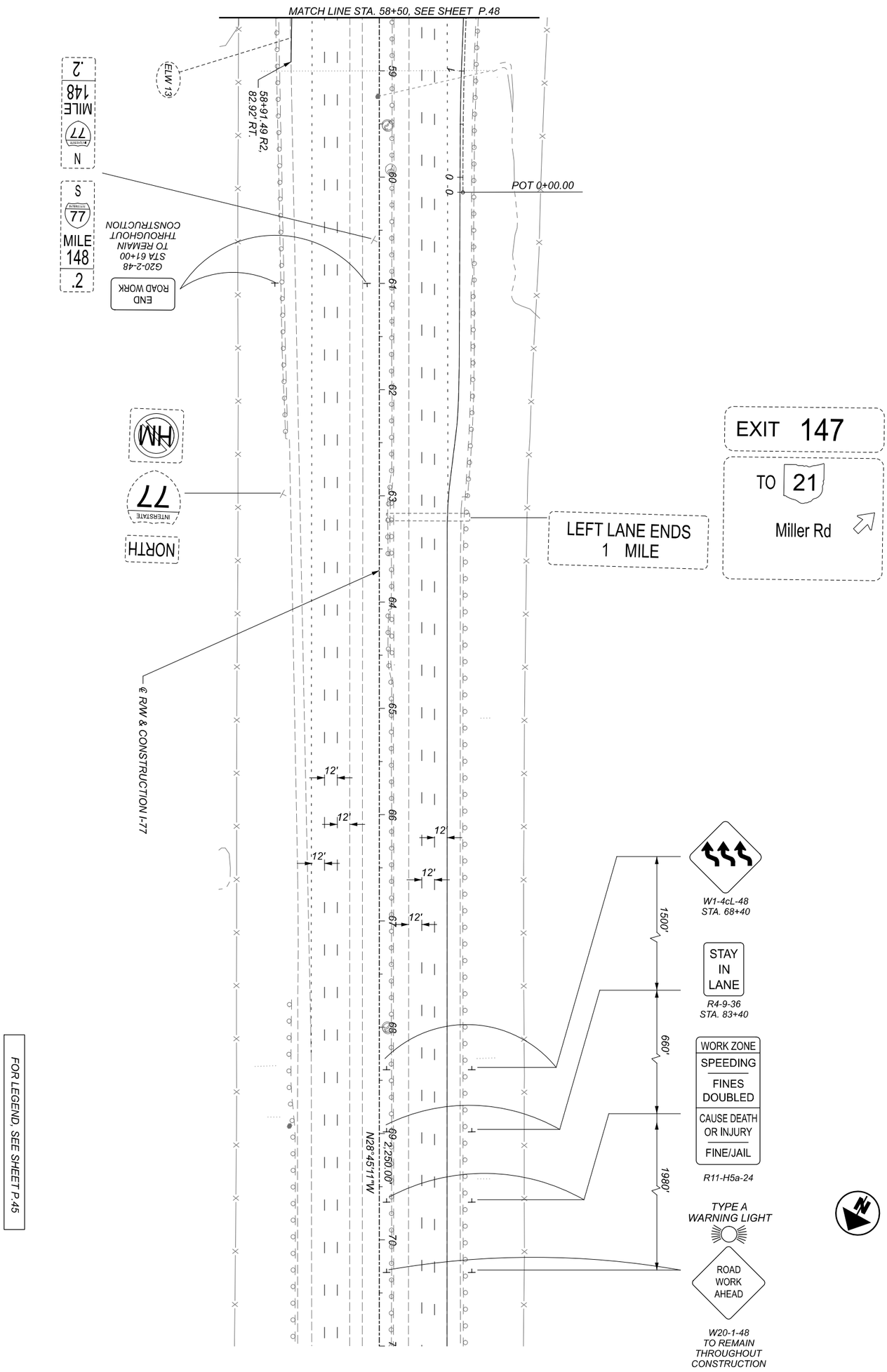

FOR LEGEND, SEE SHEET P.45

SHEET	TOTAL	PROJECT ID	REVIEWER	DESIGNER	DESIGN AGENCY
P.49	434	104983	BBD 02/25/22	MSW	TranSystems, 400 W. NATIONWIDE BLVD., STE 225, COLUMBUS, OHIO 43215

MAINTENANCE OF TRAFFIC - PHASE 1A
IR-77 STA. 58+50 TO 71+00

HORIZONTAL SCALE IN FEET
0 50
25 100

MODEL: Miller Rd Plan - Plan (Sheet) PAPERSIZE: 34x22 (in.) DATE: 3/1/2022 TIME: 4:54:36 PM USER: ssoprasouth
pw:\\hq-pwint01.ca-a.transystems.com:transystemscorp-pw\Documents\Projects_2019\C0403\403190027\Agency_Folders\400-Engineering\MOT\Sheets\104983_TC_PhaseIB_20scale.dgn

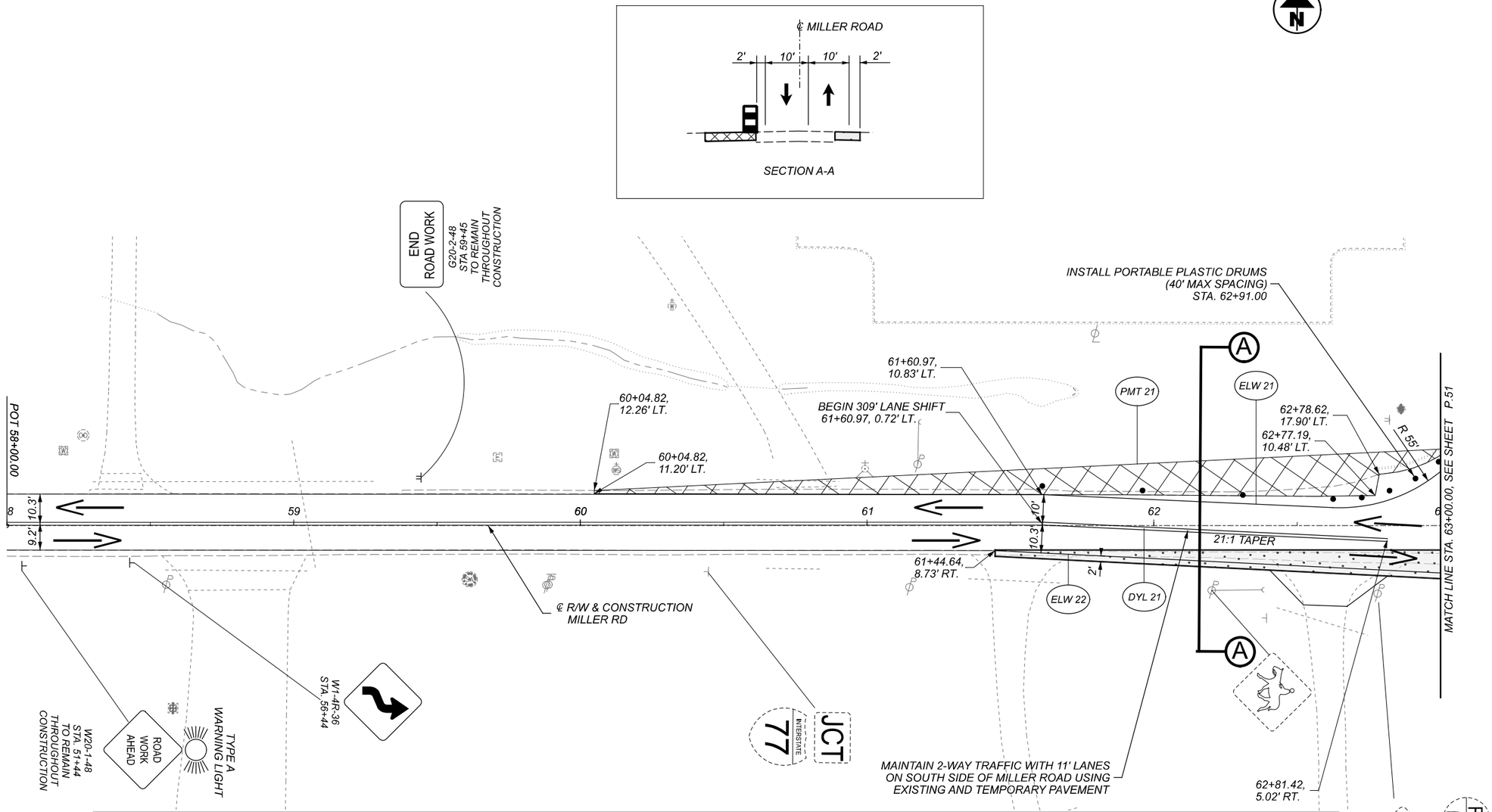

MAINTENANCE OF TRAFFIC LEGEND

DYL	CENTER LINE, DOUBLE YELLOW	IA	IMPACT ATTENUATOR		EXISTING SIGN
DLW	DOTTED LINE, WHITE	PB	PORTABLE BARRIER		EXISTING SIGN TO BE REMOVED
DLY	DOTTED LINE, YELLOW	PMT	PAVEMENT FOR MAINTAINING TRAFFIC		EXISTING SIGN TO BE RELOCATED
SL	STOP LINE	TL	TRANSVERSE LINE		EXISTING SIGN TO BE COVERED
ELW	EDGE LINE, WHITE	TR	TRAFFIC SIGNS		PROPOSED SIGN
ELY	EDGE LINE, YELLOW	GR	GUARDRAIL		EXISTING SIGN POST
CH	CHANNELIZING LINE	C	CURB, TYPE 6		PROPOSED SIGN POST
LA	LANE ARROW	XX	INSTALLED IN PREVIOUS PHASE		TYPE III BARRICADE
				→	DIRECTION OF TRAVEL
					IMPACT ATTENUATOR
					DRUMS (SPACING)
					PORTABLE BARRIER
					TEMPORARY DRAINAGE STRUCTURE (AS NOTED)
					TEMPORARY DRAINAGE CONDUIT (AS NOTED)
					TEMPORARY PAVEMENT CONSTRUCTED THIS PHASE
					PERMANENT PAVEMENT WORK ZONE
					PERMANENT PAVEMENT BUILT IN PRIOR PHASE
					TEMPORARY PAVEMENT BUILT IN PRIOR PHASE
					TEMPORARY PAVEMENT REMOVED THIS PHASE

HORIZONTAL SCALE IN FEET
0 10 20 40

MAINTENANCE OF TRAFFIC - PHASE 1B
MILLER ROAD STA. 58+00 TO 63+00

DESIGN AGENCY
TranSystems
400 W. NATIONWIDE BLVD.
SUITE 225
COLUMBUS, OHIO 43215

DESIGNER MSW
REVIEWER BBD 02/25/22
PROJECT ID 104983
SHEET P.50 TOTAL 434

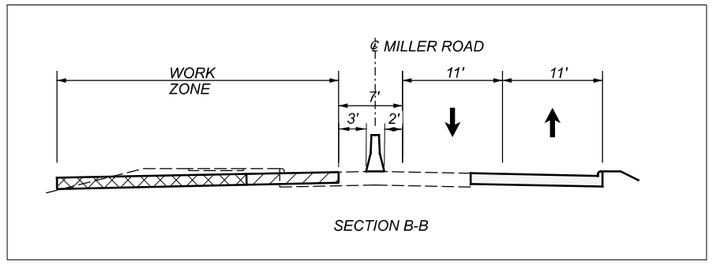

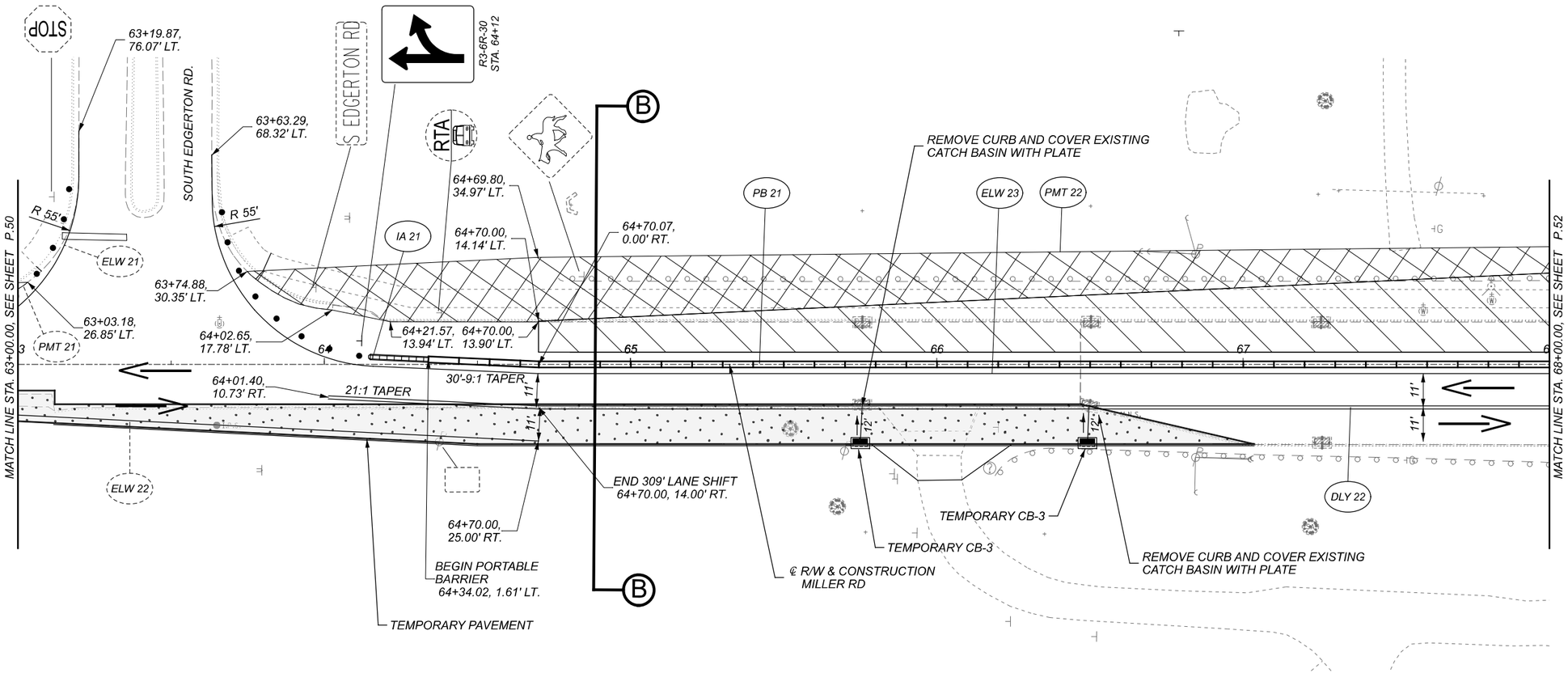

FOR LEGEND, SEE SHEET P.50

HORIZONTAL SCALE IN FEET
0 10 20 40

MAINTENANCE OF TRAFFIC - PHASE 1B
MILLER ROAD STA. 63+00 TO 68+00

CUY-77-00.42 PART 1

MODEL: Miller Rd Plan - Plan 2 [Sheet] PAPERSIZE: 34x22 (In.) DATE: 3/1/2022 TIME: 4:54:37 PM USER: asopraseuth
pw:\\hq-pwint01.ca-a.transystems.com:transystemscorp-pw\Documents\Projects_2019\C0403\403190027\Agency_Folders\400-Engineering\MOT\Sheets\104983_TC_PhaseIB_20scale.dgn

DESIGN AGENCY
TranSystems
400 W. NATIONWIDE BLVD.
SUITE 225
COLUMBUS, OHIO 43215

DESIGNER	MSW
REVIEWER	BBD 02/25/22
PROJECT ID	104983
SHEET	P.51
TOTAL	434

REMOVE EXISTING RAMP PAVEMENT BETWEEN ACTIVE WORK ZONES THIS PHASE

℄ CONSTRUCTION RELOCATED RAMP B-2

R3-H8bd-30 STA. 14+00

R3-H8bd-30 STA. 14+99

ONLY

MAINTAIN ONE 11' LANE (2-12' LANES AT INTERSECTION) USING PERMANENT PAVEMENT CONSTRUCTED IN PHASE 1A

INSTALL PORTABLE PLASTIC DRUMS

14

STOP HERE ON RED

SPEED LIMIT 35

EX RAMP B-2 (CLOSED)

USE PERMANENT CONTROLLER; MAINTAIN EX POWER SOURCE AS NEEDED

12' 12'

CH 21

LA 21

LA 22

SL 22

15+01.21, 24.00' LT.

71+05.49, 51.76' LT.

R3-1-36

PORTABLE BARRIER 71+45.00, 0.00' RT.

69+69.31, 40.25' LT.

14+73.46, 0.00' RT.

69+69.44, 37.89' LT.

PMT 22

PB 21

I-77

MATCH LINE STA. 68+00.00, SEE SHEET P.51

END PORTABLE BARRIER 69+53.19, 0.00' RT.

R 65'

R 65'

68 69 70 71 72

MATCH LINE STA. 73+00.00, SEE SHEET P.53

11'

11'

69+28.95, 14.00' RT.

SL 21

IA 22

ELW 23

TR 21

ELW 24

71+30.52, 3.00' RT.

IA 23

SL 23

12'

72+13.02, 14.00' RT.

DYL 22

69+28.95, 25.00' RT.

REMOVE EXISTING TRAFFIC SIGNAL

R3-2-36

70+31.30, 42.56' RT.

STOP HERE ON RED

ALL TRUCKS MUST TURN LEFT

BICKERT LOCAL DELIVERIES

Cuyahoga Valley National Park Ski Areas

Sleepy Hollow Golf Course

Brecksville Reservation

Cleveland Metroparks

AMERICA'S BYWAYS

TO OHIO TURNPIKE

TO 21

77 INTERSTATE

NORTH

MAINTAIN 2-WAY TRAFFIC WITH 11' LANES ON NORTH AND SOUTH OF MILLER ROAD USING EXISTING PAVEMENT

UTILIZE WORK ZONE TRAFFIC SIGNAL (SEE P.79 FOR TEMPORARY SIGNAL PLAN DETAILS)

℄ R/W & CONSTRUCTION MILLER RD

SPEED LIMIT 35

WATCH FOR STOPPED TRAFFIC

RAMP B-3

℄ MILLER ROAD

WORK ZONE

7'

3' 2'

11' 12'

SECTION C-C

FOR LEGEND, SEE SHEET P.50

HORIZONTAL SCALE IN FEET
0 10 20 40

MAINTENANCE OF TRAFFIC - PHASE 1B
MILLER ROAD STA. 68+00 TO 73+00

CUY-77-00.42 PART 1

DESIGN AGENCY
TranSystems
400 W. NATIONWIDE BLVD. SUITE 225
COLUMBUS, OHIO 43215

DESIGNER MSW

REVIEWER BBD 02/25/22

PROJECT ID 104983

SHEET P.52 TOTAL 434

MODEL: Miller Rd Plan - Plan 3 [Sheet] PAPERSIZE: 34x22 (in.) DATE: 3/1/2022 TIME: 4:54:38 PM USER: ssoprasouth
pw:\\hq-pwint01.a-e.transystems.com:transystemsorp-pw\Documents\Projects_2019\C0403\403190027\Agency_Folders\400-Engineering\MOT\Sheets\104983_TC_PhaseIB_20scale.dgn

MAINTENANCE OF TRAFFIC - PHASE 1B
MILLER ROAD STA. 73+00 TO 78+00

HORIZONTAL SCALE IN FEET
0 10 20 40

℄ R/W & CONSTRUCTION RAMP B-1

COMPLETE FINAL PORTION OF RAMP INTERSECTION. KEEP RAMP OPEN BY UTILIZING EXISTING AND PROPOSED PAVEMENT CONSTRUCTED IN PHASE 1B

NO PEDESTRIANS BICYCLES MOTORCYCLES (LESS THAN 5 BRAKE HP)

1+11.62 R2, 9.74' RT.

0+96.70 R2, 12.47' RT.

R 100'

END PORTABLE BARRIER 75+41.62, 0.00' RT.

RELOCATED TO STA. 74+63, LT.

0+67.33 R2, 6.74' RT.

TL 1

R3-6R-30 STA. 76+51

ELW 27

76+61.46, 0.67' LT.

ELW 25

R 55.3'

R 250'

76+36.38, 8.13' LT.

ELW 26

R 50'

IA 24

R 18'

PORTABLE CONCRETE BARRIER 74+50.00, 0.00' LT.

76+89.07, 3.00' RT.

PORTABLE BARRIER 77+11.21, 0.00' RT.

MATCH LINE STA. 73+00.00, SEE SHEET P.52

MATCH LINE STA. 78+00.00, SEE SHEET P.54

74 75 76 77

11' 12' 11'

PB 22

75+50.00, 14.00' RT.

SL 25

RD76

RD22

SL 24

M.N.S.

74+50.00, 14.00' RT.

DYL 23

75+50.00, 25.00' RT.

76+61.46, 14.00' RT.

IA 25

I-77

R3-6L-30 STA. 75+64

UTILIZE WORK ZONE TRAFFIC SIGNAL

MAINTAIN 2-WAY TRAFFIC WITH 11' LANES ON SOUTH SIDE OF MILLER ROAD USING EXISTING PAVEMENT

℄ R/W & CONSTRUCTION MILLER RD

77 INTERSTATE NORTH

77 INTERSTATE SOUTH

TO

RAMP B-4

FOR LEGEND, SEE SHEET P.50

℄ RAMP B-1
22' SHLDR
SECTION D-D

CUY-77-00.42 PART 1

MODEL: Miller Rd Plan - Plan 4 (Sheet) PAPERSIZE: 34x22 (in.) DATE: 3/1/2022 TIME: 4:54:39 PM USER: ssopraseuth
pw:\\hq-pwint01.dot.state.oh.us:transystems.com:transystemscorp-pw\Documents\Projects.2019\C0403\40319002?\Agency_Folders\400-Engineering\MOT\Sheets\104983_TC_PhaseIB_20scale.dgn

DESIGN AGENCY
TranSystems
400 W. NATIONWIDE BLVD. SUITE 225
COLUMBUS, OHIO 43215

DESIGNER MSW
REVIEWER BBD 02/25/22
PROJECT ID 104983
SHEET P.53 TOTAL 434

MODEL: Miller Rd Plan - Plan 5 (Sheet) PAPERSIZE: 34x22 (In.) DATE: 3/1/2022 TIME: 4:54:40 PM USER: ssopraseuth
pw:\\hq-pwint01.a-e.transysCorp.com:transyscorp-pwi\Documents\Projects_2019\C0403\403190027\Agency_Folders\400-Engineering\MOT\Sheets\104983_TC_PhaseIB_20scale.dgn

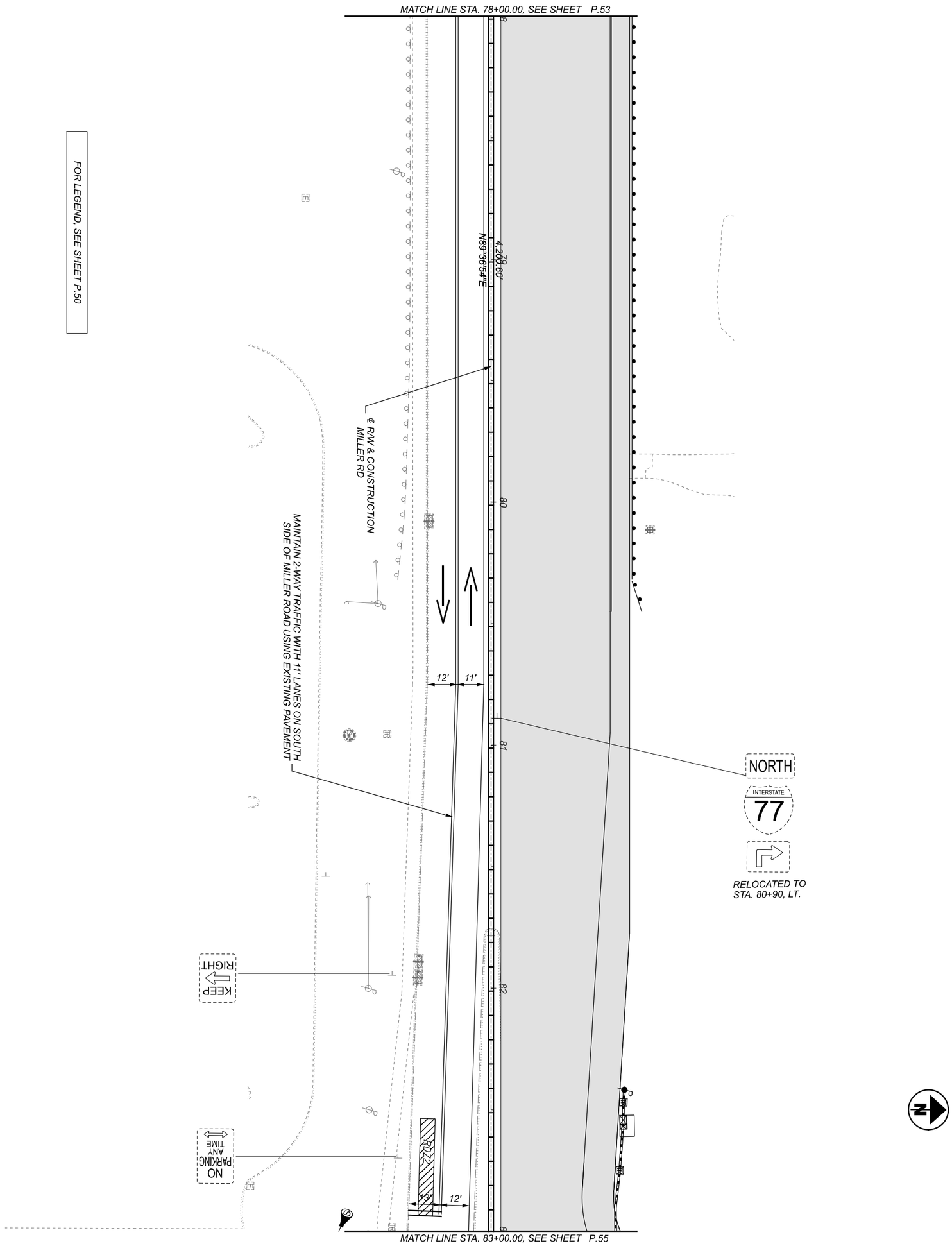

SHEET	TOTAL
P.54	434

PROJECT ID: 104983

REVIEWER: BBD 02/25/22

DESIGNER: MSW

DESIGN AGENCY
TranSystems
400 W. NATIONWIDE BLVD, SUITE 225
COLUMBUS, OHIO 43215

MAINTENANCE OF TRAFFIC - PHASE 1B
MILLER ROAD STA. 78+00 TO 83+00

HORIZONTAL SCALE IN FEET
0 20
10 40

MODEL: Miller Rd Plan - Plan 6 (Sheet) PAPERSIZE: 34x22 (In.) DATE: 3/1/2022 TIME: 4:54:40 PM USER: ssopraseuth
pw:\\hq-pwint01.a-e.transysorp.com:transysorp-pw1\Documents\Projects_2019\C0403\403190027\Agency_Folders\400-Engineering\MOT\Sheets\104983_TC_PhaseIB_20scale.dgn

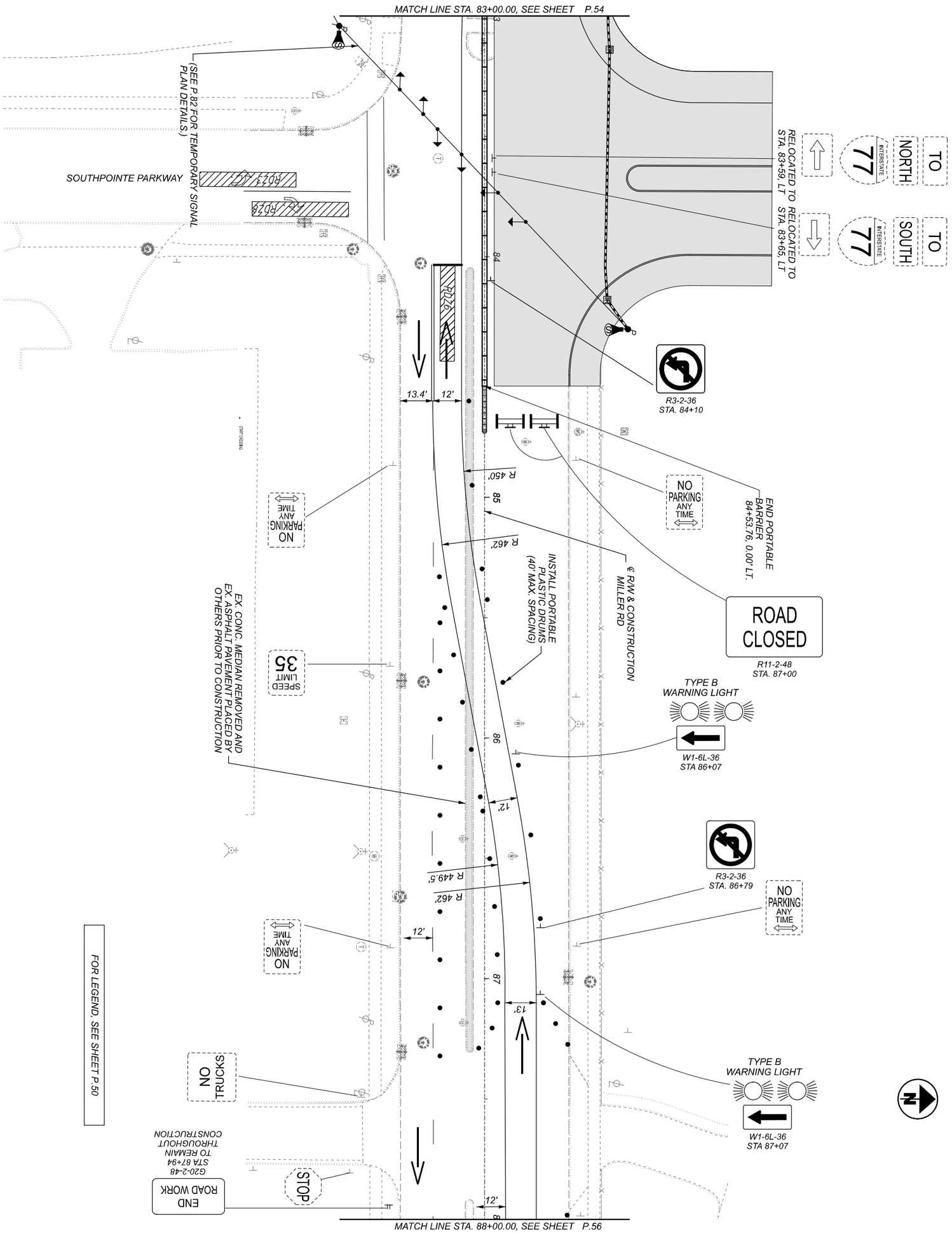

SHEET	TOTAL
P.55	434

PROJECT ID: 104983
REVIEWER: BBD 02/25/22
DESIGNER: MSW

DESIGN AGENCY
TranSystems
400 W. NATIONWIDE BLVD, SUITE 225
COLUMBUS, OHIO 43215

MAINTENANCE OF TRAFFIC - PHASE 1B
MILLER ROAD STA. 83+00 TO 88+00

HORIZONTAL SCALE IN FEET
0 20
10 40

MODEL: Miller Rd Plan - Plan 7 (Sheet) PAPERSIZE: 34x22 (In.) DATE: 3/1/2022 TIME: 4:54:41 PM USER: ssopraseuth
pw:\\hq-pwint01.a-e.transyscorp.com:transyscorp-pw1\Documents\Projects_2019\C0403\403190027\Agency_Folders\400-Engineering\MOT\Sheets\104983_TC_PhaseIB_20scale.dgn

FOR LEGEND, SEE SHEET P.50

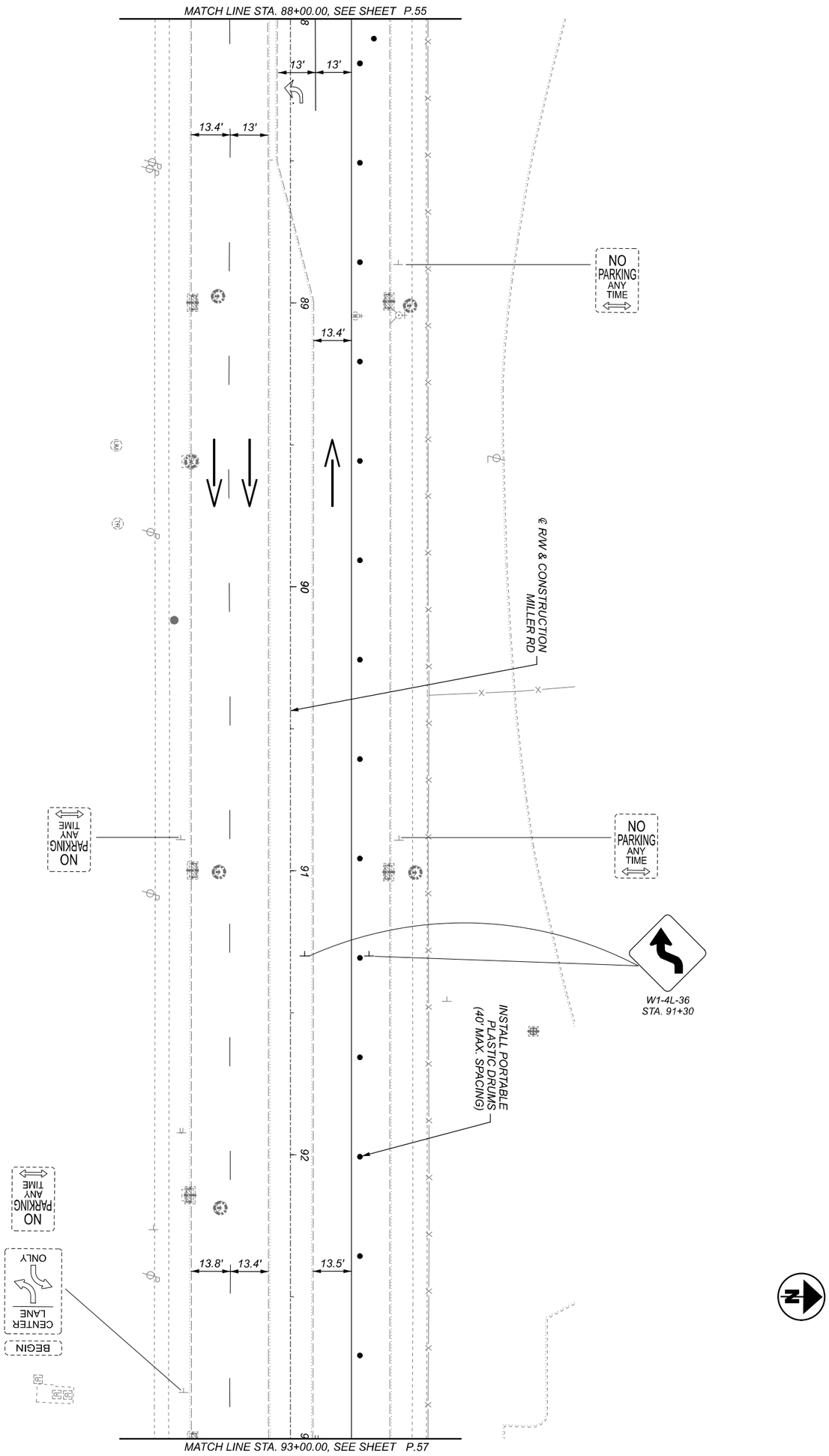

SHEET P.56 TOTAL 434	PROJECT ID 104983	REVIEWER BBD 02/25/22	DESIGNER MSW	DESIGN AGENCY TranSystems 400 W. NATIONWIDE BLVD. SUITE 225 COLUMBUS, OHIO 43215	MAINTENANCE OF TRAFFIC - PHASE 1B MILLER ROAD STA. 88+00 TO 93+00

HORIZONTAL SCALE IN FEET
0 20
10 40

MODEL: Miller Rd Plan - Plan 8 (Sheet) PAPERSIZE: 34x22 (In.) DATE: 3/1/2022 TIME: 4:54:42 PM USER: ssopraseuth
pw:\\hq-pwint01.a-e.transystcorp.com:transystcorp-pw1\Documents\Projects_2019\C0403\403190027\Agency_Folders\400-Engineering\MOT\Sheets\104983_TC_PhaseIB_20scale.dgn

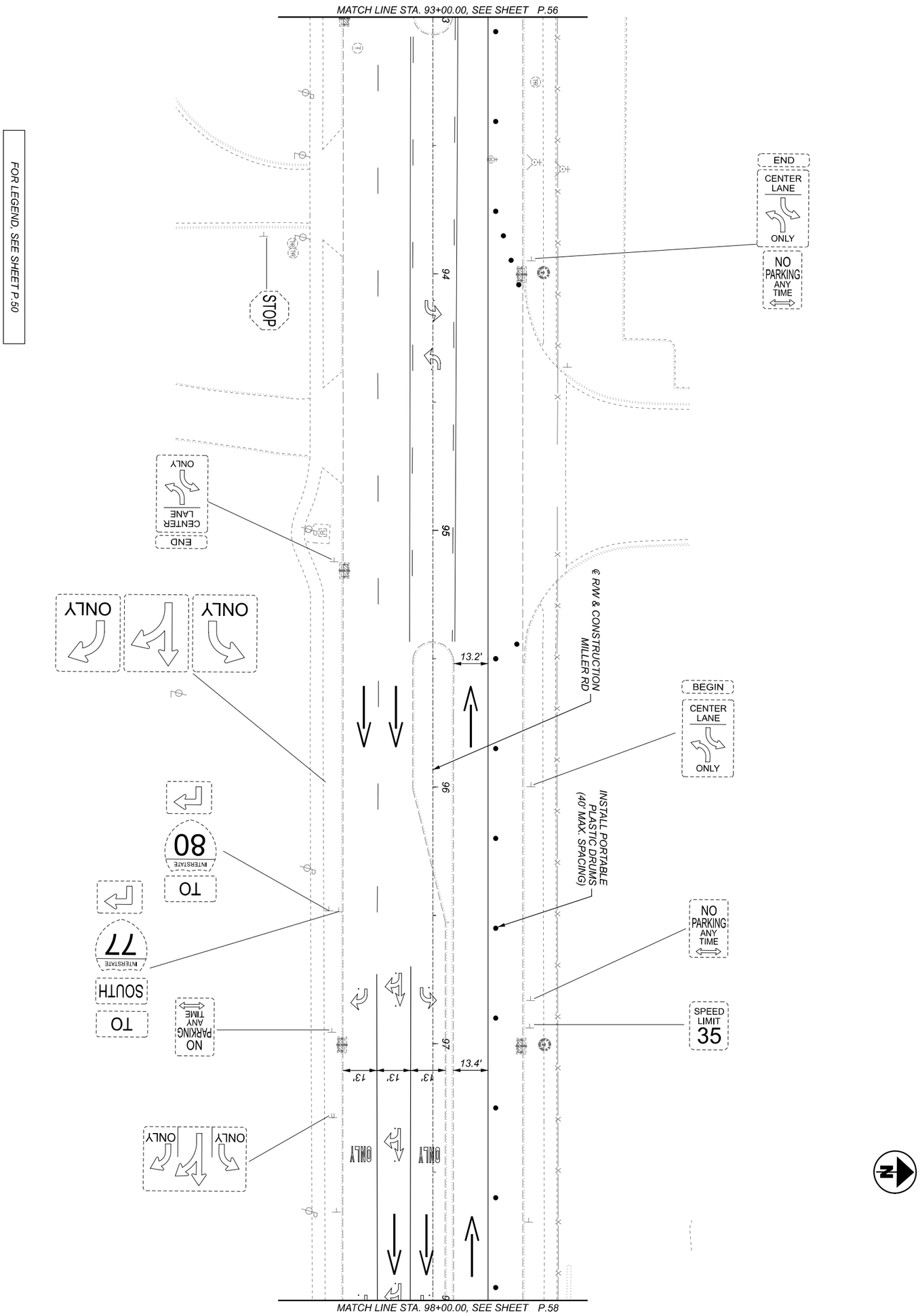

SHEET	TOTAL
P.57	434

PROJECT ID: 104983
REVIEWER: BBD 02/25/22
DESIGNER: MSW

DESIGN AGENCY
TranSystems
400 W. NATIONWIDE BLVD, SUITE 225
COLUMBUS, OHIO 43215

MAINTENANCE OF TRAFFIC - PHASE 1B
MILLER ROAD STA. 93+00 TO 98+00

HORIZONTAL SCALE IN FEET
0 20
10 40

MODEL: Miller Rd Plan - Plan 9 (Sheet) PAPERSIZE: 34x22 (In.) DATE: 3/1/2022 TIME: 4:54:42 PM USER: ssopraseuth
pw:\\hq-pwint01.a-e.transyscorp.com:transyscorp-pw1\Documents\Projects_2019\C0403\403190027\Agency_Folders\400-Engineering\MOT\Sheets\104983_TC_PhaseIB_20scale.dgn

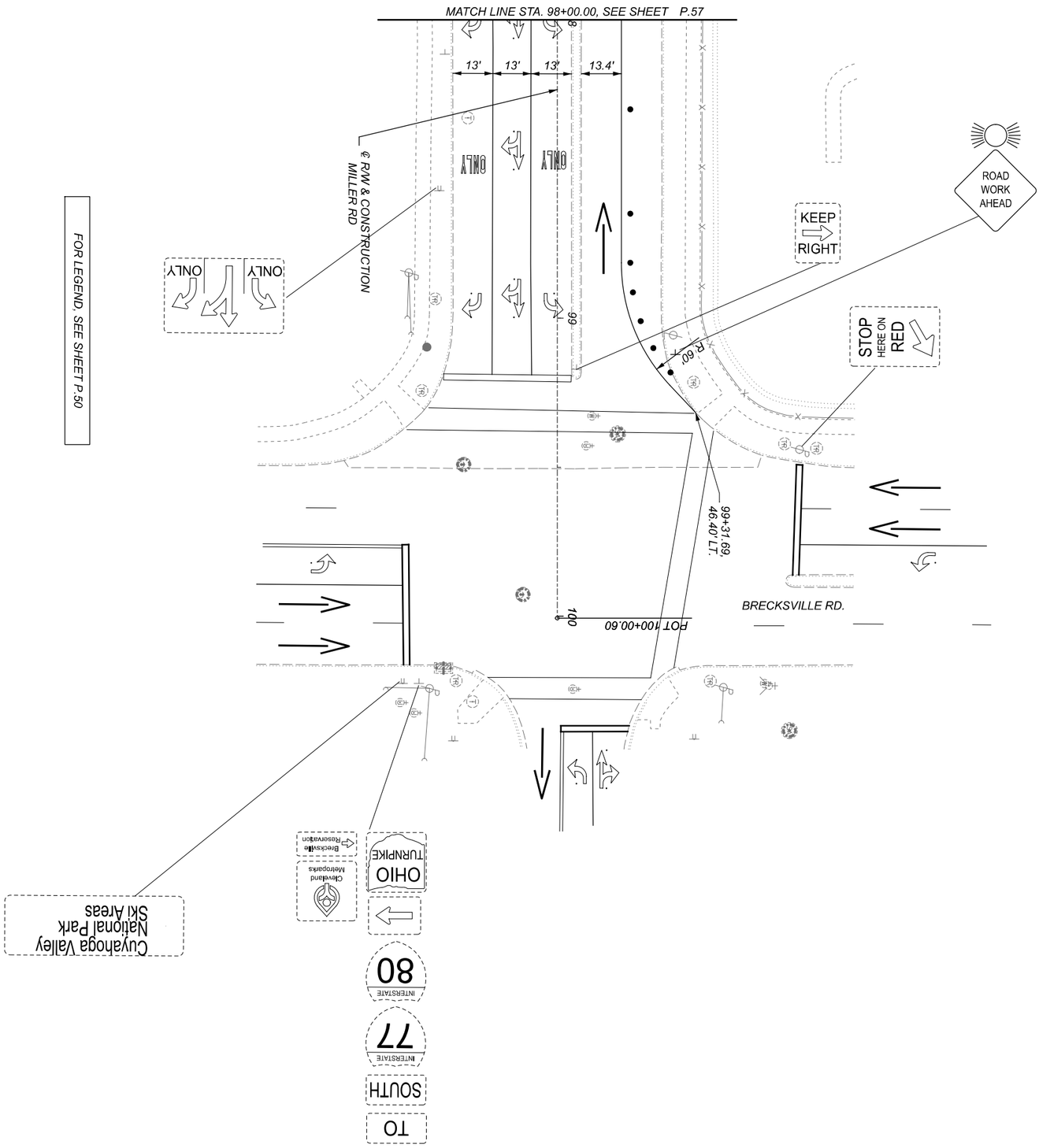

MAINTENANCE OF TRAFFIC - PHASE 1B
MILLER ROAD STA. 98+00 TO 100+00

HORIZONTAL SCALE IN FEET
0 20
10 40

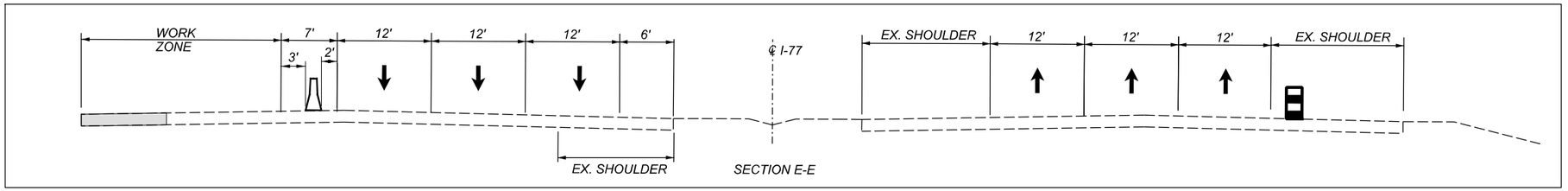

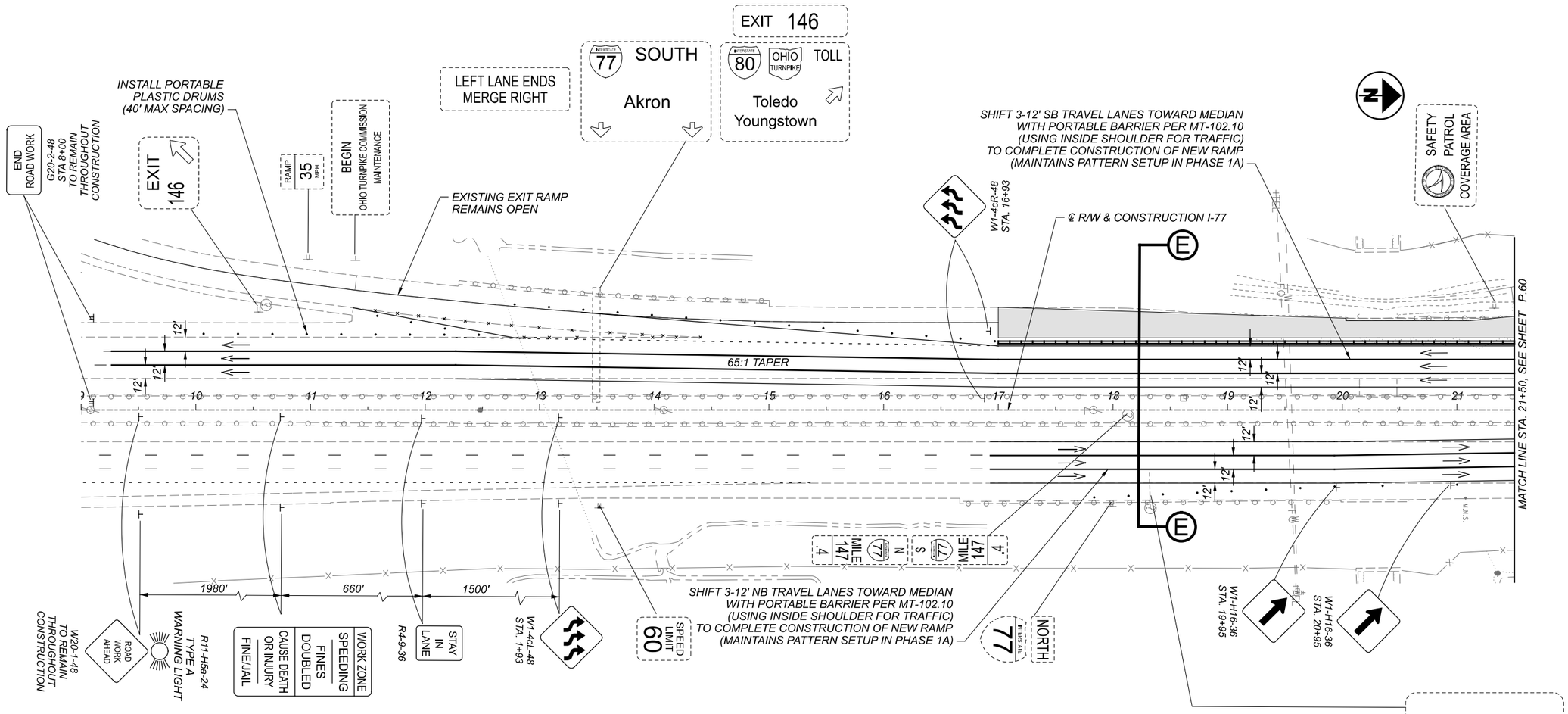

MAINTENANCE OF TRAFFIC LEGEND

DYL	CENTER LINE, DOUBLE YELLOW	IA	IMPACT ATTENUATOR		EXISTING SIGN		TYPE III BARRICADE		TEMPORARY PAVEMENT CONSTRUCTED THIS PHASE
DLW	DOTTED LINE, WHITE	PB	PORTABLE BARRIER		EXISTING SIGN TO BE REMOVED	→	DIRECTION OF TRAVEL		PERMANENT PAVEMENT WORK ZONE
DLY	DOTTED LINE, YELLOW	PMT	PAVEMENT FOR MAINTAINING TRAFFIC		EXISTING SIGN TO BE RELOCATED		IMPACT ATTENUATOR		PERMANENT PAVEMENT BUILT IN PRIOR PHASE
SL	STOP LINE	TL	TRANSVERSE LINE		EXISTING SIGN TO BE COVERED	• • • •	DRUMS (SPACING)		TEMPORARY PAVEMENT BUILT IN PRIOR PHASE
ELW	EDGE LINE, WHITE	TR	TRAFFIC SIGNS		PROPOSED SIGN		PORTABLE BARRIER		TEMPORARY PAVEMENT REMOVED THIS PHASE
ELY	EDGE LINE, YELLOW	GR	GUARDRAIL	⊣ ⊨	EXISTING SIGN POST	▣	TEMPORARY DRAINAGE STRUCTURE (AS NOTED)		
CH	CHANNELIZING LINE	C	CURB, TYPE 6	⊣ ⊨	PROPOSED SIGN POST		TEMPORARY DRAINAGE CONDUIT (AS NOTED)		
LA	LANE ARROW	XX	INSTALLED IN PREVIOUS PHASE						

HORIZONTAL SCALE IN FEET
0 25 50 100

MAINTENANCE OF TRAFFIC - PHASE 1B
IR-77 STA. 9+00 TO 21+50

DESIGN AGENCY
TranSystems
400 W. NATIONWIDE BLVD., STE 225
COLUMBUS, OHIO 43215

DESIGNER MSW
REVIEWER BBD 02/25/22
PROJECT ID 104983
SHEET P.59 TOTAL 434

CUY-77-00.42 PART 1

MODEL: CLX_I77_50sc - Plan I-1[Sheet] PAPERSIZE: 34x22 (In.) DATE: 3/1/2022 TIME: 4:55:13 PM USER: ssopraseuth
pw:\\hq-pwint01.d-e.transystems.com:transystemscorp-pw1\Documents\Projects_2019\C0403\403902?\Agency_Folders\400-Engineering\MOT\Sheets\104983_TC_PhaseIB_50scale.dgn

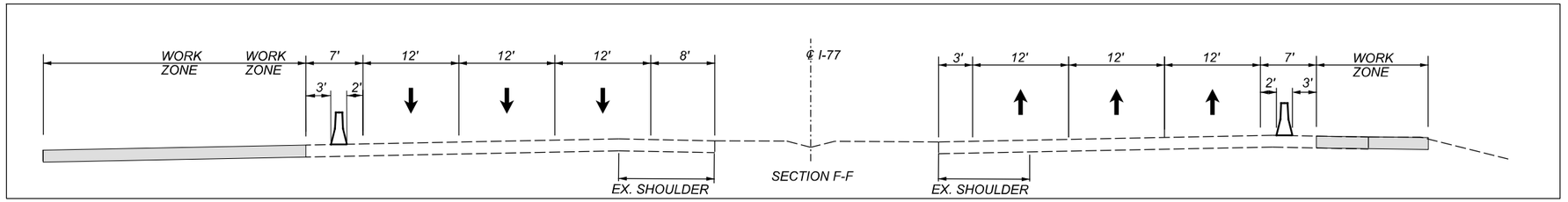

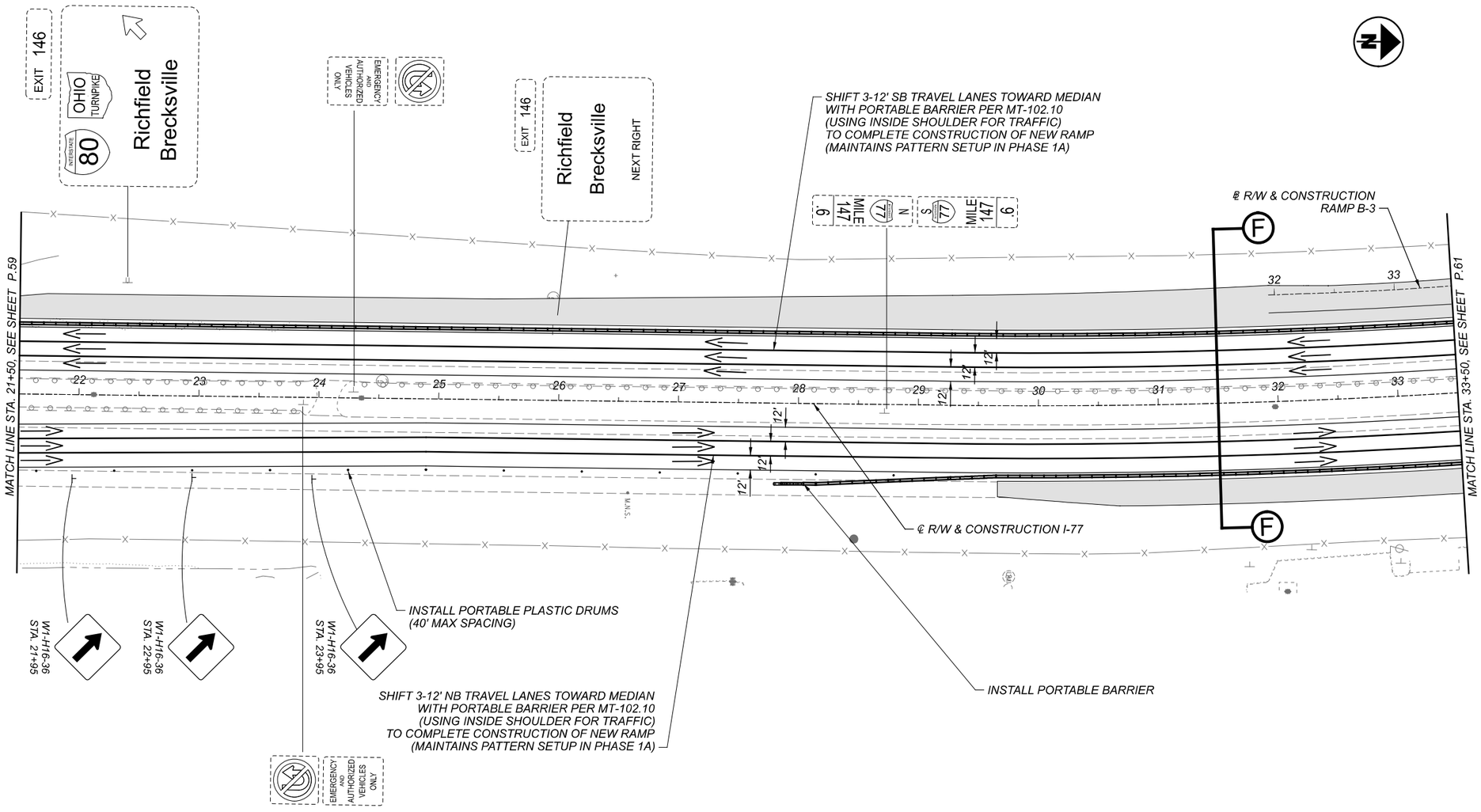

FOR LEGEND, SEE SHEET P.59

HORIZONTAL SCALE IN FEET
0 25 50 100

MAINTENANCE OF TRAFFIC - PHASE 1B
IR-77 STA. 21+50 TO 33+50

CUY-77-00.42 PART 1

DESIGN AGENCY
TranSystems
400 W. NATIONWIDE BLVD., STE 225
COLUMBUS, OHIO 43215

DESIGNER MSW
REVIEWER BBD 02/25/22
PROJECT ID 104983
SHEET P.60 TOTAL 434

MODEL: CLX_I77_50sc - Plan 2-1[Sheet] PAPERSIZE: 34x22 (In) DATE: 3/1/2022 TIME: 4:55:14 PM USER: ssopraseuth
pw:\\hq-pwint01.e.transystems.com:transystems-pw\Documents\Projects_2019\C0403\403190027\Agency_Folders\400-Engineering\MOT\Sheets\104983_TC_PhaseIB_50scale.dgn

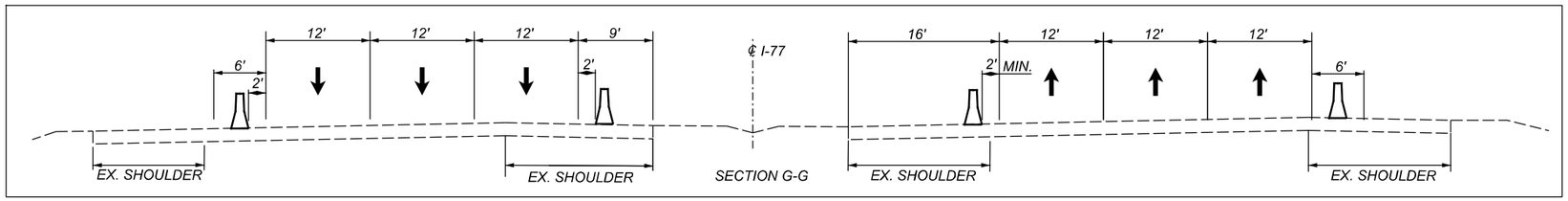

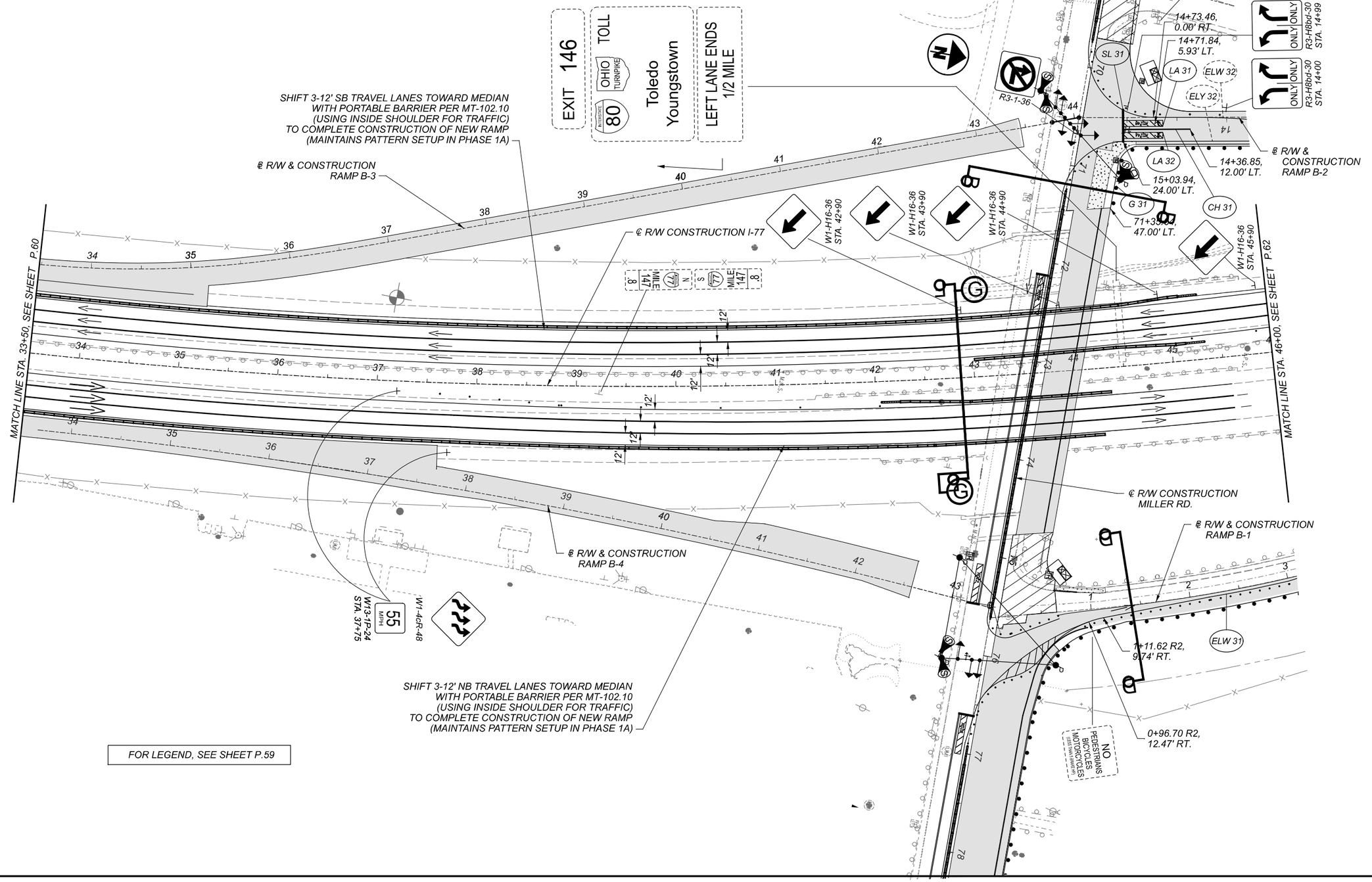

FOR LEGEND, SEE SHEET P.59

HORIZONTAL SCALE IN FEET
0 25 50 100

MAINTENANCE OF TRAFFIC - PHASE 1B
IR-77 STA. 33+50 TO 46+00

CUY-77-00.42 PART 1

MODEL: CLX_I77_50sc - Plan 3-(1Sheet) PAPERSIZE: 34x22 (In.) DATE: 3/1/2022 TIME: 4:55:15 PM USER: ssopraseuth
pw:\\hq-pwint01.ae.transystcorp.com:transystcorp-pw1\Documents\Projects_2019\C0403\40390021\Agency_Folders\400-Engineering\MOT\Sheets\104983_TC_PhaseIB_50scale.dgn

DESIGN AGENCY
TranSystems
400 W. NATIONWIDE BLVD., STE 225
COLUMBUS, OHIO 43215

DESIGNER: MSW
REVIEWER: BBD 02/25/22
PROJECT ID: 104983
SHEET: P.61 TOTAL: 434

HORIZONTAL SCALE IN FEET
0 25 50 100

MAINTENANCE OF TRAFFIC - PHASE 1B
IR-77 STA. 46+00 TO 58+50

CUY-77-00.42 PART 1

MODEL: CLX_I77_50sc - Plan 4-[Sheet] PAPERSIZE: 34x22 (In) DATE: 3/1/2022 TIME: 4:55:16 PM USER: ssopraseuth
pw:\\hq-pwint01.a-e.transystems.com:transystemscorp-pw1\Documents\Projects_2019\C0403\40319002Y\Agency_Folders\400-Engineering\MOT\Sheets\104983_TC_PhaseIB_50scale.dgn

DESIGN AGENCY
TranSystems
400 W. NATIONWIDE BLVD., STE 225
COLUMBUS, OHIO 43215

DESIGNER MSW
REVIEWER BBD 02/25/22
PROJECT ID 104983
SHEET P.62 TOTAL 434

MODEL: Unnamed Plan - Plan 5 [Sheet] PAPERSIZE: 34x22 (In.) DATE: 3/1/2022 TIME: 4:55:17 PM USER: ssopraseuth
pw:\\hq-pwint01.a-e.transyscorp.com:transyscorp-pw1\Documents\Projects_2019\C0403\403190027\Agency_Folders\400-Engineering\MOT\Sheets\104983_TC_PhaseIB_50scale.dgn

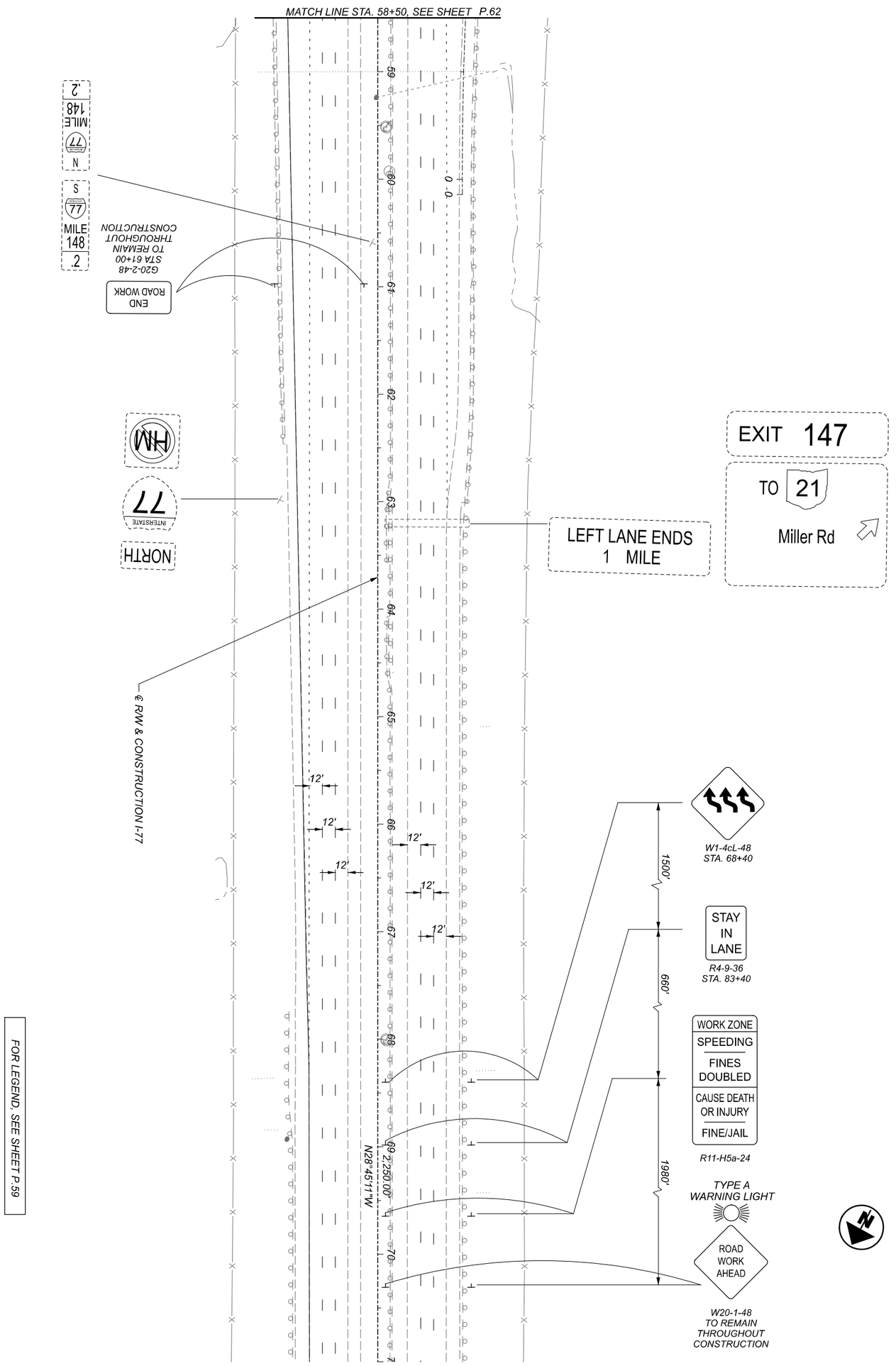

SHEET	TOTAL
P 63	434

PROJECT ID: 104983

REVIEWER: BBD 02/25/22

DESIGNER: MSW

DESIGN AGENCY: TranSystems
400 W. NATIONWIDE BLVD., STE 225
COLUMBUS, OHIO 43215

MAINTENANCE OF TRAFFIC - PHASE 1B
IR-77 STA. 58+50 TO 71+00

HORIZONTAL SCALE IN FEET
0 50
25 100

MODEL: Miller Rd Plan - Plan (ESheet) PAPERSIZE: 34x22 (in.) DATE: 3/1/2022 TIME: 4:56:01 PM USER: ssopraseuth
pw:\\hq-pwint01.a-e.transysocrp.com:transysocrp-pw\Documents\Projects.2019\C0403\403190027\Agency_Folders\400-Engineering\MOT\Sheets\104983_TC_Phase2_20scale.dgn

CUY-77-00.42 PART 1

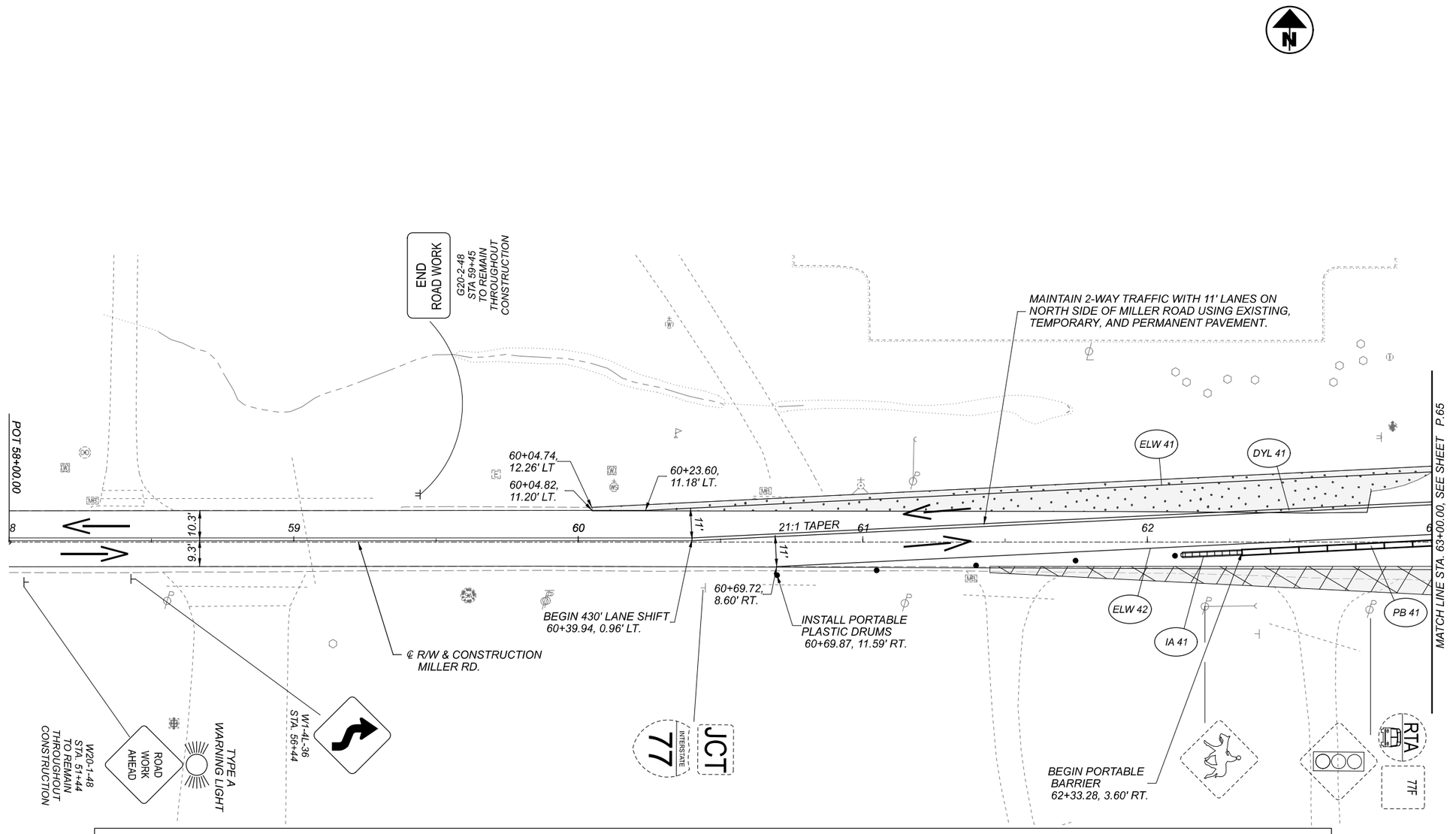

MAINTENANCE OF TRAFFIC LEGEND

DYL	CENTER LINE, DOUBLE YELLOW	IA	IMPACT ATTENUATOR		EXISTING SIGN		TYPE III BARRICADE		TEMPORARY PAVEMENT CONSTRUCTED THIS PHASE
DLW	DOTTED LINE, WHITE	PB	PORTABLE BARRIER		EXISTING SIGN TO BE REMOVED	→	DIRECTION OF TRAVEL		PERMANENT PAVEMENT WORK ZONE
DLY	DOTTED LINE, YELLOW	PMT	PAVEMENT FOR MAINTAINING TRAFFIC		EXISTING SIGN TO BE RELOCATED		IMPACT ATTENUATOR		PERMANENT PAVEMENT BUILT IN PRIOR PHASE
SL	STOP LINE	TL	TRANSVERSE LINE		EXISTING SIGN TO BE COVERED	• • • •	DRUMS (SPACING)		TEMPORARY PAVEMENT BUILT IN PRIOR PHASE
ELW	EDGE LINE, WHITE	TR	TRAFFIC SIGNS		PROPOSED SIGN		PORTABLE BARRIER		TEMPORARY PAVEMENT REMOVED THIS PHASE
ELY	EDGE LINE, YELLOW	GR	GUARDRAIL		EXISTING SIGN POST	■	TEMPORARY DRAINAGE STRUCTURE (AS NOTED)		
CH	CHANNELIZING LINE	C	CURB, TYPE 6		PROPOSED SIGN POST		TEMPORARY DRAINAGE CONDUIT (AS NOTED)		
LA	LANE ARROW	XX	INSTALLED IN PREVIOUS PHASE						

HORIZONTAL SCALE IN FEET
0 10 20 40

MAINTENANCE OF TRAFFIC - PHASE 2
MILLER ROAD STA. 58+00 TO 63+00

DESIGN AGENCY
TranSystems
400 W. NATIONWIDE BLVD. SUITE 225 COLUMBUS, OHIO 43215

DESIGNER: MSW
REVIEWER: BBD 02/25/22
PROJECT ID: 104983
SHEET: P.64 TOTAL: 434

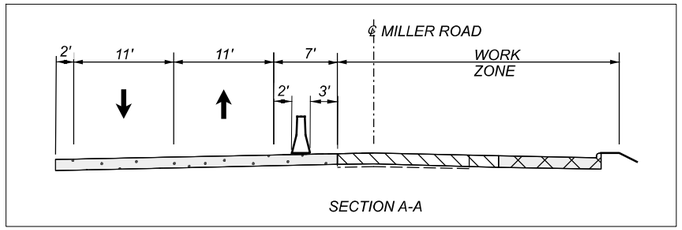

SECTION A-A

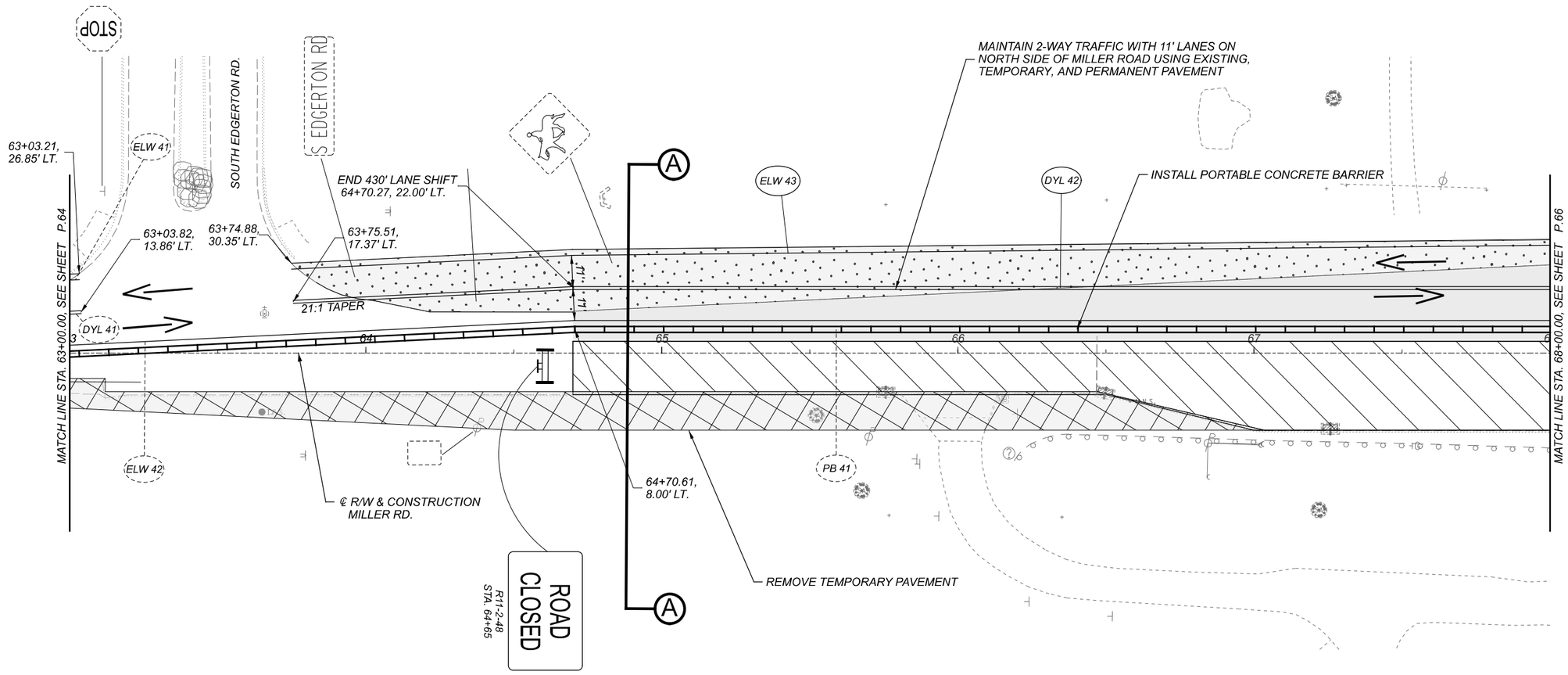

FOR LEGEND, SEE SHEET P.64

HORIZONTAL SCALE IN FEET
0 10 20 40

MAINTENANCE OF TRAFFIC - PHASE 2
MILLER ROAD STA. 63+00 TO 68+00

CUY-77-00.42 PART 1

MODEL: Miller Rd Plan - Plan 2 (Sheet) PAPERSIZE: 34x22 (in.) DATE: 3/1/2022 TIME: 4:56:03 PM USER: ssoprasouth
pw:\\hq-pwint01.d-e.transystems.com:transystemscorp-pw1\Documents\Projects_2019\C0403\403l9002?\Agency_Folders\400-Engineering\MOT\Sheets\104983_TC_Phase2_20scale.dgn

DESIGN AGENCY
TranSystems
400 W. NATIONWIDE BLVD.
SUITE 225
COLUMBUS, OHIO 43215

DESIGNER MSW
REVIEWER BBD 02/25/22
PROJECT ID 104983
SHEET P.65 TOTAL 434

MODEL: Miller Rd Plan - Plan 3 (Sheet) PAPERSIZE: 34x22 (In.) DATE: 3/1/2022 TIME: 4:56:04 PM USER: ssopraseuth
pw:\\hq-pwint01.a-e.transyscorp.com:transyscorp-pw1\Documents\Projects_2019\C0403\403190027\Agency_Folders\400-Engineering\MOT\Sheets\104983_TC_Phase2_20scale.dgn

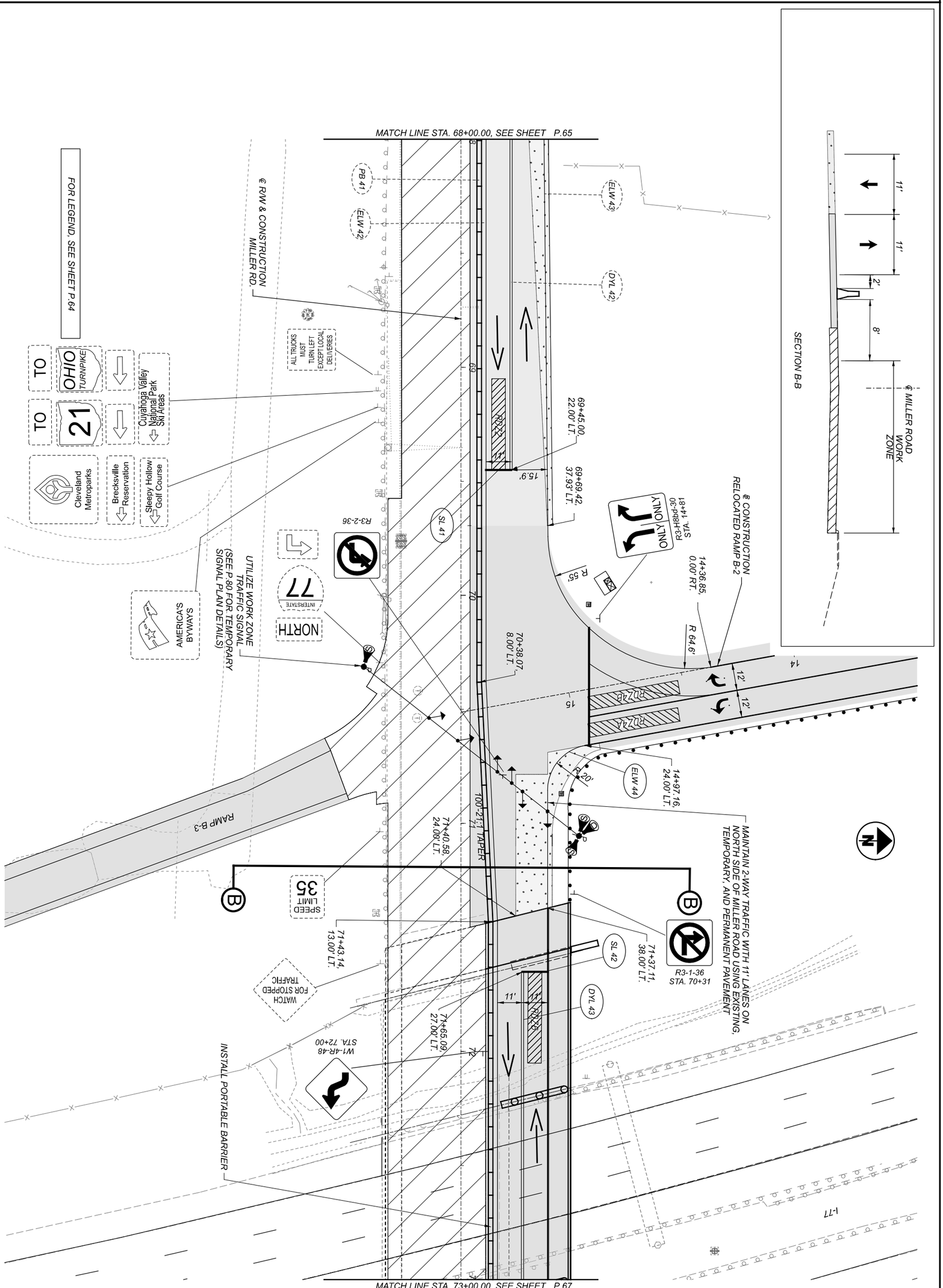

SHEET P 66 TOTAL 434	PROJECT ID 104983	REVIEWER BBD 02/25/22	DESIGNER MSW	DESIGN AGENCY TranSystems 400 W. NATIONWIDE BLVD. SUITE 225 COLUMBUS, OHIO 43215

MAINTENANCE OF TRAFFIC - PHASE 2
MILLER ROAD STA. 68+00 TO 73+00

HORIZONTAL SCALE IN FEET
0 20
10 40

MAINTENANCE OF TRAFFIC - PHASE 2
MILLER ROAD STA. 73+00 TO 78+00

HORIZONTAL SCALE IN FEET
0 10 20 40

12' 12'
NO PEDESTRIANS BICYCLES MOTORCYCLES (LESS THAN 5 BRAKE HP)
℄ CONSTRUCTION RAMP B-1
RELOCATED TO STA. 74+63, LT.
74+74.47, 27.00' LT.
DYL 43
SL 43
RDZ2
TR 41
75+96.74, 73.03' LT.
0+86.59 R2, 14.15' RT.
R 94.6'
UTILIZE WORK ZONE TRAFFIC SIGNAL FOR TEMPORARY TRAFFIC CONTROL. SHIFT SIGNAL HEADS AS SHOWN TO ACCOMMODATE TEMPORARY TRAFFIC. SIGNAL HEADS THAT ARE NOT USED OR IN CONFLICT WITH TEMPORARY TRAFFIC FOR THIS PHASE SHALL BE BAGGED ACCORDINGLY. SEE TRAFFIC SIGNAL PLANS FOR FURTHER DETAILS.
R3-6R-30 STA. 76+36
ELW 45
DYL 44
76+36.07, 38.00' LT.
SL 44
RDZ6
11' 11' 11' 11'
45:1 TAPER
MATCH LINE STA. 73+00.00, SEE SHEET P.66
MATCH LINE STA. 78+00.00, SEE SHEET P.68
74 75 76 77
74+74.47, 16.00' LT.
75+07.09, 40.94' RT.
76+36.07, 27.00' LT.
BEGIN 202' LANE SHIFT 77+00.00, 27.00' LT.
76+99.84, 13.00' LT.
℄ R/W & CONSTRUCTION MILLER RD.
SEE FOR TEMPORARY SIGNAL PLAN DETAILS.
(SEE P.80 FOR TEMPORARY SIGNAL PLAN DETAILS.)
ELW 42
PB 41
INSTALL PORTABLE BARRIER
MAINTAIN 2-WAY TRAFFIC WITH 11' LANES ON NORTH SIDE OF MILLER ROAD USING PERMANENT PAVEMENT
I-77
77 INTERSTATE NORTH
77 INTERSTATE SOUTH
TO
RAMP B-4
R3-6L-30
FOR LEGEND, SEE SHEET P.64

CUY-77-00.42 PART 1

MODEL: Miller Rd Plan - Plan 4 [Sheet] PAPERSIZE: 34x22 (in.) DATE: 3/1/2022 TIME: 4:56:04 PM USER: ssoprasouth
pw:\\hq-pwint01.dot-e.transystems.com:transystemscorp-pw\Documents\Projects_2019\C04034\40390027\Agency_Folders\400-Engineering\MOT\Sheets\104983_TC_Phase2_20scale.dgn

DESIGN AGENCY
TranSystems
400 W. NATIONWIDE BLVD. SUITE 225
COLUMBUS, OHIO 43215

DESIGNER MSW
REVIEWER BBD 02/25/22
PROJECT ID 104983
SHEET P.67 TOTAL 434

MODEL: Miller Rd Plan - Plan 5 (Sheet) PAPERSIZE: 34x22 (In.) DATE: 3/1/2022 TIME: 4:56:05 PM USER: ssopraseuth
pw:\\hq-pwint01.a-e.transyscorp.com:transyscorp-pw1\Documents\Projects_2019\C0403\403190027\Agency_Folders\400-Engineering\MOT\Sheets\104983_TC_Phase2_20scale.dgn

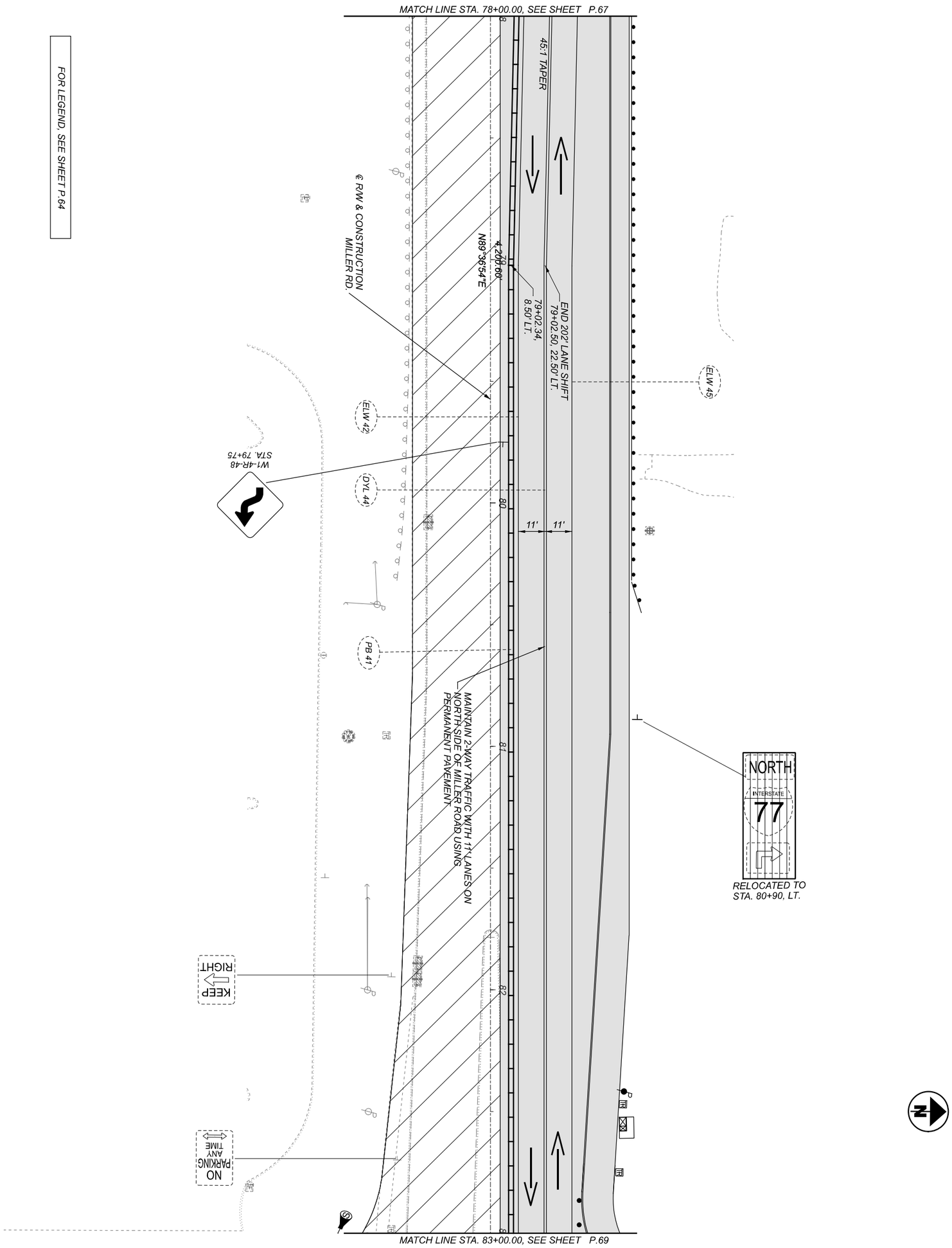

SHEET	TOTAL
P 68	434

PROJECT ID 104983

REVIEWER BBD 02/25/22

DESIGNER MSW

DESIGN AGENCY
TranSystems
400 W. NATIONWIDE BLVD. SUITE 225
COLUMBUS, OHIO 43215

MAINTENANCE OF TRAFFIC - PHASE 2
MILLER ROAD STA. 78+00 TO 83+00

HORIZONTAL SCALE IN FEET
0 20
10 40

MODEL: Miller Rd Plan - Plan 6 (Sheet) PAPERSIZE: 34x22 (in.) DATE: 3/1/2022 TIME: 4:56:06 PM USER: ssopraseuth
pw:\\hq-pwint01.a-e.transysocrp.com:transysocrp-pwi\Documents\Projects_2019\C0403\403190027\Agency_Folders\400-Engineering\MOT\Sheets\104983_TC_Phase2_20scale.dgn

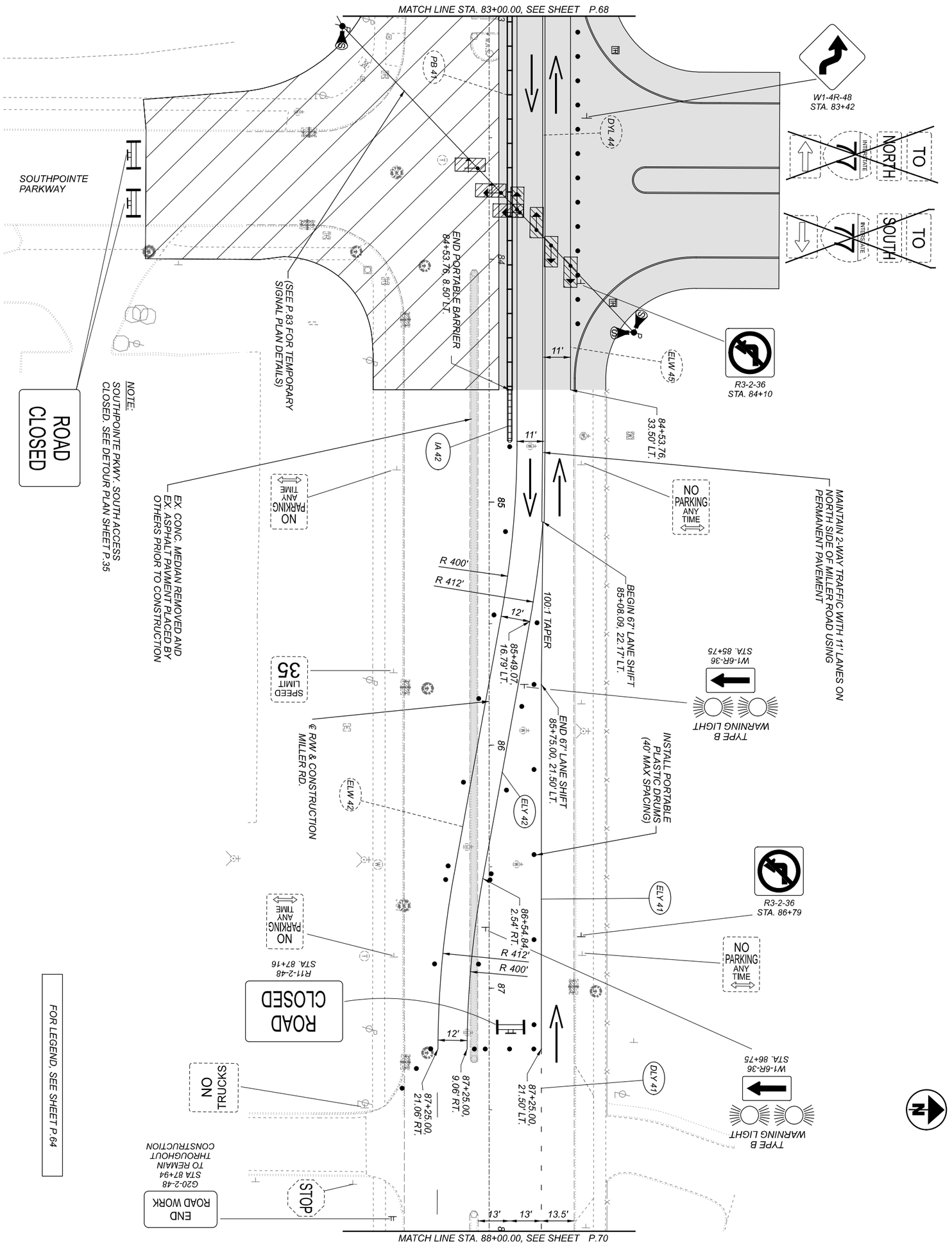

SHEET P 69 / TOTAL 434	PROJECT ID 104983	REVIEWER BBD 02/25/22	DESIGNER MSW	DESIGN AGENCY TranSystems 400 W. NATIONWIDE BLVD. SUITE 225 COLUMBUS, OHIO 43215	MAINTENANCE OF TRAFFIC - PHASE 2 MILLER ROAD STA. 83+00 TO 88+00

HORIZONTAL SCALE IN FEET
0 20
10 40

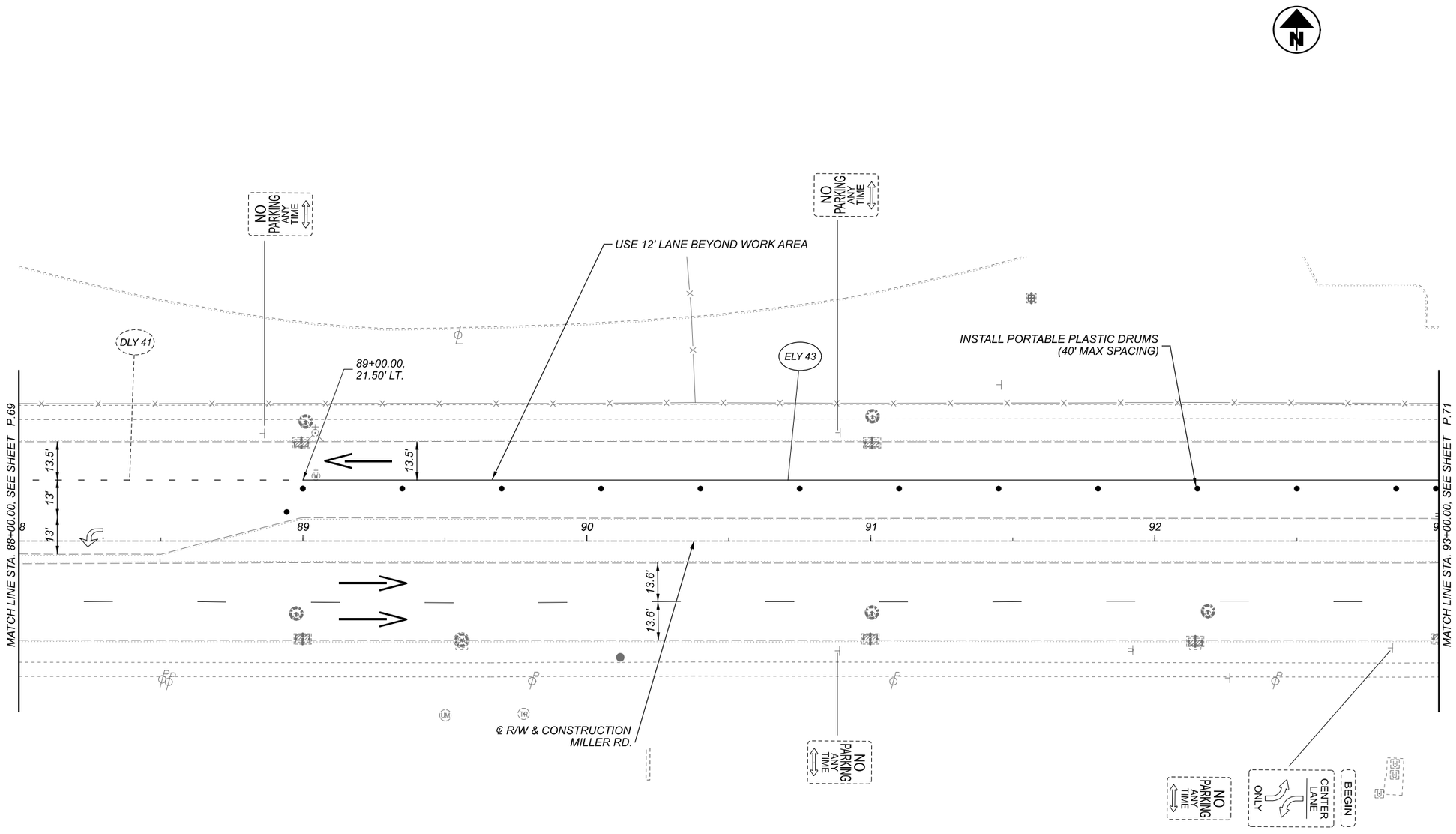

FOR LEGEND, SEE SHEET P.64

HORIZONTAL SCALE IN FEET
0 10 20 40

MAINTENANCE OF TRAFFIC - PHASE 2
MILLER ROAD STA. 88+00 TO 93+00

CUY-77-00.42 PART 1

DESIGN AGENCY
TranSystems
400 W. NATIONWIDE BLVD. SUITE 225
COLUMBUS, OHIO 43215

DESIGNER MSW
REVIEWER BBD 02/25/22
PROJECT ID 104983
SHEET P.70 TOTAL 434

MODEL: Miller Rd Plan - Plan 7 [Sheet] PAPERSIZE: 34x22 (in) DATE: 3/1/2022 TIME: 4:56:07 PM USER: ssopraseuth
pw:\\hq-pwint01.a-e.transystems.com:transystemscorp-pw\Documents\Projects.2019\C0403\403190027\Agency_Folders\400-Engineering\MOT\Sheets\104983_TC_Phase2_20scale.dgn

MODEL: Miller Rd Plan - Plan 8 [Sheet] PAPERSIZE: 34x22 (In.) DATE: 3/1/2022 TIME: 4:56:07 PM USER: ssopraseuth
pw:\\hq-pwint01.a-e.transyscorp.com:transyscorp-pw1\Documents\Projects_2019\C0403\403190027\Agency_Folders\400-Engineering\MOT\Sheets\104983_TC_Phase2_20scale.dgn

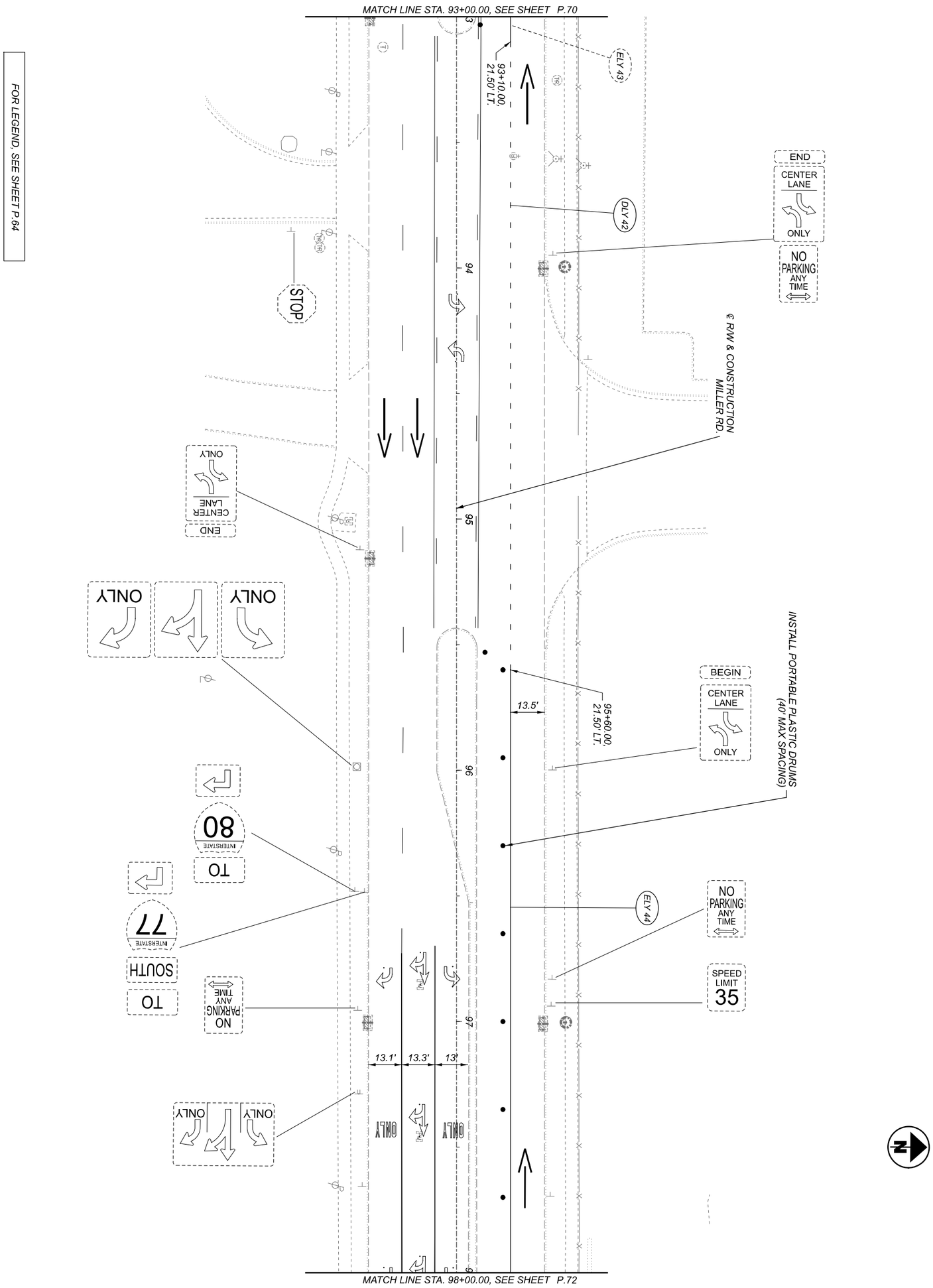

SHEET	TOTAL
P.71	434

PROJECT ID: 104983

REVIEWER: BBD 02/25/22

DESIGNER: MSW

DESIGN AGENCY: TranSystems
400 W. NATIONWIDE BLVD.
SUITE 225
COLUMBUS, OHIO 43215

MAINTENANCE OF TRAFFIC - PHASE 2
MILLER ROAD STA. 93+00 TO 98+00

HORIZONTAL SCALE IN FEET
0 20
10 40

MODEL: Miller Rd Plan - Plan 9 [Sheet] PAPERSIZE: 34x22 (In.) DATE: 3/1/2022 TIME: 4:56:08 PM USER: ssopraseuth
pw:\\hq-pwint01.a-e.transysscorp.com:transysscorp-pwi\Documents\Projects_2019\C0403\403190027\Agency_Folders\400-Engineering\MOT\Sheets\104983_TC_Phase2_20scale.dgn

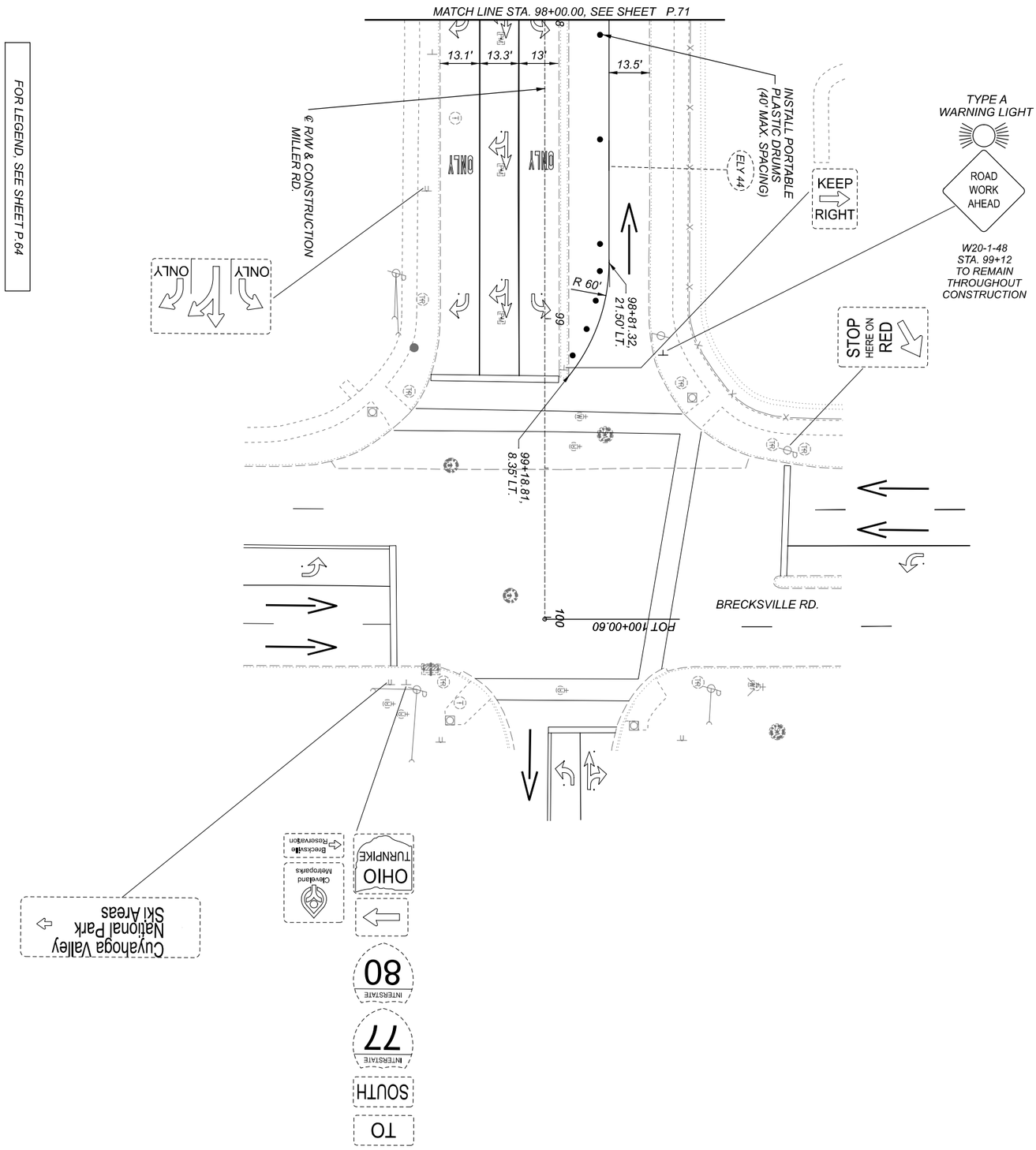

SHEET	TOTAL
P.72	434

PROJECT ID: 104983

REVIEWER: BBD 02/25/22

DESIGNER: MSW

DESIGN AGENCY: TranSystems, 400 W. NATIONWIDE BLVD. SUITE 225 COLUMBUS, OHIO 43215

MAINTENANCE OF TRAFFIC - PHASE 2
MILLER ROAD STA. 98+00 TO 100+00

HORIZONTAL SCALE IN FEET
0 20
10 40

MODEL: CLX_I77_50sc - Plan I-I[Sheet] PAPERSIZE: 34x22 (In.) DATE: 3/1/2022 TIME: 4:56:35 PM USER: ssopraseuth
pw:\\hq-pwint01.a-e.transyscorp.com:transyscorp-pw1\Documents\Projects_2019\C0403\403190027\Agency_Folders\400-Engineering\MOT\Sheets\104983_TC_Phase2_50scale.dgn

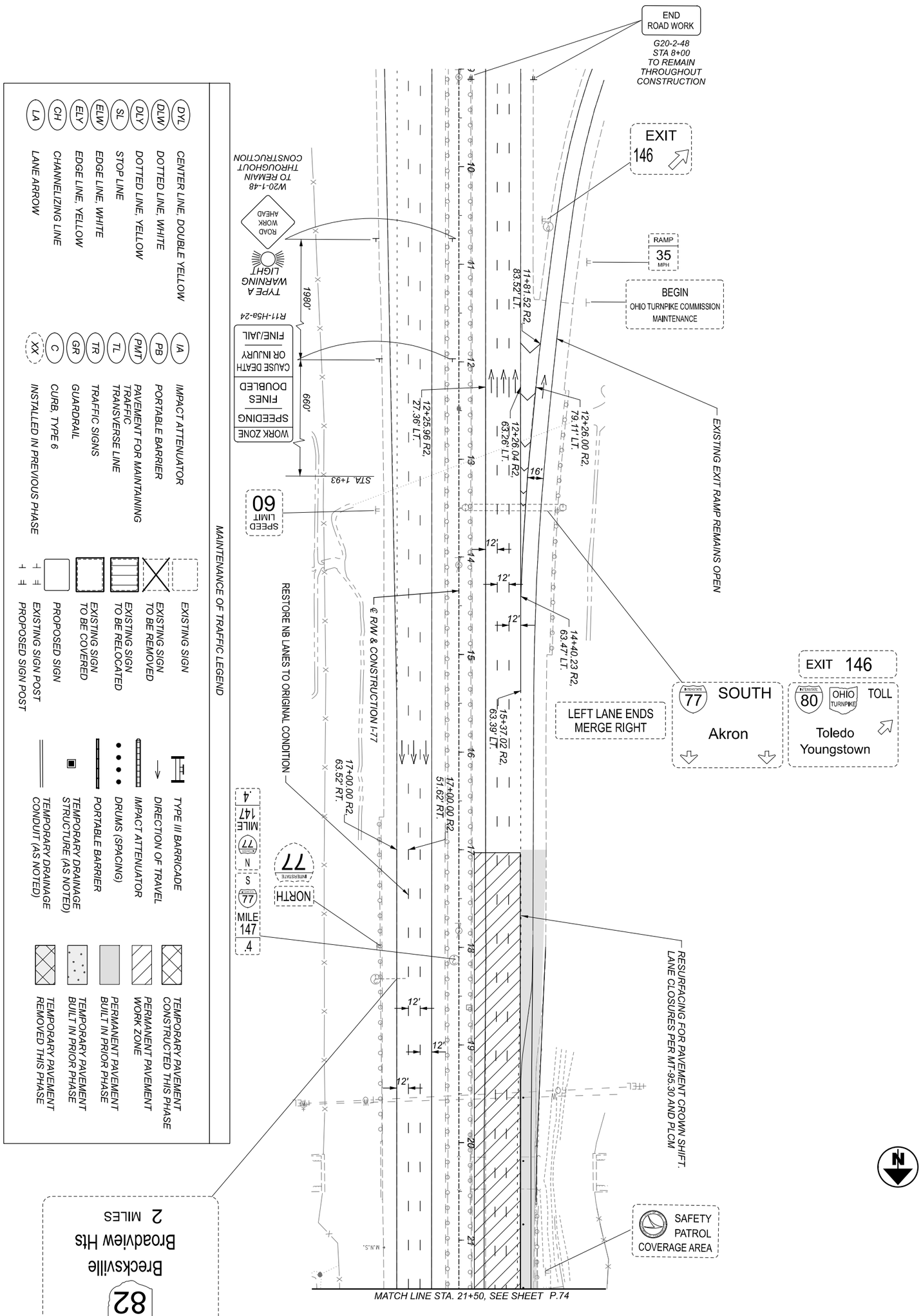

SHEET	TOTAL
P 73	434

PROJECT ID 104983

REVIEWER BBD 02/25/22

DESIGNER MSW

DESIGN AGENCY
TranSystems
400 W. NATIONWIDE BLVD., STE 225
COLUMBUS, OHIO 43215

MAINTENANCE OF TRAFFIC - PHASE 2
IR-77 STA. 9+00 TO 21+50

HORIZONTAL SCALE IN FEET
0 50
25 100

FOR LEGEND, SEE SHEET P.73

HORIZONTAL SCALE IN FEET
0 25 50 100

MAINTENANCE OF TRAFFIC - PHASE 2
IR-77 STA. 21+50 TO 33+50

CUY-77-00.42 PART 1

MODEL: CLX_I77_50sc - Plan 2-1(Sheet) PAPERSIZE: 34x22 (in.) DATE: 3/1/2022 TIME: 4:56:35 PM USER: ssopraseuth
pw:\\hq-pwint01.dot.state.oh.us:transyscorp-pw\Documents\Projects_2019\C0403\A039002?\Agency_Folders\400-Engineering\MOT\Sheets\104983_TC_Phase2_50scale.dgn

DESIGN AGENCY
TranSystems
400 W. NATIONWIDE BLVD., STE 225
COLUMBUS, OHIO 43215

DESIGNER	MSW
REVIEWER	BBD 02/25/22
PROJECT ID	104983
SHEET	P.74
TOTAL	434

MODEL: CLX_I77_50sc - Plan 3-I(Sheet) PAPERSIZE: 34x22 (In.) DATE: 3/1/2022 TIME: 4:56:36 PM USER: ssopraseuth
pw:\\hq-pwint01.a-e.transyscorp.com:transyscorp-pwl\Documents\Projects_2019\C0403\403190027\Agency_Folders\400-Engineering\MOT\Sheets\104983_TC_Phase2_50scale.dgn

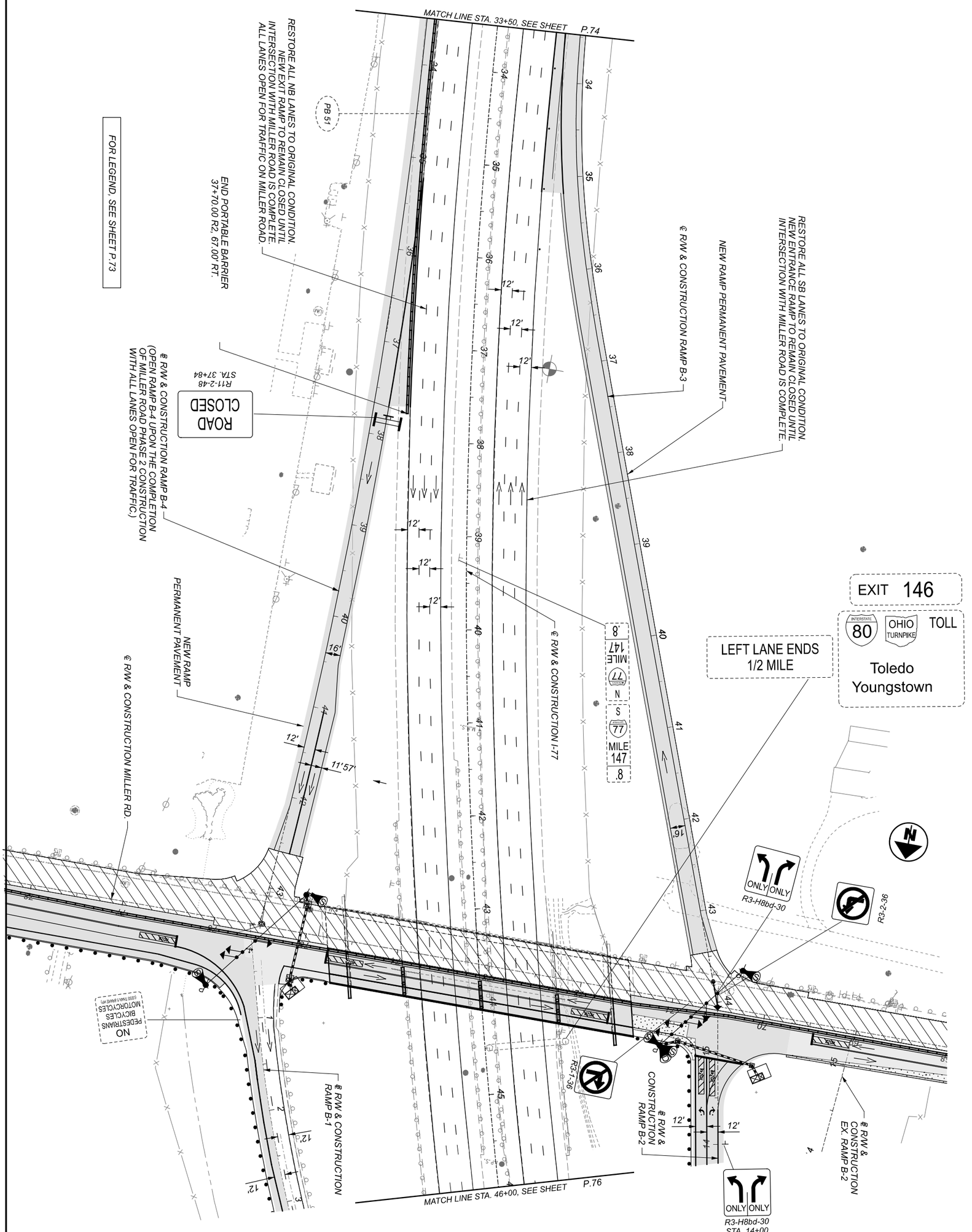

SHEET P.75 TOTAL 434	PROJECT ID 104983	REVIEWER BBD 02/25/22	DESIGNER MSW	TranSystems 400 W. NATIONWIDE BLVD., STE 225 COLUMBUS, OHIO 43215	DESIGN AGENCY

MAINTENANCE OF TRAFFIC - PHASE 2
IR-77 STA. 33+50 TO 46+00

HORIZONTAL SCALE IN FEET
0 50
25 100

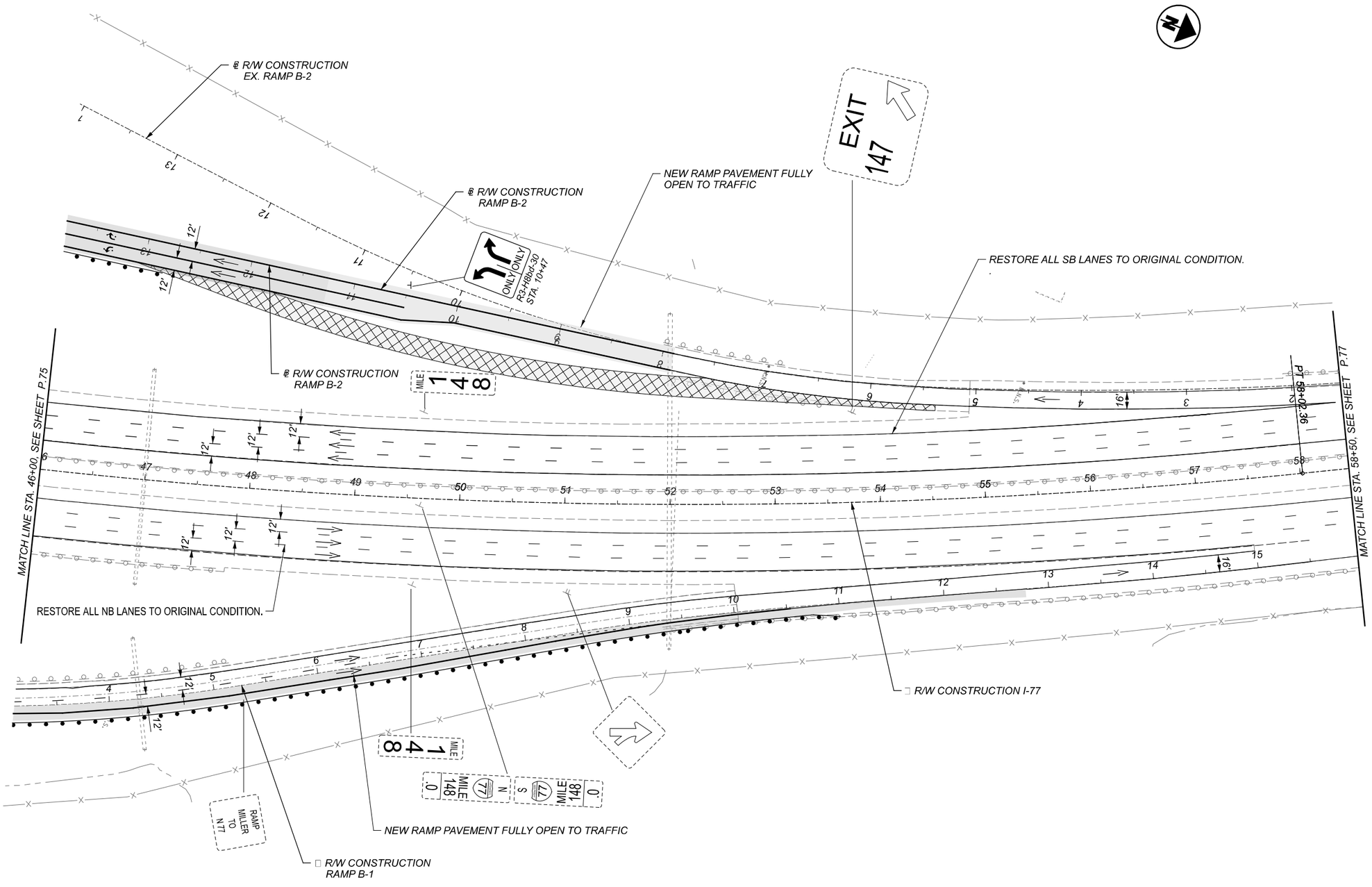

FOR LEGEND, SEE SHEET P.73

HORIZONTAL SCALE IN FEET
0 25 50 100

MAINTENANCE OF TRAFFIC - PHASE 2
IR-77 STA. 46+00 TO 58+50

CUY-77-00.42 PART 1

MODEL: CLX_I77_50sc - Plan 4-1[Sheet] PAPERSIZE: 34x22 (in) DATE: 3/1/2022 TIME: 4:56:37 PM USER: ssoprasouth
pw:\\hq-pwint01.a-e.transystems.com:transystemscorp-pw1\Documents\Projects_2019\C0403\403190027\Agency_Folders\400-Engineering\MOT\Sheets\104983_TC_Phase2_50scale.dgn

DESIGN AGENCY
TranSystems
400 W. NATIONWIDE BLVD., STE 225
COLUMBUS, OHIO 43215

DESIGNER: MSW
REVIEWER: BBD 02/25/22
PROJECT ID: 104983
SHEET: P.76 TOTAL: 434

MODEL: Unnamed Plan - Plan 5 [Sheet] PAPERSIZE: 34x22 (In.) DATE: 3/1/2022 TIME: 4:56:38 PM USER: ssopraseuth
pw:\\hq-pwint01.a-e.transyscorp.com:transyscorp-pw1\Documents\Projects_2019\C0403\403190027\Agency_Folders\400-Engineering\MOT\Sheets\104983_TC_Phase2_50scale.dgn

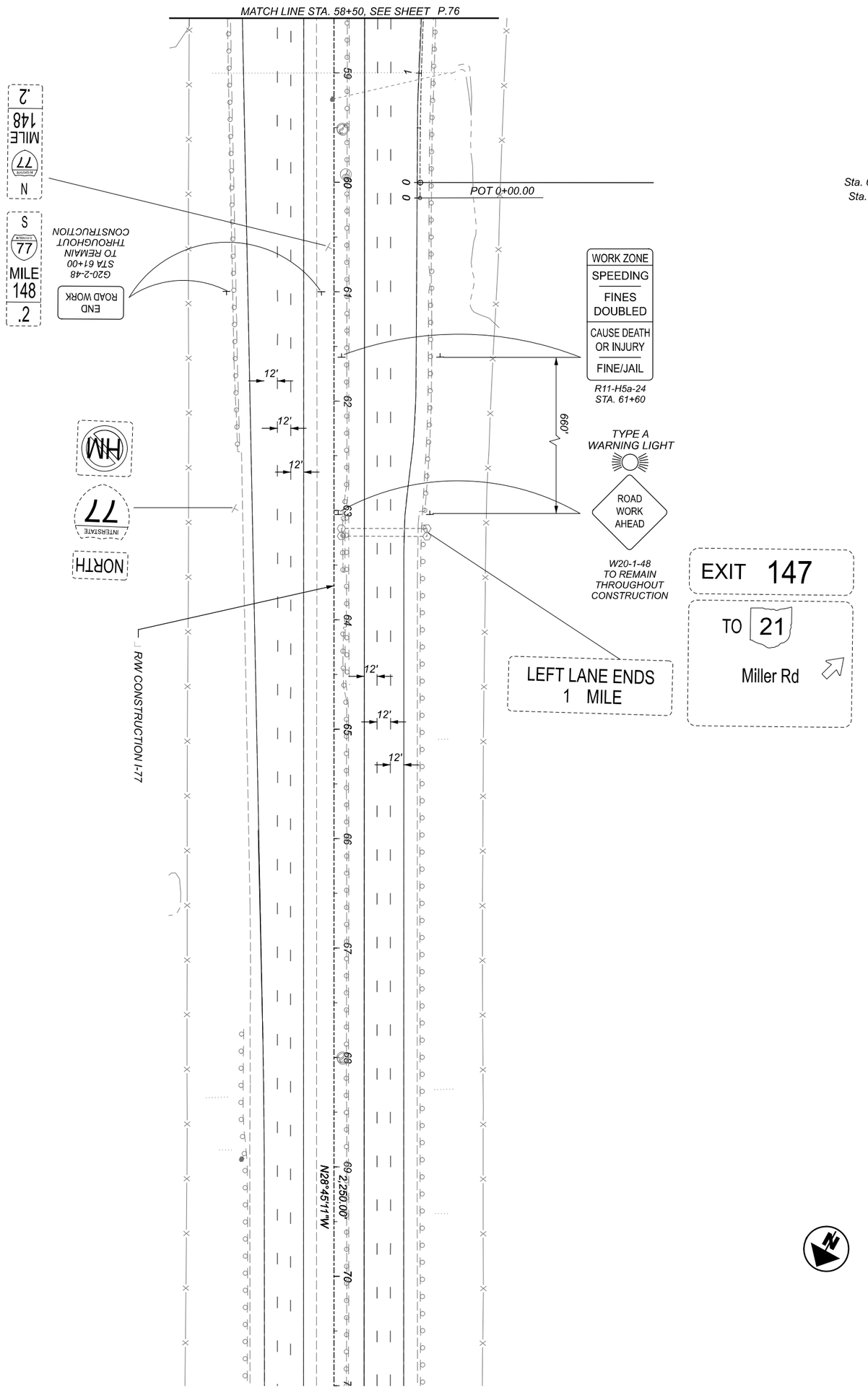

FOR LEGEND, SEE SHEET P.73

SHEET	PROJECT ID	REVIEWER	DESIGNER	DESIGN AGENCY
P.77 TOTAL 434	104983	BBD 02/25/22	MSW	TranSystems 400 W. NATIONWIDE BLVD., STE 225 COLUMBUS, OHIO 43215

MAINTENANCE OF TRAFFIC - PHASE 2
IR-77 STA. 58+50 TO 71+00

HORIZONTAL SCALE IN FEET
0 50
25 100

Temporary Signal Timing Summary - PROPOSED

General Notes:
1. All offsets are measured from the referenced phase — BEGINNING OF GREEN
2. All offsets are measured from ϕ2 & ϕ6

COORDINATION TIMING PLANS				
DAY(S) OF WEEK	PLAN NAME	HOURS	PLAN NO. OR CYCLE/SPLIT/OFFSET	CYCLE LENGTH (SEC)
M-F	AM PEAK	6am-9am	1	90
M-F	PM PEAK	4pm-7pm	2	90
M-F	OFF PEAK	10am-4pm	3	45
M-F	OFF PEAK	9am-4pm	3	45
M-F	OFF PEAK	7pm-10am	3	45
SA-SUN	OFF PEAK	10am-10am	3	45

TEMPORARY SIGNAL TIMING CHART (TEM FORM 496-3)

INTERSECTION: MILLER ROAD / RAMP B-2 / RAMP B-3
MAINTAINING AGENCY: CITY OF BRECKSVILLE

START UP
START IN: Y/R FLASH
TIME FOR FLASH, ALL RED: 9, 6
FIRST PHASE(S): 2, 6
COLOR DISPLAYED: GREEN

DUAL ENTRY: YES — PHASES: ϕ2 & 6
REST IN RED: RING 1 — RING 2

OVERLAP	A	B	C	D
PHASES	-	-	-	-

INTERVAL OR FEATURE		CONTROLLER MOVEMENT NO. 1	2	3	4	5	6	7	8
INTERSECTION MOVEMENT (PHASE)		-	EB	-	SB	-	WB	-	-
DIRECTION		-	20.0	-	10.0	-	20.0	-	-
MINIMUM GREEN (INITIAL)	(SEC.)	-	-	-	-	-	-	-	-
ADDED INITIAL	*(SEC./ACTUATION)	-	-	-	-	-	-	-	-
MAXIMUM INITIAL	*(SEC.)	-	-	-	-	-	-	-	-
PASSAGE TIME (PRESET GAP)	(SEC.)	-	-	-	3.0	-	-	-	-
TIME BEFORE REDUCTION	*(SEC.)	-	-	-	-	-	-	-	-
MINIMUM GAP	*(SEC.)	-	-	-	-	-	-	-	-
TIME TO REDUCE	*(SEC.)	-	-	-	-	-	-	-	-
MAXIMUM GREEN I	(SEC.)	-	33.5	-	46.5	-	33.5	-	-
MAXIMUM GREEN II	(SEC.)	-	-	-	-	-	-	-	-
YELLOW CHANGE	(SEC.)	-	4.1	-	3.0	-	4.1	-	-
ALL RED CLEARANCE	(SEC.)	-	1.4	-	1.7	-	1.4	-	-
DELAYED GREEN (LPI) *	(SEC.)	-	-	-	-	-	-	-	-
WALK	(SEC.)	-	-	-	-	-	-	-	-
FLASHING YELLOW ARROW DELAY *		-	-	-	-	-	-	-	-
PEDESTRIAN CLEARANCE	(SEC.)	-	-	-	-	-	-	-	-
RECALL	MAXIMUM (ON/OFF)	-	OFF	-	OFF	-	OFF	-	-
	MINIMUM (ON/OFF)	-	ON	-	OFF	-	ON	-	-
	PEDESTRIAN (ON/OFF)	-	OFF	-	OFF	-	OFF	-	-
MEMORY	(ON/OFF)	-	OFF	-	OFF	-	OFF	-	-

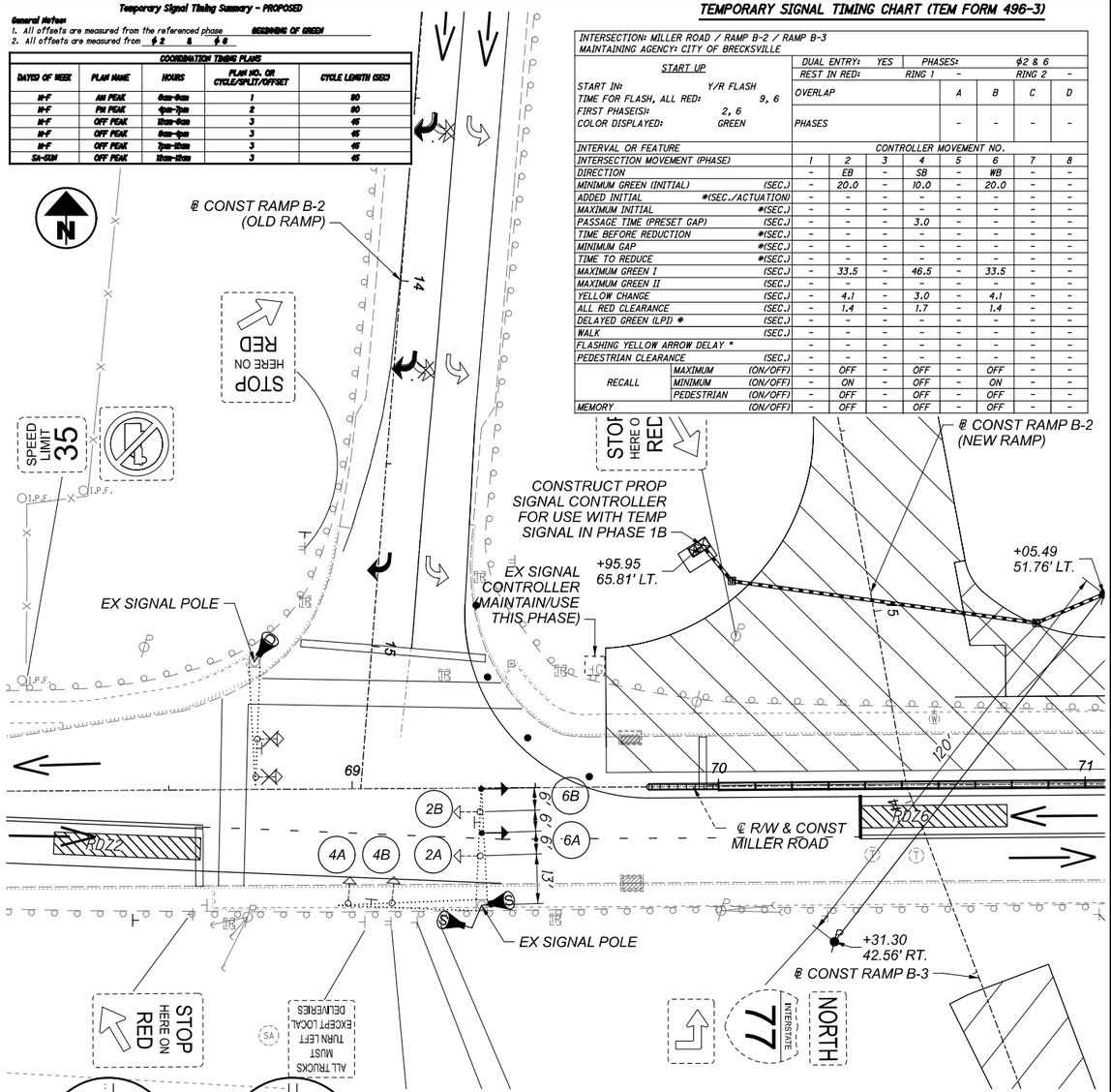

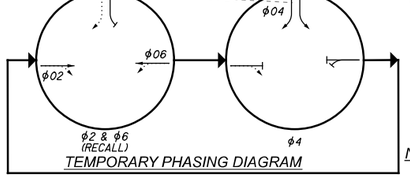

TEMPORARY PHASING DIAGRAM

PHASING DIAGRAM (TYPICAL)

LEGEND
VEHICLE ϕ
PERMITTED ϕ

NOTES

1. SIGNALIZATION SHALL BE MAINTAINED AT ALL TIMES THROUGH THE USE OF EXISTING, TEMPORARY OR PROPOSED SIGNAL POLES. THE CONTRACTOR SHALL ADJUST THE VEHICULAR SIGNAL HEADS AS INDICATED TO ACCOMMODATE LANE USAGE AND TO ENSURE ADEQUATE VISIBILITY FOR ALL APPROACH LANES. LOCATIONS SHALL BE APPROVED BY THE ENGINEER.

2. BAG AND DISCONNECT PEDESTRIAN SIGNAL HEADS FOR APPROPRIATE CLOSED CROSSWALKS. RECONNECT AND UNBAG WHEN CROSSWALKS ARE REOPENED

PROPOSED SIGNAL HEADS

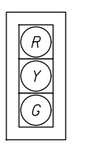

2A, 2B, 4A, 4B, 6A, 6B

VEHICULAR SIGNAL HEADS TO BE BLACK WITH 12" LED, BACKPLATE, AND CUTAWAY VISORS

LEGEND

	PROP	EXIST
TEMPORARY/RELOCATED TRAFFIC SIGNAL, 3 UNIT HEAD, 12"	→	⇢
TEMPORARY/RELOCATED TRAFFIC SIGNAL, 5 UNIT HEAD, 12"	↑	
SIGNAL SUPPORT POLE	●	○
PROPOSED MAST ARM	▬	┈┈
PROPOSED CONDUIT	▬	┈┈
TEMPORARY WOOD POLE AND SPAN WIRE	P	

	PROP	EXIST
CONTROLLER CABINET AND WORK PAD (TS-2)	⊠	⊠
TRAFFIC PULL BOX	TR	TR
STOP BAR RADAR DETECTION UNIT	S	
DILEMMA ZONE RADAR DETECTION UNIT	D	
SIGN	⊤	
TEMPORARY DETECTION ZONE	▨	
DIRECTION OF TRAVEL	→	

Temporary Signal Timing Summary - PROPOSED

General Notes:
1. All offsets are measured from the referenced phase — BEGINNING OF GREEN
2. All offsets are measured from ϕ2 & ϕ6

COORDINATION TIMING PLANS				
DAY(S) OF WEEK	PLAN NAME	HOURS	PLAN NO. OR CYCLE/SPLIT/OFFSET	CYCLE LENGTH (SEC)
M-F	AM PEAK	6am-9am	1	90
M-F	PM PEAK	4pm-7pm	2	90
M-F	OFF PEAK	10am-4pm	3	45
M-F	OFF PEAK	9am-4pm	3	45
M-F	OFF PEAK	7pm-10am	3	45
SA-SUN	OFF PEAK	10am-10am	3	45

TEMPORARY SIGNAL TIMING CHART (TEM FORM 496-3)

INTERSECTION: MILLER RD / RAMP B-1 / RAMP B-4
MAINTAINING AGENCY: CITY OF BRECKSVILLE

START UP
START IN: Y/R FLASH
TIME FOR FLASH, ALL RED: 9, 6
FIRST PHASE(S): 2 & 6
COLOR DISPLAYED: GREEN

DUAL ENTRY: YES — PHASES: ϕ2 & 6
REST IN RED: RING 1 — RING 2

OVERLAP	A	B	C	D
PHASES	-	-	-	-

INTERVAL OR FEATURE		CONTROLLER MOVEMENT NO. 1	2	3	4	5	6	7	8
INTERSECTION MOVEMENT (PHASE)		-	EB	-	-	EB LT	WB	-	-
DIRECTION		-	20.0	-	-	7.0	20.0	-	-
MINIMUM GREEN (INITIAL)	(SEC.)	-	-	-	-	-	-	-	-
ADDED INITIAL	*(SEC./ACTUATION)	-	-	-	-	-	-	-	-
MAXIMUM INITIAL	*(SEC.)	-	-	-	-	3.0	-	-	-
PASSAGE TIME (PRESET GAP)	(SEC.)	-	-	-	-	-	-	-	-
TIME BEFORE REDUCTION	*(SEC.)	-	-	-	-	-	-	-	-
MINIMUM GAP	*(SEC.)	-	-	-	-	-	-	-	-
TIME TO REDUCE	*(SEC.)	-	84.0	-	-	68.5	11.0	-	-
MAXIMUM GREEN I	(SEC.)	-	-	-	-	-	-	-	-
MAXIMUM GREEN II	(SEC.)	-	4.1	-	-	3.5	4.1	-	-
YELLOW CHANGE	(SEC.)	-	2.0	-	-	1.0	2.0	-	-
ALL RED CLEARANCE	(SEC.)	-	-	-	-	-	-	-	-
DELAYED GREEN (LPI) *	(SEC.)	-	-	-	-	-	-	-	-
WALK	(SEC.)	-	-	-	-	-	-	-	-
FLASHING YELLOW ARROW DELAY *		-	-	-	-	-	-	-	-
PEDESTRIAN CLEARANCE	(SEC.)	-	-	-	-	-	-	-	-
RECALL	MAXIMUM (ON/OFF)	-	OFF	-	-	OFF	OFF	-	-
	MINIMUM (ON/OFF)	-	ON	-	-	OFF	ON	-	-
	PEDESTRIAN (ON/OFF)	-	OFF	-	-	OFF	OFF	-	-
MEMORY	(ON/OFF)	-	OFF	-	-	OFF	OFF	-	-

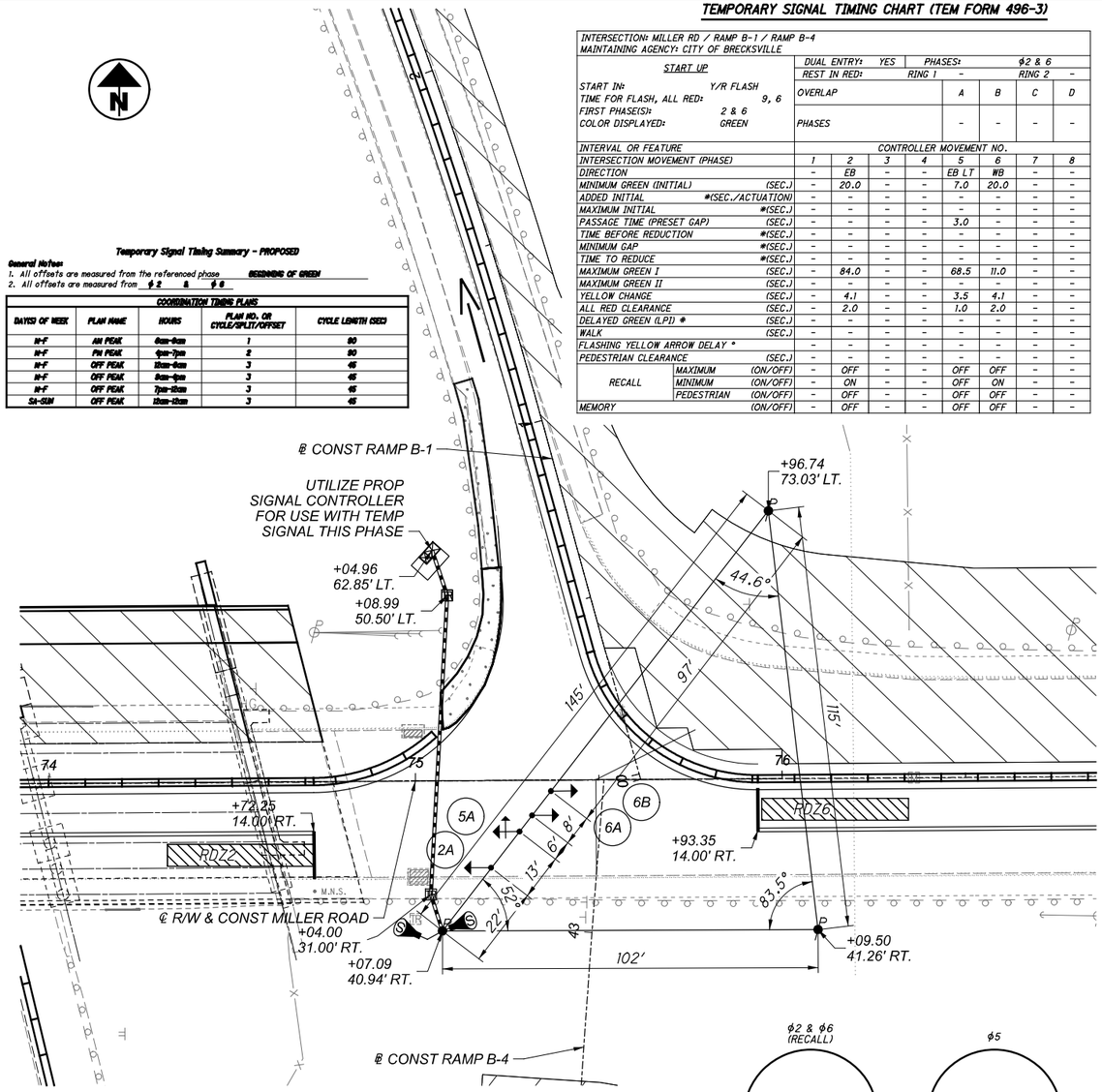

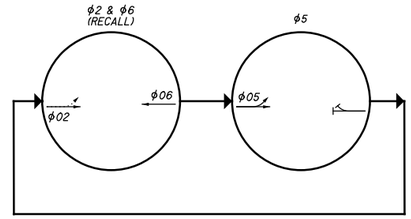

TEMPORARY PHASING DIAGRAM

PHASING DIAGRAM (TYPICAL)

LEGEND
VEHICLE ϕ
PERMITTED ϕ

NOTES

1. SIGNALIZATION SHALL BE MAINTAINED AT ALL TIMES THROUGH THE USE OF EXISTING, TEMPORARY OR PROPOSED SIGNAL POLES. THE CONTRACTOR SHALL ADJUST THE VEHICULAR SIGNAL HEADS AS INDICATED TO ACCOMMODATE LANE USAGE AND TO ENSURE ADEQUATE VISIBILITY FOR ALL APPROACH LANES. LOCATIONS SHALL BE APPROVED BY THE ENGINEER.

2. BAG AND DISCONNECT PEDESTRIAN SIGNAL HEADS FOR APPROPRIATE CLOSED CROSSWALKS. RECONNECT AND UNBAG WHEN CROSSWALKS ARE REOPENED

PROPOSED SIGNAL HEADS

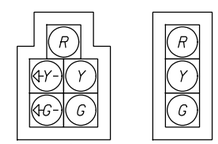

5A 2A, 6A, 6B

VEHICULAR SIGNAL HEADS TO BE BLACK WITH 12" LED, BACKPLATE, AND CUTAWAY VISORS

HORIZONTAL SCALE IN FEET
0 10 20 40

TEMPORARY SIGNAL PLAN - PHASE 1A
MILLER ROAD - RAMPS B-2/B-3 AND B-1/B-4

DESIGN AGENCY
TranSystems
400 W. NATIONWIDE BLVD. SUITE 225 COLUMBUS, OHIO 43215

DESIGNER: SS
REVIEWER: ACB 02/22/22
PROJECT ID: 104983
SHEET: P.78 TOTAL: 434

CUY-77-00.42 PART 1

MODEL: I04983_CP001 PAPERSIZE: 34x22 (In.) DATE: 3/1/2022 TIME: 4:57:04 PM USER: ssoprasouth
pw:\\hq-pwint01.a-e.transystcorp.com:transystcorp-pw\Documents\Projects_2019\C0403\40319002\Agency_Folders\400-Engineering\Signals\Sheets\104983_MM001.dgn

MODEL: I04983_CP001 PAPERSIZE: 34x22 (in.) DATE: 3/1/2022 TIME: 4:57:29 PM USER: ssoprasetuth
pw:\\hq-pwint01.c-e.transystems.com:transystems-pw\Documents\Projects_2019\C0403\403190027\Agency_Folders\400-Engineering\Signals\Sheets\104983_MM002.dgn

Temporary Signal Timing Summary - PROPOSED

General Notes:
1. All offsets are measured from the referenced phase BEGINNING OF GREEN
2. All offsets are measured from ϕ2 & ϕ6

COORDINATION TIMING PLANS				
DAY(S) OF WEEK	PLAN NAME	HOURS	PLAN NO. OR CYCLE/SPLIT/OFFSET	CYCLE LENGTH (SEC)
M-F	AM PEAK	6am-9am	1	90
M-F	PM PEAK	4pm-7pm	2	90
M-F	OFF PEAK	10am-4pm	3	45
M-F	OFF PEAK	9am-4pm	3	45
M-F	OFF PEAK	7pm-10am	3	45
SA-SUN	OFF PEAK	10am-10am	3	45

TEMPORARY SIGNAL TIMING CHART (TEM FORM 496-3)

INTERSECTION: MILLER ROAD / RAMP B-2 / RAMP B-3
MAINTAINING AGENCY: CITY OF BRECKSVILLE

START UP
START IN: Y/R FLASH
TIME FOR FLASH, ALL RED: 9, 6
FIRST PHASE(S): 2, 6
COLOR DISPLAYED: GREEN

DUAL ENTRY: YES | PHASES: ϕ2 & 6
REST IN RED: RING 1 - | RING 2 -

OVERLAP	A	B	C	D
PHASES	-	-	-	-

INTERVAL OR FEATURE		CONTROLLER MOVEMENT NO. 1	2	3	4	5	6	7	8
INTERSECTION MOVEMENT (PHASE)		-	EB	-	SB	-	WB	-	-
DIRECTION		-	20.0	-	10.0	-	20.0	-	-
MINIMUM GREEN (INITIAL)	(SEC.)	-	-	-	-	-	-	-	-
ADDED INITIAL	*(SEC./ACTUATION)	-	-	-	-	-	-	-	-
MAXIMUM INITIAL	*(SEC.)	-	-	-	3.0	-	-	-	-
PASSAGE TIME (PRESET GAP)	(SEC.)	-	-	-	-	-	-	-	-
TIME BEFORE REDUCTION	*(SEC.)	-	-	-	-	-	-	-	-
MINIMUM GAP	*(SEC.)	-	-	-	-	-	-	-	-
TIME TO REDUCE	*(SEC.)	-	33.5	-	46.5	-	33.5	-	-
MAXIMUM GREEN I	(SEC.)	-	-	-	-	-	-	-	-
MAXIMUM GREEN II	(SEC.)	-	4.1	-	3.0	-	4.1	-	-
YELLOW CHANGE	(SEC.)	-	1.4	-	1.7	-	1.4	-	-
ALL RED CLEARANCE	(SEC.)	-	-	-	-	-	-	-	-
DELAYED GREEN (LPI) *	(SEC.)	-	-	-	-	-	-	-	-
WALK	(SEC.)	-	-	-	-	-	-	-	-
FLASHING YELLOW ARROW DELAY *		-	-	-	-	-	-	-	-
PEDESTRIAN CLEARANCE	(SEC.)	-	-	-	-	-	-	-	-
RECALL	MAXIMUM (ON/OFF)	-	OFF	-	OFF	-	OFF	-	-
	MINIMUM (ON/OFF)	-	ON	-	OFF	-	ON	-	-
	PEDESTRIAN (ON/OFF)	-	OFF	-	OFF	-	OFF	-	-
MEMORY	(ON/OFF)	-	OFF	-	OFF	-	OFF	-	-

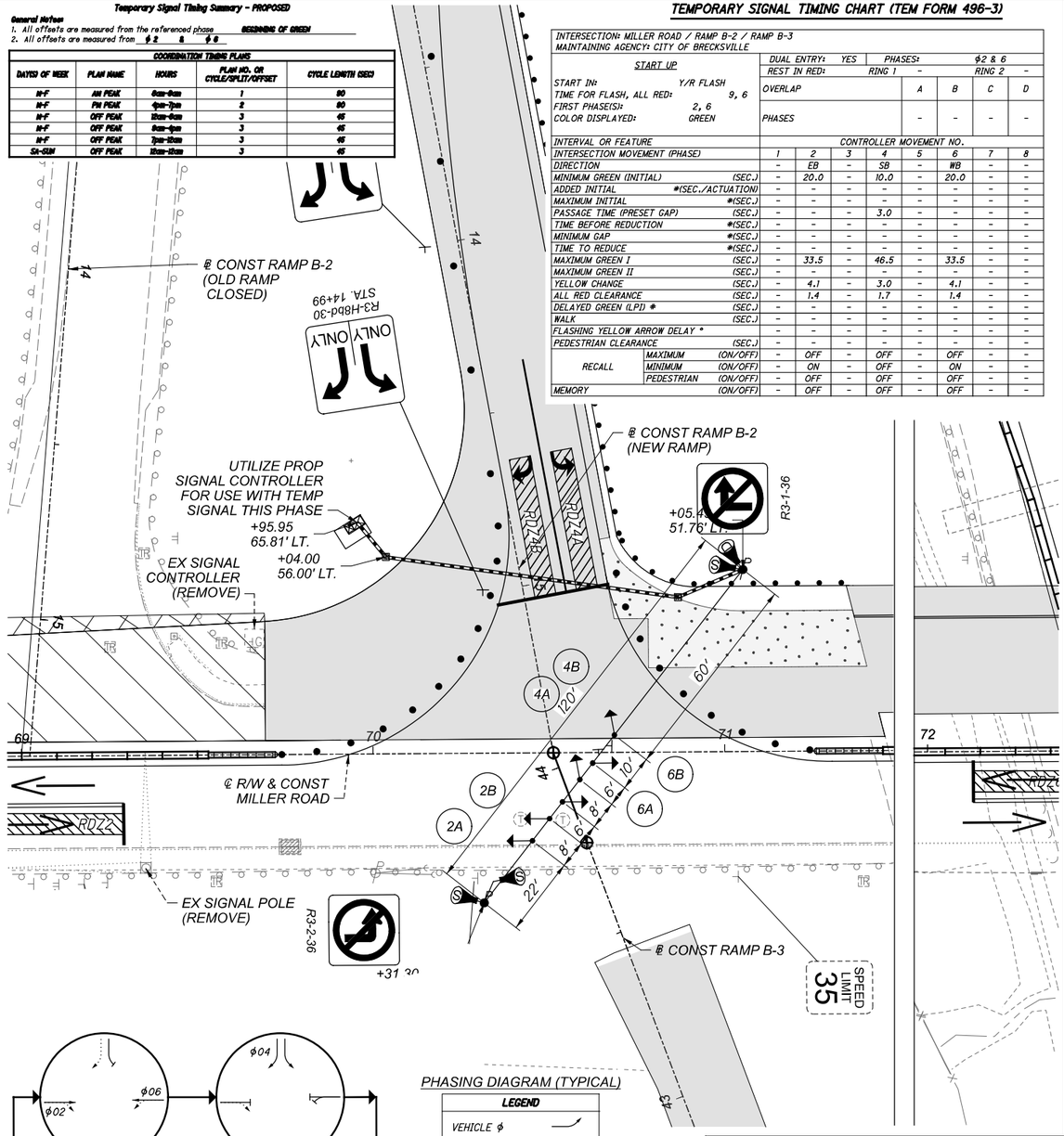

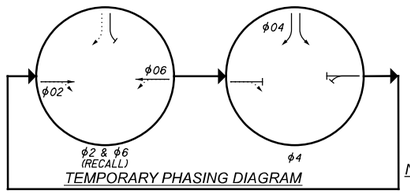

TEMPORARY PHASING DIAGRAM

PHASING DIAGRAM (TYPICAL)

LEGEND
VEHICLE ϕ
PERMITTED ϕ

NOTES

1. SIGNALIZATION SHALL BE MAINTAINED AT ALL TIMES THROUGH THE USE OF EXISTING, TEMPORARY OR PROPOSED SIGNAL POLES. THE CONTRACTOR SHALL ADJUST THE VEHICULAR SIGNAL HEADS AS INDICATED TO ACCOMMODATE LANE USAGE AND TO ENSURE ADEQUATE VISIBILITY FOR ALL APPROACH LANES. LOCATIONS SHALL BE APPROVED BY THE ENGINEER.

2. BAG AND DISCONNECT PEDESTRIAN SIGNAL HEADS FOR APPROPRIATE CLOSED CROSSWALKS. RECONNECT AND UNBAG WHEN CROSSWALKS ARE REOPENED

PROPOSED SIGNAL HEADS

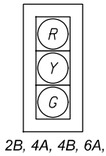

2A, 2B, 4A, 4B, 6A, 6B

VEHICULAR SIGNAL HEADS TO BE BLACK WITH 12" LED, BACKPLATE, AND CUTAWAY VISORS

LEGEND

	PROP	EXIST
TEMPORARY/RELOCATED TRAFFIC SIGNAL, 3 UNIT HEAD, 12"		
TEMPORARY/RELOCATED TRAFFIC SIGNAL, 5 UNIT HEAD, 12"		
SIGNAL SUPPORT POLE		
PROPOSED MAST ARM		
PROPOSED CONDUIT		
TEMPORARY WOOD POLE AND SPAN WIRE		
CONTROLLER CABINET AND WORK PAD (TS-2)		
TRAFFIC PULL BOX		
STOP BAR RADAR DETECTION UNIT		
DILEMMA ZONE RADAR DETECTION UNIT		
SIGN		
TEMPORARY DETECTION ZONE		
DIRECTION OF TRAVEL		

Temporary Signal Timing Summary - PROPOSED

General Notes:
1. All offsets are measured from the referenced phase BEGINNING OF GREEN
2. All offsets are measured from ϕ2 & ϕ6

COORDINATION TIMING PLANS				
DAY(S) OF WEEK	PLAN NAME	HOURS	PLAN NO. OR CYCLE/SPLIT/OFFSET	CYCLE LENGTH (SEC)
M-F	AM PEAK	6am-9am	1	90
M-F	PM PEAK	4pm-7pm	2	90
M-F	OFF PEAK	10am-4pm	3	45
M-F	OFF PEAK	9am-4pm	3	45
M-F	OFF PEAK	7pm-10am	3	45
SA-SUN	OFF PEAK	10am-10am	3	45

TEMPORARY SIGNAL TIMING CHART (TEM FORM 496-3)

INTERSECTION: MILLER RD / RAMP B-1 / RAMP B-4
MAINTAINING AGENCY: CITY OF BRECKSVILLE

START UP
START IN: Y/R FLASH
TIME FOR FLASH, ALL RED: 9, 6
FIRST PHASE(S): 2 & 6
COLOR DISPLAYED: GREEN

DUAL ENTRY: YES | PHASES: ϕ2 & 6
REST IN RED: RING 1 - | RING 2 -

OVERLAP	A	B	C	D
PHASES	-	-	-	-

INTERVAL OR FEATURE		CONTROLLER MOVEMENT NO. 1	2	3	4	5	6	7	8
INTERSECTION MOVEMENT (PHASE)		-	EB	-	-	EB LT	WB	-	-
DIRECTION		-	20.0	-	-	7.0	20.0	-	-
MINIMUM GREEN (INITIAL)	(SEC.)	-	-	-	-	-	-	-	-
ADDED INITIAL	*(SEC./ACTUATION)	-	-	-	-	-	-	-	-
MAXIMUM INITIAL	*(SEC.)	-	-	-	-	3.0	-	-	-
PASSAGE TIME (PRESET GAP)	(SEC.)	-	-	-	-	-	-	-	-
TIME BEFORE REDUCTION	*(SEC.)	-	-	-	-	-	-	-	-
MINIMUM GAP	*(SEC.)	-	-	-	-	-	-	-	-
TIME TO REDUCE	*(SEC.)	-	84.0	-	-	68.5	11.0	-	-
MAXIMUM GREEN I	(SEC.)	-	-	-	-	-	-	-	-
MAXIMUM GREEN II	(SEC.)	-	4.1	-	-	3.5	4.1	-	-
YELLOW CHANGE	(SEC.)	-	2.0	-	-	1.0	2.0	-	-
ALL RED CLEARANCE	(SEC.)	-	-	-	-	-	-	-	-
DELAYED GREEN (LPI) *	(SEC.)	-	-	-	-	-	-	-	-
WALK	(SEC.)	-	-	-	-	-	-	-	-
FLASHING YELLOW ARROW DELAY *		-	-	-	-	-	-	-	-
PEDESTRIAN CLEARANCE	(SEC.)	-	-	-	-	-	-	-	-
RECALL	MAXIMUM (ON/OFF)	-	OFF	-	-	OFF	OFF	-	-
	MINIMUM (ON/OFF)	-	ON	-	-	OFF	ON	-	-
	PEDESTRIAN (ON/OFF)	-	OFF	-	-	OFF	OFF	-	-
MEMORY	(ON/OFF)	-	OFF	-	-	OFF	OFF	-	-

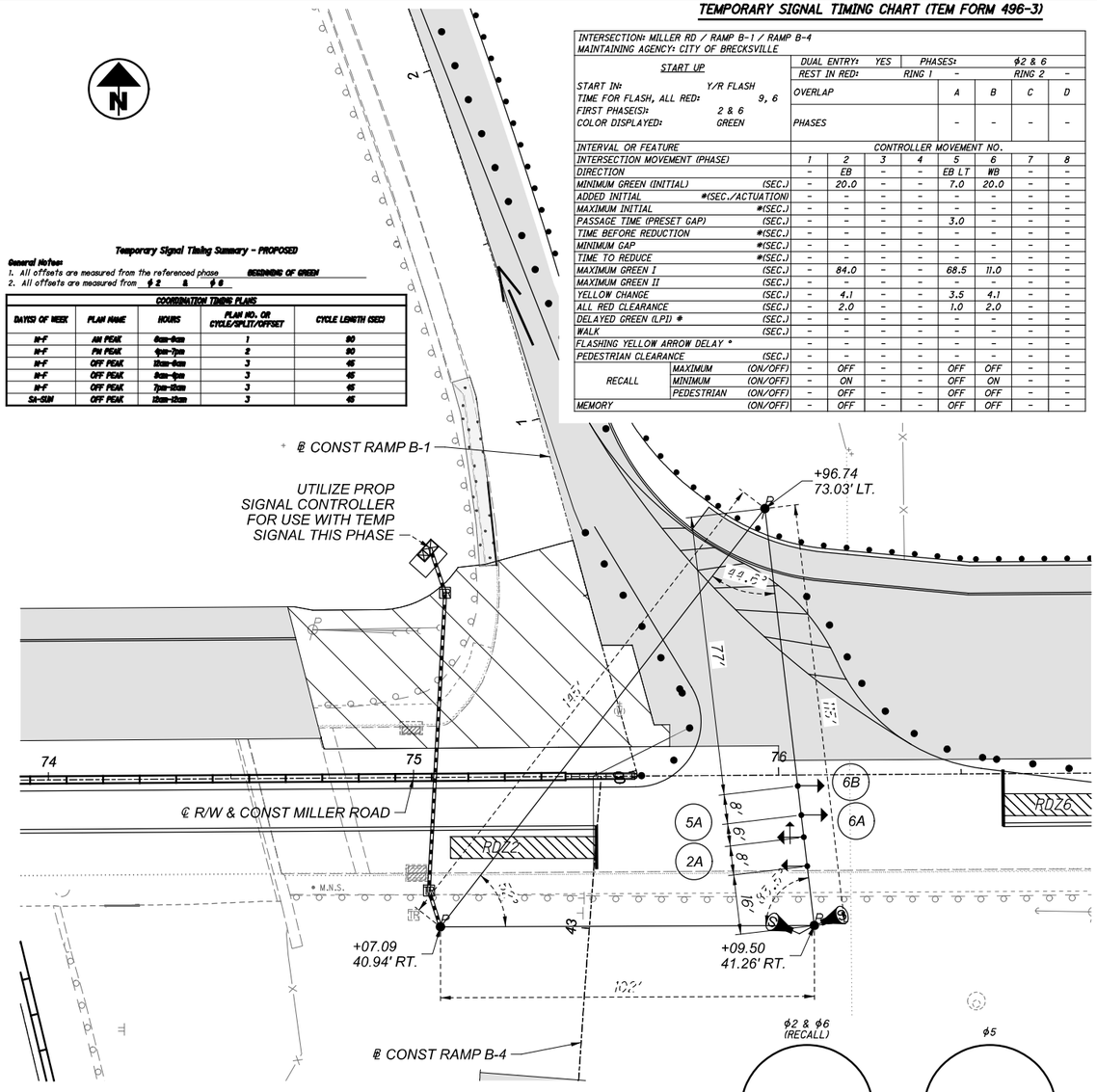

PHASING DIAGRAM (TYPICAL)

LEGEND
VEHICLE ϕ
PERMITTED ϕ

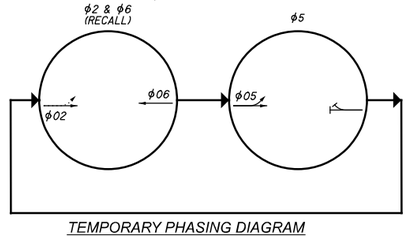

TEMPORARY PHASING DIAGRAM

NOTES

1. SIGNALIZATION SHALL BE MAINTAINED AT ALL TIMES THROUGH THE USE OF EXISTING, TEMPORARY OR PROPOSED SIGNAL POLES. THE CONTRACTOR SHALL ADJUST THE VEHICULAR SIGNAL HEADS AS INDICATED TO ACCOMMODATE LANE USAGE AND TO ENSURE ADEQUATE VISIBILITY FOR ALL APPROACH LANES. LOCATIONS SHALL BE APPROVED BY THE ENGINEER.

2. BAG AND DISCONNECT PEDESTRIAN SIGNAL HEADS FOR APPROPRIATE CLOSED CROSSWALKS. RECONNECT AND UNBAG WHEN CROSSWALKS ARE REOPENED

PROPOSED SIGNAL HEADS

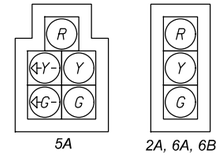

5A 2A, 6A, 6B

VEHICULAR SIGNAL HEADS TO BE BLACK WITH 12" LED, BACKPLATE, AND CUTAWAY VISORS

HORIZONTAL SCALE IN FEET
0 10 20 40

TEMPORARY SIGNAL PLAN - PHASE 1B
MILLER ROAD - RAMPS B-2/B-3 AND B-1/B-4

DESIGN AGENCY
TranSystems
400 W. NATIONWIDE BLVD, SUITE 225
COLUMBUS, OHIO 43215

DESIGNER SS
REVIEWER ACB 02/22/22
PROJECT ID 104983
SHEET P.79 TOTAL 434

TEMPORARY SIGNAL TIMING CHART (TEM FORM 496-3)

INTERSECTION: MILLER ROAD / RAMP B-2 / RAMP B-3
MAINTAINING AGENCY: CITY OF BRECKSVILLE

START UP
START IN: Y/R FLASH
TIME FOR FLASH, ALL RED: 9, 6
FIRST PHASE(S): 2, 6
COLOR DISPLAYED: GREEN

DUAL ENTRY: YES | PHASES: ϕ2 & 6
REST IN RED: | RING 1 – | RING 2 –

	A	B	C	D
OVERLAP	–	–	–	–
PHASES	–	–	–	–

INTERVAL OR FEATURE		CONTROLLER MOVEMENT NO. 1	2	3	4	5	6	7	8
INTERSECTION MOVEMENT (PHASE)		–	EB	–	SB	–	WB	–	–
DIRECTION		–	20.0	–	10.0	–	20.0	–	–
MINIMUM GREEN (INITIAL)	(SEC.)	–	–	–	–	–	–	–	–
ADDED INITIAL	*(SEC./ACTUATION)	–	–	–	–	–	–	–	–
MAXIMUM INITIAL	*(SEC.)	–	–	–	3.0	–	–	–	–
PASSAGE TIME (PRESET GAP)	(SEC.)	–	–	–	–	–	–	–	–
TIME BEFORE REDUCTION	*(SEC.)	–	–	–	–	–	–	–	–
MINIMUM GAP	*(SEC.)	–	–	–	–	–	–	–	–
TIME TO REDUCE	*(SEC.)	–	33.5	–	46.5	–	33.5	–	–
MAXIMUM GREEN I	(SEC.)	–	–	–	–	–	–	–	–
MAXIMUM GREEN II	(SEC.)	–	4.1	–	3.0	–	4.1	–	–
YELLOW CHANGE	(SEC.)	–	1.4	–	1.7	–	1.4	–	–
ALL RED CLEARANCE	(SEC.)	–	–	–	–	–	–	–	–
DELAYED GREEN (LPI) *	(SEC.)	–	–	–	–	–	–	–	–
WALK	(SEC.)	–	–	–	–	–	–	–	–
FLASHING YELLOW ARROW DELAY °		–	–	–	–	–	–	–	–
PEDESTRIAN CLEARANCE	(SEC.)	–	–	–	–	–	–	–	–
RECALL	MAXIMUM (ON/OFF)	–	OFF	–	OFF	–	OFF	–	–
	MINIMUM (ON/OFF)	–	ON	–	OFF	–	ON	–	–
	PEDESTRIAN (ON/OFF)	–	OFF	–	OFF	–	OFF	–	–
MEMORY	(ON/OFF)	–	OFF	–	OFF	–	OFF	–	–

Temporary Signal Timing Summary - PROPOSED

General Notes:
1. All offsets are measured from the referenced phase BEGINNING OF GREEN
2. All offsets are measured from ϕ2 & ϕ6

COORDINATION TIMING PLANS

DAY(S) OF WEEK	PLAN NAME	HOURS	PLAN NO. OR CYCLE/SPLIT/OFFSET	CYCLE LENGTH (SEC)
M-F	AM PEAK	6am-9am	1	80
M-F	PM PEAK	4pm-7pm	2	80
M-F	OFF PEAK	10am-4pm	3	45
M-F	OFF PEAK	9am-4pm	3	45
M-F	OFF PEAK	7pm-10pm	3	45
SA-SUN	OFF PEAK	10am-10pm	3	45

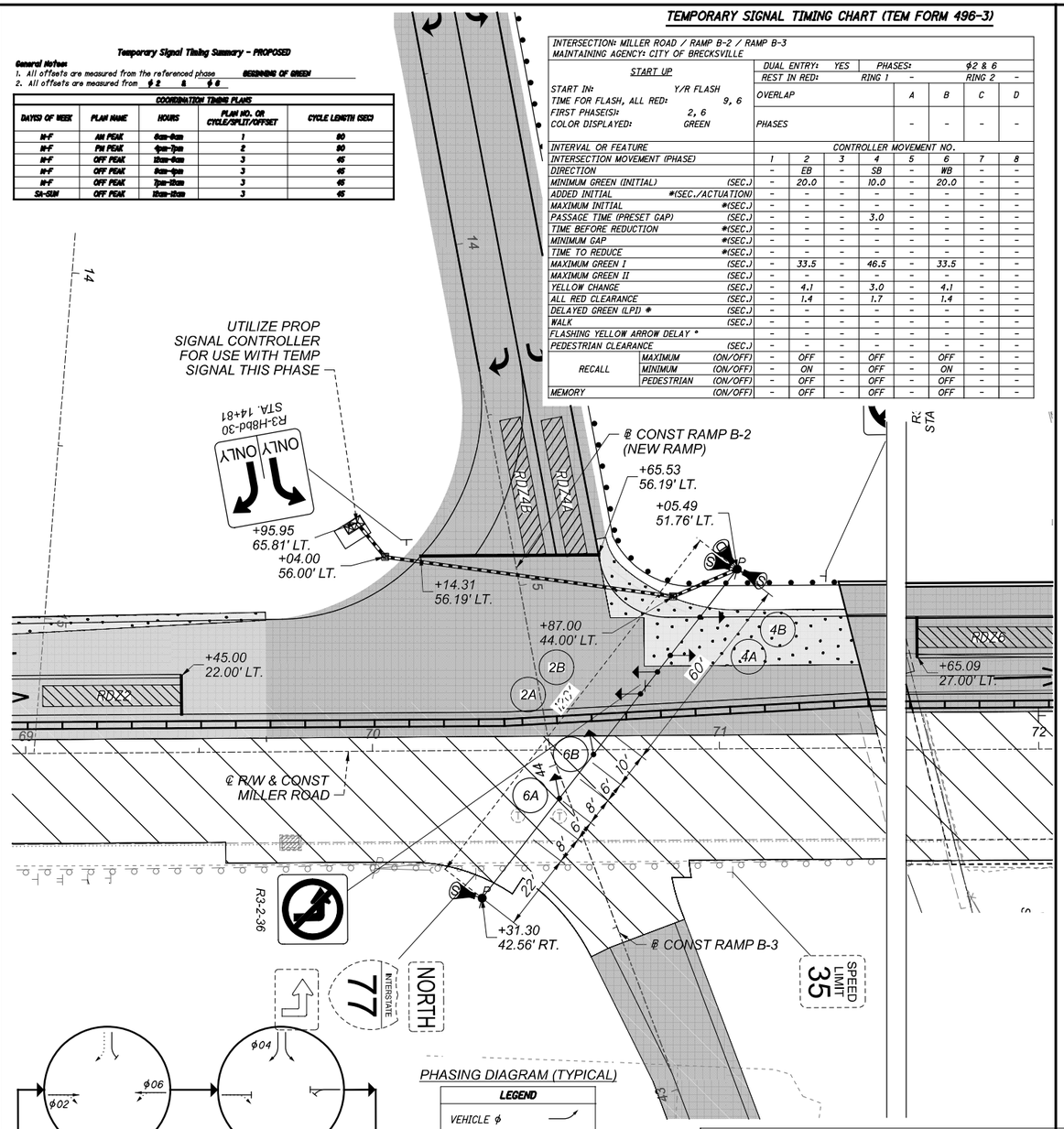

PHASING DIAGRAM (TYPICAL)

LEGEND
VEHICLE ϕ
PERMITTED ϕ

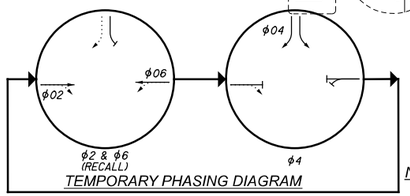

TEMPORARY PHASING DIAGRAM

NOTES

1. SIGNALIZATION SHALL BE MAINTAINED AT ALL TIMES THROUGH THE USE OF EXISTING, TEMPORARY OR PROPOSED SIGNAL POLES. THE CONTRACTOR SHALL ADJUST THE VEHICULAR SIGNAL HEADS AS INDICATED TO ACCOMMODATE LANE USAGE AND TO ENSURE ADEQUATE VISIBILITY FOR ALL APPROACH LANES. LOCATIONS SHALL BE APPROVED BY THE ENGINEER.

2. BAG AND DISCONNECT PEDESTRIAN SIGNAL HEADS FOR APPROPRIATE CLOSED CROSSWALKS. RECONNECT AND UNBAG WHEN CROSSWALKS ARE REOPENED

PROPOSED SIGNAL HEADS

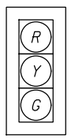

2A, 2B, 4A, 4B, 6A, 6B

VEHICULAR SIGNAL HEADS TO BE BLACK WITH 12" LED, BACKPLATE, AND CUTAWAY VISORS

LEGEND

	PROP	EXIST
TEMPORARY/RELOCATED TRAFFIC SIGNAL, 3 UNIT HEAD, 12"	→	○→
TEMPORARY/RELOCATED TRAFFIC SIGNAL, 5 UNIT HEAD, 12"	↓	
SIGNAL SUPPORT POLE	●	○
PROPOSED MAST ARM	———	·····
PROPOSED CONDUIT	———	
TEMPORARY WOOD POLE AND SPAN WIRE	P	

	PROP	EXIST
CONTROLLER CABINET AND WORK PAD (TS-2)	⊠	⊠
TRAFFIC PULL BOX	TR	TR
STOP BAR RADAR DETECTION UNIT	S	
DILEMMA ZONE RADAR DETECTION UNIT	D	
SIGN	⊤	
TEMPORARY DETECTION ZONE	▨	
DIRECTION OF TRAVEL	→	

TEMPORARY SIGNAL TIMING CHART (TEM FORM 496-3)

INTERSECTION: MILLER RD / RAMP B-1 / RAMP B-4
MAINTAINING AGENCY: CITY OF BRECKSVILLE

START UP
START IN: Y/R FLASH
TIME FOR FLASH, ALL RED: 9, 6
FIRST PHASE(S): 2 & 6
COLOR DISPLAYED: GREEN

DUAL ENTRY: YES | PHASES: ϕ2 & 6
REST IN RED: | RING 1 – | RING 2 –

	A	B	C	D
OVERLAP	–	–	–	–
PHASES	–	–	–	–

INTERVAL OR FEATURE		CONTROLLER MOVEMENT NO. 1	2	3	4	5	6	7	8
INTERSECTION MOVEMENT (PHASE)		–	EB	–	–	EB LT	WB	–	–
DIRECTION		–	20.0	–	–	7.0	20.0	–	–
MINIMUM GREEN (INITIAL)	(SEC.)	–	–	–	–	–	–	–	–
ADDED INITIAL	*(SEC./ACTUATION)	–	–	–	–	–	–	–	–
MAXIMUM INITIAL	*(SEC.)	–	–	–	–	3.0	–	–	–
PASSAGE TIME (PRESET GAP)	(SEC.)	–	–	–	–	–	–	–	–
TIME BEFORE REDUCTION	*(SEC.)	–	–	–	–	–	–	–	–
MINIMUM GAP	*(SEC.)	–	–	–	–	–	–	–	–
TIME TO REDUCE	*(SEC.)	–	84.0	–	–	68.5	11.0	–	–
MAXIMUM GREEN I	(SEC.)	–	–	–	–	–	–	–	–
MAXIMUM GREEN II	(SEC.)	–	4.1	–	–	3.5	4.1	–	–
YELLOW CHANGE	(SEC.)	–	2.0	–	–	1.0	2.0	–	–
ALL RED CLEARANCE	(SEC.)	–	–	–	–	–	–	–	–
DELAYED GREEN (LPI) *	(SEC.)	–	–	–	–	–	–	–	–
WALK	(SEC.)	–	–	–	–	–	–	–	–
FLASHING YELLOW ARROW DELAY °		–	–	–	–	–	–	–	–
PEDESTRIAN CLEARANCE	(SEC.)	–	–	–	–	–	–	–	–
RECALL	MAXIMUM (ON/OFF)	–	OFF	–	–	OFF	OFF	–	–
	MINIMUM (ON/OFF)	–	ON	–	–	OFF	ON	–	–
	PEDESTRIAN (ON/OFF)	–	OFF	–	–	OFF	OFF	–	–
MEMORY	(ON/OFF)	–	OFF	–	–	OFF	OFF	–	–

Temporary Signal Timing Summary - PROPOSED

General Notes:
1. All offsets are measured from the referenced phase BEGINNING OF GREEN
2. All offsets are measured from ϕ2 & ϕ6

COORDINATION TIMING PLANS

DAY(S) OF WEEK	PLAN NAME	HOURS	PLAN NO. OR CYCLE/SPLIT/OFFSET	CYCLE LENGTH (SEC)
M-F	AM PEAK	6am-9am	1	80
M-F	PM PEAK	4pm-7pm	2	80
M-F	OFF PEAK	10am-4pm	3	45
M-F	OFF PEAK	9am-4pm	3	45
M-F	OFF PEAK	7pm-10pm	3	45
SA-SUN	OFF PEAK	10am-10pm	3	45

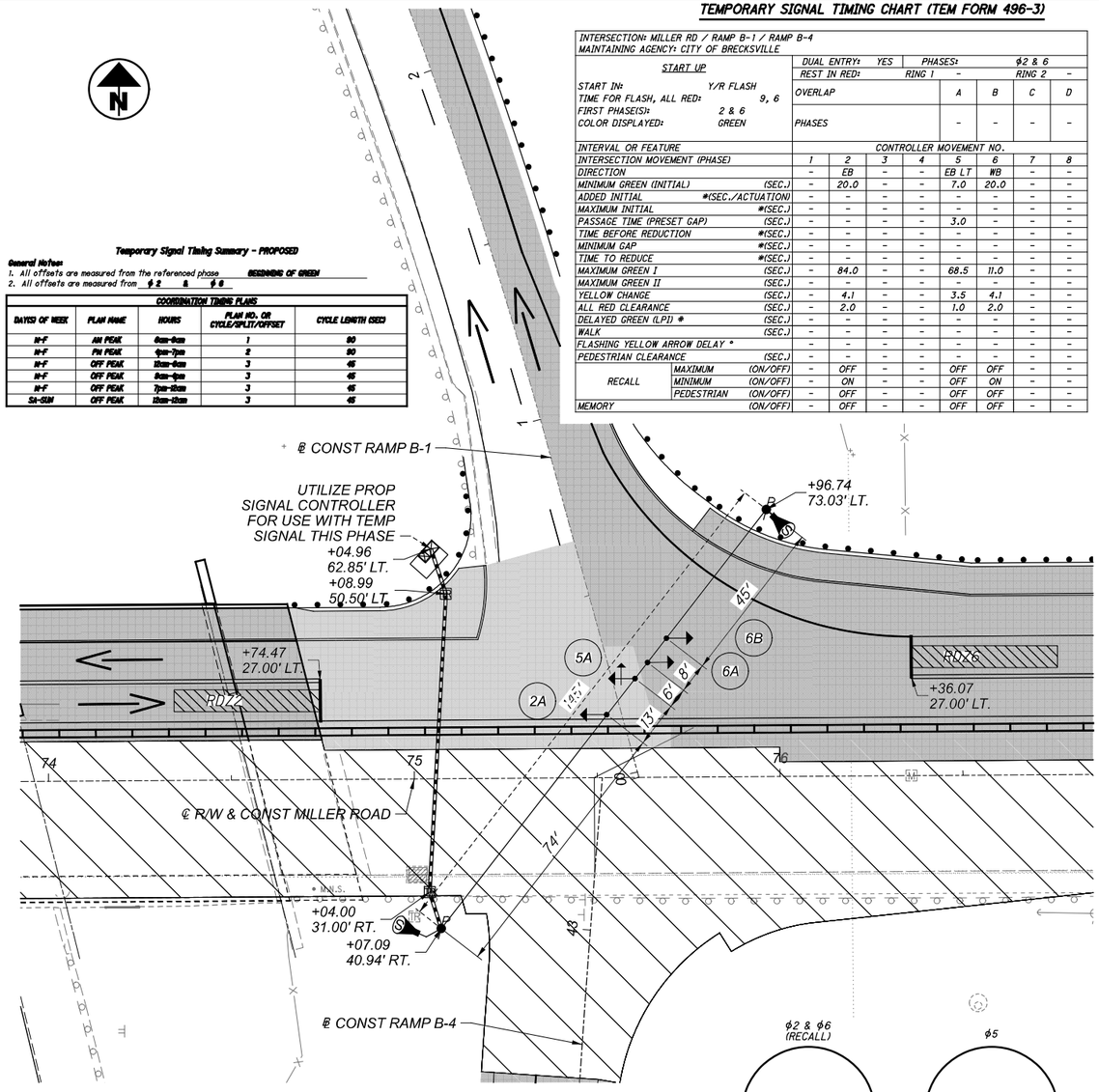

PHASING DIAGRAM (TYPICAL)

LEGEND
VEHICLE ϕ
PERMITTED ϕ

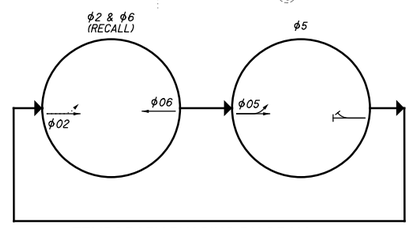

TEMPORARY PHASING DIAGRAM

NOTES

1. SIGNALIZATION SHALL BE MAINTAINED AT ALL TIMES THROUGH THE USE OF EXISTING, TEMPORARY OR PROPOSED SIGNAL POLES. THE CONTRACTOR SHALL ADJUST THE VEHICULAR SIGNAL HEADS AS INDICATED TO ACCOMMODATE LANE USAGE AND TO ENSURE ADEQUATE VISIBILITY FOR ALL APPROACH LANES. LOCATIONS SHALL BE APPROVED BY THE ENGINEER.

2. BAG AND DISCONNECT PEDESTRIAN SIGNAL HEADS FOR APPROPRIATE CLOSED CROSSWALKS. RECONNECT AND UNBAG WHEN CROSSWALKS ARE REOPENED

PROPOSED SIGNAL HEADS

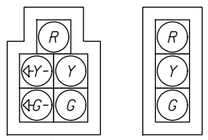

5A 2A, 6A, 6B

VEHICULAR SIGNAL HEADS TO BE BLACK WITH 12" LED, BACKPLATE, AND CUTAWAY VISORS

HORIZONTAL SCALE IN FEET
0 10 20 40

TEMPORARY SIGNAL PLAN - PHASE 2
MILLER ROAD - RAMPS B-2/B-3 AND B-1/B-4

DESIGN AGENCY
Trail Systems
400 W. NATIONWIDE BLVD. SUITE 225
COLUMBUS, OHIO 43215

DESIGNER SS
REVIEWER ACB 02/22/22
PROJECT ID 104983
SHEET P.80 TOTAL 434

CUY-77-00.42 PART 1

MODEL: 104983_CP001 PAPERSIZE: 34x22 (in.) DATE: 3/1/2022 TIME: 4:57:54 PM USER: ssopraseuth
pw:\\hq-pwint01.a-e.transystems.com:transystems-pw\Documents\Projects_2019\C0403\403190027\Agency_Folders\400-Engineering\Signals\Sheets\104983_MM003.dgn

PHASING DIAGRAM (TYPICAL)

LEGEND	
VEHICLE ϕ	———
PERMITTED ϕ	·····

TEMPORARY PHASING DIAGRAM

PROPOSED SIGNAL HEADS

2A, 2B, 4A, 4B, 6A, 6B

VEHICULAR SIGNAL HEADS TO BE BLACK WITH 12" LED, BACKPLATE, AND CUTAWAY VISORS

TEMPORARY SIGNAL TIMING CHART (TEM FORM 496-3)

INTERSECTION: MILLER ROAD / SOUTHPOINTE / ONE SHERWIN-WILLIAMS CT
MAINTAINING AGENCY: CITY OF BRECKSVILLE

START UP
START IN: Y/R FLASH
TIME FOR FLASH, ALL RED: 9, 6
FIRST PHASE(S): 2, 6
COLOR DISPLAYED: GREEN

DUAL ENTRY: YES | PHASES: ϕ2 & 6
REST IN RED: RING 1 - RING 2 -

OVERLAP	A	B	C	D
PHASES	-	-	-	-

INTERVAL OR FEATURE		CONTROLLER MOVEMENT NO.							
INTERSECTION MOVEMENT (PHASE)		1	2	3	4	5	6	7	8
DIRECTION		-	EB	NB LT	-	-	WB	-	NB
MINIMUM GREEN (INITIAL)	(SEC.)	-	20.0	10.0	-	-	20.0	-	10.0
ADDED INITIAL	#(SEC./ACTUATION)	-	-	-	-	-	-	-	-
MAXIMUM INITIAL	#(SEC.)	-	-	-	-	-	-	-	-
PASSAGE TIME (PRESET GAP)	(SEC.)	-	-	3.0	-	-	-	-	3.0
TIME BEFORE REDUCTION	#(SEC.)	-	-	-	-	-	-	-	-
MINIMUM GAP	#(SEC.)	-	-	-	-	-	-	-	-
TIME TO REDUCE	#(SEC.)	-	-	-	-	-	-	-	-
MAXIMUM GREEN I	(SEC.)	-	68.0	10.5	-	-	68.0	-	10.5
MAXIMUM GREEN II	(SEC.)	-	-	-	-	-	-	-	-
YELLOW CHANGE	(SEC.)	-	4.1	3.4	-	-	4.1	-	3.4
ALL RED CLEARANCE	(SEC.)	-	1.0	3.3	-	-	1.0	-	3.3
DELAYED GREEN (LPI) #	(SEC.)	-	-	-	-	-	-	-	-
WALK	(SEC.)	-	-	-	-	-	-	-	-
FLASHING YELLOW ARROW DELAY °		-	-	-	-	-	-	-	-
PEDESTRIAN CLEARANCE	(SEC.)	-	-	-	-	-	-	-	-
RECALL	MAXIMUM (ON/OFF)	-	OFF	OFF	-	-	OFF	-	OFF
	MINIMUM (ON/OFF)	-	ON	OFF	-	-	ON	-	OFF
	PEDESTRIAN (ON/OFF)	-	OFF	-	-	-	OFF	-	OFF
MEMORY	(ON/OFF)	-	OFF	OFF	-	-	OFF	-	OFF

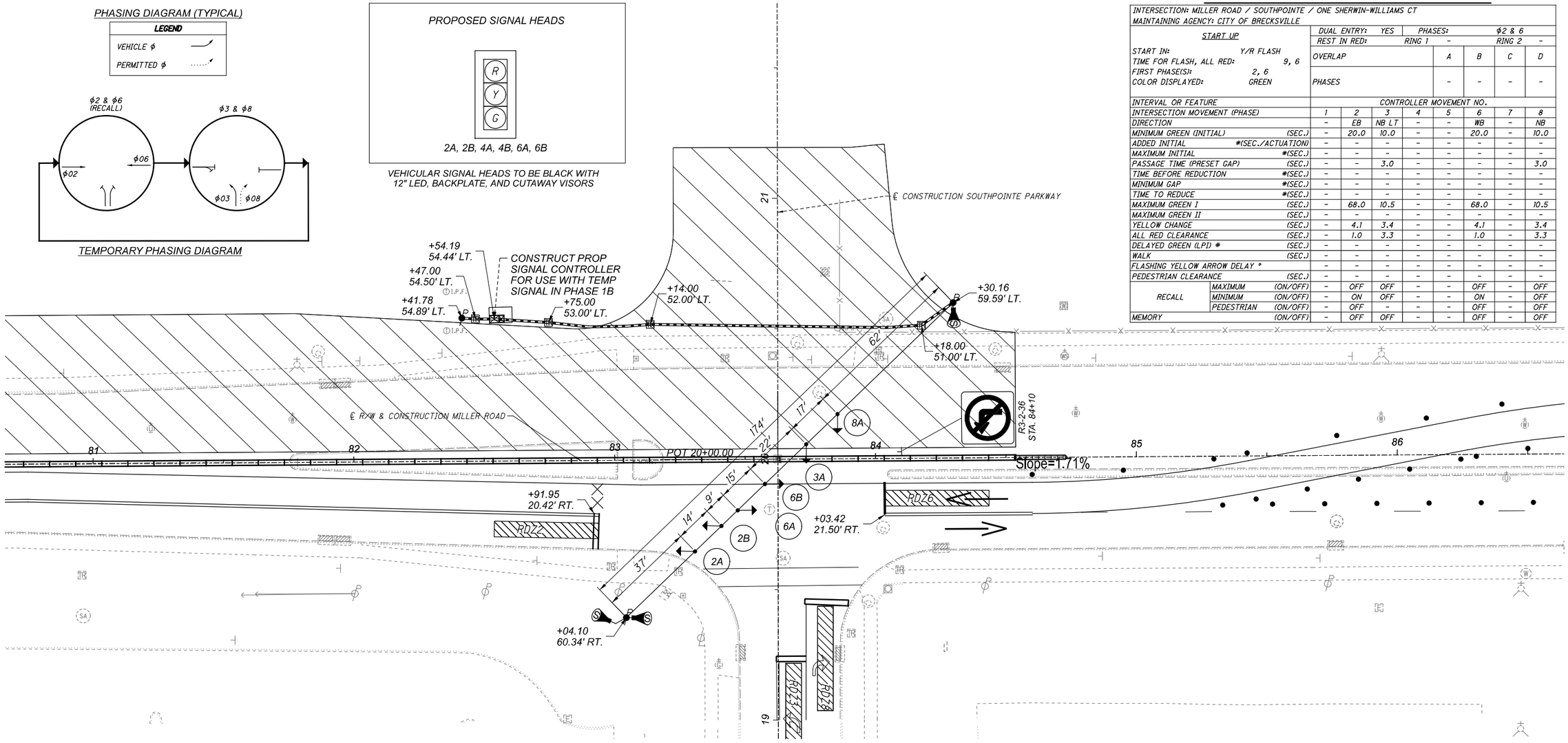

Temporary Signal Timing Summary - PROPOSED

General Notes:
1. All offsets are measured from the referenced phase **BEGINNING OF GREEN**
2. All offsets are measured from **ϕ 2 & ϕ 6**

COORDINATION TIMING PLANS				
DAY(S) OF WEEK	PLAN NAME	HOURS	PLAN NO. OR CYCLE/SPLIT/OFFSET	CYCLE LENGTH (SEC)
M-F	AM PEAK	6am-9am	1	90
M-F	PM PEAK	4pm-7pm	2	90
M-F	OFF PEAK	12am-6am	3	45
M-F	OFF PEAK	9am-4pm	3	45
M-F	OFF PEAK	7pm-12am	3	45
SA-SUN	OFF PEAK	12am-12am	3	45

LEGEND

	PROP	EXIST		PROP	EXIST
TEMPORARY/RELOCATED TRAFFIC SIGNAL, 3 UNIT HEAD, 12"	→	○→	CONTROLLER CABINET AND WORK PAD (TS-2)	⊠	⊠
TEMPORARY/RELOCATED TRAFFIC SIGNAL, 5 UNIT HEAD, 12"	↓		TRAFFIC PULL BOX	TR	TR
SIGNAL SUPPORT POLE	◉	◎	STOP BAR RADAR DETECTION UNIT	S	
PROPOSED MAST ARM	▬	·····	SIGN	⊤	
PROPOSED CONDUIT	———		TEMPORARY DETECTION ZONE	▨	
TEMPORARY WOOD POLE AND SPAN WIRE	P		DIRECTION OF TRAVEL	→	

NOTES

1. SIGNALIZATION SHALL BE MAINTAINED AT ALL TIMES THROUGH THE USE OF EXISTING, TEMPORARY OR PROPOSED SIGNAL POLES. THE CONTRACTOR SHALL ADJUST THE VEHICULAR SIGNAL HEADS AS INDICATED TO ACCOMMODATE LANE USAGE AND TO ENSURE ADEQUATE VISIBILITY FOR ALL APPROACH LANES. LOCATIONS SHALL BE APPROVED BY THE ENGINEER.

2. BAG AND DISCONNECT PEDESTRIAN SIGNAL HEADS FOR APPROPRIATE CLOSED CROSSWALKS. RECONNECT AND UNBAG WHEN CROSSWALKS ARE REOPENED

HORIZONTAL SCALE IN FEET
0 10 20 40

TEMPORARY SIGNAL PLAN - PHASE 1A
MILLER ROAD AND SOUTHPOINTE PKWY

DESIGN AGENCY
TranSystems
400 W. NATIONWIDE BLVD. SUITE 225 COLUMBUS, OHIO 43215

DESIGNER SS
REVIEWER ACB 02/22/22
PROJECT ID 104983
SHEET P.81 TOTAL 434

CUY-77-00.42 PART 1

MODEL: 104983_CP001 PAPERSIZE: 34x22 (in.) DATE: 3/1/2022 TIME: 4:58:21 PM USER: ssopraseuth
pw:\\hq-pwint01.a-e.transystems.com:transystemscorp-pw1\Documents\Projects_2019\C0403\403\9002?\Agency_Folders\400-Engineering\Signals\Sheets\104983_MM004.dgn

MODEL: 104983_CP001 PAPERSIZE: 34x22 (in.) DATE: 3/1/2022 TIME: 4:58:47 PM USER: ssopraseuth
pw:\\hq-pwint01.a-e.transystcorp.com:transystcorp-pw1\Documents\Projects_2019\C0403\403l9002Y\Agency_Folders\400-Engineering\Signals\Sheets\104983_MM005.dgn

PHASING DIAGRAM (TYPICAL)

LEGEND
VEHICLE ϕ
PERMITTED ϕ

TEMPORARY PHASING DIAGRAM

PROPOSED SIGNAL HEADS

2A, 2B, 4A, 4B, 6A, 6B

VEHICULAR SIGNAL HEADS TO BE BLACK WITH 12" LED, BACKPLATE, AND CUTAWAY VISORS

TEMPORARY SIGNAL TIMING CHART (TEM FORM 496-3)

INTERSECTION: MILLER ROAD / SOUTHPOINTE / ONE SHERWIN-WILLIAMS CT
MAINTAINING AGENCY: CITY OF BRECKSVILLE

START UP
START IN: Y/R FLASH
TIME FOR FLASH, ALL RED: 9, 6
FIRST PHASE(S): 2, 6
COLOR DISPLAYED: GREEN

DUAL ENTRY: YES | PHASES: ϕ2 & 6
REST IN RED: | RING 1 - | RING 2 -

OVERLAP	A	B	C	D
PHASES	-	-	-	-

INTERVAL OR FEATURE		CONTROLLER MOVEMENT NO.							
INTERSECTION MOVEMENT (PHASE)		1	2	3	4	5	6	7	8
DIRECTION		-	EB	NB LT	-	-	WB	-	NB
MINIMUM GREEN (INITIAL)	(SEC.)	-	20.0	10.0	-	-	20.0	-	10.0
ADDED INITIAL	*(SEC./ACTUATION)	-	-	-	-	-	-	-	-
MAXIMUM INITIAL	*(SEC.)	-	-	-	-	-	-	-	-
PASSAGE TIME (PRESET GAP)	(SEC.)	-	-	3.0	-	-	-	-	3.0
TIME BEFORE REDUCTION	*(SEC.)	-	-	-	-	-	-	-	-
MINIMUM GAP	*(SEC.)	-	-	-	-	-	-	-	-
TIME TO REDUCE	*(SEC.)	-	-	-	-	-	-	-	-
MAXIMUM GREEN I	(SEC.)	-	68.0	10.5	-	-	68.0	-	10.5
MAXIMUM GREEN II	(SEC.)	-	-	-	-	-	-	-	-
YELLOW CHANGE	(SEC.)	-	4.1	3.4	-	-	4.1	-	3.4
ALL RED CLEARANCE	(SEC.)	-	1.0	3.3	-	-	1.0	-	3.3
DELAYED GREEN (LPI) *	(SEC.)	-	-	-	-	-	-	-	-
WALK	(SEC.)	-	-	-	-	-	-	-	-
FLASHING YELLOW ARROW DELAY °		-	-	-	-	-	-	-	-
PEDESTRIAN CLEARANCE	(SEC.)	-	-	-	-	-	-	-	-
RECALL	MAXIMUM (ON/OFF)	-	OFF	OFF	-	-	OFF	-	OFF
	MINIMUM (ON/OFF)	-	ON	OFF	-	-	ON	-	OFF
	PEDESTRIAN (ON/OFF)	-	OFF	-	-	-	OFF	-	OFF
MEMORY	(ON/OFF)	-	OFF	OFF	-	-	OFF	-	OFF

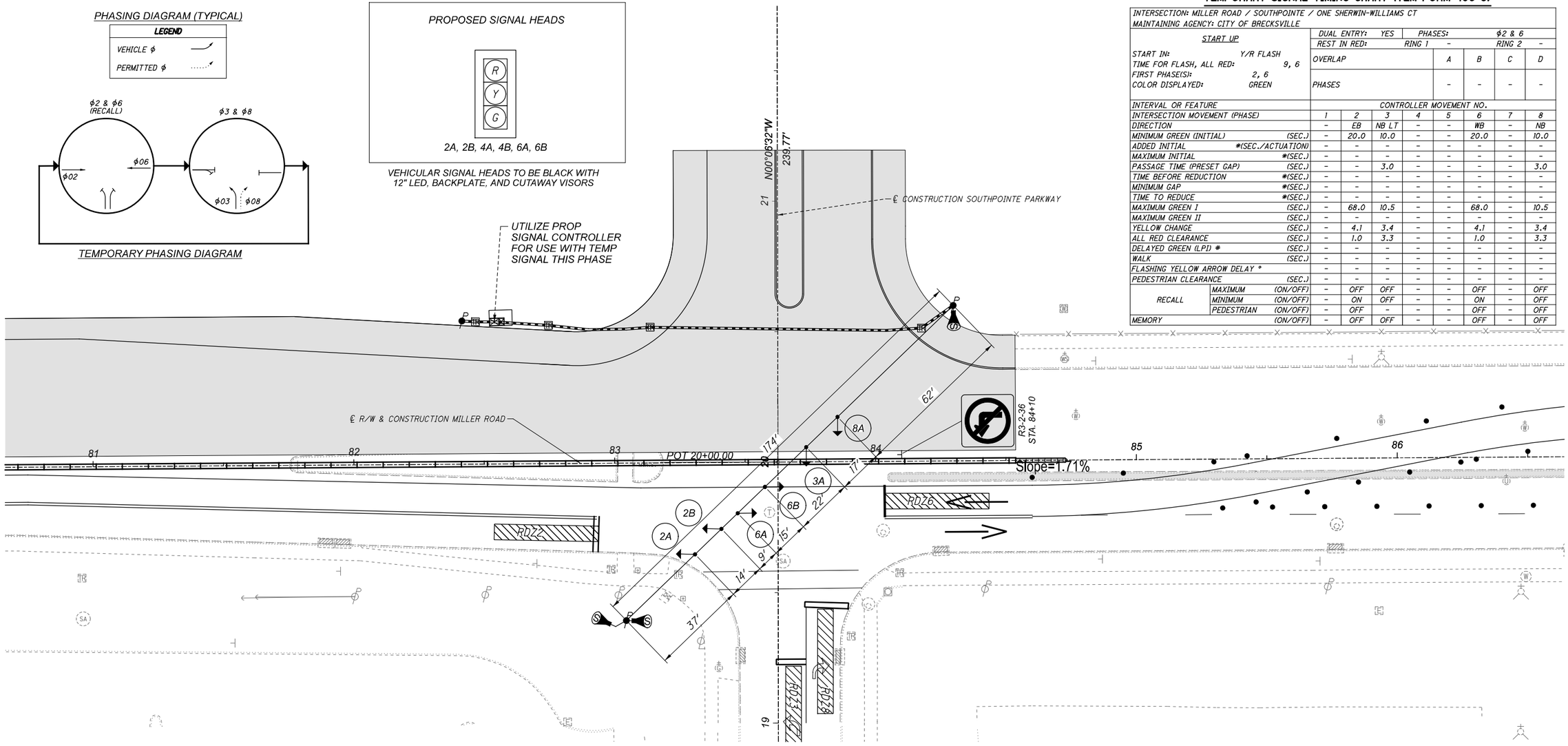

Temporary Signal Timing Summary - PROPOSED

General Notes:
1. All offsets are measured from the referenced phase **BEGINNING OF GREEN**
2. All offsets are measured from **ϕ 2 & ϕ 6**

COORDINATION TIMING PLANS				
DAY(S) OF WEEK	PLAN NAME	HOURS	PLAN NO. OR CYCLE/SPLIT/OFFSET	CYCLE LENGTH (SEC)
M-F	AM PEAK	6am-9am	1	90
M-F	PM PEAK	4pm-7pm	2	90
M-F	OFF PEAK	12am-6am	3	45
M-F	OFF PEAK	9am-4pm	3	45
M-F	OFF PEAK	7pm-12am	3	45
SA-SUN	OFF PEAK	12am-12am	3	45

LEGEND

	PROP	EXIST
TEMPORARY/RELOCATED TRAFFIC SIGNAL, 3 UNIT HEAD, 12"	→	○→
TEMPORARY/RELOCATED TRAFFIC SIGNAL, 5 UNIT HEAD, 12"		
SIGNAL SUPPORT POLE	●	○
PROPOSED MAST ARM	▬	┈┈
PROPOSED CONDUIT	┈┈	
TEMPORARY WOOD POLE AND SPAN WIRE	P	

	PROP	EXIST
CONTROLLER CABINET AND WORK PAD (TS-2)	⊠	⊠
TRAFFIC PULL BOX	TR	TR
STOP BAR RADAR DETECTION UNIT	S	
SIGN	⊤	
TEMPORARY DETECTION ZONE	▨	
DIRECTION OF TRAVEL	→	

NOTES

1. SIGNALIZATION SHALL BE MAINTAINED AT ALL TIMES THROUGH THE USE OF EXISTING, TEMPORARY OR PROPOSED SIGNAL POLES. THE CONTRACTOR SHALL ADJUST THE VEHICULAR SIGNAL HEADS AS INDICATED TO ACCOMMODATE LANE USAGE AND TO ENSURE ADEQUATE VISIBILITY FOR ALL APPROACH LANES. LOCATIONS SHALL BE APPROVED BY THE ENGINEER.

2. BAG AND DISCONNECT PEDESTRIAN SIGNAL HEADS FOR APPROPRIATE CLOSED CROSSWALKS. RECONNECT AND UNBAG WHEN CROSSWALKS ARE REOPENED

HORIZONTAL SCALE IN FEET
0 10 20 40

TEMPORARY SIGNAL PLAN - PHASE 1B
MILLER ROAD AND SOUTHPOINTE PKWY

DESIGN AGENCY
TranSystems
400 W. NATIONWIDE BLVD. SUITE 225 COLUMBUS, OHIO 43215

DESIGNER SS
REVIEWER ACB 02/22/22
PROJECT ID 104983
SHEET P.82 TOTAL 434

PHASING DIAGRAM (TYPICAL)

LEGEND

VEHICLE ϕ

PERMITTED ϕ

TEMPORARY PHASING DIAGRAM

PROPOSED SIGNAL HEADS

VEHICULAR SIGNAL HEADS TO BE BLACK WITH 12" LED, BACKPLATE, AND CUTAWAY VISORS

TEMPORARY SIGNAL TIMING CHART (TEM FORM 496-3)

INTERSECTION: MILLER ROAD / SOUTHPOINTE / ONE SHERWIN-WILLIAMS CT

MAINTAINING AGENCY: CITY OF BRECKSVILLE

START UP

START IN: Y/R FLASH

TIME FOR FLASH, ALL RED: 9, 6

FIRST PHASE(S): 2, 6

COLOR DISPLAYED: GREEN

DUAL ENTRY: YES | PHASES: ϕ2 & 6

REST IN RED: RING 1 - | RING 2 -

OVERLAP	A	B	C	D
PHASES	-	-	-	-

INTERVAL OR FEATURE		CONTROLLER MOVEMENT NO.							
INTERSECTION MOVEMENT (PHASE)		1	2	3	4	5	6	7	8
DIRECTION		-	EB	NB LT	-	-	WB	-	NB
MINIMUM GREEN (INITIAL)	(SEC.)	-	20.0	10.0	-	-	20.0	-	10.0
ADDED INITIAL	*(SEC./ACTUATION)	-	-	-	-	-	-	-	-
MAXIMUM INITIAL	*(SEC.)	-	-	-	-	-	-	-	-
PASSAGE TIME (PRESET GAP)	(SEC.)	-	-	3.0	-	-	-	-	3.0
TIME BEFORE REDUCTION	*(SEC.)	-	-	-	-	-	-	-	-
MINIMUM GAP	*(SEC.)	-	-	-	-	-	-	-	-
TIME TO REDUCE	*(SEC.)	-	-	-	-	-	-	-	-
MAXIMUM GREEN I	(SEC.)	-	68.0	10.5	-	-	68.0	-	10.5
MAXIMUM GREEN II	(SEC.)	-	-	-	-	-	-	-	-
YELLOW CHANGE	(SEC.)	-	4.1	3.4	-	-	4.1	-	3.4
ALL RED CLEARANCE	(SEC.)	-	1.0	3.3	-	-	1.0	-	3.3
DELAYED GREEN (LPI) #	(SEC.)	-	-	-	-	-	-	-	-
WALK	(SEC.)	-	-	-	-	-	-	-	-
FLASHING YELLOW ARROW DELAY °		-	-	-	-	-	-	-	-
PEDESTRIAN CLEARANCE	(SEC.)	-	-	-	-	-	-	-	-
RECALL MAXIMUM	(ON/OFF)	-	OFF	OFF	-	-	OFF	-	OFF
RECALL MINIMUM	(ON/OFF)	-	ON	OFF	-	-	ON	-	OFF
RECALL PEDESTRIAN	(ON/OFF)	-	OFF	-	-	-	OFF	-	OFF
MEMORY	(ON/OFF)	-	OFF	OFF	-	-	OFF	-	OFF

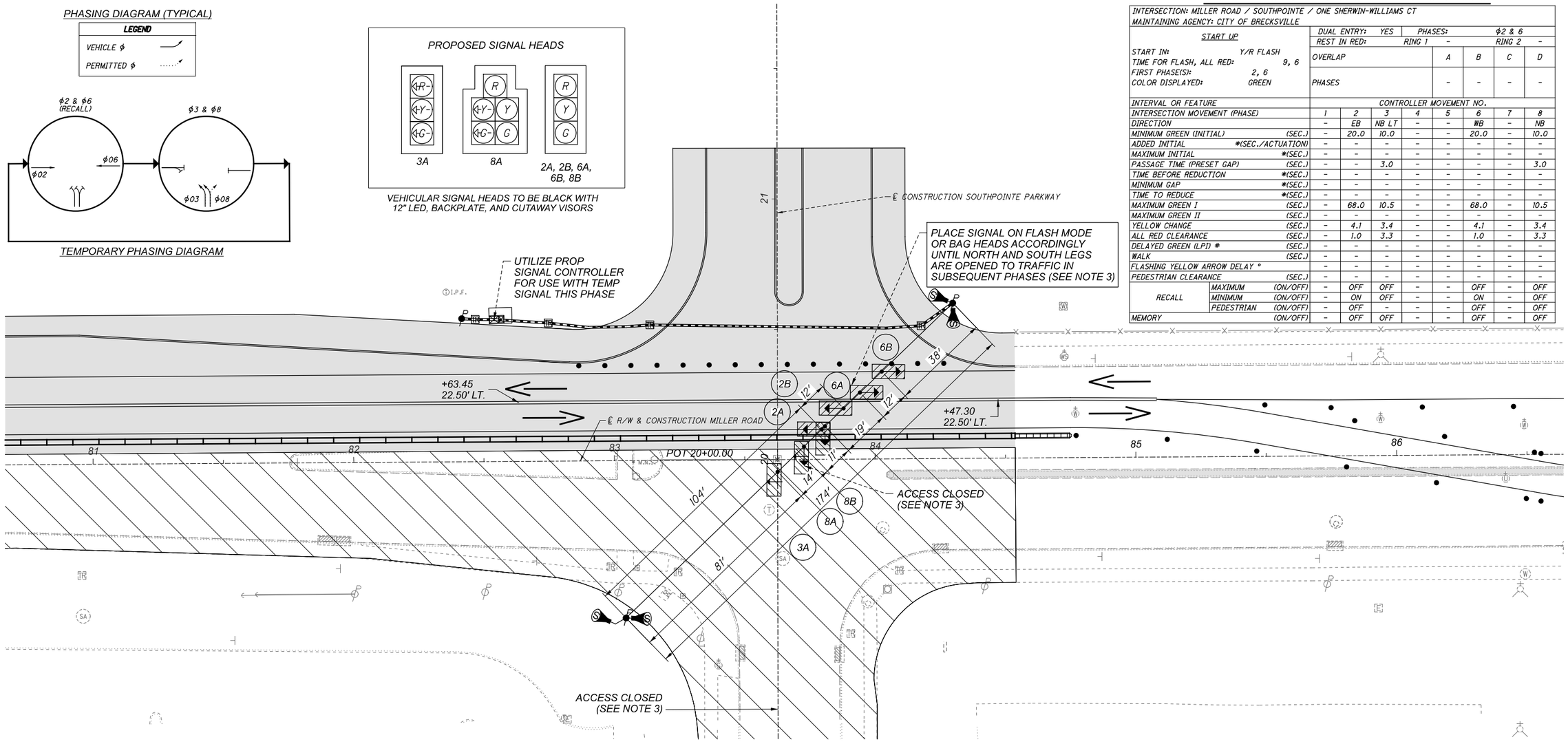

Temporary Signal Timing Summary - PROPOSED

General Notes:

1. All offsets are measured from the referenced phase **BEGINNING OF GREEN**
2. All offsets are measured from **ϕ 2 & ϕ 6**

COORDINATION TIMING PLANS				
DAY(S) OF WEEK	PLAN NAME	HOURS	PLAN NO. OR CYCLE/SPLIT/OFFSET	CYCLE LENGTH (SEC)
M-F	AM PEAK	6am-9am	1	90
M-F	PM PEAK	4pm-7pm	2	90
M-F	OFF PEAK	12am-6am	3	45
M-F	OFF PEAK	9am-4pm	3	45
M-F	OFF PEAK	7pm-12am	3	45
SA-SUN	OFF PEAK	12am-12am	3	45

LEGEND

	PROP	EXIST		PROP	EXIST
TEMPORARY/RELOCATED TRAFFIC SIGNAL, 3 UNIT HEAD, 12"	●→	○-▷	CONTROLLER CABINET AND WORK PAD (TS-2)		
COVERED/BAGGED TRAFFIC SIGNAL, 5 UNIT HEAD, 12"			TRAFFIC PULL BOX	TR	TR
SIGNAL SUPPORT POLE	●	○	STOP BAR RADAR DETECTION UNIT	S	
PROPOSED MAST ARM	▬	┈┈	SIGN		
PROPOSED CONDUIT	┈┈		TEMPORARY DETECTION ZONE		
TEMPORARY WOOD POLE AND SPAN WIRE	P		DIRECTION OF TRAVEL	→	

NOTES

1. SIGNALIZATION SHALL BE MAINTAINED AT ALL TIMES THROUGH THE USE OF EXISTING, TEMPORARY OR PROPOSED SIGNAL POLES. THE CONTRACTOR SHALL ADJUST THE VEHICULAR SIGNAL HEADS AS INDICATED TO ACCOMMODATE LANE USAGE AND TO ENSURE ADEQUATE VISIBILITY FOR ALL APPROACH LANES. LOCATIONS SHALL BE APPROVED BY THE ENGINEER.

2. BAG AND DISCONNECT PEDESTRIAN SIGNAL HEADS FOR APPROPRIATE CLOSED CROSSWALKS. RECONNECT AND UNBAG WHEN CROSSWALKS ARE REOPENED.

3. ACCESS TO SOUTHPOINTE PKWY, SOUTH APPROACH CLOSED THIS PHASE. SEE DETOUR PLAN FOR REROUTING AND DETAILS. DETOUR WILL BE LIMITED IN DURATION. UPON COMPLETION OF SOUTHPOINTE PKWY, ACCESS SHALL BE REOPENED AND TEMPORARY SIGNAL ACTIVATED FOR OPERATION.

HORIZONTAL SCALE IN FEET
0 10 20 40

TEMPORARY SIGNAL PLAN - PHASE 2
MILLER ROAD AND SOUTHPOINTE PKWY

DESIGN AGENCY
TranSystems
400 W. NATIONWIDE BLVD. SUITE 225 COLUMBUS, OHIO 43215

DESIGNER SS

REVIEWER ACB 02/22/22

PROJECT ID 104983

SHEET P.83 TOTAL 434

CUY-77-00.42 PART 1

MODEL: 104983_CP001 PAPERSIZE: 34x22 (in.) DATE: 3/1/2022 TIME: 4:59:17 PM USER: ssopraseuth
pw:\\hq-pwint01.g-e.transystems.com:transystemscorp-pw1\Documents\Projects_2019\C0403\40319002?\Agency_Folders\400-Engineering\Signals\Sheets\104983_MM006.dgn

SHEET NUM.												PART.		ITEM	ITEM	GRAND	UNIT	DESCRIPTION	SEE SHEET NO.
		17	18	19	20	92	93	94	127	366	OFFICE CALCS	01/ODOT	02/LOCAL		EXT	TOTAL			
																		ROADWAY	
		LS										LS		201	11000	LS		CLEARING AND GRUBBING	
											14,398	14,398		202	23000	14,398	SY	PAVEMENT REMOVED	
							675				17,349	18,024		202	30000	18,024	SF	WALK REMOVED	
						60						60		202	30700	60	FT	CONCRETE BARRIER REMOVED	
											34	34		202	30800	34	SY	TRAFFIC ISLAND REMOVED	
											4,165	4,165		202	32000	4,165	FT	CURB REMOVED	
						11,261						11,261		202	38000	11,261	FT	GUARDRAIL REMOVED	
						1						1		202	53100	1	EACH	MAILBOX REMOVED	
						50						50		SPECIAL	20270000	50	FT	FILL AND PLUG EXISTING CONDUIT (18")	20
						732				2,752		3,484		202	75000	3,484	FT	FENCE REMOVED	
						1						1		202	98100	1	EACH	REMOVAL MISC.:CONCRETE SLAB REMOVAL	17
						3,363						3,363		SPECIAL	20307504	3,363	FT	WICK DRAIN	211
									18,897			18,897		203	10000	18,897	CY	EXCAVATION	
									1,978			1,978		203	10001	1,978	CY	EXCAVATION, AS PER PLAN	18
									50,091			50,091		203	20000	50,091	CY	EMBANKMENT	
			6									6		SPECIAL	20365000	6	EACH	SETTLEMENT PLATFORM	18
											23,460	23,460		204	10000	23,460	SY	SUBGRADE COMPACTION	
									5,128			5,128		204	13000	5,128	CY	EXCAVATION OF SUBGRADE, AS DIRECTED	
									5,128			5,128		204	30010	5,128	CY	GRANULAR MATERIAL, TYPE B, AS DIRECTED	
			12									12		204	45000	12	HOUR	PROOF ROLLING	
											14,434	14,434		204	50000	14,434	SY	GEOTEXTILE FABRIC, AS DIRECTED	
											40	40		209	15000	40	STA	RESHAPING UNDER GUARDRAIL	
			152									152		209	60201	152	STA	LINEAR GRADING, AS PER PLAN	18
						11,993						11,993		606	15050	11,993	FT	GUARDRAIL, TYPE MGS	
						3,412						3,412		606	15550	3,412	FT	GUARDRAIL, BARRIER DESIGN, TYPE MGS	
						4						4		606	26050	4	EACH	ANCHOR ASSEMBLY, MGS TYPE B	
						9						9		606	26100	9	EACH	ANCHOR ASSEMBLY, TYPE E (MASH 2016)	
						7						7		606	26550	7	EACH	ANCHOR ASSEMBLY, MGS TYPE T	
						6						6		606	35002	6	EACH	MGS BRIDGE TERMINAL ASSEMBLY, TYPE 1	
										2,688		2,688		607	23000	2,688	FT	FENCE, TYPE CLT	
											16,193	16,193		608	10000	16,193	SF	4" CONCRETE WALK	
						2,090						2,090		608	52000	2,090	SF	CURB RAMP	
											3,240	3,240		609	14000	3,240	FT	CURB, TYPE 2-A	
											658	658		609	26000	658	FT	CURB, TYPE 6	
						63						63		622	10160	63	FT	CONCRETE BARRIER, SINGLE SLOPE, TYPE D	
						2						2		622	25000	2	EACH	CONCRETE BARRIER END SECTION, TYPE D	
						1						1		622	25050	1	EACH	CONCRETE BARRIER, END ANCHORAGE, REINFORCED, TYPE D	
						1						1		SPECIAL	69050350	1	EACH	MAILBOX REMOVED AND RESET	
																		EROSION CONTROL	
					20							20		601	21050	20	SY	TIED CONCRETE BLOCK MAT WITH TYPE 1 UNDERLAYMENT	
						60						60		601	32010	60	CY	ROCK CHANNEL PROTECTION, TYPE A WITH AGGREGATE FILTER	
						15.57						15.57		601	32110	15.57	CY	ROCK CHANNEL PROTECTION, TYPE B WITH AGGREGATE FILTER	
				5		9.55						14.55		601	32200	14.55	CY	ROCK CHANNEL PROTECTION, TYPE C WITH FILTER	
				2								2		659	00100	2	EACH	SOIL ANALYSIS TEST	
				3,525					639			4,164		659	00300	4,164	CY	TOPSOIL	
									31,760			31,760		659	10000	31,760	SY	SEEDING AND MULCHING	
				1,588								1,588		659	14000	1,588	SY	REPAIR SEEDING AND MULCHING	
				1,588								1,588		659	15000	1,588	SY	INTER-SEEDING	
				4								4		659	20000	4	TON	COMMERCIAL FERTILIZER	
				7								7		659	31000	7	ACRE	LIME	
				176								176		659	35000	176	MGAL	WATER	
				71								71		659	40000	71	MSF	MOWING	
									5,741			5,741		670	00700	5,741	SY	DITCH EROSION PROTECTION	
								410				410		670	00720	410	SY	DITCH EROSION PROTECTION MAT, TYPE B	
												1		832	30000	1	EACH	EROSION CONTROL	
								723				723		836	10000	723	SY	SEEDING AND EROSION CONTROL WITH TURF REINFORCING MAT, TYPE 1	

GENERAL SUMMARY

CUY-77-00.42 PART 1

MODEL: Sheet PAPERSIZE: 17x11 (in.) DATE: 3/4/2022 TIME: 1:13:03 PM USER: esmccaslin
F:\Jobs\11162-Miller Road Interchange\104983\400-Engineering\Roadway\Sheets\104983_GG001.dgn

DESIGN AGENCY
EUTHENICS
8235 Mohawk Dr. | Cleveland, OH 44256

DESIGNER
COM

REVIEWER
RAB 03/01/22

PROJECT ID
104983

SHEET P.84 | TOTAL P.434

SHEET NUM.												PART.		ITEM	ITEM EXT	GRAND TOTAL	UNIT	DESCRIPTION	SEE SHEET NO.
	19		20		92		93		94		OFFICE CALCS	01/ODOT	02/LOCAL						
																		DRAINAGE	
					5							5		202	20010	5	EACH	HEADWALL REMOVED	
					1,152							1,152		202	35100	1,152	FT	PIPE REMOVED, 24" AND UNDER	
					965							965		202	35200	965	FT	PIPE REMOVED, OVER 24"	
					9							9		202	58000	9	EACH	MANHOLE REMOVED	
					23							23		202	58100	23	EACH	CATCH BASIN REMOVED	
					55.7							55.7		602	20000	55.7	CY	CONCRETE MASONRY	
							2,433					2,433		605	11110	2,433	FT	6" SHALLOW PIPE UNDERDRAINS WITH GEOTEXTILE FABRIC	
			400									400		605	13300	400	FT	6" UNCLASSIFIED PIPE UNDERDRAINS	
							501					501		605	13410	501	FT	6" UNCLASSIFIED PIPE UNDERDRAINS WITH GEOTEXTILE FABRIC	
							7,324					7,324		605	14020	7,324	FT	6" BASE PIPE UNDERDRAINS WITH GEOTEXTILE FABRIC	
			200									200		605	31100	200	FT	AGGREGATE DRAINS	
	200											200		611	00900	200	FT	6" CONDUIT, TYPE B	
	50											50		611	01400	50	FT	6" CONDUIT, TYPE E	
			100				400					500		611	01500	500	FT	6" CONDUIT, TYPE F	
							1,340					1,340		611	04400	1,340	FT	12" CONDUIT, TYPE B, 706.02, AS PER PLAN	20
							127					127		611	04600	127	FT	12" CONDUIT, TYPE C	
							132					132		611	04600	132	FT	12" CONDUIT, TYPE C, 706.02, AS PER PLAN	20
							255					255		611	05900	255	FT	15" CONDUIT, TYPE B	
							348					348		611	05900	348	FT	15" CONDUIT, TYPE B, 706.02, AS PER PLAN	20
							196					196		611	06100	196	FT	15" CONDUIT, TYPE C	
							14					14		611	06100	14	FT	15" CONDUIT, TYPE C, 706.02, AS PER PLAN	20
							157					157		611	07400	157	FT	18" CONDUIT, TYPE B, 706.02, AS PER PLAN	20
							593					593		611	07600	593	FT	18" CONDUIT, TYPE C	
							24					24		611	07600	24	FT	18" CONDUIT, TYPE C, 706.02, AS PER PLAN	20
							6					6		611	09100	6	FT	21" CONDUIT, TYPE C, 706.02, AS PER PLAN	20
							50					50		611	09400	50	FT	21" CONDUIT, TYPE D, 706.02, AS PER PLAN	20
							17					17		611	10400	17	FT	24" CONDUIT, TYPE B, 706.02, AS PER PLAN	20
							30					30		611	10400	30	FT	24" CONDUIT, TYPE B, 706.02, AS PER PLAN 2	20
							10					10		611	11900	10	FT	27" CONDUIT, TYPE B, 706.02, AS PER PLAN	20
							176					176		611	13400	176	FT	30" CONDUIT, TYPE B, 706.02, AS PER PLAN	20
							15					15		611	16200	15	FT	36" CONDUIT, TYPE A, 706.02, AS PER PLAN	20
							119					119		611	16200	119	FT	36" CONDUIT, TYPE A, 706.02, 707.01 (1/2")(0.064) OR 707.35	
							96					96		611	16400	96	FT	36" CONDUIT, TYPE B, 706.02, AS PER PLAN	20
									267			267		611	19600	267	FT	42" CONDUIT, TYPE C, 706.02, AS PER PLAN	20
									120			120		611	20700	120	FT	48" CONDUIT, TYPE A, 706.02, 707.01 (1/2') (0.064), OR 707.35	
									399			399		611	21100	399	FT	48" CONDUIT, TYPE C, 706.02, AS PER PLAN	20
									30			30		611	26000	30	FT	72" CONDUIT, TYPE A	
									2			2		611	97200	2	EACH	CONDUIT, MISC.:BENTONITE CLAY DAM	227
									4			4		611	98300	4	EACH	CATCH BASIN, NO. 5	
									27			27		611	98690	27	EACH	CATCH BASIN, MISC.:CUYAHOGA COUNTY NO. 3C	20
									2			2		611	98690	2	EACH	CATCH BASIN, MISC.:CUYAHOGA COUNTY TWIN 3C	20
									5			5		611	99574	5	EACH	MANHOLE, NO. 3	
									17			17		611	99575	17	EACH	MANHOLE, NO. 3, AS PER PLAN3	20
									1			1		611	99584	1	EACH	MANHOLE, NO. 3 WITH 96" BASE I.D. AND 9" WEIR, AS PER PLAN 3	20
									1			1		611	99575	1	EACH	MANHOLE, NO. 3, AS PER PLAN4	20
									2			2		611	99655	2	EACH	MANHOLE ADJUSTED TO GRADE, AS PER PLAN	218
									3			3		611	99661	3	EACH	MANHOLE RECONSTRUCTED TO GRADE, AS PER PLAN	218
			5									5		611	99710	5	EACH	PRECAST REINFORCED CONCRETE OUTLET	
			2,000									2,000		SPECIAL	61199820	2,000	LB	MISCELLANEOUS METAL	20
									1			1		895	10030	1	EACH	MANUFACTURED WATER QUALITY STRUCTURE, TYPE 3	

GENERAL SUMMARY

DESIGN AGENCY
EUTHENICS
8235 Mohawk Dr. | Cleveland, OH 44139

DESIGNER
COM

REVIEWER
RAB 03/01/22

PROJECT ID
104983

SHEET P.85 | TOTAL P.434

CUY-77-00.42 PART 1

MODEL: Sheet PAPERSIZE: 17x11 (in.) DATE: 04-Mar-22 TIME: 3:19:33 PM USER: comfirk
F:\Jobs\11662-Miller Road Interchange\104983400-Engineering\Roadway\Sheets\104983_GG002.dgn

SHEET NUM.											OFFICE CALCS	PART. 01/ODOT	PART. 02/LOCAL	ITEM	ITEM EXT	GRAND TOTAL	UNIT	DESCRIPTION	SEE SHEET NO.
	92		94		220		246		280									**PAVEMENT**	
											737	737		254	01000	737	SY	PAVEMENT PLANING, ASPHALT CONCRETE(T = 3.25")	
											4,411	4,411		254	01000	4,411	SY	PAVEMENT PLANING, ASPHALT CONCRETE (VARIABLE THICKNESS)	
											1,001	1,001		302	46000	1,001	CY	ASPHALT CONCRETE BASE, PG64-22	
											4,587	4,587		304	20000	4,587	CY	AGGREGATE BASE	
											1,132	1,132		407	10000	1,132	GAL	TACK COAT	
											124	124		441	50701	124	CY	ASPHALT CONCRETE INTERMEDIATE COURSE, TYPE 1, (448), (UNDER GUARDRAIL), AS PER PLAN	21
											195	195		442	10001	195	CY	ASPHALT CONCRETE SURFACE COURSE, 12.5 MM, TYPE A (446), AS PER PLAN	21
											227	227		442	10100	227	CY	ASPHALT CONCRETE INTERMEDIATE COURSE, 19 MM, TYPE A (446)	
											13,166	13,166		451	15070	13,166	SY	11" REINFORCED CONCRETE PAVEMENT, CLASS QC 1P WITH QC/QA	
											8,944	8,944		452	15020	8,944	SY	12" NON-REINFORCED CONCRETE PAVEMENT, CLASS QC 1P WITH QC/QA	
	133											133		SPECIAL	45130000	133	FT	PRESSURE RELIEF JOINT, TYPE A	
									0.59			0.59		618	40601	0.59	MILE	RUMBLE STRIPS, SHOULDER (ASPHALT CONCRETE), AS PER PLAN	21
																		WATER WORK	
							310					310		202	35100	310	FT	PIPE REMOVED, 24" AND UNDER	
							1,320					588	732	202	35101	1,320	FT	PIPE REMOVED, 24" AND UNDER, AS PER PLAN	245
							2					2		202	75610	2	EACH	VALVE BOX REMOVED	242
							5,000					5,000		SPECIAL	61199820	5,000	LB	MISCELLANEOUS METAL	241
							2					2		638	98000	2	EACH	WATER WORK, MISC.: 12" CUT-IN VALVE ASSEMBLY AND VALVE BOX, COMPLETE	238
							4					4		638	98000	4	EACH	WATER WORK, MISC.: FURNISHING AND SETTING 6" HYDRANT, COMPLETE (KENNEDY VALVE K81A	243
																		STYLE)	
							3					3		638	98000	3	EACH	WATER WORK, MISC.: FIRE HYDRANT REMOVED AND DISPOSED OF	245
							1					1		638	98000	1	EACH	WATER WORK, MISC.: 2" AIR RELIEF VALVE WITH VALVE BOX, COMPLETE	245
							1					1		638	98000	1	EACH	WATER WORK, MISC.: 12" GATE VALVE WITH VALVE BOX, COMPLETE	238
							200					200		638	98600	200	FT	WATER WORK, MISC.:20" STEEL PIPE ENCASEMENT, BORED OR JACKED	244
							1,613					881	732	638	98600	1,613	FT	WATER WORK, MISC.: 12" DUCTILE IRON, CLASS 52, CEMENT LINED PUSH-ON JOINT PIPE WITH	235
																		RETAINED MECHANICAL JOINT DUCTILE IRON CLASS 350, CEMENT LINED RETAINED	
																		MECHANICAL JOINT FITTINGS	
							529					529		638	98600	529	FT	WATER WORK, MISC.:12" DUCTILE IRON, CLASS 53, CEMENT LINED PIPE AND DUCTILE IRON	235
																		CLASS 350, CEMENT LINED FITTINGS ALL HAVING BOLTLESS RESTRAINED PUSH-ON JOINTS,	
																		TYPE 1	
							601					601		638	98600	601	FT	WATER WORK, MISC.: CUT, FILL AND PLUG EXISTING 12" WATER MAIN	243
																		SANITARY SEWER	
					203							203		202	35100	203	FT	PIPE REMOVED, 24" AND UNDER	
					1							1		202	58000	1	EACH	MANHOLE REMOVED	
					2							2		202	58700	2	EACH	MANHOLE ABANDONED	
					529							529		SPECIAL	20270000	529	FT	FILL AND PLUG EXISTING CONDUIT (18")	218
					50							50		611	00900	50	FT	6" CONDUIT, TYPE B FOR SANITARY, AS PER PLAN	218
					50							50		611	01100	50	FT	6" CONDUIT, TYPE C FOR SANITARY, AS PER PLAN	218
					8							8		611	04601	8	FT	12" CONDUIT, TYPE C, AS PER PLAN, 706.02 CLASS V WITH ASTM TYPE 1 BEDDING	218
					187							187		611	07401	187	FT	18" CONDUIT, TYPE B, AS PER PLAN, 706.02 CLASS V WITH ASTM TYPE 1 BEDDING	218
					495							495		611	07601	495	FT	18" CONDUIT, TYPE C, AS PER PLAN, 706.02 CLASS V WITH ASTM TYPE 1 BEDDING	218
					4							4		611	97200	4	EACH	CONDUIT, MISC.:BENTONITE CLAY DAM	218
					5							5		611	99575	5	EACH	MANHOLE, NO. 3, AS PER PLAN1	218
					1							1		611	99575	1	EACH	MANHOLE, NO. 3, AS PER PLAN2	218

GENERAL SUMMARY

CUY-77-00.42 PART 1

MODEL: Sheet PAPERSIZE: 17x11 (in.) DATE: 04-Mar-22 TIME: 3:18:39 PM USER: comfirk
F:\Jobs\11662-Miller Road Interchange\104983\400-Engineering\Roadway\Sheets\104983_GG003.dgn

DESIGN AGENCY
EUTHENICS
8235 Mohawk Dr. | Cleveland, OH 44130

DESIGNER
COM

REVIEWER
RAB 03/01/22

PROJECT ID
104983

SHEET P.86 | TOTAL P.434

SHEET NUM.												PART.		ITEM	ITEM EXT	GRAND TOTAL	UNIT	DESCRIPTION	SEE SHEET NO.
	92		279		280		297		330		366	01/ODOT	02/LOCAL						
																		TRAFFIC CONTROL	
					4							4		620	31200	4	EACH	REMOVAL OF DELINEATOR	
					212							212		621	00100	212	EACH	RPM	
					143							143		621	54000	143	EACH	RAISED PAVEMENT MARKER REMOVED	
			9								4	13		625	32000	13	EACH	GROUND ROD	
	1											1		626	00102	1	EACH	BARRIER REFLECTOR, TYPE 1 (ONE-WAY)	
	4											4		626	00102	4	EACH	BARRIER REFLECTOR, TYPE 1 (BI-DIRECTIONAL)	
	95											95		626	00112	95	EACH	BARRIER REFLECTOR, TYPE 3 (ONE-WAY)	
	90											90		626	00112	90	EACH	BARRIER REFLECTOR, TYPE 3 (BI-DIRECTIONAL)	
			225									225		630	02100	225	FT	GROUND MOUNTED SUPPORT, NO. 2 POST	
			444									444		630	03100	444	FT	GROUND MOUNTED SUPPORT, NO. 3 POST	
			81.25									81.25		630	04100	81.25	FT	GROUND MOUNTED SUPPORT, NO. 4 POST	
			38.7									38.7		630	06500	38.7	FT	GROUND MOUNTED STRUCTURAL BEAM SUPPORT, W6X9	
			83.1									83.1		630	07600	83.1	FT	GROUND MOUNTED STRUCTURAL BEAM SUPPORT, W10X12	
			16									16		630	08600	16	EACH	SIGN POST REFLECTOR	
			6									6		630	09000	6	EACH	BREAKAWAY STRUCTURAL BEAM CONNECTION	
			7									7		630	72340	7	EACH	OVERHEAD SIGN SUPPORT, TYPE TC-12.31, DESIGN 12	
			1									1		630	72420	1	EACH	OVERHEAD SIGN SUPPORT, TYPE TC-15.116, DESIGN 2	
							9					9		630	79100	9	EACH	SIGN HANGER ASSEMBLY, MAST ARM	
			399.84				72					471.84		630	80100	471.84	SF	SIGN, FLAT SHEET	
			190									190		630	80200	190	SF	SIGN, GROUND MOUNTED EXTRUSHEET	
			1,828									1,828		630	80224	1,828	SF	SIGN, OVERHEAD EXTRUSHEET	
			3									3		630	84500	3	EACH	GROUND MOUNTED STRUCTURAL BEAM SUPPORT FOUNDATION	
			9									9		630	84510	9	EACH	RIGID OVERHEAD SIGN SUPPORT FOUNDATION	
			83									83		630	84900	83	EACH	REMOVAL OF GROUND MOUNTED SIGN AND DISPOSAL	
			7									7		630	85100	7	EACH	REMOVAL OF GROUND MOUNTED SIGN AND REERECTION	
			50									50		630	86002	50	EACH	REMOVAL OF GROUND MOUNTED POST SUPPORT AND DISPOSAL	
			2									2		630	86102	2	EACH	REMOVAL OF GROUND MOUNTED STRUCTURAL BEAM SUPPORT AND DISPOSAL	
			11									11		630	87400	11	EACH	REMOVAL OF OVERHEAD MOUNTED SIGN AND DISPOSAL	
			13									13		630	87500	13	EACH	REMOVAL OF POLE MOUNTED SIGN AND DISPOSAL	
			3									3		630	89702	3	EACH	REMOVAL OF OVERHEAD SIGN SUPPORT AND DISPOSAL	
									6			6		630	97700	6	EACH	SIGNING, MISC.:OVERPASS NAME INSTALLATION	330
					2.49							2.49		644	00104	2.49	MILE	EDGE LINE, 6"	
					1.46							1.46		644	00204	1.46	MILE	LANE LINE, 6"	
					1,603							1,603		644	00404	1,603	FT	CHANNELIZING LINE, 12"	
					559							559		644	01510	559	FT	DOTTED LINE, 6" (WHITE)	
					1,153							1,153		644	01520	1,153	FT	DOTTED LINE, 12" (WHITE)	
					1.36							1.36		646	10010	1.36	MILE	EDGE LINE, 6"	
					1.2							1.2		646	10110	1.2	MILE	LANE LINE, 6"	
					1,713							1,713		646	10310	1,713	FT	CHANNELIZING LINE, 12"	
					420							420		646	10400	420	FT	STOP LINE	
					1,308							1,308		646	10500	1,308	FT	CROSSWALK LINE	
					246							246		646	10600	246	FT	TRANSVERSE/DIAGONAL LINE	
					75							75		646	20300	75	EACH	LANE ARROW	
					3							3		646	20320	3	EACH	WRONG WAY ARROW	
					1							1		646	20350	1	EACH	LANE REDUCTION ARROW	
					618							618		646	20504	618	FT	DOTTED LINE, 6" (WHITE / YELLOW)	
					162							162		646	20510	162	FT	DOTTED LINE, 12" (WHITE)	
					337							337		646	50100	337	FT	REMOVAL OF PAVEMENT MARKING	
					0.75							0.75		807	12110	0.75	MILE	WET REFLECTIVE EPOXY PAVEMENT MARKING, LANE LINE, 6"	
					0.53							0.53		807	12200	0.53	MILE	WET REFLECTIVE EPOXY PAVEMENT MARKING, CENTER LINE	
					3,574							3,574		807	12310	3,574	FT	WET REFLECTIVE EPOXY PAVEMENT MARKING, CHANNELIZING LINE, 12"	
					1.06							1.06		850	20000	1.06	MILE	GROOVING FOR 4" RECESSED PAVEMENT MARKING, (CONCRETE)	
					0.75							0.75		850	20010	0.75	MILE	GROOVING FOR 6" RECESSED PAVEMENT MARKING, (CONCRETE)	
					3,574							3,574		850	20130	3,574	FT	GROOVING FOR 12" RECESSED PAVEMENT MARKING, (CONCRETE)	

GENERAL SUMMARY

CUY-77-00.42 PART 1

MODEL: Sheet PAPERSIZE: 17x11 (in.) DATE: 3/4/2022 TIME: 1:13:56 PM USER: esmccaslin
F:\Jobs\1162-Miller Road Interchange\104983\400-Engineering\Roadway\Sheets\104983_GG004.dgn

DESIGN AGENCY
EUTHENICS
8235 Mohawk Dr. | Cleveland, OH 44256

DESIGNER
COM

REVIEWER
RAB 03/01/22

PROJECT ID
104983

SHEET P.87 | TOTAL P.434

SHEET NUM.												PART.		ITEM	ITEM EXT	GRAND TOTAL	UNIT	DESCRIPTION	SEE SHEET NO.
									315		330	01/ODOT	02/LOCAL						
																		LIGHTING	
									9			9		625	13200	9	EACH	LIGHT TOWER, BBBB100	
									9			9		625	15100	9	EACH	LIGHT TOWER FOUNDATION, 36" X 20' DEEP	
									714			714		625	23200	714	FT	NO. 4 AWG 2400 VOLT DISTRIBUTION CABLE	
									6,082			6,082		625	24320	6,082	FT	1-1/2" DUCT CABLE WITH THREE NO. 4 AWG 2400 VOLT CABLES	
									159			159		625	25500	159	FT	CONDUIT, 3", 725.04	
									208			208		625	25902	208	FT	CONDUIT, JACKED OR DRILLED, 725.04, 3"	
									36			36		625	26263	36	EACH	LUMINAIRE, HIGH MAST, SOLID STATE (LED), AS PER PLAN, SYMMETRIC, 480V	314
									5,398			5,398		625	29000	5,398	FT	TRENCH	
									7			7		625	30706	7	EACH	PULL BOX, 725.08, 24"	
									19			19		625	32000	19	EACH	GROUND ROD	
											1	1		625	33000	1	EACH	STRUCTURE GROUNDING SYSTEM	
									1			1		625	34001	1	EACH	POWER SERVICE, AS PER PLAN	314
									6,082			6,082		625	36010	6,082	FT	UNDERGROUND WARNING/MARKING TAPE	
									10			10		625	36200	10	FT	POWER CABLE FOR LIGHT TOWER	
									414			414		632	69900	414	FT	SERVICE CABLE, 3 CONDUCTOR, NO. 4 AWG	

GENERAL SUMMARY

DESIGN AGENCY
EUTHENICS
8235 Midland Dr. | Cleveland, OH 44236

DESIGNER
COM

REVIEWER
RAB 03/01/22

PROJECT ID
104983

SHEET P.88 | TOTAL P.434

CUY-77-00.42 PART 1

MODEL: Sheet PAPERSIZE: 17x11 (in.) DATE: 3/4/2022 TIME: 1:14:13 PM USER: esmccaslin
F:\Jobs\1162\Miller Road Interchange\104983\400-Engineering\Roadway\Sheets\104983_GG005.dgn

SHEET NUM.											PART.		ITEM	ITEM EXT	GRAND TOTAL	UNIT	DESCRIPTION	SEE SHEET NO.
									297	298	01/ODOT	02/LOCAL						
																	TRAFFIC SIGNALS	
									159		159		625	25400	159	FT	CONDUIT, 2", 725.04	
									87		87		625	25500	87	FT	CONDUIT, 3", 725.04	
									955		955		625	25600	955	FT	CONDUIT, 4", 725.04	
									1,018		1,018		625	29002	1,018	FT	TRENCH, 24" DEEP	
									6		6		625	30700	6	EACH	PULL BOX, 725.08, 18"	
									9		9		625	30706	9	EACH	PULL BOX, 725.08, 24"	
									31		31		625	32000	31	EACH	GROUND ROD	
									1,018		1,018		625	36010	1,018	FT	UNDERGROUND WARNING/MARKING TAPE	
									17		17		632	05006	17	EACH	VEHICULAR SIGNAL HEAD, (LED), 3-SECTION, 12" LENS, 1-WAY, POLYCARBONATE	
									5		5		632	05064	5	EACH	VEHICULAR SIGNAL HEAD, (LED), 4-SECTION, 12" LENS, 1-WAY, POLYCARBONATE	
									4		4		632	05086	4	EACH	VEHICULAR SIGNAL HEAD, (LED), 5-SECTION, 12" LENS, 1-WAY, POLYCARBONATE	
									18		18		632	20731	18	EACH	PEDESTRIAN SIGNAL HEAD (LED), TYPE D2, COUNTDOWN, AS PER PLAN	294
									12		12		632	25000	12	EACH	COVERING OF VEHICULAR SIGNAL HEAD	
									18		18		632	26000	18	EACH	PEDESTRIAN PUSHBUTTON	
									3,227		3,227		632	40200	3,227	FT	SIGNAL CABLE, 2 CONDUCTOR, NO. 14 AWG	
									3,299		3,299		632	40500	3,299	FT	SIGNAL CABLE, 5 CONDUCTOR, NO. 14 AWG	
									3,769		3,769		632	40700	3,769	FT	SIGNAL CABLE, 7 CONDUCTOR, NO. 14 AWG	
									8		8		632	64010	8	EACH	SIGNAL SUPPORT FOUNDATION	
									11		11		632	64020	11	EACH	PEDESTAL FOUNDATION	
									45		45		632	68200	45	FT	POWER CABLE, 2 CONDUCTOR, NO. 6 AWG	
									197		197		632	68300	197	FT	POWER CABLE, 3 CONDUCTOR, NO. 6 AWG	
									3		3		632	70000	3	EACH	POWER SERVICE	
									3		3		632	70400	3	EACH	CONDUIT RISER, 2" DIAMETER	
									1		1		632	71224	1	EACH	SIGNAL SUPPORT, TYPE TC-12.31 DESIGN 6 POLE, WITH MAST ARMS TC-81.22 DESIGN 4 AND	
																	DESIGN 4	
									1		1		632	71244	1	EACH	SIGNAL SUPPORT, TYPE TC-12.31 DESIGN 6 POLE, WITH MAST ARMS TC-81.22 DESIGN 12 AND	
																	DESIGN 4	
									1		1		632	72110	1	EACH	SIGNAL SUPPORT, TYPE TC-81.22, DESIGN 4	
									2		2		632	72130	2	EACH	SIGNAL SUPPORT, TYPE TC-81.22, DESIGN 12	
									3		3		632	72140	3	EACH	SIGNAL SUPPORT, TYPE TC-81.22, DESIGN 13	
									11		11		632	89900	11	EACH	PEDESTAL, 8', TRANSFORMER BASE	
									2		2		632	90100	2	EACH	REMOVAL OF TRAFFIC SIGNAL INSTALLATION	
									8		8		632	90400	8	EACH	SIGNALIZATION, MISC.: TEST HOLE PERFORMED	296
									3		3		633	65511	3	EACH	CABINET, TYPE TS-2, AS PER PLAN	296
									3		3		633	67100	3	EACH	CABINET FOUNDATION	
									3		3		633	67200	3	EACH	CONTROLLER WORK PAD	
									3		3		633	75001	3	EACH	UNINTERRUPTIBLE POWER SUPPLY (UPS), 1000 WATT, AS PER PLAN	296
									4		4		805	00101	4	EACH	GLOBAL POSITIONING SYSTEM CLOCK ASSEMBLY, AS PER PLAN	296
									3		3		809	66030	3	EACH	TRAFFIC SIGNAL SYSTEM WITH EMERGENCY VEHICLE PRE-EMPTION	
										8	8		809	69100	8	EACH	STOP LINE RADAR DETECTION	
										1	1		809	69200	1	EACH	EMERGENCY VEHICLE PREEMPTION	
										10	10		809	69210	10	EACH	PREEMPT RECEIVING UNIT	
										2,245	2,245		809	69220	2,245	FT	PREEMPT DETECTOR CABLE	
										3	3		809	69230	3	EACH	PREEMPT PHASE SELECTOR	
										10	10		809	69241	10	EACH	PREEMPT CONFIRMATION LIGHT, AS PER PLAN	295

GENERAL SUMMARY

DESIGN AGENCY
EUTHENICS
8235 Mohawk Dr. | Cleveland, OH 44125

DESIGNER
COM

REVIEWER
RAB 03/01/22

PROJECT ID
104983

SHEET P.89 | TOTAL P.434

CUY-77-00.42 PART 1

MODEL: Sheet PAPERSIZE: 17x11 (in.) DATE: 3/4/2022 TIME: 1:14:30 PM USER: esmccaslin
F:\Jobs\1162\Miller Road Interchange\104983\400-Engineering\Roadway\Sheets\104983_GG006.dgn

SHEET NUM.	PART.		ITEM	ITEM EXT	GRAND TOTAL	UNIT	DESCRIPTION	SEE SHEET NO.
332	01/ODOT	02/LOCAL						
							STRUCTURE OVER 20 FOOT SPAN (SFN 1805673)	
LS	LS		202	11203	LS		PORTIONS OF STRUCTURE REMOVED, OVER 20 FOOT SPAN, AS PER PLAN	328
178	178		202	22900	178	SY	APPROACH SLAB REMOVED	
LS	LS		503	11101	LS		COFFERDAMS AND EXCAVATION BRACING, AS PER PLAN	328
255	255		503	21100	255	CY	UNCLASSIFIED EXCAVATION	
LS	LS		505	11100	LS		PILE DRIVING EQUIPMENT MOBILIZATION	
3,200	3,200		507	00100	3,200	FT	STEEL PILES HP10X42, FURNISHED	
2,940	2,940		507	00150	2,940	FT	STEEL PILES HP10X42, DRIVEN	
127,716	127,716		509	10001	127,716	LB	EPOXY COATED REINFORCING STEEL, AS PER PLAN	329 & 340
400	400		509	20001	400	LB	REINFORCING STEEL, REPLACEMENT OF EXISTING REINFORCING STEEL, AS PER PLAN	329
150	150		510	10001	150	EACH	DOWEL HOLES WITH NONSHRINK, NONMETALLIC GROUT, AS PER PLAN	329
2	2		511	33500	2	EACH	SEMI-INTEGRAL DIAPHRAGM GUIDE	
430	430		511	34446	430	CY	CLASS QC2 CONCRETE WITH QC/QA, BRIDGE DECK	
58	58		511	34450	58	CY	CLASS QC2 CONCRETE WITH QC/QA, BRIDGE DECK (PARAPET)	
76	76		511	41012	76	CY	CLASS QC1 CONCRETE WITH QC/QA, PIER ABOVE FOOTINGS	
82	82		511	43512	82	CY	CLASS QC1 CONCRETE WITH QC/QA, ABUTMENT INCLUDING FOOTING	
77	77		511	46512	77	CY	CLASS QC1 CONCRETE WITH QC/QA, FOOTING	
529	529		512	10050	529	SY	SEALING OF CONCRETE SURFACES (NON-EPOXY)	
1,383	1,383		512	10100	1,383	SY	SEALING OF CONCRETE SURFACES (EPOXY-URETHANE)	
8	8		512	33000	8	SY	TYPE 2 WATERPROOFING	
261,000	261,000		513	10240	261,000	LB	STRUCTURAL STEEL MEMBERS, LEVEL 2	
20,280	20,280		514	00050	20,280	SF	SURFACE PREPARATION OF EXISTING STRUCTURAL STEEL	
20,280	20,280		514	00056	20,280	SF	FIELD PAINTING OF EXISTING STRUCTURAL STEEL, PRIME COAT	
32,330	32,330		514	00060	32,330	SF	FIELD PAINTING STRUCTURAL STEEL, INTERMEDIATE COAT	
32,330	32,330		514	00066	32,330	SF	FIELD PAINTING STRUCTURAL STEEL, FINISH COAT	
34	34		514	00504	34	MNHR	GRINDING FINS, TEARS, SLIVERS ON EXISTING STRUCTURAL STEEL	
16	16		514	10000	16	EACH	FINAL INSPECTION REPAIR	
163	163		516	10010	163	FT	ARMORLESS PREFORMED JOINT SEAL	
81	81		516	13400	81	SF	3/4" PREFORMED EXPANSION JOINT FILLER	
59	59		516	13900	59	SF	2" PREFORMED EXPANSION JOINT FILLER	
68	68		516	14020	68	FT	SEMI-INTEGRAL ABUTMENT EXPANSION JOINT SEAL	
8	8		516	44201	8	EACH	ELASTOMERIC BEARING WITH INTERNAL LAMINATES AND LOAD PLATE (NEOPRENE),	348
							AS PER PLAN (LOAD PLATE 13" x 17" x 1.50", NEOPRENE 12" x 16" x 3.55")	
8	8		516	44201	8	EACH	ELASTOMERIC BEARING WITH INTERNAL LAMINATES AND LOAD PLATE (NEOPRENE),	349
							AS PER PLAN (LOAD PLATE 16" x 19" x 1.50", NEOPRENE 15" x 18" x 3.25")	
4	4		516	44201	4	EACH	ELASTOMERIC BEARING WITH INTERNAL LAMINATES AND LOAD PLATE (NEOPRENE),	349
							AS PER PLAN (LOAD PLATE 16" x 27" x 1.50", NEOPRENE 15" x 18" x 3.25")	
46	46		518	21200	46	CY	POROUS BACKFILL WITH GEOTEXTILE FABRIC	
88	88		518	40000	88	FT	6" PERFORATED CORRUGATED PLASTIC PIPE	
24	24		518	40010	24	FT	6" NON-PERFORATED CORRUGATED PLASTIC PIPE, INCLUDING SPECIALS	
17	17		519	11101	17	SF	PATCHING CONCRETE STRUCTURE, AS PER PLAN	329
352	352		526	15001	352	SY	REINFORCED CONCRETE APPROACH SLABS (T=13"), AS PER PLAN	329
163	163		526	90030	163	FT	TYPE C INSTALLATION	
LS	LS		SPECIAL	53014000	LS		STRUCTURAL SURVEY AND MONITORING OF VIBRATION	329
270	270		601	21100	270	SY	SLOPE PROTECTION, MISC.: GROUT FILLED FABRIC MATS	330
584	584		607	39900	584	FT	VANDAL PROTECTION FENCE, 6' STRAIGHT, COATED FABRIC	
864	864		607	39994	864	FT	TEMPORARY VANDAL FENCE, TYPE B	
LS	LS		607	98200	LS		FENCE, MISC.: ALUMINUM LETTERING	361
1,196	1,196		847	10000	1,196	SY	MICRO SILICA MODIFIED CONCRETE OVERLAY (1 .5" THICK)	
5	5		847	20000	5	CY	MICRO SILICA MODIFIED CONCRETE OVERLAY (VARIABLE THICKNESS), MATERIAL ONLY	
LS	LS		847	30000	LS		TEST SLAB	
3	3		847	30200	3	CY	FULL DEPTH REPAIR	
72	72		847	50000	72	SY	HAND CHIPPING	

GENERAL SUMMARY

DESIGN AGENCY
EUTHENICS
8235 Mohawk Dr. | Cleveland, OH 44139

DESIGNER
COM

REVIEWER
RAB 03/01/22

PROJECT ID
104983

SHEET P.90 | TOTAL P.434

CUY-77-00.42 PART 1

MODEL: Sheet PAPERSIZE: 17x11 (in.) DATE: 3/4/2022 TIME: 11:14:47 PM USER: esmccaslin
F:\Jobs\11162-Miller Road Interchange\104983\400-Engineering\Roadway\Sheets\104983_GG007.dgn

SHEET NUM.												PART.		ITEM	ITEM EXT	GRAND TOTAL	UNIT	DESCRIPTION	SEE SHEET NO.
				21	23	24	25	26	27	28	29	01/ODOT	02/LOCAL						
																		MAINTENANCE OF TRAFFIC	
									23			23		254	01000	23	SY	PAVEMENT PLANING, ASPHALT CONCRETE (1.5" DEPTH)	
									8			8		411	10000	8	CY	STABILIZED CRUSHED AGGREGATE	
									4			4		442	10001	4	CY	ASPHALT CONCRETE SURFACE COURSE, 12.5 MM, TYPE A (446), AS PER PLAN PG76-22M	27
											392	392		609	26000	392	FT	CURB, TYPE 6	
									500			500		614	11110	500	HOUR	LAW ENFORCEMENT OFFICER WITH PATROL CAR FOR ASSISTANCE	
											5	5		SPECIAL	61411300	5	EACH	WORK ZONE TRAFFIC SIGNAL	25
								1,206				1,206		614	11630	1,206	FT	INCREASED BARRIER DELINEATION	
											875	875		SPECIAL	61412200	875	FT	WORK ZONE GUARDRAIL	27
											7	7		614	12380	7	EACH	WORK ZONE IMPACT ATTENUATOR, 24" WIDE HAZARDS, (UNIDIRECTIONAL) (ONE-WAY)	
											9	9		614	12384	9	EACH	WORK ZONE IMPACT ATTENUATOR, 24" WIDE HAZARDS, (BIDIRECTIONAL)	
												LS		614	12420	LS		DETOUR SIGNING	
					4							4		614	12460	4	EACH	WORK ZONE MARKING SIGN	
										2		2		614	12484	2	EACH	WORK ZONE INCREASED PENALTIES SIGN	
									735			735		614	12801	735	EACH	WORK ZONE RAISED PAVEMENT MARKER, AS PER PLAN	27
											243	243		614	13310	243	EACH	BARRIER REFLECTOR, TYPE 1 (1WAY)	
								39				39		614	13312	39	EACH	BARRIER REFLECTOR, TYPE 2 (1WAY)	
								37			186	223		614	13350	223	EACH	OBJECT MARKER, ONE WAY	
											57	57		614	13360	57	EACH	OBJECT MARKER, TWO WAY	
							72					72		614	18601	72	SNMT	PORTABLE CHANGEABLE MESSAGE SIGN, AS PER PLAN	25
											0.77	0.77		614	21000	0.77	MILE	WORK ZONE CENTER LINE, CLASS I	
											5.2	5.2		614	22000	5.2	MILE	WORK ZONE EDGE LINE, CLASS I, 4"	
											14,649	14,649		614	23000	14,649	FT	WORK ZONE CHANNELIZING LINE, CLASS I, 8"	
											1,078	1,078		614	24000	1,078	FT	WORK ZONE DOTTED LINE, CLASS I	
											95	95		614	25000	95	FT	WORK ZONE TRANSVERSE/DIAGONAL LINE, CLASS I	
											170	170		614	26000	170	FT	WORK ZONE STOP LINE, CLASS I	
											6	6		614	30000	6	EACH	WORK ZONE ARROW, CLASS I	
						1						1		614	40051	1	EACH	BUSINESS ENTRANCE SIGN, AS PER PLAN	24
									LS			LS		615	10000	LS		ROADS FOR MAINTAINING TRAFFIC	
											1,860	1,860		615	20000	1,860	SY	PAVEMENT FOR MAINTAINING TRAFFIC, CLASS A	
											1,268	1,268		615	20001	1,268	SY	PAVEMENT FOR MAINTAINING TRAFFIC, CLASS A, AS PER PLAN	27
							50					50		616	10000	50	MGAL	WATER	
									5			5		616	20000	5	TON	CALCIUM CHLORIDE	
											12,150	12,150		622	41100	12,150	FT	PORTABLE BARRIER, UNANCHORED	
										4		4		808	18700	4	SNMT	DIGITAL SPEED LIMIT (DSL) SIGN ASSEMBLY	
					LS							LS		614	11000	LS		**INCIDENTALS** MAINTAINING TRAFFIC	
				9								9		619	16021	9	MNTH	FIELD OFFICE, TYPE C, AS PER PLAN	21
				LS								LS		623	10000	LS		CONSTRUCTION LAYOUT STAKES AND SURVEYING	
												LS		624	10000	LS		MOBILIZATION	
												LS		990	25400	LS		LUMP SUM ADJUSTMENT - GENERAL / OTHER ITEMS (INFLATION)	

GENERAL SUMMARY

CUY-77-00.42 PART 1

MODEL: Sheet PAPERSIZE: 17x11 (in.) DATE: 04-Mar-22 TIME: 3:21:54 PM USER: comfirk
F:\Jobs\1162-Miller Road Interchange\104983400-Engineering\Roadway\Sheets\104983_GG008.dgn

DESIGN AGENCY
EUTHENICS
8235 Mohawk Dr. | Cleveland, OH 44256
DESIGNER
COM
REVIEWER
RAB 03/01/22

PROJECT ID
104983

SHEET NO.	202												203	451	601			602	606						608			622	626					690
	HEADWALL REMOVED	WALK REMOVED	CONCRETE BARRIER REMOVED	FILL AND PLUG EXISTING CONDUIT	REMOVAL MISC.: CONCRETE SLAB REMOVAL	PIPE REMOVED, 24" AND UNDER	PIPE REMOVED, OVER 24"	GUARDRAIL REMOVED	MAILBOX REMOVED	MANHOLE REMOVED	CATCH BASIN REMOVED	FENCE REMOVED	SPECIAL - WICK DRAIN	SPECIAL - PRESSURE RELIEF JOINT, TYPE A	ROCK CHANNEL PROTECTION, TYPE A WITH AGGREGATE FILTER	ROCK CHANNEL PROTECTION, TYPE B WITH AGGREGATE FILTER	ROCK CHANNEL PROTECTION, TYPE C WITH AGGREGATE FILTER	CONCRETE MASONRY	GUARDRAIL, TYPE MGS	GUARDRAIL, BARRIER DESIGN, TYPE MGS	ANCHOR ASSEMBLY, MGS TYPE B	ANCHOR ASSEMBLY, MGS TYPE E (MASH 2016)	ANCHOR ASSEMBLY, MGS TYPE T	MGS BRIDGE TERMINAL ASSEMBLY, TYPE 1	CURB RAMP	CONCRETE BARRIER, SINGLE SLOPE, TYPE D	CONCRTE BARRIER END SECTION, TYPE D	CONCRETE BARRIER END ANCHORAGE, REINFORCED, TYPE D	BARRIER REFLECTOR, TYPE 1 ONE-WAY	BARRIER REFLECTOR, TYPE 1 BI-DIRECTIONAL	BARRIER REFLECTOR, TYPE 3 ONE-WAY	BARRIER REFLECTOR, TYPE 3 BI-DIRECTIONAL	SPECIAL - MAILBOX REMOVED AND RESET
	EACH	SF	FT	FT	EACH	FT	FT	FT	EACH	EACH	EACH	FT	FT	FT	CY	CY	CY	CY	FT	FT	EACH	EACH	EACH	EACH	SF	FT	EACH	EACH	EACH	EACH	EACH	EACH	EACH
P.97						100		1780			4						2.00	0.20	1768		1		2									23	1
P.99	2			50	1	115		822			4			66			4.88	0.40	1156			2	2	2						2		17	
P.101	2					121		2171			2	522		67					3626		2	2		2						2		50	
P.103						93	554	255	1	1	4																						
P.105						168	391			6	8	210																					
P.108			60			513		6,233		2	1							0.31	5443	3412	1	4	3	2		63	2	1	1		95		
P.114		675														8.90		4.49															
P.207																									458								
P.208																									656								
P.209																									976								
P.211													3363																				
P.213							16								60			46															
P.215	1						4									6.67		0.69															
P.216						42											2.67	2.20															
P.217																		1.38															

SHEET NO.	605			611																			
	6" SHALLOW PIPE UNDERDRAIN, WITH GEOTEXTILE FABRIC	6" BASE PIPE UNDERDRAIN, WITH GEOTEXTILE FABRIC	6" UNCLASSIFIED PIPE UNDERDRAIN, WITH GEOTEXTILE FABRIC	6" CONDUIT, TYPE F	12" CONDUIT, TYPE B, 706.02, AS PER PLAN	12" CONDUIT, TYPE C	12" CONDUIT, TYPE C, 706.02, AS PER PLAN	15" CONDUIT, TYPE B	15" CONDUIT, TYPE B, 706.02, AS PER PLAN	15" CONDUIT, TYPE C	15" CONDUIT, TYPE C, 706.02, AS PER PLAN	18" CONDUIT, TYPE B, 706.02, AS PER PLAN	18" CONDUIT, TYPE C	18" CONDUIT, TYPE C, 706.02, AS PER PLAN	21" CONDUIT, TYPE C, 706.02, AS PER PLAN	21" CONDUIT, TYPE D, 706.02, AS PER PLAN	24" CONDUIT, TYPE B, 706.02, AS PER PLAN	24" CONDUIT, TYPE B, 706.02, AS PER PLAN 2	27" CONDUIT, TYPE B, 706.02, AS PER PLAN	30" CONDUIT, TYPE B, 706.02, AS PER PLAN	36" CONDUIT, TYPE A, 706.02, AS PER PLAN	36" CONDUIT, TYPE A, 706.02, 707.01 (1/2") (0.064) OR 707.35	36" CONDUIT, TYPE B, 706.02, AS PER PLAN
	FT	FT	FT	FT	FT	FT	FT	FT	FT	FT	FT	FT	FT	FT	FT	FT	FT	FT	FT	FT	FT	FT	FT
P.96	2433		501	350																			
P.97					68		41																
P.99					584		76										50						
P.101					312																		
P.103					146				275			157		24									
P.105					230		15		73		14				6		17	30	10	176			96
P.108		2031											593										
P.114		5287		50		127		255		196											15	119	
TOTALS CARRIED TO GENERAL SUMMARY	2,433	7,324	501	400	1,340	127	132	255	348	196	14	157	593	24	6	50	17	30	10	176	15	119	96

DRAINAGE SUBSUMMARY

DESIGN AGENCY
EUTHENICS
8235 Mohawk Dr. | Cleveland, OH 44139

DESIGNER
ESM

REVIEWER
DTB 03/01/22

PROJECT ID
104983

SHEET P.93 | TOTAL P.434

CUY-77-00.42 PART 1

MODEL: Sheet PAPERSIZE: 17x11 (in.) DATE: 3/4/2022 TIME: 1:15:26 PM USER: esmcastlin
F:\Jobs\11162-Miller Road Interchange\104983400-Engineering\Roadway\Sheets\104983_GS002.dgn

SHEET NO.	611													611	670	836	895						
	42" CONDUIT, TYPE C, 706.02, AS PER PLAN	48" CONDUIT, TYPE A, 706.02, 707.01 (1/2) (0.064), OR 707.35	48" CONDUIT, TYPE C, 706.02, AS PER PLAN	72" CONDUIT, TYPE A	CATCH BASIN, NO. 5	CATCH BASIN, MISC. : CUYAHOGA COUNTY NO. 3C	CATCH BASIN, MISC. : CUYAHOGA COUNTY TWIN 3C	MANHOLE, NO. 3	MANHOLE, NO. 3, AS PER PLAN 3	MANHOLE, NO. 3, WITH 96" BASE I.D. AND 9" WEIR, AS PER PLAN 3	MANHOLE, NO. 3, AS PER PLAN 4	MANHOLE ADJUSTED TO GRADE, AS PER PLAN	MANHOLE RECONSTRUCTED TO GRADE, AS PER PLAN	CONDUIT, MISC.: BENTONITE CLAY DAM	DITCH EROSION PROTECTION MAT, TYPE B	SEEDING AND EROSION CONTROL WITH TURF REINFORCING MAT, TYPE 1	MANUFACTURED WATER QUALITY STRUCTURE, TYPE 3						
	FT	FT	FT	FT	EACH	EACH	EACH	EACH	EACH	EACH	EACH	EACH	EACH	EACH	SY	SY	EACH						
P.97						4							2			90							
P.99						9			1							73							
P.101			39			2			1														
P.103	182		360			4			8	1		1			246		1						
P.105	85					7	2		7		1	1	1										
P.108								3															
P.114		120			4	1		2						2	164	560							
P.213				30																			
TOTALS CARRIED TO GENERAL SUMMARY	267	120	399	30	4	27	2	5	17	1	1	2	3	2	410	723	1						

DRAINAGE SUBSUMMARY

DESIGN AGENCY
EUTHENICS
8235 Mohawk Dr. | Cleveland, OH 44139

DESIGNER
ESM

REVIEWER
DTB 03/01/22

PROJECT ID
104983

SHEET P.94 | TOTAL P.434

CUY-77-00.42 PART 1

MODEL: Sheet PAPERSIZE: 17x11 (in.) DATE: 04-Mar-22 TIME: 2:50:39 PM USER: comfirtk
F:\Jobs\11162-Miller Road Interchange\104983400-Engineering\Roadway\Sheets\104983_GS003.dgn

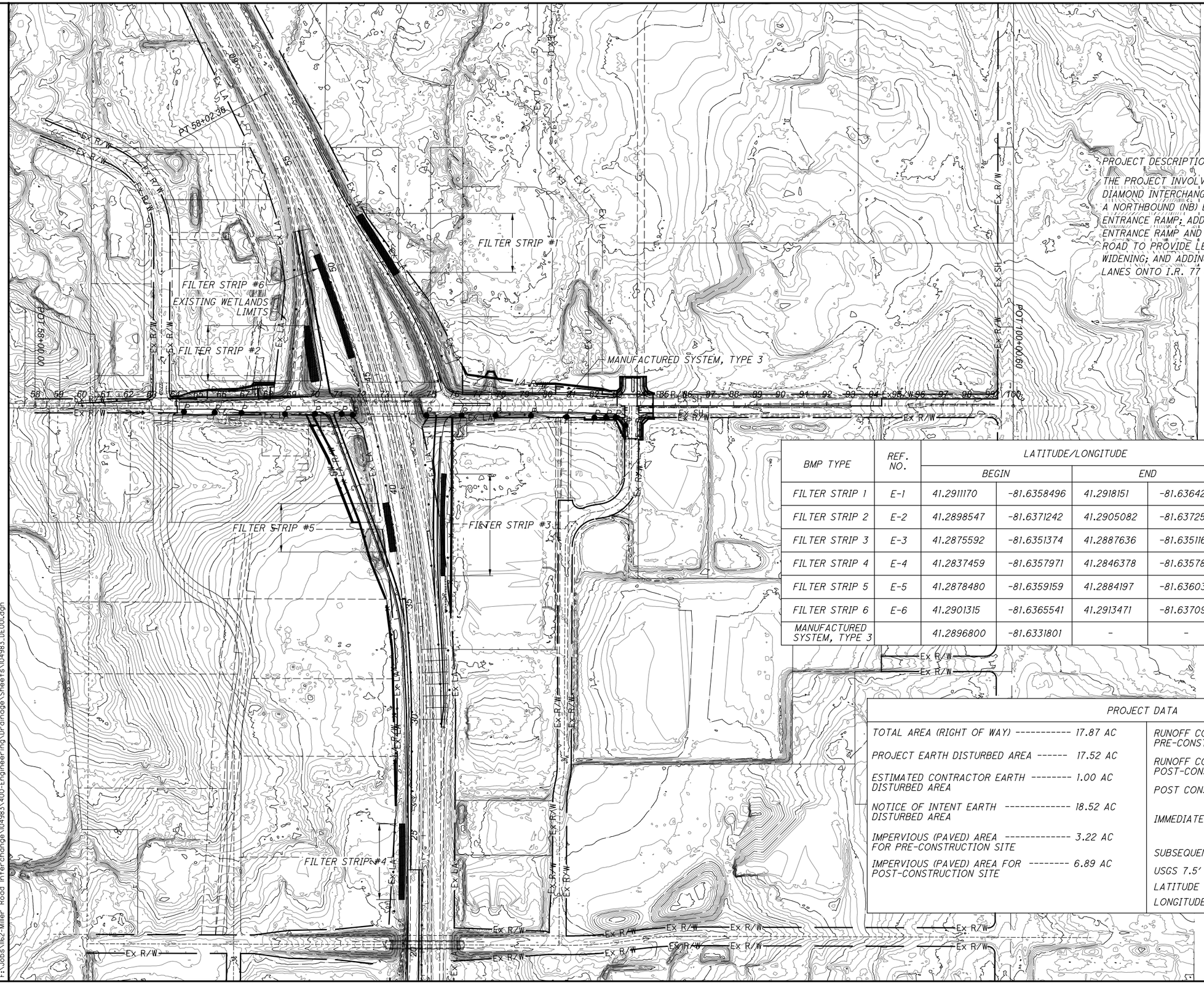

PROJECT DESCRIPTION

THE PROJECT INVOLVES COMPLETING THE EXISTING PARTIAL DIAMOND INTERCHANGE AT I.R. 77 AND MILLER ROAD BY ADDING A NORTHBOUND (NB) EXIT RAMP AND A SOUTHBOUND (SB) ENTRANCE RAMP; ADDING AN AUXILIARY LANE BETWEEN NEW SB ENTRANCE RAMP AND THE I.R. 80 EXIT RAMP; WIDENING OF MILLER ROAD TO PROVIDE LEFT-TURN LANES INCLUDING STRUCTURE WIDENING; AND ADDING DUAL WESTBOUND (WB) RIGHT TURN LANES ONTO I.R. 77 NB ENTRANCE RAMP.

BMP TYPE	REF. NO.	LATITUDE/LONGITUDE				BMP WIDTH	EDA TREATMENT CREDIT
		BEGIN		END		(FEET)	(ACRES)
FILTER STRIP 1	E-1	41.2911170	-81.6358496	41.2918151	-81.6364247	28	0.40
FILTER STRIP 2	E-2	41.2898547	-81.6371242	41.2905082	-81.6372520	22	0.38
FILTER STRIP 3	E-3	41.2875592	-81.6351374	41.2887636	-81.6351169	16	0.44
FILTER STRIP 4	E-4	41.2837459	-81.6357971	41.2846378	-81.6357858	24	0.49
FILTER STRIP 5	E-5	41.2878480	-81.6359159	41.2884197	-81.6360303	25	0.38
FILTER STRIP 6	E-6	41.2901315	-81.6365541	41.2913471	-81.6370945	28	0.84
MANUFACTURED SYSTEM, TYPE 3		41.2896800	-81.6331801	-	-	-	1.72

PROJECT DATA

TOTAL AREA (RIGHT OF WAY) ---------- 17.87 AC

PROJECT EARTH DISTURBED AREA ------ 17.52 AC

ESTIMATED CONTRACTOR EARTH DISTURBED AREA -------- 1.00 AC

NOTICE OF INTENT EARTH DISTURBED AREA ---------- 18.52 AC

IMPERVIOUS (PAVED) AREA FOR PRE-CONSTRUCTION SITE ---------- 3.22 AC

IMPERVIOUS (PAVED) AREA FOR POST-CONSTRUCTION SITE -------- 6.89 AC

RUNOFF COEFFICIENT FOR PRE-CONSTRUCTION SITE ---------- 0.57

RUNOFF COEFFICIENT FOR POST-CONSTRUCTION SITE ---------- 0.65

POST CONSTRUCTION BMP: -VEGETATED FILTER STRIP -MANUFACTURED SYSTEM 3

IMMEDIATE RECIEVING WATERS -----CHIPPEWA CREEK/ FURNACE RUN STREAM

SUBSEQUENT RECIEVING WATERS ---- CUYAHOGA RIVER

USGS 7.5' QUADRANGLE ---- BROADVIEW HEIGHTS, OH

LATITUDE ---------- 41° 17' 21.81" N

LONGITUDE ---------- 81° 38' 12.61" W

HORIZONTAL SCALE IN FEET
0 100 200 400

PROJECT SITE PLAN
MILLER ROAD & I.R. 77

DESIGN AGENCY
EUTHENICS
8235 Mohawk Dr. | Cleveland, OH 44138

DESIGNER ESM
REVIEWER RAB 03/01/22
PROJECT ID 104983
SHEET P.95 TOTAL P.434

CUY-77-00.42 PART 1

MODEL: CLX_MILLER ROAD - PLAN 1(Sheet) PAPERSIZE: 17x11(in.) DATE: 3/4/2022 TIME: 11:6:51PM USER: esmccaslin
F:\Jobs\162-Miller Road Interchange\104983\400-Engineering\Drainage\Sheets\104983_DE001.dgn

REF. NO.	START PLAN SHEET NO.	STATION LIMITS "X" DENOTES OUTLET LOCATION FOR UNDERDRAINS ONLY				LOCATION	TYPE OF OUTLET	605			611																HORIZONTAL BENDS AND BRANCHES (FOR INFORMATION ONLY)					
		BEGIN		END				6" SHALLOW PIPE UNDERDRAIN, WITH GEOTEXTILE FABRIC	6" BASE PIPE UNDERDRAIN, WITH GEOTEXTILE FABRIC	6" UNCLASSIFIED PIPE UNDERDRAIN, WITH GEOTXTILE FABRIC	6" CONDUIT, TYPE F														6" PLUG	6" X 90° BEND	6" X 30° BEND	6" X 45° BEND	6" CROSS	6" TEE
								FT	FT	FT	FT																EA	EA	EA	EA	EA	EA
																											1					
U-1	P.98		64+19	65+75	X	LT	CATCH BASIN 3C	147			10																1					
U-2	P.98		64+19	65+00	X	RT	UNCLASS. UD	71			10																1					
U-3	P.98		65+00	65+75	X	RT	CATCH BASIN 3C			65	10																					
U-4	P.98		65+78	66+34	X	LT	CATCH BASIN 3C	47			10																1					
U-5	P.98		65+78	66+34	X	RT	CATCH BASIN 3C			47	10																1					
U-6	P.100	X	66+34	67+22		LT	CATCH BASIN 3C	78			10																1					
U-7	P.100	X	66+34	67+22		RT	CATCH BASIN 3C			80	10																1					
U-8	P.100	X	67+25	68+47		LT	CATCH BASIN 3C	110			10																1					
U-9	P.100	X	67+50	68+47		RT	UNCLASS. UD	92			10																1					
U-10	P.100	X	67+25	67+50		RT	CATCH BASIN 3C			15	10																1					
U-11	P.100	X	68+50	69+72		LT	CATCH BASIN 3C			112	10																1					
U-12	P.100	X	68+50	69+72		RT	CATCH BASIN 3C			112	10																					
U-13	P.100		43+57 ***	69+75	X	RT	CATCH BASIN 3C	74			10																1					
U-14	P.100		14+44 **	69+75	X	LT	CATCH BASIN 3C	75			10																1					
U-15	P.100		14+91 **	71+09	X	LT	CATCH BASIN 3C	45			10																1	1				
U-16	P.100	X	71+09	71+34		LT	CATCH BASIN 3C			16	10																1					
U-17	P.100		71+51	71+09	X	RT	CATCH BASIN 3C	32			10																1					
U-18	P.102		74+69	74+90	X	LT	CATCH BASIN 3C			11	10																	1				
U-19	P.102		0+65*	74+90	X	LT	CATCH BASIN 3C	36			10																	1				
U-20	P.102		0+95 *	77+35	X	LT	CATCH BASIN 3C	190			10																1					
U-21	P.102		42+59 ****	77+35	X	RT	CATCH BASIN 3C	190			10																1					
U-22	P.104		77+38	80+10	X	LT	CATCH BASIN 3C	261			10																1					
U-23	P.104		77+38	79+58	X	RT	UNCLASS. UD	210			10																1					
U-24	P.104		79+58	80+08	X	RT	CATCH BASIN 3C			40	10																					
U-25	P.104		80+14	81+93	X	LT	CATCH BASIN 3C	143			10																1					
U-26	P.104		80+11	81+93	X	RT	CATCH BASIN 3C	145			10																1					
U-27	P.106	X	81+93	82+72		LT	CATCH BASIN 3C	42			10																1					
U-28	P.106	X	81+93	82+72		RT	CATCH BASIN 3C	42			10																1					
U-29	P.106	X	82+75	83+34		LT	CATCH BASIN 3C	107			10																1					
U-30	P.106	X	82+75	83+32		RT	CATCH BASIN 3C	63			10																1					
U-31	P.106	X	83+36	83+46		RT	CATCH BASIN 3C	58			10																1					
U-32	P.106	X	84+41	84+54		RT	CATCH BASIN 3C			3	10																1					
U-33	P.106	X	83+87	84+39		RT	CATCH BASIN 3C	57			10																1					
U-34	P.106		84+46	83+99	X	LT	CATCH BASIN 3C	64			10																1					
U-35	P.106	X	83+87	83+87		RT	CATCH BASIN 3C	54			10																					
* STATIONING OFF RAMP B-1 ** STATIONING OFF RAMP B-2																															
*** STATIONING OFF RAMP B-3 **** STATIONING OFF RAMP B-4																															
TOTALS CARRIED TO SUB-SUMMARY								2,433		501	350																30	2		3		

CUY-77-00.42 PART 1

MODEL: 104983_DQ001 PAPERSIZE: 17x11 (in.) DATE: 3/4/2022 TIME: 1:17:02 PM USER: esmccaslin
F:\Jobs\11162-Miller Road Interchange\104983\400-Engineering\Drainage\Sheets\104983_DQ001.dgn

UNDERDRAIN QUANTITIES - MILLER ROAD

DESIGN AGENCY
EUTHENICS
8239 Midwest Dr. | Cleveland, OH 44125

DESIGNER
ESM

REVIEWER
DTB 03/01/22

PROJECT ID
104983

SHEET P.96 TOTAL P.434

REF. NO.	SHEET NO.	STATION LIMITS BEGIN	STATION LIMITS END	LOCATION	202 PIPE REMOVED, 24" AND UNDER	202 GUARDRAIL REMOVED	202 CATCH BASIN REMOVED	601 ROCK CHANNEL PROTECTION, TYPE C WITH AGGREGATE FILTER	602 CONCRETE MASONRY	606 GUARDRAIL, TYPE MGS	606 ANCHOR ASSEMBLY, MGS TYPE B	606 ANCHOR ASSEMBLY, MGS TYPE T	611 12" CONDUIT, TYPE B, 706.02, AS PER PLAN	611 12" CONDUIT, TYPE C, 706.02, AS PER PLAN	611 CATCH BASIN, MISC.; CUYAHOGA COUNTY NO. 3C	611 MANHOLE RECONSTRUCTED TO GRADE, AS PER PLAN	626 BARRIER REFLECTOR, TYPE 3 BI-DIRECTIONAL	690 SPECIAL - MAILBOX REMOVED AND RESET	836 SEEDING AND EROSION CONTROL WITH TURF REINFORCING MAT, TYPE 1
					FT	FT	EACH	CY	CY	FT	EACH	EACH	FT	FT	EACH	EACH	EACH	EACH	SY
D-1	P.98, 100	65+75		RT/LT									32		1				
D-2	P.98, 100	65+75.71		LT										8	1				
D-3	P.98, 100	66+34.68		RT/LT									36		1				
D-4	P.98, 100	66+34.74		LT				2.00	0.20					33	1				
EC-1	P.98, 100	66+25	67+30	LT															90
GR-1	P.98, 100	64+82	67+34	LT						246		2					4		
GR-2	P.98, 100	66+45	32+51***	RT						1522	1						19		
MB-1	P.98, 100	66+15		RT														1	
R-1	P.98, 100	64+76	69+00*	LT		1221													
R-2	P.98, 100	65+75		LT	13		1												
R-3	P.98, 100	65+75		RT/LT	25		1												
R-4	P.98, 100	66+19	71+74	RT		559													
R-5	P.98, 100	66+50		RT/LT	25		1												
R-6	P.98, 100	66+50		LT	37		1												
S-1	P.98	65+52		RT												2			
TOTALS CARRIED TO SUB-SUMMARY					100	1780	4	2.00	0.20	1768	1	2	68	41	4	2	23	1	90

* INCLUDES GR ALONG EX. RAMP B-2

*** RAMP B-3

ESTIMATED QUANTITIES - MILLER ROAD
STA. 61+50 TO STA. 66+50

DESIGN AGENCY
EUTHENICS
8333 Midwest Dr. | Cleveland, OH 44130

DESIGNER: ESM

REVIEWER: DTB 03/01/22

PROJECT ID: 104983

SHEET: P.97 TOTAL: P.434

CUY-77-00.42 PART 1

MODEL: 104983_GQ001 PAPERSIZE: 17x11(in.) DATE: 3/4/2022 TIME: 11:17:06 PM USER: esmccaslin
F:\Jobs\162-Miller Road Interchange\104983\400-Engineering\Roadway\Sheets\104983_GQ001.dgn

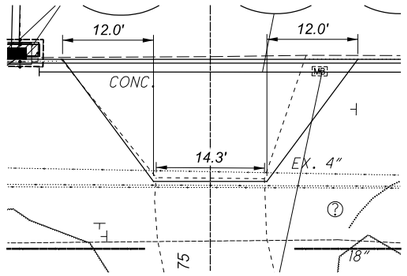

DETAIL A

(A) ROCK CHANNEL PROTECTION TYPE C, 4' W X 9' L X 18" THICK WITH AGGREGATE FILTER

(B) STA. 64+69.50 ANCHOR ASSEMBLY, MGS TYPE T

(C) PROPOSED CEI POWER POLE

LEGEND
DND - DO NOT DISTURB
H.N. - HOUSE NUMBER

NOTES:

1. REFER TO CROSS SECTIONS FOR PROPOSED DITCH LOCATIONS AND ELEVATIONS.
2. EX. SANITARY MANHOLE IS WITHIN THE LIMITS OF TEMPORARY PAVEMENT. RECONSTRUCT TO GRADE TO ACCOMODATE TEMPORARY PAVEMENT AND RECONSTRUCT TO FINAL GRADE UPON REMOVAL OF TEMPORARY PAVEMENT.

(EC-1) STA. 66+07.46 TO 67+30.00 SEEDING AND EROSION CONTROL MAT W/TURF REINFORCING MAT, TYPE 1 (W=7.5')

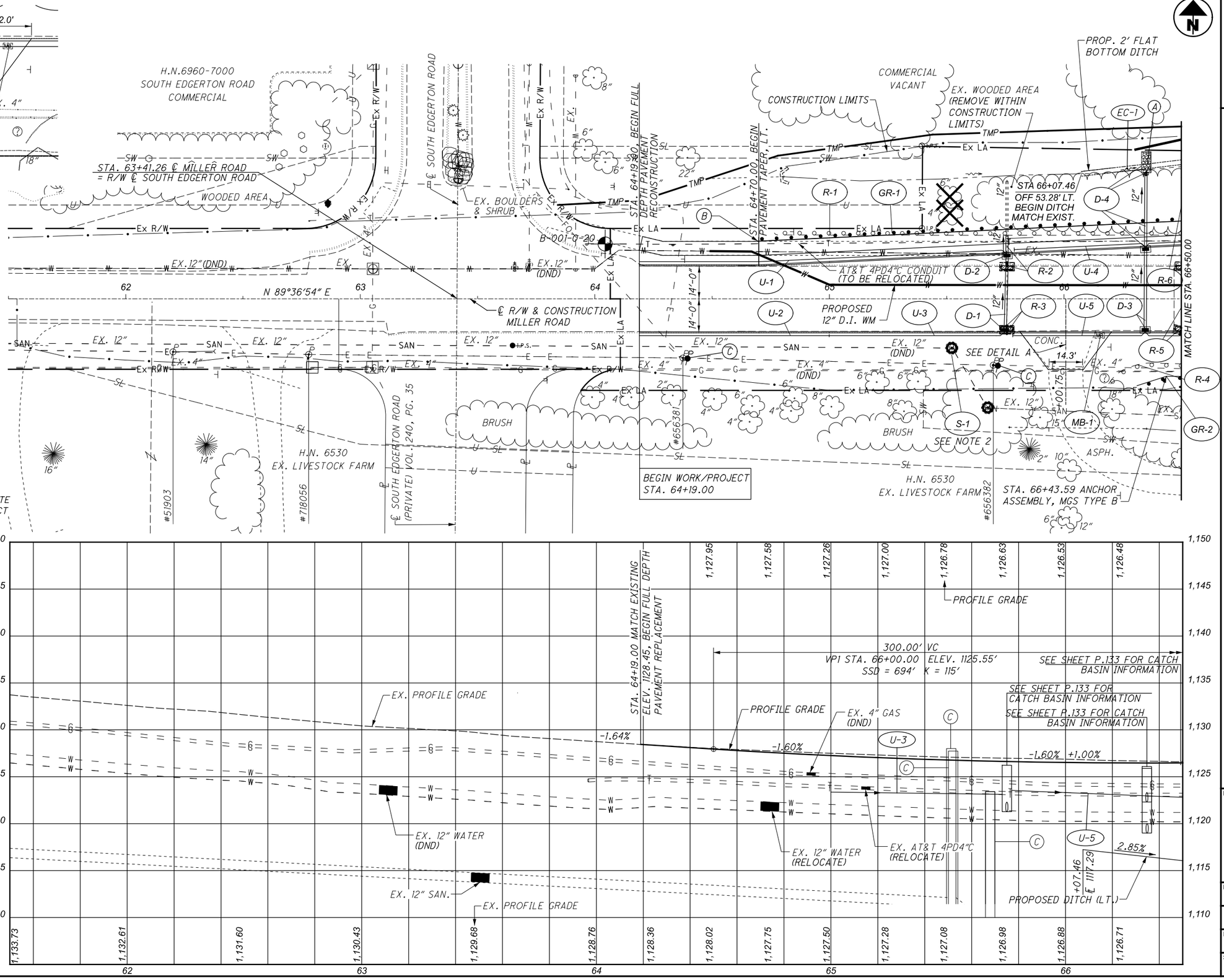

HORIZONTAL SCALE IN FEET
0 10 20 40

PLAN AND PROFILE - MILLER ROAD STA. 61+50 TO STA. 66+50

DESIGN AGENCY	EUTHENICS 8335 Hollister Dr. | Cleveland, OH 44139
DESIGNER	ESM
REVIEWER	DTB 03/01/22
PROJECT ID	104983
SHEET	P.98
TOTAL	P.434

CUY-77-00.42 PART 1

MODEL: l04983_GP001_PAPERSIZE: 17x11(in.) DATE: 3/4/2022 TIME: 11:13 PM USER: esmccaslin
F:\Jobs\162-Miller Road Interchange\104983\400-Engineering\Roadway\Sheets\104983_GP001.dgn

ESTIMATED QUANTITIES - MILLER ROAD
STA. 66+50 TO STA. 71+50

REF. NO.	SHEET NO.	STATION LIMITS BEGIN	STATION LIMITS END	LOCATION	202 PIPE REMOVED, 24" AND UNDER	202 GUARDRAIL REMOVED	202 CATCH BASIN REMOVED	202 HEADWALL REMOVED	202 REMOVAL MISC.: CONCRETE SLAB REMOVAL	451 SPECIAL - PRESSURE RELIEF JOINT, TYPE A	601 ROCK CHANNEL PROTECTION, TYPE C WITH AGGREGATE FILTER	602 CONCRETE MASONRY	606 GUARDRAIL, TYPE MGS	606 ANCHOR ASSEMBLY, MGS TYPE E (MASH 2016)	606 ANCHOR ASSEMBLY, MGS TYPE T	606 MGS BRIDGE TERMINAL ASSEMBLY, TYPE 1	611 12" CONDUIT, TYPE B, 706.02, AS PER PLAN	611 12" CONDUIT, TYPE C, 706.02, AS PER PLAN	611 21" CONDUIT, TYPE D, 706.02, AS PER PLAN	611 CATCH BASIN, MISC.: CUYAHOGA COUNTY NO. 3C	611 MANHOLE, NO. 3, AS PER PLAN 3	626 BARRIER REFLECTOR, TYPE 1 BI-DIRECTIONAL	626 BARRIER REFLECTOR, TYPE 3 BI-DIRECTIONAL	836 SEEDING AND EROSION CONTROL WITH TURF REINFORCING MAT, TYPE 1	SPECIAL FILL AND PLUG EXISTING CONDUIT
					FT	FT	EACH	EACH	EACH	FT	CY	CY	FT	EACH	EACH	EACH	FT	FT	FT	EACH	EACH	EACH	EACH	SY	FT
D-1	P.100, P.101	67+25		RT/LT													51			1					
D-2	P.100, P.101	67+25		LT																1					
D-3	P.100, P.101	67+25		LT							2.44	0.20						36							
D-4	P.100, P.100	67+30	67+80	LT															50						
D-5	P.100, P.102	68+50		LT							2.44	0.20						40		1					
D-6	P.100, P.102	68+50		RT/LT													57			1					
D-7	P.100, P.103	69+75		RT/LT													63			1					
D-8	P.100, P.103	69+75	12+75 **	LT													224			1					
D-9	P.100, P.103	71+09		RT/LT													50				1				
D-10	P.100, P.104	43+54***	71+09	RT													65			1					
D-11	P.100, P.104	71+09		RT													14			1					
D-12	P.100, P.103	71+09		LT													60			1					
EC-2	P.100, P.101	67+80	68+40	LT																				73	
GR-1	P.100, P.101	67+58	12+63**	LT									382	1	1								5		
GR-2	P.100, P.104	9+00**	71+54	LT									682	1		1						1	9		
GR-3	P.100, P.105	43+48***	71+74	RT									92		1	1						1	3		
J-1	P.100, P.204	70+79	70+97	RT/LT						66															
R-1	P.100, P.101	67+25		LT	41		1	1																	
R-2	P.100, P.101	67+25		RT/LT	37		1																		
R-3	P.100, P.104	9+00**	71+11	LT		822																			
R-4	P.100, P.103	69+75		RT/LT	37		1																		
R-5	P.100, P.103	69+75		LT	92		1	1																	
R-6	P.100, P.103	66+85		LT					1																
R-7	P.100, P.103	67+29	67+79	LT																					50
TOTALS CARRIED TO SUB-SUMMARY					115	822	4	2	1	66	4.88	0.40	1156	2	2	2	584	76	50	9	1	2	17	73	50

**RAMP B-2

***RAMP B-3

CUY-77-00.42 PART 1

MODEL: 104983_G0002 PAPERSIZE: 17x11 (in.) DATE: 3/4/2022 TIME: 11:22 PM USER: esmccaslin
F:\Jobs\162-Miller Road Interchange\104983\400-Engineering\Roadway\Sheets\104983_G0002.dgn

DESIGN AGENCY
EUTHENICS
8333 Midwest Dr. | Cleveland, OH 44129

DESIGNER	ESM
REVIEWER	DTB 03/01/22
PROJECT ID	104983
SHEET	P.99
TOTAL	P.434

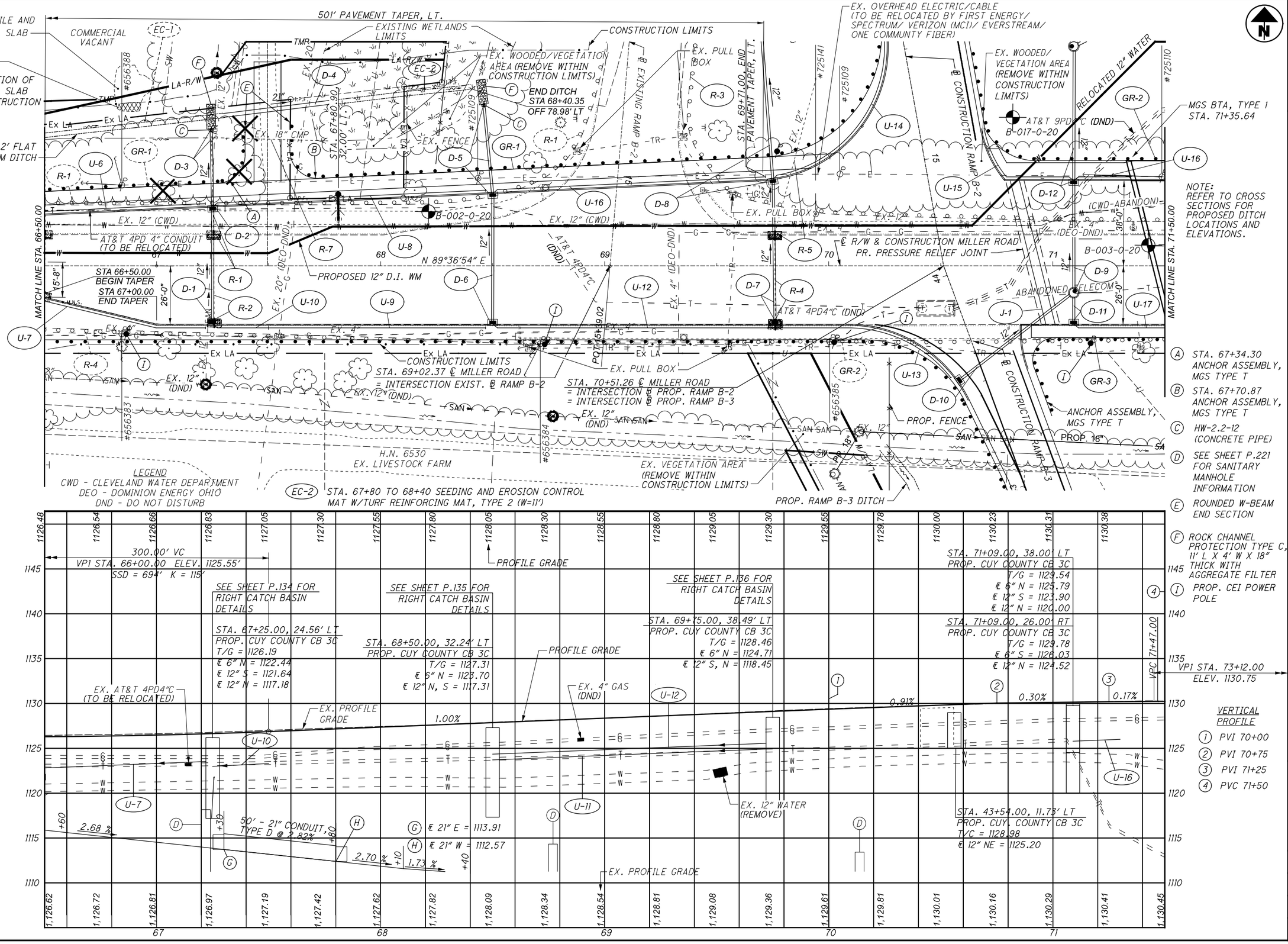

HORIZONTAL SCALE IN FEET
0 10 20 40

PLAN AND PROFILE - MILLER ROAD STA. 66+50 TO STA. 71+50

CUY-77-00.42 PART 1

MODEL: 104983_GP002 Sheet PAPERSIZE: 17x11(in.) DATE: 3/4/2022 TIME: 11:7:49 PM USER: esmccaslin
F:\Jobs\162-Miller Road Interchange\104983\400-Engineering\Roadway\Sheets\104983_GP002.dgn

DESIGN AGENCY
EUTHENICS
8235 Mohawk Dr. | Cleveland, OH 44526

DESIGNER	ESM
REVIEWER	DTB 03/01/22
PROJECT ID	104983
SHEET	P.100
TOTAL	P.434

REF. NO.	SHEET NO.	STATION LIMITS BEGIN	STATION LIMITS END	LOCATION	202 PIPE REMOVED, 24" AND UNDER	202 GUARDRAIL REMOVED	202 CATCH BASIN REMOVED	202 HEADWALL REMOVED	202 FENCE REMOVED	451 SPECIAL - PRESSURE RELIEF JOINT, TYPE A	606 GUARDRAIL, TYPE MGS	606 ANCHOR ASSEMBLY, MGS TYPE B	606 ANCHOR ASSEMBLY, MGS TYPE E (MASH 2016)	606 MGS BRIDGE TERMINAL ASSEMBLY, TYPE 1	611 12" CONDUIT, TYPE B, 706.02, AS PER PLAN	611 48" CONDUIT, TYPE C, 706.02, AS PER PLAN	611 CATCH BASIN, MISC.; CUYAHOGA COUNTY NO. 3C	611 MANHOLE, NO. 3, AS PER PLAN 3	611 MANHOLE RECONSTRUCTED TO GRADE, AS PER PLAN	626 BARRIER REFLECTOR, TYPE 1 BI-DIRECTIONAL	626 BARRIER REFLECTOR, TYPE 3 BI-DIRECTIONAL			
					FT	FT	EACH	EACH	FT	FT	FT	EACH	EACH	EACH	FT	FT	EACH	EACH	EACH	EACH	EACH				
D-1	P.102, P.106	74+90		LT											7		1								
D-2	P.102, P.106	74+90	75+09	RT/LT											60		1								
D-3	P.102, P.108	74+90	77+35	LT											245			1							
D-4	P.102, P.108	76+25	76+53	LT												39									
GR-1	P.102, P.106	74+91	0+95*	LT							55			1						1	2				
GR-2	P.102, P.106	75+00	38+50***	RT							470		1	1						1	8				
GR-3	P.102, P.108	12+78*	80+32	LT							1662	1									21				
GR-4	P.102, P.111	33+20**	80+39	RT							1439	1	1								19				
J-2	P.102, P.205	75+15	75+43	RT/LT						67															
R-1	P.102, P.106	75+00		RT/LT	37		1																		
R-2	P.102, P.106	74+65	75+00	LT	84		1	1																	
R-3	P.102, P.106	74+53	0+95*	LT		132																			
R-4	P.102, P.106	74+66	80+32	RT		568																			
R-5	P.102, P.109	12+78*	77+47	LT		1471																			
R-6	P.102, P.107	76+31		LT				1																	
R-7	P.102, P.107	76+35	81+22	LT					522																
S-1	P.102	74+73		RT															1						

EX. OVERHEAD ELECTRIC/CABLE (TO BE RELOCATED BY FIRST ENERGY/ SPECTRUM/ VERIZON (MCI)/ EVERSTREAM/ ONE COMMUNITY FIBER)

9-4" DUCTS IN 20" CASING

STA. 75+61.43 ℄ MILLER ROAD = INTERSECTION EXIST. ℄ RAMP B-1

STA. 0+95.60 CONNECT TO EX. GUARDRAIL

RELOC. 12" WATER STA. 71+67.28 TO 75+85.84, 100' LT.

AT&T 9PD4"C (DND)

MGS BTA, TYPE 1 STA. 74+65.80

B-005-0-20

B-004-0-20

B-003-0-20

EX. (RELOCATE)

EX. 4"

MATCH LINE STA. 71+50.00

MATCH LINE STA. 76+50.00

N 89°36'54" E

ABANDONED TELECOM

℄ R/W & CONSTRUCTION MILLER ROAD

CONSTRUCTION LIMITS

MGS BTA, TYPE 1 STA. 71+54.58

STA. 73+11.96 ℄ MILLER ROAD = STA. 43+59.44 ℄ I.R. 77

I.R. 77 SOUTHBOUND

I.R. 77 NORTHBOUND

EX. 12" PROP. 18"

EX. 18"

EX. 15"

EX. VEGETATION AREA (REMOVE WITHIN CONSTRUCTION LIMITS)

MGS BTA, TYPE 1 STA. 74+84.01

EX. PULL BOX

STA. 75+51.43 ℄ MILLER ROAD = INTERSECTION PROP. ℄ RAMP B-4

EX. FENCE (REMOVE)

EX. 18" (DND)

EX. VEGETATION AREA (REMOVE WITHIN CONSTRUCTION LIMITS)

12" RELOCATED WATER

℄ EXISTING RAMP B-1

B-024-0-20

EX. (PLUG & FILL)

POT 43+41.80

PT 43+35.17

ABANDONED TELECOM

AT&T 9PD4"C (DND)

STA 76+12.23, 53.00' LT. BEGIN TAPER

STA 76+08.81, 34.00' RT. BEGIN TAPER

STATE OF OHIO VACANT

B-023-0-20

EX. 21" (DND)

℄ CONSTRUCTION RAMP B-4

B-023-3-21

EX. VEGETATION & BRUSH AREA (REMOVE WITHIN CONSTRUCTION LIMITS)

NOTE: REFER TO CROSS SECTIONS FOR PROPOSED DITCH LOCATIONS AND ELEVATIONS.

LEGEND

DND - DO NOT DISTURB

(A) SEE SHEET P.213 FOR CULVERT QUANTITIES

(B) RADIUS = 25.00'

(C) RADIUS = 18.00'

(D) RADIUS = 68.00'

(E) RADIUS = 61.00'

(F) PROP. CEI POWER POLE

HORIZONTAL SCALE IN FEET 0 10 20 40

VPI Sta. 73+12.00 Elev. 1130.70
330.00' VC
SSD = 808' K = 196'
+0.17% -1.51%

PROFILE GRADE

EX. 4" GAS (DND)

VPT 74+77.00 ELEV. 1129.21

STA. 74+90.00, 31' LT. PROP. MANHOLE, NO.3, AS PER PLAN 3 T/C = 1128.00 ℄ 12" (S,E) = 1120.96

SEE SHEET P.139 FOR CATCH BASIN DETAILS

VPI 75+50.00 ELEV. 1127.11

VPI 76+00.00 ELEV. 1126.09

VPI 76+50.00

-1.51%

-2.04%

-2.50%

EX. 4"" GAS (DND)

16.81' MIN. VERT. CLEAR.

16.59' MIN. VERT. CLEAR.

EX. SANITARY MANHOLE (DO NOT DISTURB)

℄ 1104.83 4 FT. FLAT BOTTOM DITCH

245' - 12" CONDUIT, TYPE B, 706.02, AS PER PLAN @ 2.43%

EX. AT&T 9PD4"C (DND)

EX. 12" WATER (ABANDON)

EX. SANITARY MANHOLE (RECONSTRUCT TO GRADE)

F.L. DITCH (LT.) @4.05%

1,145 1,140 1,135 1,130 1,125 1,120 1,115 1,110 1,105 1,100

72 73 74 75 76

PLAN AND PROFILE - MILLER ROAD STA. 71+50 TO STA. 76+50

DESIGN AGENCY
EUTHENICS
8333 Midwest Dr. | Cleveland, OH 44125

DESIGNER ESM

REVIEWER DTB 03/01/22

PROJECT ID 104983

SHEET P.102 TOTAL P.434

CUY-77-00.42 PART 1

MODEL: I04983_GP003 PAPERSIZE: 17x11 (in.) DATE: 3/4/2022 TIME: 11:26 PM USER: esmccaslin
F:\Jobs\162-Miller Road Interchange\104983\400-Engineering\Roadway\Sheets\104983_GP003.dgn

REF. NO.	SHEET NO.	STATION LIMITS BEGIN	STATION LIMITS END	LOCATION	202 PIPE REMOVED, 24" AND UNDER	202 PIPE REMOVED, OVER 24"	202 GUARDRAIL REMOVED	202 MAILBOX REMOVED	202 CATCHBASIN REMOVED	202 MANHOLE REMOVED	611 12" CONDUIT, TYPE B, 706.02, AS PER PLAN	611 15" CONDUIT, TYPE B, 706.02, AS PER PLAN	611 18" CONDUIT, TYPE B, 706.02, AS PER PLAN	611 18" CONDUIT, TYPE C, 706.02, AS PER PLAN	611 42" CONDUIT, TYPE C, 706.02, AS PER PLAN	611 48" CONDUIT, TYPE C, 706.02, AS PER PLAN	611 CATCH BASIN, MISC.; CUYAHOGA COUNTY NO. 3C	611	611 MANHOLE, NO. 3, AS PER PLAN 3	611 MANHOLE NO. 3, WITH 72" BASE I.D., AS PER PLAN 3	611 MANHOLE NO. 3, WITH 96" BASE I.D. AND 9" WIER, AS PER PLAN 3	611 MANHOLE ADJUSTED TO GRADE, AS PER PLAN	670 DITCH EROSION PROTECTION MAT, TYPE B	895 MANUFACTURED WATER QUALITY STRUCTURE, TYPE 3
					FT	FT	FT	EACH	EACH	EACH	FT	FT	FT	FT	FT	FT	EACH		EACH	EACH	EACH	EACH	SY	EACH
D-1	P.104, P.108	76+53		LT																1				
D-2	P.104, P.109	77+35		RT/LT							67						1							
D-3	P.104, P.109	77+35		LT															1					
D-4	P.104, P.109	77+35		LT							6						1							
D-5	P.104, P.108	76+53	77+35	LT												84				1				
D-6	P.104, P.109	77+35	80+11	LT								275							1					
D-7	P.104, P.111	80+11		LT							6						1							
D-8	P.104, P.109	77+35	80+11	LT												276				1				
D-9	P.104, P.111	80+11	80+87	LT									117*								1			1
D-10	P.104, P.111	80+11	81+90	LT											182					1				
D-11	P.104, P.111	80+08	80+11	RT/LT							67						1							
D-12	P.104, P.111	80+87	81+26	LT									40	24					1					
D-13	P.104, P.111	76+53		RT																1				
EC-1	P.104	76+36	79+45	LT																			246	
R-1	P.104, P.109	77+46		LT				1																
R-2	P.104, P.108	76+31	80+11	LT		380				1														
R-3	P.104, P.109	77+65	79+63	LT			255																	
R-4	P.104, P.111	77+91		LT	4				1															
R-5	P.104, P.111	80+11		LT	37				1															
R-6	P.104, P.111	80+11	81+86	LT		174			1															
R-7	P.104, P.111	80+08	80+10	RT	52				1															
S-1	P.104, P.141	76+54		RT																		1		
SUBTOTAL																			3	5				
TOTALS CARRIED TO SUB-SUMMARY					93	554	255	1	4	1	146	275	157	24	182	360	4		8		1	1	246	1

* INCLUDES TWO-20' LENGTHS OF CONDUIT FROM MANHOLE TO WATER QUALITY STRUCTURE

ESTIMATED QUANTITIES - MILLER ROAD
STA. 76+50 TO STA. 81+50

CUY-77-00.42 PART 1

MODEL: 104983_G0004 PAPERSIZE: 17x11 (in.) DATE: 3/4/2022 TIME: 11:11:35 PM USER: esmccaslin
F:\Jobs\162-Miller Road Interchange\104983\400-Engineering\Roadway\Sheets\104983_G0004.dgn

DESIGN AGENCY
EUTHENICS
8333 Midwest Dr. | Cleveland, OH 44130

DESIGNER	REVIEWER	PROJECT ID	SHEET	TOTAL
ESM	DTB 03/01/22	104983	P.103	P.434

PLAN AND PROFILE - MILLER ROAD
STA. 76+50 TO STA. 81+50

HORIZONTAL SCALE IN FEET
0 10 20 40

NOTE:
REFER TO CROSS SECTIONS FOR PROPOSED DITCH LOCATIONS AND ELEVATIONS.

LEGEND
DEO - DOMINION ENERGY OHIO
DND - DO NOT DISTURB

STA. 76+85.96, 103.82' LT.
EX. POSTS (REMOVE)
DITCH EROSION PROTECTION MAT TYPE B (W=7.5')
EX. BRUSH/VEG AREA (REMOVE)
EX. OVERHEAD ELECTRIC/CABLE (TO BE RELOCATED BY FIRST ENERGY/SPECTRUM/VERIZON (MCI)/ EVERSTREAM/ ONE COMMUNTY FIBER)
EX. 8' CHAIN LINK FENCE (REMOVE WITHIN NEW LA AREA)
CONSTRUCTION LIMITS
EX. BILLBOARD (REMOVE)
COMMERCIAL VACANT
PROP. 2' FLAT BOTTOM DITCH
STA. 80+32.50 ANCHOR ASSEMBLY, MGS TYPE B
STA. 80+95, 68' LT. END PROP. DITCH
STA 76+52.17 END TAPER
EX. BRUSH /VEG AREA (REMOVE)
EX. 33" (REMOVE)
B-006-0-20
B-007-0-20
EX. 30"
RESERVED AREA FOR MANUFACTURED WATER QUALITY STRUCTURE, TYPE 3 (25'W x 33'L)
STA 80+95.00, 49.00' LT. BEGIN TAPER
EX. MAILBOX (REMOVE)
EX. GUARDRAIL (REMOVE)
PROP. 12" DI. WM
EX. 12" W
MATCH LINE STA. 76+50.00
MATCH LINE STA. 81+50.00
N 89°36'54" E
℄ R/W & CONSTRUCTION MILLER ROAD
ABANDONED TELECOM
AT&T 4PD4"C (DND)
STA 80+70.50, 26.00' RT. BEGIN TAPER
EX. PULL BOX
STA 76+88.80 END TAPER
CONSTRUCTION LIMITS
WOODED AREA
EX. 18"
EX. 21" SAN
#656390
#656393
COMMERCIAL
ANCHOR ASSEMBLY MGS TYPE B STA. 80+39.15
EX. 12" SAN
EX. 4" GAS

(A) 245' - 12" CONDUIT, TYPE B, 706.02, APP @ 2.43%

(B) 77' - 18" CONDUIT, TYPE B, 706.02, APP @ 0.95%

(C) STA. 80+87.00, 41.34' LT. PROP. MANHOLE NO.3 W/96" BASE I.D. AND 9" WEIR, APP T/C = 1110.74 ℄ 18' W, NE = 1104.53

(D) 40'-18" CONDUIT, TYPE B, 706.02, APP @ 0.77%

(E) PROP. CEI POWER POLE

VERTICAL PROFILE
(1) PVI 77+00
(2) PVI 77+50
(3) PVI 78+00
(4) PVI 78+50
(5) PVC 79+00

APP - AS PLAN

STA. 77+35.50, 41.24' LT.
PROP. MANHOLE NO. 3, AS PER PLAN 3
T/C = 1121.75
℄ 12" W = 1115.00
℄ 12" S = 1110.98
℄ 12" N = 1110.00
℄ 15" E = 1109.75

SEE SHEET P.212 FOR MANHOLE DETAILS

PROFILE GRADE
400.00' VC
VPI STA. 81+00.00 ELEV. 1108.57'
SSD = 347' K = 75'

STA. 80+11.00, 49.00' LT.
PROP. CUY. COUNTY CB 3C
T/G = 1111.95
℄ 6" N = 1107.96
℄ 12" S = 1106.12

STA. 81+25.60, 75.51' LT.
PROP MANHOLE NO. 3 W/ 72" BASE I.D.,
AS PER PLAN 3
T/C = 1110.45
℄ 18" S = 1104.03
℄ 42" E, W = 1101.57

STA. 80+08.00, 26.00' RT.
PROP. CUY. COUNTY CB 3C
T/G = 1112.45
℄ 6" N = 1109.46
℄ 12" S = 1108.96

STA. 80+10.69, 41.88' LT.
PROP. MANHOLE NO. 3, AS PER PLAN 3
T/C = 1112.29
℄ 12" S = 1108.01
℄ 15" W = 1107.26
℄ 12" N = 1105.95
℄ 18" E = 1105.26

STA. 81+25.00, 53.87' LT.
PROP. MANHOLE NO. 3, AS PER PLAN 3
T/C = 1111.07
℄ 18" SW, N = 1104.22

-2.72% -3.04% -3.32% -3.46% -4.00% 0.30% 1.85% 4.05%
EX. AT&T 4PD4"C (DND)
EX. 4" GAS (DND)
EX. PROFILE GRADE
STA. 76+53.7, 62.21' RT. EX. STORM MANHOLE (ADJUSTED TO GRADE, AS PER PLAN)
275' - 15" CONDUIT, TYPE B, 706.02, APP @ 0.91%
SEE SHEET P.142 FOR CATCH BASIN DETAILS
EX. 12" WATER (DND)
EX. SANITARY MANHOLE (DO NOT DISTURB)
F.L. DITCH (LT.)
EX. STORM SEWER
EX. SANITARY MANHOLE (DO NOT DISTURB)

DESIGN AGENCY
EUTHENICS
8235 Mohawk Dr. | Cleveland, OH 44526

DESIGNER ESM
REVIEWER DTB 03/01/22
PROJECT ID 104983
SHEET P.104 TOTAL P.434

CUY-77-00.42 PART 1

MODEL: 104983_GP004 PAPERSIZE: 17x11 (in.) DATE: 3/4/2022 TIME: 11:9:02 PM USER: esmccaslin
F:\Jobs\162-Miller Road Interchange\104983\400-Engineering\Roadway\Sheets\104983_GP004.dgn

ESTIMATED QUANTITIES - MILLER ROAD
STA. 81+50 TO STA. 86+50

REF. NO.	SHEET NO.	STATION LIMITS BEGIN	STATION LIMITS END	LOCATION	202					611																			
					PIPE REMOVED, 24" AND UNDER	PIPE REMOVED, OVER 24"	CATCH BASIN REMOVED	MANHOLE REMOVED	FENCE REMOVED	12" CONDUIT, TYPE B, 706.02, AS PER PLAN	12" CONDUIT, TYPE C, 706.02, AS PER PLAN	15" CONDUIT, TYPE B, 706.02, AS PER PLAN	15" CONDUIT, TYPE C, 706.02, AS PER PLAN	21" CONDUIT, TYPE C, 706.02, AS PER PLAN	24" CONDUIT, TYPE B, 706.02, AS PER PLAN	24" CONDUIT, TYPE B, 706.02, AS PER PLAN 2	27" CONDUIT, TYPE B, 706.02, AS PER PLAN	30" CONDUIT, TYPE B, 706.02, AS PER PLAN	36" CONDUIT, TYPE B, 706.02, AS PER PLAN	42" CONDUIT, TYPE C, 706.02, AS PER PLAN	CATCH BASIN, MISC.; CUYAHOGA COUNTY NO. 3C	CATCH BASIN, MISC.; CUYAHOGA COUNTY TWIN 3C		MANHOLE, NO. 3, AS PER PLAN 3	MANHOLE, NO. 3, WITH 72" BASE I.D., AS PER PLAN 3	MANHOLE, NO. 3, AS PER PLAN 4	MANHOLE ADJUSTED TO GRADE, AS PER PLAN	MANHOLE RECONSTRUCTED TO GRADE, AS PER PLAN		
					FT	FT	EACH	EACH	FT	FT	FT	FT	FT	FT	FT	FT	FT	FT	FT	FT	EACH	EACH		EACH	EACH	EACH	EACH	EACH		
D-1	P.106, P.112	81+90	82+74	LT																85					1				
D-2	P.106, P.112	81+93		RT/LT								73																	
D-2A	P.106, P.112	81+98	81+93	RT																		1							
D-3	P.106, P.112	81+90	81+93	LT									14									1							
D-4	P.106, P.112	82+75		RT/LT						71											1								
D-5	P.106, P.112	82+74	82+75	LT							7										1								
D-6	P.106, P.112	82+74	83+70	LT															96						1				
D-7	P.106, P.116	19+25*	19+38*	RT/LT						48											1								
D-8	P.106, P.113	83+70	84+46	LT														76							1				
D-9	P.106, P.116	19+25*	83+97	RT						30											1								
D-10	P.106, P.113	83+97		RT											17								1						
D-11	P.106, P.113	83+70	20+85*	LT						30											1								
D-12	P.106, P.113	83+70	84+41	RT/LT													10	100					1						
D-13	P.106, P.114	84+46	84+53	LT										6									1						
D-14	P.106, P.114	84+46	84+49	RT							8										1								
D-15	P.106, P.114	84+35	84+41	RT						10											1								
D-16	P.106, P.114	83+85	83+97	RT												30													
D-17	P.106, P.114	20+85*	83+70	LT						41													1						
R-1	P.106, P.112	81+90	81+93	RT/LT	68			1																					
R-2	P.106, P.112	NOT USED																											
R-3	P.106, P.116	19+26*		RT/LT	37		1																						
R-4	P.106, P.112	NOT USED																											
R-5	P.106, P.113	83+70	83+79	LT		20		1																					
R-6	P.106, P.113	83+79	84+41	RT/LT		94		1																					
R-7	P.106, P.113	NOT USED		LT																									
R-8	P.106, P.112	81+87	81+99	LT	2		2																						
R-9	P.106, P.112	81+90	83+70	LT		180																							
R-10	P.106, P.113	83+70	84+46	LT		76		1																					
R-11	P.106, P.114	84+46	84+54	LT	13		1	1																					
R-12	P.106, P.116	19+45*	19+60*	RT/LT		21		1																					
R-13	P.106, P.113	84+02	84+25	RT	23		1																						
R-14	P.106, P.116	19+26*	19+45*	RT	23		1																						
R-15	P.106, P.112	81+86	81+99	RT	2		2																						
R-16	P.106, P.112	NOT USED																											
R-17	P.106, P.113	83+36	84+54	LT					210																				
S-1	P.106	83+65		LT																								1	
S-2	P.106	84+05		LT																									1
		*STA. OFF SOUTHPOINTE																						SUBTOTAL	4	3			
TOTALS CARRIED TO SUB-SUMMARY					168	391	8	6	210	228	15	73	14	6	17	30	10	176	96	85	7	2		7		1	1	1	

CUY-77-00.42 PART 1

MODEL: I04983_GD005 PAPERSIZE: 17x11 (in.) DATE: 3/4/2022 TIME: 11:11:10 PM USER: esmccaslin
F:\Jobs\162-Miller Road Interchange\I04983\400-Engineering\Roadway\Sheets\I04983_GD005.dgn

DESIGN AGENCY
EUTHENICS
8333 Midwest Dr. | Cleveland, OH 44129

DESIGNER	ESM
REVIEWER	DTB 03/01/22
PROJECT ID	104983
SHEET	P.105
TOTAL	P.434

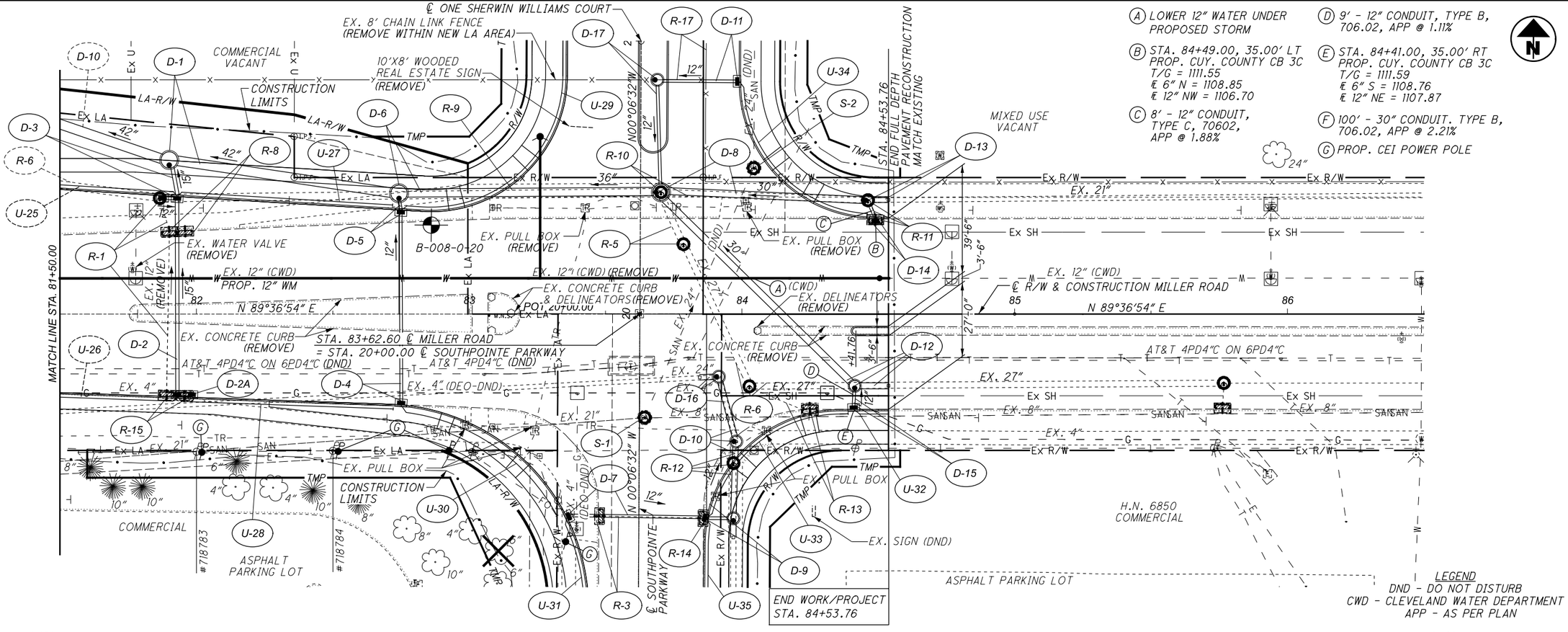

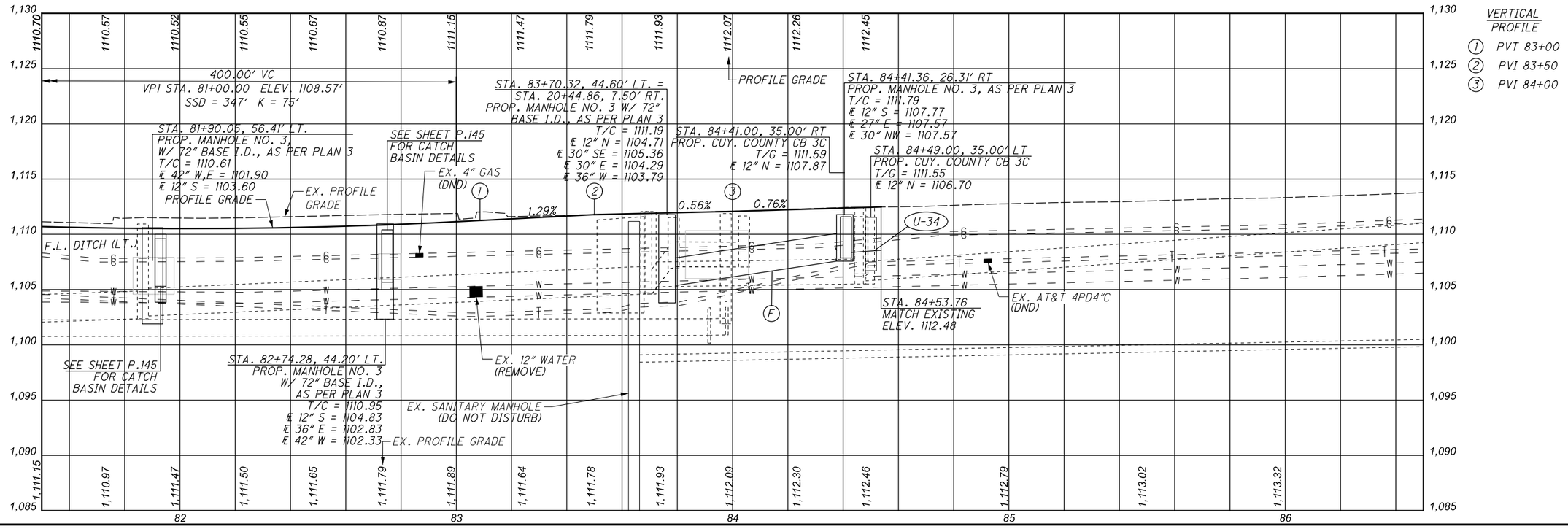

HORIZONTAL SCALE IN FEET
0 10 20 40

PLAN AND PROFILE - MILLER ROAD STA. 81+50 TO STA. 86+50

DESIGN AGENCY
EUTHENICS
8235 Mohawk Dr. | Cleveland, OH 44130

DESIGNER ESM
REVIEWER DTB 03/01/22
PROJECT ID 104983
SHEET P.106 TOTAL P.434

CUY-77-00.42 PART 1

MODEL: I04983_GP005 PAPERSIZE: 17x11(in.) DATE: 3/4/2022 TIME: 1:19:37 PM USER: esmccaslin
F:\Jobs\162-Miller Road Interchange\104983\400-Engineering\Roadway\Sheets\104983_GP005.dgn

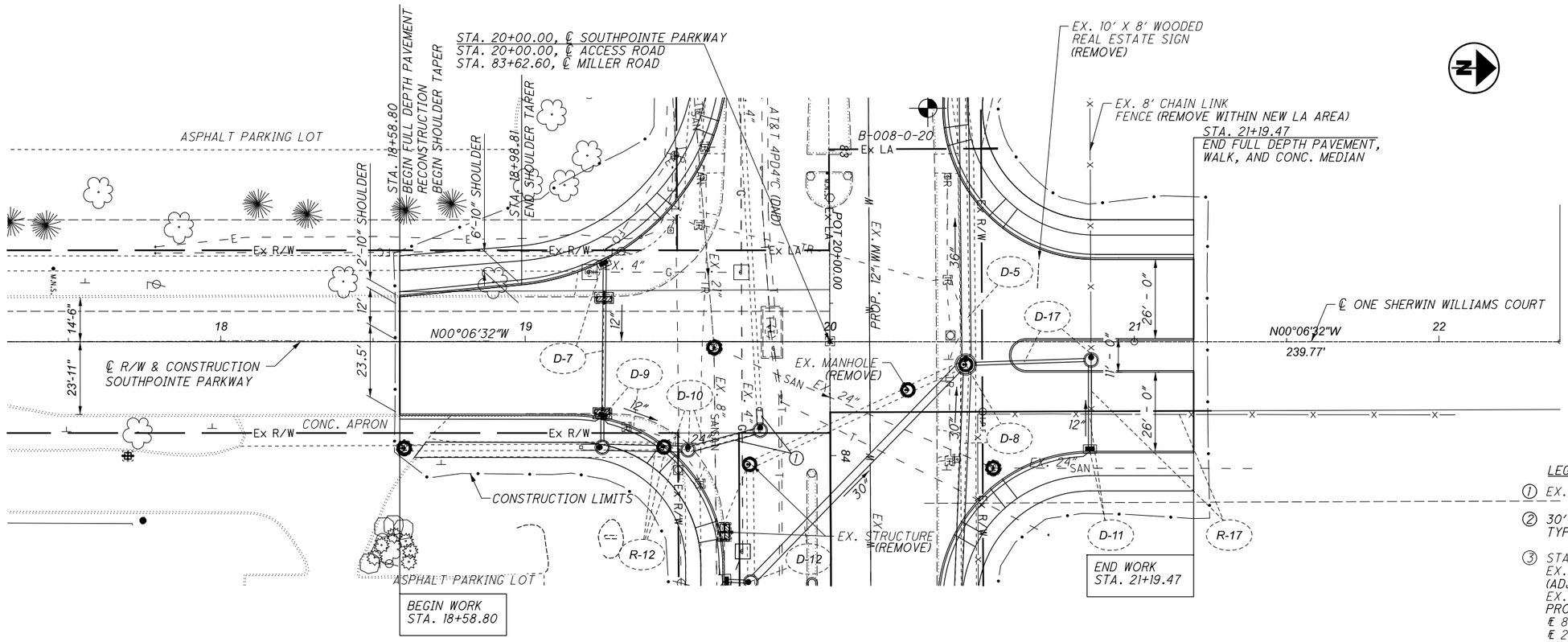

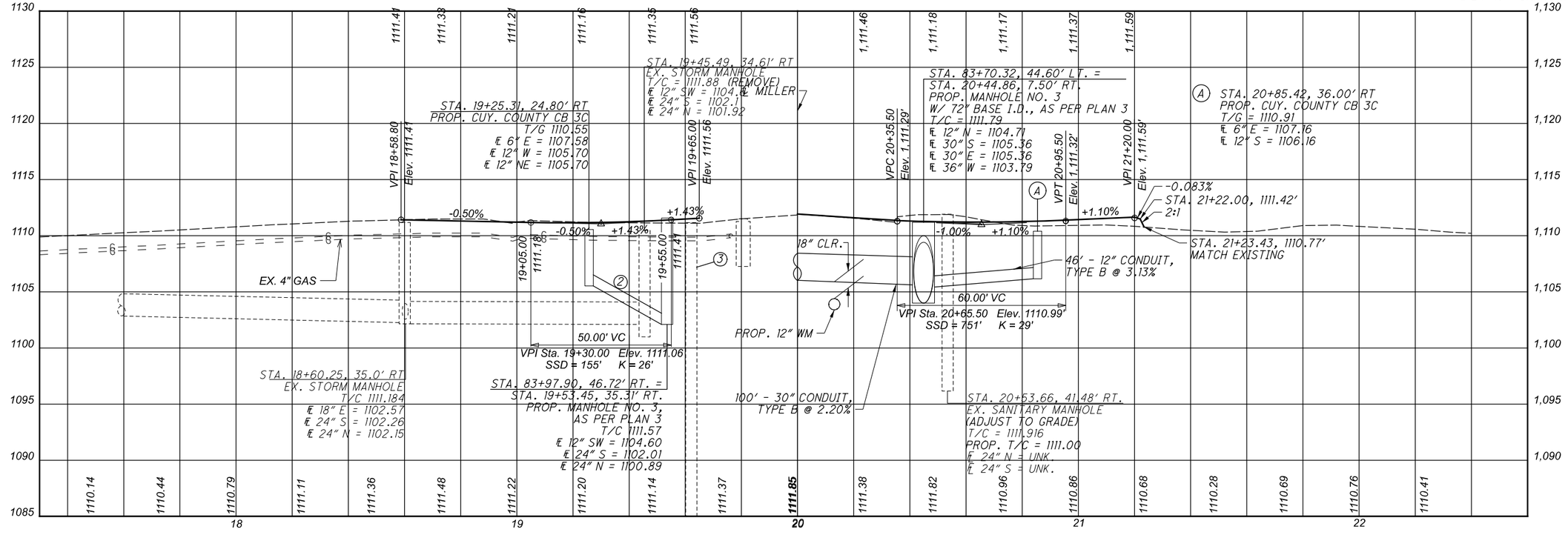

PLAN AND PROFILE - SOUTHPOINTE PARKWAY STA. 17+30 TO STA. 20+00

CUY-77-00.42 PART 1

DESIGN AGENCY
EUTHENICS
8235 Mohawk Dr. | Cleveland, OH 44256

DESIGNER	
ESM	
REVIEWER	
DTB	03/01/22
PROJECT ID	
104983	
SHEET	TOTAL
P.107	P.434

MODEL: CLP_Southpointe Sheet PAPERSIZE: 17x11(in.) DATE: 3/4/2022 TIME: 11:9:55 PM USER: esmcosilin
F:\Jobs\162-Miller Road Interchange\104983\400-Engineering\Roadway\Sheets\104983_CP601-602.dgn

REF. NO.	START PLAN SHEET NO.	STATION LIMITS		LOCATION	202					602	605	606							611		622			626					
					CONCRETE BARRIER REMOVED	PIPE REMOVED, 24" AND UNDER	GUARDRAIL REMOVED	CATCH BASIN REMOVED	MANHOLE REMOVED	CONCRETE MASONRY	6" BASE PIPE UNDERDRAIN, WITH GEOTEXTILE FABRIC	GUARDRAIL BARIER DESIGN, TYPE MGS	GUARDRAIL, TYPE MGS	ANCHOR ASSEMBLY, MGS TYPE E (MASH 2016)	ANCHOR ASSEMBLY, TYPE T	ANCHOR ASSEMBLY, TYPE B	BRIDGE TERMINAL ASSEMBLY, TYPE 1		18" CONDUIT, TYPE C	MANHOLE, NO. 3	CONCRETE BARRIER, SINGLE SLOPE, TYPE D	CONCRETE BARRIER END SECTION, TYPE D	CONCRETE BARRIER END ANCHORAGE, REINFORCED, TYPE D	BARRIER REFLECTOR TYPE 1, ONE-WAY	BARRIER REFLECTOR TYPE 3, ONE-WAY				
					FT	FT	FT	EACH	EACH	CY	FT	FT	FT	EACH	EACH	EACH	EACH		FT	EACH	FT	EACH	EACH	EACH	EACH				
D-1	P.110	26+65	28+91	LT						0.31									257	1									
D-2	P.110	28+91	31+96	LT															300	1									
D-3	P.110	31+96		LT															36	1									
GR-1	P.109	21+11	32+46	LT									1130				1							1	12				
GR-2	P.110	24+34	43+24	LT								1837		1											20				
GR-3	P.110	29+34	35+33	RT									600	1	1										6				
GR-4	P.111	41+42	58+88	RT									1750	1	1										19				
GR-5	P.111	43+24	58+86	LT									1588		1										17				
GR-6	P.111	44+44	46+72	LT									200				1												
GR-7	P.112	58+86	74+47	LT								1575				1									18				
GR-8	P.113	71+90	73+65	LT									175	1											3				
R-1	P.109	20+61	23+50	LT			269																						
R-2	P.110	25+79	28+10	LT			231																						
R-3	P.110	26+65	31+96	LT		495			1																				
R-4	P.110	31+96		LT					1																				
R-5	P.110	31+96		LT		18		1																					
R-6	P.110	24+34	44+02	LT			1965																						
R-7	P.111	41+43	45+61	RT			419																						
R-8	P.111	43+09	45+54	LT			244																						
R-9	P.111	45+04	63+54	LT			1848																						
R-10	P.113	63+02	64+59	LT			157																						
R-11	P.113	64+08	75+57	LT			1100																						
R-12	P.109	20+03	20+62	LT	60																								
U-1	P.109	20+03	22+03	LT							200																		
U-2	P.110	25+03	35+31***	LT							1025																		
U-3	P.110	29+67	37+62	RT							806																		
B-1	P.109	20+03	20+62	LT																	30	1	1						
B-2	P.111	43+44	44+44	LT																	33	1							
*** STATIONING OFF RAMP B-3																													
TOTALS CARRIED TO SUB-SUMMARY					60	513	6,233	1	2	0.31	2,031	3,412	5,443	4	3	1	2		593	3	63	2	1	1	95				

ESTIMATED QUANTITIES - I.R. 77

CUY-77-00.42 PART 1

MODEL: 104983_DQ101 PAPERSIZE: 17x11 (in.) DATE: 3/4/2022 TIME: 1:20:07 PM USER: esmccaslin
F:\Jobs\1162-Miller Road Interchange\104983400-Engineering\Drainage\Sheets\104983_DQ101.dgn

DESIGN AGENCY
EUTHENICS
8235 Mohawk Dr. | Cleveland, OH 44125

DESIGNER
ESM

REVIEWER
DTB 03/01/22

PROJECT ID
104983

SHEET P.108 | TOTAL P.434

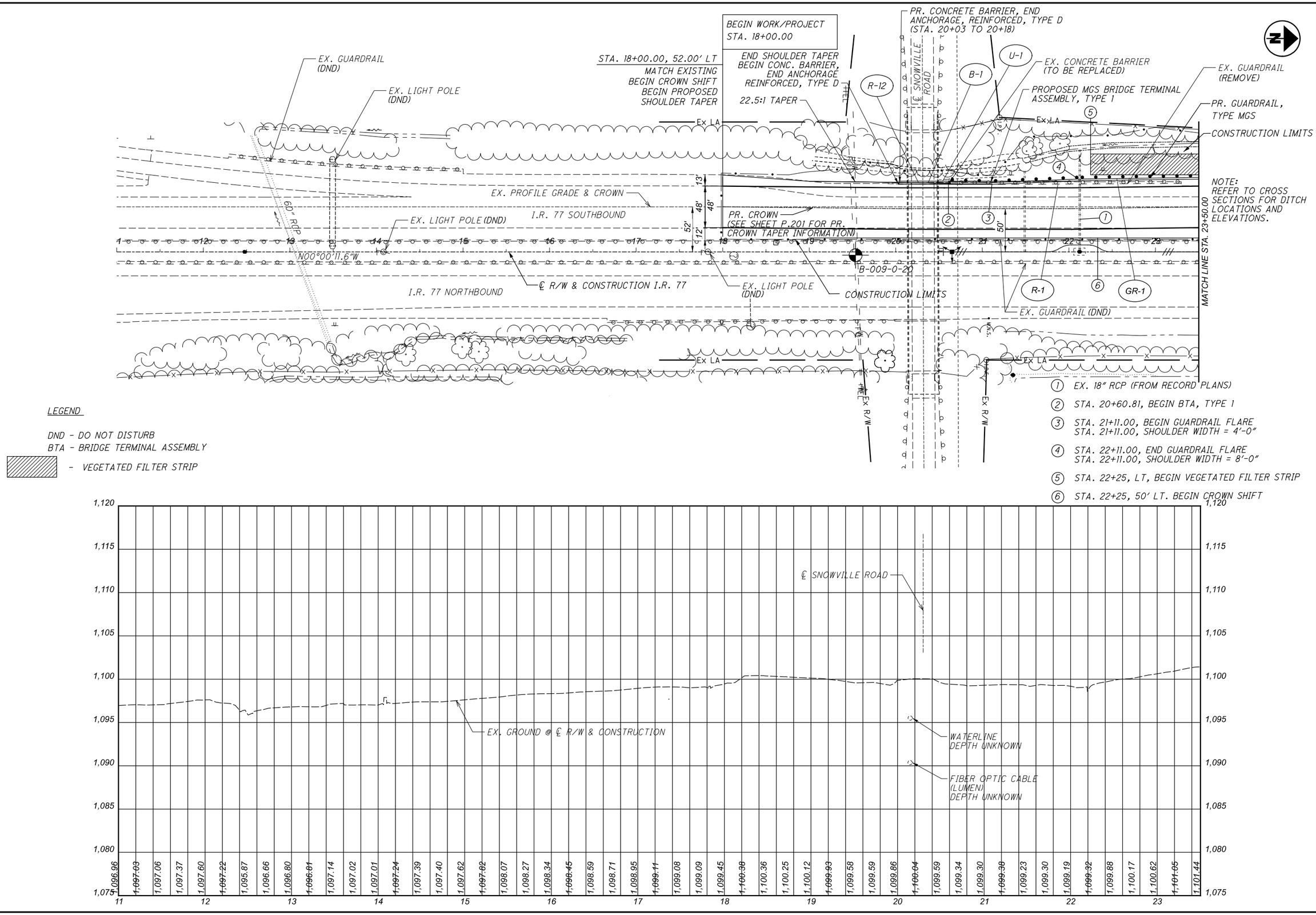

HORIZONTAL SCALE IN FEET
0 25 50 100

PLAN AND PROFILE - I.R. 77
STA. 11+00 TO STA. 23+50

CUY-77-00.42 PART 1

DESIGN AGENCY
EUTHENICS
8235 Mohawk Dr. | Cleveland, OH 44130

DESIGNER	ESM
REVIEWER	DTB 03/01/22
PROJECT ID	104983
SHEET	P.109
TOTAL	P.434

MODEL: 104983_GP101 PAPERSIZE: 17x11(in.) DATE: 3/4/2022 TIME: 12:04 PM USER: esmccaslin
F:\Jobs\162-Miller Road Interchange\104983\400-Engineering\Roadway\Sheets\104983_GP101.dgn

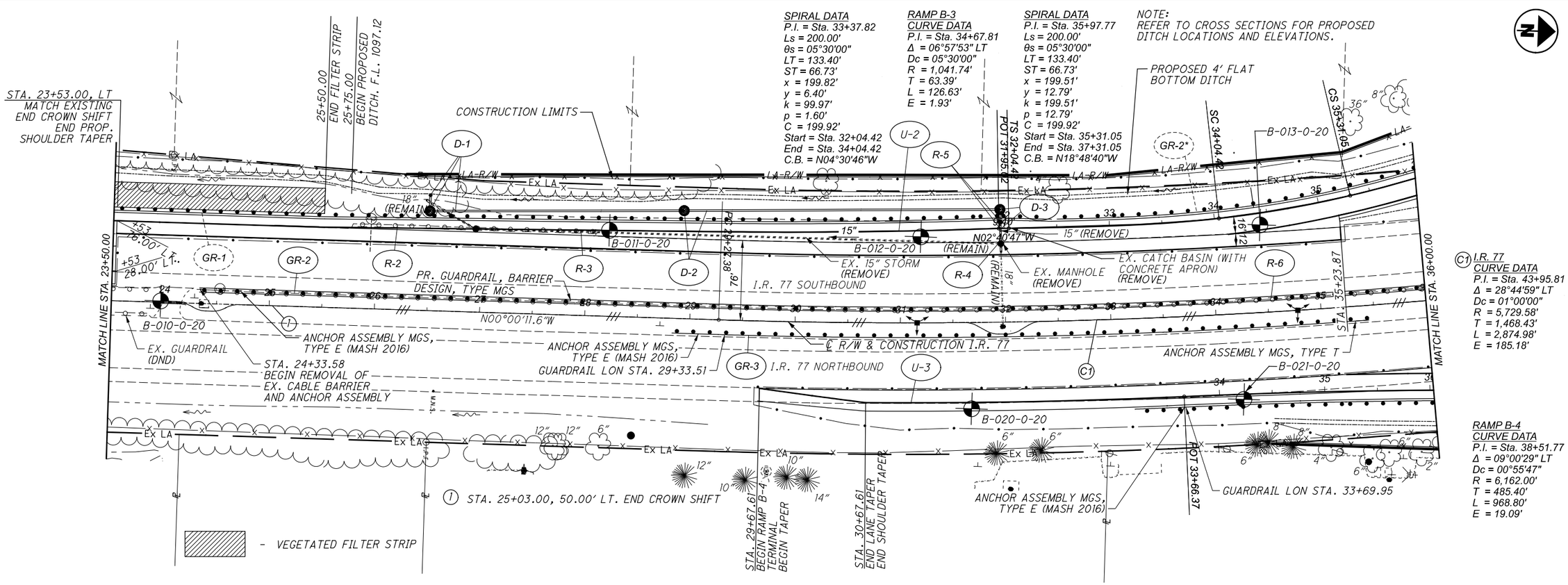

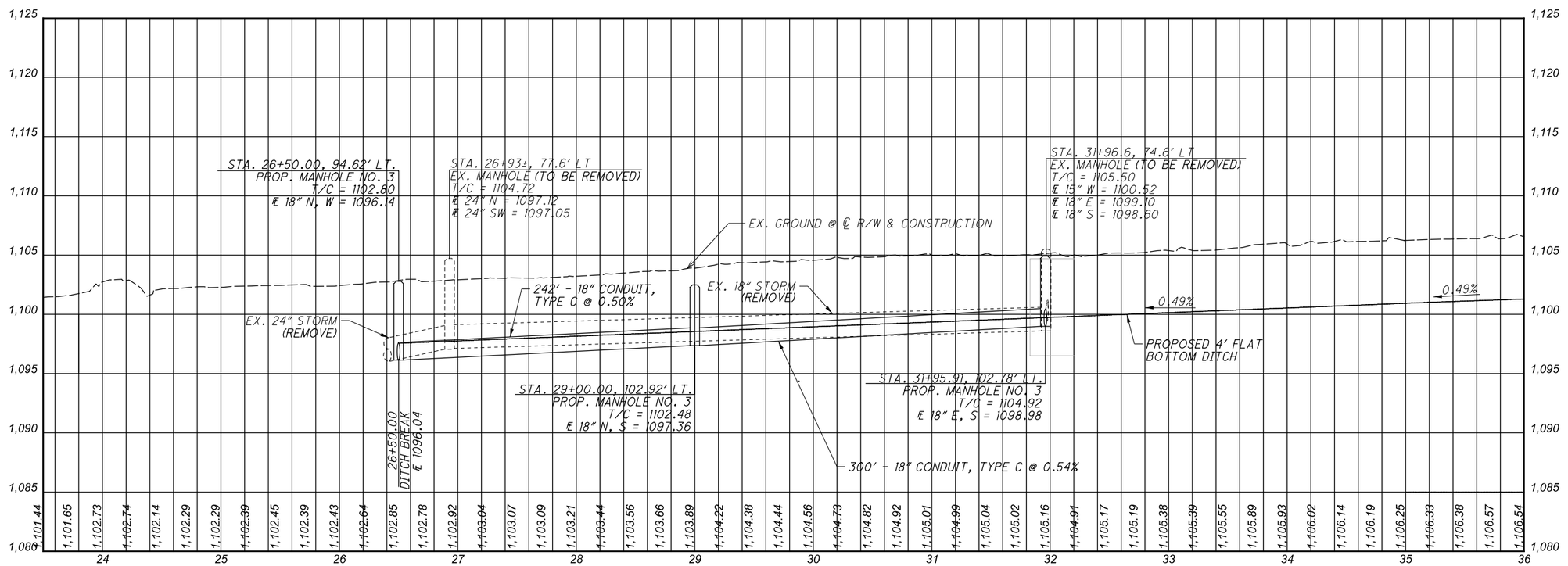

PLAN AND PROFILE - I.R. 77
STA. 23+50 TO STA. 36+00

DESIGN AGENCY
EUTHENICS
8235 Mohawk Dr. | Cleveland, OH 44125

DESIGNER	ESM
REVIEWER	DTB 03/01/22
PROJECT ID	104983
SHEET	P.110
TOTAL	P.434

CUY-77-00.42 PART 1

MODEL: 104983_GP102 PAPERSIZE: 17x11 (in.) DATE: 3/4/2022 TIME: 12:02:21 PM USER: esmccaslin
F:\Jobs\1162-Miller Road Interchange\104983\400-Engineering\Roadway\Sheets\104983_GP102.dgn

NOTE:
REFER TO CROSS SECTIONS FOR PROPOSED DITCH LOCATIONS AND ELEVATIONS.

EX. 18" SAN. SEWER (TO REMAIN)
RELOCATED 18" SANITARY SEWER
℄ CONSTRUCTION RAMP B-3
B-014-0-20
B-015-0-20
ANCHOR ASSEMBLY, MGS TYPE T
ANCHOR ASSEMBLY MGS, TYPE E (MASH 2016)
EX. SAN. SEWER (ABANDON) N20°38'39"W
B-016-0-20
℄ CONSTRUCTION RAMP B-2
PR. GUARDRAIL, TYPE MGS
ANCHOR ASSEMBLY MGS, TYPE E (MASH 2016)
VEE DITCH
GUARDRAIL LON STA. 46+19.68
PR. GUARDRAIL, BARRIER DESIGN, TYPE MGS
GR-2 I.R. 77 SOUTHBOUND
STA. 43+24.18 BEGIN PR. GUARDRAIL, TYPE MGS
STA. 45+03.57, BEGIN REMOVAL OF EX. CABLE BARRIER AND ANCHOR ASSEMBLY
EX. GUARDRAIL (TO BE REMOVED)
℄ R/W & CONSTRUCTION I.R. 77
B-022-0-20
R-6 I.R. 77 NORTHBOUND
℄ CONSTRUCTION RAMP B-4
ANCHOR ASSEMBLY MGS, TYPE E (MASH 2016)
R-7
EX. GUARDRAIL (TO BE REMOVED)
STA. 44+02.24, END REMOVAL OF EX. CABLE BARRIER AND ANCHOR ASSEMBLY
CONSTRUCTION LIMITS
℄ CONSTRUCTION RAMP B-1
B-023-0-20
MATCH LINE STA. 36+00.00
MATCH LINE STA. 48+50.00

- VEGETATED FILTER STRIP

HORIZONTAL SCALE IN FEET
0 25 50 100

(S1) RAMP B-3 SPIRAL DATA
P.I. = Sta. 35+97.77
Ls = 200.00'
θs = 05°30'00"
LT = 133.40'
ST = 66.73'
x = 199.51'
y = 12.79'
k = 199.51'
p = 12.79'
C = 199.92'
Start = Sta. 35+31.05
End = Sta. 37+31.05
C.B. = N18°48'40"W

(C1) I.R. 77 CURVE DATA
P.I. = Sta. 43+95.81
Δ = 28°44'59" LT
Dc = 01°00'00"
R = 5,729.58'
T = 1,468.43'
L = 2,874.98'
E = 185.18'

(C2) RAMP B-4 CURVE DATA
P.I. = Sta. 38+51.77
Δ = 09°00'29" RT
Dc = 00°55'47"
R = 6,162.00'
T = 485.4'
L = 968.8'
E = 19.09'

RAMP B-1 CURVE DATA
P.I. = Sta. 3+08.29
Δ = 16°32'50" LT
Dc = 04°00'00"
R = 1,432.39'
T = 208.29'
L = 413.68'
E = 15.06'

STA. 37+22.00, 41.04' RT.
(℄ CONSTRUCTION RAMP B-3)
PROP. ODOT CB NO. 2-3
T/G 1105.00
℄ 15" SW = 1102.00
PROPOSED 4' FLAT BOTTOM DITCH
EX. GROUND @ ℄ R/W AND CONSTRUCTION
PROPOSED 4' FLAT BOTTOM DITCH
MATCH EX. DITCH ℄ 1103.40

0.44% 39+49.00 ℄ 1106.00
41+74.00 34.40' LT ℄ 1106.70
1.42%
42+76.00 101.00' LT ℄ 1105.25
0.40%
43+42.00 89.10' LT ℄ 1105.00
0.42%
1.43%
44+31.00 88.70' LT ℄ 1104.63
45+17.00

1,106.54 1,106.67 1,106.71 1,106.85 1,106.93 1,106.88 1,107.00 1,107.33 1,107.29 1,107.43 1,107.57 1,107.58 1,107.58 1,107.56 1,107.61 1,107.63 1,107.42 1,107.19 1,107.25 1,107.10 1,106.95 1,106.70 1,106.46 1,106.42 1,106.53 1,106.20 1,106.19 1,106.19 1,106.09 1,106.24 1,107.24 1,106.39 1,106.64 1,106.99 1,107.57 1,107.56 1,107.38 1,107.77 1,107.62 1,107.61 1,107.73 1,108.17 1,108.58 1,108.69 1,108.79 1,108.82 1,109.19 1,109.28 1,109.36 1,109.44 1,109.56

1,140 1,135 1,130 1,125 1,120 1,115 1,110 1,105 1,100 1,095

36 37 38 39 40 41 42 43 44 45 46 47 48

PLAN AND PROFILE - I.R. 77 STA. 36+00 TO STA. 48+50

DESIGN AGENCY
EUTHENICS
8825 Mohawk Dr. | Cleveland, OH 44130

DESIGNER ESM
REVIEWER DTB 03/01/22
PROJECT ID 104983
SHEET P.111 TOTAL P.434

CUY-77-00.42 PART 1

MODEL: I04983.GPI03 PAPERSIZE: 17x11(In.) DATE: 3/4/2022 TIME: 12:0:32 PM USER: esmccaslin
F:\Jobs\162-Miller Road Interchange\104983\400-Engineering\Roadway\Sheets\104983_GPI03.dgn

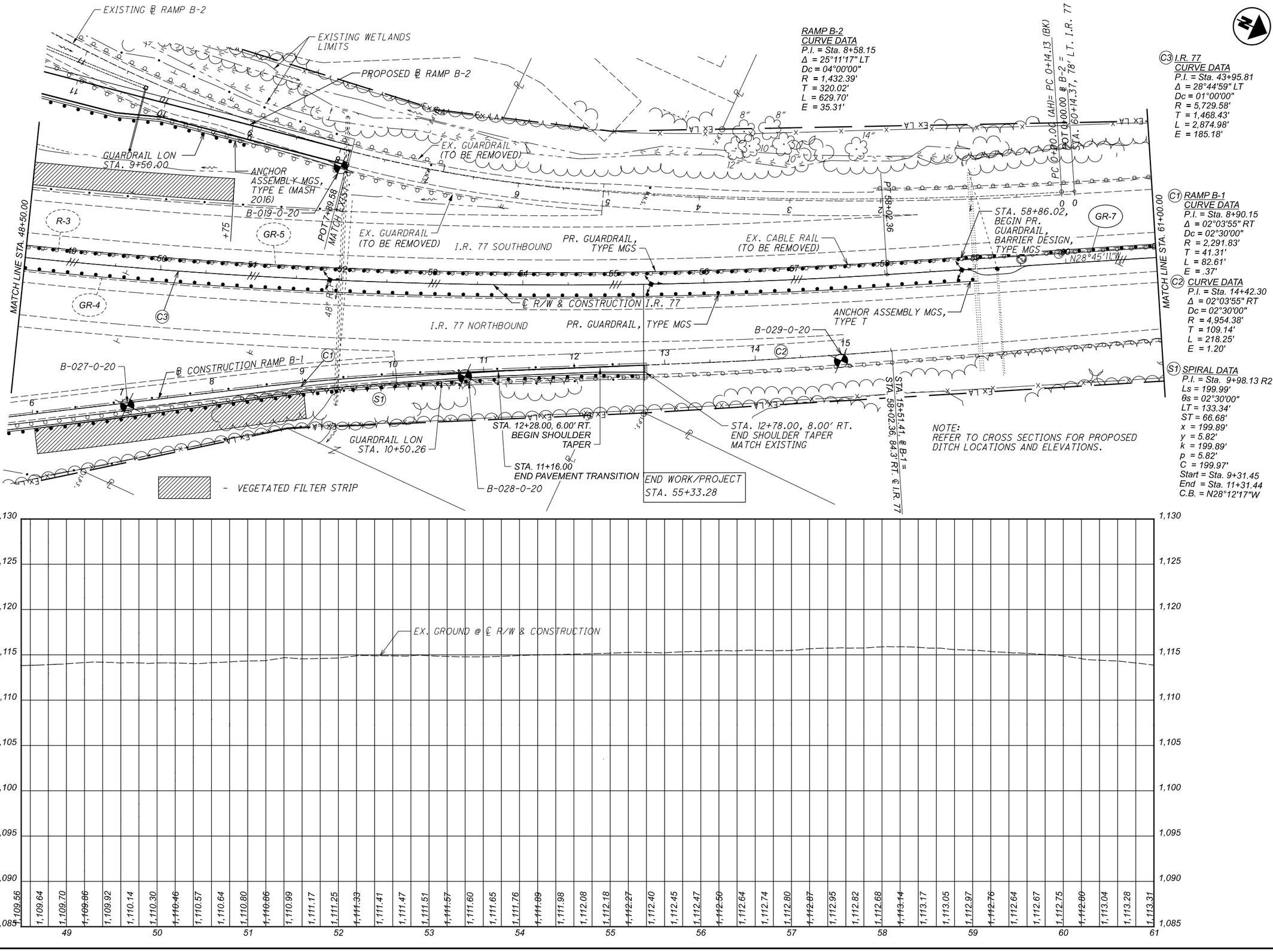

RAMP B-2
CURVE DATA
P.I. = Sta. 8+58.15
Δ = 25°11'17" LT
Dc = 04°00'00"
R = 1,432.39'
T = 320.02'
L = 629.70'
E = 35.31'

C3 I.R. 77
CURVE DATA
P.I. = Sta. 43+95.81
Δ = 28°44'59" LT
Dc = 01°00'00"
R = 5,729.58'
T = 1,468.43'
L = 2,874.98'
E = 185.18'

C1 RAMP B-1
CURVE DATA
P.I. = Sta. 8+90.15
Δ = 02°03'55" RT
Dc = 02°30'00"
R = 2,291.83'
T = 41.31'
L = 82.61'
E = .37'

C2 CURVE DATA
P.I. = Sta. 14+42.30
Δ = 02°03'55" RT
Dc = 02°30'00"
R = 4,954.38'
T = 109.14'
L = 218.25'
E = 1.20'

S1 SPIRAL DATA
P.I. = Sta. 9+98.13 R2
Ls = 199.99'
θs = 02°30'00"
LT = 133.34'
ST = 66.68'
x = 199.89'
y = 5.82'
k = 199.89'
p = 5.82'
C = 199.97'
Start = Sta. 9+31.45
End = Sta. 11+31.44
C.B. = N28°12'17"W

NOTE:
REFER TO CROSS SECTIONS FOR PROPOSED DITCH LOCATIONS AND ELEVATIONS.

HORIZONTAL SCALE IN FEET
0 25 50 100

PLAN AND PROFILE - I.R. 77
STA. 48+50 TO STA. 61+00

DESIGN AGENCY
EUTHENICS
8335 Hickman Rd. | Cleveland, OH 44125

DESIGNER
ESM

REVIEWER
DTB 03/01/22

PROJECT ID
104983

SHEET P.112 TOTAL P.434

CUY-77-00.42 PART 1

MODEL: I04983_GPI04 PAPERSIZE: 17x11(In.) DATE: 3/4/2022 TIME: 12:20:39 PM USER: esmccaslin
F:\Jobs\162-Miller Road Interchange\104983\400-Engineering\Roadway\Sheets\104983_GPI04.dgn

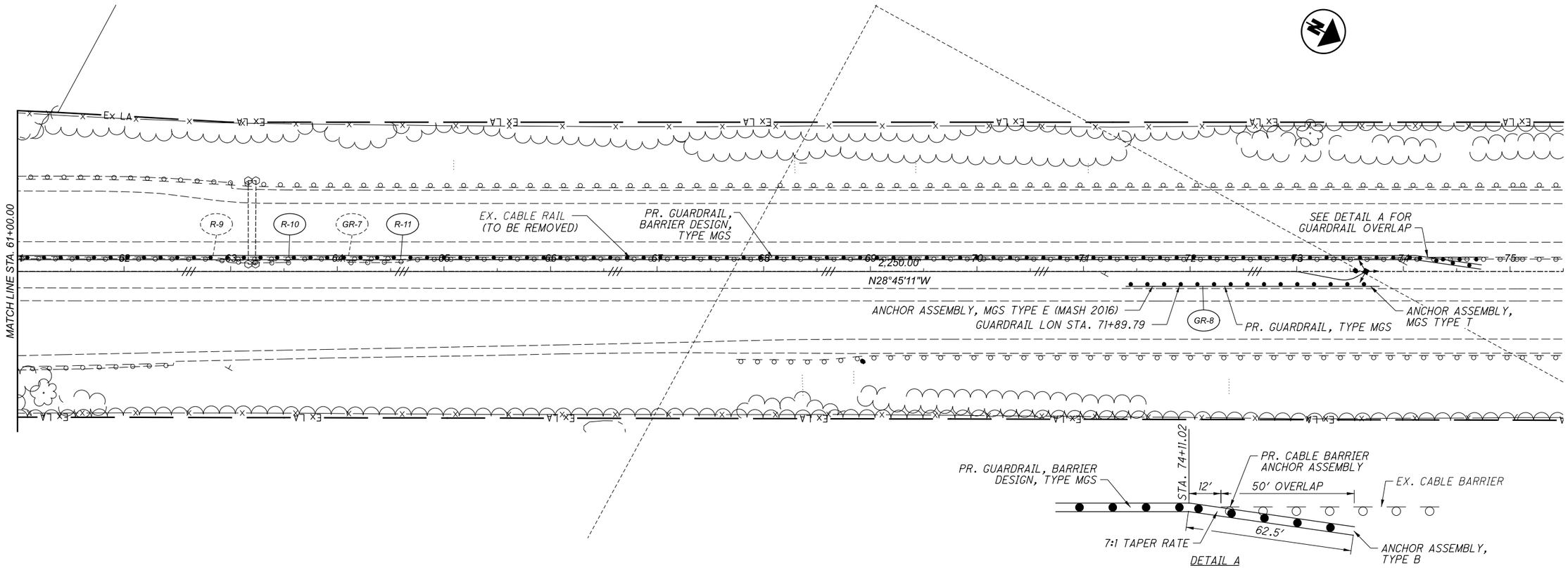

HORIZONTAL SCALE IN FEET
0 25 50 100

PLAN AND PROFILE - I.R. 77
STA. 61+00 TO STA. 75+50

CUY-77-00.42 PART 1

MODEL: 104983_GPI05 PAPERSIZE: 17x11(in.) DATE: 3/4/2022 TIME: 12:0:45 PM USER: esmccasin
F:\Jobs\162-Miller Road Interchange\104983\400-Engineering\Roadway\Sheets\104983_GPI05.dgn

DESIGN AGENCY
EUTHENICS
8235 Mohawk Dr. | Cleveland, OH 44305

DESIGNER	ESM
REVIEWER	DTB 03/01/22
PROJECT ID	104983
SHEET	P.113
TOTAL	P.434

REF. NO.	START PLAN SHEET NO.	STATION LIMITS "X" DENOTES OUTLET LOCATION FOR UNDERDRAINS ONLY			BEGIN	END	LOCATION	TYPE OF OUTLET	202 WALK REMOVED	601 ROCK CHANNEL PROTECTION, TYPE B WITH AGGREGATE FILTER	602 CONCRETE MASONRY	605 6" BASE PIPE UNDERDRAIN W/ GEOTEXTILE FABRIC	611 6" CONDUIT, TYPE F	611 15" CONDUIT, TYPE B	611 15" CONDUIT, TYPE C	611 36" CONDUIT, TYPE A, 706.02, AS PER PLAN	611 36" CONDUIT, TYPE A, 706.02, 707.01 (1/2")(0.064) OR 707.35	611 48" CONDUIT, TYPE A, 706.02, 707.01 (1/2") (0.064), OR 707.35	611 CATCH BASIN, NO. 5	611 CATCH BASIN, MISC.: CUY-COUNTY 3C	MANHOLE, NO. 3	670 DITCH EROSION PROTECTION MAT, TYPE B	836 SEEDING AND EROSION CONTROL WITH TURF REINFORCING MAT, TYPE 1	HORIZONTAL BENDS AND BRANCHES (FOR INFORMATION ONLY) 6" PLUG	6" X 90° BEND	6" X 30° BEND	6" X 45° BEND	6" CROSS	6" TEE
									WALK REMOVED	ROCK CHANNEL PROTECTION, TYPE B WITH AGGREGATE FILTER	CONCRETE MASONRY	6" BASE PIPE UNDERDRAIN W/ GEOTEXTILE FABRIC	6" CONDUIT, TYPE F	15" CONDUIT, TYPE B	15" CONDUIT, TYPE C	36" CONDUIT, TYPE A, 706.02, AS PER PLAN	36" CONDUIT, TYPE A, 706.02, 707.01 (1/2")(0.064) OR 707.35	48" CONDUIT, TYPE A, 706.02, 707.01 (1/2") (0.064), OR 707.35	CATCH BASIN, NO. 5	CATCH BASIN, MISC.: CUY-COUNTY 3C	MANHOLE, NO. 3	DITCH EROSION PROTECTION MAT, TYPE B	SEEDING AND EROSION CONTROL WITH TURF REINFORCING MAT, TYPE 1	6" PLUG	6" X 90° BEND	6" X 30° BEND	6" X 45° BEND	6" CROSS	6" TEE
									SF	CY	CY	FT	FT	FT	FT	FT	FT	FT	EACH	EACH	EACH	SY	SY	EA	EA	EA	EA	EA	EA
D-1	P.115		4+29 *				RT				0.69					15														
D-2	P.118		10+25 **				RT/LT			4.07	0.25			70																
D-3	P.118		10+25 **				RT													1										
D-4	P.119		12+75 **				RT													1										
D-5	P.119		12+75 **				RT/LT			5.18	0.25			115																
D-6	P.119		14+40 **				RT														1									
D-7	P.119		14+37 **				RT				0.20																			
D-8	P.119		14+42 **		14+62 **		LT				0.20					69						1								
D-9	P.121		37+00 ***				RT				0.25																			
D-10	P.121		37+00 ***				RT/LT							70						1										
D-11	P.122		42+60 ***		42+90 ***		RT/LT				0.66																			
D-12	P.122		42+60 ***				RT				0.66								120											
D-13	P.124		41+30 ****		42+25 ****		RT									95				1										
D-14	P.124		42+25 ****				RT									32					1									
D-15	P.124		42+25 ****				RT				0.20																			
D-16	P.124		42+40 ****				RT				0.69																			
D-17	P.124		42+30 ****		42+40 ****		RT/LT				0.69								119											
EC-1	P.121		37+14 ***		41+75 ***		LT																							
EC-2	P.122		41+75 ***		42+87 ***		LT																93							
EC-3	P.122		42+94 ***		43+42 ***		LT																40							
EC-4	P.124		42+00 ****		42+37 ****		RT																31							
U-1	P.115		1+07 *		1+45 *		RT	-				39														2				
U-2	P.115		1+45 *		10+03 *		RT	-				858																		
U-3	P.117		10+03 *		12+77 *		RT	-				274																		
U-4	P.117		12+77 *			X	RT	EX. GRADE				7	10													1				
U-5	P.118	X	7+89 **		14+95 **		LT	EX. UNDERDRAIN				706														1				
U-6	P.118	X	7+89 **		14+37 **		RT	EX. UNDERDRAIN				646														1				
U-7	P.121		43+48 ***		35+16 ***	X	RT	DITCH				810	10													1	1			
U-8	P.121		43+44 ***		35+31 ***	X	LT	DITCH				822	10													1	1			
U-9	P.123	X	37+62 ****		43+00 ****		LT	DITCH				522	10														1			
U-10	P.123	X	36+70 ****		42+59 ****		RT	DITCH				603	10														1		2	
R-1	P.123		38+42 ****		38+74 ****		RT		675																					
TOTALS CARRIED TO SUB-SUMMARY									675	8.90	4.49	5,287	50	255	134	15	119	120	4	1	2	164	560						

* STATIONING OFF RAMP B-1 ** STATIONING OFF RAMP B-2

*** STATIONING OFF RAMP B-3 **** STATIONING OFF RAMP B-4

ESTIMATED QUANTITIES
PROPOSED RAMPS

CUY-77-00.42 PART 1

MODEL: I04983_G020I PAPERSIZE: 17x11(in.) DATE: 3/4/2022 TIME: 12:05:50 PM USER: esmccasiln
F:\Jobs\162-Miller Road Interchange\I04983\400-Engineering\Roadway\Sheets\I04983_G020I.dgn

DESIGN AGENCY
EUTHENICS
8333 Midwest Dr. | Cleveland, OH 44130

DESIGNER
ESM

REVIEWER
DTB 03/01/22

PROJECT ID
104983

SHEET P.114 | TOTAL P.434

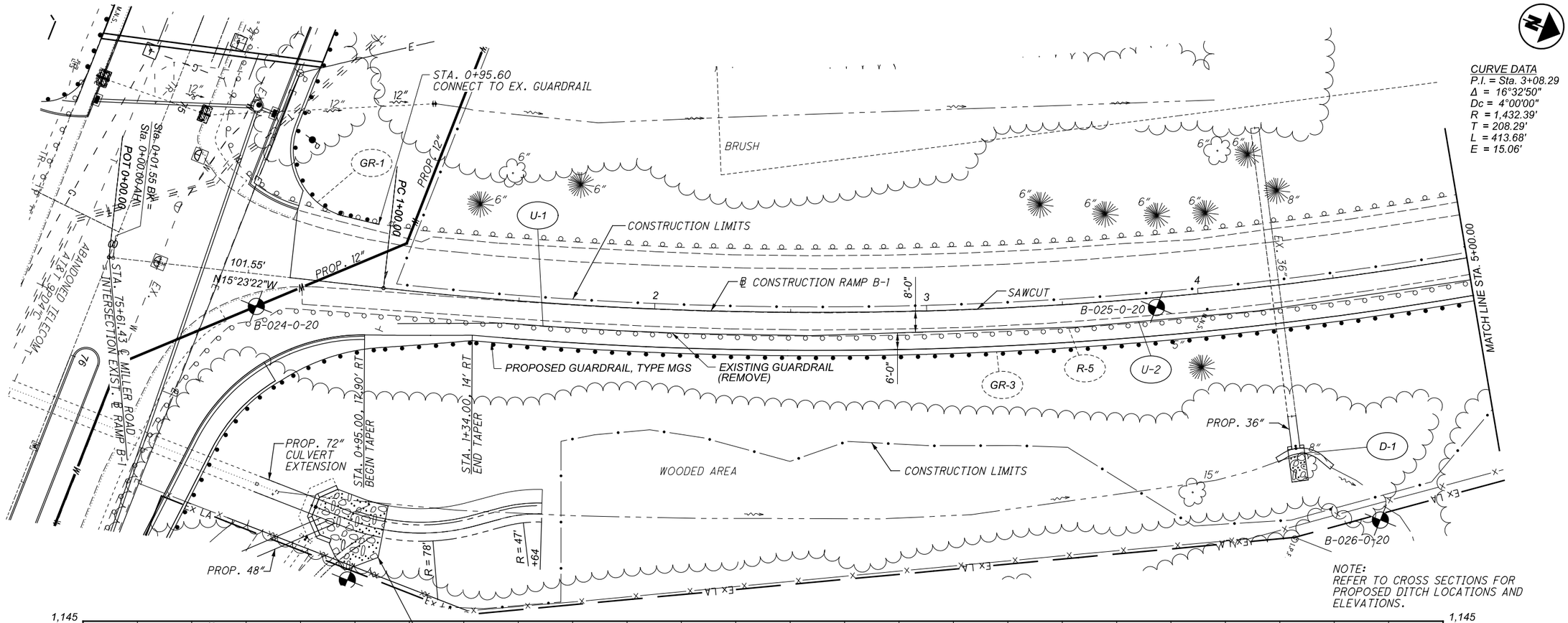

HORIZONTAL
SCALE IN FEET
0 10 20 40

PLAN AND PROFILE - RAMP B-1
STA. 00+01 TO STA. 5+00

CUY-77-00.42 PART 1

MODEL: 104983_GP201 PAPERSIZE: 17x11 (in.) DATE: 3/4/2022 TIME: 12:17 PM USER: esmccaslin
F:\Jobs\1162-Miller Road Interchange\104983\400-Engineering\Roadway\Sheets\104983_GP201.dgn

DESIGN AGENCY
EUTHENICS
8235 Mohawk Dr. | Cleveland, OH 44130
DESIGNER
ESM
REVIEWER
DTB 03/01/22
PROJECT ID
104983
SHEET P.115
TOTAL P.434

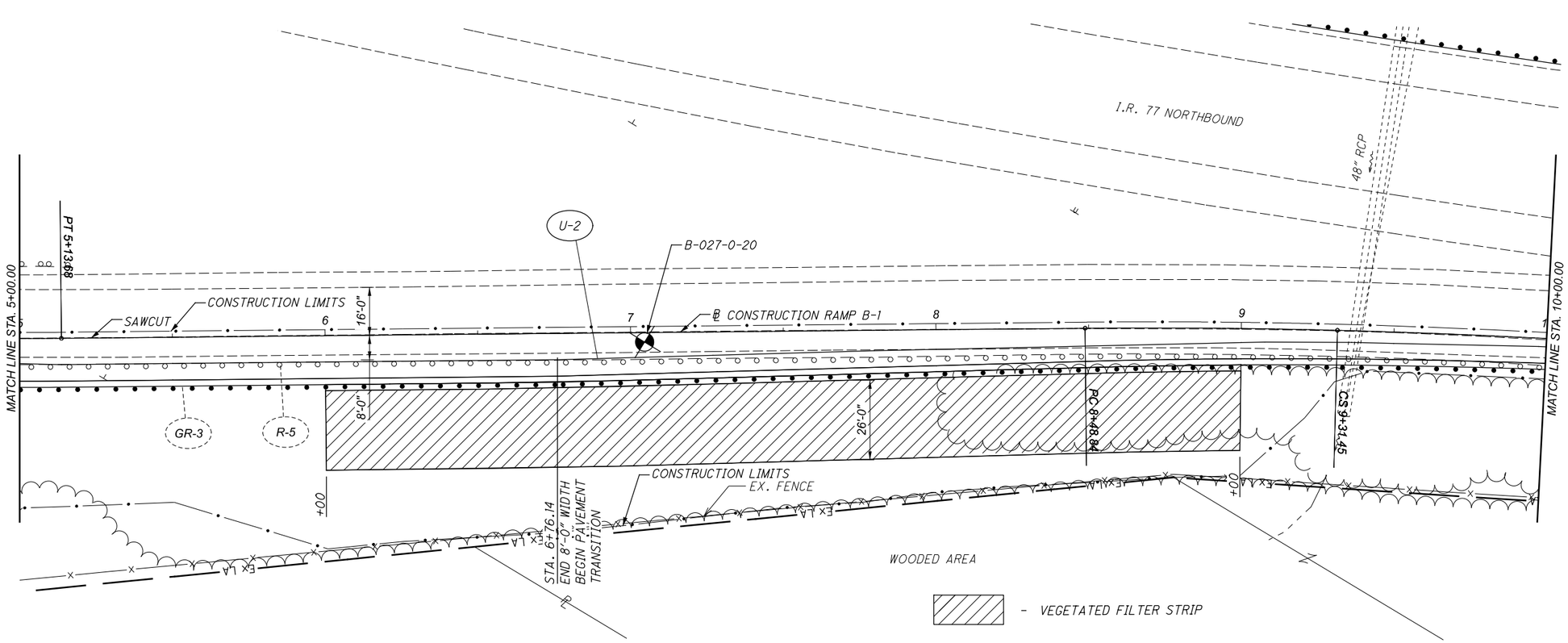

CURVE DATA
P.I. = Sta. 8+90.15
Δ = 02°03'55" LT
Dc = 02°30'00"
R = 2,291.83'
T = 41.31'
L = 82.61'
E = 0.37'

SPIRAL DATA
P.I. = Sta. 9+98.13 R2
Ls = 199.99'
θs = 02°30'00"
LT = 133.34'
ST = 66.68'
x = 199.89'
y = 5.82'
k = 199.89'
p = 5.82'
C = 199.97'
Start = Sta. 9+31.45
End = Sta. 11+31.44
C.B. = N28°12'17"W

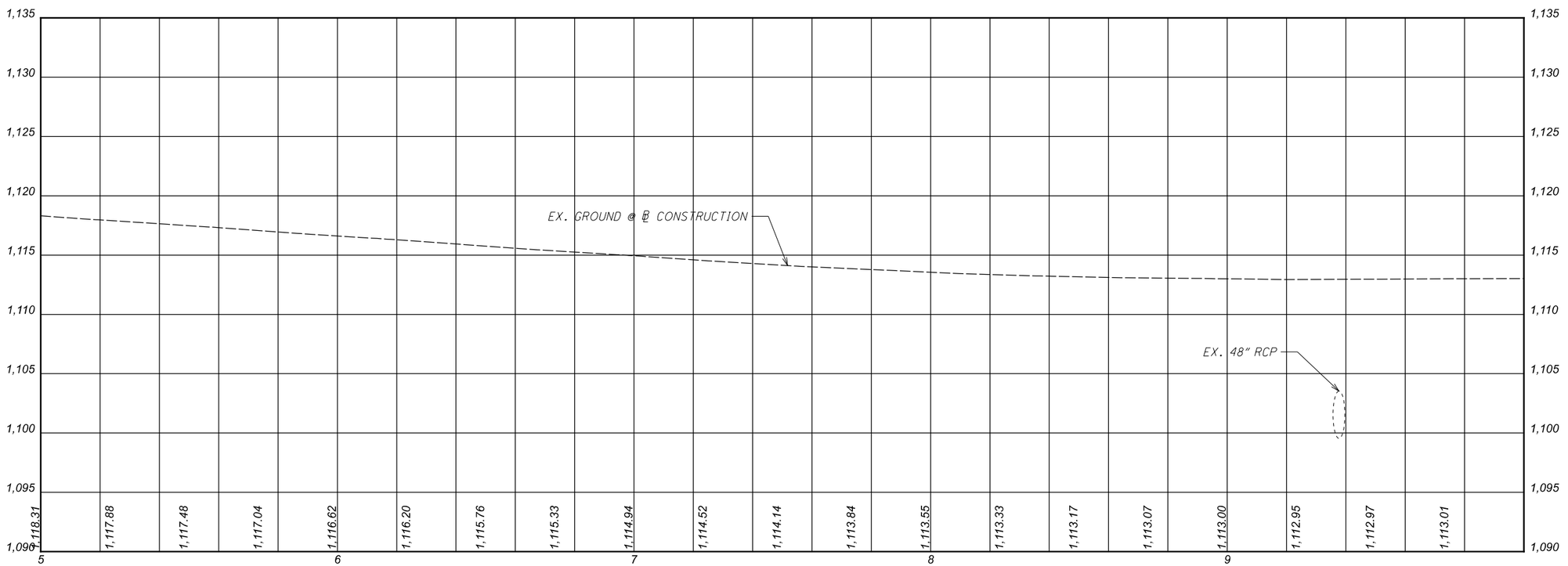

HORIZONTAL SCALE IN FEET
0 10 20 40

PLAN AND PROFILE - RAMP B-1
STA. 5+00 TO STA. 10+00

DESIGN AGENCY
EUTHENICS
8235 Mohawk Dr. | Cleveland, OH 44129

DESIGNER	ESM
REVIEWER	DTB 03/01/22
PROJECT ID	104983
SHEET	P.116
TOTAL	P.434

CUY-77-00.42 PART 1

MODEL: 104983_GP202 PAPERSIZE: 17x11 (in.) DATE: 3/4/2022 TIME: 12:25 PM USER: esmccaslin
F:\Jobs\162-Miller Road Interchange\104983\400-Engineering\Roadway\Sheets\104983_GP202.dgn

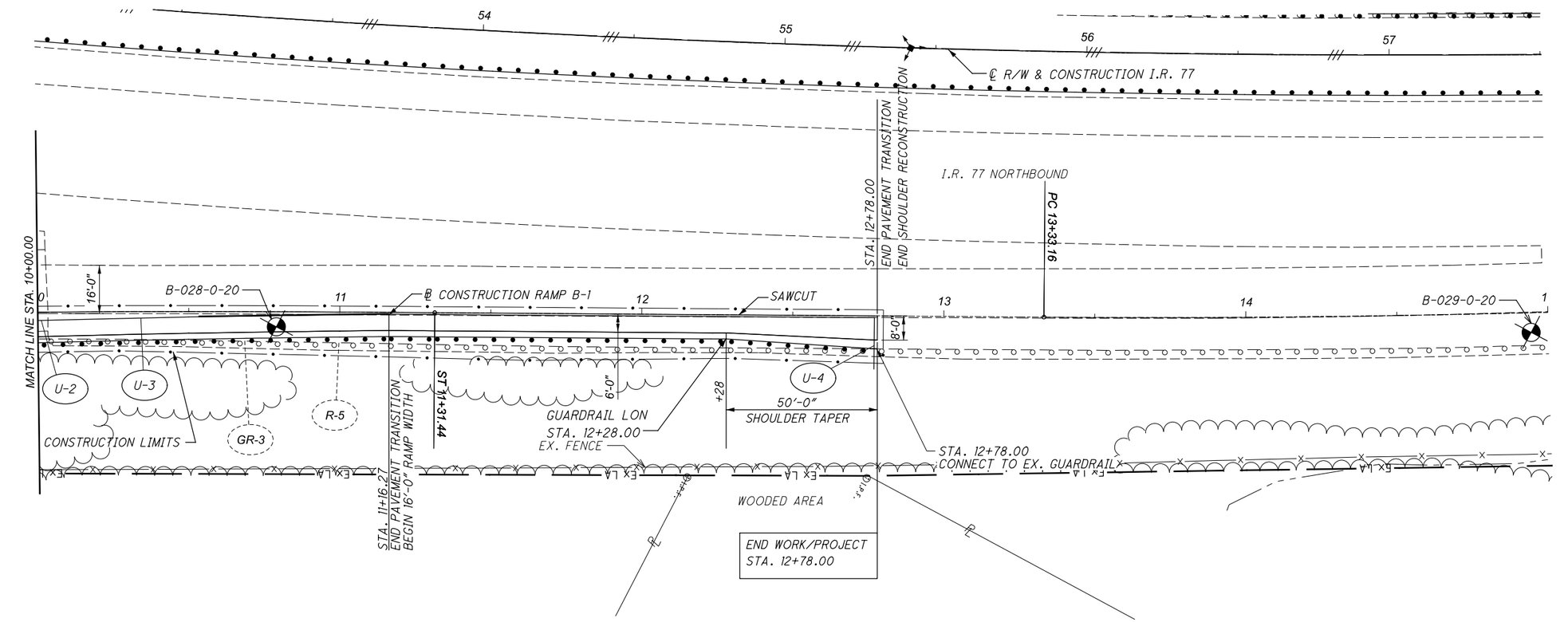

CURVE DATA
P.I. = Sta. 14+42.30
Δ = 02°31'26" LT
Dc = 01°09'23"
R = 4,954.38'
T = 109.14'
L = 218.25'
E = 1.20'

SPIRAL DATA
P.I. = Sta. 9+98.13 R2
Ls = 199.99'
θs = 02°30'00"
LT = 133.34'
ST = 66.68'
x = 199.89'
y = 5.82'
k = 199.89'
p = 5.82'
C = 199.97'
Start = Sta. 9+31.45
End = Sta. 11+31.44
C.B. = N28°12'17"W

HORIZONTAL SCALE IN FEET
0 10 20 40

PLAN AND PROFILE - RAMP B-1
STA. 10+00 TO STA. 15+00

CUY-77-00.42 PART 1

MODEL: 104983_GP203 PAPERSIZE: 17x11(in.) DATE: 3/4/2022 TIME: 12:32 PM USER: esmccasiln
F:\Jobs\162-Miller Road Interchange\104983\400-Engineering\Roadway\Sheets\104983_GP203.dgn

DESIGN AGENCY
EUTHENICS
8235 Mohawk Dr. | Cleveland, OH 44305

DESIGNER	ESM
REVIEWER	DTB 03/01/22
PROJECT ID	104983
SHEET	P.117
TOTAL	P.434

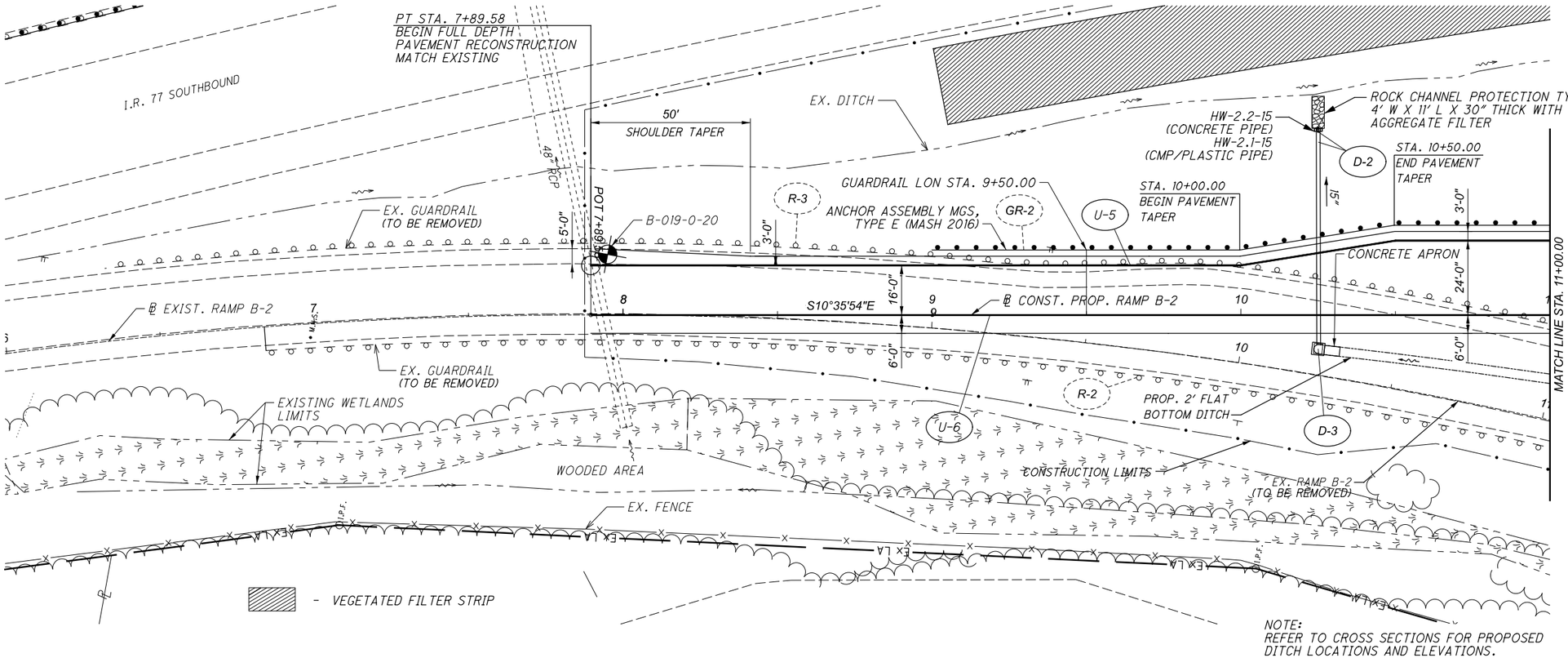

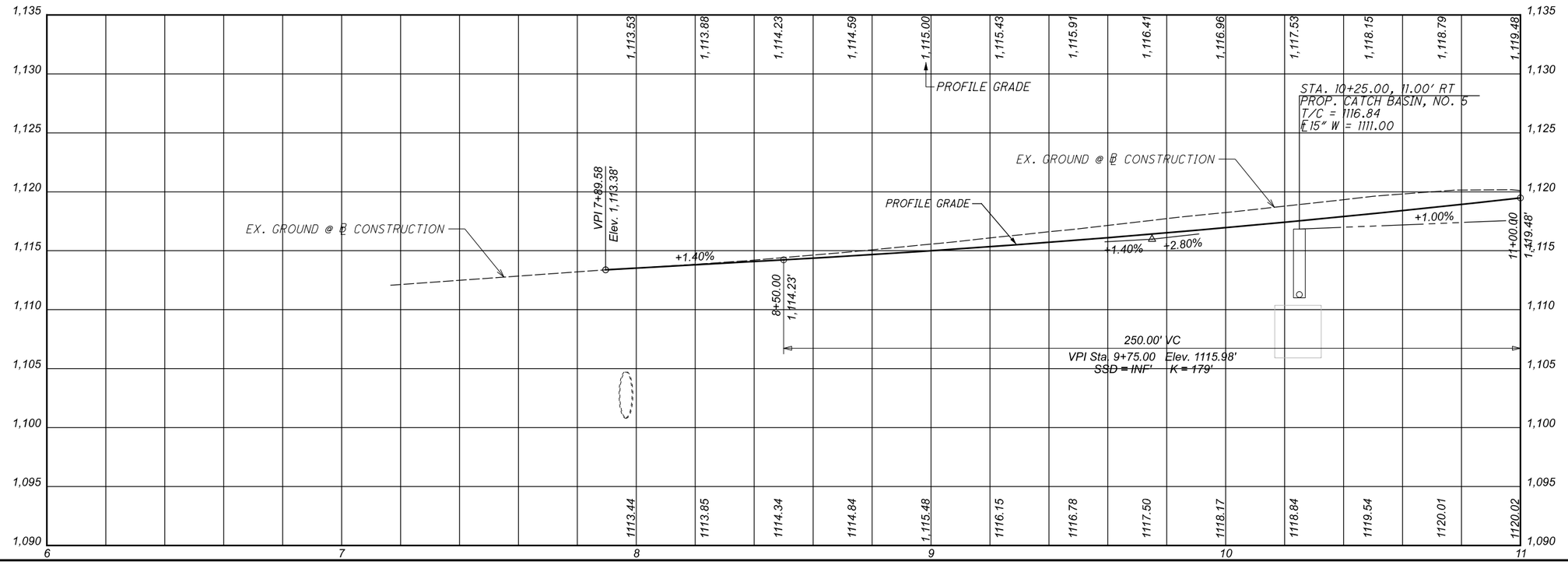

HORIZONTAL SCALE IN FEET
0 10 20 40

PLAN AND PROFILE - RAMP B-2
STA. 06+00 TO STA. 11+00

DESIGN AGENCY
EUTHENICS
8235 Mohawk Dr. | Cleveland, OH 44035

DESIGNER	ESM
REVIEWER	DTB 03/01/22
PROJECT ID	104983
SHEET	P.118
TOTAL	P.434

CUY-77-00.42 PART 1

MODEL: 104983_GP30I PAPERSIZE: 17x11 (in.) DATE: 3/4/2022 TIME: 12:39 PM USER: esmccasin
F:\Jobs\162-Miller Road Interchange\104983\400-Engineering\Roadway\Sheets\104983_GP30I.dgn

PLAN AND PROFILE - RAMP B-2
STA. 11+00 TO STA. 15+48

HORIZONTAL SCALE IN FEET
0 10 20 40

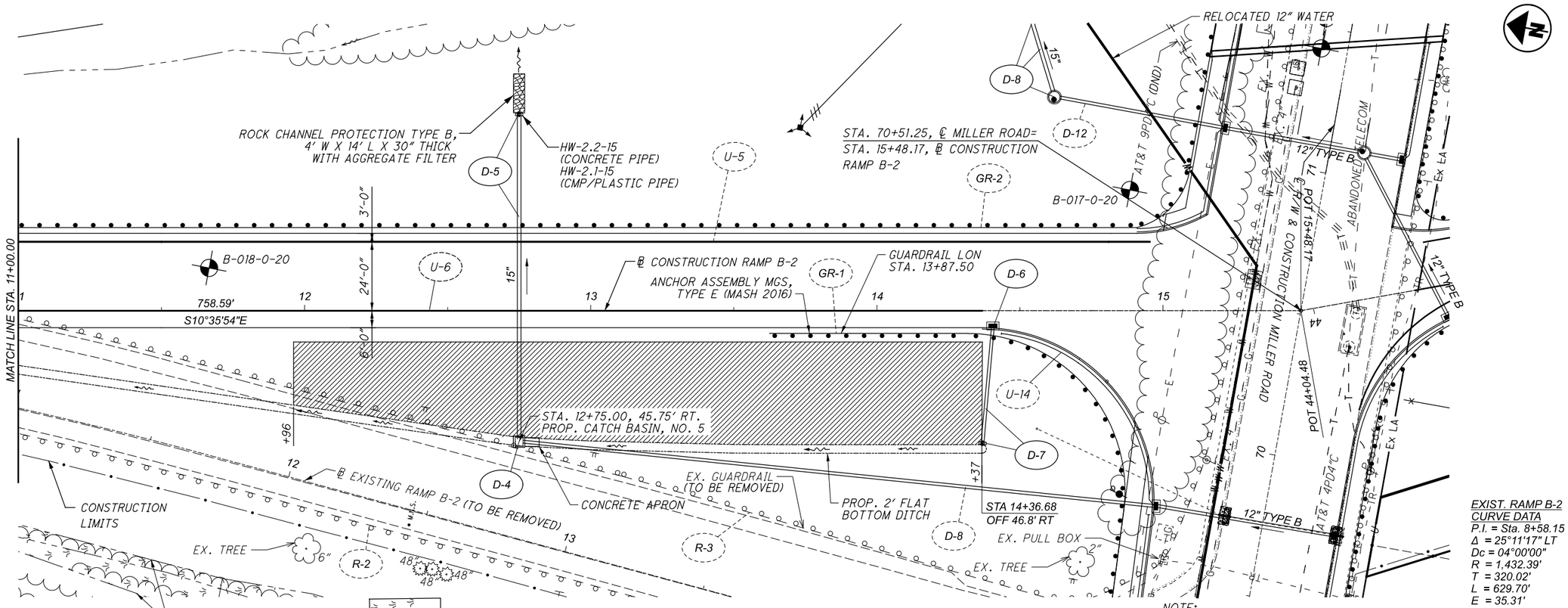

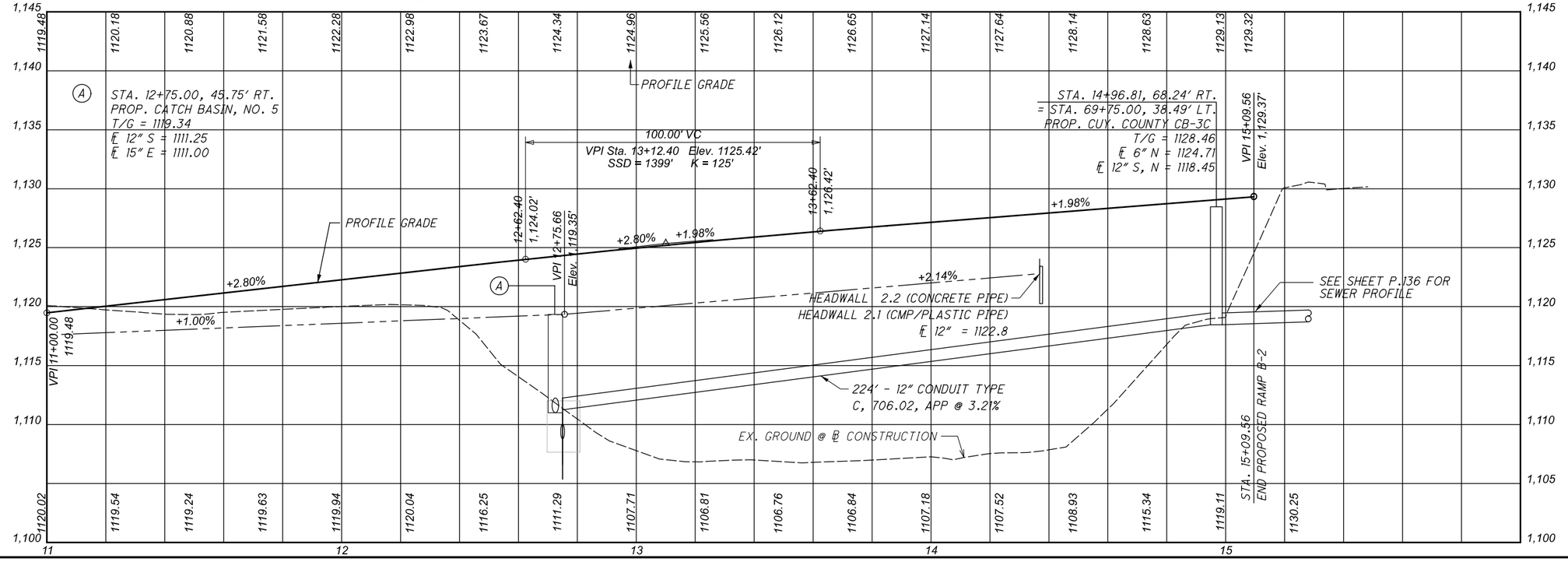

CUY-77-00.42 PART 1

MODEL: I04983_GP302 PAPERSIZE: 17x11 (in.) DATE: 3/4/2022 TIME: 12:46 PM USER: esmccosiln
F:\Jobs\162-Miller Road Interchange\I04983\400-Engineering\Roadway\Sheets\I04983_GP302.dgn

DESIGN AGENCY
EUTHENICS
8235 Mohawk Dr. | Cleveland, OH 44539

DESIGNER	ESM
REVIEWER	DTB 03/01/22
PROJECT ID	104983
SHEET	P.119
TOTAL	P.434

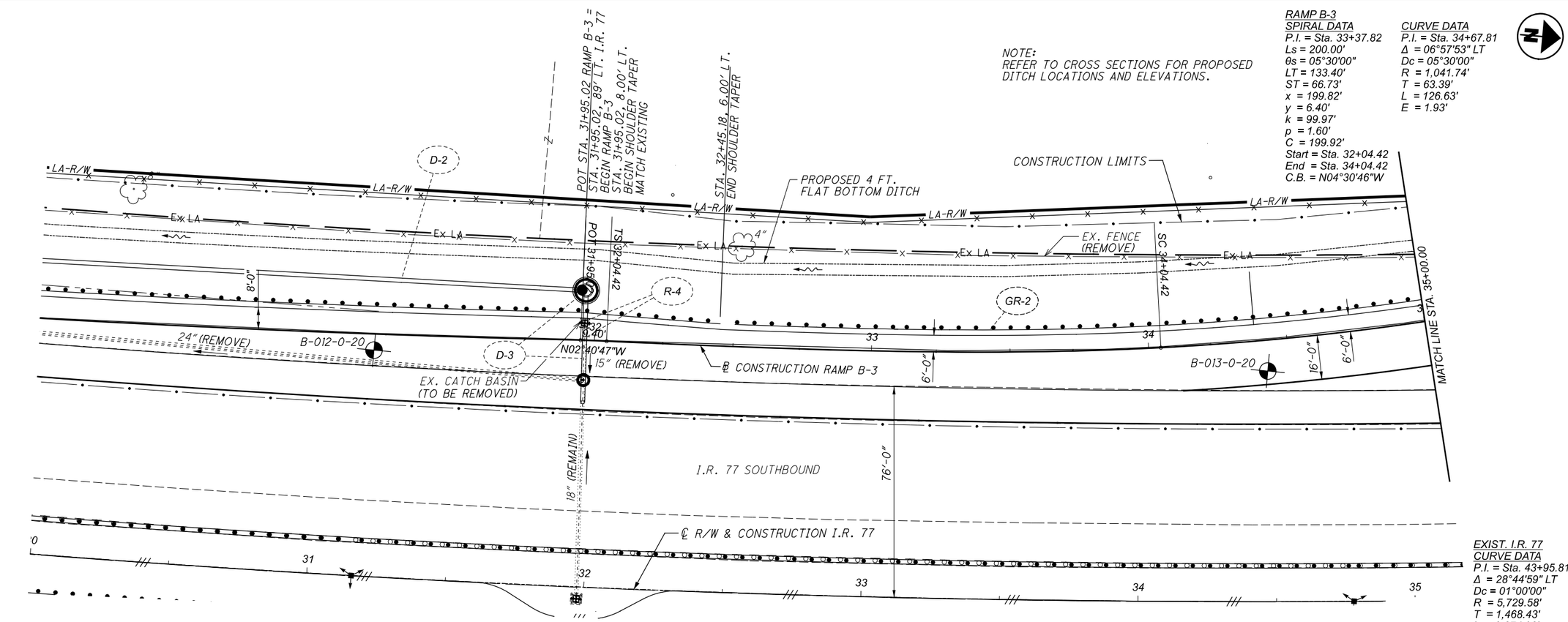

HORIZONTAL SCALE IN FEET
0 10 20 40

PLAN AND PROFILE - RAMP B-3
STA. 30+00 TO STA. 35+00

CUY-77-00.42 PART 1

MODEL: 104983_GP401 PAPERSIZE: 17x11(in.) DATE: 3/4/2022 TIME: 12:12:20 PM USER: esmccaslin
F:\Jobs\162-Miller Road Interchange\104983\400-Engineering\Roadway\Sheets\104983_GP401.dgn

DESIGN AGENCY
EUTHENICS
8235 Mohawk Dr. | Cleveland, OH 44105

DESIGNER
ESM

REVIEWER
DTB 03/01/22

PROJECT ID
104983

SHEET P.120 TOTAL P.434

RAMP B-3

CURVE DATA
P.I. = Sta. 34+67.81
Δ = 06°57'53" LT
Dc = 05°30'00"
R = 1,041.74'
T = 63.39'
L = 126.63'
E = 1.93'

SPIRAL DATA
P.I. = Sta. 35+97.77
Ls = 200.00'
θs = 05°30'00"
LT = 133.40'
ST = 66.73'
x = 199.51'
y = 12.79'
k = 199.51'
p = 12.79'
C = 199.92'
Start = Sta. 35+31.05
End = Sta. 37+31.05
C.B. = N18°48'40"W

NOTE:
REFER TO CROSS SECTIONS FOR PROPOSED DITCH LOCATIONS AND ELEVATIONS.

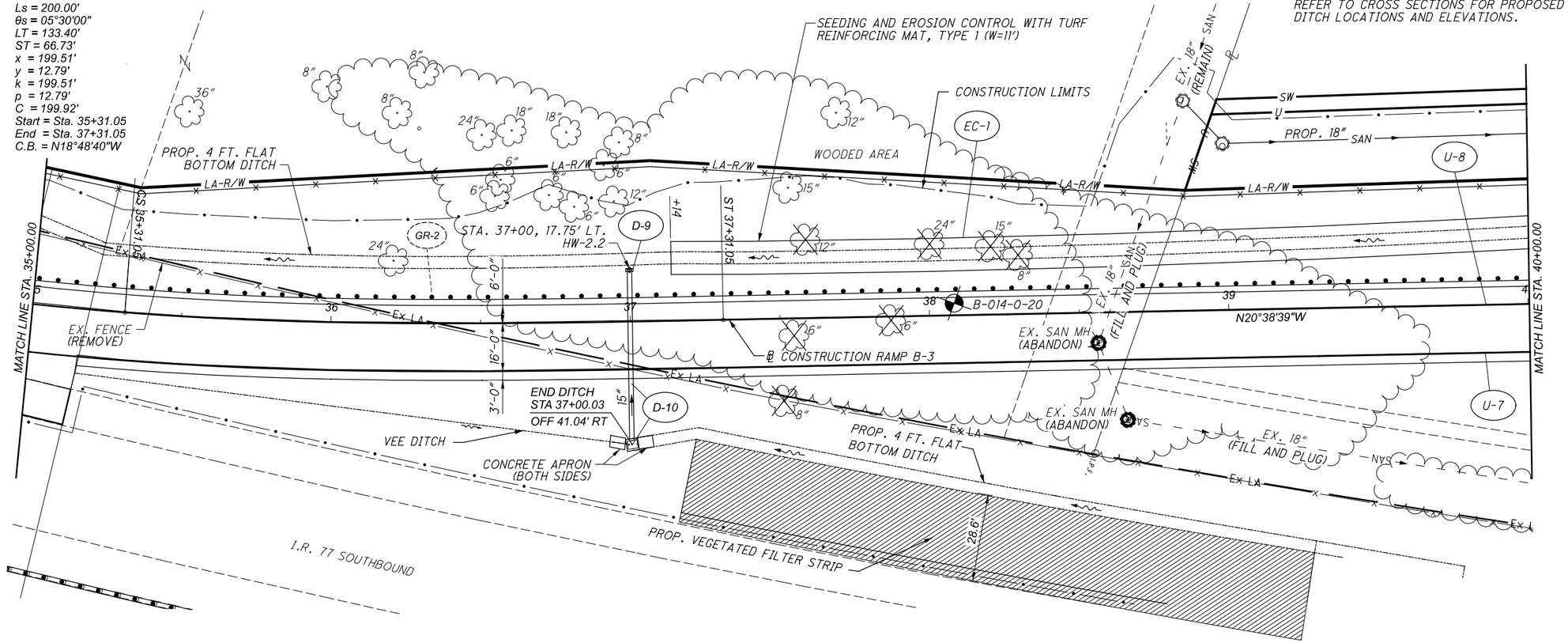

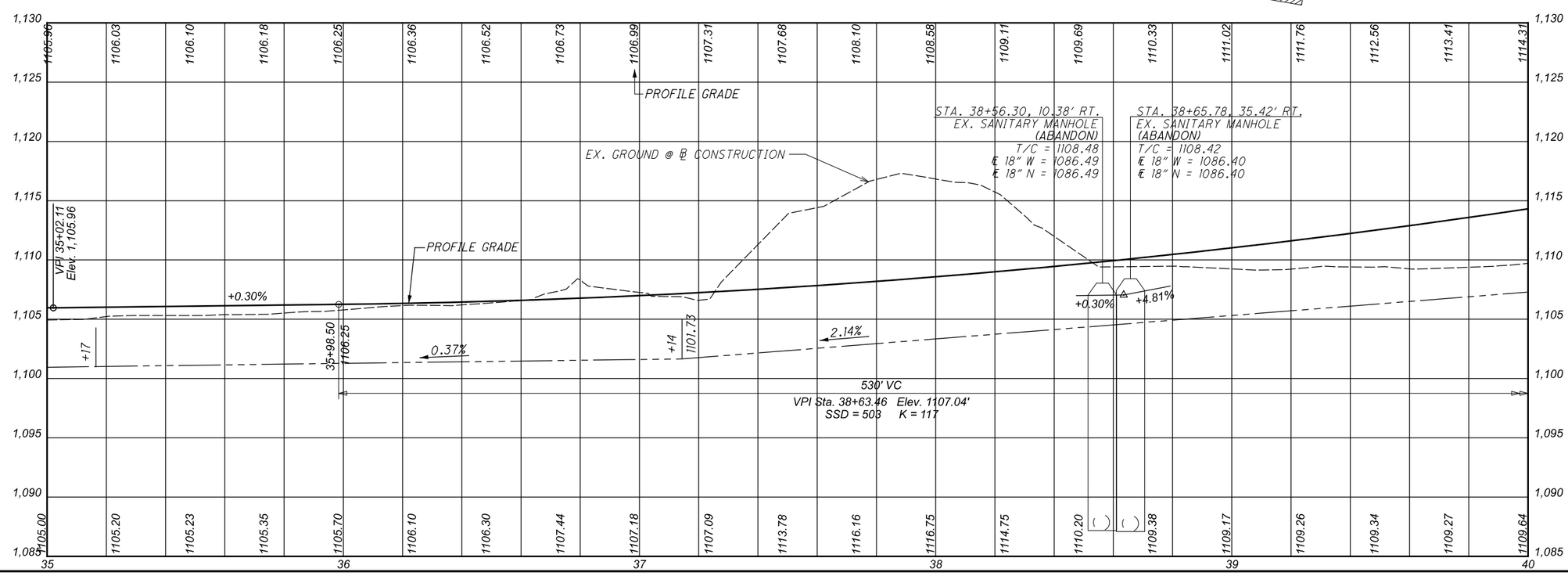

HORIZONTAL SCALE IN FEET
0 10 20 40

PLAN AND PROFILE - RAMP B-3
STA. 35+00 TO STA. 40+00

DESIGN AGENCY
EUTHENICS
8239 Midwest Dr. | Cleveland, OH 44125

DESIGNER ESM
REVIEWER DTB 03/01/22
PROJECT ID 104983
SHEET P.121 TOTAL P.434

CUY-77-00.42 PART 1

MODEL: I04983_GP402 PAPERSIZE: 17x11(in.) DATE: 3/4/2022 TIME: 12:25:54 PM USER: esmccasiln
F:\Jobs\I62-Miller Road Interchange\I04983\400-Engineering\Roadway\Sheets\I04983_GP402.dgn

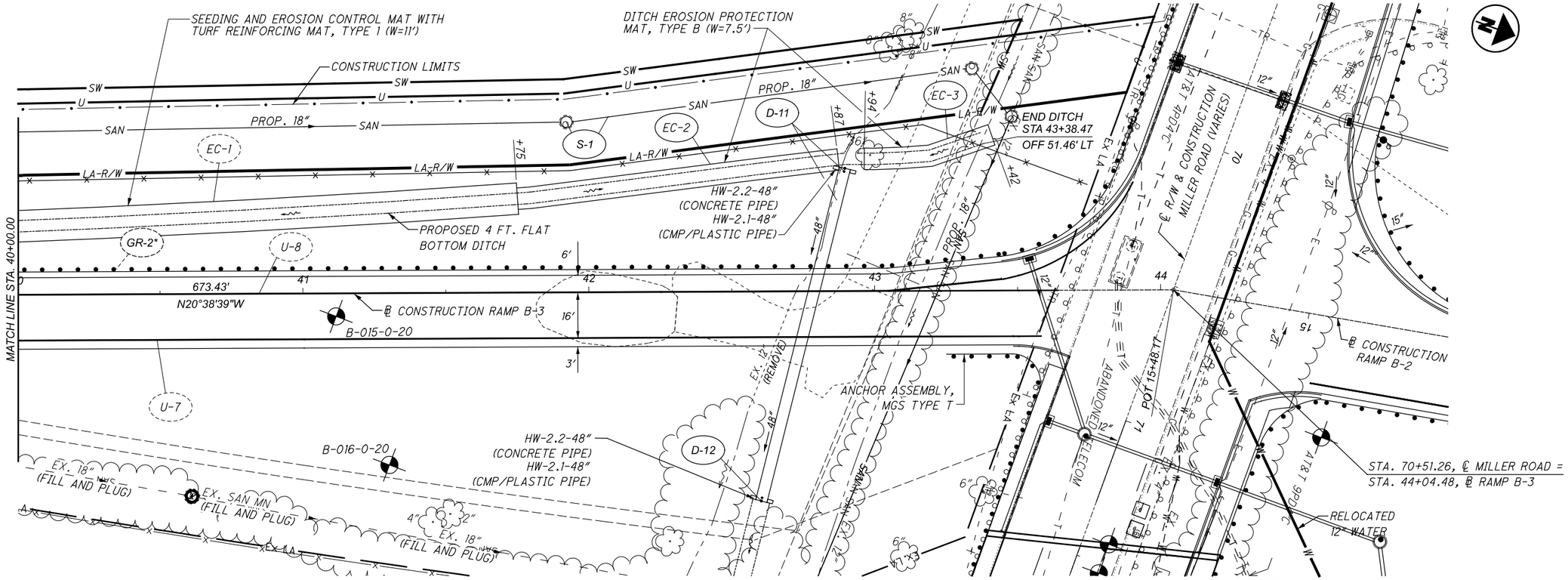

HORIZONTAL SCALE IN FEET
0 10 20 40

PLAN AND PROFILE - RAMP B-3 STA. 40+00 TO STA. 44+04

CUY-77-00.42 PART 1

MODEL: 104983_GP403 PAPERSIZE: ltxii (in.) DATE: 3/4/2022 TIME: 12:30:2 PM USER: esmccoslin
F:\Jobs\162-Miller Road Interchange\104983\400-Engineering\Roadway\Sheets\104983_GP403.dgn

DESIGN AGENCY
EUTHENICS
8235 Mohawk Dr. | Cleveland, OH 44130

DESIGNER ESM
REVIEWER DTB 03/01/22
PROJECT ID 104983
SHEET P.122 TOTAL 434

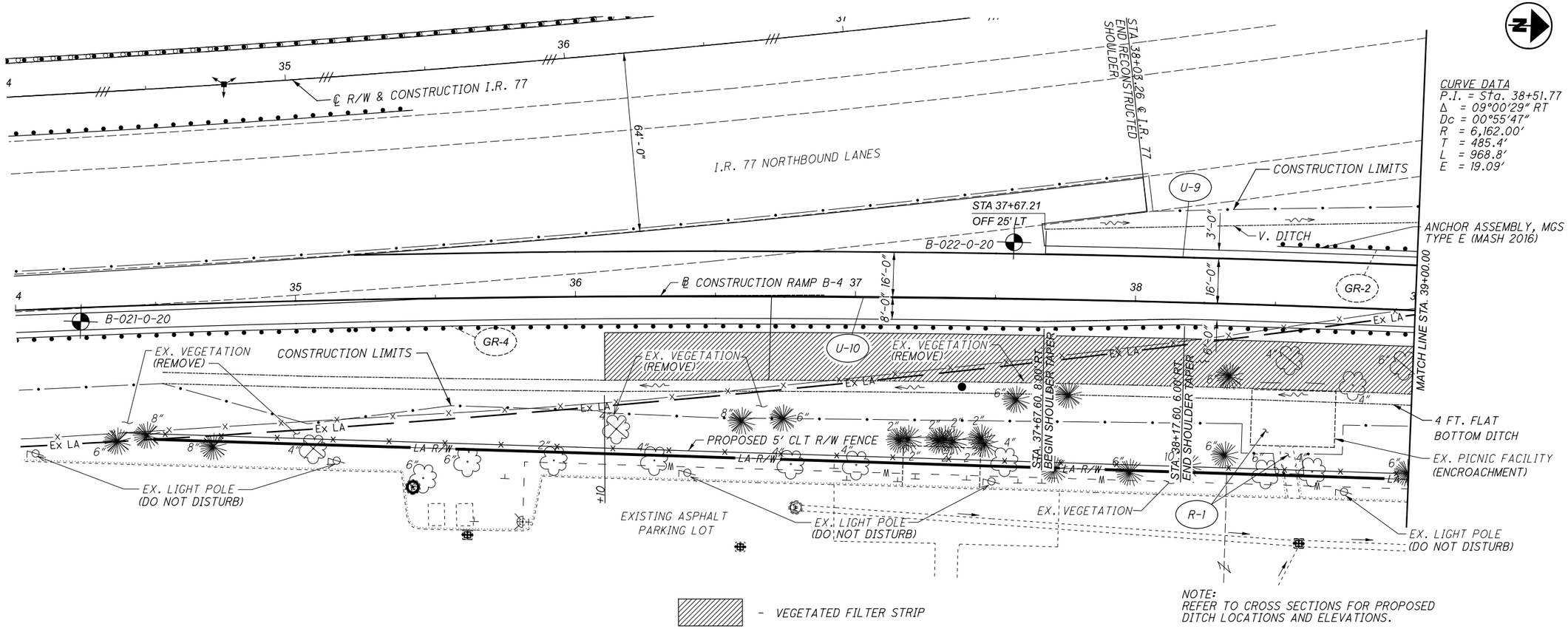

HORIZONTAL SCALE IN FEET
0 10 20 40

PLAN AND PROFILE - RAMP B-4
STA. 34+00 TO STA. 39+00

CUY-77-00.42 PART 1

MODEL: I04983_GP50I PAPERSIZE: 17x11(in.) DATE: 3/4/2022 TIME: 1:23:11 PM USER: esmcosiln
F:\Jobs\1162-Miller Road Interchange\I04983\400-Engineering\Roadway\Sheets\I04983_GP50I.dgn

DESIGN AGENCY
EUTHENICS
8235 Mohawk Dr. | Cleveland, OH 44125

DESIGNER	ESM
REVIEWER	DTB 03/01/22
PROJECT ID	104983
SHEET	P.123
TOTAL	P.434

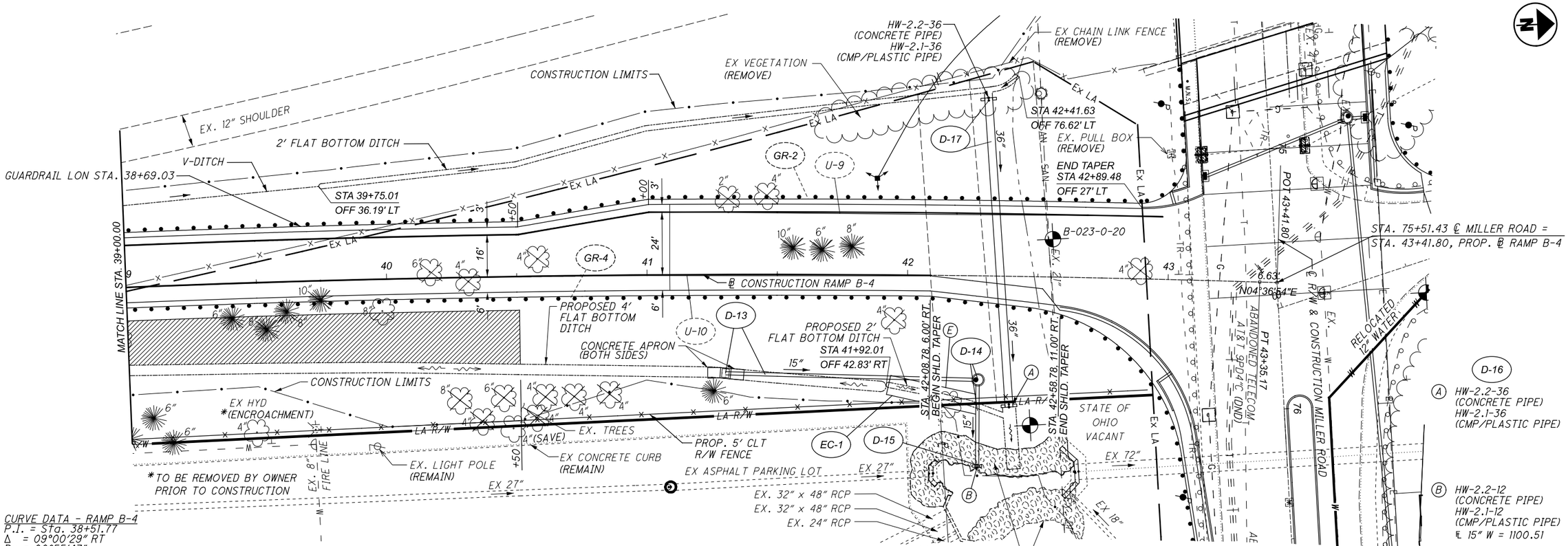

CURVE DATA - RAMP B-4
P.I. = Sta. 38+51.77
Δ = 09°00'29" RT
Dc = 00°55'47"
R = 6,162.00'
T = 485.4'
L = 968.8'
E = 19.09'

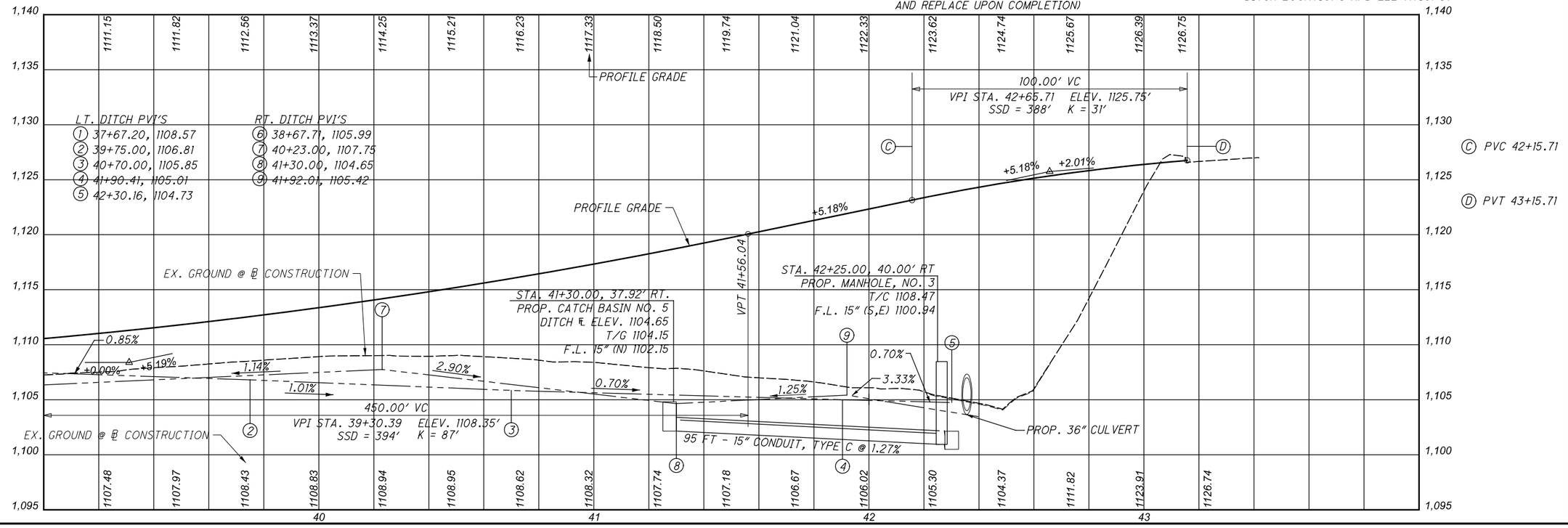

PLAN AND PROFILE - RAMP B-4
STA. 39+00 TO STA. 43+41

DESIGN AGENCY
EUTHENICS
8235 Mohawk Dr. | Cleveland, OH 44105
DESIGNER ESM
REVIEWER DTB 03/01/22
PROJECT ID 104983
SHEET P.124 TOTAL P.434

CUY-77-00.42 PART 1

MODEL: 104983_GP502 PAPERSIZE: 17x11 (in.) DATE: 3/4/2022 TIME: 12:32:20 PM USER: esmccasilin
F:\Jobs\162-Miller Road Interchange\104983\400-Engineering\Roadway\Sheets\104983_GP502.dgn

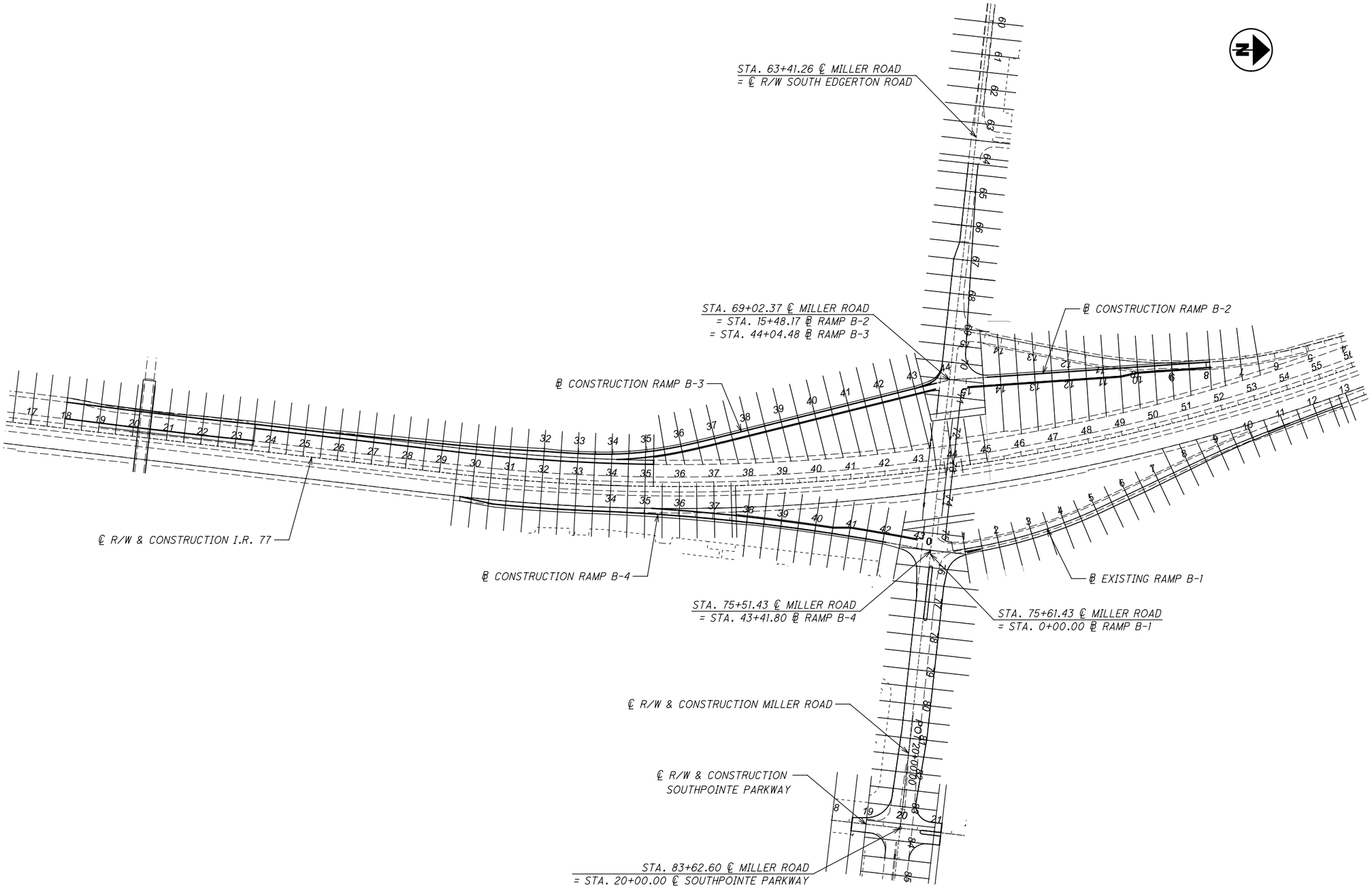

HORIZONTAL SCALE IN FEET
0 75 150 300

CROSS SECTION LAYOUT

CUY-77-00.42 PART 1

MODEL: Sheet PAPERSIZE: 17x11(in.) DATE: 3/4/2022 TIME: 12:55:03 PM USER: esmccasiln
F:\Jobs\162-Miller Road Interchange\104983\400-Engineering\Roadway\Sheets\104983_GM002.dgn

DESIGN AGENCY
EUTHENICS
8235 Mohawk Dr. | Cleveland, OH 44139

DESIGNER
FTS

REVIEWER
ANC 07/30/21

PROJECT ID
104983

SHEET P.125 | TOTAL P.434

REF. NO.	SHEET NO.	STATION		LOCATION	SIDE	203				204			659			670					
						EXCAVATION	EXCAVATION, AS PER PLAN	EMBANKMENT		EXCAVATION OF SUBGRADE	GRANULAR MATERIAL, TYPE B		SEEDING AND MULCHING	TOPSOIL		DITCH EROSION PROTECTION					
		FROM	TO			CY	CY	CY		CY	CY		SY	CY		SY					
E-1	P.95	06+00.00	09+00.00	RAMP B-1	RT									104		933					
E-2	P.95	14+37.00	16+77.00	RAMP B-2	LT									98		882					
E-3	P.95	36+10.00	40+50.00	RAMP B-4	RT									93		832					
E-4	P.95	22+25.00	25+50.00	I.R. 77	LT									139		1250					
E-5	P.95	37+35.00	39+49.00	I.R. 77	LT									66		594					
E-6	P.95	46+00.00	50+75.00	I.R. 77	LT									139		1250					
	P.132	64+50.00	65+00.00	MILLER ROAD	LT/RT	93		4					189								
	P.133	65+50.00	66+50.00	MILLER ROAD	LT/RT	275		148		53	53		458								
	P.134	67+00.00	68+00.00	MILLER ROAD	LT/RT	480		580		569	569		611								
	P.135	68+50.00	69+00.00	MILLER ROAD	LT/RT	175		525		435	435		425								
	P.136	69+50.00	70+00.00	MILLER ROAD	LT/RT	193		671		315	315		214								
	P.137	70+50.00	71+46.65	MILLER ROAD	LT/RT	363		3031		363	363		695								
	P.138	71+66.60	74+57.35	MILLER ROAD	LT/RT	30		211		22	22		127								
	P.139	74+77.31	75+00.00	MILLER ROAD	LT/RT	93		739		182	182		312								
	P.140	75+50.00	76+00.00	MILLER ROAD	LT/RT	303		1964		438	438		480								
	P.141	76+50.00	77+00.00	MILLER ROAD	LT/RT	662		2143		438	438		1161								
	P.142	77+50.00	78+00.00	MILLER ROAD	LT/RT	1217		672		438	438		833								
	P.143	78+50.00	79+50.00	MILLER ROAD	LT/RT	342		1050		657	657		597								
	P.144	80+00.00	81+00.00	MILLER ROAD	LT/RT	585		108		472	472		458								
	P.145	81+50.00	82+50.00	MILLER ROAD	LT/RT	586		0		468	468		317								
	P.146	83+00.00	84+00.00	MILLER ROAD	LT/RT	597		9		221	221		222								
	P.147	84+53.76	85+00.00	MILLER ROAD	LT/RT	123		10					18								
	P.149	19+00.00		SOUTHPOINTE PKWY	LT/RT	53		2					98								
	P.150	21+00.00	21+19.47	SOUTHPOINTE PKWY	LT/RT	39		22					74								
	P.151	17+50.00	18+50.00	I.R. 77	LT	15		0		2	2		25								
	P.152	19+00.00	20+00.00	I.R. 77	LT	33		28		28	28		189								
	P.153	20+50.00	21+50.00	I.R. 77	LT	26		40		21	21		264								
	P.154	22+00.00	23+00.00	I.R. 77	LT	90		39		6	6		592								
	P.155	23+50.00	24+50.00	I.R. 77	LT	103		74					383								
	P.156	25+00.00	26+00.00	I.R. 77	LT	153		90					395								
	P.157	26+50.00		I.R. 77	LT	98		31					208								
	P.158	27+00.00	27+50.00	I.R. 77	LT	405		61					419								
	P.159	28+00.00	29+00.00	I.R. 77	LT	782		64					642								
	P.160	29+50.00	30+50.00	I.R. 77	LT	762		57					655								
	P.161	31+00.00	32+00.00	I.R. 77	LT	714		49					620								
	P.162	32+50.00	33+50.00	I.R. 77	LT	625		54					594								
	P.163	34+00.00	35+23.87	I.R. 77	LT	626		22					624								
	P.172	43+50.00	44+00.00	I.R. 77	LT	35		6					119								
	P.173	44+50.00	45+00.00	I.R. 77	LT	45		7					153								
	P.164	29+50.00	30+50.00	I.R. 77	RT	23		7					58								
	P.165	31+00.00	32+00.00	I.R. 77	RT	45		41					234								
	P.166	32+50.00	33+50.00	I.R. 77	RT	39		52					264								
	P.167	34+00.00	35+00.00	I.R. 77	RT	45		68					291								
	P.168	35+50.00		I.R. 77	RT	25		31					147								
	P.169	36+00.00	37+00.00	I.R. 77	RT	141		77					436								
	P.170	37+50.00	37+62.67	I.R. 77	RT	76		32					190								
TOTALS CARRIED TO P.127						11115		12819		5128	5128		14791	639		5741					

EARTHWORK & EROSION CONTROL SUBSUMMARY

CUY-77-00.42 PART 1

MODEL: 104983_GS004 PAPERSIZE: 17x11 (in.) DATE: 3/4/2022 TIME: 1:25:12 PM USER: esmccall
F:\Jobs\11162-Miller Road Interchange\104983\400-Engineering\Roadway\Sheets\104983_GS004.dgn

DESIGN AGENCY
EUTHENICS
8235 Mohawk Dr. | Cleveland, OH 44130

DESIGNER
COM

REVIEWER
TDP 03/01/22

PROJECT ID
104983

SHEET P.126 | TOTAL P.434

REF. NO.	SHEET NO.	STATION FROM	STATION TO	LOCATION	SIDE	203 EXCAVATION	203 EXCAVATION, AS PER PLAN	203 EMBANKMENT		204 EXCAVATION OF SUBGRADE	204 GRANULAR MATERIAL, TYPE B		659 SEEDING AND MULCHING	659 TOPSOIL		670 DITCH EROSION PROTECTION					
		FROM	TO			CY	CY	CY		CY	CY		SY	CY		SY					
	P.174	1+00.00	2+50.00	RAMP B-1	RT	834		1200					575								
	P.175	3+00.00	4+50.00	RAMP B-1	RT	756		1274					806								
	P.176	5+00.00	6+50.00	RAMP B-1	RT	534		1568					542								
	P.177	7+00.00	9+50.00	RAMP B-1	RT	672		1793					78								
	P.178	10+00.00	12+50.00	RAMP B-1	RT	464		473					413								
	P.179	12+78.00	13+00.00	RAMP B-1	RT	4		0					6								
	P.181	7+50.00	8+50.00	RAMP B-2	LT/RT	70		0					79								
	P.182	9+00.00	10+00.00	RAMP B-2	LT/RT	267		93					691								
	P.183	10+50.00	11+00.00	RAMP B-2	LT/RT	325		325					580								
	P.184	11+50.00	12+00.00	RAMP B-2	LT/RT	215		609					859								
	P.185	12+50.00	13+00.00	RAMP B-2	LT/RT	228		2345					1031								
	P.186	13+50.00	14+00.00	RAMP B-2	LT/RT	88		5982					934								
	P.187	14+50.00		RAMP B-2	LT/RT	0		3610					547								
	P.154	35+50.00	36+50.00	RAMP B-3	LT/RT	268		76					400								
	P.155	37+00.00	38+00.00	RAMP B-3	LT/RT	1785		44					1120								
	P.156	38+50.00	39+50.00	RAMP B-3	LT/RT	904		213					1499								
	P.157	40+00.00	41+00.00	RAMP B-3	LT/RT	108		1137					949								
	P.158	41+50.00	42+00.00	RAMP B-3	LT/RT	18	1277	2972					1178								
	P.159	42+50.00	43+00.00	RAMP B-3	LT/RT	55	701	4561					1787								
	P.160	43+25.00		RAMP B-3	LT/RT	16		1039					361								
	P.195	38+00.00	38+50.00	RAMP B-4	LT/RT	38		78					119								
	P.196	39+00.00	40+00.00	RAMP B-4	LT/RT	71		732					522								
	P.197	40+50.00	41+00.00	RAMP B-4	LT/RT	33		1330					588								
	P.198	41+50.00	42+00.00	RAMP B-4	LT/RT	28		3138					822								
	P.199	42+50.00		RAMP B-4	LT/RT	1		2680					483								
		SUBTOTALS FROM THIS SHEET				7782	1978	37272					16969								
		SUBTOTALS FROM P.126				11115		12819		5128	5128		14791	639		5741					
TOTALS CARRIED TO GENERAL SUMMARY						18897	1978	50091		5128	5128		31760	639		5741					

EARTHWORK & EROSION CONTROL SUBSUMMARY

CUY-77-00.42 PART 1

MODEL: 104983_GS005 PAPERSIZE: 17x11 (in.) DATE: 3/4/2022 TIME: 1:25:16 PM USER: esmccaslin
F:\Jobs\11162-Miller Road Interchange\104983\400-Engineering\Roadway\Sheets\104983_GS005.dgn

DESIGN AGENCY
EUTHENICS
8235 Mohawk Dr. | Cleveland, OH 44130

DESIGNER
COM

REVIEWER
TDP 03/01/22

PROJECT ID
104983

SHEET P.127 | TOTAL P.434

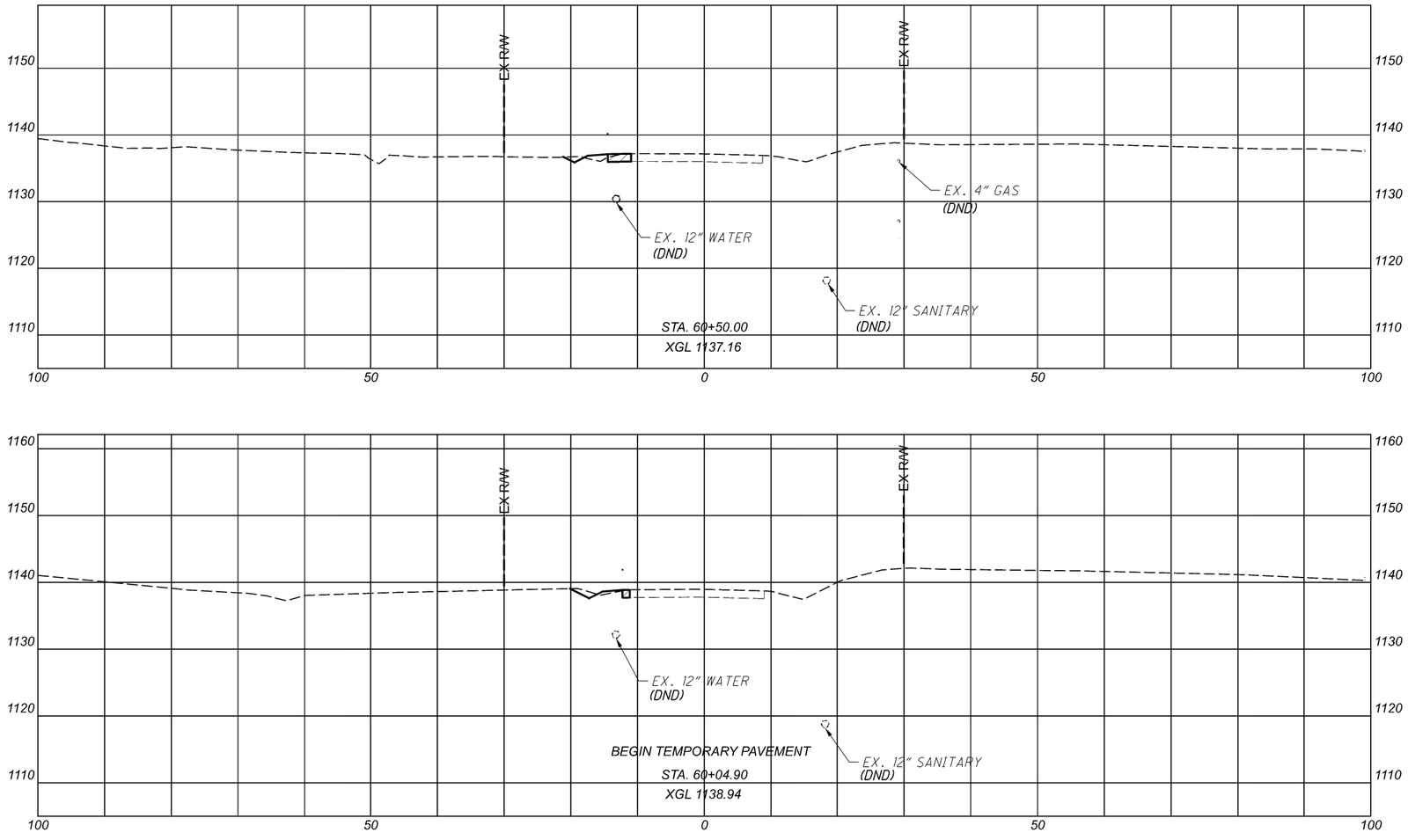

LEGEND

TEMPORARY PAVEMENT

CROSS SECTIONS - MILLER ROAD
STA. 60+04.90 TO STA. 60+50

CUY-77-00.42 PART 1

MODEL: CLX_MILLER ROAD-2 - 60+04.90 [Sheet] PAPERSIZE: 17x11in) DATE: 3/4/2022 TIME: 12:25:26 PM USER: esmccaslin
F:\Jobs\1162-Miller Road Interchange\104983\400-Engineering\Roadway\Sheets\104983_XS001.dgn

DESIGN AGENCY
EUTHENICS
8235 Mohawk Dr. | Cleveland, OH 44125

DESIGNER
DTB

REVIEWER
RAB 03/01/22

PROJECT ID
104983

Sheet Totals		
Seeding	Cut	Fill
.	.	.

SHEET P.128 TOTAL 433

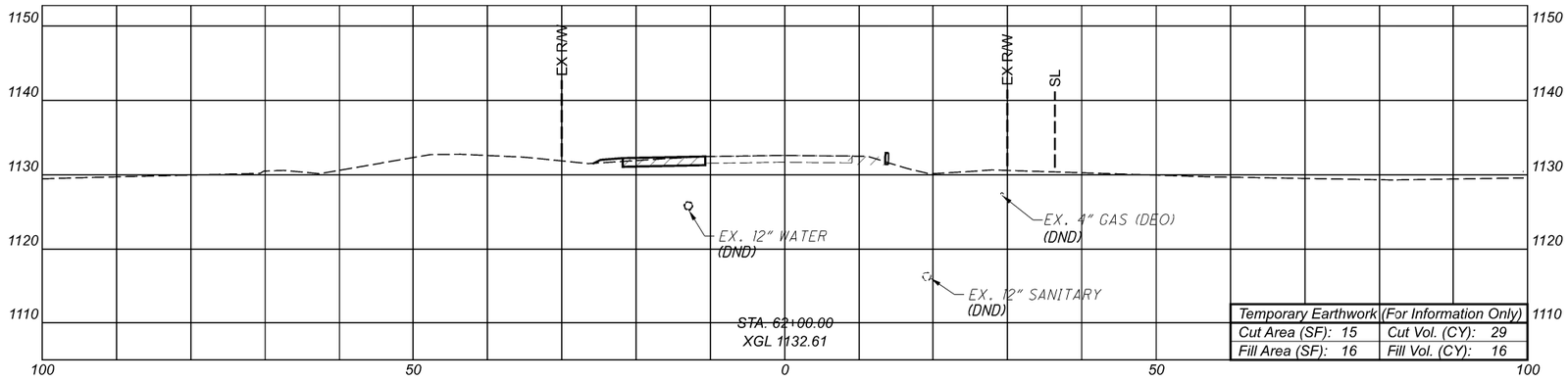

Temporary Earthwork	(For Information Only)
Cut Area (SF): 15	Cut Vol. (CY): 29
Fill Area (SF): 16	Fill Vol. (CY): 16

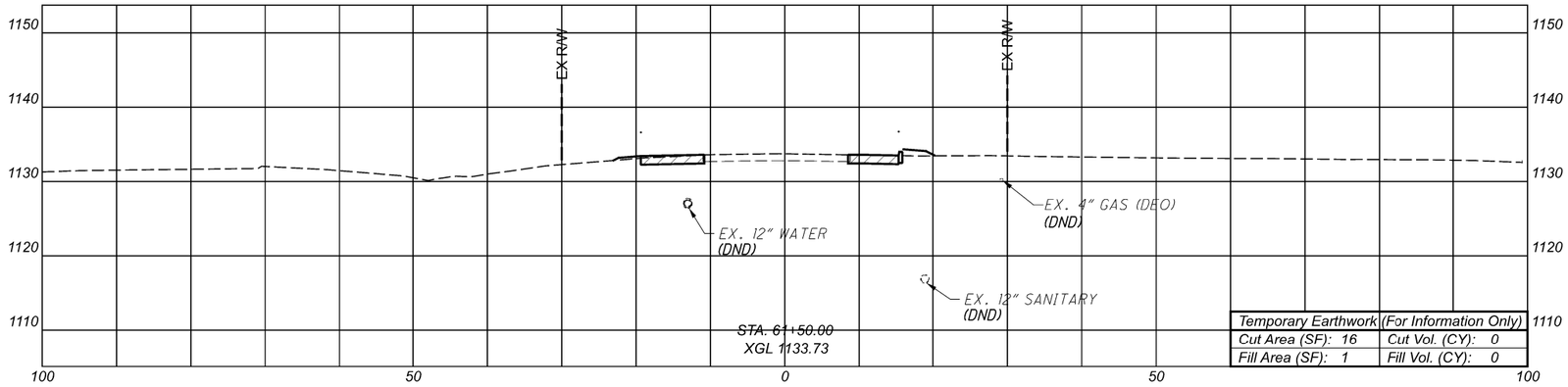

Temporary Earthwork	(For Information Only)
Cut Area (SF): 16	Cut Vol. (CY): 0
Fill Area (SF): 1	Fill Vol. (CY): 0

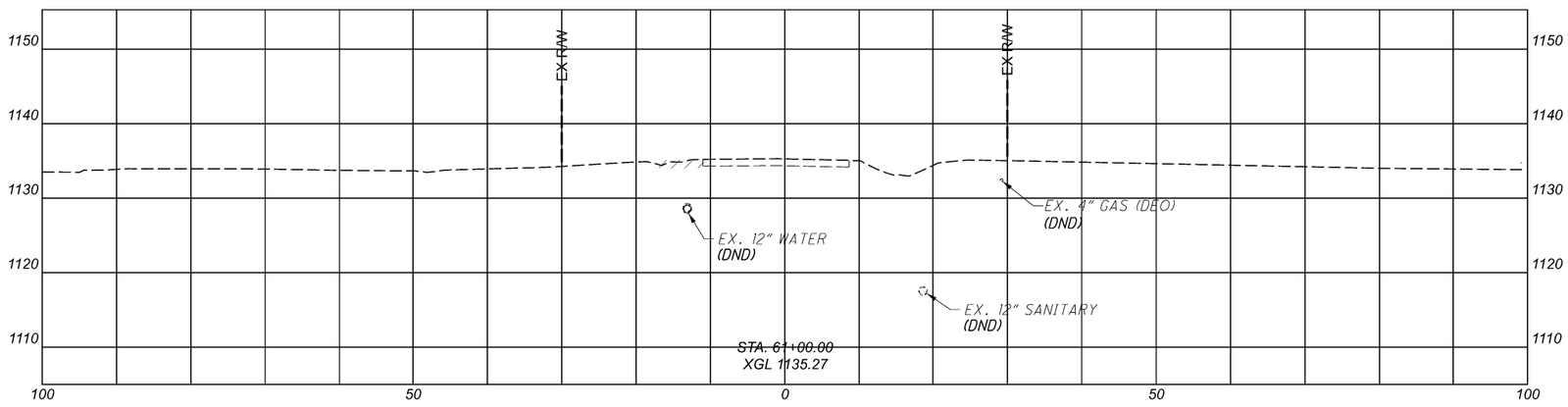

LEGEND

TEMPORARY PAVEMENT

CROSS SECTIONS - MILLER ROAD
STA. 61+00 TO STA. 62+00

Sheet Totals	
Temp. Cut	Temp. Fill
29	16

DESIGN AGENCY
EUTHENICS
8235 Mohawk Dr. | Cleveland, OH 44125

DESIGNER
DTB

REVIEWER
RAB 03/01/22

PROJECT ID
104983

SHEET P.129 TOTAL 433

CUY-77-00.42 PART 1

MODEL: CLX_MILLER MOT - 61+00.00 (Sheet) PAPERSIZE: 11x17 (in.) DATE: 3/4/2022 TIME: 12:25:38 PM USER: esmccaslin
F:\Jobs\1162-Miller Road Interchange\104983\400-Engineering\Roadway\Sheets\104983_XS001.dgn

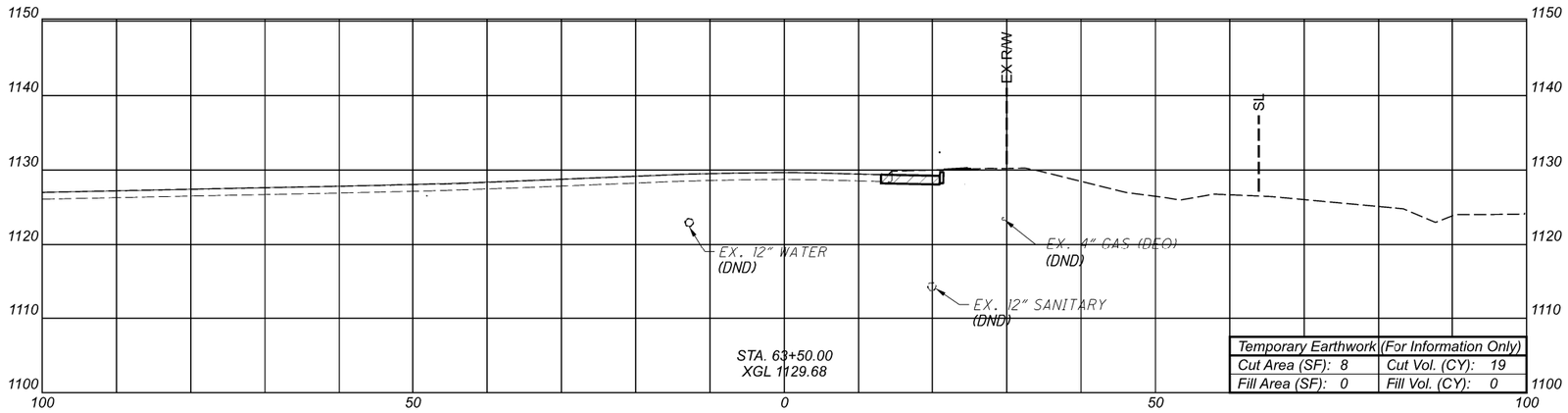

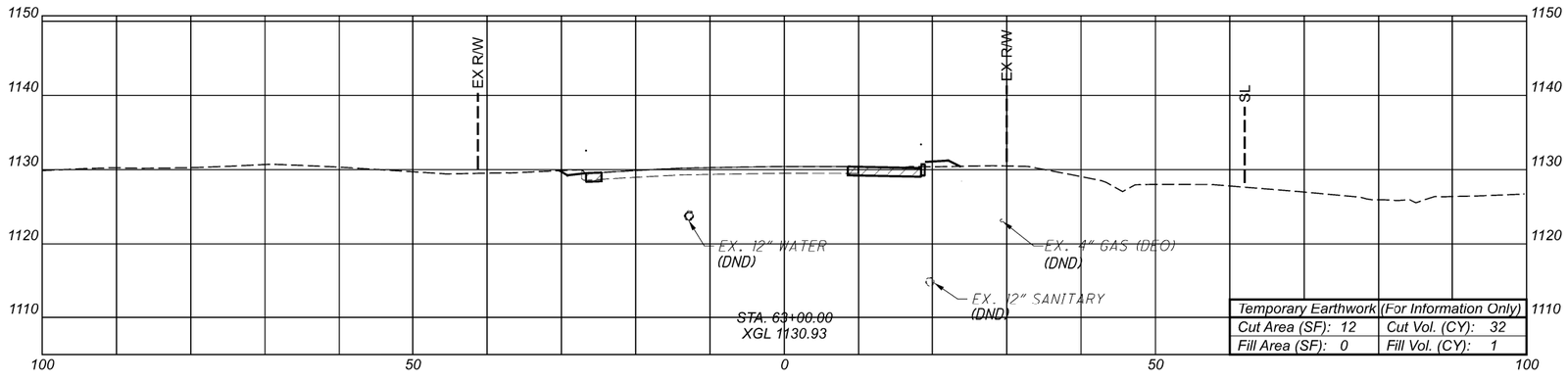

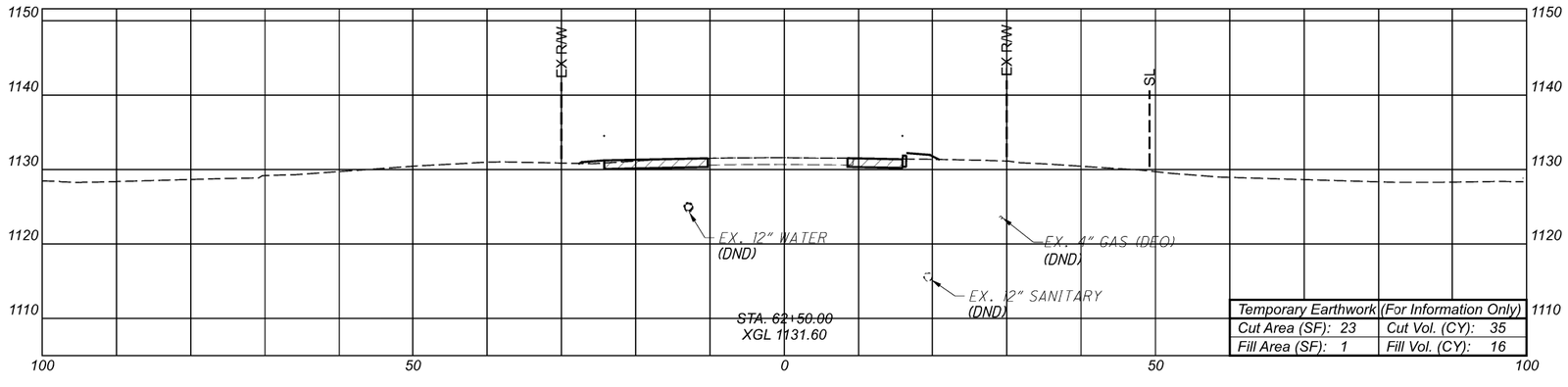

LEGEND

TEMPORARY PAVEMENT

CROSS SECTIONS - MILLER ROAD
STA. 62+50 TO STA. 63+50

CUY-77-00.42 PART 1

MODEL: CLX_MILLER MOT - 62+50.00 [Sheet] PAPERSIZE: 17x11(in.) DATE: 3/4/2022 TIME: 12:55:15 PM USER: esmccasiln
F:\Jobs\162-Miller Road Interchange\104983\400-Engineering\Roadway\Sheets\104983_XS001.dgn

DESIGN AGENCY
EUTHENICS
8235 Mohawk Dr. | Cleveland, OH 44125

DESIGNER
DTB

REVIEWER
RAB 03/01/22

PROJECT ID
104983

Sheet Totals	
Temp. Cut	Temp. Fill
86	17

SHEET P.130 TOTAL 433

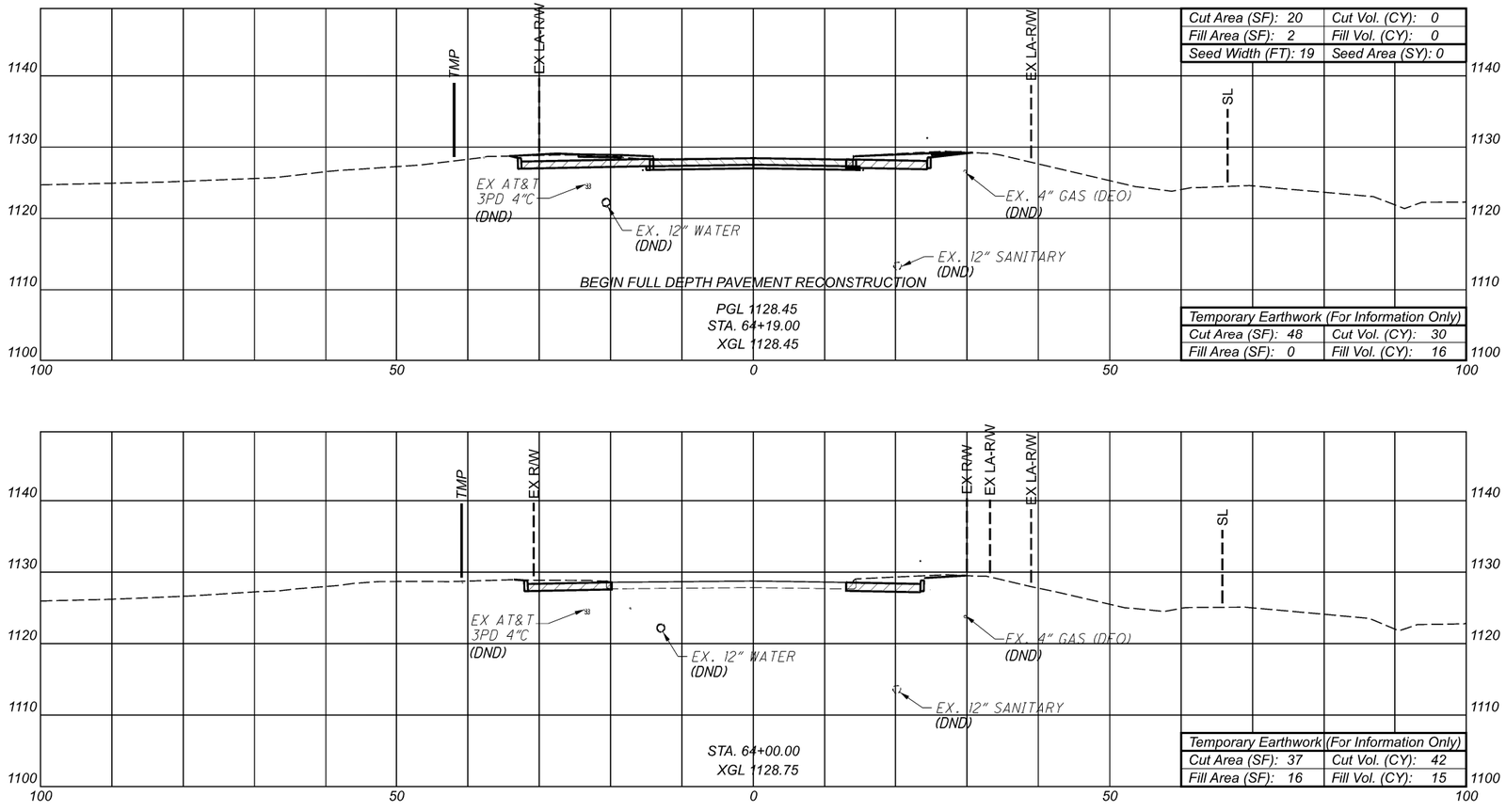

Cut Area (SF): 20	Cut Vol. (CY): 0
Fill Area (SF): 2	Fill Vol. (CY): 0
Seed Width (FT): 19	Seed Area (SY): 0

Temporary Earthwork (For Information Only)	
Cut Area (SF): 48	Cut Vol. (CY): 30
Fill Area (SF): 0	Fill Vol. (CY): 16

Temporary Earthwork (For Information Only)	
Cut Area (SF): 37	Cut Vol. (CY): 42
Fill Area (SF): 16	Fill Vol. (CY): 15

LEGEND

TEMPORARY PAVEMENT

ITEM 202 - PAVEMENT REMOVED

CROSS SECTIONS - MILLER ROAD
STA. 64+00 TO STA. 64+19

CUY-77-00.42 PART 1

MODEL: CLX_MILLER MOT - 64+00.00 (Sheet) PAPERSIZE:17x11(in.) DATE: 3/4/2022 TIME: 11:26:06 PM USER: esmccaslin
F:\Jobs\162-Miller Road Interchange\104983\400-Engineering\Roadway\Sheets\104983_XS001.dgn

DESIGN AGENCY
EUTHENICS
8235 Mohawk Dr. | Cleveland, OH 44130

DESIGNER
DTB

REVIEWER
RAB 03/01/22

PROJECT ID
104983

Sheet Totals				
Seeding	Cut	Fill	Temp. Cut	Temp. Fill
0	0	0	72	31

SHEET P.131 TOTAL 433

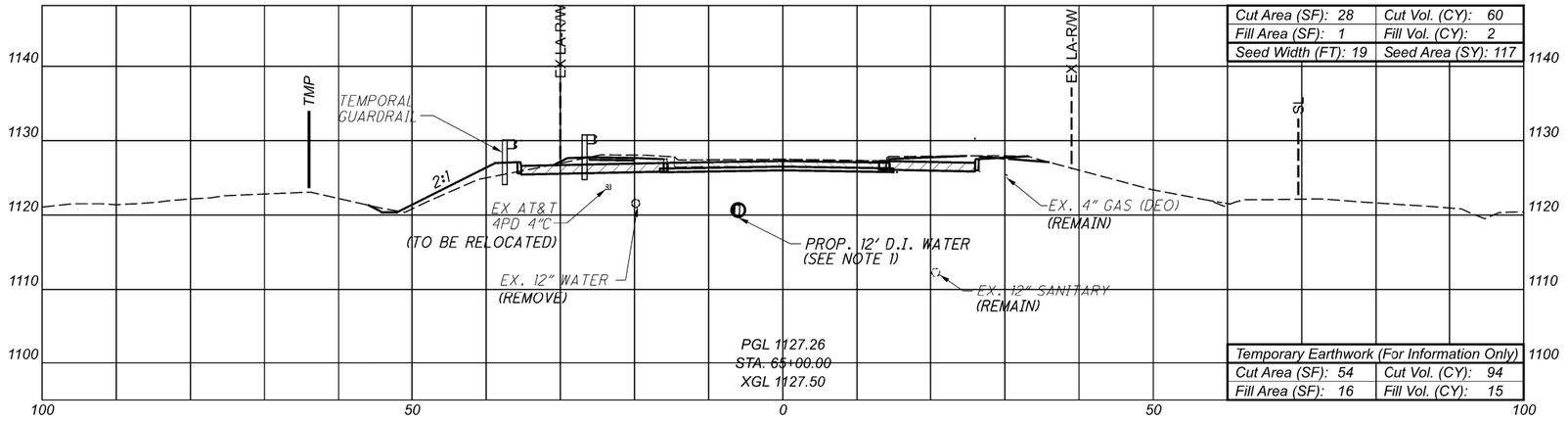

Cut Area (SF): 28	Cut Vol. (CY): 60
Fill Area (SF): 1	Fill Vol. (CY): 2
Seed Width (FT): 19	Seed Area (SY): 117

Temporary Earthwork (For Information Only)	
Cut Area (SF): 54	Cut Vol. (CY): 94
Fill Area (SF): 16	Fill Vol. (CY): 15

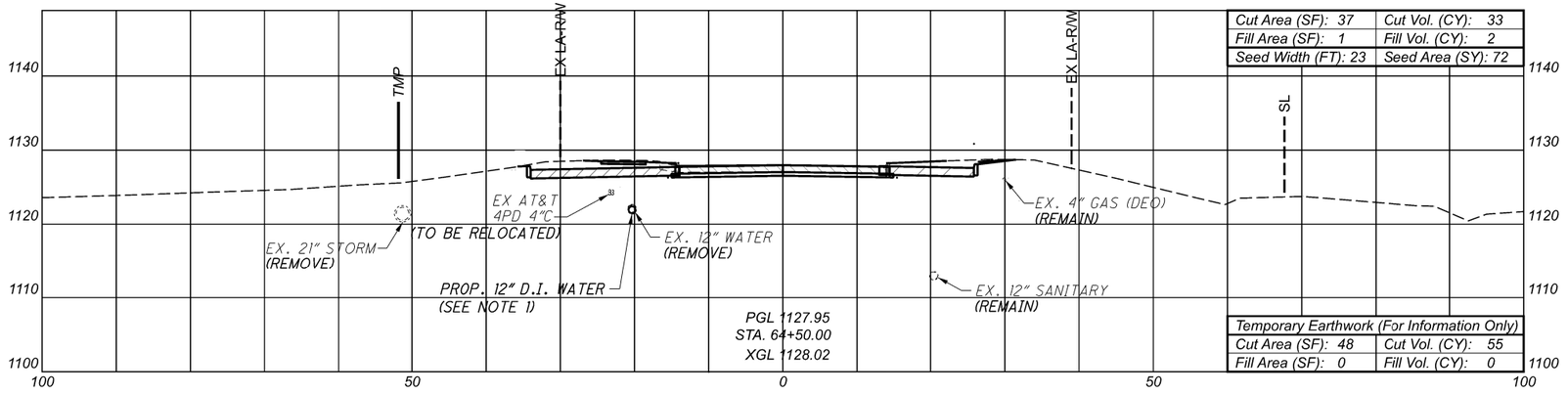

Cut Area (SF): 37	Cut Vol. (CY): 33
Fill Area (SF): 1	Fill Vol. (CY): 2
Seed Width (FT): 23	Seed Area (SY): 72

Temporary Earthwork (For Information Only)	
Cut Area (SF): 48	Cut Vol. (CY): 55
Fill Area (SF): 0	Fill Vol. (CY): 0

LEGEND

TEMPORARY PAVEMENT

ITEM 202 - PAVEMENT REMOVED

NOTES

1. FOR PROFILE AND DETAILING OF THE PROPOSED WATER MAIN, SEE SHEET P.247

CROSS SECTIONS - MILLER ROAD
STA. 64+50 TO STA. 65+00

CUY-77-00.42 PART 1

MODEL: CLX_MILLER ROAD-I- 64+50.00-II[Sheet] PAPERSIZE:17x11(in.) DATE: 3/4/2022 TIME: 12:18 PM USER: esmccaslin
F:\Jobs\1162-Miller Road Interchange\104983\400-Engineering\Roadway\Sheets\104983_XS001.dgn

DESIGN AGENCY
EUTHENICS
8235 Midwest Dr. | Cleveland, OH 44125

DESIGNER
DTB

REVIEWER
RAB 03/01/22

PROJECT ID
104983

SHEET P.132 TOTAL 433

Sheet Totals				
Seeding	Cut	Fill	Temp. Cut	Temp. Fill
189	93	4	149	15

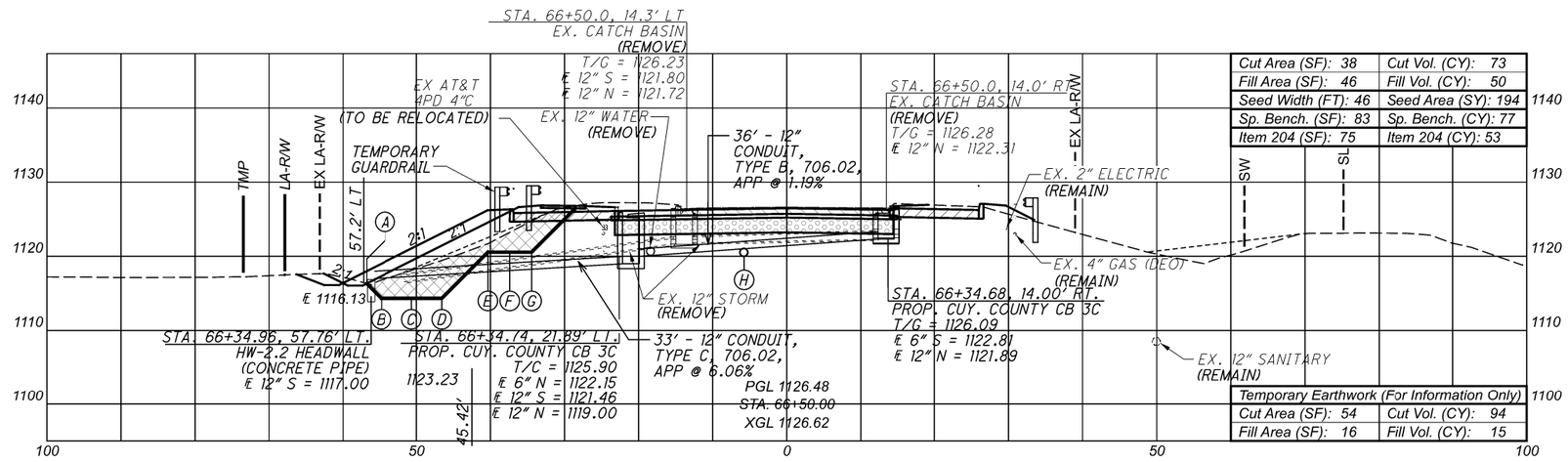

Cut Area (SF):	38	Cut Vol. (CY):	73
Fill Area (SF):	46	Fill Vol. (CY):	50
Seed Width (FT):	46	Seed Area (SY):	194
Sp. Bench. (SF):	83	Sp. Bench. (CY):	77
Item 204 (SF):	75	Item 204 (CY):	53

Temporary Earthwork (For Information Only)			
Cut Area (SF):	54	Cut Vol. (CY):	94
Fill Area (SF):	16	Fill Vol. (CY):	15

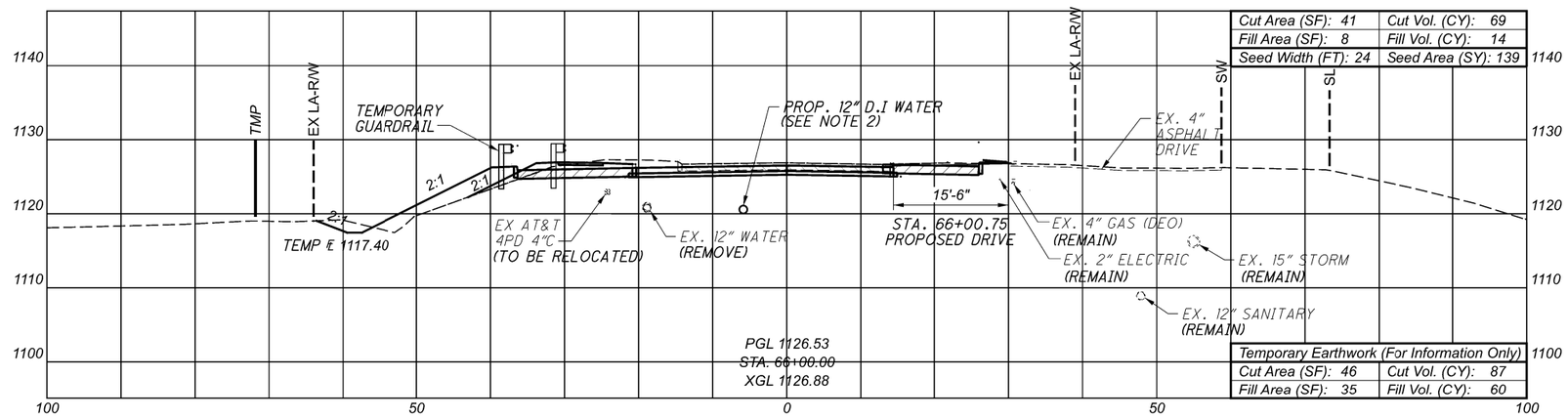

Cut Area (SF):	41	Cut Vol. (CY):	69
Fill Area (SF):	8	Fill Vol. (CY):	14
Seed Width (FT):	24	Seed Area (SY):	139

Temporary Earthwork (For Information Only)			
Cut Area (SF):	46	Cut Vol. (CY):	87
Fill Area (SF):	35	Fill Vol. (CY):	60

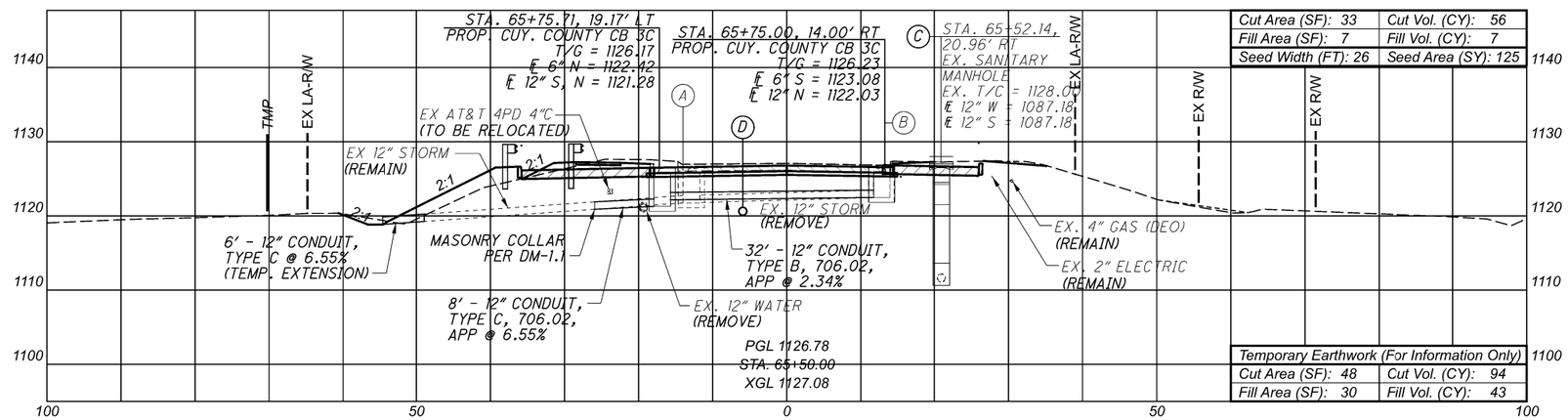

Cut Area (SF):	33	Cut Vol. (CY):	56
Fill Area (SF):	7	Fill Vol. (CY):	7
Seed Width (FT):	26	Seed Area (SY):	125

Temporary Earthwork (For Information Only)			
Cut Area (SF):	48	Cut Vol. (CY):	94
Fill Area (SF):	30	Fill Vol. (CY):	43

LEGEND

- ITEM 202 - PAVEMENT REMOVED
- ITEM 204 - EXCAVATION OF SUBGRADE
  ITEM 204 - GRANULAR MATERIAL, TYPE B AND GEOTEXTILE FABRIC (UNSTABLE SUBGRADE)
- TEMPORARY PAVEMENT
- SPECIAL BENCHING

(A) 56.8' LT.

(B) 54.8' LT.

(C) ELEV. = 1114.34

(D) 46.58' LT.

(E) 40.35' LT.

(F) ELEV. = 1120.56

(G) 34.45' LT.

(H) PROP. 12" D.I. WATER (SEE NOTE 2 AND 3)

APP - AS PER PLAN

NOTES

1. FOR PROFILE AND DETAILING OF THE PROPOSED WATER MAIN, SEE SHEET P.247
2. FOR PROFILE AND DETAILING OF THE PROPOSED WATER MAIN, SEE SHEET P.248
3. LOWER TO PROVIDE 18" VERTICAL CLEARANCE

(A) STA. 65+75.0, 14.0' LT
EX. CATCH BASIN
(REMOVE)
T/G = 1126.42
℄ 12" S = 1121.80
℄ 12" N = 1121.75

(B) STA. 65+75.0, 14.0' RT
EX. CATCH BASIN
(REMOVE)
T/G = 1126.54
℄ 12" N = 1122.48

(C) ADJUST MANHOLE TO GRADE (TEMPORARY PAVEMENT) INSTALL HEAVY DUTY CASTING

(D) PROP. 12" D.I. WATER MAIN (SEE NOTE 1 AND 3)

CROSS SECTIONS - MILLER ROAD
STA. 65+50 TO STA. 66+50

DESIGN AGENCY
EUTHENICS
8235 Midwest Dr. | Cleveland, OH 44125

DESIGNER
DTB

REVIEWER
RAB 03/01/22

PROJECT ID
104983

Sheet Totals						SHEET	TOTAL
Seeding	Cut	Fill	Temp. Cut	Temp. Fill	Item 204	P.133	433
458	275	148	275	118	53		

CUY-77-00.42 PART 1

MODEL: CLX_MILLER ROAD I - 65+50.00-II(Sheet) PAPERSIZE: 17x11(in.) DATE: 3/4/2022 TIME: 12:6:38 PM USER: esmccaslin
F:\Jobs\162 - Miller Road Interchange\104983\400-Engineering\Roadway\Sheets\104983_XS001.dgn

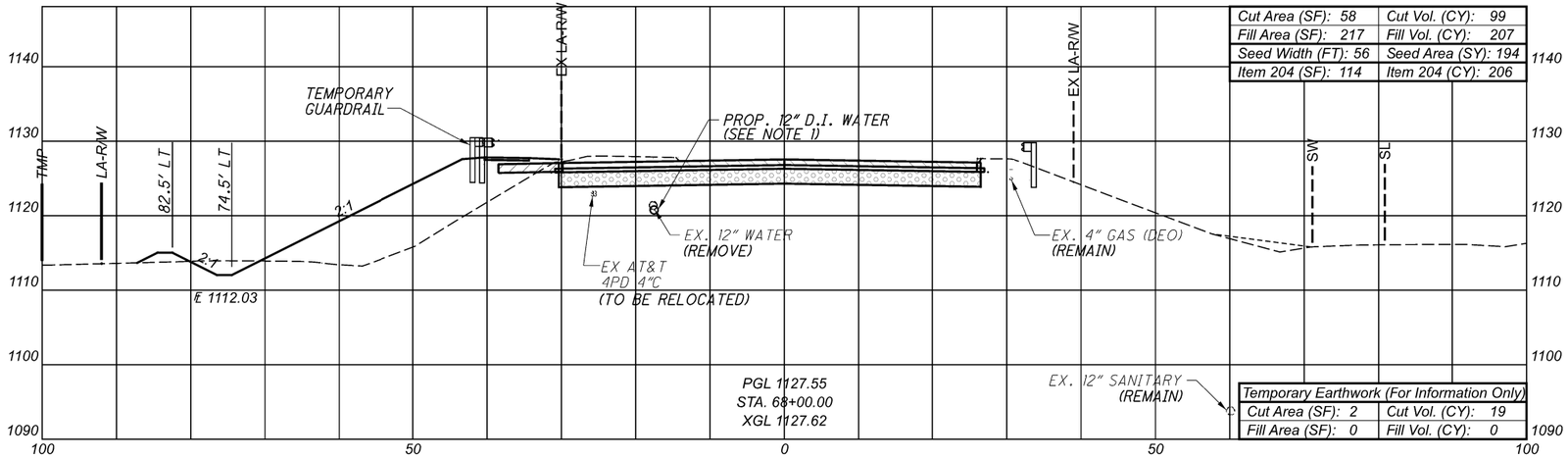

Cut Area (SF): 58	Cut Vol. (CY): 99
Fill Area (SF): 217	Fill Vol. (CY): 207
Seed Width (FT): 56	Seed Area (SY): 194
Item 204 (SF): 114	Item 204 (CY): 206

Temporary Earthwork (For Information Only)	
Cut Area (SF): 2	Cut Vol. (CY): 19
Fill Area (SF): 0	Fill Vol. (CY): 0

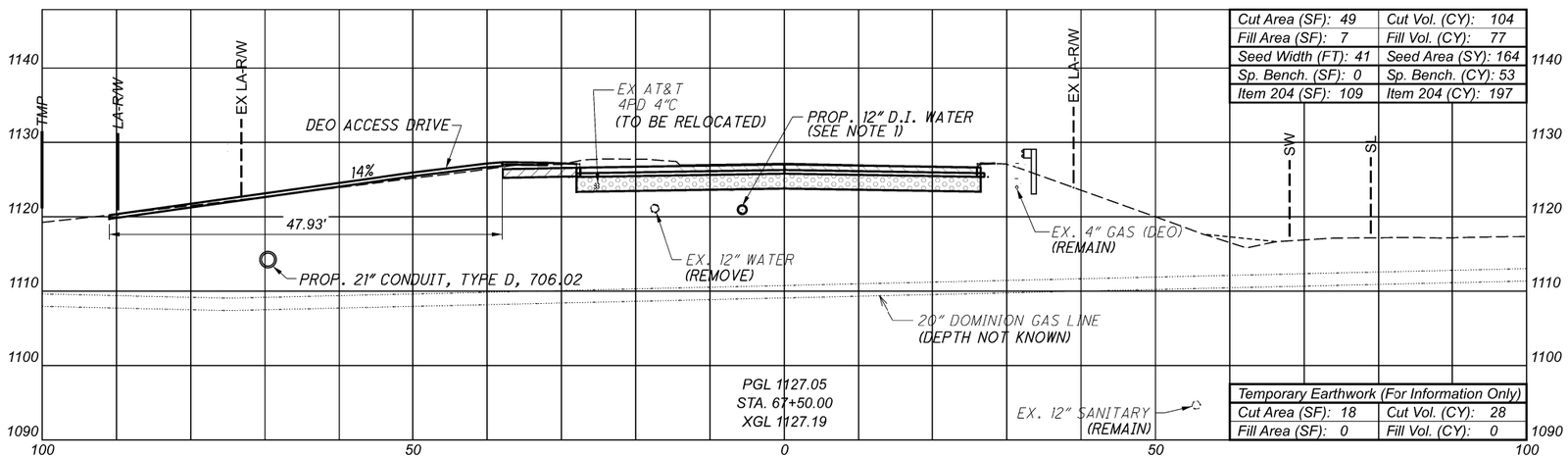

Cut Area (SF): 49	Cut Vol. (CY): 104
Fill Area (SF): 7	Fill Vol. (CY): 77
Seed Width (FT): 41	Seed Area (SY): 164
Sp. Bench. (SF): 0	Sp. Bench. (CY): 53
Item 204 (SF): 109	Item 204 (CY): 197

Temporary Earthwork (For Information Only)	
Cut Area (SF): 18	Cut Vol. (CY): 28
Fill Area (SF): 0	Fill Vol. (CY): 0

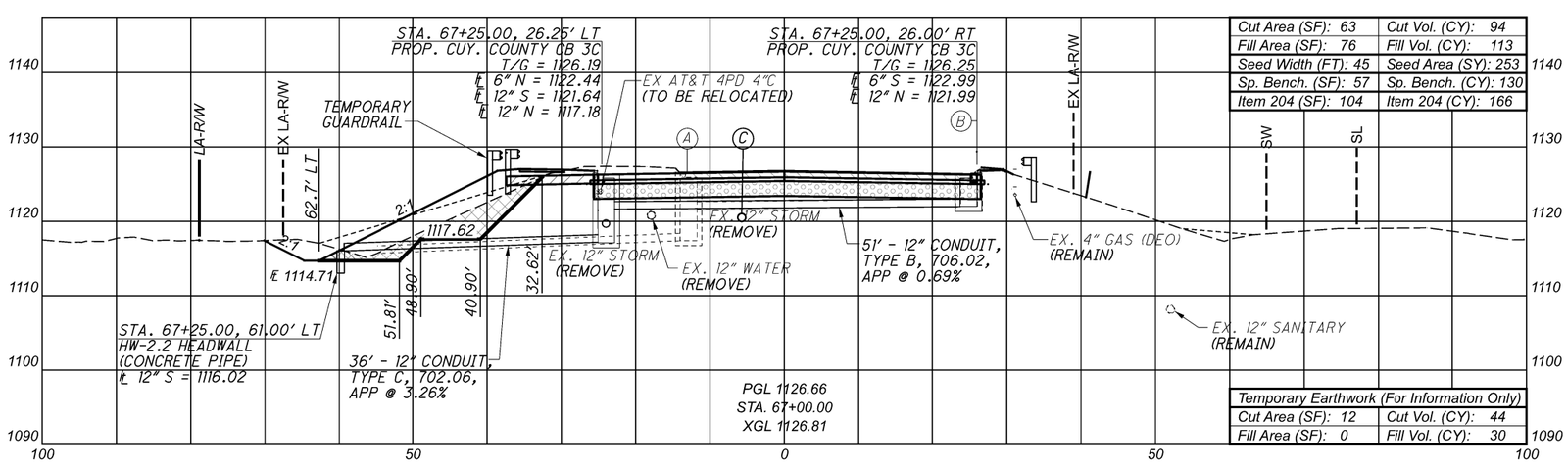

Cut Area (SF): 63	Cut Vol. (CY): 94
Fill Area (SF): 76	Fill Vol. (CY): 113
Seed Width (FT): 45	Seed Area (SY): 253
Sp. Bench. (SF): 57	Sp. Bench. (CY): 130
Item 204 (SF): 104	Item 204 (CY): 166

Temporary Earthwork (For Information Only)	
Cut Area (SF): 12	Cut Vol. (CY): 44
Fill Area (SF): 0	Fill Vol. (CY): 30

LEGEND

- ITEM 202 - PAVEMENT REMOVED
- ITEM 204 - EXCAVATION OF SUBGRADE
  ITEM 204 - GRANULAR MATERIAL, TYPE B AND GEOTEXTILE FABRIC (UNSTABLE SUBGRADE)
- TEMPORARY PAVEMENT
- SPECIAL BENCHING

NOTES

1. FOR PROFILE AND DETAILING OF THE PROPOSED WATER MAIN, SEE SHEET P.248

APP - AS PER PLAN

LEVEL A TEST HOLES - 20" GAS MAIN

LOCATION	EX. GROUND LEVEL AT TEST HOLE	DEPTH OF TEST HOLE	BOTTOM OF TEST HOLE
STA. 67+62, 26.5' LT.	1127.44	9.69'	1117.75 *
STA. 67+65, 75.0' LT.	1119.02	9.26'	1109.76 *
STA. 67+67, 75.5' LT.	1119.01	11.62'	1107.39 *
STA. 67+71, 115.6' LT.	1114.83	6.51'	1108.32 #

* NO UTILITY FOUND
\# TOP OF GAS MAIN ELEVATION

(A) STA. 67+25.0, 14.0' LT
EX. CATCH BASIN
(REMOVE)
T/G = 1126.56
℄ 12" S = 1121.64
℄ 12" N = 1117.39

(B) STA. 67+25.0, 14.0' RT
EX. CATCH BASIN
(REMOVE)
T/G = 1126.41
℄ 12" N = 1121.99

(C) PROP. 12" D.I. WATER MAIN
LOWER TO PROVIDE 18" VERTICAL CLEARANCE

Sheet Totals					
Seeding	Cut	Fill	Temp. Cut	Temp. Fill	Item 204
611	480	580	91	30	569

CROSS SECTIONS - MILLER ROAD
STA. 67+00 TO STA. 68+00

DESIGN AGENCY
EUTHENICS
8235 Mohawk Dr. | Cleveland, OH 44125

DESIGNER
DTB

REVIEWER
RAB 03/01/22

PROJECT ID
104983

SHEET P.134 TOTAL 433

CUY-77-00.42 PART 1

MODEL: CLX_MILLER ROAD1 - 67+00.00-IT[Sheet] PAPERSIZE: 17x11 (in.) DATE: 3/4/2022 TIME: 12:27:07 PM USER: esmccaslin
F:\Jobs\1162-Miller Road Interchange\104983\400-Engineering\Roadway\Sheets\104983_XS001.dgn

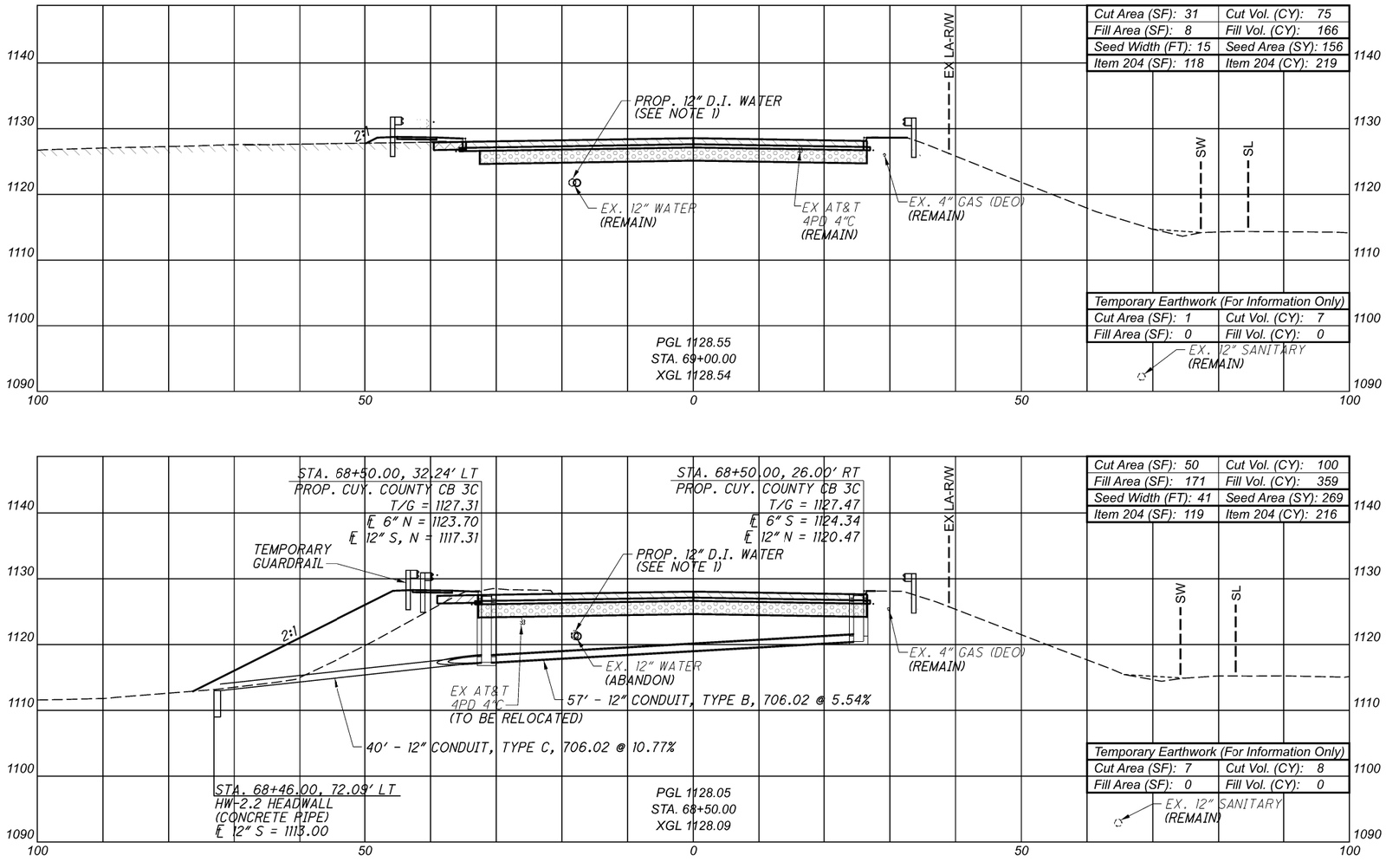

Cut Area (SF): 31	Cut Vol. (CY): 75
Fill Area (SF): 8	Fill Vol. (CY): 166
Seed Width (FT): 15	Seed Area (SY): 156
Item 204 (SF): 118	Item 204 (CY): 219

Temporary Earthwork (For Information Only)	
Cut Area (SF): 1	Cut Vol. (CY): 7
Fill Area (SF): 0	Fill Vol. (CY): 0

Cut Area (SF): 50	Cut Vol. (CY): 100
Fill Area (SF): 171	Fill Vol. (CY): 359
Seed Width (FT): 41	Seed Area (SY): 269
Item 204 (SF): 119	Item 204 (CY): 216

Temporary Earthwork (For Information Only)	
Cut Area (SF): 7	Cut Vol. (CY): 8
Fill Area (SF): 0	Fill Vol. (CY): 0

LEGEND

ITEM 202 - PAVEMENT REMOVED

ITEM 204 - EXCAVATION OF SUBGRADE
ITEM 204 - GRANULAR MATERIAL, TYPE B AND GEOTEXTILE FABRIC (UNSTABLE SUBGRADE)

TEMPORARY PAVEMENT

NOTES

1. FOR PROFILE AND DETAILING OF THE PROPOSED WATER MAIN, SEE SHEET P.248

CROSS SECTIONS - MILLER ROAD
STA. 68+50 TO STA. 69+00

DESIGN AGENCY
EUTHENICS
8235 Mohawk Dr. | Cleveland, OH 44125

DESIGNER
DTB

REVIEWER
RAB 03/01/22

PROJECT ID
104983

Sheet Totals					
Seeding	Cut	Fill	Temp. Cut	Temp. Fill	Item 204
425	175	525	15	0	435

SHEET P.135 TOTAL 433

CUY-77-00.42 PART 1

MODEL: CLX_MILLER ROAD-1 - 68+50.00-II(Sheet) PAPERSIZE: 17x11(in.) DATE: 3/4/2022 TIME: 1:27:36 PM USER: esmccaslin
F:\Jobs\162-Miller Road Interchange\104983\400-Engineering\Roadway\Sheets\104983_XS001.dgn

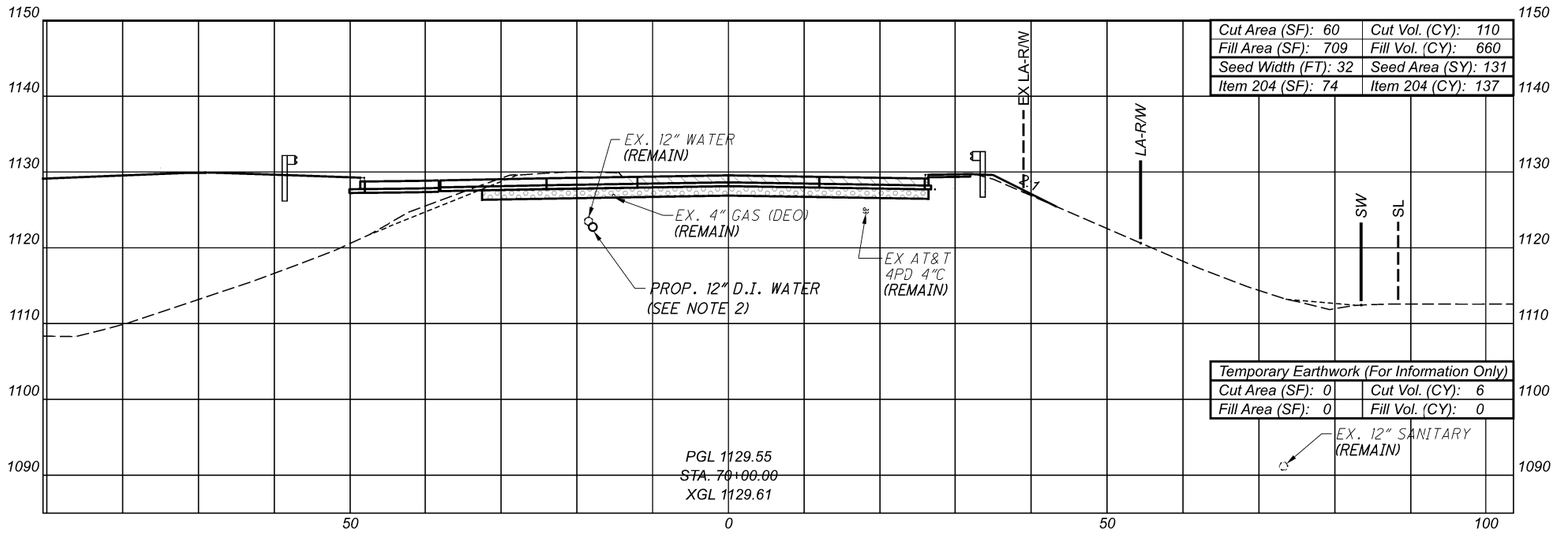

Cut Area (SF): 60	Cut Vol. (CY): 110
Fill Area (SF): 709	Fill Vol. (CY): 660
Seed Width (FT): 32	Seed Area (SY): 131
Item 204 (SF): 74	Item 204 (CY): 137

Temporary Earthwork (For Information Only)	
Cut Area (SF): 0	Cut Vol. (CY): 6
Fill Area (SF): 0	Fill Vol. (CY): 0

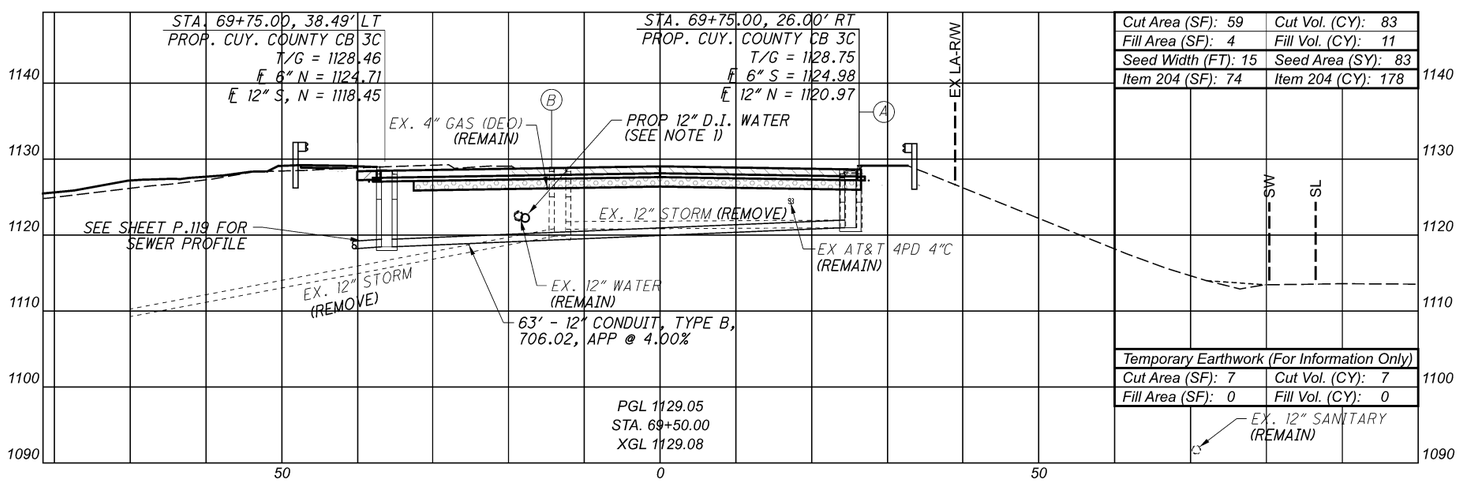

Cut Area (SF): 59	Cut Vol. (CY): 83
Fill Area (SF): 4	Fill Vol. (CY): 11
Seed Width (FT): 15	Seed Area (SY): 83
Item 204 (SF): 74	Item 204 (CY): 178

Temporary Earthwork (For Information Only)	
Cut Area (SF): 7	Cut Vol. (CY): 7
Fill Area (SF): 0	Fill Vol. (CY): 0

LEGEND

ITEM 202 - PAVEMENT REMOVED

ITEM 204 - EXCAVATION OF SUBGRADE
ITEM 204 - GRANULAR MATERIAL, TYPE B AND GEOTEXTILE FABRIC (UNSTABLE SUBGRADE)

TEMPORARY PAVEMENT

APP - AS PER PLAN

NOTES

1. FOR PROFILE AND DETAILING OF THE PROPOSED WATER MAIN, SEE SHEET P.248

2. FOR PROFILE AND DETAILING OF THE PROPOSED WATER MAIN, SEE SHEET P.249

(A) STA. 69+76.0, 26.0' RT
EX. CATCH BASIN
(REMOVE)
T/G = 1128.24
℄ 12" N = 1120.97

(B) STA. 69+75.0, 14.0' LT
EX. CATCH BASIN
(REMOVE)
T/G = 1128.92
℄ 12" S = 1120.70
℄ 12" N = 1119.85

CROSS SECTIONS - MILLER ROAD STA. 69+50 TO STA. 70+00

Sheet Totals					
Seeding	Cut	Fill	Temp. Cut	Temp. Fill	Item 204
214	193	671	13	0	315

DESIGN AGENCY
EUTHENICS
8225 Mohawk Dr. | Cleveland, OH 44125

DESIGNER DTB

REVIEWER RAB 03/01/22

PROJECT ID 104983

SHEET P.136 TOTAL 433

CUY-77-00.42 PART 1

MODEL: CLX_MILLER ROAD I- 69+50.00-II(Sheet) PAPERSIZE: 17x11(in.) DATE: 3/4/2022 TIME: 1:27:56 PM USER: esmccasiln
F:\Jobs\1162-Miller Road Interchange\104983\400-Engineering\Roadway\Sheets\104983_XS001.dgn

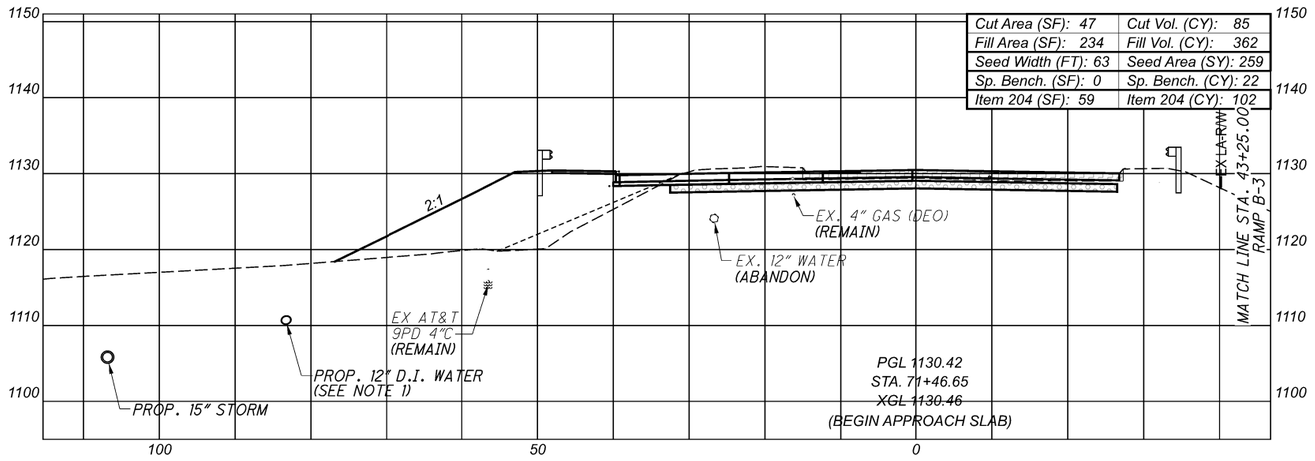

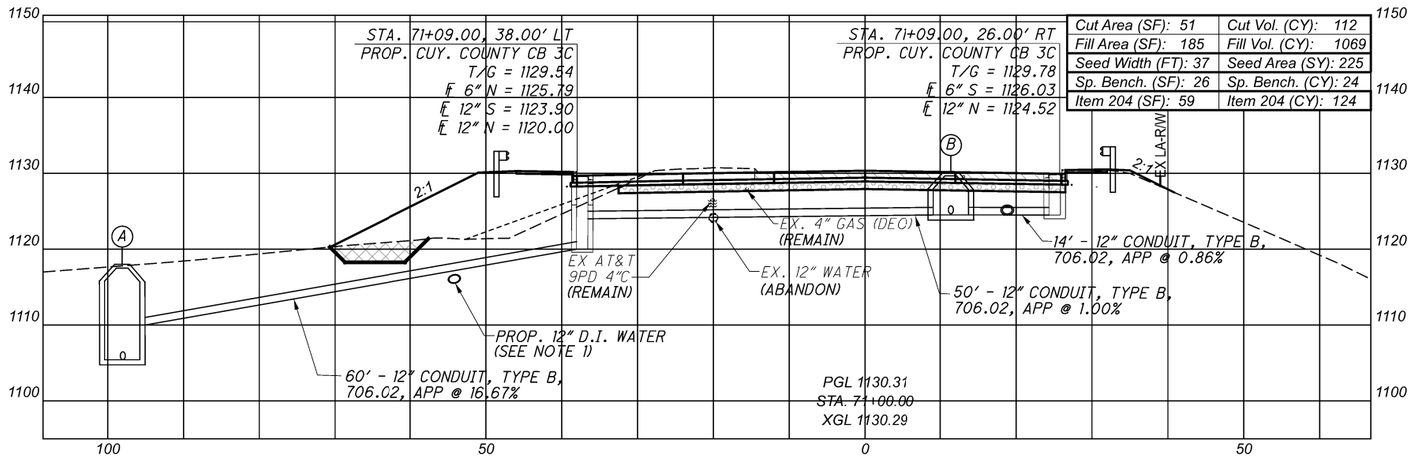

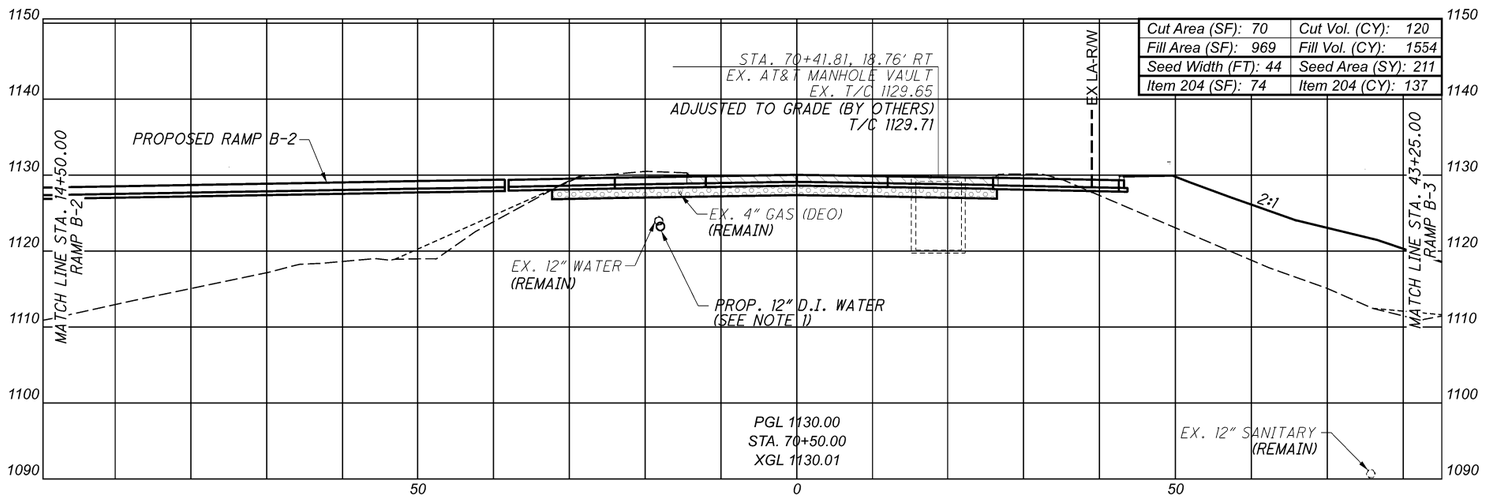

NOTES

1. FOR PROFILE AND DETAILING OF THE PROPOSESD WATER MAIN, SEE SHEET P.249

(A) STA. 71+09.00, 98.00' LT
PROP. MANHOLE NO. 3,
AS PER PLAN 3
T/C = 1118.00
℄ 12" S = 1110.00
℄ 15" E = 1105.42

(B) STA. 71+09.00, 11.42' RT
PROP. MANHOLE NO. 3,
AS PER PLAN 3
T/C = 1130.09
℄ 12" SW = 1124.55
℄ 12" N,S = 1124.40

LEGEND

ITEM 202 - PAVEMENT REMOVED

ITEM 202 - APPROACH SLAB REMOVED

ITEM 204 - EXCAVATION OF SUBGRADE
ITEM 204 - GRANULAR MATERIAL, TYPE B AND GEOTEXTILE FABRIC (UNSTABLE SUBGRADE)

TEMPORARY PAVEMENT

APP - AS PER PLAN

CROSS SECTIONS - MILLER ROAD
STA. 70+50 TO STA. 71+46.65

CUY-77-00.42 PART 1

Sheet Totals			
Seeding	Cut	Fill	Item 204
695	363	3031	363

DESIGN AGENCY
EUTHENICS
8225 Midwest Dr. | Cleveland, OH 44125

DESIGNER DTB

REVIEWER RAB 03/01/22

PROJECT ID 104983

SHEET P.137 TOTAL 433

MODEL: CLX_MILLER ROAD-I - 70+50.00-II[Sheet] PAPERSIZE: 17x11(in.) DATE: 3/4/2022 TIME: 1:28:16 PM USER: esmccasiin
F:\Jobs\1162-Miller Road Interchange\104983\400-Engineering\Roadway\Sheets\104983_XS001.dgn

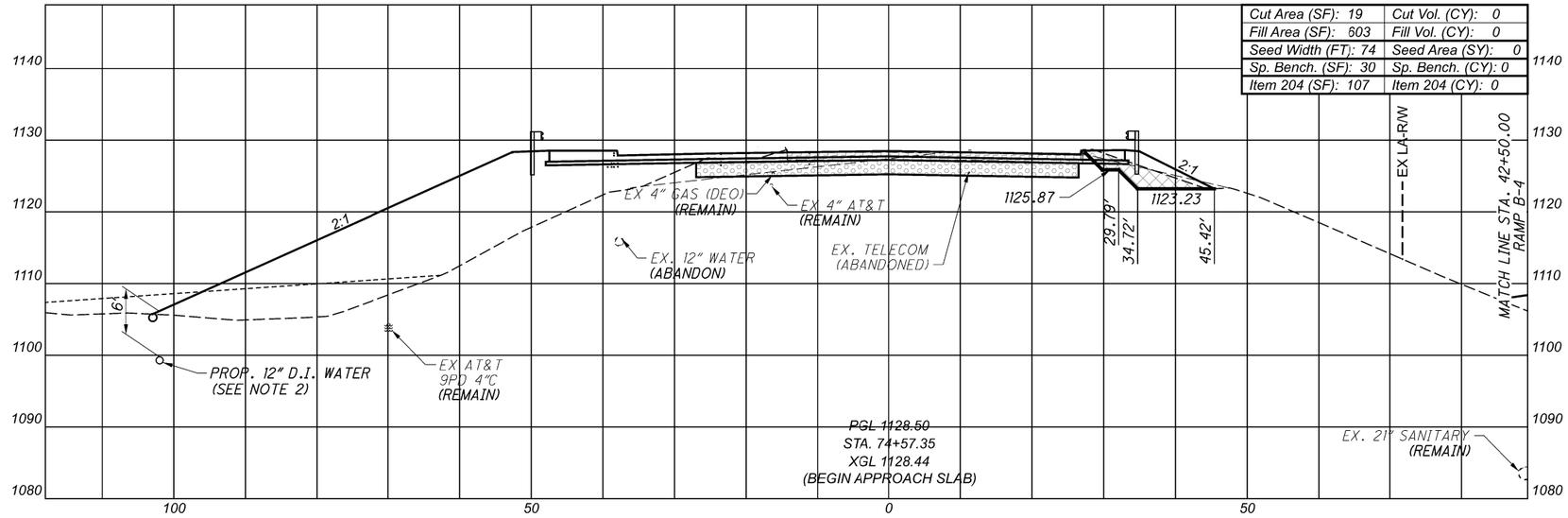

Cut Area (SF): 19	Cut Vol. (CY): 0
Fill Area (SF): 603	Fill Vol. (CY): 0
Seed Width (FT): 74	Seed Area (SY): 0
Sp. Bench. (SF): 30	Sp. Bench. (CY): 0
Item 204 (SF): 107	Item 204 (CY): 0

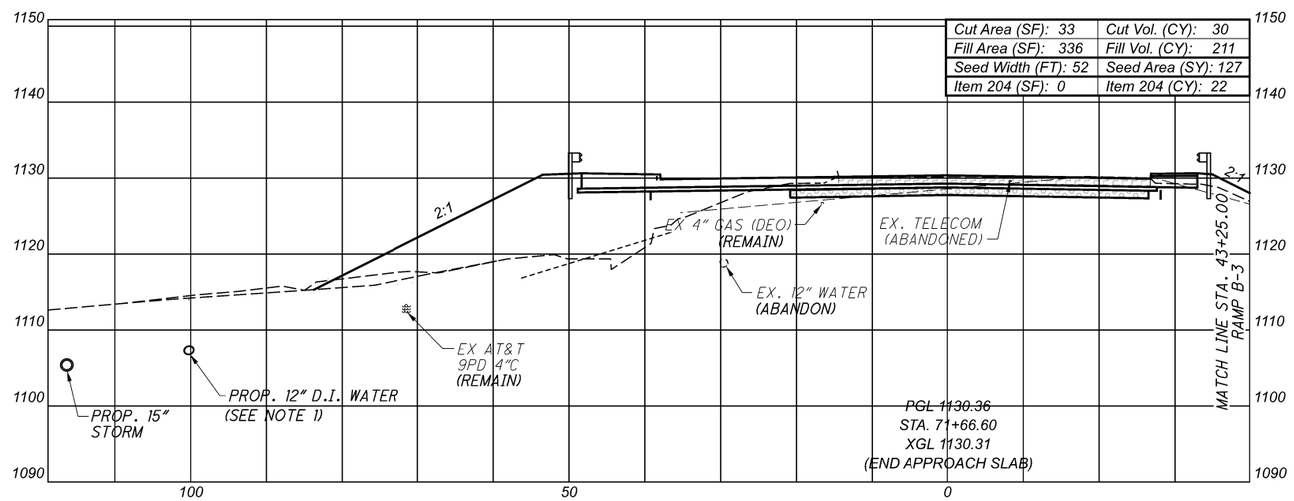

Cut Area (SF): 33	Cut Vol. (CY): 30
Fill Area (SF): 336	Fill Vol. (CY): 211
Seed Width (FT): 52	Seed Area (SY): 127
Item 204 (SF): 0	Item 204 (CY): 22

LEGEND

ITEM 202 - APPROACH SLAB REMOVED

ITEM 204 - EXCAVATION OF SUBGRADE
ITEM 204 - GRANULAR MATERIAL, TYPE B AND GEOTEXTILE FABRIC (UNSTABLE SUBGRADE)

SPECIAL BENCHING

NOTES

1. FOR PROFILE AND DETAILING OF THE PROPOSESD WATER MAIN, SEE SHEET P.249

2. FOR PROFILE AND DETAILING OF THE PROPOSED WATER MAIN, SEE SHEET P.250

CROSS SECTIONS - MILLER ROAD
STA. 71+66.60 TO STA. 74+57.35

Sheet Totals			
Seeding	Cut	Fill	Item 204
127	30	211	22

DESIGN AGENCY
EUTHENICS
8235 Midwest Dr. | Cleveland, OH 44125

DESIGNER
DTB

REVIEWER
RAB 03/01/22

PROJECT ID
104983

SHEET P.138 TOTAL 433

CUY-77-00.42 PART 1

MODEL: CLX_MILLER ROAD-I - 71+66.60-IL[Sheet] PAPERSIZE: 17x11(in.) DATE: 3/4/2022 TIME: 12:28:43 PM USER: esmccaslin
F:\Jobs\1162+Miller Road Interchange\104983\400-Engineering\Roadway\Sheets\104983_XS001.dgn

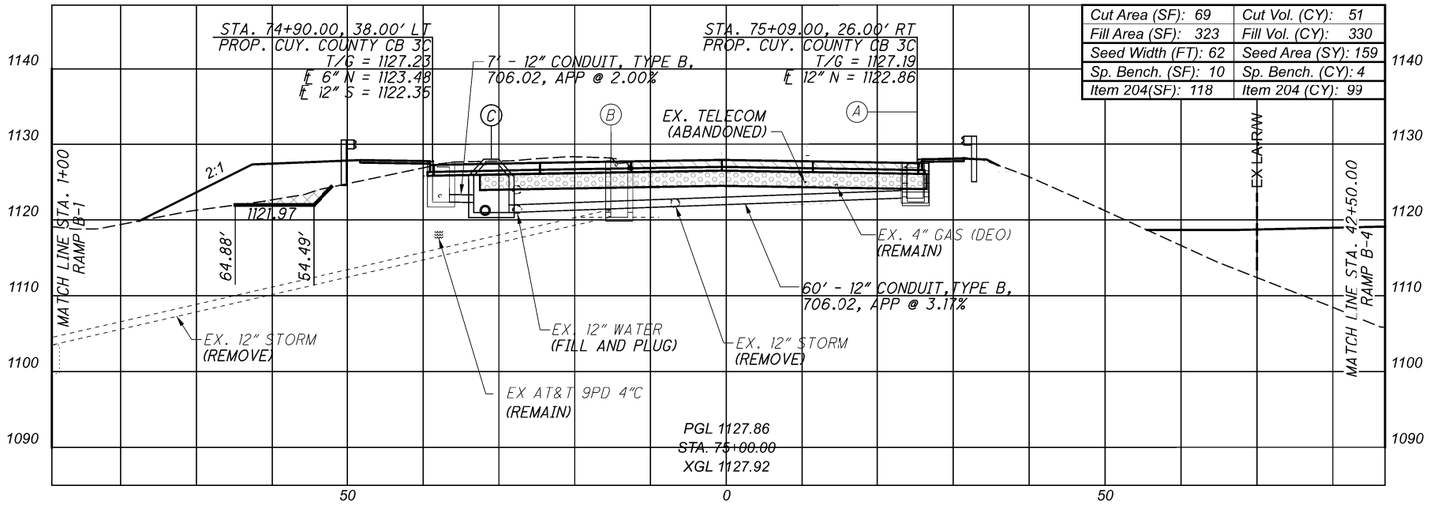

Cut Area (SF): 69	Cut Vol. (CY): 51
Fill Area (SF): 323	Fill Vol. (CY): 330
Seed Width (FT): 62	Seed Area (SY): 159
Sp. Bench. (SF): 10	Sp. Bench. (CY): 4
Item 204(SF): 118	Item 204 (CY): 99

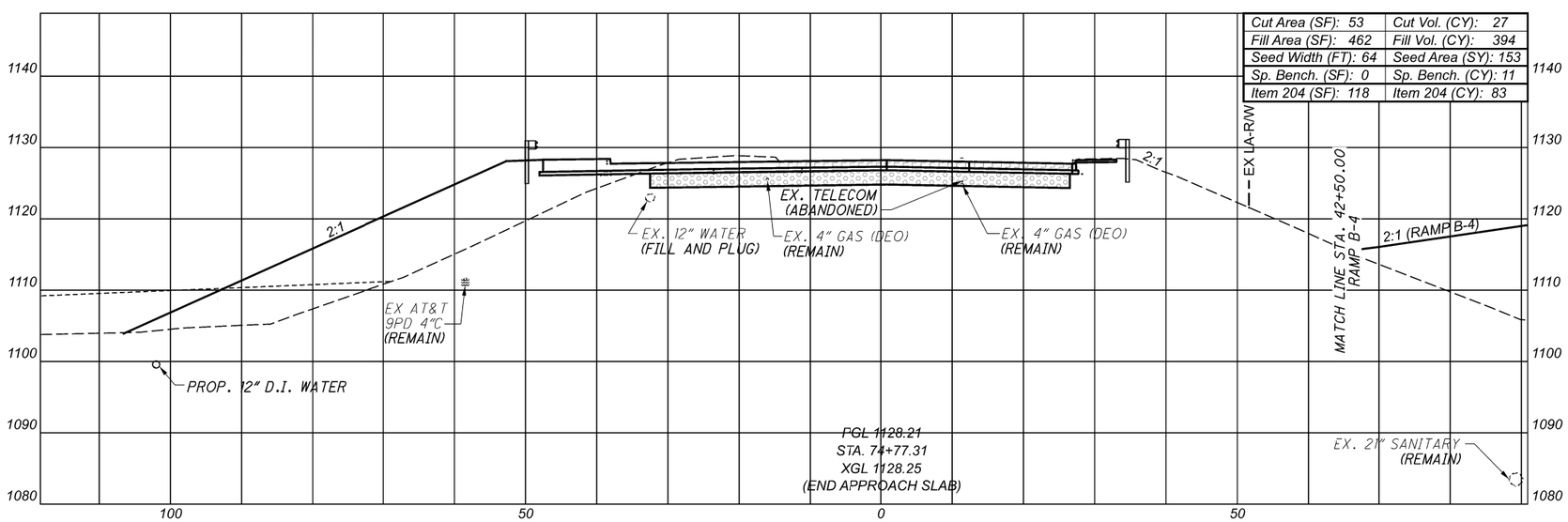

Cut Area (SF): 53	Cut Vol. (CY): 27
Fill Area (SF): 462	Fill Vol. (CY): 394
Seed Width (FT): 64	Seed Area (SY): 153
Sp. Bench. (SF): 0	Sp. Bench. (CY): 11
Item 204 (SF): 118	Item 204 (CY): 83

LEGEND

- ITEM 202 - PAVEMENT REMOVED
- ITEM 202 - APPROACH SLAB REMOVED
- ITEM 204 - EXCAVATION OF SUBGRADE
  ITEM 204 - GRANULAR MATERIAL, TYPE B AND GEOTEXTILE FABRIC (UNSTABLE SUBGRADE)
- SPECIAL BENCHING

(A) STA. 75+00.0, 26.0' RT
EX. CATCH BASIN
(REMOVE)
T/G = 1127.44
℄ 12" N = 1122.37

(B) STA. 75+00.0, 14.0' LT
EX. CATCH BASIN
(REMOVE)
T/G = 1127.56
℄ 12" S = 1121.79
℄ 12" N = 1120.34

(C) STA. 74+90.00, 31.00' LT
PROP. MANHOLE, NO. 3, AS PER PLAN 3
T/C = 1128.00
℄ 12" N = 1122.21
℄ 12" S,E = 1120.96

NOTES

1. FOR PROFILE AND DETAILING OF THE PROPOSED WATER MAIN, SEE SHEET P.250

CROSS SECTIONS - MILLER ROAD STA. 74+77.31 TO STA. 75+00

Sheet Totals			
Seeding	Cut	Fill	Item 204
312	93	739	182

DESIGN AGENCY
EUTHENICS
8235 Mohawk Dr. | Cleveland, OH 44125

DESIGNER DTB

REVIEWER RAB 03/01/22

PROJECT ID 104983

SHEET P.139 TOTAL 433

CUY-77-00.42 PART 1

MODEL: CLX_MILLER ROAD1 - 74+77.31[Sheet] PAPERSIZE: 17x11(in.) DATE: 3/4/2022 TIME: 12:29:04 PM USER: esmccaslin
F:\Jobs\162-Miller Road Interchange\104983\400-Engineering\Roadway\Sheets\104983_XS001.dgn

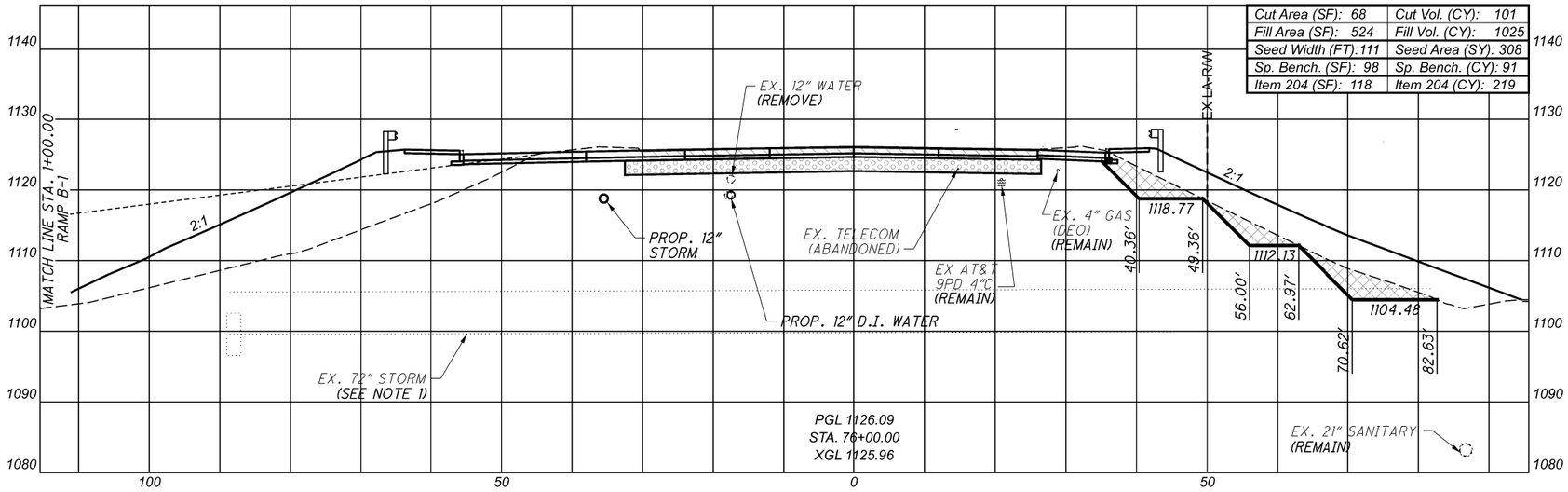

Cut Area (SF): 68	Cut Vol. (CY): 101
Fill Area (SF): 524	Fill Vol. (CY): 1025
Seed Width (FT):111	Seed Area (SY): 308
Sp. Bench. (SF): 98	Sp. Bench. (CY): 91
Item 204 (SF): 118	Item 204 (CY): 219

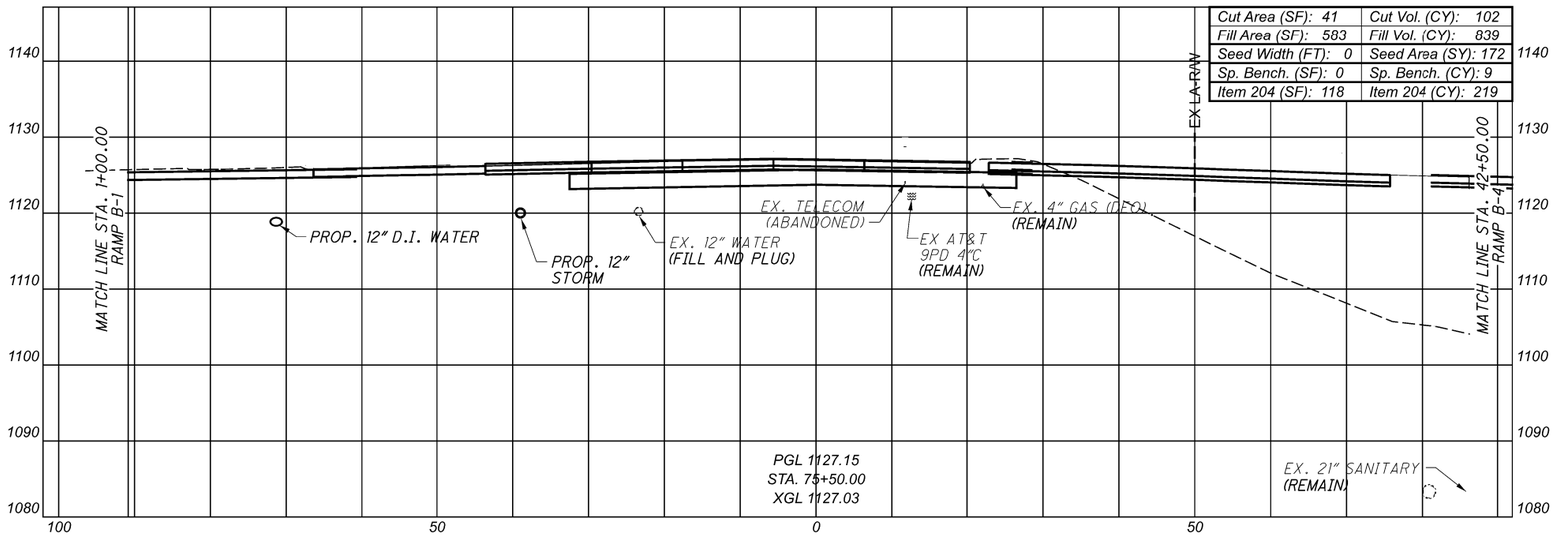

Cut Area (SF): 41	Cut Vol. (CY): 102
Fill Area (SF): 583	Fill Vol. (CY): 839
Seed Width (FT): 0	Seed Area (SY): 172
Sp. Bench. (SF): 0	Sp. Bench. (CY): 9
Item 204 (SF): 118	Item 204 (CY): 219

LEGEND

ITEM 202 - PAVEMENT REMOVED

ITEM 204 - EXCAVATION OF SUBGRADE
ITEM 204 - GRANULAR MATERIAL, TYPE B AND GEOTEXTILE FABRIC (UNSTABLE SUBGRADE)

SPECIAL BENCHING

NOTES:

1. SEE SHEET P.213 FOR EXISTING 72" CULVERT DETAIL

CROSS SECTIONS - MILLER ROAD
STA. 75+50 TO STA. 76+00

CUY-77-00.42 PART 1

MODEL: CLX_MILLER ROAD-I - 75+50.00-H(Sheet) PAPERSIZE: 17x11(in.) DATE: 3/4/2022 TIME: 1:29:25 PM USER: esmccaslin
F:\Jobs\1162-Miller Road Interchange\104983\400-Engineering\Roadway\Sheets\104983_XS001.dgn

DESIGN AGENCY
EUTHENICS
8235 Mohawk Dr. | Cleveland, OH 44125

DESIGNER
DTB

REVIEWER
RAB 03/01/22

PROJECT ID
104983

Sheet Totals			
Seeding	Cut	Fill	Item 204
480	303	1964	438

SHEET P.140 TOTAL 433

LEGEND

ITEM 202 - PAVEMENT REMOVED

ITEM 204 - EXCAVATION OF SUBGRADE
ITEM 204 - GRANULAR MATERIAL, TYPE B AND GEOTEXTILE FABRIC (UNSTABLE SUBGRADE)

SPECIAL BENCHING

APP - AS PER PLAN

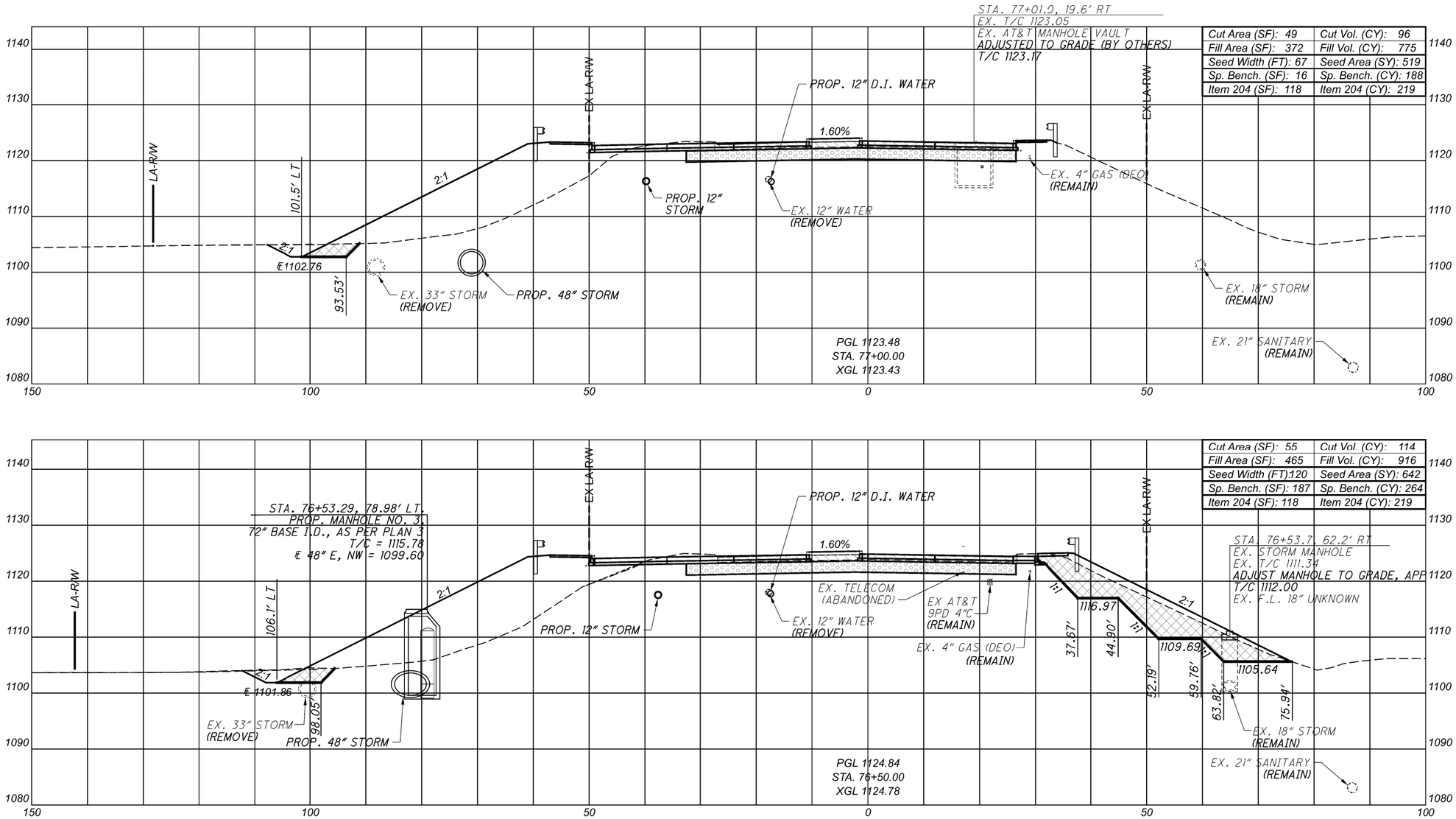

Cut Area (SF): 49	Cut Vol. (CY): 96
Fill Area (SF): 372	Fill Vol. (CY): 775
Seed Width (FT): 67	Seed Area (SY): 519
Sp. Bench. (SF): 16	Sp. Bench. (CY): 188
Item 204 (SF): 118	Item 204 (CY): 219

Cut Area (SF): 55	Cut Vol. (CY): 114
Fill Area (SF): 465	Fill Vol. (CY): 916
Seed Width (FT):120	Seed Area (SY): 642
Sp. Bench. (SF): 187	Sp. Bench. (CY): 264
Item 204 (SF): 118	Item 204 (CY): 219

CROSS SECTIONS - MILLER ROAD
STA. 76+50 TO STA. 77+00

DESIGN AGENCY
EUTHENICS
8235 Midwest Dr. | Cleveland, OH 44125

DESIGNER
DTB

REVIEWER
RAB 03/01/22

PROJECT ID
104983

Sheet Totals				SHEET	TOTAL
Seeding	Cut	Fill	Item 204	P.141	433
1161	662	2143	438		

CUY-77-00.42 PART 1

MODEL: CLX_MILLER ROAD-I - 76+50.00-II[Sheet] PAPERSIZE: 17x11(in.) DATE: 3/4/2022 TIME: 12:9:4 PM USER: esmccaslin
F:\Jobs\1162-Miller Road Interchange\104983\400-Engineering\Roadway\Sheets\104983_XS001.dgn

MODEL: CLX_MILLER ROAD-I - 77+50.00-H(Sheet) PAPERSIZE: 17x11(in.) DATE: 3/4/2022 TIME: 1:30:05 PM USER: esmccaslin
F:\Jobs\1162-Miller Road Interchange\104983\400-Engineering\Roadway\Sheets\104983_XS001.dgn

LEGEND

ITEM 202 - PAVEMENT REMOVED

ITEM 204 - EXCAVATION OF SUBGRADE
ITEM 204 - GRANULAR MATERIAL, TYPE B AND GEOTEXTILE FABRIC (UNSTABLE SUBGRADE)

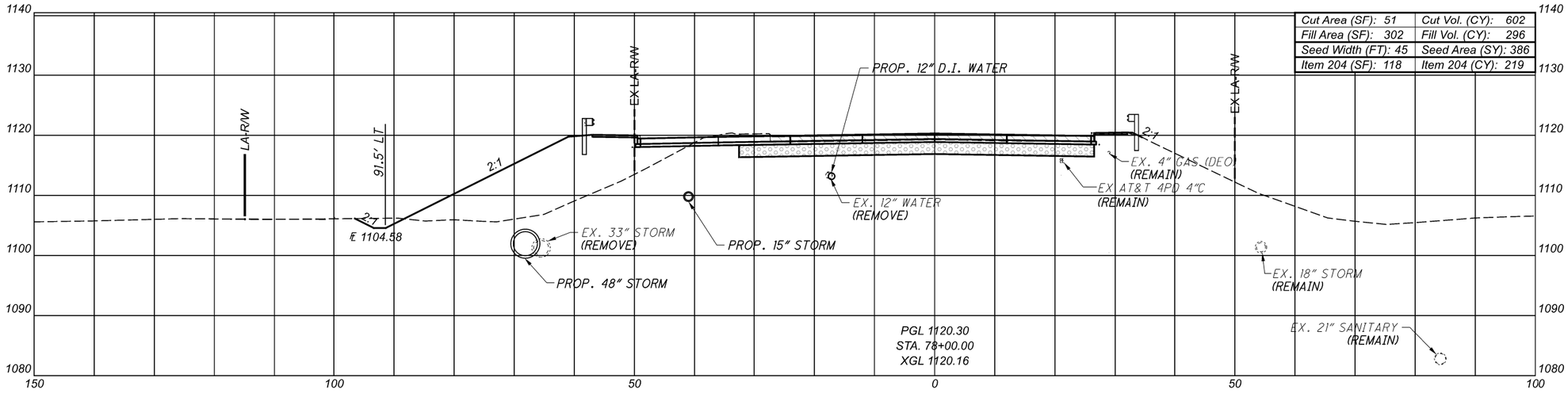

Cut Area (SF): 51	Cut Vol. (CY): 602
Fill Area (SF): 302	Fill Vol. (CY): 296
Seed Width (FT): 45	Seed Area (SY): 386
Item 204 (SF): 118	Item 204 (CY): 219

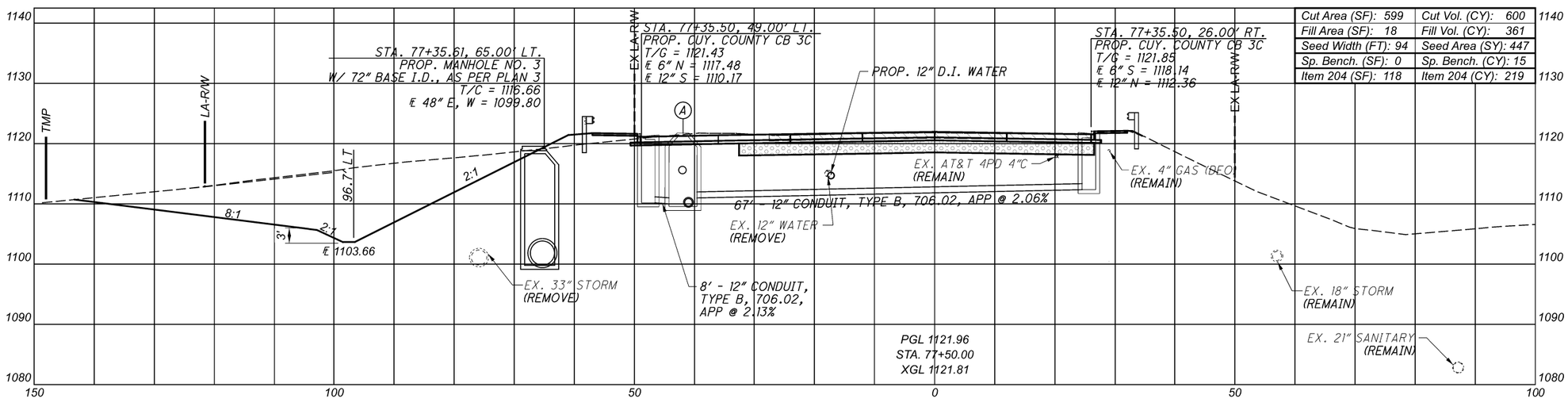

Cut Area (SF): 599	Cut Vol. (CY): 600
Fill Area (SF): 18	Fill Vol. (CY): 361
Seed Width (FT): 94	Seed Area (SY): 447
Sp. Bench. (SF): 0	Sp. Bench. (CY): 15
Item 204 (SF): 118	Item 204 (CY): 219

(A) STA. 77+35.50, 41.24' LT.
PROP. MANHOLE NO. 3,
AS PER PLAN 3
T/C = 1121.75
℄ 12" W = 1115.00
℄ 12" S = 1110.98
℄ 12" N = 1110.00
℄ 15" E = 1109.75

LEGEND

APP - AS PER PLAN

CROSS SECTIONS - MILLER ROAD
STA. 77+50 TO STA. 78+00

DESIGN AGENCY
EUTHENICS
8235 Mohawk Dr. | Cleveland, OH 44125

DESIGNER
DTB

REVIEWER
RAB 03/01/22

PROJECT ID
104983

SHEET P.142 TOTAL 433

Sheet Totals			
Seeding	Cut	Fill	Item 204
833	1217	672	438

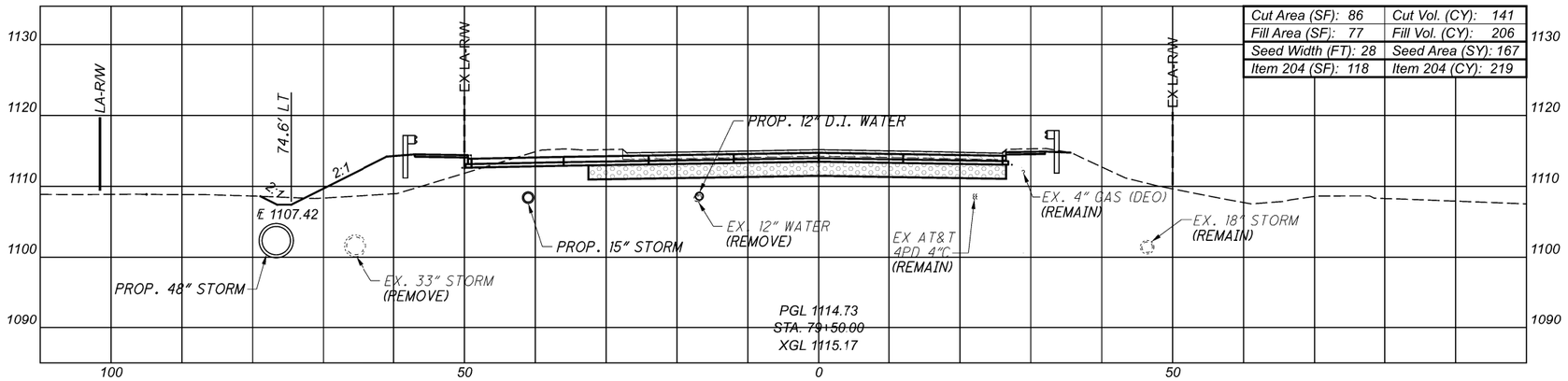

Cut Area (SF): 86	Cut Vol. (CY): 141
Fill Area (SF): 77	Fill Vol. (CY): 206
Seed Width (FT): 28	Seed Area (SY): 167
Item 204 (SF): 118	Item 204 (CY): 219

LEGEND

ITEM 202 - PAVEMENT REMOVED

ITEM 204 - EXCAVATION OF SUBGRADE
ITEM 204 - GRANULAR MATERIAL, TYPE B AND GEOTEXTILE FABRIC (UNSTABLE SUBGRADE)

NOTES

1. FOR PROFILE AND DETAILING OF THE PROPOSESD WATER MAIN, SEE SHEET P.251

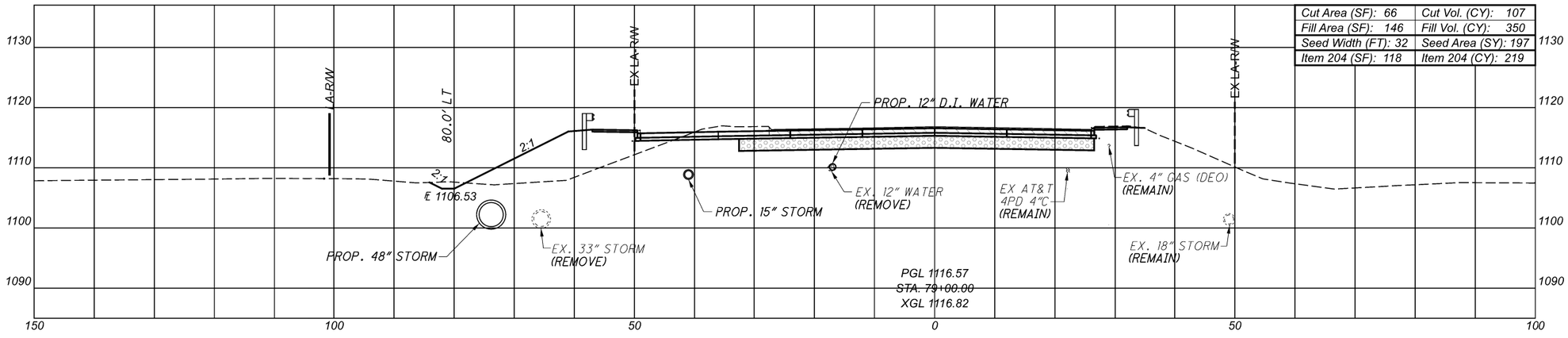

Cut Area (SF): 66	Cut Vol. (CY): 107
Fill Area (SF): 146	Fill Vol. (CY): 350
Seed Width (FT): 32	Seed Area (SY): 197
Item 204 (SF): 118	Item 204 (CY): 219

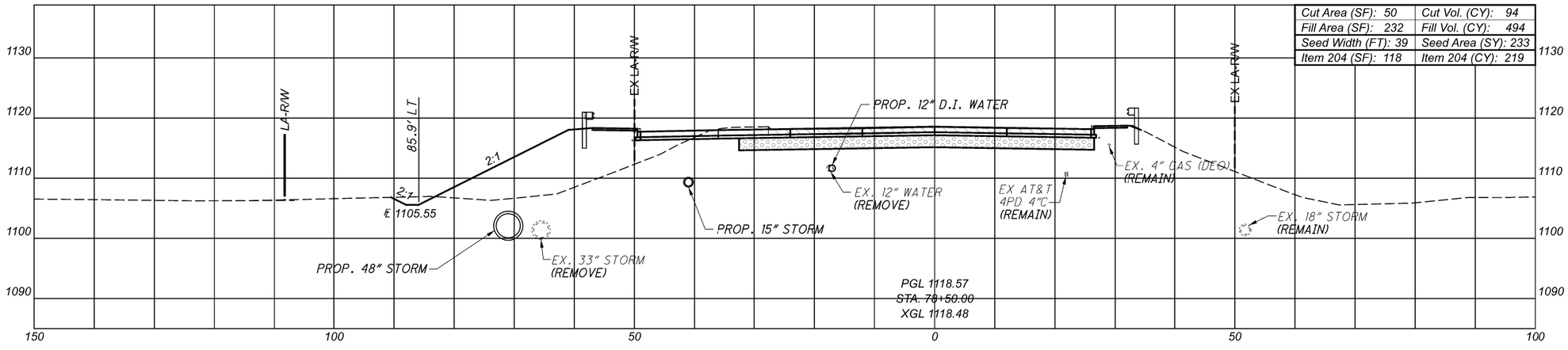

Cut Area (SF): 50	Cut Vol. (CY): 94
Fill Area (SF): 232	Fill Vol. (CY): 494
Seed Width (FT): 39	Seed Area (SY): 233
Item 204 (SF): 118	Item 204 (CY): 219

CROSS SECTIONS - MILLER ROAD
STA. 78+50 TO STA. 79+50

DESIGN AGENCY
EUTHENICS
8235 Midwest Dr. | Cleveland, OH 44125

DESIGNER
DTB

REVIEWER
RAB 03/01/22

PROJECT ID
104983

Sheet Totals			
Seeding	Cut	Fill	Item 204
597	342	1050	657

SHEET P.143 TOTAL 433

CUY-77-00.42 PART 1

MODEL: CLX_MILLER ROAD-I- 78+50.00-II(Sheet) PAPERSIZE: 17x11(in.) DATE: 3/4/2022 TIME: 11:30:25 PM USER: esmccaslin
F:\Jobs\16162-Miller Road Interchange\104983\400-Engineering\Roadway\Sheets\104983_XS001.dgn

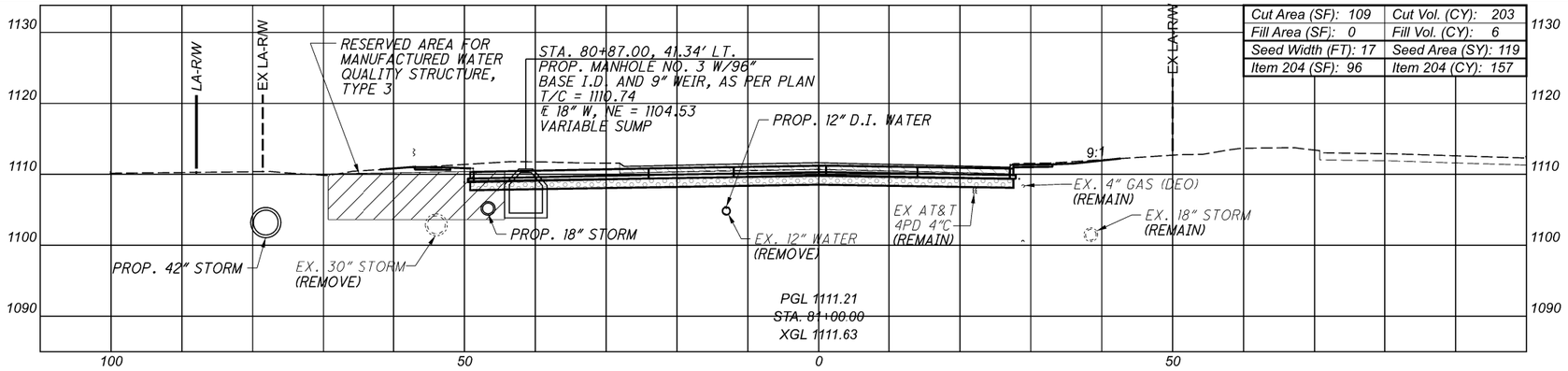

Cut Area (SF): 109	Cut Vol. (CY): 203
Fill Area (SF): 0	Fill Vol. (CY): 6
Seed Width (FT): 17	Seed Area (SY): 119
Item 204 (SF): 96	Item 204 (CY): 157

LEGEND

ITEM 202 - PAVEMENT REMOVED

ITEM 204 - EXCAVATION OF SUBGRADE
ITEM 204 - GRANULAR MATERIAL, TYPE B AND GEOTEXTILE FABRIC (UNSTABLE SUBGRADE)

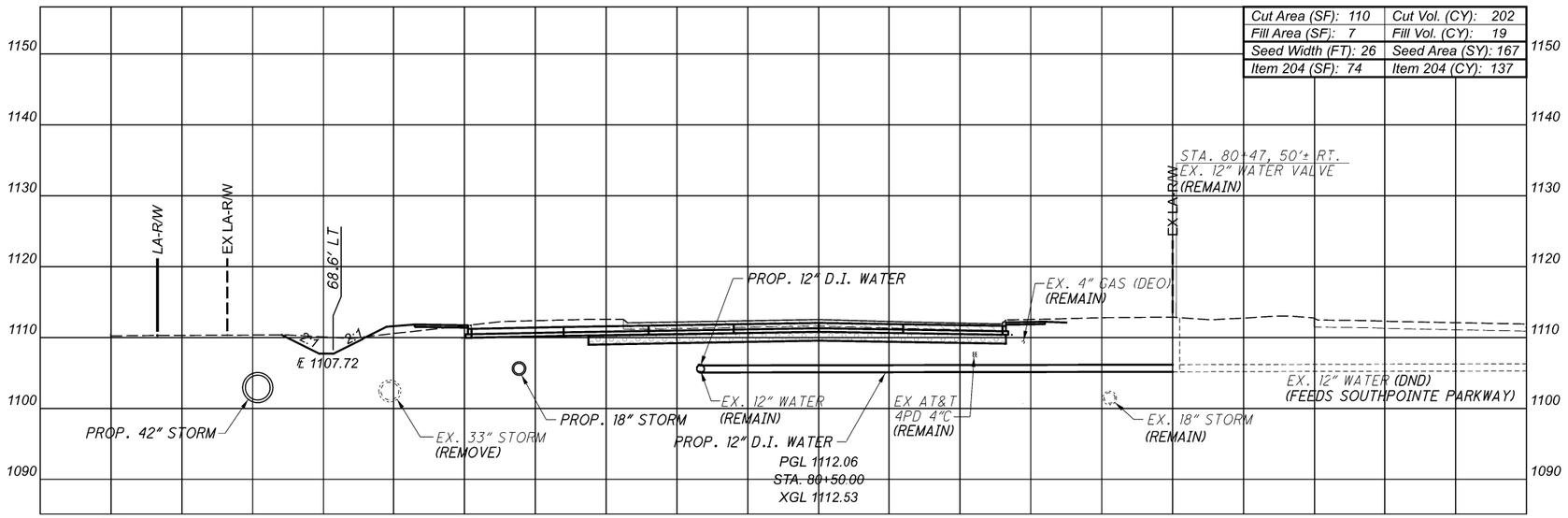

Cut Area (SF): 110	Cut Vol. (CY): 202
Fill Area (SF): 7	Fill Vol. (CY): 19
Seed Width (FT): 26	Seed Area (SY): 167
Item 204 (SF): 74	Item 204 (CY): 137

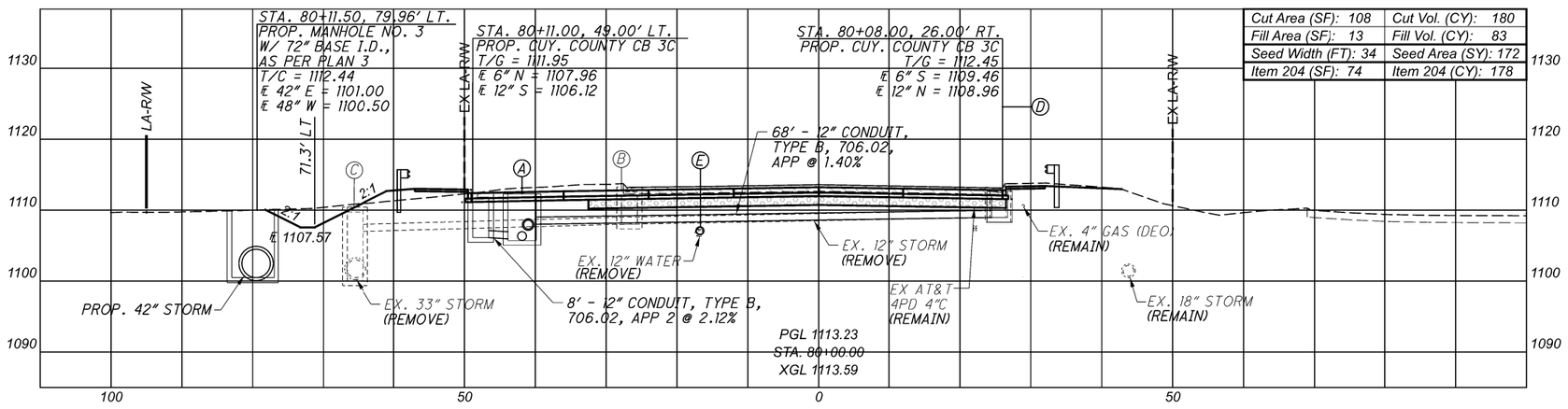

Cut Area (SF): 108	Cut Vol. (CY): 180
Fill Area (SF): 13	Fill Vol. (CY): 83
Seed Width (FT): 34	Seed Area (SY): 172
Item 204 (SF): 74	Item 204 (CY): 178

(A) STA. 80+10.69, 41.88' LT
PROP. MANHOLE NO. 3, AS PER PLAN 3
T/C = 1112.29
℄ 12" S = 1108.01
℄ 15" W = 1107.26
℄ 12" N = 1105.95
℄ 18" E = 1105.26

(B) STA. 80+10.0, 26.2' LT
EX. CATCH BASIN
(REMOVE)
T/G = 1113.28
℄ 12" S, N = 1108.01

(C) STA. 80+10.0, 65.5' LT
EX. CATCH BASIN
(REMOVE)
T/G = 1110.43
℄ 12" S = 1107.00
℄ 33" E = 1100.88
℄ 33" W = 1100.51

(D) STA. 80+08.0, 26.0' RT
EX. CATCH BASIN
(REMOVE)
T/G = 1113.25
℄ 12" N = 1108.96

(E) PROP. 12" D.I. WATER
LOWER TO PROVIDE
18" VERTICAL CLEARANCE

CROSS SECTIONS - MILLER ROAD
STA. 80+00 TO STA. 81+00

Sheet Totals			
Seeding	Cut	Fill	Item 204
458	585	108	472

DESIGN AGENCY
EUTHENICS
8235 Mohawk Dr. | Cleveland, OH 44125

DESIGNER DTB

REVIEWER RAB 03/01/22

PROJECT ID 104983

SHEET P.144 TOTAL 433

CUY-77-00.42 PART 1

MODEL: CLX_MILLER ROAD I- 80+00.00-II(Sheet) PAPERSIZE: 17x11(in.) DATE: 3/4/2022 TIME: 1:30:52 PM USER: esmccaslin
F:\Jobs\1162 - Miller Road Interchange\104983\400-Engineering\Roadway\Sheets\104983_XS001.dgn

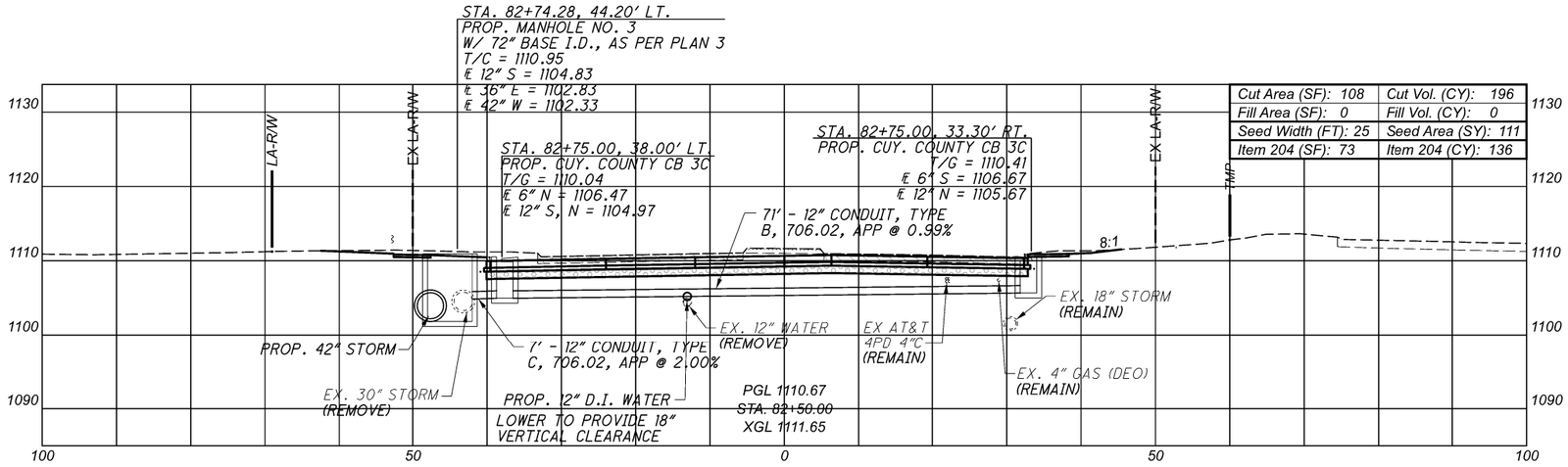

Cut Area (SF): 108	Cut Vol. (CY): 196
Fill Area (SF): 0	Fill Vol. (CY): 0
Seed Width (FT): 25	Seed Area (SY): 111
Item 204 (SF): 73	Item 204 (CY): 136

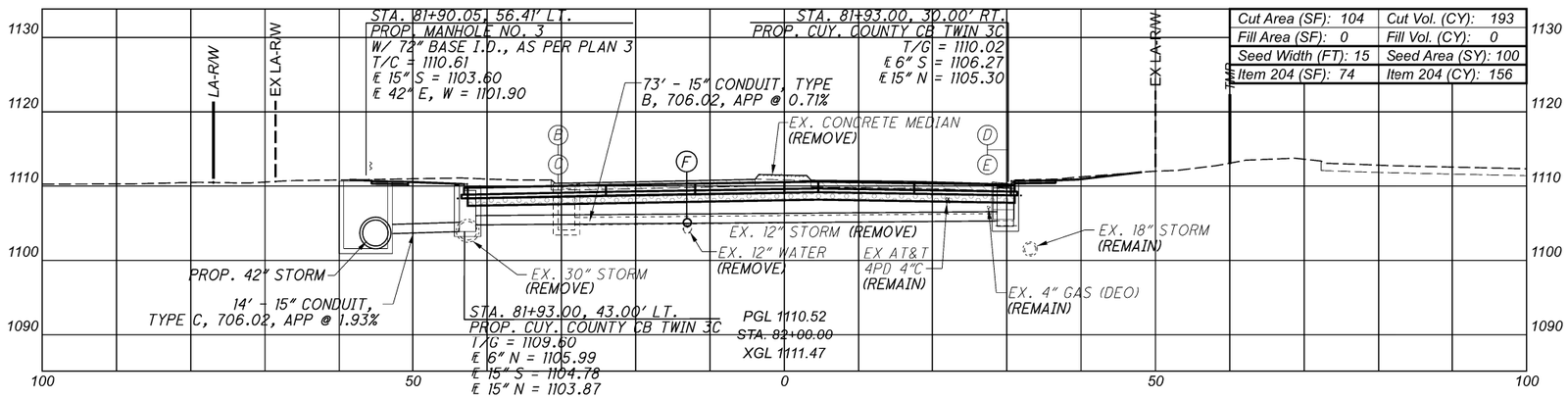

Cut Area (SF): 104	Cut Vol. (CY): 193
Fill Area (SF): 0	Fill Vol. (CY): 0
Seed Width (FT): 15	Seed Area (SY): 100
Item 204 (SF): 74	Item 204 (CY): 156

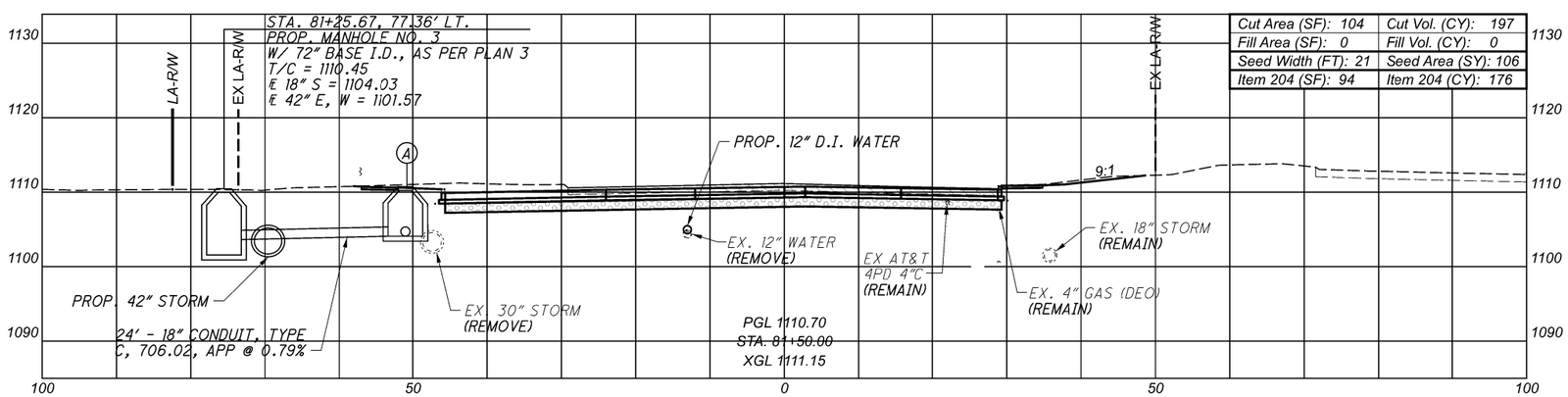

Cut Area (SF): 104	Cut Vol. (CY): 197
Fill Area (SF): 0	Fill Vol. (CY): 0
Seed Width (FT): 21	Seed Area (SY): 106
Item 204 (SF): 94	Item 204 (CY): 176

LEGEND

ITEM 202 - PAVEMENT REMOVED

ITEM 204 - EXCAVATION OF SUBGRADE
ITEM 204 - GRANULAR MATERIAL, TYPE B AND GEOTEXTILE FABRIC (UNSTABLE SUBGRADE)

(A) STA. 81+25.00, 53.87' LT.
PROP. MANHOLE, NO. 3,
AS PER PLAN 3
T/C = 1111.07
℄ 18" SW, N = 1104.22

(B) STA. 81+90.0, 30.4' LT
EX. CATCH BASIN
(REMOVE)
T/G = 1110.34
℄ 12" E = 1104.92
℄ 12" S = 1104.78
℄ 12" N = 1104.68

(C) STA. 81+95.9, 30.6' LT
EX. CATCH BASIN
(REMOVE)
T/G = 1110.27
℄ 12" W = 1104.99

(D) STA. 81+89.1, 30.2' RT
EX. CATCH BASIN
(REMOVE)
T/G = 1110.20
℄ 12" E = 1105.50
℄ 12" N = 1105.30

(E) STA. 81+95.8, 30.2' RT
EX. CATCH BASIN
(REMOVE)
T/G = 1110.15
℄ 12" W = 1105.68

(F) PROP. 12" D.I. WATER
LOWER TO PROVIDE
18" VERTICAL CLEARANCE

CROSS SECTIONS - MILLER ROAD
STA. 81+50 TO STA. 82+50

Sheet Totals			
Seeding	Cut	Fill	Item 204
317	586	0	468

DESIGN AGENCY
EUTHENICS
8235 Midwest Dr. | Cleveland, OH 44125

DESIGNER
DTB

REVIEWER
RAB 03/01/22

PROJECT ID
104983

SHEET P.145 TOTAL 433

CUY-77-00.42 PART 1

MODEL: CLX_MILLER ROAD-1 - 81+50.00-II(Sheet) PAPERSIZE: 17x11(in.) DATE: 3/4/2022 TIME: 1:31:19 PM USER: esmccaslin
F:\Jobs\162-Miller Road Interchange\104983\400-Engineering\Roadway\Sheets\104983_XS001.dgn

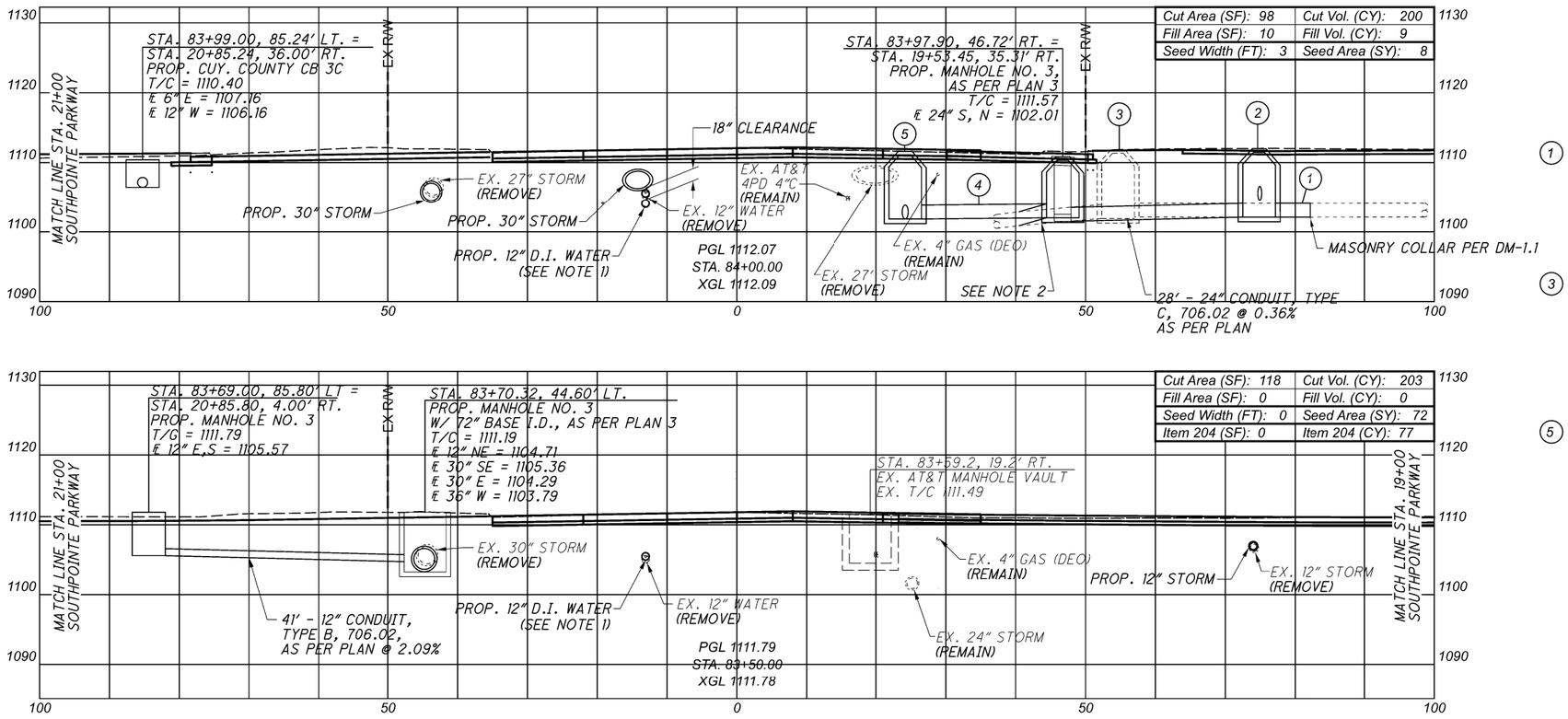

Cut Area (SF): 98	Cut Vol. (CY): 200
Fill Area (SF): 10	Fill Vol. (CY): 9
Seed Width (FT): 3	Seed Area (SY): 8

Cut Area (SF): 118	Cut Vol. (CY): 203
Fill Area (SF): 0	Fill Vol. (CY): 0
Seed Width (FT): 0	Seed Area (SY): 72
Item 204 (SF): 0	Item 204 (CY): 77

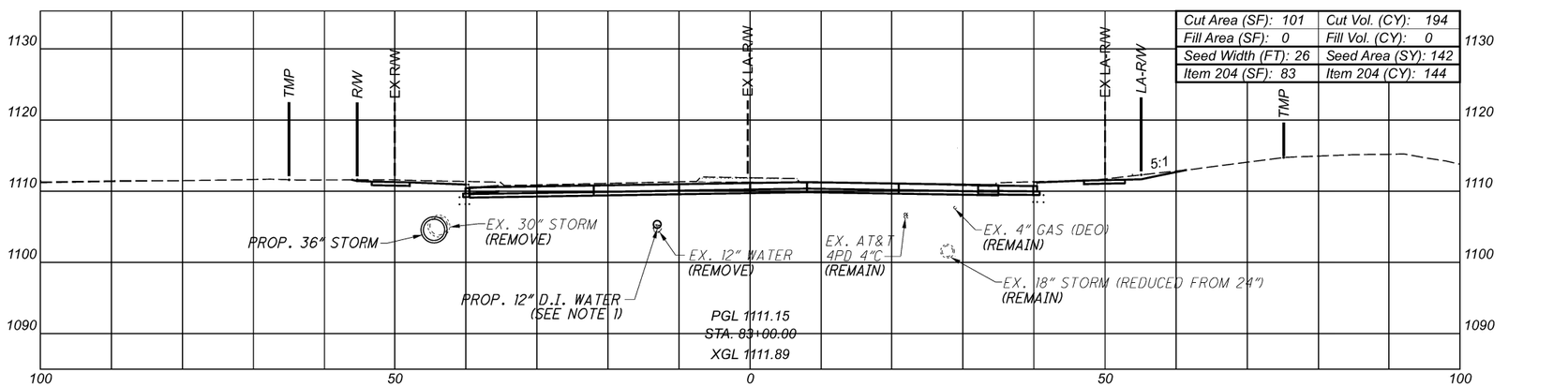

Cut Area (SF): 101	Cut Vol. (CY): 194
Fill Area (SF): 0	Fill Vol. (CY): 0
Seed Width (FT): 26	Seed Area (SY): 142
Item 204 (SF): 83	Item 204 (CY): 144

LEGEND

ITEM 202 - PAVEMENT REMOVED

ITEM 204 - EXCAVATION OF SUBGRADE
ITEM 204 - GRANULAR MATERIAL, TYPE B AND GEOTEXTILE FABRIC (UNSTABLE SUBGRADE)

NOTES

1. FOR PROFILE AND DETAILING OF THE PROPOSESD WATER MAIN, SEE SHEET P.252

2. IF THE MANHOLE AT STA. 83+9.55, 24.20' RT IS TO BE NON-PERFORMED, THE CONTRACTOR SHALL FURNISH AN APPROPRIATE LENGTH OF CONDUIT TO CONNECT TO THE EXISTING PIPE BEFORE THE BEND.

(1) 5' - 24" CONDUIT, TYPE C, 706.02, AS PER PLAN @ 0.006% (CONNECT TO EXISTING)

(2) STA. 83+96.85, 74.82' RT.
PROP. MANHOLE NO. 3,
AS PER PLAN 3
T/C = 1110.98
℄ 12" W = 1104.60
℄ 24" N, S = 1102.11

(3) STA. 83+96.93, 54.64' RT.
EX. STORM MANHOLE (REMOVE)
T/C = 1111.85
℄ 6" E = 1104.66
℄ 18" SW = 1104.60
℄ 24" S = 1102.10
℄ 24" N = 1101.92

(4) 25' - 24" CONDUIT, TYPE B, 706.02, AS PER PLAN @ 0.68% (SEE NOTE 2)

(5) STA. 83+91.55, 24.20' RT.
PROP. MANHOLE NO. 3,
AS PER PLAN 4
T/C = 1111.61
℄ 24" W, S = 1101.84
(SEE NOTE 2)

CROSS SECTIONS - MILLER ROAD
STA. 83+00 TO STA. 84+00

DESIGN AGENCY
EUTHENICS
8235 Midwest Dr. | Cleveland, OH 44125

DESIGNER	DTB
REVIEWER	RAB 03/01/22
PROJECT ID	104983

Sheet Totals				SHEET	TOTAL
Seeding	Cut	Fill	Item 204	P.146	433
222	597	9	221		

CUY-77-00.42 PART 1

MODEL: CLX_MILLER ROAD-I - 83+00.00-II(Sheet) PAPERSIZE: 17x11(in.) DATE: 3/4/2022 TIME: 1:31:45 PM USER: esmccaslin
F:\Jobs\1162-Miller Road Interchange\104983\400-Engineering\Roadway\Sheets\104983_XS001.dgn

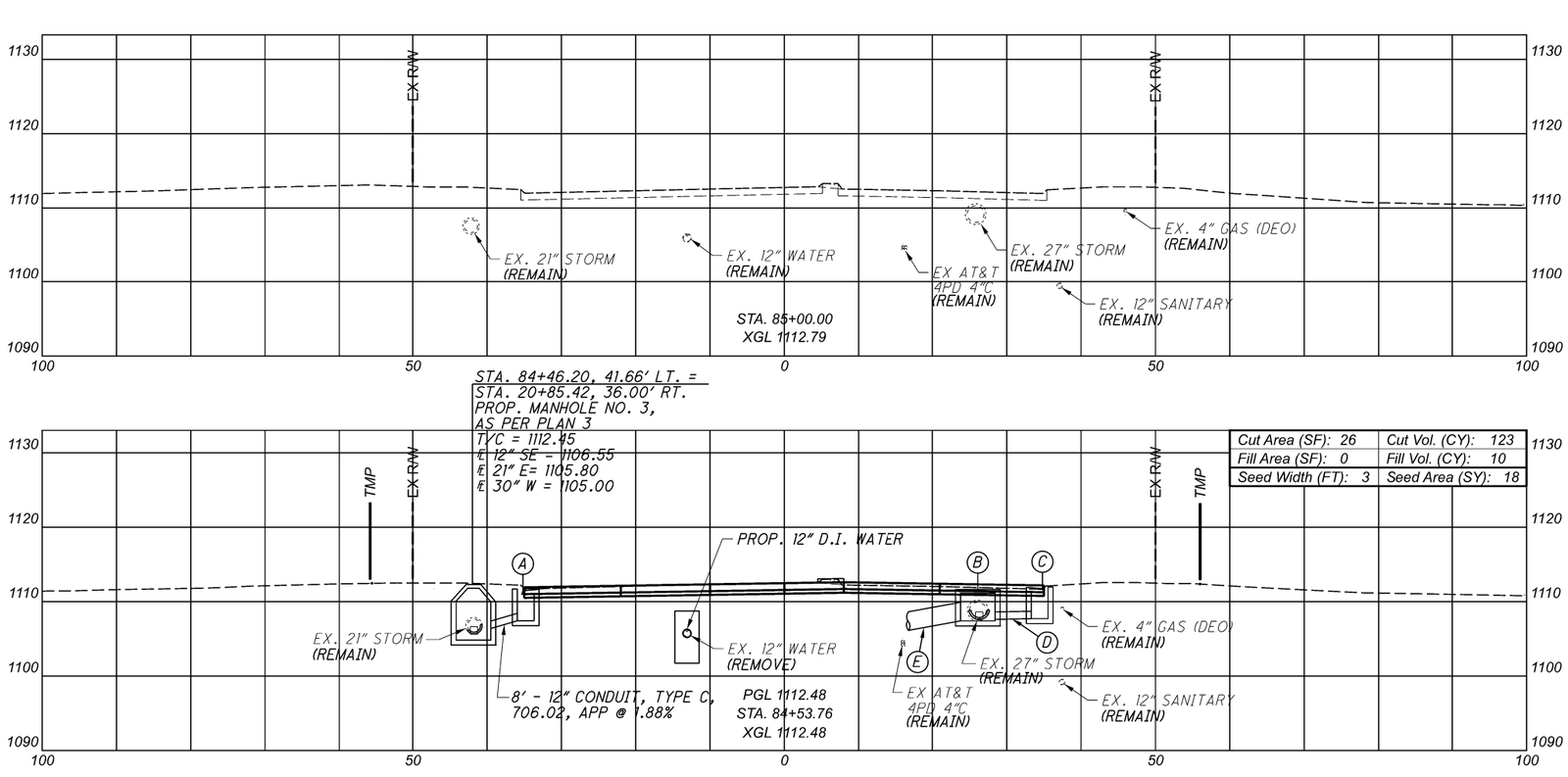

Cut Area (SF): 26	Cut Vol. (CY): 123
Fill Area (SF): 0	Fill Vol. (CY): 10
Seed Width (FT): 3	Seed Area (SY): 18

LEGEND

ITEM 202 - PAVEMENT REMOVED

ITEM 204 - EXCAVATION OF SUBGRADE
ITEM 204 - GRANULAR MATERIAL, TYPE B AND GEOTEXTILE FABRIC (UNSTABLE SUBGRADE)

APP - AS PER PLAN

(A) STA. 84+49.00, 35.00' LT.
PROP. CUY. COUNTY CB 3C
T/G = 1111.55
℄ 6" N = 1108.85
℄ 12" NW = 1106.70

(B) STA. 84+41.36, 26.31' RT.
PROP. MANHOLE NO. 3,
AS PER PLAN 3
T/C = 1111.79
℄ 12" S = 1107.77
℄ 27" E = 1107.57
℄ 30" NW = 1107.57

(C) STA. 84+41.00, 35.00' RT.
PROP. CUY. COUNTY CB 3C
T/G = 1111.59
℄ 6" S = 1108.76
℄ 12" N = 1107.87

(D) 9' - 12" CONDUIT, TYPE B, 706.02, APP @ 1.11%

(E) 100' - 30" CONDUIT, TYPE B, 706.02, APP @ 2.21%

CROSS SECTIONS - MILLER ROAD
STA. 84+53.76 TO STA. 85+00

CUY-77-00.42 PART 1

MODEL: CLX_MILLER ROAD-I - 84+53.76-II(Sheet) PAPERSIZE: 17x11(in.) DATE: 3/4/2022 TIME: 11:32:12 PM USER: esmccaslin
F:\Jobs\116?+Miller Road Interchange\104983\400-Engineering\Roadway\Sheets\104983_XS001.dgn

DESIGN AGENCY
EUTHENICS
8235 Midwest Dr. | Cleveland, OH 44125

DESIGNER
DTB

REVIEWER
RAB 03/01/22

PROJECT ID
104983

Sheet Totals		
Seeding	Cut	Fill
18	123	10

SHEET P.147 TOTAL 433

LEGEND

ITEM 202 - PAVEMENT REMOVED

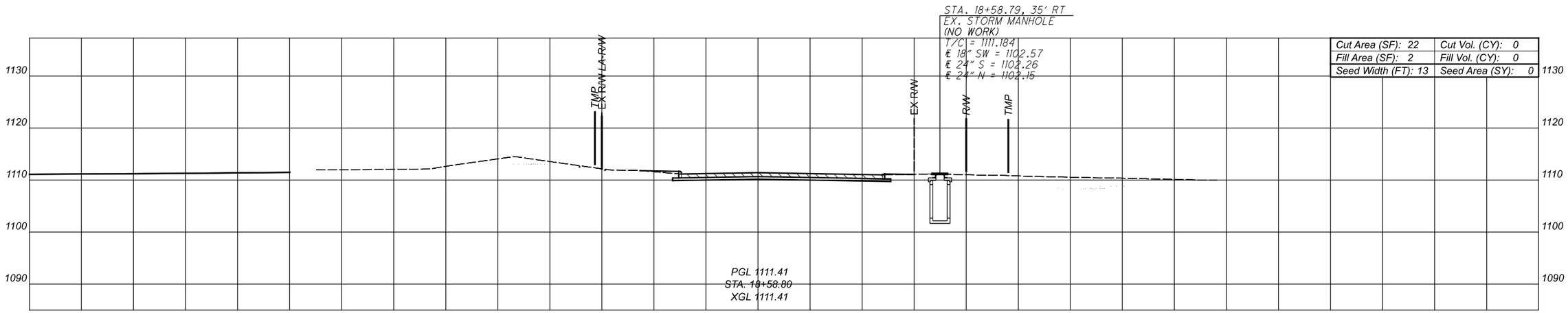

Cut Area (SF): 22	Cut Vol. (CY): 0
Fill Area (SF): 2	Fill Vol. (CY): 0
Seed Width (FT): 13	Seed Area (SY): 0

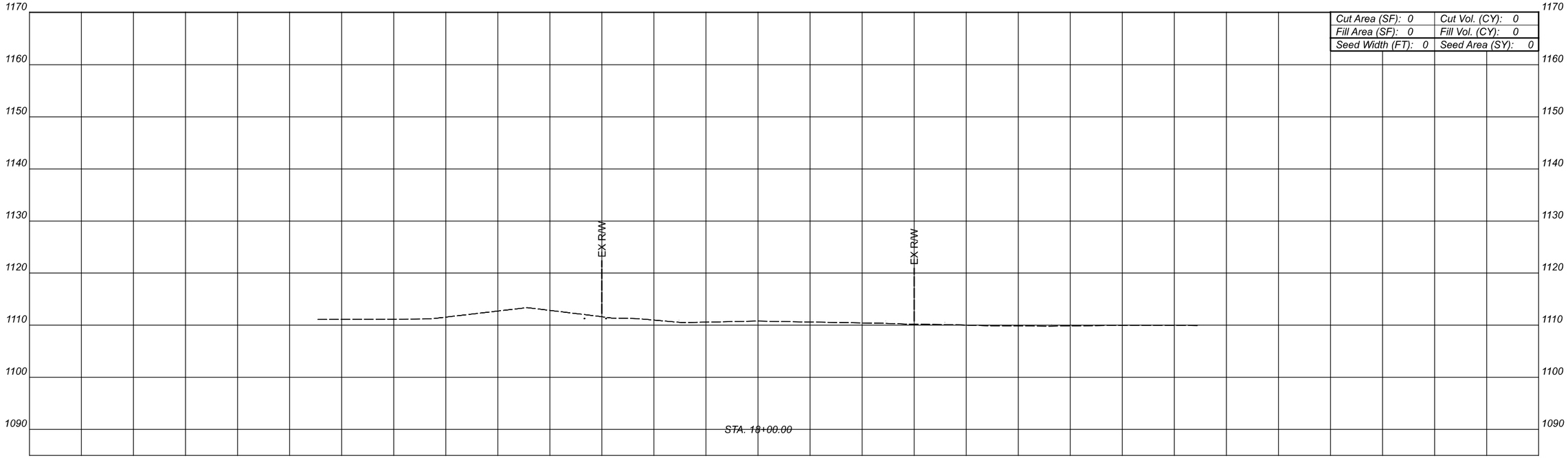

Cut Area (SF): 0	Cut Vol. (CY): 0
Fill Area (SF): 0	Fill Vol. (CY): 0
Seed Width (FT): 0	Seed Area (SY): 0

CROSS SECTIONS - SOUTHPOINTE PARKWAY
STA. 18+00 TO STA. 18+58.80

CUY-77-00.42 PART 1

MODEL: CLP_Southpointe South - 18+00.00 [Sheet] PAPERSIZE: 17x11 (in.) DATE: 3/4/2022 TIME: 1:32:37 PM USER: esmccaslin
F:\Jobs\162-Miller Road Interchange\104983\400-Engineering\Roadway\Sheets\104983_XS601.dgn

DESIGN AGENCY
EUTHENICS
8225 Mohawk Dr. | Cleveland, OH 44139

DESIGNER
DTB

REVIEWER
RAB 03/01/22

PROJECT ID
104983

Sheet Totals		
Seeding	Cut	Fill
0	0	0

SHEET	TOTAL
P.148	P.434

CUY-77-00.42 PART 1

MODEL: CLP_Southpointe South - 19+00.00-[Sheet] PAPERSIZE:17x11in.) DATE: 3/4/2022 TIME: 1:32:43 PM USER: esmccaslin
F:\Jobs\1162-Miller Road Interchange\104983\400-Engineering\Roadway\Sheets\104983_XS601.dgn

CROSS SECTIONS - SOUTHPOINTE PARKWAY
STA. 19+00

LEGEND

ITEM 202 - PAVEMENT REMOVED

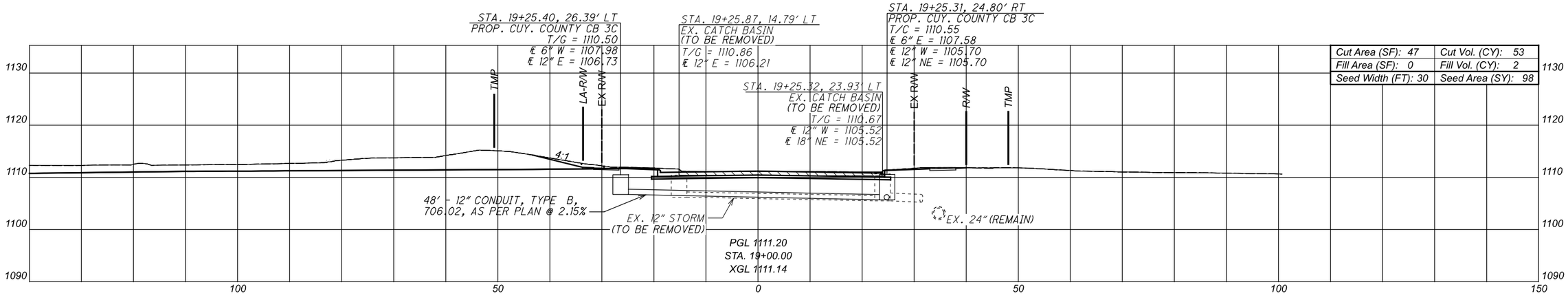

Cut Area (SF): 47	Cut Vol. (CY): 53
Fill Area (SF): 0	Fill Vol. (CY): 2
Seed Width (FT): 30	Seed Area (SY): 98

DESIGN AGENCY
EUTHENICS
8235 Mohawk Dr. | Cleveland, OH 44146

DESIGNER
DTB

REVIEWER
RAB 03/01/22

PROJECT ID
104983

Sheet Totals		
Seeding	Cut	Fill
98	53	2

SHEET P.149 TOTAL P.434

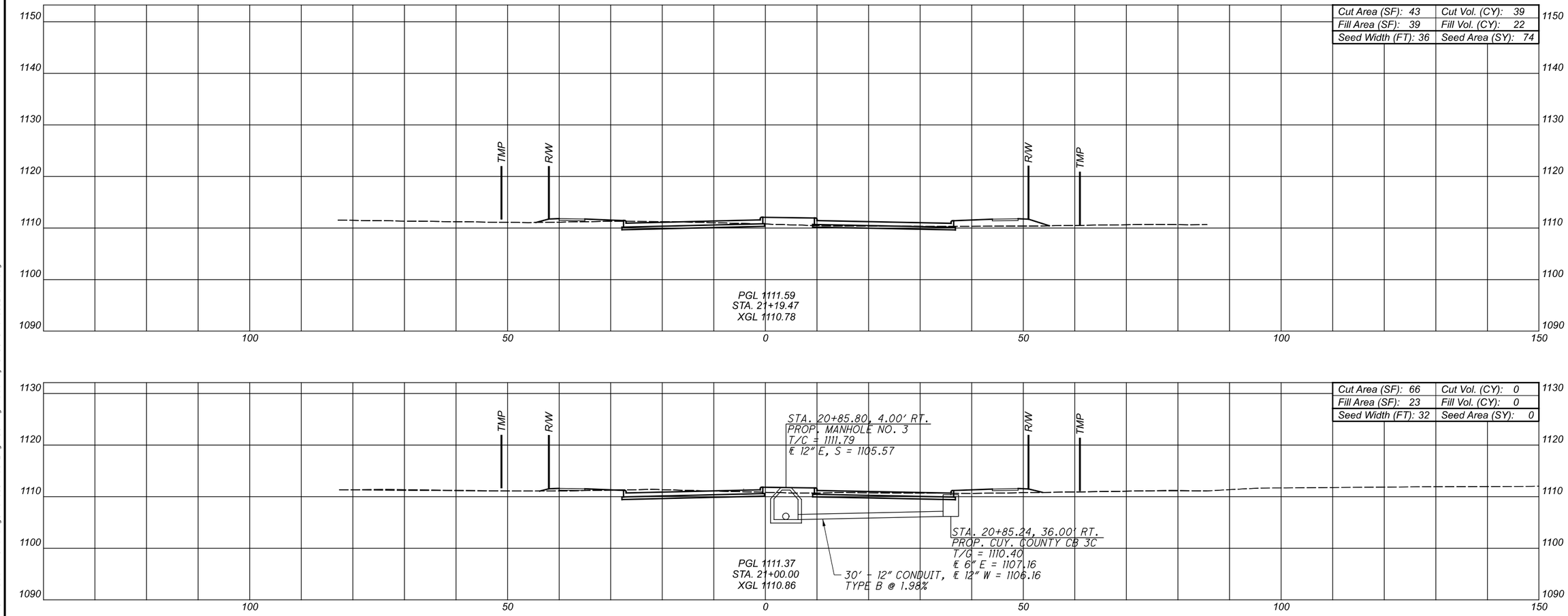

CROSS SECTIONS - SOUTHPOINTE PARKWAY (NORTH)
STA. 21+00 TO STA. 21+19.47

CUY-77-00.42 PART 1

MODEL: CLP_Southpointe North - 21+00.00-2 [Sheet] PAPERSIZE: 17x11(in.) DATE: 3/4/2022 TIME: 1:32:44 PM USER: esmccaslin
F:\Jobs\162-Miller Road Interchange\104983\400-Engineering\Roadway\Sheets\104983_XS601.dgn

DESIGN AGENCY
EUTHENICS
8235 Mohawk Dr. | Cleveland, OH 44129

DESIGNER
DTB

REVIEWER
RAB 03/01/22

PROJECT ID
104983

Sheet Totals		
Seeding	Cut	Fill
74	39	22

SHEET P.150 TOTAL P.434

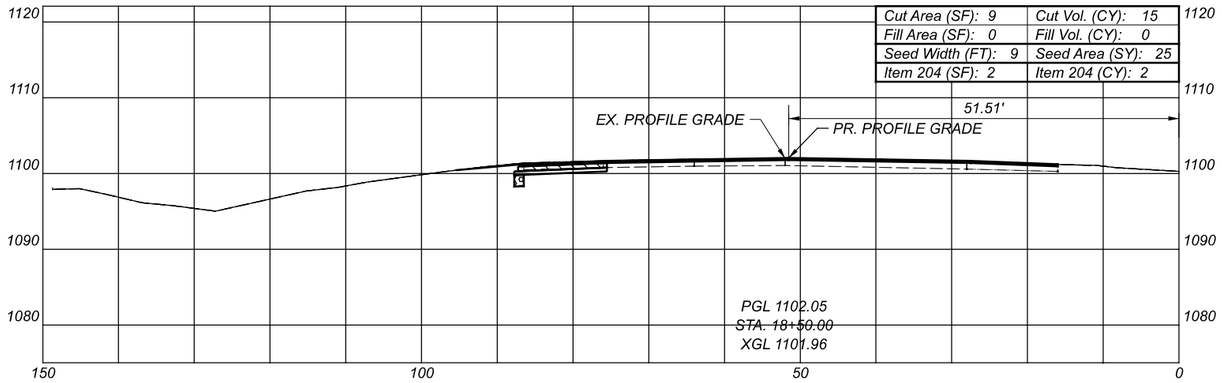

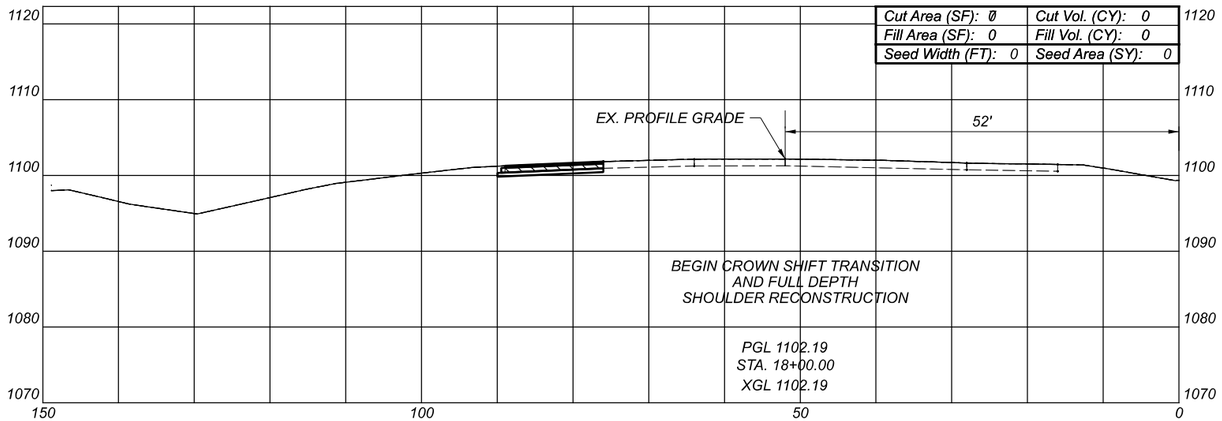

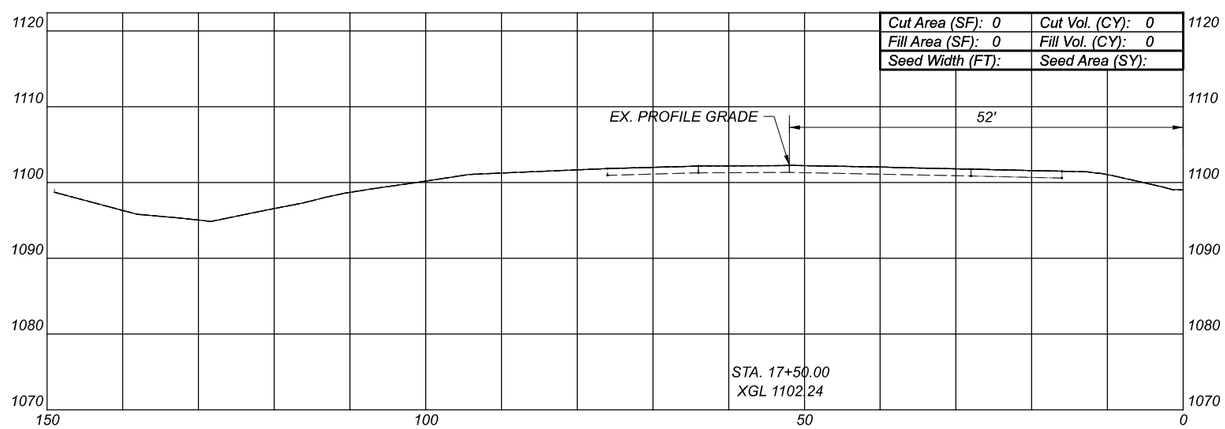

LEGEND

ITEM 202 - PAVEMENT REMOVED

ITEM 204 - EXCAVATION OF SUBGRADE
ITEM 204 - GRANULAR MATERIAL, TYPE B AND GEOTEXTILE FABRIC (UNSTABLE SUBGRADE)

℄ R/W & CONSTRUCTION
I.R. 77 (TYP.)

CROSS SECTIONS - I.R. 77 (LEFT)
STA. 17+50 TO STA. 18+50

Sheet Totals			
Seeding	Cut	Fill	Item 204
25	15	0	2

DESIGN AGENCY
EUTHENICS
8235 Mohawk Dr. | Cleveland, OH 44129

DESIGNER
DTB

REVIEWER
RAB 03/01/22

PROJECT ID
104983

SHEET P.151 TOTAL P.434

CUY-77-00.42 PART 1

MODEL: CLX_I-77_Left - I8+00.00 R2=1[Sheet] PAPERSIZE: 17x11(In.) DATE: 3/4/2022 TIME: 1:32:53 PM USER: esmccaslin
F:\Jobs\1162-Miller Road Interchange\104983\400-Engineering\Roadway\Sheets\104983_XS101.dgn

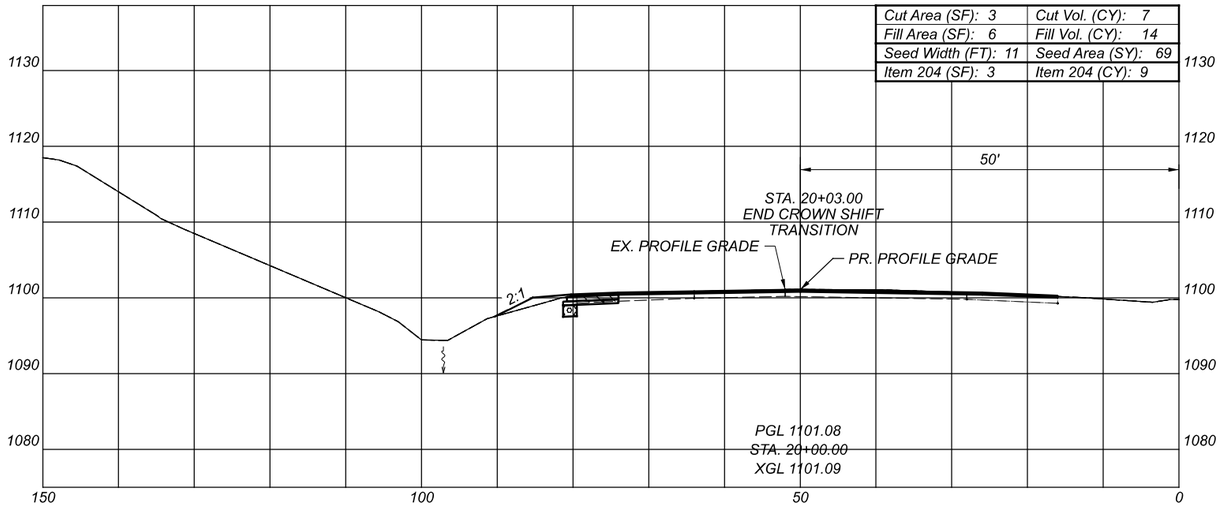

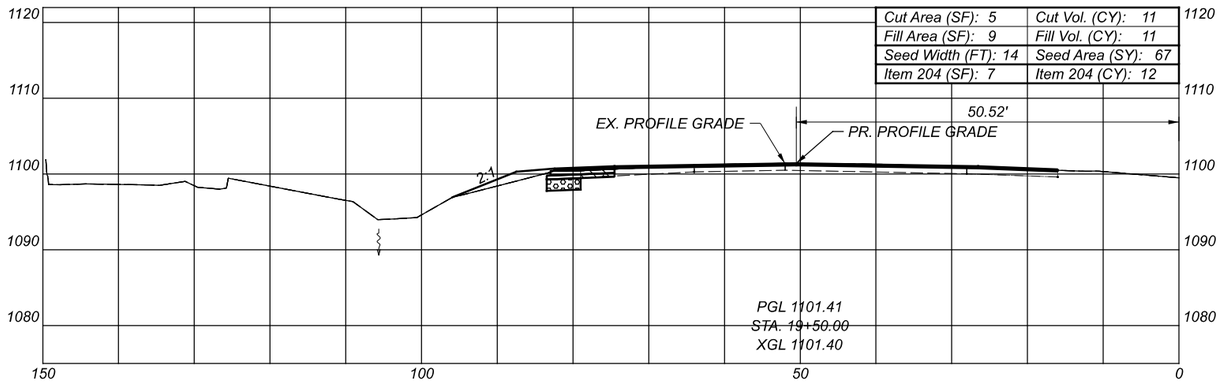

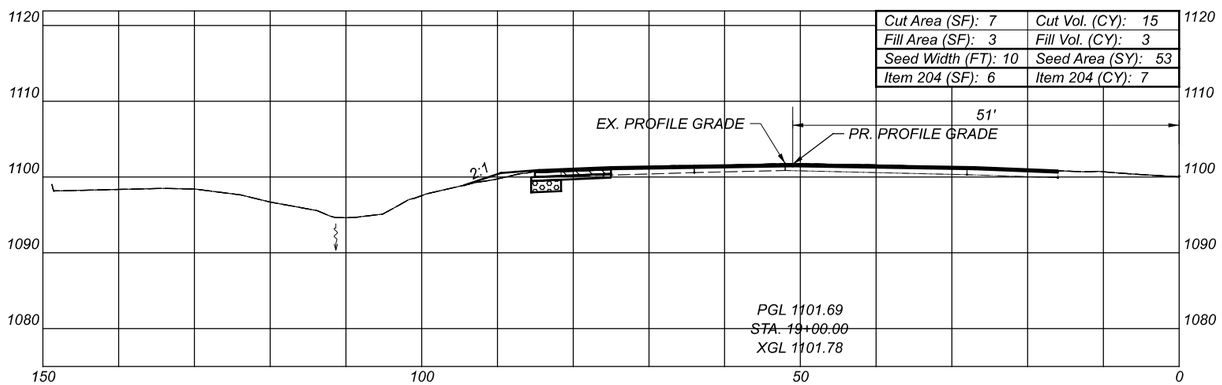

LEGEND

ITEM 202 - PAVEMENT REMOVED

ITEM 204 - EXCAVATION OF SUBGRADE
ITEM 204 - GRANULAR MATERIAL, TYPE B AND GEOTEXTILE FABRIC (UNSTABLE SUBGRADE)

℄ R/W & CONSTRUCTION
I.R. 77 (TYP.)

CROSS SECTIONS - I.R. 77 (LEFT)
STA. 19+00 TO STA. 20+00

CUY-77-00.42 PART 1

MODEL: CLX_I-77_Left - 19+50.00 R2-1[Sheet] PAPERSIZE:17x11in) DATE: 3/4/2022 TIME: 3:25:55 PM USER: esmccaslin
F:\Jobs\162-Miller Road Interchange\104983\400-Engineering\Roadway\Sheets\104983_XS101.dgn

DESIGN AGENCY
EUTHENICS
8235 Mohawk Dr. | Cleveland, OH 44139

DESIGNER
DTB

REVIEWER
RAB 03/01/22

PROJECT ID
104983

Sheet Totals			
Seeding	Cut	Fill	Item 204
189	33	28	28

SHEET P.152 TOTAL P.434

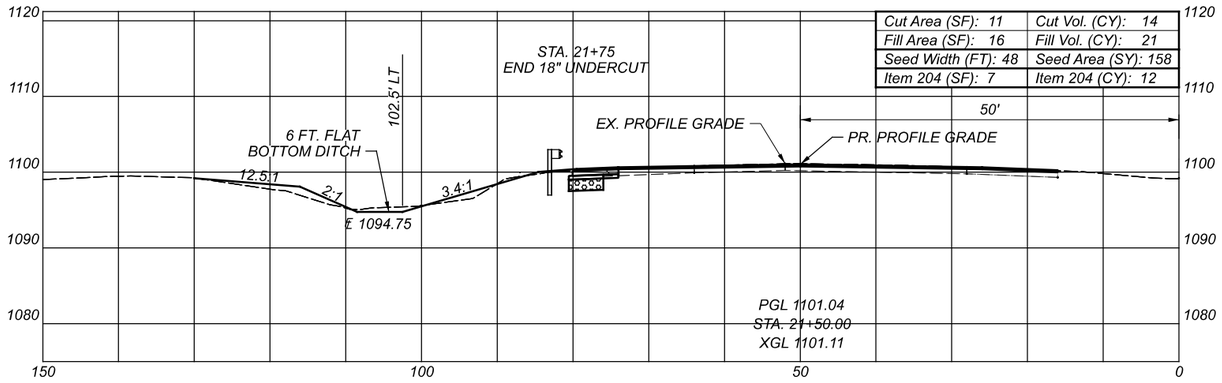

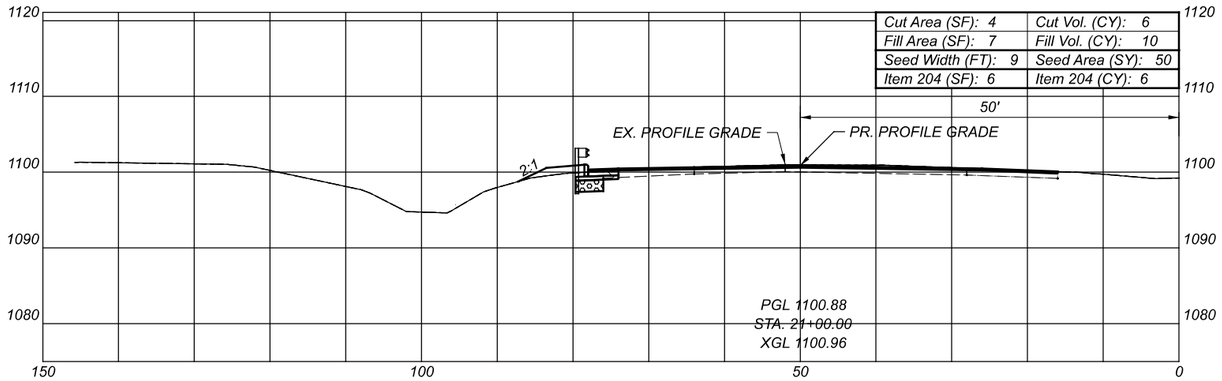

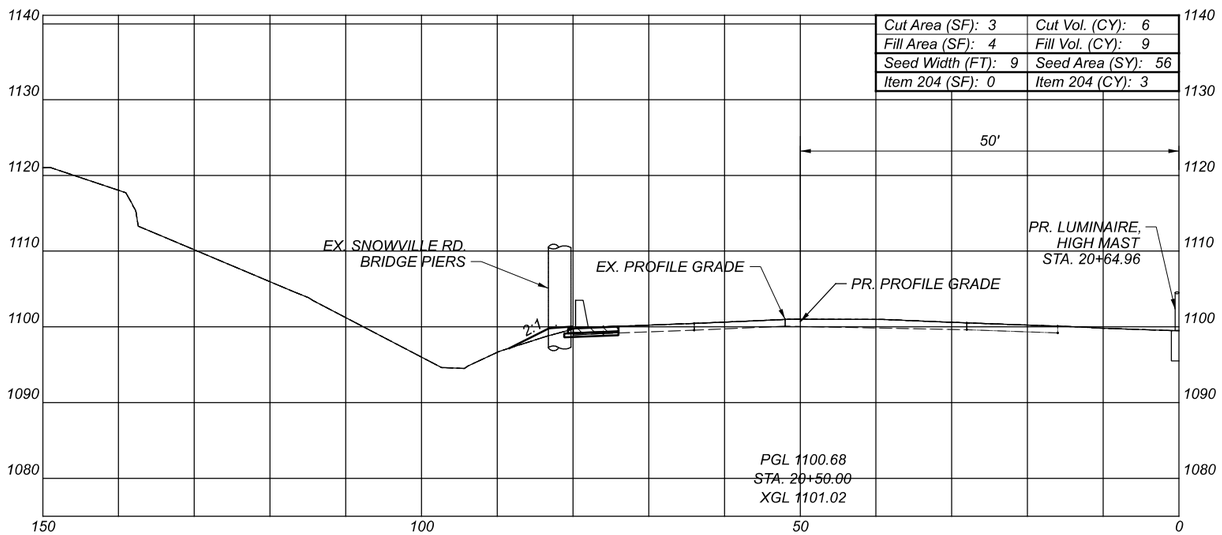

LEGEND

ITEM 202 - PAVEMENT REMOVED

ITEM 204 - EXCAVATION OF SUBGRADE
ITEM 204 - GRANULAR MATERIAL, TYPE B AND GEOTEXTILE FABRIC (UNSTABLE SUBGRADE)

℄ R/W & CONSTRUCTION
I.R. 77 (TYP.)

CROSS SECTIONS - I.R. 77 (LEFT)
STA. 20+50 TO STA. 21+50

CUY-77-00.42 PART 1

MODEL: CLX_I-77_Left - 20+50.00 R2-1 (Sheet) PAPERSIZE: 17x11 (in.) DATE: 3/4/2022 TIME: 1:32:57 PM USER: esmccasiln
F:\Jobs\16I2-Miller Road Interchange\104983\400-Engineering\Roadway\Sheets\104983_XS101.dgn

DESIGN AGENCY
EUTHENICS
8235 Mohawk Dr. | Cleveland, OH 44139

DESIGNER
DTB

REVIEWER
RAB 03/01/22

PROJECT ID
104983

Sheet Totals			
Seeding	Cut	Fill	Item 204
264	26	40	21

SHEET P.153 TOTAL P.434

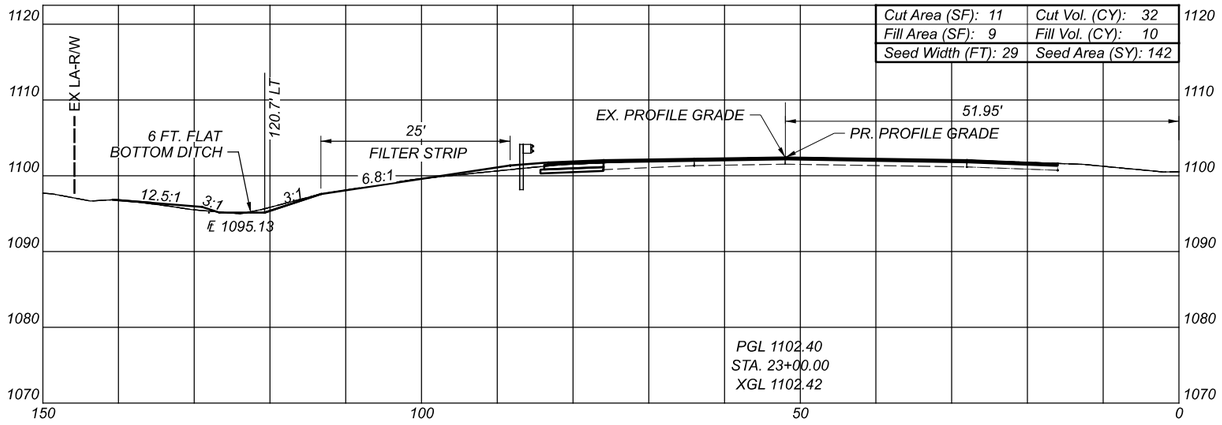

Cut Area (SF): 11	Cut Vol. (CY): 32
Fill Area (SF): 9	Fill Vol. (CY): 10
Seed Width (FT): 29	Seed Area (SY): 142

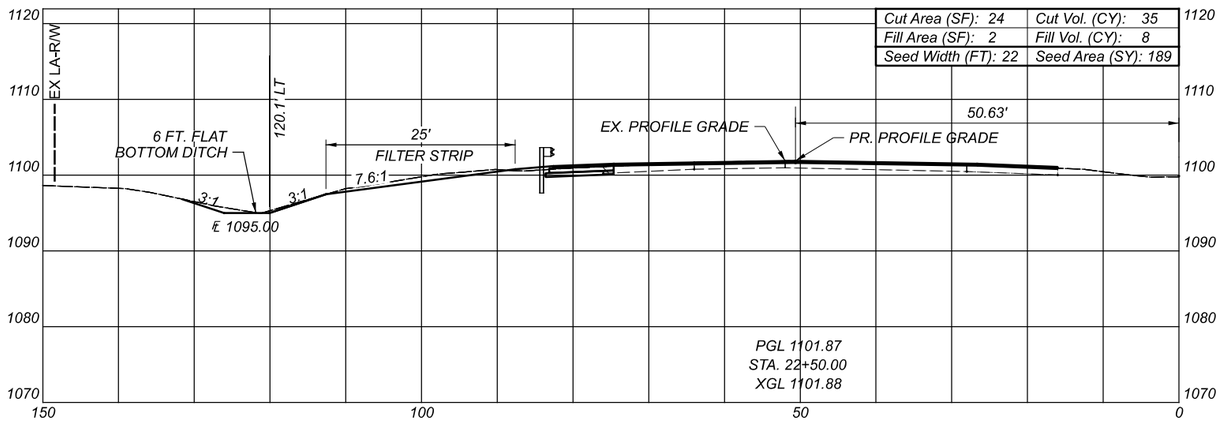

Cut Area (SF): 24	Cut Vol. (CY): 35
Fill Area (SF): 2	Fill Vol. (CY): 8
Seed Width (FT): 22	Seed Area (SY): 189

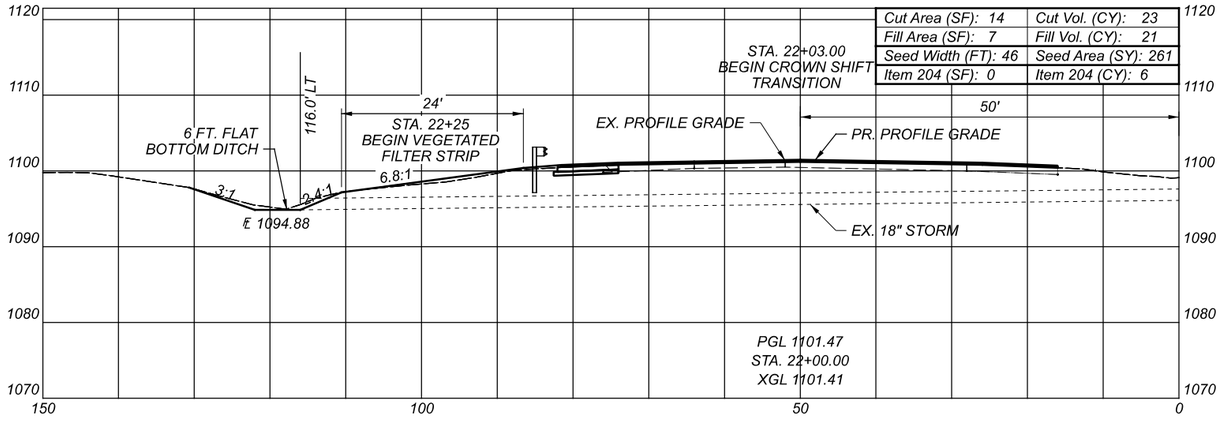

Cut Area (SF): 14	Cut Vol. (CY): 23
Fill Area (SF): 7	Fill Vol. (CY): 21
Seed Width (FT): 46	Seed Area (SY): 261
Item 204 (SF): 0	Item 204 (CY): 6

LEGEND

ITEM 202 - PAVEMENT REMOVED

℄ R/W & CONSTRUCTION
I.R. 77 (TYP.)

CROSS SECTIONS - I.R. 77 (LEFT)
STA. 22+00 TO STA. 23+00

Sheet Totals			
Seeding	Cut	Fill	Item 204
592	90	39	6

DESIGN AGENCY
EUTHENICS
8225 Mohawk Dr. | Cleveland, OH 44139

DESIGNER
DTB

REVIEWER
RAB 03/01/22

PROJECT ID
104983

SHEET P.154 TOTAL P.434

CUY-77-00.42 PART 1

MODEL: CLX_I-77_Left - 22+00.00 R2-1(Sheet) PAPERSIZE:17x11(in.) DATE: 3/4/2022 TIME: 1:33:00 PM USER: esmccasiln
F:\Jobs\1162-Miller Road Interchange\104983\400-Engineering\Roadway\Sheets\104983_XS101.dgn

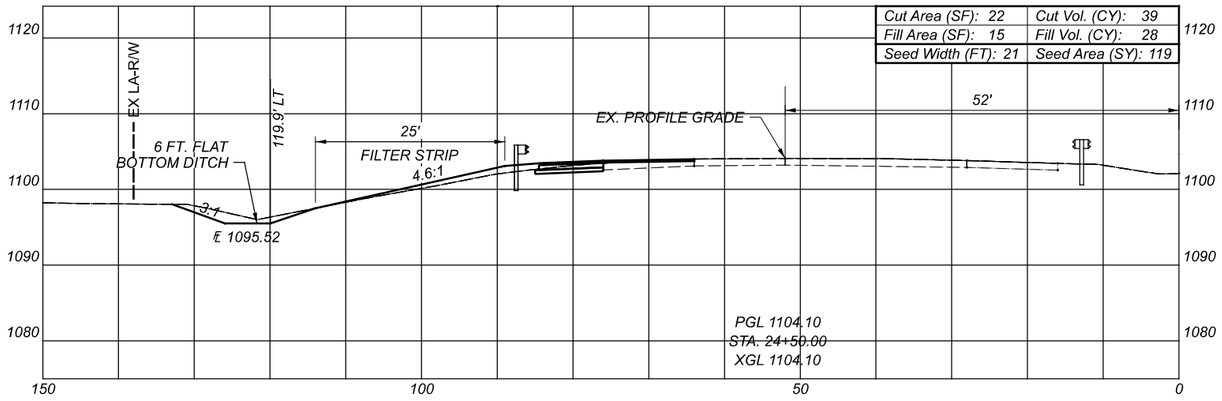

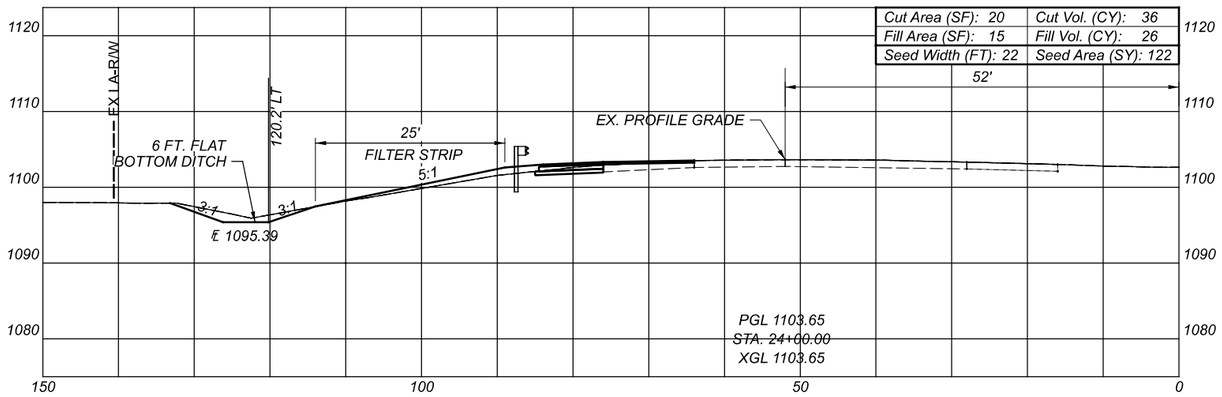

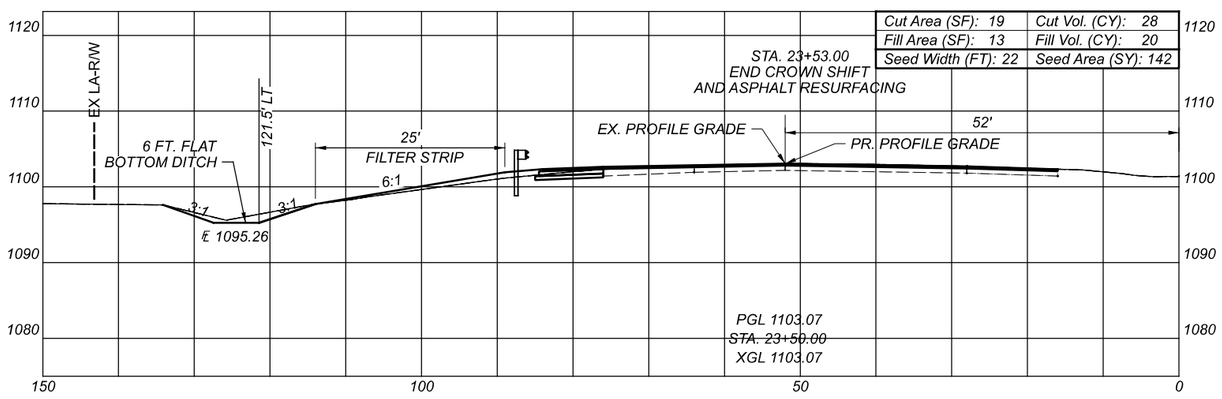

℄ R/W & CONSTRUCTION
I.R. 77 (TYP.)

CUY-77-00.42 PART 1

MODEL: CLX_I-77_Left - 23+50.00 R2-1(Sheet) PAPERSIZE: 17x11(in.) DATE: 3/4/2022 TIME: 1:33:02 PM USER: esmccaslin
F:\Jobs\1162-Miller Road Interchange\104983\400-Engineering\Roadway\Sheets\104983_XS101.dgn

CROSS SECTIONS - I.R. 77 (LEFT)
STA. 23+50 TO STA. 24+50

DESIGN AGENCY
EUTHENICS
8235 Mohawk Dr. | Cleveland, OH 44230

DESIGNER	DTB
REVIEWER	RAB 03/01/22
PROJECT ID	104983

Sheet Totals		
Seeding	Cut	Fill
383	103	74

SHEET	TOTAL
P.155	P.434

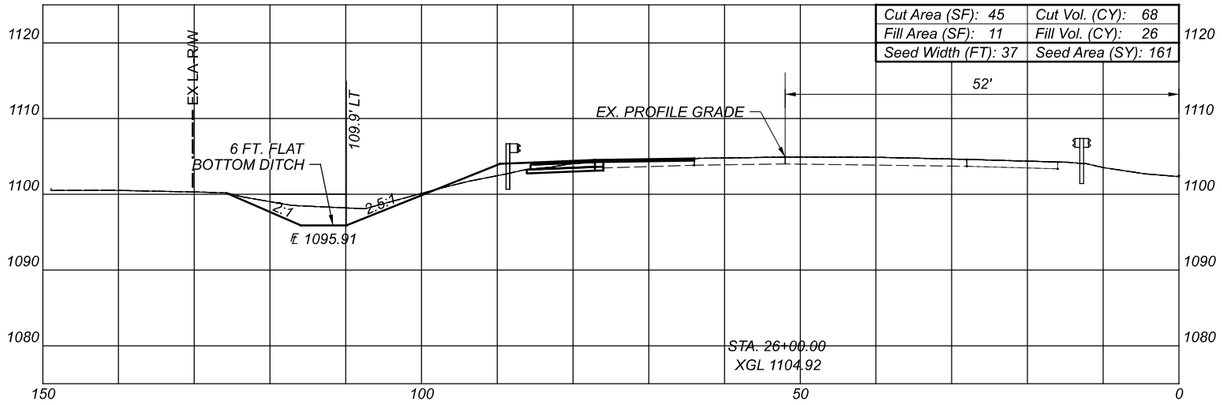

Cut Area (SF): 45	Cut Vol. (CY): 68
Fill Area (SF): 11	Fill Vol. (CY): 26
Seed Width (FT): 37	Seed Area (SY): 161

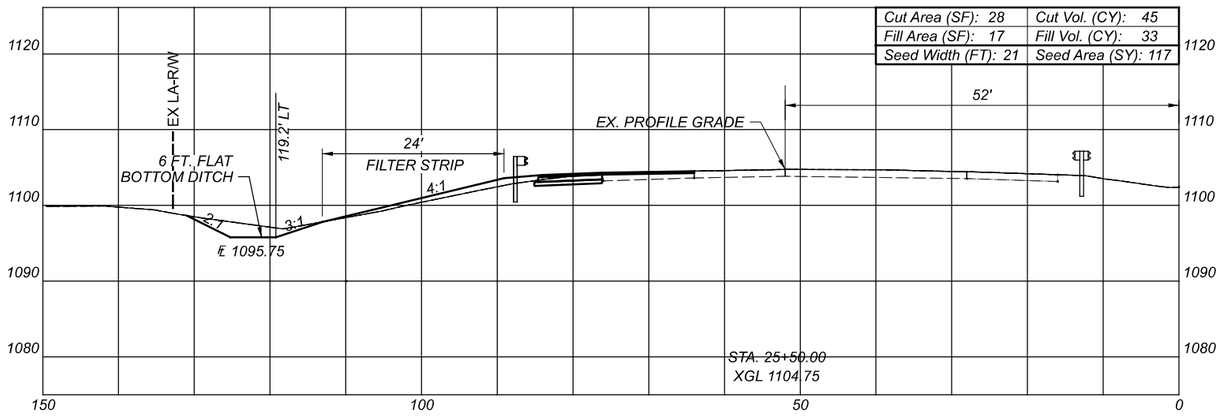

Cut Area (SF): 28	Cut Vol. (CY): 45
Fill Area (SF): 17	Fill Vol. (CY): 33
Seed Width (FT): 21	Seed Area (SY): 117

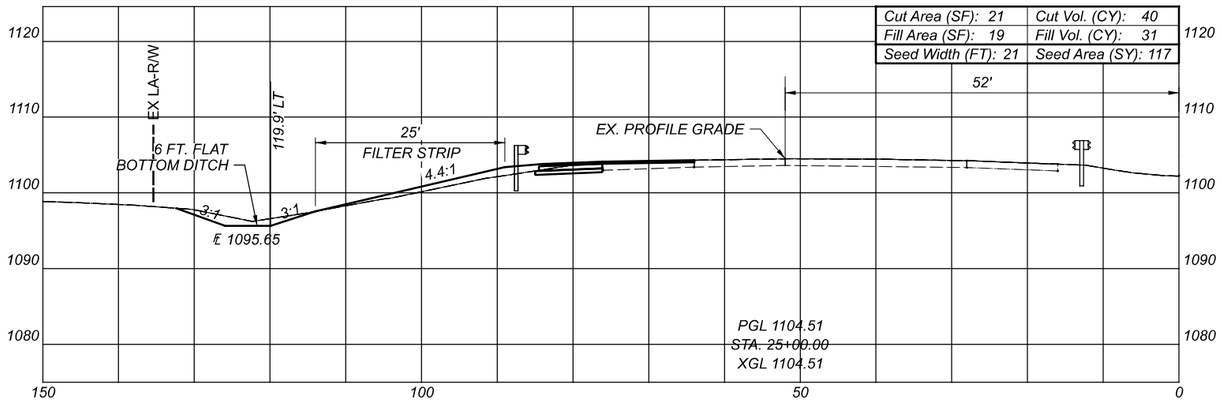

Cut Area (SF): 21	Cut Vol. (CY): 40
Fill Area (SF): 19	Fill Vol. (CY): 31
Seed Width (FT): 21	Seed Area (SY): 117

℄ R/W & CONSTRUCTION
I.R. 77 (TYP.)

CROSS SECTIONS - I.R. 77 (LEFT)
STA. 25+00 TO STA. 26+00

DESIGN AGENCY
EUTHENICS
8235 Mohawk Dr. | Cleveland, OH 44146

DESIGNER
DTB

REVIEWER
RAB 03/01/22

PROJECT ID
104983

Sheet Totals		
Seeding	Cut	Fill
395	153	90

SHEET P.156 TOTAL P.434

CUY-77-00.42 PART 1

MODEL: CLX_I-77_Left - 25+00.00 R2-1 (Sheet) PAPERSIZE: 17x11 (in.) DATE: 3/4/2022 TIME: 11:33:04 PM USER: esmccaslin
F:\Jobs\1162-Miller Road Interchange\104983\400-Engineering\Roadway\Sheets\104983_XS10.dgn

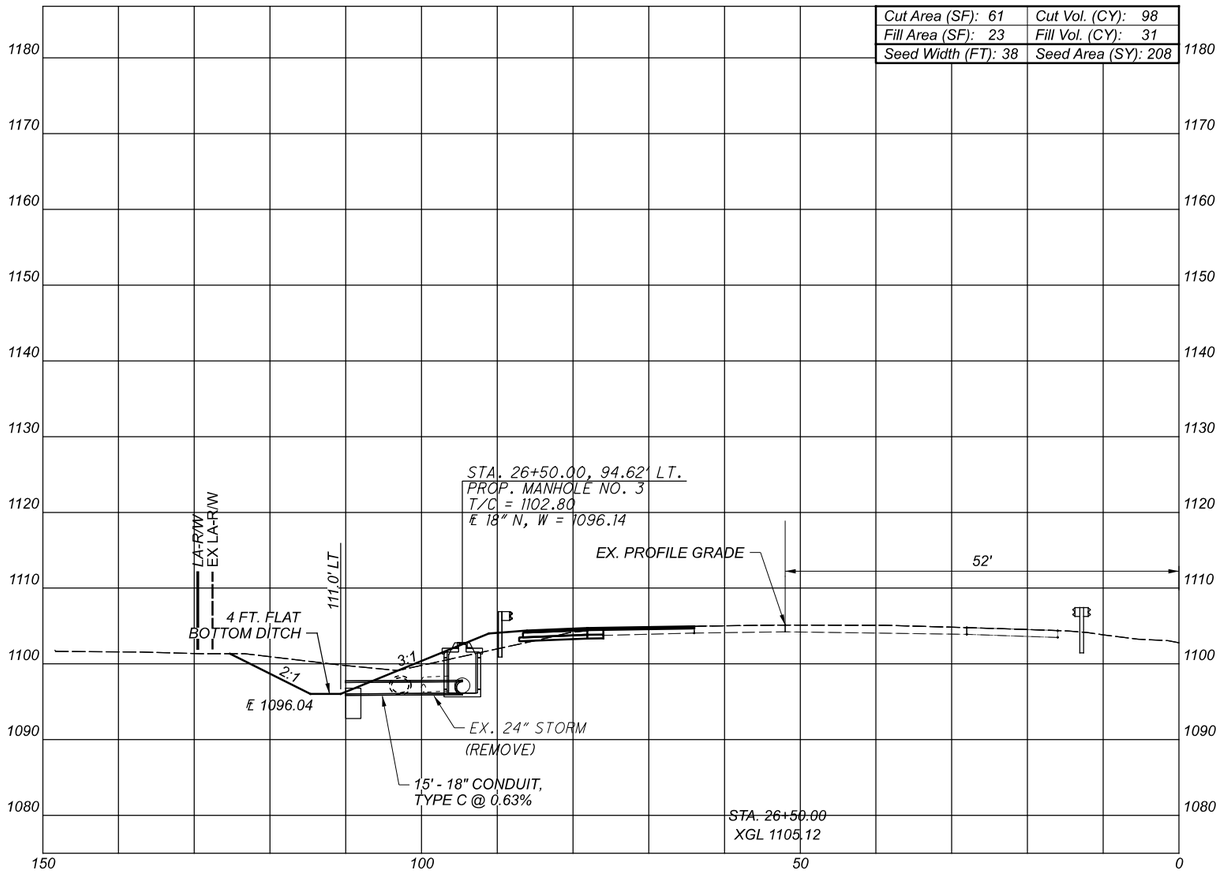

℄ R/W & CONSTRUCTION
I.R. 77 (TYP.)

CROSS SECTIONS - I.R. 77 (LEFT)
STA. 26+50

CUY-77-00.42 PART 1

MODEL: CLX-I-77_Left - 26+50.00 R2-1(Sheet) PAPERSIZE:17x11(In.) DATE: 3/4/2022 TIME: 1:33:06 PM USER: esmccasiln
F:\Jobs\1162-Miller Road Interchange\104983\400-Engineering\Roadway\Sheets\104983_XS101.dgn

DESIGN AGENCY
EUTHENICS
8825 Midwest Dr. | Cleveland, OH 44130

DESIGNER
DTB

REVIEWER
RAB 03/01/22

PROJECT ID
104983

Sheet Totals		
Seeding	Cut	Fill
208	98	31

SHEET P.157 TOTAL P.434

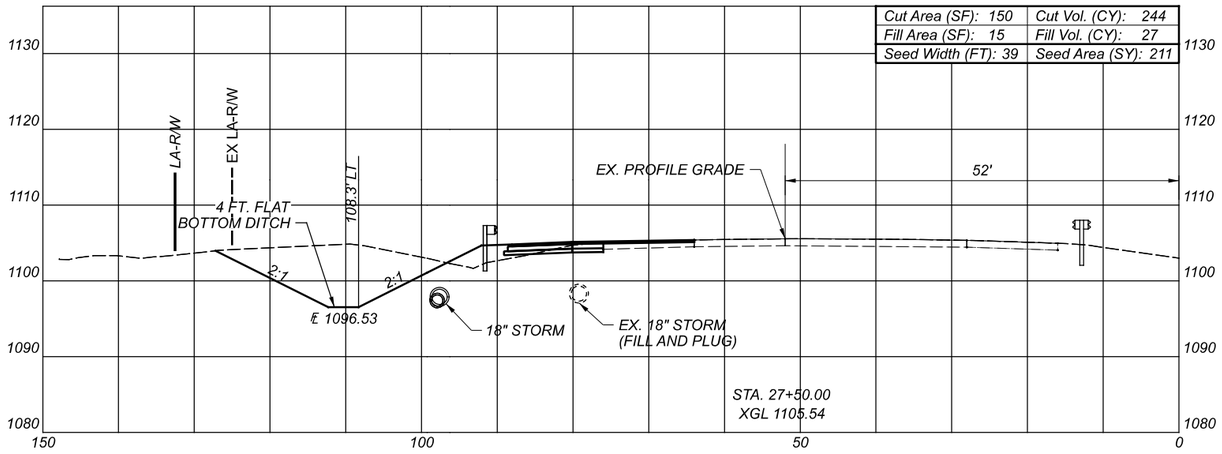

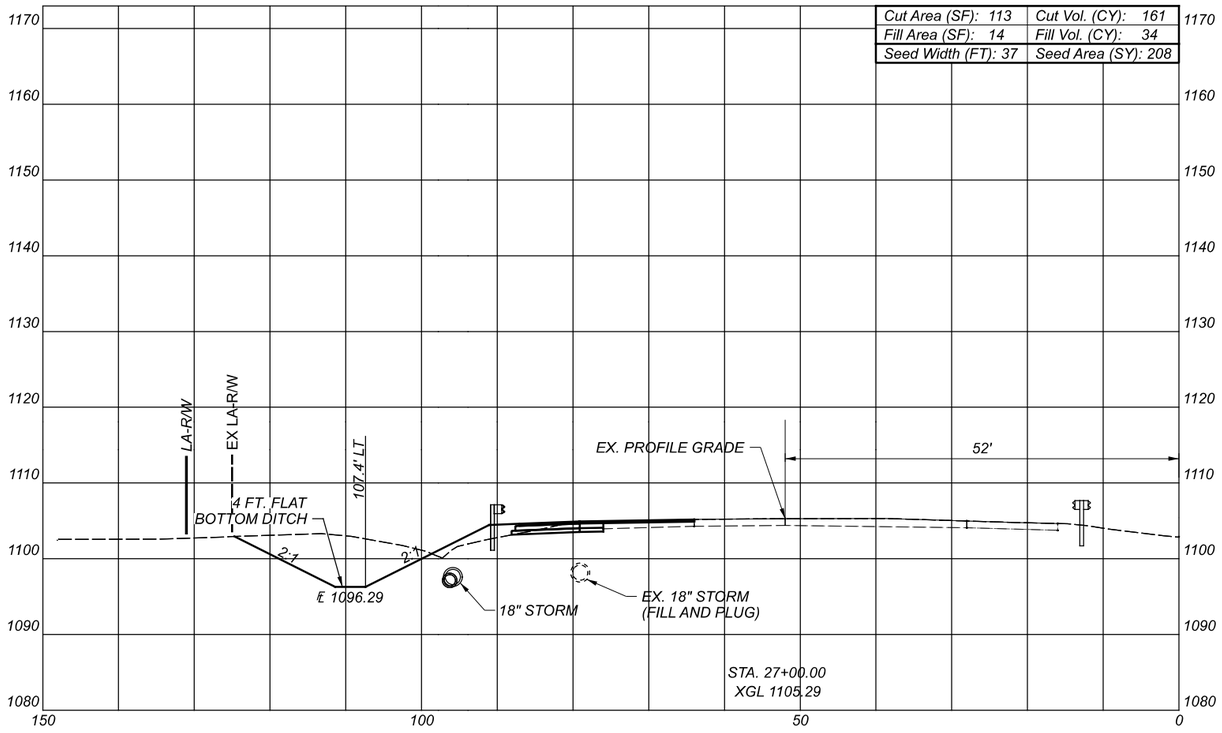

℄ R/W & CONSTRUCTION
I.R. 77 (TYP.)

CUY-77-00.42 PART 1

CROSS SECTIONS - I.R. 77 (LEFT)
STA. 27+00 TO STA. 27+50

DESIGN AGENCY
EUTHENICS
8235 Mohawk Dr. | Cleveland, OH 44230

DESIGNER
DTB

REVIEWER
RAB 03/01/22

PROJECT ID
104983

Sheet Totals		
Seeding	Cut	Fill
419	405	61

SHEET P.158 TOTAL P.434

MODEL: CLX_I-77_Left - 27+00.00 R2-1(Sheet) PAPERSIZE: 17x11(in.) DATE: 3/4/2022 TIME: 11:33:57 PM USER: esmccaslin
F:\Jobs\1162-Miller Road Interchange\104983\400-Engineering\Roadway\Sheets\104983_XS101.dgn

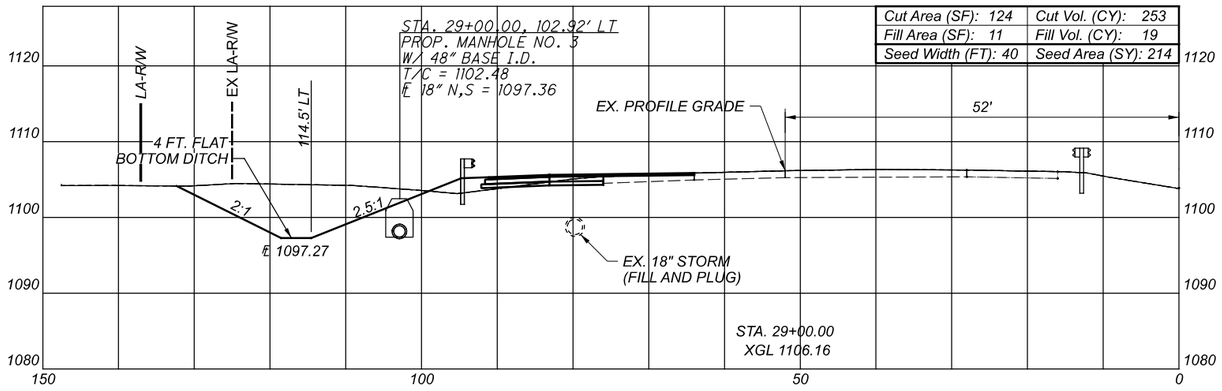

Cut Area (SF): 124	Cut Vol. (CY): 253
Fill Area (SF): 11	Fill Vol. (CY): 19
Seed Width (FT): 40	Seed Area (SY): 214

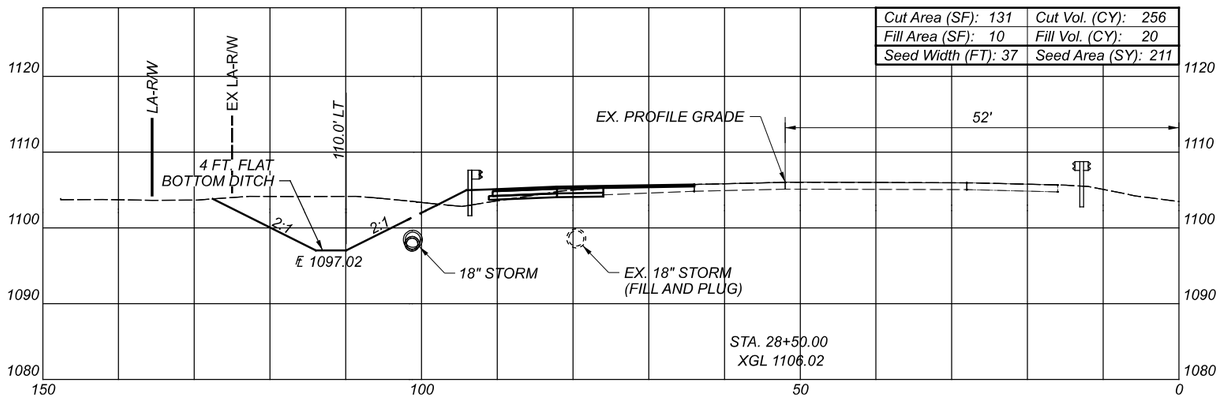

Cut Area (SF): 131	Cut Vol. (CY): 256
Fill Area (SF): 10	Fill Vol. (CY): 20
Seed Width (FT): 37	Seed Area (SY): 211

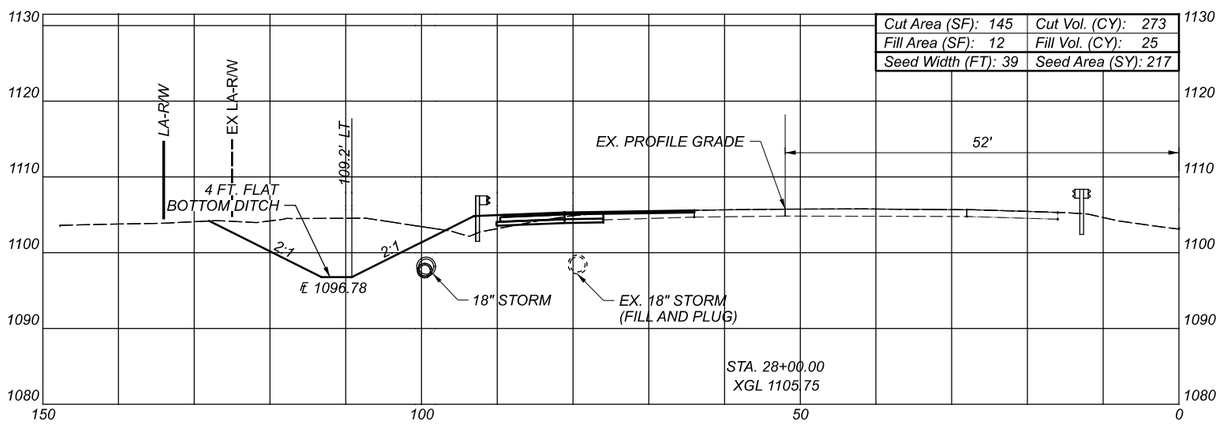

Cut Area (SF): 145	Cut Vol. (CY): 273
Fill Area (SF): 12	Fill Vol. (CY): 25
Seed Width (FT): 39	Seed Area (SY): 217

℄ R/W & CONSTRUCTION
I.R. 77 (TYP.)

CROSS SECTIONS - I.R. 77 (LEFT)
STA. 28+00 TO STA. 29+00

DESIGN AGENCY
EUTHENICS
8225 Mohawk Dr. | Cleveland, OH 44256

DESIGNER
DTB

REVIEWER
RAB 03/01/22

PROJECT ID
104983

Sheet Totals		
Seeding	Cut	Fill
642	782	64

SHEET P.159 TOTAL P.434

CUY-77-00.42 PART 1

MODEL: CLX_I-77_Left - 28+00.00 R2-1(Sheet) PAPERSIZE: 17x11(in.) DATE: 3/4/2022 TIME: 1:34:01 PM USER: esmccasiln
F:\Jobs\1162-Miller Road Interchange\104983\400-Engineering\Roadway\Sheets\104983_XS101.dgn

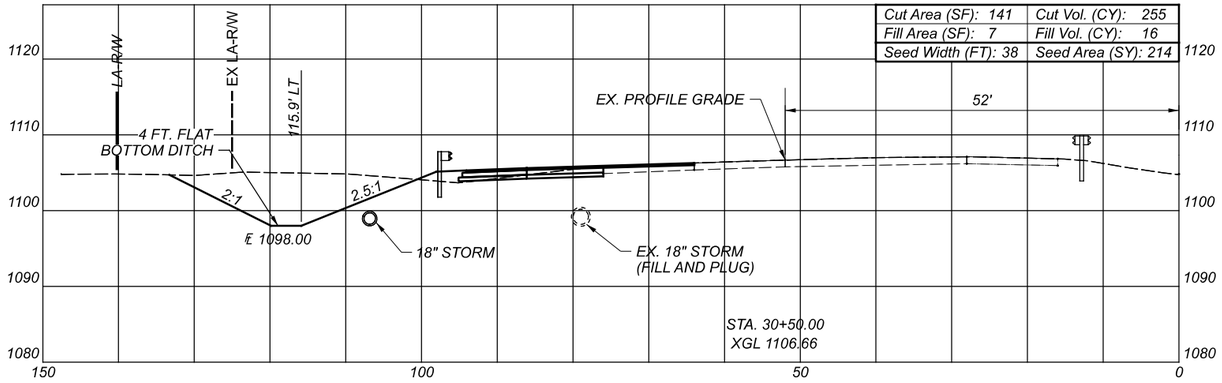

Cut Area (SF): 141	Cut Vol. (CY): 255
Fill Area (SF): 7	Fill Vol. (CY): 16
Seed Width (FT): 38	Seed Area (SY): 214

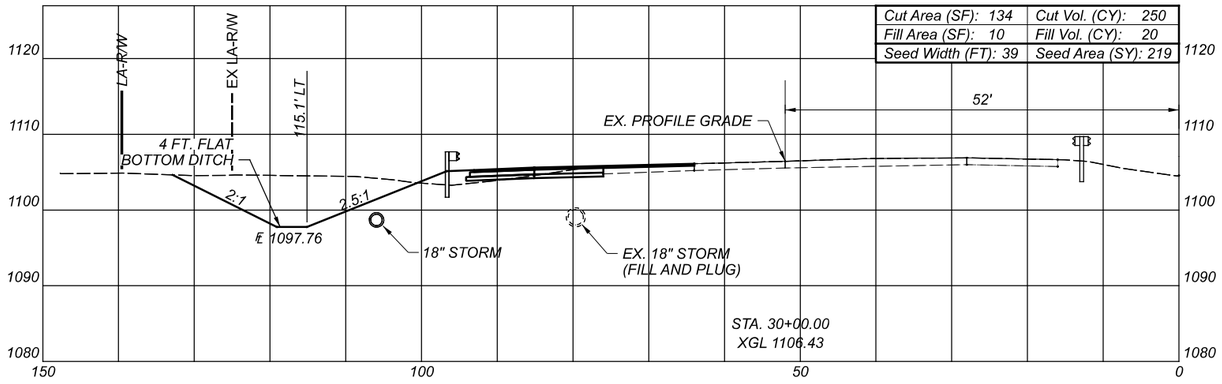

Cut Area (SF): 134	Cut Vol. (CY): 250
Fill Area (SF): 10	Fill Vol. (CY): 20
Seed Width (FT): 39	Seed Area (SY): 219

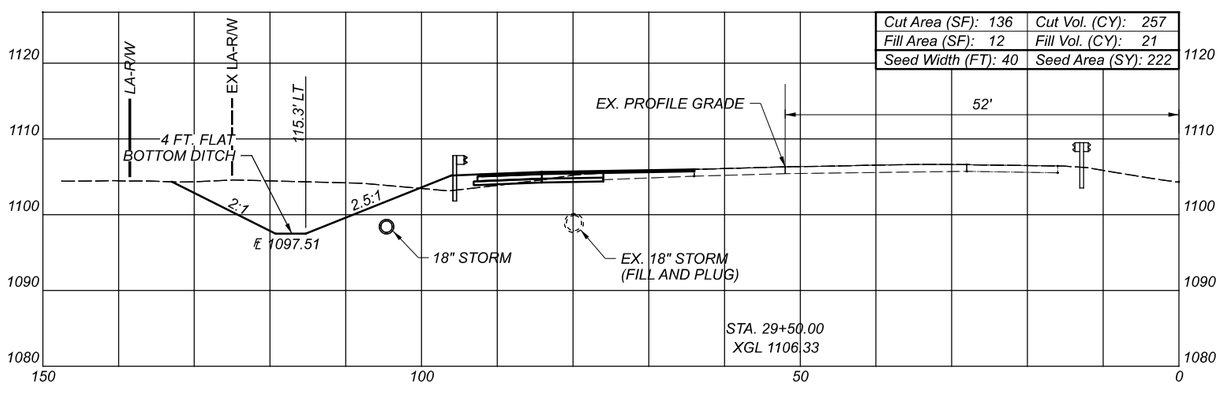

Cut Area (SF): 136	Cut Vol. (CY): 257
Fill Area (SF): 12	Fill Vol. (CY): 21
Seed Width (FT): 40	Seed Area (SY): 222

℄ R/W & CONSTRUCTION
I.R. 77 (TYP.)

CROSS SECTIONS - I.R. 77 (LEFT)
STA. 29+50 TO STA. 30+50

CUY-77-00.42 PART 1

MODEL: CLX_I-77_Left - 29+50.00 R2-1(Sheet) PAPERSIZE: 17x11(in.) DATE: 3/4/2022 TIME: 1:34:03 PM USER: esmccaslin
F:\Jobs\1162-Miller Road Interchange\104983\400-Engineering\Roadway\Sheets\104983_XS101.dgn

DESIGN AGENCY
EUTHENICS
8235 Mohawk Dr. | Cleveland, OH 44236

DESIGNER
DTB

REVIEWER
RAB 03/01/22

PROJECT ID
104983

Sheet Totals		
Seeding	Cut	Fill
655	762	57

SHEET P.160 TOTAL P.434

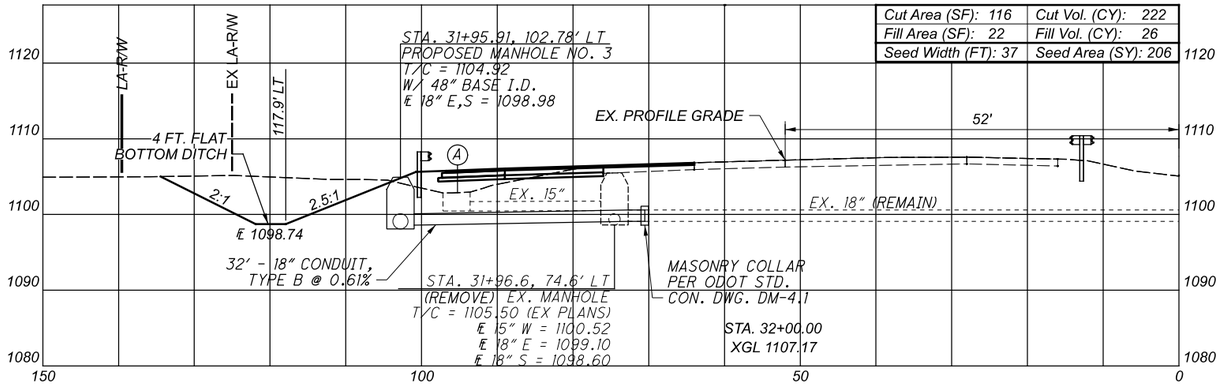

Cut Area (SF): 116	Cut Vol. (CY): 222
Fill Area (SF): 22	Fill Vol. (CY): 26
Seed Width (FT): 37	Seed Area (SY): 206

Ⓐ STA. 31+96.2, 95.4' LT
EX. CATCH BASIN (REMOVE)
T/C = 1102.84
℄ 15" E = 1100.46

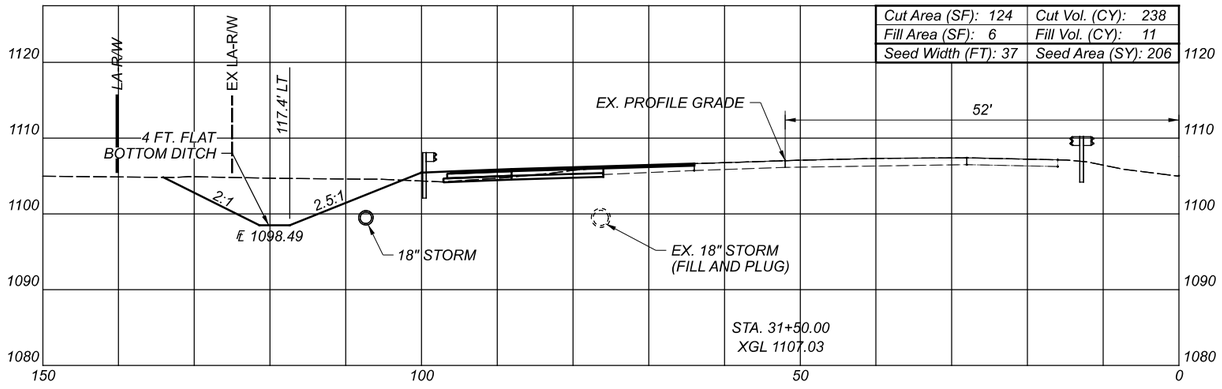

Cut Area (SF): 124	Cut Vol. (CY): 238
Fill Area (SF): 6	Fill Vol. (CY): 11
Seed Width (FT): 37	Seed Area (SY): 206

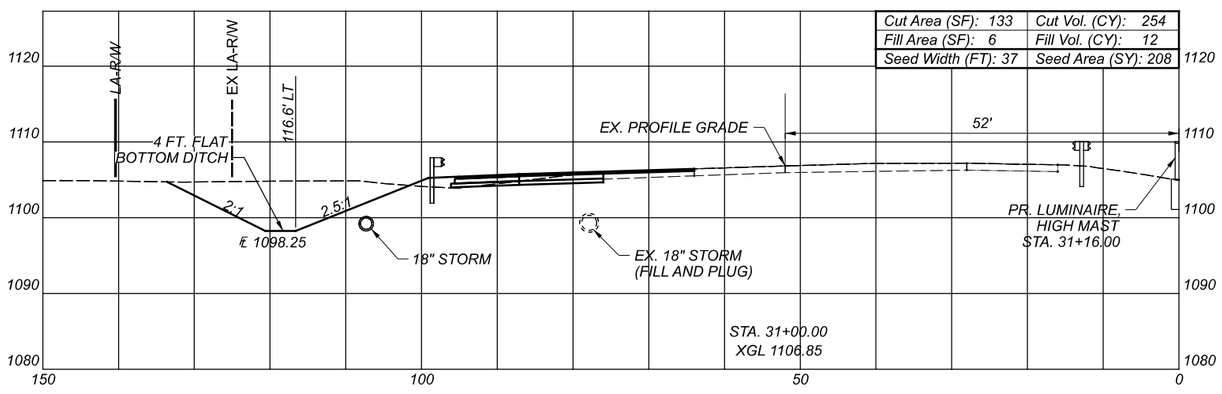

Cut Area (SF): 133	Cut Vol. (CY): 254
Fill Area (SF): 6	Fill Vol. (CY): 12
Seed Width (FT): 37	Seed Area (SY): 208

℄ R/W & CONSTRUCTION
I.R. 77 (TYP.)

CROSS SECTIONS - I.R. 77 (LEFT)
STA. 31+00 TO STA. 32+00

CUY-77-00.42 PART 1

MODEL: CLX_I-77_Left - 31+00.00 R2-1(Sheet) PAPERSIZE: 17x11(In.) DATE: 3/4/2022 TIME: 13:40:05 PM USER: esmccaslin
F:\Jobs\162-Miller Road Interchange\104983\400-Engineering\Roadway\Sheets\104983_XS101.dgn

DESIGN AGENCY
EUTHENICS
8235 Mohawk Dr. | Cleveland, OH 44129

DESIGNER
DTB

REVIEWER
RAB 03/01/22

PROJECT ID
104983

Sheet Totals		
Seeding	Cut	Fill
620	714	49

SHEET P.161 TOTAL P.434

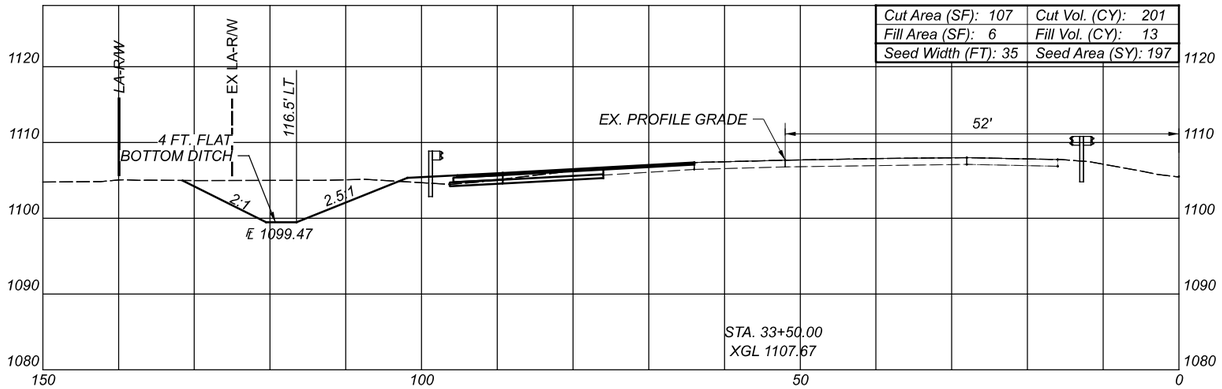

Cut Area (SF): 107	Cut Vol. (CY): 201
Fill Area (SF): 6	Fill Vol. (CY): 13
Seed Width (FT): 35	Seed Area (SY): 197

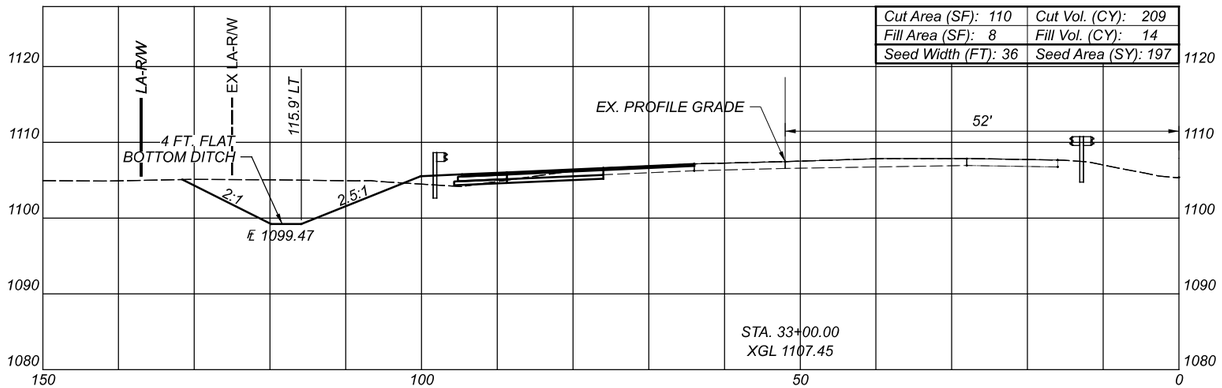

Cut Area (SF): 110	Cut Vol. (CY): 209
Fill Area (SF): 8	Fill Vol. (CY): 14
Seed Width (FT): 36	Seed Area (SY): 197

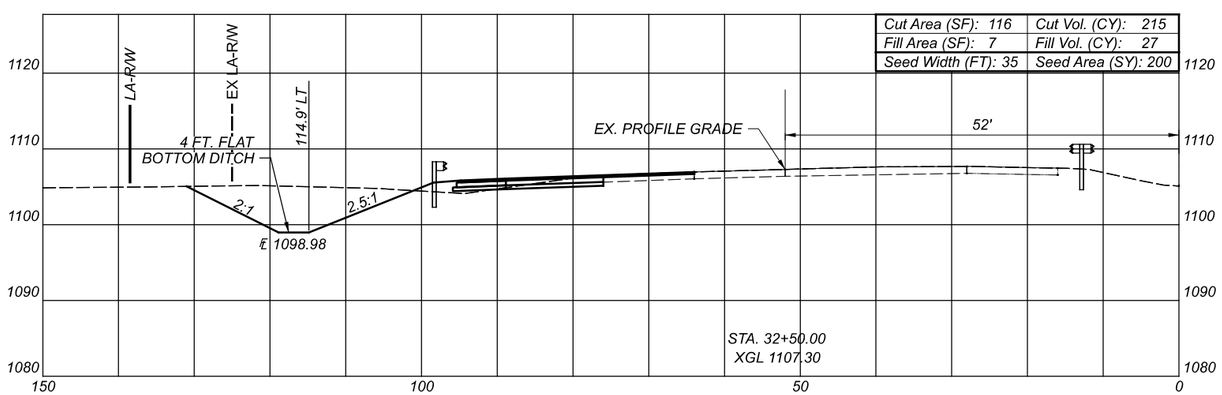

Cut Area (SF): 116	Cut Vol. (CY): 215
Fill Area (SF): 7	Fill Vol. (CY): 27
Seed Width (FT): 35	Seed Area (SY): 200

℄ R/W & CONSTRUCTION
I.R. 77 (TYP.)

CUY-77-00.42 PART 1

MODEL: CLX_I-77_Left - 32+50.00 R2-1[Sheet] PAPERSIZE: 17x11(in.) DATE: 3/4/2022 TIME: 1:34:07 PM USER: esmccaslin
F:\Jobs\1162-Miller Road Interchange\104983\400-Engineering\Roadway\Sheets\104983_XS101.dgn

CROSS SECTIONS - I.R. 77 (LEFT)
STA. 32+50 TO STA. 33+50

DESIGN AGENCY
EUTHENICS
8235 Mohawk Dr. | Cleveland, OH 44146

DESIGNER
DTB

REVIEWER
RAB 03/01/22

PROJECT ID
104983

Sheet Totals		
Seeding	Cut	Fill
594	625	54

SHEET P.162 TOTAL P.434

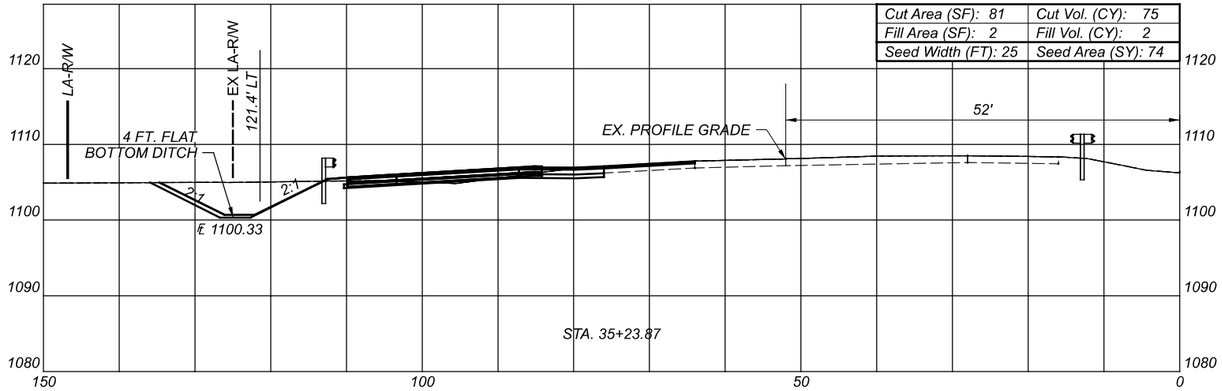

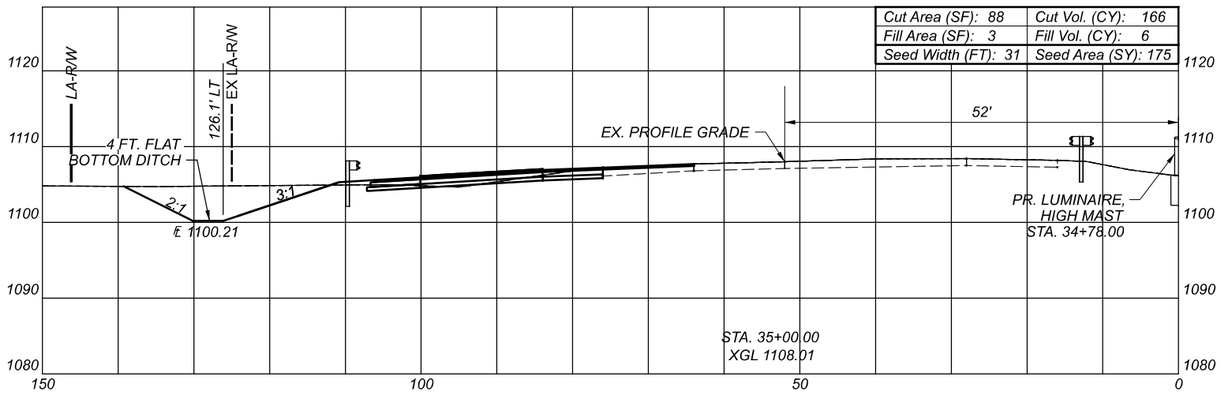

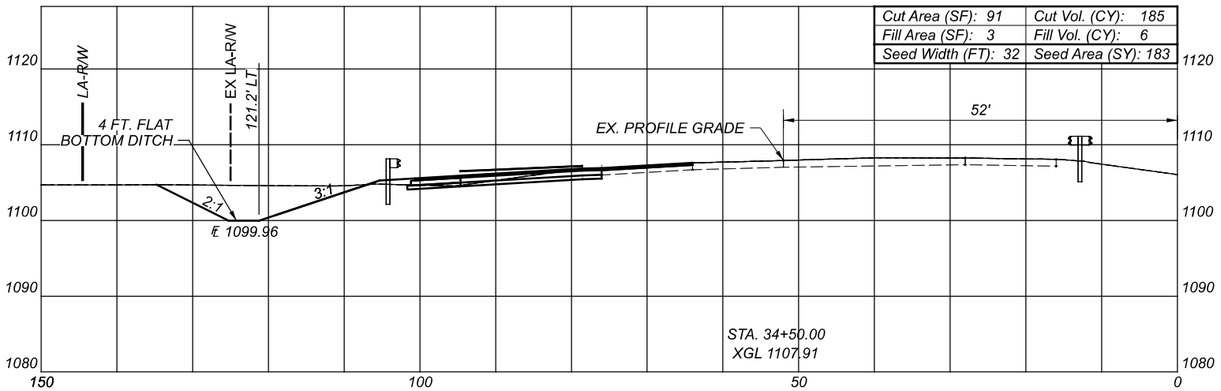

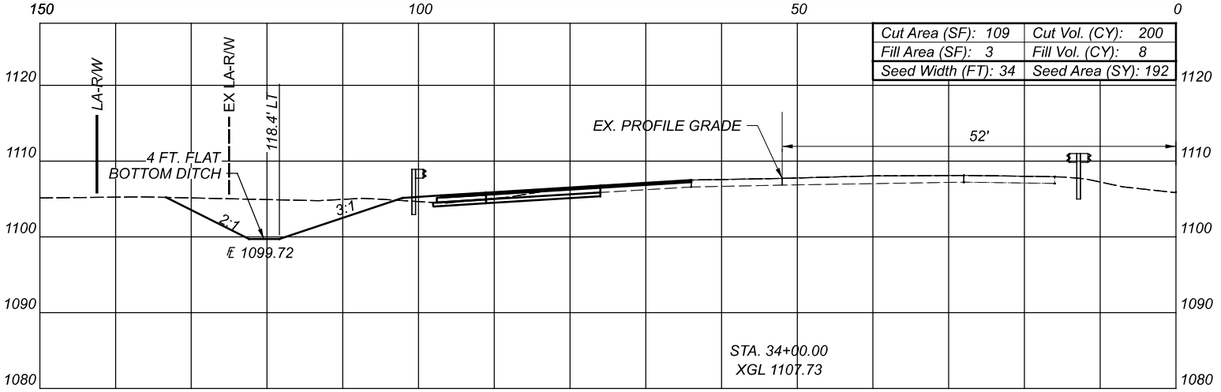

℄ R/W & CONSTRUCTION
I.R. 77 (TYP.)

CROSS SECTIONS - I.R. 77 (LEFT)
STA. 34+00 TO STA. 35+23.87

CUY-77-00.42 PART 1

MODEL: CLX_I-77_Left - 34+00.00 R2-1(Sheet) PAPERSIZE: 17x11(in.) DATE: 3/4/2022 TIME: 1:34:09 PM USER: esmccasiln
F:\Jobs\1162-Miller Road Interchange\104983\400-Engineering\Roadway\Sheets\104983_XS101.dgn

DESIGN AGENCY
EUTHENICS
8235 Mohawk Dr. | Cleveland, OH 44125

DESIGNER
DTB

REVIEWER
RAB 03/01/22

PROJECT ID
104983

Sheet Totals		
Seeding	Cut	Fill
624	626	22

SHEET P.163 TOTAL P.434

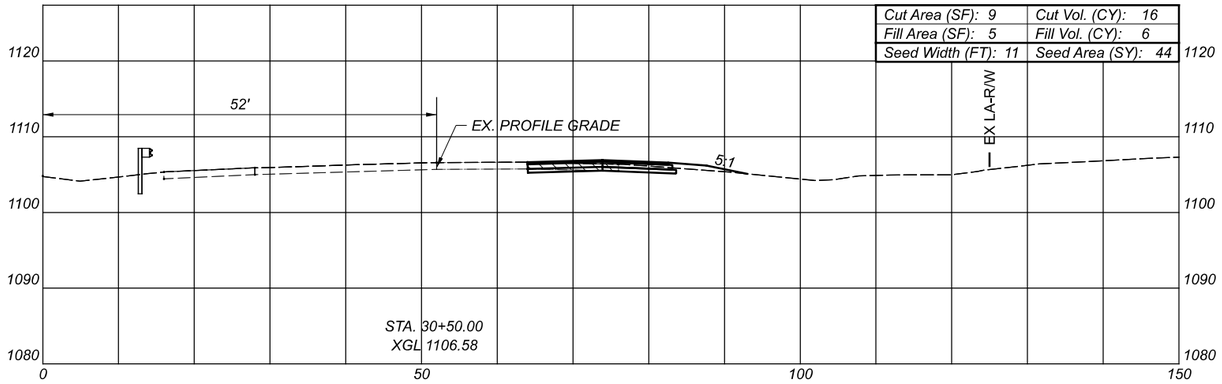

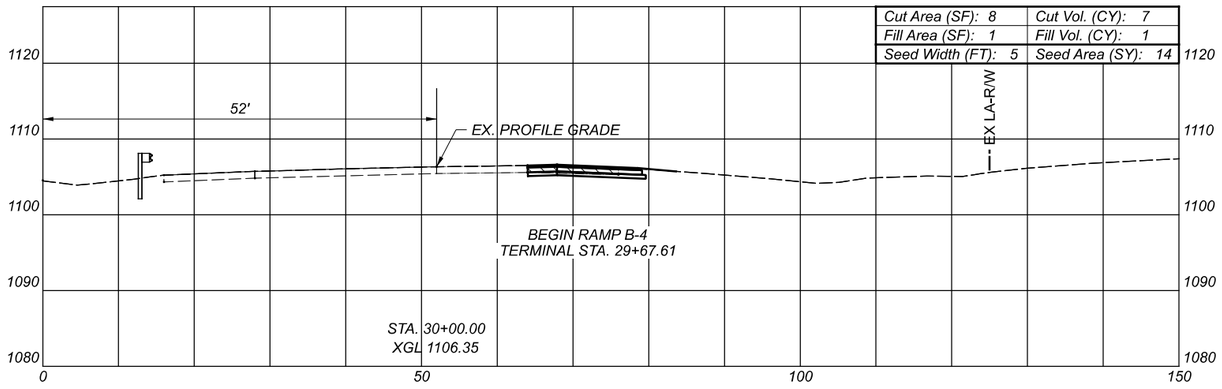

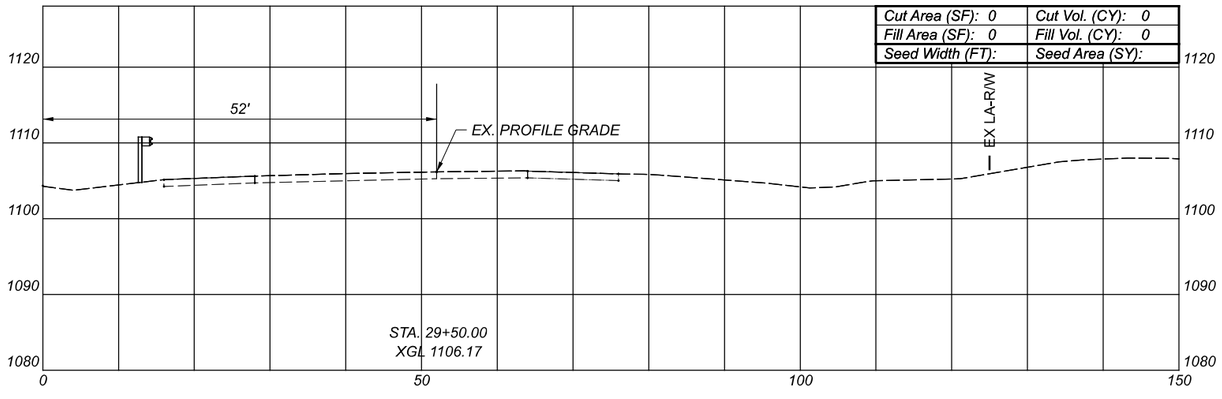

℄ R/W & CONSTRUCTION
I.R. 77 (TYP.)

LEGEND

ITEM 202 - PAVEMENT REMOVED

CROSS SECTIONS - I.R. 77 (RIGHT)
STA. 29+50 TO STA. 30+50

Sheet Totals		
Seeding	Cut	Fill
58	23	7

DESIGN AGENCY
EUTHENICS
8235 Mohawk Dr. | Cleveland, OH 44139

DESIGNER
DTB

REVIEWER
RAB 03/01/22

PROJECT ID
104983

SHEET P.164 | TOTAL P.434

CUY-77-00.42 PART 1

MODEL: CLX_I-77_Right - 29+50.00 R2-1(Sheet) PAPERSIZE: 17x11(in.) DATE: 3/4/2022 TIME: 1:34:12 PM USER: esmccaslin
F:\Jobs\162-Miller Road Interchange\104983\400-Engineering\Roadway\Sheets\104983_XS101.dgn

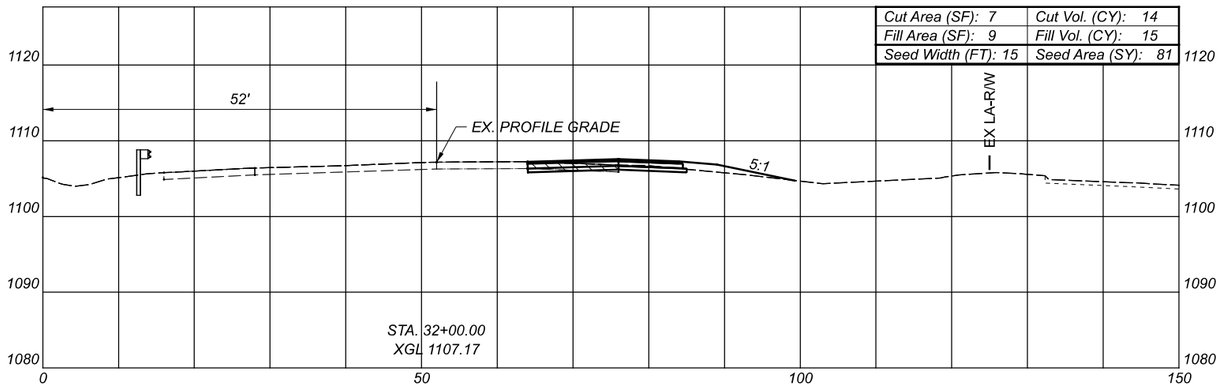

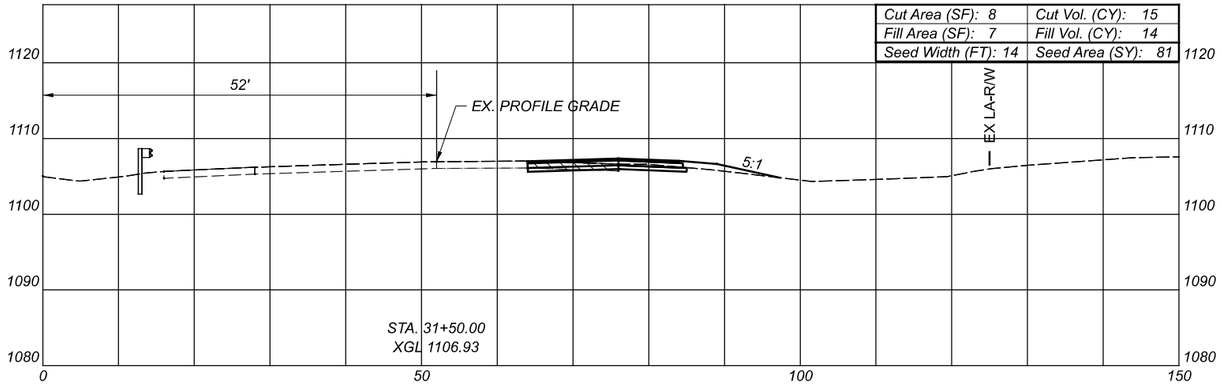

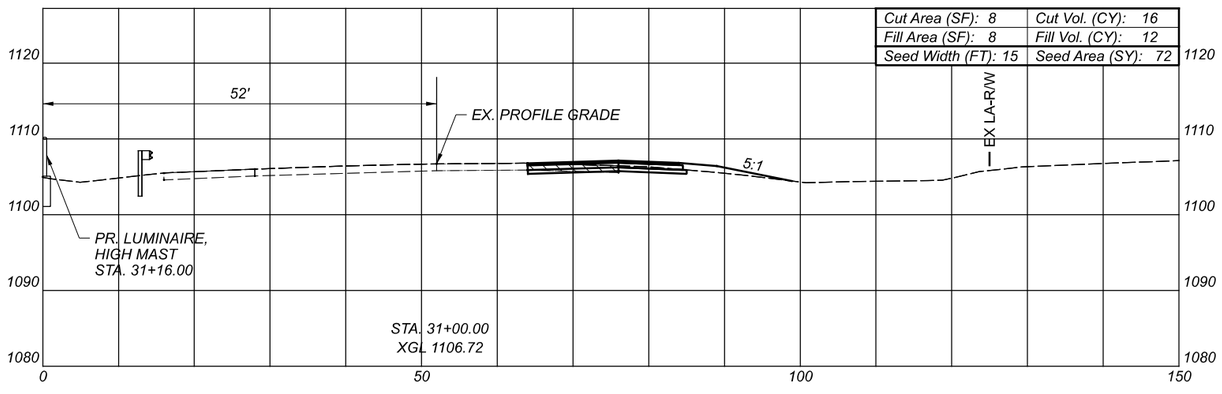

℄ R/W & CONSTRUCTION
I.R. 77 (TYP.)

LEGEND

ITEM 202 - PAVEMENT REMOVED

CROSS SECTIONS - I.R. 77 (RIGHT)
STA. 31+00 TO STA. 32+00

DESIGN AGENCY
EUTHENICS
8225 Midwest Dr. | Cleveland, OH 44130

DESIGNER
DTB

REVIEWER
RAB 03/01/22

PROJECT ID
104983

Sheet Totals		
Seeding	Cut	Fill
234	45	41

SHEET P.165 TOTAL P.434

CUY-77-00.42 PART 1

MODEL: CLX_I-77_Right - 31+00,00 R2+[Sheet] PAPERSIZE: 17x11(in.) DATE: 3/4/2022 TIME: 1:34:4 PM USER: esmccaslin
F:\Jobs\162-Miller Road Interchange\104983\400-Engineering\Roadway\Sheets\104983_XS101.dgn

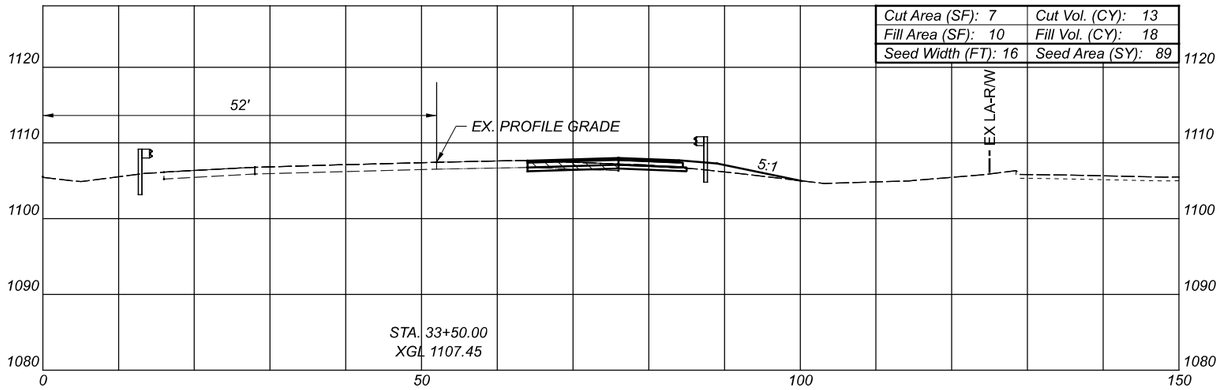

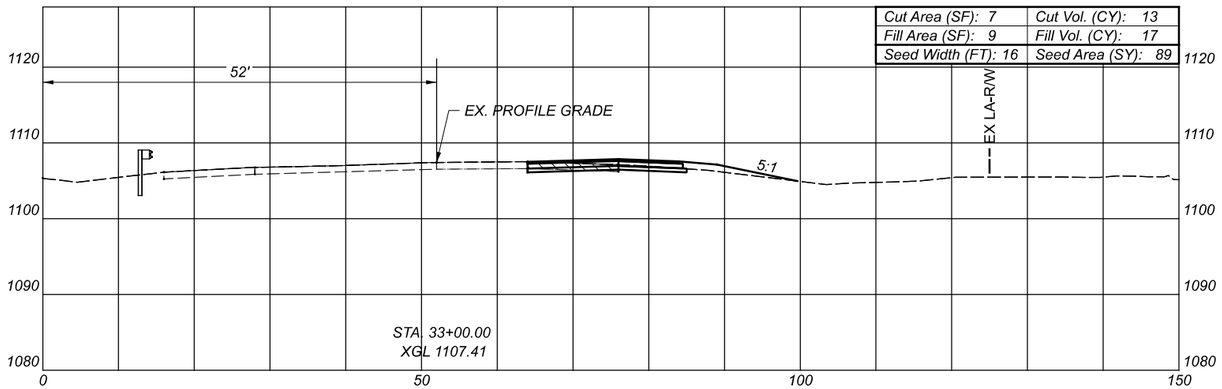

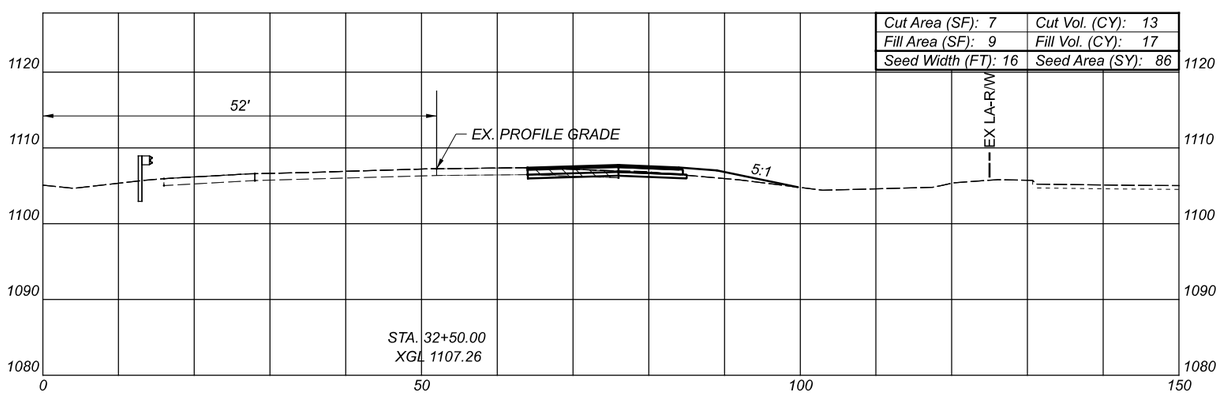

℄ R/W & CONSTRUCTION
I.R. 77 (TYP.)

LEGEND

ITEM 202 - PAVEMENT REMOVED

CROSS SECTIONS - I.R. 77 (RIGHT)
STA. 32+50 TO STA. 33+50

CUY-77-00.42 PART 1

MODEL: CLX_I-77_Right - 32+50.00 R2-1(Sheet) PAPERSIZE: 17x11(in.) DATE: 3/4/2022 TIME: 1:34:16 PM USER: esmccasiln
F:\Jobs\162-Miller Road Interchange\104983\400-Engineering\Roadway\Sheets\104983_XS101.dgn

DESIGN AGENCY
EUTHENICS
8235 Mohawk Dr. | Cleveland, OH 44139

DESIGNER
DTB

REVIEWER
RAB 03/01/22

PROJECT ID
104983

Sheet Totals		
Seeding	Cut	Fill
264	39	52

SHEET P.166 TOTAL P.434

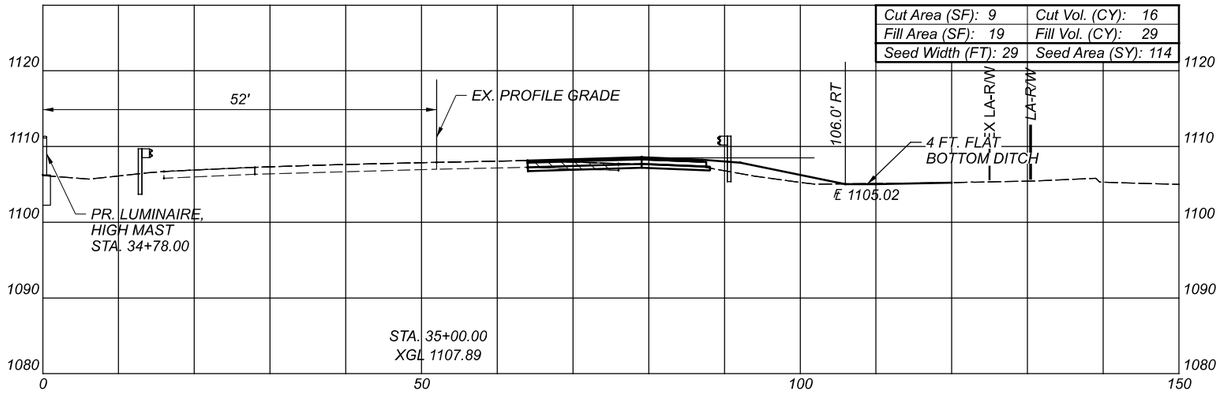

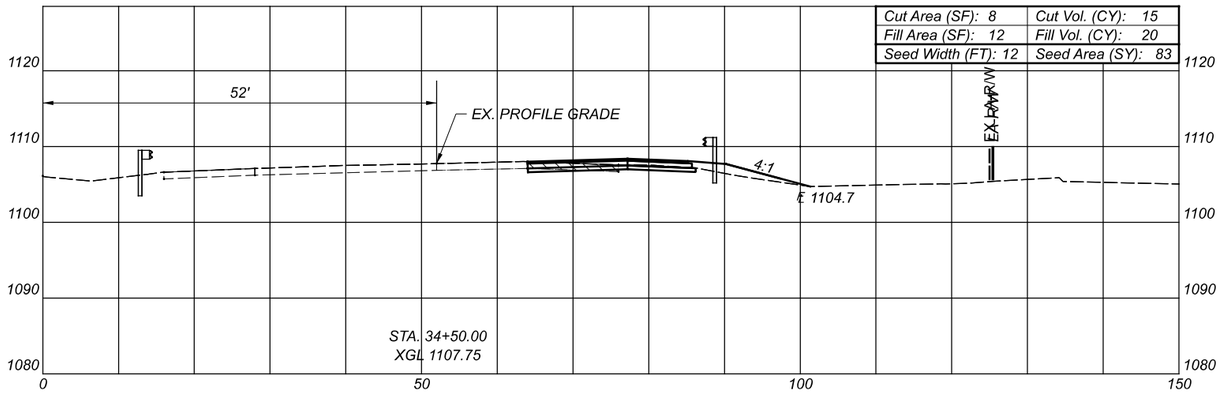

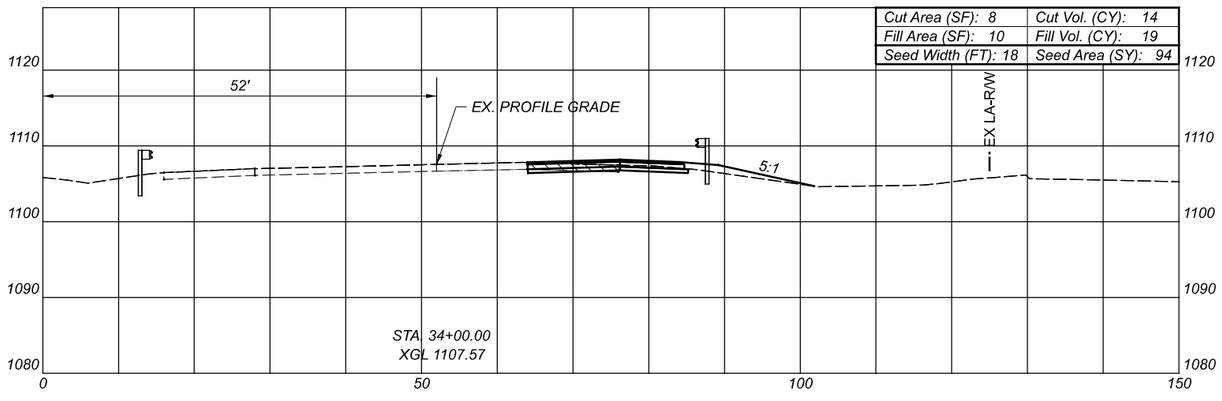

℄ R/W & CONSTRUCTION
I.R. 77 (TYP.)

LEGEND

ITEM 202 - PAVEMENT REMOVED

CROSS SECTIONS - I.R. 77 (RIGHT)
STA. 34+00 TO STA. 35+00

CUY-77-00.42 PART 1

MODEL: CLX_I-77_Right - 34+00.00 R2-1[Sheet] PAPERSIZE: 17x11(in.) DATE: 3/4/2022 TIME: 1:34:18 PM USER: esmccaslin
F:\Jobs\162-Miller Road Interchange\104983\400-Engineering\Roadway\Sheets\104983_XS101.dgn

DESIGN AGENCY
EUTHENICS
8235 Mohawk Dr. | Cleveland, OH 44139

DESIGNER
DTB

REVIEWER
RAB 03/01/22

PROJECT ID
104983

Sheet Totals		
Seeding	Cut	Fill
291	45	68

SHEET	TOTAL
P.167	P.434

CROSS SECTIONS - I.R. 77 (RIGHT)
STA. 35+50

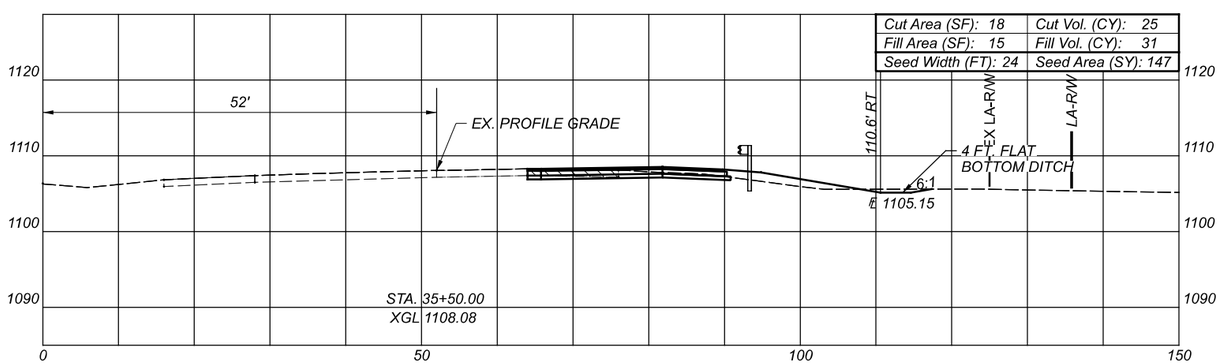

℄ R/W & CONSTRUCTION
I.R. 77 (TYP.)

LEGEND

ITEM 202 - PAVEMENT REMOVED

DESIGN AGENCY
EUTHENICS
8235 Mohawk Dr. | Cleveland, OH 44139

DESIGNER
DTB
REVIEWER
RAB 03/01/22
PROJECT ID
104983

Sheet Totals		
Seeding	Cut	Fill
147	25	31

SHEET	TOTAL
P.168	P.434

CUY-77-00.42 PART 1

MODEL: CLX_I-77_Right - 35+50.00 R2-1(Sheet) PAPERSIZE: 17x11(in.) DATE: 3/4/2022 TIME: 1:34:20 PM USER: esmccaslin
F:\Jobs\16\2-Miller Road Interchange\104983\400-Engineering\Roadway\Sheets\104983_XS101.dgn

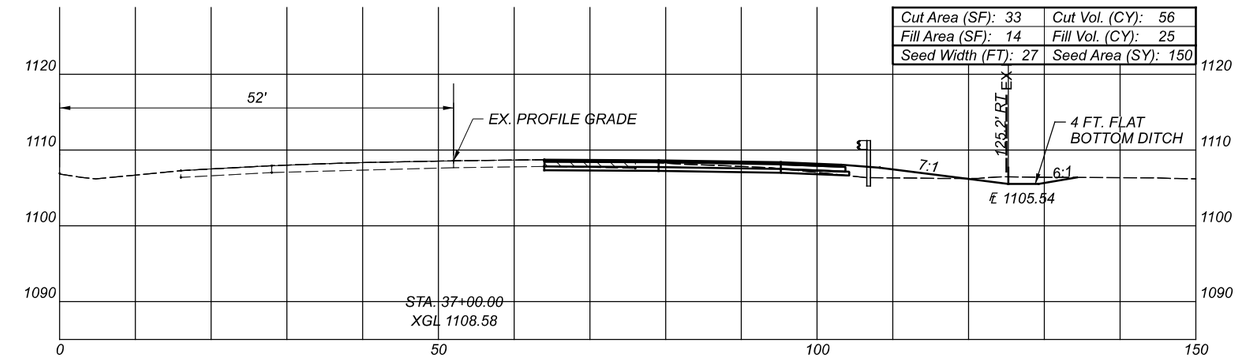

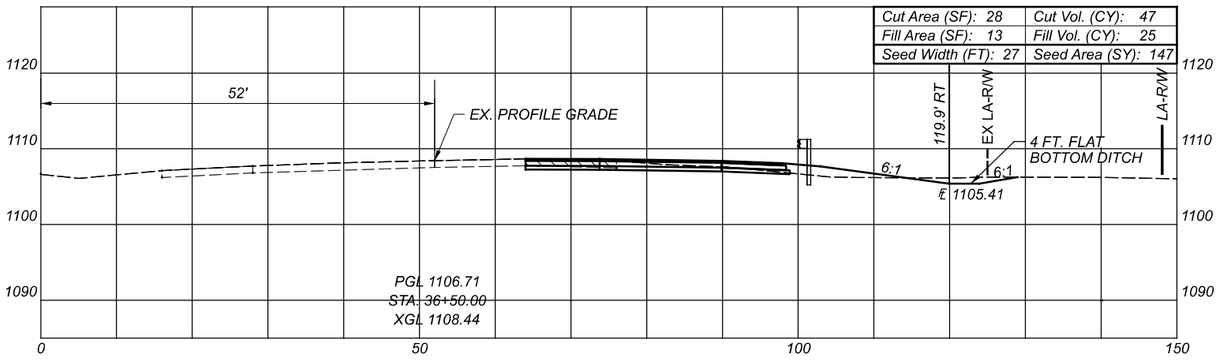

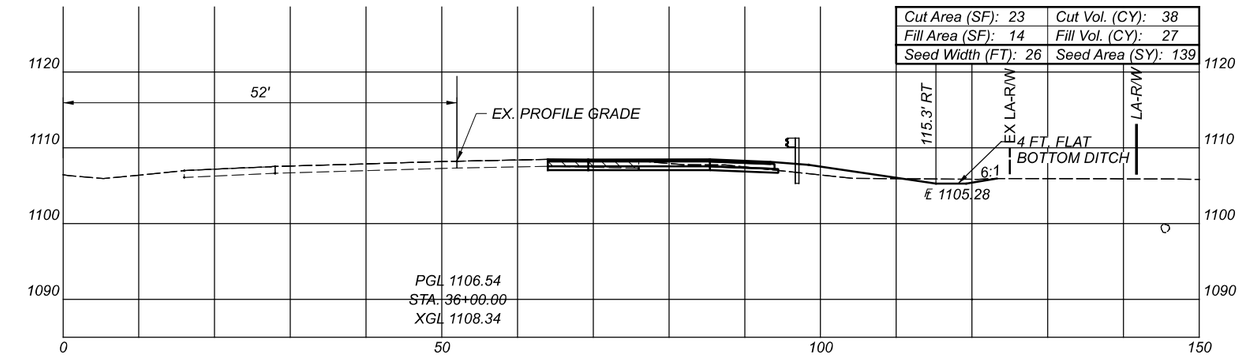

℄ R/W & CONSTRUCTION
I.R. 77 (TYP.)

LEGEND

ITEM 202 - PAVEMENT REMOVED

CROSS SECTIONS - I.R. 77 (RIGHT)
STA. 36+00 TO STA. 37+00

DESIGN AGENCY
EUTHENICS
8235 Hobart Dr. | Cleveland, OH 44125

DESIGNER
DTB

REVIEWER
RAB 03/01/22

PROJECT ID
104983

Sheet Totals		
Seeding	Cut	Fill
436	141	77

SHEET P.169 TOTAL P.434

CUY-77-00.42 PART 1

MODEL: CLX_I-77_Right - 36+00.00 R2 [Sheet] PAPERSIZE: 17x11(in.) DATE: 3/4/2022 TIME: 11:34:22 PM USER: esmccaslin
F:\Jobs\162-Miller Road Interchange\104983\400-Engineering\Roadway\Sheets\104983_XS101.dgn

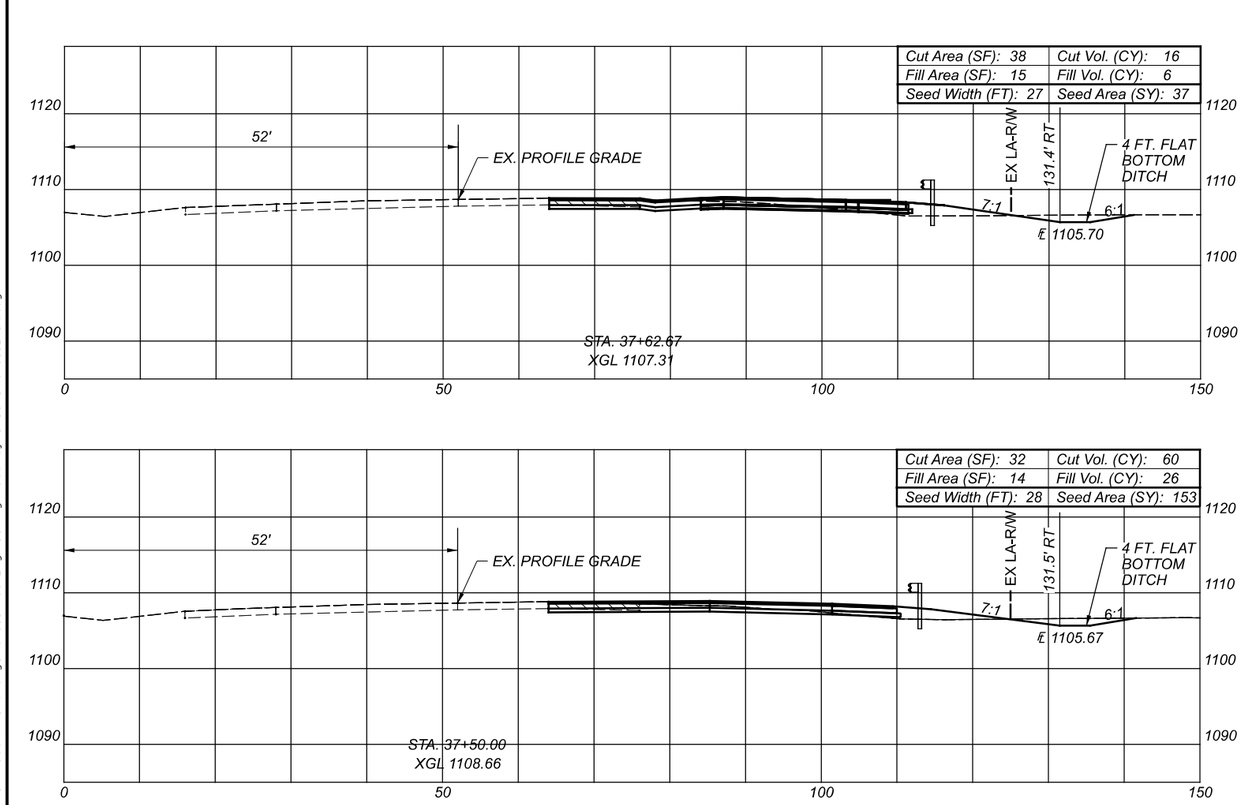

℄ R/W & CONSTRUCTION
I.R. 77 (TYP.)

LEGEND

ITEM 202 - PAVEMENT REMOVED

CROSS SECTIONS - I.R. 77 (RIGHT)
STA. 37+50 TO STA. 37+62.67

DESIGN AGENCY
EUTHENICS
8235 Mohawk Dr. | Cleveland, OH 44125

DESIGNER
DTB

REVIEWER
RAB 03/01/22

PROJECT ID
104983

Sheet Totals		
Seeding	Cut	Fill
190	76	32

SHEET P.170 TOTAL P.434

CUY-77-00.42 PART 1

MODEL: CLX-I-77_Right - 37+50.00 R2 (Sheet1 PAPERSIZE: 17x11(in.) DATE: 3/4/2022 TIME: 1:34:24 PM USER: esmccaslin
F:\Jobs\1162-Miller Road Interchange\104983\400-Engineering\Roadway\Sheets\104983_XS101.dgn

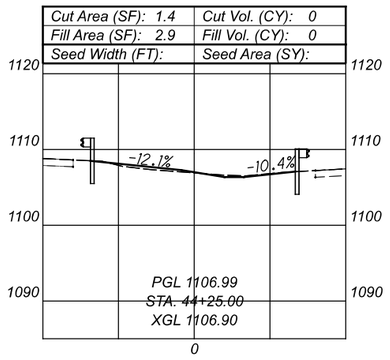

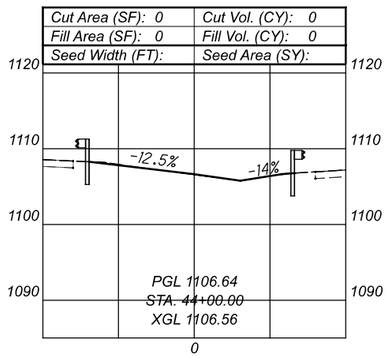

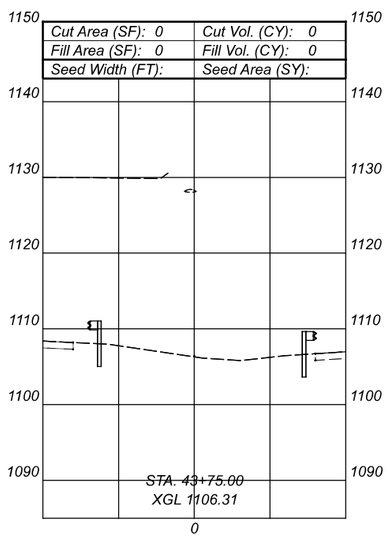

CUY-77-00.42 PART 1

MODEL: CLX_I-77_N of Miller - 43+75.00 R2-1(Sheet1 PAPERSIZE:17x11(in.) DATE: 3/4/2022 TIME: 11:34:26 PM USER: esmccaslin
F:\Jobs\162-Miller Road Interchange\104983\400-Engineering\Roadway\Sheets\104983_XS101.dgn

CROSS SECTIONS - I.R. 77
STA. 43+75 TO STA. 44+25

DESIGN AGENCY
EUTHENICS
8235 Mohawk Dr. | Cleveland, OH 44139

DESIGNER
DTB

REVIEWER
RAB 03/01/22

PROJECT ID
104983

Sheet Totals		
Seeding	Cut	Fill

SHEET P.171 TOTAL P.434

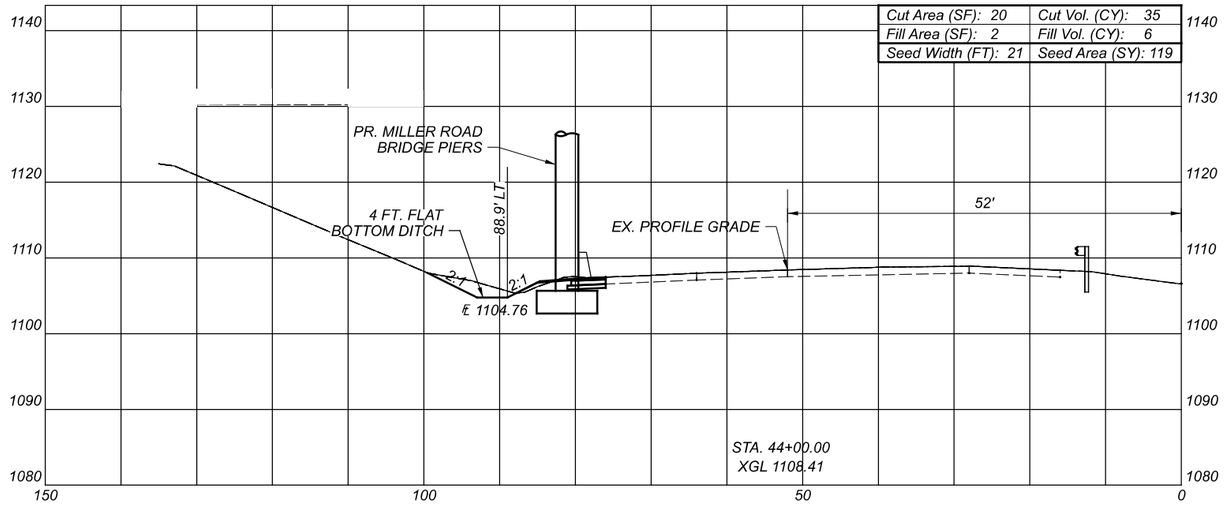

Cut Area (SF): 20	Cut Vol. (CY): 35
Fill Area (SF): 2	Fill Vol. (CY): 6
Seed Width (FT): 21	Seed Area (SY): 119

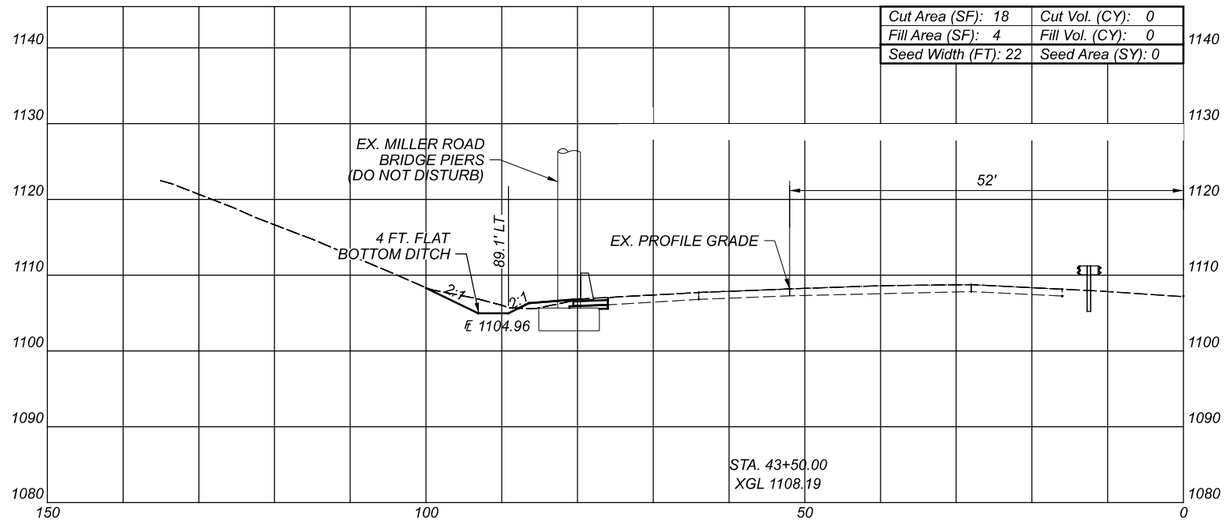

Cut Area (SF): 18	Cut Vol. (CY): 0
Fill Area (SF): 4	Fill Vol. (CY): 0
Seed Width (FT): 22	Seed Area (SY): 0

CROSS SECTIONS - I.R. 77 (LEFT)
STA. 43+50 TO STA. 44+00

CUY-77-00.42 PART 1

MODEL: CLX_I-77_Left - 43+00.00 R2 [Sheet] PAPERSIZE: 17x11(in.) DATE: 3/4/2022 TIME: 1:34:28 PM USER: esmccaslin
F:\Jobs\1162-Miller Road Interchange\104983\400-Engineering\Roadway\Sheets\104983_XS101.dgn

DESIGN AGENCY
EUTHENICS
8235 Mohawk Dr. | Cleveland, OH 44129

DESIGNER
DTB

REVIEWER
RAB 03/01/22

PROJECT ID
104983

Sheet Totals		
Seeding	Cut	Fill
119	35	6

SHEET P.172 TOTAL P.434

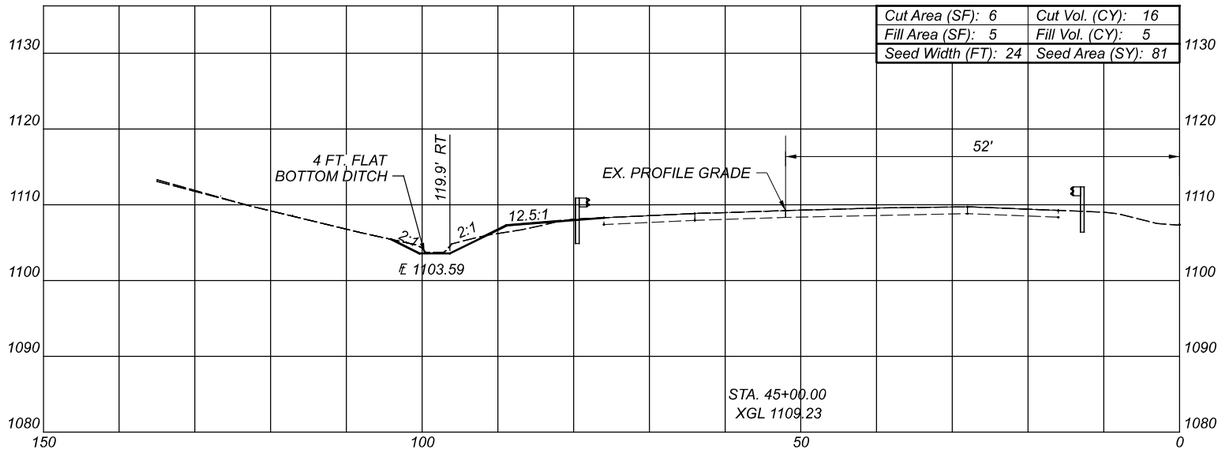

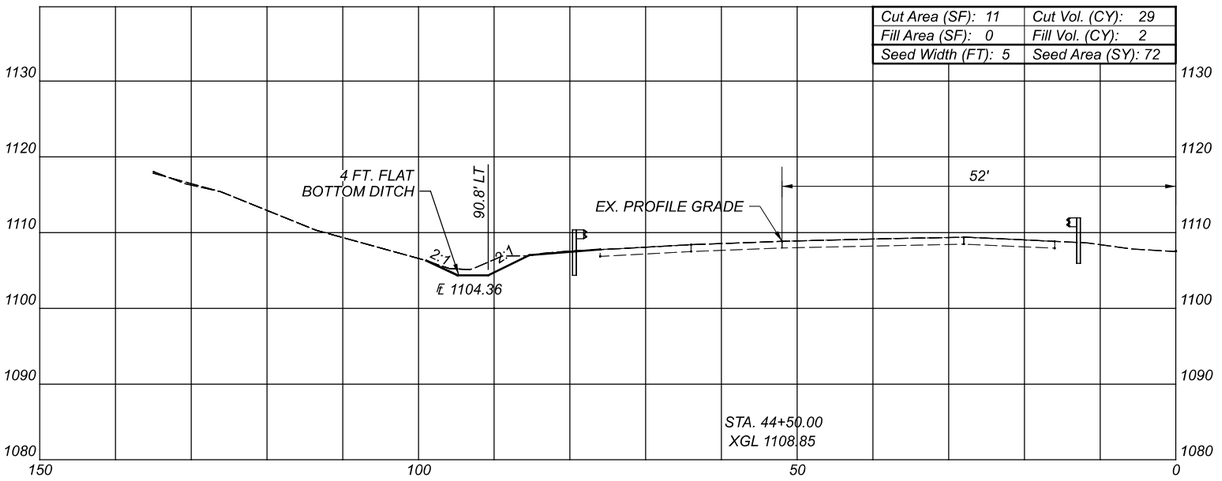

CROSS SECTIONS - I.R. 77 (LEFT)
STA. 44+50 TO STA. 45+00

CUY-77-00.42 PART 1

MODEL: CLX_I-77_Left - 44+50.00 R2 [Sheet] PAPERSIZE: 17x11 (in.) DATE: 3/4/2022 TIME: 1:34:30 PM USER: esmccaslin
F:\Jobs\11162-Miller Road Interchange\104983\400-Engineering\Roadway\Sheets\104983_XS101.dgn

DESIGN AGENCY
EUTHENICS
8235 Mohawk Dr. | Cleveland, OH 44529

DESIGNER
DTB

REVIEWER
RAB 03/01/22

PROJECT ID
104983

Sheet Totals		
Seeding	Cut	Fill
153	45	7

SHEET P.173 TOTAL P.434

LEGEND

ITEM 202 - PAVEMENT REMOVED

SPECIAL BENCHING

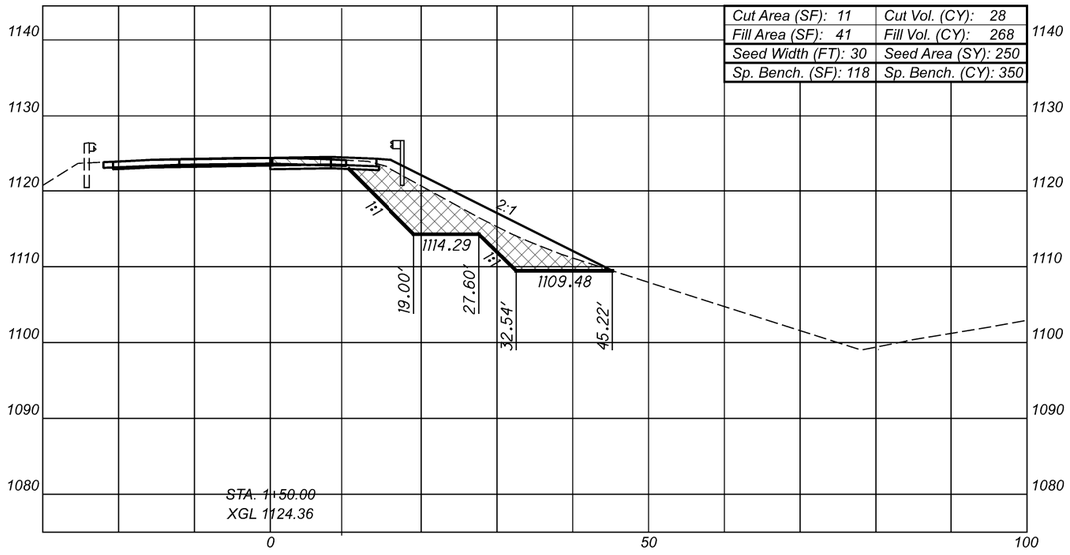

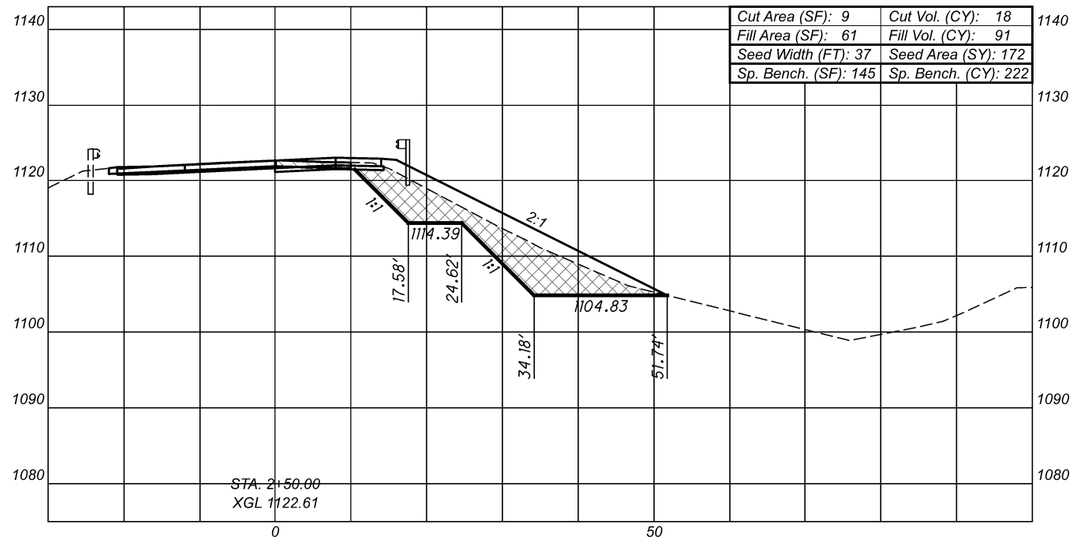

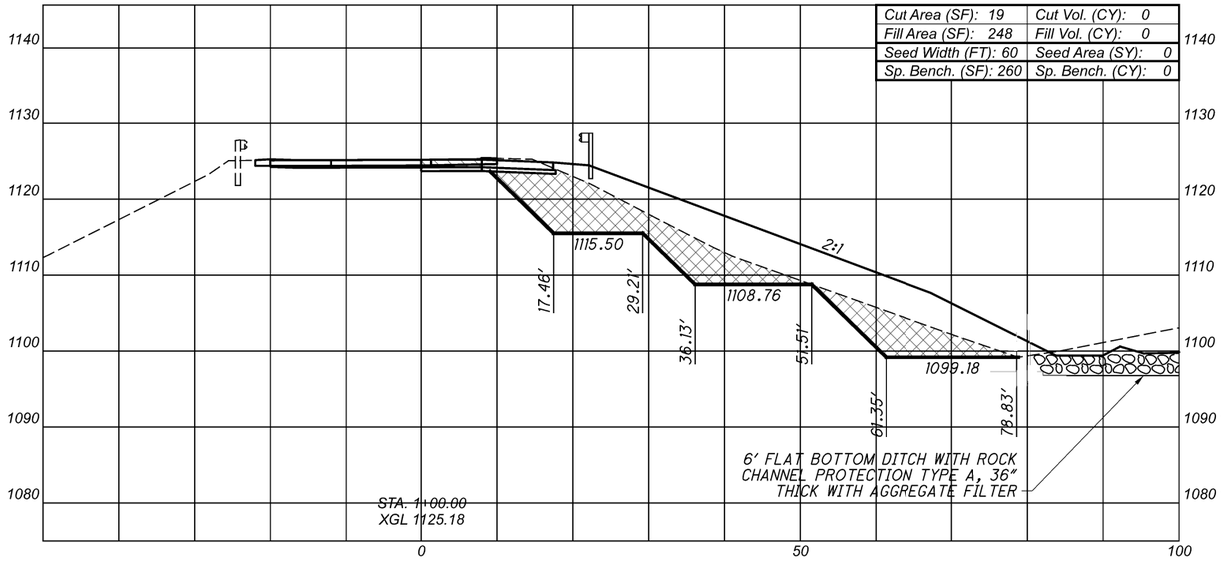

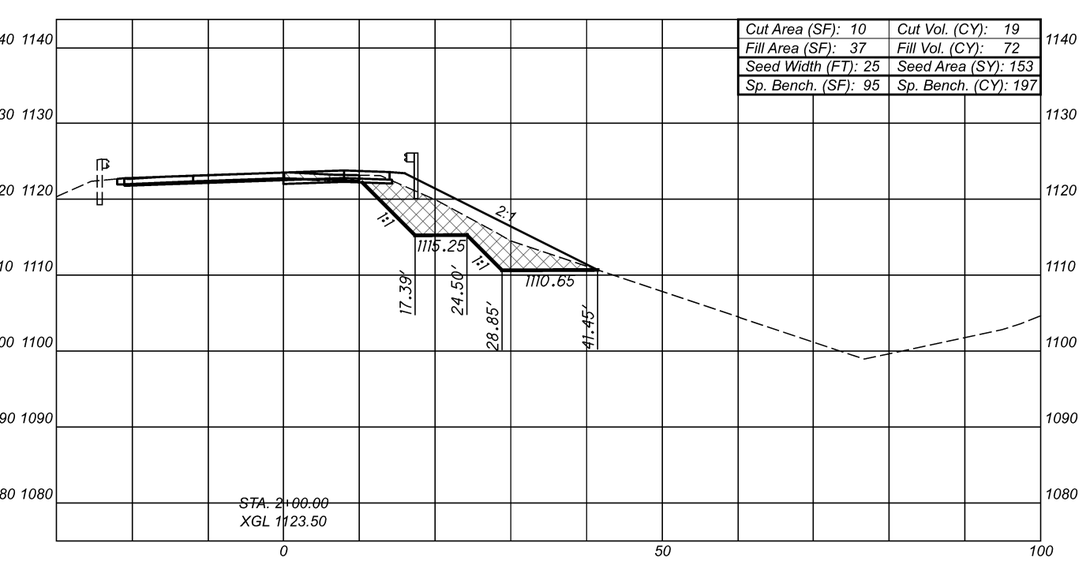

CROSS SECTIONS - RAMP B-1
STA. 1+00 TO STA. 2+50

DESIGN AGENCY
EUTHENICS
8235 Mohawk Dr. | Cleveland, OH 44125

DESIGNER	DTB
REVIEWER	RAB 03/01/22
PROJECT ID	104983
SHEET	P.174
TOTAL	P.434

Sheet Totals

Seeding	Cut	Fill
575	834	1200

CUY-77-00.42 PART 1

MODEL: BLX_R077BI - 1+00.00 R2-4 [Sheet] PAPERSIZE: 17x11 (in.) DATE: 3/4/2022 TIME: 1:34:40 PM USER: esmccaslin
F:\Jobs\1162-Miller Road Interchange\104983\400-Engineering\Roadway\Sheets\104983_XS201.dgn

CROSS SECTIONS - RAMP B-1
STA. 3+00 TO STA. 4+50

LEGEND

ITEM 202 - PAVEMENT REMOVED

SPECIAL BENCHING

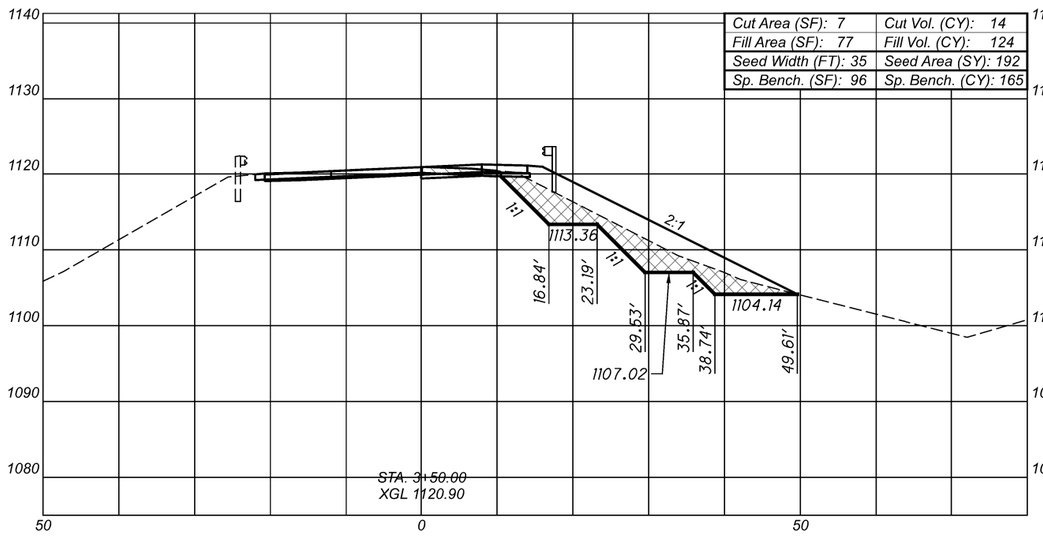

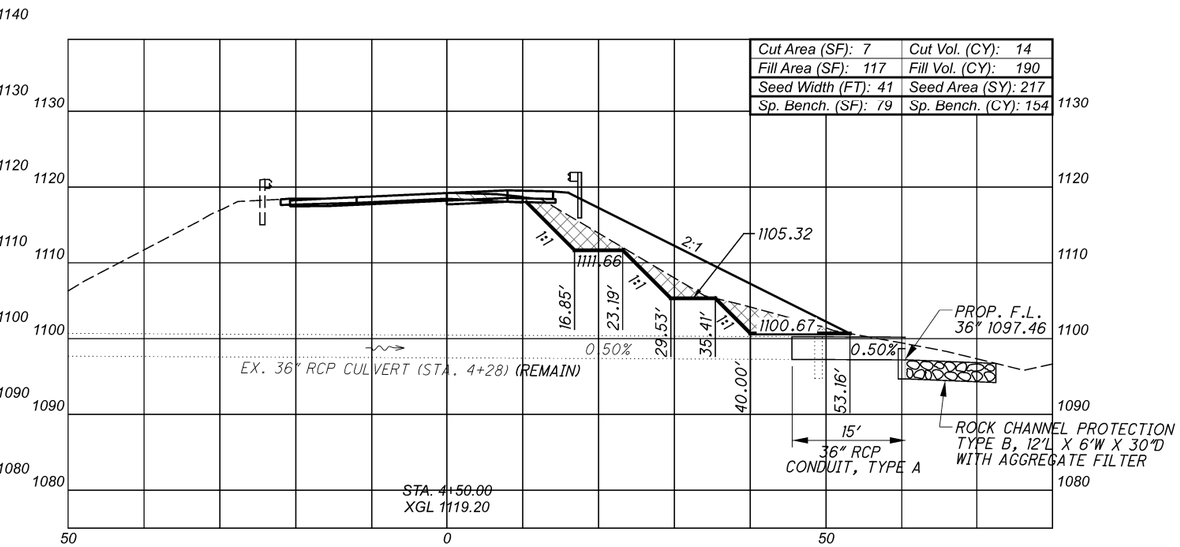

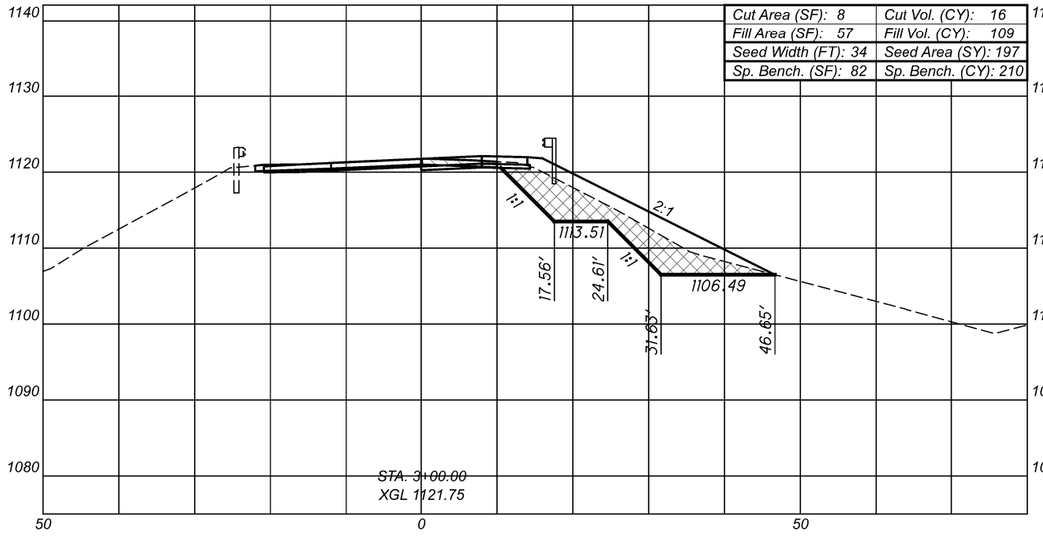

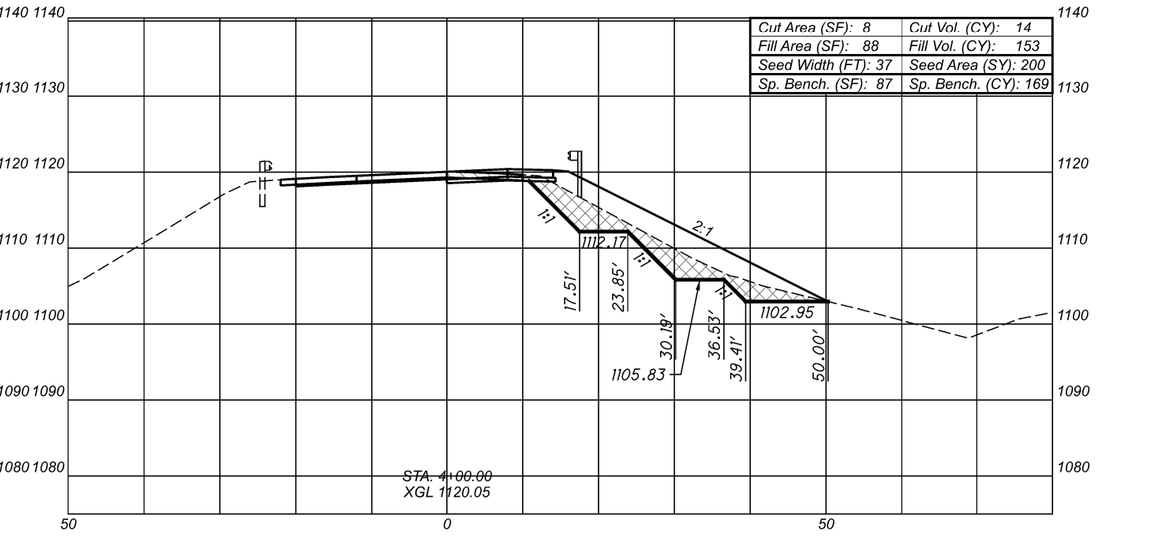

CUY-77-00.42 PART 1

MODEL: BLX_R077BI - 3+00.00 R2-4 [Sheet] PAPERSIZE: 17x11(in.) DATE: 3/4/2022 TIME: 1:34:54 PM USER: esmccasiin
F:\Jobs\1162-Miller Road Interchange\104983\400-Engineering\Roadway\Sheets\104983_XS201.dgn

DESIGN AGENCY
EUTHENICS
8235 Mohawk Dr. | Cleveland, OH 44125

DESIGNER
DTB

REVIEWER
RAB 03/01/22

PROJECT ID
104983

Sheet Totals		
Seeding	Cut	Fill
806	756	1274

SHEET P.175 TOTAL P.434

CROSS SECTIONS - RAMP B-1
STA. 5+00 TO STA. 6+50

LEGEND

ITEM 202 - PAVEMENT REMOVED

SPECIAL BENCHING

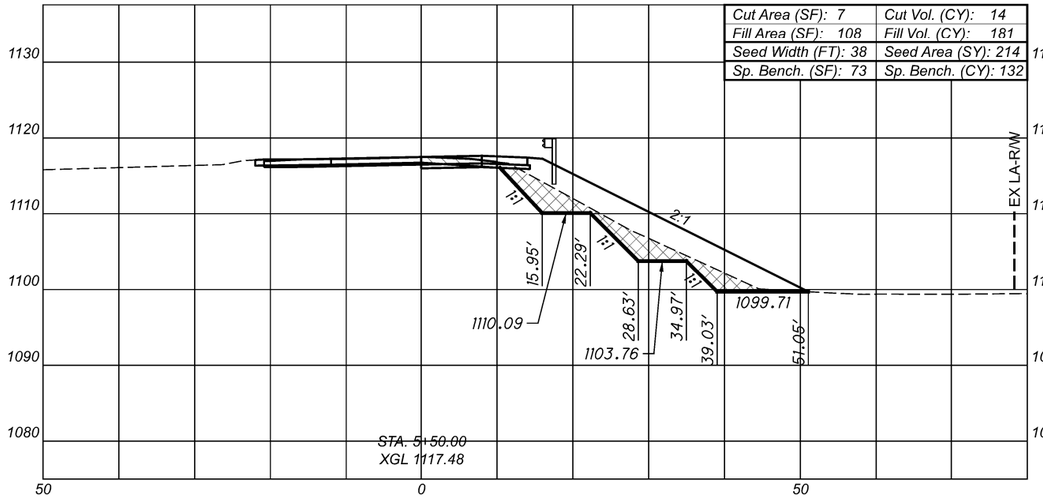

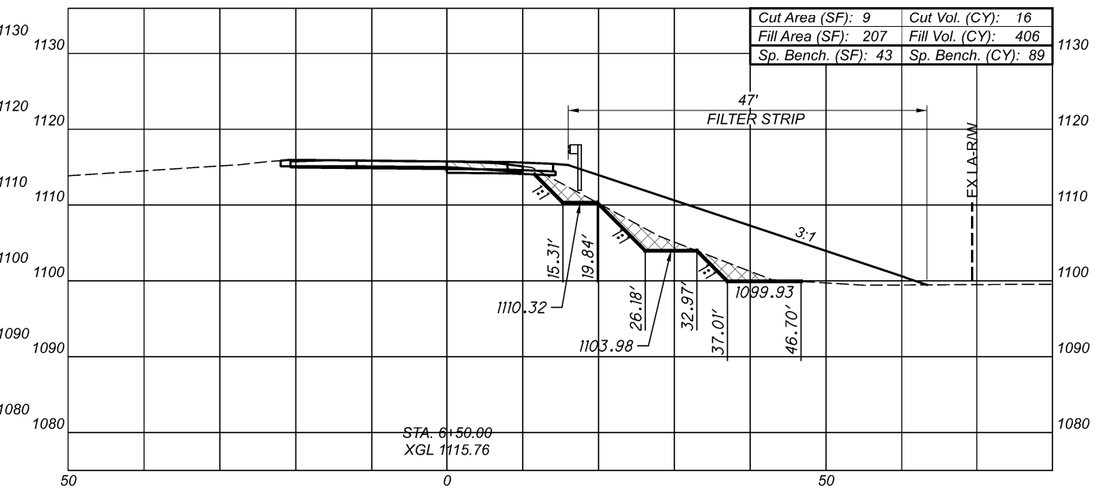

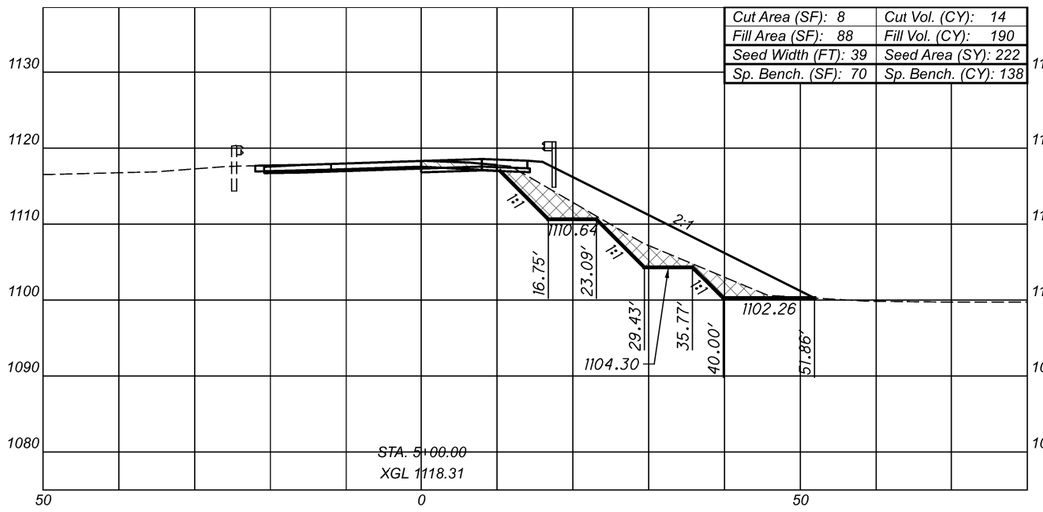

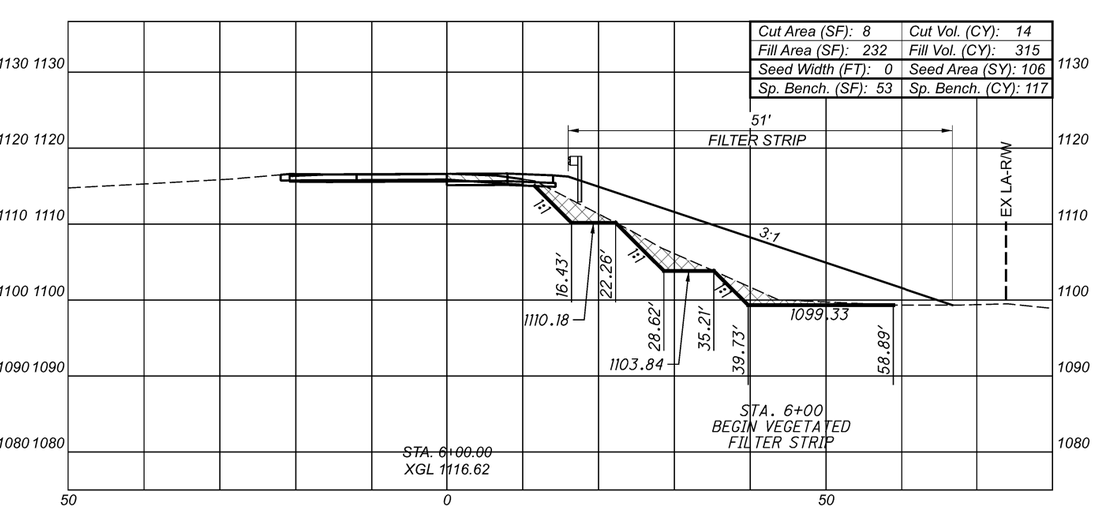

Sheet Totals		
Seeding	Cut	Fill
542	534	1568

DESIGN AGENCY
EUTHENICS
8235 Mohawk Dr. | Cleveland, OH 44125

DESIGNER	DTB
REVIEWER	RAB 03/01/22
PROJECT ID	104983
SHEET	P.176
TOTAL	P.434

CUY-77-00.42 PART 1

MODEL: BLX_R077BI - 5+00.00 R2-4 [Sheet] PAPERSIZE: 17x11 (in.) DATE: 3/4/2022 TIME: 1:35:08 PM USER: esmccaslin
F:\Jobs\162-Miller Road Interchange\104983\400-Engineering\Roadway\Sheets\104983_XS201.dgn

CROSS SECTIONS - RAMP B-1
STA. 7+00 TO STA. 9+50

LEGEND

ITEM 202 - PAVEMENT REMOVED

SPECIAL BENCHING

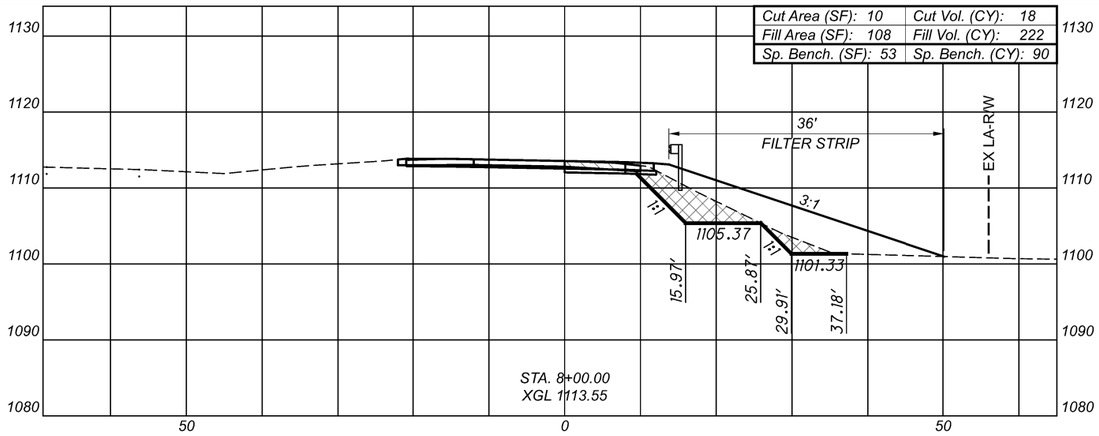

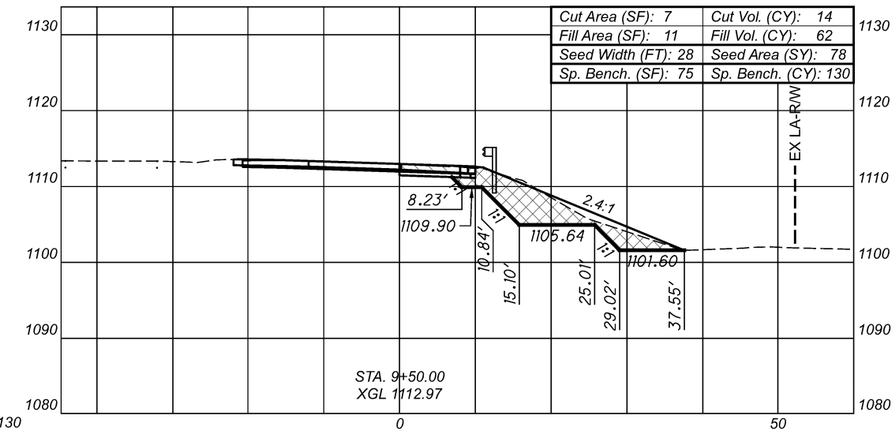

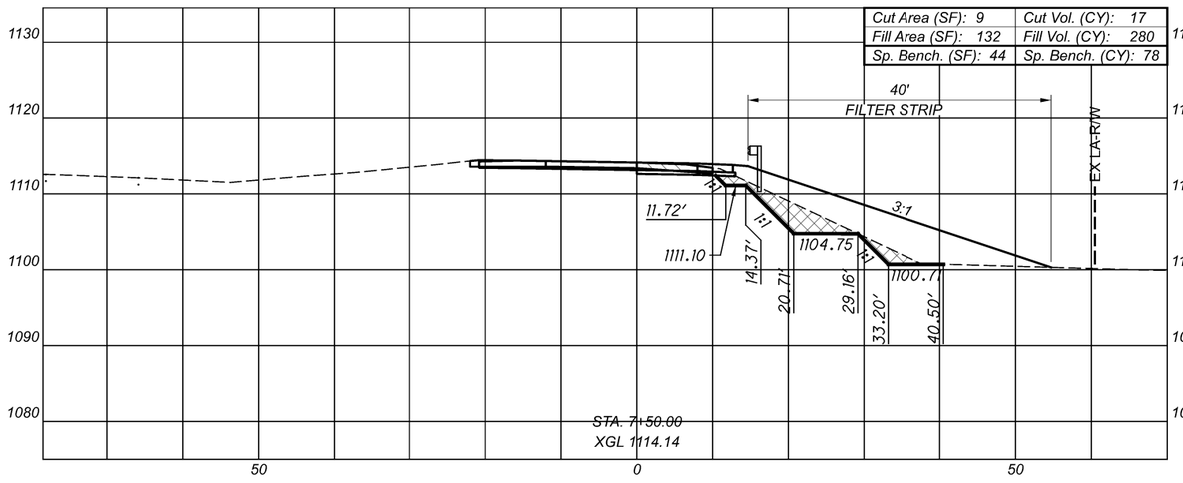

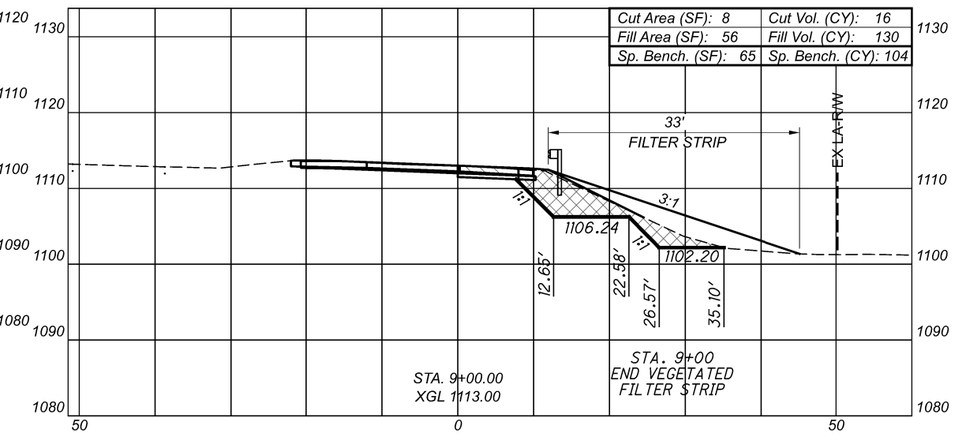

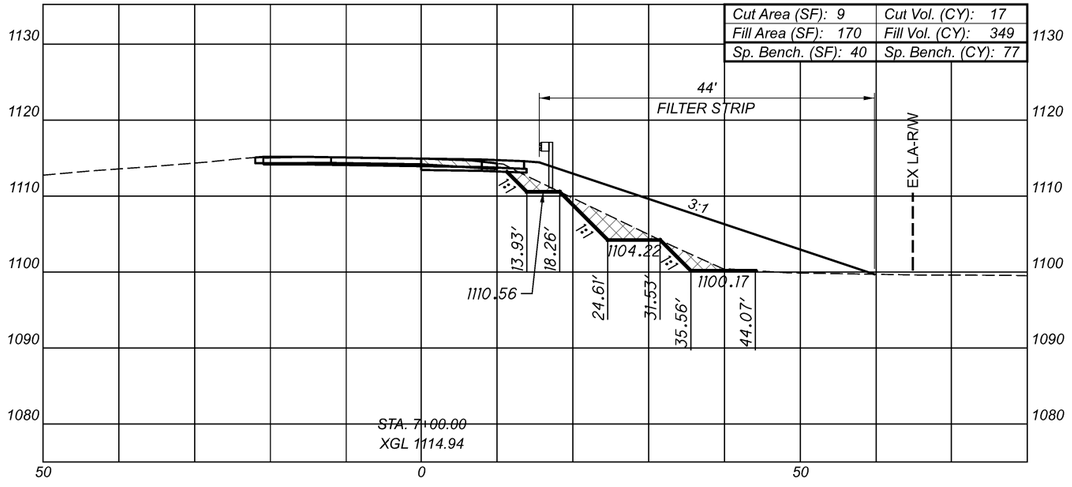

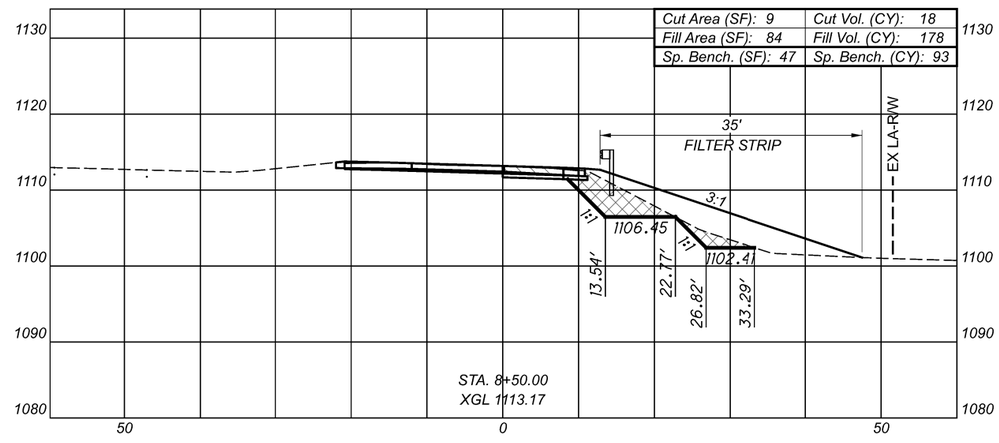

Sheet Totals		
Seeding	Cut	Fill
78	672	1793

DESIGN AGENCY
EUTHENICS
8235 Mohawk Dr. | Cleveland, OH 44125

DESIGNER
DTB

REVIEWER
RAB 03/01/22

PROJECT ID
104983

SHEET P.177 TOTAL P.434

CUY-77-00.42 PART 1

MODEL: BLX_R07TBI - 7+00.00 R2-4 (Sheet) PAPERSIZE: ITxII(in.) DATE: 3/4/2022 TIME: 1:35:21PM USER: esmccaslin
F:\Jobs\162-Miller Road Interchange\104983\400-Engineering\Roadway\Sheets\104983_XS201.dgn

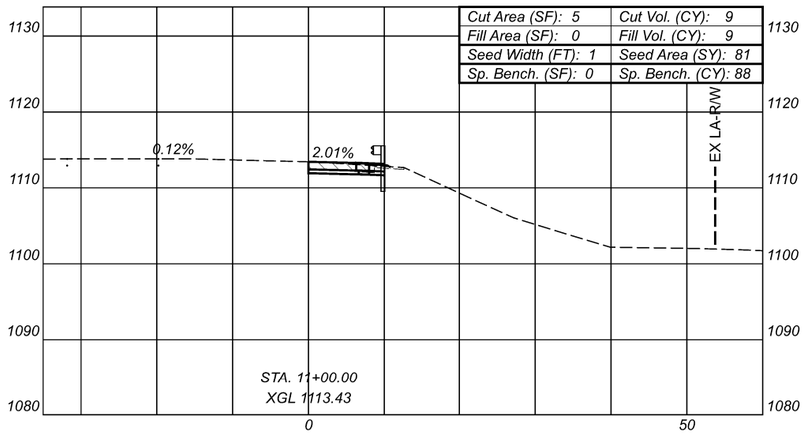

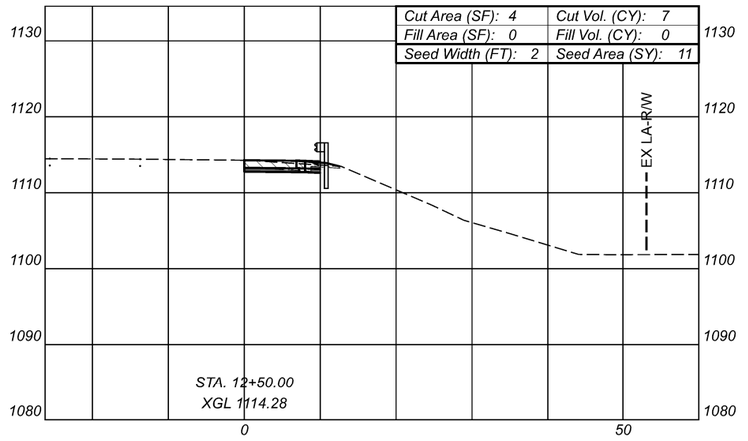

LEGEND

ITEM 202 - PAVEMENT REMOVED

SPECIAL BENCHING

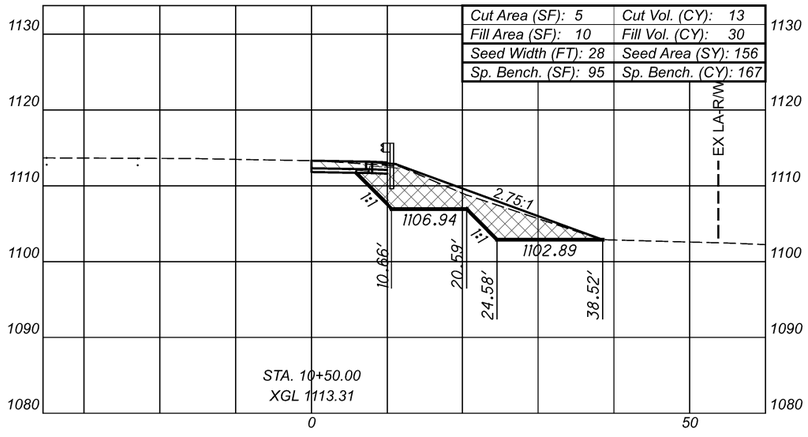

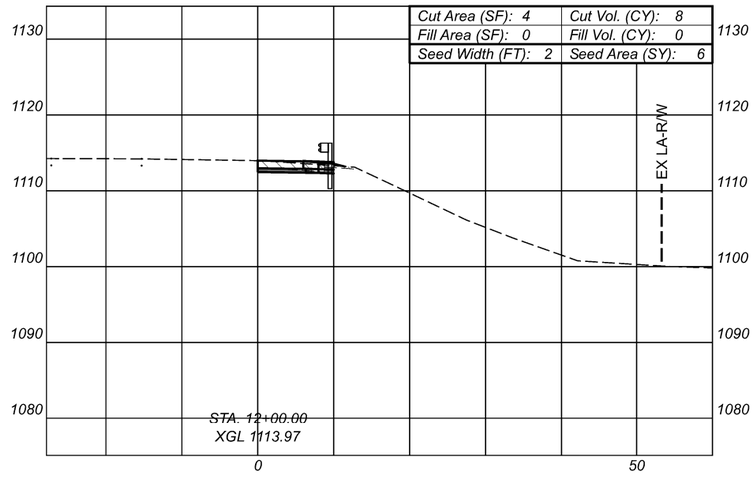

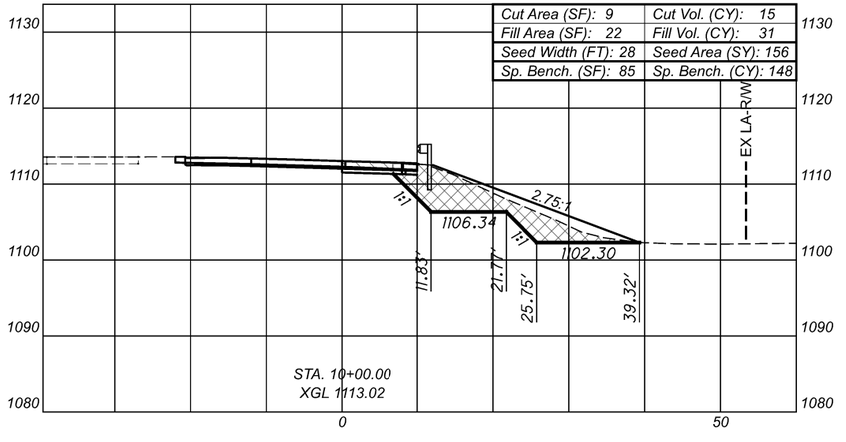

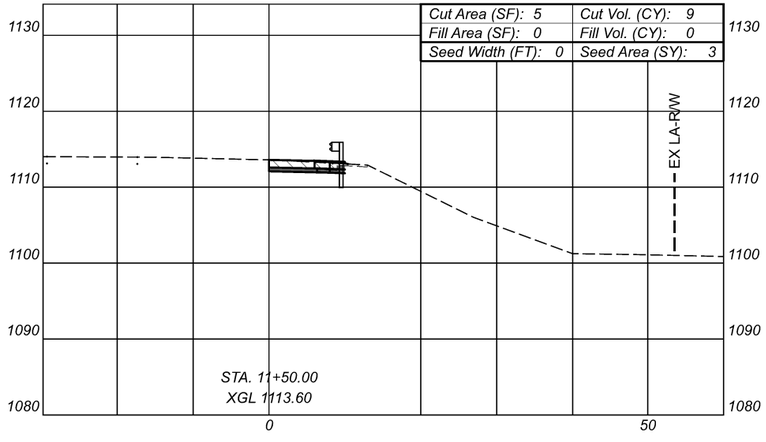

CROSS SECTIONS - RAMP B-1
STA. 10+00 TO STA. 12+50

DESIGN AGENCY
EUTHENICS
8235 Mohawk Dr. | Cleveland, OH 44125

DESIGNER
DTB

REVIEWER
RAB 03/01/22

PROJECT ID
104983

Sheet Totals		
Seeding	Cut	Fill
413	464	473

SHEET P.178 TOTAL P.434

CUY-77-00.42 PART 1

MODEL: BLX_R077BI - 10+00.00 R2-4 [Sheet] PAPERSIZE: 17x11(in.) DATE: 3/4/2022 TIME: 1:35:38 PM USER: esmccaslin
F:\Jobs\1162-Miller Road Interchange\104983\400-Engineering\Roadway\Sheets\104983_XS20.dgn

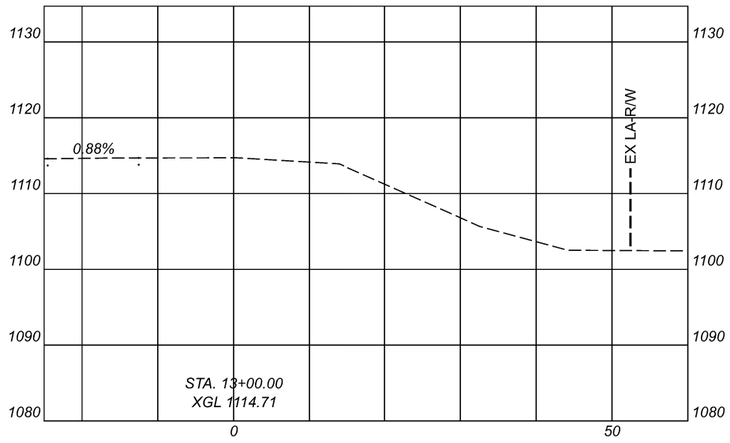

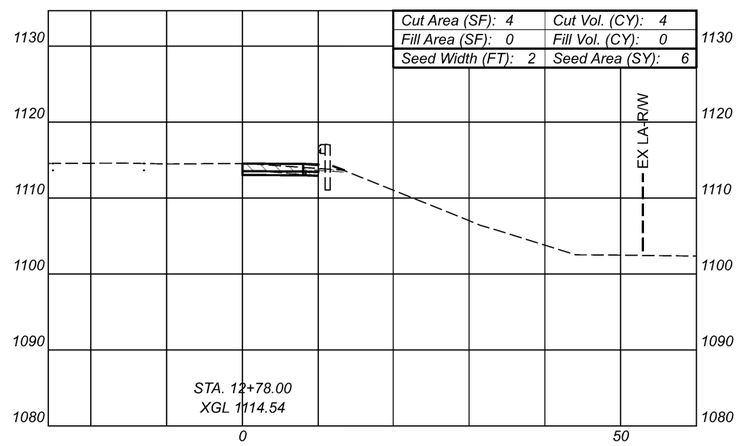

LEGEND

ITEM 202 - PAVEMENT REMOVED

CROSS SECTIONS - RAMP B-1
STA. 12+78 TO STA. 13+00

DESIGN AGENCY
EUTHENICS
8235 Mohawk Dr. | Cleveland, OH 44138

DESIGNER
DTB

REVIEWER
RAB 03/01/22

PROJECT ID
104983

Sheet Totals		
Seeding	Cut	Fill
6	4	0

SHEET P.179 TOTAL P.434

CUY-77-00.42 PART 1

MODEL: BLX_R077BI - I2+78-0.00-3 (Sheet1) PAPERSIZE: 17x11(in.) DATE: 3/4/2022 TIME: 1:35:54 PM USER: esmccaslin
F:\Jobs\1162-Miller Road Interchange\104983\400-Engineering\Roadway\Sheets\104983_XS201.dgn

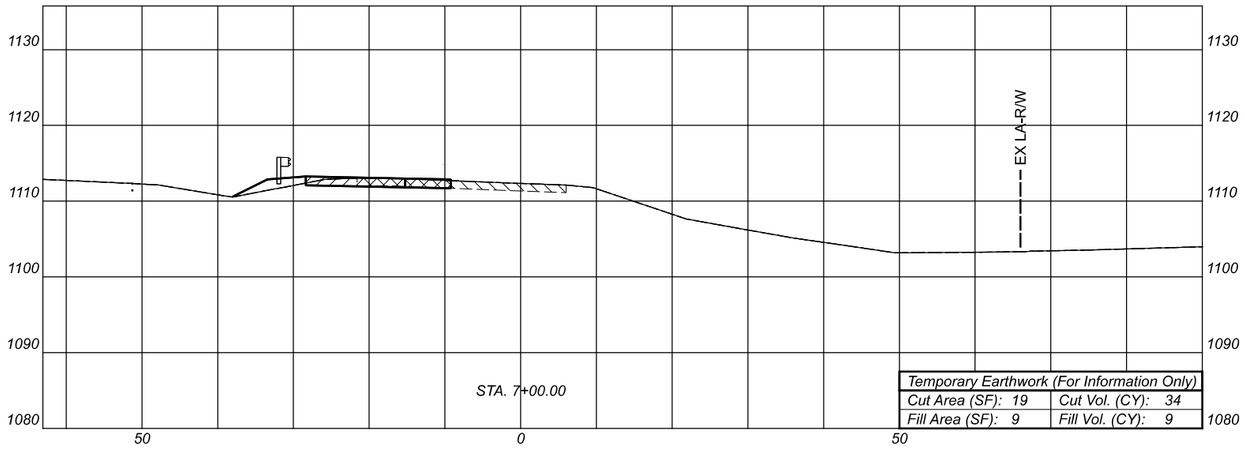

Temporary Earthwork (For Information Only)	
Cut Area (SF): 19	Cut Vol. (CY): 34
Fill Area (SF): 9	Fill Vol. (CY): 9

STA. 7+00.00

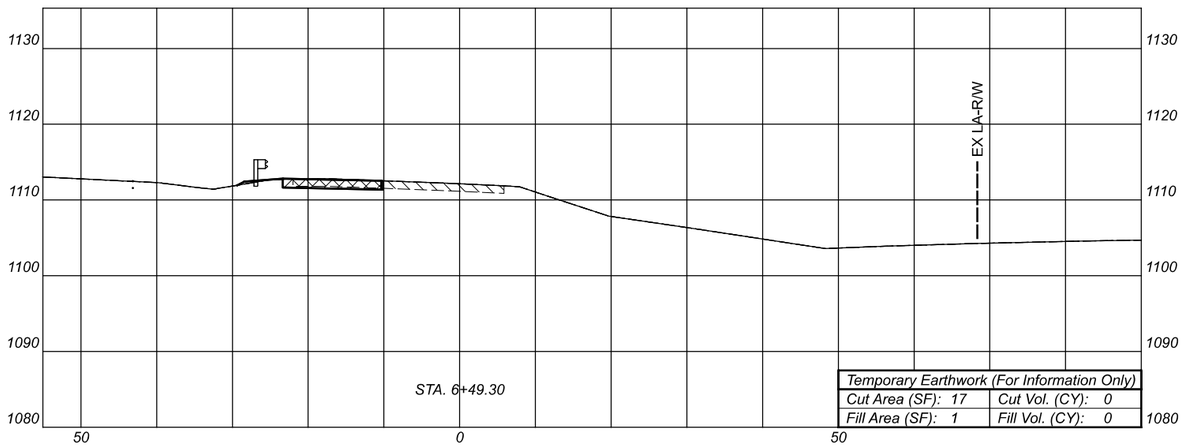

Temporary Earthwork (For Information Only)	
Cut Area (SF): 17	Cut Vol. (CY): 0
Fill Area (SF): 1	Fill Vol. (CY): 0

STA. 6+49.30

LEGEND

ITEM 202 - PAVEMENT REMOVED

ITEM 615 - TEMPORARY PAVEMENT

CROSS SECTIONS - RAMP B-2
STA. 6+49.30 TO STA. 7+00

CUY-77-00.42 PART 1

MODEL: P_BLP_R077B2 - 6+49.30 R2 [Sheet] PAPERSIZE: 17x11(in.) DATE: 3/4/2022 TIME: 11:36:28 PM USER: esmccaslin
F:\Jobs\1162-Miller Road Interchange\104983\400-Engineering\Roadway\Sheets\104983_XS30i.dgn

DESIGN AGENCY
EUTHENICS
8225 Mohawk Dr. | Cleveland, OH 44139

DESIGNER
DTB

REVIEWER
RAB 03/01/22

PROJECT ID
104983

Sheet Totals	
Temp. Cut	Temp. Fill
34	9

SHEET P.180 TOTAL P.434

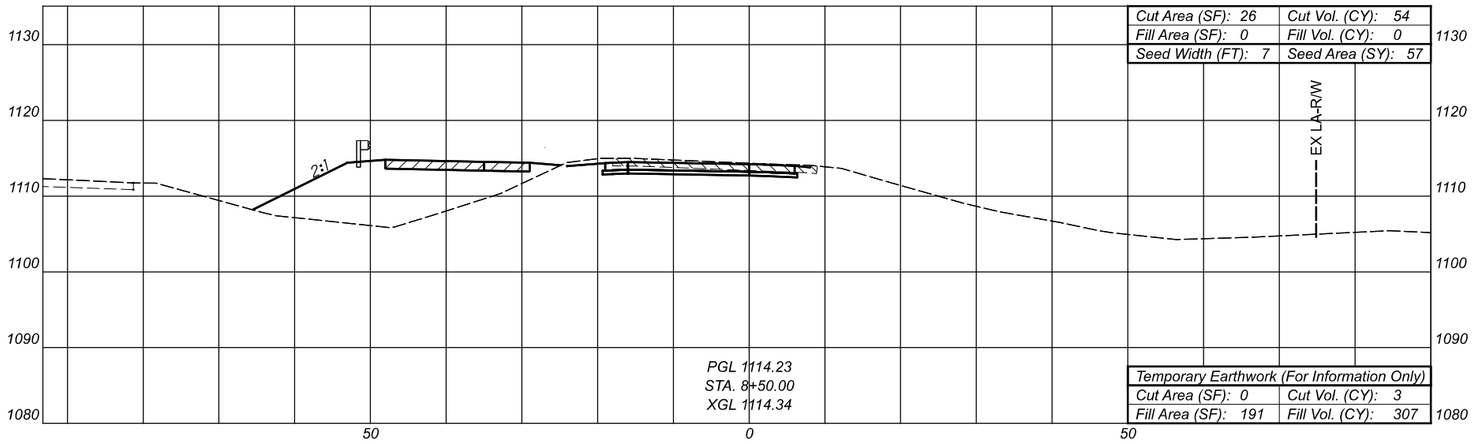

Cut Area (SF): 26	Cut Vol. (CY): 54
Fill Area (SF): 0	Fill Vol. (CY): 0
Seed Width (FT): 7	Seed Area (SY): 57

Temporary Earthwork (For Information Only)	
Cut Area (SF): 0	Cut Vol. (CY): 3
Fill Area (SF): 191	Fill Vol. (CY): 307

LEGEND

ITEM 202 - PAVEMENT REMOVED

ITEM 615 - TEMPORARY PAVEMENT

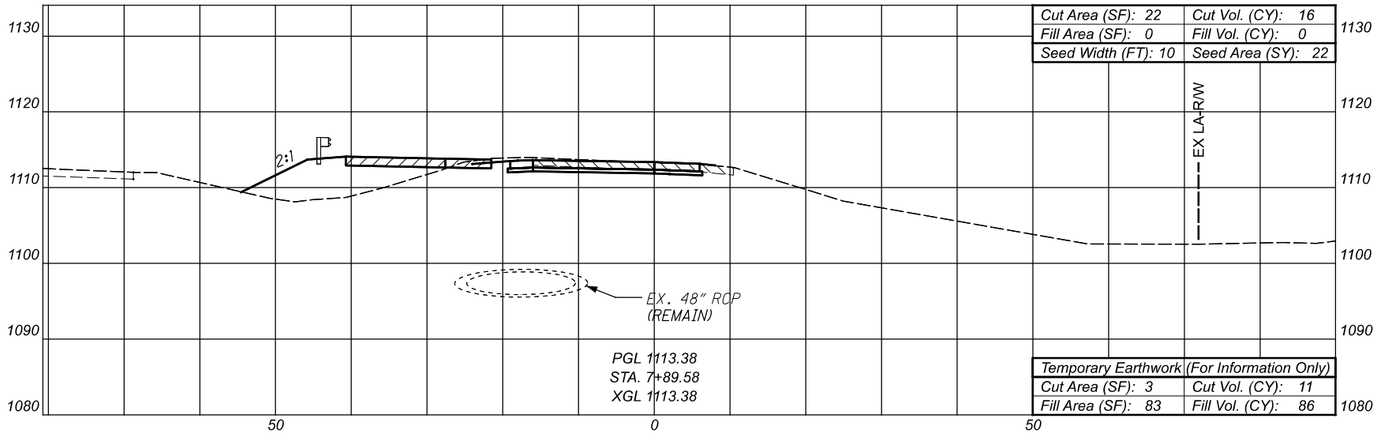

Cut Area (SF): 22	Cut Vol. (CY): 16
Fill Area (SF): 0	Fill Vol. (CY): 0
Seed Width (FT): 10	Seed Area (SY): 22

Temporary Earthwork (For Information Only)	
Cut Area (SF): 3	Cut Vol. (CY): 11
Fill Area (SF): 83	Fill Vol. (CY): 86

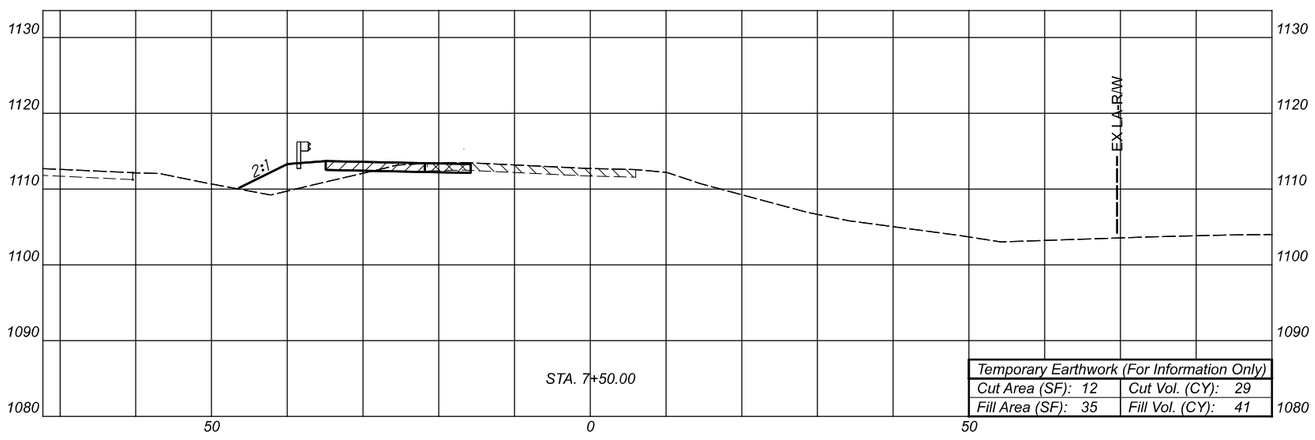

Temporary Earthwork (For Information Only)	
Cut Area (SF): 12	Cut Vol. (CY): 29
Fill Area (SF): 35	Fill Vol. (CY): 41

Sheet Totals				
Seeding	Cut	Fill	Temp. Cut	Temp. Fill
79	70	0	43	434

CROSS SECTIONS - RAMP B-2
STA. 7+50 TO STA. 8+50

DESIGN AGENCY
EUTHENICS
8235 Mohawk Dr. | Cleveland, OH 44125

DESIGNER DTB

REVIEWER RAB 03/01/22

PROJECT ID 104983

SHEET P.181 TOTAL P.434

CUY-77-00.42 PART 1

MODEL: P_BLP_R07TB2 - 7+89.58-4 [Sheet1] PAPERSIZE: 17x11(in.) DATE: 3/4/2022 TIME: 1:36:31 PM USER: esmccasiln
F:\Jobs\11162-Miller Road Interchange\104983\400-Engineering\Roadway\Sheets\104983_XS301.dgn

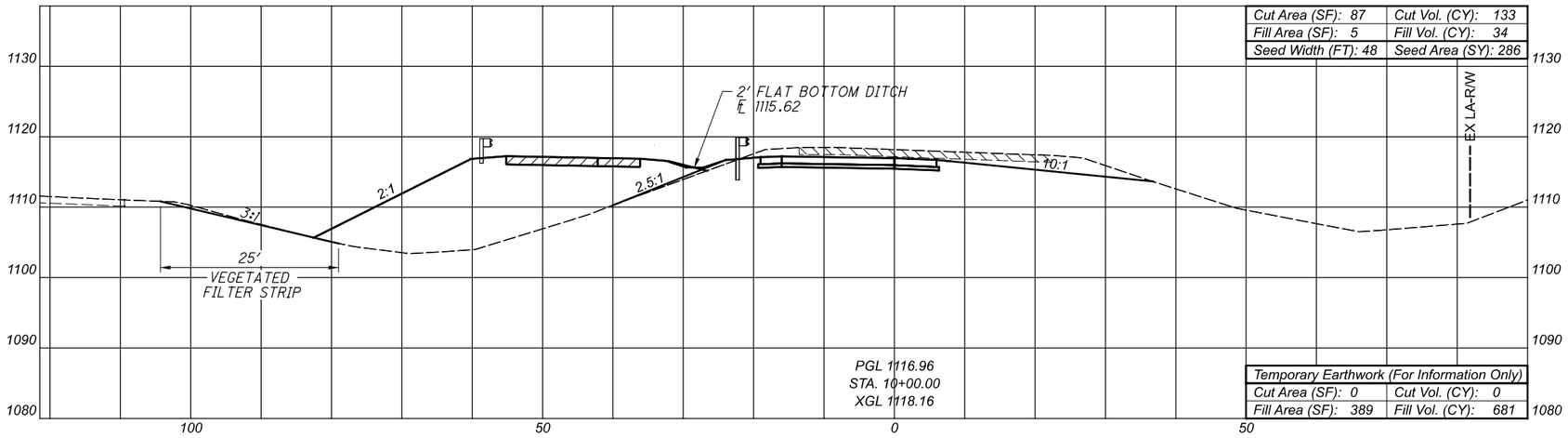

Cut Area (SF): 87	Cut Vol. (CY): 133
Fill Area (SF): 5	Fill Vol. (CY): 34
Seed Width (FT): 48	Seed Area (SY): 286

Temporary Earthwork (For Information Only)	
Cut Area (SF): 0	Cut Vol. (CY): 0
Fill Area (SF): 389	Fill Vol. (CY): 681

LEGEND

ITEM 202 - PAVEMENT REMOVED

ITEM 615 - TEMPORARY PAVEMENT

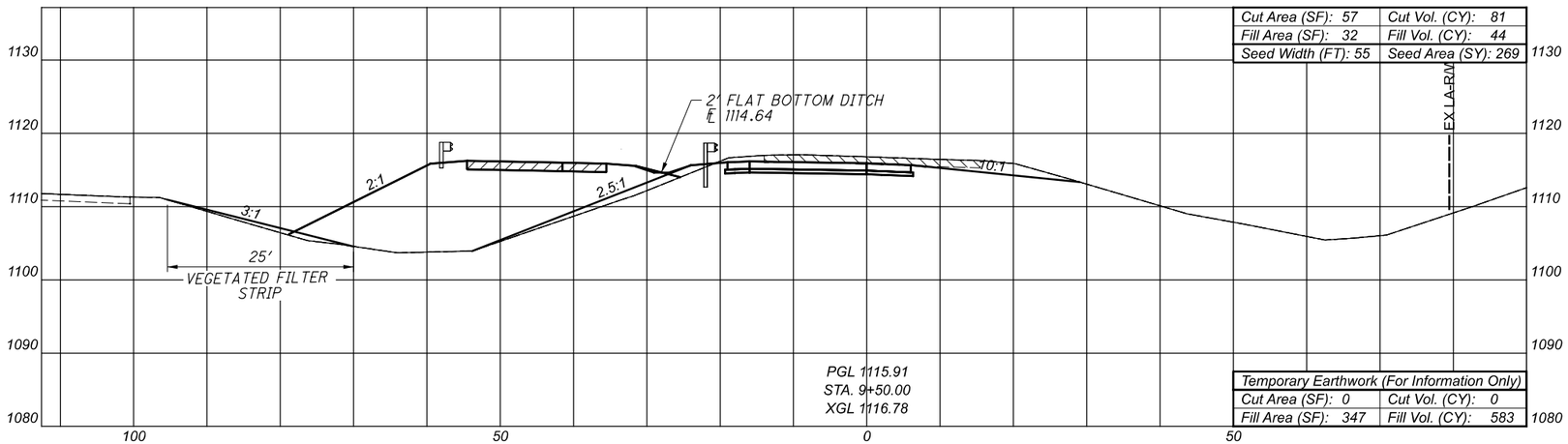

Cut Area (SF): 57	Cut Vol. (CY): 81
Fill Area (SF): 32	Fill Vol. (CY): 44
Seed Width (FT): 55	Seed Area (SY): 269

Temporary Earthwork (For Information Only)	
Cut Area (SF): 0	Cut Vol. (CY): 0
Fill Area (SF): 347	Fill Vol. (CY): 583

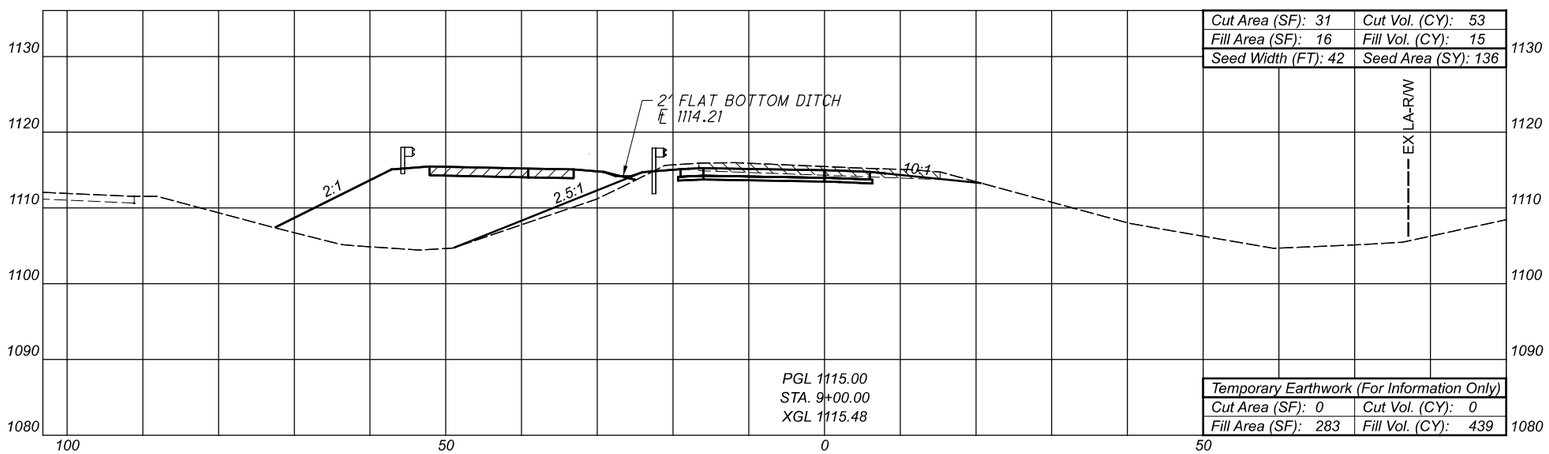

Cut Area (SF): 31	Cut Vol. (CY): 53
Fill Area (SF): 16	Fill Vol. (CY): 15
Seed Width (FT): 42	Seed Area (SY): 136

Temporary Earthwork (For Information Only)	
Cut Area (SF): 0	Cut Vol. (CY): 0
Fill Area (SF): 283	Fill Vol. (CY): 439

CROSS SECTIONS - RAMP B-2
STA. 9+00 TO STA. 10+00

Sheet Totals				
Seeding	Cut	Fill	Temp. Cut	Temp. Fill
691	267	93	0	1703

DESIGN AGENCY
EUTHENICS
8235 Mohawk Dr. | Cleveland, OH 44139

DESIGNER
DTB

REVIEWER
RAB 03/01/22

PROJECT ID
104983

SHEET P.182 TOTAL P.434

CUY-77-00.42 PART 1

MODEL: P_BLP_R077B2 - 9+00.00-7 [Sheet] PAPERSIZE: 17x11 (in.) DATE: 3/4/2022 TIME: 1:36:33 PM USER: esmccaslin
F:\Jobs\162-Miller Road Interchange\104983\400-Engineering\Roadway\Sheets\104983_XS30.dgn

LEGEND

ITEM 202 - PAVEMENT REMOVED

ITEM 615 - TEMPORARY PAVEMENT

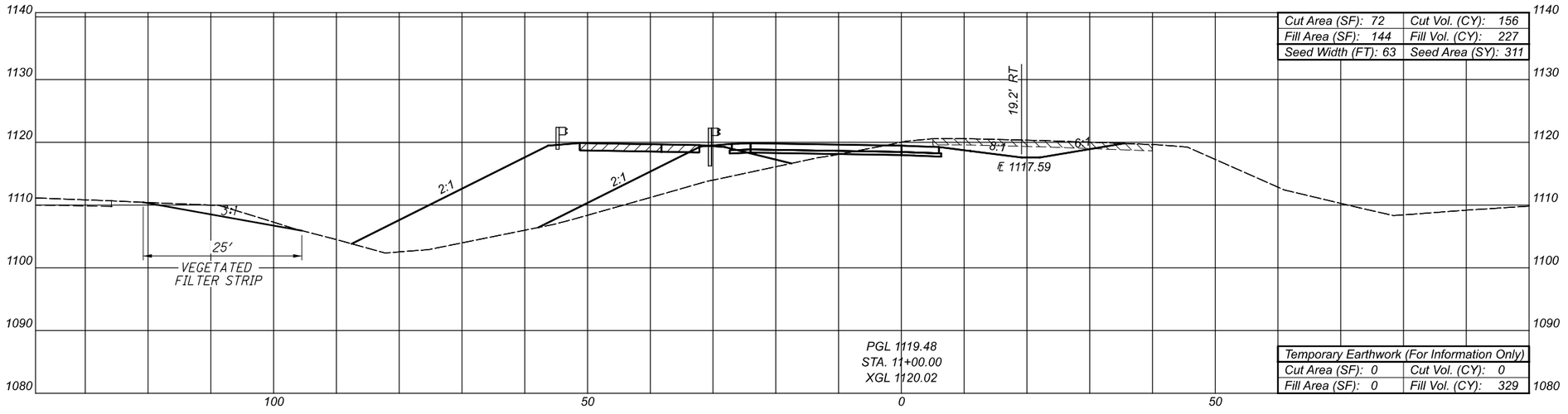

Cut Area (SF): 72	Cut Vol. (CY): 156
Fill Area (SF): 144	Fill Vol. (CY): 227
Seed Width (FT): 63	Seed Area (SY): 311

Temporary Earthwork (For Information Only)	
Cut Area (SF): 0	Cut Vol. (CY): 0
Fill Area (SF): 0	Fill Vol. (CY): 329

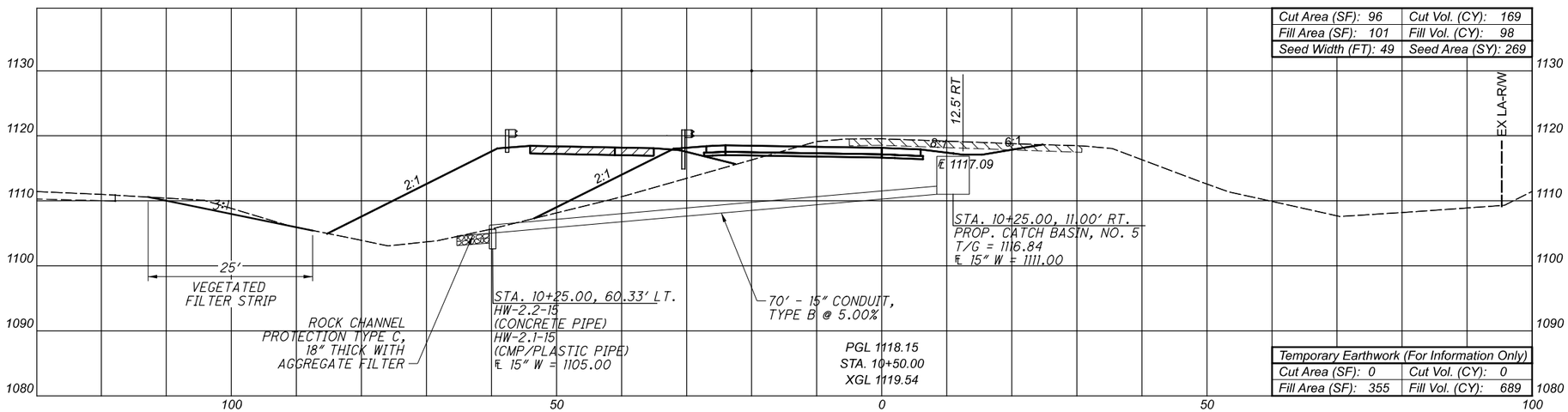

Cut Area (SF): 96	Cut Vol. (CY): 169
Fill Area (SF): 101	Fill Vol. (CY): 98
Seed Width (FT): 49	Seed Area (SY): 269

Temporary Earthwork (For Information Only)	
Cut Area (SF): 0	Cut Vol. (CY): 0
Fill Area (SF): 355	Fill Vol. (CY): 689

CROSS SECTIONS - RAMP B-2
STA. 10+50 TO STA. 11+00

Sheet Totals				
Seeding	Cut	Fill	Temp. Cut	Temp. Fill
580	325	325	0	1018

DESIGN AGENCY
EUTHENICS
8235 Mohawk Dr. | Cleveland, OH 44125

DESIGNER
DTB

REVIEWER
RAB 03/01/22

PROJECT ID
104983

SHEET P.183 TOTAL P.434

CUY-77-00.42 PART 1

MODEL: P_BLP_R077B2 - 10+50.00-7 [Sheet] PAPERSIZE: 17x11(in.) DATE: 3/4/2022 TIME: 1:36:36 PM USER: esmccasiln
F:\Jobs\1162-Miller Road Interchange\104983\400-Engineering\Roadway\Sheets\104983_XS30i.dgn

LEGEND

ITEM 202 - PAVEMENT REMOVED

ITEM 615 - TEMPORARY PAVEMENT

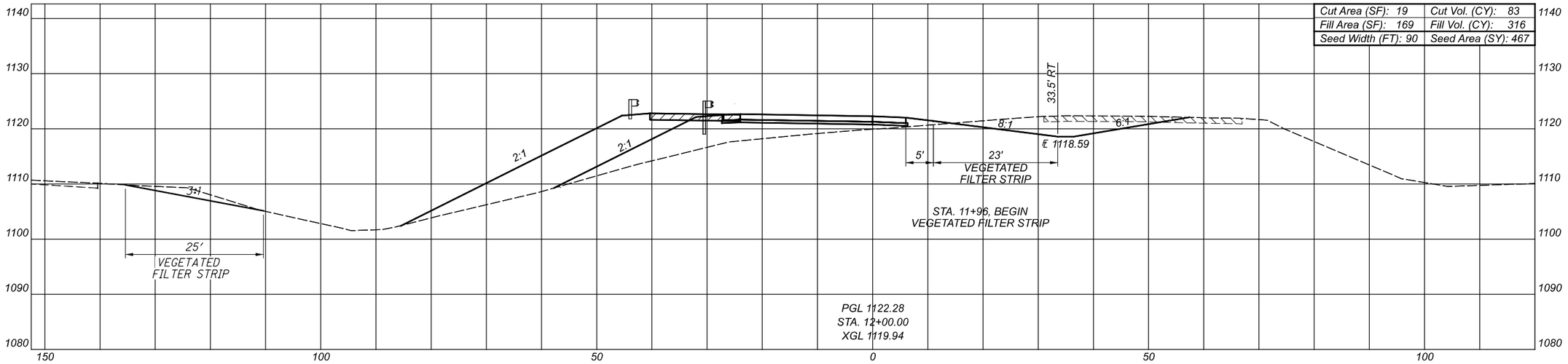

Cut Area (SF): 19	Cut Vol. (CY): 83
Fill Area (SF): 169	Fill Vol. (CY): 316
Seed Width (FT): 90	Seed Area (SY): 467

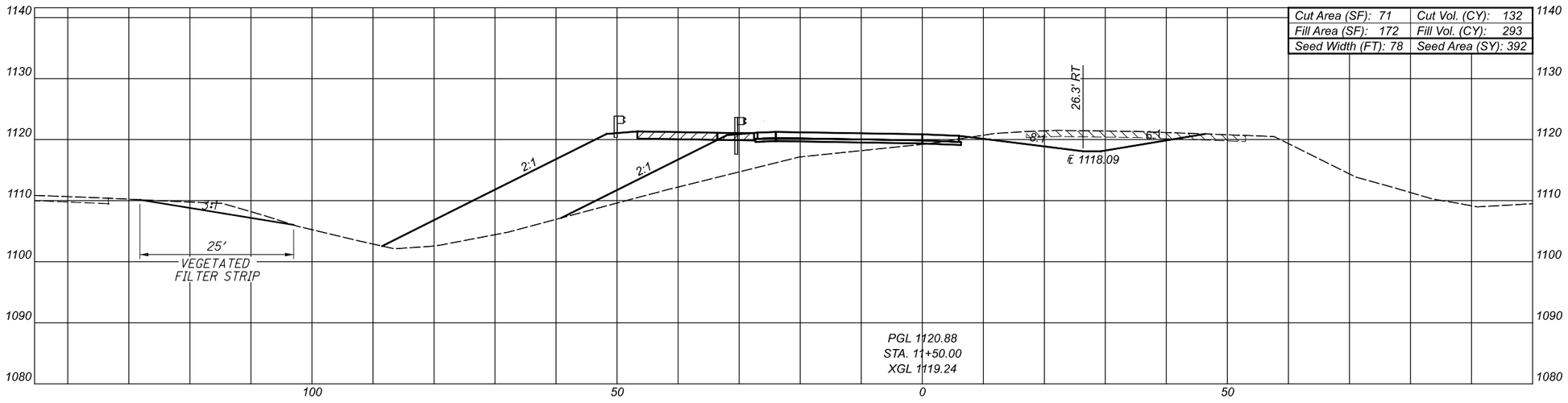

Cut Area (SF): 71	Cut Vol. (CY): 132
Fill Area (SF): 172	Fill Vol. (CY): 293
Seed Width (FT): 78	Seed Area (SY): 392

CROSS SECTIONS - RAMP B-2
STA. 11+50 TO STA. 12+00

DESIGN AGENCY
EUTHENICS
8235 Midlantic Dr. | Cleveland, OH 44236

DESIGNER
DTB

REVIEWER
RAB 03/01/22

PROJECT ID
104983

Sheet Totals		
Seeding	Cut	Fill
859	215	609

SHEET P.184 TOTAL P.434

CUY-77-00.42 PART 1

MODEL: P_BLP_R077B2 - 11+50.00-7 (Sheet) PAPERSIZE: 17x11(in.) DATE: 3/4/2022 TIME: 11:36:38 PM USER: esmccaslin
F:\Jobs\1162-Miller Road Interchange\104983\400-Engineering\Roadway\Sheets\104983_XS30l.dgn

LEGEND

ITEM 202 - PAVEMENT REMOVED

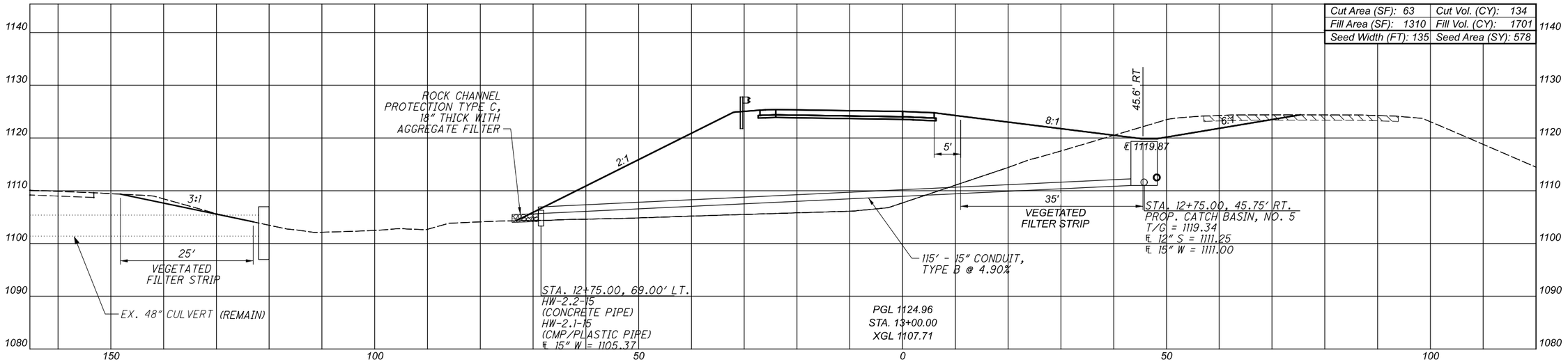

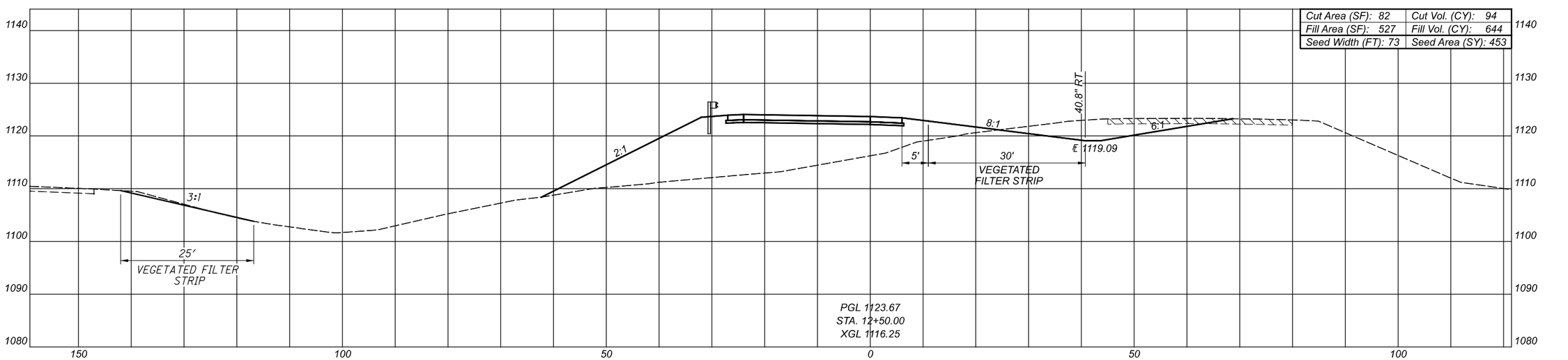

CROSS SECTIONS - RAMP B-2
STA. 12+50 TO STA. 13+00

Sheet Totals		
Seeding	Cut	Fill
1031	228	2345

DESIGN AGENCY
EUTHENICS
8235 Mohawk Dr. | Cleveland, OH 44146

DESIGNER
DTB

REVIEWER
RAB 03/01/22

PROJECT ID
104983

SHEET P.185 TOTAL P.434

CUY-77-00.42 PART 1

MODEL: P_BLP_R077B2 - 12+50.00-7 [Sheet] PAPERSIZE: 17x11(in.) DATE: 3/4/2022 TIME: 1:36:40 PM USER: esmccaslin
F:\Jobs\1162-Miller Road Interchange\104983\400-Engineering\Roadway\Sheets\104983_XS30l.dgn

LEGEND

ITEM 202 - PAVEMENT REMOVED

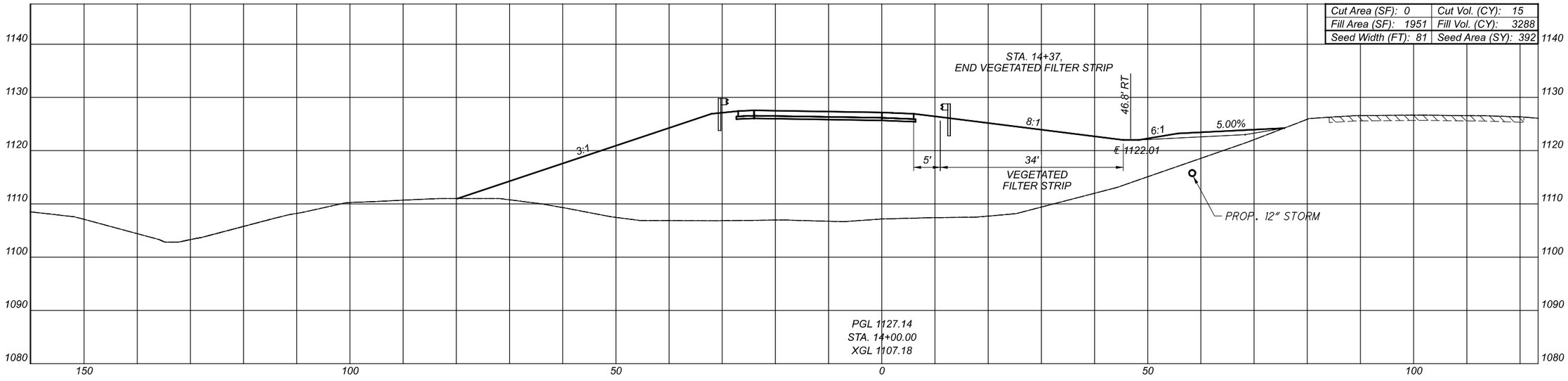

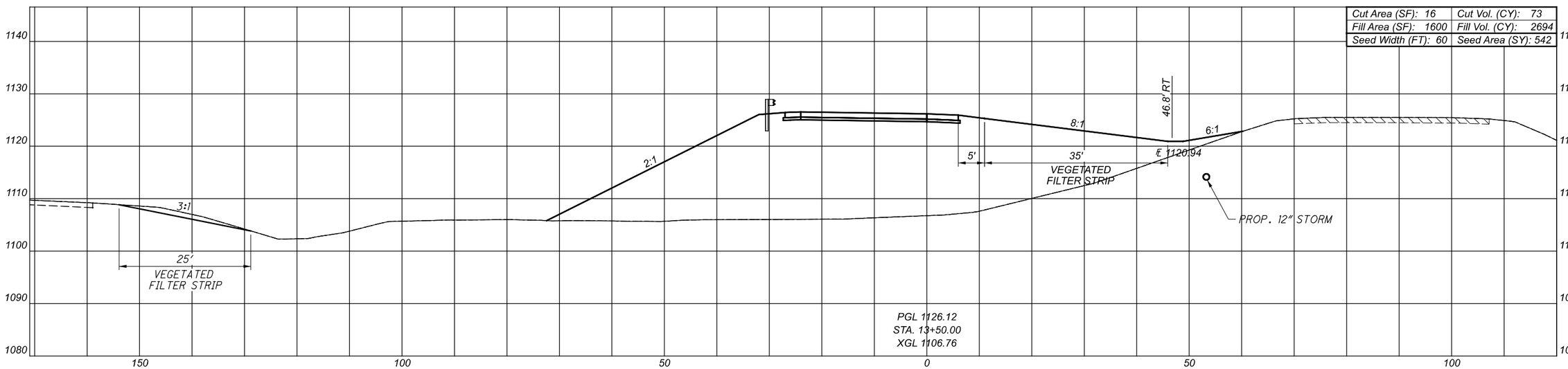

Sheet Totals		
Seeding	Cut	Fill
934	88	5982

CROSS SECTIONS - RAMP B-2
STA. 13+50 TO STA. 14+00

DESIGN AGENCY
EUTHENICS
8235 Mohawk Dr. | Cleveland, OH 44129

DESIGNER
DTB

REVIEWER
RAB 03/01/22

PROJECT ID
104983

SHEET P.186 TOTAL P.434

CUY-77-00.42 PART 1

MODEL: P_BLP_R077B2 - 13+50.00-7 [Sheet] PAPERSIZE: 17x11(in.) DATE: 3/4/2022 TIME: 11:36:42 PM USER: esmccaslin
F:\Jobs\1162-Miller Road Interchange\104983\400-Engineering\Roadway\Sheets\104983_XS30I.dgn

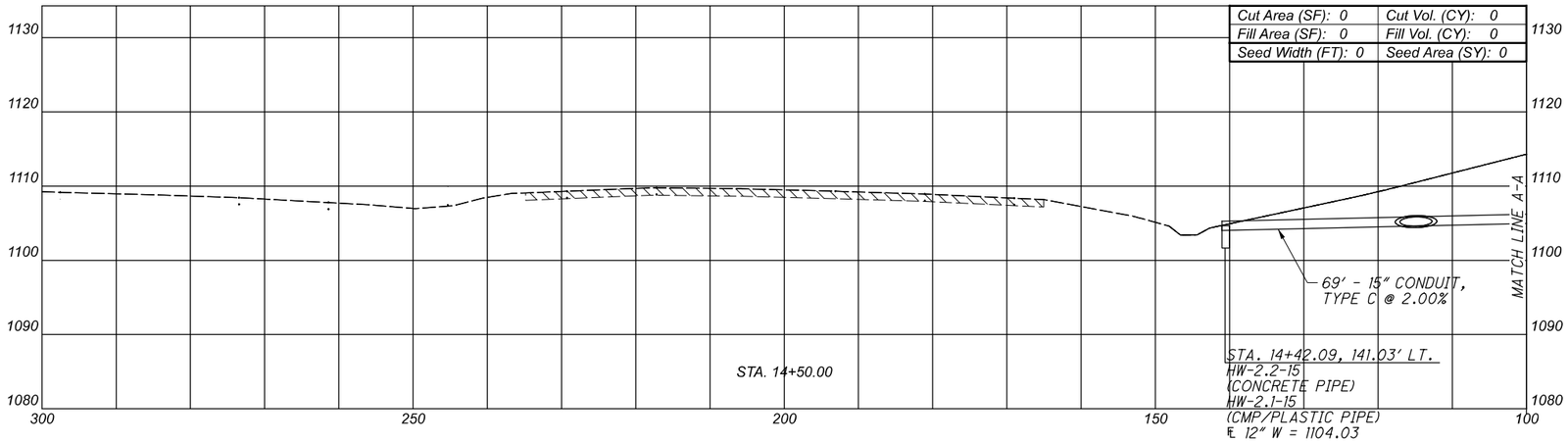

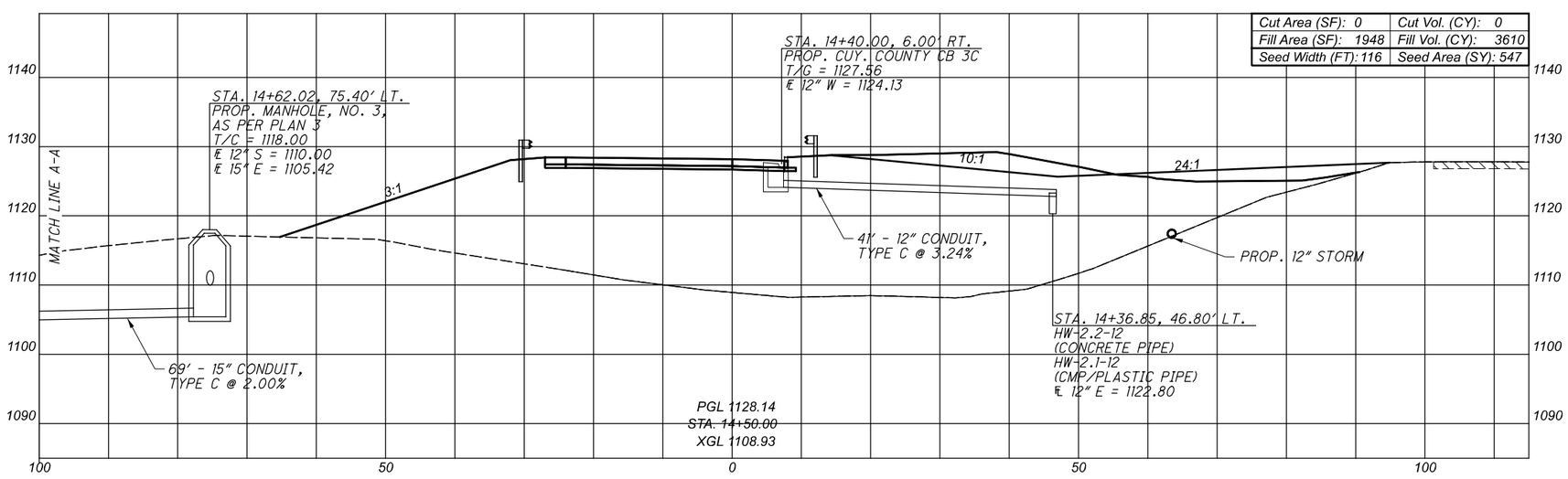

LEGEND

ITEM 202 - PAVEMENT REMOVED

CROSS SECTIONS - RAMP B-2
STA. 14+50

CUY-77-00.42 PART 1

MODEL: I4+50 Adjusted - I4+50.00 [Sheet] PAPERSIZE: 17x11(in.) DATE: 3/4/2022 TIME: 1:36:44 PM USER: esmccasiln
F:\Jobs\1162-Miller Road Interchange\104983\400-Engineering\Roadway\Sheets\104983_XS30.dgn

DESIGN AGENCY
EUTHENICS
8225 Mohawk Dr. | Cleveland, OH 44125

DESIGNER
DTB

REVIEWER
RAB 03/01/22

PROJECT ID
104983

Sheet Totals		
Seeding	Cut	Fill
547	0	3610

SHEET P.187 TOTAL P.434

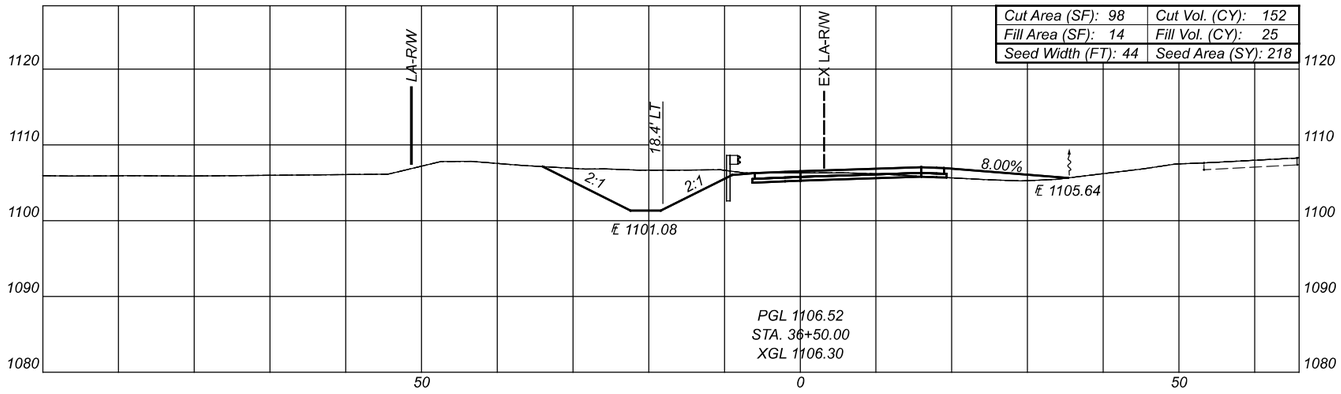

Cut Area (SF): 98	Cut Vol. (CY): 152
Fill Area (SF): 14	Fill Vol. (CY): 25
Seed Width (FT): 44	Seed Area (SY): 218

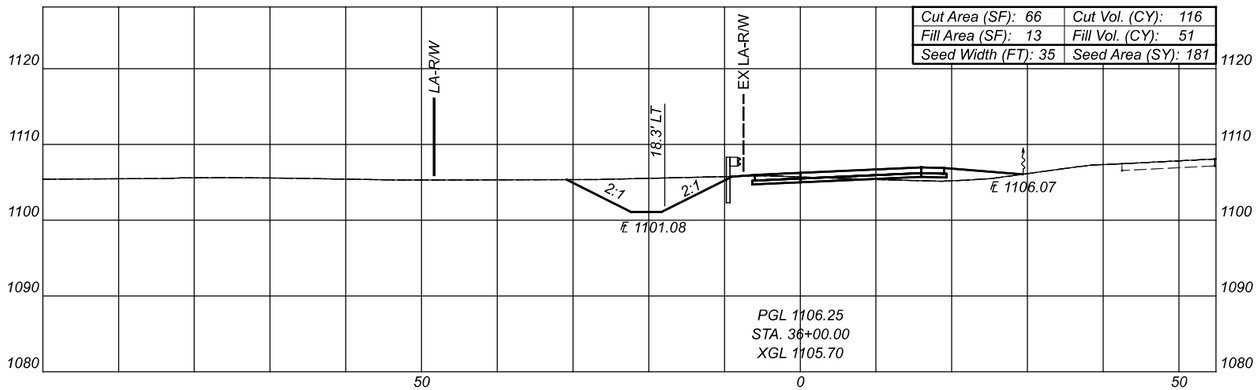

Cut Area (SF): 66	Cut Vol. (CY): 116
Fill Area (SF): 13	Fill Vol. (CY): 51
Seed Width (FT): 35	Seed Area (SY): 181

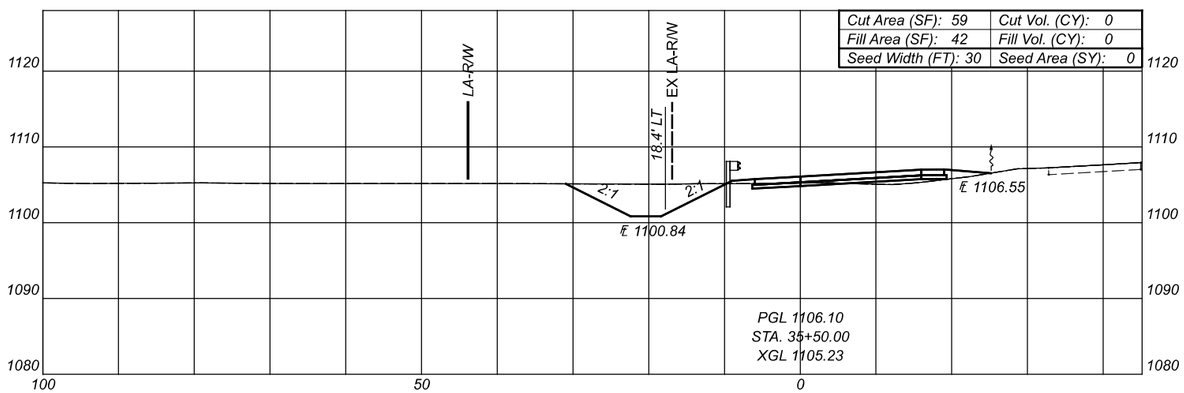

Cut Area (SF): 59	Cut Vol. (CY): 0
Fill Area (SF): 42	Fill Vol. (CY): 0
Seed Width (FT): 30	Seed Area (SY): 0

CROSS SECTIONS - RAMP B-3
STA. 35+50 TO STA. 36+50

CUY-77-00.42 PART 1

MODEL: BLP_R077B3 - 35+50.00-IS[Sheet1] PAPERSIZE: 17x11(in.) DATE: 3/4/2022 TIME: 1:36:54 PM USER: esmccasiln
F:\Jobs\1162-Miller Road Interchange\104983\400-Engineering\Roadway\Sheets\104983_XS401.dgn

DESIGN AGENCY
EUTHENICS
8225 Mohawk Dr. | Cleveland, OH 44139

DESIGNER
DTB

REVIEWER
RAB 03/01/22

PROJECT ID
104983

Sheet Totals		
Seeding	Cut	Fill
400	268	76

SHEET P.188 TOTAL P.434

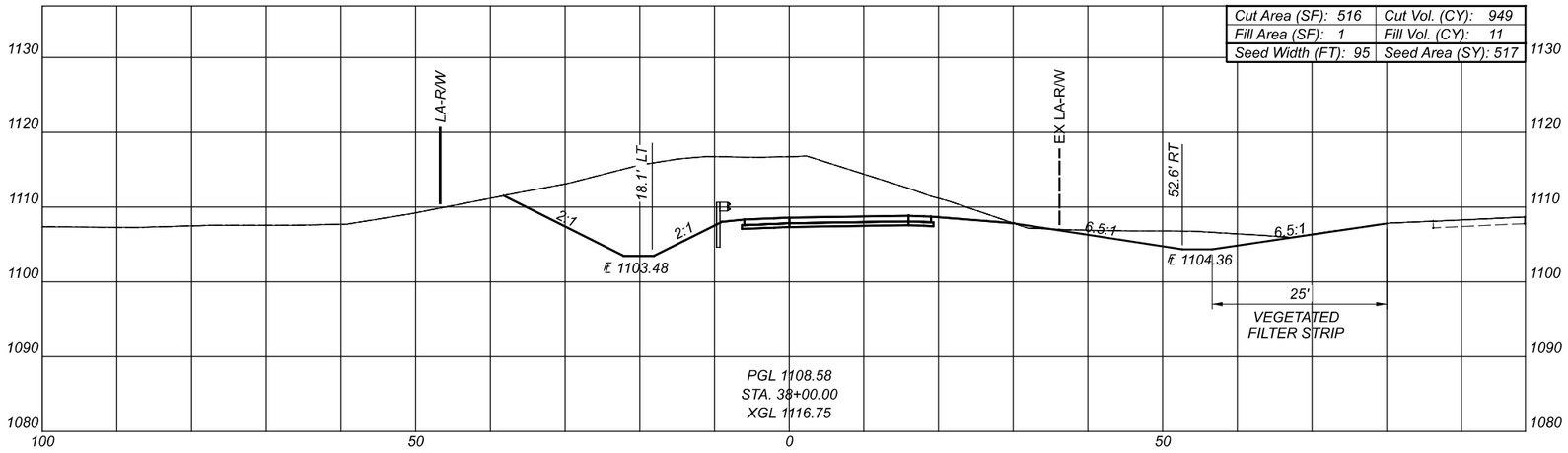

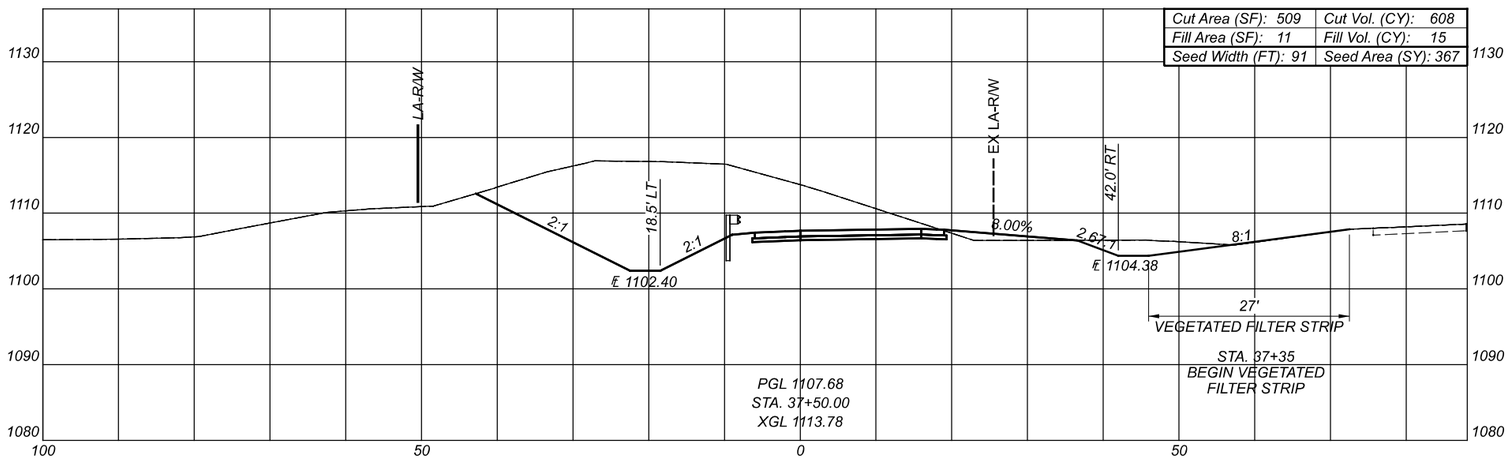

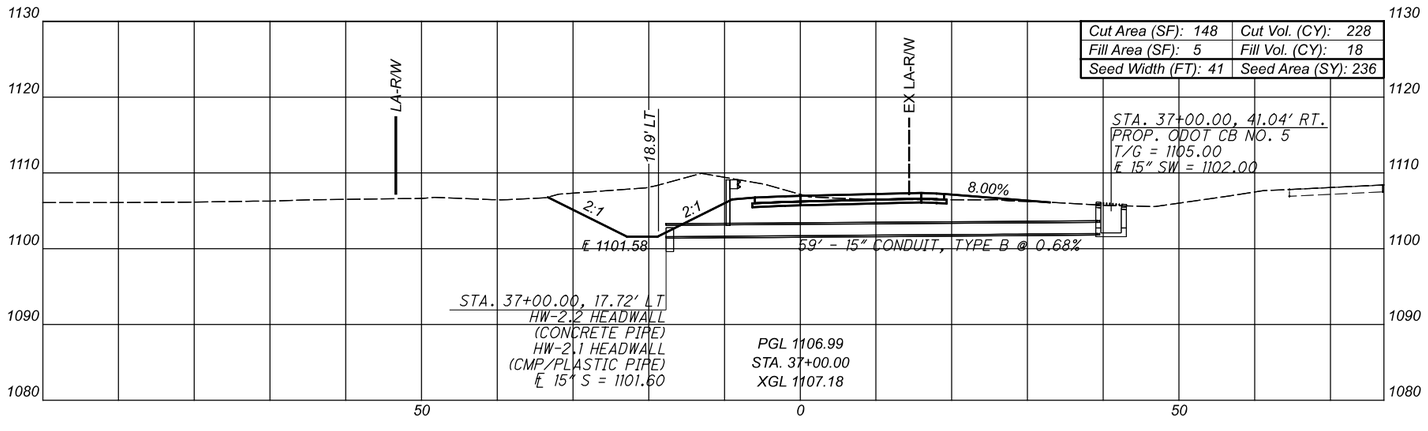

CROSS SECTIONS - RAMP B-3
STA. 37+00 TO STA. 38+00

DESIGN AGENCY
EUTHENICS
8235 Mohawk Dr. | Cleveland, OH 44146

DESIGNER
DTB

REVIEWER
RAB 03/01/22

PROJECT ID
104983

Sheet Totals		
Seeding	Cut	Fill
1120	1785	44

SHEET P.189 TOTAL P.434

CUY-77-00.42 PART 1

MODEL: BLP_R077B3 - 37+00.00-[Sheet] PAPERSIZE: 17x11(in.) DATE: 3/4/2022 TIME: 1:36:56 PM USER: esmccasiln
F:\Jobs\1162-Miller Road Interchange\104983\400-Engineering\Roadway\Sheets\104983_XS40i.dgn

CROSS SECTIONS - RAMP B-3
STA. 38+50 TO STA. 39+50

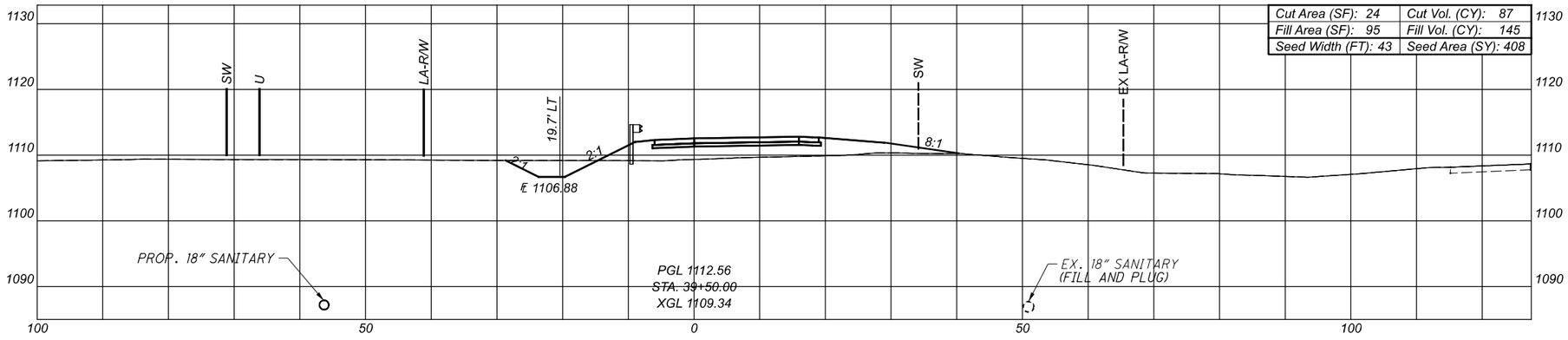

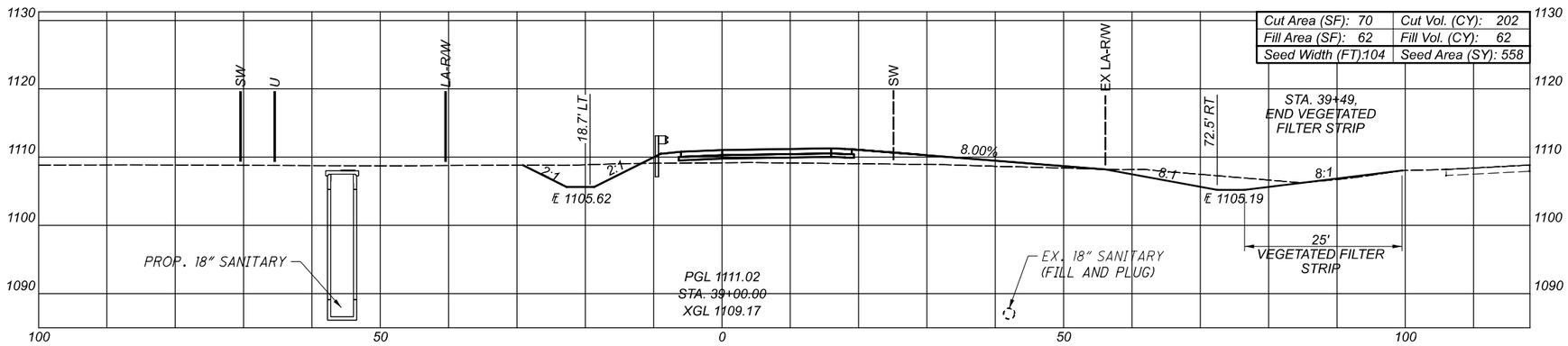

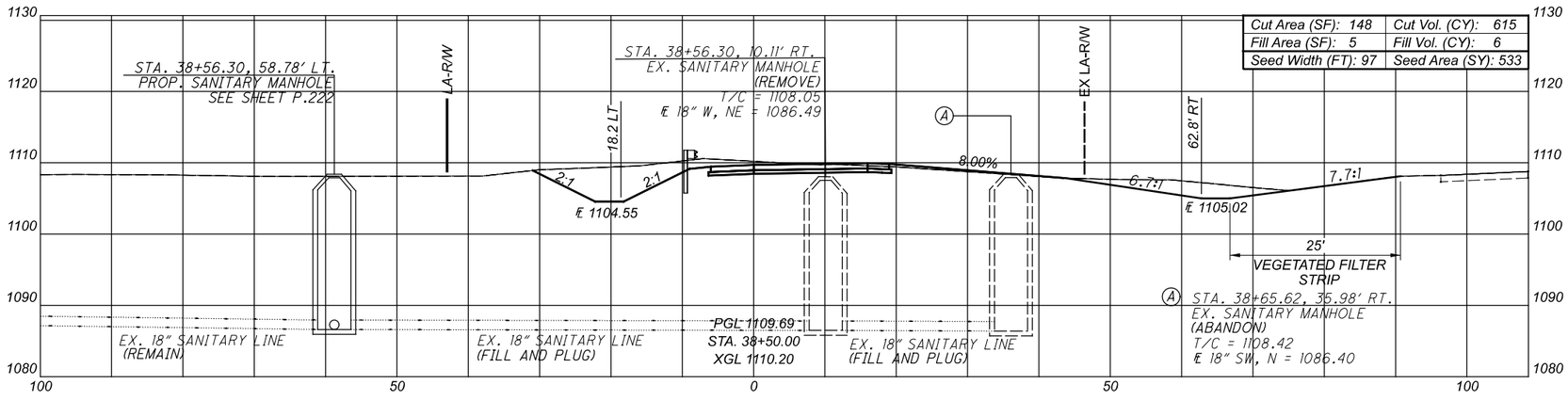

CUY-77-00.42 PART 1

MODEL: BLP_R07783 - 38+50.00-[Sheet] PAPERSIZE: 17x11(in.) DATE: 3/4/2022 TIME: 1:36:59 PM USER: esmccaslin
F:\Jobs\1162-Miller Road Interchange\104983\400-Engineering\Roadway\Sheets\104983_XS401.dgn

Sheet Totals		
Seeding	Cut	Fill
1499	904	213

DESIGN AGENCY
EUTHENICS
8235 Mohawk Dr. | Cleveland, OH 44125

DESIGNER
DTB

REVIEWER
RAB 03/01/22

PROJECT ID
104983

SHEET P.190 TOTAL P.434

CROSS SECTIONS - RAMP B-3
STA. 40+00 TO STA. 41+00

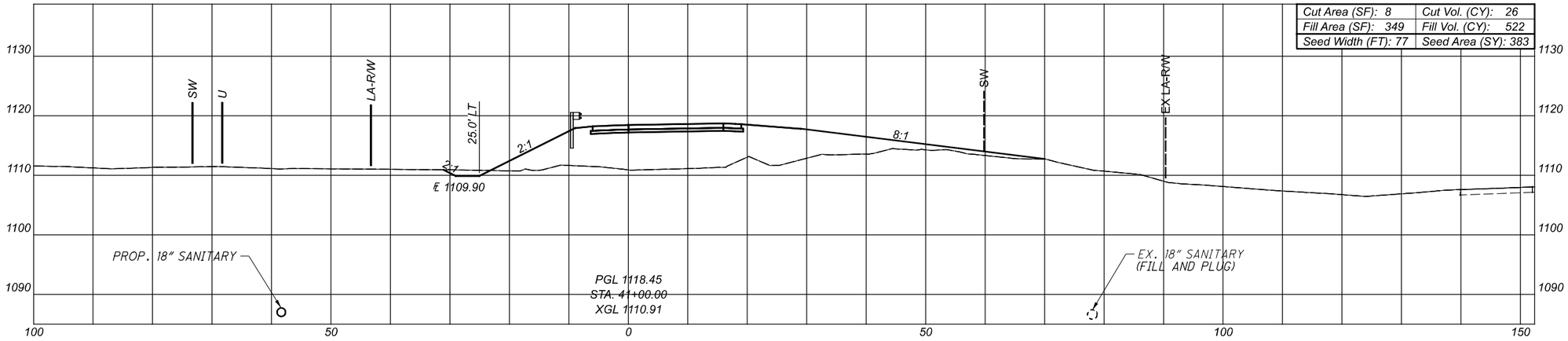

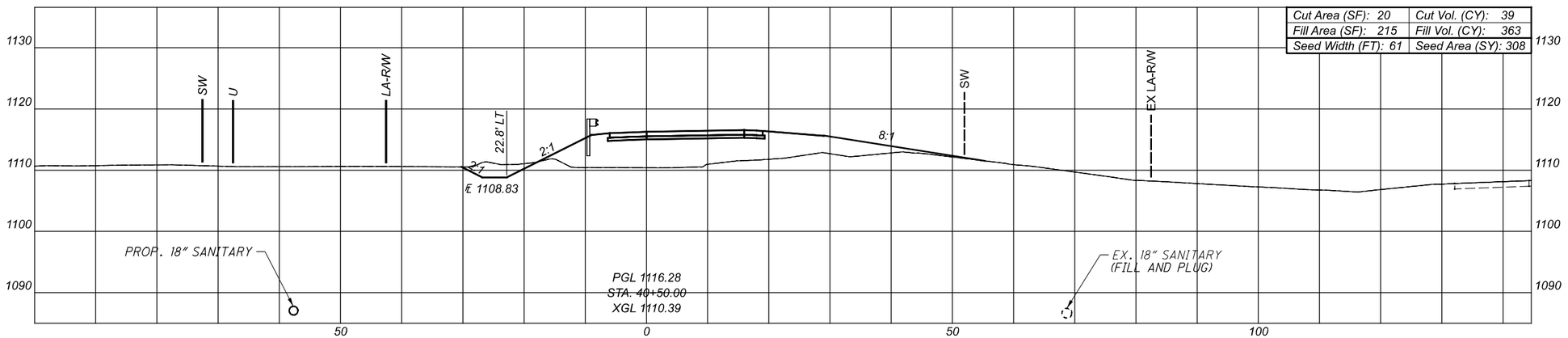

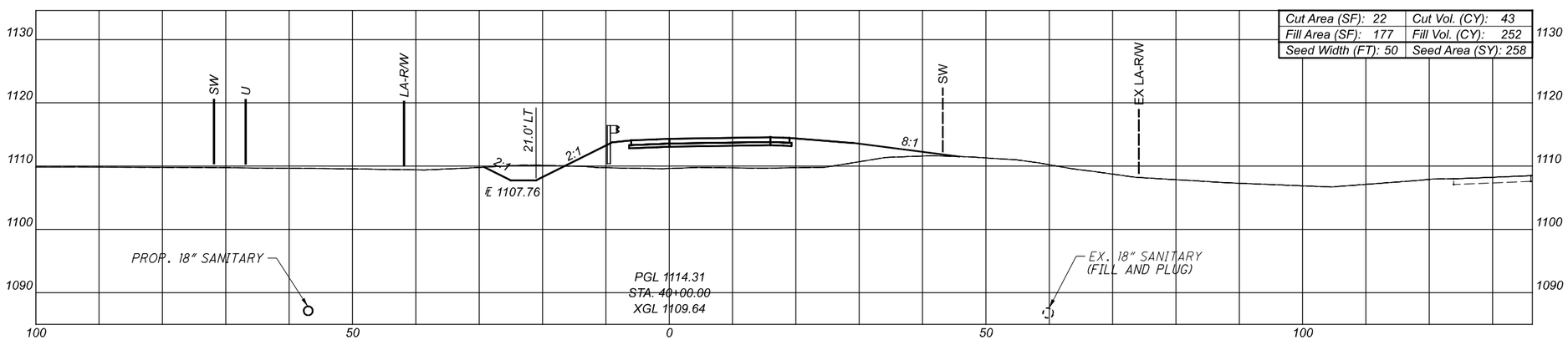

CUY-77-00.42 PART 1

MODEL: BLP_R077B3 - 40+00.00-1[Sheet] PAPERSIZE: 17x11(in.) DATE: 3/4/2022 TIME: 1:37:02 PM USER: esmccaslin
F:\Jobs\1162-Miller Road Interchange\104983\400-Engineering\Roadway\Sheets\104983_XS401.dgn

DESIGN AGENCY
EUTHENICS
8235 Mohawk Dr. | Cleveland, OH 44129

DESIGNER
DTB

REVIEWER
RAB 03/01/22

PROJECT ID
104983

Sheet Totals		
Seeding	Cut	Fill
949	108	1137

SHEET P.191 TOTAL P.434

LEGEND

ITEM 203 - EXCAVATION, AS PER PLAN
(SEE SHEET P.17 FOR NOTE)

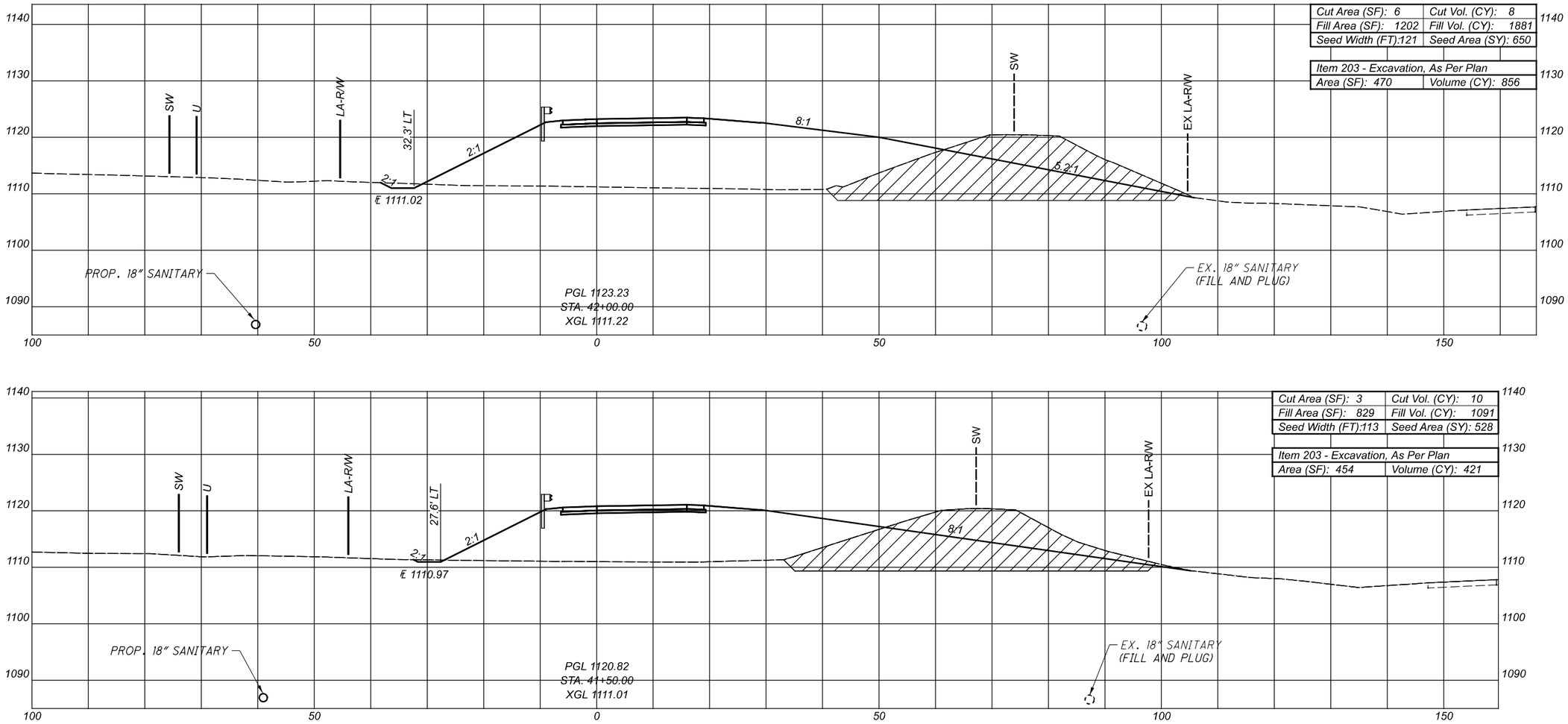

Cut Area (SF): 6	Cut Vol. (CY): 8
Fill Area (SF): 1202	Fill Vol. (CY): 1881
Seed Width (FT):121	Seed Area (SY): 650

Item 203 - Excavation, As Per Plan	
Area (SF): 470	Volume (CY): 856

Cut Area (SF): 3	Cut Vol. (CY): 10
Fill Area (SF): 829	Fill Vol. (CY): 1091
Seed Width (FT):113	Seed Area (SY): 528

Item 203 - Excavation, As Per Plan	
Area (SF): 454	Volume (CY): 421

CROSS SECTIONS - RAMP B-3
STA. 41+50 TO STA. 42+00

Sheet Totals			
Seeding	Cut	Fill	203, As Per Plan
1178	18	2972	1277

DESIGN AGENCY
EUTHENICS
8235 Mohawk Dr. | Cleveland, OH 44139

DESIGNER
DTB

REVIEWER
RAB 03/01/22

PROJECT ID
104983

SHEET	TOTAL
P.192	P.434

CUY-77-00.42 PART 1

MODEL: BLP_RO77B3 - 4+50.00-1(Sheet1) PAPERSIZE: 17x11(In.) DATE: 3/4/2022 TIME: 11:37:55 PM USER: esmccasiln
F:\Jobs\16\2-Miller Road Interchange\104983\400-Engineering\Roadway\Sheets\104983_XS401.dgn

LEGEND

ITEM 203 - EXCAVATION, AS PER PLAN
(SEE SHEET P.17 FOR NOTE)

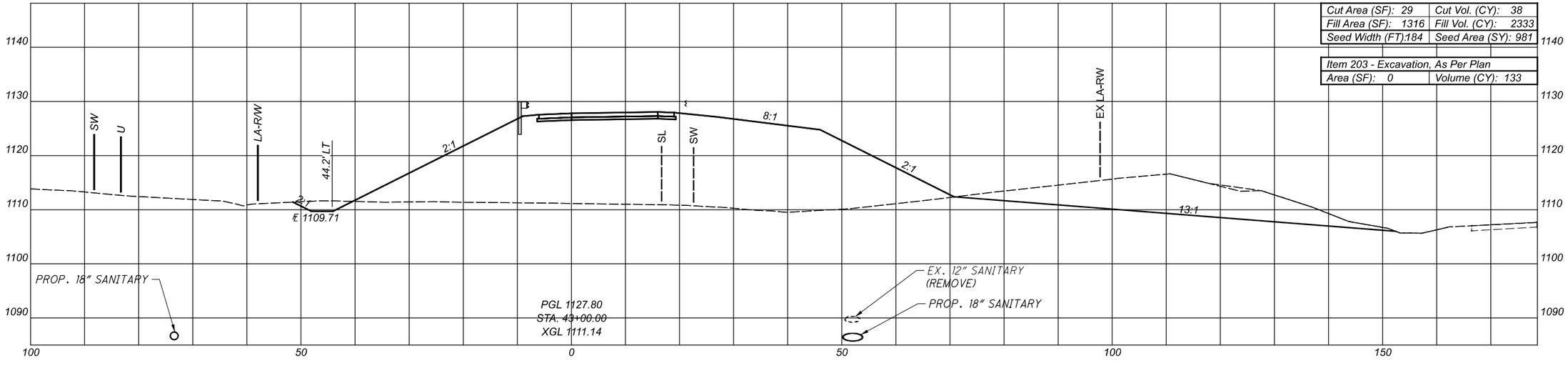

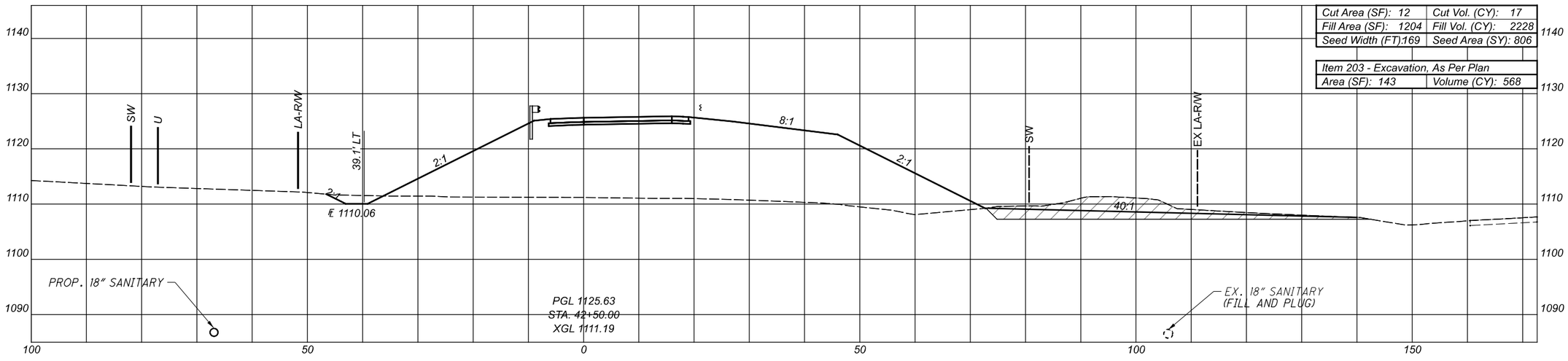

CROSS SECTIONS - RAMP B-3
STA. 42+50 TO STA. 43+00

CUY-77-00.42 PART 1

MODEL: BLP_R07TB3 - 42+50.00-I[Sheet] PAPERSIZE: 17x11(in.) DATE: 3/4/2022 TIME: 11:37:58 PM USER: esmccaslin
F:\Jobs\16\2-Miller Road Interchange\104983\400-Engineering\Roadway\Sheets\104983_XS40I.dgn

Sheet Totals			
Seeding	Cut	Fill	203, As Per Plan
1787	55	4561	701

DESIGN AGENCY
EUTHENICS
8235 Mohawk Dr. | Cleveland, OH 44129

DESIGNER
DTB

REVIEWER
RAB 03/01/22

PROJECT ID
104983

SHEET P.193 | TOTAL P.434

CUY-77-00.42 PART 1

MODEL: BLP_ROTTB3 - 43+25.00-1(Sheet1 PAPERSIZE: 17x11(In.) DATE: 3/4/2022 TIME: 11:38:01 PM USER: esmccaslin
F:\Jobs\1162-Miller Road Interchange\104983\400-Engineering\Roadway\Sheets\104983_XS40L.dgn

CROSS SECTIONS - RAMP B-3
STA. 43+25

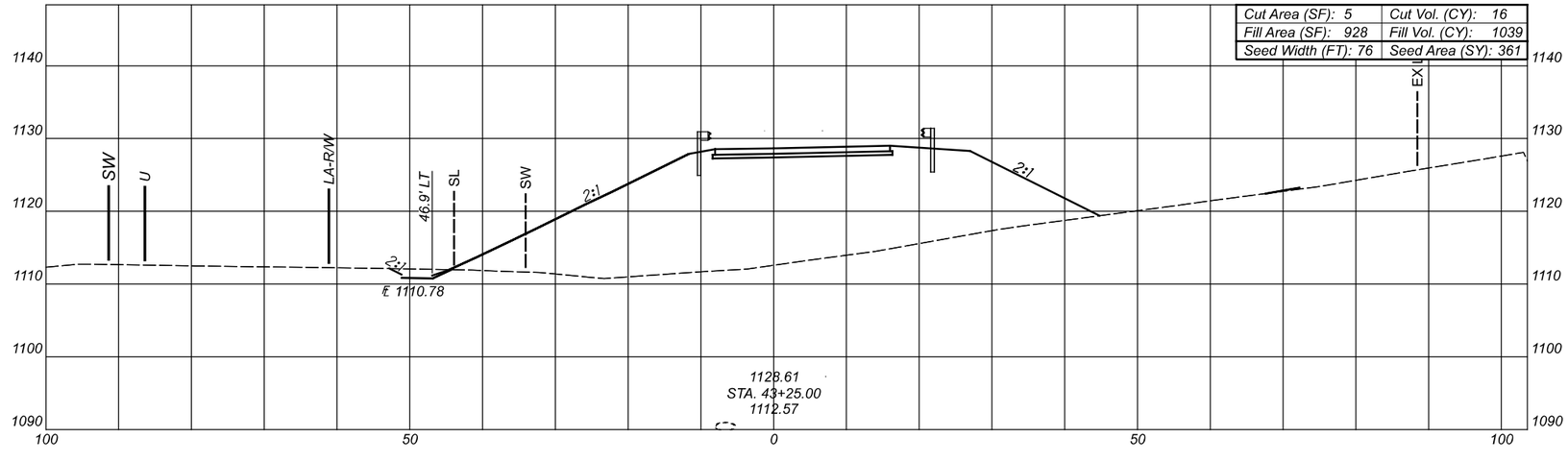

DESIGN AGENCY
EUTHENICS
8235 Mohawk Dr. | Cleveland, OH 44256

DESIGNER
DTB

REVIEWER
RAB 03/01/22

PROJECT ID
104983

Sheet Totals		
Seeding	Cut	Fill
361	16	1039

SHEET P.194 TOTAL P.434

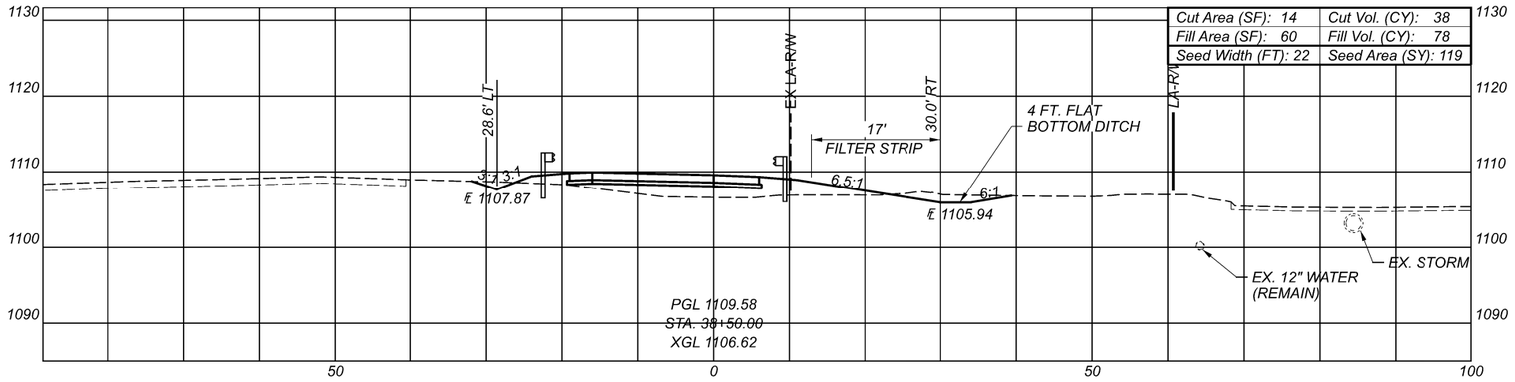

Cut Area (SF): 14	Cut Vol. (CY): 38
Fill Area (SF): 60	Fill Vol. (CY): 78
Seed Width (FT): 22	Seed Area (SY): 119

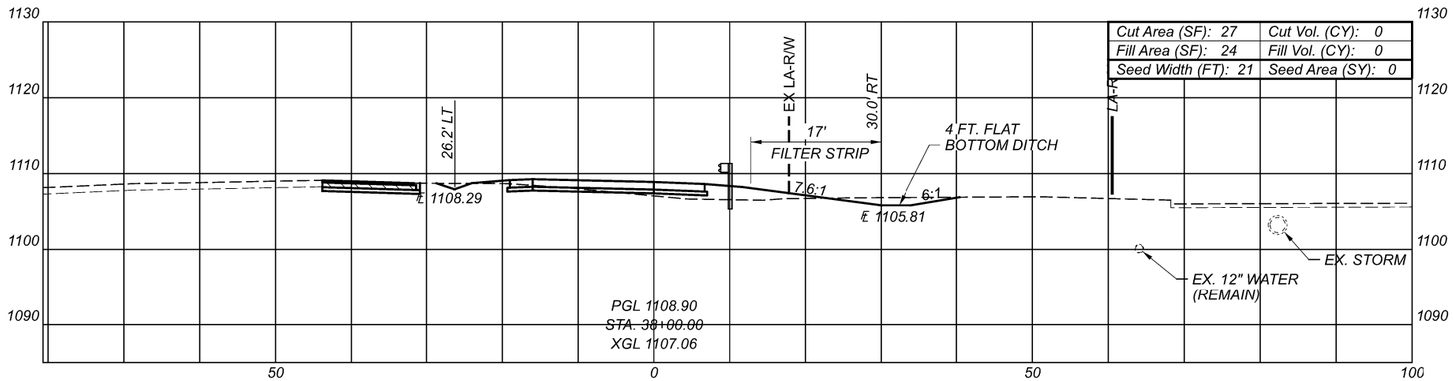

Cut Area (SF): 27	Cut Vol. (CY): 0
Fill Area (SF): 24	Fill Vol. (CY): 0
Seed Width (FT): 21	Seed Area (SY): 0

LEGEND

ITEM 202 - PAVEMENT REMOVED

CROSS SECTIONS - RAMP B-4
STA. 38+00 TO STA. 38+50

CUY-77-00.42 PART 1

MODEL: BLP_R077B4 - 37+50.00-1[Sheet] PAPERSIZE: 17x11(in.) DATE: 3/4/2022 TIME: 1:38:08 PM USER: esmccaslin
F:\Jobs\162-Miller Road Interchange\104983\400-Engineering\Roadway\Sheets\104983_XS50.dgn

DESIGN AGENCY
EUTHENICS
8225 Midwest Dr. | Cleveland, OH 44139

DESIGNER: DTB

REVIEWER: RAB 03/01/22

PROJECT ID: 104983

Sheet Totals		
Seeding	Cut	Fill
119	38	78

SHEET: P.195 TOTAL: P.434

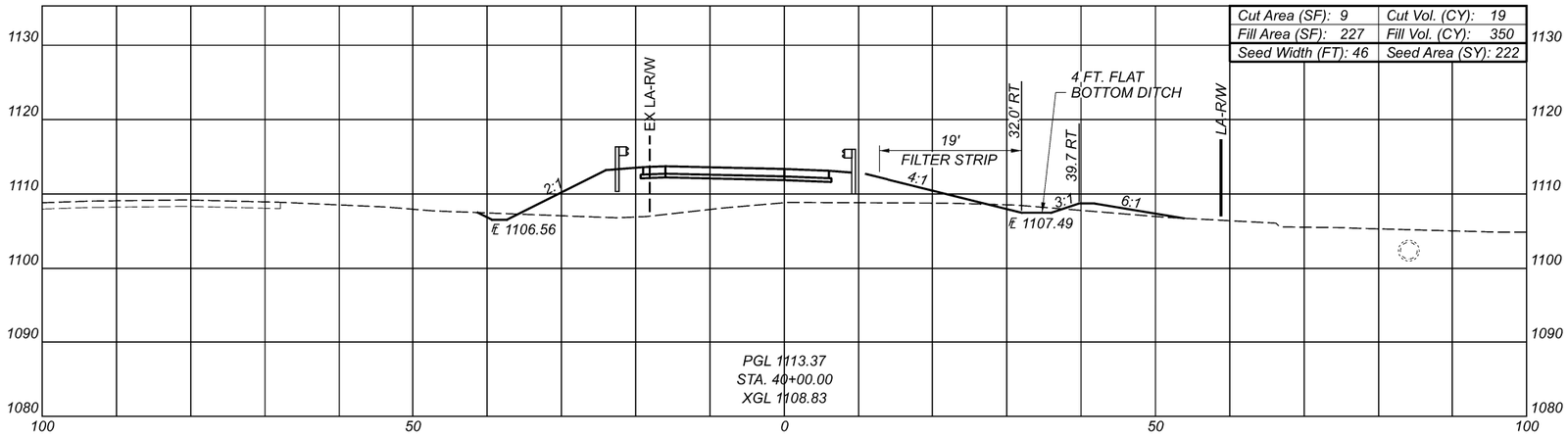

Cut Area (SF): 9	Cut Vol. (CY): 19
Fill Area (SF): 227	Fill Vol. (CY): 350
Seed Width (FT): 46	Seed Area (SY): 222

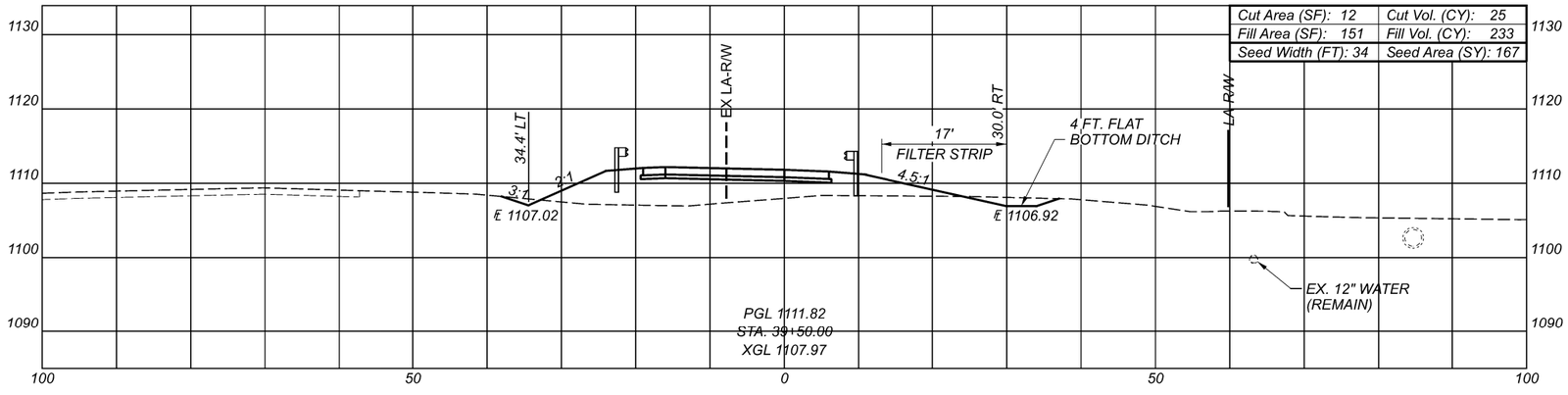

Cut Area (SF): 12	Cut Vol. (CY): 25
Fill Area (SF): 151	Fill Vol. (CY): 233
Seed Width (FT): 34	Seed Area (SY): 167

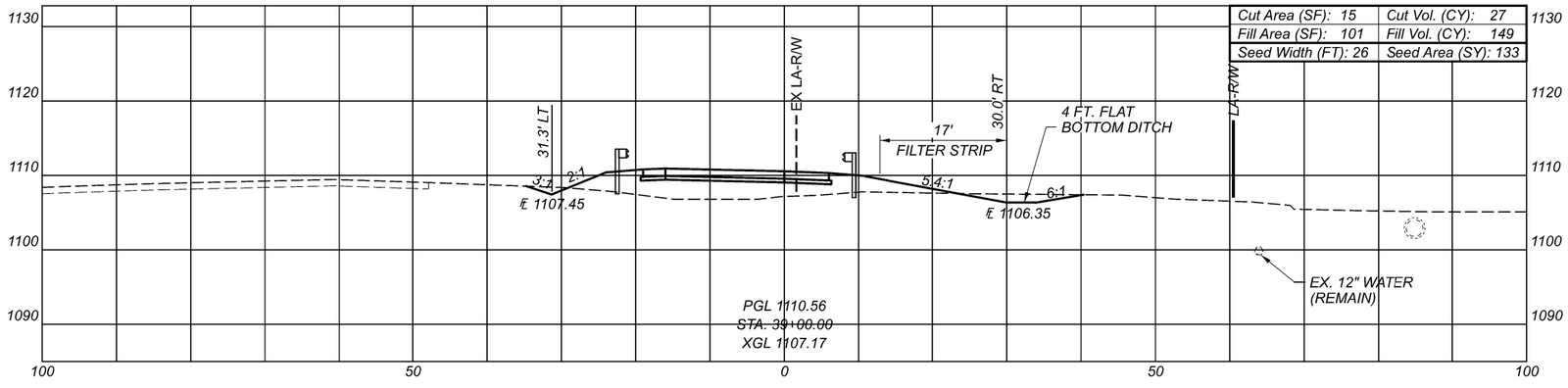

Cut Area (SF): 15	Cut Vol. (CY): 27
Fill Area (SF): 101	Fill Vol. (CY): 149
Seed Width (FT): 26	Seed Area (SY): 133

CUY-77-00.42 PART 1

MODEL: BLP_R077B4 - 39+00.00-I[Sheet] PAPERSIZE: 17x11(in.) DATE: 3/4/2022 TIME: 1:38:17 PM USER: esmccaslin
F:\Jobs\1162-Miller Road Interchange\104983\400-Engineering\Roadway\Sheets\104983_XS50i.dgn

CROSS SECTIONS - RAMP B-4
STA. 39+00 TO STA. 40+00

DESIGN AGENCY
EUTHENICS
8235 Mohawk Dr. | Cleveland, OH 44130

DESIGNER
DTB

REVIEWER
RAB 03/01/22

PROJECT ID
104983

Sheet Totals		
Seeding	Cut	Fill
522	71	732

SHEET P.196 TOTAL P.434

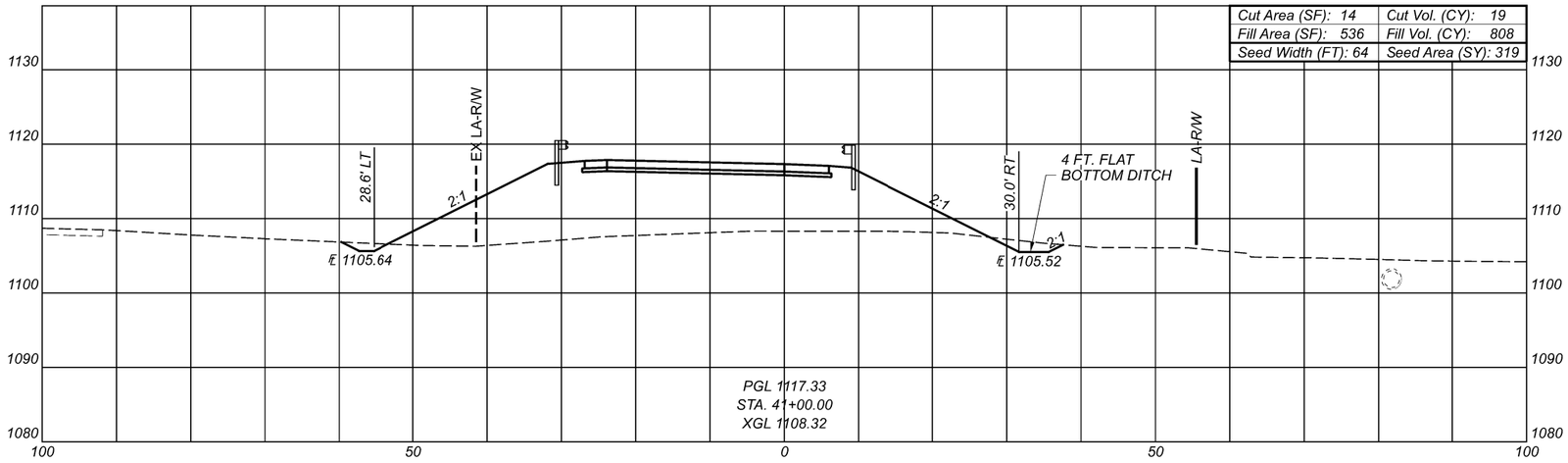

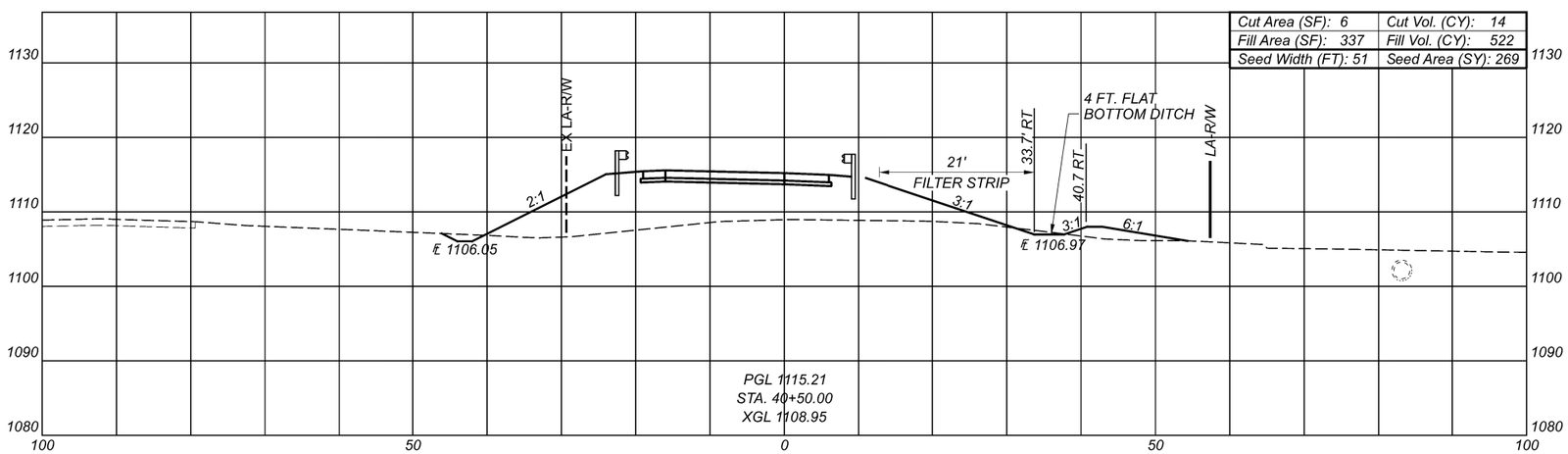

CROSS SECTIONS - RAMP B-4
STA. 40+50 TO STA. 41+00

CUY-77-00.42 PART 1

MODEL: BLP_R077B4 - 40+50.00-[Sheet] PAPERSIZE: 17x11(in.) DATE: 3/4/2022 TIME: 1:38:27 PM USER: esmccaslin
F:\Jobs\162-Miller Road Interchange\104983\400-Engineering\Roadway\Sheets\104983_XS50.dgn

DESIGN AGENCY
EUTHENICS
8235 Mohawk Dr. | Cleveland, OH 44130

DESIGNER
DTB

REVIEWER
RAB 03/01/22

PROJECT ID
104983

Sheet Totals		
Seeding	Cut	Fill
588	33	1330

SHEET P.197 TOTAL P.434

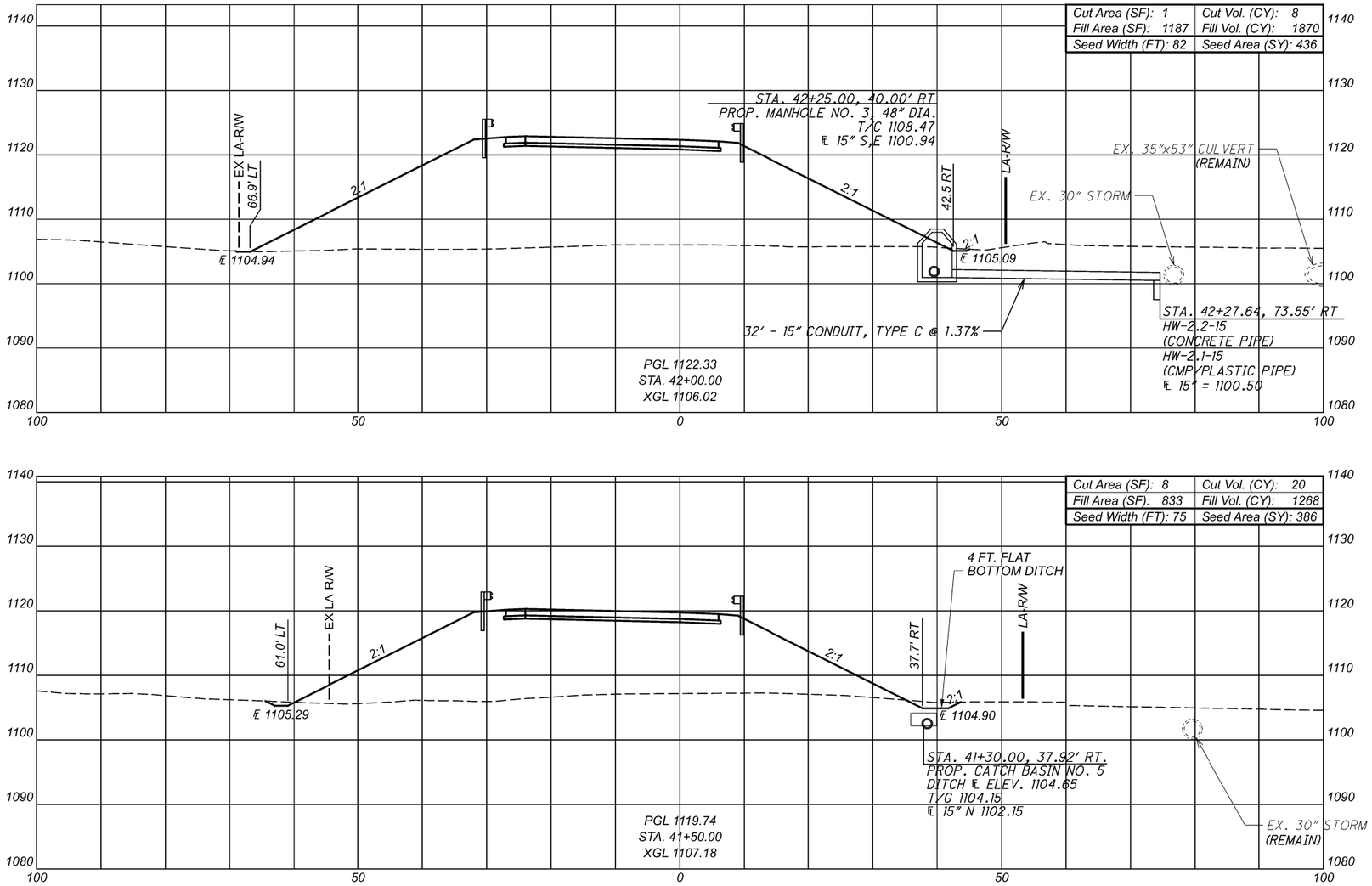

CROSS SECTIONS - RAMP B-4
STA. 41+50 TO STA. 42+00

CUY-77-00.42 PART 1

MODEL: BLP_R07TB4 - 41+50.00-1[Sheet1] PAPERSIZE: 17x11(in.) DATE: 3/4/2022 TIME: 1:38:36 PM USER: esmccaslin
F:\Jobs\1162-Miller Road Interchange\104983\400-Engineering\Roadway\Sheets\104983_XS50.dgn

DESIGN AGENCY
EUTHENICS
8235 Mohawk Dr. | Cleveland, OH 44125

DESIGNER
DTB

REVIEWER
RAB 03/01/22

PROJECT ID
104983

SHEET P.198 TOTAL P.434

Sheet Totals		
Seeding	Cut	Fill
822	28	3138

CROSS SECTIONS - RAMP B-4
STA. 42+50

Cut Area (SF): 0	Cut Vol. (CY): 1
Fill Area (SF): 1707	Fill Vol. (CY): 2680
Seed Width (FT): 92	Seed Area (SY): 483

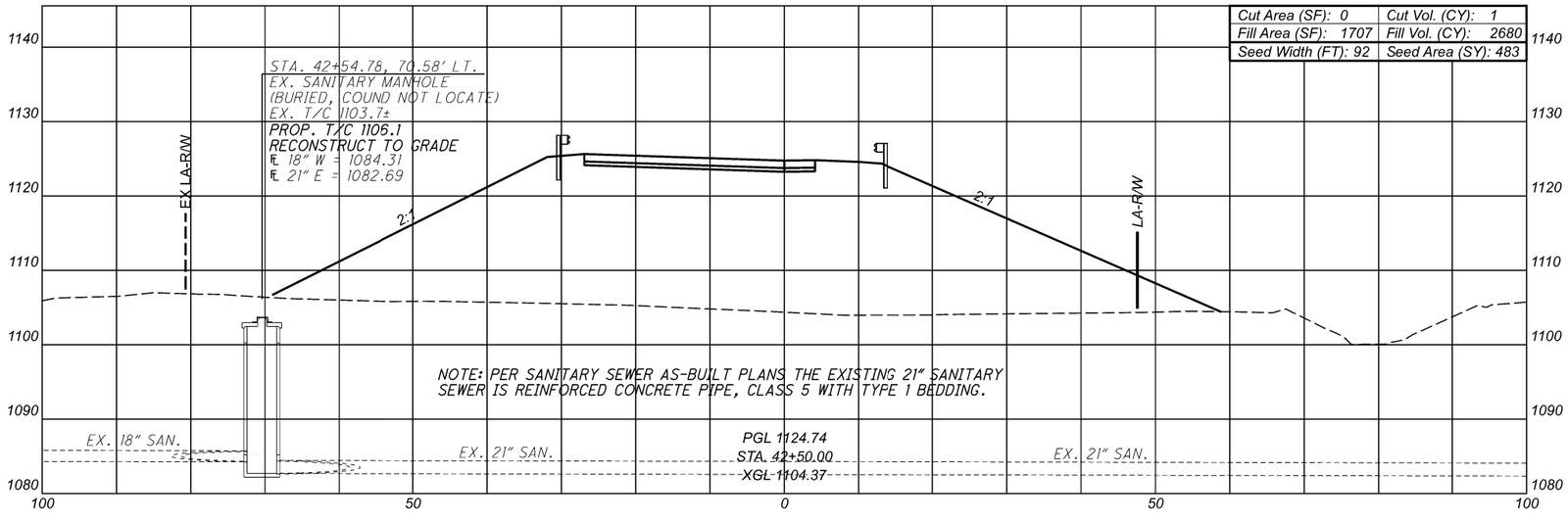

SEE SHEET P.217 FOR CULVERT DETAIL.

CUY-77-00.42 PART 1

MODEL: BLP_R07B4 - 42+50.00-1(Sheet) PAPERSIZE: 17x11(in.) DATE: 3/4/2022 TIME: 11:38:44 PM USER: esmccaslin
F:\Jobs\1162-Miller Road Interchange\104983\400-Engineering\Roadway\Sheets\104983_XS50i.dgn

DESIGN AGENCY
EUTHENICS
8235 Mohawk Dr. | Cleveland, OH 44130

DESIGNER
DTB

REVIEWER
RAB 03/01/22

PROJECT ID
104983

Sheet Totals		
Seeding	Cut	Fill
483	1	2680

SHEET P.199 TOTAL P.434

SUPERELEVATION TABLE

RAMP B-3

LEFT SIDE					BASELINE AND RIGHT SIDE E.O.P.		
EDGE ELEVATION	TRANSITION RATE	ELEVATION CORRECTION	CROSS SLOPE	WIDTH	STATION	PROFILE GRADE	REMARKS
SEE NOTE 1	SEE NOTE 1	SEE NOTE 1	SEE NOTE 1	SEE NOTE 1	32+04.42	1106.08	T.S.
					+25.00	1106.10	
					+50.00	1106.07	
					+75.00	1106.06	
					33+00.00	1106.03	
					+25.00	1106.01	
					+50.00	1105.98	
					+75.00	1105.91	
					34+00.00	1105.82	
					+04.42	1105.82	S.C.
					+25.00	1105.84	
					+50.00	1105.90	
					+75.00	1105.93	
					35+00.00	1105.97	
					+25.00	1106.03	
1107.01		0.960	0.060	16.00	+31.05	1106.05	C.S.
1107.00		0.896	0.056	16.00	+50.00	1106.10	
1106.98		0.800	0.050	16.00	+75.00	1106.18	
1106.97		0.720	0.045	16.00	36+00.00	1106.25	
1106.98		0.624	0.039	16.00	+25.00	1106.36	
1107.06	284.1:1	0.544	0.034	16.00	+50.00	1106.52	
1107.18		0.448	0.028	16.00	+75.00	1106.73	
1107.36		0.368	0.023	16.00	37+00.00	1106.99	
1107.60		0.288	0.018	16.00	+25.00	1107.31	
1107.66		0.256	0.016	16.00	37+31.05	1107.40	S.T.
1107.94		0.256	0.016	16.00	+50.00	1107.68	
1108.37		0.256	0.016	16.00	+75.00	1108.11	
1108.84		0.256	0.016	16.00	38+00.00	1108.58	

NOTE 1: FOR RAMP B-3 TERMINAL DETAILS, SEE SHEET P.202

SUPERELEVATION TABLE

RAMP B-4

LEFT SIDE					BASELINE AND RIGHT SIDE E.O.P.		
EDGE ELEVATION	TRANSITION RATE	ELEVATION CORRECTION	CROSS SLOPE	WIDTH	STATION	PROFILE GRADE	REMARKS
SEE NOTE 2	SEE NOTE 2	SEE NOTE 2	SEE NOTE 2	SEE NOTE 2	+66.37	1108.08	P.C.
					+75.00	1108.11	
					34+00.00	1108.19	
					+25.00	1108.29	
					+50.00	1108.40	
					+75.00	1108.53	
					35+00.00	1108.57	
					+25.00	1108.55	
					+50.00	1108.53	
					+75.00	1108.49	
					36+00.00	1108.47	
					+25.00	1108.44	
					+50.00	1108.41	
					+75.00	1108.39	
					37+00.00	1108.39	
					+25.00	1108.41	
					+50.00	1108.50	
1108.98		0.368	0.023	16.00	+67.21	1108.61	
1109.03		0.368	0.023	16.00	+75.00	1108.66	
1109.27		0.368	0.023	16.00	38+00.00	1108.90	
1109.57		0.368	0.023	16.00	+25.00	1109.20	
1109.95		0.368	0.023	16.00	+50.00	1109.58	
1110.40		0.368	0.023	16.00	+75.00	1110.03	
1110.93		0.368	0.023	16.00	39+00.00	1110.56	
1111.52		0.368	0.023	16.00	+25.00	1111.15	
1112.19		0.368	0.023	16.00	+50.00	1111.82	
1112.93		0.368	0.023	16.00	+75.00	1112.56	
1113.74		0.368	0.023	16.00	40+00.00	1113.37	
1114.62		0.368	0.023	16.00	+25.00	1114.25	
1115.58	N/A	0.368	0.023	16.00	+50.00	1115.21	
1116.68		0.454	0.023	19.75	+75.00	1116.23	
1117.88		0.552	0.023	24.00	41+00.00	1117.33	
1119.05		0.552	0.023	24.00	+25.00	1118.50	
1120.29		0.552	0.023	24.00	+50.00	1119.74	
1121.59		0.552	0.023	24.00	+75.00	1121.04	
1122.88		0.552	0.023	24.00	42+00.00	1122.33	
1124.17		0.552	0.023	24.00	+25.00	1123.62	
1125.29		0.552	0.023	24.00	+50.00	1124.74	
1126.22		0.552	0.023	24.00	+75.00	1125.67	
1126.94		0.552	0.023	24.00	43+00.00	1126.39	
1127.30		0.552	0.023	24.00	+15.20	1126.75	

NOTE 2: FOR RAMP B-4 TERMINAL DETAILS, SEE SHEET P.203

RAMPS B-3 & B-4 SUPERELEVATION TABLES

MODEL: Sheet PAPERSIZE: 17x11 (in.) DATE: 3/4/2022 TIME: 1:38:54 PM USER: esmccaslin
F:\Jobs\1162-Miller Road Interchange\104983\400-Engineering\Roadway\Sheets\104983_GE001.dgn

DESIGN AGENCY
EUTHENICS
8235 Mohawk Dr. | Cleveland, OH 44125
DESIGNER COM
REVIEWER RAB 03/01/22
PROJECT ID 104983
SHEET P.200 TOTAL P.434

MODEL: Untitled Sheet PAPERSIZE: 17x11(In.) DATE: 3/4/2022 TIME: 1:39:40 PM USER: esmccaslin
F:\Jobs\1162-Miller Road Interchange\104983\400-Engineering\Roadway\Sheets\104983_GI401.dgn

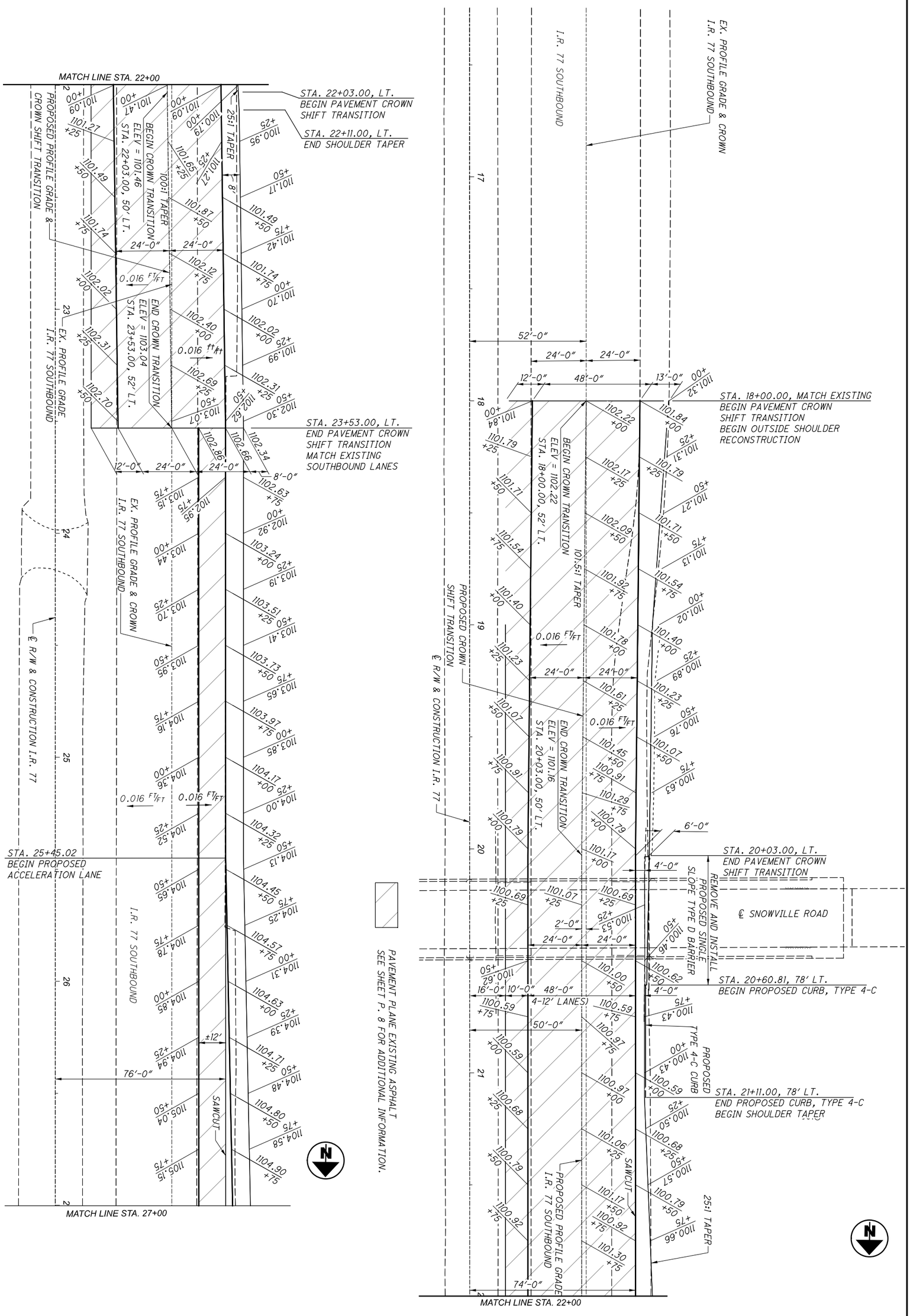

I.R. 77 - RAMP B-3 TERMINAL DETAILS
STA. 17+00 TO STA. 27+00

DESIGN AGENCY: EUTHENICS, 8235 Mohawk Dr. | Cleveland, OH 44130
DESIGNER: COM
REVIEWER: DTB 01/28/22
PROJECT ID: 104983
SHEET: P. 201 TOTAL: P. 434

HORIZONTAL SCALE IN FEET
0 20
10 40

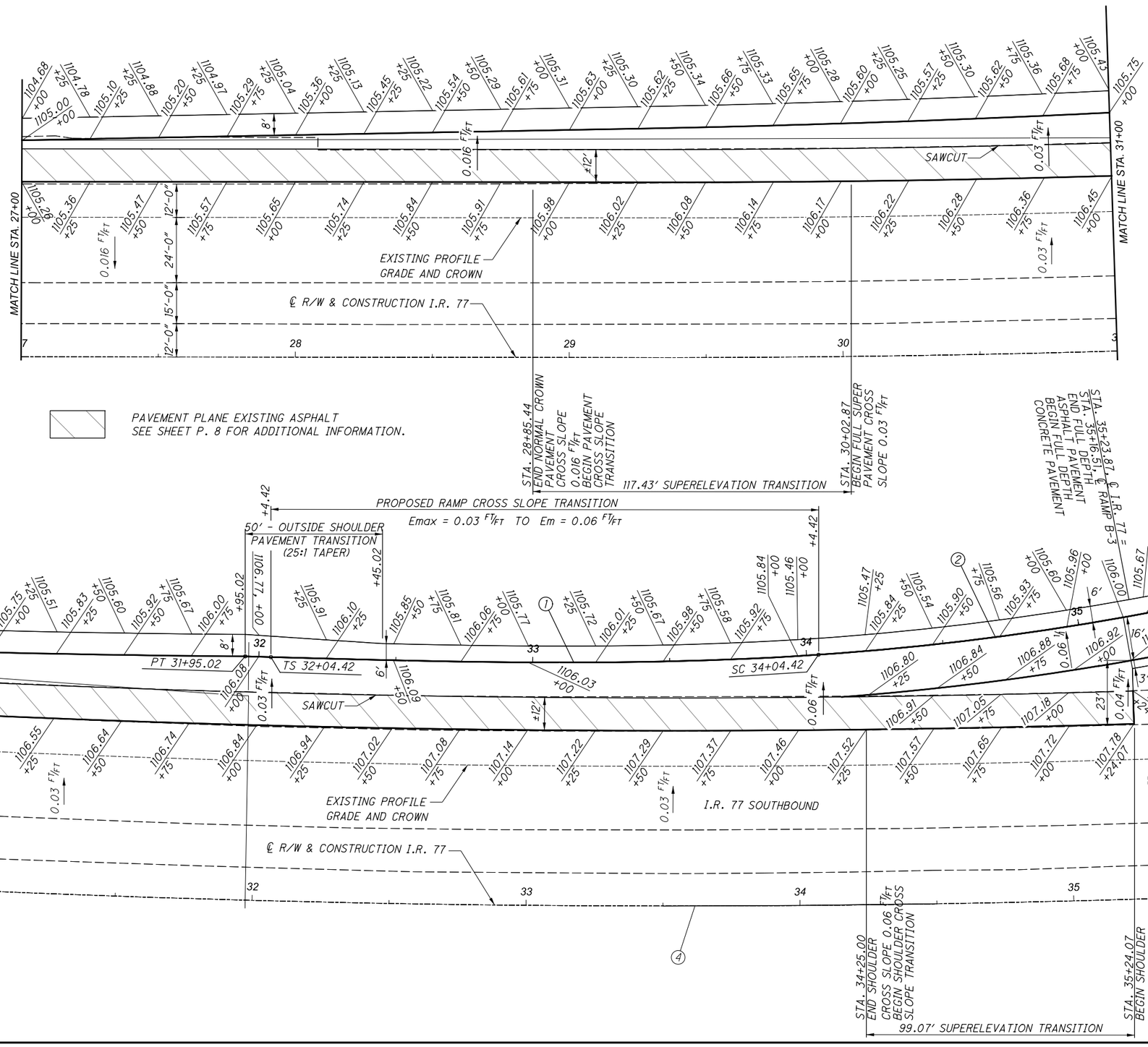

① *RAMP B-3*
SPIRAL DATA
P.I. = Sta. 33+37.82
Ls = 200.00'
θs = 05°30'00"
LT = 133.34'
ST = 66.73'
x = 199.82'
y = 6.40'
k = 99.97'
p = 1.60'
C = 199.92'
Start = Sta. 32+04.42
End = Sta. 34+04.42
C.B. = N04°30'46"W

② *CURVE DATA*
P.I. = Sta. 34+67.81
Δ = 06°57'53" LT
Dc = 05°30'00"
R = 1,041.74'
T = 63.39'
L = 126.63'
E = 1.93'

③ *SPIRAL DATA*
P.I. = Sta. 35+97.77
Ls = 200.00'
θs = 05°30'00"
LT = 133.40'
ST = 66.73'
x = 199.51'
y = 12.79'
k = 199.51'
p = 12.79'
C = 199.92'
Start = Sta. 35+31.05
End = Sta. 37+31.05
C.B. = N04°48'40"W

④ *EXIST. I.R. 77*
CURVE DATA
P.I. = Sta. 43+95.81
Δ = 28°44'69" LT
Dc = 01°00'00"
R = 5,729.58'
T = 1,468.43'
L = 2,874.98'
E = 185.18'

HORIZONTAL SCALE IN FEET
0 10 20 40

I.R. 77 - RAMP B-3 TERMINAL DETAILS
STA. 27+00 TO STA. 35+50

DESIGN AGENCY
EUTHENICS
8235 Mohawk Dr. | Cleveland, OH 44125

DESIGNER COM
REVIEWER DTB 03/01/22
PROJECT ID 104983
SHEET P.202 TOTAL P.434

CUY-77-00.42 PART 1

MODEL: Sheet PAPERSIZE: 17x11 (in.) DATE: 3/4/2022 TIME: 11:39:42 PM USER: esmccaslin
F:\Jobs\1162-Miller Road Interchange\104983\400-Engineering\Roadway\Sheets\104983_0140.dgn

MODEL: I04983_GI502 PAPERSIZE: 17x11 (in.) DATE: 3/4/2022 TIME: 1:39:51 PM USER: esmccaslin
F:\Jobs\1162-Miller Road Interchange\I04983\400-Engineering\Roadway\Sheets\I04983_GI502.dgn

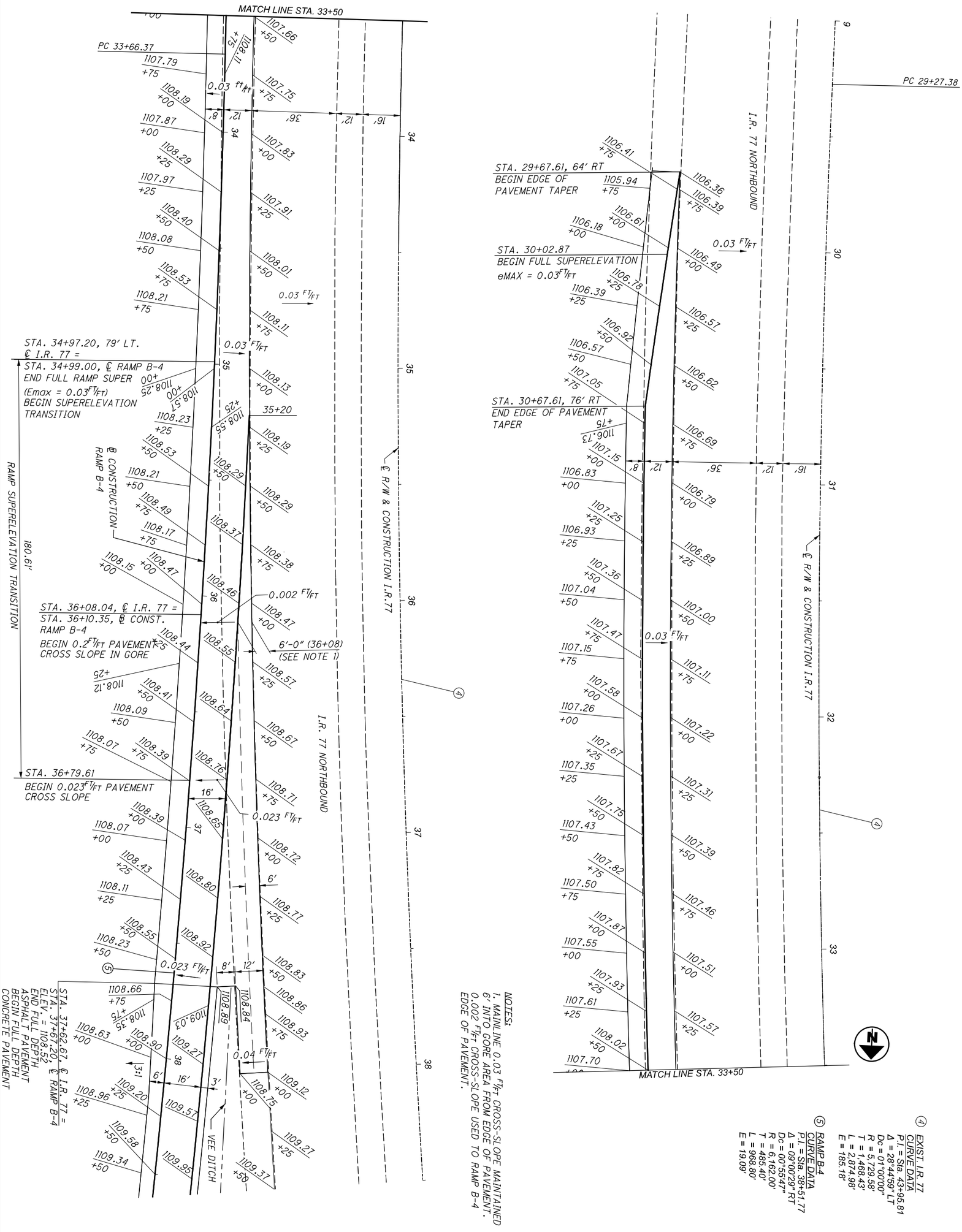

NOTES:
1. MAINLINE 0.03 FT/FT CROSS-SLOPE MAINTAINED 6' INTO GORE AREA FROM EDGE OF PAVEMENT. 0.002 FT/FT CROSS-SLOPE USED TO RAMP B-4 EDGE OF PAVEMENT.

④ EXIST. I.R. 77 CURVE DATA
P.I. = Sta. 43+95.81
Δ = 28°44'59" LT
Dc = 01°00'00"
R = 5,729.58'
T = 1,468.43'
L = 2,874.98'
E = 185.18'

⑤ RAMP B-4 CURVE DATA
P.I. = Sta. 38+51.77
Δ = 09°00'29" RT
Dc = 00°55'47"
R = 6,162.00'
T = 485.40'
L = 968.80'
E = 19.09'

SHEET P-203	TOTAL P-434	DESIGNER COM	REVIEWER DTB 03/01/22	DESIGN AGENCY EUTHENICS 8235 Mohawk Dr. | Cleveland, OH 44136	I.R. 77 - RAMP B-4 TERMINAL DETAILS STA. 29+00 TO STA. 38+50
		PROJECT ID 104983			HORIZONTAL SCALE IN FEET 0 20 10 40

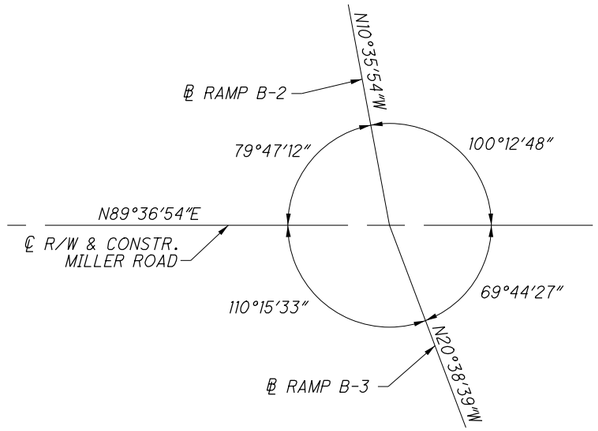

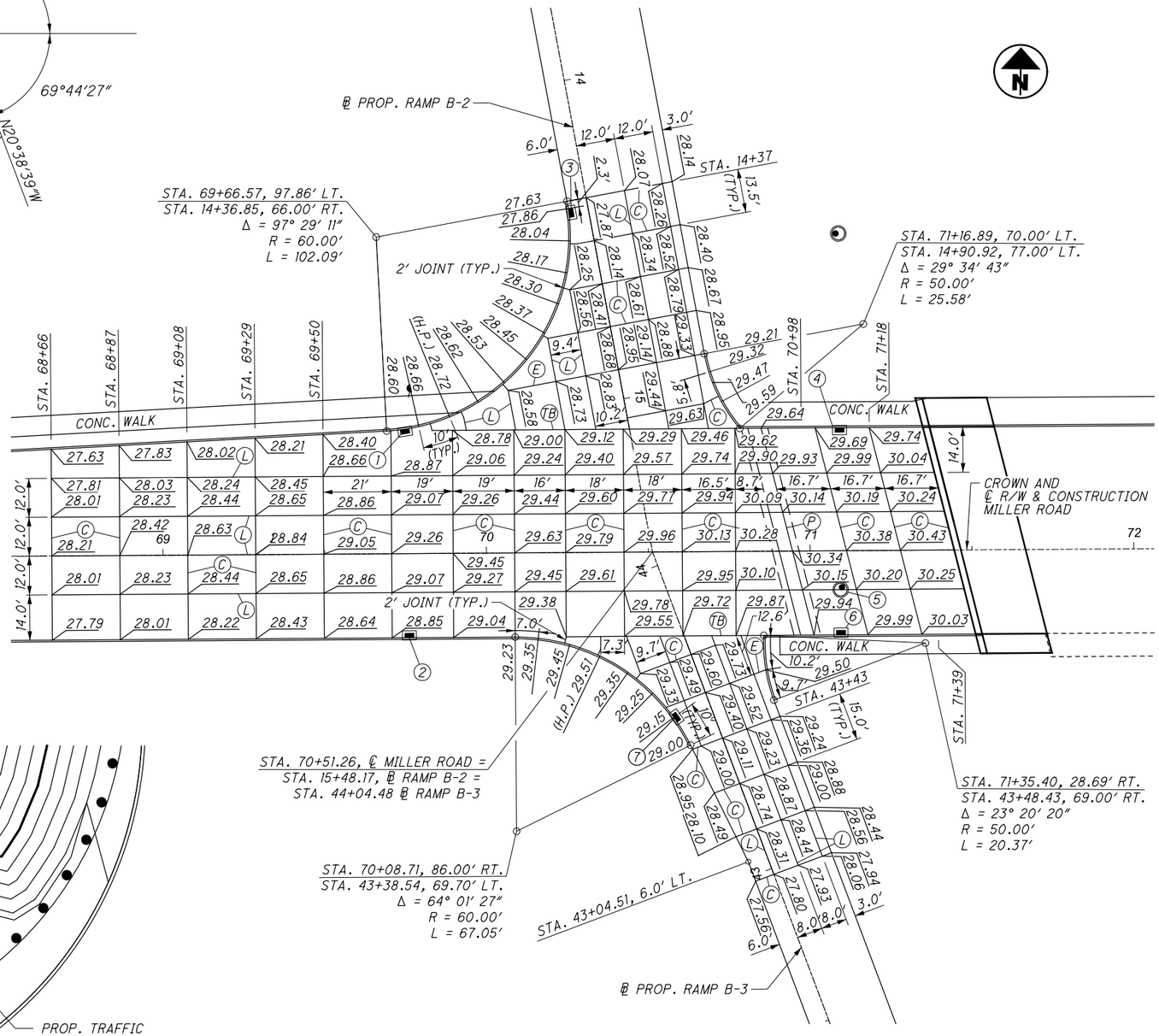

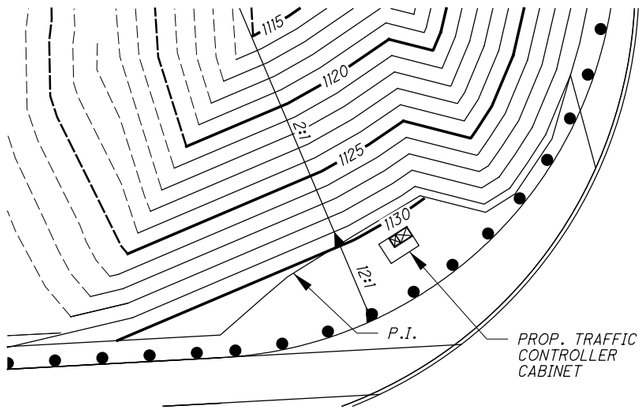

GUARDRAIL GRADING DETAIL

LEGEND

- (C) CONTRACTION JOINT
- (L) LONGITUDINAL JOINT
- (TB) THICKENED EDGE BUTT JOINT
- (P) TYPE A PRESSURE RELIEF JOINT (ODOT STD. CONST. DWG. BP-2.4)
- (E) EXPANSION JOINT
- L.P. = LOW POINT
- H.P. = HIGH POINT

1. STA. 69+75.00, 38.49' LT.
PROP. CUY. COUNTY CB 3C
T/G 28.46

2. STA. 69+76.00, 26.00' RT.
PROP. CUY. COUNTY CB 3C
T/G 28.75

3. STA. 14+40.50 (B-2), 6.11' RT.
PROP. CUY. COUNTY CB 3C
T/G 27.56

4. STA. 71+09.00, 38.00' LT.
PROP. CUY. COUNTY CB 3C
T/G 29.54

5. STA. 71+09.00, 11.42' RT.
PROP. MANHOLE NO. 3
T/C 30.09

6. STA. 71+09.00, 26.00' RT.
PROP. CUY. COUNTY CB 3C
T/G 29.78

7. STA. 43+54.00 (B-3), 11.73' LT.
PROP. CUY. COUNTY CB 3C
T/G 28.98

NOTES:
1. ALL ELEVATIONS ABBREVIATED FROM 1100.
2. SEE SHEET P.207 FOR CURB RAMP DETAILS.

HORIZONTAL SCALE IN FEET
0 10 20 40

INTERSECTION DETAIL
MILLER ROAD - RAMPS B-2 AND B-3

CUY-77-00.42 PART 1

MODEL: Sheet PAPERSIZE: 17x11 (in.) DATE: 3/4/2022 TIME: 1:40:02 PM USER: esmccaslin
F:\Jobs\162-Miller Road Interchange\104983\400-Engineering\Roadway\Sheets\104983_G100i.dgn

DESIGN AGENCY
EUTHENICS
8225 Mohawk Dr. | Cleveland, OH 44139

DESIGNER
COM

REVIEWER
MRC 03/01/22

PROJECT ID
104983

SHEET P.204 | TOTAL P.434

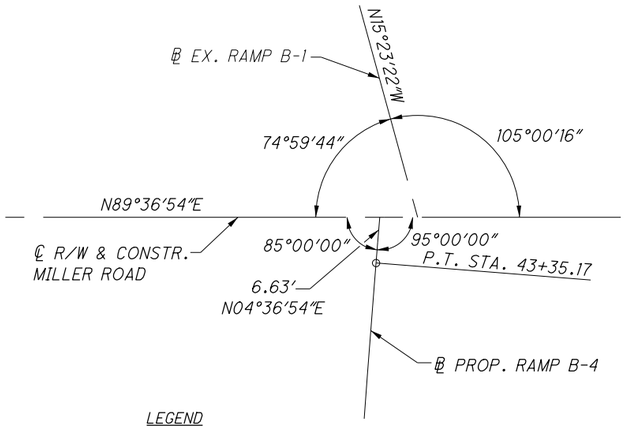

LEGEND

- (C) CONTRACTION JOINT
- (L) LONGITUDINAL JOINT
- (TB) THICKENED EDGE BUTT JOINT
- (P) TYPE A PRESSURE RELIEF JOINT (ODOT STD. CONST. DWG. BP-2.4)
- (E) EXPANSION JOINT
- L.P. = LOW POINT
- H.P. = HIGH POINT

1. STA. 74+90.00, 38.00' LT.
   PROP. CUY. COUNTY CB 3C
   T/G 27.23
2. STA. 74+90.00, 31.00' RT.
   PROP. MANHOLE NO. 3, AS P
   T/C 28.00
3. STA. 75+09.00, 26.00' RT.
   PROP. CUY. COUNTY CB 3C
   T/G 27.19
4. STA. 77+35.50, 49.00' LT
   PROP. CUY. COUNTY CB 3C
   T/G 21.43
5. STA. 77+35.50, 41.24' LT.
   PROP. MANHOLE NO. 3, AS P
   T/C 21.75
6. STA. 77+35.50, 26.00' RT.
   PROP. CUY. COUNTY CB 3C
   T/G 21.85

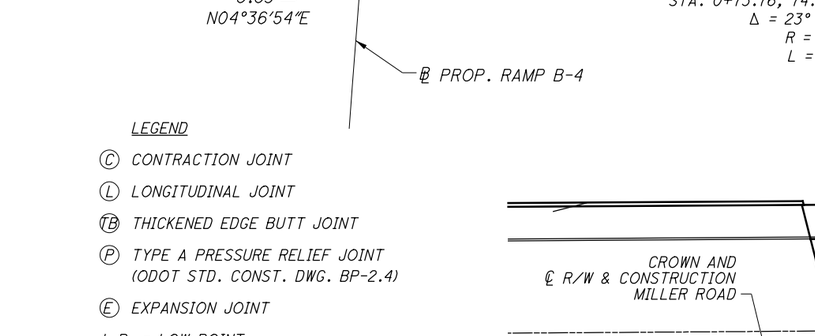

GUARDRAIL GRADING DETAIL

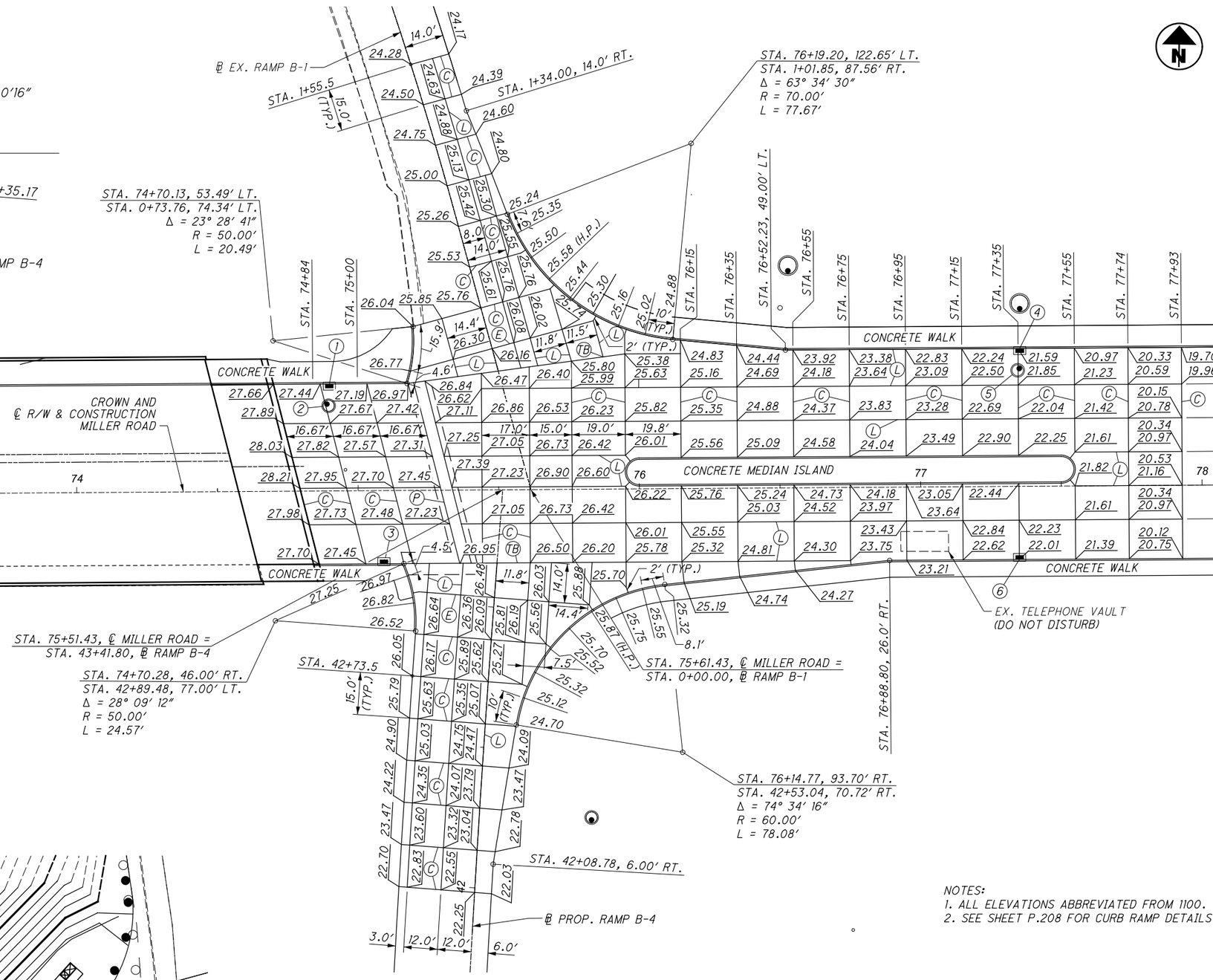

NOTES:
1. ALL ELEVATIONS ABBREVIATED FROM 1100.
2. SEE SHEET P.208 FOR CURB RAMP DETAILS.

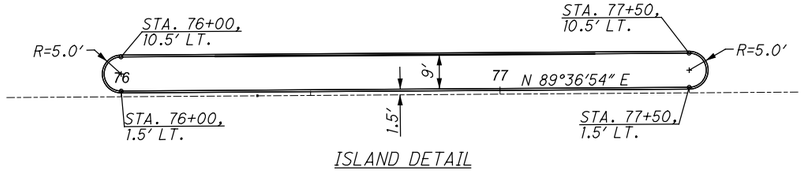

ISLAND DETAIL

HORIZONTAL SCALE IN FEET
0 10 20 40

INTERSECTION DETAIL
MILLER ROAD - RAMPS B-1 AND B-4

CUY-77-00.42 PART 1

MODEL: Sheet PAPERSIZE: 17x11(in.) DATE: 3/4/2022 TIME: 1:40:13 PM USER: esmccaslin
F:\Jobs\162-Miller Road Interchange\104983\400-Engineering\Roadway\Sheets\104983_GI002.dgn

DESIGN AGENCY
EUTHENICS
8235 Mohawk Dr. | Cleveland, OH 44130

DESIGNER
COM

REVIEWER
MRC 03/01/22

PROJECT ID
104983

SHEET P.205 | TOTAL P.434

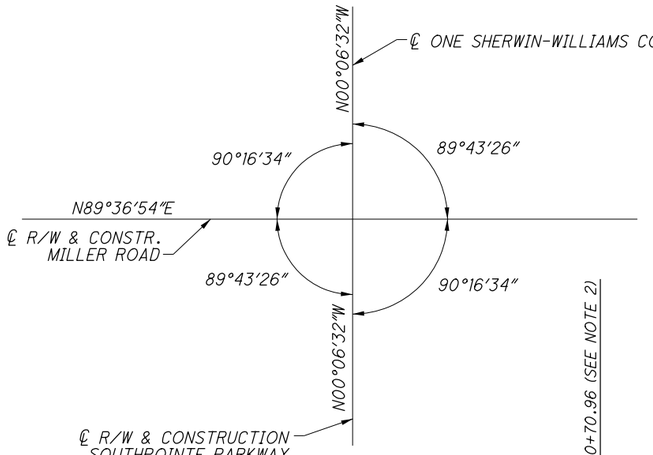

LEGEND

- (C) CONTRACTION JOINT
- (L) LONGITUDINAL JOINT
- (TB) THICKENED EDGE BUTT JOINT
- L.P. = LOW POINT
- H.P. = HIGH POINT

1. STA. 81+25.00, 53.87' LT.
   PROP. MANHOLE NO. 3
   T/C 11.07
2. STA. 81+25.60, 75.51' LT.
   PROP. MANHOLE NO. 3
   T/C 10.45
3. STA. 81+90.05, 56.41' LT.
   PROP. MANHOLE NO. 3, 72"
   T/C 10.61
4. STA. 81+93.00, 43.00' LT.
   PROP. CUY. COUNTY CB TWIN 3C
   T/G 9.60
5. STA. 81+93.00, 30.00' RT.
   PROP. CUY. COUNTY CB TWIN 3C
   T/G 10.02
6. STA. 82+75.00, 33.30' RT.
   PROP. CUY. COUNTY CB-3C
   T/G 10.41
7. STA. 82+75.00, 38.00' LT.
   PROP. CUY. COUNTY CB-3C
   T/G 10.04
8. STA. 82+74.28, 44.20' LT.
   PROP. MANHOLE NO. 3, 72"
   T/C 10.95
9. STA. 19+25.40 (SOUTHPOINTE), 26.39' LT.
   PROP. CUY. COUNTY CB-3C
   T/G 10.50
10. STA. 83+64.33, 37.96' RT.
    EX. SANITARY MANHOLE
    (ADJUST TO GRADE)
    EX. T/C 11.17
    PROP. T/C 11.40
11. STA. 20+85.81, 6.0' RT.
    PROP. MANHOLE NO. 3
    T/C 11.79
12. STA. 83+70.32, 44.60' LT.
    PROP. MANHOLE NO. 3, 60"
    T/C 11.19
13. STA. 83+78.59, 25.56' LT.
    EX. STORM MANHOLE
    (TO BE REMOVED)
14. STA. 19+25.31 (SOUTHPOINTE), 24.80' RT.
    PROP. CUY. COUNTY CB-3C
    T/G 10.55
15. STA. 83+97.90, 46.72' RT.
    PROP. MANHOLE NO. 3, 48"
    T/C 11.03
16. STA. 20+85.42 (SOUTHPOINTE), 36.00' RT.
    PROP. CUY. COUNTY CB-3C
    T/G 10.40
17. STA. 84+02.80, 26.50' RT.
    EX. STORM MANHOLE
    (TO BE REMOVED)
18. STA. 84+04.33, 53.46' LT.
    EX. SANITARY MANHOLE
    (ADJUST TO GRADE)
    EX. T/C 11.92
    PROP. T/C 11.00
19. STA. 84+41.00, 35.00' RT.
    PROP. CUY. COUNTY CB-3C
    T/G 11.59
20. STA. 84+41.36, 26.31' RT.
    PROP. MANHOLE NO. 3, 48"
    T/C 11.79
21. STA. 84+46.20, 41.66' LT.
    PROP. MANHOLE NO. 3, 48"
    T/C 12.45
22. STA. 83+91.55, 24.20' RT.
    PROP. MANHOLE NO. 3
    AS PER PLAN 4
    T/G 11.61

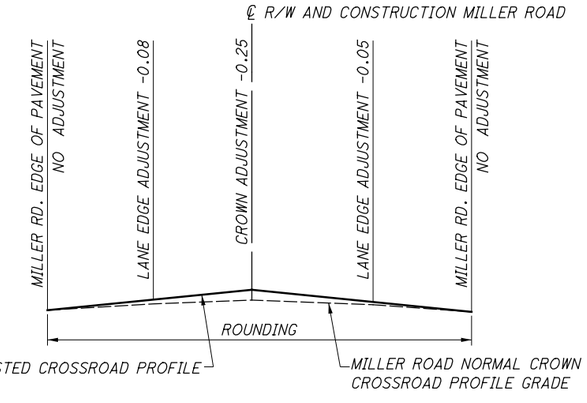

PAVEMENT ROUNDING ELEVATION ADJUSTMENT DETAIL

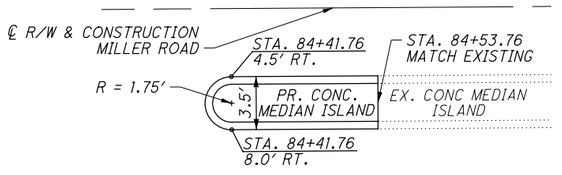

ISLAND NOSE DETAIL

NOTES:
1. ALL ELEVATIONS ABBREVIATED FROM 1100.
2. JOINTS WEST OF STA. 80+70.96 ARE PERPENDICULAR TO CENTERLINE.
   JOINTS EAST OF STA. 80+70.96 ARE PERPENDICULAR TO CURBLINE.
3. SEE SHEET P.209 FOR CURB RAMP DETAILS.

HORIZONTAL SCALE IN FEET
0 10 40

INTERSECTION DETAIL
MILLER ROAD AND SOUTHPOINTE PARKWAY / ONE SHERWIN WILLIAMS COURT

DESIGN AGENCY
EUTHENICS
8235 Mohawk Dr. | Cleveland, OH 4435

DESIGNER	COM
REVIEWER	MRC 03/01/22
PROJECT ID	104983
SHEET	P.206
TOTAL	P.434

CUY-77-00.42 PART 1

MODEL: Sheet PAPERSIZE: 17x11(in.) DATE: 3/4/2022 TIME: 1:40:21 PM USER: esmccasin
F:\Jobs\162-Miller Road Interchange\104983\400-Engineering\Roadway\Sheets\104983_GI003.dgn

ITEM 608 - CURB RAMPS				
REF. NO.	TYPE	LOCATION (MILLER ROAD)	WIDTH	AREA (SQ. FT.)
CR-1	B3	STA. 69+98.09, 46.81' LT.	5'	136
CR-2	B1	STA. 70+71.20, 49.70' LT.	5'	106
CR-3	B2	STA. 70+92.97, 38.00' LT.	5'	160
CR-4	B1	STA. 70+92.97, 26.00' RT.	5'	92
TOTAL CARRIED TO ROADWAY SUBSUMMARY				494

LOCATION SHOWN IS TO THE CENTER OF RAMP AT FACE OF CURB

LEGEND

[A] 13:1 SLOPE MAX

[B] 64:1 SLOPE MAX

TRUNCATED DOMES

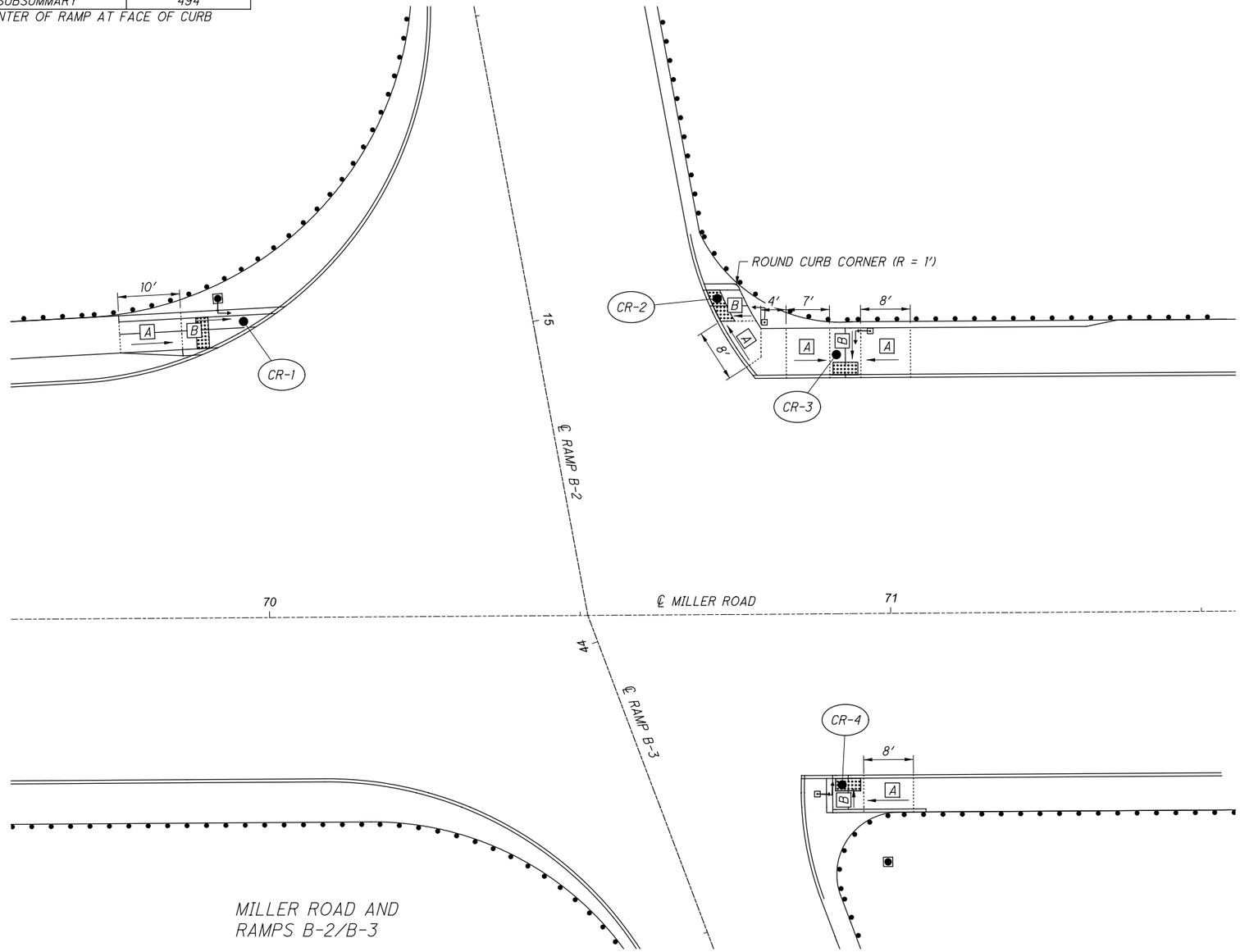

MILLER ROAD AND
RAMPS B-2/B-3

HORIZONTAL SCALE IN FEET
0 5 10 20

MISCELLANEOUS DETAILS - CURB RAMPS
MILLER ROAD - RAMPS B-2 AND B-3

DESIGN AGENCY
EUTHENICS
8235 Mohawk Dr. | Cleveland, OH 44625

DESIGNER COM
REVIEWER MRC 03/01/22
PROJECT ID 104983
SHEET P.207 TOTAL P.434

CUY-77-00.42 PART 1

MODEL: 104983_GM005_INTERSECTION | PAPERSIZE: 17x11(in.) DATE: 3/4/2022 TIME: 1:40:29 PM USER: esmccaslin
F:\Jobs\1162-Miller Road Interchange\104983\400-Engineering\Roadway\Sheets\104983_GM005.dgn

ITEM 608 - CURB RAMPS				
REF. NO.	TYPE	LOCATION (MILLER ROAD)	WIDTH	AREA (SQ. FT.)
CR-1	C1	STA. 75+05.67, 38.00' LT.	5'	122
CR-2	A1	STA. 75+19.87, 48.42' LT.	5'	134
CR-3	B1	STA. 75+79.68, 64.88' LT.	5'	111
CR-4	B1	STA. 75+86.55, 40.75' RT.	5'	89
CR-5	B1	STA. 75+18.94, 34.49' RT.	5'	80
CR-6	B2	STA. 75+95.50, 26.00' RT.	5'	120
TOTAL CARRIED TO ROADWAY SUBSUMMARY				656

LOCATION SHOWN IS TO THE CENTER OF RAMP AT FACE OF CURB

LEGEND

- A 13:1 SLOPE MAX
- B 64:1 SLOPE MAX
- C 10:1 SLOPE MAX
- D 20:1 RUNNING SLOPE MIN
- TRUNCATED DOMES

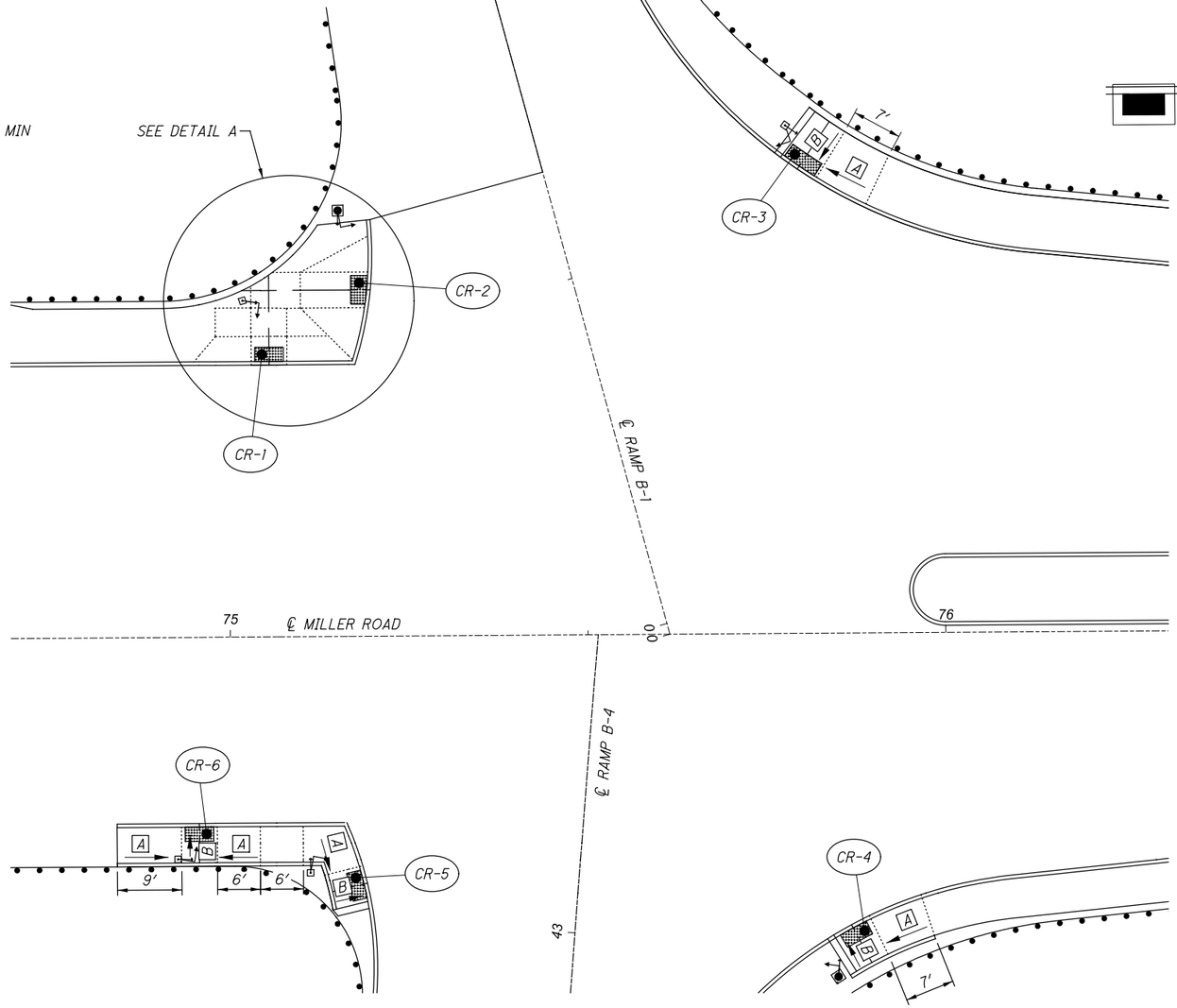

MILLER ROAD AND
RAMPS B-1/B-4

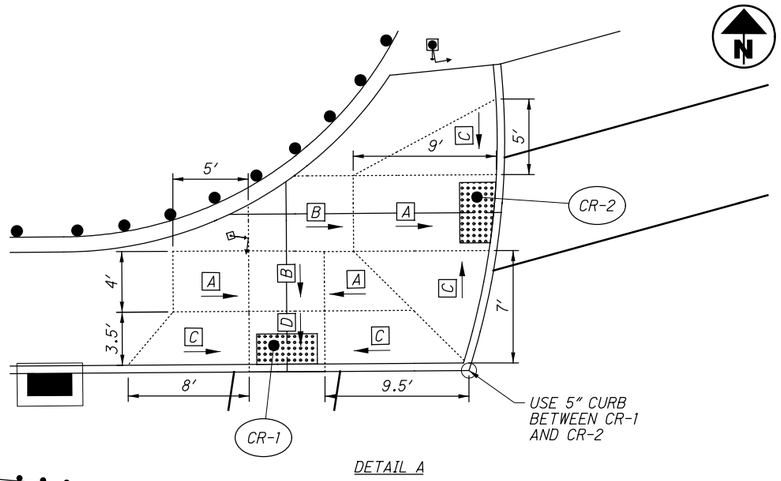

DETAIL A

HORIZONTAL
SCALE IN FEET
0 5 10 20

MISCELLANEOUS DETAILS - CURB RAMPS
MILLER ROAD - RAMPS B-1 AND B-4

DESIGN AGENCY
EUTHENICS
8235 Mohawk Dr. | Cleveland, OH 44625

DESIGNER
COM

REVIEWER
MRC 03/01/22

PROJECT ID
104983

SHEET P.208 | TOTAL P.434

CUY-77-00.42 PART 1

MODEL: 104983_GM005_INTERSECTION 2 PAPERSIZE: 17x11(in.) DATE: 3/4/2022 TIME: 1:40:30 PM USER: esmccaslin
F:\Jobs\1162-Miller Road Interchange\104983\400-Engineering\Roadway\Sheets\104983_GM005.dgn

MODEL: I04983_GM005 INTERSECTION 3 PAPERSIZE: 17x11(in.) DATE: 3/4/2022 TIME: 1:40:31 PM USER: esmccaslin
F:\Jobs\1162-Miller Road Interchange\104983\400-Engineering\Roadway\Sheets\104983_GM005.dgn

ITEM 608 - CURB RAMPS				
REF. NO.	TYPE	LOCATION (MILLER ROAD)	WIDTH	AREA (SQ. FT.)
CR-1	C2	STA. 82+95.56, 38.40' LT.	5'	113
CR-2	C2	STA. 83+23.12, 54.63' LT.	5'	129
CR-3	C2	STA. 84+09.45, 54.42' LT.	5'	117
CR-4	C2	STA. 84+23.96, 41.73' LT.	5'	129
CR-5	C2	STA. 84+24.12, 36.43' RT.	5'	136
CR-6	C2	STA. 83+97.33, 53.04' RT.	5'	124
CR-7	C2	STA. 83+20.01, 53.27' RT.	5'	118
CR-8	C2	STA. 82+92.38, 36.87' RT.	5'	110
TOTAL CARRIED TO ROADWAY SUBSUMMARY				976

LOCATION SHOWN IS TO THE CENTER OF RAMP AT FACE OF CURB

LEGEND
- A 13:1 SLOPE MAX
- B 64:1 SLOPE MAX
- TRUNCATED DOMES

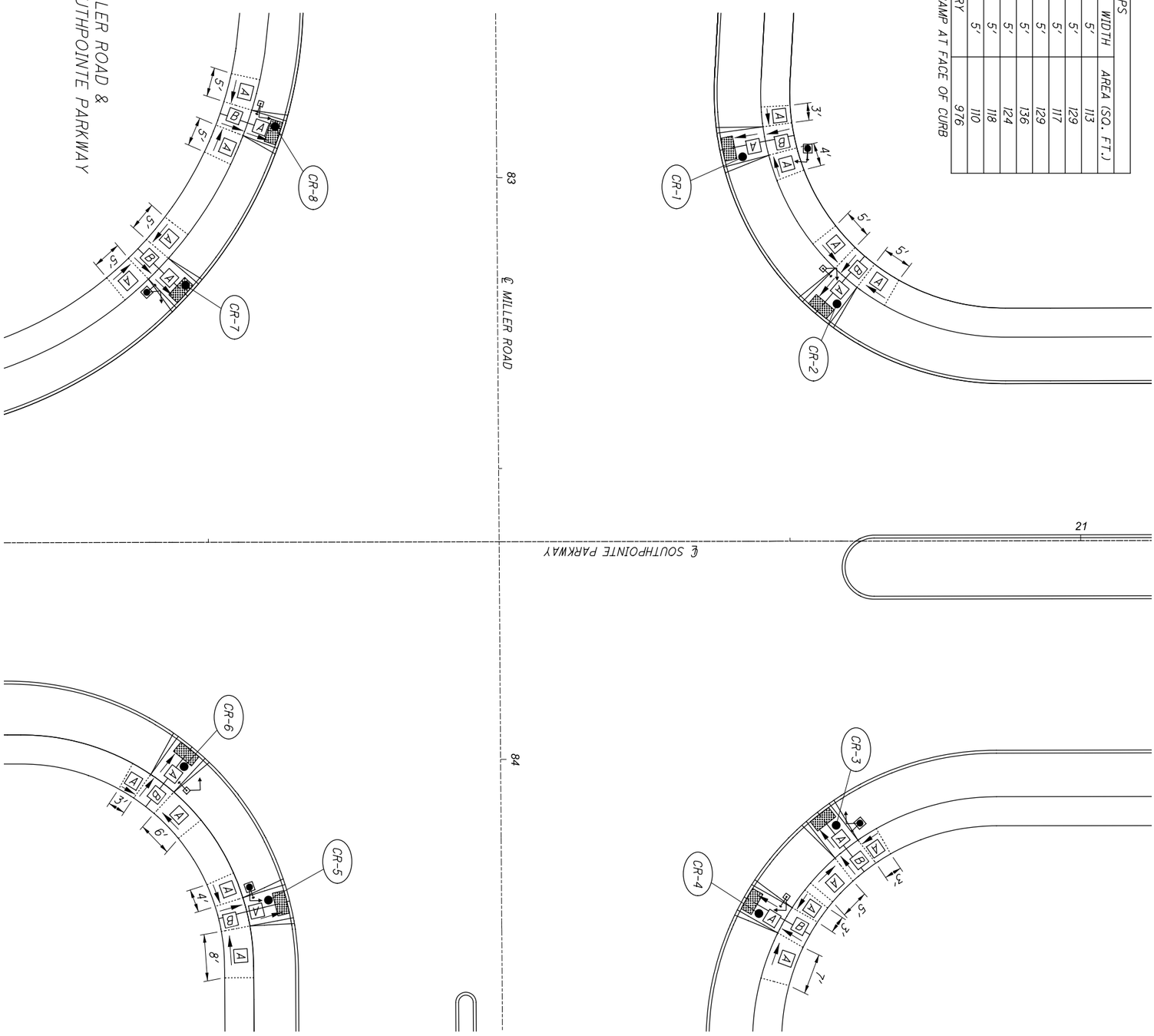
MILLER ROAD &
SOUTHPOINTE PARKWAY
CR-1
CR-2
CR-3
CR-4
CR-5
CR-6
CR-7
CR-8
3'
4'
5'
5'
5

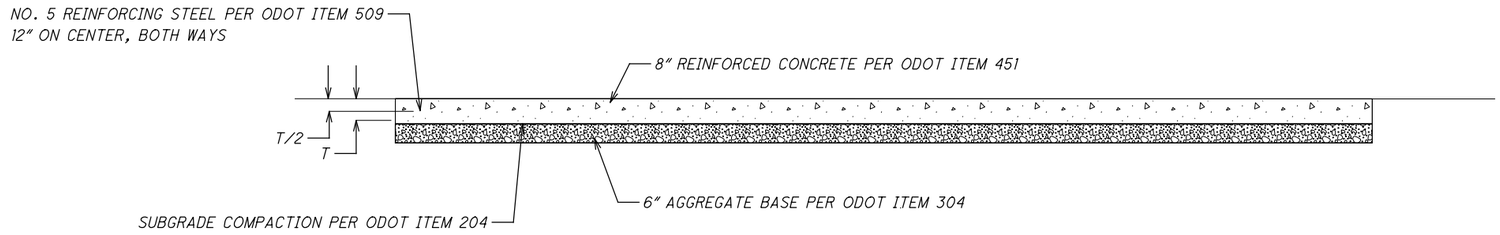

COMMERCIAL DRIVE APRON TYPICAL SECTION

NOT TO SCALE

DRIVE APRON DETAIL

DESIGN AGENCY
EUTHENICS
8235 Mohawk Dr. | Cleveland, OH 44125

DESIGNER
COM

REVIEWER
MRC 03/01/22

PROJECT ID
104983

SHEET P.210 | TOTAL P.434

CUY-77-00.42 PART 1

MODEL: 104983_GM006 PAPERSIZE: 17x11 (in.) DATE: 3/4/2022 TIME: 1:40:38 PM USER: esmccaslin
F:\Jobs\11162-Miller Road Interchange\104983\400-Engineering\Roadway\Sheets\104983_GM006.dgn

LEGEND

⊕ WICK DRAIN

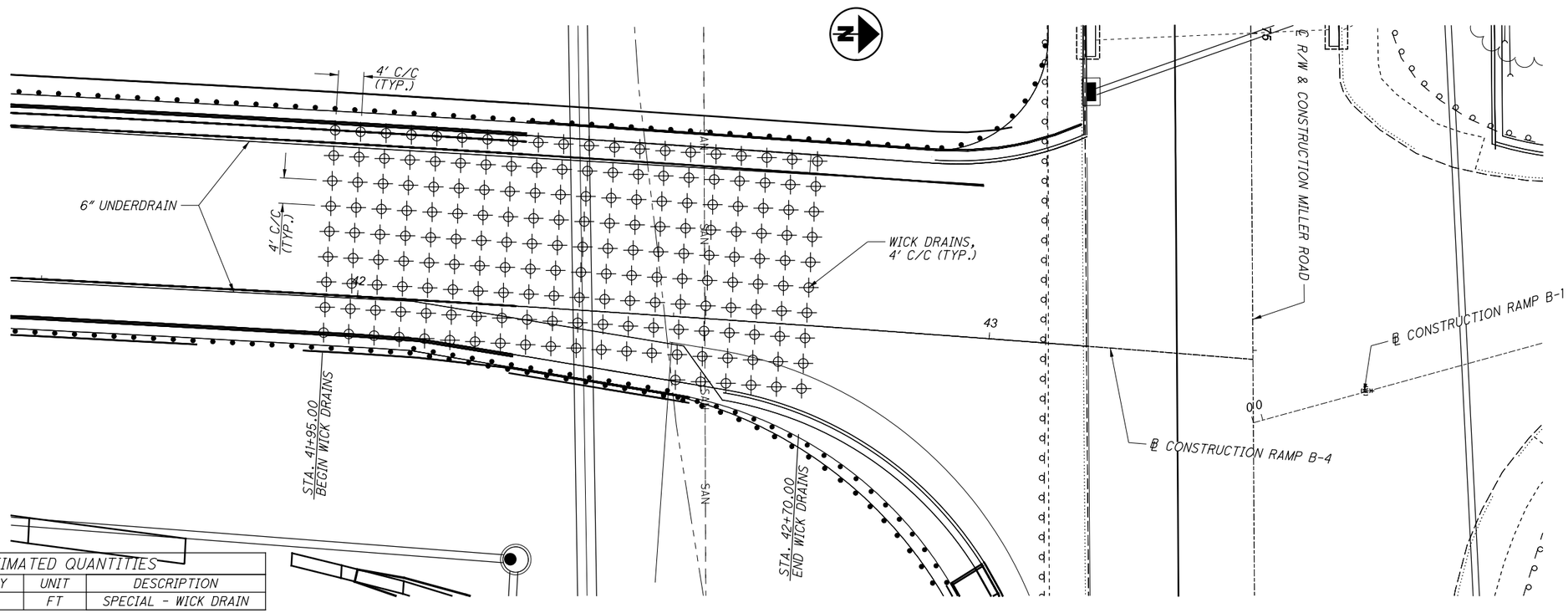

ESTIMATED QUANTITIES			
ITEM	QUANTITY	UNIT	DESCRIPTION
203	3363	FT	SPECIAL - WICK DRAIN

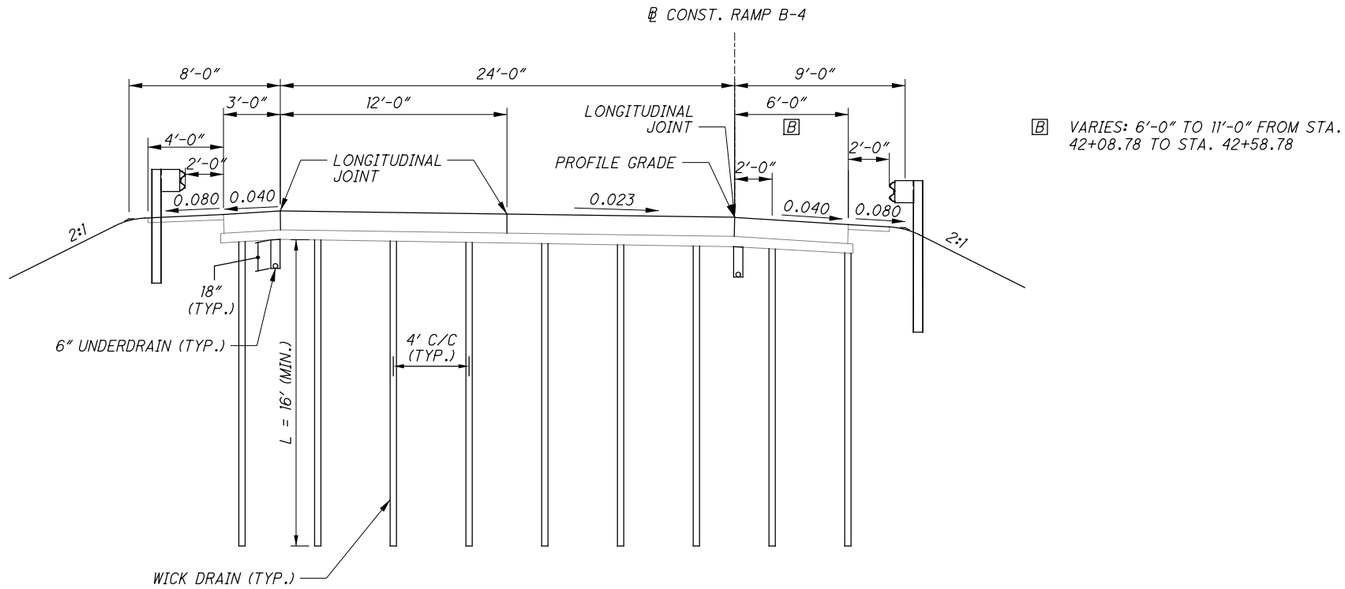

B VARIES: 6'-0" TO 11'-0" FROM STA. 42+08.78 TO STA. 42+58.78

WICK DRAIN SECTION (RAMP B-4)

SECTION APPLIES:
STA. 41+95.00 TO STA. 42+70.00 = 75.00 FT

HORIZONTAL SCALE IN FEET
0 5 10 20

WICK DRAIN DETAIL RAMP B-4

DESIGN AGENCY
EUTHENICS
8235 Mohawk Dr. | Cleveland, OH 44125

DESIGNER COM
REVIEWER RAB 03/01/22
PROJECT ID 104983
SHEET P.211 TOTAL P.434

CUY-77-00.42 PART 1

MODEL: 104983_GM008 PAPERSIZE: 17x11(in.) DATE: 3/4/2022 TIME: 1:41:10 PM USER: esmccaslin
F:\Jobs\1162-Miller Road Interchange\104983\400-Engineering\Roadway\Sheets\104983_GM008.dgn

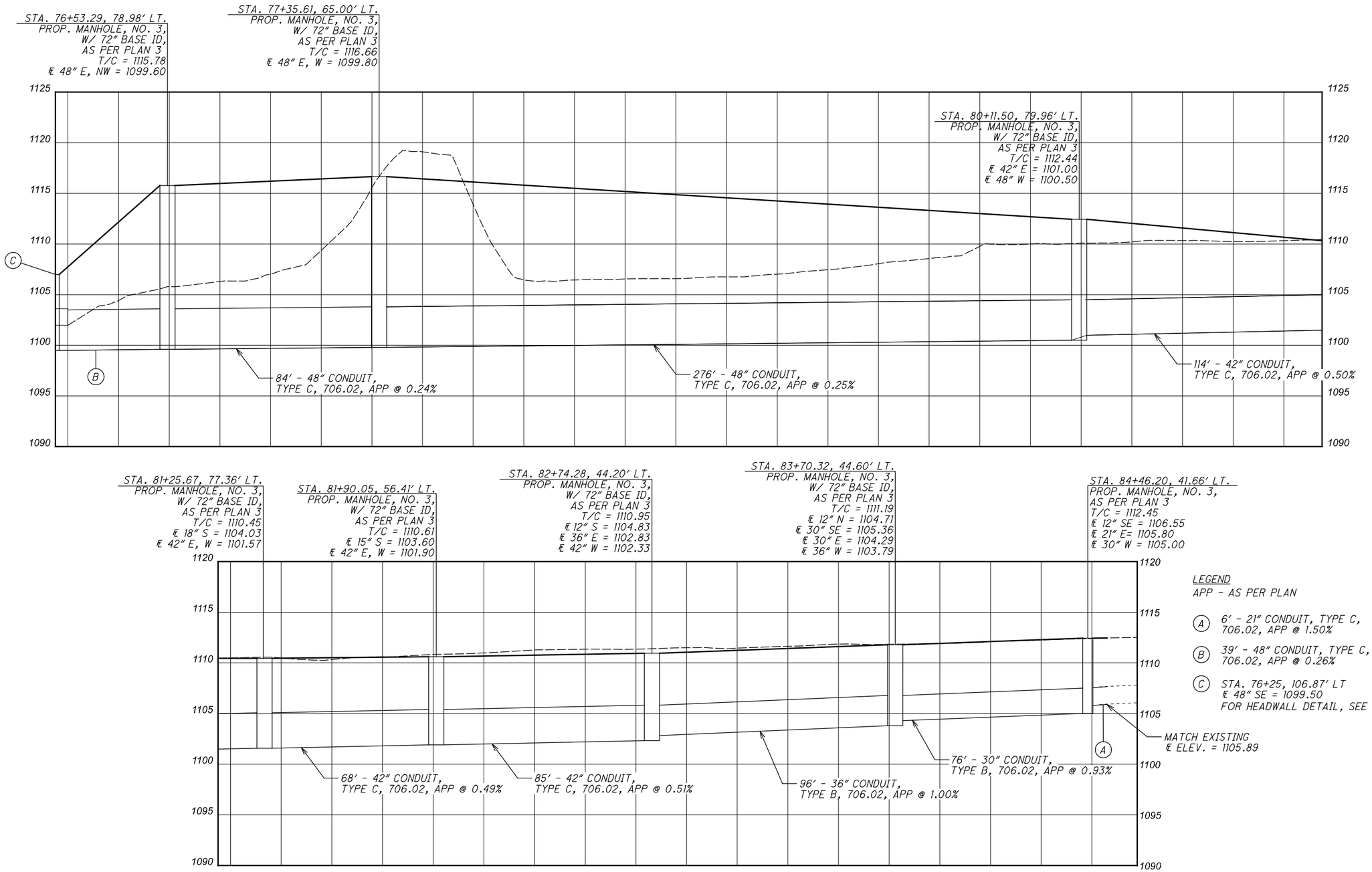

PROFILE VIEW
PROPOSED STORM SEWER

CUY-77-00.42 PART 1

MODEL: I04983_DP001 PAPERSIZE: 17x11(in.) DATE: 3/4/2022 TIME: 1:41:24 PM USER: esmccaslin
F:\Jobs\I162-Miller Road Interchange\I04983\400-Engineering\Drainage\Sheets\I04983_DP001.dgn

DESIGN AGENCY
EUTHENICS
8235 Mohawk Dr. | Cleveland, OH 44130

DESIGNER
ESM

REVIEWER
DTB 03/01/22

PROJECT ID
104983

SHEET P.212 TOTAL P.434

ESTIMATED QUANTITIES			
ITEM	QUANTITY	UNIT	DESCRIPTION
202	16	FT	PIPE REMOVED, OVER 24"
202	2	EACH	HEADWALL REMOVED
601	60	CY	ROCK CHANNEL PROTECTION, TYPE A WITH AGGREGATE FILTER
602	46	CY	CONCRETE MASONRY
611	30	FT	72" CONDUIT, TYPE A, 706.02
625	2	EACH	CONDUIT, MISC.: BENTONITE CLAY DAM

HYDRAULIC DATA

DRAINAGE AREA = 97.11 ACRES

Q (25) = 270 CFS V (25) = 9.9 FT/S HW (25) = 1106.47 FT

Q (100) = 345 CFS V (100) = 12.2 FT/S HW (100) = 1108.06 FT

ORDINARY HIGH WATER MARK: 1100.5'±

DESIGN SERVICE LIFE: N/A (EXISTING CULVERT)

ABRASION LEVEL: 1

CFN: 7654321

EX. DUMPED ROCK

ROCK CHANNEL PROTECTION TYPE A, 36" THICK WITH AGGREGATE FILTER

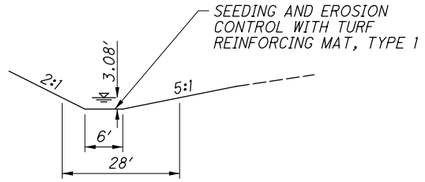

SECTION A-A
NOT TO SCALE

NOTES:

1. CONTRACTOR TO EXTEND 18" RCP THROUGH WINGWALL AND ADJUST WINGWALL REINFORCING STEEL AS NECESSARY TO ACCOMMODATE THE 18" RCP.

2. SEE SHEET P.214 FOR HEADWALL DETAIL.

① EX. 30" RCP

② EX. 32" X 48" RCP
EX. 32" X 48" RCP
EX. 24" RCP

③ EX. 18" RCP

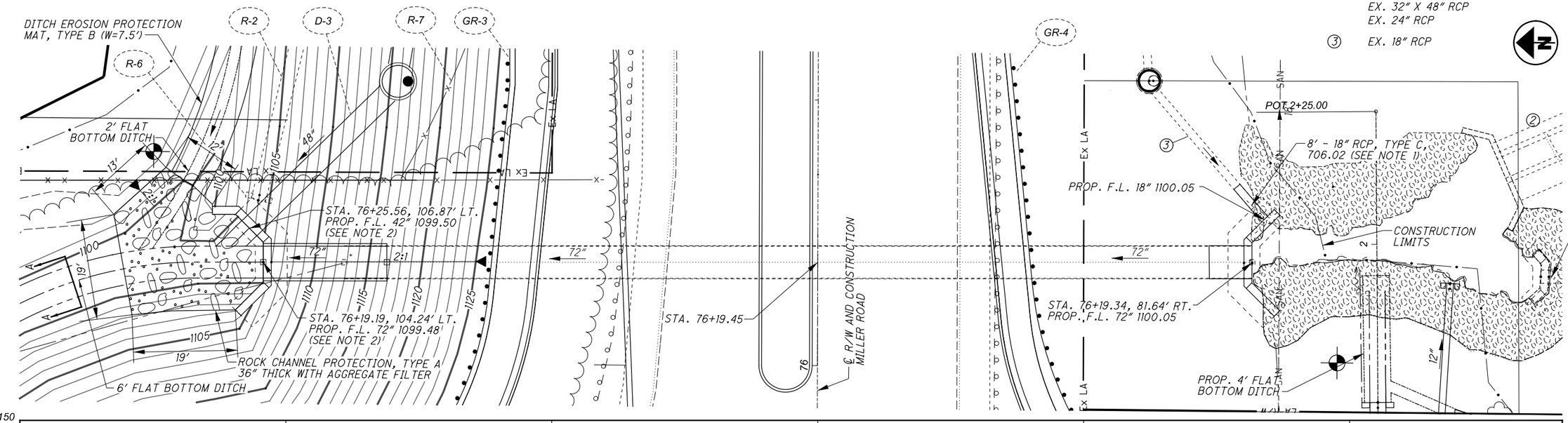

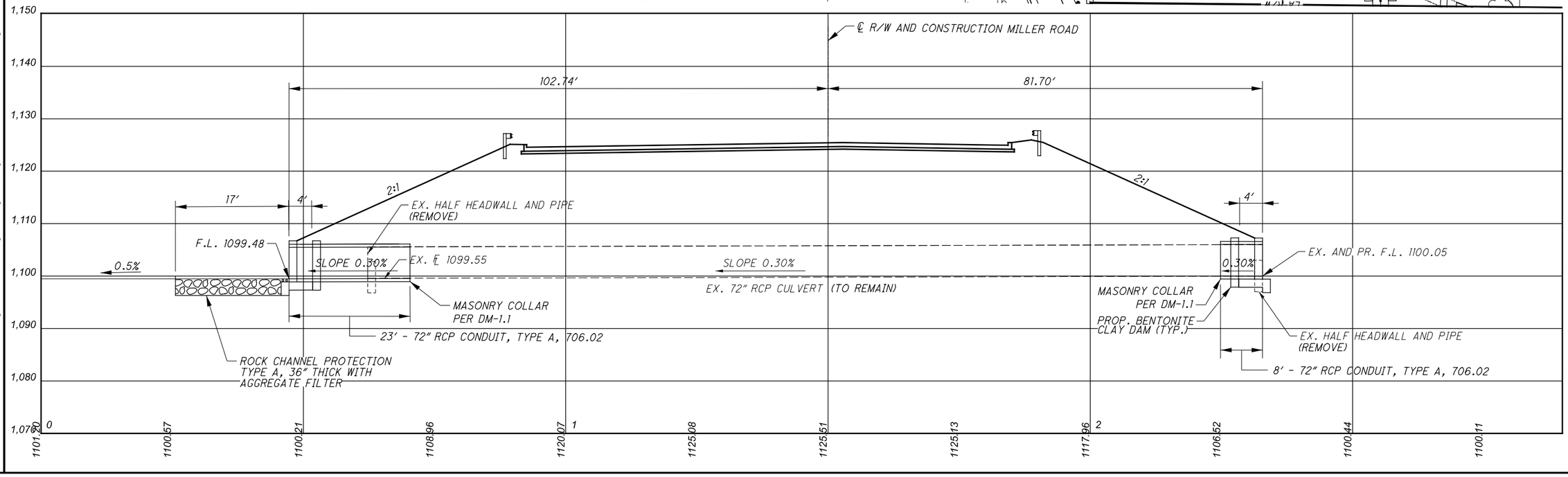

HORIZONTAL SCALE IN FEET
0 5 10 20

CULVERT DETAIL
MILLER ROAD STA. 76+20

CUY-77-00.42 PART 1

DESIGN AGENCY
EUTHENICS
8235 Mohawk Dr. | Cleveland, OH 44026

DESIGNER	DTB
REVIEWER	ARP 03/01/22
PROJECT ID	104983
SHEET	P.213
TOTAL	P.434

MODEL: Culvert-I- Miller Culvert [Sheet] PAPERSIZE: 17x11(in.) DATE: 3/4/2022 TIME: 1:41:32 PM USER: esmccaslin
F:\Jobs\IL2-Miller Road Interchange\104983\400-Engineering\Drainage\Sheets\104983_DC001-004.dgn

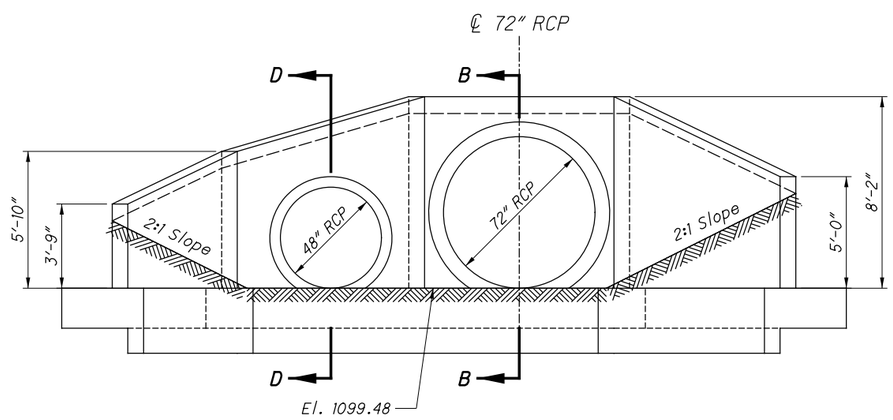

ELEVATION VIEW

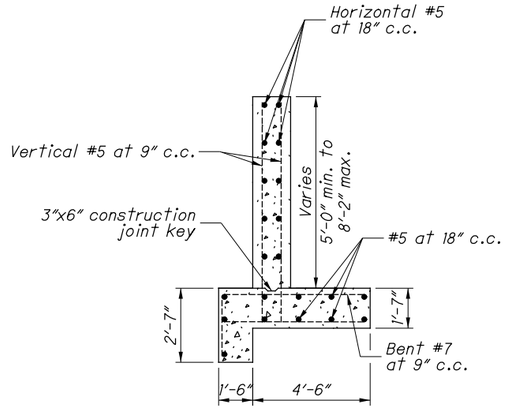

SECTION A-A

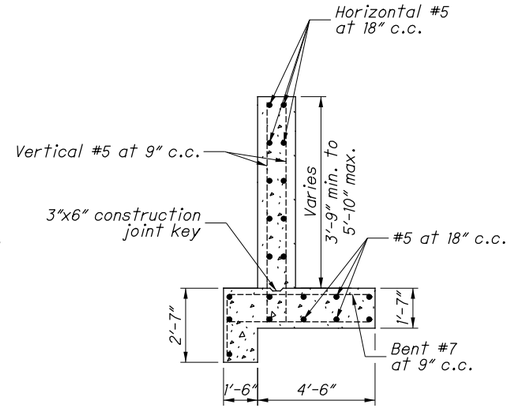

SECTION C-C

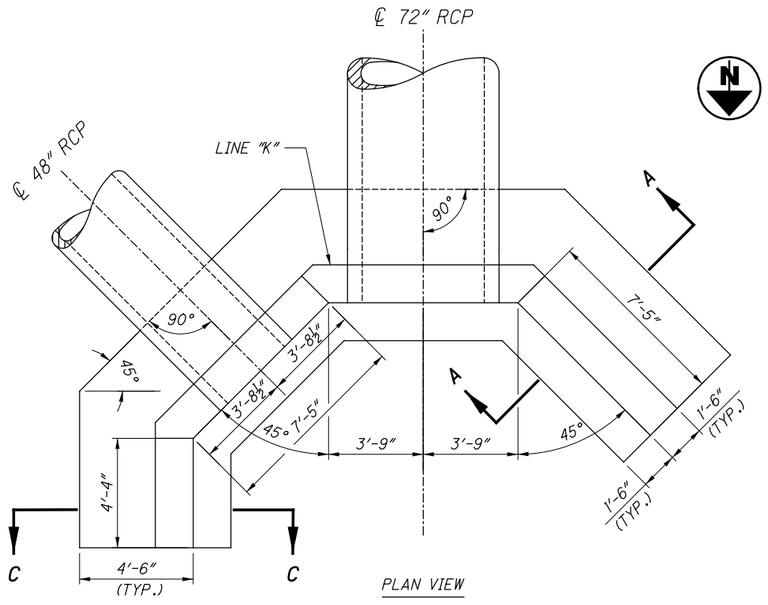

PLAN VIEW

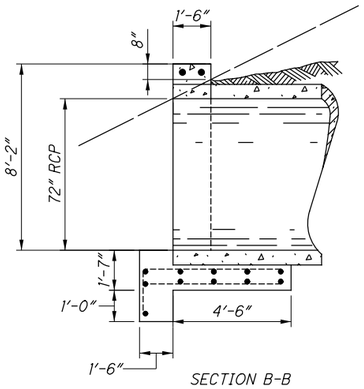

SECTION B-B

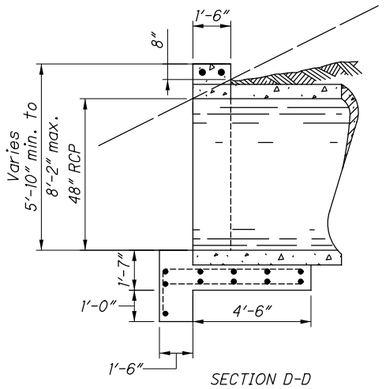

SECTION D-D

NOTES:

1. This drawing provides details to supplement the standard drawing. for headwall reinforcing steel and details not shown, refer to standard drawing HW-1.1.

HEADWALL DETAIL
MILLER ROAD STA. 76+19.19

DESIGN AGENCY
EUTHENICS
8235 Mohawk Dr. | Cleveland, OH 44138

DESIGNER
DTB

REVIEWER
ARP 03/01/22

PROJECT ID
104983

SHEET P.214 TOTAL P.434

CUY-77-00.42 PART 1

MODEL: Sheet PAPERSIZE: 17x11(in.) DATE: 3/4/2022 TIME: 1:41:45 PM USER: esmccasiln
F:\Jobs\1162-Miller Road Interchange\104983\400-Engineering\Drainage\Sheets\104983_DM001.dgn

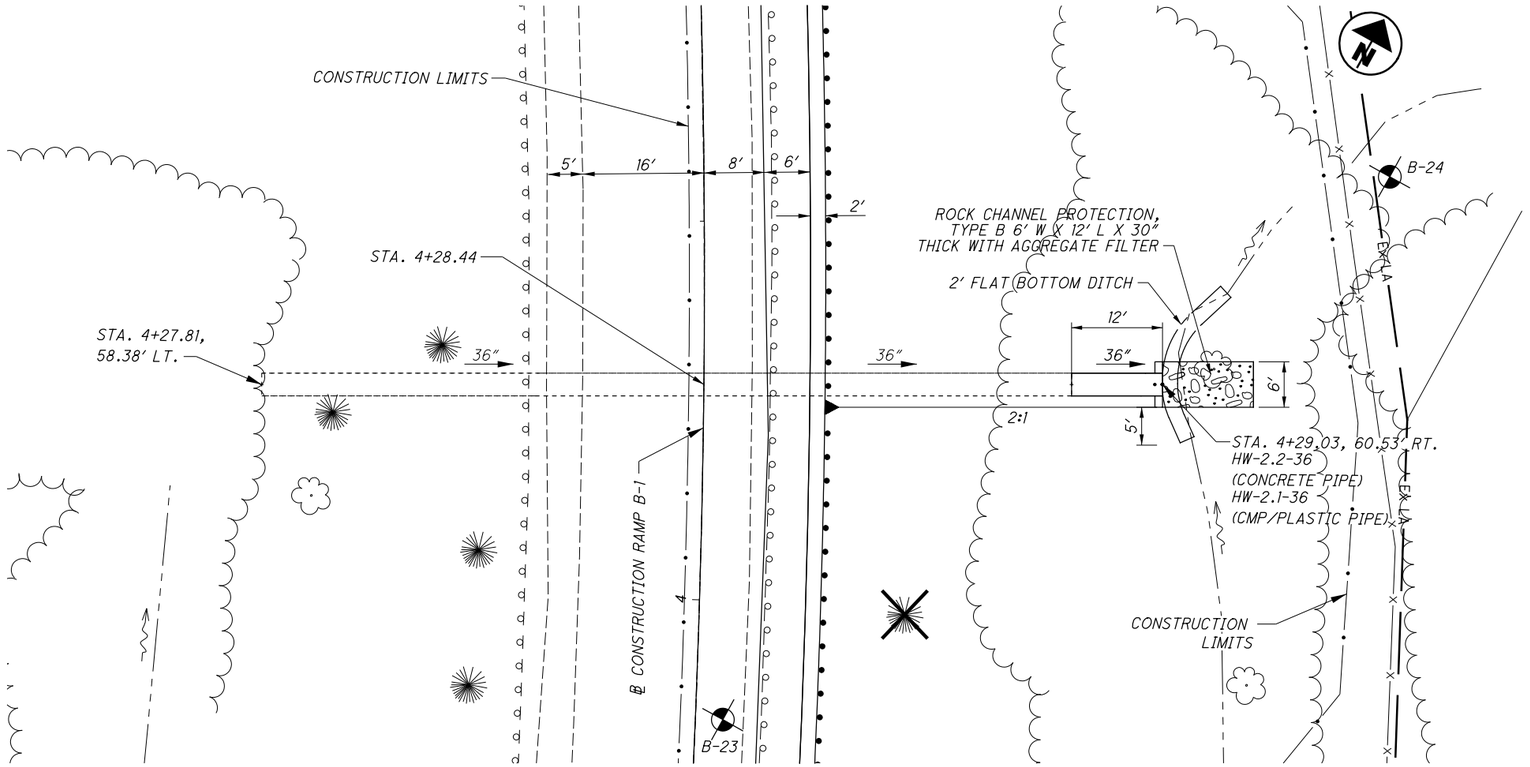

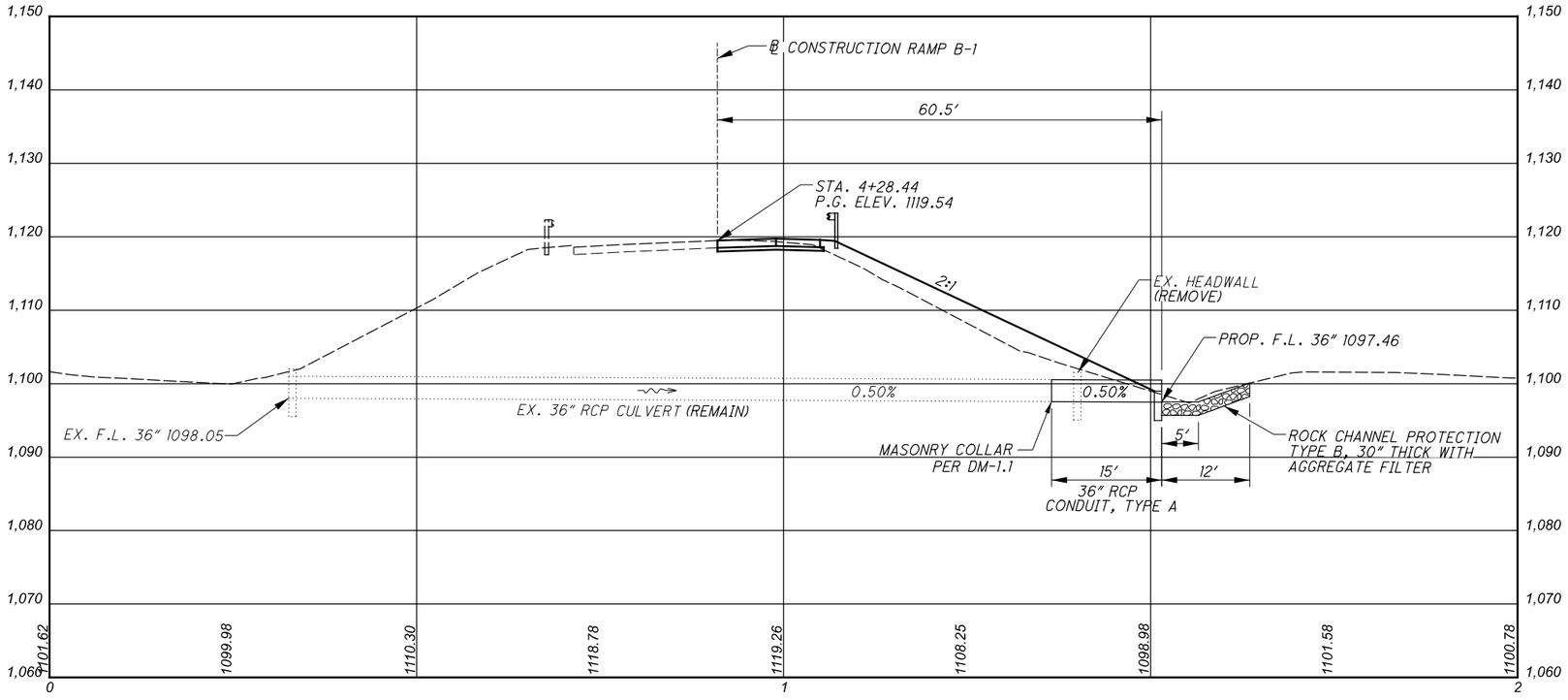

ESTIMATED QUANTITIES			
ITEM	QUANTITY	UNIT	DESCRIPTION
202	4	FT	PIPE REMOVED, OVER 24"
202	1	EACH	HEADWALL REMOVED
601	6.67	CY	ROCK CHANNEL PROTECTION, TYPE B 30" THICK WITH AGGREGATE FILTER
602	0.69	CY	CONCRETE MASONRY
611	15	FT	36" CONDUIT, TYPE A, 706.02, AS PER PLAN

CURVE DATA
P.I. = Sta. 3+08.29
Δ = 16°32'50" RT
Dc = 04°00'00"
R = 1,432.39'
T = 208.29'
L = 413.68'
E = 15.06'

NOTE: PROPOSED CONDUIT EXTENSION MUST MATCH EXISTING CONDUIT MATERIAL IN KIND.

HYDRAULIC DATA

DRAINAGE AREA = 24.19 ACRES
Q (25) = 44.67 CFS V (25) = 6.38 FT/S HW (25) = 1101.54 FT
Q (100) = 54.23 CFS V (100) = 7.73 FT/S HW (100) = 1103.87 FT
ORDINARY HIGH WATER MARK: N/A*
DESIGN SERVICE LIFE: N/A
ABRASION LEVEL: 1
CFN: TBD

* GRASSED WATERWAY

HORIZONTAL SCALE IN FEET
0 5 10 20

CULVERT DETAIL RAMP B-1 STA. 4+28

DESIGN AGENCY
EUTHENICS 8235 Mohawk Dr. | Cleveland, OH 44026

DESIGNER DTB
REVIEWER ARP 03/01/22
PROJECT ID 104983
SHEET P.215 TOTAL P.434

CUY-77-00.42 PART 1

MODEL: Ramp B-1Culvert 4+28 (Sheet1) PAPERSIZE: ITxII(In.) DATE: 3/4/2022 TIME: 1:41:50 PM USER: esmccaslin
F:\Jobs\162-Miller Road Interchange\104983\400-Engineering\Drainage\Sheets\104983_DC001-004.dgn

ESTIMATED QUANTITIES			
ITEM	QUANTITY	UNIT	DESCRIPTION
202	42	FT	PIPE REMOVED, 24" AND UNDER
601	2.67	CY	ROCK CHANNEL PROTECTION, TYPE C 18" THICK WITH AGGREGATE FILTER
602	2.20	CY	CONCRETE MASONRY
611	120	FT	48" CONDUIT, TYPE A, 706.02, 707.01 (1/2') (0.064), OR 707.35

HYDRAULIC DATA

PROPOSED CFN: TO BE DETERMINED
DRAINAGE AREA = 12.91 ACRES
Q (25) = 23.21 CFS V (25) = 8.36 FT/S HW (25) = 1111.25 FT
Q (100) = 28.12 CFS V (100) = 8.83 FT/S HW (100) = 1111.48 FT
ORDINARY HIGH WATER MARK: N/A (GRASSED WATERWAY)
DESIGN SERVICE LIFE: 75 YRS
pH: 7.7
ABRASION LEVEL: 1

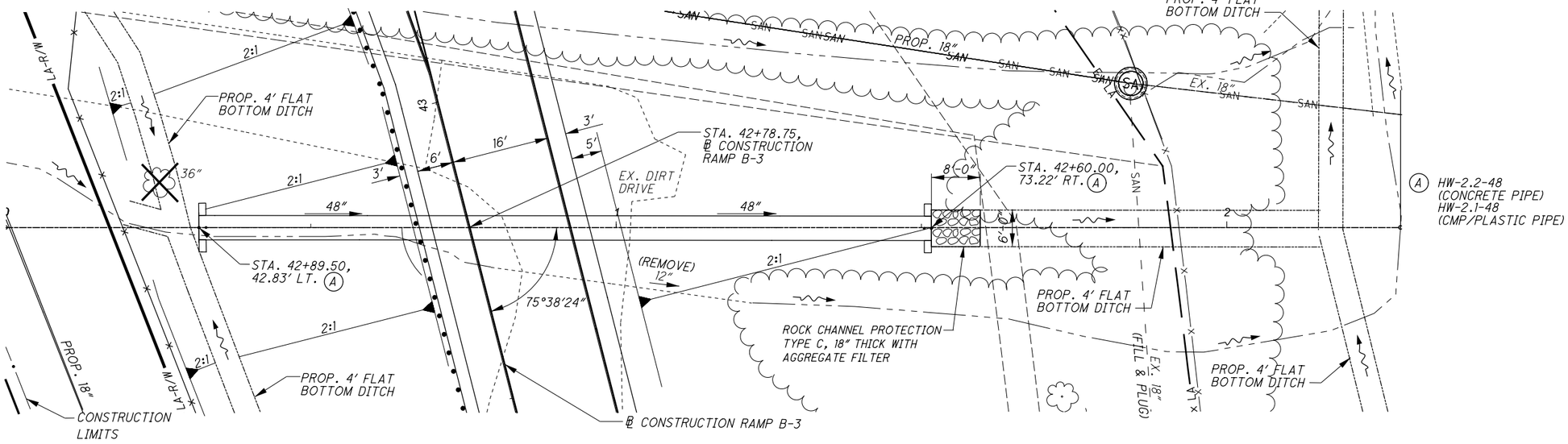

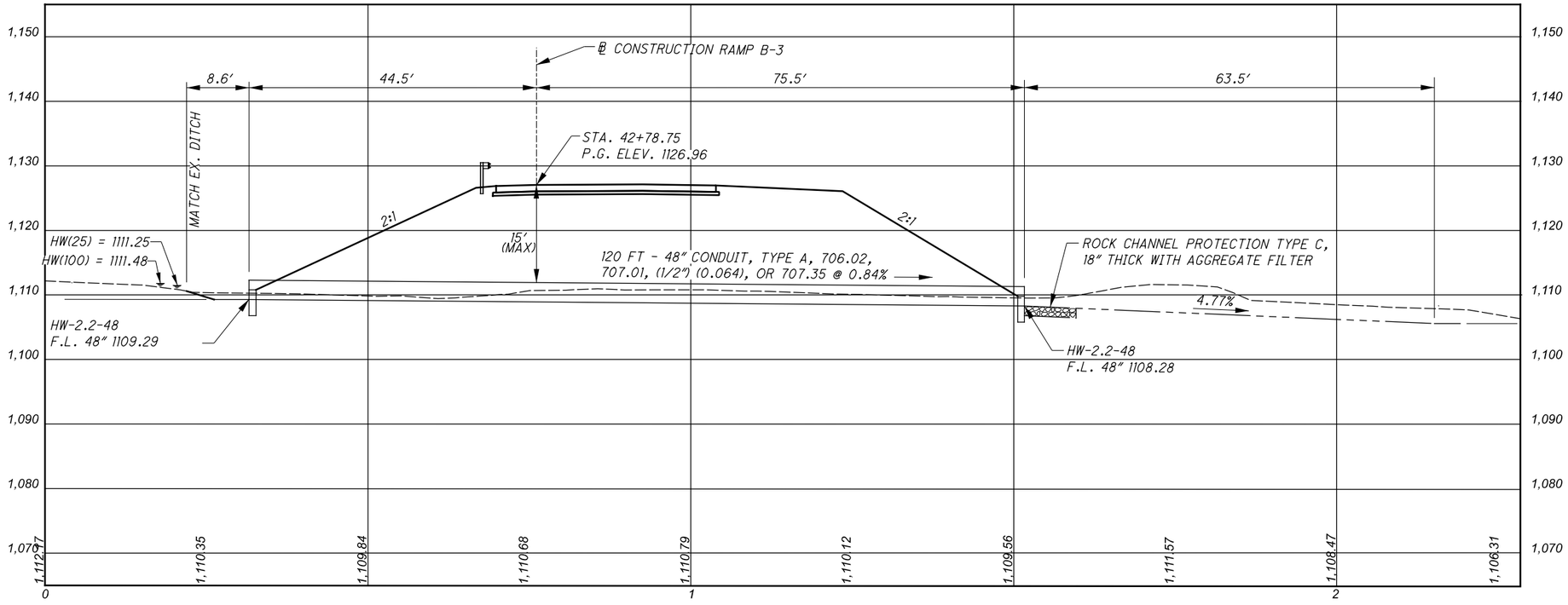

HORIZONTAL SCALE IN FEET
0 5 10 20

CULVERT DETAIL RAMP B-3 STA. 42+78

CUY-77-00.42 PART 1

MODEL: Ramp B-3 Culvert PAPERSIZE: 17x11 (in.) DATE: 3/4/2022 TIME: 1:41:52 PM USER: esmccaslin
F:\Jobs\1162-Miller Road Interchange\104983\400-Engineering\Drainage\Sheets\104983_DC001-004.dgn

DESIGN AGENCY
EUTHENICS
8235 Mohawk Dr. | Cleveland, OH 44129
DESIGNER DTB
REVIEWER ARP 03/01/22
PROJECT ID 104983
SHEET P.216 TOTAL P.434

ESTIMATED QUANTITIES			
ITEM	QUANTITY	UNIT	DESCRIPTION
602	1.38	CY	CONCRETE MASONRY
611	119	FT	36" CONDUIT, TYPE A, 706.02, 707.01 (1/2") (0.064) OR 707.35

HYDRAULIC DATA

DRAINAGE AREA = 1.03 ACRES
Q (25) = 3.27 CFS V (25) = 0.46 FT/S HW (25) = 1105.48 FT
Q (100) = 3.87 CFS V (100) = 0.55 FT/S HW (100) = 1105.55 FT
ORDINARY HIGH WATER MARK: N/A (GRASSED WATERWAY)
DESIGN SERVICE LIFE: 75 YRS
pH: 7.7
ABRASION LEVEL: 1
CFN: TO BE DETERMINED

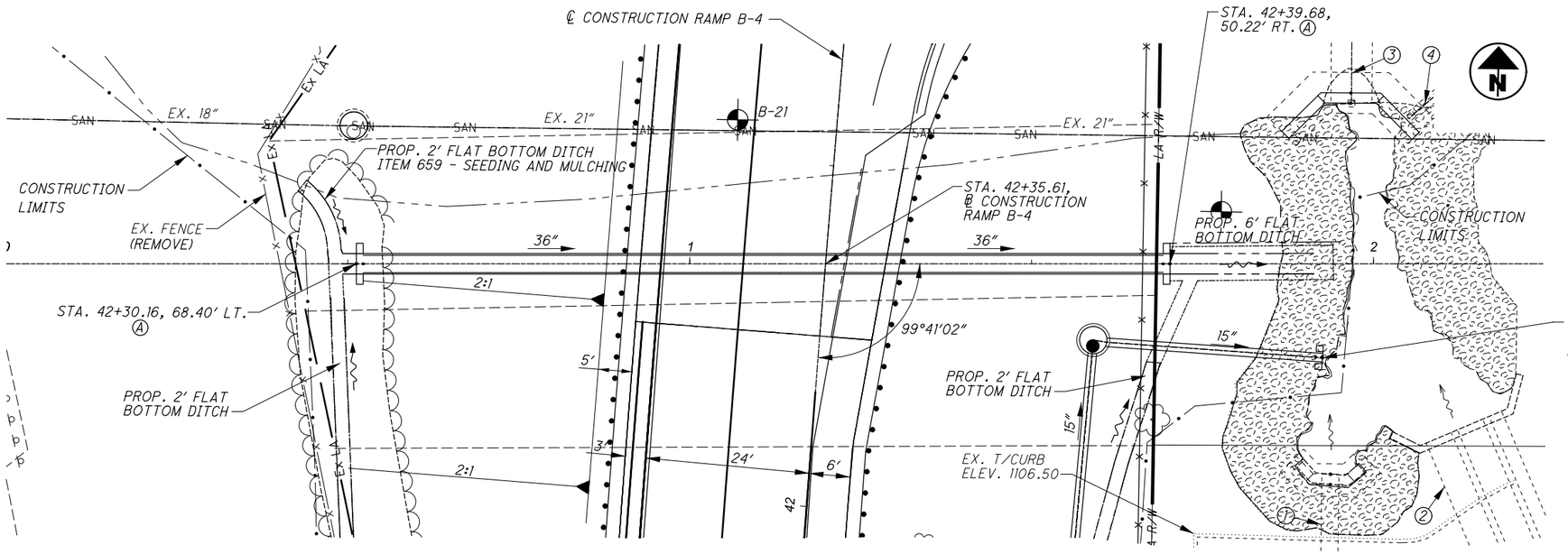

CURVE DATA
P.I. = Sta. 38+51.77
Δ = 09°00'29" RT
Dc = 00°55'47"
R = 6,162.00'
T = 485.40'
L = 968.80'
E = 19.09'

① EX. 30" RCP

② EX. 32" X 48" RCP
EX. 32" X 48" RCP
EX. 24" RCP

③ EX. 72" CMP CULVERT

④ EX. 18" RCP

Ⓐ HW-2.2-36 (CONCRETE PIPE)
HW-2.1-36 (CMP/PLASTIC PIPE)

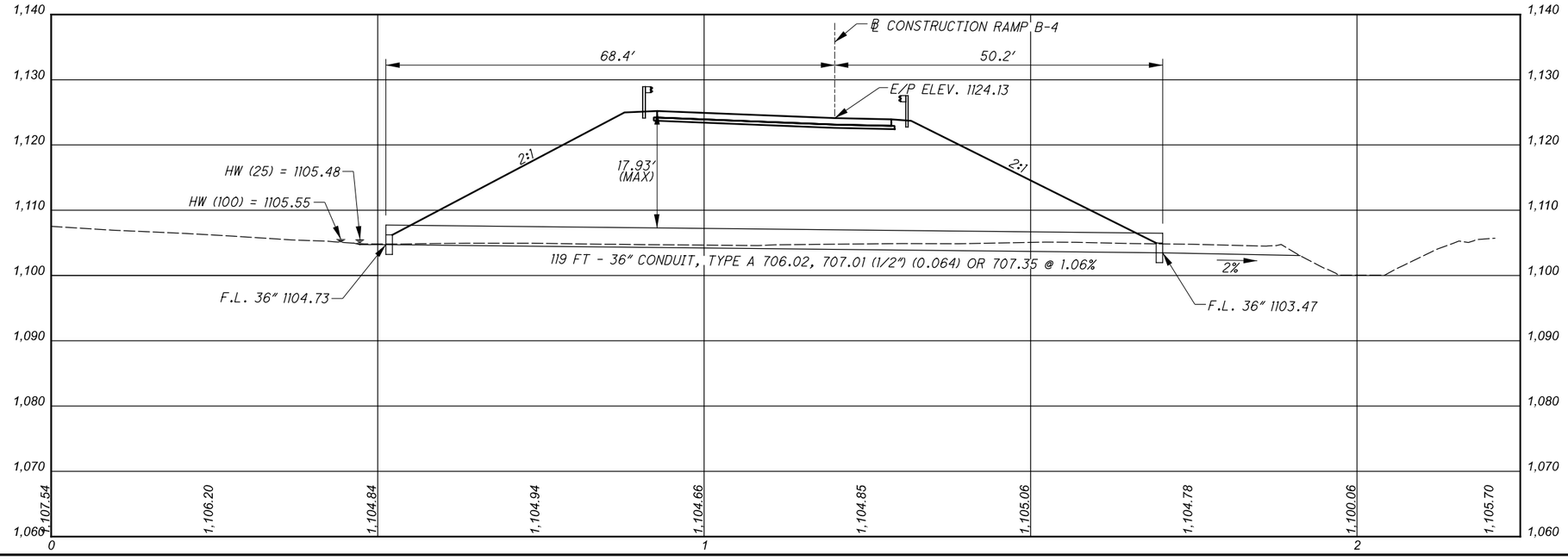

HORIZONTAL SCALE IN FEET
0 5 10 20

CULVERT DETAIL
RAMP B-4 STA. 42+35.61

CUY-77-00.42 PART 1

MODEL: Ramp B-4 Culvert PAPERSIZE: 17x11(in.) DATE: 3/4/2022 TIME: 1:41:53 PM USER: esmccaslin
F:\Jobs\162-Miller Road Interchange\104983\400-Engineering\Drainage\Sheets\104983_DC001-004.dgn

DESIGN AGENCY
EUTHENICS
8235 Mohawk Dr. | Cleveland, OH 44125

DESIGNER
DTB

REVIEWER
ARP 03/01/22

PROJECT ID
104983

SHEET P.217 | TOTAL P.434

SANITARY SEWER NOTES

SANITARY

SANITARY SEWER WORK, AS PER PLAN

ALL SANITARY SEWER WORK INCLUDING SANITARY SEWERS, SANITARY MANHOLES, WYE CONNECTIONS, SANITARY LATERALS, RISER PIPES, AND SANITARY TEST TEES SHALL BE CONSTRUCTED IN ACCORDANCE WITH THE LATEST EDITION OF THE FOLLOWING ITEMS BY A CONTRACTOR THAT IS LICENSED WITH THE CUYAHOGA COUNTY DEPARTMENT OF PUBLIC WORKS (CCDPW): THE UNIFORM STANDARDS FOR SEWERAGE IMPROVEMENTS DATED 2019 AS ADOPTED BY THE CUYAHOGA COUNTY DEPARTMENT OF PUBLIC WORKS (CCDPW); CUYAHOGA COUNTY SANITARY ENGINEERING DIVISION RULES AND REGULATIONS; UNIFORM STANDARD SEWER DETAILS; AND THE CCDPW GENERAL SANITARY NOTES. THE REFERENCES LISTED ABOVE CAN BE FOUND AT THE FOLLOWING LINK https://www.cuyahogacounty.us/publicworks/services/design- and- construction/sanitary-design. THE CONTRACTOR SHALL BECOME FAMILIAR WITH ALL OF THE SPECIFICATION, DETAILS AND REQUIREMENT OF THE CCDPW PRIOR TO ORDERING ANY SANITARY SEWER ITEMS. THE "AS PER PLAN" DESIGNATION FOR ALL SANITARY SEWER ITEMS INDICATES THAT THE BID ITEM SHALL BE CONSTRUCTED IN ACCORDANCE WITH THE REQUIREMENTS OF THE CCDPW AND THE REQUIREMENTS LISTED IN THE GENERAL NOTES, OR SHOWN ON THE SANITARY DETAILS WITHIN THIS PLAN.

THE "AS PER PLAN" REQUIRES THE CONTRACTOR TO PERFORM ADDITIONAL SUBSURFACE INVESTIGATION FOR AREAS WHERE THE PROPOSED WORK IS BELOW THE SOIL BORING DEPTHS INDICATED ON THE SUBSURFACE INVESTIGATION SHEETS PROVIDED AT THE BACK OF THE ROADWAY PLANS.

THE "AS PER PLAN" REQUIRES THE CONTRACTOR TO TEST THE SEWER PIPE AND MANHOLES PER THE REQUIREMENTS OF THE UNIFORM STANDARDS. ALL SEWER VIDEO SHALL BE REVIEWED AND APPROVED BY THE CITY ENGINEER AND THE CCDPW.

SUBJECT TO THE CONVENIENCE OF THE OHIO DEPARTMENT OF TRANSPORTATION AND THE CITY OF BRECKSVILLE AND BY OBTAINING THE NECESSARY PERMITS FROM THE CITY OF BRECKSVILLE, PROSPECTIVE BIDDERS SHALL BE PERMITTED TO EXPLORE THE SITE BY MAKING BORINGS OR DIGGING TEST PITS. IN SUCH EVENT, THE WORK SHALL BE DONE AT THE SOLE EXPENSE AND RISK OF THE BIDDER, WHO SHALL MAINTAIN AND RESTORE THE SITE TO AN ORIGINAL CONDITION OF SAFETY.

THE CONTRACTOR SHALL FIELD VERIFY ALL PIPE SIZES AND INVERTS AND MANHOLE LOCATIONS AND TOP OF CASTING ELEVATIONS PRIOR TO ORDERING MATERIALS. ANY DESCREPANCIES BETWEEN CONTRACTOR OBSERVED ELEVATIONS AND PLAN ELEVATIONS SHALL BE IMMEDIATELY BROUGHT TO THE ATTENTION OF THE ENGINEER. THIS WORK SHALL BE CONSIDERED INCIDENTIAL TO THE SANITARY SEWER WORK, AS PER PLAN ITEMS.

CCDPW PERMIT AND CONSTRUCTION INSPECTION REQUIRED

PRIOR TO ORDERING MATERIALS AND STARTING CONSTRUCTION THE CONTRACTOR SHALL OBTAIN A PERMIT FROM THE COUNTY. CONSTRUCTION MAY COMMENCE UPON PERMIT APPROVAL. A CCDPW CONSTRUCTION INSPECTOR MUST BE PRESENT AT ALL TIMES AT THE JOB SITE DURING CONSTRUCTION, TESTING, MONITORING, AND ALL OTHER ACTIVITIES RELATED TO THE SANITARY SEWER INSTALLATION OR TESTING. THE CONTRACTOR SHALL MAKE ARRANGEMENTS FOR THE CCDPW CONSTRUCTION INSPECTOR PRIOR TO THE BEGINNING OF CONSTRUCTION. ALL COSTS ASSOCIATED WITH OBTAINING A CCDPW PERMIT SHALL BE CONSIDERED INCIDENTIAL TO THE SANITARY SEWER WORK, AS PER PLAN ITEMS.

FINE FOR LACK OF CCDPW INSPECTION

IF ANY SEWER SYSTEM CONSTRUCTION IS DONE WITHOUT A CCDPW CONSTRUCTION INSPECTOR PRESENT, THE CONTRACTOR SHALL BE FINED DOUBLE THE COUNTY CONSTRUCTION INSPECTION FEE FOR EACH DAY OF WORK THAT HAS BEEN DONE WITHOUT THE REQUIRED CONSTRUCTION INSPECTION. FURTHERMORE, THE COUNTY RESERVES THE RIGHT TO REQUIRE THAT THE CONTRACTOR EXCAVATE AND UNCOVER ANY SUCH WORK FOR CCDPW INSPECTION. ANY AND ALL WORK FOUND TO BE INADEQUATE OR SUB-STANDARD IN ANY REGARD, AS DETERMINED BY THE COUNTY, SHALL BE REMOVED AND REPLACE AT THE CONTRACTOR'S EXPENSE. IN ADDITION, THE COUNTY MAY REQUIRE ANY WORK TO BE CCTV INSPECTED AND THE VIDEOS SUBMITTED TO THE COUNTY FOR REVIEW AND APPROVAL.

SHOP DRAWINGS

PRIOR TO CONSTRUCTION, SHOP DRAWINGS SHALL BE REVIEWED AND APPROVED BY THE ENGINEER, AND THEN SUBMITTED TO THE MUNICIPAL ENGINEER AND THE RESPONSIBLE AGENCY FOR REVIEW AND APPROVAL.

MAINTAINING SEWAGE FLOW

THE CONTRACTOR SHALL BE REQUIRED TO BYPASS AND MAINTAIN THE FLOW IN ALL EXISTING LIVE SANITARY AND STORM SEWERS DURING CONSTRUCTION AND THE METHOD EMPLOYED SHALL BE APPROVED BY THE RESPONSIBLE AGENCY. NO SANITARY FLOW SHALL BE PERMITTED TO BE BYPASSED INTO A CLEAN WATER SYSTEM SUCH AS A DITCH, STREAM OR STORM SEWER, AND NO STORM FLOW WILL BE PERMITTED TO BE BYPASSED INTO A SANITARY SEWER SYSTEM. THE CONTRACTOR SHALL PROTECT WATER RESOURCES, WETLANDS AND OTHER NATURAL RESOURCES. ANY SPILLAGE, LEAKAGE, FLOODING, BASEMENT FLOODING, POLLUTION, AND/OR VIOLATION OF ANY ENVIRONMENTAL LAWS, RULES, OR REGULATIONS OF ANY KIND SHALL BE TOTALLY AND COMPLETELY THE RESPONSIBILITY OF THE CONTRACTOR, INCLUDING ANY AND ALL CLEANUP AND/OR FINES, AND NO ADDITIONAL PAYMENT SHALL BE MADE. ALL COST ASSOCIATED WITH MAINTAINING SEWAGE FLOW DURING CONSTRUCTION SHALL BE CONSIDERED INCIDENTAL TO THE SANITARY SEWER WORK, AS PER PLAN ITEMS.

UNRECORDED SANITARY CONNECTIONS

ANY UNRECORDED ACTIVE CONNECTION TO A SANITARY SEWER ENCOUNTERED DURING CONSTRUCTION SHALL BE RECONNECTED TO THE EXISTING SANITARY SEWER TO THE SATISFACTION OF THE ENGINEER.

ONLY THE FOLLOWING CONDUIT TYPE MAY BE USED: POLYVINYL CHLORIDE (PVC) ODOT CMS SECTION 707.44. ALL PVC PIPE SHALL MEET THE REQUIREMENTS OF THE GENERAL COUNTY SEWER NOTES, MAIN LINE AND SERVICE LATERAL PIPE. PREMIUM JOINT PIPE IS REQUIRED FOR ALL SANITARY, STORM, AND LATERAL SEWER PIPING. ALL JOINTS ARE TO BE WATER- TIGHT; SOIL- TIGHT JOINTS, ETC. ARE NOT ACCEPTABLE. RESILIENT CONNECTORS ARE REQUIRED FOR ALL PIPING AT CONNECTIONS TO SANITARY STRUCTURES.

THE FOLLOWING ESTIMATED QUANTITIES HAVE BEEN INCLUDED IN THE GENERAL SUMMARY FOR USE AS DIRECTED BY THE ENGINEER FOR THE WORK NOTED ABOVE.

ITEM 611 - 6" CONDUIT, TYPE B FOR SANITARY, AS PER PLAN	50 LIN. FT.
ITEM 611 - 6" CONDUIT, TYPE C FOR SANITARY, AS PER PLAN	50 LIN. FT.

ITEM 611 - 12" AND 18" CONDUIT, TYPE B AND TYPE C, AS PER PLAN

IN ADDITION TO THE REQUIREMENTS OF THE UNIFORM STANDARDS FOR SEWERAGE IMPROVEMENTS THIS ITEM SHALL BE LIMITED TO REINFORCED CONCRETE CLASS 5 PIPE WITH TYPE 1 BEDDING WITH PREMIUM WATERTIGHT JOINTS PER ASTM C443 (SOIL TIGHT JOINTS, ETC. ARE NOT ACCEPTABLE), PVC PIPE WILL NOT BE PERMITTED. ALL SANITARY LATERAL CONNECTIONS SHALL HAVE PREFORMED WYE BRANCHES INSTALLED IN THE MAINLINE SEWER. THE SEWER TRENCH AND BACKFILL SHALL BE AS SHOWN ON THE TYPE 1 TYPICAL TRENCH DETAIL FOR SANITARY SEWERS ON THE SANITARY DETAIL SHEET. BACKFILL SEWER TRENCHES UNDER PAVEMENT, TO A POINT 5' BEYOND THE EDGE OF PAVEMENT WITH PREMIUM BACKFILL. RESILIENT CONNECTORS ARE REQUIRED FOR ALL PIPING AT CONNECTIONS TO SANITARY SEWER STRUCTURES. THIS ITEM SHALL ALSO INCLUDE TESTING AND TELEVISING THE COMPLETE SEWER AS REQUIRED BY CCDPW.

ITEM 611 - MANHOLE NO. 3, AS PER PLAN 1
ITEM 611 - MANHOLE NO. 3, AS PER PLAN 2

THESE ITEMS SHALL BE CONSTRUCTED AS SHOWN ON THE SANITARY SEWER MANHOLE DETAILS AND AS PER THE REQUIREMENTS OF THE UNIFORM STANDARDS FOR SEWERAGE IMPROVEMENTS.

PAYMENT SHALL BE MADE AT THE CONTRACT UNIT PRICE BID PER EACH.

ITEM 611 - MANHOLE ADJUSTED TO GRADE, AS PER PLAN
ITEM 611 - MANHOLE RECONSTRUCTED TO GRADE, AS PER PLAN

THESE ITEMS SHALL BE CONSTRUCTED IN ACCORDANCE ODOT CMS ITEM WITH THE FOLLOWING ADDITION:
CHIMNEY SEALS SHALL BE INSTALLED ON ALL EXISTING SANITARY MANHOLES ADJUSTED OR RECONSTRUCTED TO GRADE.

PAYMENT FOR ADJUSTING OR RECONSTRUCTING THE SANITARY MANHOLE INCLUDING CHIMNEY SEALS SHALL BE MADE AT THE CONTRACT UNIT PRICE BID PER EACH.

SANITARY SEWER PIPE AND MANHOLE TESTING REQUIREMENTS

ALL SANITARY SEWERS AND MANHOLES SHALL BE TESTED PER SECTION 5.211 OF THE UNIFORM STANDARDS FOR SEWERAGE IMPROVEMENTS. ALL SEWER VIDEOS SHALL BE REVIEWED AND APPROVED BY THE CITY ENGINEER AND CCDPW.

CONNECTIONS TO SANITARY SEWERS

ROOF DRAINS, FOUNDATION DRAINS AND OTHER CLEAN WATER CONNECTIONS TO THE SANITARY SEWER SYSTEM ARE PROHIBITED.

ITEM 611 - CONDUIT, MISC: BENTONITE CLAY DAM

THIS ITEM SHALL CONSIST OF CONSTRUCTING A BENTONITE CLAY DAM AROUND A SANITARY SEWER THAT IS INSTALLED BELOW THE HIGH GROUND WATER LEVEL AS DETERMINED AND DIRECTED BY THE ENGINEER. CONSTRUCT THE BENTONITE CLAY DAM PER THE NOTES AND DETAILS CONTAINED WITH THE CCDPW BENTONITE CLAY DAM DETAIL AT THE LOCATIONS DIRECTED BY THE ENGINEER.

THE FOLLOWING ESTIMATED QUANTITY HAS BEEN INCLUDED IN THE GENERAL SUMMARY FOR USE AS DIRECTED BY THE ENGINEER FOR THE WORK NOTED ABOVE:

ITEM 611 - CONDUIT, MISC: BENTONITE CLAY DAM	4 EACH

PIPE SEPARATION REQUIREMENTS

THE FOLLOWING REQUIREMENTS SHALL APPLY BOTH IN THE RIGHT-OF-WAY AND ON PRIVATE PROPERTY:

MAINTAIN MINIMUM 10' HORIZONTAL CLEARANCE (BARREL TO BARREL) BETWEEN ALL MAINLINE WATERMAINS, SANITARY SEWERS, AND STORM SEWERS.

MAINTAIN MINIMUM 5' HORIZONTAL CLEARANCE (BARREL TO BARREL) BETWEEN ALL WATER SERVICE LATERALS, SANITARY SERVICE LATERALS, AND STORM SERVICE LATERALS. LATERALS SHALL BE LAID OUT IN THIS HORIZONTAL ORDER: WATER, STORM, SANITARY, SUCH THAT THERE IS MINIMUM 10 FEET BETWEEN WATER AND SANITARY.

MAINTAIN MINIMUM 18" VERTICAL CLEARANCE (BARREL TO BARREL) BETWEEN ALL MAINLINE AND SERVICE LATERAL PIPING.

WHEN IT IS IMPOSSIBLE TO MAINTAIN THE PROPER HORIZONTAL AND VERTICAL SEPARATION AS STIPULATED, THE SEWER SHALL BE ENCASED IN CONCRETE (INCLUDE THE UNIFORM STANDARDS CONCRETE ENCASEMENT DETAIL IN THE PLANS) OR BE CONSTRUCTED OF WATER MAIN TYPE MATERIALS THAT SHALL WITHSTAND A 150-PSI PRESSURE TEST. THE CROSSING SHALL BE ARRANGED SUCH THAT THE SEWER JOINTS WILL BE AS FAR AS POSSIBLE FROM THE WATER JOINTS. ALL PIPING SHALL BE PROPERLY SUPPORTED AT ALL CROSSINGS TO PREVENT DAMAGE.

ITEM SPECIAL - FILL AND PLUG EXISTING CONDUIT

THIS ITEM SHALL CONSIST OF THE CONSTRUCTION OF BULKHEADS IN AN EXISTING CONDUIT AND FILLING THE AREA THUS SEALED OFF WITH ITEM 613 - LOW STRENGTH MORTAR BACKFILL, TYPE 3 OR OTHER MATERIAL APPROVED BY THE ENGINEER.

BULKHEADS SHALL BE LOCATED AT THE LIMITS OF THE AREA TO BE FILLED AS DETERMINED BY THE ENGINEER. THE BULKHEADS SHALL CONSIST OF BRICK OR CONCRETE MASONRY WITH A MINIMUM THICKNESS OF 12 INCHES.

THE FILL MATERIAL SHALL BE PUMPED INTO PLACE, OR PLACED BY OTHER MEANS APPROVED BY THE ENGINEER, SO THAT, AFTER SETTLEMENT, AT LEAST 90 PERCENT OF THE CROSS-SECTIONAL AREA OF THE CONDUIT, FOR ITS ENTIRE LENGTH, SHALL BE FILLED. THE LENGTH OF FILLED AND PLUGGED CONDUIT TO BE PAID FOR SHALL BE THE ACTUAL NUMBER OF FEET (MEASURED ALONG THE CENTERLINE OF EACH CONDUIT FROM THE OUTER FACE TO OUTER FACE OF BULKHEADS) FILLED AND PLUGGED AS DESCRIBED.

THE LENGTH, MEASURED AS PROVIDED ABOVE, SHALL BE PAID FOR AT THE CONTRACT PRICE PER FOOT FOR ITEM SPECIAL - FILL AND PLUG EXISTING CONDUIT. THE QUANTITY FOR PLUGGING AND FILLING THE EXISTING CONDUIT SHALL BE USED IN LIEU OF REMOVING THE EXISTING PIPE IN AREAS WHERE THE ENGINEER DEEMS IT APPROPRIATE.

THE FOLLOWING ESTIMATED QUANTITY HAS BEEN INCLUDED IN THE GENERAL SUMMARY TO BE USED AS DIRECTED BY THE ENGINEER TO FILL AND PLUG THE EXISTING 18" SANITARY SEWER BETWEEN THE PROPOSED MANHOLE AT STA. 14+77.82 BASELINE "B" AND STA. 13+23.54 BASELINE "A".

ITEM SPECIAL - FILL AND PLUG EXISTING CONDUIT	529 LIN. FT.

SANITARY NOTES

DESIGN AGENCY
EUTHENICS
8335 Hickman Rd. | Cleveland, OH 44125
DESIGNER ARP
REVIEWER RAB 03/01/22
PROJECT ID 104983
SHEET P.218 TOTAL P.434

CUY-77-00.42 PART 1
MODEL: 104983_UN001A PAPERSIZE: 17x11 (in.) DATE: 3/4/2022 TIME: 1:42:06 PM USER: esmccaslin
F:\Jobs\11162-Miller Road Interchange\104983\400-Engineering\Utilities\Sheets\104983_UN001A.dgn

STANDARD SPECIFICATIONS - SEWER MAINS AND APPURTENANCES

DEVELOPER/ENGINEER PROCEDURES

All Developer/Engineering Procedures as established by Cuyahoga County Department of Public Works (CCDPW) shall be followed, which include: Latest ODOT Specifications, Municipality standards, Uniform Standards For Sewerage Improvements and Uniform Standards Sewer Details, Cuyahoga County Sanitary Engineering Division Rules and Regulations, and Contractor Permit Information. **In the case of conflicts between written specifications and drawings, the written specification shall apply.** One (1) electronic copy in pdf format, and six (6) paper set of detail drawings on 22" x 34" sheets signed by the City Engineer and Design Engineer, (including plan and profile, applicable sewer details, proposed and existing topography and all buried utilities) and specifications of all proposed sewers and shall be submitted for review and approval to: Cuyahoga County Department of Public Works, c/o Permit Department, 2501 Harvard Ave., Newburgh Heights, OH 44105. Upon the Sanitary Engineer's approval of the detail drawings and specifications for construction, the developer/engineer will have eighteen (18) months from the date of the approval of plans to begin construction or plans must be resubmitted to the CCDPW for approval. The cost to record any and all easements and/or plats for Developer's projects for sewer lines, water lines, or pump stations to be dedicated to Cuyahoga County or a given community for ownership, operation and maintenance shall be at the cost of the Developer/Engineer.

COLLECTION SYSTEM IMPROVEMENTS

The CCDPW and/or Municipality shall determine whether or not the County sewer collection and tributary system has available capacity to allow for a development to proceed. Gravity sewers shall consist of a minimum size of eight (8) inch diameter for mainline sewers and six (6) inch diameter for service laterals at minimum slope of 1% (for laterals) and full flow minimum velocities of two (2) fps. The CCDPW shall require sewers and pump stations to be sized and to be installed at depths for the ultimate development of the entire tributary service area. Gravity sewers and service laterals shall be required in place of force mains/pressure sewers when the CCDPW determines it is in the public interest to do so. The requirements herein shall generally supersede any other requirements and any conflict in requirements shall be ultimately determined by CCDPW.

Generally, design shall be in accordance with Ohio E.P.A. regulations, the latest version of "Ten State Standards" and shall conform to the latest Uniform Standards For Sewerage Improvements, Uniform Standards Sewer Details, and ODOT Specifications.

The Developer and/or Engineer shall not allow other new utilities to be installed within six (6) feet horizontally of an installed new sanitary sewer or in the same trench as the sewer except at crossings. Should this occur, the Developer will be responsible for maintaining the sanitary sewer mains and the CCDPW will not permit taps to said line until the other utility lines are relocated six (6) feet away from the sanitary sewer. Sewer lines shall be located within the public road right-of-way, or within an approved easement. Water mains shall be installed with at least a ten (10) feet horizontal and eighteen (18) inch vertical separation from any sanitary sewers per Uniform Standards For Sewerage Improvements. The County also requires eighteen (18) inch vertical separation from any sanitary or storm sewers, measured from out-to-out.

COLLECTION MATERIAL MINIMUM REQUIRED SPECIFICATIONS AND INSTALLATION STANDARDS

LINE CONSTRUCTION STAKING

Gravity sanitary sewers and force mains shall be staked prior to the installation of new pipe. A State of Ohio Registered Professional Surveyor shall be required for the mainline staking and offsets. Staking shall be for both line and grade no greater spacing than every fifty (50) feet plus at all fittings and off-set at ten (10) feet. All public gravity sewers shall be installed with the use of a laser to insure that they are installed properly to grade.

MAIN LINE AND SERVICE LATERAL SEWER PIPE

All sewer pipe and laterals shall be buried below the frost line consisting of a minimum of at least three (3) feet of cover over the top of the pipe; for this requirement, the Designer shall consider both the existing grade and any anticipated future grade. All sewers (storm and sanitary) crossing a creek shall have six (6) inches of concrete (3000 PSI) encasement. Depths for sewers mains, laterals and force mains with less than three (3) feet of cover shall be approved in writing by the CCDPW prior to the construction phase; additional requirements for such situations may be mandated by the CCDPW.

Flexible PVC sewer pipe buried with less than thirteen (13) feet of cover shall be solid wall pipe; PVC compounds shall meet the requirements of ASTM F-789, SDR 35, six (6) inch through fifteen (15) inch diameter and ASTM F-679 (eighteen (18) inch through thirty (30) inch diameter pipe), conforming to ASTM D-3034, with joints conforming to ASTM D-3212. Fittings shall conform to ASTM D-3034. Gaskets shall conform to ASTM F-477. Pipe bedding shall conform to the Uniform Standards For Sewerage Improvements.

Flexible PVC sewer pipe buried with more than thirteen (13) feet of cover shall be solid wall pipe; PVC compounds shall meet the requirements of ASTM F-949. Pipe shall meet minimum pipe stiffness rating of PS-115 and shall consist of SDR 26 or thicker walled pipe as needed, as recommended by the manufacturer for the actual buried depth, conform to ASTM D-3034 through fifteen (15) inch diameter and ASTM F-679 for larger sizes. Fittings shall conform to ASTM D-3034. Pipe bedding shall conform to the Uniform Standards For Sewerage Improvements.

Alternate pipe different than those specified above for gravity sewer installations may be used, but piping material shall conform to the latest Uniform Standards For Sewerage Improvements and Uniform Standards Sewer Details.

All new gravity sewers 8-inch and larger shall be CCTV inspected by a CCDPW approved company regularly engaged in this type of work upon completion of installation. Costs shall be paid for by the contractor unless otherwise noted in the specifications. All sewers and laterals in the near vicinity of borings, drilling, and/or jacking of any piping shall also be CCTV inspected by the contractor at his cost to assure that no damage has been done to the piping. A copy of the video(s) and accompanying report(s) shall be submitted to the CCDPW.

All existing sewers, existing sewer laterals and/or other existing facilities to be re-used shall be located by the contractor and CCTV inspected prior to beginning of construction at the contractor's expense. The CCTV inspection shall be submitted to the CCDPW and approved before the re-use of any existing facilities may be incorporated into the project.

Service lateral pipe shall be six (6) inch diameter consisting of PVC (solid wall pipe) and shall conform to the Uniform Standards For Sewerage Improvements. If the design necessitates a larger service lateral pipe for larger usage customers, the increased size shall be subject to CCDPW approval. Service lateral pipes shall not be installed without a Permit from the County and without calling at least 24 hours in advance for inspection at (216) 443-8209. County service lateral inspections will only be performed during normal County work hours. Service laterals shall only serve gravity drains in the customer's structure, including if possible basement or lower level, such as floor drains, toilet, sink, showers, slop sinks, clothes washer drains, etc. Service laterals which cannot be gravity shall utilize an approved grinder pump system. Service laterals for residential customers shall have a test-tee installed within three (3) feet of the right-of-way line. Service laterals for commercial customers shall have a test-tee installed within five feet (5') of the building foundation exterior, and at the right-of-way line. Service laterals shall not have any bends other than 45-degree or 22.5-degree bends. Ninety (90) degree bends (Horizontal or Vertical) are not acceptable. Test Tees are to be installed behind bends (upstream of) greater than 22.5-degree. One Test Tee should be installed for every one hundred (100) feet of pipe installed and spaced and located to allow access for easy cleaning. All Cleanouts shall be straight cleanouts or Test Tees, no swiping cleanouts. Clean water connections of the sanitary sewer are prohibited, including, but not limited to, storm water drains, yard drains, driveway drains, roof water drains, exterior footer or foundation by gravity or with interior sump pump, etc. In developments where connection to a service lateral will not occur for more than thirty (30) days, the Developer's contractor shall install a watertight cap and lateral 2x2 markers including a metal rod so the ends can be located or unless approved by the Engineer. When a building(s) is abandoned, existing service laterals shall be cut and capped with a watertight cap adjacent to the sewer main. All new lateral riser shall conform to Uniform Standards Detail No. 10 (with two 45 deg bends instead of one 90 deg bend as shown) and the lateral should be installed vertical to the surface. All Test Tees shall conform to the Uniform Standards Sewer Detail. All lateral connections to existing cleanouts and/or Test Tees shall be made at the lowest point in the Cleanout or Test Tee; connections above this point are prohibited. Solvent cement type joints or glued joints are prohibited or unless approved by the Engineer.

In all communities where the CCDPW issues permits, the installation of Bentonite Clay Dams (per the Uniform Standard Detail) on sanitary sewers, storm sewers, and sanitary and storm laterals may be required by the CCDPW. Where sewers and laterals cross creeks and/or ditches, two additional Dams may be required on the pipe, one on either side of the crossing. **In addition, in Olmsted Township, the installation of Bentonite Clay Dams shall be required on all sanitary and storm laterals; plus, where sewer laterals cross creeks and/or ditches, a minimum of two Dams shall be required on every pipe, one Dam on either side of the crossing.**

Connections of service laterals and/or sewers to existing and/or proposed sewer pipe mains shall be as follows:

a. To PVC Sewer Mains - cut out a section of the existing sewer main, install a manufactured PVC wye (with six (6) inch or appropriate size branch) with water tight PVC no-hub couplings, or approved equal, pipe adaptors for connections on sewer mains 18-inch and smaller. Where sewer mains are larger than 18-inch, Inserta-tees maybe used, manufactured by Inserta Fittings Company, or approved equal. In no case shall the connections for other than six (6) inch lateral connections exceed 2/5 the diameter of the main sewer. PVC to PVC piping connections should be completed using a manufactured PVC No-Hub coupling or unless approved by the Engineer. Pipe bedding and installation shall conform to the Uniform Standards or Sewerage Improvements.

b. To Concrete Sewer Mains - cut out a section of the existing sewer main, install a manufactured RCP wye (with six (6) inch or appropriate size branch) with water- tight Strongback Fernco type, or approved equa, pipe adaptors. Where sewer mains are larger then 10-inch, core pipe and install a manufactured flexible watertight six (6) inch rubber boot with stainless steel band(s), Model NPC Kor-N-Tee (as manufactured by NPC) or approved equal. Pipe bedding and installation shall conform to the Uniform Standards For Sewerage Improvements. RCP to PVC piping connections should be completed using a Strongback Fernco connection or equal.

c. To Vitrified Clay Pipe Sewer Mains - remove one (1) section of existing pipe (joint-to-joint), install a manufactured watertight PVC wye (with six (6) inch or appropriate size branch) with water-tight Strongback Fernco type, or approved equal, pipe adaptors on sewer mains 18-inch and smaller. Where sewer mains are larger then 18-inch, Inserta-tees maybe used, manufactured by Inserta Fittings Company, or approved equal. In no case shall the connections (for other than six (6) inch lateral) connections exceed 2/5 the diameter of the main sewer. Pipe bedding and installation shall conform to the Uniform Standards For Sewerage Improvements.

Service lateral connections to manholes shall use a KOR-N-SEAL or approved equal (connections are only allowed in special cases and only one (1) inside drop per manhole allowed). Service laterals from the public sewer main to the building foundation shall not be installed until the building foundation and basement construction has been completed.

External grease interceptors shall be installed in services for all food service businesses and oil/grit interceptors on all services for customers with floor drains in garage/warehouse type buildings. Interceptors are to be sized as required by CCDPW Rules and Regulations with a minimum effective grease interceptor size of 750 gallons. The customer shall be responsible for maintenance by cleaning/pumping their interceptor on a regular schedule. Interceptors shall be constructed water-tight and shall meet the requirements of CCDPW standards. The inlet and outlet pipes shall be sized from the building foundation to the grease trap shall be six inch (6") diameter minimum with a six (6) inch minimum diameter outlet to three (3) feet outside the tank. There shall be cleanouts installed in the inlet pipe and outlet pipes outside the grease interceptor.

PRESSURE SEWER/FORCE MAIN PIPE

Pressure sewer/force main pipe shall be designed for a minimum pressure of 150 p.s.i. and shall consist of:

a. PVC, conforming to AWWA C900, DR 18 (solid wall pipe with PVC compounds meeting the requirements of SDR-26 ASTM D-2241), pipe shall include rubber gaskets or o-rings confirming to the requirements of ASTM D-3139.
b. Ductile Iron Pipe (DIP) shall have a minimum wall thickness of Class 52, with push-on type joints, cement lined (AWWA C104), and shall meet the requirements of AWWA C150 and C151.
c. HDPE, conforming to SDR 11 (ASTM F714 and D3035). Pipe joints shall be joined by use of the heat fusion technique of butt fusion resulting in a monolithic pipe.
   All joints shall be fully restrained and as strong as the pipe in both tension and hydrostatic loading.
d. Pressure sewer pipe shall be pressure tested per manufacturer's recommendations.
e. Restrained joints shall be used at a minimum at all joint fittings and at the next pipe joint from each fitting in all directions.
   Restrained joints shall consist of Meg-a-Lugs, Model Ebba Series 100 or equal as approved by CCDPW.
f. Thrust blocks shall be used at all change of direction fittings in addition to the restrained joints, and shall be 4,000 psi concrete.
g. Commercial and non-residential force mains shall have minimum cover of six (6) feet.
h. Grinder pump pressure sewers/force mains shall be flexible HDPE SDR 11, jointless. The sewer shall be installed with a minimum of six (6) feet of cover.
i. All high points in force main shall have an air release valve installed in a standard manhole conforming to the Uniform Standards Sewer Details.
j. Two (2) No. 8 stranded wires shall be buried with all PVC and HPDE pressure sewer pipes located at the 10:00 and 2:00 positions and terminated in valve boxes,
   along with four (4) inch wide tape noting "SEWER FORCE MAIN BURIED BELOW" buried over pipe twelve (12) inch below finish grade.

GENERAL PIPE REQUIREMENTS & TESTING

All manufacturer's recommendations for unloading, installation, trench preparation, assembly, backfill, pressure or infiltration test, deflection tests, etc. shall be followed unless in conflict with these specifications, the latest version of Ten State Standards, Ohio EPA, or the Uniform Standards For Sewerage Improvements standards. If there is a conflict, the more restrictive requirements shall govern, unless approved in writing by the CCDPW. The use of recycled concrete or slag for bedding and backfill is not approved by the CCDPW.

Installed sanitary sewer pipe eight (8) inch to twenty four (24) inch shall require an air testing conforming with ASTM F-1417; concrete pipe shall be tested per ASTM C-969, ASTM C-1103 or ASTM C-1214; clay pipe shall be tested per ASTM C-828 or ASTM C-1091. Installed sanitary sewer pipe twenty seven (27) inch to forty eight (48) inch shall require weir testing per the Uniform Standards For Sewerage Improvements.

All flexible pipe 8-inch and larger (Sanitary, Combined & Storm) shall meet maximum five (5) percent deflection (Mandrel) testing at 60-days from the time of backfilling the sewer trench. The mandrel shall be as specified in the Uniform Standards. When the use of the specified mandrel is not possible, laser profiling per ODOT 611.12 and 611.13 is required and shall be used in lieu of the mandrel testing. All testing above shall be performed by a certified independent agency paid by the contractor and witnessed by a representative (Inspector) of the CCDPW.

SEWER PIPEBACKFILL

Material used for bedding and backfilling along the sides of the sewer and cover to a height of 12 inches over the top of the sewer shall consist of coarse interlocking aggregate No. 57, 6, 67, 68, 7, 78, or 8 and as per Uniform Standard Sewer Details. Slag or recycled concrete is not permitted. Backfill above the pipe shall be premium backfill using Low Strength Mortar (LSM) when within five (5) feet of pavement or within city right-of-way or unless indicated differently in the specifications. All material shall be compacted to 95% Proctor in maximum 12-inch lifts.

MANHOLES/STRUCTURES

All manholes/structures shall be watertight structures made of precast concrete sections with full depth channels and shall meet the requirements of ASTM C-478 and Uniform Standards For Sewerage Improvements and Details. Chimney seals shall be installed on all new sanitary manholes. All manhole/structure frames and castings shall conform to the Uniform Standards For Sewerage Improvements and Details. Openings in ALL Structure Section for ALL pipes (Sanitary, Combined & Storm) shall be prefabricated. Flexible connections shall be provided for sanitary, storm and combined sewers. Premium seals shall meet ASTM C-923.

All new sanitary manholes shall be vacuum tested in accordance with the procedures of ASTM C-1244. No bricks shall be used as grade rings. The testing shall be performed by a certified independent agency paid by the contractor and witnessed by a representative (Inspector) of the CCDPW.

GENERAL COUNTY SEWER NOTES

REVISIONS:

SCALE
NO SCALE

DATE: OCTOBER 2021

UNIFORM STANDARDS: CUYAHOGA COUNTY DEPARTMENT OF PUBLIC WORKS --- MUNICIPAL ENGINEERS ASSOCIATION OF NE OHIO

SHEET NO. 4

SANITARY NOTES

DESIGN AGENCY
EUTHENICS
8235 Mohawk Dr. | Cleveland, OH 44130

DESIGNER
ARP

REVIEWER
RAB 03/01/22

PROJECT ID
104983

SHEET P.219 | TOTAL P.434

CUY-77-00.42 PART 1

MODEL: 104983_UN002 PAPERSIZE: 17x11 (in.) DATE: 3/4/2022 TIME: 1:42:10 PM USER: esmccaslin
F:\Jobs\1162-Miller Road Interchange\104983\400-Engineering\Utilities\Sheets\104983_UN002.dgn

REF. NO.	SHEET NO.	STATION LIMITS		LOCATION	202				SPECIAL		611												
					PIPE REMOVED, 24" AND UNDER	MANHOLE REMOVED	MANHOLE ABANDONED		FILL AND PLUG EXISTING CONDUIT		12" CONDUIT, TYPE C, AS PER PLAN, 706.02 CLASS V WITH ASTM TYPE 1" BEDDING	18" CONDUIT, TYPE B, AS PER PLAN, 706.02 CLASS V WITH ASTM TYPE 1" BEDDING	18" CONDUIT, TYPE C, AS PER PLAN, 706.02 CLASS V WITH ASTM TYPE 1" BEDDING		MANHOLE NO. 3, AS PER PLAN 1	MANHOLE NO. 3, AS PER PLAN 2	CONDUIT, MISC.: BENTONITE CLAY DAM	6" CONDUIT, TYPE B FOR SANITARY, AS PER PLAN	6" CONDUIT, TYPE C FOR SANITARY, AS PER PLAN					
		BEGIN	END		FT	EACH	EACH		FT		FT	FT	FT		EACH	EACH	EACH	EACH	EACH					
	P.218	FROM SANITARY GENERAL NOTES							529								4	50	50					
S-1	P.221	13+23.54	13+31.54	℄									8											
S-2	P.221	11+37.00	13+23.54	℄								187			1									
S-3	P.221	11+29.00	11+37.00	℄							8					1								
R-1	P.221	13+23.54	13+31.54	℄	8	1																		
R-2	P.221	11+29.00	13+23.54	℄	195																			
S-1	P.222	10+00.00	10+21.77	℄									22		1									
S-2	P.222	10+21.77	11+64.83	℄									143		1									
S-3	P.222	11+64.83	14+58.38	℄									294		1									
S-4	P.222	14+58.38	14+77.82	℄									20		1									
S-5	P.222	14+77.82	14+85.82	℄									8											
R-1	P.222	*38+56.30	*38+65.62	RT			2																	

SANITARY SEWER PLAN AND PROFILE - BASELINE "A"
MILLER ROAD

HORIZONTAL SCALE IN FEET
0 10 20 40

STA. 70+51.26 ℄ MILLER ROAD
= INTERSECTION ℄ PROP. RAMP B-2
= INTERSECTION ℄ PROP. RAMP B-3

STA. 73+11.96 ℄ MILLER ROAD
= STA. 43+59.44 ℄ I.R. 77

℄ R/W & CONSTRUCTION MILLER ROAD

EX. 4" W G
AT&T 4PD4"C
POT 15+48.17
POT 44+04.48
B-003-0-20
ABANDONED TELECOM
N 89°36'54" E
EX. 12" W
EX. 4" T
Ex LA & R/W
CONSTRUCTION LIMITS
EX. VEGETATION AREA (REMOVE WITHIN CONSTRUCTION LIMITS)
S-1 S-2 S-3 R-1 R-2
EX. 12" SAN (REMAIN)
PROP. 18" SAN
EX. 12" SAN (REMOVE)
EX. 18" SAN (REMAIN)
EX. 18" SAN (REMAIN)
EX. 6" SAN. LATERAL (REMOVE)
STA. 11+37.00 ℄ BASELINE "A"
=STA. 10+00.00 ℄ BASELINE "B"
℄ BASELINE "A"
℄ BASELINE "B"
PROP. 18" SAN
EX. 18" RCP (FILL AND PLUG)
I.R. 77 SOUTHBOUND
I.R. 77 NORTHBOUND
℄ R/W & CONSTRUCTION I.R. 77
℄ CONSTRUCTION RAMP B-3
PROPOSED 4 FT. FLAT BOTTOM DITCH
PROP. 5' CLT R/W FENCE
HW-2.2-36 (CONCRETE PIPE)
HW-2.1-36 (CMP/PLASTIC PIPE)
STA. 10+00.00 ℄ BASELINE "A" = EX. SANITARY MANHOLE
BRANT E. GIERE
6530 MILLER ROAD
604-16-001
604-16-002

NOTE: ROOF DRAINS, FOUNDATION DRAINS AND OTHER CLEAN WATER CONNECTIONS TO THE SANITARY SEWER ARE PROHIBITED

STA. 10+00.00, ℄
EX. SAN. MH
TO REMAIN
EX. T/C 1114.49 (RECORD)
℄ EX. 12" (E&W) 1091.96 (RECORD)

STA. 11+37.00, ℄ BASELINE "A" (E&W SEWER)
= STA. 10+00.00, ℄ BASELINE "B" (N&S SEWER)
= STA. 70+13.68, 73.91' RT. MILLER ROAD
MANHOLE NO. 3 WITH 8" DROP PIPE,
AS PER PLAN 2
T/C = 1113.59
℄ EX. 12" W = 1190.57±
℄ PROP. 18" S, E = 1085.97

STA. 13+23.54, ℄
EX. SAN. MH WITH DROP
(BURIED, COULD NOT LOCATE)
TO BE REMOVED
EX. T/C 1107.86 (RECORD)
℄ EX. 18" E = 1085.71
℄ EX. 18" S = 1085.76
℄ EX. 12" W = 1088.61

STA. 13+23.54, ℄ BASELINE "A" (E&W SEWER)
= STA. 72+00.00, 83.19' RT. MILLER ROAD
MANHOLE NO. 3,
AS PER PLAN 1
T/C 1108.27
℄ EX. 18" E = 1085.71
℄ PROP. 18" W = 1085.71

EX. GROUND AT ℄ PROP. SANITARY (BASELINE "A")
EX. 6" SAN. RISER AND LATERAL (TO BE REMOVED)
PROP. CONCRETE COLLAR PER DM-1.1
EX. 12" ABS SAN (TO REMAIN)
USE FERNCO TYPE COUPLER TO MAKE CONNECTION
8' - 12" CONDUIT, TYPE C, AS PER PLAN (MATCH EX. SLOPE) RCP CLASS 5 PIPE WITH ASTM TYPE 1 BEDDING
187' - 18" CONDUIT, TYPE B, AS PER PLAN @ 0.14% (RCP CLASS 5 PIPE WITH ASTM TYPE 1 BEDDING)
EX. 12" ABS SAN (TO BE REMOVED)
PROP. CONCRETE COLLAR PER DM-1.1
CONNECT AT CLOSEST JOINT USE FERNCO TYPE COUPLER TO MAKE CONNECTION IF EX. PIPE IS NOT RCP
8' - 18" CONDUIT, TYPE B, AS PER PLAN (MATCH EX. SLOPE) RCP CLASS 5 PIPE WITH ASTM TYPE 1 BEDDING
EX. 18" SAN (TO REMAIN) - PIPE MATERIAL NOT KNOWN
NOTE: STATIONING IS ALONG PROPOSED 18" SANITARY SEWER BASELINE "A"

1120 1115 1110 1105 1100 1095 1090 1085 1080 1075

1115.80 1115.40 1115.21 1114.71 1114.46 1113.67 1113.39 1113.54 1112.43 1111.77 1111.03 1110.54 1109.74 1108.96 1108.09 1107.52 1106.84 1107.97 1108.62 1106.77 1106.78 1107.74

10 11 12 13 14 15

DESIGN AGENCY
EUTHENICS
8235 Mohawk Dr. | Cleveland, OH 44129

DESIGNER ARP
REVIEWER RAB 03/01/22
PROJECT ID 104983
SHEET P.221 TOTAL P.434

CUY-77-00.42 PART 1

MODEL: CLP_1 - Plan Prof [Sheet] PAPERSIZE: 17x11 (in.) DATE: 3/4/2022 TIME: 1:43:15 PM USER: esmcosiln
F:\Jobs\162-Miller Road Interchange\104983\400-Engineering\Utilities\Sheets\104983_UP001.dgn

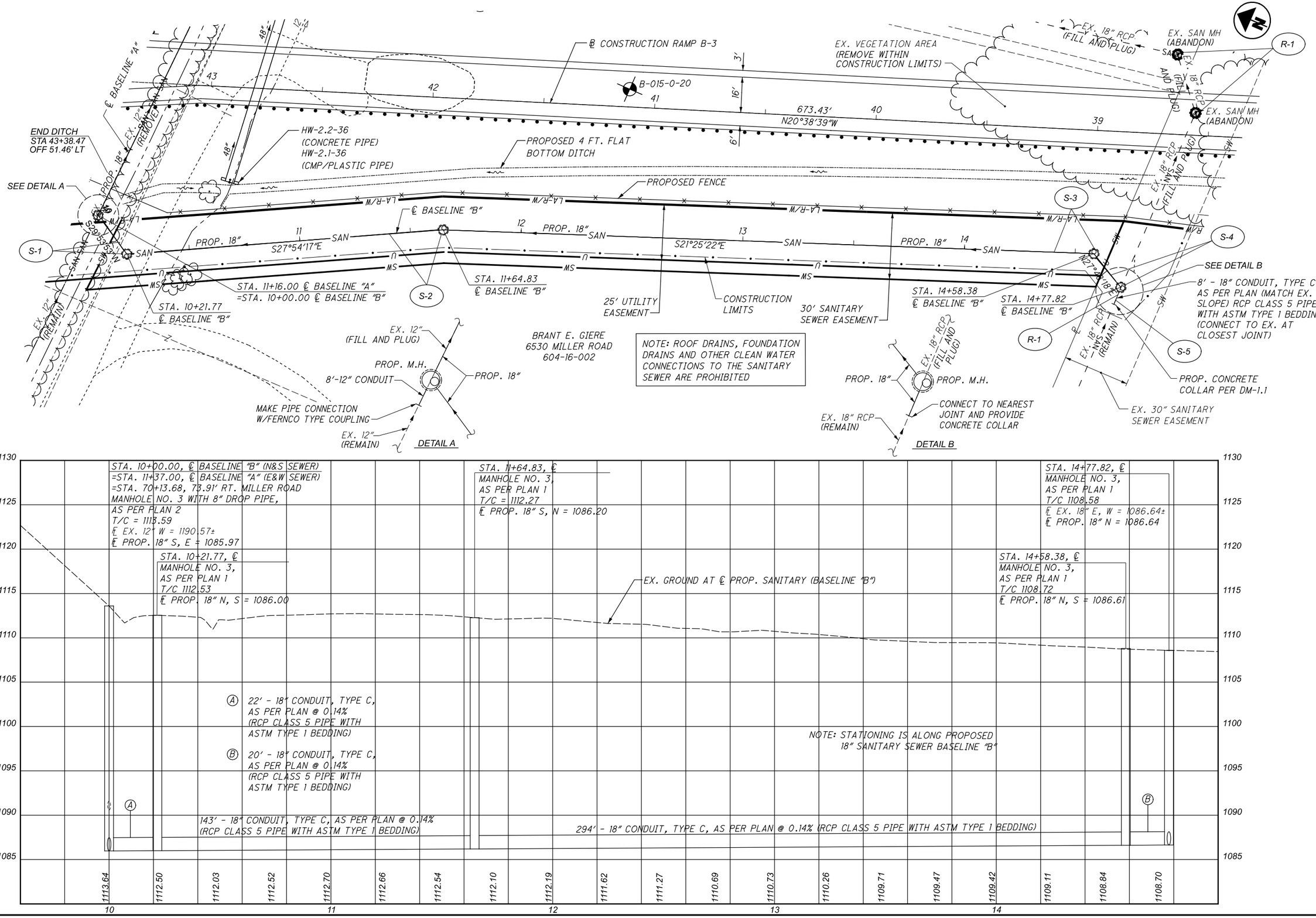

HORIZONTAL SCALE IN FEET
0 10 20 40

SANITARY SEWER PLAN AND PROFILE - BASELINE "B" RAMP B-3

CUY-77-00.42 PART 1

MODEL: CLP.I - Plan 2 [Sheet] PAPERSIZE: 17x11(in.) DATE: 04-Mar-22 TIME: 2:52:58 PM USER: comitrik
F:\Jobs\162-Miller Road Interchange\104983\400-Engineering\Utilities\Sheets\104983_UP004.dgn

DESIGN AGENCY
EUTHENICS
8235 Mohawk Dr. | Cleveland, OH 44130

DESIGNER	ARP
REVIEWER	RAB 03/01/22
PROJECT ID	104983
SHEET	P.222
TOTAL	P.434

ITEM 611 - MANHOLE NO. 3, AS PER PLAN 1

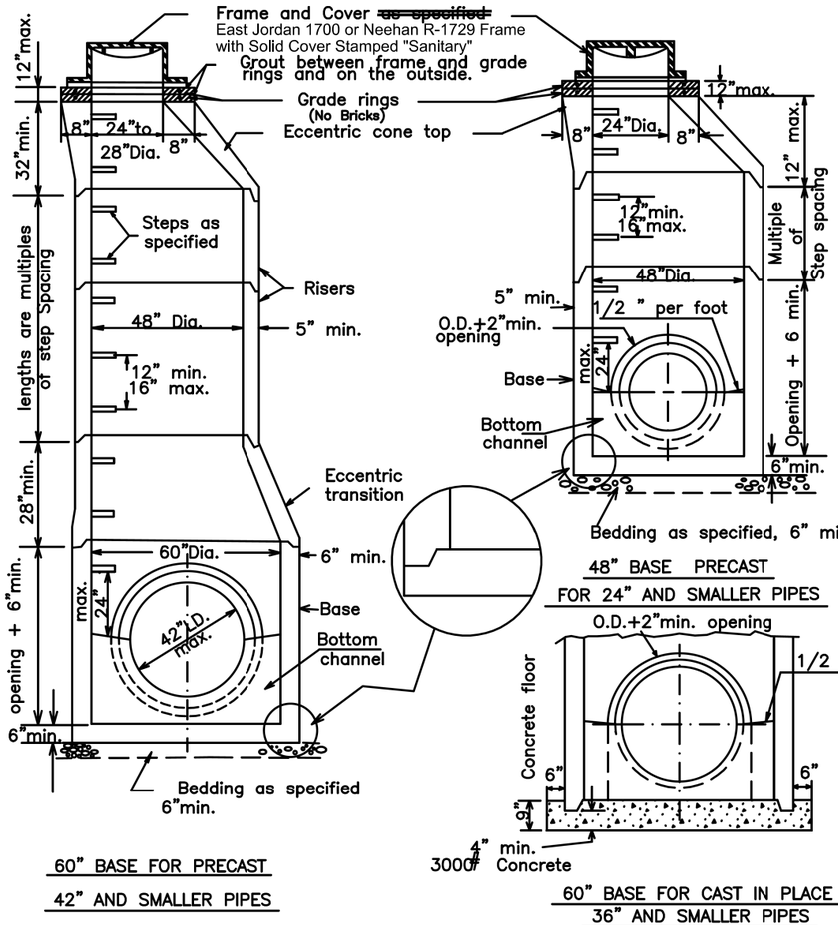

60" BASE FOR PRECAST
42" AND SMALLER PIPES

48" BASE PRECAST
FOR 24" AND SMALLER PIPES

60" BASE FOR CAST IN PLACE
36" AND SMALLER PIPES

48" BASE FOR CAST IN PLACE
18" AND SMALLER PIPES

Sanitary manholes must pass a vacuum test performed in accordance with ASTM C–1244.

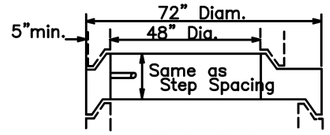

FLAT SLAB
TRANSITION

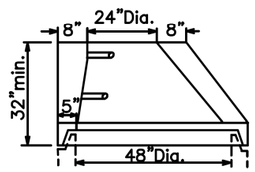

ALTERNATE
ECCENTRIC CONE TOP

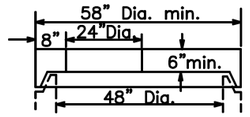

FLAT SLAB TOP

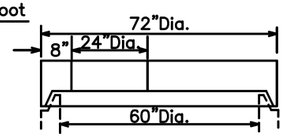

FLAT SLAB TOP

NOTES

Sections of the precast manhole shall be cast and assembled with either all tongue or all groove ends up. Lift holes may be provided in each section for handling.

TOP AND TRANSITION /or reducer/ Sections may be either eccentric cone, concentric cone or flat slab.

BASES for Manholes are shown with monolithic floor and riser which may be cast in one or two operations. A permissible alternate is to cast and ship the floor and barrel separately.Openings for inlet and outlet pipes shall be provided, either when the unit is cast or later, to meet project requirements.Bottom channels may be formed of concrete precast in the base or by field construction. Floors may also be poured in place.

OPENINGS IN RISER SECTIONS for ALL pipes (Sanitary, Combined & Storm) shall be prefabricated. Flexible connections shall be provided for sanitary, storm and combined sewers. Premium seals shall meet A.S.T.M C–923.

JOINT SEALS between precast manhole sections and sewers shall be resilient and flexible gasket joints shall meet A.S.T.M C–443, FEDERAL SPECIFICATIONS SS–S–00210 (210 A) and AASHTO M–198

MANHOLE JOINTS and GRADE RINGS shall be sealed externally and between the grade rings with a layer of mastic compound such as Faberlite, Kent Seal or equal.

MATERIALS for bases and other precast sections including reinforcement not specified hereon, shall comply with the specifications.

PRECAST MANHOLES shall conform to the requirements of A.S.T.M C–478.

SEAL all lift holes with approved concrete plugs.

LANDING PLATFORMS as shown on the LANDING DETAILS shall be installed in manholes that are over 28 feet deep to the invert with a maximum vertical spacing of 20 feet.

MANHOLE FRAMES – chimney seals will be required on all new sanitary manholes.

SANITARY MANHOLES shall have a minimum 3" vertical drop from casting elevations.

PRECAST CONCRETE
MANHOLE
42" PIPE OR SMALLER

REVISIONS:

SCALE
NO SCALE

DATE: OCTOBER 2021

UNIFORM STANDARDS: CUYAHOGA COUNTY DEPARTMENT OF PUBLIC WORKS --- MUNICIPAL ENGINEERS ASSOCIATION OF NE OHIO

SHEET NO. 5

SANITARY DETAILS

DESIGN AGENCY
EUTHENICS
8235 Mohawk Dr. | Cleveland, OH 44129

DESIGNER
ARP

REVIEWER
RAB 03/01/22

PROJECT ID
104983

SHEET P.223 | TOTAL P.434

CUY-77-00.42 PART 1

MODEL: 104983_UN003 PAPERSIZE: 17x11 (in.) DATE: 3/4/2022 TIME: 1:43:53 PM USER: esmccaslin
F:\Jobs\11624-Miller Road Interchange\104983\400-Engineering\Utilities\Sheets\104983_UN003.dgn

ITEM 611 - MANHOLE NO. 3, AS PER PLAN 2

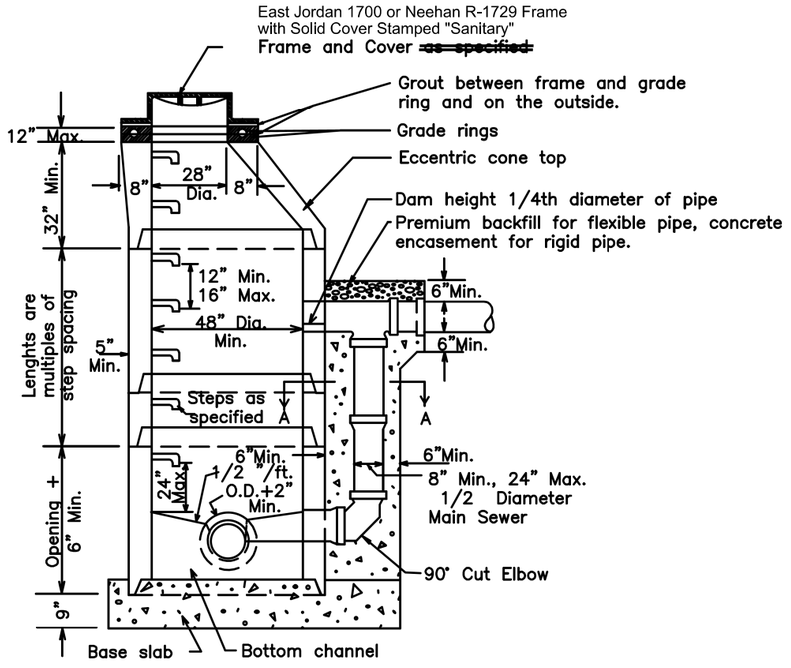

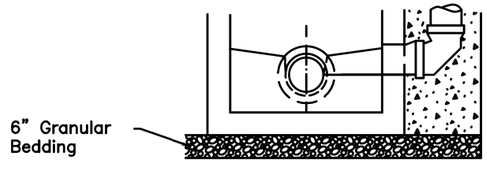

NOTE: This bedding with precast base on manhole.

ALTERNATE

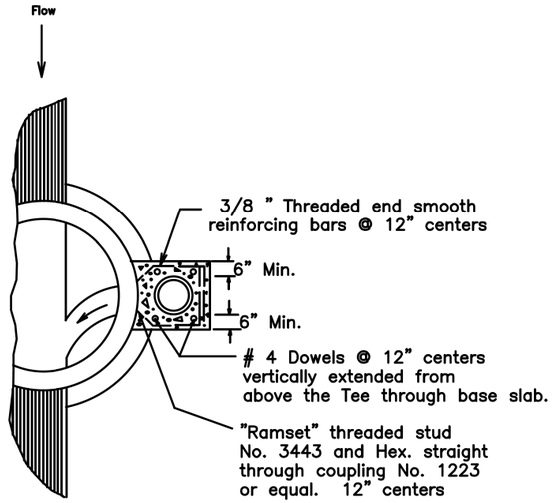

SECTION A – A.

SECTION A – A.

NOTES: **A drop manhole shall be constructed in sanitary sewers wherever the distance between the inverts is 2.0 ft. or greater.**

A drop manhole shall be constructed in storm sewers whenever the distance between the inverts is 10.0 ft. or greater, a 2 ft sump shall be installed.

The following notes on the Precast Concrete manholes shall pertain to the Drop Manhole: Top or Transition openings in riser sections. Joint Seal, Materials and Landing Platforms.

Poured in place concrete shall be 3000# Concrete.
Core bore seals shall meet ASTM C–923 and C–167.

GENERAL MANHOLE DETAILS refer to Precast Manhole Detail on sheet 5.

PRECAST CONCRETE
DROP MANHOLE

REVISIONS:

SCALE
NO SCALE

DATE: OCTOBER 2021

UNIFORM STANDARDS: CUYAHOGA COUNTY DEPARTMENT OF PUBLIC WORKS --- MUNICIPAL ENGINEERS ASSOCIATION OF NE OHIO

SHEET NO. 7

SANITARY DETAILS

DESIGN AGENCY
EUTHENICS
8235 Mohawk Dr. | Cleveland, OH 44129

DESIGNER
ARP

REVIEWER
RAB 03/01/22

PROJECT ID
104983

SHEET P.224 TOTAL P.434

CUY-77-00.42 PART 1

MODEL: 104983_UN004 PAPERSIZE: 17x11 (in.) DATE: 3/4/2022 TIME: 1:44:10 PM USER: esmccaslin
F:\Jobs\1162\Miller Road Interchange\104983\400-Engineering\Utilities\Sheets\104983_UN004.dgn

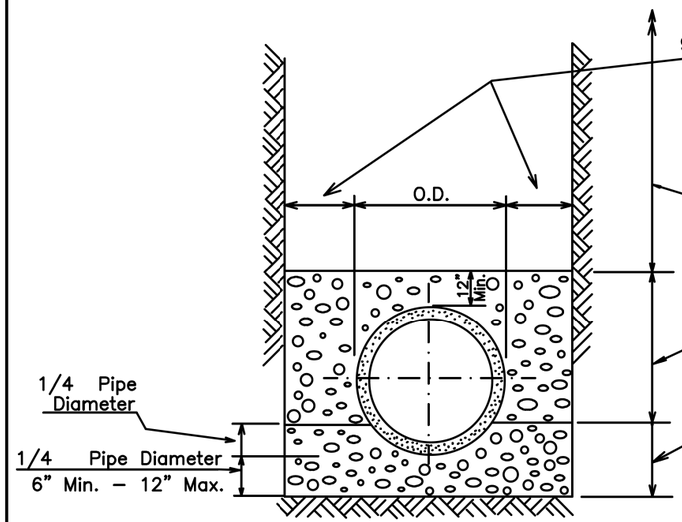

TYPICAL TRENCH DETAIL
(FLEXIBLE PIPE)

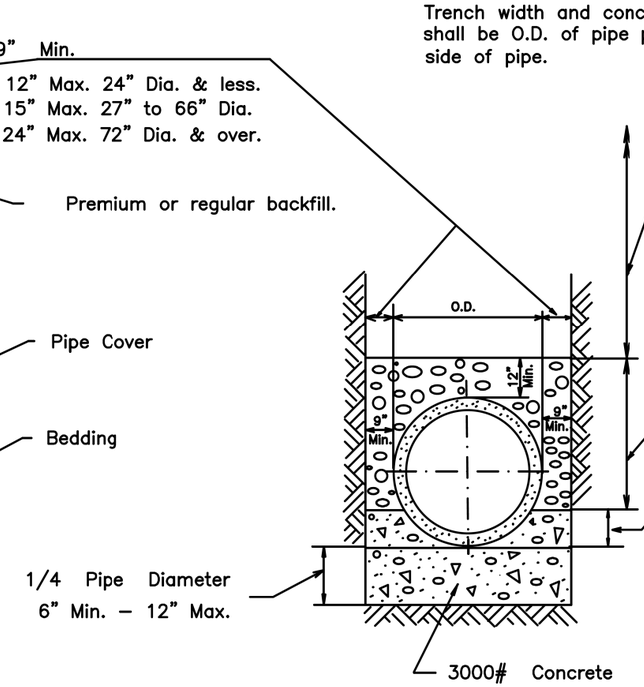

TYPICAL TRENCH DETAIL
WITH CONCRETE CRADLE

NOTE:

Lateral connections to have a minimum bedding depth of 3" coarse aggregate.

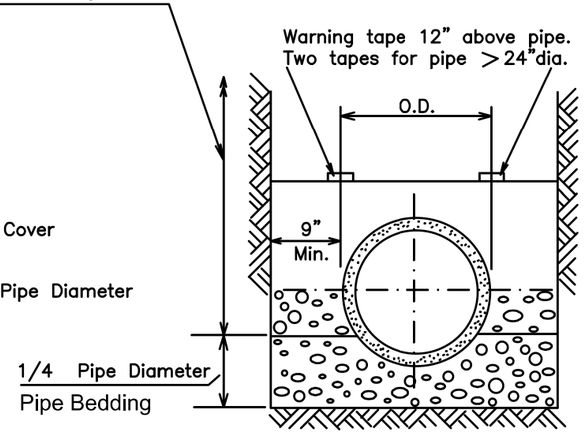

TYPE 1

TYPICAL TRENCH DETAIL
FOR CONCRETE OR DUCTILE IRON PIPE

Pipe Cover shall consist of coarse interlocking aggregate no. 57,6,67,68,7,78,or8.

Bedding shall consist of coarse interlocking aggregate no.57,6,67, 68, 7, 78, or 8 for 60" or smaller diameter pipe. For 66" or larger diameter pipe no. 4 aggregate may also be used.

Premium Backfill shall consist of coarse interlocking aggregate no. 57,6,67,68,7,78,8,304, also limestone screenings.

For concrete and ductile iron pipe, pipe cover is to the springline or greater.

In paved areas coarse interlocking aggregate to the top of the trench on all types of pipe.

TYPICAL TRENCH DETAILS

REVISIONS:

SCALE
NO SCALE

DATE: OCTOBER 2021

UNIFORM STANDARDS: CUYAHOGA COUNTY DEPARTMENT OF PUBLIC WORKS --- MUNICIPAL ENGINEERS ASSOCIATION OF NE OHIO

SHEET NO. 12

SANITARY DETAILS

CUY-77-00.42 PART 1

MODEL: 104983_UN001 PAPERSIZE: 17x11 (in.) DATE: 3/4/2022 TIME: 1:44:26 PM USER: esmccaslin
F:\Jobs\1162\Miller Road Interchange\104983\400-Engineering\Utilities\Sheets\104983_UN001.dgn

DESIGN AGENCY
EUTHENICS
8235 Mohawk Dr. | Cleveland, OH 44129

DESIGNER
ARP

REVIEWER
RAB 03/01/22

PROJECT ID
104983

SHEET P.225 | TOTAL P.434

NOTE :

Encasement required when pipe clearance is less than 18”

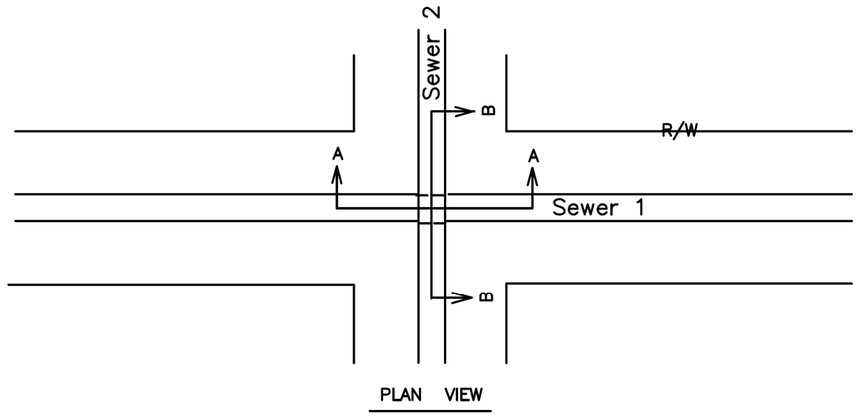

PLAN VIEW

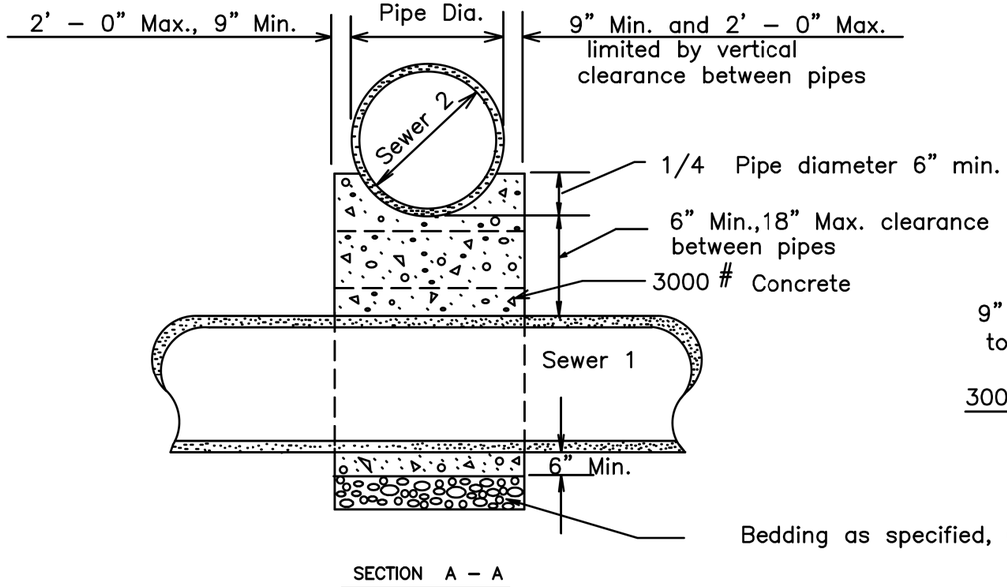

SECTION A – A

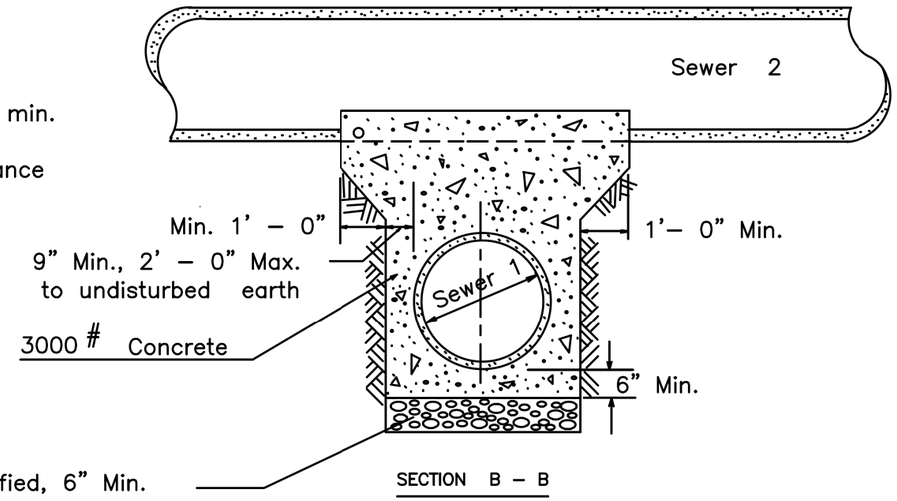

SECTION B – B

CONCRETE ENCASEMENT

MONOLITHIC CRADLING OF UPPER PIPE

REVISIONS:

SCALE
NO SCALE

DATE: OCTOBER 2021

UNIFORM STANDARDS: CUYAHOGA COUNTY DEPARTMENT OF PUBLIC WORKS --- MUNICIPAL ENGINEERS ASSOCIATION OF NE OHIO

SHEET NO.14

SANITARY DETAILS

DESIGN AGENCY
EUTHENICS
8235 Mohawk Dr. | Cleveland, OH 44129

DESIGNER
ARP

REVIEWER
RAB 03/01/22

PROJECT ID
104983

SHEET P.226 | TOTAL P.434

CUY-77-00.42 PART 1

MODEL: Sheet PAPERSIZE: 17x11 (in.) DATE: 3/4/2022 TIME: 1:44:43 PM USER: esmccaslin
F:\Jobs\11162-Miller Road Interchange\104983\400-Engineering\Utilities\Sheets\104983_UN023.dgn

ITEM 611 - CONDUIT, MISC.: BENTONITE CLAY DAM

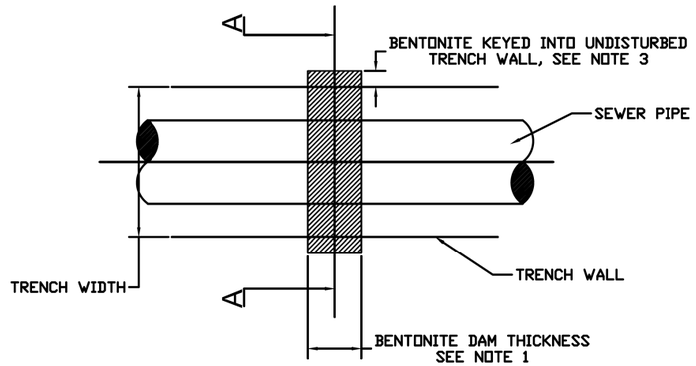

PLAN VIEW

NOTES:

1) BENTONITE DAM SHALL HAVE A THICKNESS OF 18" ON PIPES 8" AND LARGER. 12" THICKNESS ON 6" AND SMALLER.

2) BENTONITE CLAY DAM SHALL EXTEND A MINIMUM OF 1 FOOT ABOVE THE PIPE AND SHALL EXCEED THE HEIGHT OF THE HIGH GROUND WATER LEVEL BY 6" AND AS DETERMINED BY THE SEWER INSPECTOR.

3) KEYED IN SECTIONS SHALL BE A MINIMUM OF 6" AND SHALL BE BOUNDED BY UNDISTURBED TRENCH WALL SOILS.

4) THE BENTONITE CLAY DAM LIMITS SHALL BE FREE AND CLEAR OF ANY PIPE BEDDING AND PREMIUM BACKFILL MATERIAL AND SHALL CONSIST OF ONLY BENTONITE.

5) THE BENTONITE MATERAL SHALL BE CETCO MX-80 OR APPROVED EQUAL.

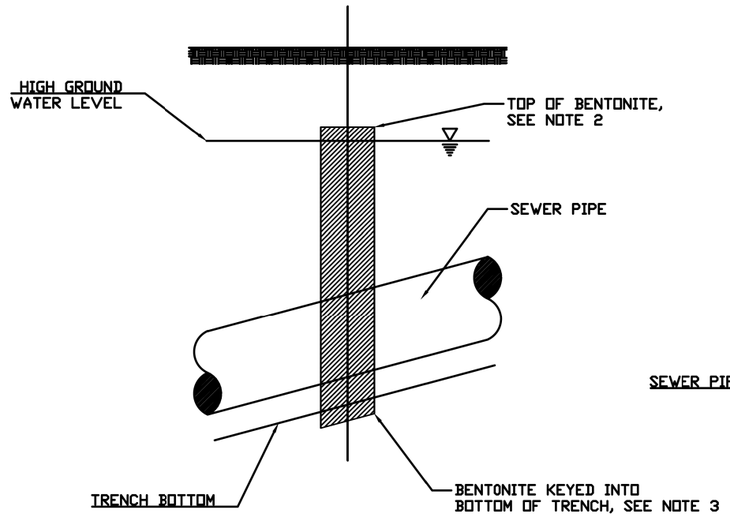

SIDE VIEW PROFILE

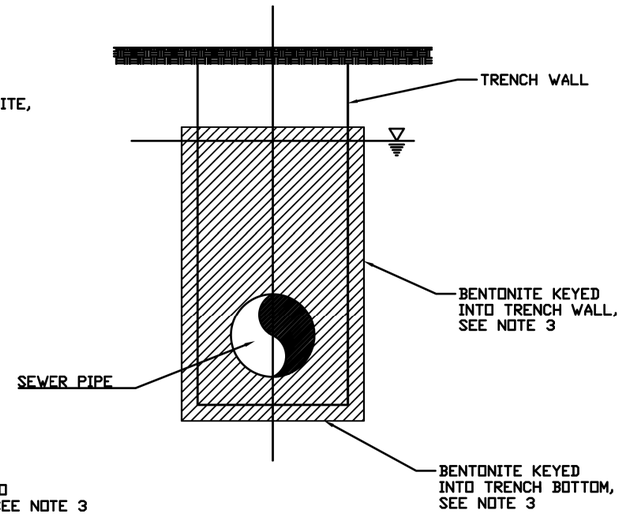

SECTION A-A

BENTONITE CLAY DAM DETAIL

REVISIONS:

SCALE
NO SCALE

DATE: OCTOBER 2021

UNIFORM STANDARDS: CUYAHOGA COUNTY DEPARTMENT OF PUBLIC WORKS --- MUNICIPAL ENGINEERS ASSOCIATION OF NE OHIO

SHEET NO. 31

SANITARY DETAILS

DESIGN AGENCY
EUTHENICS
8235 Mohawk Dr. | Cleveland, OH 44130

DESIGNER
ARP

REVIEWER
RAB 03/01/22

PROJECT ID
104983

SHEET P.227 | TOTAL P.434

CUY-77-00.42 PART 1

MODEL: 104983_UN005 PAPERSIZE: 17x11 (in.) DATE: 3/4/2022 TIME: 1:44:59 PM USER: esmccaslin
F:\Jobs\11162-Miller Road Interchange\104983\400-Engineering\Utilities\Sheets\104983_UN005.dgn

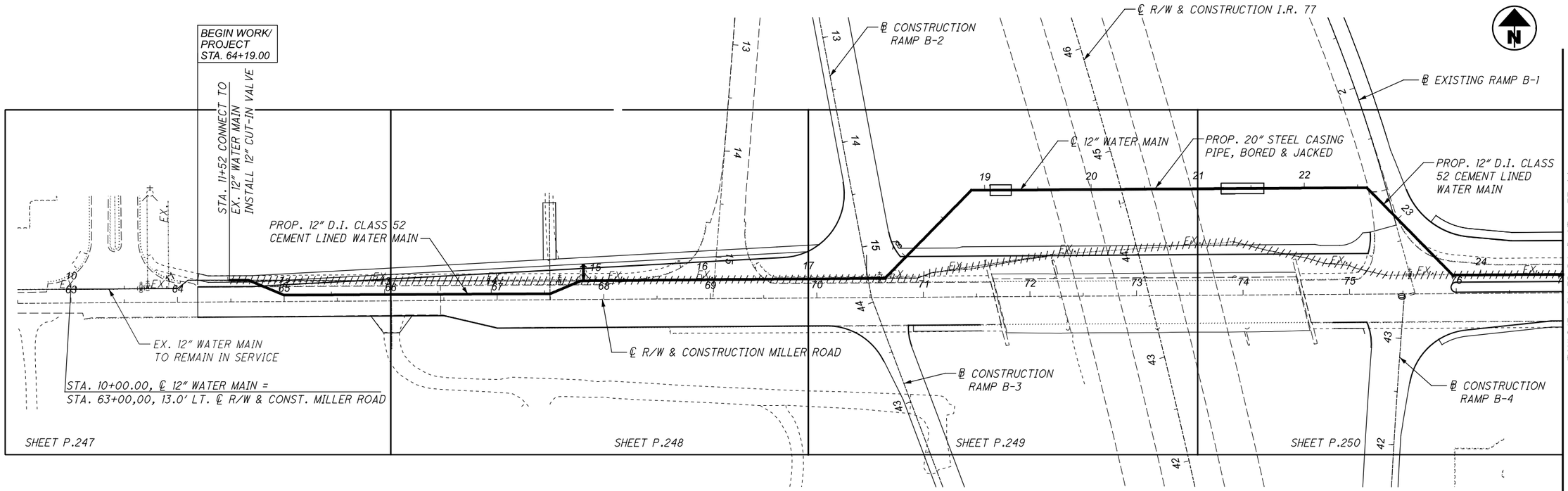

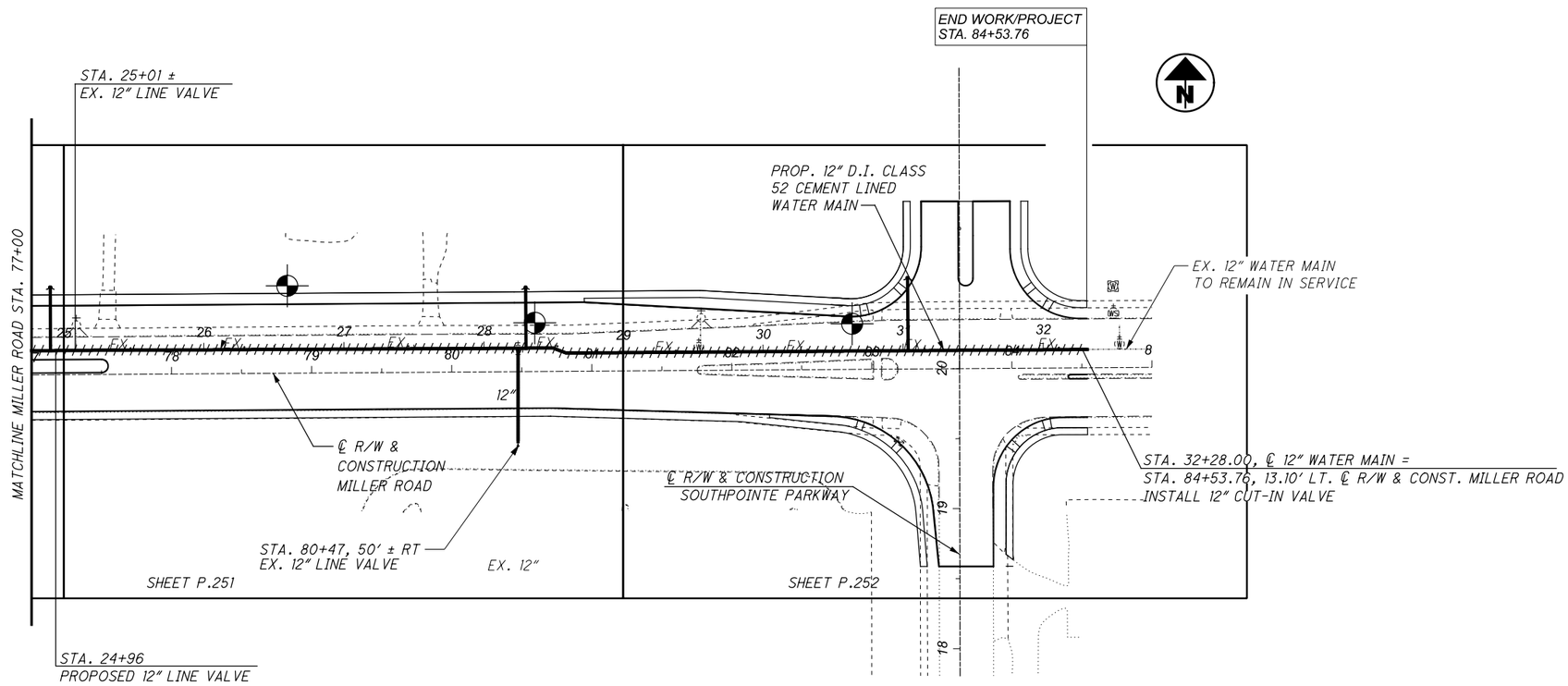

SEQUENCE OF CONSTRUCTION

STAGE ONE:
STAGE ONE WILL BEGIN WITH THE INSTALLATION OF A NEW CUT-IN-VALVE AT STA. 11+52.00. SHUT NEW 12" CUT-IN LINE VALVE AND EXISTING 12" LINE VALVE AT STA. 25+00± OFF AND CONSTRUCT PROPOSED 12" CEMENT LINED WATER MAIN.

STAGE TWO:
STAGE TWO WILL BEGIN WITH THE INSTALLATION OF A NEW CUT-IN-VALVE AT STA. 32+28.00. SHUT NEW 12" CUT-IN LINE VALVE, NEWLY CONSTRUCTED 12" LINE VALVE AND EXISTING 12" LINE VALVE ALONG SOUTHPOINT PARKWAY WATER MAIN CORRIDOR, LOCATED AT STA. 80+47, 50'± RT. ℄ MILLER ROAD AND CONSTRUCT PROPOSED 12" CEMENT LINED WATER MAIN ALONG MILLER ROAD AND ALONG SOUTHPOINTE PARKWAY BETWEEN THE MILLER ROAD WATER MAIN AND EXISTING CLOSED VALVE.

////////////// - EX. 12" WATER MAIN TO BE ABANDONED AND/OR REMOVED

3rd. HIGH SERVICE DISTRICT

DEPARTMENT OF PUBLIC UTILITIES
DIVISION OF WATER
CLEVELAND, OHIO

SUBJECT : 12" WATER MAIN ALONG MILLER ROAD AT I.R. 77
CITY OF BRECKSVILLE

SCALE: AS SHOWN | NO.

HORIZONTAL SCALE IN FEET
0 25 50 100

WATER WORK SCHEMATIC PLAN

SUBSET 1 | TOTAL 43
DESIGN AGENCY: EUTHENICS, 8235 Mohawk Dr, Cleveland, OH 44026
DESIGNER: TDP
REVIEWER: DTB 03/01/22
PROJECT ID: 104983
SHEET P.228 | TOTAL P.434

CUY-77-00.42 PART 1

MODEL: Sheet PAPERSIZE: 17x11 (in.) DATE: 3/4/2022 TIME: 1:45:14 PM USER: esmccaslin
F:\Jobs\1162-Miller Road Interchange\104983\400-Engineering\Utilities\Sheets\1043983_UB001.dgn

WATER WORK NOTES

DEVELOPERS, ENGINEERS, AND CONTRACTORS ARE TO ABIDE BY THE MOST CURRENT VERSION OF THE CLEVELAND WATER NOTES AND DETAILS. *THE MOST UP-TO-DATE VERSION CAN BE FOUND AT WWW.CLEVELANDWATER.COM/CONSTRUCTION/*

GENERAL:

1. ALL WATER WORK REQUIRED, WHETHER SHOWN ON THE PLANS OR AS DIRECTED BY CLEVELAND WATER, SHALL BE AT THE EXPENSE OF THE PROJECT UNLESS OTHERWISE AGREED TO BY THE COMMISSIONER OF THE CLEVELAND DIVISION OF WATER.

2. THE INFORMATION SHOWN ON THE CLEVELAND DIVISION OF WATER'S SUMMARY OF WORK/CHARGE LETTER, STRIP MAPS, AS BUILT DRAWINGS, AND GIS ARE TAKEN FROM EXISTING AVAILABLE RECORDS, AND THEIR ACCURACY IS NOT GUARANTEED.

3. CALL THE INSPECTION AND ENFORCEMENT UNIT AT 216-664-2342 TO SCHEDULE A PRECONSTRUCTION MEETING AT LEAST 1 WEEK PRIOR TO STARTING CONSTRUCTION. THE OPERATION OF ANY VALVE OR ALTERATION OF ANY PART OF THE WATER SYSTEM BY CONTRACTORS OR THEIR EMPLOYEES IS PROHIBITED WITHOUT THE SUPERVISION OF THE CLEVELAND DIVISION OF WATER INSPECTOR.

4. PRIOR TO REQUESTING CHLORINATION, THE CONTRACTOR SHALL SUPPLY THE CLEVELAND WATER INSPECTOR WITH REDLINE DRAWINGS SHOWING CHANGES MADE FROM THE APPROVED DESIGN DRAWINGS AND ACTUAL MEASUREMENTS. CHLORINATION SHALL NOT OCCUR BEFORE THESE DRAWINGS ARE SUBMITTED.

5. FOR THE PURPOSES OF CHLORINATION AND BACTERIOLOGICAL TESTING OF THE WATER MAINS THE CONTRACTOR SHALL PROVIDE AND INSTALL PLYWOOD OR BOX SHEETED CHLORINATION PIT, AT EACH OF THE CHLORINATION PIT LOCATIONS SHOWN AND AT OTHER LOCATIONS DETERMINED BY CLEVELAND WATER. FLUSHING/SAMPLING TAP SIZES ARE TO BE DETERMINED CLEVELAND WATER. CHLORINATION PITS SHALL BE SIX (6) FOOT SQUARE AND ARE TO MEET OSHA STANDARDS. NO CUSTOMER TAPS SHALL BE INSTALLED PRIOR TO CHLORINATION.

6. A THREE YEAR WARRANTY, COMMENCING FROM THE DATE OF ACCEPTANCE OF THE FINAL CHLORINATION OF THE WATER MAIN INSTALLATION SHALL BE PROVIDED BY THE CONTRACTOR FOR ALL WATER MAINS AND SERVICE CONNECTION WORK PERFORMED BY THE CONTRACTOR, INCLUDING TAPS IF PERFORMED. SHOULD ANY LEAKS OCCUR AND REPAIRS BE REQUIRED DUE TO DEFECTIVE MATERIAL OR POOR WORKMANSHIP. A LETTER INDICATING THE COMMENCEMENT DATE AND END DATE OF THE WARRANTY SHALL BE INCLUDED WITH THE AS-BUILT SUBMISSION IN NOTE 12.

7. USE BACKFILL MATERIAL AS SPECIFIED AND COMPACT SUFFICIENTLY IN THOSE AREAS WHERE EXISTING MAINS AND WATER SERVICE CONNECTIONS ARE EXPOSED. (SEE CLEVELAND WATER STANDARD DETAIL STD-001)

8. ALL MATERIALS, INCLUDING BUT NOT LIMITED TO WATER MAINS, FIRE HYDRANTS, VALVES, CONNECTION MATERIALS AND OTHER WATER APPURTENANCES, SHALL BE NEW AND UNUSED AND SHALL CONFORM TO THE MOST CURRENT CLEVELAND WATER SPECIFICATIONS. ALL MATERIAL SHALL BE INSTALLED IN ACCORDANCE WITH CLEVELAND WATER'S STANDARDS.

9. THE CONTRACTOR SHALL BE RESPONSIBLE FOR ANY DAMAGE TO EXISTING WATER MAINS AND APPURTENANCES THEREOF WHEN CONSTRUCTING OR CONNECTING THE NEW WATER MAIN. THIS SHALL INCLUDE LEADED JOINTS IN EXISTING FITTINGS WHICH MAY REQUIRE REPLACEMENT FITTINGS AT THE DISCRESION OF THE INSPECTOR IF IT IS DETERMINED THEY WERE DISTURBED. ALL REPAIRS TO DAMAGED EXISTING FACILITIES SHALL BE MADE BY THE CONTRACTOR, AT THE PROJECT' EXPENSE, TO THE SATISFACTION OF CLEVELAND WATER.

10. ALL HYDROSTATIC PRESSURE TESTING SHALL BE DONE BY THE CONTRACTOR IN THE PRESENCE OF THE CLEVELAND WATER INSPECTOR. THE HYDROSTATIC TEST PRESSURE SHALL BE 75 PSI ABOVE THE STATIC PRESSURE PREVAILING AT THE SITE, BUT IN NO CASE LESS THAN 150 PSI. THE PRESSURE TEST SHALL BE FOR A DURATION OF TWO (2) HOURS WITH THE PRESSURE BEING MAINTAINED WITHIN 5 PSI OF THE REQUIRED TEST PRESSURE. SHOULD THE PRESSURE TEST FAIL THE CONTRACTOR SHALL FIND AND CORRECT THE DEFICIENCY(IES) TO THE SATISFACTION OF CLEVELAND WATER AND REPEAT THE TWO (2) HOUR PRESSURE TEST.

11. ALL BURIED WATER MAINS, FITTINGS, VALVES, FIRE HYDRANT BRANCH PIPING AND APPURTENANCES SHALL BE ENCASED WITH POLYETHYLENE WRAPPING IN ACCORDANCE WITH THE MOST CURRENT REVISION OF ANSI/AWWA C-105/A21.5 INSTALLATION METHOD 'A'. ALTERNATE INSTALLATION METHOD A FOR WET TRENCH CONDITIONS SHALL BE USED WHEN WATER MAINS ARE INSTALLED IN UNPAVED LOCATIONS SUCH AS TREE LAWNS AND EASEMENTS TRAVERSING PRIVATE PROPERTY.

12. THE PROJECT'S PROFESSIONAL ENGINEER OR A DESIGNATED PROFESSIONAL SURVEYOR SHALL OBTAIN ACTUAL FIELD MEASUREMENTS OF THE MAIN DURING INSTALLATION AND SHALL FURNISH THE CLEVELAND WATER INSPECTOR WITH AS-BUILT DRAWINGS MEETING CLEVELAND WATER STANDARDS WITHIN 30 DAYS OF THE WATER MAIN GOING INTO SERVICE AND ALL TAPS/RETAPS BEING MADE. ONE HARD COPY AND ONE PDF COPY SHALL BE PROVIDED. DRAWINGS SHALL BE SIGNED, DATED, AND STAMPED WITH THE ENGINEER OR SURVEYOR'S REDLINE DRAWINGS ARE NOT SUFFICIENT. CLEVELAND WATER RESERVES THE RIGHT TO WITHHOLD PAYMENT AND/OR APPROVAL OF FUTURE WORK IF AS-BUILTS ARE NOT SUBMITTED.

WATER MAINS:

13. ALL PIPE, UNLESS OTHERWISE APPROVED BY CLEVELAND WATER, SHALL BE DUCTILE IRON, MINIMUM CLASS 52, CEMENT LINED HAVING PUSH-ON JOINTS WITH RADIALLY COMPRESSED RUBBER RING GASKET AND INSTALLED AS PER THE MOST CURRENT REVISION OF AWWA C600.

14. ALL FITTINGS, UNLESS OTHERWISE CALLED FOR, SHALL BE APPROVED DUCTILE IRON, CLASS 350, CEMENT LINED OR FUSION BONDED EPOXY ALL FITTINGS AND PIPE CONNECTED TO FITTINGS SHALL BE RESTRAINED USING A "RETAINED" MECHANICAL JOINT CONFORMING TO THE MATERIAL AND PERFORMANCE REQUIREMENTS OF ANSI/AWWA C-110/A21.10 AND ANSI/AWWA C-111/A21.11, OR "COMPACT" FITTINGS IN ACCORDANCE WITH ANSI/AWWA C-153/A21.53. EXCEPT FOR ANCHOR TEES, REDUCERS OR OTHER SPECIAL CIRCUMSTANCES WHEN BY CLEVELAND WATER, ALL FITTINGS ARE TO HAVE BELL ENDS.

15. ALL BOLTS AND NUTS ON ALL "RETAINED" MECHANICAL JOINTS SHALL HAVE FIELD APPLIED ONE (1) COAT OF BITUMASTIC PAINTING.

16. WHERE SHOWN ON THE PLANS, OR WHEN OTHERWISE CALLED FOR, PIPE AND FITTINGS SHALL HAVE AN APPROVED "TYPE I" OR "TYPE II" BOLTLESS RESTRAINED PUSH-ON JOINTS TO THE LIMITS SHOWN ON THE DRAWINGS.

17. AT THE END OF EACH WORKDAY, THE CONTRACTOR SHALL PLUG ALL OPEN PIPE ENDS WITH WATER TIGHT PLUGS AS PER THE "PREVENTITIVE AND CORRECTIVE MEASURES DURING CONSTRUCTION" SECTION OF THE MOST CURRENT REVISION OF AWWA C-651 AS TO PREVENT THE INFILTRATION OR INTRUSION OF ANY FOREIGN OBJECTS OR MATERIALS. DATE STAMPED DIGITAL PHOTOS SHALL BE PROVIDED FOR EACH WORKDAY DEMONSTRATING THAT PROPER AWWA C-651 METHODS WERE USED TO PLUG ALL OPEN WATER MAIN ENDS. EACH PHOTO SHALL CLEARLY IDENTIFY THE STATION AT WHICH THE PIPE IS PLUGGED. THE STATIONING SHALL BE SHOWN BY THE USE OF A STATION MARKER PLACED AT THE PLUGGED PIPE END.

    PHOTOS SHALL BE SUBMITTED ON A DAILY BASIS UNLESS OTHERWISE DEFINED BY THE CLEVELAND WATER INSPECTOR OR ENGINEER. ALL PHOTOS TAKEN OVER THE COURSE OF THE PROJECT SHALL BE SUBMITTED BY THE CONTRACTOR AS PART OF THE AS-BUILT SUBMITTAL. PHOTOS ARE TO INCLUDE STATIONING MARKERS. AS-BUILTS SHALL BE DEEMED INCOMPLETE WITHOUT SAID COLLECTION OF DIGITAL PHOTOS.

HYDRANTS:

18. IN ALL HYDRANT INSTALLATIONS THE CONTRACTOR SHALL FACE ALL HYDRANT'S 4" (STEAMER) NOZZLE TOWARD THE PAVEMENT PRIOR TO TESTING AND CHLORINATION OF WATER MAINS. ONLY CLEVELAND WATER APPROVED HYDRANT MODELS SHALL BE INSTALLED. CONTRACTOR SHALL CONSULT WITH THE LOCAL MUNICIPALITY'S ENGINEERING OR SERVICE DEPARTMENT TO OBTAIN HYDRANT NOZZLE THREAD REQUIREMENTS IF NOT INDICATED ON THE APPROVED PLANS.

VALVES:

19. ALL VALVES SHALL BE AN APPROVED MODEL RESILIENT SEATED GATE VALVES AS PER THE MOST CURRENT VERSION OF AWWA C509 OR C515. VALVE OPERATING NUTS SHALL BE TAPERED (1 7/8" TO 2" FROM TOP TO AND 2" DEEP. VALVES MORE THAN 10 YEARS OLD AT TIE IN POINTS TO EXISTING MAINS SHALL BE REPLACED AT THE PROJECT'S EXPENSE UNLESS OTHERWISE DIRECTED.

SERVICE CONNECTIONS:

20. ANY CITYSIDE LEAD SERVICE CONNECTION ENCOUNTERED SHALL BE REPLACED WITH TYPE K COPPER OR OTHER APPROVED MATERIAL. IF OWNERSIDE LEAD WILL REMAIN, THE CONTRACTOR SHALL IMMEDIATELY NOTIFY CWD BY CALLING 216-664-2882 AND LEAVING A CLEVELAND WATER SUPPLIED CUSTOMER NOTIFICATION DOORHANGER ON ALL ACCESSIBLE POINTS OF ENTRY TO THE HOME.

21. AS PART OF THE AS-BUILT SUBMISSION IN NOTE 12, THE CONTRACTOR SHALL PROVIDE A TABLE SHOWING ALL EXISTING CONNECTIONS, IDENTIFIED BY CLEVELAND WATER CONNECTION NUMBER, SHOWING THE FOUND CONNECTION MATERIAL FOR BOTH THE CITYSIDE AND OWNERSIDE CONNECTION, AS WELL AS THE NEW CONNECTION MATERIAL FOR ALL CONNECTIONS REPLACED. THE TABLE SHALL ALSO NOTE ANY REVISED CONNECTION MEASUREMENTS AND SIZES. A SAMPLE TABLE WILL BE PROVIDED. THE SUBMISSION SHALL BE IN MICROSOFT EXCEL CLEVELAND WATER SHALL REQUIRE THE DELIVERY AND ACCEPTANCE OF THIS TABLE BEFORE THE PRESSURE TEST AND CHLORINATION/DISINFECTION OF THE MAIN WILL BE PERMITTED.

22. NEW WATER SERVICE CONNECTIONS LOCATIONS SHOWN ON THESE DRAWINGS ARE FOR REFERENCE ONLY AND ARE NOT PART OF THE WATER MAIN APPROVAL. THE SPECIFIC LOCATION FOR EACH CONNECTION WILL BE DETERMINED BY CLEVELAND WATER PRIOR TO THE TAPS BEING INSTALLED. ALL PERMITS FOR TAPS AND METERS FOR PARCELS ASSOCIATED WITH THE WATER MAINS INSTALLED ON THIS PROJECT ARE TO BE OBTAINED BY THE LAND OWNER OF SAID IMPROVEMENT PLANS. IT IS THE LAND OWNERS RESPONSIBILITY TO ARRANGE FOR OBTAINING PERMITS FOR ALL WATER SERVICE CONNECTIONS BEFORE ANY SERVICE CONNECTION WORK MAY PROCEED. ALL FEES CAN BE OBTAINED FROM THE CLEVELAND WATER PERMITS AND SALES SECTION AT 216-664-3130 PROMPT #7 OR 216-664-2444 X75209.

    ACCOUNTS SHALL BE INITIATED IN THE LAND OWNER'S NAME AS PART OF THE PERMITTING PROCESS. ALL RESPONSIBILITIES ASSOCIATED WITH EACH WATER SERVICE, INCLUDING, THE OWNER SIDE INSPECTIONS, METER SET/METER PIPING INSPECTION AND THE METER INSTALLATION SHALL BE THE RESPONSIBILITY OF SAID OWNER.

    METERS INSTALLATIONS WILL NOT BE AUTHORIZED TO BE INSTALLED UNTIL ALL INSPECTIONS HAVE BEEN COMPLETED. ESTIMATED BILLS MAY ENSUE IF A HOME IS IDENTIFIED AS HAVING WATER SERVICE BUT NO METER HAS BEEN INSTALLED. IF NEW OWNERS, ONCE PARCELS ARE SOLD OFF AND TRANSFER TITLE, DO NOT CONTACT CLEVELAND WATER TO ESTABLISH ACCOUNTS IN THEIR NAME, ACCOUNTS AND THEIR ASSOCIATED BILLS WILL REMAIN IN THE NAME OF OUR LAST OWNER OF RECORD WHICH MAY BE THE DEVELOPER OR BUILDER. IT IS THE RESPONSIBILITY OF THE NEW OWNER TO TRANSFER ACCOUNTS INTO THEIR NAME WHEN THE PROPERTIES LEGALLY TRANSFER. UPON TRANSFER OF PROPERTY, SELLER OF PROPERTY MUST COMMUNICATE ALL UNCOMPLETED PORTIONS OF THE REFERENCED RESPONSIBILITIES TO THE NEW OWNER.

23. ONE INCH SERVICE CONNECTIONS SHALL BE PERMITTED TO SERVICE NEW HOMES (AS SHOWN ON APPROVED WATER MAIN EXTENSION BASED ON THE FOLLOWING CRITERIA:

    -PEAK FLOW DEMANDS DO NOT EXCEED 25 GPM FOR AN INDIVIDUAL HOME/UNIT. INCLUSIVE OF ALL USAGE (DOMESTIC AND/OR IRRIGATION),

    -LENGTH OF ONE INCH CONNECTION DOES NOT EXCEED 75 FEET AS MEASURED FROM THE MAIN TO THE POINT OF ENTRY INTO THE PROPOSED HOME/UNIT.

    -THE CONNECTIONS DO NOT INCLUDE LIMITED AREA OR NFPA 13D SPRINKLER SYSTEMS ANY SERVICE REQUESTS DIFFERING FROM THE STATED CRITERIA SHALL REQUIRE THE SUBMITTAL OF A COMPLETE WATER SERVICE APPLICATION FOR EACH WATER SERVICE REQUESTED.

24. ALL CURB VALVE BOXES & METER VAULTS WILL BE INSTALLED IN GRASS AREAS WHEN POSSIBLE. CURB VALVES IN EASEMENTS SHALL BE PLACED APPROXIMATELY 3 FEET OFF THE WATER MAIN. IF VALVE BOXES OR METER VAULTS ARE INSTALLED OUTSIDE OF A DEDICATED RIGHT OF WAY OR EASEMENT FOR THE PURPOSES OF WATER SUPPLY, A STANDARD CLEVELAND EASEMENT FOR A VAULT SHALL BE PROVIDED.

EMERGENCIES:

25. IF A WATER MAIN OR SERVICE CONNECTION BREAK OCCURS DURING CONSTRUCTION AND EMERGENCY ASSISTANCE IS REQUIRED, PLEASE NOTIFY CLEVELAND IMMEDIATELY.

CUY-77-00.42 PART 1
MODEL: 104983_UN006 PAPERSIZE: 17x11 (in.) DATE: 3/4/2022 TIME: 1:45:23 PM USER: esmccaslin
F:\Jobs\11622-Miller Road Interchange\104983\400-Engineering\Utilities\Sheets\104983_UN006.dgn

SUBSET	TOTAL
2	43

DESIGN AGENCY
EUTHENICS
8335 Mohawk Dr. | Cleveland, OH 44130

DESIGNER
TDP
REVIEWER
DTB 03/01/22
PROJECT ID
104983

SHEET	TOTAL
P.229	P.434

3rd. HIGH SERVICE DISTRICT

DEPARTMENT OF PUBLIC UTILITIES
DIVISION OF WATER
CLEVELAND, OHIO

SUBJECT : 12" WATER MAIN ALONG MILLER ROAD AT I.R. 77
CITY OF BRECKSVILLE

SCALE: AS SHOWN | NO.

WATER WORK NOTES

SCOPE OF WORK:

THE WORK CONTEMPLATED UNDER THIS CONTRACT COMPRISES THE FURNISHING AND INSTALLING COMPLETE WITH VALVES AND OTHER APPURTENANCES, WATER MAIN RELOCATIONS AND PERFORMING OTHER INCIDENTAL WORK NECESSARY AS SHOWN ON THE WATER WORK PLAN AND PROFILE SHEETS. THE WORK INVOLVES FURNISHING AND INSTALLING 1290 FEET OF 12 INCH DUCTILE IRON WATERLINE ALONG MILLER ROAD. ADDITIONAL WORK INCLUDES BORING AND JACKING 180 FEET OF 20 INCH STEEL CASING PIPE UNDER I.R. 77 ALONG WITH THE INSTALLATION OF (2)-16 INCH GATE VALVES, (1)-16 INCH CUT-IN VALVE, AIR RELEIF VALVE, 4 HYDRANTS AND PERFORMING OTHER INCIDENTAL WORK NECESSARY AS SHOWN ON THE WATER WORK PLAN AND PROFILE SHEETS.

GENERAL NOTES

(A) WATER MAIN IS TO BE INSTALLED IN ACCORDANCE WITH THE CONSTRUCTION AND MATERIAL SPECIFICATIONS OF THE CITY OF CLEVELAND WATER DEPARTMENT (CWD). ALL BENDS, TEES, CROSSES, HYDRANT BRANCHES, VALVES, HYDRANT BASE ELBOWS AND SPECIAL FITTINGS SHALL HAVE RETAINED MECHANICAL JOINTS. ALL MATERIAL MUST BE MADE IN THE USA.

(B) MINIMUM DEPTH OF COVER FOR WATER MAINS AND SERVICE CONNECTIONS SHALL BE SIX (6) FEET UNLESS OTHERWISE NOTED.

(C) A SIX (6") INCH HYDRANT ASSEMBLY SHALL INCLUDE THE VALVE, VALVE BOX, TEE, PIPE, A STANDARD 6" HYDRANT AND ANY NECESSARY OFFSET TO SET HYDRANT TO PROPER GRADE.

(D) ALL MATERIALS AND CONSTRUCTION SHALL CONFORM TO THE CITY OF CLEVELAND'S STANDARD SPECIFICATIONS FOR WATER MAINS.

(E) THE CONTRACTOR SHALL ASSUME FULL RESPONSIBILITY FOR MAKING ALL NECESSARY ARRANGEMENTS WITH ALL UTILITY COMPANIES.

(F) THE CONTRACTOR SHALL PROVIDE A 6' X 6' I.D. PLYWOOD OR BOXED SHEETED CHLORINATION PIT AT VARIOUS LOCATIONS AS SPECIFIED BY THE CITY OF CLEVELAND WATER DEPARTMENT.

(G) THE CONTRACTOR SHALL MAKE ARRANGEMENTS WITH THE CITY OF CLEVELAND WATER DEPARTMENT FOR INSTALLATION OF ALL WATER SERVICE CONNECTIONS.

(H) IN THE CASE OF ANY ITEM NOT SPECIFICALLY MENTIONED IN THE "WATERWORK NOTES", OHIO DEPARTMENT OF TRANSPORTATION CONSTRUCTION AND MATERIAL SPECIFICATIONS - JANUARY 1, 2019 SHALL GOVERN.

THE CONTRACTOR SHALL NOTIFY THE CLEVELAND WATER DEPARTMENT INSPECTION AND ENFORCEMENT DIVISION (PHONE: 216-664-2342) THREE (3) WEEKS PRIOR TO STARTING ANY WATER WORKS CONSTRUCTION. THE CONTRACTOR MUST NOTIFY THE CWD HYDRAULICS UNIT AT 216-664-2444 PRIOR TO SHUTTING ANY WATER MAINS DOWN.

AFTER AWARD OF CONTRACT, THE CONTRACTOR THROUGH THE ENGINEER, SHALL SUBMIT TO THE CITY OF CLEVELAND WATER DEPARTMENT, INSPECTION AND ENFORCEMENT SECTION, A CONSTRUCTION SCHEDULE AND CONSTRUCTION SEQUENCE RELATING TO WATERWORK.

CONTRACTOR SHALL ALSO MAKE PAYMENT TO THE DIVISION OF WATER FOR ALL DIVISION OF WATER LABOR REQUIRED TO COMPLETE THE WORK REQUIRED HEREIN. CONTRACTOR SHALL MAKE ALL PAYMENT FOR DIVISION OF WATER LABOR BEFORE ANY WATER WORK IS PERFORMED. SEE PARAGRAPH "DIVISION OF WATER- LABOR CHARGES". ALL DIVISION OF WATER LABOR CHARGES SHALL BE THE RESPONSIBILITY OF THE CONTRACTOR AND SHALL BE DEEMED TO BE INCLUDED IN THE APPROPRIATE BID ITEM.

DEFINITIONS

WHEREVER IN THESE WATER WORK NOTES AND SPECIFICATIONS THE FOLLOWING TERMS OR PRONOUNS IN PLACE OF THEM ARE USED, THE INTENT AND MEANING SHALL BE INTERPRETED AS FOLLOWS:

THE STATE: THE STATE IS THE CITY OF CLEVELAND ACTING THROUGH ITS AUTHORIZED REPRESENTATIVE.

ENGINEER: THE ENGINEER IS DISTRICT DEPUTY DIRECTOR OR DISTRICT ENGINEER, THE DISTRICT CONSTRUCTION ENGINEER OR THE DISTRICT MAINTENANCE ENGINEER OR THE PROJECT ENGINEER ASSIGNED TO ADMINISTER THE CONTRACT, OR THEIR DULY DESIGNATED DEPUTIES, AGENTS, OR REPRESENTATIVES.

THE CITY: THE CITY IS THE DIRECTOR OF THE DEPARTMENT OF PUBLIC UTILITIES OF THE CITY OF CLEVELAND, OR HIS DULY DESIGNATED REPRESENTATIVE(S), CITY INSPECTOR, AND/OR THE WATER DESIGN REVIEW ENGINEER OF THE DIVISION OF WATER.

STATUS OF CITY INSPECTORS

INSPECTORS AS DESIGNATED BY THE DIRECTOR OF PUBLIC UTILITIES ARE AUTHORIZED TO INSPECT ALL WORK DONE AND MATERIALS FURNISHED, SUCH INSPECTION MAY EXTEND TO ALL OR ANY PART OF THE WATERWORK, AND TO THE PREPARATION OR MANUFACTURE OF THE MATERIALS TO BE USED IN THE WATERWORK. THE CITY INSPECTOR AS DESIGNATED BY THE DIRECTOR OF PUBLIC UTILITIES WILL MAKE WORK INSTRUCTIONS THROUGH THE ENGINEER. ARRANGEMENTS FOR CITY INSPECTORS ARE TO BE MADE BY NOTIFYING INSPECTION AND ENFORCEMENT DIVISION OF WATER (216) 664-2774, WITHIN THE TIME SPECIFIED. NO WORK SHALL BE ACCEPTED UNLESS INSPECTED.

ACCESS TO WORK AND PLACE OF MANUFACTURE

THE CONTRACTOR SHALL NOTIFY THE ENGINEER AND CITY, AT LEAST SEVEN (7) DAYS PRIOR TO THE COMMENCEMENT OF THE MANUFACTURE OF ANY MATERIALS, OF THE TIME AND PLACE WHERE THE MANUFACTURE IS TO COMMENCE, IN ORDER THAT A REPRESENTATIVE OF THE ENGINEER AND THE CITY, OR HIS DESIGNEE, MAY BE PRESENT TO INSPECT THE MANUFACTURE. THE CONTRACTOR SHALL PROVIDE, WITHOUT CHARGE OR EXPENSE TO THE STATE AND CITY, ALL NECESSARY ASSISTANCE TO THE ENGINEER AND THE CITY, OR HIS DESIGNEE, WHEN REQUIRED FOR INSPECTION OR VERIFICATION OF WORK DONE.

DIMENSIONS, DETAILED DRAWINGS AND ELEVATIONS

FIGURED DIMENSIONS ON DRAWINGS SHALL TAKE PRECEDENCE OVER MEASUREMENTS BY SCALE, AND DETAILED DRAWINGS ARE TO TAKE PRECEDENCE OVER GENERAL DRAWINGS AND SHALL BE CONSIDERED AS EXPLANATORY OF THEM AND NOT AS INDICATING EXTRA WORK. IF, HOWEVER, ANY OF THE DETAILED DRAWINGS SHOW MORE ELABORATE OR EXPENSIVE WORK THAN IS NORMALLY SPECIFIED AND INDICATED BY THE CONTRACT DRAWINGS, NOTICE THEREOF MUST BE GIVEN TO THE ENGINEER BY THE CONTRACTOR WITHIN TEN (10) DAYS AFTER RECEIPT OF SUCH DETAILED DRAWINGS IN ORDER THAT THE DRAWINGS MAY BE AMENDED OR THE ADDITIONAL EXPENSE ON ACCOUNT OF SUCH WORK MAY BE ADJUSTED AND AUTHORIZED. IF THE ENGINEER DOES NOT RECEIVE SUCH NOTICE FROM THE CONTRACTOR WITHIN TEN (10) DAYS AFTER THE DETAILED DRAWINGS HAVE BEEN RECEIVED BY HIM, IT IS HEREBY AGREED THAT THE CONTRACTOR ACCEPTS THE DRAWINGS AND WILL EXECUTE THEM WITHOUT CLAIM FOR EXTRA COMPENSATION.

ERRORS AND DISCREPANCIES

IF THE CONTRACTOR, IN THE COURSE OF HIS WORK, FINDS ANY DISCREPANCY BETWEEN THE PLANS, DESCRIPTION AND LOCATION OF WORK, ESTIMATE OF QUANTITIES, THE PHYSICAL CONDITION OF THE LOCALITY, OR ANY ERRORS IN PLANS OR IN THE LAYOUT AS GIVEN BY THE DRAWINGS AND INSTRUCTIONS WHICH MAKE IT IMPOSSIBLE FOR HIM TO COMPLETE THE WORK REQUIRED UNDER THE PLANS AND SPECIFICATIONS, IT SHALL BE HIS DUTY TO IMMEDIATELY INFORM THE ENGINEER IN WRITING AND THE ENGINEER SHALL VERIFY THE SAME. ANY WORK DONE AFTER SUCH DISCOVERY, UNTIL AUTHORIZED, SHALL BE DONE AT THE CONTRACTOR'S RISK.

FLOODS AND FREEZING WEATHER

PROPER FACILITIES SHALL BE PROVIDED FOR PROTECTING THE WORK FROM DAMAGE BY FLOOD, RAIN OR FROST, AND WORK DONE IN FREEZING WEATHER SHALL BE DONE IN SUCH MANNER AS THE ENGINEER MAY APPROVE. VALVES SHALL BE PROTECTED FROM FREEZING UNTIL BACKFILLED IN THE COMPLETED WORK.

ADDITIONAL WORK

(A) ATTENTION IS CALLED TO THE FACT THAT THE WORK UNDER THIS CONTRACT INCLUDES CERTAIN PERFORMANCE AS INCIDENTAL TO THE ITEMIZED REQUIREMENTS HEREOF, THOUGH NOT EXCLUSIVE AS FOLLOWS: TO PERFORM ALL EXCAVATION, BACKFILLING, SHEETING, SHORING, AND TO TEST AND CHLORINATE THE INSTALLATION. FOR THE PERFORMANCES HEREIN DESCRIBED AND FOR OTHER INCIDENTAL ALLOWANCES OF LIKE NATURE, NO SPECIFIC OR SEPARATE PAYMENT OR ALLOWANCE WILL BE MADE, BUT THE COST THEREOF SHALL BE INCLUDED IN THE PRICES STIPULATED TO BE PAID FOR THE VARIOUS ITEMS OF WORK TO BE DONE UNLESS OTHERWISE SPECIFIED UNDER THIS CONTRACT.

(B) PRELIMINARY FLUSHING: BEFORE BEING PLACED IN SERVICE, ALL DIRT AND FOREIGN MATTER SHALL BE REMOVED FROM THE NEW AND/OR RELOCATED WATER MAIN OR EXTENSIONS TO EXISTING MAINS BY A THOROUGH FLUSHING THROUGH THE HYDRANTS OR BY OTHER APPROVED MEANS. EACH VALVED SECTION OF NEWLY LAID PIPE SHALL BE FLUSHED INDEPENDENTLY. THIS SHALL BE DONE AFTER THE PRESSURE TEST AND MAY BE DONE BEFORE OR AFTER THE TRENCH SHALL HAVE BEEN BACKFILLED.

(C) FLUSH, TEST AND SAMPLE: THE CITY, DIVISION OF WATER, WILL CHARGE TO THE CONTRACTOR A "FLUSHING, TEST AND SAMPLE" FEE FOR DIVISION OF WATER LABOR INCURRED IN THE WORK, PAYABLE TO THE PERMITS AND SALES SECTION OF THE DIVISION OF WATER BEFORE ANY WORK IS PERFORMED. FLUSHING, TEST AND SAMPLING IS LIMITED TO 350 LINEAL FEET OF WATER MAIN. NEW AND/RE RELOCATED WATER MAINS OR EXTENSION OF WATER MAINS EXCEEDING 350 LINEAL FEET SHALL BE CHLORINATED. CHLORINATION FEES WILL BE CHARGED TO THE CONTRACTOR FOR CWD LABOR INCURRED IN THE CHLORINATION OF MAINS.

CLOSING VALVES

THE CLOSING OF ALL GATE VALVES ON WATERMAINS FOR MAKING CORRECTIONS, TESTS, OR FOR ANY OTHER CAUSE, SHALL BE DONE BY THE CITY OF CLEVELAND. THE CONTRACTOR SHALL NOTIFY THE CLEVELAND WATER DEPARTMENT THREE (3) WEEKS IN ADVANCE OF THE SHUTDOWN AND THEY WILL SPECIFY THE TIME AND/OR SPECIAL CONDITIONS, HOURS, ETC. SYSTEMS DEMANDS MAY CONTROL THE TIME OF DAY, WEEK, MONTH OR YEAR WHEN VALVES MAY BE CLOSED. NO CONSIDERATION FOR DELAYS CAUSED BY SUCH CONTROLLING DEMANDS WILL BE ALLOWED. THE CONTRACTOR SHALL THOROUGHLY INVESTIGATE POSSIBLE CONDITIONS WHERE CLOSING OF VALVES MAY BE RESTRICTED TO A CERTAIN TIME.

TESTING MAINS

(A) ALL PIPES, VALVES, FITTINGS, ETC., SHALL BE LAID IN SUCH A MANNER AS TO LEAVE ALL JOINTS WATERTIGHT. AFTER THE PIPE IS LAID, SUCH LENGTHS OF THE WATER MAIN AS THE CITY OR HIS DESIGNATE MAY DETERMINE, SHALL BE TESTED UNDER HYDROSTATIC PRESSURE.

(B) THE HYDROSTATIC TEST SHALL BE UNDER THE DIRECTION OF THE CITY, OR ITS DESIGNATE. THE CONTRACTOR MAY OBTAIN WATER FOR TESTING BY OBSERVING THE RULES AND REGULATIONS ENFORCED IN THE MUNICIPALITIES OR TOWNSHIPS IN WHICH THE WORK IS BEING DONE. THE CITY WILL FURNISH A PRESSURE GAUGE FOR MEASURING THE PRESSURE ON THE WATER MAIN, BUT THE CONTRACTOR SHALL FURNISH A SUITABLE PUMP, PIPES, TEST HEADS AND ALL APPLIANCES, LABOR, FUEL AND OTHER APPURTENANCES NECESSARY TO MAKE THESE TESTS.

(C) THE HYDROSTATIC TEST PRESSURE SHALL BE FOR A DURATION OF A MINIMUM OF TWO (2) HOURS WITH ALL VALVES CLOSED DURING WHICH TIME THE INTERNAL PRESSURE SHALL REMAIN WITHIN 5 PSI OF THE SPECIFIED TEST PRESSURE. SHOULD THE TEST PRESSURE DROP MORE THAN 5 PSI, THE CONTRACTOR SHALL RECHARGE THE WATER MAIN TO THE SPECIFIED TEST PRESSURE AND LOCATE AND REPAIR THE LEAK TO THE SATISFACTION OF THE CITY. ANY DAMAGED OR DEFECTIVE PIPE, PIPE JOINTS, FITTINGS, VALVES, HYDRANTS OR APPURTENANCES SHALL BE REPAIRED OR REPLACED WITH SOUND MATERIAL AND THE HYDROSTATIC PRESSURE TEST REPEATED.

(D) AFTER A SECTION OF THE WATER MAIN HAS BEEN TESTED, THE CONTRACTOR SHALL FLUSH THE SAME. IN THE CASE OF SUPPLY MAINS WHERE DRAINS ARE CONNECTED TO VALVE OR DRAIN VAULTS, THE CONTRACTOR SHALL, WITHIN A REASONABLE TIME AFTER THE TEST HAS BEEN COMPLETED, PUMP ALL WATER OUT OF THE VAULTS. FLUSHING SHALL BE DONE IN ACCORDANCE WITH THESE SPECIFICATIONS.

(E) IN COLD WEATHER IMMEDIATELY AFTER TESTING A SECTION OF THE WATER MAIN, THE CONTRACTOR SHALL OPEN ALL VALVES, AND IN THE CASE OF SUPPLY MAINS ALL AIR RELIEF VALVES, BYPASSES AND DRAINS AND PROPERLY DRAIN BONNETS OF ALL VALVES IN THE SECTION OF THE WATER MAIN, AND TAKE ALL OTHER PRECAUTIONS NECESSARY TO PREVENT INJURY TO WATER MAIN AND APPURTENANCES DUE TO FREEZING.

(F) IN ORDER TO BE ABLE TO MAKE PROPER ALLOWANCE FOR LEAKAGE AT VALVES, AIR RELIEF VALVES, BYPASSES, AND DRAINS, ONLY THOSE SECTIONS OF WATER MAIN MAY BE TESTED AS SHALL HAVE SUCH VALVES, TEST PLUGS AND CAPS ACCESSIBLE. THE PERMITTED LEAKAGE SHALL NOT EXCEED A RATE OF SEVENTY-FIVE (75) GALLONS PER TWENTY-FOUR (24) HOURS PER MILE OF PIPE PER INCH OF NOMINAL DIAMETER.

(G) IN TESTING NEW MAINS, THE CONTRACTOR SHALL NOT BE PERMITTED TO USE ANY PART OF THE EXISTING MAINS IN HIS TEST UNLESS OTHERWISE SHOWN ON THE CONTRACT DRAWINGS. THE CONTRACTOR SHALL PROVIDE BLIND FLANGES, PLUGS OR CAPS, DEPENDING ON DESIGN, TO THE TESTED LENGTH OF THE PROPOSED MAIN SO THAT IT WILL BE COMPLETELY INDEPENDENT OF THE SAID EXISTING MAINS. PROPER RESTRAINT OF ALL BLIND FLANGES, PLUGS OR CAPS TO PREVENT BLOWOFF SHALL BE PROVIDED AND IN THE CASE OF DEAD END MAINS CONCRETE PIERS WILL BE REQUIRED. NO EXTRA PAYMENT WILL BE MADE FOR TESTING MAINS AND THE ENTIRE COST SHALL BE DEEMED TO BE INCLUDED IN THE PRICE BID PER LINEAR FOOT OF WATERMAIN FURNISHED AND INSTALLED UNDER THIS CONTRACT.

3rd. HIGH SERVICE DISTRICT

DEPARTMENT OF PUBLIC UTILITIES
DIVISION OF WATER
CLEVELAND, OHIO

SUBJECT : 12" WATER MAIN ALONG MILLER ROAD AT I.R. 77
CITY OF BRECKSVILLE

SCALE: AS SHOWN | NO.

WATER WORK NOTES

SUBSET 3 | TOTAL 43

DESIGN AGENCY
EUTHENICS
8235 Mohawk Dr. | Cleveland, OH 44539

DESIGNER TDP

REVIEWER DTB 03/01/22

PROJECT ID 104983

SHEET P.230 | TOTAL P.434

CUY-77-00.42 PART 1

MODEL: 104983_UN007 PAPERSIZE: 17x11 (in.) DATE: 3/4/2022 TIME: 1:45:27 PM USER: esmccastin
F:\Jobs\11624\Miller Road Interchange\104983400-Engineering\Utilities\Sheets\104983_UN007.dgn

WATER WORK NOTES

WATER MAIN DISINFECTION

WATER MAIN DISINFECTION SHALL CONSIST OF: (A) PRELIMINARY FLUSHING WATER MAINS AFTER THE HYDROSTATIC TEST AND PRIOR TO THE CHLORINATION PROCEDURE; (B) THE CHLORINATION PROCEDURE; (C) THE FINAL FLUSHING; (D) SAMPLING. ALL CONTRACTOR LABOR, EQUIPMENT, FEES AND MATERIAL REQUIRED TO ASSIST THE CITY IN THE DISINFECTION OF WATER MAINS SHALL BE INCLUDED IN THE PRICE PER LINEAR FOOT OF WATER MAIN BID. THE CITY, DIVISION OF WATER WILL CHARGE TO THE CONTRACTOR A "CHLORINATION" FEE FOR DIVISION OF WATER LABOR INCURRED IN THE WORK, PAYABLE TO THE PERMITS AND SALES SECTION OF THE DIVISION OF WATER BEFORE ANY WORK IS PERFORMED.

(A) PRELIMINARY FLUSHING:

BEFORE DISINFECTION ALL DIRT AND FOREIGN MATTER SHALL BE REMOVED FROM THE NEW AND/OR RELOCATED WATER MAIN OR EXTENSIONS TO EXISTING MAINS BY A THOROUGH FLUSHING THROUGH THE HYDRANTS OR BY OTHER APPROVED MEANS BY THE CONTRACTOR. EACH VALVED SECTION OF THE NEWLY LAID PIPE SHALL BE FLUSHED INDEPENDENTLY. THIS SHALL BE DONE AFTER THE PRESSURE TEST. FLUSHING SHALL BE IN ACCORDANCE WITH ANSI/AWWA C-651 STANDARD FOR "DISINFECTING WATER MAINS". WHERE THE FLUSHING VELOCITY SPECIFIED THEREIN CANNOT BE ATTAINED FLUSHING RATES AS DETERMINED BY THE CITY TO BE SUFFICIENT WILL BE PERMITTED. IF IN THE OPINION OF THE CITY THE FLUSHING PRIOR TO THE CHLORINATION PROCEDURE DOES NOT REMOVE DIRT OR OTHER ACCUMULATIONS IN THE PIPE, THE PIPE SHALL BE CLEANED BY MECHANICAL MEANS BY THE CONTRACTOR AND THE FLUSHING SHALL BE REPEATED.

ANY FLUSHING OF HYDRANTS OR WATER LINES (PROPOSED OR TEMPORARY) MUST NOT DISCHARGE WATER ONTO NORFOLK SOUTHERN RIGHT OF WAY.

(B) CHLORINATION PROCEDURE:

SUCH LENGTHS OF THE WATER MAIN AS THE CITY MAY DETERMINE, SHALL BE CHLORINATED; HOWEVER, IN NO CASE SHALL THE LENGTH EXCEED THAT WHICH CAN BE CHLORINATED SATISFACTORILY IN ONE (1) WORK DAY. SUCH MAXIMUM LENGTH IS GENERALLY UP TO THREE (3) MILES TOTAL, INCLUDING BRANCHES AND CONNECTING WATER MAIN(S), FOR SIXTEEN INCH (16") AND SMALLER; AND THREE (3) VALVE SECTIONS, OR TWO (2) MILES, FOR TWENTY INCH (20") OR LARGER WATER MAINS.

THE CONTRACTOR SHALL COOPERATE WITH THE CITY'S CHLORINATION CREW AND/OR INSPECTOR BY OPERATING ANY REQUIRED WATER MAIN APPURTENANCES TO ASSURE THE DISINFECTION OF SUCH APPURTENANCES AND OF ANY PIPE BRANCHES TO ASSURE CHLORINATION SOLUTION IS CONFINED TO WATER MAIN BEING DISINFECTED. NO OPERATION OF WATER MAIN APPURTENANCES BY THE CONTRACTOR SHALL BE PERFORMED WITHOUT THE CONSENT OF THE CITY.

THE CITY OF CLEVELAND, DIVISION OF WATER'S, CHLORINATION CREW WILL DETERMINE THE LENGTH OF TIME THE CHLORINE SOLUTION IS TO REMAIN IN THE WATER MAIN BEING DISINFECTED.

(C) FINAL FLUSHING:

1. THE FLUSHING OF THE CHLORINATION SOLUTION SHALL BE DONE BY THE CONTRACTOR UNTIL THE CHLORINE SOLUTION IS TOTALLY FLUSHED OUT OF THE SYSTEM BEING DISINFECTED. ALL FLUSHING SHALL BE UNDER THE CONTROL OF THE CITY, OR HIS DESIGNATE. THE CONTRACTOR SHALL OBTAIN WATER FOR FLUSHING IN THE SAME MANNER AS FOR TESTING.

2. IN FLUSHING, THE CONTRACTOR SHALL PROPERLY DISPOSE OF THE CHLORINATION SOLUTION. ONLY POINTS OF DISCHARGE APPROVED BY THE ENGINEER AND THE CITY'S CHLORINATION CREW SHALL BE UTILIZED WITHOUT ANY TREATMENT TO CHEMICALLY NEUTRALIZE THE SOLUTION. IN CASES WHERE DIRECT DISPOSAL IS NOT APPROVED, THE CONTRACTOR SHALL NEUTRALIZE THE CHLORINE SOLUTION AS PROVIDED IN APPENDIX B OF AWWA C-651. CONTRACTOR

SHALL OBTAIN APPROVAL, IN WRITING, OF THE LOCAL SEWER AUTHORITY BEFORE DISPOSING TO A SANITARY SEWER. A COPY OF SUCH WRITTEN APPROVAL SHALL BE PROVIDED TO THE INSPECTOR AND CHLORINATION CREW BEFORE ANY FLUSHING IS BEGUN.

3. THE CITY'S CHLORINATION CREW WILL DETERMINE WHEN THE DISINFECTION SOLUTION HAS BEEN SATISFACTORILY FLUSHED FROM THE MAIN AND BRANCHES.

(D) SAMPLING:

1. A TIME PERIOD AS DETERMINED BY THE CITY SHALL ELAPSE BEFORE WATER SAMPLES ARE TAKEN FROM THE WATER MAIN(S) AND BRANCH(ES) TO DETERMINE THE BACTERIOLOGICAL QUALITY OF THE WATER THEREIN. IN NO CASE, SHALL THE TIME PERIOD BE LESS THAN TWENTY-FOUR (24) HOURS.

NO SAMPLES SHALL BE TAKEN FROM FIRE HYDRANTS. THE CONTRACTOR SHALL ASSIST THE CITY'S CHLORINATION CREW IN OBTAINING SAMPLES. THE CITY WILL FURNISH ALL CONTAINERS AND CONTROL PROCEDURES FOR OBTAINING SAMPLES. THE CITY WILL DETERMINE THE NUMBER AND LOCATIONS OF SAMPLES TO BE TAKEN FROM THE DISINFECTED SECTIONS.

THE CITY WILL DETERMINE THE BACTERIOLOGICAL QUALITY OF THE WATER SAMPLES. IF SAMPLING RESULTS IN TWO (2) CONSECUTIVE POSITIVE SAMPLES, THE PROCEDURE OF CHLORINATION, FLUSHING AND SAMPLING SHALL BE REPEATED. FIGURE 1, SUGGESTED COMBINATION AND SAMPLING TAP, TAKEN FROM AWWA C-651, IS HEREIN MADE A PART OF THESE SPECIFICATIONS.

2. IN CASES WHERE THE LENGTH OF WATER MAIN IS LESS THAN 350 FEET, AFTER HYDROSTATIC TESTING ONLY, PRELIMINARY FLUSHING AND SAMPLING WILL BE DONE; HOWEVER, IF THERE ARE TWO (2) POSITIVE SAMPLES, AFTER FLUSHING, THE ENTIRE PROCEDURE OF PRELIMINARY FLUSHING, CHLORINATION, FLUSHING AND SAMPLING SHALL BE REQUIRED. THE CITY'S CHLORINATION CREW WILL COMPLETE AND DISTRIBUTE THE CHLORINATION APPROVAL FORM.

CONTRACTOR'S LABOR

THE CONTRACTOR SHALL FURNISH AT LEAST TWO (2) TRAINED WORKMEN TO PERFORM ALL LABOR UNDER THE SUPERVISION AND DIRECTION OF THE CITY'S CHLORINATION CREW. THE CONTRACTOR'S LABORERS SHALL PERFORM ALL DUTIES SPECIFIED IN WATER MAIN DISINFECTION GENERAL NOTE. THE CONTRACTOR SHALL PROVIDE PROPER EQUIPMENT AND PROTECTIVE CLOTHING AS MAY BE REQUIRED BY THE LABORERS IN PERFORMING THE NEEDED TASK.

NO EXTRA PAYMENT WILL BE MADE TO THE CONTRACTOR FOR PROVIDING LABOR TO ASSIST THE CITY DURING THE DISINFECTION PROCEDURE, OR FOR PROVIDING PROPER EQUIPMENT AND PROTECTIVE CLOTHING REQUIRED, BUT THE COST THEREOF SHALL BE DEEMED TO BE INCLUDED IN THE PRICE BID PER FOOT OF WATER MAIN FURNISHED AND INSTALLED UNDER THIS CONTRACT.

ACCESS PITS

(A) THE CONTRACTOR SHALL PROVIDE TIGHTLY WOOD SHEETED ACCESS PITS, CONFORMING TO THE REQUIREMENTS OF "THE SPECIFIC SAFETY REQUIREMENTS OF THE INDUSTRIAL COMMISSION OF OHIO RELATING TO CONSTRUCTION" RULE 4121:1-3-13, FOR ACCESS TO ALL WATER MAIN APPURTENANCES TO BE UTILIZED IN DISINFECTING WATER MAINS.

(B) THE CONTRACTOR SHALL HAVE ON HAND READY FOR USE, PUMPING EQUIPMENT TO DEWATER ANY AND ALL ACCESS PITS USED FOR DISINFECTING WATER MAINS AND SHALL DEWATER THE ACCESS PITS WHEN ORDERED BY THE CITY.

(C) UPON COMPETITION OF THE CHLORINATION PROCEDURE, WHEN ACCESS PITS ARE NO LONGER REQUIRED FOR USE, THE CONTRACTOR SHALL REMOVE ALL SHEETED ACCESS PITS AND BACKFILL THE EXCAVATIONS IN ACCORDANCE WITH THESE SPECIFICATIONS.

(D) NO EXTRA PAYMENT WILL BE MADE TO THE CONTRACTOR PROVIDING ACCESS PITS, PUMPING EQUIPMENT AND THE DEWATERING OF ACCESS PITS, OR FOR THE REMOVAL OF THE SHEETED ACCESS PITS AND BACKFILLING OF THE EXCAVATIONS, BUT THE COST THEREOF SHALL BE DEEMED TO BE INCLUDED IN THE PRICE BID PER LINEAL FOOT OF WATER MAIN FURNISHED AND INSTALLED UNDER THIS CONTRACT.

CONNECTION OF NEW MAINS

WHEN THE NEW AND/OR RELOCATED WATER MAINS HAVE BEEN TESTED AND CHLORINATED AND ARE READY TO BE CONNECTED TO THE EXISTING MAIN, THE CONTRACTOR SHALL MAKE SUCH CONNECTIONS AT A TIME DESIGNATED BY THE CITY. PRIOR TO SHUTTING DOWN THE EXISTING MAINS, THE CONTRACTOR SHALL TAKE SUITABLE PRECAUTIONS TO ASSURE A MINIMUM INTERRUPTION TO SERVICE, INCLUDING THE FOLLOWING:

(A) PERFORM ALL NECESSARY EXCAVATION, INCLUDING BELL HOLES, EXPOSING THE EXISTING MAIN SUFFICIENTLY FOR THE OPERATION OF THE PIPE SAW BY THE CITY, OR PIPE CUTTING BY THE CONTRACTOR.

(B) REMOVE THE CAP OR PLUG FROM THE END OF THE NEW MAIN.

(C) SWAB THE INSIDE OF ALL PIPES, BENDS, SLEEVES, COUPLINGS AND OTHER FITTINGS TO BE USED IN CONNECTION THOROUGHLY WITH A CHLORINE SOLUTION OF AT LEAST 100 P.P.M.

(D) MAKE UP AS MUCH OF THE WATER MAIN CONNECTION AS POSSIBLE OUTSIDE THE DITCH TO ELIMINATE THE NEED FOR MAKING MOST OF THE NECESSARY JOINTS DURING THE SHUTDOWN. BY CAREFUL MEASUREMENT ALL PIPE CUTS MAY BE MADE BY THE CONTRACTOR PRIOR TO SHUTTING DOWN.

(E) HAVE SUFFICIENT MANPOWER AND EQUIPMENT ON THE SITE TO PERFORM THE OPERATION IN A MINIMUM AMOUNT OF TIME.

(F) PERFORM AS MUCH OF THE SERVICE AND HYDRANT CONNECTION WORK ALONG RELOCATED MAINS AS IS POSSIBLE.

(G) IN THE TIME PERIOD FROM APRIL 1, THRU TO NOVEMBER 1, NO SHUTDOWNS WILL BE PERMITTED DUE TO SEASONAL AND SYSTEM DEMANDS UNLESS OTHERWISE APPROVED BY THE CITY.

PAINTING

(A) IT IS THE INTENTION OF THESE SPECIFICATIONS TO PROVIDE THAT ALL METAL WORK SUBJECT TO CORROSION SHALL BE SATISFACTORILY PROTECTED BY A DURABLE COATING OF PAINT OR OTHER APPROVED MATERIAL AND THAT ALL METAL SURFACES NOT BURIED IN EARTH, OR IN CONCRETE SHALL BE LEFT CLEAN AND WELL PAINTED AT THE COMPLETION OF THE CONTRACT. UNLESS OTHERWISE SPECIFIED, THE PROTECTION SHALL BE AT LEAST THAT GIVEN BY THREE (3) COATS OF APPROVED PAINT. THE FIRST COAT IS TO BE APPLIED AT THE SHOP BEFORE THE METAL HAS RUSTED AND AFTER ALL GREASE, DIRT AND SCALE HAS BEEN REMOVED. BOLTS AND NUTS SHALL NOT BE SHOP COATED, BUT SHALL RECEIVE THREE (3) COATS OF APPROVED PAINT AFTER INSTALLATION.

(B) ALL METAL WORK WHICH HAS NOT BEEN COATED BEFORE THE ARRIVAL ON THE JOB SHALL BE GIVEN A TEMPORARY PROTECTIVE COATING OF SUCH A NATURE AS TO PERMIT THE READY ADHERENCE OF FUTURE COATINGS. THE TEMPORARY COATING SHALL BE A GOOD GRADE ASPHALTIC PAINT OR OTHER APPROVED MATERIAL. THE TEMPORARY PROTECTION SHALL APPLY PARTICULARLY TO THE VALVE BOXES AND COVERS, MANHOLE RINGS AND COVERS, LADDERS AND LADDER RUNGS, DRESSER TYPE/VICTAULIC TYPE COUPLINGS AND ELSEWHERE WHEN IN THE OPINION OF THE CITY, SUCH PROTECTION IS NECESSARY.

(C) ALL SURFACES OF METAL WHICH WILL BE IN CONTACT AFTER ASSEMBLING SHALL BE PAINTED, AT LEAST ONE (1) COAT, BEFORE ASSEMBLING. THE FINAL COAT OF PAINT ON ALL EXPOSED WORK SHALL BE GIVEN SHORTLY BEFORE THE COMPLETION OF THE CONTRACT.

(D) WHERE PAINTING CLAUSES APPEAR HEREINAFTER, THEY SHALL TAKE PRECEDENCE OVER THIS SECTION, EXCEPT THAT TEMPORARY PROTECTION HEREIN DESCRIBED MAY BE REQUIRED.

(E) ALL OF THIS WORK SHALL BE INCLUDED IN THE PRICE BID FOR THE PARTICULAR ITEM REQUIRING THE PAINTING.

TESTS, INSPECTION AND REPORTS

THE ENGINEER, OR HIS AUTHORIZED DESIGNATE, WILL INSPECT THE MATERIAL AND WORK DONE, AS THE INTEREST OF THE CITY MAY REQUIRE. SUCH OFFICER SHALL HAVE UNRESTRICTED ACCESS TO THE CONTRACTOR'S PLANT, AND TO ALL PARTS OF THE WORK AND OTHER PLACES AT WHICH THE PREPARATION OF THE MATERIAL AND THE CONSTRUCTION OF THE DIFFERENT PARTS OF THE WORK TO BE DONE UNDER THESE SPECIFICATIONS ARE CARRIED ON, AND HE SHALL RECEIVE ALL FACILITIES AND ASSISTANCE TO CARRY OUT HIS WORK OF INSPECTION AND TESTING, IN A MANNER SATISFACTORY TO THE ENGINEER.

ALL PIPE SHALL BE INSPECTED AND TESTED AT THE MANUFACTURING FACILITY. THE CONTRACTOR SHALL FURNISH EIGHT (8) COPIES OF THE MANUFACTURER'S CERTIFIED INSPECTION AND TESTING REPORTS FOR ALL PIPE AND FITTINGS TO BE FURNISHED AND INSTALLED IN THE WORK.

NOTWITHSTANDING THE REQUIREMENTS OF ANY OTHER PROVISIONS OF THESE SPECIFICATIONS, THE CONTRACTOR SHALL ARRANGE FOR AND PAY ALL COSTS INVOLVED FOR SHOP INSPECTION OF ALL MATERIALS FURNISHED, MANUFACTURE OF ALL PIPE, VALVES, FITTINGS, ETC., FIELD AND SHOP WELDS AND WELDING, AND FURNISH TO THE CITY OF CLEVELAND COPIES OF ALL SHOP, FABRICATION, MANUFACTURE AND OTHER RELATED INSPECTION REPORTS OF MATERIALS FURNISHED. THIS INSPECTION SHALL BE DONE BY A RECOGNIZED INSPECTION LABORATORY APPROVED BY THE CITY OF CLEVELAND.

3rd. HIGH SERVICE DISTRICT

DEPARTMENT OF PUBLIC UTILITIES
DIVISION OF WATER
CLEVELAND, OHIO

SUBJECT : 12" WATER MAIN ALONG MILLER ROAD AT I.R. 77
CITY OF BRECKSVILLE

SCALE: AS SHOWN | NO.

WATER WORK NOTES

SUBSET 4 | TOTAL 43

DESIGN AGENCY
EUTHENICS
8235 Midwest Dr. | Cleveland, OH 44125

DESIGNER TDP

REVIEWER DTB 03/01/22

PROJECT ID 104983

SHEET P.231 | TOTAL P.434

CUY-77-00.42 PART 1

MODEL: 104983_UN008 PAPERSIZE: 17x11 (in.) DATE: 3/4/2022 TIME: 1:45:30 PM USER: esmccaslin
F:\Jobs\1162-Miller Road Interchange\104983\400-Engineering\Utilities\Sheets\104983_UN008.dgn

WATER WORK NOTES

TESTS, INSPECTION AND REPORTS - CONTINUED

SUCH INSPECTION SHALL NOT RELIEVE THE CONTRACTOR FROM ANY OBLIGATION TO PERFORM SAID WORK STRICTLY IN ACCORDANCE WITH THE SPECIFICATIONS, OR ANY MODIFICATIONS THEREOF, AS HEREIN PROVIDED, AND WORK NOT SO CONSTRUCTED SHALL BE REMOVED AND MADE GOOD BY THE CONTRACTOR, AT HIS OWN EXPENSE.

ALL DUCTILE IRON PIPE, FITTINGS AND SPECIALS SHALL BE SUBJECT TO INSPECTION AND APPROVAL BY THE ENGINEER AFTER DELIVERY OF MATERIAL TO THE JOB SITE. NO MISSHAPEN, IMPERFECTLY COATED, OR DAMAGED PIPE, FITTINGS, OR APPURTENANCES SHALL BE INSTALLED IN THE WORK.

THE CONTRACTOR SHALL FURNISH TO THE ENGINEER EIGHT (8) SETS OF LISTS OF ALL PIPE AND FITTINGS AND OF ALL APPURTENANCES IN EACH SHIPMENT OF MATERIALS DELIVERED TO THE JOB SITE. THE LISTS SHALL CONTAIN THE SERIAL OR MARK NUMBER, WEIGHT, SIZE, AND DESCRIPTION OF EACH ITEM RECEIVED AT THE JOB SITE.

THE CITY RESERVES THE RIGHT TO TEST ALL MATERIALS FURNISHED BY THE CONTRACTOR DURING THE LIFE OF THE PROPOSED CONTRACT. THE CITY MAY ELECT TO RANDOMLY TEST MATERIALS OR CAUSE TO HAVE MATERIALS RANDOMLY TESTED. NO COMPENSATION FOR DELAYS WILL BE MADE TO THE CONTRACTOR EITHER DURING OR AS A RESULT OF THESE TESTS. THE CONTRACTOR SHALL BE RESPONSIBLE, AT HIS SOLE EXPENSE, TO REMEDY ANY DEFICIENCIES, TO THE SATISFACTION OF THE CITY, FOUND AS A RESULT OF THESE TESTS.

ANY DEFECTIVE CASTINGS WHICH MAY HAVE PASSED THE INSPECTOR AT THE WORKS, OR ELSEWHERE, SHALL BE AT ALL TIMES LIABLE TO REJECTION WHEN DISCOVERED, UNTIL THE DATE OF FINAL PAYMENT UNDER THIS CONTRACT.

THE CITY RESERVES THE RIGHT TO TEST ALL MATERIALS FURNISHED BY THE CONTRACTOR DURING THE LIFE OF THE PROPOSED CONTRACT. THE CITY MAY ELECT TO RANDOMLY TEST MATERIALS OR CAUSE TO HAVE MATERIALS RANDOMLY TESTED. NO COMPENSATION FOR DELAYS WILL BE MADE TO THE CONTRACTOR EITHER DURING OR AS A RESULT OF THESE TESTS. THE CONTRACTOR SHALL BE RESPONSIBLE, AT HIS SOLE EXPENSE, TO REMEDY ANY DEFICIENCIES, TO THE SATISFACTION OF THE CITY, FOUND AS A RESULT OF THESE TESTS.

ANY DEFECTIVE CASTINGS WHICH MAY HAVE PASSED THE INSPECTOR AT THE WORKS, OR ELSEWHERE, SHALL BE AT ALL TIMES LIABLE TO REJECTION WHEN DISCOVERED, UNTIL THE DATE OF FINAL PAYMENT UNDER THIS CONTRACT.

SHOP DRAWINGS

(A) SUBMITTALS: AS SOON AS POSSIBLE AFTER THE EXECUTION OF THE CONTRACT, THE CONTRACTOR SHALL CAUSE TO BE PREPARED AND SHALL SUBMIT TO THE ENGINEER FOR REVIEW AND APPROVAL, EIGHT (8) SETS OF PRINTS OF ALL SHOP DRAWINGS. SHOP DRAWINGS SHALL BE FULLY DIMENSIONED, MANUFACTURER OR FABRICATOR GENERATED DETAILED WORKING DRAWINGS OR DETAILED SHOP DRAWINGS OF ALL PIPE AND FITTINGS, SPECIAL FITTINGS, COUPLINGS, SPECIALS AND MISCELLANEOUS DETAILS, SUCH AS VALVES, DRAIN FORGINS, PRECAST VAULTS, CASTINGS, BONDING OF JOINTS, AIR RELIEF OUTLETS, ANCHORS, PITOMETER OUTLETS, RESTRAINED JOINTS, ACCESS OPENINGS, PIPING FOR GATE VALVE ASSEMBLY, ETC. INFORMATION SHOWN ON SHOP DRAWINGS SHALL INCLUDE THICKNESSES, WEIGHT, DIRECTION OF TURNING, TYPE AND SPECIFICATION OF MATERIALS, AND OF SIMILAR INFORMATION OF ALL PIPING, VALVES AND MISCELLANEOUS DETAILS.

ALL WORKING AND SHOP DRAWING SUBMITTALS SHALL BE FULL SIZED DRAWINGS, TRUE TO SCALE. NO REDUCED COPIES OR PREVIOUSLY USED DRAWINGS FROM OTHER CONTRACTS SHALL BE ACCEPTED. NO WORK SHALL BE DONE IN THE SHOP OR IN THE FIELD UNTIL AFTER THE SHOP DRAWINGS HAVE BEEN FINALLY APPROVED BY THE ENGINEER.

THE CONTRACTOR SHALL ALSO SUBMIT THE ENGINEER FOR REVIEW AND/OR APPROVAL, A MINIMUM OF EIGHT (8) SETS OF A COMPLETE ASSEMBLY PLAN FOR THE ENTIRE LENGTH OF THE PIPE LINE CONSISTING OF THE HORIZONTAL PIPE ALIGNMENT, THE PIPE PROFILE, AND ACCOMPANIED WITH A DETAILED TABULATED LAYING SCHEDULE. THIS ASSEMBLY PLAN AND LAYING SCHEDULE SHALL SHOW THE CORRECT PLAN LOCATION AND ELEVATION, BY BOTH SURVEY AND WATER MAIN STATIONING, OF ALL FITTINGS TO BE FURNISHED, AND SHALL INCLUDE LOCATION OF ALL AIR RELIEF VALVES, DRAINS ASSEMBLIES, ANCHORS, MANHOLES, PITOMETER VAULTS, VALVE VAULTS, RESTRAINED JOINTS, ACCESS MANHOLES, ELECTROLYSIS TEST STATIONS, VALVES ASSEMBLIES, ETC. THIS WATER MAIN ASSEMBLY PLAN AND PROFILE SHALL BE A DOUBLE LINED DRAWING, INCLUDING PIPE CENTERLINE, SIMILAR TO THAT SHOWN ON THE CONTRACT DRAWINGS, AND SHALL SHOW BY SURVEY AND WATER MAIN STATIONING ALL HORIZONTAL POINTS OF INTERSECTIONS (HPI), INCLUDING DEGREE OF DEFLECTION. THE WATER MAIN ASSEMBLY PLAN PROFILE SHALL ALSO INCLUDE PIPE CENTERLINE ELEVATIONS, AND SHALL SHOW BY SURVEY AND WATER MAIN STATIONING ALL VERTICAL POINTS OF INTERSECTIONS (VPI), INCLUDING DEGREE OF DEFLECTION. THE ASSEMBLY PLAN AND TABULATED LAYING SCHEDULE SHALL SHOW THE LIMITS OF THE RESTRAINED DISTANCES, CLASS(ES) OF PIPE AND OTHER PERTINENT INFORMATION.

(B) REVIEWS AND APPROVALS: SHOP DRAWINGS, UNTIL APPROVED, SHALL BE SUBMITTED IN A MINIMUM OF EIGHT (8) SETS OR COPIES, CORRECTED AS DIRECTED BY THE ENGINEER AND RESUBMITTED AS OFTEN AS NECESSARY FOR FINAL APPROVAL. ALL SUCH DRAWINGS SHALL BE ACCOMPANIED WITH A CONTRACTOR'S "LETTER OF TRANSMITTAL" LISTING THE DRAWINGS, THEIR CONTENTS, THE ITEM NUMBER FOR WHICH THE SUBMITTAL IS MADE, AND THE PROJECT FOR WHICH THEY ARE INTENDED. TWO (2) SETS OF PRINTS OF EACH OF THE DRAWINGS SUBMITTED WILL BE RETURNED TO THE CONTRACTOR THROUGH THE ENGINEER WITH THE CRITICISMS OR APPROVAL OF THE CITY NOTED THEREON. AFTER SUCH APPROVAL, THE CONTRACTOR SHALL FURNISH NOT LESS THAN EIGHT (8) SETS OR COPIES FOR THE ENGINEER'S/DESIGN ENGINEER'S USE. THE CONTRACTOR SHALL DISTRIBUTE A SUFFICIENT NUMBER OF ADDITIONAL SETS AS MAY BE REQUIRED FOR THE WORK, INCLUDING AT LEAST ONE (1) SET FOR THE FIELD OFFICE, ALL BEARING THE ENGINEER'S/DESIGN ENGINEER'S "APPROVAL" STAMP OR OTHER WRITTEN DOCUMENTATION INDICATING APPROVAL.

(C) CONTRACTOR'S RESPONSIBILITY: THE ENGINEER WILL NOT RELEASE FINAL APPROVED SHOP DRAWINGS UNTIL THE CONTRACTOR FURNISHES FIELD DATA, IN WRITING, ON HIS COMPANY STATIONARY, ADDRESSED TO THE ENGINEER, EXPLICITLY STATING THAT THE CONTRACTOR HAS MADE, THROUGHOUT THE FULL LIMITS OF THE WORK CONTEMPLATED HEREIN, THOROUGH FIELD INVESTIGATIONS AND FIELD VERIFICATIONS OF ALL UTILITIES AND UTILITY SERVICE CONNECTIONS, BOTH PUBLIC AND PRIVATE, INCLUDING ALL SEWERS, ALL SEWER SERVICE CONNECTIONS, AND APPURTENANCES THEREOF, AND OF ANY OTHER OBSTRUCTION THAT MAY BE ENCOUNTERED IN THE WORK, AND THAT ACCORDING TO HIS FIELD INVESTIGATIONS AND FIELD VERIFICATIONS, NO KNOWN UTILITIES, UTILITY SERVICE CONNECTIONS OR OBSTRUCTIONS WILL AFFECT THE PIPE LAYING AS SHOWN ON THE CONTRACT DRAWINGS. WHERE THE CONTRACTOR FINDS VARIATIONS WILL BE REQUIRED TO THE PROPOSED PIPELINE ALIGNMENT AND/OR PROFILE AS SHOWN ON THE CONTRACT DRAWINGS, HE SHALL DOCUMENT THOSE VARIATIONS IN ACCORDANCE WITH PARAGRAPH G.

IN ADDITION, IT SHALL THE RESPONSIBILITY OF THE CONTRACTOR TO VERIFY ALL FIELD DIMENSIONS AND ALL DESIGN CRITERIA, INCLUDING DESIGN AND PRESSURE REQUIREMENTS, PRIOR TO PREPARING THE VARIOUS SHOP DRAWING SUBMITTALS IN ORDER TO ASCERTAIN THAT ALL MATERIALS TO BE FURNISHED MEET OR EXCEED THE REQUIREMENTS OF THIS CONTRACT. AT THE TIME OF EACH SUBMISSION, THE CONTRACTOR SHALL GIVE THE ENGINEER SPECIFIC WRITTEN NOTICE OF EACH VARIATION THAT THE SHOP DRAWINGS MAY HAVE FROM THE REQUIREMENTS OF THE CONTRACT DOCUMENTS. THE CONTRACTOR SHALL CAUSE A SPECIFIC NOTATION TO BE MADE ON EACH SHOP DRAWING SUBMITTED TO THE ENGINEER FOR REVIEW OF EACH SUCH VARIATION. THE ENGINEER'S/DESIGN ENGINEER'S REVIEW AND APPROVAL OF SHOP DRAWINGS SHALL NOT RELIEVE THE CONTRACTOR FROM RESPONSIBILITY FOR ANY VARIATION FROM THE REQUIREMENTS OF THE CONTRACT DOCUMENTS. THE ENGINEER'S/DESIGN ENGINEER'S APPROVAL SHALL NOT EXTEND TO ANY SUCH VARIATION UNLESS CONTRACTOR HAS, IN WRITING, CONSPICUOUSLY CALLED THE ENGINEER'S/DESIGN ENGINEER'S ATTENTION TO EACH SUCH VARIATION AT THE TIME OF THE SUBMITTAL, AS REQUIRED BY THIS PARAGRAPH, AND THE ENGINEER HAS GIVEN WRITTEN APPROVAL OF THAT PARTICULAR VARIATION BY A SPECIFIC WRITTEN NOTATION THEREOF INCORPORATED IN OR ACCOMPANYING THE SHOP DRAWING REVIEW AND/OR APPROVAL.

THE CONTRACTOR SHALL LOCATE ALL PIPE ENDS AND/OR ALL EXISTING PIPE JOINTS WHERE CONNECTIONS ARE TO BE MADE, INCLUDING WHERE EXISTING MAINS ARE TO BE TAPPED, ALONG WITH THE NEXT EXISTING PIPE JOINT TO DETERMINE THE EXACT LOCATION AND ELEVATION (LINE AND GRADE) OF THE EXISTING WATER MAIN. THE CONTRACTOR SHALL ALSO EXPOSE THE EXISTING PIPE JOINTS ADJACENT TO WHERE CONNECTIONS ARE TO BE MADE TO DETERMINE THE TYPE OF THE EXISTING JOINTS AND THE DIRECTION OF THE EXISTING JOINTS. NO PIPE FABRICATION DRAWING WILL BE APPROVED UNTIL THIS INFORMATION IS SUBMITTED TO THE ENGINEER. ALL FIELD DATA SHALL BE OBTAINED IN THE PRESENCE OF THE INSPECTOR.

THE FIELD DATA SHALL BE OBTAINED BY THE CONTRACTOR, AND SUBMITTED TO THE ENGINEER, IN SUFFICIENT TIME IN ADVANCE OF THE PROPOSED WORK IN ORDER TO DETERMINE IF ANY ADJUSTMENTS TO THE LINE AND GRADE OF THE PROPOSED WATER MAIN OR ADJUSTMENTS TO THE EXISTING WATER MAIN IS REQUIRED DUE TO THE INFORMATION OBTAINED IN THE FIELD DATA. THE INFORMATION OBTAINED IN THE FIELD DATA SHALL ALSO BE FORWARDED TO THE PIPE FABRICATOR WITH SUFFICIENT TIME TO ALLOW FOR THE PREPARATION OF REVISED SHOP DRAWINGS AND FOR FABRICATION OF THOSE PIPE AND FITTINGS REQUIRED TO MAKE THE CONNECTION. NO EXTRA COMPENSATION TO THE CONTRACTOR SHALL BE MADE FOR ANY DELAYS AND/OR ADDITIONAL, PIPE, FITTINGS, AND SPECIALS, OR EQUIPMENT, TOOLS AND INCIDENTALS, FOR FAILURE TO HAVING PROPERLY OBTAINED AND FORWARDED IN A TIMELY MANNER TO THE ENGINEER THE REQUIRED FIELD INFORMATION DATA FOR REVIEW AND APPROVAL AND THE SAME TO THE PIPE FABRICATOR.

(D) ACCURACY/COMPLETENESS: THE DATA SHOWN ON THE SHOP DRAWINGS SHALL BE COMPLETE WITH RESPECT TO QUANTITIES, DIMENSIONS, SPECIFIED PERFORMANCE AND DESIGN CRITERIA, MATERIALS AND SIMILAR DATA TO ENABLE THE ENGINEER TO REVIEW THE INFORMATION AS REQUIRED. IT IS, AMONG OTHER THINGS, THE RESPONSIBILITY OF THE CONTRACTOR TO VERIFY ALL FIELD DIMENSIONS PRIOR TO PREPARING THE VARIOUS SHOP DRAWING SUBMITTALS.

SHOP DRAWINGS SHALL BE CHECKED BY THE CONTRACTOR FOR ACCURACY OF INFORMATION PRIOR TO SUBMISSION. WHENEVER IT IS EVIDENT THAT SUCH CHECKING HAS NOT BEEN DONE, REVIEW OF THE SHOP DRAWINGS BY THE ENGINEER WILL NOT BE CONSIDERED FURTHER AND WILL BE RETURNED TO THE CONTRACTOR FOR CHECKING AND RESUBMISSION.

THE ENGINEER WILL REVIEW AND APPROVE WITH REASONABLE PROMPTNESS SIN ADDITION, IT SHALL THE RESPONSIBILITY OF THE CONTRACTOR TO VERIFY ALL FIELD DIMENSIONS AND ALL DESIGN HOP DRAWINGS SUBMITTED BY THE CONTRACTOR. HOWEVER, THE ENGINEER'S REVIEW AND APPROVAL WILL BE ONLY FOR CONFORMANCE WITH THE DESIGN CONCEPT OF THE WORK AND FOR COMPLIANCE WITH THE REQUIREMENTS SET FORTH IN THE CONTRACT DOCUMENTS. SUCH REVIEW AND APPROVAL DO NOT EXTEND TO:

1. MEANS, METHODS, TECHNIQUES, SEQUENCES OR SPECIFIC PROCEDURES OF CONSTRUCTION, EXCEPT WHERE A MEANS, METHOD, TECHNIQUE, SEQUENCE OR PROCEDURE OF CONSTRUCTION IS SPECIFIED IN OR REQUIRED BY THE CONTRACT DOCUMENTS DUE TO ITS EFFECT ON THE CONFORMANCE OF THE COMPLETED WORK WITH THE DESIGN REQUIREMENTS, OR TO SAFETY PRECAUTIONS OR PROGRAMS INCIDENT THERETO.

2. DESIGN DATA REFLECTED IN THE SHOP DRAWING SUBMITTAL WHICH IS WITHIN THE SPECIAL EXPERTISE OF THE MANUFACTURER/DESIGNER OF THAT EQUIPMENT, UPON WHICH THE CITY AND THE ENGINEER HAVE A RIGHT TO RELY.

3. SAFETY ASPECTS OF THE EQUIPMENT TO BE INSTALLED, INCLUDING, BUT NOT LIMITED TO, OSHA REQUIREMENTS AND INSTALLATION PROCEDURES.

4. APPROVAL OF A SEPARATE AND SPECIFIC ITEM OF WORK. FOR WHICH SUCH APPROVAL IS GIVEN AND, THEREFORE, GOVERNS.

5. THE APPROVAL BY THE ENGINEER OF ANY SHOP DRAWING SHALL NOT RELIEVE THE CONTRACTOR FROM ITS RESPONSIBILITY TO THE CITY AND OTHERS FOR ERRORS OR OMMISIONS IN THE SHOP DRAWINGS OR THE RESULTING INSTALLATION.

6. WHERE A SHOP DRAWING IS REQUIRED BY THE SPECIFICATIONS, ANY RELATED WORK PERFORMED PRIOR TO THE ENGINEER'S/DESIGN THE ENGINEER'S REVIEW AND APPROVAL OF THE PERTINENT SUBMISSION WILL BE THE SOLE EXPENSE AND RESPONSIBILITY OF THE CONTACTOR.

(E) FINAL MYLAR TRACINGS: AFTER THE DRAWINGS HAVE BEEN FINALLY APPROVED, THE CONTRACTOR SHALL FURNISH THE ENGINEER WITH REPRODUCIBLE TRACINGS ON MYLAR OF EACH OF THE FINAL SHOP DRAWINGS. LAYING SCHEDULES AND LINE ASSEMBLY DRAWINGS SHALL BE REVISED BY THE PIPE FABRICATOR TO REFLECT "AS-BUILT" DATA FURNISHED BY THE CONTRACTOR; SEE PARAGRAPH H, "AS-BUILT SHOP DRAWINGS." MYLAR SHALL BE OF MINIMUM 4-MIL THICKNESS, SHALL BE OF A SINGLE BASE STOCK WITH AN ETCHED SURFACE TO PROVIDE A MATTE FINISH ON THE FRONT AND SHALL BE OF A PERMANENT NON-ERASABLE, "WASH-OFF" TYPE, OF WHICH THE IMAGE ON THE MYLAR MEDIUM CANNOT BE REMOVED BY ERASURE. TRACINGS NOT 24" X 36" IN SIZE WILL NOT BE ACCEPTED. ALL MYLAR TRACINGS OF ALL WORKING AND SHOP DRAWING SUBMITTALS SHALL BE OF FULL SIZED DRAWINGS, TRUE TO SCALE. NO MYLAR TRACINGS OF REDUCED COPIES OR PREVIOUSLY USED DRAWINGS FROM OTHER CONTRACTS WILL BE ACCEPTED.

3rd. HIGH SERVICE DISTRICT

DEPARTMENT OF PUBLIC UTILITIES
DIVISION OF WATER
CLEVELAND, OHIO

SUBJECT : 12" WATER MAIN ALONG MILLER ROAD AT I.R. 77
CITY OF BRECKSVILLE

SCALE: AS SHOWN | NO.

SUBSET 5 | TOTAL 43

DESIGN AGENCY
EUTHENICS
8335 Mohawk Dr. | Cleveland, OH 44539

DESIGNER TDP

REVIEWER DTB 03/01/22

PROJECT ID 104983

SHEET P.232 | TOTAL P.434

CUY-77-00.42 PART 1
MODEL: 104983_UN009 PAPERSIZE: 17x11 (in.) DATE: 3/4/2022 TIME: 1:45:34 PM USER: esmccaslin
F:\Jobs\11622-Miller Road Interchange\1049833400-Engineering\Utilities\Sheets\104983_UN009.dgn

WATER WORK NOTES

SHOP DRAWINGS

(F) DRAWING IDENTIFICATION: ALL DRAWINGS SUBMITTED FOR APPROVAL SHALL BE IDENTIFIED AS FOLLOWS:

CITY OF CLEVELAND - DIVISION OF WATER
PROJECT IDENTIFICATION
ITEM NUMBER AND DESCRIPTION OF ITEM

(G) AS-BUILT SHOP DRAWINGS: THE FOLLOWING IS A LIST OF ITEMS TO USE WHEN COMPILING AS- BUILT DRAWINGS. A GENERAL RULE TO FOLLOW WHEN COMPILING AS- BUILT DRAWINGS IS THAT ANY IMPORTANT DEVIATIONS FROM ORIGINAL DRAWINGS MADE DURING CONSTRUCTION SHALL BE NOTED ON AS-BUILT DRAWINGS.

a. TITLE SHEET
  i. PRIME CONTRACTOR - NAME AND ADDRESS.
    1. ANY MAJOR SUBCONTRACTORS - NAME AND ADDRESS.
  ii. RESIDENT PROJECT REPRESENTATIVE.
  iii. BURIED OR CONCEALED MATERIALS USED ON PROJECT.
  iv. FOR ALL VALVES, INDICATE THE NUMBER OF TURNS TO OPEN AND INDICATE DIRECTION TO OPEN (CLOCKWISE OR COUNTER-CLOCKWISE).
  v. A BOLD NOTE TO INDICATE THAT THE SET OF PLANS ARE 1/32AS-BUILT DRAWINGS9/32.

b. WATER MAIN CONSTRUCTION
  i. SHOW UNUSUAL CONNECTIONS TO EXISTING MAINS IN DETAIL. (SCHEMATIC, WHERE NECESSARY)

  ii. SHOW CORRECT HORIZONTAL ALIGNMENT AND GRADE, INCLUDING CENTERLINE ELEVATIONS FOR ALL MAINS INSTALLED TO GRADE.

  iii. SHOW CORRECT STATIONING OF TEES, BENDS (HORIZONTAL AND VERTICAL), VALVES, AIR RELEASE VALVES, BLOW-OFF CHAMBERS, AND SERVICE CONNECTIONS.
  iv. SHOW PERPENDICULAR DISTANCES FROM HYDRANT TO WATER MAIN AND FROM HYDRANT TO WATCH VALVE. IF CONNECTION TO WATER MAIN IS BY A PARALLEL OR OVER THE MAIN TEE, SO INDICATE THIS ON THE RECORD DRAWINGS.
  v. SHOW CORRECT BEGINNING AND ENDING STATIONING AND TYPE OF ENCASEMENT PIPES. NOTE TYPE OF ANNULAR SPACE FILL MATERIAL USED.

c. DETAIL SHEETS
  i. ANY DETAILS NOT USED OR NOT APPLICABLE SHALL BE SO NOTED. EXAMPLE - IF THREE ALTERNATES FOR PAVEMENT ARE ON DETAIL SHEET, THE TWO NOT USED SHALL BE SO NOTED. (BOX AND CROSS OUT UNUSED DETAILS).

d. ALL CONSTRUCTION
  i. DENOTE ANY AREA WHERE ANY EXISTING UTILITY WAS REPAIRED, REPLACED OR RELOCATED. SHOW CORRECT LOCATION IF PLAN LOCATION WAS INCORRECT.
  ii. NOTE AND ACCURATELY LOCATE ALL EXISTING UNDERGROUND UTILITIES ENCOUNTERED DURING CONSTRUCTION, WHETHER SHOWN ON THE DRAWINGS OR NOT.

AFTER THE "AS- BUILT" DRAWINGS HAVE BEEN COMPLETED BY THE CONTRACTOR AND HIS ENGINEER/SURVEYOR AND SUCH HAS BEEN REVIEWED BY THE INSPECTOR THE CONTRACTOR SHALL SUBMIT THE ORIGINAL SET OF "AS- BUILT" PRINTS AND THE ORIGINAL FIELD BOOK TO THE CITY FOR ITS PERMANENT FILES.

(A) BASIS OF PAYMENT: THE FULL COST OF FURNISHING ALL LABOR, TESTING, MATERIAL AND EQUIPMENT TO PROVIDE THE REQUIRED SHOP DRAWING SUBMITTALS, INCLUDING THE FINAL MYLAR SUBMITTALS, AS DESCRIBED HEREIN SHALL BE INCLUDED FOR PAYMENT UNDER THE VARIOUS WATERWORK ITEMS TO BE DONE UNDER THIS CONTRACT.

HANDLING PIPE AND ACCESSORIES

(A) UNLOADING PIPE, FITTINGS, VALVES, HYDRANTS, AND OTHER ACCESSORIES SHALL, UNLESS OTHERWISE DIRECTED, BE UNLOADED AT THE POINT OF DELIVERY, HAULED TO AND DISTRIBUTED AT THE SITE OF THE PROJECT BY THE CONTRACTOR. THEY SHALL AT ALL TIMES BE HANDLED WITH CARE TO AVOID DAMAGE. IN LOADING AND UNLOADING, THEY SHALL BE LIFTED BY HOISTS OR SLID, OR ROLLED ON SKIDWAYS IN SUCH MANNER AS TO AVOID SHOCK. UNDER NO CIRCUMSTANCES SHALL THEY BE DROPPED. PIPE HANDLED ON SKIDWAYS MUST NOT BE SKIDDED OR ROLLED AGAINST PIPE ALREADY ON THE GROUND.

(B) AT SITE OF WORK: IN DISTRIBUTING THE PIPE ALONG THE WORK, EACH PIPE AND FITTING SHALL BE PLACED AS NEARLY AS POSSIBLE TO THE POINT WHERE IT IS TO BE LAID, AND FACING IN THE PROPER DIRECTION. COATED PIPE SHALL BE HANDLED WITH WIDE BELT SLINGS. IRON CHAINS, CABLES OR OTHER EQUIPMENT LIKELY TO CAUSE DAMAGE TO THE PIPE WALL OR COATINGS SHALL NOT BE USED. PIPE WHICH HAS BEEN IMPROPERLY DISTRIBUTED AND WHICH SHALL BE MOVED LONGITUDINALLY ALONG THE TRENCH SHALL BE RELOADED ON A SUITABLE CAR OR TRUCK OR LIFTED AND SWUNG BY A DERRICK OR MOVED BY SUCH MEANS AS MAY BE SATISFACTORY TO THE ENGINEER.

(C) PROTECTION OF PIPE COATING: PIPE SHALL BE HANDLED IN SUCH MANNER THAT A MINIMUM AMOUNT OF DAMAGE TO THE COATING WILL RESULT. ANY PIPE OR FITTING, THE COATING OF WHICH HAS BEEN DAMAGED IN SHIPPING OR HANDLING, SHALL HAVE THE DAMAGED PORTION WELL CLEANED AND COATED IN THE SHOP WITH A MATERIAL EQUAL TO THAT APPLIED TO THE PIPE AND FITTINGS AND APPROVED BY THE CITY BEFORE BEING PLACED IN THE WORK. THE CONTRACTOR SHALL THOROUGHLY COAT ALL EXPOSED PARTS OF BOLTS AND NUTS WITH AN APPROVED ASPHALT PAINT, AFTER ALL PIPE HAS BEEN LAID AND BEFORE BACKFILLING HAS BEEN PLACED. ALL FIELD COATINGS SHALL BE FURNISHED AND APPLIED BY THE CONTRACTOR.

(D) PROTECTION OF DUCTILE IRON PIPE: IF IN THE PROCESS OF MANUFACTURE, TRANSPORTATION, OR HANDLING, ANY DUCTILE IRON PIPE, FITTING OR SPECIAL RECEIVES ANY DAMAGE TO THE EXTERIOR COATING, THE INTERIOR CEMENT MORTAR LINING OR THE PIPE WALL, THE REPAIR OF WHICH WILL IN ANY DEGREE FURTHER INJURE IT, SUCH PIPE, FITTING OR SPECIAL SHALL BE REJECTED AND REPLACED AT THE CONTRACTOR'S EXPENSE.

(E) PIPE KEPT CLEAN: THE INTERIOR OF THE PIPE, FITTINGS, AND OTHER ACCESSORIES SHALL BE KEPT FREE FROM DIRT AND FOREIGN MATTER AT ALL TIMES.

(F) FROST PROTECTION: VALVES AND HYDRANTS BEFORE INSTALLATION SHALL BE DRAINED AND STORED IN A MANNER THAT WILL PROTECT THEM FROM DAMAGE BY FREEZING.

(G) PIPE WHICH IS PLACED IN STORAGE OR ON STREET TREELAWNS SHALL BE SO ARRANGED AS NOT TO CAUSE UNDUE INTERFERENCE OR INCONVENIENCE TO VEHICLE OR PEDESTRIAN TRAFFIC. ALL PIPE, FITTINGS AND SPECIALS SHALL BE SUFFICIENTLY PROTECTED TO PREVENT ANY INJURY TO SUCH, INCLUDING THE INTERIOR AND EXTERIOR COATINGS.

CHANGES IN WATER MAINS

WHEREVER IT BECOMES NECESSARY, IN THE OPINION OF THE ENGINEER OR THE CITY TO CHANGE THE LOCATION OR ELEVATION OF WATER MAINS AND HYDRANTS AND WHERE WATER MAIN CONNECTIONS ARE TO BE MADE BETWEEN EXISTING DISTRIBUTION MAINS AND WATER MAINS INSTALLED UNDER THIS CONTRACT, THE CONTRACTOR SHALL REMOVE AND DISPOSE OF ALL EXISTING LINE MATERIALS AS REQUIRED IN ORDER TO RECONNECT THE WATER MAIN AND SHALL FURNISH AND INSTALL COMPLETE, ALL NEW WATER MAIN MATERIALS INCLUDING PIPE, FITTINGS AND VALVES TO MAKE THE CONNECTIONS INDICATED, EXCEPT BRANCH SLEEVES AND VALVES WHICH SHALL BE FURNISHED BY THE CONTRACTOR BUT WILL BE INSTALLED BY THE CITY, EXCEPT WHERE OTHERWISE SPECIFIED UNDER THE SECTION ENTITLED "WORK TO BE DONE BY THE CITY." THE CONTRACTOR SHALL ALSO FURNISH ALL NECESSARY LABOR, MATERIALS, TOOLS AND EQUIPMENT AND MAKE THE EXCAVATION, BACKFILL AND REPAVING FOR SUCH CONNECTIONS. PAYMENT FOR THIS SHALL BE INCLUDED IN PRICE BID UNDER THE APPROPRIATE ITEM FOR SIZE OF WATER MAIN OR CONNECTION TO BE INSTALLED. ALL WATER MAIN MATERIALS, VALVES, AND APPURTENANCES REMOVED SHALL BECOME THE PROPERTY OF THE CONTRACTOR. (SEE WORK TO BE DONE BY THE CITY).

WORK TO BE DONE BY THE CITY

(A) TAPPING MAINS: THE CONTRACTOR SHALL FURNISH ALL BRANCH SLEEVES, TAPPING SADDLES AND TAPPING VALVES OF THE SIZES AND TYPES INDICATED ON THE CONTRACT DRAWINGS. THE CONTRACTOR SHALL DO ALL THE NECESSARY EXCAVATION, BACKFILLING, SEEDING OR SODDING AND REPAVING REQUIRED THEREFORE. THE CONTRACTOR SHALL ALSO FURNISH ALL EQUIPMENT, TOOLS AND INCIDENTALS, INCLUDING AIR COMPRESSOR, REQUIRED TO DO THIS WORK.

1) THE CITY WILL INSTALL ALL BRANCH SLEEVES, TAPPING SLEEVES AND TAPPING VALVES ON ALL CAST IRON, DUCTILE IRON AND CONCRETE PIPE OF ALL SIZES.

2) THE CITY WILL MAKE THE PRESSURE TAPS ON CAST IRON OR DUCTILE IRON WATER MAINS FOR TAP SIZES UP TO AND INCLUDING 16-INCHES, AND ON CONCRETE WATER MAINS FOR TAP SIZES UP TO AND INCLUDING 12-INCHES.

3) THE CONTRACTOR SHALL ARRANGE FOR AND SHALL PAY FOR ALL PRESSURE TAPS OF 20-INCH AND LARGER ON CAST IRON OR DUCTILE IRON WATER MAINS AND FOR ALL PRESSURE TAPS OF 16-INCH AND LARGER ON CONCRETE AND STEEL WATER MAINS. THE CONTRACTOR'S COSTS FOR SUCH ARRANGEMENTS FOR PRESSURE TAPPING SHALL BE INCLUDED IN THE APPROPRIATE BID ITEM.

4) THE CITY WILL NOT OPERATE EQUIPMENT PROVIDED BY THE CONTRACTOR. HOWEVER, THE CITY WILL INSTALL ALL BRANCH SLEEVES, TAPPING SADDLES AND TAPPING VALVES AS INDICATED HEREIN AND WILL ASSIST IN MAKING THE PRESSURE TAP WHERE PRESSURE TAPPING IS PROVIDED BY THE CONTRACTOR. THE CITY WILL ONLY OPERATE EQUIPMENT BELONGING TO THE CITY. ALL LABOR COSTS INCURRED BY THE CITY FOR WORK REQUIRED TO BE DONE BY THE CITY IN THE TAPPING OF WATER MAINS WILL BE CHARGED TO THE CONTRACTOR. SEE THE "DIVISION OF WATER-LABOR CHARGES" NOTE. THE CITY, DIVISION OF WATER, WILL CHARGE TO THE CONTRACTOR A "TAPPING FEE" FOR DIVISION OF WATER INCURRED IN IN THE WORK, PAYABLE TO THE PERMITS AND SALES SECTION OF THE DIVISION OF WATER BEFORE ANY WORK IS PERFORMED.

(B) PIPE CUTTING: IN LOCATIONS WHERE BRANCH SLEEVES AND VALVES CANNOT BE INSTALLED, THE CONTRACTOR WILL BE REQUIRED TO CUT IN TEES AND SLEEVE-IN THE REMAINDER OF THE CUT SECTION OF THE EXISTING MAIN, OR, WHEN OTHERWISE REQUIRED. WHERE THE CONTRACTOR MUST MAKE PIPE CUTS, IT IS CALLED TO THE CONTRACTOR'S ATTENTION THAT THE DIVISION OF WATER HAS ON HAND AT HARVARD YARDS MOTOR OPERATED PIPE CUTTERS WHICH ARE AVAILABLE FOR CUTTING PIPE BY CITY FORCES.

THE COSTS CHARGED FOR PIPE CUTTING BY CITY FORCES MAY BE OBTAINED FROM THE PERMITS AND SALES SECTION OF THE DIVISION OF WATER, PUBLIC UTILITIES BUILDING, 1201 LAKESIDE AVENUE, CLEVELAND, OHIO 44114. THE CONTRACTOR SHALL DO ALL NECESSARY EXCAVATION, BACKFILLING AND REPAVING AND ALL AIR COMPRESSOR AND CRANE SERVICE SHALL BE FURNISHED BY THE CONTRACTOR. THE CITY, DIVISION OF WATER, WILL CHARGE TO THE CONTRACTOR A "PIPE CUTTING FEE" FOR DIVISION OF WATER LABOR INCURRED IN THE WORK, PAYABLE TO THE PERMITS AND SALES SECTION OF THE DIVISION OF WATER BEFORE ANY WORK IS PERFORMED.

DIVISION OF WATER - LABOR CHARGES

THE CITY, DIVISION OF WATER, WILL CHARGE TO THE CONTRACTOR CERTAIN CHARGES PURSUANT TO SECTION 531.03(a) OF THE CODIFIED ORDINANCES OF THE DIVISION OF WATER, AS AMENDED BY ORDINANCE 1043-75 AND ADOPTED BY THE CITY OF CLEVELAND BOARD OF CONTROL RESOLUTION NO: 003- 82, AND PER ORDINANCE NO: 2661- 81, FOR DIVISION OF WATER LABOR REQUIRED IN THE WORK, PAYABLE TO THE PERMITS AND SALES SECTION OF THE DIVISION OF WATER BEFORE ANY WORK IS PERFORMED. THE PROSPECTIVE BIDDERS/CONTRACTOR ARE REFERRED TO THE DIVISION OF WATER CHARGE LETTER IN THE REFERENCE FILES AND THE GENERAL SUMMARY FOR THE LUMP SUM ITEM 638 - CITY OF CLEVELAND, DIVISION OF WATER LABOR CHARGES.

EXCAVATION

(A) THE CONTRACTOR SHALL REMOVE ALL EXISTING STRUCTURES, ROADWAYS, DRIVEWAYS AND OTHER SIMILAR MATERIALS AND MAKE ALL EXCAVATION NECESSARY FOR THE PROPER CONSTRUCTION OF THE WATER MAIN, PIPE CONNECTIONS AND APPURTENANT STRUCTURES, INCLUDING TUNNEL AND SHAFT EXCAVATION. THE EXCAVATION SHALL INCLUDE THE REMOVAL, HANDLING, REHANDLING AND DISPOSAL OF MATERIALS ENCOUNTERED IN THE WORK AND SHALL INCLUDE ALL PUMPING, BAILING, DRAINAGE, SHEETING AND BRACING. MOREOVER, THE CONTRACTOR MUST ASSUME ALL RESPONSIBILITY FOR ANY ADDED EXPENSE OR OTHER LIABILITY WHICH MAY ARISE BY MEANS OF QUICKSAND, OBSTACLES OR CONDITIONS FORESEEN AND UNFORESEEN OR ENCOUNTERED IN THE WORK OF THIS CONTRACT.

(B) TRENCHES SHALL IN EVERY CASE BE OF SUFFICIENT WIDTH TO PERMIT SOLID PACKING OF BACKFILL UNDER AND AROUND PIPES, AND SATISFACTORY CONSTRUCTION OF ALL APPURTENANCES AND FOR SUCH SHEETING AND SHORING, PUMPING AND DRAINING AS MAY BE NECESSARY.

(C) THE TRENCH SHALL BE DUG TO THE ALIGNMENT AND DEPTH REQUIRED AND ONLY SO FAR IN ADVANCE OF PIPE LAYING AS THE ENGINEER SHALL PERMIT. THE TRENCH SHALL BE SO BRACED AND DRAINED THAT WORKMEN MAY WORK THEREIN SAFELY AND EFFICIENTLY. IT IS ESSENTIAL THAT THE DISCHARGE FROM PUMPS BE LED TO NATURAL DRAINAGE CHANNELS, TO DRAINS, OR TO SEWERS.

CUY-77-00.42 PART 1
MODEL: 104983_UN010 PAPERSIZE: 17x11 (in.) DATE: 3/4/2022 TIME: 1:45:37 PM USER: esmccaslin
F:\Jobs\11162-Miller Road Interchange\104983\400-Engineering\Utilities\Sheets\104983_UN010.dgn

3rd. HIGH SERVICE DISTRICT

DEPARTMENT OF PUBLIC UTILITIES
DIVISION OF WATER
CLEVELAND, OHIO

SUBJECT : 12" WATER MAIN ALONG MILLER ROAD AT I.R. 77
CITY OF BRECKSVILLE

SCALE: AS SHOWN | NO.

SUBSET 6 | TOTAL 43
DESIGN AGENCY
EUTHENICS
8333 Mohawk Dr. | Cleveland, OH 44139
DESIGNER TDP
REVIEWER DTB 03/01/22
PROJECT ID 104983
SHEET P.233 | TOTAL P.434

WATER WORK NOTES

EXCAVATION- CONTINUED

(D) THE TRENCH WIDTH MAY VARY WITH AND DEPEND UPON THE DEPTH OF TRENCH AND THE NATURE OF THE EXCAVATED MATERIAL ENCOUNTERED, BUT IN ANY CASE SHALL BE OF AMPLE WIDTH TO PERMIT THE PIPE TO BE LAID AND JOINTED PROPERLY AND OF THE BACKFILL TO BE PLACED AND COMPACTED PROPERLY. THE MINIMUM WIDTH OF UNSHEETED TRENCH SHALL BE EIGHTEEN (18) INCHES LARGER THAN THE OUTSIDE DIAMETER OF THE PIPE EXCEPT BY CONSENT OF THE CITY; THE MAXIMUM CLEAR WIDTH OF TRENCH SHALL NOT BE MORE THAN TWO (2) FEET GREATER THAN THE OUTSIDE PIPE DIAMETER. WHEN SHEETING AND BRACING IS USED, THE TRENCH WIDTH SHALL BE INCREASED ACCORDINGLY.

(E) THE TRENCH, UNLESS OTHERWISE SPECIFIED, SHALL HAVE A FLAT BOTTOM CONFORMING TO THE GRADE TO WHICH THE PIPE IS TO BE LAID UPON SOUND SOIL CUT TRUE AND EVEN, SO THAT THE BARREL OF THE PIPE WILL HAVE A BEARING FOR ITS FULL LENGTH.

(F) ANY PART OF THE TRENCH EXCAVATED BELOW GRADE SHALL BE CORRECTED WITH APPROVED MATERIAL, THOROUGHLY COMPACTED.

(G) WHEN THE UNCOVERED TRENCH BOTTOM AT SUBGRADE IS SOFT AND IN THE OPINION OF THE ENGINEER CANNOT SUPPORT THE PIPE, A FURTHER DEPTH AND OR WIDTH SHALL BE EXCAVATED AND BACKFILLED TO PIPE FOUNDATION GRADE AS REQUIRED UNDER (F), OR OTHER APPROVED MEANS SHALL BE ADOPTED TO ASSURE A FIRM FOUNDATION FOR THE PIPE.

(H) LEDGE ROCK, BOULDERS, LARGE STONES, AND SHALE SHALL BE REMOVED TO PROVIDE A CLEARANCE OF AT LEAST SIX (6) INCHES BELOW ALL PARTS OF THE PIPE, VALVES, OR FITTINGS AND A CLEAR WIDTH OF NINE (9) INCHES ON EACH SIDE OF ALL IRON PIPE, CONCRETE PIPE, AND STEEL PIPE SHALL BE PROVIDED.

(I) EXCAVATION BELOW SUBGRADE IN ROCK, SHALE OR IN BOULDERS SHALL BE BACKFILLED TO SUBGRADE WITH APPROVED MATERIAL, THOROUGHLY COMPACTED.

(J) BELL HOLES OF AMPLE DIMENSIONS SHALL BE DUG IN EARTH TRENCHES AT EACH JOINT TO PERMIT THE JOINTING TO BE MADE PROPERLY. ADEQUATE CLEARANCE FOR PROPER JOINTING OF PIPE LAID IN ROCK SHALL BE PROVIDED AT BELL HOLES.

(K) THE USE OF EXCAVATING MACHINERY WILL BE PERMITTED EXCEPT IN PLACES WHERE ITS OPERATION WILL CAUSE DAMAGE TO TREES, BUILDINGS, OR EXISTING STRUCTURES ABOVE OR BELOW GROUND, IN WHICH CASE HAND METHODS SHALL BE EMPLOYED.

(L) TREES, FENCES, POLES AND ALL OTHER PROPERTY SHALL BE PROTECTED UNLESS THEIR REMOVAL IS AUTHORIZED. ANY PROPERTY DAMAGED SHALL BE SATISFACTORILY RESTORED BY THE CONTRACTOR.

(M) HYDRANTS UNDER PRESSURE, VALVE PIT COVERS, VALVE BOXES, CURB STOP BOXES, FIRE OR POLICE CALL BOXES, OR OTHER UTILITY CONTROLS SHALL BE LEFT UNOBSTRUCTED AND ACCESSIBLE DURING THE CONSTRUCTION PERIOD.

(N) THE CONTRACTOR SHALL MAINTAIN ALL EXCAVATIONS IN GOOD ORDER DURING THE CONSTRUCTION, SO AS NOT TO HINDER OR INJURE THE PIPE LAYING, MASONRY OR OTHER WORK. HE SHALL TAKE ALL REASONABLE PRECAUTIONS TO PREVENT MOVEMENT OF THE SIDES OF SUCH EXCAVATION, AND SHALL REMOVE AT HIS OWN EXPENSE ANY MATERIAL SLIDING INTO THE EXCAVATION.

SHEETING AND BRACING

(A) THE CONTRACTOR SHALL FURNISH AND PUT IN PLACE SUCH SHEETING AND BRACING AS MAY BE REQUIRED TO SUPPORT THE SIDES OF TRENCHES OR OTHER EXCAVATION AND SHALL REMOVE SUCH SHEETING AND BRACING, AS THE TRENCH OR EXCAVATION IS FILLED UP, UNLESS THE ENGINEER SHALL ORDER IT LEFT IN PLACE, IN WHICH CASE THE CONTRACTOR SHALL CUT THE PLANK OFF AT A HEIGHT AS ORDERED BY THE ENGINEER, OR AS CALLED FOR ON THE CONTRACT DRAWINGS.

(B) FOR ALL EXCAVATIONS FOR THE WORK DESCRIBED HEREIN, THE CONTRACTOR SHALL FURNISH AND PLACE SHEETING AND BRACING SO AS TO REDUCE TO A MINIMUM THE POSSIBILITY OF INJURY OR DAMAGE TO THE SAME.

(C) IF THE ENGINEER IS OF THE OPINION THAT AT ANY POINT SUFFICIENT OR PROPER SUPPORTS, SHEETING, OR BRACING HAVE NOT BEEN PROVIDED, HE MAY ORDER ADDITIONAL SUPPORTS, SHEETING OR BRACING, AT THE EXPENSE OF THE CONTRACTOR, AND THE COMPLIANCE WITH SUCH ORDERS BY THE CONTRACTOR SHALL NOT RELIEVE OR RELEASE HIM FROM HIS RESPONSIBILITY FOR SUFFICIENCY OF SUCH SUPPORTS.

(D) SHEETING AND BRACING SHALL BE PROVIDED IN ACCORDANCE WITH RULE 4121:1-3-13 OF "THE SPECIFIC SAFETY REQUIREMENTS OF THE INDUSTRIAL COMMISSION OF OHIO RELATING TO CONSTRUCTION."

REMOVAL OF EXCAVATED MATERIAL

(A) ALL SURPLUS MATERIAL AND SUCH OTHER MATERIAL AS THE ENGINEER MAY DEEM UNFIT FOR USE AS BACKFILL SHALL BE DISPOSED OF BY THE CONTRACTOR SO AS TO GIVE A MINIMUM OF INCONVENIENCE TO THE PUBLIC. IN CASE OF SETTLEMENT AFTER BACKFILL, THE CONTRACTOR SHALL SUPPLY SUFFICIENT MATERIAL SATISFACTORY TO THE ENGINEER TO MAKE UP FOR THE DEFICIENCY.

(B) IN THE STORING OF EXCAVATED MATERIAL, WHICH IS TO BE USED AS A BACKFILL, THE CONTRACTOR SHALL EXERCISE CARE SO AS TO AVOID INCONVENIENCING THE PUBLIC. IF IN THE OPINION OF THE ENGINEER IT IS NECESSARY TO REMOVE THIS EXCAVATED MATERIAL FROM THE STREET OR LOTS, THE CONTRACTOR SHALL BE REQUIRED TO DO SO.

(C) ANY MATERIAL WHICH MAY SPILL OR DRIP FROM VEHICLES BY HAULING IN THE STREETS SHALL BE REMOVED AND THE STREETS CLEANED BY THE CONTRACTOR, TO THE SATISFACTION OF THE ENGINEER.

(D) WHEN SO DIRECTED BY THE ENGINEER, THE CONTRACTOR SHALL IMMEDIATELY REMOVE ALL EXCAVATED MATERIALS FROM THE SITE.

LAYING PIPE

(A) PROPER IMPLEMENTS, TOOLS, AND FACILITIES, SATISFACTORY TO THE ENGINEER, SHALL BE PROVIDED AND USED BY THE CONTRACTOR FOR THE SAFE AND CONVENIENT PROSECUTION OF THE WORK. ALL PIPE, FITTINGS, AND VALVES SHALL BE CAREFULLY LOWERED INTO THE TRENCH, PIECE BY PIECE, BY MEANS OF DERRICK, PROPER SLINGS, AND OTHER SUITABLE TOOLS OR EQUIPMENT, IN SUCH MANNER AS TO PREVENT DAMAGE TO PIPE OR COATING. UNDER NO CIRCUMSTANCES SHALL PIPE OR ACCESSORIES BE DROPPED OR DUMPED INTO THE TRENCH. IF ANY DEFECTIVE PIECE IS DISCOVERED WHILE PIPE IS SUSPENDED OR AFTER BEING LAID, A NEW PIECE SHALL BE FURNISHED AND INSTALLED BY THE CONTRACTOR.

(B) ALL FOREIGN MATTER OR DIRT SHALL BE REMOVED FROM THE INSIDE OF THE PIPE BEFORE IT IS LOWERED INTO ITS POSITION IN THE TRENCH, AND IT SHALL BE KEPT CLEAN BY APPROVED MEANS DURING AND AFTER LAYING.

(C) AT TIMES WHEN PIPE LAYING IS NOT IN PROGRESS, THE OPEN ENDS OF PIPE SHALL BE CLOSED BY APPROVED MEANS, AND NO TRENCH WATER SHALL BE PERMITTED TO ENTER THE PIPE. NO PIPE SHALL BE LAID IN WATER, OR WHEN THE TRENCH CONDITIONS OR THE WEATHER IS UNSUITABLE FOR SUCH WORK, EXCEPT BY PERMISSION OF THE ENGINEER.

(D) WHEREVER NECESSARY TO DEFLECT PIPE FROM A STRAIGHT LINE, EITHER IN THE VERTICAL OR HORIZONTAL PLANE TO AVOID OBSTRUCTIONS, TO PLUMB STEMS, OR FOR OTHER REASONS, THE DEGREE OF DEFLECTION SHALL BE APPROVED BY THE ENGINEER AND SHALL NOT EXCEED THE DEGREE OF JOINT OPENING RECOMMENDED BY THE PIPE MANUFACTURER.

(E) BEFORE LAYING DUCTILE IRON PIPE, ALL LUMPS, BLISTERS AND EXCESS COAL TAR COATING SHALL BE REMOVED FROM THE BELL AND SPIGOT ENDS OF EACH PIPE. THE PIPE ENDS SHALL THEN BE KEPT CLEAN UNTIL JOINTS ARE MADE.

(F) BEFORE LAYING CONCRETE PIPE, THE PIPE ENDS SHALL BE MADE SMOOTH WITH EMERY CLOTH, FILE OR OTHER APPROVED MEANS, WIRE BRUSHED AND WIPED UNTIL CLEAN AND DRY. PIPE ENDS SHALL BE KEPT CLEAN UNTIL JOINTS ARE MADE. AFTER CLEANING AND DRYING, ALL CONTACT SURFACES OF THE GASKETS AND STEEL JOINT RINGS SHALL BE COATED WITH AN APPROVED FLAX SOAP BEFORE ENTERING THE SPIGOT ENDS INTO THE SOCKET. IMMEDIATELY AFTER THE JOINT IS PULLED TOGETHER, THE PIPE SHALL BE BLOCKED WITH WOOD BLOCKING. A SURCINGLE SHALL BE INSTALLED AROUND THE JOINT AND THE PIPE SHALL BE SECURED WITH EARTH OR SAND AS REQUIRED, CAREFULLY TAMPED UNDER AND ON EACH SIDE UP TO THE SPRING-LINE OF THE PIPE, INCLUDING THE BELL HOLES. ALL BLOCKING SHALL BE REMOVED WHEN BACKFILL HAS REACHED THE SPRING LINE FOR THE PIPE.

(G) BEFORE LAYING STEEL PIPE, THE PREPARATION OF PIPE ENDS FOR THE STEEL PIPE AND FITTINGS SHALL BE MADE IN ACCORDANCE WITH THE AWWA SPECIFICATIONS, C 200-86, "STEEL PIPE 6" AND LARGER," OR LATEST REVISION THEREOF.

FLOATING

THE CONTRACTOR SHALL TAKE EVERY PRECAUTION AGAINST THE FLOATING OF THE PIPE DUE TO WATER COMING INTO THE TRENCH, OR THROUGH CAVING IN, FLUSHING OR PUDDLING. IN CASE OF SUCH FLOATING THE CONTRACTOR SHALL REPLACE THE PIPE AT HIS OWN EXPENSE AND MAKE WHOLLY GOOD ANY INJURY OR DAMAGE WHICH MAY HAVE RESULTED.

PLUGGING DEAD ENDS

THE CONTRACTOR SHALL INSTALL STANDARD RESTRAINED PLUG WITH RODS CLAMPS INTO THE BELLS OF ALL DEAD ENDS OF PIPES, TEES, OR CROSSES, AND SHALL INSTALL STANDARD RESTRAINED CAP WITH RODS AND CLAMPS ONTO SPIGOT ENDS OF DEAD END MAINS WHERE INDICATED ON THE CONTRACT DRAWINGS OR AS ORDERED BY THE ENGINEER. CONCRETE PIERS SHALL BE PLACED BEHIND ALL PLUGS AND CAPS. THE COST OF FURNISHING AND INSTALLING THE PLUGS AND CAPS, COMPLETE WITH RODS AND CLAMPS AND CONCRETE PIER, SHALL BE INCLUDED IN THE PER LINEAR FOOT PRICE BID FOR THE VARIOUS SIZES OF NEW/RELOCATED OR LOWERED WATER MAINS. THE COST OF FURNISHING AND INSTALLING THE PLUG OR CAP, COMPLETE WITH RODS AND CLAMPS AND CONCRETE PIER, IN EXISTING WATER MAINS, SHALL BE INCLUDED IN THE UNIT PRICE BID FOR EACH "ITEM 638 - WATER WORK, MISC.: PLUGGING EXISTING WATER MAINS AND BRANCHES," AS SHOWN ELSEWHERE IN THESE PLANS. PAYMENT FOR TEMPORARY PLUGS OR CAPS USED FOR PRESSURE TESTING AND/OR CHLORINATION SHALL BE INCLUDED IN THE UNIT PRICE BID PER LINEAL FOOT OF WATER MAIN TO BE TESTED AND CHLORINATED.

BACKFILLING

(A) BACKFILLING SHALL CONSIST OF A SAND BEDDING BACKFILL, AND BACKFILL, UNLESS OTHERWISE SPECIFIED, OR WHERE PREMIUM BACKFILL IS REQUIRED PER STD-001, MADE WITH MATERIAL EXCAVATED FROM THE TRENCHES, PROVIDING THE SAME IS SATISFACTORY TO THE ENGINEER AND THE CITY. IF, IN THE OPINION OF THE ENGINEER AND THE CITY, THE MATERIAL EXCAVATED IS UNSATISFACTORY, THEN THE CONTRACTOR SHALL FURNISH AT HIS OWN EXPENSE OTHER SUITABLE MATERIAL FOR BACKFILL. ALL BACKFILL MATERIAL SHALL BE FREE FROM SLAG, CINDERS, RUBBISH, AND OTHER OBJECTIONABLE MATERIAL. BACKFILL SHALL BE PLACED INTO THE TRENCH AND NOT DOZED OR DUMPED FROM THE TOP OF THE TRENCH. THIS WORK INCLUDES ALL BACKFILLING, TOGETHER WITH RAMMING, PUDDLING, AND ROLLING, AS REQUIRED; THE FURNISHING OF SAND BEDDING BACKFILL, SUITABLE MATERIAL FOR BACKFILL, INCLUDING PREMIUM BACKFILL; AND ALL APPURTENANT WORK INCIDENTAL THERETO.

(B) BEFORE LAYING THE PIPE, THE BOTTOM OF THE TRENCH SHALL BE BROUGHT TO THE GRADE OF THE BOTTOM OF THE PIPE, EXCEPT AT PIPE JOINTS. WHEREVER THE BOTTOM OF THE TRENCH HAS BEEN EXCAVATED BELOW THE BOTTOM OF THE PIPE, THE CONTRACTOR SHALL PLACE SAND BEDDING, OR OTHER APPROVED MATERIAL SATISFACTORY TO THE ENGINEER AND THE CITY, TO BRING THE BOTTOM OF THE TRENCH TO THE GRADE OF THE BOTTOM OF THE PIPE. THIS SAND BEDDING SHALL BE THOROUGHLY TAMPED BEFORE THE PIPE IS PLACED IN THE TRENCH.

(C) THE BEDDING BACKFILL THREE (3) INCHES UNDER, AROUND AND TO A DEPTH OF ONE (1) FOOT ABOVE THE TOP OF ALL PIPE, SHALL BE MADE WITH SAND, WHICH MATERIAL SHALL BE FREE FROM STONE AND OTHER OBJECTIONABLE MATERIAL NOTED ABOVE IN PARAGRAPH (A) AND HEREIN. THE SAND USED FOR BEDDING BACKFILL SHALL BE A NATURAL BANK SAND, MEETING REQUIREMENTS OF ODOT 703 "AGGREGATE" SECTION 703.02 "AGGREGATE FOR PORTLAND CEMENT", GRADED FROM FINE TO COARSE, NOT LUMPY A NATURAL BANK SAND, GRADED FROM FINE TO COARSE, NOT LUMPY OR FROZEN, AND FREE FROM SLAG, CINDERS, ASHES, RUBBISH, OR OTHER DELETERIOUS OR OBJECTIONABLE MATERIAL. THE SAND USED FOR BEDDING BACKFILL SHALL NOT CONTAIN A TOTAL OF MORE THAN 10% BY WEIGHT OF LOAM AND CLAY, AND ALL SUCH MATERIAL MUST BE CAPABLE OF BEING PASSED THROUGH A 3/4 INCH SIEVE. NOT MORE THAN 5% SHALL REMAIN ON A #4 SIEVE. THE CONTRACTOR MUST USE SPECIAL CARE IN PLACING THIS PORTION OF THE SAND BEDDING BACKFILL, SO AS TO AVOID SCRAPING OF THE EXTERIOR COATING, INJURING THE PIPE, AND DISTORTING OR MOVING THE PIPE WHEN COMPACTING THE SAME. THE SAND BEDDING BACKFILL SHALL BE TAMPED IN THIN LAYERS OF SIX (6) INCHES, SIMULTANEOUSLY ON EACH SIDE OF THE PIPE, AND THOROUGHLY COMPACTED SO AS TO PROVIDE A SOLID BACKING AGAINST THE EXTERNAL SURFACE OF THE PIPE.

(D) BACKFILL ABOVE THE ONE (1) FOOT SAND BEDDING BACKFILL SHALL BE MADE WITH MATERIAL SPECIFIED HEREIN IN EITHER PARAGRAPH (A) OR AS SPECIFIED HEREIN FOR PREMIUM BACKFILL IN PARAGRAPH (G).

WATER WORK NOTES

CUY-77-00.42 PART 1

MODEL: 104983_UN011 PAPERSIZE: 17x11 (in.) DATE: 3/4/2022 TIME: 1:45:41 PM USER: esmccash
F:\Jobs\11624\Miller Road Interchange\104983\400-Engineering\Utilities\Sheets\104983_UN011.dgn

3rd. HIGH SERVICE DISTRICT

DEPARTMENT OF PUBLIC UTILITIES
DIVISION OF WATER
CLEVELAND, OHIO

SUBJECT : 12" WATER MAIN ALONG MILLER ROAD AT I.R. 77
CITY OF BRECKSVILLE

SCALE: AS SHOWN | NO.

SUBSET 7 | TOTAL 43

DESIGN AGENCY
EUTHENICS
8230 Mohawk Dr. | Cleveland, OH 44035

DESIGNER TDP

REVIEWER DTB 03/01/22

PROJECT ID 104983

SHEET P.234 | TOTAL P.434

WATER WORK NOTES

BACKFILLING - CONTINUED

(E) PREMIUM BACKFILL SHALL BE PLACED WHERE EXISTING AND FUTURE PERMANENT PAVEMENT, SIDEWALKS, DRIVEWAYS, SEWER PIPE CROSSINGS AND CURB CROSSINGS HAVE BEEN OPEN OR UNDERCUT. THE PLACEMENT OF PREMIUM BACKFILL ALSO APPLIES TO ALL EXCAVATION WITHIN THREE (3) FEET OF EXISTING OR FUTURE PERMANENT PAVEMENT, SIDEWALKS, DRIVEWAYS, SEWER PIPE CROSSINGS AND CURB CROSSINGS. IF PART OF THE TRENCH IS UNDER EXISTING OR FUTURE PAVEMENT, SIDEWALK, DRIVEWAY OR CURB THE ENTIRE TRENCH SHALL BE BACKFILLED WITH PREMIUM BACKFILL MATERIAL SPECIFIED HEREIN.

(F) ONLY AFTER THE ONE (1) FOOT SAND BEDDING BACKFILL HAS BEEN SATISFACTORILY COMPACTED, MAY WORK PROCEED IN PLACING THE REMAINING BACKFILL WHICH MUST BE CAREFULLY PLACED AND COMPACTED BY TAMPING, PUDDLING, OR ROLLING. ALL PRECAUTIONS MUST BE TAKEN TO ELIMINATE FUTURE SETTLEMENT. THE NUMBER OF MEN TAMPING SHALL BE NOT LESS THAN THE NUMBER BACKFILLING, AND ADDITIONAL MEN SHALL BE KEPT IN THE TRENCH TO SPREAD THE MATERIAL.

(G) PREMIUM BACKFILL SHALL CONSIST OF LIMESTONE SCREENINGS. THE PREMIUM BACKFILL SHALL BE READILY INCORPORATED IN AN 8- INCH LAYER AND SHALL BE IN ACCORDANCE WITH OHIO DEPARTMENT OF TRANSPORTATION CONSTRUCTION AND MATERIALS SPECIFICATIONS, ITEM 304, "AGGREGATE BASE" SECTION 304.02 "AGGREGATE", MEETING THE FOLLOWING REQUIREMENTS:

SIEVE	% PASSING GRADING
2-INCH	100
1-INCH	70-100
3/4-INCH	50-90
NO. 4	30-60
NO. 30	9-33
NO. 200	0-13

THE FRACTION OF THESE MATERIALS PASSING A #40 SIEVE SHALL HAVE A LIQUID LIMIT NOT GREATER THAN 30 (THIRTY) AND A PLASTICITY INDEX NOT GREATER THAN 6 (SIX).

SLAG; NATURAL OR SYNTHETIC CRUSHED AGGREGATE SUCH AS BROKEN OR CRUSHED ROCK; CRUSHED CONCRETE; OR OTHER TYPE OF MATERIAL IN LIEU OF THE SAND BEDDING BACKFILL AND THE LIMESTONE SCREENING BACKFILL MATERIAL WILL NOT BE PERMITTED.

THE MINIMUM COMPACTION FOR ALL SAND BEDDING BACKFILL, BACKFILL AND PREMIUM BACKFILL SHALL BE 95% STANDARD PROCTER.

(H) BACKFILLING SHALL NOT BE DONE IN FREEZING WEATHER, EXCEPT BY PERMISSION OF THE ENGINEER AND THE CITY, AND IT SHALL NOT BE MADE WITH FROZEN MATERIAL, NOR SHALL ANY FILL BE MADE WHERE THE MATERIAL ALREADY IN THE DITCH IS FROZEN.

(I) SPECIAL TREATMENT OF THE TRENCH WILL BE REQUIRED WHERE CINDER EXCAVATION, EXCEEDING ONE (1) FOOT MEASURED FROM THE GROUND OR PAVEMENT SURFACE IS ENCOUNTERED. BEFORE LAYING THE PIPE, THE BOTTOM OF THE TRENCH SHALL BE DUG EIGHT (8) INCHES BELOW PIPE GRADE AND THEN BROUGHT TO THE GRADE OF THE PIPE IN THE FOLLOWING MANNER. A FOUR (4) INCH LAYER OF CRUSHED LIMESTONE SHALL BE PLACED ON THE ENTIRE WIDTH OF THE BOTTOM OF THE TRENCH, FOLLOWED BY A FILLER OF HYDRATED LIME AND A LAYER OF SAND BEDDING TO SIX (6) INCHES ABOVE THE TOP OF THE PIPE. THE FOUR (4) INCH CRUSHED LIMESTONE SHALL BE WELL GRADED FROM FINE TO COARSE, AND FREE FROM SLAG, CINDERS, ASHES, RUBBISH OR OTHER OBJECTIONABLE MATERIAL. ALL LIMESTONE MUST BE CAPABLE OF BEING PASSED THROUGH A 3/4 INCH SIEVE. ON TOP OF THIS LAYER OF CRUSHED LIMESTONE, HYDRATED LIME SHALL BE SUPPLIED IN THE AMOUNT OF 3/8 OF A POUND PER SQUARE FOOT OF TRENCH. THIS BED OF CRUSHED LIMESTONE, WITH FILLER OF HYDRATED LIME IN PLACE, SHALL BE THOROUGHLY TAMPED BEFORE THE PIPE IS LAID IN THE TRENCH AND THE SAND BEDDING BACKFILL IS PLACED. THE SAND BEDDING BACKFILL SHALL BE FOR THREE (3) INCHES UNDER, AROUND AND TO A DEPTH OF SIX (6) INCHES ABOVE THE TOP OF THE PIPE. THE CONTRACTOR MUST USE SPECIAL CARE IN PLACING THIS PORTION OF THE BACKFILL SO AS TO AVOID SCRAPING OF THE EXTERIOR COATING, INJURING THE PIPE, AND DISTORTING OR MOVING THE PIPE WHEN COMPACTING THE SAME. ON TOP OF THE SAND BEDDING BACKFILL THE CONTRACTOR SHALL PLACE ANOTHER LAYER OF CRUSHED LIMESTONE SIX (6) INCHES THICK FOR THE ENTIRE WIDTH OF THE TRENCH. ON TOP OF THIS SIX (6) INCH LAYER OF COMPACTED LIMESTONE A SECOND FILLER OF HYDRATED LIME SHALL THEN BE APPLIED IN THE AMOUNT OF 3/8 OF A POUND PER SQUARE FOOT OF TRENCH. THE REMAINING BACKFILL SHALL BE MADE WITH LIMESTONE SCREENINGS AS ELSEWHERE SPECIFIED HEREIN, CAREFULLY PLACED AND COMPACTED BY TAMPING, OR ROLLING. ALL PRECAUTIONS SHALL BE TAKEN TO ELIMINATE FUTURE SETTLEMENT. THE TREATMENT OF THE TRENCH BOTTOM PREVIOUSLY DESCRIBED, MAY BE OMITTED WHERE THE CINDER DEPTH, MEASURED FROM THE TOP SURFACE DOES NOT EXCEED 2'-6".

(J) THE COST OF FURNISHING, HAULING, PLACING AND COMPACTING THE SAND BEDDING BACKFILL, BACKFILL AND PREMIUM BACKFILL MATERIALS, INCLUDING SPECIAL TREATMENT OF CINDER EXCAVATION(S), SHALL BE DEEMED TO BE INCLUDED IN THE PRICE BID PER LINEAL FOOT OF WATER MAIN FURNISHED AND INSTALLED UNDER THIS CONTRACT.

PROVISIONS FOR PROTECTING THE WORK

THE CONTRACTOR SHALL FURNISH ALL THE NECESSARY EQUIPMENT, SHALL TAKE ALL NECESSARY PRECAUTIONS AND SHALL ASSUME THE ENTIRE COST OF HANDLING ANY SEWAGE, SEEPAGE, STORM SURFACE AND FLOOD FLOWS OR ICE, WHICH MAY BE ENCOUNTERED AT ANY TIME DURING THE CONSTRUCTION OF THE WORK. THE MANNER OF PROVIDING FOR THESE OCCURRENCES SHALL MEET WITH THE APPROVAL OF THE ENGINEER. AFTER INSTALLATION, THE CONTRACTOR SHALL FURNISH AND MAINTAIN SATISFACTORY PROTECTION TO ALL EQUIPMENT WHETHER OF THIS OR OTHER CONTRACT AGAINST INJURY BY WEATHER, FLOODING OR BY DIRECT OR INCIDENTAL DAMAGE FROM HIS OWN OPERATIONS, LEAVING ALL WORK IN A PERFECT CONDITION AT THE COMPLETION OF THE CONTRACT. NO EXTRA PAYMENT WILL BE MADE FOR THIS WORK BUT THE ENTIRE COST OF THE SAME SHALL BE INCLUDED IN THE WORK TO BE DONE IN THIS CONTRACT.

CASING PIPE OR TUNNELING

THE INSTALLATION OF CASING PIPE OR TUNNELING WILL NOT BE PERMITTED WITHOUT PERMISSION OF THE CITY. ONLY WHERE SPECIFICALLY SHOWN ON THE DRAWINGS WILL CASING PIPE OR TUNNELING BE PERMITTED. IN BACKFILLING THE CASING PIPE OR TUNNEL, SAND SHALL BE USED. BACKFILLING MADE WITH NON-SHRINKING GROUT MAY BE USED WITH THE APPROVAL OF THE ENGINEER AND THE CITY. BRICK BULKHEADS ARE ALSO REQUIRED AT THE END OF EACH OPENING.

LISTS AND INVOICES

(A) THE CONTRACTOR SHALL FURNISH THE CITY WITH THE LIST IN DUPLICATE OF PIECES IN EACH SHIPMENT OF PIPE AND SPECIALS, GIVING THE SERIAL NUMBER AND DESIGNATION OF EACH PIPE AND SPECIAL SENT AT THAT TIME.

(B) THE MATERIAL SHALL BE SHIPPED IN SUCH SECTIONS AS THE STATE AND CITY MAY ORDER.

PAVEMENT SAW CUTS

WHERE "VERMEER" TYPE SAW OR ANY OTHER TYPE OF MACHINERY OR MEANS IS USED TO CUT THE EXISTING PAVEMENT IN ADVANCE OF THE PAVEMENT REMOVAL, THE CONTRACTOR SHALL IMMEDIATELY FILL THE SAW-CUT GAP WITH ASPHALT. THE CONTRACTOR SHALL BE RESPONSIBLE FOR, AND AT HIS EXPENSE, MAINTAIN, THE SAW-CUT GAPS AND SHALL REPAIR AND/OR REPLACE ASPHALT AS NECESSARY.

PREQUALIFICATIONS OF CONTRACTOR FOR TAPPING OF SERVICE CONNECTIONS ONE (1) INCH AND UNDER

FOR THE RETAPPING OF EXISTING SERVICE CONNECTIONS ONE (1) INCH AND UNDER THE COMMISSIONER OF WATER IS AUTHORIZED TO DEEM PERSONS OR FIRMS QUALIFIED TO TAP MAINS FOR SERVICE CONNECTION REINSTALLATION AFTER QUALIFICATIONS OF TAPPER, INSPECTION OF EQUIPMENT, AND PROVEN ABILITY AND WORKMANSHIP HAVE BEEN ESTABLISHED TO THE COMMISSIONER'S SATISFACTION. TO DETERMINE THE QUALIFICATIONS OF ANY PERSON OR FIRM TO TAP MAINS, THE COMMISSIONER, OR HIS DESIGNEE, SHALL WITNESS THE INSTALLATION OF A SERVICE CONNECTION IN A WATER MAIN UNDER PRESSURE AND INSPECT TAPPING EQUIPMENT TO BE USED BY TAPPER. UPON SUCCESSFUL COMPLETION OF A TAP, THE TAPPER SHALL BE CERTIFIED BY LETTER FROM THE COMMISSIONER TO THE ENGINEER INDICATING THE TAPPER'S COMPETENCE AND QUALIFICATIONS. THIS QUALIFICATION MAY BE REVOKED BY THE COMMISSIONER OF WATER IF IT IS DETERMINED THAT THE TAPPER'S COMPETENCY IS NOT MAINTAINED OR EQUIPMENT IS CHANGED. CERTIFICATION FOR TAPPING ONE (1) INCH AND UNDER SERVICE CONNECTIONS WILL BE REQUIRED ON A JOB BY JOB BASIS AND SUCH CERTIFICATION SHALL ONLY BE IN FORCE FOR THE PROJECT APPLIED FOR.

ALL TAPPING SHALL BE DONE UNDER THE INSPECTION OF THE DIVISION OF WATER'S INSPECTOR. FOR EACH SERVICE TAP TO BE MADE IN ORDER TO REINSTALL A WATER SERVICE CONNECTION, THE TAPPER SHALL OBTAIN AND COMPLETE A CITY OF CLEVELAND "CITY METER REPAIRS HY" FORM C OF C 101-130A FROM THE INSPECTOR. FAILURE TO PRESENT FORM AT TIME OF COMPLETION OF REINSTALLATION SHALL BE CAUSE FOR IMMEDIATE DISQUALIFICATION.

PAVEMENT DAMAGE - CONTRACTOR'S RESPONSIBILITY

THE CONTRACTOR SHALL BE RESPONSIBLE FOR, AND AT HIS EXPENSE, MAINTAIN, REPAIR AND/OR REPLACE ANY PAVEMENT, ROADWAYS, DRIVEWAYS, BERMS, CURBS, SIDEWALKS AND TREELAWNS OR OTHER AREAS WITHIN THE LIMITS OF THIS PROJECT, THAT MAY BE DAMAGED BY HIM OR THOSE IN HIS EMPLOY DUE TO MANEUVERING OF CONSTRUCTION EQUIPMENT, OR DAMAGED BY VEHICULAR TRAFFIC REROUTED DUE TO CONSTRUCTION AND TRAFFIC MAINTENANCE.

THE CONTRACTOR SHALL MAINTAIN, REPAIR AND/OR REPLACE ALL DAMAGED OR INJURED PAVEMENT, ROADWAYS, DRIVEWAYS, BERMS, CURBS, SIDEWALKS AND TREELAWNS, BOTH TEMPORARY AND PERMANENT, IN ACCORDANCE WITH THESE SPECIFICATIONS, CONTRACT DRAWINGS OR APPLICABLE CONSTRUCTION AND MATERIAL SPECIFICATIONS OF THE CITY OF CLEVELAND ENGINEER OR STATE OF OHIO DEPARTMENT OF TRANSPORTATION (O.D.O.T.).

REMOVED ITEMS

ALL MATERIALS CONSISTING OF PIPE, FITTINGS, VALVES, CASTINGS AND OTHER WATER MAIN STRUCTURES, UNLESS SPECIFICALLY INDICATED OTHERWISE HEREIN, WHICH ARE DESIGNATED FOR REMOVAL BY THE CONTRACTOR SHALL BECOME PROPERTY OF THE CONTRACTOR AND BE REMOVED AND DISPOSED OF BY HIM.

ITEM 638 - WATER WORK, MISC.: 12" DUCTILE IRON, CLASS 52, CEMENT LINED PUSH- ON JOINT PIPE WITH RETAINED MECHANICAL JOINT DUCTILE IRON CLASS 350, CEMENT LINED RETAINED MECHANICAL JOINT FITTINGS
ITEM 638 - WATER WORK, MISC.: 12" DUCTILE IRON, CLASS 53, CEMENT LINED PIPE AND DUCTILE IRON CLASS 350, CEMENT LINED FITTINGS ALL HAVING BOLTLESS RESTRAINED PUSH-ON JOINTS, TYPE 1

WORK INCLUDED

(A) THE CONTRACTOR SHALL, UNDER ITEM SPECIAL - DUCTILE IRON PIPE AND FITTINGS - SHALL INCLUDE THE FURNISHING, LAYING, CONNECTING IN PLACE AT THE LOCATIONS SHOWN ON THE DRAWINGS OR AS DIRECTED, ALL DUCTILE IRON PIPE AND FITTINGS, INCLUDING ALL EXCAVATION WORK, THE CUTTING INTO AND REMOVAL OF EXISTING PIPE, BACKFILLING, SAND BEDDING AND PREMIUM BACKFILL, AND REPAVING (BOTH TEMPORARY AND PERMANENT), ALL AS REQUIRED FOR THE PROPER COMPLETION OF THE WORK INCLUDED UNDER THIS CONTRACT. IN GENERAL THIS WORK SHALL INCLUDE THE FURNISHING, LAYING, CONNECTING, PAINTING, TESTING OF PIPE AND FITTINGS, THE EXCAVATION, REMOVAL AND RESTORATION OF MISCELLANEOUS ITEMS, SHEETING AND SHORING, BACKFILLING, SAND BEDDING AND PREMIUM BACKFILL, SEEDING AND SODDING, THE PERMANENT REPAVING, IF SO NOTED ON THE CONTRACT DRAWINGS, THE CUTTING INTO, REMOVAL AND STORAGE OF EXISTING MAINS, AND THE FURNISHING OF ALL LABOR, MATERIALS, TOOLS AND EQUIPMENT TO COMPLETE THE WORK AS SPECIFIED, SHOWN OR ORDERED.

(B) IN MAKING THE CONNECTION TO EXISTING MAINS WHERE BRANCH SLEEVES CAN BE USED, THE CONTRACTOR SHALL SUPPLY THE SAME. THE DIVISION OF WATER WILL INSTALL THE BRANCH SLEEVE AND WILL MAKE THE PRESSURE TAP (IF APPLICABLE) IN ACCORDANCE WITH THE REQUIREMENTS INDICATED UNDER "WORK TO BE DONE BY CITY." IF THE INSTALLATION OF BRANCH SLEEVES AND VALVES CANNOT BE ACCOMPLISHED, THE CONTRACTOR WILL BE REQUIRED TO FURNISH AND INSTALL TEES WITH SLEEVES OR COUPLINGS TO COMPLETE THE CONNECTION. THE CONTRACTOR WILL BE REQUIRED TO MAKE THE NECESSARY EXCAVATION, BACKFILL AND REPAVING (IF NOT PAID FOR SEPARATELY AS PART OF THIS CONTRACT).

DEFINITIONS/STANDARDS:

WHENEVER THE WORD "IRON" IS USED IN REFERENCE TO PIPE AND FITTINGS IT SHALL MEAN DUCTILE IRON PIPE HAVING THE THICKNESS CLASS SPECIFIED AND DUCTILE IRON FITTINGS HAVING THE PRESSURE CLASS SPECIFIED WITH ALL PIPE AND FITTINGS TO BE CEMENT LINED. JOINT TYPE ON ALL PIPE AND FITTINGS SHALL BE NOTED ON THE CONTRACT DRAWINGS AND AS SPECIFIED HEREIN. STANDARDS REFERENCED SHALL BE LATEST REVISION THEREOF, EXCEPT AS MODIFIED HEREIN:

ANSI/AWWA 104/A21.4_95:
CEMENT-MORTAR LINING FOR DUCTILE-IRON PIPE AND FITTINGS FOR WATER;

ANSI/AWWA C105/A21.5-99:
POLYETHYLENE ENCASEMENT FOR DUCTILE IRON PIPE SYSTEMS;

ANSI/AWWA C110/A21.10-98:
DUCTILE-IRON AND GRAY-IRON FITTINGS, 3-INCH THROUGH 48-INCH, FOR WATER AND OTHER LIQUIDS;

ANSI/AWWA C111/A21.11-00:
RUBBER-GASKET JOINTS FOR DUCTILE-IRON PRESSURE PIPE AND FITTINGS;

3rd. HIGH SERVICE DISTRICT

DEPARTMENT OF PUBLIC UTILITIES
DIVISION OF WATER
CLEVELAND, OHIO

SUBJECT : 12" WATER MAIN ALONG MILLER ROAD AT I.R. 77
CITY OF BRECKSVILLE

SCALE: AS SHOWN | NO.

WATER WORK NOTES

SUBSET 8 | TOTAL 43

DESIGN AGENCY
EUTHENICS
8235 Hubbard Dr. | Cleveland, OH 44125

DESIGNER TDP

REVIEWER DTB 03/01/22

PROJECT ID 104983

SHEET P.235 | TOTAL P.434

CUY-77-00.42 PART 1

MODEL: 104983_UN012 PAPERSIZE: 17x11 (in.) DATE: 3/4/2022 TIME: 1:45:45 PM USER: esmccaslin
F:\Jobs\11624\Miller Road Interchange\104983400-Engineering\Utilities\Sheets\104983_UN012.dgn

WATER WORK NOTES

DEFINITIONS/STANDARDS: - CONTINUED

ANSI/AWWA C151/A21.51-02:
DUCTILE-IRON PIPE, CENTRIFUGALLY CAST, FOR WATER OR OTHER LIQUIDS;

ANSI/AWWA C153/A21.53-00:
DUCTILE-IRON COMPACT FITTINGS, 3 IN. THROUGH 24 IN. AND 54 IN. THROUGH 64 IN., FOR WATER SERVICE;

ANSI/AWWA C600-99:
INSTALLATION OF GRAY AND DUCTILE CAST IRON WATER MAINS AND APPURTENANCES;

ASTM A 36-03:
SPECIFICATION FOR STRUCTURAL STEEL;

ASTM A 47-99:
SPECIFICATION FOR FERRITIC MALLEABLE IRON CASTINGS;

ASTM A 123-02:
SPECIFICATION FOR ZINC (HOT-DIP GALVANIZED) COATINGS ON IRON AND STEEL PRODUCTS;

ASTM A 193/A 193M-03:
SPECIFICATION FOR ALLOY- STEEL AND STAINLESS STEEL BOLTING MATERIALS FOR HIGH TEMPERATURE SERVICE;

ASTM A 194/A 194M-03:
SPECIFICATION FOR CARBON AND ALLOY STEEL NUTS FOR BOLTS FOR HIGH-PRESSURE AND HIGH- TEMPERATURE SERVICE;

ASTM A 276-03:
SPECIFICATION FOR STAINLESS AND HEAT-RESISTING STEEL BARS AND SHAPES;

ASTM A 536-99:
SPECIFICATION FOR DUCTILE-IRON CASTINGS;

ASTM B 98-03:
SPECIFICATION FOR COPPER-SILICON ALLOY ROD, BARS, AND SHAPES; AND

DIPRA:
HANDBOOK OF DUCTILE IRON PIPE, DUCTILE IRON PIPE RESEARCH ASSOCIATION.

QUALIFICATIONS AND EXPERIENCE:

QUALIFICATIONS: ALL DUCTILE IRON PIPE AND FITTINGS AND PIPE SPECIALS SHALL BE FURNISHED BY A MANUFACTURER WHO IS FULLY EXPERIENCED, REPUTABLE, AND QUALIFIED IN THE MANUFACTURE OF THE DUCTILE IRON PIPE, INCLUDING THE INTERIOR AND EXTERIOR LINING MATERIALS TO BE FURNISHED AS SPECIFIED HEREIN. THE PIPE, FITTINGS AND SPECIALS SHALL BE DESIGNED, CONSTRUCTED AND INSTALLED IN ACCORDANCE WITH THE BEST PRACTICES AND METHODS AND SHALL COMPLY IN ALL RESPECTS WITH THE CONTRACT DRAWINGS AND WITH THESE SPECIFICATIONS.

EXPERIENCE: ALL BIDDERS SHALL BE REQUIRED TO SHOW TO THE SATISFACTION OF THE ENGINEER THAT THE TYPE AND SIZE OF PIPE AND FITTINGS HE PROPOSES TO FURNISH, SHALL BE MADE BY A MANUFACTURER WHOSE PIPE HAS BEEN SUCCESSFULLY USED FOR LIKE WORK FOR A PERIOD OF NOT LESS THAN FIVE (5) YEARS. SUCH MANUFACTURERS SHALL ONLY BE DEEMED QUALIFIED WHERE THE INTERIOR CEMENT MORTAR LINING AND THE EXTERIOR COATING SYSTEM IS APPLIED AT THE SAME POINT OF MANUFACTURE AS THE DUCTILE IRON PIPE AND FITTINGS.

LAYOUT OF DUCTILE IRON PIPE AND FITTINGS FOR SUPPLY MAINS:

(A) GENERAL: THE CONTRACTOR SHALL FURNISH DUCTILE IRON CEMENT LINED PIPE WITH DUCTILE IRON CEMENT LINED FITTINGS. THICKNESS CLASS OF PIPE SHALL BE MINIMUM CLASS 52 AND SHALL BE INCREASED AS DEPTH OF PIPE INCREASES AS SPECIFIED UNDER SECTION "LAYOUT OF DUCTILE IRON PIPE AND FITTINGS FOR SUPPLY MAINS," PARAGRAPH F, "DEPTH OF WATER MAINS. "CLASS OF FITTINGS SHALL BE AS SPECIFIED UNDER SECTION "DUCTILE-IRON PIPE AND FITTINGS," PARAGRAPH, "STANDARD THICKNESS AND PIPE CLASS TABLE." ALL VALVE ASSEMBLIES, PLAIN ANCHORS, ACCESS MANHOLES, DRAIN ASSEMBLIES, AIR RELIEF/FLUSHING OUTLETS, PITOMETER OUTLETS, SUPPLEMENTAL CONNECTIONS, AND OTHER APPURTENANCES, SHALL BE CONSTRUCTED IN ACCORDANCE WITH STANDARD DETAIL DRAWINGS AND AS SPECIFIED HEREIN. DUCTILE IRON PIPE AND FITTINGS SHALL HAVE A SPECIAL EXTERIOR PIPE COATING AS SPECIFIED IN SECTION "EXTERIOR COATINGS/PAINTING," PARAGRAPH B. ALL PIPE AND FITTING JOINTS SHALL BE AS CALLED FOR ON THE CONTRACT DRAWINGS AND AS SPECIFIED HEREIN.

(B) ALIGNMENT: WATER MAIN ALIGNMENT SHOWN ON THE CONTRACT DRAWINGS IS BASED UPON GEOMETRIC DESIGN THAT PERMITS INSTALLATION OF DUCTILE IRON PIPE AND FITTINGS USING "STANDARD" FITTINGS. IN ORDER TO ACHIEVE THE HORIZONTAL AND VERTICAL DEFLECTIONS SHOWN ON THE CONTRACT DRAWINGS, STANDARD BENDS OF 11-1/4, 22-1/2, 45 DEGREES, OR COMBINATION THEREOF, SHALL BE USED. ROTATION OF BENDS OR USE OF COMPOUND BENDS SHALL NOT BE PERMITTED TO COMBINE HORIZONTAL AND VERTICAL ALIGNMENT. WHEN NECESSARY, PIPE JOINT OR PIPE/FITTING JOINTS MAY BE "OPENED" FOR ALIGNMENT TO MEET THE HORIZONTAL AND VERTICAL DEFLECTIONS SHOWN ON THE CONTRACT DRAWINGS. JOINT OPENINGS SHALL NOT EXCEED THE MANUFACTURER'S MAXIMUM SUGGESTED JOINT OPENING. THE MAXIMUM NOMINAL PIPE LENGTH SHALL BE 20'-0". IN SOME CASES DUE TO HORIZONTAL CURVE ALIGNMENT, LENGTHS LESS THAN 20'-0" MAY BE USED. THESE SMALL LENGTHS SHALL BE INCLUDED IN THE PRICE BID PER LINEAL FOOT OF WATER MAIN FURNISHED UNDER THIS CONTRACT. THE CONTRACTOR SHALL MAINTAIN ALL HORIZONTAL POINTS OF INTERSECTION (HPI), AND AS CLOSE AS POSSIBLE, ALL VERTICAL POINTS OF INTERSECTION (VPI), AS SHOWN ON THE CONTRACT DRAWINGS.

(C) RESTRAINED DISTANCE: WHERE "RESTRAINED DISTANCE" IS SHOWN ON THE CONTRACT DRAWINGS THE CONTRACTOR SHALL FURNISH DUCTILE IRON CEMENT LINED BOLTLESS RESTRAINED PUSH_ON JOINT PIPE AND DUCTILE IRON CEMENT LINED BOLTLESS RESTRAINED PUSH-ON JOINT FITTINGS OF THE PIPE THICKNESS CLASS AND FITTINGS OF THE PRESSURE CLASS NOTED ON THE CONTRACT DRAWINGS TO NOT LESS THAN THE LIMITS OF THE "RESTRAINED DISTANCE" SHOWN ON THE CONTRACT DRAWINGS. ALL BOLTLESS RESTRAINED PUSH-ON JOINTS SHALL BE OF THE TYPE SPECIFIED UNDER SECTION "JOINTS," PARAGRAPH D, "BOLTLESS RESTRAINED PUSH-ON JOINTS."

(D) VALVE ASSEMBLIES: ON ALL VALVE ASSEMBLIES, ALL PIPE JOINTS, FITTING JOINTS, AND ADAPTER JOINTS, BETWEEN THE TWO (2) ACCESS MANHOLES AND ANCHORAGES OR PLAIN ANCHORS, EXCEPT VALVE END JOINTS, SHALL HAVE BOLTLESS RESTRAINED PUSH-ON JOINTS, WHETHER WITHIN THE "RESTRAINED DISTANCE" SHOWN ON THE CONTRACT DRAWINGS OR WHERE NO "RESTRAINED DISTANCE" IS SHOWN ON THE CONTRACT DRAWINGS. VALVE END JOINTS SHALL BE OF THE TYPE SPECIFIED UNDER, "VALVES," OR AS INDICATED IN THE SCHEDULE OF BID ITEMS.

(E) SUPPLEMENTAL CONNECTIONS: WHERE SHOWN ON THE CONTRACT DRAWINGS, SUPPLEMENTAL CONNECTIONS SHALL BE CONSTRUCTED. BRANCH OF TEE FOR SUPPLEMENTAL CONNECTIONS ON SUPPLY MAINS SHALL BE FURNISHED WITH "INSULATED" FLANGED OUTLET; SEE SECTION "JOINTS," PARAGRAPH, "FLANGED JOINTS." WHERE A SUPPLEMENTAL CONNECTION FALLS WITHIN THE LIMITS OF THE "RESTRAINED DISTANCE" SHOWN ON THE CONTRACT DRAWINGS THE TEE SHALL BE A BOLTLESS RESTRAINED PUSH-ON JOINT TEE WITH AN "INSULATED" FLANGED BRANCH OUTLET OR A BOLTLESS RESTRAINED PUSH-ON JOINT TEE (ALL BELL) WITH A BOLTLESS RESTRAINED PUSH-ON JOINT TO "INSULATED" FLANGED ADAPTER. CONNECTION OF THE SUPPLEMENTAL CONNECTION TO THE DISTRIBUTION WATER MAIN SHALL BE AS SHOWN ON THE CONTRACT DRAWINGS.

WHERE A SUPPLEMENTAL CONNECTION FALLS OUTSIDE THE LIMITS OF THE "RESTRAINED DISTANCE" SHOWN ON THE CONTRACT DRAWINGS THE TEE SHALL BE A RETAINED MECHANICAL PUSH-ON JOINT TEE WITH AN "INSULATED" FLANGED BRANCH OUTLET OR A RETAINED MECHANICAL JOINT PUSH-ON JOINT TEE (ALL BELL) WITH A RETAINED MECHANICAL JOINT PUSH-ON JOINT TO "INSULATED" FLANGED ADAPTER. CONNECTION OF THE SUPPLEMENTAL CONNECTION TO THE DISTRIBUTION WATER MAIN SHALL BE AS SHOWN ON THE CONTRACT DRAWINGS. RETAINED MECHANICAL JOINTS SHALL MEET THE REQUIREMENTS OF SECTION "JOINTS," PARAGRAPH, "MECHANICAL JOINTS/RETAINED MECHANICAL JOINTS."

(F) DEPTH OF WATER MAINS: WHERE DEPTH OF COVER TO TOP OF 20-INCH OR LESS DUCTILE IRON PIPE EXCEEDS TWENTY_SIX (26') FEET, PIPE THICKNESS CLASS SHALL BE INCREASED TO MINIMUM CLASS 54. WHERE DEPTH OF COVER TO TOP OF 20-INCH OR LESS DUCTILE IRON PIPE EXCEEDS THIRTY (30') FEET, PIPE THICKNESS CLASS SHALL BE INCREASED TO MINIMUM CLASS 56. NO 20-INCH OR LESS DUCTILE IRON WATER MAIN SHALL BE INSTALLED WHERE COVER TO TOP OF PIPE EXCEEDS THIRTY-EIGHT (38').

DUCTILE-IRON PIPE AND FITTINGS - 20" AND SMALLER INCLUDE WITH ITEM SPECIAL FOR PAYMENT

(A) ALL PIPE AND FITTINGS SHALL BE MANUFACTURED IN ACCORDANCE WITH AND IN ALL RESPECTS WITH THE REQUIREMENTS OF THE LATEST SPECIFICATIONS OF THE "AMERICAN NATIONAL STANDARD" FOR ANSI/AWWA C151/A21.51-02, "DUCTILE IRON PIPE CENTRIFUGALLY CAST IN METAL MOLDS OR SAND-LINED MOLDS, AND DUCTILE IRON FITTINGS FOR WATER AND OTHER LIQUIDS," AND ANSI/AWWA C111/A21.11-00, "RUBBER-GASKET JOINTS FOR DUCTILE-IRON PIPE AND GRAY-IRON PRESSURE PIPE AND FITTINGS," ADOPTED BY THE AMERICAN WATER WORKS ASSOCIATION; WHICH STANDARDS EXCEPT AS HEREIN MODIFIED ARE MADE A PART OF THESE SPECIFICATIONS. PIPE AND FITTINGS UP TO AND INCLUDING 20-INCHES SHALL HAVE RETAINED MECHANICAL JOINTS EXCEPT WHERE BOLTLESS RESTRAINED PUSH-ON JOINT PIPE AND FITTINGS IS CALLED FOR ON THE CONTRACT DRAWINGS OR DIRECTLY SPECIFIED.

(B) ALL PIPE AND FITTINGS SHALL BE CEMENT LINED AND OF THE SIZE AND THICKNESS AND PRESSURE CLASSES NOTED ON THE RESPECTIVE CONTRACT DRAWINGS OR DIRECTLY SPECIFIED. FITTINGS ON PIPE SIZES UP TO AND INCLUDING 12-INCHES MAY BE OF THE SHORT BODIED (COMPACT) TYPE.

(C) ALL DUCTILE IRON FITTINGS SHALL BE MANUFACTURED IN ACCORDANCE WITH AMERICAN NATIONAL STANDARD, ANSI/AWWA C110/A21.10-98 "DUCTILE IRON AND GRAY-IRON FITTINGS, 3-INCH THROUGH 48-INCH, FOR WATER AND OTHER LIQUIDS," AND ALL SUBSEQUENT AMENDMENTS THERETO. METAL FOR FITTINGS SHALL CONFORM TO AMERICAN NATIONAL STANDARD ANSI A21.10-98. FITTINGS ON PIPE SIZE UP TO AND INCLUDING 12" MAY BE OF THE SHORT BODIED TYPE IN ACCORDANCE WITH ANSI/AWWA C153/A21.53-00, "DUCTILE IRON COMPACT FITTINGS, 3" THROUGH 16" FOR WATER AND OTHER LIQUIDS," AND ALL SUBSEQUENT AMENDMENTS THERETO.

(D) THE CONTRACTOR SHALL FURNISH CENTRIFUGAL CAST DUCTILE IRON CEMENT LINED PIPE. DUCTILE IRON METAL SHALL HAVE A MINIMUM TENSILE STRENGTH OF 60,000 PSI, MINIMUM YIELD STRENGTH OF 42,000 PSI AND MINIMUM ELONGATION OF 10 PERCENT AND SHALL BE FOR THE THICKNESS CLASS NOTED ON THE CONTRACT DRAWINGS OR DIRECTLY SPECIFIED. PIPE MAY BE FURNISHED IN 18 OR 20 FEET NOMINAL LAYING LENGTHS.

THE CENTRIFUGALLY CAST DUCTILE SHALL CONFORM TO THE AMERICAN NATIONAL STANDARD ANSI/AWWA C151/A21.51- 02, "DUCTILE IRON PIPE CENTRIFUGALLY CAST IN METAL MOLDS OR SAND-LINED MOLDS, AND DUCTILE IRON FITTINGS FOR WATER AND OTHER LIQUIDS," AND ALL SUBSEQUENT AMENDMENTS THERETO. PIPE ON STRAIGHT RUNS SHALL HAVE PUSH- ON SINGLE RUBBER-GASKET COMPRESSION JOINTS, ALL IN ACCORDANCE WITH AMERICAN NATIONAL STANDARD, ANSI/AWWA C111/A21.11- 00, "RUBBER-GASKET JOINTS FOR DUCTILE-IRON PIPE AND GRAY-IRON PRESSURE PIPE AND FITTINGS," AND ALL SUBSEQUENT AMENDMENTS THERETO. FOR PIPE SIZES UP TO AND INCLUDING 20- INCHES RETAINED MECHANICAL JOINTS SHALL BE FURNISHED AT BENDS, TEES, CROSSES, SPECIAL FITTINGS AND BETWEEN VERTICAL OFFSETS OR BENDS, ON HYDRANT BRANCHES AND SHALL BE RETAINED AS SPECIFIED IN SECTION "JOINTS", (B),"MECHANICAL JOINTS/RETAINED MECHANICAL JOINTS."

(E) STANDARD THICKNESS AND PIPE CLASS TABLES THE THICKNESS OF THE CENTRIFUGALLY CAST DUCTILE IRON PIPE SHALL CONFORM TO THE FOLLOWING TABLE:

STANDARD THICKNESS OF CENTRIFUGALLY CAST, DUCTILE IRON PIPE

STANDARD THICKNESS

PIPE SIZE	WORKING PRESSURE (PSI)	CLASS 52	53	54	56	FITTINGS PSI
4"	350	.29	.32	.35	.41	350
6"	350	.31	.34	.37	.43	350
8"	350	.33	.36	.39	.45	350
10"	350	.35	.38	.41	.47	350
12"	350	.37	.40	.43	.49	350
16"	350	.40	.43	.46	.52	350
20"	350	.42	.45	.48	.54	350

(F) ALL FITTINGS, UNLESS OTHERWISE NOTED ON THE CONTRACT DRAWINGS, SUCH AS BENDS, TEES, CROSSES, HYDRANT BRANCHES, ETC. SHALL HAVE BELL AND BELL, BELL AND PLAIN ENDS OF THE MECHANICAL BOLTED STUFFING-BOX TYPE WITH PIPE OR FITTING PLAIN END SEALING GASKET AND BOLTED FOLLOWER GLAND. MECHANICAL JOINT FITTINGS SHALL BE THE MECHANICAL JOINTED BOLTED STUFFING- BOX TYPE IN ACCORDANCE WITH AMERICAN NATIONAL STANDARD, ANSI/AWWA C111/A21.11-00, "RUBBER-GASKET JOINTS FOR DUCTILE-IRON PIPE AND GRAY-IRON PRESSURE PIPE AND FITTINGS," AND ALL SUBSEQUENT AMENDMENTS THERETO. ALL FITTINGS SHALL BE CEMENT LINED. ALL MECHANICAL JOINTS SHALL BE RETAINED AS SPECIFIED IN SECTION, "JOINTS", (E) "RETAINED MECHANICAL JOINTS".

(G) WHERE CALLED FOR ON THE CONTRACT DRAWINGS OR DIRECTLY SPECIFIED, PIPE AND FITTINGS HAVING BOLTLESS RESTRAINED TYPE JOINTS SHALL BE FURNISHED. BOLTLESS RESTRAINED TYPE JOINTS SHALL BE AS SPECIFIED IN SECTION "JOINTS", (D) "BOLTLESS RESTRAINED SLIP-ON JOINTS."

3rd. HIGH SERVICE DISTRICT

DEPARTMENT OF PUBLIC UTILITIES
DIVISION OF WATER
CLEVELAND, OHIO

SUBJECT : 12" WATER MAIN ALONG MILLER ROAD AT I.R. 77
CITY OF BRECKSVILLE

SCALE: AS SHOWN | NO.

SUBSET 9 | TOTAL 43

DESIGN AGENCY
EUTHENICS
8230 Mohawk Dr. | Cleveland, OH 44026

DESIGNER TDP

REVIEWER DTB 03/01/22

PROJECT ID 104983

SHEET P.236 | TOTAL P.434

CUY-77-00.42 PART 1
MODEL: 104983_UN013 PAPERSIZE: 17x11 (in.) DATE: 3/4/2022 TIME: 1:45:48 PM USER: esmccaslin
F:\Jobs\11624\Miller Road Interchange\104983\400-Engineering\Utilities\Sheets\104983_UN013.dgn

WATER WORK NOTES

DUCTILE-IRON PIPE AND FITTINGS - 20" AND SMALLER INCLUDE WITH ITEM SPECIAL FOR PAYMENT - CONTINUED

(H) GLANDS FOR ALL MECHANICAL JOINT PIPE AND FITTINGS SHALL BE DUCTILE IRON. BOLTS AND NUTS SHALL BE CORROSION RESISTANT, HIGH-STRENGTH, LOW ALLOY STEEL IN ACCORDANCE WITH AMERICAN NATIONAL STANDARD, ANSI/AWWA C111/A21.11-00, "RUBBER-GASKET JOINTS FOR DUCTILE-IRON PIPE AND GRAY-IRON PRESSURE PIPE AND FITTINGS," AND ALL SUBSEQUENT AMENDMENTS THERETO.

GASKETS SHALL BE OF RUBBER OR OTHER EQUALLY EFFECTIVE PROTECTION AGAINST UNEVEN DISTORTION OF GASKET.

(I) WHERE FITTINGS ARE SHOWN WHICH ARE NOT COVERED BY THE ABOVE SPECIFICATIONS, THEY IN SUCH PARTICULARS AS ARE LACKING THEREON SHALL CONFORM TO THE DIMENSIONS AND OTHERWISE MEET THE SPECIFICATIONS FOR THE RESPECTIVE TYPE WHICH ARE CARRIED IN THE LATEST REVISIONS TO THE CURRENT EDITION OF THE DUCTILE IRON PIPE RESEARCH ASSOCIATION "HANDBOOK OF DUCTILE IRON PIPE" OR WHICH ARE OTHERWISE SHOWN ON THE CONTRACT DRAWINGS.

(J) WHEREVER CHANGES IN LINE AND GRADES OF THE MAIN AS SHOWN ON THE DRAWINGS ARE NOT STANDARD FITTING DEFLECTIONS, THE CONTRACTOR WILL BE PERMITTED TO SUBMIT DETAILS USING COMBINATIONS OF STANDARD FITTINGS AND SMALL DEFLECTIONS (NOT TO EXCEED THE MANUFACTURER'S MAXIMUM SUGGESTED JOINT OPENING) IN THE ADJOINING LENGTHS OF PIPE.

(K) ON NEW AND/OR RELOCATED OR EXTENDED WATER MAINS, UP TO AND INCLUDING 20-INCH DIAMETER, WHERE WATER MAINS END OR TERMINATE AND ARE NOT CONNECTED TO EXISTING MAINS, RETAINED MECHANICAL BELL JOINT PLUGS ARE TO BE INSTALLED. PLUGS CAPS SHALL BE FURNISHED WITH TWO (2) PLUGGED TWO (2")-INCH TAPS FOR DRAIN AND AIR RELIEF CONNECTIONS.

(L) CLOSURE PIECES SHALL BE ACCURATELY MEASURED AND CUT IN THE FIELD AND INSTALLED USING SOLID SHORT PATTERN SLEEVES HAVING MECHANICAL BELL JOINTS. MECHANICAL BELL JOINT SLEEVES SHALL BE OF THE RETAINED TYPE AS SPECIFIED IN SECTION, "JOINTS", (E) "MECHANICAL JOINTS/RETAINED MECHANICAL JOINTS."

(M) TESTS, INSPECTION, REPORTS AND ANALYSES OF TESTS OF SAMPLES FOR ALL MATERIALS SHALL BE FURNISHED IN ACCORDANCE WITH PARAGRAPH "TEST, INSPECTION AND REPORTS" OF THE GENERAL NOTES.

(N) UNLESS OTHERWISE SPECIFIED HEREIN, THE EXTERIOR OF ALL DUCTILE IRON PIPE, FITTINGS, AND SPECIALS SHALL HAVE SHOP APPLIED A ONE (1) MIL BITUMASTIC COATING APPLIED IN ACCORDANCE WITH ANSI/AWWA C151/A21.51- 02, "DUCTILE- IRON PIPE, CENTRIFUGALLY CAST, FOR WATER OR OTHER LIQUIDS."

CEMENT LINING

ALL PIPE AND FITTINGS, SHALL BE GIVEN A CEMENT MORTAR LINING AT THE POINT OF MANUFACTURE. THE LINING SHALL CONFORM TO THE AMERICAN NATIONAL STANDARD, ANSI/AWWA C104/A21.4-95, "CEMENT-MORTAR LINING FOR DUCTILE-IRON PIPE AND FITTINGS," AND ALL SUBSEQUENT AMENDMENTS THERETO.

MARKING

ALL PIPE SHALL BE SUITABLY MARKED, ON OR NEAR THE PIPE BELL, CLEAR AND LEGIBLE, THE MANUFACTURER, NOMINAL DIAMETER, CLASS, DATE OF MANUFACTURE, WEIGHT, AND OTHER ELEMENTS OF IDENTIFICATION. ALL FITTINGS SHALL BE MARKED, CLEAR AND LEGIBLE, THE MANUFACTURER, NOMINAL DIAMETER, DATE OF MANUFACTURE, WEIGHT, PRESSURE RATING, IN THE CASE OF BENDS THE DEGREE OF BEND, AND OTHER ELEMENTS OF IDENTIFICATION.

FACING AND DRILLING

ALL FLANGES SHALL BE CAST SOLID AND FACED ACCURATELY AT RIGHT ANGLES TO THE AXIS OF THE PIPE. ALL FLANGES SHALL BE SHOP COATED WITH A COAT OF COAL TAR EPOXY, EXCEPT THE FACE OF THE FLANGE WHICH SHALL RECEIVE ONE (1) COAT OF A ZINC RICH PRIMER AT THE SHOP IMMEDIATELY AFTER THEY HAVE BEEN FACED AND DRILLED. ALL FLANGED PIPE AND FITTINGS SHALL BE FACED AND DRILLED TO ANSI B16-1, 125 LB. DRILLING, UNLESS SPECIAL DRILLING IS CALLED FOR. WHERE TAP OR STUD BOLTS ARE REQUIRED, FLANGES SHALL ALSO BE TAPPED.

LAYING

(A) PROPER AND SUITABLE TOOLS AND APPLIANCES FOR THE SAFE AND CONVENIENT HANDLING AND LAYING OF THE PIPE AND FITTINGS SHALL BE USED. GREAT CARE SHALL BE TAKEN TO PREVENT THE PIPE COATING AND FITTINGS FROM BEING DAMAGED PARTICULARLY ON THE INSIDE OF THE PIPES AND FITTINGS AND ANY SUCH DAMAGE SHALL BE REMEDIED AS DIRECTED. ALL PIPES AND FITTINGS SHALL BE CAREFULLY EXAMINED BY THE CONTRACTOR FOR DEFECTS JUST BEFORE LAYING AND NO PIPE OR FITTINGS SHALL BE LAID WHICH IS KNOWN TO BE DEFECTIVE.

(B) IF ANY DEFECTIVE PIPE IS DISCOVERED AFTER HAVING BEEN LAID, IT SHALL BE REMOVED AND REPLACED WITH A SOUND PIPE OR FITTING IN A SATISFACTORY MANNER, BY THE CONTRACTOR AT HIS OWN EXPENSE. ALL PIPES AND FITTINGS SHALL BE THOROUGHLY CLEANED BEFORE THEY ARE LAID, SHALL BE KEPT CLEAN UNTIL THEY ARE USED IN THE COMPLETED WORK, AND WHEN LAID, SHALL CONFORM TO THE LINES AND GRADES GIVEN BY THE ENGINEER. OPEN ENDS OF PIPES SHALL BE KEPT PLUGGED WITH A BULK HEAD DURING CONSTRUCTION.

(C) PIPE LAID IN TRENCH SHALL BE LAID TO A FIRM AND EVEN BEARING FOR ITS FULL LENGTH. PRECAUTIONS SHALL BE TAKEN AGAINST FLOATING.

(D) IT IS THE INTENTION OF THESE SPECIFICATIONS TO SECURE FIRST CLASS WORKMANSHIP IN THE PLACING OF PIPE AND ACCESSORIES. IN SUCH DETAILS AS ARE NOT SPECIFICALLY MENTIONED HEREIN OR CALLED FOR ON THE DRAWINGS, THE CONTRACTOR WILL BE REQUIRED TO CONFORM WITH THE APPLICABLE SECTIONS OF THE LATEST AMERICAN NATIONAL STANDARD, ANSI/AWWA C 600-99, INSTALLATION OF GRAY AND DUCTILE CAST IRON WATER MAINS AND APPURTENANCES," AS ADOPTED BY THE AMERICAN WATER WORKS ASSOCIATION.

JOINTS

(A) SLIP-ON JOINTS:

ALL PIPE UNLESS OTHERWISE REQUIRED, SHOWN ON CONTRACT DRAWINGS, DIRECTLY SPECIFIED OR CONNECTED TO FITTINGS, VALVES AND HYDRANTS SHALL HAVE SOCKET BY PLAIN END RUBBER- GASKET PUSH- ON JOINTS WITH RADIALLY COMPRESSED LOCKED IN PLACE RUBBER RING GASKETS APPROVED BY THE COMMISSIONER OF WATER. SLIP-ON COMPRESSION JOINTS SHALL CONFORM TO THE REGULAR AND SPECIAL REQUIREMENT FOR PUSH-ON JOINTS IN AMERICAN NATIONAL STANDARD, ANSI/AWWA C111/A21.11-00, "RUBBER GASKET JOINTS FOR DUCTILE-IRON AND GRAY-IRON PRESSURE PIPE AND FITTINGS," AND ALL SUBSEQUENT AMENDMENTS THERETO.

(B) MECHANICAL JOINTS/RETAINED MECHANICAL JOINTS:

1. ALL FITTINGS AND PIPE BELL ENDS CONNECTED TO FITTINGS, UNLESS OTHERWISE REQUIRED, SHOWN ON CONTRACT DRAWINGS, OR DIRECTLY SPECIFIED SHALL HAVE BELL OR PLAIN END JOINTS OF THE MECHANICAL BOLTED STUFFING-BOX TYPE WITH SEALING GASKET AND BOLTED DUCTILE IRON FOLLOWER GLAND AND SHALL BE OF THE SPECIFIED RETAINED TYPE. BOLTS AND NUTS FOR MECHANICAL JOINTS SHALL BE CORROSION RESISTANT, HIGH STRENGTH, LOW ALLOY STEEL.

2. MECHANICAL JOINTS SHALL CONFORM TO THE REGULAR AND SPECIAL REQUIREMENT THAT ALL GLANDS SHALL BE DUCTILE IRON WITH JOINT DIMENSIONS AND TOLERANCES, BOLT HOLES AND SLOTS, GASKETS, RUBBER, QUALITY CONTROL, BOLTS AND NUTS AND MARKING BE IN CONFORMANCE WITH AMERICAN NATIONAL STANDARD, ANSI/AWWA C111/A21.11-00, "RUBBER GASKET JOINTS FOR DUCTILE IRON AND GRAY IRON PRESSURE PIPE AND FITTINGS." ON ALL PIPE AND FITTINGS AT BENDS, TEES, CROSSES, SPECIAL FITTINGS, BETWEEN VERTICAL OFFSETS OR BENDS, ON HYDRANT BRANCHES, ON VALVES AND HYDRANT BASE ELBOWS, UP TO AND INCLUDING 16- INCH SIZE, THE CONTRACTOR SHALL FURNISH AND INSTALL RETAINED TYPE MECHANICAL JOINTS.

3. ON ALL PIPE AND FITTINGS AT BENDS, TEES, CROSSES, SPECIAL FITTINGS, BETWEEN VERTICAL OFFSETS OR BENDS, ON HYDRANT BRANCHES, ON VALVES AND HYDRANT BASE ELBOWS, UP TO AND INCLUDING 16-INCH SIZE, THE CONTRACTOR SHALL FURNISH AND INSTALL RETAINED TYPE MECHANICAL JOINTS.

4. PIPE AND FITTING BELL JOINT AND GASKETS SHALL BE FURNISHED AS SPECIFIED. GLANDS FOR RETAINED MECHANICAL JOINTS SHALL BE BOLTED TYPE OF DUCTILE- IRON MATERIAL CONFORMING TO AMERICAN NATIONAL STANDARD, ANSI/AWWA C111/A21.11-00, "RUBBER- GASKET JOINTS FOR DUCTILE-IRON AND GRAY-IRON PRESSURE PIPE AND FITTINGS," AND/OR CONFORMING WITH ASTM A 536- 99, "SPECIFICATION FOR DUCTILE- IRON CASTINGS." RETAINED MECHANICAL JOINT FOLLOWER GLANDS SHALL BE EQUAL TO THE "MEG-A-LUG" AS MANUFACTURED BY EBAA IRON SALES, INC., THE "SUPER-LUG" AS MANUFACTURED BY THE SIGMA CORPORATION OR THE "UNI- FLANGE SERIES 1400" AS MANUFACTURED BY THE FORD METER BOX COMPANY, INC. PROPER TORQUE SHALL BE THAT AS RECOMMENCED BY THE RETAINER GLAND MANUFACTURER. WHERE JOINT DEFLECTION IS NECESSARY FOR ALIGNMENT SUCH DEFLECTION SHALL BE LIMITED TO MANUFACTURER'S MAXIMUM JOINT OPENING. ALL RETAINED JOINTS SHALL BE RATED FOR MINIMUM 250 PSI PRESSURE. ALL RETAINED JOINTS SHALL BE POLYETHYLENE ENCASED AS SPECIFIED IN SECTION, "JOINTS", (C), EXCEPT WHERE SUCH RETAINED MECHANICAL JOINTS ARE BONDED JOINTS WHERE NO POLYETHYLENE ENCASEMENT WILL BE REQUIRED.

5. RETAINER GLANDS USING PERPENDICULAR SET SCREWS AS A MEANS RESTRAINT WILL NOT BE PERMITTED.

(C) POLYETHYLENE ENCASEMENT:

1. ALL BURIED WATERMAINS, MECHANICAL JOINTS, ALL RETAINED MECHANICAL JOINTS, FLANGES, VICTAULIC AND COMPRESSION TYPE BOLTED SLEEVED COUPLINGS, AND ALL PIPE AND FITTINGS HAVING BOLTS OR OTHER TYPE OF FASTENERS IN JOINT CONSTRUCTION AND PIPE AND FITTINGS AS SHOWN ON THE CONTRACT DRAWINGS OR WHERE REQUIRED SHALL BE POLYETHYLENE ENCASED. PIPE, FITTING AND OTHER JOINTS THAT ARE BONDED JOINTS NEED NOT BE POLYETHYLENE ENCASED. POLYETHYLENE ENCASEMENT FOR MECHANICAL JOINTS, RETAINED MECHANICAL JOINTS OR ANY JOINT REQUIRING BOLTS AND NUTS SHALL BE WRAPPED IN ACCORDANCE WITH AMERICAN NATIONAL STANDARD, ANSI/AWWA C105/A21.5- 99, "POLYETHYLENE ENCASEMENT FOR DUCTILE-IRON PIPING FOR WATER AND OTHER LIQUIDS," AND ALL SUBSEQUENT AMENDMENTS THERETO. MECHANICAL JOINTS, RETAINED MECHANICAL JOINTS AND ALL BOLTED JOINTS SHALL HAVE DOUBLE POLYETHYLENE ENCASEMENT OF CLASS "C" (BLACK) FILM, METHOD "C" DOUBLING SHEET AND PROVIDING ONE FOOT (1') MINIMUM OVERLAP ON PIPE OR FITTING ON BOTH SIDES OF JOINT. ALL PIPE AND FITTINGS WHERE SHOWN ON THE DRAWINGS OR WHERE OTHERWISE REQUIRED TO BE POLYETHYLENE ENCASED SHALL BE ENCASED USING CLASS "C" FILM, METHOD "B". POLYETHYLENE ENCASEMENT SHALL BE SECURELY TAPED SNUG AROUND PIPE AND FITTINGS.

2. ALL BOLTS AND NUTS ON ALL MECHANICAL JOINTS, RETAINED MECHANICAL JOINTS, FLANGES, VICTAULIC AND COMPRESSION TYPE BOLTED SLEEVED COUPLINGS, SHALL HAVE FIELD APPLIED THREE (3) COATS OF BITUMASTIC COATING PRIOR TO POLYETHYLENE ENCASEMENT.

(D) BOLTLESS RESTRAINED SLIP-ON JOINTS:

WHERE CALLED FOR ON THE CONTRACT DRAWINGS OR DIRECTLY SPECIFIED ALL JOINT RESTRAINT SHALL BE OF THE BOLTLESS RESTRAINED SLIP-ON JOINT DESIGN. VALVES AND VALVE JOINT TYPE WITHIN THE LIMITS OF THE BOLTLESS RESTRAINED PIPE AND FITTINGS SHALL BE OF THE TYPE INDICATED ON THE CONTRACT DRAWINGS OR AS SPECIFIED.

BOLTLESS RESTRAINED PUSH-ON JOINT PIPE AND FITTINGS SHALL BE OF A DESIGN CONSISTING OF A SHOP WELDED RETAINER RING OR SEGMENT ON THE SPIGOT END OF THE PIPE THAT WHEN THE JOINT IS FULLY ASSEMBLED "LOCKS" INTO THE BELL OF THE ADJACENT PIPE OR FITTING PROVIDING A POSITIVE RESTRAINED JOINT. NO FIELD WELDED RESTRAINED JOINTS ARE PERMITTED EXCEPT ON LENGTHS OF PIPE LESS THAN NOMINAL LENGTH NEEDED TO CLOSE THE LINE. BOLTLESS RESTRAINED JOINTS SHALL BE OF A DESIGN THAT PROVIDES RESTRAINED ACTION BETWEEN THE SPIGOT AND BELL OF THE PIPE OR FITTING INDEPENDENT OF THE GASKET. BOLTLESS RESTRAINED PUSH-ON JOINTS SHALL BE EQUAL TO: "FLEX- RING" AS MANUFACTURED BY AMERICAN CAST IRON PIPE COMPANY; "SUPER- LOCK" AS MANUFACTURED BY CLOW CORPORATION (MCWANE, INC.); OR "TR- FLEX" AS MANUFACTURED BY U. S. PIPE AND FOUNDRY.

(E) COMPRESSION COUPLINGS:

1. ALL PIPE COMPRESSION COUPLINGS SHALL BE OF A GASKETED, SLEEVE TYPE WITH DIAMETERS TO PROPERLY FIT PLAIN END IRON PIPE. EACH COUPLING SHALL CONSIST OF ONE (1) MIDDLE RING WITH STOPS REMOVED; TWO (2) FOLLOWER GLANDS; TWO (2) RUBBER- COMPOUND, BUNA- N BLEND, WEDGE SECTION GASKETS; AND SUFFICIENT TRACKHEAD STAINLESS STEEL BOLTS AND NUTS (ASTM A276-03, TYPE 304) TO PROPERLY COMPRESS THE GASKETS. THE MIDDLE RING AND FOLLOWER GLANDS SHALL BE OF EITHER STEEL (ASTM-A36-03) OR DUCTILE IRON (ASTM-A536-99). THE COMPRESSION COUPLING SHALL HAVE A MINIMUM WORKING PRESSURE RATING OF 250 PSI AND SHALL BE EQUAL TO THE DRESSER STYLE NOS: 38, 138, OR 162 (TRANSISTION TYPE). OR SMITH-BLAIR 441 STRAIGHT AND TRANSITION COUPLINGS.

2. ALL COMPRESSION COUPLINGS SHALL BE COATED IN THE SHOP WITH A FACTORY COATING COMPATIBLE WITH FIELD APPLIED PRIMER AND ENAMEL COATINGS. COMPRESSION COUPLINGS SHALL BE CLEANED AND PAINTED WITH THREE (3) FIELD COATS OF KOPPERS BITUMASTIC SUPER TANK SOLUTION OR EQUIVALENT.

COMPRESSION COUPLINGS WHERE REQUIRED, SHALL BE SIMILAR AND EQUAL TO DRESSER STYLE 38 COUPLING AS MANUFACTURED BY THE DRESSER MANUFACTURING DIVISION OF DRESSER INDUSTRIES. THEY SHALL CONSIST OF TWO (2) STEEL FOLLOWER FLANGES, ONE (1) STEEL MIDDLE RING, TWO (2) MOLDED RUBBER GASKETS, AND SUFFICIENTLY ROLLED THREAD, TRACK HEADED BOLTS TO PROPERLY COMPRESS THE GASKETS. THE MIDDLE RING SHALL CONTAIN NO PIPE STOPS.

3rd. HIGH SERVICE DISTRICT

DEPARTMENT OF PUBLIC UTILITIES
DIVISION OF WATER
CLEVELAND, OHIO

SUBJECT : 12" WATER MAIN ALONG MILLER ROAD AT I.R. 77
CITY OF BRECKSVILLE

SCALE: AS SHOWN | NO.

SUBSET 10 | TOTAL 43

DESIGN AGENCY
EUTHENICS
8235 Mohawk Dr. | Cleveland, OH 44125

DESIGNER TDP

REVIEWER DTB 03/01/22

PROJECT ID 104983

SHEET P.237 | TOTAL P.434

CUY-77-00.42 PART 1
MODEL: 104983_UN014 PAPERSIZE: 17x11 (in.) DATE: 3/4/2022 TIME: 1:45:51 PM USER: esmccaslin
F:\Jobs\11162-Miller Road Interchange\1049834\00-Engineering\Utilities\Sheets\104983_UN014.dgn

WATER WORK NOTES

JOINTS - CONTINUED

ALL METAL PARTS OF THE COUPLINGS INCLUDING BOLTS AND NUTS SHALL BE GALVANIZED OR HEAVILY CADMIUM PLATED AT THE POINT OF MANUFACTURE.

(F) FLANGED JOINTS:

1. FLANGED JOINTS SHALL BE INSTALLED AS SHOWN ON THE DRAWINGS OR AS SPECIFIED. FLANGES SHALL BE EITHER CAST STEEL, FORGED OR ROLLED STEEL, OR PROPERLY WELDED AND MACHINED FABRICATED STEEL PLATES, WELDED TO PIPE WITH TWO CONTINUOUS WELDS. THEY SHALL HAVE PLAIN FACES AND SHALL BE FACED TRUE AND SMOOTH AT RIGHT ANGLES TO THE AXIS OF THE PIPE AND SHALL BE SPOT FACED ON THE BACK. DRILLING SHALL CONFORM TO ANSI B16.1, 125 LBS. EACH BLIND FLANGE SHALL BE CAST IRON AND HAVE BOSSES TAPPED AT TOP AND BOTTOM FOR TWO (2) INCH STANDARD PIPE AND FURNISHED WITH PLUGS.

2. ALL FLANGES SHALL BE SHOP COATED WITH ONE (1) COAT OF COAL TAR EPOXY. ALL MACHINED STEEL SURFACES AT THE ENDS OF THE FLANGED PIPE AND FITTINGS OR PIPE ENDS HAVING STEEL FLANGES SHALL HAVE FACE OF FLANGE SHOP COATED WITH ONE (1) COAT OF APPROVED ZINC RICH PRIMER AT THE SHOP IMMEDIATELY AFTER THEY HAVE BEEN FACED AND DRILLED.

ALL CAST IRON AND DUCTILE IRON FLANGES SHALL BE SHOP COATED WITH ONE (1) COAT OF TAR EPOXY, EXCEPT THE FACE OF THE FLANGE WHICH SHALL RECEIVE ONE (1) COAT OF A ZINC RICH PRIMER AT THE SHOP IMMEDIATELY AFTER THEY HAVE BEEN FACED AND DRILLED.

BLIND FLANGES SHALL BE RATED FOR MINIMUM 250 PSI WORKING PRESSURE AND SHALL BE OF EITHER DISHED CAST IRON OR DISHED DUCTILE IRON. BLIND FLANGES SHALL HAVE BOSSES TAPPED AT THE TOP AND BOTTOM FOR TWO (20 INCH STANDARD IRON PIPE, EACH FINISHED WITH MALLEABLE IRON PLUGS.

3. ALL BOLTS AND NUTS IN THE FINISHED WORK FOR FLANGES SHALL BE MADE OF STAINLESS STEEL CONFORMING WITH THE REQUIREMENTS OF ASTM A 276-03, "SPECIFICATIONS FOR STAINLESS AND HEAT-RESISTING BARS AND SHAPES," TYPE 304, AND WITH ASTM A 193/A 193m-03, "SPECIFICATION FOR ALLOY-STEEL AND STAINLESS STEEL BOLTING MATERIALS FOR HIGH TEMPERATURE SERVICE" HEAVY HEX, AND ASTM A 194/A 194m-03, "SPECIFICATION FOR CARBON AND ALLOY STEEL NUTS FOR BOLTS FOR HIGH-PRESSURE AND HIGH-TEMPERATURE SERVICE," HEAVY HEX. THE ENDS OF ALL THE BOLTS SHALL BE FINISHED TO STANDARD RADIUS IN ACCEPTABLE MANNER. ALL SCREW THREADS SHALL BE AMERICAN STANDARD COARSE THREAD (N.C.). STUD BOLTS DOUBLE END (ROD) SHALL BE USED TO MAKE THE FLANGED JOINTS ON PIPE. ALL DIMENSIONS TO BE ACCORDING TO AMERICAN STANDARD HEAVY. BOLTS AND NUTS SHALL BE DELIVERED TO THE FIELD FREE FROM GREASE, RUST AND DIRT AND SHALL BE PROPERLY PROTECTED FROM MOISTURE AND DIRT IN THE FIELD.

4. GASKETS FOR FLANGED PIPE AND FITTINGS SHALL BE FULL-FACED RUBBER ONE-EIGHTH (1/8) INCH THICK EQUAL TO RAINBOW STYLE 9 AS MANUFACTURED BY THE U.S. RUBBER COMPANY: RING GASKET (PER AWWA C207-94), ONE EIGHTH (1/8) INCH THICK, CLOTH-INSERTED RUBBER EQUAL TO JOHN-MANVILLE NO. 109, JOHN CRANE CO. STYLE 777, OR APPROVED EQUAL. GASKETS SHALL BE SUITABLE FOR A WATER PRESSURE OF 350 PSI AT A TEMPERATURE OF 180 DEGREES F.

(G) VICTAULIC TYPE JOINTS:

1. WHERE SHOWN ON THE CONTRACT DRAWINGS, OR WHERE SPECIFIED OR REQUIRED, THE CONTRACTOR SHALL FURNISH AND INSTALL VICTAULIC TYPE JOINTS, INCLUDING COUPLINGS, FOR CONNECTION OF PIPE ENDS TO VICTAULIC END VALVES. PIPE ENDS SHALL BE SHOULDERED JOINTS, OF EITHER CAST PIPE OR WITH WELDED END RING, ADAPTED FOR INSTALLATION OF A VICTAULIC CO., STYLE 44 JOINT AND COUPLING. VICTAULIC COUPLINGS SHALL BE VICTAULIC CO., STYLE 44 AND SHALL BE COMPOSED OF MALLEABLE IRON HOUSINGS HELD TOGETHER WITH STEEL BOLTS HEAT TREATED AND "HOT-DIP' GALVANIZED ACCORDING TO ASTM A 123- 02, "SPECIFICATION FOR ZINC (HOT- DIP GALVANIZED) COATINGS ON IRON AND STEEL PRODUCTS," AND WITH A CONTINUOUS, HOLLOW, MOLDED RUBBER SEALING RING OF SUCH TYPE THAT THE SEAL BECOMES TIGHT AS THE PRESSURE WITHIN THE PIPE INCREASES. THE JOINTS SHALL BE CONSTRUCTED AND INSTALLED AND TO BE EQUAL IN ALL RESPECTS TO THOSE MANUFACTURED BY "VICTAULIC COMPANY OF AMERICA." MALLEABLE HOUSINGS SHALL CONFORM TO ASTM A 47-99, "SPECIFICATION FOR FERRITIC MALLEABLE IRON CASTINGS," OR TO THE REQUIREMENTS OF ASTM A536-99, "SPECIFICATION FOR DUCTILE-IRON CASTINGS."

2. BOLTS AND NUTS SHALL BE MANUFACTURED BY THE COUPLING MANUFACTURER AND SHALL BE STAINLESS STEEL, COMPLYING IN MATERIAL WITH THE REQUIREMENTS OF ASTM A 276-03, "SPECIFICATION FOR STAINLESS AND HEAT-RESISTING STEEL BARS AND SHAPES," TYPE 304, AND WITH ASTM A 193/A 193m-03, SPECIFICATIONS FOR ALLOY-STEEL AND STAINLESS STEEL BOLTING MATERIALS FOR HIGH TEMPERATURE SERVICE," HEAVY HEX, AND ASTM A 194/A 194m-03, "SPECIFICATION FOR CARBON AND ALLOY STEEL NUTS FOR BOLTS FOR HIGH- PRESSURE AND HIGH-TEMPERATURE SERVICE," HEAVY HEX.

3. ALL MACHINED STEEL SURFACES AT THE ENDS OF THE PIPE TO RECEIVE VICTAULIC TYPE COUPLINGS SHALL BE COATED WITH ONE (1) SHOP COAT OF AN APPROVED ZINC RICH PAINT. ALL METAL PARTS OF THE COUPLINGS SHALL BE COATED IN THE SHOP WITH ONE (1) COAT OF BITUMINOUS PRIMER FURNISHED BY THE SAME MANUFACTURER WHO FINISHES THE COATINGS AS SPECIFIED UNDER "PAINTING."

PAINTING

AFTER INSTALLATION AND BEFORE POLYETHYLENE ENCASEMENT, ALL EXPOSED OR DAMAGED COATING AND ALL BOLTS FOR MECHANICAL JOINTS, RETAINED MECHANICAL JOINTS, FLANGES AND VICTAULIC OR COMPRESSION TYPE BOLTED SLEEVED COUPLINGS SHALL BE CLEANED AND PAINTED WITH THREE (3) FIELD COATS OF KOPPERS BITUMASTIC SUPER TANK SOLUTION OR EQUIVALENT.

MEASUREMENT:

THE NUMBER OF LINEAR FEET OF WATER MAIN TO BE PAID FOR UNDER ITEM, "DUCTILE IRON PIPE AND FITTINGS," CLASSIFIED AS TO SIZE AND TYPE, SHALL BE THAT ACTUALLY FURNISHED AND PLACED IN ACCORDANCE WITH THAT SHOWN IN THE CONTRACT DRAWINGS AND THESE SPECIFICATIONS, AS MEASURED ALONG THE AXIS OF THE PIPE, INCLUDING FITTINGS AND VALVES CONNECTED UP IN PLACE. FOR CONNECTIONS BETWEEN NEW AND EXISTING MAINS, MEASUREMENT SHALL BE THE DISTANCE FROM CENTER LINE TO CENTER LINE OF MAINS AND THE ACTUAL LENGTH OF EXISTING MAIN ORDERED TO BE REMOVED TO MAKE THE CONNECTION.

PAYMENT:

THE UNIT PRICE STIPULATED TO BE PAID FOR ITEM, "DUCTILE IRON PIPE AND FITTINGS," CLASSIFIED AS TO SIZE AND TYPE, FOR EACH LINEAR FOOT OF DUCTILE IRON PIPE AND FITTINGS SHALL INCLUDE THE FURNISHING OF ALL THE MATERIALS, LABOR, TOOLS, EQUIPMENT, AND INCIDENTALS FOR AND TO PROPERLY CONSTRUCT AND CONNECT IN PLACE, AS SHOWN ON THE CONTRACT DRAWINGS AND AS SPECIFIED HEREIN, ALL DUCTILE IRON PIPE AND FITTINGS, PAVEMENT CUTTING, ALL EXCAVATIONS, INCLUDING ROCK, PAVEMENTS, WATER MAIN TRENCH, AND DISPOSAL OF EXCESS SOIL AND PAVEMENTS; TRENCH DEWATERING; SHEETING AND SHORING, INCLUDING USE OF TRENCH BOX; ALL SHOP DRAWING SUBMITTALS; THE FURNISHING AND INSTALLING OF ALL APPROVED MATERIALS AS HEREIN SPECIFIED AND AS REQUIRED TO COMPLETE THE WORK; SAND BEDDING BACKFILL; BACKFILL AND/OR PREMIUM BACKFILL; HYDROSTATIC PRESSURE TESTING OF THE WATER MAIN AND ALL APPURTENANCES AND THE REPAIR AND/OR REPLACEMENT OF MATERIALS DUE LEAKAGE OR DEFECTS; ASSISTING IN THE CHLORINATION AND FLUSHING PROCEDURES; PROTECTION OF TREES, SHRUBBERY AND LAWNS AND/OR THEIR REMOVAL AND REPLACEMENT; SEEDING AND/OR SODDING; SIDEWALK REMOVAL AND REPLACEMENT; REMOVAL AND REPLACEMENT OF MAILBOXES; PROTECTING AND MAINTAINING UTILITIES AND UTILITY SERVICES; REPAIR OF SITE DAMAGE DUE TO CONSTRUCTION AND THE FURNISHING OF "AS- BUILT" DRAWINGS. PAYMENT SHALL ALSO INCLUDE THE CUTTING INTO AND REMOVAL OF EXISTING PIPE, REMOVAL OF EXISTING CONCRETE THRUST BLOCKS, REMOVAL OF EXISTING PLUGS/CAPS, CONNECTING, FURNISHING AND INSTALLING RESTRAINED JOINTS, VICTAULIC JOINTS AND COMPRESSION COUPLINGS, PAINTING, SPECIAL EXTERIOR COATING, POLYETHYLENE ENCASEMENT, JOINT BONDING, REMOVAL AND RESTORATION OF MISCELLANEOUS ITEMS, AND THE FURNISHING OF ALL LABOR, MATERIALS, TOOLS, EQUIPMENT, AND OTHER INCIDENTALS REQUIRED TO COMPLETE THE WORK SHOWN ON THE CONTRACT DRAWINGS AND AS SPECIFIED, OR AS ORDERED, ALL FOR THE PROPER COMPLETION OF THE WORK INCLUDED UNDER THIS CONTRACT.

ITEM 638 - WATER WORK, MISC.; 12" GATE VALVE WITH VALVE BOX, COMPLETE
ITEM 638 - WATER WORK, MISC.; 12" CUT- IN VALVE ASSEMBLY WITH VALVE BOX, COMPLETE

WORK INCLUDED:

THE CONTRACTOR SHALL FURNISH ALL THE MATERIALS FOR, AND SHALL PROPERLY SET IN PLACE AND CONNECT, AT THE LOCATIONS SHOWN ON THE DRAWINGS OR AS DIRECTED, GATE VALVES AND VALVE BOXES AND COVERS, OF THE VARIOUS SIZES AND TYPES SPECIFIED OR ORDERED AS REQUIRED FOR THE PROPER COMPLETION OF THE WORK INCLUDED UNDER THIS CONTRACT. IN GENERAL, THE WORK SHALL INCLUDE FURNISHING, PLACING, TESTING, AND PAINTING OF THE GATE VALVES, INCLUDING OPERATING NUTS AND OTHER ACCESSORIES AND APPURTENANCES AND THE FURNISHING OF ALL LABOR, TOOLS AND APPLIANCES NECESSARY TO COMPLETE THE WORK AS SPECIFIED OR AS SHOWN. ALL VALVES SHALL HAVE CWD STANDARD SIZED OPERATING NUTS AND ALL OTHER ACCESSORIES AND APPURTENANCES, INCLUDING WHERE REQUIRED VALVE STEM EXTENSION (IN VALVE BOX) AND/OR VALVE ROD EXTENSION (IN VALVE VAULT) AND THE FURNISHING OF ALL LABOR, TOOLS AND APPLIANCES NECESSARY TO COMPLETE THE WORK AS SPECIFIED OR AS SHOWN. THE CONTRACTOR'S ATTENTION IS HEREWITH DIRECTED TO SECTION "WORK TO BE DONE BY THE CITY," OF THESE SPECIFICATIONS.

DEFINITIONS/STANDARDS:

VALVES FURNISHED AND SET IN PLACE UNDER THIS ITEM SHALL BE MANUFACTURED IN ACCORDANCE WITH THE APPLICABLE AWWA MINIMUM STANDARDS AND IN ACCORDANCE WITH THE SUPPLEMENTAL REQUIREMENTS OF THESE SPECIFICATIONS. SIZE AND TYPE OF VALVES SHALL BE AS NOTED ON THE CONTRACT DRAWINGS AND AS SPECIFIED HEREIN OR INDICATED IN THE SCHEDULE OF BID ITEMS. STANDARDS REFERENCED HEREIN SHALL BE LATEST REVISION THEREOF, EXCEPT AS MODIFIED HEREIN:

ANSI/AWWA C111/A21.11-00:
RUBBER-GASKET JOINTS FOR DUCTILE-IRON PRESSURE PIPE AND FITTINGS;

ANSI/AWWA C203-02:
COAL-TAR PROTECTIVE COATINGS AND LININGS FOR STEEL WATER PIPELINES - ENAMEL AND TAPE - HOT APPLIED;

ANSI/AWWA C509 OR C515:
METAL-RESILIENT SEATED GATE VALVES FOR WATER SERVICE SUPPLY;

ASTM A 126-95(01):
SPECIFICATION FOR GRAY- IRON CASTINGS FOR VALVES, FLANGES, AND PIPE FITTINGS;

ASTM A 193/A 193M-03:
SPECIFICATION FOR ALLOY- STEEL AND STAINLESS STEEL BOLTING MATERIALS FOR HIGH TEMPERATURE SERVICE;

ASTM A 194/A 194M-03:
SPECIFICATION FOR CARBON AND ALLOY STEEL NUTS FOR BOLTS FOR HIGH-PRESSURE AND HIGH-TEMPERATURE SERVICE;

ASTM A 276-03:
SPECIFICATION FOR STAINLESS AND HEAT-RESISTING STEEL BARS AND SHAPES;

ASTM A 536-99:
SPECIFICATION FOR DUCTILE-IRON CASTINGS;

ASTM B 62-02:
SPECIFICATION FOR COMPOSITION BRONZE OR OUNCE METAL CASTINGS;

ASTM B 98-03:
SPECIFICATION FOR COPPER-SILICON ALLOY ROD, BAR, AND SHAPES;

ASTM B 584-00:
SPECIFICATION FOR COPPER ALLOY SAND CASTINGS FOR GENERAL APPLICATIONS; AND

ASTM D 2000-01:
CLASSIFICATION SYSTEM FOR RUBBER PRODUCTS IN AUTOMOTIVE APPLICATIONS,

3rd. HIGH SERVICE DISTRICT

DEPARTMENT OF PUBLIC UTILITIES
DIVISION OF WATER
CLEVELAND, OHIO

SUBJECT : 12" WATER MAIN ALONG MILLER ROAD AT I.R. 77
CITY OF BRECKSVILLE

SCALE: AS SHOWN | NO.

WATER WORK NOTES

SUBSET 11 | TOTAL 43

DESIGN AGENCY
EUTHENICS
8235 Midwest Dr. | Cleveland, OH 44130

DESIGNER TDP

REVIEWER DTB 03/01/22

PROJECT ID 104983

SHEET P.238 | TOTAL P.434

CUY-77-00.42 PART 1

MODEL: 104983_UN015 PAPERSIZE: 17x11 (in.) DATE: 3/4/2022 TIME: 1:45:55 PM USER: esmccaslin
F:\Jobs\1162-Miller Road Interchange\104983\400-Engineering\Utilities\Sheets\104983_UN015.dgn

WATER WORK NOTES

GATE VALVES - GENERAL

(A) STRENGTH OF VALVES: GATE VALVES, 3" TO 12", SHALL BE DESIGNED FOR MINIMUM 200 PSI WORKING PRESSURE AND SHALL WITHSTAND AN INTERNALLY APPLIED HYDROSTATIC PRESSURE AT ALL POINTS OF AT LEAST TWICE THE RATED WORKING PRESSURE, EXCEPT AS SPECIFIED IN SECTION "MATERIAL SPECIFICATION", PARAGRAPH J, "HYDROSTATIC TESTS AT SHOP". SHOULD TESTS REVEAL ANY WEAKNESS, THE VALVES FROM THAT DESIGN SHALL BE REJECTED AND A NEW DESIGN MADE.

(B) PARTS TO BE INTERCHANGEABLE: ALL PARTS OF VALVES OF THE SAME SIZE AND MANUFACTURER SHALL BE PERFECTLY INTERCHANGEABLE AND ALL WORK SHALL BE DONE IN A THOROUGH AND WORKMANLIKE MANNER.

(C) VALVE BODY: THE VALVE BODY SHALL BE OF SHORT BODY DESIGN. THE VALVE BODY SHALL HAVE CAST THEREON IN A CONSPICUOUS PLACE THE MANUFACTURER'S NAME OR INITIALS, RATED WORKING PRESSURE, AND THE YEAR OF MANUFACTURE. THESE LETTERS SHALL BE 1/8- INCH IN RELIEF AND OF AN APPROVED HEIGHT.

(D) CASTINGS: ALL CASTINGS, WHETHER OF BRONZE, IRON, OR STEEL, SHALL BE SOUND AND SMOOTH WITHOUT COLD SHUTS, SWELLS, LUMPS, SCABS, BLISTERS, SAND HOLES OR OTHER IMPERFECTIONS, AND SHALL BE MADE IN ACCORDANCE WITH THE BEST MODERN FOUNDRY PRACTICE TO OBTAIN CASTINGS OF THE BEST QUALITY AND OF UNIFORM THICKNESS. NO WELDING, PLUGGING OR FILLING OF HOLES OR OTHER DEFECT SHALL BE PERMITTED. FOR PARTS WHOSE THICKNESS IS LESS THAN ONE (1") INCH, CASTINGS BEING THINNER THAN THE SPECIFIED THICKNESS BY .06 INCH OR MORE SHALL BE REJECTED; AND FOR PARTS FOR WHOSE THICKNESS IS ONE (1") INCH OR MORE, CASTINGS BEING THINNER THAN SPECIFIED BY .08 INCH OR MORE SHALL BE REJECTED.

(E) MECHANICAL JOINT ENDS: ALL VALVES REQUIRING MECHANICAL JOINT ENDS SHALL BE FURNISHED WITH RETAINED MECHANICAL JOINT ENDS COMPLETE WITH GASKETS AND RETAINER TYPE GLANDS AND SHALL FIT THE PLAIN-END OF ALL DUCTILE IRON PIPE, MANUFACTURED IN CONFORMANCE WITH SPECIFICATIONS ANSI/AWWA C111/A21.11- 00, "RUBBER- GASKET JOINTS FOR DUCTILE- IRON PRESSURE PIPE AND FITTINGS," INCLUDING THE PLAIN-END OF ALL MAKES OF DUCTILE IRON PIPE OF THE PUSH-ON JOINT TYPE.

(F) VICTAULIC ENDS: VICTAULIC ENDS, WHEN REQUIRED, SHALL CONFORM TO THE DIMENSIONS GIVEN ON THE CONTRACT DRAWINGS. VICTAULIC COUPLINGS FURNISHED AND INSTALLED TO CONNECT THE VALVE END TO THE PIPE END SHALL BE INCLUDED AND PAID FOR UNDER THE APPROPRIATE VICTAULIC END VALVE ITEM.

(G) FLANGED ENDS: FLANGES SHALL BE FACED AND DRILLED. BOLT HOLES SHALL BE SPOT FACED ON THE BACK TO SECURE AN EVEN BEARING. SPOT FACING SHALL BE REQUIRED ON THE BACK OF VALVE FLANGES WHERE SUCH IS NOT PARALLEL TO THE FACE OF THE FLANGE WITHIN THREE (3) DEGREES AS SPECIFIED IN ASME/ANSI B16.1. ALL SPOT FACING, SHALL BE IN ACCORDANCE WITH THE MANUFACTURERS STANDARDIZATION SOCIETY (MSS) STANDARD PRACTICES, SP- 9. ALL BOLT HOLES SHALL BE ACCURATELY DRILLED FROM TEMPLATES, SPACED EQUAL DISTANCES APART AND SHALL STRADDLE BOTH THE HORIZONTAL AND VERTICAL AXIS OF THE VALVE, UNLESS SPECIAL DRILLING PATTERN IS CALLED FOR ON THE DETAIL DRAWINGS. FLANGES SHALL BE PLAIN FACED WITH A SMOOTH FINISH.

THE DIMENSIONS AND DRILLING OF ALL END FLANGES SHALL CONFORM TO THE PROPER DRILLING PATTERN. FOR CONNECTING FLANGES 12- INCH AND SMALLER, ANSI B16.1, 125 LB., UNLESS SPECIAL DRILLING IS OTHERWISE CALLED FOR ON THE CONTRACT DRAWINGS.

DOUBLE DISC GATE VALVES - SUPPLEMENTAL REQUIREMENTS

(A) TYPE OF VALVES: THE GATE VALVES SHALL BE MANUFACTURED IN FULL COMPLIANCE WITH THE ANSI/AWWA C500-02, "METAL-SEATED GATE VALVES FOR WATER SERVICE SUPPLY," OR LATEST REVISION THEREOF, AND IN ADDITION SHALL COMPLY WITH THE SUPPLEMENTARY REQUIREMENTS HEREIN SPECIFIED. ALL GATE VALVES SHALL BE OF THE DOUBLE-DISC PARALLEL SEAT BOTTOM WEDGE OR SIDE WEDGE TYPE OR DOUBLE REVOLVING DISC PARALLEL SEAT BOTTOM WEDGE OR SIDE WEDGE TYPE. IN OPENING OR CLOSING THE VALVE, THE GATES SHALL BE FORCED TO ASCENT OR DESCENT BY REASON OF THE THRUST EXERTED UPON THE GATES DIRECTLY BY THE VALVE STEM WRENCH NUT, THIS THRUST BEING GENERATED BY THE ROTATION OF THE VALVE STEM. IN CLOSING THE VALVE, THE DISCS, WHEN OPPOSITE THE PORTS, SHALL BE PRESSED FIRMLY AGAINST THE BODY SEATS BY WEDGES OR SOME OTHER DEVICE OF EQUALLY SUITABLE AND APPROVED MEANS. THE DESIGN OF THE MECHANICAL WEDGING ACTION SHALL BE SUCH THAT SEATING FORCE IS APPLIED EQUALLY TO TWO OR MORE CONTACT POINTS NEAR THE OUTER EDGE OF EACH DISC AT OR ABOVE AND BELOW THE HORIZONTAL CENTERLINE OF DISC. THE MECHANISM SHALL BE DESIGNED SO THAT ALL WEDGING MEMBERS ARE ACTIVATED AT ONE TIME. IT SHALL BE OF THE TYPE WHICH WILL ELIMINATE UNBALANCED SEATING PRESSURE AND MINIMIZE DISTORTION OF THE DISCS.

(B) IRON PARTS: THE VALVE BODIES, COVERS, DISCS, FRAMES, ETC., OF ALL GATE VALVES 3-INCH AND OVER, SHALL BE OF CAST IRON OR DUCTILE IRON.

(C) VERTICAL AND HORIZONTAL VALVES: ALL GATE VALVES, 16-INCH AND UNDER, SHALL BE CONSTRUCTED TO WORK VERTICALLY.

(D) WATERWAY OPENINGS: WITH THE GATE VALVE OPEN, AN UNOBSTRUCTED WATERWAY SHALL BE AFFORDED; THE DIAMETER OF WHICH IS NOT TO BE LESS THAN THE FULL NOMINAL DIAMETER OF THE VALVE, EXCEPT WHERE LUGS ARE PROVIDED FOR INSERTING OR REMOVING THE BODY-SEAT RINGS. THE LUGS NEED NOT BE REMOVED AFTER THE VALVE IS ASSEMBLED.

(E) STUFFING BOXES: THE STUFFING BOX ON EACH GATE VALVE 3-INCH OR OVER, SHALL BE SEPARATE FROM THE DOME AND FASTENED TO IT BY BOLTS. FOR 2_INCH VALVES AND UNDER, THE STUFFING BOXES MAY BE FORMED IN THE DOME OF THE VALVE. VALVES 16-INCH AND SMALLER, SHALL BE FURNISHED WITH "O" RING TYPE SEALS. THE SEALS SHALL BE FITTED WITH AT LEAST TWO (2) "O" RINGS; THE LOWER "O" RING SERVING AS THE PRESSURE SEAL AND THE UPPER "O" RING AS A COMBINED DIRT AND MOISTURE SEAL. THE "O" RING SHALL BE COMPOUNDED TO MEET ASTM D 2000- 01, "CLASSIFICATION SYSTEM FOR RUBBER PRODUCTS IN AUTOMOTIVE APPLICATIONS," AND HAVE PHYSICAL PROPERTIES SUITABLE FOR THE APPLICATION.

THE DIMENSIONS OF THE STUFFING BOX FLANGE SHALL BE OF A THICKNESS AND UNIFORMITY PROPORTIONED TO FIT THE VARIOUS EXTERNALLY APPLIED TORQUE AND INTERNAL THRUST PRESSURE. BOLT HOLES SHALL BE FITTED AND OF A NUMBER SUCH THAT LEAVES A SUFFICIENT CROSS SECTIONAL AREA OF METAL THEREBY PROVIDING SATISFACTORY STRENGTH TO THE UPPER AND LOWER STUFFING BOX FLANGE.

(F) VALVE STEM: THE STEM SHALL BE OF SUFFICIENT LENGTH TO ALLOW THE REMOVAL OF PACKING WITHOUT NECESSITATING THE REMOVAL OF THE OPERATING NUT. THE STEM OPENING AND THRUST BEARING RECESS SHALL BE BRONZE BUSHED WITH TWO (2) "O" RINGS LOCATED ABOVE THE THRUST COLLAR AND ONE (1) "O" RING BELOW FORMING A LUBRICANT CHAMBER. THE NUMBER OF THREADS PER INCH SHALL BE NOT LESS THAN THAT INDICATED IN ANSI/AWWA C500-02.

(G) VALVES WITH STATIONARY STEMS: ALL GATE VALVES, UNLESS OTHERWISE ORDERED, SHALL BE MADE WITH SINGLE, NON-RISING STEMS (NRS).

(H) VALVES TO OPEN CLOCKWISE: ALL GATE VALVES 2-INCH AND OVER, INCLUDING BYPASS VALVES, SHALL BE MADE TO OPEN BY TURNING IN A CLOCKWISE DIRECTION. WHERE SPECIFICALLY CALLED FOR, VALVES 2-INCH AND UNDER SHALL BE MADE TO OPEN BY TURNING IN A COUNTERCLOCKWISE DIRECTION. ALL VALVES TO BE MADE SO THAT THEY CAN BE EASILY OPERATED.

(I) WRENCH CAPS: THE WRENCH CAPS (OPERATING NUTS) AND RETAINING NUTS ON HEADS OF VALVE STEMS AND PINION SHAFTS SHALL BE OF BRONZE SPECIFICATION ASTM B 584-00, C.A. 867, "SPECIFICATION FOR COPPER ALLOY SAND CASTINGS FOR GENERAL APPLICATIONS," OR DUCTILE IRON SPECIFICATION ASTM A 536-99, "SPECIFICATION FOR DUCTILE-IRON CASTINGS." ON VALVES 2-INCH THRU 20-INCH INCLUSIVE, THEY SHALL BE 1-3/4 INCH SQUARE ON TOP, 1-7/8 INCH SQUARE AT BASE AND 1-3/4 INCH DEEP. MACHINED WRENCH CAPS FOR VALVES 2-INCH TO 16-INCH INCLUSIVE SHALL BE FITTED TO A MACHINED SQUARE STEM OR PINION SHAFT AND HELD IN PLACE BY A RETAINING NUT OF BRONZE, ASTM B 584-00, C.A. 867. WRENCH CAPS SHALL HAVE A CUT_AWAY SKIRT TO PERMIT EASY ACCESS TO GLAND BOLTS.

(J) FACING OF GATES: ALL DISCS OF GATES AND THREADS FOR SEAT RINGS IN THE BODY SHALL BE MACHINED TRUE AND ANY GROOVE OR GROOVES SHALL BE MACHINED IN EACH DISC OR GATE FOR THE RECEPTION OF THE FACE RING. THE RINGS ARE TO BE FINISHED TO A TRUE SURFACE. THE DISC AND SEAT RINGS SHALL BE SECURELY AND RIGIDLY ATTACHED TO THE DISCS OR BODY SEATS IN A MANNER APPROVED BY THE ENGINEER.

(K) OUTSIDE SCREW AND YOKE VALVES: GATE VALVES WITH OUTSIDE SCREW AND YOKES, SHALL BE MADE WITH SINGLE RISING STEMS. ALL OUTSIDE SCREW AND YOKE VALVES SHALL BE EQUIPPED WITH WHEELS FOR OPERATING SAME. WHEELS ARE TO BE OF CAST IRON OR DUCTILE IRON. WHEELS SHALL HAVE CAST ON THEM AN ARROW INDICATING THE DIRECTION OF TURNING FOR OPENING THE VALVE. OUTSIDE SCREW AND YOKE GATE VALVES 6-INCH AND LARGER IN SIZE SHALL BE PROVIDED WITH TWO BOSSES ON ONE SIDE OF THE BODY, LOCATED ON THE HORIZONTAL CENTERLINE OF GATE VALVES, TO PERMIT THE INSTALLATION OF BYPASS AROUND THE GATE. BOSSES ARE TO BE LEFT SOLID AND OF AMPLE SIZE TO PERMIT DRILLING AND TAPPING FOR BYPASSES.

(L) MARKING: ALL GATE VALVES 3-INCH AND OVER SHALL HAVE THE IDENTITY OF THE MAKER, SIZE AND YEAR WHEN MADE AND ALSO THE LETTERS "C.W.D." CAST UPON ITS BODY OR DOME IN RAISED LETTERS OR HAVE A PERMANENT BRONZE TAG OF SUFFICIENT SIZE AFFIXED TO THE BODY OF THE VALVE WITH THE IDENTITY OF THE MAKER, SIZE AND YEAR WHEN MADE AND THE LETTERS "C.W.D." INDICATED THEREON.

RESILIENT GATE VALVES - 2" THRU 16"

IN LIEU OF THE DOUBLE DISC GATE VALVES SPECIFIED THE CONTRACTOR MAY FURNISH AND INSTALL 2" THRU 16" RESILIENT GATE VALVES THAT ARE CURRENTLY APPROVED BY THE DIVISION OF WATER. ALL RESILIENT GATE VALVES SHALL BE MADE TO OPEN CLOCKWISE, SHALL HAVE STAINLESS STEEL BOLTS AND NUTS AS SPECIFIED ELSEWHERE IN THESE SPECIFICATIONS AND SHALL BE FURNISHED WITH STANDARD CWD TAPERED WRENCH NUT. THE APPROVED RESILIENT GATE VALVES APPROVED BY THE DIVISION OF WATER ARE AS FOLLOWS:

CLOW FIGURE 3100 SERIES:

1) 169/32 R/S NRS MJ VALVE: 169/32, CWD DWG. NO: 101253 (CLOW DWG. NO: D-21706);

2) 16" R/S NRS FLANGE VALVE: 16", CWD DWG. NO: 101254 (CLOW DWG. NO: D-21707);

3) 16" R/S NRS MJ X TAP VALVE : CWD DWG. NO: 101255 (CLOW DWG. NO: D-21708);

4) 3" THRU 12" R/S NRS SMJ VALVE: CWD DWG. NO: 101256 (CLOW DWG. NO: D-21720);

5) 3" THRU 12" R/S NRS MJ X TAP FLG VALVE: CWD DWG. NO: 101257 (CLOW DWG. NO: D-21721);

6) 3" THRU 12" R/S NRS FLG X FLG VALVE: CWD DWG. NO: 101258 (CLOW DWG. NO: D-21732).

AMERICAN FLOW CONTROL SERIES 2500:

1) 16" RESILIENT SEATED GATE VALVE - MJ ENDS: CWD DWG. NO: 101247, (AMERICAN FLOW CONTROL DWG NO: 94-20284);

2) 16" RESILIENT SEATED GATE VALVE-TAPPING FLG. X MJ BELL: CWD DWG. NO: 101248, (AMERICAN FLOW CONTROL DWG NO: 94-20285);

3) 16" RESILIENT SEATED GATE VALVE-FLG. X MJ BELL: CWD DWG. NO: 101452, (AMERICAN FLOW CONTROL DWG NO: 94-20324);

4) 16" RESILIENT SEATED GATE VALVE-FLANGED END: CWD DWG. NO: 101451, (AMERICAN FLOW CONTROL DWG NO: 94-20319);

5) 3", 6", AND 8" RESILIENT SEATED GATE VALVE - MJ ENDS: CWD DWG. NO: 101249, (AMERICAN FLOW CONTROL DWG NO: 94-20289);

6) 10" AND 12" RESILIENT SEATED GATE VALVE - MJ ENDS: CWD DWG. NO: 101250, (AMERICAN FLOW CONTROL DWG NO: 94-20290);

7) 3", 6", AND 8" RESILIENT SEATED GATE VALVE -TAPPING FLG. X MJ BELL: 3", 6" AND 8" CWD DWG. NO: 101251, (AMERICAN FLOW CONTROL DWG NO: 94-20291);

8) 3", 6", AND 8" RESILIENT SEATED GATE VALVE - FLG. X MJ BELL: 3", 6" AND 8" CWD DWG. NO: 101448, (AMERICAN FLOW CONTROL DWG NO: 94-20322);

9) 3", 6", AND 8" RESILIENT SEATED GATE VALVE - FLANGED END: 3", 6" AND 8" CWD DWG. NO: 101447, (AMERICAN FLOW CONTROL DWG NO: 94-20320);

10) 10" AND 12" RESILIENT SEATED GATE VALVE - TAPPING FLG. X MJ BELL: CWD DWG. NO: 101252, (AMERICAN FLOW CONTROL DWG NO: 94-20292);

3rd. HIGH SERVICE DISTRICT

DEPARTMENT OF PUBLIC UTILITIES
DIVISION OF WATER
CLEVELAND, OHIO

SUBJECT : 12" WATER MAIN ALONG MILLER ROAD AT I.R. 77
CITY OF BRECKSVILLE

SCALE: AS SHOWN | NO.

SUBSET 12 | TOTAL 43

DESIGN AGENCY
EUTHENICS
8335 Hickman Rd. | Cleveland, OH 44125

DESIGNER TDP

REVIEWER DTB 03/01/22

PROJECT ID 104983

SHEET P.239 | TOTAL P.434

CUY-77-00.42 PART 1
MODEL: 104983_UN016 PAPERSIZE: 17x11 (in.) DATE: 3/4/2022 TIME: 1:45:59 PM USER: esmccaslin
F:\Jobs\11162-Miller Road Interchange\104983\400-Engineering\Utilities\Sheets\104983_UN016.dgn

WATER WORK NOTES

RESILIENT GATE VALVES - 2" THRU 16" - CONTINUED

11) 109/32 AND 129/32 RESILIENT SEATED GATE VALVE - FLG. X MJ BELL: CWD DWG. NO: 101450, (AMERICAN FLOW CONTROL DWG NO: 94-20323);

12) 109/32 AND 129/32 RESILIENT SEATED GATE VALVE - FLANGED END: CWD DWG. NO: 101449, (AMERICAN FLOW CONTROL DWG NO: 94-20321);

MUELLER:

1) 39/32, 69/32, 89/32, 109/32 AND 129/32 A2360 RESILIENT WEDGE GATE VALVE- FLG. ENDS-MJ ENDS-FLG X MJ: CWD DWG. NO: 101244, (MUELLER DWG NO: 6664);

2) 3", 6", 8", 10" AND 12" T2360 RESILIENT WEDGE TAPPING VALVE- FLANGE X MECHANICAL JOINT: CWD DWG. NO: 101245, (MUELLER DWG NO: 6665);

3) 16" RESILIENT WEDGE GATE VALVE- FLG ENDS-MJ ENDS-FLG X MJ: CWD DWG. NO: 101246, (MUELLER DWG NO: 6667).

KENNEDY:

1) 3", 6", 8", 10" AND 12" KEN-SEAL II FLANGED END GATE VALVE: CWD DWG. NO: 101238 (KENNEDY DWG. NO: 81108FE);

2) 3", 6", 8", 10" AND 12" KEN-SEAL II FLANGE X MJ TAPPING VALVE: CWD DWG. NO: 101239 (KENNEDY DWG. NO: 81108TP);

3) 3", 6", 8", 10" AND 12" KEN-SEAL II MJ END GATE VALVE: CWD DWG. NO: 101240 (KENNEDY DWG. NO: 81108MJ);

4) 16" MECHANICAL JOINT END GATE VALVE: 16" CWD DWG. NO: 101241 (KENNEDY DWG. NO: 81341);

5) 16" FLANGED END GATE VALVE: CWD DWG. NO: 101242 (KENNEDY DWG. NO: 81342);

6) 16" MECHANICAL JOINT X TAP VALVE: CWD DWG. NO: 101243 (KENNEDY DWG. NO: 811343).

U.S. PIPE AND FOUNDRY METROSEAL 250:

1) 4", 6", 8", 10", 12" AND 16" RESILIENT SEATED TAPPING GATE VALVE - MJ X FLANGE, DOUBLE FLANGE: CWD DWG. NO: 101293 (U.S. PIPE AND FOUNDRY DWG. NO: 860533);

2) 4", 6", 8", 10", 12" AND 16" RESILIENT SEATED GATE VALVE - DOUBLE MECHANICAL JOINT, DOUBLE FLANGE, MJ X FLANGE: CWD DWG. NO: 101294 (U.S. PIPE AND FOUNDRY DWG. NO: 860534).

EAST JORDAN IRON WORK "FLOWMASTER"

1) 4", 6", 8", 10", 12", 16" - MJ X MJ: CWD DWG. NO: 101525;

2) 4", 6", 8", 10", 12", 16" - MJ X FLANGE: CWD DWG. NO: 101526;

3) 4", 6", 8", 10", 12", 16" - MJ X FLANGE TAP VALVE: CWD DWG. NO: 101527;
4) 4", 6", 8", 10", 12", 16" - FLANGE X FLANGE: CWD DWG. NO: 101528.

MATERIAL SPECIFICATIONS:

(A) BOLTS AND NUTS: ALL BOLTS AND NUTS ON THE EXTERNAL VALVE BODIES, VALVE FLANGES AND TAPPING FLANGES SHALL BE MADE OF STAINLESS STEEL MEETING THE REQUIREMENTS OF ASTM A 276-03, "SPECIFICATION FOR STAINLESS AND HEAT-RESISTING STEEL BARS AND SHAPES," TYPE 304 AND ASTM A 193/A 193M-03, "SPECIFICATION FOR ALLOY- STEEL AND STAINLESS STEEL BOLTING MATERIALS FOR HIGH TEMPERATURE SERVICE," HEAVY HEX, AND ASTM A 194/A 194M-03, "SPECIFICATION FOR CARBON AND ALLOY STEEL NUTS FOR BOLTS FOR HIGH-PRESSURE AND HIGH-TEMPERATURE SERVICE," HEAVY HEX.

(B) BRONZE PARTS: ALL GRADES OF BRONZE SHALL BE IN ACCORDANCE WITH ANSI/AWWA C500-02, "METAL-SEATED GATE VALVES FOR WATER SERVICE SUPPLY," UNLESS OTHERWISE SPECIFIED HEREIN.

(C) CAST IRON: CAST IRON SHALL CONFORM TO ASTM SPECIFICATION A 126-95(01), CLASS B, "SPECIFICATION FOR GRAY IRON CASTINGS FOR VALVES, FLANGES, AND PIPE FITTINGS," OR LATEST REVISION THEREOF. ALL IRON CASTINGS SHALL BE TOUGH AND WITHOUT BRITTLENESS, SUCH AS MAY BE CUT, DRILLED AND CHIPPED BY HAND WITH DUE EASE. A BLOW FROM A HAMMER SHALL PRODUCE AN INDENTATION ON THE EDGE OF THE CASTING WITHOUT FLAKING THE METAL.

(D) DUCTILE IRON: DUCTILE IRON SHALL CONFORM TO ASTM SPECIFICATION A 536-99, "SPECIFICATION FOR DUCTILE-IRON CASTINGS," OR LATEST REVISION THEREOF. ALL IRON CASTINGS SHALL BE TOUGH AND WITHOUT BRITTLENESS, SUCH AS MAY BE CUT, DRILLED AND CHIPPED BY HAND WITH DUE EASE. A BLOW FROM A HAMMER SHALL PRODUCE AN INDENTATION ON THE EDGE OF THE CASTING WITHOUT FLAKING THE METAL.

(E) SILICON BRONZE: BRONZE SHALL CONFORM TO ASTM SPECIFICATION B 98-03, ALLOY 655, "SPECIFICATION FOR COPPER-SILICON ALLOY ROD, BAR, AND SHAPES."

(F) STAINLESS STEEL: STAINLESS STEEL SHALL CONFORM TO ASTM SPECIFICATION A 276-03, TYPE 304 AND TYPE 316, "SPECIFICATION FOR STAINLESS AND HEAT-RESISTING STEEL BARS AND SHAPES."

(G) OTHER MATERIALS: ALL OTHER MATERIALS USED IN THE MANUFACTURE OF THESE VALVES AND NOT SPECIFIED IN THE SPECIFICATIONS, SHALL BE OF THE BEST QUALITY OF THEIR RESPECTIVE KINDS, AND SUBJECT TO INSPECTION, TESTS, AND APPROVAL BY THE ENGINEER.

(H) CHEMICAL ANALYSIS: CHEMICAL ANALYSIS OF THE MATERIAL USED SHALL BE FURNISHED BY THE CONTRACTOR TO THE ENGINEER WHENEVER REQUIRED.

(I) CLEANING OF CASTINGS: ALL IRON CASTINGS SHALL BE THOROUGHLY CLEANED ON THE OUTSIDE AND INSIDE SURFACES AND PROTECTED FROM RAIN OR MOISTURE UNTIL THEY ARE PAINTED.

(J) HYDROSTATIC TESTS AT SHOP: ALL GATE VALVES SHALL BE TESTED IN THE SHOP BY HYDROSTATIC PRESSURE, BY CLOSING THE VALVE AND APPLYING THE REQUIRED TEST PRESSURE IN THE BODY AND DOME OF THE VALVE AS SPECIFIED BELOW:

3" THRU 12" 400 PSI. - NO TIME REQUIREMENT;

THIS IS MODIFICATION OF SECTION 5.1.2.1 AND SECTION 5.1.2.2 OF THE STANDARD, ANSI/AWWA C 500-02. ALL LEAKS, FLAWS OR OTHER DEFECTS DEVELOPED IN MAKING THESE TESTS SHALL BE CORRECTED TO THE SATISFACTION OF THE ENGINEER OR THE ENTIRE PIECE SHALL BE REJECTED. AFTER TESTING, ALL VALVES SHALL BE THOROUGHLY DRAINED. ALL EQUIPMENT FOR TESTING AND ALL TESTS SHALL BE MADE AT THE CONTRACTOR'S EXPENSE. THE CONTRACTOR SHALL INCLUDE WITH EACH VALVE THREE (3) CERTIFIED COPIES OF REPORTS SHOWING THE RESULTS OF ALL SHOP TESTS, AND A BRIEF DESCRIPTION OF HOW THE TESTS WERE PERFORMED.

(K) PERFORMANCE TESTS: TO DEMONSTRATE THE FREE AND PERFECT FUNCTIONING OF ALL PARTS OF THE VALVES IN THEIR INTENDED MANNER, PRIOR THEIR INSTALLATION, THE CONTRACTOR SHALL MAKE A PERFORMANCE TEST BY OPERATING EACH VALVE, IN THE POSITION THAT THE VALVE WILL ASSUME IN SERVICE, AND FOR THE FULL LENGTH OF GATE TRAVEL IN BOTH DIRECTIONS. ANY DEFECTS OF WORKMANSHIP OF THE VALVES AND/OR WITH FUNCTIONING PARTS THEREOF SHALL BE CORRECTED BY THE CONTRACTOR AT HIS EXPENSE, TO THE SATISFACTION OF THE ENGINEER, AND THE TEST REPEATED UNTIL SATISFACTORY PERFORMANCE IS DEMONSTRATED.

VERTICAL GATE VALVE WITH VALVE BOX, COMPLETE

CONTRACTOR SHALL FURNISH AND INSTALL "GATE VALVE WITH VALVE BOX, COMPLETE" AT THE LOCATIONS SHOWN ON THE CONTRACT DRAWINGS OR WHERE ORDERED. GATE VALVE SHALL BE A DOUBLE-DISC OR RESILIENT VALVE CONFORMING WITH THESE SPECIFICATIONS FOR VERTICAL GATE VALVES, INCLUDING THE SUPPLEMENTAL REQUIREMENTS THEREOF AS SPECIFIED HEREIN.

GATE VALVES SHALL BE OF THE SIZE SHOWN ON THE CONTRACT DRAWINGS AND NOTED IN THE BID SCHEDULE AND SHALL BE FURNISHED AND INSTALLED WITH VALVE BOX COMPLETE, PROPERLY SET IN PLACE. WHERE DEPTH OF WATER MAIN IS SUCH WHERE TOP OF THE VALVE OPERATING NUT EXCEEDS FOUR (4) FOOT DEPTH THE GATE VALVE SHALL BE FURNISHED AND INSTALLED WITH A VALVE STEM EXTENSION OF THE PROPER LENGTH CONFORMING TO THE DETAIL SHOWN ON THE STANDARD DETAIL DRAWINGS.

PAYMENT FOR EACH "VALVE WITH VALVE BOX, COMPLETE," CLASSIFIED AS TO SIZE AND JOINT TYPE, SHALL BE MADE UNDER ITEM SPECIFIED AND SHALL INCLUDE A VERTICAL GATE VALVE; A VALVE BOX COMPLETE; AND, IF SO REQUIRED, A VALVE STEM EXTENSION OF THE PROPER LENGTH.

CUT-IN-VALVE ASSEMBLY WITH VALVE BOX, COMPLETE

WHERE SHOWN ON THE CONTRACT DRAWINGS, OR WHERE ORDERED, THE CONTRACTOR SHALL INSTALL UNDER SUPERVISION OF THE DIVISION OF WATER, "CUT-IN-VALVE ASSEMBLY WITH VALVE BOX, COMPLETE." THE DIVISION OF WATER WILL DETERMINE THE TIME OF INSTALLATION. THE CONTRACTOR SHALL FURNISH ALL MATERIALS IN ACCORDANCE WITH THESE SPECIFICATIONS AND SHALL DO ALL PIPE CUTTING AS REQUIRED.

THE CONTRACTOR'S ATTENTION IS HEREWITH DIRECTED TO SECTION "WORK TO BE DONE BY THE CITY," PERTAINING TO CUTTING PIPE. THE CONTRACTOR SHALL FURNISH AND INSTALL A RETAINED MECHANICAL JOINT BELL END GATE VALVE, VALVE BOX COMPLETE, EITHER RETAINED MECHANICAL JOINT SOLID SLEEVES (LONG PATTERN) OR COMPRESSION COUPLINGS EQUAL TO DRESSER STYLE NO. 38, 138 OR 162 OR SMITH-BLAIR NO. 441, HAVING STAINLESS STEEL BOLTS AND NUTS (ASTM A276/ASTM A193/ASTM A194, TYPE 304, HEAVY HEX), DUCTILE IRON PIPE SHORTS AND, IF REQUIRED, A VALVE STEM EXTENSION. THE COMPRESSION COUPLINGS SHALL BE FURNISHED WITHOUT PIPE STOPS AND BE RATED FOR A MINIMUM WORKING PRESSURE OF 250 PSI. THE CONTRACTOR SHALL PERFORM ALL EXCAVATION, PROVIDE SHEETING AND BRACING AS REQUIRED, PERFORM ALL BACKFILLING AS SPECIFIED, SEEDING AND SODDING, SIDEWALK REPLACEMENT, OR OTHER INCIDENTALS NECESSARY TO COMPLETE THE WORK.

PAYMENT FOR EACH "CUT-IN-VALVE ASSEMBLY COMPLETE WITH VALVE BOX COMPLETE," CLASSIFIED AS TO SIZE, SHALL BE MADE UNDER ITEM SPECIFIED AND SHALL INCLUDE A VERTICAL GATE VALVE (EITHER DOUBLE-DISC OR RESILIENT); A VALVE BOX COMPLETE; A VALVE STEM EXTENSION OF THE PROPER LENGTH, IF SO REQUIRED; DUCTILE IRON CLASS 52 CEMENT LINED PIPE; AND RETAINED MECHANICAL JOINT SOLID SLEEVES (LONG PATTERN) OR COMPRESSION COUPLINGS.

PLACING AND TESTING

(A) ALL VALVES SHALL BE TESTED ACCURATELY AND CAREFULLY TO THE LINES AND GRADES GIVEN. ALL CONNECTIONS TO PIPE SHALL HAVE THE NECESSARY MECHANICAL JOINT, FLANGED, SCREWED, VICTAULIC OR SOLDERED ENDS AS REQUIRED.

(B) AFTER THE VALVES ARE SET IN PLACE AND READY TO OPERATE, THE CONTRACTOR SHALL TEST THEM UNDER THE TEST PRESSURE AND CONDITIONS HEREIN SPECIFIED ELSEWHERE IN THESE SPECIFICATIONS AND ANY VALVE FOUND TO LEAK SHALL BE MADE WATERTIGHT AND, IF FOUND TO BE OF FAULTY DESIGN, SHALL BE SATISFACTORILY REPAIRED OR REPLACED BY THE CONTRACTOR.

(C) ALL BURIED VALVES SHALL COME COMPLETE WITH VALVE BOXES TO GRADE. THIS SHALL INCLUDE MAIN VALVE OPERATION AND THE BYPASS VALVE.

VALVE BOXES AND COVERS

(A) THE CONTRACTOR SHALL FURNISH AND INSTALL, OVER EACH VERTICALLY SET VALVE AT THE LOCATIONS SHOWN ON THE DRAWINGS, OR AS REQUIRED, VALVE BOXES WITH COVERS OF THE ASSEMBLED TYPES AND SIZES INDICATED ON THE CONTRACT PLANS. ASSEMBLED TYPE VALVE BOXES SHALL EXTEND FROM THE VALVE BONNET TO THE FINISHED GRADE OR THE ELEVATION REQUIRED, BEING CAREFULLY LOCATED OVER THE VALVE OPERATING NUT(S) AND SHALL BE SET PLUMB AND TRUE AS REQUIRED.

(B) VALVE BOXES AND COVER ASSEMBLIES SHALL BE COMPLETED AND THEIR PARTS SHALL COMPLY WITH THOSE PARTS SHOWN ON STANDARD DETAIL DRAWINGS.

PAINTING

THE BODY OF ALL IRON VALVES SHALL EITHER BE DIPPED IN COAL TAR RICH PAINT AND ALL BRONZE INTERNAL PARTS CLEANED, OR AFTER PASSING THE HYDRAULIC TEST, THE IRON BODIED VALVES SHALL BE GIVEN AT LEAST TWO (2) COATS OF APPROVED PAINT.

ALL INTERIOR OR EXTERIOR FERROUS METAL SURFACES, EXCEPT MACHINE SURFACES, SHALL BE THOROUGHLY CLEANED OF ALL RUST, WIRE BRUSHED AND WASHED WITH BENZENE BEFORE PAINTING OR COATING.

AFTER INSTALLATION, ALL EXPOSED METAL SURFACES OF VALVES EXCEPT BRASS OR BRONZE SHALL BE PAINTED WITH TWO (2) FIELD COATS OF COAL TAR PITCH PAINT EQUAL TO KOPPERS BITUMASTIC SUPER TANK SOLUTION.

3rd. HIGH SERVICE DISTRICT

DEPARTMENT OF PUBLIC UTILITIES
DIVISION OF WATER
CLEVELAND, OHIO

SUBJECT : 12" WATER MAIN ALONG MILLER ROAD AT I.R. 77
CITY OF BRECKSVILLE

SCALE: AS SHOWN | NO.

SUBSET 13 | TOTAL 43

DESIGN AGENCY
EUTHENICS
8230 Midwest Dr. | Cleveland, OH 44125

DESIGNER TDP

REVIEWER DTB 03/01/22

PROJECT ID 104983

SHEET P.240 | TOTAL P.434

CUY-77-00.42 PART 1
MODEL: 104983_UN017 PAPERSIZE: 17x11(in.) DATE: 3/4/2022 TIME: 1:46:02 PM USER: esmccasiln
F:\Jobs\162-Miller Road Interchange\104983\400-Engineering\Utilities\Sheets\104983_UN017.dgn

WATER WORK NOTES

PAYMENT

THE UNIT PRICE STIPULATED TO BE PAID FOR ITEM "VALVES," CLASSIFIED AS TO SIZE AND TYPE, SHALL INCLUDE THE FURNISHING, SHOP TESTING, PLACING, FIELD TESTING AND PAINTING OF THE VALVES OF THE VARIOUS SIZES AND JOINT TYPES HEREIN SPECIFIED OR AS ORDERED, VERTICAL GATE VALVE WITH VALVE BOX, CUT-IN-VALVE ASSEMBLY WITH VALVE BOX COMPLETE, OPERATING NUTS, VALVE STEM EXTENSION WHEN REQUIRED AND OTHER ACCESSORIES AND APPURTENANCES AND THE FURNISHING OF ALL LABOR, TOOLS AND APPLIANCES NECESSARY TO COMPLETE THE WORK AS SPECIFIED OR AS SHOWN. PAYMENT FOR THE FURNISHING AND PLACING OF VALVES UNDER THIS ITEM SHALL ALSO INCLUDE PAVEMENT CUTTING (FOR TRENCH); ALL EXCAVATIONS, WATER MAIN TRENCH, AND SHEETING AND SHORING, INCLUDING USE OF TRENCH BOX; ALL SHOP DRAWING SUBMITTALS; THE FURNISHING AND INSTALLING OF ALL APPROVED MATERIALS AS HEREIN SPECIFIED AND AS REQUIRED TO COMPLETE THE WORK; SAND BEDDING BACKFILL; BACKFILL AND/OR PREMIUM BACKFILL; HYDROSTATIC PRESSURE TESTING OF THE WATER MAIN AND ALL APPURTENANCES AND THE REPAIR AND/OR REPLACEMENT OF MATERIALS DUE LEAKAGE OR DEFECTS; ASSISTING IN THE CHLORINATION AND FLUSHING PROCEDURES; PROTECTION OF TREES, SHRUBBERY AND LAWNS AND/OR THEIR REMOVAL AND REPLACEMENT; SEEDING AND/OR SODDING; REMOVAL AND REPLACEMENT OF MAILBOXES; PROTECTING AND MAINTAINING UTILITIES AND UTILITY SERVICES; REPAIR OF SITE DAMAGE DUE TO CONSTRUCTION.

ITEM SPECIAL- MISCELLANEOUS METAL

WORK INCLUDED

(A) THE CONTRACTOR SHALL FURNISH AND INSTALL ALL MISCELLANEOUS METAL WORK WHICH IS REQUIRED FOR THE PROPER COMPLETION OF THE WORK INCLUDED UNDER THIS CONTRACT AND IS NOT SPECIFICALLY INCLUDED UNDER THE OTHER ITEMS OF THESE SPECIFICATIONS.

(B) IN GENERAL, MISCELLANEOUS METAL FURNISHED AND INSTALLED UNDER THE APPROPRIATE ITEMS SHALL INCLUDE MANHOLE STEPS, VALVE BOXES, EXTENSION STEMS AND BRACE, STRUCTURAL MEMBERS, BRONZE BOLTS, REINFORCING STEEL AND OTHER SIMILAR ITEMS REQUIRED FOR THE PROPER COMPLETION OF THE WORK. ALL MISCELLANEOUS METAL WORK SHALL INCLUDE THE REPLACEMENT OF ANY VALVE BOXES, COVERS, MANHOLE RINGS AND COVERS, WATER SERVICE STOP BOXES, BRONZE BOLTS, MANHOLE STEPS, EXTENSION STEMS, BRACE STRUCTURAL MEMBERS AND OTHER SIMILAR ITEMS AS DETERMINED BY THE ENGINEER.

MATERIALS

(A) ALL IRON CASTINGS SHALL BE SMOOTH AND FREE FROM BLOW HOLES AND OTHER DEFECTS, AND MUST CONFORM TO THE DIMENSIONS GIVEN ON THE DRAWINGS, AND TO THE STANDARD SPECIFICATIONS FOR GRAY IRON CASTINGS OF THE AMERICAN SOCIETY FOR TESTING AND MATERIALS, SERIAL DESIGNATION A-48-74, CLASS 30C. ALL CASTINGS SHALL BE TRUE AND WHERE REQUIRED SHALL FIT PROPERLY TOGETHER. THE CONTACT SURFACES OF THE FRAMES AND COVERS FOR MANHOLES AND FLOOR OPENINGS SHALL BE CHIPPED AND MACHINED IF NECESSARY, IN ORDER TO GIVE AN EVEN BEARING FOR THE COVER ON THE FRAME, AND TO RENDER THEM TIGHT. WHERE REQUIRED, THE SURFACES OF PLATES AND COVERS SHALL BE CAST WITH SUITABLE CHECKERED OR OTHER RAISED PATTERN.

(B) CAST IRON VALVE BOXES AND COVERS SHALL BE GRAY IRON CASTINGS, IN WHICH APPEARANCE AND DIMENSION TOLERANCES ARE PRIMARY CONSIDERATIONS AND STRENGTH IS NOT A PRIMARY OR MAJOR CONSIDERATION. VALVE BOXES AND COVERS SHALL BE ASTM DESIGNATION A 48-83, "SPECIFICATION FOR GRAY-IRON CASTINGS," WITH NO SPECIFIC REQUIREMENT AS TO CLASS. CHEMICAL COMPOSITION SHALL NOT BE CONSIDERED, BUT THE MATERIAL SHALL BE OF GOOD QUALITY AND OF SUCH CHARACTER AS SHALL MAKE THE METAL OF THE CASTINGS STRONG, TOUGH AND OF EVEN GRAIN. THE METAL SHALL BE MADE WITHOUT ANY ADMIXTURE OF CINDER IRON OR OTHER INFERIOR METAL.

(C) WORKMANSHIP AND FINISH SHALL CONFORM SUBSTANTIALLY TO THE DIMENSIONS ON THE CONTRACT DRAWINGS OR FURNISHED DRAWINGS. THE CASTINGS OR MOLDINGS SHALL BE FREE FROM INJURIOUS DEFECTS, CRACKS, GAS HOLES, FLAWS, AND EXCESSIVE SHRINKAGE. ADDITIONAL INSPECTION MAY BE MADE AT THE PROJECT OR WORK SITE. INSPECTION SHALL BE VISUAL INSPECTION FOR APPEARANCE AND SURFACE SMOOTHNESS IN COMPARISON WITH SAMPLES ACCEPTED AS STANDARD. SAMPLE CASTINGS OR MOLDINGS FROM EACH PATTERN, WHEN REQUIRED BY THE ENGINEER, SHALL BE SUBMITTED BY THE MANUFACTURER FOR THE PURPOSE OF ESTABLISHING STANDARDS OF APPEARANCE AND DIMENSIONAL TOLERANCES. THE MANUFACTURER SHALL CERTIFY THAT HIS PRODUCT CONFORMS TO THESE SPECIFICATIONS. EACH CERTIFICATION SO FURNISHED SHALL BE SIGNED BY AN AUTHORIZED AGENT OF THE MANUFACTURER.

(D) ALL STEEL SHALL MEET THE REQUIREMENTS OF THE "SPECIFICATIONS FOR STRUCTURAL STEEL", SERIAL DESIGNATION A 36-70A, ADOPTED BY THE AMERICAN SOCIETY FOR TESTING AND MATERIALS.

(E) WHERE IRON OR STEEL IS SHOWN GALVANIZED, CADMIUM PLATED, PARKERIZED OR OTHERWISE TREATED, OR IS SO ORDERED, NO ADDITIONAL ALLOWANCE WILL BE MADE FOR SUCH TREATMENT. ALL METAL TO BE GALVANIZED SHALL BE THOROUGHLY CLEANED BY IMMERSION IN PICKLING LIQUORS. GALVANIZING SHALL BE PERFORMED BY DIPPING IN HOT ZINC BATH AND KEEPING THE METAL IMMERSED UNTIL THE TEMPERATURE OF THE METAL HAS OBTAINED THE SAME TEMPERATURE AS THAT OF THE BATH. CADMIUM PLATING SHALL BE BY AN APPROVED PROCESS AND PLATING SHALL BE FROM 0.0003 INCH TO 0.0005 INCH THICK.

(F) ALUMINUM, EXCEPT AS OTHERWISE REQUIRED, SHALL BE ALUMINUM ALLOY EQUIVALENT TO SPECIFICATION 6063; RIVETS AND SCREWS SHALL BE 2017 ALLOY; ALUMINUM PLATE AND STRUCTURAL SHAPES SHALL BE 6061-T6 AND EXTRUDED SHAPES SHALL BE 6063-T5; ALL AS MANUFACTURED BY THE ALUMINUM COMPANY OF AMERICA, OR APPROVED EQUAL.

(G) BRASS SHALL BE OF A COMMERCIAL GRADE CONFORMING TO THE "STANDARD SPECIFICATIONS FOR BRASS PLATE, SHEET, STRIP AND ROLLED BAR", ASTM DESIGNATION B 36-89, ALLOY NO. 3, "SPECIFICATION FOR STRUCTURAL STEEL."

(H) BRONZE FOR BOLTS, NUTS AND ANCHOR BOLTS SHALL BE TOBIN OR MANGANESE BRONZE OR OF SIMILAR APPROVED MATERIAL.

(I) COPPER-SILICON ALLOY OR "EVERDUR" SHALL CONFORM TO ASTM DESIGNATION B 96-86, "SPECIFICATION FOR COPPER-SILICON ALLOY PLATE SHEET, STRIP, AND ROLLED BAR FOR GENERAL PURPOSES AND PRESSURE VESSELS," (FORMERLY B 97-70, TYPE B).

(J) STAINLESS STEEL RODS AND FASTENERS SHALL CONFORM TO THE REQUIREMENTS OF ASTM DESIGNATION A 276-89A, TYPE 304, "SPECIFICATION FOR STAINLESS AND HEAT-RESISTING STEEL BARS AND SHAPES",

(K) ALL CASTINGS SHALL BE SMOOTH, FREE FROM BLOW HOLES, TRUE AND WHERE REQUIRED, SHALL FIT PROPERLY TOGETHER.

(L) ALL WROUGHT IRON SHALL MEET THE REQUIREMENTS OF ASTM DESIGNATION A 860-89, "SPECIFICATION FOR HIGH STRENGTH BUTT WELDING FITTINGS OF WROUGHT HIGH STRENGTH FOR ALLOY STEEL."

CLEANING AND TESTING

ALL CASTINGS SHALL BE THOROUGHLY CLEANED AND SUBJECTED TO A CAREFUL HAMMER TEST. NO CASTINGS SHALL BE COATED UNLESS CLEAN AND FREE FROM RUST, AND APPROVED IN THESE RESPECTS BY THE ENGINEER OR HIS AUTHORIZED INSPECTOR IMMEDIATELY BEFORE BEING DIPPED.

COATING

EACH CASTING SHALL BE SPRAYED OR BRUSHED INSIDE AND OUT WITH ONE COAT OF ASPHALTIC COMPOUND VARNISH. THE VARNISH SHALL BE MADE OF HIGH GRADE ASPHALT FLUXED AND BLENDED WITH PROPERLY TREATED DRYING OILS AND THINNED TO A PROPER CONSISTENCY WITH A VOLATILE SOLVENT. THE VARNISH SHALL BE EQUAL TO BLACK ASPHALT VARNISH AS MANUFACTURED BY THE EXCELSIOR VARNISH WORKS, INC., CLEVELAND, OHIO 44102. OTHER METHODS OF COATING AND TYPES OF COATING MATERIALS SHALL BE SUBJECT TO THE APPROVAL OF THE ENGINEER. IN ADDITION TO THE SHOP COAT, THE CASTINGS SHALL RECEIVE TWO (2) COATS OF APPROVED PAINT.

STEPS AND LADDERS

GALVANIZED WROUGHT IRON STEPS, DUCTILE IRON STEPS OR APPROVED POLYPROPYLENE PLASTIC STEPS OF THE SIZE AND SHAPE SHOWN ON THE CONTRACT DRAWINGS, SHALL BE BUILT INTO THE BRICK AND CONCRETE MASONRY MANHOLES, AS INDICATED ON THE DRAWINGS.

MANHOLE FRAME AND COVERS

(A) THE CONTRACTOR SHALL FURNISH AND INSTALL, AT LOCATIONS SHOWN ON THE DRAWINGS AND AS REQUIRED, TOGETHER WITH ALL GATE VALVE VAULTS (CHAMBERS), DRAIN MANHOLES, ACCESS MANHOLE AND ANCHORAGE ASSEMBLIES, AND PITOMETER VAULTS, ALL MANHOLE FRAME AND COVERS OF THE ASSEMBLED TYPES AND SIZES SHOWN ON STANDARD DETAIL REFERENCE DRAWING SM-31. ASSEMBLY AND PLACEMENT OF THE MANHOLE FRAME AND COVERS SHALL BE MADE IN ACCORDANCE WITH THE CONFIGURATIONS SHOWN ON THE VARIOUS DETAILS SHOWN ON THE CONTRACT DRAWINGS.

(B) THE RIMS SHALL BE PROPERLY SET IN PLACE IN FULL BED OF MORTAR OR POURED MONOLITHIC IN THE MASONRY, AT SUCH ELEVATION AS TO MAKE THE TOP OF THE RIM CONFORM TO THE FINISHED SURFACES OF THE STRUCTURES OR THE FINISHED GRADE AS ESTABLISHED BY THE ENGINEER.

(C) REQUIRED MANHOLE FRAME AND COVER ASSEMBLIES SHALL BE COMPLETE AS FOLLOWS:

(1) 20" THRU 48" GATE VALVE VAULTS (CHAMBERS): MANHOLE FRAME AND COVER MARK SM-31B: CAST IRON ROUND DOUBLE-COVER STYLED CASTING CONSISTING OF MANHOLE FRAME, PATTERN SM-31-B1; TOP COVER, PATTERN SM-31-B2; AND INSIDE COVER, PATTERN SM-31-B3.

(2) 4"/6" DRAIN MANHOLE: MANHOLE FRAME AND COVER MARK NO. 3: CAST IRON ROUND SINGLE-COVER STYLE CASTING CONSISTING OF MANHOLE FRAME, PATTERN SM-31-C1; AND TOP COVER, PATTERN SM-31-B2.

(3) ACCESS MANHOLE AND ANCHORAGE, TYPE "A": MANHOLE FRAME AND COVER MARK SM-31A: CAST IRON RECTANGULAR DOUBLE-COVER STYLED CASTING CONSISTING OF MANHOLE FRAME, PATTERN SM-31-A1; TOP COVER PATTERN SM-31-A2; AND INSIDE COVER PATTERN SM-31-A3.

(4) ACCESS MANHOLE AND ANCHORAGE, TYPE "B": MANHOLE FRAME AND COVER MARK SM-31B: CAST IRON ROUND DOUBLE-COVER STYLED CASTING CONSISTING OF MANHOLE FRAME, PATTERN SM-31-B1; TOP COVER PATTERN SM-31-B2; AND INSIDE COVER, PATTERN SM31-B3.

(5) ACCESS MANHOLE AND ANCHORAGE TYPE "C": MANHOLE FRAME AND COVER MARK SM-31A: CAST IRON RECTANGULAR DOUBLE-COVER STYLED CASTING CONSISTING OF MANHOLE FRAME, PATTERN SM-31-A1; TOP COVER PATTERN SM-31-A2; AND INSIDE COVER, PATTERN SM-31-A3.

(6) PITOMETER VAULTS: MANHOLE FRAME AND COVER MARK SM-31B: CAST IRON ROUND DOUBLE-COVER STYLED CASTING CONSISTING OF MANHOLE FRAME, PATTERN SM-31-B1; TOP COVER, PATTERN SM-31-B2; AND INSIDE COVER, PATTERN SM-31-B3.

PAINTING

ALL MISCELLANEOUS METAL WORK NOT GALVANIZED SHALL BE THOROUGHLY CLEANED AND GIVEN THREE (3) FIELD COATS OF COAL TAR PITCH EQUAL TO KOPPERS BITUMASTIC SUPER TANK SOLUTION OR EQUIVALENT.

MEASUREMENT

THE MISCELLANEOUS METAL WORK SHALL BE THE METAL WORK ACTUALLY FURNISHED AND PLACED IN ACCORDANCE WITH THESE SPECIFICATIONS AND THE DETAILED DRAWINGS APPROVED BY THE ENGINEER. IN THE COMPUTING OF WEIGHTS, IF NOT DETERMINED BY WEIGHING, ONE (1) CUBIC FOOT OF CAST IRON SHALL BE ASSUMED TO WEIGH FOUR HUNDRED AND FIFTY (450) POUNDS, AND ONE (1) CUBIC FOOT OF STEEL SHALL BE ASSUMED TO WEIGH FOUR HUNDRED AND NINETY (490) POUNDS. THE WEIGHT OF CAST IRON SHALL BE USED FOR CAST IRON VALVE BOXES AND COVERS, ANY CAST IRON SECTIONS OF VALVE BOXES AND COVERS, AND MANHOLE FRAME AND COVERS.

PAYMENT

THE UNIT PRICE STIPULATED PER POUND FOR " ITEM SPECIAL - MISCELLANEOUS METAL" SHALL INCLUDE THE FURNISHING, ERECTING, MACHINING, FITTING, ADJUSTING, BOLTING, CLEANING AND PAINTING OF ALL MISCELLANEOUS METAL, AND THE FURNISHING OF ALL LABOR, MATERIALS, TOOLS AND APPLIANCES NECESSARY TO COMPLETE THE WORK AS SPECIFIED OR AS SHOWN. THE FOLLOWING ESTIMATED QUANTITIES ARE INCLUDED IN THE BID SCHEDULE FOR THIS WORK:

ITEM SPECIAL- MISCELLANEOUS METAL 5,000 LB.

CUY-77-00.42 PART 1
MODEL: 104983_UN018 PAPERSIZE: 17x11 (in.) DATE: 3/4/2022 TIME: 1:46:06 PM USER: esmccaslin
F:\Jobs\11162-Miller Road Interchange\104983\400-Engineering\Utilities\Sheets\104983_UN018.dgn

3rd. HIGH SERVICE DISTRICT
DEPARTMENT OF PUBLIC UTILITIES
DIVISION OF WATER
CLEVELAND, OHIO
SUBJECT : 12" WATER MAIN ALONG MILLER ROAD AT I.R. 77
CITY OF BRECKSVILLE
SCALE: AS SHOWN | NO.

SUBSET 14 | TOTAL 43
DESIGN AGENCY
EUTHENICS 8235 Midwest Dr. | Cleveland, OH 44130
DESIGNER TDP
REVIEWER DTB 03/01/22
PROJECT ID 104983
SHEET P.241 | TOTAL P.434

WATER WORK NOTES

BRICK AND CONCRETE MASONRY: VAULTS, MANHOLES OR CHAMBERS

WORK INCLUDED

UNDER THESE ITEMS THE CONTRACTOR SHALL FURNISH ALL NECESSARY LABOR, MATERIALS, INCLUDING FRAMES, COVERS, AND STEPS, TOOLS AND EQUIPMENT FOR THE CONSTRUCTION, COMPLETE, OF ALL MISCELLANEOUS MASONRY STRUCTURES AND INCLUDING ALL WATER MAIN VALVE CHAMBERS, DRAIN VAULTS, PITOMETER VAULTS, METER VAULTS, FIRELINE VAULTS, ACCESS AND ANCHORAGE MANHOLES, PLAIN ANCHORS, PIERS (THRUST BLOCKS), SUPPORTS UNDER VALVES, FLOORS FOR VAULTS AND CHAMBERS, AND OTHER PERTINENT WORK TOGETHER WITH THE HAULING, MIXING, PLACING, FORMING, SCAFFOLDING, SHEETING AND BRACING, GROUTING, PLASTERING, CURING, ETC., ALL AS SPECIFIED AND AS REQUIRED OR SHOWN ON THE CONTRACT DRAWINGS.

BRICK AND MASONRY MATERIAL

THE MATERIAL FURNISHED BY THE CONTRACTOR FOR THE VARIOUS KINDS OF MASONRY CONSTRUCTION TO BE CONSTRUCTED SHALL CONFORM TO THE FOLLOWING OHIO DEPARTMENT OF TRANSPORTATION (ODOT) SPECIFICATIONS:

(A) ALL BRICK FURNISHED AND USED SHALL EITHER BE O.D.O.T. ITEM 704.01 SHALE BRICK COMPLYING WITH THE REQUIREMENTS FOR "GRADE SM", ASTM DESIGNATION: C 32-84, "SPECIFICATION FOR SEWER AND MANHOLE BRICK (MADE FROM CLAY OR SHALE)," OR SHALL BE SOLID TYPE O.D.O.T. ITEM 704.02 CONCRETE BRICK COMPLYING WITH THE REQUIREMENTS PER ASTM DESIGNATION: C 55- 85,"SPECIFICATION FOR CONCRETE BUILDING BLOCK," TYPE II, GRADES N-11 OR S-11, EXCEPT AS MODIFIED PER ODOT SPECIFICATIONS.

(B) ALL CEMENT USED SHALL CONFORM TO ASTM DESIGNATION: C 150- 89, "SPECIFICATION FOR PORTLAND CEMENT," TYPE III, PER O.D.O.T. ITEM 701.05 AND ITEM 705.10.

(C) FINE AGGREGATE USED FOR CONCRETE SAND, MORTAR OR GROUT SHALL BE CLEAN, FREE FROM DIRT, LOAM, VEGETABLE OR OTHER ORGANIC MATTER. SAND SHALL NOT CONTAIN MORE THAN THREE PERCENT (3%) BY WEIGHT OF LOAM OR CLAY AND IN NO CASE SHALL SAND BE USED IF ITS GRAINS ARE COATED WITH THESE SUBSTANCES. FINE AGGREGATE SHALL BE WELL GRADED FROM COURSE TO FINE AND WHEN TESTED BY MEANS OF LABORATORY SIEVES SHALL CONFORM TO THE REQUIREMENTS OF O.D.O.T. ITEM 703.03. SILT SHALL NOT EXCEED THREE (3%) PERCENT.

(D) AGGREGATE FOR PORTLAND CEMENT CONCRETE SHALL CONFORM TO THE REQUIREMENTS OF 703.02 ODOT.

(E) ALL WATER SHALL BE CLEAN AND ACCURATELY MEASURED FOR EACH BATCH OF CONCRETE.

(F) ALL PLAIN CONCRETE SHALL BE CLASS "C" CONCRETE PER ODOT ITEM 499.03 HAVING A COMPRESSIVE STRENGTH AT 28 DAYS OF 4000 POUNDS. PLACING AND JOINTS SHALL BE PER DETAILS AND PER ODOT 511.08, 511.09, 511.10, 511.11 AND 511.12. CONCRETE TEST CYLINDERS SHALL BE MADE AND TESTED PER ASTM C31-84 AND C-39-83B.

(G) REINFORCING STEEL SHALL BE GRADE 60 AND BE PER ODOT ITEM 509.

(H) ALL CEMENT MORTAR SHALL BE MIXED IN THE PROPORTION OF ONE (1) PART CEMENT, THREE (3) PARTS OF SAND, EXCEPT THE MORTAR FOR BRICK CATCH BASINS AND SEWER MANHOLES WHICH SHALL BE 1:2 MIX.

(I) PRECAST MASONRY VAULT SECTIONS MAY BE FURNISHED IF THEY MEET THE REQUIREMENTS OF THE DRAWINGS AND SPECIFICATIONS ON FILE WITH THE CLEVELAND DIVISION OF WATER OR APPROVED BY THE ENGINEER.

VAULT, MANHOLE AND CHAMBER CONSTRUCTION

(A) ALL BRICK MANHOLES, BRICK NECKS AND EXTENSIONS SHALL BE BUILT IN ACCORDANCE WITH THE CONTRACT DRAWINGS.

(B) THE WALLS OF MANHOLES SHALL BE BUILT OF SHALE BRICK OR CONCRETE BRICK OF THE TYPE SPECIFIED HEREIN LAID IN 1:3 PORTLAND CEMENT MORTAR, WITH BRICK ARRANGED RADIALLY AS HEADERS, FORMING A WALL NINE (9) INCHES THICK. IN DEEP MANHOLES THE WALL SHALL BE 13" THICK BELOW A POINT 12 FEET FROM THE SURFACE. ALL OF THE BRICK COMPOSING SAID STRUCTURES SHALL BE LAID IN FULL MORTAR BEDS AND JOINTS, WITH NO MORTAR JOINTS APPEARING ON THE INNER SURFACE OF THE MANHOLE EXCEEDING THREE-EIGHTHS (3/8") INCHES THICK.

(C) THE TOP OF THE WALLS OF STRUCTURES SHALL BE PROPERLY LEVELED OFF WITH MORTAR SO AS TO FORM A FLAT SURFACE UPON WHICH THE CAST IRON MANHOLE RING IS TO REST. ALL STRUCTURES SHALL BE BUILT TO PROPER HEIGHT AS INDICATED BY THE CONTRACT DRAWINGS.

(D) THE ENTIRE OUTER SURFACE OF ALL BRICK MANHOLES SHALL BE PLASTERED WITH A SMOOTH COATING OF 1:3 PORTLAND CEMENT MORTAR, AT LEAST ONE-HALF (1/2) INCH THICK.

(E) PRECAST OR CAST- IN- PLACE CONCRETE MASONRY CONSTRUCTION SHALL FOLLOW THE APPLICABLE SECTIONS OF ODOT SPECIFICATIONS, ITEM 611. ALL NEW VAULTS MUST BE PRECAST CONCRETE.

PAYMENT

PAYMENT FOR VAULTS SHALL BE MADE AT THE CONTRACT UNIT PRICE BID PER EACH "ITEM SPECIAL - WATER WORK, MISC.: (_") METER VAULTS COMPLETE AND ACCEPTED IN PLACE INCLUDING MANHOLE FRAMES, AND COVERS, STEPS AND REINFORCING STEEL.

PAYMENT FOR BRICK OR CONCRETE MASONRY IS TO BE INCLUDED IN THE UNIT PRICE IN WHICH IT IS TO BE USED AND SHALL CONSTITUTE FULL COMPENSATION FOR PERFORMING ALL THE REQUIREMENTS OF THIS ITEM INCLUDING ALL NECESSARY LABOR, TOOLS, EQUIPMENT AND INCIDENTALS TO MAKE THIS A COMPLETE ITEM OF WORK.

PAYMENT FOR PLAIN CONCRETE MASONRY USED FOR CONCRETE ANCHORS AND PIERS (THRUST BLOCKS) SHALL BE INCLUDED IN THE UNIT PRICE PER LINEAR FOOT OF WATER MAIN BID FOR "ITEM 638 - WATER WORK, MISC.: DUCTILE IRON PIPE" OR SHALL BE INCLUDED IN "ITEM 638 - WATER WORK, MISC.: PLUGGING EXISTING WATER MAINS AND BRANCHES."

ITEM 202 - VALVE BOX REMOVED

WORK INCLUDED

WHERE INDICATED ON THE CONTRACT DRAWINGS, OR AS ORDERED, THE CONTRACTOR SHALL REMOVE EXISTING VALVE BOX. THE CONTRACTOR SHALL PERFORM ALL WORK NECESSARY AT THE LOCATIONS SHOWN ON THE CONTRACT DRAWINGS OR WHERE ORDERED INCLUDING PAVEMENT CUTTING, PAVEMENT REMOVAL, EXCAVATION, BACKFILLING, SEEDING AND SODDING AND REPAVING, ALL AS REQUIRED OR AS ORDERED TO COMPLETE THE WORK.

PAYMENT

PAYMENT FOR WORK UNDER THIS ITEM SHALL BE PAID FOR AT THE CONTRACT UNIT PRICE BID FOR EACH:

ITEM 202 - VALVE BOX REMOVED

AND SHALL INCLUDE ALL PAVEMENT CUTTING, PAVEMENT REMOVAL, EXCAVATION, AND BACKFILLING, AND THE FURNISHING OF ALL LABOR, TOOLS, AND ALL EQUIPMENT AND INCIDENTALS NECESSARY TO COMPLETE THE WORK AS SHOWN OR AS ORDERED. SEEDING AND SODDING, REPAVING (BOTH TEMPORARY AND PERMANENT), SIDEWALK REPLACEMENT AND OTHER SIDE RESTORATION SHALL BE INCLUDED IF NOT PAID FOR SEPARATELY UNDER OTHER ITEMS INDICATED IN THE PLANS.

ITEM 638 - WATER WORK, MISC.: PLUG EXISTING SERVICE CONNECTION

WORK INCLUDED

(A) EXISTING MAINS: ON EXISTING WATER MAINS TO REMAIN IN SERVICE, WHERE INDICATED ON THE CONTRACT DRAWINGS OR WHERE ORDERED, THE CONTRACTOR SHALL PLUG THE WATER SERVICE CONNECTION OR FIRE LINE CONNECTION AT THE MAIN, AND DO ALL THE NECESSARY EXCAVATION, SHEETING AND SHORING, BACKFILLING, SEEDING AND SODDING, AND REPAVING REQUIRED THEREFOR. ALL WATER SERVICE CONNECTIONS AND FIRE LINE CONNECTIONS SHALL BE PLUGGED AT THE MAIN, BUT ALL LEAD TYPE FITTINGS SHALL BE CUT OUT OF THE MAINS BY SLEEVING- IN A DUCTILE IRON SPOOL PIECE CONNECTING TO EXISTING MAIN WITH RETAINED MECHANICAL JOINT SOLID SLEEVES (SHORT PATTERN) OR WITH APPROVED COMPRESSION COUPLINGS EQUAL TO DRESSER STYLE NO. 38, 138, OR 162 (TRANSITION TYPE), OR SMITH- BLAIR 441 STRAIGHT AND TRANSITION COUPLINGS WITH TRACKHEAD STAINLESS STEEL BOLTS AND NUTS (ASTM A276- 89A, TYPE 304). THE COMPRESSION COUPLING SHALL HAVE STOPS REMOVED AND BE RATED FOR A MINIMUM WORKING PRESSURE OF 250 PSI.

(B) ABANDONED MAINS: ON ABANDONED WATER MAINS TO BE TAKEN OUT OF SERVICE THE CONTRACTOR SHALL PLUG THE WATER SERVICE CONNECTION OR FIRE LINE CONNECTION AS FOLLOWS:

1. CONNECTIONS 1-1/2" AND SMALLER: THE CONTRACTOR LEAD SHALL CRIMP THE COPPER TUBING ENDS, OR IN THE CASE OF CONCRETE OR GALVANIZED PIPING, SHALL CRIMP OR FILL WITH THE ENDS OF ALL WATER SERVICE CONNECTIONS DESIGNATED TO BE PLUGGED ON THE CONTRACT DRAWINGS. THE "PLUGGING" SHALL BE DONE IN THE RELOCATED WATER MAIN TRENCH AFTER THE CONNECTIONS HAVE BEEN TRANSFERRED, OR IF SUCH CONNECTION IS NOT TO BE TRANSFERRED IS TO BE PLUGGED AT THE TIME THE RELOCATED WATER INSTALLATION.

2. CONNECTIONS 2" AND LARGER: WHERE CONNECTIONS 2-INCH AND LARGER ARE DESIGNATED TO BE PLUGGED ON THE CONTRACT DRAWINGS, THE CONTRACTOR SHALL CLOSE ALL FILL CONNECTIONS VALVES AT THE ABANDONED WATER MAIN, FILL WITH ABANDONED LOWER VALVE BOX CASTING WITH CONCRETE, AND CONNECTIONS. CONCRETE THE ENDS OF ALL WATER SERVICE THE "PLUGGING" SHALL BE DONE AFTER THE WATER CONNECTIONS HAVE BEEN TRANSFERRED TO THE RELOCATED TRANSFERRED MAIN, OR IF SUCH CONNECTION IS NOT TO BE MAY BE PLUGGED AT THE TIME THE RELOCATED WATER INSTALLATION.

PAYMENT

THE WORK INCLUDED IN THIS ITEM SHALL BE PAID FOR AT THE UNIT PRICE BID FOR EACH "ITEM 638 - WATER MAIN, MISC.; PLUG EXISTING SERVICE CONNECTION". THE PRICE AND PAYMENT SHALL CONSTITUTE FULL COMPENSATION FOR PERFORMING ALL EXCAVATION, BACKFILLING, AND THE FURNISHING OF ALL MATERIALS, LABOR, TOOLS, AND ALL EQUIPMENT AND INCIDENTALS NECESSARY TO COMPLETE THE WORK IN PLACE AS SHOWN. SEEDING AND SODDING, REPAVING (BOTH TEMPORARY AND PERMANENT), SIDEWALK REPLACEMENT AND OTHER SITE RESTORATION SHALL BE INCLUDED IF NOT PAID FOR SEPARATELY UNDER OTHER ITEMS INDICATED IN THE PLANS. PAYMENT FOR REMOVAL OF EXISTING VALVE BOXES ON CONNECTIONS 1-1/2" AND LARGER WILL PAID FOR UNDER "ITEM 202 - VALVE BOX REMOVED".

CUY-77-00.42 PART 1
MODEL: 104983_UN019 PAPERSIZE: 17x11 (in.) DATE: 3/4/2022 TIME: 1:46:10 PM USER: esmccaslin
F:\Jobs\1162\Miller Road Interchange\104983\400-Engineering\Utilities\Sheets\104983_UN019.dgn

3rd. HIGH SERVICE DISTRICT

DEPARTMENT OF PUBLIC UTILITIES
DIVISION OF WATER
CLEVELAND, OHIO

SUBJECT : 12" WATER MAIN ALONG MILLER ROAD AT I.R. 77
CITY OF BRECKSVILLE

SCALE: AS SHOWN | NO.

SUBSET 15 | TOTAL 43
DESIGN AGENCY
EUTHENICS
8230 Mohawk Dr. | Cleveland, OH 44035
DESIGNER TDP
REVIEWER DTB 03/01/22
PROJECT ID 104983
SHEET P.242 | TOTAL P.434

WATER WORK NOTES

ITEM 638 - WATER WORK, MISC.: FURNISHING AND SETTING 6" HYDRANT, COMPLETE (KENNEDY VALVE K81A STYLE)

WORK INCLUDED

THE CONTRACTOR SHALL FURNISH ALL CITY OF CLEVELAND STANDARD HYDRANTS, HYDRANT BRANCH DUCTILE IRON PIPE AND RETAINED MECHANICAL JOINT FITTINGS, TAPPING VALVES, VALVE BOXES AND COVERS, LABOR, TOOLS AND EQUIPMENT FOR AND SHALL PROPERLY INSTALL AT THE LOCATION(S) SHOWN ON THE CONTRACT DRAWINGS, 6" HYDRANT ASSEMBLY COMPLETE.

IN GENERAL, THIS WORK SHALL INCLUDE THE FURNISHING, SETTING, TESTING, PAINTING, THE EXCAVATION, SHEETING, SHORING, BACKFILLING, AND THE FURNISHING OF ALL LABOR, MATERIALS, TOOLS, AND APPLIANCES NECESSARY TO COMPLETE THE WORK AS SPECIFIED OR AS SHOWN.

HYDRANTS

THE 6" HYDRANT SHALL CONFORM WITH THE DIVISION OF WATER'S SPECIFICATIONS AND APPROVED HYDRANT DRAWINGS ON FILE WITH THE DIVISION OF WATER AT THE PUBLIC UTILITIES BUILDING, 1201 LAKESIDE AVENUE, CLEVELAND, OHIO 44114. IN ADDITION, ALL HYDRANTS FURNISHED MUST BE K81A STYLE MANUFACTURED BY KENNEDY VALVE COMPANY.

SETTING

(A) GENERAL LOCATION:

HYDRANTS SHALL BE LOCATED A MINIMUM OF TEN (10) FEET AWAY FROM SANITARY SEWERS AND FIVE (5) FEET AWAY FROM STORM SEWERS AND IN A MANNER TO PROVIDE COMPLETE ACCESSIBILITY, AND IN SUCH A MANNER THAT THE POSSIBILITY OF DAMAGES FROM VEHICLES OR INJURY TO PEDESTRIANS WILL BE MINIMIZED. UNLESS OTHERWISE DIRECTED, THE SETTING OF ANY HYDRANT SHALL CONFORM TO THE FOLLOWING:

(B) LOCATION REGARDING CURB LINES:

WHEN PLACED BEHIND THE CURB, THE HYDRANT BARREL SHALL BE SET SO THAT THE CENTER OF THE BARREL WILL BE NO LESS THAN THREE (3) FEET FROM THE GUTTER FACE OF THE CURB, OR DEVIATE FROM SUCH LOCATION OR DEVIATE FROM THE LOCATION INDICATED ON THE CONTRACT DRAWINGS, EXCEPT BY CONSENT OF THE ENGINEER.

(C) LOCATION REGARDING SIDEWALKS:

WHEN SET IN THE LAWN SPACE BETWEEN THE CURB AND SIDEWALK, OR BETWEEN THE SIDEWALK AND THE PROPERTY LINE, NO PORTION OF THE NOZZLE OR HYDRANT CAP SHALL BE WITHIN SIX (6) INCHES OF THE SIDEWALK.

(D) POSITION OF NOZZLES:

THE HYDRANT SHALL STAND PLUMB, WITH THE NOZZLE POINTING TOWARD THE CURB AND AT AN ANGLE OF NINETY DEGREES THEREFROM. WHERE HYDRANT BRANCH PIPING IS PARALLEL WITH, OR NOT AT RIGHT ANGLES TO THE CURB, THE CONTRACTOR SHALL RELEASE THE SWIVEL HEAD BOLTS AND ADJUST HYDRANT NOZZLES TO FACE THE CURB AT THE PROPER ANGLE. HYDRANT WITHOUT SWIVEL HEADS WILL BE ADJUSTED BY THE CITY WHERE NECESSARY TO CORRECT OF NOZZLE FACING CURBING. HEIGHT OF HYDRANT SHALL CONFORM TO THE ESTABLISHED GRADE WITH TOPS OF THE FROST CASING AT LEAST FOUR (4) INCHES ABOVE GRADE.

(E) CONNECTION TO MAIN:

THE HYDRANT SHALL BE CONNECTED TO THE DISTRIBUTION WATER MAIN WITH A DUCTILE IRON PIPE BRANCH CONTROLLED BY AN INDEPENDENT SIX (6) INCH CITY OF CLEVELAND, DIVISION OF WATER, STANDARD GATE VALVE WITH VALVE BOX COMPLETE. THE BRANCH PIPING SHALL BE SIX (6) INCH AND SHALL INCLUDE ALL NECESSARY DUCTILE IRON CEMENT LINED RETAINED MECHANICAL JOINT FITTINGS AND/OR OFFSETS REQUIRED TO BRING THE HYDRANT TO THE PROPER GRADE. THE BRANCH VALVE WITH THE VALVE BOX COMPLETE SHALL BE INSTALLED OUT OF THE WATER MAIN RETAINED MECHANICAL JOINT TEE (ALL BELL) OR SWIVEL TEE AT A DISTANCE NOT TO EXCEED THREE (3) FEET.

WHERE DISTANCE FORM BRANCH VALVE TO HYDRANT SHOE EXCEEDS ONE (1) FULL LENGTH OF DUCTILE IRON PIPE ALL PIPE JOINTS AND FITTINGS JOINTS SHALL BE RESTRAINED. WHERE HYDRANT BRANCH MUST BE HORIZONTALLY OFFSET WITH A NINETY (90) DEGREE BEND THE DISTANCE FROM THE BEND TO THE HYDRANT SHOE SHALL NOT EXCEED ONE (1) FULL LENGTH OF DUCTILE IRON PIPE.

(F) DRAINAGE OF HYDRANT:

DRAINAGE SHALL BE PROVIDED AT THE BASE OF THE HYDRANT BY FILLING AROUND THE ELBOW WITH COARSE GRAVEL OR CRUSHED STONE TO AT LEAST SIX (6) INCHES ABOVE THE WASTE OPENING. WHEREVER THE HYDRANT IS SET IN ROCK, CLAY OR OTHER IMPERVIOUS SOIL, THE TRENCH SHALL BE WIDENED AND DEEPENED ON EACH SIDE OF THE HYDRANT BASE, WHICH SPACE SHALL BE FILLED COMPACTLY WITH COARSE GRAVEL, CRUSHED STONE, OR BROKEN STONE AND MIXED WITH COARSE SAND OF SUFFICIENT QUANTITY TO ABSORB ALL WATER TO BE DRAINED FROM THE HYDRANT WHEN BRANCH VALVE IS CLOSED.

(G) ANCHORAGE FOR HYDRANT:

THE HYDRANT SHALL BE SET ON A STONE SLAB OR SIMILAR FOUNDATION AND THE BASE OF THE HYDRANT SHALL BE BRACED AGAINST UNEXCAVATED EARTH TO THE END OF THE TRENCH WITH CONCRETE BACKING AND IT SHALL BE TIED TO THE PIPE WITH SUITABLE RODS, CLAMPS OR OTHER APPROVED RESTRAINT AS APPROVED OR DIRECTED BY THE ENGINEER. (H) CLEANING: THE INTERIOR OF THE HYDRANT SHALL BE THOROUGHLY CLEANED OF ALL DIRT AND FOREIGN MATTER BEFORE SETTING.

PAYMENT

THE UNIT PRICE STIPULATED TO BE PAID FOR EACH "ITEM 638 - WATER WORK, MISC.: FURNISHING AND SETTING 6" HYDRANT, COMPLETE (KENNEDY VALVE K81A STYLE)" SHALL INCLUDE FURNISHING HYDRANT, HYDRANT BRANCH PIPE AND FITTINGS, 6" TAPPING SLEEVE AND VALVE WITH VALVE BOX COMPLETE. OR 6" BRANCH TEE WITH 6" GATE VALVE AND VALVE BOX COMPLETE, SETTING, TESTING, PAINTING, EXCAVATING, SHEETING AND SHORING, BACKFILLING, AND THE FURNISHING OF ALL LABOR, MATERIALS, TOOLS AND APPLIANCES NECESSARY TO COMPLETE THE WORK AS SPECIFIED OR AS SHOWN.

ITEM SPECIAL-OFFSET BENDS

IN ADDITION TO LOCATIONS DETAILED IN THE PLANS, WHENEVER IN THE EXECUTION OF THE WORK BEING DONE UNDER THIS CONTRACT, INTERFERENCE DEVELOPS BETWEEN THE WORK CONTEMPLATED AND EXISTING SEWERS (STORM AND/OR SANITARY), SEWER CONNECTIONS (STORM AND/OR SANITARY) THE CONTRACTOR SHALL INSTALL WATER MAIN OFFSET BENDS TO AVOID THE INTERFERENCE AND PROVIDE THE REQUIRED PIPE CLEARANCE. PAYMENT SHALL BE PER EACH, FOR "ITEM SPECIAL-OFFSET BEND". WHICH SHALL INCLUDE THE TOTAL ADDITIONAL COST OF LOWERING OR RAISING THE WATER MAIN TO MISS THE OBSTRUCTION, SAID COST SHALL INCLUDE THE ADDITIONAL LABOR AND MATERIAL COSTS TO INSTALL THE OFFSET PIPE, AND ALL ADDITIONAL EXCAVATION AND ADDITIONAL BACKFILL REQUIRED TO INSTALL THE COMPLETE LOWERING OR RAISING OF THE WATERLINE AS SHOWN IN THE PLANS AND CWD STANDARD DRAWING STD-L06.

ALL ADDITIONAL LABOR AND MATERIAL EXPENSES IN CONNECTION WITH THE WATER MAIN LOWERING OR RAISING WITH OFFSET BENDS, AS INDICATED HEREIN, SHALL BE PAID FOR UNDER "ITEM SPECIAL-OFFSET BEND"; OR WHEN CHANGES OR MODIFICATIONS OF THE WORK ARE REQUIRED, UNDER THE PROVISIONS SET FORTH UNDER "CHANGES IN WORK" OF THESE SPECIFICATIONS; AND SHALL INCLUDE THE UNIT PRICE BID PER EACH "ITEM SPECIAL-OFFSET BEND", AND SHALL INCLUDE ALL ADDITIONAL LABOR AND MATERIAL COSTS TO FURNISH AND INSTALL THE OFFSET PIPE, ADDITIONAL EXCAVATION (INCLUDING EXPLORATORY EXCAVATION), ADDITIONAL BACKFILL, AND ADDITIONAL PREMIUM BACKFILL. THE COST FOR THE WATER MAIN OFFSET IS IN ADDITION TO THE UNIT COST BID PER LINEAR FOOT OF WATER MAIN WHICH WILL BE PAID TO THE CONTRACTOR. NO CLAIM BY THE CONTRACTOR, FOR DELAYS, ADDITIONAL WORK OR OTHERWISE, WILL BE ENTERTAINED BY THE CITY FOR WHICH CLAIM IS BASED ON THE FAILURE TO HAVE INDICATED CORRECTLY THE LOCATION OR PRESENCE OF ANY SEWER, SEWER CONNECTION, OR THEIR APPURTENANCES.

ITEM 638 - WATER WORK, MISC.: CUT, FILL AND PLUG EXISTING 12" WATER MAIN

WORK INCLUDED

WHERE SHOWN ON THE CONTRACT DRAWINGS, OR WHERE ORDERED, THE CONTRACTOR, UNDER ITEM 638 - WATER WORK, MISC.: CUT, FILL AND PLUG EXISTING 12" WATER MAIN SHALL CAP OR PLUG EXISTING WATERMAIN ENDS PER CLEVELAND WATER DEPARTMENT STD. DWG. STD-004. THE CONTRACTOR SHALL DO ALL THE EXCAVATION, BACKFILLING, AND ALL OTHER WORK AS REQUIRED. THE CAP OR PLUG SHALL BE A RESTRAINED FITTING AND SHALL BE FURNISHED WITH RODS AND CLAMPS COMPLETE, BACKED WITH A CONCRETE PIER TO UNDISTURBED EARTH. PLUG AND/OR CAPS TO BE INSTALLED AS PART OF NEW OR RELOCATED INSTALLATIONS SHALL BE FURNISHED, INSTALLED AND PAID FOR UNDER DUCTILE IRON PIPE AND FITTINGS, BY SIZE AND TYPE.

ADDITIONALLY UNDER ITEM 638 - WATER WORK, MISC.: CUT, FILL AND PLUG EXISTING 12" WATER MAIN THE CONTRACTOR SHALL FURNISH ALL MATERIALS FOR FILLING THE AREA THUS SEALED OFF WITH CEMENT GROUT, COMPACTED SAND, OR FLOWABLE FILL. THE FILL MATERIAL SHALL BE PUMPED INTO PLACE, OR PLACED BY OTHER MEANS APPROVED BY THE ENGINEER, SO THAT AFTER SETTLEMENT, AT LEAST 90 PERCENT OF THE CROSS-SECTIONAL AREA OF THE CONDUIT, FOR ITS ENTIRE LENGTH, SHALL BE FILLED. THE LENGTH OF CUT, FILLED AND PLUGGED CONDUIT TO BE PAID FOR SHALL BE THE ACTUAL NUMBER OF FEET FILLED AND PLUGGED AS DESCRIBED ABOVE.

WHERE EXISTING WATERMAIN ENDS, TO BE PLUGGED IS A LEAD JOINT FITTING, THE CONTRACTOR SHALL CUT OUT THE LEAD JOINT FITTING AND SLEEVE-IN A DUCTILE IRON SPOOL PIECE. THE SPOOL PIECE SHALL BE SLEEVED-IN USING RETAINED MECHANICAL JOINT SOLID SLEEVES (LONG PATTERN) OR APPROVED COMPRESSION COUPLINGS EQUAL TO DRESSER STYLE NOS: 38, 138, OR 162 (TRANSITION TYPE), OR SMITH-BLAIR 441 STRAIGHT AND TRANSITION COUPLINGS WITH TRRACKHEAD STAINLESS STEEL BOLTS AND NUTS (ASTM A276-03, TYPE 304, AND ASTM A 193-03/ASTM A 194-03, HEAVY HEX). THE COMPRESSION COUPLING SHALL BE FURNISHED WITHOUT PIPE STOPS AND BE RATED FOR A MINIMUM WORKING PRESSURE OF 250 PSI.

PAYMENT

THE UNIT PRICE STIPULATED PER LINEAL FOOT FOR ITEM 638 - WATER WORK, MISC.: CUT, FILL AND PLUG EXISTING 12" WATER MAIN SHALL BE IN FULL COMPENSATION FOR THE FURNISHING OF ALL MATERIALS FOR AND THE SAW CUTTING, FILLING AND PLUGGING OF THE EXISTING WATER MAIN AT LOCATIONS INDICATED IN THE PLANS.

THE CONTRACTOR SHALL PROVIDE ALL LABOR, MATERIALS, TOOLS AND EQUIPMENT NECESSARY TO PEFORM THE WORK AT THE LOCATIONS SHOWN, OR WHERE ORDERED, INCLUDING ALL EXCAVATING, SHEETING AND SHORING, BACKFILLING, AND OTHER WORK AS REQUIRED.

WATER WORK NOTES

CUY-77-00.42 PART 1

MODEL: 104983_UN020 PAPERSIZE: 17x11 (in.) DATE: 3/4/2022 TIME: 1:46:14 PM USER: esmccaslin
F:\Jobs\1162\Miller Road Interchange\104983\400-Engineering\Utilities\Sheets\104983_UN020.dgn

3rd. HIGH SERVICE DISTRICT

DEPARTMENT OF PUBLIC UTILITIES
DIVISION OF WATER
CLEVELAND, OHIO

SUBJECT : 12" WATER MAIN ALONG MILLER ROAD AT I.R. 77
CITY OF BRECKSVILLE

SCALE: AS SHOWN | NO.

SUBSET 16 | TOTAL 43

DESIGN AGENCY
EUTHENICS
8235 Midwest Dr. | Cleveland, OH 44125

DESIGNER TDP

REVIEWER DTB 03/01/22

PROJECT ID 104983

SHEET P.243 | TOTAL P.434

WATER WORK NOTES

ITEM 638 - WATER WORK, MISC.: - 20" STEEL PIPE ENCASEMENT, BORED OR JACKED

WARRANTY BOND

THE CONTRACTOR SHALL FURNISH A WARRANTY BOND FOR A PERIOD OF THREE (3) YEARS FROM THE DATE OF ACCEPTANCE BY OHIO DEPARTMANT OF TRANSPORTATION AND THE CITY OF CLEVELAND GUARANTEEING THAT THE CONTRACTOR WILL PROMPTLY CORRECT, REPAIR AND REPLACE ANY DEFECTIVE WORK ARISING OUT OF THE INSTALLATION THE 12" WATERMAIN AND 20" CASING, INCLUDING, BUT NOT LIMITED TO, THE SUBSIDENCE OR FAILURE OF LATERAL AND SUBJACENT SUPPORT, WHETHER RESULTING FROM DEFECTIVE MATERIALS OR DEFECTIVE WORKMANSHIP. THE DATE OF ACCEPTANCE SHALL BE THE FINAL CHLORINATION OF THE WATER MAIN INSTALLATION. THE WARRANTY BOND SHALL BE IN A SUM EQUAL TO FIFTY PERCENT (50%) OF THE ACTUAL CONSTRUCTION COST ASSOCIATED WITH THE INSTALLATION OF THE 12" WATERMAIN AND 20" CASING, PAYABLE TO THE FISCAL OFFICER OF OHIO DEPARTMANT OF TRANSPORTATION AND EXECUTED BY A SURETY AUTHORIZED TO TRANSACT BUSINESS IN THE STATE OF OHIO. THE WARRANTY BOND SHALL NAME OHIO DEPARTMANT OF TRANSPORTATION AND THE CITY OF CLEVELAND AS OBLIGEES.

WORK INCLUDED

THE CONTRACTOR SHALL, UNDER ITEM 638 - WATER WORK, MISC.: - 20" STEEL PIPE ENCASEMENT, BORED OR JACKED, FURNISH ALL THE MATERIALS FOR AND SHALL PROPERLY CONSTRUCT AT THE LOCATIONS SHOWN ON THE DRAWINGS, OR AS DIRECTED, ALL STEEL PIPE CASING TOGETHER WITH ALL EXCAVATIONS (INCLUDING BORING AND RECEIVING PITS), JACKING, GROUT, HAULING AWAY WASTE MATERIAL, SHEETING AND BRACING, BACKFILLING AND ALL OTHER APPURTENANCES WHICH ARE NECESSARY FOR THE PROPER INSTALLATION OF THE ENCASEMENTS WHICH ARE REQUIRED FOR THE PROPER COMPLETION OF THE WORK INCLUDED IN THIS CONTRACT.

STEEL PIPE CASING

THE STEEL PIPE CASING TO BE JACKED INTO POSITION WHERE SHOWN ON THE DRAWINGS, SHALL BE OF THE SIZES HEREIN SPECIFIED. THE STEEL PIPE CASING SHALL MEET THE REQUIREMENTS OF ASTM SPECIFICATIONS A 53, GRADE B, "PIPE, STEEL, BLACK AND HOT-DIPPED, ZINC-COATED WELDED AND SEAMLESS", WITH MINIMUM WALL THICKNESS AND NOMINAL UNCOATED WEIGHT PER FOOT AS SPECIFIED HEREIN.

BUTT-WELDED STEEL SHEETS WITH STRAIGHT OR SPIRAL SEAMS. THE ENDS OF EACH PIPE SECTION SHALL BE PROPERLY BEVELED FOR FIELD WELDING. COATING AND LINING OF THE STEEL CASING PIPE WILL NOT BE REQUIRED, BUT THE PIPE SHALL BE PROPERLY PROTECTED PRIOR TO ITS INSTALLATION. CONTRACTOR SHALL VERIFY MANUFACTURER'S OUTSIDE DIAMETER OF BELL OF PIPE AND INCREASE I.D. OF STEEL PIPE CASING IF REQUIRED.

NOM. CARRIER PIPE	CASING PIPE
12"	20" I.D. X 0.781"

JACKING OPERATION

FOR BORINGS GREATER THAN 20 FEET, A BORING MACHINE SHALL BE USED. FOR BORINGS LESS THAN 20 FEET, THE CASING MAY BE PUSHED INTO PLACE WITH THE EXCAVATOR OR OTHER SIMILAR METHOD. CASINGS SHALL BE TO THE LENGTHS AS SHOWN ON THE CONTRACT DRAWINGS AND IF NOT DESIGNATED, SHALL EXTEND 5 FEET BEYOND EACH SIDE OF THE CULVERT OR PIPE BEING CROSSED.

THE JACKING EQUIPMENT SHALL BE SET UP IN A TRENCH WITH A BACKSTOP ERECTED TO TAKE THE THRUST DEVELOPED BY THE JACKS. THE BACKSTOP SHALL BE CONSTRUCTED OF HEAVY TIMBERS, RAILS OR STRUCTURAL SHAPES AND SHALL BE SECURELY ANCHORED TO PREVENT ANY APPRECIABLE LATERAL DISPLACEMENT WHICH WILL CAUSE MISALIGNMENT OF THE PIPE DURING JACKING OPERATIONS.

THE FIRST SECTION OF CASING PIPE SHALL BE PLACED ON THE GUIDES AND THE HEADFRAME SET FOR THE REQUIRED DIRECTION OF TRAVEL. PRESSURE SHALL BE APPLIED BY THE JACKS IN SUCH A MANNER THAT THE RESULTING THRUST WILL BE COAXIAL WITH THE CASING PIPE. WHEN THE REAR OF A SECTION HAS REACHED THE FACE OF THE JACKING TRENCH, PRESSURE SHALL BE RELIEVED ON THE JACKS AND THE BLOCKING SHALL BE REMOVED.

EACH SECTION OF PIPE CASING SHALL BE JACKED IN PLACE UNTIL THE END OF THE SECTION PROTRUDES FROM THE HEADING OF THE JACKING PIT A SUFFICIENT DISTANCE TO PROPERLY CONNECT THE FOLLOWING SECTION OF PIPE CASING. THIS CONNECTION SHALL BE MADE BY FIELD WELDING AND ALL WELDING SHALL BE DONE BY MEN WHO ARE PROPERLY QUALIFIED FOR THIS TYPE OF WORK. INSTALLATION PROCEDURE OF THE CASING SHALL BE PERFORMED TO PERMIT THE REMOVAL OF ANY ENCOUNTERED GROUND WATER. THE JACKING OPERATION SHALL BE CARRIED ON WITHOUT DISTURBANCE OF EMBANKMENT, ROADWAY OR SUBSURFACE STRUCTURES AND MUST BE SUBORDINATE TO THE FREE AND UNOBSTRUCTED USE OF THE ROADWAY FOR THE PASSAGE OF TRAFFIC WITHOUT DELAY OR DANGER TO LIFE, EQUIPMENT OR PROPERTY.

THE JACKING-BORING METHOD SHALL CONSIST OF PUSHING THE CASING WITH A BORING AUGER ROTATING WITHIN THE CASING TO REMOVE THE SPOIL. WHEN AUGERS, OR SIMILAR DEVICES, ARE USED FOR CASING EMPLACEMENT, THE FRONT OF THE CASING SHALL BE PROVIDED WITH MECHANICAL ARRANGEMENTS OR DEVICES THAT WILL POSITIVELY PREVENT THE AUGER AND CUTTING HEAD FROM LEADING THE CASING WITH NO UNSUPPORTED EXCAVATION AHEAD OF THE CASING. ALL AUGER LEADS SHALL BE OF THE PROPER SIZE. THE AUGER AND CUTTING HEAD ARRANGEMENT SHALL BE REMOVABLE FROM WITHIN THE CASING IN THE EVENT AN OBSTRUCTION IS ENCOUNTERED. THE FACE OF THE CUTTING HEAD SHALL BE ARRANGED TO PROVIDE REASONABLE OBSTRUCTION TO THE FREE FLOW OF SOFT OR POOR MATERIAL.

AFTER THE CASING IS IN PLACE, THE PIPE SHALL BE INSERTED ON SKIDS AS REQUIRED WITH JOINTS PROPERLY MADE AND SO PULLED INTO PLACE AS TO TIGHTEN THE JOINTS WHICH ARE TO BE MADE AS SPECIFIED, AND WITH PROPER PROVISIONS FOR CONNECTING TO THE PIPE AT EACH END OF THE ENCASED SECTIONS.

AFTER THE PIPE IS IN PLACE, THE SPACE BETWEEN THE OUTSIDE OF THE PIPE AND INSIDE OF THE CASING SHALL BE COMPLETELY FILLED BY PRESSURE GROUTING WITH PORTLAND CEMENT GROUT CONSISTING OF ONE (1) PART CEMENT TO NOT MORE THAN THREE (3) PARTS FINE SAND, FORCED INTO PLACE BY MEANS OF A GROUTING MACHINE TO THE FULL SATISFACTION OF THE CITY.

WHEN THE BORED OR AUGURED HOLE IS OVERSIZED, THE CONTRACTOR SHALL CAREFULLY PRESSURE GROUT THE ENTIRE VOID AROUND THE OUTSIDE OF THE CASING PIPE.

IF, IN THE OPINION OF THE ENGINEER, THE INSTALLATION OF THE CASING IS BEING CONDUCTED IN AN UNSAFE MANNER, OR IS NOT SUCH AS TO MINIMIZE SETTLEMENT OR PERMIT CLOSE ADHERENCE TO LINE AND GRADE, THE ENGINEER MAY REQUIRE THE CONTRACTOR TO REVISE HIS PROCEDURE TO COMPLY WITH METHODS WHICH ARE KNOWN TO GIVE MORE SATISFACTORY RESULTS.

THE JACKING OPERATION SHALL BE PROGRESSED ON A 24-HOUR BASIS WITHOUT STOPPAGE (EXCEPT FOR ADDING LENGTHS OF PIPE) UNTIL THE LEADING EDGE OF THE PIPE HAS REACHED THE RECEIVING PIT. HOWEVER, SHOULD THE JACKING STOP, AND FOR ANY REASON WHATEVER SHOULD NOT BE ABLE TO GET STARTED AGAIN, THE CONTRACTOR SHALL, AT HIS OWN EXPENSE, TUNNEL THE REMAINING DISTANCE USING TUNNEL PLATES. THE CASING SHALL BE INSTALLED INSIDE THE TUNNEL LINER AND THE ANNULAR SPACE BETWEEN CASING AND LINER SHALL BE PRESSURE GROUTED. IN ANY CASE, THE METHOD AND MATERIALS TO BE USED SHALL BE SUBMITTED TO THE CITY THROUGH THE ENGINEER AND APPROVED BY THE CITY BEFORE WORK PROCEEDS WITH THE INSTALLATION OF THE ENCASEMENT.

THE CONTRACTOR AND/OR ANY SUBCONTRACTOR MUST BE FULLY EQUIPPED AND EXPERIENCED IN THE INSTALLATION OF PIPES BY JACKING, SHIELD JACKING OR TUNNELING METHODS. THE CONTRACTOR AND/OR ANY SUBCONTRACTOR SHALL SUBMIT TO THE ENGINEER AND TO THE CITY EVIDENCE OF SUCCESSFUL INSTALLATION BY HIM OF SIMILAR PROJECTS UNDER SIMILAR CIRCUMSTANCES.

EXCAVATION

ALL MATERIAL ENCOUNTERED IN THE JACKING OR BORING AND JACKING OR THE PIPE CASING SHALL BE EXCAVATED REGARDLESS OF THE NATURE THEREOF BY APPROVED TUNNELING OR BORING METHODS. ALL PIPE CASING EXCAVATED MATERIAL MUST BE REMOVED AND TRANSPORTED TO A CSXT APPROVED DISPOSAL SITE AFTER BEING TESTED BY CSXT. THE NEAREST CSXT APPROVED DISPOSAL SITE TO THE PROJECT LOCATION IS THE WASTE MANAGEMENT, INC. - CUYAHOGA REGIONAL LF IN SOLON, OHIO. EXCAVATION SHALL BE CONFINED WITHIN THE LIMITS OF THE CASING. IN DRY AND STABLE SOILS EXCAVATION, IF APPROVED BY THE ENGINEER AND THE CITY, MAY BE CARRIED AHEAD OF JACKING A DISTANCE NOT TO EXCEED 18-INCHES. IN SAND, GRAVEL AND ANY SOFT OR WET MATERIAL, EXCAVATION AHEAD OF THE PIPE CASING WILL NOT BE PERMITTED. OPEN CUT WILL NOT BE PERMITTED UNLESS THE CONTRACT DRAWINGS OR DETAIL DRAWINGS INDICATE OTHERWISE.

INSTALLATION OF CARRIER PIPE

CASING SPACERS/CHOCKS: THE CONTRACTOR SHALL FURNISHA ND INSTALL A BOLTED STYLE STAINLESS TEEL (TYPE 304) RUBBER OR PVC LINED SHLEL WITH SPACER/CHOCK MADE OF ULTRA-HIGH MOLECULAR WEIGHT (UHMW) POLYETHYLENE HAVING A HIGH ABRASIVE RESISTANT AND LOW FRICTION PROPERTIES. ALL BOLTS AND NUTS USED TO FASTEN THE SHELL TO THE CARRIER PIPE SHALL BE MADE OF STAINLESS STEEL, TYPE 304. THE SPACERS/CHOCKS SHALL BE EQUAL TO THAT MANUFACTURED BY CASCADE WATERWORKS MANUFACTURING, COMPANY OR POWER SEAL PIPE LINE PRODUCTS CORPORATION. THREE (3) SETS OF SPACRS/CHOCKS PER EIGHTEEN (18) FOOT LENGTHS OF PIPE OR FOUR (4) SETS OF SPACERS/CHOCKS PER TWNETY 920) FOOT LENGTHS WILL BE REQUIRED. A SET OF SPACERS/CHOCKS SHALL BE PLACED NOT MORE THAN 2-1/2 FEET FROM EACH PIPE JOINT WITH ADDITIONAL BLOCKS EVENLY SPACED. CARRIER PIPE SHALL BE INSTALLED USING THE "STANDARD CONFIGURATION" AND THE CASING VOIDS SHALL BE FILLED WITH GROUT. INSTALLATION OF THE CARRIER PIPE WITHIN THE ENCASEMENT WILL BE PAID FOR UNDER THE APROPIATE ITEM SPECIAL FOR WATER MAINS.

INSTALLATION OF CARRIER PIPE

CASING SPACERS/CHOCKS: THE CONTRACTOR SHALL FURNISHA ND INSTALL A BOLTED STYLE STAINLESS TEEL (TYPE 304) RUBBER OR PVC LINED SHLEL WITH SPACER/CHOCK MADE OF ULTRA-HIGH MOLECULAR WEIGHT (UHMW) POLYETHYLENE HAVING A HIGH ABRASIVE RESISTANT AND LOW FRICTION PROPERTIES. ALL BOLTS AND NUTS USED TO FASTEN THE SHELL TO THE CARRIER PIPE SHALL BE MADE OF STAINLESS STEEL, TYPE 304. THE SPACERS/CHOCKS SHALL BE EQUAL TO THAT MANUFACTURED BY CASCADE WATERWORKS MANUFACTURING, COMPANY OR POWER SEAL PIPE LINE PRODUCTS CORPORATION. THREE (3) SETS OF SPACRS/CHOCKS PER EIGHTEEN (18) FOOT LENGTHS OF PIPE OR FOUR (4) SETS OF SPACERS/CHOCKS PER TWNETY 920) FOOT LENGTHS WILL BE REQUIRED. A SET OF SPACERS/CHOCKS SHALL BE PLACED NOT MORE THAN 2-1/2 FEET FROM EACH PIPE JOINT WITH ADDITIONAL BLOCKS EVENLY SPACED. CARRIER PIPE SHALL BE INSTALLED USING THE "STANDARD CONFIGURATION" AND THE CASING VOIDS SHALL BE FILLED WITH GROUT. INSTALLATION OF THE CARRIER PIPE WITHIN THE ENCASEMENT WILL BE PAID FOR UNDER THE APROPIATE ITEM SPECIAL FOR WATER MAINS.

BULKHEADS AND GROUT FILL

AFTER THE WATER MAIN HAS BEEN INSTALLED IN ITS FINAL POSITION INSIDE THE CASING AND HAS BEEN TESTED, A BRICK BULKHEAD AT LEAST SIX INCHES THICK SHALL BE BUILT IN ONE END OF THE CASING COMPLETELY FILLING THE SPACE BETWEEN THE WATER MAIN AND THE CASING. FOLLOWING THE COMPLETION OF THE BULKHEAD, GROUT SHALL BE PUMPED INTO THE CASING COMPLETELY FILLING THE SPACE BETWEEN IT AND THE WATER MAIN. THE METHOD USED FOR PLACING THIS GROUT SHALL BE SUCH THAT IT WILL NOT DAMAGE THE COATING ON THE WATER MAIN. AFTER THE GROUT FILL IS COMPLETED, ANOTHER BRICK BULKHEAD SHALL BE INSTALLED AT THE OPPOSITE END OF THE CASING TO PREVENT ESCAPE OF BACKFILL MATERIAL. THE VOIDS BETWEEN THE CASING AND BORE SHALL BE PRESSURE GROUT FILLED.

BEFORE STARTING THIS BACKFILLING, THE CONTRACTOR SHALL SUBMIT FULL DETAILS OF THE METHOD OF BACKFILLING THAT HE PROPOSES TO USE TO THE CITY, AND NO WORK SHALL BE STARTED UNTIL APPROVAL OF THE METHOD HAS BEEN GRANTED.

CONTRACTOR'S RESPONSIBILITY

THE CONTRACTOR SHALL CONDUCT HIS OPERATIONS IN SUCH A MANNER THAT STANDARD ROADWAY CLEARANCES WILL BE MAINTAINED AT ALL TIMES. ALL WORKING OPERATIONS OF THE CONTRACTOR, OR ANY SUBCONTRACTOR MUST BE SUBORDINATE TO THE FREE AND UNOBSTRUCTED USE OF THE ROADWAY.

THE CONTRACTOR SHALL ALSO BE RESPONSIBLE FOR ALL COSTS OF THE FLAGMEN AND INSPECTION AS WELL AS OTHER COSTS INCURRED IN CONNECTION WITH THIS WORK. SUCH COSTS WILL BE CONSIDERED AS HAVING BEEN INCLUDED IN THE PRICE BID FOR JACKED ENCASEMENTS UNDER ITEM 638 - WATER WORK, MISC.: - 20" STEEL PIPE ENCASEMENT, BORED OR JACKED.

CUY-77-00.42 PART 1
MODEL: 104983_UN021 PAPERSIZE: 17x11 (in.) DATE: 3/4/2022 TIME: 1:46:17 PM USER: esmccash
F:\Jobs\1162-Miller Road Interchange\104983\400-Engineering\Utilities\Sheets\104983_UN021.dgn

3rd. HIGH SERVICE DISTRICT

DEPARTMENT OF PUBLIC UTILITIES
DIVISION OF WATER
CLEVELAND, OHIO

SUBJECT : 12" WATER MAIN ALONG MILLER ROAD AT I.R. 77
CITY OF BRECKSVILLE

SCALE: AS SHOWN | NO.

SUBSET	TOTAL
17	43

DESIGN AGENCY
EUTHENICS
8235 Mohawk Dr. | Cleveland, OH 44035

DESIGNER
TDP

REVIEWER
DTB 03/01/22

PROJECT ID
104983

SHEET	TOTAL
P.244	P.434

WATER WORK NOTES

ITEM 638 - WATER WORK, MISC.: 20" STEEL PIPE ENCASEMENT, BORED OR JACKED - CONTINUED

AGREEMENTS/PERMITS

ALL JACKED ENCASEMENTS SHALL BE BUILT IN FULL ACCORD WITH THE REQUIREMENTS OF STATE, COUNTY, RAILROAD COMPANY, AND/OR LOCAL REGULATIONS AND ORDINANCES PERTAINING TO SUCH CONSTRUCTION AND SHALL BE SUBJECT TO INSPECTION AND CONTROL BY THE VARIOUS OFFICIALS HAVING JURISDICTION OVER SAME. PERMITS FOR JACKING CASING ACROSS INTERSTATE FREEWAYS OR RAILROAD CROSSINGS ARE MADE PART OF THESE SPECIFICATIONS, IF SO APPLICABLE, AND IF AVAILABLE. PERMITS NOT AVAILABLE AT THE TIME OF BIDDING WILL BE MADE AVAILABLE TO THE CONTRACTOR AS SOON AS POSSIBLE AFTER AWARD OF THE CONTRACT. THE PERMIT, ITS TERMS AND CONDITIONS SET FORTH IN THE PERMIT BY THE ISSUING AGENCY, SHALL HAVE THE FULL FORCE AS THOUGH BEING MADE PART OF THESE SPECIFICATIONS.

TEST BORINGS

THE CONTRACTOR SHALL BE RESPONSIBLE FOR MAKING HIS OWN TEST BORINGS AND FOR DETERMINING THE MATERIALS HE WILL ENCOUNTER IN CONSTRUCTION OF THE WORK UNDER THIS ITEM.

SUBMITTED DATA

PRIOR TO THE CONSTRUCTION OF THE WORK UNDER ITEM 638 - WATER WORK, MISC.: - 20" STEEL PIPE ENCASEMENT, BORED OR JACKED, THE CONTRACTOR SHALL SUBMIT DRAWINGS AND OTHER DATA ON MATERIALS TO BE FURNISHED HEREUNDER FOR THE APPROVAL OF THE CITY IN ACCORDANCE WITH THE SHOP DRAWING PROVISIONS OF THESE SPECIFICATIONS.

PAYMENT

THE UNIT PRICE STIPULATED PER LINEAL FOOT FOR STEEL PIPE ENCASEMENTS SPECIFIED UNDER ITEM 638 - WATER WORK, MISC.: - 20" STEEL PIPE ENCASEMENT, BORED OR JACKED SHALL BE IN FULL COMPENSATION FOR THE FURNISHING OF ALL MATERIALS FOR AND THE PROPER INSTALLATION OF THE STEEL PIPE ENCASEMENTS INCLUDING ALL EXCAVATION AND BACKFILL (INCLUDING BORING PIT AND RECEIVING PIT), BORING, JACKING, HAULING AWAY WASTE MATERIAL, SHEETING AND BRACING, WOOD BLOCKING, SKIDS AND STRAPPING, GROUT BRICK BULKHEADS AND THE FURNISHING OF ALL LABOR, MATERIALS AND TOOLS AND APPLIANCES NECESSARY TO PROPERLY COMPLETE THE WORK AS SPECIFIED OR AS SHOWN ON THE CONTRACT DRAWINGS. THE CARRIER PIPE AND FITTINGS WILL BE PAID FOR UNDER APPROPRIATE ITEM FOR WATER MAINS.

ITEM 638 - WATER WORK, MISC.: 2" AIR RELIEF VALVE WITH VALVE BOX, COMPLETE

WORK INCLUDED

THE CONTRACTOR SHALL, UNDER "ITEM 638 - WATER WORK, MISC.: 2" AIR RELIEF VALVE WITH VALVE BOX, COMPLETE", FURNISH ALL MATERIAL INCLUDING PIPE, VALVE, VALVE BOX COMPLETE REQUIRED TO INSTALL 2" AIR RELIEF VALVE ASSEMBLY WITH VALVE BOX COMPLETE, AT THE LOCATION(S) SHOWN ON THE PLANS. THE 2" AIR RELIEF VALVE ASSEMBLY WITH VALVE BOX SHALL BE INSTALLED IN ACCORDANCE WITH THE DETAILS SHOWN ON THE PLANS.

AIR RELIEF VALVE ASSEMBLY COMPLETE WITH VALVE BOXES COMPLETE

ALL AIR RELIEF VALVES SHALL BE 2-INCH BRONZE ANGLE VALVES WITH A 2- INCH BRONZE WATER METER AND 2- INCH IRON PIPE THREADED COMPANION FLANGE, AND A 2-INCH EXTRA HEAVY BRASS "CLOSE" (2-INCH LONG) NIPPLE. 2-INCH AIR RELIEF VALVES SHALL BE RATED FOR MINIMUM 150 PSI WORKING PRESSURE AND 225 PSI TEST PRESSURE AND BE EQUAL IN ALL RESPECTS TO THE 2-INCH ANGLE METER VALVE MANUFACTURED BY FORD METER BOX CO. NO. FV 13-777W; OR MUELLER CO. NO. H-14286. THE AIR RELIEF VALVE ASSEMBLY SHALL INCLUDE ALL 2" GALVANIZED BLACK IRON PIPE AND BRASS PIPE AS REQUIRED AND SPECIFIED HEREIN AND SHALL INCLUDE VALVE BOXES AS REQUIRED.

2" GALVANIZED BLACK IRON PIPE AND BRASS PIPE

THE CONTRACTOR SHALL ALSO UNDER "ITEM 638 - WATER WORK, MISC.: - 2" AIR RELIEF VALVE WITH VALVE BOX, COMPLETE" FURNISH ALL THE MATERIALS FOR AND SHALL PROPERLY CONNECT IN PLACE AT THE LOCATIONS SHOWN ON THE DRAWINGS OR AS ORDERED, ALL 2-INCH EXTRA STRONG BRASS PIPE AND FITTINGS AND ALL 2-INCH EXTRA HEAVY GALVANIZED BLACK IRON PIPE AND FITTINGS RESPECTIVELY, WHICH ARE NECESSARY FOR THE PROPER COMPLETION OF THE WORK INCLUDED UNDER THIS CONTRACT.

BRASS PIPE AND FITTINGS

ALL BRASS PIPE AND FITTINGS SHALL BE EXTRA STRONG 2-INCH PIPE SIZE RATED FOR MINIMUM 150 PSI WORKING PRESSURE AND 225 PSI TEST PRESSURE AND SHALL CONFORM TO ASTM B 43-88, "SPECIFICATION FOR SEAMLESS RED BRASS PIPE, STANDARD SIZES," AND BE EQUAL TO REVERE RED BRASS PIPE AS MANUFACTURED BY REVERE COPPER AND BRASS, INCORPORATED. FITTINGS SHALL BE EXTRA STRONG WEIGHT AND SHALL HAVE SOUND WELL-FITTING THREADS.

GALVANIZED BLACK IRON PIPE AND FITTINGS

ALL GALVANIZED BLACK IRON PIPE, NIPPLES AND FITTINGS SHALL BE EXTRA HEAVY BLACK IRON PIPE RATED FOR MINIMUM 150 PSI WORKING PRESSURE AND 225 PSI TEST PRESSURE AND SHALL CONFORM TO ASTM DESIGNATION A 53-89A, "SPECIFICATION FOR PIPE, STEEL, BLACK AND HOT-DIPPED, ZINC COATED WELDED AND SEAMLESS," OR EQUAL. THE FITTINGS SHALL BE BEADED, OR MALLEABLE IRON EXTRA HEAVY WEIGHT. ALL PIPE AND FITTINGS SHALL BE HOT- DIPPED GALVANIZED INSIDE AND OUTSIDE, AND SHALL HAVE SOUND, WELL-FITTING THREADS.

PAYMENT

THE WORK INCLUDED IN THIS ITEM SHALL BE PAID FOR AT THE CONTRACT UNIT PRICE BID FOR EACH "ITEM 638 - WATER WORK, MISC.: 2" AIR RELIEF VALVE WITH VALVE BOX, COMPLETE" WHICH PRICE AND PAYMENT SHALL CONSTITUTE FULL PAYMENT FOR FURNISHING AND INSTALLING ALL MATERIALS LABOR, EQUIPMENT, TOOLS, AND APPLIANCES REQUIRED TO COMPLETE THIS ITEM INCLUDING ALL EXCAVATION, BACKFILLING, AND THE FURNISHING OF ALL LABOR, TOOLS, ALL EQUIPMENT AND INCIDENTALS NECESSARY TO COMPLETE THE WORK IN PLACE AS SHOWN. SEEDING AND SODDING, REPAVING (BOTH TEMPORARY AND PERMANENT), SIDEWALK REPLACEMENT AND OTHER SITE RESTORATION SHALL BE INCLUDED IF NOT PAID FOR SEPARATELY UNDER OTHER ITEMS INDICATED IN THE PLANS.

ITEM 638 - WATER WORK, MISC.: FIRE HYDRANT REMOVED AND DISPOSED OF

THE CONTRACTOR, UNDER ITEM 638 - WATER WORK, MISC.: FIRE HYDRANT REMOVED AND DISPOSED OF SHALL REMOVE THE EXISTING HYDRANT BRANCH PIPING AND PERFORM ALL WORK NECESSARY AT THE LOCATIONS SHOWN ON THE CONTRACT DRAWINGS, OR WHERE ORDERED; DELIVER THE REMOVED HYDRANT TO HARVARD YARDS; EXCAVATE, PROVIDE SHEETING AND SHORING, BACKFILL, AND PROVIDE ALL OTHER WORK AS REQUIRED. PAYMENT FOR REMOVAL AND DELIVERY OF EXISTING HYDRANT SHALL BE MADE UNDER ITEM 638 - WATER WORK, MISC.: FIRE HYDRANT REMOVED AND DISPOSED OF. PAYMENT FOR REMOVING HYDRANT BRANCH PIPING SHALL BE MADE UNDER ITEM 202 - PIPE REMOVED, 24" AND UNDER, AS PER PLAN.

ITEM 202 - PIPE REMOVED, 24" AND UNDER, AS PER PLAN

THIS ITEM SHALL CONFIRM TO ODOT ITEM 202 WITH THE FOLLOWING EXEPTION:

1. *THIS WORK ITEM DOES NOT INCLUDE EXCAVATION. THE COST OF EXCAVATION IS INCLUDED WITH THE COST TO INSTALL THE PROPOSED 12" WATERMAIN.*

PAYMENT SHALL BE MADE AT THE UNIT PRICE PER FOOT OF PIPE REMOVED, 24" AND UNDER, AS PER PLAN

WATER WORK NOTES

SUBSET	TOTAL
18	43

DESIGN AGENCY
EUTHENICS
8235 Midwest Dr. | Cleveland, OH 44125

DESIGNER
TDP

REVIEWER
DTB 03/01/22

PROJECT ID
104983

SHEET	TOTAL
P.245	P.434

3rd. HIGH SERVICE DISTRICT

DEPARTMENT OF PUBLIC UTILITIES
DIVISION OF WATER
CLEVELAND, OHIO

SUBJECT : 12" WATER MAIN ALONG MILLER ROAD AT I.R. 77
CITY OF BRECKSVILLE

SCALE: AS SHOWN | NO.

CUY-77-00.42 PART 1

MODEL: 104983_UN022 PAPERSIZE: 17x11 (in.) DATE: 3/4/2022 TIME: 1:46:21 PM USER: esmccaslin
F:\Jobs\1162\Miller Road Interchange\104983\400-Engineering\Utilities\Sheets\104983_UN022.dgn

REF. NO.	START PLAN SHEET NO.	STATION LIMITS BEGIN	STATION LIMITS END	LOCATION	202 PIPE REMOVED 24" AND UNDER	202 PIPE REMOVED 24" AND UNDER, AS PER PLAN	202 PIPE REMOVED 24" AND UNDER, AS PER PLAN	202 VALVE BOX REMOVED	SPECIAL MISCELLANEOUS METAL	638 WATERWORK MISC.: 20" STEEL PIPE ENCASEMENT BORED OR JACKED	638 WATER WORK MISC.: 12" CUT-IN VALVE ASSEMBLY AND VALVE BOX, COMPLETE	638 WATER WORK MISC.: FURNISHING AND SETTING 6" HYDRANT, COMPLETE	638 WATERWORK MISC.: FIRE HYDRANT REMOVED AND DISPOSED OF	638 WATER WORK MISC.: 12" DUCTILE IRON, CLASS 52, CEMENT LINED PUSH-ON JOINT PIPE WITH RETAINED MECHANICAL JOINT DUCTILE IRON CLASS 350, CEMENT LINED RETAINED MECHANICAL JOINT FITTINGS	638 WATER WORK MISC.: 12" DUCTILE IRON, CLASS 52, CEMENT LINED PUSH-ON JOINT PIPE WITH RETAINED MECHANICAL JOINT DUCTILE IRON CLASS 350, CEMENT LINED RETAINED MECHANICAL JOINT FITTINGS	638 WATER WORK MISC.: 12" DUCTILE IRON, CLASS 53, CEMENT LINED PIPE AND DUCTILE IRON CLASS 350, CEMENT LINED FITTINGS ALL HAVING BOLTLESS RESTRAINED PUSH-ON JOINTS, TYPE 1	638 WATER WORK MISC.: 2" AIR RELIEF VALVE WITH VALVE BOX, COMPLETE	638 WATER WORK MISC.: 12" GATE VALVE WITH VALVE BOX, COMPLETE	638 WATER WORK MISC.: CUT, FILL AND PLUG EXISTING 12" WATER MAIN
					FT	FT	FT	EACH	LB	FT	EACH	EACH	EACH	FT	FT	FT	EACH	EACH	FT
FUNDING SOURCE						(ODOT)	(LOCAL)							(ODOT)	(LOCAL)				
	P.241	WATER NOTES							5000										
W-1	P.247	11+52									1								
W-2	P.247	11+52	11+70			18													
W-3	P.247	11+52	17+48											442	154				
W-4	P.247	11+70	14+86		310														
W-4A		14+87	17+72			131	154												
W-5		14+89										1							
W-5A		14+89											1						
W-6		17+60															1		
W-7		17+67						1											
W-8		17+48	22+77													529			
W-9		17+72	23+73																601
W-10		19+23	21+23							200									
W-11		22+77	32+28											439	512				
W-12		22+77	32+28			439	512												
W-13		24+90.5										1							
W-14		25+00																1	
W-15		25+02						1											
W-16		25+08											1						
W-17		28+24													66				
W-17A		28+24					66												
W-18		28+30										1							
W-19		29+55											1						
W-20		31+03.50										1							
W-21		32+28									1								
TOTALS CARRIED TO GENERAL SUMMARY					310	588	732	2	5000	200	2	4	3	881	732	529	1	1	601

CUY-77-00.42 PART 1

MODEL: I04983_U0001 PAPERSIZE: 17x11 (in.) DATE: 3/4/2022 TIME: 1:46:25 PM USER: esmccaslin
F:\Jobs\162-Miller Road Interchange\104983\400-Engineering\Utilities\Sheets\104983_U0002.dgn

WATER WORK QUANTITIES
MILLER ROAD

SUBSET 19 | TOTAL 43

DESIGN AGENCY
EUTHENICS
8235 Mohawk Dr. | Cleveland, OH 44125

DESIGNER TDP

REVIEWER DTB 03/01/22

PROJECT ID 104983

SHEET P.246 | TOTAL P.434

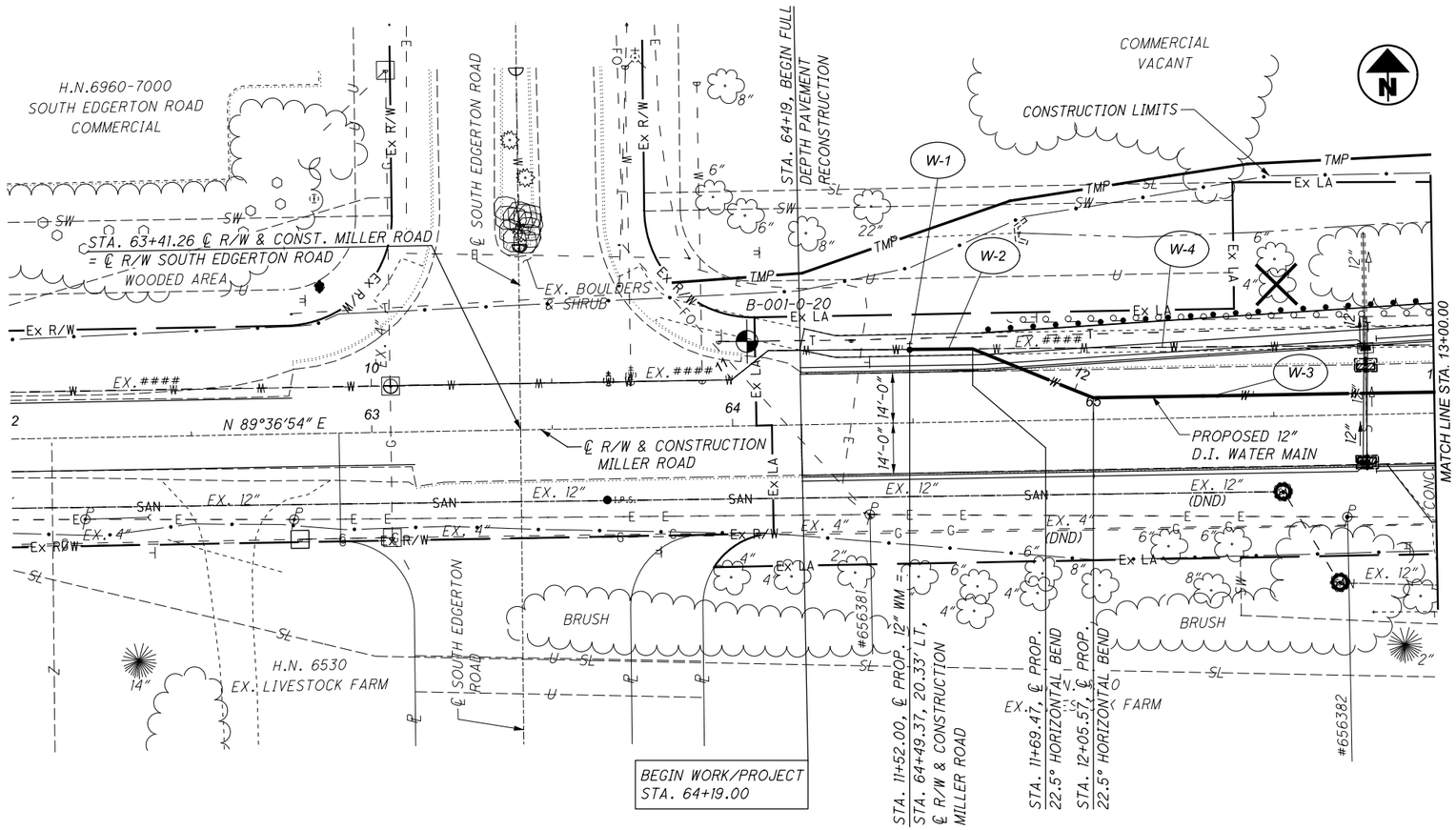

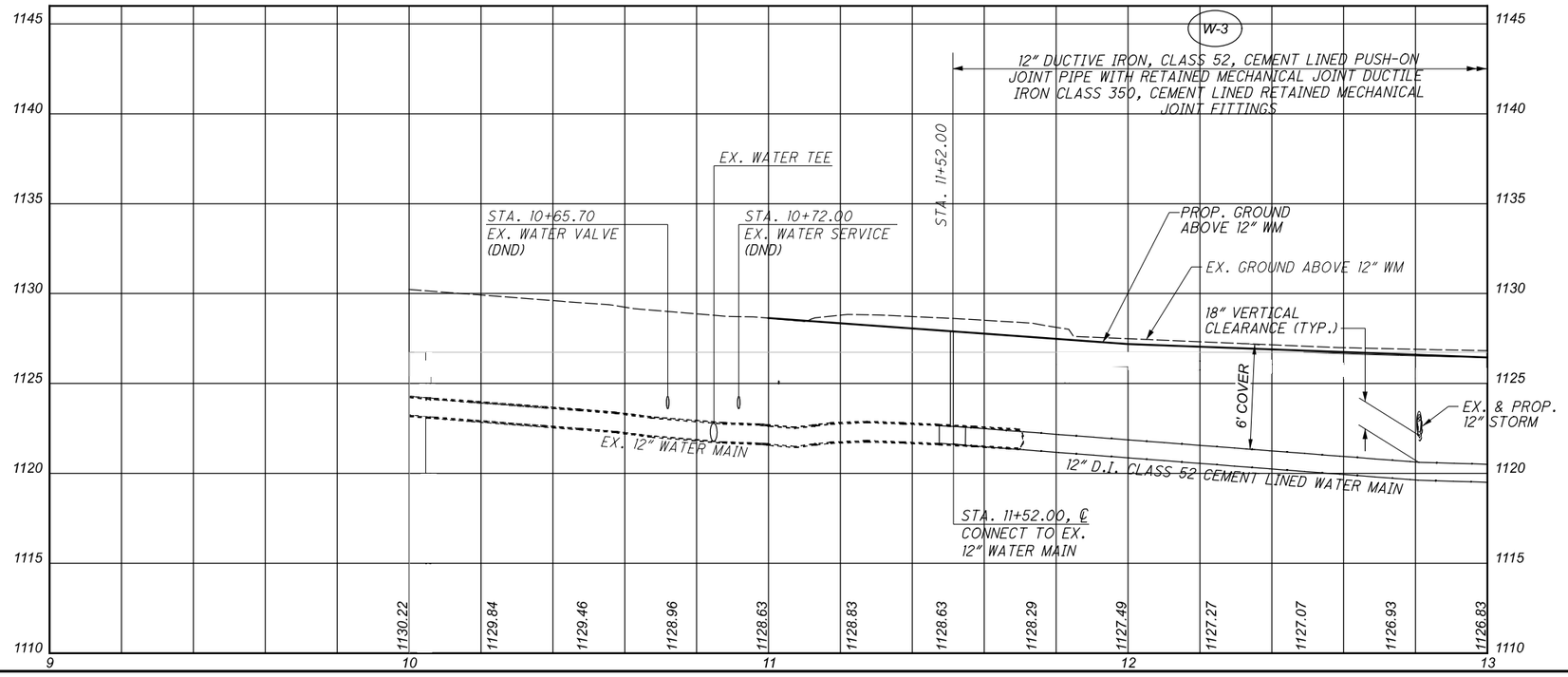

HORIZONTAL SCALE IN FEET
0 10 20 40

WATER WORK PLAN AND PROFILE
STA. 9+00 TO STA. 13+00

CUY-77-00.42 PART 1

MODEL: CLP_14 - Miller Water Line [Sheet] PAPERSIZE: 17x11(in.) DATE: 3/4/2022 TIME: 1:46:33 PM USER: esmccaslin
F:\Jobs\162-Miller Road Interchange\104983\400-Engineering\Utilities\Sheets\104983_UP002.dgn

SUBSET	TOTAL
20	43

DESIGN AGENCY
EUTHENICS
8235 Mohawk Dr. | Cleveland, OH 44130

DESIGNER
ESM

REVIEWER
DTB 11/12/21

PROJECT ID
104983

SHEET	TOTAL
P.247	P.434

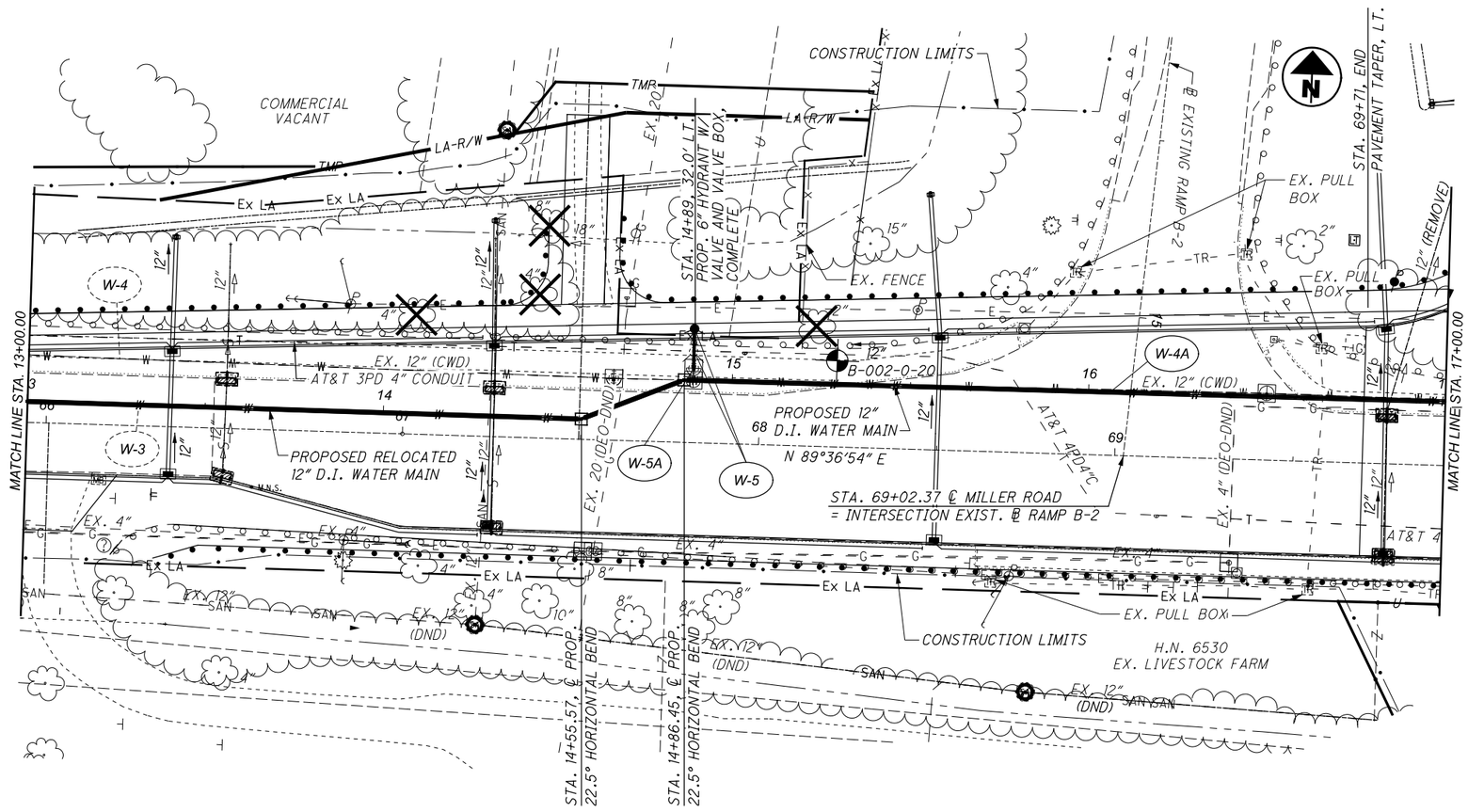

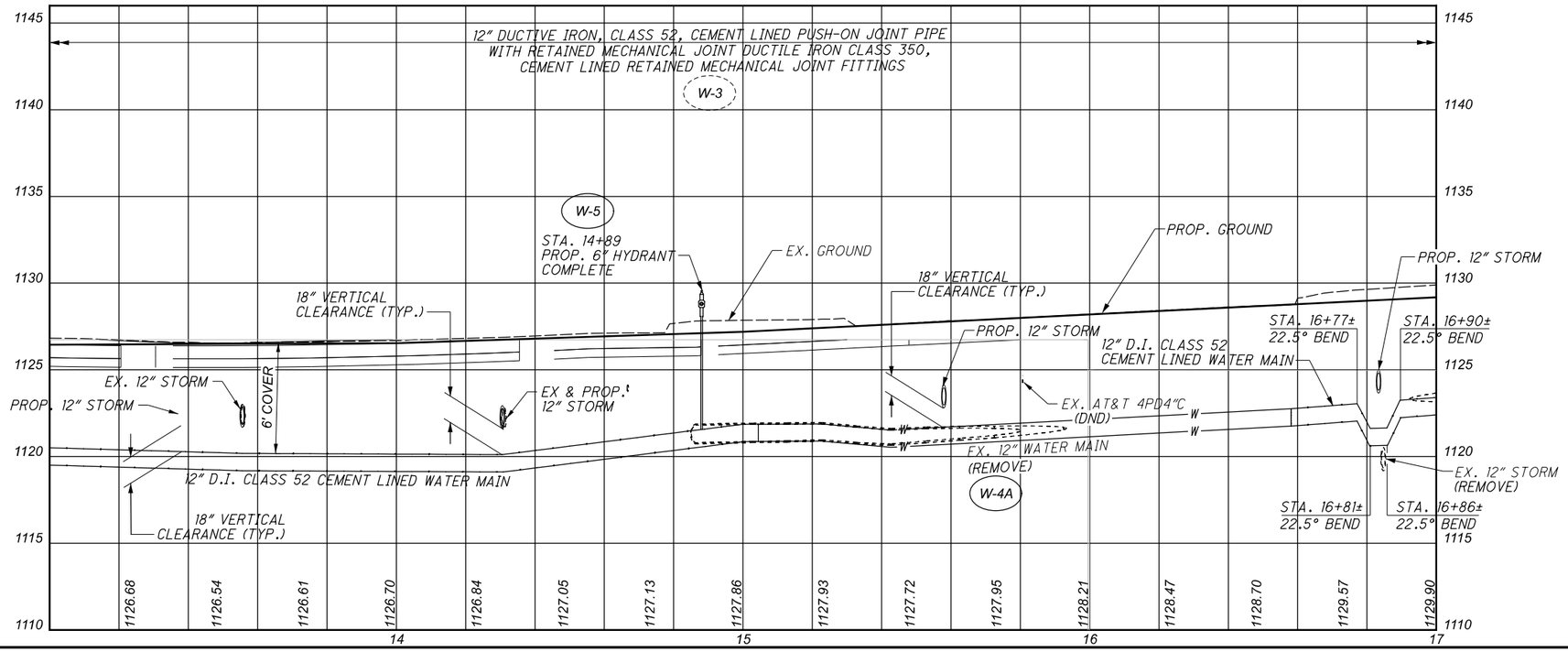

HORIZONTAL
SCALE IN FEET
0 10 20 40

WATER WORK PLAN AND PROFILE
STA. 13+00 TO STA. 17+00

CUY-77-00.42 PART 1

MODEL: CLP_14 - Miller Water Line-1[Sheet] PAPERSIZE: 17x11(in.) DATE: 3/4/2022 TIME: 1:47:52 PM USER: esmccoslin
F:\Jobs\162-Miller Road Interchange\104983\400-Engineering\Utilities\Sheets\104983_UP002.dgn

SUBSET	TOTAL
21	43

DESIGN AGENCY
EUTHENICS
8235 Mohawk Dr. | Cleveland, OH 44105

DESIGNER
ESM

REVIEWER
DTB 11/12/21

PROJECT ID
104983

SHEET	TOTAL
P.248	P.434

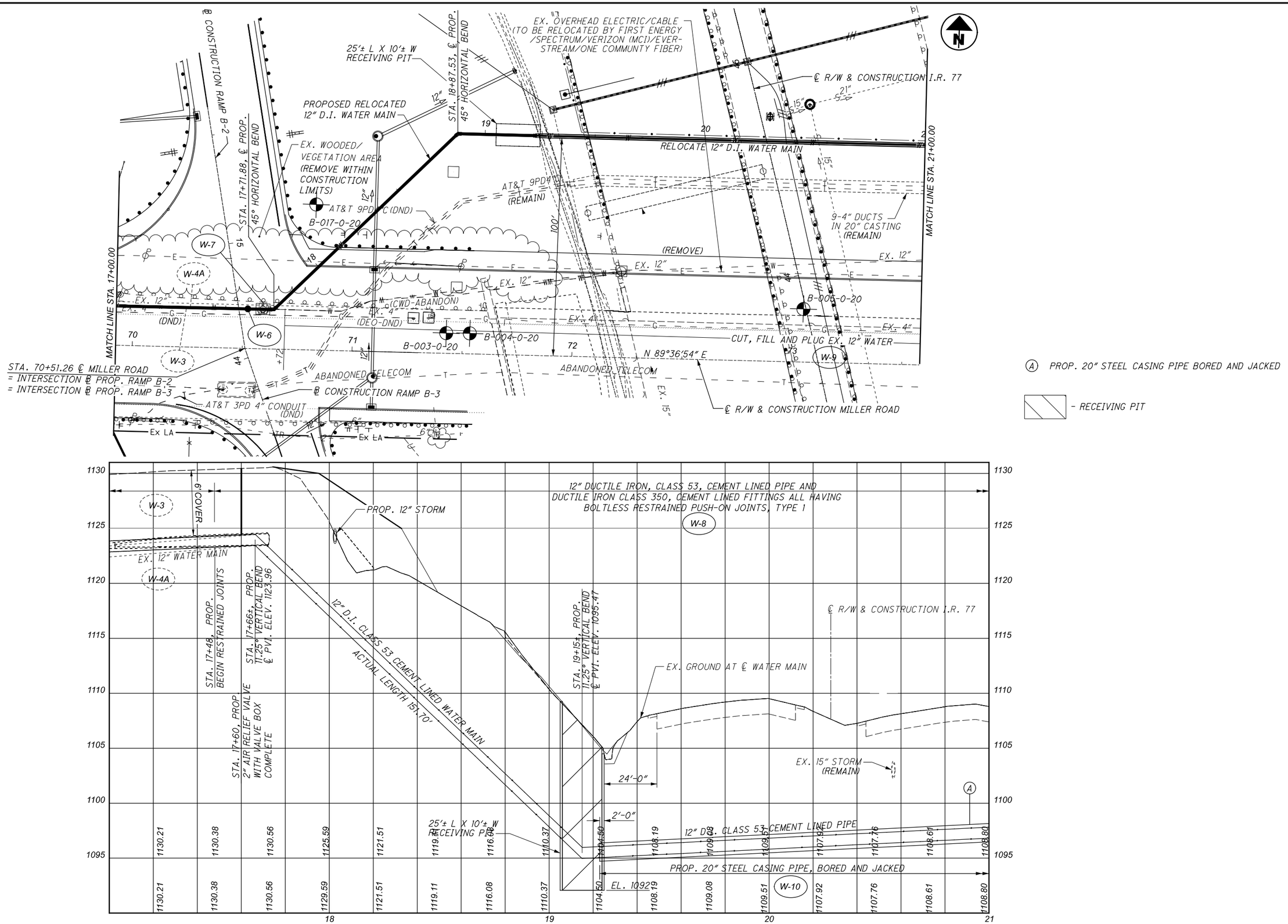

HORIZONTAL SCALE IN FEET
0 10 20 40

WATER WORK PLAN AND PROFILE
STA. 17+00 TO STA. 21+00

CUY-77-00.42 PART 1

MODEL: CLP_14 - Miller Water Line-2 [Sheet] PAPERSIZE: 17x11(in.) DATE: 3/4/2022 TIME: 1:48:17 PM USER: esmccasiln
F:\Jobs\1162-Miller Road Interchange\104983\400-Engineering\Utilities\Sheets\104983_UP002.dgn

SUBSET	TOTAL
22	43

DESIGN AGENCY
EUTHENICS
8235 Mohawk Dr. | Cleveland, OH 44125

DESIGNER	ESM
REVIEWER	DTB 11/12/21
PROJECT ID	104983
SHEET	TOTAL
P.249	P.434

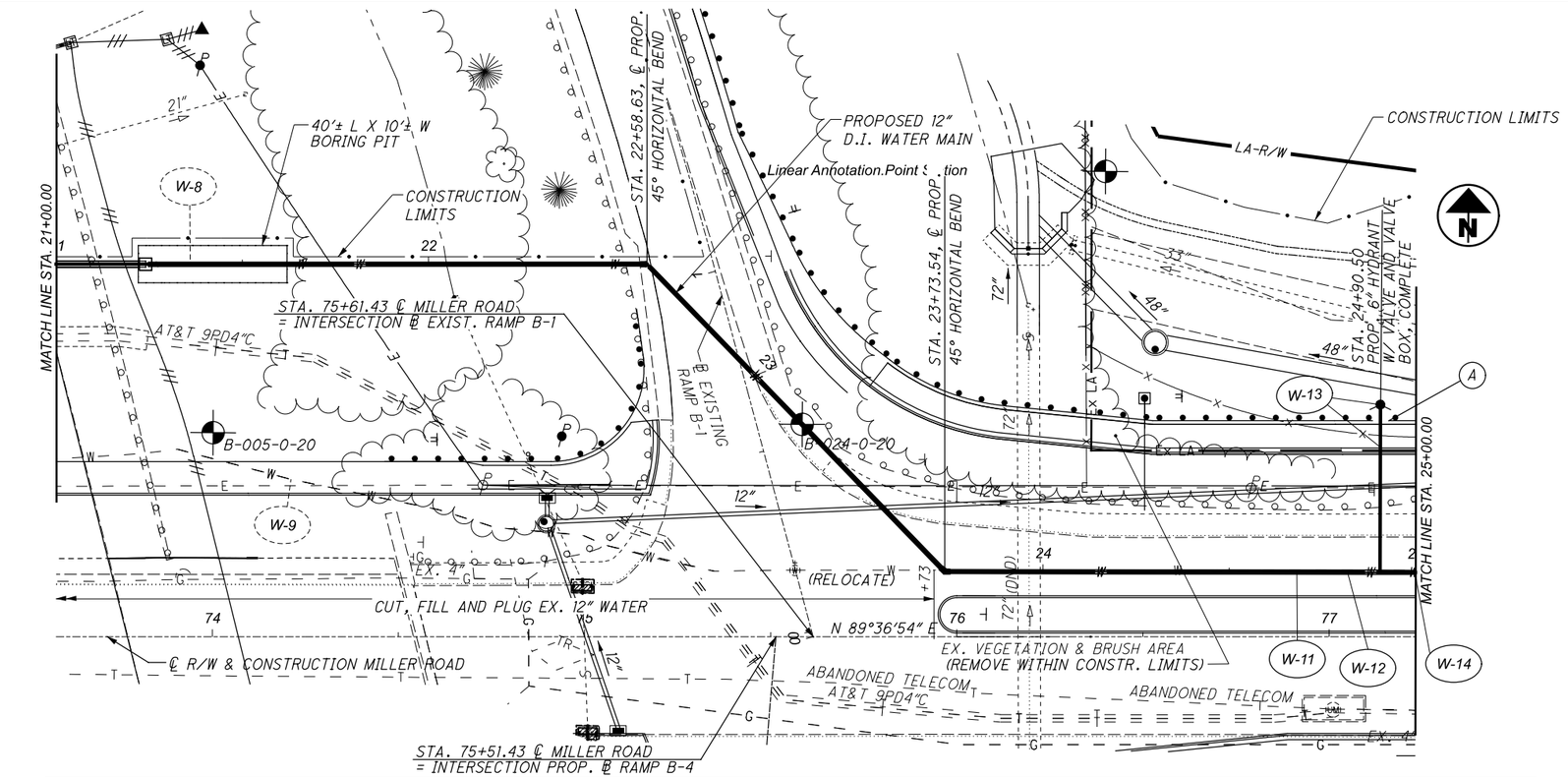

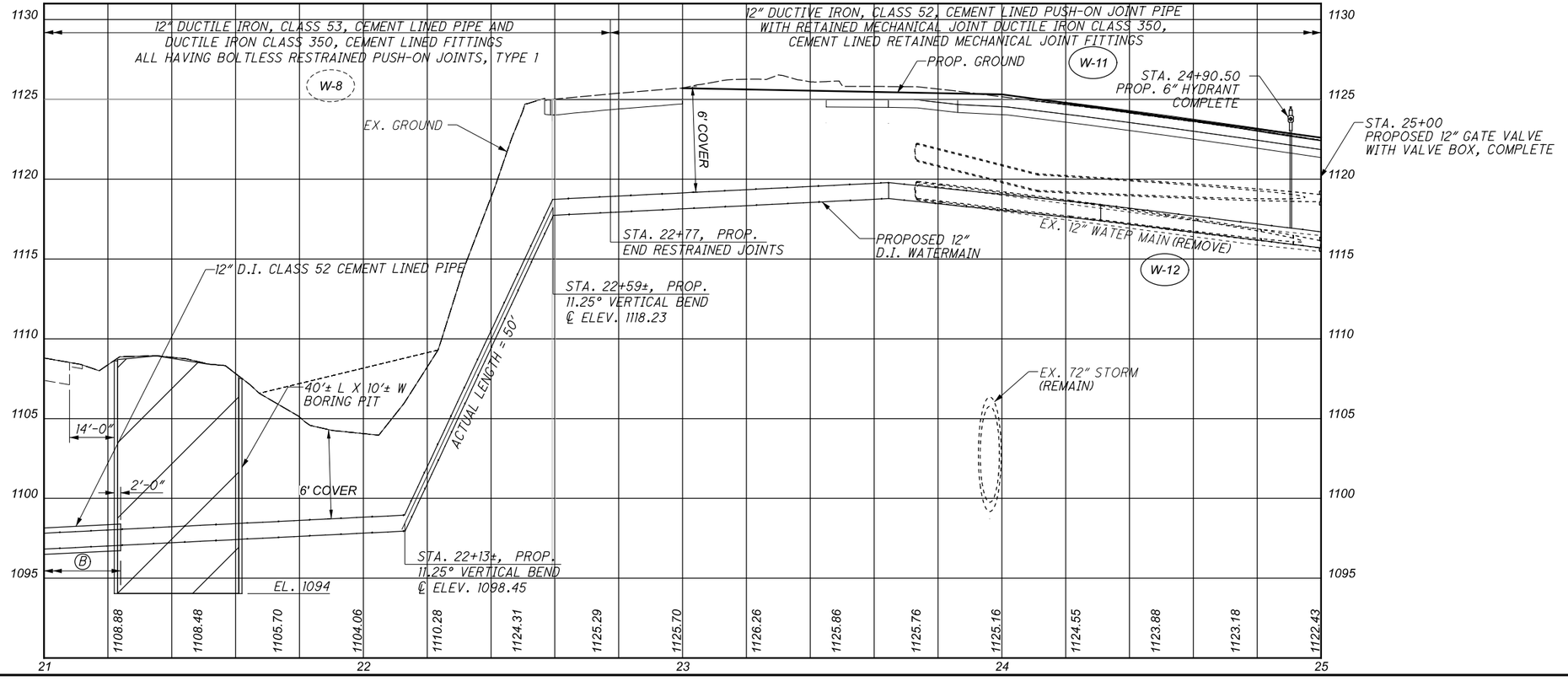

HORIZONTAL SCALE IN FEET
0 10 20 40

WATER WORK PLAN AND PROFILE STA. 21+00 TO STA. 25+00

CUY-77-00.42 PART 1

SUBSET 23 | TOTAL 43

DESIGN AGENCY
EUTHENICS 8235 Mohawk Dr. | Cleveland, OH 44539

DESIGNER ESM

REVIEWER DTB 11/12/21

PROJECT ID 104983

SHEET P.250 | TOTAL P.434

MODEL: CLP_I4 - Miller Water Line-3 [Sheet] PAPERSIZE: 17x11(In.) DATE: 3/4/2022 TIME: 1:48:40 PM USER: esmccaslin
F:\Jobs\1162-Miller Road Interchange\104983\400-Engineering\Utilities\Sheets\104983_UP002.dgn

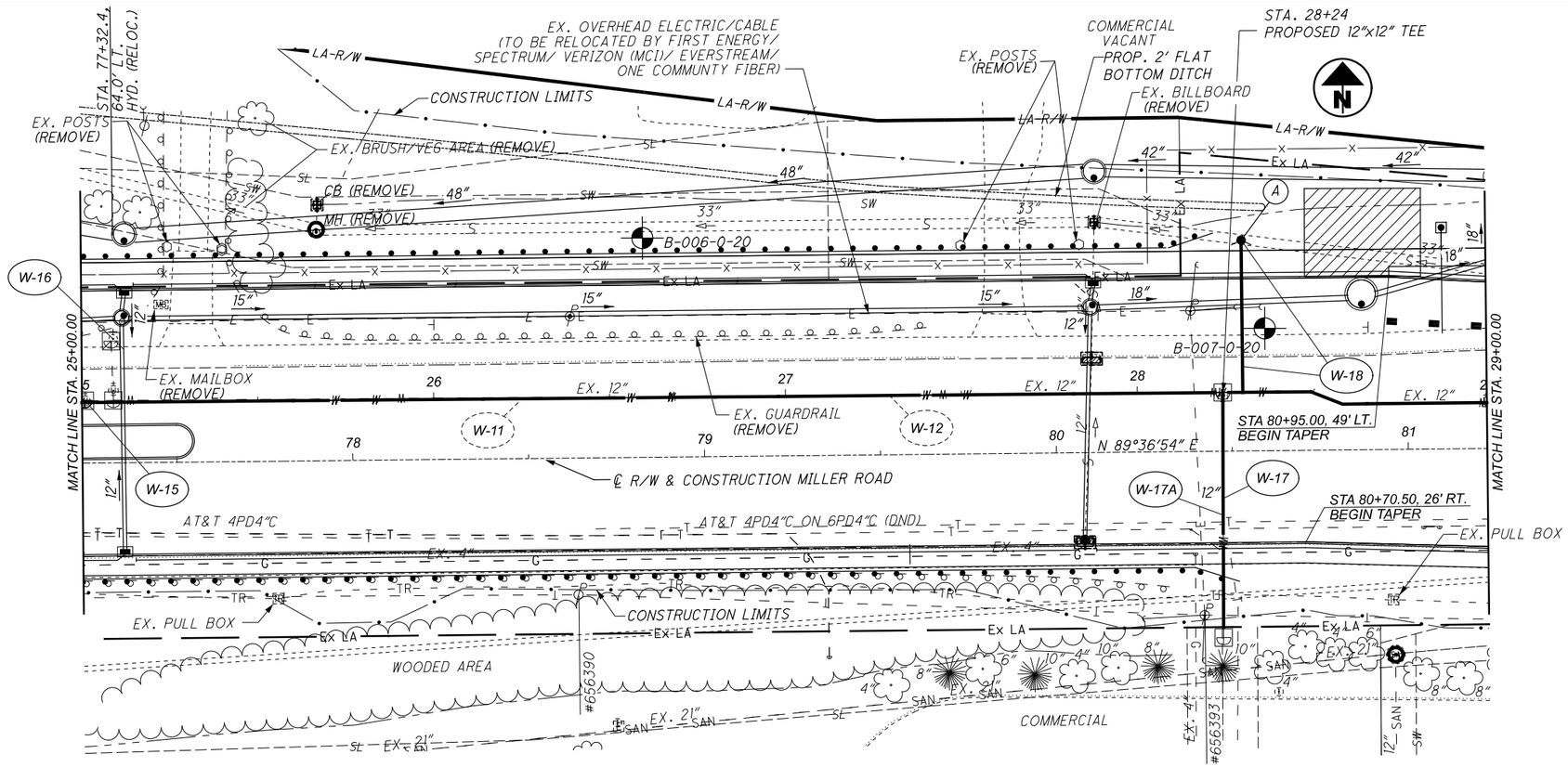

HORIZONTAL SCALE IN FEET
0 10 20 40

WATER WORK PLAN AND PROFILE
STA. 25+00 TO STA. 29+00

SUBSET	TOTAL
24	43

DESIGN AGENCY
EUTHENICS
8333 Midwest Dr. | Cleveland, OH 44130

DESIGNER	ESM
REVIEWER	DTB 11/12/21
PROJECT ID	104983
SHEET	P.251
TOTAL	P.434

CUY-77-00.42 PART 1

MODEL: CLP_I4 - Miller Water Line-4 [Sheet] PAPERSIZE: 17x11(in.) DATE: 3/4/2022 TIME: 1:49:02 PM USER: esmccaslin
F:\Jobs\162-Miller Road Interchange\104983\400-Engineering\Utilities\Sheets\104983_UP002.dgn

WATER WORK PLAN AND PROFILE
STA. 29+00 TO STA. 32+28

HORIZONTAL SCALE IN FEET
0 10 20 40

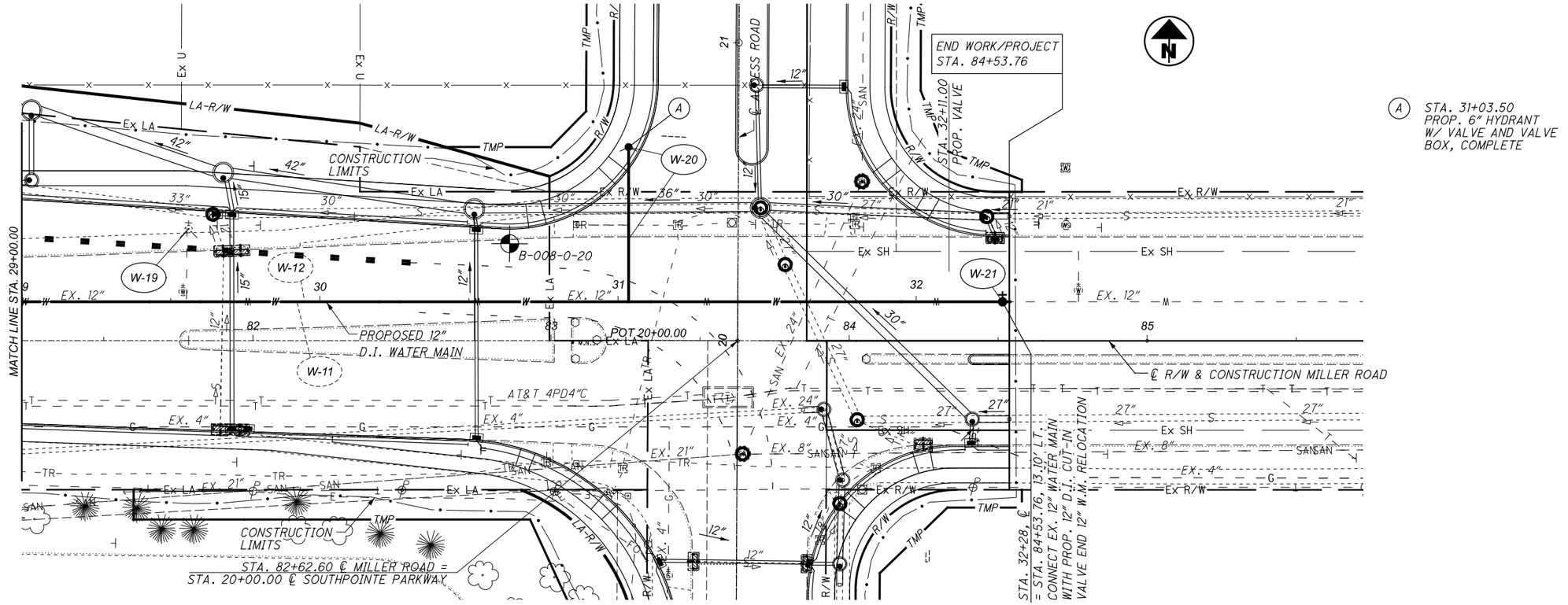

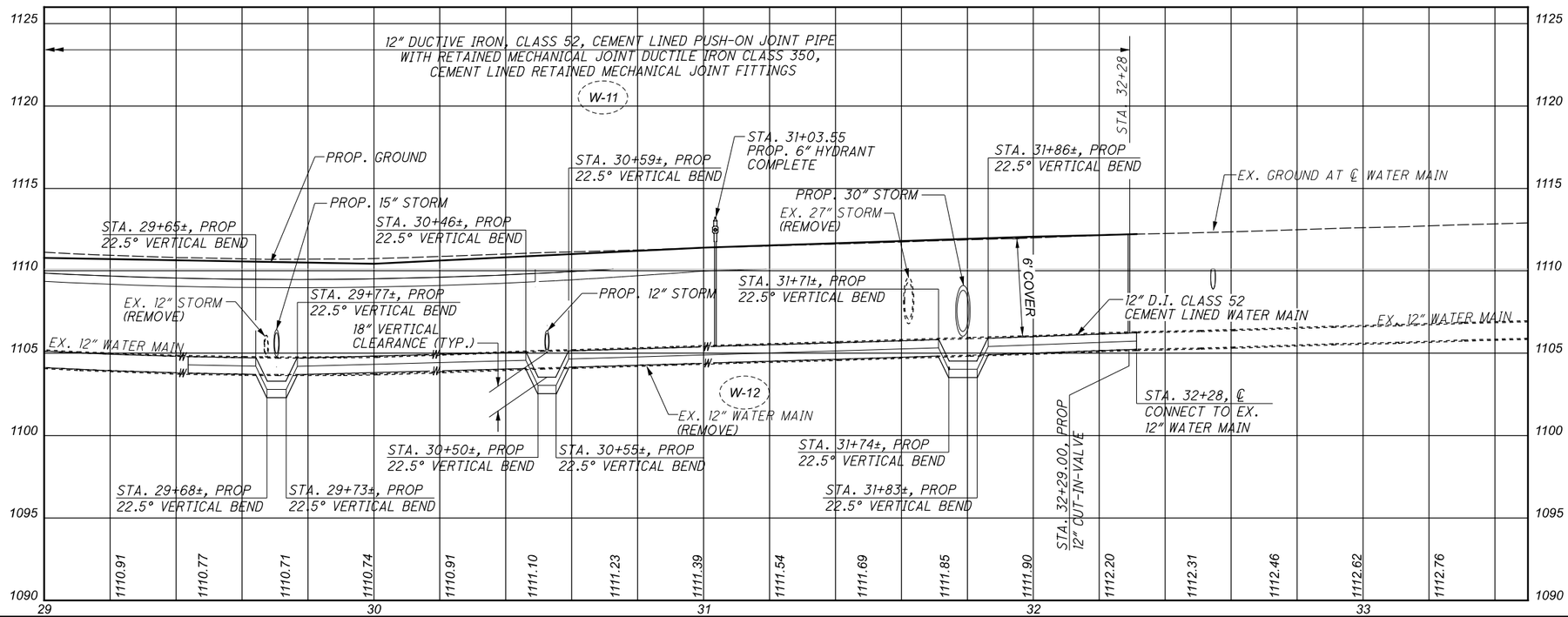

CUY-77-00.42 PART 1

MODEL: CLP_I4 - Miller Water Line-5 [Sheet] PAPERSIZE: 17x11(in.) DATE: 3/4/2022 TIME: 1:49:26 PM USER: esmccaslin
F:\Jobs\162-Miller Road Interchange\104983\400-Engineering\Utilities\Sheets\104983_UP002.dgn

SUBSET 25 | TOTAL 43

DESIGN AGENCY
EUTHENICS
8333 Midwest Dr. | Cleveland, OH 44130

DESIGNER ESM

REVIEWER DTB 11/12/21

PROJECT ID 104983

SHEET P.252 | TOTAL P.434

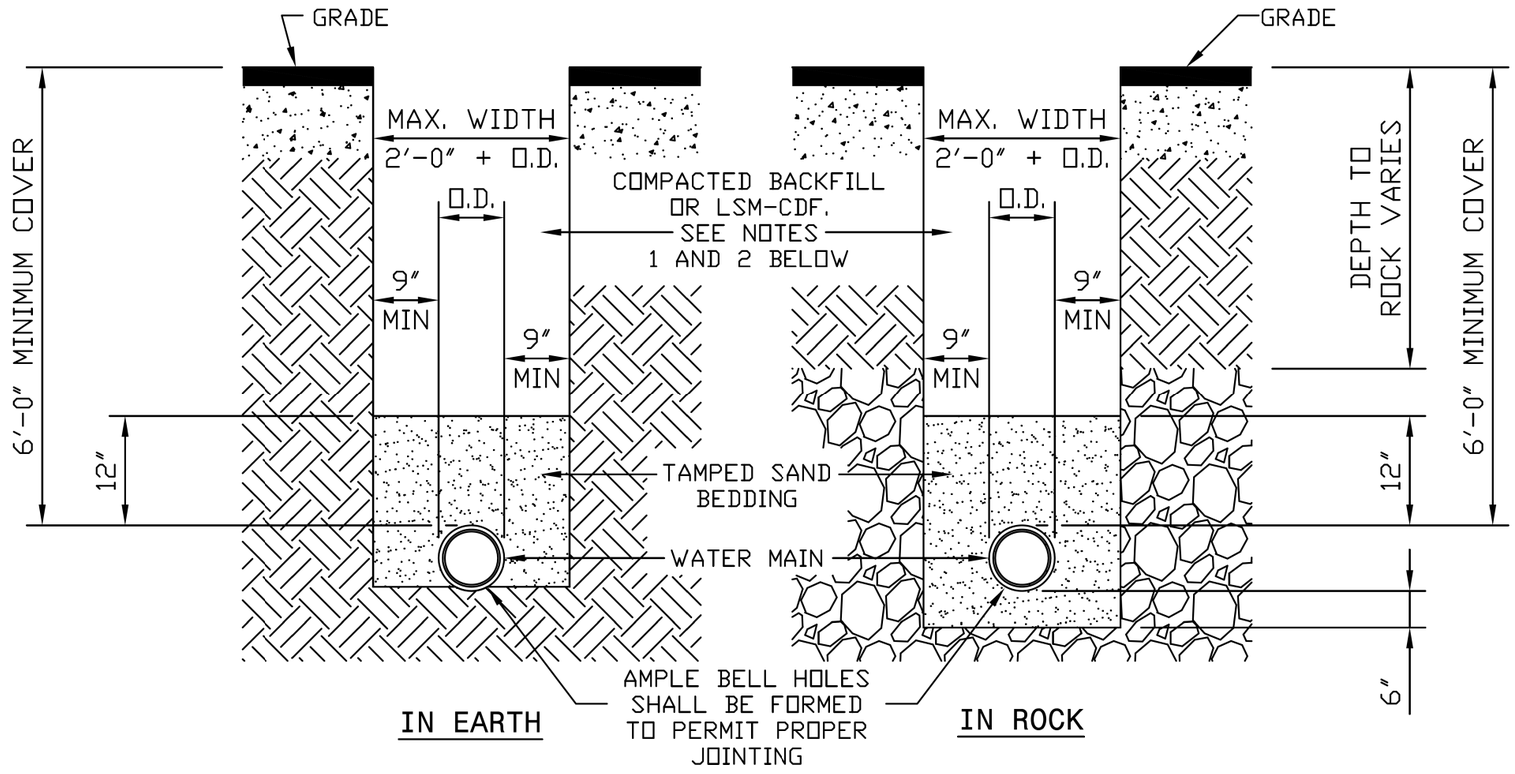

WATER MAIN TRENCH DETAILS

- NOT TO SCALE -

NOTES:

1) PREMIUM BACKFILL CONSISTING OF LOW STRENGTH MORTAR - CONTROLLED DENSITY FILL (LSM-CDF) "FLOWABLE FILL" IS REQUIRED:
   A) UNDER ALL EXISTING OR FUTURE PAVEMENTS, SIDEWALKS AND DRIVES WITHIN THE CITY OF CLEVELAND CORPORATION LIMITS.
   B) AS SPECIFIED IN LOCAL MUNICIPALITIES SERVED BY CWD (SEE LOCAL REQUIREMENTS)
2) WHEN PREMIUM BACKFILL IS REQUIRED BY THE LOCAL MUNICIPALITY FOR CASES OTHER THAN THOSE LISTED IN NOTE 1 ABOVE, IT SHALL BE LIMESTONE GRADED PER ODOT 304.02 OR ODOT 411. NO SLAG IS PERMITTED.
3) CONTRACTOR SHALL USE SPECIAL CARE IN PLACING THE SAND BEDDING, SO AS TO AVOID SCRAPING OF THE EXTERIOR COATING, INJURING THE PIPE, DISTORTING OR MOVING THE PIPE WHEN COMPACTING THE SAME. THE SAND BEDDING SHALL BE TAMPED IN SIX (6) INCH LAYERS, SIMULTANEOUSLY ON EACH SIDE OF THE PIPE, AND THOROUGHLY COMPACTED SO AS TO PROVIDE A SOLID BACKING AGAINST THE EXTERNAL SURFACE OF THE PIPE.
4) MINIMUM COMPACTION FOR ALL SAND BEDDING, BACKFILL AND PREMIUM BACKFILL SHALL BE 95% STANDARD PROCTOR.
5) PAVEMENT, SIDEWALK OR DRIVES TO BE INSTALLED IN ACCORDANCE WITH LOCAL MUNICIPALITY'S SPECIFICATIONS.

STD-001

DATE: 6-21-2012

WATER WORK DETAILS

CUY-77-00.42 PART 1

MODEL: 104983_UD001 PAPERSIZE: 17x11 (in.) DATE: 3/4/2022 TIME: 1:49:59 PM USER: esmccaslin
F:\Jobs\1162-Miller Road Interchange\104983400-Engineering\Utilities\Sheets\104983_UD001.dgn

3rd. HIGH SERVICE DISTRICT

DEPARTMENT OF PUBLIC UTILITIES
DIVISION OF WATER
CLEVELAND, OHIO

SUBJECT : 12" WATER MAIN ALONG MILLER ROAD AT I.R. 77
CITY OF BRECKSVILLE

SCALE: AS SHOWN | NO.

SUBSET 26 | TOTAL 43

DESIGN AGENCY
EUTHENICS
8235 Hubbard Dr. | Cleveland, OH 44125

DESIGNER TDP

REVIEWER DTB 03/01/22

PROJECT ID 104983

SHEET P. 253 | TOTAL P.434

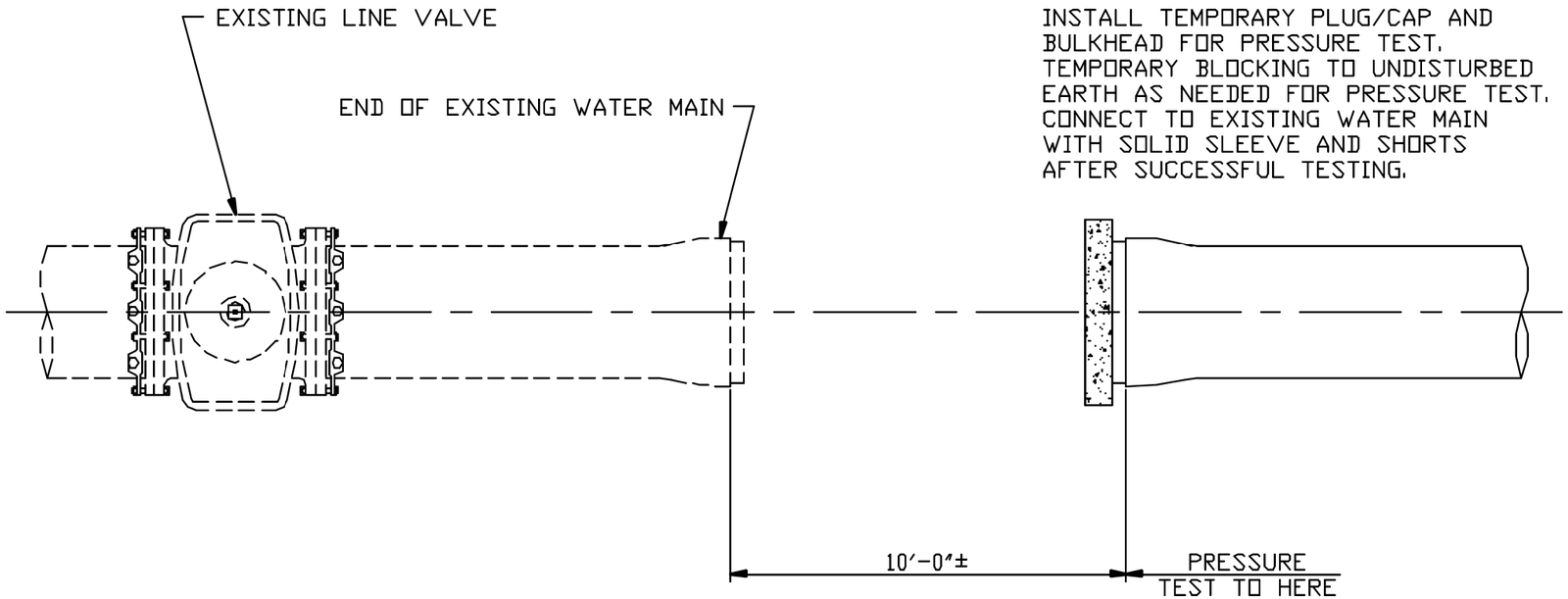

NOTE:

PRESSURE TESTING OF WATER MAINS:

WHERE NEW/EXTENDED WATER MAINS ARE CONNECTED TO AN EXISTING WATER MAIN FOR PRESSURE TEST, RESULTING IN FAILURE OF THE PRESSURE TEST OR ANY DAMAGE TO THE EXISTING WATER MAIN , OR ITS APPURTENANCES, THE REPAIR THEREOF SHALL BE THE SOLE RESPONSIBILITY OF THE CONTRACTOR.

ALL REPAIRS SHALL BE DONE TO THE SATISFACTION OF THE DIVISION OF WATER.

ALTERNATE PRESSURE TESTING DETAIL

- NOT TO SCALE -

STD-002

DATE: 10-1-97 | BY: RSK

WATER WORK DETAILS

3rd. HIGH SERVICE DISTRICT

DEPARTMENT OF PUBLIC UTILITIES
DIVISION OF WATER
CLEVELAND, OHIO

SUBJECT : 12" WATER MAIN ALONG MILLER ROAD AT I.R. 77
CITY OF BRECKSVILLE

SCALE: AS SHOWN | NO.

SUBSET 27 | TOTAL 43

DESIGN AGENCY
EUTHENICS
8230 Midwest Dr. | Cleveland, OH 44125

DESIGNER TDP

REVIEWER DTB 03/01/22

PROJECT ID 104983

SHEET P. 254 | TOTAL P.434

CUY-77-00.42 PART 1

MODEL: 104983_UD002 PAPERSIZE: 17x11 (in.) DATE: 3/4/2022 TIME: 1:50:12 PM USER: esmccaslin
F:\Jobs\11162\Miller Road Interchange\104983\400-Engineering\Utilities\Sheets\104983_UD002.dgn

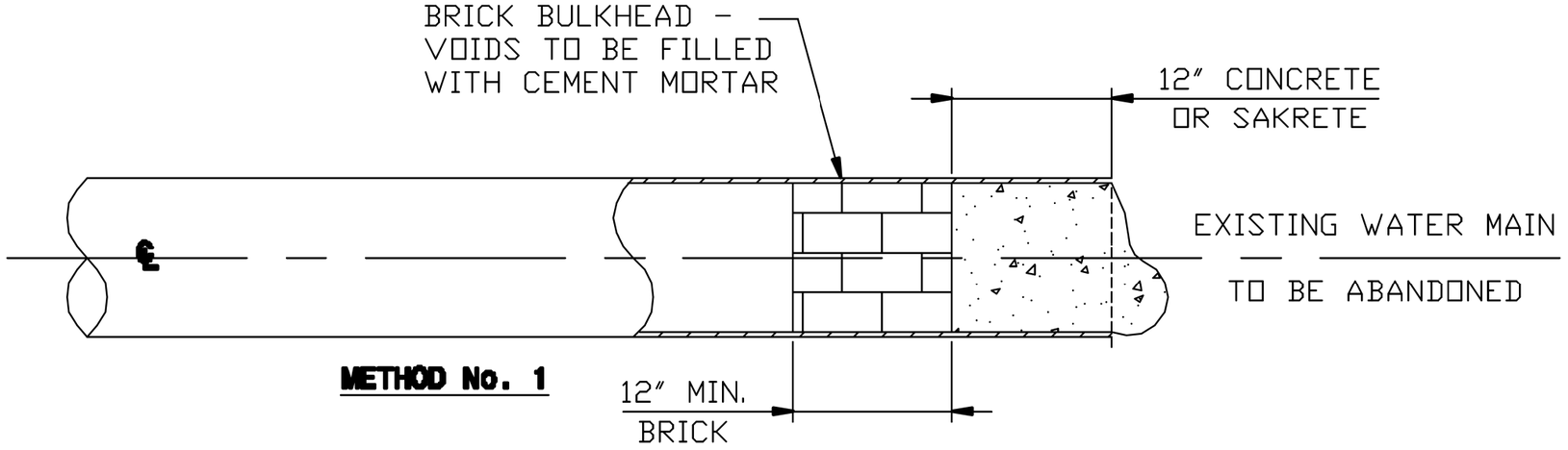

METHOD No. 1

NOTE:
PROPERLY DRAIN MAIN
PRIOR TO ABANDONMENT

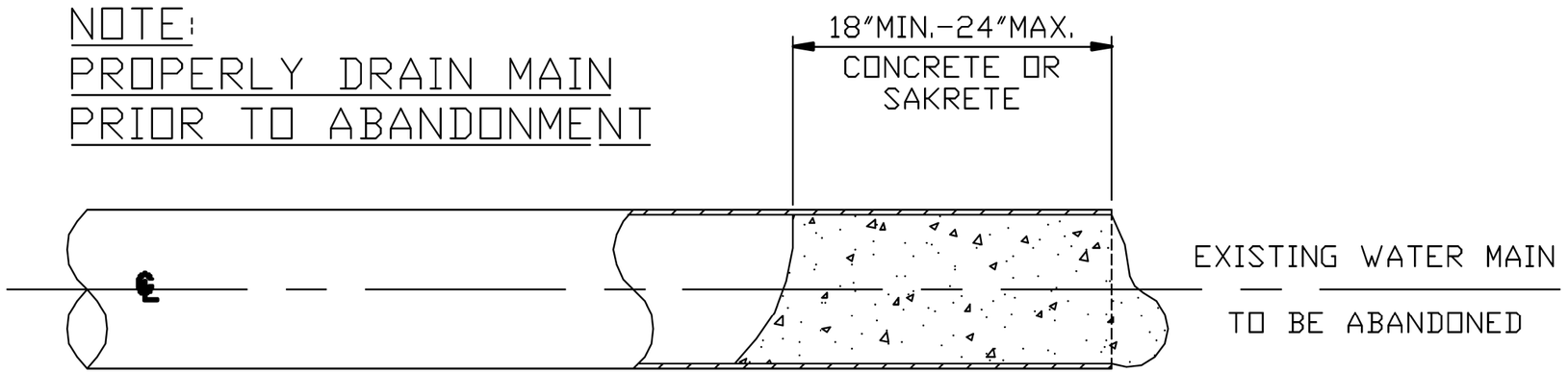

METHOD No. 2

PLUGGING ABANDONED WATER MAIN ENDS

- NOT TO SCALE -

STD-004

DATE: 10-1-97 | BY: RSK

3rd. HIGH SERVICE DISTRICT

DEPARTMENT OF PUBLIC UTILITIES
DIVISION OF WATER
CLEVELAND, OHIO

SUBJECT : 12" WATER MAIN ALONG MILLER ROAD AT I.R. 77
CITY OF BRECKSVILLE

SCALE: AS SHOWN | NO.

WATER WORK DETAILS

SUBSET 28 | TOTAL 43

DESIGN AGENCY
EUTHENICS
8235 Mohawk Dr. | Cleveland, OH 44129

DESIGNER TDP

REVIEWER DTB 03/01/22

PROJECT ID 104983

SHEET P. 255 | TOTAL P.434

CUY-77-00.42 PART 1

MODEL: 1049893_UD003 PAPERSIZE: 17x11 (in.) DATE: 3/4/2022 TIME: 1:50:24 PM USER: esmccaslin
F:\Jobs\11162-Miller Road Interchange\104983\400-Engineering\Utilities\Sheets\104983_UD003.dgn

*CONNECTION SHALL BE MADE WITH RETAINED MECHANICAL JOINT SOLID SLEEVES (SHORT OR LONG PATTERN) DUCTILE IRON CLASS 350 OR CAST IRON CLASS 250 OR COMPRESSION COUPLINGS.

COMPRESSION COUPLINGS SHALL BE OF A GASKETED, SLEEVE TYPE WITH DIAMETERS TO PROPERLY FIT PLAIN END IRON PIPE. EACH COUPLING SHALL CONSIST OF ONE (1) MIDDLE RING, WITHOUT STOPS; TWO (2) FOLLOWER GLANDS; TWO (2) RUBBER-COMPOUND BUNA-N BLEND, WEDGE SECTION GASKETS; AND SUFFICIENT TRACKHEAD STAINLESS STEEL BOLTS AND NUTS (ASTM A276/A193/194, TYPE 304, EXTRA HEAVY HEX) TO PROPERLY COMPRESS THE GASKETS.

MIDDLE RING AND FOLLOWER GLANDS SHALL BE OF EITHER STEEL OR DUCTILE IRON (ASTM-A536).

THE COMPRESSION COUPLING SHALL BE WITHOUT STOPS AND BE RATED FOR A MINIMUM WORKING PRESSURE OF 250 PSI AND SHALL BE EQUAL TO THE DRESSER STYLE No's 38, 138 OR 162 (TRANSITION TYPE), OR SMITH-BLAIR 441 STRAIGHT AND TRANSITION COUPLINGS.

ALL BOLTS AND NUTS ON ALL MECHANICAL JOINTS, INCLUDING THOSE ON THE 'RETAINED' TYPE, SHALL HAVE FIELD APPLIED ONE (1) COAT OF BITUMASTIC PAINTING FOLLOWED BY AN ENCASEMENT OF POLYETHYLENE WRAPPING IN ACCORDANCE WITH ANSI/AWWA C-105/A21.5-88, CLASS 'C', METHOD 'B'.

THE DIVISION OF WATER WILL DETERMINE THE FIELD LOCATION OF THE CUT-IN-VALVE ASSEMBLY. THE DIVISION OF WATER WILL ALSO SET THE TIME OF INSTALLATION OF THE CUT-IN-VALVE ASSEMBLY.

THE CONTRACTOR SHALL DO ALL PIPE CUTTING AND INSTALLATION. HOWEVER, THE INSTALLATION OF THE CUT-IN-VALVE ASSEMBLY SHALL BE DONE UNDER THE SUPERVISION OF THE DIVISION OF WATER.

CUT-IN-VALVE DETAIL

- NOT TO SCALE -

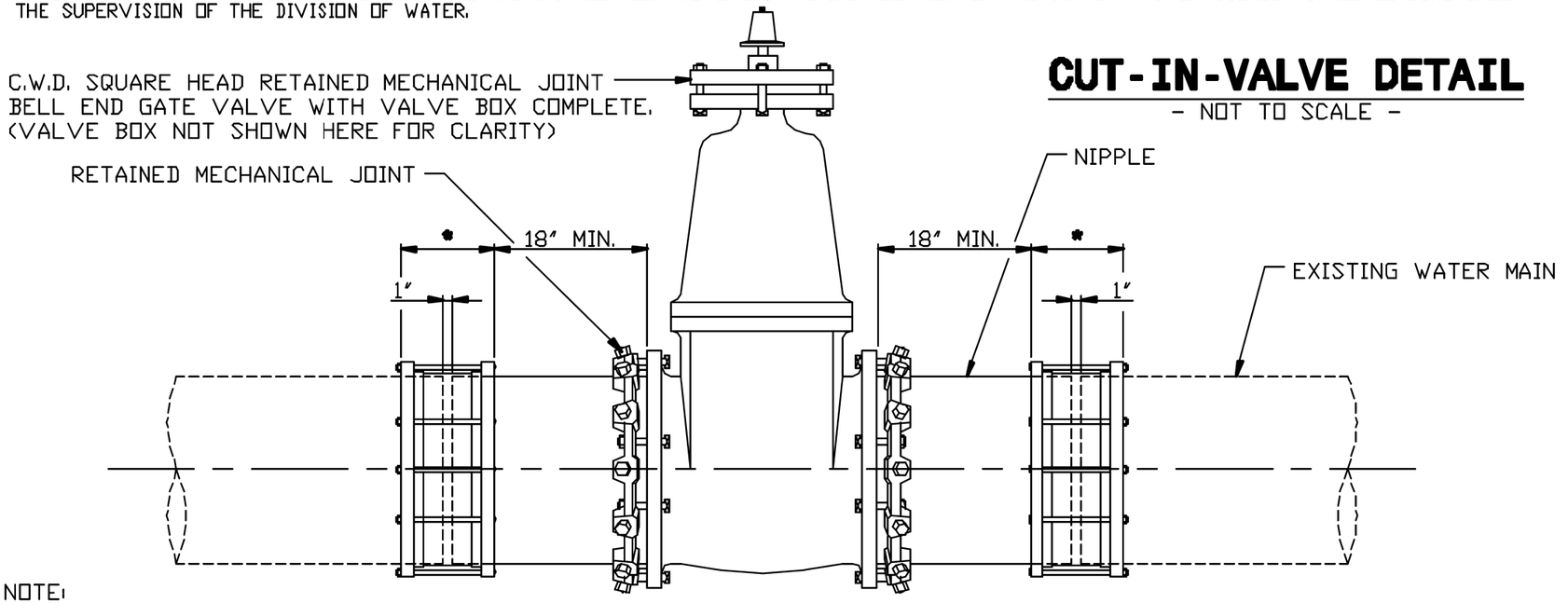

NOTE:
BEFORE CUTTING EXISTING WATER MAIN, THE NIPPLES SHALL BE CONNECTED TO THE MECHANICAL JOINT BELL END GATE VALVE. AFTER CUTTING PIPE, FINAL CONNECTIONS SHALL BE MADE WITH COUPLINGS/SOLID SLEEVES AS SPECIFIED.

STD-005 | DATE: 10-1-97 | BY: RSK

WATER WORK DETAILS

3rd. HIGH SERVICE DISTRICT

DEPARTMENT OF PUBLIC UTILITIES
DIVISION OF WATER
CLEVELAND, OHIO

SUBJECT : 12" WATER MAIN ALONG MILLER ROAD AT I.R. 77
CITY OF BRECKSVILLE

SCALE: AS SHOWN | NO.

SUBSET 29 | TOTAL 43

DESIGN AGENCY
EUTHENICS
8235 Mohawk Dr. | Cleveland, OH 44129

DESIGNER TDP

REVIEWER DTB 03/01/22

PROJECT ID 104983

SHEET P. 256 | TOTAL P.434

CUY-77-00.42 PART 1

MODEL: 104983_UD004 PAPERSIZE: 17x11 (in.) DATE: 3/4/2022 TIME: 1:50:35 PM USER: esmccastlin
F:\Jobs\1162-Miller Road Interchange\104983400-Engineering\Utilities\Sheets\104983_UD004.dgn

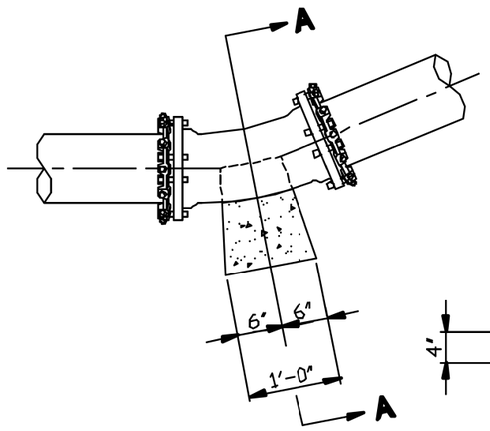

PLAN

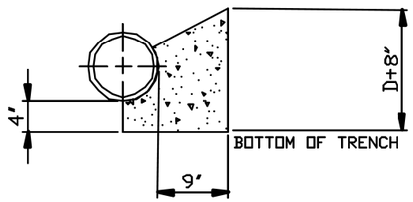

SECTION A-A

(22-1/2 DEGREE) BEND

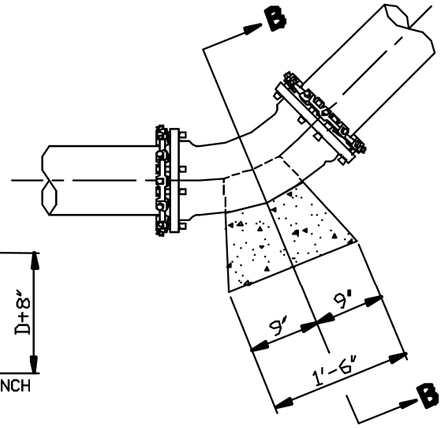

PLAN

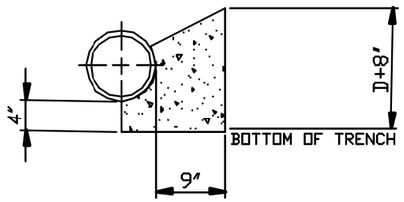

SECTION B-B

(45 DEGREE) BEND

TYPICAL THRUST BLOCK DETAIL FOR HORIZONTAL DEFLECTION FOR PIPE UP TO 16" DIAMETER

- NOT TO SCALE -
D = PIPE DIAMETER

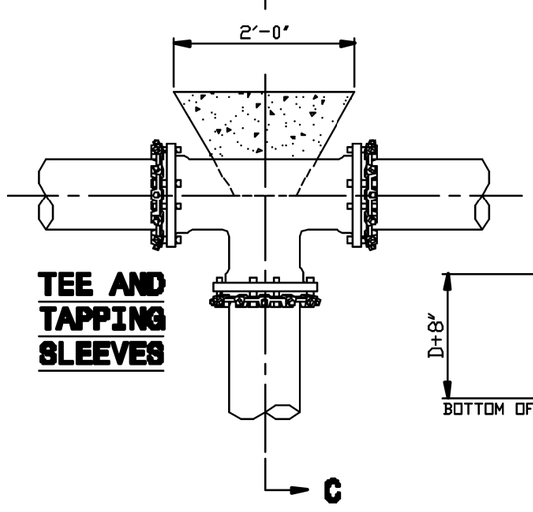

TEE AND TAPPING SLEEVES

PLAN

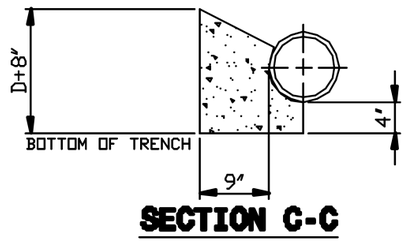

SECTION C-C

NOTE 1: ALL DIMENSIONS SHOWN HEREON ARE MINIMUM; THRUST BLOCK SHALL BE POURED TO UNDISTURBED EARTH.

NOTE 2: ALL CONCRETE FOR THRUST BLOCKS SHALL BE CLASS "C" HAVING 4,000 PSI 28 DAY COMPRESSIVE STRENGTH.

NOTE 3: DO NOT COVER BOLTS WITH CONCRETE ON MECHANICAL JOINTS.

NOTE 4: USE FORMS WHEN POURING CONCRETE TO MAINTAIN SHAPE AND DIMENSIONS OF THRUST BLOCKS.

STD-006

DATE: 1-15-98 | BY: RSK

WATER WORK DETAILS

3rd. HIGH SERVICE DISTRICT

DEPARTMENT OF PUBLIC UTILITIES
DIVISION OF WATER
CLEVELAND, OHIO

SUBJECT : 12" WATER MAIN ALONG MILLER ROAD AT I.R. 77
CITY OF BRECKSVILLE

SCALE: AS SHOWN | NO.

SUBSET 30 | TOTAL 43

DESIGN AGENCY
EUTHENICS
8235 Midwest Dr. | Cleveland, OH 44125

DESIGNER TDP

REVIEWER DTB 03/01/22

PROJECT ID 104983

SHEET P. 257 | TOTAL P.434

CUY-77-00.42 PART 1

MODEL: 104983_UD005 PAPERSIZE: 17x11 (in.) DATE: 3/4/2022 TIME: 1:50:47 PM USER: esmccaslin
F:\Jobs\1162-Miller Road Interchange\104983400-Engineering\Utilities\Sheets\104983_UD005.dgn

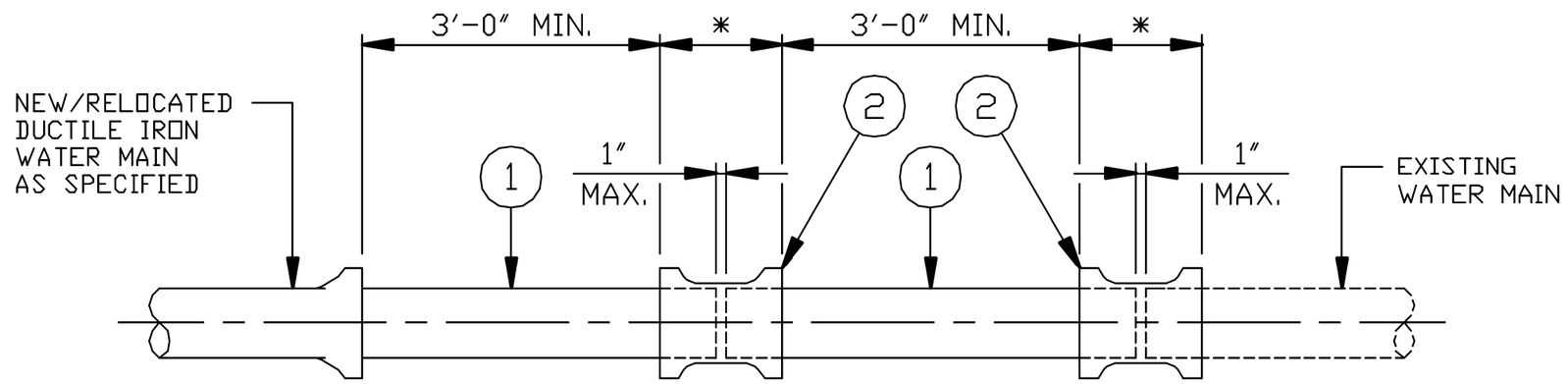

SLEEVE-IN INSTALLATION DETAIL

- NOT TO SCALE -

1) PLAIN END x PLAIN END DUCTILE IRON PIPE AS SPECIFIED (CUT TO SUIT).

2) *CONNECTION SHALL BE MADE WITH RETAINED MECHANICAL JOINT SOLID SLEEVES (SHORT OR LONG PATTERN) DUCTILE IRON CLASS 350 OR CAST IRON CLASS 250 OR COMPRESSION COUPLINGS.

COMPRESSION COUPLINGS SHALL BE OF A GASKETED, SLEEVE TYPE WITH DIAMETERS TO PROPERLY FIT PLAIN END IRON PIPE. EACH COUPLING SHALL CONSIST OF ONE (1) MIDDLE RING, WITHOUT STOPS; TWO (2) FOLLOWER GLANDS; TWO (2) RUBBER-COMPOUND BUNA-N BLEND, WEDGE SECTION GASKETS; AND SUFFICIENT TRACKHEAD STAINLESS STEEL BOLTS AND NUTS (ASTM A276/A193/194, TYPE 304, EXTRA HEAVY HEX) TO PROPERLY COMPRESS THE GASKETS.

MIDDLE RING AND FOLLOWER GLANDS SHALL BE OF EITHER STEEL OR DUCTILE IRON (ASTM-A536).

THE COMPRESSION COUPLING SHALL BE WITHOUT STOPS AND BE RATED FOR A MINIMUM WORKING PRESSURE OF 250 PSI AND SHALL BE EQUAL TO THE DRESSER STYLE No's 38, 138 OR 162 (TRANSITION TYPE), OR SMITH-BLAIR 441 STRAIGHT AND TRANSITION COUPLINGS.

3) ALL BOLTS AND NUTS ON ALL MECHANICAL JOINTS, INCLUDING THOSE ON THE "RETAINED" TYPE, SHALL HAVE FIELD APPLIED ONE (1) COAT OF BITUMASTIC PAINTING FOLLOWED BY AN ENCASEMENT OF POLYETHYLENE WRAPPING IN ACCORDANCE WITH ANSI/AWWA C-105/A21.5-88, CLASS "C", METHOD "B".

STD-007

DATE: 10-1-97 | BY: RSK

WATER WORK DETAILS

CUY-77-00.42 PART 1

MODEL: 104983_UD006 PAPERSIZE: 17x11 (in.) DATE: 3/4/2022 TIME: 1:50:59 PM USER: esmccaslin
F:\Jobs\1162-Miller Road Interchange\104983\400-Engineering\Utilities\Sheets\104983_UD006.dgn

3rd. HIGH SERVICE DISTRICT

DEPARTMENT OF PUBLIC UTILITIES
DIVISION OF WATER
CLEVELAND, OHIO

SUBJECT : 12" WATER MAIN ALONG MILLER ROAD AT I.R. 77
CITY OF BRECKSVILLE

SCALE: AS SHOWN | NO.

SUBSET 31 | TOTAL 43

DESIGN AGENCY
EUTHENICS
8239 Midwest Dr. | Cleveland, OH 44125

DESIGNER TDP

REVIEWER DTB 03/01/22

PROJECT ID 104983

SHEET P. 258 | TOTAL P.434

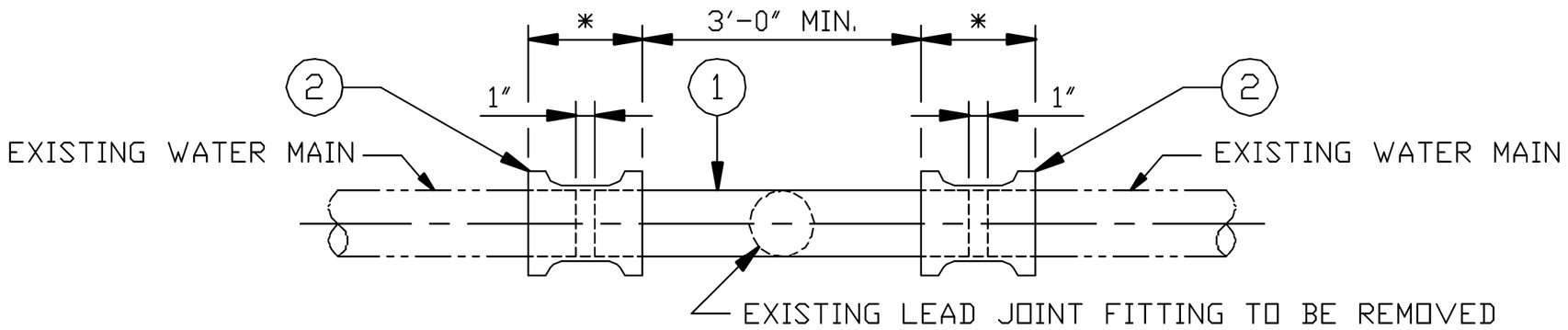

SPOOL PIECE INSTALLATION DETAIL

NOT TO SCALE

1) PLAIN END x PLAIN END DUCTILE IRON PIPE AS SPECIFIED (CUT TO SUIT).

2) *CONNECTION SHALL BE MADE WITH RETAINED MECHANICAL JOINT SOLID SLEEVES (SHORT OR LONG PATTERN) DUCTILE IRON CLASS 350 OR CAST IRON CLASS 250 OR COMPRESSION COUPLINGS.

COMPRESSION COUPLINGS SHALL BE OF A GASKETED, SLEEVE TYPE WITH DIAMETERS TO PROPERLY FIT PLAIN END IRON PIPE. EACH COUPLING SHALL CONSIST OF ONE (1) MIDDLE RING, WITHOUT STOPS; TWO (2) FOLLOWER GLANDS; TWO (2) RUBBER-COMPOUND BUNA-N BLEND, WEDGE SECTION GASKETS; AND SUFFICIENT TRACKHEAD STAINLESS STEEL BOLTS AND NUTS (ASTM A276/A193/194, TYPE 304, EXTRA HEAVY HEX) TO PROPERLY COMPRESS THE GASKETS.

MIDDLE RING AND FOLLOWER GLANDS SHALL BE OF EITHER STEEL OR DUCTILE IRON (ASTM-A536).

THE COMPRESSION COUPLING SHALL BE WITHOUT STOPS AND BE RATED FOR A MINIMUM WORKING PRESSURE OF 250 PSI AND SHALL BE EQUAL TO THE DRESSER STYLE No's 38, 138 OR 162 (TRANSITION TYPE), OR SMITH-BLAIR 441 STRAIGHT AND TRANSITION COUPLINGS.

3) ALL BOLTS AND NUTS ON ALL MECHANICAL JOINTS, INCLUDING THOSE ON THE "RETAINED" TYPE, SHALL HAVE FIELD APPLIED ONE (1) COAT OF BITUMASTIC PAINTING FOLLOWED BY AN ENCASEMENT OF POLYETHYLENE WRAPPING IN ACCORDANCE WITH ANSI/AWWA C-105/A21.5-88, CLASS "C", METHOD "B".

STD-008

DATE: 10-1-97 | BY: RSK

WATER WORK DETAILS

3rd. HIGH SERVICE DISTRICT

DEPARTMENT OF PUBLIC UTILITIES
DIVISION OF WATER
CLEVELAND, OHIO

SUBJECT : 12" WATER MAIN ALONG MILLER ROAD AT I.R. 77
CITY OF BRECKSVILLE

SCALE: AS SHOWN | NO.

SUBSET 32 | TOTAL 43

DESIGN AGENCY
EUTHENICS
8239 Midwest Dr. | Cleveland, OH 44125

DESIGNER TDP

REVIEWER DTB 03/01/22

PROJECT ID 104983

SHEET P. 259 | TOTAL P.434

CUY-77-00.42 PART 1

MODEL: 104983_UD007 PAPERSIZE: 17x11 (in.) DATE: 3/4/2022 TIME: 1:51:11 PM USER: esmccaslin
F:\Jobs\1162-Miller Road Interchange\104983\400-Engineering\Utilities\Sheets\104983_UD007.dgn

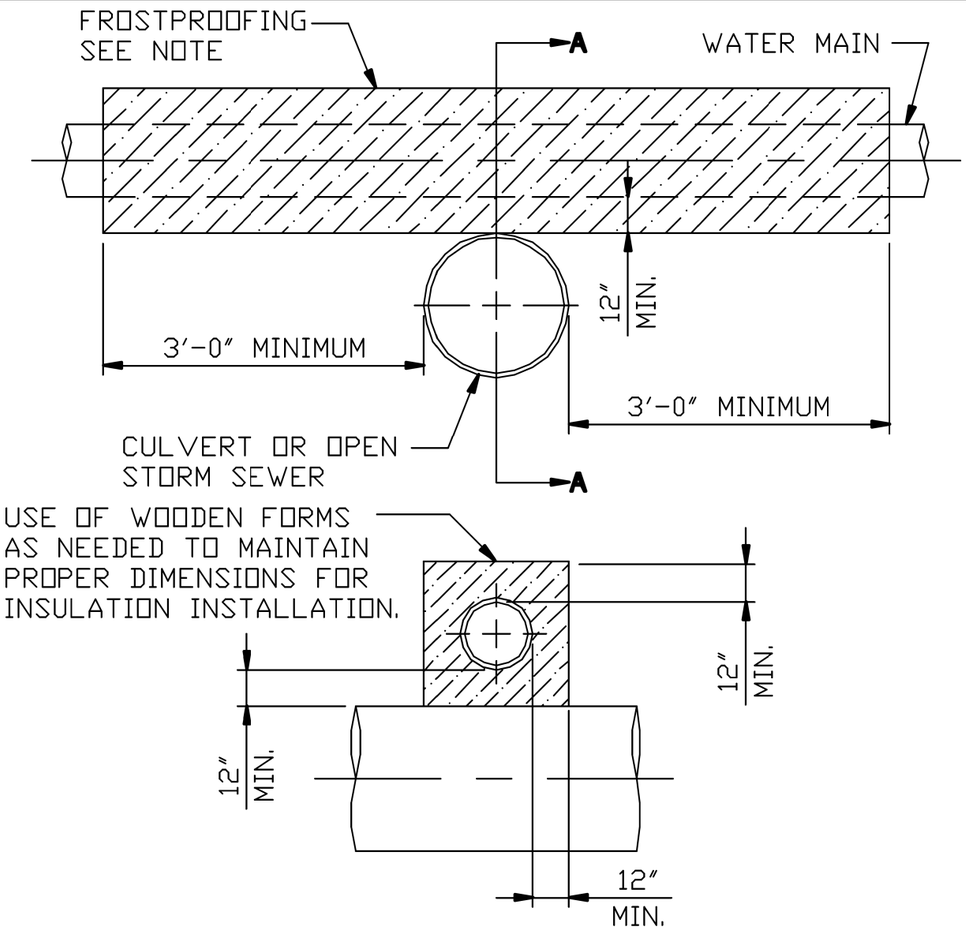

SECTION A-A

MINIMUM ONE (1) FOOT FROSTPROOFING INSULATION ENVELOPE REQUIRED WITH WATER MAIN LAID WITH LESS THAN FIVE (5) FT. COVER; CROSSING OVER STORM SEWERS 24″ AND LARGER; OR CROSSING UNDER OPEN END CULVERTS, OR OTHERWISE DIRECTED BY C.W.D.

IN NO CASE SHALL THE MAINS BE LAID WITH LESS THAN 3'-6" OF COVER IN UNPAVED AREAS & 3'-0" TO BOTTOM OF SLAB IN PAVED AREAS.

NOTE:

COMPACTED "WITCOLITE" INSULATION AS MANUFACTURED BY PIONEER PRODUCTS, DIVISION OF WITCO CHEMICAL COMPANY, INC. OR "GILSULATE 500 XR" AS MANUFACTURED BY AMERICAN THERMAL PRODUCTS, INC.

TYPICAL FROSTPROOFING DETAIL

- NOT TO SCALE -

STD-009	DATE: 10-1-97	BY: RSK

WATER WORK DETAILS

3rd. HIGH SERVICE DISTRICT

DEPARTMENT OF PUBLIC UTILITIES
DIVISION OF WATER
CLEVELAND, OHIO

SUBJECT : 12″ WATER MAIN ALONG MILLER ROAD AT I.R. 77
CITY OF BRECKSVILLE

SCALE: AS SHOWN | NO.

SUBSET	TOTAL
33	43

DESIGN AGENCY
EUTHENICS
8235 Midwest Dr. | Cleveland, OH 44125

DESIGNER
TDP

REVIEWER
DTB 03/01/22

PROJECT ID
104983

SHEET	TOTAL
P. 260	P.434

CUY-77-00.42 PART 1

MODEL: 104983_UD008 PAPERSIZE: 17x11 (in.) DATE: 3/4/2022 TIME: 1:51:23 PM USER: esmccastlin
F:\Jobs\11162-Miller Road Interchange\104983400-Engineering\Utilities\Sheets\104983_UD008.dgn

DUCTILE IRON CLASS 52 CEMENT LINED BOLTLESS RESTRAINED PUSH-ON JOINT PIPE (TYPE I NEW CONSTRUCTION) (TYPE II EXISTING CONSTRUCTION).

WRAP AROUND RUBBER END SEALS ARE TO BE USED FOR SINGLE CARRIER PIPES, OR MOLDED END SEALS FOR CLUSTER CARRIER PIPES. ALL FASTNERS ARE TO BE STAINLESS STEEL. BRICK BULKHEADS ARE NOT ALLOWED.

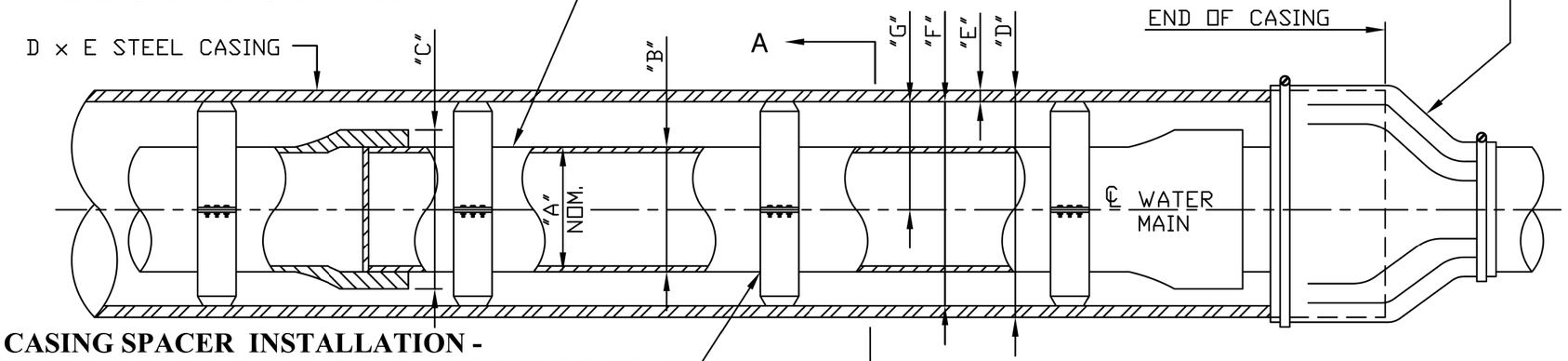

- CASING SPACER INSTALLATION -

THREE CASING SPACER PER 18FT. OR 20FT. PIPE JOINTS ARE TO BE USED FOR MAXIMUM CARRIER PIPE SUPPORT; ONE BEHIND THE BELL, ONE AT THE SPIGOT END MAKE-UP LINE, AND ONE CENTERED BETWEEN THE AFOREMENTIONED TWO SPACERS. CASING SPACERS SHOULD CENTER & RESTRAIN THE CARRIER PIPE. WOODEN SKIDS ARE NOT ALLOWED.

A	B	C*	D	E	F	G
8"	9.05"	11.89"	16"	$\frac{3}{8}$"	$15\frac{1}{4}$"	8.00"
12"	13.20"	16.35"	20"	$\frac{3}{8}$"	$19\frac{1}{4}$"	10.00"
16"	17.40"	20.84"	24"	$\frac{1}{2}$"	23"	12.00"

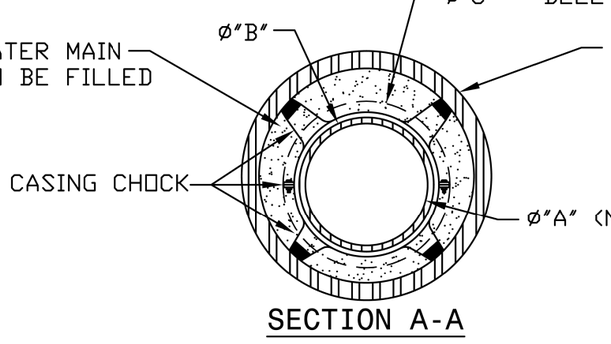

SECTION A-A

- CASING SPACER DETAIL -

CASING SPACERS ARE TO BE STAINLESS STEEL, OR POLYMER COATED CARBON STEEL. STAINLESS STEEL IS NOT ALLOWED IF GROUTING IS REQUIRED. SPACER BAND WIDTHS ARE TO BE 8" CARRIER PIPES THROUGH 24" AND 21" FOR 26" AND LARGER. RUNNERS ARE TO BE GLASS-FILLED POLYMER PLASTIC AND LINER IS TO BE EPDM OR PVC.

NOTES:

1. CONTRACTOR'S FAILURE TO MAINTAIN THE CASING PIPE ON THE LINE AND GRADE AS SHOWN OR DIRECTED, RESULTING IN THE USE OF ADDITIONAL PIPE AND/OR FITTINGS TO MAKE CONNECTIONS TO EXISTING WATER MAIN WILL BE CAUSE FOR REJECTION OF CASING INSTALLATION.

*2. OUTSIDE DIAMETER OF BELL OF BOLTLESS RESTRAINED PIPE MAY VARY WITH MANUFACTURE, THEREFORE, CONTRACTOR SHALL VERIFY O.D. OF BELL AND INCREASE SIZE OF STEEL CASING AS REQUIRED.

STD-016 | CASING DETAIL No. 2 END OF CASING AND CASING CHOCK DETAIL | DATE: 1-21-2010 | BY: RSK

WATER WORK DETAILS

CUY-77-00.42 PART 1

MODEL: 104983_UD009 PAPERSIZE: 17x11 (in.) DATE: 3/4/2022 TIME: 1:51:33 PM USER: esmccaslin
F:\Jobs\1162\Miller Road Interchange\104983\400-Engineering\Utilities\Sheets\104983_UD009.dgn

3rd. HIGH SERVICE DISTRICT

DEPARTMENT OF PUBLIC UTILITIES
DIVISION OF WATER
CLEVELAND, OHIO

SUBJECT : 12" WATER MAIN ALONG MILLER ROAD AT I.R. 77
CITY OF BRECKSVILLE

SCALE: AS SHOWN | NO.

SUBSET 34 | TOTAL 43

DESIGN AGENCY
EUTHENICS
8230 Midwest Dr. | Cleveland, OH 44125

DESIGNER TDP

REVIEWER DTB 03/01/22

PROJECT ID 104983

SHEET P. 261 | TOTAL P.434

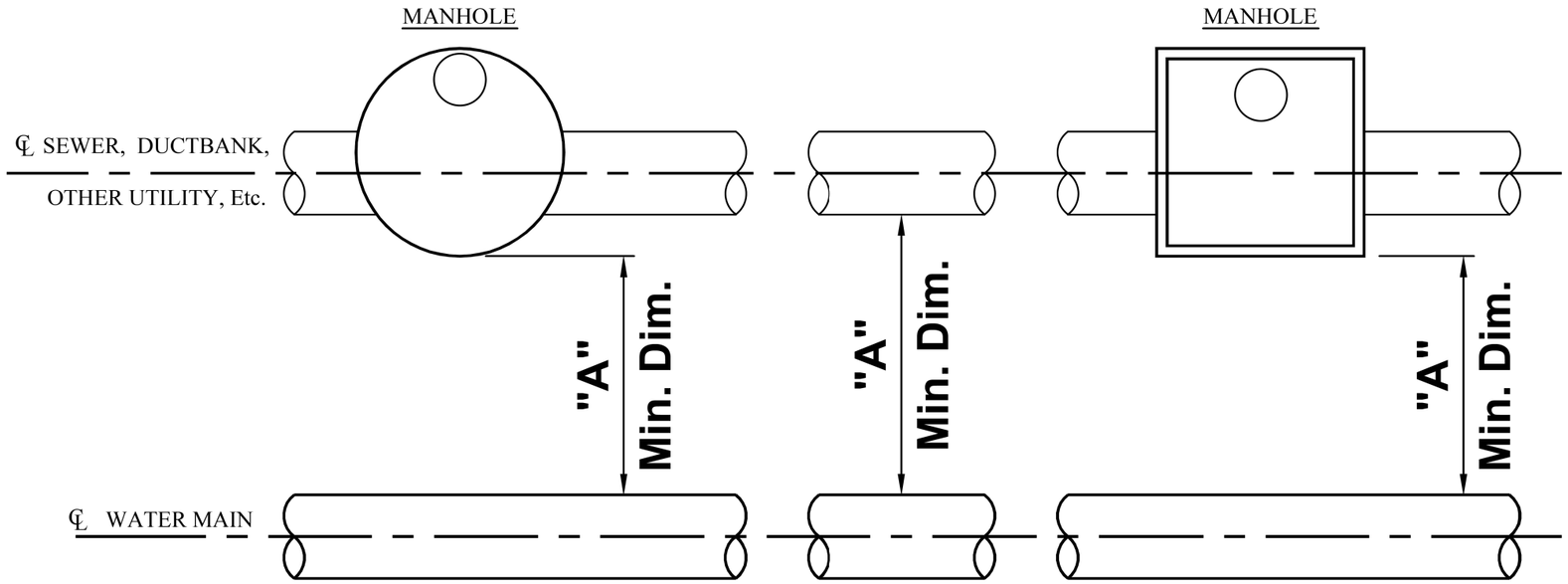

PLAN VIEW

- SEE STD-018 FOR PROFILE VIEW -

HORIZONTAL CLEARANCE	STORM SEWER	SANITARY SEWER	GAS, DUCTBANK, OTHER UTILITY, Etc.
"A"	10'-0" MIN.	10-0" MIN.	5'-0" MIN.

HORIZONTAL CLEARANCE FOR UTILITIES

NOT TO SCALE

STD-017

DATE: 7-02-2014 | BY: MTA

WATER WORK DETAILS

CUY-77-00.42 PART 1

MODEL: 104983_UD010 PAPERSIZE: 17x11 (in.) DATE: 3/4/2022 TIME: 1:51:44 PM USER: esmccaslin
F:\Jobs\1162-Miller Road Interchange\104983\400-Engineering\Utilities\Sheets\1044983_UD010.dgn

3rd. HIGH SERVICE DISTRICT

DEPARTMENT OF PUBLIC UTILITIES
DIVISION OF WATER
CLEVELAND, OHIO

SUBJECT : 12" WATER MAIN ALONG MILLER ROAD AT I.R. 77
CITY OF BRECKSVILLE

SCALE: AS SHOWN | NO.

SUBSET 35 | TOTAL 43

DESIGN AGENCY
EUTHENICS
8230 Midwest Dr. | Cleveland, OH 44125

DESIGNER TDP

REVIEWER DTB 03/01/22

PROJECT ID 104983

SHEET P. 262 | TOTAL P.434

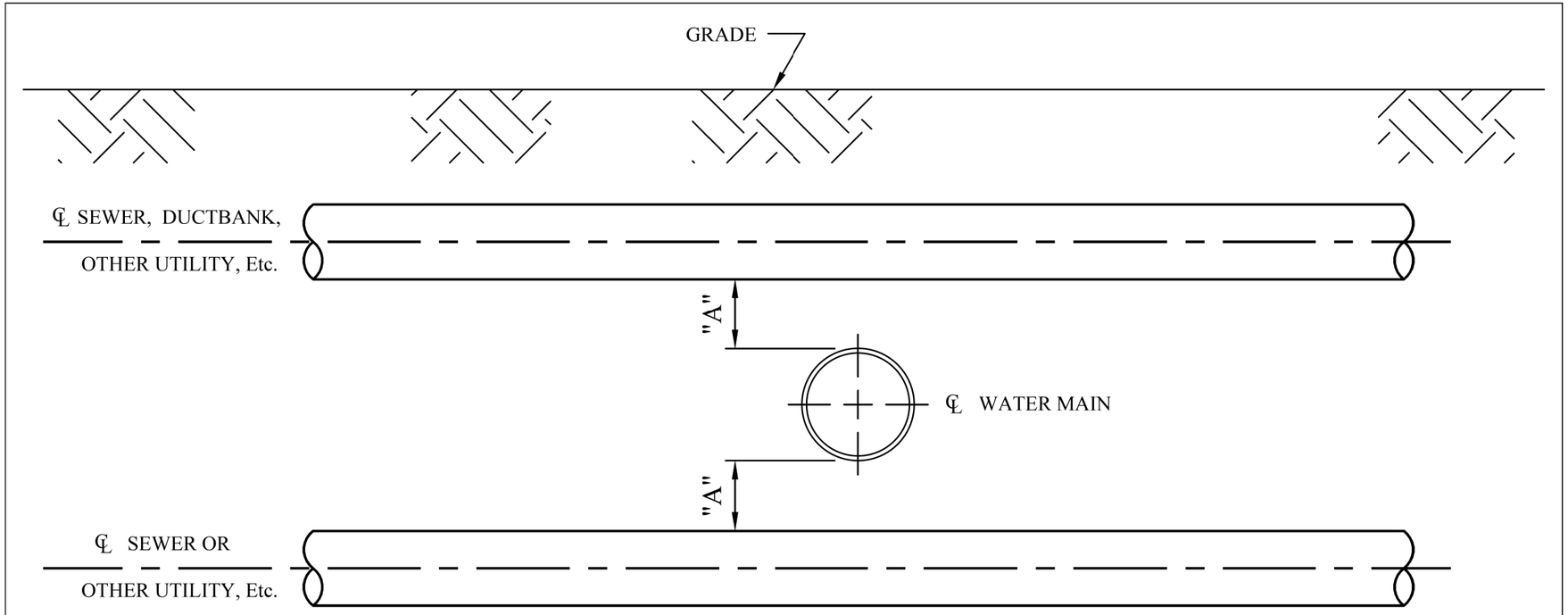

PROFILE VIEW

- SEE STD-017 FOR PLAN VIEW -

VERTICAL CLEARANCE	SANITARY SEWER LESS THAN 24"	SANITARY SEWER 24" & LARGER	STORM SEWER, DUCTBANK, GAS, OTHER UTILITY LESS THAN 24"	STORM SEWER, DUCTBANK, GAS, OTHER UTILITY 24" & LARGER	REMARKS
"A"	18" Min.	18" Min.	18" Min.	18" Min.	IF CANNOT ACHIEVE MIN. CLEARANCE WATER MAIN TO BE LOWERED

VERTICAL CLEARANCE FOR UTILITIES

NOT TO SCALE

STD-018

DATE: 7-02-2014 | BY: MTA

WATER WORK DETAILS

CUY-77-00.42 PART 1

MODEL: 104983_UD011 PAPERSIZE: 17x11 (in.) DATE: 3/4/2022 TIME: 1:51:55 PM USER: esmccasl
F:\Jobs\11162-Miller Road Interchange\104983400-Engineering\Utilities\Sheets\104983_UD011.dgn

3rd. HIGH SERVICE DISTRICT

DEPARTMENT OF PUBLIC UTILITIES
DIVISION OF WATER
CLEVELAND, OHIO

SUBJECT : 12" WATER MAIN ALONG MILLER ROAD AT I.R. 77
CITY OF BRECKSVILLE

SCALE: AS SHOWN | NO.

SUBSET 36 | TOTAL 43

DESIGN AGENCY
EUTHENICS
8235 Mohawk Dr. | Cleveland, OH 44625

DESIGNER TDP

REVIEWER DTB 03/01/22

PROJECT ID 104983

SHEET P. 263 | TOTAL P.434

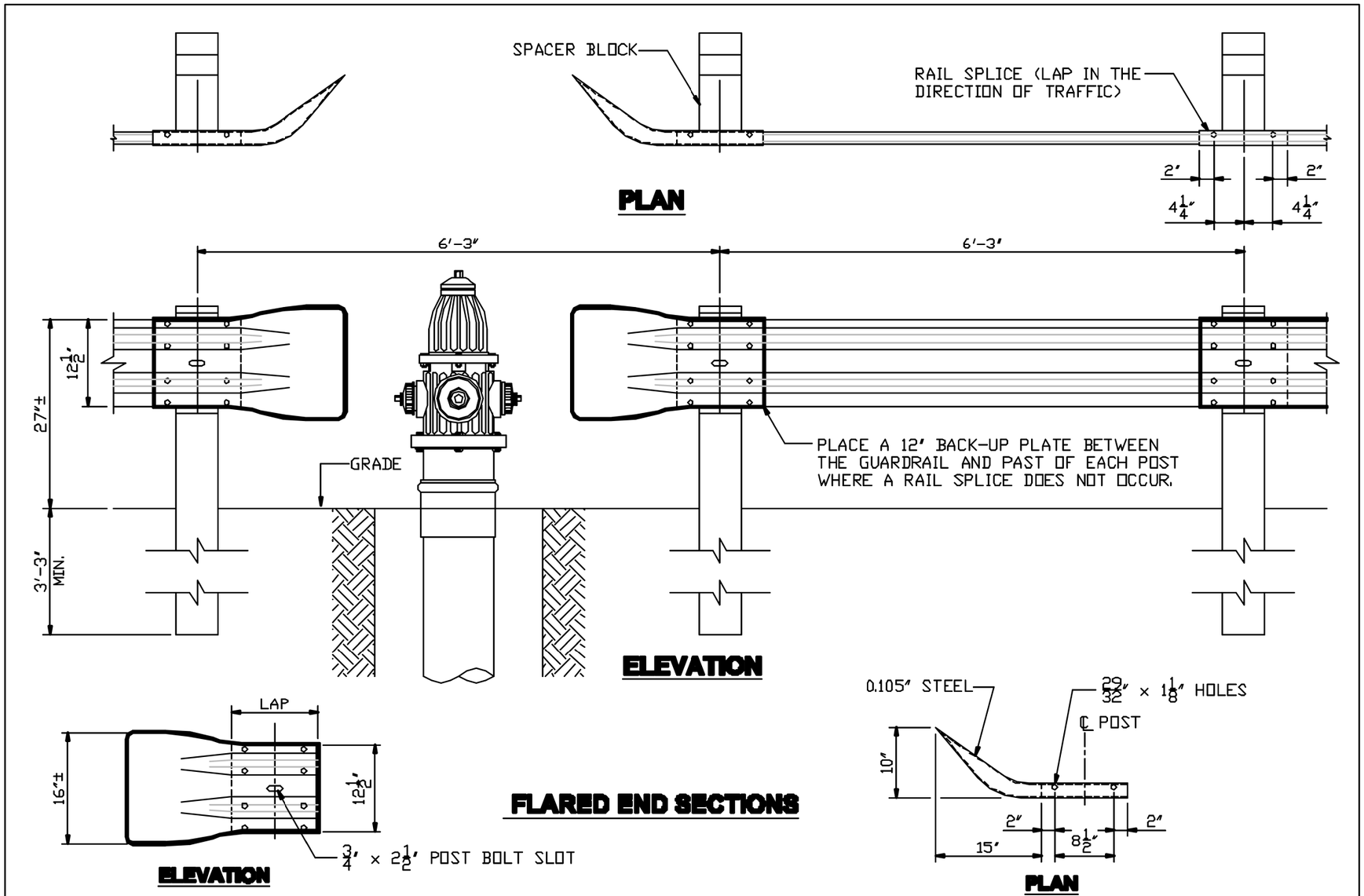

STD-022 GUARDRAIL DETAILS AT HYDRANT

DATE: 10-15-1999 BY: RSK

3rd. HIGH SERVICE DISTRICT

DEPARTMENT OF PUBLIC UTILITIES
DIVISION OF WATER
CLEVELAND, OHIO

SUBJECT : 12″ WATER MAIN ALONG MILLER ROAD AT I.R. 77
CITY OF BRECKSVILLE

SCALE: AS SHOWN | NO.

WATER WORK DETAILS

SUBSET	TOTAL
37	43

DESIGN AGENCY
EUTHENICS
8235 Mohawk Dr. | Cleveland, OH 44129

DESIGNER TDP

REVIEWER DTB 03/01/22

PROJECT ID 104983

SHEET	TOTAL
P. 264	P.434

CUY-77-00.42 PART 1

MODEL: 104983_UD012 PAPERSIZE: 17x11 (in.) DATE: 3/4/2022 TIME: 1:52:06 PM USER: esmccaslin
F:\Jobs\11162-Miller Road Interchange\104983\400-Engineering\Utilities\Sheets\104983_UD012.dgn

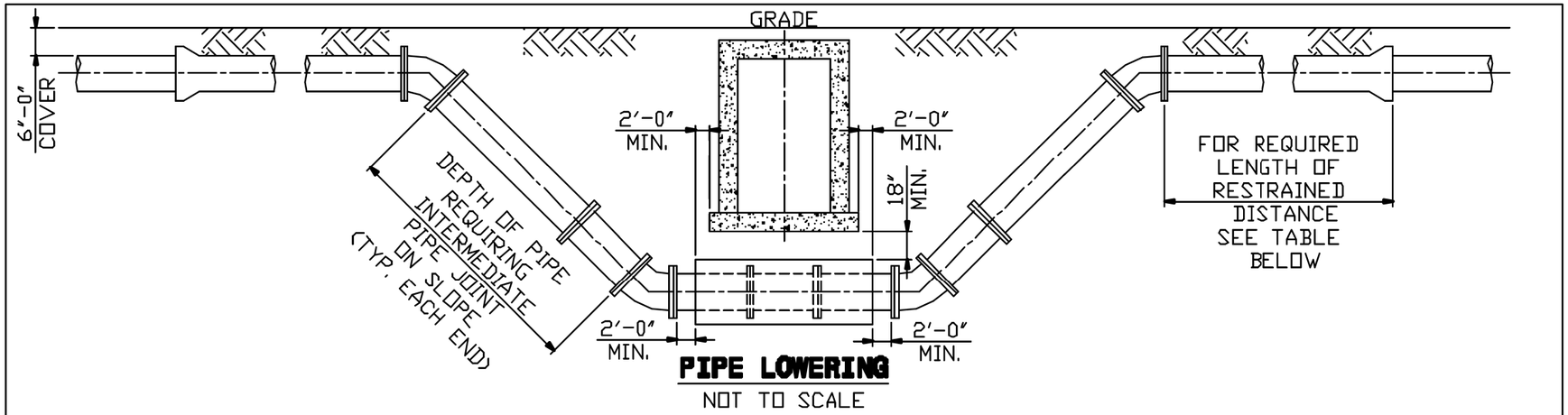

PIPE LOWERING

NOT TO SCALE

. TO LOWER WATER MAIN TO CLEAR OBSTACLE WHERE DEPTH OF PIPE LOWERING REQUIRES AN INTERMEDIATE JOINT ON SLOPE THE ENTIRE OFFSET SHALL HAVE BOLTLESS RESTRAINED PUSH-ON JOINT PIPE AND FITTINGS AS SPECIFIED. JOINT RESTRAINT SHALL EXTEND BEYOND TOP VERTICAL BEND TO THE LIMITS SHOWN IN TABLE.

① CALCULATIONS FOR RESTRAINED LENGTHS INCLUDE 75 PSI FOR TESTING.

DIAMETER	BEND	STATIC PRESSURE ①	* RESTRAINED LENGTHS
8"	11°15'	0 to 275 PSI	ONE (1)
	22°30'	0 to 250 PSI	ONE (1)
		251 to 275 PSI	TWO (2)
	45°	0 to 125 PSI	ONE (1)
		126 to 275 PSI	TWO (2)
12"	11°15'	0 to 275 PSI	ONE (1)
	22°30'	0 to 165 PSI	ONE (1)
		166 to 275 PSI	TWO (2)
	45°	0 to 65 PSI	ONE (1)
		66 to 215 PSI	TWO (2)
		166 to 275 PSI	THREE (3)
16"	11°15'	0 to 275 PSI	ONE (1)
	22°30'	0 to 115 PSI	ONE (1)
		116 to 275 PSI	TWO (2)
	45°	0 to 45 PSI	ONE (1)
		46 to 165 PSI	TWO (2)
		166 to 275 PSI	THREE (3)

STD-L01

DATE: 11-24-2003 | BY: RSK

WATER WORK DETAILS

3rd. HIGH SERVICE DISTRICT

DEPARTMENT OF PUBLIC UTILITIES
DIVISION OF WATER
CLEVELAND, OHIO

SUBJECT : 12" WATER MAIN ALONG MILLER ROAD AT I.R. 77
CITY OF BRECKSVILLE

SCALE: AS SHOWN | NO.

SUBSET 38 | TOTAL 43

DESIGN AGENCY
EUTHENICS
8235 Mohawk Dr. | Cleveland, OH 44130

DESIGNER TDP

REVIEWER DTB 03/01/22

PROJECT ID 104983

SHEET P. 265 | TOTAL P.434

CUY-77-00.42 PART 1

MODEL: 104983_UD013 PAPERSIZE: 17x11 (in.) DATE: 3/4/2022 TIME: 1:52:17 PM USER: esmccaslin
F:\Jobs\11622-Miller Road Interchange\104983\400-Engineering\Utilities\Sheets\104983_UD013.dgn

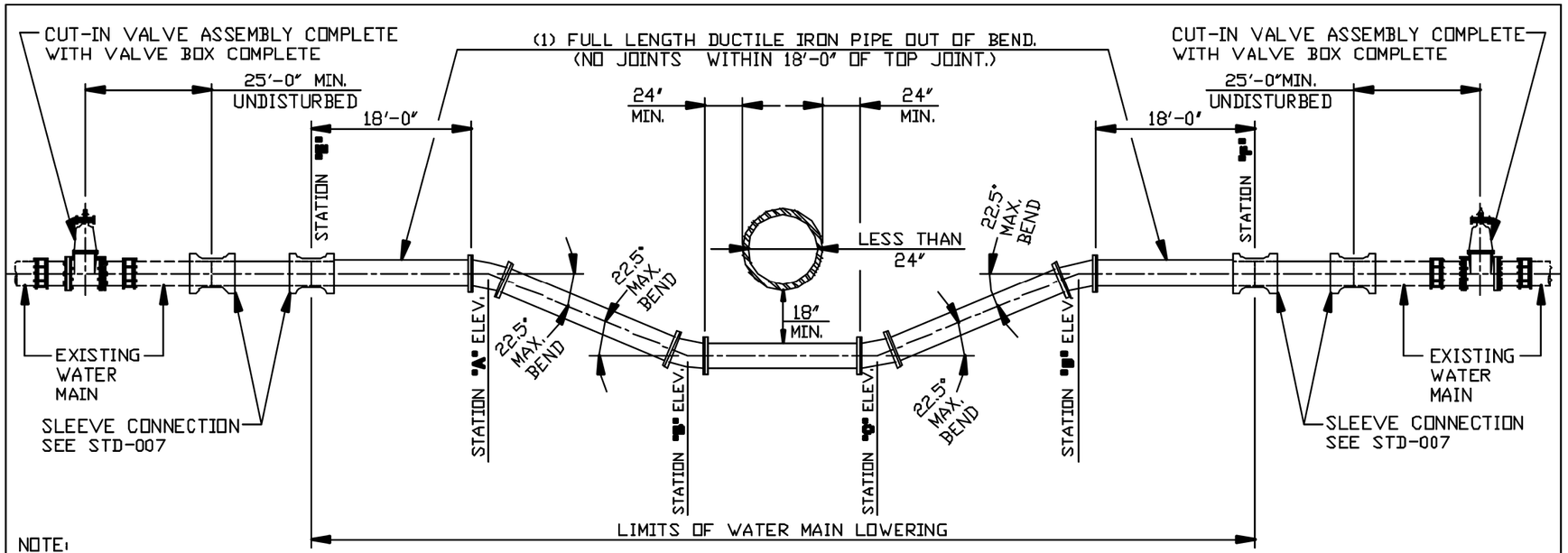

NOTE:

1) WATER MAIN SHALL BE DUCTILE IRON, MINIMUM CLASS 52, CEMENT LINED PUSH-ON JOINT PIPE WITH RETAINED MECHANICAL JOINT DUCTILE IRON CLASS 350, CEMENT LINED OR FUSION BONDED EPOXY COATED RETAINED MECHANICAL JOINT FITTINGS.

2) WHERE DEPTH OF LOWERING REQUIRES AN INTERMEDIATE JOINT BETWEEN STATIONS **"A"** & **"B"** AND/OR **"C"** & **"D"** THE ENTIRE LOWERING SHALL BE MADE WITH DUCTILE IRON, MINIMUM CLASS 52, CEMENT LINED PIPE AND DUCTILE IRON CLASS 350, CEMENT LINED FITTINGS **ALL** HAVING BOLTLESS RESTRAINED PUSH-ON JOINTS, TYPE II.

3) WHERE LENGTH OF LOWERING UNDER OBSTRUCTION(S) REQUIRES AN INTERMEDIATE JOINT **ONLY** BETWEEN STATIONS **"B"** & **"C"**, THAT INTERMEDIATE JOINT(S) SHALL BE MADE WITH A BOLTLESS RESTRAINED PUSH-ON JOINT, TYPE II.

4) WHERE EXISTING WATER MAIN IS SIX (6)-INCHES IN DIAMETER THE PIPE LOWERING SHALL BE MADE WITH PIPE AND FITTINGS NO LESS THAN EIGHT (8)-INCH IN DIAMETER WITH REDUCERS INSTALLED AT STATIONS **"E"** AND **"F"**. THE REDUCERS SHALL BE RETAINED MECHANICAL JOINT WITH SMALL END OF REDUCER PLAIN END FOR CONNECTION WITH SLEEVES OR COMPRESSION COUPLINGS.

5) ALL EXISTING WATER SERVICE CONNECTIONS BETWEEN THE CUT-IN-VALVE ASSEMBLIES SHALL BE MAINTAINED BY 'TEMPORARY SERVICE CONNECTIONS' PROVIDED AND MAINTAINED BY THE CONTRACTOR.

6) EXISTING WATER SERVICE CONNECTIONS NEEDED TO BE RETAPPED AND RECONNECTED WILL ONLY BE PERMITTED BETWEEN STATIONS **"A"** AND **"E"** AND STATIONS **"D"** AND **"F"**. NO RETAPPING OF SERVICE CONNECTIONS WILL BE ALLOWED BETWEEN STATIONS **"A"** AND **"D"**.

DETAIL FOR WATER MAIN LOWERING UNDER OBSTRUCTIONS LESS THAN 24" IN DIAMETER OR WIDTH FOR "EXISTING CONSTRUCTION"

- NOT TO SCALE -

STD-L02

DATE: 3-4-2002 | BY: RSK

WATER WORK DETAILS

SUBSET 39 | TOTAL 43

DESIGN AGENCY
EUTHENICS
8235 Mohawk Dr. | Cleveland, OH 44130

DESIGNER TDP

REVIEWER DTB 03/01/22

PROJECT ID 104983

SHEET P. 266 | TOTAL P.434

3rd. HIGH SERVICE DISTRICT

DEPARTMENT OF PUBLIC UTILITIES
DIVISION OF WATER
CLEVELAND, OHIO

SUBJECT : 12" WATER MAIN ALONG MILLER ROAD AT I.R. 77
CITY OF BRECKSVILLE

SCALE: AS SHOWN | NO.

CUY-77-00.42 PART 1

MODEL: 104983_UD014 PAPERSIZE: 17x11 (in.) DATE: 3/4/2022 TIME: 1:52:29 PM USER: esmccaslin
F:\Jobs\11162-Miller Road Interchange\104983400-Engineering\Utilities\Sheets\104983_UD014.dgn

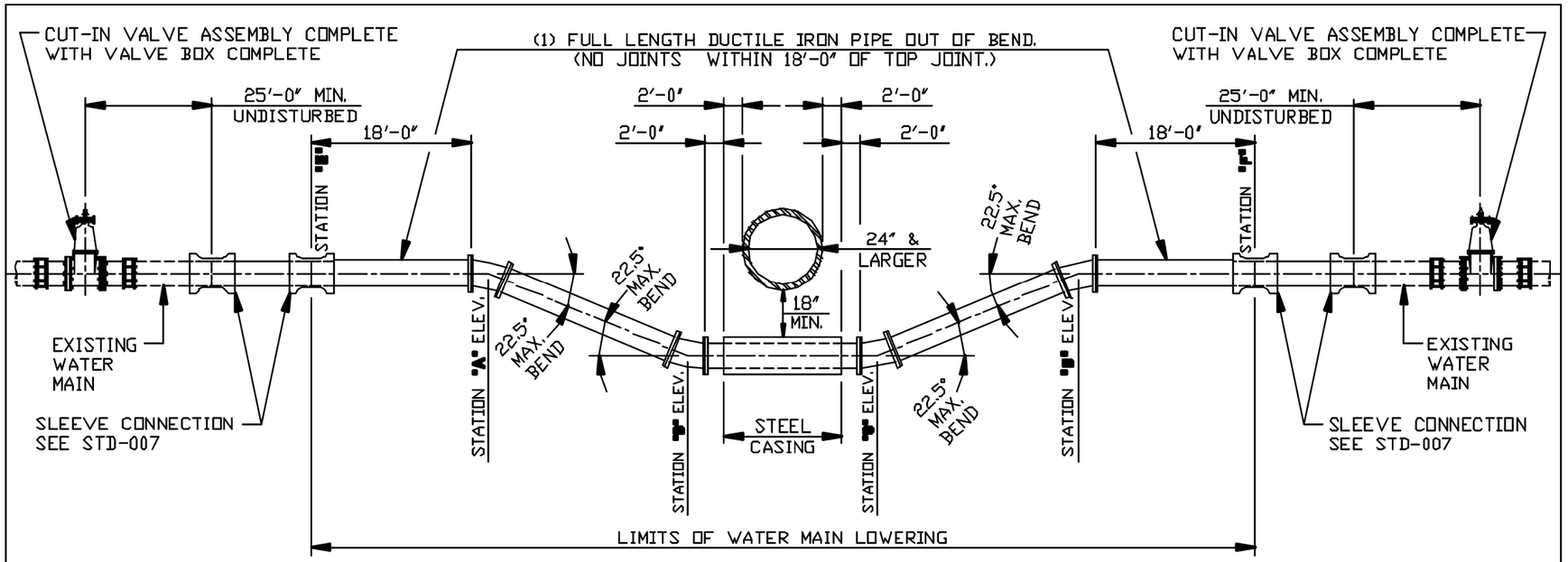

NOTE:

1) WATER MAIN SHALL BE DUCTILE IRON, MINIMUM CLASS 52, CEMENT LINED PUSH-ON JOINT PIPE WITH RETAINED MECHANICAL JOINT DUCTILE IRON CLASS 350, CEMENT LINED OR FUSION BONDED EPOXY COATED RETAINED MECHANICAL JOINT FITTINGS.

2) WHERE DEPTH OF LOWERING REQUIRES AN INTERMEDIATE JOINT BETWEEN STATIONS **"A"** & **"B"** AND/OR **"C"** & **"D"** THE ENTIRE LOWERING SHALL BE MADE WITH DUCTILE IRON, MINIMUM CLASS 52, CEMENT LINED PIPE AND DUCTILE IRON CLASS 350, CEMENT LINED FITTINGS **ALL** HAVING BOLTLESS RESTRAINED PUSH-ON JOINTS, TYPE II.

3) WHERE LENGTH OF LOWERING UNDER OBSTRUCTIONS) REQUIRES AN INTERMEDIATE JOINT **ONLY** BETWEEN STATIONS **"B"** & **"C"**, THAT INTERMEDIATE JOINT(S) SHALL BE MADE WITH A BOLTLESS RESTRAINED PUSH-ON JOINT, TYPE II.

4) WHERE EXISTING WATER MAIN IS SIX (6)-INCHES IN DIAMETER THE PIPE LOWERING SHALL BE MADE WITH PIPE AND FITTINGS NO LESS THAN EIGHT (8)-INCH IN DIAMETER WITH REDUCERS INSTALLED AT STATIONS **"E"** AND **"F"**. THE REDUCERS SHALL BE RETAINED MECHANICAL JOINT WITH SMALL END OF REDUCER PLAIN END FOR CONNECTION WITH SLEEVES OR COMPRESSION COUPLINGS.

5) ALL EXISTING WATER SERVICE CONNECTIONS BETWEEN THE CUT-IN-VALVE ASSEMBLIES SHALL BE MAINTAINED BY 'TEMPORARY SERVICE CONNECTIONS' PROVIDED AND MAINTAINED BY THE CONTRACTOR.

6) EXISTING WATER SERVICE CONNECTIONS NEEDED TO BE RETAPPED AND RECONNECTED WILL ONLY BE PERMITTED BETWEEN STATIONS **"A"** AND **"E"** AND STATIONS **"D"** AND **"F"**. NO RETAPPING OF SERVICE CONNECTIONS WILL BE ALLOWED BETWEEN STATIONS **"A"** AND **"D"**.

DETAIL FOR WATER MAIN LOWERING UNDER OBSTRUCTIONS 24" & LARGER IN DIAMETER OR WIDTH FOR "EXISTING CONSTRUCTION"

- NOT TO SCALE -

STD-L03

DATE: 3-4-2002 | BY: RSK

WATER WORK DETAILS

3rd. HIGH SERVICE DISTRICT

DEPARTMENT OF PUBLIC UTILITIES
DIVISION OF WATER
CLEVELAND, OHIO

SUBJECT : 12" WATER MAIN ALONG MILLER ROAD AT I.R. 77
CITY OF BRECKSVILLE

SCALE: AS SHOWN | NO.

SUBSET 40 | TOTAL 43

DESIGN AGENCY
EUTHENICS
8230 Midwest Dr. | Cleveland, OH 44125

DESIGNER TDP

REVIEWER DTB 03/01/22

PROJECT ID 104983

SHEET P. 267 | TOTAL P.434

CUY-77-00.42 PART 1

MODEL: 104983_UD015 PAPERSIZE: 17x11 (in.) DATE: 3/4/2022 TIME: 1:52:42 PM USER: esmccaslin
F:\Jobs\1162\Miller Road Interchange\104983\400-Engineering\Utilities\Sheets\104983_UD015.dgn

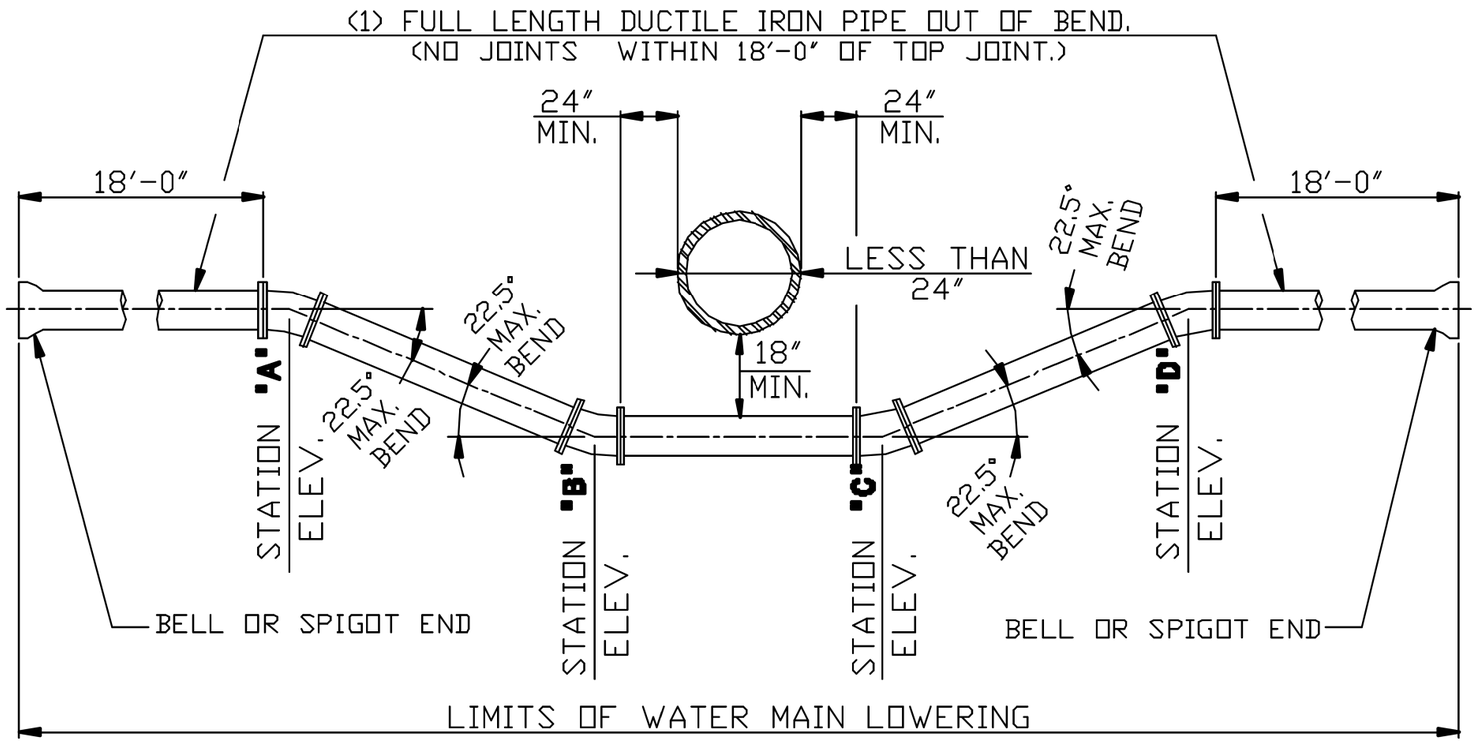

NOTE:

1) WATER MAIN SHALL BE DUCTILE IRON, MINIMUM CLASS 52, CEMENT LINED PUSH-ON JOINT PIPE WITH RETAINED MECHANICAL JOINT DUCTILE IRON CLASS 350, CEMENT LINED RETAINED MECHANICAL JOINT FITTINGS.

2) WHERE DEPTH OF LOWERING REQUIRES AN INTERMEDIATE JOINT BETWEEN STATIONS **"A"** & **"B"** AND/OR **"C"** & **"D"** THE ENTIRE LOWERING SHALL BE MADE WITH DUCTILE IRON, MINIMUM CLASS 52, CEMENT LINED PIPE AND DUCTILE IRON CLASS 350, CEMENT LINED FITTINGS **ALL** HAVING BOLTLESS RESTRAINED PUSH-ON JOINTS, TYPE I.

3) WHERE LENGTH OF LOWERING UNDER OBSTRUCTION(S) REQUIRES AN INTERMEDIATE JOINT **ONLY** BETWEEN STATIONS **"B"** & **"C"**, AND PIPE JOINTS ARE AS INDICATED IN NOTE **"1"** ABOVE, THAT INTERMEDIATE JOINT(S) SHALL BE MADE WITH A BOLTLESS RESTRAINED PUSH-ON JOINT, TYPE II.

4) WHERE LENGTH OF LOWERING UNDER OBSTRUCTION(S) REQUIRES AN INTERMEDIATE JOINT **ONLY** BETWEEN **"B"** AND **"C"** AND PIPE JOINTS ARE AS INDICATED IN NOTE **"2"** ABOVE, THAT INTERMEDIATE JOINT(S) SHALL BE MADE WITH A BOLTLESS RESTRAINED PUSH-ON JOINT, TYPE I.

DETAIL FOR WATER MAIN LOWERING UNDER OBSTRUCTIONS LESS THAN 24" IN DIAMETER OR WIDTH FOR "NEW CONSTRUCTION"

STD-L04	- NOT TO SCALE -	DATE: 10-1-97	BY: RSK

WATER WORK DETAILS

3rd. HIGH SERVICE DISTRICT

DEPARTMENT OF PUBLIC UTILITIES
DIVISION OF WATER
CLEVELAND, OHIO

SUBJECT : 12" WATER MAIN ALONG MILLER ROAD AT I.R. 77
CITY OF BRECKSVILLE

SCALE: AS SHOWN | NO.

SUBSET 41 | TOTAL 43

DESIGN AGENCY
EUTHENICS
8239 Midwest Dr. | Cleveland, OH 44125

DESIGNER TDP

REVIEWER DTB 03/01/22

PROJECT ID 104983

SHEET P. 268 | TOTAL P.434

CUY-77-00.42 PART 1

MODEL: 104983_UD016 PAPERSIZE: 17x11 (in.) DATE: 3/4/2022 TIME: 1:52:55 PM USER: esmccaslin
F:\Jobs\1162-Miller Road Interchange\104983\400-Engineering\Utilities\Sheets\104983_UD016.dgn

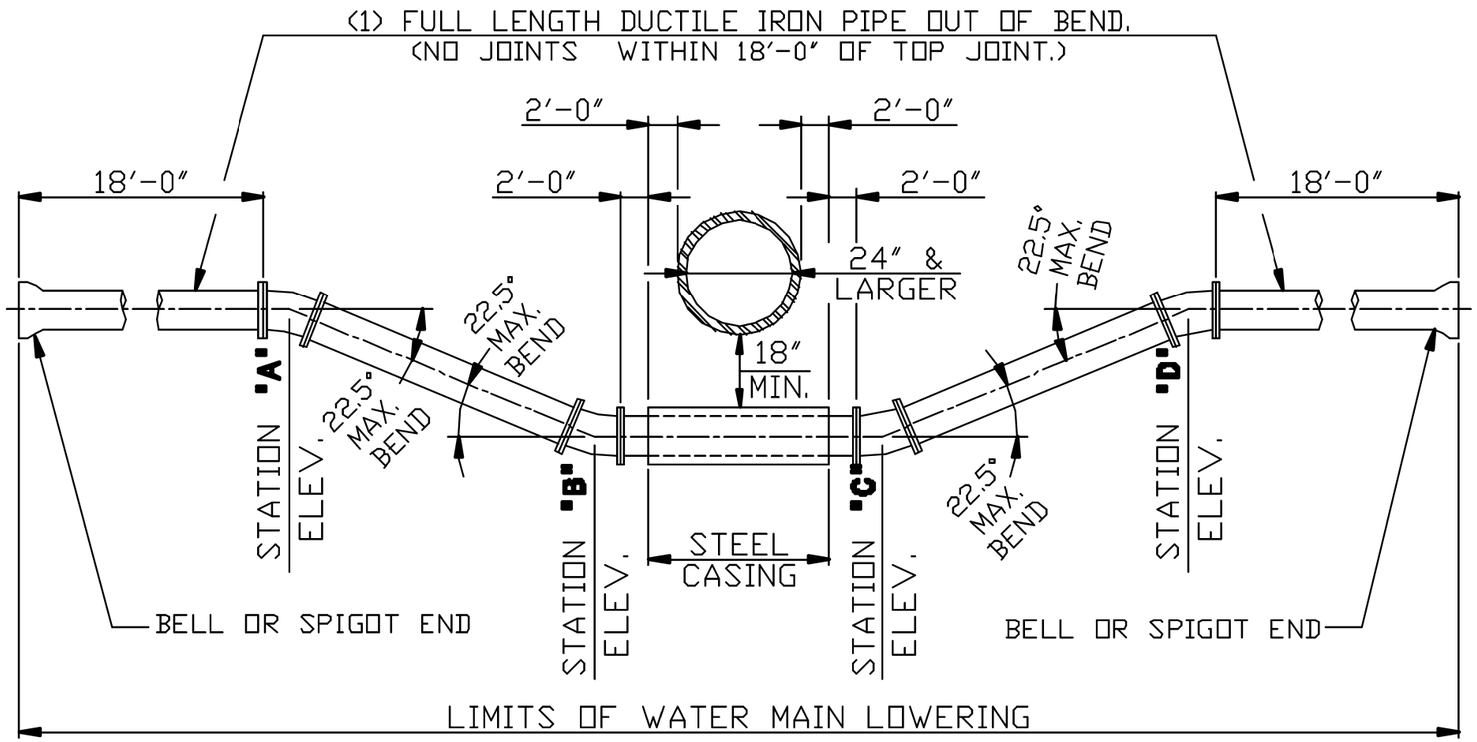

NOTE:

1) WATER MAIN SHALL BE DUCTILE IRON, MINIMUM CLASS 52, CEMENT LINED PUSH-ON JOINT PIPE WITH RETAINED MECHANICAL JOINT DUCTILE IRON CLASS 350, CEMENT LINED RETAINED MECHANICAL JOINT FITTINGS.

2) WHERE DEPTH OF LOWERING REQUIRES AN INTERMEDIATE JOINT BETWEEN STATIONS **"A"** & **"B"** AND/OR **"C"** & **"D"** THE ENTIRE LOWERING SHALL BE MADE WITH DUCTILE IRON, MINIMUM CLASS 52, CEMENT LINED PIPE AND DUCTILE IRON CLASS 350, CEMENT LINED FITTINGS **ALL** HAVING BOLTLESS RESTRAINED PUSH-ON JOINTS, TYPE I.

3) WHERE LENGTH OF LOWERING UNDER OBSTRUCTION(S) REQUIRES AN INTERMEDIATE JOINT **ONLY** BETWEEN STATIONS **"B"** & **"C"**, AND PIPE JOINTS ARE AS INDICATED IN NOTE **"1"** ABOVE, THAT INTERMEDIATE JOINT(S) SHALL BE MADE WITH A BOLTLESS RESTRAINED PUSH-ON JOINT, TYPE II.

4) WHERE LENGTH OF LOWERING UNDER OBSTRUCTION(S) REQUIRES AN INTERMEDIATE JOINT **ONLY** BETWEEN **"B"** AND **"C"** AND PIPE JOINTS ARE AS INDICATED IN NOTE **"2"** ABOVE, THAT INTERMEDIATE JOINT(S) SHALL BE MADE WITH A BOLTLESS RESTRAINED PUSH-ON JOINT, TYPE I.

DETAIL FOR WATER MAIN LOWERING UNDER OBSTRUCTIONS 24" & LARGER IN DIAMETER OR WIDTH FOR "NEW CONSTRUCTION"

STD-L05	- NOT TO SCALE -	DATE: 10-1-97	BY: RSK

WATER WORK DETAILS

3rd. HIGH SERVICE DISTRICT

DEPARTMENT OF PUBLIC UTILITIES
DIVISION OF WATER
CLEVELAND, OHIO

SUBJECT : 12" WATER MAIN ALONG MILLER ROAD AT I.R. 77
CITY OF BRECKSVILLE

SCALE: AS SHOWN | NO.

SUBSET 42 | TOTAL 43

DESIGN AGENCY
EUTHENICS
8239 Midwest Dr. | Cleveland, OH 44125

DESIGNER TDP

REVIEWER DTB 03/01/22

PROJECT ID 104983

SHEET P. 269 | TOTAL P.434

CUY-77-00.42 PART 1

MODEL: 104983_UD017 PAPERSIZE: 17x11 (in.) DATE: 3/4/2022 TIME: 1:53:06 PM USER: esmccaslin
F:\Jobs\1162-Miller Road Interchange\104983\400-Engineering\Utilities\Sheets\104983_UD017.dgn

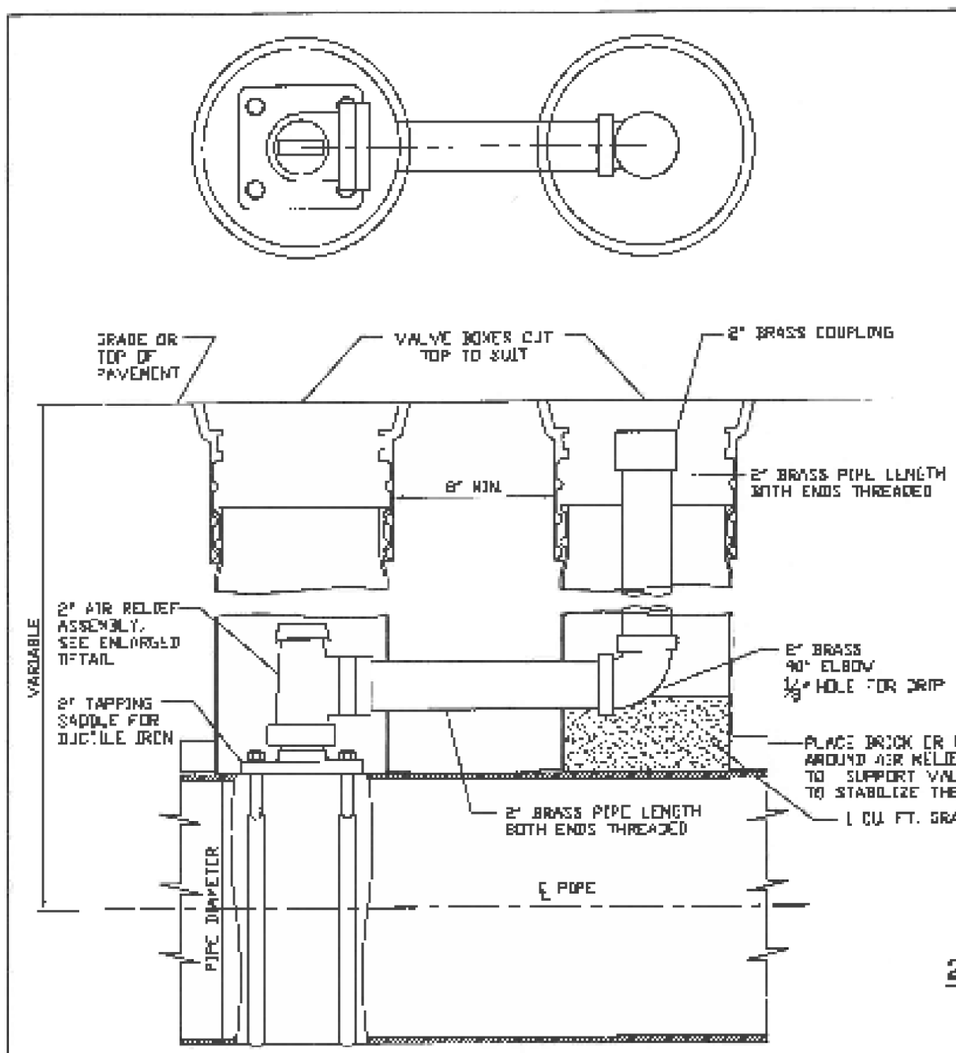

DOUBLE VALVE BOX ASSEMBLY

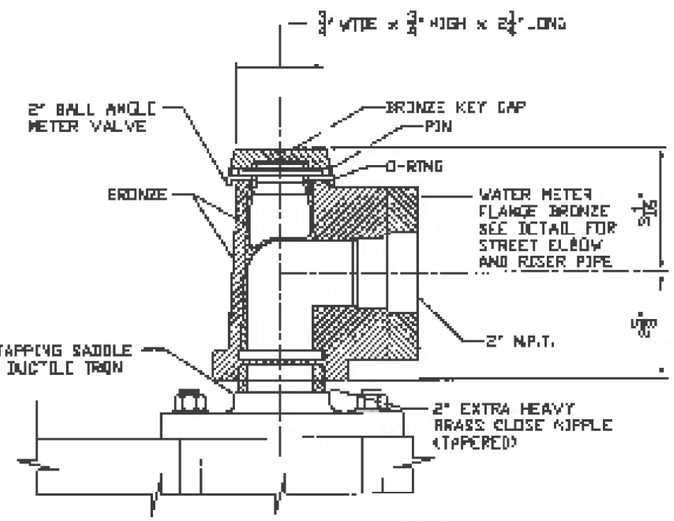

AIR RELIEF VALVE ASSEMBLY

2" AIR RELIEF/FLUSHING OUTLET VALVE FOR DUCTILE IRON WATER MAINS

STD-A03

DATE: 5-15-2007 | BY: RSK

WATER WORK DETAILS

CUY-77-00.42 PART 1

MODEL: 104983_UD018 PAPERSIZE: 17x11 (in.) DATE: 3/4/2022 TIME: 1:53:43 PM USER: esmccaslin
F:\Jobs\11162-Miller Road Interchange\104983\400-Engineering\Utilities\Sheets\104983_UD018.dgn

3rd. HIGH SERVICE DISTRICT

DEPARTMENT OF PUBLIC UTILITIES
DIVISION OF WATER
CLEVELAND, OHIO

SUBJECT : 12" WATER MAIN ALONG MILLER ROAD AT I.R. 77
CITY OF BRECKSVILLE

SCALE: AS SHOWN | NO.

SUBSET 43 | TOTAL 43

DESIGN AGENCY
EUTHENICS
835 Mohawk Dr. | Cleveland, OH 44130

DESIGNER TDP

REVIEWER DTB 03/01/22

PROJECT ID 104983

SHEET P. 270 | TOTAL P.434

SHEET NO.	REF. NO.	LOCATION	STATION	SIDE	CODE	SIZE (INCHES)	625 GROUND ROD	630 GROUND MOUNTED SUPPORT, NO. 2 POST	630 GROUND MOUNTED SUPPORT, NO. 3 POST	630 GROUND MOUNTED SUPPORT, NO. 4 POST	630 GROUND MOUNTED STRUCTURAL BEAM SUPPORT, W6x9	630 GROUND MOUNTED STRUCTURAL BEAM SUPPORT, W10x12	630 SIGN POST REFLECTOR	630 BREAKAWAY STRUCTURAL BEAM CONNECTION	630 OVERHEAD SIGN SUPPORT, TYPE TC-12.31, DESIGN 12	630 OVERHEAD SIGN SUPPORT, TYPE TC-15.116, DESIGN 2	630 SIGN, FLAT SHEET	630 SIGN, GROUND MOUNTED EXTRUSHEET	630 SIGN, OVERHEAD EXTRUSHEET	630 GROUND MOUNTED STRUCTURAL BEAM SUPPORT FOUNDATION	630 RIGID OVERHEAD SIGN SUPPORT FOUNDATION	630 REMOVAL OF GROUND MOUNTED SIGN AND DISPOSAL	630 REMOVAL OF GROUND MOUNTED SIGN AND REERECTION	630 REMOVAL OF GROUND MOUNTED POST SUPPORT AND DISPOSAL	630 REMOVAL OF OVERHEAD MOUNTED SIGN AND DISPOSAL	630 REMOVAL OF POLE MOUNTED SIGN AND DISPOSAL	630 REMOVAL OF OVERHEAD SIGN SUPPORT AND DISPOSAL	630 REMOVAL OF GROUND MOUNTED STRUCTURAL BEAM SUPPORT AND DISPOSAL
							EA	FT	FT	FT	FT	FT	EA	EA	EA	EA	SF	SF	SF	EA	EA	EA	EA	EA	EA	EA	EA	EA	EA
232	S-1	MILLER ROAD	STA. 60+45	RT	M2-1-21	21 x 15											2.19					2		1				
					M1-1-24-2	24 x 24			14.25								4												
233	S-2	MILLER ROAD	STA. 66+30	RT	D7-H16-48	48 x 24			12.5-12.5								8												
233	S-3	MILLER ROAD	STA. 67+65	RT	R3-H8bk-36	36 x 30			13.5								7.5												
233	R-1	MILLER ROAD	STA. 68+11	LT																		2		1					
233	R-2	MILLER ROAD	STA. 68+58	RT																		1		1					
233	R-3	MILLER ROAD	STA. 69+03	RT																		1		1					
233	R-4	MILLER ROAD	STA. 69+10	RT																		6							2
233	S-4	MILLER ROAD	STA. 69+95	RT	M6-3-21	21 x 15			14.75								2.19												
					M1-1-24-2	24 x 24											4												
					M3-1-24	24 x 12											2												
					M6-1-21	21 x 15			14.75								2.19												
					M1-1-24-2	24 x 24											4												
					M3-3-24	24 x 12											2												
					M1-H5c-24	24 x 24			15.5								4												
					M1-1-24-2	24 x 24											4												
					M4-5-24	24 x 12											2												
233	R-5	MILLER ROAD	STA. 70+05	LT																							1		
233	R-6	MILLER ROAD	STA. 70+30	RT																		3		1					
233	S-5	MILLER ROAD	STA. 71+00	LT	LEVEL 3	180 x 96						22.0-19		2				60		1									
233	R-7	MILLER ROAD	STA. 71+04	RT																		1		1					
233	S-6	MILLER ROAD	STA. 71+00	RT	D1-1-60	120 x 72														1									
																							1						
233	S-7	MILLER ROAD	STA. 71+05	LT	R5-H2b-36	36 x 24				16.0							6												
233					R3-H8ba-30	30 x 36											7.5												
233	R-8	MILLER ROAD	STA. 71+61	RT																		1		1					
233	S-8	MILLER ROAD	STA. 71+04	RT					14.0														3	1					
233	S-9	MILLER ROAD	STA. 71+08	RT					14.0														1	1					
233	S-10	MILLER ROAD	STA. 71+50	RT	M3-1-24	24 x 12				16.25							2												
					M1-1-24-2	24 x 24											4												
					M5-1-21	21 x 15											2.19												
233	R-9	MILLER ROAD	STA. 74+57	LT																		1		1					
233	S-11	MILLER ROAD	STA. 74+60	LT	M3-3-24	24 x 12											2												
					M1-1-24-2	24 x 24											4												
					M5-1-21	21 x 15											2.19												
					M4-5-24	24 x 12											2												
					M1-1-24-2	24 x 24											4												
					M1-H5c-24	24 x 24				16.25-16.5							4												
233	S-12	MILLER ROAD	STA. 74+90	RT	R3-H8ca-48	48 x 30		13-14.25									10												
233	R-10	MILLER ROAD	STA. 75+46	RT																		7		2					
233	R-11	MILLER ROAD	STA. 75+91	LT																		1		1					
233	R-12	MILLER ROAD	STA. 77+12	LT																		1		1					
233	S-13	MILLER ROAD	STA. 75+00	RT	LEVEL 3	156 x 108	1								1				117		1								
233	S-15	MILLER ROAD	STA. 76+08	CL	CUSTOM	24 x 12	1	14.0									2												
					R4-H3a-24	24 x 30											5												
233	S-16	MILLER ROAD	STA. 76+50	LT	LEVEL 3	96 x 96									1				64		1								
233	S-17	MILLER ROAD	STA. 76+55	LT	R3-H8cm-48	48 x 30		13-14.25									10												
233	R-14	MILLER ROAD	STA. 78+23	LT																		1		1					
234	R-15	MILLER ROAD	STA. 80+39	LT																							2		
234	R-16	MILLER ROAD	STA. 80+89	LT																		3		1					
234	S-18	MILLER ROAD	STA. 81+10	LT	LEVEL 3	144 x 96	1								1				96		1								
234	R-18	MILLER ROAD	STA. 81+88	LT																		1		1					
SUB-TOTALS CARRIED TO P.279							3	68.5	125.75	65	0	41	0	2	3	0	115.0	60	277	2	3	32	5	17	0	3	0	2	

ESTIMATED SIGNING QUANTITIES
MILLER ROAD

DESIGN AGENCY
EUTHENICS
8235 Midwest Dr. | Cleveland, OH 44125

DESIGNER
MRC

REVIEWER
ANC 03/01/22

PROJECT ID
104983

SHEET P.271 | TOTAL P.434

CUY-77-00.42 PART 1

MODEL: 104983_T0001 PAPERSIZE: 17x11 (in.) DATE: 3/4/2022 TIME: 5:53:58 PM USER: esmccaslin
F:\Jobs\162-Miller Road Interchange\104983\400-Engineering\Traffic\Sheets\104983_T0001.dgn

SHEET NO.	REF. NO.	LOCATION	STATION	SIDE	CODE	SIZE (INCHES)	625 GROUND ROD EA	630 GROUND MOUNTED SUPPORT, NO. 2 POST FT	630 GROUND MOUNTED SUPPORT, NO. 3 POST FT	630 GROUND MOUNTED SUPPORT, NO. 4 POST FT	630 GROUND MOUNTED STRUCTURAL BEAM SUPPORT, W6x9 FT	630 GROUND MOUNTED STRUCTURAL BEAM SUPPORT, W10x12 FT	630 SIGN POST REFLECTOR EA	630 BREAKAWAY STRUCTURAL BEAM CONNECTION EA	630 OVERHEAD SIGN SUPPORT, TYPE TC-12.31, DESIGN 12 EA	630 OVERHEAD SIGN SUPPORT, TYPE TC-15.116, DESIGN 2 EA	630 SIGN, FLAT SHEET SF	630 SIGN, GROUND MOUNTED EXTRUSHEET SF	630 SIGN, OVERHEAD EXTRUSHEET SF	630 GROUND MOUNTED STRUCTURAL BEAM SUPPORT FOUNDATION EA	630 RIGID OVERHEAD SIGN SUPPORT FOUNDATION EA	630 REMOVAL OF GROUND MOUNTED SIGN AND DISPOSAL EA	630 REMOVAL OF GROUND MOUNTED SIGN AND REERECTION EA	630 REMOVAL OF GROUND MOUNTED POST SUPPORT AND DISPOSAL EA	630 REMOVAL OF OVERHEAD MOUNTED SIGN AND DISPOSAL EA	630 REMOVAL OF POLE MOUNTED SIGN AND DISPOSAL EA	630 REMOVAL OF OVERHEAD SIGN SUPPORT AND DISPOSAL EA	630 REMOVAL OF GROUND MOUNTED STRUCTURAL BEAM SUPPORT AND DISPOSAL EA
234	R-17	MILLER ROAD	STA. 81+78	CL																		1		1					
234	R-19	MILLER ROAD	STA. 81+95	LT																		1		1					
234	S-19	MILLER ROAD	STA. 82+00	LT	EX. RELOC.			12															1	1					
					EX. RELOC.																		1	1					
234	S-20	MILLER ROAD	STA. 82+76	RT	R3-H8ca-48	48 x 30		13-13									10												
234	R-20	MILLER ROAD	STA. 83+69	LT																		4		1					
234	R-21	MILLER ROAD	STA. 83+76	LT																		4		1					
234	S-21	MILLER ROAD	STA. 84+64	LT	R3-H8ca-48	48 x 30		13-13									10												
234	S-22	MILLER ROAD	STA. 86+20	LT	CUSTOM	24 x 12											2												
					R4-H3a-24	24 x 30		14.0									5												
234	R-22	MILLER ROAD	STA. 87+83	LT																		1		1					
235	S-23	MILLER ROAD	STA. 93+00	LT	M4-5-12	12 x 24			14.75								2												
					M1-1-24-2	24 x 24											4												
					M1-H5c-24	24 x 24											4												
					M3-3-24	24 x 12			14.75								2												
					M1-1-24-2	24 x 24											4												
					M6-3-21	21 x 15											2.19												
					M3-1-24	24 x 12			15.5								2												
					M1-1-24-2	24 x 24											4												
					M6-3-21	21 x 15											2.19												
235	R-23	MILLER ROAD	STA. 96+49	RT																		7		2					
235	S-24	MILLER ROAD	STA. 97+29	RT	R3-8b-48	48 x 30		13-13									10					1		2					
235	S-25	MILLER ROAD	STA. 98+07	RT	R3-8b-48	48 x 30		13-13									10					1		2					
235	S-26	BRECKSVILLE	STA. 28+65	RT	M4-1a-24	24 x 12				16.25							2					4		1					
					M3-3-24	24 x 12											2												
					M1-1-24-2	24 x 24											4												
					M6-3-21	21 x 15											2.19												
					M4-5-24	24 x 12			15.25								2												
					M1-1-24-2	24 x 24											4												
					M6-1-21	21 x 15											2.19												
235	S-27	BRECKSVILLE	STA. 17+83.05	RT	M4-5-24	24 x 12											2					4		1					
					M1-1-24-2	24 x 24											4												
					M5-1-21	21 x 15			16.25								2.19												
235	R-24	BRECKSVILLE	STA. 30+43	LT																							6		
235	S-28	BRECKSVILLE	STA. 41+81.89	LT	M4-5-24	24 x 12											2										4		
					M1-1-24-2	24 x 24											4												
					M5-1-21	21 x 15			16.25								2.19												
SUB-TOTALS CARRIED TO P.279							0	130	92.75	16.25	0	0	0	0	0	0	108.14	0	0	0	0	28	2	15	0	10	0	0	

ESTIMATED SIGNING QUANTITIES
MILLER ROAD

DESIGN AGENCY
EUTHENICS
8235 Mohawk Dr. | Cleveland, OH 44105

DESIGNER MRC

REVIEWER ANC 03/01/22

PROJECT ID 104983

SHEET P.272 TOTAL P.434

CUY-77-00.42 PART 1

MODEL: 104983_T0002 PAPERSIZE: 17x11 (in.) DATE: 3/4/2022 TIME: 1:54:10 PM USER: esmccasiln
F:\Jobs\162-Miller Road Interchange\104983\400-Engineering\Traffic\Sheets\104983_T0002.dgn

ESTIMATED PAVEMENT MARKING QUANTITIES
MILLER ROAD

SHEET NO.	REF. NO.	LOCATION	STATION FROM	STATION TO	SIDE	618 RUMBLE STRIPS, SHOULDER (ASPHALT CONCRETE) MILE	620 REMOVAL OF DELINEATOR EACH	621 RPM (ONE-WAY) EACH	621 RPM (TWO-WAY) EACH	621 RAISED PAVEMENT MARKER REMOVED EACH	644 EDGE LINE, 6" MILE	644 LANE LINE, 6" MILE	644 CHANNELIZING LINE, 12" FT	644 DOTTED LINE, 6" (WHITE) FT	644 DOTTED LINE, 12" (WHITE) FT	646 EDGE LINE, 6" MILE	646 LANE LINE, 6" MILE	646 CHANNELIZING LINE, 12" FT	646 STOP LINE FT	646 CROSSWALK LINE, 12" FT	646 TRANSVERSE/DIAGONAL LINE FT	646 LANE ARROW EACH	646 WRONG WAY ARROW EACH	646 LANE REDUCTION ARROW EACH	646 DOTTED LINE, 6" (WHITE) FT	646 DOTTED LINE, 6" (YELLOW) FT	646 DOTTED LINE, 12" (WHITE) FT	646 REMOVAL OF PAVEMENT MARKING FT	807 WET REFLECTIVE EPOXY PAVEMENT MARKING, LANE LINE, 6" MILE	807 WET REFLECTIVE EPOXY PAVEMENT MARKING, CENTER LINE MILE	807 WET REFLECTIVE EPOXY PAVEMENT MARKING, CHANNELIZING LINE, 12" FT	850 GROOVING FOR 4" RECESSED PAVEMENT MARKING, (CONCRETE) MILE	850 GROOVING FOR 6" RECESSED PAVEMENT MARKING, (CONCRETE) MILE	850 GROOVING FOR 12" RECESSED PAVEMENT MARKING, (CONCRETE) FT
232	CL-1	MILLER ROAD	61+45	63+00	CL																										0.03		0.06		
232	EL-1	MILLER ROAD	61+45	62+78	LT						0.03																								
232	EL-2	MILLER ROAD	61+45	63+12	RT						0.03																								
232/233	CL-2	MILLER ROAD	63+80	70+08	CL																										0.12		0.24		
232/233	CL-3	MILLER ROAD	64+70	70+08	LT																										0.10		0.20		
232/233	TR-1	MILLER ROAD	64+70	70+08	CL/LT																190														
233	LL-1	MILLER ROAD	67+00	68+58	RT																									0.03				0.03	
233	CH-1	MILLER ROAD	68+58	70+08	RT																											150			150
233	LA-1	MILLER ROAD	68+66		RT																	2													
233	LA-2	MILLER ROAD	69+32		RT																	2													
233	LA-3	MILLER ROAD	69+98		RT																	2													
233	SL-1	MILLER ROAD	70+08		RT														26																
233	CW-1	RAMP B-2	69+91	70+74	LT															149															
233	CW-2	MILLER ROAD	70+90	70+97	LT/RT															128															
233	SL-2	MILLER ROAD	71+00		LT														26																
233	CL-4	MILLER ROAD	71+00	74+84	CL																										0.07		0.14		
233	CH-2	MILLER ROAD	71+00	74+84	LT																											384			384
233	CH-3	MILLER ROAD	71+00	74+84	RT																											384			384
233	LL-2	MILLER ROAD	71+00	74+84	RT																									0.07				0.07	
233	LA-4	MILLER ROAD	71+10		LT																	2													
233	LA-5	MILLER ROAD	71+76		LT																	2													
233	LA-6	MILLER ROAD	72+42		LT																	2													
233	LA-7	MILLER ROAD	73+42		RT																	1													
233	LA-8	MILLER ROAD	74+08		RT																	1													
233	LA-9	MILLER ROAD	74+74		RT																	1													
233	SL-3	MILLER ROAD	74+84		RT														38																
233	CW-3	MILLER ROAD	74+92	75+09	LT/RT															130															
233	CW-4	RAMP B-1	75+19	75+84	LT															125															
233	CW-5	RAMP B-4	75+18	75+95	RT															140															
233	SL-4	MILLER ROAD	76+00		LT														44																
233/234	LL-3	MILLER ROAD	76+00	82+85	RT																									0.13				0.13	
233/234	CH-4	MILLER ROAD	76+00	80+95	LT																											495			495
233/234	CH-5	MILLER ROAD	76+00	80+95	LT																											495			495
233	LA-10	MILLER ROAD	76+10		LT																	3													
233	LA-11	MILLER ROAD	76+76		LT																	3													
233	LA-12	MILLER ROAD	77+42		LT																	3													
233	LA-13	RAMP B-1	2+50		RT																	1													
233/234	CL-5	MILLER ROAD	77+56	82+56	LT																										0.09		0.18		
233	CL-6	MILLER ROAD	77+56	78+06	RT																										0.01		0.02		
		SUB-TOTAL						0	0																	0	0								
		TOTALS CARRIED TO P.280				0	0	0		0	0.06	0	0	0	0	0	0	0	134	672	190	25	0	0	0		0	0	0.23	0.43	1908	0.84	0.23	1908

CUY-77-00.42 PART 1

MODEL: I04983_T0003 PAPERSIZE: 17x11 (in.) DATE: 3/4/2022 TIME: 15:42:3 PM USER: esmccaslin
F:\Jobs\162-Miller Road Interchange\04983\400-Engineering\Traffic\Sheets\I04983_T0003.dgn

DESIGN AGENCY
EUTHENICS
8235 Mohawk Dr. | Cleveland, OH 4435

DESIGNER
MRC

REVIEWER
ANC 03/01/22

PROJECT ID
104983

SHEET P.273 | TOTAL P.434

ESTIMATED PAVEMENT MARKING QUANTITIES
MILLER ROAD

SHEET NO.	REF. NO.	LOCATION	STATION FROM	STATION TO	SIDE	618 RUMBLE STRIPS, SHOULDER (ASPHALT CONCRETE) MILE	620 REMOVAL OF DELINEATOR EACH	621 RPM (ONE-WAY) EACH	621 RPM (TWO-WAY) EACH	621 RAISED PAVEMENT MARKER REMOVED EACH	644 EDGE LINE, 6" MILE	644 LANE LINE, 6" MILE	644 CHANNELIZING LINE, 12" FT	644 DOTTED LINE, 6" (WHITE) FT	644 DOTTED LINE, 12" (WHITE) FT	646 EDGE LINE, 6" MILE	646 LANE LINE, 6" MILE	646 CHANNELIZING LINE, 12" FT	646 STOP LINE FT	646 CROSSWALK LINE, 12" FT	646 TRANSVERSE/DIAGONAL LINE FT	646 LANE ARROW EACH	646 WRONG WAY ARROW EACH	646 LANE REDUCTION ARROW EACH	646 DOTTED LINE, 6" (WHITE) FT	646 DOTTED LINE, 6" (YELLOW) FT	646 DOTTED LINE, 12" (WHITE) FT	646 REMOVAL OF PAVEMENT MARKING FT	807 WET REFLECTIVE EPOXY PAVEMENT MARKING, LANE LINE, 6" MILE	807 WET REFLECTIVE EPOXY PAVEMENT MARKING, CENTER LINE MILE	807 WET REFLECTIVE EPOXY PAVEMENT MARKING, CHANNELIZING LINE, 12" FT	850 GROOVING FOR 4" RECESSED PAVEMENT MARKING, (CONCRETE) MILE	850 GROOVING FOR 6" RECESSED PAVEMENT MARKING, (CONCRETE) MILE	850 GROOVING FOR 12" RECESSED PAVEMENT MARKING, (CONCRETE) FT
234	LA-14	MILLER ROAD	78+08		LT																	3												
234	CH-6	MILLER ROAD	78+21	82+56	CL																											435			435
234	CH-7	MILLER ROAD	80+71	82+85	RT																											214			214
234	LA-15	MILLER ROAD	78+74		LT																	3												
234	LA-16	MILLER ROAD	79+40		LT																	3												
234	LA-17	MILLER ROAD	80+06		LT																	3												
234	DW-1	MILLER ROAD	80+95	82+56	LT																							162						
234	TR-2	MILLER ROAD	80+71	82+56	CL/RT																56													
234	LA-18	MILLER ROAD	81+14		LT																	1												
234	LA-19	MILLER ROAD	81+80		LT																	1												
234	LA-20	MILLER ROAD	82+46		LT																	1												
234	SL-5	MILLER ROAD	82+56		LT/RT														16															
234	SL-6	MILLER ROAD	82+85		RT														27															
234	CW-6	MILLER ROAD	82+90	82+97	LT/RT															151														
234	RD-1	MILLER ROAD	83+19		LT/RT		3																											
234	CW-7	ONE SHERWIN WILLIAMS	83+20	84+12	LT															172														
234	SL-7	ONE SHERWIN WILLIAMS	20+65		LT														31															
234	CH-8	ONE SHERWIN WILLIAMS	20+65	21+20	LT																											55			55
234	LA-21	ONE SHERWIN WILLIAMS	20+75		LT																	2												
234	CL-6	SOUTHPOINTE DRIVE	18+59	19+17	CL																											0.01		0.02	
234	CW-8	SOUTHPOINTE DRIVE	19+43	19+50	LT/RT															156														
234	SL-8	SOUTHPOINTE DRIVE	19+17		RT														12															
234	SL-9	SOUTHPOINTE DRIVE	19+39		RT														18															
234	CH-9	SOUTHPOINTE DRIVE	18+59	19+39	RT																											80			80
234	LA-22	SOUTHPOINTE DRIVE	19+04		RT																	1												
234	LA-23	SOUTHPOINTE DRIVE	19+21		RT																	1												
234	RD-2	MILLER ROAD	84+05		RT		1																											
234	CW-9	MILLER ROAD	84+21	84+28	LT/RT															157														
234	SL-10	MILLER ROAD	84+42		LT														40															
234	CH-10	MILLER ROAD	84+42	88+30	LT																											388			388
234	DW-2	MILLER/SOUTHPOINTE	82+56	19+50	LT/RT																					158								
234	DY-1	MILLER/SOUHTPOINTE	82+56	19+50	LT/RT																						132							
234/235	LL-4	MILLER ROAD	84+42	99+20	LT																									0.28			0.28	
234/235	LL-5	MILLER ROAD	84+42	96+73	RT																									0.23			0.23	
234	LA-24	MILLER ROAD	84+52		CL																	1												
234	LA-25	MILLER ROAD	85+18		CL																	1												
234	LA-26	MILLER ROAD	85+84		CL																	1												
234	LA-27	MILLER ROAD	86+50		CL																	1												
234	LA-28	MILLER ROAD	87+16		CL																	1												
235	CL-7	MILLER ROAD	93+00	95+50	LT																											0.05		0.10	
235	CL-8	MILLER ROAD	93+00	95+50	RT																											0.05		0.10	
235	LA-29	MILLER ROAD	94+25		CL																	2												
235	CH-11	MILLER ROAD	96+73	99+20	RT																											247			247
235	CH-12	MILLER ROAD	96+73	99+20	RT																											247			247
235	LA-30	MILLER ROAD	97+12		RT																	3												
235	LA-31	MILLER ROAD	97+78		RT																	3												
235	LA-32	MILLER ROAD	98+44		RT																	3												
235	LA-33	MILLER ROAD	99+10		RT																	3												
235	SL-11	MILLER ROAD	99+20		RT														44															
		SUB-TOTAL						0	0																	158	132							
		TOTALS CARRIED TO P.280				0	4	0		0	0	0	0	0	0	0	0	0	188	636	56	38	0	0	290		162	0	0.51	0.10	1666	0.22	0.51	1666

DESIGN AGENCY
EUTHENICS
8235 Mohawk Dr. | Cleveland, OH 44539

DESIGNER MRC

REVIEWER ANC 03/01/22

PROJECT ID 104983

SHEET P.274 | TOTAL P.434

CUY-77-00.42 PART 1

MODEL: I04983_T0004 PAPERSIZE: 17x11 (in.) DATE: 3/4/2022 TIME: 11:54:35 PM USER: esmccaslin
F:\Jobs\162-Miller Road Interchange\04983\400-Engineering\Traffic\Sheets\I04983_T0004.dgn

MODEL: I04983_TPI PAPERSIZE: 17x11 (In.) DATE: 3/4/2022 TIME: 1:55:30 PM USER: esmccasl1n
F:\Jobs\1162-Miller Road Interchange\I04983\400-Engineering\Traffic\Sheets\I04983_TP001.dgn

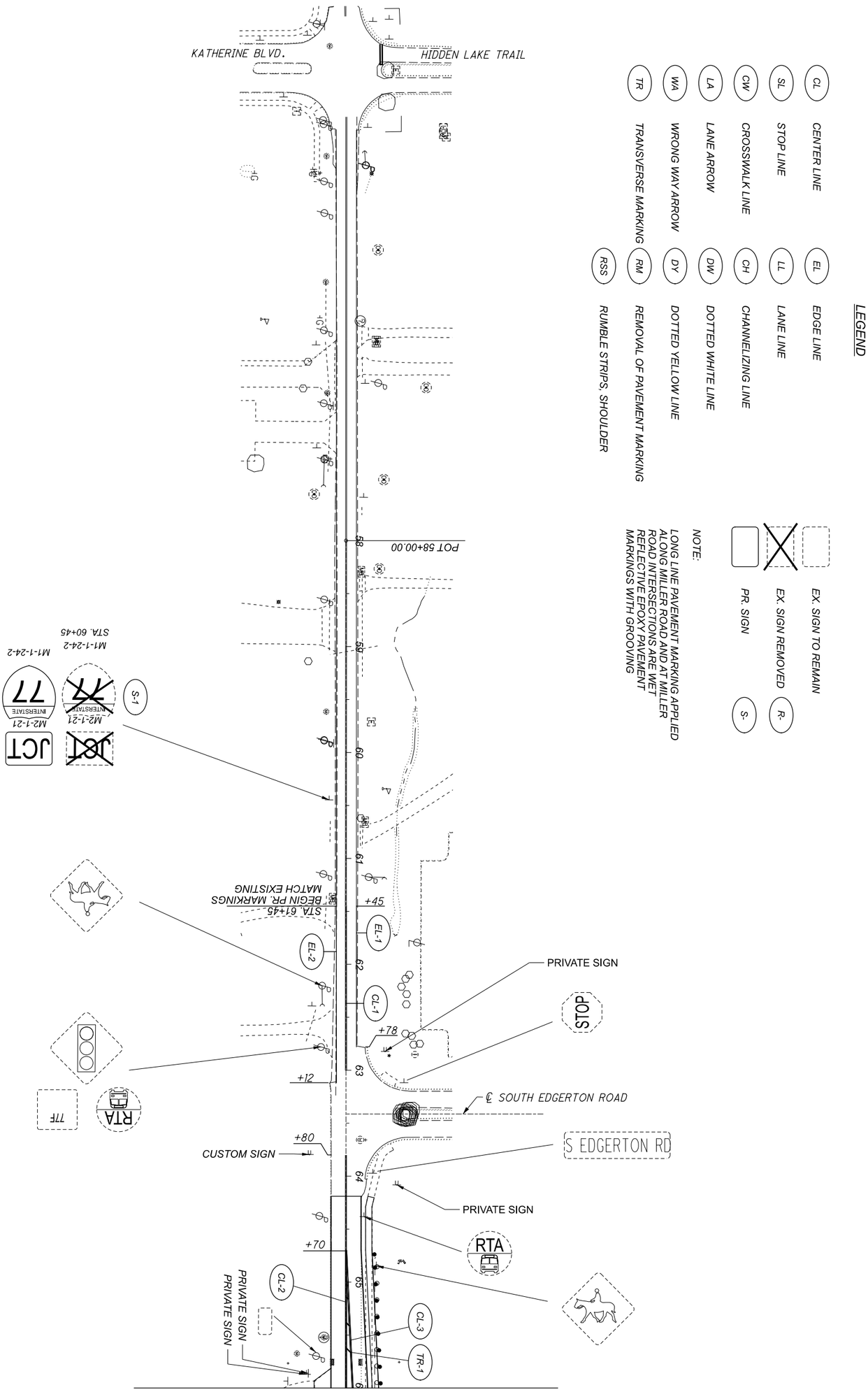

LEGEND

CL	CENTER LINE	EL	EDGE LINE
SL	STOP LINE	LL	LANE LINE
CW	CROSSWALK LINE	CH	CHANNELIZING LINE
LA	LANE ARROW	DW	DOTTED WHITE LINE
WA	WRONG WAY ARROW	DY	DOTTED YELLOW LINE
TR	TRANSVERSE MARKING	RM	REMOVAL OF PAVEMENT MARKING
		RSS	RUMBLE STRIPS, SHOULDER

EX. SIGN TO REMAIN
EX. SIGN REMOVED (R)
PR. SIGN (S)

NOTE:
LONG LINE PAVEMENT MARKING APPLIED ALONG MILLER ROAD AT MILLER ROAD INTERSECTIONS ARE WET REFLECTIVE EPOXY PAVEMENT MARKINGS WITH GROOVING

SHEET	TOTAL
P 275	P 434

PROJECT ID: 104983
REVIEWER: ANC 03/01/22
DESIGNER: MRC
DESIGN AGENCY: EUTHENICS, 8235 Mohawk Dr. | Cleveland, OH 44130

SIGNING AND PAVEMENT MARKING
MILLER ROAD

HORIZONTAL SCALE IN FEET
0 50
25 100

MODEL: I04983_TP2 PAPERSIZE: 17x11 (in.) DATE: 3/4/2022 TIME: 1:55:37 PM USER: esmccasiln
F:\Jobs\1162-Miller Road Interchange\I04983\400-Engineering\Traffic\Sheets\I04983_TP002.dgn

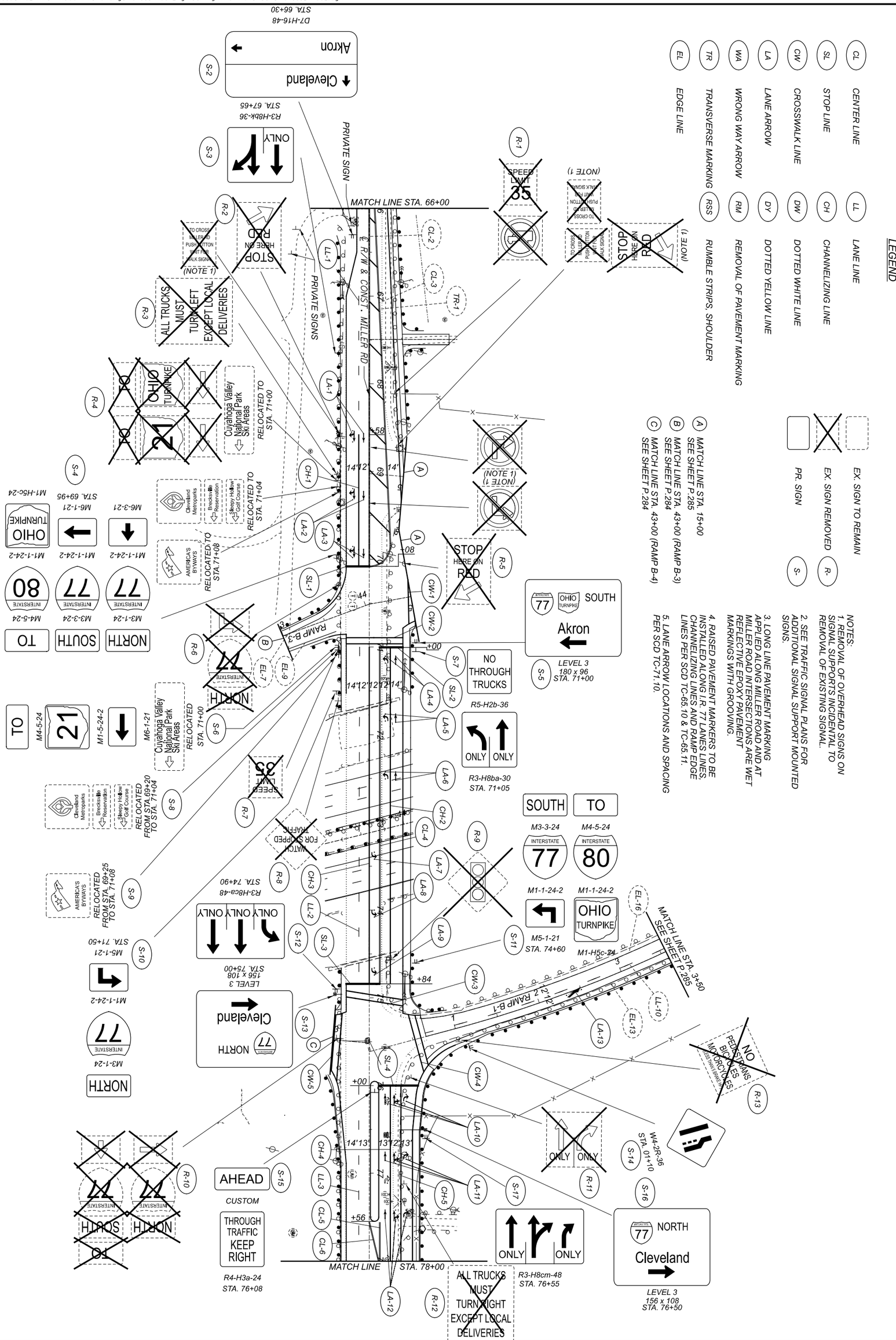

SHEET	TOTAL
P 276	P 434

PROJECT ID: 104983
REVIEWER: ANC 03/01/22
DESIGNER: MRC
DESIGN AGENCY: EUTHENICS, 8235 Mohawk Dr. | Cleveland, OH 44130

SIGNING AND PAVEMENT MARKING
MILLER ROAD

HORIZONTAL SCALE IN FEET
0 50
25 100

MODEL: I04983_TP3 PAPERSIZE: 17x11(in.) DATE: 3/4/2022 TIME: 1:55:43 PM USER: esmccasiln
F:\Jobs\1162-Miller Road Interchange\I04983\400-Engineering\Traffic\Sheets\I04983_TP003.dgn

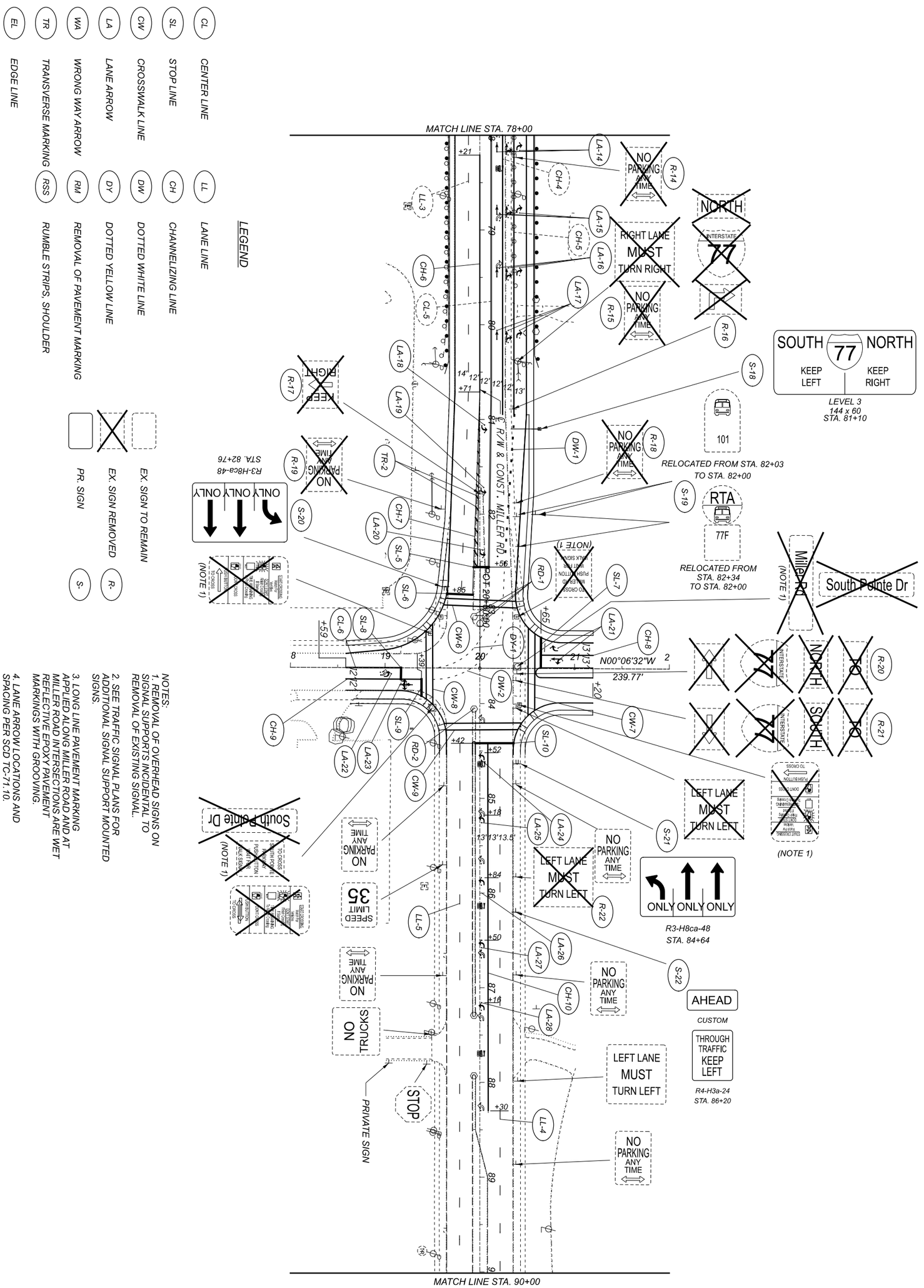

NOTES:
1. REMOVAL OF OVERHEAD SIGNS ON SIGNAL SUPPORTS INCIDENTAL TO REMOVAL OF EXISTING SIGNAL.
2. SEE TRAFFIC SIGNAL PLANS FOR ADDITIONAL SIGNAL SUPPORT MOUNTED SIGNS.
3. LONG LINE PAVEMENT MARKING APPLIED ALONG MILLER ROAD AND AT MILLER ROAD INTERSECTIONS ARE WET REFLECTIVE EPOXY PAVEMENT MARKINGS WITH GROOVING.
4. LANE ARROW LOCATIONS AND SPACING PER SCD TC-71.10.

SHEET	TOTAL
P 277	P 434

PROJECT ID 104983

REVIEWER ANC 03/01/22

DESIGNER MRC

DESIGN AGENCY
EUTHENICS
8235 Mohawk Dr. | Cleveland, OH 44130

SIGNING AND PAVEMENT MARKING
MILLER ROAD

HORIZONTAL SCALE IN FEET
0 50
25 100

LEGEND

CL	CENTER LINE	LL	LANE LINE
SL	STOP LINE	CH	CHANNELIZING LINE
CW	CROSSWALK LINE	DW	DOTTED WHITE LINE
LA	LANE ARROW	DY	DOTTED YELLOW LINE
WA	WRONG WAY ARROW	RM	REMOVAL OF PAVEMENT MARKING
TR	TRANSVERSE MARKING		
RSS	RUMBLE STRIPS, SHOULDER		
EL	EDGE LINE		

EX. SIGN TO REMAIN

EX. SIGN REMOVED (R-)

PR. SIGN (S-)

(A) STA. 99+20 END MARKINGS MATCH EXISTING

NOTE:

1. LONG LINE PAVEMENT MARKING APPLIED ALONG MILLER ROAD AND AT MILLER ROAD INTERSECTIONS ARE WET REFLECTIVE EPOXY PAVEMENT MARKINGS WITH GROOVING.

2. LANE ARROW LOCATIONS AND SPACING PER SCD TC-71.10.

NORTH M3-1-24 | INTERSTATE 77 M1-1-24-2 | M6-3-21

SOUTH M3-3-24 | INTERSTATE 77 M1-1-24-2 | M6-3-21 STA. 93+00

TO | M4-5-12 | INTERSTATE 80 M1-1-24-2 | OHIO TURNPIKE M1-H5c-24

M5-1-21 STA. 17+83.05 | M6-3-21 STA. 28+65 | M6-1-21

M4-5-24 TO NORTH | M1-1-24-2 INTERSTATE 77 | M3-3-24 SOUTH | M4-14-24 ALT | M1-1-24-2 INTERSTATE 77 | M4-5-24 TO NORTH

S-23 S-26 S-27

NO PARKING ANY TIME ⇕

PRIVATE SIGN

END CENTER LANE ONLY

NO PARKING ANY TIME ⇕

BEGIN CENTER LANE ONLY

NO PARKING ANY TIME ⇕

SPEED LIMIT 35

KEEP RIGHT

CUSTOM SIGN

STOP HERE ON RED

TO CROSS MILLER RD PUSH BUTTON WAIT FOR WALK SIGNAL

TO CROSS BRECKSVILLE PUSH BUTTON WAIT FOR WALK SIGNAL

TO CROSS DRIVEWAY PUSH BUTTON WAIT FOR WALK SIGNAL

Brecksville Rd

MATCH LINE STA. 90+00

℄ R/W & CONST. MILLER RD.

LL-4 LL-5 LA-29 CL-7 CL-8 LA-30 LA-31 LA-32 LA-33 A CH-11 CH-12 SL-11

STOP

MILLER RD BRECKSVILLE ROAD 500 FEET AHEAD

NO PARKING ANY TIME ⇕

NO PARKING ANY TIME ⇕

ONLY | CENTER LANE | BEGIN

ONLY | CENTER LANE | END

NO PARKING ANY TIME ⇕

ONLY ONLY ONLY

R3-8b-48 STA. 97+29

S-24

ONLY ONLY ONLY

R3-8b-48 STA. 98+07

S-25

TO CROSS MILLER RD PUSH BUTTON WAIT FOR WALK SIGNAL

Miller Rd

TO CROSS DRIVEWAY PUSH BUTTON WAIT FOR WALK SIGNAL

TO CROSS BRECKSVILLE PUSH BUTTON WAIT FOR WALK SIGNAL

TO CROSS DRIVEWAY PUSH BUTTON WAIT FOR WALK SIGNAL

PRIVATE SIGN

R-24

OHIO TURNPIKE | INTERSTATE 80 | INTERSTATE 77 | SOUTH

Cleveland Metroparks

Brecksville Reservation

Cuyahoga Valley National Park Ski Areas

S-28

TO NORTH | INTERSTATE 77

TO M4-5-24

INTERSTATE 77 M1-1-24-2

M5-1-21 STA. 41+81.89

R-23

21 JCT

POT 100+00.60

HORIZONTAL SCALE IN FEET 0 25 50 100

SIGNING AND PAVEMENT MARKING MILLER ROAD

CUY-77-00.42 PART 1

MODEL: 104983_TP004 PAPERSIZE: 17x11(in.) DATE: 3/4/2022 TIME: 1:55:49 PM USER: esmccaslin
F:\Jobs\1162-Miller Road Interchange\104983\400-Engineering\Traffic\Sheets\104983_TP004.dgn

DESIGN AGENCY
EUTHENICS
8235 Mohawk Dr. | Cleveland, OH 44130

DESIGNER MRC

REVIEWER ANC 03/01/22

PROJECT ID 104983

SHEET P.278 TOTAL P.434

SHEET NO.	REF. NO.	LOCATION	STATION	SIDE	CODE	SIZE (INCHES)	625 GROUND ROD EA	630 GROUND MOUNTED SUPPORT, NO. 2 POST FT	630 GROUND MOUNTED SUPPORT, NO. 3 POST FT	630 GROUND MOUNTED SUPPORT, NO. 4 POST FT	630 GROUND MOUNTED STRUCTURAL BEAM SUPPORT, W6x9 FT	630 GROUND MOUNTED STRUCTURAL BEAM SUPPORT, W10x12 FT	630 SIGN POST REFLECTOR EA	630 BREAKAWAY STRUCTURAL BEAM CONNECTION EA	630 OVERHEAD SIGN SUPPORT, TYPE TC-12.31, DESIGN 12 EA	630 OVERHEAD SIGN SUPPORT, TYPE TC-15.116, DESIGN 2 EA	630 SIGN, FLAT SHEET SF	630 SIGN, GROUND MOUNTED EXTRUSHEET SF	630 SIGN, OVERHEAD EXTRUSHEET SF	630 GROUND MOUNTED STRUCTURAL BEAM SUPPORT FOUNDATION EA	630 RIGID OVERHEAD SIGN SUPPORT FOUNDATION EA	630 REMOVAL OF GROUND MOUNTED SIGN AND DISPOSAL EA	630 REMOVAL OF GROUND MOUNTED SIGN AND REERECTION EA	630 REMOVAL OF GROUND MOUNTED POST SUPPORT AND DISPOSAL EA	630 REMOVAL OF OVERHEAD MOUNTED SIGN AND DISPOSAL EA	630 REMOVAL OF POLE MOUNTED SIGN AND DISPOSAL EA	630 REMOVAL OF OVERHEAD SIGN SUPPORT AND DISPOSAL EA	630 REMOVAL OF GROUND MOUNTED STRUCTURAL BEAM SUPPORT AND DISPOSAL EA
233	R-13	RAMP B-1	STA. 1+01	RT																			1		1			
233	S-14	RAMP B-1	STA. 1+10	RT	W4-2R-36	36 x 36			13.5								9											
237	S-29	I.R. 77	STA. 8+50	RT	E1-H5P-108	108 x 30	1								1				22.5		1							
					LEVEL 1	156 x108													117									
237	R-25	I.R. 77	STA. 13+50	LT																						3		
237	S-30	I.R. 77	STA. 13+50	LT	E1-H5P-96	96 x 30													20									
					LEVEL 1	228 x120													80									
					E11-1d-228	228 x 48													76									
					LEVEL 1	228 x 120													80									
238	R-26	I.R. 77	STA. 22+39	LT																			2		2			
238	S-31	I.R. 77	STA. 26+00	LT	E1-H5P-108	108 x 30	1								1				22.5		1					2		1
					LEVEL 1	228 x 120													190									
					E11-1d-228	228 x 36													57									
239	S-32	I.R. 77	STA. 35+20	RT	LEVEL 1	192 x 96	2									1			128		2							
					LEVEL 1	216 x 144													216									
					LEVEL 1	192 x 96													128									
					E1-H5P-108	108 x 36													27									
					E1-H5P-108	108 x 36													27									
239	S-33	RAMP B-4	STA. 38+62	RT	E5-H1a-96	96 x 60					19.4-19.3			2				40		1								
239	S-34	RAMP B-4	STA. 40+13	RT/LT	R3-H8bd-30	30 x 30			12.5-12.5				4				6.25											
					R5-1a-36	36 x 24			12.5-12.5								6											
					R5-1a-36	36 x 24											6											
239	S-35	RAMP B-4	STA. 42+63	RT/LT	R3-H8bd-30	30 x 30			13.5-13.5				4				6.25											
					R6-1R-54	54 x 18			13.5-13.5								6.75											
					R6-1L-54	54 x 18											6.75											
					R5-1-36	36 x 36											9											
240	S-36	RAMP B-2	STA. 14+55	RT/LT	R3-H8bd-30	30 x 30			13.5-13.5				4				6.25											
					R6-1R-54	54 x 18			13.5-13.5								6.75											
					R6-1L-54	54 x 18											6.75											
					R5-1-36	36 x 36											9											
240	R-27	I.R. 77	STA. 44+38	LT																			1		2			
240	R-28	I.R. 77	STA. 44+50	CL/LT																						3		1
240	S-37	I.R. 77	STA. 45+05	LT	LEVEL 1	192 x 144	1								1				192		1							
					E1-H5P-96	96 x 30													20									
240	S-38	I.R. 77	STA. 45+55	LT	E9-H3-180	180 x 72						21.9-20.2		2				90										
240	R-29	EX. RAMP B-2	STA. 14+74	RT/LT																			8		4			
240	S-39	RAMP B-2	STA. 12+00	RT/LT	R3-H8bq-36	30 x 36			13.5-13.5				4				7.5											
					R5-1a-36	36 x 24			13.5-13.5								6											
					R5-1a-36	36 x 24											6											
240	R-30	EX. RAMP B-2	STA. 13+02	RT																			5		1			
240	R-31	EX. RAMP B-2	STA. 13+02	LT																			2		2			
240	R-32	EX. RAMP B-2	STA. 9+31	RT																			1		2			
240	R-33	RAMP B-2	STA. 9+39	LT																			1		2			
240	S-40	RAMP B-1	STA. 5+30	RT	D10-H5a-30	30 x 30		13.5									6.25						1		1			
240	S-41	RAMP B-2	STA. 10+00	RT	D10-H5a-30	30 x 30		13									6.25						1		1			
241	S-42	I.R. 77	STA. 58+50	LT	LEVEL 1	192 x 96	1								1				128		1							
					E1-H5P-96	96 x 30													20									
241	R-34	I.R. 77	STA. 63+20	CL/LT																						3		1
CURRENT SHEET SUBTOTAL							6	26.5	225.5	0	38.7	42.1	16	4	4	1	116.75	130	1551	1	6	23	0	18	11	0	3	0
P.271 SUBTOTAL							3	68.5	125.75	65	0	41	0	2	3	0	114.95	60	277	2	3	32	5	17	0	3	0	2
P.272 SUBTOTAL							0	130	92.75	16.25	0	0	0	0	0	0	108.14	0	0	0	0	28	2	15	0	10	0	0
TOTALS CARRIED TO GENERAL SUMMARY							9	225	444	81.25	38.7	83.1	16	6	7	1	339.84	190	1828	3	9	83	7	50	11	13	3	2

ESTIMATED SIGNING QUANTITIES
I.R. 77 & RAMPS

DESIGN AGENCY
EUTHENICS
8235 Mohawk Dr. | Cleveland, OH 44139

DESIGNER MRC

REVIEWER ANC 03/01/22

PROJECT ID 104983

SHEET P.279 | TOTAL P.434

CUY-77-00.42 PART 1

MODEL: 104983_T0006 PAPERSIZE: 17x11(in.) DATE: 3/4/2022 TIME: 1:55:54 PM USER: esmccaslin
F:\Jobs\162-Miller Road Interchange\104983\400-Engineering\Traffic\Sheets\104983_T0006.dgn

ESTIMATED PAVEMENT MARKING QUANTITIES
I.R. 77 AND RAMPS

SHEET NO.	REF. NO.	LOCATION	STATION FROM	STATION TO	SIDE	618 RUMBLE STRIPS, SHOULDER (ASPHALT CONCRETE)	620 REMOVAL OF DELINEATOR	621 RPM (ONE-WAY)	621 RPM (TWO-WAY)	621 RAISED PAVEMENT MARKER REMOVED	644 EDGE LINE, 6"	644 LANE LINE, 6"	644 CHANNELIZING LINE, 12"	644 DOTTED LINE, 6" (WHITE)	644 DOTTED LINE, 12" (WHITE)	646 EDGE LINE, 6"	646 LANE LINE, 6"	646 CHANNELIZING LINE, 12"	646 STOP LINE	646 CROSSWALK LINE, 12"	646 TRANSVERSE/DIAGONAL LINE	646 LANE ARROW	646 WRONG WAY ARROW	646 LANE REDUCTION ARROW	646 DOTTED LINE, 6" (WHITE)	646 DOTTED LINE, 6" (YELLOW)	646 DOTTED LINE, 12" (WHITE)	646 REMOVAL OF PAVEMENT MARKING	807 WET REFLECTIVE EPOXY PAVEMENT MARKING, LANE LINE, 6"	807 WET REFLECTIVE EPOXY PAVEMENT MARKING, CENTER LINE	807 WET REFLECTIVE EPOXY PAVEMENT MARKING, CHANNELIZING LINE, 12"	850 GROOVING FOR 4" RECESSED PAVEMENT MARKING, (CONCRETE)	850 GROOVING FOR 6" RECESSED PAVEMENT MARKING, (CONCRETE)	850 GROOVING FOR 12" RECESSED PAVEMENT MARKING, (CONCRETE)
						MILE	EACH	EACH	EACH	EACH	MILE	MILE	FT	FT	FT	MILE	MILE	FT	FT	FT	FT	EACH	EACH	EACH	FT	FT	FT	FT	MILE	MILE	FT	MILE	MILE	FT
237-240	EL-3	I.R. 77	12+26	51+00	LT						0.73																							
237-240	LL-6	I.R. 77	12+26	51+00	LT			33		33		0.73																						
237-240	LL-8	I.R. 77	12+26	51+00	LT			33		33		0.73																						
237	CH-13	I.R. 80 RAMP	12+26	14+40	LT				6	6			215																					
237	CH-14	I.R. 77	12+26	15+37	LT				8	8			311																					
237-238	DW-3	I.R. 77	15+37	26+90	LT										1153																			
237-240	EL-4	I.R. 77	17+00	45+50	RT						0.54																							
237-239	EL-6	I.R. 77	17+00	37+67	RT						0.39																							
237-240	LL-7	I.R. 77	17+00	45+50	RT			24		24							0.54																	
237-240	LL-9	I.R. 77	17+00	45+50	RT			24		24							0.54																	
237-239	EL-5	I.R. 77/RAMP B-3	18+00	35+17	LT						0.32																							
239	EL-7	RAMP B-3	35+17	43+69	LT											0.16																	
239	EL-8	RAMP B-4	37+67	43+00	RT				7							0.10																	
237-238	RSS-1	I.R. 77/RAMP B-3	18+00	35+17	LT	0.33																												
237-238	RSS-2	I.R. 77	18+00	23+53	LT	0.11																												
238	RM-1	I.R. 77	23+53	26+90	LT																								337					
238-239	CH-15	I.R. 77	26+90	35+24	RT								834																					
238-239	CH-16	RAMP B-3	26+90	35+17	RT				21									827																
238-239	RSS-3	RAMP B-4	29+68	37+67	RT	0.15																												
238-239	DW-4	I.R. 77	29+68	35+20	RT									559																				
239	EL-9	RAMP B-3	35+17	43+58	RT				10							0.16																		
239	CH-17	RAMP B-4	35+20	37+67	LT				6									247																
239	CH-18	I.R. 77	35+20	37+63	RT				6				243																					
239-240	EL-11	I.R. 77	35+24	51+00	LT						0.30																							
239-240	EL-12	I.R. 77	37+63	45+50	RT						0.15																							
239	EL-10	RAMP B-4	37+67	43+00	LT				7							0.10																		
239	WA-1	RAMP B-4	40+23		LT																								1					
239	CH-19	RAMP B-4	41+00	42+97	LT													197																
239	LA-34	RAMP B-4	41+55		LT																	2												
239	LA-35	RAMP B-4	42+21		LT																	2												
239	LA-36	RAMP B-4	42+87		LT																	2												
239	SL-12	RAMP B-4	42+97		LT/RT														47															
240	SL-13	RAMP B-2	14+92		LT/RT														39															
240	SL-14	RAMP B-2	14+82		LT														12															
240	CH-20	RAMP B-2	10+50	14+92	RT													442																
240-241	EL-14	RAMP B-2	5+06	14+86	CL											0.19																		
240-241	EL-15	RAMP B-2	5+06	14+92	LT				12							0.19																		
240	LA-37	RAMP B-2	13+40 / 13+50		LT																	2												
240	LA-38	RAMP B-2	14+06 / 14+16		LT																	2												
240	LA-39	RAMP B-2	14+72 / 14+82		LT																	2												
240	WA-2	RAMP B-2	12+18		LT																			2										
233, 240-24	EL-13	RAMP B-1	0+59	12+80	RT											0.23																		
233, 240-24	LL-10	RAMP B-1	0+65	6+76	LT												0.12																	
240	LA-40	RAMP B-1	5+75		RT																									1				
240-241	DW-5	RAMP B-1	6+76	10+03	LT/RT																						328							
233, 240-24	EL-16	RAMP B-1	0+65	12+80	LT				15	15						0.23																		
CURRENT SHEET SUBTOTAL						0.59	0	114	98	143	2.43	1.46	1603	559	1153	1.36	1.20	1713	98	0	0	12	3	1	328	0	0	337	0.00	0.00	0	0.00	0.00	0
P.273 SUBTOTAL						0	0	0		0	0.06	0	0	0	0.0	0.0	0.0	0	134	672	190	25	0	0	0		0	0	0.23	0.43	1908	0.84	0.23	1908
P.274 SUBTOTAL						0	4	0		0	0	0	0	0	0	0	0	0	188	636	56	38	0	0	290		162	0	0.51	0.10	1666	0.22	0.51	1666
TOTALS CARRIED TO GENERAL SUMMARY						0.59	4	212.00		143	2.49	1.46	1603	559	1153	1.36	1.20	1713	420	1308	246	75	3	1	618		162	337	0.75	0.53	3574	1.06	0.75	3574

DESIGN AGENCY
EUTHENICS
8235 Mohawk Dr. | Cleveland, OH 44125

DESIGNER MRC

REVIEWER ANC 03/01/22

PROJECT ID 104983

SHEET P.280 | TOTAL P.434

CUY-77-00.42 PART 1

MODEL: 104983_T0005 PAPERSIZE: 17x11(in.) DATE: 3/4/2022 TIME: 1:56:11 PM USER: esmccaslin
F:\Jobs\1162-Miller Road Interchange\104983\400-Engineering\Traffic\Sheets\104983_T0005.dgn

I.R. 77 NORTHBOUND GUIDE SIGNS CONSTRUCTED IN PID 104983 PART 2

EXIT 147

E1-H5P-96
96" X 30"

To 21

Miller Rd

1 MILE

LEVEL 1
156" X 108"
STA. 1083+75

To 21

Miller Rd

2 MILE

LEVEL 1
156" X 108"
STA. 1033+00

CUY-77-00.42 PART 1

MODEL: I04983_TPI01 PAPERSIZE: 17x11in DATE: 3/4/2022 TIME: 05:06 PM USER: esmccasin
F:\Jobs\162-Miller Road Interchange\I04983\400-Engineering\Traffic\Sheets\I04983_TPI01.dgn

HORIZONTAL SCALE IN FEET
0 25 50 100

SIGNING AND PAVEMENT MARKING
I.R. 77

DESIGN AGENCY
EUTHENICS
8239 Midwest Dr. | Cleveland, OH 44125

DESIGNER
MRC

REVIEWER
ANC 03/01/22

PROJECT ID
104983

SHEET P.281 TOTAL P.434

MODEL: I04983_TPI02 PAPERSIZE: 17x11 (in.) DATE: 3/4/2022 TIME: 1:57:13 PM USER: esmccaslin
F:\Jobs\1162-Miller Road Interchange\I04983\400-Engineering\Traffic\Sheets\I04983_TPI02.dgn

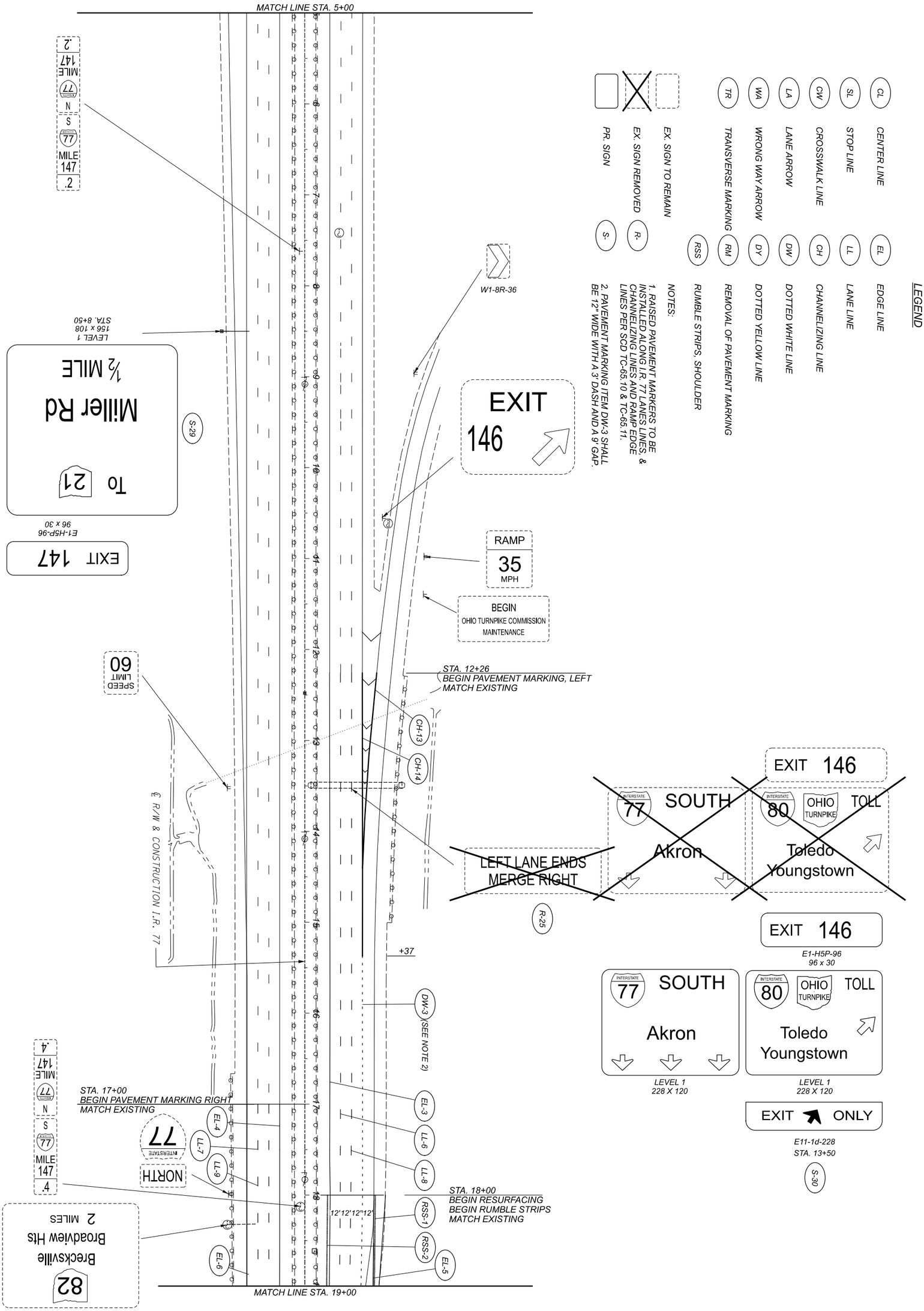

SHEET	PROJECT ID	REVIEWER	DESIGNER	DESIGN AGENCY
P 282 / TOTAL P 434	104983	ANC 03/01/22	MRC	EUTHENICS 8235 Mohawk Dr. | Cleveland, OH 44130

SIGNING AND PAVEMENT MARKING
I.R. 77

HORIZONTAL SCALE IN FEET
0 50
25 100

MODEL: 104983_TPI03 PAPERSIZE: 17x11 (in.) DATE: 3/4/2022 TIME: 1:57:19 PM USER: esmccaslin
F:\Jobs\1162-Miller Road Interchange\104983\400-Engineering\Traffic\Sheets\104983_TPI03.dgn

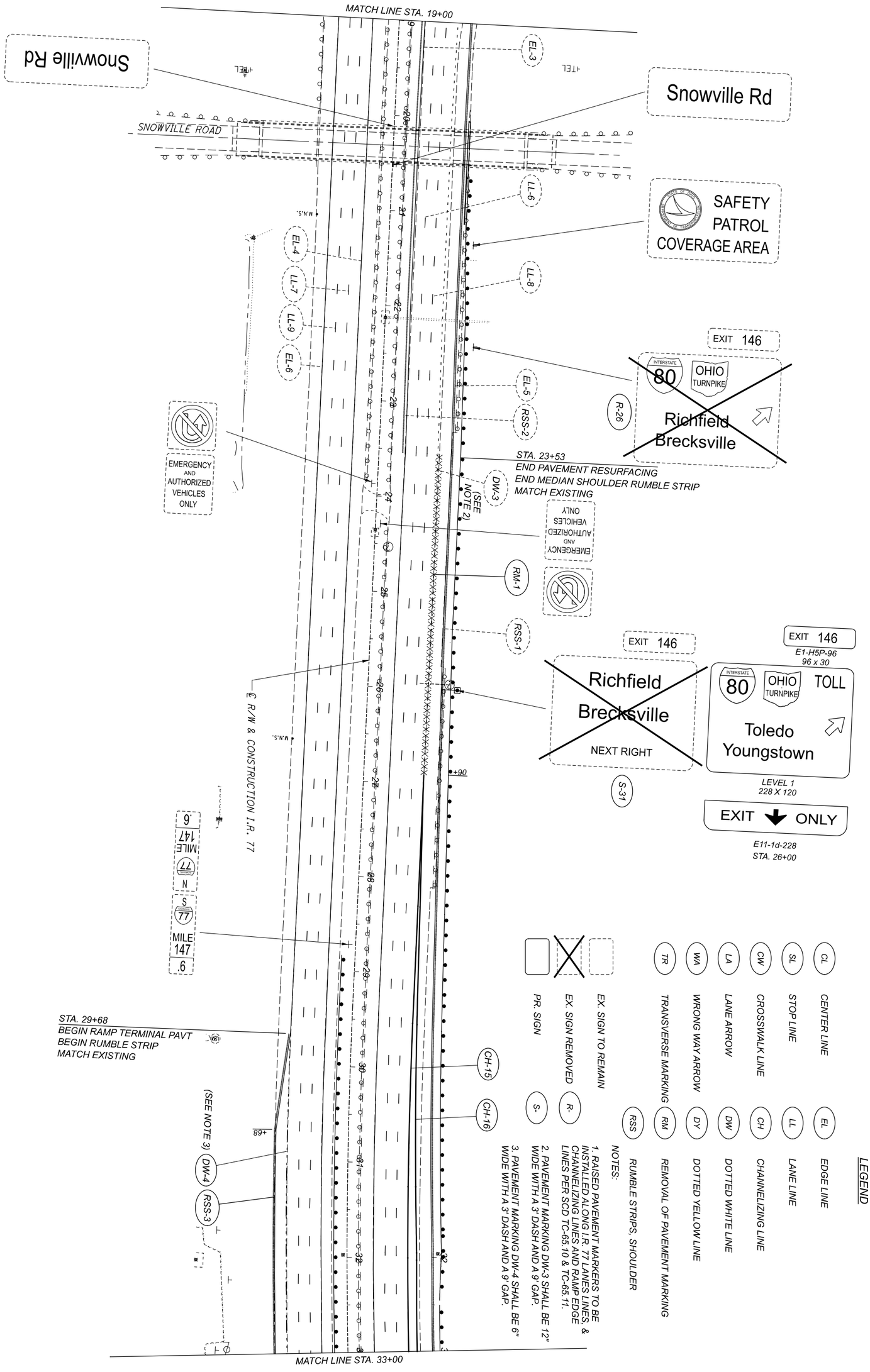

LEGEND

EL	EDGE LINE
LL	LANE LINE
CH	CHANNELIZING LINE
DW	DOTTED WHITE LINE
DY	DOTTED YELLOW LINE
RM	REMOVAL OF PAVEMENT MARKING
RSS	RUMBLE STRIPS, SHOULDER
CL	CENTER LINE
SL	STOP LINE
CW	CROSSWALK LINE
LA	LANE ARROW
WA	WRONG WAY ARROW
TR	TRANSVERSE MARKING
R-	EX. SIGN REMOVED
S-	PR. SIGN

EX. SIGN TO REMAIN

NOTES:

1. RAISED PAVEMENT MARKERS TO BE INSTALLED ALONG I.R. 77 LANES LINES, & CHANNELIZING LINES AND RAMP EDGE LINES PER SCD TC-65.10 & TC-65.11.
2. PAVEMENT MARKING DW-3 SHALL BE 12" WIDE WITH A 3' DASH AND A 9' GAP.
3. PAVEMENT MARKING DW-4 SHALL BE 6" WIDE WITH A 3' DASH AND A 9' GAP.

SIGNING AND PAVEMENT MARKING
I.R. 77

HORIZONTAL SCALE IN FEET
0 50
25 100

SHEET	TOTAL
P 283	P 434

PROJECT ID 104983
REVIEWER ANC 03/01/22
DESIGNER MRC
DESIGN AGENCY EUTHENICS 8235 Mohawk Dr. | Cleveland, OH 44130

LEGEND

CL	CENTER LINE	EL	EDGE LINE
SL	STOP LINE	LL	LANE LINE
CW	CROSSWALK LINE	CH	CHANNELIZING LINE
LA	LANE ARROW	DW	DOTTED WHITE LINE
WA	WRONG WAY ARROW	DY	DOTTED YELLOW LINE
TR	TRANSVERSE MARKING	RM	REMOVAL OF PAVEMENT MARKING
		RSS	RUMBLE STRIPS, SHOULDER

EX. SIGN TO REMAIN

EX. SIGN REMOVED R-

PR. SIGN S-

NOTES:

1. RAISED PAVEMENT MARKERS TO BE INSTALLED ALONG I.R. 77 LANES LINES, & CHANNELIZING LINES AND RAMP EDGE LINES PER SCD TC-65.10 & TC-65.11.

2. PAVEMENT MARKING DW-4 SHALL BE 6" WIDE WITH A 3' DASH AND A 9' GAP/

HORIZONTAL SCALE IN FEET
0 25 50 100

SIGNING AND PAVEMENT MARKING I.R. 77

CUY-77-00.42 PART 1

MODEL: 104983_TPI04 PAPERSIZE: 17x11(in.) DATE: 3/4/2022 TIME: 1:57:25 PM USER: esmccaslin
F:\Jobs\162-Miller Road Interchange\104983\400-Engineering\Traffic\Sheets\104983_TPI04.dgn

MATCH LINE STA. 33+00
SEE SHEET P.275

MATCH LINE STA. 43+00
SEE SHEET P.276

MATCH LINE STA. 43+50

℄ RAMP B-3

℄ RAMP B-4

CH-15 CH-16 EL-5 RSS-1 EL-9 EL-7 EL-11 EL-3 LL-6 LL-8 EL-4 WA-1 LL-7 LL-9 EL-12 CH-19 LA-36 SL-12 LA-34 LA-35 RSS-3 CH-18 CH-17 EL-6 EL-8 EL-10 DW-4 (SEE NOTE 2)

MILE 147.8 N (77) S

EX. PRIVATE SIGN

EX. PRIVATE SIGNS

EX. PRIVATE SIGNS

EX. PRIVATE SIGNS

77 NORTH Cleveland
LEVEL 1
192"X96"

82 Brecksville Broadview Heights 1 ½ MILES
LEVEL 1
216"X144"
STA. 35+20

EXIT 149
E1-H5P-108
108 x 30

To 21 Miller Rd
LEVEL 1
192"X96"

EXIT 147
E1-H5P-108
108 x 30

S-32

S-33

EXIT 147
E5-H1a-96
96 x 60
STA. 38+62

S-34

ONLY
R3-H86b-30
STA. 40+13

WRONG WAY
WRONG WAY
R5-1a-36

S-35

ONE WAY
R6-1L-54

ONLY
R3-H86b-30
STA. 42+63

DO NOT ENTER
R5-1-36

ONE WAY
R6-1R-54

ADOPT A HIGHWAY
LITTER CONTROL
Grand Bay of Brecksville

SAFETY PATROL COVERAGE AREA

DESIGN AGENCY
EUTHENICS
8235 Mohawk Dr. | Cleveland, OH 44129

DESIGNER
MRC

REVIEWER
ANC 03/01/22

PROJECT ID
104983

SHEET P.284 TOTAL P.434

MODEL: I04983_TPI05 PAPERSIZE: 17x11 (in.) DATE: 3/4/2022 TIME: 1:57:32 PM USER: esmccaslin
F:\Jobs\1162-Miller Road Interchange\I04983\400-Engineering\Traffic\Sheets\I04983_TPI05.dgn

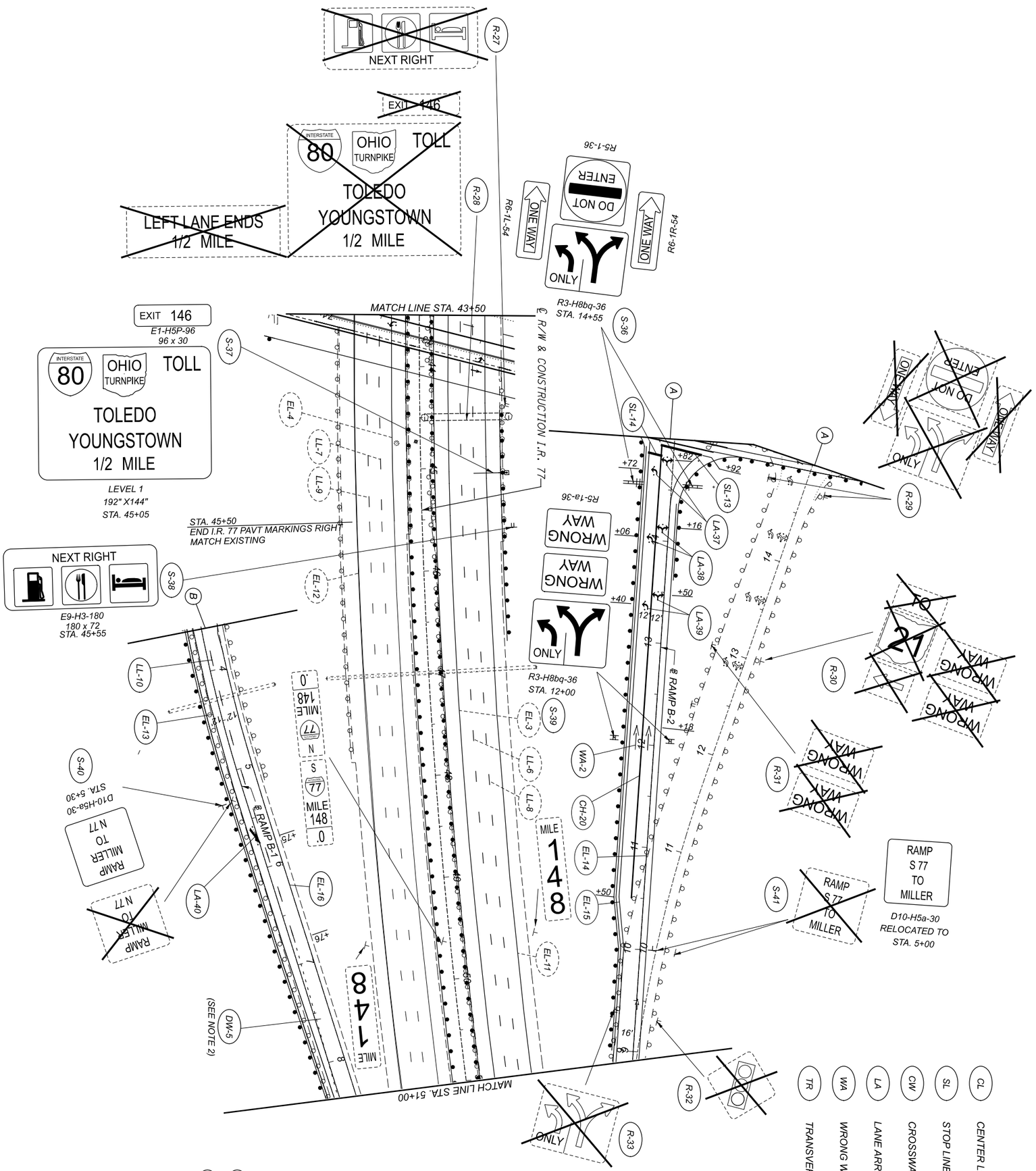

LEGEND

CL	*CENTER LINE*	
SL	*STOP LINE*	
LA	*LANE ARROW*	
CW	*CROSSWALK LINE*	
WA	*WRONG WAY ARROW*	
TR	*TRANSVERSE MARKING*	
EL	*EDGE LINE*	
LL	*LANE LINE*	
CH	*CHANNELIZING LINE*	
DW	*DOTTED WHITE LINE*	
DY	*DOTTED YELLOW LINE*	
RM	*REMOVAL OF PAVEMENT MARKING*	
RSS	*RUMBLE STRIPS, SHOULDER*	
	EX. SIGN TO REMAIN	
R-	*EX. SIGN REMOVED*	
S-	*PR. SIGN*	

NOTES:

1. RAISED PAVEMENT MARKERS TO BE INSTALLED ALONG I.R. 77 LANES LINES, & CHANNELIZING LINES AND RAMP EDGE LINES PER SCD TC-65.10 & TC-65.11.

2. PAVEMENT MARKING DW-5 SHALL BE 6" WIDE WITH A 2' DASH AND A 6' GAP.

(A) *MATCH LINE STA. 15+00 SEE SHEET P 276*

(B) *MATCH LINE STA. 3+50 SEE SHEET P 276*

SIGNING AND PAVEMENT MARKING
I.R. 77

SHEET	P 285
TOTAL	P 434
PROJECT ID	104983
REVIEWER	ANC 03/01/22
DESIGNER	MRC
DESIGN AGENCY	EUTHENICS 8235 Mohawk Dr. | Cleveland, OH 44130

HORIZONTAL SCALE IN FEET
0 50
25 100

LEGEND

CL	CENTER LINE	EL	EDGE LINE
SL	STOP LINE	LL	LANE LINE
CW	CROSSWALK LINE	CH	CHANNELIZING LINE
LA	LANE ARROW	DW	DOTTED WHITE LINE
WA	WRONG WAY ARROW	DY	DOTTED YELLOW LINE
TR	TRANSVERSE MARKING	RM	REMOVAL OF PAVEMENT MARKING
		RSS	RUMBLE STRIPS, SHOULDER

EX. SIGN TO REMAIN

EX. SIGN REMOVED R-

PR. SIGN S-

NOTES:

1. RAISED PAVEMENT MARKERS TO BE INSTALLED ALONG I.R. 77 LANES LINES, & CHANNELIZING LINES AND RAMP EDGE LINES PER SCD TC-65.10 & TC-65.11.

2. PAVEMENT MARKING DW-5 SHALL BE 6" WIDE WITH A 2' DASH AND A 6' GAP.

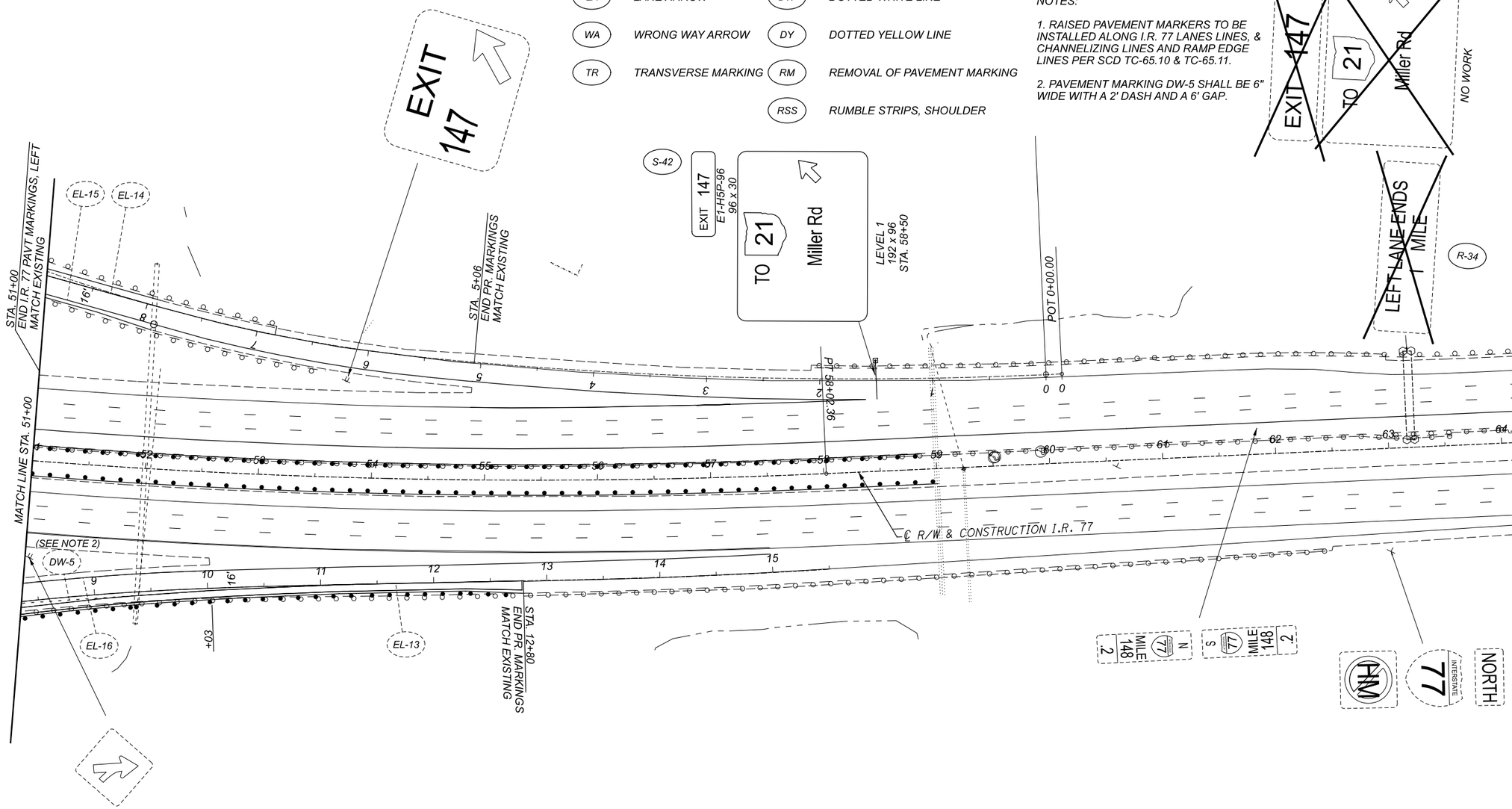

HORIZONTAL SCALE IN FEET
0 25 50 100

SIGNING AND PAVEMENT MARKING I.R. 77

CUY-77-00.42 PART 1

MODEL: l04983_TPI06 PAPERSIZE: 17x11(in.) DATE: 3/4/2022 TIME: 1:57:38 PM USER: esmccaslin
F:\Jobs\1162-Miller Road Interchange\104983\400-Engineering\Traffic\Sheets\104983_TPI06.dgn

DESIGN AGENCY
EUTHENICS
8235 Mohawk Dr. | Cleveland, OH 44130

DESIGNER	MRC
REVIEWER	ANC 03/01/22
PROJECT ID	104983
SHEET	P.286
TOTAL	P.434

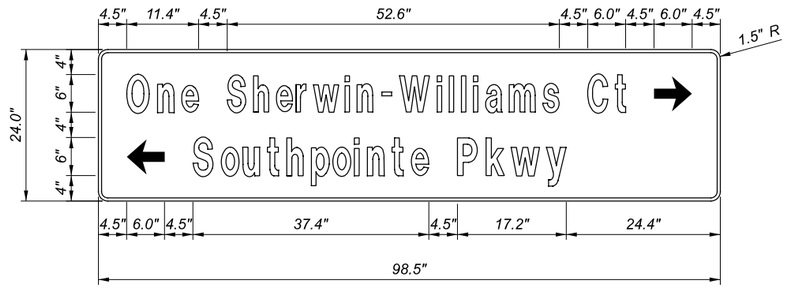

D3-1 98.5x24
0.5" BORDER, WHITE ON GREEN
(ONE SHERWIN-WILLIAMS CT, SOUTHPOINTE PKWY) FONT C

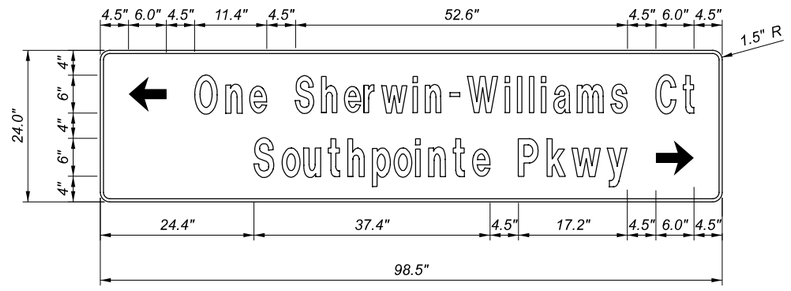

D3-1 98.5x24
0.5" BORDER, WHITE ON GREEN
(ONE SHERWIN-WILLIAMS CT, SOUTHPOINTE PKWY) FONT C

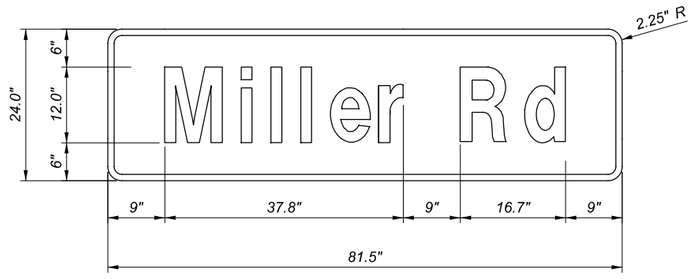

D3-1 81.5x24
1" BORDER, WHITE ON GREEN
(MILLER RD) FONT D

* NOT TO SCALE

STREET NAME SIGN DETAILS

DESIGN AGENCY
EUTHENICS
8335 Hobart Dr. | Cleveland, OH 44130

DESIGNER MRC
REVIEWER ANC 03/01/22
PROJECT ID 104983
SHEET P.287 TOTAL P.434

CUY-77-00.42 PART 1

MODEL: 104983_TD001 PAPERSIZE: 17x11 (in.) DATE: 3/4/2022 TIME: 1:57:43 PM USER: esmccaslin
F:\Jobs\11162-Miller Road Interchange\104983\400-Engineering\Traffic\Sheets\104983_TD001.dgn

MODEL: CLX_I77 SIGNS-2 - 8+50.00 R2-2 (Sheet) PAPERSIZE: 17x11 (in.) DATE: 3/1/2022 TIME: 4:39:57 PM USER: ssopraseuth
pw:\\hq-pwint01.g-e.transyscorp.com:transyscorp-pw\Documents\Projects_2019\C0403\40390027\Agency_Folders\400-Engineering\Traffic\Sheets\104983_TE102.dgn

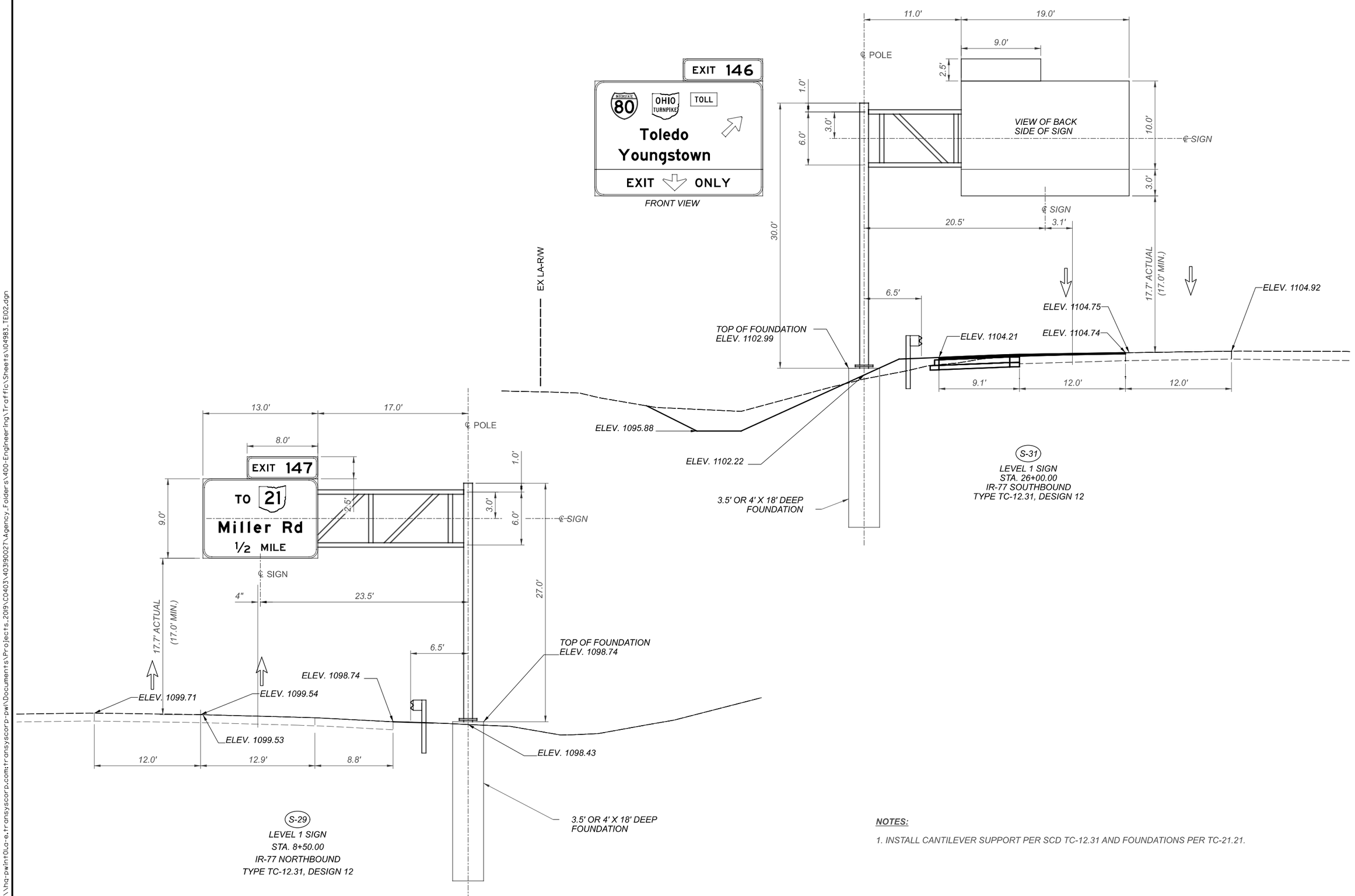

NOTES:

1. INSTALL CANTILEVER SUPPORT PER SCD TC-12.31 AND FOUNDATIONS PER TC-21.21.

SIGN ELEVATION VIEW
IR-77

DESIGN AGENCY
TranSystems
400 W. NATIONWIDE BLVD, STE 225
COLUMBUS, OHIO 43215

DESIGNER	HB
REVIEWER	SS 02-18-22
PROJECT ID	104983
SHEET	P.288
TOTAL	434

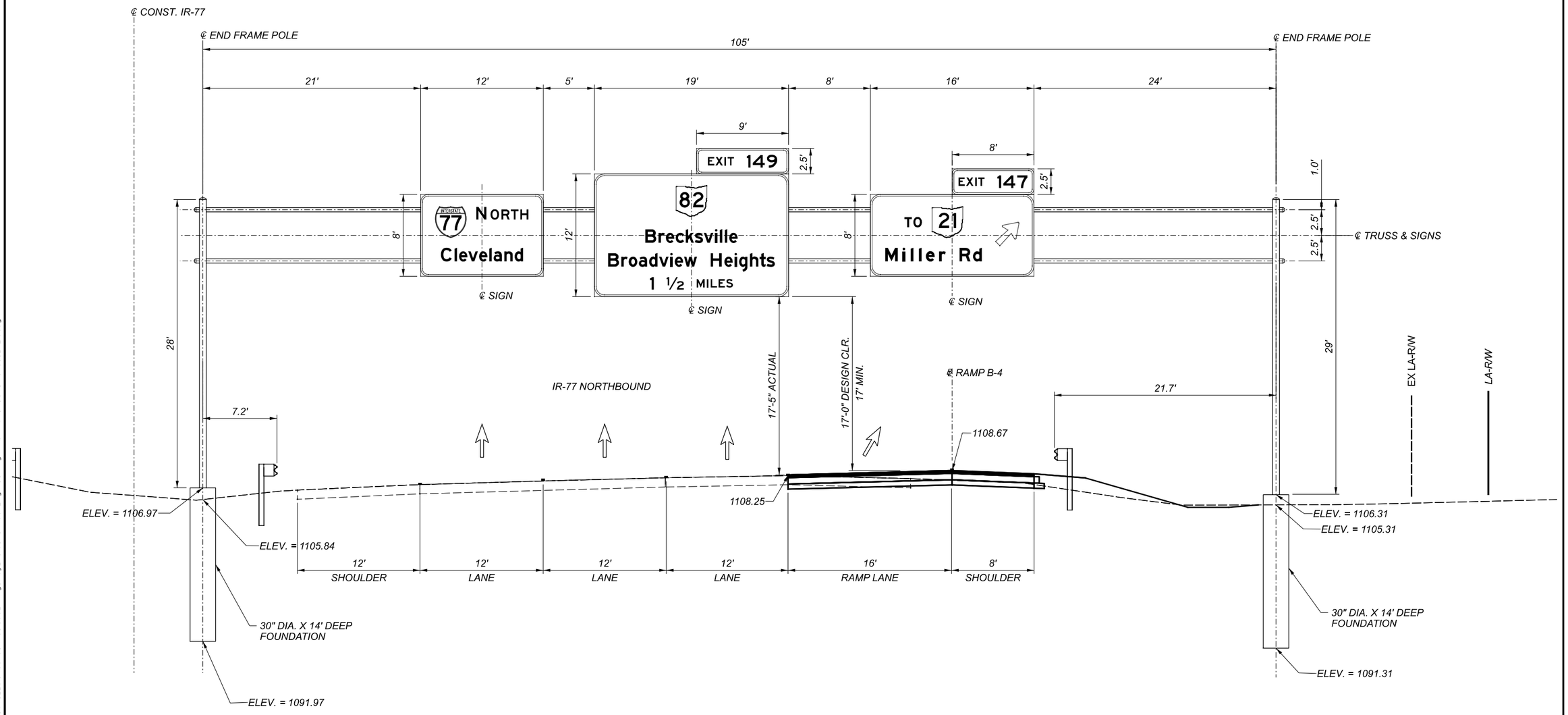

LEVEL 1 SIGN
STA. 35+20.00
IR-77 NORTHBOUND / RAMP B-4

S-32

TYPE TC-15.116, DESIGN 2
105' SPAN, 5' SQUARE BOX

NOTES:

1. *FOR PLAN VIEW OF PROPOSED TRUSS OVERHEAD SIGN SUPPORT LOCATION, SEE TRAFFIC CONTROL SHEET.*
2. *INTERNAL DIAGONALS AND BRACES OF TRUSS NOT SHOWN FOR CLARITY.*
3. *INSTALL TRUSS SIGN SUPPORT PER SCD TC-15.116 AND FOUNDATION PER TC-21.11.*

SIGN ELEVATION VIEW
IR-77 - RAMP B-4

CUY-77-00.42 PART 1

MODEL: CLX_I77 SIGNS - 35+20.00 R2-1(Sheet) PAPERSIZE:17x11(in.) DATE: 3/1/2022 TIME: 4:40:17 PM USER: ssopraseuth
pw:\\hq-pwint01.g-e.transystems.com:transystemscorp-pw\Documents\Projects_2019\C0403\40390027\Agency_Folders\400-Engineering\Traffic\Sheets\104983_TE101.dgn

DESIGN AGENCY
TranSystems
400 W. NATIONWIDE BLVD.
SUITE 225
COLUMBUS, OHIO 43215

DESIGNER
HB

REVIEWER
SS 02-18-22

PROJECT ID
104983

SHEET P.289 | TOTAL 434

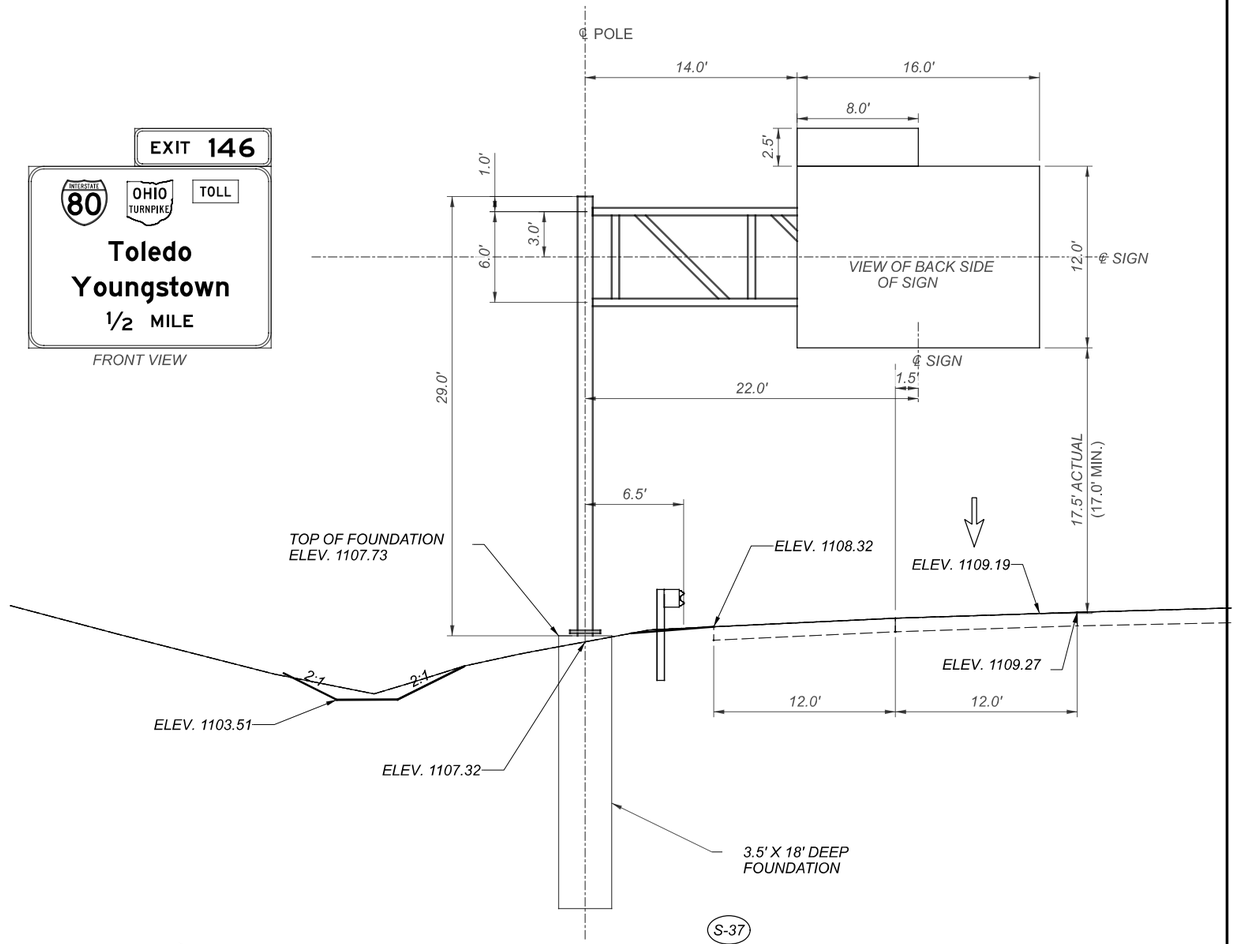

EXIT 146

INTERSTATE 80 OHIO TURNPIKE TOLL

Toledo
Youngstown
½ MILE

FRONT VIEW

S-37

LEVEL 1
STA. 45+05.00
IR-77 SOUTHBOUND
TYPE TC-12.31, DESIGN 12

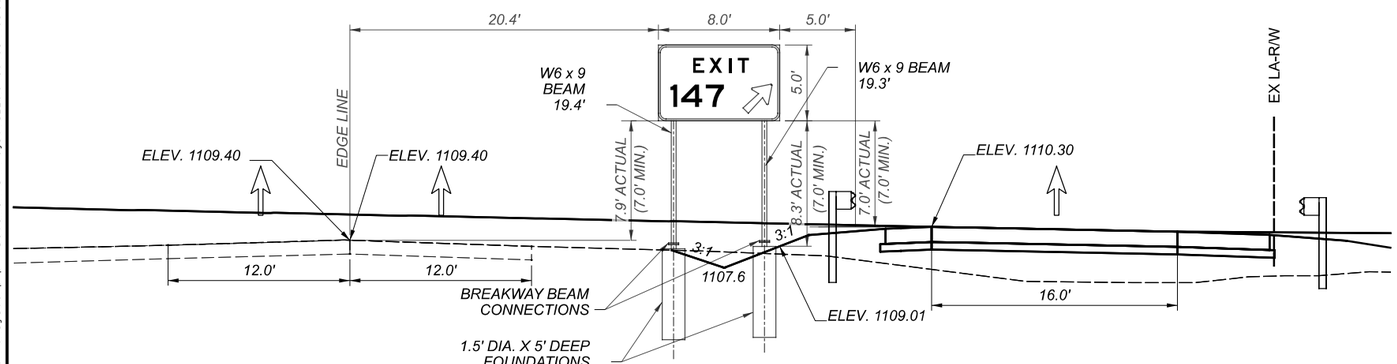

S-33

LEVEL 1
STA. 38+62.00
IR-77 NORTHBOUND/RAMP B-4
STRUCTURAL BEAM

NOTES:

1. INSTALL STRUCTURAL BEAM SIGN SUPPORTS PER SCD TC-41.10 AND FOUNDATIONS PER TC-41.10.
2. INSTALL CANTILEVER SUPPORT PER SCD TC-12.31 AND FOUNDATIONS PER TC-21.21.

SIGN ELEVATION VIEW
IR-77

CUY-77-00.42 PART 1

MODEL: CLX_I77 SIGNS - 26+00.00 R2-1[Sheet] PAPERSIZE: 17x11(in.) DATE: 3/1/2022 TIME: 4:40:34 PM USER: ssopraseuth
pw:\\hq-pwint01.g-e.transysscorp.com:transysscorp-pw\Documents\Projects_2019\C0403\40390027\Agency_Folders\400-Engineering\Traffic\Sheets\104983_TE102.dgn

DESIGN AGENCY
TranSystems
400 W. NATIONWIDE BLVD, STE 225
COLUMBUS, OHIO 43215

DESIGNER HB
REVIEWER SS 02-18-22
PROJECT ID 104983
SHEET P.290 TOTAL 434

FRONT VIEW

FRONT VIEW

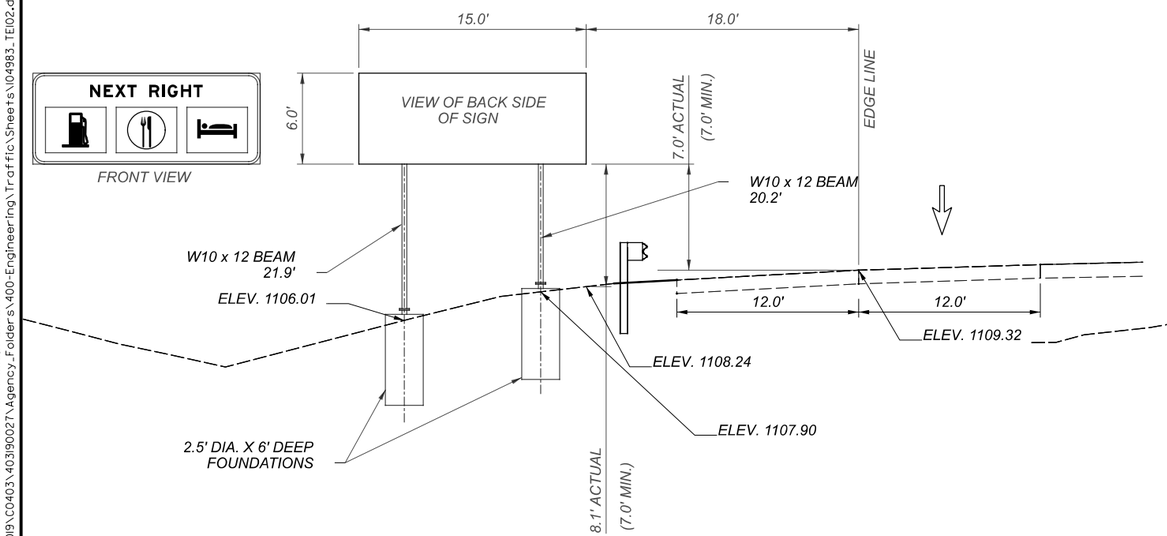

S-38

STA. 45+55.00
IR-77 SOUTHBOUND
STRUCTURAL BEAM

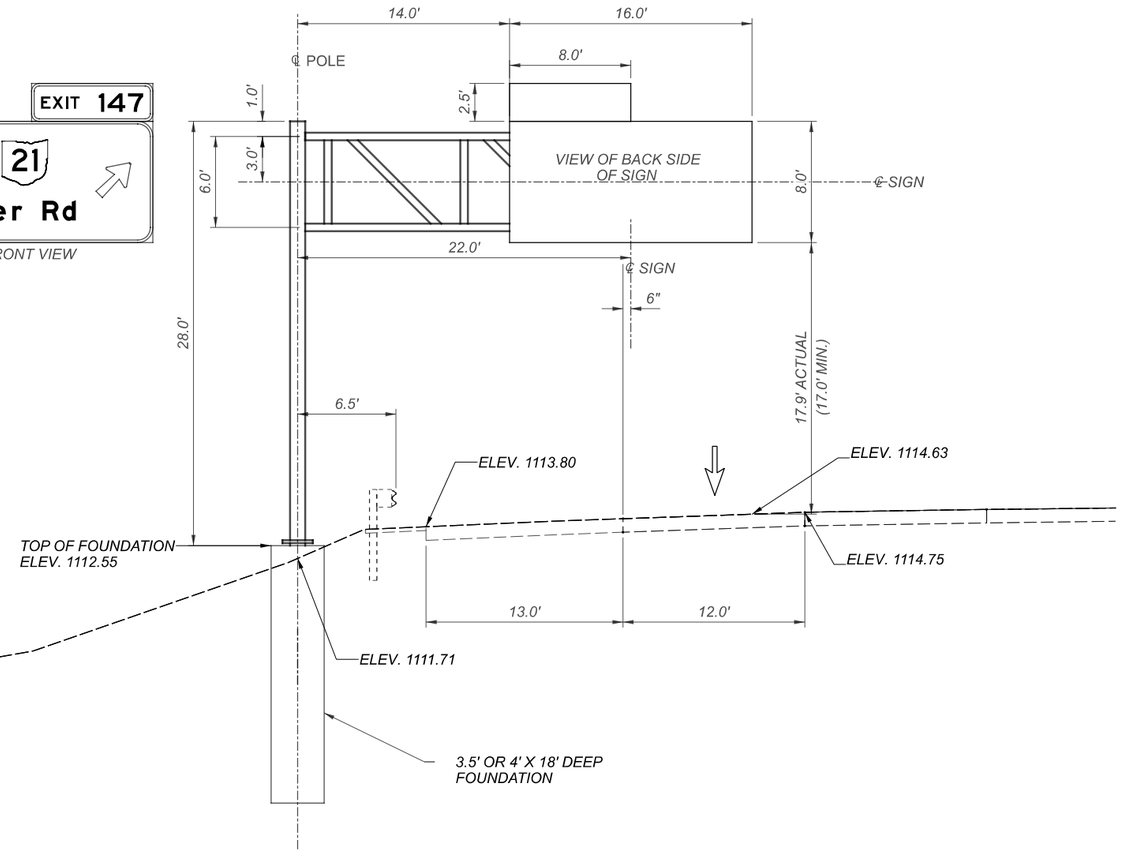

S-42

LEVEL 1
STA. 58+50.00
IR-77 SOUTHBOUND
TYPE TC-12.31, DESIGN 12

NOTES:

1. INSTALL STRUCTURAL BEAM SIGN SUPPORTS PER SCD TC-41.10 AND FOUNDATIONS PER TC-41.10.
2. INSTALL CANTILEVER SUPPORT PER SCD TC-12.31 AND FOUNDATIONS PER TC-21.21.

SIGN ELEVATION VIEW
IR-77

DESIGN AGENCY
TranSystems
400 W. NATIONWIDE BLVD., STE 225
COLUMBUS, OHIO 43215

DESIGNER: HB
REVIEWER: SS 02-18-22
PROJECT ID: 104983
SHEET: P.291 TOTAL: 434

CUY-77-00.42 PART 1

MODEL: CLX_I77 SIGNS - 45+05.00 R2-1[Sheet] PAPERSIZE:17x11in DATE: 3/1/2022 TIME: 4:40:38 PM USER: ssopraseuth
pw:\\hq-pwint01.e.transystems.com:transystemscorp-pw\Documents\Projects_2019\C0403\40390027\Agency_Folders\400-Engineering\Traffic\Sheets\104983_TE102.dgn

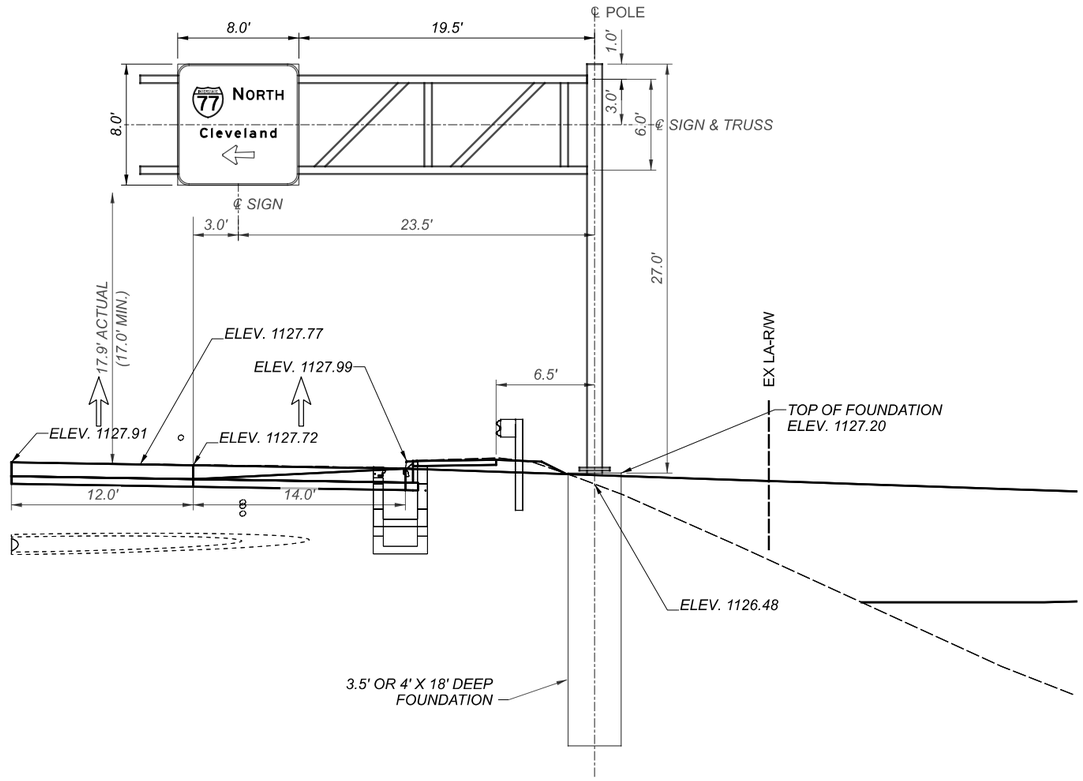

S-13

LEVEL 3
STA. 75+00.00
MILLER RD. EASTBOUND
TYPE TC-12.31, DESIGN 12

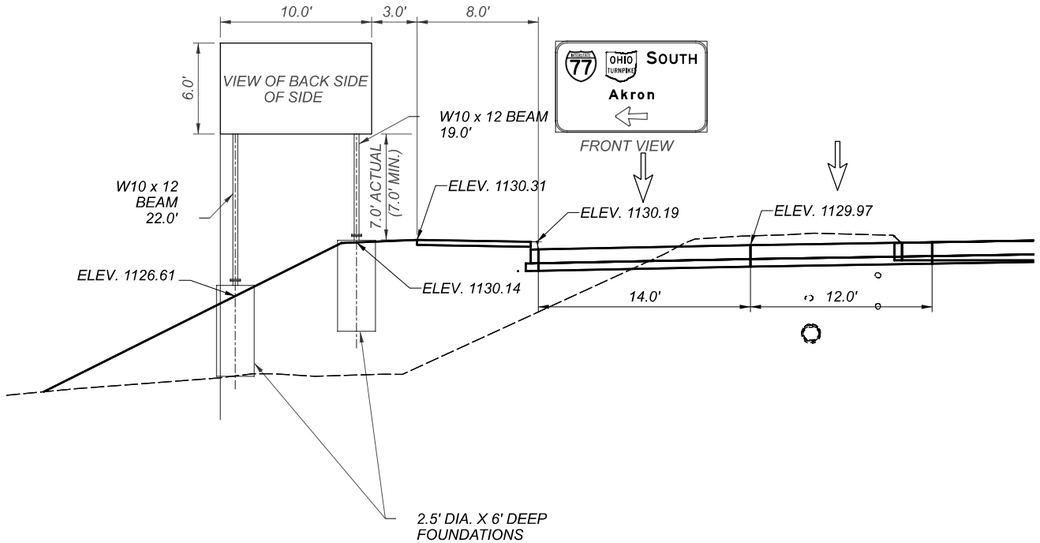

S-5

D1-1-60
STA. 71+00.00
MILLER RD. WESTBOUND
STRUCTURAL BEAM

NOTES:

1. INSTALL STRUCTURAL BEAM SIGN SUPPORTS PER SCD TC-41.10 AND FOUNDATIONS PER TC-41.10.

2. INSTALL CANTILEVER SUPPORT PER SCD TC-12.31 AND FOUNDATIONS PER TC-21.21.

SIGN ELEVATION VIEW
IR-77

CUY-77-00.42 PART 1

MODEL: CLX_MILLER SIGNS - 71+00.00 [Sheet] PAPERSIZE: 17x11(in.) DATE: 3/1/2022 TIME: 4:40:41 PM USER: ssoprasouth
pw:\\hq-pwint01.g-e.transystems.com:transystemscorp-pw\Documents\Projects_2019\C0403\40390027\Agency_Folders\400-Engineering\Traffic\Sheets\104983_TE102.dgn

DESIGN AGENCY
TranSystems
400 W. NATIONWIDE BLVD, STE 225
COLUMBUS, OHIO 43215

DESIGNER	
HB	
REVIEWER	
SS	02-18-22
PROJECT ID	
104983	
SHEET	TOTAL
P.292	434

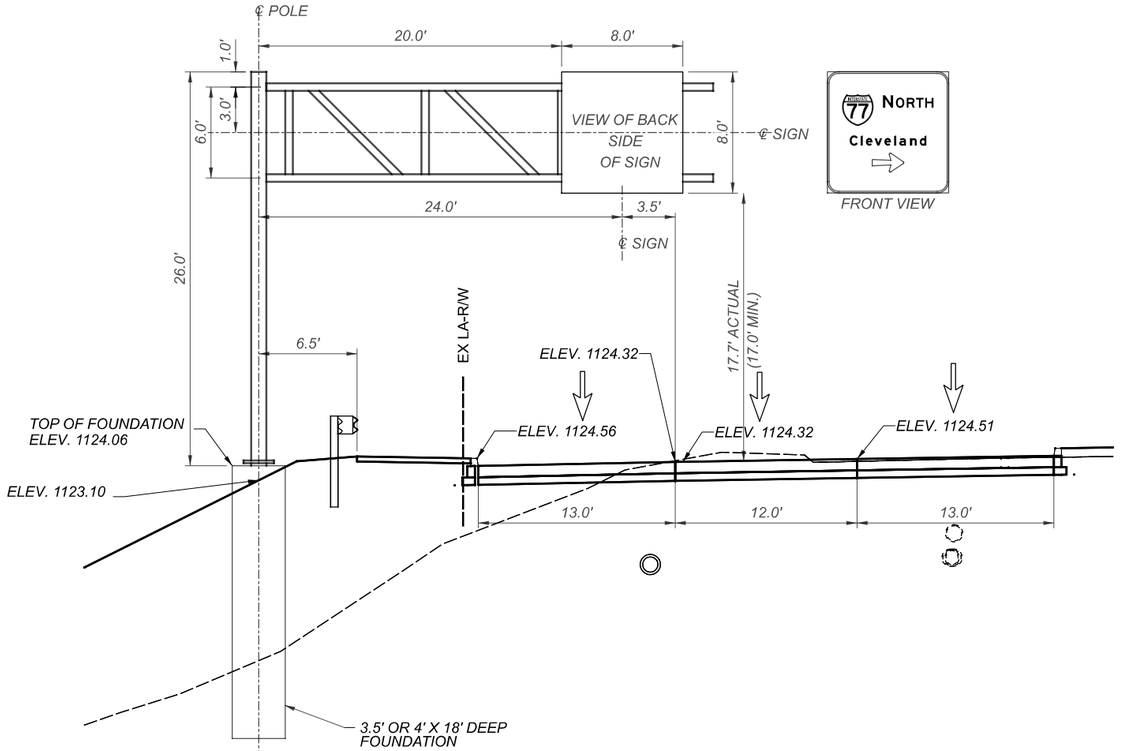

S-16

LEVEL 3
STA. 76+50.00
MILLER RD. WESTBOUND
TYPE-12.31, DESIGN 12

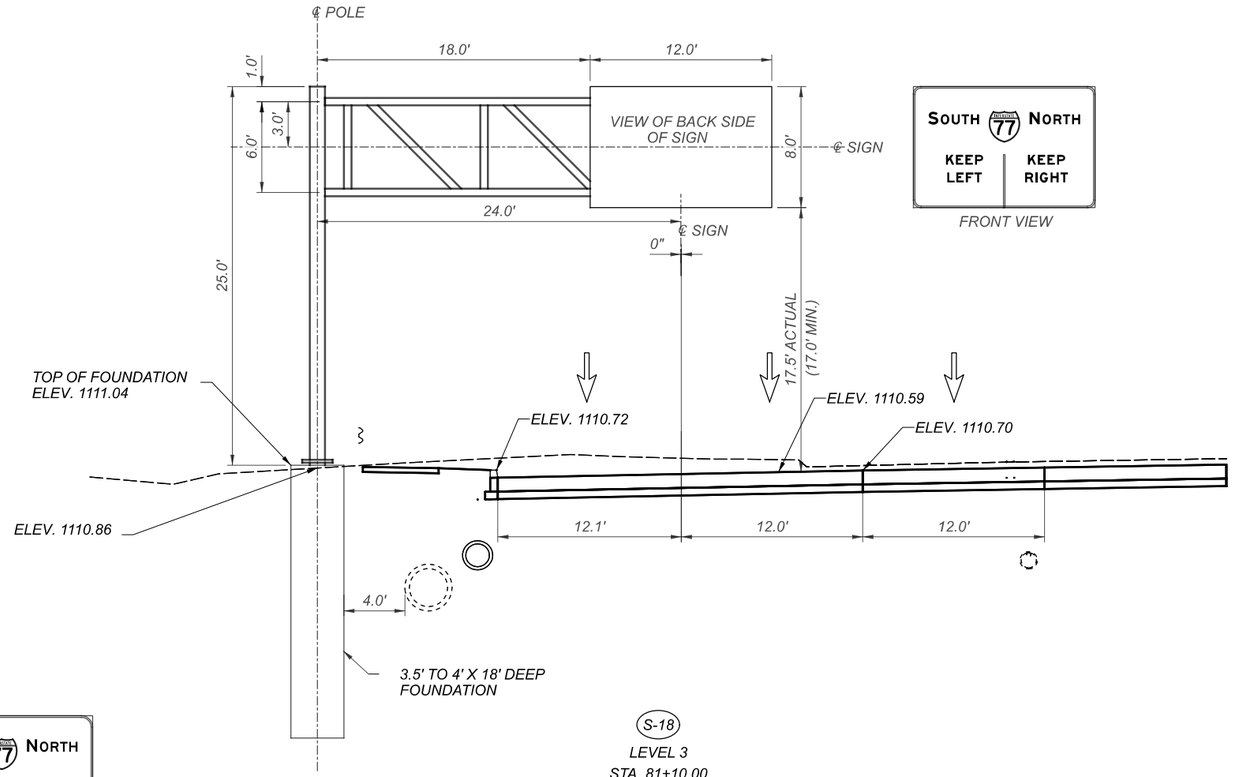

S-18

LEVEL 3
STA. 81+10.00
MILLER RD. WESTBOUND
TYPE TC-12.31, DESIGN 12

NOTES:

1. INSTALL CANTILEVER SUPPORT PER SCD TC-12.31 AND FOUNDATIONS PER TC-21.21.

SIGN ELEVATION VIEW
IR-77

CUY-77-00.42 PART 1

MODEL: CLX_MILLER SIGNS - 76+50.00 (Sheet) PAPERSIZE: 17x11(in.) DATE: 3/1/2022 TIME: 4:40:45 PM USER: ssopraseuth
pw:\\hq-pwint01.e.transystems.com:transystemscorp-pw\Documents\Projects_2019\C0403\40319002?\Agency_Folders\400-Engineering\Traffic\Sheets\104983_TE102.dgn

DESIGN AGENCY
Trans Systems
400 W. NATIONWIDE BLVD., STE 225
COLUMBUS, OHIO 43215

DESIGNER	HB
REVIEWER	SS 02-18-22
PROJECT ID	104983
SHEET	P.293
TOTAL	434

POWER SUPPLY FOR TRAFFIC SIGNALS

ELECTRIC POWER SHALL BE OBTAINED FROM THE CEI FIRST ENERGY COMPANY AT THE LOCATION INDICATED ON THE PLANS. POWER SUPPLIED SHALL BE 120 VOLTS.

SIGNAL ACTIVATION

PRIOR TO ACTIVATING THE NEW TRAFFIC SIGNAL TO STOP-AND-GO MODE AND/OR REMOVING THE EXISTING TRAFFIC SIGNAL FROM SERVICE, ALL ITEMS IN THE PROPOSED SIGNAL PLAN SHALL BE FULLY COMPLETED, (I.E., VEHICLE DETECTION, PEDESTRIAN SIGNAL HEADS, ETC). IF THERE ARE CONSTRUCTABILITY ISSUES (I.E., ROADWAY WIDENING, ETC.) THAT PREVENT THE SIGNAL FROM BEING COMPLETED PRIOR TO ACTIVATION, IT SHALL BE BROUGHT TO THE ATTENTION OF THE PROJECT ENGINEER AND DISTRICT TRAFFIC ENGINEER. THE DISTRICT TRAFFIC ENGINEER WILL THEN REVIEW, APPROVE OR REJECT PROPOSALS TO ACTIVATE THE TRAFFIC SIGNAL PRIOR TO COMPLETION.

THE CONTRACTOR SHALL NOTIFY THE PROJECT ENGINEER AND DISTRICT TRAFFIC ENGINEER AT LEAST 10 WORKING DAYS PRIOR TO SCHEDULING THE FINAL INSPECTION OF THE SIGNAL INSTALLATION. FINAL INSPECTION IS NOT CONSIDERED COMPLETE UNTIL DESIGNATED DISTRICT TRAFFIC PERSONNEL INSPECT THE TRAFFIC SIGNAL AND ISSUE WRITTEN APPROVAL. IF ISSUES ARE FOUND DURING THE FINAL INSPECTION THAT EFFECT THE SAFETY OF THE TRAVELING PUBLIC AND/OR THE EFFICIENCY OF THE INTERSECTION, THE SIGNAL SHALL NOT BE ACTIVATED ON THE PROPOSED DATE. ANY PUNCH LIST ITEMS THAT ARE FOUND SHALL BE CORRECTED AND REINSPECTED BY DISTRICT TRAFFIC PERSONNEL PRIOR TO FINAL ACCEPTANCE. ODOT FORCES SHALL ONLY ASSUME DAY TO DAY MAINTENANCE OF THE TRAFFIC SIGNAL AFTER FINAL WRITTEN ACCEPTANCE HAS BEEN ISSUED.

632 REMOVAL OF TRAFFIC SIGNAL INSTALLATION

TRAFFIC SIGNAL INSTALLATIONS, INCLUDING SIGNAL HEADS, CABLE, MESSENGER WIRE, STRAIN POLES, CABINET, CONTROLLER, ETC., SHALL BE REMOVED IN ACCORDANCE WITH C&MS 632.26 AND AS INDICATED ON THE PLANS. REMOVED ITEMS SHALL BE STORED ON THE PROJECT FOR SALVAGE BY THE CITY OF BRECKSVILLE IN ACCORDANCE WITH THE LISTING GIVEN HEREIN.

ITEMS TO BE STORED:
1. SIGNAL POLES AND MAST ARMS. THE POLES AND ARMS SHALL BE TAGGED AS PAIRS, ALL EXISTING HARDWARE SHALL BE RETAINED, LABELED AND TAGGED WITH EXISTING POLE/ARM.
2. PEDESTRIAN PUSHBUTTONS
3. UPS CABINET AND EQUIPMENT WITHIN CABINET.
4. ALL VEHICULAR AND PEDESTRIAN SIGNAL HEADS.
5. CONTROLLER CABINET AND EQUIPMENT WITHIN THE CABINET.
6. PEDESTAL POLES.
7. STREET SIGNS

THE FOLLOWING ITEMS SHALL BE DISPOSED OF BY THE CONTRACTOR:

- ALL SIGNAL CABLES, MESSENGER WIRES, FOUNDATIONS, AND REMOVED CONDUIT.

REMOVED ITEMS SHALL BE DELIVERED TO THE BRECKSVILLE SERVICE DEPARTMENT WHOSE ADDRESS IS LISTED BELOW:

BRECKSVILLE SERVICE DIRECTOR, RON WEIDIG (440-526-4351)

9069 BRECKSVILLE ROAD,
BRECKSVILLE, OH 44141

IN THE EVENT THE ITEMS STORED ON THE PROJECT FOR SALVAGE BY THE LOCAL AGENCY ARE NOT REMOVED, THE CONTRACTOR SHALL, WHEN DIRECTED BY THE ENGINEER IN WRITING, REMOVE AND DISPOSE OF THE ITEMS AT NO ADDITIONAL COST TO THE PROJECT.

DETECTION MAINTENANCE

IF VEHICLE DETECTION BECOMES UNEXPECTEDLY DISABLED, REQUIRES MODIFICATION, OR IS SCHEDULED TO BE TEMPORARILY REMOVED DURING THE CONSTRUCTION PROJECT, THE CONTRACTOR SHALL IMMEDIATELY NOTIFY THE PROJECT ENGINEER AND DISTRICT TRAFFIC ENGINEER.

IF THE LOSS OF VEHICLE DETECTION IS KNOWN PRIOR TO THE START OF CONSTRUCTION, IT SHALL BE DISCUSSED AT THE PRECONSTRUCTION MEETING. AT SUCH TIME, THE DISTRICT TRAFFIC ENGINEER SHALL ADVISE THE PROJECT ENGINEER AND CONTRACTOR ON THE APPROPRIATE ACTION TO RECTIFY ANY LOSS OF VEHICLE DETECTION. THIS MAY INCLUDE PLACING THE TRAFFIC SIGNAL ON MINIMUM OR MAXIMUM RECALL, MODIFYING THE MINIMUM GREEN TIMES, AND REMOVING THE MALFUNCTIONING DETECTION FROM SERVICE. WHERE NON-INTRUSIVE DETECTION (I.E. VIDEO, RADAR) ALREADY EXISTS, THE CONTRACTOR SHALL INSURE THAT DETECTION IS OPERATING AND MAINTAINED BY RECONFIGURING THE DETECTION UNITS ACCORDINGLY DURING ALL CONSTRUCTION PHASES. THIS IS TO AVOID THE SIGNAL FROM MAXING OUT THE EFFECTED SIGNAL PHASE AND CREATING UNNECESSARY DELAYS.

LOCATIONS WHERE NON-INTRUSIVE DETECTION IS PROPOSED AND THE EXISTING VEHICLE DETECTION IS TO BE ABANDON, THE NON-INTRUSIVE VEHICLE DETECTION SHALL BE INSTALLED, CONFIGURED AND MADE FULLY FUNCTIONAL PRIOR TO THE EXISTING DETECTION BEING DISABLED. THE CONTRACTOR SHALL CONTINUE TO MAINTAIN AND MODIFY THE DETECTION UNTIL FINAL ACCEPTANCE OF THE TRAFFIC SIGNAL. THIS IS TO ENSURE VEHICLE DETECTION REMAINS FULLY FUNCTIONAL THROUGHOUT CONSTRUCTION.

WORK INSPECTION

THE CONTRACTOR SHALL PROVIDE THE PROJECT ENGINEER AND DISTRICT TRAFFIC ENGINEER WITH 72-HOUR NOTICE OF ANY SIGNAL WORK TO BE PERFORMED AT THE INTERSECTION SITE(S) SO THAT INSPECTION SERVICES CAN BE SUPPLIED.

632 PEDESTRIAN SIGNAL HEAD (LED), (COUNTDOWN), TYPE D2, AS PER PLAN

IN ADDITION TO THE REQUIREMENTS OF C&MS 632 AND 732 THE FOLLOWING SHALL APPLY:

1. SIGNAL HEADS AND VISORS SHALL BE CONSTRUCTED OF BLACK POLYCARBONATE PLASTIC AND MEET ITE SPECIFICATIONS.

2. PROPER EXTERIOR COLORS SHALL BE OBTAINED BY USE OF COLORED PLASTIC MATERIAL RATHER THAN PAINTING.

3. PIPE, SPACERS AND FITTINGS CONSTRUCTED OF POLYCARBONATE PLASTIC MAY BE USED IN LIEU OF GALVANIZED STEEL OR ALUMINUM.

4. THE PEDESTRIAN SIGNAL HEAD SHALL BE OF THE LED COUNTDOWN TYPE.

5. NEW ATTACHMENT HARDWARE AND FITTINGS SHALL BE USED.

6. THE LIGHT EMITTING DIODE (LED) MODULES SHALL MEET THE REQUIREMENTS OF C&MS 732.04-C. THE CONTRACTOR SHALL PROVIDE ODOT, IN WRITING, WITH THE LED MANUFACTURER NAME, SERIAL NUMBER, PART NUMBER, DESCRIPTION OF LAMP, AND DATE OF MANUFACTURE FOR ALL LED UNITS THAT ARE TO BE USED IN THE SIGNAL HEAD PRIOR TO INSTALLATION, FOR ACCEPTANCE AND WARRANTY PURPOSES.

PAYMENT FOR ITEM 632 PEDESTRIAN SIGNAL HEAD (LED), (COUNTDOWN), TYPE D2, AS PER PLAN SHALL BE MADE FOR THE NUMBER OF COMPLETE SIGNAL HEAD FURNISHED AND INSTALLED, INCLUDING ALL LABOR, EQUIPMENT, MATERIALS AND NEW ATTACHMENT HARDWARE.

GUARANTEE

THE CONTRACTOR SHALL GUARANTEE THAT THE TRAFFIC CONTROL SYSTEM INSTALLED AS PART OF THIS CONTRACT SHALL OPERATE SATISFACTORILY FOR A PERIOD OF 180 DAYS FOLLOWING COMPLETION OF THE 10-DAY PERFORMANCE TEST. IN THE EVENT OF UNSATISFACTORY OPERATION, THE CONTRACTOR SHALL CORRECT FAULTY INSTALLATIONS, MAKE REPAIRS AND REPLACE DEFECTIVE PARTS WITH NEW PARTS OF EQUAL OR BETTER QUALITY.

EQUIPMENT, MATERIAL AND LABOR COSTS INCURRED IN CORRECTING AN UNSATISFACTORY OPERATION SHALL BE BORNE BY THE CONTRACTOR.

THE GUARANTEE SHALL COVER THE FOLLOWING ITEMS OF THE TRAFFIC CONTROL SYSTEM: CONTROLLER, CABINET, UNINTERRUPTIBLE POWER SUPPLY, VEHICLE DETECTION EQUIPMENT, LED LAMP UNITS, NETWORK AND COMMUNICATION/ INTERCONNECT EQUIPMENT.

CUSTOMARY MANUFACTURER'S GUARANTEES FOR THE FOREGOING ITEMS SHALL BE TURNED OVER TO THE STATE OR THE MAINTAINING AGENCY FOLLOWING ACCEPTANCE OF THE EQUIPMENT.

THE COST OF GUARANTEEING THE TRAFFIC CONTROL SYSTEM WILL BE INCIDENTAL TO AND INCLUDED IN THE CONTRACT UNIT PRICE OF THE VARIOUS ITEMS MAKING UP THE SYSTEM.

809 PREEMPTION

THIS ITEM OF WORK SHALL CONSIST OF FURNISHING AND INSTALLING PREEMPTION EQUIPMENT IN THE LOCATIONS AND LOCAL CONTROLLERS AS SHOWN IN THE PLANS. THE PREEMPTION SHALL CONFORM TO ODOT SUPPLEMENTAL SPECIFICATION 809 AND SHALL UTILIZE COMMUNICATIONS TO IDENTIFY THE PRESENCE OF AN EMERGENCY PRIORITY VEHICLE. DETECTION EQUIPMENT SHALL BE MANUFACTURED BY SONEM OR APPROVED EQUAL. IT SHALL CAUSE THE TRAFFIC SIGNAL CONTROLLER TO SELECT A PRE-PROGRAMMED PREEMPTION PLAN THAT WILL DISPLAY AND HOLD THE DESIRED SIGNAL PHASE FOR THE DIRECTION OF THE EMERGENCY VEHICLE.

THE COMMUNICATIONS MEDIUM SHALL EMPLOY SOUND DETECTION TECHNIQUES TO DETERMINE AND LOG THE PRESENCE OF THE EMERGENCY VEHICLE. THE SYSTEM SHALL DETECT THE PRESENCE OF THE VEHICLE THROUGH AN EMITTING DEVICE LOCATED ON THE EMERGENCY VEHICLE. THE SYSTEM SHALL ACTIVATE THE PREEMPTION SEQUENCE BY APPLYING A SIGNAL TO ONE OF THE CONTROLLER'S PREEMPT DISCRETE INPUTS. THE SYSTEM SHALL BE COMPLETELY COMPATIBLE WITH THE CONTROLLER.

THE EQUIPMENT SHALL BE SHELF OR RACK MOUNTED AND EASILY REMOVABLE AND REPLACEABLE WITHIN THE CABINET. SUPPLY EQUIPMENT COMPLETELY WIRED IN THE CONTROLLER CABINET AND TESTED. THE SYSTEM SHALL BE CAPABLE OF PREEMPTING AND RECEIVING PRIORITY FOR EACH APPROACH TO THE INTERSECTION. IT SHALL BE POSSIBLE TO DETECT THE EMERGENCY VEHICLE AT LEAST 2000 FEET FROM THE INTERSECTION IN AN 80dB-A NOISE ENVIRONMENT.

ALL PREEMPTION PLANS SHOULD BE PROGRAMMED TO PREVENT THE YELLOW TRAP, UNLESS AS DIRECTED BY THE DISTRICT TRAFFIC ENGINEER. YELLOW TRAP PREVENT WILL FORCE THE TRANSITION THROUGH YELLOW CHANGE AND RED CLEARANCE FOR RESOLUTION OF YELLOW TRAP IF ANY PHASE OPPOSING THE PREEMPTION CLEARANCE PHASE(S) IS ACTIVE AND DISPLAYING A GREEN OR FLASHING YELLOW ARROW INDICATION WHEN THE PREEMPTION PLAN IS ACTIVATED AND THE PREEMPTION CLEARANCE PHASE(S) ARE GREEN.

SUPPLY EACH INTERSECTION SHOWN IN THE PLANS WITH THE FOLLOWING COMPONENTS, EACH BID SEPARATELY:

1. PREEMPT RECEIVING UNIT.

2. PREEMPT DETECTOR CABLE.

3. PREEMPT PHASE SELECTOR ASSEMBLY AND INTERFACE WIRING PANEL.

4. CONFIRMATION LIGHT.

THE CITY OF BRECKSVILLE USES SOUND ACTIVATED PREEMPTION. THE CONTRACTOR SHALL INVENTORY THE ABOVE EMERGENCY VEHICLES TO DETERMINE COMPATIBILITY OF THE SIRENS WITH THE SYSTEM. EACH VEHICLE THAT IS DETERMINED TO BE NOT COMPATIBLE SHALL BE SUPPLIED WITH NEW SIRENS AT COST INCIDENTAL TO THE SYSTEM. THE MODEL SUPPLIED SHALL BE SONEM 2000 MANUFACTURED BY TRAFFIC SYSTEMS LLC, RIGHT-O-WAY MANUFACTURED BY WAPITI MICROSYSTEMS, OR APPROVED EQUAL.

THE CITY SHALL BE SUPPLIED WITH SOFTWARE REQUIRED TO CALIBRATE, LOG, AND OPERATE THE SYSTEM. TWO (2) OPERATING AND INSTRUCTION MANUALS SHALL BE SUPPLIED WITH THE SOFTWARE.

THE CONTRACTOR SHALL THOROUGHLY TEST THE INSTALLED SYSTEM. AS A MINIMUM, THE CONTRACTOR SHALL VERIFY THAT ALL CONNECTIONS ARE PROPERLY MADE TO THE CONTROLLER CABINETS. THE CONTRACTOR SHALL CHECK THAT THE RANGE SETTING IS PROPER FOR EACH INTERSECTION. THE CONTRACTOR SHALL DETERMINE THAT ALL PHASE SELECTORS ARE SELECTING THE PROPER PHASE AND TIMING ACCURATELY. THE CONTRACTOR SHALL VERIFY THAT ALL VEHICLE EMITTERS ARE BEING PROPERLY DETECTED.

SIGNAL NOTES

MODEL: 104983_CN001 PAPERSIZE: 17x11 (in.) DATE: 3/4/2022 TIME: 1:57:46 PM USER: esmccall
F:\Jobs\11622-Miller Road Interchange\104983\400-Engineering\Signals\Sheets\104983_CN001.dgn

DESIGN AGENCY
EUTHENICS
8235 Mohawk Dr. | Cleveland, OH 44139

DESIGNER
MRC

REVIEWER
ANC 03/01/22

PROJECT ID
104983

SHEET P.294 TOTAL P.434

809 PREEMPTION (CONT.)

IF THE PROPOSED PREEMPT SYSTEM IS NOT COMPATIBLE WITH THE EXISTING SYSTEM, THE CONTRACTOR SHALL PROVIDE TRAINING FOR UP TO FIFTEEN (15) PERSONS IN THE OPERATION OF THE SYSTEM. IT SHALL BE PROVIDED WITHIN 48 HOURS OF THE INSTALLATION OF THE SYSTEM. IT SHALL CONSIST OF HANDS-ON INSTRUCTION FOR A MINIMUM OF SIXTEEN (16) HOURS. THE CONTRACTOR SHALL PROVIDE TRAINING FOR UP TO FOUR (4) PERSONS IN THE INSTALLATION AND MAINTENANCE OF THE SYSTEM. IT SHALL CONSIST OF A MINIMUM OF EIGHT (8) HOURS OF INSTRUCTION. TRAINING SHALL BE SUPPLIED WITHIN SEVEN (7) DAYS OF THE INSTALLATION OF THE SYSTEM. ALL TRAINING SHALL BE HELD IN A CITY SUPPLIED LOCATION. TRAINING SHALL BE CONDUCTED BY SOMEONE WHO HAS PERFORMED THIS WITHIN THE LAST YEAR AND DOES IT ON A REGULAR BASIS. THE COST OF TRAINING, INCLUDING COURSE MATERIAL, TRAVEL SUBSISTENCE AND RELATED COSTS, SHALL BE ENTIRELY BORNE BY THE CONTRACTOR AND SHALL BE INCIDENTAL TO THE PREEMPTION EQUIPMENT.

PAYMENT FOR ITEM 809 PREEMPTION SHALL BE MADE AT THE CONTRACT UNIT PRICE FOR EACH PREEMPTION IN PLACE AND FULLY OPERATIONAL AS SHOWN IN THE PLANS, EXCEPT FOR THOSE ITEMS BID SEPARATELY.

809 PREEMPTION RECEIVING UNIT

RECEIVING UNITS SHALL CONSIST OF A LIGHTWEIGHT, WEATHER-PROOF AND DIRECTIONAL ASSEMBLY. EACH RECEIVING UNIT SHALL BE 360 DEGREE ADJUSTABLE. THE RECEIVING UNIT SHALL BE CAPABLE OF SENDING THE PROPER ELECTRICAL SIGNAL TO THE TRAFFIC SIGNAL CONTROLLER VIA THE PREEMPTION DETECTOR CABLE. RECEIVING UNITS SHALL BE SUPPLIED WITH MAST ARM MOUNTING HARDWARE AS SHOWN IN THE PLANS.

FURNISH PREEMPTION RECEIVING UNITS WITH 60-MONTH WARRANTIES OR FOR THE MANUFACTURER'S STANDARD WARRANTY WHICHEVER IS GREATER. ENSURE THAT THE WARRANTY PERIOD BEGINS ON THE DATE OF SHIPMENT TO THE PROJECT. ENSURE THAT EACH UNIT HAS A PERMANENT LABEL OR STAMP INDICATING THE DATE OF SHIPMENT.

PAYMENT FOR ITEM 809 PREEMPTION RECEIVING UNIT SHALL BE AT THE CONTRACT UNIT FOR EACH RECEIVING UNIT IN PLACE, COMPLETELY INSTALLED AT THE LOCATION SHOWN IN THE PLANS, WIRED, TESTED AND ACCEPTED.

809 PREEMPTION DETECTOR CABLE

THIS ITEM SHALL CONSIST OF FURNISHING AND INSTALLING PREEMPTION DETECTOR HOME RUN CABLE IN THE LOCATIONS SHOWN IN THE PLANS. IT SHALL CONNECT THE PREEMPT RECEIVING UNITS TO THE PHASE SELECTORS IN THE LOCAL CONTROLLER CABINET.

PREEMPTION DETECTOR CABLE SHALL CONFORM TO ODOT SPECIFICATION 632. ONLY ONE EXTERNAL SPLICE SHALL BE PERMITTED BETWEEN PREEMPTION RECEIVER UNIT AND CONTROLLER CABINET. THIS SPLICE SHALL MEET THE REQUIREMENTS OF C&MS 632.23 USING A WATERPROOF EPOXY SPLICE KIT. THE CABLE SHALL BE APPROVED FOR BOTH OVERHEAD AND UNDERGROUND USE. THE JACKET SHALL WITHSTAND EXPOSURE TO SUNLIGHT AND ATMOSPHERIC TEMPERATURES AND STRESSES REASONABLY EXPECTED IN NORMAL INSTALLATIONS.

PAYMENT FOR ITEM 809 PREEMPTION DETECTOR CABLE SHALL BE MADE AT THE CONTRACT UNIT PRICE PER FOOT FOR THE CABLE FURNISHED, IN PLACE, ALL CONNECTIONS MADE AND WIRING COMPLETED, TESTED AND ACCEPTED.

809 PREEMPT PHASE SELECTOR

THIS ITEM SHALL CONSIST OF FURNISHING AND INSTALLING PREEMPT PHASE SELECTORS INCLUDING WIRING INTERFACE PANELS IN THE LOCAL CONTROLLER CABINET AND ALL OTHER ACCESSORIES THAT ARE NECESSARY TO MAKE THE PREEMPT PHASE SELECTORS COMPLETELY FUNCTIONAL AND OPERATIONAL AS SHOWN IN THE PLANS. THIS ITEM SHALL INCLUDE THE EXTRA CABINET SPACE NECESSARY TO BE LOCATED IN THE LOCAL CONTROLLER CABINETS WHERE INDICATED IN THE PLANS.

THE PHASE SELECTORS SHALL CONSIST OF A MODULE OR MODULES THAT WILL PROVIDE THE NECESSARY INPUTS TO THE CONTROLLER. PHASE SELECTORS SHALL BE SUPPLIED WITH SUFFICIENT QUANTITIES OF CHANNELS TO PROVIDE PREEMPTION FOR ALL APPROACHES TO THE INTERSECTION SEPARATELY. POWER SHALL BE OBTAINED FROM THE PHASE SELECTOR OR PHASE SELECTOR POWER SUPPLY AND NOT FROM THE LOCAL CONTROLLER TIMER.

THE PHASE SELECTORS SHALL HAVE FRONT PANEL INDICATORS FOR ACTIVE PREEMPT CHANNEL STATUS. IT SHALL HAVE TEST SWITCHES TO ACTIVATE ALL PREEMPT CHANNELS.

FURNISH PREEMPT PHASE SELECTORS WITH 60-MONTH WARRANTIES OR FOR THE MANUFACTURER'S STANDARD WARRANTY WHICHEVER IS GREATER. ENSURE THAT THE WARRANTY PERIOD BEGINS ON THE DATE OF SHIPMENT TO THE PROJECT. ENSURE THAT EACH UNIT HAS A PERMANENT LABEL OR STAMP INDICATING THE DATE OF SHIPMENT.

PAYMENT FOR ITEM 809 PREEMPT PHASE SELECTOR SHALL BE MADE AT THE CONTRACT UNIT PRICE FOR EACH PHASE SELECTOR IN PLACE, COMPLETELY INSTALLED IN THE LOCAL CONTROLLER SHOWN IN THE PLANS, WIRED, TESTED AND ACCEPTED.

809 PREEMPT CONFIRMATION LIGHT, LED

THIS ITEM SHALL CONSIST OF FURNISHING AND INSTALLING PREEMPT CONFIRMATION LIGHTS INCLUDING HARDWARE AND ALL OTHER ACCESSORIES THAT ARE NECESSARY TO MAKE THE PREEMPT CONFIRMATION LIGHT COMPLETELY FUNCTIONAL AND OPERATIONAL AS SHOWN IN THE PLANS.

A CONFIRMATION LIGHT SHALL BE SUPPLIED FOR EACH INTER-SECTION TO INDICATE THAT THE EMERGENCY VEHICLE HAS ACHIEVED CONTROL OF THE TRAFFIC SIGNAL.

THE CONFIRMATION LIGHT SHALL BE A WEATHER TIGHT LIGHTING FIXTURE. IT SHALL BE SUPPLIED WITH A CLEAR GLOBE, LED LAMP AND MOUNTING HARDWARE TO ATTACH TO THE TRAFFIC SIGNAL MAST ARM. THE CONFIRMATION LIGHT SHALL BE POWERED BY A LOAD SWITCH IN THE TRAFFIC SIGNAL CONTROLLER. SIGNAL CABLE CONFORMING TO 732.19 SHALL BE USED FOR CONFIR-MATION LIGHTS. A MINIMUM OF 4-CONDUCTOR CABLE SHALL BE USED WITH THE GREEN WIRE SERVING AS THE SAFETY GROUND CONDUCTOR. PAYMENT FOR ITEM 809 PREEMPT CONFIRMATION LIGHT, LED SHALL BE MADE AT THE CONTRACT UNIT PRICE FOR EACH LIGHT IN PLACE, COMPLETELY INSTALLED IN THE LOCATION SHOWN IN THE PLANS, WIRED, TESTED AND ACCEPTED.

GROUNDING AND BONDING

THE REQUIREMENTS OF THE CONSTRUCTION AND MATERIAL SPECIFICATIONS (C&MS) AND THE TC SERIES OF STANDARD CONSTRUCTION DRAWINGS ARE MODIFIED AS FOLLOWS:

1. ALL METALLIC PARTS CONTAINING ELECTRICAL CONDUCTORS SHALL BE PERMANENTLY JOINED TO FORM AN EFFECTIVE GROUND FAULT CURRENT PATH BACK TO THE GROUNDED CONDUCTOR IN THE POWER SERVICE DISCONNECT SWITCH.

   A. PROVIDE AN EQUIPMENT GROUNDING CONDUCTOR IN METALLIC CONDUITS (725.04) IN ADDITION TO THE CONDUCTORS SPECIFIED AND BOND THE CONDUIT TO THIS GROUNDING CONDUCTOR.

   B. WHEN AN EQUIPMENT GROUNDING CONDUCTOR IS REQUIRED IN PLASTIC CONDUIT (725.05), THE INSTALLATION SHALL INCLUDE A SEPARATE EQUIPMENT GROUNDING CONDUCTOR IN ADDITION TO THE CONDUCTORS SPECIFIED.

   C. METALLIC CONDUIT CARRYING THE LOOP WIRES FROM IN THE PAVEMENT TO THE PULL BOX SPLICE LOCATION WILL ONLY BE BONDED AT THE PULL BOX END, AND WILL NOT CONTAIN AN EQUIPMENT GROUNDING CONDUCTOR.

   D. IF MULTIPLE CONDUIT RUNS BEGIN AND END AT THE SAME POINTS, ONLY ONE EQUIPMENT GROUNDING CONDUCTOR IS REQUIRED.

   E. IF AN EQUIPMENT GROUNDING CONDUCTOR IS NEEDED IN CONDUIT BETWEEN SIGNALIZED INTERSECTIONS FOR UNDERGROUND INTERCONNECT CABLE, THE GROUNDING SYSTEM FOR EACH SIGNALIZED INTERSECTION WILL BE SEPARATED ABOUT MIDWAY BETWEEN THE INTERSECTIONS.

   F. THE MESSENGER WIRE AT SIGNALIZED INTERSECTIONS WILL BE USED AS THE CONDUCTIVE PATH FROM CORNER TO CORNER IF CONDUIT IS NOT PROVIDED UNDER THE ROADWAY. WHEN CONDUIT CONNECTS THE CORNERS OF AN INTERSECTION, AN EQUIPMENT GROUNDING CONDUCTOR SHALL BE USED IN THE CONDUIT.

2. CONDUITS.

   A. THE 725.04 CONDUIT SHALL HAVE GROUNDING BUSHINGS INSTALLED AT ALL TERMINATION POINTS. THE BUSHING MATERIAL SHALL BE COMPATIBLE WITH GALVANIZED STEEL CONDUIT AND THE GROUNDING LUG MATERIAL SHALL BE COMPATIBLE FOR USE WITH COPPER WIRE. THREADED OR COMPRESSION TYPE BUSHINGS MAY BE USED.

   B. THE 725.05 CONDUIT SHALL HAVE THE INSIDE AND OUTSIDE DIAMETERS OF THE CONDUIT DEBURRED AT ALL TERMINATION POINTS.

   C. BOTH ENDS OF METALLIC CONDUIT SHALL BE BONDED TO THE EQUIPMENT GROUNDING CONDUCTOR.

   D. METALLIC CONDUIT MAY BE BONDED TO METALLIC BOXES THROUGH THE USE OF CONDUIT FITTINGS UL APPROVED FOR THIS TYPE OF CONNECTION, WITH THE BOX BONDED TO THE EQUIPMENT GROUNDING CONDUCTOR.

3. WIRE FOR GROUNDING AND BONDING.

   A. USE INSULATED, COPPER WIRE FOR THE EQUIPMENT GROUNDING CONDUCTOR. BONDING JUMPERS IN BOXES AND ENCLOSURES MAY BE BARE OR INSULATED COPPER WIRE. WIRE SIZE SHALL BE AS FOLLOWS:

      I. USE 4 AWG BETWEEN THE POWER SERVICE AND SUPPORTS, POLES, PEDESTALS, CONTROLLER OR FLASHER CABINETS.

      II. USE A MINIMUM 8 AWG BETWEEN LOOP DETECTOR PULL BOXES AND THE FIRST CONDUIT THAT REQUIRES A LARGER SIZE AS SPECIFIED IN 3.A.I ABOVE.

      III. USE A MINIMUM 8 AWG BETWEEN THE "PREPARE TO STOP WHEN FLASHING" INSTALLATION (INCLUDING SUPPORT) AND THE FIRST CONDUIT THAT REQUIRES A LARGER SIZE AS SPECIFIED IN 3.A.I ABOVE.

      IV. THE INSULATION SHALL BE GREEN OR GREEN WITH YELLOW STRIPE(S). FOR 4 AWG OR LARGER, INSULATION MAY ALSO BE BLACK WITH GREEN TAPE/LABELS INSTALLED AT ALL ACCESS POINTS.

   B. IN A HIGHWAY LIGHTING SYSTEM, THE EQUIPMENT GROUNDING CONDUCTOR SHALL BE THE SAME WIRE SIZE AS THE DUCT CABLE OR DISTRIBUTION CABLE CIRCUIT CONDUCTORS, WITH THE MINIMUM CONDUCTOR SIZE OF 4 AWG. BONDING JUMPERS WILL BE MINIMUM SIZE 4 AWG.

4. GROUND ROD.

   A. A 3/4-INCH SCHEDULE 40 PVC CONDUIT WILL BE USED IN FOUNDATIONS AND CONCRETE WALLS FOR THE GROUNDING CONDUCTOR (GROUND WIRE) RACEWAY TO THE GROUND ROD. SHOULD METALLIC CONDUIT BE USED, BOTH ENDS OF THE CONDUIT SHALL BE BONDED TO THE GROUNDING CONDUCTOR.

   B. THE TYPICAL GROUNDING CONDUCTOR (GROUND WIRE) SHALL BE 4 AWG INSULATED, COPPER.

5. THE GREEN CONDUCTOR IN SIGNAL CABLES (CONDUCTOR #4) SHALL NOT BE USED TO SUPPLY POWER TO A SIGNAL INDICATION. IT WILL BE CONNECTED TO THE SIGNAL BODY AS AN EQUIPMENT GROUND IN ALUMINUM HEADS AND IT WILL BE UNUSED IN PLASTIC HEADS. UNUSED CONDUCTORS SHALL BE GROUNDED IN THE CABINET. TYPICAL USE OF CONDUCTORS IS AS FOLLOWS:

COND. NO.	COLOR	VEHICLE SIGNAL	PEDESTRIAN SIGNAL
1	BLACK	GREEN BALL	#1 WALK
2	WHITE	AC NEUTRAL	AC NEUTRAL
3	RED	RED BALL	#1 DW/FDW
4	GREEN	EQUIPMENT GROUND	EQUIPMENT GROUND
5	ORANGE	YELLOW BALL	#2 DW/FDW
6	BLUE	GREEN ARROW	#2 WALK
7	WHITE/BLACK	STRIPE YELLOW ARROW	NOT USED

6. POWER SERVICE AND DISCONNECT SWITCH.

   A. AT THE POWER SERVICE LOCATION, THE GROUNDING CONDUCTOR (GROUND WIRE) FROM THE DISCONNECT SWITCH NEUTRAL (AC-) BAR TO THE GROUND ROD SHALL BE A CONTINUOUS, UNSPLICED CONDUCTOR. IF SPLICED, IT SHALL BE AN EXOTHERMIC WELD BUTT SPLICE.

   B. THE SERVICE NEUTRAL (AC-) SHALL ONLY BE CONNECTED TO GROUND AT THE PRIMARY POWER SERVICE DISCONNECT SWITCH.

      I. NEMA CONTROLLER CABINETS: IF A POWER SERVICE DISCONNECT SWITCH IS LOCATED BEFORE THE CONTROLLER CABINET, THE NEUTRAL (AC-) AND THE GROUNDING BARS IN THE CONTROLLER CABINET SHALL NOT BE CONNECTED TOGETHER AS SHOWN IN NEMA TS-2, FIGURE 5-4.

      II. IF SECONDARY DISCONNECT SWITCHES ARE CONNECTED AFTER THE PRIMARY DISCONNECT SWITCH, THE NEUTRAL (AC-) SHALL ONLY BE GROUNDED AT THE PRIMARY SWITCH. EQUIPMENT GROUNDING CONDUCTORS SHALL BE BROUGHT TO THE PRIMARY SWITCH, BUT SHALL BE GROUNDED AT BOTH SECONDARY AND PRIMARY SWITCHES.

7. PAYMENT - ALL MATERIALS AND WORK REQUIRED TO COMPLETE THE EFFECTIVE GROUND FAULT CURRENT PATH SYSTEM ARE INCIDENTAL TO THE CONDUCTORS INSTALLED BY CONTRACT.

SIGNAL NOTES

MODEL: 104983_CN002 PAPERSIZE: 17x11 (in.) DATE: 3/4/2022 TIME: 1:57:50 PM USER: esmccaslin
F:\Jobs\11162-Miller Road Interchange\104983\400-Engineering\Signals\Sheets\104983_CN002.dgn

DESIGN AGENCY
EUTHENICS
9235 Mitchell Dr. | Cleveland, OH 44125
DESIGNER
MRC
REVIEWER
ANC 03/01/22
PROJECT ID
104983
SHEET P.295 TOTAL P.434

633 UNINTERRUPTIBLE POWER SUPPLY (UPS), 1000 WATT, AS PER PLAN

IN ADDITION TO THE REQUIREMENTS OF C&MS 633 AND 733, POLE ATTACHMENT HARDWARE WILL BE INCLUDED FOR POLE-MOUNTED CABINETS, AND A CABINET RISER (8-INCH MINIMUM) AND ANCHOR BOLTS WILL BE PROVIDED FOR BASE-MOUNTED CABINETS. BEFORE PERFORMING THE WORK, THE CONTRACTOR, THE DISTRICT TRAFFIC ENGINEER AND THE PROJECT ENGINEER WILL PERFORM A SITE INSPECTION TO ESTABLISH THE LOCATION OF THE UPS CABINET AND FOUNDATION.

THE UPS CABINET SHALL INCLUDE A GENERATOR POWER PANEL WITH A HEAVY-DUTY POWER RELAY VERSUS THE LINE VOLTAGE GENERATOR SWITCH. THE GENERATOR INLET SHALL BE A RECESSED PANEL WITH A DOOR THAT IS FLUSH WITH THE EXTERNAL SIDE OF THE UPS CABINET. IT SHALL INCLUDE A RECESSED PLUG, AUTOMATIC TRANSFER SWITCH AND A DOOR THAT SECURELY CLOSES OVER THE POWER CORD.

THE CABINET SHALL HAVE A DOOR STOP MECHANISM AND THERMOSTATICALLY CONTROLLED FAN.

THE CABINET SHALL INCLUDE A BATTERY BALANCING DEVICE THAT REGULATES THE BATTERIES AND OPTIMIZES PERFORMANCE.

AFTER FOUR (4) HOURS OF BATTERY RUNTIME, THE SYSTEM SHALL BE PROGRAMMED TO SWITCH THE INTERSECTION FROM FULL OPERATION TO CONTROLLER AUTOMATIC FLASH OPERATION THROUGH THE MONITOR. THE CONTROLLER SHALL BE PROGRAMMED SO THAT FLASH OPERATION SHALL BEGIN ONCE THE INTERSECTION RUNS MINOR STREET GREEN (TYP. PH. 4 &8), ALL-RED CLEARANCE, AND THEN FLASH OPERATION.

THE UPS OUTPUT NOTIFICATIONS FOR ON BATTERY, BATTERY 2-HOUR TIMER, AND LOW BATTERY SHALL BE WIRED INTO THE TRAFFIC SIGNAL CABINET BACK PANEL OR THROUGH THE CONTROLLER WITH A C11 TO PROVIDE SPECIAL STATUS ALARMS FOR EACH OUTPUT INTO THE SIGNAL CONTROLLER.

THIS ITEM SHALL INCLUDE A RED LED STATUS INDICATOR LAMP TO ALLOW MAINTENANCE PERSONNEL AND LAW ENFORCEMENT TO QUICKLY ASSESS WHETHER A TRAFFIC SIGNAL CABINET IS BEING POWERED BY A UPS. THE LED HOUSING SHALL BE NEMA 4X, IP65 OR IP66, RATED FOR OUTDOOR USE AND BE TAMPER/ SHATTER RESISTANT. IT SHALL BE A DOMED ENCLOSURE CONTAINING A RED LENS WITH LED THAT IS VISIBLE FROM 100 FOOT MINIMUM. THE ENCLOSURE AND LED MODULE SHOULD BE PLACED ON THE SIDE OF THE UPS CABINET FACING TOWARDS THE MAINLINE ROADWAY AND SEALED FROM WATER INTRUSION. IT SHOULD BE WIRED USING MINIMUM 20GA STRANDED, INSULATED HOOKUP WIRE TO THE STATUS RELAY OUTPUTS OF THE UPS. THE WIRES SHALL BE TERMINATED BY LUGS AT THE DISPLAY END AND PERMANENTLY LABELED "BACKUP POWER STATUS DISPLAY," WITH WIRE POLARITY INDICATED. THE RED LED SHALL ONLY ILLUMINATE TO INDICATE THE CABINET IS OPERATING UNDER UPS BACKUP POWER (THE "BACKUP" OPERATING CONDITION). THIS ITEM INCLUDES PROGRAMMING THE UPS STATUS RELAY OUTPUTS TO PRODUCE THE LAMP STATUS DISPLAYS. THESE STATUS DISPLAYS WILL BE SOLID 100% DUTY CYCLE (NOT FLASHING) DISPLAYS. THE OPERATING VOLTAGE OF THE LED LAMP SHALL BE 120V AC UNLESS OTHERWISE INDICATED.

TEST HOLE PERFORMED

IT IS ANTICIPATED THAT THE CONTRACTOR WILL ENCOUNTER UNDERGROUND UTILITIES WHILE EXCAVATING FOR SIGNAL SUPPORT FOUNDATIONS OR SIMILAR FOUNDATIONS. AFTER ACCURATELY IDENTIFYING THE PROPOSED LOCATION OF THE FOUNDATION, AS SHOWN IN THE PLANS AND AFTER MODIFYING THAT LOCATION, IF NECESSARY, BASED ON THE FIELD MARKING OF UNDERGROUND UTILITY LOCATION, THE CONTRACTOR DISCOVERS A UTILITY CONFLICT DURING THE EXCAVATION OPERATION, THE CONTRACTOR WILL BE COMPENSATED FOR EACH PARTIAL FOUNDATION EXCAVATION ACCORDING TO THE BID PRICE.

BEFORE THE CONTRACTOR BEGINS THE EXCAVATION AT THE MODIFIED LOCATION, THE CONTRACTOR SHALL VERIFY THAT THERE WILL BE NO OVERHEAD UTILITY CONFLICTS RESULTING FROM THE NEW SIGNAL SUPPORT LOCATION. NEW SUPPORT LOCATIONS ARE TO BE APPROVED BY THE ENGINEER.

THE WORK WILL INCLUDE BACKFILLING, COMPACTING, AND RESTORATION OF THE EXCAVATION TO THE SITES ORIGINAL CONDITION.

EXCAVATIONS SHALL NOT BE LEFT OPEN OVERNIGHT.

PAYMENT FOR THIS ITEM SHALL BE AT THE UNIT PRICE BID PER EACH ITEM 632 TEST HOLE PERFORMED TO BE USED AT THE DIRECTION OF THE ENGINEER.

632 SIGNAL SUPPORT FOUNDATION

PRIOR TO ORDERING THE SIGNAL SUPPORTS, THE CONTRACTOR SHALL CONTACT OUPS TO HAVE ALL THE UTILITIES LOCATED IN THE FIELD THEN MEET WITH THE PROJECT ENGINEER TO LOCATE THE PROPOSED SUPPORT LOCATIONS TO INSURE THERE ARE NO CONFLICTS WITH UTILITIES. IF THERE ARE ISSUES, THE PROJECT ENGINEER SHALL PROVIDE GUIDANCE AS TO THE RELOCATION OF THE SUPPORT POLES.

PAYMENT WILL BE AT THE CONTRACT UNIT PRICE AND WILL BE FULL COMPENSATION FOR ALL LABOR, MATERIALS, TOOLS, EQUIPMENT AND OTHER INCIDENTALS NECESSARY FOR EACH SUPPORT FURNISHED, IN PLACE, COMPLETE AND ACCEPTED.

633 CONTROLLER UNIT, TYPE TS2/A2, WITH CABINET, TYPE TS2, AS PER PLAN

THE EQUIPMENT PROVIDED AS PART OF THIS CONTRACT SHALL BE ON THE OFFICE OF TRAFFIC OPPERATIONS TRAFFIC AUTHOR-IZED PRODUCTS (TAP) LIST.

THE CONTROLLER PROVIDED SHALL BE AN ECONOLITE COBALT.

THE GROUND-MOUNTED CABINET SHALL BE A NEMA TS2 CABINET SIZE 7 AND SHALL HAVE A MINIMUM OF THREE SHELVES.

THE CABINET SHALL BE FURNISHED WITH AN EDI MMU AS ALLOWED ON THE TAP/APPROVED PRODUCTS LIST.

EACH CABINET SHALL COME EQUIPPED WITH TWO 16-CHANNEL CABINET DETECTOR RACKS (CDR) INCLUDING BUS INTERFACE UNITS (BIU). THE LOOP DETECTOR TERMINATION PANEL FOR THE SECOND DETECTOR RACK SHALL BE OMITTED.

PAYMENT FOR ITEM 633 CONTROLLER UNIT, TYPE TS2/A2, WITH CABINET, TYPE TS2, AS PER PLAN WILL BE AT THE CONTRACT BID PRICE PER EACH COMPLETE AND IN PLACE INCLUDING ALL CONNECTIONS TESTED AND ACCEPTED.

805 GLOBAL POSITIONING SYSTEM CLOCK ASSEMBLY, AS PER PLAN

THIS ITEM OF WORK SHALL CONSIST OF FURNISHING AND INSTALLING A GPS (GLOBAL POSITIONING SYSTEM) CLOCK TO UPDATE AND MAINTAIN ACCURATE TIME WITHIN THE TRAFFIC SIGNAL CONTROLLER, PRIMARILY FOR THE PURPOSE OF MAINTAINING SYNCHRONIZATION IN A TIME-BASE COORDINATION SIGNAL SYSTEM.

THE GPS CLOCK ASSEMBLY SHALL CONSIST OF A GPS ANTENNA SECURELY MOUNTED TO THE TOP OF THE TRAFFIC SIGNAL CONTROLLER CABINET AND CUSTOM DIRECT SERIAL INTERFACE (NMEA STANDARD 0183) TO THE TRAFFIC CONTROLLER. THE GPS CLOCK SHALL CONNECT TO AN RS-232 SERIAL PORT ON THE TRAFFIC CONTROLLER AND STREAMS THE SATELLITE TIME DIRECTLY INTO THE CONTROLLER'S SOFTWARE.

THE ASSEMBLY IS TO BE INSTALLED AT THE FOLLOWING THREE NEW INTERSECTIONS ON MILLER ROAD, IN ADDITION TO THE RETROFITTING OF THE EXISTING CABINET AT THE S.R 21 AND MILLER ROAD INTERSECTION:

- PROPOSED RAMPS B-2 AND B-3
-PROPOSED RAMPS B-1 AND B-4
-SOUTHPOINTE PARKWAY / ONE SHERWIN-WILLIAMS COURT

PAYMENT FOR ITEM 805 - GLOBAL POSITIONING SYSTEM CLOCK ASSEMBLY, AS PER PLAN SHALL BE MADE AT THE CONTRACT PRICE BID FOR EACH COMPLETE, IN PLACE, TESTED AND ACCEPTED INCLUDING PRICE FOR ALL ASSOCIATED WIRING AND CONNECTIONS INSTALLED IN THE CABINET TO MAKE A COMPLETE FUNCTIONING SYSTEM. A QUANTIY OF 4 WILL BE CARRIED TO THE SIGNAL SUBSUMARRY ON SHEET P.297

824 SYSTEM ANALYSIS

THE SYSTEM ANALYSIS SHALL BE PERFORMED FOR I.R. 77 SOUTHBOUND RAMPS, I.R. 77 NORTHBOUND RAMPS, SOUTHPOINTE PARKWAY, AND S.R. 21.

SIGNAL NOTES

CUY-77-00.42 PART 1
MODEL: 104983_CN003 PAPERSIZE: 17x11 (in.) DATE: 3/4/2022 TIME: 1:57:54 PM USER: esmccaslin
F:\Jobs\11622-Miller Road Interchange\104983\400-Engineering\Signals\Sheets\104983_CN003.dgn

DESIGN AGENCY
EUTHENICS
8333 Midwest Dr. | Cleveland, OH 44130

DESIGNER MRC
REVIEWER ANC 03/01/22
PROJECT ID 104983
SHEET P.296 TOTAL P.434

SHEET NO.	LOCATION	625	625	625	625	625	625	625	625	630	630	632	632	632	632	632	632	632	632	632	632	
		CONDUIT, 2", 725.04	CONDUIT, 3", 725.04	CONDUIT, 4", 725.04	TRENCH, 24" DEEP	PULLBOX, 725.08, 18"	PULLBOX, 725.08, 24"	GROUND ROD	UNDERGROUND WARNING/MARKING TAPE	SIGN HANGER ASSEMBLY, MAST ARM	SIGN, FLAT SHEET	VEHICULAR SIGNAL HEAD, (LED), 3-SECTION, 12" LENS, 1-WAY, POLYCARBONATE	VEHICULAR SIGNAL HEAD, (LED), 4-SECTION, 12" LENS, 1-WAY, POLYCARBONATE	VEHICULAR SIGNAL HEAD, (LED), 5-SECTION, 12" LENS, 1-WAY, POLYCARBONATE	PEDESTRIAN SIGNAL HEAD, (LED), TYPE D2, COUNTDOWN, AS PER PLAN	COVERING OF VEHICULAR SIGNAL HEAD	PEDESTRIAN PUSHBUTTON	SIGNAL CABLE, 2 CONDUCTOR, NO. 14 AWG	SIGNAL CABLE, 5 CONDUCTOR, NO. 14 AWG	SIGNAL CABLE, 7 CONDUCTOR, NO. 14 AWG	SIGNAL SUPPORT FOUNDATION	
		FT	FT	FT	FT	EACH	EACH	EACH	FT	EACH	SF	EACH	EACH	EACH	EACH	EACH	EACH	FT	FT	FT	EACH	
P.299	RAMPS B-2 AND B-3	53	23	190	253	2	2	7	253	1	7.5	6	1		4	6	4	539	555	741	2	
P.303	RAMPS B-1 AND B-4	50	9	253	299	3	2	8	299	2	19.5	5	2	1	6		6	693	717	966	2	
P.307	MILLER ROAD AND SOUTHPOINTE	56	55	512	466	1	5	16	466	6	45	6	2	3	8	6	8	1995	2027	2062	4	
TOTALS CARRIED TO GENERAL SUMMARY		159	87	955	1,018	6	9	31	1,018	9	72	17	5	4	18	12	18	3,227	3,299	3,769	8	

SHEET NO.	LOCATION	632	632	632	632	632	632	632	632	632	632	632	632	632	633	633	633	633	805	824		
		PEDESTAL FOUNDATION	POWER CABLE, 2 CONDUCTOR, NO. 6 AWG	POWER CABLE, 3 CONDUCTOR, NO. 6 AWG	POWER SERVICE	CONDUIT RISER, 2" DIAMETER	SIGNAL SUPPORT, TYPE TC-12.31 DESIGN 6 POLE, WITH MAST ARMS TC-81.21 DESIGN 4 AND DESIGN 4	SIGNAL SUPPORT, TYPE TC-12.31 DESIGN 6 POLE, WITH MAST ARMS TC-81.21 DESIGN 12 AND DESIGN 4	SIGNAL SUPPORT, TYPE TC-81.22, DESIGN 4	SIGNAL SUPPORT, TYPE TC-81.22, DESIGN 12	SIGNAL SUPPORT, TYPE TC-81.22, DESIGN 13	PEDESTAL 8' TRANSFORMER BASE	REMOVAL OF TRAFFIC SIGNAL INSTALLATION	SIGNALIZATION, MISC.: TEST HOLE PERFORMED	CONTROLLER UNIT, TYPE TS2/A2, WITH CABINET, TYPE TS2, AS PER PLAN	CABINET FOUNDATION	CONTROLLER WORK PAD	UNINTERRUPTIBLE POWER SUPPLY (UPS), 1000 WATT, AS PER PLAN	GLOBAL POSITIONING SYSTEM CLOCK ASSEMBLY, AS PER PLAN	SYSTEM ANALYSIS		
		EACH	FT	FT	EACH	EACH	EACH	EACH	EACH	EACH	EACH	EACH	EACH	EACH	EACH	EACH	EACH	EACH	EACH	EACH		
P.299	RAMPS B-2 AND B-3	3	15	69	1	1	1		1			3	1	2	1	1	1	1				
P.303	RAMPS B-1 AND B-4	4	15	62	1	1		1			1	4		2	1	1	1	1				
P.307	MILLER ROAD AND SOUHTPOINTE	4	15	66	1	1				2	2	4	1	4	1	1	1	1				
P.296	SIGNAL NOTES																		4	3		
TOTALS CARRIED TO GENERAL SUMMARY		11	45	197	3	3	1	1	1	2	3	11	2	8	3	3	3	3	4	3		

TRAFFIC SIGNAL SUBSUMMARY

DESIGN AGENCY
EUTHENICS
8235 Mohawk Dr. | Cleveland, OH 44035

DESIGNER
MRC

REVIEWER
ANC 03/01/22

PROJECT ID
104983

SHEET P.297 | TOTAL P.434

CUY-77-00.42 PART 1

MODEL: 104983_CS001 PAPERSIZE: 17x11 (in.) DATE: 3/4/2022 TIME: 1:57:58 PM USER: esmccaslin
F:\Jobs\11624\Miller Road Interchange\104983\400-Engineering\Signals\Sheets\104983_CS001.dgn

SHEET NO.	LOCATION	809 STOP-LINE RADAR DETECTION	809 EMERGENCY VEHICLE PREEMPTION	809 PREEMPTION RECIEVING UNIT	809 PREEMPTION DETECTOR CABLE	809 PREEMPTION PHASE SELECTOR	809 PREEMPTION CONFIRMATION LIGHT, LED														
		EACH	EACH	EACH	FT	EACH	EACH														
P.299	RAMPS B-2 AND B-3	2		3	616	1	3														
P.303	RAMPS B-1 AND B-4	2		3	461	1	3														
P.307	MILLER ROAD AND SOUTHPOINTE	4		4	1,168	1	4														
P.296	SIGNAL NOTES		1																		
TOTALS CARRIED TO GENERAL SUMMARY		8	1	10	2,245	3	10														

SHHET NO.	LOCATION

TRAFFIC SIGNAL SUBSUMMARY

DESIGN AGENCY
EUTHENICS
8235 Mohawk Dr. | Cleveland, OH 44305

DESIGNER
MRC

REVIEWER
ANC 03/01/22

PROJECT ID
104983

SHEET P.298 | TOTAL P.434

CUY-77-00.42 PART 1

MODEL: 104983_CS002 PAPERSIZE: 17x11 (in.) DATE: 3/4/2022 TIME: 1:58:01 PM USER: esmccaslin
F:\Jobs\1162\Miller Road Interchange\104983\400-Engineering\Signals\Sheets\104983_CS002.dgn

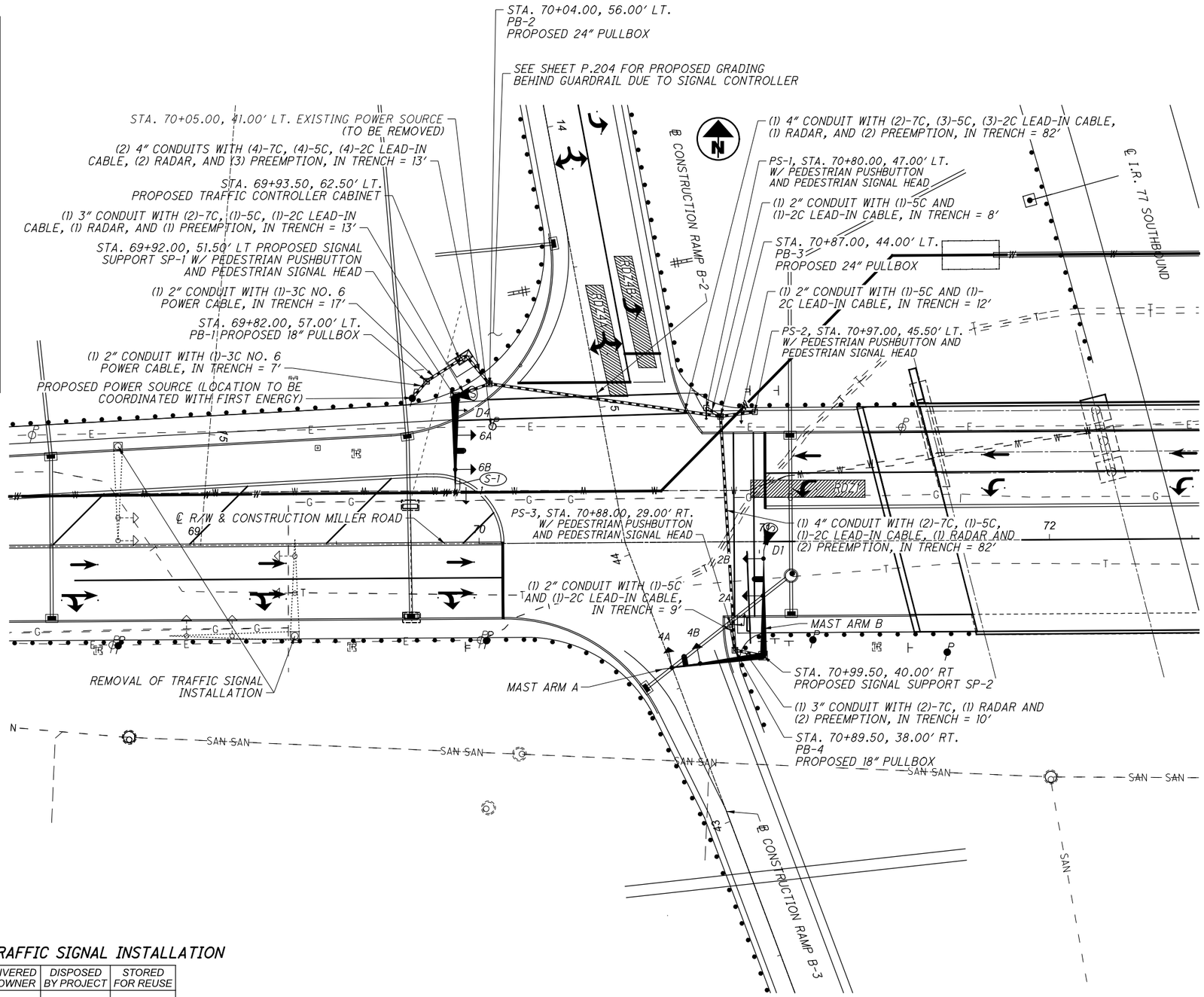

PROPOSED SIGNS

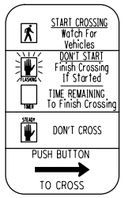

R10-3E-9
1 - LEFT ARROWS
3 - RIGHT ARROWS

R10-H12c
S-1

LEGEND

	PROP	EXIST
TRAFFIC SIGNAL, 3 UNIT HEAD, 12"	●→	○→
TRAFFIC SIGNAL, 3 OR 4 UNIT HEAD, 12" WITH ARROWS	●↕	
TRAFFIC SIGNAL, 5 UNIT HEAD, 12"	●↕	
SIGNAL SUPPORT POLE	●	○
EXISTING MAST ARM	⋯→	
PROPOSED MAST ARM	▬→	
PROPOSED CONDUIT	▬	
CONTROLLER CABINET AND WORK PAD (TS-2)	⊠	⊠
TRAFFIC PULL BOX	TR	TR
STOP BAR RADAR DETECTION UNIT	S	
SIGN	⊤	
PROPOSED PREEMPTION CONFIRMATION LIGHT AND RECEIVER	▬	
PEDESTRIAN HEAD	┐	┐
PEDESTRIAN PUSH BUTTON	→	→
PEDESTAL SUPPORT	⊡	⊡
DETECTION ZONE	▨	

HORIZONTAL SCALE IN FEET
0 10 20 40

PROPOSED SIGNAL HEADS

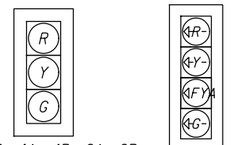

2A, 2B, 4A, 4B, 6A, 6B — 1

PEDESTRIAN HEADS
(LED, COUNTDOWN, TYPE D2)

VEHICULAR SIGNAL HEADS TO BE BLACK WITH 12" LED, BACKPLATE, AND CUTAWAY VISORS

ITEM 632 - REMOVAL OF TRAFFIC SIGNAL INSTALLATION

QTY	ITEM	DELIVERED TO OWNER	DISPOSED BY PROJECT	STORED FOR REUSE
1	GROUND MOUNTED CABINET W/ CONTROLLER	X		
2	MAST ARM SUPPORT	X		
2	PED. SIGANL SUPPORT	X		
4	SIGNAL SUPPORT FOUNDATION		X	
6	VEHICULAR SIGNAL HEAD	X		
4	PEDESTIAN SIGNAL HEAD	X		
7	SIGN	X		
5	PULL BOX		X	
LUMP	SIGNAL CABLE		X	

ESTIMATED QUANTITIES FOR INFORMATION ONLY. REMOVE PER SIGNAL NOTE FOR ITEM 632, REMOVAL OF TRAFFIC SIGNAL INSTALLATION.

TRAFFIC SIGNAL PLAN
MILLER ROAD - RAMPS B-2 AND B-3

DESIGN AGENCY
EUTHENICS
8225 Mohawk Dr. | Cleveland, OH 44125

DESIGNER MRC
REVIEWER ANC 03/01/22
PROJECT ID 104983
SHEET P.299 TOTAL P.434

CUY-77-00.42 PART 1

MODEL: 104983_CP001 PAPERSIZE: 17x11 (in.) DATE: 3/4/2022 TIME: 1:58:26 PM USER: esmccaslin
F:\Jobs\1162-Miller Road Interchange\104983\400-Engineering\Signals\Sheets\104983_CP001.dgn

SIGNAL TIMING CHART (TEM FORM 496-3)

INTERSECTION: MILLER ROAD / RAMP B-2 / RAMP B-3
MAINTAINING AGENCY: CITY OF BRECKSVILLE

START UP
START IN: Y/R FLASH
TIME FOR FLASH, ALL RED: 9, 6
FIRST PHASE(S): 2, 6
COLOR DISPLAYED: GREEN

DUAL ENTRY: YES | PHASES: ϕ2 & 6
REST IN RED: RING 1 - | RING 2 -

	A	B	C	D
OVERLAP				
PHASES	-	-	-	-

INTERVAL OR FEATURE		CONTROLLER MOVEMENT NO.							
INTERSECTION MOVEMENT (PHASE)		1	2	3	4	5	6	7	8
DIRECTION		WB LT	EB	-	SB	-	WB	-	-
MINIMUM GREEN (INITIAL)	(SEC.)	7.0	20.0	-	10.0	-	20.0	-	-
ADDED INITIAL	*(SEC./ACTUATION)	-	-	-	-	-	-	-	-
MAXIMUM INITIAL	*(SEC.)	-	-	-	-	-	-	-	-
PASSAGE TIME (PRESET GAP)	(SEC.)	3.0	-	-	3.0	-	-	-	-
TIME BEFORE REDUCTION	*(SEC.)	-	-	-	-	-	-	-	-
MINIMUM GAP	*(SEC.)	-	-	-	-	-	-	-	-
TIME TO REDUCE	*(SEC.)	-	-	-	-	-	-	-	-
MAXIMUM GREEN I	(SEC.)	20.0	60.0	-	30.0	-	60.0	-	-
MAXIMUM GREEN II	(SEC.)	-	-	-	-	-	-	-	-
YELLOW CHANGE	(SEC.)	4.1	4.1	-	3.0	-	4.1	-	-
ALL RED CLEARANCE	(SEC.)	1.4	1.4	-	1.7	-	1.4	-	-
DELAYED GREEN (LPI) #	(SEC.)	-	-	-	-	-	-	-	-
WALK	(SEC.)	-	-	-	6.0	-	7.0	-	-
FLASHING YELLOW ARROW DELAY °		3.0	-	-	-	-	-	-	-
PEDESTRIAN CLEARANCE	(SEC.)	-	-	-	16.0	-	18.0	-	-
RECALL	MAXIMUM (ON/OFF)	OFF	OFF	-	OFF	-	OFF	-	-
	MINIMUM (ON/OFF)	OFF	ON	-	OFF	-	ON	-	-
	PEDESTRIAN (ON/OFF)	-	-	-	OFF	-	OFF	-	-
MEMORY	(ON/OFF)	OFF	OFF	-	OFF	-	OFF	-	-

*VOLUME DENSITY CONTROLS

#FOR CROSSING WITH PEDESTRIAN PUSHBUTTONS, LPI'S (LEADING PEDESTRIAN INTERVALS) MAY BE IMPLEMENTED (3-6 SEC.) IN ACCORDANCE WITH LPI DURATION TIME PER THE ODOT SIGNAL CALCULATIONS - CLEARANCE INTERVALS SPREADSHEET.

°WHEN IMPLEMENTING FYA, A MINIMUM 3 SECOND DELAY SHALL BE PROGRAMMED.

NOTES:

- ALL MOVEMENTS SHALL BE ACTUATED. THE PRIMARY THRU MOVEMENT SHOULD HAVE MIN RECALL ACTIVE TO REST IN GREEN.
- FOR PROTECTED/PERMISSIVE PHASES, IMPLEMENT CALL OMITS TO AVOID YELLOW BALL TRAP.
- ENABLE ϕ1, 3 & ϕ5, 7 DETECTOR SWITCHING TO ALLOW ϕ1 & ϕ5 TO EXTEND ϕ2 & ϕ6 OR ϕ3 & ϕ7 TO EXTEND ϕ4 & ϕ8, RESPECTIVELY, WHEN ALLOCATED GREEN TIME FOR LEFT TURN PHASES ARE EXHAUSTED.
- COUNTDOWN PEDESTRIAN SIGNALS SHALL GO TO ZERO ON YELLOW PER OMUTCD FIGURE 4E-2.
- ALL DETECTOR DELAYS SHALL BE PLACED IN THE CONTROLLER.
- FOR ANY ENTRY TO FLASHING OPERATION, PROGRAMMING SHALL RUN MINOR STREET GREEN (TYP. ϕ4 & ϕ8), ALL-RED CLEARANCE, AND THEN FLASHING OPERATION.
- AFTER PREEMPTION REQUEST, THE SHORTENING OR OMISSION OF ANY PEDESTRIAN WALK INTERVAL AND/OR PEDESTRIAN CHANGE INTERVAL SHALL BE PERMITTED.

PHASING DIAGRAM (TYPICAL)

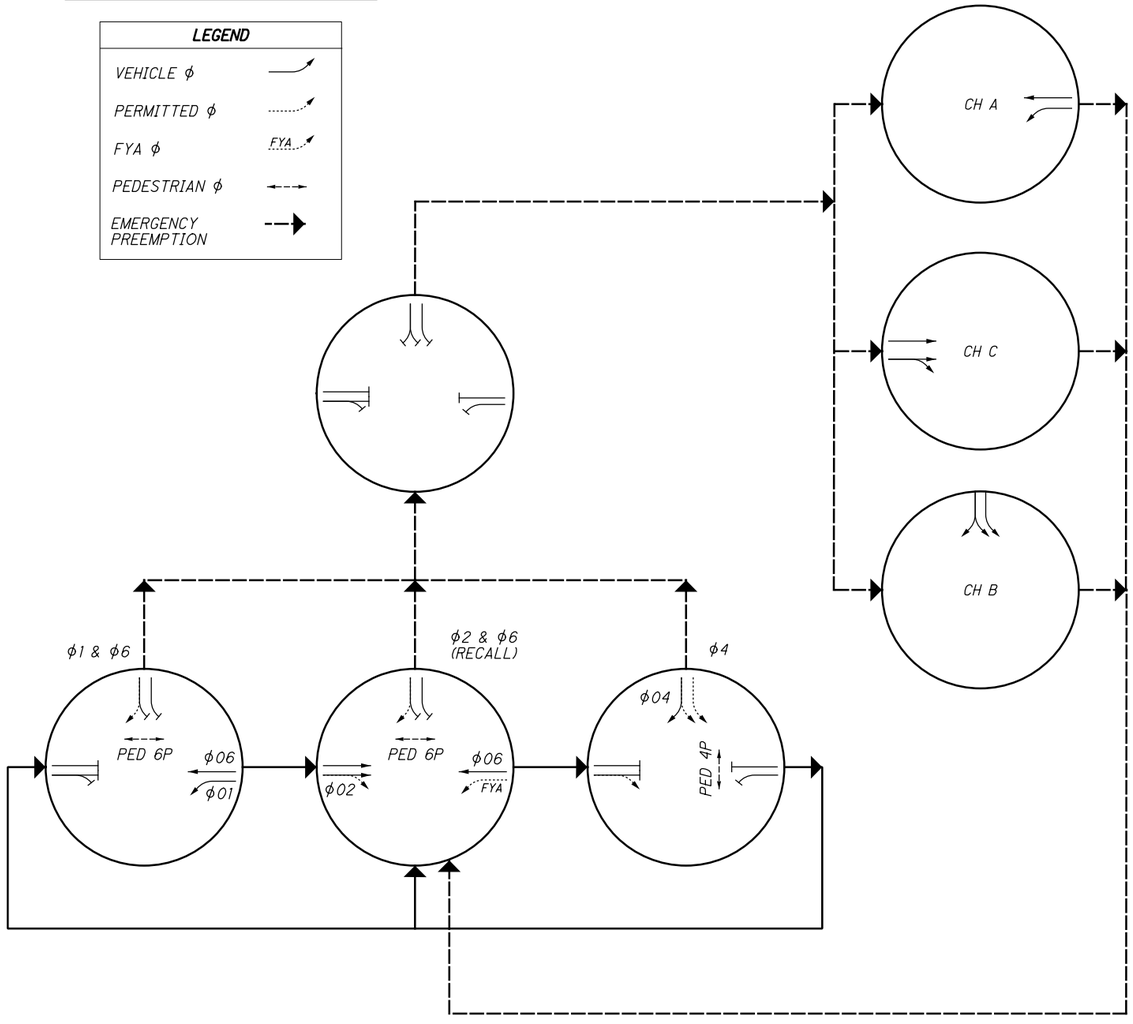

RADAR DETECTION CHART (TEM FORM 496-4)

DETECTION ZONE	MOVEMENT	WIDTH	DELAY PROGRAMMED IN CONTROLLER (SEC)	EXTENSION PROGRAMMED IN CONTROLLER (SEC)	DETECTOR NUMBER	PURPOSE	DETECTION ZONE LENGTH (FT)
RDZ4A	SBLT	6	10	-	D4	STOP LINE	40
RDZ1	WBLT	6	5	-	D1	STOP LINE	40
RDZ4B	SBLT	6	-	-	D4	STOP LINE	40

TRAFFIC SIGNAL PLAN DETAILS
MILLER ROAD - RAMPS B-2 AND B-3

DESIGN AGENCY
EUTHENICS
8239 Midwest Dr. | Cleveland, OH 44125

DESIGNER MRC
REVIEWER ANC 03/01/22
PROJECT ID 104983
SHEET P.300 TOTAL P.434

CUY-77-00.42 PART 1

MODEL: I04983_CD001 PAPERSIZE: 17x11(ln.) DATE: 3/4/2022 TIME: 1:58:37 PM USER: esmccaslin
F:\Jobs\II62-Miller Road Interchange\I04983\400-Engineering\Signals\Sheets\I04983_CD001.dgn

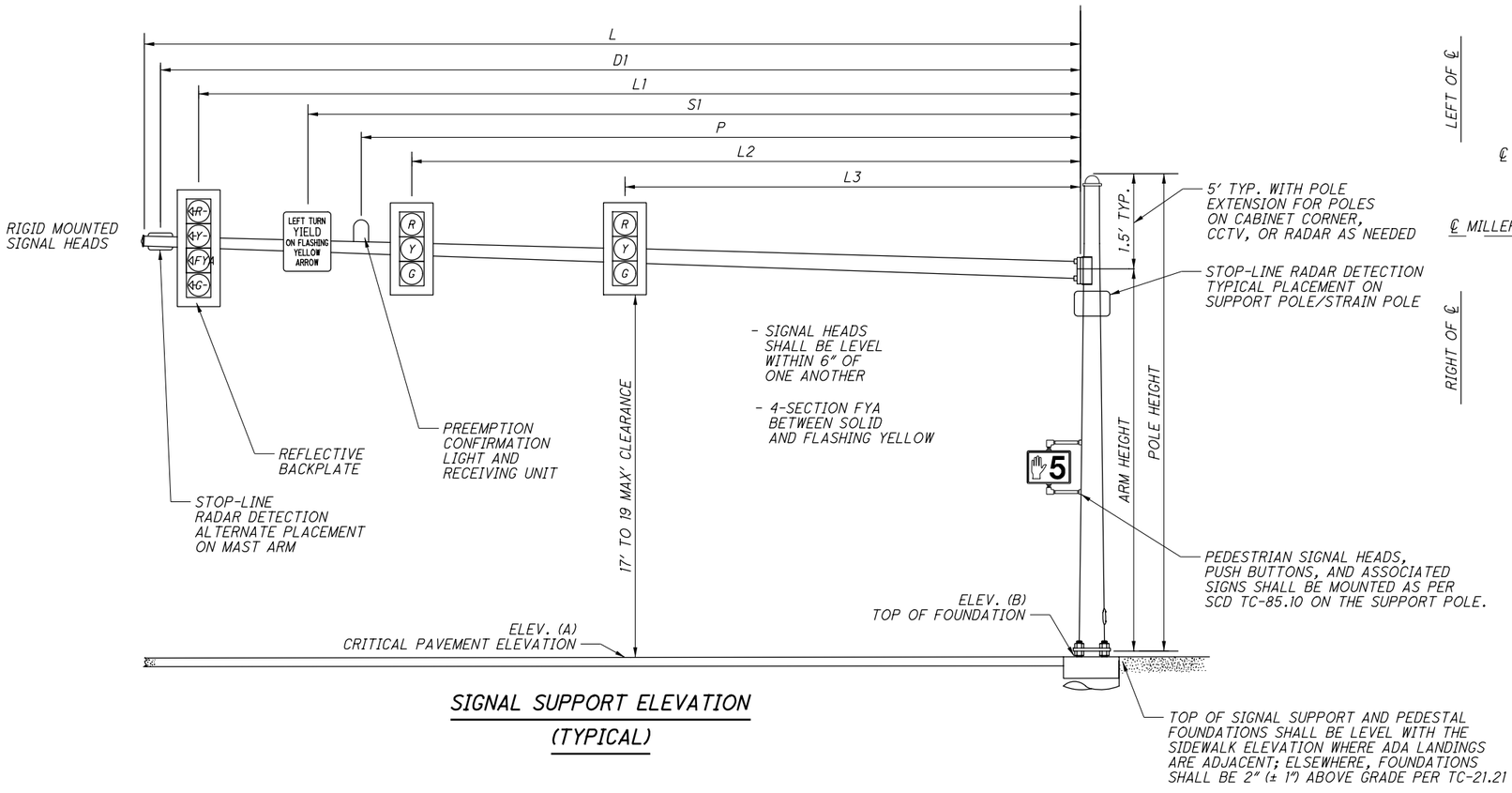

SIGNAL SUPPORT ELEVATION (TYPICAL)

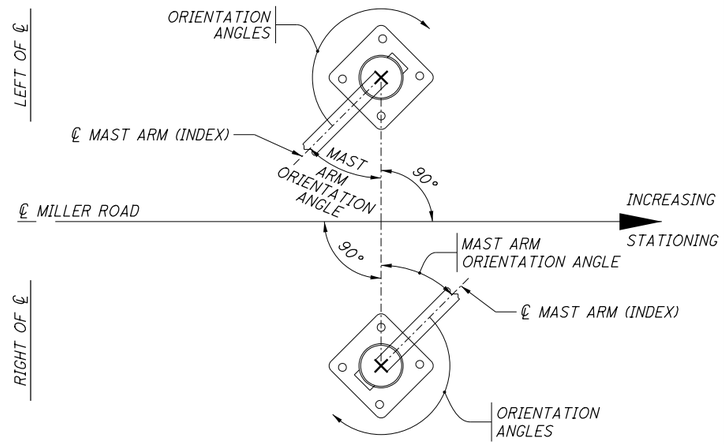

POLE ORIENTATION

MAST ARM TABLE (TEM FIGURE 498-37 & 38)

SUPPORT NO.	STATION	OFFSET	ELEVATION		SIGNAL SUPPORT DETAILS										ORIENTATION		ANGLES FROM MAST ARM A		
			A (PAVEMENT ELEVATION)	B (TOP OF FOUNDATION)	DESIGN TYPE	DESIGN NO.	POLE HEIGHT	ARM HEIGHT	L	L1	L2	L3	D1	P	S1	MAST ARM A ANGLE	MAST ARM B ANGLE	PEDESTRIAN SIGNAL	PEDESTRIAN PUSH BUTTON	HANDHOLE
							FT	FT	FT	FT	FT	FT	FT	FT	FT	DEG	DEG	DEG	DEG	DEG
SP-1	69+92.00	51.50' LT	1129.17	1129.44	TC-81.22	4	22	20.5	36.5	33.5	25.5	13.5	-	19	30.5	0	-	0	0	0
SP-2 A	70+99.55	40.00' RT	1130.17	1128.07	TC-12.31	6	22	20.5	35.3	32.3	22.2	-	-	27.25	-	258	-	-	-	90
SP-2 B	-	-	1129.50	-	-	-	-	20.5	37	34	21	-	36	27	-	-	0	-	-	"

CUY-77-00.42 PART 1

MODEL: 104983_CD002 PAPERSIZE: 17x11(in.) DATE: 3/4/2022 TIME: 1:58:42 PM USER: esmccaslin
F:\Jobs\1162-Miller Road Interchange\104983\400-Engineering\Signals\Sheets\104983_CD002.dgn

TRAFFIC SIGNAL PLAN DETAILS
MILLER ROAD - RAMPS B-2 AND B-3

DESIGN AGENCY
EUTHENICS
8235 Mohawk Dr. | Cleveland, OH 44105

DESIGNER MRC
REVIEWER ANC 03/01/22
PROJECT ID 104983
SHEET P.301 TOTAL P.434

WIRING DIAGRAM (TYPICAL)

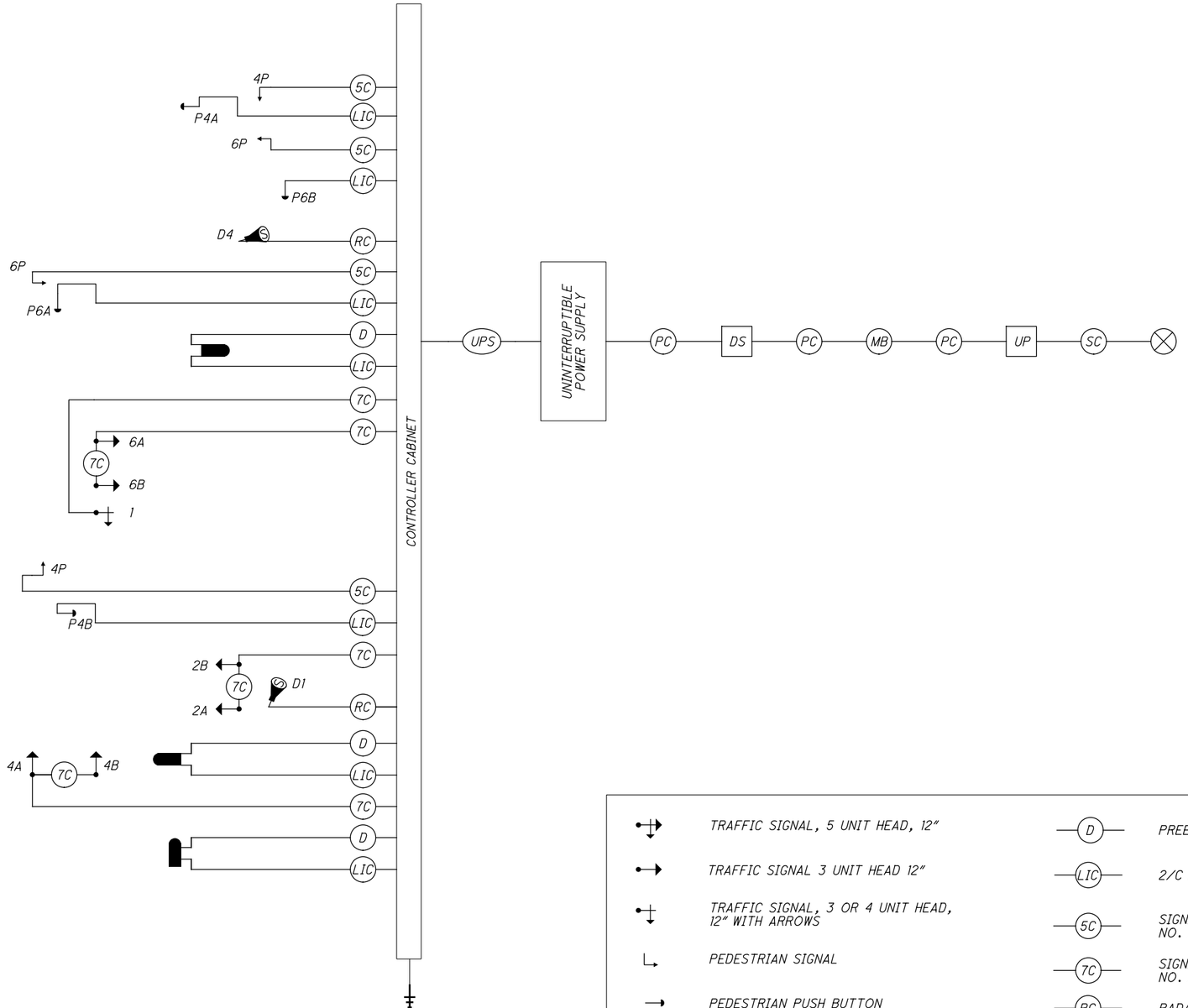

NOTES:

- FOR LOCATIONS WITH LEFT TURN LANES RUN 7C FOR POTENTIAL PT/PM LT PHASE IF INITIAL DESIGN IS FOR PERMITTED ONLY.
- OVERLAPS SHALL BE WIRED TO THE APPROPRIATE LOAD SWITCHES AS PER THE FIELD HOOKUP CHART AND CONFIGURED IN THE CONTROLLER SOFTWARE PER THE SIGNAL TIMING CHART.

FIELD WIRING HOOK-UP CHART (TEM FORM 496-16)

SIGNAL HEAD	INDICATION	FIELD TERMINAL	FLASH
1 (WBLT)	<-R-	ϕ1 R	Y
	<-Y-	ϕ1 Y	
	<FYA	ϕ1 FYA	
	<-G-	ϕ1 G	
	-	-	
2A, 2B (EB)	R	ϕ2 R	Y
	Y	ϕ2 Y	
	G	ϕ2 G	
	-	-	
	-	-	
4A, 4B (SB)	R	ϕ4 R	R
	Y	ϕ4 Y	
	G	ϕ4 G	
	-	-	
	-	-	
6A, 6B (WB)	R	ϕ6 R	Y
	Y	ϕ6 Y	
	G	ϕ6 G	
PEDESTRIAN MOVEMENTS			
4P (SOUTH)	DW	ϕ4/LS 9/R	OUT
	W	ϕ4/LS 9/G	
6P (WEST)	DW	ϕ6/LS 10/R	OUT
	W	ϕ6/LS 10/G	
LS = LOAD SWITCH			

LEGEND

- TRAFFIC SIGNAL, 5 UNIT HEAD, 12"
- TRAFFIC SIGNAL 3 UNIT HEAD 12"
- TRAFFIC SIGNAL, 3 OR 4 UNIT HEAD, 12" WITH ARROWS
- PEDESTRIAN SIGNAL
- PEDESTRIAN PUSH BUTTON
- STOP LINE RADAR DETECTION UNIT
- ANTENNA FOR GPS CLOCK
- PREEMPTION CONFIRMATION LIGHT & RECEIVER
- D — PREEMPTION DETECTOR CABLE
- LIC — 2/C NO. XX AWG (LEAD-IN CABLE)
- 5C — SIGNAL CABLE, 5 CONDUCTOR, NO. XX AWG
- 7C — SIGNAL CABLE, 7 CONDUCTOR, NO. XX AWG
- RC — RADAR DETECTION CABLE
- POWER SOURCE
- SC — SERVICE CABLE, 3 CONDUCTOR, NO. X AWG
- PC — POWER CABLE, 2 CONDUCTOR, NO. X AWG
- UP — UTILITY POLE
- MB — METER BASE
- DS — DISCONNECT SWITCH
- UPS — UNINTERRUPTIBLE POWER SUPPLY CABLE

TRAFFIC SIGNAL PLAN DETAILS
MILLER ROAD - RAMPS B-2 AND B-3

DESIGN AGENCY
EUTHENICS
8235 Mohawk Dr. | Cleveland, OH 44130

DESIGNER MRC
REVIEWER ANC 03/01/22
PROJECT ID 104983
SHEET P.302 TOTAL P.434

CUY-77-00.42 PART 1

MODEL: I04983_CD003 PAPERSIZE: 17x11 (in.) DATE: 3/4/2022 TIME: 1:58:45 PM USER: esmccasiln
F:\Jobs\1162-Miller Road Interchange\104983\400-Engineering\Signals\Sheets\104983_CD003.dgn

PROPOSED SIGNS

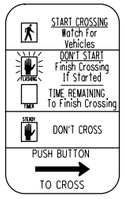

R10-3E-9
3 - LEFT ARROWS
3 - RIGHT ARROWS

NO TURN ON RED

R10-11a-18
S-1

LEFT TURN YIELD ON FLASHING YELLOW ARROW

R10-H12c
S-2

SEE SHEET P.205 FOR PROPOSED GRADING BEHIND GUARDRAIL DUE TO SIGNAL CONTROLLER

STA. 75+15.50, 59.50' LT
PROPOSED SIGNAL SUPPORT SP-1
W/ PEDESTRIAN PUSHBUTTON
AND PEDESTRIAN SIGNAL HEAD

(1) 3" CONDUIT WITH (4)-7C, (1)-5C, (1)-2C LEAD-IN,
(1) RADAR AND (2) PREEMPTION, IN TRENCH = 11'

STA. 75+04.50, 59.00' LT
PROPOSED TRAFFIC CONTROLLER CABINET

(1) 2" CONDUIT WITH (1)-3C NO. 6
POWER CABLE, IN TRENCH = 11'

STA. 74+98.00, 54.00' LT.
PB-1, PROPOSED 18" PULLBOX

(1) 2" CONDUIT WITH (1)-3C NO. 6
POWER CABLE, IN TRENCH = 4'

PROPOSED POWER SOURCE
(LOCATION TO BE COORDINATED
WITH FIRST ENERGY)

(2) 4" CONDUITS WITH (6)-7C, (6)-5C, (6)-2C LEAD-IN
CABLE, (2) RADAR AND (3) PREEMPTION, IN TRENCH = 13'

(1) 2" CONDUIT WITH
(1)-5C AND (1)-2C LEAD-IN
CABLE, IN TRENCH = 11'

PS-1, STA. 75+02.00, 47.00' LT.
W/ PEDESTRIAN PUSHBUTTON
AND PEDESTRIAN SIGNAL HEAD

(1) 4" CONDUIT WITH (2)-7C, (3)-5C, (3)-2C LEAD-IN
CABLE, (1) RADAR AND (1) PREEMPTION, IN TRENCH = 82'

PS-2, STA. 74+92.50, 31.00' RT.
W/ PEDESTRIAN PUSHBUTTON
AND PEDESTRIAN SIGNAL HEAD

(1) 2" CONDUIT WITH
(1)-5C AND (1)-2C LEAD-IN
CABLE, IN TRENCH = 12'

STA. 75+04.00, 31.00' RT.
PB-3
PROPOSED 24" PULLBOX

(1) 2" CONDUIT WITH
(1)-5C AND (1)-2C LEAD-IN
CABLE, IN TRENCH = 7'

PS-3, STA. 75+11.00, 33.00' RT.
W/ PEDESTRIAN PUSHBUTTON
AND PEDESTRIAN SIGNAL HEAD

(1) 4" CONDUIT WITH
(1)-5C AND (1)-2C LEAD-IN
CABLE, IN TRENCH = 69'

STA. 75+74.00, 73.50' LT.
PB-5
PROPOSED 18" PULLBOX

(1) 2" CONDUIT WITH
(1)-5C AND (1)-2C LEAD-IN
CABLE, IN TRENCH = 5'

PS-4, STA. 75+78.00, 71.00' LT.
W/ PEDESTRIAN PUSHBUTTON
AND PEDESTRIAN SIGNAL HEAD

MAST ARM B
S-1

STA. 75+09.00, 50.50' LT.
6A PB-2
PROPOSED 24" PULLBOX

MAST ARM A
6B
6C
D5

℄ CONSTRUCTION RAMP B-1

℄ CONSTRUCTION RAMP B-4

℄ R/W & CONSTRUCTION MILLER ROAD

S-2
2B
2A
D8

STA. 75+84.50, 48.00' RT
PROPOSED SIGNAL SUPPORT SP-2
W/ PEDESTRIAN PUSHBUTTON
AND PEDESTRIAN SIGNAL HEAD

(1) 3" CONDUIT WITH (2)-7C, (1)-5C, (1)-2C LEAD-IN,
(1) RADAR AND (1) PREEMPTION, IN TRENCH = 9'

STA. 75+77.00, 51.00' RT.
PB-4
PROPOSED 18" PULLBOX

(1) 4" CONDUIT WITH (2)-7C, (1)-5C,
(1)-2C LEAD-IN CABLE, (1) RADAR AND
(1) PREEMPTION, IN TRENCH = 76'

I.R. 77 NORTHBOUND

50'-5"

LEGEND

	PROP	EXIST
TRAFFIC SIGNAL, 3 UNIT HEAD, 12"		
TRAFFIC SIGNAL, 3 OR 4 UNIT HEAD, 12" WITH ARROWS		
TRAFFIC SIGNAL, 4 OR 5 UNIT HEAD, 12"		
TRAFFIC SIGNAL, 5 UNIT HEAD, 12" WITH ARROWS		
SIGNAL SUPPORT POLE		
EXISTING MAST ARM		
PROPOSED MAST ARM		
PROPOSED CONDUIT		
CONTROLLER CABINET AND WORK PAD (TS-2)		
TRAFFIC PULL BOX		
STOP BAR RADAR DETECTION UNIT		
SIGN		
PROPOSED PREEMPTION CONFIRMATION LIGHT AND RECEIVER		
PEDESTRIAN HEAD		
PEDESTRIAN PUSH BUTTON		
PEDESTAL SUPPORT		
DETECTION ZONE		

PROPOSED SIGNAL HEADS

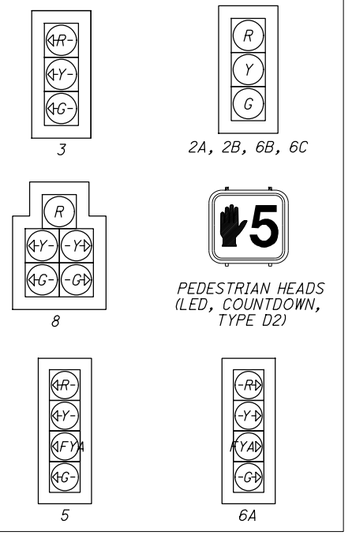

VEHICULAR SIGNAL HEADS TO BE BLACK WITH 12" LED, BACKPLATE, AND CUTAWAY VISORS

HORIZONTAL SCALE IN FEET
0 10 20 40

TRAFFIC SIGNAL PLAN
MILLER ROAD - RAMPS B-1 AND B-4

DESIGN AGENCY
EUTHENICS
8225 Mohawk Dr. | Cleveland, OH 44139

DESIGNER MRC
REVIEWER ANC 03/01/22
PROJECT ID 104983
SHEET P.303 TOTAL P.434

CUY-77-00.42 PART 1

MODEL: 104983_CP002 PAPERSIZE: 17x11 (in.) DATE: 3/4/2022 TIME: 1:58:50 PM USER: esmccaslin
F:\Jobs\162-Miller Road Interchange\104983\400-Engineering\Signals\Sheets\104983_CP002.dgn

SIGNAL TIMING CHART (TEM FORM 496-3)

INTERSECTION: MILLER RD / RAMP B-1 / RAMP B-4
MAINTAINING AGENCY: CITY OF BRECKSVILLE

START UP			DUAL ENTRY: YES		PHASES:		ϕ2 & 6		
START IN: Y/R FLASH			REST IN RED:		RING 1 -		RING 2 -		
TIME FOR FLASH, ALL RED: 9, 6			OVERLAP			A	B	C	D
FIRST PHASE(S): 2 & 6			PHASES			ϕ5	ϕ4+ ϕ8	ϕ4	-
COLOR DISPLAYED: GREEN									
INTERVAL OR FEATURE			CONTROLLER MOVEMENT NO.						
INTERSECTION MOVEMENT (PHASE)			1	2	3	4	5	6	7	8
DIRECTION			-	EB	NB LT	-	EB LT	WB	-	NB
MINIMUM GREEN (INITIAL)		(SEC.)	-	20.0	10.0	-	7.0	20.0	-	10.0
ADDED INITIAL		*(SEC./ACTUATION)	-	-	-	-	-	-	-	-
MAXIMUM INITIAL		*(SEC.)	-	-	-	-	-	-	-	-
PASSAGE TIME (PRESET GAP)		(SEC.)	-	-	3.0	-	3.0	-	-	3.0
TIME BEFORE REDUCTION		*(SEC.)	-	-	-	-	-	-	-	-
MINIMUM GAP		*(SEC.)	-	-	-	-	-	-	-	-
TIME TO REDUCE		*(SEC.)	-	-	-	-	-	-	-	-
MAXIMUM GREEN I		(SEC.)	-	60.0	30.0	-	20.0	60.0	-	30.0
MAXIMUM GREEN II		(SEC.)	-	-	-	-	-	-	-	-
YELLOW CHANGE		(SEC.)	-	4.1	3.0	-	4.1	4.1	-	3.0
ALL RED CLEARANCE		(SEC.)	-	2.0	1.2	-	2.0	2.0	-	1.2
DELAYED GREEN (LPI) #		(SEC.)	-	-	-	-	-	-	-	-
WALK		(SEC.)	-	7.0	-	-	-	7.0	-	7.0
FLASHING YELLOW ARROW DELAY °			-	-	-	-	3.0	-	-	-
PEDESTRIAN CLEARANCE		(SEC.)	-	16	-	16	-	14	-	-
RECALL	MAXIMUM	(ON/OFF)	-	OFF	OFF	-	OFF	OFF	-	OFF
	MINIMUM	(ON/OFF)	-	ON	OFF	-	OFF	ON	-	OFF
	PEDESTRIAN	(ON/OFF)	-	OFF	-	OFF	-	OFF	-	-
MEMORY		(ON/OFF)	-	OFF	OFF	-	OFF	OFF	-	OFF

*VOLUME DENSITY CONTROLS

#FOR CROSSING WITH PEDESTRIAN PUSHBUTTONS, LPI'S (LEADING PEDESTRIAN INTERVALS) MAY BE IMPLEMENTED (3-6 SEC.) IN ACCORDANCE WITH LPI DURATION TIME PER THE ODOT SIGNAL CALCULATIONS - CLEARANCE INTERVALS SPREADSHEET.

°WHEN IMPLEMENTING FYA, A MINIMUM 3 SECOND DELAY SHALL BE PROGRAMMED.

NOTES:

- ALL MOVEMENTS SHALL BE ACTUATED. THE PRIMARY THRU MOVEMENT SHOULD HAVE MIN RECALL ACTIVE TO REST IN GREEN.
- FOR PROTECTED/PERMISSIVE PHASES, IMPLEMENT CALL OMITS TO AVOID YELLOW BALL TRAP.
- ENABLE ϕ1, 3 & ϕ5, 7 DETECTOR SWITCHING TO ALLOW ϕ1 & ϕ 5 TO EXTEND ϕ2 & ϕ6 OR ϕ3 & ϕ7 TO EXTEND ϕ4 & ϕ8, RESPECTIVELY, WHEN ALLOCATED GREEN TIME FOR LEFT TURN PHASES ARE EXHAUSTED.
- COUNTDOWN PEDESTRIAN SIGNALS SHALL GO TO ZERO ON YELLOW PER OMUTCD FIGURE 4E-2.
- ALL DETECTOR DELAYS SHALL BE PLACED IN THE CONTROLLER.
- FOR ANY ENTRY TO FLASHING OPERATION, PROGRAMMING SHALL RUN MINOR STREET GREEN (TYP. ϕ4 & ϕ8), ALL-RED CLEARANCE, AND THEN FLASHING OPERATION.
- AFTER PREEMPTION REQUEST, THE SHORTENING OR OMISSION OF ANY PEDESTRIAN WALK INTERVAL AND/OR PEDESTRIAN CHANGE INTERVAL SHALL BE PERMITTED.

PHASING DIAGRAM (TYPICAL)

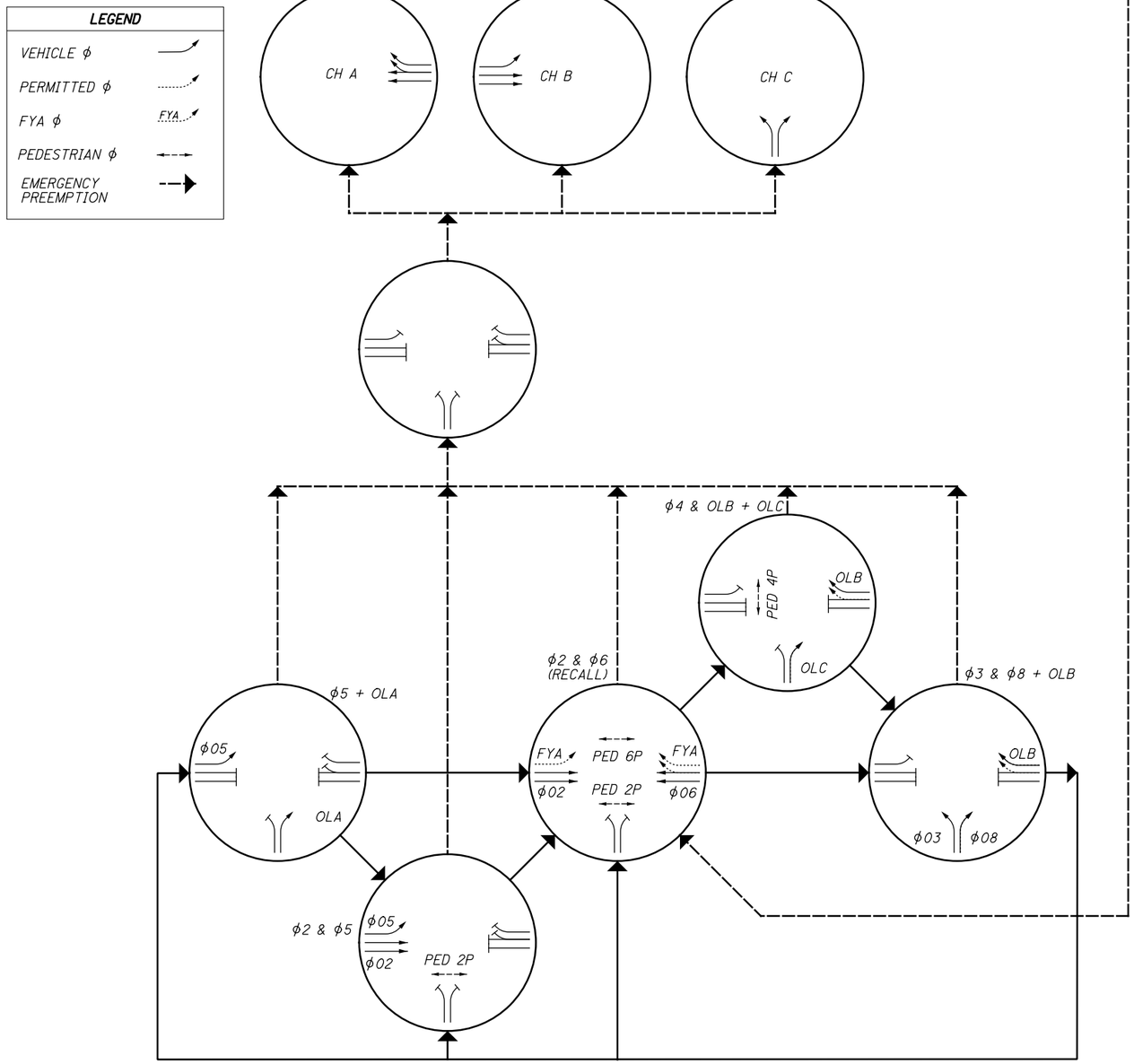

RADAR DETECTION CHART (TEM FORM 496-4)

DETECTION ZONE	MOVEMENT	WIDTH	DELAY PROGRAMMED IN CONTROLLER (SEC)	EXTENSION PROGRAMMED IN CONTROLLER (SEC)	DETECTOR NUMBER	PURPOSE	DETECTION ZONE LENGTH (FT)
RDZ3	NBLT	6	-	-	D8	STOP LINE	40
RDZ5	EBLT	6	5	-	D5	STOP LINE	40
RDZ8	NBRT	6	10	-	D8	STOP LINE	40

TRAFFIC SIGNAL PLAN DETAILS
MILLER ROAD - RAMPS B-1 AND B-4

DESIGN AGENCY
EUTHENICS
8230 Mohawk Dr. | Cleveland, OH 44625

DESIGNER MRC
REVIEWER ANC 03/01/22
PROJECT ID 104983
SHEET P.304 TOTAL P.434

CUY-77-00.42 PART 1

MODEL: 104983_CD004 PAPERSIZE: 17x11 (in.) DATE: 3/4/2022 TIME: 1:59:02 PM USER: esmccaslin
F:\Jobs\162-Miller Road Interchange\104983\400-Engineering\Signals\Sheets\104983_CD004.dgn

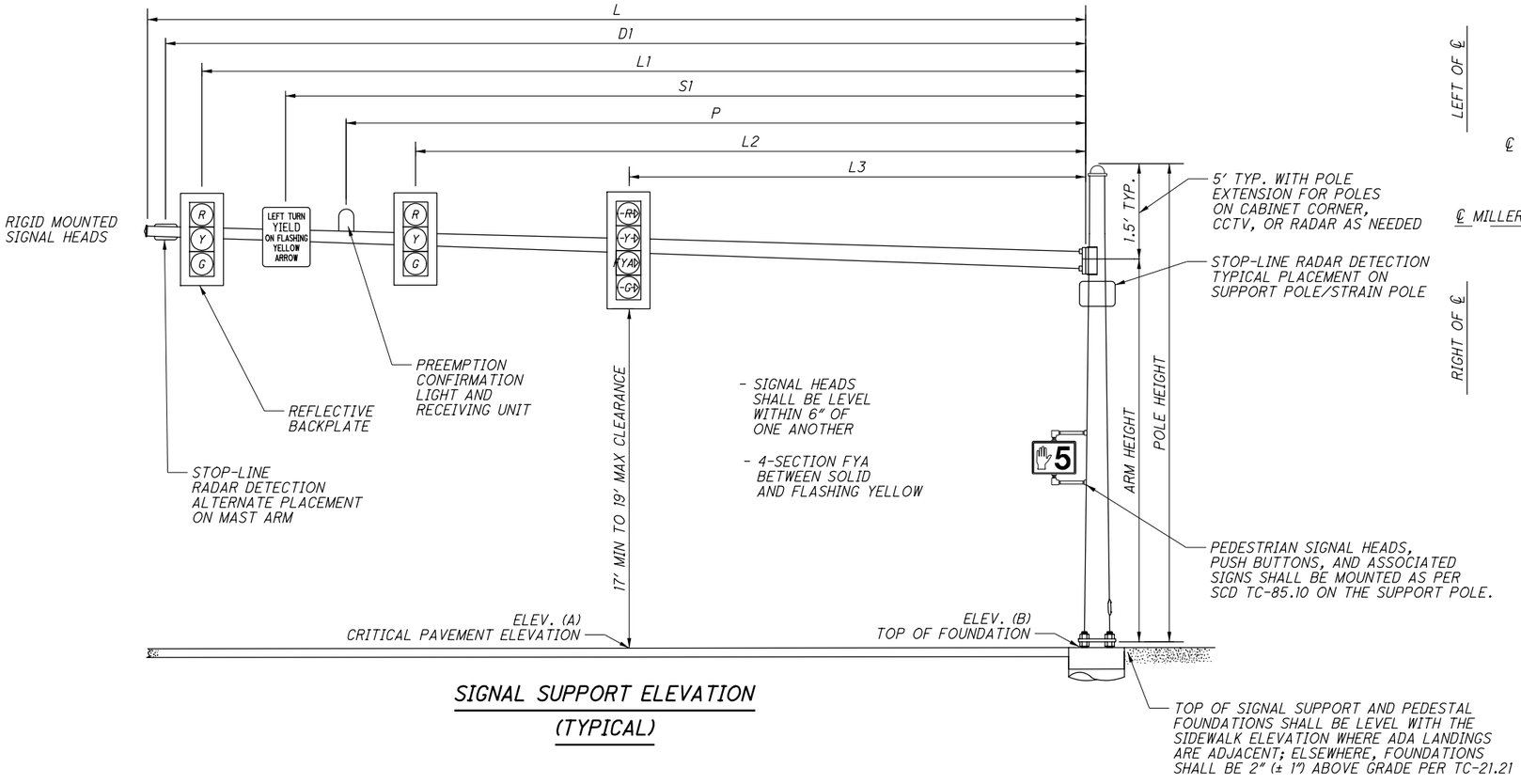

SIGNAL SUPPORT ELEVATION (TYPICAL)

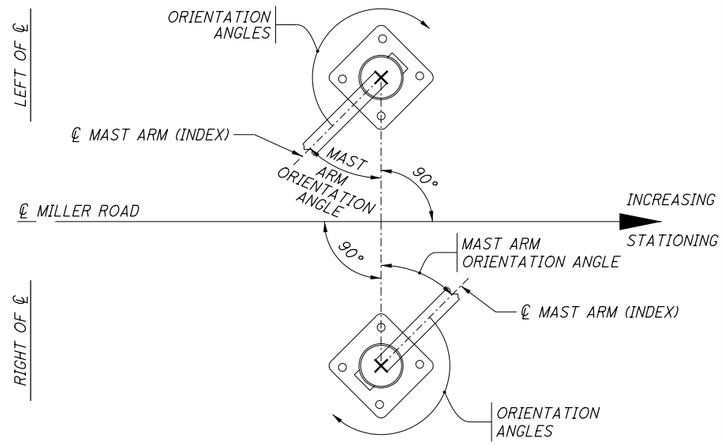

POLE ORIENTATION

MAST ARM TABLE (TEM FIGURE 498-37 & 38)

SUPPORT NO.	STATION	OFFSET	ELEVATION		SIGNAL SUPPORT DETAILS											ORIENTATION ANGLES FROM MAST ARM A				
			A (PAVEMENT ELEVATION)	B (TOP OF FOUNDATION)	DESIGN TYPE	DESIGN NO.	POLE HEIGHT	ARM HEIGHT	L	L1	L2	L3	D1	P	S1	MAST ARM A ANGLE	MAST ARM B ANGLE	PEDESTRIAN SIGNAL	PEDESTRIAN PUSH BUTTON	HANDHOLE
			FT	FT			FT	FT	FT	FT	FT	FT	FT	FT	FT	DEG	DEG	DEG	DEG	DEG
SP-1 A	75+15.50	59.50' LT	1127.58	1126.77	TC-12.31	6	23	21.5	45	42	29.5	17.5	44	36	-	0	-	348	0	0
SP-1 B	-	-	1125.87	-	-	-	-	21.5	37.8	34.8	17.2	-	-	25.8	31.8	-	266	"	"	"
SP-2	75+84.50	48.00 RT	1126.33	1126.20	TC-81.22	13	22	20.5	57	54	42	29	-	36	51	0	-	7	7	45

CUY-77-00.42 PART 1

MODEL: 104983_CD005 PAPERSIZE: 17x11(in.) DATE: 3/4/2022 TIME: 1:59:06 PM USER: esmccaslin
F:\Jobs\1162-Miller Road Interchange\104983\400-Engineering\Signals\Sheets\104983_CD005.dgn

TRAFFIC SIGNAL PLAN DETAILS
MILLER ROAD - RAMPS B-1 AND B-4

DESIGN AGENCY
EUTHENICS
8235 Mohawk Dr. | Cleveland, OH 44130

DESIGNER MRC
REVIEWER ANC 03/01/22
PROJECT ID 104983
SHEET P.305 TOTAL P.434

WIRING DIAGRAM (TYPICAL)

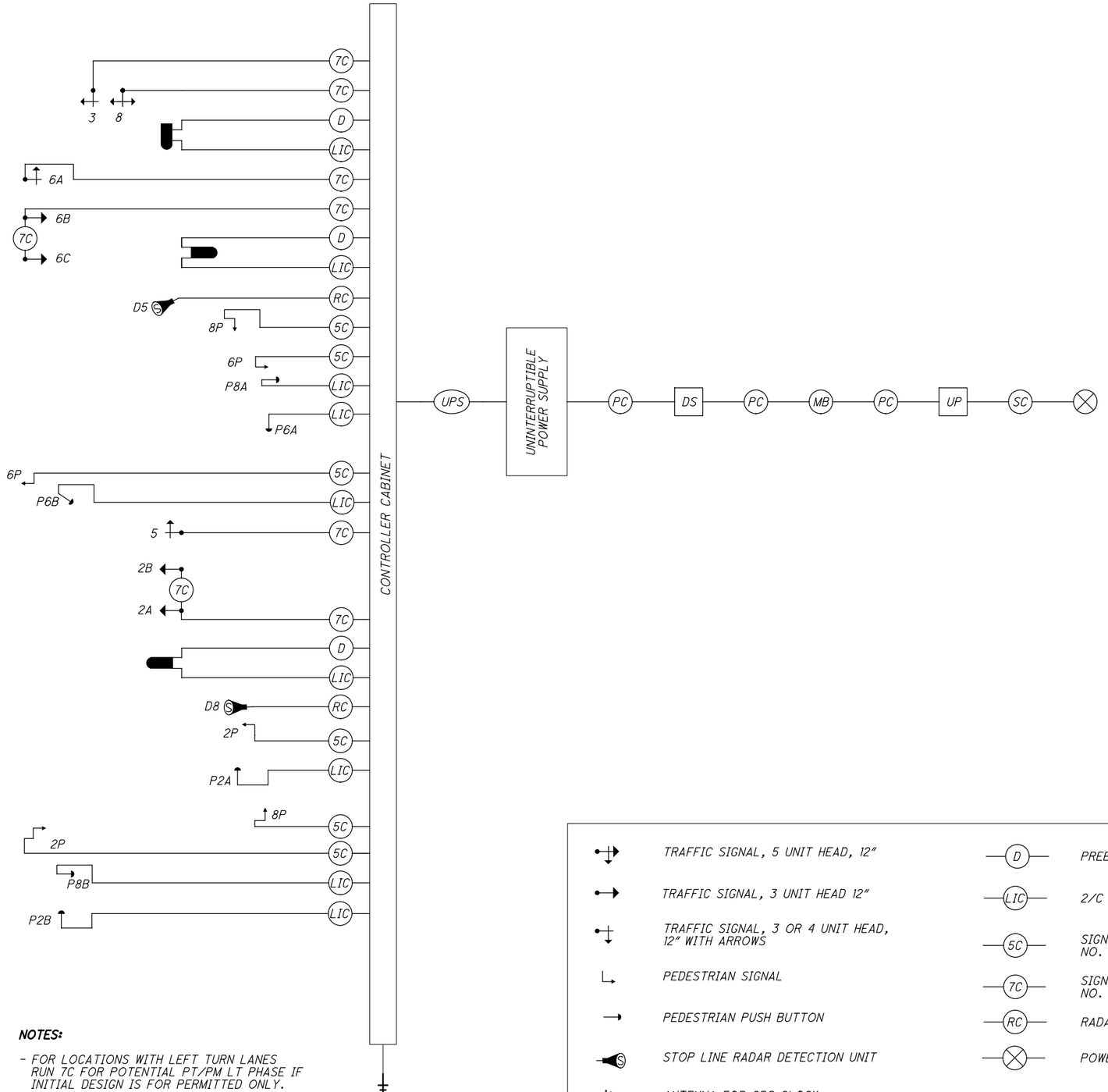

NOTES:

- FOR LOCATIONS WITH LEFT TURN LANES RUN 7C FOR POTENTIAL PT/PM LT PHASE IF INITIAL DESIGN IS FOR PERMITTED ONLY.
- OVERLAPS SHALL BE WIRED TO THE APPROPRIATE LOAD SWITCHES AS PER THE FIELD HOOKUP CHART AND CONFIGURED IN THE CONTROLLER SOFTWARE PER THE SIGNAL TIMING CHART.

FIELD WIRING HOOK-UP CHART (TEM FORM 496-16)

SIGNAL HEAD	INDICATION	FIELD TERMINAL	FLASH
2A, 2B (EB)	R	ϕ2 R	Y
	Y	ϕ2 Y	
	G	ϕ2 G	
	-	-	
	-	-	
3 (NBLT)	<-R-	ϕ3 R	R
	<-Y-	ϕ3 Y	
	<-G-	ϕ3 G	
	-	-	
	-	-	
5 (EBLT)	<-R-	ϕ5 R	Y
	<-Y-	ϕ5 Y	
	<FYA	OLA Y	
	<-G-	OLA G	
	-	-	
6A (WBRT)	-R->	ϕ6 R	Y
	-Y->	ϕ6 Y/OLB Y	
	FYA>	ϕ6 FYA	
	-G->	ϕ6 G/OLB G	
	-	-	
6B, 6C (WB)	R	ϕ6 R	Y
	Y	ϕ6 Y	
	G	ϕ6 G	

SIGNAL HEAD	INDICATION	FIELD TERMINAL	FLASH
8 (NB)	R	ϕ8 R	R
	<-Y-	ϕ8 Y	
	<-G-	ϕ8 G	
	-Y->	OLB Y	
	-G->	OLB G	
PEDESTRIAN MOVEMENTS			
2P (EAST)	DW	ϕ2/LS 9/R	OUT
	W	ϕ2/LS 9/G	
6P (WEST)	DW	ϕ6/LS 10/R	OUT
	W	ϕ6/LS 10/G	
4P	DW	ϕ4/LS 11/R	OUT
	W	ϕ4/LS 11/G	
-	-	-	-
-	-	-	
OVERLAPS			
OLA	-Y->	ϕ5Y / LS13	OUT
	-G->	ϕ5G / LS13	
OLB	FYA>	ϕ4DW / LS14	OUT
	-G->	ϕ4W / LS14	
OLC	-Y->	ϕ4DW / LS15	OUT
	-G->	ϕ4W / LS15	
LS = LOAD SWITCH			

LEGEND

- TRAFFIC SIGNAL, 5 UNIT HEAD, 12"
- TRAFFIC SIGNAL, 3 UNIT HEAD 12"
- TRAFFIC SIGNAL, 3 OR 4 UNIT HEAD, 12" WITH ARROWS
- PEDESTRIAN SIGNAL
- PEDESTRIAN PUSH BUTTON
- STOP LINE RADAR DETECTION UNIT
- ANTENNA FOR GPS CLOCK
- PREEMPTION CONFIRMATION LIGHT & RECEIVER
- D — PREEMPTION DETECTOR CABLE
- LIC — 2/C NO. XX AWG (LEAD-IN CABLE)
- 5C — SIGNAL CABLE, 5 CONDUCTOR, NO. XX AWG
- 7C — SIGNAL CABLE, 7 CONDUCTOR, NO. XX AWG
- RC — RADAR DETECTION CABLE
- POWER SOURCE
- SC — SERVICE CABLE, 3 CONDUCTOR, NO. X AWG
- PC — POWER CABLE, 2 CONDUCTOR, NO. X AWG
- UP — UTILITY POLE
- MB — METER BASE
- DS — DISCONNECT SWITCH
- UPS — UNINTERRUPTIBLE POWER SUPPLY CABLE

TRAFFIC SIGNAL PLAN DETAILS
MILLER ROAD - RAMPS B-1 AND B-4

DESIGN AGENCY
EUTHENICS
8235 Mohawk Dr. | Cleveland, OH 44130

DESIGNER MRC
REVIEWER ANC 03/01/22
PROJECT ID 104983
SHEET P.306 TOTAL P.434

CUY-77-00.42 PART 1

MODEL: I04983_CD006 PAPERSIZE: 17x11 (in.) DATE: 3/4/2022 TIME: 1:59:10 PM USER: esmccaslin
F:\Jobs\1162-Miller Road Interchange\104983\400-Engineering\Signals\Sheets\104983_CD006.dgn

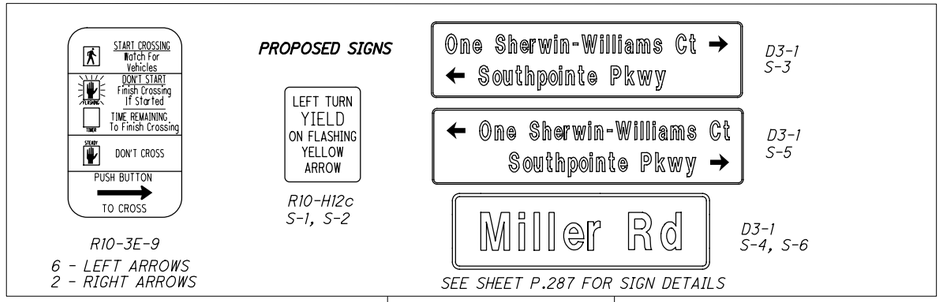

R10-3E-9
6 - LEFT ARROWS
2 - RIGHT ARROWS

PROPOSED SIGNS

LEFT TURN YIELD ON FLASHING YELLOW ARROW

R10-H12c
S-1, S-2

One Sherwin-Williams Ct →
← Southpointe Pkwy

D3-1
S-3

← One Sherwin-Williams Ct
Southpointe Pkwy →

D3-1
S-5

Miller Rd

D3-1
S-4, S-6

SEE SHEET P.287 FOR SIGN DETAILS

PULL BOX #	STATION	SIDE	OFFSET	SIZE (IN.)
PB-1	82+47.00	LT	54.50′	18
PB-2	82+75.00	LT	53.00′	24
PB-3	83+14.00	LT	52.00′	24
PB-4	84+18.00	LT	51.00′	24
PB-5	84+11.00	RT	48.00′	24
PB-6	83+14.00	RT	52.00′	24

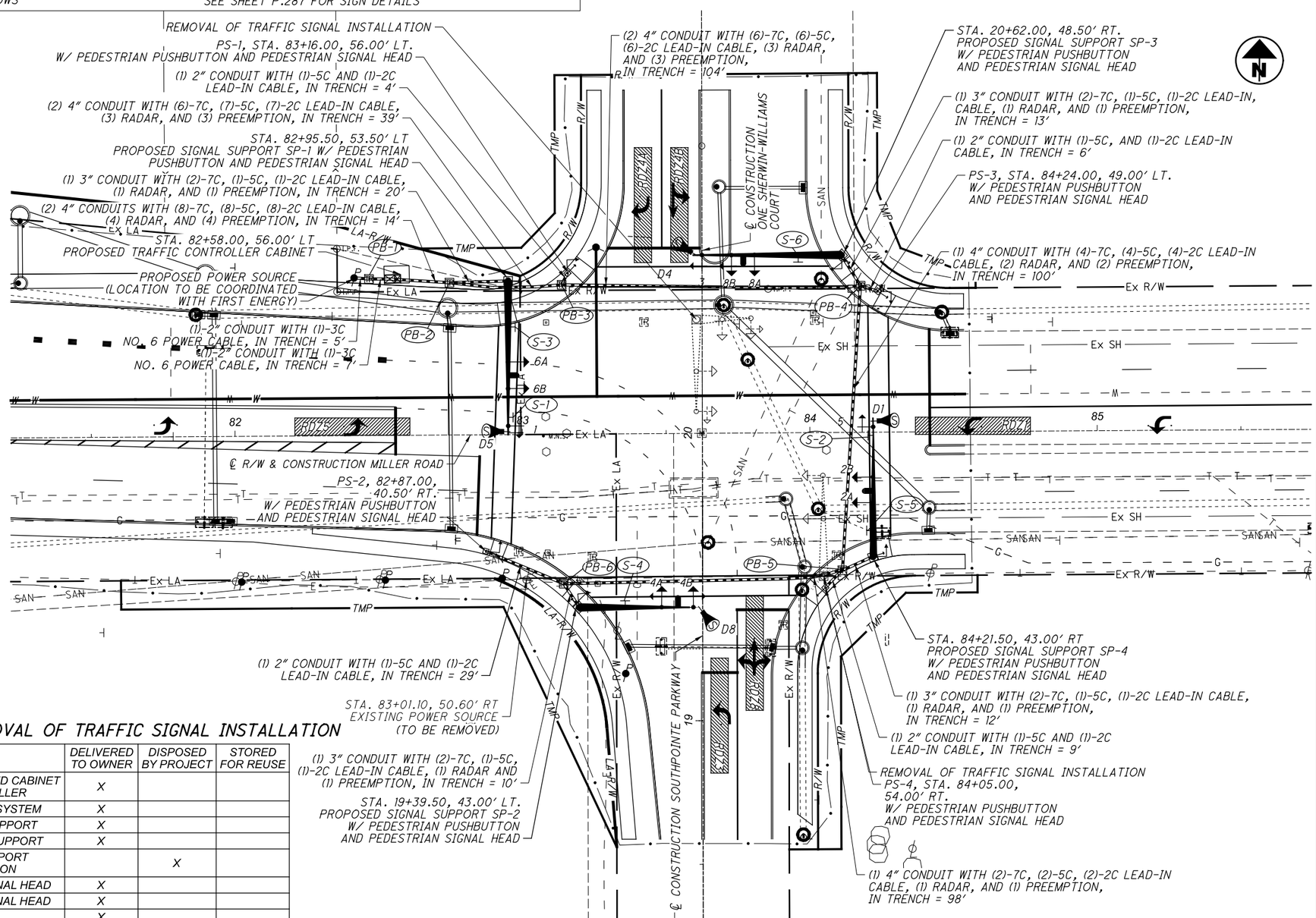

ITEM 632 - REMOVAL OF TRAFFIC SIGNAL INSTALLATION

QTY	ITEM	DELIVERED TO OWNER	DISPOSED BY PROJECT	STORED FOR REUSE
1	GROUND MOUNTED CABINET W/ CONTROLLER	X		
1	PREEMPTION SYSTEM	X		
2	MAST ARM SUPPORT	X		
4	PED. SIGANL SUPPORT	X		
6	SIGNAL SUPPORT FOUNDATION		X	
6	VEHICULAR SIGNAL HEAD	X		
6	PEDESTIAN SIGNAL HEAD	X		
8	SIGN	X		
7	PULL BOX		X	
LUMP	SIGNAL CABLE		X	

ESTIMATED QUANTITIES FOR INFORMATION ONLY. REMOVE PER SIGNAL NOTE FOR ITEM 632, REMOVAL OF TRAFFIC SIGNAL INSTALLATION

LEGEND

	PROP	EXIST
TRAFFIC SIGNAL, 3 UNIT HEAD, 12″	→	○→
TRAFFIC SIGNAL, 3 OR 4 UNIT HEAD, 12″ WITH ARROWS	↓	
TRAFFIC SIGNAL, 5 UNIT HEAD, 12″	↓	○↓
SIGNAL SUPPORT POLE	●	○
EXISTING MAST ARM		
PROPOSED MAST ARM		
PROPOSED CONDUIT		
CONTROLLER CABINET AND WORK PAD (TS-2)		
TRAFFIC PULL BOX	PB	PB
STOP BAR RADAR DETECTION UNIT	S	
SIGN		
PROPOSED PREEMPTION CONFIRMATION LIGHT AND RECEIVER		
PEDESTRIAN HEAD		
PEDESTRIAN PUSH BUTTON		
PEDESTAL SUPPORT		
DETECTION ZONE		

PROPOSED SIGNAL HEADS

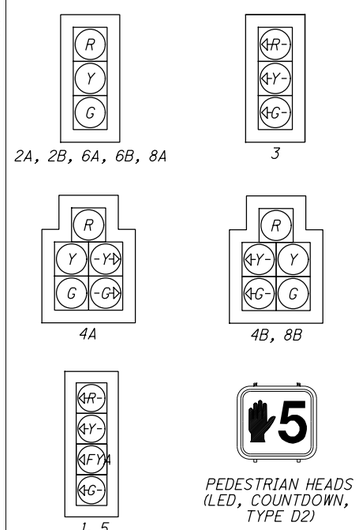

VEHICULAR SIGNAL HEADS TO BE BLACK WITH 12″ LED, BACKPLATE, AND CUTAWAY VISORS

HORIZONTAL SCALE IN FEET
0 10 20 40

TRAFFIC SIGNAL PLAN
MILLER ROAD - SOUTHPOINTE PARKWAY AND ONE SHERWIN-WILLIAMS CT

DESIGN AGENCY
EUTHENICS
8235 Mohawk Dr. | Cleveland, OH 44139

DESIGNER MRC
REVIEWER ANC 03/01/22
PROJECT ID 104983
SHEET P.307 TOTAL P.434

CUY-77-00.42 PART 1

MODEL: I04983_CP003 PAPERSIZE: 17x11(in.) DATE: 3/4/2022 TIME: 1:59:15 PM USER: esmccaslin
F:\Jobs\162-Miller Road Interchange\104983\400-Engineering\Signals\Sheets\104983_CP003.dgn

SIGNAL TIMING CHART (TEM FORM 496-3)

INTERSECTION: MILLER ROAD / SOUTHPOINTE PARKWAY / ONE SHERWIN-WILLIAMS COURT
MAINTAINING AGENCY: CITY OF BRECKSVILLE

START UP			DUAL ENTRY: YES		PHASES:			ϕ2 & 6	
START IN: Y/R FLASH			REST IN RED:		RING 1 -			RING 2 -	
TIME FOR FLASH, ALL RED: 9, 6			OVERLAP			A	B	C	D
FIRST PHASE(S): 2, 6									
COLOR DISPLAYED: GREEN			PHASES			5	-	-	-
INTERVAL OR FEATURE			CONTROLLER MOVEMENT NO.						
INTERSECTION MOVEMENT (PHASE)			1	2	3	4	5	6	7	8
DIRECTION			WB LT	EB	NB LT	SB	EB LT	WB	SB LT	NB
MINIMUM GREEN (INITIAL)		(SEC.)	7.0	20.0	10.0	10.0	7.0	20.0	10.0	10.0
ADDED INITIAL		*(SEC./ACTUATION)	-	-	-	-	-	-	-	-
MAXIMUM INITIAL		*(SEC.)	-	-	-	-	-	-	-	-
PASSAGE TIME (PRESET GAP)		(SEC.)	3.0	-	3.0	3.0	3.0	-	3.0	3.0
TIME BEFORE REDUCTION		*(SEC.)	-	-	-	-	-	-	-	-
MINIMUM GAP		*(SEC.)	-	-	-	-	-	-	-	-
TIME TO REDUCE		*(SEC.)	-	-	-	-	-	-	-	-
MAXIMUM GREEN I		(SEC.)	20.0	60.0	30.0	30.0	20.0	60.0	30.0	30.0
MAXIMUM GREEN II		(SEC.)	-	-	-	-	-	-	-	-
YELLOW CHANGE		(SEC.)	4.1	4.1	3.4	3.4	4.1	4.1	3.4	3.4
ALL RED CLEARANCE		(SEC.)	3.0	1.0	3.3	2.0	3.0	1.0	2.0	3.3
DELAYED GREEN (LPI) #		(SEC.)	-	-	-	-	-	-	-	-
WALK		(SEC.)	-	7.0	-	9.0	-	7.0	-	7.0
FLASHING YELLOW ARROW DELAY °			3.0	-	-	-	3.0	-	-	-
PEDESTRIAN CLEARANCE		(SEC.)	-	19.0	-	19.0	-	21.0	-	19.0
RECALL	MAXIMUM	(ON/OFF)	OFF	OFF	OFF	OFF	OFF	OFF	OFF	OFF
	MINIMUM	(ON/OFF)	OFF	ON	OFF	OFF	OFF	ON	OFF	OFF
	PEDESTRIAN	(ON/OFF)	-	OFF	-	OFF	-	OFF	-	OFF
MEMORY		(ON/OFF)	OFF	OFF	OFF	OFF	OFF	OFF	OFF	OFF

*VOLUME DENSITY CONTROLS

#FOR CROSSING WITH PEDESTRIAN PUSHBUTTONS, LPI'S (LEADING PEDESTRIAN INTERVALS) MAY BE IMPLEMENTED (3-6 SEC.) IN ACCORDANCE WITH LPI DURATION TIME PER THE ODOT SIGNAL CALCULATIONS - CLEARANCE INTERVALS SPREADSHEET.

°WHEN IMPLEMENTING FYA, A MINIMUM 3 SECOND DELAY SHALL BE PROGRAMMED.

NOTES:

- ALL MOVEMENTS SHALL BE ACTUATED. THE PRIMARY THRU MOVEMENT SHOULD HAVE MIN RECALL ACTIVE TO REST IN GREEN.
- FOR PROTECTED/PERMISSIVE PHASES, IMPLEMENT CALL OMITS TO AVOID YELLOW BALL TRAP.
- ENABLE ϕ1, 3 & ϕ5, 7 DETECTOR SWITCHING TO ALLOW ϕ1 & ϕ5 TO EXTEND ϕ2 & ϕ6 OR ϕ3 & ϕ7 TO EXTEND ϕ4 & ϕ8, RESPECTIVELY, WHEN ALLOCATED GREEN TIME FOR LEFT TURN PHASES ARE EXHAUSTED.
- COUNTDOWN PEDESTRIAN SIGNALS SHALL GO TO ZERO ON YELLOW PER OMUTCD FIGURE 4E-2.
- ALL DETECTOR DELAYS SHALL BE PLACED IN THE CONTROLLER.
- FOR ANY ENTRY TO FLASHING OPERATION, PROGRAMMING SHALL RUN MINOR STREET GREEN (TYP. ϕ4 & ϕ8), ALL-RED CLEARANCE, AND THEN FLASHING OPERATION.
- AFTER PREEMPTION REQUEST, THE SHORTENING OR OMISSION OF ANY PEDESTRIAN WALK INTERVAL AND/OR PEDESTRIAN CHANGE INTERVAL SHALL BE PERMITTED.

PHASING DIAGRAM (TYPICAL)

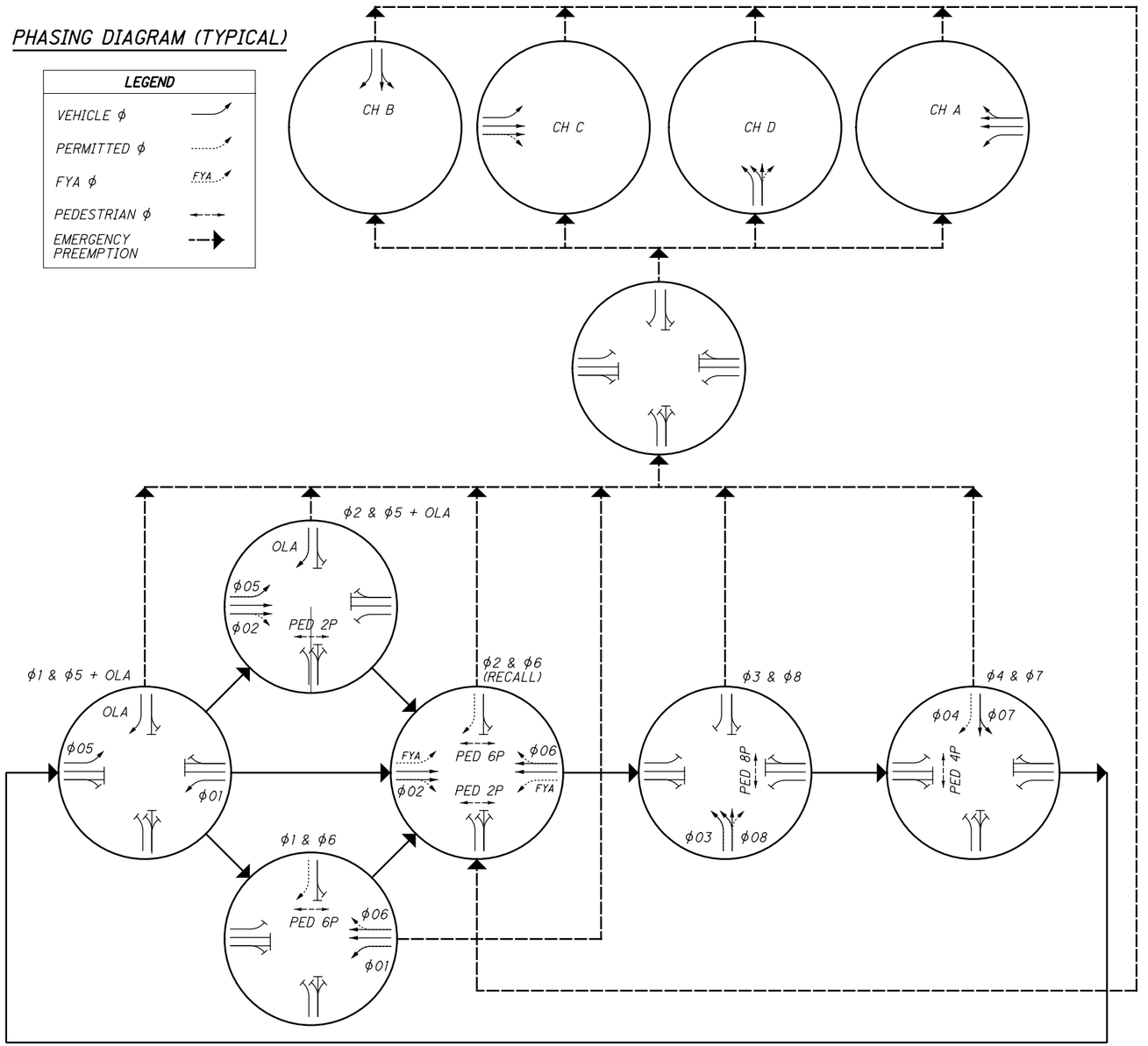

RADAR DETECTION CHART (TEM FORM 496-4)

DETECTION ZONE	MOVEMENT	WIDTH	DELAY PROGRAMMED IN CONTROLLER (SEC)	EXTENSION PROGRAMMED IN CONTROLLER (SEC)	DETECTOR NUMBER	PURPOSE	DETECTION ZONE LENGTH (FT)
RDZ5	EBLT	6	5	-	D5	STOP LINE	40
RDZ3	NBLT	6	5	-	D8	STOP LINE	40
RDZ4A	SBRT	6	10	-	D4	STOP LINE	40
RDZ4B	SBLT	6	-	-	D4	STOP LINE	40
RDZ1	WBLT	6	5	-	D1	STOP LINE	40
RDZ8	NBRT	6	10	-	D8	STOP LINE	40

TRAFFIC SIGNAL PLAN DETAILS
MILLER ROAD - SOUTHPOINTE PARKWAY AND ONE SHERWIN-WILLIAMS CT

DESIGN AGENCY
EUTHENICS
8235 Mohawk Dr. | Cleveland, OH 44130
DESIGNER MRC
REVIEWER ANC 03/01/22
PROJECT ID 104983
SHEET P.308 TOTAL P.434

CUY-77-00.42 PART 1

MODEL: 104983_CD007 PAPERSIZE: 17x11(in.) DATE: 3/4/2022 TIME: 1:59:26 PM USER: esmccasiln
F:\Jobs\162-Miller Road Interchange\104983\400-Engineering\Signals\Sheets\104983_CD007.dgn

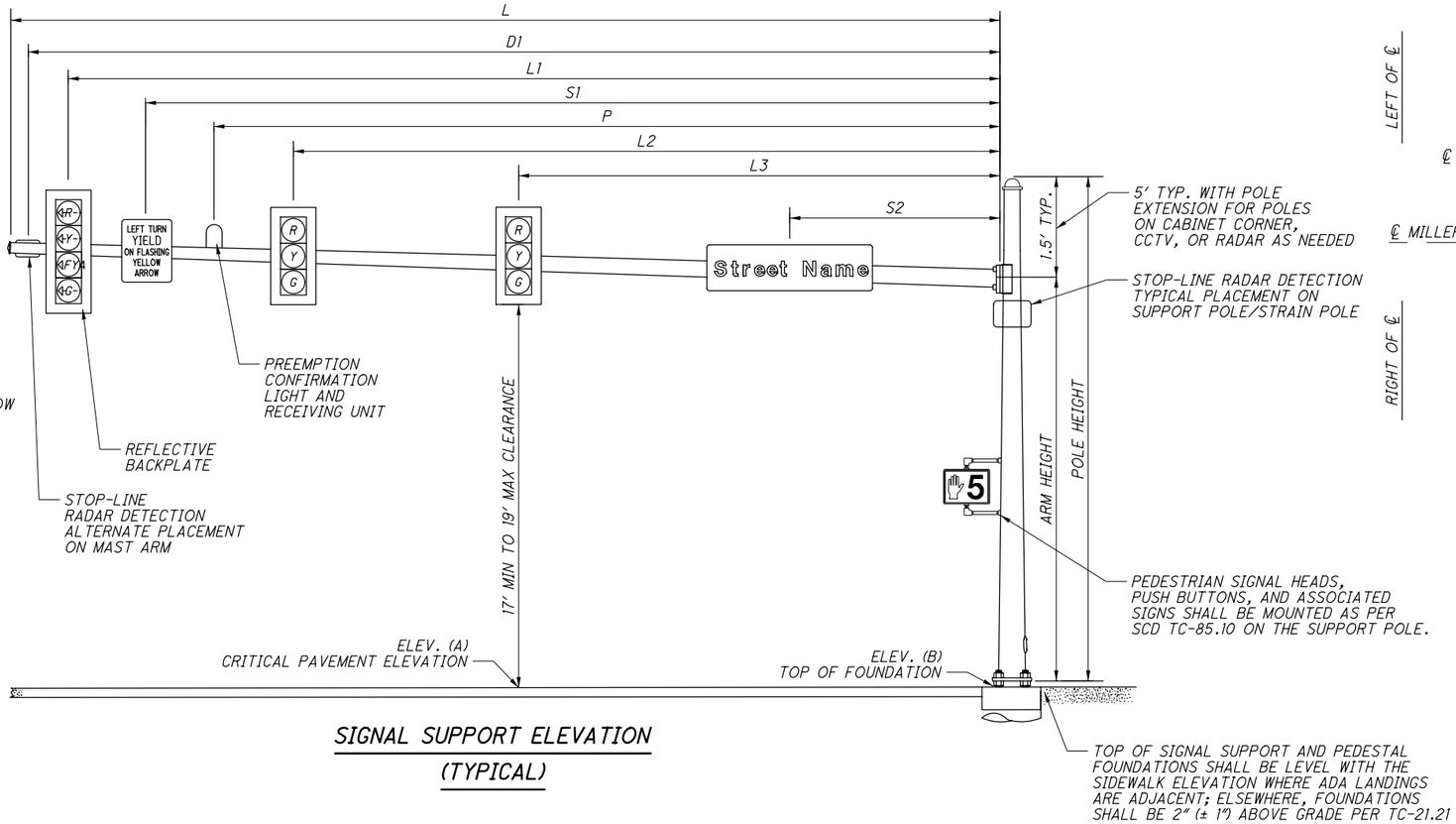

SIGNAL SUPPORT ELEVATION (TYPICAL)

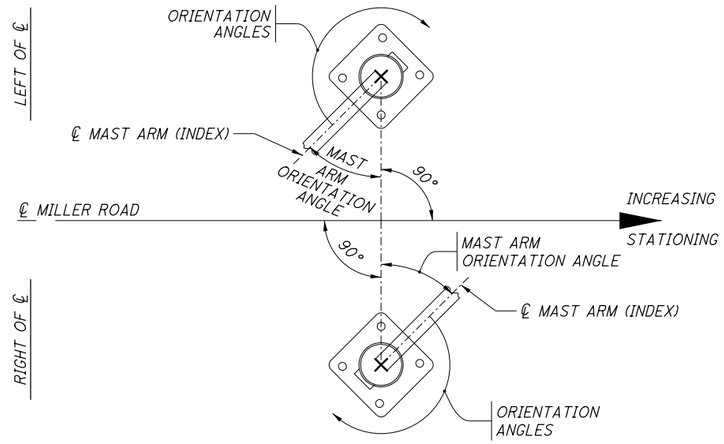

POLE ORIENTATION

MAST ARM TABLE (TEM FIGURE 498-37 & 38)

SUPPORT NO.	STATION	OFFSET	ELEVATION A (PAVEMENT ELEVATION)	ELEVATION B (TOP OF FOUNDATION)	SIGNAL SUPPORT DETAILS: DESIGN TYPE	DESIGN NO.	POLE HEIGHT	ARM HEIGHT	L	L1	L2	L3	D1	P	S1	S2	ORIENTATION ANGLES FROM MAST ARM A: MAST ARM A ANGLE	PEDESTRIAN SIGNAL	PEDESTRIAN PUSH BUTTON	HANDHOLE
							FT	FT	FT	FT	FT	FT	FT	FT	FT	FT	DEG	DEG	DEG	DEG
SP-1	82+95.50	53.50' LT	1111.19	1111.40	TC-81.22	13	21.5	20	53.5	50.5	37.5	28	52.5	33	47.5	16	0	273	270	0
SP-2	19+39.50	43.00' LT	1111.10	1111.40	TC-81.22	12	21.5	20	42.5	39.5	28.5	-	41.5	34	16	-	90	267	229	90
SP-3	20+62.00	48.50' RT	1111.13	1111.82	TC-81.22	13	21.5	20	51.5	48.5	38	30	50.5	34	15	-	90	268	225	90
SP-4	84+21.50	43.00' RT	1112.00	1111.91	TC-81.22	12	22	20.5	48	45	27.5	18.5	47	23	42	9	0	96	116	180

CUY-77-00.42 PART 1

MODEL: 104983_CD008 PAPERSIZE: 17x11(in.) DATE: 3/4/2022 TIME: 2:00:17 PM USER: esmccasiln
F:\Jobs\162-Miller Road Interchange\104983\400-Engineering\Signals\Sheets\104983_CD008.dgn

TRAFFIC SIGNAL PLAN DETAILS
MILLER ROAD - SOUTHPOINTE PARKWAY AND ONE SHERWIN-WILLIAMS CT

DESIGN AGENCY
EUTHENICS
8235 Midwest Dr. | Cleveland, OH 44125
DESIGNER MRC
REVIEWER ANC 03/01/22
PROJECT ID 104983
SHEET P.309 TOTAL P.434

WIRING DIAGRAM (TYPICAL)

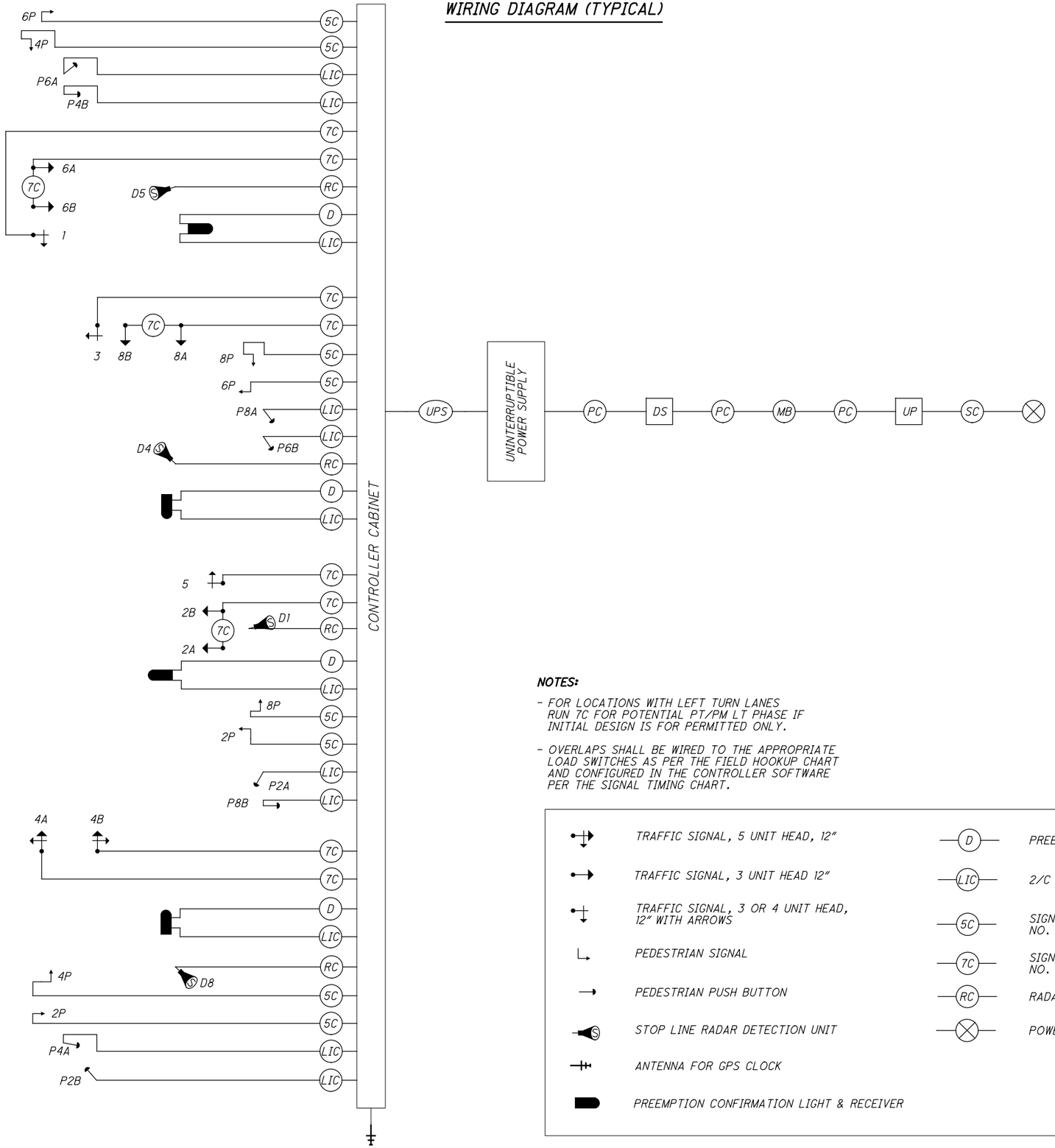

FIELD WIRING HOOK-UP CHART (TEM FORM 496-16)

SIGNAL HEAD	INDICATION	FIELD TERMINAL	FLASH
1 (WBLT)	<-R-	ϕ1 R	Y
	<-Y-	ϕ1 Y	
	<FYA	ϕ1 FYA	
	<-G-	ϕ1 G	
	-	-	
2A, 2B (EB)	R	ϕ2 R	Y
	Y	ϕ2 Y	
	G	ϕ2 G	
	-	-	
	-	-	
3 (NBLT)	<-R-	ϕ3 R	R
	<-Y-	ϕ3 Y	
	<-G-	ϕ3 G	
4A (SBRT)	R	ϕ4 R	R
	Y	ϕ4 Y	
	G	ϕ4 G	
	-Y->	ϕ4 Y/OLA Y	
	-G->	ϕ4 G/OLA G	
4B (SBLT)	R	ϕ4 R	R
	Y	ϕ4 Y	
	G	ϕ4 G	
	<-Y-	ϕ7 Y	
	<-G-	ϕ7 G	
5 (EBLT)	<-R-	ϕ5 R	Y
	<-Y-	ϕ5 Y	
	<FYA	OLA Y	
	<-G-	OLA G	
LS = LOAD SWITCH			

SIGNAL HEAD	INDICATION	FIELD TERMINAL	FLASH
6A, 6B (WB)	R	ϕ6 R	Y
	Y	ϕ6 Y	
	G	ϕ6 G	
	-	-	
	-	-	
8A (NB)	R	ϕ8 R	R
	Y	ϕ8 Y	
	G	ϕ8 G	
8B (NBLT)	R	ϕ8 R	R
	Y	ϕ8 Y	
	G	ϕ8 G	
	<-Y-	ϕ3 Y	
	<-G-	ϕ3 G	
PEDESTRIAN MOVEMENTS			
2P (EAST)	DW	ϕ2/LS 9/R	OUT
	W	ϕ2/LS 9/G	
4P (SOUTH)	DW	ϕ4/LS 10/R	OUT
	W	ϕ4/LS 10/G	
6P (WEST)	DW	ϕ6/LS 11/R	OUT
	W	ϕ6/LS 11/G	
8P (NORTH)	DW	ϕ8/LS 12/R	OUT
	W	ϕ8/LS 12/G	
OVERLAPS			
OLA	-Y->	ϕ5Y / LSI3	OUT
	-G->	ϕ5G / LSI3	

NOTES:

- FOR LOCATIONS WITH LEFT TURN LANES RUN 7C FOR POTENTIAL PT/PM LT PHASE IF INITIAL DESIGN IS FOR PERMITTED ONLY.
- OVERLAPS SHALL BE WIRED TO THE APPROPRIATE LOAD SWITCHES AS PER THE FIELD HOOKUP CHART AND CONFIGURED IN THE CONTROLLER SOFTWARE PER THE SIGNAL TIMING CHART.

LEGEND

- TRAFFIC SIGNAL, 5 UNIT HEAD, 12"
- TRAFFIC SIGNAL, 3 UNIT HEAD 12"
- TRAFFIC SIGNAL, 3 OR 4 UNIT HEAD, 12" WITH ARROWS
- PEDESTRIAN SIGNAL
- PEDESTRIAN PUSH BUTTON
- STOP LINE RADAR DETECTION UNIT
- ANTENNA FOR GPS CLOCK
- PREEMPTION CONFIRMATION LIGHT & RECEIVER
- D — PREEMPTION DETECTOR CABLE
- LIC — 2/C NO. XX AWG (LEAD-IN CABLE)
- 5C — SIGNAL CABLE, 5 CONDUCTOR, NO. XX AWG
- 7C — SIGNAL CABLE, 7 CONDUCTOR, NO. XX AWG
- RC — RADAR DETECTION CABLE
- POWER SOURCE
- SC — SERVICE CABLE, 3 CONDUCTOR, NO. X AWG
- PC — POWER CABLE, 2 CONDUCTOR, NO. X AWG
- UP — UTILITY POLE
- MB — METER BASE
- DS — DISCONNECT SWITCH
- UPS — UNINTERRUPTIBLE POWER SUPPLY CABLE

TRAFFIC SIGNAL PLAN DETAILS
MILLER ROAD - SOUTHPOINTE PARKWAY AND ONE SHERWIN-WILLIAMS CT

DESIGN AGENCY
EUTHENICS
8235 Mohawk Dr. | Cleveland, OH 44125

DESIGNER	MRC
REVIEWER	ANC 03/01/22
PROJECT ID	104983
SHEET	P.310
TOTAL	P.434

CUY-77-00.42 PART 1

MODEL: 104983_CD009 PAPERSIZE: 17x11 (in.) DATE: 3/4/2022 TIME: 2:00:21 PM USER: esmccaslin
F:\Jobs\1162-Miller Road Interchange\104983\400-Engineering\Signals\Sheets\104983_CD009.dgn

COORDINATION TIMING CHART (TEM FORM 496-5)

	SPLITS (G+Y+AR) IN SECONDS								OFFSET 1 (SEC)	OFFSET 2 (SEC)
PHASE	1	2	3	4	5	6	7	8		
DIRECTION	WBLT	EB	NBLT	SB	EBLT	WB	SBLT	NB		
PLAN NO./C/S/O	INTERSECTION 1									
1/60/1/19	12.5	24.5	-	22.7	-	37.3	22.7	-	19	-
2/70/1/39	18.2	27.8	-	24.0	-	46.0	24.0	-	39	-
-	-	-	-	-	-	-	-	-	-	-
-	-	-	-	-	-	-	-	-	-	-
-	-	-	-	-	-	-	-	-	-	-

	SPLITS (G+Y+AR) IN SECONDS								OFFSET 1 (SEC)	OFFSET 2 (SEC)
PHASE	1	2	3	4	5	6	7	8		
DIRECTION	WBLT	EB	NBLT	SB	EBLT	WB	SBLT	NB		
PLAN NO./C/S/O	INTERSECTION 2									
1/60/1/53	-	41.5	18.5	-	18.5	23.0	-	18.5	53	-
2/70/1/32	-	47.5	22.5	-	22.5	25.0	-	22.5	32	-
-	-	-	-	-	-	-	-	-	-	-
-	-	-	-	-	-	-	-	-	-	-
-	-	-	-	-	-	-	-	-	-	-

	SPLITS (G+Y+AR) IN SECONDS								OFFSET 1 (SEC)	OFFSET 2 (SEC)
PHASE	1	2	3	4	5	6	7	8		
DIRECTION	WBLT	EB	NBLT	SB	EBLT	WB	SBLT	NB		
PLAN NO./C/S/O	INTERSECTION 3#									
1/120/1/0	14.2	53.5	25.8	26.5	34.9	32.8	26.5	25.8	0	-
2/140/1/0	14.1	44.5	55.0	26.4	14.2	44.4	26.4	55.0	0	-
-	-	-	-	-	-	-	-	-	-	-
-	-	-	-	-	-	-	-	-	-	-
-	-	-	-	-	-	-	-	-	-	-

	SPLITS (G+Y+AR) IN SECONDS								OFFSET 1 (SEC)	OFFSET 2 (SEC)
PHASE	1	2	3	4	5	6	7	8		
DIRECTION	WBLT	EB	NBLT	SB	EBLT	WB	SBLT	NB		
PLAN NO./C/S/O	INTERSECTION 4									
1/120/1/46	10.0	42.0	43.0	25.0	27.0	25.0	10.0	58.0	46	-
2/140/1/62	10.5	48.5	43.0	38.0	32.0	27.0	9.6	71.4	62	-
-	-	-	-	-	-	-	-	-	-	-
-	-	-	-	-	-	-	-	-	-	-
-	-	-	-	-	-	-	-	-	-	-

CORRIDOR LAYOUT

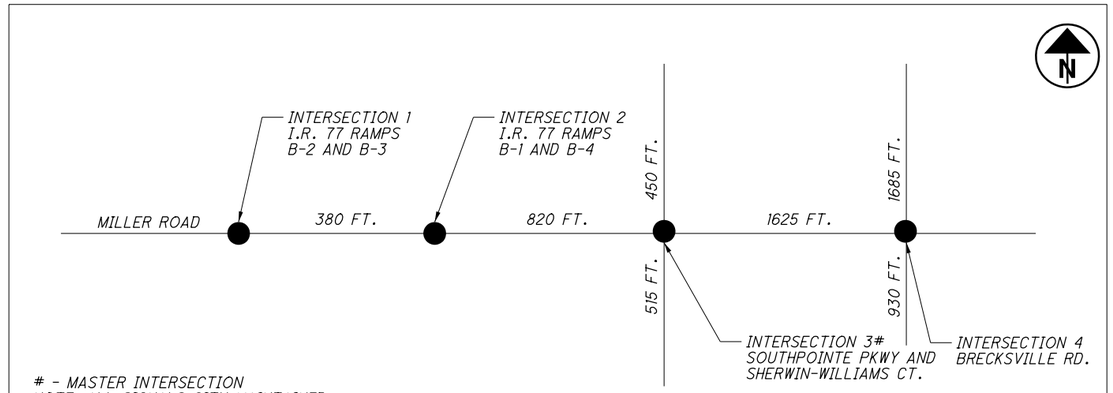

- MASTER INTERSECTION
NOTE: ALL SIGNALS CITY MAINTAINED

COORDINATION TIMING PLANS

DAY(S) OF WEEK	PLAN NAME	HOURS	PLAN NO. OR C/S/O	CYCLE LENGTH (SEC)
SUNDAY-SATURDAY	PLAN 1: INTERSECTION 1	AM	60/1/19	60
SUNDAY-SATURDAY	PLAN 2: INTERSECTION 1	PM	70/1/39	70
SUNDAY-SATURDAY	PLAN 1: INTERSECTION 2	AM	60/1/53	60
SUNDAY-SATURDAY	PLAN 2: INTERSECTION 2	PM	70/1/32	70
SUNDAY-SATURDAY	PLAN 1: INTERSECTION 3	AM	120/1/0	120
SUNDAY-SATURDAY	PLAN 2: INTERSECTION 3	PM	140/1/0	140
SUNDAY-SATURDAY	PLAN 1: INTERSECTION 4	AM	120/1/46	120
SUNDAY-SATURDAY	PLAN 2: INTERSECTION 4	PM	140/1/62	140
-	-	-	-	-
-	-	-	-	-

NOTES:

- OFFSETS ARE MEASURED FROM REFERENCE PHASE(S) NUMBERED "END OF GREEN/BEGINNING OF YELLOW."
- MASTER INTERSECTION OFFSET REFERENCE IS ALWAYS EQUAL TO ZERO.
- $\Sigma\phi 1+\phi 2 = \Sigma\phi 5+\phi 6$ AND $\Sigma\phi 3+\phi 4 = \Sigma\phi 7+\phi 8$

ECONOLITE COORD SETTINGS	
MANUAL PATTERN	-
SYSTEM SOURCE	-
SPLITS IN	-
TRANSITION	-
DWELL/ADD TIME	-
OFFSET REFERENCE	-
PED RECALL	-
CAL ZERO OVERIDE	-
RE-SYNC COUNT	-
ECPI COORD	-
SYSTEM FORMAT	-
OFFSET IN	-
MAX SELECT	-
FORCE OFF	-
USE PED TIME	-
PED RESERVICE	-
FO ADD INI GRN	-
MULTISYNC	-

SIEMENS COORD SETTINGS	
OPERATION	-
MODE (NORMAL)	-
MAXIMUM	-
CORRECTION	-
OFFSET MODE	-
FORCE MODE	-
MAX DWELL TIME	-
YIELD PERIOD	-
MANUAL CONTROL: DIAL	-
MANUAL CONTROL: SPLIT	-
MANUAL CONTROL: OFFSET	-

TRAFFIC SIGNAL COORDINATION PLAN

DESIGN AGENCY
EUTHENICS
8235 Holland Dr. | Cleveland, OH 44526

DESIGNER MRC
REVIEWER ANC 03/01/22
PROJECT ID 104983
SHEET P.311 TOTAL P.434

CUY-77-00.42 PART 1

MODEL: Sheet PAPERSIZE: 17x11 (in.) DATE: 3/4/2022 TIME: 2:00:30 PM USER: esmccaslin
F:\Jobs\11162-Miller Road Interchange\104983400-Engineering\Signals\Sheets\104983_CD010.dgn

MATERIAL SPECIFICATIONS FOR BBS GENERATOR POWER PANEL EQUIPMENT

GENERATOR INLET - The inlet shall be 30 amp, 125/250V, locking, four (4) wire grounding and meet the NEMA configuration number L14-30-P 30A 125/250V specification. The inlet shall be a Hubbell catalog #2715.

LINE VOLTAGE GENERATOR SWITCH - The switch shall be 30 amp, 125/250V AC, two (2) pole, three (3) position (On, Off, On). The switch shall be a Hubbell catalog #1388.

LINE VOLTAGE INDICATOR LIGHT - The indicator light shall be 125V AC light emitting diode with a red lens.

LINE VOLTAGE CIRCUIT BREAKER - The circuit breaker shall be single pole single throw and a minimum of 30 amps. The amperage shall be increased to accomodate greater loads, if necessary. The gauge of the power cable shall be of proper size per N.E.C.

EXTERNAL LINE VOLTAGE INDICATOR LIGHT - The indicator light shall be a 1" waterproof NEMA 4X or IP66 LED lamp with a green lens.

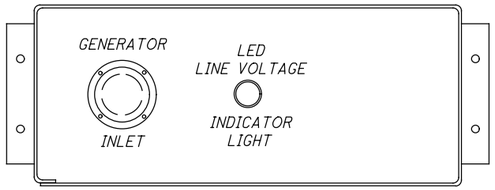

FRONT VIEW OF GENERATOR POWER PANEL

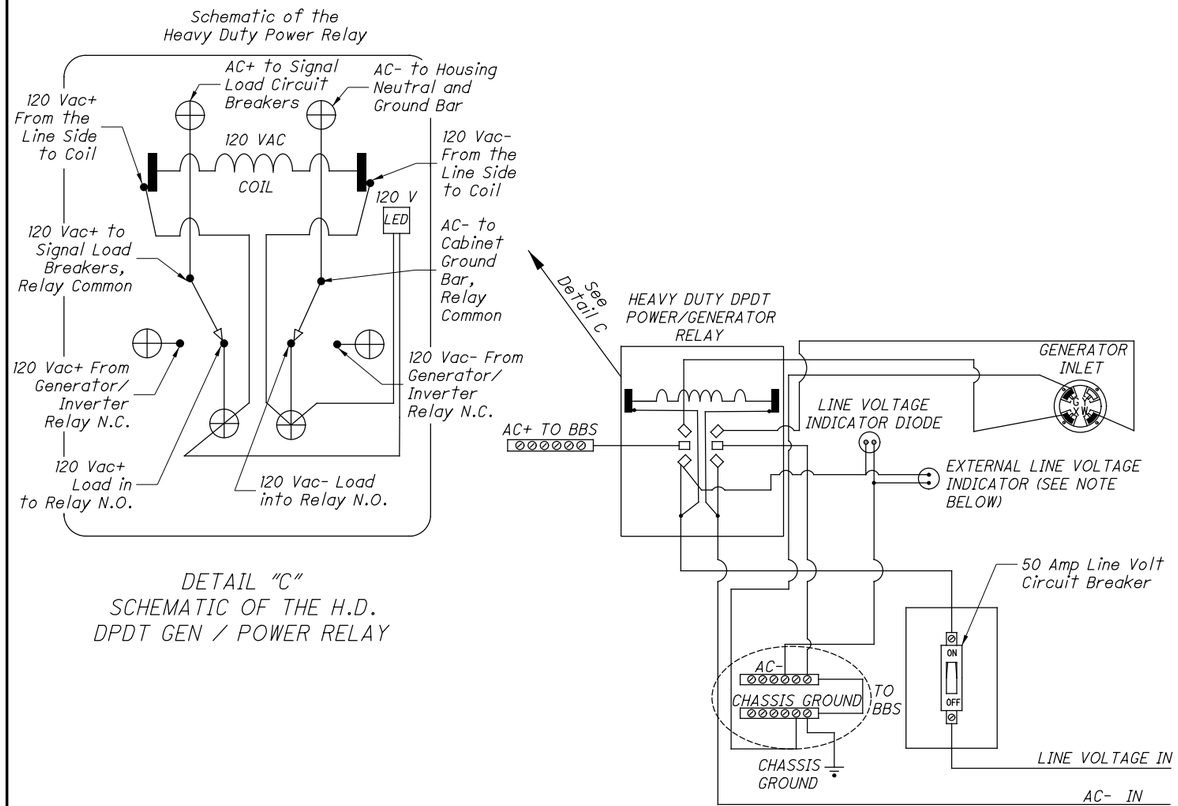

DETAIL "C"
SCHEMATIC OF THE H.D.
DPDT GEN / POWER RELAY

ELECTRICAL HOOKUP DETAIL FOR THE BBS GENERATOR POWER PANEL

NOTE: EXTERNAL LINE VOLTAGE INDICATOR LIGHT required when called for in the plans. EXTERNAL LINE VOLTAGE INDICATOR LIGHT shall be located on the enclosure exterior for visibility from the adjacent roadway when all cabinet, and generator panel doors are closed.

GENERATOR POWER PANEL ENCLOSURE

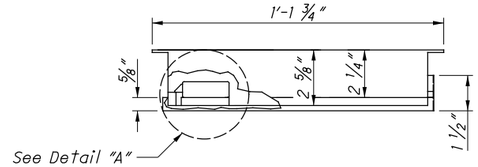

TOP VIEW

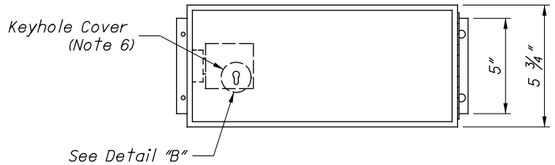

FRONT VIEW CLOSED DOOR

NOTES:

1. The enclosure shall be constructed of 1/8" thick alumimum.
2. The lock shall be the standard police door type, keyed with the standard flasher door skeleton key.
3. The door shall be sealed with a foam rubber gasket to prevent moisture from entering the enclosure.
4. The enclosure shall be mounted onto the outside of the controller cabinet with non-accessible bolts and sealed with a high quality silicon caulk at all surfaces touching the cabinet.
5. The hinge shall be of stainless steel or equivalent corrosive-resistant material.
6. Keyhole shall be covered with a movable circular aluminum or brass cover with top pivot pin.

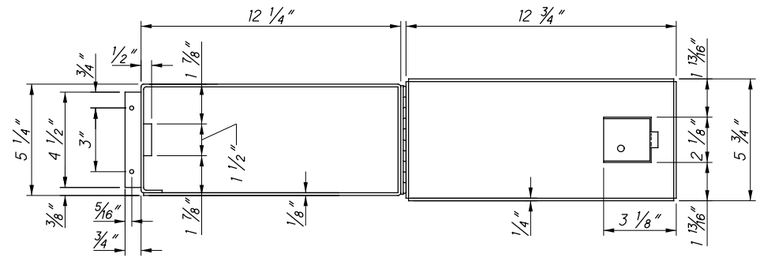

FRONT VIEW OPEN DOOR

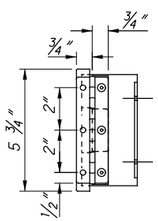

RIGHT SIDE VIEW
CLOSED DOOR

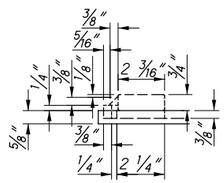

DETAIL "A"

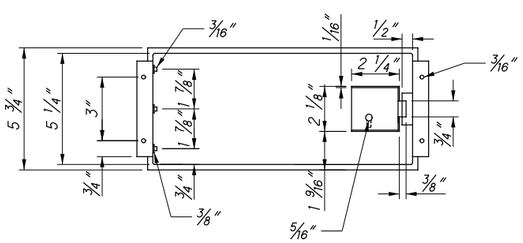

BACK VIEW CLOSED DOOR

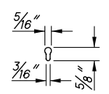

DETAIL "B"

THIS DRAWING REPLACES PIS 203012 DATED 04-20-2012.

OFFICE OF ROADWAY ENGINEERING

DESIGNED MRC
REVIEWED ANC
REVISION DATE 03-01-2022
CHECKED CHECKED

PLAN INSERT SHEET
BATTERY BACKUP SYSTEM (BBS)
GENERATOR POWER PANEL

PIS 203012

1 / 1

312
434

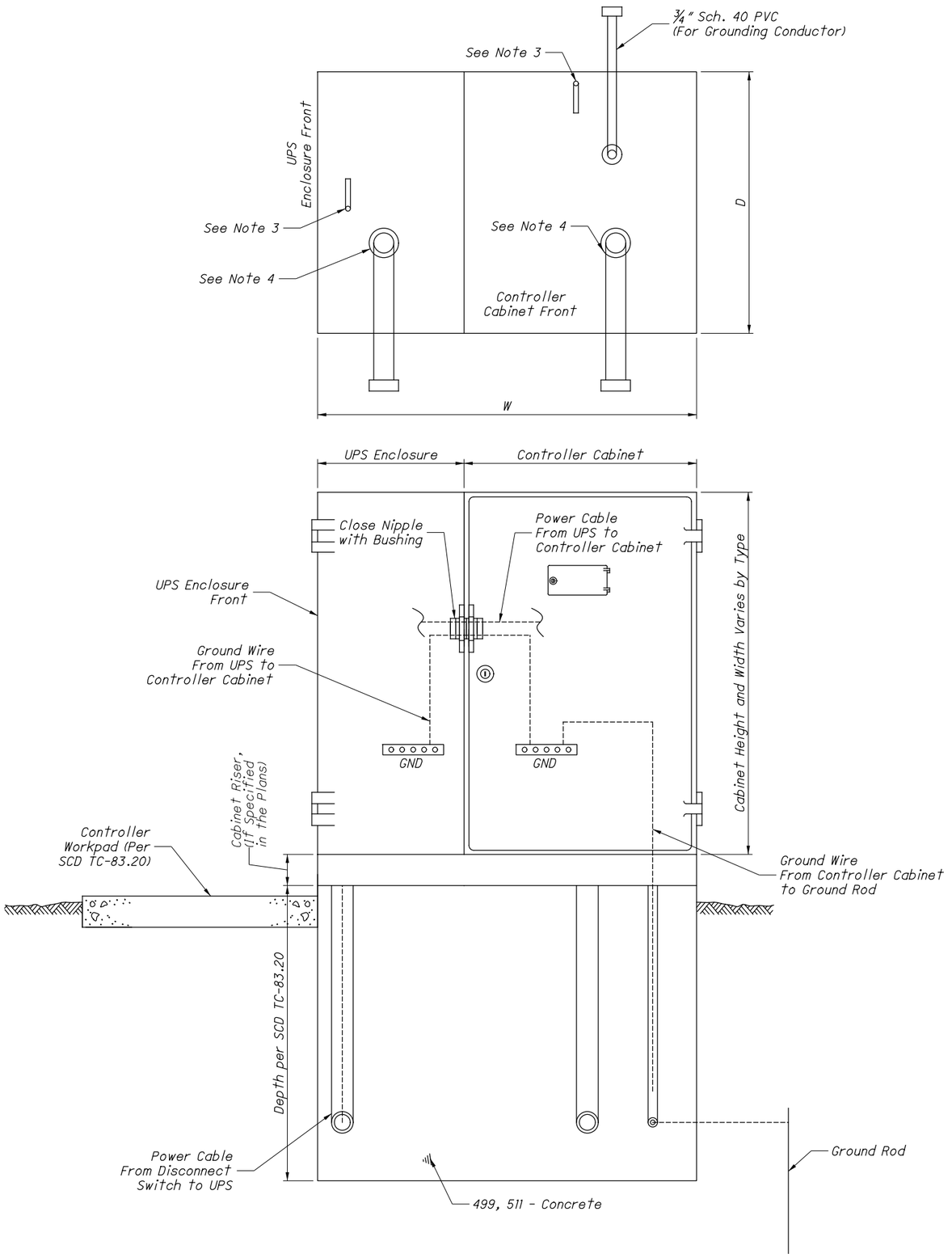

NOTES:

1. The Uninterruptible Power Supply (UPS) enclosure shall be mounted flush up against the traffic signal cabinet and sealed with silicone. The Contractor shall be responsible for providing the necessary power cable between the UPS unit and signal cabinet.
2. The UPS should be placed on the opposite side of the pull box on a 332/336 cabinet (per Standard Construction Drawing (SCD) TC-83.20). The UPS placement for a NEMA cabinet varies, placement should provide adequate access with respect to slope, guardrail spacing, etc.
3. The size, number, and location of anchor bolts shall be in accordance with the manufacturer's recommendations.
4. The size, number, and orientation of conduit ells shall be as shown in the plan, except that a ¾" schedule 40 PVC shall be installed in each foundation.
5. 1/2" preformed joint filler as per CMS 705.03 shall be used between foundations and adjacent paved areas.
6. See SCD TC-83.20 for further details.

TYPE	W (IN.)	D (IN.)	FOUNDATION CONCRETE (CU. YD.)
TS-1	60	24	1.23
TS-2	70	36	2.16
2070/170	50	36	1.54

THIS DRAWING REPLACES PIS 208320 DATED 04-20-2012.

OFFICE OF ROADWAY ENGINEERING

DESIGNED MRC
REVIEWED ANC
REVISION DATE 03-01-2022
CHECKED CHECKED

PLAN INSERT SHEET

UNINTERRUPTIBLE POWER SUPPLY (UPS) AND CONTROLLER CABINET FOUNDATION

PIS 208320

1 / 1

313
434

PROJECT DESCRIPTION

THE LIGHTING ACTIVITIES OF PROJECT CUY-77-00.42, PID 104983, INCLUDES THE INSTALLATION OF HIGH MAST LIGHT POLES WITH LED LUMINAIRES, CONTROL CENTER, RELATED WIRING, CONDUIT AND PULL BOXES AS SHOWN ON THE PLANS. THE LIGHTING LIMITS ARE AS FOLLOWS:

- ALONG IR-77 JUST NORTH OF SNOWVILLE RD TO THE PROPOSED MILLER RD INTERCHANGE AND NORTH TO THE NORTHBOUND ENTRANCE RAMP TERMINAL. INSTALL PARTIAL INTERCHANGE LIGHTING AS SHOWN IN THE PLANS. APPROXIMATE FUTURE POTENTIAL HIGH MAST LOCATIONS ARE ALSO SHOWN FOR FUTURE COMPLETE INTERCHANGE LIGHTING CONSIDERATIONS.

THESE NOTES ARE SUPPLEMENTAL TO ITEMS 625 AND 725 OF THE STATE OF OHIO DEPARTMENT OF TRANSPORTATION CONSTRUCTION AND MATERIAL SPECIFICATIONS (C&MS).

UTILITIES

THE CONTRACTOR SHALL CONTACT THE OHIO UTILITY PROTECTION SERVICE BEFORE BEGINNING WORK. THE LOCATION OF THE UNDERGROUND UTILITIES SHOWN ON THE PLANS ARE AS OBTAINED FROM THE OWNERS AS REQUIRED BY SECTION 153.64 ORC.

PADLOCKS AND KEYS

PADLOCKS FURNISHED SHALL BE EITHER BRASS OR BRONZE, EQUAL TO MASTER NO. 4BKA OR WILSON BOHANNAN 660A, AND SHALL BE KEYED IN ACCORDANCE WITH C&MS 631.06. PAYMENT SHALL BE INCLUDED IN THE BID FOR THE ITEMS BEING LOCKED.

625, POWER SERVICE, AS PER PLAN

IN ADDITION TO THE REQUIREMENTS OF THE SPECIFICATIONS, THE FOLLOWING IS ADDED.

THE POWER SUPPLYING AGENCY FOR THIS PROJECT IS:

POWER COMPANY OHIO EDISON (FIRST ENERGY)

ADDRESS 470 EAST HIGHLAND ROAD, MACEDONIA, OH 44056

PHONE # 330-342-1220

CONTACT NAME BRIAN POUND

THE ENGINEER SHALL ENSURE THAT EACH POWER SERVICE ELECTRICAL ENERGY ACCOUNT IS IN THE NAME OF AND THAT THE BILLING ADDRESS IS TO THE MAINTAINING AGENCY NOTED IN THE PLANS. THIS SHALL BE DONE NOT ONLY FOR EACH NEW POWER SERVICE ESTABLISHED BY THIS PROJECT BUT ALSO FOR EACH EXISTING POWER SERVICE, SINCE THERE MAY BE A REASSIGNMENT OF THE RESPONSIBILITY FOR AN EXISTING SERVICE AS A RESULT OF THE WORK PERFORMED BY THIS PROJECT.

PAYMENT WILL BE MADE AT THE UNIT BID PRICE FOR EACH C&MS ITEM 625, "POWER SERVICE, AS PER PLAN" WHICH SHALL BE FULL COMPENSATION FOR ALL LABOR, MATERIALS AND INCIDENTALS REQUIRED TO COMPLETE THIS ITEM IN A SATISFACTORY AND WORKMANLIKE MANNER.

LIGHT TOWER DECALS

NEW LIGHT TOWER DECALS SHALL BE PLACED ON ALL PROPOSED LIGHT TOWERS TO MATCH THE ALPHA NUMBERIC IDENTIFIER AS DETAILED WITHIN THE PLANS TO CONFORM WITH THE ODOT CONSTRUCTION AND MATERIAL SPECIFICATIONS. LIGHT TOWER DECALS SHALL BE PLACED ON BOTH SIDES FOR EASE IN LOCATING DURING MAINTENANCE ACTIVITIES. THE CONTRACTOR IS ALSO REQUIRED TO REMOVE AND DISPOSE OF EXISTING DECALS AND HAVE NEW ONES INSTALLED ON ALL EXISTING TOWERS TO REMAIN AND WHOSE IDENTIFICATION CALLOUTS ARE TO BE REASSIGNED PER THE PLANS. IDENTIFICATION OF THE LIGHT TOWERS AND THE REMOVAL OF ANY PREVIOUS IDENTIFIER SHALL BE CONSIDERED INCIDENTAL TO THE PROJECT.

625, LUMINAIRE, HIGH MAST, SOLID STATE (LED), AS PER PLAN

THE LUMINAIRE ARRAYS AND ASSOCIATED ILLUMINATION TEST AREAS SPECIFIED IN C&MS 725.21 ARE HEREBY WAIVED. INSTEAD, THE LUMINAIRES FOR HIGH-MAST LIGHTING SHALL MEET THE FOLLOWING REQUIREMENTS:

LUMINAIRES FOR HIGH-MAST LIGHTING UNITS WITH SYMMETRIC DISTRIBUTION SHALL BE HOLOPHANE "HMLED4 P2" WITH PHOTOMETRIC DISTRIBUTION HMLED4_P2_30K_XXXXX_AW.ies, GENERAL ELECTRIC "ERHM02-EVOLVE" WITH PHOTOMETRIC DISTRIBUTION ERHM02_50VW730XXXXXX.ies, OR COOPER "CST CELESTEON" WITH PHOTOMETRIC DISTRIBUTION CST-CA8-330-730-U-T5.ies, OR EQUAL AS APPROVED BY THE ENGINEER.

IN ADDITION, OTHER LUMINAIRES WILL BE CONSIDERED IF THE DESIGNED INTENSITY AND UNIFORMITY ARE PROVIDED USING THE DESIGNED POLE LOCATIONS AND THE DESIGNED NUMBER AND TYPE OF FIXTURES PER POLE.

PAYMENT WILL BE MADE AT THE UNIT PRICE BID UNDER CMS ITEM 625, LUMINAIRE, HIGH MAST, SOLID STATE (LED), AS PER PLAN FOR EACH LUMINAIRE WHICH SHALL BE FULL COMPENSATION FOR ALL LABOR, MATERIALS AND INCIDENTALS REQUIRED TO COMPLETE THIS ITEM IN A SATISFACTORY AND WORKMANLIKE MANNER.

LIGHTING GENERAL NOTES

DESIGN AGENCY
TransSystems
400 W. NATIONWIDE BLVD.
SUITE 225
COLUMBUS, OHIO 43215

DESIGNER
SS

REVIEWER
SPS 11-12-21

PROJECT ID
104983

SHEET P.314 TOTAL 434

CUY-77-00.42 PART 1

MODEL: Notes PAPERSIZE: 17x11 (in.) DATE: 3/1/2022 TIME: 4:34:55 PM USER: sssopraseuth
pw:\\hq-pwin01.a-e.transystems.com:transystemscorp-pw1\Documents\Projects_2019\CO403\40319002\7\Agency_Folders\400-Engineering\Lighting\Sheets\104983_LN001.dgn

SHEET NO.	LOCATION		625 LIGHT TOWER, BBBB100 EACH	625 LIGHT TOWER FOUNDATION, 36" x 20' DEEP EACH	625 NO. 4 AWG 2400 VOLT DISTRIBUTION CABLE FT	625 1-1/2" DUCT TABLE WITH THREE NO. 4 AWG 2400 VOLT CABLES FT	625 CONDUIT, 3", 725.04 FT	625 LUMINAIRE, HIGH MAST, SOLID STATE (LED), AS PER PLAN, SYMMETRIC, 480V EACH	625 CONDUIT, JACKED OR DRILLED, 725.04, 3" FT	625 TRENCH FT	625 PULL BOX, 725.08, 24" EACH	625 GROUND ROD EACH	625 POWER SERVICE, AS PER PLAN EACH	625 UNDERGROUND WARNING/MARKING TAPE FT	625 POWER CABLE FOR LIGHT TOWER FT	632 SERVICE CABLE, 3 CONDUCTER, NO. 4 AWG FT						
	IR-77																					
	CIRCUIT A																					
P.316	1-A-10	PB5	1	1	114	504		4	28		1	2		504								
P.317	PB5	1-A-9	1	1		517		4		517		2		517								
P.317	1-A-9	1-A-8	1	1		368		4		368		2		368								
P.317/P.318	1-A-8	PB6				523				523	1			523								
P.318	PB6	PB3				505				505	1			505								
P.318	PB3	PB4			303	91			91		1			91								
P.318	PB4	1-A-6	1	1		128		4		128		2		128								
P.318	PB3	PB2			297	89			89		1			89								
P.318	PB2	PB1				139	139			139	1			139								
P.318	PB2	1-A-13	1	1		353		4		353		2		353								
P.318	PB1	CC1				20	20			20		1	1	20	10	414						
P.317/P.318	PB3	1-A-3	1	1		687		4		687		2		687								
P.319	1-A-3	1-A-5	1	1		355		4		355		2		355								
P.319	1-A-5	1-A-2	1	1		344		4		344		2		344								
P.320	1-A-2	PB7				731				731	1			731								
P.320	PB7	1-A-14	1	1		728		4		728		2		728								
TOTALS CARRIED TO GENERAL SUMMARY			9	9	714	6082	159	36	208	5398	7	19	1	6082	10	414						

LIGHTING SUBSUMMARY

CUY-77-00.42 PART 1

MODEL: Sheet PAPERSIZE: 17x11 (in.) DATE: 3/1/2022 TIME: 4:35:07 PM USER: ssopraseuth
pw:\\hq-pwint01.ae.transystems.com:transystemscorp-pw1\Documents\Projects_2019\CO40340319002?Agency_Folders\400-Engineering\Lighting\Sheets\104983_LS002.dgn

DESIGN AGENCY
TranSystems
400 W. NATIONWIDE BLVD., STE 225
COLUMBUS, OHIO 43215

DESIGNER SPS

REVIEWER SS 02-18-22

PROJECT ID 104983

SHEET P.315 TOTAL 434

LIGHTING PLAN NOTES (I.R. 77)

1. FOR LIGHTING LEGEND, SEE THIS SHEET.
2. ALL STATIONS AND OFFSETS ARE APPROXIMATE AND REFERENCED FROM CENTERLINE CONSTRUCTION OF I.R. 77 UNLESS SPECIFIED OTHERWISE.

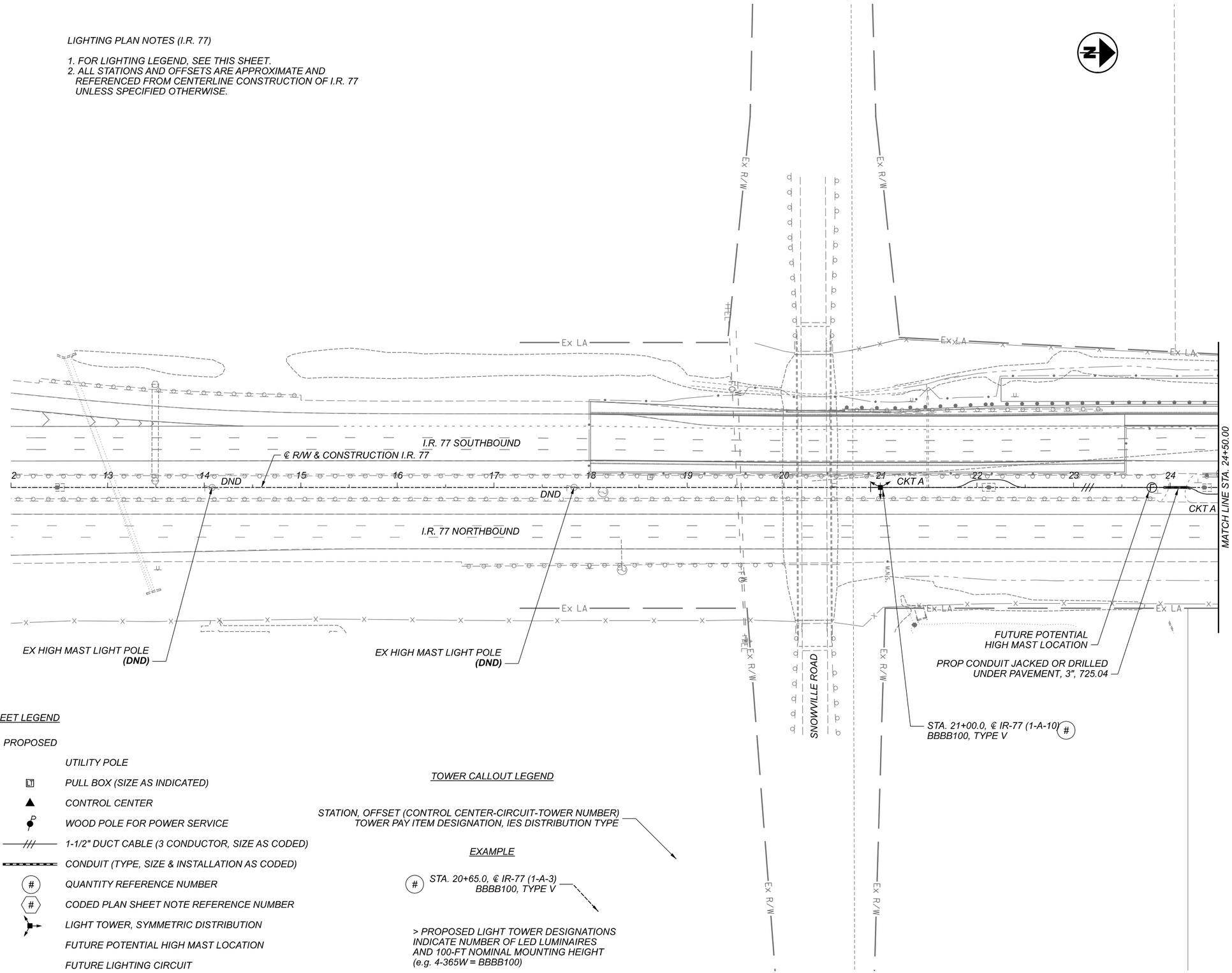

LIGHTING PLAN SHEET LEGEND

FUTURE	EXISTING	PROPOSED	
	P		UTILITY POLE
			PULL BOX (SIZE AS INDICATED)
			CONTROL CENTER
	P		WOOD POLE FOR POWER SERVICE
	///		1-1/2" DUCT CABLE (3 CONDUCTOR, SIZE AS CODED)
			CONDUIT (TYPE, SIZE & INSTALLATION AS CODED)
	(#)		QUANTITY REFERENCE NUMBER
	⬡		CODED PLAN SHEET NOTE REFERENCE NUMBER
			LIGHT TOWER, SYMMETRIC DISTRIBUTION
Ⓕ			FUTURE POTENTIAL HIGH MAST LOCATION
///			FUTURE LIGHTING CIRCUIT

TOWER CALLOUT LEGEND

STATION, OFFSET (CONTROL CENTER-CIRCUIT-TOWER NUMBER)
TOWER PAY ITEM DESIGNATION, IES DISTRIBUTION TYPE

EXAMPLE

(#) *STA. 20+65.0, ℄ IR-77 (1-A-3)*
BBBB100, TYPE V

> PROPOSED LIGHT TOWER DESIGNATIONS INDICATE NUMBER OF LED LUMINAIRES AND 100-FT NOMINAL MOUNTING HEIGHT (e.g. 4-365W = BBBB100)

HORIZONTAL SCALE IN FEET
0 25 50 100

LIGHTING PLAN - I.R. 77
STA. 12+00 TO STA. 24+50

DESIGN AGENCY
TranSystems
400 W. NATIONWIDE BLVD. SUITE 225 COLUMBUS, OHIO 43215

DESIGNER SS
REVIEWER SPS 11-12-21
PROJECT ID 104983
SHEET P.316 TOTAL 434

CUY-77-00.42 PART 1

MODEL: CLX_I-77 - Plan 6-1 PAPERSIZE: 17x11 (in.) DATE: 3/1/2022 TIME: 4:35:20 PM USER: ssoprasseuth
pw:\\hq-pwint01.ca-a.transystems.com:transystems-pw\Documents\Projects.2019\C0403\403190027\Agency_Folders\400-Engineering\Lighting\Sheets\104983_LP101.dgn

LIGHTING PLAN NOTES (I.R. 77)

1. FOR LIGHTING LEGEND, SEE SHEET P.316
2. ALL STATIONS AND OFFSETS ARE APPROXIMATE AND REFERENCED FROM CENTERLINE CONSTRUCTION OF I.R. 77 UNLESS SPECIFIED OTHERWISE.

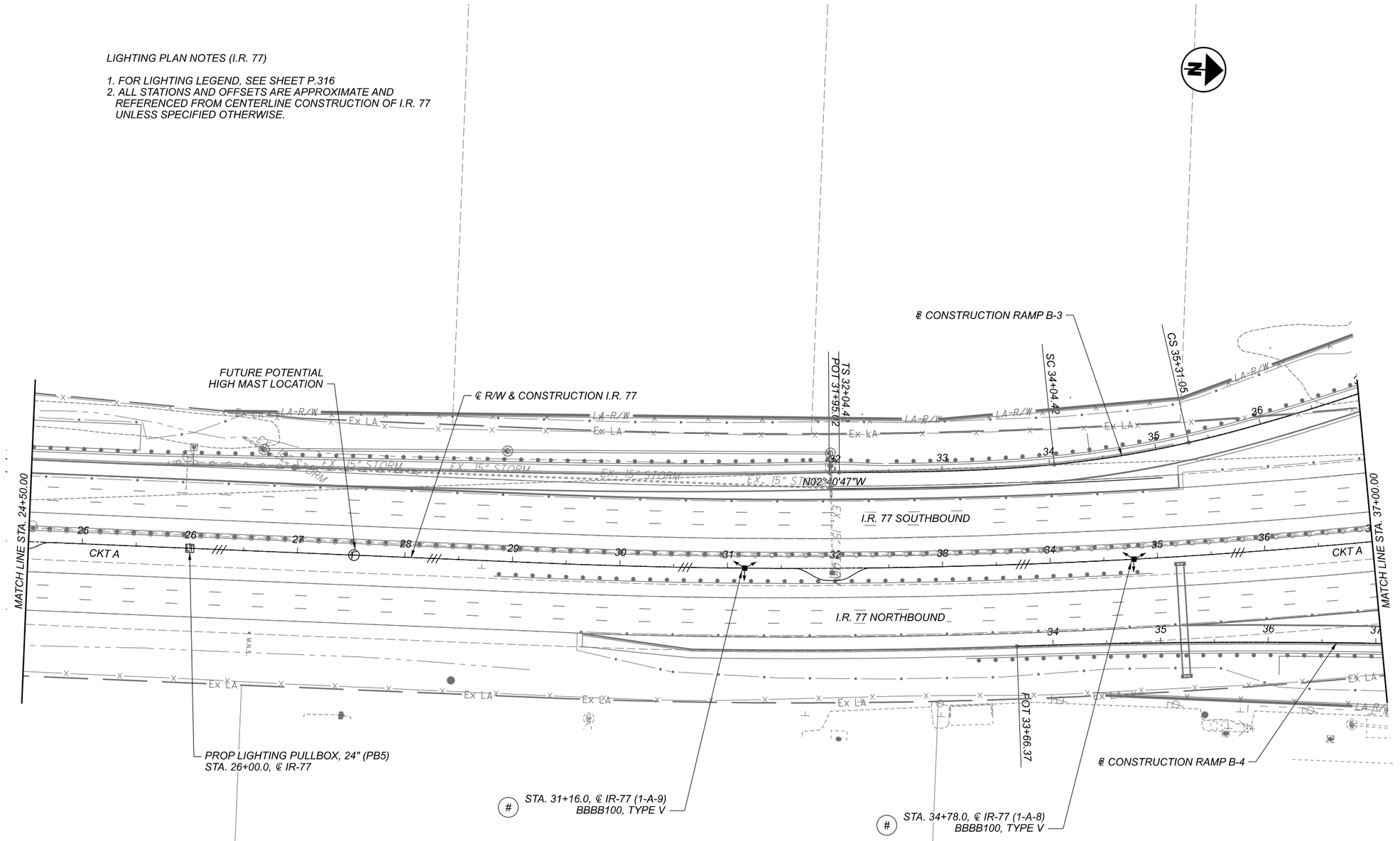

HORIZONTAL SCALE IN FEET
0 25 50 100

LIGHTING PLAN - I.R. 77
STA. 24+50 TO STA. 37+00

CUY-77-00.42 PART 1

MODEL: CLX_I-77 - Plan 7-1 PAPERSIZE: 17x11(in.) DATE: 3/1/2022 TIME: 4:35:52 PM USER: ssopraseuth
pw:\\hq-pwint01.a-e.transystems.com:transystemsorp-pw\Documents\Projects.2019\C0403\403190027\Agency_Folders\400-Engineering\Lighting\Sheets\104983_LP102.dgn

DESIGN AGENCY
TranSystems
400 W. NATIONWIDE BLVD.
SUITE 225
COLUMBUS, OHIO 43215

DESIGNER: SS
REVIEWER: SPS 11-12-21
PROJECT ID: 104983
SHEET: P.317 TOTAL: 434

LIGHTING PLAN NOTES (I.R. 77)

1. FOR LIGHTING LEGEND, SEE SHEET P.316
2. ALL STATIONS AND OFFSETS ARE APPROXIMATE AND REFERENCED FROM CENTERLINE CONSTRUCTION OF I.R. 77 UNLESS SPECIFIED OTHERWISE.

HORIZONTAL SCALE IN FEET
0 25 50 100

℄ EXISTING RAMP B-2
℄ CONSTRUCTION RAMP B-3
℄ CONSTRUCTION RAMP B-2
℄ CONSTRUCTION RAMP B-4
℄ EXISTING RAMP B-1
℄ R/W & CONSTRUCTION I.R. 77
℄ R/W & CONSTRUCTION MILLER ROAD
I.R. 77 SOUTHBOUND
I.R. 77 NORTHBOUND
STRUCTURE NO CUY-1805673
MATCH LINE STA. 37+00.00
MATCH LINE STA. 49+50.00
MATCH LINE STA. 78+00.00, MILLER RD
ST 37+31.09
BOT 15+48.11
BOT 43+35.17
N20°38'39"W
S10°35'54"E
N04°38'54"E
N15°23'22"W
101.55'
N89°36'54"E
42.08'
CKT A
FUTURE POTENTIAL HIGH MAST LOCATION
STA. 46+00.0, 173.0' LT, ℄ IR-77 (1-A-6) BBBB100, TYPE V
STA. 41+72.0, 152.0' RT, ℄ IR-77 (1-A-13) BBBB100, TYPE V
PROP LIGHTING PULLBOX, 24" (PB4) STA. 45+00.0, 91.0' LT
PROP CONDUIT JACKED OR DRILLED UNDER PAVEMENT, 3", 725.04
PROP LIGHTING PULLBOX, 24" (PB3) STA. 45+00.0, 0.0' LT
PROP CONDUIT JACKED OR DRILLED UNDER PAVEMENT, 3", 725.04
PROP LIGHTING PULLBOX, 24" (PB6) STA. 40+00.0, ℄ IR-77
PROP LIGHTING PULLBOX, 24" (PB2) STA. 45+00.0, 89.0' RT
PROP LIGHTING PULLBOX, 24" (PB1) STA. 74+62.0, 64.0' LT (MILLER RD)
PROP LIGHTING CONTROL CENTER (CC1) STA. 74+71.0, 60.0' LT (MILLER RD)
AERIAL SERVICE CABLE FOR POWER DROP
EX UTILITY POLE TO BE RELOCATED BY OTHERS
TO EXISTING POWER POLE W/ TRANSFORMER
EX UTILITY POLE / POWER SERVICE TO BE RELOCATED BY OTHERS, STA 78+62±

LIGHTING PLAN - I.R. 77 STA. 37+00 TO STA. 49+50

DESIGN AGENCY
TranSystems
400 W. NATIONWIDE BLVD. SUITE 225 COLUMBUS, OHIO 43215

DESIGNER	
SS	
REVIEWER	
SPS	11-12-21
PROJECT ID	
104983	
SHEET	TOTAL
P.318	434

CUY-77-00.42 PART 1

MODEL: CLX_I-77 - Plan 8-1 PAPERSIZE: 17x11in DATE: 3/1/2022 TIME: 4:36:07 PM USER: ssopraseuth
pw:\\hq-pwint01.ce.transystems.com:transystemscorp-pw\Documents\Projects_2019\C0403\40390027\Agency_Folders\400-Engineering\Lighting\Sheets\104983_LP103.dgn

LIGHTING PLAN NOTES (I.R. 77)

1. FOR LIGHTING LEGEND, SEE SHEET P.316
2. ALL STATIONS AND OFFSETS ARE APPROXIMATE AND REFERENCED FROM CENTERLINE CONSTRUCTION OF I.R. 77 UNLESS SPECIFIED OTHERWISE.

℄ EXISTING RAMP B-2

℄ CONSTRUCTION RAMP B-2

POT 17+89.58

POT 01+00.00

PT 58+02.36

MATCH LINE STA. 49+50.00

MATCH LINE STA. 62+00.00 R2

I.R. 77 SOUTHBOUND

I.R. 77 NORTHBOUND

CKT A

CKT A

℄ R/W & CONSTRUCTION I.R. 77

201.72'

N27°22'18"W

℄ EXISTING RAMP B-1

STA. 51+87.0, ℄ IR-77 (1-A-3) BBBB100, TYPE V

STA. 55+42.0, ℄ IR-77 (1-A-5) BBBB100, TYPE V

STA. 58+85.0, ℄ IR-77 (1-A-2) BBBB100, TYPE V

HORIZONTAL SCALE IN FEET
0 25 50 100

LIGHTING PLAN - I.R. 77
STA. 49+50 TO STA. 62+00

CUY-77-00.42 PART 1

MODEL: CLX_I-77 - Plan 9-1 PAPERSIZE: ITxll(in.) DATE: 3/1/2022 TIME: 4:36:22 PM USER: ssoprasseuth
pw:\\hq-pwint01.a-e.transystems.com:transystemsp-pw1\Documents\Projects.2019\C0403\403190027\Agency_Folders\400-Engineering\Lighting\Sheets\104983_LP104.dgn

DESIGN AGENCY
TranSystems
400 W. NATIONWIDE BLVD.
SUITE 225
COLUMBUS, OHIO 43215

DESIGNER
SS

REVIEWER
SPS 11-12-21

PROJECT ID
104983

LIGHTING PLAN NOTES (I.R. 77)

1. FOR LIGHTING LEGEND, SEE SHEET P.316
2. ALL STATIONS AND OFFSETS ARE APPROXIMATE AND REFERENCED FROM CENTERLINE CONSTRUCTION OF I.R. 77 UNLESS SPECIFIED OTHERWISE.

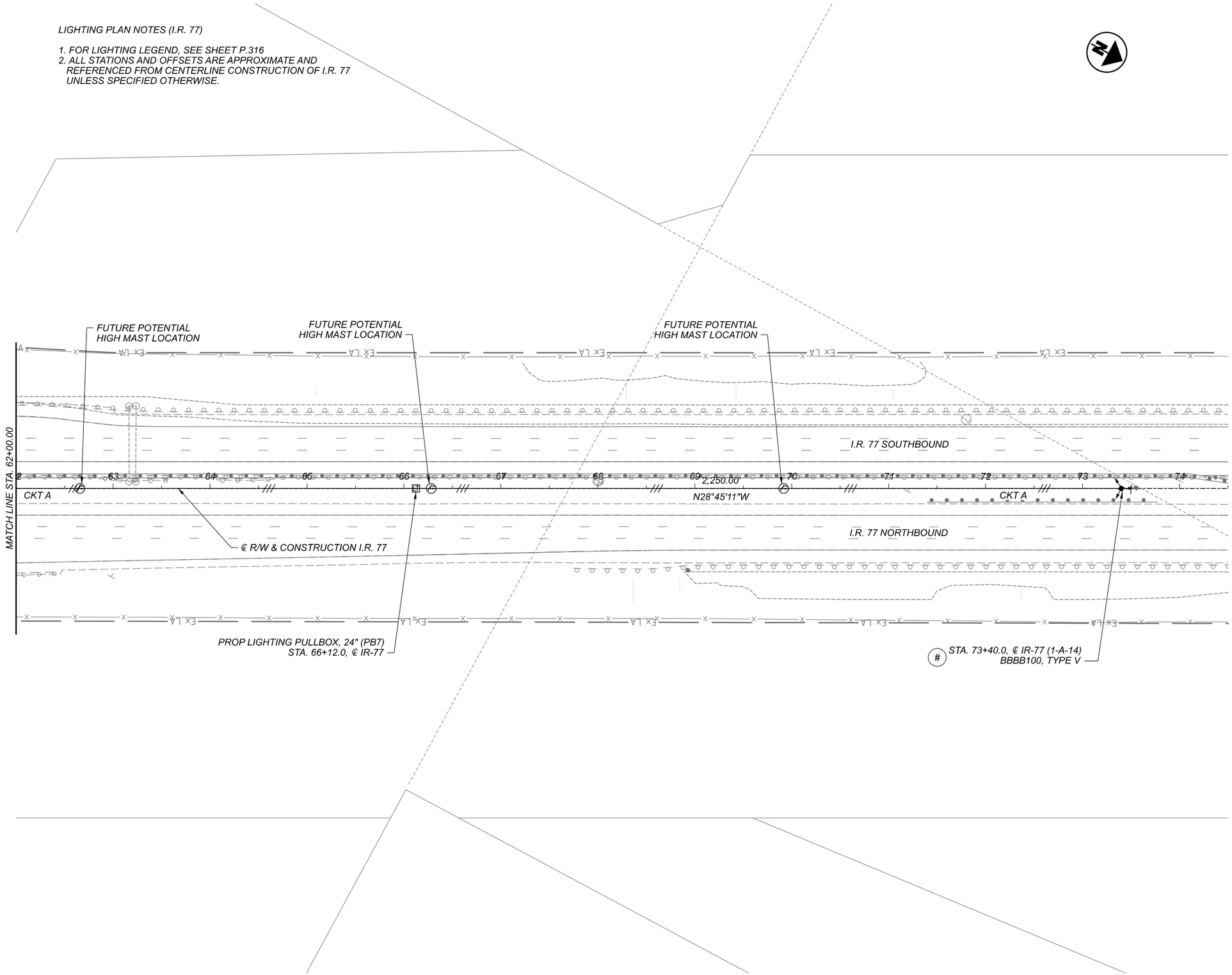

HORIZONTAL SCALE IN FEET
0 25 50 100

LIGHTING PLAN - I.R. 77
STA. 62+00 TO STA. 74+50

CUY-77-00.42 PART 1

MODEL: CLX_I-77 - Plan 10-I PAPERSIZE: 17x11(in.) DATE: 3/1/2022 TIME: 4:36:38 PM USER: ssoprgseuth
pw:\\hq-pwint01.a-e.transystems.com:transystemscorp-pw\Documents\Projects_2019\C0403\40390027\Agency_Folders\400-Engineering\Lighting\Sheets\104983_LP105.dgn

DESIGN AGENCY
TranSystems
400 W. NATIONWIDE BLVD, SUITE 225
COLUMBUS, OHIO 43215

DESIGNER: SS
REVIEWER: SPS 11-12-21
PROJECT ID: 104983
SHEET: P.320 TOTAL: 434

VOLTAGE DROP CALCULATIONS
Miller Road Interchange Lighting (PIL)

CO. **CUY** RTE. **77** SEC. **00.42** SUPPLY POINT: **1** LEG(S): **A**

VOLTAGE: **480** WATTAGE: LED AMPS: 0.99

LED AMPS: 0.00

WIRE FACTORS USED (per wire): NO. OF WIRES FOR CALCULATION: 2

NO. 2 AWG 0.19 Ohms/MFT/1000

NO. 4 AWG 0.31 Ohms/MFT/1000

NO. 6 AWG 0.49 Ohms/MFT/1000

NO. 8 AWG 0.78 Ohms/MFT/1000

SECTION			AMPERES		AMP-FT	AWG	VOLTAGE DROP		% DROP	AT PT.
FROM	TO	FEET	AT PT.	ACCUM.			IN SECT.	ACCUM.		
(f)	(f)	386	0.00	0.00	0	4	0.00	1.64	**0.3%**	(f)
(f)	PB4	332	0.00	0.00	0	4	0.00	1.64	0.3%	(f)
(f)	6	300	0.00	0.00	0	4	0.00	1.73	**0.4%**	(f)
6	PB4	138	0.99	0.99	137	4	0.08	1.73	0.4%	6
PB4	PB3	101	0.00	0.99	100	4	0.06	1.64	0.3%	PB4
14	(f)	383	0.99	0.99	379	4	0.24	5.33	**1.1%**	14
(f)	(f)	373	0.00	0.99	369	4	0.23	5.10	1.1%	(f)
(f)	PB7	30	0.00	0.99	30	4	0.02	1.75	0.4%	(f)
PB7	(f)	343	0.00	0.99	340	4	0.21	4.87	1.0%	PB7
(f)	2	391	0.00	0.99	387	4	0.24	4.66	1.0%	(f)
2	5	354	0.99	1.98	701	4	0.43	4.42	0.9%	2
5	3	365	0.99	2.97	1084	4	0.67	3.98	0.8%	5
3	PB3	697	0.99	3.96	2760	4	1.71	3.31	0.7%	3
10	(f)	326	0.99	0.99	323	4	0.20	5.05	**1.1%**	10
(f)	PB5	190	0.00	0.99	188	4	0.12	4.85	1.0%	(f)
PB5	(f)	190	0.00	1.98	376	4	0.23	0.92	0.2%	PB5
(f)	9	374	0.00	0.99	370	4	0.23	4.73	1.0%	(f)
9	8	372	0.99	1.98	737	4	0.46	4.50	0.9%	9
8	PB6	520	0.00	3.96	2059	4	1.28	1.50	0.3%	8
PB6	PB3	520	0.99	2.97	1544	4	0.96	4.05	0.8%	PB6
PB3	PB2	100	0.00	7.92	792	4	0.49	1.58	0.3%	PB3
(f)	13	326	0.00	0.00	0	4	0.00	1.31	**0.3%**	(f)
13	PB2	363	0.99	0.99	359	4	0.22	1.31	0.3%	13
PB2	PB1	36	0.00	8.91	321	4	0.20	1.09	0.2%	PB2
(f)	(f)	363	0.00	0.00	0	4	0.00	0.89	**0.2%**	(f)
(f)	PB1	108	0.00	0.00	0	4	0.00	0.89	0.2%	(f)
PB1	CC	15	0.00	8.91	134	4	0.08	0.89	0.2%	PB1
CC	PS1	146	0.00	8.91	1301	4	0.81	0.81	0.2%	CC
		SUM	8.91	AMPS PROPOSED LOAD						
			4.3	kVA						

LEG(S) A

1. CABLE FROM POWER SOURCE TO CONTROL CENTER HAS BEEN APPROXIMATED AS 15 FEET.
2. TEN (10) FEET OF SLACK IS INCLUDED IN EACH CABLE RUN BETWEEN POLES/PULL BOXES.
3. (f) DENOTES FUTURE CIL INSTALLATIONS FOR INFORMATIONAL PURPOSES ONLY.

NOTE: THE COMPLETE VOLTAGE DROP CALCULATIONS INCLUDING FUTURE TOWERS HAS BEEN CALCULATED FOR FUTURE CONSIDERATION AND THE LARGEST VOLTAGE DROP WAS 2.4% USING NO. 4 AWG WIRE.

LIGHTING CONTROL CENTER DATA

CONTROL CENTER	LINE VOLTAGE (VOLTS)	CONNECTED LOAD (kVA)	SERVICE ENTRANCE CABLE (AWG)	ENCLOSURE RATING (AMPS)	CIRCUIT NO.	CIRCUIT LOAD (AMPS)	PROP. CIRCUIT FUSE SIZE (AMPS)	PROP. CIRCUIT CABLE SIZE (AWG)	MAINTAINING AGENCY
CC1	480	4.3	2	100	A	8.91	60	4	ODOT D12
					B	FUTURE	40		

NOTES:

1. FOR ADDITIONAL CONTROL CENTER DETAILS, SEE ODOT HL-60.31.
2. SERVICE FOR LIGHTING CONTROL CENTER CC1 IS SINGLE PHASE, 3-WIRE.

LEGEND

- PROPOSED TOWER
- PROPOSED CIRCUIT
- FUTURE CIRCUIT
- (f) FUTURE TOWER LOCATION
- PROPOSED CONTROLLER
- PROPOSED PULL BOX WITH CIRCUIT SPLICING
- X.X% CIRCUIT TERMINUS NODE VOLTAGE DROP
- STUB AND CAP CONDUIT ELL
- E AERIAL POWER SERVICE

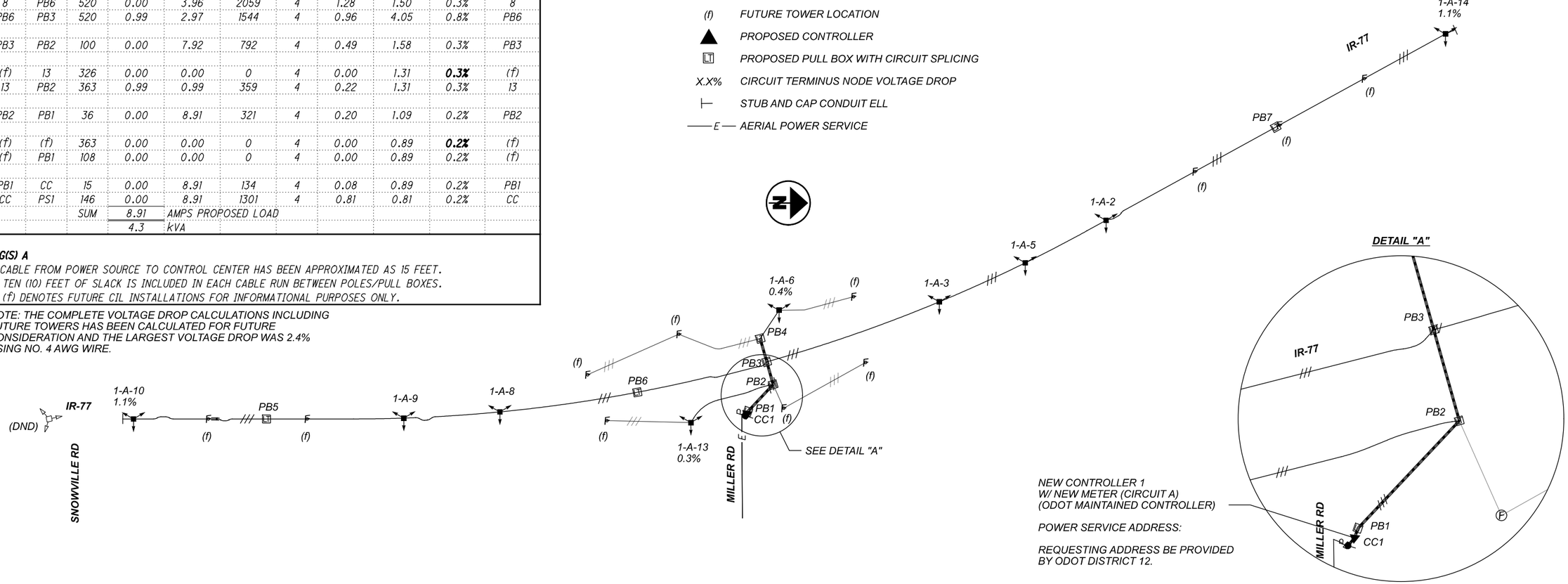

HORIZONTAL SCALE IN FEET
0 100 200 400

LIGHTING CIRCUIT DIAGRAM "CC1"

DESIGN AGENCY
TranSystems
400 W. NATIONWIDE BLVD. SUITE 225 COLUMBUS, OHIO 43215

DESIGNER SS

REVIEWER SPS 11-12-21

PROJECT ID 104983

SHEET P.321 TOTAL 434

CUY-77-00.42 PART 1

MODEL: Sheet PAPERSIZE: 17x11(in.) DATE: 3/1/2022 TIME: 4:36:51 PM USER: ssopraseuth
pw:\\hq-pwint01.a-e.transystems.com:transystemscorp-pw\Documents\Projects_2019\C0403\40390027\Agency_Folders\400-Engineering\Lighting\Sheets\104983_LC001.dgn

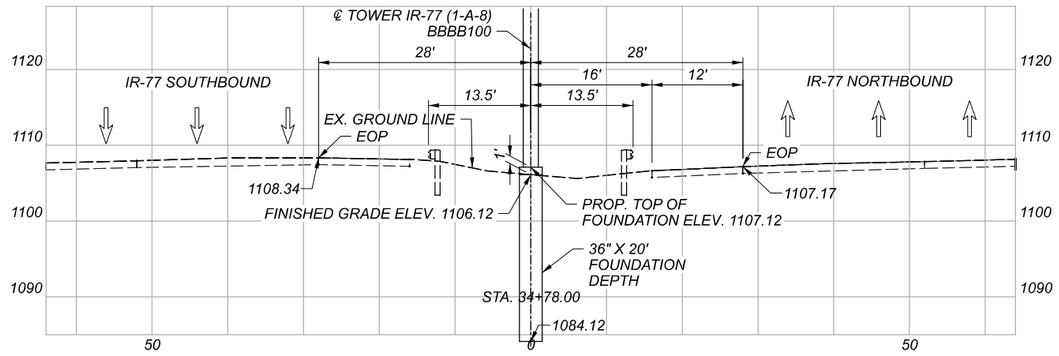

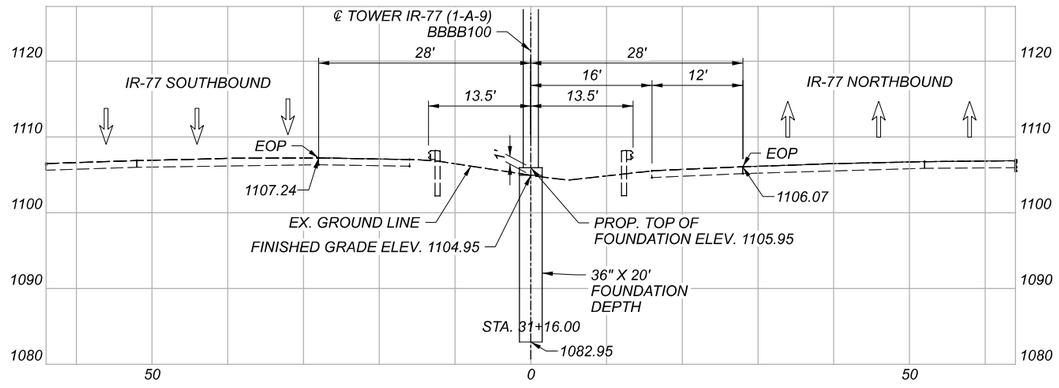

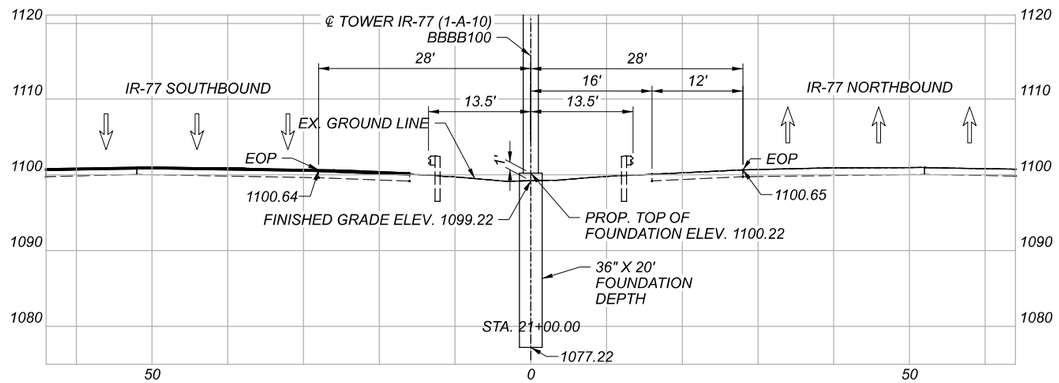

NOTES:

1. ELEVATION IS FINAL GROUND SURFACE (EXISTING OR PROPOSED) AT TOWER FOUNDATION CENTERLINE. FOUNDATION DEPTH EXCLUDES TOP 2' OF GROUND SURFACE PER ODOT TEM.

2. SEE STANDARD DRAWING HL-20.21 FOR LIGHT TOWER FOUNDATIONS AND ADDITIONAL REINFORCING STEEL DETAILS.

LIGHT TOWER ELEVATIONS
IR-77

DESIGN AGENCY
TranSystems
400 W. NATIONWIDE BLVD.
SUITE 225
COLUMBUS, OHIO 43215

DESIGNER
SS

REVIEWER
SPS 02-18-22

PROJECT ID
104983

SHEET P.322 | TOTAL 434

CUY-77-00.42 PART 1

MODEL: CLX-77 LIGHTING - 21+00.00 R2 [Sheet] PAPERSIZE: 17x11(in.) DATE: 3/1/2022 TIME: 4:37:18 PM USER: ssopraseuth
pw:\\hq-pwint01.a-e.transystcorp.com:transystcorp-pw\Documents\Projects_2019\C0403\40390027\Agency_Folders\400-Engineering\Lighting\Sheets\104983_LE101.dgn

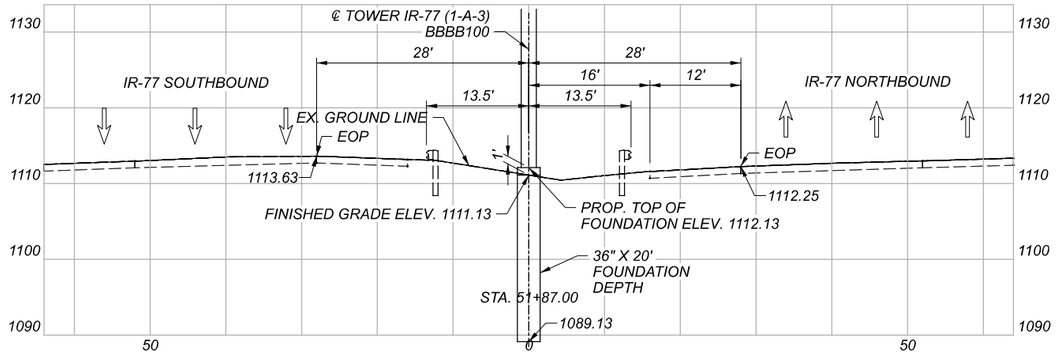

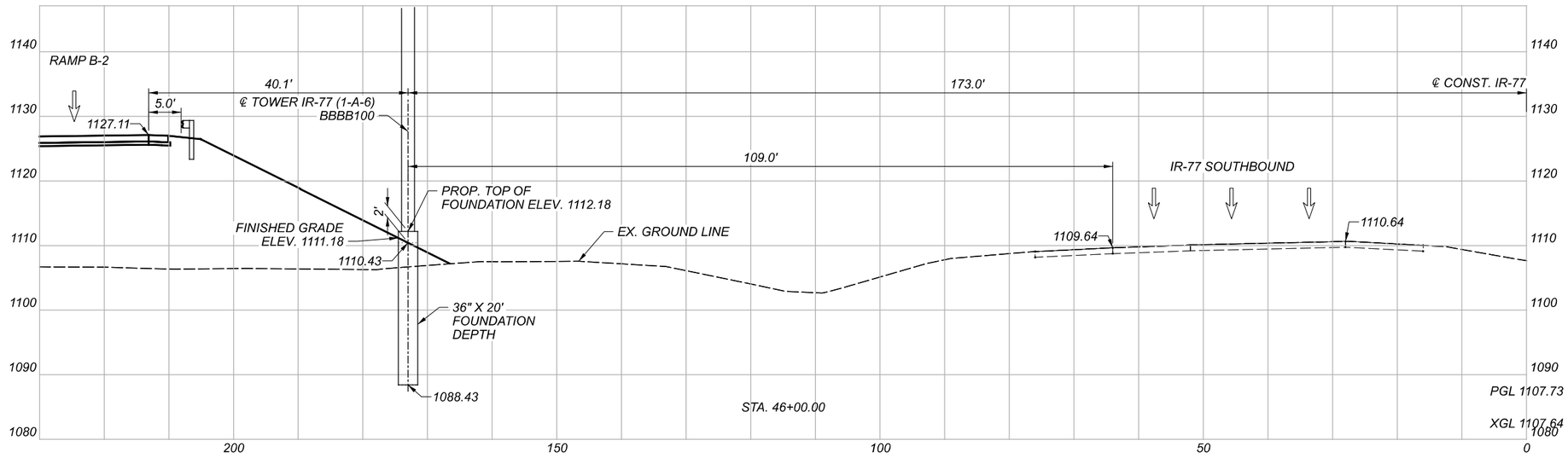

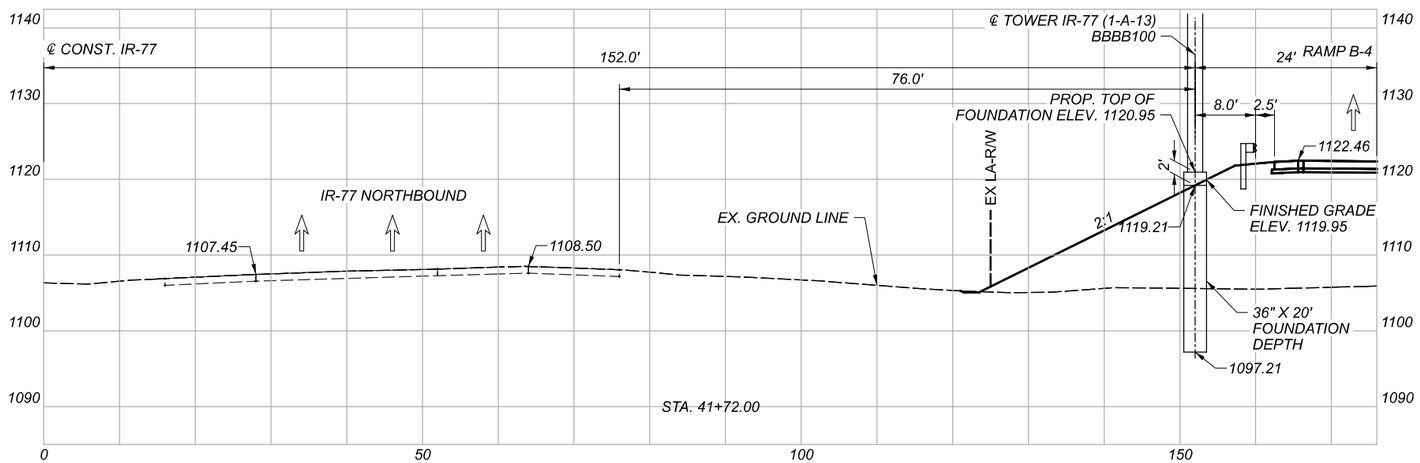

LIGHT TOWER ELEVATIONS
IR-77

DESIGN AGENCY
TranSystems
400 W. NATIONWIDE BLVD.
SUITE 225
COLUMBUS, OHIO 43215

DESIGNER
SS

REVIEWER
SPS 02-18-22

PROJECT ID
104983

SHEET P.323 TOTAL 434

CUY-77-00.42 PART 1

MODEL: CLX-77 LIGHTING - 41+72.00 R2 [Sheet] PAPERSIZE: 17x11in.] DATE: 3/1/2022 TIME: 4:37:25 PM USER: ssopraseuth
pw:\\hq-pwint01.g-e.transystcorp.com:transystcorp-pw\Documents\Projects_2019\C0403\40390027\Agency_Folders\400-Engineering\Lighting\Sheets\104983_LE101.dgn

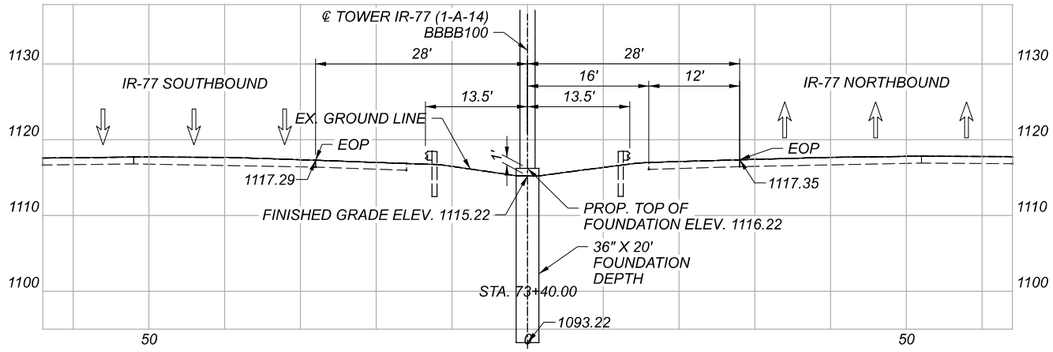

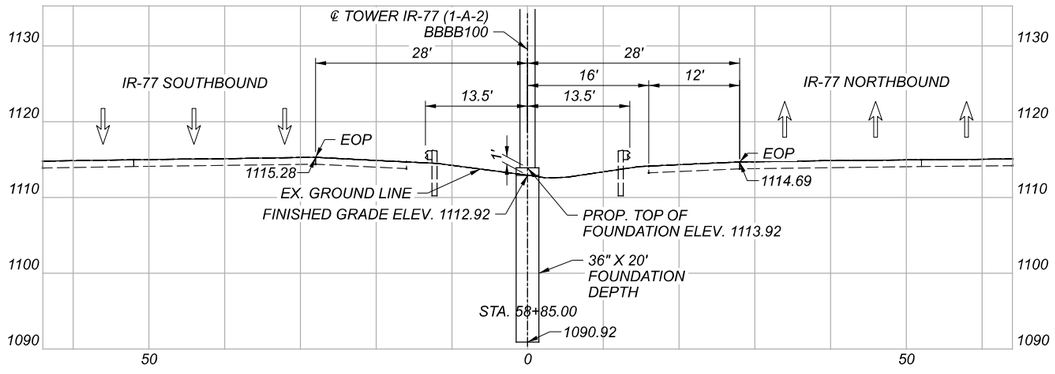

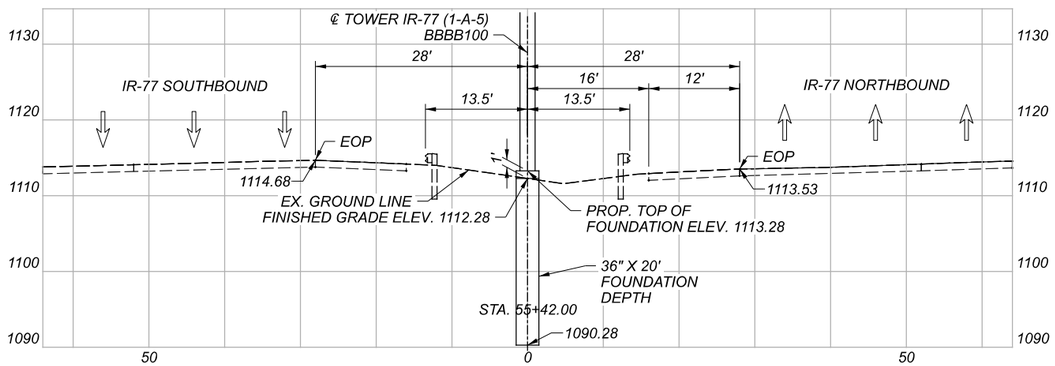

LIGHT TOWER ELEVATIONS
IR-77

CUY-77-00.42 PART 1

MODEL: CLX-77 LIGHTING - 55+42.00 R2 [Sheet] PAPERSIZE: 17x11(in.) DATE: 3/1/2022 TIME: 4:37:29 PM USER: ssopraseuth
pw:\\hq-pwint01.g-e.transystems.com:transystemscorp-pw1\Documents\Projects_2019\C0403\40390027\Agency_Folders\400-Engineering\Lighting\Sheets\104983_LE101.dgn

DESIGN AGENCY
TranSystems
400 W. NATIONWIDE BLVD.
SUITE 225
COLUMBUS, OHIO 43215

DESIGNER
SS

REVIEWER
SPS 02-18-22

PROJECT ID
104983

SHEET P.324 | TOTAL 434

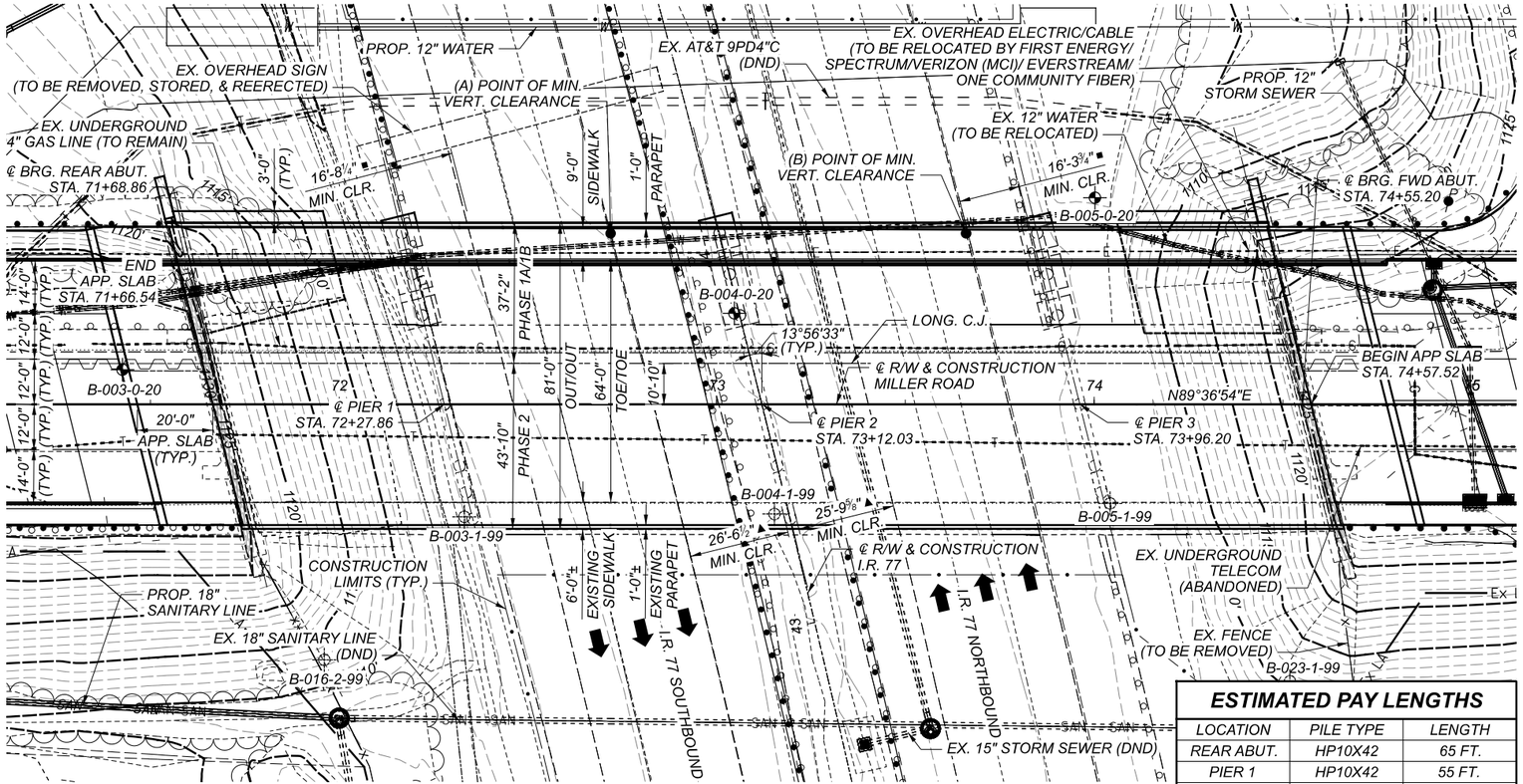

PLAN

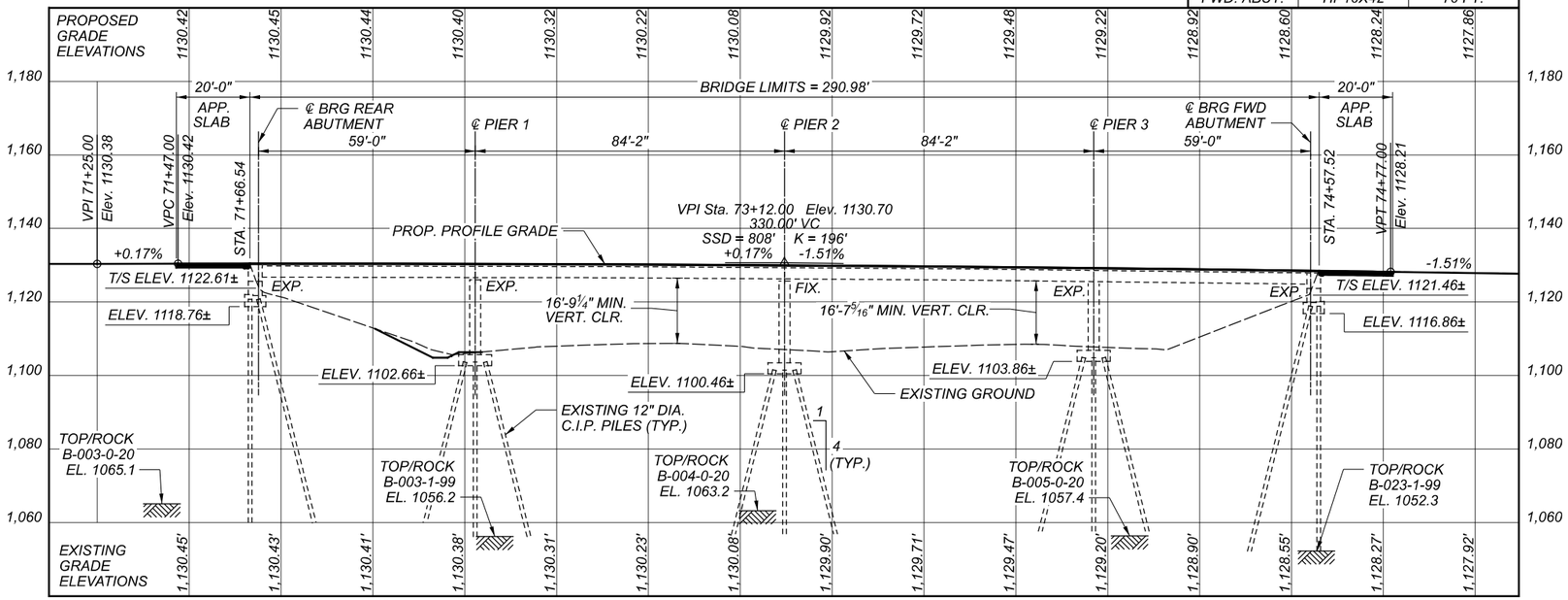

PROFILE ALONG ℄ R/W & CONSTRUCTION MILLER ROAD

ESTIMATED PAY LENGTHS

LOCATION	PILE TYPE	LENGTH
REAR ABUT.	HP10X42	65 FT.
PIER 1	HP10X42	55 FT.
PIER 2	HP10X42	45 FT.
PIER 3	HP10X42	55 FT.
FWD. ABUT.	HP10X42	70 FT.

BENCHMARK DATA

BM #1 STA. 90+11.75	ELEV.	1116.09	OFFSET	40.89 RT, CONC. MON.
BM #2 STA. 99+09.72	ELEV.	1130.58	OFFSET	43.69 RT, CONC. MON.

FOR ADDITIONAL BENCHMARK INFORMATION, SEE SCHEMATIC PLAN SHEET P.2 OF P.434.

NOTES

EARTHWORK LIMITS SHOWN ARE APPROXIMATE. ACTUAL SLOPES SHALL CONFORM TO PLAN CROSS SECTIONS.

DESIGN TRAFFIC

2020 ADT = 11,050 2020 ADTT = 553
2040 ADT = 11,050 2040 ADTT = 553
DIRECTIONAL DISTRIBUTION = 65%

LEGEND

BORING LOCATION — HISTORIC BORING LOCATION

VERTICAL CLEARANCES

POINT	EXISTING	PROPOSED	REQUIRED
A	17'-0½"	16'-9¼"	16'-6"
B	16'-8"	16'-7⁵⁄₁₆"	16'-6"

HORIZONTAL CLEARANCES

■ 11'-8" REQUIRED MINIMUM HORIZONTAL CLEARANCE
16'-3¾" ACTUAL MINIMUM HORIZONTAL CLEARANCE
▲ 9'-0" REQUIRED MINIMUM HORIZONTAL CLEARANCE
25'-9⅝" ACTUAL MINIMUM HORIZONTAL CLEARANCE

EXISTING STRUCTURE

TYPE: CONTINUOUS STEEL BEAMS WITH REINFORCED CONCRETE DECK, SEMI-INTEGRAL ABUTMENTS, AND CAP AND COLUMN PIERS

SPANS: 59'-0"±, 84'-2"±, 84'-2"±, 59'-0"± C/C BEARINGS

ROADWAY: 40'-0"± TOE/TOE CURBS WITH TWO 6'-0"± SIDEWALKS

LOADING: HS20 (CASE II) AND ALTERNATE MILITARY LOADING

SKEW: 13°56'33"± RIGHT FORWARD

WEARING SURFACE: 1" MONOLITHIC CONCRETE

APPROACH SLABS: 20'-0"± LONG (AS-1-81)

ALIGNMENT: TANGENT

CROWN: 0.0156± FT/FT

STRUCTURAL FILE NUMBER: 1805673

DATE BUILT: 1968 MAJOR REHAB: 2005

DISPOSITION: REHABILITATE AND WIDEN EXISTING STRUCTURE

PROPOSED STRUCTURE

PROPOSED WORK: SEE GENERAL NOTES

TYPE: CONTINUOUS STEEL BEAMS WITH REINFORCED CONCRETE DECK, SEMI-INTEGRAL ABUTMENTS, AND CAP AND COLUMN PIERS

SPANS: 59'-0", 84'-2", 84'-2", 59'-0" C/C BEARINGS

ROADWAY: 64'-0" TOE/TOE CURBS WITH 9'-0" LEFT SIDEWALK AND 6'-0"± RIGHT SIDEWALK

LOADING: SEE GENERAL NOTES

SKEW: 13°56'33" RIGHT FORWARD

WEARING SURFACE: 1" MONOLITHIC CONCRETE

APPROACH SLABS: 20'-0" LONG MODIFIED (AS-1-15, AS-2-15)

ALIGNMENT: TANGENT

CROWN: 0.0156 FT/FT

DECK AREA: 23,569 SF

COORDINATES: LATITUDE N41°17'21.81"
LONGITUDE W81°38'14.44"

HORIZONTAL SCALE IN FEET
0 10 20 40

SITE PLAN
BRIDGE NO. CUY-CR187-00.977
MILLER ROAD OVER I.R. 77

SFN 1805673
DESIGN AGENCY EUTHENICS 3225 Mitchell Dr. | Cleveland, OH 44109
DESIGNER SRW | CHECKER BPS
REVIEWER LAB 02/24/22
PROJECT ID 104983
SUBSET 1 | TOTAL 41
SHEET P.325 | TOTAL P.434

CUY-77-00.42 PART 1

MODEL: CLX_MILLER ROAD-2 - Miller Rd Plan-1 PAPERSIZE: 17x11 (in.) DATE: 3/4/2022 TIME: 2:01:00 PM USER: esmccaslin
F:\Jobs\11162-Miller Road Interchange\104983\400-Engineering\Structures\SFN_1805673\Sheets\104983_SFN_1805673_SP001.dgn

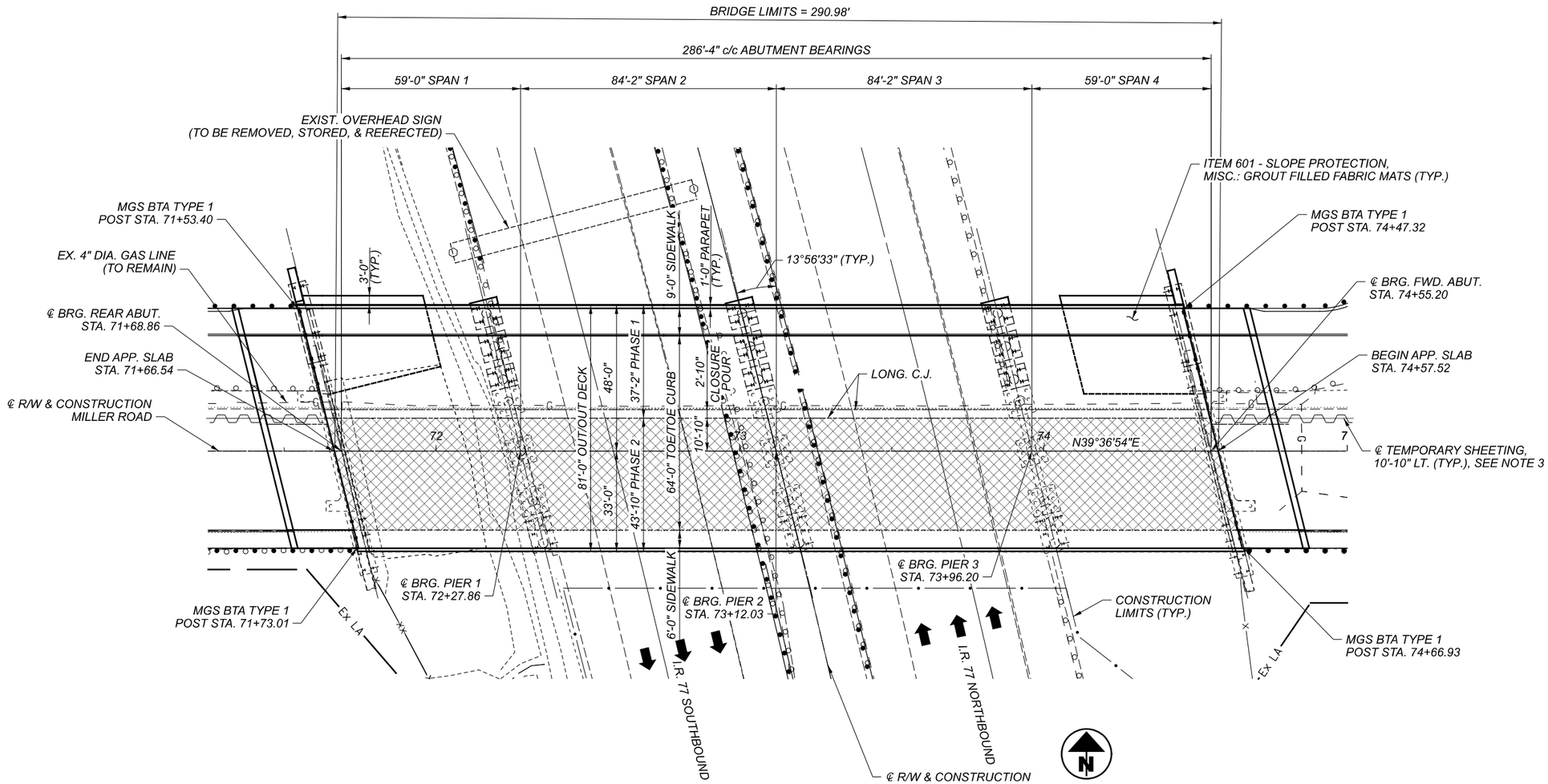

GENERAL PLAN

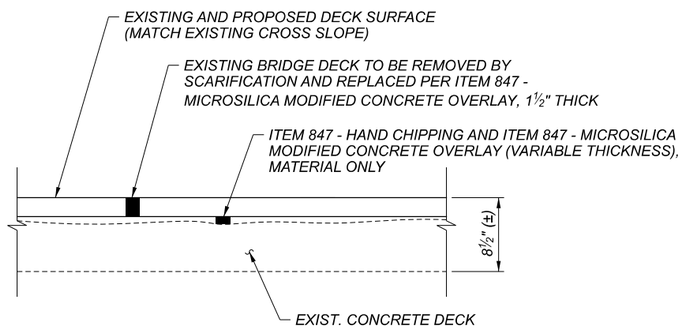

BRIDGE DECK WEARING SURFACE REPLACEMENT DETAIL

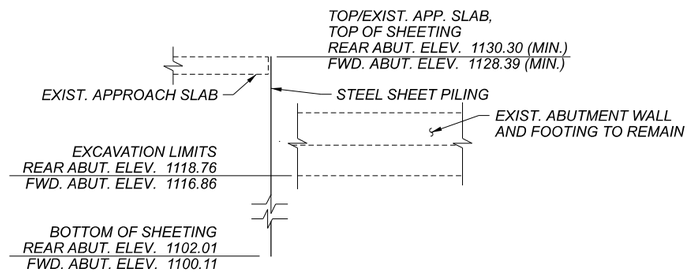

SHEET PILE DETAIL

PLACE INTERLOCKING STEEL SHEET
PILING WITH A MINIMUM SECTION
MODULUS OF 48.50 CUBIC INCHES PER FOOT.

LEGEND

BTA = BRIDGE TERMINAL ASSEMBLY

AREAS OF THE DECK AND APPROACH SLABS TO HAVE WEARING SURFACE REMOVED AND REPLACED, PER SUPPLEMENTAL SPECIFICATION 847.

NOTES

1. FINISHED TOP OF DECK ELEVATIONS SHALL MATCH EXISTING TOP OF DECK ELEVATIONS.
2. FOR ADDITIONAL DETAILS NOT SHOWN, SEE ODOT SUPPLEMENTAL SPECIFICATION 847.
3. THE CONTRACTOR SHALL PHYSICALLY LOCATE THE EXISTING GAS LINE BEFORE INSTALLING TEMPORARY SHEETING.

HORIZONTAL SCALE IN FEET
0 10 20 40

GENERAL PLAN
BRIDGE NO. CUY-CR187-00.977
MILLER ROAD OVER I.R. 77

SFN 1805673

DESIGN AGENCY
EUTHENICS
8335 Mohawk Dr. | Cleveland, OH 44130

DESIGNER	CHECKER
OOS	BPS

REVIEWER: LAB 02/24/22

PROJECT ID: 104983

SUBSET	TOTAL
2	41

SHEET	TOTAL
P.326	P.434

CUY-77-00.42 PART 1

MODEL: GP001 PAPERSIZE: 17x11 (in.) DATE: 3/4/2022 TIME: 2:01:14 PM USER: esmccaslin
F:\Jobs\1162-Miller Road Interchange\104983\400=Engineering\Structures\SFN_1805673\Sheets\104983_SFN_1805673_SG001.dgn

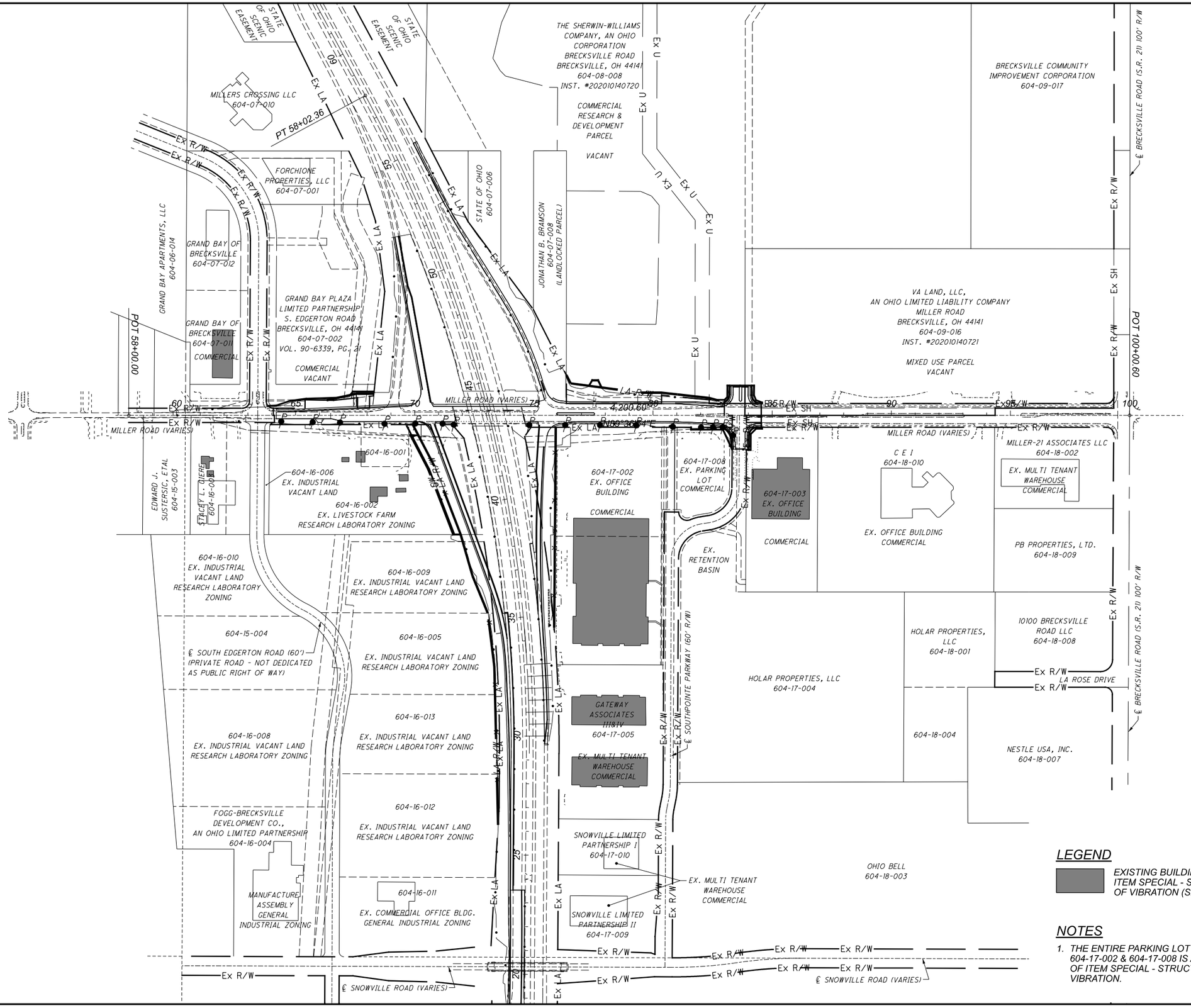

LEGEND

EXISTING BUILDING SUBJECT TO REQUIREMENTS OF ITEM SPECIAL - STRUCTURAL SURVEY AND MONITORING OF VIBRATION (SEE NOTE 1)

NOTES

1. THE ENTIRE PARKING LOT FOR THE PNC BUILDING ON PARCELS 604-17-002 & 604-17-008 IS ALSO SUBJECT TO THE REQUIREMENTS OF ITEM SPECIAL - STRUCTURAL SURVEY AND MONITORING OF VIBRATION.

HORIZONTAL SCALE IN FEET
0 100 200 400

PRECONSTRUCTION CONDITION SURVEY PLAN
BRIDGE NO. CUY-CR187-00.977
MILLER ROAD OVER I.R. 77

SFN 1805673

DESIGN AGENCY
EUTHENICS
8235 Mohawk Dr. | Cleveland, OH 44138

DESIGNER	CHECKER
GGR	BPS

REVIEWER: LAB 02/24/22

PROJECT ID: 104983

SUBSET	TOTAL
3	41

SHEET	TOTAL
P.327	P.434

CUY-77-00.42 PART 1

MODEL: CLX_MILLER ROAD - PLAN 1 (Sheet) PAPERSIZE: 17x11 (in.) DATE: 3/4/2022 TIME: 2:01:22 PM USER: esmccaslin
F:\Jobs\1162-Miller Road Interchange\104983\400-Engineering\Structures\SFN_1805673\Sheets\104983_SFN_1805673_SG002.dgn

REFER TO THE FOLLOWING STANDARD BRIDGE DRAWINGS:

AS-1-15	REVISED	07-17-15
AS-2-15	REVISED	01-18-19
BR-2-15	REVISED	01-21-22
GSD-1-19	DATED	01-15-21
PCB-91	REVISED	07-17-20
RM-4.2	DATED	04-17-20
SICD-2-14	REVISED	01-15-21
TVPF-1-18	DATED	07-20-18
VPF-1-90	REVISED	07-20-18

AND TO THE FOLLOWING SUPPLEMENTAL SPECIFICATIONS:

800	DATED	01-21-22
832	DATED	10-19-18
847	DATED	01-15-21

DESIGN SPECIFICATIONS:

THIS STRUCTURE CONFORMS TO THE 9TH EDITION OF THE "LRFD BRIDGE DESIGN SPECIFICATIONS" ADOPTED BY THE AMERICAN ASSOCIATION OF STATE HIGHWAY AND TRANSPORTATION OFFICIALS, 2020 AND THE ODOT BRIDGE DESIGN MANUAL, 2020.

OPERATIONAL IMPORTANCE:

A LOAD MODIFIER OF 1.00 HAS BEEN ASSUMED FOR THE DESIGN OF THIS STRUCTURE IN ACCORDANCE WITH THE AASHTO LRFD BRIDGE DESIGN SPECIFICATIONS, ARTICLE 1.3.5. AND THE ODOT BRIDGE DESIGN MANUAL.

DESIGN LOADING:

DECK: HL-93; NO ALLOWANCE FOR FUTURE WEARING SURFACE (FWS)
SUPERSTRUCTURE (PROPOSED BEAMS): HL-93; NO ALLOWANCE FOR FWS
SUPERSTRUCTURE (EXISTING BEAMS): HL-93; NO ALLOWANCE FOR FWS
SUBSTRUCTURE (PROPOSED SUBSTRUCTURES): HL-93; NO ALLOWANCE FOR FWS
SUBSTRUCTURE (EXISTING SUBSTRUCTURES): HS-20; NO ALLOWANCE FOR FWS
FOUNDATION (PROPOSED FOUNDATIONS): HL-93; NO ALLOWANCE FOR FWS
FOUNDATION (EXISTING FOUNDATIONS): HS-20; NO ALLOWANCE FOR FWS

DESIGN DATA:

CONCRETE CLASS QC2 WITH QC/QA - COMPRESSIVE STRENGTH 4.5 KSI (SUPERSTRUCTURE)
CONCRETE CLASS QC1 WITH QC/QA - COMPRESSIVE STRENGTH 4.0 KSI (SUBSTRUCTURE)

REINFORCING STEEL - MINIMUM YIELD STRENGTH 60 KSI
STRUCTURAL STEEL - ASTM A709 GRADE 50 - YIELD STRENGTH 50 KSI

STEEL H-PILES - ASTM A572 - YIELD STRENGTH 50 KSI

MONOLITHIC WEARING SURFACE:

MONOLITHIC WEARING SURFACE IS ASSUMED, FOR DESIGN PURPOSES, TO BE 1 INCH THICK.

MAINTENANCE OF TRAFFIC:

MAINTENANCE OF TRAFFIC FOR THE STRUCTURE WORK SHALL BE COORDINATED WITH THE OVERALL PROJECT. REFER TO THE MAINTENANCE OF TRAFFIC NOTES AND DETAILS ELSEWHERE IN THE PLANS. ADDITIONALLY, THE CONTRACTOR MAY CLOSE ONE LANE (EASTBOUND LANE) USING A FLAGGER IN ACCORDANCE WITH ODOT STANDARD DRAWING MT-97.10, WHEN PLACING THE MICRO-SILICA MODIFIED CONCRETE OVERLAY TO PROVIDE ADDITIONAL ROOM AND SAFETY TO WORKERS.

TEMPORARY MINIMUM VERTICAL CLEARANCE:

THE TEMPORARY MINIMUM VERTICAL CLEARANCE OVER ROADWAYS AND SHOULDERS SHALL NOT BE LESS THAN 15'-6".

NOTIFICATION OF MINIMUM VERTICAL CLEARANCE REDUCTION

THE CONTRACTOR SHALL NOTIFY THE SPECIAL HAULING PERMIT SECTION OF THE OHIO DEPARTMENT OF TRANSPORTATION AT (614)728-4099 AND THE ENGINEER:

1. AT LEAST 14 DAYS PRIOR TO REDUCING THE VERTICAL CLEARANCE OF A BRIDGE, AND
2. WITHIN 14 DAYS AFTER RESTORING THE VERTICAL CLEARANCE TO ITS ORIGINAL VERTICAL CLEARANCE.

EXISTING STRUCTURE PLANS:

PLANS MAY BE EXAMINED BY THE PROSPECTIVE BIDDERS AT THE OHIO DEPARTMENT OF TRANSPORTATION, DISTRICT 12, 5500 TRANSPORTATION BLVD., GARFIELD HEIGHTS, OH 44125-5396, TEL 216.581.2100; OR ONLINE AT HTTP://WWW.DOT.STATE.OH.US/DIVISIONS/CONTRACTADMIN/CONTRACTS/PAGES/DESIGNFILES.ASPX

EXISTING STRUCTURE VERIFICATION:

DETAILS AND DIMENSIONS SHOWN ON THESE PLANS PERTAINING TO THE EXISTING STRUCTURE HAVE BEEN OBTAINED FROM PLANS OF THE EXISTING STRUCTURE AND FROM FIELD OBSERVATIONS AND MEASUREMENTS. CONSEQUENTLY, THEY ARE INDICATIVE OF THE EXISTING STRUCTURE AND THE PROPOSED WORK BUT THEY SHALL BE CONSIDERED TENTATIVE AND APPROXIMATE. THE CONTRACTOR IS REFERRED TO CMS SECTIONS 102.05, 105.02, AND 513.04.

BASE CONTRACT BID PRICES UPON A RECOGNITION OF THE UNCERTAINTIES DESCRIBED ABOVE AND UPON A PREBID EXAMINATION OF THE EXISTING STRUCTURE. HOWEVER, THE DEPARTMENT WILL PAY FOR ALL PROJECT WORK BASED UPON ACTUAL DETAILS AND DIMENSIONS THAT HAVE BEEN VERIFIED IN THE FIELD.

ITEM 202 - PORTIONS OF STRUCTURE REMOVED, OVER 20 FOOT SPAN, AS PER PLAN:

THIS WORK CONSISTS OF THE REMOVAL OF CONCRETE DECKS INCLUDING SIDEWALKS, CONCRETE BRIDGE RAILINGS, METAL RAILINGS, DECK JOINTS AND OTHER APPURTENANCES FROM STEEL SUPPORTING SYSTEMS (BEAMS,GIRDERS, CROSSFRAMES, ETC.). THE PROVISIONS OF ITEM 202 APPLY EXCEPT AS SPECIFIED BY THE FOLLOWING NOTES. PERFORM WORK CAREFULLY DURING DECK REMOVALS TO PROTECT PORTIONS OF SUCH SYSTEMS THAT ARE TO BE SALVAGED AND INCORPORATED INTO THE PROPOSED STRUCTURE. THE USE OF EXPLOSIVES, HEADACHE BALLS AND/OR HOE RAM TYPE OF EQUIPMENT IS PROHIBITED. SUBMIT CONSTRUCTION PLANS ACCORDING TO CMS 501.05.

PROTECTION OF STEEL SUPPORT SYSTEMS: BEFORE DECK SLAB CUTTING IS PERMITTED, DRAW THE OUTLINE OF PRIMARY STEEL MEMBERS IN CONTACT WITH THE BOTTOM OF THE DECK ON THE SURFACE OF DECK.

DRILL SMALL DIAMETER PILOT HOLES 2 INCHES OUTSIDE THESE LINES TO CONFIRM THE LOCATION OF FLANGE EDGES. DECK CUTS OVER OR WITHIN 2 INCHES OF FLANGE EDGES SHALL NOT EXTEND LOWER THAN THE BOTTOM LAYER OF DECK SLAB REINFORCING STEEL. CUTS MADE OUTSIDE 2 INCHES OF FLANGE EDGES MAY EXTEND THE FULL DEPTH OF THE DECK. PERFORM WORK CAREFULLY DURING CUTTING OF THE DECK SLAB TO AVOID DAMAGING STEEL MEMBERS THAT ARE TO BE INCORPORATED INTO THE PROPOSED STRUCTURE. REPLACE OR REPAIR STEEL MEMBERS DAMAGED BY THE DECK SLAB CUTTING OPERATIONS AT NO COST TO THE PROJECT. AT LEAST 7 DAYS BEFORE PERFORMING REPAIR WORK, SUBMIT A PROPOSED REPAIR PLAN, DEVELOPED BY AN OHIO REGISTERED PROFESSIONAL ENGINEER TO THE ENGINEER. OBTAIN THE ENGINEER'S APPROVAL BEFORE PERFORMING REPAIR.

REMOVAL METHODS: THE CONTRACTOR MAY REMOVE CONCRETE BY CUTTING AND BY MEANS OF HAND OPERATED PNEUMATIC HAMMERS EMPLOYING POINTED OR BLUNTED CHISEL TYPE TOOLS. FOR REMOVAL OVER STRUCTURAL MEMBERS (STEEL BEAM, STEEL GIRDER, ETC.), THE CONTRACTOR MAY USE A HAMMER HEAVIER THAN 35 POUNDS BUT NOT TO EXCEED 90 POUNDS UNLESS APPROVED BY THE ENGINEER. REMOVAL METHODS OVER STRUCTURAL MEMBERS SHALL ENSURE ADEQUATE DEPTH CONTROL AND PREVENT NICKING OR GOUGING THE PRIMARY STRUCTURAL MEMBERS. DUE TO THE POSSIBLE PRESENCE OF ATTACHMENTS (E.G., FINISHING MACHINE, SCUPPER AND FORM SUPPORTS, ETC.) TO EXISTING STRUCTURAL MEMBERS, PERFORM WORK CAREFULLY DURING DECK REMOVAL TO AVOID DAMAGING STRUCTURAL MEMBERS THAT ARE TO REMAIN. REPLACE OR REPAIR STRUCTURAL MEMBERS DAMAGED BY THE REMOVAL OPERATIONS AT NO COST TO THE PROJECT. AT LEAST 7 DAYS BEFORE PERFORMING REPAIR WORK, SUBMIT A PROPOSED REPAIR PLAN, DEVELOPED BY AN OHIO REGISTERED PROFESSIONAL ENGINEER TO THE ENGINEER. OBTAIN THE ENGINEER'S APPROVAL BEFORE PERFORMING REPAIR.

EXISTING WELDED ATTACHMENTS: REMOVE EXISTING WELDED ATTACHMENTS (E.G., FINISHING MACHINE AND FORM SUPPORTS; AND SUPPORTS FOR SCUPPERS AND BULB ANGLES WHICH ARE TO BE REMOVED) LOCATED IN THE DESIGNATED TENSION PORTIONS OF THE TOP FLANGES OF EXISTING STEEL MEMBERS AND GRIND THE FLANGE SURFACES SMOOTH. CAREFULLY GRIND PARALLEL TO THE FLANGES.

CUT LINE CONSTRUCTION JOINT PREPARATION: SAW CUT BOUNDARIES OF PROPOSED CONCRETE REMOVALS 1 INCH DEEP. REMOVE CONCRETE TO A ROUGH SURFACE. LEAVE THE EXISTING REINFORCING STEEL, IF REQUIRED IN THE PLANS, IN PLACE. INSTALL DOWEL BARS IF SPECIFIED. PRIOR TO CONCRETE PLACEMENT ABRASIVELY CLEAN JOINT SURFACES AND EXISTING EXPOSED REINFORCEMENT TO REMOVE LOOSE AND DISINTEGRATED CONCRETE AND LOOSE RUST. THOROUGHLY CLEAN THE JOINT SURFACE AND EXPOSED REINFORCEMENT OF ALL DIRT, DUST, RUST OR OTHER FOREIGN MATERIAL BY THE USE OF WATER, AIR UNDER PRESSURE, OR OTHER METHODS THAT PRODUCE SATISFACTORY RESULTS. EXISTING REINFORCING STEEL DOES NOT HAVE TO HAVE A BRIGHT STEEL FINISH BUT REMOVE ALL PACK AND LOOSE RUST. THOROUGHLY DRENCH EXISTING CONCRETE SURFACES WITH CLEAN WATER AND ALLOW TO DRY TO A DAMP CONDITION BEFORE PLACING CONCRETE.

SUBSTRUCTURE CONCRETE REMOVAL: REMOVE CONCRETE BY MEANS OF APPROVED PNEUMATIC HAMMERS EMPLOYING POINTED AND BLUNT CHISEL TOOLS. HYDRAULIC HOE-RAM TYPE HAMMERS WILL NOT BE PERMITTED. THE WEIGHT OF THE HAMMER SHALL NOT BE MORE THAN 35 POUNDS FOR REMOVAL WITHIN 18 INCHES OF PORTIONS TO BE PRESERVED. OUTSIDE THE 18 INCH LIMIT, THE CONTRACTOR MAY USE HAMMERS NOT EXCEEDING 90 POUNDS UPON THE APPROVAL OF THE ENGINEER. DO NOT PLACE PNEUMATIC HAMMERS IN DIRECT CONTACT WITH REINFORCING STEEL THAT IS TO BE RETAINED IN THE REBUILT STRUCTURE.

MEASUREMENT & PAYMENT: THE DEPARTMENT WILL MEASURE THE QUANTITY OF REMOVALS ON A LUMP SUM BASIS. THE DEPARTMENT WILL PAY FOR THE ACCEPTED QUANTITIES OF REMOVALS AT THE CONTRACT PRICE FOR ITEM 202 - PORTIONS OF STRUCTURE REMOVED, OVER 20 FOOT SPAN, AS PER PLAN.

ASBESTOS NOTIFICATION:

REFER TO THE ENVIRONMENTAL COMMITMENTS SECTION IN THE ROADWAY GENERAL NOTES ON SHEET P.19 OF P.434 FOR ASBESTOS NOTIFICATION REQUIREMENTS. PAYMENT FOR THIS WORK SHALL BE INCLUDED WITH ITEM 202 - PORTIONS OF STRUCTURE REMOVED, OVER 20 FOOT SPAN, AS PER PLAN.

PILES TO BEDROCK:

DRIVE PILES TO REFUSAL ON BEDROCK. THE DEPARTMENT WILL CONSIDER REFUSAL TO BE OBTAINED WHEN THE PILE PENETRATION IS AN INCH OR LESS AFTER RECEIVING AT LEAST 20 BLOWS FROM THE PILE HAMMER. SELECT THE HAMMER SIZE TO ACHIEVE THE REQUIRED DEPTH TO BEDROCK AND REFUSAL.

THE TOTAL FACTORED LOAD IS 88 KIPS FOR THE ABUTMENT PILES. THE TOTAL FACTORED LOAD IS 300 KIPS FOR THE PIER PILES.

REAR ABUTMENTS PILES:
HP10x42 PILES 70 FEET LONG, ORDER LENGTH

FORWARD ABUTMENTS PILES:
HP10x42 PILES 75 FEET LONG, ORDER LENGTH

PIER 1 & PIER 3 PILES:
HP10x42 PILES 60 FEET LONG, ORDER LENGTH

PIER 2 PILES:
HP10x42 PILES 50 FEET LONG, ORDER LENGTH

PILES SPLICES:

IN LIEU OF USING THE FULL PENETRATION BUTT WELDS SPECIFIED IN CMS 507.09 TO SPLICE STEEL H-PILES, THE CONTRACTOR MAY USE A MANUFACTURED H-PILE SPLICER. FURNISH SPLICERS FROM THE FOLLOWING MANUFACTURER:

ASSOCIATED PILE AND FITTING CORPORATION
8 WOOD HOLLOW RD. PLAZA 1
PARSIPPANY, NEW JERSEY 07054

INSTALL AND WELD THE SPLICER TO THE PILE SECTIONS IN ACCORDANCE WITH THE MANUFACTURER'S WRITTEN ASSEMBLY PROCEDURE SUPPLIED TO THE ENGINEER BEFORE THE WELDING IS PERFORMED.

ITEM 503 - COFFERDAMS AND EXCAVATION BRACING, AS PER PLAN:

THE DESIGN SHOWN ON THE PLANS FOR TEMPORARY SUPPORT OF EXCAVATION IS ONE REPRESENTATIVE DESIGN THAT MAY BE USED TO CONSTRUCT THE PROJECT. THE CONTRACTOR MAY CONSTRUCT THE DESIGN SHOWN ON THE PLANS OR PREPARE AN ALTERNATE DESIGN TO SUPPORT THE SIDES OF EXCAVATIONS. IF CONSTRUCTING AN ALTERNATE DESIGN FOR TEMPORARY SUPPORT OF EXCAVATION, PREPARE AND PROVIDE PLANS IN ACCORDANCE WITH CMS 501.05. THE DEPARTMENT WILL PAY FOR THE TEMPORARY SUPPORT OF EXCAVATION AT THE CONTRACT LUMP SUM PRICE FOR COFFERDAMS AND EXCAVATION BRACING. THE DEPARTMENT WILL NOT MAKE ADDITIONAL PAYMENT FOR PROVIDING AN ALTERNATE DESIGN.

GENERAL NOTES - 1
BRIDGE NO. CUY-CR187-00.977
MILLER ROAD OVER I.R. 77

SFN 1805673
DESIGN AGENCY
EUTHENICS
8235 Mohawk Dr. | Cleveland, OH 44138
DESIGNER OOS | CHECKER BPS
REVIEWER LAB 02/24/22
PROJECT ID 104983
SUBSET 4 | TOTAL 41
SHEET P.328 | TOTAL P.434

CUY-77-00.42 PART 1

MODEL: SN001 PAPERSIZE: 17x11 (in.) DATE: 3/4/2022 TIME: 2:01:28 PM USER: esmccaslin
F:\Jobs\11162-Miller Road Interchange\104983\400-Engineering\Structures\SFN_1805673\Sheets\104983_SFN_1805673_SN001.dgn

ITEM 509 - EPOXY COATED REINFORCING STEEL, AS PER PLAN:

IN ADDITION TO THE PROVISIONS OF ITEM 509, FIELD BEND AND/OR FIELD CUT THE REINFORCING STEEL DESIGNATED IN THE PLANS, AS NECESSARY, IN ORDER TO MAINTAIN THE REQUIRED CLEARANCES AND BAR SPACING. REPAIR ALL DAMAGE TO THE EPOXY COATING, AS A RESULT OF THIS WORK, ACCORDING TO CMS 709.00.

ITEM 509 - REINFORCING STEEL, REPLACEMENT OF EXISTING REINFORCING STEEL, AS PER PLAN:

REPLACE ALL EXISTING REINFORCING BARS DEEMED BY THE ENGINEER TO BE USABLE BECAUSE OF CORROSION. THE DEPARTMENT WILL MEASURE THE REPLACEMENT REINFORCING STEEL BY THE NUMBER OF POUNDS ACCEPTED IN PLACE.

A QUANTITY OF 400 LBS HAS BEEN CARRIED TO THE ESTIMATED QUANTITIES FOR USE AS DIRECTED BY THE ENGINEER.

REPLACE ALL EXISTING REINFORCING STEEL BARS WHICH ARE TO BE INCORPORATED INTO THE NEW WORK AND ARE DEEMED BY THE ENGINEER TO BE MADE UNUSABLE BY CONCRETE REMOVAL OPERATIONS WITH NEW REINFORCING STEEL OF THE SAME SIZE AND COATING AT NO COST TO THE DEPARTMENT.

ITEM 510 - DOWEL HOLES WITH NONSHRINK, NONMETALLIC GROUT, AS PER PLAN:

DESCRIPTION: THIS ITEM SHALL CONSIST OF DRILLING HOLES INTO CONCRETE AND FURNISHING AND PLACING GROUT INTO THE HOLES IN ACCORDANCE WITH CMS 510 AND MODIFIED BY THE FOLLOWING REQUIREMENTS.

MATERIALS: FURNISH AN ADHESIVE ANCHOR SYSTEM THAT MEETS THE REQUIREMENTS OF ACI 355.4-11, SUCH AS DAYTON SUPERIOR CORPORATION PRO-POXY 500, HILTI HIT HY 200, DEWALT PURE 110+, OR APPROVED EQUAL.

PLACING HOLES: PRIOR TO DRILLING DOWEL HOLES, LOCATE ALL EXISTING REINFORCING STEEL WITH AID OF A REINFORCING STEEL BAR LOCATOR (PACHOMETER). IF AN EXISTING BAR IS ENCOUNTERED AT THE SAME LOCATION AS A PROPOSED DOWEL HOLE, MOVE THE DOWEL HOLE TO EITHER SIDE OF THE EXISTING BAR.

METHOD OF MEASUREMENT: THE QUANTITY MEASURED WILL BE THE NUMBER OF DOWEL HOLES COMPLETE IN PLACE.

BASIS OF PAYMENT: ACCEPTED QUANTITIES WILL BE PAID FOR AT THE CONTRACT UNIT PRICE BID PER EACH DOWEL HOLE COMPLETE IN PLACE. THIS PRICE SHALL INCLUDE FULL COMPENSATION FOR ALL MATERIALS, LABOR, EQUIPMENT, AND INCIDENTALS INCLUDING LOCATING THE EXISTING REINFORCING STEEL, DRILLING DOWEL HOLES, AND INSTALLING AN ADHESIVE ANCHOR SYSTEM. PAYMENT WILL BE MADE UNDER ITEM 510 - DOWEL HOLES WITH NONSHRINK, NONMETALLIC GROUT, AS PER PLAN.

ITEM 512 - SEALING OF CONCRETE SURFACES (EPOXY-URETHANE):

THE COLOR OF THE FINISH COAT FOR ALL SURFACES SHALL BE FEDERAL COLOR NO. 595B-25630 (LIGHT GREY).

ITEM 514 - FIELD PAINTING OF STRUCTURAL STEEL:

COLOR OF THE FINISH COAT FOR FASCIA BEAMS SHALL BE FEDERAL COLOR NO. 595B-14066 (DARK GREEN, GLOSS).

COLOR OF THE FINISH COAT FOR ALL OTHER STEEL SHALL BE FEDERAL COLOR NO. 595B-14516 (LIGHT GREEN, GLOSS).

INSPECTION OF EXISTING STRUCTURAL STEEL:

THE ENGINEER WILL VISUALLY INSPECT ALL EXISTING BUTT-WELDED SPLICES AND/OR TOP FLANGE COVER PLATE FILLET WELDS TO ENSURE THE WELDS, PLATES AND BEAMS OR GIRDERS ARE FREE OF DEFECTS AND CRACKS. IF NECESSARY, REMOVE ALL DECK SLAB HAUNCH FORMS IMMEDIATELY ADJACENT TO SUCH WELDS THAT MAY INTERFERE WITH THE ENGINEER'S INSPECTION. THE INSPECTION WILL NOT TAKE PLACE UNTIL THE TOP FLANGES ARE CLEANED ACCORDING TO CMS 511.10, BUT IT WILL BE DONE BEFORE THE DECK SLAB REINFORCEMENT IS INSTALLED. THE DEPARTMENT WILL PAY FOR THE COST ASSOCIATED WITH THIS INSPECTION WITH ITEM 511 - CLASS QC2 CONCRETE WITH QC/QA, BRIDGE DECK. THE ENGINEER WILL REPORT ALL CRACKS FOUND TO THE OFFICE OF CONSTRUCTION ADMINISTRATION, BRIDGE CONSTRUCTION SPECIALIST, ALONG WITH SPECIFIC INFORMATION ON LOCATION OF THE CRACKS, LENGTH, AND DEPTH SO AN EVALUATION AND REPAIR OR REPLACEMENT RECOMMENDATION CAN BE MADE.

ITEM 519 - PATCHING CONCRETE STRUCTURES, AS PER PLAN:

PRIOR TO THE SURFACE CLEANING SPECIFIED IN CMS 519.04 AND WITHIN 24 HOURS OF PLACING PATCHING MATERIAL, BLAST CLEAN ALL SURFACES TO BE PATCHED INCLUDING THE EXPOSED REINFORCING STEEL. ACCEPTABLE METHODS INCLUDE HIGH-PRESSURE WATER BLASTING WITH OR WITHOUT ABRASIVES IN THE WATER, ABRASIVE BLASTING WITH CONTAINMENT, OR VACUUM ABRASIVE BLASTING.

ITEM 526 - REINFORCED CONCRETE APPROACH SLABS (T=13"), AS PER PLAN:

DESCRIPTION: THIS ITEM SHALL CONSIST OF CONSTRUCTING REINFORCED CONCRETE APPROACH SLABS WITH SIDEWALKS AND SIDEWALK EXPANSION JOINTS IN ACCORDANCE WITH THE DETAILS IN THE STRUCTURE PLANS AND ODOT STANDARD DRAWINGS AS-1-15 AND AS-2-15.

MATERIALS: CONCRETE FOR THIS ITEM, INCLUDING APPROACH SLABS AND SIDEWALK SHALL BE ITEM 511 - CLASS QC2 WITH QC/QA. USE THE SAME MIX DEISGN FOR ITEM 526 AS IS USED FOR THE SUPERSTRUCTURE.

METHOD OF MEASUREMENT: THE AREA MEASURED WILL BE THE NUMBER OF SQUARE YARDS COMPLETE IN PLACE.

BASIS OF PAYMENT: ACCEPTED QUANTITIES WILL BE PAID FOR AT THE CONTRACT UNIT PRICE BID PER SQUARE YARD COMPLETE IN PLACE. THIS PRICE SHALL INCLUDE FULL COMPENSATION FOR ALL CONCRETE APPROACH SLABS AND SIDEWALKS, INCLUDING SEALERS, EPOXY COATED REINFORCING STEEL, PREFORMED EXPANSION JOINT FILLER, EXPANSION JOINT MATERIALS, AND OTHER INCIDENTAL MATERIALS, LABOR AND EQUIPMENT. PAYMENT WILL BE MADE UNDER ITEM 526 - REINFORCED CONCRETE APPROACH SLABS (T=13"), AS PER PLAN.

DECK PLACEMENT DESIGN ASSUMPTIONS:

THE FOLLOWING ASSUMPTIONS OF CONSTRUCTION MEANS AND METHODS WERE MADE FOR THE ANALYSIS AND DESIGN OF THE SUPERSTRUCTURE. THE CONTRACTOR IS RESPONSIBLE FOR THE DESIGN OF THE FALSEWORK SUPPORT SYSTEM WITHIN THESE PARAMETERS AND WILL ASSUME RESPONSIBILITY FOR SUPERSTRUCTURE ANALYSIS FOR DEVIATION FROM THESE DESIGN ASSUMPTIONS.

AN EIGHT WHEEL FINISHING MACHINE WITH A MAXIMUM WHEEL LOAD OF 2.2 KIPS.

A MINIMUM OUT-TO-OUT WHEEL SPACING AT EACH END OF THE MACHINE OF 103".

A MAXIMUM SPACING OF OVERHANG FALSEWORK BRACKETS OF 48 IN.

A MAXIMUM DISTANCE FROM THE CENTERLINE OF THE FASCIA GIRDER TO THE FACE OF THE SAFETY HANDRAIL OF 65".

ITEM SPECIAL - STRUCTURAL SURVEY AND MONITORING OF VIBRATION:

MINIMUM REQUIRED SURVEY AND VIBRATION:
AT A MINIMUM, A CONDITION SURVEY SHALL BE COMPLETED FOR ALL EXISTING BUILDINGS, STRUCTURES, AND UTILITIES AS DEPICTED ON SHEET 3 OF 41.

OTHER STRUCTURES WITHIN 300' OF THE EARTH WORK AND 500' FROM THE PILE DRIVING WORK MAY BE PRESENT ON THE PROJECT. THE CONTRACTOR SHALL IDENTIFY, SURVEY, AND MONITOR THOSE IN ADDITION TO THE MINIMUM REQUIRED PROPERTIES.

STRUCTURAL SURVEY:
BEFORE ROADWAY WORK WITHIN 250' OF IDENTIFIED STRUCTURES OR PILE DRIVING WORK WITHIN 500' OF IDENTIFIED STRUCTURES BEGINS, CONDUCT A CONDITION SURVEY OF ALL EXISTING BUILDINGS, STRUCTURES, AND UTILITIES WITHIN 300-FT OF THE WORK, OR AS IDENTIFIED ON SHEET 3 OF 41. THE PURPOSE OF THE SURVEY IS TO DOCUMENT THE CONDITION OF THE BUILDINGS, STRUCTURES, OR UTILITIES PRIOR TO ROADWAY WORK, SO THAT CLAIMS OF DAMAGE CAUSED BY THE WORK CAN BE VERIFIED.

RETAIN AN EXPERIENCED VIBRATION SPECIALIST TO PERFORM OR SUPERVISE THE CONDITION SURVEY. USE A VIBRATION SPECIALIST THAT MEETS THE QUALIFICATION REQUIREMENTS FOR VIBRATION MONITORING.

RECORD THE CONDITION OF EXISTING STRUCTURES AND BUILDING MATERIALS, USING WRITTEN TEXT, PHOTOGRAPHS, AND VIDEO RECORDINGS. INSPECT INTERIOR WALLS, CEILINGS, AND FLOORS THAT ARE ACCESSIBLE. INSPECT THE EXTERIOR OF THE BUILDING THAT IS VISIBLE FROM GROUND LEVEL. ALSO RECORD THE LOCATION, SIZE, AND TYPE OF ALL CRACKS AND OTHER STRUCTURAL DEFICIENCIES.

IF OWNERS OR OCCUPANTS FAIL TO ALLOW ACCESS TO THE PROPERTY FOR THE PRECONSTRUCTION CONDITION SURVEY, SEND A CERTIFIED LETTER TO THE OWNER OR OCCUPANT. DOCUMENT THE NOTIFICATION EFFORT AND THE CERTIFIED LETTER IN THE REPORT.

SUBMIT THREE COPIES OF A STRUCTURAL SURVEY REPORT TO THE ENGINEER THAT SUMMARIZES THE PRECONSTRUCTION CONDITION OF THE BUILDINGS, STRUCTURES, AND UTILITIES, AND THAT IDENTIFIES AREAS OF CONCERN.

VIBRATION MONITORING:
MONITOR GROUND VIBRATIONS CAUSED BY ROADWAY WORK WITHIN 250' OF IDENTIFIED STRUCTURES AND PILE DRIVING WORK WITHIN 500' OF IDENTIFIED STRUCTURES TO MINIMIZE THE POTENTIAL DAMAGE TO EXISTING STRUCTURES.

RETAIN AN EXPERIENCED VIBRATION SPECIALIST TO ESTABLISH THE ACCEPTABLE VIBRATION LIMITS AND TO PERFORM THE VIBRATION MONITORING. USE A VIBRATION SPECIALIST THAT IS AN EXPERT IN THE INTERPRETATION OF VIBRATION DATA, AND WHO MEETS ONE OF THE FOLLOWING CRITERIA: 1) IS A REGISTERED ENGINEER WITH AT LEAST TWO YEARS OF PROVEN EXPERIENCE IN MONITORING VIBRATIONS ON SIMILAR CONSTRUCTION PROJECTS, OR 2) HAS AT LEAST FIVE YEARS OF PROVEN EXPERIENCE IN MONITORING VIBRATIONS ON SIMILAR CONSTRUCTION PROJECTS. DO NOT USE A VIBRATION SPECIALIST THAT IS AN EMPLOYEE OF THE CONTRACTOR.

SUBMIT A RESUME OF THE CREDENTIALS OF THE PROPOSED VIBRATION SPECIALIST AT OR BEFORE THE PRECONSTRUCTION MEETING. INCLUDE IN THE RESUME A LIST OF CONSTRUCTION PROJECTS ON WHICH THE VIBRATION SPECIALIST WAS RESPONSIBLY IN CHARGE OF MONITORING THE VIBRATIONS. LIST A DESCRIPTION OF THE PROJECTS, WITH DETAILS OF THE VIBRATION INTERPRETATIONS MADE ON THE PROJECT. LIST THE NAMES AND TELEPHONE NUMBERS OF PROJECT OWNERS WITH SUFFICIENT KNOWLEDGE OF THE PROJECTS TO VERIFY THE SUBMITTED INFORMATION. OBTAIN THE ENGINEER'S ACCEPTANCE OF THE VIBRATION SPECIALIST BEFORE BEGINNING ANY ROADWAY WORK NEAR EXISTING STRUCTURES. ALLOW 30 DAYS FOR THE REVIEW OF THIS DOCUMENTATION.

USE SEISMOGRAPHS CAPABLE OF CONTINUOUSLY RECORDING THE PEAK PARTICLE VELOCITY FOR THREE MUTUALLY PERPENDICULAR COMPONENTS OF VIBRATION, AND OF PROVIDING A PERMANENT RECORD OF THE ENTIRE VIBRATION EVENT. USE A SUFFICIENT NUMBER OF SEISMOGRAPHS TO PROVIDE REDUNDANCY IN CASE ONE DEVICE SHOULD FAIL. SUBMIT A PLAN OF THE PROPOSED SEISMOGRAPH LOCATIONS TO THE ENGINEER FOR REVIEW.

THE VIBRATION SPECIALIST SHALL PERFORM THE FOLLOWING:

1. MEASURE THE AMBIENT GROUND VIBRATIONS NEAR EXISTING STRUCTURES BEFORE ROADWAY WORK BEGINS WITHIN THE SPECIFIED DISTANCE.
2. ESTABLISH VIBRATION LIMITS TO MINIMIZE POTENTIAL DAMAGE TO EXISTING STRUCTURES AND EXPLAIN WHY THEY ARE BEING USED TO THE ENGINEER BEFORE ROADWAY WORK NEAR EXISTING STRUCTURES.
3. MONITOR GROUND VIBRATIONS DURING ROADWAY WORK WITHIN THE SPECIFIED DISTANCE.
4. IMMEDIATELY INFORM THE CONTRACTOR AND ENGINEER IF THE VIBRATION LIMITS ARE REACHED OR EXCEEDED.
5. FURNISH THE DATA RECORDED AND INCLUDE THE FOLLOWING:
   A. IDENTIFICATION OF SEISMOGRAPH.
   B. DISTANCE AND DIRECTION OF SEISMOGRAPH FROM ROADWAY WORK.
   C. START TIME AND DURATION OF ROADWAY WORK.
   D. DESCRIPTION OF ROADWAY WORK PERFORMED DURING EACH MONITORING INTERVAL.

IMMEDIATELY SUSPEND ALL ROADWAY WORK WITHIN THE SPECIFIED DISTANCE IF THE VIBRATION LIMITS ARE REACHED OR EXCEEDED. EVALUATE ALTERNATIVE CONSTRUCTION PROCEDURES TO REDUCE THE VIBRATIONS. SUBMIT THREE COPIES OF THE FINAL REPORT WHICH CONTAINS ALL MEASUREMENTS, INTERPRETATIONS, AND RECOMMENDATIONS TO THE ENGINEER.

BASIS OF PAYMENT:
THE DEPARTMENT WILL PAY FOR THIS ITEM AT THE CONTRACT LUMP SUM PRICE FOR SPECIAL - STRUCTURAL SURVEY AND MONITORING OF VIBRATION. THE DEPARTMENT WILL PAY THE INITIAL 20% AFTER THE ENGINEER RECEIVES ALL STRUCTURAL SURVEY REPORTS. THE DEPARTMENT WILL PAY THE FINAL 20% AFTER THE ENGINEER RECEIVES THE FINAL VIBRATION MONITORING REPORT. THE DEPARTMENT WILL PAY ACCORDING TO CMS 109.05 FOR ALTERNATIVE CONSTRUCTION PROCEDURES THAT THE ENGINEER DETERMINES ARE NECESSARY TO REDUCE VIBRATIONS.

GENERAL NOTES - 2
BRIDGE NO. CUY-CR187-00.977
MILLER ROAD OVER I.R. 77

SFN 1805673

DESIGN AGENCY
EUTHENICS
8235 Mohawk Dr. | Cleveland, OH 44539

DESIGNER	CHECKER
OOS	BPS

REVIEWER
LAB 02/24/22

PROJECT ID
104983

SUBSET	TOTAL
5	41

SHEET	TOTAL
P.329	P.434

CUY-77-00.42 PART 1

MODEL: SN002 PAPERSIZE: 17x11 (in.) DATE: 3/4/2022 TIME: 2:01:33 PM USER: esmccaslin
F:\Jobs\11162-Miller Road Interchange\104983\400-Engineering\Structures\SFN_1805673\Sheets\104983_SFN_1805673_SN002.dgn

ITEM 601 - SLOPE PROTECTION, MISC.: GROUT FILLED FABRIC MATS:

DESCRIPTION: EMBANKMENT SLOPE PROTECTION EXTENDING FROM THE FACE OF THE ABUTMENT DOWN TO THE TOE OF SLOPE SHALL BE IN ACCORDANCE WITH CMS 601.05 EXCEPT AS MODIFIED HEREIN. THE FOLLOWING SHALL BE CONSIDERED AS SUPPLEMENTAL TO THE PROVISIONS SET FORTH THEREIN.

MATERIAL: PREPARE THE BRIDGE SLOPES BY GRADING THE EXISTING MATERIALS AND SUPPLYING ADDITIONAL CRUSHED AGGREGATE AS NECESSARY TO PROVIDE A PREPARED SLOPE SUITABLE TO THE PROJECT ENGINEER. THE MATERIAL USED FOR EMBANKMENT SLOPE PROTECTION SHALL CONSIST OF SPECIALLY-WOVEN MULTIPLE PANELS OF DOUBLE LAYER, OPEN SELVAGE NYLON FABRIC, JOINED IN A MAT CONFIGURATION WITH 8" FILTER POINT SPACING, SIMILAR TO FILTER FABRIC, "FABRIFORM 8" OR APPROVED ALTERNATE. THIS MAT SHALL BE FILLED WITH A GROUT CONSISTING OF A MIXTURE OF PORTLAND CEMENT, FINE AGGREGATE AND WATER SO PROPORTIONED AND MIXED AS TO PROVIDE A PUMPABLE SLURRY. POZZOLAN AND GROUT FLUIDFIER MAY BE USED AT THE OPTION OF THE CONTRACTOR. THE MIX SHALL EXHIBIT A COMPRESSIVE STRENGTH OF 2000 P.S.I. AT TWENTY-EIGHT (28) DAYS WHEN MADE AND TESTED IN ACCORDANCE WITH ASTM C-31 AND C-39.

INSTALLATION: THE GROUT FILLED FABRIC MATS SHALL BE INSTALLED ON THE PREPARED SLOPE IN STRICT ACCORDANCE WITH THE MANUFACTURER'S RECOMMENDATIONS. THE SIDES AND BOTTOM OF THE GROUT FILLED FABRIC MATS SHALL TERMINATE IN ANCHOR TRENCHES. THE TOP OF THE GROUT FILLED FABRIC MATS SHALL TERMINATE AT THE ABUTMENTS AGAINST 2" PREFORMED EXPANSION JOINT FILLER. (SEE DETAILS BELOW).

MEASUREMENT FOR PAYMENT: GROUT FILLED FABRIC MATS WILL BE MEASURED BY THE SQUARE YARD OF FINISHED SURFACE COMPLETE IN PLACE.

BASIS OF PAYMENT: PAYMENT FOR THE ACCEPTED QUANTITIES, COMPLETE IN PLACE WILL BE MADE AT THE CONTRACT UNIT PRICE BID FOR:

ITEM	*UNIT*	*DESCRIPTION*
601	*SY*	*SLOPE PROTECTION, MISC.: GROUT FILLED FABRIC MATS*

THIS PRICE SHALL BE FULL COMPENSATION FOR ALL MATERIALS, LABOR, EQUIPMENT AND INCIDENTALS NECESSARY TO COMPLETE THIS ITEM AS SPECIFIED.

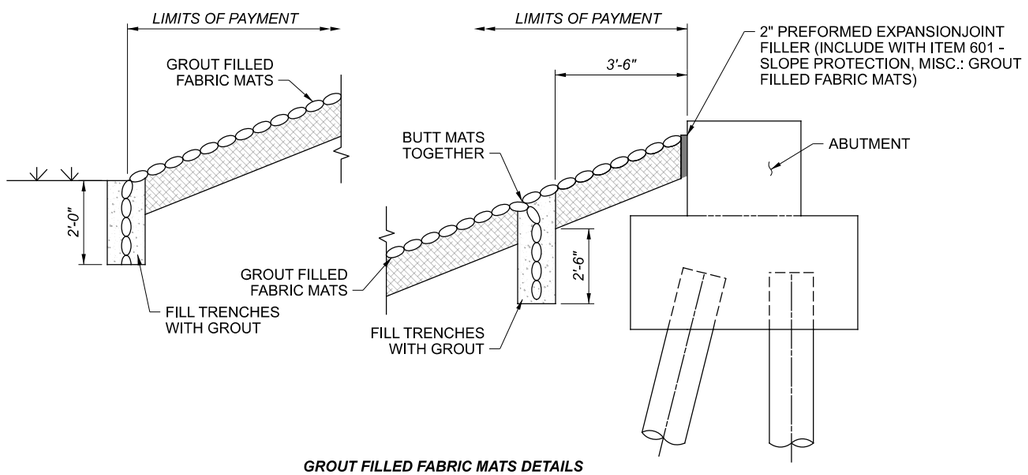

GROUT FILLED FABRIC MATS DETAILS

ITEM 625 - STRUCTURE GROUNDING SYSTEM:

INSTALL A STRUCTURE GROUNDING SYSTEM IN ACCORDANCE WITH ODOT STANDARD DRAWING HL-50.21. SURFACE-MOUNTED GROUND CONDUCTORS USING 1" METAL CONDUIT WILL BE REQUIRED TO GROUND THE RIGHT VANDAL PROTECTION FENCE AND THE RIGHT EXTERIOR BEAM. AS PART OF THE REQUIREMENTS OF CMS 625.06 FOR SHOP DRAWINGS, THE CONTRACTOR SHALL PROVIDE BOTH A LAYOUT AND DETAILS OF THE SURFACE-MOUNTED GROUND CONDUCTORS TO THE ENGINEER FOR REVIEW AND APPROVAL. PAYMENT WILL BE MADE UNDER ITEM 625 – STRUCTURE GROUNDING SYSTEM. A QUANTITY OF 1 EACH HAS BEEN CARRIED TO THE GENERAL SUMMARY ON SHEET P.88 OF P.434.

ITEM 630 - SIGNING, MISC.: OVERPASS NAME INSTALLATION:

THIS ITEM SHALL APPLY TO THE FOLLOWING STRUCTURE: CUY-CR187-00977 (SFN 1805673)

THE CONTRACTOR IS REQUIRED TO INSTALL OVERHEAD STREET NAME DESIGNATION SIGNS ON THE FASCIA BEAMS AFTER PAINTING AND APPROVAL OF PAINTING IS COMPLETED.

INSTALL SIGNS, AS DIRECTED BY THE ENGINEER, WHERE THEY ARE MOST VISIBLE TO THE TRAVELING PUBLIC BUT NOT OVER TRAVELED LANES. SIGNS MAY BE INSTALLED OVER BERMS, BUT MAY NOT BE CUT FOR INSTALLATION. THE SIGN DECALS WILL BE PROVIDED BY THE DISTRICT. THE SIGN DECAL MAY BE PICKED UP AT THE DISTRICT OFFICE FROM THE DISTRICT TRAFFIC ENGINEER, KEITH HAMILTON, AT 216-584-2220. THE DISTRICT TRAFFIC ENGINEER REQUIRES 30 DAYS ADVANCE NOTIFICATION FOR COORDINATION OF ACQUISITION OF THE SIGN DECALS. ALL LABOR AND EQUIPMENT REQUIRED TO PERFORM THE ABOVE DESCRIBED WORK SHALL BE INCLUDED FOR PAYMENT AS ITEM 630 - SIGNING, MISC.: OVERPASS NAME INSTALLATION. A QUANTITY OF 6 EACH HAS BEEN CARRIED TO THE GENERAL SUMMARY ON SHEET P.87 OF P.434.

SUMMARY OF PROPOSED REHABILITATION WORK:

THE FOLLOWING LIST CONTAINS THE MAJOR ITEMS OF WORK INCLUDED IN THESE PLANS FOR THE REHABILITATION OF THIS STRUCTURE:

1. *PARTIAL REMOVAL OF THE EXISTING BRIDGE DECK INCLUDING SIDEWALK, PARAPET, AND VANDAL PROTECTION FENCING.*
2. *REMOVAL OF EXISTING APPROACH SLABS.*
3. *REMOVAL OF PORTIONS OF THE EXISTING ABUTMENTS AND WINGWALLS TO ACCOMMODATE SUBSTRUCTURE WIDENING.*
4. *WIDENING OF EXISTING ABUTMENTS AND CONSTRUCTION OF NEW WINGWALLS ON EXISTING AND NEW PILE-SUPPORTED FOUNDATIONS.*
5. *CONSTRUCTION OF NEW ADDITIONAL INDIVIDUAL CAP AND COLUMN PIERS.*
6. *CONSTRUCTION OF NEW SUPERSTRUCTURE WITH INSTALLATION OF FOUR (4) BEAM LINES.*
7. *CONSTRUCTION OF WIDENED SEMI-INTEGRAL CONCRETE END DIAPHRAGMS.*
8. *CONSTRUCTION OF WIDENED SUPERSTRUCTURE DECK SLAB INCLUDING SIDEWALK, PARAPET, AND VANDAL PROTECTION FENCING.*
9. *CONSTRUCTION OF WIDENED APPROACH SLAB.*
10. *PARTIAL REMOVAL OF CONCRETE WEARING SURFACE AND REPLACEMENT WITH MICRO-SILICA CONCRETE OVERLAY.*
11. *REMOVAL AND REPLACEMENT OF THE EXISTING PARAPET AND VANDAL PROTECTION FENCE.*
12. *SEALING OF PARAPETS AND DECK EDGE.*
13. *PATCHING AND SEALING OF COMPLETED SUBSTRUCTURE.*
14. *PAINTING OF STRUCTURAL STEEL.*

GENERAL NOTES - 3
BRIDGE NO. CUY-CR187-00.977
MILLER ROAD OVER I.R. 77

SFN 1805673

DESIGN AGENCY
EUTHENICS
8235 Hobart Dr. | Cleveland, OH 44129

DESIGNER	CHECKER
OOS	BPS

REVIEWER LAB 02/24/22

PROJECT ID 104983

SUBSET	TOTAL
6	41

SHEET	TOTAL
P.330	P.434

CUY-77-00.42 PART 1

MODEL: SN003 PAPERSIZE: 17x11 (in.) DATE: 3/4/2022 TIME: 2:01:37 PM USER: esmccaslin
F:\Jobs\11662-Miller Road Interchange\104983\400-Engineering\Structures\SFN_1805673\Sheets\104983_SFN_1805673_SN003.dgn

SUGGESTED CONSTRUCTION PROCEDURE:

PRIOR TO PHASE 1A/1B CONSTRUCTION:

1. *REMOVE PORTIONS OF SLOPE PROTECTION FOR ABUTMENT CONSTRUCTION.*

PHASE 1A/1B CONSTRUCTION:

1. *IMPLEMENT PHASE 1A/1B MAINTENANCE OF TRAFFIC.*
2. *SAW CUT THE EXISTING DECK SLAB AND EXISTING APPROACH SLABS AT THE LONGITUDINAL CUT LINE.*
3. *DISCONNECT THE INTERMEDIATE CROSS FRAMES BETWEEN BEAMS A AND B AT BEAM B.*
4. *REMOVE THE PHASE 1A/1B REMOVAL SECTION OF THE EXISTING BRIDGE DECK AND EXISTING APPROACH SLABS. REMOVALS WILL NOT INCLUDE END DIAPHRAGM CONCRETE.*
5. *REMOVE PORTIONS OF EXISTING ABUTMENTS AND WINGWALLS ON THE PHASE 1A/1B REMOVAL SIDE.*
6. *INSTALL NEW PILES FOR ABUTMENT AND PIER FOUNDATIONS.*
7. *CONSTRUCT ABUTMENT WIDENING ON THE PHASE 1A/1B CONSTRUCTION SIDE, INCLUDING NEW WINGWALLS AND NEW BEAM SEAT FOR PROPOSED BEAMS 1 THROUGH 4.*
8. *CONSTRUCT NEW PORTION OF THE CAP AND COLUMN PIER ON THE PHASE 1A/1B CONSTRUCTION SIDE.*
9. *INSTALL NEW BEAMS 1 THROUGH 4, INCLUDING BEARINGS AND INTERMEDIATE CROSSFRAMES.*
10. *CONSTRUCT THE PHASE 1A/1B CONSTRUCTION SIDE OF THE NEW BRIDGE DECK, INCLUDING SEMI-INTEGRAL CONCRETE END DIAPHRAGMS AT THE ABUTMENTS.*
11. *RECONNECT THE INTERMEDIATE CROSS FRAMES BETWEEN BEAMS A AND B.*
12. *INSTALL NEW POROUS BACKFILL AND DRAINAGE PIPES BEHIND WIDENED ABUTMENTS.*
13. *CONSTRUCT THE PHASE 1A/1B CONSTRUCTION SIDE OF THE NEW APPROACH SLABS.*
14. *CONSTRUCT AND SEAL NEW SIDEWALK AND PARAPETS.*
15. *CONSTRUCT VANDAL PROTECTION FENCING.*

PHASE 2 CONSTRUCTION:

1. *IMPLEMENT PHASE 2 MAINTENANCE OF TRAFFIC.*
2. *REMOVE THE PHASE 2 REMOVAL SECTION OF THE EXISTING BRIDGE DECK OVERLAY BY SCARIFICATION.*
3. *CONSTRUCT THE PHASE 2 CONSTRUCTION SECTION OF THE EXISTING BRIDGE DECK OVERLAY.*
4. *REMOVE AND REPLACE THE PHASE 2 PORTION OF THE EXISTING APPROACH SLABS.*
5. *REMOVE AND REPLACE THE PHASE 2 PORTION OF THE EXISTING PARAPET AND VANDAL PROTECTION FENCE.*
6. *SEAL EXISTING SIDEWALK AND PARAPETS.*

UPON COMPLETION OF PHASE 2 CONSTRUCTION:

1. *IMPLEMENT PERMANENT TRAFFIC PATTERN FOR VEHICULAR TRAFFIC.*
2. *SEAL THE SUBSTRUCTURE CONCRETE AND PAINT STRUCTURAL STEEL.*

THE ABOVE IS A SUGGESTED CONSTRUCTION PROCEDURE. THE CONTRACTOR SHALL SUBMIT HIS PROPOSED CONSTRUCTION PROCEDURE AND SCHEDULE TO THE DIRECTOR FOR APPROVAL BEFORE BEGINNING CONSTRUCTION. NO CONSTRUCTION OPERATIONS WILL BE PERMITTED WITHOUT PRIOR APPROVAL.

PLAN ABBREVIATIONS:

ABUT.	*ABUTMENT*
BRG.	*BEARING*
B.T.A.	*BRIDGE TERMINAL ASSEMBLY*
℄	*CENTERLINE*
c/c	*CENTER TO CENTER*
C.J.	*CONSTRUCTION JOINT*
CLR.	*CLEAR COVER*
CONST.	*CONSTRUCTION*
DIA.	*DIAMETER*
EL.	*ELEVATION*
ELEV.	*ELEVATION*
E.F.	*EACH FACE*
EXIST.	*EXISTING*
F.A.	*FOWARD ABUTMENT*
F.F.	*FAR FACE*
F.S.	*FAR SIDE*
FWD.	*FORWARD*
INV.	*INVERT*
MAX.	*MAXIMUM*
MIN.	*MINIMUM*
N.F.	*NEAR FACE*
N.S.	*NEAR SIDE*
N.P.C.P.P.	*NON-PERFORATED CORRUGATED PLASTIC PIPE*
OPT.	*OPTIONAL*
P.C.P.P.	*PERFORATED CORRUGATED PLASTIC PIPE*
PEJF	*PREFORMED EXPANSION JOINT FILLER*
PROP.	*PROPOSED*
R.A.	*REAR ABUTMENT*
SPA.	*SPACE, SPACES, SPACED*
STA.	*STATION*
TYP.	*TYPICAL*
U.N.O.	*UNLESS NOTED OTHERWISE*
CMS	*CONSTRUCTION AND MATERIAL SPECIFICATION*

GENERAL NOTES - 4
BRIDGE NO. CUY-CR187-00.977
MILLER ROAD OVER I.R. 77

SFN 1805673

DESIGN AGENCY
EUTHENICS
8235 Hubbard Dr. | Cleveland, OH 44125

DESIGNER	CHECKER
OOS	BPS

REVIEWER LAB 02/24/22

PROJECT ID 104983

SUBSET	TOTAL
7	41

SHEET	TOTAL
P.331	P.434

CUY-77-00.42 PART 1

MODEL: SN003 PAPERSIZE: 17x11 (in.) DATE: 3/4/2022 TIME: 2:01:40 PM USER: esmccaslin
F:\Jobs\11162-Miller Road Interchange\104983\400-Engineering\Structures\SFN_1805673\Sheets\104983_SFN_1805673_SN004.dgn

ESTIMATED QUANTITIES

CALC. BY: SRW
CHKD. BY: BPS

DATE: 02/21/22
DATE: 02/28/22

FUNDING		ESTIMATED QUANTITIES										
ODOT	LOCAL	ITEM	ITEM EXTENSION	TOTAL	UNIT	DESCRIPTION	REAR ABUTMENT	FOWARD ABUTMENT	PIERS	SUPER-STRUCTURE	GENERAL	REF. SHEET NUMBER
LS		202	11203	LS		PORTIONS OF STRUCTURE REMOVED, OVER 20 FOOT SPAN, AS PER PLAN					LS	4
178		202	22900	178	SY	APPROACH SLAB REMOVED					178	
LS		503	11101	LS		COFFERDAMS AND EXCAVATION BRACING, AS PER PLAN					LS	4
255		503	21100	255	CY	UNCLASSIFIED EXCAVATION	53	53	149			
LS		505	11100	LS		PILE DRIVING EQUIPMENT MOBILIZATION					LS	
3200		507	00100	3200	FT	STEEL PILES HP10X42, FURNISHED	560	600	2040			
2940		507	00150	2940	FT	STEEL PILES HP10X42, DRIVEN	520	560	1860			
127,715		509	10001	127,716	LB	EPOXY COATED REINFORCING STEEL, AS PER PLAN	2845	2692	23,139	99,040		5 & 16
400		509	20001	400 ✳	LB	REINFORCING STEEL, REPLACEMENT OF EXISTING REINFORCING STEEL, AS PER PLAN					400	5
150		510	10001	150	EACH	DOWEL HOLES WITH NONSHRINK, NONMETALLIC GROUT, AS PER PLAN	29	27		94		5
2		511	33500	2	EACH	SEMI-INTEGRAL DIAPHRAGM GUIDE	1	1				
430		511	34446	430	CY	CLASS QC2 CONCRETE WITH QC/QA, BRIDGE DECK				430		
58		511	34450	58	CY	CLASS QC2 CONCRETE WITH QC/QA, BRIDGE DECK (PARAPET)				58		
76		511	41012	76	CY	CLASS QC1 CONCRETE WITH QC/QA, PIER ABOVE FOOTINGS			76			
82		511	43512	82	CY	CLASS QC1 CONCRETE WITH QC/QA, ABUTMENT INCLUDING FOOTING	41	41				
77		511	46512	77	CY	CLASS QC1 CONCRETE WITH QC/QA, FOOTING			77			
529		512	10050	529	SY	SEALING OF CONCRETE SURFACES (NON-EPOXY)				529		
1383		512	10100	1383	SY	SEALING OF CONCRETE SURFACES (EPOXY-URETHANE)	40	40	638	665		
8		512	33000	8	SY	TYPE 2 WATERPROOFING	4	4				
261,000		513	10240	261,000	LB	STRUCTURAL STEEL MEMBERS, LEVEL 2				261,000		
20,280		514	00050	20,280	SF	SURFACE PREPARATION OF EXISTING STRUCTURAL STEEL				20,280		
20,280		514	00056	20,280	SF	FIELD PAINTING OF EXISTING STRUCTURAL STEEL, PRIME COAT				20,280		
32,330		514	00060	32,330	SF	FIELD PAINTING STRUCTURAL STEEL, INTERMEDIATE COAT				32,330		
32,330		514	00066	32,330	SF	FIELD PAINTING STRUCTURAL STEEL, FINISH COAT				32,330		
34		514	00504	34	MNHR	GRINDING FINS, TEARS, SLIVERS ON EXISTING STRUCTURAL STEEL				34		
16		514	10000	16	EACH	FINAL INSPECTION REPAIR				16		
163		516	10010	163	FT	ARMORLESS PREFORMED JOINT SEAL					163	
81		516	13400	81	SF	3/4" PREFORMED EXPANSION JOINT FILLER			81			
59		516	13900	59	SF	2" PREFORMED EXPANSION JOINT FILLER				59		
68		516	14020	68	FT	SEMI-INTEGRAL ABUTMENT EXPANSION JOINT SEAL	34	34				
8		516	44201	8	EACH	ELASTOMERIC BEARING WITH INTERNAL LAMINATES AND LOAD PLATE (NEOPRENE),	4	4				24
						AS PER PLAN (LOAD PLATE 13" x 17" x 1.50", NEOPRENE 12" x 16" x 3.55")						
8		516	44201	8	EACH	ELASTOMERIC BEARING WITH INTERNAL LAMINATES AND LOAD PLATE (NEOPRENE),			8			25
						AS PER PLAN (LOAD PLATE 16" x 19" x 1.50", NEOPRENE 15" x 18" x 3.00")						
4		516	44201	4	EACH	ELASTOMERIC BEARING WITH INTERNAL LAMINATES AND LOAD PLATE (NEOPRENE),			4			25
						AS PER PLAN (LOAD PLATE 16" x 27" x 1.50", NEOPRENE 15" x 18" x 3.00")						
46		518	21200	46	CY	POROUS BACKFILL WITH GEOTEXTILE FABRIC	23	23				
88		518	40000	88	FT	6" PERFORATED CORRUGATED PLASTIC PIPE	44	44				
24		518	40010	24	FT	6" NON-PERFORATED CORRUGATED PLASTIC PIPE, INCLUDING SPECIALS	12	12				
17		519	11101	17 ✳	SF	PATCHING CONCRETE STRUCTURE, AS PER PLAN	4	3	10			5
352		526	15001	352	SY	REINFORCED CONCRETE APPROACH SLABS (T=13"), AS PER PLAN					352	5
163		526	90030	163	FT	TYPE C INSTALLATION					163	
LS		SPECIAL	53014000	LS		STRUCTURAL SURVEY AND MONITORING OF VIBRATION					LS	5
270		601	21100	270	SY	SLOPE PROTECTION, MISC.: GROUT FILLED FABRIC MATS	135	135				6
584		607	39900	584	FT	VANDAL PROTECTION FENCE, 6' STRAIGHT, COATED FABRIC				584		
864		607	39994	864	FT	TEMPORARY VANDAL FENCE, TYPE B				664	200	
	LS	607	98200	LS		FENCE, MISC.: ALUMINUM LETTERING					LS	37
1196		847	10000	1196	SY	MICRO SILICA MODIFIED CONCRETE OVERLAY				1196		
5		847	20000	5	CY	MICRO SILICA MODIFIED CONCRETE OVERLAY (VARIABLE THICKNESS), MATERIAL ONLY				5		
LS		847	30000	LS		TEST SLAB				LS		
3		847	30200	3	CY	FULL DEPTH REPAIR				3		
72		847	50000	72	SY	HAND CHIPPING				72		

✳ DENOTES QUANTITY TO BE USED "AS DIRECTED BY THE ENGINEER"

ESTIMATED QUANTITIES
BRIDGE NO. CUY-CR187-00.977
MILLER ROAD OVER I.R. 77

SFN 1805673

DESIGN AGENCY
EUTHENICS
8333 Hubbard Dr. | Cleveland, OH 44125

DESIGNER	CHECKER
SRW	BPS

REVIEWER
LAB 02/24/22

PROJECT ID
104983

SUBSET	TOTAL
8	41

SHEET	TOTAL
P.332	P.434

CUY-77-00.42 PART 1

MODEL: SQ001 PAPERSIZE: 17x11 (in.) DATE: 3/4/2022 TIME: 2:01:44 PM USER: esmccaslin
F:\Jobs\11162-Miller Road Interchange\104983\400=Engineering\Structures\SFN_1805673\Sheets\104983_SFN_1805673_SQ001.dgn

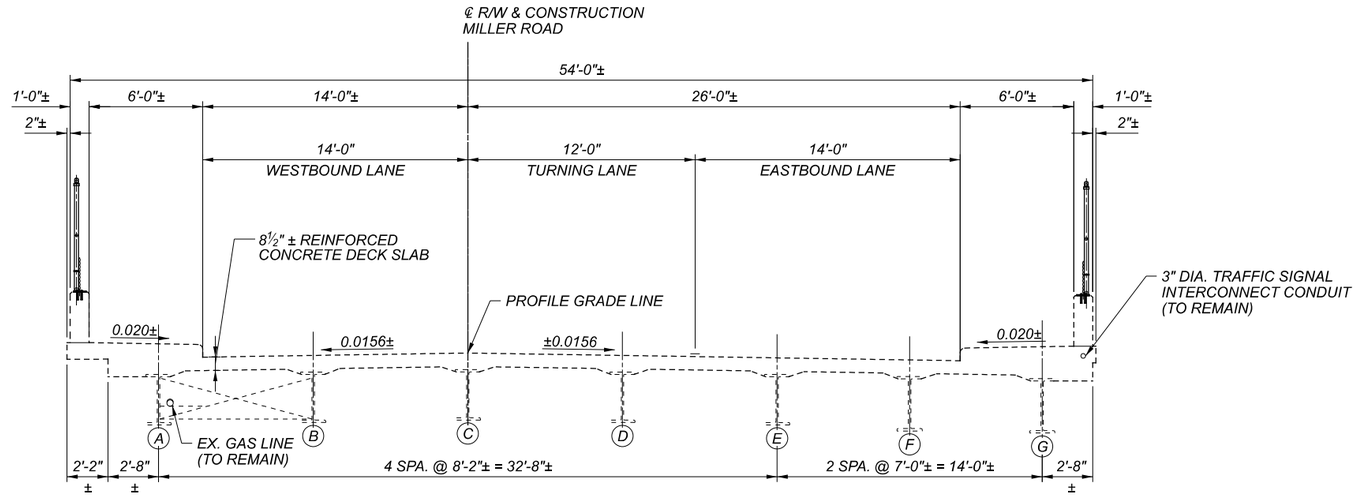

EXISTING TRANSVERSE SECTION

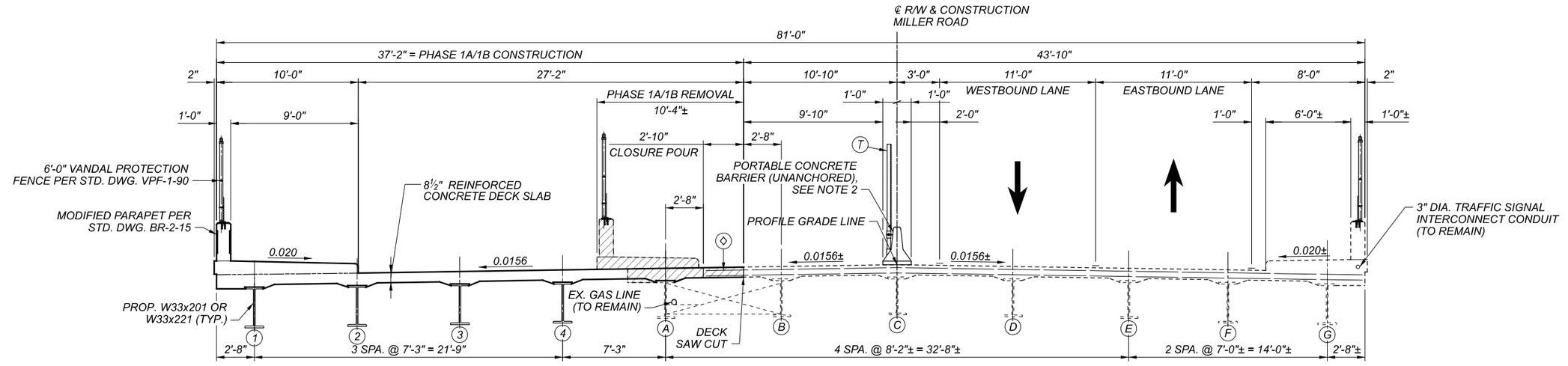

PHASE 1A/1B REMOVAL & CONSTRUCTION

PHASE 1A/1B CONSTRUCTION NOTES

1. MAINTAIN TRAFFIC AS SHOWN ON THE RIGHT HALF OF THE BRIDGE.
2. SAW CUT EXISTING DECK SLAB 10'-10" LEFT OF CENTERLINE AND REMOVE LEFT SIDE OF EXISTING DECK, SIDEWALK, PARAPET, AND VANDAL PROTECTION FENCE.
3. WIDEN ABUTMENTS AND PIERS AND PLACE BEARINGS.
4. SET PROPOSED BEAMS 1 THRU 4 AS SHOWN.
5. CONSTRUCT PROPOSED NON-COMPOSITE BRIDGE DECK AND SIDEWALK WITH RAILING AND VANDAL PROTECTION FENCE.

LEGEND

- (X) - BEAM LINE DESIGNATION
- PORTIONS OF EXISTING STRUCTURE TO BE REMOVED PER ITEM 202.
- (◇) - EXIST. #5 BAR TO BE PRESERVED (SEE NOTES 4 & 5)
- (T) - TEMPORARY VANDAL PROTECTION FENCE, TYPE B PER STD. DWG. TVPF-1-18 (SEE NOTE 3)

NOTES

1. FOR MAINTENANCE OF TRAFFIC SCHEMATIC, SEE SHEETS P.32 THRU P.34.
2. IN LIEU OF PROVIDING PORTABLE CONCRETE BARRIER PER ODOT STD. DWG. PCB-91, THE CONTRACTOR MAY USE AN APPROVED UNANCHORED PORTABLE BARRIER ON ODOT'S APPROVED PRODUCT'S LIST. THESE PRODUCTS SHALL BE INSTALLED ACCORDING TO THE MANUFACTURER'S RECOMMENDATIONS. NO PRODUCT SHALL BE USED THAT REQUIRES ANCHORS INSTALLED IN THE BRIDGE DECK.
3. CONTRACTOR TO PROVIDE ADDITIONAL FENCING AT THE ENDS OF THE BRIDGE TO PREVENT ACCESS TO THE CONSTRUCTION AREA DURING OFF-WORK HOURS. AN ADDITIONAL QUANTITY OF 100 LINEAR FEET HAS BEEN INCLUDED WITH ITEM 607-TEMPORARY VANDAL PROTECTION FENCE, TYPE B FOR THIS WORK
4. EXERCISE CARE IN REMOVING CONCRETE TO NOT DAMAGE EXISTING REINFORCING STEEL THAT IS TO BE PRESERVED.
5. PRESERVE AND CLEAN A PROJECTION OF 2'-8" OF EXISTING #5 TOP AND BOTTOM TRANSVERSE BARS.

PHASED CONSTRUCTION DETAILS - 1
BRIDGE NO. CUY-CR187-00.977
MILLER ROAD OVER I.R. 77

SFN	1805673
DESIGN AGENCY	EUTHENICS 8235 Midland Dr. | Cleveland, OH 44125
DESIGNER	SRW
CHECKER	BPS
REVIEWER	LAB 02/24/22
PROJECT ID	104983
SUBSET	9
TOTAL	41
SHEET	P.333
TOTAL	P.434

CUY-77-00.42 PART 1

MODEL: SC001 PAPERSIZE: 17x11 (in.) DATE: 3/4/2022 TIME: 2:01:48 PM USER: esmccaslin
F:\Jobs\11624-Miller Road Interchange\104983400-Engineering\Structures\SFN_1805673\Sheets\104983_SFN_1805673_SC001.dgn

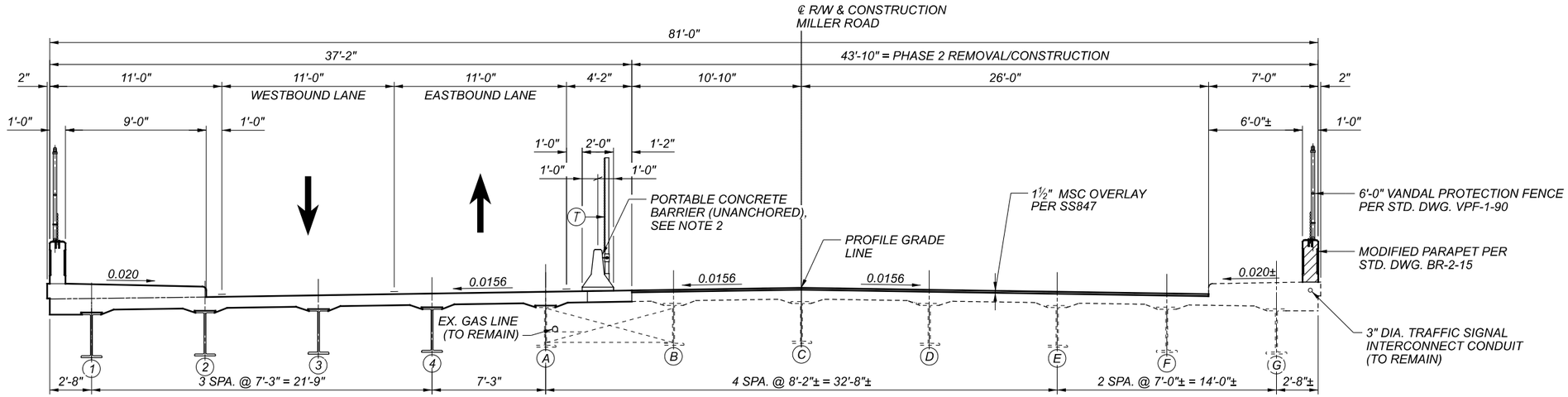

PHASE 2 REMOVAL & CONSTRUCTION

PHASE 2 CONSTRUCTION NOTES

1. MAINTAIN TRAFFIC AS SHOWN ON THE LEFT HALF OF THE BRIDGE.
2. REMOVE THE TOP 1½" OF THE EXISTING CONCRETE DECK AND REPLACE WITH 1½" MSC OVERLAY PER SS847.
3. REMOVE AND REPLACE THE RIGHT PARAPET AND VANDAL PROTECTION FENCE.

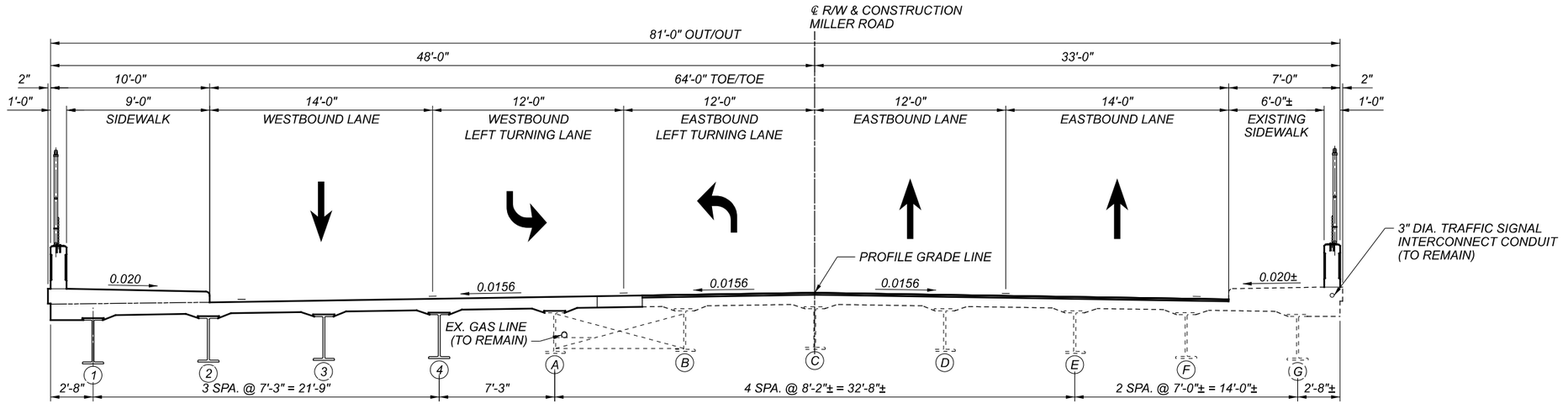

PROPOSED TRANVSERSE SECTION

LEGEND

- (X) - BEAM LINE DESIGNATION
- PORTIONS OF EXISTING STRUCTURE TO BE REMOVED PER ITEM 202.
- (T) - TEMPORARY VANDAL PROTECTION FENCE, TYPE B PER STD. DWG. TVPF-1-18 (SEE NOTE 3)

NOTES

1. FOR MAINTENANCE OF TRAFFIC SCHEMATIC, SEE SHEETS P.32 THRU P.34.
2. IN LIEU OF PROVIDING PORTABLE CONCRETE BARRIER PER ODOT STD. DWG. PCB-91, THE CONTRACTOR MAY USE AN APPROVED UNANCHORED PORTABLE BARRIER ON ODOT'S APPROVED PRODUCT'S LIST. THESE PRODUCTS SHALL BE INSTALLED ACCORDING TO THE MANUFACTURER'S RECOMMENDATIONS. NO PRODUCT SHALL BE USED THAT REQUIRES ANCHORS INSTALLED IN THE BRIDGE DECK.
3. CONTRACTOR TO PROVIDE ADDITIONAL FENCING AT THE ENDS OF THE BRIDGE TO PREVENT ACCESS TO THE CONSTRUCTION AREA DURING OFF-WORK HOURS. AN ADDITIONAL QUANTITY OF 100 LINEAR FEET HAS BEEN INCLUDED WITH ITEM 607- TEMPORARY VANDAL PROTECTION FENCE, TYPE B FOR THIS WORK

PHASED CONSTRUCTION DETAILS - 2
BRIDGE NO. CUY-CR187-00.977
MILLER ROAD OVER I.R. 77

SFN 1805673

DESIGN AGENCY
EUTHENICS
8235 Mohawk Dr. | Cleveland, OH 44125

DESIGNER	CHECKER
SRW	BPS

REVIEWER
LAB 02/24/22

PROJECT ID
104983

SUBSET	TOTAL
10	41

SHEET	TOTAL
P.334	P.434

CUY-77-00.42 PART 1

MODEL: SC002 PAPERSIZE: 17x11 (in.) DATE: 3/4/2022 TIME: 2:01:51 PM USER: esmccaslin
F:\Jobs\11162\Miller Road Interchange\104983\400-Engineering\Structures\SFN_1805673\Sheets\104983_SFN_1805673_SC002.dgn

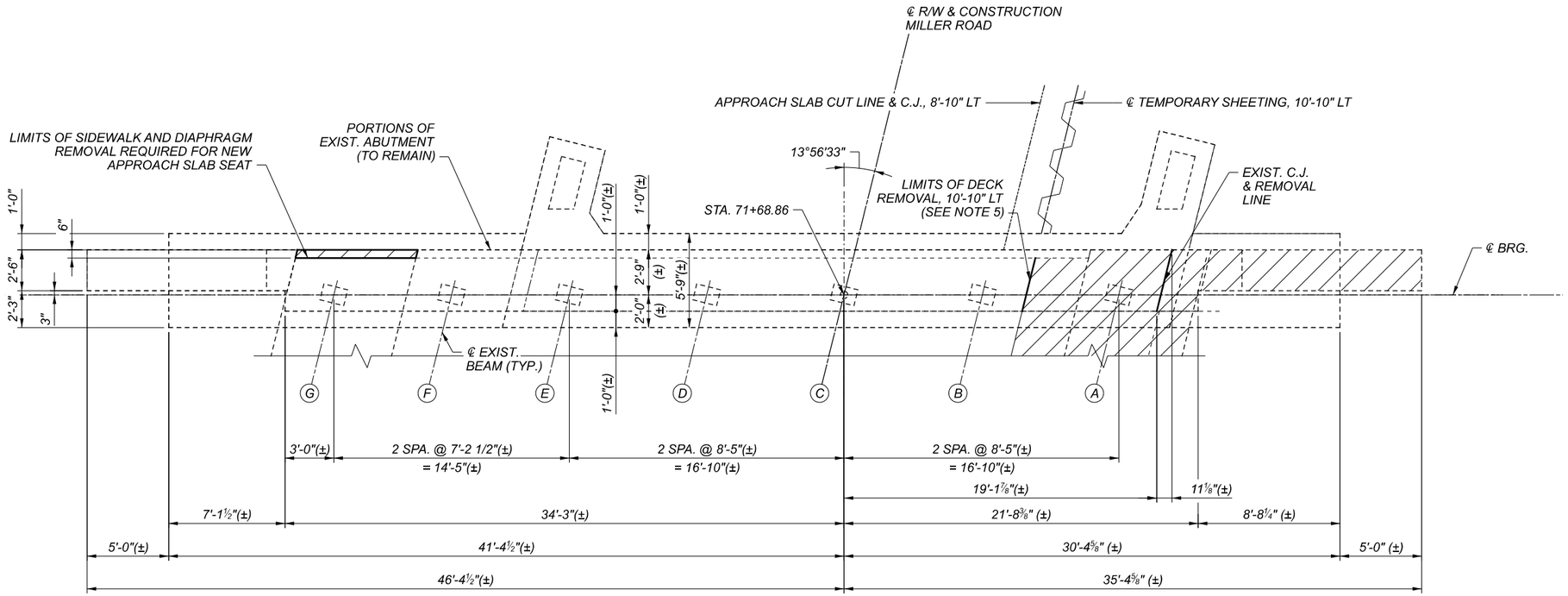

PLAN

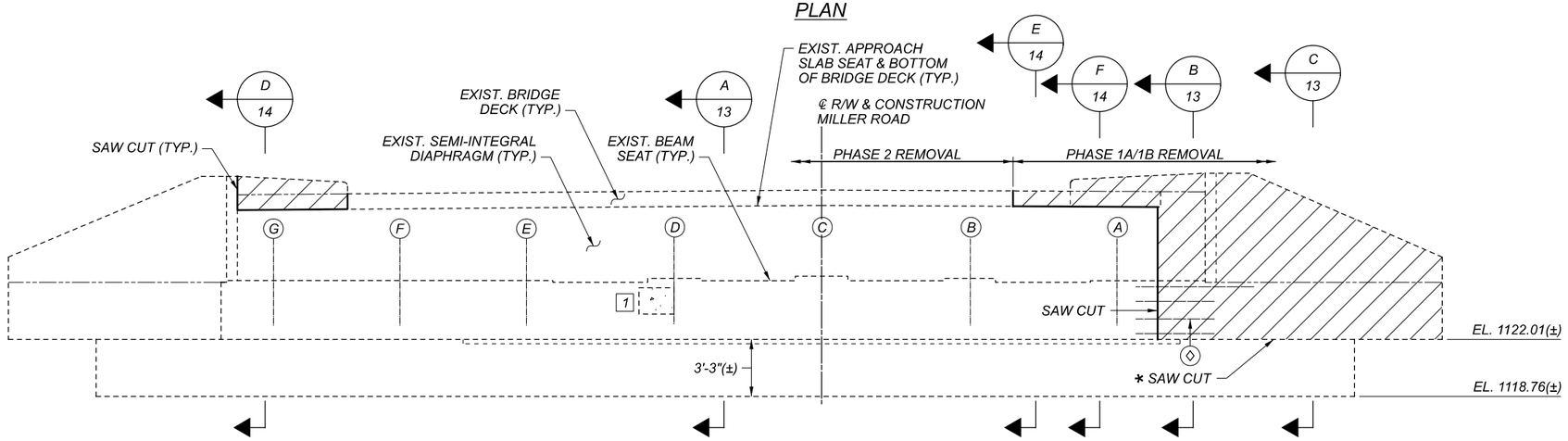

ELEVATION

PILES NOT SHOWN FOR CLARITY

ESTIMATED PATCHING QUANTITIES		
LOCATION	WIDTH X HEIGHT	AREA (SF)
1	2'-0" x 1'-6"	3.00
TOTAL AREA MEASURED		3.00
TOTAL AREA ESTIMATED		4.00**

** SEE NOTE 4

LEGEND

- PORTIONS OF EXISTING STRUCTURE TO BE REMOVED PER ITEM 202
- AREA OF DELAMINATION TO BE REPAIRED PER ITEM 519 - PATCHING CONCRETE STRUCTURE
- ◇ EXIST. #5 OR #8 BAR TO BE PRESERVED (SEE NOTES 1 & 2)
- * SAW CUT AND REMOVE BEAM SEAT TO EXISTING TOP OF FOOTING

NOTES

1. EXERCISE CARE IN REMOVING CONCRETE TO NOT DAMAGE EXISTING REINFORCING STEEL THAT IS TO BE PRESERVED.
2. PRESERVE AND CLEAN A PROJECTION OF 3'-3" OF EXISTING #5 BARS AND A PROJECTION OF 5'-6" OF EXISTING #8 BARS.
3. PHYSICAL INVENTORY OF MEASURED QUANTITIES OF DETERIORATION WAS PERFORMED IN JUNE 2021. THE EXACT DIMENSIONS AND LOCATIONS OF PATCHES SHALL BE DETERMINED BY THE ENGINEER IN THE FIELD FOR FINAL PAY QUANTITY.
4. ESTIMATED PATCHING QUANTITIES HAVE BEEN INCREASED BY 35% OVER MEASURED QUANTITIES TO ALLOW FOR ADDITIONAL DETERIORATION.
5. FOR ADDITIONAL DECK REMOVAL DETAILS, SEE PHASED CONSTRUCTION DETAILS, SHEETS 9/41 AND 10/41.

REAR ABUTMENT REMOVAL PLAN & ELEVATION
BRIDGE NO. CUY-CR187-00.977
MILLER ROAD OVER I.R. 77

SFN 1805673

DESIGN AGENCY
EUTHENICS
8235 Mohawk Dr. | Cleveland, OH 44130

DESIGNER	CHECKER
OOS	BPS

REVIEWER LAB 02/24/22

PROJECT ID 104983

SUBSET	TOTAL
11	41

SHEET	TOTAL
P.335	P.434

CUY-77-00.42 PART 1

MODEL: SV001 PAPERSIZE: 17x11 (in.) DATE: 3/4/2022 TIME: 2:01:55 PM USER: esmccaslin
F:\Jobs\11622-Miller Road Interchange\104983\400-Engineering\Structures\SFN_1805673\Sheets\104983_SFN_1805673_SV001.dgn

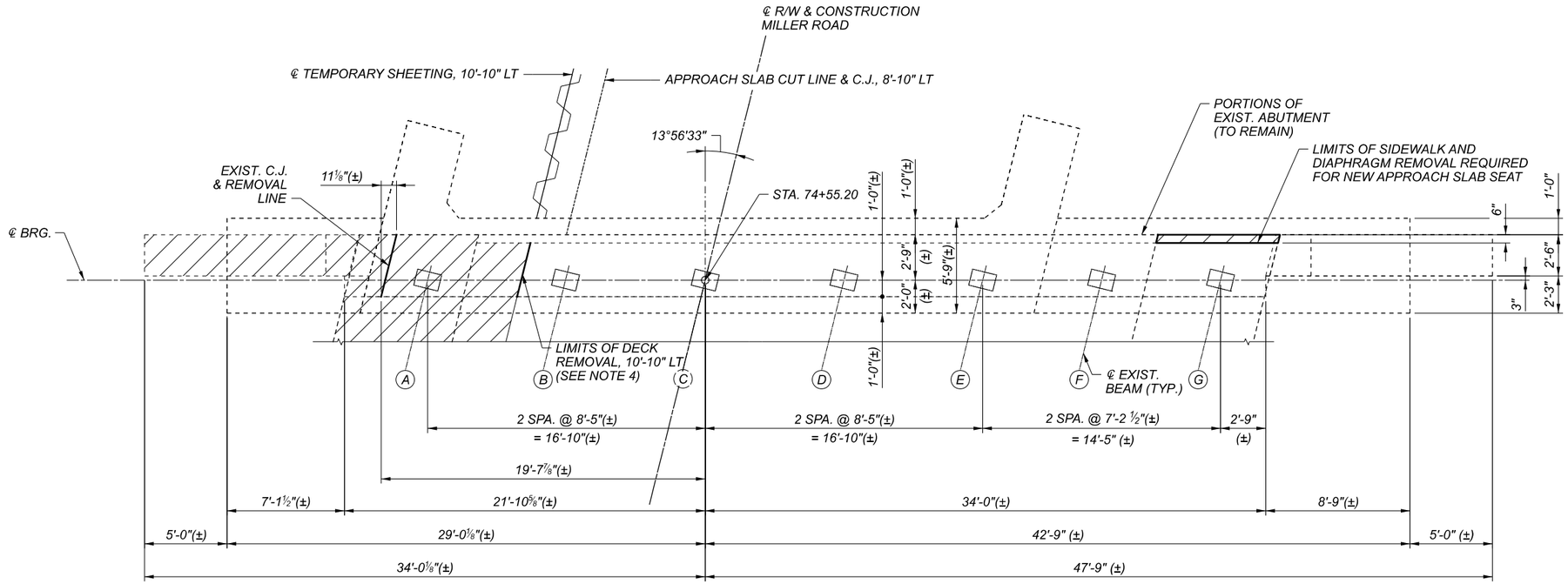

PLAN

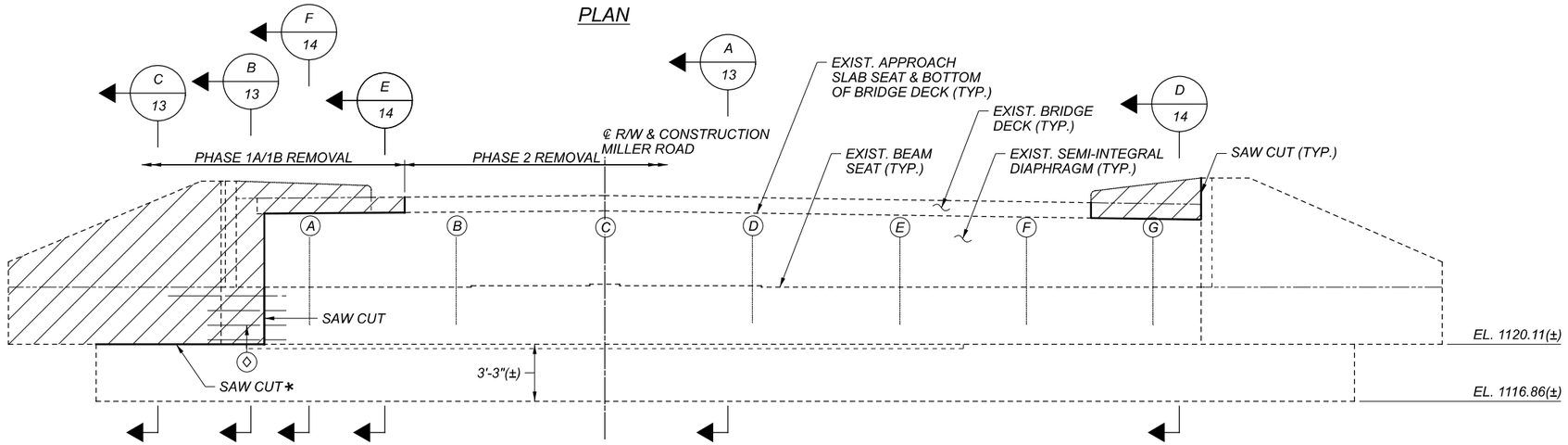

ELEVATION

PILES NOT SHOWN FOR CLARITY

LEGEND

PORTIONS OF EXISTING STRUCTURE TO BE REMOVED PER ITEM 202

◇ EXIST. #5 OR #8 BAR TO BE PRESERVED (SEE NOTES 1 & 2)

* SAW CUT AND REMOVE BEAM SEAT TO EXISTING TOP OF FOOTING

NOTES

1. EXERCISE CARE IN REMOVING CONCRETE TO NOT DAMAGE EXISTING REINFORCING STEEL THAT IS TO BE PRESERVED.
2. PRESERVE AND CLEAN A PROJECTION OF 3'-3" OF EXISTING #5 BARS AND A PROJECTION OF 5'-6" OF EXISTING #8 BARS.
3. PHYSICAL INVENTORY OF MEASURED QUANTITIES OF DETERIORATION WAS PERFORMED IN JUNE 2021 AND FOUND NO AREAS OF DELAMINATION. A QUANTITY OF 3 SF HAS BEEN INCLUDED IN THE ESTIMATED QUANTITIES TO ACCOUNT FOR PATCHING, TO BE USED AS DIRECTED BY THE ENGINEER.
4. FOR ADDITIONAL DECK REMOVAL DETAILS, SEE PHASED CONSTRUCTION DETAILS, SHEETS 9/41 AND 10/41.

FORWARD ABUTMENT REMOVAL PLAN & ELEVATION
BRIDGE NO. CUY-CR187-00.977
MILLER ROAD OVER I.R. 77

SFN 1805673

DESIGN AGENCY
EUTHENICS
8235 Mohawk Dr. | Cleveland, OH 44125

DESIGNER	CHECKER
OOS	BPS

REVIEWER
LAB 02/24/22

PROJECT ID
104983

SUBSET	TOTAL
12	41

SHEET	TOTAL
P.336	P.434

CUY-77-00.42 PART 1

MODEL: SV002 PAPERSIZE: 17x11 (in.) DATE: 3/4/2022 TIME: 2:01:59 PM USER: esmccaslin
F:\Jobs\11162\Miller Road Interchange\104983\400-Engineering\Structures\SFN_1805673\Sheets\104983_SFN_1805673_SV002.dgn

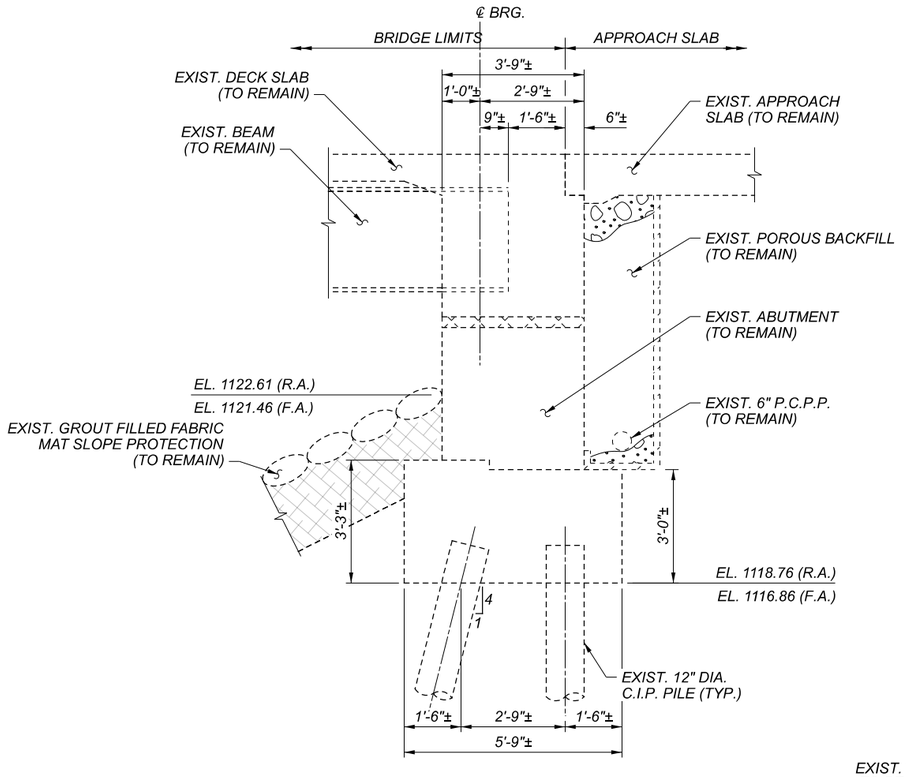

SECTION A 11 / A 12

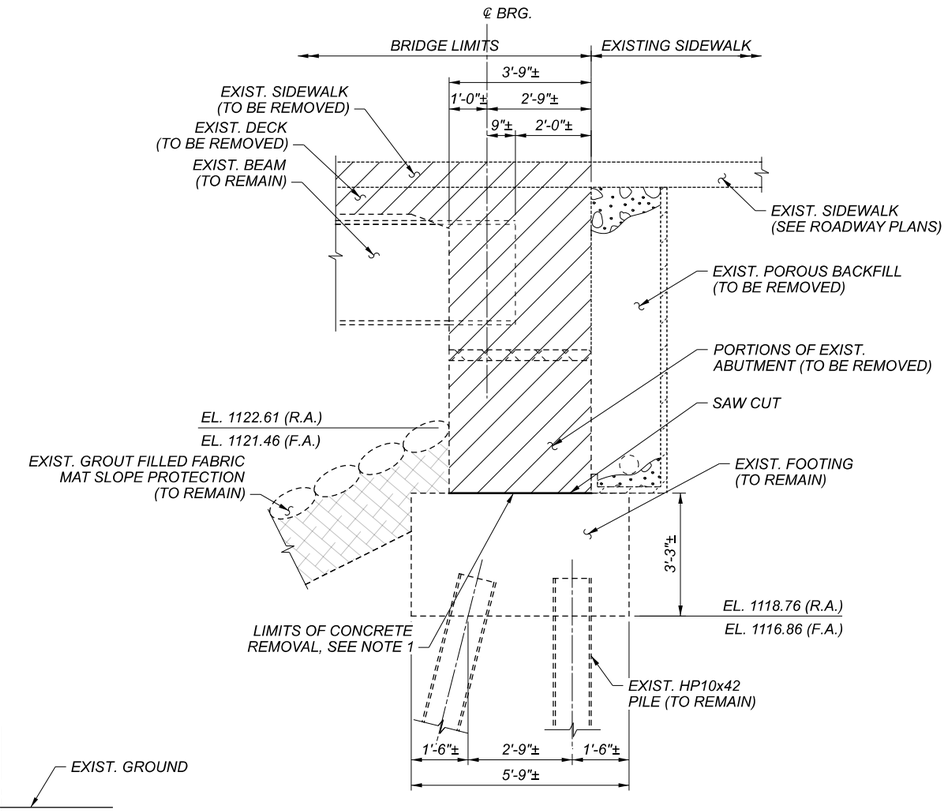

SECTION B 11 / B 12

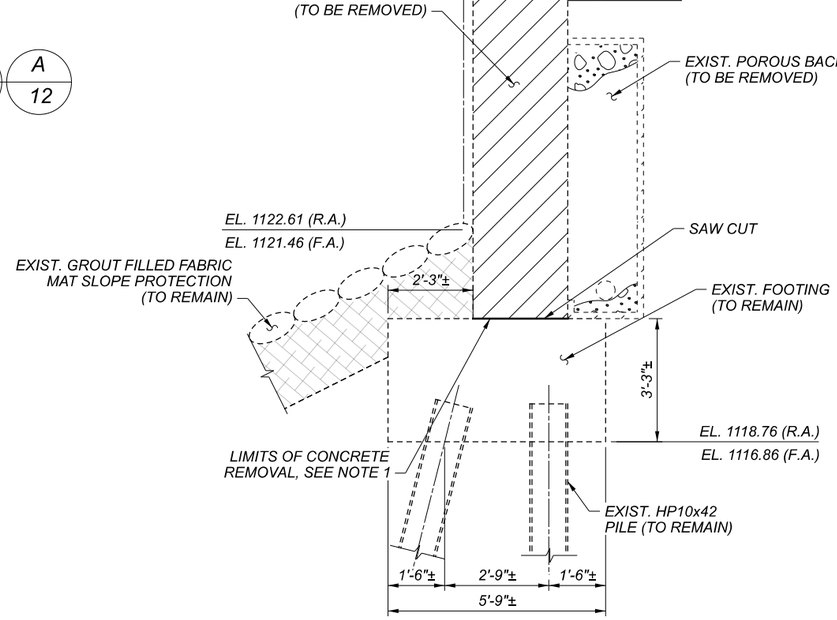

SECTION C 11 / C 12

LEGEND

PORTIONS OF EXISTING STRUCTURE TO BE REMOVED PER ITEM 202

NOTES

1. SAW CUT 1" INTO EXISTING CONCRETE BEFORE REMOVING ABOVE CUTLINES.
2. EXERCISE CARE IN REMOVING CONCRETE TO NOT DAMAGE EXISTING REINFORCING STEEL THAT IS TO BE PRESERVED.

ABUTMENT REMOVAL DETAILS - 1
BRIDGE NO. CUY-CR187-00.977
MILLER ROAD OVER I.R. 77

SFN	1805673
DESIGN AGENCY	EUTHENICS, 8235 Midland Dr. | Cleveland, OH 44125
DESIGNER	OOS
CHECKER	BPS
REVIEWER	LAB 02/24/22
PROJECT ID	104983
SUBSET	13
TOTAL	41
SHEET	P.337
TOTAL	P.434

CUY-77-00.42 PART 1

MODEL: Sheet PAPERSIZE: 17x11 (in.) DATE: 3/4/2022 TIME: 2:02:03 PM USER: esmccaslin
F:\Jobs\11162-Miller Road Interchange\104983\400-Engineering\Structures\SFN_1805673\Sheets\104983_SFN_1805673_SV003.dgn

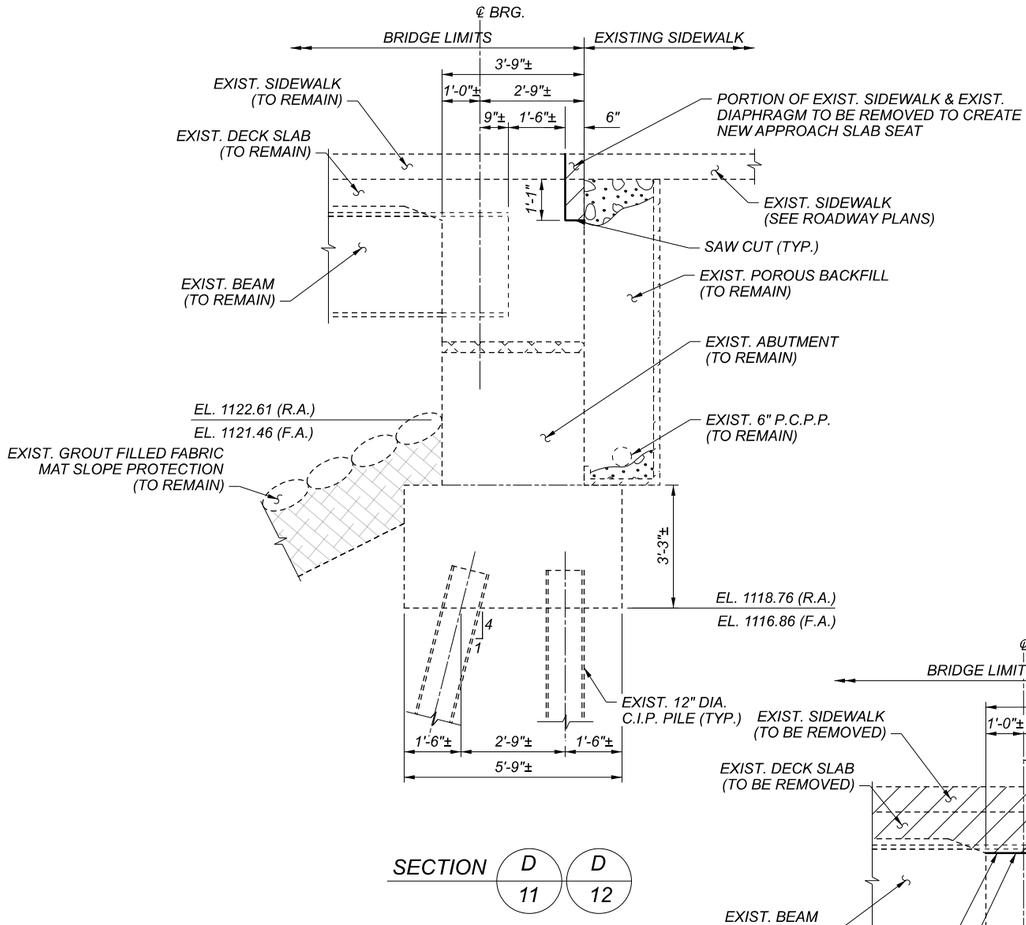

SECTION D 11 D 12

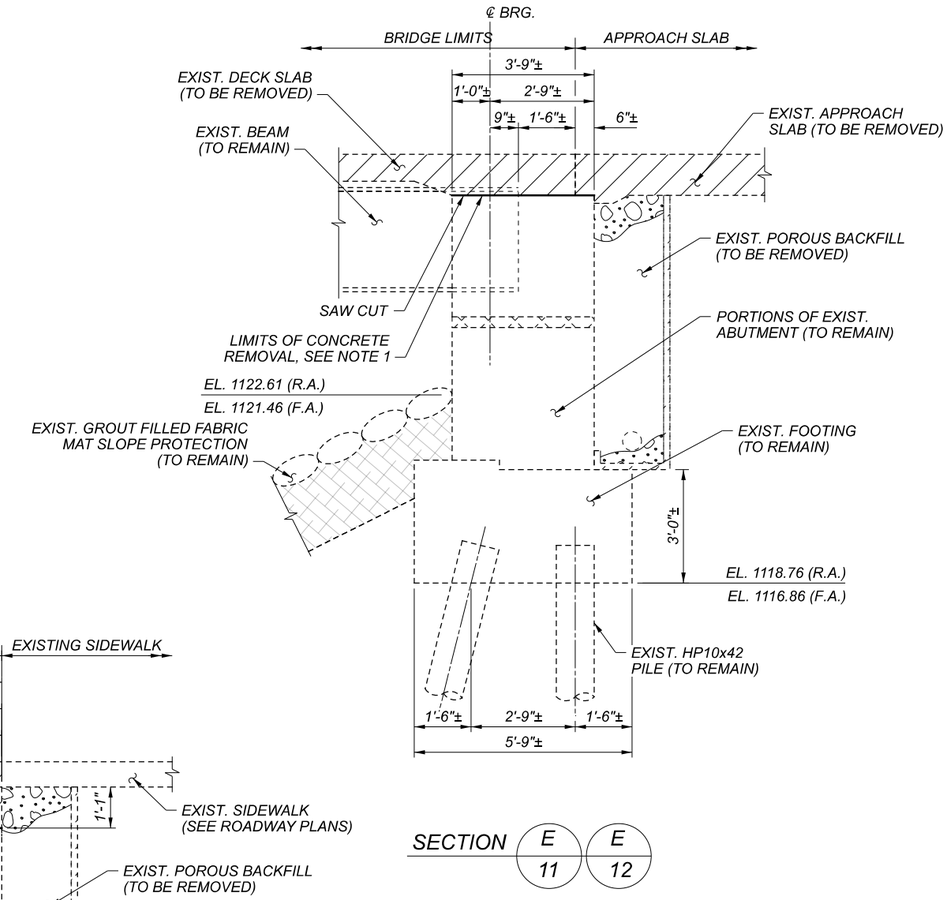

SECTION E 11 E 12

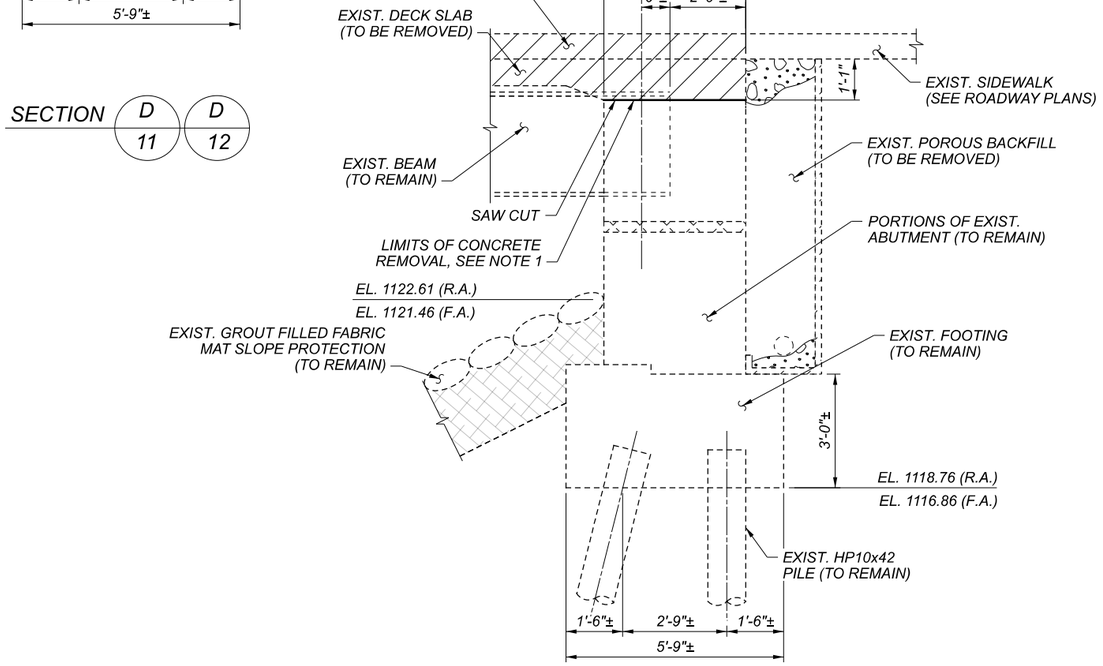

SECTION F 11 F 12

LEGEND

PORTIONS OF EXISTING STRUCTURE TO BE REMOVED PER ITEM 202

NOTES

1. SAW CUT 1" INTO EXISTING CONCRETE BEFORE REMOVING ABOVE CUTLINES.
2. EXERCISE CARE IN REMOVING CONCRETE TO NOT DAMAGE EXISTING REINFORCING STEEL THAT IS TO BE PRESERVED.

ABUTMENT REMOVAL DETAILS - 2
BRIDGE NO. CUY-CR187-00.977
MILLER ROAD OVER I.R. 77

SFN 1805673

DESIGN AGENCY
EUTHENICS
8333 Hickman Dr. | Cleveland, OH 44125

DESIGNER	CHECKER
SRW	BPS

REVIEWER: LAB 02/24/22

PROJECT ID: 104983

SUBSET	TOTAL
14	41

SHEET	TOTAL
P.338	P.434

CUY-77-00.42 PART 1

MODEL: Sheet PAPERSIZE: 17x11 (in.) DATE: 3/4/2022 TIME: 2:02:06 PM USER: esmccaslin
F:\Jobs\11162-Miller Road Interchange\104983\400-Engineering\Structures\SFN_1805673\Sheets\104983_SFN_1805673_SV004.dgn

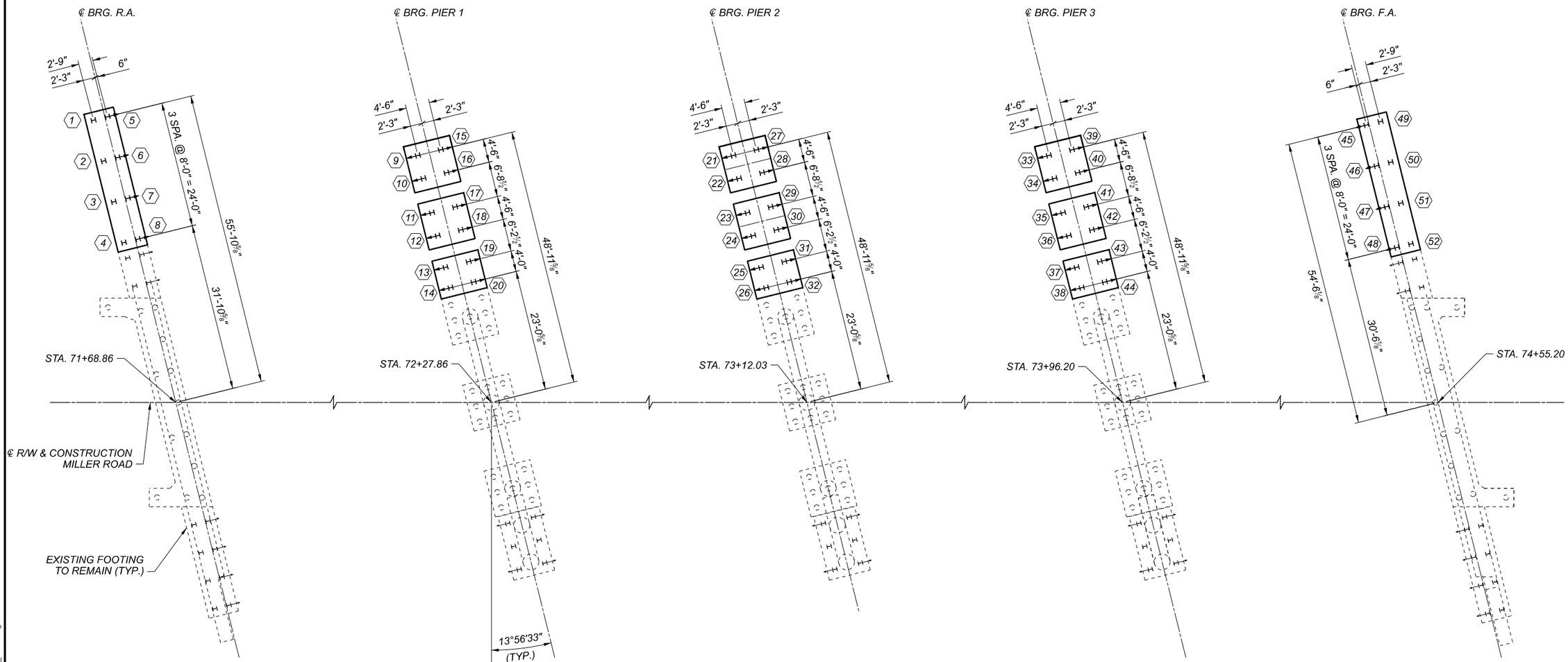

FOUNDATION PLAN

PILE INFORMATION			
PILE NUMBER	LOCATION	CUT-OFF ELEVATION	ESTIMATED PAY LENGTH
1 - 8	REAR ABUT.	1119.76	65 FT.
9 - 20	PIER 1	1103.66	55 FT.
21 - 32	PIER 2	1101.46	45 FT.
33 - 44	PIER 3	1104.86	55 FT.
45 - 52	FWD. ABUT.	1117.86	70 FT.

LEGEND

- (X) = PILE NUMBER
- = EXISTING 12" DIA. CIP PILE
- = EXISTING HP10X42 PILE
- = PROPOSED HP10X42 PILE
- = PROPOSED HP10X42 PILE BATTERED 1H:4V IN DIRECTION SHOWN

FOUNDATION PLAN
BRIDGE NO. CUY-CR187-00.977
MILLER ROAD OVER I.R. 77

SFN 1805673
DESIGN AGENCY EUTHENICS 8235 Midwest Dr. | Cleveland, OH 44130
DESIGNER OOS | CHECKER BPS
REVIEWER LAB 02/24/22
PROJECT ID 104983
SUBSET 15 | TOTAL 41
SHEET P.339 | TOTAL P.434

CUY-77-00.42 PART 1

MODEL: SO001 PAPERSIZE: 17x11 (in.) DATE: 3/4/2022 TIME: 2:02:10 PM USER: esmccaslin
F:\Jobs\1162-Miller Road Interchange\104983\400-Engineering\Structures\SFN_1805673\Sheets\104983_SFN_1805673_SO001.dgn

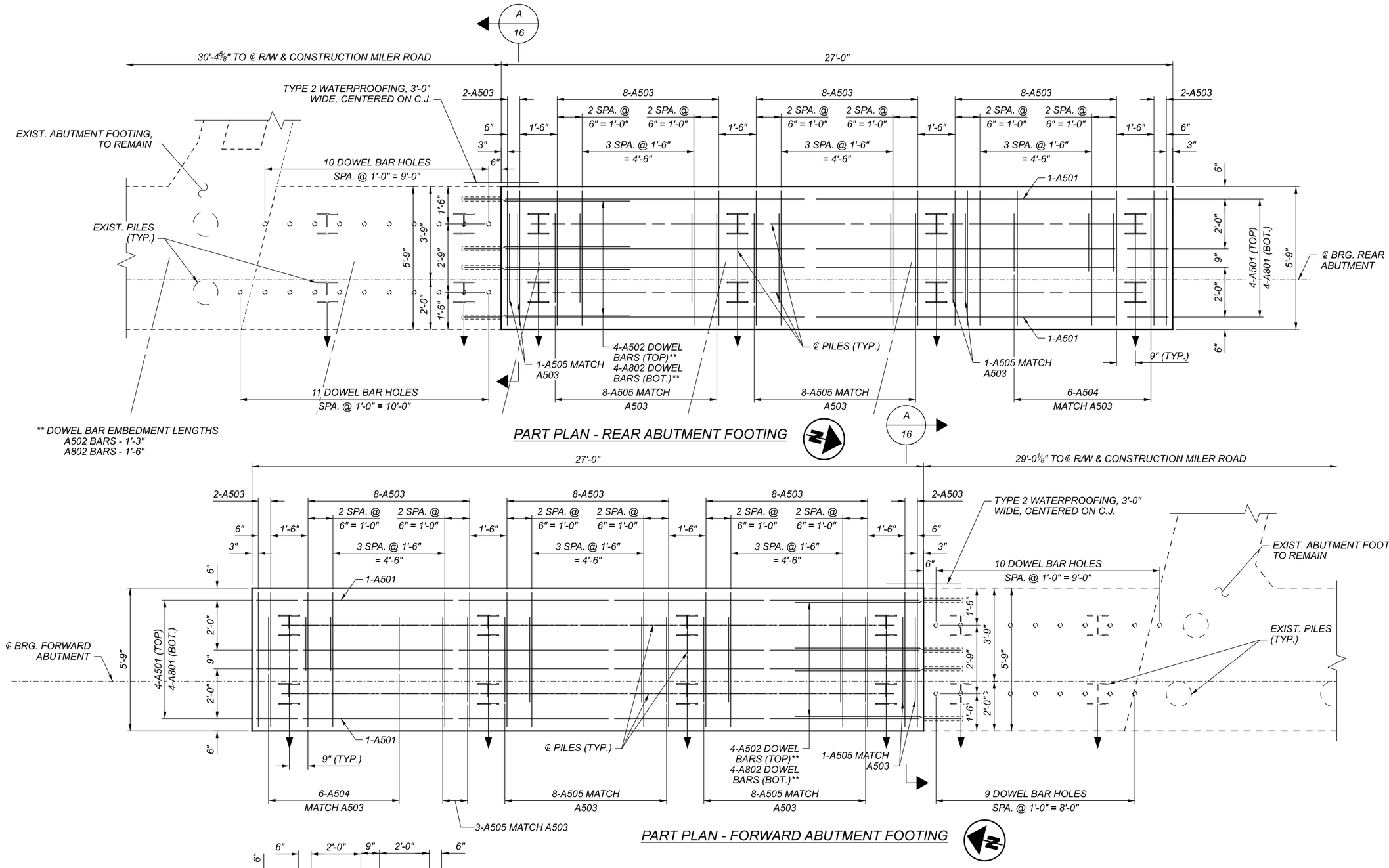

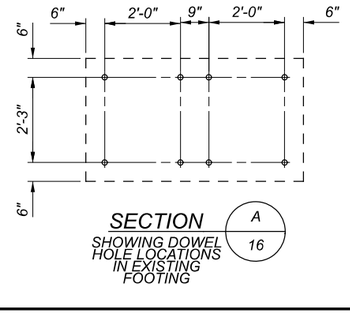

LEGEND

- C.I.P. PILE (EXIST.)
- HP PILE (PROP. AND EXIST.)
- BATTERED HP PILE (PROP. AND EXIST.)

NOTES

1. INSTALL DOWEL HOLES ACCORDING TO ITEM 510 – DOWEL HOLES WITH NONSHRINK, NONMETALLIC GROUT, AS PER PLAN. DOWEL HOLES HAVE BEEN LOCATED TO AVOID INTERFERENCE WITH THE EXISTING REINFORCING STEEL BASED ON INFORMATION OBTAINED FROM THE RECORD PLANS. IF EXISTING REINFORCING STEEL IS ENCOUNTERED WHILE DRILLING DOWEL HOLE, THE HOLE LOCATION MAY BE ADJUSTED BY UP TO 3" TO ELIMINATE THE CONFLICT. FOR DETAILS OF EXISTING REINFORCING STEEL NOT SHOWN, REFER TO THE RECORD PLANS.
2. FOR ABUTMENT REMOVAL DETAILS, SEE SHEETS 11/41 THROUGH 14/41.
3. FOR FOUNDATION PLAN, SEE SHEET 15/41.
4. FOR REAR ABUTMENT PLAN AND ELEVATION, SEE SHEET 17/41.
5. FOR FORWARD ABUTMENT PLAN AND ELEVATION, SEE SHEET 19/41.
6. PRIOR TO ORDERING A505 BARS, THE CONTRACTOR SHALL VERIFY THAT THE BOTTOM OF FOOTING ELEVATIONS SHOWN IN THESE PLANS MATCHES EXISTING FIELD CONDITIONS. THE CONTRACTOR SHALL ADJUST THE LENGTH OF THE LEGS OF THE A505 BARS AS NECESSARY TO ACCOMODATE ANY ADJUSTMENTS IN BOTTOM OF FOOTING ELEVATIONS NEEDED TO MATCH EXISTING CONDITIONS. PAYMENT IS CONSIDERED INCIDENTAL TO ITEM 509 - EPOXY COATED REINFORCING STEEL, AS PER PLAN.

ABUTMENT FOOTING PLANS
BRIDGE NO. CUY-CR187-00.977
MILLER ROAD OVER I.R. 77

SFN 1805673
DESIGN AGENCY EUTHENICS 8235 Mohawk Dr. | Cleveland, OH 44129
DESIGNER SRW | CHECKER BPS
REVIEWER LAB 02/24/22
PROJECT ID 104983
SUBSET 16 | TOTAL 41
SHEET P.340 | TOTAL P.434

CUY-77-00.42 PART 1

MODEL: SR001A PAPERSIZE: 17x11 (in.) DATE: 3/4/2022 TIME: 2:02:14 PM USER: esmccaslin
F:\Jobs\11162-Miller Road Interchange\104983400-Engineering\Structures\SFN_1805673\Sheets\104983_SFN_1805673_SR001A.dgn

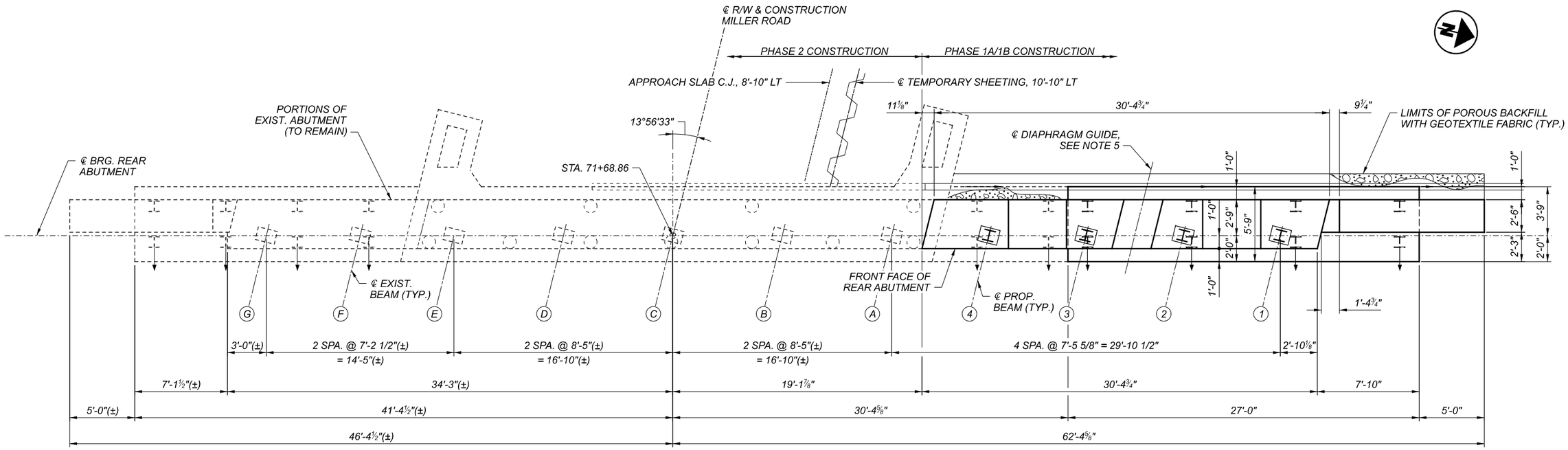

PLAN

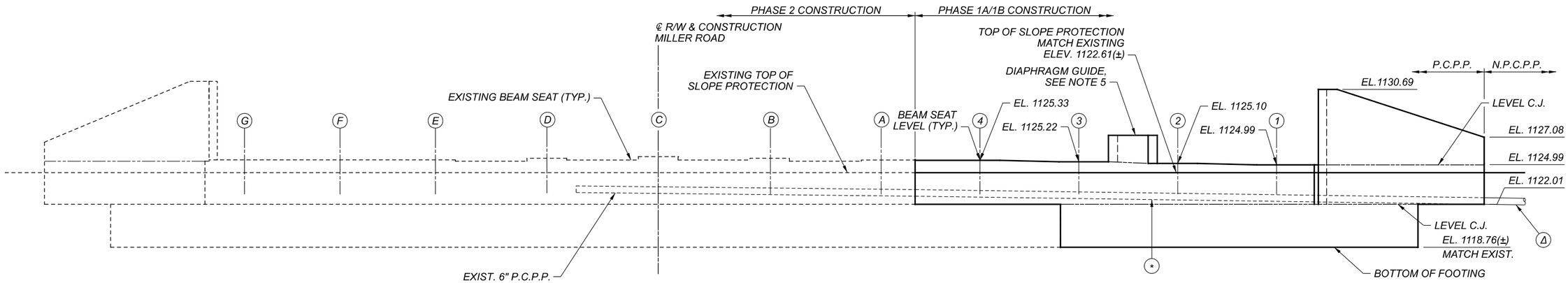

ELEVATION

PILES NOT SHOWN FOR CLARITY

LEGEND

(*) 6" P.C.P.P. TO CONNECT TO EXISTING 6" P.C.P.P. AT START OF PROPOSED BEAM SEAT

(Δ) 6" N.C.P.P. TIED TO 6" P.C.P.P. WITH NEW 6" P.C.P.P. AND SLOPED AS SHOWN (SEE NOTE 2)

NOTES

1. POROUS BACKFILL WITH GEOTEXTILE FABRIC, 2'-0" WIDE THICK, SHALL EXTEND UP TO THE PLANE OF THE SUBGRADE TO 1'-0" BELOW THE EMBANKMENT SURFACE, AND LATERALLY TO THE LIMITS SHOWN.
2. 6" N.P.C.P.P. SHALL EXTEND TO THE SURFACE OF THE EMBANKMENT AND SHALL DRAIN INTO A PRECAST CONCRETE OUTLET WITH TYPE 1 TIED CONCRETE BLOCK MAT AS SHOWN IN DM-1.1.
3. FOR REAR ABUTMENT FOOTING PLAN, SEE SHEET 16/41.
4. FOR ADDITIONAL BEAM SEAT DETAILS AND ABUTMENT REINFORCING, SEE SHEET 18/41.
5. FOR DIAPHRAGM GUIDE DETAILS, SEE SHEET 21/41.
6. FOR REAR ABUTMENT DIAPHRAGM DETAILS, SEE SHEET 32/41.
7. INSTALL STRUCTURE GROUNDING SYSTEM IN ACCORDANCE WITH ITEM 625 – STRUCTURE GROUNDING SYSTEM. SEE GENERAL NOTE ON SHEET 6 FOR DETAILS.

REAR ABUTMENT PLAN & ELEVATION
BRIDGE NO. CUY-CR187-00.977
MILLER ROAD OVER I.R. 77

SFN 1805673

DESIGN AGENCY
EUTHENICS
8235 Mohawk Dr. | Cleveland, OH 44130

DESIGNER	CHECKER
SRW	BPS

REVIEWER LAB 02/24/22

PROJECT ID 104983

SUBSET	TOTAL
17	41

SHEET	TOTAL
P.341	P.434

CUY-77-00.42 PART 1

MODEL: SR001 PAPERSIZE: 17x11 (in.) DATE: 3/4/2022 TIME: 2:02:18 PM USER: esmccaslin
F:\Jobs\11622-Miller Road Interchange\104983\400-Engineering\Structures\SFN_1805673\Sheets\104983_SFN_1805673_SR001.dgn

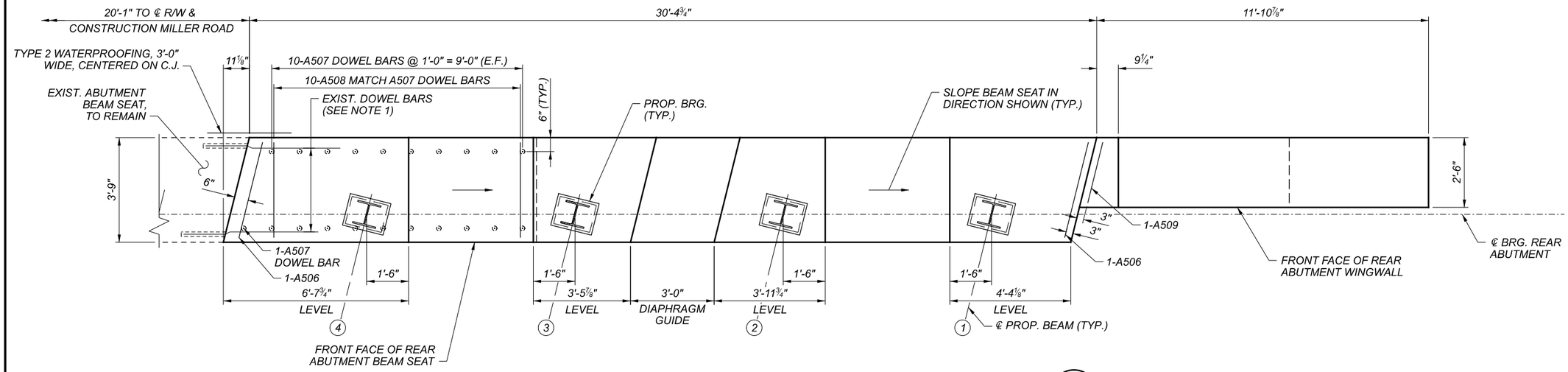

PART PLAN - REAR ABUTMENT BEAM SEAT

PROPOSED PILES NOT SHOWN

* DOWEL BAR EMBEDMENT LENGTHS
A502 BARS - 1'-3"
A507 BARS - 1'-3"
A802 BARS - 1'-6"

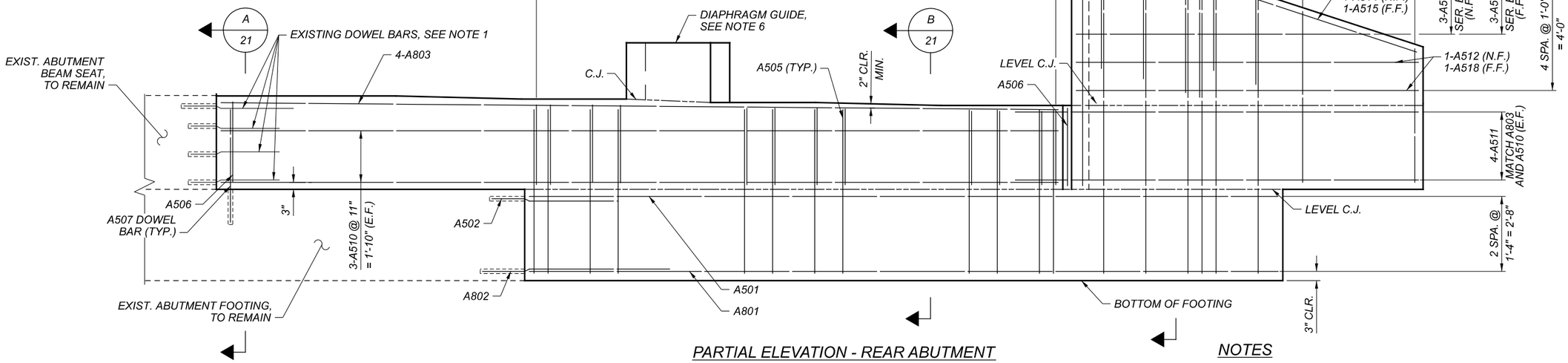

PARTIAL ELEVATION - REAR ABUTMENT

PROPOSED PILES NOT SHOWN

NOTES

1. EXERCISE CARE IN REMOVING CONCRETE TO NOT DAMAGE EXISTING REINFORCING STEEL THAT IS TO BE PRESERVED.
2. ALL BARS SHALL MAINTAIN A MINIMUM 2" CLEARANCE, UNLESS NOTED OTHERWISE.
3. REINFORCING SPLICE LENGTHS SHALL BE 3'-1" FOR #5 BARS AND 5'-4" FOR #8 BARS.
4. FOR REAR ABUTMENT FOOTING PLAN, SEE SHEET 16/41.
5. FOR REAR ABUTMENT PLAN AND ELEVATION, SEE SHEET 17/41.
6. FOR DIAPHRAGM GUIDE DETAILS, SEE SHEET 21/41.

REAR ABUTMENT DETAILS
BRIDGE NO. CUY-CR187-00.977
MILLER ROAD OVER I.R. 77

SFN	1805673
DESIGN AGENCY	EUTHENICS 8235 Mohawk Dr. | Cleveland, OH 44139
DESIGNER	SRW
CHECKER	BPS
REVIEWER	LAB 02/24/22
PROJECT ID	104983
SUBSET	18
TOTAL	41
SHEET	P.342
TOTAL	P.434

CUY-77-00.42 PART 1

MODEL: SR002 PAPERSIZE: 17x11 (in.) DATE: 3/4/2022 TIME: 2:02:21 PM USER: esmccaslin
F:\Jobs\11162-Miller Road Interchange\104983\400-Engineering\Structures\SFN_1805673\Sheets\104983_SFN_1805673_SR002.dgn

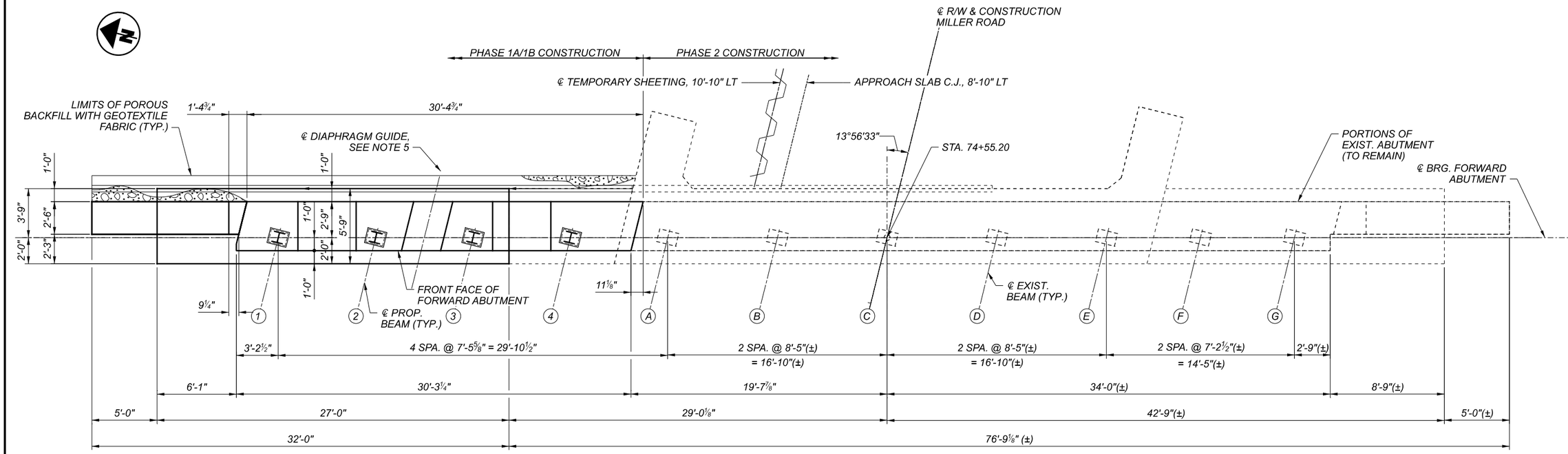

PLAN

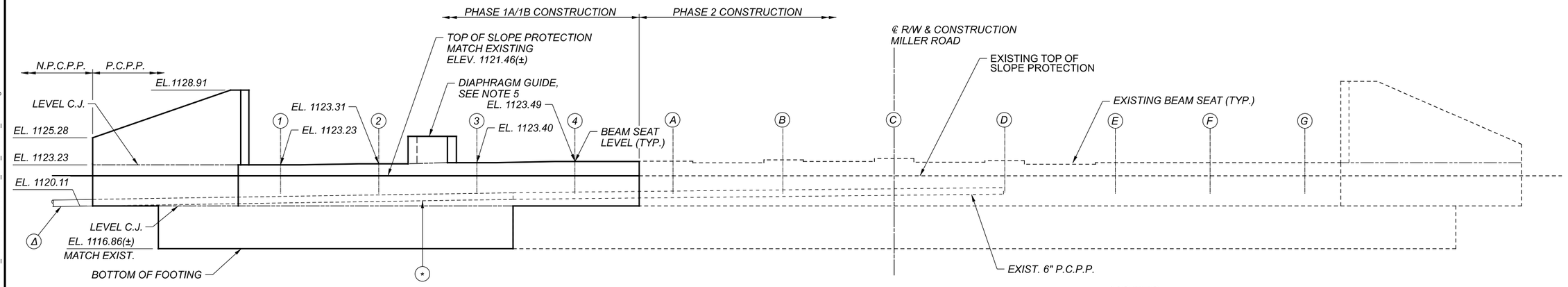

ELEVATION

PILES NOT SHOWN FOR CLARITY

LEGEND

(*) 6" P.C.P.P. TO CONNECT TO EXISTING 6" P.C.P.P. AT START OF PROPOSED BEAM SEAT

(Δ) 6" N.C.P.P. TIED TO 6" P.C.P.P. WITH NEW 6" P.C.P.P. AND SLOPED AS SHOWN (SEE NOTE 2)

NOTES

1. POROUS BACKFILL WITH GEOTEXTILE FABRIC, 2'-0" WIDE THICK, SHALL EXTEND UP TO THE PLANE OF THE SUBGRADE TO 1'-0" BELOW THE EMBANKMENT SURFACE, AND LATERALLY TO THE LIMITS SHOWN.
2. 6" N.P.C.P.P. SHALL EXTEND TO THE SURFACE OF THE EMBANKMENT AND SHALL DRAIN INTO A PRECAST CONCRETE OUTLET WITH TYPE 1 TIED CONCRETE BLOCK MAT AS SHOWN IN DM-1.1.
3. FOR FORWARD ABUTMENT FOOTING PLAN, SEE SHEET 16/41.
4. FOR ADDITIONAL BEAM SEAT DETAILS AND ABUTMENT REINFORCING, SEE SHEET 20/41.
5. FOR DIAPHRAGM GUIDE DETAILS, SEE SHEET 21/41.
6. FOR FORWARD ABUTMENT DIAPHRAGM DETAILS, SEE SHEET 33/41.
7. INSTALL STRUCTURE GROUNDING SYSTEM IN ACCORDANCE WITH ITEM 625 – STRUCTURE GROUNDING SYSTEM. SEE GENERAL NOTE ON SHEET 6 FOR DETAILS.

FORWARD ABUTMENT PLAN & ELEVATION
BRIDGE NO. CUY-CR187-00.977
MILLER ROAD OVER I.R. 77

SFN 1805673

DESIGN AGENCY
EUTHENICS
8235 Mohawk Dr. | Cleveland, OH 44129

DESIGNER	CHECKER
SRW	BPS

REVIEWER LAB 02/24/22

PROJECT ID 104983

SUBSET	TOTAL
19	41

SHEET	TOTAL
P.343	P.434

CUY-77-00.42 PART 1

MODEL: SF001 PAPERSIZE: 17x11 (in.) DATE: 3/4/2022 TIME: 2:02:25 PM USER: esmccaslin
F:\Jobs\11162\Miller Road Interchange\104983\400-Engineering\Structures\SFN_1805673\Sheets\1049833_SFN_1805673_SF001.dgn

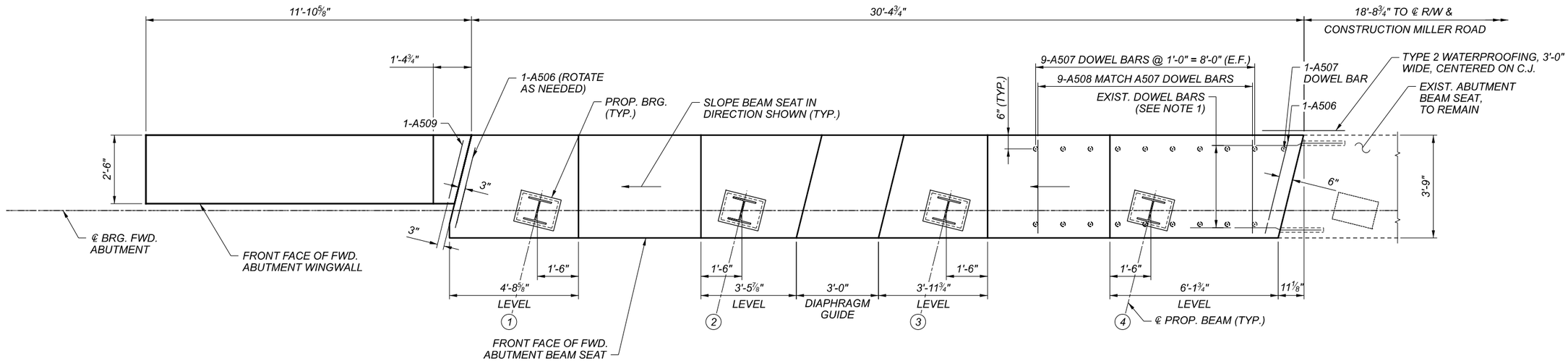

PART PLAN - FORWARD ABUTMENT BEAM SEAT

PROPOSED PILES NOT SHOWN

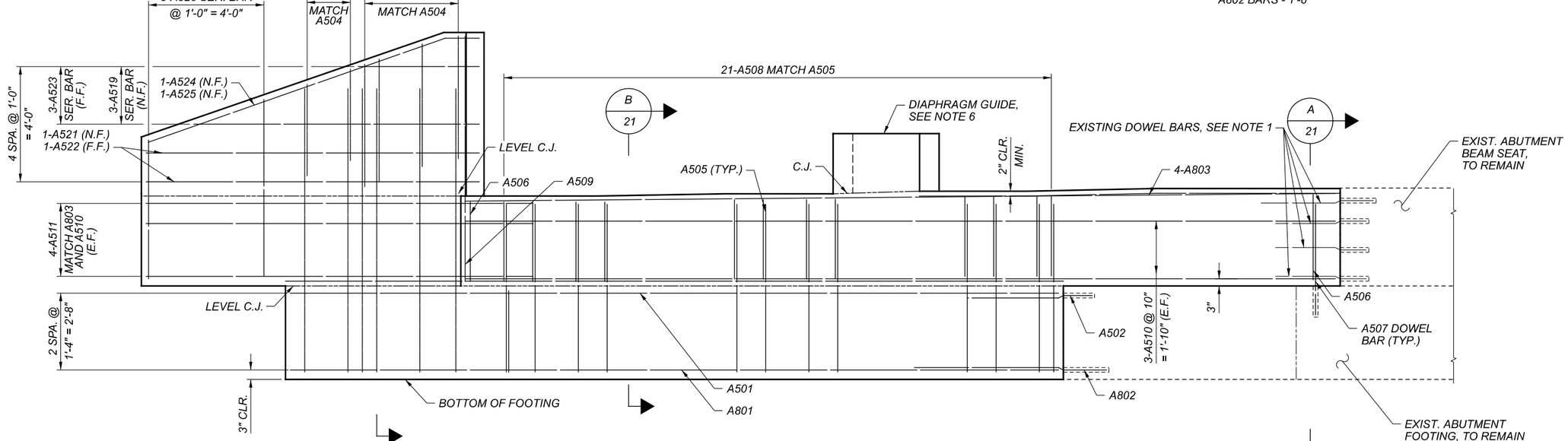

PARTIAL ELEVATION - FORWARD ABUTMENT

PROPOSED PILES NOT SHOWN

* DOWEL BAR EMBEDMENT LENGTHS
A502 BARS - 1'-3"
A507 BARS - 1'-3"
A802 BARS - 1'-6"

NOTES

1. EXERCISE CARE IN REMOVING CONCRETE TO NOT DAMAGE EXISTING REINFORCING STEEL THAT IS TO BE PRESERVED.
2. ALL BARS SHALL MAINTAIN A MINIMUM 2" CLEARANCE, UNLESS NOTED OTHERWISE.
3. REINFORCING SPLICE LENGTHS SHALL BE 3'-1" FOR #5 BARS AND 5'-4" FOR #8 BARS.
4. FOR FORWARD ABUTMENT FOOTING PLAN, SEE SHEET 16/41.
5. FOR FORWARD ABUTMENT PLAN AND ELEVATION, SEE SHEET 19/41.
6. FOR DIAPHRAGM GUIDE DETAILS, SEE SHEET 21/41.

FORWARD ABUTMENT DETAILS
BRIDGE NO. CUY-CR187-00.977
MILLER ROAD OVER I.R. 77

SFN 1805673

DESIGN AGENCY
EUTHENICS
8225 Mohawk Dr. | Cleveland, OH 44130

DESIGNER	CHECKER
SRW	BPS

REVIEWER: LAB 02/24/22

PROJECT ID: 104983

SUBSET	TOTAL
20	41

SHEET	TOTAL
P.344	P.434

CUY-77-00.42 PART 1

MODEL: SF002 PAPERSIZE: 17x11 (in.) DATE: 3/4/2022 TIME: 2:02:29 PM USER: esmccaslin
F:\Jobs\1162-Miller Road Interchange\104983\400-Engineering\Structures\SFN_1805673\Sheets\104983_SFN_1805673_SF002.dgn

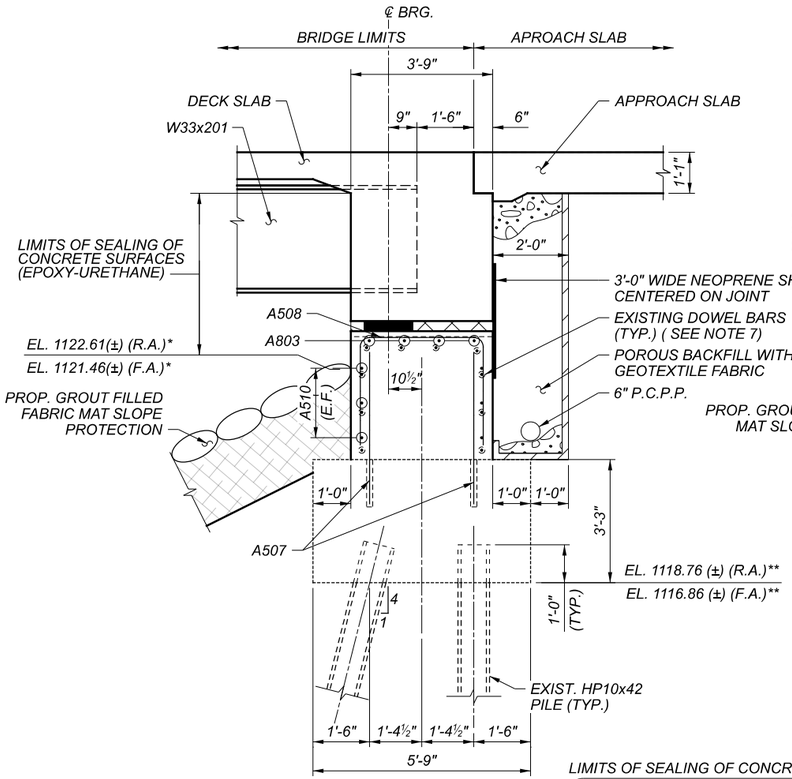

SECTION A 18,20

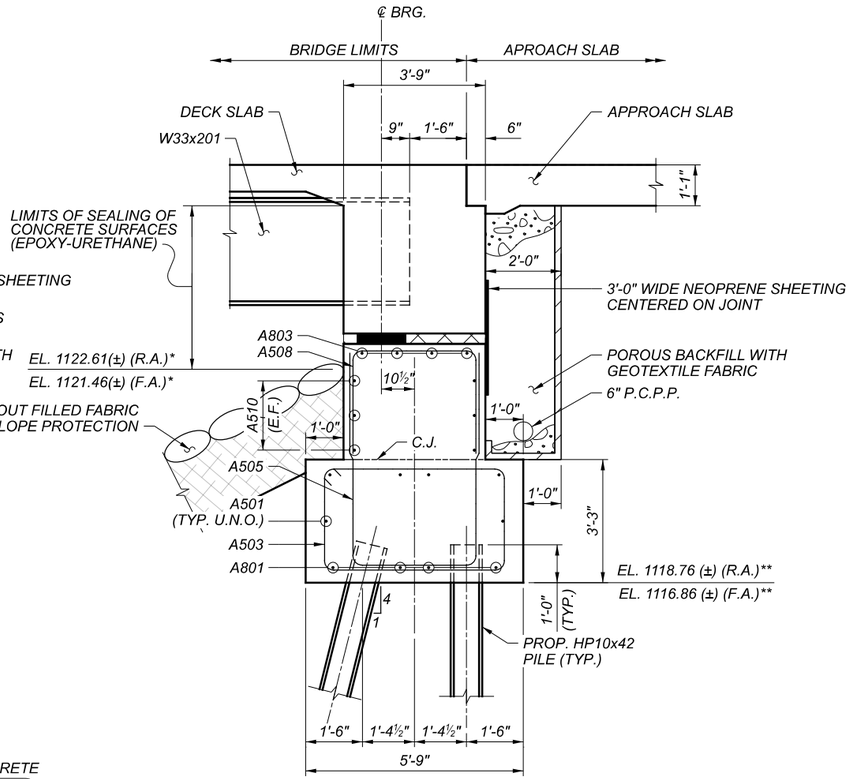

SECTION B 18,20

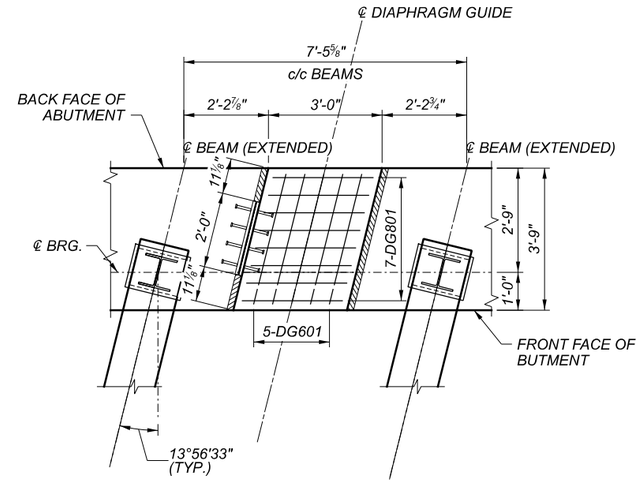

DIAPHRAGM GUIDE PLAN

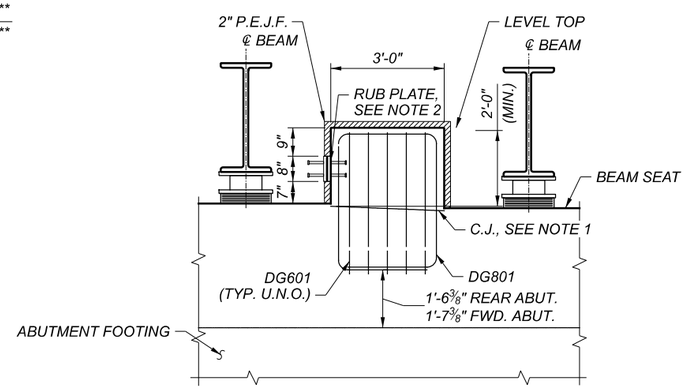

DIAPHRAGM GUIDE ELEVATION

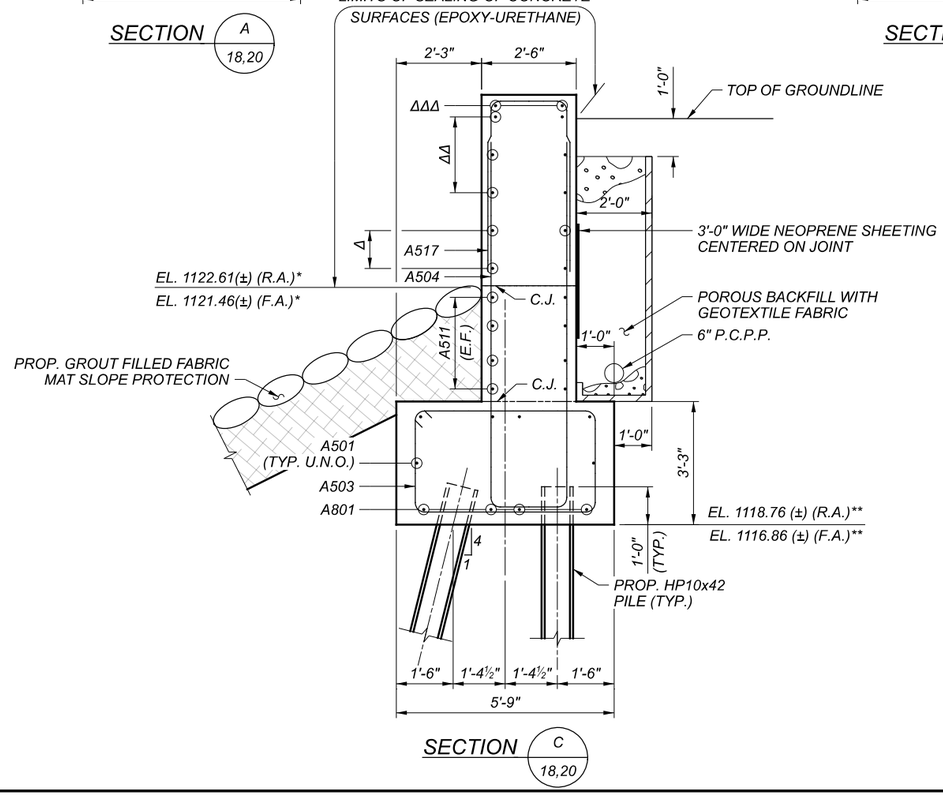

SECTION C 18,20

LEGEND

* - *ABUTMENT TOP OF SLOPE PROTECTION ELEVATIONS TO MATCH EXISTING TOP OF SLOPE PROTECTION*

** - *ABUTMENT BOTTOM OF FOOTING ELEVATIONS TO MATCH EXISTING ABUTMENT FOOTING ELEVATIONS*

Δ - *A512 (R.A.) (N.F.)*
A518 (R.A.) (F.F.)
A521 (F.A.) (N.F.)
A522 (F.A.) (F.F.)

ΔΔ - *A513 (R.A.) (N.F.)*
A519 (R.A.) (N.F.)
(F.A.) (F.F.)
A523 (F.A.) (N.F.)

ΔΔΔ - *A514 (R.A.) (N.F.)*
A515 (R.A.) (F.F.)
A524 (F.A.) (N.F.)
A525 (F.A.) (F.F.)

NOTES

1. *FINISH SURFACE OF THE CONSTRUCTION JOINT WITH A SERRATED TROWEL. THE SERRATIONS SHALL BE 1/4" DEEP MINIMUM.*
2. *FOR DETAILS OF RUB PLATES, GENERAL NOTES, AND ADDITIONAL DETAILS NOT SHOWN, SEE STANDARD DRAWING SICD-2-14.*
3. *BASIS OF PAYMENT: THE UNIT PRICE BID SHALL INCLUDE ALL MATERIALS, LABOR, AND INCIDENTALS NECESSARY TO CONSTRUCT THE DIAPHRAGM GUIDES IN ACCORDANCE WITH THE DETAILS ON THIS SHEET AND STANDARD DRAWING SICD-2-14. PAYMENT WILL BE MADE AT THE CONTRACT BID PRICE FOR ITEM 511 - SEMI-INTEGRAL DIAPHRAGM GUIDE.*
4. *FOR ADDITIONAL REAR ABUTMENT AND FORWARD ABUTMENT FOOTING REINFORCING DETAILS, SEE SHEET 16/41.*
5. *FOR ADDITIONAL REAR ABUTMENT REINFORCING DETAILS, SEE SHEET 18/41.*
6. *FOR ADDITIONAL FORWARD ABUTMENT REINFORCING DETAILS, SEE SHEET 20/41.*
7. *EXERCISE CARE IN REMOVING CONCRETE TO NOT DAMAGE EXISTING REINFORCING STEEL THAT IS TO BE PRESERVED.*

ABUTMENT SECTIONS AND DIAPHRAGM GUIDE DETAILS
BRIDGE NO. CUY-CR187-00.977
MILLER ROAD OVER I.R. 77

CUY-77-00.42 PART 1

MODEL: SR003 PAPERSIZE: 17x11 (in.) DATE: 3/4/2022 TIME: 2:02:33 PM USER: esmccaslin
F:\Jobs\11162-Miller Road Interchange\104983\400-Engineering\Structures\SFN_1805673\Sheets\104983_SFN_1805673_SR003.dgn

SFN	1805673
DESIGN AGENCY	EUTHENICS 8235 Mohawk Dr. | Cleveland, OH 44146
DESIGNER	SRW
CHECKER	BPS
REVIEWER	LAB 02/24/22
PROJECT ID	104983
SUBSET	21
TOTAL	41
SHEET	P.345
TOTAL	P.434

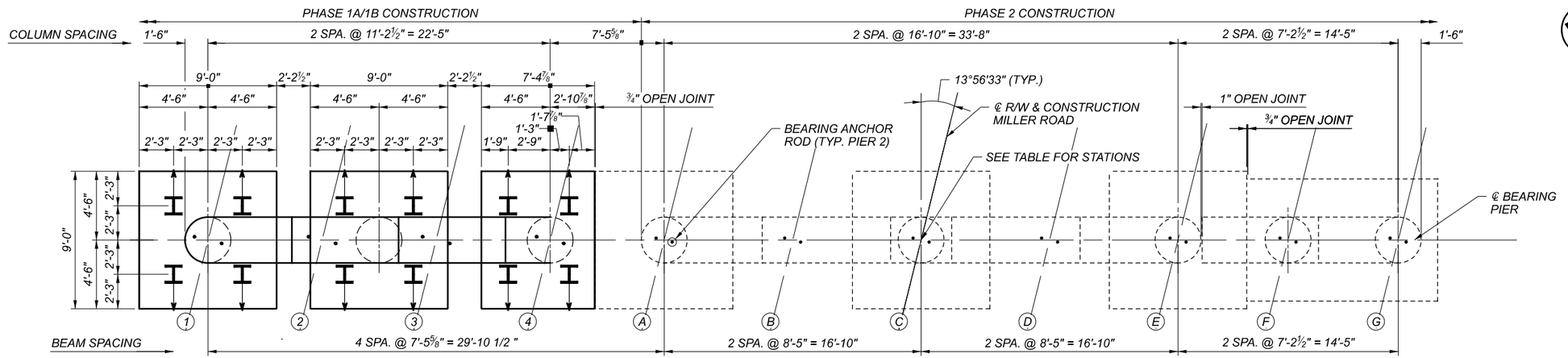

PIER PLAN

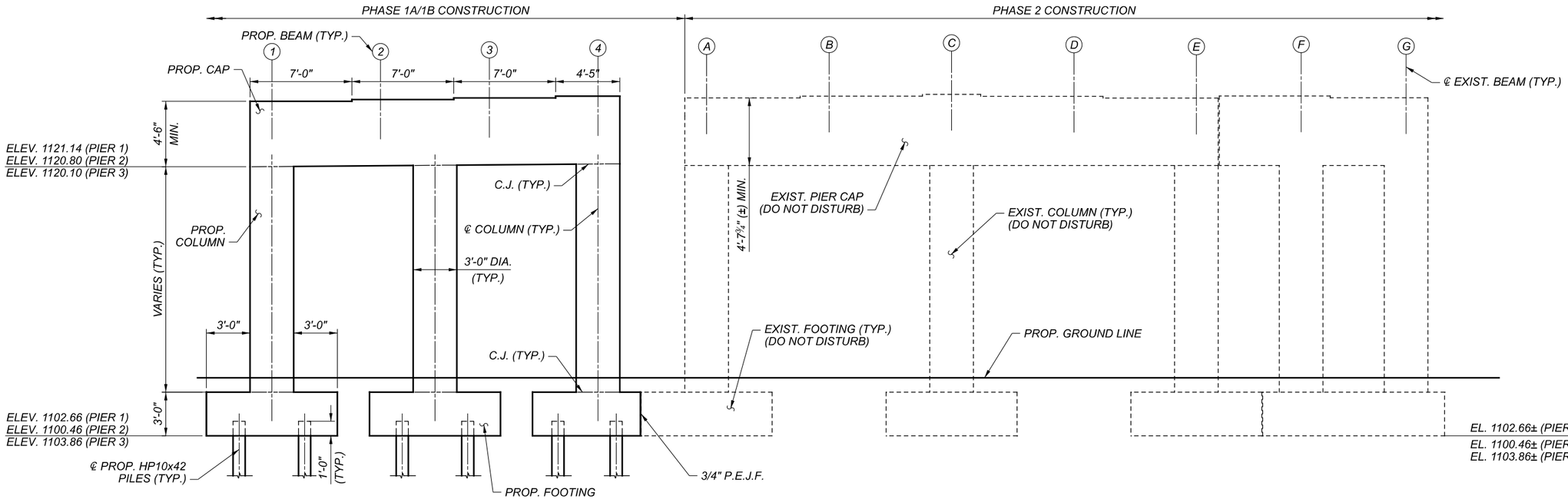

PIER ELEVATION

EXISTING PILES NOT SHOWN FOR CLARITY

PIER BEAM SEAT ELEVATIONS				
BEAM	1	2	3	4
PIER 1	1125.64	1125.75	1125.86	1125.97
PIER 2	1125.30	1125.40	1125.50	1125.60
PIER 3	1124.60	1124.69	1124.79	1124.88

PIER STATIONS AT CENTERLINE	
PIER	STATION
PIER 1	72+27.86
PIER 2	73+12.03
PIER 3	73+96.20

LEGEND

(#) BEAM LINE DESIGNATION

NOTES

1. PIER DETAILS SHOWN TYPICAL FOR PIERS 1, 2 & 3.
2. PHYSICAL INVENTORY OF MEASURED QUANTITIES OF DETERIORATION WAS PERFORMED IN JUNE 2021 AND FOUND NO AREAS OF DELAMINATION. A QUANTITY OF 10 SF HAS BEEN INCLUDED IN THE ESTIMATED QUANTITIES TO ACCOUNT FOR PATCHING, TO BE USED AS DIRECTED BY THE ENGINEER.
3. INSTALL STRUCTURE GROUNDING SYSTEM IN ACCORDANCE WITH ITEM 625 – STRUCTURE GROUNDING SYSTEM. SEE GENERAL NOTE ON SHEET 6 FOR DETAILS.

PIER PLAN & ELEVATION
BRIDGE NO. CUY-CR187-00.977
MILLER ROAD OVER I.R. 77

SFN 1805673

DESIGN AGENCY
EUTHENICS
8235 Mohawk Dr. | Cleveland, OH 44539

DESIGNER	CHECKER
OOS	BPS

REVIEWER LAB 02/24/22

PROJECT ID 104983

SUBSET	TOTAL
22	41

SHEET	TOTAL
P.346	P.434

CUY-77-00.42 PART 1

MODEL: SI001 PAPERSIZE: 17x11 (in.) DATE: 3/4/2022 TIME: 2:02:37 PM USER: esmccaslin
F:\Jobs\11624\Miller Road Interchange\104983\400-Engineering\Structures\SFN_1805673\Sheets\104983_SFN_1805673_SI001.dgn

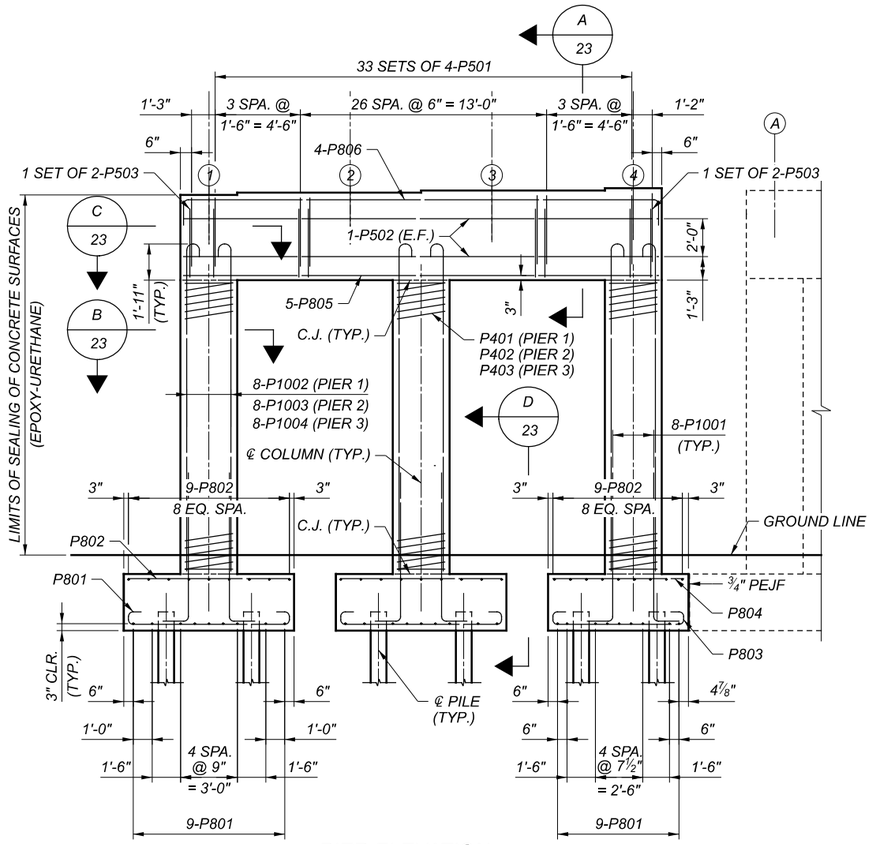

PIER ELEVATION

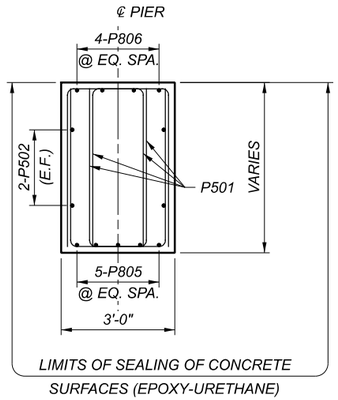

SECTION A

TYPICAL PIER CAP REINFORCING

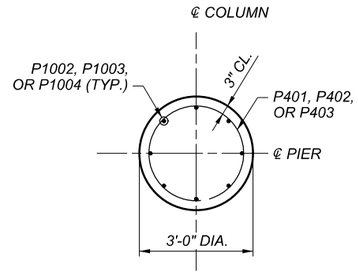

SECTION B

TYPICAL COLUMN REINFORCING

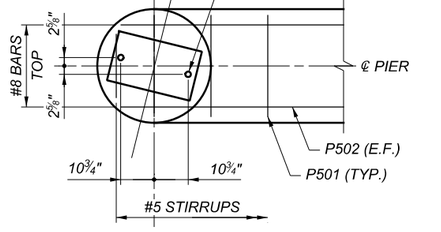

SECTION C

SHOWING DOWEL PLACEMENT AT EXTERIOR COLUMN

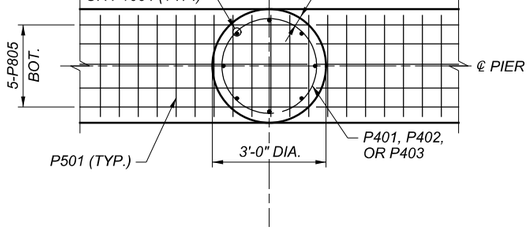

CAP AT COLUMN DETAIL

SHOWING BOTTOM CAP REINFORCING PLACEMENT

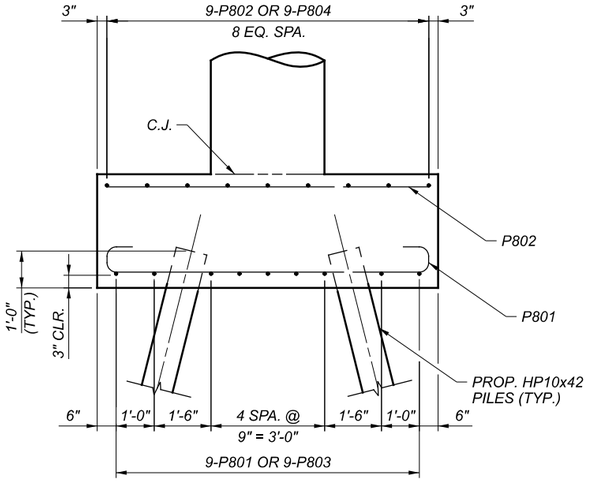

SECTION D

LEGEND

(#) BEAM LINE DESIGNATION

NOTES

1. FOR THE PIER REINFORCEMENT, THE MINIMUM LAP LENGTHS ARE AS FOLLOWS: #5 BARS = 2'-5".
2. ACCURATELY PLACE REINFORCING STEEL IN THE VICINITY OF THE BRIDGE SEAT TO AVOID INTERFERENCE WITH THE DRILLING OF BEARING ANCHOR HOLES OR THE PRESETTING OF BEARING ANCHORS.
3. FOR PIER STATIONS AND ELEVATIONS, SEE SHEET 22/41.
4. CONCRETE SEALING LIMITS SHOWN ALSO APPLY TO ALL EXISTING PIER CAP AND COLUMNS SURFACES.
5. REINFORCING AND CLEARANCES TYPICAL FOR ALL COLUMNS OF EACH RESPECTIVE PIER, REINFORCING AND CLEARANCES TYPICAL FOR TWO EXTERIOR FOOTINGS OF EACH PIER.

PIER DETAILS

BRIDGE NO. CUY-CR187-00.977
MILLER ROAD OVER I.R. 77

SFN 1805673

DESIGN AGENCY
EUTHENICS
8235 Mohawk Dr. | Cleveland, OH 44130

DESIGNER	CHECKER
OOS	BPS

REVIEWER
LAB 02/24/22

PROJECT ID
104983

SUBSET	TOTAL
23	41

SHEET	TOTAL
P.347	P.434

CUY-77-00.42 PART 1

MODEL: SI002 PAPERSIZE: 17x11 (in.) DATE: 3/4/2022 TIME: 2:02:41 PM USER: esmccaslin
F:\Jobs\1162-Miller Road Interchange\104983\400-Engineering\Structures\SFN_1805673\Sheets\1049830_SFN_1805673_SI002.dgn

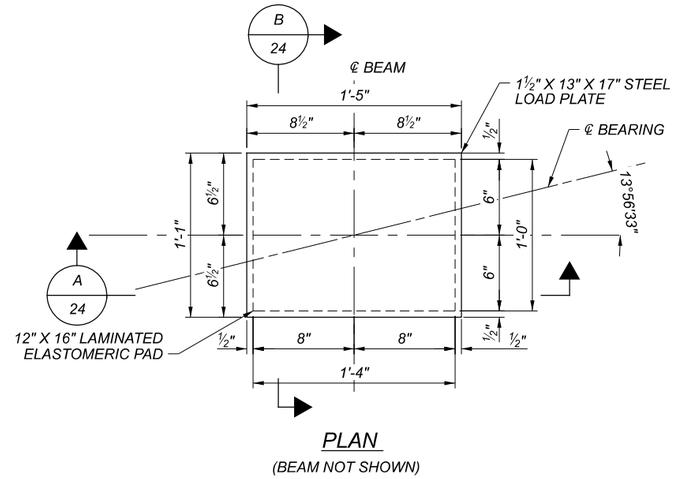

PLAN

(BEAM NOT SHOWN)

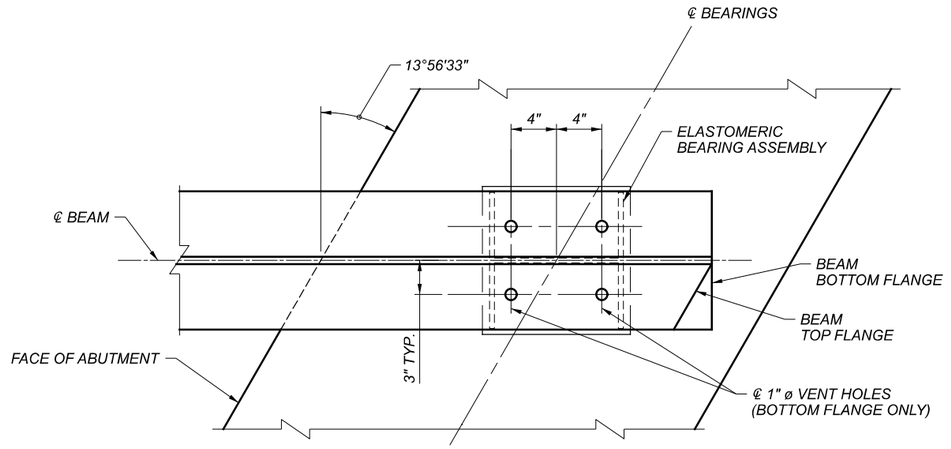

DETAIL A

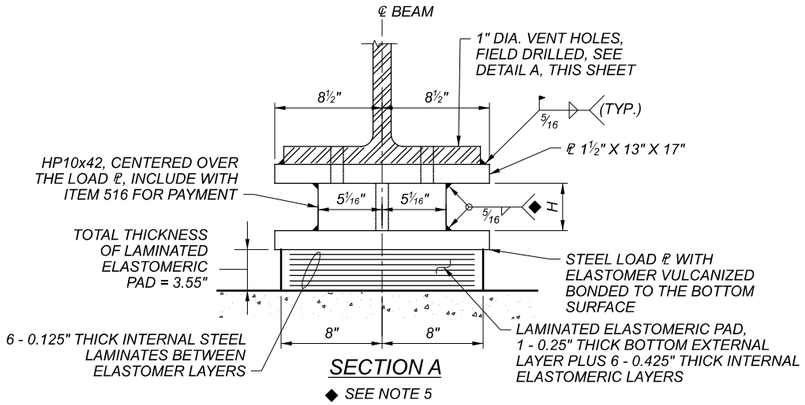

SECTION A

◆ SEE NOTE 5

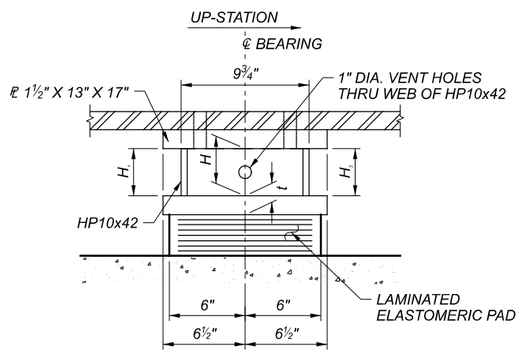

SECTION B

EXPANSION BEARING

(ABUTMENTS, 8 REQUIRED)

TABLE OF BEARING DIMENSIONS				
LOCATION	t	H_1	H	H_2
REAR ABUT.	1.5"	6"	6"	6"
FWD. ABUT.	1.5"	6 3/16"	6 3/32"	6"

NOTES

1. BEARING DESIGN LOADS:

	EXPANSION BEARING (ABUTMENTS)
DEAD LOADS	49.6 K
LIVE LOADS	44.6 K
TOTAL DESIGN LOAD	94.2 K

2. THE STEEL LOAD PLATES SHALL BE ASTM A709, GRADE 50 STEEL. THE LOAD PLATE SHALL BE VULCANIZED BONDED TO THE LAMINATED ELASTOMERIC PAD DURING THE MOLDING PROCESS.
3. ELASTOMER SHALL HAVE A HARDNESS OF 50 DUROMETER. THE BEARINGS WERE DESIGNED IN ACCORDANCE WITH SECTION 14.7.6 (METHOD A) OF AASHTO LRFD BRIDGE DESIGN SPECIFICATIONS. THE LONG TERM COMPRESSION PROOF LOAD TEST (AASHTO STANDARD SPECIFICATIONS FOR HIGHWAY BRIDGES, DIVISION II, SECTION 18.7.2.6) IS NOT REQUIRED.
4. ALL BEARINGS SHALL BE MARKED PRIOR TO SHIPPING. THE MARKS SHALL INCLUDE THE BEARING LOCATION ON THE BRIDGE, AND A DIRECTION ARROW THAT POINTS UP-STATION. ALL MARKS SHALL BE PERMANENT AND VISIBLE AFTER THE BEARING IS INSTALLED.
5. WELDING OF HP-SHAPE: IF ALL-AROUND WELD TO BOTH PLATES IS IMPRACTICAL DUE TO CLEARANCES REQUIRED FOR WELDING EQUIPMENT, PROVIDE AN ALL-AROUND WELD TO LOAD PLATE AND PROVIDE A CONTINUOUS WELD TO TOP PLATE ALONG OUTSIDE OF FLANGE, AROUND FLANGE EDGES, AND RETURNED 3" MINIMUM ALONG INSIDE OF THE FLANGE, BOTH SIDES OF HP-SHAPE.
6. BASIS OF PAYMENT, EXPANSION BEARINGS: THE UNIT PRICE BID SHALL INCLUDE ALL MATERIALS, LABOR, AND INCIDENTALS NECESSARY TO FURNISH AND INSTALL THE LAMINATED ELASTOMERIC BEARINGS, STEEL LOAD PLATES, AND HP SHAPES. PAYMENT WILL BE MADE AT THE CONTRACT PRICE FOR ITEM 516 - ELASTOMERIC BEARING WITH INTERNAL LAMINATES AND LOAD PLATE (NEOPRENE), AS PER PLAN (LOAD PLATE 13" x 17" x 1.50", NEOPRENE 12" x 16" x 3.55")

BEARING DETAILS - ABUTMENTS
BRIDGE NO. CUY-CR187-00.977
MILLER ROAD OVER I.R. 77

SFN 1805673

DESIGN AGENCY
EUTHENICS
8235 Midland Dr. | Cleveland, OH 44125

DESIGNER	CHECKER
OOS	BPS

REVIEWER LAB 02/24/22

PROJECT ID 104983

SUBSET	TOTAL
24	41

SHEET	TOTAL
P.348	P.434

CUY-77-00.42 PART 1

MODEL: SB002 PAPERSIZE: 17x11 (in.) DATE: 3/4/2022 TIME: 2:02:45 PM USER: esmccaslin
F:\Jobs\11162-Miller Road Interchange\104983\400-Engineering\Structures\SFN_1805673\Sheets\104983_SFN_1805673_SB002.dgn

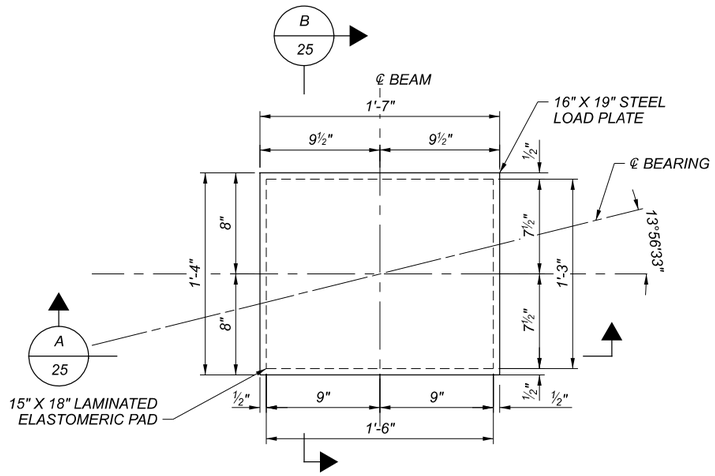

PLAN - PIER 1 & PIER 3

(BEAM NOT SHOWN)

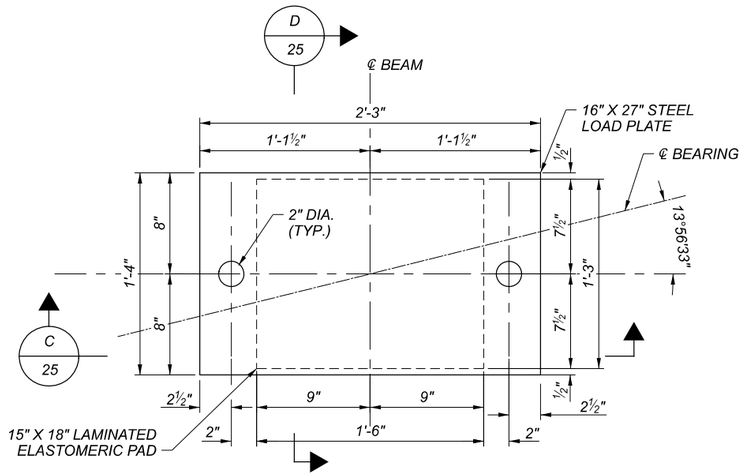

PLAN - PIER 2

(BEAM NOT SHOWN)

TABLE OF BEARING DIMENSIONS			
LOCATION	t_s	t	t_s
PIER 1	1.5"	1.5"	1.5"
PIER 2	1.5"	1.5"	1.5"
PIER 3	$1^{11}/_{16}$"	$1^{19}/_{32}$"	1.5"

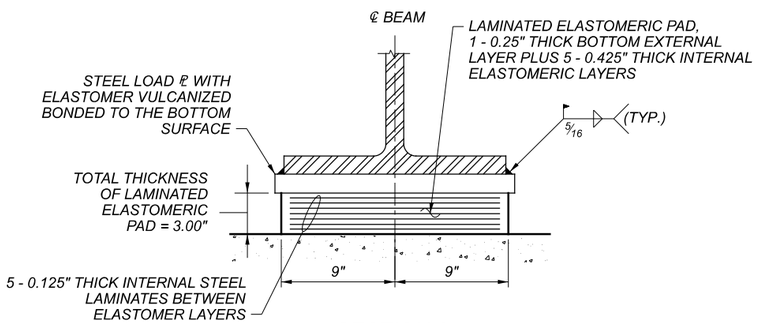

SECTION A

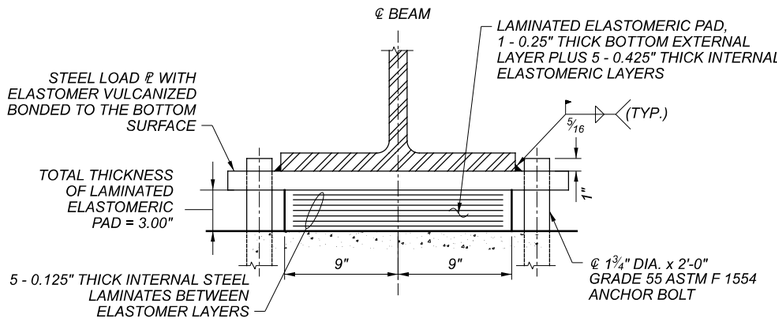

SECTION C

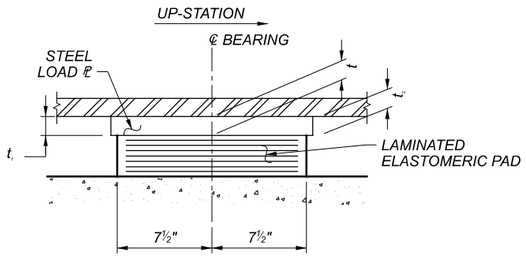

SECTION B

EXPANSION BEARING

(PIER 1, 4 REQUIRED)

(PIER 3, 4 REQUIRED)

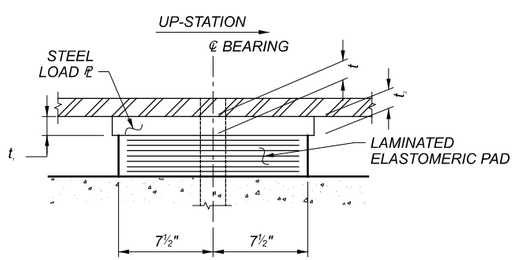

SECTION D

FIXED BEARING

(PIER 2, 4 REQUIRED)

NOTES

1. BEARING DESIGN LOADS:

	EXPANSION BEARING (PIER 1 & PIER 3)
DEAD LOADS	186.9 K
LIVE LOADS	83.3 K
TOTAL DESIGN LOAD	270.2 K

2. BEARING DESIGN LOADS:

	FIXED BEARING (PIER 2)
DEAD LOADS	208.3 K
LIVE LOADS	86.7 K
TOTAL DESIGN LOAD	295.0 K

3. THE STEEL LOAD PLATES SHALL BE ASTM A709, GRADE 50 STEEL. THE LOAD PLATE SHALL BE VULCANIZED BONDED TO THE LAMINATED ELASTOMERIC PAD DURING THE MOLDING PROCESS.

4. ELASTOMER SHALL HAVE A HARDNESS OF 50 DUROMETER. THE BEARINGS WERE DESIGNED IN ACCORDANCE WITH SECTION 14.7.6 (METHOD A) OF AASHTO LRFD BRIDGE DESIGN SPECIFICATIONS. THE LONG TERM COMPRESSION PROOF LOAD TEST (AASHTO STANDARD SPECIFICATIONS FOR HIGHWAY BRIDGES, DIVISION II, SECTION 18.7.2.6) IS NOT REQUIRED.

5. ALL BEARINGS SHALL BE MARKED PRIOR TO SHIPPING. THE MARKS SHALL INCLUDE THE BEARING LOCATION ON THE BRIDGE, AND A DIRECTION ARROW THAT POINTS UP-STATION. ALL MARKS SHALL BE PERMANENT AND VISIBLE AFTER THE BEARING IS INSTALLED.

6. BASIS OF PAYMENT, EXPANSION BEARINGS: THE UNIT PRICE BID SHALL INCLUDE ALL MATERIALS, LABOR, AND INCIDENTALS NECESSARY TO FURNISH AND INSTALL THE LAMINATED ELASTOMERIC BEARINGS AND STEEL LOAD PLATES. PAYMENT WILL BE MADE AT THE CONTRACT PRICE FOR ITEM 516 - ELASTOMERIC BEARING WITH INTERNAL LAMINATES AND LOAD PLATE (NEOPRENE), AS PER PLAN (LOAD PLATE 16" x 19" x 1.50", NEOPRENE 15" x 18" x 3.00")

7. BASIS OF PAYMENT, FIXED BEARINGS: THE UNIT PRICE BID SHALL INCLUDE ALL MATERIALS, LABOR, AND INCIDENTALS NECESSARY TO FURNISH AND INSTALL THE DOWEL HOLES, ANCHOR RODS, LAMINATED ELASTOMERIC BEARINGS AND STEEL LOAD PLATES. PAYMENT WILL BE MADE AT THE CONTRACT PRICE FOR ITEM 516 - ELASTOMERIC BEARING WITH INTERNAL LAMINATES AND LOAD PLATE (NEOPRENE), AS PER PLAN (LOAD PLATE 16" x 27" x 1.50", NEOPRENE 15" x 18" x 3.00")

BEARING DETAILS - PIERS
BRIDGE NO. CUY-CR187-00.977
MILLER ROAD OVER I.R. 77

SFN 1805673

DESIGN AGENCY
EUTHENICS
8235 Mohawk Dr. | Cleveland, OH 44539

DESIGNER	CHECKER
OOS	BPS

REVIEWER LAB 02/24/22

PROJECT ID 104983

SUBSET	TOTAL
25	41

SHEET	TOTAL
P.349	P.434

CUY-77-00.42 PART 1

MODEL: SB001 PAPERSIZE: 17x11 (in.) DATE: 3/4/2022 TIME: 2:02:49 PM USER: esmccaslin
F:\Jobs\11622-Miller Road Interchange\104983\400-Engineering\Structures\SFN_1805673\Sheets\104983_SFN_1805673_SB001.dgn

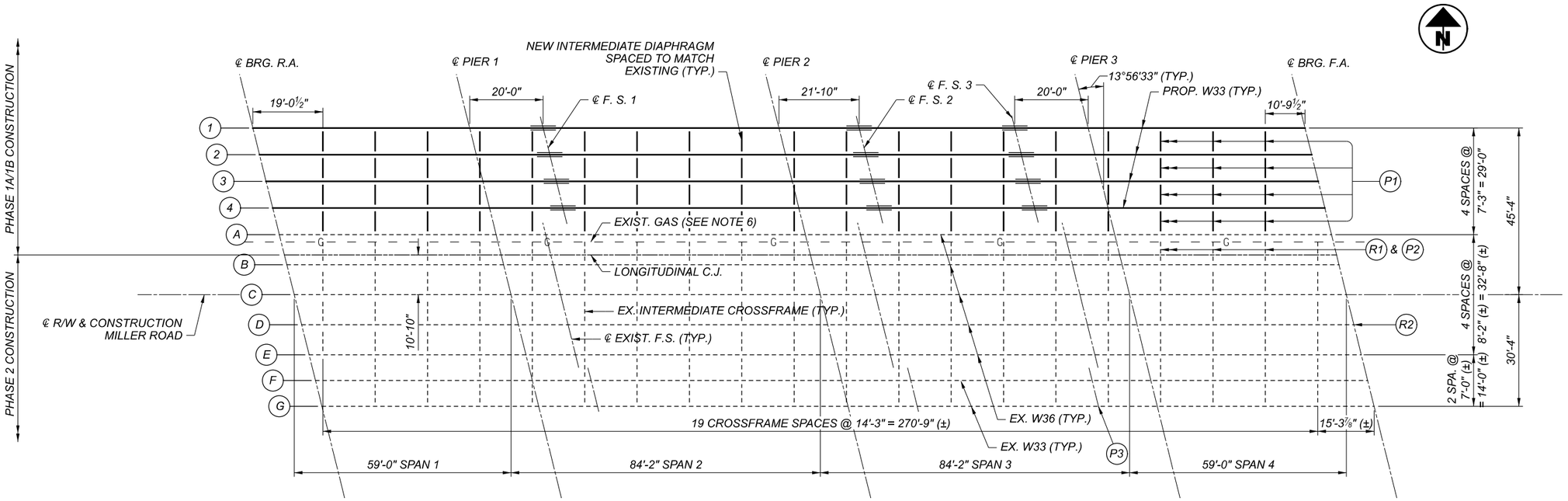

FRAMING PLAN

LEGEND

- (X) EXISTING BEAM LINE DESIGNATION.
- (#) PROPOSED BEAM LINE DESIGNATION.
- (R1) EXISTING INTERMEDIATE CROSSFRAME TO BE DISCONNECTED AT BEAM B AFTER SAW CUTTING EXISTING DECK FOR PHASE 1 REMOVAL (TYP. BETWEEN EX. BEAMS A AND B).
- (R2) EXISTING ABANDONED WELDED UTILITY SUPPORT TO BE REMOVED FROM WEB BY GRINDING SMOOTH (TYP. OF BEAM D). CAREFULLY GRIND VERTICALLY ONLY. COST OF REMOVAL IS TO BE INCLUDED WITH ITEM 202 - PORTIONS OF STRUCTURE REMOVED, OVER 20' SPAN, AS PER PLAN.
- (P1) PROPOSED INTERMEDIATE DIAPHRAGM PER STANDARD DRAWING GSD-1-19 TO BE INSTALLED PRIOR TO PHASE 1A/1B DECK PLACEMENT (TYP. BETWEEN BEAMS 1 AND A).
- (P2) EXISTING INTERMEDIATE CROSSFRAME TO BE RECONNECTED AT BEAM B AFTER COMPLETION OF CLOSURE POUR DURING PHASE 1A/1B CONSTRUCTION (TYP. BETWEEN EX. BEAMS A AND B).
- (P3) EXISTING FIELD SPLICE TO BE REPAIRED BY REPLACING MISSING BOLTS (LOCATED ON BEAM G). PAYMENT IS INCLUDED UNDER ITEM 513 - STRUCTURAL STEEL MEMBERS, LEVEL 2.

NOTES

1. ALL EXISTING FRAMING IS TO REMAIN UNLESS OTHERWISE NOTED.
2. FIELD SPLICE LOCATIONS SHOWN ARE FOR PROPOSED BEAMS. FOR LOCATION OF EXISTING BEAM FIELD SPLICES, SEE TYPICAL BEAM ELEVATIONS, SHEET 27/41.
3. THIS SHEET IS INTENDED TO PROVIDE A SCHEMATIC OVERVIEW OF THE EXISTING FRAMING AND SHOW THE LOCATION OF VARIOUS WORK ITEMS. SELECTED DIMENSIONS HAVE BEEN PROVIDED FOR THE CONTRACTOR'S INFORMATION. ADDITIONAL DATA, IF REQUIRED, MAY BE OBTAINED FROM THE RECORD PLANS ON FILE WITH ODOT DISTRICT 12.
4. ALL STRUCTURAL STEEL SHALL BE ASTM GRADE 50, MINIMUM YIELD STRENGTH 50,000 PSI.
5. FOR DETAILS OF PROPOSED INTERMEDIATE DIAPHRAGMS, SEE STANDARD DRAWING GSD-1-19.
6. THE EXISTING GAS LINE IS SUPPORTED BY UTILITY SUPPORTS WHICH ARE CONNECTED TO BEAM A AND THE CROSS FRAMES BETWEEN BEAM A AND BEAM B. THE CONTRACTOR CONTRACTOR SHALL MAINTAIN SUPPORT OF THE GAS LINE AT ALL TIMES THROUGHOUT CONSTRUCTION OF THIS PROJECT.
7. FOR TYPICAL BEAM ELEVATIONS, SEE SHEET 27/41.
8. FOR TRANSVERSE SECTIONS, SEE SHEET 30/41.
9. FOR DECK SLAB PLAN, SEE SHEET 31/41.

FRAMING PLAN
BRIDGE NO. CUY-CR187-00.977
MILLER ROAD OVER I.R. 77

SFN 1805673
DESIGN AGENCY
EUTHENICS
8235 Holland Dr. | Cleveland, OH 44125
DESIGNER OOS | CHECKER BPS
REVIEWER LAB 02/24/22
PROJECT ID 104983
SUBSET 26 | TOTAL 41
SHEET P.350 | TOTAL P.434

CUY-77-00.42 PART 1

MODEL: SS001 PAPERSIZE: 17x11 (in.) DATE: 3/4/2022 TIME: 2:02:53 PM USER: esmccaslin
F:\Jobs\11162-Miller Road Interchange\104983\400-Engineering\Structures\SFN_1805673\Sheets\104983_SFN_1805673_SS001.dgn

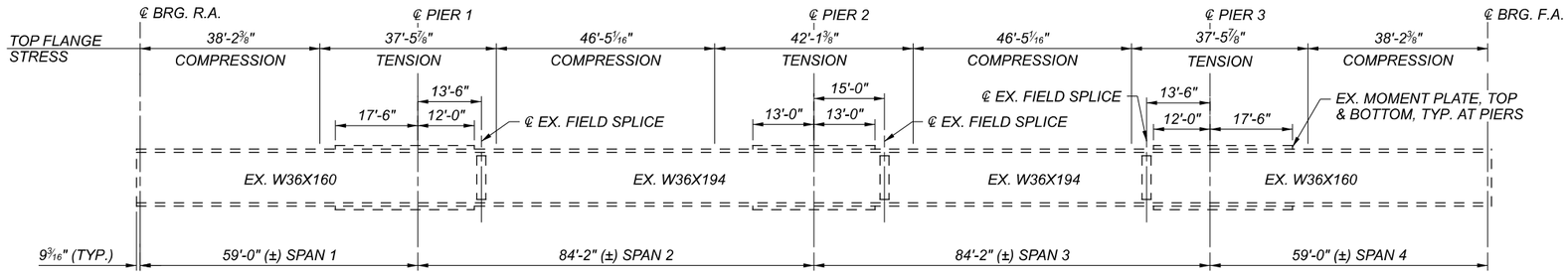

TYPICAL EXISTING BEAM ELEVATION
BEAMS A THROUGH E

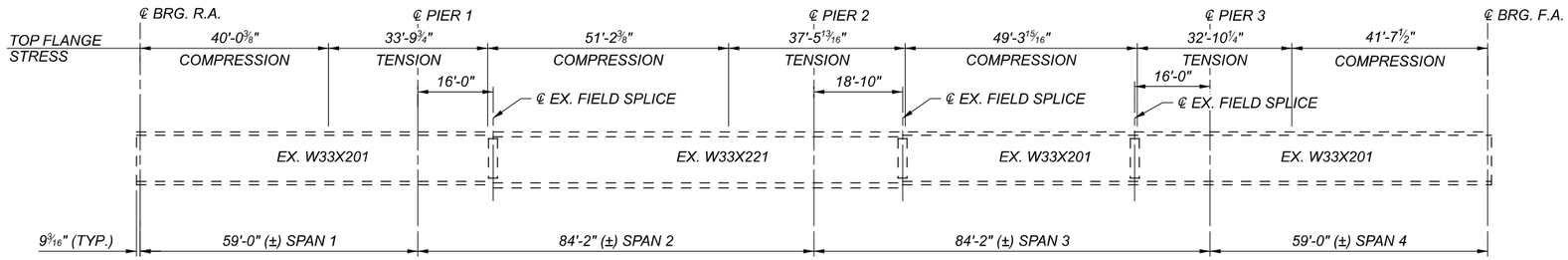

TYPICAL EXISTING BEAM ELEVATION
BEAMS F AND G

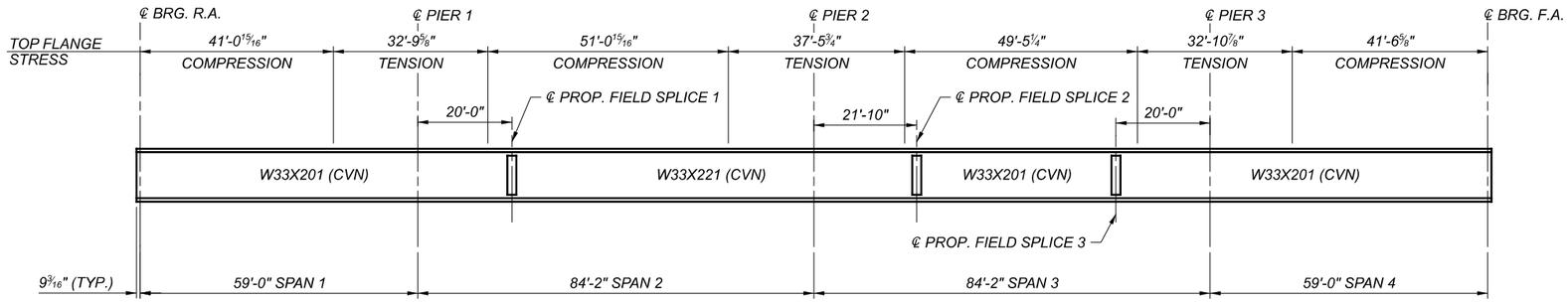

TYPICAL PROPOSED BEAM ELEVATION
BEAMS 1 THROUGH 4

NOTES

1. *WHERE A SHAPE OR PLATE IS DESIGNATED (CVN), FURNISH MATERIAL THAT MEETS THE MINIMUM NOTCH TOUGHNESS REQUIREMENTS AS SPECIFIED IN 711.01.*
2. *WELD ATTACHMENT OF SUPPORTS FOR CONCRETE FINISHING MACHINE TO AREAS OF THE FASCIA STRINGER FLANGES DESIGNATED "COMPRESSION". DO NOT WELD ATTACHMENTS TO AREAS DESIGNATED "TENSION". FILLET WELDS TO COMPRESSION FLANGES SHALL BE AT LEAST 1" FROM THE EDGE OF FLANGE, BE NO MORE THAN 2" LONG, AND BE AT LEAST ¼" FOR THICKNESSES UP TO ¾" OR ⁵⁄₁₆" FOR GREATER THAN ¾" THICK.*
3. *CLEAN AND PAINT ALL BEAMS, INTERMEDIATE CROSSFRAMES, FIELD SPLICES, AND BEARING DEVICES.*
4. *FOR BOLTED FIELD SPLICE, AND BEAM END DETAILS, SEE SHEET 28/41.*
5. *FOR FRAMING PLAN, SEE SHEET 26/41.*

BEAM ELEVATIONS
BRIDGE NO. CUY-CR187-00.977
MILLER ROAD OVER I.R. 77

SFN 1805673
DESIGN AGENCY
EUTHENICS
8235 Hubbard Dr. | Cleveland, OH 44125
DESIGNER OOS | CHECKER BPS
REVIEWER LAB 02/24/22
PROJECT ID 104983
SUBSET 27 | TOTAL 41
SHEET P.351 | TOTAL P.434

CUY-77-00.42 PART 1

MODEL: SS002 PAPERSIZE: 17x11 (in.) DATE: 3/4/2022 TIME: 2:02:56 PM USER: esmccaslin
F:\Jobs\11162-Miller Road Interchange\104983\400-Engineering\Structures\SFN_1805673\Sheets\104983_SFN_1805673_SS002.dgn

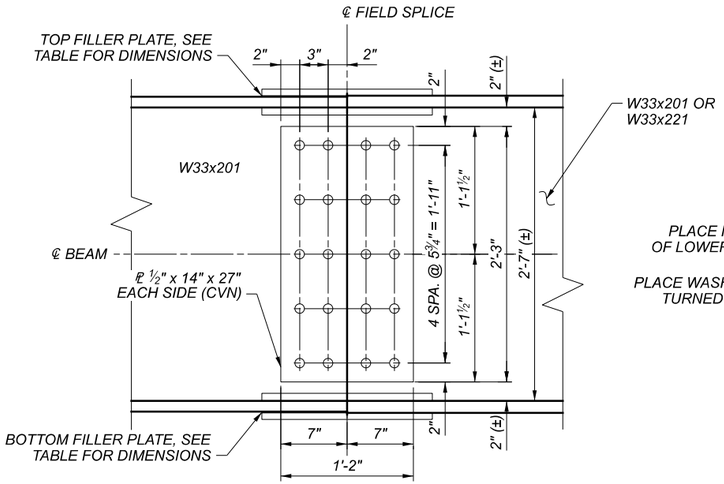

WEB SPLICE DETAIL

(SYMMETRICAL ABOUT ℄ FIELD SPLICE)
(TYPICAL OF ALL FIELD SPLICES)

FILLER PLATE DIMENSIONS		
LOCATION	F.S. 1 & 2	F.S. 3
TOP FILLER PLATE	℄ ⅛" x 15¾" x 9"	NONE
BOTTOM FILLER PLATE	℄ ⅛" x 15¾" x 9"	NONE

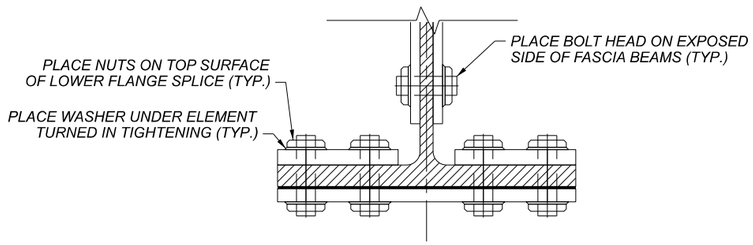

PARTIAL SECTION

(NOT TO SCALE)

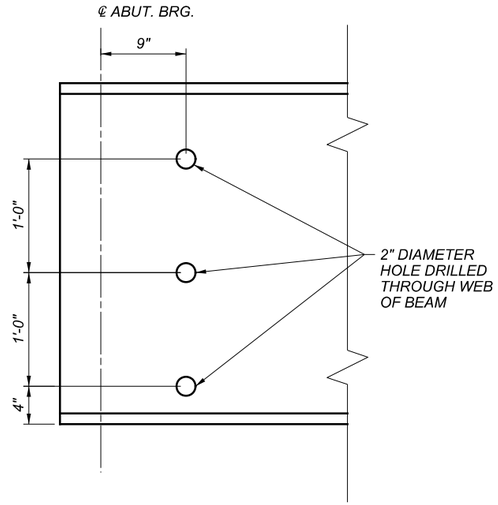

BEAM END DETAIL

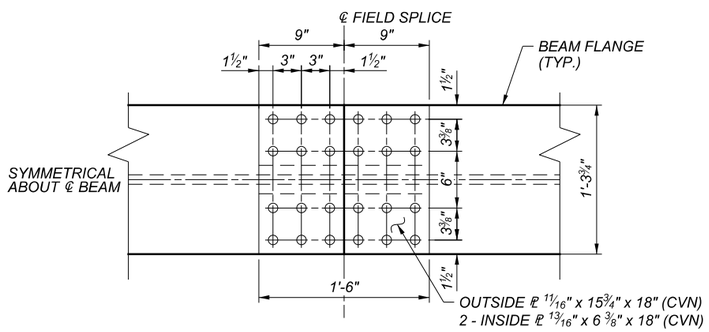

TOP AND BOTTOM FLANGE SPLICE DETAIL

(SYMMETRICAL ABOUT ℄ FIELD SPLICE)
(TYPICAL OF ALL FIELD SPLICES)

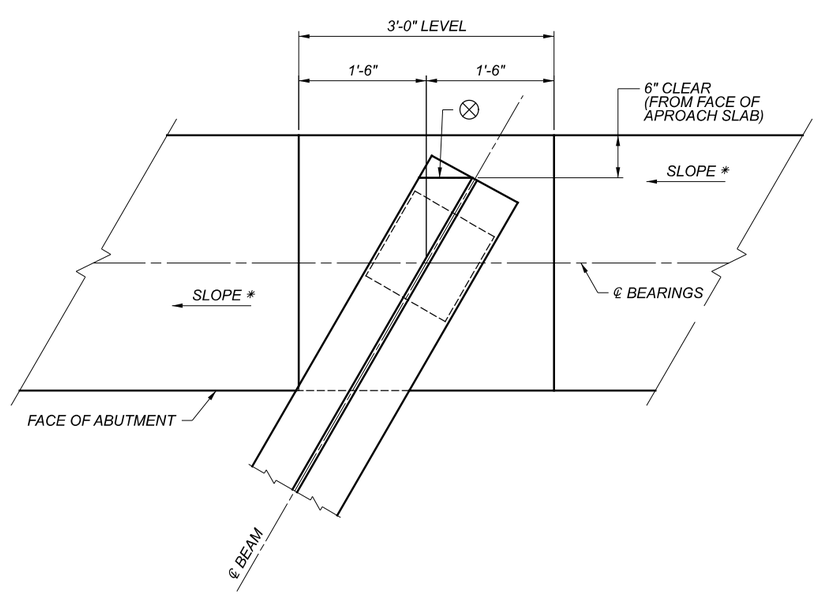

BEAM SECTION DETAIL

⊗ - CLIP ONLY THE TOP FLANGE TO MAINTAIN THE CLEARANCE

* - SLOPE IN DIRECTION SHOWN IN ABUTMENT PLANS

NOTES

1. ALL STRUCTURAL STEEL SHALL BE ASTM A709 GRADE 50. (MINIMUM YIELD STRENGTH = 50 KSI)
2. ALL STRUCTURAL STEEL FOR BEAMS AND SPLICE PLATES SHALL HAVE CVN DESIGNATION AND MEET SPECIFIED MINIMUM (CVN) NOTCH TOUGHNESS REQUIREMENTS AS SPECIFIED IN 711.01. CROSSFRAMES AND FILLER PLATES ARE NOT REQUIRED TO HAVE CVN DESIGNATION.
3. HIGH STRENGTH BOLTS FOR FIELD SPLICES SHALL BE 1" DIAMETER A325 TYPE I BOLTS. HOLES FOR HIGH STRENGTH BOLTS FOR FIELD SPLICES SHALL BE 1 1/16" DIAMETER, THE STANDARD HOLE SIZE.
4. FOR LOCATION OF FIELD SPLICES, SEE FRAMING PLAN SHEET 26/41.
5. ALL SPLICE MATERIALS, INCLUDING PLATES AND BOLT ASSEMBLIES, SHALL BE INCLUDED WITH THE STRUCTURAL STEEL QUANTITY FOR PAYMENT.
6. BEAM ENDS AT SPLICES SHALL BE CUT AND FIT AS PER PLAN. THE OPENING BETWEEN GIRDER ENDS AFTER ASSEMBLY SHALL NOT EXCEED ¼".

FIELD SPLICE DETAILS
BRIDGE NO. CUY-CR187-00,977
MILLER ROAD OVER I.R. 77

SFN 1805673
DESIGN AGENCY EUTHENICS 8230 Mohawk Dr. | Cleveland, OH 44105
DESIGNER SRW | CHECKER BPS
REVIEWER LAB 02/24/22
PROJECT ID 104983
SUBSET 28 | TOTAL 41
SHEET P.352 | TOTAL P.434

CUY-77-00.42 PART 1

MODEL: SS003 PAPERSIZE: 17x11 (in.) DATE: 3/4/2022 TIME: 2:03:00 PM USER: esmccastlin
F:\Jobs\11624-Miller Road Interchange\104983400-Engineering\Structures\SFN_1805673\Sheets\104983_SFN_1805673_SS003.dgn

DEFLECTION AND CAMBER (IN INCHES)

		SPAN 1				SPAN 2				SPAN 3				SPAN 4				
BEAM LINE	CAMBER DESCRIPTION	℄ BRG. R.A.	0.25	0.50	0.75	℄ PIER 1	0.25	0.50	0.75	℄ PIER 2	0.25	0.50	0.75	℄ PIER 3	0.25	0.50	0.75	℄ BRG. F.A.
①	DEFLECTION DUE TO WEIGHT OF STEEL	0"	1/16"	1/16"	0"	0"	1/8"	3/16"	1/8"	0"	1/16"	3/16"	1/8"	0"	0"	1/16"	1/16"	0"
	DEFLECTION DUE TO REMAINING DEAD LOAD	0"	1/4"	1/4"	1/16"	0"	7/16"	11/16"	3/8"	0"	7/16"	3/4"	1/2"	0"	1/16"	1/4"	1/4"	0"
	ADJUSTMENT FOR VERTICAL CURVATURE	0"	3/16"	1/4"	3/16"	0"	3/8"	9/16"	3/8"	0"	3/8"	9/16"	3/8"	0"	3/16"	1/4"	3/16"	0"
	REQUIRED SHOP CAMBER	0"	1/2"	9/16"	5/16"	0"	15/16"	1 7/16"	7/8"	0"	7/8"	1 7/16"	1"	0"	5/16"	9/16"	1/2"	0"
②	DEFLECTION DUE TO WEIGHT OF STEEL	0"	1/16"	1/16"	0"	0"	1/8"	3/16"	1/8"	0"	1/16"	3/16"	1/8"	0"	0"	1/16"	1/16"	0"
	DEFLECTION DUE TO REMAINING DEAD LOAD	0"	1/4"	1/4"	1/8"	0"	7/16"	3/4"	3/8"	0"	7/16"	13/16"	1/2"	0"	1/16"	1/4"	1/4"	0"
	ADJUSTMENT FOR VERTICAL CURVATURE	0"	3/16"	1/4"	3/16"	0"	3/8"	9/16"	3/8"	0"	3/8"	9/16"	3/8"	0"	3/16"	1/4"	3/16"	0"
	REQUIRED SHOP CAMBER	0"	1/2"	9/16"	5/16"	0"	1"	1 7/16"	7/8"	0"	15/16"	1 1/2"	1"	0"	5/16"	9/16"	1/2"	0"
③	DEFLECTION DUE TO WEIGHT OF STEEL	0"	1/16"	1/16"	0"	0"	1/8"	3/16"	1/8"	0"	1/16"	3/16"	1/8"	0"	0"	1/16"	1/16"	0"
	DEFLECTION DUE TO REMAINING DEAD LOAD	0"	1/4"	1/4"	1/8"	0"	7/16"	3/4"	3/8"	0"	7/16"	13/16"	1/2"	0"	1/16"	1/4"	1/4"	0"
	ADJUSTMENT FOR VERTICAL CURVATURE	0"	3/16"	1/4"	3/16"	0"	3/8"	9/16"	3/8"	0"	3/8"	9/16"	3/8"	0"	3/16"	1/4"	3/16"	0"
	REQUIRED SHOP CAMBER	0"	1/2"	9/16"	5/16"	0"	1"	1 7/16"	7/8"	0"	15/16"	1 1/2"	1"	0"	5/16"	9/16"	1/2"	0"
④	DEFLECTION DUE TO WEIGHT OF STEEL	0"	1/16"	1/16"	0"	0"	1/8"	3/16"	1/8"	0"	1/16"	3/16"	1/8"	0"	0"	1/16"	1/16"	0"
	DEFLECTION DUE TO REMAINING DEAD LOAD	0"	1/4"	1/4"	1/8"	0"	7/16"	3/4"	3/8"	0"	7/16"	13/16"	1/2"	0"	1/16"	1/4"	1/4"	0"
	ADJUSTMENT FOR VERTICAL CURVATURE	0"	3/16"	1/4"	3/16"	0"	3/8"	9/16"	3/8"	0"	3/8"	9/16"	3/8"	0"	3/16"	1/4"	3/16"	0"
	REQUIRED SHOP CAMBER	0"	1/2"	9/16"	5/16"	0"	1"	1 7/16"	7/8"	0"	15/16"	1 1/2"	1"	0"	5/16"	9/16"	1/2"	0"

NOTE: POSITIVE DIMENSIONS INDICATE DOWNWARD DEFLECTION AND UPWARD CAMBER

BLOCKING DIMENSIONS

BEAM LINE	DIMENSION "A"	DIMENSION "B"	DIMENSION "C"
①	4 1/8"	6 1/4"	4 1/8"
②	4 1/8"	6 1/4"	4 1/8"
③	4 1/8"	6 1/4"	4 1/8"
④	4 1/8"	6 1/4"	4 1/8"

NOTE: POSITIVE DIMENSIONS ARE ABOVE THE WORK LINE

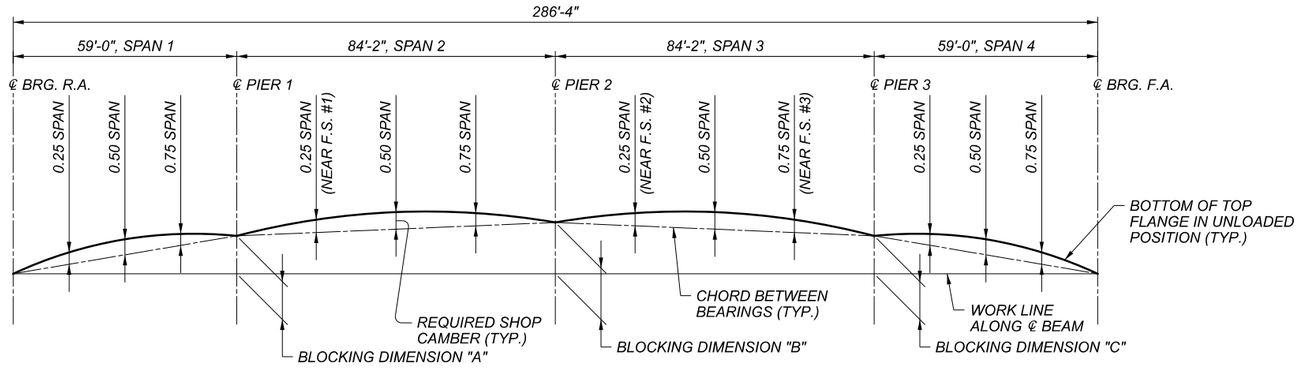

CAMBER AND BLOCKING DIAGRAM

NOTES

1. FOR DECK SCREED ELEVATION TABLES, SEE SHEET 34/41.
2. FOR BEARING DETAILS, SEE SHEETS 24/41 AND 25/41.

CAMBER AND DEFLECTIONS TABLE
BRIDGE NO. CUY-CR187-00,977
MILLER ROAD OVER I.R. 77

SFN 1805673
DESIGN AGENCY EUTHENICS 8335 Hollister Rd. | Cleveland, OH 44139
DESIGNER OOS | CHECKER BPS
REVIEWER LAB 02/24/22
PROJECT ID 104983
SUBSET 29 | TOTAL 41
SHEET P.353 | TOTAL P.434

CUY-77-00.42 PART 1

MODEL: SS004 PAPERSIZE: 17x11 (in.) DATE: 3/4/2022 TIME: 2:03:43 PM USER: esmccaslin
F:\Jobs\1162-Miller Road Interchange\104983\400-Engineering\Structures\SFN_1805673\Sheets\104983_SFN_1805673_SS004.dgn

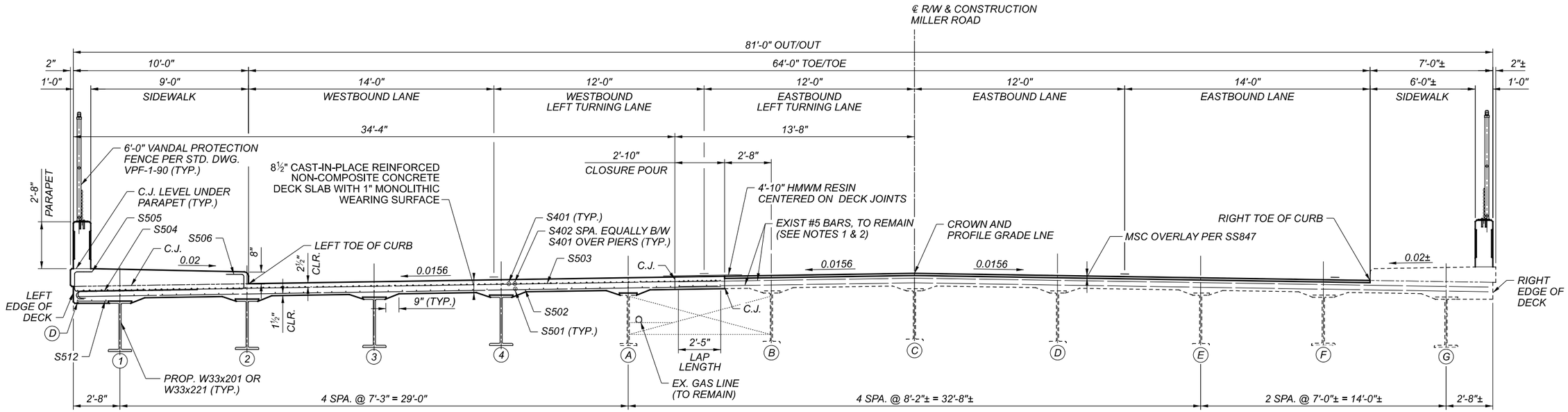

TRANSVERSE SECTION

LEGEND

(#) - BEAM LINE DESIGNATION

(D) - 1" DIAMETER HALF-ROUND DRIP GROOVE (TYP.), SEE NOTE 5.

NOTES

1. EXERCISE CARE IN REMOVING CONCRETE TO NOT DAMAGE EXISTING REINFORCING STEEL THAT IS TO BE PRESERVED.
2. PRESERVE AND CLEAN A PROJECTION OF 2'-8" OF EXISTING #5 TRANSVERSE BARS.
3. THE LONGITUDINAL CONSTRUCTION JOINTS SHALL BE SEALED WITH HIGH MOLECULAR WEIGHT METHACRYLATE (HMWM). THE WIDTH OF THE SEALING SHALL BE 4'-10", CENTERED OVER THE JOINTS, IN ACCORDANCE WITH CMS 511.22.
4. DECK SLAB CONCRETE QUANTITY: THE ESTIMATED QUANTITY OF DECK SLAB CONCRETE IS BASED ON THE CONSTANT DECK SLAB THICKNESS, AS SHOWN, PLUS THE QUANTITY OF CONCRETE THAT FORMS EACH BEAM HAUNCH. THE ESTIMATE ASSUMES AN AVERAGE HAUNCH THICKNESS OF 2 INCHES AND A CONSTANT HAUNCH WIDTH OUTSIDE THE EDGE OF EACH BEAM FLANGE OF 9 INCHES. DEVIATE FROM THIS HAUNCH THICKNESS AS NECESSARY TO PLACE THE DECK SURFACE AT THE FINISHED GRADE. THE ALLOWABLE TOLERANCE FOR THE HAUNCH WIDTH OUTSIDE THE EDGE OF EACH BEAM FLANGE IS PLUS OR MINUS 3 INCHES.

   THE HAUNCH THICKNESS WAS MEASURED AT THE CENTERLINE OF THE BEAM, FROM THE SURFACE OF THE DECK TO THE BOTTOM OF THE TOP FLANGE MINUS THE DECK SLAB THICKNESS. THE AREA OF ALL EMBEDDED STEEL PLATES HAS BEEN DEDUCTED FROM THE HAUNCH QUANTITY IN ACCORDANCE WITH 511.24.
5. DRIP GROOVES SHALL TERMINATE 2'-0" FROM THE FACE OF EACH ABUTMENT AND 2'-0" FROM THE FACE OF EACH PIER CAP.
6. FOR SLAB PLAN, SEE SHEET 31/41.
7. FOR LIMITS OF CONCRETE SEALING AND SIDEWALK AND PARAPET DETAILS, SEE SHEET 35/41.
8. FOR SCREED AND FINAL DECK ELEVATIONS, SEE SHEET 34/41.

TRANSVERSE SECTION
BRIDGE NO. CUY-CR187-00.977
MILLER ROAD OVER I.R. 77

SFN 1805673

DESIGN AGENCY
EUTHENICS
8235 Midwest Dr. | Cleveland, OH 44125

DESIGNER	CHECKER
SRW	BPS

REVIEWER
LAB 02/24/22

PROJECT ID
104983

SUBSET	TOTAL
30	41

SHEET	TOTAL
P.354	P.434

CUY-77-00.42 PART 1

MODEL: ST001 PAPERSIZE: 17x11 (in.) DATE: 3/4/2022 TIME: 2:03:47 PM USER: esmccaslin
F:\Jobs\11162-Miller Road Interchange\104983\400-Engineering\Structures\SFN_1805673\Sheets\1049B3_SFN_1805673_ST001.dgn

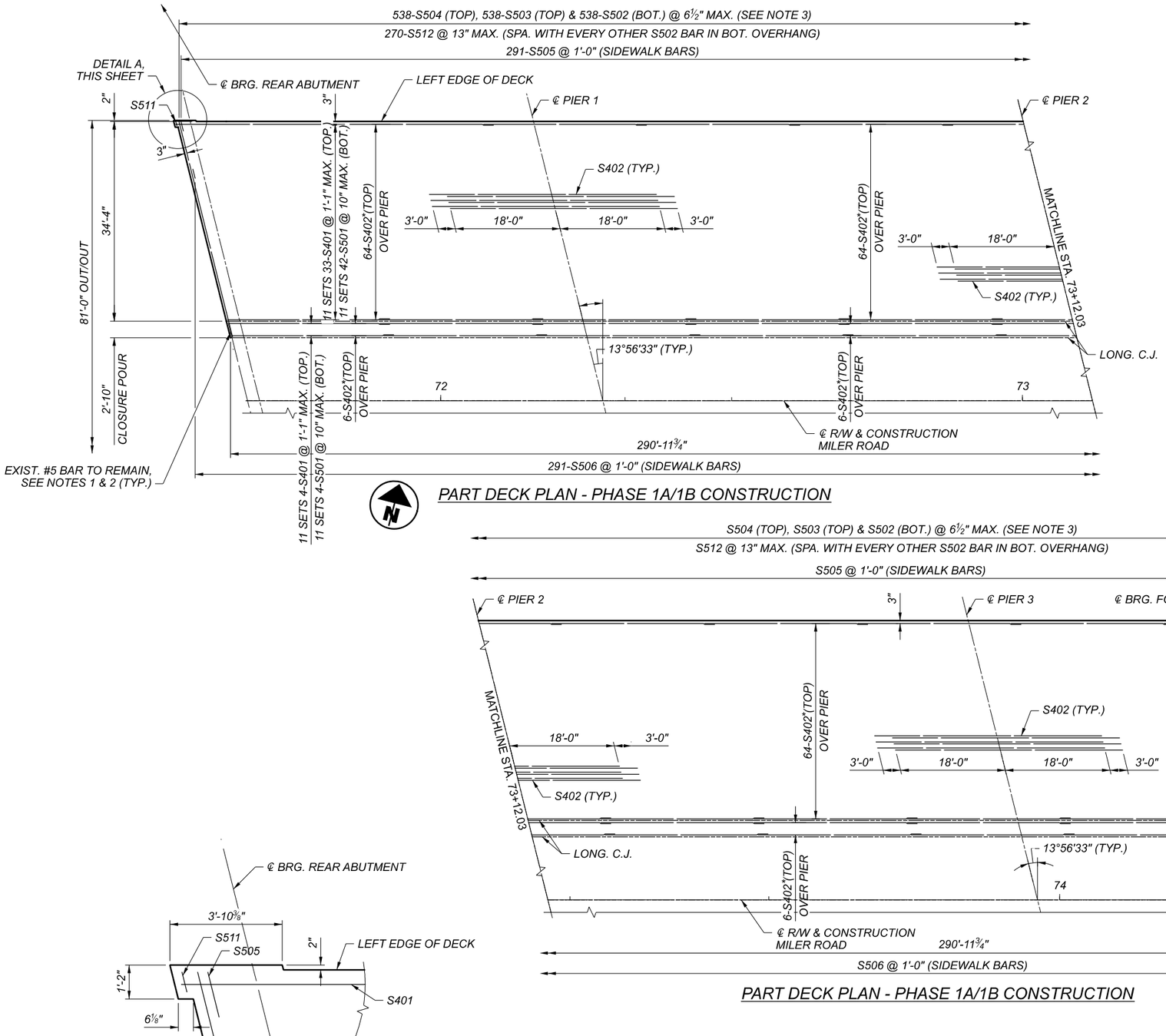

PART DECK PLAN - PHASE 1A/1B CONSTRUCTION

* - 2-S402 BARS TO BE EVENLY SPACED BETWEEN EACH S401 BAR OVER THE PIERS AS SHOWN

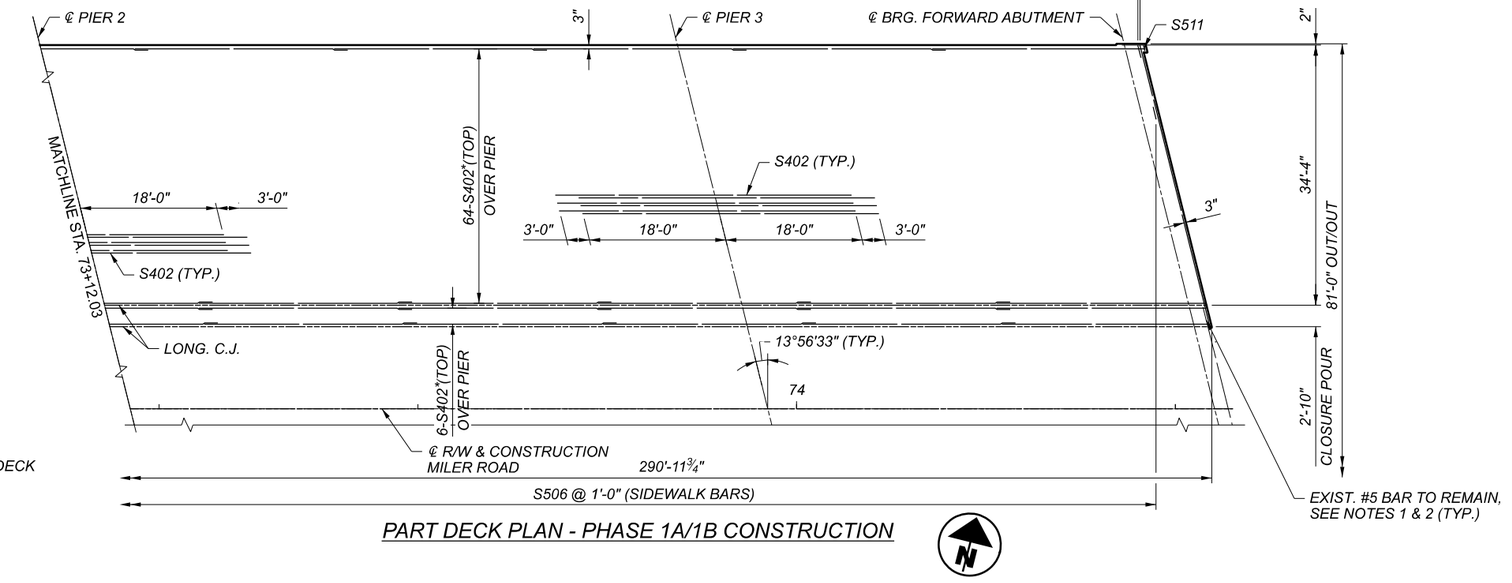

PART DECK PLAN - PHASE 1A/1B CONSTRUCTION

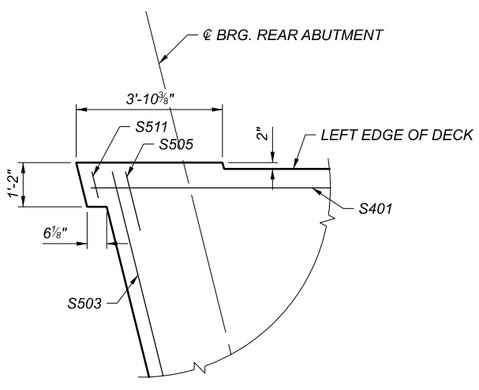

DETAIL A

REAR LEFT DECK SLAB CORNER SHOWN, FORWARD LEFT DECK SLAB SIMILAR.

NOTES

1. EXERCISE CARE IN REMOVING CONCRETE TO NOT DAMAGE EXISTING REINFORCING STEEL THAT IS TO BE PRESERVED.
2. PRESERVE AND CLEAN A PROJECTION OF 2'-8" OF EXISTING #5 TRANSVERSE BARS. THE EXISTING #5 TRANSVERSE BARS ARE SPACED AT 6½" C/C PER RECORD PLANS.
3. PLACE PROPOSED TRANSVERSE BARS TO LAP SPLICE TO THE EXISTING #5 BARS AT SPACING NOT TO EXCEED 6½" C/C.
4. FOR SIDEWALK AND PARAPET DETAILS, SEE SHEET 35/41.
5. FOR SCREED AND FINAL DECK ELEVATIONS, SEE SHEET 34/41.
6. FOR THE DECK REINFORCEMENT, THE MINIMUM LAP LENGTHS ARE AS FOLLOWS:
   # 4 BARS = 1'-11"
   #5 BARS = 2'-5" (TRANSVERSE)
   #5 BARS = 3'-0" (LONGITUDINAL)

DECK SLAB PLAN
BRIDGE NO. CUY-CR187-00.977
MILLER ROAD OVER I.R. 77

SFN	1805673
DESIGN AGENCY	EUTHENICS, 8235 Midwest Dr. | Cleveland, OH 44125
DESIGNER	SRW
CHECKER	BPS
REVIEWER	LAB 02/24/22
PROJECT ID	104983
SUBSET	31
TOTAL	41
SHEET	P.355
TOTAL	P.434

CUY-77-00.42 PART 1
MODEL: SD001 PAPERSIZE: 17x11 (in.) DATE: 3/4/2022 TIME: 2:04:10 PM USER: esmccaslin
F:\Jobs\11624-Miller Road Interchange\104983400-Engineering\Structures\SFN_1805673\Sheets\104983_SFN_1805673_SD001.dgn

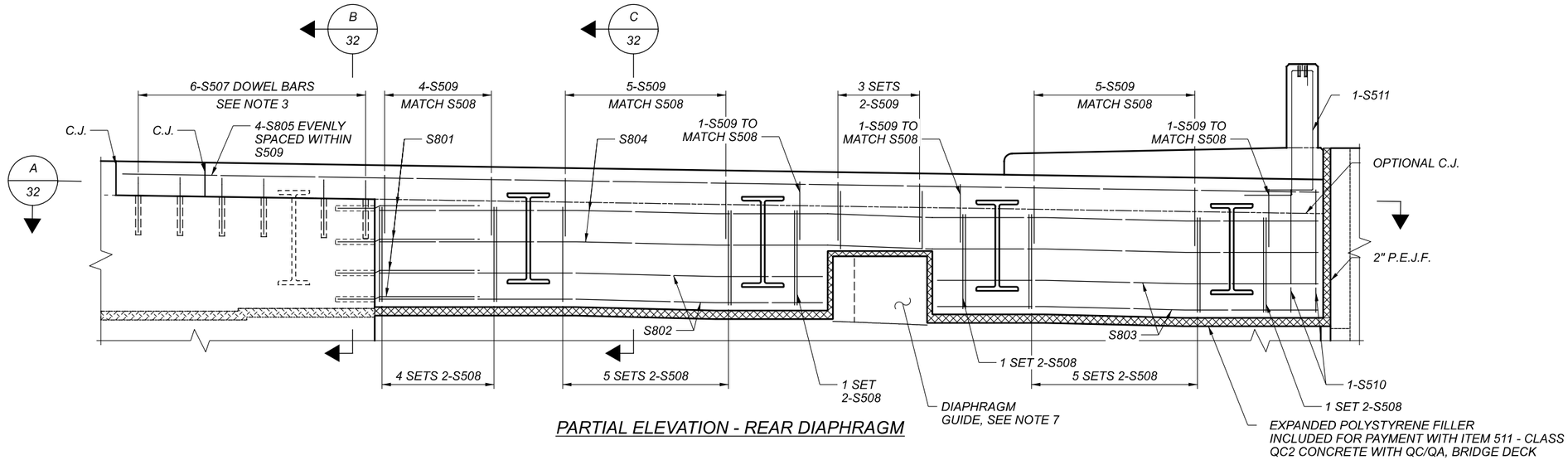

PARTIAL ELEVATION - REAR DIAPHRAGM

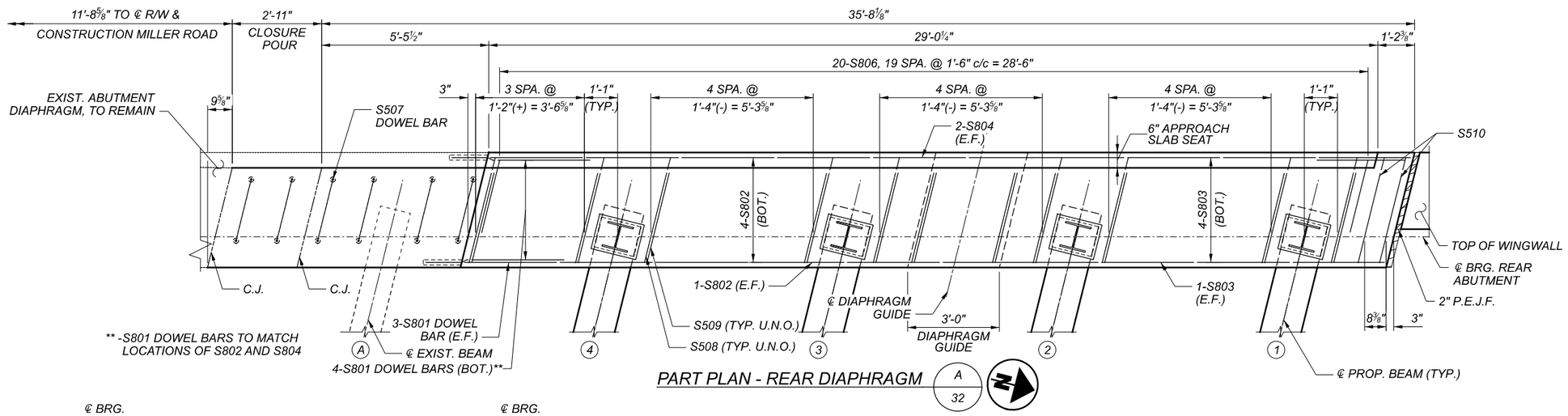

PART PLAN - REAR DIAPHRAGM A 32

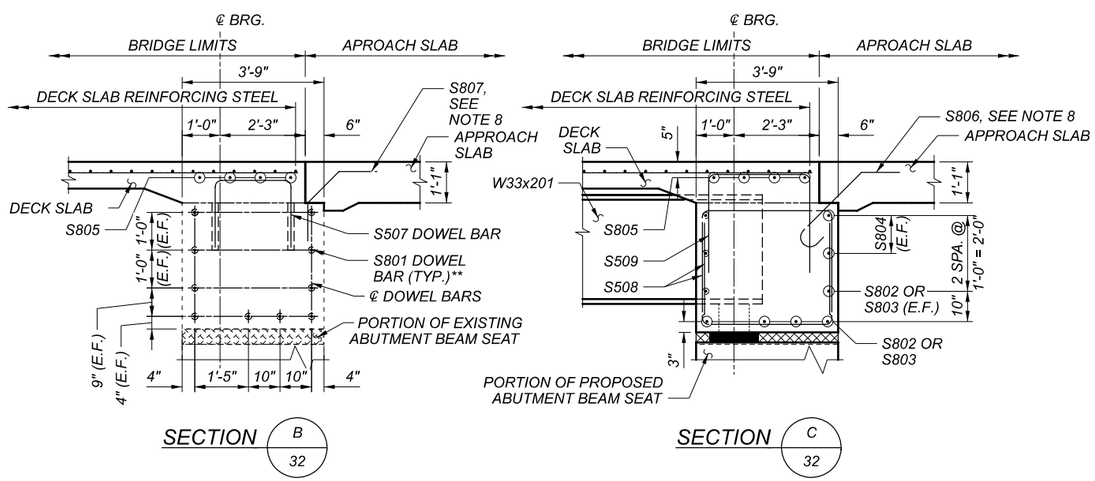

NOTES

1. ALL BARS SHALL MAINTAIN A MINIMUM 2" CLEARANCE, UNLESS NOTED OTHERWISE.
2. S508 AND S509 BARS TO BE SET PARALLEL TO PROPOSED BEAM LINES AND SPACED EVENLY BETWEEN BEAMS.
3. MATCH S507 DOWEL BARS AT THE LOCATIONS OF EXISTING DIAPHRAGM SHEAR STIRRUPS.
4. INSTALL DOWEL HOLES ACCORDING TO ITEM 510 – DOWEL HOLES WITH NONSHRINK, NONMETALLIC GROUT, AS PER PLAN. DOWEL HOLES HAVE BEEN LOCATED TO AVOID INTERFERENCE WITH THE EXISTING REINFORCING STEEL BASED ON INFORMATION OBTAINED FROM THE RECORD PLANS. IF EXISTING REINFORCING STEEL IS ENCOUNTERED WHILE DRILLING DOWEL HOLE, THE HOLE LOCATION MAY BE ADJUSTED BY UP TO 3" TO ELIMINATE THE CONFLICT. FOR DETAILS OF EXISTING REINFORCING STEEL NOT SHOWN, REFER TO THE RECORD PLANS.
5. DOWEL BAR EMBEDMENT LENGTHS
   S507 - 1'-3"
   S801 - 1'-6"
6. ABUTMENT DIAPHRAGM CONCRETE: PLACE THE DIAPHRAGM CONCRETE ENCASING THE STRUCTURAL MEMBER ENDS WITH THE DECK CONCRETE OR AT LEAST 48 HOURS BEFORE PLACEMENT OF THE DECK CONCRETE. IF PLACED SEPARATELY, LOCATE A HORIZONTAL CONSTRUCTION JOINT IN THE DIAPHRAGMAS SHOWN ON SICD-1-21 FOR STEEL SUPERSTRUCTURES AND PLACE REMAINING DIAPHRAGM CONCRETE WITH THE DECK.
7. FOR DIAPHRAGM GUIDE NOTES AND DETAILS, SEE SHEET 21/41.
8. FOR S806 AND S807 LAYOUT, SEE APPROACH SLAB PLAN ON SHEET 38/41.

REAR DIAPHRAGM DETAILS
BRIDGE NO. CUY-CR187-00.977
MILLER ROAD OVER I.R. 77

SFN 1805673
DESIGN AGENCY EUTHENICS 8235 Mohawk Dr. | Cleveland, OH 44146
DESIGNER SRW | CHECKER BPS
REVIEWER LAB 02/24/22
PROJECT ID 104983
SUBSET 32 | TOTAL 41
SHEET P.356 | TOTAL P.434

CUY-77-00.42 PART 1

MODEL: SS005 PAPERSIZE: 17x11 (in.) DATE: 3/4/2022 TIME: 2:04:15 PM USER: esmccaslin
F:\Jobs\11162-Miller Road Interchange\104983\400-Engineering\Structures\SFN_1805673\Sheets\104983_SFN_1805673_SS005.dgn

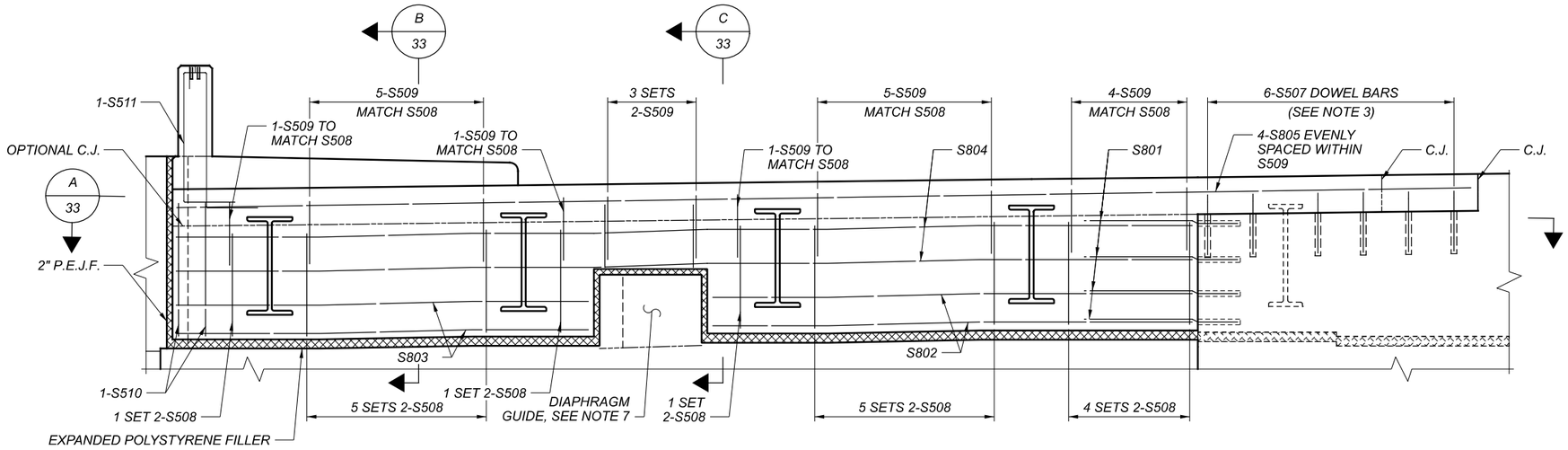

PARTIAL ELEVATION - FORWARD DIAPHRAGM

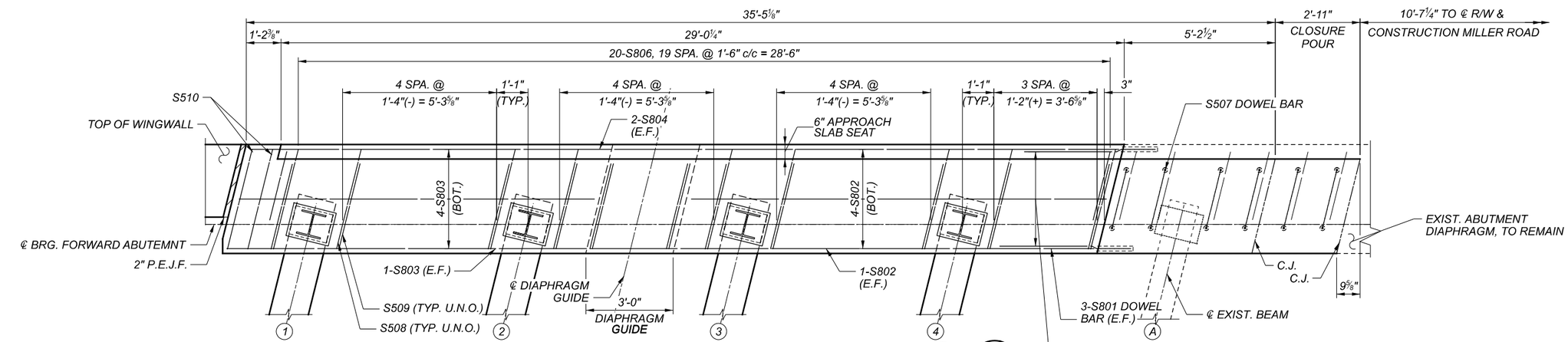

** -S801 DOWEL BARS TO MATCH LOCATIONS OF S802 AND S804

PART PLAN - FORWARD DIAPHRAGM A 33

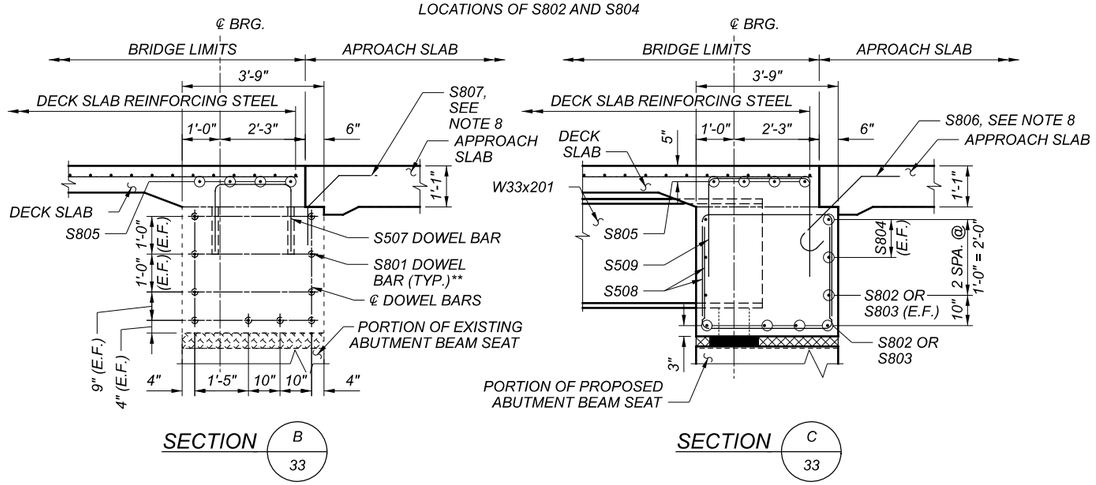

NOTES

1. ALL BARS SHALL MAINTAIN A MINIMUM 2" CLEARANCE, UNLESS NOTED OTHERWISE.
2. S508 AND S509 BARS TO BE SET PARALLEL TO PROPOSED BEAM LINES AND SPACED EVENLY BETWEEN BEAMS.
3. MATCH S507 DOWEL BARS AT THE LOCATIONS OF EXISTING DIAPHRAGM SHEAR STIRRUPS.
4. INSTALL DOWEL HOLES ACCORDING TO ITEM 510 – DOWEL HOLES WITH NONSHRINK, NONMETALLIC GROUT, AS PER PLAN. DOWEL HOLES HAVE BEEN LOCATED TO AVOID INTERFERENCE WITH THE EXISTING REINFORCING STEEL BASED ON INFORMATION OBTAINED FROM THE RECORD PLANS. IF EXISTING REINFORCING STEEL IS ENCOUNTERED WHILE DRILLING DOWEL HOLE, THE HOLE LOCATION MAY BE ADJUSTED BY UP TO 3" TO ELIMINATE THE CONFLICT. FOR DETAILS OF EXISTING REINFORCING STEEL NOT SHOWN, REFER TO THE RECORD PLANS.
5. DOWEL BAR EMBEDMENT LENGTHS
   S507 - 1'-3"
   S801 - 1'-6"
6. ABUTMENT DIAPHRAGM CONCRETE: PLACE THE DIAPHRAGM CONCRETE ENCASING THE STRUCTURAL MEMBER ENDS WITH THE DECK CONCRETE OR AT LEAST 48 HOURS BEFORE PLACEMENT OF THE DECK CONCRETE. IF PLACED SEPARATELY, LOCATE A HORIZONTAL CONSTRUCTION JOINT IN THE DIAPHRAGMAS SHOWN ON SICD-1-21 FOR STEEL SUPERSTRUCTURES AND PLACE REMAINING DIAPHRAGM CONCRETE WITH THE DECK.
7. FOR DIAPHRAGM GUIDE NOTES AND DETAILS, SEE SHEET 21/41.
8. FOR S806 AND S807 LAYOUT, SEE APPROACH SLAB PLAN ON SHEET 38/41.

FORWARD DIAPHRAGM DETAILS
BRIDGE NO. CUY-CR187-00.977
MILLER ROAD OVER I.R. 77

SFN 1805673
DESIGN AGENCY EUTHENICS 8235 Mohawk Dr. | Cleveland, OH 44146
DESIGNER SRW | CHECKER BPS
REVIEWER LAB 02/24/22
PROJECT ID 104983
SUBSET 33 | TOTAL 41
SHEET P.357 | TOTAL P.434

CUY-77-00.42 PART 1

MODEL: SS006 PAPERSIZE: 17x11 (in.) DATE: 3/4/2022 TIME: 2:04:19 PM USER: esmccaslin
F:\Jobs\11162-Miller Road Interchange\104983\400-Engineering\Structures\SFN_1805673\Sheets\104983_SFN_1805673_SS006.dgn

DECK SCREED ELEVATION TABLE - PHASE 1 CONSTRUCTION

ELEVATION LOCATION		SPAN 1				SPAN 2				SPAN 3				SPAN 4				
		℄ BRG. R. A.	0.25	0.50	0.75	℄ PIER 1	0.25	0.50	0.75	℄ PIER 2	0.25	0.50	0.75	℄ PIER 3	0.25	0.50	0.75	℄ BRG. F. A.
LEFT EDGE OF DECK	STATION	71+56.94	71+71.69	71+86.44	72+01.19	72+15.94	72+36.99	72+58.03	72+79.07	73+00.11	73+21.16	73+42.20	73+63.24	73+84.28	73+99.03	74+13.78	74+28.53	74+43.28
	OFFSET	-48.00	-48.00	-48.00	-48.00	-48.00	-48.00	-48.00	-48.00	-48.00	-48.00	-48.00	-48.00	-48.00	-48.00	-48.00	-48.00	-48.00
	FINAL TOP OF DECK ELEV.	1129.69	1129.70	1129.70	1129.69	1129.67	1129.62	1129.55	1129.45	1129.33	1129.19	1129.03	1128.85	1128.64	1128.48	1128.31	1128.13	1127.94
	SCREED ELEV.	1129.69	1129.72	1129.72	1129.70	1129.67	1129.65	1129.60	1129.48	1129.33	1129.23	1129.10	1128.89	1128.64	1128.49	1128.33	1128.15	1127.94
BEAM 1	STATION	71+57.61	71+72.36	71+87.11	72+01.86	72+16.61	72+37.65	72+58.69	72+79.73	73+00.78	73+21.82	73+42.86	73+63.90	73+84.95	73+99.70	74+14.45	74+29.20	74+43.95
	OFFSET	-45.33	-45.33	-45.33	-45.33	-45.33	-45.33	-45.33	-45.33	-45.33	-45.33	-45.33	-45.33	-45.33	-45.33	-45.33	-45.33	-45.33
	FINAL TOP OF DECK ELEV.	1129.73	1129.74	1129.74	1129.73	1129.71	1129.66	1129.58	1129.49	1129.37	1129.23	1129.07	1128.88	1128.68	1128.52	1128.35	1128.16	1127.97
	TOP OF HAUNCH ELEV.	1129.02	1129.05	1129.05	1129.03	1129.00	1128.99	1128.93	1128.81	1128.66	1128.56	1128.42	1128.22	1127.97	1127.81	1127.66	1127.48	1127.26
BEAM 2	STATION	71+59.41	71+74.16	71+88.91	72+03.66	72+18.41	72+39.45	72+60.49	72+81+53	73+02.58	73+23.62	73+44.66	73+65.70	73+86.75	74+01.50	74+16.25	74+31.00	74+45.75
	OFFSET	-38.08	-38.08	-38.08	-38.08	-38.08	-38.08	-38.08	-38.08	-38.08	-38.08	-38.08	-38.08	-38.08	-38.08	-38.08	-38.08	-38.08
	FINAL TOP OF DECK ELEV.	1129.84	1129.85	1129.85	1129.84	1129.82	1129.77	1129.69	1129.59	1129.47	1129.33	1129.17	1128.98	1128.77	1128.61	1128.44	1128.26	1128.06
	TOP OF HAUNCH ELEV.	1129.13	1129.16	1129.17	1129.14	1129.11	1129.10	1129.04	1128.92	1128.77	1128.66	1128.53	1128.31	1128.06	1127.91	1127.75	1127.57	1127.35
LEFT TOE OF CURB	STATION	71+59.43	71+74.18	71+88.93	72+03.68	72+18.43	72+39.47	72+60.51	72+81.55	73+02.60	73+23.64	73+44.68	73+65.72	73+86.77	74+01.52	74+16.27	74+31.02	74+45.77
	OFFSET	-38.00	-38.00	-38.00	-38.00	-38.00	-38.00	-38.00	-38.00	-38.00	-38.00	-38.00	-38.00	-38.00	-38.00	-38.00	-38.00	-38.00
	FINAL TOP OF DECK ELEV.	1129.84	1129.85	1129.85	1129.84	1129.82	1129.77	1129.69	1129.59	1129.47	1129.33	1129.17	1128.98	1128.77	1128.61	1128.44	1128.26	1128.06
	SCREED ELEV.	1129.84	1129.87	1129.88	1129.85	1129.82	1129.80	1129.75	1129.63	1129.47	1129.37	1129.23	1129.02	1128.77	1128.62	1128.46	1128.28	1128.06
BEAM 3	STATION	71+61.21	71+75.96	71+90.71	72+05.46	72+20.21	72+41.25	72+62.29	72+83.33	73+04.38	73+25.42	73+46.46	73+67.50	73+88.55	74+03.30	74+18.05	74+32.80	74+47.55
	OFFSET	-30.83	-30.83	-30.83	-30.83	-30.83	-30.83	-30.83	-30.83	-30.83	-30.83	-30.83	-30.83	-30.83	-30.83	-30.83	-30.83	-30.83
	FINAL TOP OF DECK ELEV.	1129.96	1129.97	1129.96	1129.95	1129.93	1129.87	1129.80	1129.70	1129.58	1129.43	1129.26	1129.08	1128.86	1128.70	1128.53	1128.35	1128.15
	TOP OF HAUNCH ELEV.	1129.25	1129.28	1129.28	1129.25	1129.22	1129.20	1129.15	1129.02	1128.87	1128.76	1128.62	1128.41	1128.16	1128.00	1127.84	1127.66	1127.44
BEAM 4	STATION	71+63.01	71+77.76	71+92.51	72+07.26	72+22.01	72+43.05	72+64.09	72+85.13	73+06.18	73+27.22	73+48.26	73+69.30	73+90.35	74+05.10	74+19.85	74+34.60	74+49.35
	OFFSET	-23.58	-23.58	-23.58	-23.58	-23.58	-23.58	-23.58	-23.58	-23.58	-23.58	-23.58	-23.58	-23.58	-23.58	-23.58	-23.58	-23.58
	FINAL TOP OF DECK ELEV.	1130.07	1130.08	1130.08	1130.06	1130.04	1129.98	1129.90	1129.80	1129.68	1129.53	1129.36	1129.17	1128.96	1128.79	1128.62	1128.44	1128.24
	TOP OF HAUNCH ELEV.	1129.36	1129.39	1129.39	1129.36	1129.33	1129.31	1129.25	1129.12	1128.97	1128.86	1128.72	1128.51	1128.25	1128.09	1127.93	1127.75	1127.53
BEAM A	STATION	71+64.81	71+79.56	71+94.31	72+09.06	72+23.81	72+44.85	72+65.89	72+86.93	73+07.98	73+29.02	73+50.06	73+71.10	73+92.15	74+06.90	74+21.65	74+36.40	74+51.15
	OFFSET	-16.33	-16.33	-16.33	-16.33	-16.33	-16.33	-16.33	-16.33	-16.33	-16.33	-16.33	-16.33	-16.33	-16.33	-16.33	-16.33	-16.33
	FINAL TOP OF DECK ELEV.	1130.19	1130.19	1130.19	1130.17	1130.15	1130.09	1130.01	1129.90	1129.78	1129.63	1129.46	1129.27	1129.05	1128.89	1128.71	1128.52	1128.33
	BOTTOM OF FLANGE ELEV. (BEFORE REMOVAL) *																	
	BOTTOM OF FLANGE ELEV. (AFTER REMOVAL) *																	
	REBOUND **																	
	WEIGHT OF EXIST. DECK	1.02 k/ft	1.02 k/ft	1.02 k/ft	1.02 k/ft	1.02 k/ft	1.02 k/ft	1.02 k/ft	1.02 k/ft	1.02 k/ft	1.02 k/ft	1.02 k/ft	1.02 k/ft	1.02 k/ft	1.02 k/ft	1.02 k/ft	1.02 k/ft	1.02 k/ft
	WEIGHT OF PROP. DECK	1.05 k/ft	1.05 k/ft	1.05 k/ft	1.05 k/ft	1.05 k/ft	1.05 k/ft	1.05 k/ft	1.05 k/ft	1.05 k/ft	1.05 k/ft	1.05 k/ft	1.05 k/ft	1.05 k/ft	1.05 k/ft	1.05 k/ft	1.05 k/ft	1.05 k/ft
	DECK DEFLECTION ***																	
	DECK THICKNESS	0.71	0.71	0.71	0.71	0.71	0.71	0.71	0.71	0.71	0.71	0.71	0.71	0.71	0.71	0.71	0.71	0.71
	SCREED ELEV. ****																	
	TOP OF HAUNCH ELEV. *****																	
LEFT PHASE CONSTR.	STATION	71+65.47	71+80.22	71+94.97	72+09.72	72+24.47	72+45.51	72+66.55	72+87.59	73+08.64	73+29.68	73+50.72	73+71.76	73+92.81	74+07.56	74+22.31	74+37.06	74+51.81
	OFFSET	-13.67	-13.67	-13.67	-13.67	-13.67	-13.67	-13.67	-13.67	-13.67	-13.67	-13.67	-13.67	-13.67	-13.67	-13.67	-13.67	-13.67
	FINAL TOP OF DECK ELEV.	1130.23	1130.23	1130.23	1130.21	1130.19	1130.13	1130.05	1129.94	1129.82	1129.67	1129.50	1129.30	1129.09	1128.92	1128.75	1128.56	1128.36
	SCREED ELEV. ****	1130.23				1130.19				1129.82				1129.09				1128.36
RIGHT PHASE CONSTR.	STATION	71+66.17	71+80.92	71+95.67	72+10.42	72+25.17	72+46.21	72+67.25	72+88.30	73+09.34	73+30.38	73+51.42	73+72.47	73+93.51	74+08.26	74+23.01	74+37.76	74+52.51
	OFFSET	-10.83	-10.83	-10.83	-10.83	-10.83	-10.83	-10.83	-10.83	-10.83	-10.83	-10.83	-10.83	-10.83	-10.83	-10.83	-10.83	-10.83
	FINAL TOP OF DECK ELEV.	1130.27	1130.28	1130.27	1130.26	1130.23	1130.17	1130.09	1129.98	1129.86	1129.71	1129.53	1129.34	1129.12	1128.96	1128.78	1128.59	1128.39
	SCREED ELEV. ****	1130.27				1130.23				1129.86				1129.12				1128.39

NOTE : ASTERISKS INDICATE ITEMS THAT CONTRACTOR IS REQUIRED TO COMPLETE PER THE DECK SCREED ELEVATION TABLE PROCEDURE BELOW.

DECK SCREED ELEVATION TABLE PROCEDURE

1. PRIOR TO DECK REMOVAL CONTRACTOR SHALL SURVEY THE BOTTOM OF OF FLANGE ELEVATIONS OF ALL EXISTING BEAMS AT QUARTER POINTS ALONG THE LENGTH OF THE STRUCTURE. THE CONTRACTOR SHALL ENTER THESE ELEVATIONS IN THE TABLE ABOVE IN THE ROW " BOTTOM OF OF FLANGE ELEV. (BEFORE REMOVAL) * " FOR EACH BEAM.
2. AFTER DECK REMOVAL CONTRACTOR SHALL SURVEY THE BOTTOM OF FLANGE ELEVATIONS OF ALL EXISTING BEAMS AT QUARTER POINTS ALONG THE LENGTH OF THE STRUCTURE. THE CONTRACTOR SHALL ENTER THESE ELEVATIONS IN THE TABLE ABOVE, IN THE ROW "BOTTOM OF FLANGE ELEV. (AFTER REMOVAL) * " FOR EACH BEAM.
3. THE DIFFERENCE BETWEEN THESE ELEVATIONS BECOMES THE SUPERSTRUCTURE REBOUND. THE CONTRACTOR SHALL RECORD THESE VALUES IN THE TABLE ABOVE, IN THE ROW " REBOUND ** " FOR EACH BEAM.
4. MULTIPLY THE " REBOUND" BY THE PER FOOT WEIGHT OF THE PROPOSED DECK AND DIVIDE BY THE PER FOOT WEIGHT OF THE EXISTING DECK TO DETERMINE THE DEFLECTION DUE TO THE PROPOSED DECK PLACEMENT. THE CONTRACTOR SHALL RECORD THESE VALUES IN THE TABLE ABOVE, IN THE ROW " DECK DEFLECTION *** " FOR EACH BEAM.
5. ADD THE " DECK DEFLECTION " TO THE " FINAL TOP OF DECK ELEVATION" TO DETERMINE SCREED ELEVATIONS. THE CONTRACTOR SHALL RECORD THESE ELEVATIONS IN THE TABLE ABOVE, IN THE ROW "SCREED ELEV. *****" FOR EACH BEAM.

DECK SCREED ELEVATION TABLE PROCEDURE (CONT.)

6. ADD THE "DECK DEFLECTION" TO THE "FINAL TOP OF DECK ELEVATIONS" AND SUBSTRACT THE DESIGN DECK THICKNESS TO DETERMINE TOP OF HAUNCH ELEVATIONS. THE CONTRACTOR SHALL RECORD THESE ELEVATIONS IN THE TABLE ABOVE, IN THE ROW "TOP OF HAUNCH ELEV. *****" FOR EACH BEAM.
7. ADD THE "DECK DEFLECTION" OF THE NEAREST BEAM TO THE "FINAL TOP OF DECK ELEVATIONS" TO DETERMINE THE SCREED ELEVATIONS FOR THE NON-BEAM LOCATIONS. THE CONTRACTOR SHALL RECORD THESE ELEVATIONS IN THE TABLE ABOVE, IN THE ROW "SCREED ELEV. *****" FOR REMAINING LOCATIONS.

LEGEND

- BRG. - BEARING.
- F.A. - FORWARD ABUTMENT.
- R.A. - REAR ABUTMENT.
- * - BOTTOM OF BEAM ELEVATION SURVEYED DURING CONSTRUCTION.
- ** - REBOUND = BOTTOM OF FLANGE ELEVATION AFTER REMOVAL MINUS BOTTOM OF FLANGE ELEVATION BEFORE REMOVAL.
- *** - DECK DEFLECTION = RATIO OF PROPOSED DECK WEIGHT TO EXISTING DECK WEIGHT MULTIPLIED BY THE REBOUND.
- **** - SCREED ELEVATION = FINAL DECK ELEVATION PLUS DECK DEFLECTION.
- ***** - TOP OF HAUNCH ELEVATION = FINAL DECK ELEVATION PLUS DECK DEFLECTION MINUS DECK THICKNESS.

NOTES

1. FINAL DECK SURFACE ELEVATIONS SHOWN REPRESENT THE DECK SURFACE LOCATION AFTER ALL ANTICIPATED DEAD LOAD DEFLECTIONS HAVE OCCURRED.
2. SCREED ELEVATIONS SHOWN REPRESENT THE THEORETICAL DECK SURFACE LOCATION PRIOR TO DEFLECTIONS CAUSED BY DECK PLACEMENT AND OTHER ANTICIPATED DEAD LOADS.
3. TOP OF HAUNCH ELEVATIONS SHOWN REPRESENT THE THEORETICAL LOCATION OF THE BOTTOM OF THE DECK ABOVE THE BEAM HAUNCH PRIOR TO DEFLECTIONS CAUSED BY DECK PLACEMENT AND OTHER ANTICIPATED DEAD LOADS.
4. THE COST OF SURVEYING IS CONSIDERED INCIDENTAL TO DECK CONSTRUCTION AND SHALL BE INCLUDED WITH ITEM 511 - CLASS QC2 CONCRETE WITH QC/QA, BRIDGE DECK FOR PAYMENT.
5. THE CONTRACTOR SHALL NOTIFY THE ENGINEER IMMEDIATELY IF ANY DISCREPANCIES ARE FOUND WITHIN THE DECK ELEVATION TABLE PROCEDURE.
6. FOR SCREED LINE LOCATIONS, SEE TRANSVERSE SECTION, SHEET 30/41.

DECK ELEVATIONS
BRIDGE NO. CUY-CR187-00.977
MILLER ROAD OVER I.R. 77

SFN 1805673
DESIGN AGENCY
EUTHENICS
8235 Mohawk Dr. | Cleveland, OH 44125
DESIGNER OOS | CHECKER BPS
REVIEWER LAB 02/24/22
PROJECT ID 104983
SUBSET 34 | TOTAL 41
SHEET P.358 | TOTAL P.434

CUY-77-00.42 PART 1

MODEL: SS007 PAPERSIZE: 17x11 (in.) DATE: 3/4/2022 TIME: 2:04:22 PM USER: esmccaslin
F:\Jobs\11162-Miller Road Interchange\104983\400-Engineering\Structures\SFN_1805673\Sheets\104983_SFN_1805673_SS007.dgn

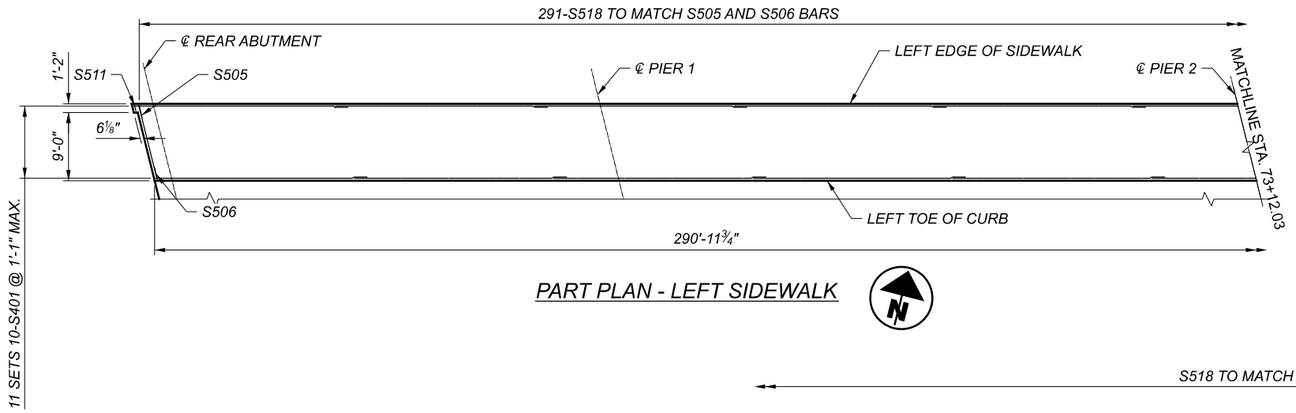

PART PLAN - LEFT SIDEWALK

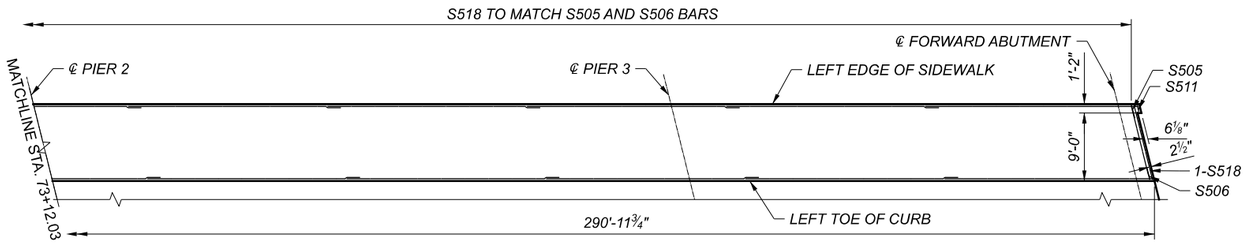

PART PLAN - LEFT SIDEWALK

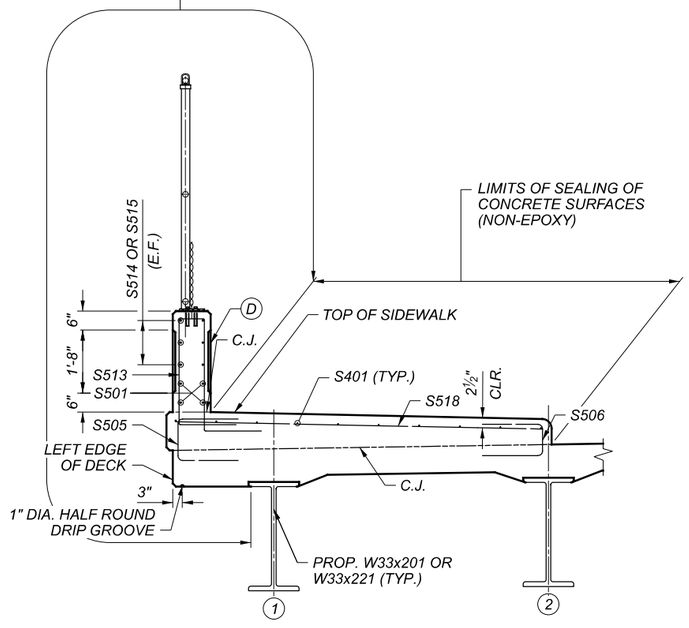

LEFT SIDEWALK AND PARAPET DETAIL

DECK REINFORCING STEEL NOT SHOWN
SEE TRANSVERSE SECTION, SHEET 27/37

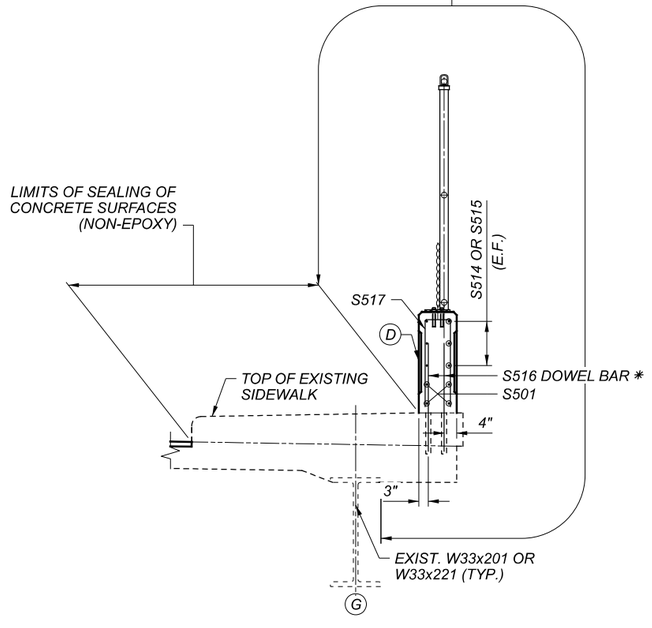

RIGHT PARAPET DETAIL

LEGEND

(D) 1/2" RECESSED PANEL (TYP.)

✱ DOWEL BAR EMBEDMENT LENGTHS
S516 BARS - 1'-0"

NOTES

1. FOR PARAPET DETAILS, SEE SHEET 36/41.
2. FOR SCREED AND FINAL DECK ELEVATIONS, SEE SHEET 34/41.
3. FOR THE SIDEWALK REINFORCEMENT, THE MINIMUM LAP LENGTHS ARE AS FOLLOWS:
   # 4 BARS = 1'-11"
   #5 BARS = 2'-5"

SIDEWALK PLAN AND PARAPET DETAILS
BRIDGE NO. CUY-CR187-00.977
MILLER ROAD OVER I.R. 77

SFN	1805673
DESIGN AGENCY	EUTHENICS 8235 Mohawk Dr. | Cleveland, OH 44125
DESIGNER	SRW
CHECKER	BPS
REVIEWER	LAB 02/24/22
PROJECT ID	104983
SUBSET	35
TOTAL	41
SHEET	P.359
TOTAL	P.434

CUY-77-00.42 PART 1

MODEL: SD002 PAPERSIZE: 17x11 (in.) DATE: 3/4/2022 TIME: 2:04:26 PM USER: esmccastlin
F:\Jobs\1162\Miller Road Interchange\104983\400-Engineering\Structures\SFN_1805673\Sheets\104983_SFN_1805673_SD002.dgn

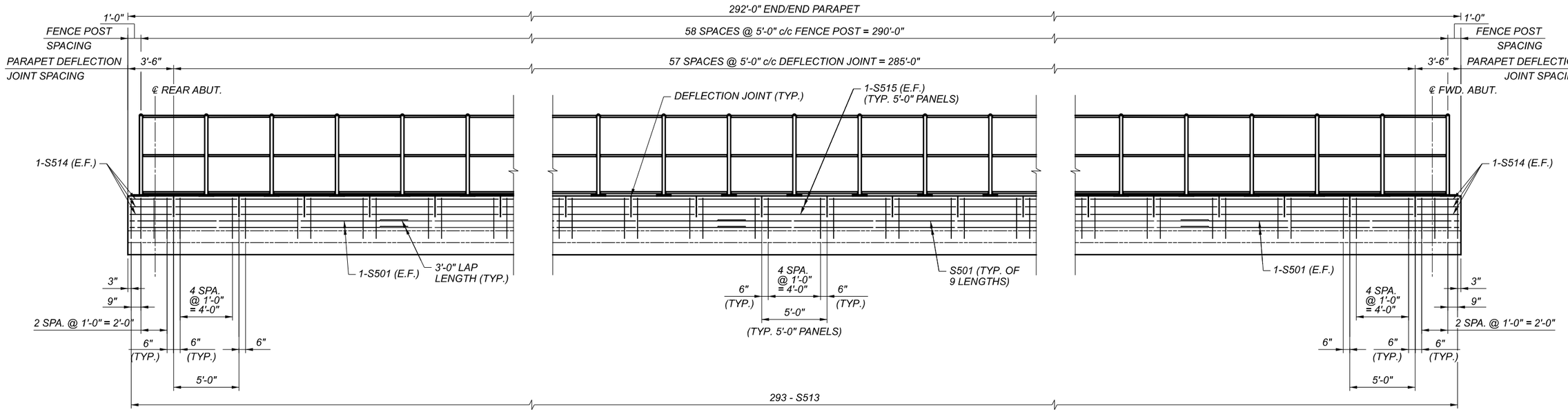

ELEVATION LEFT PARAPET

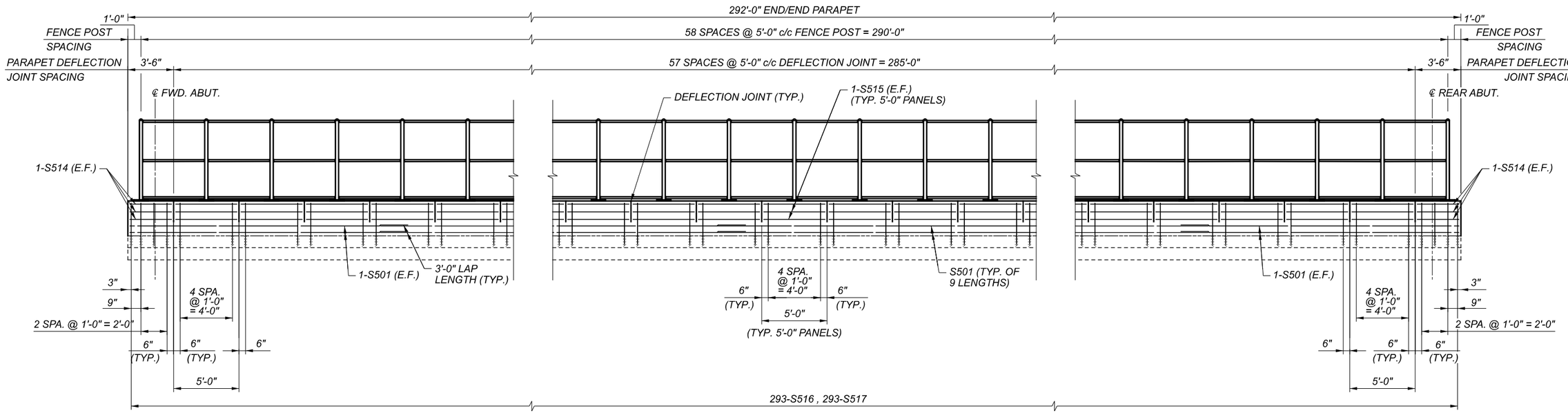

LEGEND

ELEVATION RIGHT PARAPET

NOTES

1. FENCE ON SIDEWALK PARAPETS SHALL BE IN ACCORDANCE WITH ODOT STANDARD DRAWING VPF-1-90, 6'-0" TALL, POST TYPE PS-4 WITH BP-1 BASE PLATES AND COATED FABRIC, COLOR BLACK.
2. FOR ADDITIONAL PARAPET DETAILS, SEE ODOT STANDARD DRAWING BR-2-15 AND THE DETAILS ON SHEET 35/41.
3. FOR AESTHETIC DETAILS, SEE SHEET 37/41.

PARAPET ELEVATION
BRIDGE NO. CUY-CR187-00.977
MILLER ROAD OVER I.R. 77

CUY-77-00.42 PART 1

MODEL: SA001 PAPERSIZE: 17x11 (in.) DATE: 3/4/2022 TIME: 2:04:30 PM USER: esmccaslin
F:\Jobs\11622-Miller Road Interchange\104983\400-Engineering\Structures\SFN_1805673\Sheets\104983_SFN_1805673_SA001.dgn

SFN	1805673
DESIGN AGENCY	EUTHENICS 8235 Holbrook Dr. | Cleveland, OH 44125
DESIGNER	OOS
CHECKER	BPS
REVIEWER	LAB 02/24/22
PROJECT ID	104983
SUBSET	36
TOTAL	41
SHEET	P.360
TOTAL	P.434

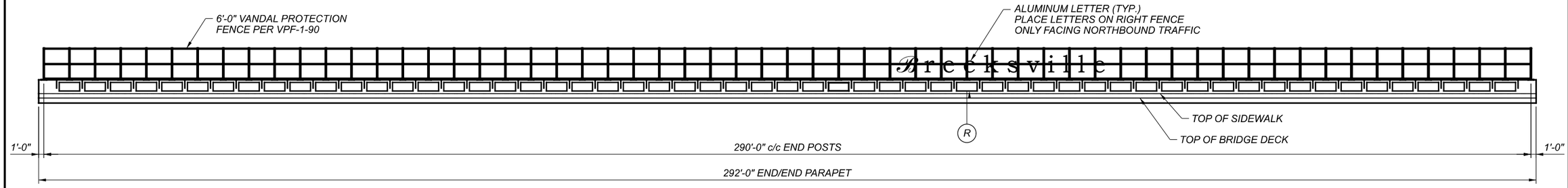

OUTSIDE BRIDGE DECK ELEVATION

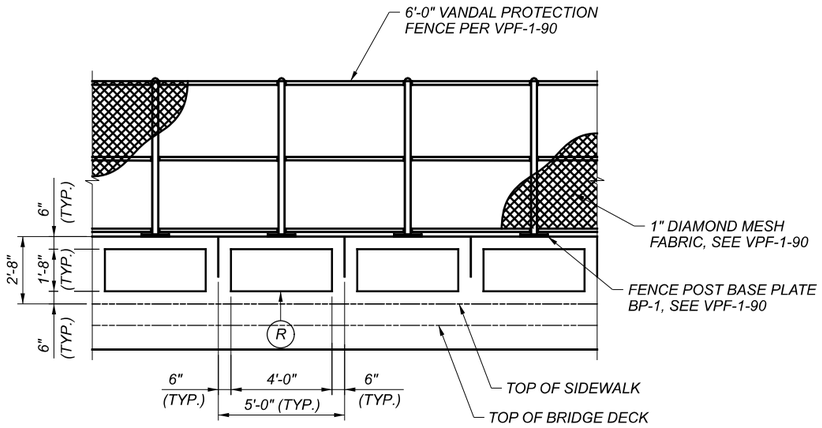

TYPICAL FENCE AND PARAPET PANEL

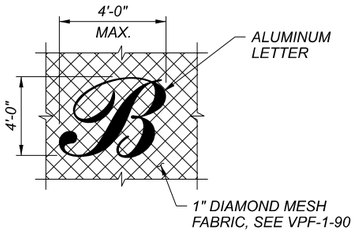

LETTER "B" DETAIL

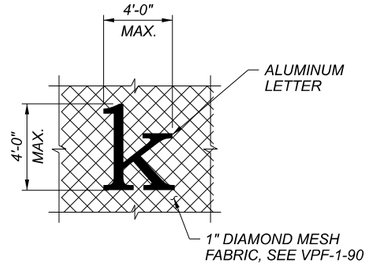

TYPICAL LETTER DETAIL
(SHOWING LOWER CASE LETTER WITH ASCENDER)

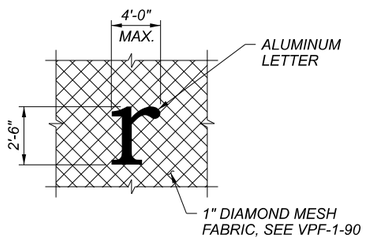

TYPICAL LETTER DETAIL
(SHOWING LOWER CASE LETTER WITHOUT ASCENDER)

NOTES FOR SUPERSTRUCTURE FENCE AND LETTERS

1. MATERIALS: 1/4" THICK NON-ILLUMINATED ALUMINUM PLATE ALLOY-5052 LETTERS. ALL MOUNTING HARDWARE SHALL BE STAINLESS STEEL GRADE 304.
2. FONT: THE FONT FOR THE CAPITAL LETTER "B" SHALL BE COMMERCIALSCRIPT BT. THE FONT FOR THE REMAINING LOWERCASE LETTERS SHALL BE BOOKMAN OLD STYLE.
3. FABRICATION METHOD: LETTERS SHALL BE FLAT CUT OUT METAL ROUTER CUT.
4. COLOR: ANODIZED FINISH (BLACK) TO BE SELECTED FROM MANUFACTURER'S STANDARD FINISHES.
5. FINISH: 2-PART HARDENED ACRYLIC POLYURETHANE CLEARCOAT.
6. ATTACH THE LETTERS TO THE OUTSIDE OF THE WIRE MESH (FACING IR-77 TRAFFIC) PER THE MANUFACTURER'S RECOMMENDATIONS.
7. THE BOTTOM OF THE LETTERS SHALL BE PLACED VERTICALLY 1'-0" FROM THE BOTTOM HORIZONTAL FENCE RAIL.
8. CONTRACTOR SHALL COORDINATE WITH THE FENCE SUPPLIER AND SUBMIT SHOP DRAWINGS, FABRICATION, MOUNTING, AND LOCATION DETAILS OF THE LETTERS TO THE ENGINEER FOR APPROVAL PRIOR TO FABRICATION. CONTRACTOR TO SUBMIT MATERIAL SAMPLES TO THE ENGINEER FOR APPROVAL.
9. LETTERING, ATTACHMENT HARDWARE, AND LABOR NECESSARY TO ATTACH LETTERING SHALL BE INCLUDED WITH ITEM 607 - FENCE, MISC.: ALUMINUM LETTERING FOR PAYMENT.
10. GROUND FENCE PER DETAILS ON ODOT STANDARD DRAWING HL-50.21.

LEGEND

(R) 1/2" RECESSED PANEL (TYP.)

PARAPET FENCE DETAILS
BRIDGE NO. CUY-CR187-00.977
MILLER ROAD OVER I.R. 77

SFN	1805673
DESIGN AGENCY	EUTHENICS 8235 Mohawk Dr. | Cleveland, OH 44139
DESIGNER	OOS
CHECKER	BPS
REVIEWER	LAB 02/24/22
PROJECT ID	104983
SUBSET / TOTAL	37 / 41
SHEET / TOTAL	P.361 / P.434

CUY-77-00.42 PART 1

MODEL: SA002 PAPERSIZE: 17x11 (in.) DATE: 3/4/2022 TIME: 2:04:34 PM USER: esmccaslin
F:\Jobs\1162-Miller Road Interchange\104983\400-Engineering\Structures\SFN_1805673\Sheets\104983_SFN_1805673_SA002.dgn

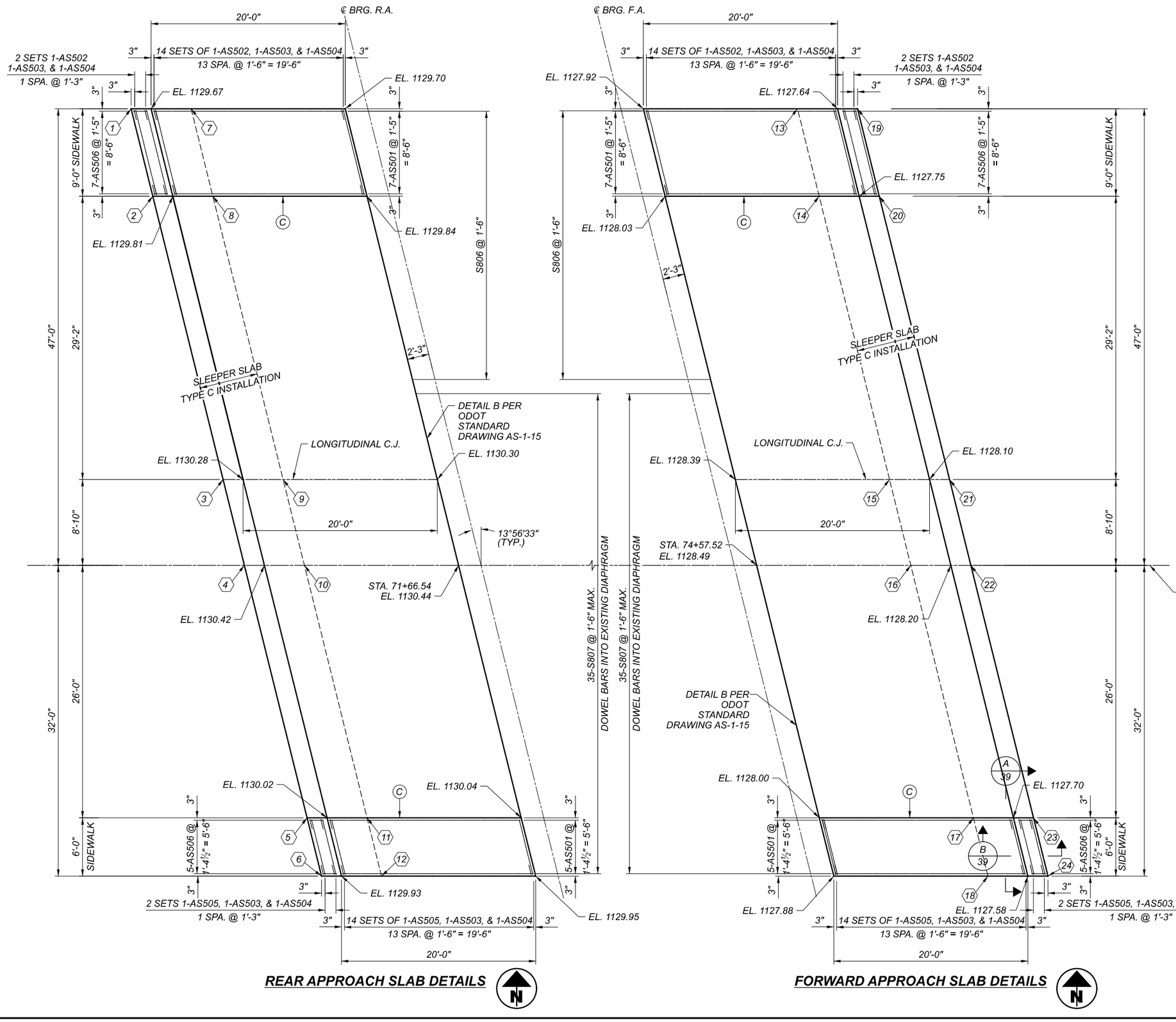

REAR APPROACH SLAB DETAILS

FORWARD APPROACH SLAB DETAILS

SLEEPER SLAB ELEVATIONS *

REAR ABUTMENT

POINT	STATION	OFFSET	ELEVATION
1	71+32.81	47.0' LT.	1128.58
2	71+35.05	38.0' LT.	1128.72
3	71+42.29	8.83' LT.	1129.19
4	71+44.48	0.0'	1129.33
5	71+50.93	26.0' RT.	1128.94
6	71+52.42	32.0' RT.	1128.85
7	71+38.99	47.0' LT.	1128.59
8	71+41.23	38.0' LT.	1128.73
9	71+48.47	8.83' LT.	1129.20
10	71+50.66	0.0'	1129.34
11	71+57.12	26.0' RT.	1128.95
12	71+58.61	32.0' RT.	1128.85

FORWARD ABUTMENT

POINT	STATION	OFFSET	ELEVATION
13	74+61.73	47.0' LT.	1126.62
14	74+63.96	38.0' LT.	1126.72
15	74+71.21	8.83' LT.	1127.07
16	74+73.40	0.0'	1127.18
17	74+79.85	26.0' RT.	1126.68
18	74+81.34	32.0' RT.	1126.56
19	74+67.91	47.0' LT.	1126.53
20	74+70.15	38.0' LT.	1126.63
21	74+77.39	8.83' LT.	1126.98
22	74+79.58	0.0'	1127.09
23	74+86.04	26.0' RT.	1126.58
24	74+87.53	32.0' RT.	1126.47

* ELEVATIONS LISTED FOR THESE POINTS ARE LOCATED AT THE TOP SURFACE OF THE SLEEPER SLAB BELOW THE APPROACH SLAB.

LEGEND

Ⓒ TRANSITION CURB HEIGHT FROM 8" (AT BRIDGE) TO 6" OVER THE LENGTH OF THE APPROACH SLAB

NOTES

1. THIS DRAWING PROVIDES DETAILS TO SUPPLEMENT THE STANDARD DRAWING. FOR APPROACH SLAB REINFORCING STEEL AND DETAILS NOT SHOWN, SEE ODOT STANDARD DRAWINGS AS-1-15 AND AS-2-15.
2. FOR ADDITIONAL APPROACH SLAB DETAILS, SEE SHEET 39/41.

APPROACH SLAB DETAILS
BRIDGE NO. CUY-CR187-00.977
MILLER ROAD OVER I.R. 77

SFN	1805673
DESIGN AGENCY	EUTHENICS, 8233 Mohawk Dr., Cleveland, OH 44026
DESIGNER	SRW
CHECKER	BPS
REVIEWER	LAB 02/24/22
PROJECT ID	104983
SUBSET	38
TOTAL	41
SHEET	P.362
TOTAL	P.434

CUY-77-00.42 PART 1

MODEL: SM001 PAPERSIZE: 17x11 (in.) DATE: 3/4/2022 TIME: 2:04:37 PM USER: esmccaslin
F:\Jobs\1162-Miller Road Interchange\104983\400=Engineering\Structures\SFN_1805673\Sheets\104983_SFN_1805673_SM001.dgn

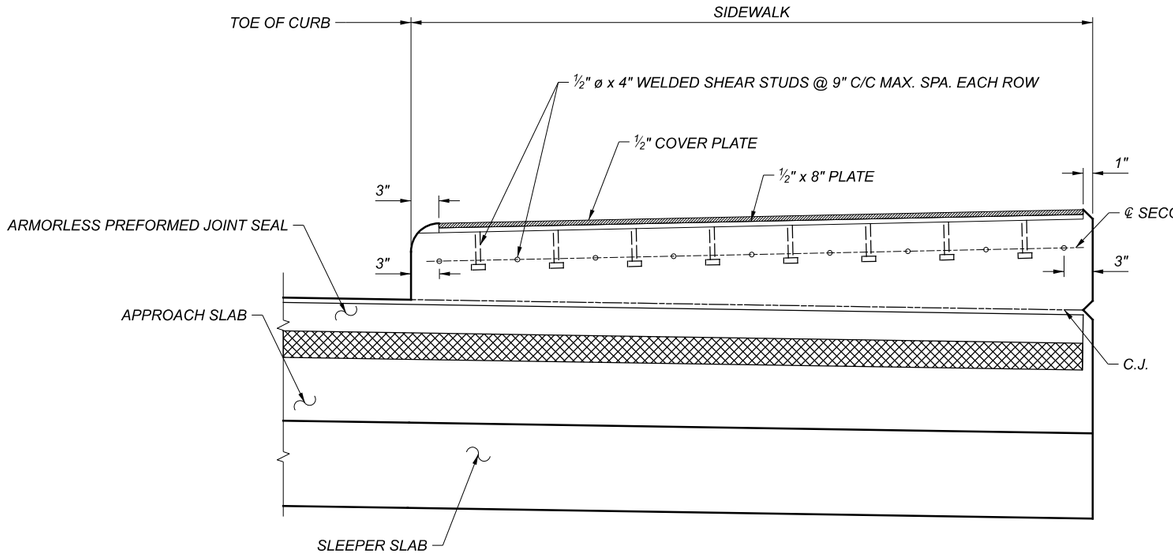

SECTION A / 38

RIGHT SIDEWALK SHOWN,
LEFT SIDEWALK SIMILAR

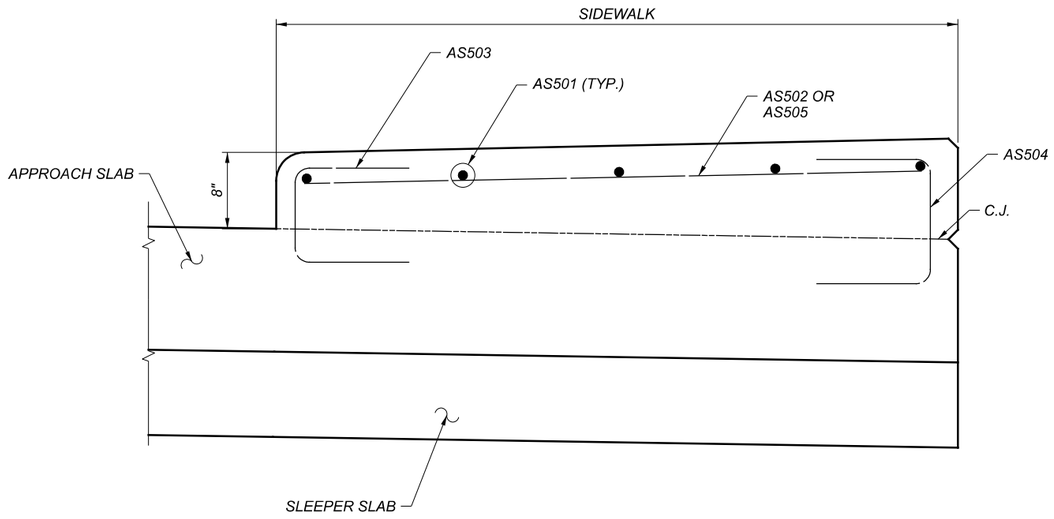

TYPICAL APPROACH SLAB SIDEWALK SECTION

RIGHT SIDEWALK SHOWN, LEFT SIDEWALK SIMILAR

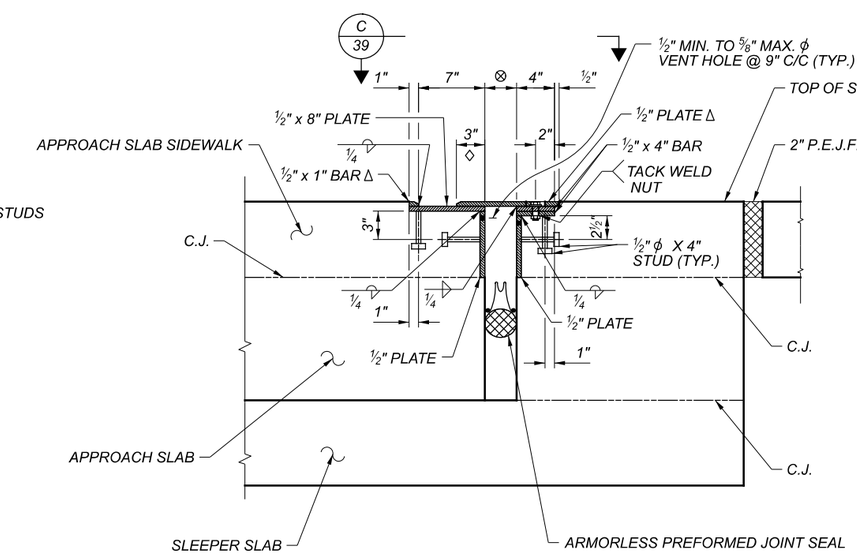

SECTION B / 38

⊗ SEE AS-2-15 FOR JOINT OPENING DIMENSIONS

◇ 3" OVERLAP AT 60°F

Δ PROVIDE A 1/2" HORIZONTAL X 1/4" VERTICAL BEVEL AT THE EXPOSED EDGE OF THE 1/2" COVER PLATE AND 1/2" X 1" BAR

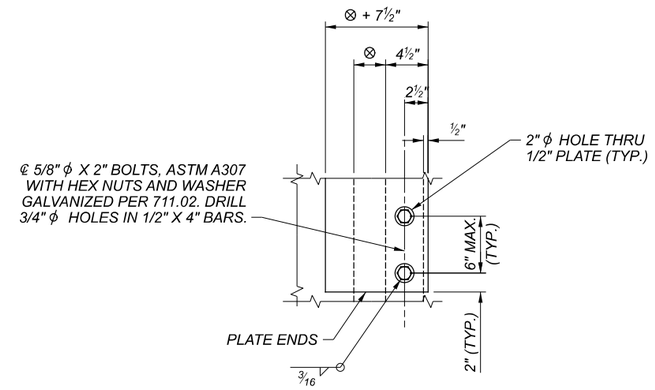

VIEW C / 39

NOTES

1. THIS DRAWING PROVIDES DETAILS TO SUPPLEMENT THE STANDARD DRAWING. FOR APPROACH SLAB REINFORCING STEEL AND DETAILS NOT SHOWN, SEE ODOT STANDARD DRAWINGS AS-1-15 AND AS-2-15.
2. FOR ADDITIONAL APPROACH SLAB DETAILS, SEE SHEET 38/41.

APPROACH SLAB DETAILS
BRIDGE NO. CUY-CR187-00.977
MILLER ROAD OVER I.R. 77

SFN 1805673

DESIGN AGENCY
EUTHENICS
8235 Mohawk Dr. | Cleveland, OH 44125

DESIGNER	CHECKER
SRW	BPS

REVIEWER LAB 02/24/22

PROJECT ID 104983

SUBSET	TOTAL
39	41

SHEET	TOTAL
P.302	P.434

CUY-77-00.42 PART 1

MODEL: SM002 PAPERSIZE: 17x11 (in.) DATE: 3/4/2022 TIME: 2:04:41 PM USER: esmccaslin
F:\Jobs\11162\Miller Road Interchange\104983400-Engineering\Structures\SFN_1805673\Sheets\104983_SFN_1805673_SM002.dgn

REINFORCING STEEL LIST

MARK	NO.	LENGTH	WEIGHT	TYPE	DIMENSIONS A	B	C	D	E	SERIES INC.
REAR ABUTMENT										
A501	6	26'-8"	167	STR						
A502	4	6'-8"	28	STR						
A503	28	16'-6"	482	3	5'-4"	2'-8"				
A504	6	21'-6"	135	2	9'-10"	2'-1"	9'-10"			
A505	20	14'-7"	304	2	5'-9"	3'-4"	5'-9"			
A506	2	8'-7"	18	2	2'-8"	3'-6"	2'-8"			
A507	21	4'-0"	88	STR						
A508	30	8'-5"	263	2	2'-8"	3'-4"	2'-8"			
A509	1	18'-9"	20	2	8'-5"	2'-2"	8'-5"			
A510	6	30'-0"	188	STR						
A511	8	15'-8"	131	STR						
A512	2	12'-1"	25	STR						
	1	4'-4"		STR						
A513	SER OF	TO	23	STR						3'-0"
	3	10'-4"		STR						
A514	1	12'-8"	13	19	11'-6"	1'-2"	0'-4"			
A515	1	12'-1"	13	19	11'-6"	0'-7"	0'-2"			
A516	2	8'-3"	17	2	3'-2"	2'-2"	3'-2"			
A517	4	10'-5"	43	2	4'-3"	2'-2"	4'-3"			
A518	2	11'-7"	24	STR						
	1	3'-10"		STR						
A519	SER OF	TO	21	STR						3'-0"
	3	9'-10"		STR						
	1	14'-4"		3		4'-9"				
A520	SER OF	TO	81	3	2'-2"	TO				0'-3.75"
	5	16'-10"		3		6'-0"				
	1	14'-6"		3		4'-10"				
A526	SER OF	TO	83	3	2'-2"	TO				0'-4.25"
	5	17'-4"		3		6'-3"				
A801	4	26'-8"	285	STR						
A802	4	6'-8"	71	STR						
A803	4	30'-2"	322	STR						
TOTAL			2845	LBS						

REINFORCING STEEL LIST

MARK	NO.	LENGTH	WEIGHT	TYPE	DIMENSIONS A	B	C	D	E	SERIES INC.
FWD ABUTMENT										
A501	6	26'-8"	167	STR						
A502	4	6'-8"	28	STR						
A503	28	16'-6"	482	3	5'-4"	2'-8"				
A504	6	21'-6"	135	2	9'-10"	2'-1"	9'-10"			
A505	21	14'-7"	319	2	5'-9"	3'-4"	5'-9"			
A506	2	8'-7"	18	2	2'-8"	3'-6"	2'-8"			
A507	19	4'-0"	79	STR						
A508	31	8'-5"	272	2	2'-8"	3'-4"	2'-8"			
A509	1	18'-9"	20	2	8'-5"	2'-2"	8'-5"			
A510	6	30'-0"	188	STR						
A511	8	15'-8"	131	STR						
A516	2	8'-3"	17	2	3'-2"	2'-2"	3'-2"			
A517	4	10'-5"	43	2	4'-3"	2'-2"	4'-3"			
	1	3'-10"		STR						
A519	SER OF	TO	21	STR						3'-0"
	3	9'-10"		STR						
A521	2	10'-11"	23	STR						
A522	2	11'-6"	24	STR						
	1	4'-2"		STR						
A523	SER OF	TO	22	STR						2'-10"
	3	9'-10"		STR						
A524	1	11'-6"	12	19	10'-11"	0'-7"	0'-2"			
A525	1	12'-1"	13	19	10'-11"	1'-2"	0'-4"			
A801	4	26'-8"	285	STR						
A802	4	6'-8"	71	STR						
A803	4	30'-2"	322	STR						
TOTAL			2692	LBS						

BENDING DIAGRAMS

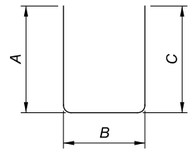

TYPE-2

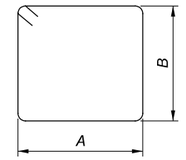

TYPE-3

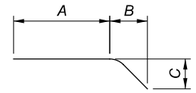

TYPE-19

REINFORCING STEEL NOTES

1. SERIES BARS - EACH BAR VARIES BY TABULATED AMOUNT.
2. ALL DIMENSIONS ARE OUT TO OUT.
3. TYPE 'STR' INDICATES A STRAIGHT BAR.
4. THE BAR SIZE NUMBER IS INDICATED IN THE 'MARK' COLUMN. THE FIRST ONE OR TWO DIGITS OF EACH MARK INDICATES THE BAR SIZE NUMBER. FOR EXAMPLE , A501 IS A #5 BAR SIZE AND P1101 IS A #11 BAR SIZE.
5. ALL REINFORCING STEEL SHALL BE EPOXY COATED.

REINFORCING STEEL - 1
BRIDGE NO. CUY-CR187-00.977
MILLER ROAD

SFN 1805673

DESIGN AGENCY
EUTHENICS
8235 Mohawk Dr. | Cleveland, OH 44125

DESIGNER	CHECKER
SRW	LAB

REVIEWER BPS 02/28/22

PROJECT ID 104983

SUBSET	TOTAL
40	41

SHEET	TOTAL
P.364	P.434

CUY-77-00.42 PART 1

MODEL: SL001 PAPERSIZE: 17x11 (in.) DATE: 3/4/2022 TIME: 2:04:45 PM USER: esmccaslin
F:\Jobs\11162-Miller Road Interchange\104983\400-Engineering\Structures\SFN_1805673\Sheets\104983_SFN_1805673_SL001.dgn

REINFORCING STEEL LIST

MARK	NO.	LENGTH	WEIGHT	TYPE	DIMENSIONS A	B	C	D	E	SERIES INC.
PIERS										
P401	3	15'-2"	210	27	0'-4.5"	2'-6"	15'-2"			
P402	3	17'-0"	236	27	0'-4.5"	2'-6"	17'-0"			
P403	3	12'-11"	179	27	0'-4.5"	2'-6"	12'-11"			
P501	396	8'-11"	3683	2	3'-7"	2'-0"	3'-7"			
P502	12	25'-1"	314	STR						
P503	12	8'-7"	107	2	3'-7"	1'-8"	3'-7"			
P801	135	10'-6"	3785	17	8'-8"					
P802	135	8'-8"	3124	STR						
P803	27	8'-10"	637	17	7'-0"					
P804	27	7'-0"	505	STR						
P805	15	25'-1"	1005	STR						
P806	12	27'-4"	876	2	1'-4"	25'-1"	1'-4"			
P1001	72	8'-10"	2737	1	1'-4"	7'-10"				
P1002	24	18'-8"	1928	16	17'-3"					
P1003	24	20'-6"	2117	16	19'-1"					
P1004	24	16'-5"	1695	16	15'-0"					
TOTAL			23139	LBS						

APPROACH SLABS			(FOR INFORMATION ONLY)							
AS501	24	19'-8"	492	STR						
AS502	32	8'-11"	298	STR						
AS503	64	2'-9"	184	2	1'-0"	1'-0"	1'-0"			
AS504	64	2'-11"	195	2	1'-0"	1'-2"	1'-0"			
AS505	32	5'-10"	195	STR						
AS506	24	1'-5"	35	STR						
TOTAL			1399	LBS						

NOTE: REINFORCING STEEL FOR APPROACH SLABS IS INCLUDED FOR PAYMENT UNTER ITEM 526, REINFORCED CONCRETE APPROACH SLABS (T=13"), AS PER PLAN.

REINFORCING STEEL LIST

MARK	NO.	LENGTH	WEIGHT	TYPE	DIMENSIONS A	B	C	D	E	SERIES INC.
SUPERSTRUCTURE										
S401	517	28'-4"	9785	STR						
S402	210	39'-0"	5471	STR						
S501	594	29'-4"	18173	STR						
S502	538	37'-11"	21276	STR						
S503	538	38'-6"	21604	16	37'-11"					
S504	538	7'-7"	4255	16	7'-0"					
S505	291	2'-11"	885	2	1'-0"	1'-2"	1'-0"			
S506	291	2'-9"	835	2	1'-0"	1'-0"	1'-0"			
S507	12	5'-4"	67	2	1'-9"	2'-1"	1'-9"			
S508	68	8'-7"	609	2	2'-8"	3'-6"	2'-8"			
S509	46	7'-11"	380	2	2'-7"	3'-0"	2'-7"			
S510	4	15'-2"	63	3	3'-6"	3'-10"				
S511	2	10'-10"	23	30	1'-6"	0'-8"	3'-11"	3'-9"		
S512	270	1'-8"	469	STR						
S513	293	8'-10"	2699	30	1'-6"	0'-8"	2'-11"	2'-9"		
S514	24	3'-2"	79	STR						
S515	684	4'-8"	3329	STR						
S516	293	2'-11"	891	STR						
S517	293	4'-11"	1503	2	2'-3"	0'-8"	2'-3"			
S518	292	10'-1"	3071	STR						
S801	20	4'-6"	240	STR						
S802	12	14'-2"	454	STR						
S803	12	12'-2"	390	STR						
S804	8	29'-10"	637	STR						
S805	8	38'-1"	813	STR						
S806	40	4'-4"	463	18	2'-5"	0'-8.5"	0'-8.5"			
S807	70	3'-1"	576	20	0'-8.5"	0'-8.5"	1'-2"	0'-8.5"	0'-8.5"	
TOTAL			99040	LBS						

BENDING DIAGRAMS

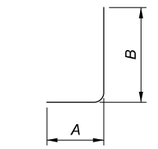

TYPE-1

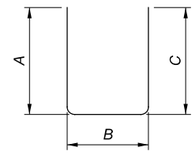

TYPE-2

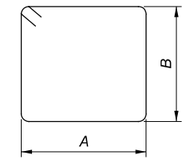

TYPE-3

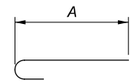

TYPE-16

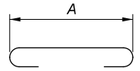

TYPE-17

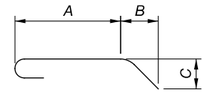

TYPE-18

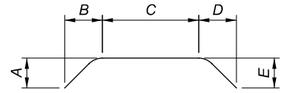

TYPE-20

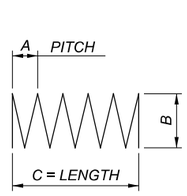

TYPE-27

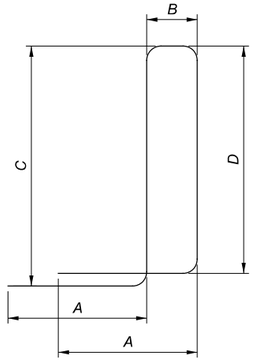

TYPE-30

REINFORCING STEEL NOTES

1. SERIES BARS - EACH BAR VARIES BY TABULATED AMOUNT.
2. ALL DIMENSIONS ARE OUT TO OUT.
3. TYPE 'STR' INDICATES A STRAIGHT BAR.
4. THE BAR SIZE NUMBER IS INDICATED IN THE 'MARK' COLUMN. THE FIRST ONE OR TWO DIGITS OF EACH MARK INDICATES THE BAR SIZE NUMBER. FOR EXAMPLE , A501 IS A #5 BAR SIZE AND P1101 IS A #11 BAR SIZE.
5. ALL REINFORCING STEEL SHALL BE EPOXY COATED.

REINFORCING STEEL - 2
BRIDGE NO. CUY-CR187-00.77
MILLER ROAD OVER I.R. 77

SFN 1805673

DESIGN AGENCY
EUTHENICS
8235 Mohawk Dr. | Cleveland, OH 44539

DESIGNER	CHECKER
SRW	LAB

REVIEWER: BPS 02/28/22

PROJECT ID: 104983

SUBSET	TOTAL
41	41

SHEET	TOTAL
P.365	P.434

CUY-77-00.42 PART 1

MODEL: SL002 PAPERSIZE: 17x11 (h.) DATE: 3/4/2022 TIME: 2:04:48 PM USER: esmccaslin
F:\Jobs\11624\Miller Road Interchange\104983\400-Engineering\Structures\SFN_1805673\Sheets\104983_SFN_1805673_SL002.dgn

REF. NO.	SHEET NO.	STATION BEGIN	STATION END	LOCATION	SIDE	202 FENCE REMOVED		607 FENCE, TYPE CLT		625 GROUND ROD														
						FT		FT		EACH														
R-1	P.367	26+30	43+52	I.R. 77	LT	1693																		
R-2	P.367	34+35	42+83	I.R. 77	RT	871																		
R-3	P.301	68+11	68+29	MILLER	LT	58																		
R-4	P.301	76+34	76+35	MILLER	LT	130																		
F-1	P.367	26+30	43+74*	I.R. 77	LT			1709		1														
F-2	P.367	34+35	42+93**	I.R. 77	RT			849		1														
F-3	P.301	68+25	68+28	MILLER	LT			35		1														
F-4	P.301	76+34	76+35	MILLER	LT			95		1														
*RAMP B-3 **RAMP B-4																								
TOTALS CARRIED TO GENERAL SUMMARY						2,752		2,688		4														

ESTIMATED FENCING QUANTITIES
I.R. 77

CUY-77-00.42 PART 1

MODEL: Sheet PAPERSIZE: 17x11(in.) DATE: 3/4/2022 TIME: 2:04:52 PM USER: esmccaslin
F:\Jobs\162-Miller Road Interchange\104983\400-Engineering\Roadway\Sheets\104983_G0006.dgn

DESIGN AGENCY
EUTHENICS
8235 Mohawk Dr. | Cleveland, OH 44139

DESIGNER
COM

REVIEWER
DTB 03/01/22

PROJECT ID
104983

SHEET P.366 TOTAL P.434

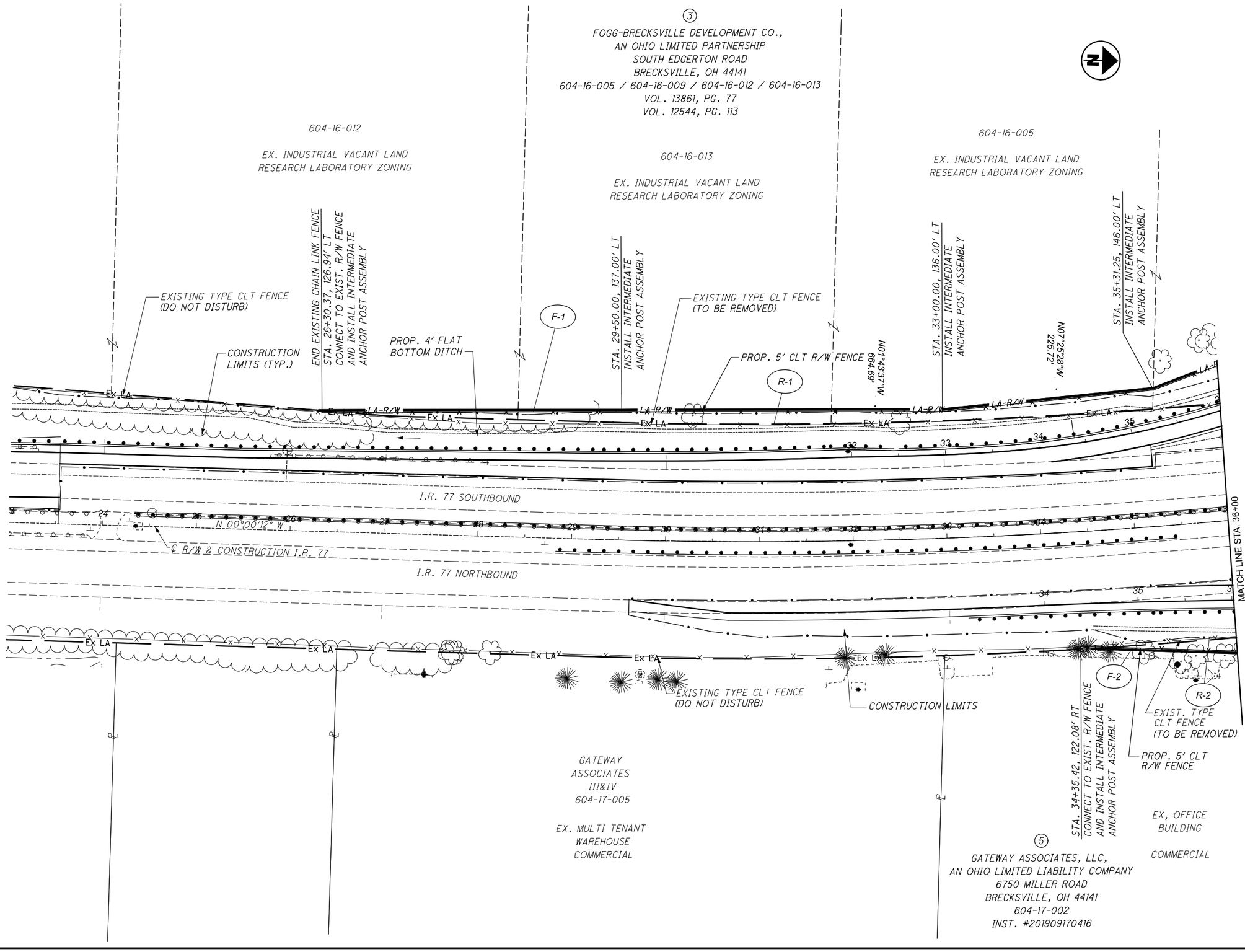

HORIZONTAL SCALE IN FEET
0 25 50 100

FENCING PLAN
STA. 23+00 TO STA. 36+00

DESIGN AGENCY
EUTHENICS
8235 McKnett Dr. | Cleveland, OH 44125

DESIGNER	COM
REVIEWER	DTB 03/01/22
PROJECT ID	104983
SHEET	P.367
TOTAL	P.434

CUY-77-00.42 PART 1

MODEL: Untitled-2 PAPERSIZE: 17x11(in.) DATE: 3/4/2022 TIME: 2:04:57 PM USER: esmccasin
F:\Jobs\162-Miller Road Interchange\104983\400-Engineering\Roadway\Sheets\104983_GM003.dgn

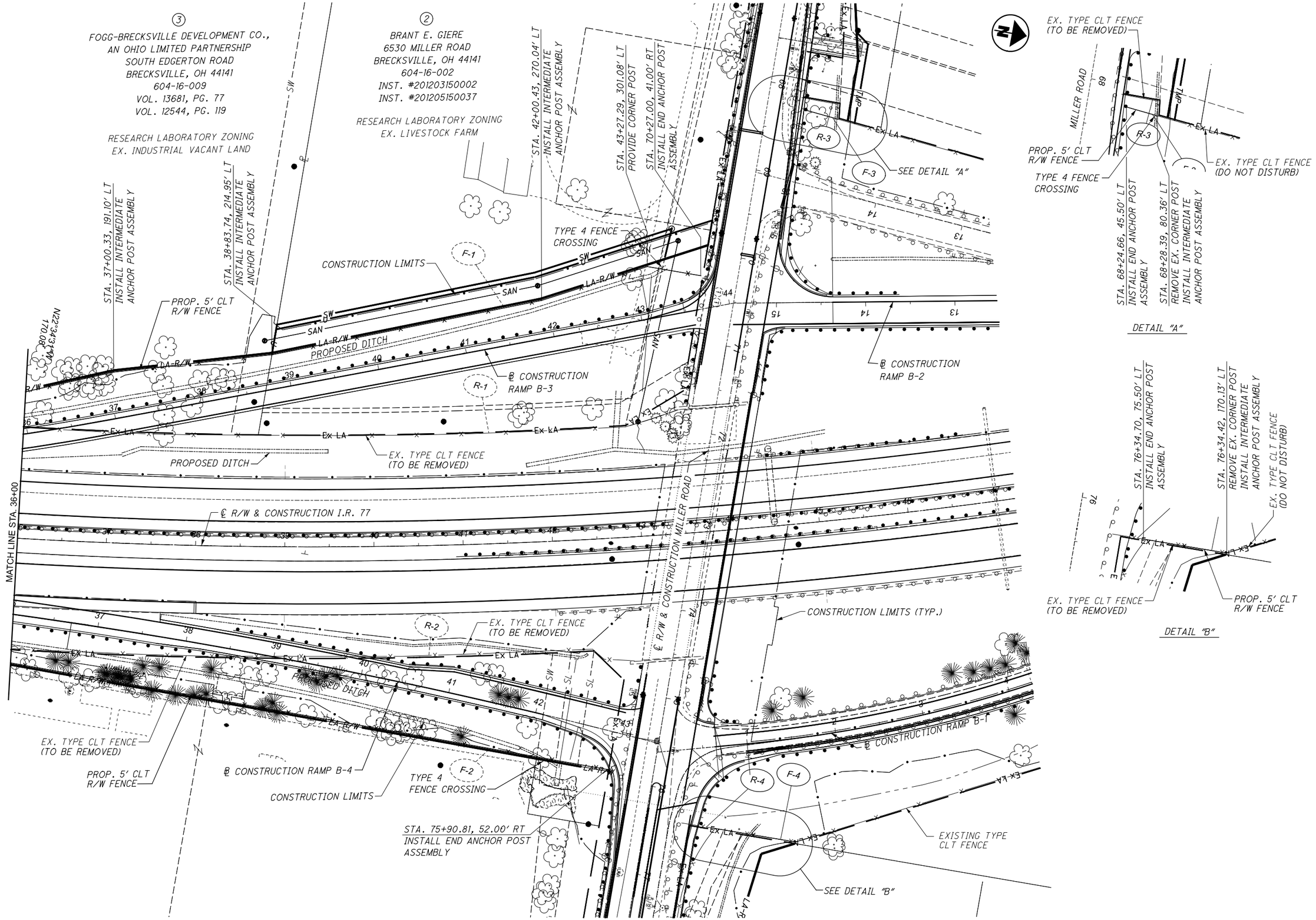

FENCING PLAN
STA. 36+00 TO STA. 50+00

CUY-77-00.42 PART 1

MODEL: l04983_GM004 PAPERSIZE: 17x11(in.) DATE: 3/4/2022 TIME: 2:05:03 PM USER: esmccaslin
F:\Jobs\l62-Miller Road Interchange\l04983\400-Engineering\Roadway\Sheets\l04983_GM004.dgn

DESIGN AGENCY
EUTHENICS
8235 Mohawk Dr. | Cleveland, OH 44125

DESIGNER	COM
REVIEWER	DTB 03/01/22
PROJECT ID	104983
SHEET	P.368
TOTAL	P.434

LOCATION MAP
(NOT TO SCALE)
LATITUDE: 41°17'22" N LONGITUDE: 81°38'13" W

UTILITY OWNERS	
TYPE	NAME & ADDRESS
ELECTRIC	CEI FIRST ENERGY 6896 MILLER ROAD, SUITE 101 AKRON, OH 44141 ATTN: JOHN M. ZASSICK PHONE: (440) 546-8706 EMAIL: jmzassick@firstenergycorp.com
WATER	CITY OF CLEVELAND WATER 1201 LAKESIDE AVENUE CLEVELAND, OH 44114 ATTN: FRED ROBERTS PHONE: (216) 664-2444 EXT. 75590 EMAIL: fred_roberts@ClevelandWater.com
SEWER	CUYAHOGA COUNTY DEPT OF PUBLIC WORKS 2079 E 9TH STREET, 5TH FLOOR CLEVELAND, OH 44115 ATTN: THOMAS P. SOTAK PHONE: (216) 698-2534 CELL: (216) 701-1175 EMAIL: tsotak@cuyahogacounty.us
GAS	
DOMINION ENERGY OHIO 320 SPRINGSIDE DRIVE, SUITE 320 AKRON, OH 44333 ATTN: MICAH J RISACHER @ 2ND FLOOR RELOCATION DESIGN PHONE: (330) 664-2409 EMAIL: Relocation@dominionenergy.com Micah.J.Risacher@dominionenergy.com	DOMINION ENERGY TRANS 329 SPRINGSIDE DRIVE, SUITE 320 AKRON, OH 44333 ATTN: GILBERT ABI SALLOUM PHONE: (330) 351-7700 EMAIL: GilbertAbiSalloum@usicllc.com
COMMUNICATIONS		
AT&T OHIO 13630 LORAIN AVE., ROOM 350 CLEVELAND, OHIO 44111-3436 ATTN: ERIC JOHNSTON PHONE: (216) 476-6141 CELL: (412) 680-9561 EMAIL: ej1265@att.com	CENTURYLINK 3801 ELM RD NE WARREN, OH 44483 ATTN: DOUG HOLLOWAY PHONE (216) 906-6284 EMAIL: relocations@lumen.com	SPECTRUM (CHARTER COMMUNICATIONS) 578 TERNES LN ELYRIA, OH 44035 ATTN: JOSHUA CURTIS PHONE: (440) 343-2146 EMAIL: JOSHUA.CURTIS@charter.com
VERIZON (MCI) 12300 RIDGE ROAD NORTH ROYALTON, OHIO 44133 ATTN: DAN ARZ OFFICE: (440) 457-4832 CELL: (216) 570-9343	ZAYO FIBER SOLUTIONS 4199 KINROSS LAKES PARKWAY, SUITE 10, RICHFIELD, OHIO 44286 ATTN: DAVE GALUSKA PHONE: (234) 281-0025 EMAIL: dave.galuska@zayo.com	

RIGHT OF WAY LEGEND SHEET
CUY-77-00.42

CITY OF BRECKSVILLE
BRECKSVILLE TOWNSHIP
CUYAHOGA COUNTY, OHIO
O.L. 55 & O.L. 60, T-5N, R-12W

INDEX OF SHEETS:

LEGEND SHEET	1
CENTERLINE PLAT	2-4
PROPERTY MAPS	5-7
SUMMARY OF ADDITIONAL R/W	8-10
R/W TOPOGRAPHIC SHEETS	11-33 (ODD #'S)
R/W BOUNDARY SHEETS	12-34 (EVEN #'S)

LIMITED ACCESS

THIS IMPROVEMENT IS ESPECIALLY DESIGNED FOR THROUGH TRAFFIC AND HAS BEEN DECLARED A LIMITED ACCESS HIGHWAY OR FREEWAY BY ACTION OF THE DIRECTOR IN ACCORDANCE WITH THE PROVISIONS OF SECTION 5511.02 OF THE REVISED CODE OF OHIO.

NOTE:

THE LOCATION OF THE UNDERGROUND UTILITIES SHOWN ON THE PLANS ARE AS OBTAINED FROM THE OWNER OF THE UTILITIES AS REQUIRED BY SECTION 153.64 O.R.C.

MONUMENT LEGEND

- MONUMENT BOX WITHOUT IRON PIN FOUND
- IRON PIN IN MONUMENT BOX FOUND
- PROPOSED R/W MONUMENT BOX
- EXISTING CONCRETE MONUMENT WITH 3" ALUMINUM DISK
- EXISTING CONCRETE MONUMENT WITH 5/8" REBAR
- M.N. MAGNAIL CONTROL POINT
- I.R.F. IRON PIN FOUND
- I.R.F. IRON PIN FOUND W/ ID CAP
- I.R.S. IRON PIN SET W/ ID CAP

CONVENTIONAL SYMBOLS

County Line
Section Line
Fence Line (Ex) (Pr)
Center Line
Limited Access (Ex) Ex LA
Limited Access (Pr) LA
Right of Way (Ex) Ex R/W
Right of Way (Pr) R/W
Standard Highway Easement (Ex) Ex SH
Temporary Right of Way TMP
Sewer Easement (Ex) Ex SW
Sewer Easement (Pr) SW
Utility Easement (Ex) Ex U
Utility Easement (Pr) U
Scenic Easement (Ex) Ex WS Ex WS
Slope Easement (Ex) Ex SL
Guardrail (Ex) (Pr)
Construction Limits
Edge of Pavement (Ex)
Edge of Pavement (Pr)

Edge of Shoulder (Ex)
Edge of Shoulder (Pr)
Ditch / Creek (Ex)
Ditch / Creek (Pr)
Tree Line (Ex)
Ownership Hook Symbol , Example
Property Line Symbol , Example
Break Line Symbol , Example
Tree (Pr), Tree (Ex), Shrub (Ex)
Tree (Remove) , Shrub (Remove)
Evergreen (Ex) , Stump
Evergreen (Remove) , Stump (Remove)
Wetland (Pr) , Grass (Pr) , Aerial Target
Post (Ex) , Mailbox (Ex) MB , Mailbox (Pr) MB
Light (Ex) , Telephone Marker (Ex) TEL
Fire Hydrant (Ex) , Water Meter (Ex) WM
Water Valve (Ex) , Utility Valve Unknown (Ex.)
Telephone Pole (Ex) , Power Pole (Ex)
Light Pole (Ex)

STRUCTURE KEY

- RESIDENTIAL
- COMMERCIAL
- OUT-BUILDING

LEGEND

WL = FEE SIMPLE WITH LIMITATION OF ACCESS
WD = WARRANTY DEED
T = TEMPORARY EASEMENT
S = SEWER EASEMENT
U = UTILITY EASEMENT

PROJECT DESCRIPTION

THE PROJECT INVOLVES COMPLETING THE EXISTING PARTIAL DIAMOND INTERCHANGE AT I.R. 77 AND MILLER ROAD BY ADDING A NORTHBOUND (NB) EXIT RAMP AND A SOUTHBOUND (SB) ENTRANCE RAMP; ADDING AN AUXILARY LANE BETWEEN NEW SB ENTRANCE RAMP AND THE IR80 EXIT RAMP; WIDENING OF MILLER ROAD TO PROVIDE LEFT-TURN LANES INCLUDING STRUCTURE WIDENING; AND ADDING DUAL WESTBOUND (WB) RIGHT TURN LANES ONTO I.R. 77 NB ENTRANCE RAMP.

THE EXISTING AND PROPOSED RIGHT OF WAY OF I.R. 77 SHALL BE REFERENCED FROM THE CENTERLINE OF RIGHT OF WAY OF I.R. 77

THE EXISTING AND PROPOSED RIGHT OF WAY OF MILLER ROAD SHALL BE REFERENCED FROM THE CENTERLINE OF RIGHT OF WAY OF MILLER ROAD

PLANS PREPARED BY:

FIRM NAME : EUTHENICS, INC.
R/W DESIGNER: ALAN R. PIATAK, P.E.
R/W REVIEWER: RICHARD S. WASOSKY, P.S.
FIELD REVIEWER: RICHARD S. WASOSKY, P.S.
PRELIMINARY FIELD REVIEW DATE: 06-28-21
TRACINGS FIELD REVIEW DATE: 09-29-21
OWNERSHIP UPDATED BY: ALAN R. PIATAK, P.E.
DATE COMPLETED: 09-28-21
PLAN COMPLETION DATE: 10-01-21

I, RICHARD S. WASOSKY, P.S. HAVE CONDUCTED A SURVEY OF THE EXISTING CONDITIONS FOR THE CITY OF BRECKSVILLE BETWEEN MARCH 2021 AND JUNE 2021. THE RESULTS OF THAT SURVEY ARE CONTAINED HEREIN.

UNDERGROUND UTILITY LOCATIONS ARE SHOWN FOR INFORMATIONAL PURPOSES ONLY. THOUGH THEY ARE BELIEVED TO BE ACCURATE, THEIR LOCATION IS AS MARKED ON THE GROUND BY THE UTILITY COMPANY PER OUPS CONFIRMATION NUMBERS A035001815, A035001817, A035001818, A035001821, A035001825, AND A035001828 AND THOSE MARKINGS SUBSEQUENTLY BEING SURVEYED AS A PART OF THIS PROJECT OR BY RECORD PLAN INFORMATION PROVIDED BY THE UTILITY COMPANIES.

THE HORIZONTAL COORDINATES EXPRESSED HEREIN ARE BASED ON THE OHIO STATE PLANE COORDINATES SYSTEM, - NORTH ZONE ON NAD 83 (2011) DATUM. THE PROJECT COORDINATES (US SURVEY FOOT) ARE RELATIVE TO STATE PLANE GRID COORDINATES (US SURVEY FEET) BY A PROJECT SCALE FACTOR OF 1.00010121.

AS A PART OF THIS PROJECT I HAVE REESTABLISHED THE LOCATIONS OF THE EXISTING PROPERTY LINES AND THE EXISTING CENTERLINE OF RIGHT OF WAY FOR THE PROPERTY TAKES HEREIN.

AS A PART OF THIS PROJECT I HAVE ESTABLISHED THE PROPOSED PROPERTY LINES, CALCULATED THE GROSS TAKE, PRESENT ROADWAY OCCUPIED (PRO), NET TAKE AND NET RESIDUE; AS WELL AS PREPARED THE LEGAL DESCRIPTIONS NECESSARY TO ACQUIRE THE PARCELS AS SHOWN HEREIN.

AS PART OF THIS WORK, I HAVE SET RIGHT OF WAY MONUMENTS AT PROPERTY CORNERS, PROPERTY LINE INTERSECTIONS, POINTS ALONG THE RIGHT OF WAY AND/OR ANGLE POINTS ON THE RIGHT OF WAY, AND OTHER POINTS AS SHOWN HEREIN.

ALL OF MY WORK CONTAINED HEREIN WAS CONDUCTED IN ACCORDANCE WITH THE OHIO ADMINISTRATIVE CODE CHAPTER 4733-37 STANDARDS FOR BOUNDARY SURVEYS.

THE WORDS I AND MY, AS USED HEREIN, ARE TO MEAN THAT EITHER MYSELF OR SOMEONE WORKING UNDER MY DIRECT SUPERVISION.

10-01-21
RICHARD S. WASOSKY DATE

PROFESSIONAL LAND SURVEYOR NO. 8217

SURVEYORS SEAL

STATE OF OHIO
RICHARD S. WASOSKY
8217
REGISTERED
PROFESSIONAL SURVEYOR

RIGHT OF WAY LEGEND SHEET

SUBSET	TOTAL
1	34

DESIGN AGENCY
EUTHENICS
8235 Mohawk Dr. | Cleveland, OH 44125

DESIGNER ARP
REVIEWER RSW 10-01-21
PROJECT ID 104983
SHEET P.369 TOTAL P.434

CUY-77-00.42 PART 1

MODEL: Sheet PAPERSIZE: 17x11 (in.) DATE: 3/4/2022 TIME: 2:05:09 PM USER: esmccaslin
F:\Jobs\1162-Miller Road Interchange\104983400-Engineering\RW\Sheets\104983_RL001.dgn

CUY-77-00.42
CITY OF BRECKSVILLE
BRECKSVILLE TOWNSHIP
COUNTY OF CUYAHOGA, OHIO
O.L. 55 & O.L. 60, T-5N., R-12W.

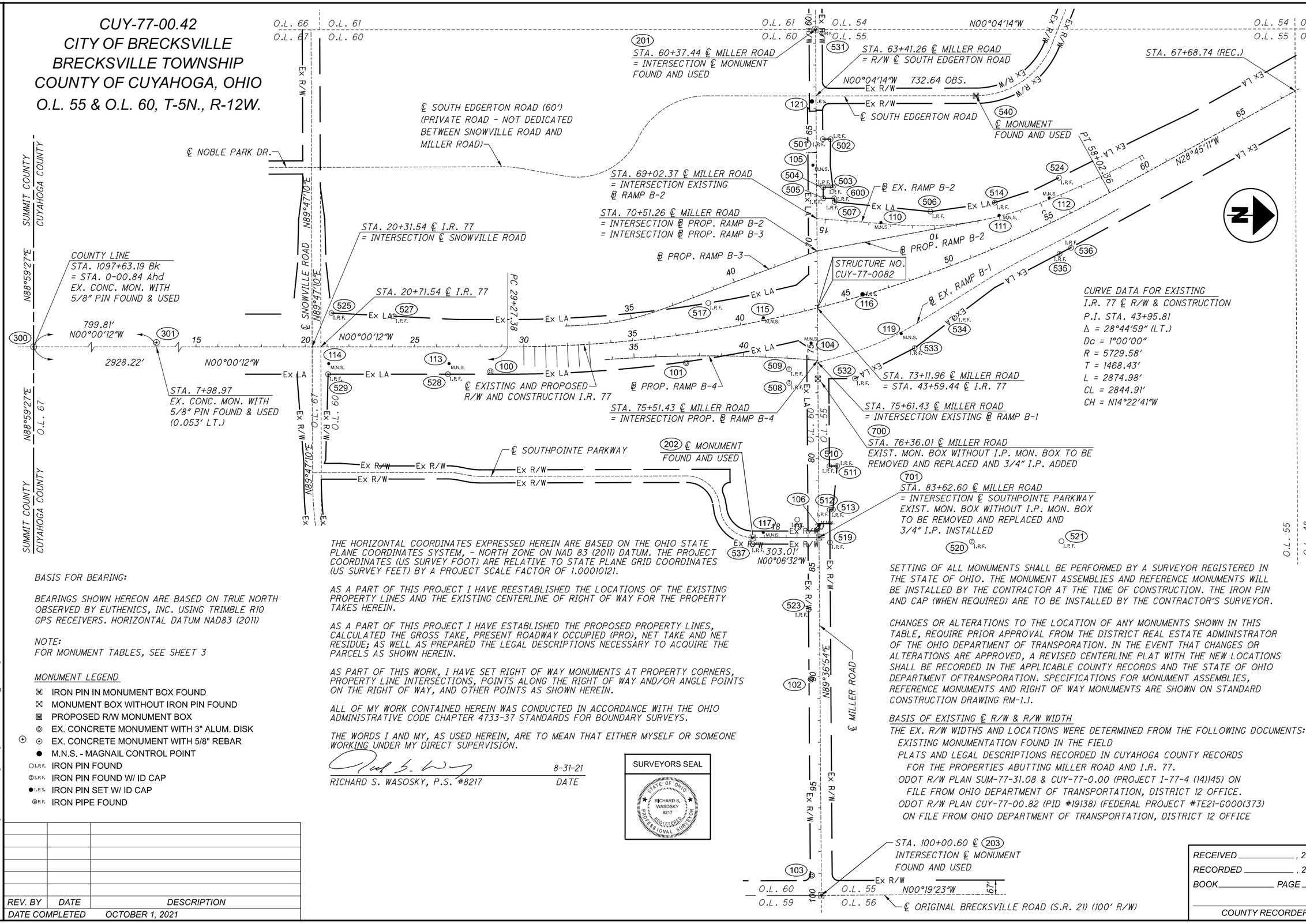

HORIZONTAL SCALE IN FEET
0 100 200 400

CENTERLINE PLAT

BASIS FOR BEARING:

BEARINGS SHOWN HEREON ARE BASED ON TRUE NORTH OBSERVED BY EUTHENICS, INC. USING TRIMBLE R10 GPS RECEIVERS. HORIZONTAL DATUM NAD83 (2011)

NOTE:
FOR MONUMENT TABLES, SEE SHEET 3

MONUMENT LEGEND

- IRON PIN IN MONUMENT BOX FOUND
- MONUMENT BOX WITHOUT IRON PIN FOUND
- PROPOSED R/W MONUMENT BOX
- EX. CONCRETE MONUMENT WITH 3" ALUM. DISK
- EX. CONCRETE MONUMENT WITH 5/8" REBAR
- M.N.S. - MAGNAIL CONTROL POINT
- I.R.F. IRON PIN FOUND
- I.R.F. IRON PIN FOUND W/ ID CAP
- I.R.S. IRON PIN SET W/ ID CAP
- P.R.F. IRON PIPE FOUND

THE HORIZONTAL COORDINATES EXPRESSED HEREIN ARE BASED ON THE OHIO STATE PLANE COORDINATES SYSTEM, - NORTH ZONE ON NAD 83 (2011) DATUM. THE PROJECT COORDINATES (US SURVEY FOOT) ARE RELATIVE TO STATE PLANE GRID COORDINATES (US SURVEY FEET) BY A PROJECT SCALE FACTOR OF 1.00010121.

AS A PART OF THIS PROJECT I HAVE REESTABLISHED THE LOCATIONS OF THE EXISTING PROPERTY LINES AND THE EXISTING CENTERLINE OF RIGHT OF WAY FOR THE PROPERTY TAKES HEREIN.

AS A PART OF THIS PROJECT I HAVE ESTABLISHED THE PROPOSED PROPERTY LINES, CALCULATED THE GROSS TAKE, PRESENT ROADWAY OCCUPIED (PRO), NET TAKE AND NET RESIDUE; AS WELL AS PREPARED THE LEGAL DESCRIPTIONS NECESSARY TO ACQUIRE THE PARCELS AS SHOWN HEREIN.

AS PART OF THIS WORK, I HAVE SET RIGHT OF WAY MONUMENTS AT PROPERTY CORNERS, PROPERTY LINE INTERSECTIONS, POINTS ALONG THE RIGHT OF WAY AND/OR ANGLE POINTS ON THE RIGHT OF WAY, AND OTHER POINTS AS SHOWN HEREIN.

ALL OF MY WORK CONTAINED HEREIN WAS CONDUCTED IN ACCORDANCE WITH THE OHIO ADMINISTRATIVE CODE CHAPTER 4733-37 STANDARDS FOR BOUNDARY SURVEYS.

THE WORDS I AND MY, AS USED HEREIN, ARE TO MEAN THAT EITHER MYSELF OR SOMEONE WORKING UNDER MY DIRECT SUPERVISION.

RICHARD S. WASOSKY, P.S. #8217 — *8-31-21 DATE*

SURVEYORS SEAL

STATE OF OHIO
RICHARD S. WASOSKY
8217
REGISTERED PROFESSIONAL SURVEYOR

SETTING OF ALL MONUMENTS SHALL BE PERFORMED BY A SURVEYOR REGISTERED IN THE STATE OF OHIO. THE MONUMENT ASSEMBLIES AND REFERENCE MONUMENTS WILL BE INSTALLED BY THE CONTRACTOR AT THE TIME OF CONSTRUCTION. THE IRON PIN AND CAP (WHEN REQUIRED) ARE TO BE INSTALLED BY THE CONTRACTOR'S SURVEYOR.

CHANGES OR ALTERATIONS TO THE LOCATION OF ANY MONUMENTS SHOWN IN THIS TABLE, REQUIRE PRIOR APPROVAL FROM THE DISTRICT REAL ESTATE ADMINISTRATOR OF THE OHIO DEPARTMENT OF TRANSPORATION. IN THE EVENT THAT CHANGES OR ALTERATIONS ARE APPROVED, A REVISED CENTERLINE PLAT WITH THE NEW LOCATIONS SHALL BE RECORDED IN THE APPLICABLE COUNTY RECORDS AND THE STATE OF OHIO DEPARTMENT OFTRANSPORATION. SPECIFICATIONS FOR MONUMENT ASSEMBLIES, REFERENCE MONUMENTS AND RIGHT OF WAY MONUMENTS ARE SHOWN ON STANDARD CONSTRUCTION DRAWING RM-1.1.

BASIS OF EXISTING ℄ R/W & R/W WIDTH

THE EX. R/W WIDTHS AND LOCATIONS WERE DETERMINED FROM THE FOLLOWING DOCUMENTS:
- *EXISTING MONUMENTATION FOUND IN THE FIELD*
- *PLATS AND LEGAL DESCRIPTIONS RECORDED IN CUYAHOGA COUNTY RECORDS FOR THE PROPERTIES ABUTTING MILLER ROAD AND I.R. 77.*
- *ODOT R/W PLAN SUM-77-31.08 & CUY-77-0.00 (PROJECT I-77-4 (14)145) ON FILE FROM OHIO DEPARTMENT OF TRANSPORTATION, DISTRICT 12 OFFICE.*
- *ODOT R/W PLAN CUY-77-00.82 (PID #19138) (FEDERAL PROJECT #TE21-G000(373) ON FILE FROM OHIO DEPARTMENT OF TRANSPORTATION, DISTRICT 12 OFFICE*

REV. BY	DATE	DESCRIPTION
DATE COMPLETED		OCTOBER 1, 2021

RECEIVED _____, 20 ____
RECORDED _____, 20 ____
BOOK _____ PAGE _____
COUNTY RECORDER

SUBSET	TOTAL
2	34
DESIGN AGENCY	
EUTHENICS 8225 Mohawk Dr. | Cleveland, OH 44130	
DESIGNER	ARP
REVIEWER	RSW 08/31/21
PROJECT ID	104983
SHEET	TOTAL
P.370	P.434

CUY-77-00.42 PART 1

MODEL: Sheet PAPERSIZE: 17x11 (in.) DATE: 3/4/2022 TIME: 2:05:13 PM USER: esmccaslin
F:\Jobs\1162-Miller Road Interchange\104983\400-Engineering\RW\Sheets\104983_RC001.dgn

PROJECT: Miller Road

PID: 104983

Import Units:	**Ground Coord?** ☑ TRUE		**Unit Conversion Factor1 (sft->m):**	**0.304800610**	**Unitless Ground to Grid Factor:**	**Unitless Factor:**
	U.S. Survey FT	sft	**Unit Conversion Factor2 (sft->sft):**	**1.000000000**		
Output Unit1:	Meters	m	**Adjustment Factor1:**	**0.304769764**	**0.999898800**	**Primary Project Control:**
Output Unit2:	U.S. Survey FT	sft	**Adjustment Factor2:**	**0.9998988**		

GROUND COORDINATES - U.S. Survey FT

PROJECT coordinates are scaled from GRID coordinates about the Ohio North Zone grid point N=0, E=0 (N 39º 27' 01.76097", W 89º 28' 32.98476")

STATE PLANE GRID COORDINATES

Horiz. Datum NAD83 (2011) Ohio State Plane, North Zone Vert. Datum: NAVD88
defined by GPS from CORS using NAVD88. All other elevations are established by leveling from .

MONUMENTS TO BE SET DURING CONSTRUCTION

NAME	Alignment Name	STATION	OFFSET (sft)	RT/LT	NORTH (sft)	EAST (sft)	ELEVATION (sft)	FEATURE	POINT TYPE	DESCRIPTION	NAME	NORTH (m)	EAST (m)	ORTHO HT (m)	NORTH (sft)	EAST (sft)	ITEM 623.05 MONUMENT ASSEMBLY	ITEM 623.05 REFERENCE MONUMENT
102	Miller Rd	90+11.75	40.886'	RT	592409.6710	2207629.2380	1116.09	CONC Monument	Project Control Points	Concrete Monument with 3" Alum Disk	102	180548.5555	672818.6415	340.150	592349.7193	2207405.8265		
103	Miller Rd	99+09.72	43.688'	RT	592412.9020	2208527.2090	1130.58	CONC Monument	Project Control Points	Concrete Monument with 3" Alum Disk	103	180549.5402	673092.3160	344.567	592352.9500	2208303.7066		
105	Miller Rd	66+58.13	16.214'	RT	592418.5280	2205275.5000	1127.03	Mag Nail	Project Control Points	Mag Nail Control Point	105	180551.2549	672101.2934	343.485	592358.5754	2205052.3267		
106	Miller Rd	83+07.28	0.577'	RT	592445.2450	2206924.5100	1111.99	Mag Nail	Project Control Points	Mag Nail Control Point	106	180559.3974	672603.8618	338.901	592385.2897	2206701.1698		
117	Miller Rd	83+37.41	254.820'	RT	592191.2120	2206956.3530	0.00	Mag Nail	Project Control Points	Mag Nail Control Point	117	180481.9758	672613.5665	0.000	592131.2824	2206733.0096		
121	Miller Rd	63+64.92	19.865'	RT	592412.9070	2204982.3270	1130.01	Iron Pin Set	Project Control Points		121	180549.5418	672011.9431	344.393	592352.9550	2204759.1833		
201	Miller Rd	60+37.44	0.00	RT/LT	592430.5710	2204654.7200	0.00	Monument Box	Centerline Alignment	Monument box 3/4" Rebar with YPC C.W. Courtney	201	180554.9252	671912.0984	0.000	592370.6172	2204431.6095		
202	Miller Rd	83+61.13	303.009'	RT	592143.1820	2206980.3980	0.00	Monument Box	Existing R/W Points	Monument box 3/4" Rebar	202	180467.3377	672620.8947	0.000	592083.2573	2206757.0521		
203	Miller Rd	100+00.60	0.00	RT/LT	592457.2000	2208617.7910	0.00	Monument Box	Centerline Alignment	Monument box 3/4" Rebar	203	180563.0409	673119.9226	0.000	592397.2435	2208394.2794		
501	Miller Rd	65+39.44	30.083'	LT	592464.0260	2205156.5020	0.00	Property Corner	Existing Boundary Monuments	Property Corner 5/8" Rebar No Cap (Bent)	501	180565.1213	672065.0264	0.000	592404.0688	2204933.3407		
502	Miller Rd	65+39.43	65.252'	LT	592499.1940	2205156.2630	0.00	Property Corner	Existing Boundary Monuments	Property Corner 5/8" Rebar No Cap	502	180575.8394	672064.9535	0.000	592439.2332	2204933.1017		
503	Miller Rd	67+59.86	74.328'	LT	592509.7510	2205376.6220	0.00	Property Corner	Existing Boundary Monuments	Property Corner 5/8" Rebar No Cap	503	180579.0569	672132.1123	0.000	592449.7892	2205153.4384		
504	Miller Rd	67+59.56	30.202'	LT	592465.6240	2205376.6180	0.00	Property Corner	Existing Boundary Monuments	Property Corner 5/8" Rebar No Cap	504	180565.6083	672132.1111	0.000	592405.6666	2205153.4344		
505	Miller Rd	68+10.16	30.288'	LT	592466.0500	2205427.2240	0.00	Property Corner	Existing Boundary Monuments	Property Corner 5/8" Rebar No Cap	505	180565.7381	672147.5343	0.000	592406.0926	2205204.0353		
507	Miller Rd	68+27.26	81.894'	LT	592517.7700	2205443.9710	0.00	Property Corner	Existing Boundary Monuments	Property Corner 5/8" Rebar No Cap	507	180581.5008	672152.6382	0.000	592457.8073	2205220.7806		
510	Miller Rd	80+35.82	50.094'	LT	592494.0910	2206652.7190	0.00	Property Corner	Existing Boundary Monuments	Property Corner 5/8" Rebar with YPC DG Bohning Assoc	510	180574.2842	672521.0281	0.000	592434.1307	2206429.4063		
511	Miller Rd	80+35.85	85.166'	LT	592529.1630	2206652.5120	0.00	Property Corner	Existing Boundary Monuments	Property Corner 5/8" Rebar No Cap Bent	511	180584.9731	672520.9650	0.000	592469.1992	2206429.1993		
512	Miller Rd	82+35.89	50.088'	LT	592495.4300	2206852.7880	0.00	Property Corner	Existing Boundary Monuments	Property Corner 5/8" Rebar with YPC DG Bohning Assoc	512	180574.6923	672582.0031	0.000	592435.4696	2206629.4550		
513	Miller Rd	82+35.84	65.082'	LT	592510.4230	2206852.6290	0.00	Property Corner	Existing Boundary Monuments	Property Corner 5/8" Rebar with YPC unledgable	513	180579.2617	672581.9546	0.000	592450.4611	2206629.2960		
519	Miller Rd	83+85.81	50.113'	LT	592496.4620	2207002.6980	0.00	Property Corner	Existing Boundary Monuments	Property Corner 5/8" Rebar No Cap	519	180575.0068	672627.6911	0.000	592436.5015	2206779.3499		
520	Miller Rd	83+86.49	699.719'	LT	593146.0580	2206999.0180	0.00	Property Corner	Existing Boundary Monuments	Property Corner 5/8" Rebar with OPC Neff & Assoc 8622-Metcalf	520	180772.9840	672626.5695	0.000	593086.0318	2206775.6702		
521	Miller Rd	83+87.13	1109.694'	LT	593556.0280	2206996.8960	0.00	Property Corner	Existing Boundary Monuments	Property Corner 5/8" Rebar No Cap	521	180897.9305	672625.9228	0.000	593495.9603	2206773.5484		
523	Miller Rd	86+92.29	49.845'	RT	592398.5650	2207309.8470	0.00	Property Corner	Existing Boundary Monuments	Property Corner 5/8" Rebar No Cap	523	180545.1708	672721.3008	0.000	592338.6144	2207086.4678		
531	Miller Rd	60+55.82	30.047'	LT	592460.7410	2204672.8980	0.00	Property Corner	Existing Boundary Monuments	Property Corner 2" pipe	531	180564.1201	671917.6385	0.000	592400.7841	2204449.7856		
537	Miller Rd	83+91.14	303.178'	RT	592143.2150	2207010.4050	0.00	Property Corner	Existing Boundary Monuments	Property Corner 5/8" Rebar No Cap	537	180467.3478	672630.0400	0.000	592083.2903	2206787.0561		
540	Miller Rd	63+45.15	732.762'	LT	593165.3840	2204957.5010	0.00	Monument Box	Existing R/W Points	Monument box 5/8" Rebar with YPC Garnett S-5828	540	180778.8740	672004.3769	0.000	593105.3558	2204734.3598		
600	Miller Rd	68+10.49	79.908	LT	592515.6710	2205427.2160	0.00	Property Corner	Existing Boundary Monuments	Property Corner 5/8" Rebar (Bent)	600	180580.8611	672147.5318	0.000	592455.7086	2205204.0273		
700	Miller Rd	76+36.01(new)	0.00' (new)	RT/LT	592441.3120	2206253.3220	0.00	Monument Box	Centerline Alignment	Replace Existing Monument Box and add 3/4" Rebar with YPC	700	180558.1988	672399.3039	0.000	592381.3571	2206030.0497	1	
701	Miller Rd	83+62.60 (new)	0.00' (new)	RT/LT	592446.1940	2206979.8220	0.00	Monument Box	Centerline Alignment	Replace Existing Monument Box and add 3/4" Rebar with YPC	701	180559.6866	672620.7192	0.000	592386.2386	2206756.4762	1	
100	IR 77	28+47.47	112.509'	RT	590942.0440	2206219.8410	1105.62	CONC Monument	Project Control Points	Concrete Monument with 3" Alum Disk	100	180101.2672	672389.1000	336.960	590882.2408	2205996.5721		
101	IR 77	37+28.36	130.687'	RT	591838.5400	2206180.7960	1106.42	CONC Monument	Project Control Points	Concrete Monument with 3" Alum Disk	101	180374.4921	672377.2002	337.203	591778.6461	2205957.5310		
104	IR 77	42+93.47	148.821'	RT	592410.2770	2206089.7730	1128.62	Mag Nail	Project Control Points	Mag Nail Control Point	104	180548.7402	672349.4592	343.969	592350.3252	2205866.5172		
110	IR 77	47+58.92	294.226'	LT	592729.9630	2205537.6560	1109.21	Mag Nail	Project Control Points	Mag Nail Control Point	110	180646.1709	672181.1906	338.054	592669.9789	2205314.4561		
111	IR 77	52+95.63	130.572'	LT	593270.8600	2205505.1080	0.00	Mag Nail	Project Control Points	Mag Nail Control Point	111	180811.0199	672171.2709	0.000	593210.8211	2205281.9114		
112	IR 77	55+42.47	106.277'	LT	593500.3080	2205425.2880	0.00	Mag Nail	Project Control Points	Mag Nail Control Point	112	180880.9487	672146.9442	0.000	593440.2459	2205202.0995		
113	IR 77	26+58.50	76.284'	RT	590753.0770	2206183.6260	0.00	Mag Nail	Project Control Points	Mag Nail Control Point	113	180043.6758	672378.0627	0.000	590693.2929	2205960.3608		
114	IR 77	21+07.48	76.734'	RT	590202.0570	2206184.1070	0.00	Mag Nail	Project Control Points	Mag Nail Control Point	114	179875.7415	672378.2093	0.000	590142.3287	2205960.8417		
115	IR 77	41+08.22	12.644'	LT	592191.8540	2205973.6310	1108.59	Mag Nail	Project Control Points	Mag Nail Control Point	115	180482.1715	672314.0626	337.865	592131.9243	2205750.3870		
116	IR 77	45+75.61	6.199'	LT	592645.7700	2205865.8470	1108.47	Iron Pin Set	Project Control Points		116	180620.5114	672281.2133	337.828	592585.7944	2205642.6139		
119	IR 77	46+89.74	218.476'	RT	592822.7920	2206046.5360	1119.84	Mag Nail	Project Control Points	Mag Nail Control Point	119	180674.4623	672336.2818	341.293	592762.7985	2205823.2846		
300	IR 77	0-00.84	0.00	RT/LT	588093.7251	2206107.4920	0.00	CONC Monument	Existing Centerline Control Point	Concrete Monument with 5/8" Rebar Punched	300	179233.1857	672354.8594	0.000	588034.2102	2205884.2345		
301	IR 77	7+98.97	0.053'	LT	588893.5414	2206107.3940	0.00	CONC Monument	Existing Centerline Control Point	Concrete Monument with 5/8" Rebar Punched	301	179476.9455	672354.8295	0.000	588833.9455	2205884.1365		
506	IR 77	50+00.78	265.417'	LT	592956.3910	2205487.9090	0.00	Property Corner	Existing Boundary Monuments	Property Corner 5/8" Rebar No Cap	506	180715.1793	672166.0292	0.000	592896.3840	2205264.7142		
508	IR 77	41+59.77	303.671'	RT	592309.6800	2206271.8990	0.00	Property Corner	Existing Boundary Monuments	Property Corner 5/8" Rebar with YPC SH&A 5160	508	180518.0813	672404.9657	0.000	592249.7384	2206048.6248		
509	IR 77	41+72.03	242.397'	RT	592309.0780	2206209.2970	0.00	Property Corner	Existing Boundary Monuments	Property Corner 5/8" Rebar with PPC NPC PS 8160 8668	509	180517.8978	672385.8865	0.000	592249.1365	2205986.0292		
514	IR 77	53+00.45	191.779'	LT	593250.5300	2205447.1870	0.00	Property Corner	Existing Boundary Monuments	Property Corner 5/8" Rebar with broken unledgable cap	514	180804.8239	672153.6184	0.000	593190.4932	2205223.9963		
517	IR 77	38+69.48	125.270'	LT	591939.2900	2205906.4160	0.00	Property Corner	Existing Boundary Monuments	Property Corner 5/8" Rebar No Cap	517	180405.1976	672293.5775	0.000	591879.3859	2205683.1788		
524	IR 77	56+25.51	168.962'	LT	593544.7520	2205332.9770	0.00	Property Corner	Existing Boundary Monuments	Property Corner 5/8" Rebar No Cap	524	180894.4939	672118.8106	0.000	593484.6854	2205109.7978		
525	IR 77	21+19.85	155.204'	LT	590214.4080	2205952.1690	0.00	Property Corner	Existing Boundary Monuments	Property Corner 5/8" Rebar No Cap	525	179879.5057	672307.5216	0.000	590154.6784	2205728.9272		
527	IR 77	24+05.53	140.454'	LT	590500.0940	2205966.9020	0.00	Property Corner	Existing Boundary Monuments	Property Corner 5/8" Rebar No Cap	527	179966.5742	672312.0118	0.000	590440.3355	2205743.6587		
528	IR 77	26+53.16	124.912'	RT	590747.7400	2206232.2540	0.00	Property Corner	Existing Boundary Monuments	Property Corner 5/8" Rebar No Cap	528	180042.0492	672392.8831	0.000	590687.9565	2206008.9838		
529	IR 77	21+04.62	124.837'	RT	590199.1910	2206232.2100	0.00	Property Corner	Existing Boundary Monuments	Property Corner 5/8" Rebar No Cap	529	179874.8681	672392.8696	0.000	590139.4630	2206008.9398		
532	IR 77	44+41.38	356.148'	RT	592611.4220	2206252.1520	0.00	Property Corner	Existing Boundary Monuments	Property Corner 5/8" Rebar No Cap	532	180610.0431	672398.9474	0.000	592551.4499	2206028.8798		
533	IR 77	47+26.09	300.590'	RT	592884.0800	2206113.0950	0.00	Property Corner	Existing Boundary Monuments	Property Corner 5/8" Rebar with YPC Dempsey 6914	533	180693.1411	672356.5670	0.000	592824.0803	2205889.8369		
534	IR 77	49+34.78	229.478'	RT	593067.2870	2205974.6780	0.00	Property Corner	Existing Boundary Monuments	Property Corner 5/8" Rebar with YPC Dempsey 6914	534	180748.9770	672314.3817	0.000	593007.2687	2205751.4339		
535	IR 77	54+73.45	144.623'	RT	593547.1970	2205681.3070	0.00	Property Corner	Existing Boundary Monuments	Property Corner 5/8" Rebar with YPC Dempsey 6914	535	180895.2391	672224.9711	0.000	593487.1302	2205458.0926		
536	IR 77	55+31.42	142.801'	RT	593599.9210	2205653.8490	0.00	Property Corner	Existing Boundary Monuments	Property Corner 5/8" Rebar with YPC Dempsey 6914	536	180911.3077	672216.6027	0.000	593539.8488	2205430.6374		
																TOTAL	2	

PROJECT ADJUSTMENT FACTOR BASED ON:

PROJECT SCALE FACTOR: 1.0001012102 STATE PLANE GRID (US SURVEY FEET) TO PROJECT GROUND (US SURVEY FEET)

PROJECT ADJUSTMENT FACTOR: 3.281165385

ENG./METRIC CONVERSION: 3.28083333 US SURVEY FEET TO METERS CONVERSION FACTOR

REV. BY	DATE	DESCRIPTION

DATE COMPLETED OCTOBER 1, 2021

CENTERLINE PLAT

SUBSET 3 TOTAL 34

DESIGN AGENCY
EUTHENICS
8235 Midlane Dr. | Cleveland, OH 44125

DESIGNER ARP

REVIEWER RSW 08/31/21

PROJECT ID 104983

SHEET P.371 TOTAL P.434

CUY-77-00.42 PART 1

MODEL: Sheet PAPERSIZE: 17x11 (in.) DATE: 3/4/2022 TIME: 2:05:17 PM USER: esmccaslin
F:\Jobs\1162-Miller Road Interchange\104983400-Engineering\RW\Sheets\104983_RC002.dgn

PROJECT: MILLER ROAD — NEW REFERENCE MONUMENTS TO BE SET DURING CONSTRUCTION — PID: 104983

Import Units:	Ground Coord?	☑ TRUE	Unit Conversion Factor1 (sft->m):	0.304800610	Unitless Ground to Grid Factor:	Unitless Factor:
	U.S. Survey FT	sft	Unit Conversion Factor2 (sft->sft):	1.000000000		
Output Unit1:	Meters	m	Adjustment Factor1:	0.304769764	0.999898800	Primary Project Control:
Output Unit2:	U.S. Survey FT	sft	Adjustment Factor2:	0.9998988		

EXPECTED TO BE DISTURBED DURING CONSTRUCTION

MONUMENTS TO BE SET DURING CONSTRUCTION

ITEM 623.05

GROUND COORDINATES - U.S. Survey FT

PROJECT coordinates are scaled from GRID coordinates about the Ohio North Zone grid point N=0, E=0 (N 39º 27' 01.76097", W 89º 28' 32.98476")

STATE PLANE GRID COORDINATES

Horiz. Datum: NAD83 (2011) Ohio State Plane, North Zone Vert. Datum: NAVD88
defined by GPS from CORS using NAVD88. All other elevations are established by leveling from .

NAME	Alignment Name	STATION	OFFSET (sft)	RT/LT	NORTH (sft)	EAST (sft)	ELEVATION (sft)	FEATURE	POINT TYPE	PROPOSED RIGHT-OF-WAY MONUMENTS	NAME	NORTH (m)	EAST (m)	ORTHO HT (m)	NORTH (sft)	EAST (sft)	REFERENCE MONUMENT
IPS 800	Miller Rd	66+30.00	63.50'	LT	592434.552	2205247.267	0.00	IPINS	Prop. Boundary Monuments	30" - 3/4" Iron Pin with 2" Aluminum Cap Stamped "ODOT R/W" and "EUTHENICS 8217"	IPS 800	180556.1385	672092.6888	0.000	592374.5978	2205024.0965	
IPS 801	Miller Rd	67+60.00	92.00'	LT	592435.426	2205377.264	0.00	IPINS	Prop. Boundary Monuments		IPS 801	180556.4049	672132.3080	0.000	592375.4717	2205154.0804	
IPS 802	Miller Rd/IR 77	68+28.34	92.00'	LT	592435.885	2205445.603	0.00	IPINS	Prop. Boundary Monuments		IPS 802	180556.5448	672153.1356	0.000	592375.9306	2205222.4124	
IPS 803	Miller Rd/IR 77	76+54.00	134.33'	LT	592575.756	2206270.341	0.00	IPINS	Prop. Boundary Monuments		IPS 803	180599.1732	672404.4908	0.000	592515.7875	2206047.0670	
IPS 804	Miller Rd	79+50.00	95.00'	LT	592443.422	2206567.237	0.00	IPINS	Prop. Boundary Monuments		IPS 804	180558.8418	672494.9757	0.000	592383.4669	2206343.9329	
IPS 805	Miller Rd	80+35.87	95.00'	LT	592443.999	2206653.101	0.00	IPINS	Prop. Boundary Monuments		IPS 805	180559.0177	672521.1445	0.000	592384.0438	2206429.7882	
IPS 806	Miller Rd	82+35.92	73.00'	LT	592445.343	2206853.148	0.00	IPINS	Prop. Boundary Monuments		IPS 806	180559.4273	672582.1128	0.000	592385.3877	2206629.8150	
IPS 807	Miller Rd	82+99.50	55.18'	LT	592445.770	2206916.729	0.00	IPINS	Prop. Boundary Monuments		IPS 807	180559.5574	672601.4903	0.000	592385.8146	2206693.3896	1
IPS 808	Miller Rd	83+21.01	87.31'	LT	592445.915	2206938.243	0.00	IPINS	Prop. Boundary Monuments		IPS 808	180559.6016	672608.0472	0.000	592385.9596	2206714.9014	1
IPS 809	Miller Rd	83+21.20	125.00'	LT	592445.916	2206938.425	0.00	IPINS	Prop. Boundary Monuments		IPS 809	180559.6019	672608.1026	0.000	592385.9606	2206715.0834	1
IPS 810	Miller Rd	84+14.20	125.00'	LT	592571.538	2207030.584	0.00	IPINS	Prop. Boundary Monuments		IPS 810	180597.8877	672636.1899	0.000	592511.5699	2206807.2330	1
IPS 811	Miller Rd	84+14.01	85.17'	LT	592531.706	2207030.660	0.00	IPINS	Prop. Boundary Monuments		IPS 811	180585.7481	672636.2131	0.000	592471.7419	2206807.3090	1
IPS 812	Miller Rd	84+49.01	50.00'	LT	592496.773	2207065.895	0.00	IPINS	Prop. Boundary Monuments		IPS 812	180575.1016	672646.9516	0.000	592436.8125	2206842.5405	1
IPS 813	Miller Rd	84+36.19	50.00'	RT	592446.689	2207053.417	0.00	IPINS	Prop. Boundary Monuments		IPS 813	180559.8375	672643.1487	0.000	592386.7335	2206830.0637	1
IPS 814	Miller Rd	84+02.19	83.84	RT	592446.460	2207019.418	0.00	IPINS	Prop. Boundary Monuments		IPS 814	180559.7677	672632.7868	0.000	592386.5046	2206796.0682	1
IPS 815	Miller Rd	84+01.90	145.00'	RT	592446.458	2207019.123	0.00	IPINS	Prop. Boundary Monuments		IPS 815	180559.7671	672632.6969	0.000	592386.5026	2206795.7732	
IPS 816	Miller Rd	83+91.90	145.00'	RT	592446.391	2207009.123	0.00	IPINS	Prop. Boundary Monuments		IPS 816	180559.7467	672629.6492	0.000	592386.4356	2206785.7742	
IPS 817	Miller Rd	83+31.90	143.95'	RT	592445.988	2206949.129	0.00	IPINS	Prop. Boundary Monuments		IPS 817	180559.6239	672611.3649	0.000	592386.0326	2206725.7863	
IPS 818	Miller Rd	83+28.75	102.41'	RT	592445.967	2206945.982	0.00	IPINS	Prop. Boundary Monuments		IPS 818	180559.6175	672610.4058	0.000	592386.0116	2206722.6396	1
IPS 819	Miller Rd	82+89.78	50.00'	RT	592445.705	2206907.005	0.00	IPINS	Prop. Boundary Monuments		IPS 819	180559.5376	672598.5268	0.000	592385.7496	2206683.6665	1
IPS 820	Miller Rd	75+91.81	50.00'	RT	592441.015	2206209.058	0.00	IPINS	Prop. Boundary Monuments		IPS 820	180558.1082	672385.8136	0.000	592381.0601	2205985.7902	1
IPS 821	IR 77	34+45.17	125.00'	RT	591539.130	2206083.908	0.00	IPINS	Prop. Boundary Monuments		IPS 821	180283.2410	672347.6717	0.000	591479.2664	2205860.6528	
IPS 822	IR 77	26+26.44	128.83'	LT	590721.008	2206107.344	0.00	IPINS	Prop. Boundary Monuments		IPS 822	180033.9021	672354.8143	0.000	590661.2272	2205884.0865	
IPS 823	IR 77	28+39.23	135.23'	LT	590933.794	2206107.332	0.00	IPINS	Prop. Boundary Monuments		IPS 823	180098.7529	672354.8106	0.000	590873.9916	2205884.0745	
IPS 824	IR 77	31+78.92	139.88'	LT	591273.407	2206101.792	0.00	IPINS	Prop. Boundary Monuments		IPS 824	180202.2566	672353.1222	0.000	591213.5703	2205878.5350	
IPS 825	IR 77	33+00.00	137.00'	LT	591394.305	2206095.194	0.00	IPINS	Prop. Boundary Monuments		IPS 825	180239.1027	672351.1113	0.000	591334.4560	2205871.9377	
IPS 826	IR 77	35+31.24	147.00'	LT	591624.691	2206075.501	0.00	IPINS	Prop. Boundary Monuments		IPS 826	180309.3174	672345.1095	0.000	591564.8187	2205852.2467	
IPS 827	IR 77	37+00.00	193.00'	LT	591792.226	2206055.27	0.00	IPINS	Prop. Boundary Monuments		IPS 827	180360.3770	672338.9437	0.000	591732.3368	2205832.0177	
IPS 828	IR 77	38+84.08	217.00'	LT	591974.207	2206027.586	0.00	IPINS	Prop. Boundary Monuments		IPS 828	180415.8393	672330.5064	0.000	591914.2994	2205804.3365	1
IPS 829	IR 77	42+00.00	272.00'	LT	592284.122	2205966.503	0.00	IPINS	Prop. Boundary Monuments		IPS 829	180510.2920	672311.8902	0.000	592224.1830	2205743.2597	1
IPS 830	Miller Rd	69+92.00	39.00'	RT	592436.985	2205609.258	0.00	IPINS	Prop. Boundary Monuments		IPS 830	180556.8800	672203.0127	0.000	592377.0305	2205386.0509	1
IPS 831	Miller Rd	83+35.90	125.00'	RT	592571.348	2207002.285	0.00	IPINS	Prop. Boundary Monuments		IPS 831	180597.8298	672627.5652	0.000	592511.3799	2206778.9369	1
IPS 832	Miller Rd	84+53.76	50.00'	RT	592496.805	2207070.645	0.00	IPINS	Prop. Boundary Monuments	30" - 3/4" Iron Pin with 2" Aluminum Cap Stamped "ODOT R/W" and "EUTHENICS 8217"	IPS 832	180575.1113	672648.3993	0.000	592436.8445	2206847.2900	1
IPS 833	Miller Rd	76+36.13	50.00'	RT	592491.312	2206253.037	0.00	IPINS	Prop. Boundary Monuments		IPS 833	180573.4372	672399.2171	0.000	592431.3520	2206029.7647	1
																TOTAL	17

CENTERLINE PLAT

REV. BY	DATE	DESCRIPTION

DATE COMPLETED OCTOBER 1, 2021

SUBSET 4 | TOTAL 34

DESIGN AGENCY
EUTHENICS 8235 Midway Dr. | Cleveland, OH 44236

DESIGNER ARP

REVIEWER RSW 10/01/21

PROJECT ID 104983

SHEET P.372 | TOTAL P.434

CUY-77-00.42 PART 1

MODEL: Sheet PAPERSIZE: 17x11 (in.) DATE: 3/4/2022 TIME: 2:05:31 PM USER: esmccaslin
F:\Jobs\11162-Miller Road Interchange\104983400-Engineering\RW\Sheets\104983_RC003.dgn

CUY-77-00.42
CITY OF BRECKSVILLE
BRECKSVILLE TOWNSHIP
COUNTY OF CUYAHOGA, OHIO
O.L. 55 & O.L. 60, T-5N., R-12W.

ARP	12-09-21	ADDED TEMPORARY 1-T1 AND CHANGED 1-T TO 1-T2
REV. BY	DATE	DESCRIPTION
DATE COMPLETED	OCTOBER 1, 2021	

HORIZONTAL SCALE IN FEET
0 75 150 300

PROPERTY MAP

BRECKSVILLE COMMUNITY IMPROVEMENT CORPORATION 603-21-089
6-N PARCEL 3
ROBERT & JENNIFER L. WAMPLER 603-19-014
JOSEPH A. CAPUTO JR. 603-19-015
STATE OF OHIO SCENIC EASEMENT
Ex LA & R/W
Ex WS
Ex SW
Ex U
BRECKSVILLE COMMUNITY IMPROVEMENT CORPORATION 603-21-088
PARKVIEW DR. (PRIVATE RD.)
Ex R/W
SW
O.L. 49
O.L. 48
O.L. 47
O.L. 54
O.L. 55
O.L. 56
KEYBANK NATIONAL ASSOCIATION, TRUSTEE 604-07-003 LAND LOCKED PARCEL
6-J
6-K
60'
30'
6-N PARCEL 2
⑥ THE SHERWIN-WILLIAMS COMPANY, AN OHIO CORPORATION BRECKSVILLE ROAD BRECKSVILLE, OH 44141 604-08-008 INST. #202010140720
COMMERCIAL RESEARCH & DEVELOPMENT PARCEL
VACANT
6-A 6-B 6-C 6-D 6-O
BRECKSVILLE COMMUNITY IMPROVEMENT CORPORATION 604-09-017
604-06-013
℄ EXISTING I.R. 77
℄ BRECKSVILLE ROAD (S.R. 21) 100' R/W
MILLERS CROSSING LLC 604-07-010
STATE OF OHIO SCENIC EASEMENT
CONSERVATION EASEMENT (TYP.)
FORCHIONE PROPERTIES, LLC 604-07-001
GRAND BAY APARTMENTS, LLC 604-06-014
GRAND BAY OF BRECKSVILLE 604-07-012
GRAND BAY OF BRECKSVILLE 604-07-011 COMMERCIAL
1-A 1-B 1-C 1-D 1-E 1-F 1-G 1-H 1-I
① GRAND BAY PLAZA LIMITED PARTNERSHIP S. EDGERTON ROAD BRECKSVILLE, OH 44141 604-07-002 VOL. 90-6339, PG. 21
℄ SOUTH EDGERTON RD. (70' R/W) VOL. 240 PG. 35
604-07-005
604-07-006 STATE OF OHIO
JONATHAN B. BRAMSON 604-07-008 (LANDLOCKED PARCEL)
6-N PARCEL 1
PROP. RAMP B-1
PROP. RAMP B-2
EX. RAMP B-1
EX. RAMP B-2
6-G 6-H 6-I 6-E 6-M 6-L
STA. 82+99.50, END LIMITED ACCESS LEFT
⑧ VA LAND, LLC, AN OHIO LIMITED LIABILITY COMPANY MILLER ROAD BRECKSVILLE, OH 44141 604-09-016 INST. #202010140721
MIXED USE PARCEL
VACANT
8-A 8-B 8-C
EX. 20' R/W EASEMENT
Ex SH
604-06-007
604-06-009
BLDG. LINE
O.L. 61
O.L. 60
O.L. 59
STA. 64+06.58
BEGIN LIMITED ACCESS (LEFT)
MILLER ROAD (VARIES)
STA. 43+59.44, ℄ I.R. 77
= STA. 73+11.96 ℄ MILLER ROAD
MATCH LINE SHEET 5

SUBSET	TOTAL
5	34

DESIGN AGENCY
EUTHENICS
8335 Midwest Dr. | Cleveland, OH 44125

DESIGNER	ARP
REVIEWER	RSW 10/01/21
PROJECT ID	104983
SHEET	TOTAL
P.373	P.434

CUY-77-00.42 PART 1

MODEL: Sheet PAPERSIZE: 17x11 (in.) DATE: 3/4/2022 TIME: 2:05:43 PM USER: esmccaslin
F:\Jobs\1162-Miller Road Interchange\104983\400-Engineering\RW\Sheets\104983_RM001.dgn

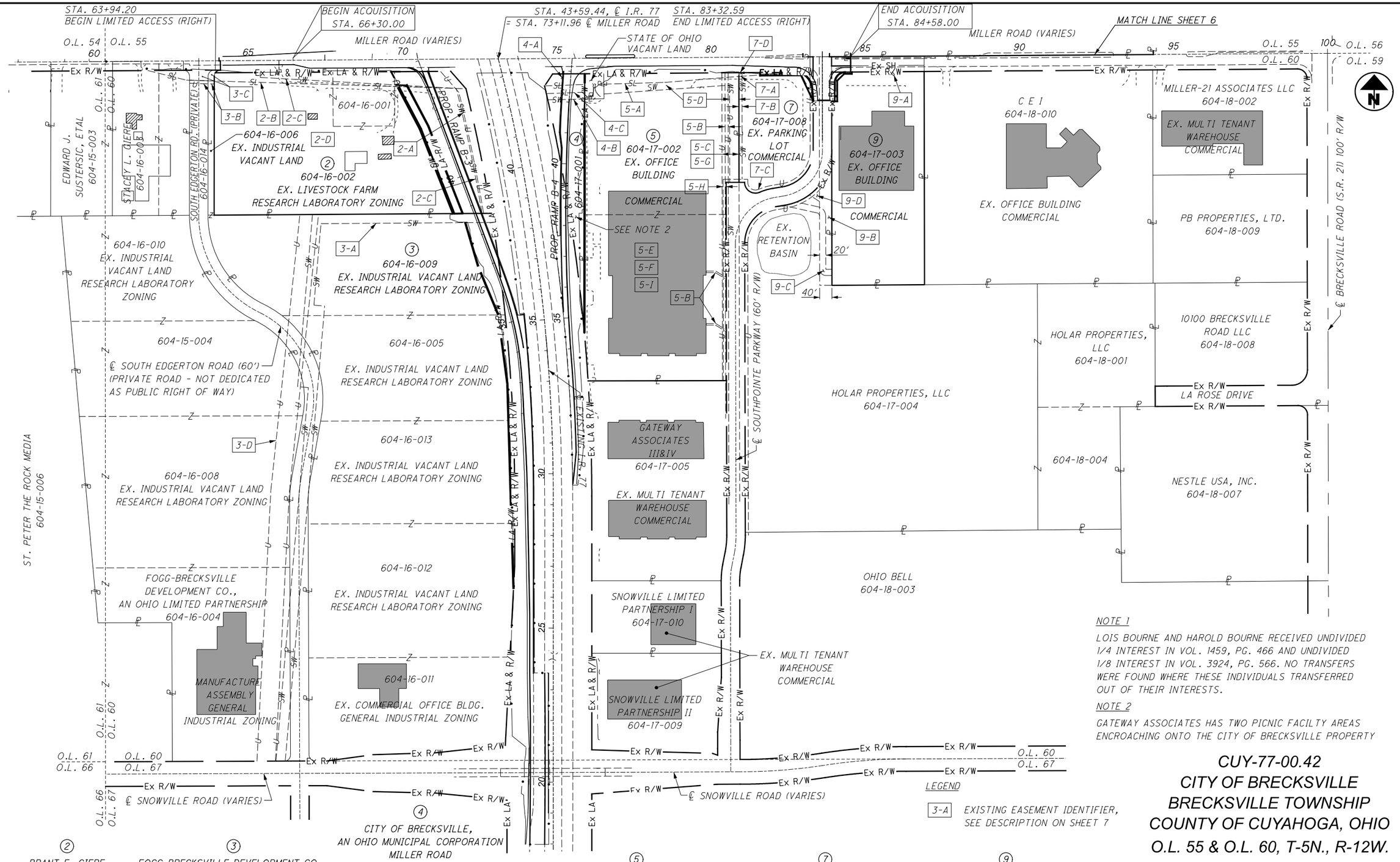

PROPERTY MAP

NOTE 1

LOIS BOURNE AND HAROLD BOURNE RECEIVED UNDIVIDED 1/4 INTEREST IN VOL. 1459, PG. 466 AND UNDIVIDED 1/8 INTEREST IN VOL. 3924, PG. 566. NO TRANSFERS WERE FOUND WHERE THESE INDIVIDUALS TRANSFERRED OUT OF THEIR INTERESTS.

NOTE 2

GATEWAY ASSOCIATES HAS TWO PICNIC FACILTY AREAS ENCROACHING ONTO THE CITY OF BRECKSVILLE PROPERTY

LEGEND

3-A EXISTING EASEMENT IDENTIFIER, SEE DESCRIPTION ON SHEET 7

CUY-77-00.42
CITY OF BRECKSVILLE
BRECKSVILLE TOWNSHIP
COUNTY OF CUYAHOGA, OHIO
O.L. 55 & O.L. 60, T-5N., R-12W.

(2) BRANT E. GIERE
6530 MILLER ROAD
BRECKSVILLE, OH 44141
604-16-001
INST. #201205150037
604-16-002
INST. #201203150002
(SEE NOTE 1)

(3) FOGG-BRECKSVILLE DEVELOPMENT CO., AN OHIO LIMITED PARTNERSHIP
SOUTH EDGERTON ROAD
BRECKSVILLE, OH 44141
604-16-005 / 604-16-009
604-16-012 / 604-16-013
VOL. 13861, PG. 77
VOL. 12544, PG. 113

(5) GATEWAY ASSOCIATES, LLC, AN OHIO LIMITED LIABILITY COMPANY
6750 MILLER ROAD
BRECKSVILLE, OH 44141
604-17-002
INST. #201909170416

(7) PNC BANK, NATIONAL ASSOCIATION
fka NATIONAL CITY CORPORATION,
A DELAWARE CORPORATION
SOUTHPOINTE
BRECKSVILLE, OH 44141
604-17-008
INST. #200110090844

(9) CROSSCOUNTRY MORTGAGE, INC.
AN OHIO CORPORATION
6850 MILLER ROAD
BRECKSVILLE, OH 44141
604-17-003
INST. #201005070623

REV. BY	DATE	DESCRIPTION

DATE COMPLETED OCTOBER 1, 2021

SUBSET 6 | TOTAL 34
DESIGN AGENCY
EUTHENICS
8230 Midwest Dr. | Cleveland, OH 44125
DESIGNER ARP
REVIEWER RSW 08/31/21
PROJECT ID 104983
SHEET P.374 | TOTAL P.434

CUY-77-00.42 PART 1

MODEL: Sheet PAPERSIZE: 17x11 (in.) DATE: 3/4/2022 TIME: 2:06:47 PM USER: esmccaslin
F:\Jobs\1162-Miller Road Interchange\104983\400-Engineering\RW\Sheets\104983_RM002.dgn

EXISTING EASEMENTS

(1) GRAND BAY PLAZA LIMITED PARTNERSHIP
604-07-002

1-A FORCHIONE PROPERTIES, LLC, AN OHIO LIMITED LIABILITY COMPANY
DRAINAGE EASEMENT
INST. #201107250697

1-B THE STATE OF OHIO
HIGHWAY AND UTILITY EASEMENT
(LIMITED ACCESS)
INST. #200203080138

1-C THE OHIO BELL TELEPHONE COMPANY
UNDERGROUND COMMUNICATION EASEMENT
VOL. 88-4119, PG. 25

1-D THE CITY OF BRECKSVILLE
STORM AND SANITARY EASEMENT
VOL. 87-4429, PG. 66

1-E THE STATE OF OHIO
SLOPE EASEMENT
VOL. 11865, PG. 733

1-F THE EAST OHIO GAS COMPANY
GAS PIPE LINE EASEMENT
VOL. 11827, PG. 925

1-G THE STATE OF OHIO
SLOPE EASEMENT
VOL. 11669, PG. 767

1-H CEI, OHIO BELL TELEPHONE CO.,
AND THE EAST OHIO GAS COMPANY
10' UTILITY EASEMENT
CUYAHOGA COUNTY SOUTH EDGERTON
ROAD DEDICATION VOL. 240, PG. 25

1-I CITY OF BRECKSVILLE
30' SEWER EASEMENT
CUYAHOGA COUNTY SOUTH EDGERTON
ROAD DEDICATION VOL. 240, PG. 25

EXISTING EASEMENTS

(2) BRANT E. GIERE
604-16-001 / 604-16-002

2-A FOGG-BRECKSVILLE DEVELOPMENT COMPANY
AN OHIO LIMITED PARTNERSHIP
UTILITY EASEMENT
INST. #200211130684

2-B THE STATE OF OHIO
SLOPE EASEMENT
VOL. 11689, PG. 965

2-C THE CITY OF BRECKSVILLE
SANITARY SEWER EASEMENT
VOL. 13662, PG. 793

2-D THE EAST OF OHIO GAS COMPANY
GAS PIPE LINE EASEMENT (BLANKET)
VOL. 419, PG. 460

EXISTING EASEMENTS

(3) FOGG-BRECKSVILLE DEVELOPMENT CO.,
AN OHIO LIMITED PARTNERSHIP
604-16-005 / 604-16-009
604-16-012 / 604-16-013

3-A THE CITY OF BRECKSVILLE
SANITARY SEWER EASEMENT
VOL. 13674, PG. 859

3-B THE OHIO BELL TELEPHONE COMPANY
UNDERGROUND COMMUNICATION EASEMENT
VOL. 13627, PG. 23

3-C THE STATE OF OHIO
SLOPE EASEMENT
VOL. 11689, PG. 965

3-D THE EAST OHIO GAS COMPANY
GAS PIPE LINE EASEMENT
VOL 14432, PG. 609

EXISTING EASEMENTS

(4) CITY OF BRECKSVILLE,
AN OHIO MUNICIPAL CORPORATION
604-17-001

4-A THE STATE OF OHIO
SLOPE EASEMENT
VOL. 11689, PG. 965

4-B THE CITY OF BRECKSVILLE
SANITARY SEWER EASEMENT
VOL. 13662, PG. 793

4-C THE CITY OF BRECKSVILLE
ADDITIONAL SLOPE EASEMENT
INST. #200110250481

EXISTING EASEMENTS

(5) GATEWAY ASSOCIATES, LLC,
AN OHIO LIMITED LIABILITY COMPANY
604-17-002

5-A THE STATE OF OHIO
SLOPE EASEMENT
VOL. 11680, PG. 175

5-B THE OHIO BELL TELEPHONE COMPANY
UNDERGROUND COMMUNICATION EASEMENT
VOL. 84-2965, PG. 17

5-C THE CITY OF BRECKSVILLE
WATER EASEMENT
VOL. 85-0745, PG. 3

5-D THE CITY OF BRECKSVILLE
SANITARY SEWER EASEMENT
VOL. 90-2137, PG. 22

5-E GATEWAY ASSOCIATES, AN OHIO PARTNERSHIP
DECLARATION OF EASEMENTS
VOL. 93-00135, PG. 56

5-F GATEWAY ASSOCIATES, AN OHIO PARTNERSHIP
AMENDED AND RESTATED
DECLARATION OF EASEMENTS
VOL. 95-01978, PG. 44

5-G THE CITY OF BRECKSVILLE
UTILITY EASEMENT
VOL. 95-01978, PG. 60

5-H THE CITY OF BRECKSVILLE
ELECTRIC EASEMENT
VOL. 96-01566, PG. 43

5-I GATEWAY ASSOCIATES III & IV, LTD.,
AN OHIO LIMITED LIABILITY COMPANY
MUTUAL STORM SEWER AND DETENTION AREA EASEMENT
INST. #201512010492

EXISTING EASEMENTS

(6) THE SHERWIN-WILLIAMS COMPANY,
AN OHIO CORPORATION
604-08-008

6-A THE EAST OHIO GAS COMPANY
GAS PIPE LINE EASEMENT (BLANKET)
VOL 919, PG. 458

6-B THE EAST OHIO GAS COMPANY
GAS PIPE LINE EASEMENT (BLANKET)
VOL 919, PG. 460

6-C THE EAST OHIO GAS COMPANY
GAS PIPE LINE EASEMENT (BLANKET)
VOL 1094, PG. 306

6-D THE EAST OHIO GAS COMPANY
GAS PIPE LINE EASEMENT (BLANKET)
VOL 1094, PG. 308

6-E THE STATE OF OHIO
SLOPE EASEMENT
VOL. 11684, PG. 795

6-F THE STATE OF OHIO
SLOPE EASEMENT
VOL. 11690, PG. 291

6-G THE STATE OF OHIO
SLOPE EASEMENT
VOL. 11693, PG. 387

6-H THE STATE OF OHIO
SEWER EASEMENT
VOL. 12175, PG. 261

6-I THE STATE OF OHIO
SEWER EASEMENT
VOL. 12350, PG. 769

6-J THE CITY OF BRECKSVILLE
AND THE CITY OF CLEVELAND
WATER MAIN AND SANITARY SEWER EASEMENT
VOL. 87-7254, PG. 66

6-K THE CITY OF BRECKSVILLE
SANITARY SEWER EASEMENT
VOL. 88-5013, PG. 47

6-L THE CITY OF BRECKSVILLE
HIGHWAY RIGHT OF WAY EASEMENT
VOL. 96-06809, PG. 9

6-M OHIO DEPARTMENT OF TRANSPORTATION
VS. PARKWOOD PLACE, LTD.
LIMITATION OF ACCESS TO 2 ACCESS POINTS
INST. # 200601310549

6-N WEST CREEK PRESERVATION COMMITTEE
CONSERVATION EASEMENT
INST. #201409170555

6-O BRECKSVILLE COMMUNITY IMPROVEMENT CORPORATION,
AN OHIO NON-PROFIT CORPORATION
DIGERONIMO DEVELOPMENT LLC, AN OHIO LIMITED
LIABILITY COMPANY
VA LAND, LLC, AN OHIO LIMITED LIABILITY COMPANY
AND THE SHERWIN-WILLIAMS COMPANY,
AN OHIO CORPORATION
EASEMENT AND DEVELOPMENT AGREEMENT
INST. #202010140722

EXISTING EASEMENTS

(7) PNC BANK, NATIONAL ASSOCIATION
fka NATIONAL CITY CORPORATION,
A DELAWARE CORPORATION
604-17-008

7-A THE STATE OF OHIO
SLOPE EASEMENT
VOL. 11688, PG. 637

7-B THE CITY OF BRECKSVILLE
SANITARY SEWER EASEMENT
VOL. 88-2336, PG. 22

7-C CEI, AMERITECH COMPANY, THE EAST OHIO
GAS COMPANY, AND CABLEVISION
10' UTILITY EASEMENT
SOUTHPOINTE PARKWAY DEDICATION
PLAT VOL. 277, PG. 07

7-D THE CITY OF BRECKSVILLE
SANITARY SEWER EASEMENT
VOL. 88-2338, PG. 27

EXISTING EASEMENTS

(8) VA LAND, LLC, AN OHIO
LIMITED LIABILITY COMPANY
604-09-016

8-A THE CITY OF BRECKSVILLE
HIGHWAY RIGHT OF WAY EASEMENT
VOL. 96-06809, PG. 9

8-B THE CITY OF BRECKSVILLE
EXISTING RIGHT OF WAY TURNOUT EASEMENT
VOL. 12308, PG. 261

8-C BRECKSVILLE COMMUNITY IMPROVEMENT CORPORATION,
AN OHIO NON-PROFIT CORPORATION
DIGERONIMO DEVELOPMENT LLC, AN OHIO LIMITED
LIABILITY COMPANY
VA LAND, LLC, AN OHIO LIMITED LIABILITY COMPANY
AND THE SHERWIN-WILLIAMS COMPANY,
AN OHIO CORPORATION
EASEMENT AND DEVELOPMENT AGREEMENT
INST. #202010140722

EXISTING EASEMENTS

(9) CROSSCOUNTRY MORTGAGE, INC.
AN OHIO CORPORATION
604-17-003

9-A THE OHIO BELL TELEPHONE COMPANY
UNDERGROUND COMMUNICATION EASEMENT
VOL. 92-4610, PG. 51

9-B BANK ONE, COLUMBUS, N.A.,
A NATIONAL BANKING ASSOCIATION
AND MILLER ROAD GROUP
INGRESS/EGRESS EASEMENT
VOL. 89-4713, PG. 2

9-C BANK ONE, COLUMBUS, N.A.,
A NATIONAL BANKING ASSOCIATION
AND MILLER ROAD GROUP
DRAINAGE EASEMENT
VOL. 89-4713, PG. 9

9-D JP MORGAN CHASE BANK, NATIONAL ASSOCIATION,
A NATIONAL BANKING ASSOCIATION
AMENDMENT TO EASEMENT (INGRESS/EGRESS)
INST. #200910281255

REV. BY	DATE	DESCRIPTION

DATE COMPLETED OCTOBER 1, 2021

PROPERTY MAP

SUBSET 7 | TOTAL 34

DESIGN AGENCY
EUTHENICS
8235 Hilliard Dr. | Cleveland, OH 44026

DESIGNER ARP

REVIEWER RSW 10/01/21

PROJECT ID 104983

SHEET P.375 | TOTAL P.434

CUY-77-00.42 PART 1

MODEL: Sheet PAPERSIZE: 17x11 (in.) DATE: 3/4/2022 TIME: 2:05:51 PM USER: esmccaslin
F:\Jobs\11624-Miller Road Interchange\104983400-Engineering\RW\Sheets\104983_RM003.dgn

TOTAL NUMBER OF :

8 OWNERSHIPS
22 PARCELS
1 TOTAL TAKES
1 OWNERSHIPS W/ STRUCTURES INVOLVED

NET RESIDUE = RECORD AREA - TOTAL PRO - NET TAKE

ALL AREAS IN ACRES

GRANTEE:

ALL RIGHT OF WAY ACQUIRED IN THE NAME OF
THE CITY OF BRECKSVILLE
UNLESS OTHERWISE SHOWN.

PARCEL NO.	OWNER	SHEET NO.	OWNERS RECORD	AUDITOR'S PARCEL	RECORD AREA	TOTAL P.R.O.	GROSS TAKE	P.R.O. IN TAKE	NET TAKE	STRUC-TURE	NET RESIDUE LEFT	NET RESIDUE RIGHT	TYPE FUND	REMARKS	AS ACQUIRED BOOK	AS ACQUIRED PAGE
1-WL	GRAND BAY PLAZA LIMITED PARTNERSHIP	11-15	VOL. 90-6339, PG. 21	604-07-002	9.053	0.0000	0.1073	0.0000	0.1073		8.9457		STATE	CONSOLIDATION PLAT FILED IN INST. #201106140269		
													/LOCAL	0.0095 ACRES OVERLAPS CITY OF BRECKSVILLE EXISTING		
														STORM AND SANITARY EASEMENT VOL. 87-4429 PG. 66		
														0.0587 ACRES OVERLAYS EAST OHIO GAS CO. GAS EXISTING		
														PIPE LINE EASEMENT VOL. 11827 PG. 925		
														0.0548 ACRES OVERLAYS THE STATE OF OHIO EXISTING		
														SLOPE EASEMENT VOL. 11865 PG. 733		
1-T1							0.1059	0.0000	0.1059					FOR TEMPORARY PAVEMENT AND GRADING		
1-T2							0.0189	0.0000	0.0189					FOR ROADSIDE AND ACCESS DRIVE GRADING		
2-WL	BRANT E. GIERE	11-15,27,28	INST# 201205150037	604-16-001	0.826	0.0000	0.0000	0.0000	0.0000			0.8260		DEFECT IN TITLE - LOIS BOURNE AND HARD BOURNE		
			INST# 201203150002	604-16-002	8.168	0.0000	1.4922	0.0000	1.4922			6.6758		RECEIVED UNDIVIDED 1/4 INTERESTS IN VOLUME 1459,		
														PAGE 466 AND UNDIVIDED 1/8 INTERESTS IN VOLUME 3924,		
	TOTAL				8.994	0.0000	1.4922	0.0000	1.4922			7.5018		PAGE 566. NO TRANSFERS WERE FOUND WHERE THESE		
														INDIVIDUALS TRANSFERRED OUT OF THEIR INTERESTS		
2-S				604-16-002		0.0000	0.3128	0.0000	0.3128							
							-		-							
2-U				604-16-001		0.0000	0.0028	0.0000	0.0028					GRANTEE: FOGG-BRECKSVILLE DEVELOPMENT CO. AN		
				604-16-002		0.0000	0.2865	0.0000	0.2865					OHIO LIMITED PARTNERSHIP		
	TOTAL					0.0000	0.2893	0.0000	0.2893					0.2806 ACRES OF 2-WL OVERLAPS EXISTING FOGG-		
														BRECKSVILLE DEVELOPMENT CO. UTILITY EASEMENT		
														INSTRUMENT #200211130684		
														0.4896 ACRES 2-WL AND 0.0288 ACRES 2-UV OVERLAPS		
														EXISTING CITY OF BRECKSVILLE SANITARY SEWER EASEMENT		
														VOLUME 13662, PAGE 793		
														1.4922 ACRES 2-WL AND 0.3128 ACRES OF 2-SV AND 0.2893		
														ACRES OF 2-UV OVERLAPS EXISTING THE EAST OHIO GAS		
														BLANKET EASEMENT VOLUME 919, PAGE 460		
														0.2148 ACRES 2-WL AND 0.0039 ACRES OF 2-SV AND 0.0320		
														ACRES OF 2-UV OVERLAP THE EXISTING STATE OF OHIO		
														SLOPE EASEMENT VOLUME 11689, PAGE 965		
3-WL1	FOGG-BRECKSVILLE DEVELOPMENT CO.,	21-28	VOL. 13861, PG. 77	604-16-012	6.609	0.0000	0.0311	0.0000	0.0311			6.5779		NO OHIO SECRETARY OF STATE FILINGS WERE FOUND		
3-WL2	AN OHIO LIMITED PARTNERSHIP		VOL. 12544, PG. 113	604-16-013	5.011	0.0000	0.1067	0.0000	0.1067			4.9043		FOR FOGG-BRECKSVILLE DEVELOPMENT COMPANY		
3-WL3				604-16-005	5.003	0.0000	0.1287	0.0000	0.1287			4.8743		FOGG-BRECKSVILLE DEVELOPMENT COMPANY INDUSTRIAL		
3-WL4				604-16-009	6.584	0.0000	0.4867	0.0000	0.4867			6.0973		PARK NO. 2 FILED IN INST. #201112090610		
														APN 604-16-006; 604-16-008; 604-16-011; 604-16-004;		
	TOTAL				23.207	0.0000	0.7532	0.0000	0.7532			22.4538		604-15-004; 604-16-010 AND 604-16-014 ARE ALL		
														CONTIGUOUS TO LISTED PARCELS.		
														APN 604-16-014 IS KNOWN AS SOUTH EDGERTON ROAD;		
														HOWEVER, IT IS A PRIVATE ROAD THAT HAS NOT BEEN		
														DEDICATED AS PUBLIC RIGHT OF WAY.		
														0.0628 ACRES OF 3-WL4 OVERLAPS THE EXISTING CITY OF		
														BRECKSVILLE SANITARY SEWER EASEMENT VOLUME 13674,		
													STATE	PAGE 859		
													/LOCAL			

TYPES OF TITLE LEGEND:
WL = FEE SIMPLE WITH LIMITATION OF ACCESS
WD = WARRANTY DEED
T = TEMPORARY EASEMENT
S = SEWER EASEMENT
U = UTILITY EASEMENT

NOTE: ALL TEMPORARY PARCELS TO BE OF 24 MONTH DURATION.

NOTE: UNDER NO CIRCUMSTANCES ARE TEMPORARY EASEMENTS TO BE USED FOR STORAGE OF MATERIAL OR EQUIPMENT BY THE CONTRACTOR UNLESS NOTED OTHERWISE.

REV. BY	DATE	DESCRIPTION
ARP	12-09-21	ADDED TEMPORARY 1-T1 AND CHANGED 1-T TO 1-T2

DATE COMPLETED OCTOBER 1, 2021

SUMMARY OF ADDITIONAL RIGHT OF WAY (PARCELS 1-3)

SUBSET 8 | TOTAL 34

DESIGN AGENCY
EUTHENICS
8235 Mohawk Dr. | Cleveland, OH 44129

DESIGNER ARP

REVIEWER RSW 08/31/21

PROJECT ID 104983

SHEET P.376 | TOTAL P.434

CUY-77-00.42 PART 1

MODEL: Sheet PAPERSIZE: 17x11 (in.) DATE: 3/4/2022 TIME: 2:05:55 PM USER: esmccaslin
F:\Jobs\11162-Miller Road Interchange\104983\400-Engineering\RW\Sheets\104983_RS001.dgn

NET RESIDUE = RECORD AREA - TOTAL PRO - NET TAKE

ALL AREAS IN ACRES

GRANTEE:

ALL RIGHT OF WAY ACQUIRED IN THE NAME OF
THE CITY OF BRECKSVILLE
UNLESS OTHERWISE SHOWN.

PARCEL NO.	OWNER	SHEET NO.	OWNERS RECORD	AUDITOR'S PARCEL	RECORD AREA	TOTAL P.R.O.	GROSS TAKE	P.R.O. IN TAKE	NET TAKE	STRUC-TURE	NET RESIDUE LEFT	NET RESIDUE RIGHT	TYPE FUND	REMARKS	AS ACQUIRED BOOK	AS ACQUIRED PAGE
4-WL	CITY OF BRECKSVILLE,	15,16,31-34	INST# 200907080150	604-17-001	1.1262 (C)	0.0000	1.1262	0.0000	1.1262			0.0000	STATE	TOTAL TAKE		
	AN OHIO MUNICIPAL CORPORATION												/LOCAL			
														NOTE: AUDITOR STATES ACREAGE AT 1.146 ACRES		
														DEED 200907080150 STATES ACREAGE AT 1.13161 ACRES		
														DEFECT IN TITLE - LOIS BOURNE AND HARD BOURNE		
														RECEIVED UNDIVIDED 1/4 INTERESTS IN VOLUME 1459,		
														PAGE 466 AND UNDIVIDED 1/8 INTERESTS IN VOLUME		
														3924, PAGE 566. NO TRANSFERS WERE FOUND WHERE		
														THESE INDIVIDUALS TRANSFERRED OUT OF THEIR		
														INTERESTS.		
														0.0983 ACRES OVERLAPS THE STATE OF OHIO EXISTING		
														SLOPE EASEMENT VOLUME 11689, PAGE 965.		
														0.0730 ACRES OVERLAPS THE STATE OF OHIO EXISTING		
														ADDITIONAL SLOPE EASEMENT INSTRUMENT #200110250481.		
														0.2303 ACRES OVERLAPS THE CITY OF BRECKSVILLE EXIST.		
														SANITARY SEWER EASEMENT VOLUME 13662, PAGE 793		
5	GATEWAY ASSOCIATES, LLC,	17,18	INST. #201909170416	604-17-002	10.599	0.0000								NO ADDITIONAL RIGHT OF WAY REQUIRED		
	AN OHIO LIMITED LIABILITY COMPANY													ALL PROPOSED WORK WITHIN EXISTING RIGHT OF WAY		
														OR EXISTING SLOPE EASEMENT AREA		
6-WL	THE SHERWIN-WILLIAMS COMPANY,	15-20	INST# 202010140720	604-08-008	118.839	0.0000	0.6317	0.0000	0.6317	S				SEE PLAT RECORDED IN INSTRUMENT #202010140717		
	AN OHIO CORPORATION													SEE DEVELOPMENT AGREEMENT IN INSTRUMENT #201109290331		
														EXISTING 10'x8' PRIVATELY OWNED WOOD REAL ESTATE		
6-WD		19,20					0.1185	0.0000	0.1185					ADVERTISING SIGN TO BE REMOVED		
	TOTAL				118.839	0.0000	0.7502	0.0000	0.7502		118.0888			SEE DECLARATION OF DEVELOPMENT GUIDELINES AND		
														RESTRICTIONS RECORDED IN INSTRUMENT 202010140718		
														THE SHERWIN-WILLIAMS COMPANY IS NOT A REGISTERED		
														ENTITY WITH THE OHIO SECRETARY OF STATE'S OFFICE		
6-T1		17,18					0.0249	0.0000	0.0249					FOR REGRADING THE ROADSIDE AND DITCH:		
														0.2613 ACRES		
														OVERLAPS THE STATE OF OHIO EXISTING SLOPE EASEMENT		
														VOLUME 11693, PAGE 387.		
6-T2		19,20					0.0187	0.0000	0.0187					FOR REGRADING THE ROADWAY:		
														0.1033 ACRES OVERLAPS THE STATE OF OHIO EXISTING		
														SLOPE EASEMENT VOLUME 11684, PAGE 295.		
														0.1393 ACRES OVERLAPS THE STATE OF OHIO EXISTING		
														SEWER EASEMENT VOLUME 12175, PAGE 261.		
														0.0457 ACRES OVERLAPS THE STATE OF OHIO EXISTING		
														SEWER EASEMENT VOLUME 12350, PAGE 769.		
														0.0114 ACRES OVERLAPS THE CITY OF BRECKSVILLE AND		
														CITY OF CLEVELAND EXISTING WATERMAIN AND SANITARY		
														SEWER EASEMENT VOLUME 87-7254, PAGE 66		
														0.0110 ACRES OVERLAPS THE STATE OF OHIO EXISTING		
														SLOPE EASEMENT VOLUME 11690, PAGE 291.		
														0.5426 ACRES OVERLAPS THE BLANKET GAS PIPE LINE		
														EASEMENTS FOR THE EAST OHIO		
														GAS COMPANY. VOLUME 919, PAGE 458; VOLUME 919,		
														PAGE 460, VOLUME 1094, PAGE 306; VOLUME 1094,		
													STATE	PAGE 308		
													/LOCAL			

(C) CALCULATED AREA

TYPES OF TITLE LEGEND:
WL = FEE SIMPLE WITH LIMITATION OF ACCESS
WD = WARRANTY DEED
T = TEMPORARY EASEMENT
S = SEWER EASEMENT
U = UTILITY EASEMENT

NOTE: ALL TEMPORARY PARCELS TO BE OF 24 MONTH DURATION.

NOTE: UNDER NO CIRCUMSTANCES ARE TEMPORARY EASEMENTS TO BE USED FOR STORAGE OF MATERIAL OR EQUIPMENT BY THE CONTRACTOR UNLESS NOTED OTHERWISE.

REV. BY	DATE	DESCRIPTION

DATE COMPLETED OCTOBER 1, 2021

SUMMARY OF ADDITIONAL RIGHT OF WAY (PARCELS 4-6)

SUBSET 9 | TOTAL 34

DESIGN AGENCY
EUTHENICS
8235 Mohawk Dr. | Cleveland, OH 44129

DESIGNER ARP

REVIEWER RSW 10/01/21

PROJECT ID 104983

SHEET P.377 | TOTAL P.434

CUY-77-00.42 PART 1

MODEL: Sheet PAPERSIZE: 17x11 (in.) DATE: 3/4/2022 TIME: 2:05:58 PM USER: esmccaslin
F:\Jobs\11162-Miller Road Interchange\104983\400-Engineering\RW\Sheets\104983_RS002.dgn

NET RESIDUE = RECORD AREA - TOTAL PRO - NET TAKE

ALL AREAS IN ACRES

GRANTEE:

ALL RIGHT OF WAY ACQUIRED IN THE NAME OF
THE CITY OF BRECKSVILLE
UNLESS OTHERWISE SHOWN.

SUMMARY OF ADDITIONAL RIGHT OF WAY (PARCELS 7-9)

PARCEL NO.	OWNER	SHEET NO.	OWNERS RECORD	AUDITOR'S PARCEL	RECORD AREA	TOTAL P.R.O.	GROSS TAKE	P.R.O. IN TAKE	NET TAKE	STRUC-TURE	NET RESIDUE LEFT	NET RESIDUE RIGHT	TYPE FUND	REMARKS	AS ACQUIRED BOOK	AS ACQUIRED PAGE
7-WL	PNC BANK, NATIONAL ASSOCIATION fka	17-20	INST. #200110090844	604-17-008	1.943	0.0000	0.0196	0.0000	0.0196			1.9234	STATE	SEE PLAT RECORDED IN INSTRUMENT #202010140717		
	NATIONAL CITY CORPORATION,												/LOCAL	0.0114 ACRES OF 7-WL AND 0.0077 ACRES OF 7-T OVERLAPS		
	A DELAWARE CORPORATION													EXISTING CEI, AMERITECH		
														COMPANY, THE EAST OHIO GAS COMPANY, AND		
														CABLEVISION UTILITY EASEMENT ON DEDICATION PLAT		
														VOLUME 277, PAGE 07		
7-T		19,20					0.0578	0.0000	0.0578					0.0001 ACRES OF 7-WL AND 0.0133 ACRES OF 7-T OVERLAPS		
														EXISTING STATE OF OHIO SLOPE EASEMENT VOLUME 11688,		
														PAGE 637		
8-WD	VA LAND, LLC, AN OHIO LIMITED	19,20	INST# 202010140721	604-09-016	25.055	2.0183 (C)	0.1326	0.0780	0.0546		22.9821			SEE PLAT RECORDED IN INSTRUMENT #202010140717		
	LIABILITY COMPANY													FOR RECORD AREA. SEE DEVELOPMENT AGREEMENT		
														RECORDED IN INSTRUMENT #201109290331.		
8-T		19,20					0.0209	0.0000	0.0209							
														FOR ROADSIDE GRADING:		
														0.0567 ACRES OF 8-WDV AND 0.0087 ACRES OF 8-T		
							-		-					OVERLAPS EXISTING CITY OF BRECKSVILLE		
														SANITARY SEWER EASEMENT VOLUME 88-5013, PAGE 47		
														(NOTE: THIS EASEMENT WILL BE RELEASED AFTER NEW		
														SANITARY SEWER IS COMPLETED BY D. GERONIMO		
														DEVELOPMENT, LLC.		
9-WD1	CROSSCOUNTRY MORTGAGE, INC.	19,20	INST# 201005070623	604-17-003	4.960	0.2066	0.0422	0.0422	0.0000					ENTIRE TAKE AREA IS PRO		
	AN OHIO CORPORATION															
9-WD2		19,20					0.0274	0.0000	0.0274	S				EXISTING 28"X18" PRIVATELY OWNED SIGN TO BE REMOVED		
	TOTAL				4.960	0.2066	0.0696	0.0422	0.0274			4.7260				
9-T		19,20					0.0243	0.0000	0.0243					FOR ROADSIDE GRADING		
														SEE AFFIDAVIT OF FACTS RELATING TO TITLE RECORDED		
														IN INSTRUMENT #201065140389		
													STATE			
													/LOCAL			

(C) CALCULATED AREA

TYPES OF TITLE LEGEND:
WL = FEE SIMPLE WITH LIMITATION OF ACCESS
WD = WARRANTY DEED
LA = LIMITED ACCESS EASEMENT
T = TEMPORARY EASEMENT
SE = SEWER EASEMENT
U = UTILITY EASEMENT

NOTE: ALL TEMPORARY PARCELS TO BE OF 24 MONTH DURATION.

NOTE: UNDER NO CIRCUMSTANCES ARE TEMPORARY EASEMENTS TO BE USED FOR STORAGE OF MATERIAL OR EQUIPMENT BY THE CONTRACTOR UNLESS NOTED OTHERWISE.

REV. BY	DATE	DESCRIPTION

DATE COMPLETED OCTOBER 1, 2021

SUBSET 10 | TOTAL 34

DESIGN AGENCY
EUTHENICS
8235 Mohawk Dr. | Cleveland, OH 44129

DESIGNER ARP

REVIEWER RSW 10/01/21

PROJECT ID 104983

SHEET P.378 | TOTAL P.434

CUY-77-00.42 PART 1

MODEL: Sheet PAPERSIZE: 17x11 (in.) DATE: 3/4/2022 TIME: 2:06:02 PM USER: esmccaslin
F:\Jobs\11162-Miller Road Interchange\104983\400-Engineering\RW\Sheets\104983_RS003.dgn

CUY-77-00.42 PART 1

MODEL: 104983_RT001 PAPERSIZE: 17x11 (in.) DATE: 3/4/2022 TIME: 2:06:08 PM USER: esmccaslin
F:\Jobs\162-Miller Road Interchange\104983\400-Engineering\RW\Sheets\104983_RT001.dgn

CUY-77-00.42
CITY OF BRECKSVILLE
BRECKSVILLE TOWNSHIP
COUNTY OF CUYAHOGA, OHIO
O.L. 55 & O.L. 60, T-5N., R-12W.

HORIZONTAL SCALE IN FEET
0 10 20 40

RIGHT OF WAY TOPO SHEET
MILLER ROAD STA. 61+50 TO STA. 66+50

BUILDING LINE

Ex R/W

℄ SOUTH EDGERTON ROAD (70' R/W)
VOL. 240, PG. 35

THE OHIO BELL TELEPHONE COMPANY UNDERGROUND COMMUNICATION EASEMENT VOL. 88-4119, PG. 25

CEI, OHIO BELL TELEPHONE CO., AND THE EAST OHIO GAS COMPANY 10' UTILITY EASEMENT CUYAHOGA COUNTY SOUTH EDGERTON ROAD DEDICATION VOL. 240, PG. 25

① GRAND BAY PLAZA LIMITED PARTNERSHIP
S. EDGERTON ROAD
BRECKSVILLE, OH 44141

604-07-002
VOL. 90-6339, PG. 21

COMMERCIAL
VACANT

GRAND BAY OF BRECKSVILLE
604-07-011

COMMERCIAL

STA. 63+41.26 ℄ MILLER ROAD
= R/W ℄ SOUTH EDGERTON ROAD

STA. 64+06.64 BEGIN LIMITED ACCESS LEFT

BEGIN WORK
STA. 64+19.00

THE STATE OF OHIO SLOPE EASEMENT VOL. 11689, PG. 767

CITY OF BRECKSVILLE
30' SEWER EASEMENT
CUYAHOGA COUNTY SOUTH EDGERTON ROAD DEDICATION VOL. 240, PG. 25

BEGIN ACQUISTION
STA. 66+30.00

THE STATE OF OHIO HIGHWAY AND UTILITY EASEMENT (LIMITED ACCESS) INST. #200203080138

PROP. 2' FLAT BOTTOM DITCH

1-WL

CONSTRUCTION LIMITS

1-T1

EX. WOODED AREA (REMOVE WITHIN CONSTRUCTION LIMITS)

PROP. SPDA (TO BE REMOVED)

℄ R/W & CONSTRUCTION MILLER ROAD (VARIES)

MATCH LINE STA. 66+50.00

O.L. 55
O.L. 60

N 89°36'54" E

62 63 64 65 66

CONC.

ASPH.

STA. 63+94.20
BEGIN LIMITED ACCESS RIGHT

THE STATE OF OHIO SLOPE EASEMENT VOL. 11689, PG. 965

THE OHIO BELL TELEPHONE CO. UNDERGROUND COMMUNICATION EASEMENT VOL. 13627, PG. 23

THE STATE OF OHIO SLOPE EASEMENT VOL. 11689, PG. 965

THE CITY OF BRECKSVILLE SANITARY SEWER EASEMENT VOL. 13662, PG. 793

② BRANT E. GIERE
6530 MILLER ROAD
BRECKSVILLE, OH 44141
604-16-002
INST. #201203150002

RESEARCH LABORATORY ZONING
EX. LIVESTOCK FARM

EX. PRIVATE SIGN "HORSE BARN ENTRANCE" (ENCROACHMENT)

EX. PRIVATE SIGN "STOP PRIVATE DRIVE" (ENCROACHMENT)

STACEY L. GIERE
604-16-003

℄ SOUTH EDGERTON ROAD (60')
(PRIVATE ROAD - NOT DEDICATED AS PUBLIC RIGHT OF WAY)

604-16-014
FOGG-BRECKSVILLE DEVELOPMENT CO., AN OHIO LIMITED PARTNERSHIP

604-16-006

ARP	12-09-21	ADDED TEMPORARY 1-T1
REV. BY	DATE	DESCRIPTION
DATE COMPLETED	OCTOBER 1, 2021	

SUBSET 11 | TOTAL 34

DESIGN AGENCY
EUTHENICS
8235 Mohawk Dr. | Cleveland, OH 44130

DESIGNER ARP

REVIEWER RSW 10-01-21

PROJECT ID 104983

SHEET P.379 | TOTAL P.434

CUY-77-00.42
CITY OF BRECKSVILLE
BRECKSVILLE TOWNSHIP
COUNTY OF CUYAHOGA, OHIO
O.L. 55 & O.L. 60, T-5N., R-12W.

HORIZONTAL SCALE IN FEET: 0, 10, 20, 40

STA. 63+45.15, 732.76' LT
℄ MILLER ROAD
540

THE OHIO BELL TELEPHONE COMPANY
UNDERGROUND COMMUNICATION EASEMENT
VOL. 88-4119, PG. 25

BUILDING LINE

Ex R/W

℄ SOUTH EDGERTON ROAD (70' R/W)
VOL. 240, PG. 35

CEI, OHIO BELL TELEPHONE CO., AND THE
EAST OHIO GAS COMPANY -10' UTILITY EASEMENT
CUYAHOGA COUNTY SOUTH EDGERTON
ROAD DEDICATION VOL. 240, PG. 25

1
GRAND BAY PLAZA
LIMITED PARTNERSHIP
S. EDGERTON ROAD
BRECKSVILLE, OH 44141

604-07-002
VOL. 90-6339, PG. 21
COMMERCIAL
VACANT

GRAND BAY OF BRECKSVILLE
604-07-011
COMMERCIAL

CITY OF BRECKSVILLE
30' SEWER EASEMENT
CUYAHOGA COUNTY SOUTH EDGERTON
ROAD DEDICATION VOL. 240, PG. 25

STA. 64+06.58, 30.00' LT.
BEGIN LIMITED ACCESS LEFT

THE STATE OF OHIO
HIGHWAY AND UTILITY
EASEMENT (LIMITED ACCESS)
INST. #200203080138

4,613 S.F.
(0.1059 AC.)
1-T1

65+44.00
70.00' LT

64+78.00
61.00' LT

136.07'
TMP
N87°44'14"E

N77°14'52"E
133.09'

S77°14'52"W
51.19'

IPS 800

1-WL

4,672 S.F.
(0.0173 AC.)

66+30.00, 63.50' LT
TPOB (1-WL & 1-T2)

29.72'
N89°25'49"W

66.61'
TMP
N81°50'59"E

N89°25'49"W
90.30'

502
I.P.F.
EX LA & R/W

65+39.71
65.00' LT

N71°28'37"E
61.03'
TMP

N86°24'53"E
35.83'
TMP

THE STATE OF OHIO
SLOPE EASEMENT
VOL. 11669, PG. 767

EX LA & R/W
35.00'
S00°04'26"E

63+84.23
40.00' LT

64+06.59
30.00' LT

64+20.00
42.00' LT

132.93'
S89°36'54"W

EX LA & R/W

65+39.52
30.00' LT

501
I.P.F.

STATE OF OHIO
WARRANTY DEED
VOL. 11865, PG. 727

531
I.P.F.
Ex R/W

STA. 60+37.44
℄ MILLER ROAD

A
CURVE DATA
Δ = 48°11'23"
Dc = 190°59'09"
R = 30.00'
T = 13.42'
L = 25.23'
CL = N66°17'24"W
CH = 24.49'

1274.52' (MEASURED AND USED STA. 60+37.44 TO ℄ I-77)
1274.50' (CUY-77-0.00 RECORD ℄ SURVEY PLAT)

N89°36'54"E
303.82'

592.56' (MON. BOX TO LEAD-IN POINT)

63.50' N00°23'06"W
(1-WL & 1-T2 LEAD-IN)

66+30.00

N89°36'54"E
288.74'

℄ R/W & CONSTRUCTION MILLER ROAD (VARIES)

MATCH LINE STA. 66+50.00

O.L. 54
O.L. 61
O.L. 55
O.L. 60
201

62
63
64
65
66

20' EXISTING L/A
BREAK FOR DRIVEWAY
STA. 65+92.00
STA. 66+12.00
ESMT 5

STA. 63+94.20, 39.00' RT.
BEGIN LIMITED ACCESS RIGHT

ESMT 4
THE STATE OF OHIO
SLOPE EASEMENT
VOL. 11689, PG. 965

THE CITY OF BRECKSVILLE
SANITARY SEWER EASEMENT
VOL. 13662, PG. 793

STA. 63+41.26 ℄ MILLER ROAD
= R/W ℄ SOUTH EDGERTON ROAD

THE STATE OF OHIO
SLOPE EASEMENT
VOL. 11689, PG. 965

THE OHIO BELL TELEPHONE CO.
UNDERGROUND COMMUNICATION EASEMENT
VOL. 13627, PG. 23

2
BRANT E. GIERE
6530 MILLER ROAD
BRECKSVILLE, OH 44141
604-16-002
INST. #201203150002
INST. #201205150037

RESEARCH LABORATORY ZONING
EX. LIVESTOCK FARM

ESMT 7
EAST OHIO GAS COMPANY
BLANKET GAS PIPE LINE EASEMENT
VOL. 919, PG. 460

STACEY L. GIERE
604-16-003

℄ SOUTH EDGERTON ROAD (60')
(PRIVATE ROAD - NOT DEDICATED
AS PUBLIC RIGHT OF WAY)

FOGG-BRECKSVILLE DEVELOPMENT CO.,
AN OHIO LIMITED PARTNERSHIP
604-16-014

604-16-006

(201) MON. BOX WITH 3/4" REBAR WITH YPC
C.W. COURTNEY FOUND AND USED FOR
℄ R/W MILLER ROAD

(501) 5/8" REBAR NO CAP FOUND AND USED
FOR PROPERTY LINE (N 0.08', W 0.09')

(502) 5/8" REBAR NO CAP FOUND AND USED
FOR PROPERTY LINE (N 0.25', W 0.28')

(531) 2" PIPE FOUND AND USED FOR R/W LINE
(N 0.047')

(540) MON. BOX WITH 5/8" REBAR WITH YPC
GARNETT S-5828 FOUND AND USED
FOR ℄ SOUTH EDGERTON ROAD

ARP	12-09-21	ADDED TEMPORARY 1-T1
REV. BY	DATE	DESCRIPTION
DATE COMPLETED		OCTOBER 1, 2021

RIGHT OF WAY BOUNDARY SHEET
MILLER ROAD STA. 61+50 TO STA. 66+50

SUBSET 12 | TOTAL 34

DESIGN AGENCY
EUTHENICS
8235 Mohawk Dr. | Cleveland, OH 44035

DESIGNER ARP

REVIEWER RSW 08/31/21

PROJECT ID 104983

SHEET P.380 | TOTAL P.434

CUY-77-00.42 PART 1

MODEL: RB001 PAPERSIZE: 17x11 (in.) DATE: 3/4/2022 TIME: 2:06:23 PM USER: esmccaslin
F:\Jobs\162-Miller Road Interchange\104983\400-Engineering\RW\Sheets\104983_RB001.dgn

ARP	12-09-21	ADDED TEMPORARY 1-T1 AND CHANGED 1-T TO 1-T2
REV. BY	DATE	DESCRIPTION
DATE COMPLETED	OCTOBER 1, 2021	

HORIZONTAL SCALE IN FEET
0 10 20 40

CUY-77-00.42
CITY OF BRECKSVILLE
BRECKSVILLE TOWNSHIP
COUNTY OF CUYAHOGA, OHIO
O.L. 55 & O.L. 60, T-5N., R-12W.

THE CITY OF BRECKSVILLE 30' STORM AND SANITARY EASEMENT VOL. 87-4429, PG. 66 (ESMT 1)

(1) GRAND BAY PLAZA LIMITED PARTNERSHIP S. EDGERTON ROAD BRECKSVILLE, OH 44141

604-07-002 VOL. 90-6339, PG. 21 COMMERCIAL VACANT

ESMT 2 THE EAST OHIO GAS CO. 60' GAS PIPE LINE EASEMENT VOL. 11827, PG. 925

BUILDING LINE

EX. DEBRIS PILE AND 12" CONCRETE SLAB (REMOVE WITHIN CONSTRUCTION LIMITS)

EX. WOODED AREA (REMOVE WITHIN CONSTRUCTION LIMITS)

CONSTRUCTION LIMITS

EX. WOODED AREA (REMOVE WITHIN CONSTRUCTION LIMITS)

THE STATE OF OHIO HIGHWAY AND UTILITY EASEMENT (LIMITED ACCESS) INST. #200203080138

PROP. 2' FLAT BOTTOM DITCH

THE STATE OF OHIO SLOPE EASEMENT VOL. 8865, PG. 733 (ESMT 3)

PROP. 2' FLAT BOTTOM DITCH

℄ EXISTING RAMP B-2

℄ CONSTRUCTION RAMP B-2

EX. WOODED/ VEGETATION AREA (REMOVE WITHIN CONSTRUCTION LIMITS)

RELOCATED 12" WATER

AT&T 9PD4°C (DND)

N 89°36'54" E

℄ R/W & CONSTRUCTION MILLER ROAD (VARIES)

STA. 69+02.37 ℄ MILLER ROAD = INTERSECTION EXIST. ℄ RAMP B-2

O.L. 55 O.L. 60

ABANDONED TELECOM

THE CITY OF BRECKSVILLE SANITARY SEWER EASEMENT VOL. 13662, PG. 793 (ESMT 5)

ESMT 6 FOGG-BRECKSVILLE DEVELOPMENT CO., AN OHIO LIMITED PARTNERSHIP UTILITY EASEMENT INST. #200211130684

ESMT 4 THE STATE OF OHIO SLOPE EASEMENT VOL. 11689, PG. 965

STA. 70+51.26 ℄ MILLER ROAD = INTERSECTION ℄ PROP. RAMP B-2 = INTERSECTION ℄ PROP. RAMP B-3

EX. VEGETATION AREA (REMOVE WITHIN CONSTRUCTION LIMITS)

TYPE 4 FENCE CROSSING

PROP. 18"

℄ CONSTRUCTION RAMP B-3

HW-2.2-36 32" X 49"

32" X 49"

PROP. 2' FLAT BOTTOM DITCH

EX. VEGETATION AREA (REMOVE WITHIN CONSTRUCTION LIMITS)

604-16-002 INST. #201203150002

(2) BRANT E. GIERE 6530 MILLER ROAD BRECKSVILLE, OH 44141 604-16-001 INST. #201203150002

RESEARCH LABORATORY ZONING EX. LIVESTOCK FARM

ESMT 7 THE EAST OHIO GAS CO. BLANKET GAS PIPE LINE EASEMENT VOL. 919, PG. 460

PROP. 5' CLT R/W FENCE

CONSTRUCTION LIMITS

MATCH LINE STA. 42+25.00 RAMP B-3

MATCH LINE STA. 66+50.00

MATCH LINE STA. 71+50.00

RIGHT OF WAY TOPO SHEET
MILLER ROAD STA. 66+50 TO STA. 71+50

SUBSET	TOTAL
13	34

DESIGN AGENCY
EUTHENICS 8235 Mohawk Dr. | Cleveland, OH 44026

DESIGNER	ARP
REVIEWER	RSW 10-01-21
PROJECT ID	104983
SHEET	P.381
TOTAL	P.434

CUY-77-00.42 PART 1

MODEL: 104983_RT002 PAPERSIZE: 17x11 (in.) DATE: 3/4/2022 TIME: 2:06:29 PM USER: esmccasiln
F:\Jobs\162-Miller Road Interchange\104983\400-Engineering\RW\Sheets\104983_RT002.dgn

ARP	12-09-21	ADDED TEMPORARY 1-T1 AND CHANGE 1-T TO 1-T2
REV. BY	DATE	DESCRIPTION
DATE COMPLETED	OCTOBER 1, 2021	

HORIZONTAL SCALE IN FEET
0 10 20 40

CUY-77-00.42
CITY OF BRECKSVILLE
BRECKSVILLE TOWNSHIP
COUNTY OF CUYAHOGA, OHIO
O.L. 55 & O.L. 60, T-5N., R-12W.

RIGHT OF WAY BOUNDARY SHEET
MILLER ROAD STA. 66+50 TO STA. 71+50

(1)
GRAND BAY PLAZA
LIMITED PARTNERSHIP
S. EDGERTON ROAD
BRECKSVILLE, OH 44141

604-07-002
VOL. 90-6339, PG. 21

COMMERCIAL
VACANT

ESMT 1
THE CITY OF BRECKSVILLE
30' STORM AND SANITARY EASEMENT
VOL. 87-4429, PG. 66

ESMT 2
THE EAST OHIO GAS CO.
60' GAS PIPE LINE EASEMENT
VOL. 11827, PG. 925

BUILDING LINE

506 I.P.F. Ex
STA. 50+00.78, 265.42' LT
℄ I-77

S 05°43'26" W
440.82'

Ex LA & R/W

67+40.00
100.00' LT
823 S.F.
(0.0189 AC.)

67+60.00
92.00' LT
1-T2

68+29.20
100.00' LT

8.05' S 05°43'26" W

68+28.34
92.00' LT

67+29.00
85.20' LT, TPOB (1-T)

N36°14'29"E
18.44'

89.20'
TMP
68.34'

N 89°36'54" E

IPS 802

10.16' S 05°43'26" W

507 I.P.F.

68+27.26
81.89' LT

16.88' S 83°10'16" W

68+10.49
80.00' LT

66+80.00
74.46' LT

133.09'
N 77°14'52" E
50.16'
LA-R/W

IPS 801

31.74'
N77°14'52"E

600

503 I.P.F.

SL

S77°14'52"W
51.19'

N87°44'14"E
136.07'

1-T1

TMP

Ex LA

Ex LA & R/W
100.69'

S 83°10'59" W

67+59.78
74.28' LT

29.72'
N 89°25'49" W

THE STATE OF OHIO
HIGHWAY AND UTILITY
EASEMENT (LIMITED ACCESS)
INST. #200203080138

66+59.72
63.00' LT

N 00°04'28" W
44.28'

Ex LA & R/W

1-WL
4,672 S.F.
(0.0173 AC.)

S 00°04'28" E
100.00'

ESMT 3
THE STATE OF OHIO
SLOPE EASEMENT
VOL. 11865, PG. 733

504 I.P.F.
Ex LA & R/W
S 89°36'54" W
50.68'

505 I.P.F.

67+59.54
30.00' LT

68+10.22
30.00' LT

℄ EXISTING RAMP B-2

℄ CONSTRUCTION RAMP B-2

STA. 70+51.26 ℄ MILLER ROAD
= INTERSECTION ℄ PROP. RAMP B-2
= INTERSECTION ℄ PROP. RAMP B-3

67 68 69 70 71

272.37'
N89°36'54"E
℄ R/W & CONSTRUCTION MILLER ROAD (VARIES)

STA. 69+02.37 ℄ MILLER ROAD
= INTERSECTION EXIST. ℄ RAMP B-2

954.56'
(MON. BOX TO LEAD-IN POINT)

69+92.00

89.63' N89°36'54"E

N89°36'54"E 59.26'

39.00' S00°23'06"E
(2-WL, 2-S, S-U, 3-WL1, 3-WL2
3-WL3 & 3-WL4 LEAD-IN)

N 89°36'54" E
28.17'

69+92.00, 39.00' RT, MILLER ROAD
P.P.O.B. (2-WL, 2-S & 2-U)

165.52'

N 89°36'54" E

69+63.83, 39.00' RT
MILLER ROAD

11.21'
U

IPS 830

69+75.04, 39.00' RT
MILLER ROAD

N00°23'06"W
21.59'

24.33'
N27°48'32"W

69+75.04, 60.59' RT
MILLER ROAD

208.07'

S27°48'32"E
51.19'

196.49'

70+15.58, 84.44' RT
MILLER ROAD
T.P.O.B. (2-SV)

2-U

34.99'
S86°50'45"E

69+80.66, 82.28' RT.
MILLER ROAD

N 27°48'32" W
161.64'

145.30'

2-WL
65,000 S.F.
(1.4922 AC.)

25'

2-U
12,603 S.F.
(0.2893 AC.)

30'

2-S
13,627 S.F.
(0.3128 AC.)

N 27°48'32" W

S 27°48'32" E

N 27°48'32" W

℄ CONSTRUCTION RAMP B-3

MATCH LINE STA. 42+25.00 RAMP B-3

MATCH LINE STA. 66+50.00

MATCH LINE STA. 71+50.00

• M.N.S.

ESMT 4
THE STATE OF OHIO
SLOPE EASEMENT
VOL. 11689, PG. 965

604-16-002
INST. #201203150002
INST. #201205150037

ESMT 5
THE CITY OF BRECKSVILLE
SANITARY SEWER EASEMENT
VOL. 13662, PG. 793

ESMT 6
FOGG-BRECKSVILLE
DEVELOPMENT CO., AN
OHIO LIMITED PARTNERSHIP
UTILITY EASEMENT
INST. #200211130684

ESMT 7
THE EAST OHIO GAS CO.
BLANKET GAS PIPE LINE EASEMENT
VOL. 919, PG. 460

(2)
BRANT E. GIERE
6530 MILLER ROAD
BRECKSVILLE, OH 44141
604-16-001
INST. #201203150002
INST. #201205150037

RESEARCH LABORATORY ZONING
EX. LIVESTOCK FARM

604-16-002
INST. #201203150002
INST. #201205150037

(503) 5/8" REBAR NO CAP FOUND AND USED FOR PROPERTY LINE (N 0.04', E 0.08')

(504) 5/8" REBAR NO CAP FOUND AND USED FOR PROPERTY LINE (N 0.20', E 0.02')

(505) 5/8" REBAR NO CAP FOUND AND USED FOR PROPERTY LINE (N 0.29', W 0.06')

(506) 5/8" REBAR NO CAP FOUND AND USED FOR PROPERTY LINE (N 0.00', W 0.03')

(507) 5/8" REBAR NO CAP FOUND AND USED FOR PROPERTY LINE (N 0.00', W 0.00')

(600) 5/8" REBAR (BENT) FOUND AND USED FOR PROPERTY LINE (S 0.09', E 0.00')

PARCEL	AFN # VOL. PG.	TYPE	TOTAL AREA (ACRES)	AREA OF OVERLAP (ACRES)				
				1-WL	1-T	2-WL	2-S	2-U
ESMT 1	VOL. 87-4429 PG. 66	SEWER	1.0564 (C)	0.0095	0.0006			
ESMT 2	VOL. 11827 PG. 925	UTILITY	1.3604 (C)	0.0587	0.0123			
ESMT 3	VOL. 11865 PG. 733	SLOPE	0.0548 (C)	0.0548				
ESMT 4	VOL. 11689 PG. 965	SLOPE	0.7499 (C)			0.2148	0.0039	0.0320
ESMT 5	VOL. 13662 PG. 793	SEWER	0.8128 (C)			0.4896		0.0288
ESMT 6	INST #200211130684	UTILITY	0.2806 (C)			0.2806		
ESMT 7	VOL. 919 PG. 460	UTILITY	8.9942 (C)			1.4922	0.3128	0.2893

(C) - INDICATES AREA CALCULATED FROM CAD, NOT FROM RECORD

SUBSET 14 | TOTAL 34

DESIGN AGENCY
EUTHENICS
8235 Mohawk Dr. | Cleveland, OH 44526

DESIGNER ARP

REVIEWER RSW 08-31-21

PROJECT ID 104983

SHEET P.382 | TOTAL P.434

CUY-77-00.42 PART 1

MODEL: RB002 PAPERSIZE: 17x11(in.) DATE: 3/4/2022 TIME: 2:06:41PM USER: esmccoslin
F:\Jobs\162-Miller Road Interchange\104983\400-Engineering\RW\Sheets\104983_RB002.dgn

CUY-77-00.42
CITY OF BRECKSVILLE
BRECKSVILLE TOWNSHIP
COUNTY OF CUYAHOGA, OHIO
O.L. 55 & O.L. 60, T-5N., R-12W.

HORIZONTAL SCALE IN FEET
0 10 20 40

RIGHT OF WAY TOPO SHEET
MILLER ROAD STA. 71+50 TO STA. 76+50

CUY-77-00.42 PART 1

MODEL: 104983_RT003 PAPERSIZE: 17x11 (in.) DATE: 3/4/2022 TIME: 2:06:47 PM USER: esmccaslin
F:\Jobs\162-Miller Road Interchange\104983\400-Engineering\RW\Sheets\104983_RT003.dgn

MATCH LINE STA. 71+50.00

MATCH LINE STA. 76+50.00

MATCH LINE STA. 42+00.00 I.R. 77

MATCH LINE STA. 42+00.00 RAMP B-4

℄ R/W & CONSTRUCTION I.R. 77

℄ R/W & CONSTRUCTION MILLER ROAD (VARIES)

STA. 75+61.43 ℄ MILLER ROAD
= INTERSECTION EXIST. ℄ RAMP B-1

STA. 73+11.96 ℄ MILLER ROAD
= STA. 43+59.44 ℄ I.R. 77

STA. 75+51.43 ℄ MILLER ROAD
= INTERSECTION PROP. ℄ RAMP B-4

330.9699

CONSTRUCTION LIMITS

RELOCATED 12" WATER

RELOCATED 12" WATER

EX. (RELOCATE)

EX. WOODED/VEGETATION AREA (REMOVE WITHIN CONSTRUCTION LIMITS)

EX. VEGETATION AND BRUSH AREA (REMOVE WITHIN CONSTRUCTION LIMITS)

EX. VEGETATION & BRUSH AREA (REMOVE WITHIN CONSTRUCTION LIMITS)

8' CHAIN LINK PRIVATE FENCE (REMOVE)

EX. VEGETATION AREA (REMOVE WITHIN CONSTRUCTION LIMITS)

EX. VEGETATION AREA (REMOVE WITHIN CONSTRUCTION LIMITS)

AT&T 9PD4"C

ABANDONED TELECOM AT&T 9PD4"C

ABANDONED TELECOM

N 89°36'54" E

O.L. 55

O.L. 60

EXISTING RAMP B-1

RAMP B-4

PROP. 18" SAN

EX. 18"

EX. 21"

PROP. 2' FLAT BOTTOM DITCH

HW-2.2-36

PROP. 5' CLT R/W FENCE

TYPE 4 FENCE CROSSING

PROP. 2' FLAT BOTTOM DITCH

1'-2'ϕ DUMPED ROCK (REMOVE WITHIN CONSTRUCTION LIMITS)

I.R. 77 SOUTHBOUND

I.R. 77 NORTHBOUND

Ex LA & R/W

STATE OF OHIO VACANT

GENERAL INDUSTRIAL ZONING
MUNICIPAL OWNED VACANT LAND

COMMERCIAL
EX. OFFICE BUILDING

RESEARCH LABORATORY ZONING
EX. LIVESTOCK FARM

ESMT 4
THE STATE OF OHIO
SLOPE EASEMENT
VOL. 11689, PG. 965

ESMT 5
THE CITY OF BRECKSVILLE
SANITARY SEWER EASEMENT
VOL. 13662, PG. 793

ESMT 6
FOGG-BRECKSVILLE
DEVELOPMENT CO.,
AN OHIO LIMITED
PARTNERSHIP
UTILITY EASEMENT
INST. #200211130684

ESMT 8
THE STATE OF OHIO
SLOPE EASEMENT
VOL. 11689, PG. 965

ESMT 9
THE STATE OF OHIO
ADDITIONAL SLOPE EASEMENT
INST. 200110250481

ESMT 10
THE CITY OF BRECKSVILLE
SANITARY SEWER EASEMENT
VOL. 13662, PG. 793

BRANT E. GIERE
6530 MILLER ROAD
BRECKSVILLE, OH 44141
604-16-002
INST. #201203150002

JONATHAN B. BRAMSON
604-07-003

THE SHERWIN-WILLIAMS COMPANY
AN OHIO CORPORATION
BRECKSVILLE ROAD
BRECKSVILLE, OH 44141
604-08-005
INST. #202010140720

(4) CITY OF BRECKSVILLE,
AN OHIO MUNICIPAL CORPORATION
MILLER ROAD
BRECKSVILLE, OH 44141
604-17-001
INST. #200907080150

(5) GATEWAY ASSOCIATES, LLC,
AN OHIO LIMITED LIABILITY COMPANY
6750 MILLER ROAD
BRECKSVILLE, OH 44141
604-17-002
INST. #201909170416

REV. BY	DATE	DESCRIPTION
DATE COMPLETED		OCTOBER 1, 2021

SUBSET 15 | TOTAL 34

DESIGN AGENCY
EUTHENICS
8235 Mohawk Dr. | Cleveland, OH 44129

DESIGNER ARP

REVIEWER RSW 10-01-21

PROJECT ID 104983

SHEET P.383 | TOTAL P.434

CUY-77-00.42
CITY OF BRECKSVILLE
BRECKSVILLE TOWNSHIP
COUNTY OF CUYAHOGA, OHIO
O.L. 55 & O.L. 60, T-5N., R-12W.

(509) 5/8" REBAR WITH PPC NPC PS 8160 8668 FOUND AND USED FOR PROPERTY LINE

(532) 5/8" REBAR NO CAP FOUND AND USED FOR PROPERTY LINE (N 0.55', W 0.20')

(700) MON. BOX WITHOUT IRON PIN MON. BOX IS TO BE REMOVED AND REPLACED AND 3/4" IRON PIN INSTALLED

P.T. STA. 58+02.36 (MEASURED AND USED)
P.T. STA. 58+02.70 (RECORD
CUY-77-0.00 ℄ SURVEY PLAT)

℄ R/W I-77 CURVE DATA

(SURVEYED AND USED)	(CUY-77-0.00 RECORD ℄ SURVEY PLAT)
P.I. = 43+95.81	P.I. = 43+96.00
Δ = 28°44'59"	Δ = 28°45'11"
Dc = 1°00'00"	Dc = 1°00'00"
R = 5729.58'	R = 5729.58'
T = 1468.43'	T = 1468.60'
L = 2874.98'	L = 2875.30'
E = 185.18'	E = 185.22'
CL = 2844.91'	
CH = N14°22'41"W	

℄ R/W & CONSTRUCTION I.R. 77

℄ EXISTING RAMP B-1

NOTE: CUY-77-0.00 CENTERLINE SURVEY PLAT SHOWS INTERSECTION STATIONING AT STA. 73+11.94 ℄ MILLER ROAD= STA. 43+59.54 ℄ I-77

STA. 73+11.96 ℄ MILLER ROAD (USED)
= STA. 43+59.44 ℄ I.R. 77 (USED)

STA. 75+61.43 ℄ MILLER ROAD
= INTERSECTION EXIST. ℄ RAMP B-1

STA. 75+51.43 ℄ MILLER ROAD
= INTERSECTION PROP. ℄ RAMP B-4

2688.64' ℄ I-77 TO ℄ BRECKSVILLE ROAD (MEASURED AND USED)
2688.06' (CUY-77-0.00 RECORD ℄ SURVEY PLAT)

1274.52' (MEASURED AND USED STA. 60+37.44 TO ℄ I-77)
1274.50' (CUY-77-0.00 RECORD ℄ SURVEY PLAT)

324.12' TO MON. BOX STA. 76+36.08 (CALC. AND USED)
323.23' TO MON. BOX STA. 76+36.08 (CUY-77-0.00 RECORD ℄ SURVEY PLAT)

MATCH LINE STA. 71+50.00

72 N89°36'54"E 260.70'

73

74 N89°36'54"E 239.47'

75

75+92.21 N89°36'54"E 30.78'

76 43.87' N89°36'54"E

76+36.08

MATCH LINE STA. 76+50.00

℄ R/W & CONSTRUCTION MILLER ROAD (VARIES)

STA 75+00.00
OFF 0.00' LT

10.00' N89°36'54"E

℄ CONSTRUCTION RAMP B-4

50.00' S00°04'05"W (4-WL LEAD-IN)

2408.39' (MON. BOX TO LEAD-IN POINT)

2364.52' (MON. BOX TO ℄ ORIGINAL BRECKSVILLE ROAD (CALC. AND USED)
2364.83' CUY-77-0.00 RECORD ℄ SURVEY PLAT

JONATHAN B. BRAMSON
604-07-008

76+36.25
169.56' LT

532 I.P.F.

Ex LA & R/W

LA-R

S27°07'21"E
39.45'

N00°19'36"W

SW SL

6-WL
27,518 S.F.
(0.6317 AC.)

119.56'

IPS 833

76+36.13
50.00' LT

399.69'
S89°36'54"W

N00°19'36"W 50.00'

700

6

THE SHERWIN-WILLIAMS COMPANY,
AN OHIO CORPORATION
BRECKSVILLE ROAD
BRECKSVILLE, OH 44141
604-08-008
INST. #202010140720

71+57.52, 39.00' RT - MILLER ROAD
43+58.77, 159.28' LT - I.R. 77

165.52'
N89°36'54"E

S 41°02'57" E
Ex LA & R/W

ESMT 6
FOGG-BRECKSVILLE DEVELOPMENT CO., AN OHIO LIMITED PARTNERSHIP
UTILITY EASEMENT
INST. #200211130684

25'

75.32'

72+06.60, 96.13' RT - MILLER ROAD
42+90.00, 125.00' LT - I.R. 77

SW SL U

ESMT 5
THE CITY OF BRECKSVILLE
SANITARY SEWER EASEMENT
VOL. 13662, PG. 793

30'

2-WL
65,000 S.F.
(1.4922 AC.)

CURVE DATA
Δ = 04°12'40"
Dc = 1°01'20"
R = 5604.58'
T = 206.06'
L = 411.93'
CL = 411.84'
CH = S11°31'26"E

Ex LA & R/W

2

BRANT E. GIERE
6530 MILLER ROAD
BRECKSVILLE, OH 44141
604-16-002
INST. #201203150002
INST. #201205150037

RESEARCH LABORATORY ZONING
EX. LIVESTOCK FARM

MATCH LINE STA. 42+00.00 I.R. 77

74+87.92, 50.00' RT - MILLER ROAD
42+70.98, 159.44' RT - I.R. 77

N 89°36'54" E
Ex LA & R/W

43

103.89'

IPS 820
Ex LA & R/W
75+91.81, 50.00' RT
TPOB (4-WL)

ESMT 8
THE STATE OF OHIO
SLOPE EASEMENT
VOL. 11689, PG. 965

N 34°02'19" E
46.84'
Ex LA & R/W

4-WL
49,058 S.F.
(1.1262 AC.)

4

GENERAL INDUSTRIAL ZONING
MUNICIPAL OWNED VACANT LAND

74+61.44, 88.64' RT - MILLER ROAD
42+40.00, 125.00' RT - I.R. 77

CURVE DATA
Δ = 07°56'50"
Dc = 00°58'43"
R = 5854.58'
T = 406.69'
L = 812.07'
CL = 811.42'
CH = N09°09'21"W

SL

THE STATE OF OHIO
ADDITIONAL SLOPE EASEMENT
INST. #200110250481 ESMT 9

THE CITY OF BRECKSVILLE
SANITARY SEWER EASEMENT
VOL. 13662, PG. 793 ESMT 10

81.94'

LA R/W

840.60' S00°04'05"W

STATE OF OHIO
VACANT

509 O.I.P.F.

5

COMMERCIAL
EX. OFFICE BUILDING

4

CITY OF BRECKSVILLE,
AN OHIO MUNICIPAL CORPORATION
MILLER ROAD
BRECKSVILLE, OH 44141
604-17-001
INST. #200907080150

(TOTAL TAKE)

5

GATEWAY ASSOCIATES, LLC,
AN OHIO LIMITED LIABILITY COMPANY
6750 MILLER ROAD
BRECKSVILLE, OH 44141
604-17-002
INST. #201909170416

PARCEL	AFN # VOL. PG.	TYPE	TOTAL AREA (ACRES)	AREA OF OVERLAP (ACRES)		
				4-WL		
ESMT 8	VOL. 11689 PG. 965	SLOPE	0.0983 (C)	0.0983		
ESMT 9	INST #200110250481	SLOPE	0.0730 (C)	0.0730		
ESMT 10	VOL. 13662 VOL. 793	SEWER	0.2303 (C)	0.2303		

(C) - INDICATES AREA CALCULATED FROM CAD, NOT FROM RECORD

REV. BY	DATE	DESCRIPTION
DATE COMPLETED		OCTOBER 1, 2021

HORIZONTAL SCALE IN FEET
0 10 20 40

RIGHT OF WAY BOUNDARY SHEET
MILLER ROAD STA. 71+50 TO STA. 76+50

SUBSET 16 | TOTAL 34

DESIGN AGENCY
EUTHENICS
8230 Mohawk Dr. | Cleveland, OH 44125

DESIGNER ARP

REVIEWER RSW 10-01-21

PROJECT ID 104983

SHEET P.384 | TOTAL P.434

CUY-77-00.42 PART 1

MODEL: RB003 PAPERSIZE: ITxII (in.) DATE: 3/4/2022 TIME: 2:06:58 PM USER: esmccaslin
F:\Jobs\ll62-Miller Road Interchange\104983\400-Engineering\RW\Sheets\104983_RB003.dgn

REV. BY	DATE	DESCRIPTION
DATE COMPLETED	OCTOBER 1, 2021	

CUY-77-00.42
CITY OF BRECKSVILLE
BRECKSVILLE TOWNSHIP
COUNTY OF CUYAHOGA, OHIO
O.L. 55 & O.L. 60, T-5N., R-12W.

HORIZONTAL SCALE IN FEET
0 10 20 40

RIGHT OF WAY TOPO SHEET
MILLER ROAD STA. 76+50 TO STA. 81+50

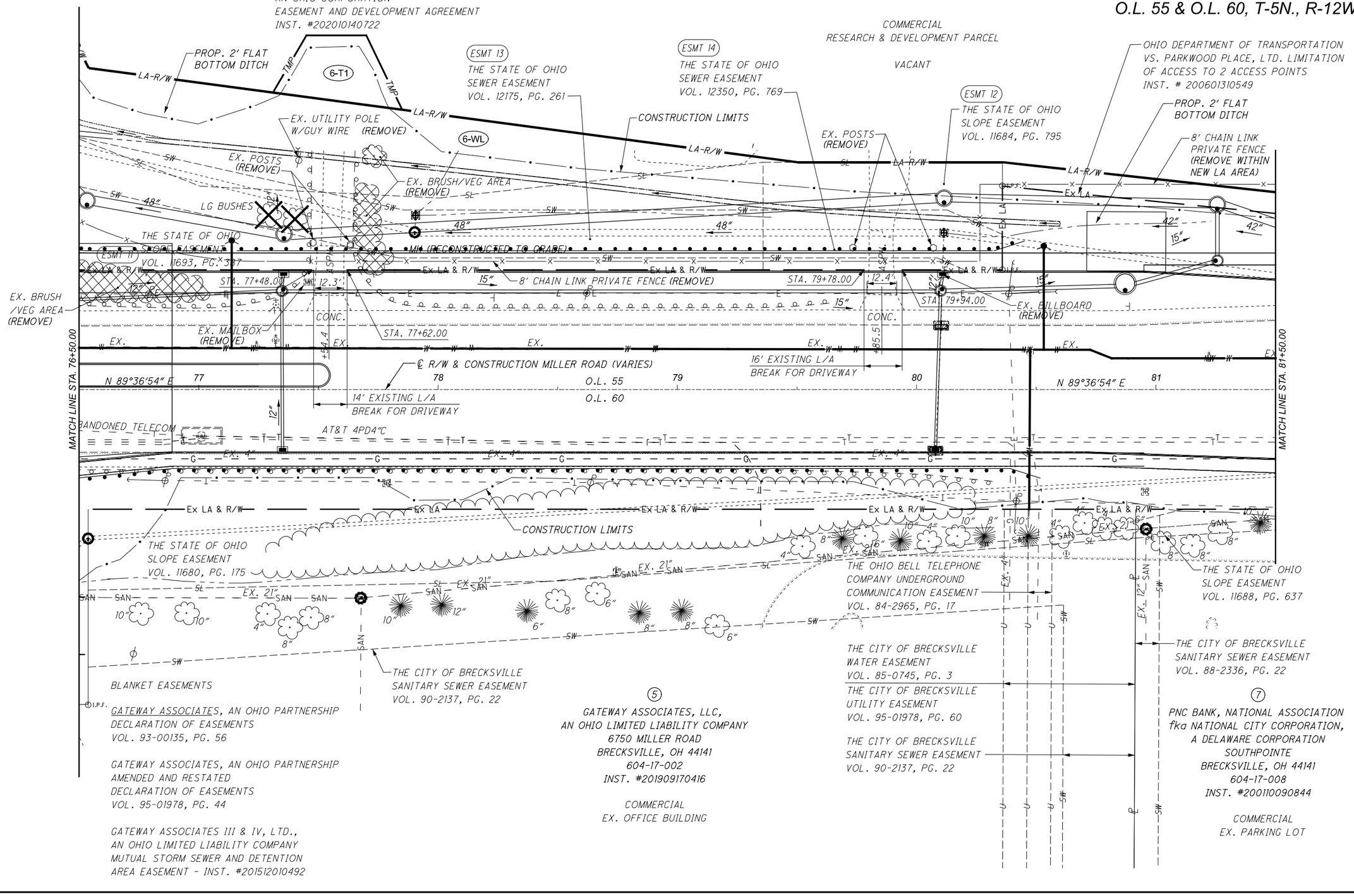

SUBSET	TOTAL
17	34

DESIGN AGENCY
EUTHENICS
8235 Mohawk Dr. | Cleveland, OH 44035

DESIGNER ARP
REVIEWER RSW 10-01-21
PROJECT ID 104983
SHEET P.385 TOTAL P.434

CUY-77-00.42 PART 1

MODEL: 104983_RT004 PAPERSIZE: 17x11(in.) DATE: 3/4/2022 TIME: 2:07:05 PM USER: esmccaslin
F:\Jobs\162-Miller Road Interchange\104983\400-Engineering\RW\Sheets\104983_RT004.dgn

REV. BY	DATE	DESCRIPTION
DATE COMPLETED	OCTOBER 1, 2021	

CUY-77-00.42
CITY OF BRECKSVILLE
BRECKSVILLE TOWNSHIP
COUNTY OF CUYAHOGA, OHIO
O.L. 55 & O.L. 60, T-5N., R-12W.

HORIZONTAL SCALE IN FEET
0 10 20 40

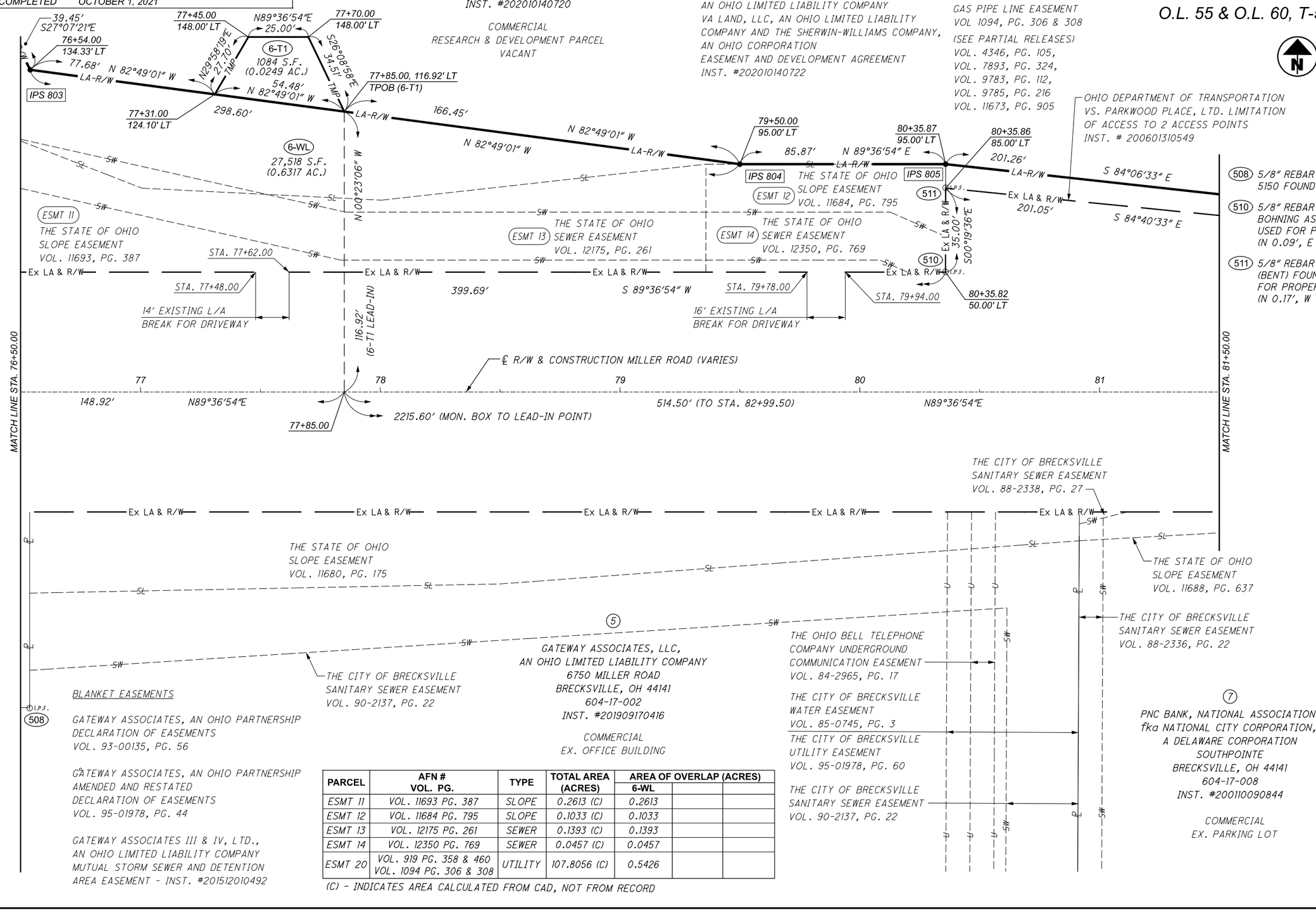

(6)
THE SHERWIN-WILLIAMS COMPANY,
AN OHIO CORPORATION
BRECKSVILLE ROAD
BRECKSVILLE, OH 44141
604-08-008
INST. #202010140720

COMMERCIAL
RESEARCH & DEVELOPMENT PARCEL
VACANT

BLANKET EASEMENTS

BRECKSVILLE COMMUNITY IMPROVEMENT CORPORATION, AN OHIO NON-PROFIT CORPORATION
DIGERONIMO DEVELOPMENT LLC, AN OHIO LIMITED LIABILITY COMPANY
VA LAND, LLC, AN OHIO LIMITED LIABILITY COMPANY AND THE SHERWIN-WILLIAMS COMPANY, AN OHIO CORPORATION
EASEMENT AND DEVELOPMENT AGREEMENT
INST. #202010140722

ESMT 20
THE EAST OHIO GAS COMPANY
GAS PIPE LINE EASEMENT
VOL 919, PG. 458 & 460
THE EAST OHIO GAS COMPANY
GAS PIPE LINE EASEMENT
VOL 1094, PG. 306 & 308
(SEE PARTIAL RELEASES)
VOL. 4346, PG. 105,
VOL. 7893, PG. 324,
VOL. 9783, PG. 112,
VOL. 9785, PG. 216
VOL. 11673, PG. 905

(508) 5/8" REBAR WITH YPC SH&A 5150 FOUND (N 0.19', W 0.00')

(510) 5/8" REBAR WITH YPC DG BOHNING ASSOC. FOUND AND USED FOR PROPERTY LINE (N 0.09', E 0.00')

(511) 5/8" REBAR WITH NO CAP (BENT) FOUND AND USED FOR PROPERTY LINE (N 0.17', W 0.01')

BLANKET EASEMENTS

GATEWAY ASSOCIATES, AN OHIO PARTNERSHIP
DECLARATION OF EASEMENTS
VOL. 93-00135, PG. 56

GATEWAY ASSOCIATES, AN OHIO PARTNERSHIP
AMENDED AND RESTATED
DECLARATION OF EASEMENTS
VOL. 95-01978, PG. 44

GATEWAY ASSOCIATES III & IV, LTD.,
AN OHIO LIMITED LIABILITY COMPANY
MUTUAL STORM SEWER AND DETENTION
AREA EASEMENT - INST. #201512010492

(5)
GATEWAY ASSOCIATES, LLC,
AN OHIO LIMITED LIABILITY COMPANY
6750 MILLER ROAD
BRECKSVILLE, OH 44141
604-17-002
INST. #201909170416

COMMERCIAL
EX. OFFICE BUILDING

(7)
PNC BANK, NATIONAL ASSOCIATION
fka NATIONAL CITY CORPORATION,
A DELAWARE CORPORATION
SOUTHPOINTE
BRECKSVILLE, OH 44141
604-17-008
INST. #200110090844

COMMERCIAL
EX. PARKING LOT

PARCEL	AFN # VOL. PG.	TYPE	TOTAL AREA (ACRES)	AREA OF OVERLAP (ACRES)		
				6-WL		
ESMT 11	VOL. 11693 PG. 387	SLOPE	0.2613 (C)	0.2613		
ESMT 12	VOL. 11684 PG. 795	SLOPE	0.1033 (C)	0.1033		
ESMT 13	VOL. 12175 PG. 261	SEWER	0.1393 (C)	0.1393		
ESMT 14	VOL. 12350 PG. 769	SEWER	0.0457 (C)	0.0457		
ESMT 20	VOL. 919 PG. 358 & 460 VOL. 1094 PG. 306 & 308	UTILITY	107.8056 (C)	0.5426		

(C) - INDICATES AREA CALCULATED FROM CAD, NOT FROM RECORD

RIGHT OF WAY BOUNDARY SHEET
MILLER ROAD STA. 76+50 TO STA. 81+50

SUBSET 18 | TOTAL 34
DESIGN AGENCY EUTHENICS 8235 Mohawk Dr. | Cleveland, OH 44146
DESIGNER ARP
REVIEWER RSW 10-01-21
PROJECT ID 104983
SHEET P.386 | TOTAL P.434

CUY-77-00.42 PART 1
MODEL: RB004 PAPERSIZE: 17x11(in.) DATE: 3/4/2022 TIME: 2:08:05 PM USER: esmccasiln
F:\Jobs\162-Miller Road Interchange\104983\400-Engineering\RW\Sheets\104983_RB004.dgn

CUY-77-00.42
CITY OF BRECKSVILLE
BRECKSVILLE TOWNSHIP
COUNTY OF CUYAHOGA, OHIO
O.L. 55 & O.L. 60, T-5N., R-12W.

HORIZONTAL SCALE IN FEET
0 10 20 40

RIGHT OF WAY TOPO SHEET
MILLER ROAD STA. 81+50 TO STA. 86+50

⑥ THE SHERWIN-WILLIAMS COMPANY, AN OHIO CORPORATION
BRECKSVILLE ROAD
BRECKSVILLE, OH 44141
604-08-008
INST. #202010140720
COMMERCIAL
RESEARCH & DEVELOPMENT PARCEL
VACANT

ESMT 15 — THE CITY OF BRECKSVILLE AND THE CITY OF CLEVELAND WATER MAIN AND SANITARY SEWER EASEMENT VOL. 87-7254, PG. 66

OHIO DEPARTMENT OF TRANSPORTATION VS. PARKWOOD PLACE, LTD. LIMITATION OF ACCESS TO 2 ACCESS POINTS INST. # 200601310549

ESMT 16 — THE STATE OF OHIO SLOPE EASEMENT VOL. 11690, PG. 291

8' CHAIN LINK PRIVATE FENCE (DO NOT DISTURB OUTSIDE OF PROPOSED RIGHT OF WAY AREA)

10'X8' WOODED REAL ESTATE SIGN (REMOVE)

8' CHAIN LINK PRIVATE FENCE (REMOVE WITHIN NEW R/W LIMITS)

℄ ACCESS ROAD

ESMT 19 — THE CITY OF BRECKSVILLE SANITARY SEWER EASEMENT. VOL. 88-5013, PG. 47
SEWER EASEMENT AREA ON VA LAND, LLC TO BE RELEASED AFTER NEW SANITARY SEWER IS CONSTRUCTED BY DIGERONIMO DEVELOPMENT, LLC

6' CHAIN LINK PRIVATE FENCE (DO NOT DISTURB OUTSIDE OF PROPOSED RIGHT OF WAY AREA)

⑧ VA LAND, LLC.
AN OHIO LIMITED LIABILITY COMPANY
MILLER ROAD
BRECKSVILLE, OH 44141
604-09-016
INST. #202010140721
MIXED USE PARCEL
VACANT

BLANKET EASEMENTS

BRECKSVILLE COMMUNITY IMPROVEMENT CORPORATION, AN OHIO NON-PROFIT CORPORATION
DIGERONIMO DEVELOPMENT LLC, AN OHIO LIMITED LIABILITY COMPANY
VA LAND, LLC, AN OHIO LIMITED LIABILITY COMPANY AND THE SHERWIN-WILLIAMS COMPANY, AN OHIO CORPORATION
EASEMENT AND DEVELOPMENT AGREEMENT
INST. #202010140722

CONSTRUCTION LIMITS

6' CHAIN LINK PRIVATE FENCE (REMOVE WITHIN NEW R/W LIMITS)

THE CITY OF BRECKSVILLE HIGHWAY RIGHT OF WAY EASEMENT VOL. 96-06809, PG. 9

NEW VA LAND, LLC ℄

℄ R/W & CONSTRUCTION MILLER ROAD (VARIES)

EX. DELINEATOR (REMOVE)

EX. DELINEATOR (TYP.) (REMOVE)

STA. 83+62.60 ℄ MILLER ROAD
= STA. 20+00.00 ℄ SOUTHPOINTE PARKWAY

MATCH LINE STA. 81+50.00

N 89°36'54" E

O.L. 55

O.L. 60

N 00°06'32" W

℄ SOUTHPOINTE PARKWAY (60' R/W)

CITY OF BRECKSVILLE LIMITED WARRANTY DEED VOL. 96-00565, PG. 2

THE OHIO BELL TELEPHONE COMPANY UNDERGROUND COMMUNICATION EASEMENT VOL. 92-4610, PG. 51

EX SIGN (DO NOT DISTURB)

END ACQUISITION
STA. 84+58.00

END WORK
STA. 84+53.76

28"X18" WOODED PRIVATE SIGN (REMOVE)

ESMT 17 — THE STATE OF OHIO SLOPE EASEMENT VOL. 11688, PG. 637

⑦ PNC BANK, NATIONAL ASSOCIATION
fka NATIONAL CITY CORPORATION,
A DELAWARE CORPORATION
SOUTHPOINTE
BRECKSVILLE, OH 44141
604-17-008
INST. #200110090844
COMMERCIAL
EX. PARKING LOT

CONSTRUCTION LIMITS

ESMT 18 — 10' UTILITY EASEMENT
CEI, AMERITECH COMPANY, THE EAST OHIO GAS COMPANY, AND CABLEVISION
SOUTHPOINTE PARKWAY DEDICATION
PLAT VOL. 277, PG. 07

⑨ CROSSCOUNTRY MORTGAGE, INC.
AN OHIO CORPORATION
6850 MILLER ROAD
BRECKSVILLE, OH 44141
604-17-003
INST. #201005070623
COMMERCIAL
EX. OFFICE BUILDING

REV. BY	DATE	DESCRIPTION
DATE COMPLETED		OCTOBER 1, 2021

SUBSET 19 | TOTAL 34

DESIGN AGENCY
EUTHENICS
8235 Mohawk Dr. | Cleveland, OH 44130

DESIGNER ARP

REVIEWER RSW 10-01-21

PROJECT ID 104983

SHEET P.387 | TOTAL P.434

CUY-77-00.42 PART 1

MODEL: 104983_RT005 PAPERSIZE: 17x11 (in.) DATE: 3/4/2022 TIME: 2:08:14 PM USER: esmccaslin
F:\Jobs\162-Miller Road Interchange\104983\400-Engineering\RW\Sheets\104983_RT005.dgn

CUY-77-00.42
CITY OF BRECKSVILLE
BRECKSVILLE TOWNSHIP
COUNTY OF CUYAHOGA, OHIO
O.L. 55 & O.L. 60, T-5N., R-12W.

HORIZONTAL SCALE IN FEET: 0, 10, 20, 40

RIGHT OF WAY BOUNDARY SHEET
MILLER ROAD STA. 81+50 TO STA. 86+50

(6) THE SHERWIN-WILLIAMS COMPANY, AN OHIO CORPORATION
BRECKSVILLE ROAD
BRECKSVILLE, OH 44141
604-08-008
INST. #202010140721
COMMERCIAL
RESEARCH & DEVELOPMENT PARCEL
VACANT

(8) VA LAND, LLC.
AN OHIO LIMITED LIABILITY COMPANY
MILLER ROAD
BRECKSVILLE, OH 44141
604-09-016
INST. #202010140721
MIXED USE PARCEL
VACANT

(7) PNC BANK, NATIONAL ASSOCIATION fka NATIONAL CITY CORPORATION, A DELAWARE CORPORATION
SOUTHPOINTE
BRECKSVILLE, OH 44141
604-17-008
INST. #200110090844
COMMERCIAL
EX. PARKING LOT

(9) CROSSCOUNTRY MORTGAGE, INC.
AN OHIO CORPORATION
6850 MILLER ROAD
BRECKSVILLE, OH 44141
604-17-003
INST. #201005070623
COMMERCIAL
EX. OFFICE BUILDING

ESMT 15 — THE CITY OF BRECKSVILLE AND THE CITY OF CLEVELAND 60' WATER MAIN AND SANITARY SEWER EASEMENT VOL. 87-7254, PG. 66

ESMT 16 — THE STATE OF OHIO SLOPE EASEMENT VOL. 11690, PG. 291

ESMT 17 — THE STATE OF OHIO SLOPE EASEMENT VOL. 11688, PG. 637

ESMT 18 — 10' UTILITY EASEMENT CEI, AMERITECH COMPANY, THE EAST OHIO GAS COMPANY, AND CABLEVISION SOUTHPOINTE PARKWAY DEDICATION PLAT VOL. 277, PG. 07

ESMT 19 — THE CITY OF BRECKSVILLE SANITARY SEWER EASEMENT. VOL. 88-5013, PG. 47 SEWER EASEMENT AREA ON VA LAND, LLC TO BE RELEASED AFTER NEW SANITARY SEWER IS CONSTRUCTED BY DIGERONIMO DEVELOPMENT, LLC

OHIO DEPARTMENT OF TRANSPORTATION VS. PARKWOOD PLACE, LTD. LIMITATION OF ACCESS TO 2 ACCESS POINTS INST. # 200601310549

THE CITY OF BRECKSVILLE HIGHWAY RIGHT OF WAY EASEMENT VOL. 96-06809, PG. 9

CITY OF BRECKSVILLE LIMITED WARRANTY DEED VOL. 96-00565, PG. 2

THE OHIO BELL TELEPHONE COMPANY UNDERGROUND COMMUNICATION EASEMENT VOL. 92-4610, PG. 51

BLANKET EASEMENT & DEVELOPMENT AGREEMENT

BRECKSVILLE COMMUNITY IMPROVEMENT CORPORATION, AN OHIO NON-PROFIT CORPORATION
DIGERONIMO DEVELOPMENT LLC, AN OHIO LIMITED LIABILITY COMPANY
VA LAND, LLC, AN OHIO LIMITED LIABILITY COMPANY AND THE SHERWIN-WILLIAMS COMPANY, AN OHIO CORPORATION
EASEMENT AND DEVELOPMENT AGREEMENT
INST. #202010140722

(203) MON. BOX WITH 3/4" REBAR FOUND AND USED FOR ℄ MILLER ROAD

(512) 5/8" REBAR WITH YPC DG BOHNING ASSOC. FOUND AND USED FOR PROPERTY LINE (N 0.09', E 0.00')

(513) 5/8" REBAR WITH YPC UNLEDGEABLE FOUND AND USED FOR PROPERTY LINE (N 0.08', W 0.07')

(519) 5/8" REBAR NO CAP FOUND AND USED FOR PROPERTY LINE (N 0.11', W 0.01')

(520) 5/8" REBAR WITH OPC NEFF & ASSOC. 8622 - METCALF FOUND AND USED FOR PROPERTY LINE (S 0.10', W 0.00')

(521) 5/8" REBAR NO CAP FOUND AND USED FOR PROPERTY LINE (N 4.58', E 0.23')

(523) 5/8" REBAR NO CAP FOUND AND USED FOR PROPERTY LINE (N 0.15')

(537) 5/8" REBAR NO CAP FOUND AND USED FOR PROPERTY LINE (N 0.00', E 0.00')

(701) EXIST. MON. BOX WITHOUT I.P. FOUND REPLACE WITH NEW MON. BOX WITH 3/4" I.P.

(202) STA. 83+61.13, 303.01' RT ℄ MILLER ROAD =STA. 23+03.01 ℄ SOUTHPOINTE PARKWAY EXIST. MON. BOX WITH 3/4" REBAR FOUND AND USED FOR ℄ SOUTHPOINTE PARKWAY

[A] CURVE DATA
Δ = 67°03'47"
Dc = 163°42'08"
R = 35.00'
T = 23.19'
L = 40.97'
CL = N33°25'22"E
CH = 38.67'

[B] CURVE DATA
Δ = 90°16'34"
Dc = 163°42'08"
R = 35.00'
T = 35.17'
L = 55.15'
CL = S45°14'49"E
CH = 49.62'

[C] CURVE DATA
Δ = 89°43'26'
Dc = 168°31'01"
R = 34.00'
T = 33.84'
L = 53.24'
CL = S44°45'11"W
CH = 47.97'

[D] CURVE DATA
Δ = 64°36'48"
Dc = 93°46'20"
R = 61.10'
T = 38.64'
L = 68.90'
CL = N37°01'32"W
CH = 65.31'

PARCEL	AFN # VOL. PG.	TYPE	TOTAL AREA (ACRES)	AREA OF OVERLAP (ACRES)				
				6-WL	7-WL	7-T	8-T	8-WD
ESMT 15	VOL. 87-7254 PG. 66	WATER/SEWER	3.7112 (C)	0.0114				
ESMT 16	VOL. 11690 PG. 291	SLOPE	0.0110 (C)	0.0110				
ESMT 17	VOL. 11688 PG. 637	SLOPE	0.0292 (C)		0.0001	0.0133		
ESMT 18	PLAT VOL. 277 PG. 07	UTILITY	0.1328 (C)		0.0114	0.0077		
ESMT 19	VOL. 88-5013 PG. 47	SEWER	0.4613 (C)				0.0019	0.0635

(C) - INDICATES AREA CALCULATED FROM CAD, NOT FROM RECORD

REV. BY	DATE	DESCRIPTION
DATE COMPLETED		OCTOBER 1, 2021

SUBSET 20 | TOTAL 34

DESIGN AGENCY: EUTHENICS, 8235 Mohawk Dr, Cleveland, OH 44130

DESIGNER: ARP
REVIEWER: RSW 10-01-21
PROJECT ID: 104983
SHEET P.388 | TOTAL P.434

CUY-77-00.42 PART 1

MODEL: RB005 PAPERSIZE: 17x11 (in.) DATE: 3/4/2022 TIME: 2:08:25 PM USER: esmccasiln
F:\Jobs\162-Miller Road Interchange\04983\400-Engineering\RW\Sheets\04983_RB005.dgn

CUY-77-00.42
CITY OF BRECKSVILLE
BRECKSVILLE TOWNSHIP
COUNTY OF CUYAHOGA, OHIO
O.L. 55 & O.L. 60, T-5N., R-12W.

REV. BY	DATE	DESCRIPTION
DATE COMPLETED	OCTOBER 1, 2021	

HORIZONTAL SCALE IN FEET
0 10 20 40

RIGHT OF WAY TOPO SHEET
I.R. 77 STA. 22+00 LT. TO STA. 27+00 LT.

604-16-011

EX. COMMERCIAL OFFICE BLDG.
GENERAL INDUSTRIAL ZONING

(3)
FOGG-BRECKSVILLE DEVELOPMENT CO.,
AN OHIO LIMITED PARTNERSHIP
SOUTH EDGERTON ROAD
BRECKSVILLE, OH 44141

604-16-012

EX. INDUSTRIAL VACANT LAND
RESEARCH LABORATORY ZONING

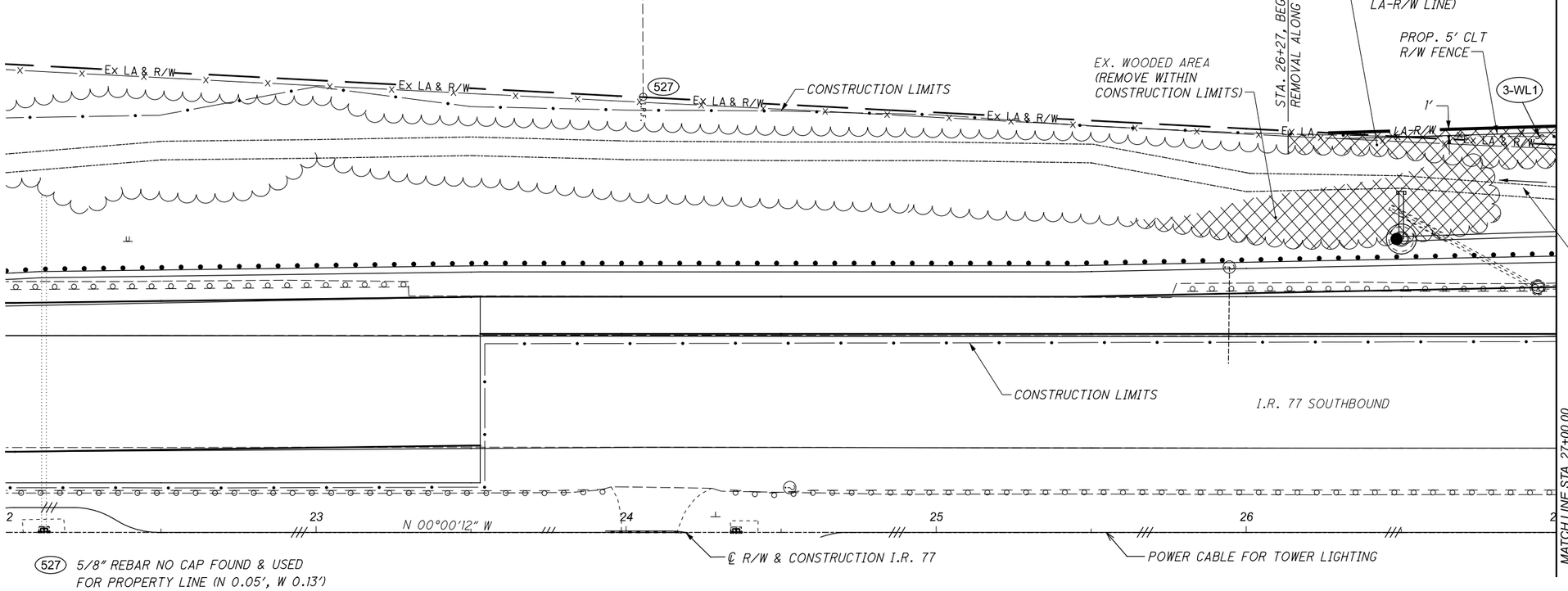

(527) 5/8" REBAR NO CAP FOUND & USED FOR PROPERTY LINE (N 0.05', W 0.13')

CUY-77-00.42 PART 1

MODEL: I04983_RT101 PAPERSIZE: 17x11 (in.) DATE: 3/4/2022 TIME: 2:08:32 PM USER: esmccasiln
F:\Jobs\1162-Miller Road Interchange\104983\400-Engineering\RW\Sheets\104983_RT101.dgn

SUBSET 21 | TOTAL 34

DESIGN AGENCY
EUTHENICS
8235 Mohawk Dr. | Cleveland, OH 44129

DESIGNER ARP

REVIEWER RSW 08-31-21

PROJECT ID 104983

SHEET P.389 | TOTAL P.434

REV. BY	DATE	DESCRIPTION
DATE COMPLETED		OCTOBER 1, 2021

HORIZONTAL SCALE IN FEET
0 10 20 40

CUY-77-00.42
CITY OF BRECKSVILLE
BRECKSVILLE TOWNSHIP
COUNTY OF CUYAHOGA, OHIO
O.L. 55 & O.L. 60, T-5N., R-12W.

604-16-011

EX. COMMERCIAL OFFICE BLDG.
GENERAL INDUSTRIAL ZONING

(3)
FOGG-BRECKSVILLE DEVELOPMENT CO.,
AN OHIO LIMITED PARTNERSHIP
SOUTH EDGERTON ROAD
BRECKSVILLE, OH 44141

604-16-012

EX. INDUSTRIAL VACANT LAND
RESEARCH LABORATORY ZONING

Ex R/W
I.P.F.
525
EX LA & R/W
Ex LA & R/W
Ex LA & R/W
527
Ex LA & R/W
Ex LA & R/W
Ex LA
IPS 822

26+26.44, 128.83' LT - I.R. 77
73+49.72, 1718.43' RT - MILLER ROAD

212.88' N 01°43'37" W
LA-R/W
Ex LA & R/W
73.64' S 02°58'38" W
3-WL1
1,355 S.F.
(0.0311 AC.)

26+99.98, 125.00' LT - I.R. 77
73+54.04, 1644.91' RT - MILLER ROAD

525 5/8" REBAR NO CAP FOUND & USED
FOR PROPERTY LINE (N 0.00', W 0.00')

527 5/8" REBAR NO CAP FOUND & USED
FOR PROPERTY LINE (N 0.05', W 0.13')

STA. 0-00.84 AHD, ℄ I-77
EX. CONC. MON. WITH 5/8" REBAR PUNCHED

2928.22' (MEASURED AND USED)
2927.40' (CUY-77-0.00 ℄ RECORD SURVEY PLAT)

N00°00'12"W N00°00'12"W 2 23 N 00°00'12" W 24 25 26 2

300 301

STA. 7+98.97, ℄ I-77
EX. CONC. MON. WITH 5/8" REBAR
PUNCHED (N 0.00', W 0.053')

℄ R/W & CONSTRUCTION I.R. 77

MATCH LINE STA. 27+00.00

RIGHT OF WAY BOUNDARY SHEET
I.R. 77 STA. 22+00 LT. TO STA. 27+00 LT.

SUBSET	TOTAL
22	34

DESIGN AGENCY
EUTHENICS
8235 Mohawk Dr. | Cleveland, OH 44129

DESIGNER
ARP

REVIEWER
RSW 08-31-21

PROJECT ID
104983

SHEET	TOTAL
P.390	P.434

CUY-77-00.42 PART 1

MODEL: I04983_RBI01 PAPERSIZE: 17x11(In.) DATE: 3/4/2022 TIME: 2:08:42 PM USER: esmccasiln
F:\Jobs\I162-Miller Road Interchange\I04983\400-Engineering\RW\Sheets\I04983_RBI01.dgn

CUY-77-00.42
CITY OF BRECKSVILLE
BRECKSVILLE TOWNSHIP
COUNTY OF CUYAHOGA, OHIO
O.L. 55 & O.L. 60, T-5N., R-12W.

REV. BY	DATE	DESCRIPTION
DATE COMPLETED		OCTOBER 1, 2021

HORIZONTAL SCALE IN FEET
0 10 20 40

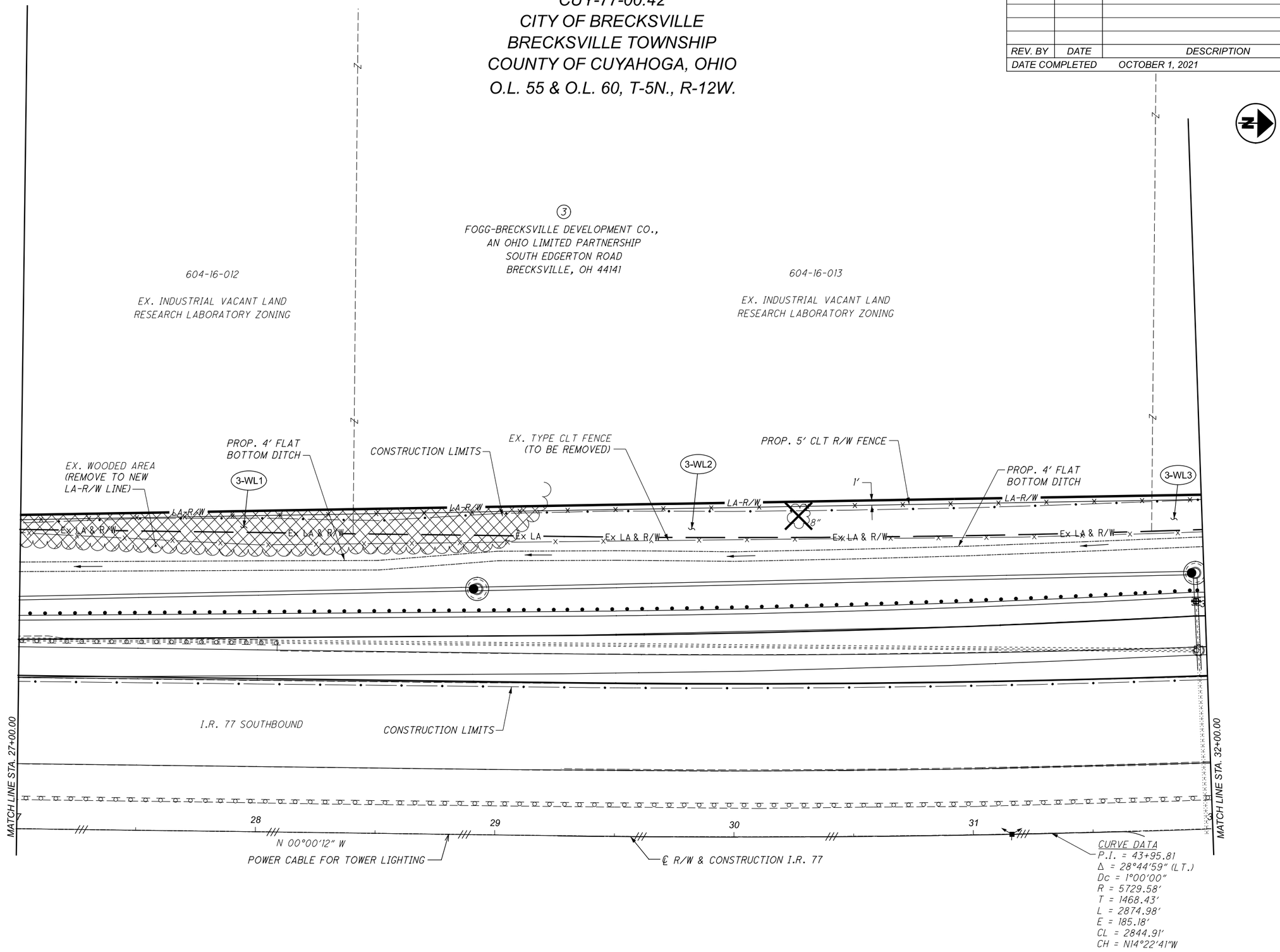

RIGHT OF WAY TOPO SHEET
I.R. 77 STA. 27+00 LT. TO STA. 32+00 LT.

SUBSET	TOTAL
23	34

DESIGN AGENCY
EUTHENICS
8225 Mohawk Dr. | Cleveland, OH 44129

DESIGNER	ARP
REVIEWER	RSW 08-31-21
PROJECT ID	104983
SHEET	P.391
TOTAL	P.434

CUY-77-00.42 PART 1

MODEL: 104983_RT102 PAPERSIZE: 11x17 (in.) DATE: 3/4/2022 TIME: 2:08:49 PM USER: esmccaslin
F:\Jobs\1162-Miller Road Interchange\104983\400-Engineering\RW\Sheets\104983_RT102.dgn

REV. BY	DATE	DESCRIPTION
DATE COMPLETED		OCTOBER 1, 2021

HORIZONTAL SCALE IN FEET
0 10 20 40

CUY-77-00.42
CITY OF BRECKSVILLE
BRECKSVILLE TOWNSHIP
COUNTY OF CUYAHOGA, OHIO
O.L. 55 & O.L. 60, T-5N., R-12W.

604-16-012

EX. INDUSTRIAL VACANT LAND
RESEARCH LABORATORY ZONING

③

FOGG-BRECKSVILLE DEVELOPMENT CO.,
AN OHIO LIMITED PARTNERSHIP
SOUTH EDGERTON ROAD
BRECKSVILLE, OH 44141

604-16-013

EX. INDUSTRIAL VACANT LAND
RESEARCH LABORATORY ZONING

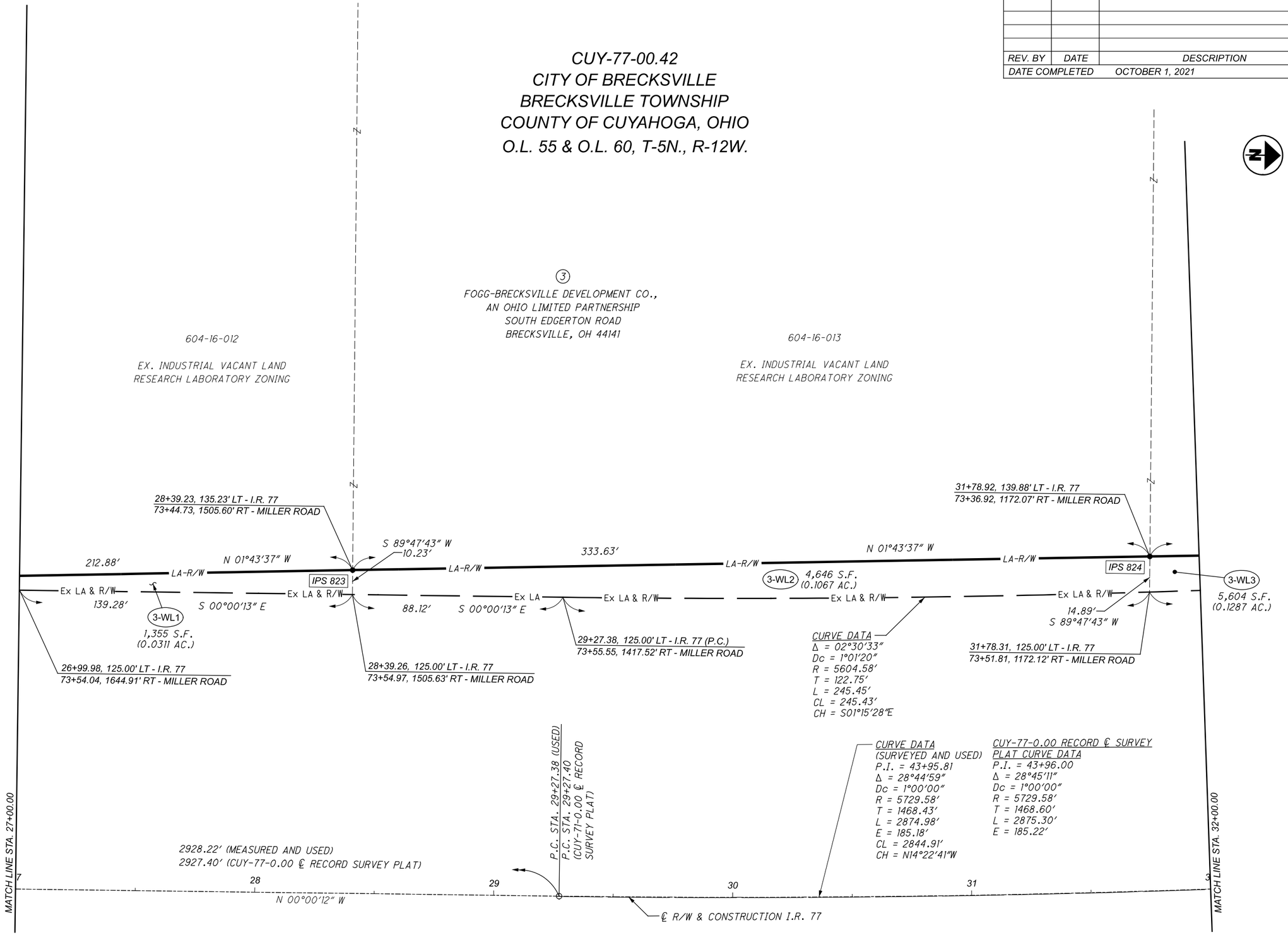

RIGHT OF WAY BOUNDARY SHEET
I.R. 77 STA. 27+00 LT. TO STA. 32+00 LT.

SUBSET	TOTAL
24	34

DESIGN AGENCY
EUTHENICS
8235 Midwest Dr. | Cleveland, OH 44125

DESIGNER	ARP
REVIEWER	RSW 08-31-21
PROJECT ID	104983
SHEET	P.392
TOTAL	P.434

CUY-77-00.42 PART 1

MODEL: I04983_RBI02 PAPERSIZE: 17x11(in.) DATE: 3/4/2022 TIME: 2:08:59 PM USER: esmccasiln
F:\Jobs\I62-Miller Road Interchange\I04983\400-Engineering\RW\Sheets\I04983_RBI02.dgn

CUY-77-00.42
CITY OF BRECKSVILLE
BRECKSVILLE TOWNSHIP
COUNTY OF CUYAHOGA, OHIO
O.L. 55 & O.L. 60, T-5N., R-12W.

REV. BY	DATE	DESCRIPTION
DATE COMPLETED		OCTOBER 1, 2021

HORIZONTAL SCALE IN FEET
0 10 20 40

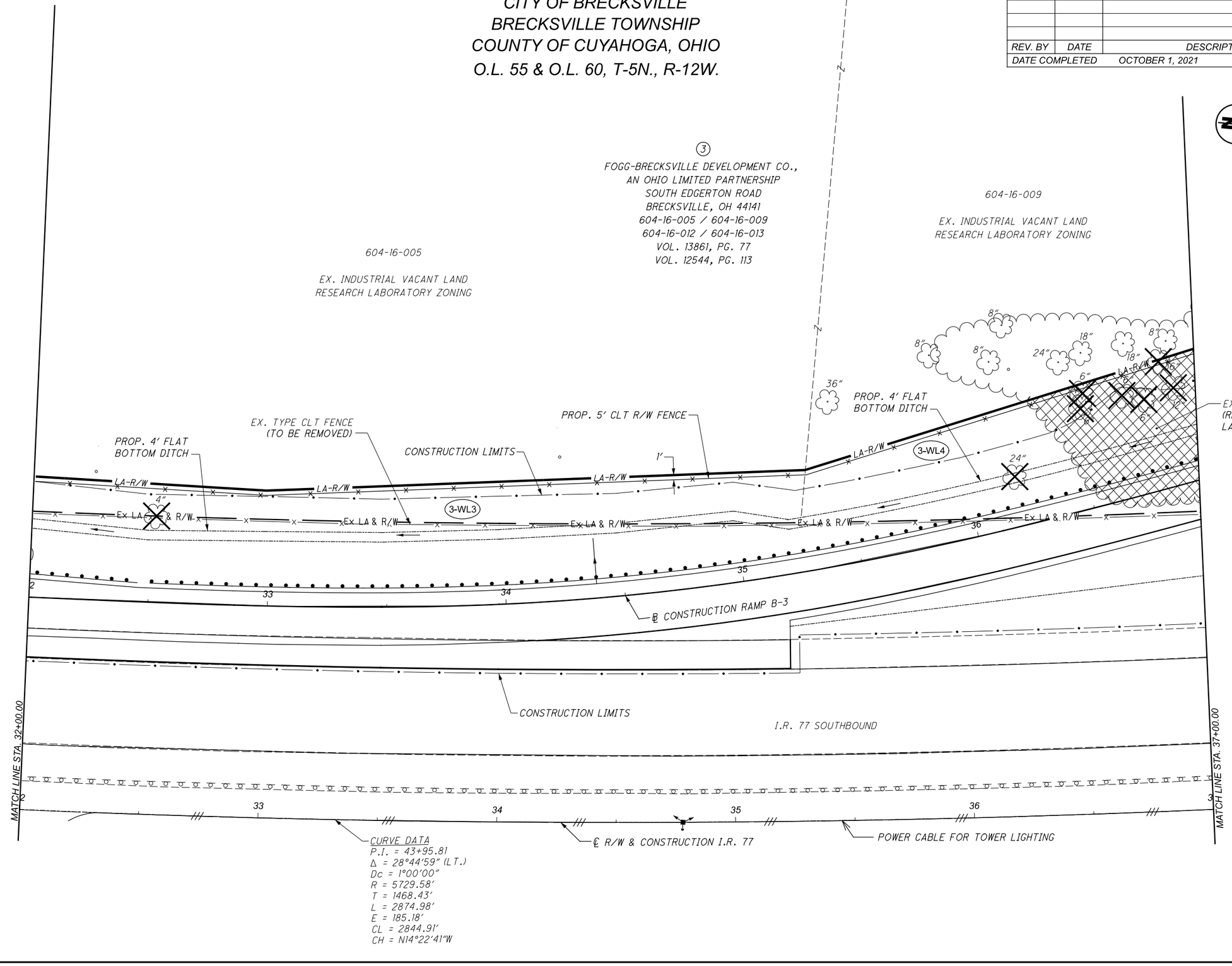

RIGHT OF WAY TOPO SHEET
I.R. 77 STA. 32+00 LT. TO STA. 37+00 LT.

SUBSET	TOTAL
25	34

DESIGN AGENCY
EUTHENICS
8235 Mohawk Dr. | Cleveland, OH 44129

DESIGNER
ARP

REVIEWER
RSW 08-31-21

PROJECT ID
104983

SHEET	TOTAL
P.393	P.434

CUY-77-00.42 PART 1

MODEL: 104983_RT103 PAPERSIZE: 17x11(in.) DATE: 3/4/2022 TIME: 2:09:06 PM USER: esmccaslin
F:\Jobs\162-Miller Road Interchange\104983\400-Engineering\RW\Sheets\104983_RT103.dgn

CUY-77-00.42
CITY OF BRECKSVILLE
BRECKSVILLE TOWNSHIP
COUNTY OF CUYAHOGA, OHIO
O.L. 55 & O.L. 60, T-5N., R-12W.

REV. BY	DATE	DESCRIPTION
DATE COMPLETED		OCTOBER 1, 2021

HORIZONTAL SCALE IN FEET
0 10 20 40

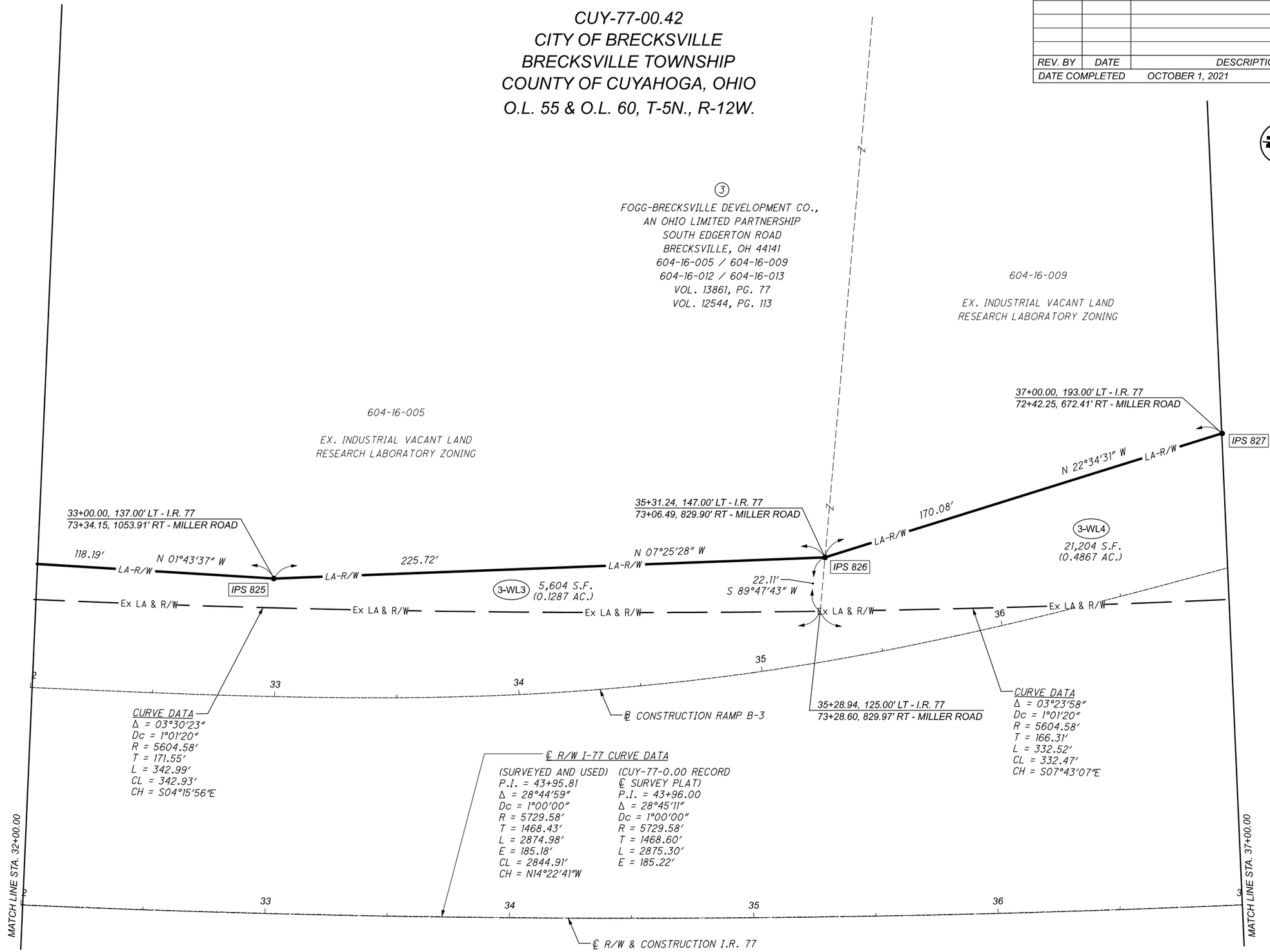

RIGHT OF WAY BOUNDARY SHEET
I.R. 77 STA. 32+00 LT. TO STA. 37+00 LT.

SUBSET 26 | TOTAL 34

DESIGN AGENCY
EUTHENICS
8235 Mohawk Dr. | Cleveland, OH 44129

DESIGNER ARP

REVIEWER RSW 08-31-21

PROJECT ID 104983

SHEET P.394 | TOTAL P.434

CUY-77-00.42 PART 1

MODEL: I04983_RBI03 PAPERSIZE: 17x11 (in.) DATE: 3/4/2022 TIME: 2:09:16 PM USER: esmccaslin
F:\Jobs\I162-Miller Road Interchange\I04983\400-Engineering\RW\Sheets\I04983_RBI03.dgn

REV. BY	DATE	DESCRIPTION
DATE COMPLETED	OCTOBER 1, 2021	

CUY-77-00.42
CITY OF BRECKSVILLE
BRECKSVILLE TOWNSHIP
COUNTY OF CUYAHOGA, OHIO
O.L. 55 & O.L. 60, T-5N., R-12W.

(517) 5/8" REBAR NO CAP FOUND AND USED FOR PROPERTY LINE (N 0.59', W 0.27')

(3)
FOGG-BRECKSVILLE DEVELOPMENT CO.,
AN OHIO LIMITED PARTNERSHIP
SOUTH EDGERTON ROAD
BRECKSVILLE, OH 44141
604-16-009
VOL. 13681, PG. 77
VOL. 12544, PG. 119

RESEARCH LABORATORY ZONING
EX. INDUSTRIAL VACANT LAND

(2)
BRANT E. GIERE
6530 MILLER ROAD
BRECKSVILLE, OH 44141
604-16-002
INST. #201203150002
INST. #201205150037

RESEARCH LABORATORY ZONING
EX. LIVESTOCK FARM

ESMT 2
THE CITY OF BRECKSVILLE
SANITARY SEWER EASEMENT
VOL. 13674, PG. 859

ESMT 7
THE EAST OHIO GAS COMPANY
BLANKET GAS PIPE LINE EASEMENT
VOL. 919, PG. 460

GARAGE
DIRT/GRAV DRIVE
CONSTRUCTION LIMITS
PROP. 5' CLT R/W FENCE
EX. WOODED AREA (REMOVE TO NEW LA-R/W LINE)
EX. 18" (REMAIN)
PROP. 18"
SAN
SW
U
LA-R/W
2-S
2-U
2-WL
3-WL4
1'
PROP. 4' FLAT BOTTOM DITCH
MATCH LINE STA. 42+25.00 RAMP B-3
℄ CONSTRUCTION RAMP B-3
EX. 18" (PLUG AND FILL)
EX. SAN MH (ABANDON)
THE CITY OF BRECKSVILLE
SANITARY SEWER EASEMENT
VOL. 13662, PG. 793
ESMT 5
EX. 18" (FILL AND PLUG)
NYS
Ex LA & R/W
FOGG-BRECKSVILLE DEVELOPMENT COMPANY
UTILITY EASEMENT
INST. #200211130684
ESMT 6
EX. VEGETATION AREA (REMOVE ENTIRE AREA WITHIN CONSTRUCTION LIMTS)
EX. TYPE CLT FENCE (TO BE REMOVED)
PROPOSED 4' FLAT BOTTOM DITCH
EX. WOODED AREA (REMOVE WITHIN CONSTRUCTION LIMITS)
CONSTRUCTION LIMITS
EX. SHOULDER
I.R. 77 SOUTHBOUND
MATCH LINE STA. 37+00.00
MATCH LINE STA. 42+00.00 I.R. 77

CURVE DATA
P.I. = 43+95.81
Δ = 28°44'59" (LT.)
Dc = 1°00'00"
R = 5729.58'
T = 1468.43'
L = 2874.98'
CL = 2844.91'
CH = N14°22'41"W

℄ R/W & CONSTRUCTION I.R. 77
POWER CABLE FOR TOWER LIGHTING

HORIZONTAL SCALE IN FEET
0 10 20 40

RIGHT OF WAY TOPO SHEET
I.R. 77 STA. 37+00 LT. TO STA. 42+00 LT.

SUBSET	TOTAL
27	34

DESIGN AGENCY
EUTHENICS
8230 Mohawk Dr. | Cleveland, OH 44035

DESIGNER
ARP

REVIEWER
RSW 08-31-21

PROJECT ID
104983

SHEET	TOTAL
P.395	P.434

CUY-77-00.42 PART 1

MODEL: 104983_RT104 PAPERSIZE: 17x11(in.) DATE: 3/4/2022 TIME: 2:09:22 PM USER: esmccaslin
F:\Jobs\162-Miller Road Interchange\104983\400-Engineering\RW\Sheets\104983_RT104.dgn

CUY-77-00.42
CITY OF BRECKSVILLE
BRECKSVILLE TOWNSHIP
COUNTY OF CUYAHOGA, OHIO
O.L. 55 & O.L. 60, T-5N., R-12W.

REV. BY	DATE	DESCRIPTION
DATE COMPLETED		OCTOBER 1, 2021

HORIZONTAL SCALE IN FEET: 0, 10, 20, 40

(517) 5/8" REBAR NO CAP FOUND AND USED FOR PROPERTY LINE (N 0.59', W 0.27')

(2)
BRANT E. GIERE
6530 MILLER ROAD
BRECKSVILLE, OH 44141
604-16-002
INST. #201203150002
INST. #201205150037

RESEARCH LABORATORY ZONING
EX. LIVESTOCK FARM

(3)
FOGG-BRECKSVILLE DEVELOPMENT CO.,
AN OHIO LIMITED PARTNERSHIP
SOUTH EDGERTON ROAD
BRECKSVILLE, OH 44141
604-16-009
VOL. 13681, PG. 77
VOL. 12544, PG. 119

RESEARCH LABORATORY ZONING
EX. INDUSTRIAL VACANT LAND

THE EAST OHIO GAS COMPANY
BLANKET GAS PIPE LINE EASEMENT
VOL. 919, PG. 460
(ESMT 7)

THE CITY OF BRECKSVILLE
SANITARY SEWER EASEMENT
VOL. 13674, PG. 859
(ESMT 2)

41+93.46, 301.40' LT - I.R. 77
70+55.10, 225.75' RT - MILLER ROAD

41+94.55, 296.56' LT - I.R. 77
70+59.67, 223.69' RT - MILLER ROAD

38+88.55, 243.45' LT - I.R. 77
71+66.20, 500.22' RT - MILLER ROAD

38+89.45, 248.73' LT - I.R. 77
71+60.84, 500.22' RT - MILLER ROAD

N27°48'32"W 161.64'
N27°48'32"W 208.07'
S27°48'32"E 145.30'
N27°48'32"W 196.49'

N 21°27'15" W
294.13'
296.34'
307.36'

SW
U
LA-R/W
30'
25'

2-S 13,627 S.F. (0.3128 AC.)
2-U 12,603 S.F. (0.2893 AC.)
2-WL 65,000 S.F. (1.4922 AC.)
3-WL4 21,204 S.F. (0.4867 AC.)

IPS 827
IPS 828
IPS 829

42+00.00, 272.00' LT - I.R. 77
70+82.50, 213.41' RT - MILLER ROAD

38+84.08, 217.00' LT - I.R. 77
71+92.99, 500.22' RT - MILLER ROAD

S89°36'54"W 32.15'
S89°36'54"W 26.79'
S 89°36'54" W
N 16°20'59" W
179.10'
673.43'
N20°38'59"W

℄ CONSTRUCTION RAMP B-3

MATCH LINE STA. 42+25.00 RAMP B-3

THE CITY OF BRECKSVILLE
SANITARY SEWER EASEMENT
VOL. 13662, PG. 793
(ESMT 5)

93.18'
Ex LA & R/W
517
1"=40'

38+68.88, 125.00' LT - I.R. 77
72+86.17, 500.22' RT - MILLER ROAD

FOGG-BRECKSVILLE DEVELOPMENT COMPANY
UTILITY EASEMENT
INST. #200211130684
(ESMT 6)

CURVE DATA
Δ = 03°23'58"
Dc = 1°01'20"
R = 5604.58'
T = 166.31'
L = 332.52'
CL = 332.47'
CH = S07°43'07"E

CURVE DATA
Δ = 04°12'40"
Dc = 1°01'20"
R = 5604.58'
T = 206.06'
L = 411.93'
CL = 411.84'
CH = S11°31'26"E

℄ R/W I-77 CURVE DATA

(SURVEYED AND USED)	(CUY-77-0.00 RECORD ℄ SURVEY PLAT)
P.I. = 43+95.81	P.I. = 43+96.00
Δ = 28°44'59"	Δ = 28°45'11"
Dc = 1°00'00"	Dc = 1°00'00"
R = 5729.58'	R = 5729.58'
T = 1468.43'	T = 1468.60'
L = 2874.98'	L = 2875.30'
E = 185.18'	E = 185.22'
CL = 2844.91'	
CH = N14°22'41"W	

PARCEL	AFN # VOL. PG.	TYPE	TOTAL AREA (ACRES)	AREA OF OVERLAP (ACRES)		
				3-WL4		
ESMT 2	VOL. 13674 PG. 859	SEWER	0.6341 (C)	0.0628		

(C) - INDICATES AREA CALCULATED FROM CAD, NOT FROM RECORD

MATCH LINE STA. 37+00.00

MATCH LINE STA. 42+00.00 I.R. 77

℄ R/W & CONSTRUCTION I.R. 77

RIGHT OF WAY BOUNDARY SHEET
I.R. 77 STA. 37+00 LT. TO STA. 42+00 LT.

SUBSET 28 | TOTAL 34

DESIGN AGENCY
EUTHENICS
8255 Mohawk Dr. | Cleveland, OH 44125

DESIGNER ARP

REVIEWER RSW 08-31-21

PROJECT ID 104983

SHEET P.396 | TOTAL P.434

CUY-77-00.42 PART 1

MODEL: I04983_RBI04 PAPERSIZE: 17x11(in.) DATE: 3/4/2022 TIME: 2:09:31 PM USER: esmccaslin
F:\Jobs\I62-Miller Road Interchange\I04983\400-Engineering\RW\Sheets\I04983_RBI04.dgn

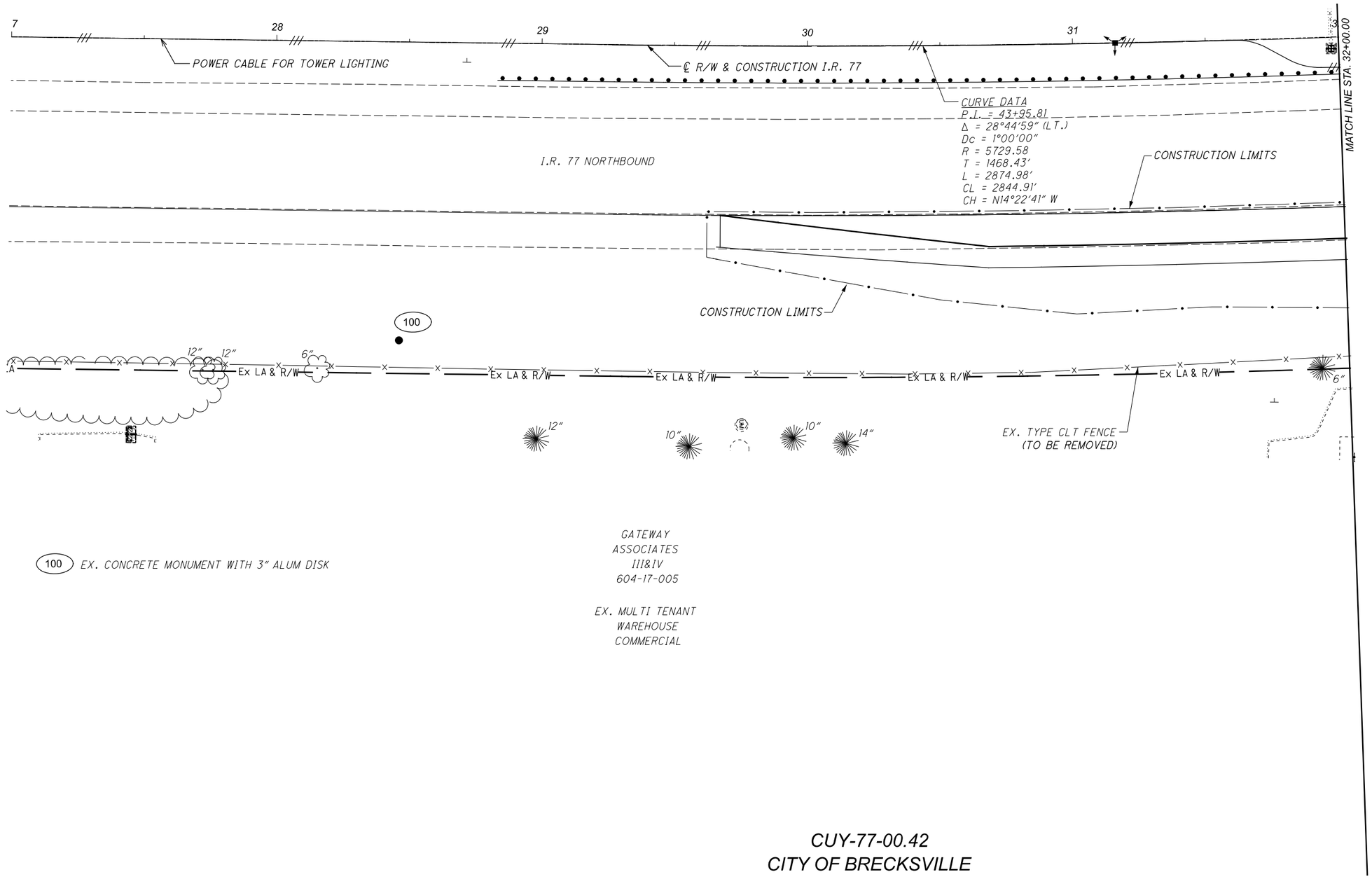

100 EX. CONCRETE MONUMENT WITH 3" ALUM DISK

GATEWAY
ASSOCIATES
III&IV
604-17-005

EX. MULTI TENANT
WAREHOUSE
COMMERCIAL

CUY-77-00.42
CITY OF BRECKSVILLE
BRECKSVILLE TOWNSHIP
COUNTY OF CUYAHOGA, OHIO
O.L. 55 & O.L. 60, T-5N., R-12W.

REV. BY	DATE	DESCRIPTION

DATE COMPLETED OCTOBER 1, 2021

HORIZONTAL SCALE IN FEET
0 10 20 40

RIGHT OF WAY TOPO SHEET
I.R. 77 STA. 27+00 RT. TO STA. 32+00 RT.

SUBSET 29 | TOTAL 34

DESIGN AGENCY
EUTHENICS
8225 Mohawk Dr. | Cleveland, OH 44139

DESIGNER ARP

REVIEWER RSW 08-31-21

PROJECT ID 104983

SHEET P.399 | TOTAL P.434

CUY-77-00.42 PART 1

MODEL: 104983_RT106 PAPERSIZE: 17x11(in.) DATE: 3/4/2022 TIME: 2:09:38 PM USER: esmccaslin
F:\Jobs\1162-Miller Road Interchange\104983\400-Engineering\RW\Sheets\104983_RT106.dgn

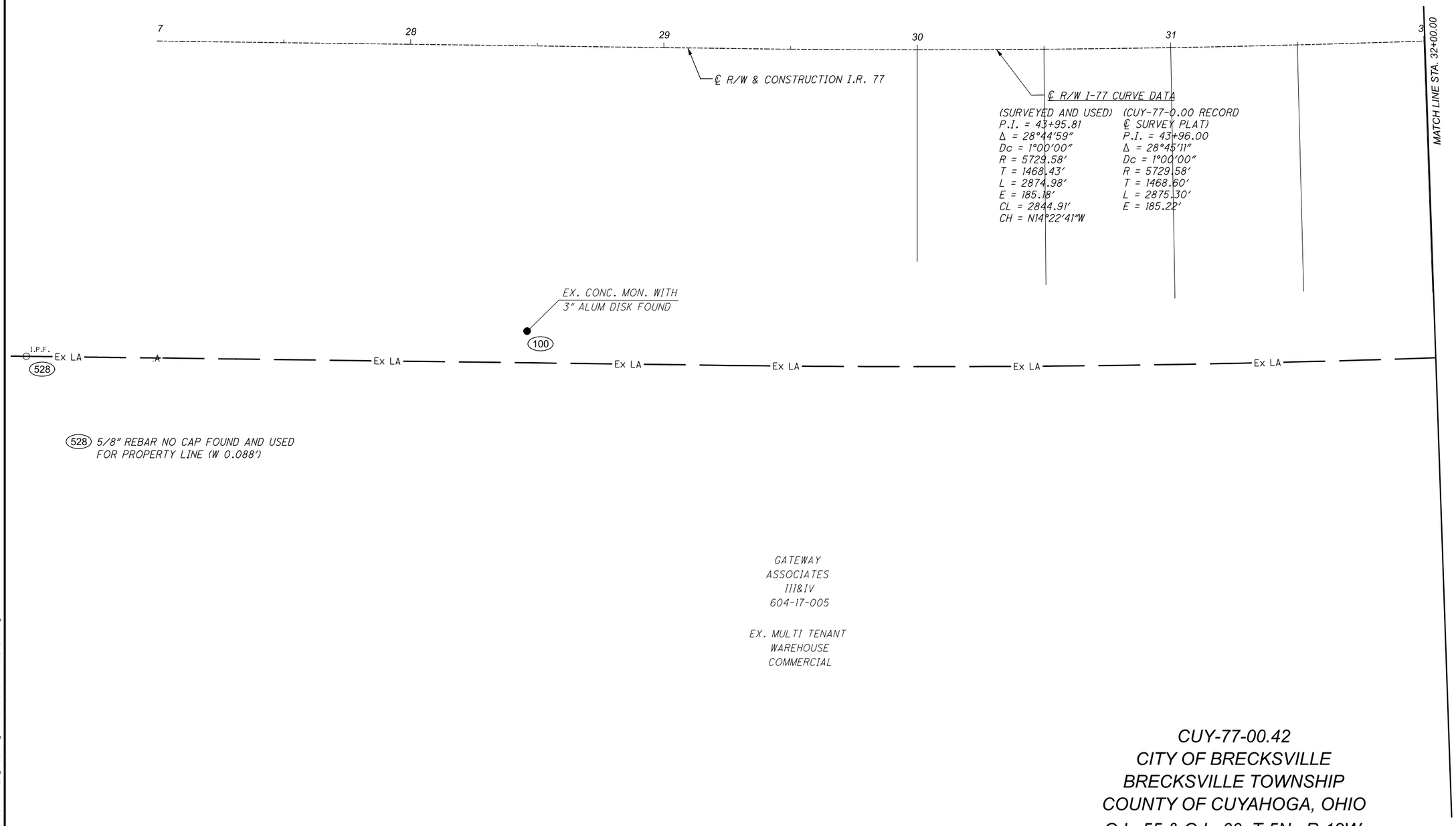

GATEWAY
ASSOCIATES
III&IV
604-17-005

EX. MULTI TENANT
WAREHOUSE
COMMERCIAL

CUY-77-00.42
CITY OF BRECKSVILLE
BRECKSVILLE TOWNSHIP
COUNTY OF CUYAHOGA, OHIO
O.L. 55 & O.L. 60, T-5N., R-12W.

REV. BY	DATE	DESCRIPTION

DATE COMPLETED OCTOBER 1, 2021

HORIZONTAL SCALE IN FEET
0 10 20 40

RIGHT OF WAY BOUNDARY SHEET
I.R. 77 STA. 27+00 RT. TO STA. 32+00 RT.

SUBSET	TOTAL
30	34

DESIGN AGENCY
EUTHENICS
8235 Mohawk Dr. | Cleveland, OH 44129

DESIGNER
ARP

REVIEWER
RSW 08-31-21

PROJECT ID
104983

SHEET	TOTAL
P.400	P.434

CUY-77-00.42 PART 1

MODEL: 104983_RBI06 PAPERSIZE: ITxII (in.) DATE: 3/4/2022 TIME: 2:09:47 PM USER: esmccaslin
F:\Jobs\162-Miller Road Interchange\104983\400-Engineering\RW\Sheets\104983_RBI06.dgn

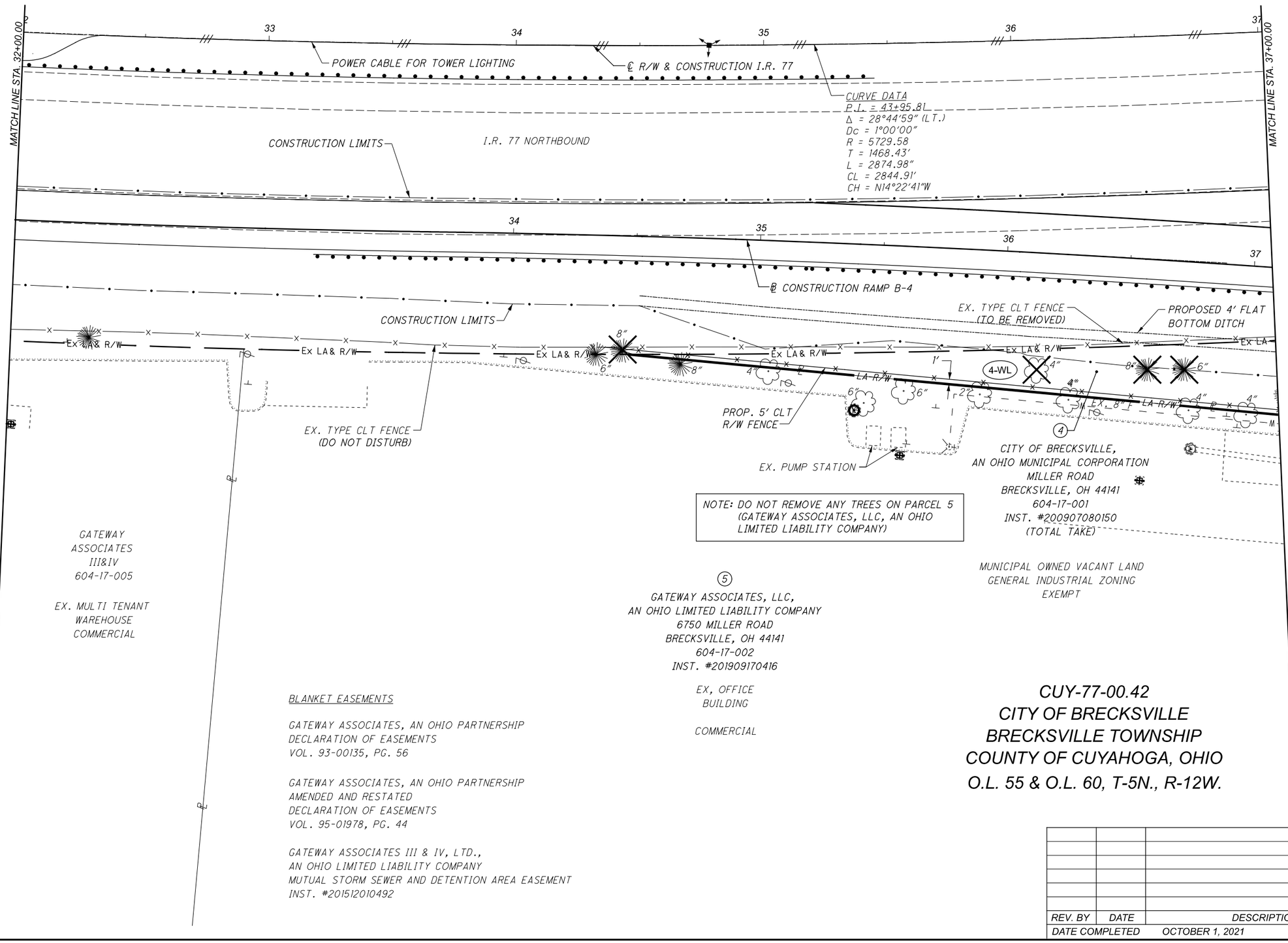

CUY-77-00.42 PART 1

MODEL: 104983_RT107 PAPERSIZE: 17x11 (in.) DATE: 3/4/2022 TIME: 2:09:55 PM USER: esmccaslin
F:\Jobs\162-Miller Road Interchange\104983\400-Engineering\RW\Sheets\104983_RT107.dgn

HORIZONTAL
SCALE IN FEET
0 10 20 40

RIGHT OF WAY TOPO SHEET
I.R. 77 STA. 32+00 RT. TO STA. 37+00 RT.

CUY-77-00.42
CITY OF BRECKSVILLE
BRECKSVILLE TOWNSHIP
COUNTY OF CUYAHOGA, OHIO
O.L. 55 & O.L. 60, T-5N., R-12W.

REV. BY	DATE	DESCRIPTION
DATE COMPLETED		OCTOBER 1, 2021

SUBSET 31 | TOTAL 34
DESIGN AGENCY
EUTHENICS
8235 Mohawk Dr. | Cleveland, OH 44125
DESIGNER ARP
REVIEWER RSW 08-31-21
PROJECT ID 104983
SHEET P.401 | TOTAL P.434

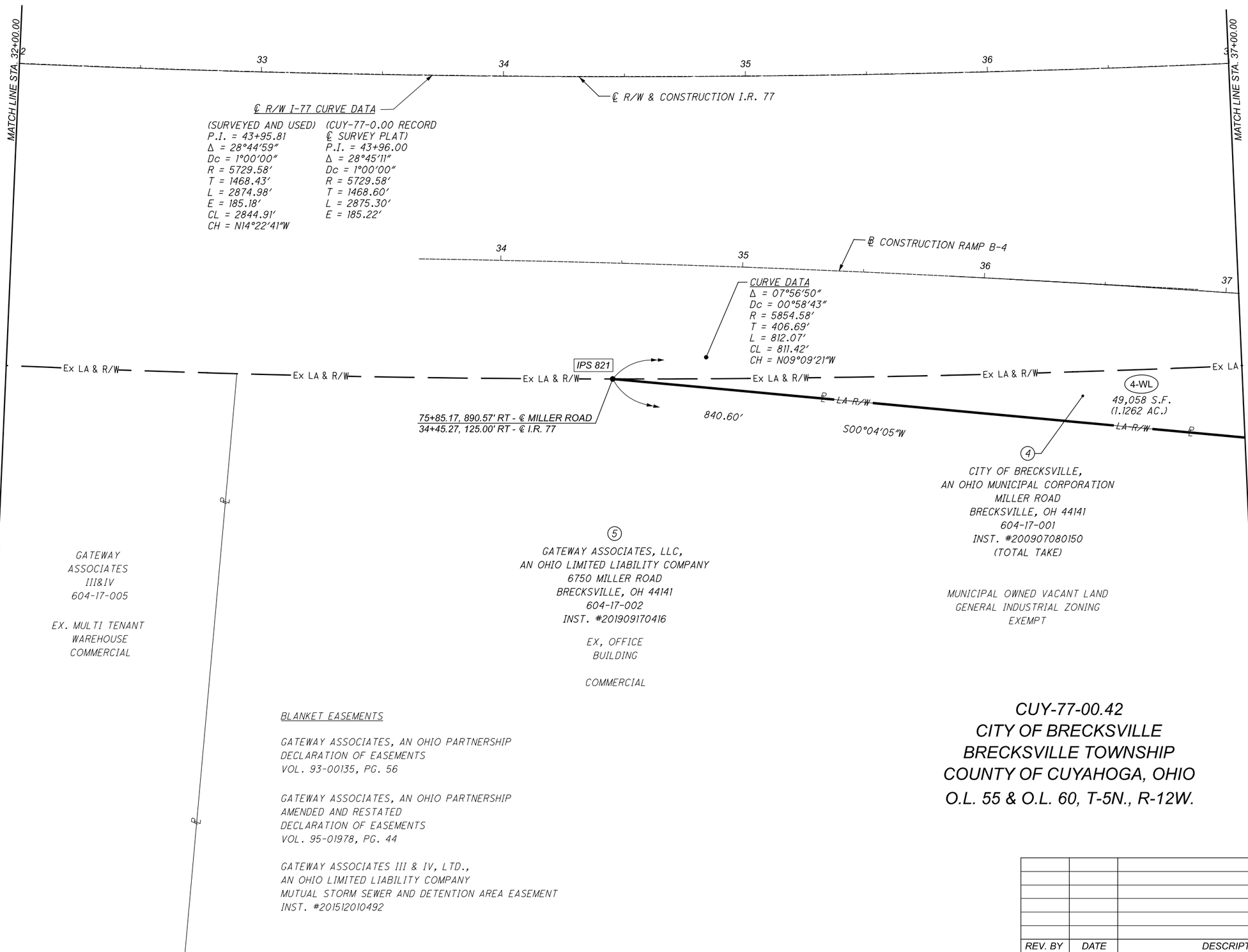

CUY-77-00.42 PART 1

MODEL: 104983_RBI07 PAPERSIZE: 17x11(in.) DATE: 3/4/2022 TIME: 2:10:05 PM USER: esmccaslin
F:\Jobs\162-Miller Road Interchange\104983\400-Engineering\RW\Sheets\104983_RBI07.dgn

HORIZONTAL SCALE IN FEET
0 10 20 40

RIGHT OF WAY BOUNDARY SHEET
I.R. 77 STA. 32+00 RT. TO STA. 37+00 RT.

CUY-77-00.42
CITY OF BRECKSVILLE
BRECKSVILLE TOWNSHIP
COUNTY OF CUYAHOGA, OHIO
O.L. 55 & O.L. 60, T-5N., R-12W.

REV. BY	DATE	DESCRIPTION

DATE COMPLETED OCTOBER 1, 2021

SUBSET 32 | TOTAL 34

DESIGN AGENCY
EUTHENICS
8235 Mohawk Dr. | Cleveland, OH 44129

DESIGNER ARP
REVIEWER RSW 08-31-21
PROJECT ID 104983
SHEET P.402 | TOTAL P.434

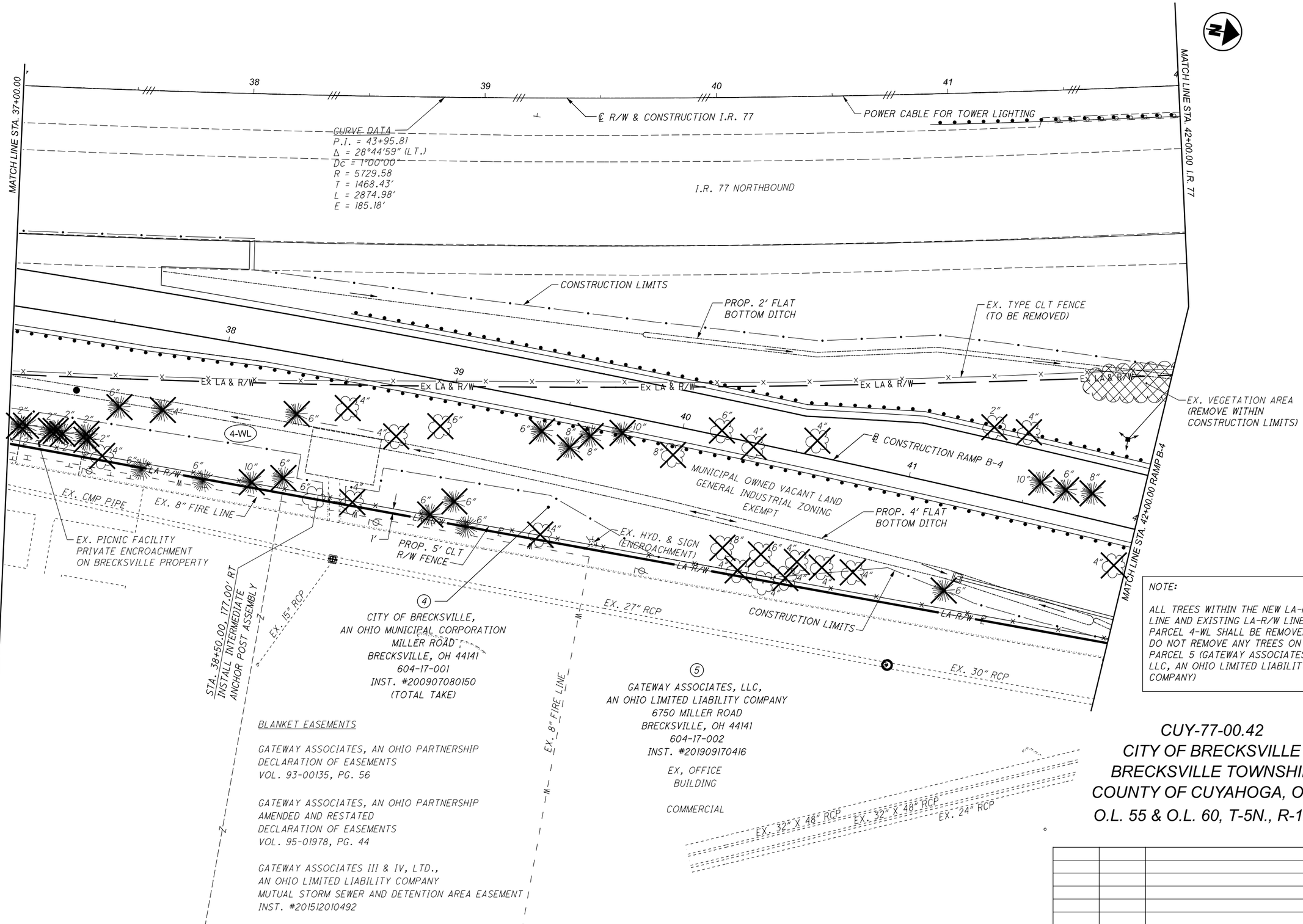

④
CITY OF BRECKSVILLE,
AN OHIO MUNICIPAL CORPORATION
MILLER ROAD
BRECKSVILLE, OH 44141
604-17-001
INST. #200907080150
(TOTAL TAKE)

BLANKET EASEMENTS

GATEWAY ASSOCIATES, AN OHIO PARTNERSHIP
DECLARATION OF EASEMENTS
VOL. 93-00135, PG. 56

GATEWAY ASSOCIATES, AN OHIO PARTNERSHIP
AMENDED AND RESTATED
DECLARATION OF EASEMENTS
VOL. 95-01978, PG. 44

GATEWAY ASSOCIATES III & IV, LTD.,
AN OHIO LIMITED LIABILITY COMPANY
MUTUAL STORM SEWER AND DETENTION AREA EASEMENT
INST. #201512010492

⑤
GATEWAY ASSOCIATES, LLC,
AN OHIO LIMITED LIABILITY COMPANY
6750 MILLER ROAD
BRECKSVILLE, OH 44141
604-17-002
INST. #201909170416

EX, OFFICE BUILDING

COMMERCIAL

NOTE:

ALL TREES WITHIN THE NEW LA-R/W LINE AND EXISTING LA-R/W LINE ON PARCEL 4-WL SHALL BE REMOVED. DO NOT REMOVE ANY TREES ON PARCEL 5 (GATEWAY ASSOCIATES, LLC, AN OHIO LIMITED LIABILITY COMPANY)

CUY-77-00.42
CITY OF BRECKSVILLE
BRECKSVILLE TOWNSHIP
COUNTY OF CUYAHOGA, OHIO
O.L. 55 & O.L. 60, T-5N., R-12W.

REV. BY	DATE	DESCRIPTION
DATE COMPLETED		OCTOBER 1, 2021

HORIZONTAL SCALE IN FEET
0 10 20 40

RIGHT OF WAY TOPO SHEET
I.R. 77 STA. 37+00 RT.TO STA. 42+00 RT.

SUBSET	TOTAL
33	34

DESIGN AGENCY
EUTHENICS
8235 Mohawk Dr. | Cleveland, OH 44129

DESIGNER	ARP
REVIEWER	RSW 08-31-21
PROJECT ID	104983
SHEET	P.403
TOTAL	P.434

CUY-77-00.42 PART 1

MODEL: I04983_RT108 PAPERSIZE: 17x11 (in.) DATE: 3/4/2022 TIME: 2:10:12 PM USER: esmccaslin
F:\Jobs\162-Miller Road Interchange\04983\400-Engineering\RW\Sheets\04983_RT108.dgn

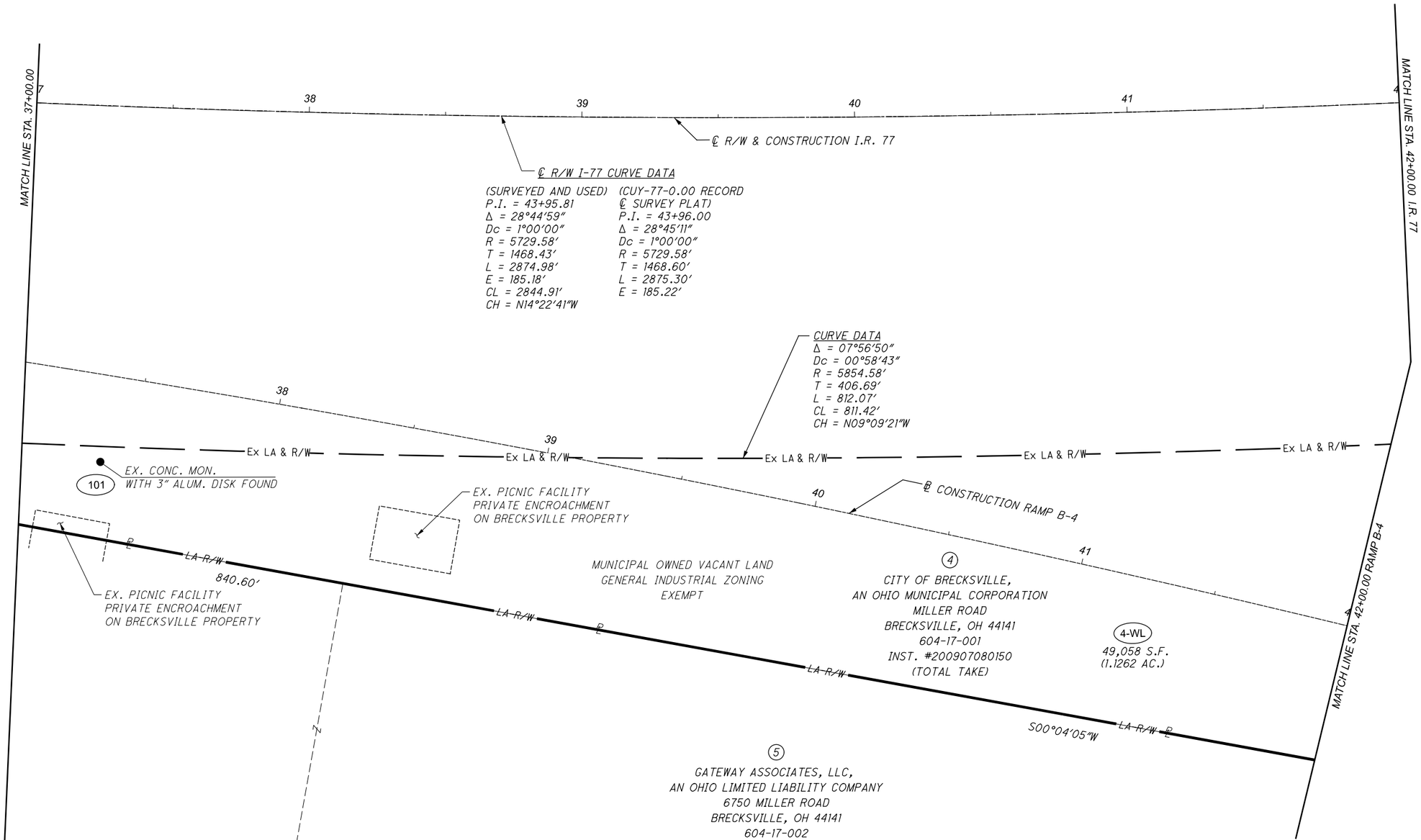

HORIZONTAL SCALE IN FEET
0 10 20 40

RIGHT OF WAY BOUNDARY SHEET
I.R. 77 STA. 37+00 RT.TO STA. 42+00 RT.

CUY-77-00.42 PART 1

MODEL: I04983.RBI08 PAPERSIZE: 17x11(in.) DATE: 3/4/2022 TIME: 2:10:22 PM USER: esmccaslin
F:\Jobs\162-Miller Road Interchange\104983\400-Engineering\RW\Sheets\104983_RBI08.dgn

CUY-77-00.42
CITY OF BRECKSVILLE
BRECKSVILLE TOWNSHIP
COUNTY OF CUYAHOGA, OHIO
O.L. 55 & O.L. 60, T-5N., R-12W.

REV. BY	DATE	DESCRIPTION
DATE COMPLETED		OCTOBER 1, 2021

SUBSET 34 | TOTAL 34

DESIGN AGENCY
EUTHENICS
8235 Midwest Dr. | Cleveland, OH 44125

DESIGNER ARP

REVIEWER RSW 08-31-21

PROJECT ID 104983

SHEET P.404 | TOTAL P.434

PROJECT DESCRIPTION

THE PROJECT CUY-77-00.42 AND CUY-CR- 187-00.977 (CUY-77/MILLER ROAD INTERCHANGE) CONSISTS OF WIDENING MILLER ROAD AND THE SOUTH BOUND OF I-77, WIDENING EXISTING MILLER ROAD BRIDGE OVER I-77, MODIFYING THE EXISTING I-77/MILLER ROAD RAMPS, AND INSTALLING TWO NEW I-77 EXIT AND ON RAMPS. THIS REPORT ADDRESSES GEOTECHNICAL PARAMETERS RELATED TO THE SUBGRADE OF THE ROADWAY AND BRIDGE FOUNDATION DESIGN. WE ANTICIPATE AS MUCH AS 18 TO 20 FEET OF EMBANKMENT FILL AT THE PROPOSED RAMPS. THE FILL SECTION OF THE EMBANKMENT WILL BE CONSTRUCTED AT 2H: 1V.

HISTORY

HISTORICAL BORINGS WERE AVAILABLE ALONG I-77 SOUTH BOUND AND NORTH BOUND FROM ODOT TRANSPORTATION INFORMATION MAPPING SYSTEM. THOSE BORINGS HAVE BEEN RENUMBERED TO B-006-2-99, B-003-1-99, B-004-1-99, B-005-1-99, B-023-1-99, B-006-1-00, B-023-2-00, B-024-1-00, B-002-1-00 AND B-005-2-00 TO COINCIDE WITH THE BORING NUMBERING FROM THE CURRENT PROJECT

GEOLOGY

ACCORDING TO THE OHIO DEPARTMENT OF NATURAL RESOURCES' DIVISION OF GEOLOGICAL SURVEY, THE PROJECT SITE CONSISTS OF APPROXIMATELY 40 FEET OF WISCONSINAN-AGE TILL. THE WISCONSINAN-AGE TILL CONSISTS OF AN UNSORTED MIX OF CLAY, SILT, SAND, GRAVEL, AND BOULDERS. THESE SEDIMENTS HAVE BEEN DIRECTLY DEPOSITED FROM THE ICE OF SEVERAL SEPARATE ADVANCES. THE TILL MAY CONTAIN SILT, SAND, AND GRAVEL LENSES. THE BEDROCK GEOLOGY OF THE PROJECT SITE IS MISSISSIPPIAN-AGE SHALE AND SANDSTONE, BEREA SANDSTONE AND BEDFORD SHALE. THE PROJECT SITE IS IN THE KILLBUCK-GLACIATED PITTSBURGH PLATEAU, WHICH IS PART OF THE APPALACHIAN PLATEAU PROVINCE IN TERMS OF PHYSIOGRAPHIC CLASSIFICATIONS. ACCORDING TO THE ODNR, THE KILLBUCK-GLACIATED PITTSBURGH PLATEAU CONSISTS OF RIDGES AND FLAT UPLANDS GENERALLY ABOVE 1200 FEET ELEVATION. IT IS MOSTLY COVERED WITH THIN DRIFT AND DISSECTED BY STEEP VALLEYS; VALLEY SEGMENTS ALTERNATE BETWEEN BROAD DRIFT-FILLED AND NARROW ROCK- WALLED REACHES. ACCORDING TO OHIO DEPARTMENT OF NATURAL RESOURCES - DIVISION OF MINERAL RESOURCES WEBSITE (WWW.OHIODNR.COM/MINERAL), THERE IS NO MINES LISTED IN THE IMMEDIATE VICINITY OF THE PROJECT AREA.

RECONNAISSANCE

THE PROJECT SITE IS LOCATED IN A SUBURBAN SETTING SURROUNDED BY COMMERCIAL, DEVELOPMENT, AND FARMLAND. THE PAVEMENT ALONG MILLER ROAD IS IN FAIR CONDITION WITH SOME LONGITUDINAL CRACKING. THE EDGES OF THE PAVEMENTS ARE IN DISTRESSED CONDITION. THE PAVEMENT ALONG I-77 AND THE EXIT RAMPS ARE IN GOOD CONDITION. THERE ARE NO SIGNS OF INSTABILITY ALONG THE SLOPES OF THE EXISTING RAMPS AND AT THE BRIDGE ABUTMENTS. STOCKPILES OF RANDOM FILLS AND MANURE WERE NOTED AT RAMP B-3 ALONG THE SIDE OF THE EXISTING FARM. SOFT AND WET CONDITIONS WITH STORM DISCHARGE CULVERTS WERE NOTED ALONG THE TOE OF EXISTING I-77 NORTH BOUND ENTRANCE RAMP (RAMP B-1). THE SITE TERRAIN OVERALL IS FAIRLY LEVELED WITH THE EXCEPTION OF THE EXISTING EMBANKMENTS. THE GROUND COVER OFF THE SIDES OF PAVED AREAS CONSISTED OF MOWED GRASS, TALL VEGETATION, AND FEW TREES.

SUBSURFACE EXPLORATION

DURING THE PERIOD OF JANUARY 25 TO JUNE 15, 2021, CTL ENGINEERING ADVANCED TWENTY NINE (29) SOIL BORINGS IDENTIFIED AS B-001-0-20 TO B-020-0-20 TO DEPTHS RANGING FROM 7 TO 80 FEET BELOW EXISTING GRADE.CTL ENGINEERING, IN COLLABORATION WITH EUTHENICS, INC SELECTED THE BORING LOCATIONS AS SHOWN APPROXIMATELY ON THE ENCLOSED PLAN AND PROFILE SHEETS PROVIDED IN APPENDIX A. THE DRILLERS OBTAINED CONTINUOUS SPLIT SPOON SOIL SAMPLES IN THE UPPER 7 FEET AND SAMPLES AT 2.5-FOOT INTERVAL UP TO 20 FEET AND AT 5-FOOT INTERVAL THEREAFTER. THE DRILLING CREW OBTAINED ROCK CORE SAMPLES FROM BORINGS B-003-0-20, B-004-0-20 AND B-005-0-20. THE SPLIT SPOON SAMPLES WERE OBTAINED IN ACCORDANCE WITH STANDARD PENETRATION (SPT) PROCEDURE. THE SPT CONSISTS OF DRIVING A 2.0-INCH OUTSIDE DIAMETER (OD) SPLIT-SPOON SAMPLER 18 INCHES INTO THE SOIL WITH AN AUTOMATIC 140-POUND HAMMER FALLING 30 INCHES. THE THREE SPT HAMMERS USED FOR THIS PROJECT WERE CALIBRATED IN OCTOBER OF 2019, 2020 AND DECEMBER OF 2020 AND HAD ENERGY RATIOS OF 81.5, 76.4 AND 90 PERCENT IN OBTAINING INDUSTRY STANDARD N-VALUES (N60-VALUES).

EXPLORATION FINDINGS

THE PAVEMENT SECTION AT THE SOIL BORINGS B-003, B-023 AND B-025 CONSISTED OF 12 TO 14 INCHES OF CONCRETE. THE PAVEMENT SECTION AT BORING B-028 CONSISTED OF 12 INCHES OF ASPHALT. THE SURFACE MATERIAL AT BORINGS B-001, B-002, B-005 TO B-007, B-009 TO B-013, B-016, B-017, B-020 TO B-024, B-026, B-028 CONSISTED OF 5 TO 12 INCHES OF TOPSOIL. THE SUBSURFACE MATERIALS AT ALL BORINGS CONSISTED OF FILL MATERIAL EXTENDING TO DEPTHS VARYING FROM 1 TO 10 FEET BELOW EXISTING GRADES. THE FILL MATERIAL GENERALLY CONSISTED OF MEDIUM DENSE GRAVEL WITH SAND (A-1-b), MEDIUM DENSE TO VERY DENSE GRAVEL WITH SAND AND SILT (A-2-4), DENSE SILT (A-4b), VERY STIFF TO HARD SANDY SILT (A-4a), VERY STIFF TO HARD CLAY DEPOSITS (A-7-6). BORINGS B-003-0-20 TO B-005-0-20 ENCOUNTERED SEVERELY WEATHERED, VERY WEAK GREY SHALE AT DEPTHS RANGING FROM 43.5 TO 65 FEET BELOW EXISTING GRADES (ABOUT ELEVATIONS RANGING FROM 1057.4 FEET TO 1065.1 FEET). THE STANDARD PENETRATION TEST (SPT, N60) VALUES AND MOISTURE CONTENT OF THE FILL MATERIALS RANGED FROM 4 TO OVER 50 BLOWS PER FOOT (BPF) AND 8 TO 26 PERCENT, RESPECTIVELY. THE SPT AND MOISTURE CONTENT OF THE NATURAL SOIL BELOW THE FILL RANGED FROM 3 TO OVER 50 BLOWS PER FOOT (BPF) AND 4 TO 31 PERCENT RESPECTIVELY. THE LIQUID LIMITS AND PLASTICITY INDEX OF THE COHESIVE SOILS RANGED FROM 46 TO 27 PERCENT AND 4 TO 26 PERCENT RESPECTIVELY. THE SULFATE CONTENT VALUES OF TESTED SAMPLES WITHIN ANTICIPATED DESIGN SUBGRADES RANGED FROM 100 PPM TO 2800 PPM RESPECTIVELY. THE ORGANIC CONTENT OF THE TESTED PEAT SAMPLE IS 42.7 PERCENT. THE UNCONFINED COMPRESSIVE STRENGTH OF TESTED SALE IS 44.2 KSF AND UNIT WEIGHT IS 153.5 PCF. BASED ON HISTORICAL BORING DATA, THE SUBSURFACE MATERIAL AT BORINGS CONSISTED OF VERY STIFF TO HARD CLAYEY SILT, STIFF TO VERY STIFF SILTY CLAY, LOOSE TO DENSE COARSE TO FINE SAND. BORINGS ENCOUNTERED HIGHLY WEATHERED SHALE/SANDSTONE AT A DEPTH OF 51 TO 53.5 FEET BELOW EXISTING GRADES (ABOUT ELEVATIONS RANGING FROM 1052.3 FEET TO 1057 FEET).

LEGEND

DESCRIPTION	ODOT CLASS	CLASSIFIED MECH./VISUAL	
GRAVEL WITH SAND	*A-1-b*	*6*	*8*
GRAVEL WITH SAND AND SILT	*A-2-4*	*7*	*12*
GRAVEL WITH SAND, SILT & CLAY	*A-2-6*	*1*	*1*
SANDY SILT	*A-4a*	*25*	*59*
SILT	*A-4b*	*3*	*0*
SILT AND CLAY	*A-6a*	*17*	*36*
SILTY CLAY	*A-6b*	*6*	*16*
CLAY	*A-7-6*	*2*	*9*
	TOTAL	*67*	*141*
UNCONTROLLED FILL	*VISUAL*		
SHALE	*VISUAL*		
PAVEMENT OR BASE = X = APPROXIMATE THICKNESS	*VISUAL*		
SOD AND TOPSOIL = X = APPROXIMATE THICKNESS	*VISUAL*		

EXPLORATION LOCATION - PLAN VIEW

HISTORIC BORING LOCATION - PLAN VIEW

DRIVE SAMPLE AND/OR ROCK CORE BORING PLOTTED TO VERTICAL SCALE ONLY. HORIZONTAL BAR INDICATES A CHANGE IN STRATIGRAPHY.

WC INDICATES WATER CONTENT IN PERCENT.

N_{60} INDICATES STANDARD PENETRATION RESISTANCE NORMALIZED TO 60% DRILL ROD ENERGY RATIO.

● PLASTIC MATERIAL WITH A MOISTURE CONTENT EQUAL TO GREATER THAN LIQUID LIMIT MINUS THREE.

X/Y/D" NUMBER OF BLOWS FOR STANDARD PENETRATION TEST (SPT): X= NUMBER OF BLOWS FOR 6 INCHES (UNCORRECTED). Y/D"= NUMBER OF BLOWS (UNCORRECTED) FOR D" OF PENETRATION AT REFUSAL.

⊖ NON PLASTIC MATERIAL WITH WATER CONTENT GREATER THAN 25% OR GREATER THAN 19% WITH A WET APPEARANCE.

W— INDICATES FREE WATER ELEVATION.

▼— INDICATES STATIC WATER ELEVATION.

SO4 INDICATES A SULFATE CONTENT.

SS INDICATES A SPLIT SPOON SAMPLE.

NP INDICATES A NON-PLASTIC SAMPLE.

TR INDICATES THE TOP OF ROCK.

NX INDICATES ROCK CORE SAMPLE.

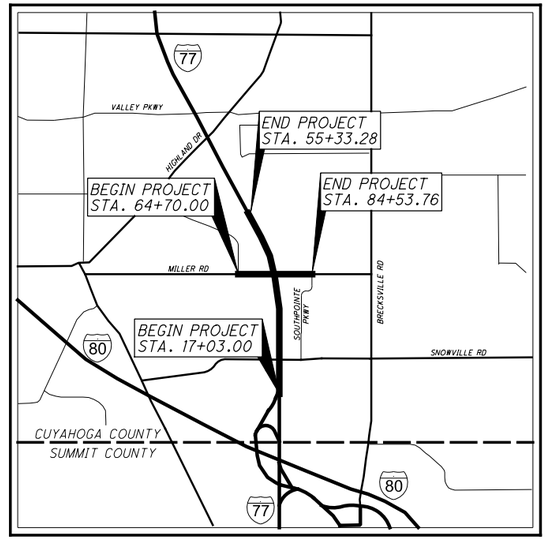

LOCATION MAP

SCALE IN MILES

0 1 2 3 4

N

PARTICLE SIZE DEFINITIONS

12"	3"	2.0 mm	0.42 mm	0.074 mm	0.005 mm
BOULDERS	COBBLES	GRAVEL	COARSE SAND	FINE SAND	SILT	CLAY
		No. 10 SIEVE	No. 40 SIEVE	No. 200 SIEVE	

SPECIFICATIONS

THIS GEOTECHNICAL EXPLORATION WAS PERFORMED IN ACCORDANCE WITH THE STATE OF OHIO, DEPARTMENT OF TRANSPORTATION, OFFICE OF GEOTECHNICAL ENGINEERING, SPECIFICATIONS FOR GEOTECHNICAL EXPLORATIONS, DATED JULY 2020.

AVAILABLE INFORMATION

THE SOIL, BEDROCK, AND GROUNDWATER INFORMATION COLLECTED FOR THIS SUBSURFACE EXPLORATION THAT CAN BE CONVENIENTLY DISPLAYED ON THE SOIL PROFILE SHEETS HAS BEEN PRESENTED. GEOTECHNICAL REPORTS, IF PREPARED, ARE AVAILABLE FOR REVIEW ON THE OFFICE OF CONTRACT SALES WEBSITE.

RECON. - MK 10/09/2020
DRILLING - TOM 01/25/2021 - 06/15/2021
VIRGIL 01/25/2021 - 06/15/2021
DRAWN - NKS 03/02/22
REVIEWED - MK 03/02/22

CTL ENGINEERING, INC.
3085 INTERSTATE PKWY.
BRUNSWICK, OHIO 44212
PHONE:(330)220-8900 FAX:(330)220-8944

PID NO. 104983

SOIL PROFILE

CUY-77-00.42

D:\Drop Box\CTL 2022\March\Dept 05\CLE\Nithya\20050046CLE_ODOT\104983IC001.dgn 02-03-2022 22:24:31 hp

HISTORIC BORING LEGEND

	DESCRIPTION	ODOT CLASS	CLASSIFIED MECH./VISUAL	
	GRAVEL AND/OR STONE FRAGMENTS	*A-1-a*	*1*	*0*
	GRAVEL AND/OR STONE FRAGMENTS WITH SAND	*A-1-b*	*1*	*2*
	FINE SAND	A-3	0	1
	COARSE AND FINE SAND	A-3a	1	3
	SANDY SILT	*A-4a*	*18*	*42*
	SILT AND CLAY	*A-6a*	*1*	*37*
		TOTAL	*22*	*85*
	SHALE	*VISUAL*		
	SILTSTONE	*VISUAL*		
SPT	INDICATES STANDARD PENETRATION RESISTANCE.			

INDEX OF SHEETS

LOCATION FROM STA. TO STA.	PLAN VIEW SHEET	PROFILE SHEET	CROSS-SECTION SHEET	CUT MAX.	FILL EMB. MAX.
COVER SHEET 1 & 2					
SUMMARY OF SOIL TEST DATA 3 TO 6					
MILLER ROAD					
61+50.00 75+00.00	7	7	-	0 FT	0 FT
75+00.00 86+50.00	8	8	-	0 FT	0 FT
I.R. 77					
17+00.00 30+00.00	9	9	-	0 FT	0 FT
30+00.00 43+00.00	10	10	-	0 FT	0 FT
RAMP B-1					
0+00.00 15+00.00	11	11	15	0 FT	0 FT
RAMP B-2					
8+00.00 15+48.17	12	12	-	2 FT	20 FT
RAMP B-3					
31+00.00 14+04.48	13	13	16	9 FT	17 FT
RAMP B-4					
34+00.00 43+41.80	14	14	-	0 FT	20 FT
CROSS SECTION 15 & 16					
BRIDGE NO. CUY-CR 187-00.977					
71+61.58 75+11.24	17	17	-	0 FT	0 FT
71+61.58 75+11.24	-	18	-	0 FT	0 FT
TBR SHEETS 19 TO 30					

CTL ENGINEERING, INC.
3085 INTERSTATE PKWY.
BRUNSWICK, OHIO 44212
PHONE:(330)220-8900 FAX:(330)220-8944

PID NO. 104983

SOIL PROFILE

CUY-77-00.42

D:\Drop Box\CTL 2022\March\Dept 05\CLE\Nithya\20050046CLE_ODOT\104983IC002.dgn 02-03-2022 21:43:51 hp

SUMMARY OF SOIL TEST DATA
MILLER ROAD

EXPLORATION NO., STATION & OFFSET	FROM TO	SAMPLE ID	N60	% REC	HP tsf	% GR	% CS	% FS	% SILT	% CLAY	LL	PL	PI	% WC	ODOT CLASS (GI)	ppm SO4
B-001-0-20 STA. 64+04, 23' LT. LATITUDE = 41.289636 LONGITUDE = -81.639303	01.00-02.50	SS-1	14	100	4.50	0	5	6	53	36	40	25	15	21	A-6a (10)	100
	02.50-04.00	SS-2	15	100	4.50	VERY STIFF TO HARD, BROWN, SILT AND CLAY								18	A-6a (VISUAL)	-
	04.00-05.50	SS-3	14	100	2.50	SAME AS SS-2								20	A-6a (VISUAL)	-
	05.50-07.00	SS-4	18	100	2.50	SAME AS SS-2								17	A-6a (VISUAL)	-
B-002-0-20 STA. 68+21, 24' LT. LATITUDE = 41.289636 LONGITUDE = -81.637786	01.00-02.50	SS-1	10	100	3.00	8	5	10	47	32	34	20	14	15	A-6a (10)	580
	02.50-04.00	SS-2	8	100	2.25	VERY STIFF, BROWN, SILT AND CLAY								17	A-6a (VISUAL)	-
	04.00-05.50	SS-3	12	100	4.50	17	6	7	41	29	28	17	11	13	A-6a (7)	-
	05.50-07.00	SS-4	14	100	4.50	HARD, GRAY, SILT AND CLAY								13	A-6a (VISUAL)	-
B-002-1-00 STA. 70+17, 8' RT. LATITUDE = 41.289400 LONGITUDE = -81.637856	01.00-02.50	SS-1	7	-	-	STIFF SILTY AND CLAY								15	A-6a (VISUAL)	-
	03.50-05.00	SS-2	13	-	-	SAME AS SS-1								-	A-6a (VISUAL)	-
	06.00-07.50	SS-3	15	-	-	SAME AS SS-1								-	A-6a (VISUAL)	-
	08.50-10.00	SS-4	14	-	-	SAME AS SS-1								-	A-6a (VISUAL)	-
B-005-2-00 STA. 77+40, 7' LT. LATITUDE = 41.289431 LONGITUDE = 81.635194	01.00-02.50	SS-1	11	-	-	STIFF SANDY SILT								12	A-4a (VISUAL)	-
	03.50-05.00	SS-2	13	-	-	SAME AS SS-1								-	A-4a (VISUAL)	-
	06.00-07.50	SS-3	10	-	-	SAME AS SS-1								-	A-4a (VISUAL)	-
	08.50-10.00	SS-4	14	-	-	SAME AS SS-1								-	A-4a (VISUAL)	-
B-006-0-20 STA. 78+83, 62' LT. LATITUDE = 41.289731 LONGITUDE = -81.633922	01.00-02.50	SS-1	14	100	-	56	5	5	23	11	29	20	9	16	A-2-4 (0)	100
	02.50-04.00	SS-2	11	100	2.75	VERY STIFF, BROWN, SANDY SILT								19	A-4a (VISUAL)	-
	04.00-05.50	SS-3	9	100	2.25	STIFF TO VERY STIFF, BROWN, SILTY CLAY								23	A-6b (VISUAL)	-
	05.50-07.00	SS-4	3	100	1.75	9	8	13	53	17	40	19	21	23	A-6b (11)	-
	08.50-10.00	SS-5	25	100	4.50	HARD, GRAY, SILT AND CLAY								13	A-6a (VISUAL)	-
	11.00-12.50	SS-6	27	100	4.50	25	2	5	37	31	31	17	14	14	A-6a (8)	-
	13.50-15.00	SS-7	18	100	4.50	HARD, GRAY, SILT AND CLAY								14	A-6a (VISUAL)	-
B-007-0-20 STA. 80+60, 35' LT. LATITUDE = 41.289653 LONGITUDE = -81.633281	01.00-02.50	SS-1	13	100	2.25	11	10	9	41	29	29	20	9	14	A-4a (7)	100
	02.50-04.00	SS-2	11	100	3.50	VERY STIFF, BROWN, SANDY SILT								16	A-4a (VISUAL)	-
	04.00-05.50	SS-3	17	100	4.50	5	4	7	60	24	35	21	14	17	A-6a (10)	-
	05.50-07.00	SS-4	22	100	4.50	HARD, BROWN, SILT AND CLAY								16	A-6a (VISUAL)	-
B-008-0-20 STA. 82+86, 33' LT. LATITUDE = 41.288822 LONGITUDE = -81.632467	01.00-02.50	SS-1	11	100	3.00	7	4	6	48	35	29	21	8	15	A-4a (8)	100
	02.50-04.00	SS-2	18	100	4.50	VERY STIFF TO HARD BROWN, SANDY SILT								15	A-4a (VISUAL)	-
	04.00-05.50	SS-3	17	100	2.25	SAME AS SS-2								15	A-4a (VISUAL)	-
	05.50-07.00	SS-4	19	100	3.50	SAME AS SS-2								16	A-4a (VISUAL)	-

I.R. 77

EXPLORATION NO., STATION & OFFSET	FROM TO	SAMPLE ID	N60	% REC	HP tsf	% GR	% CS	% FS	% SILT	% CLAY	LL	PL	PI	% WC	ODOT CLASS (GI)	ppm SO4
B-009-0-20 STA. 19+54, 4' RT. LATITUDE = 41.282997 LONGITUDE = -81.635425	01.50-03.00	SS-1	11	100	4.50	27	4	2	64	3	28	20	8	19	A-4b (6)	100
	03.00-04.50	SS-2	14	100	4.50	VERY STIFF TO HARD, BROWN, SILTY CLAY								20	A-6b (VISUAL)	-
	04.50-06.00	SS-3	11	100	3.50	SAME AS SS-2								23	A-6b (VISUAL)	-
	06.00-07.50	SS-4	16	100	-	41	20	12	21	6	30	20	10	10	A-2-4 (0)	-
B-010-0-20 STA. 23+97, 1' LT. LATITUDE = 41.284214 LONGITUDE = -81.635428	01.50-03.00	SS-1	43	100	-	16	5	6	42	31	30	26	4	13	A-4a (8)	880
	03.00-04.50	SS-2	62	100	-	VERY DENSE, BROWN, GRAVEL WITH SAND AND SILT								8	A-2-4 (VISUAL)	-
	04.50-06.00	SS-3	10	100	2.50	0	1	1	52	46	45	29	16	27	A-7-6 (11)	-
	06.00-07.50	SS-4	12	100	3.50	VERY STIFF, BROWNISH ORANGE, CLAY								29	A-7-6 (VISUAL)	-

SUMMARY OF SOIL TEST DATA

I.R. 77

EXPLORATION NO., STATION & OFFSET	FROM TO	SAMPLE ID	N60	% REC	HP tsf	% GR	% CS	% FS	% SILT	% CLAY	LL	PL	PI	% WC	ODOT CLASS (GI)	ppm SO4
B-011-0-20	01.50-03.00	SS-1	18	100	-	36	20	10	34		NP	NP	NP	18	A-2-4 (0)	1100
STA. 28+21, 82' LT.	03.00-04.50	SS-2	12	100	-	MEDIUM DENSE TO DENSE, BROWN, GRAVEL WITH SAND AND SILT								12	A-2-4 (VISUAL)	-
LATITUDE = 41.285378	04.50-06.00	SS-3	39	100	-	SAME AS SS-2								16	A-2-4 (VISUAL)	-
LONGITUDE = -81.635408	06.00-07.50	SS-4	14	100	-	SAME AS SS-2								17	A-2-4 (VISUAL)	-
B-012-0-20	01.50-03.00	SS-1	30	100	-	48	6	6	40		NP	NP	NP	18	A-4a (1)	100
STA. 31+20, 82' LT.	03.00-04.50	SS-2	8	22	1.50	STIFF TO VERY STIFF, BROWNISH ORANGE, SANDY SILT								27	A-4a (VISUAL)	-
LATITUDE = 41.287078	04.50-06.00	SS-3	14	100	2.50	33	1	2	37	27	40	32	8	30	A-4a (6)	-
LONGITUDE = -81.635772	06.00-07.50	SS-4	15	100	3.00	STIFF TO VERY STIFF, BROWNISH ORANGE, SANDY SILT								27	A-4a (VISUAL)	-
B-020-0-20	01.50-03.00	SS-1	16	100	3.50	6	5	3	63	23	33	14	19	17	A-6b (12)	100
STA. 31+67, 82' RT.	03.00-04.50	SS-2	18	100	2.25	31	0	0	31	38	46	29	17	30	A-7-6 (11)	-
LATITUDE = 41.286336	04.50-06.00	SS-3	11	100	2.25	STIFF TO VERY STIFF, BROWNISH ORANGE, CLAY								30	A-7-6 (VISUAL)	-
LONGITUDE = -81.635117	06.00-07.50	SS-4	15	100	1.75	SAME AS SS-3								27	A-7-6 (VISUAL)	-

RAMP B-1

EXPLORATION NO., STATION & OFFSET	FROM TO	SAMPLE ID	N60	% REC	HP tsf	% GR	% CS	% FS	% SILT	% CLAY	LL	PL	PI	% WC	ODOT CLASS (GI)	ppm SO4
B-024-0-20	01.00-02.50	SS-1	20	100	2.25	28	14	13	29	16	32	17	15	17	A-6a (4)	100
STA. 0+54, 12' RT.	02.50-04.00	SS-2	18	100	2.00	VERY STIFF TO HARD, BROWN, SILT AND CLAY								18	A-6a (VISUAL)	-
LATITUDE = 41.289719	04.00-05.50	SS-3	23	100	4.50	SAME AS SS-2								14	A-6a (VISUAL)	-
LONGITUDE = -81.635103	05.50-07.00	SS-4	23	100	4.50	SAME AS SS-2								13	A-6a (VISUAL)	-
	08.50-10.00	SS-5	18	100	4.50	SAME AS SS-2								13	A-6a (VISUAL)	-
	11.00-12.50	SS-6	23	100	4.50	16	7	8	40	29	26	19	7	13	A-4a (7)	-
	13.50-15.00	SS-7	31	100	4.50	HARD, GREY, SANDY SILT								13	A-4a (VISUAL)	-
	16.00-17.50	SS-8	25	100	4.50	SAME AS SS-7								12	A-4a (VISUAL)	-
	18.50-20.00	SS-9	31	100	4.50	SAME AS SS-7								10	A-4a (VISUAL)	-
	23.50-25.00	SS-10	32	100	4.50	SAME AS SS-7								12	A-4a (VISUAL)	-
	28.50-30.00	SS-11	31	100	4.50	SAME AS SS-7								12	A-4a (VISUAL)	-
B-025-0-20	01.00-02.50	SS-1	57	100	4.00	4	14	17	47	18	39	27	12	21	A-6a (7)	1700
STA. 3+84, 4' RT.	02.50-04.00	SS-2	51	100	4.00	VERY STIFF, BROWN, SILT AND CLAY								19	A-6a (VISUAL)	-
LATITUDE = 41.290567	04.00-05.50	SS-3	20	100	4.00	SAME AS SS-2								14	A-6a (VISUAL)	-
LONGITUDE = -81.635539	05.50-07.00	SS-4	18	100	4.00	VERY STIFF, BROWN, SANDY SILT								12	A-4a (VISUAL)	-
	08.50-10.00	SS-5	23	100	4.00	23	5	6	40	26	44	24	20	15	A-4a (8)	-
	11.00-12.50	SS-6	20	100	4.00	SAME AS SS-4								13	A-4a (VISUAL)	-
	13.50-15.00	SS-7	20	100	4.00	SAME AS SS-4								13	A-4a (VISUAL)	-
	16.00-17.50	SS-8	27	100	4.00	SAME AS SS-4								17	A-4a (VISUAL)	-
	18.50-20.00	SS-9	25	100	4.00	SAME AS SS-4								18	A-4a (VISUAL)	-
	23.50-25.00	SS-10	28	100	4.00	SAME AS SS-4								18	A-4a (VISUAL)	-
	28.50-30.00	SS-11	29	100	4.00	8	5	8	40	39	32	21	11	26	A-6a (8)	-
	33.50-35.00	SS-12	29	100	4.00	VERY STIFF, BROWN, SILT AND CLAY								20	A-6a (VISUAL)	-
B-026-0-20	01.00-02.50	SS-1	8	100	2.50	6	4	9	37	44	38	19	19	15	A-6b (12)	-
STA. 4+57, 91' RT.	02.50-04.00	SS-2	9	100	2.00	STIFF TO VERY STIFF, BROWN, SILTY CLAY								26	A-6b (VISUAL)	-
LATITUDE = 41.290739	04.00-05.50	SS-3	10	100	1.50	SAME AS SS-2								21	A-6b (VISUAL)	-
LONGITUDE = -81.635672	05.50-07.00	SS-4	13	100	2.50	SAME AS SS-2								17	A-6b (VISUAL)	-
	08.50-10.00	SS-5	20	100	2.00	30	7	7	37	19	25	16	9	8	A-4a (4)	-
	11.00-12.50	SS-6	14	100	4.00	VERY STIFF, GREY, SANDY SILT								12	A-4a (VISUAL)	-
	13.50-15.00	SS-7	19	100	4.00	SAME AS SS-6								15	A-4a (VISUAL)	-

SUMMARY OF SOIL TEST DATA

RAMP B-1

EXPLORATION NO., STATION & OFFSET	FROM TO	SAMPLE ID	N60	% REC	HP tsf	% GR	% CS	% FS	% SILT	% CLAY	LL	PL	PI	% WC	ODOT CLASS (GI)	ppm SO4
B-027-0-20 STA. 7+05, 3' RT. LATITUDE = 41.291325 LONGITUDE = -81.636128	01.00-02.50	SS-1	70	100	-	51	8	6	29	6	39	21	18	16	A-2-6 (2)	2800
	02.50-04.00	SS-2	45	100	-	DENSE TO VERY DENSE, BROWN, GRAVEL WITH SAND, SILT AND CLAY								13	A-2-6 (VISUAL)	-
	04.00-05.50	SS-3	24	100	4.50	HARD, BROWN, CLAY								14	A-7-6 (VISUAL)	-
	05.50-07.00	SS-4	33	100	4.50	SAME AS SS-3								14	A-7-6 (VISUAL)	-
	08.50-10.00	SS-5	18	100	4.50	SAME AS SS-3								16	A-7-6 (VISUAL)	-
	11.00-12.50	SS-6	24	100	4.50	SAME AS SS-3								13	A-7-6 (VISUAL)	-
	13.50-15.00	SS-7	5	100	2.00	6	4	15	51	24	36	21	15	29	A-6a (10)	-
	16.00-17.50	SS-8	18	100	4.00	VERY STIFF, BROWN, SILT AND CLAY								15	A-6a (VISUAL)	-
	18.50-20.00	SS-9	18	100	3.50	SAME AS SS-8								14	A-6a (VISUAL)	-
	23.50-25.00	SS-10	22	100	3.50	SAME AS SS-8								13	A-6a (VISUAL)	-
B-028-0-20 STA. 10+79, 5' RT. LATITUDE = 41.292219 LONGITUDE = -81.636797	01.00-02.50	SS-1	57	100	-	58	8	5	22	7	NP	NP	NP	17	A-2-4 (0)	1200
	02.50-04.00	SS-2	97	100	-	VERY DENSE, BROWN, GRAVEL WITH SAND AND SILT								16	A-2-4 (VISUAL)	-
	04.00-05.50	SS-3	14	100	3.50	VERY STIFF TO HARD, BROWN, SANDY SILT								11	A-4a (VISUAL)	-
	05.50-07.00	SS-4	22	100	4.50	SAME AS SS-3								16	A-4a (VISUAL)	-
	08.50-10.00	SS-5	29	100	2.00	8	5	7	39	41	31	22	9	22	A-4a (8)	-
	11.00-12.50	SS-6	24	100	4.00	VERY STIFF, BROWN, SANDY SILT								12	A-4a (VISUAL)	-
	13.50-15.00	SS-7	25	100	4.00	SAME AS SS-6								18	A-4a (VISUAL)	-
	16.00-17.50	SS-8	23	100	3.50	SAME AS SS-6								19	A-4a (VISUAL)	-
	18.50-20.00	SS-9	32	100	3.50	SAME AS SS-6								16	A-4a (VISUAL)	-
	23.50-25.00	SS-10	32	100	3.50	SAME AS SS-6								15	A-4a (VISUAL)	-
B-029-0-20 STA. 14+94, 7' RT. LATITUDE = 41.293233 LONGITUDE = -81.637483	01.00-02.50	SS-1	38	100	-	50	10	6	26	8	NP	NP	NP	17	A-2-4 (0)	2600
	02.50-04.00	SS-2	34	100	-	MEDIUM DENSE, BROWN, GRAVEL WITH SAND AND SILT								18	A-2-4 (VISUAL)	-
	04.00-05.50	SS-3	28	100	4.50	HARD, BROWN, SANDY SILT								15	A-4a (VISUAL)	-
	05.50-07.00	SS-4	38	100	4.50	SAME AS SS-3								12	A-4a (VISUAL)	-
	08.50-10.00	SS-5	28	100	4.50	11	5	6	38	40	33	21	12	11	A-6a (9)	-
	11.00-12.50	SS-6	29	100	4.50	HARD, BROWN, SILT AND CLAY								14	A-6a (VISUAL)	-
	13.50-15.00	SS-7	28	100	4.00	SAME AS SS-6								17	A-6a (VISUAL)	-

RAMP B-2

EXPLORATION NO., STATION & OFFSET	FROM TO	SAMPLE ID	N60	% REC	HP tsf	% GR	% CS	% FS	% SILT	% CLAY	LL	PL	PI	% WC	ODOT CLASS (GI)	ppm SO4
B-017-0-20 STA. 14+88, 42' LT. LATITUDE = 41.289728 LONGITUDE = -81.636989	01.50-03.00	SS-1	24	100	-	37	22	25	13	3	24	18	6	18	A-1-b (0)	-
	03.00-04.50	SS-2	31	100	-	MEDIUM DENSE TO DENSE, BROWN, GRAVEL WITH SAND								17	A-1-b (VISUAL)	-
	04.50-06.00	SS-3	39	100	-	SAME AS SS-2								4	A-1-b (VISUAL)	-
	06.00-07.50	SS-4	33	100	-	SAME AS SS-2								7	A-1-b (VISUAL)	-
	08.50-10.00	SS-5	34	100	2.00	24	11	10	37	18	27	20	7	17	A-4a (4)	-
	11.00-12.50	SS-6	26	100	2.00	VERY STILL, BROWN, SANDY SILT								17	A-4a (VISUAL)	-
	13.50-15.00	SS-7	30	100	2.50	SAME AS SS-6								17	A-4a (VISUAL)	-
	16.00-17.50	SS-8	14	100	2.50	20	2	5	45	28	32	24	8	23	A-4a (8)	-
	18.50-20.00	SS-9	12	100	2.75	VERY STIFF, BROWN, SILTY CLAY								23	A-6b (VISUAL)	-
	23.50-25.00	SS-10	16	100	4.50	HARD, GREY, SILTY CLAY								9	A-6b (VISUAL)	-
	28.50-30.00	SS-11	30	-	4.50	SAME AS SS-10								15	A-6b (VISUAL)	-
B-018-0-20 STA. 11+67, 15' LT. LATITUDE = 41.290606 LONGITUDE = -81.637139	01.50-03.00	SS-1	50	100	-	38	2	3	55	2	NP	NP	NP	17	A-4b (4)	100
	03.00-04.50	SS-2	31	100	-	DENSE TO VERY DENSE, BROWN, GRAVEL WITH SAND AND SILT								16	A-2-4 (VISUAL)	-
	04.50-06.00	SS-3	34	100	-	SAME AS SS-2								12	A-2-4 (VISUAL)	-
	06.00-07.50	SS-4	60	100	-	SAME AS SS-2								18	A-2-4 (VISUAL)	-
	08.50-10.00	SS-5	18	100	-	DENSE TO MEDIUM DENSE, BROWN, GRAVEL WITH SAND AND SILT								15	A-2-4 (VISUAL)	-
	11.00-12.50	SS-6	15	100	-	62	3	4	24	7	35	31	4	28	A-2-4 (0)	-
	13.50-15.00	SS-7	18	100	2.75	17	7	9	44	23	40	29	11	18	A-4a (VISUAL)	-
	16.00-17.50	SS-8	31	100	3.75	VERY STIFF, BROWN, SANDY SILT								15	A-4a (VISUAL)	-
	18.50-20.00	SS-9	38	100	3.75	SAME AS SS-8								14	A-6b (VISUAL)	-

SUMMARY OF SOIL TEST DATA

RAMP B-2

EXPLORATION NO., STATION & OFFSET	FROM	TO	SAMPLE ID	N60	% REC	HP tsf	% GR	% CS	% FS	% SILT	% CLAY	LL	PL	PI	% WC	ODOT CLASS (GI)	ppm SO4
B-019-0-20	01.50	03.00	SS-1	64	100	-	52	15	11	21	1	NP	NP	NP	19	A-1-b (0)	1500
STA. 7+95, 20' LT.	03.00	04.50	SS-2	29	100	4.50	49	3	3	29	16	26	19	7	12	A-4a (2)	-
LATITUDE = 41.291611	04.50	06.00	SS-3	26	100	4.50	HARD, BROWNISH GREY, SANDY SILT								13	A-4a (VISUAL)	-
LONGITUDE = -81.637358	06.00	07.50	SS-4	33	100	4.50	SAME AS SS-3								14	A-4a (VISUAL)	-

RAMP B-3

EXPLORATION NO., STATION & OFFSET	FROM	TO	SAMPLE ID	N60	% REC	HP tsf	% GR	% CS	% FS	% SILT	% CLAY	LL	PL	PI	% WC	ODOT CLASS (GI)	ppm SO4
B-013-0-20	01.50	03.00	SS-1	15	100	2.50	0	12	11	35	42	39	23	16	24	A-6b (10)	100
STA. 34+42, 11' RT.	03.00	04.50	SS-2	16	100	3.50	STIFF TO VERY STIFF, BROWNISH ORANGE, SILTY CLAY								22	A-6b (VISUAL)	-
LATITUDE = 41.287800	04.50	06.00	SS-3	12	100	1.50	19	14	20	34	13	NP	NP	NP	31	A-4a (2)	-
LONGITUDE = -81.635875	06.00	07.50	SS-4	14	100	-	STIFF, BROWN, SANDY SILT								12	A-4a (VISUAL)	-
B-014-0-20	01.00	02.50	SS-1	21	94	-	MEDIUM DENSE TO DENSE, BROWN, GRAVEL WITH SAND								18	A-1-b (VISUAL)	-
STA. 38+08, 4' LT.	03.50	05.00	SS-2	17	94	-	SAME AS SS-1								18	A-1-b (VISUAL)	-
LATITUDE = 41.288031	06.00	07.00	SS-3	-	100	-	43	32	13	12		NP	NP	NP	22	A-1-b (0)	-
LONGITUDE = -81.636206	08.50	10.00	SS-4	42	-	-	SAME AS SS-1								20	A-1-b (VISUAL)	1300
	11.00	12.50	SS-5	15	78	3.75	STIFF TO HARD, BROWN, SILT AND CLAY								20	A-6a (VISUAL)	-
	13.50	15.00	SS-6	15	94	4.50	11	2	4	49	34	35	24	11	20	A-6a (8)	-
	16.00	17.50	SS-7	21	100	1.75	SAME AS SS-5								15	A-6a (VISUAL)	-
	18.50	20.00	SS-8	18	100	4.50	HARD, GREY, CLAY								13	A-7-6 (VISUAL)	-
B-015-0-20	01.00	02.50	SS-1	12	83	4.50	6	3	6	58	27	30	26	4	18	A-4b (8)	-
STA. 41+12, 8' RT.	03.50	05.00	SS-2	18	89	4.50	VERY STIFF TO HARD, BROWN, SILTY CLAY								17	A-6b (VISUAL)	-
LATITUDE = 41.288811	06.00	07.50	SS-3	26	100	4.50	SAME AS SS-2								16	A-6b (VISUAL)	-
LONGITUDE = -81.636583	08.50	10.00	SS-4	24	100	3.75	SAME AS SS-2								16	A-6b (VISUAL)	-
B-016-0-20	01.00	02.25	SS-1	-	100	2.25	44	4	3	46	3	30	18	12	10	UCF (VISUAL)	740
STA. 41+28, 58' RT.	03.00	03.25	SS-2	-	100	-	VERY STIFF, BROWNISH GREY, SILT AND CLAY								24	UCF (VISUAL)	-
LATITUDE = 41.288806	04.50	06.00	SS-3	10	100	2.50	33	13	9	31	14	39	27	12	16	UCF (VISUAL)	-
LONGITUDE = -81.637217	06.00	07.50	SS-4	5	44	2.25	VERY STIFF, BROWN, SILT AND CLAY								18	UCF (VISUAL)	-
	08.50	10.00	SS-5	3	100	-	VERY LOOSE, BLACK, PEAT								126	PEAT (VISUAL)	-
	11.00	12.50	SS-6	33	100	-	56	11	9	17	7	NP	NP	NP	21	A-1-b (0)	-
	13.50	15.00	SS-7	12	100	-	MEDIUM DENSE TO DENSE, BROWNISH GREY, GRAVEL WITH SAND								18	A-1-b (VISUAL)	-
	16.00	17.50	SS-8	8	100	-	SAME AS SS-7								18	A-1-b (VISUAL)	-
	18.50	20.00	SS-9	19	0	-	STIFF TO VERY STIFF, GREY, SILTY CLAY								-	A-6b (VISUAL)	-
	23.50	25.00	SS-10	38	100	3.75	SAME AS SS-9								13	A-6b (VISUAL)	-

RAMP B-4

EXPLORATION NO., STATION & OFFSET	FROM	TO	SAMPLE ID	N60	% REC	HP tsf	% GR	% CS	% FS	% SILT	% CLAY	LL	PL	PI	% WC	ODOT CLASS (GI)	ppm SO4
B-021-0-20	01.50	03.00	SS-1	38	100	4.50	15	1	2	48	34	32	18	14	14	A-6a (10)	100
STA. 34+23, 5' RT.	03.00	04.50	SS-2	19	100	4.25	HARD, BLACK, SILT AND CLAY								27	A-6a (VISUAL)	-
LATITUDE = 41.285169	04.50	06.00	SS-3	12	100	3.50	0	1	3	44	52	36	28	8	27	A-4a (8)	-
LONGITUDE = -81.637958	06.00	07.50	SS-4	19	100	1.75	STIFF TO VERY STIFF, BROWNISH ORANGE, SANDY SILT								24	A-4a (VISUAL)	-
B-022-0-20	01.50	03.00	SS-1	15	100	2.50	9	6	9	54	22	40	19	21	25	A-6b (12)	100
STA. 37+56, 20' LT.	03.00	04.50	SS-2	14	100	4.25	4	5	7	54	30	36	22	14	23	A-4a (4)	-
LATITUDE = 41.287958	04.50	06.00	SS-3	22	100	2.50	VERY STIFF TO HARD, BROWN, SILT AND CLAY								17	A-4a (VISUAL)	-
LONGITUDE = -81.635297	06.00	07.50	SS-4	29	100	4.25	SAME AS SS-3								18	A-4a (VISUAL)	-
B-023-0-20	01.00	02.50	SS-1	18	100	4.00	23	1	2	42	32	37	22	15	19	A-6a (10)	2800
STA. 42+56, 15' LT.	02.50	04.00	SS-2	20	100	3.50	VERY STIFF BROWNISH GREY, SILT AND CLAY								15	A-6a (VISUAL)	-
LATITUDE = 41.289331	04.00	05.50	SS-3	9	100	2.50	SAME AS SS-2								17	A-6a (VISUAL)	-
LONGITUDE = -81.635208	05.50	07.00	SS-4	11	100	3.50	SAME AS SS-2								10	A-6a (VISUAL)	-

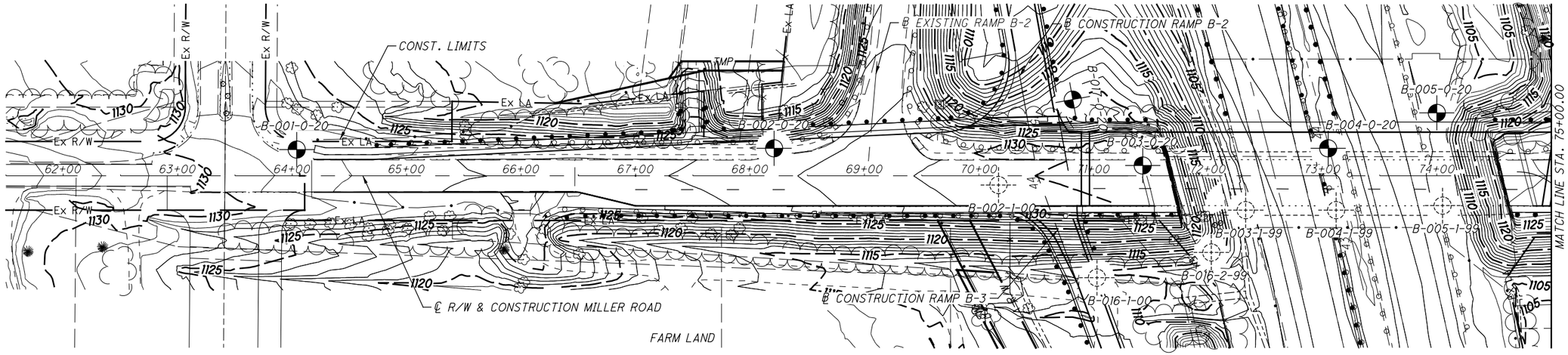

NOTE: SEE SHEET 17 OF 30 FOR BORINGS B-003-0-20, B-003-1-99, B-004-0-20, B005-0-20, AND B-023-1-99 SOIL PROFILE.
SEE SHEET 18 OF 30 FOR BORINGS B-004-1-99, B-005-1-99, B-016-1-00 AND B-016-2-99 SOIL PROFILE.

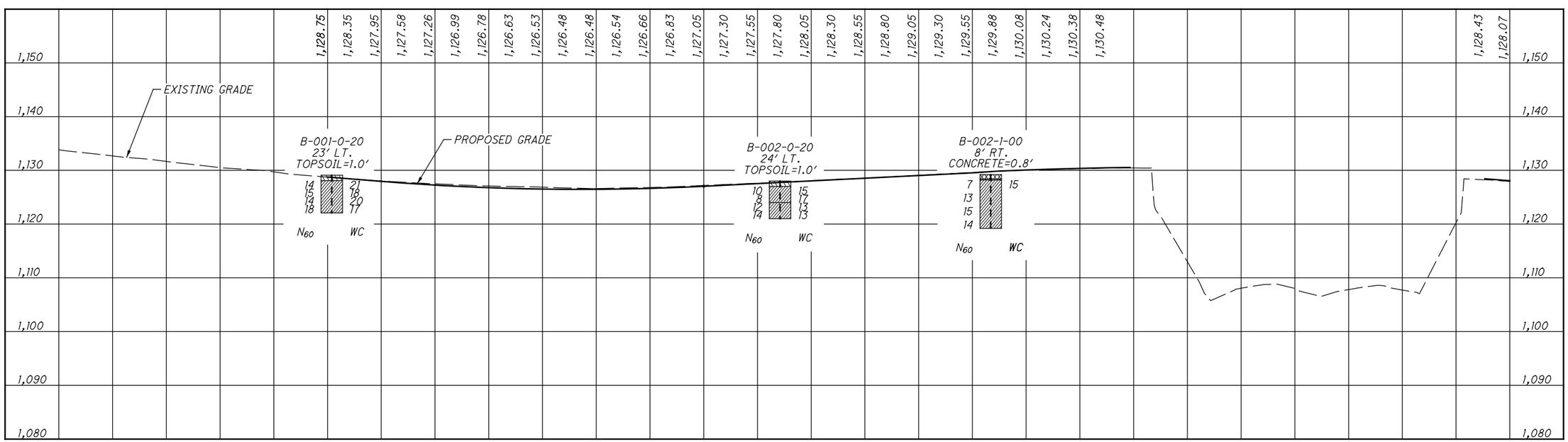

SOIL PROFILE - MILLER ROAD
STA. 61+50.00 TO STA. 75+00.00

CUY-77-00.42

7 / 30

411 / 434

HORIZONTAL SCALE IN FEET
0 25 50 100

DRAWN N.K.S
CHECKED MK

D:\Drop Box\CTL 2022\March\Dept 05\CLE\Nithya\20050046CLE_ODOT\104983GP001.dgn 02-03-2022 21:15:00 hp

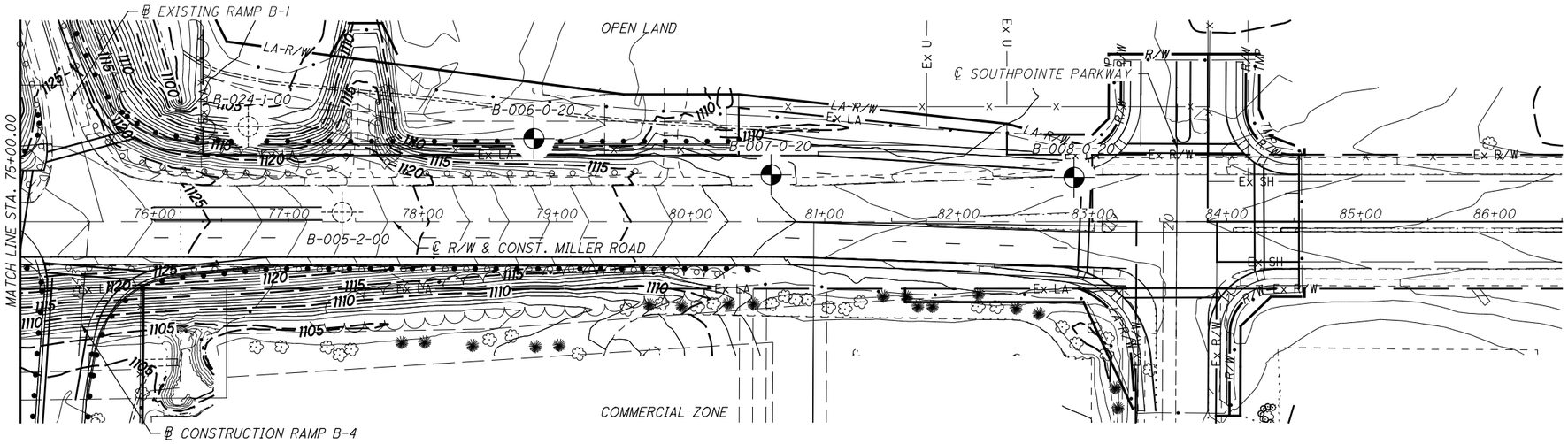

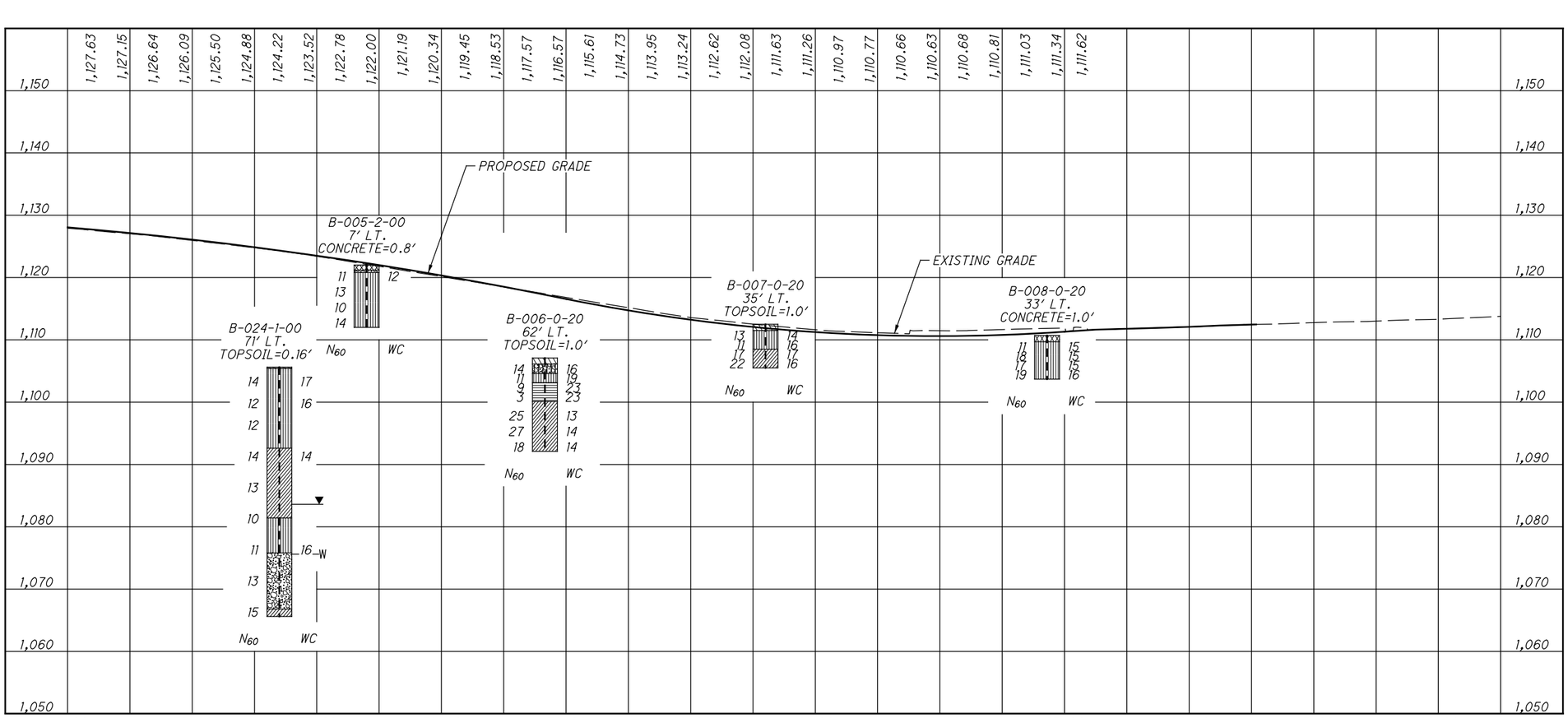

DRAWN N.K.S
CHECKED MK

HORIZONTAL SCALE IN FEET
0 25 50 100

SOIL PROFILE - MILLER ROAD STA. 75+00.00 TO STA. 86+50.00

CUY-77-00.42

8 / 30

412 / 434

D:\Drop Box\CTL 2022\March\Dept 05\CLE\Nithya\20050046CLE_ODOT\104983GP002.dgn 02-03-2022 21:34:29 hp

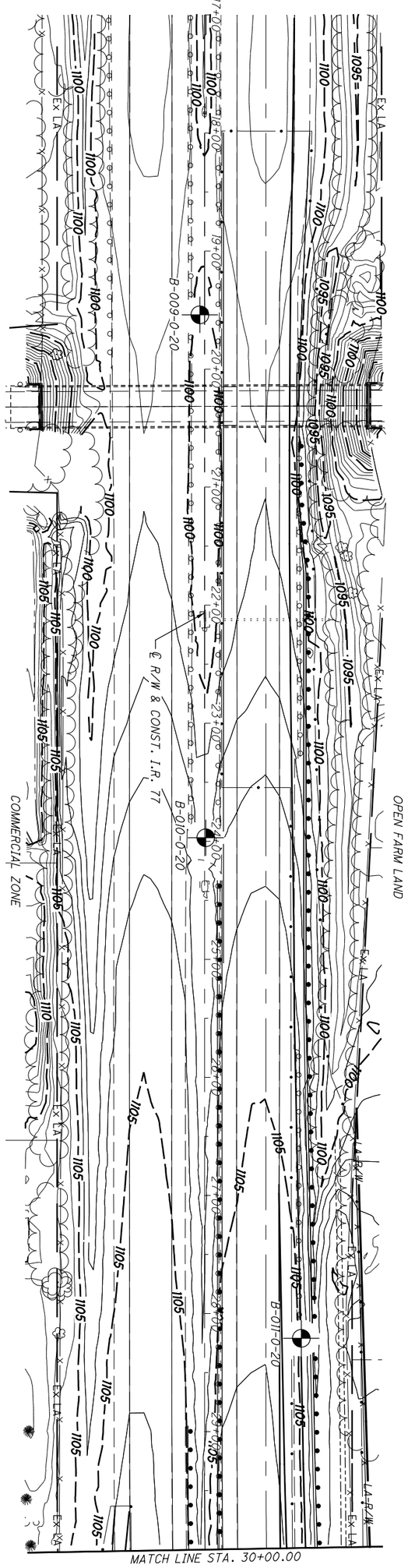

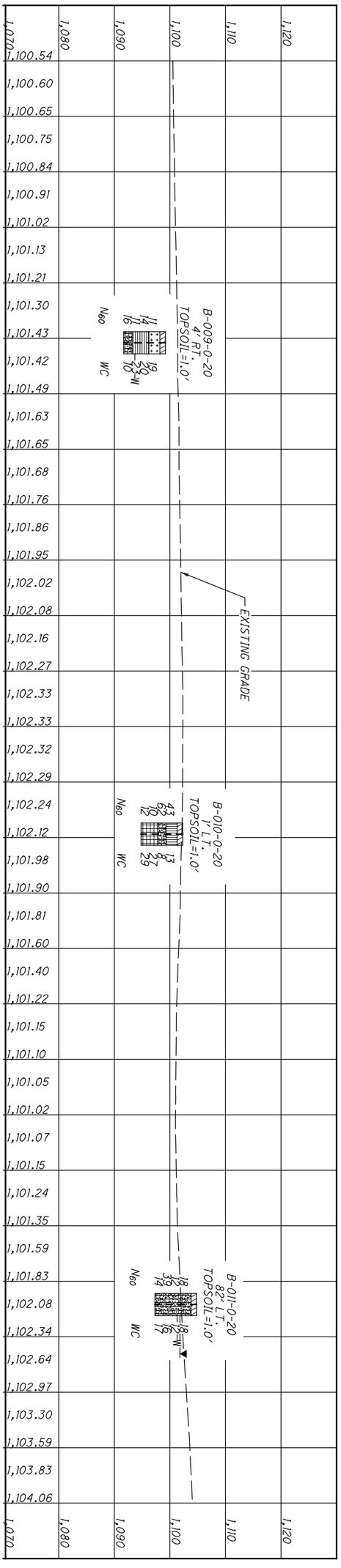

413/434	9/30	CUY-77-00.42	SOIL PROFILE - I.R. 77 STA. 17+00.00 TO STA. 30+00.00

DRAWN N.K.S
CHECKED MK
0 50
25 100
HORIZONTAL SCALE IN FEET

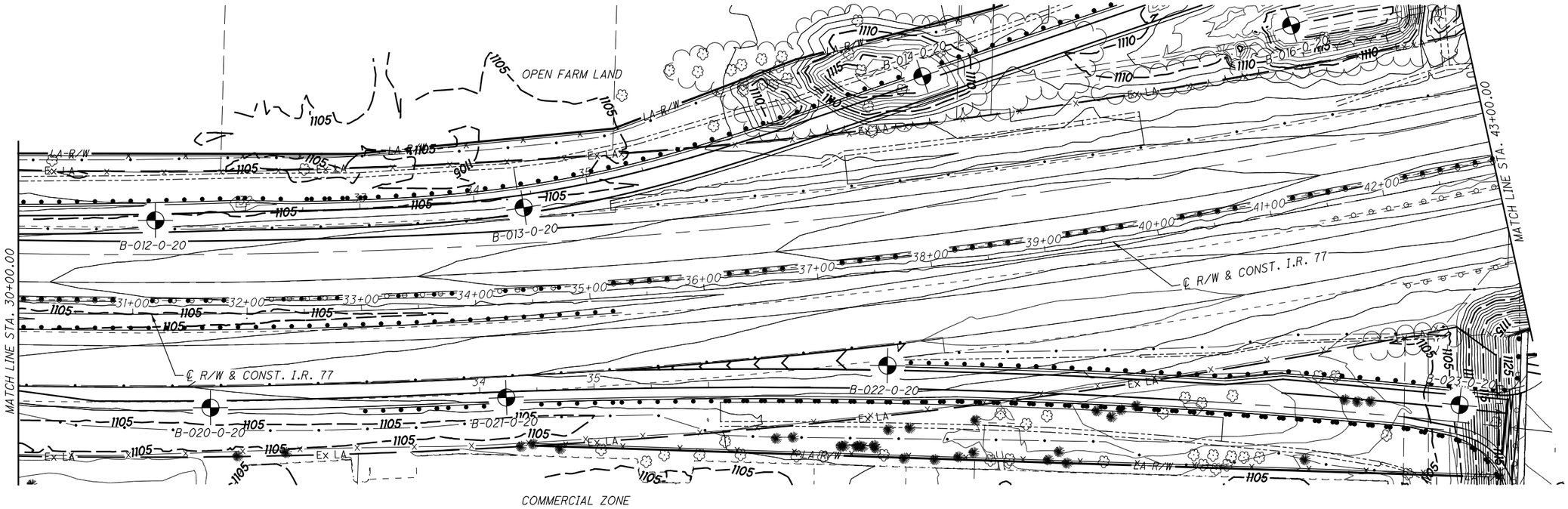

NOTE: SEE SHEET 9 OF 30 FOR BORING B-013-0-20 SOIL PROFILE.
SEE SHEET 13 OF 30 FOR BORINGS B-014-0-20 AND B-016-0-29 SOIL PROFILES.
SEE SHEET 14 OF 30 FOR BORINGS B-021-0-20, B-022-0-20 AND B-023-0-20 SOIL PROFILES.

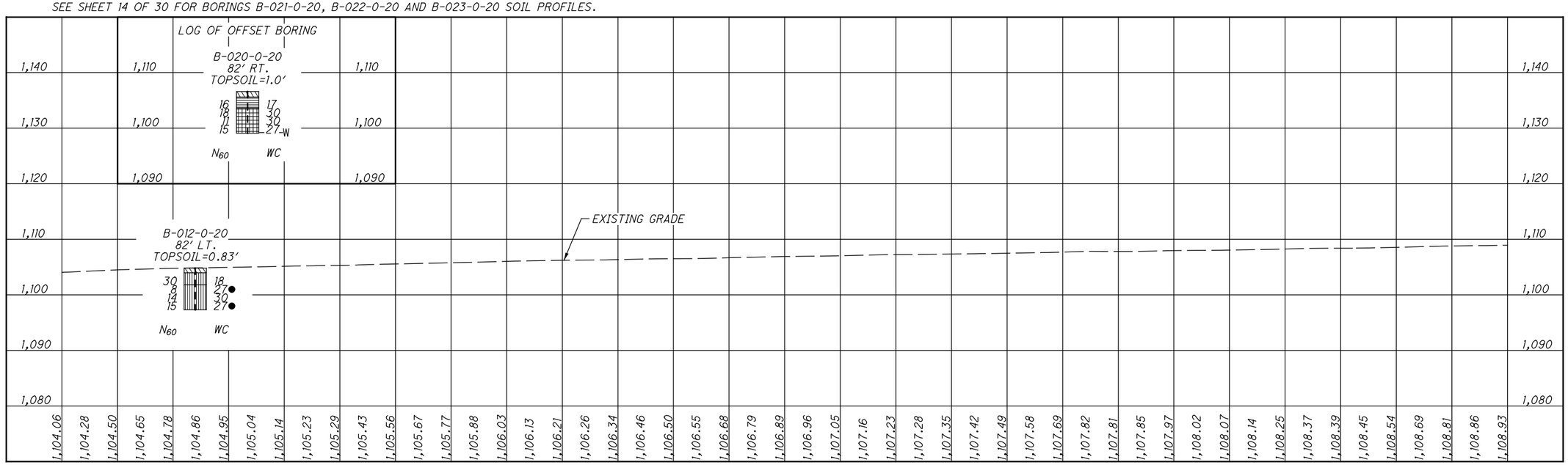

HORIZONTAL SCALE IN FEET
0 25 50 100

DRAWN N.K.S
CHECKED MK

SOIL PROFILE - I.R. 77
STA. 30+00.00 TO STA. 43+00.00

CUY-77-00.42

10 / 30

414 / 434

D:\Drop Box\CTL 2022\March\Dept 05\CLE\Nithya\20050046CLE_ODOT\104983GP004.dgn 02-03-2022 21:37:16 hp

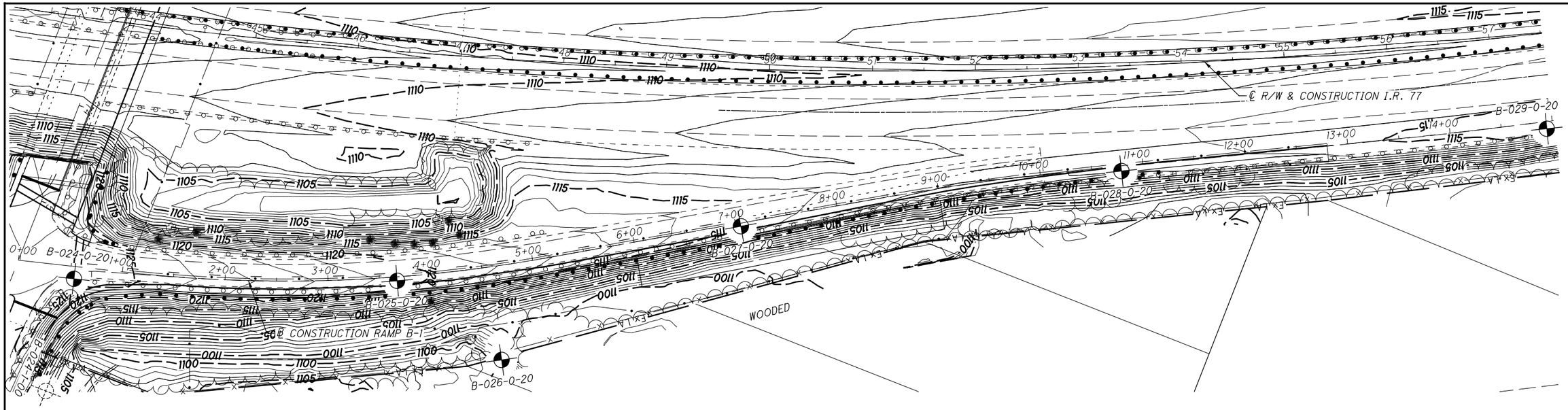

NOTE: SEE SHEET 15 OF 30 FOR BORING B-026-0-20 SOIL PROFILE.

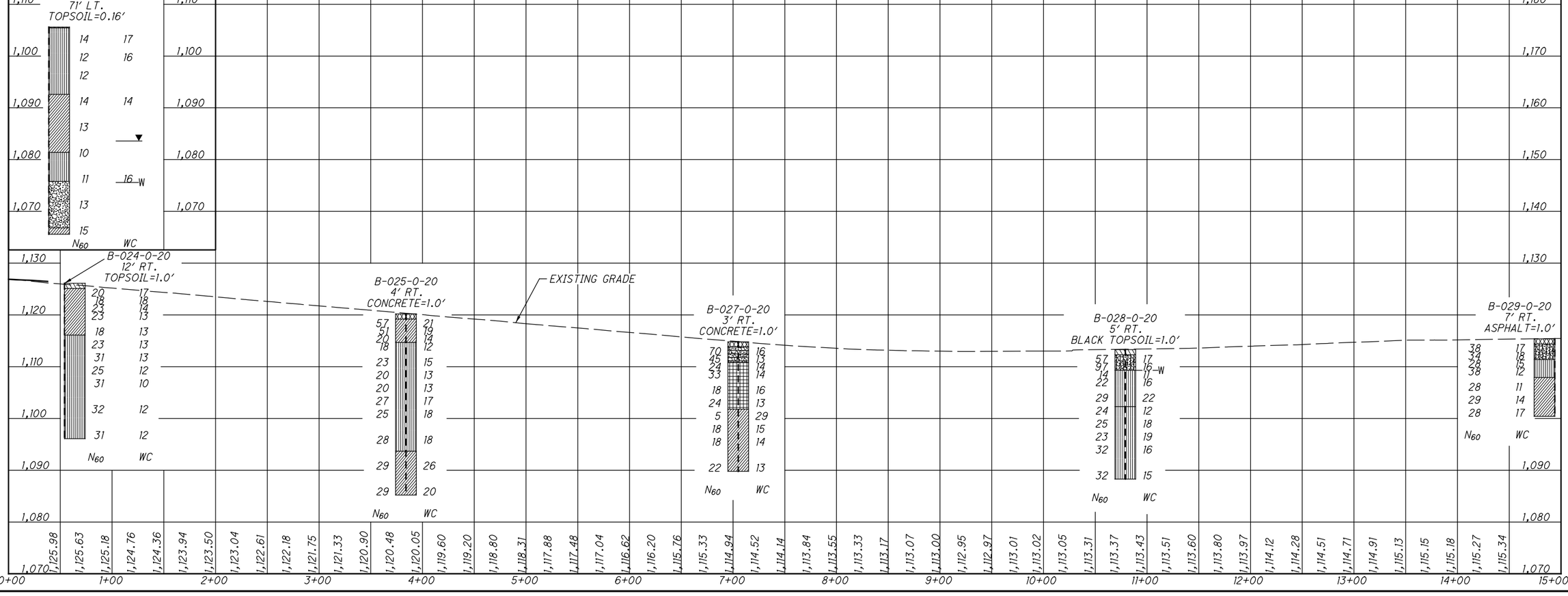

SOIL PROFILE - RAMP B-1
STA. 0+00.00 TO STA. 15+00.00

CUY-77-00.42

11 / 30

415 / 434

HORIZONTAL SCALE IN FEET
0 25 50 100

DRAWN N.K.S
CHECKED MK

D:\Drop Box\CTL 2022\March\Dept 05\CLE\Nithya\20050046CLE_ODOT\104983GP005.dgn 02-03-2022 21:38:11 hp

D:\Drop Box\CTL 2022\March\Dept 05\CLE\Nithya\20050046CLE_ODOT\104983GP006.dgn 02-03-2022 21:39:08 hp

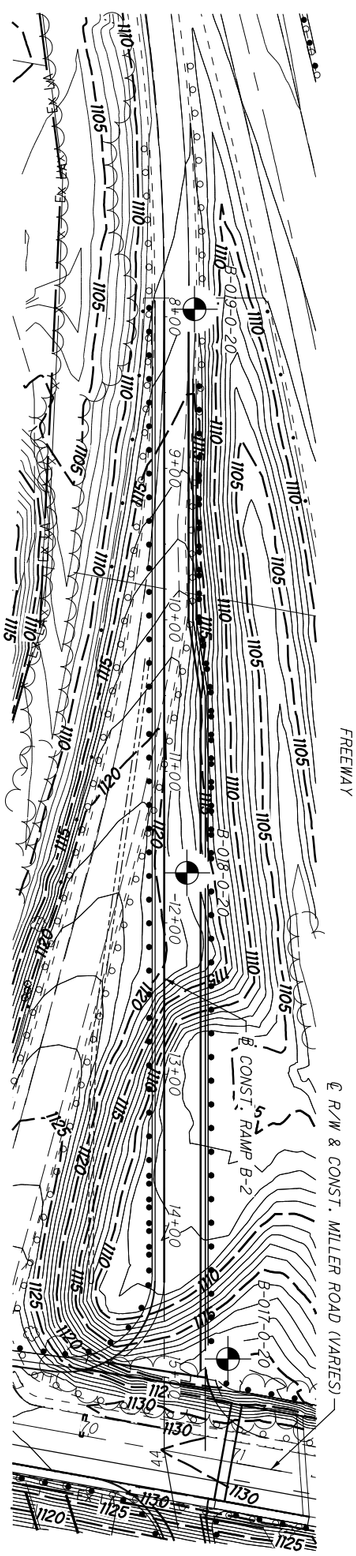

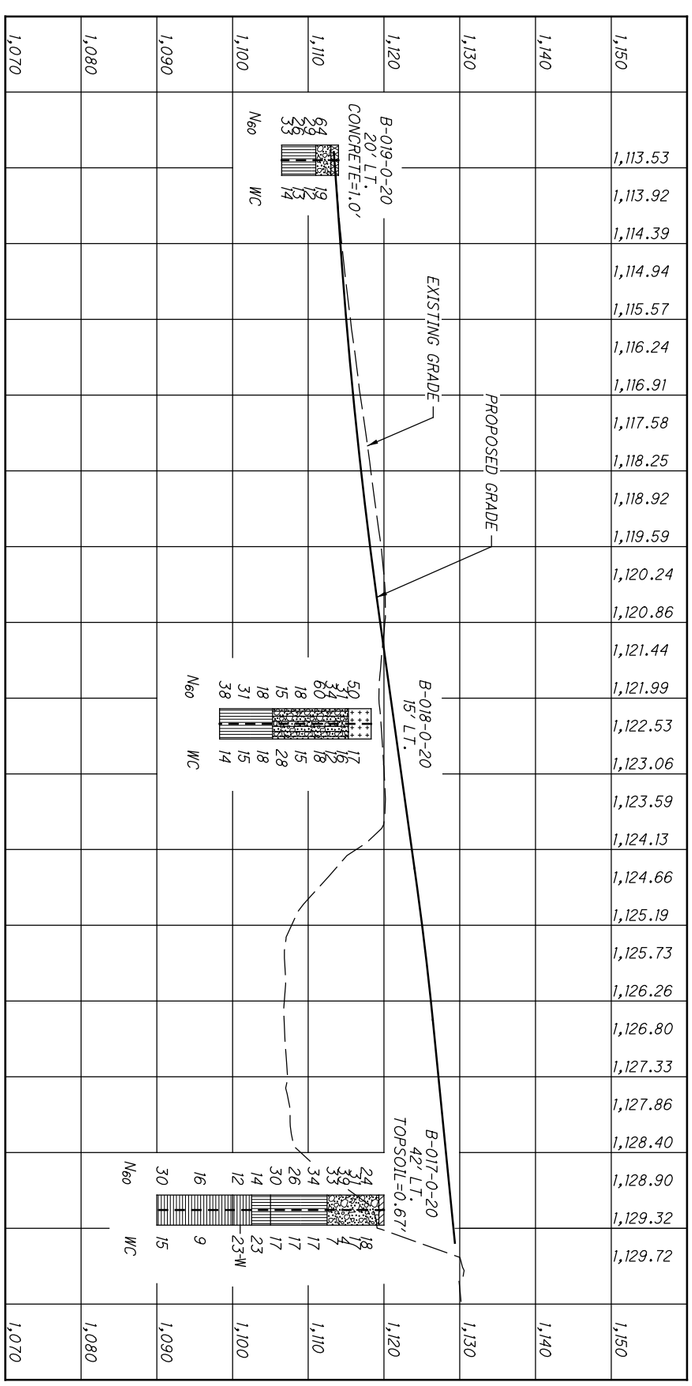

416/434	12/30	CUY-77-00.42	SOIL PROFILE - RAMP B-2 STA. 8+00.00 TO STA. 15+48.17	DRAWN N.K.S CHECKED MK	0 50 25 100 HORIZONTAL SCALE IN FEET	N

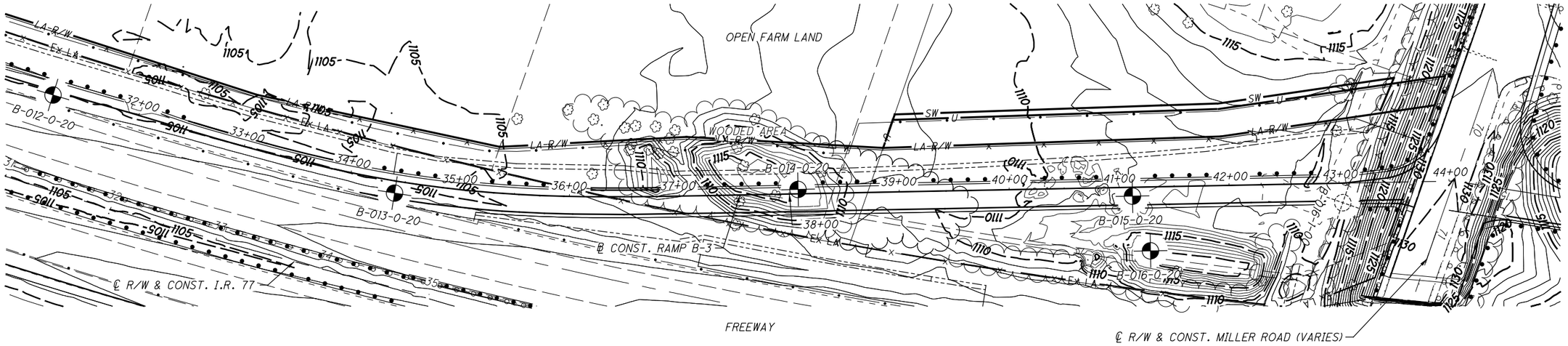

NOTE: SEE SHEET 16 OF 30 FOR BORING B-015-0-20 SOIL PROFILE.

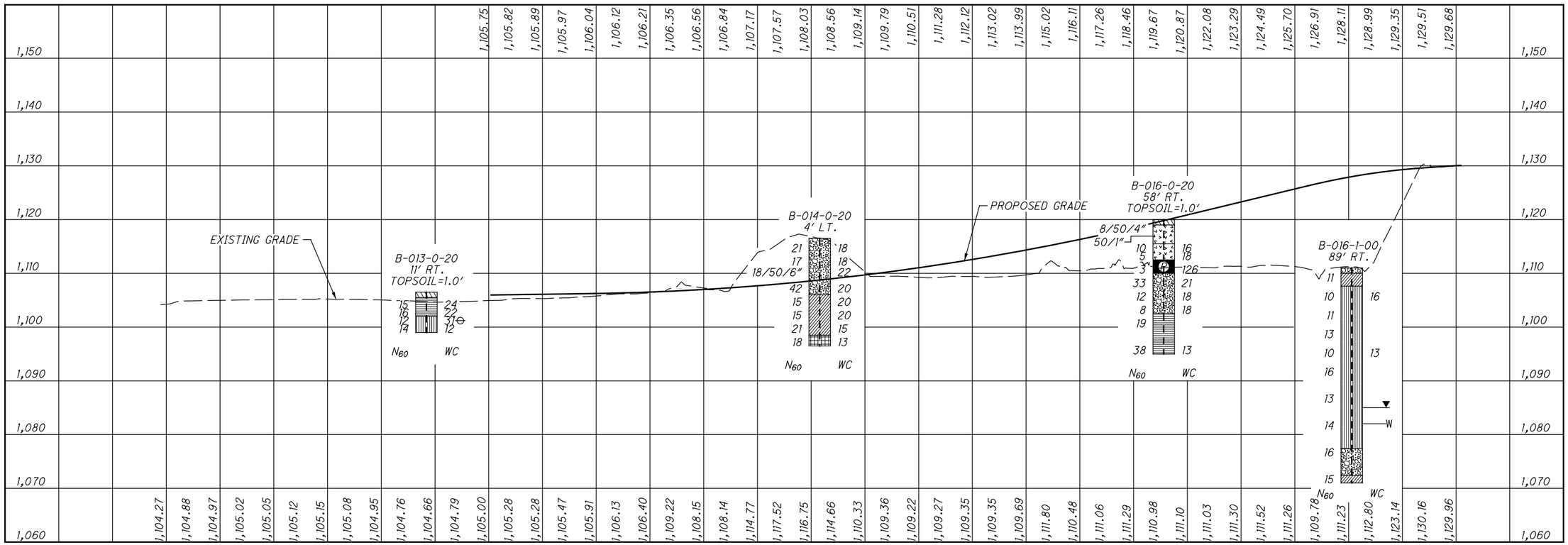

SOIL PROFILE - RAMP B-3
STA. 31+00.00 TO STA. 44+04.48

CUY-77-00.42

13 / 30

417 / 434

HORIZONTAL SCALE IN FEET
0 25 50 100

DRAWN N.K.S
CHECKED MK

D:\Drop Box\CTL 2022\March\Dept 05\CLE\Nithya\20050046CLE_ODOT\104983GP007.dgn 02-03-2022 21:40:49 hp

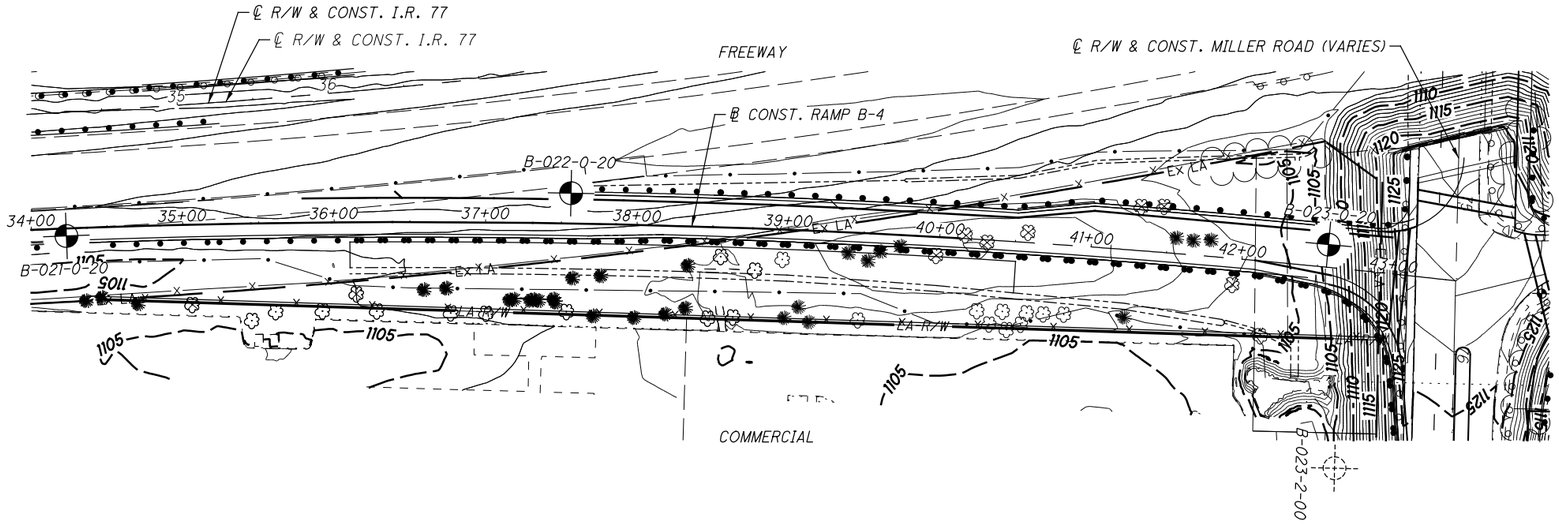

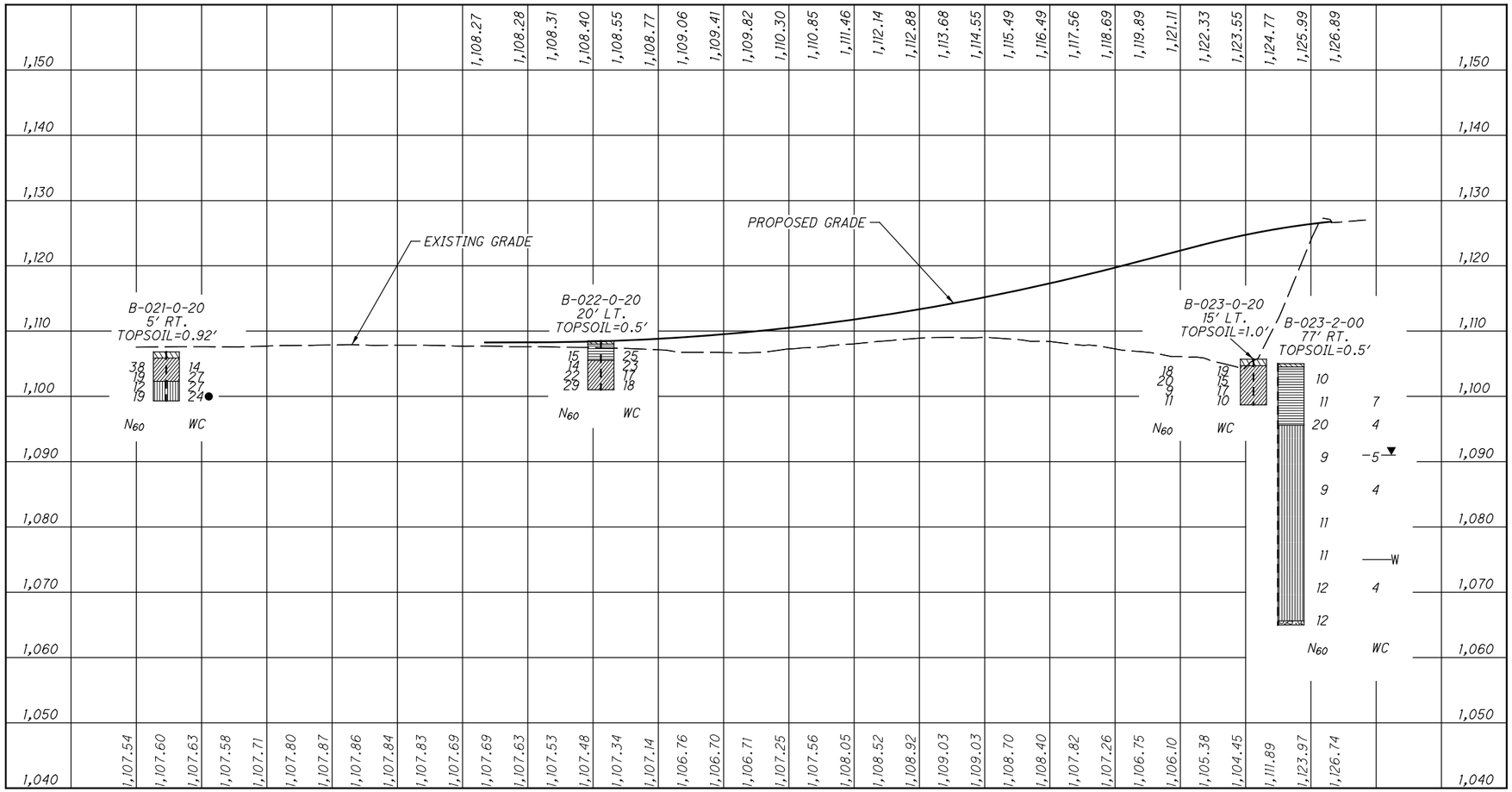

SOIL PROFILE - RAMP B-4
STA. 34+00.00 TO STA. 43+41.80

DRAWN N.K.S
CHECKED MK

HORIZONTAL SCALE IN FEET
0 25 50 100

CUY-77-00.42

D:\Drop Box\CTL 2022\March\Dept 05\CLE\Nithya\20050046CLE_ODOT\104983GP008.dgn 02-03-2022 21:42:08 hp

STA. 4+00 (RAMP B-1)

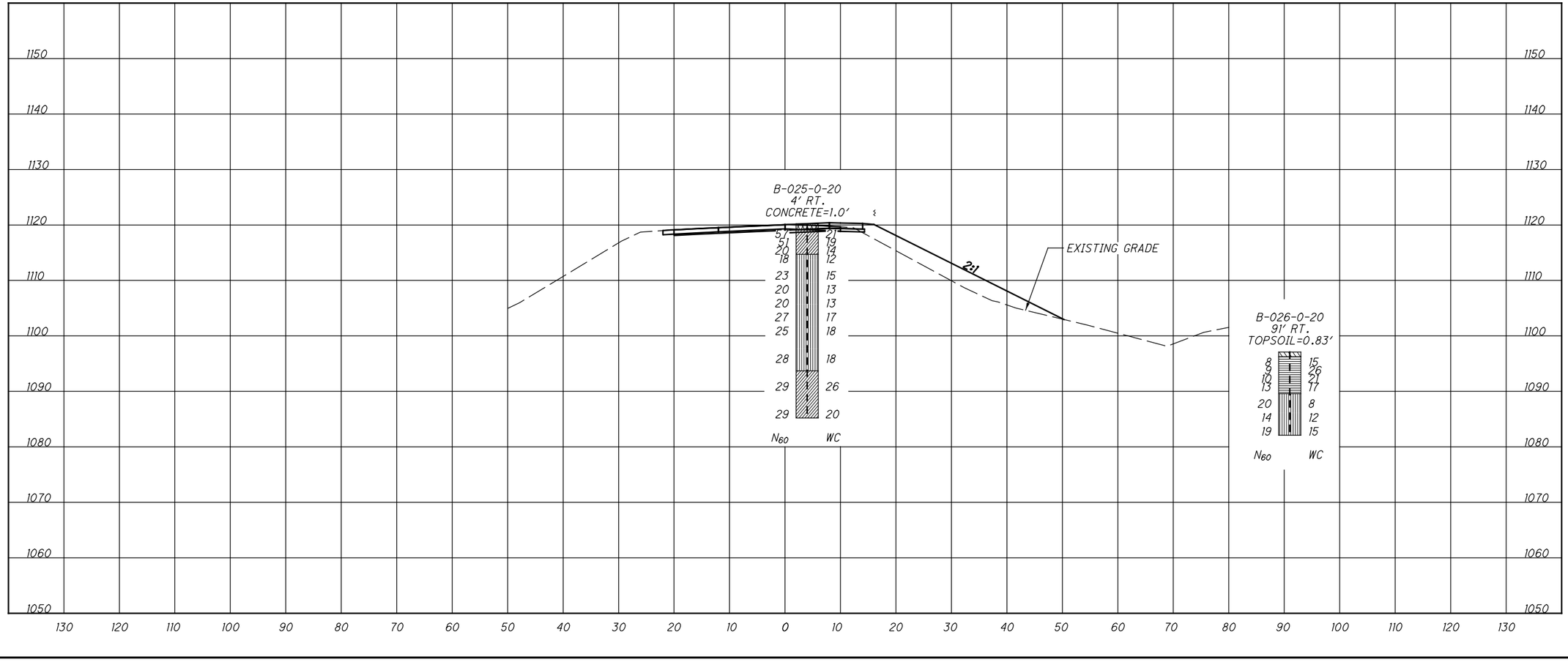

SOIL PROFILE
RAMP B-1 CROSS SECTION STA. 4+00.00

HORIZONTAL SCALE IN FEET
0 5 10 20

DRAWN N.K.S
CHECKED MK

CUY-77-00.42

D:\Drop Box\CTL 2022\March\Dept 05\CLE\Nithya\20050046CLE_ODOT\104983XS001.dgn 02-03-2022 21:47:40 hp

STA. 41+00 (RAMP B-3)

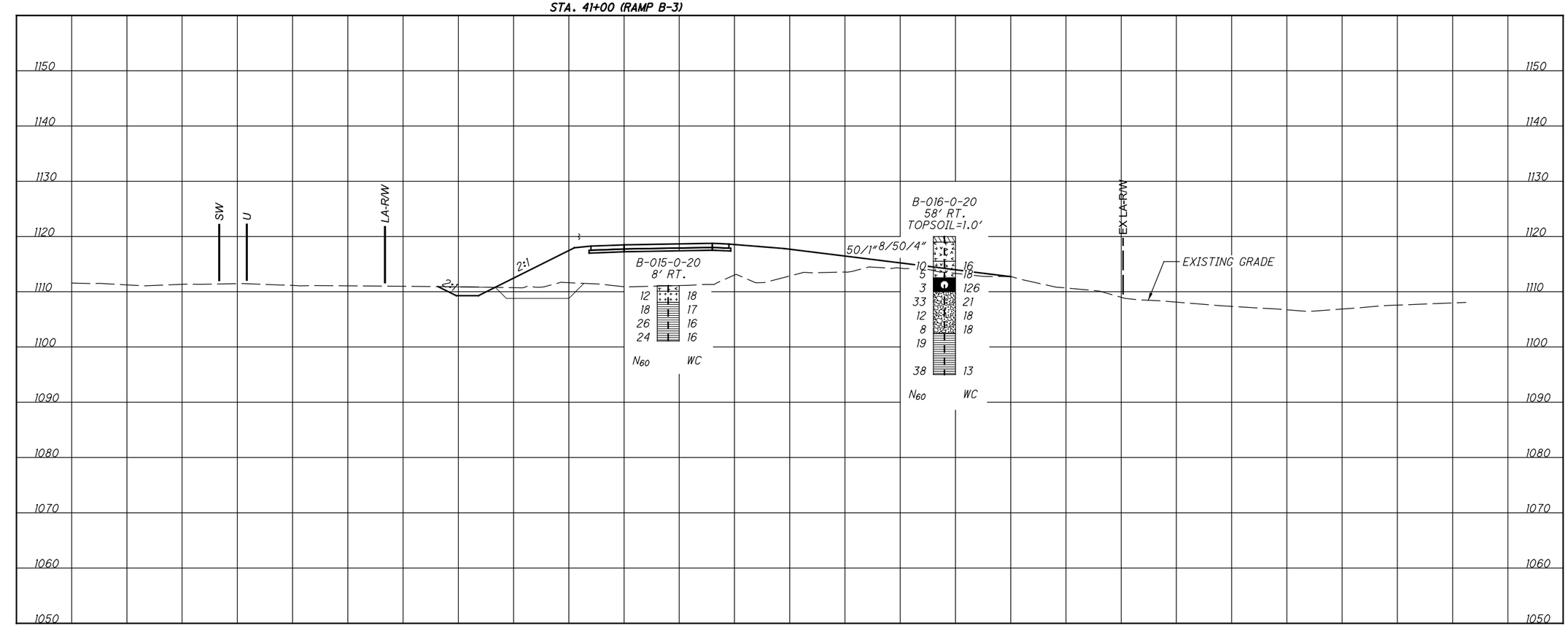

0 5 10 20
HORIZONTAL SCALE IN FEET

DRAWN N.K.S
CHECKED MK

SOIL PROFILE
CROSS SECTION STA. 41+00.00
RAMP B-3

CUY-77-00.42

16 / 30

420
434

D:\Drop Box\CTL 2022\March\Dept 05\CLE\Nithya\20050046CLE_ODOT\104983XS002.dgn 02-03-2022 21:48:33 hp

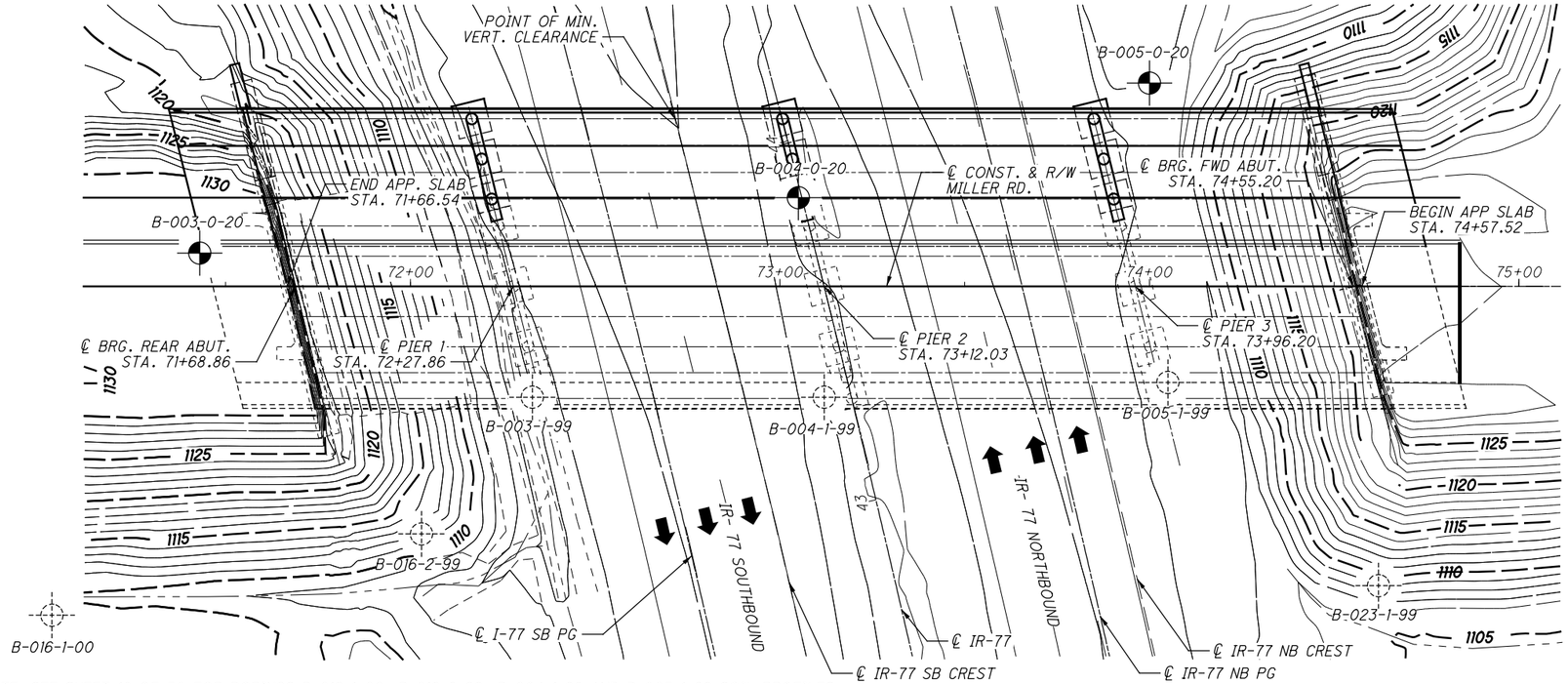

NOTE: SEE SHEET 18 OF 30 FOR BORINGS B-016-1-00, B-016-2-99, B-004-1-99 AND B-005-1-99 SOIL PROFILES.

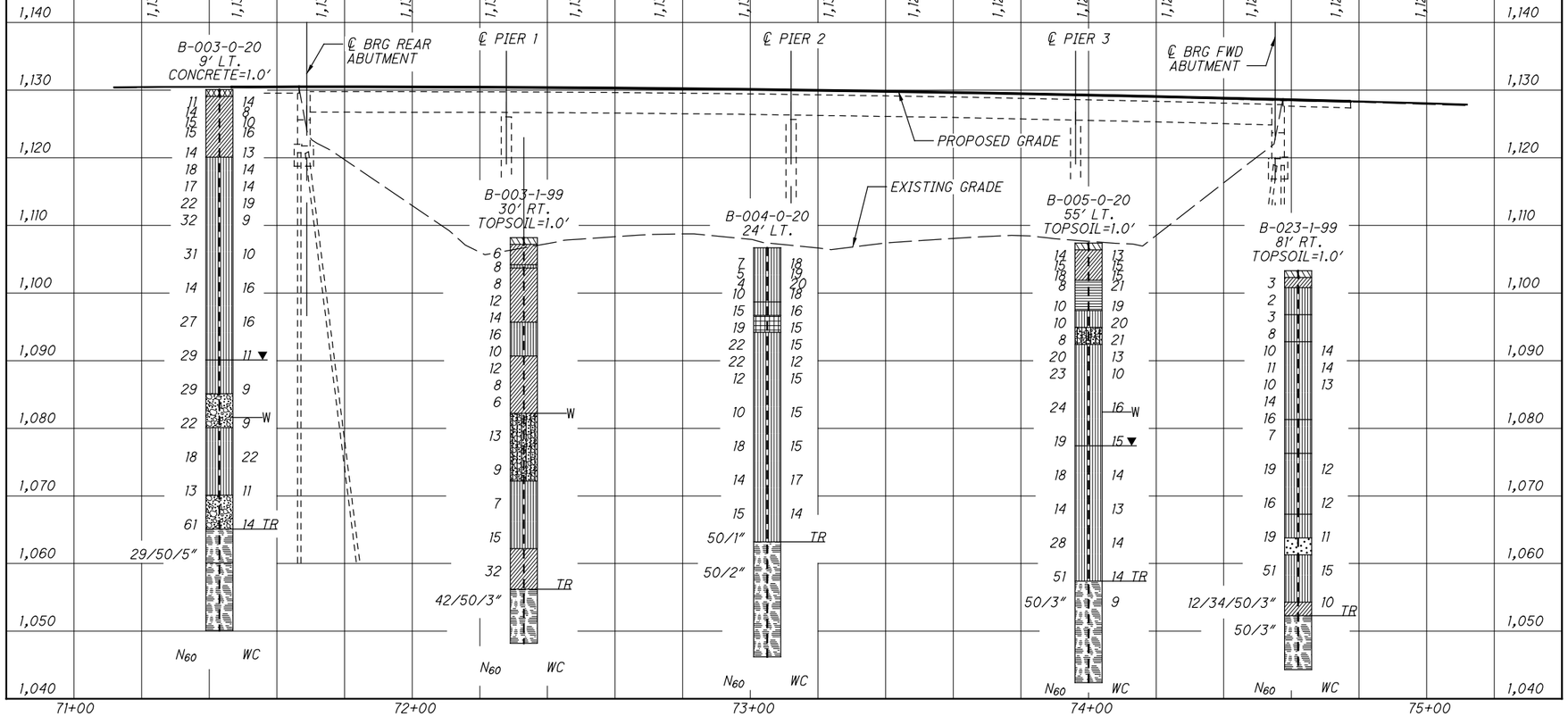

STRUCTURE FOUNDATION EXPLORATION

BRIDGE NO- CUY-CR 187-00.977 OVER IR-77
STA. 71+61.58 TO STA. 75+11.24

CUY-CR 187-00.977

17 / 30

421 / 434

HORIZONTAL SCALE IN FEET

DRAWN N.K.S CHECKED MK

D:\Drop Box\CTL 2022\March\Dept 05\CLE\Nithya\20050046CLE_ODOT\104983_SFN_1805673_SP001.dgn 02-03-2022 21:13:08 hp

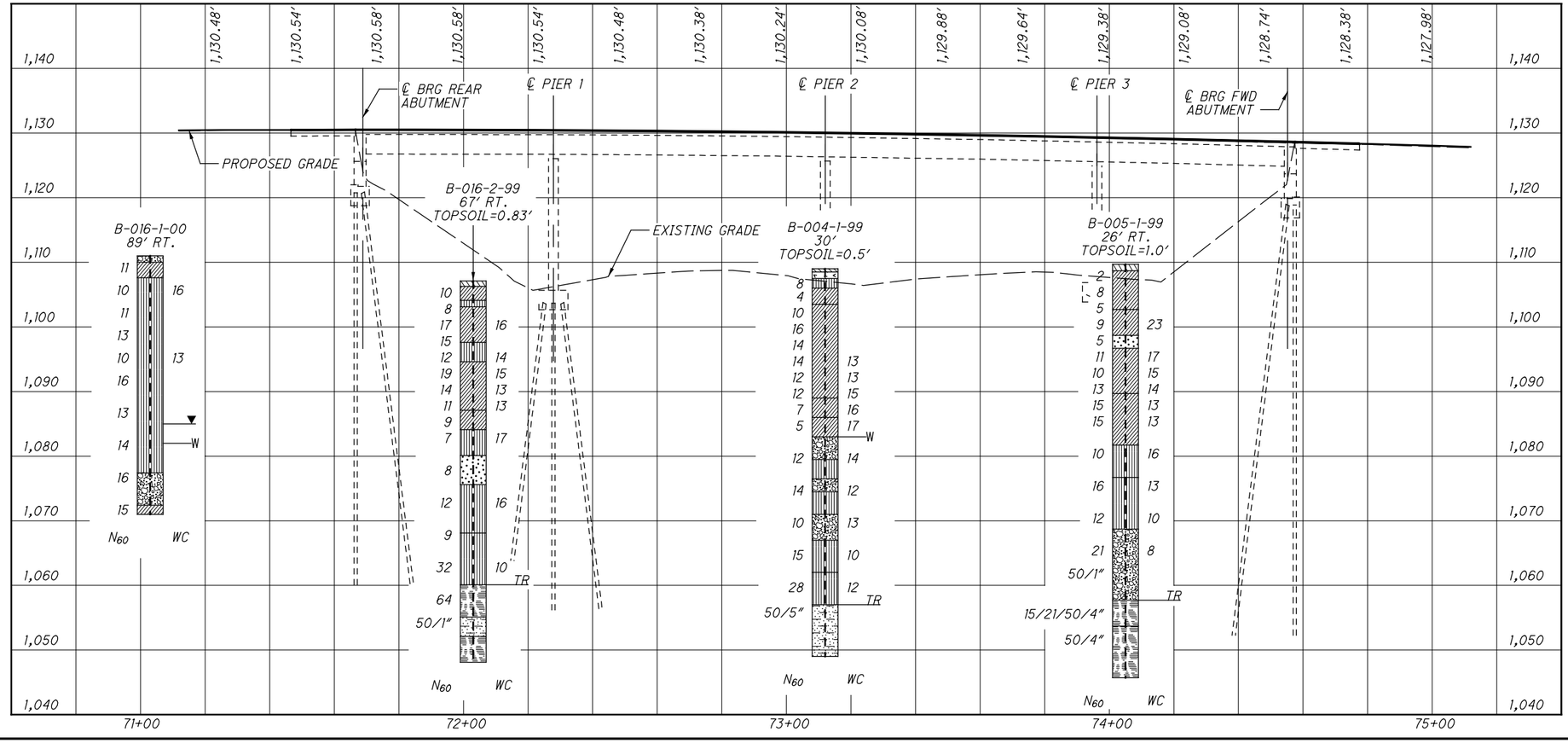

D:\Drop Box\CTL 2022\March\Dept 05\CLE\Nithya\20050046CLE_ODOT\104983_SFN_1805673_SP002.dgn 02-03-2022 21:13:56 hp

STRUCTURE FOUNDATION EXPLORATION

BRIDGE NO- CUY-CR 187-00.977 OVER IR-77
STA. 71+61.58 TO STA. 75+11.24

DRAWN N.K.S
CHECKED MK

0 10 20 40
HORIZONTAL SCALE IN FEET

CUY-CR 187-00.977

D:\Drop Box\CTL 2022\March\Dept 05\CLE\Nithya\20050046CLE_ODOT\104983ZL001.dgn 02-03-2022 21:49:23 hp

PROJECT: CUY-77-00.42	DRILLING FIRM / OPERATOR: CTL / VIRGIL	DRILL RIGB-57 MOBILE TRACK CTL	STATION / OFFSET: 71+43, 9' LT.	EXPLORATION ID B-003-0-20
TYPE: STRUCTURE FOUNDATION	SAMPLING FIRM / LOGGER: CTL / VIRGIL	HAMMER: CME AUTOMATIC	ALIGNMENT: MILLER	
PID: 104983 SFN: 1805673	DRILLING METHOD: 3.25" HSA	CALIBRATION DATE: 10/21/20	ELEVATION: 1130.1 (MSL) EOB: 80.0 ft.	PAGE 1 OF 2
START: 3/11/21 END: 3/11/21	SAMPLING METHOD: SPT	ENERGY RATIO (%): 76.4	LAT / LONG: 41.289592, -81.636617	

MATERIAL DESCRIPTION AND NOTES	ELEV.	DEPTHS	SPT/ RQD	N_{60}	REC (%)	SAMPLE ID	HP (tsf)	GRADATION (%) GR	CS	FS	SI	CL	ATTERBERG LL	PL	PI	WC	ODOT CLASS (GI)	SO4 ppm	ABAN-DONED
CONCRETE (12")	1130.1																		
	1129.1																		
HARD, BROWN, **SILT AND CLAY**, LITTLE GRAVEL, LITTLE SAND, DAMP (FILL)			8 5 4	11	100	SS-1	4.50	16	7	9	38	30	32	19	13	14	A-6a (8)	100	
			7 6 5	14	100	SS-2	4.50	-	-	-	-	-	-	-	-	8	A-6a (V)	-	
			5 7 5	15	100	SS-3	4.50	-	-	-	-	-	-	-	-	10	A-6a (V)	-	
			3 5 7	15	100	SS-4	4.50	-	-	-	-	-	-	-	-	16	A-6a (V)	-	
	1120.1		5 5 6	14	100	SS-5	4.50	-	-	-	-	-	-	-	-	13	A-6a (V)	-	
HARD, BROWN, **SANDY SILT**, LITTLE GRAVEL, SOME CLAY, DAMP			7 7 7	18	100	SS-6	4.50	-	-	-	-	-	-	-	-	14	A-4a (V)	-	
			8 6 7	17	100	SS-7	4.50	-	-	-	-	-	-	-	-	14	A-4a (V)	-	
			5 6 11	22	100	SS-8	4.50	16	5	7	35	37	29	20	9	19	A-4a (7)	-	
			7 8 17	32	100	SS-9	4.50	-	-	-	-	-	-	-	-	9	A-4a (V)	-	
			6 13 11	31	100	SS-10	4.50	-	-	-	-	-	-	-	-	10	A-4a (V)	-	
			3 4 7	14	100	SS-11	4.50	-	-	-	-	-	-	-	-	16	A-4a (V)	-	
			7 10 11	27	100	SS-12	4.50	16	22	19	37	6	29	23	6	16	A-4a (2)	-	
	1090.1	▼	7 11 12	29	100	SS-13	4.50	-	-	-	-	-	-	-	-	11	A-4a (V)	-	
HARD, GREYISH BROWN, **SANDY SILT**, AND GRAVEL, LITTLE CLAY, DAMP																			
	1085.1		7 8 15	29	100	SS-14	4.50	50	4	4	29	13	24	16	8	9	A-4a (1)	-	
MEDIUM DENSE, GREY, **GRAVEL WITH SAND**, LITTLE SILT, LITTLE CLAY, DAMP		▼1081.6																	
	1080.1		4 8 9	22	100	SS-15	-	45	16	15	-	24 -	NP	NP	NP	9	A-1-b (0)	-	
VERY STIFF, GREY, **SANDY SILT**, AND CLAY, LITTLE TO SOME GRAVEL, DAMP																			
			4 6 8	18	100	SS-16	2.50	25	3	4	43	25	30	23	7	22	A-4a (7)	-	
	1070.1		6 5 5	13	100	SS-17	3.00	16	8	26	45	5	NP	NP	NP	11	A-4a (3)	-	

STANDARD ODOT LOG W/ SULFATES (11 X 17) - OH DOT GDT - 10/28/21 10:42 - K:\DEPARTMENT 05\2020 PROJECTS\20050046CLE EUTHENICS CUY-77MILLERRD\BORING LOGS & LAB\20050046CLE.GPJ

PID: 104983	SFN: 1805673	PROJECT: CUY-77-00.42	STATION / OFFSET: 71+43, 9' LT.	START: 3/11/21	END: 3/11/21	PG 2 OF 2	B-003-0-20

MATERIAL DESCRIPTION AND NOTES	ELEV.	DEPTHS	SPT/ RQD	N_{60}	REC (%)	SAMPLE ID	HP (tsf)	GRADATION (%) GR	CS	FS	SI	CL	ATTERBERG LL	PL	PI	WC	ODOT CLASS (GI)	SO4 ppm	ABAN-DONED
VERY DENSE, GREY, **GRAVEL WITH SAND**, LITTLE SILT, LITTLE CLAY, WET	1070.1	61 62 63 64	11 22 26	61	100	SS-18	-	34	18	29	-	19 -	NP	NP	NP	14	A-1-b (0)	-	
	1065.1	TR 65																	
SHALE, GREY, HIGHLY WEATHERED, VERY WEAK.		66 67 68																	
		69	29 50/5"	-	100	SS-19	-	-	-	-	-	-	-	-	-	8	Rock (V)	-	
	1060.1	70																	
SHALE, GREY, SEVERLY WEATHERED, VERY WEAK. HIGHLY FRACTURED, INTERLAYERED WITH SILTSTONE		71 72 73 74 75	38		96	NX-20												Rock (V) CORE		
@ 73.5 ' Angular fracture																			
@76' Angular fracture		76 77 78 79	94		100	NX-21												Rock (V) CORE	
	1050.1	EOB 80																	

NOTES: CAVED@ 80'

ABANDONMENT METHODS, MATERIALS, QUANTITIES: MIXED WITH AUGER CUTTINGS

STANDARD ODOT LOG W/ SULFATES (11 X 17) - OH DOT GDT - 10/28/21 10:42 - K:\DEPARTMENT 05\2020 PROJECTS\20050046CLE EUTHENICS CUY-77MILLERRD\BORING LOGS & LAB\20050046CLE.GPJ

STRUCTURE FOUNDATION EXPLORATION
BRIDGE NO. CUY-CR 187-00.977
BORING LOG - B-003-0-20 CONTINUED

DRAWN N.K.S
CHECKED MK

D:\Drop Box\CTL 2022\March\Dept 05\CLE\Nithya\20050046CLE_ODOT\104983ZL003.dgn 02-03-2022 21:51:14 hp

PROJECT: CUY-77-00.42	DRILLING FIRM / OPERATOR: CTL / TOM	DRILL RIG: CME 55 393 TRACK CTL	STATION / OFFSET: 73+05, 24' LT.	EXPLORATION ID B-004-0-20
TYPE: STRUCTURE FOUNDATION	SAMPLING FIRM / LOGGER: CTL / TOM	HAMMER: CME AUTOMATIC	ALIGNMENT: MILLER	
PID: 104983 SFN: 1805673	DRILLING METHOD: 3.25" HSA	CALIBRATION DATE: 10/8/19	ELEVATION: 1106.7 (MSL) EOB: 60.5 ft.	PAGE 1 OF 1
START: 1/26/21 END: 1/26/21	SAMPLING METHOD: SPT	ENERGY RATIO (%): 81.5	LAT / LONG: 41.289631, -81.636028	

MATERIAL DESCRIPTION AND NOTES	ELEV.	DEPTHS	SPT/ RQD	N_{60}	REC (%)	SAMPLE ID	HP (tsf)	GRADATION (%) GR	CS	FS	SI	CL	ATTERBERG LL	PL	PI	WC	ODOT CLASS (GI)	SO4 ppm	ABAN-DONED
VERY STIFF, BROWN, **SANDY SILT**, AND CLAY,TRACE GRAVEL, DAMP (FILL)	1106.7		1 2 3	7	100	SS-1	3.25	6	2	4	47	41	32	24	8	18	A-4a (8)	-	
			1 1 3	5	100	SS-2	2.00	-	-	-	-	-	-	-	-	19	A-4a (V)	-	
			0 1 2	4	100	SS-3	2.00	-	-	-	-	-	-	-	-	20	A-4a (V)	-	
	1098.7		1 2 5	10	100	SS-4	3.75	-	-	-	-	-	-	-	-	18	A-4a (V)	-	
VERY STIFF, BROWN, **SANDY SILT**, SOME GRAVEL,SOME CLAY, DAMP	1096.7		4 5 6	15	100	SS-5	2.50	-	-	-	-	-	-	-	-	16	A-4a (V)	-	
HARD, BROWN, **CLAY**, SOME GRAVEL, MOIST	1094.2		5 7 7	19	100	SS-6	4.50	-	-	-	-	-	-	-	-	15	A-7-6 (V)	-	
VERY STIFF TO HARD, GREY, **SANDY SILT**, AND GRAVEL, LITTLE CLAY, DAMP			6 7 9	22	100	SS-7	4.50	41	3	3	37	16	27	18	9	15	A-4a (4)	-	
			6 7 9	22	100	SS-8	4.50	-	-	-	-	-	-	-	-	12	A-4a (V)	-	
			3 4 5	12	100	SS-9	4.50	-	-	-	-	-	-	-	-	15	A-4a (V)	-	
			2 5 2	10	56	SS-10	2.50	-	-	-	-	-	-	-	-	15	A-4a (V)	-	
			5 6 7	18	100	SS-11	2.50	-	-	-	-	-	-	-	-	15	A-4a (V)	-	
@33.5' SOME GRAVEL	1063.2	TR	4 5 5	14	100	SS-12	2.50	26	6	10	38	20	26	19	7	17	A-4a (5)	-	
			4 4 7	15	100	SS-13	2.50	-	-	-	-	-	-	-	-	14	A-4a (V)	-	
SHALE, GREY, HIGHLY WEATHERED, VERY WEAK.			50/1"	-	100	SS-14	-	-	-	-	-	-	-	-	-	4	Rock (V)	-	
			50/2"	-	100	SS-15	-	-	-	-	-	-	-	-	-	11	Rock (V)	-	
@51' Vertical fracture			0		87	NX-16											CORE		
@53.5' Angular fracture			16		100	NX-17											CORE		
@57' Vertical fracture																			
@59' Vertical fracture	1046.2	EOB	16		100	NX-18											CORE		

NOTES: CAVED@ 40.5'

ABANDONMENT METHODS, MATERIALS, QUANTITIES: MIXED WITH AUGER CUTTINGS

STANDARD ODOT LOG W/ SULFATES (11 X 17) - OH DOT GDT - 11/8/21 09:27 - K:\DEPARTMENT 05\2020 PROJECTS\20050046CLE EUTHENICS\CUY-77\MILLER\RDI\BORING LOGS & LAB\20050046CLE.GPJ

STRUCTURE FOUNDATION EXPLORATION
BRIDGE NO. CUY-CR 187-00.977
BORING LOG - B-004-0-20

DRAWN N.K.S
CHECKED MK

PROJECT: CUY-77-00.42	DRILLING FIRM / OPERATOR: CTL / VIRGIL	DRILL RIGB-57 MOBILE TRACK CTL	STATION / OFFSET: 74+00, 55' LT.	EXPLORATION ID B-005-0-20
TYPE: STRUCTURE FOUNDATION	SAMPLING FIRM / LOGGER: CTL / VIRGIL	HAMMER: CME AUTOMATIC	ALIGNMENT: MILLER	
PID: 104983 SFN: 1805673	DRILLING METHOD: 3.25" HSA	CALIBRATION DATE: 10/21/20	ELEVATION: 1107.4 (MSL) EOB: 65.0 ft.	PAGE 1 OF 2
START: 3/12/21 END: 3/12/21	SAMPLING METHOD: SPT	ENERGY RATIO (%): 76.4	LAT / LONG: 41.289714, -81.635681	

MATERIAL DESCRIPTION AND NOTES	ELEV.	DEPTHS	SPT/ RQD	N_{60}	REC (%)	SAMPLE ID	HP (tsf)	GRADATION (%) GR	CS	FS	SI	CL	ATTERBERG LL	PL	PI	WC	ODOT CLASS (GI)	SO4 ppm	ABAN-DONED
TOPSOIL (12")	1107.4																		
	1106.4																		
HARD, BROWN, **SILT AND CLAY**, LITTLE SAND, TRACE GRAVEL, DAMP (FILL)			5 5 6	14	100	SS-1	4.50	6	6	9	50	29	30	19	11	13	A-6a (8)	-	
			4 6 6	15	100	SS-2	4.50	-	-	-	-	-	-	-	-	15	A-6a (V)	-	
			7 7 7	18	100	SS-3	4.50	-	-	-	-	-	-	-	-	15	A-6a (V)	-	
	1101.9																		
VERY STIFF, BROWNISH GREY, **SILTY CLAY**, LITTLE SAND, LITTLE GRAVEL, MOIST			3 2 4	8	100	SS-4	2.00	11	5	7	42	35	36	20	16	21	A-6b (10)	-	
			3 4 4	10	100	SS-5	2.50	-	-	-	-	-	-	-	-	19	A-6b (V)	-	
	1097.4																		
STIFF, BROWN, **SANDY SILT**, SOME GRAVEL, LITTLE CLAY, DAMP			2 3 5	10	100	SS-6	1.25	22	1	25	40	12	28	22	6	20	A-4a (3)	-	
	1094.9																		
LOOSE, BROWN, **GRAVEL WITH SAND AND SILT**, TRACE CLAY, WET			2 2 4	8	100	SS-7	-	24	24	24	22	6	30	20	10	21	A-2-4 (0)	-	
	1092.4																		
VERY STIFF TO HARD, GREY, **SANDY SILT**, SOME CLAY, LITTLE GRAVEL, DAMP			7 6 10	20	100	SS-8	4.25	-	-	-	-	-	-	-	-	13	A-4a (V)	-	
			6 8 10	23	100	SS-9	4.50	-	-	-	-	-	-	-	-	10	A-4a (V)	-	
		W 1082.4	7 9 10	24	100	SS-10	4.00	14	9	11	45	21	23	19	4	16	A-4a (6)	-	
	1077.4		6 7 8	19	100	SS-11	3.50	-	-	-	-	-	-	-	-	15	A-4a (V)	-	
STIFF, GREY, **SANDY SILT**, SOME GRAVEL, LITTLE CLAY, DAMP																			
			4 6 8	18	100	SS-12	1.50	25	9	19	31	16	23	16	7	14	A-4a (2)	-	
			4 4 7	14	100	SS-13	1.50	-	-	-	-	-	-	-	-	13	A-4a (V)	-	
@ 43.5' SOME SAND			9 9 13	28	100	SS-14	3.50	-	-	-	-	-	-	-	-	14	A-4a (V)	-	
	1057.4	TR	16 20 20	51	100	SS-15	-	-	-	-	-	-	-	-	-	14	A-4a (V)	-	
SHALE, GREY, SEVERELY WEATHERED, VERY WEAK.			50/3"	-	100	SS-16	-	-	-	-	-	-	-	-	-	9	Rock (V)	-	
			73		73	NX-17											Rock (V) CORE		
@ 58' CLAY SEAM @58.5' ROCK COMPRESSIVE STRENGTH = 44.2 ksf; UNIT WEIGHT = 153.5 pcf.																			

STANDARD ODOT LOG W/ SULFATES (11 X 17) - OH DOT GDT - 10/28/21 10:42 - K:\DEPARTMENT 05\2020 PROJECTS\20050046CLE EUTHENICS CUY-77MILLERRD\BORING LOGS & LAB\20050046CLE.GPJ

STRUCTURE FOUNDATION EXPLORATION
BRIDGE NO. CUY-CR 187-00.977
BORING LOG - B-005-0-20

DRAWN N.K.S
CHECKED MK

PID: 104983	SFN: 1805673	PROJECT: CUY-77-00.42	STATION / OFFSET: 74+00, 55' LT.	START: 3/12/21	END: 3/12/21	PG 2 OF 2	B-005-0-20

MATERIAL DESCRIPTION AND NOTES	ELEV. 1047.4	DEPTHS	SPT/ RQD	N_{60}	REC (%)	SAMPLE ID	HP (tsf)	GRADATION (%) GR	CS	FS	SI	CL	ATTERBERG LL	PL	PI	WC	ODOT CLASS (GI)	SO4 ppm	ABAN-DONED
SHALE, GREY, SEVERELY WEATHERED, VERY WEAK. *(continued)*		61	92		100	NX-18											Rock (V) CORE		
@59.3' ANGULAR FRACTURE		62																	
@ 61' ANGULAR FRACTURE		63																	
@ 64.5' ANGULAR FRACTURE	1042.4	64 EOB 65	50		100	NX-19											Rock (V) CORE		

NOTES: CAVED@ 32'

ABANDONMENT METHODS, MATERIALS, QUANTITIES: MIXED WITH AUGER CUTTINGS

STANDARD ODOT LOG W/ SULFATES (11 X 17) - OH DOT GDT - 10/28/21 10:42 - K:\DEPARTMENT 05\2020 PROJECTS\20050046CLE EUTHENICS CUY-77MILLERRD\BORING LOGS & LAB\20050046CLE.GPJ

D:\Drop Box\CTL 2022\March\Dept 05\CLE\Nithya\20050046CLE_ODOT\104983ZL006.dgn 02-03-2022 21:53:59 hp

BBC&M

LOG OF BORING NO. B-2 **B-003-1-99**
CUY-77-00.82
BRECKSVILLE, CUYAHOGA COUNTY, OHIO

TYPE: 3-1/4" I.D. Hollow-stem Auger
2" O.D. Split-barrel Sampler
NXM Core Barrel

LOCATION: Sta. 72+33, 30' Rt. of CL Miller Road

COMPLETION DEPTH: 60.0' ELEVATION: 1108.2 DATE: 6/2/99

DEPTH, FEET	SAMPLE NO.	SAMPLES	SAMPLING EFFORT	HAND PENE-TROMETER tsf	MOISTURE CONTENT %	LIQUID LIMIT %	PLASTIC LIMIT %	AGG.	C.S.	F.S.	SILT	CLAY	DESCRIPTION
0													TOPSOIL - 6 INCHES
	1		3/3/3	2.4-3.7									FILL: Topsoil intermixed with slag. Visual
	2A			1.5-1.9									FILL: Stiff to very-stiff brown and gray silty clay intermixed with clayey silt, some fine to coarse sand, little fine to coarse gravel (contains slag). Est. A-6a
	2B		2/3/5	1.5-4.5+									
5	2C			2.5									
	3		3/4/4	3.8									POSSIBLE FILL: Stiff to hard dark-gray clayey silt (partly organic), little fine to coarse sand. Est. A-4a
	4		3/5/7	2.5-3.7									Very-stiff to hard brown mottled with gray silty clay, little to some fine to coarse sand, trace fine to coarse gravel, occasional clayey silt pockets, few roots. Est. A-6a
10	5		3/5/9	3.8-4.5+	17								
	6		5/8/8	4.5+	13								Very-stiff to hard gray clayey silt, little fine to coarse gravel, little fine to coarse sand (contains sandstone, shale and siltstone fragments).
15	7		3/5/5	3.7-4.5+	13			16	9	9	66		Est. A-4a
	8		5/5/7	3.5-3.8	14								Stiff to very-stiff gray silty clay, some fine to coarse sand, little to some fine to coarse gravel (contains sandstone, shale and siltstone fragments).
20	9		3/3/5	1.3-1.8	16								
	10		2/2/4	1.0-1.3	16								Est. A-6a
25													Loose to medium-dense gray fine to coarse sand, trace fine gravel, some clayey silt.
30	11		5/7/6		12			35	24	11	30		
	12		4/4/5										Est. A-2-4
35													Medium-stiff to stiff gray clayey silt interbedded with silty clay, some fine to coarse sand, little fine to coarse gravel (contains few to many fine to coarse sand seams).
40	13		3/4/3	0.7-1.3	15	22	13	14	13	14	30	29	A-4a(5)
													Medium-dense brown fine to coarse sand, "and" clayey silt, little fine to coarse gravel.
45	14		5/6/9		12	22	15	32	13	12	27	16	A-4a(1)
													Medium-dense gray fine to coarse gravel, "and" silty clay, some fine to coarse sand, contains many shale fragments, becoming partly similar to shale.
50	15		15/15/17		8	29	18	46	13	5	21	15	A-6a(1)
	16		42/50-3.5"R										Very-soft to soft gray shale, weathered contains several seams of medium-hard siltstone, occasional silty clay layers (less than 1/2").
55			NXM										
			REC	RQD									
	17		98%	31%									
60													- Encountered water at 26.0'.
													- Samples 2 and 3 were taken in an offset hole due to slag obstruction.
65													
70													
75													

WATER LEVEL: ▽ ▽ ▽ ▽ ▽ ▽
WATER NOTE:
DATE:

STRUCTURE FOUNDATION EXPLORATION
BRIDGE NO. CUY-CR 187-00.977
BORING LOG - B-003-1-99

DRAWN N.K.S
CHECKED MK

D:\Drop Box\CTL 2022\March\Dept 05\CLE\Nithya\20050046CLE_ODOT\104983ZL007.dgn 02-03-2022 21:54:53 hp

BBC&M

LOG OF BORING NO. B-3 B-004-1-99
CUY-77-00.82
BRECKSVILLE, CUYAHOGA COUNTY, OHIO

TYPE: 3-1/4" I.D. Hollow-stem Auger
2" O.D. Split-barrel Sampler
NXM Core Barrel

LOCATION: Sta. 73+12, 30' Rt. of CL Miller Road

COMPLETION DEPTH: 60.0' ELEVATION: 1109.0 DATE: 6/3/99

DEPTH, FEET	SAMPLE NO.	SAMPLES SAMPLING EFFORT	HAND PENE-TROMETER tsf	MOISTURE CONTENT %	LIQUID LIMIT %	PLASTIC LIMIT %	AGG.	C.S.	F.S.	SILT	CLAY	DESCRIPTION
0												TOPSOIL - 6 INCHES
	1	3/4/4	2.3-3.8									FILL: Slag intermixed with fine to coarse sand, some clayey silt, many roots. Visual
	2	2/2/2	1.2-2.4									FILL: Very-stiff brown clayey silt, some to "and" fine to coarse sand, little fine to coarse gravel, contains few silty clay pockets, few roots. Est. A-4a
5	3	3/5/5	3.4-4.4									FILL: Stiff to very-stiff brown silty clay intermixed with clayey silt, some fine to coarse sand, little fine to coarse gravel, few roots. Est. A-6a
	4	5/7/9	4.5+									
10	5	4/6/8	3.5-4.5+									Very-stiff to hard brown mottled with gray silty clay, some fine to coarse sand, little to some fine to coarse gravel, few cobbles, few shale fragments, (occasional fine to medium sand seams).
	6	5/6/8	4.5+	13								
15	7	5/5/7	4.5+	13								Est. A-6a
	8	3/5/7	3.0-4.0	15								Stiff to very-stiff gray silty clay, little to some fine to coarse sand, trace to little fine to coarse gravel, contains few shale fragments. Est. A-6a
20	9	2/3/4	1.4-2.8	16								Soft to medium-stiff gray silty clay, little fine to coarse sand, trace fine to coarse gravel, contains few shale fragments. Est. A-6a
	10	1/2/3	0.3-0.9	17			9	6	10	75		Loose to medium-dense gray fine to coarse sand, little fine gravel, little clayey silt. Est. A-1-b
25	11A 11B	4/5/7	3.7-4.5+	14								Very-stiff to hard gray and brown clayey silt, some fine to coarse sand, contains few interbedded silty clay seams. Est. A-4a
30	12A 12B	4/6/8	2.7-3.8	12	24	14	20	8	11	35	26	Loose to medium-dense gray fine to coarse sand, little clayey silt, trace fine gravel. Est. A-1-b
												Very-stiff gray clayey silt interbedded with silty clay, some fine to coarse sand, trace to little fine to coarse gravel. A-4a(5)
35	13	5/5/5		13			48	20	15	17		Loose gray fine to coarse sand, some fine to coarse gravel, little clayey silt (contains few seams <3" of clayey silt). Est. A-1-b
40	14	4/7/8		10	21	14	39	12	13	28	8	Medium-dense greenish-brown fine to coarse sand, "and" clayey silt, some fine to coarse gravel. A-4a(0)
45	15	16/13/15		12	22	17	43	12	8	31	6	Medium-dense gray fine to coarse sand, "and" clayey silt, some fine to coarse gravel, contains many shale fragments, few siltstone fragments, becoming similar to shale. A-4a(0)
50	16	50-5"R										Very-soft to soft gray shale, contains few interbedded seams of medium-hard siltstone (<4"), (occasional silty clay seam <1/4" thick).
55		NXM										
		REC	RQD									
	17	96%	22%									
60												- Encountered water at 26.0'.
65												
70												
75												

WATER LEVEL: ▽ ▽ ▽ ▽ ▽ ▽
WATER NOTE:
DATE:

STRUCTURE FOUNDATION EXPLORATION
BRIDGE NO. CUY-CR 187-00.977
BORING LOG - B-004-1-99

DRAWN N.K.S
CHECKED MK

D:\Drop Box\CTL 2022\March\Dept 05\CLE\Nithya\20050046CLE_ODOT\104983ZL008.dgn 02-03-2022 21:55:45 hp

BBC&M

LOG OF BORING NO. B-4 B-005-1-99
CUY-77-00.82
BRECKSVILLE, CUYAHOGA COUNTY, OHIO

TYPE: 3-1/4" I.D. Hollow-stem Auger; 2" O.D. Split-barrel Sampler; NXM Core Barrel
LOCATION: Sta. 74+05, 26' Rt. of CL Miller Road
COMPLETION DEPTH: 64.0' ELEVATION: 1109.7 DATE: 6/1/99 - 6/3/99

DEPTH, FEET	SAMPLE NO.	SAMPLES SAMPLING EFFORT	HAND PENE-TROMETER tsf	MOISTURE CONTENT %	LIQUID LIMIT %	PLASTIC LIMIT %	AGG.	C.S.	F.S.	SILT	CLAY	DESCRIPTION
0												TOPSOIL - 12 INCHES
	1	1/1/1	2.1-3.0									FILL: Very-stiff brown and gray silty clay, little to some fine to coarse sand, trace fine to coarse gravel, contains few roots, occasional organic silty clay pocket, (contains a very-soft pocket at 6.7'). Est. A-6a
5	2	2/4/4	2.6									
	3A	2/2/3	0.2-3.8									
	3B		1.8									Stiff to very-stiff brown mottled with gray silty clay, trace to little fine to medium sand, contains several thin clayey silt seams. Est. A-6a
10	4	3/4/5	3.3	23								
	5	5/2/3										Loose brown fine to medium sand, some clayey silt, little coarse sand, trace fine gravel (slight seepage). Est. A-3a
15	6	3/4/7	2.7-3.8	17								Very-stiff to hard brown and gray silty clay, some fine to coarse sand, little to some fine to coarse gravel (contains few to many shale fragments).
	7	3/4/6	3.0-4.4	15								
20	8	4/5/8	4.5+	14								Est. A-6a
	9	6/7/8	4.5+	13								Very-stiff to hard gray silty clay, some fine to coarse sand, little to some fine to coarse gravel (many shale fragments).
25	10	5/6/9	3.1-4.5+	13								Est. A-6a
30	11	3/4/6	1.5-2.4	16	26	16	7	7	11	33	42	Stiff to very-stiff gray clayey silt, some fine to coarse sand, trace fine to coarse gravel (few shale fragments). Est. A-4a(8)
35	12	4/6/10	3.2-4.4	13	24	16	14	10	14	34	28	Very-stiff to hard brown and gray clayey silt, some fine to coarse sand, little fine to coarse gravel (several shale fragments). A-4a(5)
40	13	4/4/8		10	20	13	23	11	20	24	22	Medium-dense gray fine to coarse sand, "and" clayey silt, little fine to coarse gravel, many shale fragments. A-4a(2)
45	14	3/7/14		8			68	18	10	4		Medium-dense gray fine to coarse gravel, "and" fine to coarse sand, trace silt, few cobbles and boulders.
50	15	50-1"R										A-1-a(0)
55	16	15/21/50-4"R										Very-soft gray weathered shale, contains a few silty clay inclusions.
60	17	50-4"R										Very-soft to soft gray shale, nearly horizontally bedded, few vertical fractures, contains few medium-hard siltstone seams (4" thick), occasional silty clay layer (<1/2" thick).
	18	NXM REC 94% RQD 24%										
65												- From 11.0' to 13.0' : slight seepage.
												- From 28.0' to 52.0' there were several fine to medium sand/silt layers.
70												- Drove 48.5' sample on boulder (no recovery).
75												

WATER LEVEL:
WATER NOTE:
DATE:

D:\Drop Box\CTL 2022\March\Dept 05\CLE\Nithya\20050046CLE_ODOT\104983ZL009.dgn 02-03-2022 21:56:46 hp

BBC&M

LOG OF BORING NO. B-1 B-016-2-99

CUY-77-00.82
BRECKSVILLE, CUYAHOGA COUNTY, OHIO

TYPE: 3-1/4" I.D. Hollow-stem Auger
2" O.D. Split-barrel Sampler
NXM Core Barrel

LOCATION: Sta. 72+03, 67' Rt. of CL Miller Road

COMPLETION DEPTH: 59.0' ELEVATION: 1107.1 DATE: 6/2/99

DEPTH, FEET	SAMPLE NO.	SAMPLES SAMPLING EFFORT	HAND PENE-TROMETER tsf	MOISTURE CONTENT %	LIQUID LIMIT %	PLASTIC LIMIT %	AGG.	C.S.	F.S.	SILT	CLAY	DESCRIPTION
0												TOPSOIL - 10 INCHES
	1	3/5/5	3.6-4.5+									FILL: Very-stiff to hard brown and gray silty clay intermixed with clayey silt, some fine to coarse sand, little fine to coarse gravel, few roots. Est. A-6a
5	2A 2B	3/3/5	1.7-2.4 2.3-4.5+	20								Stiff to very-stiff brown clayey silt, some to "and" fine to coarse sand, little fine to coarse gravel. Est. A-4a
	3	5/7/10	4.5+	16								Very-stiff to hard brown with few gray streaks silty clay, some fine to coarse sand, little to some fine to coarse gravel (few shale fragments). Est. A-6a
10	4A 4B	5/7/8	4.5+ 4.5+									
	5	4/5/7	3.5-4.5+	14			11	9	10	70		Very-stiff to hard gray clayey silt, some fine to coarse sand, trace fine gravel (few to many shale fragments). Est. A-4a
	6	5/7/12	3.1-3.8	15								Very-stiff to hard gray clayey silt, little to some fine to coarse sand, little to some fine to coarse gravel (few shale fragments), (% gravel increases with depth).
15	7	4/6/8	4.5+	13								
	8	3/5/6	3.6-4.5+	13	23	13	19	7	8	29	37	A-4a(6)
20	9	3/4/5	1.1-2.6									Stiff to very-stiff gray silty clay, some fine to coarse sand, little fine to coarse gravel (few to many shale fragments). Est. A-6a
	10	2/3/4	0.7-1.5	17	24	15	6	7	10	33	44	Medium-stiff to stiff gray clayey silt, little to some fine to coarse sand, trace fine to coarse gravel (few shale fragments). A-4a(8)
25												
	11	3/4/4										Loose brown and gray fine to medium sand interbedded with many silty clay seams, trace coarse sand, occasional silt pocket. Est. A-3a
30												
	12	4/5/7	2.1-2.7	16	25	16	10	6	7	40	37	Very-stiff gray clayey silt, some fine to coarse sand, little fine to coarse gravel (many shale fragments). A-4a(8)
35												
	13A 13B	7/4/5	3.0									Medium-dense to dense greenish-gray fine to coarse sand, "and" clayey silt, little to some fine to coarse gravel, few shale fragments.
40												
	14	11/14/18		10			38	13	12	37		Est. A-4a
45												
	15	12/18/46										Very-soft to soft gray shale, weathered, contains several seams of silty clay, occasional siltstone layer.
50												
	16	50-1"R										Medium-hard gray siltstone.
55		NXM REC	RQD									
	17	95%	8%									Very-soft to soft gray shale, weathered, contains few interbedded medium-hard siltstone seams, occasional silty clay layer (<1-1/4").
60												
												- Encountered water at 27.0'
65												
70												
75												

WATER LEVEL:
WATER NOTE:
DATE:

STRUCTURE FOUNDATION EXPLORATION
BRIDGE NO. CUY-CR 187-00.977
BORING LOG - B-006-2-99

DRAWN N.K.S
CHECKED MK

D:\Drop Box\CTL 2022\March\Dept 05\CLE\Nithya\20050046CLE_ODOT\104983ZL010.dgn 02-03-2022 21:57:42 hp

BBC&M

LOG OF BORING NO. B-5 B-023-1-99
CUY-77-00.82
BRECKSVILLE, CUYAHOGA COUNTY, OHIO

TYPE: 3-1/4" I.D. Hollow-stem Auger; 2" O.D. Split-barrel Sampler; NXM Core Barrel
LOCATION: Sta. 74+62, 81' Rt. of CL Miller Road
COMPLETION DEPTH: 59.0' ELEVATION: 1103.3 DATE: 6/1/99

DEPTH, FEET	SAMPLE NO.	SAMPLES	SAMPLING EFFORT	HAND PENE-TROMETER tsf	MOISTURE CONTENT %	LIQUID LIMIT %	PLASTIC LIMIT %	AGG.	C.S.	F.S.	SILT	CLAY	DESCRIPTION
0													TOPSOIL - 12 INCHES
	1		2/1 1/2	0.6-2.2									FILL: Mediurn-stiff to very-stiff brown, gray and dark-brown silty clay intermixed with clayey silt, some fine to coarse sand, little fine to coarse gravel, few roots, contains a few organic silty clay pockets (old topsoil). Est. A-6a
5	2		1 /1/1	0.1-0.8									
	3A 3B		S/H /1/2	0.6-2.5									FILL: Very-soft to medium-stiff dark-brown and gray clayey silt, some fine to medium sand, little coarse sand, little fine to coarse gravel, few roots, few to many organic silty clay pockets (contains a very-stiff pocket from 6.6' to 6.8'). Est. A-4a
10	4		3/4/4										
	5		3/4/6	3.3-4.5+	14								Very-loose to loose brown fine sand, "and" silt, trace medium sand, trace clay. Est. A-4a
	6		4/5/6	4.5+	14								
15	7		4/4/6	2.3-4.3	13	23	13	11	7	11	29	42	Very-stiff to hard gray clayey silt, little to some fine to coarse sand, little fine to coarse gravel (few shale fragments), occasional cobbles.
	8		6/6/8	2.5	12			3	6	7	84		A-4a(7,8)
20	9A 9B		4/6/10	4.5+									Loose gray fine to coarse sand, "and" clayey silt, some fine to coarse gravel (contains few very-stiff silty clay layers).
	10		3/4/3		15			27	16	16	41		Est. A-4a
25													Very-stiff to hard gray clayey silt, some fine to coarse gravel, some fine to coarse sand (many shale fragments).
	11		6/8/11	3.0-4.5+	12	22	13	18	10	15	27	30	
30													A-4a(4)
	12		4/6/10	3.3-4.0	12								Stiff to very-stiff gray clayey silt, little fine to coarse sand, trace to little fine to coarse gravel. Est. A-4a
35	13A 13B		4/6/13	1.8-3.5	11								Medium-dense gray fine to coarse sand, some fine to coarse gravel, some clayey silt. Est. A-3a
	14		8/23/28	4.5+	15	25	15	37	10	5	24	24	Hard gray clayey silt, some fine to coarse gravel, some fine to coarse sand, contains many shale fragments.
40													A-4a(3)
	15		24/34/50-3"R	4.5+	10								Hard gray silty clay, "and" fine to coarse gravel, some fine to coarse sand, contains many shale fragments, similar to shale. Est. A-6a
45													
	16		50-3"R										Very-soft to soft gray shale contains few siltstone layers (54.1' to 54.4'), contains several silty clay layers (<1").
50			NXM REC 100% RQD 0%										
	17												
55													
60													- Encountered water @ 23.0'.
65													- Moved boring 5.0' north after Sample 2 (possible storm sewer).
70													- Starting with Sample 3 (6.0'-7.5') all samples taken in boring 5.0' north of original location.
75													

WATER LEVEL: ▽ ▽ ▽ ▽ ▽ ▽
WATER NOTE:
DATE:

B-003-0-20

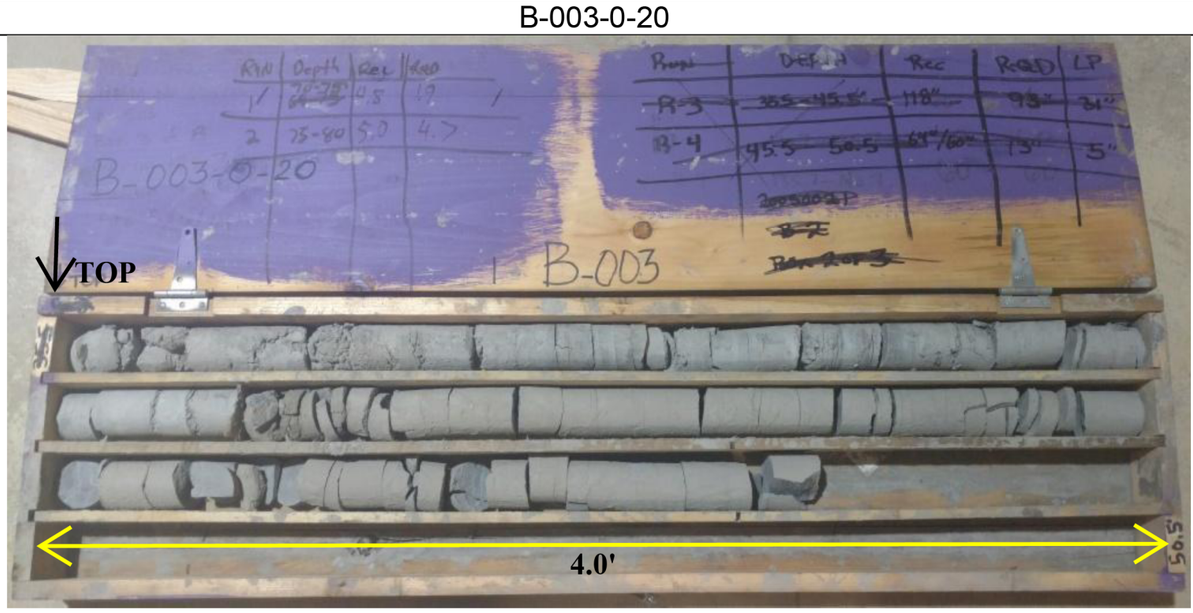

Run #:	Depth		Recovery		RQD	
NX-20	70.0’	75.0’	58/60	96%	23/60	38%
NX-21	75.0’	80.0’	60/60	100%	56/60	94%
CUY-CR 187-00.977 PID 104983						

B-004-0-20

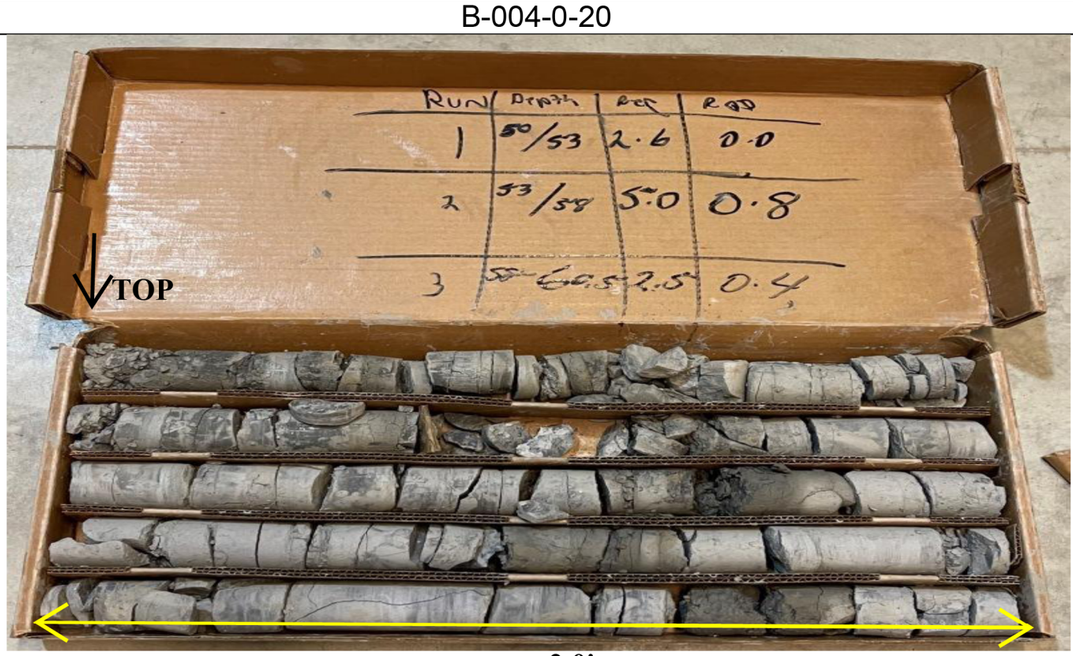

Run #:	Depth		Recovery		RQD	
NX-16	50.0’	53.0’	31/36	87	0/36	0
NX-17	53.0’	58.0’	60/60	100	10/60	16
NX-18	58.0’	60.5’	30/30	100	5/30	16
CUY-CR 187-00.977 PID 104983						

B-005-0-20

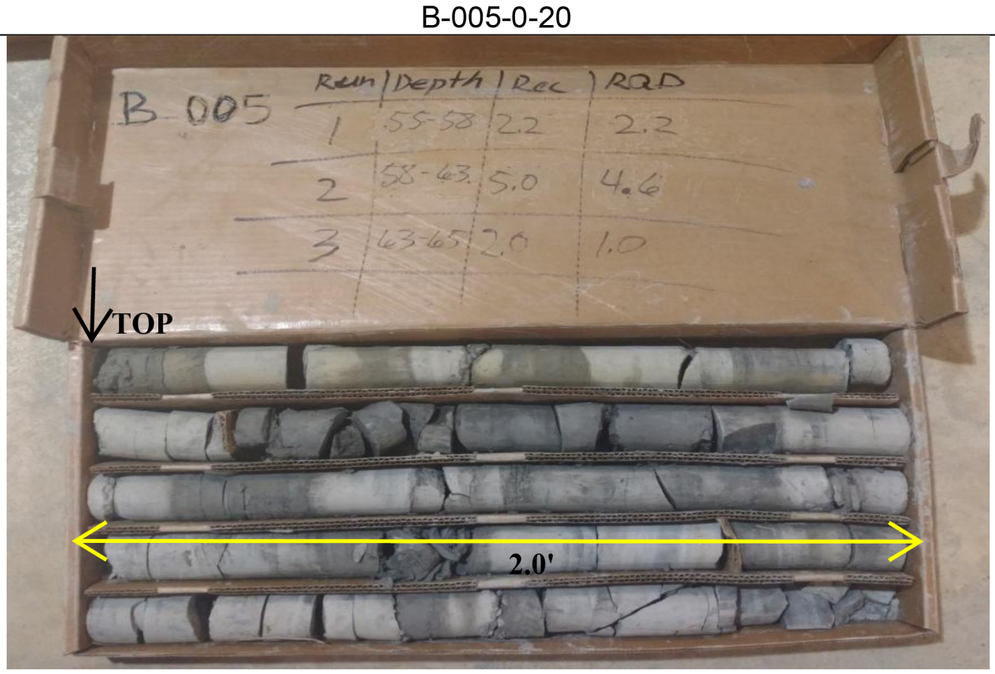

Run #:	Depth		Recovery		RQD	
NX-17	55.0’	58.0’	26/36	73%	26/36	73%
NX-18	58.0’	63.0’	60/60	100%	55/60	92%
NX-19	63.0’	65.0’	24/24	100%	12/24	50%
CUY-CR 187-00.977 PID 104983						

STATE OF OHIO
DEPARTMENT OF TRANSPORTATION
SUM-77-32.27
PART 2
FOR PART 1, SEE CUY-77-00.42 (MILLER ROAD)
VILLAGE OF RICHFIELD
RICHFIELD TOWNSHIP
SUMMIT COUNTY

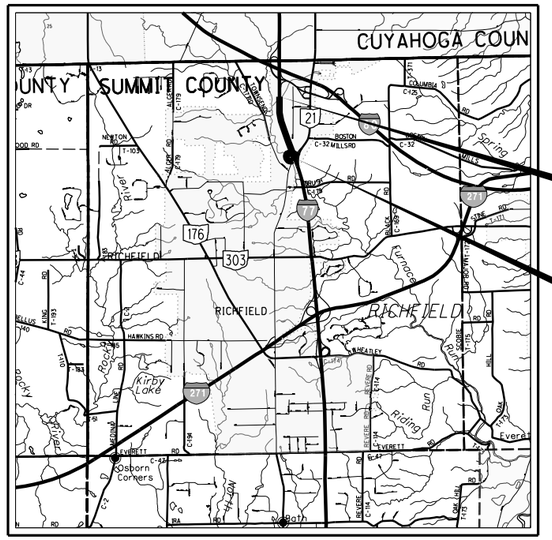

LOCATION MAP

LATITUDE: 41°15'43" N LONGITUDE: 81°38'04" W

SCALE IN MILES

0 1 2 3 4

PORTION TO BE IMPROVED
INTERSTATE HIGHWAY
FEDERAL ROUTES
STATE ROUTES
COUNTY & TOWNSHIP ROADS
OTHER ROADS

DESIGN DESIGNATION

	SR 21 TO 33.06		SR 21
CURRENT ADT (2028)	58,970	(2023)	10,500
DESIGN YEAR ADT (2048)	69,490	(2043)	12,000
DESIGN HOURLY VOLUME (2048)	7,450	(2043)	1,400
DIRECTIONAL DISTRIBUTION	0.52		1.00
TRUCKS (24 HOUR B&C)	7%		8%
DESIGN SPEED	70 mph		45 mph
LEGAL SPEED	65 mph		40 mph
DESIGN FUNCTIONAL CLASSIFICATION:	URBAN INTERSTATE		URBAN MINOR ARTERIAL
NHS PROJECT	YES		NO

DESIGN EXCEPTIONS

DESIGN FEATURE	APPROVAL DATE	SHEET NUMBERS
SHOULDER WIDTH	PENDING	7 - 12

ADA DESIGN WAIVERS

N/A

UNDERGROUND UTILITIES
Contact Two Working Days Before You Dig
OHIO811.org Before You Dig
OHIO811, 8-1-1, or 1-800-362-2764
(Non members must be called directly)

PLAN PREPARED BY:
Gannett Fleming
2500 CORPORATE EXCHANGE DR, SUITE 230
COLUMBUS, OHIO 43231

INDEX OF SHEETS:

TITLE SHEET	1	CROSS SECTIONS - IR-77	93 - 148
SCHEMATIC PLAN	2	CROSS SECTIONS - SR-21 RAMP G	149 - 166
INTERCHANGE GEOMETRICS	3	CROSS SECTIONS - SR-21	167 - 180
PROJECT CONTROL AND BENCHMARKS	4	SUPERELEVATION TABLES	181 - 186
TYPICAL SECTIONS	5 - 13	INTERCHANGE DETAILS - IR-77 & SR-21	187 - 191
GENERAL NOTES	14 - 18	STORM SEWER PROFILES	192 - 195
MAINTENANCE OF TRAFFIC	19 - 76	DRAINAGE DETAILS	196 - 199
GENERAL SUMMARY	77 - 79	TRAFFIC CONTROL PLAN	200 - 224
ESTIMATED QUANTITIES	80 - 83	STRUCTURE (OVER 20 FOOT SPAN)	
PROJECT SITE PLAN	84	SUM-77-3227 L	225 - 261
PLAN AND PROFILE- IR-77	85 - 89	SUM-77-3227 R	262 - 297
PLAN - SR-21	90	SOIL PROFILE (STG 3, FOLDER 04 ***)	1-19
PLAN - SR-21 RAMP G	91	*** TO BE NUMBERED WITH FULL PLANS WITH TRACINGS	
PROFILE - SR-21 RAMP G	92		

FEDERAL PROJECT NUMBER

E200136

RAILROAD INVOLVEMENT

NONE

PROJECT DESCRIPTION

THIS PROJECT INCLUDES THE FULL REMOVAL AND REPLACEMENT OF THE ORIGINAL PAVEMENT ON IR-77 AND WIDENING TO SIX LANES FROM SLM 32.27 TO 33.06 IN SUMMIT COUNTY, OHIO. COMPLETE REMOVAL AND REPLACEMENT OF RAMP G PAVEMENT (WB BRECKSVILLE ROAD/SR-21 TO SB IR-77). LOWERING OF SR-21 UNDER IR-77 ALONG WITH SR-21 DRAINAGE IMPROVEMENTS WILL BE COMPLETED AS PART OF THE PROJECT. THE PROJECT ALSO INCLUDES THE WIDENING OF TWO MAINLINE BRIDGES (SUM-77-3227 L/R). IN ADDITION, GENERAL GRADING, MEDIAN DRAINAGE, GUARDRAIL, MEDIAN CABLE BARRIER AND TRAFFIC CONTROL IMPROVEMENTS ARE BEING MADE.

CULVERT REPLACEMENT AND REHABILITATION UNDER IR-77 IS NOT PART OF THIS PROJECT, BUT WILL BE COMPLETED BY THE SUM-77-28.75 PROJECT (PID 111405).

EARTH DISTURBED AREAS

PROJECT EARTH DISTURBED AREA: 28.56 ACRES
ESTIMATED CONTRACTOR EARTH DISTURBED AREA: 0.25 ACRES
NOTICE OF INTENT EARTH DISTURBED AREA: 28.81 ACRES

LIMITED ACCESS

THIS IMPROVEMENT IS ESPECIALLY DESIGNED FOR THROUGH TRAFFIC AND HAS BEEN DECLARED A LIMITED ACCESS HIGHWAY OR FREEWAY BY ACTION OF THE DIRECTOR IN ACCORDANCE WITH THE PROVISIONS OF SECTION 5511.02 OF THE OHIO REVISED CODE.

2019 SPECIFICATIONS

THE STANDARD SPECIFICATIONS OF THE STATE OF OHIO, DEPARTMENT OF TRANSPORTATION, INCLUDING SUPPLEMENTAL SPECIFICATIONS LISTED IN THE PLANS AND CHANGES LISTED IN THE PROPOSAL SHALL GOVERN THIS IMPROVEMENT.

I HEREBY APPROVE THESE PLANS AND DECLARE THAT THE MAKING OF THIS IMPROVEMENT WILL NOT REQUIRE THE CLOSING TO TRAFFIC OF THE HIGHWAY EXCEPT FOR SR-21 AND ENTRANCE RAMP AS DESCRIBED ON SHEET 19 AND AS SHOWN ON SHEETS 30 & 32, AND THAT PROVISIONS FOR THE MAINTENANCE AND SAFETY OF TRAFFIC WILL BE AS SET FORTH ON THE PLANS AND ESTIMATES.

ENGINEER'S SEAL:	ENGINEER'S SEAL:	ENGINEER'S SEAL:
ROADWAY SHEETS: 1-191, 200-224	DRAINAGE SHEETS: 192 - 199	SUM-77-3227 L/R BRIDGE SHEETS: 225 - 297
SIGNED: _____ DATE: _____	SIGNED: _____ DATE: _____	SIGNED: _____ DATE: _____

STAGE 3 SUBMITTAL
2/25/2022

NOT FOR CONSTRUCTION

INFORMATION ONLY

STANDARD CONSTRUCTION DRAWINGS

BP-2.1	1/21/22	RM-4.1	1/17/20	DM-4.4	1/15/16	MT-102.10	7/17/20	TC-51.11	1/15/16	SBR-1-20	7/17/20
BP-2.2	1/15/21	RM-4.2	4/17/20			MT-102.30	10/16/15	TC-52.10	10/18/13	HL-50.21	1/15/21
BP-3.1	1/21/22	RM-4.5	7/21/17	MT-95.30	7/19/19	MT-103.10	1/21/22	TC-52.20	1/15/21		
BP-5.1	1/21/22	RM-4.6	7/19/13	MT-95.31	7/19/19	MT-104.10	10/16/15	TC-65.10	1/17/14		
BP-6.1	1/21/22			MT-95.40	1/17/20	MT-105.10	1/17/20	TC-65.11	7/21/17		
BP-9.1	1/18/19	CB-2-2A	7/16/21	MT-95.41	1/17/20			TC-71.10	7/16/21		
		CB-2-3	7/16/21	MT-97.10	4/19/19	HL-30.32	4/17/20	TC-72.20	7/20/18		
MGS-1.1	7/16/21	CB-3A	7/16/21	MT-98.10	1/17/20	HL-30.33	1/21/22				
MGS-2.1	1/19/18	CB-4	7/16/21	MT-98.21	1/17/20			ITS-14.10	1/21/22		
MGS-3.1	1/19/18	I-3D	7/16/21	MT-98.29	1/17/20	TC-12.31	1/21/22	ITS -14.11	1/21/22		
MGS-3.2	1/18/13	MH-3	7/16/21	MT-99.20	4/19/19	TC-21.21	7/16/21	ITS -14.50	1/21/22		
MGS-4.2	7/19/13			MT-99.30	1/17/20	TC-22.20	1/17/14				
MGS-5.3	7/15/16	DM-1.1	7/17/20	MT-101.60	1/17/20	TC-41.10	7/19/13	AS-1-15	7/17/15		
MGS-6.1	1/19/18	DM-1.2	7/16/21	MT-101.70	1/17/20	TC-41.20	10/18/13	AS-2-15	1/18/19		
		DM-4.1	7/17/20	MT-101.75	1/17/20	TC-42.10	10/18/13	GSD-1-19	1/15/21		
		DM-4.3	1/15/16	MT-101.90	7/17/20	TC-42.20	10/18/13	PCB-91	7/17/20		

SUPPLEMENTAL SPECIFICATIONS		SPECIAL PROVISIONS
800-2019	1/21/22	
804	10/15/21	
807	1/21/22	
808	1/18/19	
809	1/21/22	
846	4/17/15	
904	10/15/21	
905	4/17/20	
908	10/20/17	
909	1/21/22	
PN-519	7/21/17	
PN-555	1/15/21	

APPROVED _____
DATE _____ DISTRICT DEPUTY DIRECTOR

APPROVED _____
DATE _____ DIRECTOR, DEPARTMENT OF TRANSPORTATION

TITLE SHEET

DESIGN AGENCY
Gannett Fleming
ENGINEERS AND ARCHITECTS, P.C.
2500 Corporate Exchange Drive
Suite 230
Columbus, OH 43231

DESIGNER TQD
REVIEWER DRJ 02/01/22
PROJECT ID 104983
SHEET 1 TOTAL 297

SUM-77-32.27

MODEL: Sheet PAPERSIZE: 17x11 (in.) DATE: 2/24/2022 TIME: 8:25:25 PM USER: edues
pw:\\gfnet-pw.bentley.com:gfnet-pw-01\Documents\Projects\67490\104983\401-Engineering-GFIRoadway\Sheets\104983_GT001.dgn

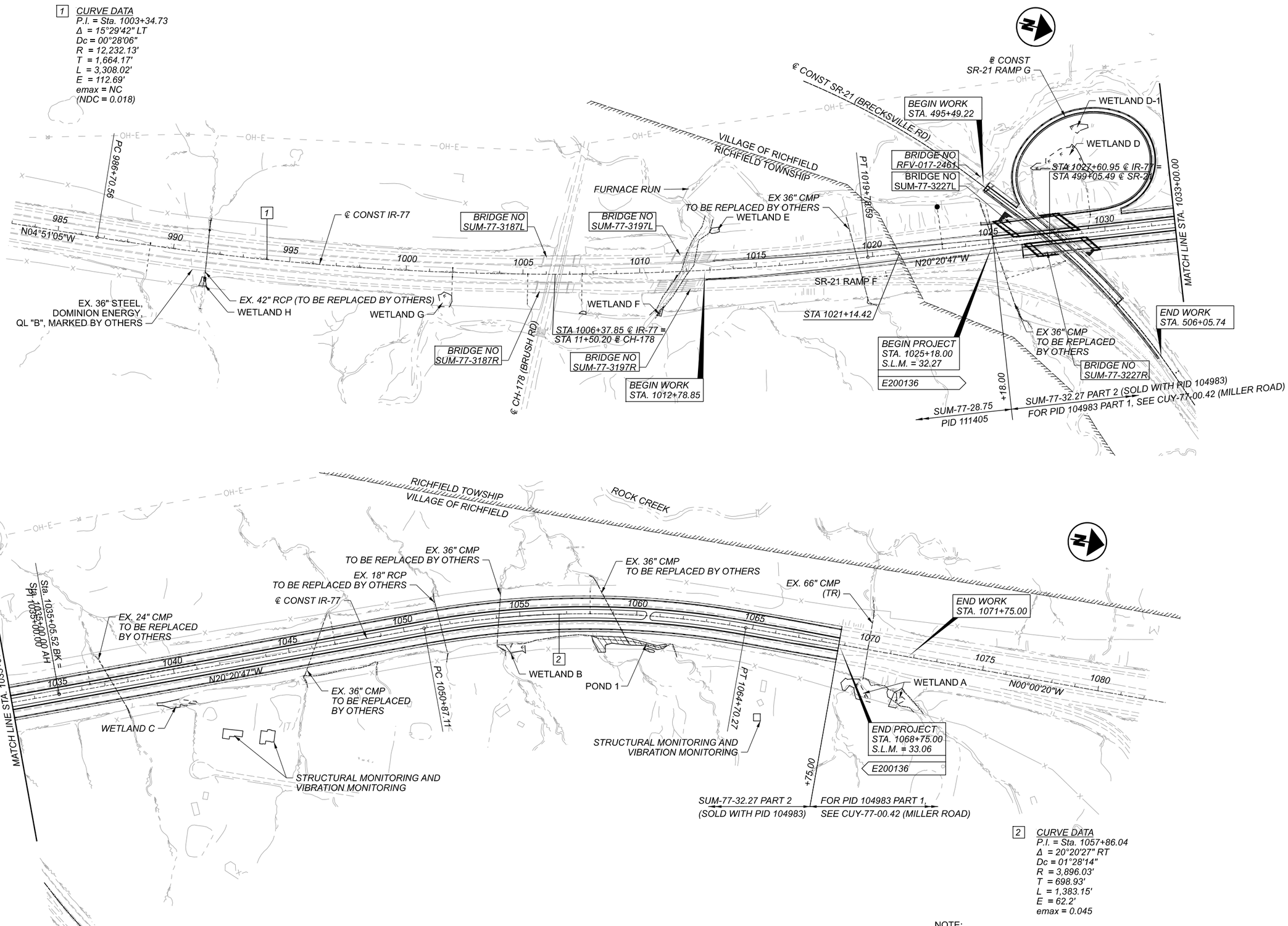

NOTE:
1. FOR INTERCHANGE GEOMETRICS PLAN, SEE SHEET 3
2. THERE ARE NO EXISTING LANDSCAPED AREAS WITHIN THE WORK LIMITS.

HORIZONTAL SCALE IN FEET
0 100 200 400

SCHEMATIC PLAN
IR-77 STA 983+00.00 TO STA 1083+00.00

SUM-77-32.27

DESIGN AGENCY
Gannett Fleming
ENGINEERS AND ARCHITECTS, P.C.
2300 Corporate Exchange Drive Suite 200
Columbus, OH 43231

DESIGNER TQD
REVIEWER DRJ 02/01/22
PROJECT ID 104983
SHEET 2 TOTAL 297

MODEL: IN405_GBI04-I PAPERSIZE: 17x11(in.) DATE: 2/22/2022 TIME: 5:53:43 PM USER: tdinh
pw:\\gfnet-pw.bentley.com:gfnet-pw-ON\Documents\Projects\67490\104983\401-Engineering-GF\Roadway\Sheets\104983_GBI02.dgn

SR-21 RAMP G

G1 SPIRAL DATA
P.I. = Sta. 10008+06.73
Ls = 150.00'
θs = 20°27'46"
LT = 100.68'
ST = 50.62'
x = 148.10'
y = 17.70'
k = 74.68'
p = 4.44'
C = 149.15'
Start = Sta. 10007+06.05
End = Sta. 10008+56.05
C.B. = S31°56'20"W

G2 CURVE DATA
P.I. = Sta. 10009+76.29
Δ = 59°35'22" RT
Dc = 27°17'01"
R = 210.00'
T = 120.24'
L = 218.41'
E = 31.99'
emax = 0.057
(25 MPH)

G3 CURVE DATA
P.I. = Sta. 10013+63.74
Δ = 79°08'57" RT
Dc = 16°22'13"
R = 350.00'
T = 289.28'
L = 483.49'
E = 104.08'
emax = 0.060
(35 MPH)

G4 CURVE DATA
P.I. = Sta. 10019+47.43
Δ = 125°38'19" RT
Dc = 28°38'52"
R = 200.00'
T = 389.48'
L = 438.56'
E = 237.83'
emax = 0.057
(25 MPH)

G5 SPIRAL DATA
P.I. = Sta. 10020+64.81
Ls = 200.00'
θs = 28°38'52"
LT = 135.12'
ST = 68.30'
x = 186.88'
y = 64.78'
k = 186.88'
p = 64.78'
C = 197.79'
Start = Sta. 10019+96.51
End = Sta. 10021+97.07
C.B. = S30°54'57"E

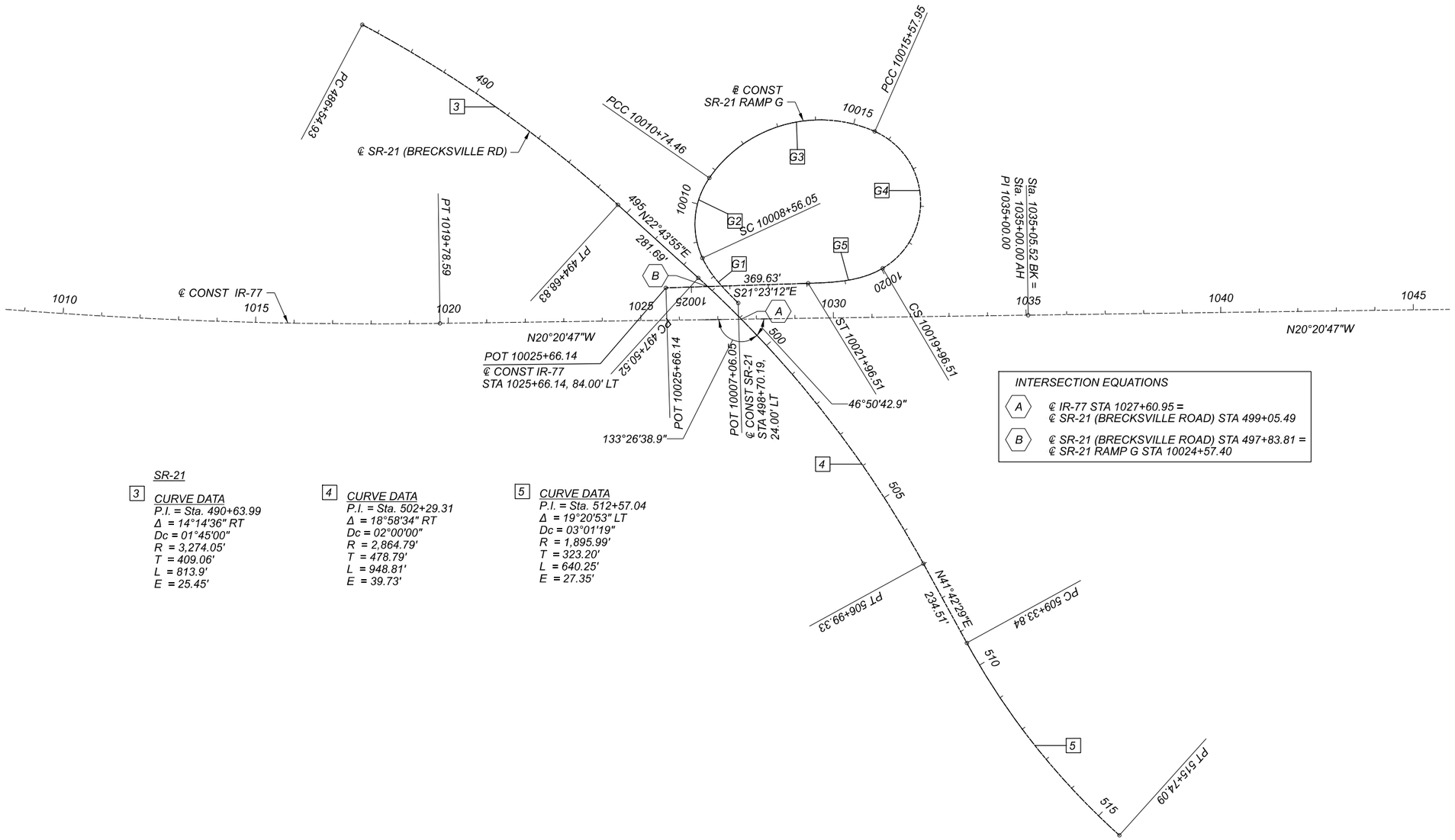

INTERSECTION EQUATIONS

A ℄ IR-77 STA 1027+60.95 =
℄ SR-21 (BRECKSVILLE ROAD) STA 499+05.49

B ℄ SR-21 (BRECKSVILLE ROAD) STA 497+83.81 =
℄ SR-21 RAMP G STA 10024+57.40

SR-21

3 CURVE DATA
P.I. = Sta. 490+63.99
Δ = 14°14'36" RT
Dc = 01°45'00"
R = 3,274.05'
T = 409.06'
L = 813.9'
E = 25.45'

4 CURVE DATA
P.I. = Sta. 502+29.31
Δ = 18°58'34" RT
Dc = 02°00'00"
R = 2,864.79'
T = 478.79'
L = 948.81'
E = 39.73'

5 CURVE DATA
P.I. = Sta. 512+57.04
Δ = 19°20'53" LT
Dc = 03°01'19"
R = 1,895.99'
T = 323.20'
L = 640.25'
E = 27.35'

HORIZONTAL SCALE IN FEET
0 75 150 300

INTERCHANGE GEOMETRICS PLAN
IR-77 OVER SR-21

SUM-77-32.27

MODEL: III405_GII03 PAPERSIZE: 17x11(in.) DATE: 2/22/2022 TIME: 5:55:51 PM USER: tdinh
pw:\\gfnet-pw.bentley.com:gfnet-pw-01\Documents\Projects\67490\104983\40i-Engineering-GF\Roadway\Sheets\104983_GI40I.dgn

DESIGN AGENCY
Gannett Fleming
ENGINEERS AND ARCHITECTS, P.C.
2500 Corporate Exchange Drive
Suite 230
Columbus, OH 43231

DESIGNER TQD
REVIEWER DRJ 02/01/22
PROJECT ID 104983
SHEET 3 TOTAL 297

PROJECT CONTROL AND BENCHMARKS

GROUND COORDINATES - U.S. Survey FT											GRID COORDINATES - U.S. Survey FT	
NAME	Alignment Name	STATION	OFFSET (sft)	RT/LT	NORTH (sft)	EAST (sft)	ELEVATION (sft)	FEATURE	POINT TYPE	DESCRIPTION	NORTH (sft)	EAST (sft)
EXISTING I-77 CENTERLINE MONUMENTATION												
MN781	CLX_77	781+06.53	0.00	RT	556791.606	2209377.373	NA	CMON	Existing CL Control Point	1/4" IRON PIN FOUND IN ROUND CONCRETE MONUMENT	556733.939	2209148.548
MN796	CLX_77	796+80.78	0.08	RT	558365.716	2209356.932	NA	CMON	Existing CL Control Point	1/4" IRON PIN FOUND IN ROUND CONCRETE MONUMENT	558307.886	2209128.109
MN813	CLX_77	813+08.37	0.32	RT	559993.179	2209335.951	NA	CMON	Existing CL Control Point	1/4" IRON PIN FOUND IN ROUND CONCRETE MONUMENT	559935.181	2209107.130
MN845	CLX_77	845+57.10	-0.02	LT	563241.626	2209293.267	NA	CMON	Existing CL Control Point	1/4" IRON PIN FOUND IN ROUND CONCRETE MONUMENT	563183.291	2209064.451
MN860	CLX_77	860+78.98	0.12	RT	564761.400	2209219.574	NA	CMON	Existing CL Control Point	1/4" IRON PIN FOUND IN ROUND CONCRETE MONUMENT	564702.908	2208990.765
MN868	CLX_77	868+03.60	0.06	RT	565483.460	2209158.687	NA	CMON	Existing CL Control Point	1/4" IRON PIN FOUND IN ROUND CONCRETE MONUMENT	565424.893	2208929.884
MN878	CLX_77	878+53.60	0.01	RT	566529.751	2209070.495	NA	CMON	Existing CL Control Point	1/4" IRON PIN FOUND IN ROUND CONCRETE MONUMENT	566471.076	2208841.702
MN919	CLX_77	919+19.48	0.00		570581.275	2208729.177	NA	CMON	Existing CL Control Point	1/4" IRON PIN FOUND IN ROUND CONCRETE MONUMENT	570522.180	2208500.419
MN929	CLX_77	929+54.93	0.05	RT	571613.021	2208641.655	NA	CMON	Existing CL Control Point	1/4" IRON PIN FOUND IN ROUND CONCRETE MONUMENT	571553.819	2208412.906
MN936	CLX_77	936+58.14	0.10	RT	572313.712	2208582.230	NA	CMON	Existing CL Control Point	1/4" IRON PIN FOUND IN ROUND CONCRETE MONUMENT	572254.437	2208353.487
MN953	CLX_77	953+10.65	0.21	RT	573960.318	2208442.580	NA	CMON	Existing CL Control Point	1/4" IRON PIN FOUND IN ROUND CONCRETE MONUMENT	573900.873	2208213.852
MN962	CLX_77	962+00.15	0.24	RT	574846.627	2208367.386	NA	CMON	Existing CL Control Point	1/4" IRON PIN FOUND IN ROUND CONCRETE MONUMENT	574787.090	2208138.665
MN972	CLX_77	972+94.16	0.05	RT	575936.709	2208274.672	NA	CMON	Existing CL Control Point	1/4" IRON PIN FOUND IN ROUND CONCRETE MONUMENT	575877.059	2208045.961
MN986	CLX_77	986+70.56	0.00		577308.172	2208158.213	NA	CMON	Existing CL Control Point	1/4" IRON PIN FOUND IN ROUND CONCRETE MONUMENT	577248.380	2207929.514
MN1019	CLX_77	1019+85.05	0.00		580532.773	2207436.598	NA	CMON	Existing CL Control Point	1/4" IRON PIN FOUND IN ROUND CONCRETE MONUMENT	580472.647	2207207.974
MN1025	CLX_77	1025+24.70	-0.13	LT	581038.706	2207248.838	NA	CMON	Existing CL Control Point	1/4" IRON PIN FOUND IN ROUND CONCRETE MONUMENT	580978.528	2207020.233
MN1035	CLX_77	1035+05.52	0.04	RT	581958.392	2206907.977	NA	CMON	Existing CL Control Point	1/4" IRON PIN FOUND IN ROUND CONCRETE MONUMENT	581898.119	2206679.408
MN1050	CLX_77	1050+87.11	0.00		583446.466	2206356.105	NA	CMON	Existing CL Control Point	1/4" IRON PIN FOUND IN ROUND CONCRETE MONUMENT	583386.038	2206127.593
MN1097	CLX_77	1097+64.67	0.00		588095.124	2206112.706	NA	CMON	Existing CL Control Point	1/4" IRON PIN FOUND IN ROUND CONCRETE MONUMENT	588034.215	2205884.219
PROJECT CONTROL POINTS												
MN7704	CLX_77	801+09.52	-85.24	LT	558793.309	2209266.031	1157.93	GOVCONS	Project Control Points	CONCRETE MONUMENT SET WITH ODOT DISC	558735.434	2209037.217
MN7705	CLX_77	883+21.69	-119.75	LT	566986.133	2208911.868	1122.61	GOVCONS	Project Control Points	CONCRETE MONUMENT SET WITH ODOT DISC	566927.410	2208683.091
MN7706	CLX_77	914+21.22	372.26	RT	570116.028	2209141.950	1087.41	GOVCONS	Project Control Points	CONCRETE MONUMENT SET WITH ODOT DISC	570056.981	2208913.149
MN7707	CLX_77	962+01.58	119.80	RT	574858.167	2208486.395	1042.50	GOVCONS	Project Control Points	CONCRETE MONUMENT SET WITH ODOT DISC	574798.629	2208257.662
MN7708	CLX_77	1027+68.48	230.28	RT	581347.393	2207380.115	1041.15	GOVCONS	Project Control Points	CONCRETE MONUMENT SET WITH ODOT DISC	581287.182	2207151.497
MN7709	CLX_77	5+93.68	-124.97	LT	588688.788	2205987.682	1099.81	GOVCONS	Project Control Points	CONCRETE MONUMENT SET WITH ODOT DISC	588627.818	2205759.208
PROJECT BENCHMARKS												
BM111	CLX_77	790+08.18	96.82	RT	557694.440	2209462.440	1163.62	SIGNPB	Bench Mark	"X" CUT ON SW BOLT OF TRAFFIC INFO SIGN BASE NB	557636.680	2209233.606
BM112	CLX_77	819+59.40	84.61	RT	560645.240	2209411.750	1167.00	OTSS	Bench Mark	"X" CUT ON SW BOLT OF OVERHEAD TRUSS SIGN NB	560587.174	2209182.921
BM113	CLX_77	828+69.61	96.56	RT	561555.530	2209411.830	1168.05	SIGNPB	Bench Mark	"X" CUT ON SW BOLT OF SIGN BASE FOOD EXIT 143 NB	561497.370	2209183.001
BM114	CLX_77	847+23.12	98.54	RT	563409.670	2209388.990	1164.35	SIGNPB	Bench Mark	"X" CUT ON SW BOLT SIGN BASE GAS EXIT 143 NB	563351.318	2209160.164
BM115	CLX_77	874+11.24	87.95	RT	566096.330	2209195.260	1137.03	SIGNPB	Bench Mark	"X" CUT ON SW BOLT SIGN BASE RICHFIELD NEXT RIGHT NB	566037.699	2208966.454
BM116	CLX_77	900+00.10	-4.20	LT	568668.320	2208886.120	1104.67	TOWLGT	Bench Mark	"X" CUT ON NE BOLT ON HIGH MAST POLE #B8-17	568609.423	2208657.346
BM117	CLX_77	927+00.58	-5.92	LT	571359.080	2208657.220	1079.67	TOWLGT	Bench Mark	"X" CUT ON NE BOLT ON HIGH MAST POLE #B7-24	571299.904	2208428.469
BM118	CLX_77	944+50.61	-6.37	LT	573102.800	2208508.760	1064.27	TOWLGT	Bench Mark	"X" CUT ON NE BOLT ON HIGH MAST POLE #B8-29	573043.444	2208280.025
BM119	CLX_77	983+41.67	101.30	RT	576989.030	2208286.970	1005.19	SIGNPB	Bench Mark	"X" CUT ON SW BOLT SIGN BASE FOOD EXIT 145 NB	576929.271	2208058.258
BM120	CLX_77	1000+00.25	85.45	RT	578640.800	2208057.900	995.78	SIGNPB	Bench Mark	"X" CUT ON SW BOLT SIGN BASE GAS EXIT 145 NB	578580.870	2207829.212
BM121	CLX_77	1036+81.45	83.94	RT	582157.700	2206923.550	1048.90	OCSS	Bench Mark	"X" CUT ON SW BOLT CANTILEVER SIGN OHIO TURNPIKE 3/4 MILE	582097.406	2206694.979
BM122	CLX_77	1049+97.80	84.97	RT	583392.270	2206466.830	1043.05	OCSS	Bench Mark	"X" CUT ON SW BOLT CANTILEVER SIGN OHIO TURNPIKE 1/2 MILE	583331.848	2206238.306
BM123	CLX_77	1071+86.08	0.44	RT	585516.540	2206113.390	1066.60	TOWLGT	Bench Mark	"X" CUT ON NE BOLT HIGH MAST POLE HM-L1	585455.898	2205884.903
BM124	CLX_77	1088+05.33	1.05	RT	587135.790	2206113.850	1088.05	TOWLGT	Bench Mark	"X" CUT ON NE BOLT HIGH MAST POLE HM-L8	587074.980	2205885.363
BM150	CLX_77	913+99.50	-5.81	LT	570062.650	2208767.040	1092.07	TOWLGT	Bench Mark	"X" CUT ON NE BOLT HIGH MAST POLE #B-8-21	570003.609	2208538.278
										SET BY NEAS		
BM300	CLX_77	956+63.09	81.08	RT	574318.337	2208493.356	1049.56	CUTS ON WALLA	Bench Mark	CHISELED SQUARE SET ON I-77 NB BRIDGE OVER W STREETSBORO ROAD (RT 303) ON SE CORNER OF SE PARAPET WALL	574258.855	2208264.622
BM301	CLX_77	1006+99.95	79.47	RT	579326.529	2207896.997	995.68	CUTS ON WALLA	Bench Mark	CHISELED SQUARE SET ON I-77 NB BRIDGE OVER BRUSH RD ON NE CORNER OF NE PARAPET WALL	579266.528	2207668.325
BM304	CLX_77	1029+57.99	79.10	RT	581472.514	2207172.475	1045.44	CUTS ON WALLA	Bench Mark	CHISELED SQUARE SET ON I-77 NB BRIDGE OVER BRECKSVILLE RD ON NE CORNER OF NE PARAPET WALL	581412.291	2206943.878
BM306	CLX_77	1005+75.20	-79.36	LT	579166.921	2207773.246	996.36	CUTS ON WALLA	Bench Mark	CHISELED SQUARE SET ON I-77 SB BRIDGE OVER BRUSH RD ON SW CORNER OF SW PARAPET WALL	579106.937	2207544.587
BM307	CLX_77	1005+98.41	238.31	RT	579265.500	2208076.000	971.70	CUTS ON GRRT	Bench Mark	"X" CUT SET ON NW ANCHOR BOLT OF GUARDRAIL AT WEST END OF BRUSH ROAD BRIDGE OVER FURNACE RUN	579205.505	2207847.310

PROJECT CONTROL AND BENCHMARKS

DESIGN AGENCY
Gannett Fleming
ENGINEERS AND ARCHITECTS, P.C.
2300 Corporate Exchange Drive
Suite 330
Columbus, OH 43231

DESIGNER TQD

REVIEWER DRJ 02/01/22

PROJECT ID 104983

SHEET 4 | TOTAL 297

SUM-77-32.27

MODEL: 111405_GB104_1 PAPERSIZE: 17x11 (in.) DATE: 2/22/2022 TIME: 5:58:00 PM USER: tdinh
pw:\\gfnet-pw.bentley.com:gfnet-pw-01\Documents\Projects\67490\104983\401-Engineering-GFIRoadway\Sheets\104983_GB104.dgn

SHEET 1

EXISTING PAVEMENT LEGEND

- (A) EXISTING ASPHALT CONCRETE SURFACE COARSE (1.5")
- (B) EXISTING ASPHALT CONCRETE INTERMEDIATE COARSE (1.75")
- (C) EXISTING ASPHALT CONCRETE (7.5")
- (D) EXISTING AGGREGATE BASE COURSE (AVG 7")
- (E) EXISTING ASPHALT CONCRETE (5.25")
- (F) EXISTING REINFORCED CONCRETE (10")
- (G) EXISTING REINFORCED CONCRETE (9")
- (H) EXISTING UNDERDRAIN
- (I) EXISTING GUARDRAIL
- (J) EXISTING MINIMUM ASPHALTIC CONCRETE SURFACE (2.5")
- (K) EXISTING BRICK WEARING COURSE (3.5")
- (L) EXISTING SLAG CUSHION (0.75")
- (M) EXISTING CONCRETE BASE COURSE (8")
- (N) CONCRETE BARRIER
- (O) EXISTING CONCRETE APPROACH SLAB (13.5")

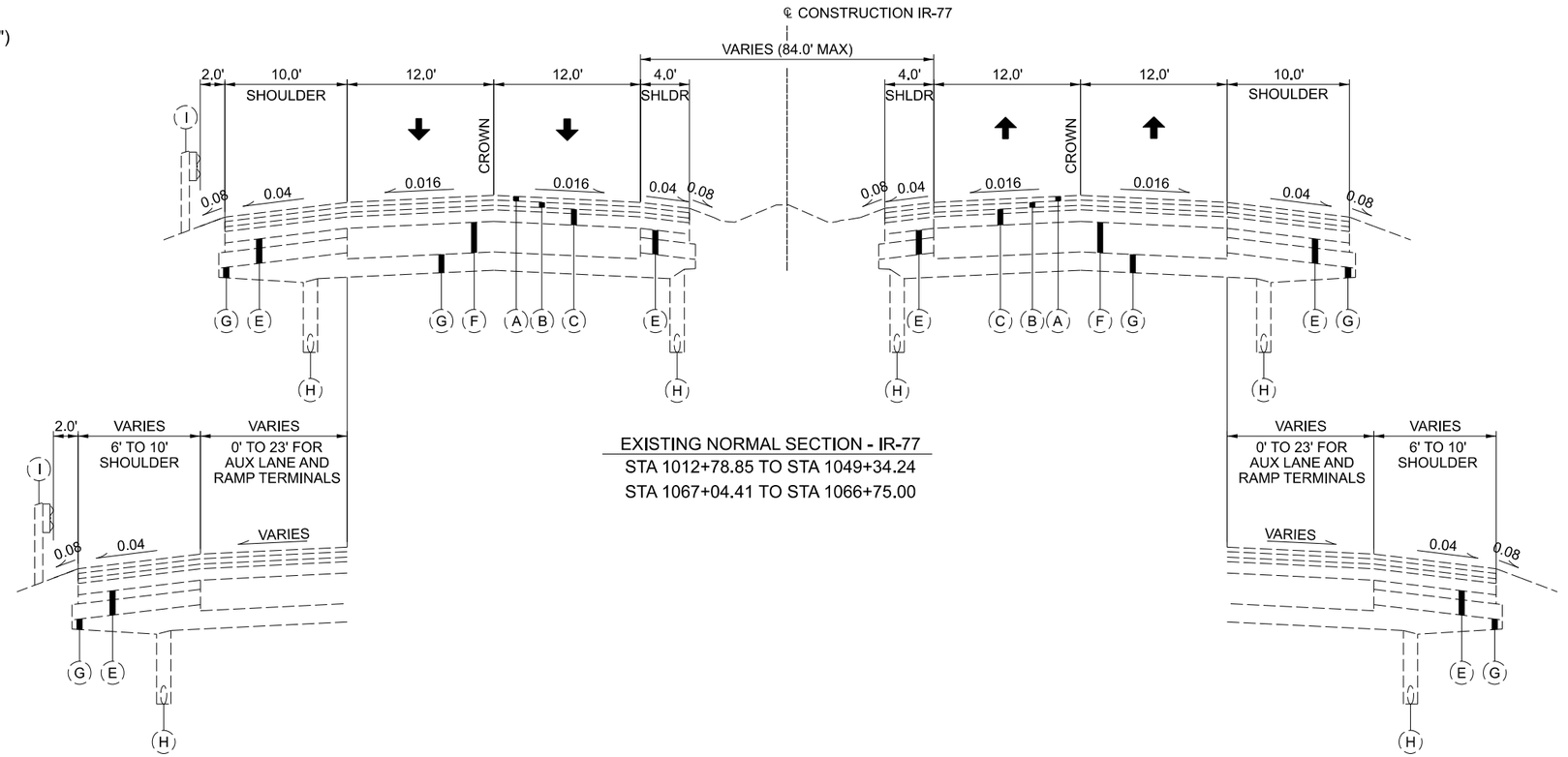

EXISTING NORMAL SECTION - IR-77
STA 1012+78.85 TO STA 1049+34.24
STA 1067+04.41 TO STA 1066+75.00

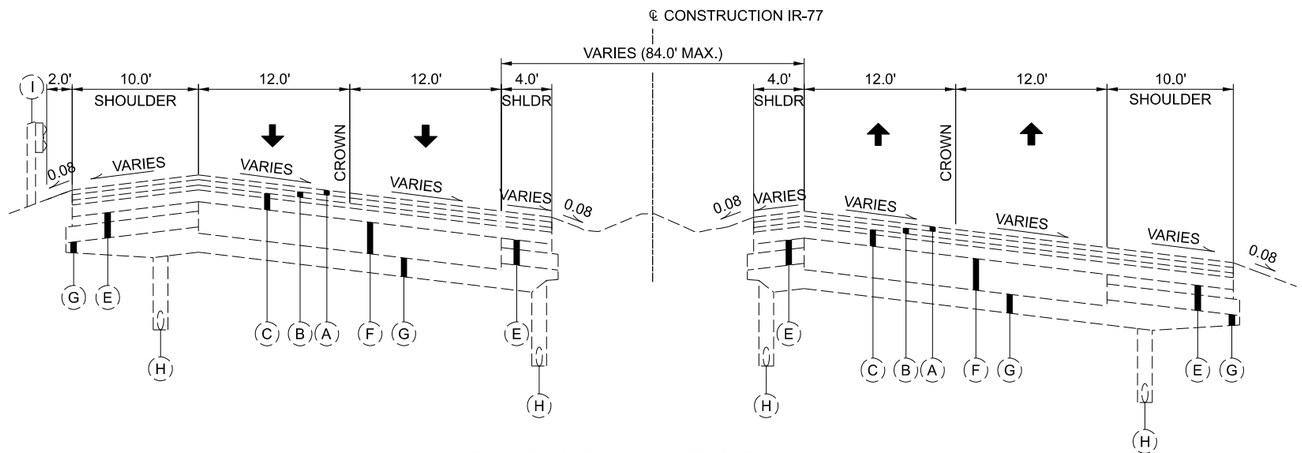

EXISTING SUPERELEVATED SECTION - IR-77
STA 1049+34.24 TO STA 1067+04.41

TYPICAL SECTIONS - EXISTING

SUM-77-32.27

MODEL: Sheet 1 PAPERSIZE: 17x11 (in.) DATE: 2/23/2022 TIME: 11:29:07 AM USER: tdinh
pw:\\gfnet-pw.bentley.com:gfnet-pw-01\Documents\Projects\67490\104983\401-Engineering-GFI\Roadway\Sheets\104983_GY001.dgn

DESIGN AGENCY
Gannett Fleming
ENGINEERS AND ARCHITECTS, P.C.
2200 Corporate Exchange Drive
Suite 230
Columbus, OH 43231

DESIGNER TQD

REVIEWER DRJ 02/01/22

PROJECT ID 104983

SHEET 5 TOTAL 297

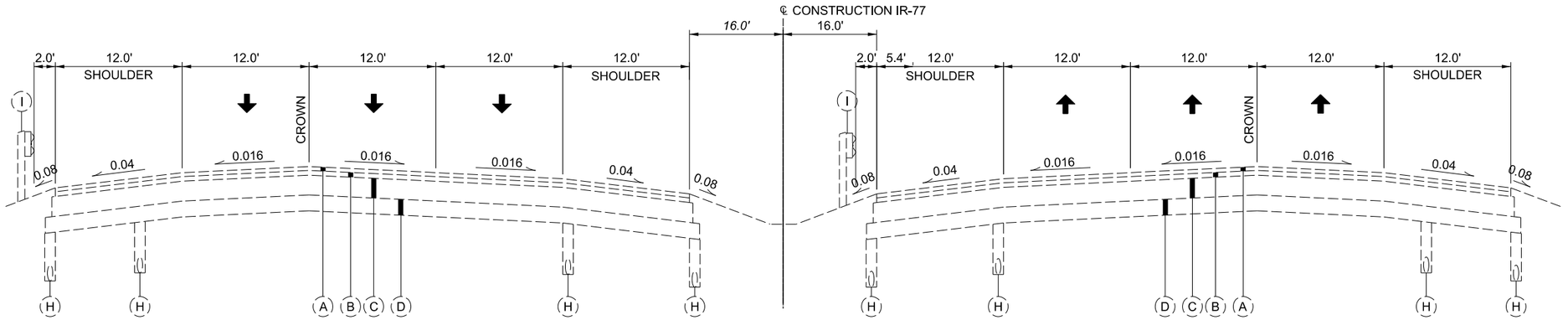

EXISTING NORMAL TIE-IN SECTION - IR-77
STA 1066+75.00 TO STA 1068+75.00

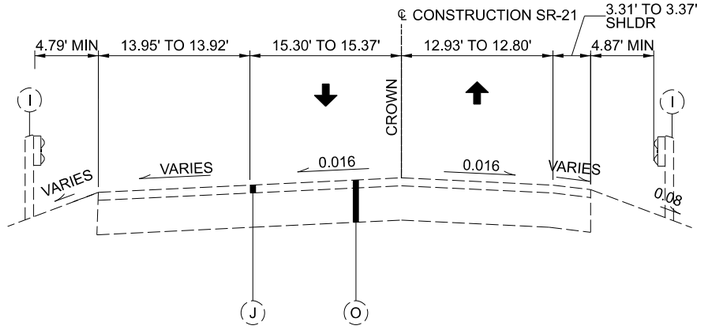

EXISTING APPROACH SLAB SECTION - SR-21
STA 495+49.22 TO STA 495+73.38

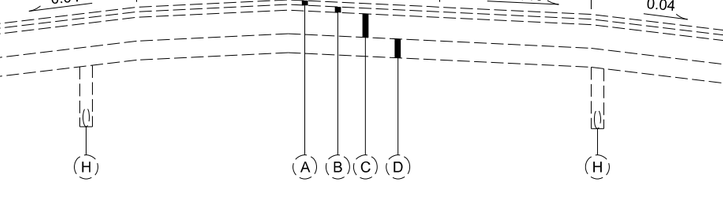

EXISTING NORMAL SECTION - SR-21
STA 495+73.38 TO STA 496+95.68

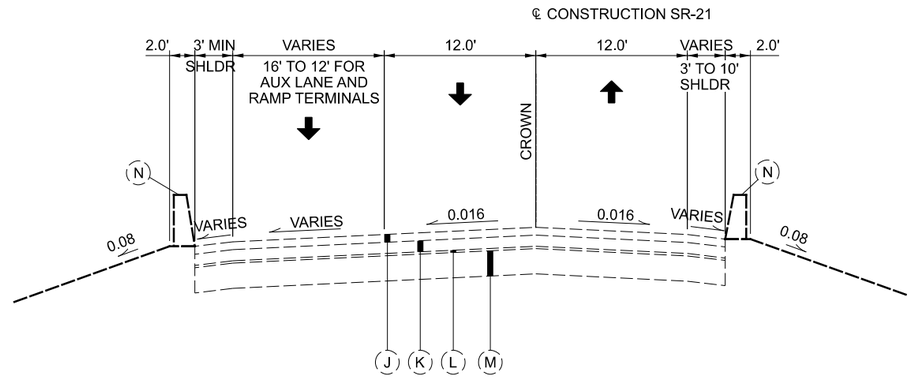

EXISTING NORMAL SECTION - SR-21
STA 496+95.68 TO STA 506+05.74

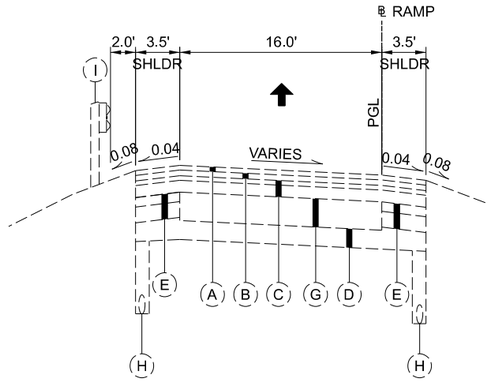

EXISTING SECTION - RAMP
SR-21 RAMP G (BRECKSVILLE ROAD)

FOR EXISTING PAVEMENT LEGEND, SEE SHEET 5

TYPICAL SECTIONS - EXISTING

SUM-77-32.27

MODEL: Sheet 2 PAPERSIZE: 17x11 (in.) DATE: 2/23/2022 TIME: 11:29:09 AM USER: tdhh
pw:\\gfnet-pw.bentley.com:gfnet-pw-01\Documents\Projects\67490\104983\401-Engineering-GF\Roadway\Sheets\104983_GY001.dgn

DESIGN AGENCY
Gannett Fleming
ENGINEERS AND ARCHITECTS, P.C.
2500 Corporate Exchange Drive
Suite 230
Columbus, OH 43231

DESIGNER
TQD

REVIEWER
DRJ 02/01/22

PROJECT ID
104983

SHEET 6 TOTAL 297

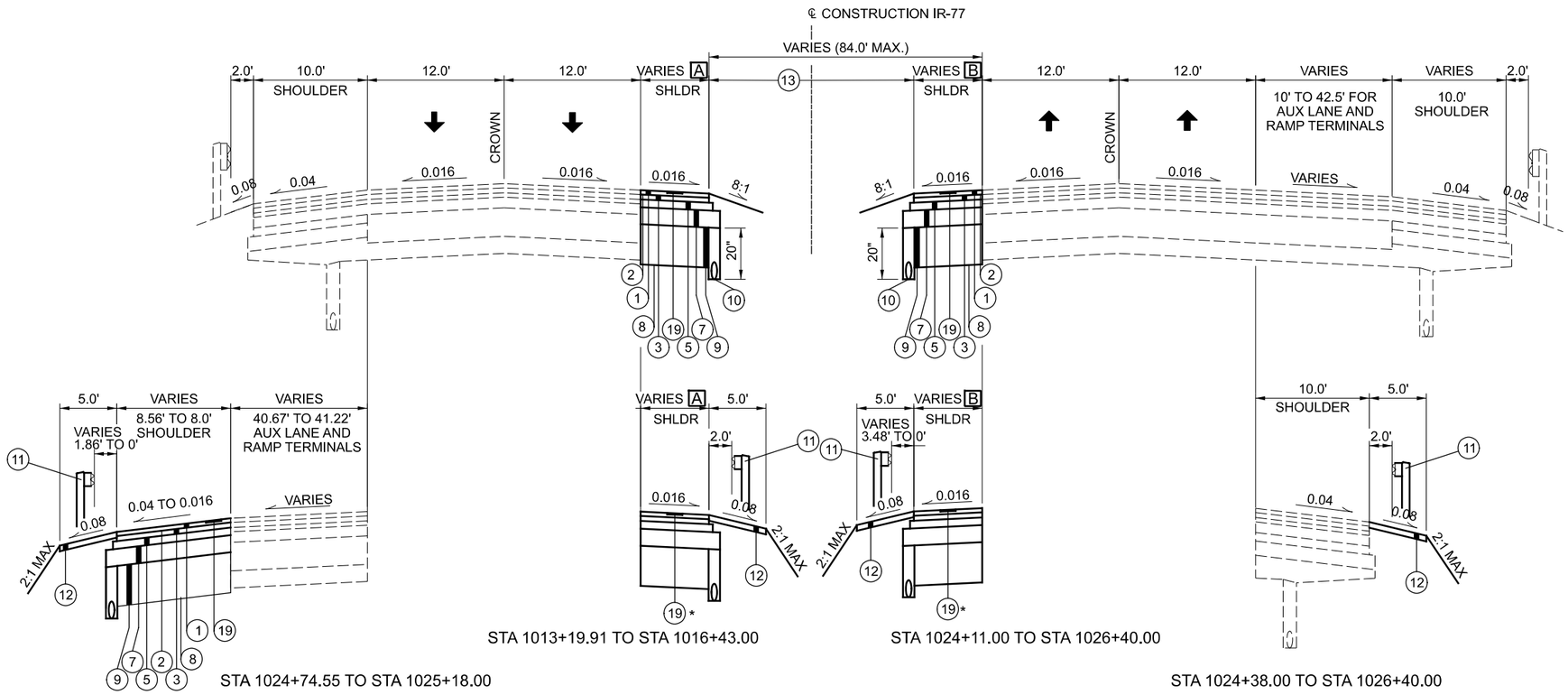

PROPOSED NORMAL SECTION - IR-77 SOUTHBOUND
STA 1013+19.91 TO STA 1025+18.00

PROPOSED NORMAL SECTION - IR-77 NORTHBOUND
STA 1012+78.85 TO STA 1026+40.00

* THE SHOULDERS HAVE BEEN DESIGNED FOR MAINTENANCE OF TRAFFIC DURING CONSTRUCTION, THE PATTERN MAY BE PLACED IN THE MIDDLE OF THE SHOULDER.

[A] 3.90' TO 24.74' STA 1013+19.91 TO STA 1025+18.00

[B] 4.25' TO 4.12' STA 1012+78.85 TO STA 1014+20.00
4.17' TO 23.92' STA 1014+20.00 TO STA 1026+20.00
23.92' STA 1026+20.00 TO STA 1026+40.00

PROPOSED PAVEMENT LEGEND

(1) ITEM 442 - 1 1/2" ASPHALT CONCRETE SURFACE COURSE, 12.5mm, TYPE A (447), AS PER PLAN
(2) ITEM 407 - NON-TRACKING TACK COAT (0.055 GAL/SY)
(3) ITEM 861 - 1.75" ASPHALT CONCRETE INTERMEDIATE COURSE, 12.5mm, TYPE A (446)
(4) ITEM 526 - REINFORCED CONCRETE APPROACH SLAB WITH QC/QA (T=15"), AS PER PLAN
(5) ITEM 301 - 7.5" ASPHALT CONCRETE BASE, PG 64-22 (2-3.75" LIFTS)
(6) ITEM 452 - 11.5" NON-REINFORCED CONCRETE PAVEMENT, CLASS QC1P WITH QC/QA
(7) ITEM 304 - 6" AGGREGATE BASE
(8) ITEM 204 - SUBGRADE COMPACTION
(9) ITEM 206 - CEMENT STABILIZATION (12" DEEP)
(10) ITEM 605 - 6" SHALLOW PIPE UNDERDRAIN WITH GEOTEXTILE FABRIC
(11) ITEM 606 - GUARDRAIL, TYPE MGS
(12) ITEM 441 - 2" ASPHALT CONCRETE INTERMEDIATE COURSE, TYPE 1, (448), (UNDER GUARDRAIL)
(13) ITEM 659 - SEEDING AND MULCHING
(14) ITEM 622 - CONCRETE BARRIER, SINGLE SLOPE, TYPE D
(15) ITEM 606 - CABLE BARRIER, WITH CONCRETE LINE POST FOUNDATION
(16) ITEM 441 - 1 1/2" ASPHALT CONCRETE SURFACE COURSE, TYPE 1, (446), PG64-22, AS PER PLAN
(17) ITEM 441 - 1.75" ASPHALT CONCRETE INTERMEDIATE COURSE, TYPE 2, (446)
(18) ITEM 301 - 6" ASPHALT CONCRETE BASE, PG 64-22 (2-3" LIFTS)
(19) ITEM 618 - RUMBLE STRIPS (ASPHALT CONCRETE)
(20) ITEM 609 - CURB, TYPE 4-A
(21) ITEM 254 - PAVEMENT PLANING, ASPHALT CONCRETE, AS PER PLAN (3" DEPTH)
(22) ITEM 206 - CEMENT STABILIZATION (14" DEEP)

FOR GUARDRAIL LOCATIONS, SEE SHEETS 85 - 91

PGL = PROFILE GRADE LINE

TYPICAL SECTIONS - PROPOSED

SUM-77-32.27
MODEL: Sheet 3 PAPERSIZE: 17x11 (in.) DATE: 2/23/2022 TIME: 11:29:10 AM USER: tdinh
pw:\\gfnet-pw.bentley.com:gfnet-pw-01\Documents\Projects\67490\104983\401-Engineering-GF\Roadway\Sheets\104983_GY001.dgn

DESIGN AGENCY
Gannett Fleming
ENGINEERS AND ARCHITECTS, P.C.
2550 Corporate Exchange Drive
Suite 220
Columbus, OH 43231

DESIGNER TQD
REVIEWER DRJ 02/01/22
PROJECT ID 104983
SHEET 7 TOTAL 297

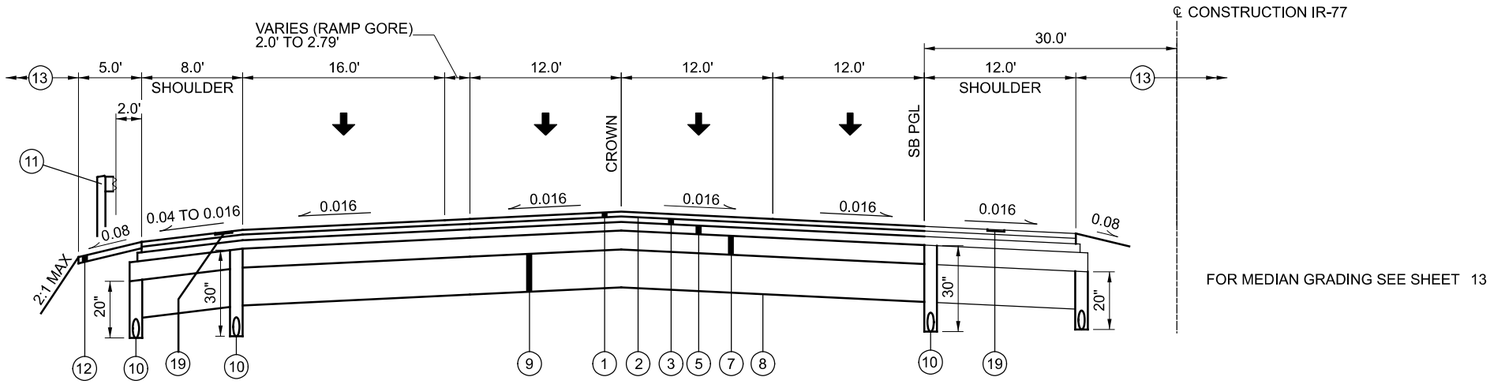

PROPOSED NORMAL SECTION - IR-77 SOUTHBOUND
STA 1025+18.00 TO STA 1025+95.25

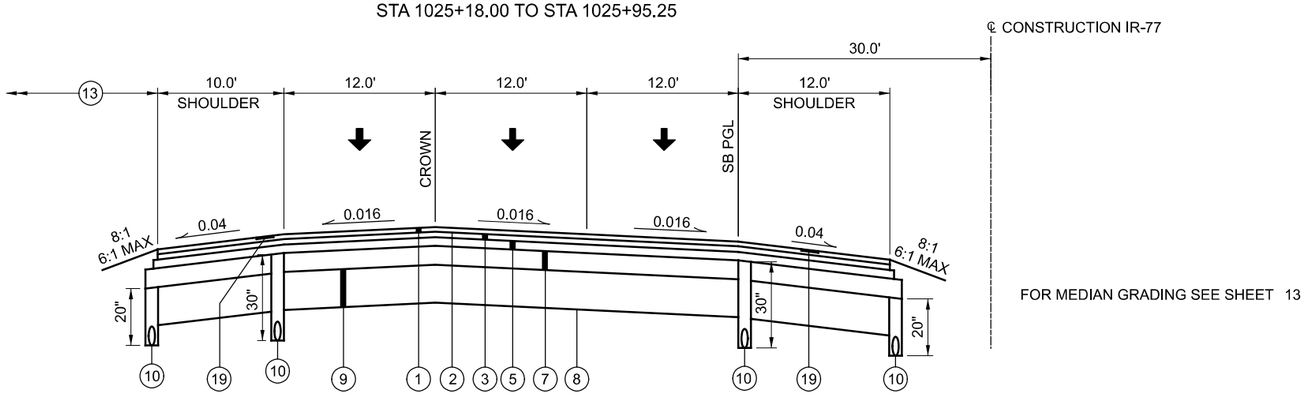

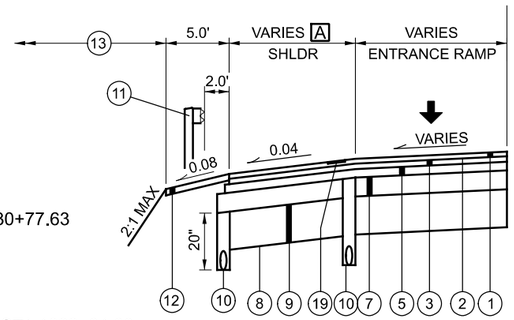

STA 1028+79.19 TO STA 1030+77.63

A 8.00' TO 6.00' STA 1029+35.00 TO STA 1029+84.83

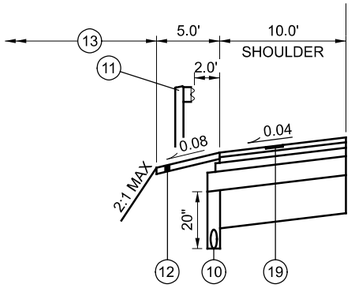

STA 1032+00.00 TO STA 1039+95.00
STA 1043+00.00 TO STA 1048+33.11

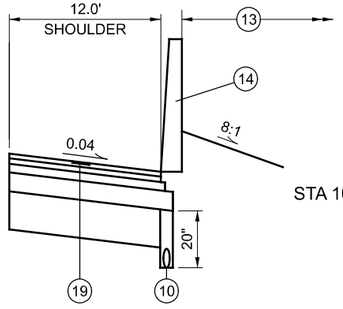

STA 1028+95.00TO STA 1037+00.00

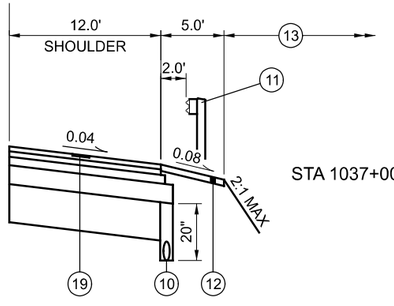

STA 1037+00.00 TO STA 1046+00.00

PROPOSED NORMAL SECTION - IR-77 SOUTHBOUND
STA 1028+79.19 TO STA 1048+33.11

FOR GUARDRAIL LOCATIONS, SEE SHEETS 85 - 91

FOR PROPOSED PAVEMENT LEGEND, SEE SHEET 7

TYPICAL SECTIONS - PROPOSED

SUM-77-32.27
MODEL: Sheet 4 PAPERSIZE: 17x11 (in.) DATE: 2/23/2022 TIME: 11:28:10 AM USER: tdinh
pw:\\gfnet-pw.bentley.com:gfnet-pw-01\Documents\Projects\67490\104983\401-Engineering-GF\Roadway\Sheets\104983_GY001.dgn

DESIGN AGENCY
Gannett Fleming
ENGINEERS AND ARCHITECTS, P.C.
2300 Corporate Exchange Drive
Suite 230
Columbus, OH 43231
DESIGNER
TQD
REVIEWER
DRJ 02/01/22
PROJECT ID
104983
SHEET 8 TOTAL 297

FOR MEDIAN GRADING SEE SHEET 13

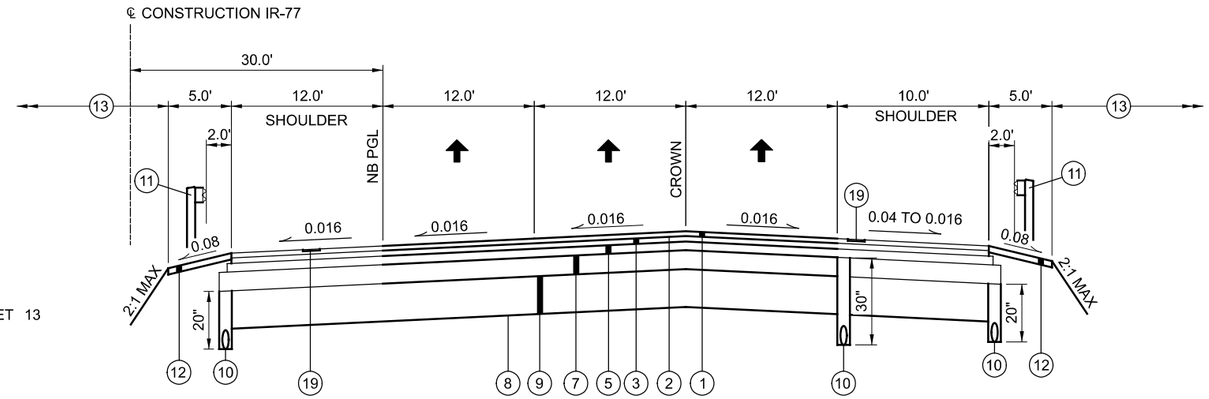

PROPOSED NORMAL SECTION - IR-77 NORTHBOUND
STA 1026+40.00 TO STA 1026+61.03

FOR MEDIAN GRADING SEE SHEET 13

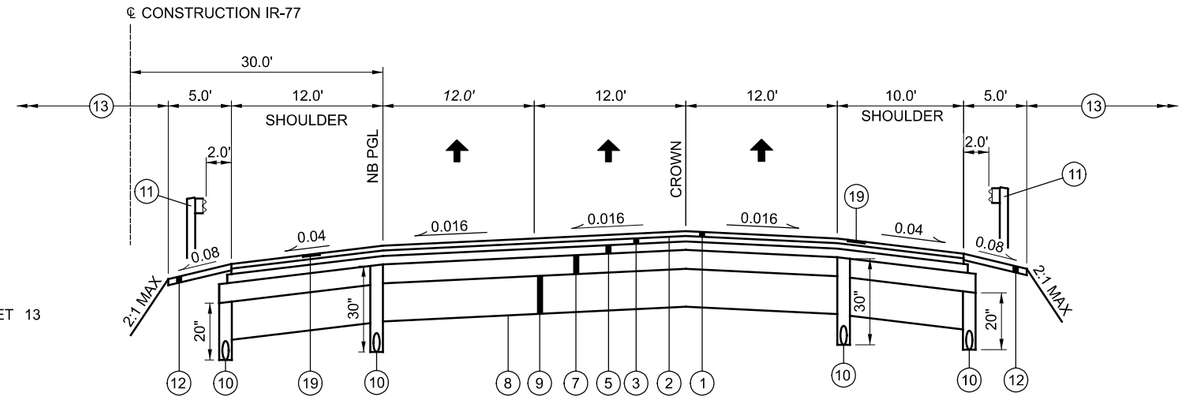

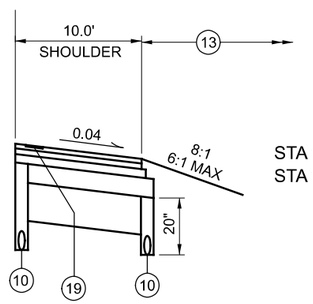

STA 1038+50.00 TO STA 1043+25.00
STA 1046+50.00 TO STA 1048+87.50

PROPOSED NORMAL SECTION - IR-77 NORTHBOUND
STA 1029+27.85 TO STA 1047+53.11

FOR GUARDRAIL LOCATIONS, SEE SHEETS 85 - 91

FOR PROPOSED PAVEMENT LEGEND, SEE SHEET 7

TYPICAL SECTIONS - PROPOSED

SUM-77-32.27

MODEL: Sheet 5 PAPERSIZE: 17x11 (in.) DATE: 2/23/2022 TIME: 11:29:11 AM USER: tdnh
pw:\\gfnet-pw.bentley.com:gfnet-pw-01\Documents\Projects\67490\104983\401-Engineering-GFIRoadway\Sheets\104983_GY001.dgn

DESIGN AGENCY
Gannett Fleming
ENGINEERS AND ARCHITECTS, P.C.
2300 Corporate Exchange Drive
Suite 330
Columbus, OH 43231

DESIGNER TQD
REVIEWER DRJ 02/01/22
PROJECT ID 104983
SHEET 9 TOTAL 297

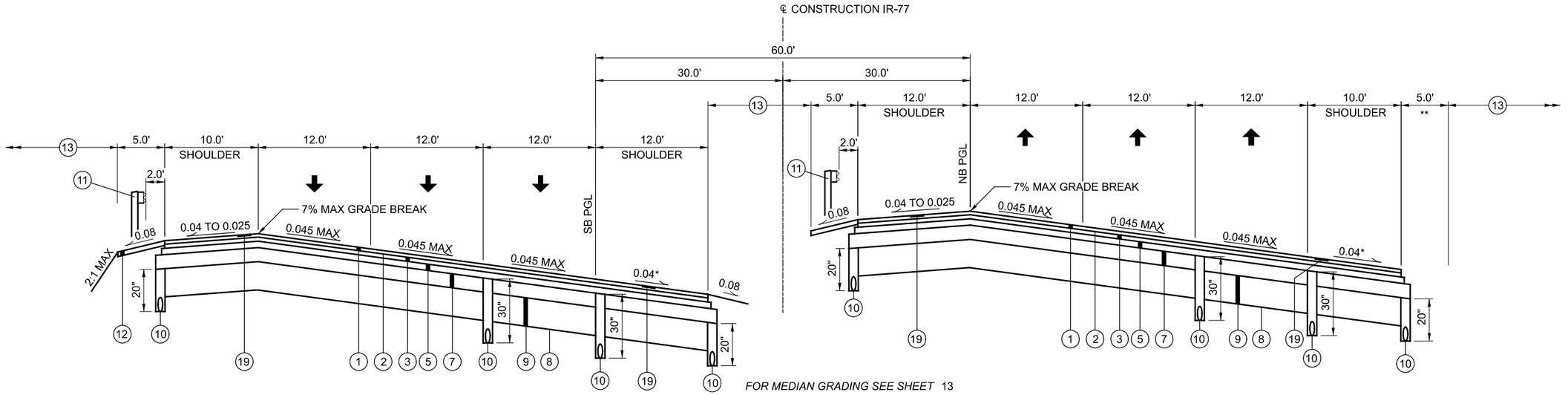

STA 1048+33.11 TO STA 1050+60.00

PROPOSED SUPERELEVATED BIFURCATED SECTION - IR-77

STA 1047+53.11 TO STA 1050+60.00

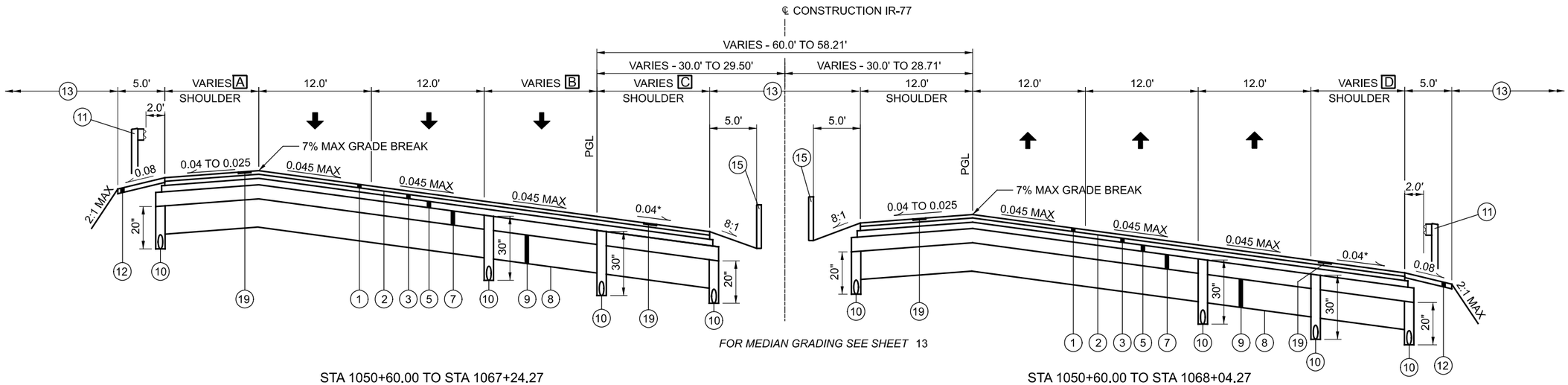

STA 1050+60.00 TO STA 1067+24.27

STA 1050+60.00 TO STA 1068+04.27

PROPOSED SUPERELEVATED SECTION - IR-77

A 10.0' STA 1050+50.00 TO STA 1066+75.00
10.0' TO 10.91' STA 1066+75.00 TO STA 1067+24.27

B 12.0' STA 1050+50.00 TO STA 1066+75.00
12.0' TO 12.10' STA 1066+75.00 TO STA 1067+24.27

C 12.0' STA 1050+50.00 TO STA 1066+75.00
12.0' TO 12.32' STA 1066+75.00 TO STA 1067+24.27

D 10.0' STA 1050+50.00 TO STA 1066+75.00
10.0' TO 12.33' STA 1066+75.00 TO STA 1068+04.27

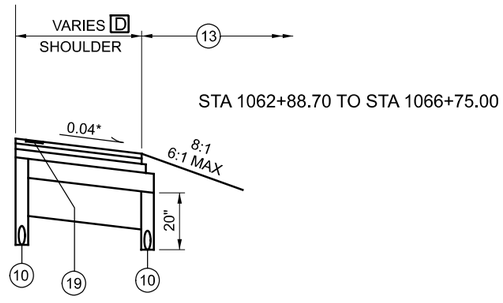

STA 1062+88.70 TO STA 1066+75.00

FOR GUARDRAIL LOCATIONS, SEE SHEETS 85 - 91
* OR RATE OF SUPERELEVATION IF GREATER
** REFER TO SB TYPICAL, LEFT SIDE, FOR SHOULDER AND GUARDRAIL

FOR PROPOSED PAVEMENT LEGEND, SEE SHEET 7

TYPICAL SECTIONS - PROPOSED

DESIGN AGENCY
Gannett Fleming
ENGINEERS AND ARCHITECTS, P.C.
2550 Corporate Exchange Drive
Suite 230
Columbus, OH 43231

DESIGNER TQD
REVIEWER DRJ 02/01/22
PROJECT ID 104983
SHEET 10 TOTAL 297

SUM-77-32.27

MODEL: Sheet 6 PAPERSIZE: 17x11 (in.) DATE: 2/23/2022 TIME: 11:29:11 AM USER: tdinh
pw:\\gfnet-pw.bentley.com:gfnet-pw-01\Documents\Projects\674900\104983\401-Engineering-GF\Roadway\Sheets\104983_GY001.dgn

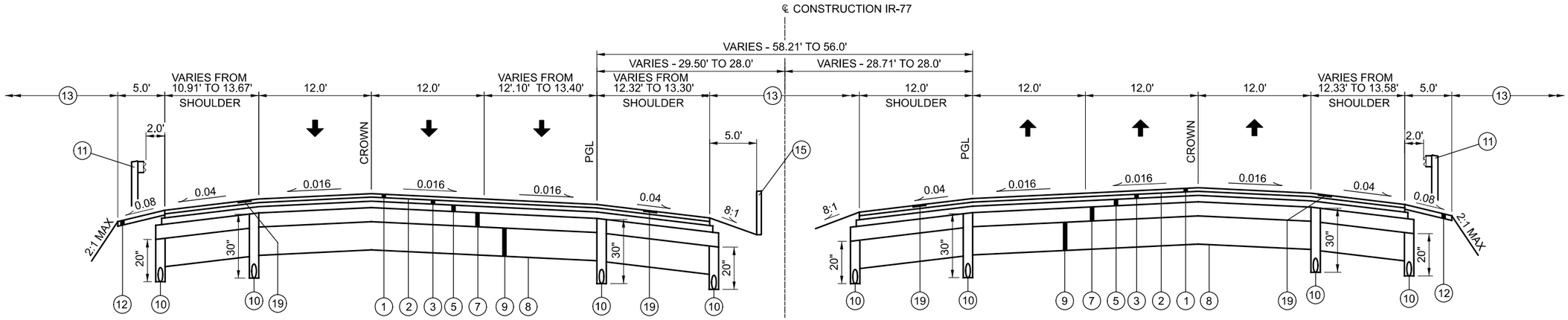

FOR MEDIAN GRADING SEE SHEET 13

PROPOSED NORMAL SECTION - IR-77

STA 1067+24.27 TO STA 1068+75.00

STA 1068+04.27 TO STA 1068+75.00

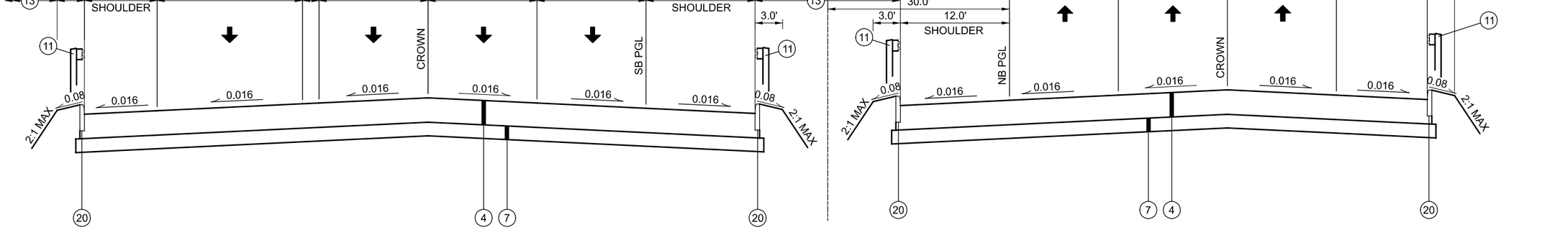

STA 1025+95.25 TO STA 1026+20.25
BRIDGE: STA 1026+20.25 TO STA 1028+54.19
STA 1028+54.19 TO STA 1028+79.19

FOR MEDIAN GRADING SEE SHEET 13

STA 1026+61.03 TO STA 1026+86.03
BRIDGE: STA 1026+86.03 TO STA 1029+02.85
STA 1029+02.85 TO STA 1029+27.85

PROPOSED APPROACH SLAB - IR-77

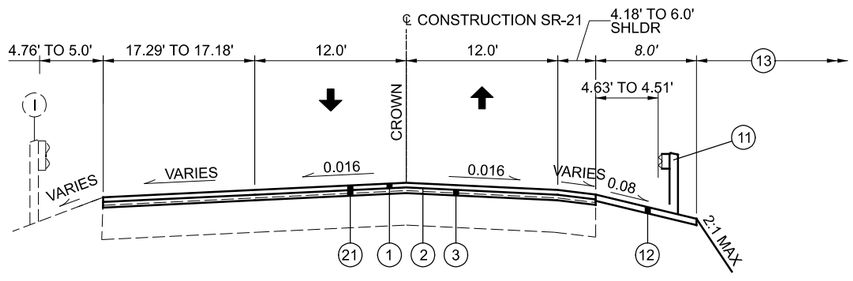

EXISTING APPROACH SLAB SECTION - SR-21
STA 495+60.00 TO STA 495+73.38

FOR GUARDRAIL LOCATIONS, SEE SHEETS 85 - 91

FOR PROPOSED PAVEMENT LEGEND, SEE SHEET 7

TYPICAL SECTIONS - PROPOSED

SUM-77-32.27

MODEL: Sheet 7 PAPERSIZE: 17x11 (in.) DATE: 2/23/2022 TIME: 11:44:27 AM USER: tdinh
pw:\\gfnet-pw.bentley.com:gfnet-pw-01\Documents\Projects\67490\104983\401-Engineering-GF\Roadway\Sheets\104983_GY001.dgn

DESIGN AGENCY
Gannett Fleming
ENGINEERS AND ARCHITECTS, P.C.
2300 Corporate Exchange Drive
Suite 230
Columbus, OH 43231

DESIGNER TQD

REVIEWER DRJ 02/01/22

PROJECT ID 104983

SHEET 11 TOTAL 297

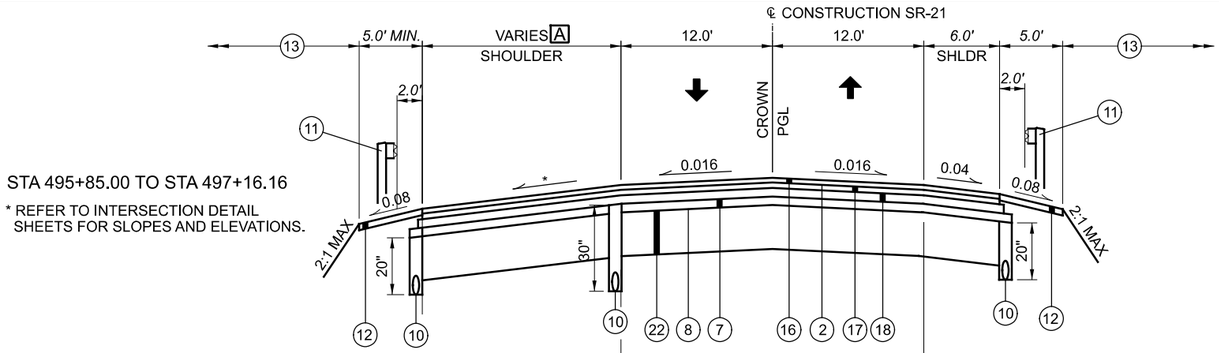

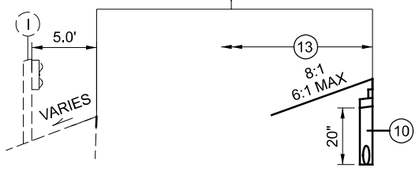

STA 495+73.38 TO STA 495+85.00

STA 497+16.16 TO STA 497+46.42

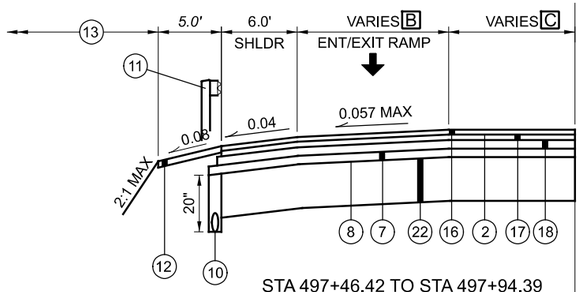

STA 497+46.42 TO STA 497+94.39

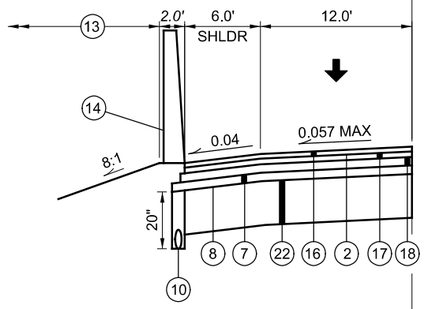

STA 497+94.39 TO STA 500+55.14

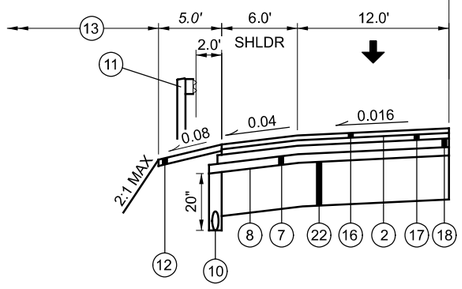

STA 500+55.14 TO STA 501+28.65

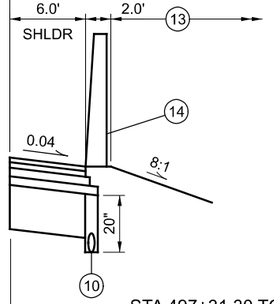

STA 497+31.30 TO STA 499+99.31

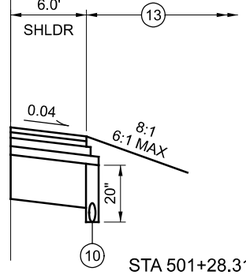

STA 501+28.31 TO STA 501+28.65

STA 495+73.38 TO STA 497+31.30
STA 499+99.31 TO STA 501+28.31

PROPOSED NORMAL SECTION - SR-21
STA 495+73.38 TO STA 501+28.65

A 17.18' TO 16' STA 495+73.38 TO STA 497+16.16
B 16.0' TO 12.0' STA 497+16.16 TO STA 498+70.19
C 16.0' TO 0' STA 497+16.16 TO STA 498+70.19

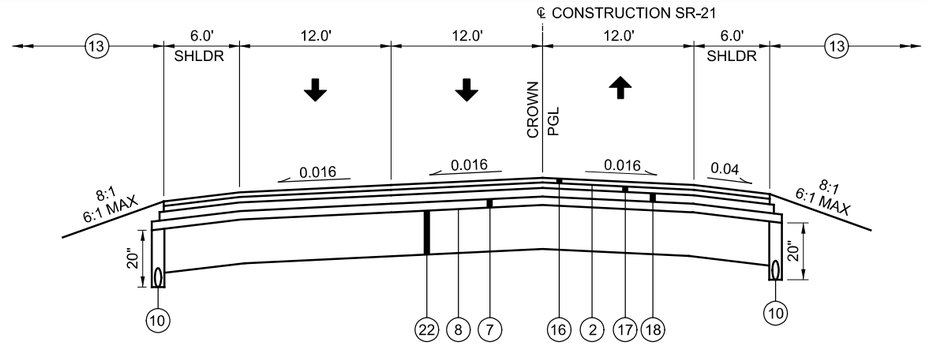

PROPOSED NORMAL SECTION - SR-21
STA 501+28.65 TO STA 503+11.58

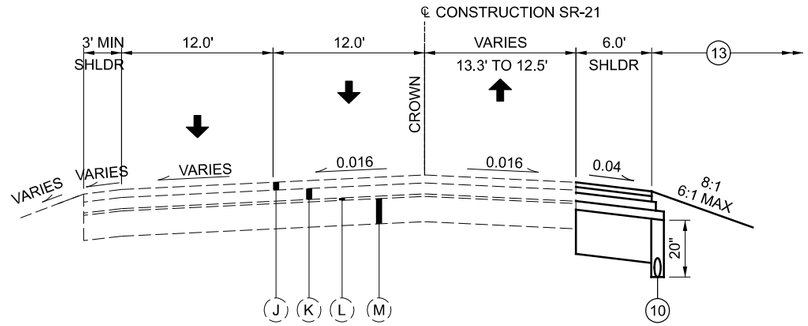

EXISTING NORMAL SECTION - SR-21
STA 503+11.58 TO STA 506+05.74

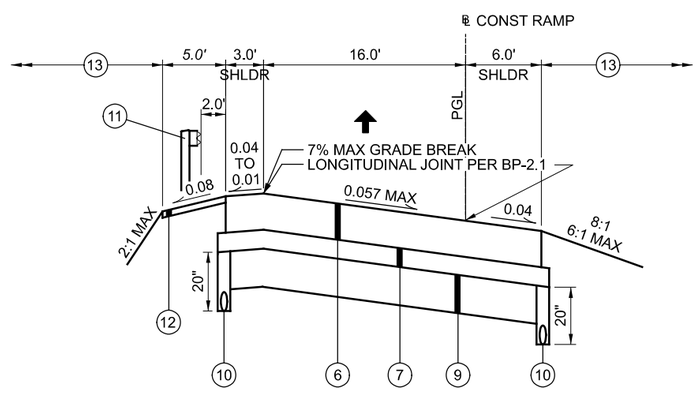

PROPOSED SUPERELEVATED SECTION - SR-21 RAMP G
STA 10008+56.05 TO STA 10020+57.11

FOR GUARDRAIL LOCATIONS, SEE SHEETS 85 - 91
FOR PROPOSED PAVEMENT LEGEND, SEE SHEET 7

TYPICAL SECTIONS - PROPOSED

SUM-77-32.27

MODEL: Sheet 8 PAPERSIZE: 17x11 (in.) DATE: 2/23/2022 TIME: 11:44:30 AM USER: tdhh
pw:\\gfnet-pw.bentley.com:gfnet-pw-01\Documents\Projects\674901\104983\401-Engineering-GF\Roadway\Sheets\104983_GY001.dgn

DESIGN AGENCY
Gannett Fleming
ENGINEERS AND ARCHITECTS, P.C.
2300 Corporate Exchange Drive
Suite 200
Columbus, OH 43231

DESIGNER TQD
REVIEWER DRJ 02/01/22
PROJECT ID 104983
SHEET 12 TOTAL 297

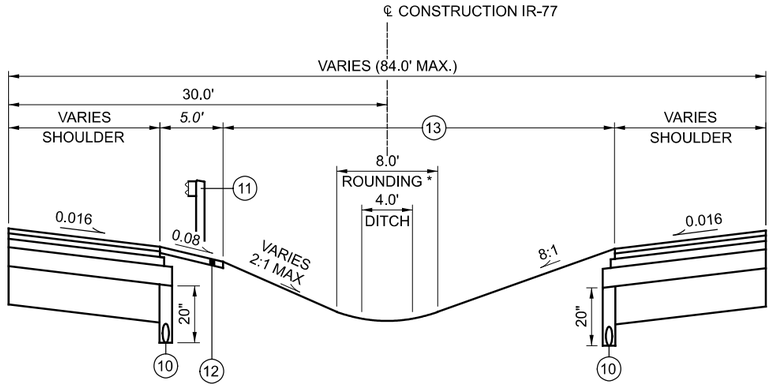

PROPOSED MEDIAN GRADING - IR-77
STA 1012+78.85 TO STA 1016+43.00

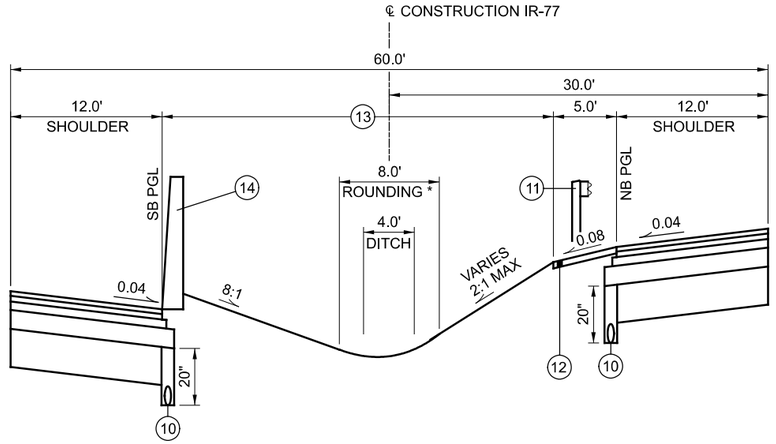

PROPOSED BIFURCATED MEDIAN GRADING - IR-77
STA 1029+27.19 TO STA 1037+00.00

PROPOSED MEDIAN GRADING - IR-77
STA 1016+43.00 TO STA 1024+11.00

PROPOSED BIFURCATED MEDIAN GRADING - IR-77
STA 1037+00.00 TO STA 1050+60.00

PROPOSED MEDIAN GRADING - IR-77
STA 1024+11.00 TO STA 1026+40.00

PROPOSED MEDIAN GRADING - IR-77
STA 1050+60.00 TO STA 1068+75.00

* WHERE VEGETATED BIOFILTERS ARE PROPOSED, NO ROUNDING IS REQUIRED.

FOR PROPOSED PAVEMENT LEGEND, SEE SHEET 7

TYPICAL SECTIONS - PROPOSED

SUM-77-32.27

MODEL: Sheet 9 PAPERSIZE: 17X11 (in.) DATE: 2/23/2022 TIME: 11:44:30 AM USER: tdinh
pw:\\gfnet-pw.bentley.com:gfnet-pw-01\Documents\Projects\67490\104983401-Engineering-GF\Roadway\Sheets\104983_GY001.dgn

DESIGN AGENCY
Gannett Fleming
ENGINEERS AND ARCHITECTS, P.C.
2200 Corporate Exchange Drive, Suite 230, Columbus, OH 43231

DESIGNER
TQD

REVIEWER
DRJ 02/01/22

PROJECT ID
104983

SHEET 13 | TOTAL 297

ROUNDING

THE ROUNDING AT SLOPE BREAKPOINTS SHOWN ON THE TYPICAL SECTIONS APPLIES TO ALL CROSS-SECTIONS, EVEN THOUGH OTHERWISE SHOWN.

UTILITIES

THE CONTRACTOR SHALL USE THE FOLLOWING PROCEDURE AT EACH LOCATION WHERE WORK IS PERFORMED, IN ACCORDANCE WITH SECTIONS 105.07 AND 107.16 IN THE CONSTRUCTION AND MATERIALS SPECIFICATIONS:

THE CONTRACTOR SHALL NOTIFY THE PROJECT ENGINEER, OHIO 811, THE OHIO & GAS PROCEDURES UNDERGROUND PROTECTION SERVICE (OGPUPS), THE OHIO DEPARTMENT OF TRANSPORTATION DISTRICT 4 HEADQUARTERS (MICHELLE CHANEY 330-786-2267) AND ALL NON REGISTERED UTILITY OWNERS AT LEAST TWO (2) WORKING DAYS PRIOR TO COMMENCING CONSTRUCTION OPERATIONS IN ALL AREAS.

OHIO 811 1-800-362-2764 (CONTACT LIMITED BASIS PARTICIPANTS DIRECTLY)

OGPUPS 1-800-925-0988

ODOT 330-786-2267 MICHELLE CHANEY

ODOT ITS LAB 1606 W. BROAD ST, COLUMBUS, OH 43223, EMAIL: CEN.ITS.LAB@DOT.OHIO.GOV

(EMAIL FOR ITS LOCATES AS WE ARE NOT A MEMBER OF OUPS)

LISTED BELOW ARE ALL UTILITIES LOCATED WITHIN THE PROJECT CONSTRUCTION LIMITS TOGETHER WITH THEIR RESPECTIVE OWNERS:

AT&T OHIO
13630 LORAIN AVE 2ND FLOOR
CLEVELAND OHIO 44111
216-750-0135
MIKE DEIDERICH
MD4145@ATT.COM

AT&T TRANSMISSION
155 COMMERCE PARK DR. SUITE #1
WESTERVILLE, OHIO 43082
770-584-7083
CHAD HARKNESS
CHAD.HARKNESS@MCGFIBER.COM

CENTURYLINK (LEVEL 3 COMMUNICATIONS)
100 S. CINNCINNATI AVE., SUITE 1200
TULSA, OK. 74103
NATIONALRELO@CENTURYLINK.COM
KENDALL ZETINA
KENDALL.ZETINA@CENTURYLINK.COM

CHARTER COMM
8179 DOW CIRCLE
STRONGSVILLE, OHIO 44136
216-575-8016
Gary Naumann
GARY.NAUMANN1@CHARTER.COM

CENTURYLINK/LUMEN
ATTN: ALAN PETERS
3801 ELM RD WARREN, OHIO 44483
330-841-1309
330-219-3306 CELL
ALAN.L.PETERS@LUMEN.COM

UTILITIES (CONTINUED)

FRONTIER COMM
6223 NORWALK ROAD
MEDINA, OHIO 44256
330-772-9586
RANDY HOWARD
J.HOWARD@FTR.COM

MCI
120 RAVINE ST
AKRON, OHIO 44303
330 253 8267
DANIEL ARZ
DANIEL.ARZ@VERIZON.COM
ALLAN GUEST
ALLAN.GUEST@VERIZON.COM

WINDSTREAM
560 TARNES AVE.
ELYRIA, OHIO 44035
440 329-4245
GEOFFREY HAMM
GEOFFREY.P.HAMM@WINDSTREAM.COM
216 385-1669
JEFF GULYAS
JEFF.GULYAS@WINDSTREAM.COM

CLEVELAND WATER DEPARTMENT
1201 LAKESIDE AVE.
CLEVELAND, OH 44114
216-362-6370
WILLIAM HUNT III
WHUNT@OCCLS.COM

COUNTY OF SUMMIT - DEPT OF SANITARY
RUSSELL M. PRY BUILDING
1180 SOUTH MAIN STREET
SUITE 201
AKRON, OH 44301
330-926-2405
MELISSA MCFADDEN
MELISSAMCFADDEN@SUMMITOH.NET

DOMINION ENERGY
320 SPRINGSIDE DR, SUITE 320
AKRON OHIO 44333
330-664-2409
DERRICK T GRAFTON
DERRICK.T.GRAFTON@DOMINIONENERGY.COM
330-664-2409
JASON ROSS
JASON.M.ROSS@DOMINIONENERGY.COM
RELOCATIONS@DOMINIONENERGY.COM

OHIO EDISON (FIRST ENERGY CORP) - (USIC)
76 S MAIN ST
AKRON, OH 44308
MICHAEL JANSON
JANSONM@FIRSTENERGYCORP.COM

SUNOCO PIPELINE
8111 WESTCHESTER DRIVE
DALLAS, TX 75225
216-346-1561
713-989-7079
RAY LEPOSKY
AGT_COMM@IRTH.COM

THE LOCATION OF THE UNDERGROUND UTILITIES SHOWN ON THE PLANS ARE AS OBTAINED FROM THE OWNERS AS REQUIRED BY SECTION 153.64 O.R.C.

SURVEYING PARAMETERS

PRIMARY PROJECT CONTROL MONUMENTS GOVERN ALL POSITIONING ON ODOT PROJECTS. SEE SHEET 4 OF THE PLANS FOR A TABLE CONTAINING PROJECT CONTROL INFORMATION.

USE THE FOLLOWING PROJECT CONTROL, VERTICAL POSITIONING, AND HORIZONTAL POSITIONING PARAMETERS FOR ALL SURVEYING:

PROJECT CONTROL

POSITIONING METHOD: STATIC GNSS METHODS
MONUMENT TYPE: TYPE A

VERTICAL POSITIONING
ORTHOMETRIC HEIGHT DATUM: NAVD88
GEOID: GEOID 18

HORIZONTAL POSITIONING
REFERENCE FRAME: NAD83 (2011)
ELLIPSOID: GRS80
MAP PROJECTION: LAMBERT CONFROMAL CONIC
COORDINATE SYSTEM: OHIO STATE PLANE, NORTH ZONE (3401)
COMBINED SCALE FACTOR: 1.00010358070
ORIGIN OF COORDINATE SYSTEM: (0,0)

USE THE POSITIONING METHODS AND MONUMENT TYPE USED IN THE ORIGINAL SURVEY TO RESTORE ALL MONUMENTS RELATED TO PRIMARY PROJECT CONTROL THAT ARE DAMAGED OR DESTROYED BY CONSTRUCTION ACTIVITIES. RESTORE THE DAMAGED OR DESTROYED MONUMENTS IN ACCORDANCE WITH CMS 623.

UNITS ARE IN U.S. SURVEY FEET.

WORK LIMITS

THE WORK LIMITS SHOWN ON THESE PLANS ARE FOR PHYSICAL CONSTRUCTION ONLY. PROVIDE THE INSTALLATION AND OPERATION OF ALL WORK ZONE TRAFFIC CONTROL AND WORK ZONE TRAFFIC CONTROL DEVICES REQUIRED BY THESE PLANS WHETHER INSIDE OR OUTSIDE THESE WORK LIMITS.

ITEM 623, CONSTRUCTION LAYOUT STAKES AND SURVEYING, AS PER PLAN

IN ADDITION TO THE REQUIREMENTS OF THE CMS, THIS ITEM OF WORK WILL INCLUDE THE FOLLOWING ADDITIONAL REQUIREMENTS.

AN OHIO PROFESSIONAL SURVEYOR SHALL DETERMINE THE MINIMUM VERTICAL CLEARANCES OF ALL BRIDGES WITHIN THE PROJECT LIMITS AFTER COMPLETION OF ALL WORK, BUT PRIOR TO FINAL ACCEPTANCE OF THE PROJECT. AS A MINIMUM, MEASUREMENTS SHALL BE TAKEN ALONG THE CENTERLINE OF EACH FASCIA BEAM A T THE EDGE OF SHOULDERS, EDGE LINES, LANE LINES, AND CROWN OF THE ROADWAY BELOW. THE MEASUREMENTS SHALL BE DOCUMENTED ON THE ODOT VERTICAL CLEARANCE SURVEY FORM. THE FORM SHALL BEAR THE STAMP OR SEAL OF THE OHIO PROFESSIONAL SURVEYOR WHO HAS TAKEN THE MEASUREMENTS.THE OHIO PROFESSIONAL SURVEYOR SHALL SUBMIT THE COMPLETED FORM TO THE PROJECT ENGINEER AND THE DISTRICT BRIDGE MAINTENANCE ENGINEER PRIOR TO FINAL ACCEPTANCE OF THE PROJECT.

PAYMENT FOR ALL OF THE ABOVE WORK SHALL BE AT THE UNIT PRICE BID FOR ITEM 623, CONSTRUCTION LAYOUT STAKES AND SURVEYING, AS PER PLAN, WHICH SHALL INCLUDE ALL LABOR, EQUIPMENT, MATERIALS AND INCIDENTALS NECESSARY TO COMPLETE THE WORK ABOVE.

PROTECTION OF RIGHT-OF-WAY LANDSCAPING

PRIOR TO BEGINNING WORK, THE CONTRACTOR, THE PROJECT ENGINEER, AND A REPRESENTATIVE OF THE MAINTAINING AGENCY WILL REVIEW AND RECORD ALL LANDSCAPING ITEMS WITHIN THE RIGHT-OF-WAY (BOTH WITHIN AND OUTSIDE THE CONSTRUCTION LIMITS). A RECORD OF THIS REVIEW WILL BE KEPT IN THE PROJECT ENGINEER'S FILES. PRIOR TO FINAL ACCEPTANCE, A FINAL REVIEW OF LANDSCAPING ITEMS WILL BE MADE.

CONSTRICT ALL ACTIVITIES, EQUIPMENT STORAGE, AND STAGING TO WITHIN THE CONSTRUCTION LIMITS. UNLESS OTHERWISE IDENTIFIED IN THE PLANS OR PROPOSAL, THE CONSTRUCTION LIMITS ARE IDENTIFIED AS 30 FEET FROM THE EDGE OF PAVEMENT.

SUBMIT A WRITTEN REQUEST TO THE PROJECT ENGINEER TO USE ANY AREA OUTSIDE THESE LIMITS. THE DOCUMENT SUBMITTED MUST CLEARLY IDENTIFY THE AREA AND EXPLAIN THE PROPOSED USE AND RESTORATION OF THE AREA. USE OF THESE AREAS FOR DISPOSAL OF WASTE MATERIAL AND CONSTRUCTION DEBRIS, EXCAVATION OF BORROW MATERIAL AND PLACEMENT OF PORTABLE PLANTS IS PROHIBITED. THE REQUEST MUST BE APPROVED, IN WRITING, BEFORE THE CONTRACTOR HAS PERMISSION TO USE THE AREA.

ANY ITEMS DAMAGED BEYOND THE CONSTRUCTION LIMITS, AS DEFINED ABOVE, WILL BE REPLACED IN KIND OR AS APPROVED BY THE PROJECT ENGINEER.

CLEARING AND GRUBBING

ALTHOUGH THERE ARE NO TREES OR STUMPS SPECIFICALLY MARKED FOR REMOVAL WITHIN THE LIMITS OF THE PROJECT, A LUMP SUM QUANTITY IS INCLUDED IN THE GENERAL SUMMARY FOR ITEM 201, CLEARING AND GRUBBING. ALL PROVISIONS AS SET FORTH IN THE SPECIFICATIONS UNDER THIS ITEM ARE INCLUDED IN THE LUMP SUM PRICE BID FOR ITEM 201, CLEARING AND GRUBBING.

MONUMENT ASSEMBLIES

CONSTRUCT MONUMENT ASSEMBLIES IN ACCORDANCE WITH THE DETAILS SHOWN ON THE STANDARD CONSTRUCTION DRAWINGS AND AT THE LOCATIONS SHOWN ON RIGHT OF WAY PLANS.

ITEM 623 - RIGHT OF WAY MONUMENT 8 EACH

ITEM 204 - PROOF ROLLING

THE FOLLOWING QUANTITY IS PROVIDED IN THE GENERAL SUMMARY TO ADDRESS LOCATIONS REQUIRING PROOF ROLLING.

ITEM 204 - PROOF ROLLING 46 HOUR.

GENERAL NOTES

DESIGN AGENCY
Gannett Fleming
ENGINEERS AND ARCHITECTS, P.C.
2500 Corporate Exchange Drive
Suite 230
Columbus, OH 43231

DESIGNER TQD

REVIEWER DRJ 02/01/22

PROJECT ID 104983

SHEET 14 TOTAL 297

SUM-77-32.27
MODEL: 111405_GN001_1 PAPERSIZE: 17x11 (in.) DATE: 2/22/2022 TIME: 6:02:32 PM USER: tdinh
pw:\\gfnet-pw.bentley.com:gfnet-pw-01\Documents\Projects\67490\104983\401-Engineering-GFI\Roadway\Sheets\104983_GN001.dgn

ITEM 204 - SUBGRADE COMPACTION AND PROOF ROLLING

CONSTRUCT THE SUBGRADE AS FOLLOWS AND IN THE FOLLOWING SEQUENCE:

1. SHAPE THE SUBGRADE TO WITHIN 0.2 FEET OF THE PLAN SUBGRADE ELEVATION.

2. EXCAVATE AND REPLACE UNSUITABLE SUBGRADE BEFORE PROOF ROLLING. UNSUITABLE SUBGRADE INCLUDES UNSUITABLE SOIL (A-4B, A-2-5, A-5, A-7-5, A-8A, A-8B, AND SOIL WITH A LIQUID LIMIT GREATER THAN 65) AND ANY COAL, SHALE, OR ROCK WHICH NEEDS TO BE REMOVED ACCORDING TO SECTION 204.05 OF THE CONSTRUCTION AND MATERIAL SPECIFICATIONS (C&MS).

IF THERE IS UNSUITABLE SUBGRADE IN A SHALLOW FILL LOCATION, EXCAVATE AND REPLACE THE UNSUITABLE SUBGRADE BEFORE CONSTRUCTING THE SHALLOW FILL AND SHAPING THE SUBGRADE.

3. COMPACT THE SUBGRADE ACCORDING TO C&MS 204.03.

4. UNSTABLE SUBGRADE HAS NOT BEEN IDENTIFIED THROUGH THIS EXPLORATION. THE ENGINEER WILL IDENTIFY THE ACTUAL LIMITS OF EXCAVATION FOR UNSTABLE SUBGRADE BASED ON THE PROOF ROLLING RESULTS AND VISUAL OBSERVATIONS. PROOF ROLL THE COMPACTED SUBGRADE ACCORDING TO C&MS 204.06.

5. EXCAVATE UNSTABLE SUBGRADE AS DIRECTED BY THE ENGINEER AND STABILIZE BY REPLACINGWITH THE SPECIFIED MATERIALS ACCORDING TO C&MS 204.07. EXCAVATIONS WILL EXTEND 18 INCHES BEYOND THE EDGE OF THE SURFACE OF THE PAVEMENT, PAVED SHOULDERS, OR PAVED MEDIANS.

6. PROOF ROLL THE STABILIZED AREAS ACCORDING TO C&MS 204.06 TO VERIFY STABILITY.

THE QUANTITIES FOR EXCAVATING THE UNSUITABLE SUBGRADE AND UNSTABLE SUBGRADE ARE BOTH PAID UNDER ITEM 204, EXCAVATION OF SUBGRADE.

CROSSINGS AND CONNECTIONS TO EXISTING PIPES AND UTILITIES

WHERE PLANS PROVIDE FOR A PROPOSED CONDUIT TO BE CONNECTED TO, OR CROSS OVER OR UNDER AN EXISTING SEWER OR UNDERGROUND UTILITY, THE CONTRACTOR SHALL LOCATE THE EXISTING PIPES OR UTILITIES BOTH AS TO LINE AND GRADE BEFORE STARTING TO LAY THE PROPOSED CONDUIT.

IF IT IS DETERMINED THAT THE ELEVATION OF THE EXISTING CONDUIT, OR EXISTING APPURTENANCE TO BE CONNECTED, DIFFERS FROM THE PLAN ELEVATION OR RESULTS IN A CHANGE IN THE PLAN CONDUIT SLOPE, NOTIFY THE ENGINEER BEFORE STARTING CONSTRUCTION OF ANY PORTION OF THE PROPOSED CONDUIT WHICH WILL BE AFFECTED BY THE VARIANCE IN THE EXISTING ELEVATIONS.

IF IT IS DETERMINED THAT THE PROPOSED CONDUIT WILL INTERSECT AN EXISTING SEWER OR UNDERGROUND UTILITY IF CONSTRUCTED AS SHOWN ON THE PLAN, NOTIFY THE ENGINEER BEFORE STARTING CONSTRUCTION OF ANY PORTION OF THE PROPOSED CONDUIT WHICH WOULD BE AFFECTED BY THE INTERFERENCE WITH AN EXISTING FACILITY.

PAYMENT FOR ALL THE OPERATIONS DESCRIBED ABOVE IS INCLUDED IN THE CONTRACT PRICE FOR THE PERTINENT 611 CONDUIT ITEM.

ITEM 422 - ASPHALT CONCRETE SURFACE COURSE, 12.5mm, TYPE A (447), AS PER PLAN

THE REQUIREMENTS OF 442 AND 446 WILL APPLY; DEVIATIONS FROM THESE ARE AS FOLLOWS:

THE PERCENTAGE OF RECLAIMED MATERIAL PROPOSED FOR USE WILL BE INCLUDED IN THE MIX DESIGN PROCESS TO ESTABLISH THE JOB MIX FORMULA (JMF) IN ACCORDANCE WITH 401.04.

MATERIALS:	THE MATERIALS WILL BE:
AGGREGATES	703.05*

*THE VIRGIN COARSE AGGREGATE PORTION OF THE MIXTURE WILL CONTAIN 50% AIR COOLED BLAST FURNACE SLAG (ACBFS) AND MEET THE REQUIREMENTS OF 703.05.

USE AN NDES OF 50, AN NMAX OF 75 AND THE COMBINATION OF NEW AGGREGATES, NEW ASPHALT BINDER, AND RECLAIMED MATERIAL SHALL BE AS REQUIRED TO PRODUCE A COMPOSITION CONTAINING A MINIMUM OF 6.0% NEW ASPHALT BINDER RESULTING IN A MINIMUM TOTAL BINDER OF 6.5%.

703.05 DO NOT USE ANY FINE OR COARSE AGGREGATE WITH A 'SR' OR 'SRH' DESIGNATION ACCORDING TO THE OFFICE OF MATERIALS MANAGEMENT (OMM) IN ANY JOB MIX FORMULA (JMF) FOR THIS ITEM.

THE CONTRACTOR SHALL USE THE APPROPRIATE COUNTY, ROUTE AND SECTION TO OBTAIN TRAFFIC DATA, TO BE USED IN THE DESIGN OF THE JMF, AT THIS WEB SITE LOCATION: http://www.odotonline.org/techservapps/traffmonit/countinformation/default.htm

ITEM 254 - PAVEMENT PLANING, ASPHALT CONCRETE, AS PER PLAN

THIS ITEM OF WORK SHALL BE PERFORMED IN CONFORMANCE WITH ITEM 254 IN THE CMS EXCEPT THE DEPTH SHALL VARY FROM 2" TO THE TOP OF THE BRICK WHICHEVER IS FIRST. THIS WORK SHALL BE PERFORMED SO THAT THE BRICK BASE IS NOT DISTURBED. ALL EQUIPMENT, LABOR, TOOLS, AND OTHER INCIDENTALS REQUIRED TO PERFORM THIS WORK SHALL BE INCLUDED IN THE UNIT BID PRICE FOR ITEM 254 PAVEMENT PLANING, ASPHALT CONCRETE, AS PER PLAN.

ITEM 442 ASPHALT CONCRETE SURFACE COURSE, 12.5MM, TYPE A (447), AS PER PLAN

THIS ITEM IS FOR ROADS WITH GREATER THAN 1500 TRUCKS IN THE OPENING DAY TRAFFIC. THE 12.5MM MIX IS DESIGNED FOR MAXIMUM RUT RESISTANCE AT 1.5 INCHES (38 MM) THICK. THE SURFACE COURSE IS GENERALLY THE MOST EXPENSIVE LAYER AND AN INCREASED THICKNESS MAY NOT BE ECONOMICAL. IN SPECIAL SITUATIONS WHERE AN INTERMEDIATE COURSE IS NOT POSSIBLE, THE 12.5MM MIX MAY BE SPECIFIED UP TO A MAXIMUM OF 2.5 INCHES (65 MM). A 12.5MM MIX CANNOT BE PLACED PROPERLY AT A THICKNESS LESS THAN 1.5 INCHES (38 MM); DURABILITY AND CONSTRUCTABILITY PROBLEMS WILL RESULT. BEST PRACTICE IS TO USE 1.5 INCHES (38 MM). IF 446 OR 447 ACCEPTANCE IS SPECIFIED A UNIFORM THICKNESS IS REQUIRED.

DRAINAGE DISCHARGE CONTINUANCE

FURNISH A DRAINAGE DISCHARGE CONTINUANCE FOR ANY DRAINAGE DISCHARGE DISTURBED BY THE WORK AND NOT SHOWN IN THE PLANS. THE LOCATION, TYPE (CONDUIT ORSWALE), SIZE AND GRADE OF THE DRAINAGE DISCHARGE CONTINUANCE WILL BE AGREED TO BY THE ENGINEER

FURNISH AN INSPECTION WELL AT THE RIGHT OF WAY LINE PER SCD DM-3.1. FOR EACH DRAINAGE DISCHARGE THAT OUTLETS THROUGH A CURB OPENING, OR INTO A STORM SEWER OR DRAINAGE STRUCTURE. THE COST IS INCLUDED IN ITEM 611, INSPECTION WELL.

FURNISH A WELL GRADED TRANSITION BETWEEN THE DITCH AND THE SWALE WHEN OUTLETTING A SWALE TO A DITCH. THE COST FOR THE GRADED TRANSITION IS INCLUDED IN ITEM 203, EMBANKMENT AS PER PLAN.

FURNISH AN EROSION CONTROL PAD AS SHOWN IN SCD DM-1.1 WHEN OUTLETTING A CONDUIT TO A DITCH. THE COST FOR THE EROSION CONTROL PAD IS INCLUDED IN ITEM 611, CONDUIT, MISC: TYPE X FOR DRAINAGE DISCHARGE CONTINUANCE.

FURNISH A DRILLED CORE HOLE WHEN OUTLETTING INTO A STORM SEWER OR DRAINAGE STRUCTURE. THE COST OF THE DRILLED CORE HOLE IS INCLUDED IN ITEM 611, CONDUIT, MISC.: TYPE X FOR DRAINAGE DISCHARGE CONTINUANCE.

DOCUMENTATION
PROVIDE WRITTEN DOCUMENTATION TO THE ENGINEER AND TO THE DISTRICT R/W PERMIT OFFICE. THE DOCUMENTATION INCLUDES THE CONSTRUCTION PROJECT NUMBER, PID, COUNTY, ROUTE, SECTION, LATITUDE AND LONGITUDE OF THE DRAINAGE DISCHARGE AT THE R/W, THE NAME OF PROPERTY OWNER WITH ADDRESS, THE DATE THE DRAINAGE DISCHARGE WAS LOCATED, THE DATE THE DRAINAGE DISCHARGE CONTINUANCE WAS FURNISHED, A DETAILED DESCRIPTION OF THE WORK AND PICTURES OF THE DRAINAGE DISCHARGE CONTINUANCE (IN PDF OR JPEG FORMAT). THE DOCUMENTATION IS INCLUDED IN ITEM 611, CONDUIT, MISC.: TYPE X FOR DRAINAGE DISCHARGE CONTINUANCE OR ITEM 203, EMBANKMENT AS PER PLAN.

DRAINAGE DISCHARGE CONTINUANCE REMOVAL
THE ENGINEER MAY REQUIRE THE NEWLY INSTALLED DRAINAGE DISCHARGE CONTINUANCE TO BE REMOVED.

REMOVE THE NEWLY INSTALLED CONDUIT AND ANY EXISTING CONDUIT TO THE RIGHT OF WAY LINE. FOR CONDUIT THAT OUTLETS TO A STORM SEWER OR DRAINAGE STRUCTURE LEAVE 6 INCHES PROTRUDING OUTSIDE OF THE CONDUIT. PLUG THE PROTRUDING CONDUIT WITH EITHER A MANUFACTURED CAP OR CLASS QC 1 CONCRETE. FOR CONDUIT THAT OUTLETS TO THE DITCH REMOVE THE EROSION CONTROL PAD. RESTORE ALL AREAS AS REQUIRED. PLUG THE EXISTING CONDUIT EGARDLESS OF SIZE AT THE RIGHT OF WAY LINE WITH CLASS QC 1 CONCRETE AND RESTORE ALL AREAS AS REQUIRED. ALL COSTS ARE INCLUDED IN ITEM 202, REMOVAL MISC. CONDUIT.

DAM THE SWALE THAT OUTLETS TO THE DITCH AT THE R/W AS DIRECTED BY THE ENGINEER. ALL COSTS ARE INCLUDED IN ITEM 203, EMBANKMENT AS PER PLAN.

DRAINAGE DISCHARGE CONTINUANCE REMOVAL (CONTINUED)

REMOVE THE INSPECTION WELL AND RESTORE ALL AREAS AS REQUIRED. THE COST IS INCLUDED IN ITEM 202, REMOVAL MISC. INSPECTION WELL.

CONDUIT MATERIAL TYPES
THE FOLLOWING CONDUIT MATERIAL TYPES MAY BE USED: 707.33, 707.41 NON-PERFORATED, 707.42, 707.43, 707.45, 707.46, 707.47, AND 707.51 SDR35.

PAY ITEMS
EACH OF THE PAY ITEMS LISTED BELOW FOR CONDUIT MISCELLANEOUS TYPES B, C, E AND F FOR DRAINAGE DISCHARGE CONTINUANCE INCLUDE CONDUIT SIZES 2 INCH TO 10 INCH. THERE IS NO COST DIFFERENTIATION FOR SIZE IN THESE PAY ITEMS.

THE FOLLOWING ESTIMATED QUANTITIES HAVE BEEN INCLUDED IN THE GENERAL SUMMARY FOR USE AS DIRECTED BY THE ENGINEER IN MAKING THE ABOVE DRAINAGE DISCHARGE CONTINUANCE:

ITEM 611, 2 EACH INSPECTION WELL
ITEM 611, 100 FT.CONDUIT, MISC TYPE B FOR DRAINAGE DISCHARGE CONTINUANCE
ITEM 611, 100 FT.CONDUIT, MISC TYPE C FOR DRAINAGE DISCHARGE CONTINUANCE
ITEM 611, 100 FT.CONDUIT, MISC TYPE E FOR DRAINAGE DISCHARGE CONTINUANCE
ITEM 611, 100 FT.CONDUIT, MISC TYPE F FOR DRAINAGE DISCHARGE CONTINUANCE
ITEM 202, 200 FT. REMOVAL MISC CONDUIT
ITEM 202, 2 EACH REMOVAL MISC INSPECTION WELL
ITEM 203, 25 CUBIC YARD EMBANKMENT AS PER PLAN

ITEM 611 - CONDUIT BORED OR JACKED

WHERE IT IS SPECIFIED THAT A CONDUIT BE INSTALLED BY THE METHOD OF BORING OR JACKING, NO TRENCH EXCAVATION SHALL BE CLOSER THAN 30 FEET TO THE (EDGE OF PAVEMENT) PROVIDE A STEEL CASING PIPE CONFORMING TO 748.06. JOINTS WITH A CIRCUMFERENCIAL FULLY PENETRATING B-U4B WELD THAT IS PERFORMED BY AN ODOT APPROVED FIELD WELDER OR MACHINED INTERLOCKING JOINTS ARE PERMITTED. THE INSTALLED CASING PIPE IS THE STORM WATER CONVEYANCE CARRIER UNLESS OTHERWISE SPECIFIED IN THE PLANS. HYDROSTATIC TESTING IS NOT REQUIRED FOR THE CASING PIPE.

GENERAL NOTES

DESIGN AGENCY
Gannett Fleming
ENGINEERS AND ARCHITECTS, P.C.
2300 Corporate Exchange Drive
Suite 230
Columbus, OH 43231

DESIGNER
TQD

REVIEWER
DRJ 02/01/22

PROJECT ID
104983

SHEET 15 TOTAL 297

SUM-77-32.27
MODEL: 111405_GN001_2 PAPERSIZE: 17x11 (in.) DATE: 2/22/2022 TIME: 6:02:32 PM USER: tdinh
pw:\\gfnet-pw.bentley.com:gfnet-pw-01\Documents\Projects\674900\104983401-Engineering-GFI\Roadway\Sheets\104983_GN001.dgn

GENERAL NOTES

REVIEW OF DRAINAGE FACILITIES

PRIOR TO THE START OF WORK AND AGAIN BEFORE FINAL ACCEPTANCE, PERFORM AN INSPECTION WITH REPRESENTATIVES OF THE DEPARTMENT, CONTRACTOR AND LOCALS OF ALL EXISTING DRAINAGE FACILITIES THAT ARE TO REMAIN IN SERVICE WHICH MAY BE AFFECTED BY THE WORK. THE CONDITION OF THE EXISTING CONDUITS AND THEIR APPURTENANCES IS DETERMINED FROM FIELD OBSERVATIONS. RECORDS OF THE INSPECTION ARE MAINTAINED BY THE DEPARTMENT.

CONFIRM ALL EXISTING SEWERS INSPECTED INITIALLY BY THE ABOVE-MENTIONED PARTIES ARE MAINTAINED AND LEFT IN A CONDITION COMPARABLE TO THAT DETERMINED BY THE ORIGINAL INSPECTION. THE CONTRACTOR IS RESPONSIBLE TO CORRECT ANY CHANGE IN THE CONDITION RESULTING FROM THEIR OPERATIONS AS DIRECTED AND APPROVED BY THE ENGINEER.

PAYMENT FOR ALL OPERATIONS DESCRIBED ABOVE IS INCLUDED IN THE CONTRACT PRICE FOR THE PERTINENT 611 CONDUIT ITEMS.

EXISTING SUBSURFACE DRAINAGE

PROVIDE UNOBSTRUCTED OUTLETS FOR ALL EXISTING UNDERDRAINS OR AGGREGATE DRAINS ENCOUNTERED DURING CONSTRUCTION.

PROVIDE AN OUTLET PER STANDARD CONSTRUCTION DRAWING DM-1.1 FOR ALL UNDERDRAINS THAT OUTLET TO A SLOPE. UNDERDRAINS THAT CAN BE CONNECTED TO THE NEW OR EXISTING UNDERDRAINS AT THE END OF THE PROJECT LIMITS AS WELL AS ALL NECESSARY BENDS OR BRANCHES REQUIRED FOR CONNECTION ARE INCLUDED IN THE BASIS OF PAYMENT FOR UNCLASSIFIED PIPE UNDERDRAINS.

THE FOLLOWING ESTIMATED QUANTITIES HAVE BEEN INCLUDED IN THE GENERAL SUMMARY FOR THE WORK NOTED ABOVE:

ITEM 601, TIED CONCRETE BLOCK MAT, TYPE 1 10 SQ. YD.
ITEM 605, AGGREGATE DRAINS 50 FT.
ITEM 611, 6 " CONDUIT, TYPE F 100 FT.
ITEM 611, PRECAST REINFORCED CONCRETE OUTLET 2 EACH
ITEM 605, 6 " UNCLASSIFIED PIPE UNDERDRAINS 100 FT.

SEEDING AND MULCHING

THE FOLLOWING QUANTITIES ARE PROVIDED TO PROMOTE GROWTH AND CARE OF PERMANENT SEEDED AREAS:

ITEM 659, SOIL ANALYSIS TEST 2 EACH
ITEM 659, TOPSOIL FURNISHED AND PLACED 300 CU. YD.
ITEM 659, SEEDING AND MULCHING 33272 SQ. YD.
ITEM 659, REPAIR SEEDING AND MULCHING 1664 SQ. YD.
ITEM 659, INTER-SEEDING 1664 SQ. YD.
ITEM 659, COMMERCIAL FERTILIZER 10 TON
ITEM 659, LIME 7 ACRES
ITEM 659, WATER 270 M. GAL.
ITEM 659, MOWING 8318 M. SQ.FT.

SEEDING AND MULCHING SHALL BE APPLIED TO ALL AREAS OF EXPOSED SOIL BETWEEN THE RIGHT-OF-WAY LINES, AND WITHIN THE CONSTRUCTION LIMITS FOR AREAS OUTSIDE THE RIGHT-OF-WAY LINES COVERED BY WORK AGREEMENT OR SLOPE EASEMENT. QUANTITY CALCULATIONS FOR SEEDING AND MULCHING ARE BASED ON THESE LIMITS.

PART-WIDTH CONSTRUCTION

BECAUSE OF THE NECESSITY TO BUILD THIS PROJECT UNDER TRAFFIC AND TO CONSTRUCT THE FULL PAVEMENT WIDTH IN STAGES, EXERCISE CARE TO PREVENT THE CONSTRUCTION OF A BUTT JOINT IN THE BASE COURSES. LAP LONGITUDINAL JOINTS AS SHOWN ON STANDARD CONSTRUCTION DRAWING BP-3.1.

CONNECTION BETWEEN EXISTING AND PROPOSED GUARDRAIL

WHEN IT IS NECESSARY TO SPLICE PROPOSED GUARDRAIL TO EXISTING GUARDRAIL, ONLY THE EXISTING GUARDRAIL SHALL BE CUT, DRILLED, OR PUNCHED. THE CONNECTION SHALL BE MADE USING A W-BEAM, BEAM SPLICE AS SHOWN IN AASHTO M 180-12, EXCEPT THE BEAM WASHERS ARE NOT TO BE USED. PAYMENT SHALL BE INCLUDED IN THE CONTRACT PRICE FOR THE RESPECTIVE GUARDRAIL ITEMS.

ITEM 606 - ANCHOR ASSEMBLY, MGS TYPE E

THIS ITEM SHALL CONSIST OF FURNISHING AND INSTALLING ANY OF THE GUARDRAIL END TERMINALS FOR TYPE MGS GUARDRAIL AS LISTED ON ROADWAY ENGINEERING'S WEB PAGE UNDER ROADSIDE SAFETY DEVICES FOR APPROVED GUARDRAIL END TREATMENTS. INSTALLATION SHALL BE AT THE LOCATIONS SPECIFIED IN THE PLANS, IN ACCORDANCE WITH THE MANUFACTURER'S SPECIFICATIONS.

THE FACE OF THE TYPE E IMPACT HEAD SHALL BE COVERED WITH A SHEET OF TYPE G REFLECTIVE SHEETING, PER CMS 730.19.

REFER TO THE MANUFACTURER'S INSTRUCTIONS REGARDING THE INSTALLATION OF, AND THE GRADING AROUND THE FOUNDATION TUBES AND GROUND STRUT. THE TOP OF ANY FOUNDATION TUBE SHOULD BE LESS THAN 4 INCHES ABOVE THE GROUND. THE PLACEMENT OF THE FOUNDATION TUBES SHOULD BE AN APPROPRIATE DEPTH BELOW THE LEVEL LINE IN ORDER TO MAINTAIN THE FINISHED GUARDRAIL HEIGHT OF 31 INCHES FROM THE EDGE OF THE SHOULDER.

ON-SITE GRADING IS REQUIRED IF THE TOP OF THE FOUNDATION TUBES OR TOP OF THE GROUND STRUT DOES PROJECT MORE THAN 4 INCHES ABOVE THE GROUND LINE.

PAYMENT FOR THE ABOVE WORK SHALL BE MADE AT THE UNIT PRICE BID FOR ITEM 606, ANCHOR ASSEMBLY, MGS TYPE E, EACH, AND SHALL INCLUDE ALL LABOR, TOOLS, EQUIPMENT AND MATERIALS NECESSARY TO CONSTRUCT A COMPLETE AND FUNCTIONAL ANCHOR ASSEMBLY SYSTEM, INCLUDING ALL RELATED TRANSITIONS, REFLECTIVE SHEETING, HARDWARE, GRADING, EMBANKMENT AND EXCAVATION NOT SEPARATELY SPECIFIED, AS REQUIRED BY THE MANUFACTURER.

PAVING UNDER GUARDRAIL

THIS OPERATION SHALL INCLUDE PREPARATION OF THE GRADED SHOULDER USING ITEM 209, LINEAR GRADING, AS PER PLAN AND PAVING UNDER THE GUARDRAIL USING 441 ASPHALT CONCRETE INTERMEDIATE COURSE, TYPE 1, (448), UNDER GUARDRAIL, AS PER PLAN.

ITEM 209, LINEAR GRADING, AS PER PLAN SHALL CONSIST OF EXCAVATING TOPSOIL, AND PLACING GRANULAR MATERIAL.

ALL COLLECTED DEBRIS AND TOPSOIL, INCLUDING RHIZOMES, ROOTS AND OTHER VEGETATIVE PLANT MATERIAL SHALL BE REMOVED AND DISPOSED OF AS SPECIFIED IN 105.17.

THE REMOVED MATERIAL SHALL BE REPLACED WITH COMPACTABLE GRANULAR MATERIAL CONFORMING TO 703.16 PLACED TO GRADE AS DETAILED ON THE TYPICAL SECTION OR AS APPROVED BY THE ENGINEER.

ALL EQUIPMENT, MATERIALS AND LABOR REQUIRED TO PERFORM THE WORK OUTLINED ABOVE SHALL BE INCLUDED FOR PAYMENT UNDER ITEM 209, LINEAR GRADING, AS PER PLAN.

PAVING UNDER GUARDRAIL SHALL CONSIST OF PLACING ITEM 441 TO THE DEPTH SPECIFIED USING ONE OF THE FOLLOWING METHODS:

METHOD A:
1. *SET GUARDRAIL POSTS*
2. *PLACE ITEM 441*

METHOD B:
1. *PLACE ITEM 441*
2. *BORE ASPHALT AT POST LOCATIONS (MAY BE OMITTED IF STEEL POSTS ARE USED)*
3. *SET GUARDRAIL POSTS*
4. *PATCH AROUND POSTS. THE MATERIALS USED FOR PATCHING SHALL BE AN ASPHALT CONCRETE APPROVED BY THE ENGINEER. PATCHED AREAS SHALL BE COMPACTED USING EITHER HAND OR MECHANICAL METHODS. FINISHED SURFACES SHALL BE SMOOTH AND SLOPED TO DRAIN AWAY FROM THE POSTS.*

ALL EQUIPMENT, MATERIALS AND LABOR REQUIRED TO PERFORM THE WORK OUTLINED ABOVE, WITH THE EXCEPTION OF SETTING GUARDRAIL POSTS, SHALL BE INCLUDED FOR PAYMENT UNDER ITEM 441, ASPHALT CONCRETE, INTERMEDIATE COURSE, TYPE 1 (448), UNDER GUARDRAIL, AS PER PLAN.

SUM-77-32.27
MODEL: 111405_GN001_3 PAPERSIZE: 17x11 (in.) DATE: 2/22/2022 TIME: 6:02:33 PM USER: tdinh
pw:\\gfnet-pw.bentley.com:gfnet-pw-01\Documents\Projects\67490\104983401-Engineering-GF\Roadway\Sheets\104983_GN001.dgn

DESIGN AGENCY
Gannett Fleming
ENGINEERS AND ARCHITECTS, P.C.
2500 Corporate Exchange Drive
Suite 230
Columbus, OH 43231

DESIGNER
TQD

REVIEWER
DRJ 02/01/22

PROJECT ID
104983

SHEET 16 TOTAL 297

ITEM 606 - CABLE GUARDRAIL

THIS ITEM SHALL CONSIST OF FURNISHING AND INSTALLING ANY ONE OF THE HIGH TENSION FOUR CABLE GUARDRAIL SYSTEMS AS LISTED ON THE OFFICE OF ROADWAY ENGINEERING'S WEB PAGE. PAYMENT FOR THE ABOVE WORK SHALL BE MADE AT THE UNIT PRICE BID FOR ITEM 606, CABLE BARRIER WITH CONCRETE LINE POST FOUNDATION, AND ITEM 606 CABLE BARRIER, ANCHOR ASSEMBLY AND SHALL INCLUDE ALL LABOR, TOOLS, EQUIPMENT AND MATERIALS NECESSARY TO CONSTRUCT A COMPLETE AND FUNCTIONAL HIGH TENSION CABLE GUARDRAIL SYSTEM NOT SEPARATELY SPECIFIED, AS REQUIRED BY THE MANUFACTURER. THE LENGTH OF THE TENSIONED CABLE NECESSARY TO INSTALL A FUNCTIONAL ANCHOR SYSTEM SHALL BE INCLUDED IN ITEM 606, CABLE BARRIER WITH CONCRETE LINE POST FOUNDATION.

INSTALLATION SHALL BE AT THE LOCATIONS SPECIFIED IN THE PLANS, IN ACCORDANCE WITH THE MANUFACTURER'S SPECIFICATIONS.

SYSTEMS SHALL HAVE A MAXIMUM DEFLECTION OF 8 FEET AND THE MAXIMUM LONGITUDINAL DISTANCE BETWEEN POSTS SHALL BE 15 FEET.

INSTALLATION WILL BE A FOUR CABLE HIGH TENSION SYSTEM INSTALLED IN SOCKETED POSTS FOUNDATION WITH A FOUR FOOT WIDE "NO MOW STRIP".

DELINEATE THE CABLE BARRIER USING TYPE 6 BARRIER REFLECTORS PER ITEM 626 OR USING FLEXIBLE POSTS PER ITEM 620 AS CALLED FOR IN THE PLANS OR DIRECTED BY THE ENGINEER.

ANCHOR TERMINAL STRUTS SHALL BE COVERED COMPLETELY ON BOTH SIDES WITH YELLOW TYPE J, ASTM D 4956 TYPE XI REFLECTIVE SHEETING, PER CMS 730.193.

TRANSITIONS TO W-BEAM GUARDRAIL ARE NOT ALLOWED.

REFER TO MANUFACTURER FOR MAXIMUM OFFSET FROM BREAK POINT.

TORPEDO OR BULLET SPLICES ARE NOT ALLOWED. ALL CABLE SPLICES SHALL BE A SWAGED OR OPEN BODY DESIGN THAT ALLOWS FOR ANNUAL INSPECTION BETWEEN THE WEDGE AND STRANDS OF CABLE.

POSTS ARE SET IN SOCKETED CONCRETE FOUNDATIONS AND SHALL NOT BE PERMANENTLY INSTALLED UNTIL THEIR RESPECTIVE RUNS OF TENSIONED CABLE GUARDRAIL ARE READY FOR FINAL CONNECTION TO THE END TERMINAL ASSEMBLY. THE CONTRACTOR SHALL REPLACE ANY POSTS DAMAGED DURING INSTALLATION AS DETERMINED BY THE ENGINEER AT NO ADDITIONAL COST TO THE STATE.

POST CONSTRUCTION STORM WATER TREATMENT

THIS PLAN UTILIZES STRUCTURAL BEST MANAGEMENT PRACTICES (BMP'S) FOR POST CONSTRUCTION STORM WATER TREATMENT.

BRIDGE INSPECTION - BATS

PRIOR TO WORK ON THE STA-77-0912, STA-77-0937, AND STA-30-1487 BRIDGE STRUCTURES, THE UNDERSIDE OF THE BRIDGES SHALL BE CAREFULLY EXAMINED FOR THE PRESENCE OF BATS, ESPECIALLY FROM APRIL 1 TO SEPTEMBER 30. IF ANY BATS ARE FOUND ROOSTING ON THE UNDERSIDE OF THE BRIDGE, THE US FISH AND WILDLIFE SERVICE, ECOLOGICAL SERVICES DIVISION (614-416-8993), ODOT OFFICE OF ENVIRONMENTAL SERVICES (614-466-7100), AND ODOT DISTRICT 4 ENVIRONMENTAL SECTION (330-786-3100) SHALL BE CONTACTED.

REMOVAL MISC.: CONCRETE PAD

REMOVE EXISTING CONCRETE PADS NOTED ON PLANS. BACKFILL THE CAVITY CREATED BY THE REMOVAL ITEM ACCORDING TO CMS 202.02. PROPERLY DISPOSE OF THE MATERIAL OFF THE PROJECT SITE.

REMOVAL MISC.: CONCRETE PAVEMENT, 10" DEPTH

REMOVE ALL ASPHALT CONCRETE FROM THE SURFACE TO THE BOTTOM OF THE PAVEMENT COURSES AS LOCATED ON THE PLANS. REMOVAL WILL INCLUDE THE WEARING COURSE. BACKFILL THE CAVITY CREATED BY THE REMOVAL ITEM ACCORDING TO CMS 202.02, EXCEPT WHEN THE CAVITY LIES WITHIN THE LIMITS OF SUBSEQUENT EXCAVATION OR OTHER WORK.

THE COST OF CONCRETE PAVEMENT REMOVAL AND DISPOSAL WILL BE PAID AT THE UNIT PRICE BID PER SQUARD YARD.

ITEM SPECIAL - FILL AND PLUG EXISTING CONDUIT

THIS ITEM CONSISTS OF THE CONSTRUCTION OF BULKHEADS IN AN EXISTING LESS THAN 24" IN DIAMETER CONDUIT AND FILLING THE AREA SEALED OFF WITH ITEM 613, SAND OR OTHER MATERIAL APPROVED BY THE ENGINEER.

LOCATE THE BULKHEADS AT THE LIMITS OF THE AREA TO BE FILLED, AS INDICATED ON THE PLANS. THE BULKHEADS CONSIST OF BRICK OR CONCRETE MASONRY WITH A MINIMUM THICKNESS OF 12 INCHES. PUMP THE FILL MATERIAL INTO PLACE OR BY OTHER MEANS APPROVED BY THE ENGINEER, SO THAT AFTER SETTLEMENT, AT LEAST 90 PERCENT OF THE CROSSSECTIONAL AREA OF THE CONDUIT, FOR ITS ENTIRE LENGTH IS FILLED. THE LENGTH OF FILLED AND PLUGGED CONDUIT TO BE PAID FOR IS THE ACTUAL NUMBER OF FEET (MEASURED ALONG THE CENTERLINE OF EACH CONDUIT FROM OUTER FACE TO OUTER FACE OF BULKHEADS) FILLED AND PLUGGED AS DESCRIBED ABOVE.

IN LIEU OF FILLING AND PLUGGING THE EXISTING CONDUIT, THE PIPE MAY BE CRUSHED AND BACKFILLED PER 203, OR IT MAY BE REMOVED. THE LENGTH, MEASURED AS PROVIDED ABOVE, WILL BE PAID FOR AT THE CONTRACT PRICE PER FOOT FOR, ITEM SPECIAL, FILL AND PLUG EXISTING CONDUIT.

REMOVAL MISC.: EXISTING ODOT ITS HIGHWAY ADVISORY RADIO

REMOVE EXISTING ODOT ITS HIGHWAY ADVISORY RADIO ON WOOD POLE FROM THE FOLLOWING LOCATIONS: STATION 1026+79.34 RT AND 1028+39.68 RT. UNDERGROUND CABLE AND PULL BOXES IS TO BE ABANDONED IN PLACE. SERVICE NEEDS TO BE DISCONNECTED TO HIGHWAY ADVISORY RADIO. THE POWER SERVICE ARE TO BE MAINTAINED FOR FUTURE USE. PROPERLY DISPOSE OF THE ADVISORY RADIO OFF THE PROJECT SITE.

THE COST OF ITS HIGHWAY ADVISORY RADIO REMOVAL AND DISPOSAL WILL BE PAID AT THE UNIT BID PER EACH.

625, TEMPORARY LIGHTING

THE TEMPORARY LIGHTING SHALL INCLUDE THE REMOVAL OF THE EXISTING LIGHTING WITHIN INFIELD OF RAMP G FROM SR-21 TO I-77 SOUTHBOUND. THERE ARE 8 EXISTING LIGHT POLES, LUMINAIRES, FOUNDATIONS AND APPURTENANCES TO REMOVE IN ACCORDANCE WITH CMS 625.21 AND AS SHOWN ON THE PLANS. THE LIGHT POLE FOUDNATION SHALL BE REMOVED TO A MINIMUM OF 1 FOOT BELOW THE FINISHED GRADE, PROPOSED PAVEMENT BASE OR REMOVE THE FOUNDATION COMPLETELY, AND SHALL INCLUDE BACKFILLING THE RESULTANT DEPRESSION WITH COMPACTED SOIL. ALL CABLES SHALL BE REMOVED AND CONDUITS ABANDONED.

THE CONTRACTOR SHALL NOT PROCEED WITH THE REMOVAL OF THE EXISTING LIGHTING BEFORE THE NEW TEMPORARY LIGHTING IS OPERATIONAL. THE POLES SHALL BE SPACED AT 150 FEET, BRACKET ARMS SHALL BE 30 FEET, LUMINAIRES SHALL PROVIDE THE STATED FOOTCANDLES OR AT A MINIMUM MATCH THE EXISTING LIGHTING, 30-FOOT MOUNTING HEIGHT OF LUMINAIRES, OVERHEAD WIRING METHODS, SHALL BE PLACED OUTSIDE THE CLEAR ZONE. THE TEMPORARY LIGHTING SHALL PROVIDE AN AVERAGE INITIAL INTENSITY OF 1.2 FOOTCANDLES WITH AN AVERAGE TO MINIMUM UNIFORMITY NOT TO EXCEED 3:1. THE MINIMUM OVERHEAD CONDUCTOR CLEARANCE SHALL BE 20 FEET. TEMPORARY OVERHEAD CONSTRUCTION SHALL NOT BE LESS THAN GRADE "B" FOR STRENGTH REQUIREMENTS AS DEFINED BY THE NATIONAL ELECTRIC SAFETY CODE. WOOD POLES WITH OVERHEAD WIRING MAY BE USED. HOWEVER, TEMPORARY LIGHTING SHALL MEET FEDERAL AND STATE SAFETY CRITERIA.

ALL MATERIALS NECESSARY TO COMPLETE THE TEMPORARY LIGHTING SHALL BE FURNISHED AND INSTALLED BY THE CONTRACTOR AND SHALL BE LEFT IN PLACE AT THE END OF THE CONTRACT.

THE MAINTAINING AGENCY WILL PAY FOR ELECTRICAL ENERGY CONSUMED BY EXISTING POWER SERVICES AND BY PROPOSED POWER SERVICES AFTER ACCEPTANCE OF THE TEMPORARY LIGHTING WORK.

PAYMENT SHALL BE MADE AT THE UNIT PRICE BID PER LUMP SUM FOR ITEM 625 TEMPORARY LIGHTING AND SHALL INCLUDE ALL LABOR, EQUIPMENT, MATERIALS, TESTING AND INCIDENTALS TO REMOVE THE EXISTING LIGHTING AND PLACE A TEMPORARY LIGHTING SYSTEM COMPLETE, FULLY OPERATIONAL AND IN PLACE.

GENERAL NOTES

DESIGN AGENCY
Gannett Fleming
ENGINEERS AND ARCHITECTS, P.C.
2500 Corporate Exchange Drive
Suite 230
Columbus, OH 43231

DESIGNER
TQD

REVIEWER
DRJ 02/01/22

PROJECT ID
104983

SHEET 17 TOTAL 297

MODEL: 111405_GN001_4 PAPERSIZE: 17x11 (in.) DATE: 2/22/2022 TIME: 6:02:34 PM USER: idnh
pw:\\gfnet-pw.bentley.com:gfnet-pw-01\Documents\Projects\67490\104983\401-Engineering-GF\Roadway\Sheets\104983_GN001.dgn

ITEM SPECIAL - STRUCTURAL SURVEY AND MONITORING OF VIBRATION

MINIMUM REQUIRED SURVEY AND VIBRATION:
AT A MINIMUM, A CONDITION SURVEY SHALL BE COMPLETED FOR ALL EXISTING BUILDINGS, STRUCTURES, AND UTILITIES WITHIN 300-FT OF THE WORK ON THE FOLLOWING PROPERTIES:

4640 BERKLEY ROAD, RICHFIELD, OH 44286
4660 BERKLEY ROAD, RICHFIELD, OH 44286
4860 BERKLEY ROAD, RICHFIELD, OH 44286

OTHER STRUCTURES WITHIN 300' OF THE WORK MAY BE PRESENT ON THE PROJECT, THE CONTRACTOR SHALL IDENTIFY, SURVEY, AND MONITOR THOSE IN ADDITION TO THE MINIMUM REQUIRED PROPERTIES.

STRUCTURAL SURVEY:
BEFORE ROADWAY WORK WITHIN 250' OF IDENTIFIED STRUCTURES BEGINS, CONDUCT A CONDITION SURVEY OF ALL EXISTING BUILDINGS, STRUCTURES, AND UTILITIES WITHIN 300-FT OF THE WORK. THE PURPOSE OF THE SURVEY IS TO DOCUMENT THE CONDITION OF THE BUILDINGS, STRUCTURES, OR UTILITIES PRIOR TO ROADWAY WORK, SO THAT CLAIMS OF DAMAGE CAUSED BY THE WORK CAN BE VERIFIED.

RETAIN AN EXPERIENCED VIBRATION SPECIALIST TO PERFORM OR SUPERVISE THE CONDITION SURVEY. USE A VIBRATION SPECIALIST THAT MEETS THE QUALIFICATION REQUIREMENTS FOR VIBRATION MONITORING.

RECORD THE CONDITION OF EXISTING STRUCTURES AND BUILDING MATERIALS, USING WRITTEN TEXT, PHOTOGRAPHS, AND VIDEO RECORDINGS. INSPECT INTERIOR WALLS, CEILINGS, AND FLOORS THAT ARE ACCESSIBLE. INSPECT THE EXTERIOR OF THE BUILDING THAT IS VISIBLE FROM GROUND LEVEL. ALSO RECORD THE LOCATION, SIZE, AND TYPE OF ALL CRACKS AND OTHER STRUCTURAL DEFICIENCIES.

IF OWNERS OR OCCUPANTS FAIL TO ALLOW ACCESS TO THE PROPERTY FOR THE PRECONSTRUCTION CONDITION SURVEY, SEND A CERTIFIED LETTER TO THE OWNER OR OCCUPANT. DOCUMENT THE NOTIFICATION EFFORT AND THE CERTIFIED LETTER IN THE REPORT.

SUBMIT THREE COPIES OF A STRUCTURAL SURVEY REPORT TO THE ENGINEER THAT SUMMARIZES THE PRECONSTRUCTION CONDITION OF THE BUILDINGS, STRUCTURES, AND UTILITIES, AND THAT IDENTIFIES AREAS OF CONCERN.

VIBRATION MONITORING:
MONITOR GROUND VIBRATIONS CAUSED BY ROADWAY WORK WITHIN 250' OF IDENTIFIED STRUCTURES TO MINIMIZE THE POTENTIAL DAMAGE TO EXISTING STRUCTURES.

RETAIN AN EXPERIENCED VIBRATION SPECIALIST TO ESTABLISH THE ACCEPTABLE VIBRATION LIMITS AND TO PERFORM THE VIBRATION MONITORING. USE A VIBRATION SPECIALIST THAT IS AN EXPERT IN THE INTERPRETATION OF VIBRATION DATA, AND WHO MEETS ONE OF THE FOLLOWING CRITERIA: 1) IS A REGISTERED ENGINEER WITH AT LEAST TWO YEARS OF PROVEN EXPERIENCE IN MONITORING VIBRATIONS ON SIMILAR CONSTRUCTION PROJECTS, OR 2) HAS AT LEAST FIVE YEARS OF PROVEN EXPERIENCE IN MONITORING VIBRATIONS ON SIMILAR CONSTRUCTION PROJECTS. DO NOT USE A VIBRATION SPECIALIST THAT IS AN EMPLOYEE OF THE CONTRACTOR.

ITEM SPECIAL - STRUCTURAL SURVEY AND MONITORING OF VIBRATION (CONTINUED)

SUBMIT A RESUME OF THE CREDENTIALS OF THE PROPOSED VIBRATION SPECIALIST AT OR BEFORE THE PRECONSTRUCTION MEETING. INCLUDE IN THE RESUME A LIST OF CONSTRUCTION PROJECTS ON WHICH THE VIBRATION SPECIALIST WAS RESPONSIBLY IN CHARGE OF MONITORING THE VIBRATIONS. LIST A DESCRIPTION OF THE PROJECTS, WITH DETAILS OF THE VIBRATION INTERPRETATIONS MADE ON THE PROJECT. LIST THE NAMES AND TELEPHONE NUMBERS OF PROJECT OWNERS WITH SUFFICIENT KNOWLEDGE OF THE PROJECTS TO VERIFY THE SUBMITTED INFORMATION. OBTAIN THE ENGINEER'S ACCEPTANCE OF THE VIBRATION SPECIALIST BEFORE BEGINNING ANY ROADWAY WORK NEAR EXISTING STRUCTURES. ALLOW 30 DAYS FOR THE REVIEW OF THIS DOCUMENTATION.

USE SEISMOGRAPHS CAPABLE OF CONTINUOUSLY RECORDING THE PEAK PARTICLE VELOCITY FOR THREE MUTUALLY PERPENDICULAR COMPONENTS OF VIBRATION, AND OF PROVIDING A PERMANENT RECORD OF THE ENTIRE VIBRATION EVENT. USE A SUFFICIENT NUMBER OF SEISMOGRAPHS TO PROVIDE REDUNDANCY IN CASE ONE DEVICE SHOULD FAIL. SUBMIT A PLAN OF THE PROPOSED SEISMOGRAPH LOCATIONS TO THE ENGINEER FOR REVIEW.

THE VIBRATION SPECIALIST SHALL PERFORM THE FOLLOWING:
1. MEASURE THE AMBIENT GROUND VIBRATIONS NEAR EXISTING STRUCTURES BEFORE ROADWAY WORK BEGINS WITHIN THE SPECIFIED DISTANCE.
2. ESTABLISH VIBRATION LIMITS TO MINIMIZE POTENTIAL DAMAGE TO EXISTING STRUCTURES AND EXPLAIN WHY THEY ARE BEING USED TO THE ENGINEER BEFORE ROADWAY WORK NEAR EXISTING STRUCTURES.
3. MONITOR GROUND VIBRATIONS DURING ROADWAY WORK WITHIN THE SPECIFIED DISTANCE.
4. IMMEDIATELY INFORM THE CONTRACTOR AND ENGINEER IF THE VIBRATION LIMITS ARE REACHED OR EXCEEDED.
5. FURNISH THE DATA RECORDED AND INCLUDE THE FOLLOWING:
   A. IDENTIFICATION OF SEISMOGRAPH.
   B. DISTANCE AND DIRECTION OF SEISMOGRAPH FROM ROADWAY WORK.
   C. START TIME AND DURATION OF ROADWAY WORK.
   D. DESCRIPTION OF ROADWAY WORK PERFORMED DURING EACH MONITORING INTERVAL.

IMMEDIATELY SUSPEND ALL ROADWAY WORK WITHIN THE SPECIFIED DISTANCE IF THE VIBRATION LIMITS ARE REACHED OR EXCEEDED. EVALUATE ALTERNATIVE CONSTRUCTION PROCEDURES TO REDUCE THE VIBRATIONS. SUBMIT THREE COPIES OF THE FINAL REPORT WHICH CONTAINS ALL MEASUREMENTS, INTERPRETATIONS, AND RECOMMENDATIONS TO THE ENGINEER.

PAYMENT:
THE DEPARTMENT WILL PAY FOR THIS ITEM AT THE CONTRACT LUMP SUM PRICE FOR SPECIAL - STRUCTURAL SURVEY AND MONITORING OF VIBRATION.

THE DEPARTMENT WILL PAY THE INITIAL TWENTY PERCENT AFTER THE ENGINEER RECEIVES ALL STRUCTURAL SURVEY REPORTS.

THE DEPARTMENT WILL PAY THE FINAL TWENTY PERCENT AFTER THE ENGINEER RECEIVES THE FINAL VIBRATION MONITORING REPORT.

THE DEPARTMENT WILL PAY ACCORDING TO C&MS 109.05 FOR ALTERNATIVE CONSTRUCTION PROCEDURES THAT THE ENGINEER DETERMINES ARE NECESSARY TO REDUCE VIBRATIONS.

PN 121 - 01/18/2019 - INCENTIVE/DISINCENTIVE CONTRACT

THE CONTRACTOR SHALL COMPLETE ALL CRITICAL WORK AND SAFETY ITEMS ACCORDING TO THE INCENTIVE/ DISINCENTIVE CONTRACT TABLE. THE INCENTIVE/DISINCENTIVE CONTRACT TABLE IS LOCATED IN THE PLAN GENERAL NOTES. IN THE EVENT THE CONTRACTOR IMPEDES THE FLOW OF TRAFFIC SUBSEQUENT TO THE OPENING TO UNRESTRICTED TRAFFIC, THE CONTRACTOR SHALL BE ASSESSED A DISINCENTIVE ACCORDING TO THE INCENTIVE/DISINCENTIVE CONTRACT TABLE.

CRITICAL WORK IS SHOWN IN THE INCENTIVE/DISINCENTIVE CONTRACT TABLE.

CRITICAL WORK IS DEFINED AS HAVING THE DESIGNATED SECTION OF WORK OPEN TO UNRESTRICTED TRAFFIC AS SHOWN IN THE TABLE, OR THE ENTIRE PROJECT IF NOT OTHERWISE LISTED.

UNRESTRICTED TRAFFIC IS DEFINED AS ALL TRAFFIC LANES BEING AVAILABLE FOR USE AT THEIR FINAL DESIGN WIDTH WITH ALL MARKINGS, RPM'S, AND SAFETY FEATURES INSTALLED, ALONG WITH NO RESTRICTIONS WITHIN 2 FEET OF THE EDGE LINE ON THE SHOULDERS.

INCENTIVE/DISINCENTIVE AMOUNT:
THE CONTRACTOR WILL BE PAID AN INCENTIVE OR WILL BE ASSESSED A DISINCENTIVE ACCORDING TO THE INCENTIVE/ DISINCENTIVE CONTRACT TABLE.

EXTENSIONS OF TIME WILL BE FOR CALENDAR DAYS AND CALCULATED IN ACCORDANCE WITH C&MS 108.06 EXCEPT AS FOLLOWS: NO EXTENSIONS OF TIME WILL BE GRANTED FOR DELAYS IN MATERIAL DELIVERIES (UNLESS SUCH DELAYS ARE INDUSTRY WIDE), AND LABOR STRIKES (UNLESS SUCH STRIKES ARE AREA WIDE).

INCENTIVE / DISINCENTIVE CONTRACT TABLE

DESCRIPTION OR LOCATION OF CRITICAL WORK	COMPLETION DATE	TIME PERIOD	DISINCENTIVE $ PER TIME PERIOD	INCENTIVE $ PER TIME PERIOD	MAXIMUM INCENTIVE $
MOT PHASE 2 (IR-77 SB LANES)	10/01/2023	DAY	$3,000	NONE	N/A

EARTHWORK FOR MAINLINE PAVEMENT

EXCAVATION AND EMBANKMENT CONSTRUCTION EXCAVATED SOILS ON THE PROJECT SITE MAY NOT BE SUITABLE FOR EMBANKMENT USE. THE CONTRACTOR SHALL BE RESPONSIBLE FOR ENSURING THAT ANY ON-SITE SOIL USED AS EMBANKMENT MEETS THE REQUIREMENTS OF 203.

ITEM 203, EXCAVATION, INCLUDES WASTING ANY EXCAVATED MATERIAL WITHIN THE RIGHT-OF-WAY WITH THE APPROVAL OF THE ENGINEER OR OUTSIDE THE RIGHT-OF-WAY AT THE CONTRACTOR'S EXPENSE, IF NO SUITABLE AREAS EXIST FOR WASTING WITHIN THE RIGHT-OF-WAY.

ITEM 203, EMBANKMENT INCLUDES CONSTRUCTIN EMBANKMENTS TO PLAN LINES AND INCLUDES FURNISHING AND PLACING SUITABLE BORROW MATERIAL AS SPECIFIED IN 203, WHEN REQUIRED. FOR SOIL BORROW OR OTHER MATERIALS NOT ALREADY CERTIFIED TO MEET 203 REQUIREMENTS, THE CONTRACTOR SHALL ALLOW THE ENGINEER 10 DAYS TO PERFORM IN SITU TESTS PRIOR TO USING THE MATERIAL.

PRIOR TO EARTH DISTURBING ACTIVITIES, INSTALL ALL REQUIRED EROSION CONTROL ITEMS AS SPECIFIED ON THE STORMWATER POLLUTION PREVENTION PLAN PREPARED BY THE CONTRACTOR. FOR EARTH DISTURBING WORK OUTSIDE THE WORK LIMITS, THE CONTRACTOR SHALL BE SOLELY RESPONSIBLE FOR ACQUIRING ALL NECESSARY PERMITS, IF REQUIRED, INCLUDING FOR BORROW AREAS. PROVIDE THE APPROPRIATE EROSION CONTROL MEASURES AS REQUIRED.

THE FOLLOWING IS A SUMMARY OF ALL EARTHWORK QUANTITIES GENERATED BY THE CROSS SECTIONS.

IR-77	
203, EXCAVATION	50387 CU. YD.
203, EMBANKMENT	7367 CU. YD.
SR-21	
203, EXCAVATION	3464 CU. YD.
203, EMBANKMENT	66 CU. YD.
RAMP G	
203, EXCAVATION	6530 CU. YD.
203, EMBANKMENT	89 CU. YD.

THE FOLLOWING GRAND TOTAL HAS BEEN CARRIED TO THE GENERAL SUMMARY:

203, EXCAVATION	60381 CU. YD.
203, EMBANKMENT	7522 CU. YD.

GENERAL NOTES

DESIGN AGENCY
Gannett Fleming
ENGINEERS AND ARCHITECTS, P.C.
2350 Corporate Exchange Drive
Suite 230
Columbus, OH 43231

DESIGNER
TQD

REVIEWER
DRJ 02/01/22

PROJECT ID
104983

SHEET 18 TOTAL 297

MODEL: 111405_GN001_5 PAPERSIZE: 17x11 (in.) DATE: 2/22/2022 TIME: 6:02:34 PM USER: tdinh
pw:\\gfnet-pw.bentley.com:gfnet-pw-01\Documents\Projects\67490\104983401-Engineering-GFI\Roadway\Sheets\104983_GN001.dgn

ITEM 614 - MAINTAINING TRAFFIC

THIS ITEM SHALL CONSIST OF MAINTENANCE OF TRAFFIC ON EXISTING ROADWAYS AND RAMPS IN ACCORDANCE WITH THE OHIO MANUAL OF UNIFORM TRAFFIC CONTROL DEVICES FOR STREETS AND HIGHWAYS, CURRENT EDITION, LATEST REVISION, THE SPECIFICATIONS AND THE FOLLOWING:

1. A MINIMUM OF ONE ELEVEN FOOT LANE IN EACH DIRECTION (TEN FOOT LANE ONLY ON BRIDGES) SHALL BE MAINTAINED ON THE EXISTING PAVEMENT OR COMPLETED PAVEMENT DURING CONSTRUCTION OF THE WORK.

2. THE CONTRACTOR SHALL INFORM THE DISTRICT OFFICE (330) 786-2208, EIGHTEEN (18) DAYS PRIOR TO THE BEGINNING OF WORK.

3. N/A

4. N/A

5. N/A

6. TRUCK MOUNTED ATTENUATORS [TMA'S] SHALL BE USED AS SHOWN IN THE STANDARD CONSTRUCTION DRAWINGS.

7. N/A

8. FOR ROUTES NOT ON THE PERMITTED LANE CLOSURE CHART, ONLY DURING OFF-PEAK PERIODS (ie ANY PERIOD OTHER THAN 6-8AM AND 3-6PM) SHALL THE CONTRACTOR INSTALL AND SUBSEQUENTLY RESET ALL TRAFFIC CONTROL NECESSARY FOR THE WORK ZONE FOR EACH CONSTRUCTION PHASE.

9. N/A

10. A QUANTITY OF 100 CU. YDS. OF ITEM 614 ASPHALT CONCRETE FOR MAINTAINING TRAFFIC SHALL BE PROVIDED FOR USE IN MAINTAINING PAVEMENT, SHOULDERS AND OTHER LOCATIONS AS DIRECTED BY THE ENGINEER.

11. PRIOR TO OPENING TO TRAFFIC EACH LANE SHALL BE IN A SAFE, PASSABLE CONDITION. ALL TRANSVERSE JOINTS SHALL EXTEND ACROSS THE FULL LANE AND SHOULDER WIDTH AND EACH LANE SHALL BE FREE FROM UNEVEN LONGITUDINAL JOINTS. THE CONTRACTOR SHALL PROVIDE ASPHALT WEDGES FOR TRANSVERSE JOINTS WHEREVER THERE ARE PAVEMENT ELEVATION DIFFERENCES.

12. THE CONTRACTOR SHALL PLACE THE SIGNS: W8-1 [BUMP] PER OMUTCD 2C.28; W8-11 [UNEVEN LANES] PER OMUCTD 6F.45; AND W6-3 [TWO-WAY TRAFFIC] PER OMUTCD 6F.32. PAYMENT FOR THESE SIGNS SHALL BE INCIDENTAL TO THE LUMP SUM ITEM 614-MAINTAINING TRAFFIC.

13. N/A

A MINIMUM OF 2 LANES OF TRAFFIC IN EACH DIRECTION SHALL BE MAINTAINED ALONG THE MAINLINE AT ALL TIMES BY USE OF THE EXISTING PAVEMENT, THE COMPLETED PAVEMENT, ITEM 615 PAVEMENT FOR MAINTAINING TRAFFIC, AND ITEM 615 ROADS FOR MAINTAINING TRAFFIC.

SR-21 & RAMP G
A MINIMUM OF ONE LANE OF TRAFFIC IN EACH DIRECTION SHALL BE MAINTAINED AT ALL TIMES, EXCEPT FOR A PERIOD NOT TO EXCEED 45 CONSECUTIVE CALENDAR DAYS, WHEN THROUGH TRAFFIC MAY BE DETOURED AS SHOWN ON SHEET 32 .

REFER TO GENERAL NOTES FOR "PN-121 INCENTIVE/DISINCENTIVE CONTRACT" FOR COMPLETION OF IR-77 SOUTHBOUND WIDENING.

ITEM 614 - MAINTAINING TRAFFIC (CONTINUED)

ALL EXISTING LANES, INCLUDING RAMPS, SHALL BE OPEN AND AVAILABLE TO TRAFFIC IN THE ORIGINAL OR PROPOSED FINAL ALIGNMENT BETWEEN OCTOBER 01 AND APRIL 01. SHOULD THE CONTRACTOR FAIL TO MEET THESE REQUIREMENTS, A DISINCENTIVE SHALL BE ASSESSED IN THE AMOUNT OF $ 500.00 PER CALENDAR DAY.

NO WORK SHALL BE PERFORMED AND ALL AVAILABLE LANES SHALL BE OPEN TO TRAFFIC DURING THE FOLLOWING DESIGNATED HOLIDAYS OR EVENTS:

CHRISTMAS	FOURTH OF JULY
NEW YEAR'S	LABOR DAY
MEMORIAL DAY	THANKSGIVING

THE PERIOD OF TIME THAT THE LANES ARE TO BE OPEN DEPENDS ON THE DAY OF THE WEEK ON WHICH THE HOLIDAY OR EVENT FALLS. THE FOLLOWING SCHEDULE SHALL BE USED TO DETERMINE THIS PERIOD:

DAY OF HOLIDAY	TIME ALL LANES MUST BE OPEN TO TRAFFIC
SUNDAY	12:00N FRIDAY THROUGH 6:00 AM MONDAY
MONDAY	12:00N FRIDAY THROUGH 6:00 AM TUESDAY
TUESDAY	12:00N MONDAY THROUGH 6:00 AM WEDNESDAY
WEDNESDAY	12:00N TUESDAY THROUGH 6:00 AM THURSDAY
THURSDAY	12:00N WEDNESDAY THROUGH 6:00 AM FRIDAY
THURSDAY (THANKSGIVING)	5:00 AM WEDNESDAY THROUGH 6:00 AM MONDAY
FRIDAY	12:00N THURSDAY THROUGH 6:00 AM MONDAY
SATURDAY	12:00N FRIDAY THROUGH 6:00 AM MONDAY

SHOULD THE CONTRACTOR FAIL TO MEET ANY OF THESE REQUIREMENTS, THE CONTRACTOR SHALL BE ASSESSED A DISINCENTIVE PER THE LANE VALUE CONTRACT (PN 127).

LENGTH AND DURATION OF LANE CLOSURES AND RESTRICTIONS SHALL BE AT THE APPROVAL OF THE ENGINEER. IT IS THE INTENT TO MINIMIZE THE IMPACT TO THE TRAVELING PUBLIC. LANE CLOSURES OR RESTRICTIONS OVER SEGMENTS OF THE PROJECT IN WHICH NO WORK IS ANTICIPATED WITHIN A REASONABLE TIME FRAME, AS DETERMINED BY THE ENGINEER, SHALL NOT BE PERMITTED. THE LEVEL OF UTILIZATION OF MAINTENANCE OF TRAFFIC DEVICES SHALL BE COMMENSURATE WITH THE WORK IN PROGRESS.

NOTICE OF CLOSURE SIGNS (W20-H13) SHALL BE ERECTED BY THE CONTRACTOR PRIOR TO THE SCHEDULED ROAD OR RAMP CLOSURE IN ACCORDANCE WITH THE NOTICE OF CLOSURE TIME TABLE BELOW. AT THE APPROVAL OF THE ENGINEER, PORTABLE CHANGEABLE MESSAGE SIGNS MAY BE USED IN LIEU OF THE STANDARD FLATSHEET SIGN.

THE SIGNS SHALL BE ERECTED ON THE RIGHT-HAND SIDE OF THE ROAD/RAMP FACING TRAFFIC. THEY SHALL BE PLACED SO AS NOT TO INTERFERE WITH THE VISIBILITY OF ANY OTHER TRAFFIC CONTROL SIGNS. ON ROADWAYS, THEY SHOULD BE ERECTED AT OR NEAR THE POINT OF CLOSURE. THE SIGNS MAY BE ERECTED ANYWHERE ON RAMPS AS LONG AS THEY ARE VISIBLE TO THE MOTORISTS USING THE RAMP. ON ENTRANCE RAMPS, THE SIGN SHALL BE ERECTED WELL IN ADVANCE OF THE MERGE AREA TO AVOID DISTRACTING MOTORISTS.

ITEM 614 - MAINTAINING TRAFFIC (CONTINUED)

NOTICE OF CLOSURE SIGN TIME TABLE

ITEM	DURATION OF CLOSURE	SIGN DISPLAYED TO PUBLIC
RAMPS & ROAD CLOSURES	>= 2 WEEKS	14 CALENDAR DAYS PRIOR TO CLOSURE
	> 12 HOURS & < 2 WEEKS	7 CALENDAR DAYS PRIOR TO CLOSURE
	<= 12 HOURS	2 BUSINESS DAYS PRIOR TO CLOSURE

THE SIGN SHALL DISPLAY THE DATE OF THE CLOSURE IN MMM-DD FORMAT AND THE NUMBER OF DAYS OF THE CLOSURE. THE LAST LINE OF THE W20-H13 SIGN LISTS A PHONE NUMBER WHICH A MOTORIST MAY CALL FOR ADDITIONAL INFORMATION. THIS IS TO BE A SPECIFIC OFFICE WITHIN THE DISTRICT RATHER THAN THE GENERAL SWITCHBOARD NUMBER.

ALL WORK AND TRAFFIC CONTROL DEVICES SHALL BE IN ACCORDANCE WITH C&MS 614 AND OTHER APPLICABLE PORTIONS OF THE SPECIFICATIONS, AS WELL AS THE OHIO MANUAL OF UNIFORM TRAFFIC CONTROL DEVICES. PAYMENT FOR ALL LABOR, EQUIPMENT AND MATERIALS SHALL BE INCLUDED IN THE LUMP SUM CONTRACT PRICE FOR ITEM 614, MAINTAINING TRAFFIC, UNLESS SEPARATELY ITEMIZED IN THE PLAN.

COOPERATION BETWEEN CONTRACTORS

THE CONTRACTOR SHALL BE ADVISED THAT PROJECT CUY-77-00.42 MILLER ROAD INTERCHANGE (PID 104983) & SUM-77-28.75 (PID 111405) MAY BE ONGOING IN AN AREA IMMEDIATELY ADJACENT TO AND WITHIN THE PROJECT LIMITS OF THIS PROJECT. THE CONTRACTOR SHALL SCHEDULE HIS WORK SO AS TO CAUSE A MINIMUM OF DELAY OR CONFLICT WITH THE OTHER PROJECTS. IN ACCORDANCE WITH 105.08, THE CONTRACTOR SHALL ARRANGE WITH THE OTHER CONTRACTORS APPROVAL OF THE ENGINEER. THE CONTRACTOR SHALL RECEIVE DAILY APPROVALS FROM THE ENGINEER PRIOR TO COMMENCING ANY OPERATIONS. ANY CONFLICT BETWEEN CONTRACTORS INVOLVING WORK SCHEDULES, WORK AREA, OR COOPERATION SHALL BE RESOLVED BY THE ENGINEER. COMPENSATION FOR THE ABOVE COOPERATION SHALL BE INCIDENTAL TO THE VARIOUS PAY ITEMS INCLUDED WITHIN THIS PROJECT.

ADVANCED NOTICE TO PAVE

THE CONTRACTOR SHALL SUBMIT FOR APPROVAL TO THE DISTRICT CONSTRUCTION ENGINEER A DETAILED SCHEDULE 15 DAYS PRIOR TO THE PLACEMENT OF THE OVERLAY COURSES, ON HOW THEY PROPOSE TO PROSECUTE THE PAVING OPERATIONS. THE DETAILS SHALL SHOW THE ORDER OF PERFORMANCE OF EACH STAGE (START TO FINISH) OF THE WORK INCLUDING THE MAINTENANCE OF TRAFFIC THAT WILL BE USED.

DETOUR NOTIFICATION

THE CONTRACTOR SHALL ADVISE THE ODOT DISTRICT OFFICE (330-786-3148), SUMMIT COUNTY AND THE VILLAGE OF RICHFIELD EIGHTEEN (18) DAYS IN ADVANCE OF WHEN THE DETOUR ROUTE SHOULD BE IN EFFECT. ALL WORK ZONE DEVICES REQUIRED SHALL BE FURNISHED, ERECTED, MAINTAINED, AND SUBSEQUENTLY REMOVED BY THE CONTRACTOR. PAYMENT FOR ALL WORK ASSOCIATED WITH THE DETOUR SHALL BE INCLUDED UNDER THE LUMP SUM BID FOR ITEM 614, DETOUR SIGNING.

INTERIM COMPLETION DATE

This is a placeholder

TRENCH FOR WIDENING [SPEED LIMIT > 45MPH]

TRENCH EXCAVATION FOR BASE WIDENING SHALL BE ONLY ON ONE SIDE OF THE PAVEMENT AT A TIME. THE OPEN TRENCH SHALL BE ADEQUATELY MAINTAINED AND PROTECTED WITH DRUMS OR BARRICADES AT ALL TIMES. AS SHOWN ON MT-101.90. PLACEMENT OF PROPOSED BASE MATERIAL SHALL FOLLOW AS CLOSELY AS POSSIBLE BEHIND THE EXCAVATION OPERATIONS. THE LENGTH OF WIDENING TRENCH WHICH IS OPEN AT ANY ONE TIME SHALL BE HELD TO A MINIMUM AND SHALL AT ALL TIMES BE SUBJECT TO THE APPROVAL OF THE ENGINEER. THE BASE WIDENING ON THIS PROJECT WILL BE COMPLETED TO A DEPTH OF 3 INCHES BELOW THE EXISTING PAVEMENT BY THE END OF THE WORK DAY. NO TRENCH WILL BE LEFT OPEN OVERNIGHT. IN CASE WORK MUST BE SUSPENDED BECAUSE OF INCLEMENT WEATHER OR OTHER REASONS, THE TRENCH FOR THE UNCOMPLETED BASE WIDENING WILL BE BACKFILLED AT THE DIRECTION OF THE ENGINEER.

OVERNIGHT TRENCH CLOSING

THE BASE WIDENING SHALL BE COMPLETED TO A DEPTH OF NO MORE THAN 3 INCHES BELOW THE EXISTING PAVEMENT BY THE END OF EACH WORK DAY. NO TRENCH SHALL BE LEFT OPEN OVERNIGHT EXCEPT FOR A SHORT LENGTH (25 FEET OR LESS) OF A WORK SECTION AT THE END OF THE TRENCH. IN CASE WORK MUST BE SUSPENDED BECAUSE OF INCLEMENT WEATHER OR OTHER REASONS, THE TRENCH FOR THE UNCOMPLETED BASE WIDENING SHALL BE BACKFILLED AT THE DIRECTION OF THE ENGINEER.

NOTIFICATION OF TRAFFIC RESTRICTIONS

THROUGHOUT THE DURATION OF THE PROJECT, THE CONTRACTOR SHALL NOTIFY THE PROJECT ENGINEER IN WRITING OF ALL TRAFFIC RESTRICTIONS AND UPCOMING MAINTENANCE OF TRAFFIC CHANGES. THE CONTRACTOR SHALL ENSURE THE WRITTEN NOTIFICATION IS SUBMITTED IN A TIMELY MANNER TO ALLOW THE PROJECT ENGINEER TO MEET THE REQUIRED TIME FRAMES SET FORTH IN THE TABLE BELOW TO INFORM THE SPECIAL HAULING PERMITS SECTION (HAULING.PERMITS@DOT.OHIO.GOV) AND THE DISTRICT PUBLIC INFORMATION OFFICE (PIO). THIS NOTIFICATION SHALL BE RECEIVED BY THE PROJECT ENGINEER PRIOR TO THE PHYSICAL SETUP OF ANY APPLICABLE SIGNS OR MESSAGE BOARDS.

INFORMATION SHOULD INCLUDE, BUT IS NOT LIMITED TO, ALL CONSTRUCTION ACTIVITIES THAT IMPACT OR INTERFERE WITH TRAFFIC AND SHALL LIST THE SPECIFIC LOCATION, TYPE OF WORK, ROAD STATUS, DATE AND TIME OF RESTRICTION, DURATION OF RESTRICTION, NUMBER OF LANES MAINTAINED, NUMBER OF LANES CLOSED, MINIMUM VERTICAL CLEARANCE, MINIMUM WIDTH OF DRIVABLE PAVEMENT, DETOUR ROUTES, IF APPLICABLE, AND ANY OTHER INFORMATION REQUESTED BY THE PROJECT ENGINEER.

NOTIFICATION TIME TABLE

ITEM	DURATION OF CLOSURE	NOTICE DUE TO PERMITS & PIO
RAMPS & ROAD CLOSURES	>= 2 WEEKS	21 CALENDAR DAYS PRIOR TO CLOSURE
	> 12 HOURS & < 2 WEEKS	14 CALENDAR DAYS PRIOR TO CLOSURE
	<= 12 HOURS	4 BUSINESS DAYS PRIOR TO CLOSURE
LANE CLOSURES & RESTRICTIONS	>= 2 WEEKS	14 CALENDAR DAYS PRIOR TO CLOSURE
	< 2 WEEKS	5 BUSINESS DAYS PRIOR TO CLOSURE
START OF CONST-RUCTION & TRAFFIC PATTERN CHANGES	N/A	14 CALENDAR DAYS PRIOR TO IMPLEMENT-ATION

ANY UNFORESEEN CONDITIONS NOT SPECIFIED IN THE PLANS REQUIRING TRAFFIC RESTRICTIONS SHALL ALSO BE REPORTED TO THE PROJECT ENGINEER USING THE NOTIFICATION TIME TABLE.

MOT NOTES

SUM-77-32.27
MODEL: MN001 PAPERSIZE: 17x11 (in.) DATE: 2/22/2022 TIME: 6:04:45 PM USER: tdhh
pw:\\gfnet-pw.bentley.com:gfnet-pw-01\Documents\Projects\674901\104983401-Engineering-GF\MOT\Sheets\104983_MN001.dgn

DESIGN AGENCY
Gannett Fleming
ENGINEERS AND ARCHITECTS, P.C.
2500 Corporate Exchange Drive
Suite 230
Columbus, OH 43231

DESIGNER ACW
REVIEWER DRJ 02-08-22
PROJECT ID 104983
SHEET 19 TOTAL 297

SEQUENCE OF CONSTRUCTION

ALL WORK IN A GIVEN PHASE SHALL BE COMPLETED IN ITS ENTIRETY PRIOR TO PROCEEDING TO THE NEXT PHASE.

PRE-PHASE

WORK TO BE COMPLETED IN THIS PHASE IS AS FOLLOWS:

1. CONSTRUCT TEMPORARY PAVEMENT ALONG OUTSIDE SHOULDER OF IR-77 SOUTHBOUND FOR USE IN PHASE 1
2. CONSTRUCT TEMPORARY PAVEMENT ALONG OUTSIDE SHOULDER OF IR-77 NORTHBOUND FOR USE IN PHASE 1 BRIDGE WIDENING.

MAINTAIN TRAFFIC AS FOLLOWS:

1. MAINTAIN TRAFFIC USING MT-95.30 AND THE LATEST PERMITTED LANE CLOSURE SCHEDULE (PLCS) AVAILABLE FROM THE ODOT WEBSITE DURING CONSTRUCTION OF SOUTHBOUND TEMPORARY PAVEMENT (odot.ms2soft.com/tdms.ui/PLCS/AdminSchedules?loc=odot)

PHASE 1

WORK TO BE COMPLETED IN THIS PHASE IS AS FOLLOWS:

1. CONSTRUCT INSIDE WIDENING OF PROJECT BRIDGE (SUM-77-32.27L) ALONG IR-77SB
2. CONSTRUCT INSIDE WIDENING OF PROJECT BRIDGE (SUM-77-32.27R) ALONG IR-77NB
3. CONSTRUCT INSIDE ROADWAY IMPROVEMENTS ALONG IR-77SB SOUTH OF BRIDGE (SUM-77-32.27L)
4. CONSTRUCT INSIDE ROADWAY IMPROVEMENTS ALONG IR-77NB SOUTH OF BRIDGE (SUM-77-32.27R)
5. CONSTRUCT INSIDE ROADWAY IMPROVEMENTS ALONG IR-77SB NORTH OF BRIDGE (SUM-77-32.27L) TO NORTHERN PROJECT LIMITS
6. CONSTRUCT ROADWAY IMPROVEMENTS ALONG SR-21

MAINTAIN TRAFFIC AS FOLLOWS:

1. IMPLEMENT DETOURS AND CLOSE RAMP FROM SR 21 TO IR-77SB
2. PLACE PORTABLE BARRIER AND TEMPORARY MARKINGS ALONG IR-77SB ROADWAY
3. SHIFT TWO IR-77SB LANES TO THE OUTSIDE ONTO EXISTING & TEMPORARY PAVEMENT CONSTRUCTED IN PRE-PHASE
4. PLACE PORTABLE BARRIER AND TEMPORARY MARKINGS ALONG IR-77NB ROADWAY
5. SHIFT TWO IR-77NB LANES TO THE OUTSIDE ONTO EXISTING & TEMPORARY PAVEMENT CONSTRUCTED IN PRE-PHASE

PHASE 2

WORK TO BE COMPLETED IN THIS PHASE IS AS FOLLOWS:

1. CONSTRUCT OUTSIDE IMPROVEMENTS OF PROJECT BRIDGE (SUM-77-32.27L) ALONG IR-77SB
2. CONSTRUCT OUTSIDE ROADWAY IMPROVEMENTS ALONG IR-77SB NORTH OF BRIDGE (SUM-77-32.27L) TO NORTHERN PROJECT LIMITS
3. CONSTRUCT RAMP IMPROVEMENTS ALONG SR 21 TO IR-77SB RAMP
4. CONSTRUCT TEMPORARY PAVEMENT ALONG OUTSIDE SHOULDER OF IR-77NB FOR USE IN PHASE 3

MAINTAIN TRAFFIC AS FOLLOWS:

1. CONTINUE RAMP CLOSURE AND DETOUR OF SR 21 TO IR-77SB RAMP. OPEN RAMP TO TRAFFIC WHEN PHASE 2 WORK IS COMPLETE
2. PLACE PORTABLE BARRIER AND TEMPORARY MARKINGS ALONG IR-77SB ROADWAY
3. SHIFT TWO IR-77SB LANES TO THE INSIDE ONTO PAVEMENT BUILT IN PHASE 1
4. RETURN TWO IR-77NB TRAFFIC LANES TO PRECONSTRUCTION CONDITION
5. MAINTAIN IR-77NB TRAFFIC USING MT-95.30 AND THE LATEST PERMITTED LANE CLOSURE SCHEDULE (PLCS) AVAILABLE FROM THE ODOT WEBSITE DURING CONSTRUCTION OF NORTHBOUND TEMPORARY PAVEMENT

SEQUENCE OF CONSTRUCTION (CONTINUED)

WINTER MOT CONDITIONS (SHEETS 33 - 35)

IT IS ANTICIPATED THAT END OF PHASE 2 WORK WILL COINCIDE WITH THE IMPLEMENTATION OF WINTER MOT TRAFFIC CONTROL

MAINTAIN TRAFFIC AS FOLLOWS:

1. REMOVE TEMPORARY TRAFFIC CONTROL FROM IR-77SB LANES AND STRIPE FOR 3 THROUGH LANES
2. KEEP IR-77NB LANES IN PHASE 2 CONFIGURATION
3. ITEM 621 RPMs SHALL BE USED

PHASE 3

WORK TO BE COMPLETED IN THIS PHASE IS AS FOLLOWS:

1. CONSTRUCT INSIDE ROADWAY IMPROVEMENTS ALONG IR-77NB NORTH OF BRIDGE (SUM-77-32.27R) TO NORTHERN PROJECT LIMITS

MAINTAIN TRAFFIC AS FOLLOWS:

1. PLACE PORTABLE BARRIER AND TEMPORARY MARKINGS ALONG IR-77NB ROADWAY
2. SHIFT TWO IR-77NB LANES TO THE OUTSIDE ONTO EXISTING & TEMPORARY PAVEMENT CONSTRUCTED IN PHASE 2

PHASE 4

WORK TO BE COMPLETED IN THIS PHASE IS AS FOLLOWS:

1. CONSTRUCT OUTSIDE IMPROVEMENTS OF PROJECT BRIDGE (SUM-77-32.27R) ALONG IR-77NB
2. CONSTRUCT OUTSIDE ROADWAY IMPROVEMENTS ALONG IR-77NB NORTH OF BRIDGE (SUM-77-32.27R) TO NORTHERN PROJECT LIMITS

MAINTAIN TRAFFIC AS FOLLOWS:

1. PLACE PORTABLE BARRIER AND TEMPORARY MARKINGS ALONG IR-77NB ROADWAY
2. SHIFT TWO IR-77NB LANES TO THE INSIDE ONTO PAVEMENT BUILT IN PHASE 3

FINAL

WORK TO BE COMPLETED IN THIS PHASE IS AS FOLLOWS:

1. PLACE FINAL SURFACE COURSE THROUGHOUT PROJECT
2. COMPLETE INSTALLATION OF PERMANENT TRAFFIC CONTROL

MAINTAIN TRAFFIC AS FOLLOWS:

1. MAINTAIN TRAFFIC PER MT-99.20 USING THE LATEST PLCS GUIDELINES

NOTE ON SEQUENCE OF CONSTRUCTION

THIS SEQUENCE OF CONSTRUCTION IS PHASED TO PRIORITIZE THE CONSTRUCTION OF THE SOUTHBOUND ROADWAY IMPROVEMENTS WITHOUT CONSIDERATION FOR THE NORTHBOUND DIRECTION.

HOWEVER, THE CONTRACTOR MAY CONSTRUCT THE MEDIAN IMPROVEMENTS AND WIDENING SHOWN IN PHASE 1 AND PHASE 3 CONCURRENTLY. THE CONTRACTOR SHALL COMMUNICATE TO THE ENGINEER WITH HIS INTENTION OF COMBINING THIS WORK AND RECEIVE THE APPROVAL OF THE ENGINEER.

IF PHASE 1 AND PHASE 3 WORK IS COMBINED, THE CONTRACTOR IS STILL REQUIRED TO MEET THE CONTRACTUAL MILESTONE DATE(S) FOR THE OPENING OF THE SOUTHBOUND IMPROVEMENTS.

DRAINAGE DURING MOT

IN ADDITION TO THE PROVISIONS IN CMS 105.14 AND CMS 614.02, THE CONTRACTOR MAY BE REQUIRED TO INSTALL TEMPORARY DRAINS/DRAINAGE TO ENSURE POSITIVE DRAINAGE DURING CONSTRUCTION WHILE THE PERMANENT DRAINAGE FACILITIES ARE BEING CONSTRUCTED. ALL WORK RELATED TO DRAINAGE DURING MOT, NOT ITEMIZED IN THE DRAINAGE PLANS, SHALL BE CONSIDERED INCIDENTAL TO AND INCLUDED IN THE LUMP SUM PRICE FOR ITEM 614 MAINTAINING TRAFFIC.

ITEM 614 - PORTABLE CHANGEABLE MESSAGE SIGN, AS PER PLAN

THE CONTRACTOR SHALL FURNISH, INSTALL, MAINTAIN AND REMOVE, WHEN NO LONGER NEEDED, A PORTABLE CHANGEABLE MESSAGE SIGN, THE SIGN SHALL BE OF A TYPE SHOWN ON A LIST OF APPROVED PCMS UNITS AVAILABLE ON THE OFFICE OF MATERIALS MANAGEMENT WEB PAGE. THE LIST CONTAINS CLASS A AND B UNITS WITH MINIMUM LEGIBILITY DISTANCE OF 800 FEET AND 650 FEET RESPECTIVELY.

EACH SIGN SHALL BE TRAILER MOUNTED AND EQUIPPED WITH A FUNCTIONAL DIMMING MECHANISM TO DIM THE SIGN DURING DARKNESS AND A TAMPER AND VANDAL PROOF ENCLOSURE. EACH SIGN SHALL BE PROVIDED WITH APPROPRIATE TRAINING AND OPERATION INSTRUCTIONS TO ENABLE ON-SITE PERSONNEL TO OPERATE AND TROUBLESHOOT THE UNIT. THE SIGN SHALL ALSO BE CAPABLE OF BEING POWERED BY AN ELECTRICAL SERVICE DROP FROM A LOCAL UTILITY COMPANY. PCMS TRAILERS SHOULD BE DELINEATED.

PLACEMENT, OPERATION, MAINTENANCE AND ALL ACTIVATION OF THE SIGNS BY THE CONTRACTOR SHALL BE AS DIRECTED BY THE ENGINEER. THE PCMS SHOULD NOT BE LOCATED IN THE MEDIAN OF THE HIGHWAY UNLESS IT IS PROTECTED FROM BOTH DIRECTIONS OF TRAFFIC. THE PCMS SHALL BE LOCATED. IN A HIGHLY VISIBLE POSITION YET PROTECTED FROM TRAFFIC. THE CONTRACTOR SHALL, AT THE DIRECTION OF THE ENGINEER, RELOCATE THE PCMS TO IMPROVE THE VISIBILITY OR ACCOMMODATE CHANGED CONDITIONS. WHEN NOT IN USE, THE PCMS WILL BE OFF. ADDITIONALLY WHEN NOT IN USE FOR EXTENDED PERIODS OF TIME, THE PCMS SHALL BE TURNED, FACING AWAY FROM ALL TRAFFIC AND SHALL DISPLAY ONE OR MORE TYPE G YELLOW REFLECTIVE SHEETING SURFACES OF 9-INCH BY 15-INCH MINIMUM SIZE FACING TRAFFIC.

THE ENGINEER SHALL BE PROVIDED ACCESS TO EACH SIGN UNIT AND SHALL BE PROVIDED WITH APPROPRIATE TRAINING AND OPERATION INSTRUCTIONS TO ENABLE PERSONNEL TO OPERATE AND TROUBLESHOOT THE UNIT AND TO REVISE SIGN MESSAGES, IF NECESSARY.

ALL MESSAGES TO BE DISPLAYED ON THE SIGN WILL BE PROVIDED BY THE CONTRACTOR. A LIST OF ALL PROPOSED PREPROGRAMMED MESSAGES WILL BE GIVEN TO THE ENGINEER PRIOR TO CONSTRUCTION. THE SIGN SHALL HAVE THE CAPABILITY TO STORE UP TO 99 MESSAGES. MESSAGE MEMORY OR PREPROGRAMMED DISPLAYS SHALL NOT BE LOST AS A RESULT OF POWER FAILURES TO THE ON-BOARD COMPUTER. THE SIGN LEGEND SHALL BE CAPABLE OF BEING CHANGED IN THE FIELD. THREE LINE PRESENTATION FORMATS WITH UP TO OF SIX MESSAGE PHASES SHALL BE SUPPORTED. PCMS FORMAT SHALL PERMIT THE COMPLETE MESSAGE FOR EACH PHASE TO BE READ AT LEAST TWICE.

THE PCMS SHALL CONTAIN AN ACCURATE CLOCK AND PROGRAMMING LOGIC WHICH WILL ALLOW THE SIGN TO BE ACTIVATED, DE-ACTIVATED OR MESSAGES CHANGED AUTOMATICALLY AT DIFFERENT TIMES OF THE DAY FOR DIFFERENT DAYS OF THE WEEK.

THE PCMS SHALL CONTAIN A CELLULAR TELEPHONE DATA LINK WHICH WILL [IN ACTIVE CELLULAR AREAS] ALLOW REMOTE SIGN ACTIVATION, DEACTIVATION, MESSAGE CHANGES, MESSAGE ADDITIONS AND REVISIONS TO TIME OF DAY PROGRAMS. THE SYSTEM SHALL ALSO PERMIT VERIFICATION OF CURRENT AND PROGRAMMED MESSAGES.

THE PCMS UNIT SHALL BE MAINTAINED IN GOOD WORKING ORDER BY THE CONTRACTOR IN ACCORDANCE WITH THE PROVISIONS OF 614.07. THE CONTRACTOR SHALL PRIOR TO ACTIVATING THE UNIT, MAKE ARRANGEMENTS WITH AN AUTHORIZED SERVICE AGENT FOR THE PCMS TO ASSURE PROMPT SERVICE IN THE EVENT OF FAILURE. ANY FAILURE SHALL NOT RESULT IN THE SIGN BEING OUT OF SERVICE FOR MORE THAN 12 HOURS INCLUDING WEEKENDS.

ITEM 614 - PORTABLE CHANGEABLE MESSAGE SIGN, AS PER PLAN (CONTINUED)

FAILURE TO COMPLY MAY RESULT IN AN ORDER TO STOP WORK AND OPEN ALL TRAFFIC LANES AND/OR IN THE DEPARTMENT TAKING APPROPRIATE ACTION TO SAFELY CONTROL TRAFFIC. THE ENTIRE COST TO CONTROL TRAFFIC ACCRUED BY THE DEPARTMENT WILL BE DEDUCTED FROM MONEYS DUE, OR TO BECOME DUE THE CONTRACTOR ON HIS CONTRACT.

THE CONTRACTOR SHALL BE RESPONSIBLE FOR 24 HOURS PER DAY OPERATION AND MAINTENANCE OF THESE SIGNS ON THE PROJECT FOR THE DURATION OF THEIR USE. THE REQUIREMENT TO FURNISH, INSTALL, MAINTAIN AND REMOVE A PCMS UNIT ON THIS PROJECT SHALL NOT IN ANY WAY RELIEVE THE CONTRACTOR OF HIS RESPONSIBILITIES AS OUTLINED IN 614.02.

PAYMENT FOR THE ABOVE DESCRIBED ITEM SHALL BE AT THE CONTRACT UNIT PRICE. PAYMENT SHALL INCLUDE ALL LABOR, MATERIALS, EQUIPMENT, FUELS, LUBRICATING OILS, SOFTWARE, HARDWARE AND INCIDENTALS TO PERFORM THE ABOVE DESCRIBED WORK.

ITEM 614 PORTABLE CHANGEABLE MESSAGE SIGN, AS PER PLAN
30 SNMT
(2 CLASS A PCMS SIGNS FOR 12 MONTHS / IR-77)
(2 CLASS A PCMS SIGNS FOR 3 MONTHS / SR-21)

ITEM 614 - WORK ZONE RAISED PAVEMENT MARKER, AS PER PLAN

WORK ZONE RAISED PAVEMENT MARKERS, AS PER PLAN, AND THEIR INSTALLATION SHALL CONFORM TO C&MS 614 OR C&MS 621 AS SPECIFIED HEREIN.

RAISED PAVEMENT MARKERS IN USE DURING THE SNOW-PLOWING SEASON SHALL CONFORM TO 621.

RAISED PAVEMENT MARKERS IN USE DURING THE NON-SNOW-PLOW SEASON SHALL CONFORM TO EITHER 614 OR TO 621.

THE SNOW-PLOWING SEASON SHALL RUN FROM OCTOBER 15 THROUGH APRIL 1.

IF PROJECT DELAYS, NOT THE FAULT OF ODOT, CAUSE THE WORK TO EXTEND INTO THE SNOW-PLOWING SEASON, THE CONTRACTOR SHALL BE RESPONSIBLE FOR REPLACING WORK ZONE RAISED PAVEMENT MARKERS (WZRPMS) CONFORMING TO C&MS 614, WITH RAISED PAVEMENT MARKERS CONFORMING TO 621, AS DETERMINED BY THE ENGINEER, AT THE CONTRACTOR'S EXPENSE.

THIS ITEM SHALL INCLUDE PURCHASE, INSTALLATION AND REMOVAL OF ITEM 614 WORK ZONE PAVEMENT MARKER, AS PER PLAN, INCLUDING FILLING OF ANY DEPRESSIONS CREATED IN THE PAVEMENT AS PER C&MS 621.08

THE FOLLOWING BID ITEM IS INCLUDED IN THE PLANS AND IS QUANTIFIED IN THE MOT SUBSUMMARY:

ITEM 614 WORK ZONE RAISED PAVEMENT MARKER, AS PER PLAN

MODEL: MN002 PAPERSIZE: 17x11 (in.) DATE: 2/22/2022 TIME: 6:04:45 PM USER: tdhh
pw:\\gfnet-pw.bentley.com:gfnet-pw-01\Documents\Projects\6749001\104983\401-Engineering-GF\MOT\Sheets\104983_MN001.dgn

DESIGN AGENCY
Gannett Fleming
ENGINEERS AND ARCHITECTS, P.C.
2500 Corporate Exchange Drive
Suite 230
Columbus, OH 43231

DESIGNER ACW

REVIEWER DRJ 02-08-22

PROJECT ID 104983

SHEET 20 TOTAL 297

MOT NOTES

ITEM 614, WORK ZONE IMPACT ATTENUATOR FOR 24" WIDE HAZARDS (UNIDIRECTIONAL)

THIS ITEM SHALL CONSIST OF FURNISHING AND INSTALLING A NON-GATING IMPACT ATTENUATOR. FURNISH AN IMPACT ATTENUATOR FROM THE OFFICE OF ROADWAY ENGINEERING'S APPROVED LIST FOR WORK ZONE IMPACT ATTENUATORS, FROM THE ROAD WAY STANDARDS APPROVED PRODUCTS WEB PAGE.

INSTALLATION SHALL BE AT THE LOCATIONS SPECIFIED IN THE PLANS IN ACCORDANCE WITH THE MANUFACTURER'S SPECIFICATIONS.

THE CONTRACTOR SHALL REPAIR OR REPLACE A DAMAGED UNIT WITHIN 24 HOURS OF A DAMAGING IMPACT. WHEN BIDIRECTIONAL DESIGNS ARE SPECIFIED, THE CONTRACTOR SHALL SUPPLY APPROPRIATE TRANSITIONS. WHEN GATING IMPACT ATTENUATORS ARE DESIRED, THE CONTRACTOR SHALL SUBMIT DOCUMENTATION TO THE ENGINEER FOR ACCEPTANCE.

THE COST FOR THE ADDITIONAL BARRIER REQUIRED FOR A GATING IMPACT ATTENUATOR SHALL BE INCLUDED IN THE COST OF THE GATING IMPACT ATTENUATOR.

PAYMENT FOR THE ABOVE WORK SHALL BE MADE AT THE UNIT PRICE BID AND SHALL INCLUDE ALL LABOR, TOOLS, EQUIPMENT AND MATERIALS NECESSARY TO CONSTRUCT AND MAINTAIN A COMPLETE AND FUNCTIONAL IMPACT ATTENUATOR SYSTEM, INCLUDING ALL RELATED BACKUPS, TRANSITIONS, LEVELING PADS, HARDWARE AND GRADING, NOT SEPARATELY SPECIFIED, AS REQUIRED BY THE MANUFACTURER.

DELINEATION OF PORTABLE AND PERMANENT BARRIER

BARRIER REFLECTORS AND OBJECT MARKERS SHALL BE INSTALLED ON ALL PORTABLE BARRIER (PB) USED FOR TRAFFIC CONTROL; AND, ON PERMANENT CONCRETE BARRIER (INCLUDING BRIDGE PARAPETS) LOCATED WITHIN 5 FEET OF THE EDGE OF THE ADJACENT TRAVEL LANE.

BARRIER REFLECTORS SHALL CONFORM TO C&MS 626, EXCEPT THAT THE SPACING SHALL BE AS PER TRAFFIC SCD MT-101.70. OBJECT MARKERS AND THEIR INSTALLATION SHALL CONFORM TO C&MS 614.03 AND SCD MT-101.70. WHEN THE PB CONTAINS GLARE SCREEN, ONE SET OF THREE VERTICAL STRIPES OF SHEETING SHALL BE CONSIDERED EQUIVALENT TO AN OBJECT MARKER, ONE-WAY.

THE FOLLOWING ITEMS ARE QUANTITIED IN THE MOT SUBSUMMARY:

ITEM 614, BARRIER REFLECTOR, TYPE 1 (ONE-WAY)
ITEM 614, OBJECT MARKER, ONE-WAY

PAYMENT SHALL BE FULL COMPENSATION FOR ALL MATERIAL, LABOR, INCIDENTALS AND EQUIPMENT NECESSARY FOR FURNISHING, INSTALLING, MAINTAINING AND REMOVING EACH OF THE ABOVE ITEMS

WORKSITE TRAFFIC SUPERVISOR

SUBJECT TO APPROVAL OF THE ENGINEER, THE CONTRACTOR SHALL EMPLOY AND IDENTIFY (SOMEONE OTHER THAN THE SUPERINTENDENT) A PREQUALIFIED WORKSITE TRAFFIC SUPERVISOR (WTS) BEFORE STARTING WORK IN THE FIELD. THE WTS SHALL BE TRAINED IN ACCORDANCE WITH CMS 614.03, SHALL HAVE SUCCESSFULLY COMPLETED ODOT ADMINISTERED WTS TESTING (AND RE-TESTING WHEN APPLICABLE) AND BE LISTED ON THE ODOT PREQUALIFIED WTS ROSTER. PREQUALIFICATION EXPIRES EVERY 5 YEARS. RE-TESTING SHALL BE SUCCESSFULLY REPEATED EVERY 5 YEARS TO REMAIN PREQUALIFIED.

THE NAME OF THE PREQUALIFIED WTS AND RELATED 24-HOUR CONTACT INFORMATION SHALL BE PROVIDED TO THE ENGINEER AT THE PRECONSTRUCTION CONFERENCE. IF THE DESIGNATED WTS WILL NOT BE AVAILABLE FULL TIME (24/7), THE CON-RACTOR MAY DESIGNATE AN ALTERNATE (SECONDARY) WTS TO BE AVAILABLE WHEN THE PRIMARY IS OFF DUTY; HOWEVER THE PRIMARY WTS SHALL REMAIN THE POINT OF CONTACT AT ALL TIMES. ANY ALTERNATE (SECONDARY) WTS IS SUBJECT TO THE SAME TRAINING, PREQUALIFICATION AND OTHER REQUIREMENTS OUTLINED WITHIN THIS PLAN NOTE. AT ALL TIMES THE ENGINEER, OR ENGINEER'S REPRESENTATIVES, MUST BE INFORMED OF WHO THE PRIMARY WTS (AND SECONDARY WTS, IF APPLICABLE) IS AT THE CURRENT TIME.

THE WTS POSITION HAS THE PRIMARY RESPONSIBILITY OF IMPLEMENTING THE TRAFFIC MANAGEMENT PLAN (TMP), MONITORING THE SAFETY AND MOBILITY OF THE ENTIRE WORK ZONE, AND CORRECTING TEMPORARY TRAFFIC CONTROL (TTC) DEFICIENCIES FOR THE ENTIRE WORK ZONE. THE WTS, AND ALTERNATE WTS WHEN ON DUTY, SHALL HAVE SUFFICIENT AUTHORITY TO EFFECTIVELY CARRY OUT THE IDENTIFIED WTS RESPONSIBILITIES AND DUTIES. THE DUTIES OF THE WTS ARE AS FOLLOWS:

1. *BE AVAILABLE ON A 24-HOUR PER DAY BASIS.*
2. *BE ON SITE FOR ALL EMERGENCY TTC NEEDS WITHIN ONE HOUR OF NOTIFICATION BY POLICE OR PROJECT STAFF, AND EFFECT CORRECTIVE MEASURES IMMEDIATELY ON EXISTING WORK ZONE TTC DEVICES.*
3. *ATTEND PRECONSTRUCTION MEETING AND ALL PROJECT MEETINGS WHERE TTC MANAGEMENT IS DISCUSSED.*
4. *BE AVAILABLE ON SITE FOR OTHER MEETINGS OR DISCUSSIONS WITH THE ENGINEER UPON REQUEST.*
5. *BE AWARE OF ALL EXISTING AND PROPOSED TTC OPERATIONS OF THE CONTRACTOR, SUBCONTRACTORS AND SUPPLIERS, AND ENSURE COORDINATION OCCURS BETWEEN THEM TO ELIMINATE CONFLICTING TEMPORARY AND/OR PERMANENT TRAFFIC CONTROL.*
6. *COORDINATE PROJECT ACTIVITIES WITH ALL LAW ENFORCEMENT OFFICERS (LEOS). THE WTS SHALL ALSO BE THE MAIN CONTACT PERSON WITH THE LEOS WHILE LEOS ARE ON THE PROJECT.*
7. *COORDINATE AND FACILITATE MEETINGS WITH ODOT PERSONNEL, LEOS AND OTHER APPLICABLE ENTITIES BEFORE EACH PLAN PHASE SWITCH TO DISCUSS THE WORK ZONE TTC FOR IMPLEMENTING THE PHASE SWITCH. SUBMIT A WRITTEN DETAIL OF MOT OPERATIONS AND SCHEDULE OF EVENTS TO IMPLEMENT THE SWITCH BETWEEN PHASE PLANS TO THE ENGINEER 5 CALENDAR DAYS PRIOR TO THIS MEETING.*

WORKSITE TRAFFIC SUPERVISOR (CONTINUED)

8. *BE PRESENT, ON SITE FOR, AND INVOLVED WITH, EACH TTC SET UP/TAKE DOWN AND EACH PHASE CHANGE IN ACCORDANCE WITH CMS 614.03.*
9. *ON A CONTINUAL BASIS ENSURE THAT THE TTC ZONE AND ALL RELATED DEVICES ARE INSTALLED, MAINTAINED AND REMOVED IN COMPLIANCE WITH THE CONTRACT DOCUMENTS.*
10. *ON A CONTINUAL BASIS FACILITATE CORRECTIVE ACTION(S) NECESSARY TO BRING DEFICIENT TTC ZONES AND ALL RELATED DEVICES INTO COMPLIANCE WITH CONTRACT DOCUMENTS IN THE TIMEFRAME DETERMINED BY THE ENGINEER.*
11. *INSPECT, EVALUATE, PROPOSE NECESSARY MODIFICATIONS TO, AND DOCUMENT THE EFFECTIVENESS OF, THE TTC DEVICES AND TRAFFIC OPERATIONS ON A DAILY BASIS (7 DAYS A WEEK). IN ADDITION, PERFORM ONE WEEKLY NIGHT INSPECTION OF THE WORK ZONE SETUP FOR DAYTIME WORK OPERATIONS; AND ONE DAYTIME INSPECTION PER WEEK FOR NIGHTTIME PROJECTS. THIS SHALL INCLUDE (BUT NOT BE LIMITED TO) DOCUMENTATION ON THE FOLLOWING PROJECT EVENTS:*
    - *A. INITIAL TTC SETUP (DAY AND NIGHT REVIEW).*
    - *B. DAILY TTC SETUP AND REMOVAL.*
    - *C. WHEN CONSTRUCTION STAGING CAUSES A CHANGE IN THE TTC SETUP.*
    - *D. CRASH OCCURRENCES WITHIN THE CONSTRUCTION AREA AND WITHIN THE INFLUENCE AREA(S) APPROACHING THE WORK ZONE.*
    - *E. REMOVAL OF TTC DEVICES AT THE END OF A PHASE OR PROJECT.*
    - *F. ALL OTHER EMERGENCY TTC NEEDS.*
12. *COMPLETE THE DEPARTMENT APPROVED LONG TERM INSPECTION FORM (CA-D-8) AFTER EACH INSPECTION AS REQUIRED IN # 11 AND SUBMIT IT TO THE ENGINEER THE FOLLOWING WORKDAY. THESE REPORTS SHALL INCLUDE A CHECKLIST OF ALL TTC MAINTENANCE ITEMS TO BE REVIEWED. A COPY OF THE FORM WILL BE PROVIDED AT THE PRE-CONSTRUCTION MEETING. ANY DEFICIENCIES OBSERVED SHALL BE NOTED, ALONG WITH RECOMMENDED OR COMPLETED CORRECTIVE ACTIONS AND THE DATES BY WHICH SUCH CORRECTIONS WERE, OR WILL BE, COMPLETED. A COPY OF THE CURRENT CA-D-8 DOCUMENT CAN BE FOUND ON THE OFFICE OF CONSTRUCTION ADMINISTRATION'S INSPECTION FORMS WEBSITE. THE FORM SHALL BE SUBMITTED UTILIZING GoFormz. THE DEPARTMENT SHALL PROVIDE ACCESS TO THE SOFTWARE TO BE UTILIZED. THE CONTRACTOR SHALL SUPPLY AN APPROPRIATE MOBILE DEVICE IN ORDER TO UTILIZE THE SOFTWARE.*
13. *HAVE COPIES OF THE ODOT TEMPORARY TRAFFIC CONTROL MANUAL AND CONTRACT DOCUMENTS AVAILABLE AT ALL TIMES ON THE PROJECT.*

THE DEPARTMENT WILL DEDUCT:

- *A. THE PRORATED DAILY AMOUNT OF ITEM 614 MAINTAINING TRAFFIC FOR ANY DAY IN WHICH THE WTS FAILS TO PERFORM THE DUTIES SET FORTH ABOVE. THE PRORATED DAILY AMOUNT WILL BE EQUAL TO THE ORIGINAL BID AMOUNT FOR ITEM 614 MAINTAINING TRAFFIC DIVIDED BY THE DIFFERENCE BETWEEN THE ORIGINAL COMPLETION DATE AND THE FIRST DAY OF WORK, IN CALENDAR DAYS.*

WORKSITE TRAFFIC SUPERVISOR (CONTINUED)

- *B. 1% OF THE ORIGINAL BID AMOUNT FOR ITEM 614 MAINTAINING TRAFFIC FOR ANY DAY THAT A TTC ISSUE IS IDENTIFIED IN THE FIELD AND IS NOT CORRECTED IN THE GIVEN TIMEFRAME PER THE ENGINEER. DEDUCTION B SHALL NOT APPLY TO SITUATIONS COVERED BY DEDUCTION C.*
- *C. 1% OF THE ORIGINAL BID AMOUNT FOR ITEM 614 MAINTAINING TRAFFIC FOR ANY DAY THAT A LANE OR RAMP IS BLOCKED (FULLY OR PARTIALLY) WITHOUT TTC, AS DETERMINED BY THE ENGINEER. THIS DEDUCTION SHALL BE IN ADDITION TO ANY OTHER DISINCENTIVES ESTABLISHED FOR UNAUTHORIZED LANE USE.*

FOR DAYS IN WHICH MORE THAN ONE DEDUCTION LISTED ABOVE OCCUR, THE HIGHEST DEDUCTION AMOUNT WILL APPLY.

IF THREE OR MORE TOTAL DAYS RESULT IN TTC ISSUES DESCRIBED IN DEDUCTION B OR C ABOVE, THE PRIMARY WTS SHALL BE IMMEDIATELY REMOVED FROM THE WORK IN ACCORDANCE WITH C&MS 108.05. UPON REMOVAL THE ENGINEER SHALL NOTIFY ODOT CENTRAL OFFICE (WTSPREQUALIFICATION@DOT.OHIO.GOV) TO REGISTER A REMOVAL AGAINST THE STATEWIDE PREQUALIFICATION FOR THE PRIMARY WTS. THREE REMOVALS SHALL CAUSE STATEWIDE DISQUALIFICATION FOR ANY PREVIOUSLY PREQUALIFIED WTS.

PAYMENT FOR THE ABOVE REQUIREMENTS, RESPONSIBILITIES AND DUTIES SHALL BE INCLUDED IN THE LUMP SUM PRICE BID FOR ITEM 614, MAINTAINING TRAFFIC.

EARTHWORK FOR MAINTAINING TRAFFIC

THE FOLLOWING QUANTITIES HAVE BEEN INCLUDED IN THE PLAN FOR INFORMATION ONLY.

EXCAVATION FOR MAINTAINING TRAFFIC 4670 CU. YD.
EMBANKMENT FOR MAINTAINING TRAFFIC 250 CU. YD.

WHEN UNDERCUTS ARE NECESSARY FOR MAINLINE PAVEMENT OR EMBANKMENT CONSTRUCTION, EVALUATE THE NEED FOR TEMPORARY ROAD UNDERCUTS IF WITHIN A CLOSE PROXIMITY TO THE MAINLINE UNDERCUTS. A GEOTECHNICAL EVALUATION SHOULD BE CONSIDERED TO DETERMINE IF THE EXISTING SOIL CONDITIONS ARE ADEQUATE TO SUPPORT THE TEMPORARY ROAD. ADDITIONAL SOIL BORINGS ALONG THE TEMPORARY ROAD ARE NOT NORMALLY REQUIRED.

DUST CONTROL

THE CONTRACTOR SHALL FURNISH AND APPLY WATER FOR DUST CONTROL AS DIRECTED BY THE ENGINEER. THE FOLLOWING ESTIMATED QUANTITIES HAVE BEEN INCLUDED FOR DUST CONTROL PURPOSES:

ITEM 616, WATER 231 M. GAL.

DESIGN AGENCY
Gannett Fleming
ENGINEERS AND ARCHITECTS, P.C.
2500 Corporate Exchange Drive
Suite 230
Columbus, OH 43231

DESIGNER
ACW

REVIEWER
CJM 09-28-21

PROJECT ID
104983

SHEET 21 TOTAL 297

SUM-77-32.27

MODEL: MN003 PAPERSIZE: 17x11 (in.) DATE: 2/22/2022 TIME: 6:04:46 PM USER: tdhh
pw:\\gfnet-pw.bentley.com:gfnet-pw-01\Documents\Projects\67490\104983\401-Engineering-GF\MOT\Sheets\104983_MN001.dgn

WORK ZONE INCREASED PENALTIES SIGN (R11-H5A)

R11-H5A-48 SIGNS SHALL BE FURNISHED, ERECTED, AND MAINTAINED IN GOOD CONDITION AND/OR REPLACED AS NECESSARY AND SUBSEQUENTLY REMOVED BY THE CONTRACTOR. SIGNS SHALL BE MOUNTED AT THE APPROPRIATE OFFSETS AND ELEVATIONS AS PRESCRIBED BY THE OHIO MANUAL OF UNIFORM TRAFFIC CONTROL DEVICES. THEY SHALL BE MAINTAINED ON SUPPORTS MEETING CURRENT SAFETY CRITERIA.

THE SIGNS MAY BE ERECTED OR UNCOVERED NO MORE THAN FOUR HOURS BEFORE THE ACTUAL START OF WORK. THE SIGNS SHALL BE REMOVED OR COVERED NO LATER THAN FOUR HOURS FOLLOWING RESTORATION OF ALL LANES TO TRAFFIC WITH NO RESTRICTIONS, OR SOONER AS DIRECTED BY THE ENGINEER. TEMPORARY SIGN COVERING AND UNCOVERING DUE TO TEMPORARY LANE RESTORATIONS SHALL BE GUIDED BY THE FOUR-HOUR LIMITATIONS STATED ABOVE. SUCH LANE RESTORATIONS SHOULD BE EXPECTED TO REMAIN IN EFFECT FOR 30 OR MORE CONSECUTIVE CALENDAR DAYS, SUCH AS DURING WINTER SHUT-DOWNS.

THE SIGNS ON THE MAINLINE SHALL BE DUAL MOUNTED UNLESS NOT PHYSICALLY POSSIBLE. THE FIRST SIGN SHALL BE PLACED BETWEEN THE ROAD WORK AHEAD (W20-1) SIGN AND THE NEXT SIGN IN THE SEQUENCE. SIGNS SHALL BE ERECTED ON EACH ENTRANCE RAMP AND EVERY 2 MILES THROUGH THE CONSTRUCTION WORK LIMITS. SIGNS ON THE MAINLINE SHALL BE R11-H5A-48. SIGNS USED ON THE RAMPS SHALL BE R11-H5A-24. R11-H5A-24 SIGNS MAY BE USED IN THE MEDIAN IN LIEU OF R11-H5A-48 SIGNS IF IT IS NOT PHYSICALLY POSSIBLE TO PROVIDE R11-H5A-48 SIGNS IN THE MEDIAN.

THE R11-H5A-48 SIGNS SHALL BE MOUNTED ON 2 NO. 3 POSTS WHEN LOCATED WITHIN CLEAR ZONES.

THE CONTRACTOR MAY USE SIGNS AND SUPPORTS IN USED, BUT GOOD, CONDITION PROVIDED THE SIGNS MEET CURRENT ODOT SPECIFICATIONS. SIGN FACES SHALL BE RETROREFLECTORIZED WITH TYPE G SHEETING COMPLYING WITH THE REQUIREMENTS OF C&MS 730.19.

WORK ZONE INCREASED PENALTIES SIGNS AND SUPPORTS WILL BE MEASURED AS THE NUMBER OF SIGN INSTALLATIONS, INCLUDING THE SIGN AND NECESSARY SUPPORTS. IF A SIGN AND SUPPORT COMBINATION IS REMOVED AND REERECTED AT ANOTHER LOCATION AS DIRECTED BY THE ENGINEER, IT SHALL BE CONSIDERED ANOTHER UNIT.

PAYMENT FOR ACCEPTED QUANTITIES, COMPLETE, IN PLACE WILL BE MADE AT THE CONTRACT UNIT PRICE. PAYMENT SHALL BE FULL COMPENSATION FOR ALL MATERIALS, LABOR, INCIDENTALS AND EQUIPMENT FOR FURNISHING, ERECTING, MAINTAINING, COVERING DURING SUSPENSION OF WORK, AND REMOVAL OF THE SIGN AND SUPPORT.

ITEM 614, WORK ZONE INCREASED PENALTIES SIGN 9 EACH

WORK ZONE SPEED ZONES (WZSZS)

THE FOLLOWING WORK ZONE SPEED ZONE (WZSZ) SPEED LIMIT REVISION(S) HAVE BEEN APPROVED FOR USE ON THIS PROJECT WHEN WORK ZONE CONDITIONS AND FACTORS ARE MET AS DESCRIBED BELOW:

WZSZ REVISION NUMBER(S) COUNTY-ROUTE-SECTION(S) DIRECTION(S)
WZ-
WZ-
WZ-

POTENTIAL WZSZ LOCATIONS SHALL HAVE AN ORIGINAL (PRE-CONSTRUCTION) POSTED SPEED LIMIT OF 55 MPH OR GREATER, A QUALIFYING WORK ZONE CONDITION OF AT LEAST 0.5 MILE IN LENGTH, AN EXPECTED WORK DURATION OF AT LEAST THREE HOURS, AND A WORK ZONE CONDITION IN PLACE THAT REDUCES THE EXISTING FUNCTIONALITY OF THE TRAVEL LANES OR SHOULDERS (I.E., LANE CLOSURE, LANE SHIFT, CROSSOVER, CONTRAFLOW AND/OR SHOULDER CLOSURE). THE LENGTH OF THE WORK ZONE CONDITION IS MEASURED FROM THE BEGINNING OF THE TAPER FOR THE SUBJECT WORK ZONE CONDITION IMPACTING THE TRAVEL LANES AND/OR SHOULDER TO THE END OF THE DOWNSTREAM TAPER, WHERE DRIVERS ARE RETURNED TO TYPICAL ALIGNMENT. AN EXPECTED WORK DURATION OF AT LEAST THREE HOURS IS REQUIRED TO BALANCE THE ADDITIONAL EXPOSURE CREATED BY INSTALLING AND REMOVING WZSZ SIGNING WITH THE TIME NEEDED TO COMPLETE THE WORK.

IF THE WORK ZONE MEETS THESE MINIMUM CRITERIA, IT SHALL BE ANALYZED FURTHER USING TABLE 1 BELOW TO DETERMINE IF AND WHEN IT QUALIFIES FOR A SPEED LIMIT REDUCTION. DEPENDING ON THE ORIGINAL POSTED SPEED LIMIT, THE TYPE OF TEMPORARY TRAFFIC CONTROL USED, AND WHETHER OR NOT WORKERS ARE PRESENT, A WARRANTED WZSZ WILL VARY IN THE APPROVED SPEED LIMIT TO BE POSTED OVER TIME.

C&MS ITEM 614, PARAGRAPH 614.02(B), INDICATES THAT TWO DIRECTIONS OF A DIVIDED HIGHWAY ARE CONSIDERED SEPARATE HIGHWAY SECTIONS. THEREFORE, IF THE WORK ON A MULTI-LANE DIVIDED HIGHWAY IS LIMITED TO ONLY ONE DIRECTION, A SPEED LIMIT REDUCTION IN THE DIRECTION OF THE WORK DOES NOT AUTOMATICALLY CONSTITUTE A SPEED LIMIT REDUCTION IN THE OPPOSITE DIRECTION. EACH DIRECTION SHALL BE ANALYZED INDEPENDENTLY FROM EACH OTHER.

ALL WZSZS FLUCTUATE BETWEEN TWO APPROVED REDUCED SPEED LIMITS OR BETWEEN AN APPROVED REDUCED SPEED LIMIT AND THE ORIGINAL POSTED SPEED LIMIT. ONLY ONE OF TWO SIGNING STRATEGIES SHALL BE USED TO IMPLEMENT A WZSZ.

WZSZS USING DSL SIGN ASSEMBLIES SHALL BE IN ACCORDANCE WITH THIS NOTE, APPROVED LIST, SUPPLEMENTAL SPECIFICATIONS (SS) 808 AND 908, AND TRAFFIC SCD MT-104.10.

ONLY ONE WARRANTED SPEED LIMIT APPLIES AT ANY ONE TIME; SPEED LIMIT REDUCTIONS ARE NOT CUMULATIVE. WZSZS SHALL NOT BE USED FOR MOVING/MOBILE ACTIVITIES, AS DEFINED IN OMUTCD PART 6.

WHEN LOOKING UP THE WARRANTED WORK ZONE SPEED LIMITS, ALWAYS USE THE ORIGINAL, PRECONSTRUCTION, POSTED SPEED LIMIT. DO NOT USE A PRIOR OR CURRENT WORK ZONE SPEED LIMIT AS A LOOK UP VALUE IN THE TABLE. POSITIVE PROTECTION IS GENERALLY REGARDED AS PORTABLE BARRIER OR OTHER RIGID BARRIER IN USE ALONG THE WORK AREA WITHIN THE SUBJECT WARRANTED WORK ZONE CONDITION. WITHOUT POSITIVE PROTECTION IS GENERALLY REGARDED AS USING DRUMS, CONES, SHADOW VEHICLE, ETC., ALONG THE WORK AREA WITHIN THE SUBJECT WARRANTED WORK ZONE CONDITION.

WORK ZONE SPEED ZONES (WZSZS) (CONTINUED)

WORKERS ARE CONSIDERED AS BEING PRESENT WHEN ON-SITE, WORKING WITHIN THE SUBJECT WARRANTED WORK ZONE CONDITION. WHEN THE WORK ZONE CONDITION REDUCING THE EXISTING FUNCTIONALITY OF THE TRAVEL LANES OR SHOULDERS IS REMOVED, THE SPEED LIMIT DISPLAYED SHALL RETURN TO THE ORIGINAL POSTED SPEED LIMIT.

TABLE 1: WARRANTED WORK ZONE SPEED LIMITS (MPH) FOR WORK ZONES ON HIGH-SPEED (55 MPH OR GREATER) MULTI-LANE HIGHWAYS

	WITH POSITIVE PROTECTION		WITHOUT POSITIVE PROTECTION	
ORIGINAL POSTED SPEED LIMIT	WORKERS PRESENT	WORKERS NOT PRESENT	WORKERS PRESENT	WORKERS NOT PRESENT
70	60	65	55	65
65	55	60	50	60
60	55	60	50	60
55	50	55	45	55

THE FOLLOWING ESTIMATED QUANTITY HAS BEEN CARRIED TO THE GENERAL SUMMARY.

ITEM 808, DIGITAL SPEED LIMIT (DSL) SIGN ASSEMBLY
78 SIGN MONTHS
[ASSUMING 5 DSL SIGN ASSEMBLIES]

PORTABLE BARRIER PLACEMENT

DURING THE PLACEMENT OF THE PORTABLE BARRIER, TRAFFIC WILL BE PROHIBITED FROM OCCUPYING THE TRAVEL LANE ADJACENT TO THE BARRIER. THE BARRIER WILL BE PLACED AT NIGHT PER THE WORK HOUR RESTRICTION NOTE AND IN ACCORDANCE WITH THE PERMITTED LANE CLOSURE MAP. THE CLOSURE OF THE ADJACENT LANE WILL BE PER THE STANDARD DRAWING MT-95.30.

THE CONTRACTOR WILL SUBMIT A PLAN TO THE ENGINEER FOR APPROVAL SEVEN (7) DAYS IN ADVANCE OF THE PLANNED LANE CLOSURE. WORK WILL NOT BEGIN UNTIL APPROVAL OF THE PLANS HAS BEEN GRANTED.

ALL COSTS INVOLVED IN PLACING THE PORTABLE CONCRETE BARRIER WILL BE INCLUDED IN THE CONTRACT PRICE BID FOR THE PORTABLE BARRIER ITEM(S).

ITEM 614 - LAW ENFORCEMENT OFFICER (WITH PATROL CAR) FOR ASSISTANCE DURING CONSTRUCTION OPERATIONS

USE OF LAW ENFORCEMENT OFFICERS (LEOS) BY CONTRACTORS OTHER THAN THE USES SPECIFIED BELOW WILL NOT BE PERMITTED AT PROJECT COST. LEOS SHOULD NOT BE USED WHERE THE OMUTCD INTENDS THAT FLAGGERS BE USED.

IN ADDITION TO THE REQUIREMENTS OF CMS 614 AND THE OMUTCD, A UNIFORMED LEO WITH AN OFFICIAL PATROL CAR (CAR WITH TOP-MOUNTED EMERGENCY FLASHING LIGHTS AND COMPLETE MARKINGS OF THE APPROPRIATE LAW ENFORCEMENT AGENCY) SHALL BE PROVIDED FOR THE FOLLOWING TRAFFIC CONTROL TASKS:

DURING THE ENTIRE ADVANCE PREPARATION AND CLOSURE SEQUENCE WHERE COMPLETE BLOCKAGE OF TRAFFIC IS REQUIRED.

FOR LANE CLOSURES: DURING INITIAL SET-UP PERIODS, TEAR DOWN PERIODS, SUBSTANTIAL SHIFTS OF A CLOSURE POINT OR WHEN NEW LANE CLOSURE ARRANGEMENTS ARE INITIATED FOR LONG-TERM LANE CLOSURES/SHIFTS (FOR THE FIRST AND LAST DAY OF MAJOR CHANGES IN TRAFFIC CONTROL SETUP).

ITEM 614 - LAW ENFORCEMENT OFFICER (WITH PATROL CAR) FOR ASSISTANCE DURING CONSTRUCTION OPERATIONS (CONTINUED)

LEOS SHOULD NOT FORGO THEIR TRAFFIC CONTROL RESPONSIBILITIES TO APPREHEND MOTORISTS FOR ROUTINE TRAFFIC VIOLATIONS. HOWEVER, IF A MOTORIST'S ACTIONS ARE CONSIDERED TO BE RECKLESS, THEN PURSUIT OF THE MOTORIST IS APPROPRIATE.

IN GENERAL LEOS SHOULD BE POSITIONED IN ADVANCE OF AND ON THE SAME SIDE AS THE LANE RESTRICTION OR AT THE POINT OF ROAD CLOSURE.

THE LEOS WORK AT THE DIRECTION OF THE ENGINEER. THE CONTRACTOR IS RESPONSIBLE FOR SECURING THE SERVICES OF THE LEOS WITH THE APPROPRIATE AGENCIES AND COMMUNICATING THE INTENTIONS OF THE PLANS WITH RESPECT TO DUTIES OF THE LEOS. THE ENGINEER SHALL HAVE FINAL CONTROL OVER THE LEOS' DUTIES AND PLACEMENT, AND WILL RESOLVE ANY ISSUES THAT MAY ARISE BETWEEN THE TWO PARTIES.

THE LEO SHALL REPORT IN TO THE CONTRACTOR PRIOR TO THE START OF THE SHIFT, IN ORDER TO RECEIVE INSTRUCTIONS REGARDING SPECIFIC WORK ASSIGNMENTS DURING HIS/HER SHIFT. THE LEO IS EXPECTED TO STAY AT THE PROJECT SITE FOR THE ENTIRE DURATION OF HIS/HER SHIFT. THE LEO SHALL REPORT TO THE CONTRACTOR AT THE END OF HIS/HER SHIFT. ONCE THE LEO HAS COMPLETED THE DUTIES DESCRIBED ABOVE AND STILL HAS TIME REMAINING ON HIS/HER SHIFT, THE LEO MAY BE ASKED TO PATROL THROUGH THE WORK ZONE (WITH FLASHING LIGHTS OFF) OR BE PLACED AT A LOCATION TO DETER MOTORISTS FROM SPEEDING. SHOULD IT BE NECESSARY TO LEAVE THE PROJECT SITE, THE LEO SHALL NOTIFY THE ENGINEER. THE CONTRACTOR SHALL PROVIDE THE LEO WITH A TWO-WAY COMMUNICATION DEVICE WHICH SHALL BE RETURNED TO THE CONTRACTOR AT THE END OF HIS/HER SHIFT.

LEOS (WITH PATROL CAR) REQUIRED BY THE TRAFFIC MAINTENANCE TASKS ABOVE SHALL BE PAID FOR ON A UNIT PRICE (HOURLY) BASIS UNDER ITEM 614, LAW ENFORCEMENT OFFICER (WITH PATROL CAR) FOR ASSISTANCE. THE FOLLOWING ESTIMATED QUANTITIES HAVE BEEN CARRIED TO THE GENERAL SUMMARY.

ITEM 614, LAW ENFORCEMENT OFFICER WITH PATROL CAR FOR ASSISTANCE 200 HOURS

THE HOURS PAID SHALL INCLUDE ANY MINIMUM SHOW-UP TIME REQUIRED BY THE LAW ENFORCEMENT AGENCY INVOLVED.

ANY ADDITIONAL COSTS (ADMINISTRATIVE OR OTHERWISE) INCURRED BY THE CONTRACTOR TO OBTAIN THE SERVICES OF AN LEO ARE INCLUDED WITH THE BID UNIT PRICE FOR ITEM 614, LAW ENFORCEMENT OFFICER WITH PATROL CAR FOR ASSISTANCE.

ITEM 614 - WORK ZONE ARROW, CLASS I, AS PER PLAN

IN ADDITION TO THE REQUIREMENTS OF 614, THE WORK ZONE ARROW, CLASS I, AS PER PLAN SHALL BE A LANE REDUCTION ARROW.

PAYMENT SHALL BE PER THE UNIT PRICE BID FOR EACH

MOT NOTES

SUM-77-32.27
MODEL: MN004 PAPERSIZE: 17x11 (in.) DATE: 2/22/2022 TIME: 6:04:47 PM USER: tdhh
pw:\\gfnet-pw.bentley.com:gfnet-pw-01\Documents\Projects\67490\104983\401-Engineering-GF\MOT\Sheets\104983_MN001.dgn

DESIGN AGENCY
Gannett Fleming
ENGINEERS AND ARCHITECTS, P.C.
2500 Corporate Exchange Drive
Suite 230
Columbus, OH 43231

DESIGNER ACW
REVIEWER DRJ 02-08-22
PROJECT ID 104983
SHEET 22 TOTAL 297

TEMPORARY SIGN OVERLAYS

TEMPORARY OVERHEAD SIGN OVERLAYS ARE USED ON THIS PROJECT. THE CONTRACTOR SHALL FABRICATE, INSTALL AND REMOVE THE SIGN OVERLAYS AS DETAILED IN THESE PLANS.

REFER TO THE SIGN PANEL DETAILS BELOW TO ASSIST IN SIGN FABRICATION.

THE REQUIRED WORK SHALL BE PAID FOR WITH THE FOLLOWING ITEMS. THE QUANTITIES ARE FOUND IN THE MOT SUBSUMMARY.

ITEM 630E80300, SIGN, TEMPORARY OVERLAY
ITEM 630E81304, SIGN ERECTED, TEMPORARY OVERLAY
ITEM 630E89894, REMOVAL OF TEMPORARY OVERLAY SIGN AND DISPOSAL

ITEM 615 - ROADS FOR MAINTAINING TRAFFIC

THIS WORK CONSISTS OF PROVIDING, MAINTAINING, AND SUBSEQUENTLY REMOVING ROADS AND APPURTENANCES AND PAVEMENTS FOR MAINTAINING TRAFFIC.

ADDITIONAL EXCAVATION AND EMBANKMENT IS REQUIRED BEYOND THE PHYSICAL LIMITS OF PROPOSED SHOULDER WIDTHS AT RAMP GORES, AT TAPERS AND CROSS OVER LOCATIONS. REQUIRED ADDITIONAL EARTHWORK IN THESE AREAS WILL BE PAID FOR UNDER THE LUMP SUM AMOUNT FOR ITEM 615, ROADS FOR MAINTAINING TRAFFIC.

REMOVE ALL PAVEMENT FOR MAINTAINING TRAFFIC IN ACCORDANCE WITH THE PROVISIONS OF ITEM 615 UNLESS OTHERWISE SPECIFIED IN THE PLANS.

REFER TO THE "EARTHWORK FOR MAINTAINING TRAFFIC" NOTE FOR ESTIMATED QUANTITIES OF EXCAVATION AND EMBANKMENT FOR MAINTAINING TRAFFIC.

PAYMENT FOR ABOVE REQUIREMENTS SHALL BE INCLUDED IN THE LUMP SUM BID FOR ITEM 615, ROADS FOR MAINTAINING TRAFFIC.

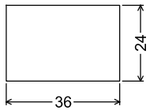

No border, None on Orange;
(BLANK)

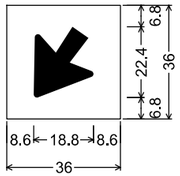

No border, None on Orange;
Arrow B-1 - 25.0" 235° Black;
Table of letter and object lefts

8.6

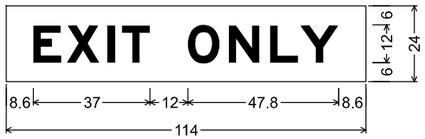

No border, None on Orange;
"EXIT ONLY" Black, E Mod 2K;
Table of letter and object lefts

E	X	I	T	O	N	L	Y
8.6	19.2	32.2	36.7	57.6	70.6	83.6	93.2

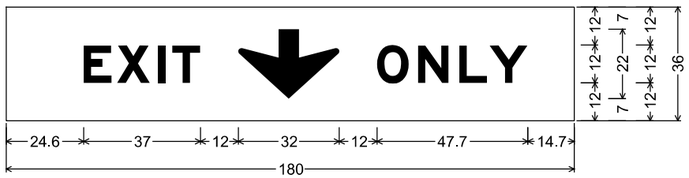

No border, None on Orange;
"EXIT" Black, E Mod 2K; Down Arrow C-1 - 22.0" 270° Black;
"ONLY" Black, E Mod 2K;
Table of letter and object lefts

E	X	I	T		O	N	L	Y
24.6	35.2	48.1	52.7	73.6	117.6	130.5	143.6	153.2

MAINTENANCE OF TRAFFIC LEGEND

DYL	WZ CENTER LINE, DOUBLE YELLOW		EXISTING SIGN
ELW	WZ EDGE LINE, WHITE, 6"		EXISTING SIGN TO BE REMOVED
ELY	WZ EDGE LINE, YELLOW, 6"		PROPOSED SIGN
CH	WZ CHANNELIZING LINE, 12"		EXISTING SIGN SUPPORT
LL	WZ LANE LINE, 6"		PROPOSED SIGN SUPPORT
DL	WZ DOTTED LINE, 6"		WORK ZONE
WDL	WZ DOTTED LINE, 8"		TEMPORARY PAVEMENT (NEW)
CM	WZ CHEVRON MARKING		TEMPORARY PAVEMENT (BUILT IN PREVIOUS PHASE)
IA	IMPACT ATTENUATOR		PORTABLE BARRIER
PB	PORTABLE BARRIER		IMPACT ATTENUATOR
LA	WZ ARROW		DRUMS (SPACING)
RPM	RAISED PAVEMENT MARKER	XX	ITEM, QUANTIFIED
PMT	PAVEMENT FOR MAINTAINING TRAFFIC, CLASS A	XX	ITEM, PREVIOUSLY QUANTIFIED
S	SIGN WORK (QUANTIFIABLE)		DIRECTION OF TRAVEL

MOT NOTES

DESIGN AGENCY
Gannett Fleming
ENGINEERS AND ARCHITECTS, P.C.
2500 Corporate Exchange Drive
Suite 230
Columbus, OH 43231

DESIGNER ACW
REVIEWER CJM 09-28-21
PROJECT ID 104983
SHEET 23 TOTAL 297

SUM-77-32.27

MODEL: MN005 PAPERSIZE: 17x11 (in.) DATE: 2/22/2022 TIME: 6:04:47 PM USER: tdhh
pw:\\gfnet-pw.bentley.com:gfnet-pw-01\Documents\Projects\674901\104983\401-Engineering-GF\MOT\Sheets\104983_MN001.dgn

SHEET NUMBER																			ITEM	TOTAL	UNIT	DESCRIPTION
25	26	27	28											29								
200																			614	200	HOUR	LAW ENFORCEMENT OFFICER WITH PATROL CAR FOR ASSISTANCE
2	6	2	1																614	11	EACH	WORK ZONE IMPACT ATTENUATOR, 24" WIDE HAZARDS, (UNIDIRECTIONAL)
LUMP																			614	LUMP		DETOUR SIGNING
9																			614	9	EACH	WORK ZONE INCREASED PENALTIES SIGN
748	389	766	561																614	2464	EACH	WORK ZONE RAISED PAVEMENT MARKER, AS PER PLAN
100																			614	100	CY	ASPHALT CONCRETE FOR MAINTAINING TRAFFIC
159	126	176	94																614	555	EACH	BARRIER REFLECTOR, TYPE 1, 1 WAY
159	126	176	94																614	555	EACH	OBJECT MARKER, ONE WAY
30																			614	30	SNMT	PORTABLE CHANGEABLE MESSAGE SIGN, AS PER PLAN
1.2	6.84	4.49	0.78																614	13.31	MILE	WORK ZONE LANE LINE, CLASS I, 6"
	0.26	0.15																	614	0.41	MILE	WORK ZONE CENTER LINE, CLASS I, 642 PAINT
3.62	10.17	6.08	2.43																614	22.3	MILE	WORK ZONE EDGE LINE, CLASS I, 6"
4940	6587	6521	5298																614	23346	FT	WORK ZONE CHANNELIZING LINE, CLASS I, 12"
1138	5845	3399	420																614	10802	FT	WORK ZONE DOTTED LINE, CLASS I, 6", 642 PAINT
	2662																		614	2662	FT	WORK ZONE DOTTED LINE, CLASS I, 8", 642 PAINT
		33																	614	33	FT	WORK ZONE GORE MARKING, CLASS II
	2	2																	614	4	EACH	WORK ZONE ARROW, CLASS I, AS PER PLAN
LUMP																			615	LUMP		ROADS FOR MAINTAINING TRAFFIC
12201																			615	12201	SY	PAVEMENT FOR MAINTAINING TRAFFIC, CLASS A
231																			616	231	MGAL	WATER
	315																		621	315	EACH	RPM
7330	6260	8840	4700																622	27130	FT	PORTABLE BARRIER, UNANCHORED
600																			622	600	FT	PORTABLE BARRIER, ANCHORED
														113					630	113	SF	SIGN, TEMPORARY OVERLAY
														113					630	113	SF	SIGN ERECTED, TEMPORARY OVERLAY
														7					630	7	EACH	REMOVAL OF TEMPORARY OVERLAY SIGN AND DISPOSAL
78																			808	78	SNMT	DIGITAL SPEED LIMIT (DSL) SIGN ASSEMBLY

MOT SUBSUMMARY

SUM-77-32.27

MODEL: MS001 PAPERSIZE: 17x11 (in.) DATE: 2/22/2022 TIME: 6:07:10 PM USER: tdhh
pw:\\gfnet-pw.bentley.com:gfnet-pw-01\Documents\Projects\67490\104983\401-Engineering-GF\MOT\Sheets\104983_MS001.dgn

DESIGN AGENCY
Gannett Fleming
ENGINEERS AND ARCHITECTS, P.C.
2200 Corporate Exchange Drive
Suite 230
Columbus, OH 43231

DESIGNER
ACW

REVIEWER
DRJ 02-08-22

PROJECT ID
104983

SHEET 24 | TOTAL 297

MOT ESTIMATED QUANTITIES

REF NO.	SHEET NO.	LOCATION	STATION FROM	STATION TO	SIDE	614 LAW ENFORCEMENT OFFICER WITH PATROL CAR FOR ASSISTANCE HOUR	614 DETOUR SIGNING LS	614 WORK ZONE INCREASED PENALTIES SIGN EACH	614 ASPHALT CONCRETE FOR MAINTAINING TRAFFIC CY	614 PORTABLE CHANGEABLE MESSAGE SIGN, AS PER PLAN SNMT	615 ROADS FOR MAINTAINING TRAFFIC LS	616 WATER MGAL	808 DIGITAL SPEED LIMIT (DSL) SIGN ASSEMBLY SNMT	614 WORK ZONE IMPACT ATTENUATOR, 24" WIDE HAZARDS, (UNIDIRECTIONAL) EACH	614 WORK ZONE RAISED PAVEMENT MARKER, AS PER PLAN (1-WAY WHITE) EACH	614 WORK ZONE RAISED PAVEMENT MARKER, AS PER PLAN (1-WAY YELLOW) EACH	614 BARRIER REFLECTOR, TYPE 1, 1 WAY EACH	614 OBJECT MARKER, ONE WAY EACH	614 WORK ZONE LANE LINE, CLASS I, 6" MILE	614 WORK ZONE EDGE LINE, CLASS I, 6" (WHITE) MILE	614 WORK ZONE EDGE LINE, CLASS I, 6" (YELLOW) MILE	614 WORK ZONE CHANNELIZING LINE, CLASS I, 12" FT	614 WORK ZONE DOTTED LINE, CLASS I, 6", 642 PAINT FT	615 PAVEMENT FOR MAINTAINING TRAFFIC, CLASS A SY	622 PORTABLE BARRIER, UNANCHORED FT	622 PORTABLE BARRIER, ANCHORED FT
	19	NOTES					1		100																		
	20	NOTES								30																	
	21	NOTES										231															
	22	NOTES				200		9					78														
	23	NOTES									1																
		PRE-PHASE																									
PMT-1	40	IR-77	1009+06	1011+50	LT																					93	
PMT-2	40	IR-77	1013+38	1019+26	LT																					357	
PMT-3	40	IR-77	1015+25	1027+14	RT																					909	
PMT-4	41	IR-77	1028+34	1068+75	LT																					5687	
PMT-5	41	IR-77	1029+60	1068+75	RT																					5155	
	42	NO NEW																									
	43	NO NEW																									
		PHASE 1																									
	44	NONE																									
CH-1	45	IR-77	1005+75	1015+79	RT										50							1009					
CH-2	45	IR-77	1006+10	1016+00	LT										49							986					
ELW-1	45	IR-77	1007+00	1014+75	RT										50					0.14							
ELY-1	45	IR-77	1008+75	1039+00	RT											115					0.57						
ELW-2	45	IR-77	1009+10	1076+15	LT										114					1.27							
ELY-2	45	IR-77	1009+10	1076+15	LT											114					1.27						
IA-1	45	IR-77	1010+83		RT									1													
PB-1	45	IR-77	1010+83	1026+60	RT												32	32								1580	
DL-1	45	IR-77	1012+30	1016+50	RT																			423			
PB-2	45	IR-77	1013+10	1025+70	LT												25	25								1260	
LL-1	45	IR-77	1015+79	1029+00	RT										11				0,25								
LL-2	45	IR-77	1016+00	1066+00	LT										42				0.95								
CH-3	45	IR-77	1016+50	1019+79	RT										8							324					
ELW-3	45	IR-77	1019+79	1039+00	RT										65					0.37							
PB-3	46	IR-77	1025+70	1028+70	LT												6	6									300
PB-4	46	IR-77	1026+60	1029+60	RT												6	6									300
PB-5	46	IR-77	1028+70	1070+70	LT												85	85								4230	
CH-4	46	IR-77	1029+00	1042+00	RT										65							1306					
PB-6	46	IR-77	1029+60	1032+20	RT												5	5								260	
	47	NO NEW																									
CH-5	48	IR-77	1066+00	1079+15	LT										65							1315					
DL-2	48	IR-77	1069+00	1076+15	LT																			715			
IA-2	48	IR-77	1070+70		LT									1													
	49	NONE																									
	50	NONE																									
	51	NONE																									
SUBTOTAL						200	1	9	100	30	1	231	78	2	519	229	159	159	1.2	1.78	1.84	4940	1138		12201	7330	600
TOTALS CARRIED TO SUBSUMMARY ON SHEET 24						200	1	9	100	30	1	231	78	2	748		159	159	1.2	3.62		4940	1138		12201	7330	600

DESIGN AGENCY
Gannett Fleming
ENGINEERS AND ARCHITECTS, P.C.
2500 Corporate Exchange Drive
Suite 230
Columbus, OH 43231

DESIGNER ACW
REVIEWER DRJ 02-08-22
PROJECT ID 104983
SHEET 25 TOTAL 297

SUM-77-32.27

MODEL: MQ001 PAPERSIZE: 17x11 (in.) DATE: 2/22/2022 TIME: 6:09:22 PM USER: tdinh
pw:\\gfnetpw.Bentley.com:gfnet-pw-01\Documents\Projects\67490\104983\401-Engineering-GF\MOT\Sheets\104983_MQ001.dgn

REF NO.	SHEET NO.	LOCATION	STATION FROM	STATION TO	SIDE	614 WORK ZONE IMPACT ATTENUATOR, 24" WIDE HAZARDS, (UNIDIRECTIONAL) EACH	614 WORK ZONE RAISED PAVEMENT MARKER, AS PER PLAN (1-WAY WHITE) EACH	614 WORK ZONE RAISED PAVEMENT MARKER, AS PER PLAN (1-WAY YELLOW) EACH	614 WORK ZONE RAISED PAVEMENT MARKER, AS PER PLAN (2-WAY YELLOW) EACH	614 BARRIER REFLECTOR, TYPE 1, 1 WAY EACH	614 OBJECT MARKER, ONE WAY EACH	614 WORK ZONE LANE LINE, CLASS I, 6" MILE	614 WORK ZONE CENTER LINE, CLASS I, 642 PAINT (DOUBLE YELLOW) MILE	614 WORK ZONE EDGE LINE, CLASS I, 6" (WHITE) MILE	614 WORK ZONE EDGE LINE, CLASS I, 6" (YELLOW) MILE	614 WORK ZONE CHANNELIZING LINE, CLASS I, 12" FT	614 WORK ZONE DOTTED LINE, CLASS I, 6", 642 PAINT FT	614 WORK ZONE DOTTED LINE, CLASS I, 8", 642 PAINT FT	614 WORK ZONE ARROW, CLASS I, AS PER PLAN EACH	622 PORTABLE BARRIER, UNANCHORED FT	621 RPM (1-WAY WHITE) EACH	621 RPM (1-WAY YELLOW) EACH	621 RPM (2-WAY YELLOW) EACH
		PHASE 1																					
ELW-4	52	SR-21	495+50	502+50	RT									0.13									
IA-3	52	SR-21	496+41		RT	1																	
PB-7	52	SR-21	496+41	500+92	RT					9	9										450		
ELW-5	52	SR-21	496+50	506+45	LT									0.19									
DYL-1	52	SR-21	496+50	502+50	CL				8				0.11										
IA-4	52	SR-21	496+72		LT	1																	
PB-8	52	SR-21	496+72	501+69	LT					10	10										500		
IA-5	52	SR-21	500+92		RT	1																	
IA-6	52	SR-21	500+69		LT	1																	
DL-3	52	SR-21	502+80	506+45	LT												365						
		PHASE 2																					
	53	NONE																					
LL-1	54	IR-77	1005+75	1042+00	RT		30					0.69											
LL-2	54	IR-77	1006+10	1086+25	LT		67					1.52											
ELW-1	54	IR-77	1007+00	1014+79	RT									0.14									
DL-1	54	IR-77	1007+10	1015+25	RT												829						
ELY-1	54	IR-77	1008+75	1039+00	RT										0.57								
ELW-2	54	IR-77	1009+10	1093+25	LT									1.6									
ELY-2	54	IR-77	1009+10	1097+65	LT			67							1.68								
CH-1	54	IR-77	1015+25	1019+79	RT		11									456							
ELW-3	54	IR-77	1019+79	1039+00	RT									0.37									
PB-1	55	IR-77	1023+30	1071+10	LT					96	96										4800		
IA-1	55	IR-77	1026+95		RT	1																	
PB-2	55	IR-77	1026+95	1032+05	RT					11	11										510		
	56	NO NEW																					
IA-2	57	IR-77	1071+10		LT	1																	
DL-2	57	IR-77	1072+00	1081+62	LT												962						
CH-2	58	IR-77	1081+62	1085+62	LT		10									401							
CH-3	58	IR-77	1081+62	1085+62	LT		10									400							
ELY-3	58	IR-77	1085+62	1093+25	LT			9							0.14								
ELW-4	58	IR-77	1085+62	11+38	LT		67							0.44									
CH-4	58	IR-77	1086+25	2+10	LT		67									1350							
LL-3	58	IR-77	2+10	8+64	LT		5					0.12											
CH-5	59	IR-77	11+38	15+88	LT		11									450							
CH-6	59	IR-77	13+92	15+88	LT		5									196							
WDL-1	59	IR-77	15+88	42+50	LT		22											2662					
	60	NO NEW																					
		WINTER PHASE																					
		IR-77 SB										3.67		1.25	1.76	2694	2860		2			227	5	
		IR-77 NB										0.69		0.51	0.57	456	829					41		
		SR-21 / RAMP G										0.15	0.15	0.58	0.24	184						16	16	10
SUBTOTAL						6	305	76	8	126	126	6.84	0.26	5.21	4.96	6587	5845	2662	2	6260		284	21	10
TOTALS CARRIED TO SUBSUMMARY ON SHEET 24						6	389			126	126	6.84	0.26	10.17		6587	5845	2662	2	6260		315		

SUM-77-32.27

MODEL: MQ002 PAPERSIZE: 17x11 (in.) DATE: 2/22/2022 TIME: 6:09:22 PM USER: tdinh
pw:\\gfnet-pw.bentley.com:gfnet-pw-01\Documents\Projects\67490\104983\401-Engineering-GFI\MOT\Sheets\104983_MQ001.dgn

MOT ESTIMATED QUANTITIES

DESIGN AGENCY
Gannett Fleming
ENGINEERS AND ARCHITECTS, P.C.
2300 Corporate Exchange Drive
Suite 330
Columbus, OH 43231

DESIGNER ACW
REVIEWER DRJ 02-08-22
PROJECT ID 104983
SHEET 26 TOTAL 297

MOT ESTIMATED QUANTITIES

REF NO.	SHEET NO.	LOCATION	STATION FROM	STATION TO	SIDE	614 WORK ZONE IMPACT ATTENUATOR, 24" WIDE HAZARDS, (UNIDIRECTIONAL) EACH	614 WORK ZONE RAISED PAVEMENT MARKER, AS PER PLAN (1-WAY WHITE) EACH	614 WORK ZONE RAISED PAVEMENT MARKER, AS PER PLAN (1-WAY YELLOW) EACH	614 WORK ZONE RAISED PAVEMENT MARKER, AS PER PLAN (2-WAY YELLOW) EACH	614 BARRIER REFLECTOR, TYPE 1, 1 WAY EACH	614 OBJECT MARKER, ONE WAY EACH	614 WORK ZONE LANE LINE, CLASS I, 6" MILE	614 WORK ZONE CENTER LINE, CLASS I, 642 PAINT (DOUBLE YELLOW) MILE	614 WORK ZONE EDGE LINE, CLASS I, 6" (WHITE) MILE	614 WORK ZONE EDGE LINE, CLASS I, 6" (YELLOW) MILE	614 WORK ZONE CHANNELIZING LINE, CLASS I, 12" FT	614 WORK ZONE DOTTED LINE, CLASS I, 6", 642 PAINT FT	614 WORK ZONE GORE MARKING, CLASS II FT	614 WORK ZONE ARROW, CLASS I, AS PER PLAN EACH	622 PORTABLE BARRIER, UNANCHORED FT
		PHASE 3																		
	61	NONE																		
ELW-1	62	IR-77	1009+00	1030+74	LT									0.41						
LL-1	62	IR-77	1009+00	42+50	LT		109					2.49								
ELY-1	62	IR-77	1009+00	1097+65	LT										1.68					
CH-1	62	IR-77	1016+00	1029+00	RT		65									1302				
DL-1	62	IR-77	1017+00	1024+56	LT												755			
ELY-2	62	IR-77	1019+00	1081+85	RT			157							1.19					
CH-2	62	IR-77	1019+00	1019+79	RT		18									79				
ELW-2	62	IR-77	1019+79	1075+64	RT		109							1.05						
IA-1	63	IR-77	1023+40		RT	1														
PB-1	63	IR-77	1023+40	1070+50	RT					94	94									4710
CH-3	63	IR-77	1024+56	1030+78	LT		15									622				
CH-4	63	IR-77	1024+56	1030+78	LT		15									622				
PB-2	63	IR-77	1028+79	1069+94	LT					82	82									4130
LL-2	63	IR-77	1029+00	1063+75	RT		29					0.66								
DL-2	63	IR-77	1030+00	1037+75	LT												780			
ELW-3	63	IR-77	1030+78	1068+75	LT									0.72						
LL-3	63	IR-77	1037+75	2+10	LT		52					1.18								
LA-1	63	IR-77	1038+75		LT														1	
LA-2	64	IR-77	1046+75		LT														1	
CH-5	65	IR-77	1063+75	1083+85	RT		100									2008				
DL-3	65	IR-77	1068+75	1082+00	LT												1325			
IA-2	65	IR-77	1069+94		LT	1														
DL-4	65	IR-77	1071+00	1076+39	RT												539			
CH-6	65	IR-77	1076+39	1078+92	RT		13									254				
ELW-4	65	IR-77	1078+92	1079+08	RT		1							0.01						
CH-7	66	IR-77	1082+00	1089+25	LT		18									725				
CH-8	66	IR-77	1082+00	1089+25	LT		18									725				
ELW-5	66	IR-77	1086+66	1093+25	LT									0.12						
ELY-3	66	IR-77	1089+25	1093+25	LT			5							0.08					
	67	NO NEW																		
	68	NO NEW																		
ELW-6	69	SR-21	495+45	503+12	RT									0.15						
DYL-1	69	SR-21	495+49	503+12	CL				10				0.15							
ELW-7	69	SR-21	495+54	497+20	LT									0.03						
CH-9	69	SR-21	497+20	498+09	LT		3									89				
CH-10	69	SR-21/RAMP G	498+09	10008+58	LT		3									95				
CM-1	69	SR-21	497+20	498+09	LT													33		
LL-4	69	SR-21	498+09	506+45	LT		10					0.16								
ELW-8	69	SR-21/RAMP G	506+45	10020+58	LT/CL									0.4						
ELY-4	69	RAMP G	10008+58	10020+58	LT			16							0.24					
SUBTOTAL						2	578	178	10	176	176	4.49	0.15	2.89	3.19	6521	3399	33	2	8840
TOTALS CARRIED TO SUBSUMMARY ON SHEET 24						2	766			176	176	4.49	0.15	6.08		6521	3399	33	2	8840

SUM-77-32.27

MODEL: MQ003 PAPERSIZE: 17x11 (in.) DATE: 2/22/2022 TIME: 6:09:23 PM USER: tdnh
pw:\\gfnet-pw.bentley.com:gfnet-pw-01\Documents\Projects\67490\1049834\01-Engineering-GF\MOT\Sheets\104983_MQ001.dgn

DESIGN AGENCY
Gannett Fleming
ENGINEERS AND ARCHITECTS, P.C.
2280 Corporate Exchange Drive
Suite 230
Columbus, OH 43231

DESIGNER ACW

REVIEWER DRJ 02-08-22

PROJECT ID 104983

SHEET 27 TOTAL 297

REF NO.	SHEET NO.	LOCATION	STATION FROM	STATION TO	SIDE		614 WORK ZONE IMPACT ATTENUATOR, 24" WIDE HAZARDS, (UNIDIRECTIONAL) EACH	614 WORK ZONE RAISED PAVEMENT MARKER, AS PER PLAN (1-WAY WHITE) EACH	614 WORK ZONE RAISED PAVEMENT MARKER, AS PER PLAN (1-WAY YELLOW) EACH	614 BARRIER REFLECTOR, TYPE 1, 1 WAY EACH	614 OBJECT MARKER, ONE WAY EACH	614 WORK ZONE LANE LINE, CLASS I, 6" MILE	614 WORK ZONE EDGE LINE, CLASS I, 6" (WHITE) MILE	614 WORK ZONE EDGE LINE, CLASS I, 6" (YELLOW) MILE	614 WORK ZONE CHANNELIZING LINE, CLASS I, 12" FT	614 WORK ZONE DOTTED LINE, CLASS I, 6", 642 PAINT FT				622 PORTABLE BARRIER, UNANCHORED FT								
		PHASE 4																								
	70	NONE																								
CH-1	71	IR-77	1008+70	1029+20	RT			102							2050											
ELY-1	71	IR-77	1011+70	1081+85	RT				174					1.33												
CH-2	71	IR-77	1011+70	1019+79	RT			41							813											
CH-3	71	IR-77	1013+00	1016+51	RT			9							353											
ELW-1	71	IR-77	1019+79	1076+75	RT			82					1.08													
IA-1	72	IR-77	1023+50		RT		1																			
PB-1	72	IR-77	1023+50	1070+50	RT					94	94														4700	
LL-1	72	IR-77	1029+20	1066+50	RT			31				0.71														
	73	NO NEW																								
CH-4	74	IR-77	1066+50	1081+00	RT			72							1450											
DL-1	74	IR-77	1070+50	1074+70	RT			21								420										
CH-5	74	IR-77	1074+70	1078+92	RT			21							426											
CH-6	74	IR-77	1074+70	1076+75	RT			5							206											
ELW-2	74	IR-77	1078+92	1079+92	RT								0.02													
LL-2	75	IR-77	1080+10	1083+85	RT			3				0.07														
	76	NO NEW																								
SUBTOTAL							1	387	174	94	94	0.78	1.1	1.33	5298	420				4700						
TOTALS CARRIED TO SUBSUMMARY ON SHEET 24							1	561		94	94	0.78	2.43		5298	420				4700						

MOT ESTIMATED QUANTITIES

SUM-77-32.27

MODEL: MQ004 PAPERSIZE: 17x11 (in.) DATE: 2/22/2022 TIME: 6:09:23 PM USER: tdinh
pw:\\gfnet-pw.bentley.com:gfnet-pw-01\Documents\Projects\67490\104983\401-Engineering-GF\MOT\Sheets\104983_MQ001.dgn

DESIGN AGENCY
Gannett Fleming
ENGINEERS AND ARCHITECTS, P.C.
2280 Corporate Exchange Drive
Suite 230
Columbus, OH 43231

DESIGNER ACW

REVIEWER DRJ 02-08-22

PROJECT ID 104983

SHEET 28 TOTAL 297

REF NO.	SHEET NO.	LOCATION	STATION FROM	STATION TO	SIDE	CODE	SIZE (INCHES)	630 SIGN, TEMPORARY OVERLAY SF	630 SIGN ERECTED, TEMPORARY OVERLAY SF	630 REMOVAL OF TEMPORARY OVERLAY SIGN AND DISPOSAL EACH
		PHASE 2								
S-1	59	IR-77	13+50		LT	(DOWN ARROW)	36 X 36	9	9	
					LT	(DOWN ARROW)	36 X 36	9	9	
					LT	(EXIT ONLY)	114 X 24	19	19	
S-2	59	IR-77	22+50		LT	(EXIT ONLY)	114 X 24	19	19	
S-3	60	IR-77	44+50		LT	(EXIT - ONLY)	180 X 36	45	45	
		PHASE 3								
S-1	65	IR-77	1075+65		RT	(BLANK)	36 X 24	6	6	
S-2	67	IR-77	13+50		LT					3
S-3	67	IR-77	22+50		LT					1
S-4	68	IR-77	44+50		LT					1
		PHASE 4								
S-1	74	IR-77	1075+65		RT	(BLANK)	36 X 24	6	6	2
		SUBTOTAL						113	113	7
		TOTALS CARRIED TO SUBSUMMARY ON SHEET 24						113	113	7

MOT ESTIMATED QUANTITIES (SIGNING)

SUM-77-32.27

MODEL: MQ005 PAPERSIZE: 17x11 (in.) DATE: 2/22/2022 TIME: 6:09:24 PM USER: tdinh
pw:\\gfnet-pw.bentley.com:gfnet-pw-01\Documents\Projects\67490\104983\401-Engineering-GF\MOT\Sheets\104983_MQ001.dgn

DESIGN AGENCY
Gannett Fleming
ENGINEERS AND ARCHITECTS, P.C.
2500 Corporate Exchange Drive
Suite 230
Columbus, OH 43231

DESIGNER
ACW

REVIEWER
DRJ 02-08-22

PROJECT ID
104983

SHEET 29 TOTAL 297

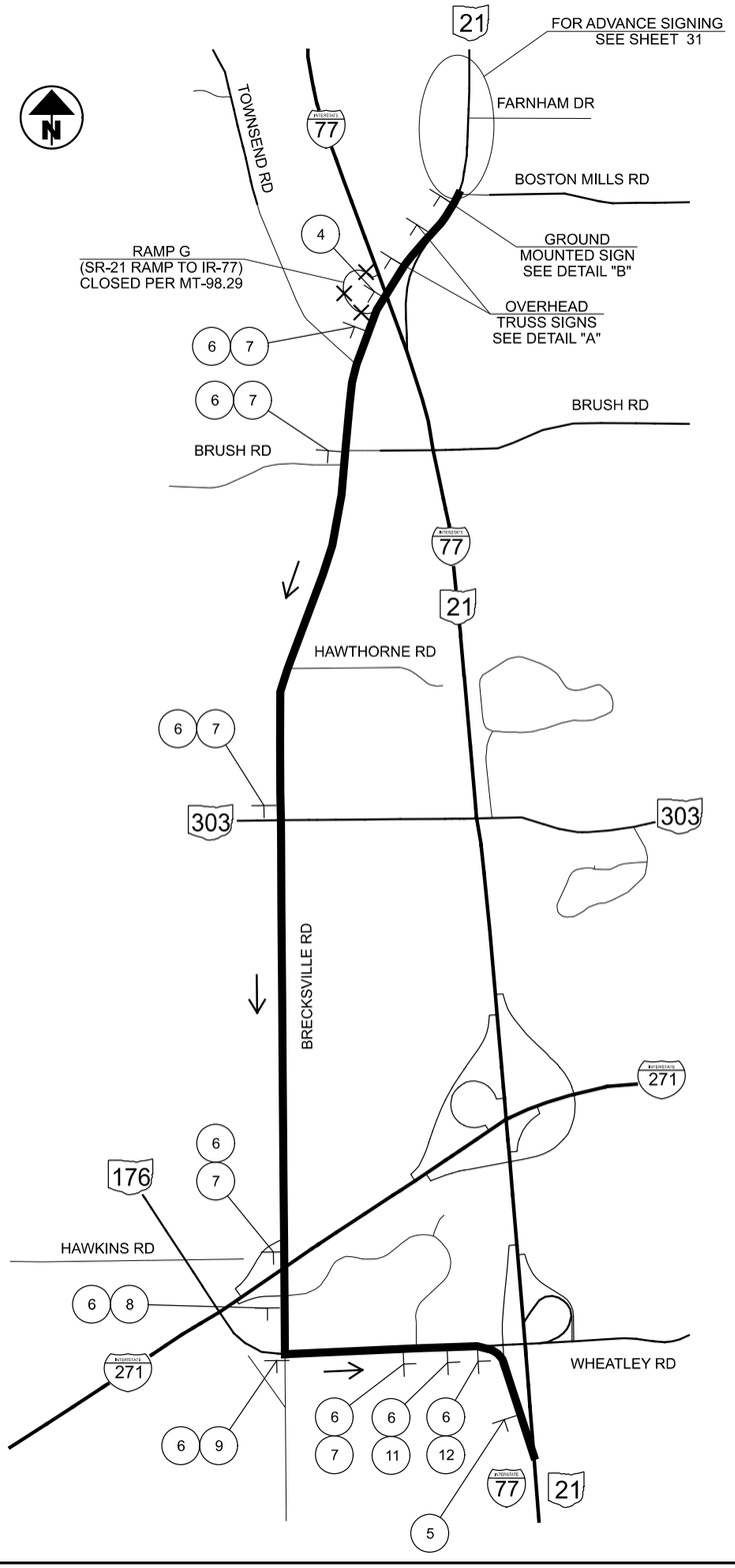

1 CALLOUT NOT USED

2 CALLOUT NOT USED

3 CALLOUT NOT USED

4 FLAGS

TYPE B TYPE B

ROAD CLOSED

R11-2-48
TYPE III
BARRICADE

5

END DETOUR

M4-8a-24

6

DETOUR TO SOUTH INTERSTATE 77 21

M4-8-24
M4-5-24
M3-3-30
M1-1-30
M1-5-30

7 M6-3-21

8 M5-1L-21

9 M6-1L-21

10 M5-1R-21

11 M5-2R-21

12 M6-2R-21

M4-5-24

TO

SOUTH INTERSTATE 77 SOUTH 21

M3-3-30
M1-1-30

M3-3-30
M1-5-30

County Rd 17
Brecksville Rd

South
77
21
CLOSED
Akron
Canton

EXIT ONLY

CLOSED

96" X 24" PANEL
BLACK ON ORANGE
(NO BORDER)
12" E MOD TEXT

DETAIL "A" - NOT TO SCALE

OVERHEAD SIGNS

77 South 21
CLOSED
Akron
Canton
KEEP RIGHT

CLOSED

96" X 24" PANEL
BLACK ON ORANGE
(NO BORDER)
12" E MOD TEXT

DETAIL "B" - NOT TO SCALE

GROUND-MOUNTED SIGN

LEGEND

XXX CLOSURE

DETOUR ROUTE

SIGN

DIRECTION OF TRAVEL

NOTES:

1. IMPLEMENT THIS DETOUR PLAN WHEN THE RAMP FROM SR-21 TO IR-77 SOUTHBOUND IS CLOSED. THIS SHEET IS USED IN CONJUNCTION WITH THE SECOND SHEET OF RAMP G CLOSURE DETOUR. SEE SHEET 31

2. PLACE "CLOSED" PLACARD DIAGONALLY ON OVERHEAD SIGNS AND GROUND MOUNTED SIGN AS SHOWN. (TWO OVERHEAD TRUSS LOCATIONS)

3. SIGN SPACING PER OMUTCD TABLE 6C-1 "RECOMMENDED ADVANCE WARNING SIGN MINIMUM SPACING".

4. COVER CONFLICTING SIGNAGE.

MOT DETOUR PLAN - RAMP G
SR-21 SOUTHBOUND RAMP CLOSURE

DESIGN AGENCY
Gannett Fleming
ENGINEERS AND ARCHITECTS, P.C.
2550 Corporate Exchange Drive
Suite 230
Columbus, OH 43231

DESIGNER ACW

REVIEWER DRJ 02-08-22

PROJECT ID 104983

SHEET 30 TOTAL 297

SUM-77-32.27

MODEL: MD001 PAPERSIZE: 17x11 (in.) DATE: 2/22/2022 TIME: 6:11:35 PM USER: tdinh
pw:\\gfnet-pw.bentley.com:gfnet-pw-01\Documents\Projects\67490\104983\401-Engineering-GF\MOT\Sheets\104983_MD001.dgn

NOT TO SCALE

NOTES:

1. THIS SHEET IS A SUPPLEMENTAL SHEET TO THE RAMP G CLOSURE DETOUR. SEE SHEET 30
2. ALL ITEMS AND MATERIALS REQUIRED TO IMPLEMENT THIS DETOUR SHALL BE INCLUDED IN THE LUMP SUM ITEM, DETOUR SIGNING.

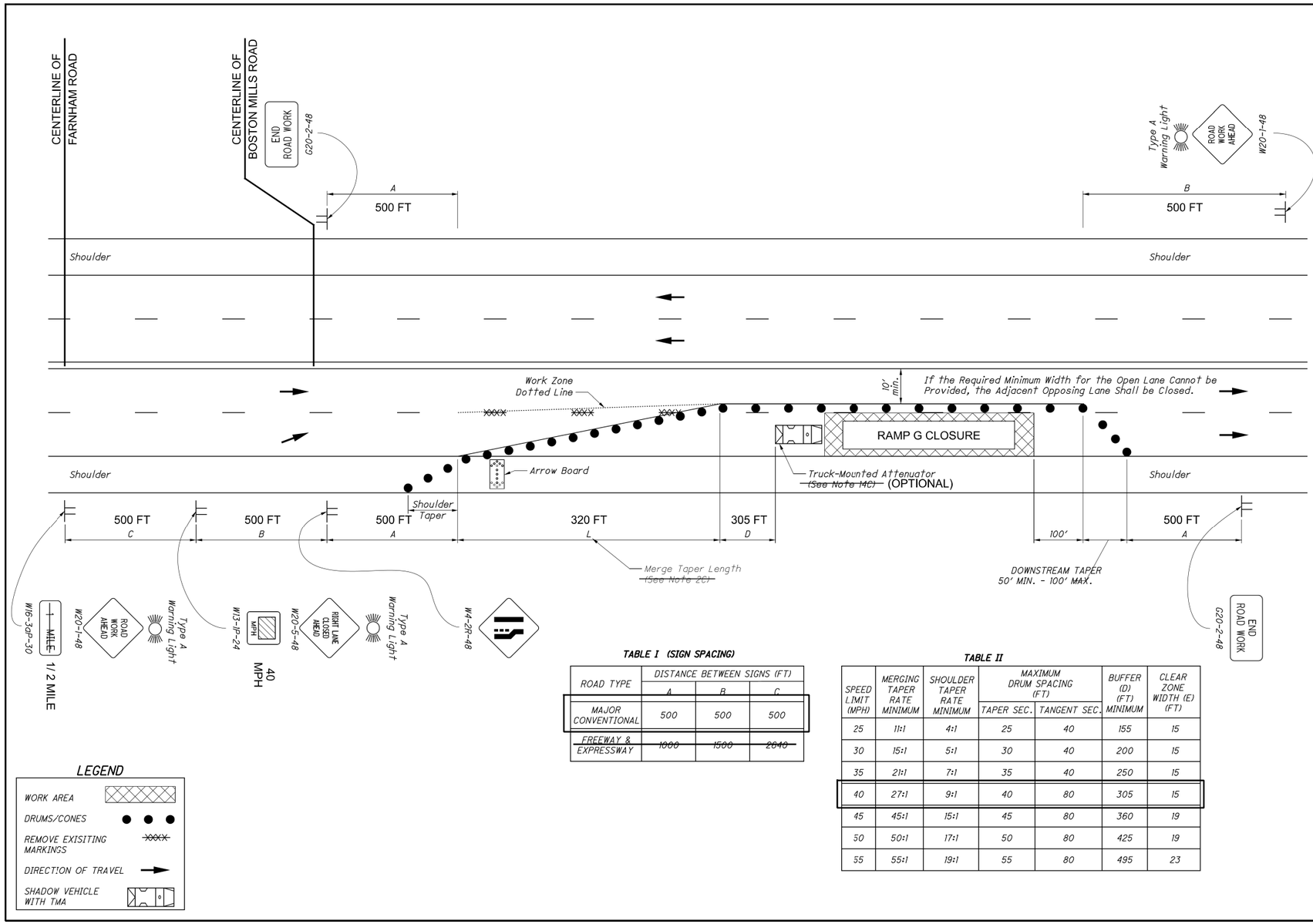

TABLE I (SIGN SPACING)

ROAD TYPE	DISTANCE BETWEEN SIGNS (FT)		
	A	B	C
MAJOR CONVENTIONAL	500	500	500
~~FREEWAY & EXPRESSWAY~~	~~1000~~	~~1500~~	~~2640~~

TABLE II

SPEED LIMIT (MPH)	MERGING TAPER RATE MINIMUM	SHOULDER TAPER RATE MINIMUM	MAXIMUM DRUM SPACING (FT)		BUFFER (D) (FT) MINIMUM	CLEAR ZONE WIDTH (E) (FT)
			TAPER SEC.	TANGENT SEC.		
25	11:1	4:1	25	40	155	15
30	15:1	5:1	30	40	200	15
35	21:1	7:1	35	40	250	15
40	27:1	9:1	40	80	305	15
45	45:1	15:1	45	80	360	19
50	50:1	17:1	50	80	425	19
55	55:1	19:1	55	80	495	23

LEGEND

- WORK AREA
- DRUMS/CONES
- REMOVE EXISITING MARKINGS
- DIRECTION OF TRAVEL
- SHADOW VEHICLE WITH TMA

THIS DRAWING REPLACES MT-95.31 DATED 04-19-2019.

STANDARD ROADWAY CONSTRUCTION DRAWING

CLOSING RIGHT LANES OF A MULTI-LANE UNDIVIDED HIGHWAY WITH DRUMS

SCD NUMBER: **MT-95.31**

1 / 3

OFFICE OF ROADWAY ENGINEERING

STATE OF OHIO DEPARTMENT OF TRANSPORTATION ADMINISTRATOR
David L. Holstein

STDS. ENGINEER
Soisson

REVISION DATE
07-19-2019

MOT DETOUR PLAN - RAMP G
SR-21 SOUTHBOUND RAMP CLOSURE

DESIGN AGENCY
Gannett Fleming
ENGINEERS AND ARCHITECTS, P.C.
2300 Corporate Exchange Drive
Suite 330
Columbus, OH 43231

DESIGNER: ACW
REVIEWER: DRJ 02-08-22
PROJECT ID: 104983
SHEET: 31 TOTAL: 297

SUM-77-32.27

MODEL: MD011 PAPERSIZE: 17x11 (in.) DATE: 2/22/2022 TIME: 6:13:59 PM USER: tdinh
pw:\\gfnet-pw.bentley.com:gfnet-pw-01\Documents\Projects\67490\104983\401-Engineering-GFI\MOT\Sheets\104983_MD011.dgn

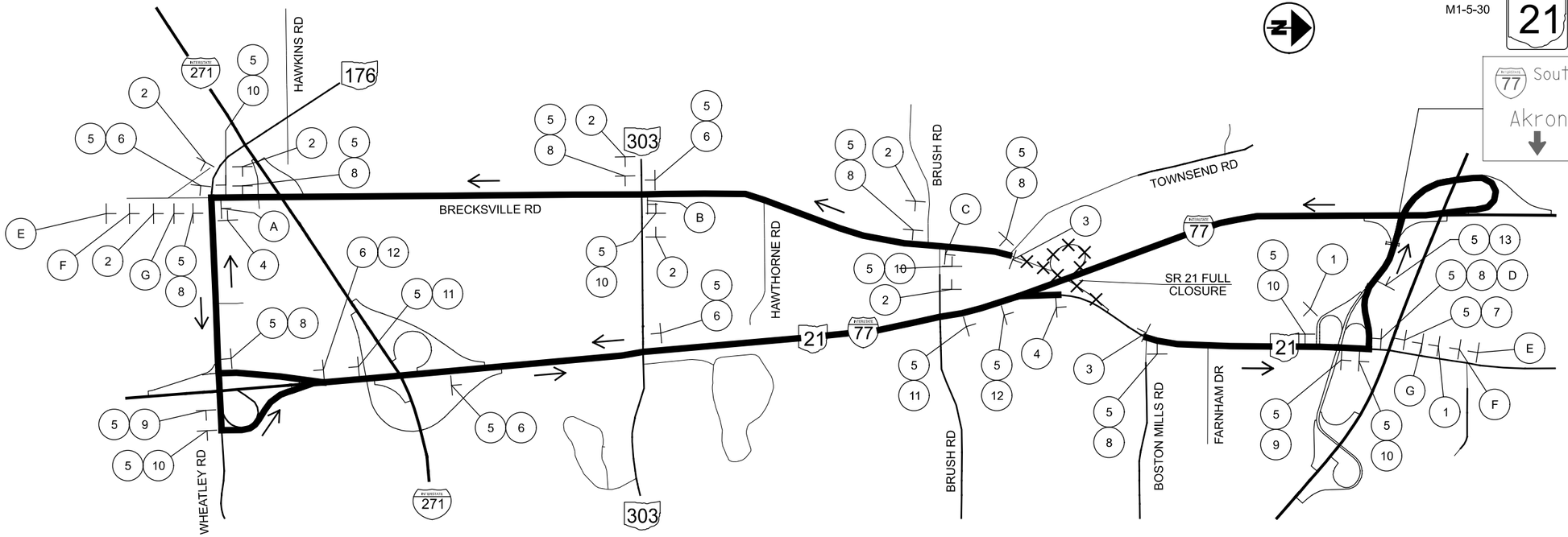

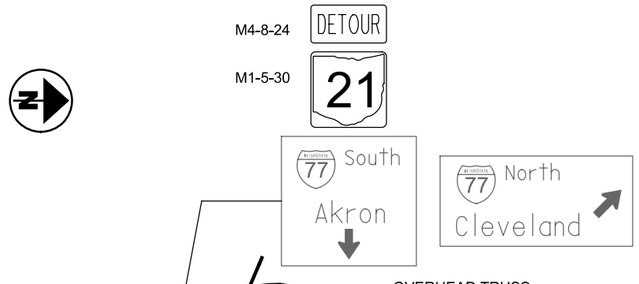

OVERHEAD TRUSS
MOUNTED SIGNS

MOT DETOUR PLAN
SR 21 FULL CLOSURE

LEGEND

XXX	CLOSURE
▬▬	DETOUR ROUTE
⊢	SIGN
←	DIRECTION OF TRAVEL

NOTES:

1. IMPLEMENT THIS DETOUR PLAN WHEN SR 21 UNDER THE PROJECT BRIDGES IS CLOSED.
2. SIGN SPACING PER OMUTCD TABLE 6C-1 "RECOMMENDED ADVANCE WARNING SIGN MINIMUM SPACING".
3. COVER CONFLICTING SIGNAGE.

(1) Brecksville Rd Closed at Boston Mills Rd — SPECIAL-36

(2) Brecksville Rd Closed at Townsend Rd — SPECIAL-36

(3) FLAGS — TYPE B — ROAD CLOSED — TYPE B — R11-2-48 TYPE III BARRICADE

(4) END DETOUR — M4-8a-24

(5) DETOUR / Brecksville Rd / 21 — M4-8-24, W16-H8P, M1-5-30

(6) M6-3-21

(7) M5-1R-21

(8) M6-1R-21

(9) M5-1L-21

(10) M6-1L-21

(11) M5-2R-21

(12) M6-2R-21

(13) LEFT LANE — M5-4-24

(A) ROAD CLOSED 2.5 MILES AHEAD LOCAL TRAFFIC ONLY — R11-3a-60

(B) ROAD CLOSED 1.2 MILES AHEAD LOCAL TRAFFIC ONLY — R11-3a-60

(C) ROAD CLOSED 0.2 MILES AHEAD LOCAL TRAFFIC ONLY — R11-3a-60

(D) ROAD CLOSED 0.8 MILES AHEAD LOCAL TRAFFIC ONLY — R11-3a-60

(E) ROAD WORK AHEAD — W20-1-36 TYPE A WARNING LIGHT

(F) ROAD CLOSED AHEAD — W20-3-36 TYPE A WARNING LIGHT

(G) DETOUR AHEAD — W20-2-36

DESIGN AGENCY
Gannett Fleming
ENGINEERS AND ARCHITECTS, P.C.
2500 Corporate Exchange Drive
Suite 230
Columbus, OH 43231

DESIGNER ACW
REVIEWER DRJ 02-08-22
PROJECT ID 104983
SHEET 32 TOTAL 297

SUM-77-32.27

MODEL: MD002 PAPERSIZE: 17x11 (in.) DATE: 2/22/2022 TIME: 6:17:00 PM USER: tdhh
pw:\\gfnet-pw.bentley.com:gfnet-pw-01\Documents\Projects\67490\104983\401-Engineering-GF\MOT\Sheets\104983_MD002.dgn

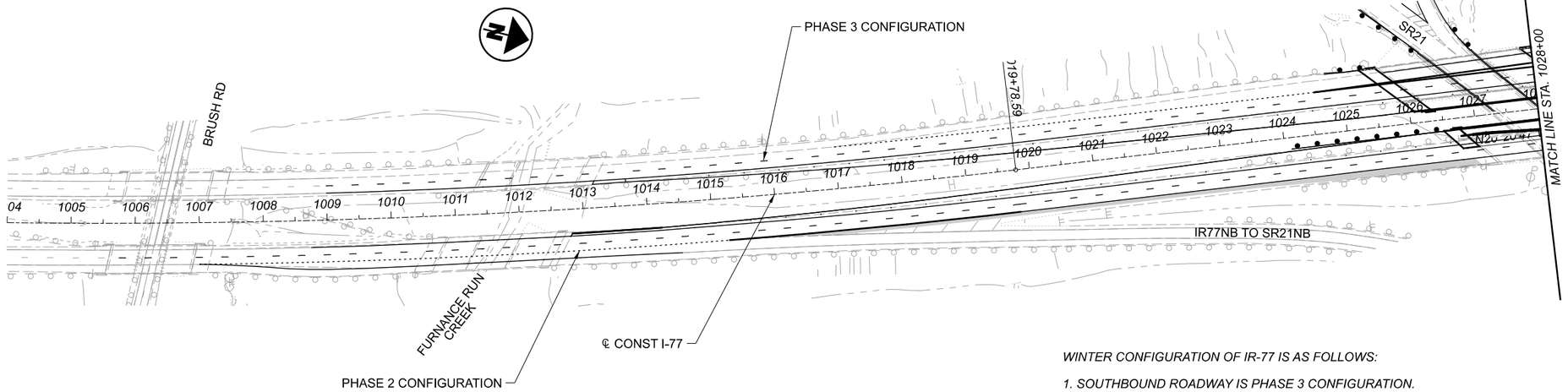

WINTER CONFIGURATION OF IR-77 IS AS FOLLOWS:

1. SOUTHBOUND ROADWAY IS PHASE 3 CONFIGURATION.

CONTRACTOR SHALL IMPLEMENT PHASE 3 PLAN SHEETS FOR WINTER CONDITION. (PAVEMENT MARKINGS AND SIGNING)

2. NORTHBOUND ROADWAY IS PHASE 2 CONFIGURATION.

CONTRACTOR SHALL FOLLOW PHASE 2 PLAN SHEETS FOR WINTER CONDITION. (PAVEMENT MARKINGS AND SIGNING)

3. SEPARATE PAVEMENT MARKING QUANTITIES ARE PROVIDED TO REINSTALL SOUTHBOUND (PHASE 3) MARKINGS AT THE END OF WINTER/BEGINNING OF PHASE 3.

4. SEPARATE PAVEMENT MARKING QUANTITIES ARE PROVIDED TO REINSTALL THE NORTHBOUND (PHASE 2) MARKINGS AT THE END OF PHASE 2/BEGINNING OF WINTER.

5. ALL RAISED PAVEMENT MARKINGS FOR THIS WINTER PHASE ARE QUANTIFIED AS ITEM 621 RPM

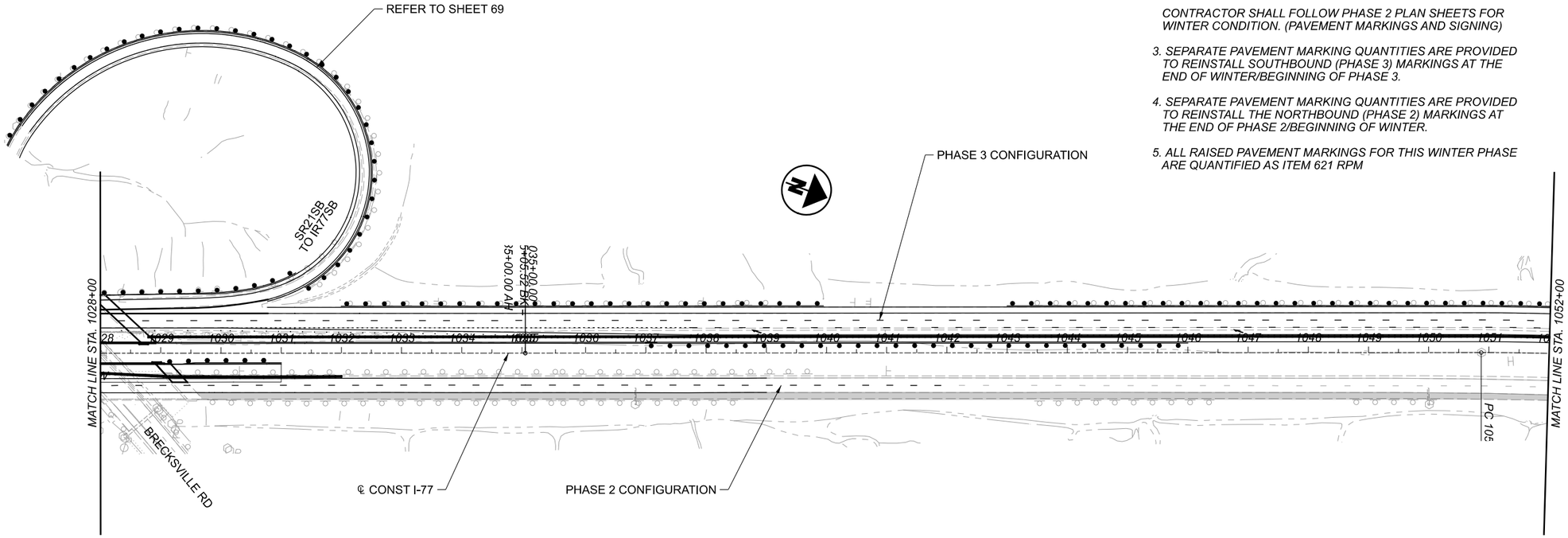

HORIZONTAL SCALE IN FEET
0 50 100 200

MAINTENANCE OF TRAFFIC - WINTER PHASE SCHEMATIC STA. 1004+00 TO STA. 1052+00

DESIGN AGENCY
Gannett Fleming
ENGINEERS AND ARCHITECTS, P.C.
250 Civic Center Drive, Suite 200
Columbus, OH 43215

DESIGNER: ACW
REVIEWER: DRJ 02-08-22
PROJECT ID: 104983
SHEET: 33 TOTAL: 297

SUM-77-32.27

MODEL: 104983_MPW01 PAPERSIZE: 17x11(in.) DATE: 2/22/2022 TIME: 6:19:15 PM USER: tdinh
pw:\\gfnet-pw.bentley.com:gfnet-pw-01\Documents\Projects\67490\104983\401-Engineering-GF\MOT\Sheets\104983_MPW01.dgn

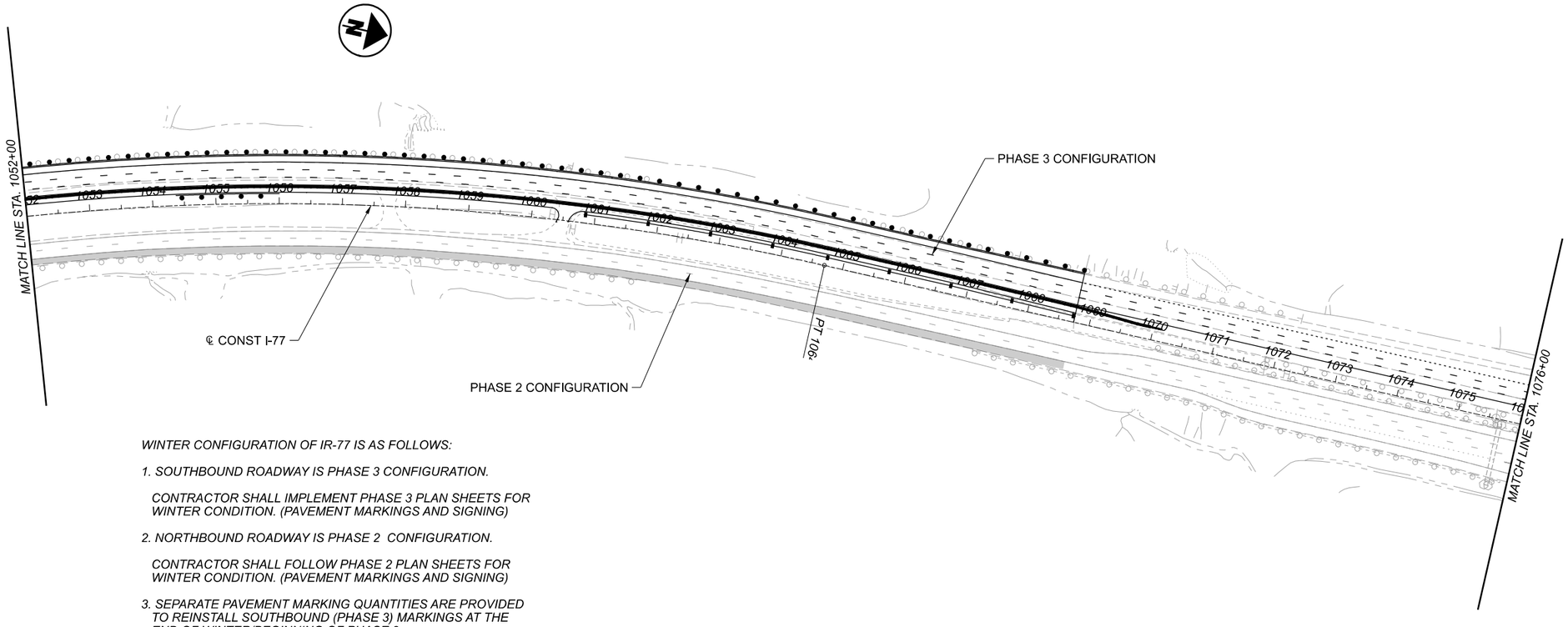

WINTER CONFIGURATION OF IR-77 IS AS FOLLOWS:

1. SOUTHBOUND ROADWAY IS PHASE 3 CONFIGURATION.

CONTRACTOR SHALL IMPLEMENT PHASE 3 PLAN SHEETS FOR WINTER CONDITION. (PAVEMENT MARKINGS AND SIGNING)

2. NORTHBOUND ROADWAY IS PHASE 2 CONFIGURATION.

CONTRACTOR SHALL FOLLOW PHASE 2 PLAN SHEETS FOR WINTER CONDITION. (PAVEMENT MARKINGS AND SIGNING)

3. SEPARATE PAVEMENT MARKING QUANTITIES ARE PROVIDED TO REINSTALL SOUTHBOUND (PHASE 3) MARKINGS AT THE END OF WINTER/BEGINNING OF PHASE 3.

4. SEPARATE PAVEMENT MARKING QUANTITIES ARE PROVIDED TO REINSTALL THE NORTHBOUND (PHASE 2) MARKINGS AT THE END OF PHASE 2/BEGINNING OF WINTER.

5. ALL RAISED PAVEMENT MARKINGS FOR THIS WINTER PHASE ARE QUANTIFIED AS ITEM 621 RPM

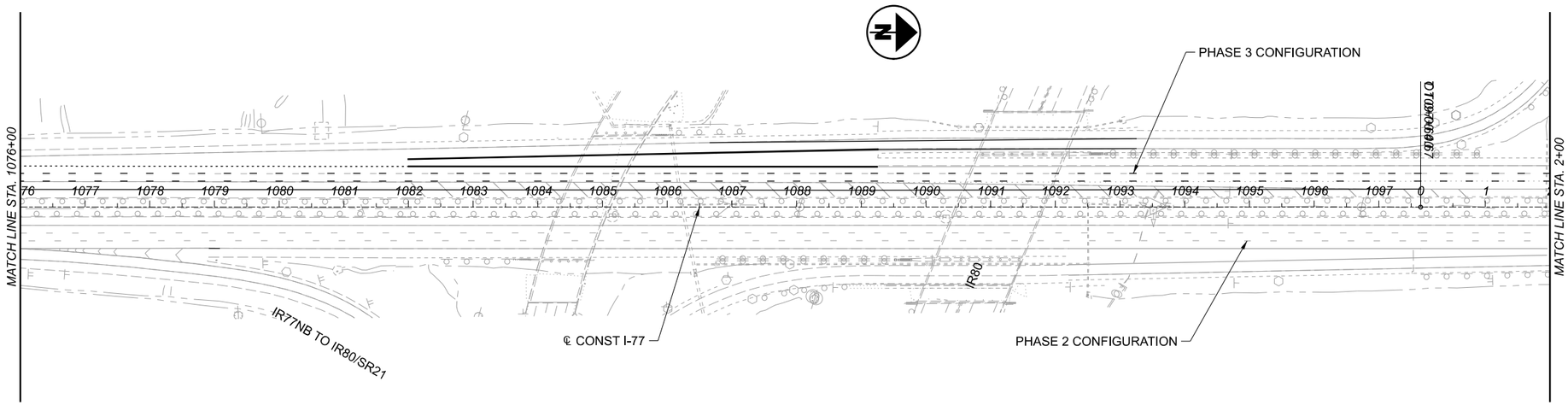

HORIZONTAL SCALE IN FEET
0 50 100 200

MAINTENANCE OF TRAFFIC - WINTER PHASE SCHEMATIC STA. 1052+00 TO STA. 2+00

SUM-77-32.27

MODEL: 104983_MPW02 PAPERSIZE: 17x11(in) DATE: 2/22/2022 TIME: 6:21:57 PM USER: tdinh
pw:\\gfnet-pw.bentley.com:gfnet-pw-01\Documents\Projects\67490\104983\401-Engineering-GF\MOT\Sheets\104983_MPW02.dgn

DESIGN AGENCY
Gannett Fleming
ENGINEERS AND ARCHITECTS, P.C.
2200 Corporate Exchange Drive
Suite 230
Columbus, OH 43231

DESIGNER: ACW
REVIEWER: DRJ 02-08-22
PROJECT ID: 104983
SHEET: 34 TOTAL: 297

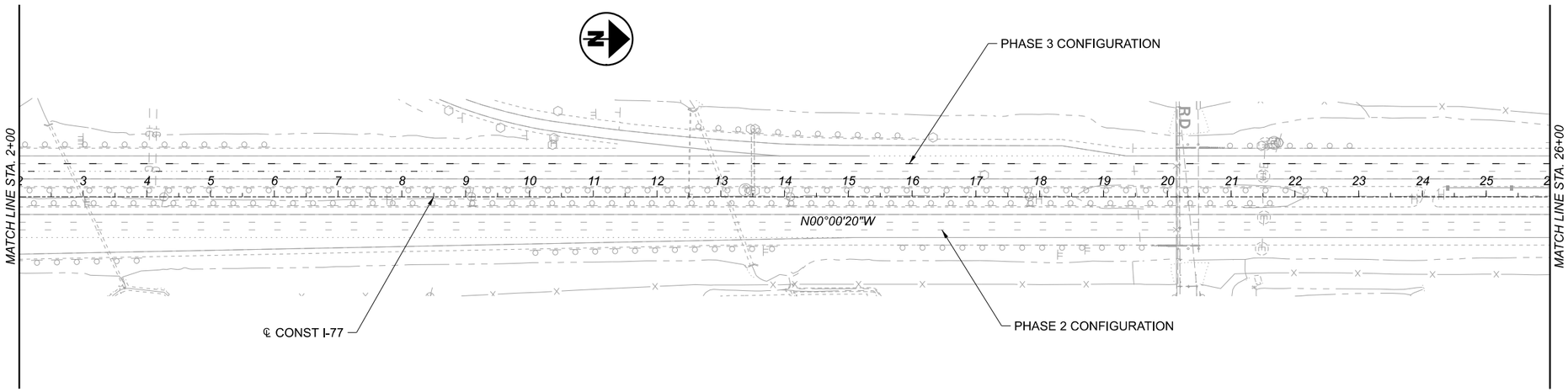

WINTER CONFIGURATION OF IR-77 IS AS FOLLOWS:

1. SOUTHBOUND ROADWAY IS PHASE 3 CONFIGURATION.

CONTRACTOR SHALL IMPLEMENT PHASE 3 PLAN SHEETS FOR WINTER CONDITION. (PAVEMENT MARKINGS AND SIGNING)

2. NORTHBOUND ROADWAY IS PHASE 2 CONFIGURATION.

CONTRACTOR SHALL FOLLOW PHASE 2 PLAN SHEETS FOR WINTER CONDITION. (PAVEMENT MARKINGS AND SIGNING)

3. SEPARATE PAVEMENT MARKING QUANTITIES ARE PROVIDED TO REINSTALL SOUTHBOUND (PHASE 3) MARKINGS AT THE END OF WINTER/BEGINNING OF PHASE 3.

4. SEPARATE PAVEMENT MARKING QUANTITIES ARE PROVIDED TO REINSTALL THE NORTHBOUND (PHASE 2) MARKINGS AT THE END OF PHASE 2/BEGINNING OF WINTER.

5. ALL RAISED PAVEMENT MARKINGS FOR THIS WINTER PHASE ARE QUANTIFIED AS ITEM 621 RPM

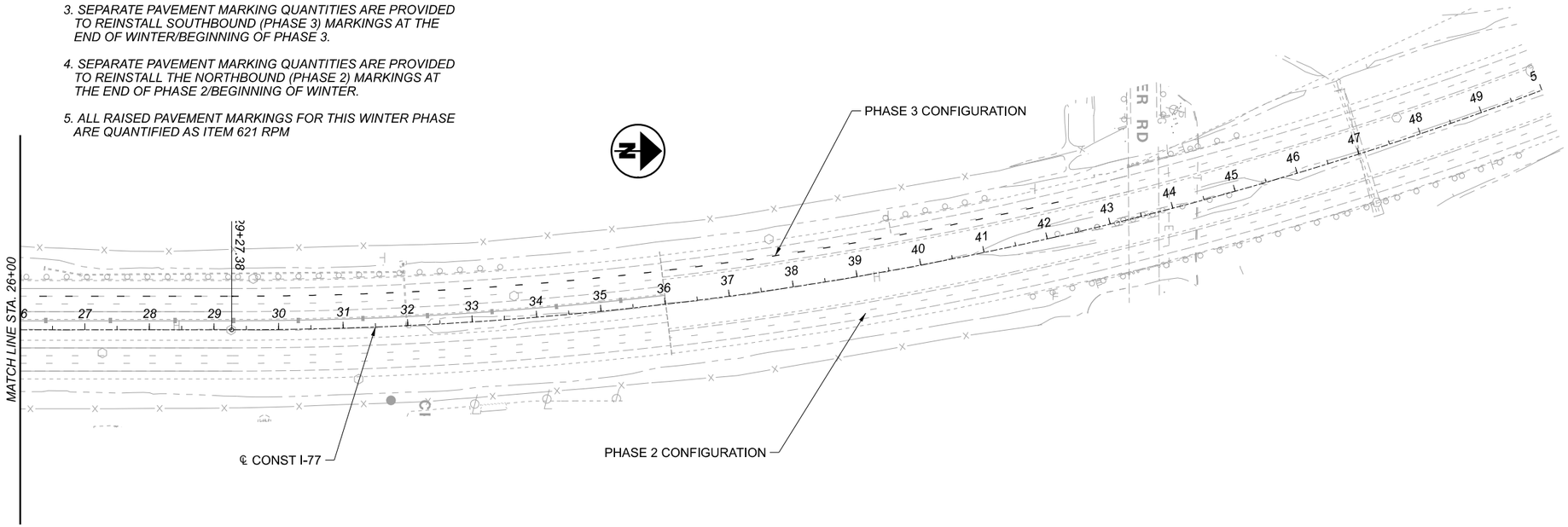

HORIZONTAL SCALE IN FEET
0 50 100 200

MAINTENANCE OF TRAFFIC - WINTER PHASE SCHEMATIC
STA. 2+00 TO STA. 50+00

DESIGN AGENCY
Gannett Fleming
ENGINEERS AND ARCHITECTS, P.C.
250 Civic Center Drive, Suite 200
Columbus, OH 43215

DESIGNER: ACW
REVIEWER: DRJ 02-08-22
PROJECT ID: 104983
SHEET 35 TOTAL 297

SUM-77-32.27

MODEL: 104983_MPW03 PAPERSIZE: 17x11(in.) DATE: 2/22/2022 TIME: 6:24:5 PM USER: tdinh
pw:\\gfnet-pw.bentley.com:gfnet-pw-01\Documents\Projects\67490\104983\401-Engineering-GF\MOT\Sheets\104983_MPW03.dgn

MOT TRANSVERSE SECTION LEGEND

- PORTABLE BARRIER
- WORK ZONE DRUM
- DIRECTION OF TRAVEL
- ACTIVE WORK ZONE
- PAVEMENT FOR MAINTAINING TRAFFIC (PROPOSED)
- PAVEMENT FOR MAINTAINING TRAFFIC (CONSTRUCTED IN PREVIOUS PHASE)

NOTES:

1. INSIDE SAWCUT LINE FOR PAVEMENT FOR MAINTAINING TRAFFIC (TEMPORARY PAVEMENT) IS ON EXISTING EDGE OF PAVEMENT.

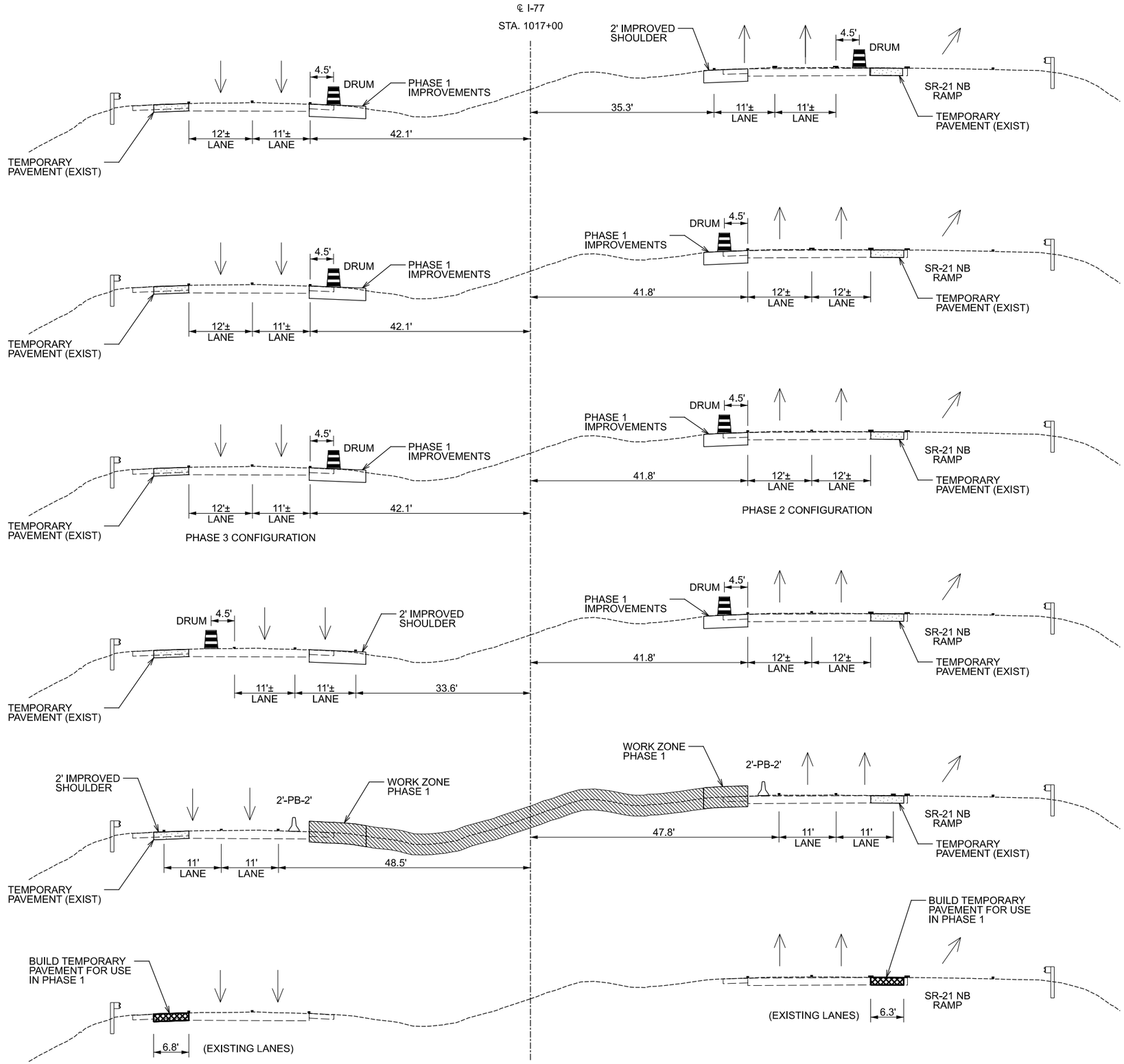

MOT - TYPICAL SECTION SECTION A-A (STA. 1017+00)

DESIGN AGENCY	Gannett Fleming ENGINEERS AND ARCHITECTS, P.C. 2500 Corporate Exchange Drive Suite 230 Columbus, OH 43231
DESIGNER	ACW
REVIEWER	DRJ 02-08-22
PROJECT ID	104983
SHEET	36
TOTAL	297

SUM-77-32.27

MODEL: MY001 PAPERSIZE: ITxII(in.) DATE: 2/22/2022 TIME: 6:26:24 PM USER: tdinh
pw:\\gfnet-pw.bentley.com:gfnet-pw-01\Documents\Projects\67490\104983\401-Engineering-GFX\MOT\Sheets\104983_MY001.dgn

MOT TRANSVERSE SECTION LEGEND

- PORTABLE BARRIER
- WORK ZONE DRUM
- DIRECTION OF TRAVEL
- ACTIVE WORK ZONE
- PAVEMENT FOR MAINTAINING TRAFFIC (PROPOSED)
- PAVEMENT FOR MAINTAINING TRAFFIC (CONSTRUCTED IN PREVIOUS PHASE)

℄ I-77
STA. 1027+50

PHASE 4

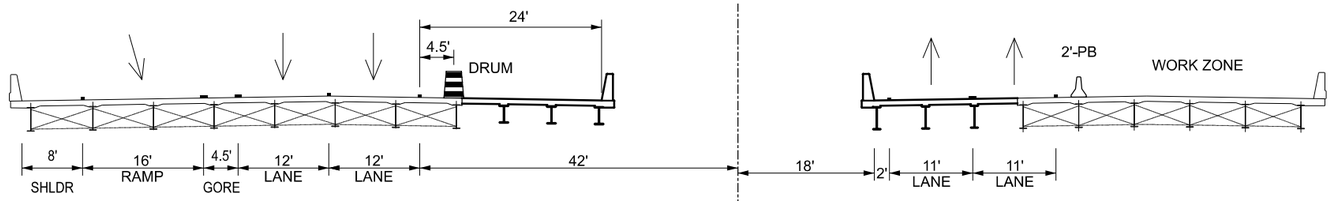

PHASE 3

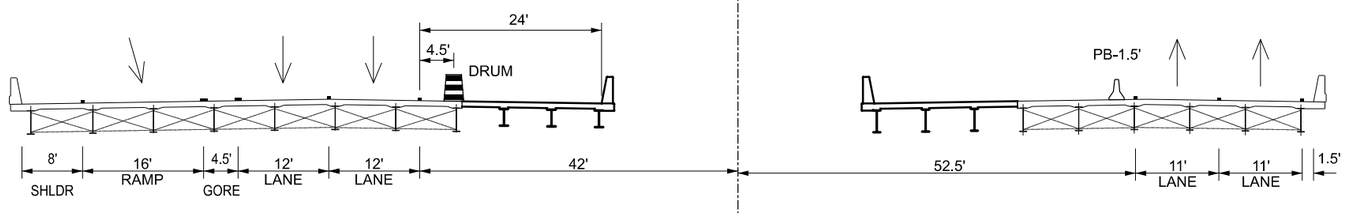

WINTER MOT

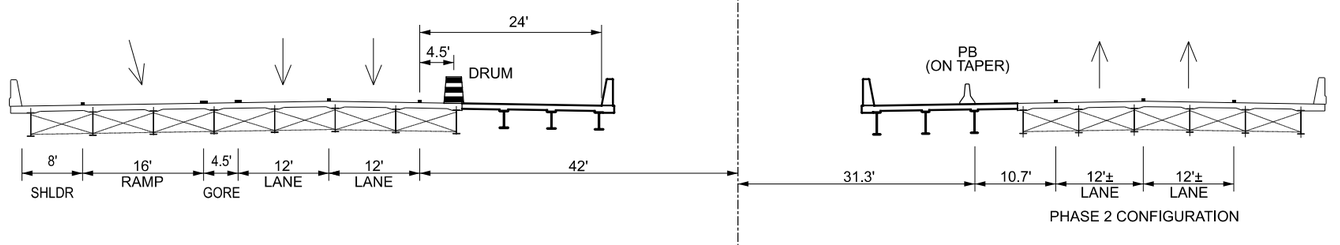

PHASE 2 CONFIGURATION

PHASE 2

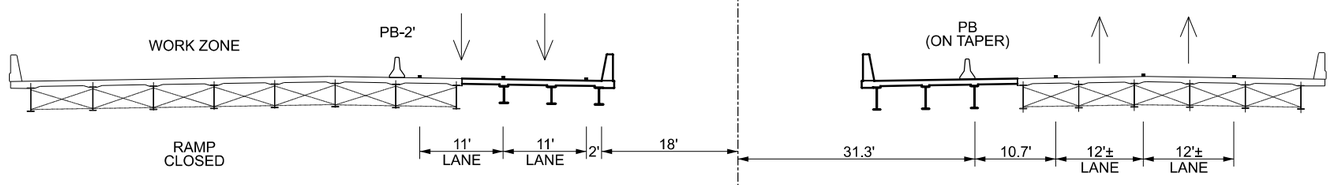

PHASE 1

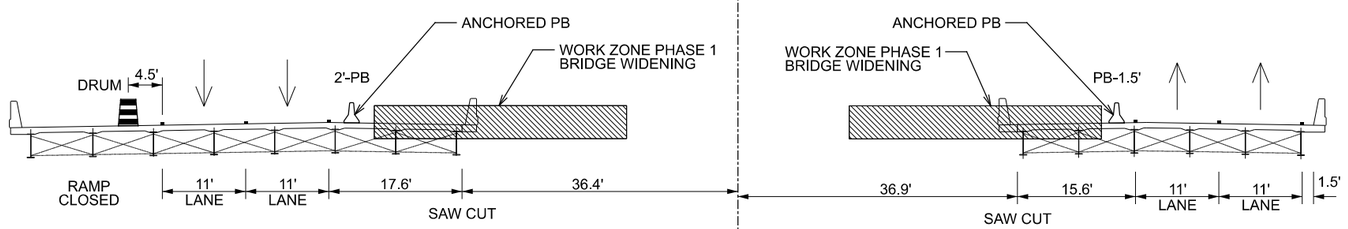

PRE PHASE

MOT - TYPICAL SECTION SECTION B-B (STA. 1027+50)

SUM-77-32.27

MODEL: MY002 PAPERSIZE: 17x11(in.) DATE: 2/22/2022 TIME: 6:26:24 PM USER: tdinh
pw:\\gfnet-pw.bentley.com:gfnet-pw-01\Documents\Projects\67490\104983\401-Engineering-GFW\MOT\Sheets\104983_MY001.dgn

DESIGN AGENCY
Gannett Fleming
ENGINEERS AND ARCHITECTS, P.C.
2500 Corporate Exchange Drive
Suite 230
Columbus, OH 43231

DESIGNER ACW
REVIEWER DRJ 02-08-22
PROJECT ID 104983
SHEET 37 TOTAL 297

MOT TRANSVERSE SECTION LEGEND

- PORTABLE BARRIER
- WORK ZONE DRUM
- DIRECTION OF TRAVEL
- ACTIVE WORK ZONE
- PAVEMENT FOR MAINTAINING TRAFFIC (PROPOSED)
- PAVEMENT FOR MAINTAINING TRAFFIC (CONSTRUCTED IN PREVIOUS PHASE)

NOTES:

1. INSIDE SAWCUT LINE FOR PAVEMENT FOR MAINTAINING TRAFFIC (TEMPORARY PAVEMENT) IS ON EXISTING EDGE OF PAVEMENT.

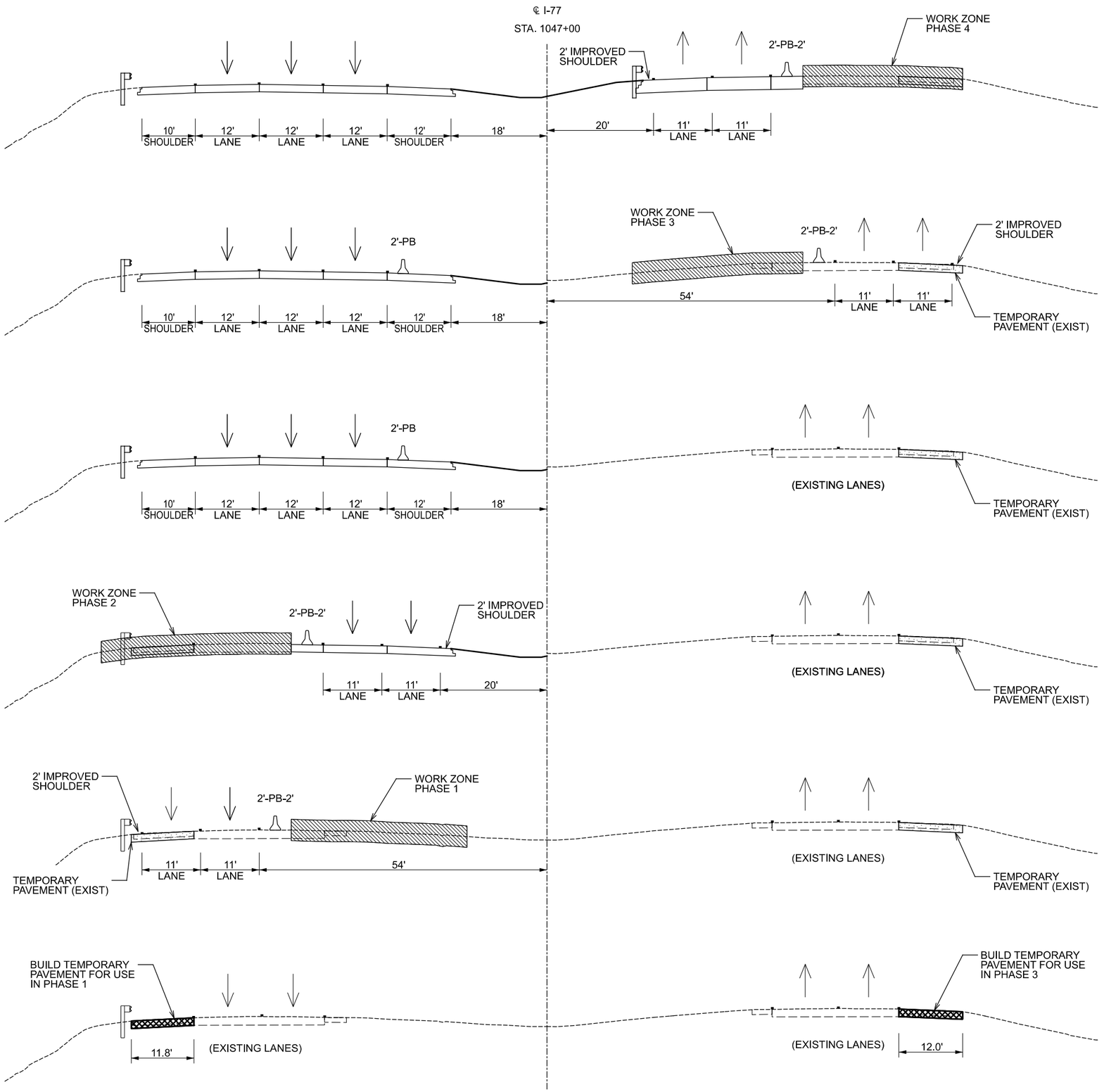

MOT - TYPICAL SECTION SECTION C-C (STA. 1047+00)

SUM-77-32.27

MODEL: MY003 PAPERSIZE: 11x17(in.) DATE: 2/22/2022 TIME: 6:26:26 PM USER: tdinh
pw:\\gfnet-pw.bentley.com:gfnet-pw-01\Documents\Projects\67490\104983\401-Engineering-GF\MOT\Sheets\104983_MY001.dgn

DESIGN AGENCY
Gannett Fleming
ENGINEERS AND ARCHITECTS, P.C.
2500 Corporate Exchange Drive
Suite 230
Columbus, OH 43231

DESIGNER	ACW
REVIEWER	CJM 09-28-21
PROJECT ID	104983
SHEET	38
TOTAL	297

MOT TRANSVERSE SECTION LEGEND

- PORTABLE BARRIER
- WORK ZONE DRUM
- DIRECTION OF TRAVEL
- ACTIVE WORK ZONE
- PAVEMENT FOR MAINTAINING TRAFFIC (PROPOSED)
- PAVEMENT FOR MAINTAINING TRAFFIC (CONSTRUCTED IN PREVIOUS PHASE)

NOTES:

1. INSIDE SAWCUT LINE FOR PAVEMENT FOR MAINTAINING TRAFFIC (TEMPORARY PAVEMENT) IS ON EXISTING EDGE OF PAVEMENT.

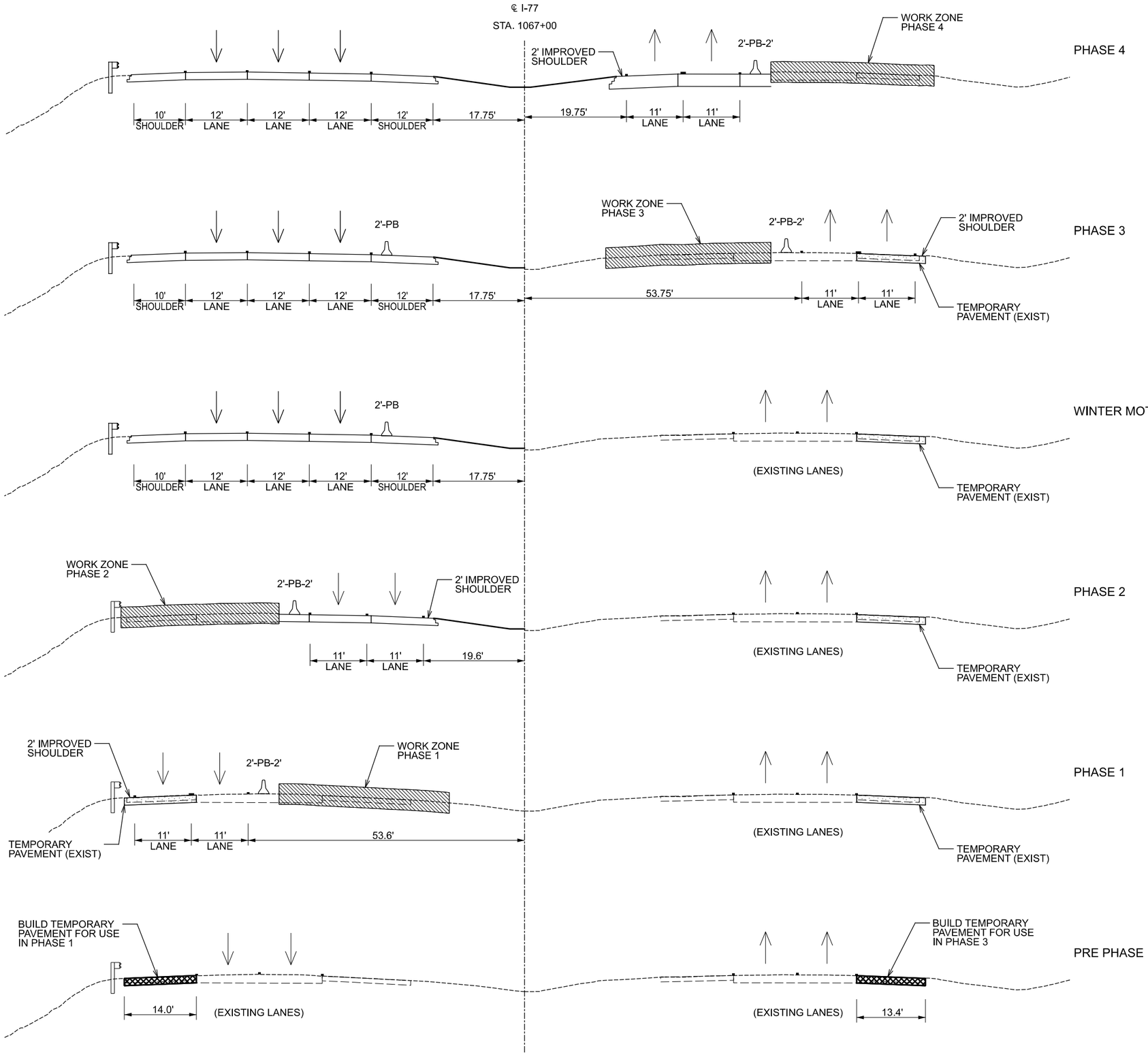

MOT - TYPICAL SECTION SECTION D-D (STA. 1067+00)

SUM-77-32.27

MODEL: MY004 PAPERSIZE: 17x11(in.) DATE: 2/22/2022 TIME: 6:26:26 PM USER: tdhh
pw:\\gfnet-pw.bentley.comgfnet-pw-01\Documents\Projects\67490\104983\40i-Engineering-GF\MOT\Sheets\104983_MY00i.dgn

DESIGN AGENCY
Gannett Fleming
ENGINEERS AND ARCHITECTS, P.C.
2200 Corporate Exchange Drive
Suite 230
Columbus, OH 43231

DESIGNER ACW

REVIEWER CJM 09-28-21

PROJECT ID 104983

SHEET 39 TOTAL 297

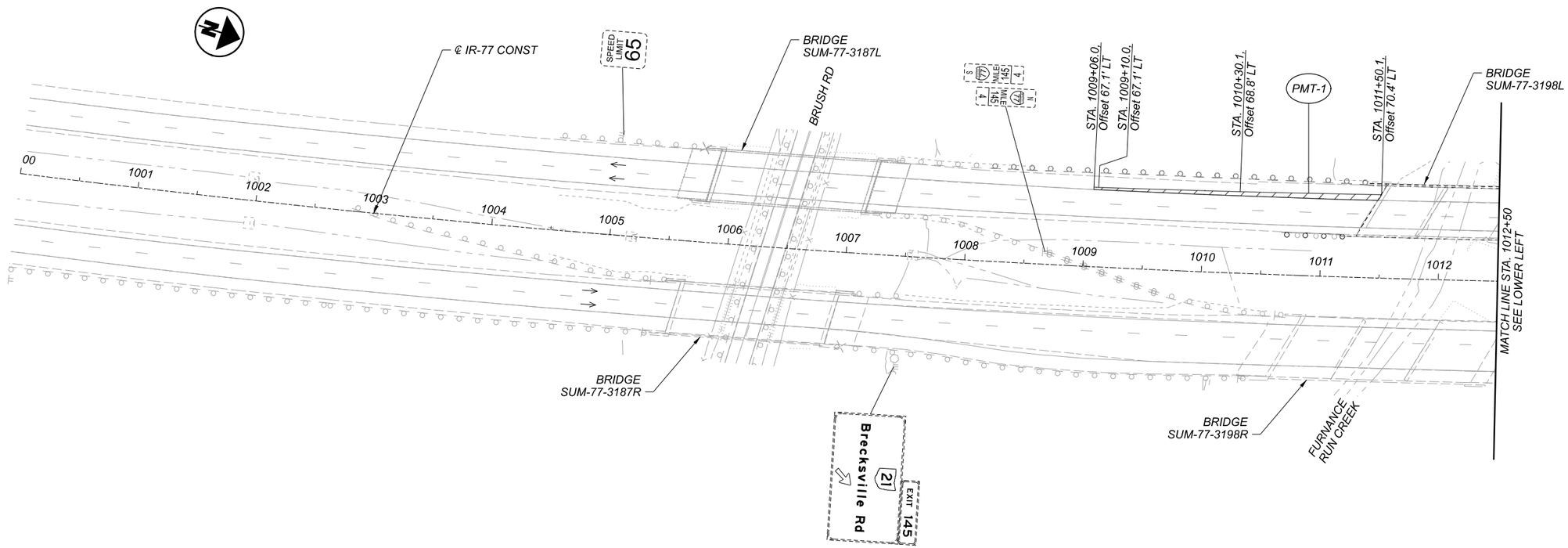

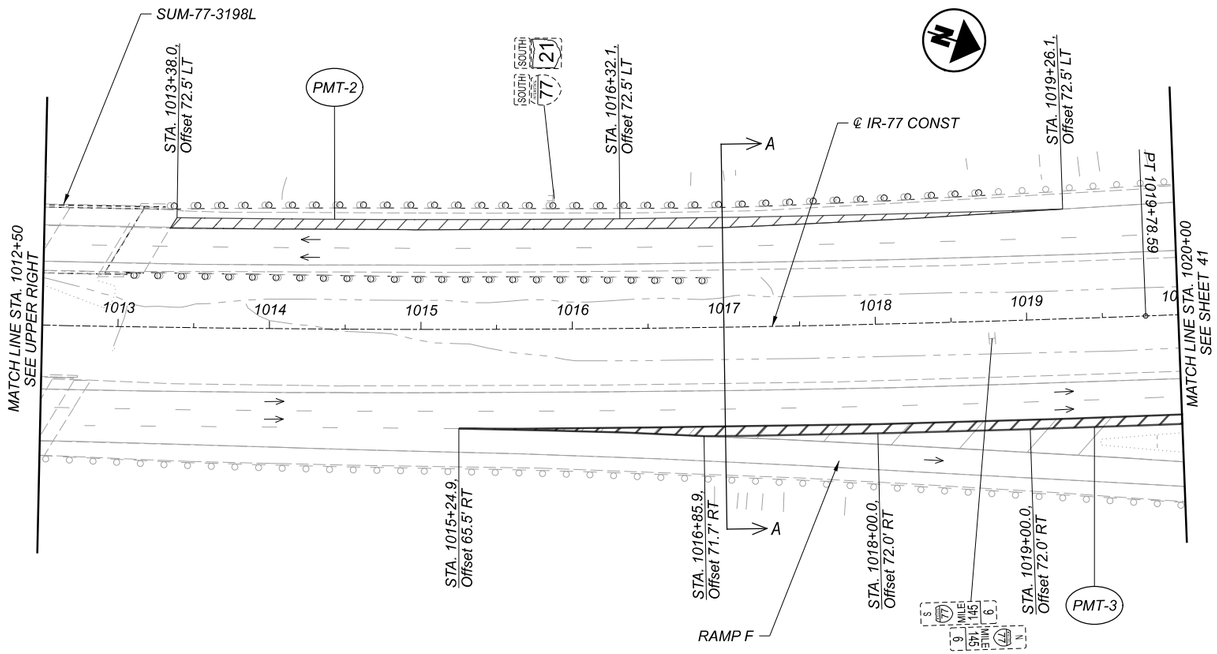

NOTES:

1. FOR MAINTENANCE OF TRAFFIC LEGEND, SEE SHEET 23

2. MAINTAIN EXISTING TRAFFIC DURING CONSTRUCTION OF PAVEMENT FOR MAINTAINING TRAFFIC. REFER TO ODOT'S PERMITTED LANE CLOSURE SCHEDULE (PCMS) FOR PERMISSIBLE LANE CLOSURES AND TIMES. INSIDE EDGE OF TEMPORARY PAVEMENT IS EXISTING EDGE OF PAVEMENT. FOR MOT SETUP, REFER TO SCD MT-95.30

3. MAINTAIN EXISTING STRIPING UNLESS OTHERWISE NOTED. REMOVE CONFLICTING PAVEMENT MARKINGS.

4. FOR SECTION A-A, SEE SHEET 36

HORIZONTAL SCALE IN FEET
0 25 50 100

MAINTENANCE OF TRAFFIC - PRE PHASE
IR-77 - STA 1000+00 TO STA 1020+00

SUM-77-32.27

MODEL: 104983_MP001 PAPERSIZE: 17x11(in.) DATE: 2/22/2022 TIME: 6:28:30 PM USER: tdinh
pw:\\gfnet-pw.bentley.com:gfnet-pw-01\Documents\Projects\67490\104983\401-Engineering-GF\MOT\Sheets\104983_MP001.dgn

DESIGN AGENCY
Gannett Fleming
ENGINEERS AND ARCHITECTS, P.C.
2500 Corporate Exchange Drive
Suite 230
Columbus, OH 43231

DESIGNER: ACW
REVIEWER: CJM 09-28-21
PROJECT ID: 104983
SHEET: 40 TOTAL: 297

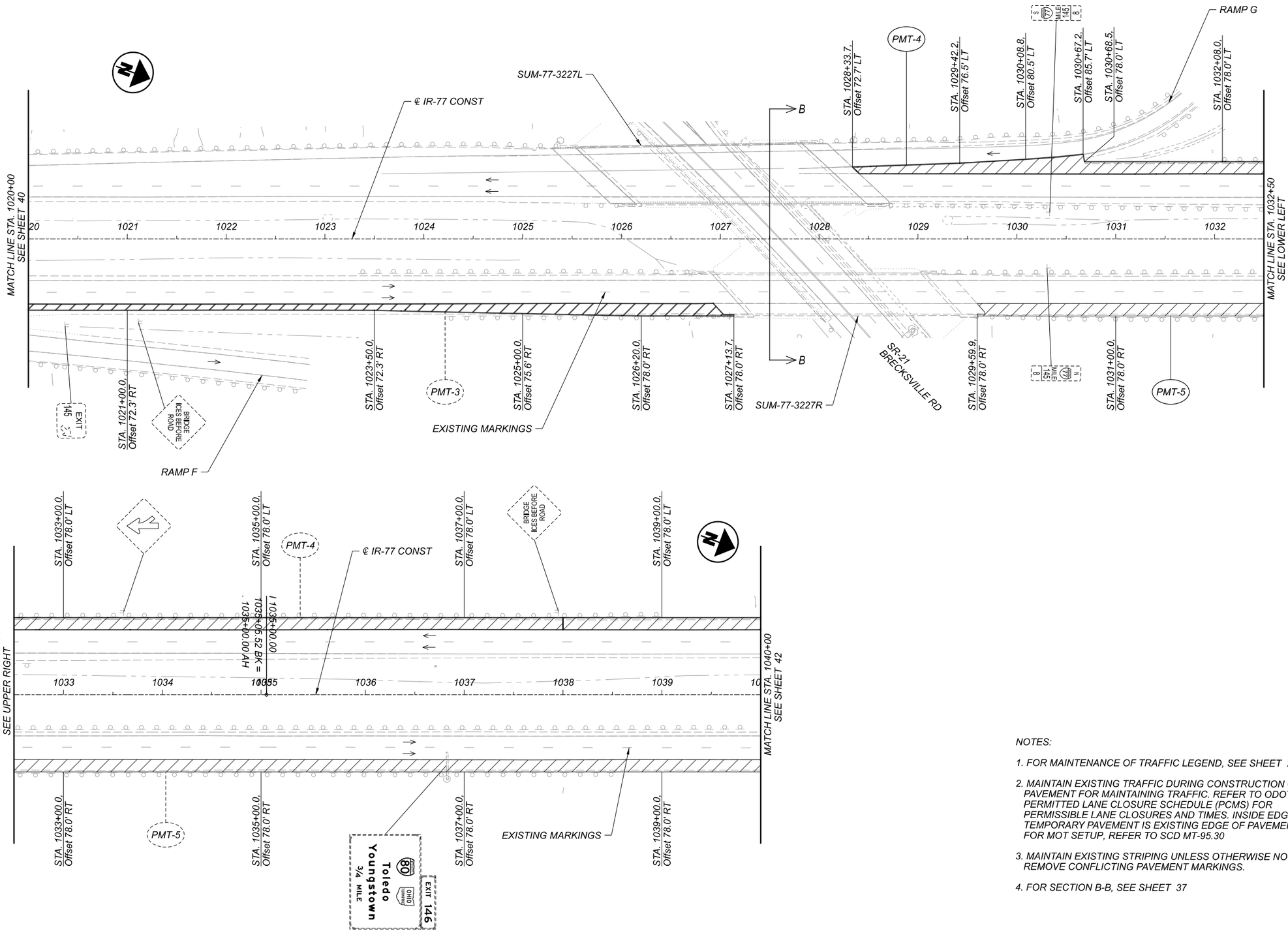

HORIZONTAL SCALE IN FEET
0 25 50 100

MAINTENANCE OF TRAFFIC - PRE PHASE
IR-77 - STA 1020+00 TO STA 1040+00

NOTES:

1. FOR MAINTENANCE OF TRAFFIC LEGEND, SEE SHEET 23

2. MAINTAIN EXISTING TRAFFIC DURING CONSTRUCTION OF PAVEMENT FOR MAINTAINING TRAFFIC. REFER TO ODOT'S PERMITTED LANE CLOSURE SCHEDULE (PCMS) FOR PERMISSIBLE LANE CLOSURES AND TIMES. INSIDE EDGE OF TEMPORARY PAVEMENT IS EXISTING EDGE OF PAVEMENT. FOR MOT SETUP, REFER TO SCD MT-95.30

3. MAINTAIN EXISTING STRIPING UNLESS OTHERWISE NOTED. REMOVE CONFLICTING PAVEMENT MARKINGS.

4. FOR SECTION B-B, SEE SHEET 37

DESIGN AGENCY
Gannett Fleming
ENGINEERS AND ARCHITECTS, P.C.
2500 Corporate Exchange Drive
Suite 220
Columbus, OH 43231

DESIGNER ACW
REVIEWER CJM 09-28-21
PROJECT ID 104983
SHEET 41 TOTAL 297

SUM-77-32.27

MODEL: 104983_MP002 PAPERSIZE: 11x17(in.) DATE: 2/22/2022 TIME: 6:3107 PM USER: tdmh
pw:\\gfnet-pw.bentley.com:gfnet-pw-01\Documents\Projects\67490\104983\401-Engineering-GF\MOT\Sheets\104983_MP002.dgn

MODEL: I04983_MP003 PAPERSIZE: 17x11(in,) DATE: 2/22/2022 TIME: 6:33:14 PM USER: tdinh
pw:\\gfnet-pw.bentley.com:gfnet-pw-01\Documents\Projects\67490\104983\401-Engineering-GF\MOT\Sheets\104983_MP003.dgn

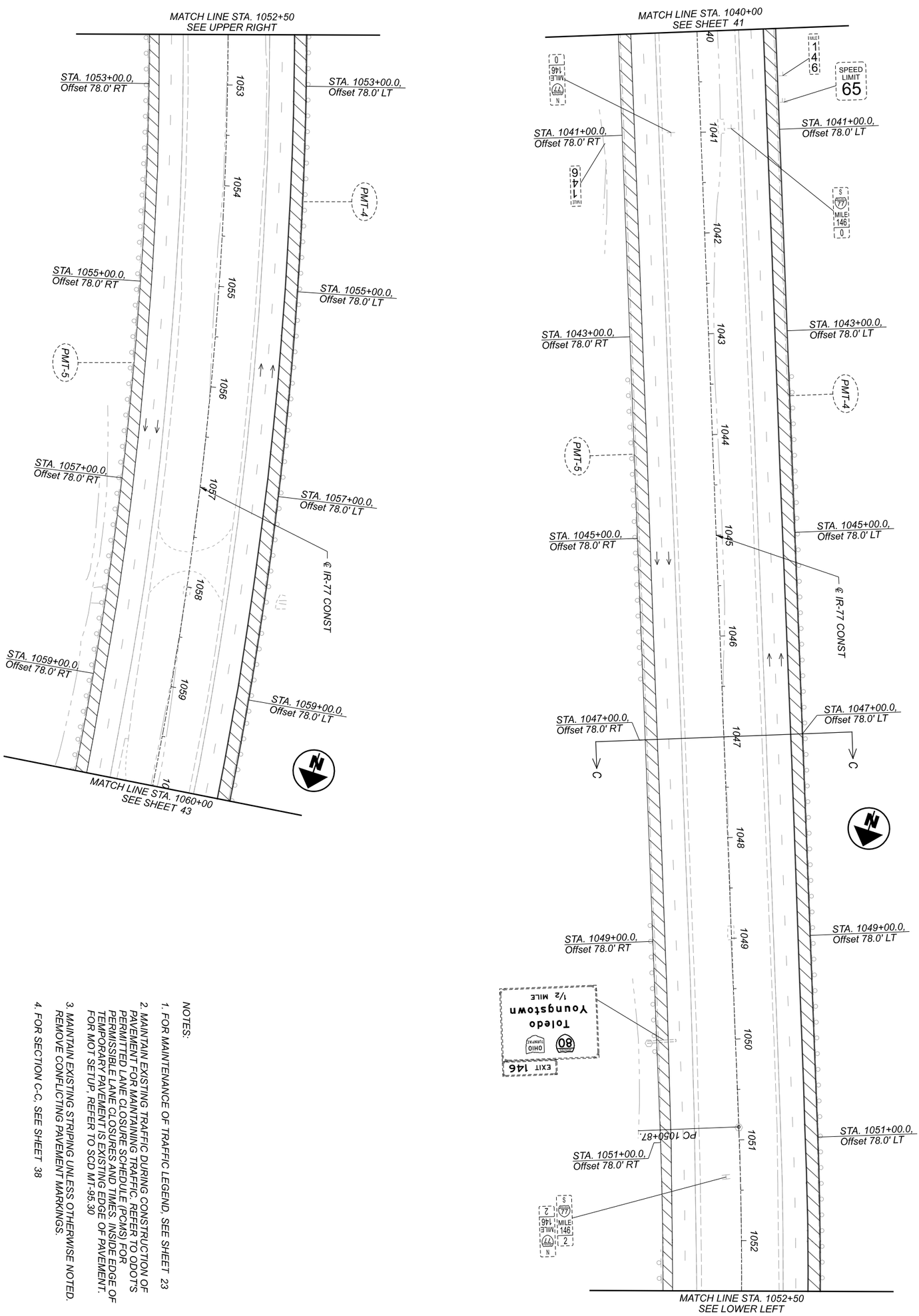

NOTES:

1. FOR MAINTENANCE OF TRAFFIC LEGEND, SEE SHEET 23
2. MAINTAIN EXISTING TRAFFIC DURING CONSTRUCTION OF PAVEMENT FOR MAINTAINING TRAFFIC, REFER TO ODOT'S PERMITTED LANE CLOSURE SCHEDULE (PCMS) FOR PERMISSIBLE LANE CLOSURES AND TIMES. INSIDE EDGE OF TEMPORARY PAVEMENT IS EXISTING EDGE OF PAVEMENT. FOR MOT SETUP, REFER TO SCD MT-95.30
3. MAINTAIN EXISTING STRIPING UNLESS OTHERWISE NOTED. REMOVE CONFLICTING PAVEMENT MARKINGS.
4. FOR SECTION C-C, SEE SHEET 38

MAINTENANCE OF TRAFFIC - PRE PHASE
IR-77 - STA 1040+00 TO STA 1060+00

HORIZONTAL SCALE IN FEET
0 50
25 100

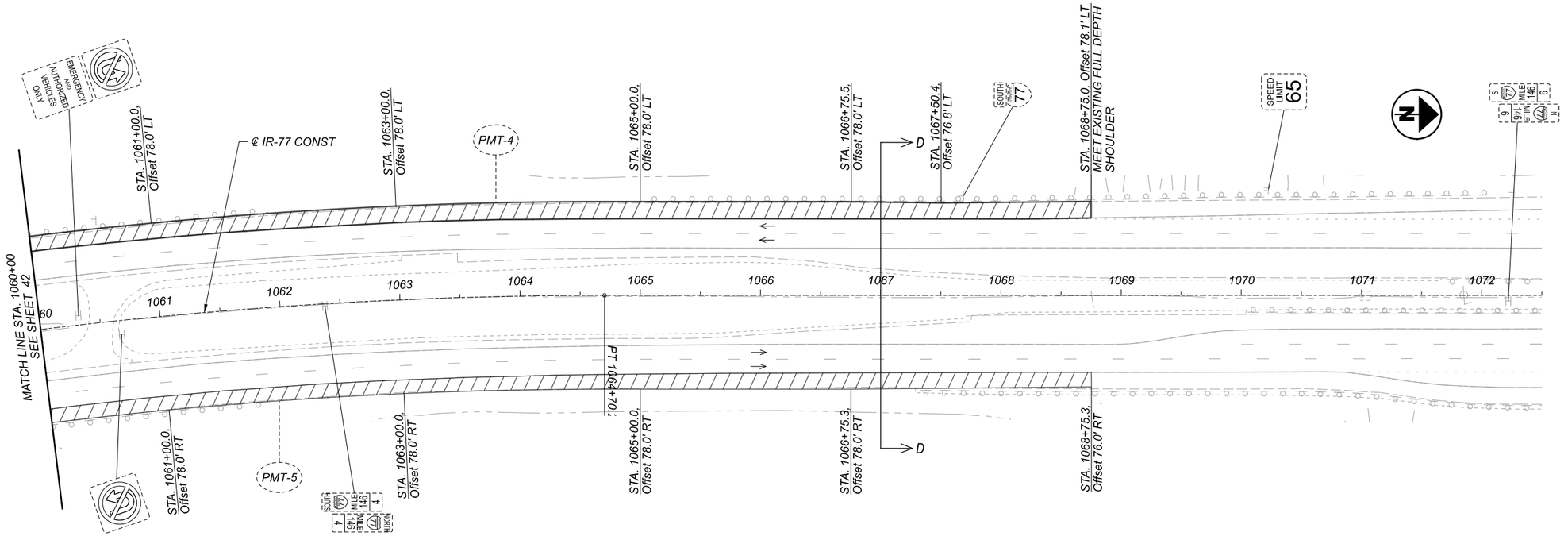

HORIZONTAL SCALE IN FEET
0 25 50 100

MAINTENANCE OF TRAFFIC - PRE PHASE
IR-77 - STA 1060+00 TO STA 1072+50

NOTES:

1. FOR MAINTENANCE OF TRAFFIC LEGEND, SEE SHEET 23

2. MAINTAIN EXISTING TRAFFIC DURING CONSTRUCTION OF PAVEMENT FOR MAINTAINING TRAFFIC. REFER TO ODOT'S PERMITTED LANE CLOSURE SCHEDULE (PCMS) FOR PERMISSIBLE LANE CLOSURES AND TIMES. INSIDE EDGE OF TEMPORARY PAVEMENT IS EXISTING EDGE OF PAVEMENT. FOR MOT SETUP, REFER TO SCD MT-95.30

3. MAINTAIN EXISTING STRIPING UNLESS OTHERWISE NOTED. REMOVE CONFLICTING PAVEMENT MARKINGS.

4. FOR SECTION D-D, SEE SHEET 39

DESIGN AGENCY
Gannett Fleming
ENGINEERS AND ARCHITECTS, P.C.
2500 Corporate Exchange Drive
Suite 220
Columbus, OH 43231

DESIGNER ACW
REVIEWER CJM 09-28-21
PROJECT ID 104983
SHEET 43 TOTAL 297

SUM-77-32.27

MODEL: 104983_MP004 PAPERSIZE: 17x11(in.) DATE: 2/22/2022 TIME: 6:35:41PM USER: tdinh
pw:\\gfnet-pw.bentley.com:gfnet-pw-01\Documents\Projects\67490\104983\40i-Engineering-GF\MOT\Sheets\104983_MP004.dgn

MODEL: 104983_MPI00 PAPERSIZE: 17x11(in.) DATE: 2/22/2022 TIME: 6:37:58 PM USER: tdinh
pw:\\gfnet-pw.bentley.com:gfnet-pw-01\Documents\Projects\67490\104983\401-Engineering-GF\MOT\Sheets\104983_MPI00.dgn

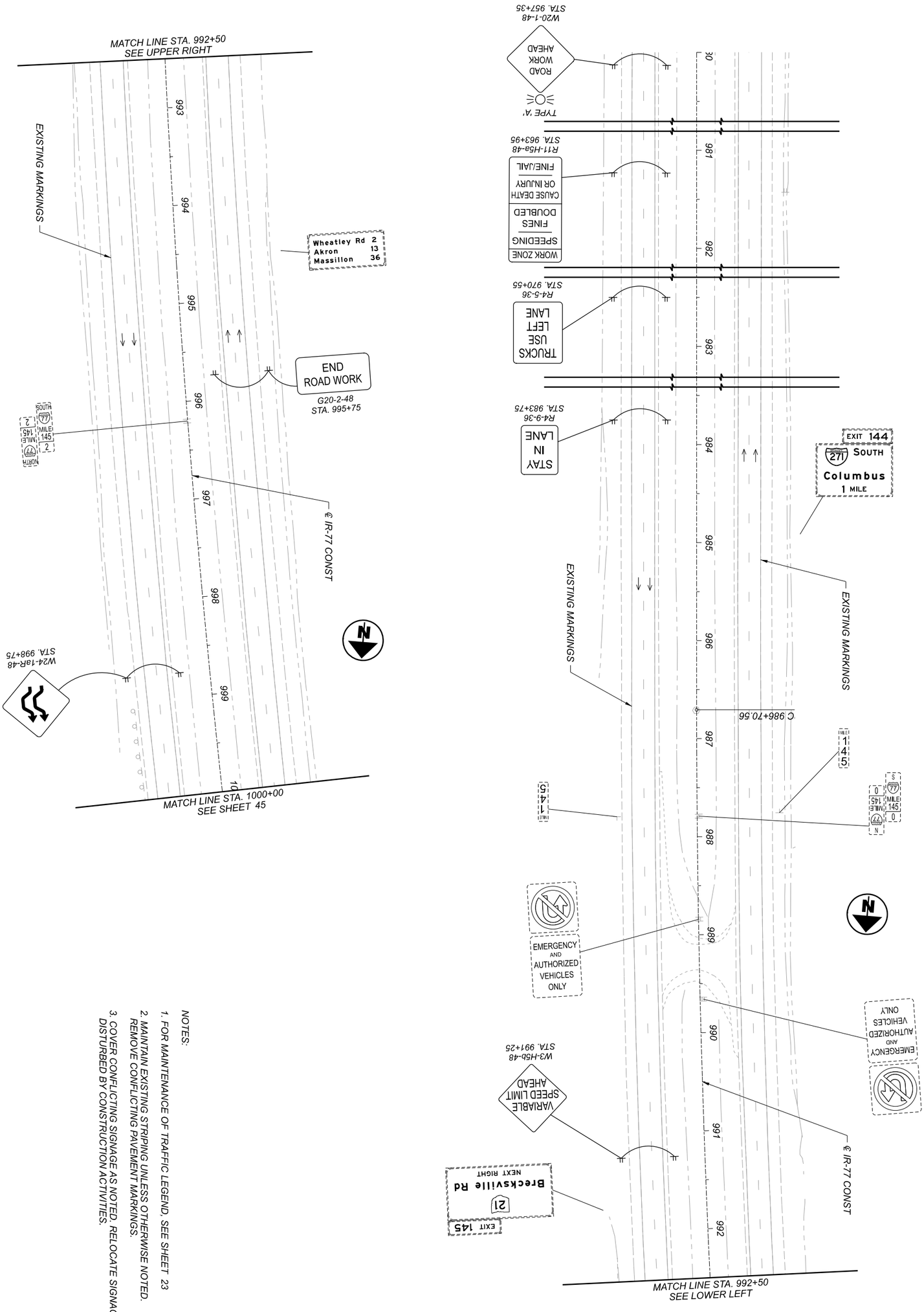

NOTES:

1. FOR MAINTENANCE OF TRAFFIC LEGEND, SEE SHEET 23
2. MAINTAIN EXISTING STRIPING UNLESS OTHERWISE NOTED. REMOVE CONFLICTING PAVEMENT MARKINGS.
3. COVER CONFLICTING SIGNAGE AS NOTED. RELOCATE SIGNAGE DISTURBED BY CONSTRUCTION ACTIVITIES.

SHEET	TOTAL
44	297

PROJECT ID: 104983

REVIEWER: DRJ 02-08-22

DESIGNER: ACW

DESIGN AGENCY

Gannett Fleming
ENGINEERS AND ARCHITECTS, P.C.
2500 Corporate Exchange Drive
Suite 230
Columbus, OH 43231

MAINTENANCE OF TRAFFIC - PHASE 1
IR-77 - STA 980+00 TO STA 1000+00

HORIZONTAL SCALE IN FEET

0 50
25 100

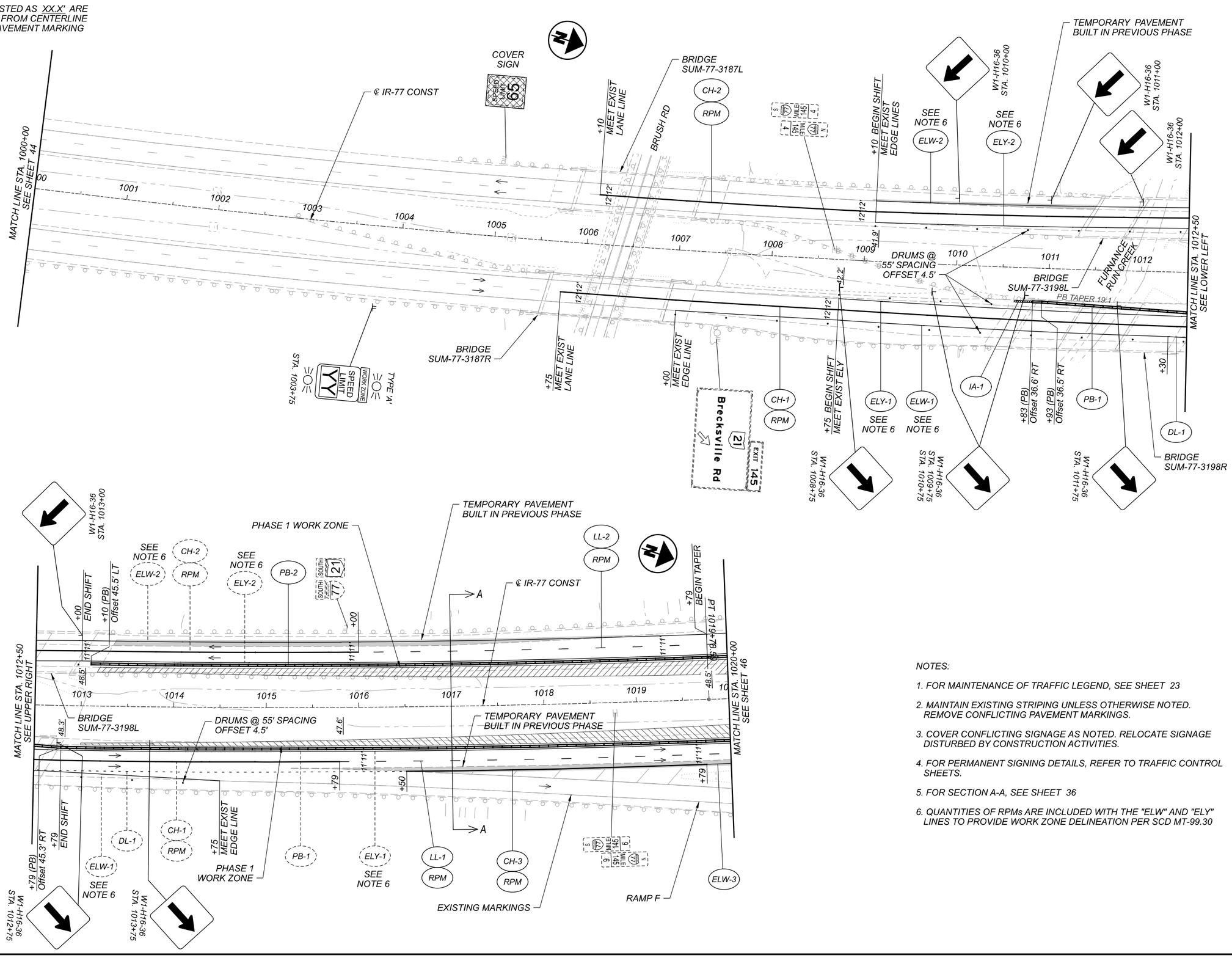

NOTES:

1. *FOR MAINTENANCE OF TRAFFIC LEGEND, SEE SHEET 23*
2. *MAINTAIN EXISTING STRIPING UNLESS OTHERWISE NOTED. REMOVE CONFLICTING PAVEMENT MARKINGS.*
3. *COVER CONFLICTING SIGNAGE AS NOTED. RELOCATE SIGNAGE DISTURBED BY CONSTRUCTION ACTIVITIES.*
4. *FOR PERMANENT SIGNING DETAILS, REFER TO TRAFFIC CONTROL SHEETS.*
5. *FOR SECTION A-A, SEE SHEET 36*
6. *QUANTITIES OF RPMs ARE INCLUDED WITH THE "ELW" AND "ELY" LINES TO PROVIDE WORK ZONE DELINEATION PER SCD MT-99.30*

HORIZONTAL SCALE IN FEET
0 25 50 100

MAINTENANCE OF TRAFFIC - PHASE 1
IR-77 - STA 1000+00 TO STA 1020+00

SUM-77-32.27

MODEL: 104983_MPI01 PAPERSIZE: ITxII(in.) DATE: 2/22/2022 TIME: 6:40:06 PM USER: tdinh
pw:\\gfnet-pw.bentley.comsgfnet-pw-01\Documents\Projects\67490\104983\401-Engineering-GF\MOT\Sheets\104983_MPI01.dgn

DESIGN AGENCY
Gannett Fleming
ENGINEERS AND ARCHITECTS, P.C.
2300 Corporate Exchange Drive
Suite 330
Columbus, OH 43231

DESIGNER	ACW
REVIEWER	DRJ 02-08-22
PROJECT ID	104983
SHEET	45
TOTAL	297

OFFSETS LISTED AS XX.X' ARE MEASURED FROM CENTERLINE TO FIRST PAVEMENT MARKING

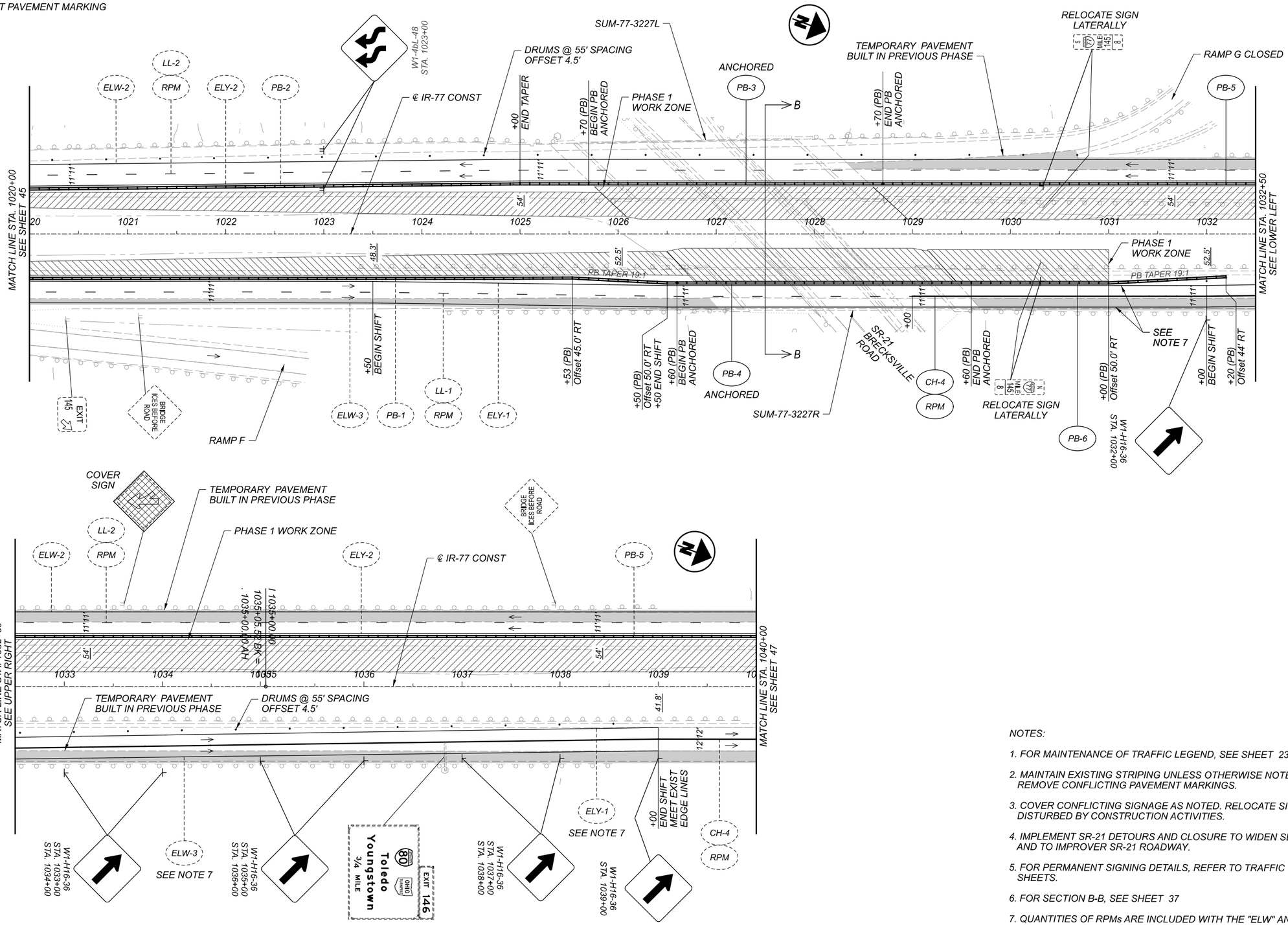

NOTES:

1. FOR MAINTENANCE OF TRAFFIC LEGEND, SEE SHEET 23
2. MAINTAIN EXISTING STRIPING UNLESS OTHERWISE NOTED. REMOVE CONFLICTING PAVEMENT MARKINGS.
3. COVER CONFLICTING SIGNAGE AS NOTED. RELOCATE SIGNAGE DISTURBED BY CONSTRUCTION ACTIVITIES.
4. IMPLEMENT SR-21 DETOURS AND CLOSURE TO WIDEN SB BRIDGE AND TO IMPROVER SR-21 ROADWAY.
5. FOR PERMANENT SIGNING DETAILS, REFER TO TRAFFIC CONTROL SHEETS.
6. FOR SECTION B-B, SEE SHEET 37
7. QUANTITIES OF RPMs ARE INCLUDED WITH THE "ELW" AND "ELY" LINES TO PROVIDE WORK ZONE DELINEATION PER SCD MT-99.30

HORIZONTAL SCALE IN FEET
0 25 50 100

MAINTENANCE OF TRAFFIC - PHASE 1
IR-77 - STA 1020+00 TO STA 1040+00

DESIGN AGENCY
Gannett Fleming
ENGINEERS AND ARCHITECTS, P.C.
2500 Corporate Exchange Drive
Suite 200
Columbus, OH 43231

DESIGNER: ACW
REVIEWER: DRJ 02-08-22
PROJECT ID: 104983
SHEET 46 | TOTAL 297

SUM-77-32.27

MODEL: 104983_MPI02 PAPERSIZE: 11x17 (in.) DATE: 2/22/2022 TIME: 6:42:11 PM USER: tdinh
pw:\\gfnet-pw.bentley.com:gfnet-pw-01\Documents\Projects\67490\104983\401-Engineering-GF\MOT\Sheets\104983_MPI02.dgn

OFFSETS LISTED AS XX.X' ARE MEASURED FROM CENTERLINE TO FIRST PAVEMENT MARKING

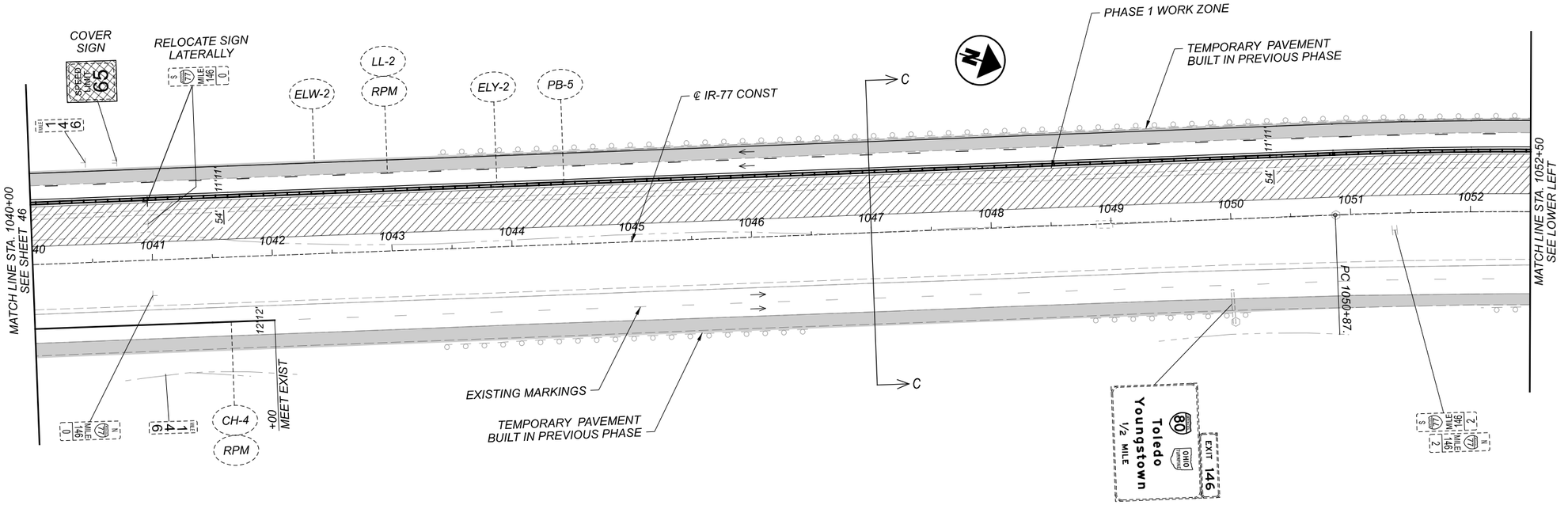

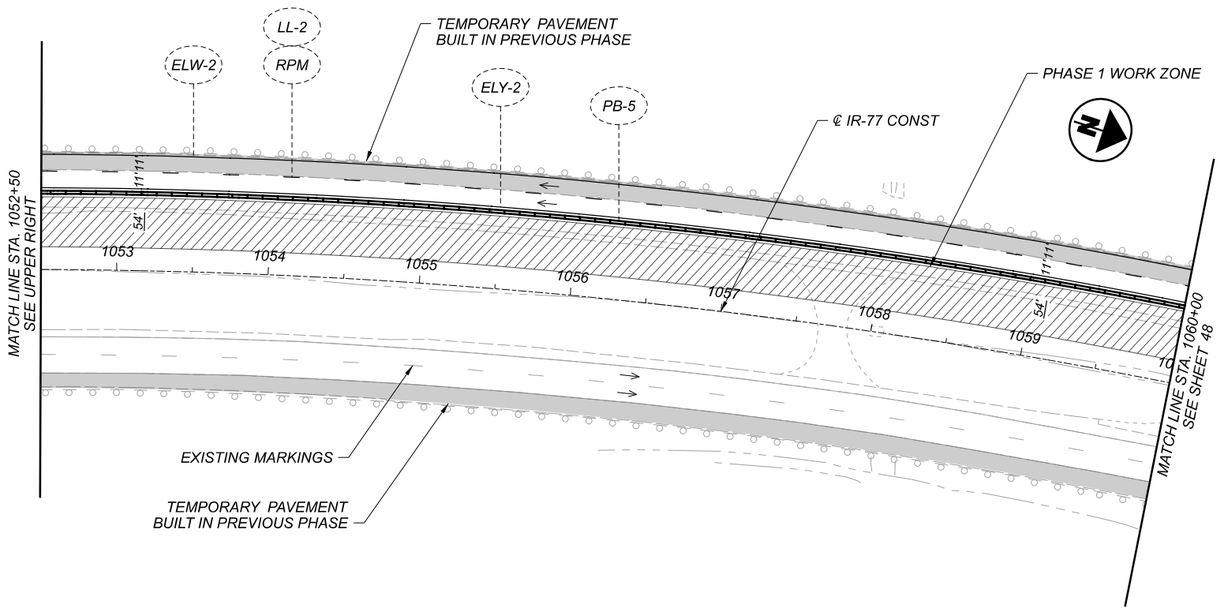

NOTES:

1. FOR MAINTENANCE OF TRAFFIC LEGEND, SEE SHEET 23
2. MAINTAIN EXISTING STRIPING UNLESS OTHERWISE NOTED. REMOVE CONFLICTING PAVEMENT MARKINGS.
3. COVER CONFLICTING SIGNAGE AS NOTED. RELOCATE SIGNAGE DISTURBED BY CONSTRUCTION ACTIVITIES.
4. FOR PERMANENT SIGNING DETAILS, REFER TO TRAFFIC CONTROL SHEETS.
5. FOR SECTION C-C, SEE SHEET 38

HORIZONTAL SCALE IN FEET
0 25 50 100

MAINTENANCE OF TRAFFIC - PHASE 1
IR-77 - STA 1040+00 TO STA 1060+00

SUM-77-32.27

MODEL: 104983_MPI03 PAPERSIZE: 17x11(in.) DATE: 2/22/2022 TIME: 6:44:18 PM USER: tdinh
pw:\\gfnet-pw.bentley.com:gfnet-pw-01\Documents\Projects\67490\104983\401-Engineering-GF\MOT\Sheets\104983_MPI03.dgn

DESIGN AGENCY
Gannett Fleming
ENGINEERS AND ARCHITECTS, P.C.
2550 Corporate Exchange Drive Suite 230 Columbus, OH 43231

DESIGNER ACW
REVIEWER CJM 09-28-21
PROJECT ID 104983
SHEET 47 TOTAL 297

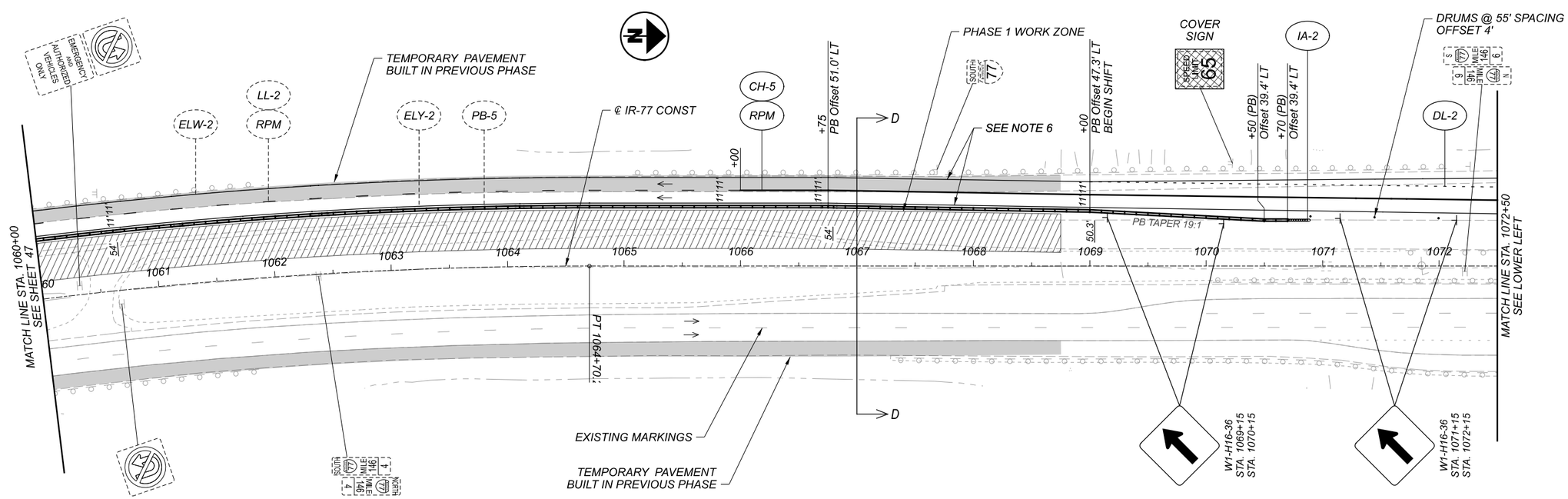

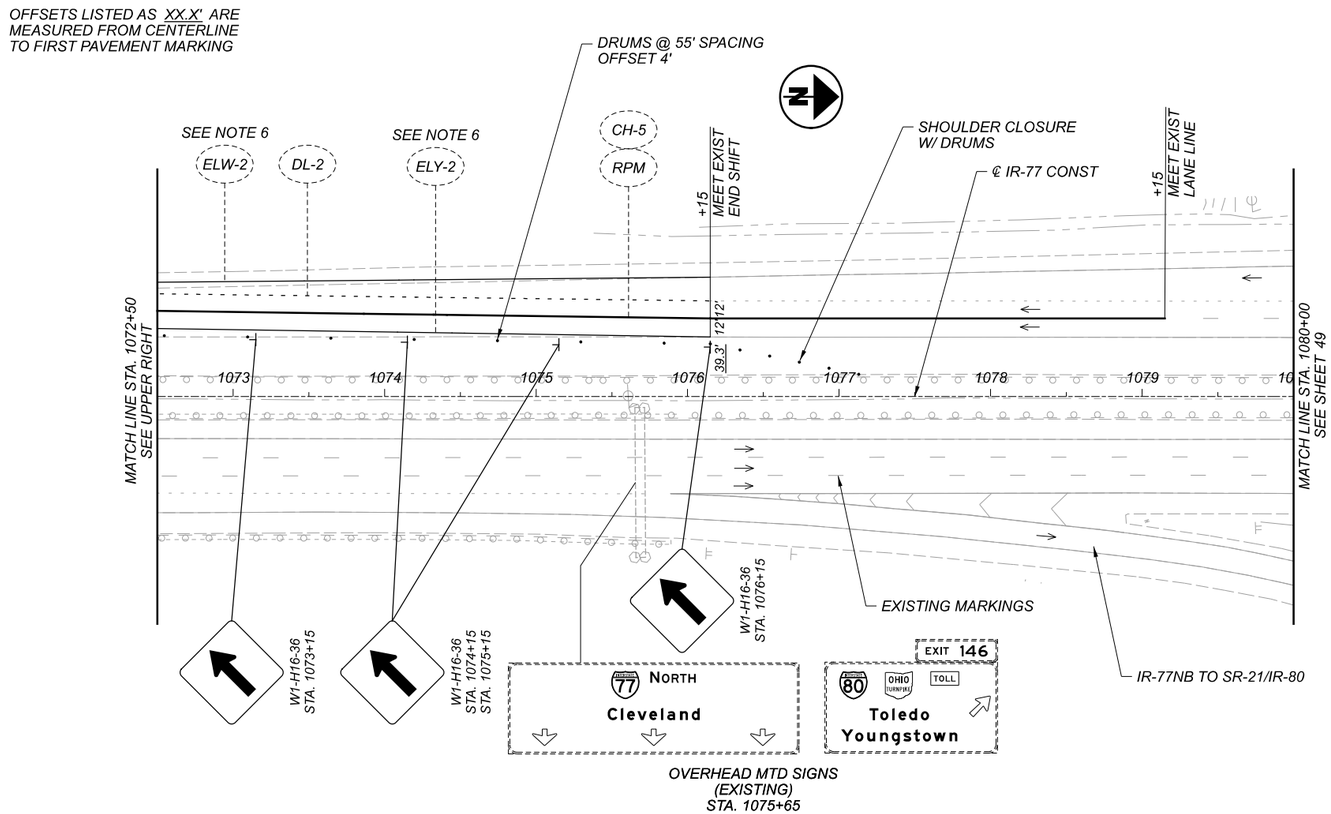

NOTES:

1. *FOR MAINTENANCE OF TRAFFIC LEGEND, SEE SHEET 23*
2. *MAINTAIN EXISTING STRIPING UNLESS OTHERWISE NOTED. REMOVE CONFLICTING PAVEMENT MARKINGS.*
3. *COVER CONFLICTING SIGNAGE AS NOTED. RELOCATE SIGNAGE DISTURBED BY CONSTRUCTION ACTIVITIES.*
4. *FOR PERMANENT SIGNING DETAILS, REFER TO TRAFFIC CONTROL SHEETS.*
5. *FOR SECTION D-D, SEE SHEET 39*
6. *QUANTITIES OF RPMs ARE INCLUDED WITH THE "ELW" AND "ELY" LINES TO PROVIDE WORK ZONE DELINEATION PER SCD MT-99.30*

HORIZONTAL SCALE IN FEET
0 25 50 100

MAINTENANCE OF TRAFFIC - PHASE 1
IR-77 - STA 1060+00 TO STA 1080+00

DESIGN AGENCY
Gannett Fleming
ENGINEERS AND ARCHITECTS, P.C.
2500 Corporate Exchange Drive
Suite 230
Columbus, OH 43231

DESIGNER ACW
REVIEWER DRJ 02-08-22
PROJECT ID 104983
SHEET 48 TOTAL 297

SUM-77-32.27

MODEL: 104983_MPI04 PAPERSIZE: ITxII (in.) DATE: 2/22/2022 TIME: 6:46:28 PM USER: tdinh
pw:\\gfnet-pw.bentley.com:gfnet-pw-01\Documents\Projects\67490\104983\40i-Engineering-GF\MOT\Sheets\104983_MPI04.dgn

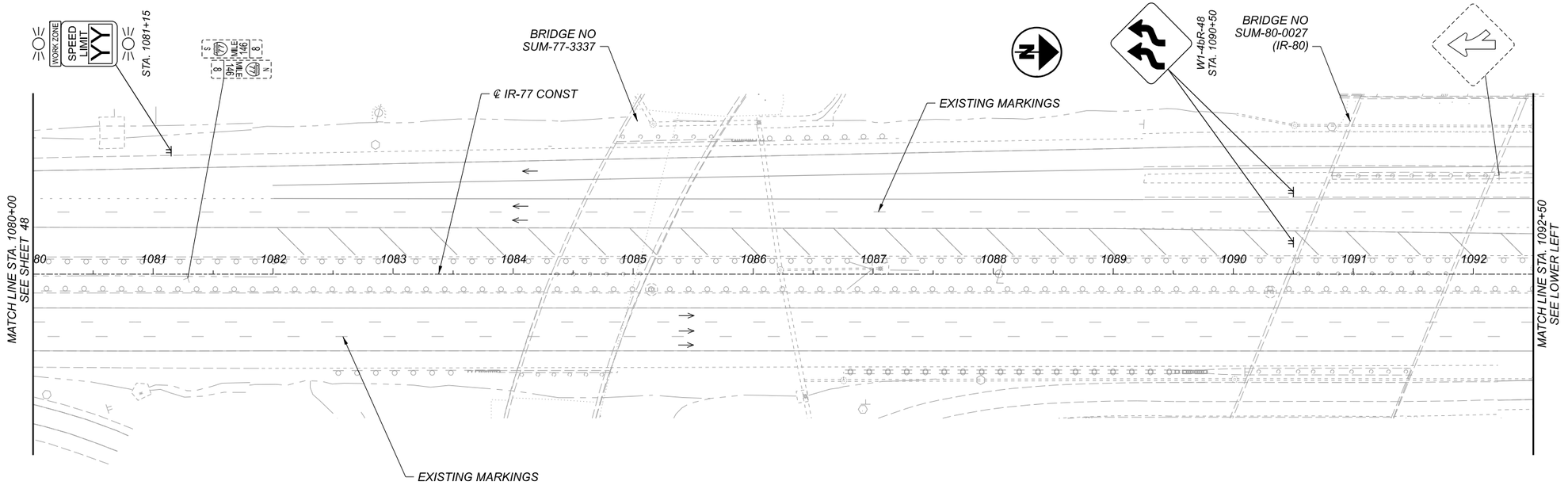

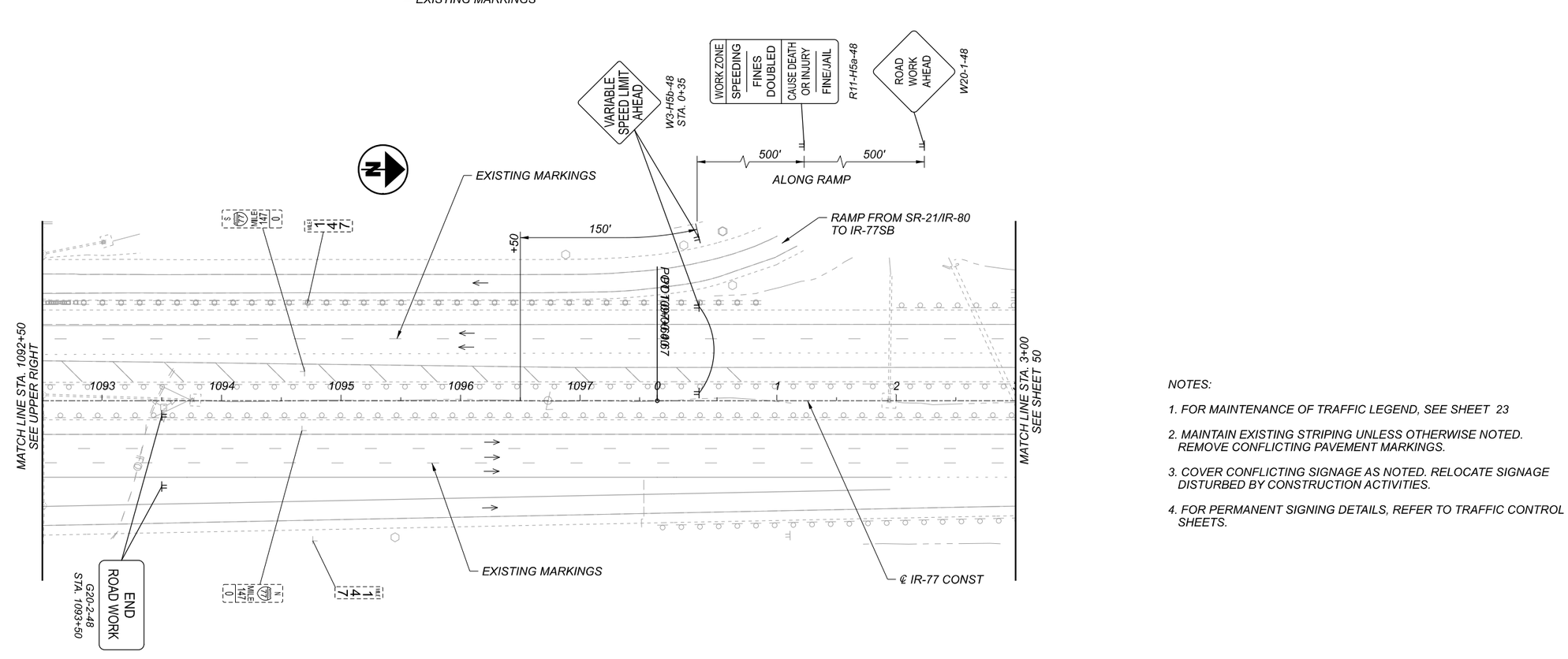

NOTES:

1. FOR MAINTENANCE OF TRAFFIC LEGEND, SEE SHEET 23
2. MAINTAIN EXISTING STRIPING UNLESS OTHERWISE NOTED. REMOVE CONFLICTING PAVEMENT MARKINGS.
3. COVER CONFLICTING SIGNAGE AS NOTED. RELOCATE SIGNAGE DISTURBED BY CONSTRUCTION ACTIVITIES.
4. FOR PERMANENT SIGNING DETAILS, REFER TO TRAFFIC CONTROL SHEETS.

HORIZONTAL SCALE IN FEET
0 25 50 100

MAINTENANCE OF TRAFFIC - PHASE 1
IR-77 - STA 1080+00 TO STA 3+00

DESIGN AGENCY
Gannett Fleming
ENGINEERS AND ARCHITECTS, P.C.
2500 Corporate Exchange Drive
Suite 230
Columbus, OH 43231

DESIGNER ACW
REVIEWER CJM 09-28-21
PROJECT ID 104983
SHEET 49 TOTAL 297

SUM-77-32.27

MODEL: I04983_MPI05 PAPERSIZE: 17x11(in.) DATE: 2/22/2022 TIME: 6:48:33 PM USER: tdinh
pw:\\gfnet-pw.bentley.com:gfnet-pw-01\Documents\Projects\67490\104983\401-Engineering-GF\MOT\Sheets\104983_MPI05.dgn

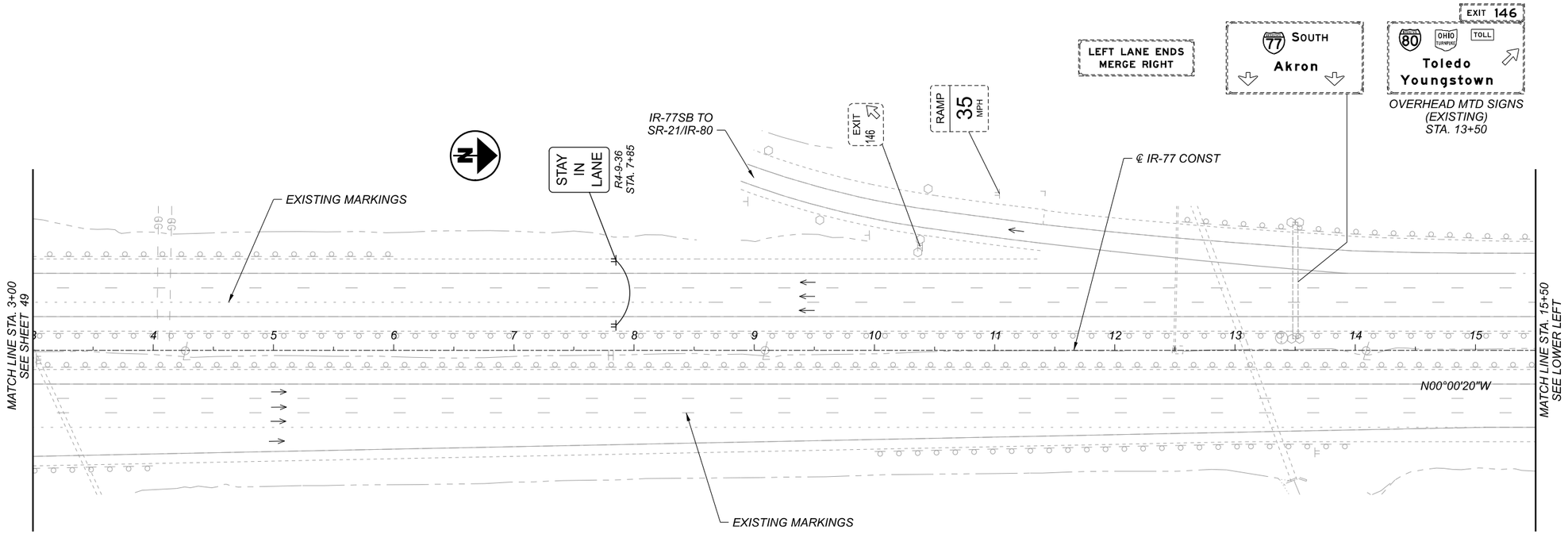

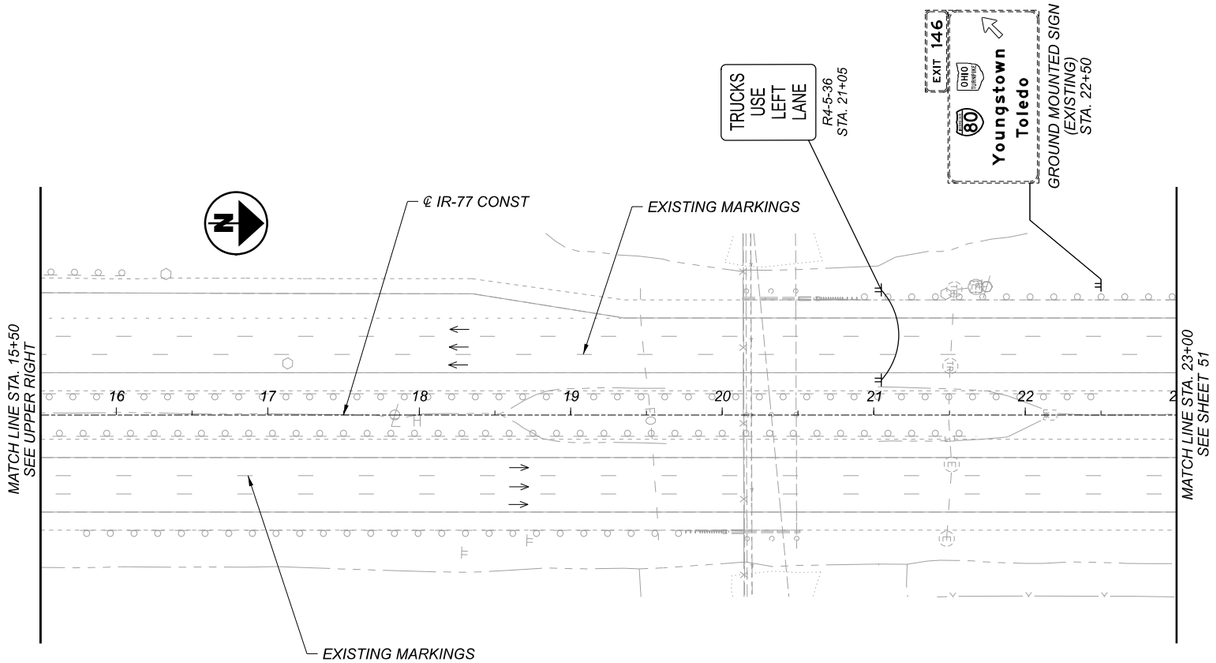

NOTES:

1. FOR MAINTENANCE OF TRAFFIC LEGEND, SEE SHEET 23

2. MAINTAIN EXISTING STRIPING UNLESS OTHERWISE NOTED. REMOVE CONFLICTING PAVEMENT MARKINGS.

3. COVER CONFLICTING SIGNAGE AS NOTED. RELOCATE SIGNAGE DISTURBED BY CONSTRUCTION ACTIVITIES.

4. FOR PERMANENT SIGNING DETAILS, REFER TO TRAFFIC CONTROL SHEETS.

HORIZONTAL SCALE IN FEET
0 25 50 100

MAINTENANCE OF TRAFFIC - PHASE 1
IR-77 - STA 3+00 TO STA 23+00

DESIGN AGENCY
Gannett Fleming
ENGINEERS AND ARCHITECTS, P.C.
2500 Corporate Exchange Drive
Suite 230
Columbus, OH 43231

DESIGNER ACW
REVIEWER CJM 09-28-21
PROJECT ID 104983
SHEET 50 TOTAL 297

SUM-77-32.27

MODEL: 104983_MPI06 PAPERSIZE: 17x11(in.) DATE: 2/22/2022 TIME: 6:50:39 PM USER: tdinh
pw:\\gfnet-pw.bentley.com:gfnet-pw-01\Documents\Projects\67490\104983\401-Engineering-GF\MOT\Sheets\104983_MPI06.dgn

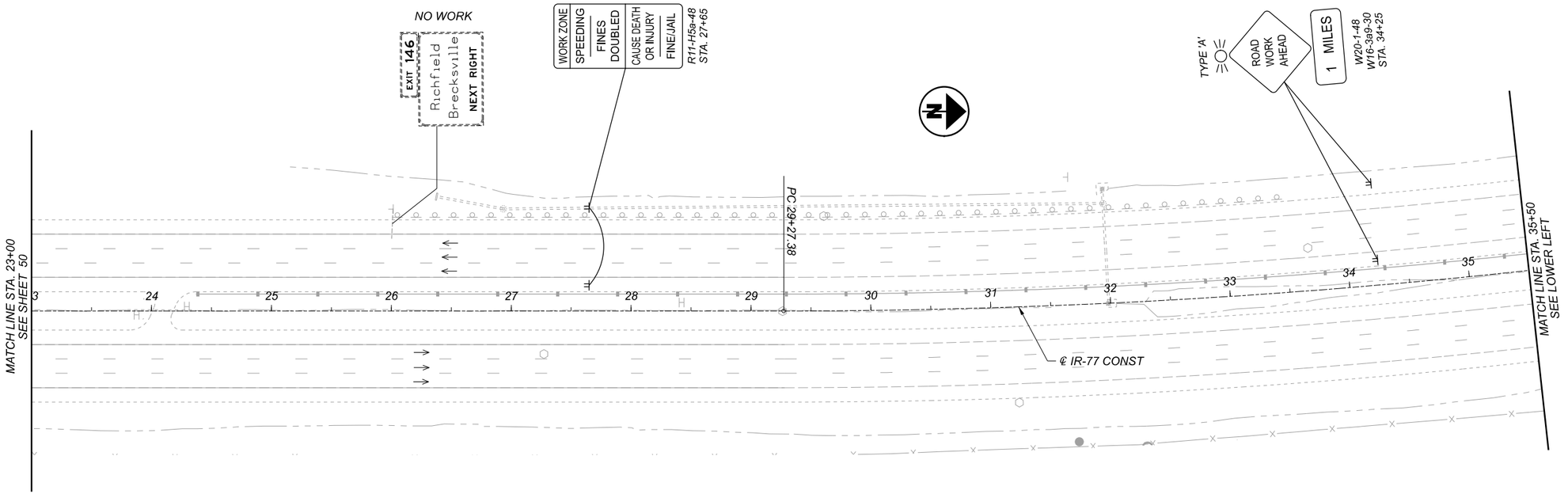

NOTES:

1. FOR MAINTENANCE OF TRAFFIC LEGEND, SEE SHEET 23
2. MAINTAIN EXISTING STRIPING UNLESS OTHERWISE NOTED. REMOVE CONFLICTING PAVEMENT MARKINGS.
3. COVER CONFLICTING SIGNAGE AS NOTED. RELOCATE SIGNAGE DISTURBED BY CONSTRUCTION ACTIVITIES.
4. FOR PERMANENT SIGNING DETAILS, REFER TO TRAFFIC CONTROL SHEETS.

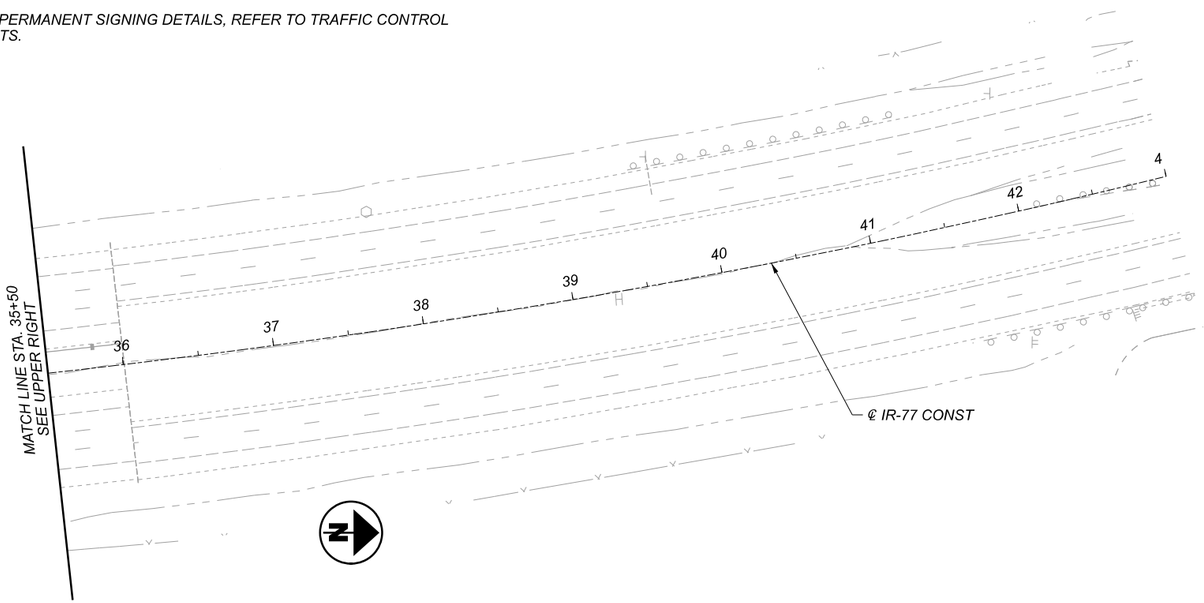

HORIZONTAL SCALE IN FEET
0 25 50 100

MAINTENANCE OF TRAFFIC - PHASE 1
IR-77 - STA 23+00 TO STA 43+00

DESIGN AGENCY
Gannett Fleming
ENGINEERS AND ARCHITECTS, P.C.
2500 Corporate Exchange Drive
Suite 230
Columbus, OH 43231

DESIGNER: ACW
REVIEWER: DRJ 02-08-22
PROJECT ID: 104983
SHEET: 51 TOTAL: 297

SUM-77-32.27

MODEL: 104983_MPI07 PAPERSIZE: 17x11(in.) DATE: 2/22/2022 TIME: 6:52:49 PM USER: tdinh
pw:\\gfnet-pw.bentley.comgfnet-pw-01\Documents\Projects\67490\104983\40i-Engineering-GF\MOT\Sheets\104983_MPI07.dgn

MODEL: 104983_MP202 PAPERSIZE: 17x11(in.) DATE: 2/22/2022 TIME: 6:55:23 PM USER: tdinh
pw:\\gfnet-pw.bentley.com:gfnet-pw-01\Documents\Projects\67490\104983\401-Engineering-GF\MOT\Sheets\104983_MPIII.dgn

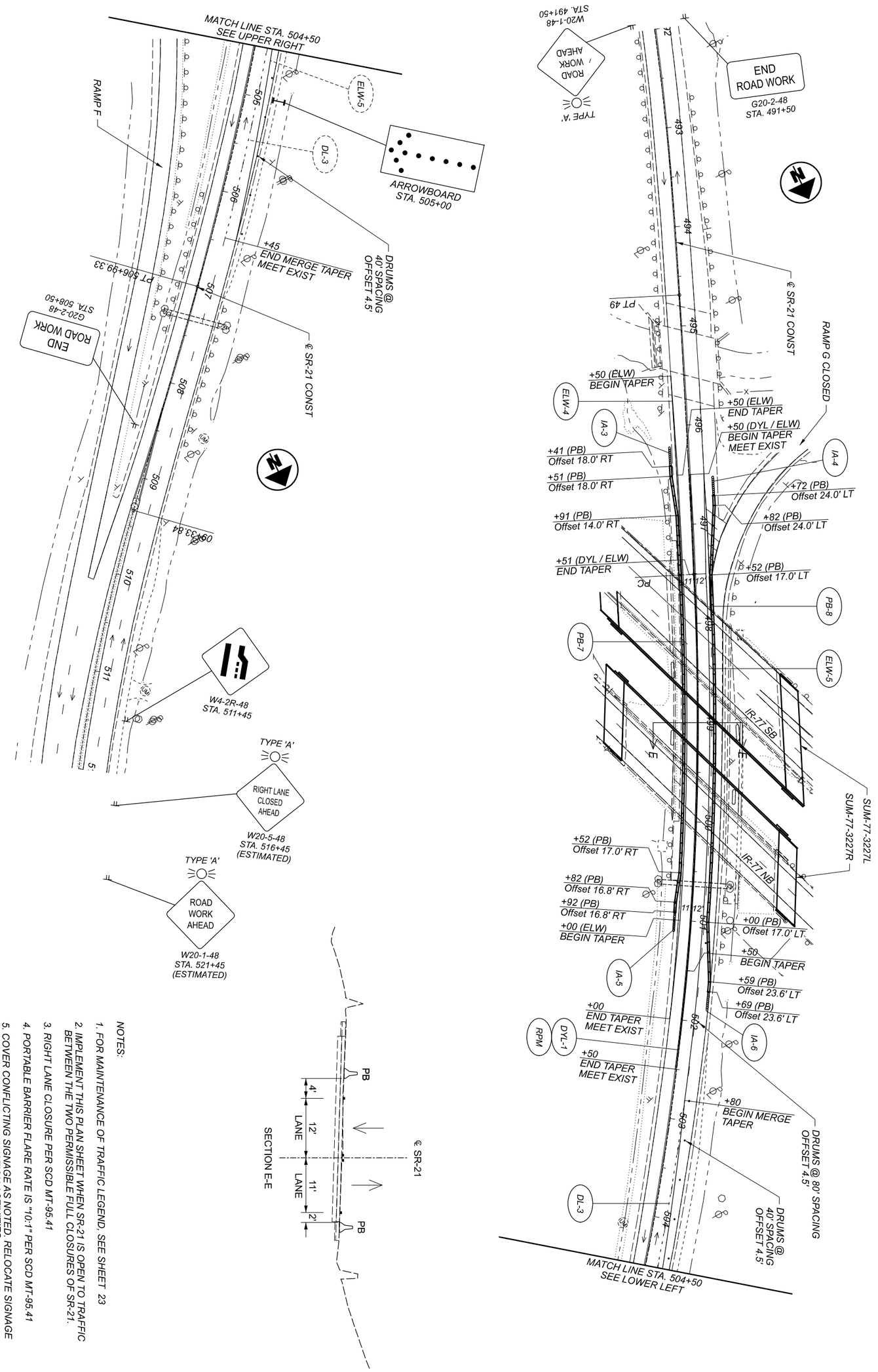

NOTES:

1. FOR MAINTENANCE OF TRAFFIC LEGEND, SEE SHEET 23
2. IMPLEMENT THIS PLAN SHEET WHEN SR-21 IS OPEN TO TRAFFIC BETWEEN THE TWO PERMISSIBLE FULL CLOSURES OF SR-21.
3. RIGHT LANE CLOSURE PER SCD MT-95.41
4. PORTABLE BARRIER FLARE RATE IS "10:1" PER SCD MT-95.41
5. COVER CONFLICTING SIGNAGE AS NOTED. RELOCATE SIGNAGE DISTURBED BY CONSTRUCTION ACTIVITIES.

SHEET	TOTAL
52	297

PROJECT ID: 104983

REVIEWER: DRJ 02-08-22

DESIGNER: ACW

DESIGN AGENCY

Gannett Fleming
ENGINEERS AND ARCHITECTS, P.C.
2500 Corporate Exchange Drive
Suite 230
Columbus, OH 43231

MAINTENANCE OF TRAFFIC - PHASE 1
SR-21 - STA 492+00 TO STA 512+00

HORIZONTAL SCALE IN FEET

0 50
25 100

MODEL: I04983_MP100 PAPERSIZE: 17x11(in.) DATE: 2/22/2022 TIME: 6:57:42 PM USER: tdinh
pw:\\gfnet-pw.bentley.com:gfnet-pw-01\Documents\Projects\67490\I04983\401-Engineering-GF\MOT\Sheets\I04983_MP200.dgn

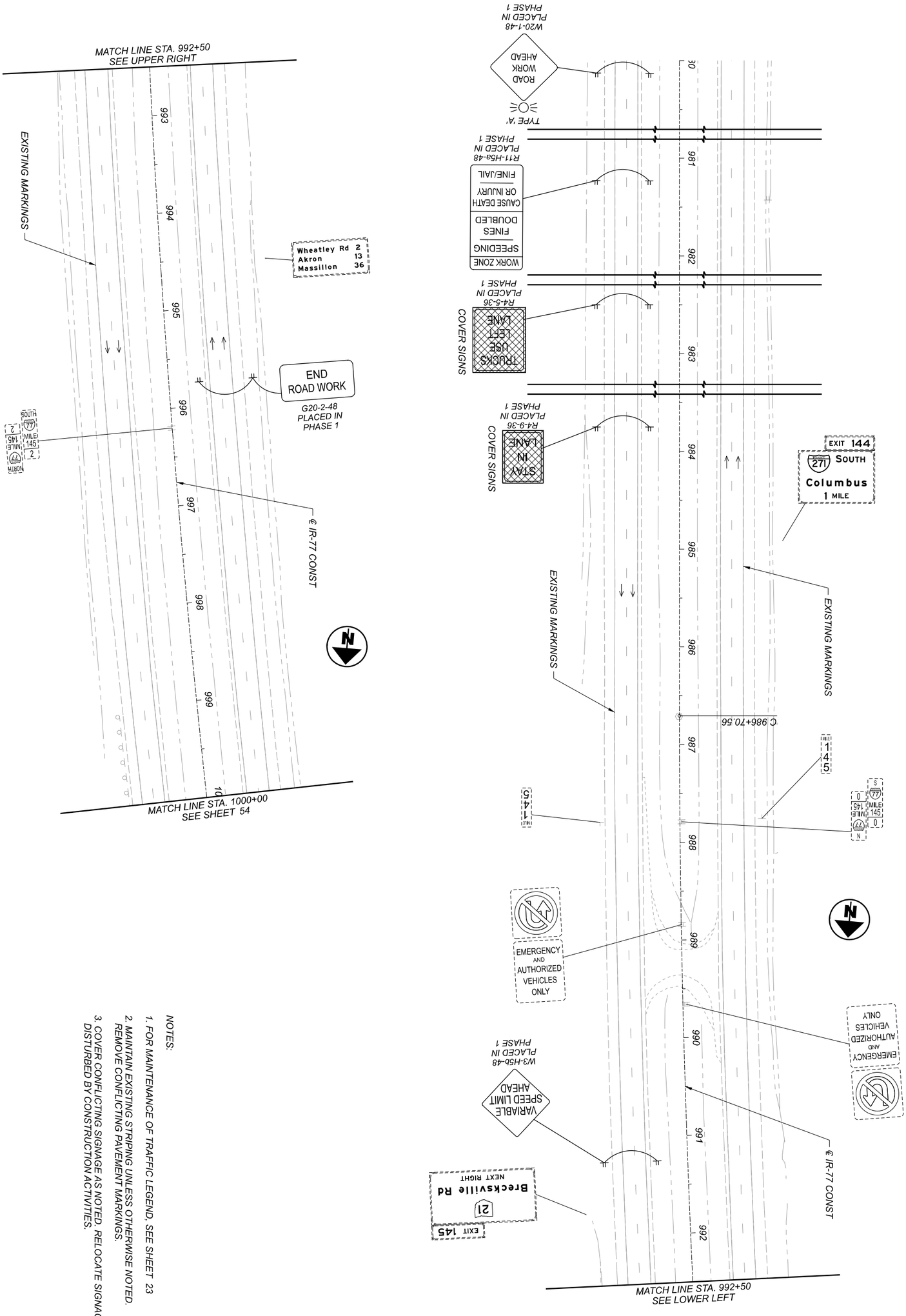

NOTES:

1. FOR MAINTENANCE OF TRAFFIC LEGEND, SEE SHEET 23
2. MAINTAIN EXISTING STRIPING UNLESS OTHERWISE NOTED. REMOVE CONFLICTING PAVEMENT MARKINGS.
3. COVER CONFLICTING SIGNAGE AS NOTED. RELOCATE SIGNAGE DISTURBED BY CONSTRUCTION ACTIVITIES.

SHEET	TOTAL
53	297

PROJECT ID: 104983

REVIEWER: DRJ 02-08-22

DESIGNER: ACW

DESIGN AGENCY

Gannett Fleming
ENGINEERS AND ARCHITECTS, P.C.
2500 Corporate Exchange Drive
Suite 230
Columbus, OH 43231

MAINTENANCE OF TRAFFIC - PHASE 2
IR-77 - STA 980+00 TO STA 1000+00

HORIZONTAL SCALE IN FEET

0 50
25 100

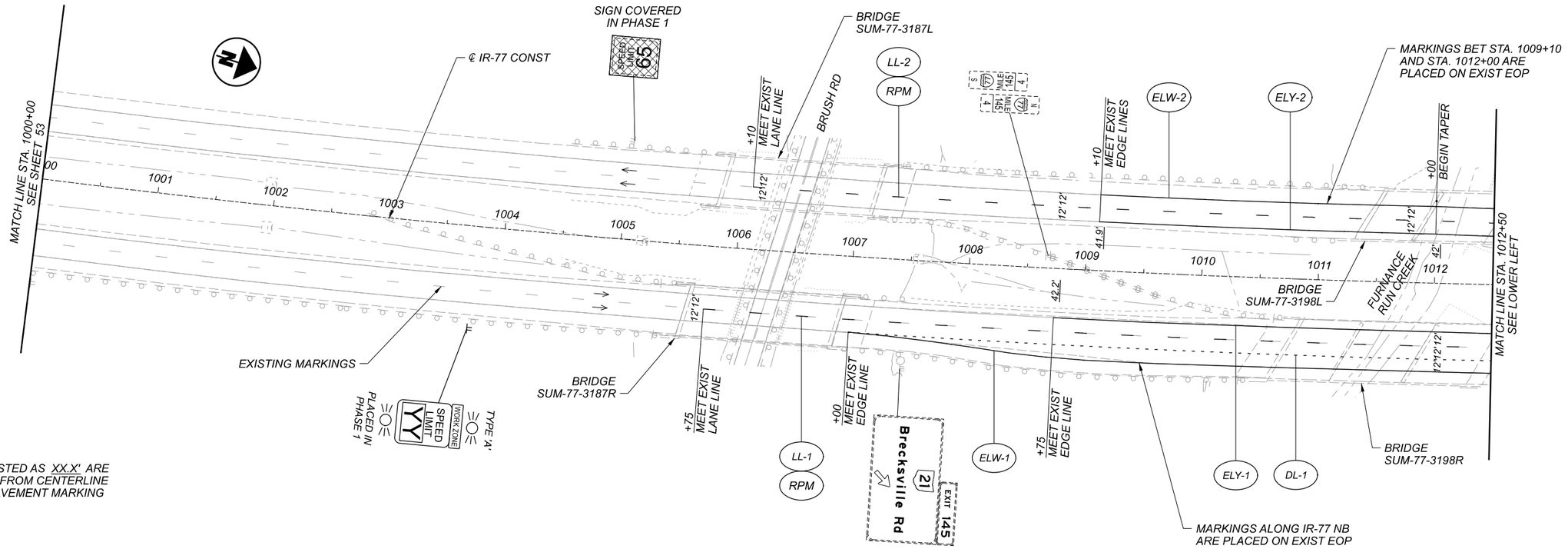

NOTES:

1. FOR MAINTENANCE OF TRAFFIC LEGEND, SEE SHEET 23
2. MAINTAIN EXISTING STRIPING UNLESS OTHERWISE NOTED. REMOVE CONFLICTING PAVEMENT MARKINGS.
4. COVER CONFLICTING SIGNAGE AS NOTED. RELOCATE SIGNAGE DISTURBED BY CONSTRUCTION ACTIVITIES.
5. FOR PERMANENT SIGNING DETAILS, REFER TO TRAFFIC CONTROL SHEETS.
6. FOR SECTION A-A, SEE SHEET 36

HORIZONTAL SCALE IN FEET
0 25 50 100

MAINTENANCE OF TRAFFIC - PHASE 2
IR-77 - STA 1000+00 TO STA 1020+00

SUM-77-32.27

MODEL: 104983_MP20i PAPERSIZE: 17x11(in.) DATE: 2/22/2022 TIME: 6:59:59 PM USER: tdinh
pw:\\gfnet-pw.bentley.com:gfnet-pw-01\Documents\Projects\67490\104983\40i-Engineering-GF\MOT\Sheets\104983_MP20i.dgn

DESIGN AGENCY
Gannett Fleming
ENGINEERS AND ARCHITECTS, P.C.
2500 Corporate Exchange Drive
Suite 220
Columbus, OH 43231

DESIGNER ACW
REVIEWER CJM 09-28-21
PROJECT ID 104983
SHEET 54 TOTAL 297

OFFSETS LISTED AS XX.X' ARE MEASURED FROM CENTERLINE TO FIRST PAVEMENT MARKING

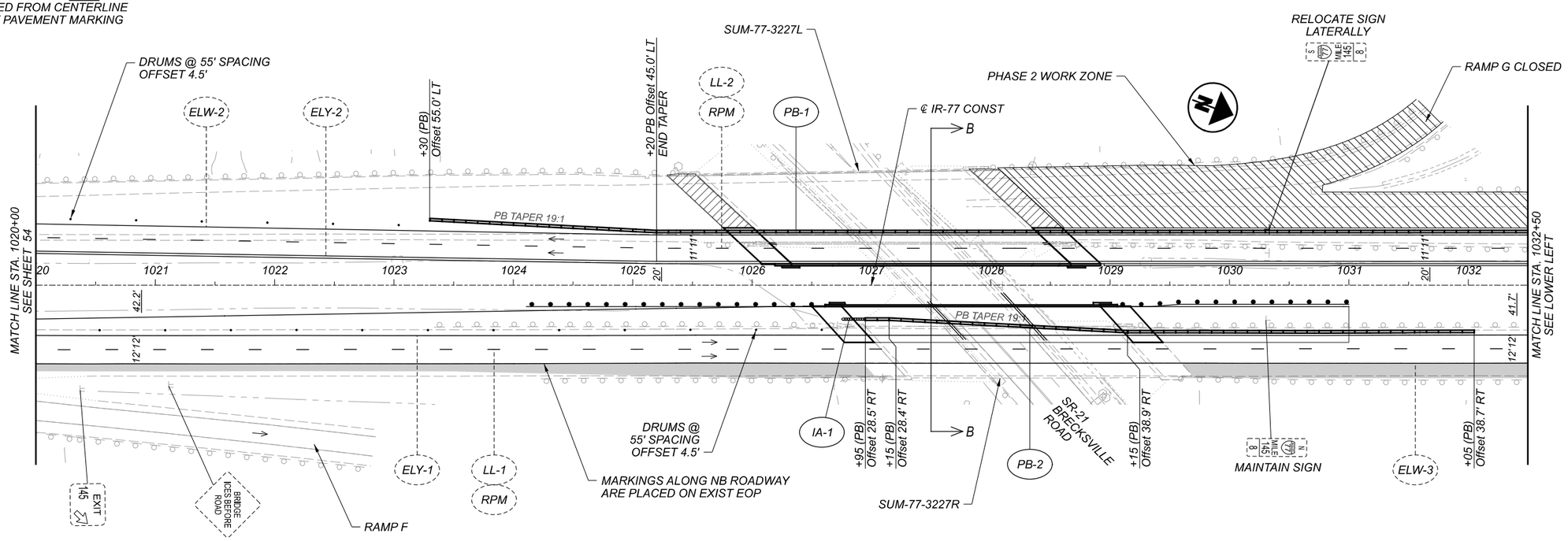

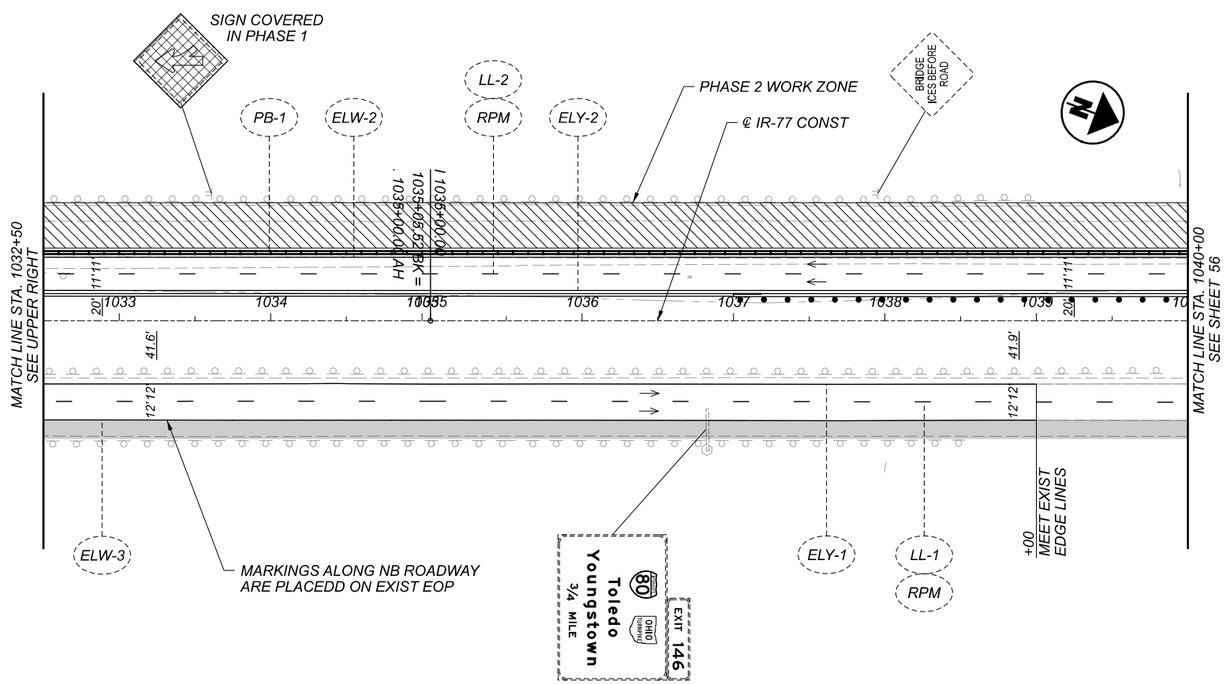

NOTES:

1. FOR MAINTENANCE OF TRAFFIC LEGEND, SEE SHEET 23
2. MAINTAIN EXISTING STRIPING UNLESS OTHERWISE NOTED. REMOVE CONFLICTING PAVEMENT MARKINGS.
3. COVER CONFLICTING SIGNAGE AS NOTED. RELOCATE SIGNAGE DISTURBED BY CONSTRUCTION ACTIVITIES.
4. FOR PERMANENT SIGNING DETAILS, REFER TO TRAFFIC CONTROL SHEETS.
5. FOR SECTION B-B, SEE SHEET 37

HORIZONTAL SCALE IN FEET
0 25 50 100

MAINTENANCE OF TRAFFIC - PHASE 2
IR-77 - STA 1020+00 TO STA 1040+00

DESIGN AGENCY
Gannett Fleming
ENGINEERS AND ARCHITECTS, P.C.
2550 Corporate Exchange Drive
Suite 220
Columbus, OH 43231

DESIGNER ACW
REVIEWER CJM 09-28-21
PROJECT ID 104983
SHEET 55 TOTAL 297

SUM-77-32.27

MODEL: 104983_MP202 PAPERSIZE: 17x11(in.) DATE: 2/22/2022 TIME: 7:02:22 PM USER: tdinh
pw:\\gfnet-pw.bentley.com:gfnet-pw-01\Documents\Projects\67490\104983\401-Engineering-GF\MOT\Sheets\104983_MP202.dgn

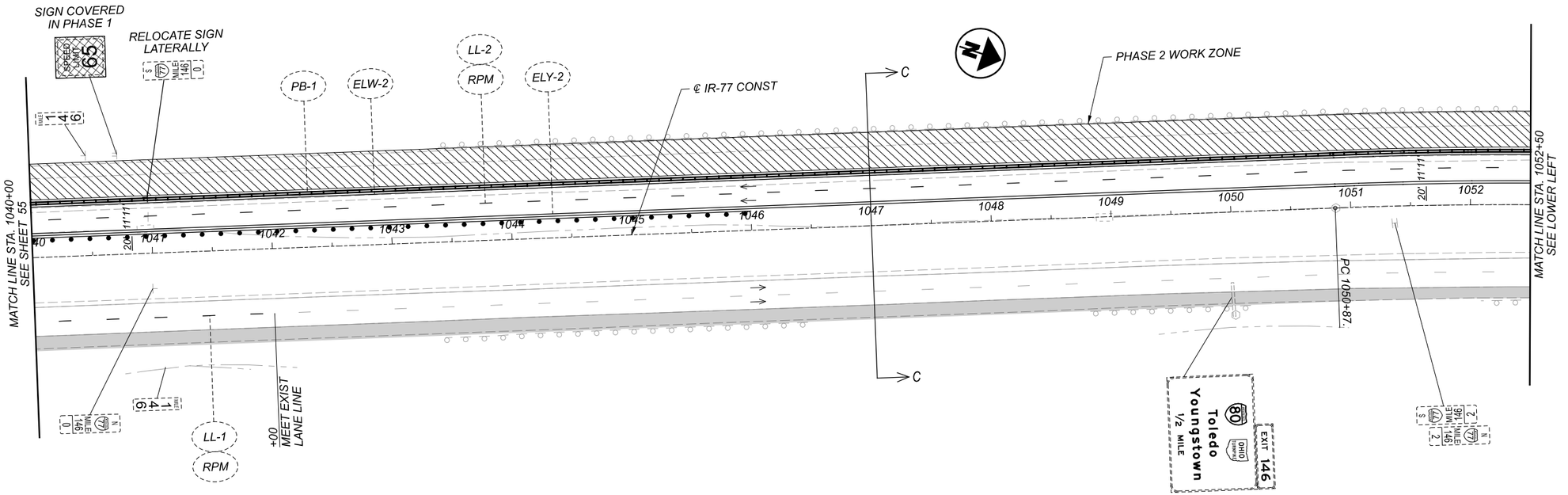

OFFSETS LISTED AS XX.X' ARE MEASURED FROM CENTERLINE TO FIRST PAVEMENT MARKING

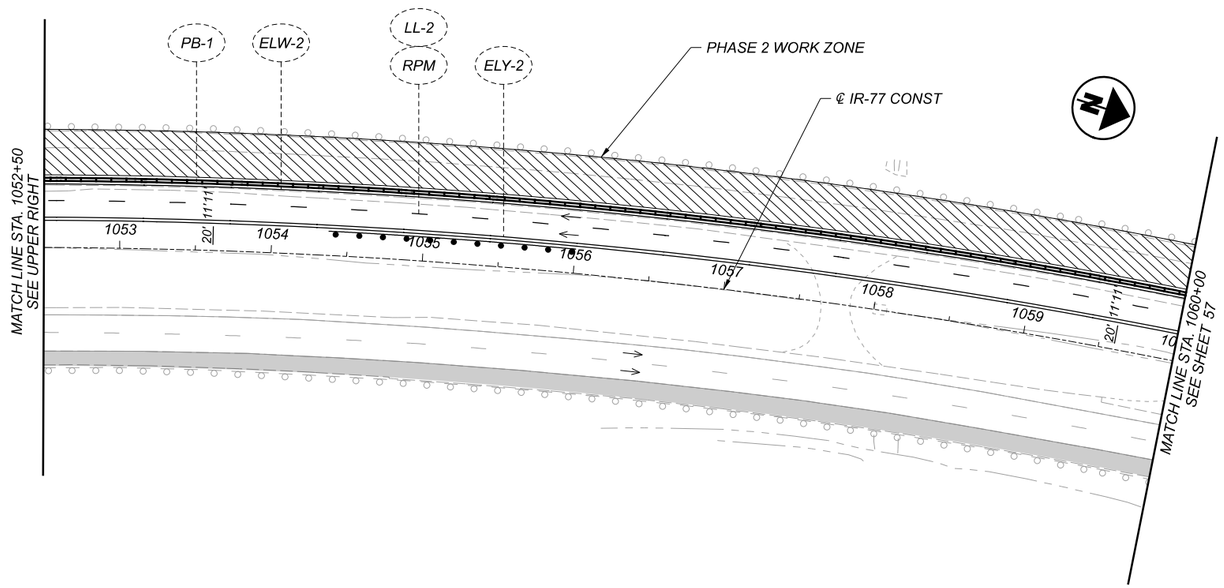

NOTES:

1. *FOR MAINTENANCE OF TRAFFIC LEGEND, SEE SHEET 23*
2. *MAINTAIN EXISTING STRIPING UNLESS OTHERWISE NOTED. REMOVE CONFLICTING PAVEMENT MARKINGS.*
3. *COVER CONFLICTING SIGNAGE AS NOTED. RELOCATE SIGNAGE DISTURBED BY CONSTRUCTION ACTIVITIES.*
4. *FOR PERMANENT SIGNING DETAILS, REFER TO TRAFFIC CONTROL SHEETS.*
5. *FOR SECTION C-C, SEE SHEET 38*

HORIZONTAL SCALE IN FEET
0 25 50 100

MAINTENANCE OF TRAFFIC - PHASE 2
IR-77 - STA 1040+00 TO STA 1060+00

DESIGN AGENCY
Gannett Fleming
ENGINEERS AND ARCHITECTS, P.C.
2500 Corporate Exchange Drive Suite 220 Columbus, OH 43231

DESIGNER: ACW
REVIEWER: CJM 09-28-21
PROJECT ID: 104983
SHEET: 56 TOTAL: 297

SUM-77-32.27

MODEL: 104983_MP203 PAPERSIZE: 17x11(in.) DATE: 2/22/2022 TIME: 7:04:27 PM USER: tdinh
pw:\\gfnet-pw.bentley.com:gfnet-pw-01\Documents\Projects\67490\104983\401-Engineering-GF\MOT\Sheets\104983_MP203.dgn

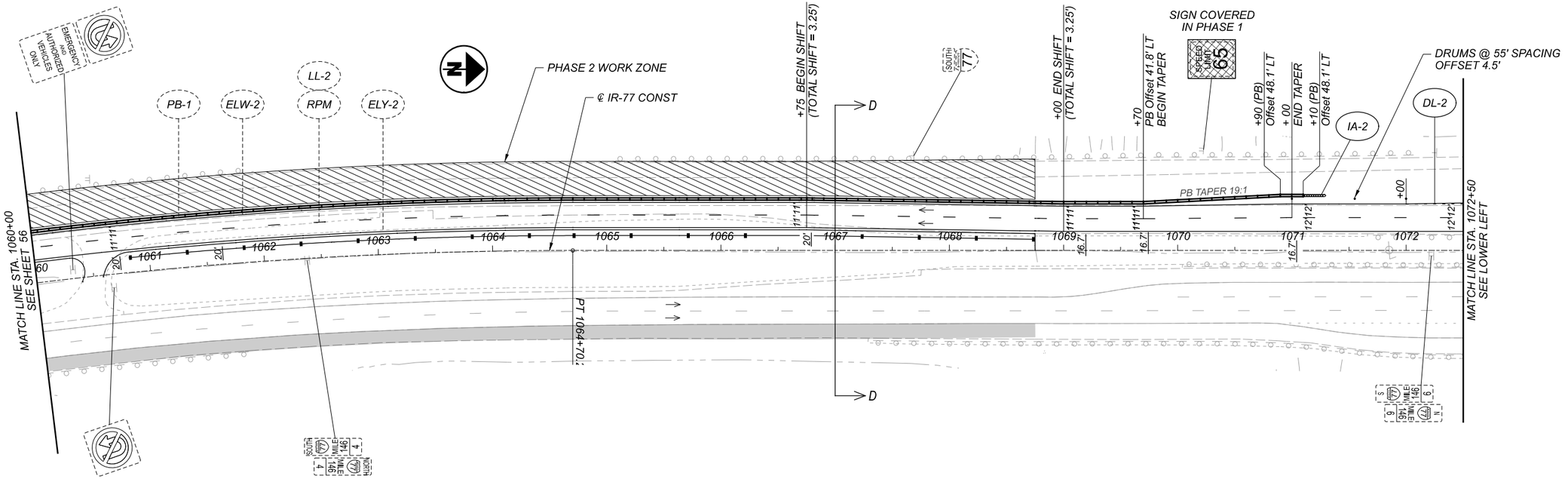

OFFSETS LISTED AS XX.X' ARE MEASURED FROM CENTERLINE TO FIRST PAVEMENT MARKING

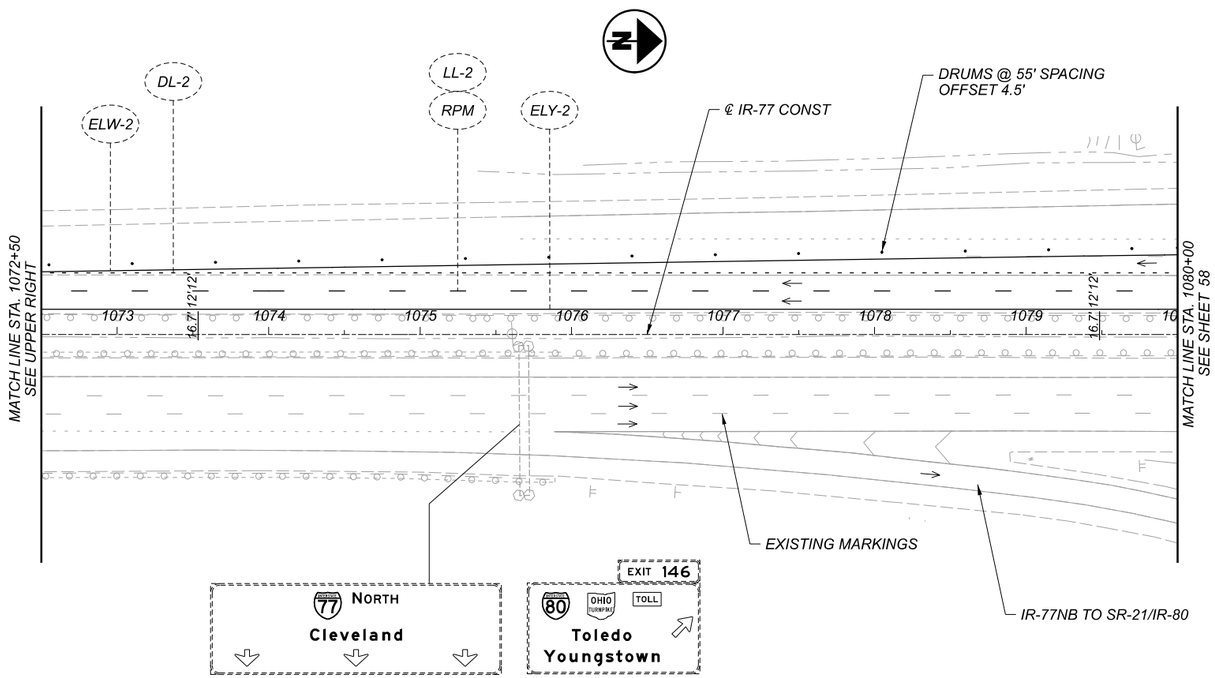

OVERHEAD MTD SIGNS (EXISTING) STA. 1075+65

NOTES:

1. *FOR MAINTENANCE OF TRAFFIC LEGEND, SEE SHEET 23*
2. *MAINTAIN EXISTING STRIPING UNLESS OTHERWISE NOTED. REMOVE CONFLICTING PAVEMENT MARKINGS.*
3. *COVER CONFLICTING SIGNAGE AS NOTED. RELOCATE SIGNAGE DISTURBED BY CONSTRUCTION ACTIVITIES.*
4. *FOR PERMANENT SIGNING DETAILS, REFER TO TRAFFIC CONTROL SHEETS.*
5. *FOR SECTION D-D, SEE SHEET 39*

HORIZONTAL SCALE IN FEET
0 25 50 100

MAINTENANCE OF TRAFFIC - PHASE 2
IR-77 - STA 1060+00 TO STA 1080+00

DESIGN AGENCY
Gannett Fleming
ENGINEERS AND ARCHITECTS, P.C.
2280 Corporate Exchange Drive
Suite 230
Columbus, OH 43231

DESIGNER ACW
REVIEWER CJM 09-28-21
PROJECT ID 104983
SHEET 57 TOTAL 297

SUM-77-32.27

MODEL: 104983_MP204 PAPERSIZE: 17x11(in.) DATE: 2/22/2022 TIME: 7:06:45 PM USER: tdhh
pw:\\gfnet-pw.bentley.com:gfnet-pw-01\Documents\Projects\67490\104983\40-Engineering-GF\MOT\Sheets\104983_MP204.dgn

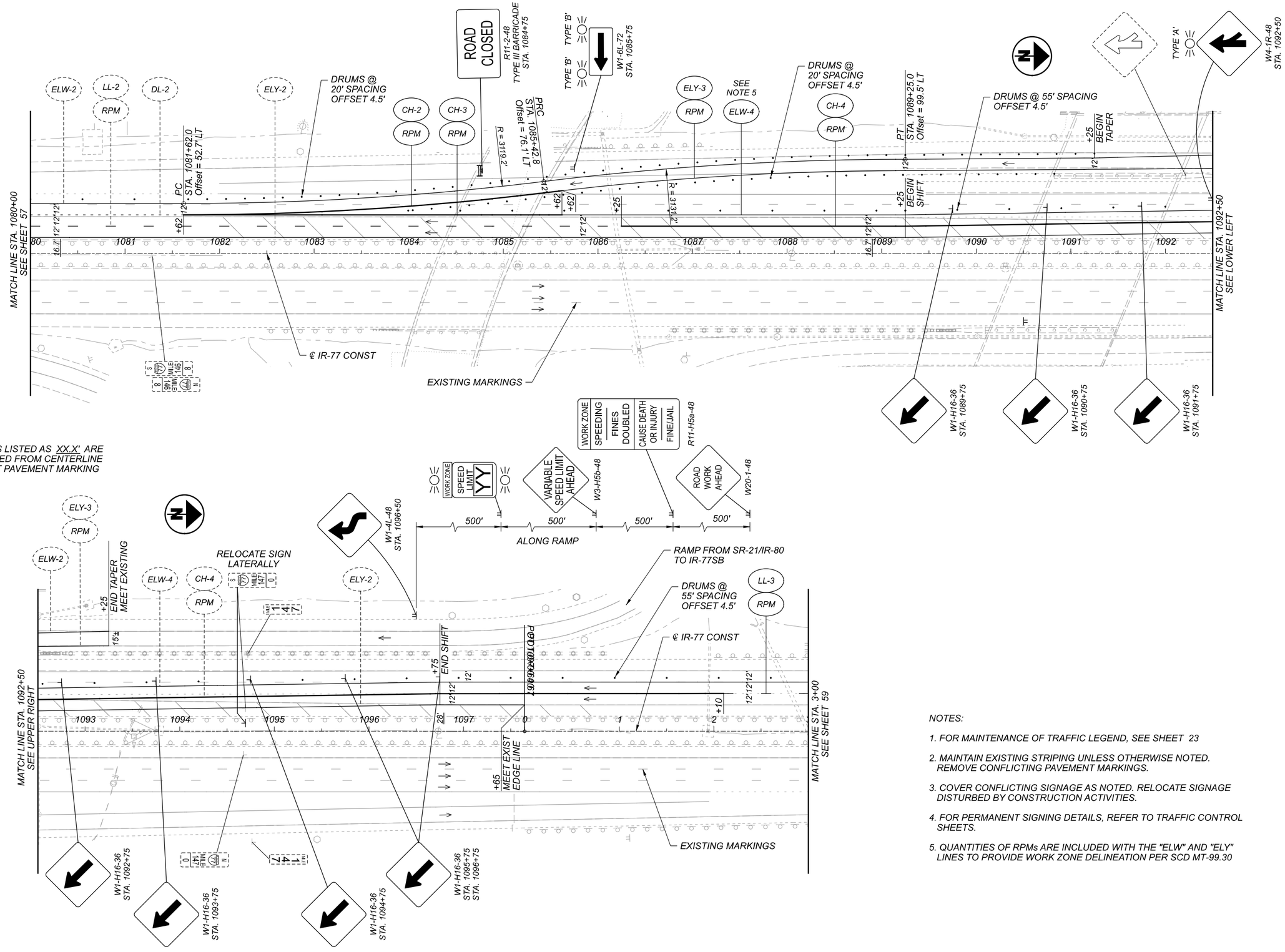

OFFSETS LISTED AS XX.X' ARE MEASURED FROM CENTERLINE TO FIRST PAVEMENT MARKING

NOTES:

1. *FOR MAINTENANCE OF TRAFFIC LEGEND, SEE SHEET 23*
2. *MAINTAIN EXISTING STRIPING UNLESS OTHERWISE NOTED. REMOVE CONFLICTING PAVEMENT MARKINGS.*
3. *COVER CONFLICTING SIGNAGE AS NOTED. RELOCATE SIGNAGE DISTURBED BY CONSTRUCTION ACTIVITIES.*
4. *FOR PERMANENT SIGNING DETAILS, REFER TO TRAFFIC CONTROL SHEETS.*
5. *QUANTITIES OF RPMs ARE INCLUDED WITH THE "ELW" AND "ELY" LINES TO PROVIDE WORK ZONE DELINEATION PER SCD MT-99.30*

HORIZONTAL SCALE IN FEET
0 25 50 100

MAINTENANCE OF TRAFFIC - PHASE 2
IR-77 - STA 1080+00 TO STA 3+00

SUM-77-32.27

MODEL: 104983_MP205 PAPERSIZE: 17x11(in) DATE: 2/22/2022 TIME: 1:09:02 PM USER: tdinh
pw:\\gfnet-pw.bentley.com:gfnet-pw-01\Documents\Projects\67490\104983\401-Engineering-GF\MOT\Sheets\104983_MP205.dgn

DESIGN AGENCY
Gannett Fleming
ENGINEERS AND ARCHITECTS, P.C.
2300 Corporate Exchange Drive
Suite 230
Columbus, OH 43231

DESIGNER ACW
REVIEWER CJM 09-28-21
PROJECT ID 104983
SHEET 58 TOTAL 297

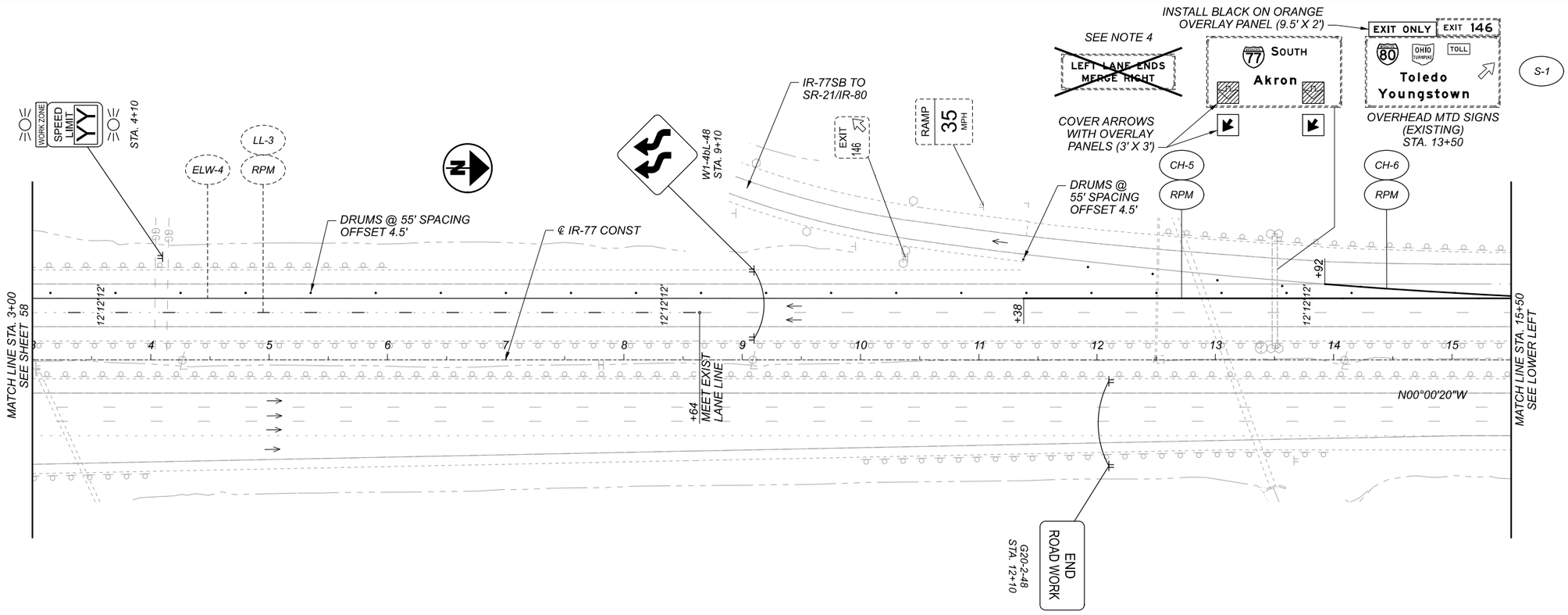

HORIZONTAL SCALE IN FEET
0 25 50 100

MAINTENANCE OF TRAFFIC - PHASE 2
IR-77 - STA 3+00 TO STA 23+00

NOTES:

1. *FOR MAINTENANCE OF TRAFFIC LEGEND, SEE SHEET 23*
2. *MAINTAIN EXISTING STRIPING UNLESS OTHERWISE NOTED. REMOVE CONFLICTING PAVEMENT MARKINGS.*
3. *COVER CONFLICTING SIGNAGE AS NOTED. RELOCATE SIGNAGE DISTURBED BY CONSTRUCTION ACTIVITIES.*
4. *FOR PERMANENT SIGNING DETAILS, REFER TO TRAFFIC CONTROL SHEETS.*

DESIGN AGENCY
Gannett Fleming
ENGINEERS AND ARCHITECTS, P.C.
2500 Corporate Exchange Drive
Suite 230
Columbus, OH 43231

DESIGNER ACW
REVIEWER CJM 09-28-21
PROJECT ID 104983
SHEET 59 TOTAL 297

SUM-77-32.27

MODEL: 104983_MP206 PAPERSIZE: 17x11in DATE: 2/22/2022 TIME: 7:11:11 PM USER: tdinh
pw:\\gfnet-pw.bentley.com:gfnet-pw-01\Documents\Projects\67490\104983\40i-Engineering-GF\MOT\Sheets\104983_MP206.dgn

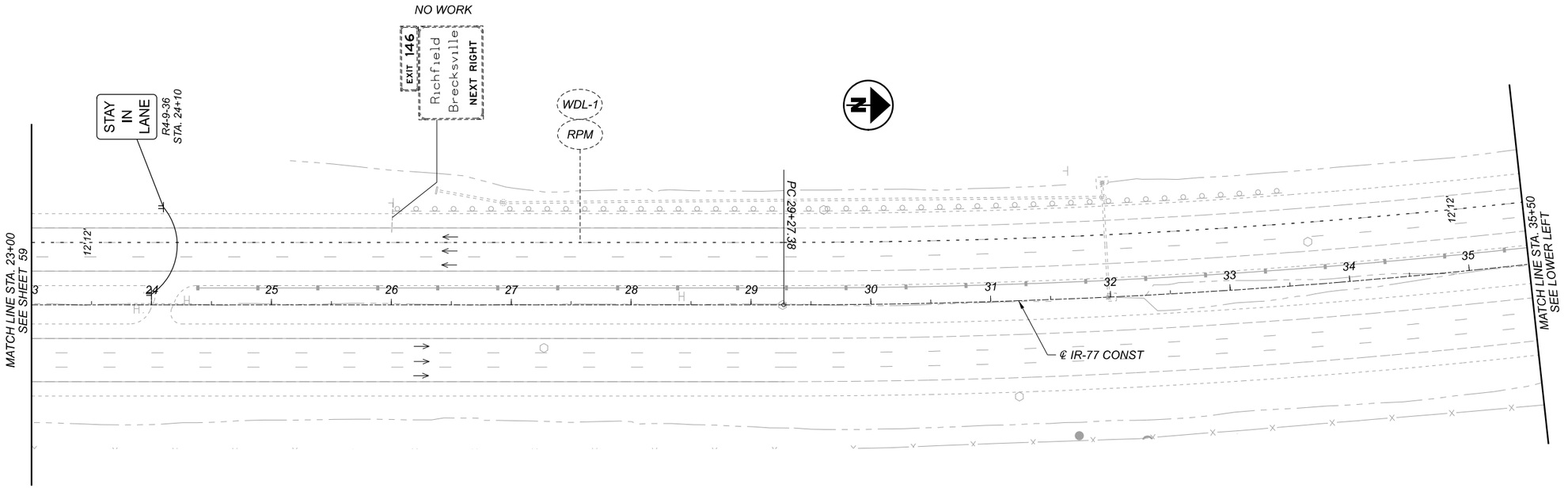

NOTES:

1. FOR MAINTENANCE OF TRAFFIC LEGEND, SEE SHEET 23
2. MAINTAIN EXISTING STRIPING UNLESS OTHERWISE NOTED. REMOVE CONFLICTING PAVEMENT MARKINGS.
3. COVER CONFLICTING SIGNAGE AS NOTED. RELOCATE SIGNAGE DISTURBED BY CONSTRUCTION ACTIVITIES.
4. FOR PERMANENT SIGNING DETAILS, REFER TO TRAFFIC CONTROL SHEETS.
5. COORDINATE PLACEMENT OF SIGNS WITH MILLER ROAD INTERCHANGE PROJECT.

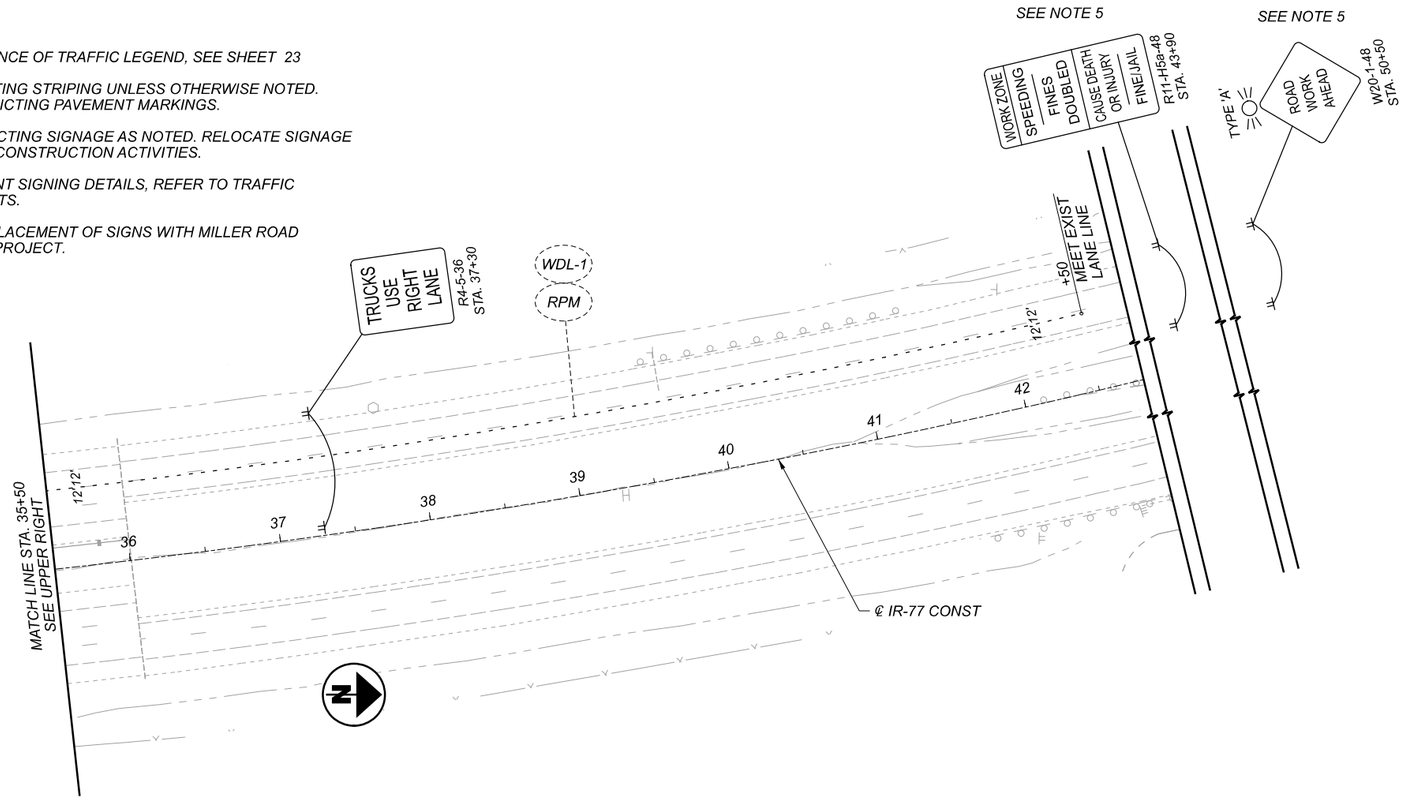

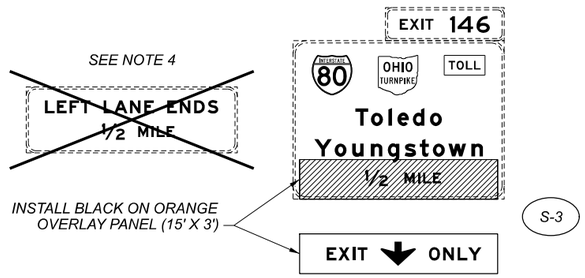

OVERHEAD MTD SIGNS
(EXISTING)
STA. 44+50 LT

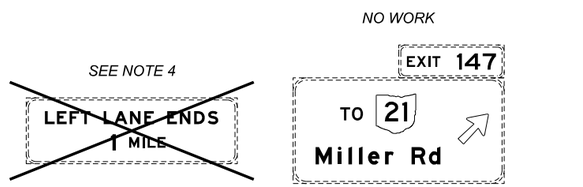

OVERHEAD MTD SIGNS
(EXISTING)
STA. 63+00 LT

HORIZONTAL
SCALE IN FEET
0 25 50 100

MAINTENANCE OF TRAFFIC - PHASE 2
IR-77 - STA 23+00 TO STA 43+00

SUM-77-32.27

MODEL: 104983_MP207 PAPERSIZE: 17x11in DATE: 2/22/2022 TIME: 7:13:19 PM USER: tdinh
pw:\\gfnet-pw.bentley.comgfnet-pw-01\Documents\Projects\67490\104983\40i-Engineering-GF\MOT\Sheets\104983_MP207.dgn

DESIGN AGENCY
Gannett Fleming
ENGINEERS AND ARCHITECTS, P.C.
2550 Corporate Exchange Drive
Suite 230
Columbus, OH 43231

DESIGNER ACW
REVIEWER CJM 09-28-21
PROJECT ID 104983
SHEET 60 TOTAL 297

MODEL: I04983_MP300 PAPERSIZE: 17x11 (In.) DATE: 2/22/2022 TIME: 7:15:36 PM USER: tdinh
pw:\\gfnet-pw.bentley.com:gfnet-pw-01\Documents\Projects\67490\I04983\401-Engineering-GF\MOT\Sheets\I04983_MP300.dgn

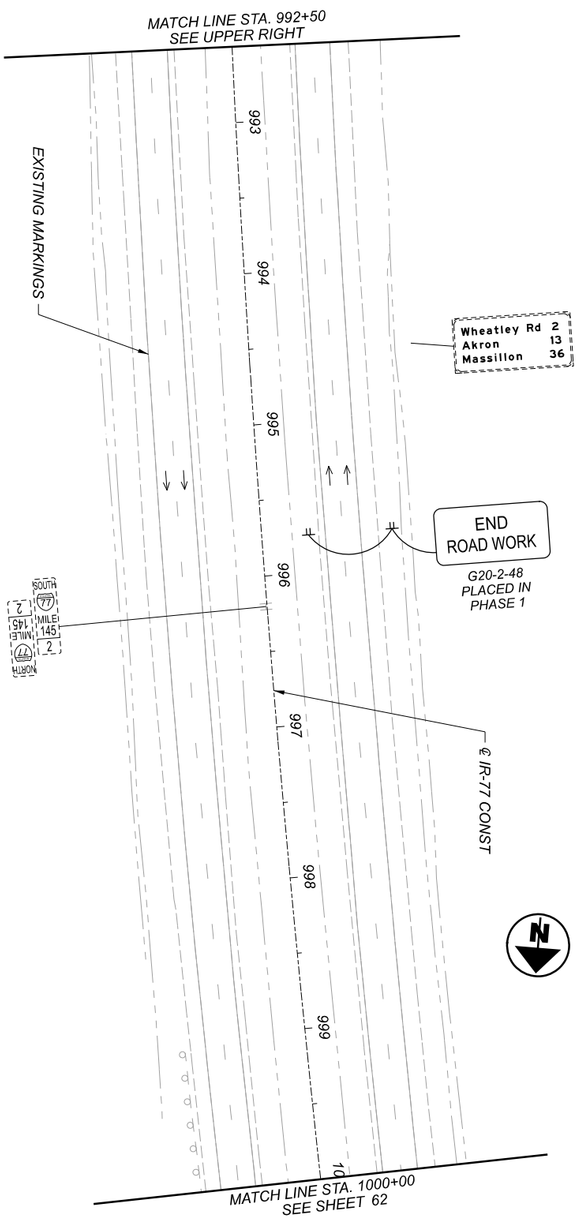

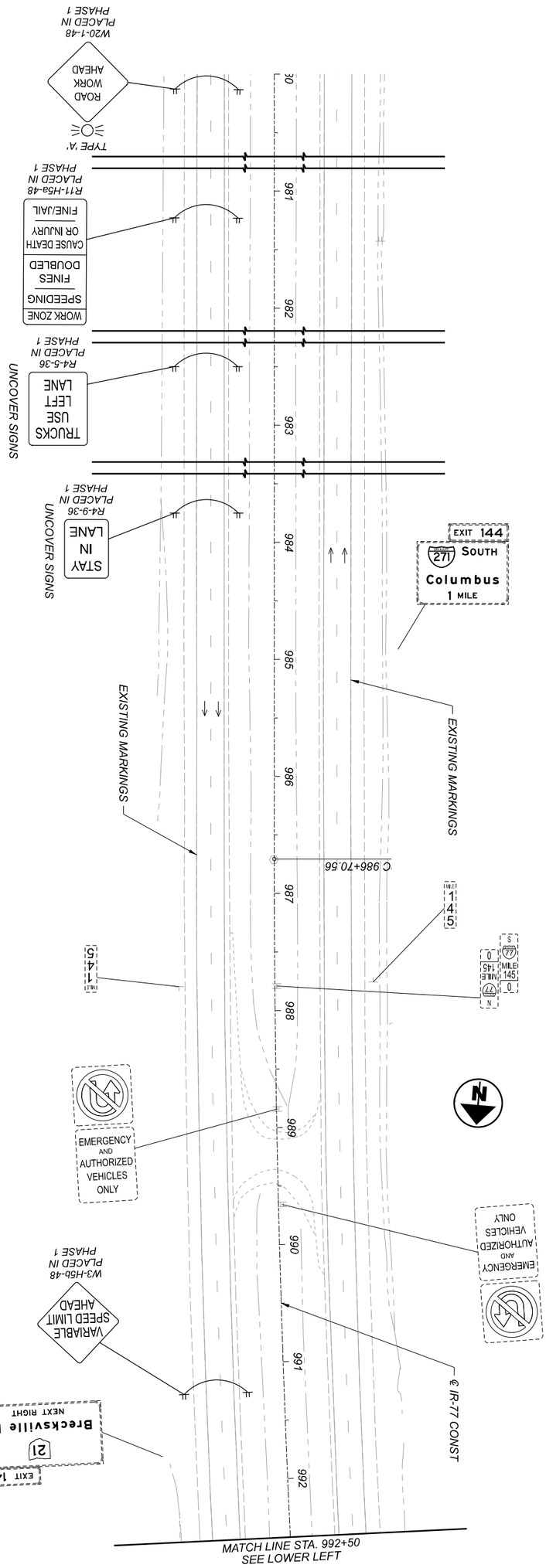

NOTES:

1. FOR MAINTENANCE OF TRAFFIC LEGEND, SEE SHEET 23
2. MAINTAIN EXISTING STRIPING UNLESS OTHERWISE NOTED. REMOVE CONFLICTING PAVEMENT MARKINGS.
3. COVER CONFLICTING SIGNAGE AS NOTED. RELOCATE SIGNAGE DISTURBED BY CONSTRUCTION ACTIVITIES.

MAINTENANCE OF TRAFFIC - PHASE 3
IR-77 - STA 980+00 TO STA 1000+00

HORIZONTAL SCALE IN FEET
0 50
25 100

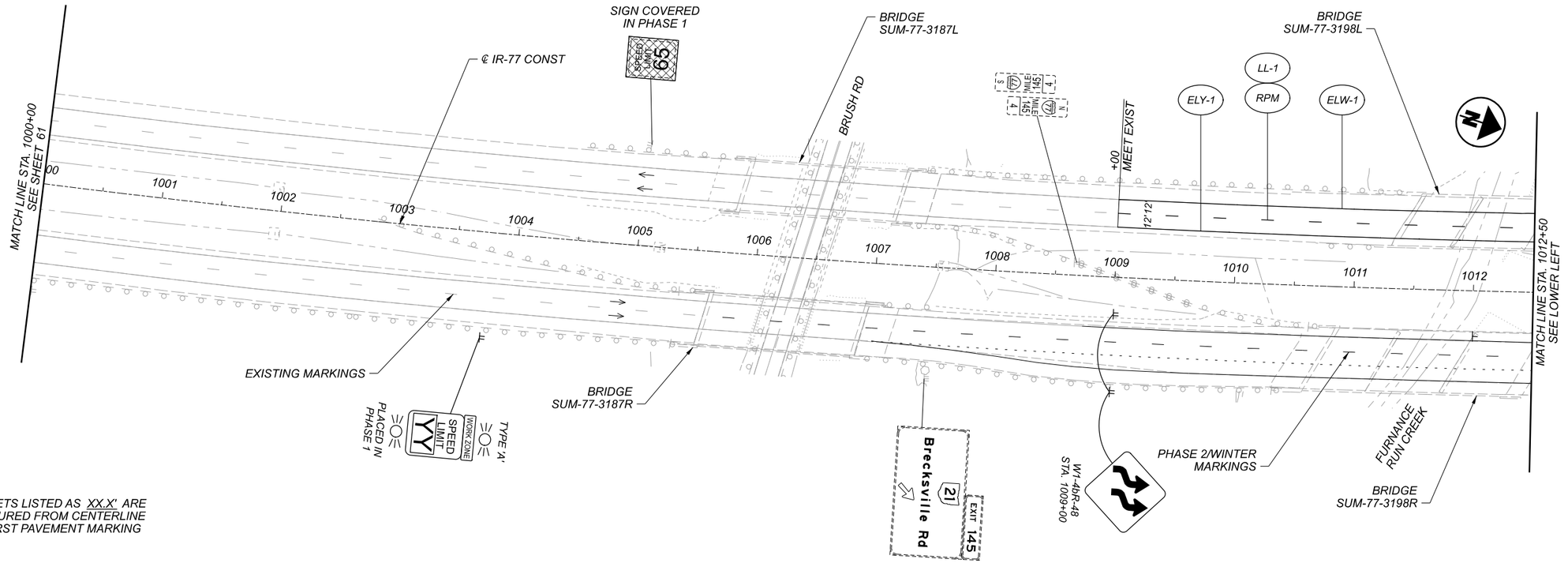

NOTES:

1. FOR MAINTENANCE OF TRAFFIC LEGEND, SEE SHEET 23
2. MAINTAIN EXISTING STRIPING UNLESS OTHERWISE NOTED. REMOVE CONFLICTING PAVEMENT MARKINGS.
3. COVER CONFLICTING SIGNAGE AS NOTED. RELOCATE SIGNAGE DISTURBED BY CONSTRUCTION ACTIVITIES.
4. FOR PERMANENT SIGNING DETAILS, REFER TO TRAFFIC CONTROL SHEETS.
5. FOR SECTION A-A, SEE SHEET 36
6. QUANTITIES OF RPMs ARE INCLUDED WITH THE "ELW" AND "ELY" LINES TO PROVIDE WORK ZONE DELINEATOIN PER SCD MT-99.30

HORIZONTAL
SCALE IN FEET
0 25 50 100

MAINTENANCE OF TRAFFIC - PHASE 3
IR-77 - STA 1000+00 TO STA 1020+00

DESIGN AGENCY
Gannett Fleming
ENGINEERS AND ARCHITECTS, P.C.
2500 Corporate Exchange Drive
Suite 220
Columbus, OH 43231

DESIGNER ACW
REVIEWER CJM 09-28-21
PROJECT ID 104983
SHEET 62 TOTAL 297

SUM-77-32.27

MODEL: I04983_MP30I PAPERSIZE: 17x11(in.) DATE: 2/22/2022 TIME: 7:17:44 PM USER: tdnh
pw:\\gfnet-pw.bentley.com:gfnet-pw-01\Documents\Projects\67490\104983\40i-Engineering-GF\MOT\Sheets\I04983_MP30I.dgn

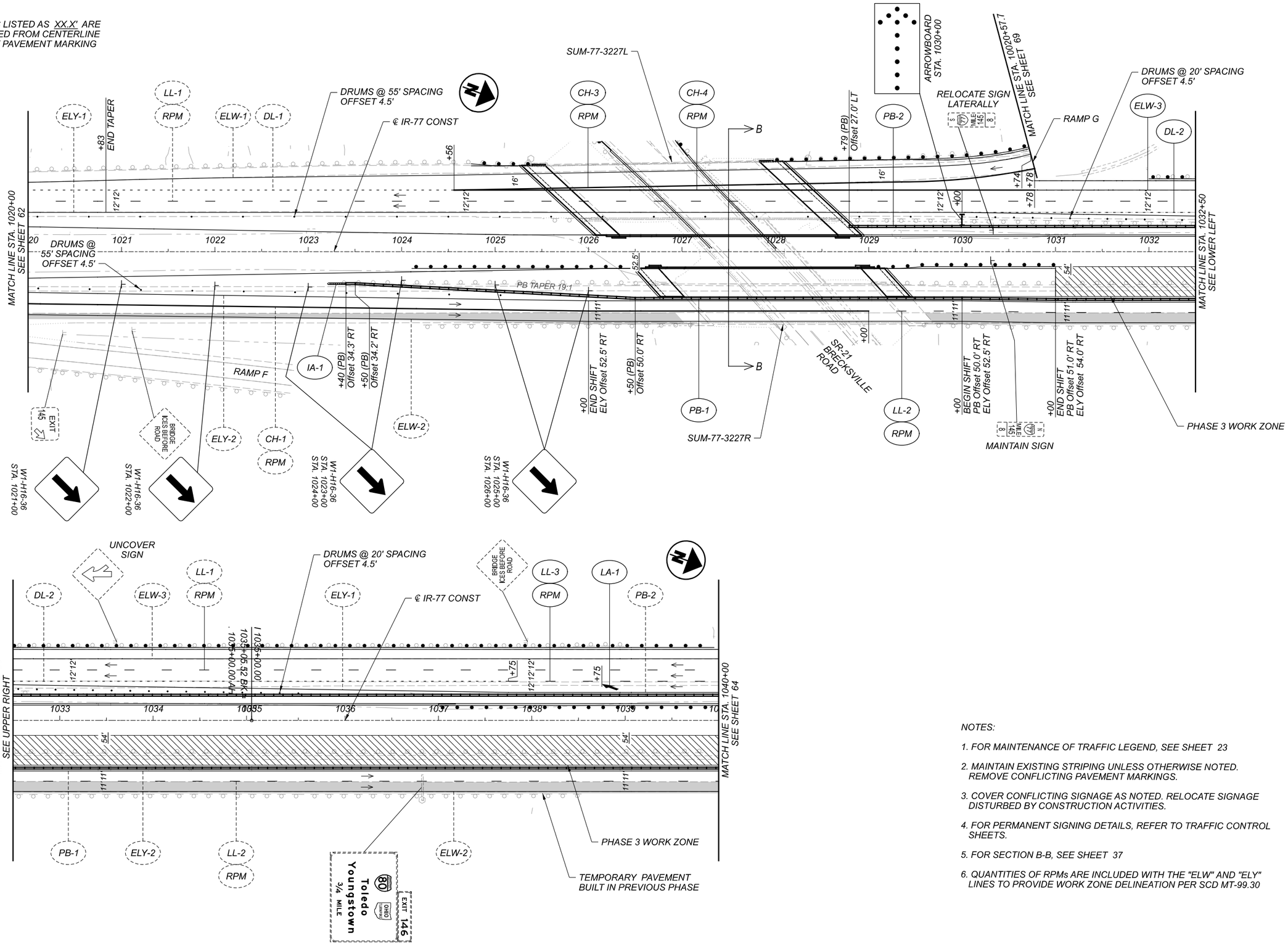

NOTES:

1. *FOR MAINTENANCE OF TRAFFIC LEGEND, SEE SHEET 23*
2. *MAINTAIN EXISTING STRIPING UNLESS OTHERWISE NOTED. REMOVE CONFLICTING PAVEMENT MARKINGS.*
3. *COVER CONFLICTING SIGNAGE AS NOTED. RELOCATE SIGNAGE DISTURBED BY CONSTRUCTION ACTIVITIES.*
4. *FOR PERMANENT SIGNING DETAILS, REFER TO TRAFFIC CONTROL SHEETS.*
5. *FOR SECTION B-B, SEE SHEET 37*
6. *QUANTITIES OF RPMs ARE INCLUDED WITH THE "ELW" AND "ELY" LINES TO PROVIDE WORK ZONE DELINEATION PER SCD MT-99.30*

MAINTENANCE OF TRAFFIC - PHASE 3
IR-77 - STA 1020+00 TO STA 1040+00

DESIGN AGENCY
Gannett Fleming
ENGINEERS AND ARCHITECTS, P.C.
2200 Corporate Exchange Drive Suite 230 Columbus, OH 43231

DESIGNER ACW
REVIEWER CJM 09-28-21
PROJECT ID 104983
SHEET 63 TOTAL 297

SUM-77-32.27

MODEL: I04983_MP30I PAPERSIZE: ITxII(In.) DATE: 2/22/2022 TIME: 7:19:53 PM USER: tdnh
pw:\\gfnet-pw.bentley.comgfnet-pw-01\Documents\Projects\67490\I04983\40i-Engineering-GF\MOT\Sheets\I04983_MP302.dgn

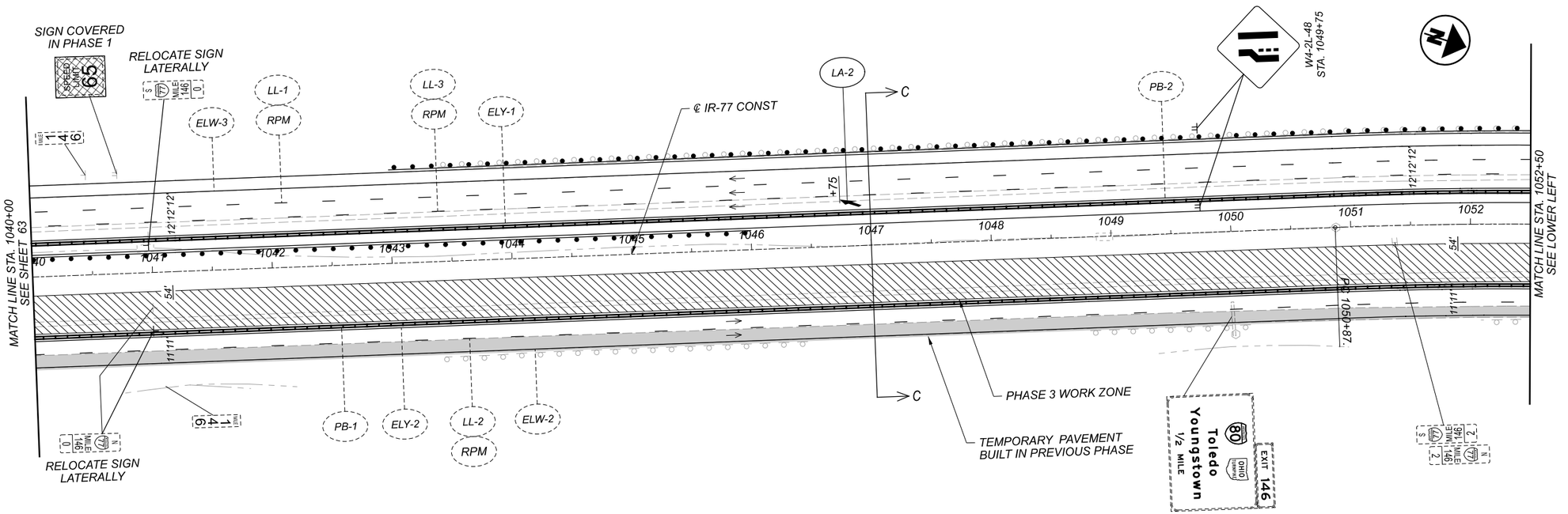

OFFSETS LISTED AS XX.X' ARE MEASURED FROM CENTERLINE TO FIRST PAVEMENT MARKING

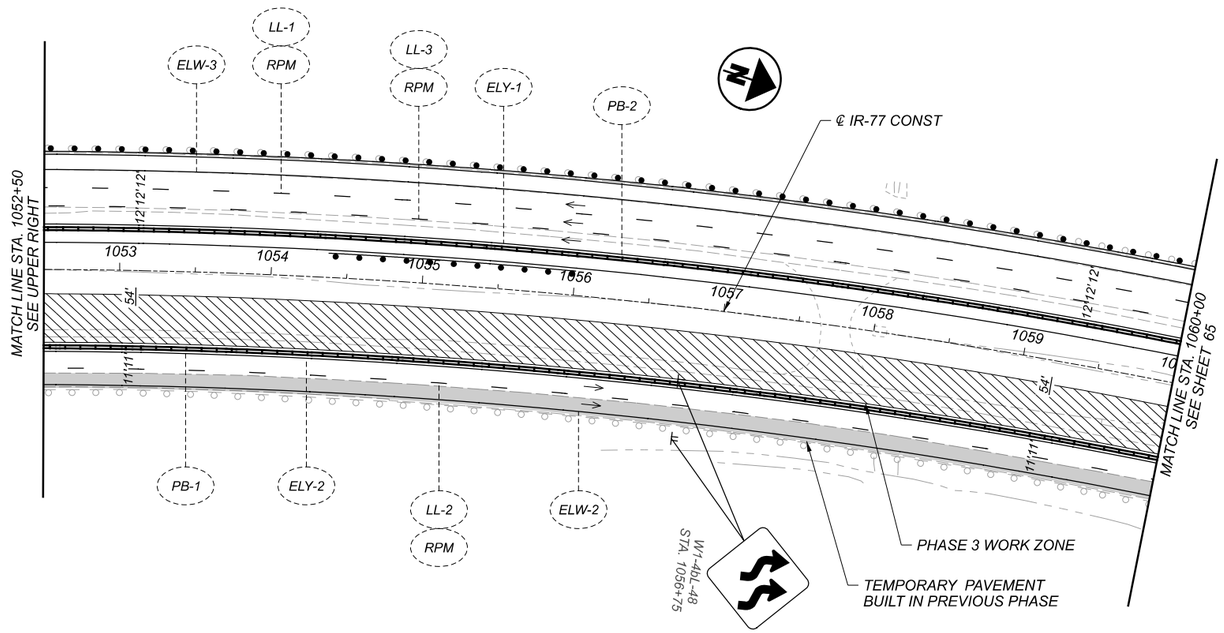

NOTES:

1. *FOR MAINTENANCE OF TRAFFIC LEGEND, SEE SHEET 23*
2. *MAINTAIN EXISTING STRIPING UNLESS OTHERWISE NOTED. REMOVE CONFLICTING PAVEMENT MARKINGS.*
3. *COVER CONFLICTING SIGNAGE AS NOTED. RELOCATE SIGNAGE DISTURBED BY CONSTRUCTION ACTIVITIES.*
4. *FOR PERMANENT SIGNING DETAILS, REFER TO TRAFFIC CONTROL SHEETS.*
5. *FOR SECTION C-C, SEE SHEET 38*

HORIZONTAL SCALE IN FEET
0 25 50 100

MAINTENANCE OF TRAFFIC - PHASE 3
IR-77 - STA 1040+00 TO STA 1060+00

DESIGN AGENCY	Gannett Fleming ENGINEERS AND ARCHITECTS, P.C. 2500 Corporate Exchange Drive Suite 220 Columbus, OH 43231
DESIGNER	ACW
REVIEWER	CJM 09-28-21
PROJECT ID	104983
SHEET	64
TOTAL	297

SUM-77-32.27

MODEL: I04983_MP30I PAPERSIZE: ITxII(In.) DATE: 2/22/2022 TIME: 7:22:11PM USER: tdinh
pw:\\gfnet-pw.bentley.com:gfnet-pw-01\Documents\Projects\67490\104983\40i-Engineering-GF\MOT\Sheets\I04983_MP303.dgn

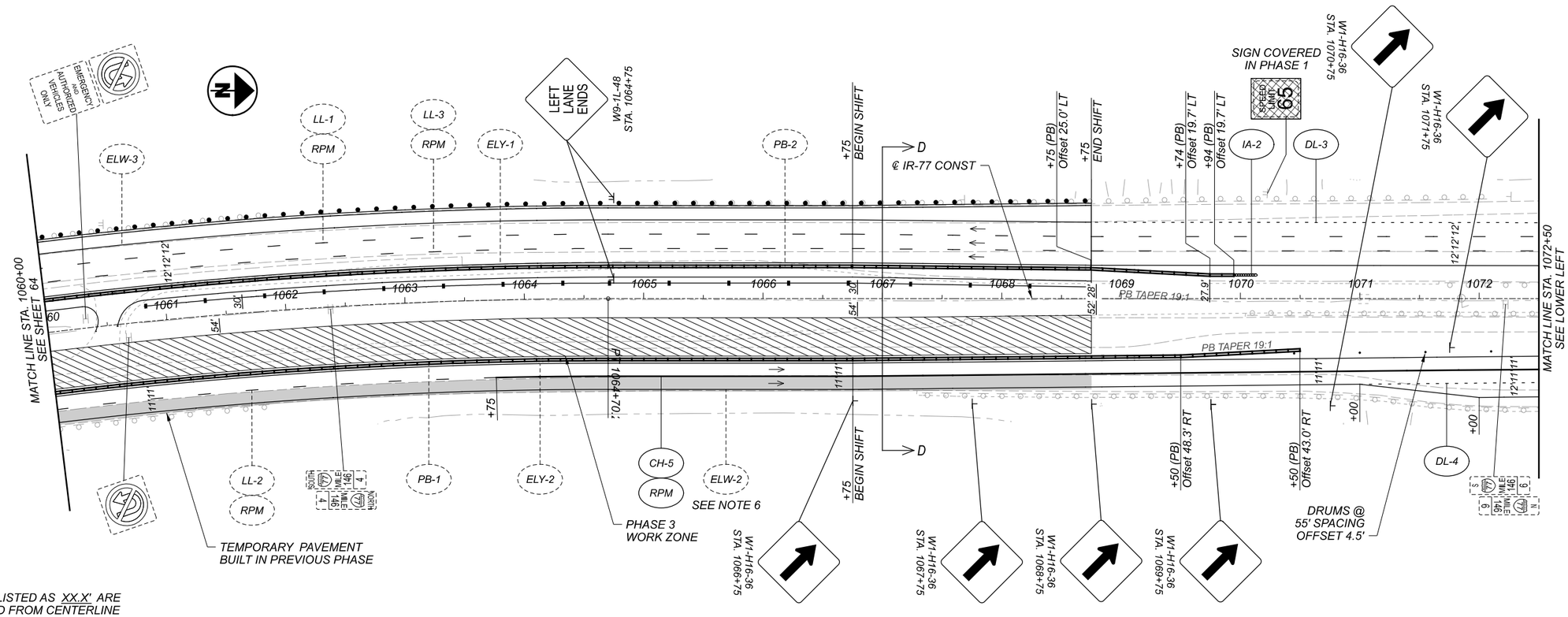

OFFSETS LISTED AS XX.X' ARE MEASURED FROM CENTERLINE TO FIRST PAVEMENT MARKING

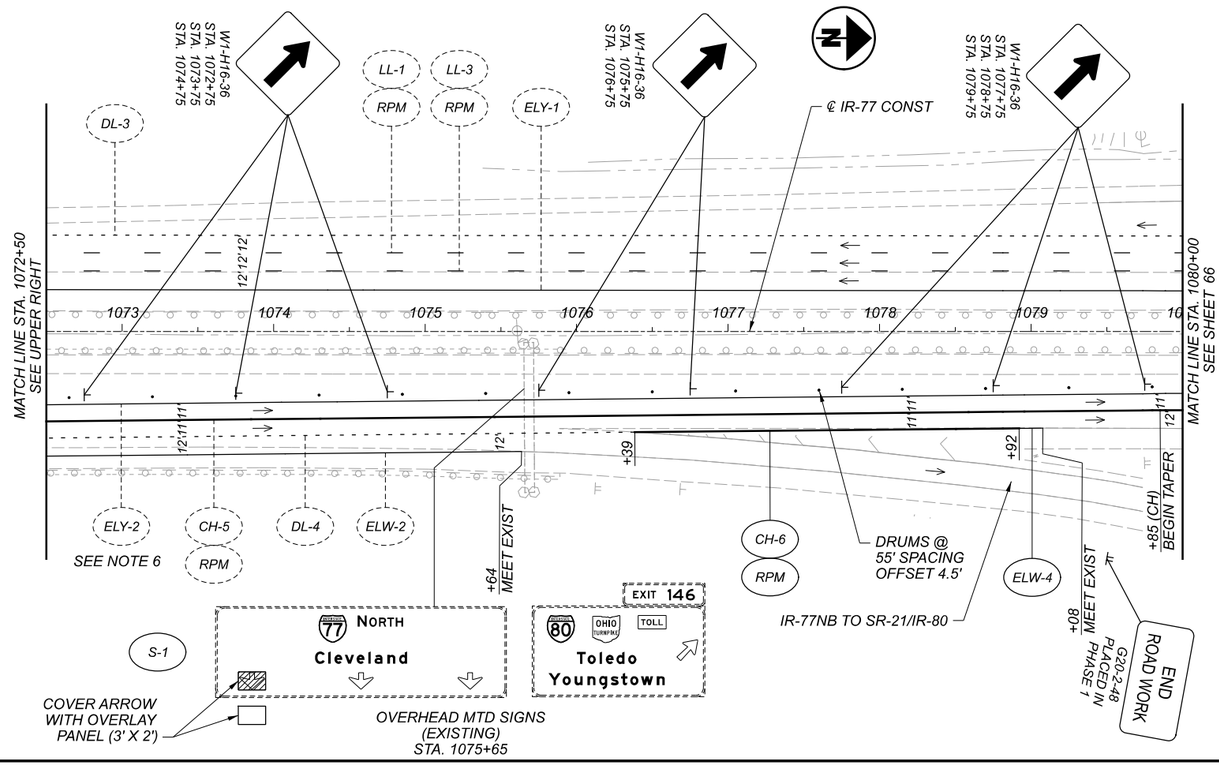

NOTES:

1. *FOR MAINTENANCE OF TRAFFIC LEGEND, SEE SHEET 23*
2. *MAINTAIN EXISTING STRIPING UNLESS OTHERWISE NOTED. REMOVE CONFLICTING PAVEMENT MARKINGS.*
3. *COVER CONFLICTING SIGNAGE AS NOTED. RELOCATE SIGNAGE DISTURBED BY CONSTRUCTION ACTIVITIES.*
4. *FOR PERMANENT SIGNING DETAILS, REFER TO TRAFFIC CONTROL SHEETS.*
5. *FOR SECTION D-D, SEE SHEET 39*
6. *QUANTITIES OF RPMs ARE INCLUDED WITH THE "ELW" AND "ELY" LINES TO PROVIDE WORK ZONE DELINEATION PER SCD MT-99.30*

HORIZONTAL SCALE IN FEET
0 25 50 100

MAINTENANCE OF TRAFFIC - PHASE 3
IR-77 - STA 1060+00 TO STA 1080+00

DESIGN AGENCY
Gannett Fleming
ENGINEERS AND ARCHITECTS, P.C.
2300 Corporate Exchange Drive
Suite 330
Columbus, OH 43231

DESIGNER ACW
REVIEWER CJM 09-28-21
PROJECT ID 104983
SHEET 65 TOTAL 297

SUM-77-32.27

MODEL: 104983_MP301 PAPERSIZE: 17x11(in.) DATE: 2/22/2022 TIME: 7:24:28 PM USER: tdinh
pw:\\gfnet-pw.bentley.com:gfnet-pw-01\Documents\Projects\67490\104983\401-Engineering-GF\MOT\Sheets\104983_MP304.dgn

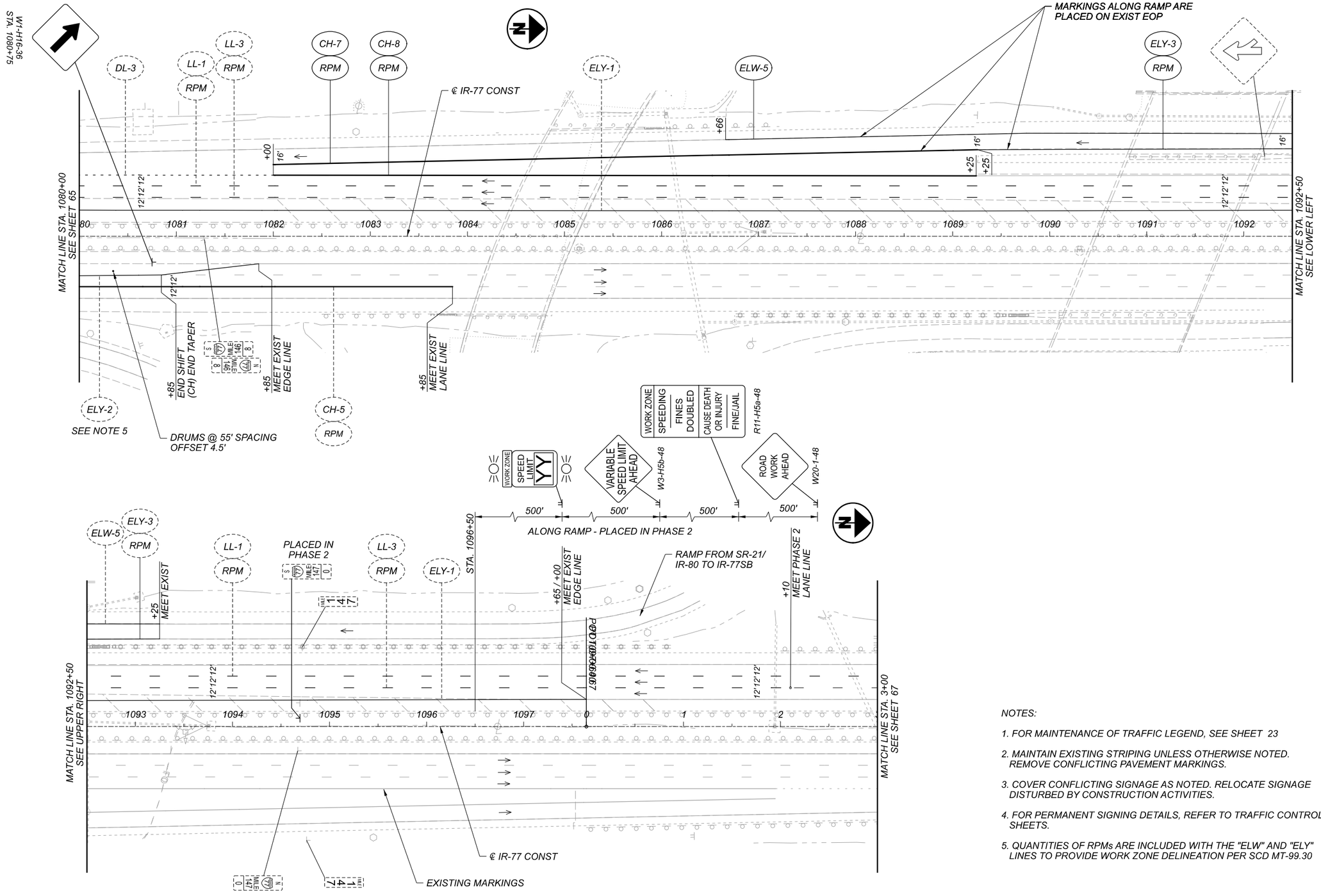

NOTES:

1. *FOR MAINTENANCE OF TRAFFIC LEGEND, SEE SHEET 23*
2. *MAINTAIN EXISTING STRIPING UNLESS OTHERWISE NOTED. REMOVE CONFLICTING PAVEMENT MARKINGS.*
3. *COVER CONFLICTING SIGNAGE AS NOTED. RELOCATE SIGNAGE DISTURBED BY CONSTRUCTION ACTIVITIES.*
4. *FOR PERMANENT SIGNING DETAILS, REFER TO TRAFFIC CONTROL SHEETS.*
5. *QUANTITIES OF RPMs ARE INCLUDED WITH THE "ELW" AND "ELY" LINES TO PROVIDE WORK ZONE DELINEATION PER SCD MT-99.30*

HORIZONTAL SCALE IN FEET
0 25 50 100

MAINTENANCE OF TRAFFIC - PHASE 3
IR-77 - STA 1080+00 TO STA 3+00

SUM-77-32.27

MODEL: 104983_MP301 PAPERSIZE: 17x11(in.) DATE: 2/22/2022 TIME: 7:26:37 PM USER: tdinh
pw:\\gfnet-pw.bentley.com:gfnet-pw-01\Documents\Projects\67490\104983\401-Engineering-GF\MOT\Sheets\104983_MP305.dgn

DESIGN AGENCY
Gannett Fleming
ENGINEERS AND ARCHITECTS, P.C.
2300 Corporate Exchange Drive
Suite 200
Columbus, OH 43231

DESIGNER ACW
REVIEWER CJM 09-28-21
PROJECT ID 104983
SHEET 66 TOTAL 297

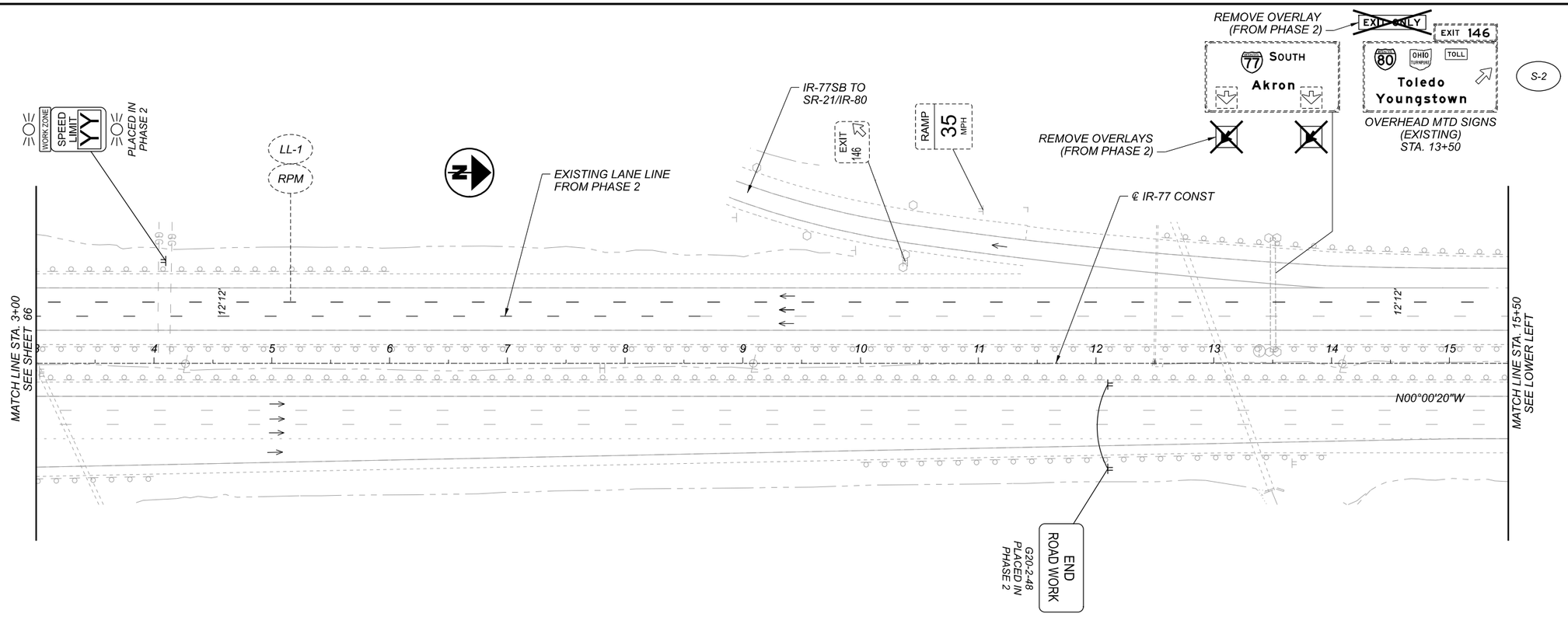

NOTES:

1. *FOR MAINTENANCE OF TRAFFIC LEGEND, SEE SHEET 23*
2. *MAINTAIN EXISTING STRIPING UNLESS OTHERWISE NOTED. REMOVE CONFLICTING PAVEMENT MARKINGS.*
3. *COVER CONFLICTING SIGNAGE AS NOTED. RELOCATE SIGNAGE DISTURBED BY CONSTRUCTION ACTIVITIES.*
4. *FOR PERMANENT SIGNING DETAILS, REFER TO TRAFFIC CONTROL SHEETS.*

HORIZONTAL SCALE IN FEET
0 25 50 100

MAINTENANCE OF TRAFFIC - PHASE 3
IR-77 - STA 3+00 TO STA 23+00

DESIGN AGENCY
Gannett Fleming
ENGINEERS AND ARCHITECTS, P.C.
2500 Corporate Exchange Drive
Suite 230
Columbus, OH 43231

DESIGNER ACW
REVIEWER CJM 09-28-21
PROJECT ID 104983
SHEET 67 TOTAL 297

SUM-77-32.27

MODEL: l04983_MP30l PAPERSIZE: l7x11(in.) DATE: 2/22/2022 TIME: 7:28:58 PM USER: tdnh
pw:\\gfnet-pw.bentley.comgfnet-pw-01\Documents\Projects\67490\l04983\40l-Engineering-GF\MOT\Sheets\l04983_MP306.dgn

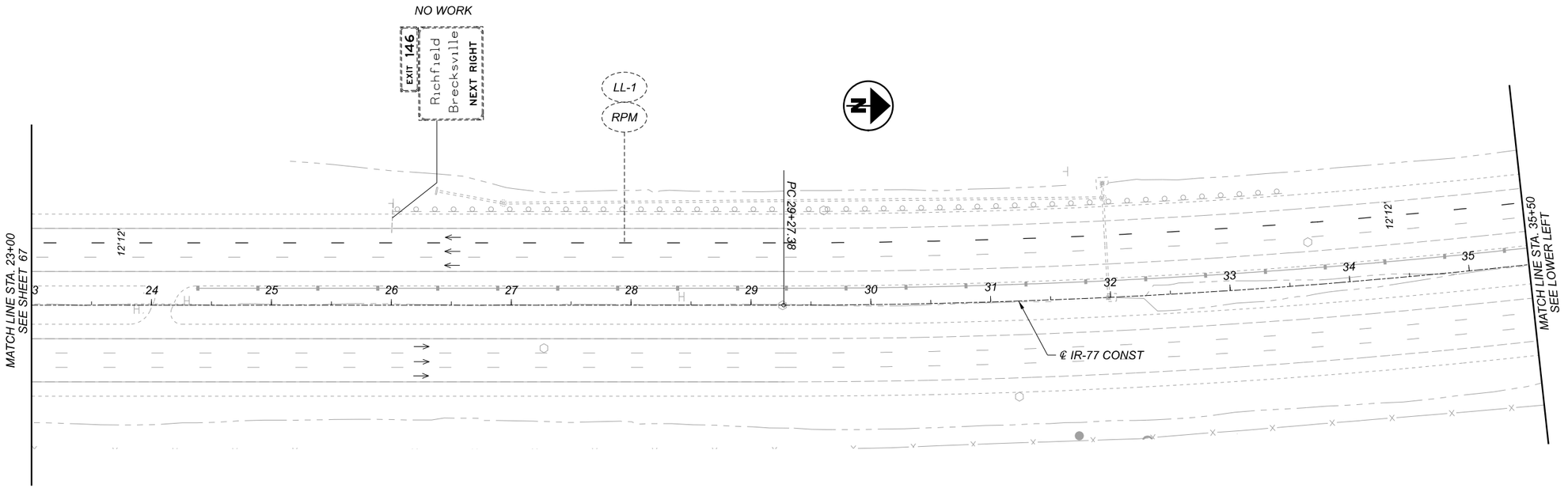

NOTES:

1. FOR MAINTENANCE OF TRAFFIC LEGEND, SEE SHEET 23
2. MAINTAIN EXISTING STRIPING UNLESS OTHERWISE NOTED. REMOVE CONFLICTING PAVEMENT MARKINGS.
3. COVER CONFLICTING SIGNAGE AS NOTED. RELOCATE SIGNAGE DISTURBED BY CONSTRUCTION ACTIVITIES.
4. FOR PERMANENT SIGNING DETAILS, REFER TO TRAFFIC CONTROL SHEETS.

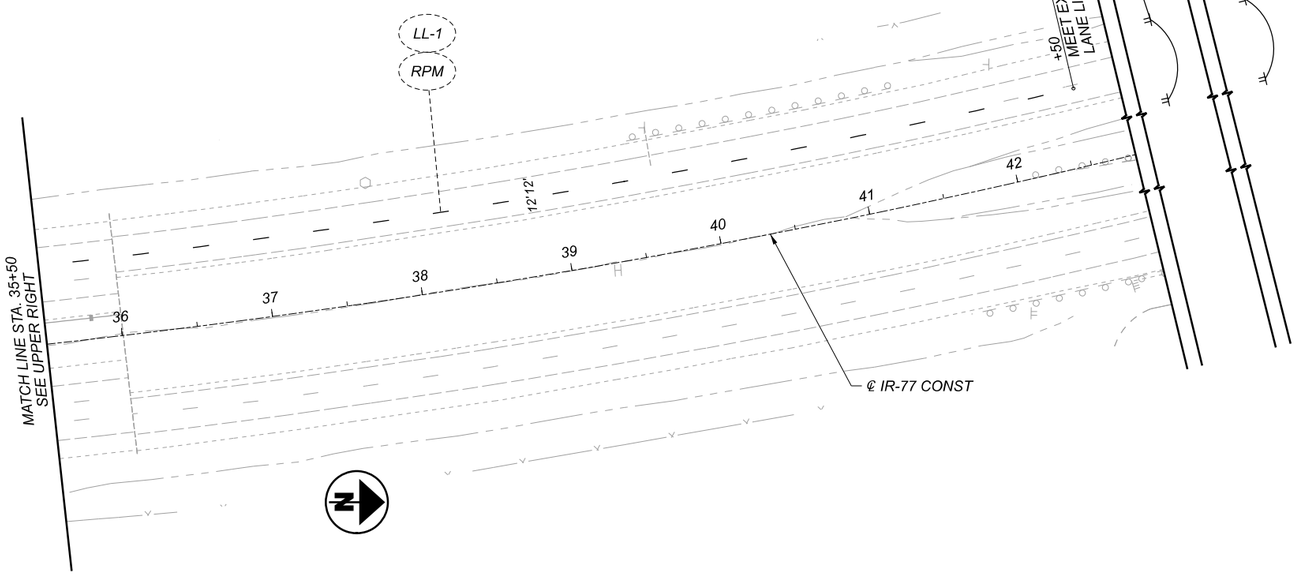

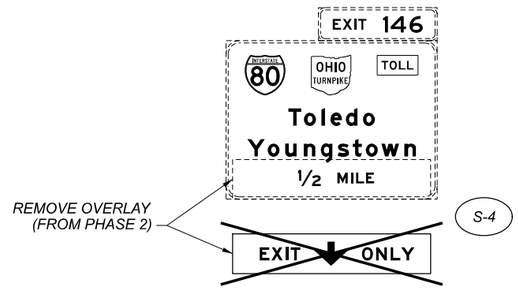

OVERHEAD MTD SIGNS
(EXISTING)
STA. 44+50 LT

NO WORK

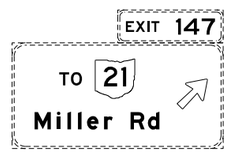

OVERHEAD MTD SIGNS
(EXISTING)
STA. 63+00 LT

HORIZONTAL
SCALE IN FEET
0 25 50 100

MAINTENANCE OF TRAFFIC - PHASE 3
IR-77 - STA 23+00 TO STA 43+00

SUM-77-32.27

MODEL: 104983_MP307 PAPERSIZE: 17x11(in.) DATE: 2/22/2022 TIME: 7:31:31 PM USER: tdinh
pw:\\gfnet-pw.bentley.com:gfnet-pw-01\Documents\Projects\67490\104983\401-Engineering-GF\MOT\Sheets\104983_MP307.dgn

DESIGN AGENCY
Gannett Fleming
ENGINEERS AND ARCHITECTS, P.C.
2260 Corporate Exchange Drive
Suite 230
Columbus, OH 43231

DESIGNER: ACW
REVIEWER: CJM 09-28-21
PROJECT ID: 104983
SHEET: 68 TOTAL: 297

MODEL: I04983_MP202 PAPERSIZE: 17x11(in.) DATE: 2/22/2022 TIME: 7:33:40 PM USER: tdinh
pw:\\gfnet-pw.bentley.com:gfnet-pw-01\Documents\Projects\67490\I04983\401-Engineering-GF\MOT\Sheets\I04983_MP3II.dgn

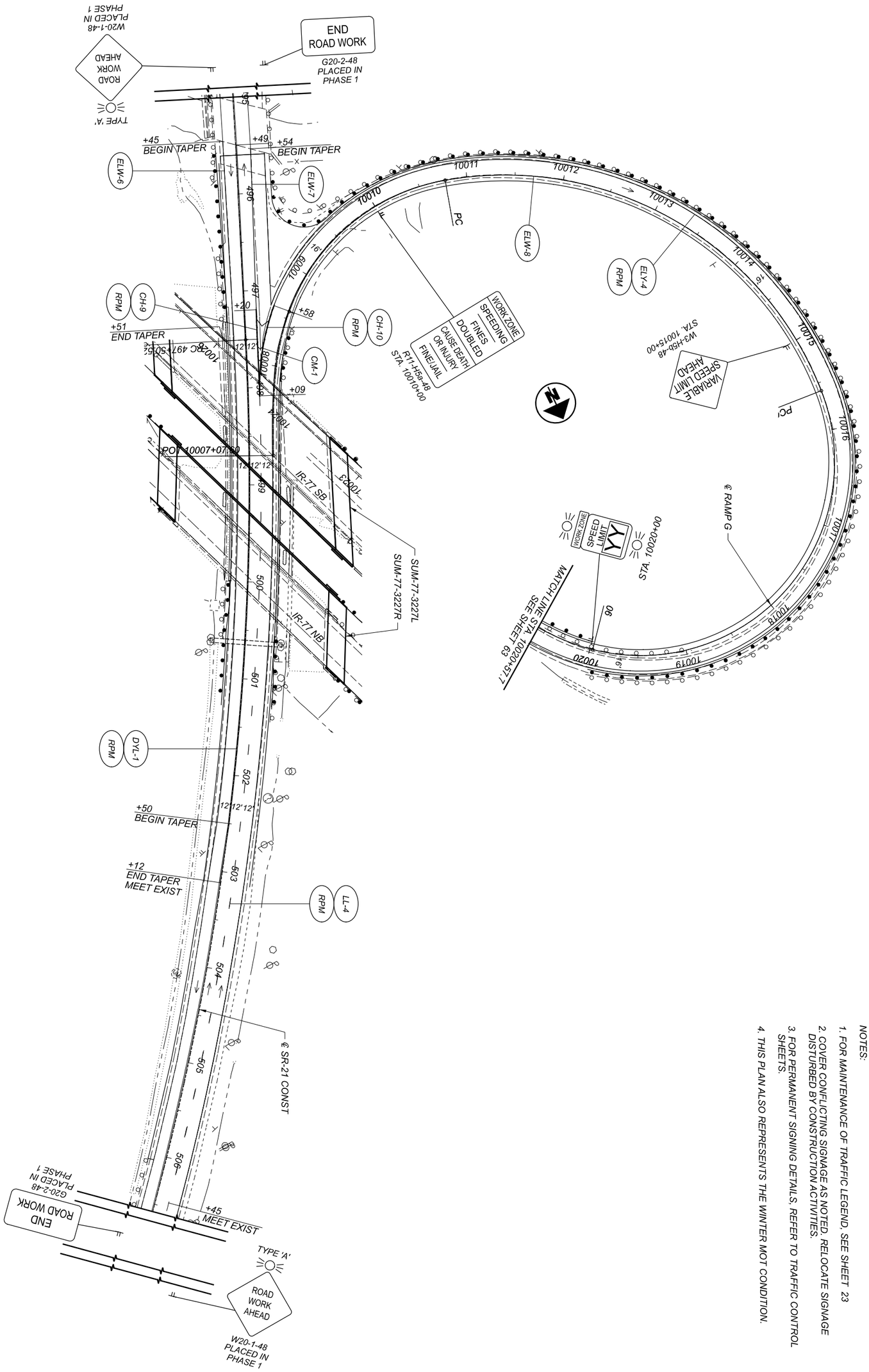

NOTES:

1. FOR MAINTENANCE OF TRAFFIC LEGEND, SEE SHEET 23
2. COVER CONFLICTING SIGNAGE AS NOTED. RELOCATE SIGNAGE DISTURBED BY CONSTRUCTION ACTIVITIES.
3. FOR PERMANENT SIGNING DETAILS, REFER TO TRAFFIC CONTROL SHEETS.
4. THIS PLAN ALSO REPRESENTS THE WINTER MOT CONDITION.

DESIGNER: ACW
REVIEWER: DRJ 02-08-22
PROJECT ID: 104983
SHEET: 69 TOTAL: 297

DESIGN AGENCY
Gannett Fleming
ENGINEERS AND ARCHITECTS, P.C.
2500 Corporate Exchange Drive
Suite 230
Columbus, OH 43231

MAINTENANCE OF TRAFFIC - PHASE 3
SR-21 - STA 495+00 TO STA 508+00

HORIZONTAL SCALE IN FEET
0 50
25 100

MODEL: I04983_MP400 PAPERSIZE: 17x11(In.) DATE: 2/22/2022 TIME: 7:35:46 PM USER: tdinh
pw:\\gfnet-pw.bentley.com:gfnet-pw-01\Documents\Projects\67490\I04983\401-Engineering-GF\MOT\Sheets\I04983_MP400.dgn

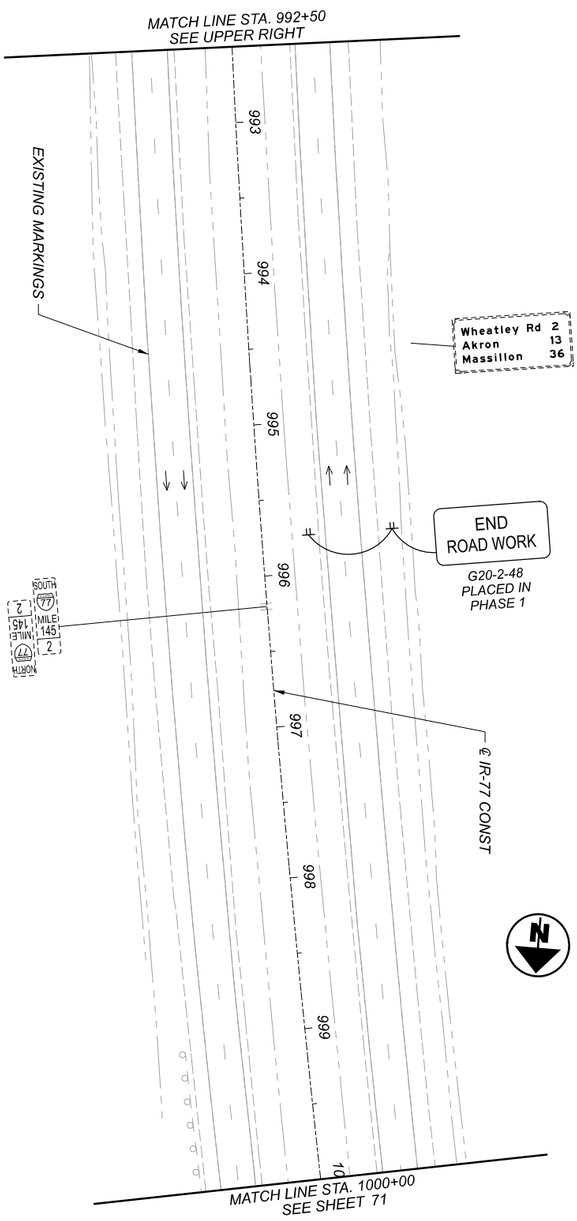

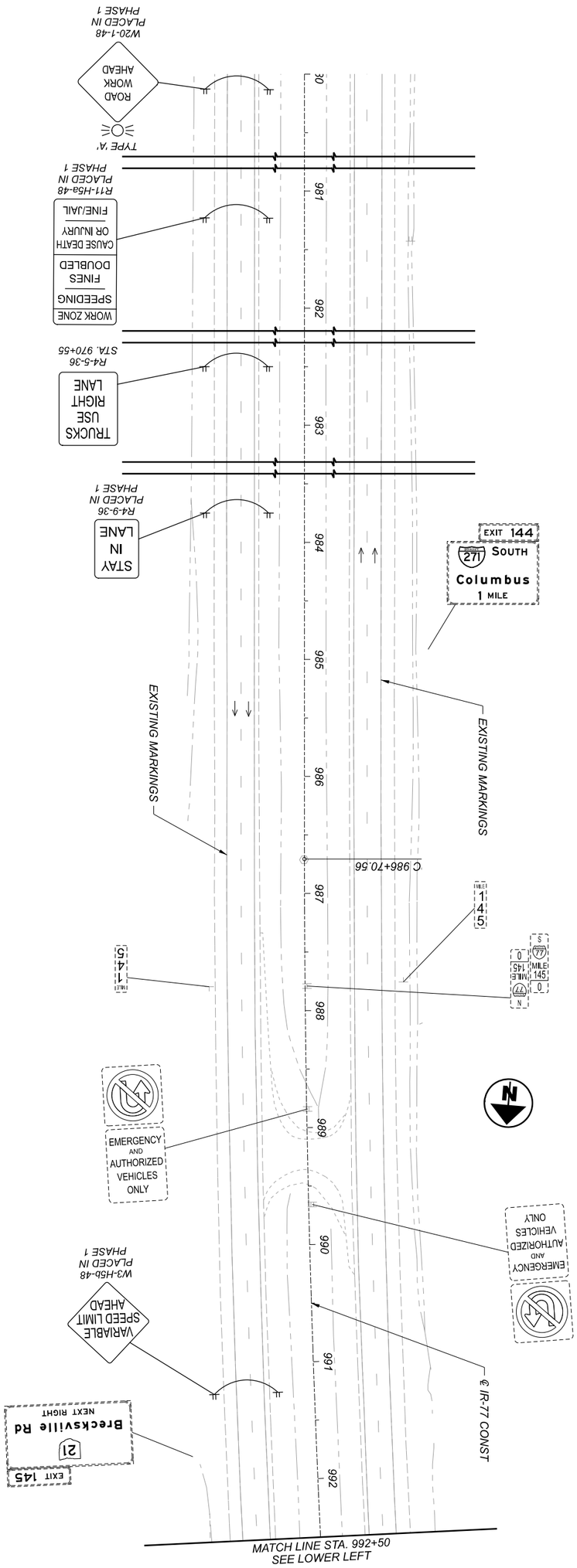

NOTES:

1. FOR MAINTENANCE OF TRAFFIC LEGEND, SEE SHEET 23
2. MAINTAIN EXISTING STRIPING UNLESS OTHERWISE NOTED. REMOVE CONFLICTING PAVEMENT MARKINGS.
3. COVER CONFLICTING SIGNAGE AS NOTED. RELOCATE SIGNAGE DISTURBED BY CONSTRUCTION ACTIVITIES.

SHEET	TOTAL
70	297

PROJECT ID: 104983

REVIEWER: DRJ 02-08-22

DESIGNER: ACW

DESIGN AGENCY

Gannett Fleming
ENGINEERS AND ARCHITECTS, P.C.
2500 Corporate Exchange Drive
Suite 230
Columbus, OH 43231

MAINTENANCE OF TRAFFIC - PHASE 4
IR-77 - STA 980+00 TO STA 1000+00

HORIZONTAL SCALE IN FEET

0 50
25 100

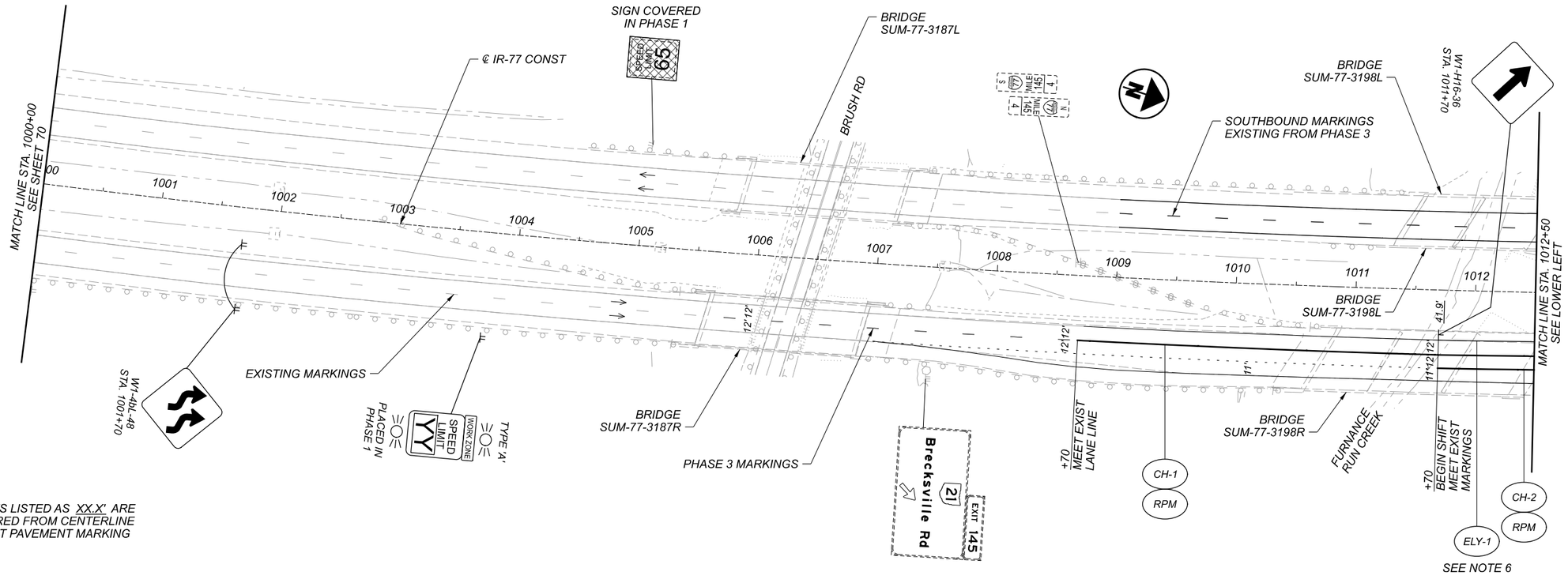

OFFSETS LISTED AS XX.X' ARE MEASURED FROM CENTERLINE TO FIRST PAVEMENT MARKING

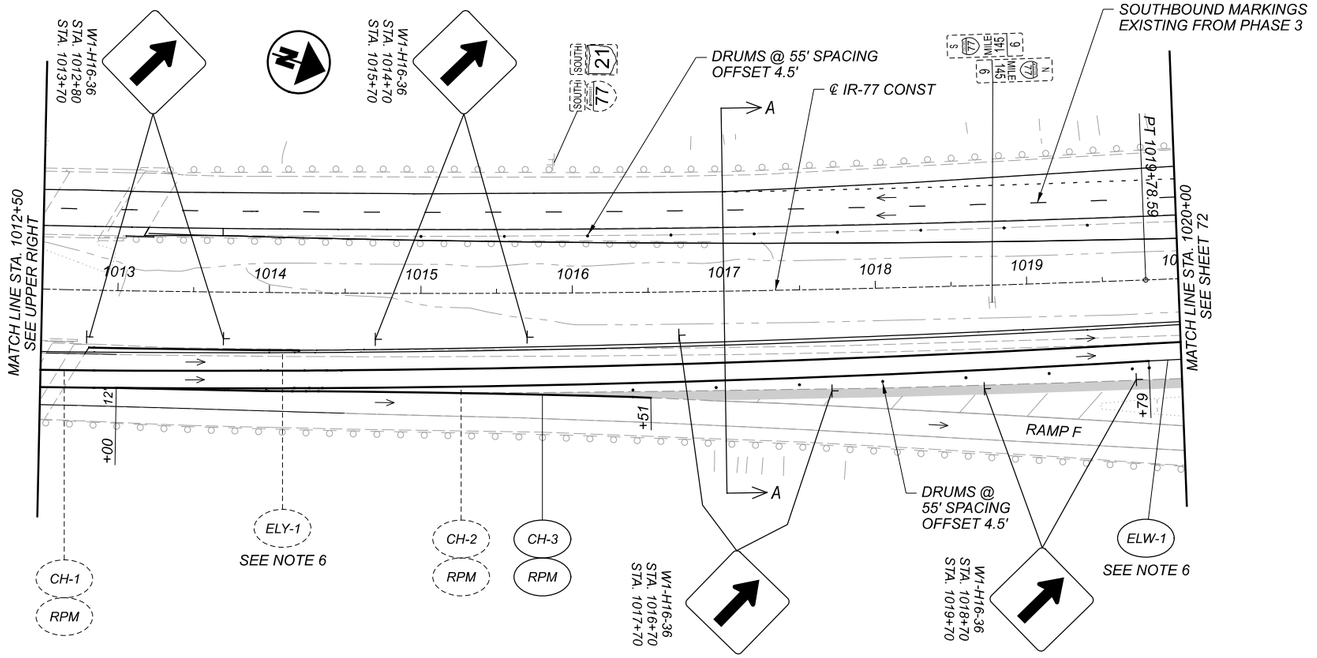

NOTES:

1. FOR MAINTENANCE OF TRAFFIC LEGEND, SEE SHEET 23
2. MAINTAIN EXISTING STRIPING UNLESS OTHERWISE NOTED. REMOVE CONFLICTING PAVEMENT MARKINGS. SOUTHBOUND MARKINGS ARE EXISTING FROM PHASE 3 MOT.
3. COVER CONFLICTING SIGNAGE AS NOTED. RELOCATE SIGNAGE DISTURBED BY CONSTRUCTION ACTIVITIES.
4. FOR PERMANENT SIGNING DETAILS, REFER TO TRAFFIC CONTROL SHEETS.
5. FOR SECTION A-A, SEE SHEET 36
6. QUANTITIES OF RPMs ARE INCLUDED WITH THE "ELW" AND "ELY" LINES TO PROVIDE WORK ZONE DELINEATION PER SCD MT-99.30

HORIZONTAL SCALE IN FEET
0 25 50 100

MAINTENANCE OF TRAFFIC - PHASE 4
IR-77 - STA 1000+00 TO STA 1020+00

SUM-77-32.27

MODEL: 104983_MP40I PAPERSIZE: 17x11(in.) DATE: 2/22/2022 TIME: 7:31:54 PM USER: tdinh
pw:\\gfnet-pw.bentley.com:gfnet-pw-01\Documents\Projects\67490\104983\40i-Engineering-GF\MOT\Sheets\104983_MP40I.dgn

DESIGN AGENCY
Gannett Fleming
ENGINEERS AND ARCHITECTS, P.C.
2500 Corporate Exchange Drive
Suite 220
Columbus, OH 43231

DESIGNER
ACW

REVIEWER
CJM 09-28-21

PROJECT ID
104983

SHEET 71 TOTAL 297

OFFSETS LISTED AS XX.X' ARE MEASURED FROM CENTERLINE TO FIRST PAVEMENT MARKING

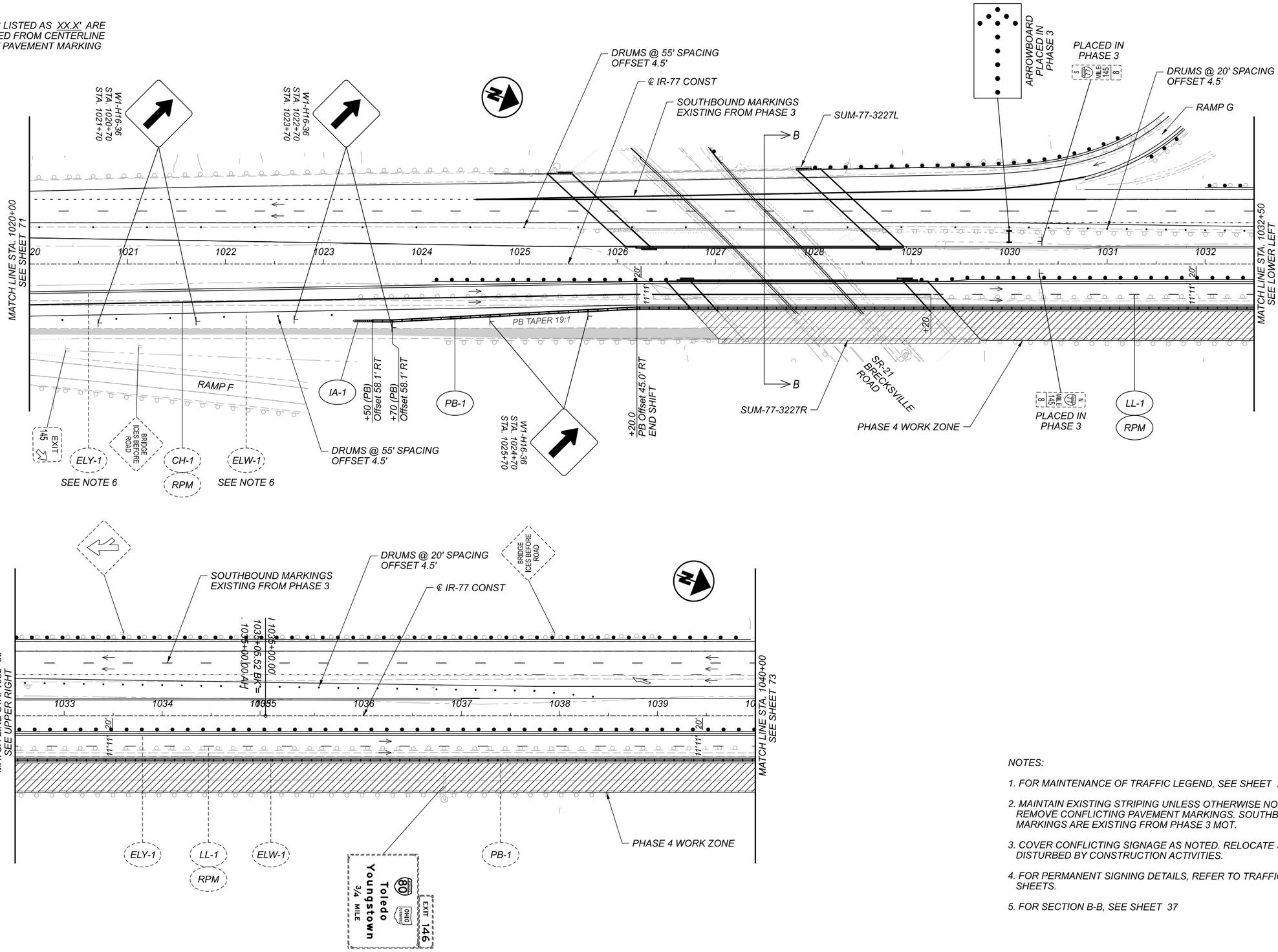

NOTES:

1. FOR MAINTENANCE OF TRAFFIC LEGEND, SEE SHEET 23
2. MAINTAIN EXISTING STRIPING UNLESS OTHERWISE NOTED. REMOVE CONFLICTING PAVEMENT MARKINGS. SOUTHBOUND MARKINGS ARE EXISTING FROM PHASE 3 MOT.
3. COVER CONFLICTING SIGNAGE AS NOTED. RELOCATE SIGNAGE DISTURBED BY CONSTRUCTION ACTIVITIES.
4. FOR PERMANENT SIGNING DETAILS, REFER TO TRAFFIC CONTROL SHEETS.
5. FOR SECTION B-B, SEE SHEET 37

HORIZONTAL SCALE IN FEET
0 25 50 100

MAINTENANCE OF TRAFFIC - PHASE 4
IR-77 - STA 1020+00 TO STA 1040+00

DESIGN AGENCY
Gannett Fleming
ENGINEERS AND ARCHITECTS, P.C.
2550 Corporate Exchange Drive
Suite 220
Columbus, OH 43231

DESIGNER ACW
REVIEWER CJM 09-28-21
PROJECT ID 104983
SHEET 72 TOTAL 297

SUM-77-32.27

MODEL: 104983_MP401 PAPERSIZE: 17x11(in.) DATE: 2/22/2022 TIME: 7:39:59 PM USER: tdinh
pw:\\gfnet-pw.bentley.com:gfnet-pw-01\Documents\Projects\67490\104983\401-Engineering-GF\MOT\Sheets\104983_MP402.dgn

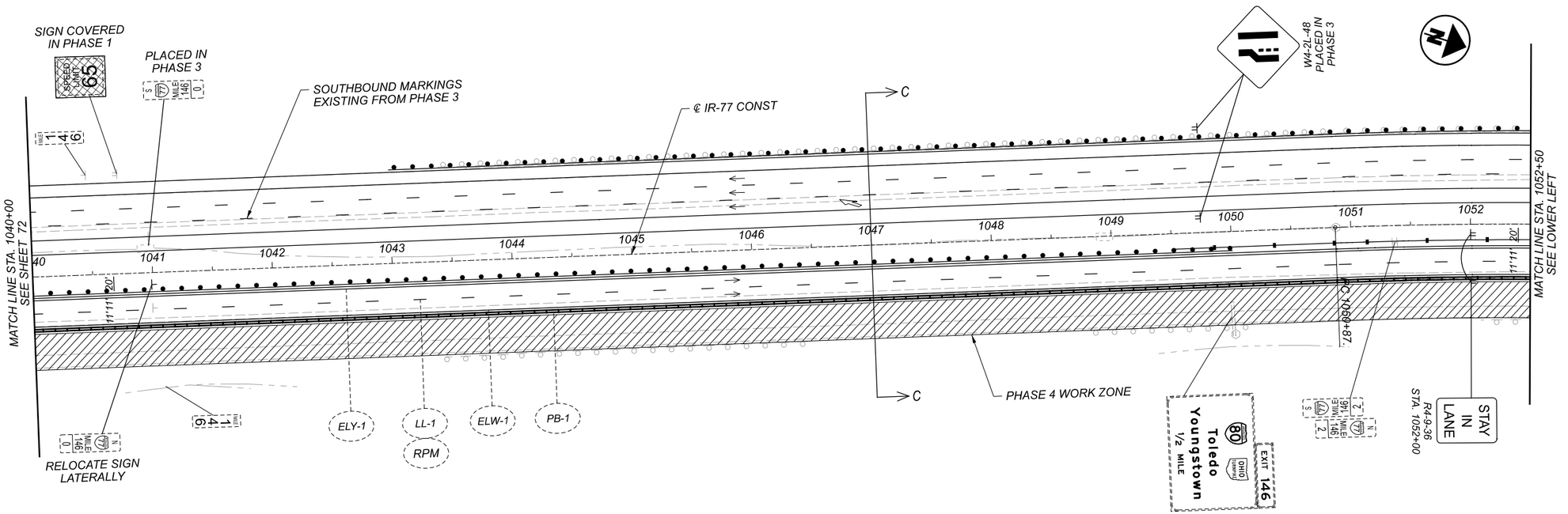

OFFSETS LISTED AS XX.X' ARE MEASURED FROM CENTERLINE TO FIRST PAVEMENT MARKING

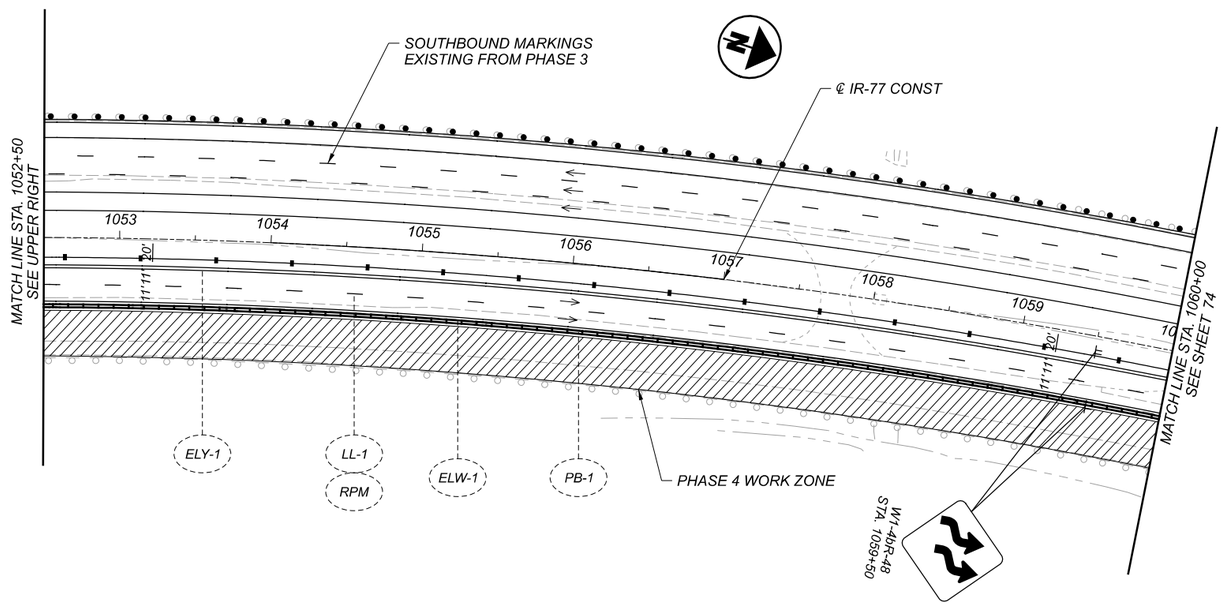

NOTES:

1. FOR MAINTENANCE OF TRAFFIC LEGEND, SEE SHEET 23
2. MAINTAIN EXISTING STRIPING UNLESS OTHERWISE NOTED. REMOVE CONFLICTING PAVEMENT MARKINGS. SOUTHBOUND MARKINGS ARE EXISTING FROM PHASE 3 MOT.
3. COVER CONFLICTING SIGNAGE AS NOTED. RELOCATE SIGNAGE DISTURBED BY CONSTRUCTION ACTIVITIES.
4. FOR PERMANENT SIGNING DETAILS, REFER TO TRAFFIC CONTROL SHEETS.
5. FOR SECTION C-C, SEE SHEET 38

HORIZONTAL SCALE IN FEET
0 25 50 100

MAINTENANCE OF TRAFFIC - PHASE 4
IR-77 - STA 1040+00 TO STA 1060+00

SUM-77-32.27

MODEL: 104983_MP403 PAPERSIZE: 17x11(in.) DATE: 2/22/2022 TIME: 7:42:03 PM USER: tdinh
pw:\\gfnet-pw.bentley.com:gfnet-pw-01\Documents\Projects\67490\104983\401-Engineering-GF\MOT\Sheets\104983_MP403.dgn

DESIGN AGENCY
Gannett Fleming
ENGINEERS AND ARCHITECTS, P.C.
2500 Corporate Exchange Drive
Suite 220
Columbus, OH 43231

DESIGNER ACW
REVIEWER CJM 09-28-21
PROJECT ID 104983
SHEET 73 TOTAL 297

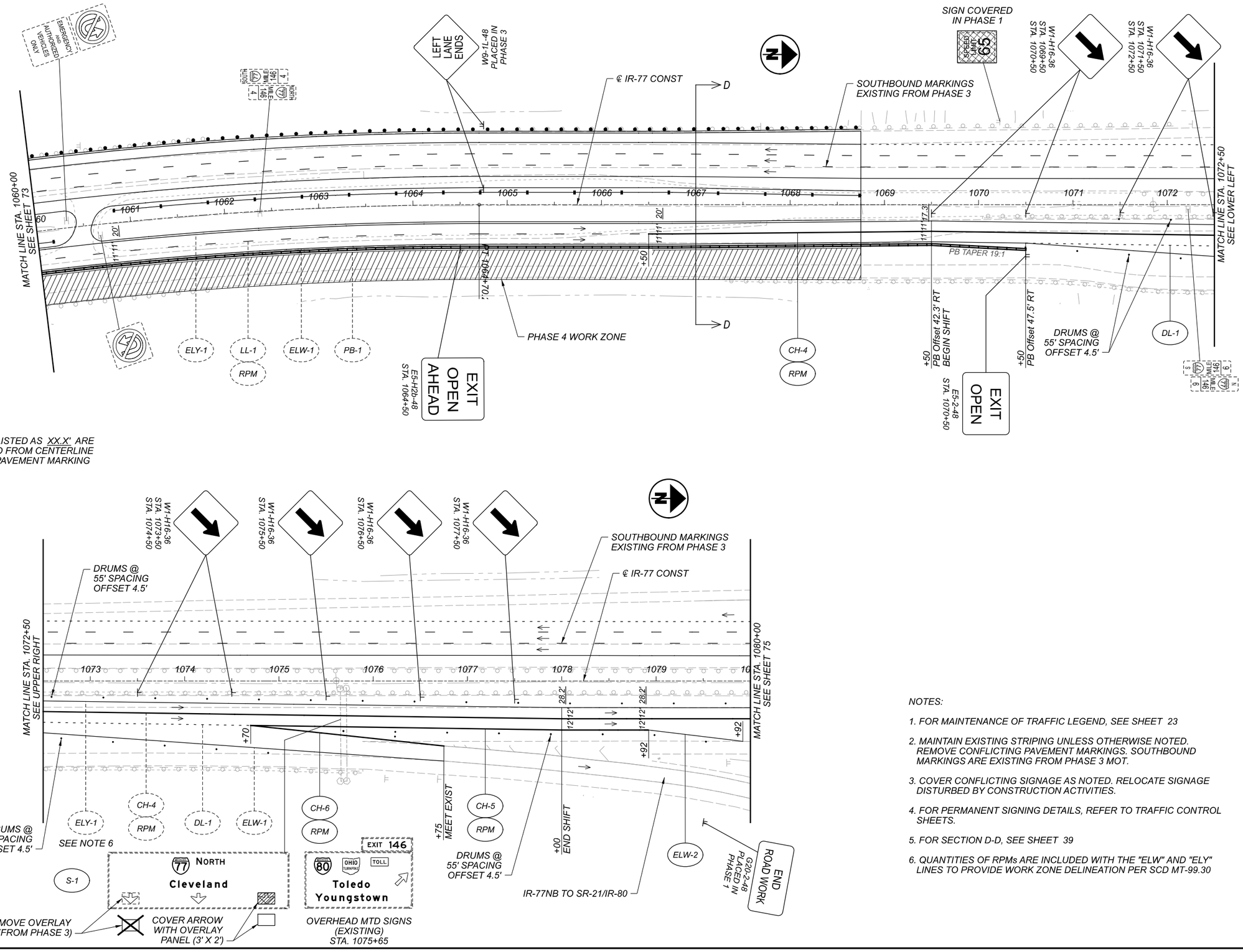

OFFSETS LISTED AS XX.X' ARE MEASURED FROM CENTERLINE TO FIRST PAVEMENT MARKING

NOTES:

1. *FOR MAINTENANCE OF TRAFFIC LEGEND, SEE SHEET 23*
2. *MAINTAIN EXISTING STRIPING UNLESS OTHERWISE NOTED. REMOVE CONFLICTING PAVEMENT MARKINGS. SOUTHBOUND MARKINGS ARE EXISTING FROM PHASE 3 MOT.*
3. *COVER CONFLICTING SIGNAGE AS NOTED. RELOCATE SIGNAGE DISTURBED BY CONSTRUCTION ACTIVITIES.*
4. *FOR PERMANENT SIGNING DETAILS, REFER TO TRAFFIC CONTROL SHEETS.*
5. *FOR SECTION D-D, SEE SHEET 39*
6. *QUANTITIES OF RPMs ARE INCLUDED WITH THE "ELW" AND "ELY" LINES TO PROVIDE WORK ZONE DELINEATION PER SCD MT-99.30*

HORIZONTAL SCALE IN FEET
0 25 50 100

MAINTENANCE OF TRAFFIC - PHASE 4
IR-77 - STA 1060+00 TO STA 1080+00

DESIGN AGENCY
Gannett Fleming
ENGINEERS AND ARCHITECTS, P.C.
2300 Corporate Exchange Drive
Suite 200
Columbus, OH 43231

DESIGNER ACW
REVIEWER CJM 09-28-21
PROJECT ID 104983
SHEET 74 TOTAL 297

SUM-77-32.27

MODEL: 104983_MP404 PAPERSIZE: 17x11(in) DATE: 2/22/2022 TIME: 7:44:13 PM USER: tdinh
pw:\\gfnet-pw.bentley.com:gfnet-pw-01\Documents\Projects\67490\104983\40-Engineering-GF\MOT\Sheets\104983_MP404.dgn

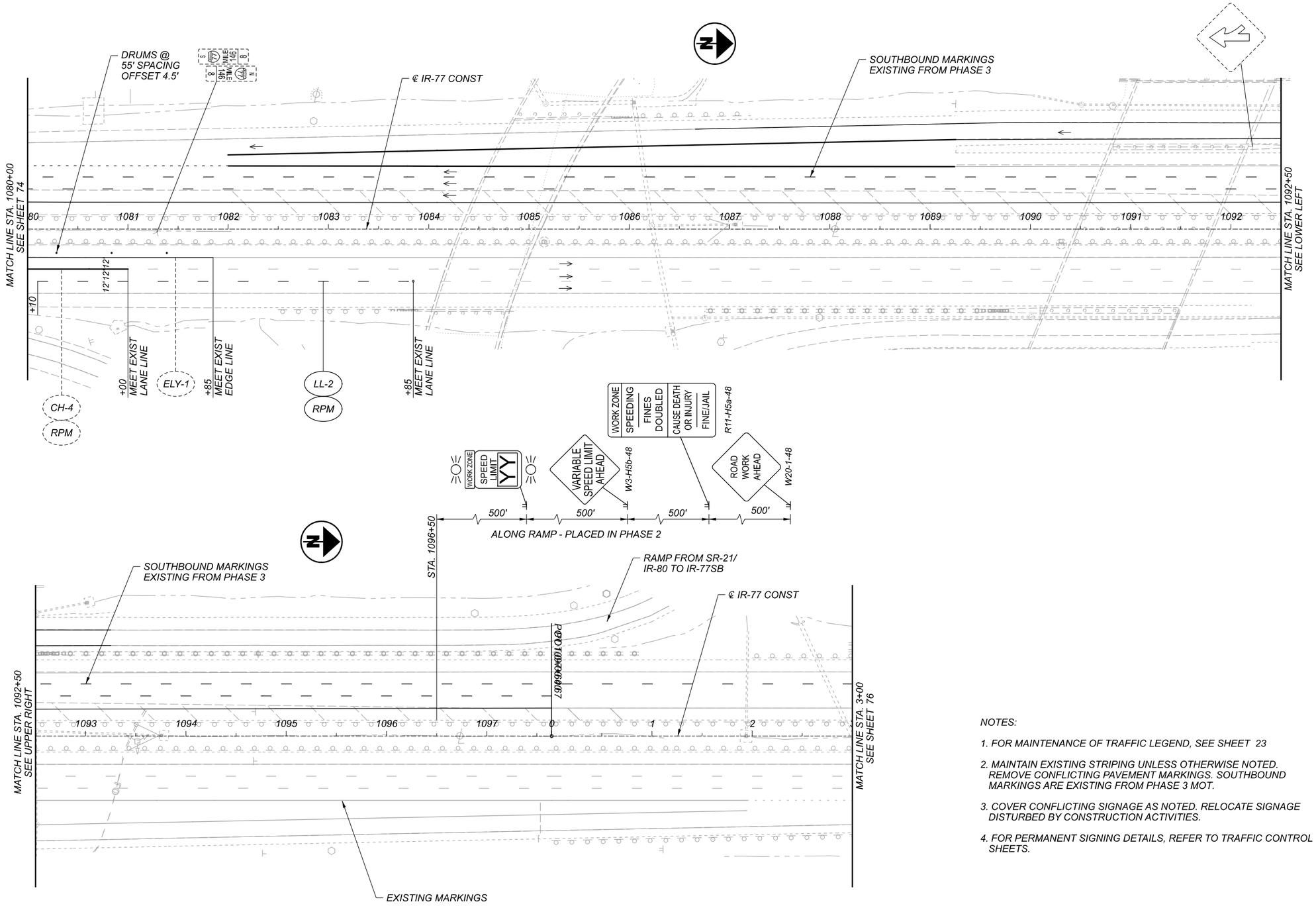

HORIZONTAL
SCALE IN FEET
0 25 50 100

MAINTENANCE OF TRAFFIC - PHASE 4
IR-77 - STA 1080+00 TO STA 3+00

NOTES:

1. FOR MAINTENANCE OF TRAFFIC LEGEND, SEE SHEET 23

2. MAINTAIN EXISTING STRIPING UNLESS OTHERWISE NOTED. REMOVE CONFLICTING PAVEMENT MARKINGS. SOUTHBOUND MARKINGS ARE EXISTING FROM PHASE 3 MOT.

3. COVER CONFLICTING SIGNAGE AS NOTED. RELOCATE SIGNAGE DISTURBED BY CONSTRUCTION ACTIVITIES.

4. FOR PERMANENT SIGNING DETAILS, REFER TO TRAFFIC CONTROL SHEETS.

DESIGN AGENCY
Gannett Fleming
ENGINEERS AND ARCHITECTS, P.C.
2300 Corporate Exchange Drive
Suite 230
Columbus, OH 43231

DESIGNER ACW
REVIEWER CJM 09-28-21
PROJECT ID 104983
SHEET 75 TOTAL 297

SUM-77-32.27

MODEL: I04983_MP405 PAPERSIZE: 17x11(in) DATE: 2/22/2022 TIME: 7:46:30 PM USER: tdinh
pw:\\gfnet-pw.bentley.com:gfnet-pw-01\Documents\Projects\67490\104983\401-Engineering-GF\MOT\Sheets\104983_MP405.dgn

MODEL: 104983_MP30| PAPERSIZE: 17x11(in.) DATE: 2/22/2022 TIME: 7:48:33 PM USER: tdmh
pw:\\gfnet-pw.bentley.comgfnet-pw-01\Documents\Projects\61490\104983\40i-Engineering-GF\MOT\Sheets\104983_MP406.dgn

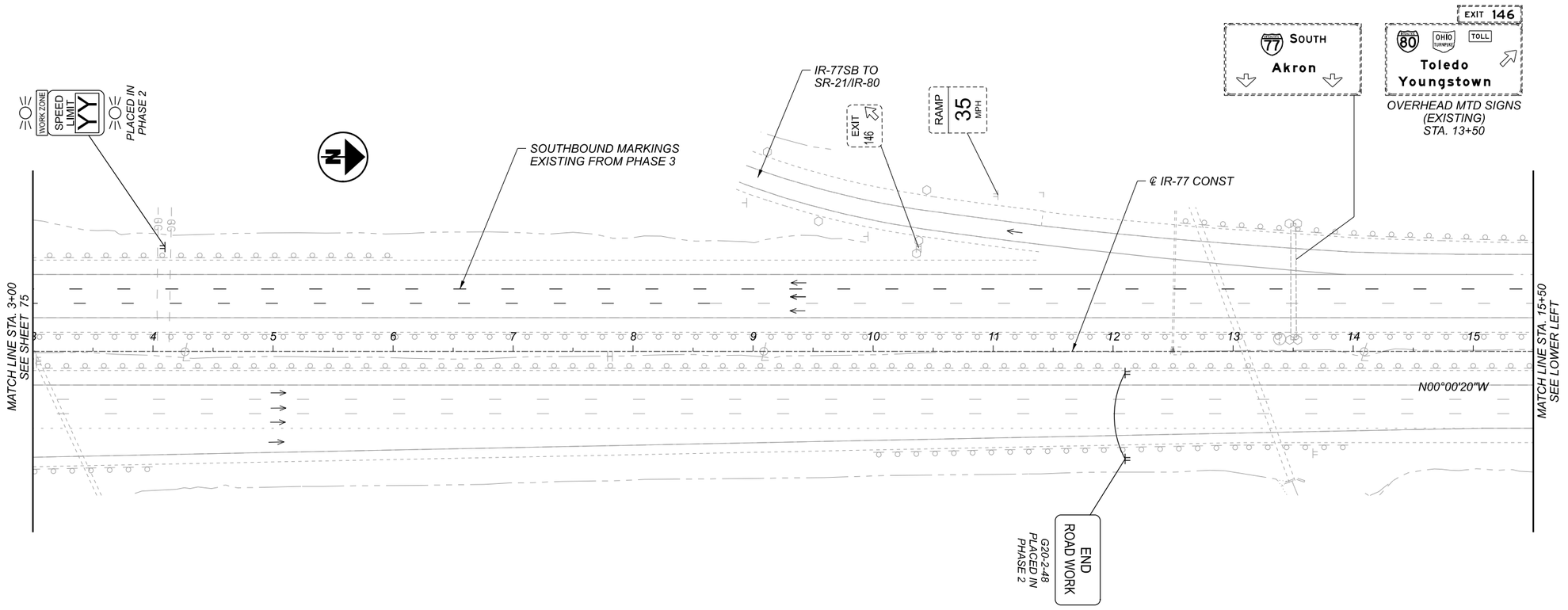

HORIZONTAL SCALE IN FEET
0 25 50 100

MAINTENANCE OF TRAFFIC - PHASE 4
IR-77 - STA 3+00 TO STA 23+00

NOTES:

1. *FOR MAINTENANCE OF TRAFFIC LEGEND, SEE SHEET 23*
2. *MAINTAIN EXISTING STRIPING UNLESS OTHERWISE NOTED. REMOVE CONFLICTING PAVEMENT MARKINGS.*
3. *COVER CONFLICTING SIGNAGE AS NOTED. RELOCATE SIGNAGE DISTURBED BY CONSTRUCTION ACTIVITIES.*
4. *FOR PERMANENT SIGNING DETAILS, REFER TO TRAFFIC CONTROL SHEETS.*

DESIGN AGENCY
Gannett Fleming
ENGINEERS AND ARCHITECTS, P.C.
2500 Corporate Exchange Drive
Suite 230
Columbus, OH 43231

DESIGNER ACW
REVIEWER DRJ 02-08-22
PROJECT ID 104983
SHEET 76 TOTAL 297

SHEET NUMBER														FUNDING		ITEM	ITEM EXT.	GRAND TOTAL	UNIT	DESCRIPTION	SEE SHEET NO.
0C	14	15	16	17	18	24	80	83	84	192	199	201		04/IMS/PV	05/IMS/PV						
																				ROADWAY	
	LS													LUMP		201	11000	LS		CLEARING AND GRUBBING	14
								11		2				13		202	20010	13	EACH	HEADWALL REMOVED	
							541							541		202	30700	541	FT	CONCRETE BARRIER REMOVED	
							206							206		202	32000	206	FT	CURB REMOVED	
								1069						1069		202	35100	1069	FT	PIPE REMOVED, 24" AND UNDER	
								334		8				342		202	35200	342	FT	PIPE REMOVED, OVER 24"	
							10021							10021		202	38000	10021	FT	GUARDRAIL REMOVED	
								9						9		202	58100	9	EACH	CATCH BASIN REMOVED	
								512						512		202	70000	512	FT	FILL AND PLUG EXISTING CONDUIT	
							2							2		202	98100	2	EACH	REMOVAL MISC.: EXISTING ODOT ITS HIGHWAY ADVISORY RADIO	17
		2												2		202	98100	2	EACH	REMOVAL MISC.: INSPECTION WELL	15
		200												200		202	98200	200	FT	REMOVAL MISC.: CONDUIT	15
							227							227		202	98300	227	SY	REMOVAL MISC.: CONCRETE PAD	17
24083														24083		202	98300	24083	SY	REMOVAL MISC.: CONCRETE PAVEMENT, 10" DEPTH	17
					60381									40257	20124	203	10000	60381	CY	EXCAVATION	
		25			7522					2				5033	2516	203	20000	7549	CY	EMBANKMENT	
60789														40529	20260	204	10000	60789	SY	SUBGRADE COMPACTION	
	46													31	15	204	45000	46	HOUR	PROOF ROLLING	
64466														64466		206	11000	64466	SY	CURING COAT	
60187														60187		206	15010	60187	SY	CEMENT STABILIZED SUBGRADE, 12 INCHES DEEP	
4279														2853	1426	206	15020	4279	SY	CEMENT STABILIZED SUBGRADE, 14 INCHES DEEP	
33.9														34		206	20000	33.9	HOUR	TEST ROLLING	
					3									3		SPECIAL	53014010	3	EACH	STRUCTURAL SURVEY AND MONITORING OF VIBRATION	18
							12350							12350		606	15050	12350	FT	GUARDRAIL, TYPE MGS	
							12							12		606	26150	12	EACH	ANCHOR ASSEMBLY, MGS TYPE E NCHRP 350/MASH 2016	
							11							11		606	26550	11	EACH	ANCHOR ASSEMBLY, MGS TYPE T	
							5							5		606	35002	5	EACH	MGS BRIDGE TERMINAL ASSEMBLY, TYPE 1	
							3							3		606	35102	3	EACH	MGS BRIDGE TERMINAL ASSEMBLY, TYPE 2	
							2154							2154		SPECIAL	60655010	2154	FT	CABLE BARRIER WITH CONCRETE LINE POST FOUNDATION	17
							1341							1341		622	24000	1341	FT	CONCRETE BARRIER, TYPE D	
							5							5		622	25050	5	EACH	CONCRETE BARRIER, END ANCHORAGE, REINFORCED, TYPE D	
	8													8		623	40520	8	EACH	RIGHT-OF-WAY MONUMENT	14
			300											300		653	10000	300	CY	TOPSOIL FURNISHED AND PLACED	
																				EROSION CONTROL	
										4				4		601	11000	4	SY	RIPRAP, TYPE D	
			10								28			38		601	21050	38	SY	TIED CONCRETE BLOCK MAT WITH TYPE 1 UNDERLAYMENT	
										8				8		601	32104	8	CY	ROCK CHANNEL PROTECTION, TYPE B WITH GEOTEXTILE FABRIC	
								425						425		601	32204	425	CY	ROCK CHANNEL PROTECTION, TYPE C WITH GEOTEXTILE FABRIC	
			2											2		659	00100	2	EACH	SOIL ANALYSIS TEST	
									1610					1610		659	00300	1610	CY	TOPSOIL	
			33272							100				33372		659	10000	33372	SY	SEEDING AND MULCHING	
			1664											1664		659	14000	1664	SY	REPAIR SEEDING AND MULCHING	
			1664											1664		659	15000	1664	SY	INTER-SEEDING	
			10											10		659	20000	10	TON	COMMERCIAL FERTILIZER	
			7											7		659	31000	7	ACRE	LIME	
			270											270		659	35000	270	MGAL	WATER	
			8318											8318		659	40000	8318	MSF	MOWING	
									14640					14640		670	00500	14640	SY	SLOPE EROSION PROTECTION	
								1855						1855		670	00700	1855	SY	DITCH EROSION PROTECTION	
									LS					LUMP		832	15000	LS		STORM WATER POLLUTION PREVENTION PLAN	84
									LS					LUMP		832	15002	LS		STORM WATER POLLUTION PREVENTION INSPECTIONS	84
									LS					LUMP		832	15010	LS		STORM WATER POLLUTION PREVENTION INSPECTION SOFTWARE	84
									35000					35000		832	30000	35000	EACH	EROSION CONTROL	
																				DRAINAGE	
								2.6		1.2				4		602	20000	3.8	CY	CONCRETE MASONRY	
											36432			36432		605	11110	36432	FT	6" SHALLOW PIPE UNDERDRAINS WITH GEOTEXTILE FABRIC	
			100											100		605	13300	100	FT	6" UNCLASSIFIED PIPE UNDERDRAINS	
											1709			1709		605	14020	1709	FT	6" BASE PIPE UNDERDRAINS WITH GEOTEXTILE FABRIC	
			50											50		605	31100	50	FT	AGGREGATE DRAINS	

SHEET 1

SUM-77-32.27

MODEL: 111405_GG001_1 PAPERSIZE: 17x11 (in.) DATE: 2/24/2022 TIME: 5:14:28 PM USER: tdinh
pw:\\gfnet-pw.bentley.com:gfnet-pw-01\Documents\Projects\67490\104983\401-Engineering-GF\Roadway\Sheets\104983_GG001.dgn

GENERAL SUMMARY

DESIGN AGENCY
Gannett Fleming
ENGINEERS AND ARCHITECTS, P.C.
2280 Corporate Exchange Drive, Suite 230, Columbus, OH 43231

DESIGNER
TQD

REVIEWER
DRJ 02/01/22

PROJECT ID
104983

SHEET 77 | TOTAL 297

SHEET 2

SHEET NUMBER															FUNDING		ITEM	ITEM EXT.	GRAND TOTAL	UNIT	DESCRIPTION	SEE SHEET NO.
0C	14	15	16	17	18	24	80	83	84	192	199	201			04/IMS/PV	05/IMS/PV						
																					DRAINAGE - CONTINUED FROM PREVIOUS PAGE	
			100								638				738		611	00510	738	FT	6" CONDUIT, TYPE F FOR UNDERDRAIN OUTLETS	
								92							92		611	04400	92	FT	12" CONDUIT, TYPE B	
								49							49		611	06100	49	FT	15" CONDUIT, TYPE C	
								228							228		611	06701	228	FT	15" CONDUIT, TYPE F, 707.05 TYPE C OR 707.21	
								50							50		611	07400	50	FT	18" CONDUIT, TYPE B	
								352							352		611	07600	352	FT	18" CONDUIT, TYPE C	
								107							107		611	10400	107	FT	24" CONDUIT, TYPE B	
										8					8		611	13201	8	FT	30" CONDUIT, TYPE A, 706.02	
								50							50		611	13600	50	FT	30" CONDUIT, TYPE C	
											602				602		611	96600	602	FT	6" CONDUIT, TYPE B, 748.06 JACKED OR BORED	
								552							552		611	96600	552	FT	15" CONDUIT, TYPE B, 748.06 JACKED OR BORED	
								107							107		611	96600	107	FT	21" CONDUIT, TYPE B, 748.06 JACKED OR BORED	
								239							239		611	96600	239	FT	30" CONDUIT, TYPE B, 748.06 JACKED OR BORED	
		100													100		611	97400	100	FT	CONDUIT, MISC.: TYPE B FOR DRAINAGE DISCHARGE CONTINUANCE	
		100													100		611	97400	100	FT	CONDUIT, MISC.: TYPE C FOR DRAINAGE DISCHARGE CONTINUANCE	
		100													100		611	97400	100	FT	CONDUIT, MISC.: TYPE E FOR DRAINAGE DISCHARGE CONTINUANCE	
		100													100		611	97400	100	FT	CONDUIT, MISC.: TYPE F FOR DRAINAGE DISCHARGE CONTINUANCE	
								1							1		611	98180	1	EACH	CATCH BASIN, NO. 3A	
								6							6		611	98230	6	EACH	CATCH BASIN, NO. 4	
								1							1		611	98450	1	EACH	CATCH BASIN, NO. 2-2A	
								2							2		611	98510	2	EACH	CATCH BASIN, NO. 2-3	
								1							1		611	98630	1	EACH	CATCH BASIN ADJUSTED TO GRADE	
								3							3		611	99114	3	EACH	INLET, NO. 3 FOR SINGLE SLOPE BARRIER, TYPE D	
								2							2		611	99574	2	EACH	MANHOLE, NO. 3	
			2								14				16		611	99710	16	EACH	PRECAST REINFORCED CONCRETE OUTLET	
		2													2		611	99720	2	EACH	INSPECTION WELL	
																					PAVEMENT	
78															53	25	254	01001	78	SY	PAVEMENT PLANING, ASPHALT CONCRETE, AS PER PLAN	
12491															8328	4163	302	56000	12491	CY	ASPHALT CONCRETE BASE, PG64-22, (449)	
10733															7156	3577	304	20000	10733	CY	AGGREGATE BASE	
3350															2234	1116	407	20000	3350	GAL	NON-TRACKING TACK COAT	
176															118	58	441	10101	176	CY	ASPHALT CONCRETE SURFACE COURSE, TYPE 1, (446) PG64-22, AS PER PLAN	15
205															137	68	441	10200	205	CY	ASPHALT CONCRETE INTERMEDIATE COURSE, TYPE 2, (446)	
							378								253	125	441	70800	378	CY	ASPHALT CONCRETE INTERMEDIATE COURSE, TYPE 1, (449), (UNDER GUARDRAIL)	
2363															1576	787	442	10301	2363	CY	ASPHALT CONCRETE SURFACE COURSE, 12.5 MM, TYPE A (447), AS PER PLAN	15
3599															2400	1199	452	14122	3599	SY	11.5" NON-REINFORCED CONCRETE PAVEMENT, CLASS QC 1P WITH QC/QA	
							164								164		609	24510	164	FT	CURB, TYPE 4-C	
							18089								18089		618	40100	18089	FT	RUMBLE STRIPS, SHOULDER (ASPHALT CONCRETE)	
2756															1838	918	861	11100	2756	CY	ASPHALT CONCRETE INTERMEDIATE COURSE, 12.5 MM, TYPE A (446)	
																					LIGHTING	
							600								600		625	25600	600	FT	CONDUIT, 4", 725.04	
							4								4		625	30710	4	EACH	PULL BOX, 725.08, 32"	
							4								4		625	32000	4	EACH	GROUND ROD	
				LS											LUMP		625	39000	LS		TEMPORARY LIGHTING	17
																					TRAFFIC CONTROL	
												378			378		621	00100	378	EACH	RPM	
												378			378		621	54000	378	EACH	RAISED PAVEMENT MARKER REMOVED	
												5			5		625	32000	5	EACH	GROUND ROD	
												17			17		626	00102	17	EACH	BARRIER REFLECTOR, TYPE 1, 1WAY	
												154			154		626	00110	154	EACH	BARRIER REFLECTOR, TYPE 2, 1WAY	
												664			664		630	03100	664	FT	GROUND MOUNTED SUPPORT, NO. 3 POST	
												16			16		630	06500	16	FT	GROUND MOUNTED STRUCTURAL BEAM SUPPORT, W6X9	
												2			2		630	09000	2	EACH	BREAKAWAY STRUCTURAL BEAM CONNECTION	
												5			5		630	21200	5	EACH	OVERHEAD SIGN SUPPORT, TYPE TC-12.30, DESIGN 12	
												1			1		630	75000	1	EACH	SIGN ATTACHMENT ASSEMBLY	
												455			455		630	80100	455	SF	SIGN, FLAT SHEET	
												40			40		630	80200	40	SF	SIGN, GROUND MOUNTED EXTRUSHEET	

GENERAL SUMMARY

SUM-77-32.27

MODEL: 111405_GG001_2 PAPERSIZE: 17x11 (in.) DATE: 2/24/2022 TIME: 5:14:29 PM USER: tdinh
pw:\\gfnetpw.bentley.com:gfnet-pw-01\Documents\Projects\67490\104983\401-Engineering-GFIRoadway\Sheets\104983_GG001.dgn

DESIGN AGENCY
Gannett Fleming
ENGINEERS AND ARCHITECTS, P.C.
2300 Corporate Exchange Drive
Suite 230
Columbus, OH 43231

DESIGNER TQD

REVIEWER DRJ 02/01/22

PROJECT ID 104983

SHEET NUMBER															FUNDING		ITEM	ITEM EXT.	GRAND TOTAL	UNIT	DESCRIPTION	SEE SHEET NO.
0C	14	15	16	17	18	24	80	83	84	192	199	201			04/IMS/PV	05/IMS/PV						
																					TRAFFIC CONTROL - CONTINUED FROM PREVIOUS PAGE	
												678			678		630	80224	678	SF	SIGN, OVERHEAD EXTRUSHEET	
												2			2		630	84500	2	EACH	GROUND MOUNTED STRUCTURAL BEAM SUPPORT FOUNDATION	
												5			5		630	84510	5	EACH	RIGID OVERHEAD SIGN SUPPORT FOUNDATION	
												38			38		630	84900	38	EACH	REMOVAL OF GROUND MOUNTED SIGN AND DISPOSAL	
												8			8		630	85100	8	EACH	REMOVAL OF GROUND MOUNTED SIGN AND REERECTION	
												41			41		630	86002	41	EACH	REMOVAL OF GROUND MOUNTED POST SUPPORT AND DISPOSAL	
												4			4		630	86010	4	EACH	REMOVAL OF GROUND MOUNTED POST SUPPORT AND REERECTION	
												1			1		630	87100	1	EACH	REMOVAL OF OVERHEAD MOUNTED SIGN AND REERECTION	
												5			5		630	87400	5	EACH	REMOVAL OF OVERHEAD MOUNTED SIGN AND DISPOSAL	
												2			2		630	89706	2	EACH	REMOVAL OF OVERHEAD SIGN SUPPORT AND DISPOSAL, TYPE TC-12.30	
												0.2			0.2		646	10200	0.2	MILE	CENTER LINE	
												4286			4286		646	10310	4286	FT	CHANNELIZING LINE, 12"	
												373			373		646	10600	373	FT	TRANSVERSE/DIAGONAL LINE	
												259			259		646	10620	259	FT	CHEVRON MARKING	
												2			2		646	20350	2	EACH	LANE REDUCTION ARROW	
												5744			5744		646	20504	5744	FT	DOTTED LINE, 6"	
												7.86			7.86		807	12010	7.86	MILE	WET REFLECTIVE EPOXY PAVEMENT MARKING, EDGE LINE, 6"	
												6.35			6.35		807	12110	6.35	MILE	WET REFLECTIVE EPOXY PAVEMENT MARKING, LANE LINE, 6"	
																					STRUCTURES (OVER 20')	
																					SUM-77-3227 L	228
																					SUM-77-3227 R	265
																					MAINTENANCE OF TRAFFIC	
						200									200		614	11110	200	HOUR	LAW ENFORCEMENT OFFICER WITH PATROL CAR FOR ASSISTANCE	
						11									11		614	12380	11	EACH	WORK ZONE IMPACT ATTENUATOR, 24" WIDE HAZARDS, (UNIDIRECTIONAL)	
						LS									LUMP		614	12420	LS		DETOUR SIGNING	
						9									9		614	12484	9	EACH	WORK ZONE INCREASED PENALTIES SIGN	
						2464									2464		614	12801	2464	EACH	WORK ZONE RAISED PAVEMENT MARKER, AS PER PLAN	
						100									100		614	13000	100	CY	ASPHALT CONCRETE FOR MAINTAINING TRAFFIC	
						555									555		614	13310	555	EACH	BARRIER REFLECTOR, TYPE 1, 1 WAY	
						555									555		614	13350	555	EACH	OBJECT MARKER, ONE WAY	
						30									30		614	18601	30	SNMT	PORTABLE CHANGEABLE MESSAGE SIGN, AS PER PLAN	
						13.31									13.31		614	20010	13.31	MILE	WORK ZONE LANE LINE, CLASS I, 6"	
						0.41									0.41		614	21100	0.41	MILE	WORK ZONE CENTER LINE, CLASS I, 642 PAINT	
						22.3									22.3		614	22010	22.3	MILE	WORK ZONE EDGE LINE, CLASS I, 6"	
						23346									23346		614	23010	23346	FT	WORK ZONE CHANNELIZING LINE, CLASS I, 12"	
						10802									10802		614	24202	10802	FT	WORK ZONE DOTTED LINE, CLASS I, 6", 642 PAINT	
						2662									2662		614	24204	2662	FT	WORK ZONE DOTTED LINE, CLASS I, 8", 642 PAINT	
						33									33		614	28000	33	FT	WORK ZONE GORE MARKING, CLASS II	
						4									4		614	30001	4	EACH	WORK ZONE ARROW, CLASS I, AS PER PLAN	
						LS									LUMP		615	10000	LS		ROADS FOR MAINTAINING TRAFFIC	
						12201									12201		615	20000	12201	SY	PAVEMENT FOR MAINTAINING TRAFFIC, CLASS A	
						231									231		616	10000	231	MGAL	WATER	
						315									315		621	00100	315	EACH	RPM	
						27130									27130		622	41100	27130	FT	PORTABLE BARRIER, UNANCHORED	
						600									600		622	41110	600	FT	PORTABLE BARRIER, ANCHORED	
						113									113		630	80300	113	SF	SIGN, TEMPORARY OVERLAY	
						113									113		630	81304	113	SF	SIGN ERECTED, TEMPORARY OVERLAY	
						7									7		630	89894	7	EACH	REMOVAL OF TEMPORARY OVERLAY SIGN AND DISPOSAL	
						78									78		808	18700	78	SNMT	DIGITAL SPEED LIMIT (DSL) SIGN ASSEMBLY	
																					INCIDENTALS	
															LUMP		614	11000	LS		MAINTAINING TRAFFIC	19
															34		619	16020	34	MNTH	FIELD OFFICE, TYPE C	
															LUMP		623	10001	LS		CONSTRUCTION LAYOUT STAKES AND SURVEYING, AS PER PLAN	14
															LUMP		624	10000	LS		MOBILIZATION	

SHEET 3

GENERAL SUMMARY

SUM-77-32.27

MODEL: 111405_GG001_3 PAPERSIZE: 17x11 (in.) DATE: 2/24/2022 TIME: 5:14:29 PM USER: tdinh
pw:\\gfnet-pw.bentley.com:gfnet-pw-01\Documents\Projects\67490\104983\401-Engineering-GF\Roadway\Sheets\104983_GG001.dgn

DESIGN AGENCY
Gannett Fleming
ENGINEERS AND ARCHITECTS, P.C.
2500 Corporate Exchange Drive
Suite 220
Columbus, OH 43231

DESIGNER
TQD

REVIEWER
DRJ 02/01/22

PROJECT ID
104983

SHEET 79 | TOTAL 297

SHEET NUMBER																			ITEM	TOTAL	UNIT	DESCRIPTION	SEE SHEET NO.
81	82																						
541																			202	541	FT	CONCRETE BARRIER REMOVED	
206																			202	206	FT	CURB REMOVED	
10021																			202	10021	FT	GUARDRAIL REMOVED	
	2																		202	2	EACH	REMOVAL MISC.: EXISTING ODOT ITS HIGHWAY ADVISORY RADIO	
227																			202	227	SY	REMOVAL MISC.: CONCRETE PAD	
	378																		441	378	CY	ASPHALT CONCRETE INTERMEDIATE COURSE, TYPE 1, (449), (UNDER GUARDRAIL)	
	12350																		606	12350	FT	GUARDRAIL, TYPE MGS	
	12																		606	12	EACH	ANCHOR ASSEMBLY, MGS TYPE E NCHRP 350/MASH 2016	
	11																		606	11	EACH	ANCHOR ASSEMBLY, MGS TYPE T	
	5																		606	5	EACH	MGS BRIDGE TERMINAL ASSEMBLY, TYPE 1	
	3																		606	3	EACH	MGS BRIDGE TERMINAL ASSEMBLY, TYPE 2	
	2154																		SPECIAL	2154	FT	CABLE BARRIER WITH CONCRETE LINE POST FOUNDATION	
	164																		609	164	FT	CURB, TYPE 4-C	
	18089																		618	18089	FT	RUMBLE STRIPS, SHOULDER (ASPHALT CONCRETE)	
	1341																		622	1341	FT	CONCRETE BARRIER, TYPE D	
	5																		622	5	EACH	CONCRETE BARRIER, END ANCHORAGE, REINFORCED, TYPE D	
	600																		625	600	FT	CONDUIT, 4", 725.04	
	4																		625	4	EACH	PULL BOX, 725.08, 32"	
	4																		625	4	EACH	GROUND ROD	

SHEET 1

SUM-77-32.27

MODEL: 111405_GG001_1 PAPERSIZE: 17x11 (in.) DATE: 2/23/2022 TIME: 10:40:10 AM USER: tdinh
pw:\\gfnetpw.bentley.com:gfnet-pw-01\Documents\Projects\67490\104983\401-Engineering-GF\Roadway\Sheets\104983_GS001.dgn

ROADWAY SUBSUMMARY

DESIGN AGENCY
Gannett Fleming
ENGINEERS AND ARCHITECTS, P.C.
250 Civic Center Drive
Suite 230
Columbus, OH 43231

DESIGNER
TQD

REVIEWER
DRJ 02/01/22

PROJECT ID
104983

SHEET 80 TOTAL 297

SHEET 1

REF NO.	SHEET NO.	STATION FROM		STATION TO		SIDE	202 CONCRETE BARRIER REMOVED FT	202 CURB REMOVED FT	202 GUARDRAIL REMOVED FT			202 REMOVAL MISC.: CONCRETE PAD SY
R1	85	IR77	1013+01.70	IR77	1016+92.07	LT			390			
R2	86	IR77	1023+33.70	IR77	1026+81.73	RT			348			
R3	86	IR77	1024+18.93	IR77	1027+13.43	RT			295			
R4	86	IR77	1024+74.55	IR77	1025+41.78	LT			67			
R5	86	IR77	1024+99.74	IR77	1025+40.61	LT		37				
R6	86	IR77	1025+49.79	IR77	1026+13.97	LT		64				
R7	86	IR77	1025+50.91	IR77	1025+99.70	LT			49			
R8	86	IR77	1026+41.60	IR77	1026+75.34	RT						13.9
R9	86	IR77	1026+68.44	IR77	1026+77.61	RT		10				
R10	86	IR77	1026+76.41	IR77	1027+16.53	RT						9.8
R11	86	IR77	1026+97.69	IR77	1027+14.05	RT		16				
R12	86	IR77	1027+84.35	IR77	1028+17.49	LT		33				
R13	86	IR77	1027+96.52	G	10018+93.53	LT/RT			439			
R14	86	IR77	1028+47.45	IR77	1028+81.81	LT		34				
R15	86	IR77	1028+64.39	IR77	1032+67.55	LT			403			
R16	86	IR77	1029+21.01	IR77	1029+33.33	RT		12				
R17	86	IR77	1029+21.01	IR77	1039+87.83	RT			1072			
R18	86	IR77	1029+24.97	IR77	1029+34.67	LT						7.9
R19	86	IR77	1029+57.73	IR77	1038+53.16	RT			901			
R20	86	IR77	1032+05.63	IR77	1039+01.75	LT			702			
R21	87	IR77	1040+87.99	IR77	1041+01.93	LT						9.3
R22	87	IR77	1043+41.01	IR77	1061+96.12	LT			1878			
R23	87	IR77	1043+41.37	IR77	1046+44.06	RT			303			
R24	88	IR77	1048+73.19	IR77	1050+13.75	RT			141			
R25	88	IR77	1048+87.75	IR77	1049+01.34	LT/RT						9.4
R26	88	IR77	1052+08.09	IR77	1061+80.44	RT			953			
R27	88	IR77	1057+99.49	IR77	1058+08.42	LT/RT						6.5
R28	89	IR77	1065+07.15	IR77	1068+75.00	LT/RT			368			
R29	89	IR77	1067+29.10	IR77	1068+75.00	RT			146			78.7
R30	90	21	495+42.42	21	495+86.50	RT			44			
R31	90	21	495+60.17	G	10019+97.32	LT			1241			
R32	90	21	496+56.28	21	497+32.41	RT			76			
R33	90	G	##########	G	##########	RT			64			
R34	90	21	497+31.29	21	499+99.27	RT	266					
R35	90	21	498+02.58	21	500+74.54	LT	275					
R36	90	21	498+08.12	21	498+17.24	LT						5.6
R37	90	21	498+95.79	21	500+79.68	LT						85.1
R38	90	21	499+96.96	21	500+60.13	RT			63			
R39	90	21	500+71.65	21	501+48.65	LT			78			
SUBTOTAL							541	206	10021			226.2
TOTALS CARRIED TO GRAND TOTAL ON SHEET						80	541	206	10021			227

ESTIMATED QUANTITIES

SUM-77-32.27

MODEL: 111405_GQ001_1 PAPERSIZE: 17x11 (in.) DATE: 2/23/2022 TIME: 10:40:17 AM USER: tdinh
pw:\\gfnet-pw.bentley.com:gfnet-pw-01\Documents\Projects\67490\104983\401-Engineering-GF\Roadway\Sheets\104983_GQ001.dgn

DESIGN AGENCY
Gannett Fleming
ENGINEERS AND ARCHITECTS, P.C.
2550 Corporate Exchange Drive
Suite 230
Columbus, OH 43231

DESIGNER TQD

REVIEWER DRJ 02/01/22

PROJECT ID 104983

SHEET 81 TOTAL 297

SHEET 2

REF NO.	SHEET NO.	STATION FROM		STATION TO		SIDE	441 ASPHALT CONCRETE INTERMEDIATE COURSE, TYPE 1, (449), (UNDER GUARDRAIL) CY	606 GUARDRAIL, TYPE MGS FT	606 ANCHOR ASSEMBLY, MGS TYPE E NCHRP 350/MASH 2016 EACH	606 ANCHOR ASSEMBLY, MGS TYPE T EACH		606 MGS BRIDGE TERMINAL ASSEMBLY, TYPE 1 EACH	606 MGS BRIDGE TERMINAL ASSEMBLY, TYPE 2 EACH		606 SPECIAL - CABLE BARRIER WITH CONCRETE LINE POST FOUNDATION FT		622 CONCRETE BARRIER, TYPE D FT	622 CONCRETE BARRIER, END ANCHORAGE, REINFORCED, TYPE D EACH		609 CURB, TYPE 4-C FT		618 RUMBLE STRIPS, SHOULDER (ASPHALT CONCRETE) FT		202 REMOVAL MISC.: EXISTING ODOT ITS HIGHWAY ADVISORY RADIO EACH		625 PULL BOX, 725.08, 32" EACH	625 CONDUIT, 4", 725.04 FT	625 GROUND ROD EACH
GR1	85	IR77	1013+01.70	IR77	1016+43.00	LT	10.9	350	1			1																	
GR2	86	IR77	1024+11.00	IR77	1026+61.15	RT	7.8	250	1			1																	
GR3	86	IR77	1024+38.00	IR77	1027+13.72	RT	8.9	287.5	1			1																	
GR4	86	IR77	1024+74.55	IR77	1025+41.78	LT	2.4	75					1																
GR5	86	IR77	1027+97.41	IR77	1031+24.26	LT	10.5	337.5	1			1																	
GR6	86	IR77	1028+95.00	IR77	1037+00.00	LT				2							811	1											
GR7	86	IR77	1029+05.97	IR77	1050+00.50	RT	64.9	2100		1			1																
GR8	86	IR77	1029+58.55	IR77	1038+50.00	RT	27.8	900		1			1																
GR9	86	IR77	1032+00.00	IR77	1039+95.00	LT	25.1	812.5	1	1																			
GR10	87	IR77	1037+00.00	IR77	1046+00.00	LT	27.8	900	1			1																	
GR11	87	IR77	1043+00.00	IR77	1068+74.98	LT	80.7	2612.5		1																			
GR12	87	IR77	1043+25.00	IR77	1046+50.00	RT	10.1	325	1	1																			
GR13	88	IR77	1048+87.50	IR77	1062+88.70	RT	42.9	1387.5	1	1																			
GR14	88	IR77	1049+50.50	IR77	1060+17.71	RT										1064													
GR15	89	IR77	1060+82.28	IR77	1071+70.89	LT										1090													
GR16	89	IR77	1066+75.00	IR77	1068+74.98	RT	6.2	200	1																				
GR17	90	21	495+85.00	G	10019+96.51	LT	37.9	1225		1																			
GR18	90	21	495+55.00	21	497+31.30	RT	5.8	187.5																					
GR19	90	21	497+31.30	21	499+99.31	RT	0										266	2											
GR20	90	21	497+46.11	21	497+94.39	LT	1.6	50		1																			
GR21	90	21	497+94.39	21	500+55.14	LT											264	2											
GR22	90	21	499+99.31	21	501+28.50	RT	4.3	137.5	1																				
GR23	90	21	500+55.14	21	501+28.65	LT	2.4	75	1																				
GR24	88	IR77	1054+37.50	IR77	1056+00.00	LT		137.5	1	1																			
C1	85	IR77	1013+04.88	IR77	1013+23.08	LT														18.2									
C2	86	IR77	1026+43.00	IR77	1026+61.15	RT														18.2									
C3	86	IR77	1026+95.58	IR77	1027+13.72	RT														18.2									
C4	86	IR77	1027+97.41	IR77	1028+15.56	LT														18.2									
C5	87	IR77	1037+00.00	IR77	1037+18.15	LT														18.2									
C6	90	21	497+13.15	21	497+31.30	RT														18.2									
C7	90	21	497+76.71	21	497+94.45	LT														18.2									
C8	90	21	500+00.70	21	500+17.57	LT														18.2									
C9	90	21	500+55.14	21	500+73.10	RT														18.2									
P1	85	IR77	1013+18.80	IR77	1025+95.25	LT																1275							
P2	85	IR77	1014+20.00	IR77	1026+60.67	RT																1242							
P3	86	IR77	1028+85.27	IR77	1060+30.81	LT																3157							
P4	86	IR77	1029+22.71	IR77	1060+17.71	RT																3095							
P5	86	IR77	1030+77.63	IR77	1068+75.01	LT																3895							
P6	86	IR77	1030+77.63	IR77	1068+75.01	LT																3827							
P7	89	IR77	1060+82.28	IR77	1068+74.94	LT																795							
P8	89	IR77	1060+69.21	IR77	1068+74.94	RT																803							
ITS1	86	IR77	1026+79.34			RT																		1					
ITS2	86	IR77	1028+39.68			RT																		1					
ITS3	86	IR77	1026+41.42	IR77	1029+31.97	RT																				2	300	2	
ITS4	86	IR77	1026+08.13	IR77	1028+92.07	LT																				2	300	2	
SUBTOTAL							378	12350	12	11		5	3		2154		1341	5		163.8		18089		2		4	600	4
TOTALS CARRIED TO SUBSUMMARY ON SHEET						80	378	12350	12	11		5	3		2154		1341	5		164		18089		2		4	600	4

ESTIMATED QUANTITIES

SUM-77-32.27

MODEL: 111405_GQ001_2 PAPERSIZE: 17x11 (in.) DATE: 2/23/2022 TIME: 10:40:18 AM USER: tdinh
pw:\\gfnet-pw.bentley.com:gfnet-pw-01\Documents\Projects\67490\104983\401-Engineering-GF\Roadway\Sheets\104983_GQ001.dgn

DESIGN AGENCY
Gannett Fleming
ENGINEERS AND ARCHITECTS, P.C.
2500 Corporate Exchange Drive
Suite 220
Columbus, OH 43231

DESIGNER TQD

REVIEWER DRJ 02/01/22

PROJECT ID 104983

SHEET 82 TOTAL 297

SHEET NO.	REF. NO.	LOCATION				CFN	202	202	202	202	SPECIAL	601	602	611	611	611	611	611	611	611	611	611	611	611	611	611	611	670
		STATION		ROAD	SIDE		HEADWALL REMOVED	PIPE REMOVED, 24" AND UNDER	PIPE REMOVED, OVER 24"	CATCH BASIN REMOVED	FILL AND PLUG EXISTING CONDUIT	ROCK CHANNEL PROTECTION, TYPE C WITH GEOTEXTILE FABRIC	CONCRETE MASONRY	12" CONDUIT, TYPE B	15" CONDUIT, TYPE B, 748.06 JACKED OR BORED	15" CONDUIT, TYPE C	15" CONDUIT, TYPE F, 707.05 TYPE C OR 707.21	18" CONDUIT, TYPE B	18" CONDUIT, TYPE C	21" CONDUIT, TYPE B, 748.06 JACKED OR BORED	24" CONDUIT, TYPE B	30" CONDUIT, TYPE B, 748.06 JACKED OR BORED	30" CONDUIT, TYPE C	CATCH BASIN, NO. 3A	CATCH BASIN, NO. 4	CATCH BASIN, NO. 2-2A	CATCH BASIN, NO. 2-3	CATCH BASIN ADJUSTED TO GRADE	INLET, NO. 3 FOR SINGLE SLOPE BARRIER, TYPE D	MANHOLE, NO. 3	DITCH EROSION PROTECTION
		FROM	TO				EACH	FT	FT	EACH	FT	CY	CY	FT	FT	FT	FT	FT	FT	FT	FT	FT	FT	EACH	EACH	EACH	EACH	EACH	EACH	EACH	SY
85	EC1	1013+00.00	1019+00.00	I-77	LT																										500
86	DR1	1023+00.00		I-77	LT	1988190	1	117		1	54																				
86	D1	1023+10.00		I-77	LT	1988191						1.4	0.27		84	10	91									1					
86	EC2	1023+10.00	1024+60.00	I-77	LT																										125
86	D2	1026+00.00		I-77	LT	1988200									114									1							
86	D3	1025+11.92		I-77	LT																									1	
86	D4	1029+25.00		I-77	LT	1988199										11									1					
86	D5	1029+25.00		I-77	LT	1988208						1.4	0.27		76	12	77													1	
86	EC3	1029+25.00	1030+75.00	I-77	LT																										125
86	DR2	1029+29.10		I-77	LT	1831351	1			1	59																				
86	DR3	1029+44.30		I-77	LT	1830917	1	93		1	22																				
87	D6	1035+00.00		I-77	LT	1988209										9									1					
87	D7	1035+00.00		I-77	LT	1988210						1.4	0.27		93														1	
87	EC4	1035+00.00	1036+50.00	I-77	LT																										125
87	DR4	1036+37.52		I-77	LT	1830177	1		30	1	57																				
87	DR5	1040+94.25	1036+37.52	I-77	LT		1	457		1																					
87	D8	1041+10.00		I-77	LT	1988211						1.4	0.27		106										1					
87	EC5	1041+10.00	1042+60.00	I-77	LT																										125
88	DR6	1047+00.00		I-77	LT	1830916	1	69		1	58																				
88	DR7	1047+00.00	1048+95.12	I-77	LT		1	195		1																					
88	D9	1049+00.00		I-77	LT	1988201						1.4	0.39							107					1						
88	EC6	1049+00.00	1050+50.00	I-77	LT																										125
88	DR8	1058+00.00		I-77	LT	1805888	1	58		1	40																				
88	D10	1058+08.00		I-77	LT	1988202						1.4	0.27		79	7	60									1					
88	EC7	1058+08.00	1059+58.00	I-77	LT																										125
89	D11	1060+25.00	1060+75.00	I-77	CL														50												
90	D12	501+00.00	500+23.00	SR 21	LT	1988214																107						1			
90	D13	500+23.00		SR 21	RT																		50					1			
90	D14	500+23.00	9026+42.18	SR 21	RT	1988206						1.4	0.60										239							1	
90	D15	503+75.00	503+00.00	SR 21	RT															81							1				
90	D16	503+00.00	500+23.00	SR 21	RT															271										1	
90	EC8	506+06.52	503+75.00	SR 21	RT							96.5																			
90	EC9	503+75.00	500+23.00	SR 21	RT							146.7																			
90	EC10	500+23.00	495+91.50	SR 21	RT																										360
90	D17	497+40.00		SR 21	RT	1988203						1.4	0.21	92															1		
90	EC11	496+05.50	495+34.00	SR 21	RT							37.5																			
90	EC12	503+12.34	501+00.00	SR 21	LT							88.5																			
90	EC13	501+00.00	498+05.95	SR 21	LT																										245
90	EC14	498+05.95	497+30.72	SR 21	LT							44.2																			
90	DR9	500+23.34		SR 21	RT			40		1	222																				
90	DR10	501+77.65	501+37.29	SR 21	LT			40																							
90	DR11	500+79.74	498+96.33	SR 21	LT				183																						
90	DR12	498+96.33	498+18.00	SR 21	LT		2		78																						
90	DR13	498+18.00	497+74.67	SR 21	LT		1		43																						
TOTALS CARRIED TO GENERAL SUMMARY							11	1069	334	9	512	425	2.6	92	552	49	228	50	352	107	107	239	50	1	6	1	2	1	3	2	1855

DRAINAGE SUBSUMMARY

SUM-77-32.27

MODEL: Drainage Subsum 1 PAPERSIZE: 17x11 (in.) DATE: 2/23/2022 TIME: 10:40:24 AM USER: tdinh
pw:\\gfnetpw.bentley.com:gfnet-pw-01\Documents\Projects\67490\104983\402-Engineering-ARCADIS\Drainage\Sheets\104983_DS001.dgn

DESIGN AGENCY
ARCADIS
222 SOUTH MAIN STREET SUITE 200
AKRON, OHIO 44308
(330) 434-4566
www.arcadis.com

DESIGNER
AZF

REVIEWER
PSB 02-07-22

PROJECT ID
104983

SHEET 83 TOTAL 297

BMP TYPE	LATITUDE/LONGITUDE				BMP WIDTH	EDA TREATMENT CREDIT
	BEGIN		END		(FEET)	(ACRES)
VEGETATED FILTER STRIP 1	41.2644	81.6345	41.2673	81.6355	17	0.75
VEGETATED FILTER STRIP 2	41.2676	81.6356	41.2691	81.6356	17	0.37
VEGETATED FILTER STRIP 3	41.2584	81.6324	41.2570	81.6328	36	1.50
VEGETATED FILTER STRIP 4	41.2584	81.6324	41.2594	81.6331	VARIES	2.42
VEGETATED FILTER STRIP 5	41.2570	81.6307	41.2604	81.6305	VARIES	1.57
			TREATMENT PROVIDED			6.61
			TREATMENT REQUIRED*			5.71

* CALCULATED PER L&D VOL. 2, SEC. 1111.7

LEGEND

VEGETATED FILTER STRIP

CATCH BASIN

MANHOLE

USGS MAP: BROADVIEW HEIGHTS QUADRANGLE
BROADVIEW HEIGHTS, OH
LATITUDE: 41.2619*
LONGITUDE: 81.6344*
*LATITUDE AND LONGITUDE TO APPROX. CENTER OF PROJECT

CONTRACTOR SHALL NOT DISTURB EXISTING GRASS AREA TO BE USED FOR VFS4. NO BMP QUANTITIES NEEDED FOR EXISTING GRASS AREA.

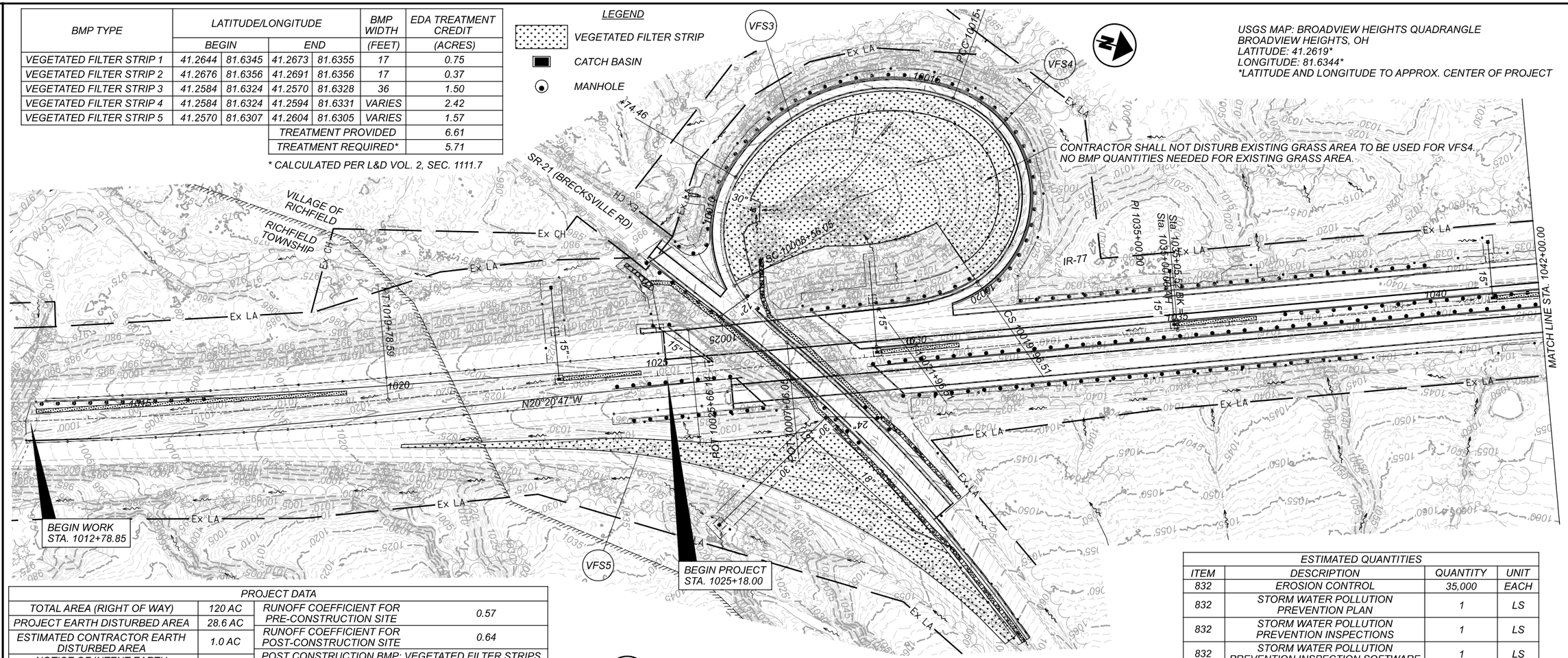

PROJECT DATA			
TOTAL AREA (RIGHT OF WAY)	120 AC	RUNOFF COEFFICIENT FOR PRE-CONSTRUCTION SITE	0.57
PROJECT EARTH DISTURBED AREA	28.6 AC	RUNOFF COEFFICIENT FOR POST-CONSTRUCTION SITE	0.64
ESTIMATED CONTRACTOR EARTH DISTURBED AREA	1.0 AC	POST CONSTRUCTION BMP: VEGETATED FILTER STRIPS WERE PROVIDED TO MEET NPDES POST-CONSTRUCTION REQUIREMENTS.	
NOTICE OF INTENT EARTH DISTURBED AREA	29.6 AC	IMMEDIATE RECEIVING WATERS	FURNACE RUN
IMPERVIOUS (PAVED) AREA FOR PRE-CONSTRUCTION SITE	9.88 AC	SUBSEQUENT RECEIVING WATERS	CUYAHOGA RIVER
IMPERVIOUS (PAVED) AREA FOR POST-CONSTRUCTION SITE	13.88 AC		

ESTIMATED QUANTITIES			
ITEM	DESCRIPTION	QUANTITY	UNIT
832	EROSION CONTROL	35,000	EACH
832	STORM WATER POLLUTION PREVENTION PLAN	1	LS
832	STORM WATER POLLUTION PREVENTION INSPECTIONS	1	LS
832	STORM WATER POLLUTION PREVENTION INSPECTION SOFTWARE	1	LS
659	TOPSOIL	1,610	CY
670	SLOPE EROSION PROTECTION	14,640	SY

QUANTITIES CARRIED TO GENERAL SUMMARY

HORIZONTAL SCALE IN FEET
0 50 100 200

PROJECT SITE PLAN

SUM-77-32.27

MODEL: Sheet PAPERSIZE: 17x11 (in.) DATE: 2/22/2022 TIME: 7:56:53 PM USER: tdinh
pw:\\gfnet-pw.bentley.com:gfnet-pw-01\Documents\Projects\674900\104983\402-Engineering-ARCADIS\Drainage\Sheets\104983_DE001.dgn

DESIGN AGENCY
ARCADIS
222 SOUTH MAIN STREET SUITE 200
AKRON, OHIO 44308
(330) 434-3555
www.arcadis.com

DESIGNER AZF

REVIEWER PSB 02-07-22

PROJECT ID 104983

SHEET 84 TOTAL 297

CROSS REFERENCES	SHEET(S)
SUPERELEVATION TABLES	181 - 186
STORM SEWER PROFILES	193 - 195
INTERCHANGE DETAILS	187 - 191
TRAFFIC CONTROL	206 - 218
PROJECT SITE PLAN	84

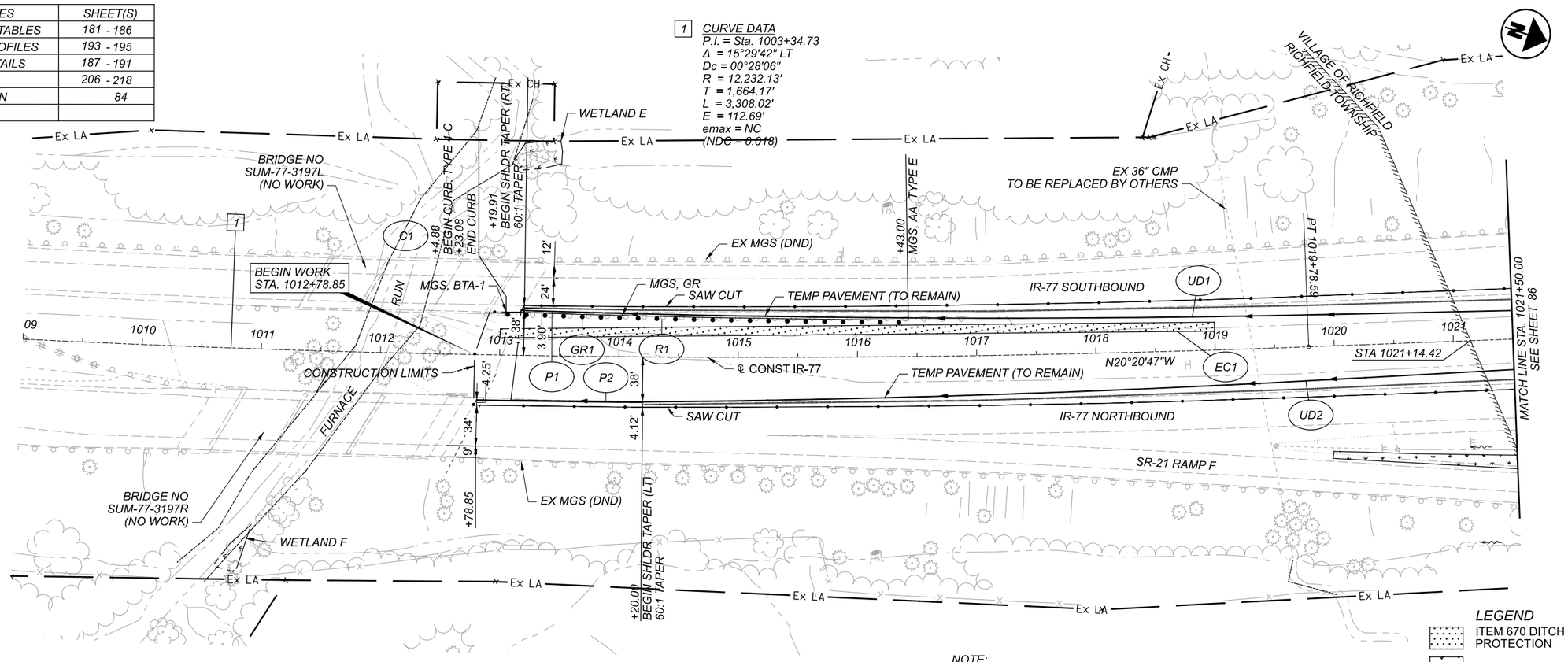

NOTE:
FOR EDGE OF PAVEMENT AND SHOULDER ELEVATIONS, SEE SHEETS 188 - 190

LEGEND
- ITEM 670 DITCH EROSION PROTECTION
- VEGETATED FILTER STRIP

NO PROFILE WORK IS DONE ON SHEET

1009 1010 1011 1012 1013 1014 1015 1016 1017 1018 1019 1020 1021

HORIZONTAL SCALE IN FEET
0 25 50 100

PLAN AND PROFILE
IR-77 STA. 1009+00.00 TO STA. 1021+50.00

DESIGN AGENCY
Gannett Fleming
ENGINEERS AND ARCHITECTS, P.C.
2300 Corporate Exchange Drive
Suite 230
Columbus, OH 43231

DESIGNER: TQD
REVIEWER: DRJ 02/01/22
PROJECT ID: 104983
SHEET 85 TOTAL 297

SUM-77-32.27

MODEL: ll405_GPI29 PAPERSIZE: 17x11 (in.) DATE: 2/22/2022 TIME: 8:01:26 PM USER: tdinh
pw:\\gfnet-pw.bentley.com:gfnet-pw-01\Documents\Projects\67490\104983\401-Engineering-GF\Roadway\Sheets\104983_GPI15.dgn

CROSS REFERENCES	SHEET(S)
SR-21 PLAN AND PROFILE	90
SR-21 RAMP G PLAN	91
SR-21 RAMP G PROFILE	92
SUPERELEVATION TABLES	181 - 186

CROSS REFERENCES	SHEET(S)
SUM-77-3227 BRIDGE	225 - 297
STORM SEWER PROFILES	193 - 195
INTERCHANGE DETAILS	187 - 191
TRAFFIC CONTROL PLAN	206 - 218
PROJECT SITE PLAN	84

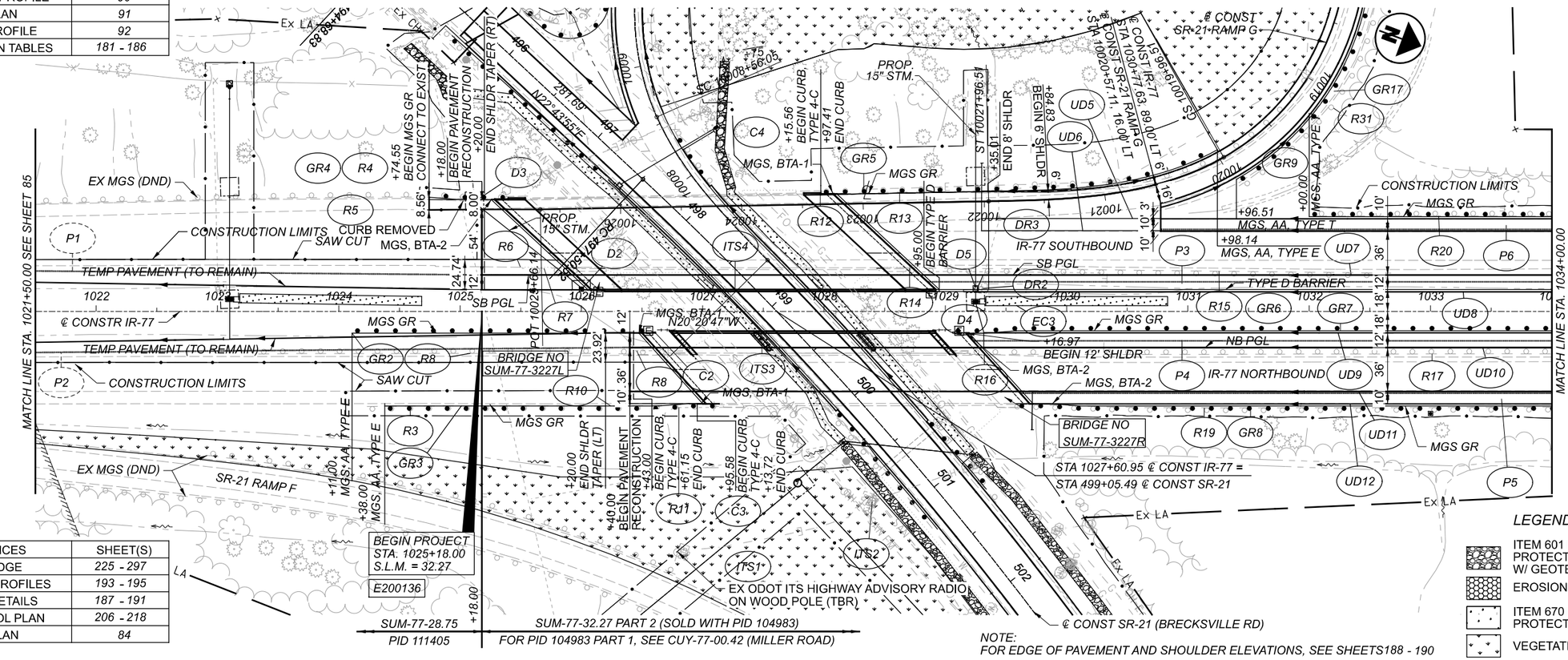

NOTE:
FOR EDGE OF PAVEMENT AND SHOULDER ELEVATIONS, SEE SHEETS188 - 190

LEGEND

- ITEM 601 ROCK CHANNEL PROTECTION TYPE C W/ GEOTEXTILE FABRIC
- EROSION CONTROL PAD
- ITEM 670 DITCH EROSION PROTECTION
- VEGETATED FILTER STRIP

HORIZONTAL SCALE IN FEET
0 25 50 100

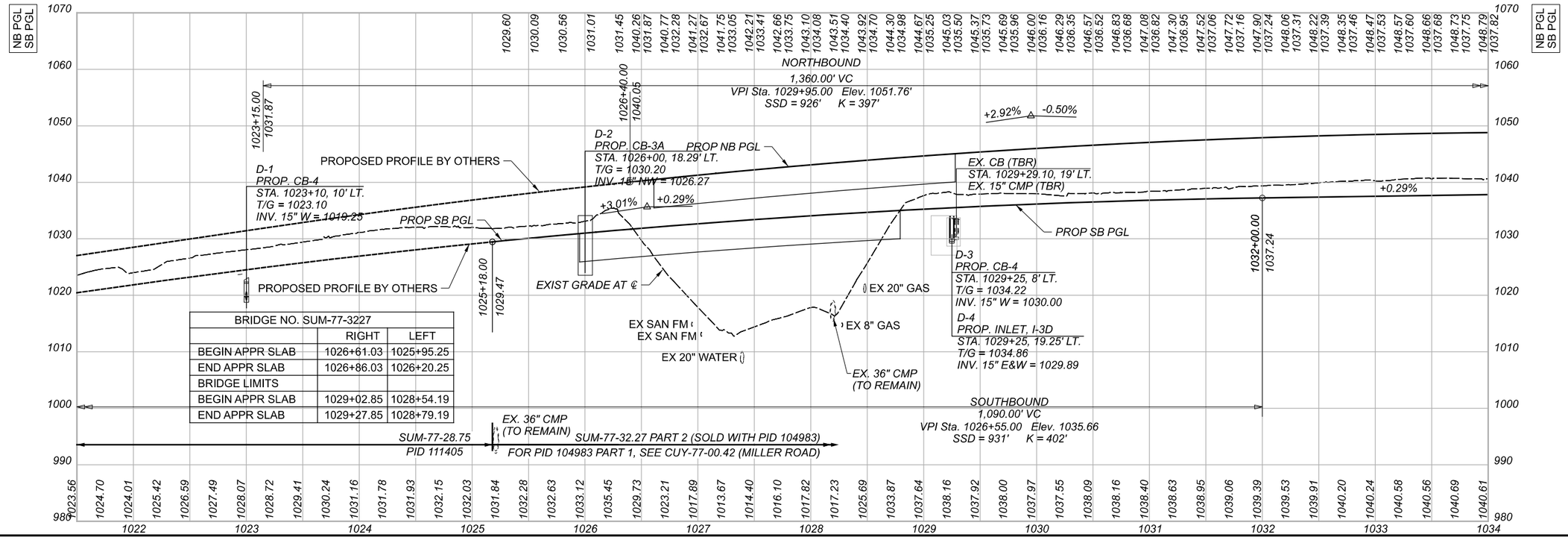

BRIDGE NO. SUM-77-3227		
	RIGHT	LEFT
BEGIN APPR SLAB	1026+61.03	1025+95.25
END APPR SLAB	1026+86.03	1026+20.25
BRIDGE LIMITS		
BEGIN APPR SLAB	1029+02.85	1028+54.19
END APPR SLAB	1029+27.85	1028+79.19

PLAN AND PROFILE
IR-77 STA. 1021+50.00 TO STA. 1034+00.00

DESIGN AGENCY
Gannett Fleming
ENGINEERS AND ARCHITECTS, P.C.
250 Civic Center Drive, Suite 220
Columbus, OH 43215

DESIGNER: TQD
REVIEWER: DRJ 02/01/22
PROJECT ID: 104983
SHEET: 86 TOTAL: 297

SUM-77-32.27

MODEL: ill405_GPI30 PAPERSIZE: ITxII (In.) DATE: 2/22/2022 TIME: 8:03:40 PM USER: tdinh
pw:\\gfnet-pw.bentley.com:gfnet-pw-01\Documents\Projects\67490\104983\401-Engineering-GF\Roadway\Sheets\104983_GPII6.dgn

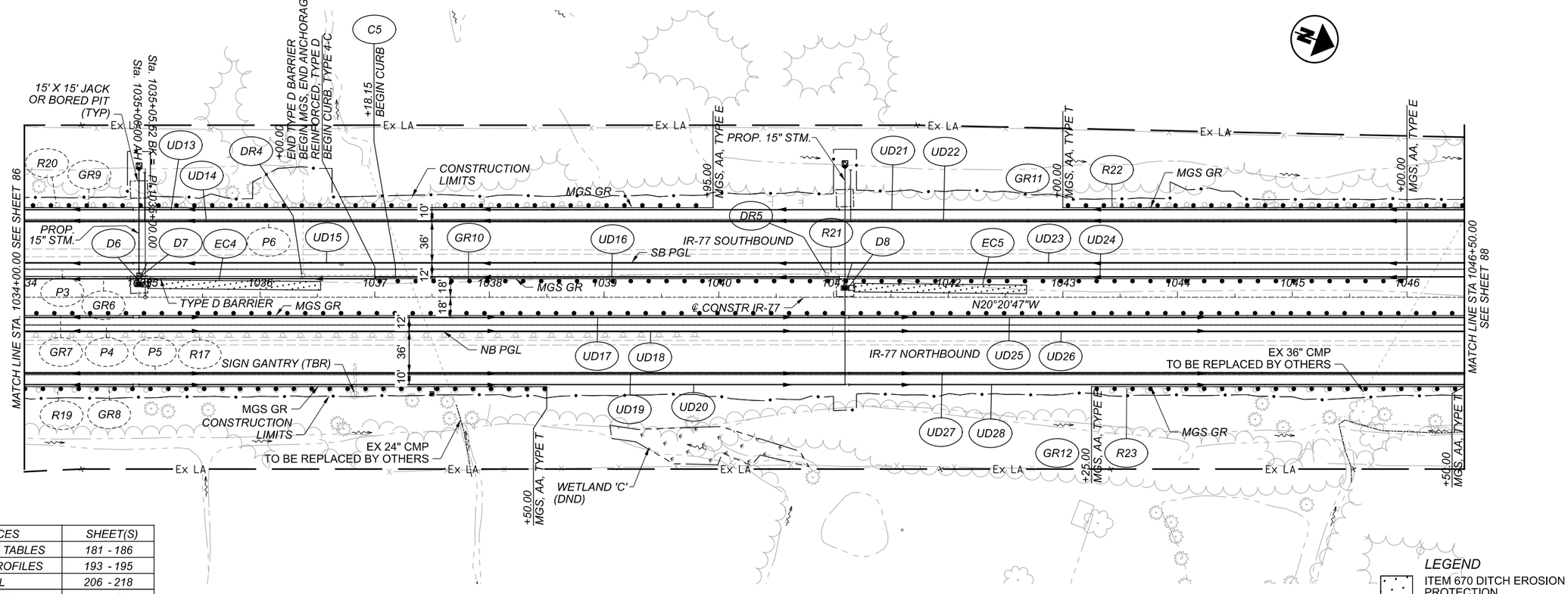

CROSS REFERENCES	SHEET(S)
SUPERELEVATION TABLES	181 - 186
STORM SEWER PROFILES	193 - 195
TRAFFIC CONTROL	206 - 218
PROJECT SITE PLAN	84

LEGEND

ITEM 670 DITCH EROSION PROTECTION

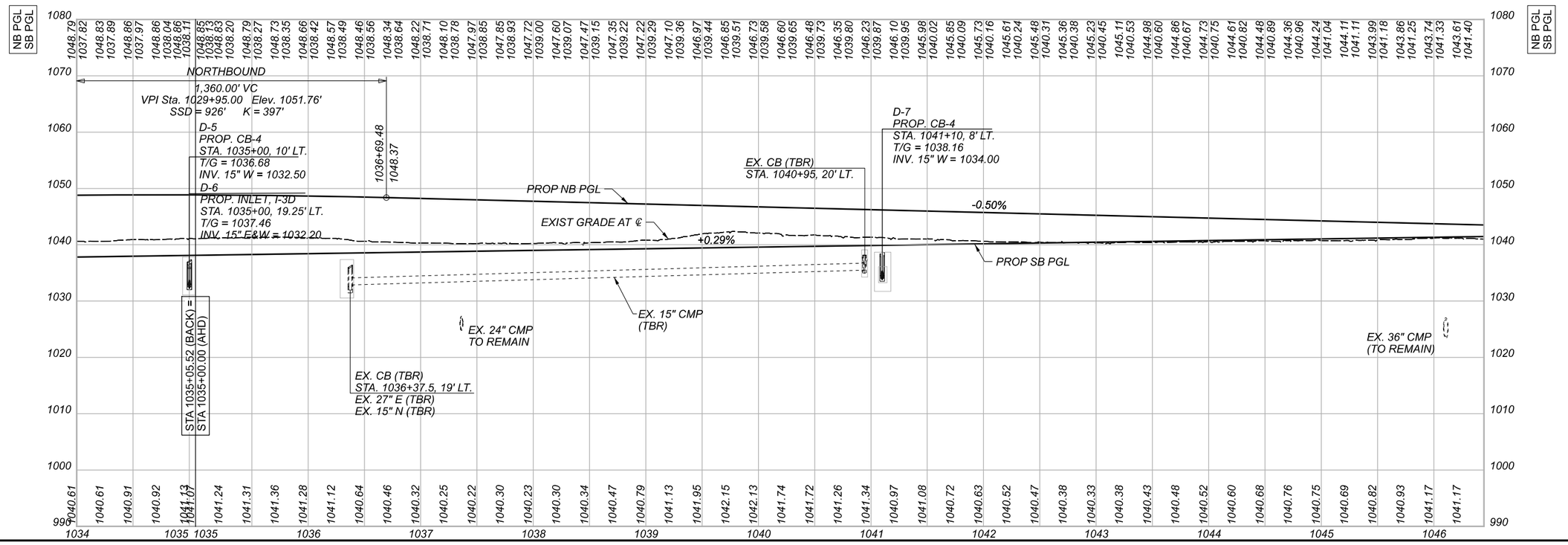

HORIZONTAL SCALE IN FEET
0 25 50 100

PLAN AND PROFILE
IR-77 STA. 1034+00.00 TO STA. 1046+50.00

DESIGN AGENCY
Gannett Fleming
ENGINEERS AND ARCHITECTS, P.C.
2300 Corporate Exchange Drive Suite 330 Columbus, OH 43231

DESIGNER TQD
REVIEWER DRJ 02/01/22
PROJECT ID 104983
SHEET 87 TOTAL 297

SUM-77-32.27

MODEL: ll405_GP13 PAPERSIZE: 17x11(in.) DATE: 2/22/2022 TIME: 8:06:00 PM USER: tdhh
pw:\\gfnet-pw.bentley.com:gfnet-pw-01\Documents\Projects\67490\104983\40i-Engineering-GF\Roadway\Sheets\104983_GP117.dgn

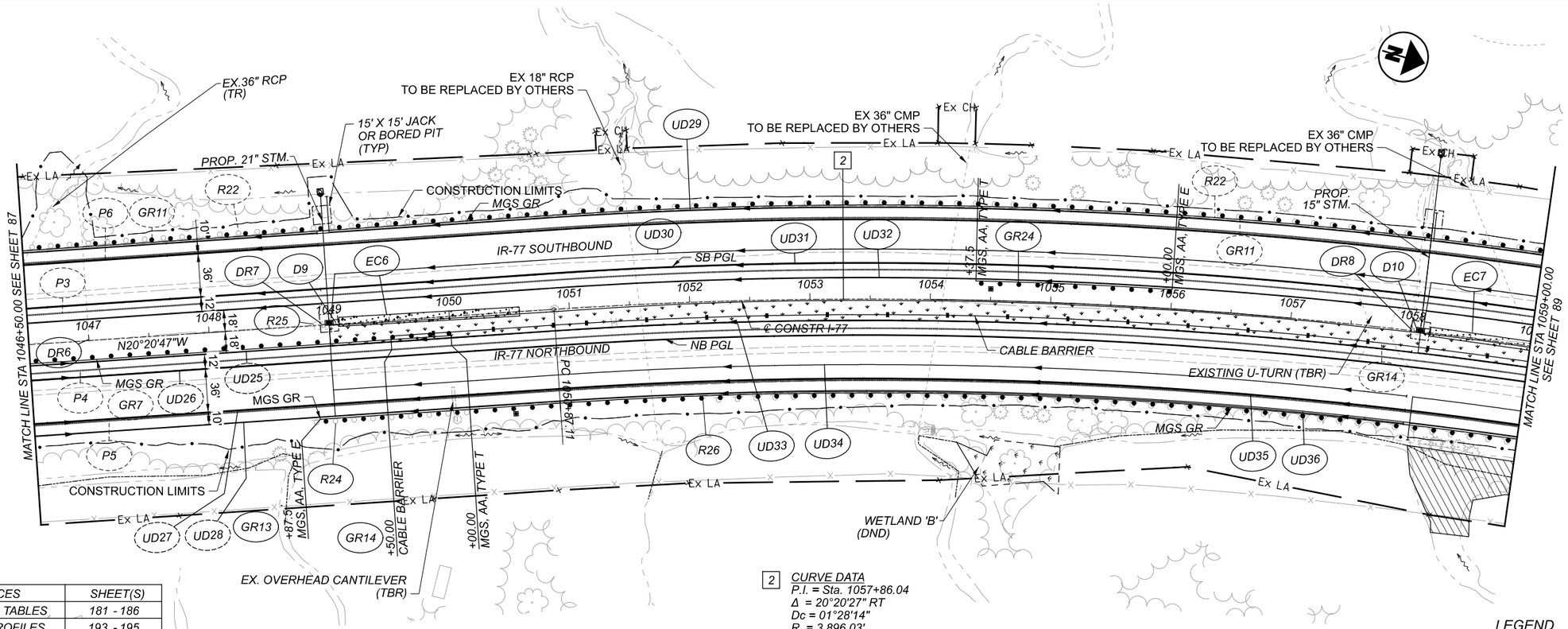

CROSS REFERENCES	SHEET(S)
SUPERELEVATION TABLES	181 - 186
STORM SEWER PROFILES	193 - 195
TRAFFIC CONTROL	206 - 218
PROJECT SITE PLAN	84

2 *CURVE DATA*
P.I. = Sta. 1057+86.04
Δ = 20°20'27" RT
Dc = 01°28'14"
R = 3,896.03'
T = 698.93'
L = 1,383.15'
E = 62.2'
emax = 0.045

LEGEND
ITEM 670 DITCH EROSION PROTECTION
VEGETATED FILTER STRIP

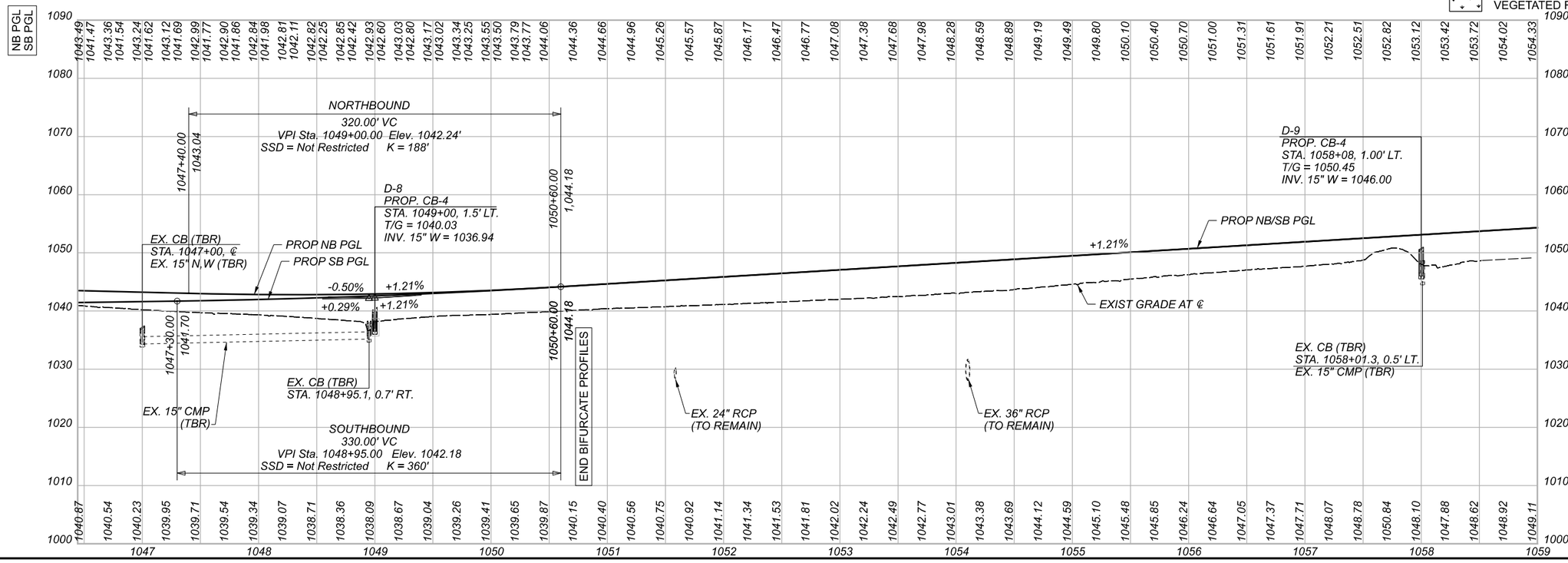

HORIZONTAL SCALE IN FEET
0 25 50 100

PLAN AND PROFILE
IR-77 STA. 1046+50.00 TO STA. 1059+00.00

SUM-77-32.27

MODEL: ill405_GPI32 PAPERSIZE: 17x11(in.) DATE: 2/22/2022 TIME: 8:08:12 PM USER: tdinh
pw:\\gfnet-pw.bentley.comgfnet-pw-01\Documents\Projects\67490\104983\40i-Engineering-GF\Roadway\Sheets\104983.CPII8.dgn

DESIGN AGENCY
Gannett Fleming
ENGINEERS AND ARCHITECTS, P.C.
2200 Corporate Exchange Drive Suite 230 Columbus, OH 43231

DESIGNER	TQD
REVIEWER	DRJ 02/01/22
PROJECT ID	104983
SHEET	88
TOTAL	297

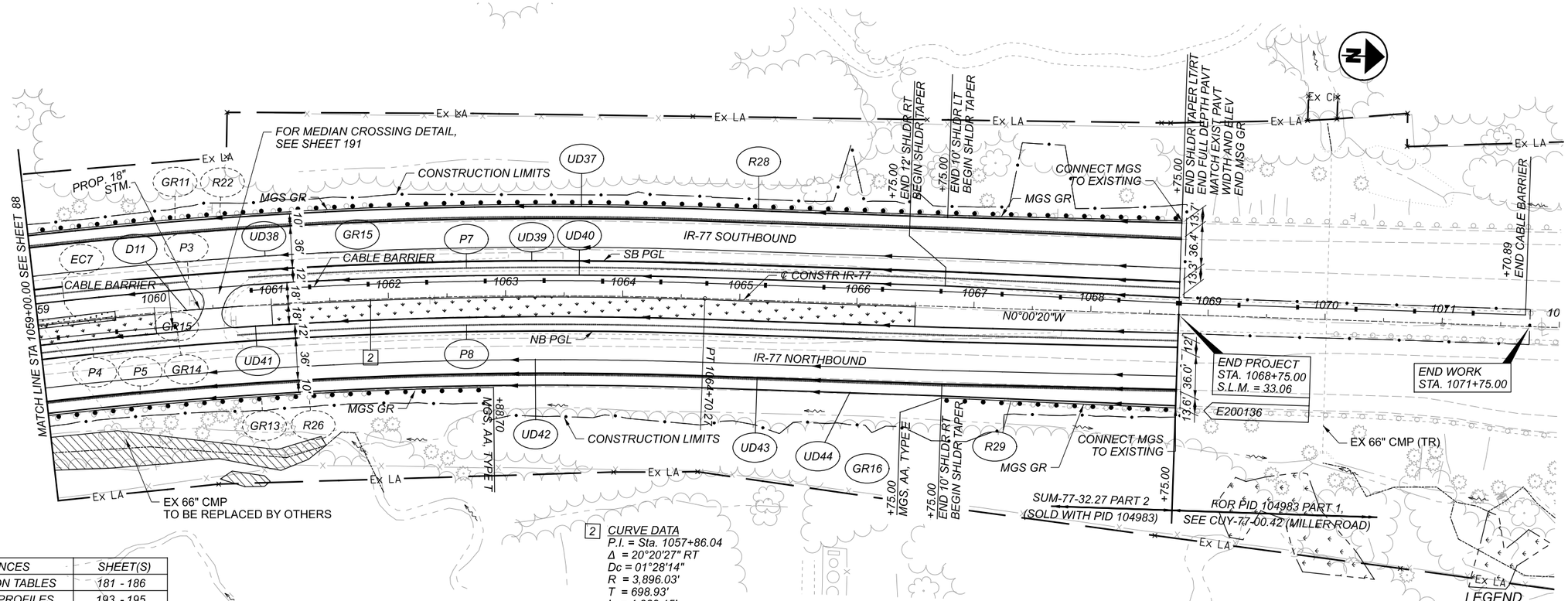

2 *CURVE DATA*
P.I. = Sta. 1057+86.04
Δ = 20°20'27" RT
Dc = 01°28'14"
R = 3,896.03'
T = 698.93'
L = 1,383.15'
E = 62.2'
emax = 0.045

CROSS REFERENCES	SHEET(S)
SUPERELEVATION TABLES	181 - 186
STORM SEWER PROFILES	193 - 195
TRAFFIC CONTROL	206 - 218
PROJECT SITE PLAN	84

LEGEND
- ITEM 670 DITCH EROSION PROTECTION
- VEGETATED FILTER STRIP

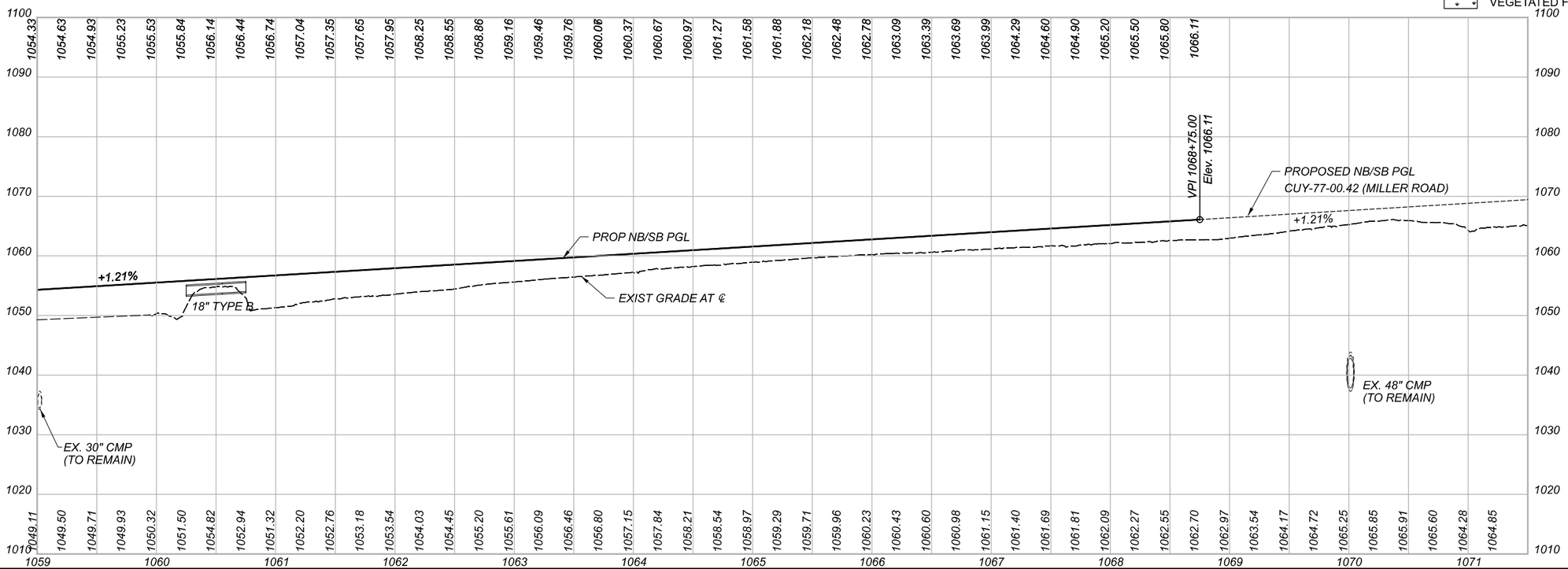

HORIZONTAL SCALE IN FEET
0 25 50 100

PLAN AND PROFILE
IR-77 STA. 1059+00.00 TO STA. 1072+00.00

DESIGN AGENCY
Gannett Fleming
ENGINEERS AND ARCHITECTS, P.C.
2200 Corporate Exchange Drive Suite 230 Columbus, OH 43231

DESIGNER TQD
REVIEWER DRJ 02/01/22
PROJECT ID 104983
SHEET 89 TOTAL 297

SUM-77-32.27

MODEL: ill405_GPI33 PAPERSIZE: 17x11(in) DATE: 2/22/2022 TIME: 8:02:23 PM USER: tdinh
pw:\\gfnet-pw.bentley.comgfnet-pw-01\Documents\Projects\67490\104983\401-Engineering-GF\Roadway\Sheets\104983.dgn

CROSS REFERENCES	SHEET(S)
IR-77 PLAN AND PROFILE	86
SR-21 RAMP G PROFILE	92
SUPERELEVATION TABLES	181 - 186
TYPICAL SECTIONS	12
INTERCHANGE DETAILS	189 - 191
STORM SEWER DETAILS	193 - 195
TRAFFIC CONTROL	206 - 218
CULVERT DETAIL	192
PROJECT SITE PLAN	84

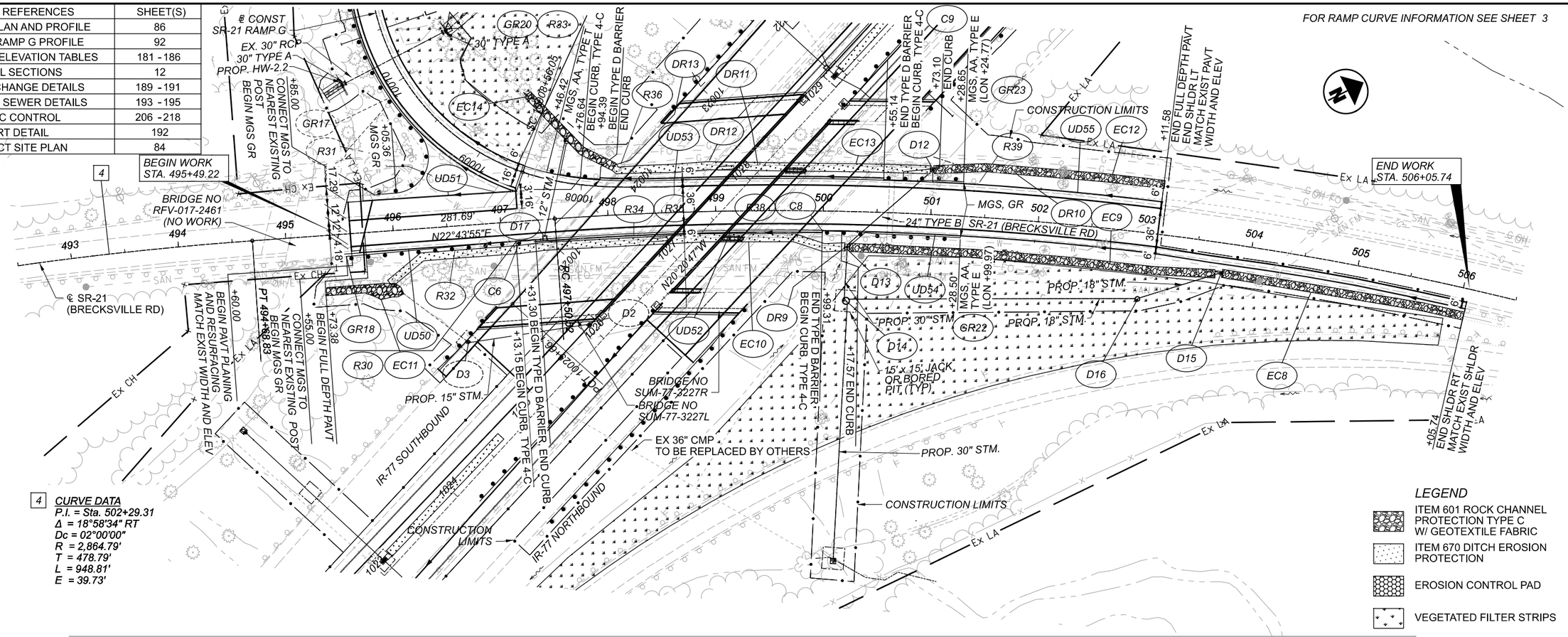

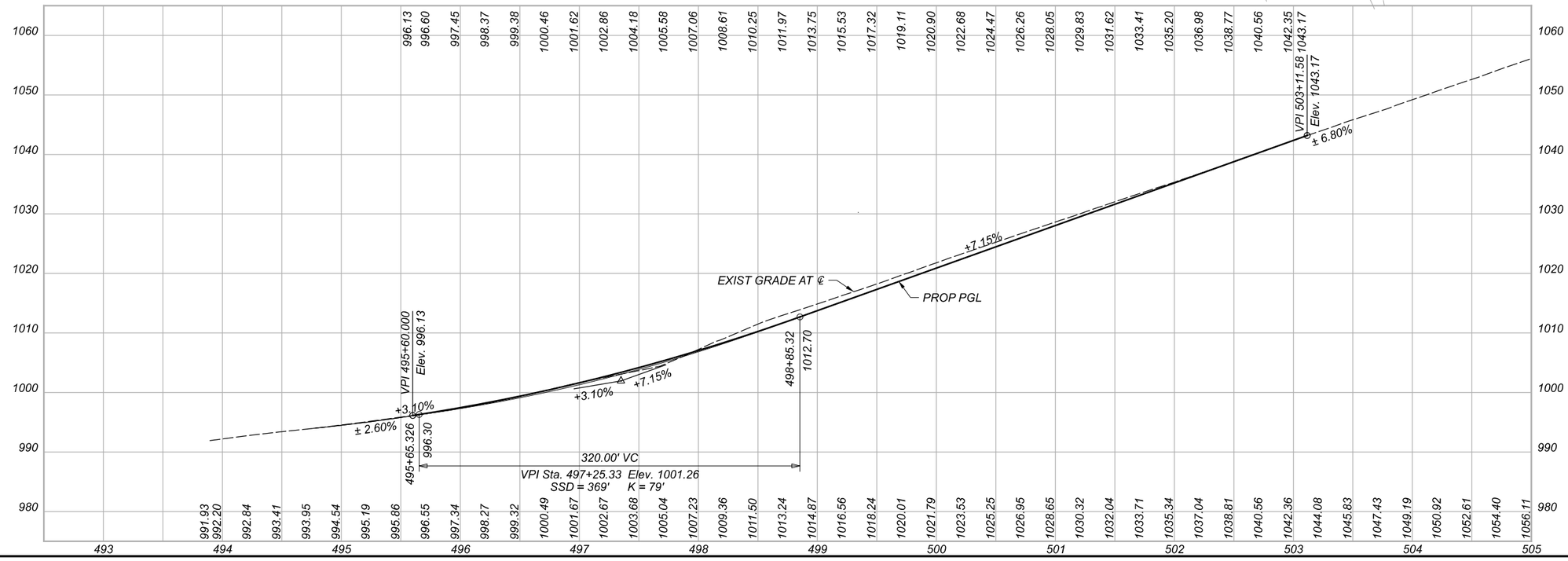

PLAN AND PROFILE
SR-21 (BRECKSVILLE ROAD)

SUM-77-32.27

MODEL: 104983_GP50i PAPERSIZE: 17x11(in.) DATE: 2/22/2022 TIME: 8:02:55 PM USER: tdinh
pw:\\gfnet-pw.bentley.com:gfnet-pw-01\Documents\Projects\67490\104983\40i-Engineering-GF\Roadway\Sheets\104983_GP50i.dgn

DESIGN AGENCY
Gannett Fleming
ENGINEERS AND ARCHITECTS, P.C.
2500 Corporate Exchange Drive
Suite 220
Columbus, OH 43231

DESIGNER TQD
REVIEWER DRJ 02/01/22
PROJECT ID 104983
SHEET 90 TOTAL 297

CROSS REFERENCES	SHEET(S)
IR-77 PLAN AND PROFILE	86
SR-21 RAMP G PROFILE	92
SUPERELEVATION TABLES	181 - 186
TYPICAL SECTIONS	12
INTERCHANGE DETAILS	189 - 191
STORM SEWER DETAILS	193 - 195
TRAFFIC CONTROL	206 - 218
CULVERT DETAIL	192
PROJECT SITE PLAN	*84*

FOR RAMP CURVE INFORMATION SEE SHEET 3

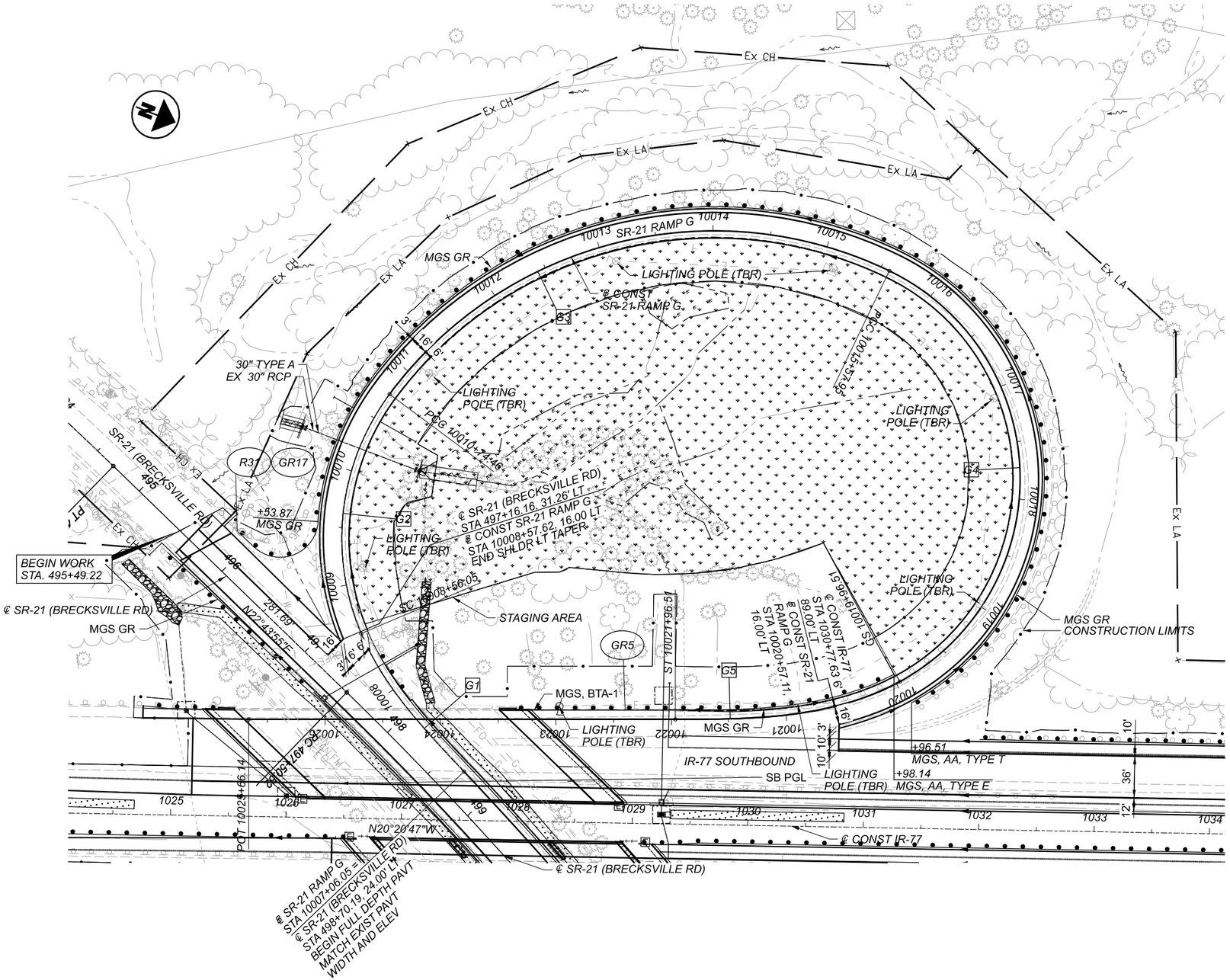

LEGEND

- ITEM 601 ROCK CHANNEL PROTECTION TYPE C W/ GEOTEXTILE FABRIC
- ITEM 670 DITCH EROSION PROTECTION
- VEGETATED FILTER STRIP

HORIZONTAL SCALE IN FEET
0 25 50 100

PLAN SHEET
SR-21 (BRECKSVILLE ROAD) - RAMP G

DESIGN AGENCY
Gannett Fleming
ENGINEERS AND ARCHITECTS, P.C.
250 Civic Center Drive, Suite 200
Columbus, OH 43215

DESIGNER TQD
REVIEWER DRJ 02/01/22
PROJECT ID 104983
SHEET 91 TOTAL 297

SUM-77-32.27

MODEL: ill405.CP40l PAPERSIZE: ITxll (in.) DATE: 2/22/2022 TIME: 8:59:9 PM USER: tdnh
pw:\\gfnet-pw.bentley.com:gfnet-pw-01\Documents\Projects\67490\104983\40l-Engineering-GF\Roadway\Sheets\104983_CP40l.dgn

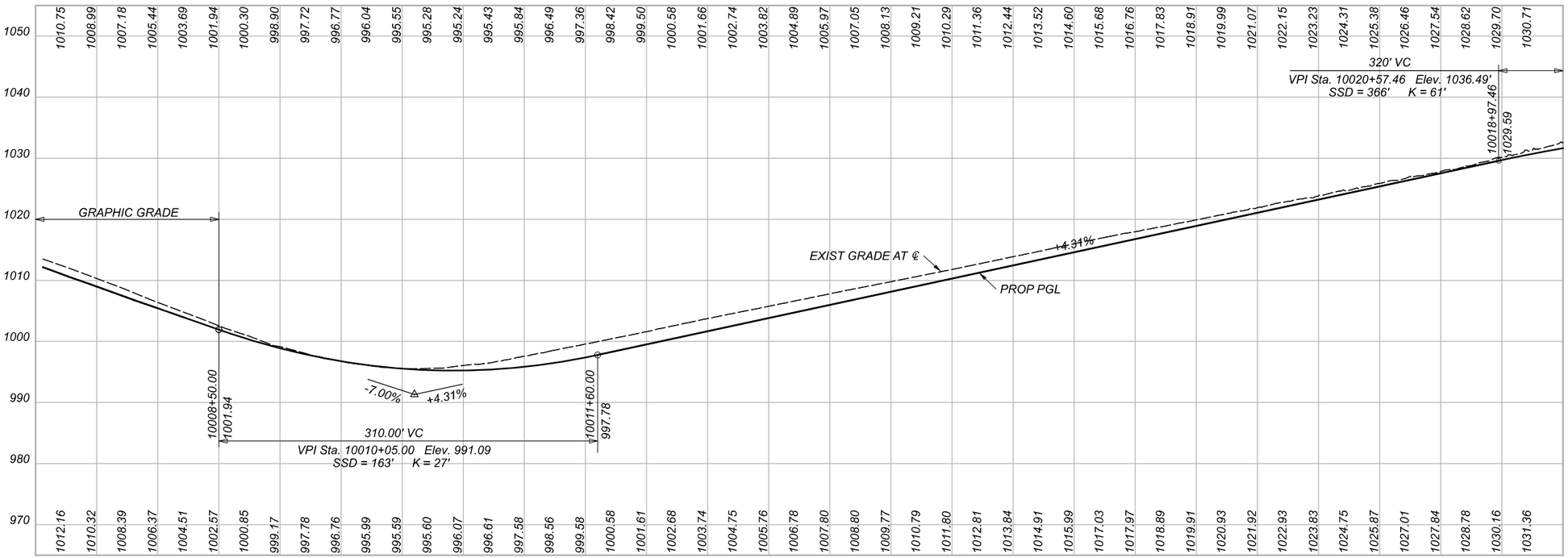

SR-21 RAMP G

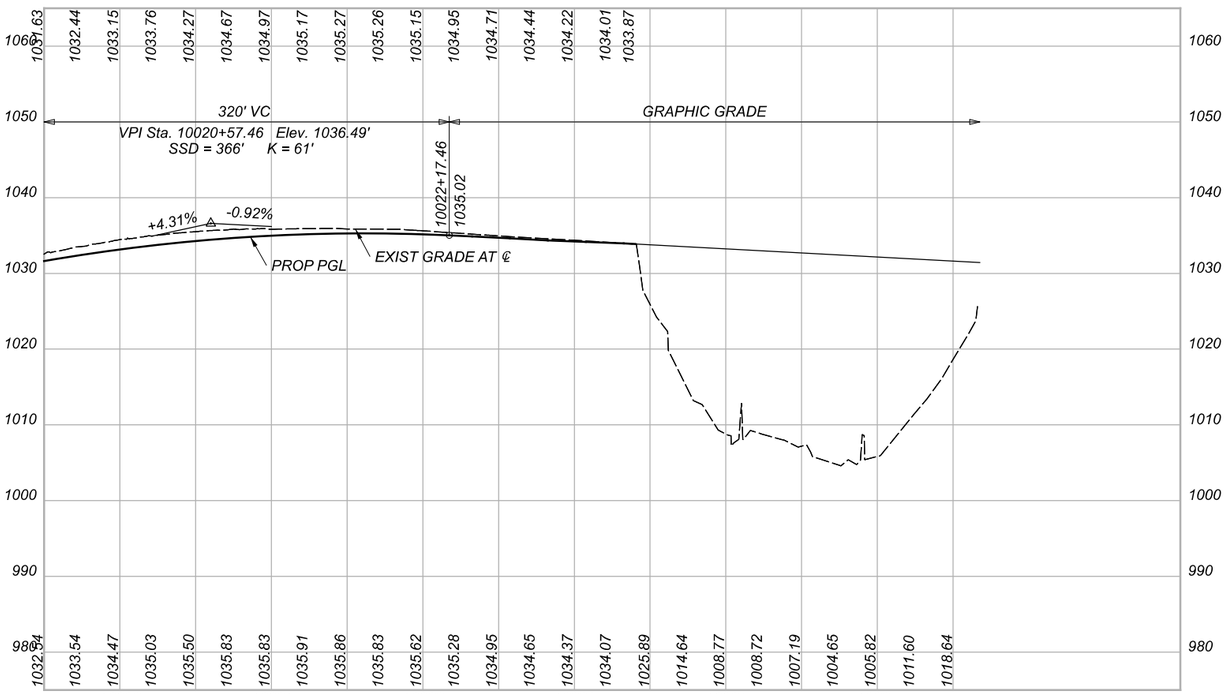

SR-21 RAMP G

PROFILE SHEET
SR-21 (BRECKSVILLE ROAD) - RAMP G

SUM-77-32.27

MODEL: BLP_R02IG-I - I04983_GP4ll PAPERSIZE: 17x11(in.) DATE: 2/22/2022 TIME: 8:17:24 PM USER: tdinh
pw:\\gfnet-pw.bentley.com:gfnet-pw-01\Documents\Projects\67490\I04983\40l-Engineering-GF\Roadway\Sheets\I04983_GP4ll.dgn

DESIGN AGENCY
Gannett Fleming
ENGINEERS AND ARCHITECTS, P.C.
2500 Corporate Exchange Drive
Suite 220
Columbus, OH 43231

DESIGNER: TQD
REVIEWER: DRJ 02/01/22
PROJECT ID: 104983
SHEET: 92 TOTAL: 297

SB BRIDGE OMISSION
STA. 1011+30.08 TO 1013+16.00

NB BRIDGE OMISSION
STA. 1010+57.08 TO 1012+57.21

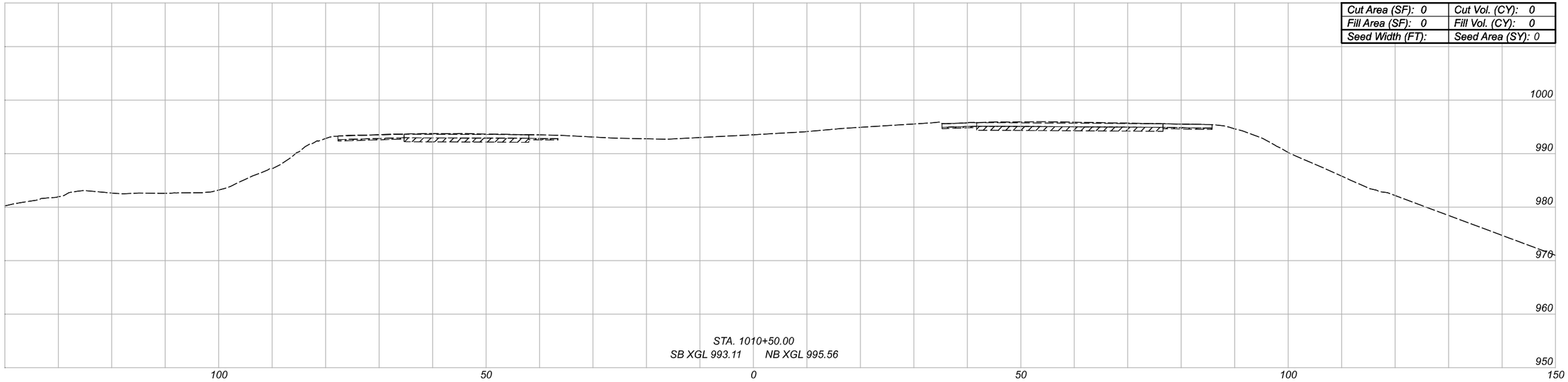

STA. 1010+50.00
SB XGL 993.11 NB XGL 995.56

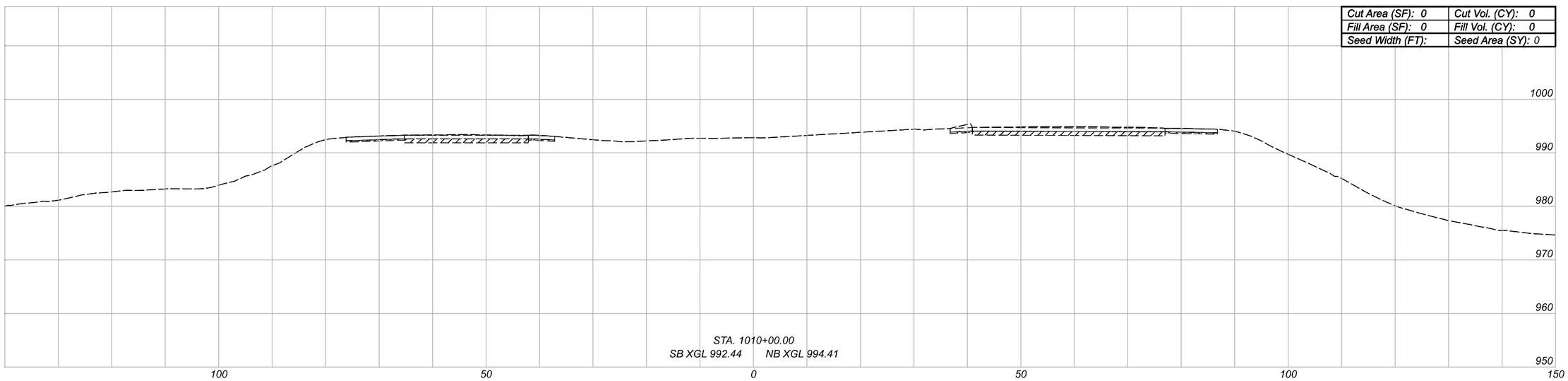

STA. 1010+00.00
SB XGL 992.44 NB XGL 994.41

EX ASPHALT CONCRETE BASE

CROSS SECTIONS - IR-77
STA 1010+00.00 TO STA 1010+50.00

DESIGN AGENCY
Gannett Fleming
ENGINEERS AND ARCHITECTS, P.C.
2500 Corporate Exchange Drive
Suite 230
Columbus, OH 43231

DESIGNER JAS
REVIEWER DRJ 02/01/22
PROJECT ID 104983
SHEET 93 TOTAL 297

SUM-77-32.27

MODEL:I77-E-C-2 - 1010+00.00 [Sheet] PAPERSIZE:17x11(in.) DATE:2/22/2022 TIME:8:26:29 PM USER:tdinh
pw:\\gfnet-pw.bentley.comsgfnet-pw-01\Documents\Projects\67490\104983\40i-Engineering-GF\Roadway\Sheets\104983_XS104A.dgn

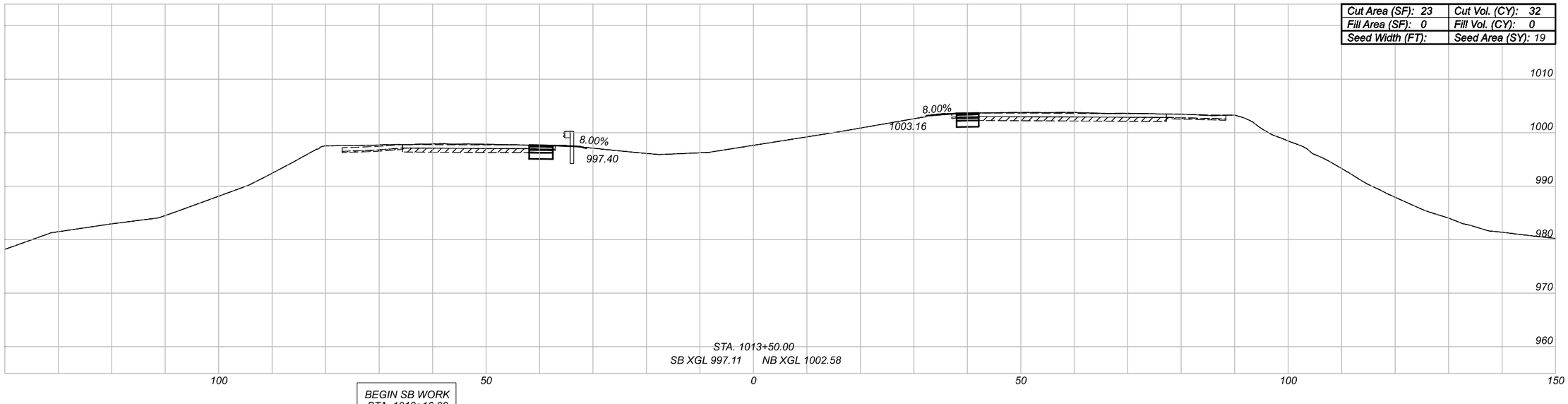

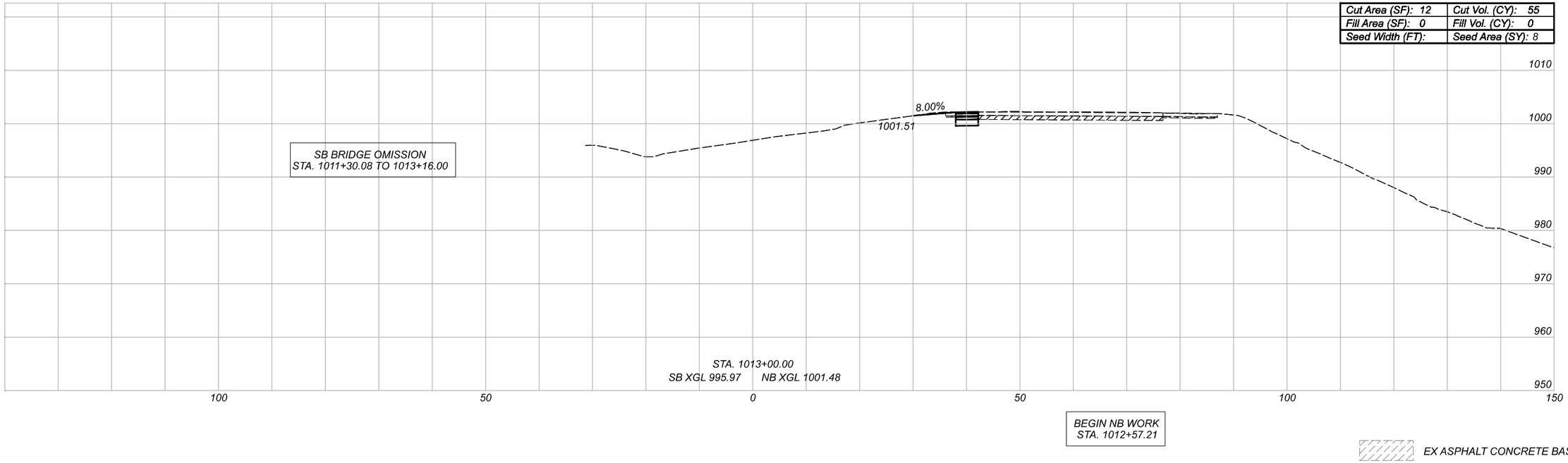

CROSS SECTIONS - IR-77
STA 1013+00.00 TO STA 1013+50.00

SUM-77-32.27

MODEL:I77-E-C-2 - 1013+00.00 [Sheet] PAPERSIZE:17x11(in.) DATE:2/22/2022 TIME:8:21:36 PM USER:tdinh
pw:\\gfnet-pw.bentley.com:gfnet-pw-01\Documents\Projects\67490\104983\401-Engineering-GF\Roadway\Sheets\104983_XS104A.dgn

DESIGN AGENCY
Gannett Fleming
ENGINEERS AND ARCHITECTS, P.C.
2500 Corporate Exchange Drive
Suite 230
Columbus, OH 43231

DESIGNER
JAS

REVIEWER
DRJ 02/01/22

PROJECT ID
104983

SHEET 94 TOTAL 297

MODEL: I77-E-C-2 - 1014+00.00 (Sheet) PAPERSIZE: 17x11 (in.) DATE: 2/22/2022 TIME: 8:21:41 PM USER: tdinh
pw:\\gfnet-pw.bentley.com:gfnet-pw-01\Documents\Projects\67490\104983\401-Engineering-GF\Roadway\Sheets\104983_XS1014A.dgn

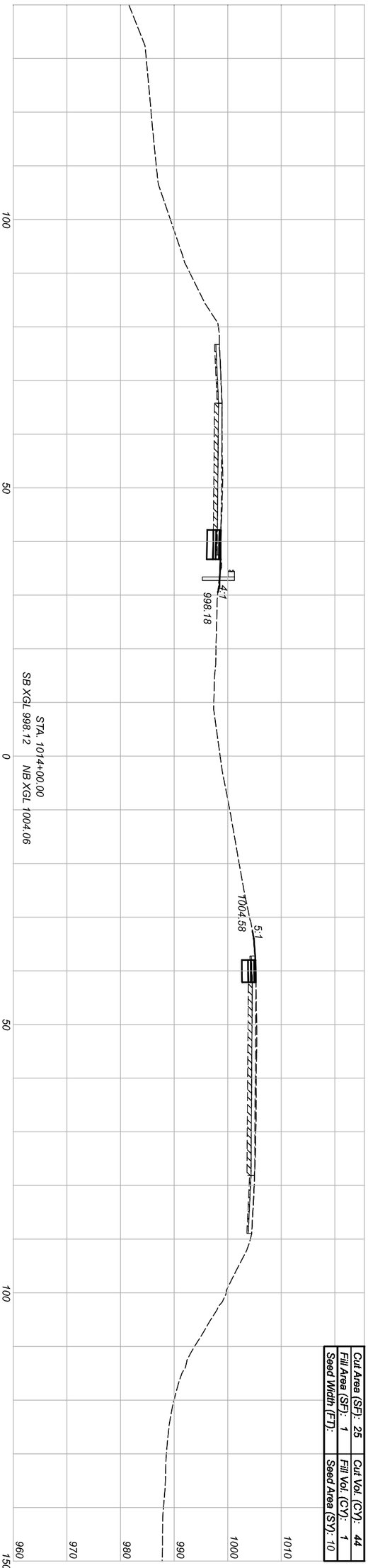

Cut Area (SF):	25
Fill Area (SF):	1
Seed Width (FT):	
Cut Vol. (CY):	44
Fill Vol. (CY):	1
Seed Area (SY):	10

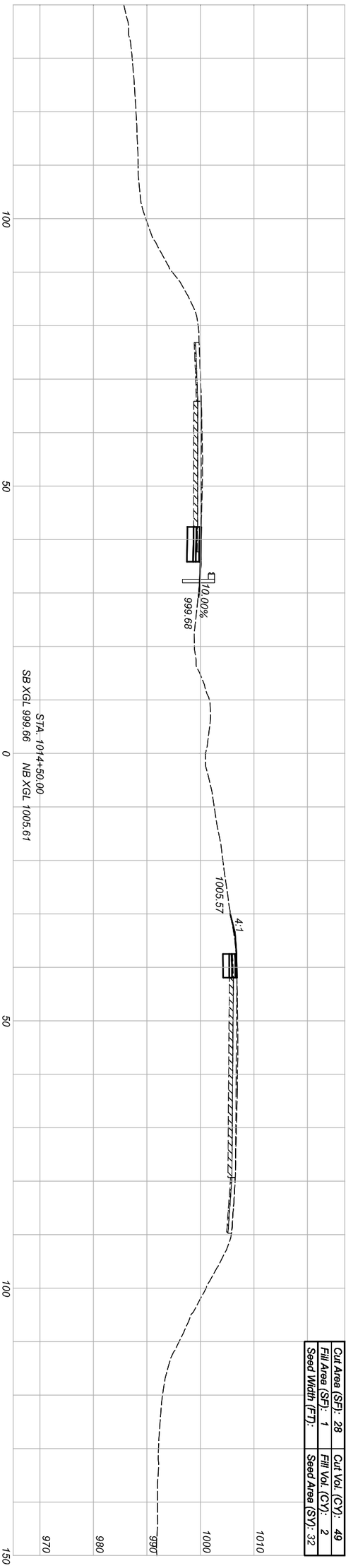

Cut Area (SF):	28
Fill Area (SF):	1
Seed Width (FT):	
Cut Vol. (CY):	49
Fill Vol. (CY):	2
Seed Area (SY):	32

EX ASPHALT CONCRETE BASE

CROSS SECTIONS - IR-77
STA 1014+00.00 TO STA 1014+50.00

DESIGN AGENCY: Gannett Fleming
ENGINEERS AND ARCHITECTS, P.C.
2500 Corporate Exchange Drive
Suite 230
Columbus, OH 43231

DESIGNER: JAS
REVIEWER: DRJ 02/01/22
PROJECT ID: 104983
SHEET: 95 TOTAL: 297

Cut Area (SF): 35	Cut Vol. (CY): 62
Fill Area (SF): 6	Fill Vol. (CY): 8
Seed Width (FT):	Seed Area (SY): 51

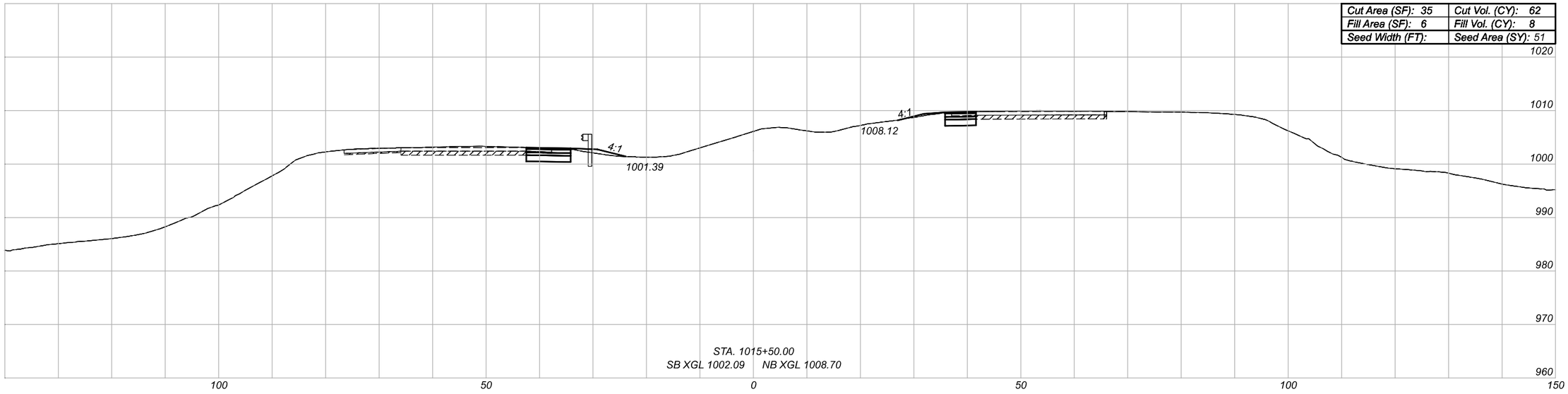

Cut Area (SF): 32	Cut Vol. (CY): 55
Fill Area (SF): 2	Fill Vol. (CY): 3
Seed Width (FT):	Seed Area (SY): 36

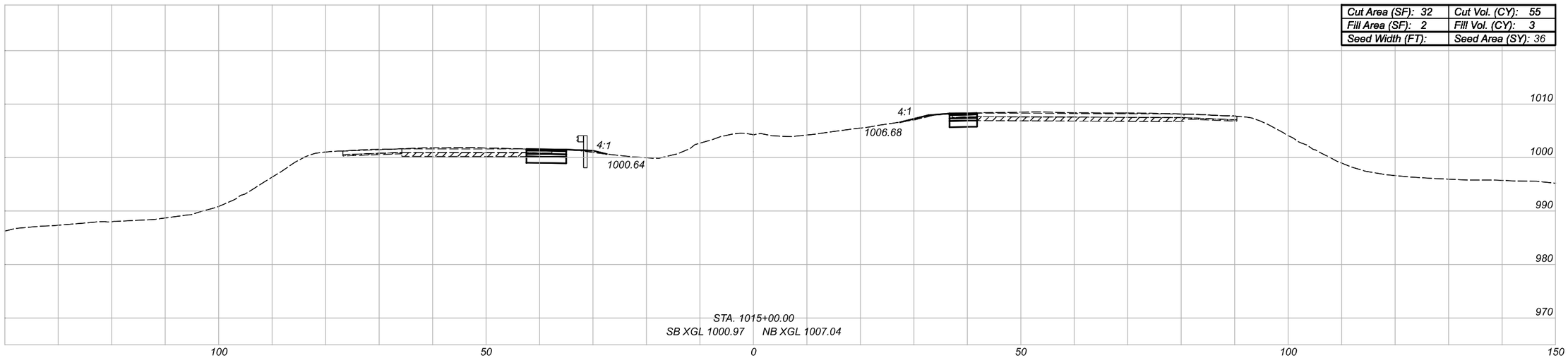

EX ASPHALT CONCRETE BASE

CROSS SECTIONS - IR-77
STA 1015+00.00 TO STA 1015+50.00

SUM-77-32.27

MODEL:I77-E-C-2 - 1015+00.00 [Sheet] PAPERSIZE:17x11(in.) DATE:2/22/2022 TIME:8:21:46 PM USER:tdinh
pw:\\gfnet-pw.bentley.com:gfnet-pw-01\Documents\Projects\67490\104983\401-Engineering-GF\Roadway\Sheets\104983_XS104A.dgn

DESIGN AGENCY
Gannett Fleming
ENGINEERS AND ARCHITECTS, P.C.
2500 Corporate Exchange Drive
Suite 230
Columbus, OH 43231

DESIGNER	JAS
REVIEWER	DRJ 02/01/22
PROJECT ID	104983
SHEET	96
TOTAL	297

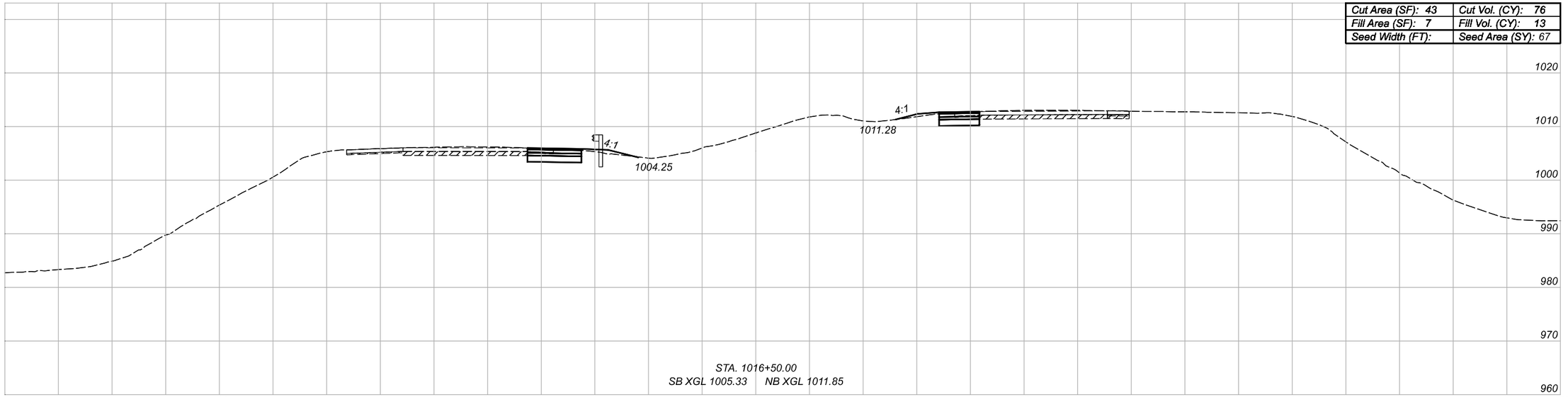

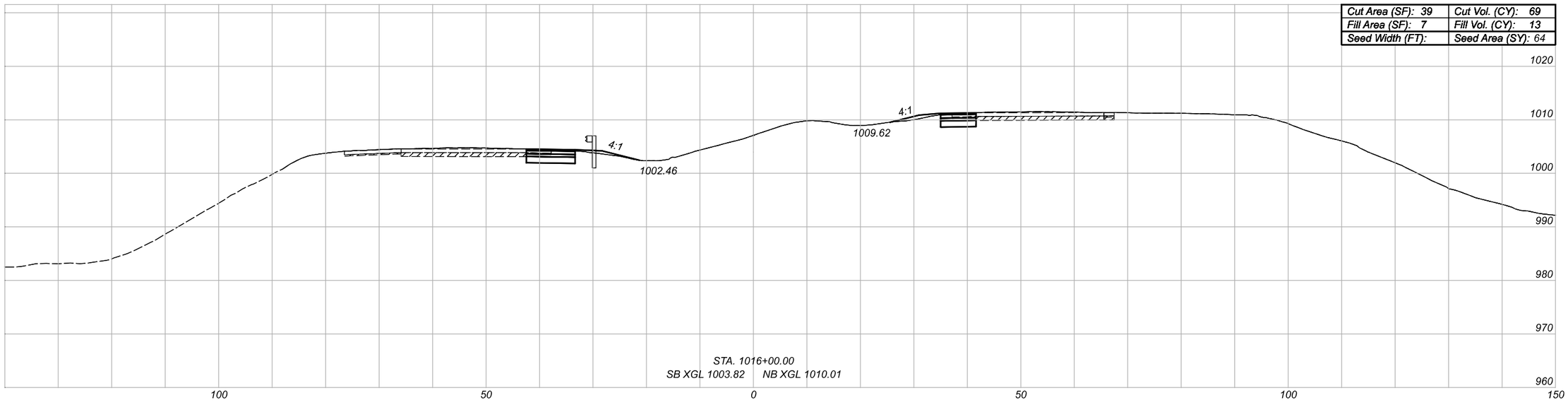

EX ASPHALT CONCRETE BASE

CROSS SECTIONS - IR-77
STA 1016+00.00 TO STA 1016+50.00

SUM-77-32.27

MODEL:I77-E-C-2 - 1016+00.00 [Sheet] PAPERSIZE:17x11(in.) DATE:2/22/2022 TIME:8:21:52 PM USER:tdinh
pw:\\gfnet-pw.bentley.com:gfnet-pw-01\Documents\Projects\67490\104983\401-Engineering-GF\Roadway\Sheets\104983_XS104A.dgn

DESIGN AGENCY
Gannett Fleming
ENGINEERS AND ARCHITECTS, P.C.
2500 Corporate Exchange Drive
Suite 230
Columbus, OH 43231

DESIGNER JAS

REVIEWER DRJ 02/01/22

PROJECT ID 104983

SHEET 97 TOTAL 297

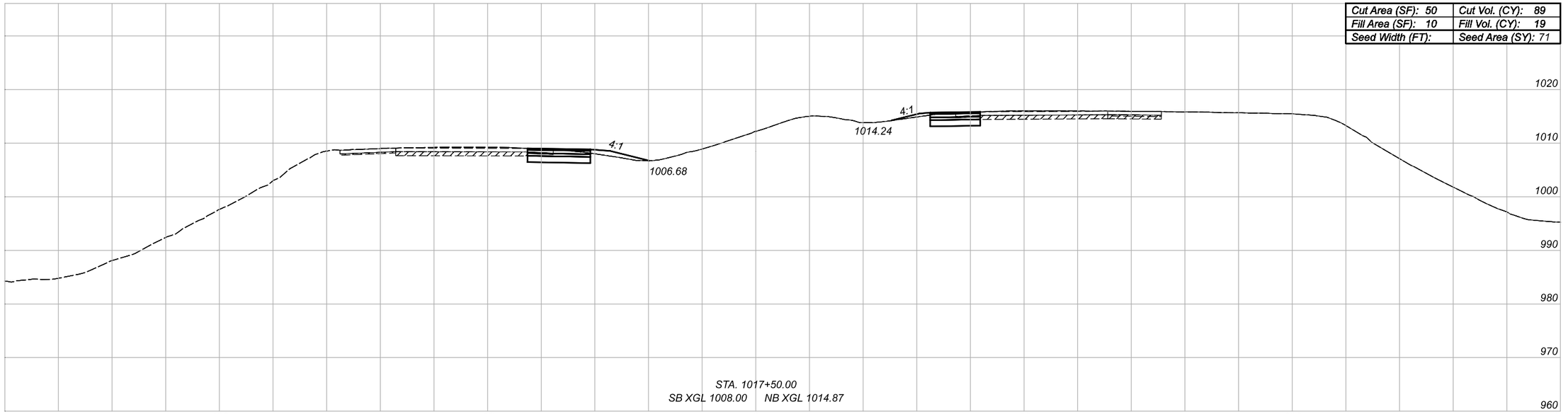

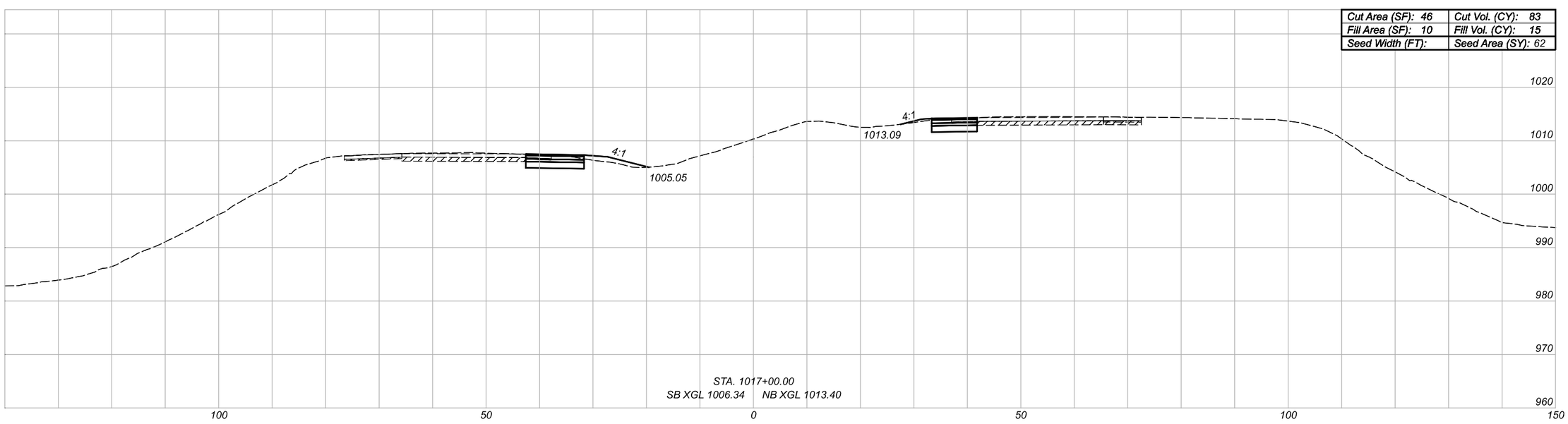

EX ASPHALT CONCRETE BASE

CROSS SECTIONS - IR-77
STA 1017+00.00 TO STA 1017+50.00

SUM-77-32.27

MODEL: I77-E-C-2 - 1017+00.00 [Sheet] PAPERSIZE: 17x11(in.) DATE: 2/22/2022 TIME: 8:21:58 PM USER: tdinh
pw:\\gfnet-pw.bentley.com:gfnet-pw-01\Documents\Projects\67490\104983\401-Engineering-GF\Roadway\Sheets\104983_XS104A.dgn

DESIGN AGENCY
Gannett Fleming
ENGINEERS AND ARCHITECTS, P.C.
2500 Corporate Exchange Drive
Suite 230
Columbus, OH 43231

DESIGNER	JAS
REVIEWER	DRJ 02/01/22
PROJECT ID	104983
SHEET	98
TOTAL	297

MODEL:I77-E-C-2 - I018+00.00 [Sheet] PAPERSIZE:17x11(In.) DATE:2/22/2022 TIME:8:22:03 PM USER:tdinh
pw:\\gfnet-pw.bentley.com:gfnet-pw-01\Documents\Projects\67490\104983\40I-Engineering-GF\Roadway\Sheets\104983_XSI04A.dgn

SUM-77-32.27

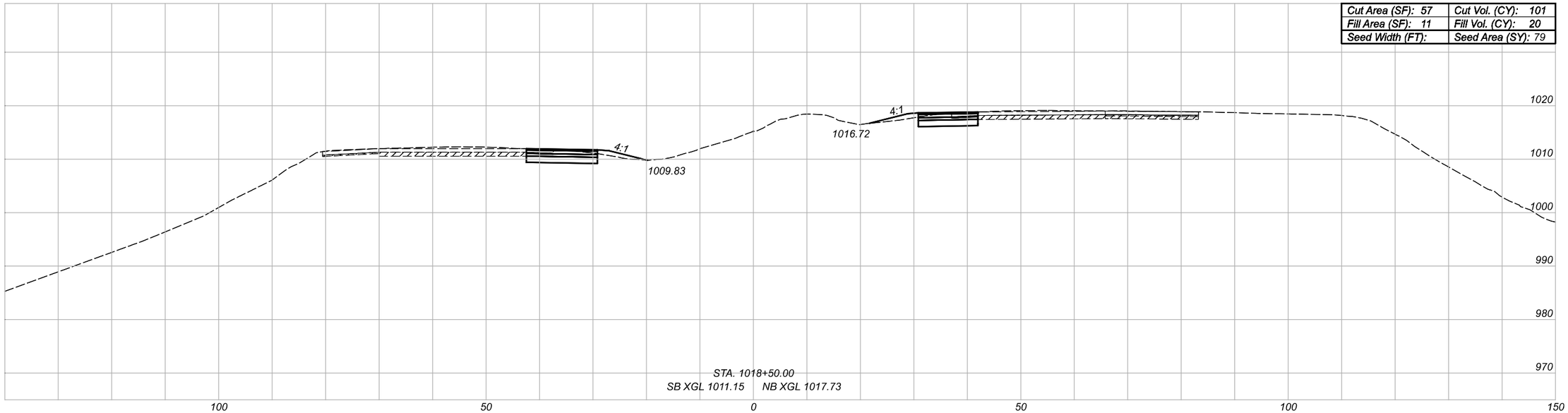

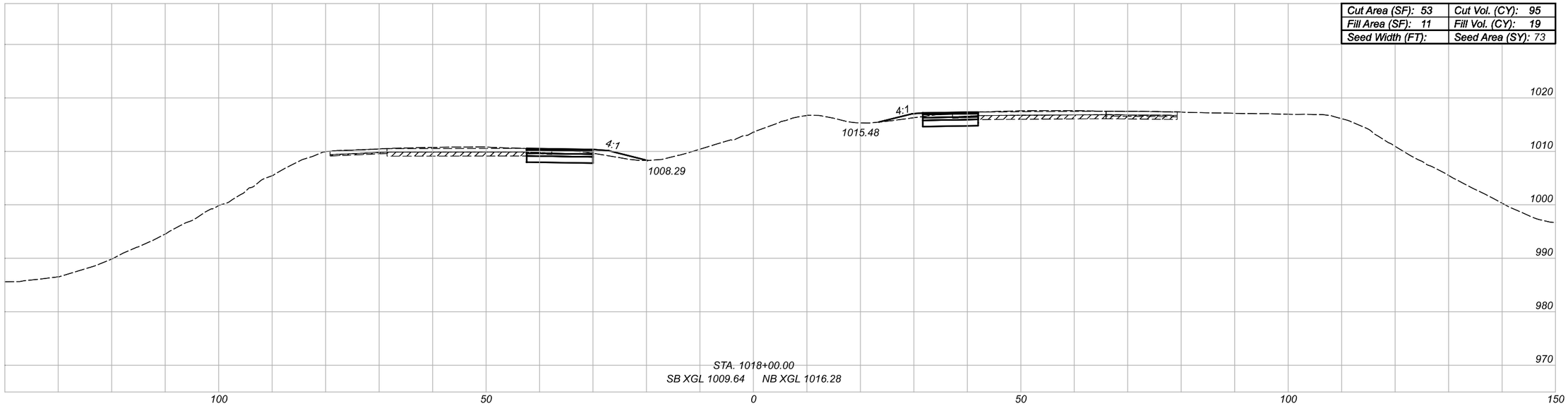

EX ASPHALT CONCRETE BASE

CROSS SECTIONS - IR-77
STA 1018+00.00 TO STA 1018+50.00

DESIGN AGENCY
Gannett Fleming
ENGINEERS AND ARCHITECTS, P.C.
2500 Corporate Exchange Drive
Suite 230
Columbus, OH 43231

DESIGNER JAS

REVIEWER DRJ 02/01/22

PROJECT ID 104983

SHEET 99 TOTAL 297

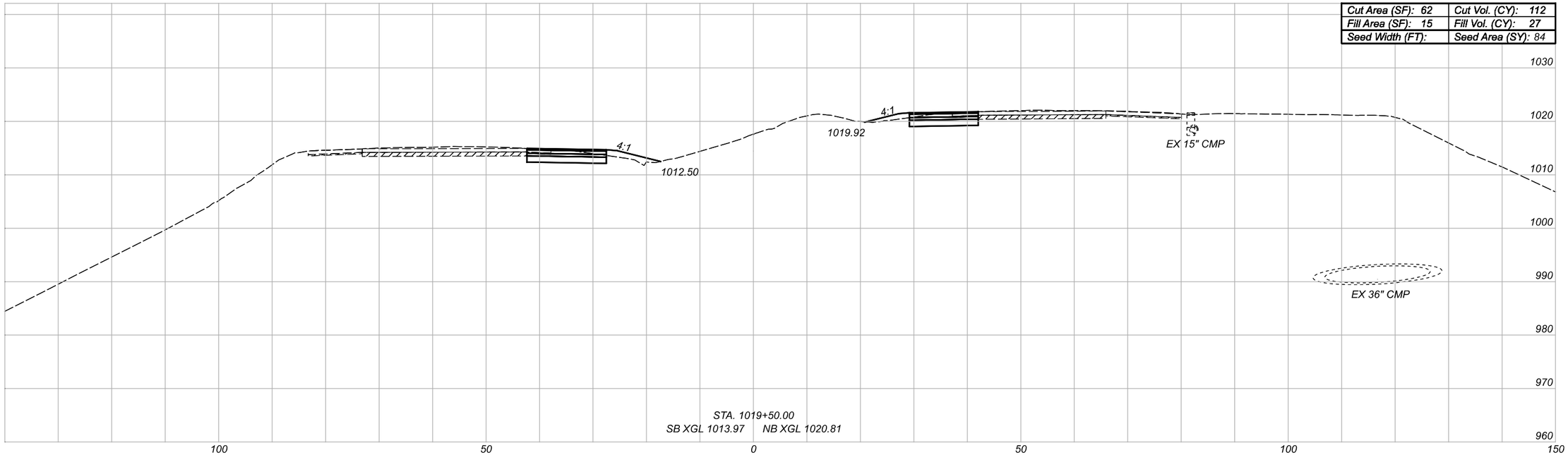

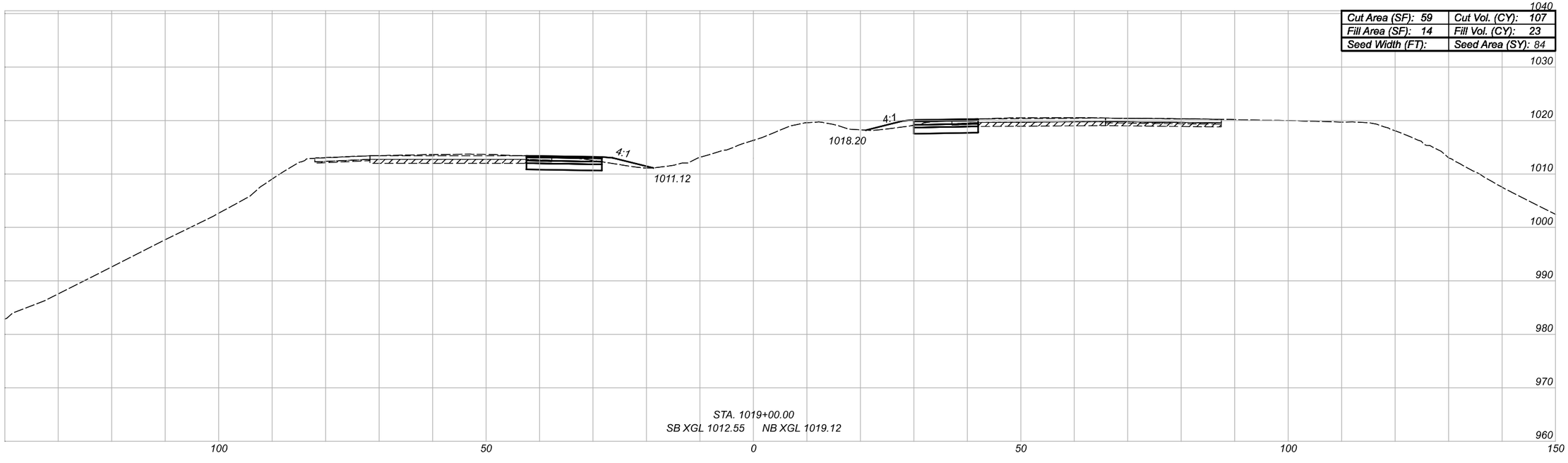

CROSS SECTIONS - IR-77
STA 1019+00.00 TO STA 1019+50.00

DESIGN AGENCY
Gannett Fleming
ENGINEERS AND ARCHITECTS, P.C.
2500 Corporate Exchange Drive
Suite 230
Columbus, OH 43231

DESIGNER
JAS

REVIEWER
DRJ 02/01/22

PROJECT ID
104983

SHEET 100 TOTAL 297

SUM-77-32.27

MODEL:I77-E-C-2 - 1019+00.00 [Sheet] PAPERSIZE:17x11(in) DATE:2/22/2022 TIME:8:22:10 PM USER:tdinh
pw:\\gfnet-pw.bentley.com:gfnet-pw-01\Documents\Projects\67490\104983\401-Engineering-GF\Roadway\Sheets\104983_XS104A.dgn

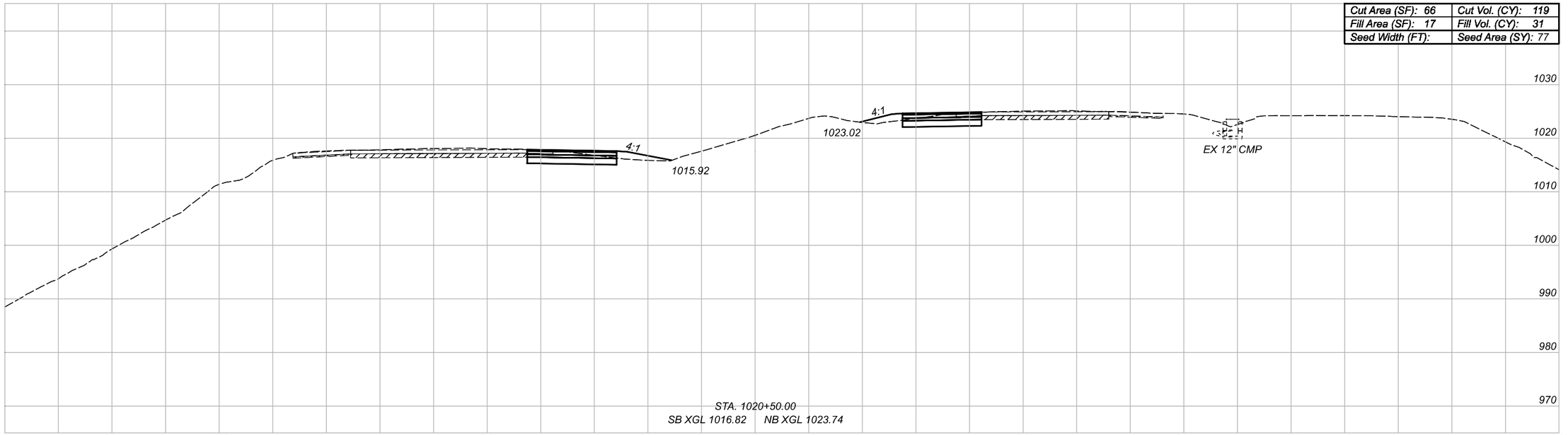

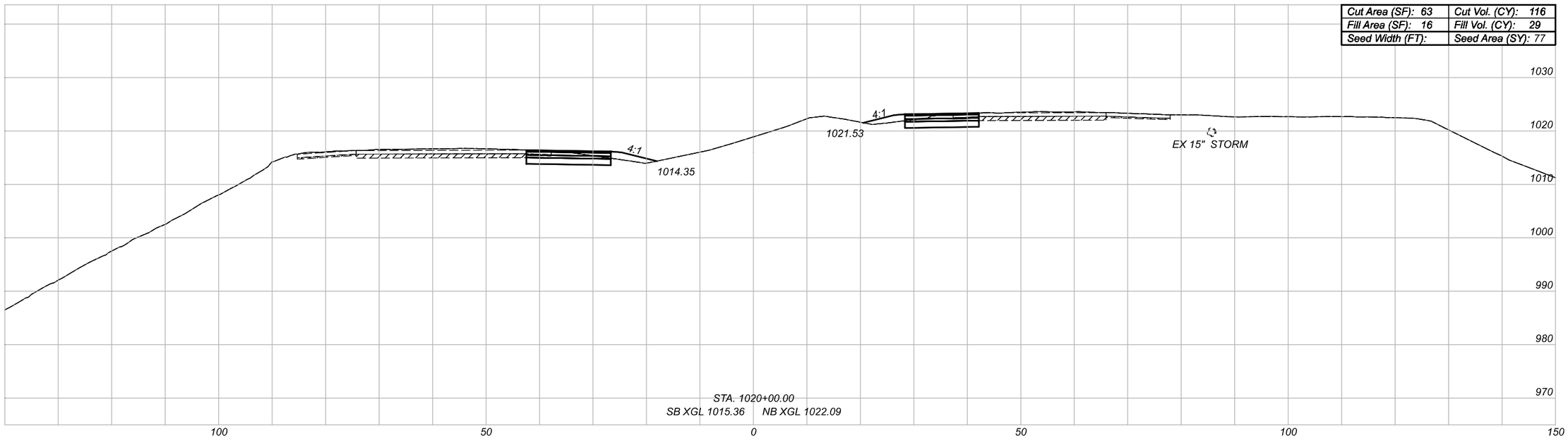

EX ASPHALT CONCRETE BASE

CROSS SECTIONS - IR-77
STA 1020+00.00 TO STA 1020+50.00

SUM-77-32.27

MODEL: I77-E-C-2 - 1020+00.00 [Sheet] PAPERSIZE: 17x11(in) DATE: 2/22/2022 TIME: 8:23:02 PM USER: tdinh
pw:\\gfnet-pw.bentley.com:gfnet-pw-01\Documents\Projects\67490\104983\401-Engineering-GF\Roadway\Sheets\104983_XS104A.dgn

DESIGN AGENCY
Gannett Fleming
ENGINEERS AND ARCHITECTS, P.C.
2500 Corporate Exchange Drive
Suite 230
Columbus, OH 43231

DESIGNER JAS

REVIEWER DRJ 02/01/22

PROJECT ID 104983

SHEET 101 TOTAL 297

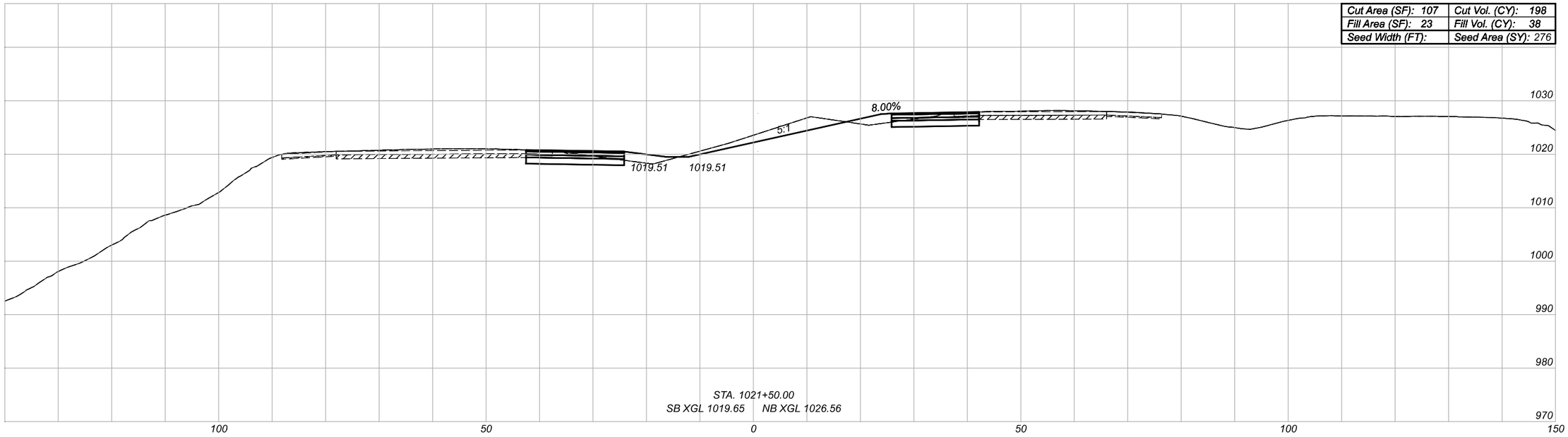

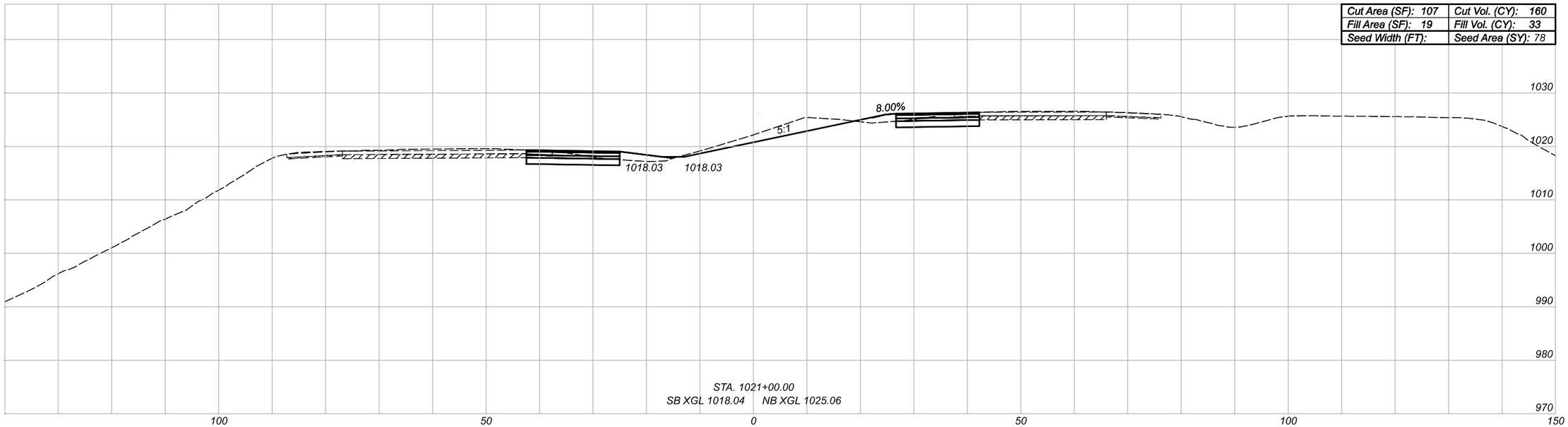

EX ASPHALT CONCRETE BASE

CROSS SECTIONS - IR-77
STA 1021+00.00 TO STA 1021+50.00

SUM-77-32.27

MODEL:I77-E-C-2 - 1021+00.00 [Sheet] PAPERSIZE:17x11(in.) DATE:2/22/2022 TIME:8:23:09 PM USER:tdinh
pw:\\gfnet-pw.bentley.com:gfnet-pw-01\Documents\Projects\67490\104983\401-Engineering-GF\Roadway\Sheets\104983_XS104A.dgn

DESIGN AGENCY
Gannett Fleming
ENGINEERS AND ARCHITECTS, P.C.
2500 Corporate Exchange Drive
Suite 230
Columbus, OH 43231

DESIGNER JAS

REVIEWER DRJ 02/01/22

PROJECT ID 104983

SHEET 102 TOTAL 297

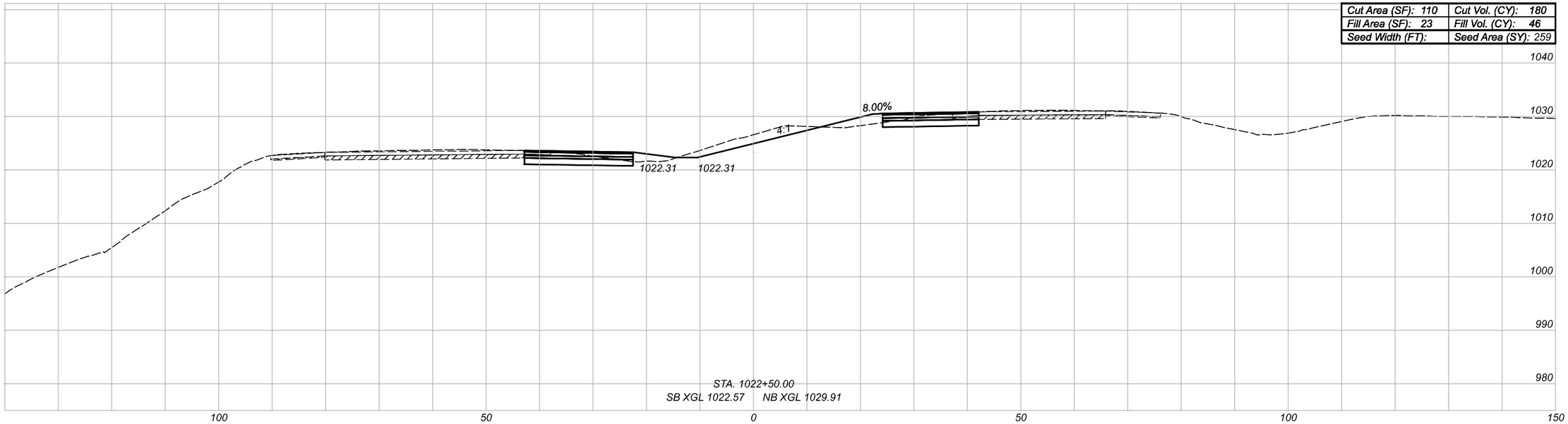

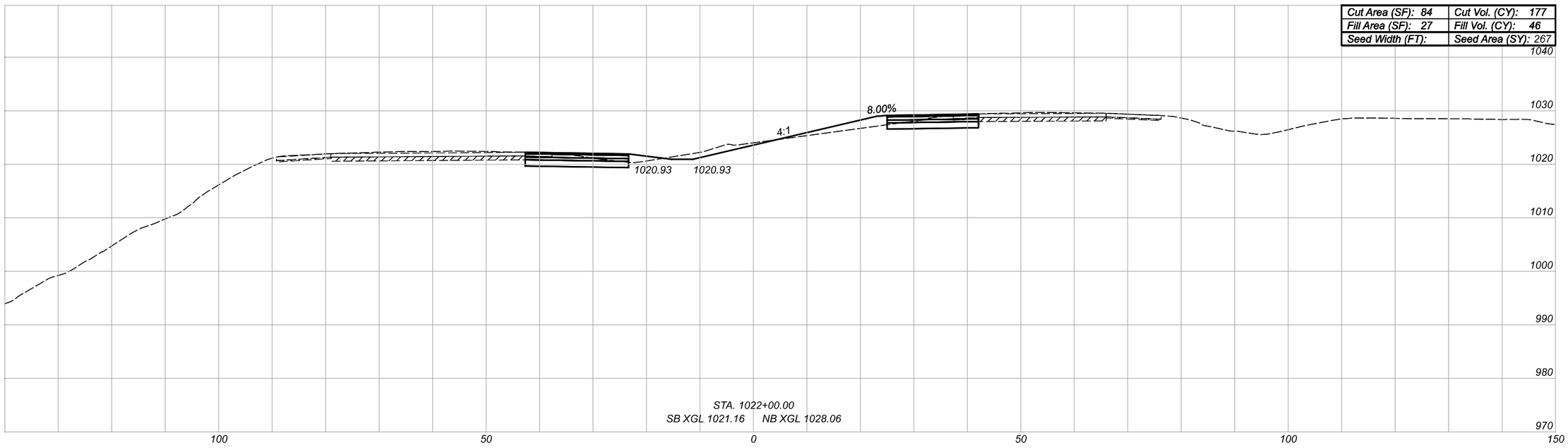

EX ASPHALT CONCRETE BASE

CROSS SECTIONS - IR-77
STA 1022+00.00 TO STA 1022+50.00

SUM-77-32.27

MODEL:I77-E-C-2 - I022+00.00 [Sheet] PAPERSIZE:17x11(in) DATE:2/22/2022 TIME:8:23:15 PM USER:tdinh
pw:\\gfnet-pw.bentley.com:gfnet-pw-01\Documents\Projects\67490\104983\401-Engineering-GF\Roadway\Sheets\104983_XS104A.dgn

DESIGN AGENCY
Gannett Fleming
ENGINEERS AND ARCHITECTS, P.C.
2500 Corporate Exchange Drive
Suite 230
Columbus, OH 43231

DESIGNER JAS

REVIEWER DRJ 02/01/22

PROJECT ID 104983

SHEET 103 TOTAL 297

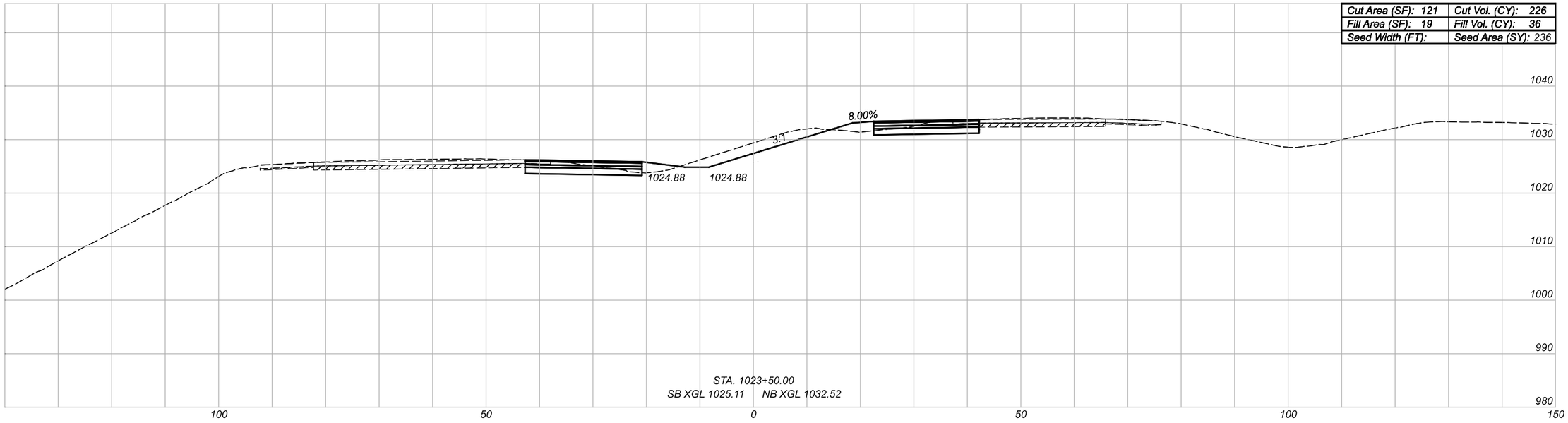

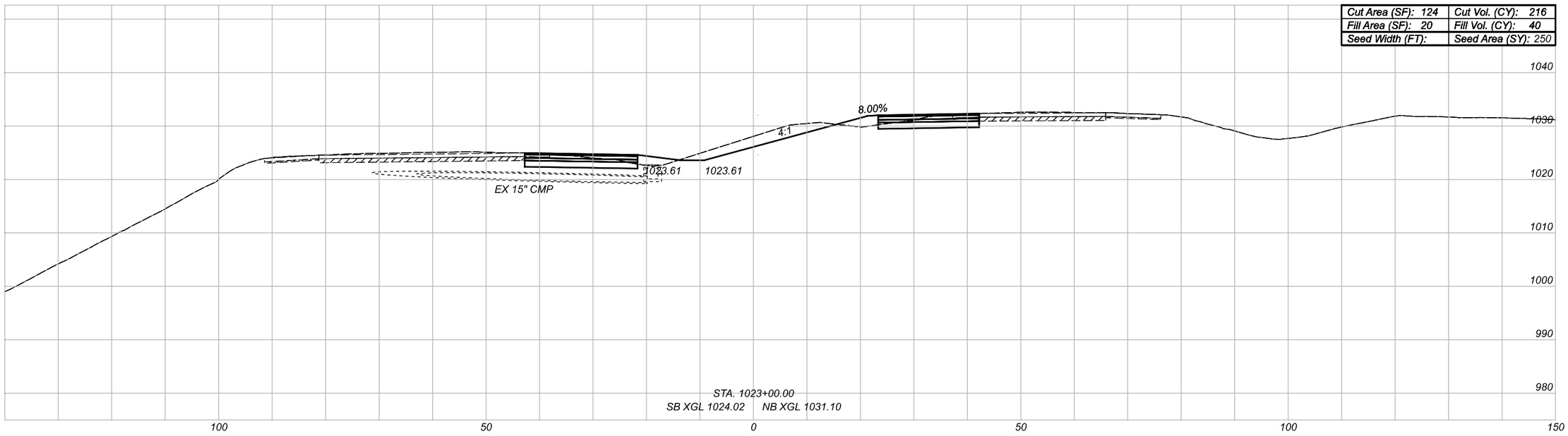

EX ASPHALT CONCRETE BASE

CROSS SECTIONS - IR-77
STA 1023+00.00 TO STA 1023+50.00

SUM-77-32.27

MODEL: I77-E-C-2 - 1023+00.00 [Sheet] PAPERSIZE: 17x11(in.) DATE: 2/22/2022 TIME: 8:23:21 PM USER: tdinh
pw:\\gfnet-pw.bentley.com:gfnet-pw-01\Documents\Projects\67490\104983\401-Engineering-GF\Roadway\Sheets\104983_XS104A.dgn

DESIGN AGENCY
Gannett Fleming
ENGINEERS AND ARCHITECTS, P.C.
2500 Corporate Exchange Drive
Suite 230
Columbus, OH 43231

DESIGNER	JAS
REVIEWER	DRJ 02/01/22
PROJECT ID	104983
SHEET	104
TOTAL	297

Cut Area (SF): 131	Cut Vol. (CY): 241
Fill Area (SF): 12	Fill Vol. (CY): 25
Seed Width (FT):	Seed Area (SY): 204

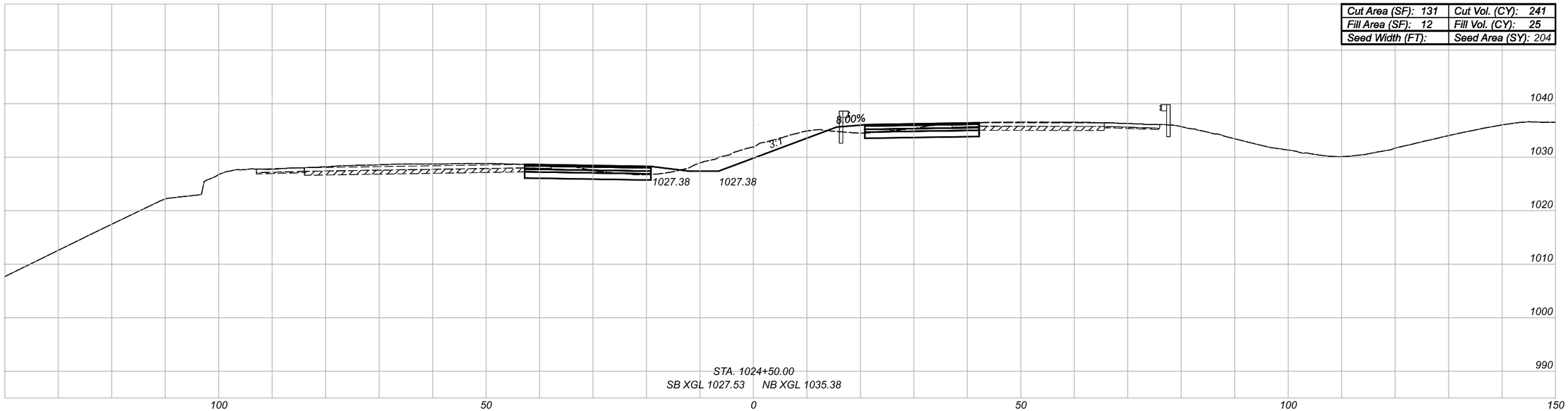

STA. 1024+50.00
SB XGL 1027.53 NB XGL 1035.38

Cut Area (SF): 130	Cut Vol. (CY): 232
Fill Area (SF): 15	Fill Vol. (CY): 32
Seed Width (FT):	Seed Area (SY): 216

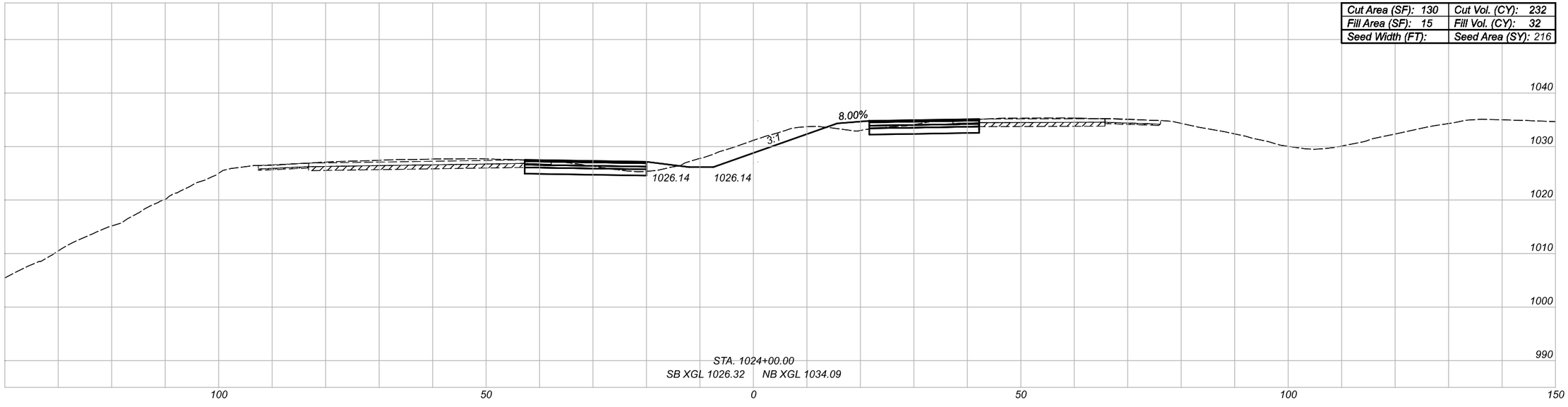

STA. 1024+00.00
SB XGL 1026.32 NB XGL 1034.09

EX ASPHALT CONCRETE BASE

CROSS SECTIONS - IR-77
STA 1024+00.00 TO STA 1024+50.00

DESIGN AGENCY
Gannett Fleming
ENGINEERS AND ARCHITECTS, P.C.
2500 Corporate Exchange Drive
Suite 230
Columbus, OH 43231

DESIGNER JAS

REVIEWER DRJ 02/01/22

PROJECT ID 104983

SHEET 105 TOTAL 297

SUM-77-32.27

MODEL:I77-E-C-2 - 1024+00.00 [Sheet] PAPERSIZE:ITxII(In.) DATE:2/22/2022 TIME:8:23:26 PM USER:tdinh
pw:\\gfnet-pw.bentley.com:gfnet-pw-01\Documents\Projects\67490\104983\40i-Engineering-GF\Roadway\Sheets\104983_XS04A.dgn

Cut Area (SF): 118	Cut Vol. (CY): 230
Fill Area (SF): 19	Fill Vol. (CY): 36
Seed Width (FT):	Seed Area (SY): 196

SB BRIDGE OMISSION
STA. 1025+25.78 TO 1028+95.00

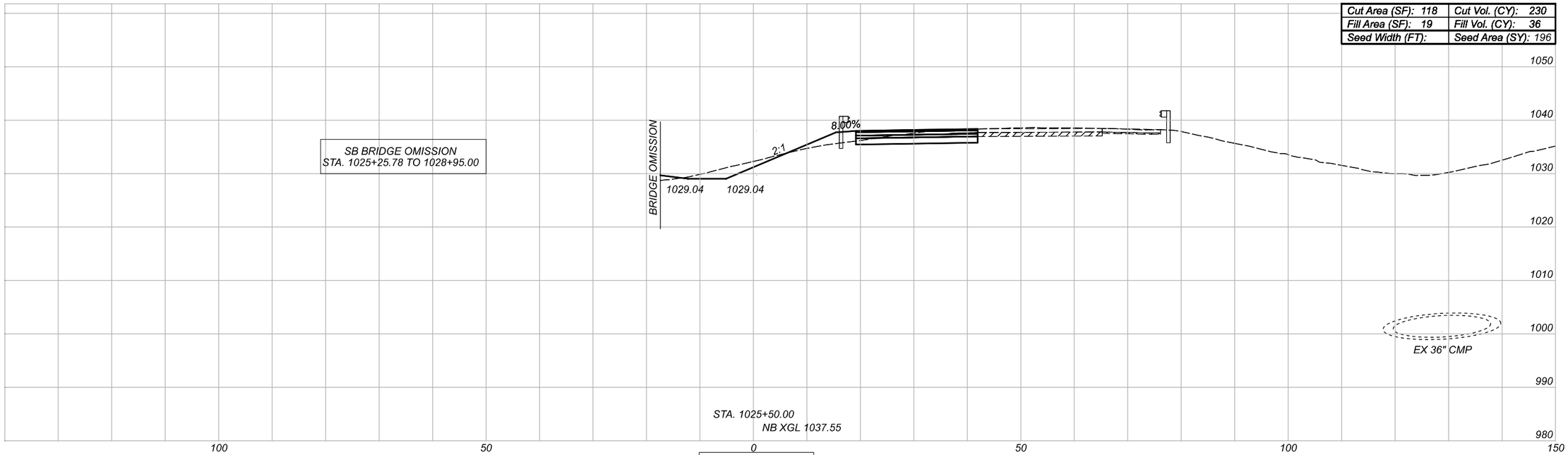

STA. 1025+50.00
NB XGL 1037.55

BEGIN PROJECT
STA. 1025+18.00

Cut Area (SF): 131	Cut Vol. (CY): 242
Fill Area (SF): 20	Fill Vol. (CY): 30
Seed Width (FT):	Seed Area (SY): 200

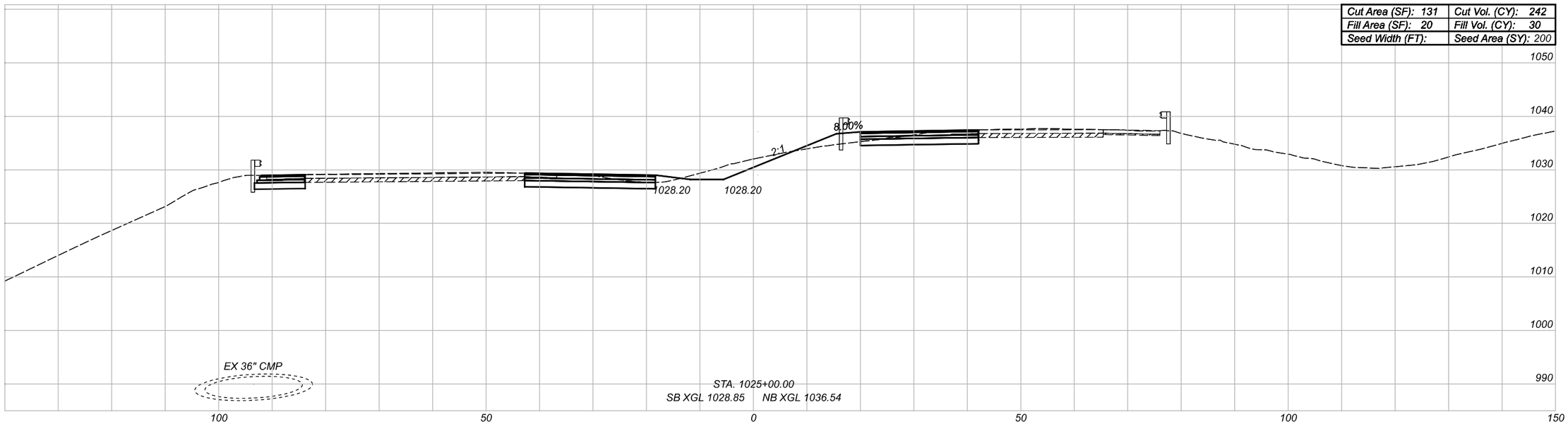

STA. 1025+00.00
SB XGL 1028.85 NB XGL 1036.54

EX ASPHALT CONCRETE BASE

CROSS SECTIONS - IR-77
STA 1025+00.00 TO STA 1025+50.00

SUM-77-32.27

MODEL: I77-E-C-2 - 1025+00.00 (Sheet) PAPERSIZE: 17x11(in.) DATE: 2/22/2022 TIME: 8:23:32 PM USER: tdinh
pw:\\gfnet-pw.bentley.com:gfnet-pw-01\Documents\Projects\67490\104983\40i-Engineering-GF\Roadway\Sheets\104983_XS104A.dgn

DESIGN AGENCY
Gannett Fleming
ENGINEERS AND ARCHITECTS, P.C.
2500 Corporate Exchange Drive
Suite 220
Columbus, OH 43231

DESIGNER JAS

REVIEWER DRJ 02/01/22

PROJECT ID 104983

SHEET 106 TOTAL 297

NB BRIDGE OMISSION
STA. 1026+47.45 TO 1029+72.25

Cut Area (SF): 64	Cut Vol. (CY): 169
Fill Area (SF): 0	Fill Vol. (CY): 17
Seed Width (FT):	Seed Area (SY): 195

SB BRIDGE OMISSION
STA. 1025+25.78 TO 1028+95.00

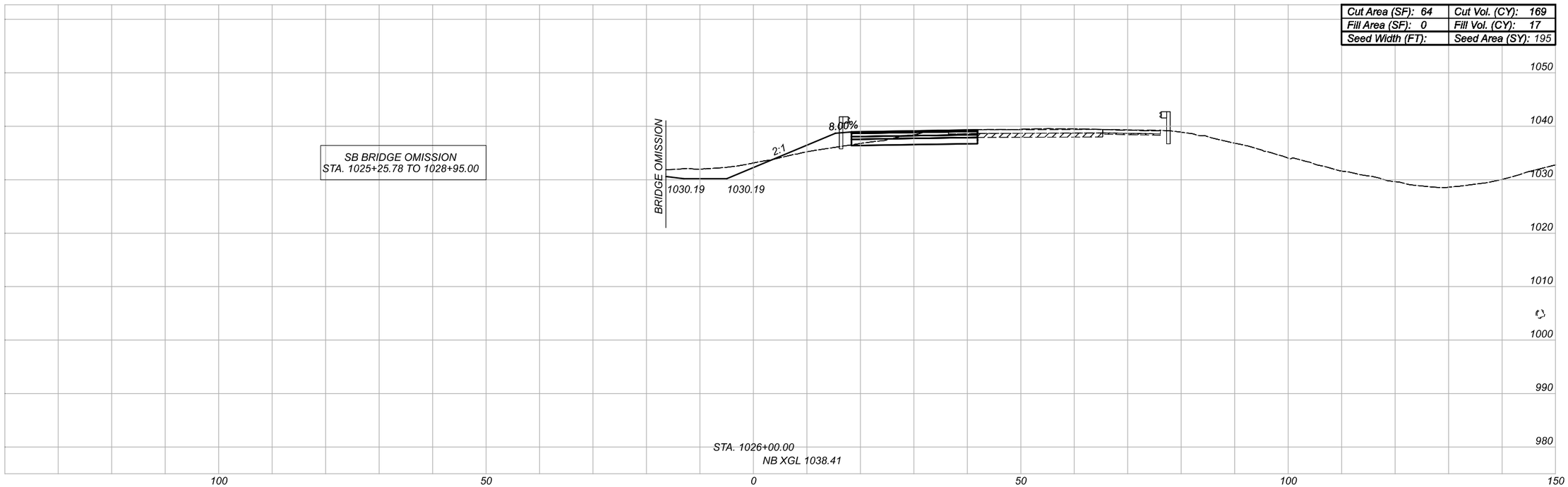

EX ASPHALT CONCRETE BASE

CROSS SECTIONS - IR-77
STA 1026+00.00 TO STA 1026+50.00

DESIGN AGENCY
Gannett Fleming
ENGINEERS AND ARCHITECTS, P.C.
2500 Corporate Exchange Drive
Suite 230
Columbus, OH 43231

DESIGNER JAS
REVIEWER DRJ 02/01/22
PROJECT ID 104983
SHEET 107 TOTAL 297

SUM-77-32.27

MODEL:I77-E-C-2 - 1026+00.00 [Sheet] PAPERSIZE:17x11(in.) DATE:2/22/2022 TIME:8:23:38 PM USER:tdinh
pw:\\gfnet-pw.bentley.com:gfnet-pw-01\Documents\Projects\67490\104983\401-Engineering-GF\Roadway\Sheets\104983_XS104A.dgn

Cut Area (SF): 238	Cut Vol. (CY): 196
Fill Area (SF): 37	Fill Vol. (CY): 55
Seed Width (FT):	Seed Area (SY): 14

Note: Earthwork based on 25' interval.

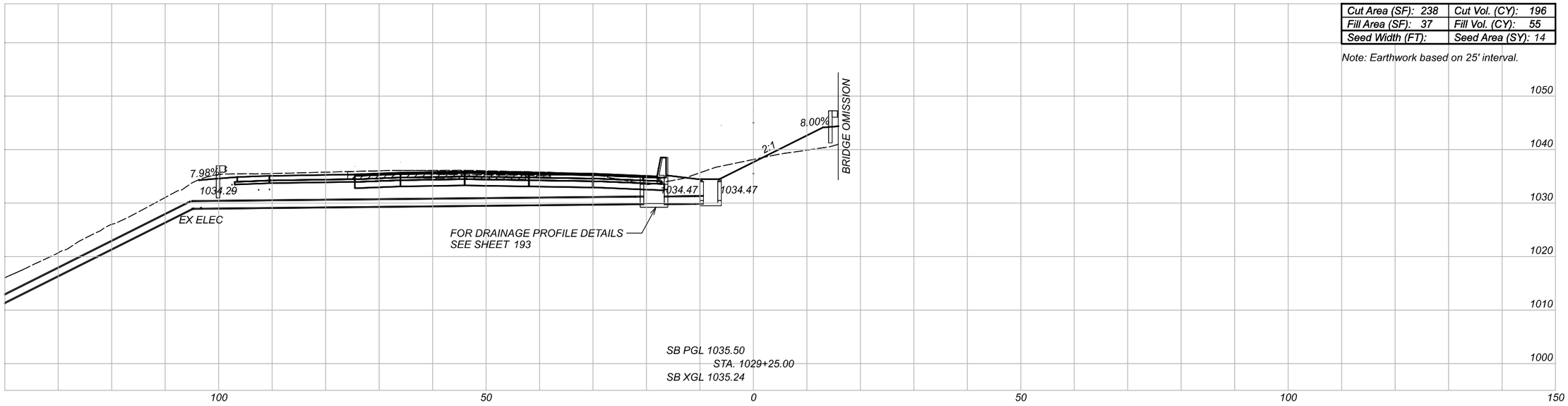

Cut Area (SF): 185	Cut Vol. (CY): 0
Fill Area (SF): 81	Fill Vol. (CY): 0
Seed Width (FT):	Seed Area (SY): 13

Note: Earthwork based on 25' interval.

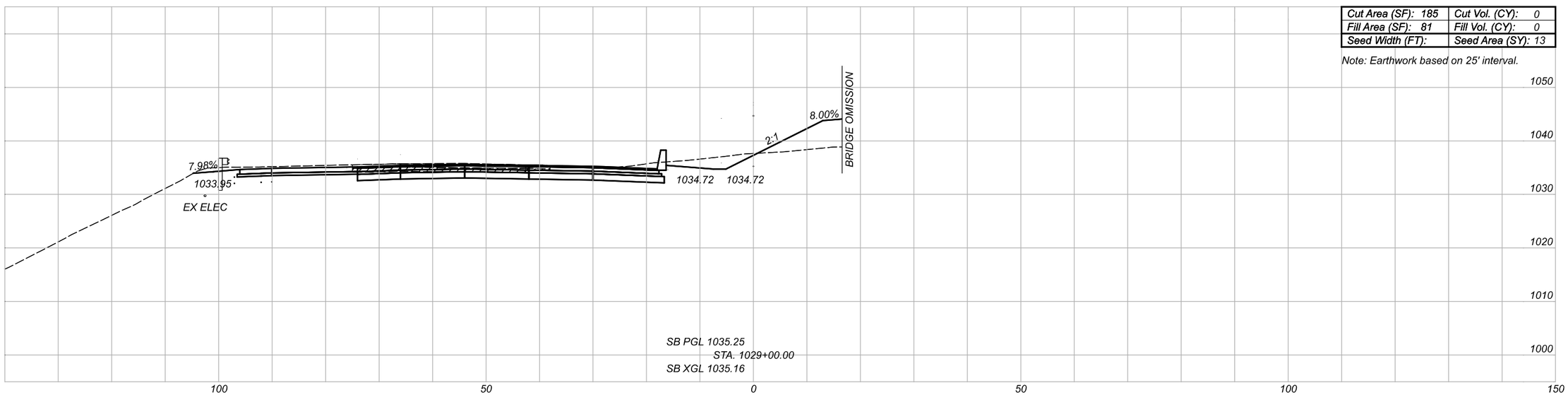

EX ASPHALT CONCRETE BASE

CROSS SECTIONS - IR-77
STA 1029+25.00 TO STA 1029+00.00

SUM-77-32.27

MODEL: I77-E-C-2 - 1029+00.00 (Sheet) PAPERSIZE: 17x11(in.) DATE: 2/22/2022 TIME: 8:23:42 PM USER: tdinh
pw:\\gfnet-pw.bentley.com:gfnet-pw-01\Documents\Projects\67490\104983\401-Engineering-GF\Roadway\Sheets\104983_XS104A.dgn

DESIGN AGENCY
Gannett Fleming
ENGINEERS AND ARCHITECTS, P.C.
2500 Corporate Exchange Drive
Suite 200
Columbus, OH 43231

DESIGNER: JAS

REVIEWER: DRJ 02/01/22

PROJECT ID: 104983

SHEET: 108 TOTAL: 297

Cut Area (SF): 293	Cut Vol. (CY): 552
Fill Area (SF): 53	Fill Vol. (CY): 82
Seed Width (FT):	Seed Area (SY): 202

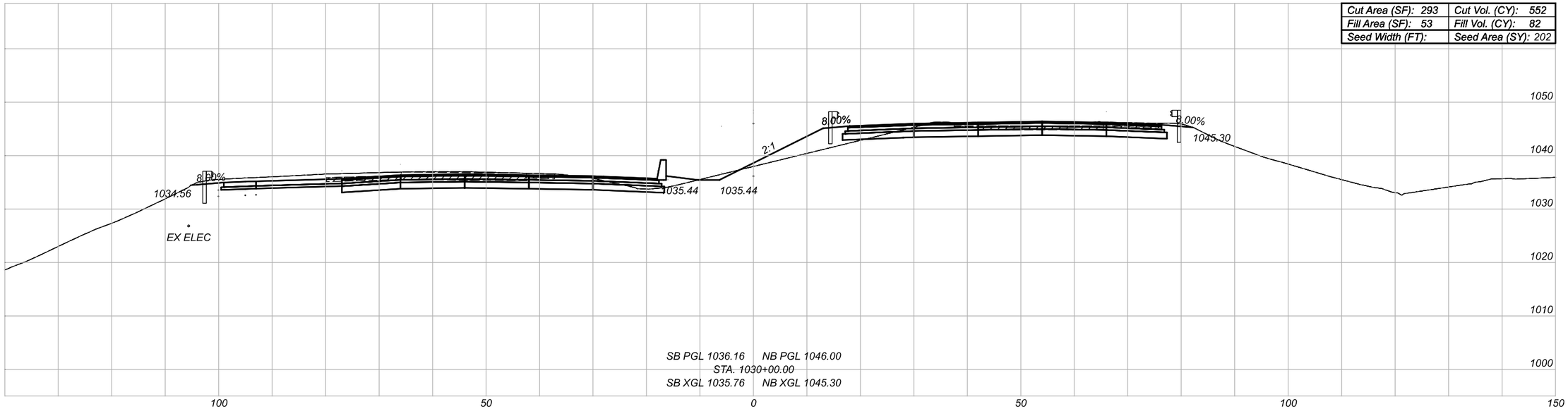

Cut Area (SF): 304	Cut Vol. (CY): 251
Fill Area (SF): 36	Fill Vol. (CY): 34
Seed Width (FT):	Seed Area (SY): 14

Note: Earthwork based on 25' interval.

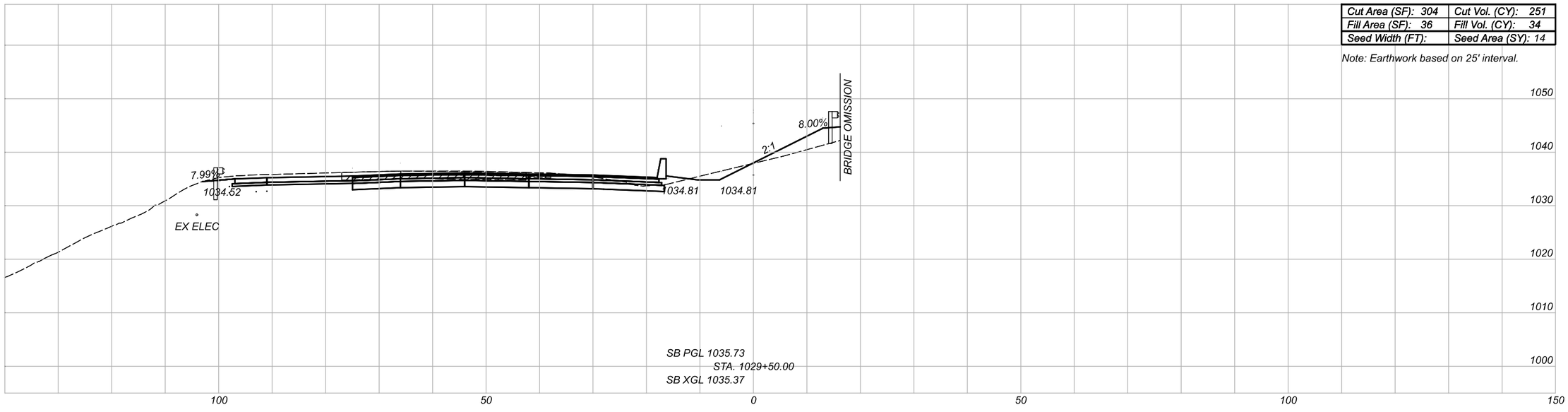

EX ASPHALT CONCRETE BASE

CROSS SECTIONS - IR-77
STA 1029+50.00 TO STA 1030+00.00

DESIGN AGENCY
Gannett Fleming
ENGINEERS AND ARCHITECTS, P.C.
2500 Corporate Exchange Drive
Suite 230
Columbus, OH 43231

DESIGNER: JAS

REVIEWER: DRJ 02/01/22

PROJECT ID: 104983

SHEET: 109 TOTAL: 297

SUM-77-32.27

MODEL: I77-E-C-2 - 1029+50.00 [Sheet] PAPERSIZE: 17x11(in.) DATE: 2/22/2022 TIME: 8:23:48 PM USER: tdinh
pw:\\gfnet-pw.bentley.com:gfnet-pw-01\Documents\Projects\67490\104983\40I-Engineering-GF\Roadway\Sheets\104983_XSI04A.dgn

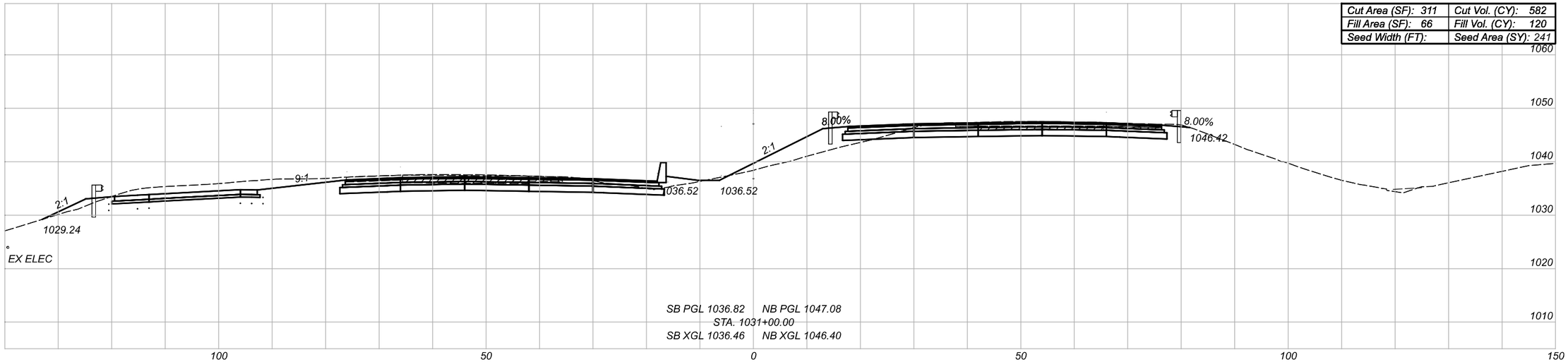

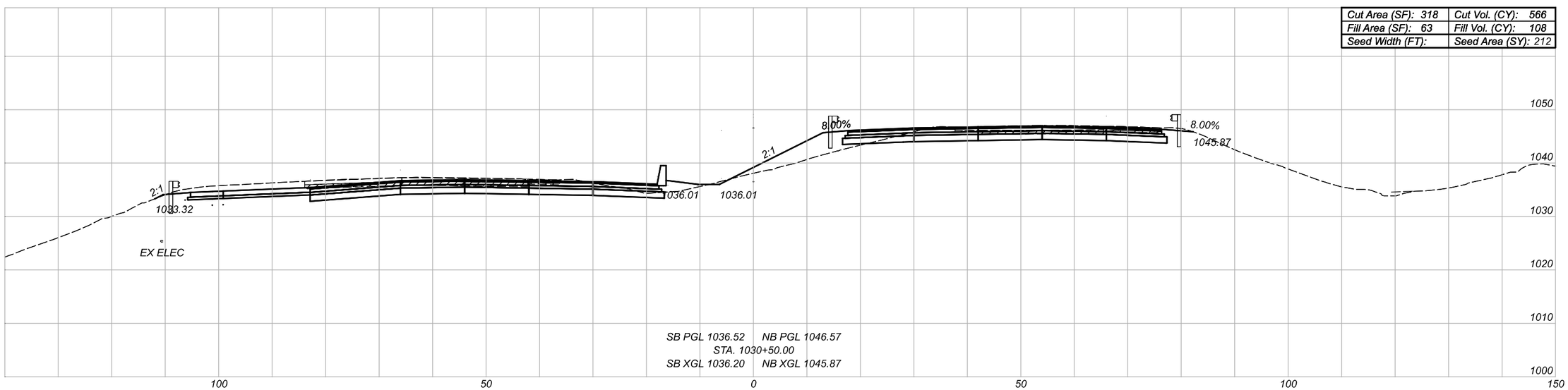

EX ASPHALT CONCRETE BASE

CROSS SECTIONS - IR-77
STA 1030+50.00 TO STA 1031+00.00

SUM-77-32.27

MODEL:I77-E-C-2 - 1030+50.00 [Sheet] PAPERSIZE:17x11(in) DATE:2/22/2022 TIME:8:23:53 PM USER:tdinh
pw:\\gfnet-pw.bentley.com:gfnet-pw-01\Documents\Projects\67490\104983\401-Engineering-GF\Roadway\Sheets\104983_XS104A.dgn

DESIGN AGENCY
Gannett Fleming
ENGINEERS AND ARCHITECTS, P.C.
2590 Corporate Exchange Drive
Suite 230
Columbus, OH 43231

DESIGNER JAS

REVIEWER DRJ 02/01/22

PROJECT ID 104983

SHEET 110 TOTAL 297

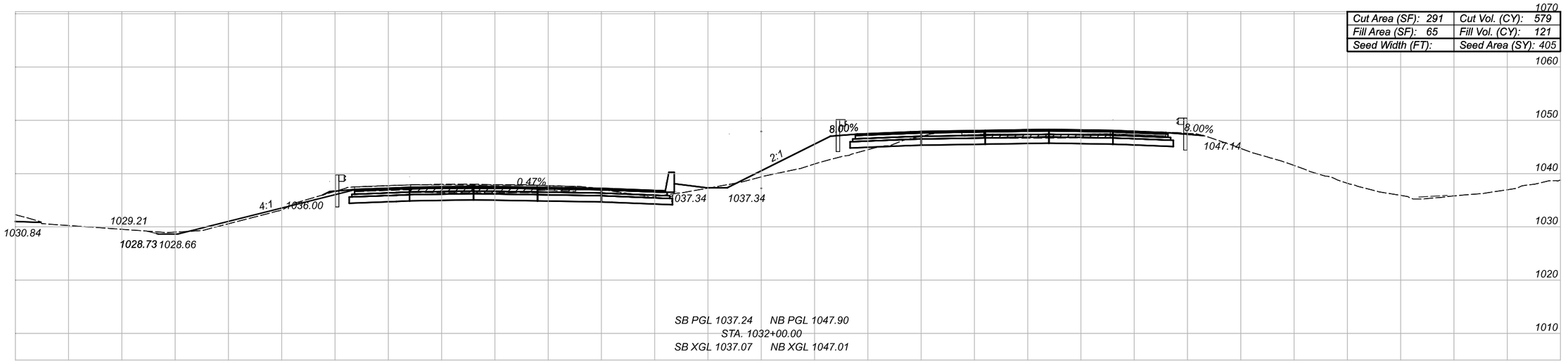

Cut Area (SF): 291	Cut Vol. (CY): 579
Fill Area (SF): 65	Fill Vol. (CY): 121
Seed Width (FT):	Seed Area (SY): 405

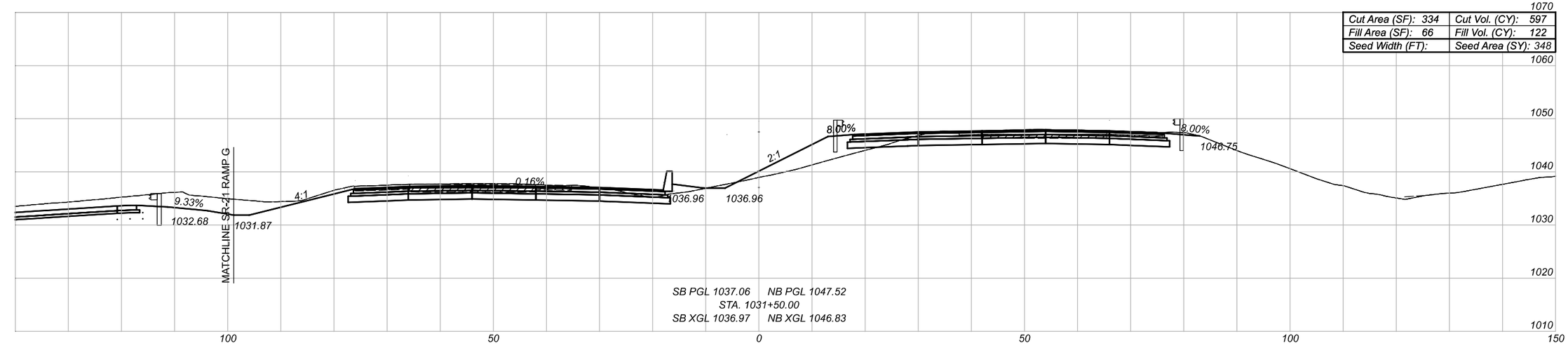

Cut Area (SF): 334	Cut Vol. (CY): 597
Fill Area (SF): 66	Fill Vol. (CY): 122
Seed Width (FT):	Seed Area (SY): 348

EX ASPHALT CONCRETE BASE

CROSS SECTIONS - IR-77
STA 1031+50.00 TO STA 1032+00.00

SUM-77-32.27

MODEL: I77-E-C-2 - 1031+50.00 [Sheet] PAPERSIZE: 17x11(in.) DATE: 2/22/2022 TIME: 8:23:59 PM USER: tdinh
pw:\\gfnet-pw.bentley.com:gfnet-pw-01\Documents\Projects\67490\104983\401-Engineering-GF\Roadway\Sheets\104983_XS104A.dgn

DESIGN AGENCY
Gannett Fleming
ENGINEERS AND ARCHITECTS, P.C.
2500 Corporate Exchange Drive
Suite 230
Columbus, OH 43231

DESIGNER JAS
REVIEWER DRJ 02/01/22
PROJECT ID 104983
SHEET 111 TOTAL 297

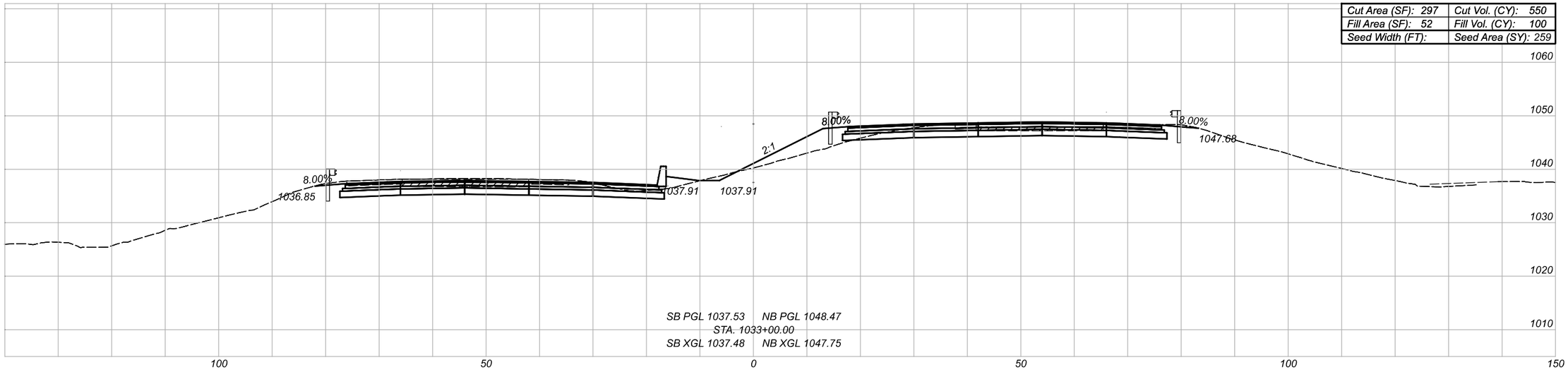

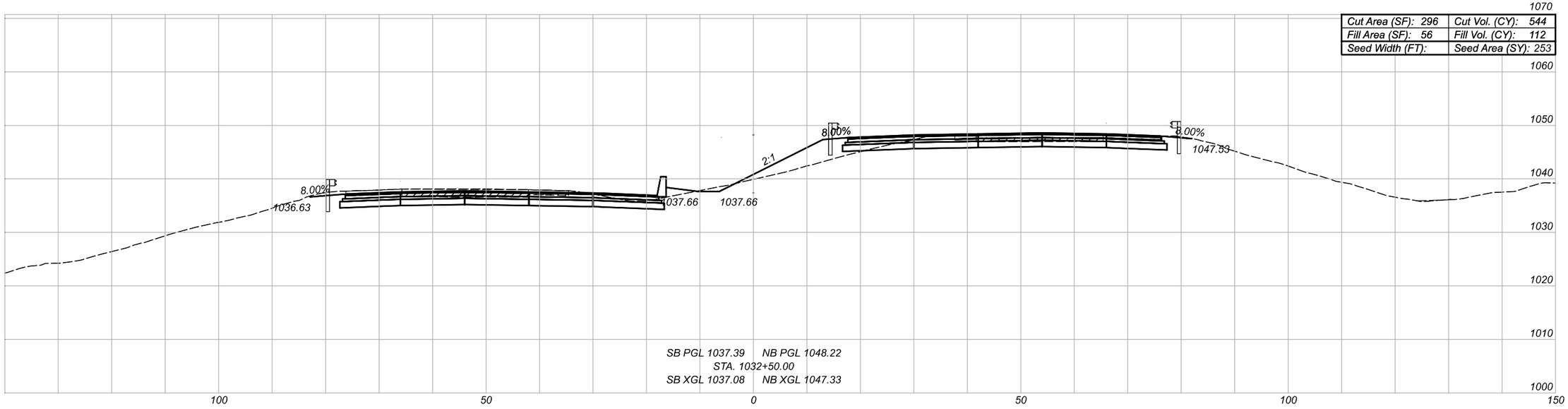

EX ASPHALT CONCRETE BASE

CROSS SECTIONS - IR-77
STA 1032+50.00 TO STA 1033+00.00

SUM-77-32.27

MODEL: I77-E-C-2 - 1032+50.00 [Sheet] PAPERSIZE: 17x11(in) DATE: 2/22/2022 TIME: 8:24:05 PM USER: tdinh
pw:\\gfnet-pw.bentley.com:gfnet-pw-01\Documents\Projects\67490\104983\40i-Engineering-GF\Roadway\Sheets\104983_XS104A.dgn

DESIGN AGENCY
Gannett Fleming
ENGINEERS AND ARCHITECTS, P.C.
2500 Corporate Exchange Drive
Suite 230
Columbus, OH 43231

DESIGNER JAS

REVIEWER DRJ 02/01/22

PROJECT ID 104983

SHEET 112 TOTAL 297

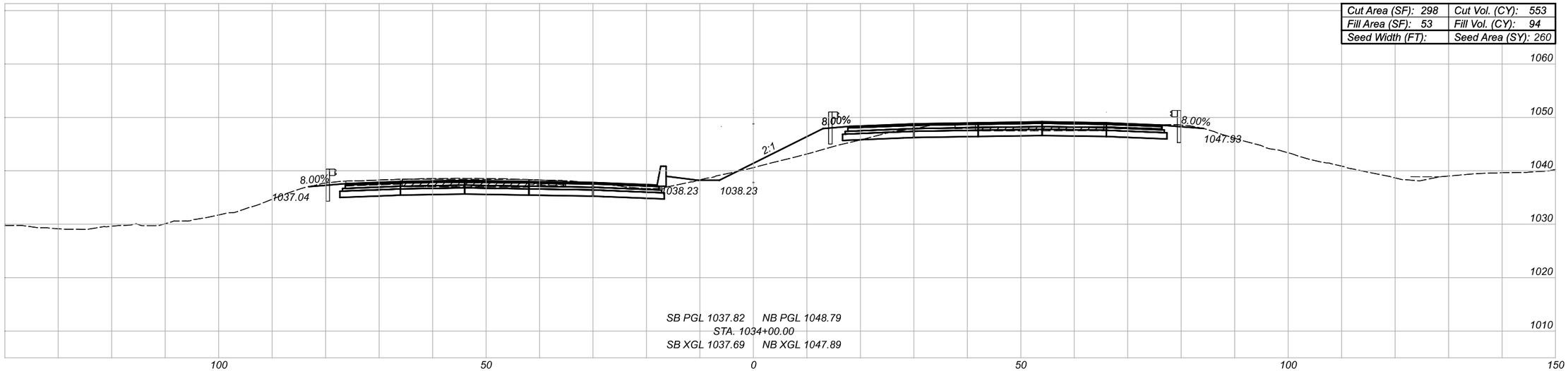

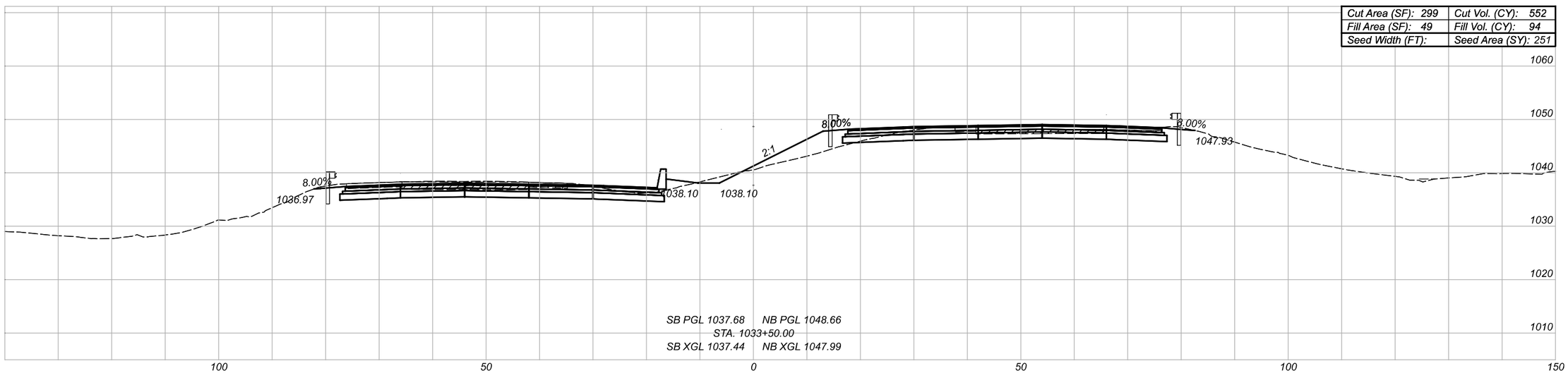

EX ASPHALT CONCRETE BASE

CROSS SECTIONS - IR-77
STA 1033+50.00 TO STA 1034+00.00

SUM-77-32.27

MODEL:I77-E-C-2 - 1033+50.00 [Sheet] PAPERSIZE:17x11(in.) DATE:2/22/2022 TIME:8:24:11PM USER:tdinh
pw:\\gfnet-pw.bentley.comsgfnet-pw-01\Documents\Projects\67490\104983\401-Engineering-GF\Roadway\Sheets\104983_XS104A.dgn

DESIGN AGENCY
Gannett Fleming
ENGINEERS AND ARCHITECTS, P.C.
2500 Corporate Exchange Drive
Suite 230
Columbus, OH 43231

DESIGNER	JAS
REVIEWER	DRJ 02/01/22
PROJECT ID	104983
SHEET	113
TOTAL	297

Cut Area (SF): 315	Cut Vol. (CY): 573
Fill Area (SF): 38	Fill Vol. (CY): 75
Seed Width (FT):	Seed Area (SY): 268

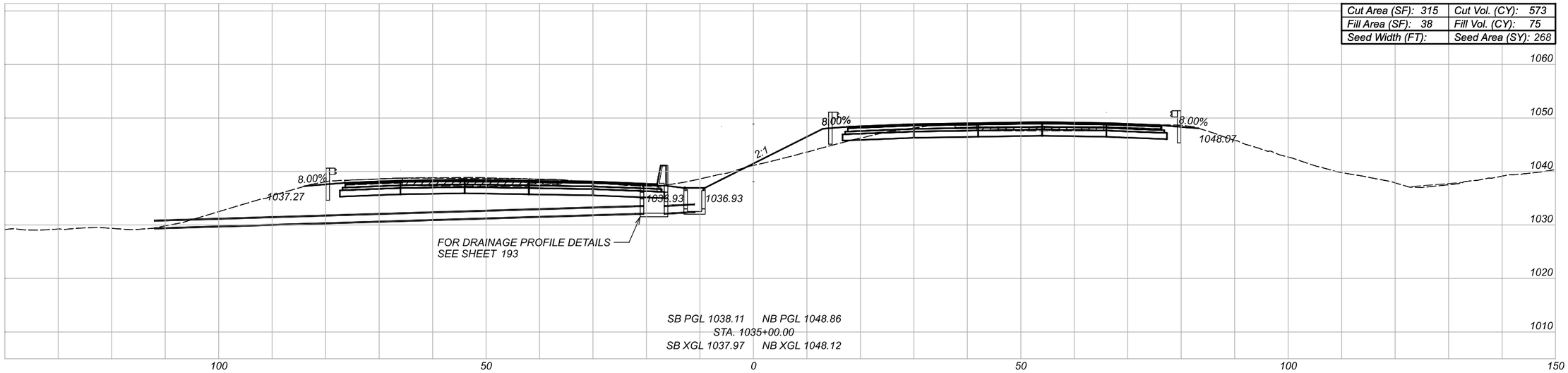

Cut Area (SF): 304	Cut Vol. (CY): 557
Fill Area (SF): 42	Fill Vol. (CY): 88
Seed Width (FT):	Seed Area (SY): 266

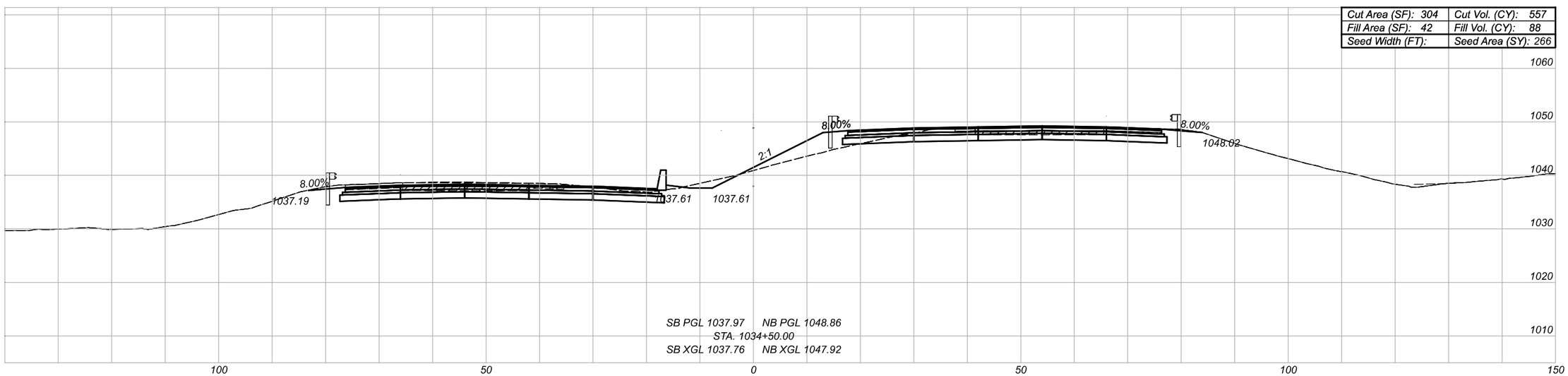

EX ASPHALT CONCRETE BASE

CROSS SECTIONS - IR-77
STA 1034+50.00 TO STA 1035+00.00

SUM-77-32.27

MODEL: I77-E-C-2 - 1034+50.00 [Sheet] PAPERSIZE: 11x17in) DATE: 2/22/2022 TIME: 8:24:16 PM USER: tdinh
pw:\\gfnet-pw.bentley.com:gfnet-pw-01\Documents\Projects\67490\104983\401-Engineering-GF\Roadway\Sheets\104983_XS104A.dgn

DESIGN AGENCY
Gannett Fleming
ENGINEERS AND ARCHITECTS, P.C.
2590 Corporate Exchange Drive
Suite 230
Columbus, OH 43231

DESIGNER: JAS
REVIEWER: DRJ 02/01/22
PROJECT ID: 104983
SHEET: 114 TOTAL: 297

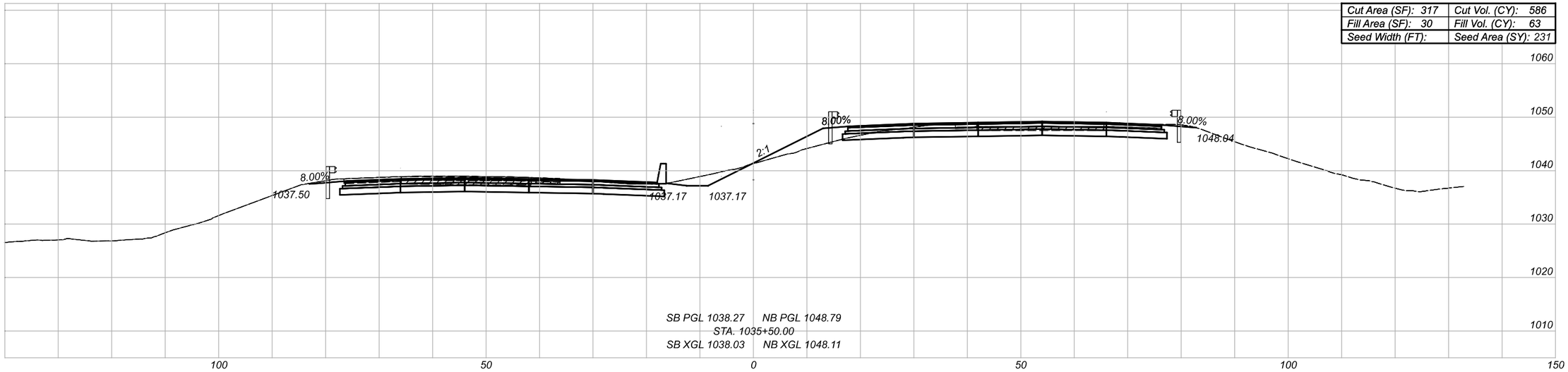

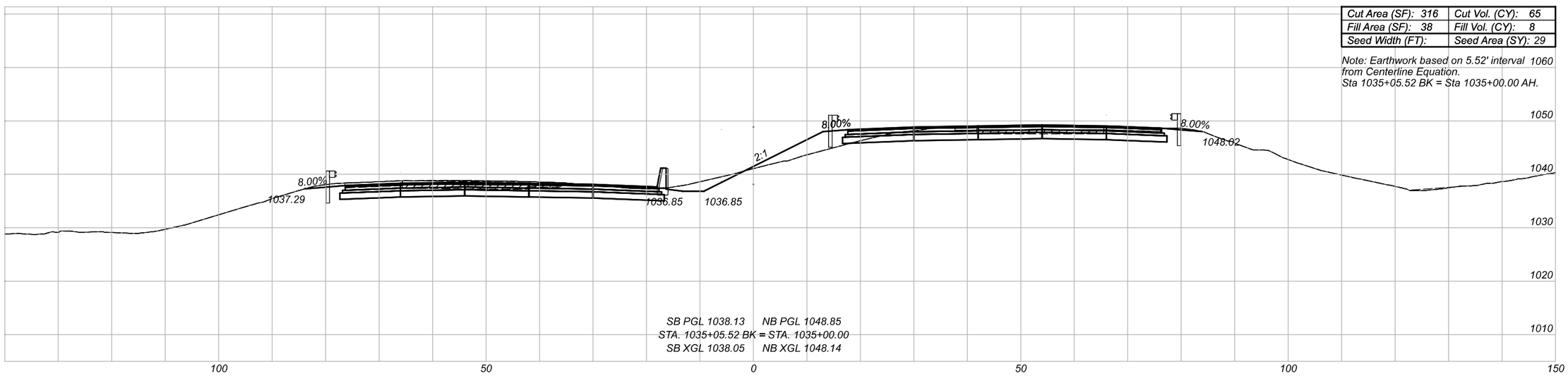

EX ASPHALT CONCRETE BASE

CROSS SECTIONS - IR-77
STA A 1035+00.00 TO STA 1035+50.00

SUM-77-32.27

MODEL: I77-E-C-2 - A 1035+00.00 [Sheet] PAPERSIZE:17x11in) DATE: 2/22/2022 TIME: 8:24:22 PM USER: tdinh
pw:\\gfnet-pw.bentley.com:gfnet-pw-01\Documents\Projects\67490\104983\40-Engineering-GF\Roadway\Sheets\104983_XS104A.dgn

DESIGN AGENCY
Gannett Fleming
ENGINEERS AND ARCHITECTS, P.C.
2500 Corporate Exchange Drive
Suite 230
Columbus, OH 43231

DESIGNER JAS
REVIEWER DRJ 02/01/22
PROJECT ID 104983
SHEET 115 TOTAL 297

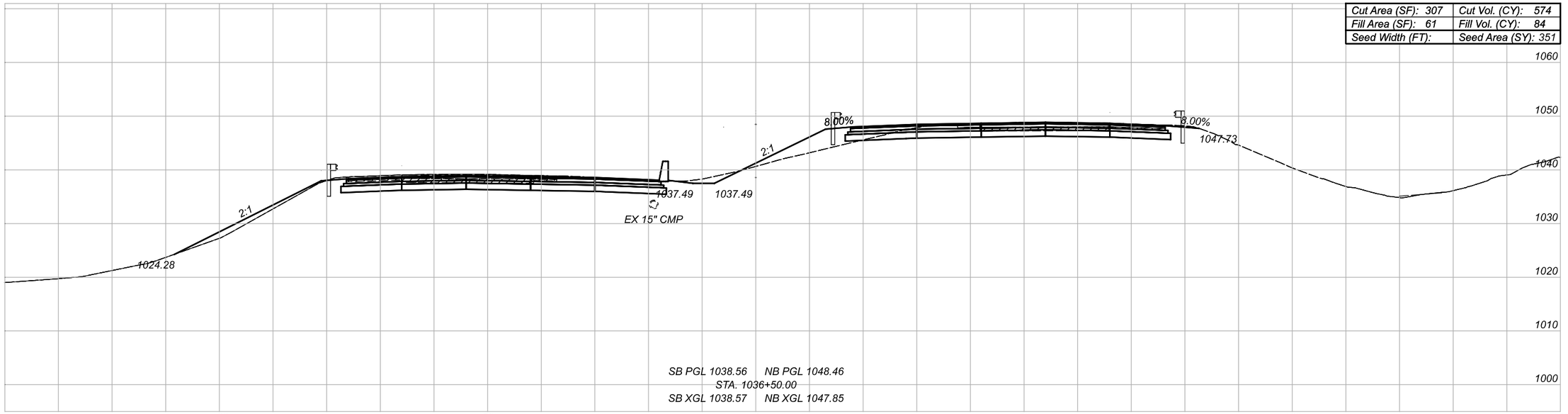

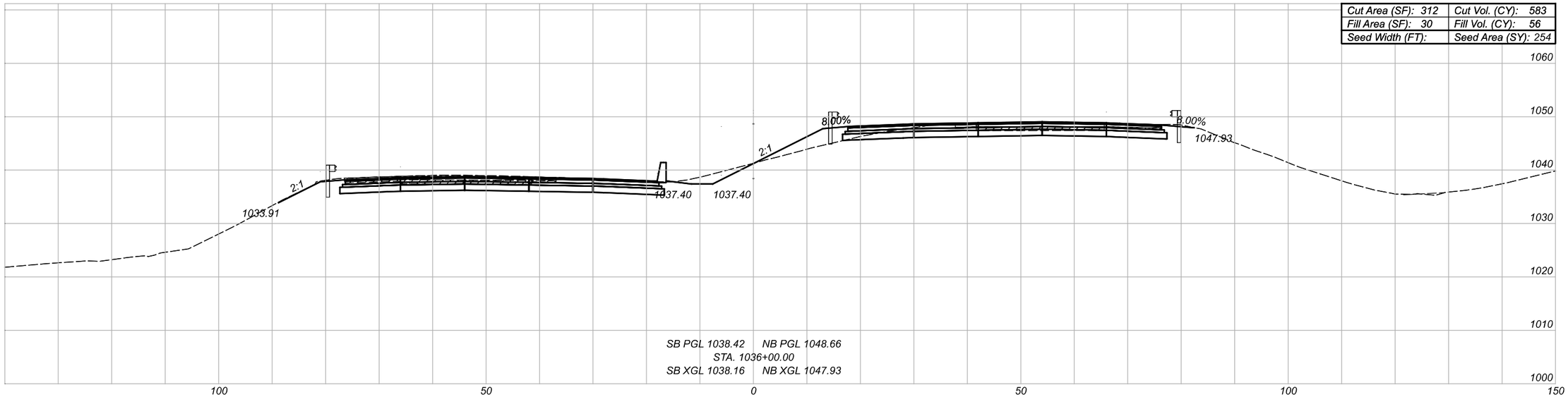

EX ASPHALT CONCRETE BASE

CROSS SECTIONS - IR-77
STA 1036+00.00 TO STA 1036+50.00

SUM-77-32.27

MODEL: I77-E-C-2 - A 1036+00.00 [Sheet] PAPERSIZE: 17x11(in) DATE: 2/22/2022 TIME: 8:24:27 PM USER: tdhh
pw:\\gfnet-pw.bentley.com:gfnet-pw-01\Documents\Projects\67490\104983\401-Engineering-GF\Roadway\Sheets\104983_XS104A.dgn

DESIGN AGENCY
Gannett Fleming
ENGINEERS AND ARCHITECTS, P.C.
2500 Corporate Exchange Drive
Suite 230
Columbus, OH 43231

DESIGNER JAS
REVIEWER DRJ 02/01/22
PROJECT ID 104983
SHEET 116 TOTAL 297

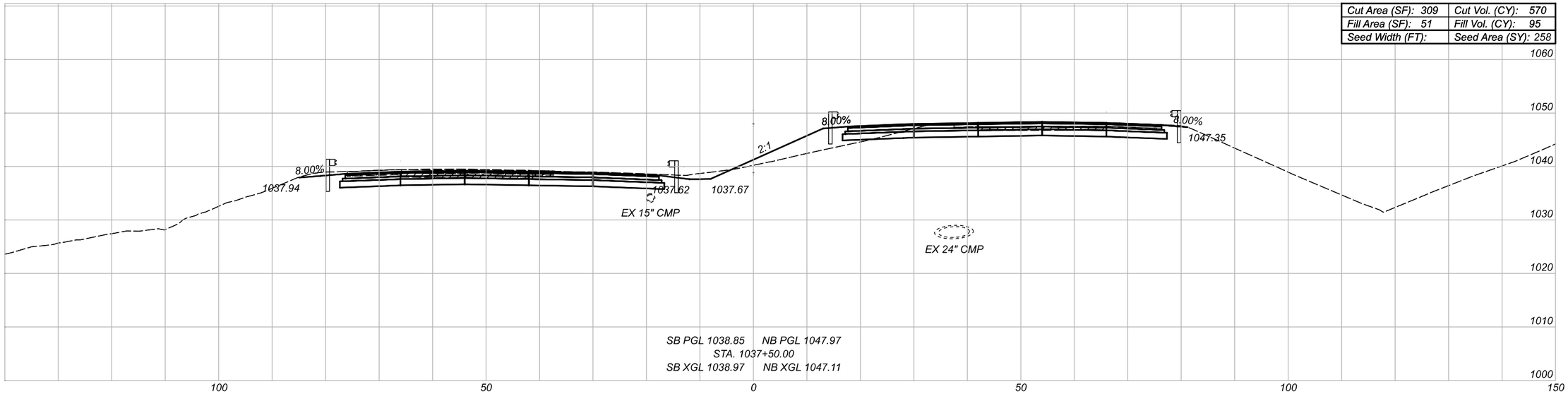

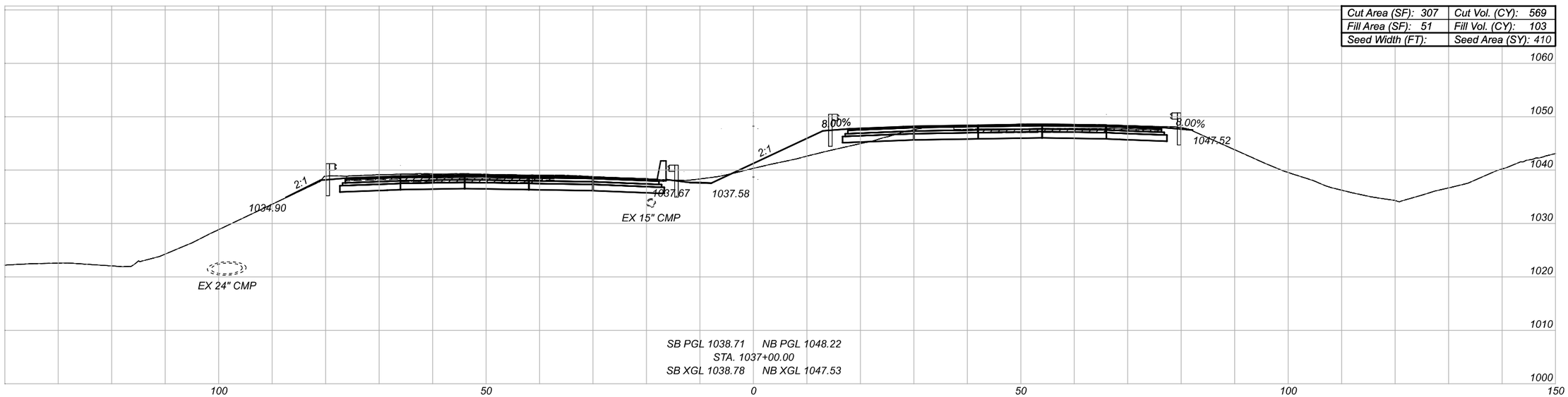

EX ASPHALT CONCRETE BASE

CROSS SECTIONS - IR-77
STA 1037+00.00 TO STA 1037+50.00

SUM-77-32.27

MODEL: I77-E-C-2 - A 1037+00.00 [Sheet] PAPERSIZE: 17x11(in.) DATE: 2/22/2022 TIME: 8:24:32 PM USER: tdinh
pw:\\gfnet-pw.bentley.comgfnet-pw-01\Documents\Projects\67490\104983\40i-Engineering-GF\Roadway\Sheets\104983_XS04A.dgn

DESIGN AGENCY
Gannett Fleming
ENGINEERS AND ARCHITECTS, P.C.
2550 Corporate Exchange Drive
Suite 220
Columbus, OH 43231

DESIGNER
JAS

REVIEWER
DRJ 02/01/22

PROJECT ID
104983

SHEET 117 | TOTAL 297

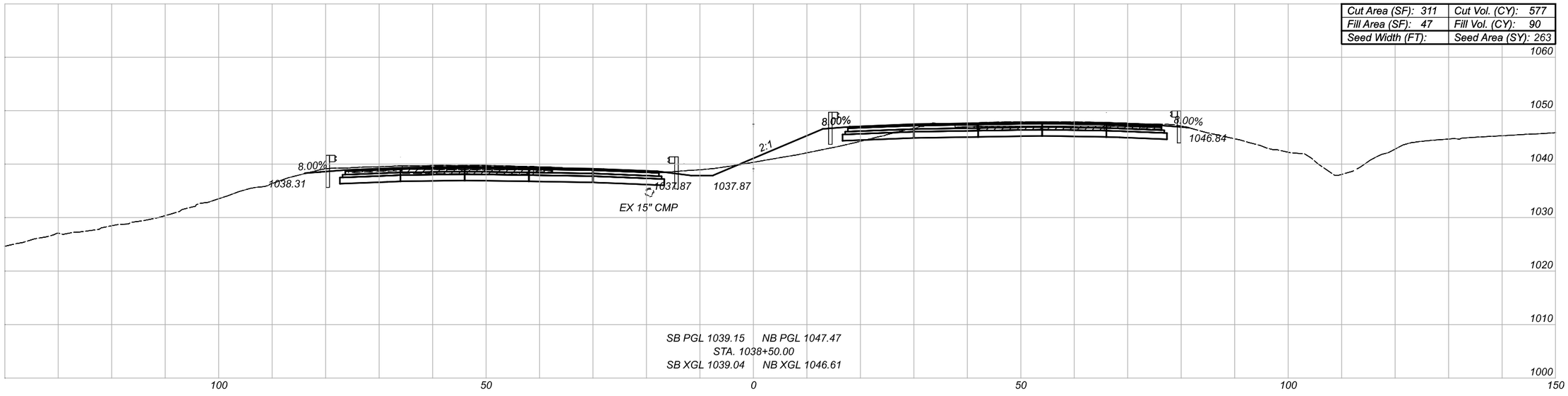

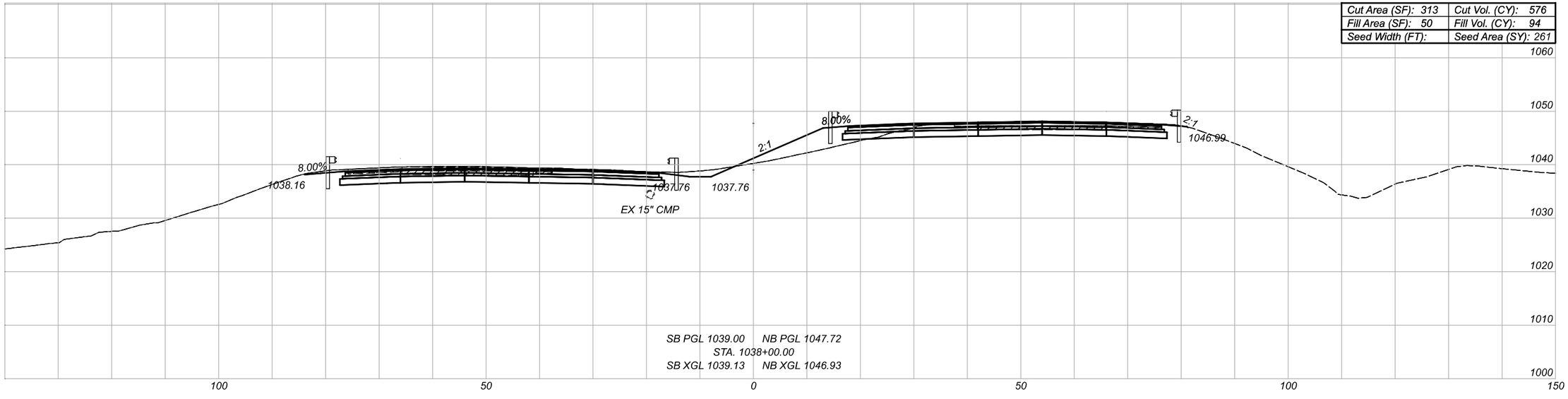

EX ASPHALT CONCRETE BASE

CROSS SECTIONS - IR-77
STA 1038+00.00 TO STA 1038+50.00

SUM-77-32.27

MODEL: I77-E-C-2 - A 1038+00.00 [Sheet] PAPERSIZE: 17x11(in) DATE: 2/22/2022 TIME: 8:24:38 PM USER: tdhh
pw:\\gfnet-pw.bentley.com:gfnet-pw-01\Documents\Projects\67490\104983\40-Engineering-GF\Roadway\Sheets\104983_XS104A.dgn

DESIGN AGENCY
Gannett Fleming
ENGINEERS AND ARCHITECTS, P.C.
2500 Corporate Exchange Drive
Suite 230
Columbus, OH 43231

DESIGNER: JAS

REVIEWER: DRJ 02/01/22

PROJECT ID: 104983

SHEET: 118 TOTAL: 297

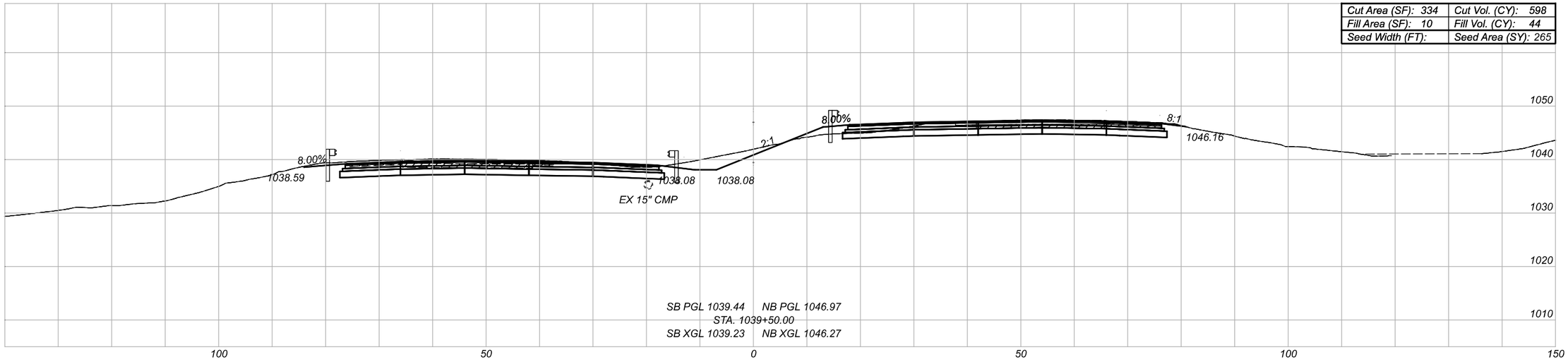

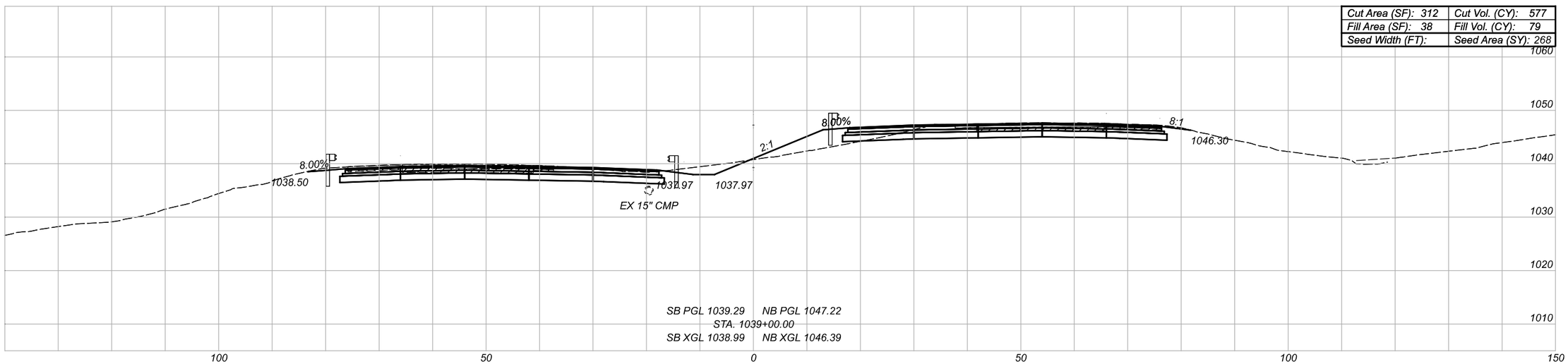

EX ASPHALT CONCRETE BASE

CROSS SECTIONS - IR-77
STA 1039+00.00 TO STA 1039+50.00

SUM-77-32.27

MODEL:I77-E-C-2 - A 1039+00.00 [Sheet] PAPERSIZE:17x11(in.) DATE:2/22/2022 TIME:8:24:43 PM USER:tdinh
pw:\\gfnet-pw.bentley.com:gfnet-pw-01\Documents\Projects\67490\104983\401-Engineering-GF\Roadway\Sheets\104983_XS104A.dgn

DESIGN AGENCY
Gannett Fleming
ENGINEERS AND ARCHITECTS, P.C.
2500 Corporate Exchange Drive
Suite 230
Columbus, OH 43231

DESIGNER JAS

REVIEWER DRJ 02/01/22

PROJECT ID 104983

SHEET 119 TOTAL 297

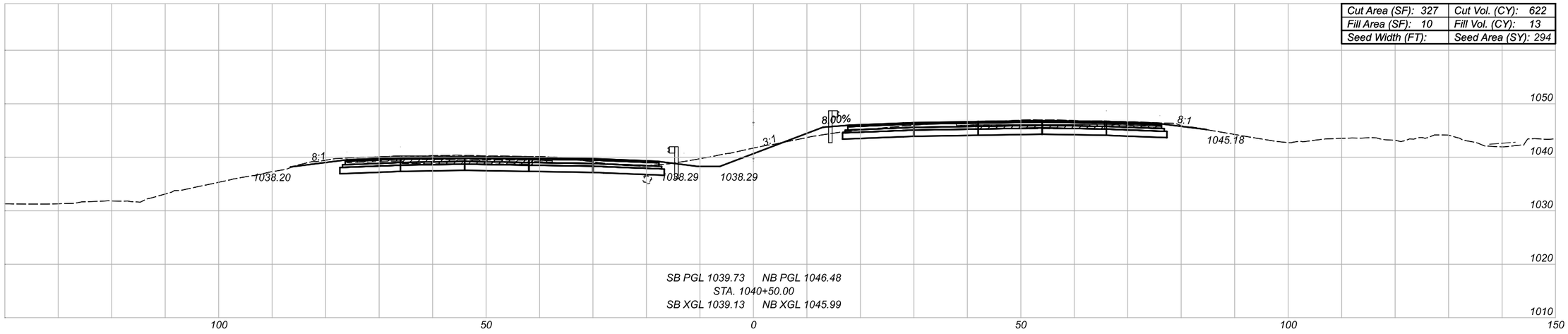

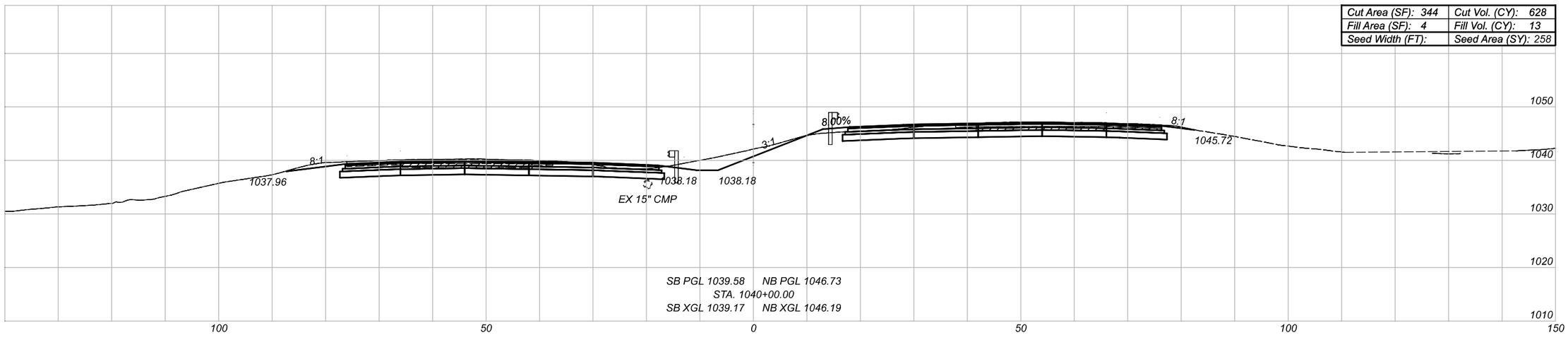

EX ASPHALT CONCRETE BASE

CROSS SECTIONS - IR-77
STA 1040+00.00 TO STA 1040+50.00

SUM-77-32.27

MODEL: I77-E-C-2 - A 1040+00.00 [Sheet] PAPERSIZE: 17x11(in.) DATE: 2/22/2022 TIME: 8:24:49 PM USER: tdmh
pw:\\gfnet-pw.bentley.comgfnet-pw-01\Documents\Projects\67490\104983\40i-Engineering-GF\Roadway\Sheets\104983_XS104A.dgn

DESIGN AGENCY
Gannett Fleming
ENGINEERS AND ARCHITECTS, P.C.
2500 Corporate Exchange Drive
Suite 220
Columbus, OH 43231

DESIGNER JAS

REVIEWER DRJ 02/01/22

PROJECT ID 104983

SHEET 120 TOTAL 297

CROSS SECTIONS - IR-77
STA 1041+00.00 TO STA 1041+10.00

Cut Area (SF): 319	Cut Vol. (CY): 118
Fill Area (SF): 17	Fill Vol. (CY): 6
Seed Width (FT):	Seed Area (SY): 56

Note: Earthwork based on 10' interval.

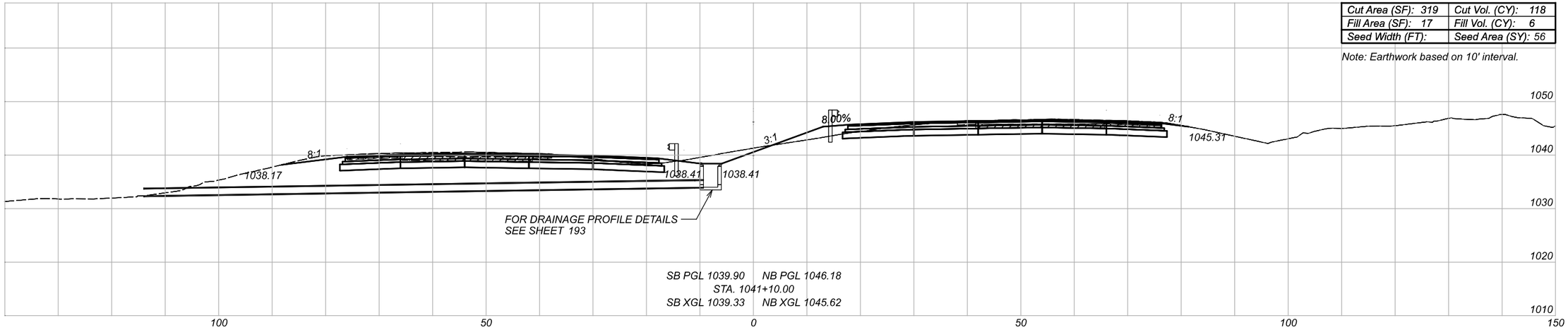

Cut Area (SF): 315	Cut Vol. (CY): 595
Fill Area (SF): 17	Fill Vol. (CY): 25
Seed Width (FT):	Seed Area (SY): 291

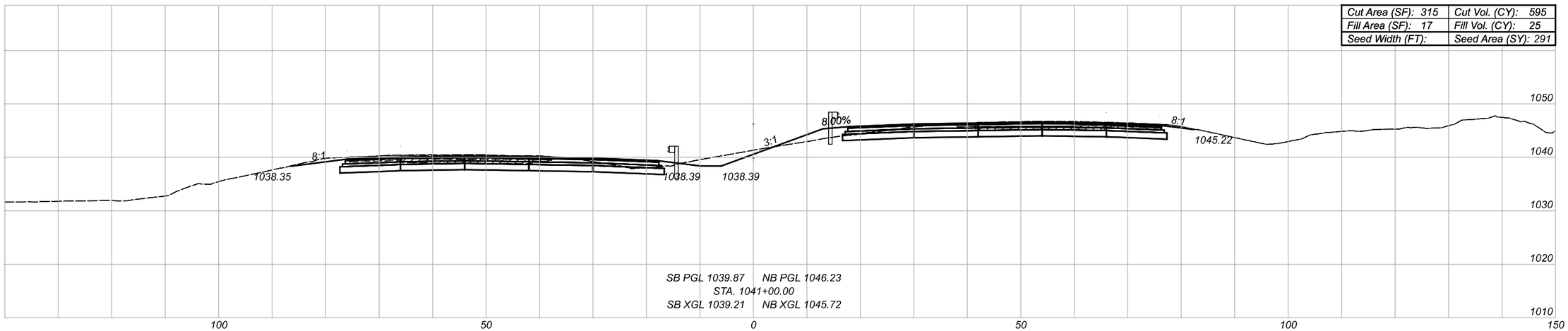

EX ASPHALT CONCRETE BASE

DESIGN AGENCY
Gannett Fleming
ENGINEERS AND ARCHITECTS, P.C.
2590 Corporate Exchange Drive
Suite 230
Columbus, OH 43231

DESIGNER JAS

REVIEWER DRJ 02/01/22

PROJECT ID 104983

SHEET 121 TOTAL 297

SUM-77-32.27

MODEL: I77-E-C-2 - A 1041+00.00 [Sheet] PAPERSIZE: 17x11(in.) DATE: 2/22/2022 TIME: 8:24:55 PM USER: tdinh
pw:\\gfnet-pw.bentley.com:gfnet-pw-01\Documents\Projects\167490\104983\401-Engineering-GF\Roadway\Sheets\104983_XS104A.dgn

Cut Area (SF): 318	Cut Vol. (CY): 585
Fill Area (SF): 21	Fill Vol. (CY): 37
Seed Width (FT):	Seed Area (SY): 285

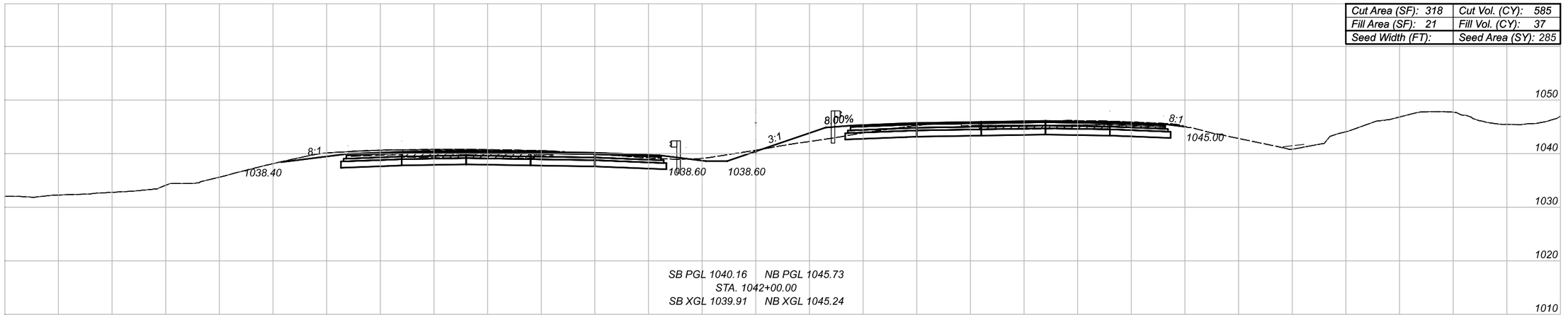

SB PGL 1040.16 NB PGL 1045.73
STA. 1042+00.00
SB XGL 1039.91 NB XGL 1045.24

Cut Area (SF): 314	Cut Vol. (CY): 469
Fill Area (SF): 19	Fill Vol. (CY): 27
Seed Width (FT):	Seed Area (SY): 225

Note: Earthwork based on 40' interval.

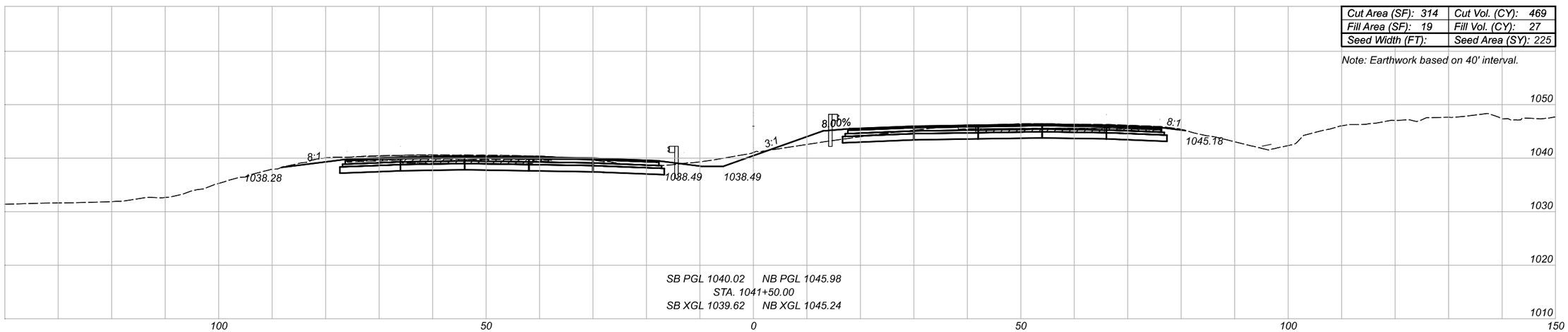

SB PGL 1040.02 NB PGL 1045.98
STA. 1041+50.00
SB XGL 1039.62 NB XGL 1045.24

EX ASPHALT CONCRETE BASE

CROSS SECTIONS - IR-77
STA 1041+50.00 TO STA 1042+00.00

SUM-77-32.27

MODEL:I77-E-C-2 - A 1041+50.00 [Sheet] PAPERSIZE:17x11(in) DATE:2/22/2022 TIME:8:25:00 PM USER:tdnh
pw:\\gfnet-pw.bentley.com:gfnet-pw-01\Documents\Projects\67490\104983\401-Engineering-GF\Roadway\Sheets\104983_XS104A.dgn

DESIGN AGENCY
Gannett Fleming
ENGINEERS AND ARCHITECTS, P.C.
2500 Corporate Exchange Drive
Suite 230
Columbus, OH 43231

DESIGNER JAS

REVIEWER DRJ 02/01/22

PROJECT ID 104983

SHEET 122 TOTAL 297

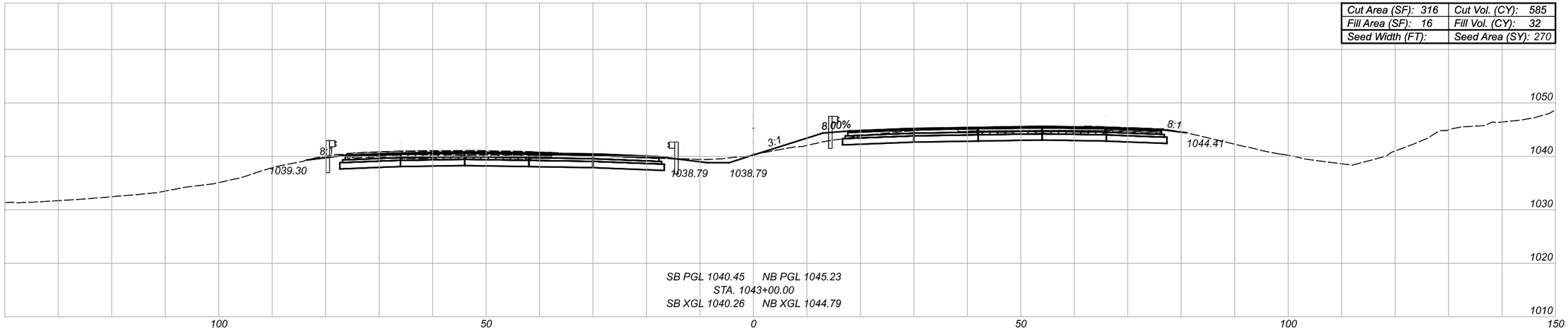

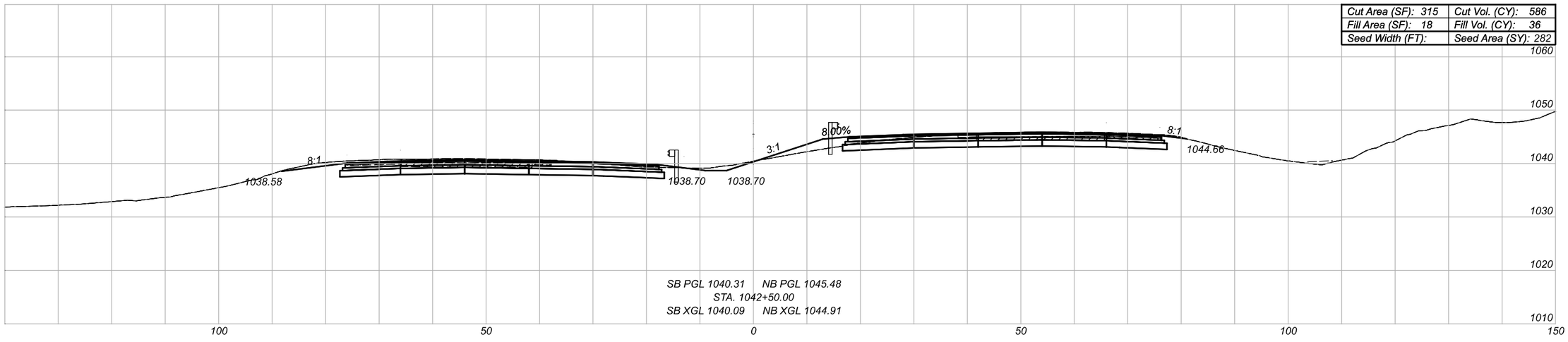

EX ASPHALT CONCRETE BASE

CROSS SECTIONS - IR-77
STA 1042+50.00 TO STA 1043+00.00

SUM-77-32.27

MODEL: I77-E-C-2 - A 1042+50.00 [Sheet] PAPERSIZE: 17x11(in.) DATE: 2/22/2022 TIME: 8:25:06 PM USER: tdinh
pw:\\gfnet-pw.bentley.com:gfnet-pw-01\Documents\Projects\67490\104983\401-Engineering-CF\Roadway\Sheets\104983_XS104A.dgn

DESIGN AGENCY
Gannett Fleming
ENGINEERS AND ARCHITECTS, P.C.
2500 Corporate Exchange Drive
Suite 200
Columbus, OH 43231

DESIGNER JAS

REVIEWER DRJ 02/01/22

PROJECT ID 104983

SHEET 123 TOTAL 297

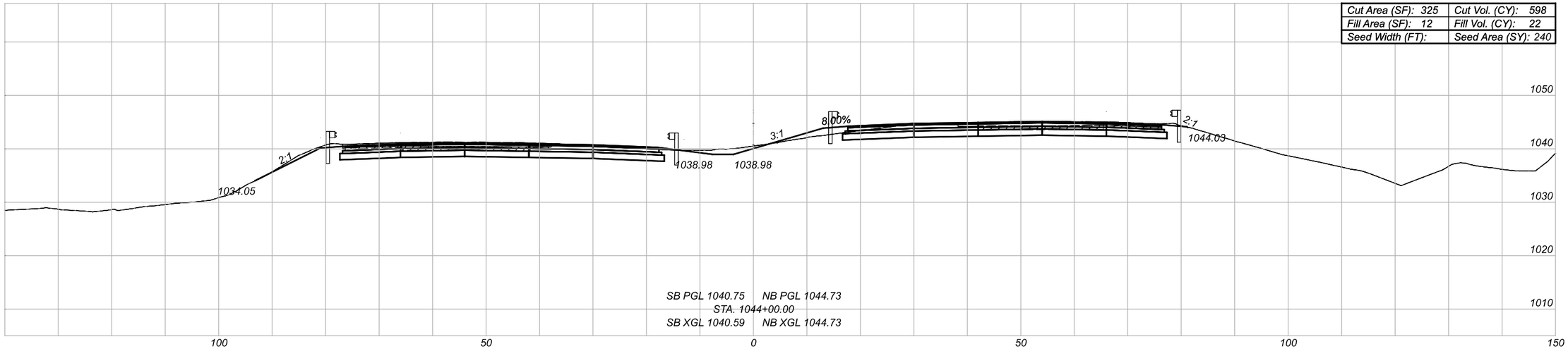

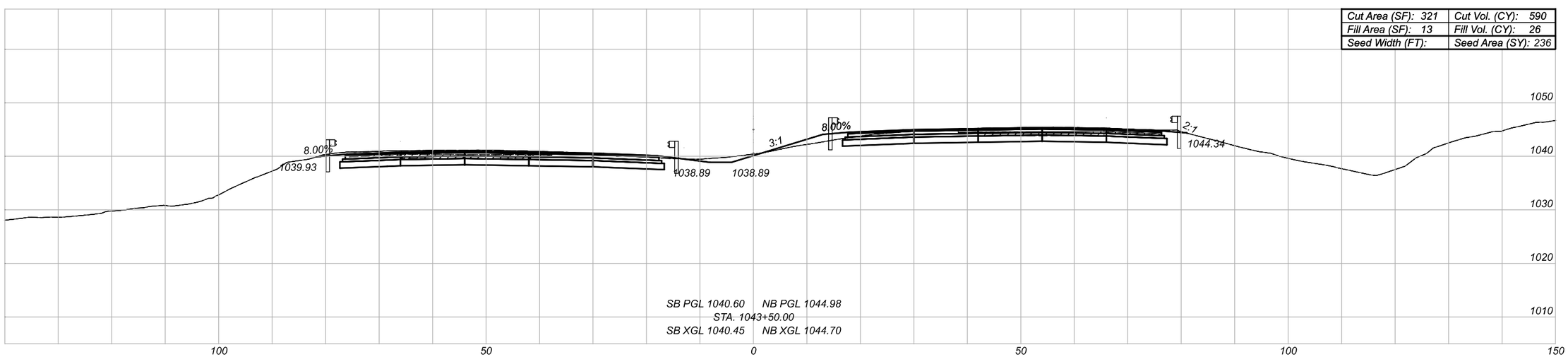

EX ASPHALT CONCRETE BASE

CROSS SECTIONS - IR-77
STA 1043+50.00 TO STA 1044+00.00

SUM-77-32.27

MODEL: I77-E-C-2 - A 1043+50.00 [Sheet] PAPERSIZE: 17x11in) DATE: 2/22/2022 TIME: 8:25:11 PM USER: tdinh
pw:\\gfnet-pw.bentley.com:gfnet-pw-01\Documents\Projects\67490\104983\40i-Engineering-GF\Roadway\Sheets\104983_XS104A.dgn

DESIGN AGENCY
Gannett Fleming
ENGINEERS AND ARCHITECTS, P.C.
2500 Corporate Exchange Drive
Suite 230
Columbus, OH 43231

DESIGNER	JAS
REVIEWER	DRJ 02/01/22
PROJECT ID	104983
SHEET	124
TOTAL	297

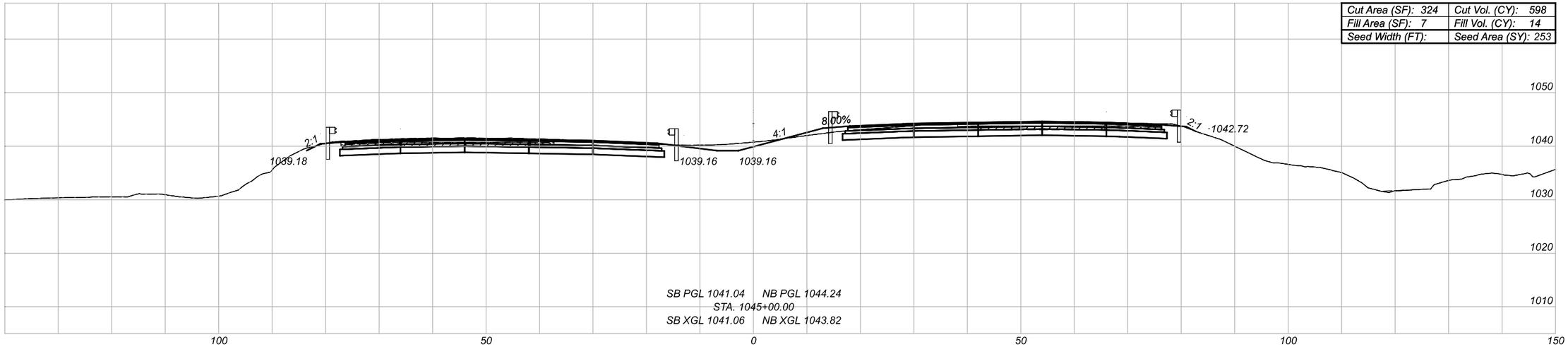

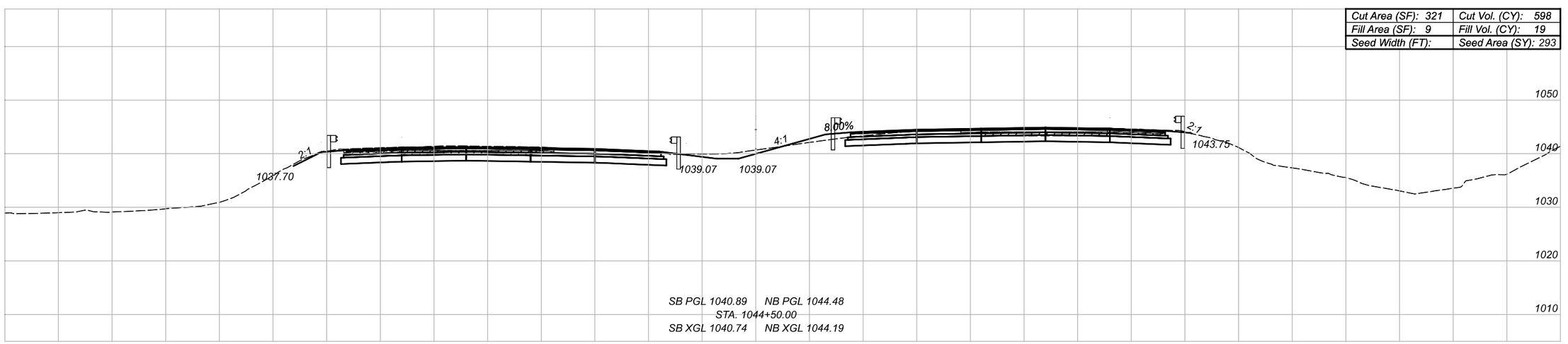

EX ASPHALT CONCRETE BASE

CROSS SECTIONS - IR-77
STA 1044+50.00 TO STA 1045+00.00

SUM-77-32.27

MODEL: I77-E-C-2 - A 1044+50.00 [Sheet] PAPERSIZE: 17x11(in.) DATE: 2/22/2022 TIME: 8:25:17 PM USER: tdinh
pw:\\gfnet-pw.bentley.comsgfnet-pw-01\Documents\Projects\67490\104983\40-Engineering-GF\Roadway\Sheets\104983_XS104A.dgn

DESIGN AGENCY
Gannett Fleming
ENGINEERS AND ARCHITECTS, P.C.
2500 Corporate Exchange Drive
Suite 200
Columbus, OH 43231

DESIGNER	
JAS	
REVIEWER	
DRJ	02/01/22
PROJECT ID	
104983	
SHEET	TOTAL
125	297

MODEL: I77-E-C-2 - A 1045+50.00 [Sheet] PAPERSIZE: 17x11(in.) DATE: 2/22/2022 TIME: 8:25:23 PM USER: tdinh
pw:\\gfnet-pw.bentley.com:gfnet-pw-01\Documents\Projects\67490\104983\40i-Engineering-GF\Roadway\Sheets\104983_XS104A.dgn

SUM-77-32.27

Cut Area (SF): 337	Cut Vol. (CY): 614
Fill Area (SF): 6	Fill Vol. (CY): 12
Seed Width (FT):	Seed Area (SY): 244

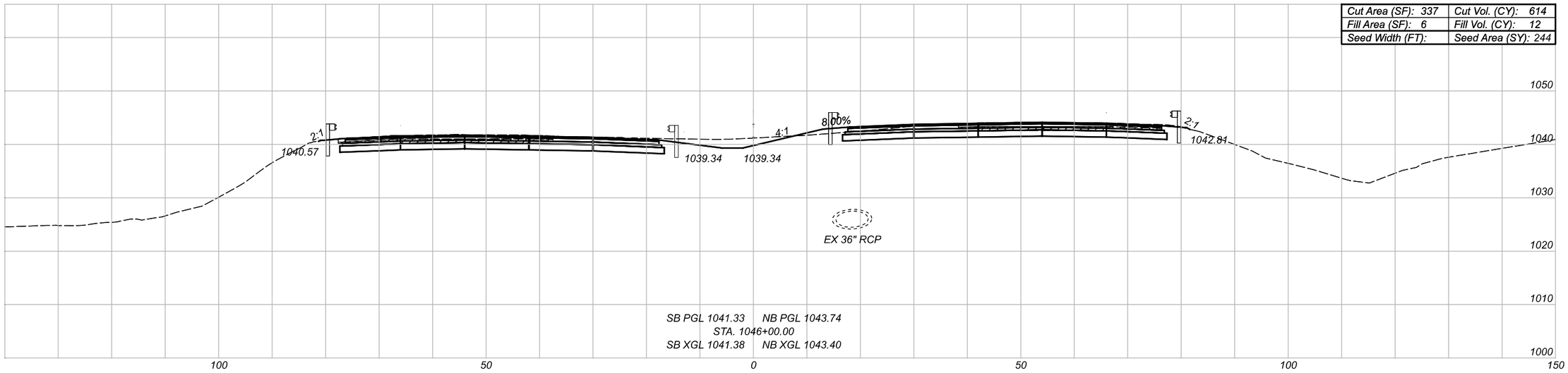

SB PGL 1041.33 NB PGL 1043.74
STA. 1046+00.00
SB XGL 1041.38 NB XGL 1043.40

Cut Area (SF): 326	Cut Vol. (CY): 602
Fill Area (SF): 7	Fill Vol. (CY): 13
Seed Width (FT):	Seed Area (SY): 261

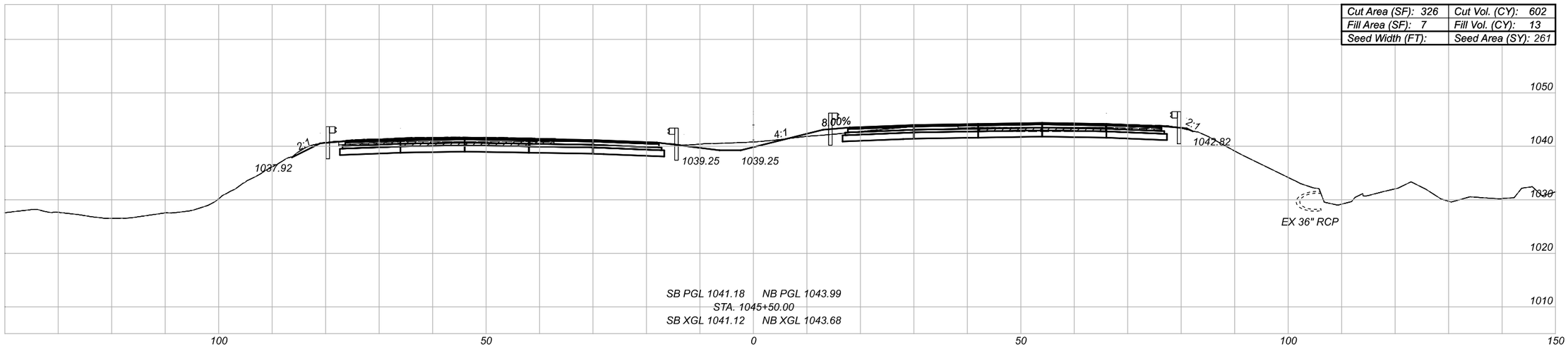

SB PGL 1041.18 NB PGL 1043.99
STA. 1045+50.00
SB XGL 1041.12 NB XGL 1043.68

EX ASPHALT CONCRETE BASE

CROSS SECTIONS - IR-77
STA 1045+50.00 TO STA 1046+00.00

DESIGN AGENCY
Gannett Fleming
ENGINEERS AND ARCHITECTS, P.C.
2500 Corporate Exchange Drive
Suite 220
Columbus, OH 43231

DESIGNER JAS

REVIEWER DRJ 02/01/22

PROJECT ID 104983

SHEET 126 TOTAL 297

Cut Area (SF): 314	Cut Vol. (CY): 606
Fill Area (SF): 10	Fill Vol. (CY): 16
Seed Width (FT):	Seed Area (SY): 290

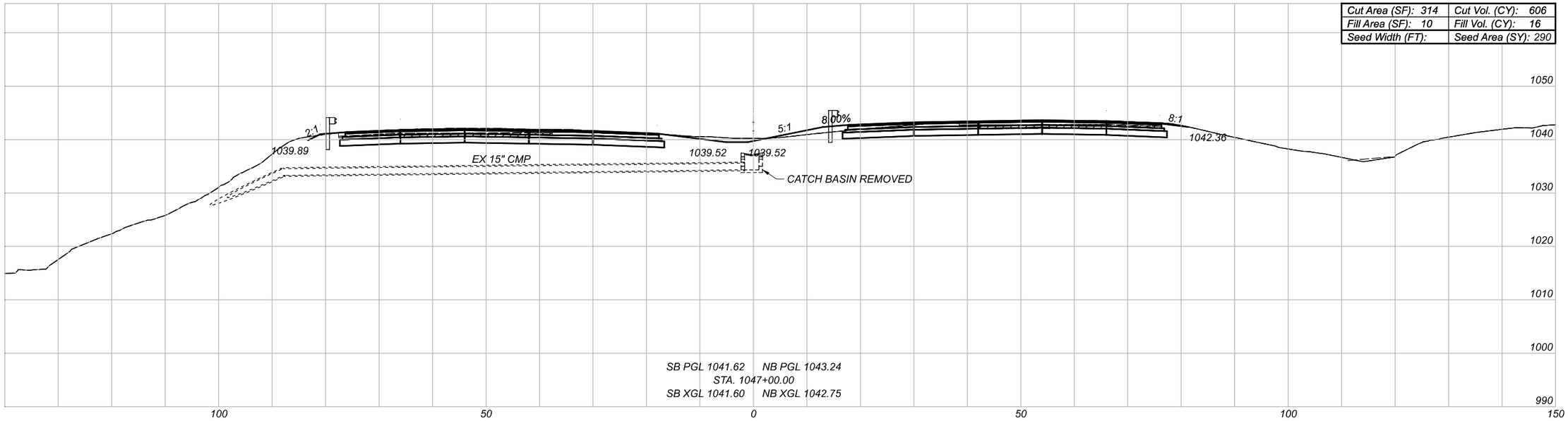

Cut Area (SF): 340	Cut Vol. (CY): 627
Fill Area (SF): 7	Fill Vol. (CY): 12
Seed Width (FT):	Seed Area (SY): 228

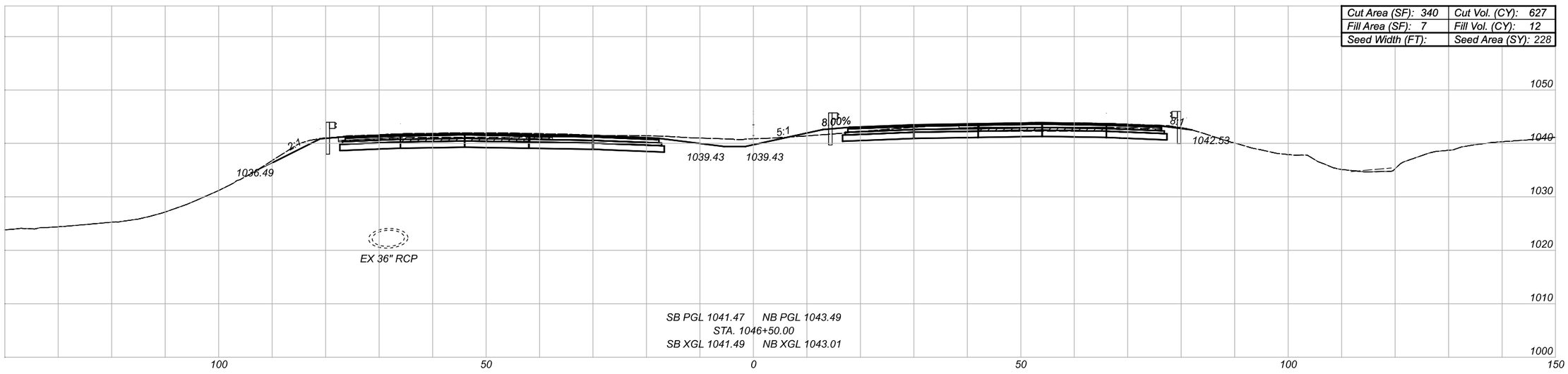

EX ASPHALT CONCRETE BASE

CROSS SECTIONS - IR-77
STA 1046+50.00 TO STA 1047+00.00

SUM-77-32.27

MODEL:I77-E-C-2 - A 1046+50.00 [Sheet] PAPERSIZE:17x11in) DATE:2/22/2022 TIME:8:25:29 PM USER:tdinh
pw:\\gfnet-pw.bentley.com:gfnet-pw-01\Documents\Projects\67490\104983\40i-Engineering-GF\Roadway\Sheets\104983_XS104A.dgn

DESIGN AGENCY
Gannett Fleming
ENGINEERS AND ARCHITECTS, P.C.
2500 Corporate Exchange Drive
Suite 230
Columbus, OH 43231

DESIGNER JAS

REVIEWER DRJ 02/01/22

PROJECT ID 104983

SHEET 127 TOTAL 297

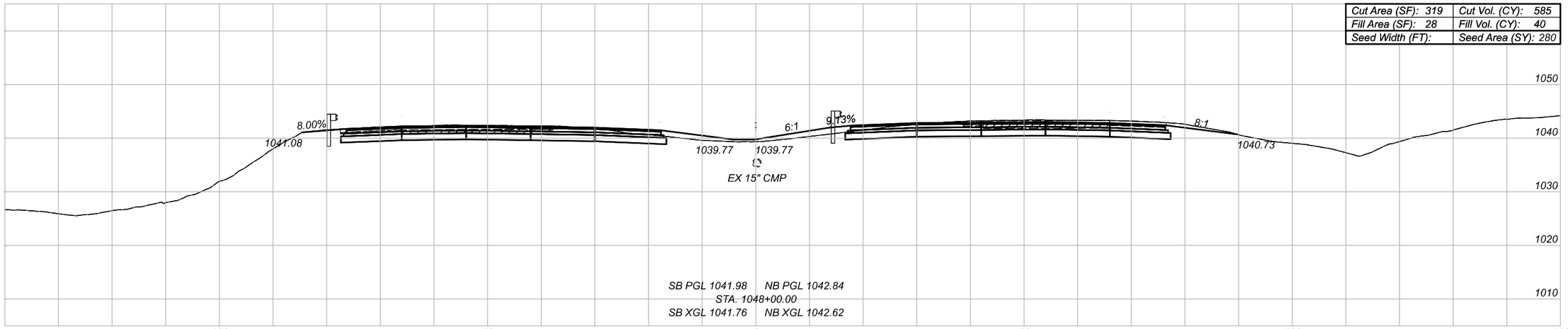

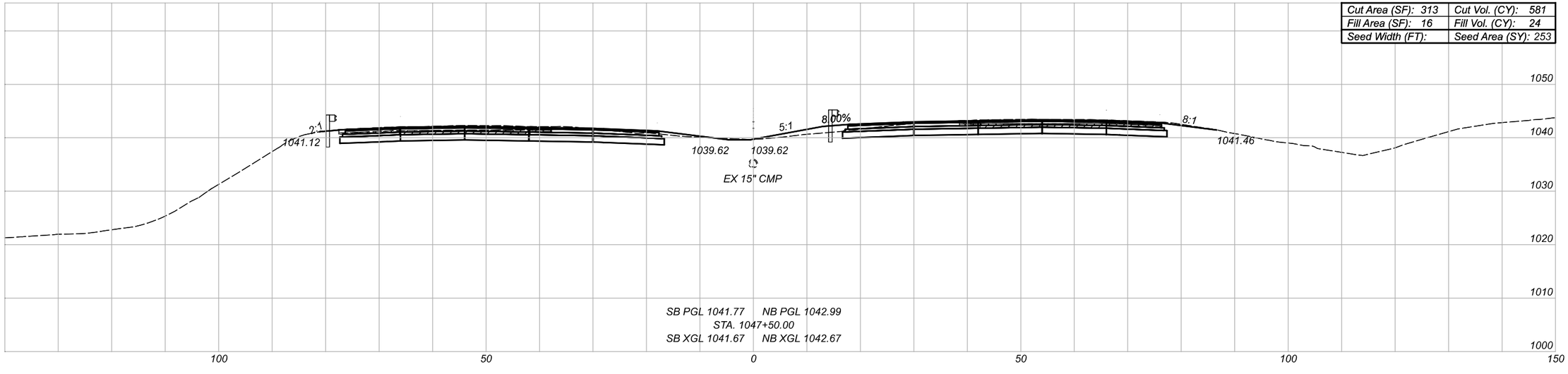

EX ASPHALT CONCRETE BASE

CROSS SECTIONS - IR-77
STA 1047+50.00 TO STA 1048+00.00

SUM-77-32.27

MODEL: I77-E-C-2 - A 1047+50.00 [Sheet] PAPERSIZE: 17x11(in) DATE: 2/22/2022 TIME: 8:25:35 PM USER: tdinh
pw:\\gfnet-pw.bentley.com:gfnet-pw-01\Documents\Projects\67490\104983\401-Engineering-GF\Roadway\Sheets\104983_XS104A.dgn

DESIGN AGENCY
Gannett Fleming
ENGINEERS AND ARCHITECTS, P.C.
2500 Corporate Exchange Drive
Suite 230
Columbus, OH 43231

DESIGNER
JAS

REVIEWER
DRJ 02/01/22

PROJECT ID
104983

SHEET 128 TOTAL 297

Cut Area (SF): 322	Cut Vol. (CY): 598
Fill Area (SF): 58	Fill Vol. (CY): 109
Seed Width (FT):	Seed Area (SY): 314

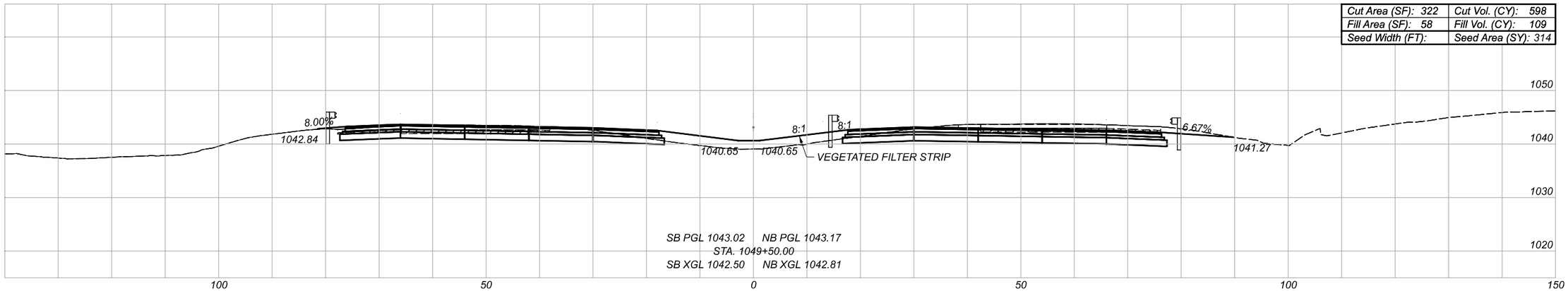

SB PGL 1043.02 NB PGL 1043.17
STA. 1049+50.00
SB XGL 1042.50 NB XGL 1042.81

Cut Area (SF): 323	Cut Vol. (CY): 597
Fill Area (SF): 60	Fill Vol. (CY): 100
Seed Width (FT):	Seed Area (SY): 338

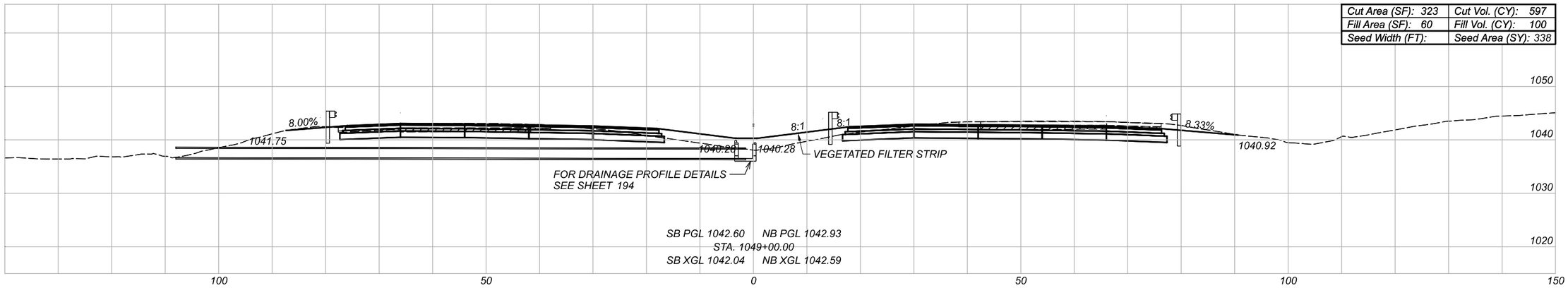

SB PGL 1042.60 NB PGL 1042.93
STA. 1049+00.00
SB XGL 1042.04 NB XGL 1042.59

Cut Area (SF): 321	Cut Vol. (CY): 592
Fill Area (SF): 47	Fill Vol. (CY): 69
Seed Width (FT):	Seed Area (SY): 311

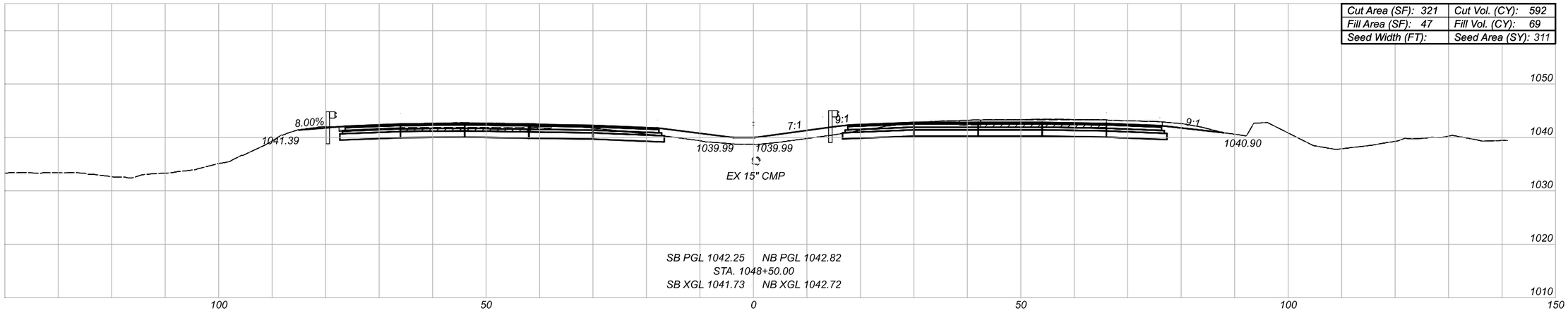

SB PGL 1042.25 NB PGL 1042.82
STA. 1048+50.00
SB XGL 1041.73 NB XGL 1042.72

EX ASPHALT CONCRETE BASE

CROSS SECTIONS - IR-77
STA 1048+50.00 TO STA 1049+50.00

SUM-77-32.27

MODEL: I77-E-C-2 - A 1048+50.00 [Sheet] PAPERSIZE: 17x11(in.) DATE: 2/22/2022 TIME: 8:25:41 PM USER: tdinh
pw:\\gfnet-pw.bentley.com:gfnet-pw-01\Documents\Projects\67490\104983\401-Engineering-GF\Roadway\Sheets\104983_XS104A.dgn

DESIGN AGENCY
Gannett Fleming
ENGINEERS AND ARCHITECTS, P.C.
2550 Corporate Exchange Drive, Suite 200, Columbus, OH 43231

DESIGNER JAS
REVIEWER DRJ 02/01/22
PROJECT ID 104983
SHEET 129 TOTAL 297

Cut Area (SF): 294	Cut Vol. (CY): 559
Fill Area (SF): 71	Fill Vol. (CY): 124
Seed Width (FT):	Seed Area (SY): 306

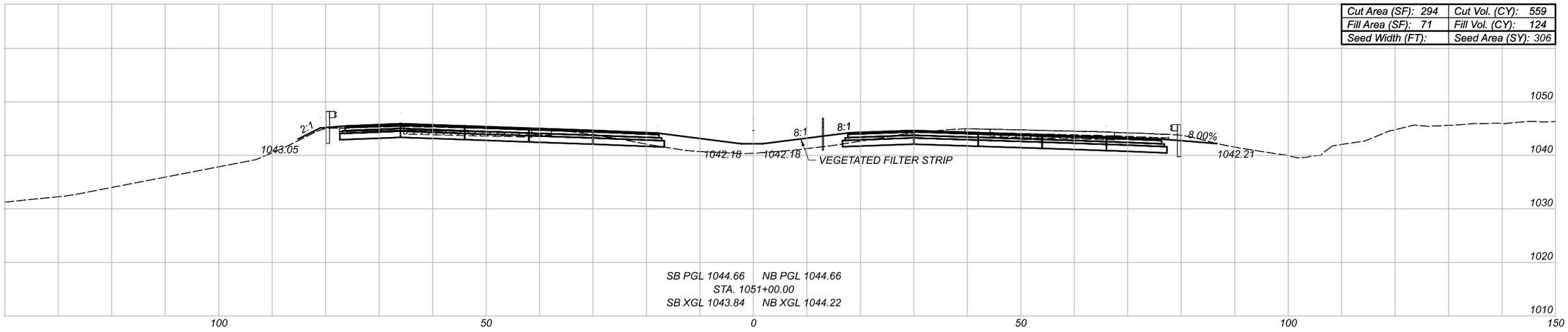

SB PGL 1044.66 NB PGL 1044.66
STA. 1051+00.00
SB XGL 1043.84 NB XGL 1044.22

Cut Area (SF): 310	Cut Vol. (CY): 587
Fill Area (SF): 63	Fill Vol. (CY): 112
Seed Width (FT):	Seed Area (SY): 305

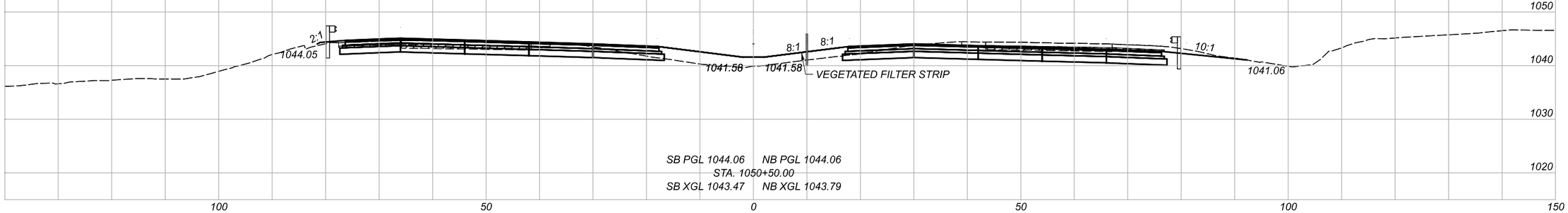

SB PGL 1044.06 NB PGL 1044.06
STA. 1050+50.00
SB XGL 1043.47 NB XGL 1043.79

Cut Area (SF): 325	Cut Vol. (CY): 599
Fill Area (SF): 58	Fill Vol. (CY): 107
Seed Width (FT):	Seed Area (SY): 301

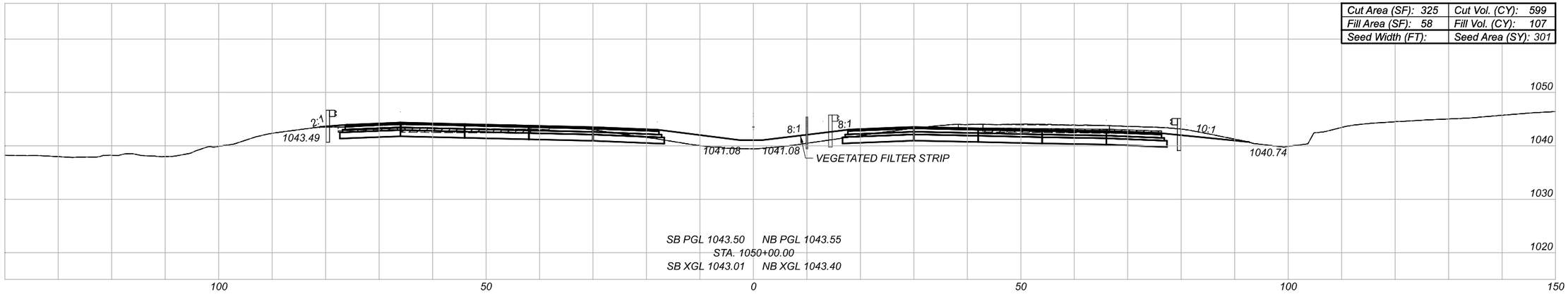

SB PGL 1043.50 NB PGL 1043.55
STA. 1050+00.00
SB XGL 1043.01 NB XGL 1043.40

EX ASPHALT CONCRETE BASE

CROSS SECTIONS - IR-77
STA 1050+00.00 TO STA 1051+00.00

SUM-77-32.27

MODEL: I77-E-C-2 - A 1050+00.00 [Sheet] PAPERSIZE: 17x11(in) DATE: 2/22/2022 TIME: 8:25:49 PM USER: tdinh
pw:\\gfnet-pw.bentley.com:gfnet-pw-01\Documents\Projects\67490\104983\401-Engineering-GF\Roadway\Sheets\104983_XS04A.dgn

DESIGN AGENCY
Gannett Fleming
ENGINEERS AND ARCHITECTS, P.C.
2500 Corporate Exchange Drive
Suite 230
Columbus, OH 43231

DESIGNER JAS

REVIEWER DRJ 02/01/22

PROJECT ID 104983

SHEET 130 TOTAL 297

Cut Area (SF): 284	Cut Vol. (CY): 524
Fill Area (SF): 84	Fill Vol. (CY): 151
Seed Width (FT):	Seed Area (SY): 340

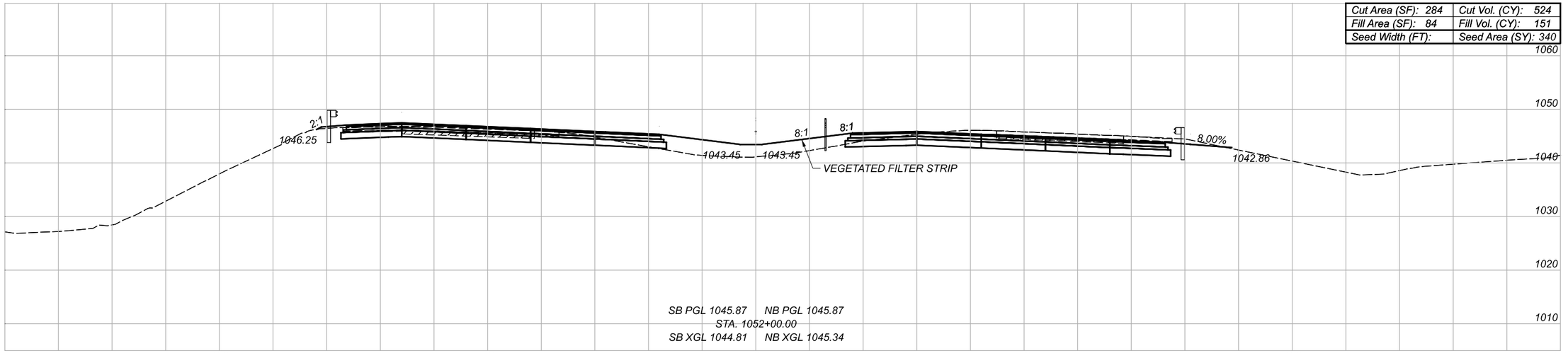

Cut Area (SF): 282	Cut Vol. (CY): 534
Fill Area (SF): 79	Fill Vol. (CY): 139
Seed Width (FT):	Seed Area (SY): 340

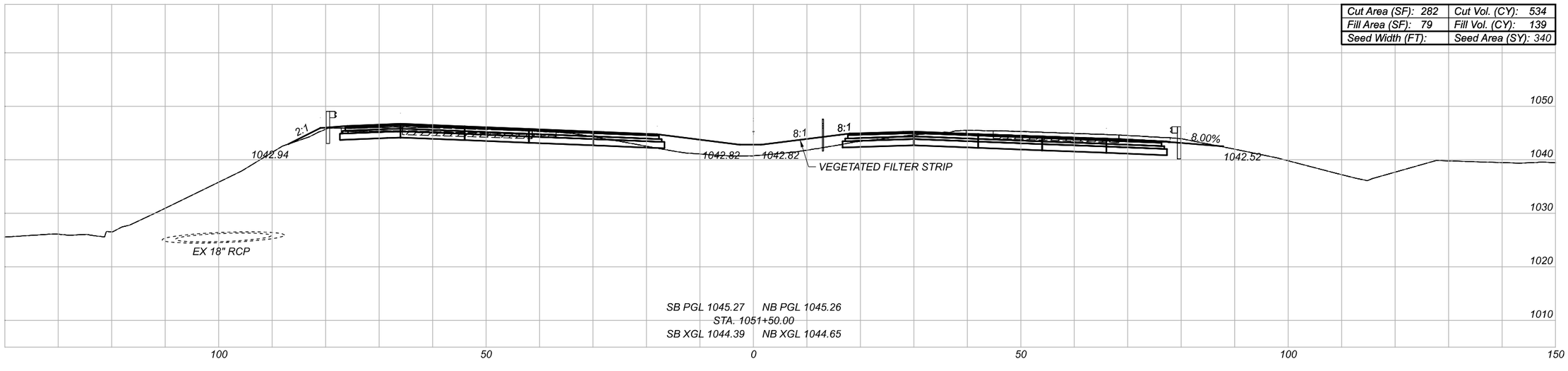

EX ASPHALT CONCRETE BASE

CROSS SECTIONS - IR-77
STA 1051+50.00 TO STA 1052+00.00

SUM-77-32.27

MODEL: I77-E-C-2 - A 1051+50.00 [Sheet] PAPERSIZE: 17x11(in.) DATE: 2/22/2022 TIME: 8:25:57 PM USER: tdinh
pw:\\gfnet-pw.bentley.com:gfnet-pw-01\Documents\Projects\67490\104983\40i-Engineering-GF\Roadway\Sheets\104983_XS104A.dgn

DESIGN AGENCY
Gannett Fleming
ENGINEERS AND ARCHITECTS, P.C.
2500 Corporate Exchange Drive
Suite 230
Columbus, OH 43231

DESIGNER JAS

REVIEWER DRJ 02/01/22

PROJECT ID 104983

SHEET 131 TOTAL 297

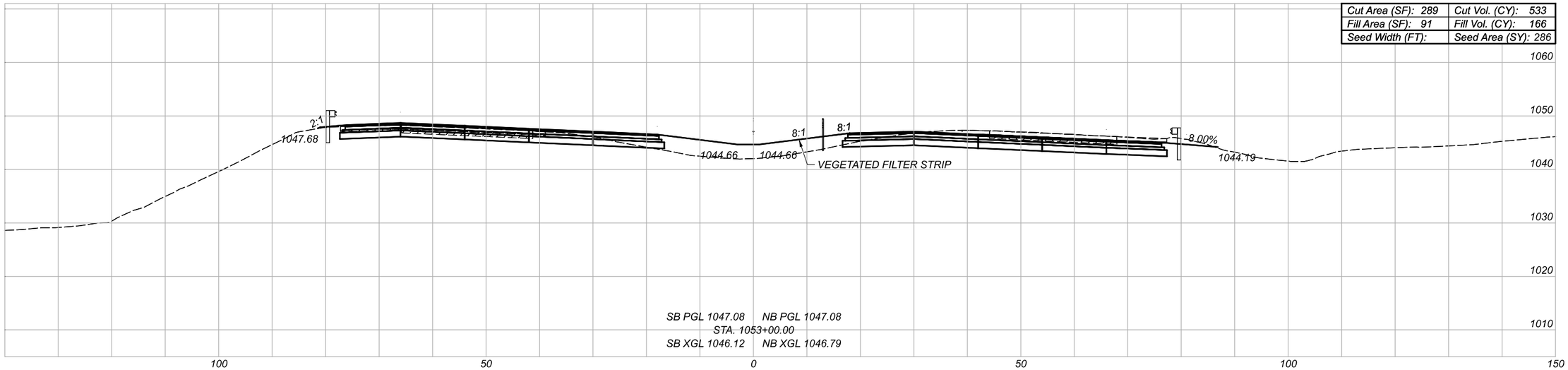

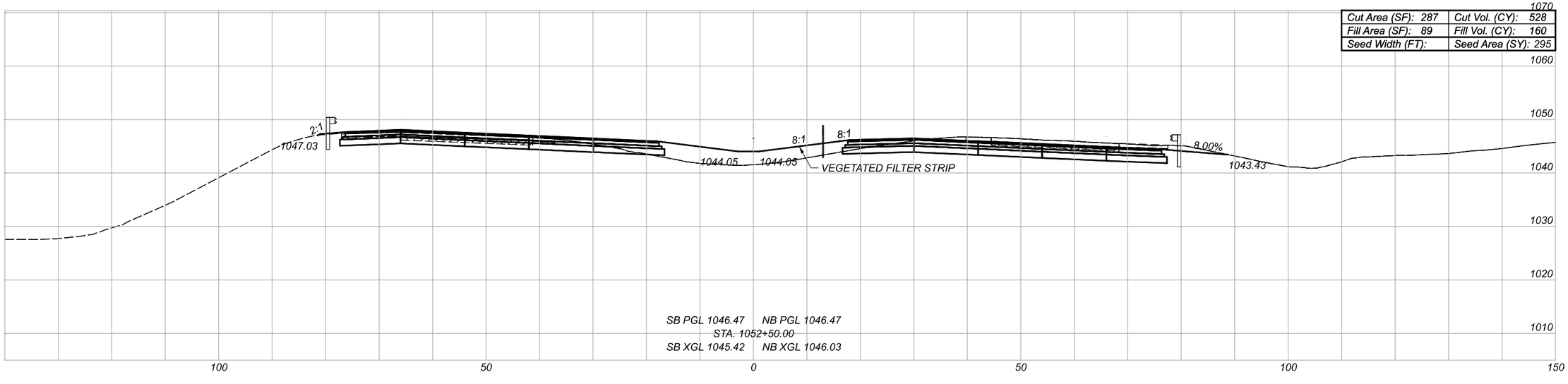

EX ASPHALT CONCRETE BASE

CROSS SECTIONS - IR-77
STA 1052+50.00 TO STA 1053+00.00

SUM-77-32.27

MODEL:I77-E-C-2 - A 1052+50.00 [Sheet] PAPERSIZE:17x11(in) DATE:2/22/2022 TIME:8:26:02 PM USER:tdhh
pw:\\gfnet-pw.bentley.com:gfnet-pw-01\Documents\Projects\67490\104983\401-Engineering-GF\Roadway\Sheets\104983_XS104A.dgn

DESIGN AGENCY
Gannett Fleming
ENGINEERS AND ARCHITECTS, P.C.
2500 Corporate Exchange Drive
Suite 230
Columbus, OH 43231

DESIGNER: JAS

REVIEWER: DRJ 02/01/22

PROJECT ID: 104983

SHEET: 132 TOTAL: 297

Cut Area (SF): 276	Cut Vol. (CY): 518
Fill Area (SF): 96	Fill Vol. (CY): 176
Seed Width (FT):	Seed Area (SY): 267

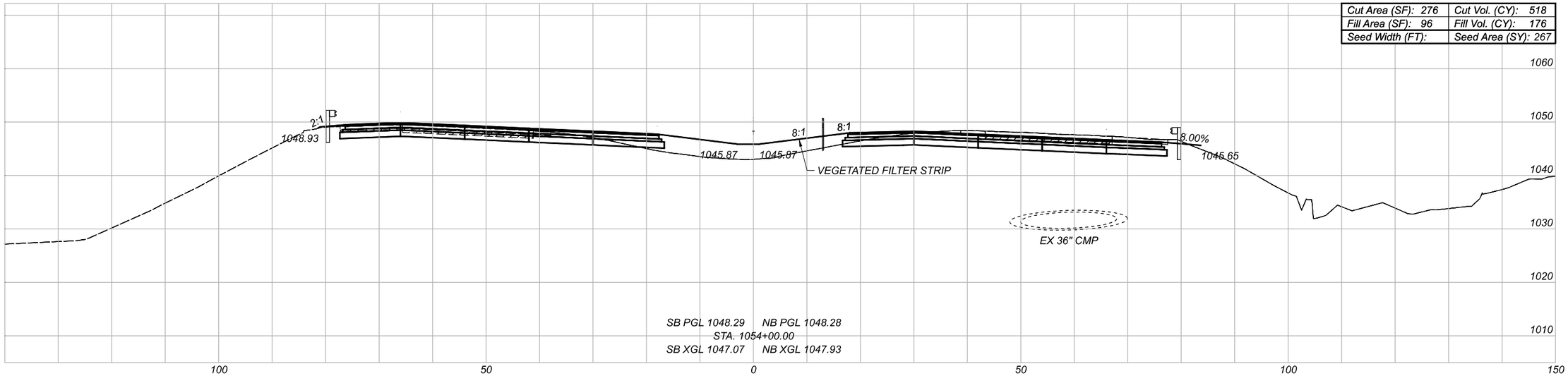

Cut Area (SF): 284	Cut Vol. (CY): 530
Fill Area (SF): 95	Fill Vol. (CY): 172
Seed Width (FT):	Seed Area (SY): 277

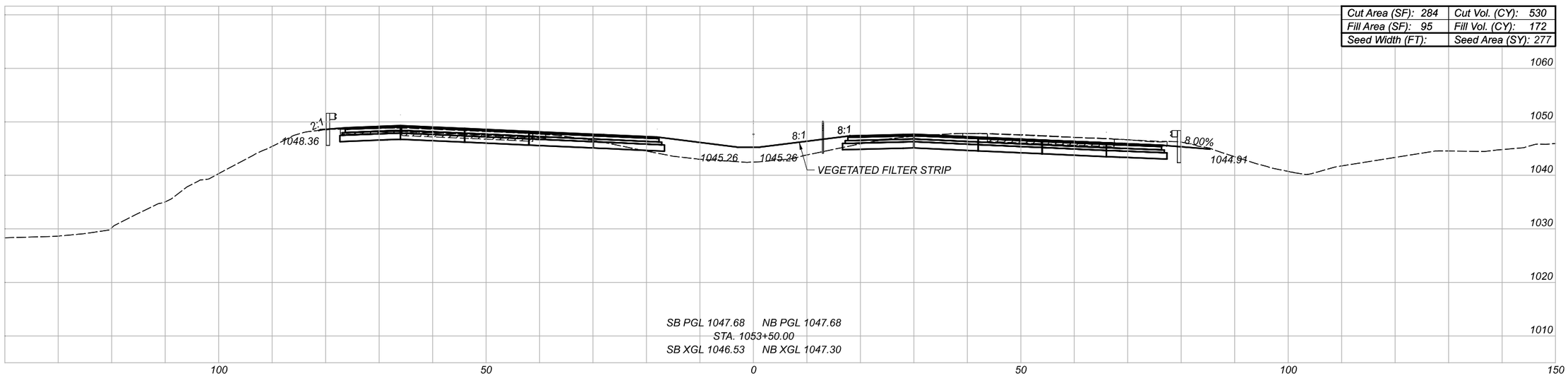

EX ASPHALT CONCRETE BASE

CROSS SECTIONS - IR-77
STA 1053+50.00 TO STA 1054+00.00

SUM-77-32.27

MODEL:I77-E-C-2 - A 1053+50.00 [Sheet] PAPERSIZE:17x11(in.) DATE:2/22/2022 TIME:8:26:07 PM USER:tdinh
pw:\\gfnet-pw.bentley.com:gfnet-pw-01\Documents\Projects\67490\104983\40I-Englneering-GF\Roadway\Sheets\104983_XSI04A.dgn

DESIGN AGENCY
Gannett Fleming
ENGINEERS AND ARCHITECTS, P.C.
2500 Corporate Exchange Drive
Suite 230
Columbus, OH 43231

DESIGNER JAS

REVIEWER DRJ 02/01/22

PROJECT ID 104983

SHEET 133 TOTAL 297

Cut Area (SF): 281	Cut Vol. (CY): 517
Fill Area (SF): 82	Fill Vol. (CY): 162
Seed Width (FT):	Seed Area (SY): 257

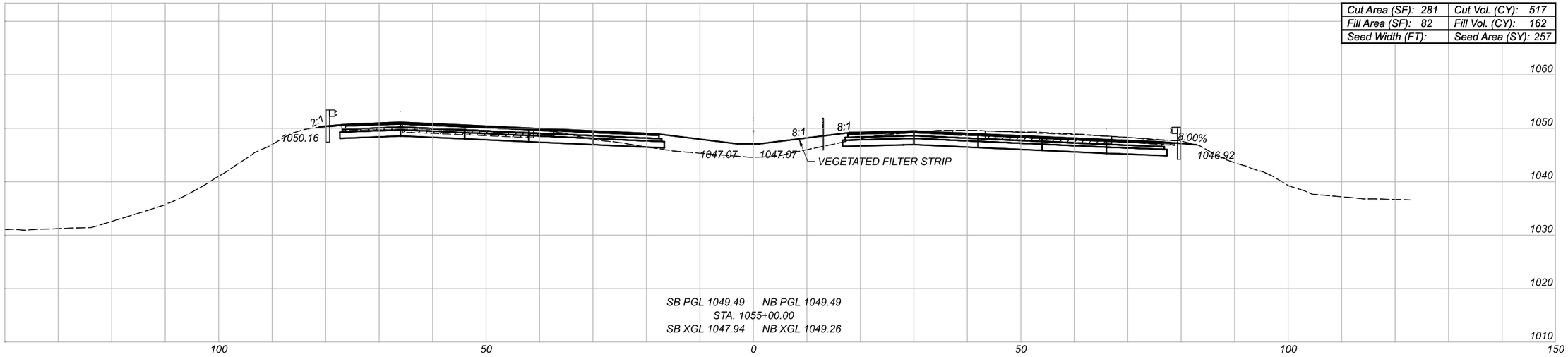

Cut Area (SF): 278	Cut Vol. (CY): 513
Fill Area (SF): 94	Fill Vol. (CY): 175
Seed Width (FT):	Seed Area (SY): 265

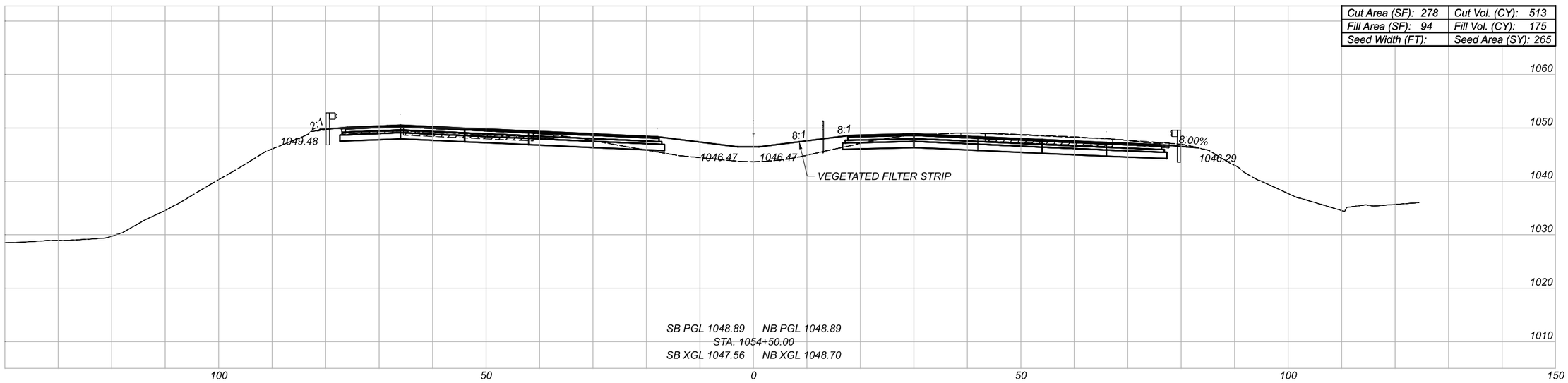

EX ASPHALT CONCRETE BASE

CROSS SECTIONS - IR-77
STA 1054+50.00 TO STA 1055+00.00

SUM-77-32.27

MODEL:I77-E-C-2 - A 1054+50.00 [Sheet] PAPERSIZE:17x11(in.) DATE:2/22/2022 TIME:8:26:13 PM USER:tdinh
pw:\\gfnet-pw.bentley.com:gfnet-pw-01\Documents\Projects\67490\104983\401-Engineering-GF\Roadway\Sheets\104983_XS104A.dgn

DESIGN AGENCY
Gannett Fleming
ENGINEERS AND ARCHITECTS, P.C.
2500 Corporate Exchange Drive
Suite 200
Columbus, OH 43231

DESIGNER JAS

REVIEWER DRJ 02/01/22

PROJECT ID 104983

SHEET 134 TOTAL 297

Cut Area (SF): 288	Cut Vol. (CY): 529
Fill Area (SF): 66	Fill Vol. (CY): 129
Seed Width (FT):	Seed Area (SY): 262

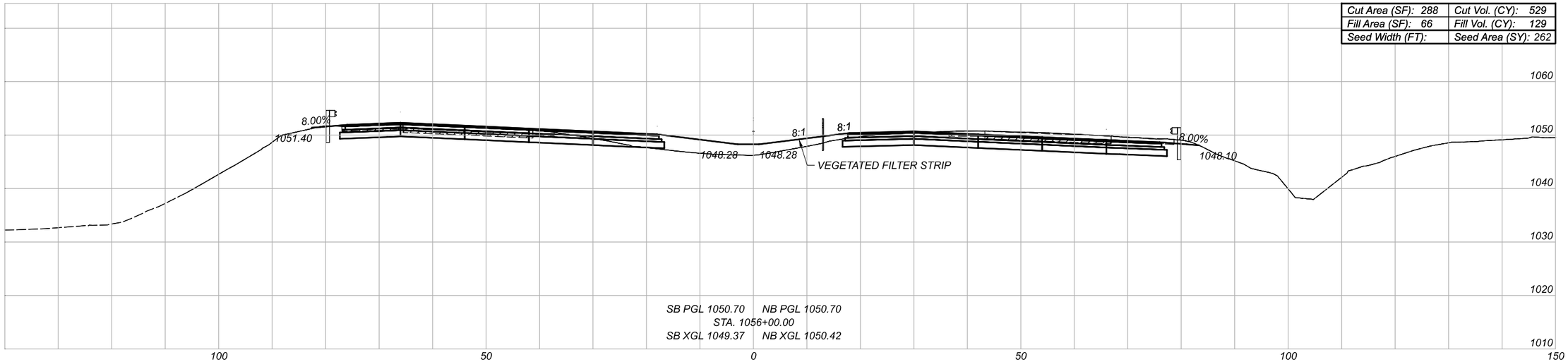

Cut Area (SF): 283	Cut Vol. (CY): 522
Fill Area (SF): 72	Fill Vol. (CY): 143
Seed Width (FT):	Seed Area (SY): 257

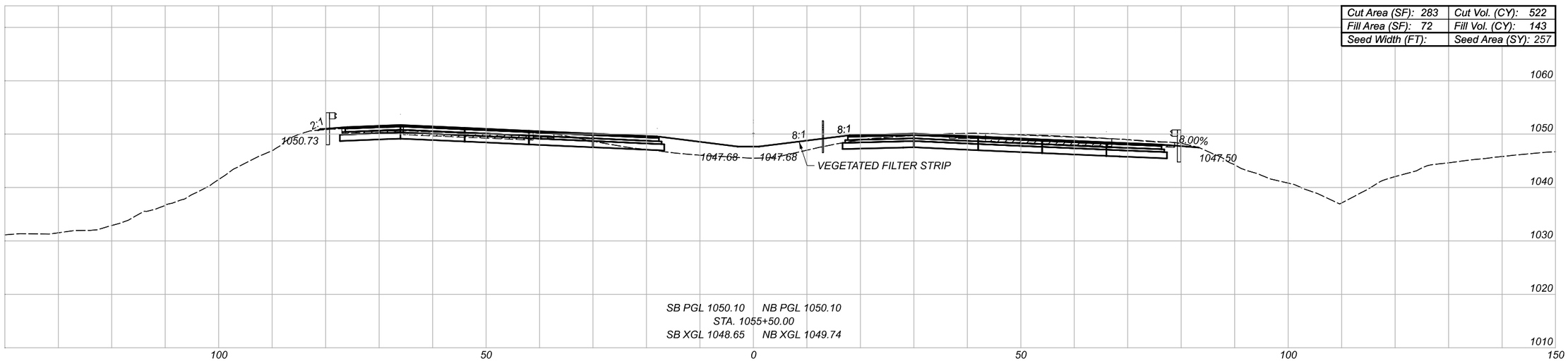

EX ASPHALT CONCRETE BASE

CROSS SECTIONS - IR-77
STA 1055+50.00 TO STA 1056+00.00

SUM-77-32.27

MODEL: I77-E-C-2 - A 1055+50.00 [Sheet] PAPERSIZE: 17x11(in) DATE: 2/22/2022 TIME: 8:26:19 PM USER: tdinh
pw:\\gfnet-pw.bentley.com:gfnet-pw-01\Documents\Projects\67490\104983\401-Engineering-GF\Roadway\Sheets\104983_XS104A.dgn

DESIGN AGENCY
Gannett Fleming
ENGINEERS AND ARCHITECTS, P.C.
2500 Corporate Exchange Drive
Suite 230
Columbus, OH 43231

DESIGNER JAS

REVIEWER DRJ 02/01/22

PROJECT ID 104983

SHEET 135 TOTAL 297

Cut Area (SF): 293	Cut Vol. (CY): 542
Fill Area (SF): 57	Fill Vol. (CY): 107
Seed Width (FT):	Seed Area (SY): 264

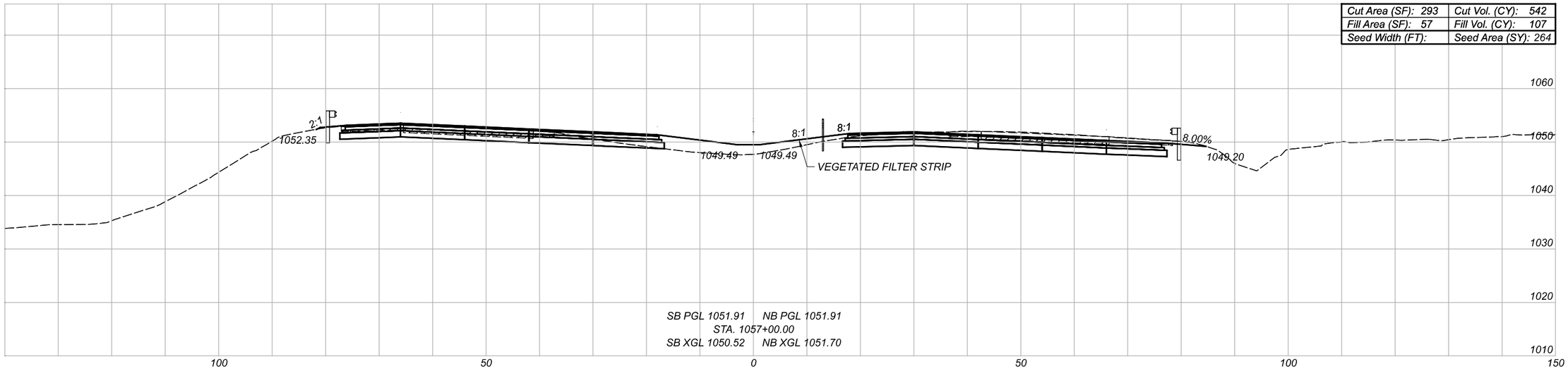

Cut Area (SF): 292	Cut Vol. (CY): 537
Fill Area (SF): 58	Fill Vol. (CY): 115
Seed Width (FT):	Seed Area (SY): 270

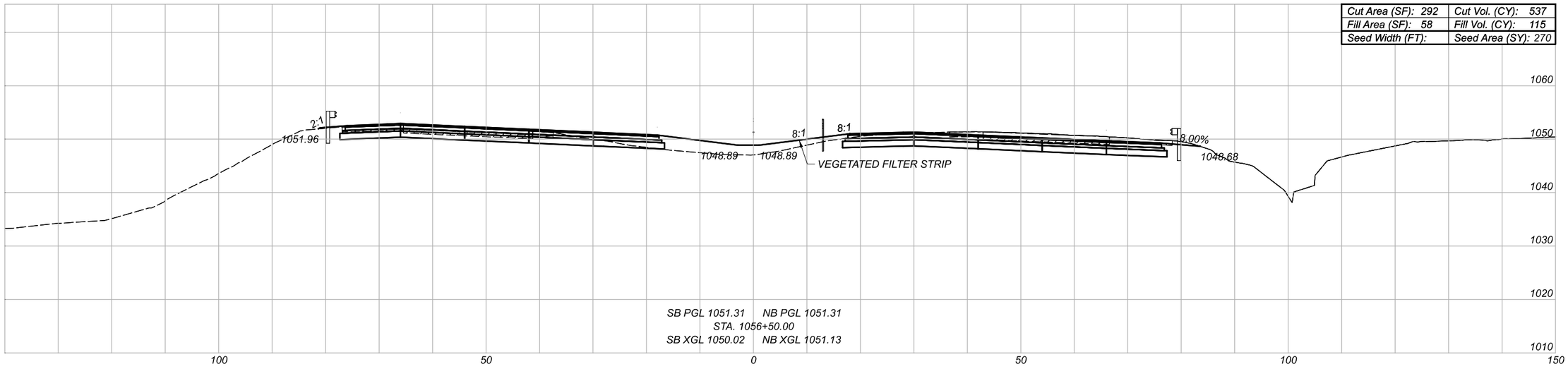

EX ASPHALT CONCRETE BASE

CROSS SECTIONS - IR-77
STA 1056+50.00 TO STA 1057+00.00

SUM-77-32.27

MODEL: I77-E-C-2 - A 1056+50.00 [Sheet] PAPERSIZE: 17x11in DATE: 2/22/2022 TIME: 8:26:24 PM USER: tdnn
pw:\\gfnet-pw.bentley.com:gfnet-pw-01\Documents\Projects\67490\104983\40i-Engineering-GF\Roadway\Sheets\104983_XS104A.dgn

DESIGN AGENCY
Gannett Fleming
ENGINEERS AND ARCHITECTS, P.C.
2500 Corporate Exchange Drive
Suite 220
Columbus, OH 43231

DESIGNER	JAS
REVIEWER	DRJ 02/01/22
PROJECT ID	104983
SHEET	136
TOTAL	297

Cut Area (SF): 285	Cut Vol. (CY): 540
Fill Area (SF): 79	Fill Vol. (CY): 115
Seed Width (FT):	Seed Area (SY): 272

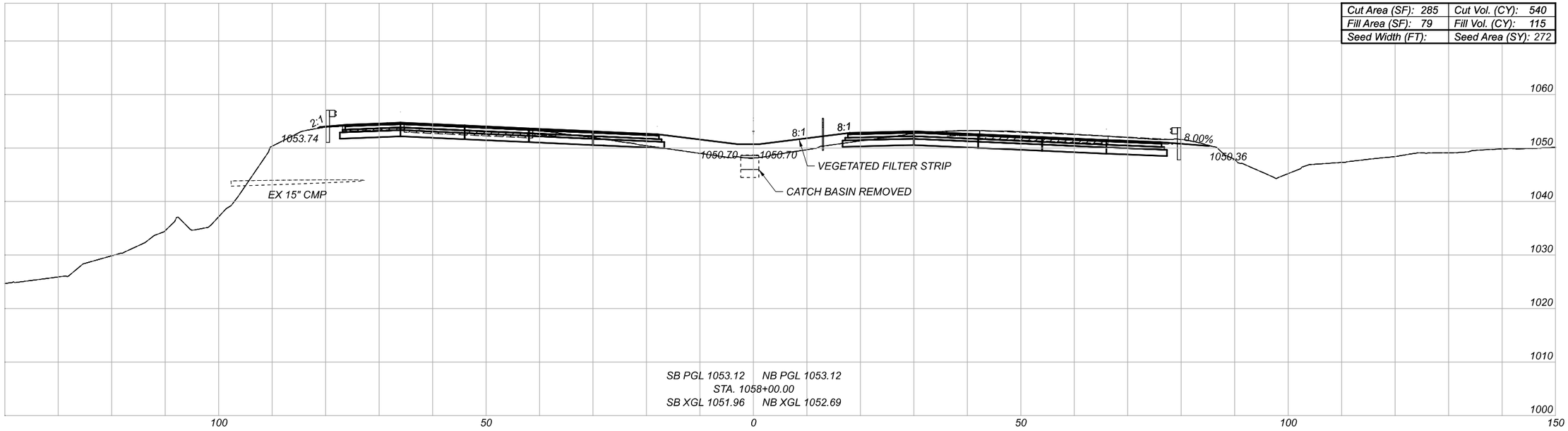

Cut Area (SF): 298	Cut Vol. (CY): 547
Fill Area (SF): 45	Fill Vol. (CY): 95
Seed Width (FT):	Seed Area (SY): 274

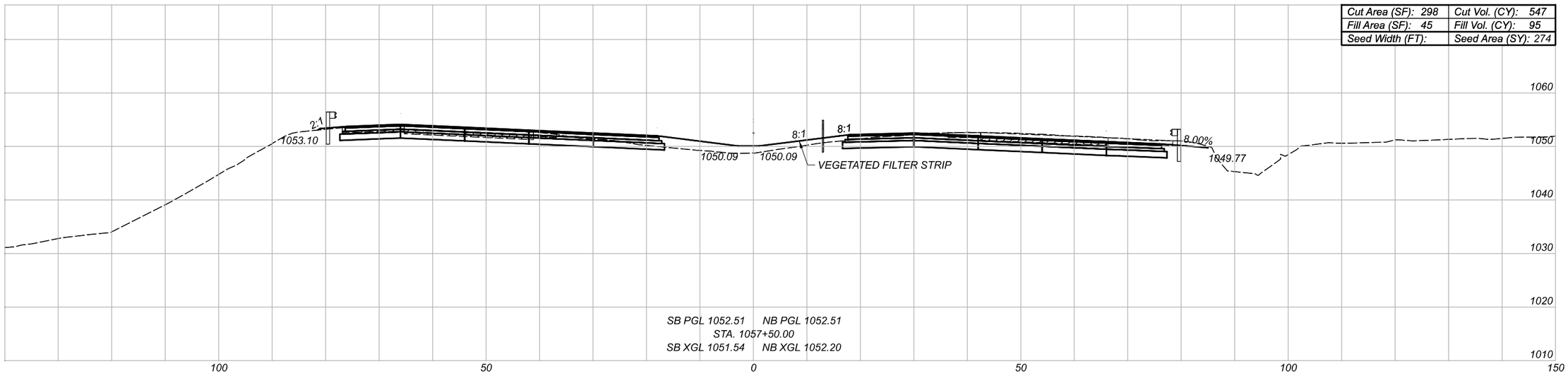

EX ASPHALT CONCRETE BASE

CROSS SECTIONS - IR-77
STA 1057+50.00 TO STA 1058+00.00

SUM-77-32.27

MODEL: I77-E-C-2 - A 1057+50.00 [Sheet] PAPERSIZE: 17x11(in.) DATE: 2/22/2022 TIME: 8:26:30 PM USER: tdmh
pw:\\gfnet-pw.bentley.com:gfnet-pw-01\Documents\Projects\67490\104983\40i-Engineering-GF\Roadway\Sheets\104983_XS04A.dgn

DESIGN AGENCY
Gannett Fleming
ENGINEERS AND ARCHITECTS, P.C.
2550 Corporate Exchange Drive
Suite 220
Columbus, OH 43231

DESIGNER JAS

REVIEWER DRJ 02/01/22

PROJECT ID 104983

SHEET 137 TOTAL 297

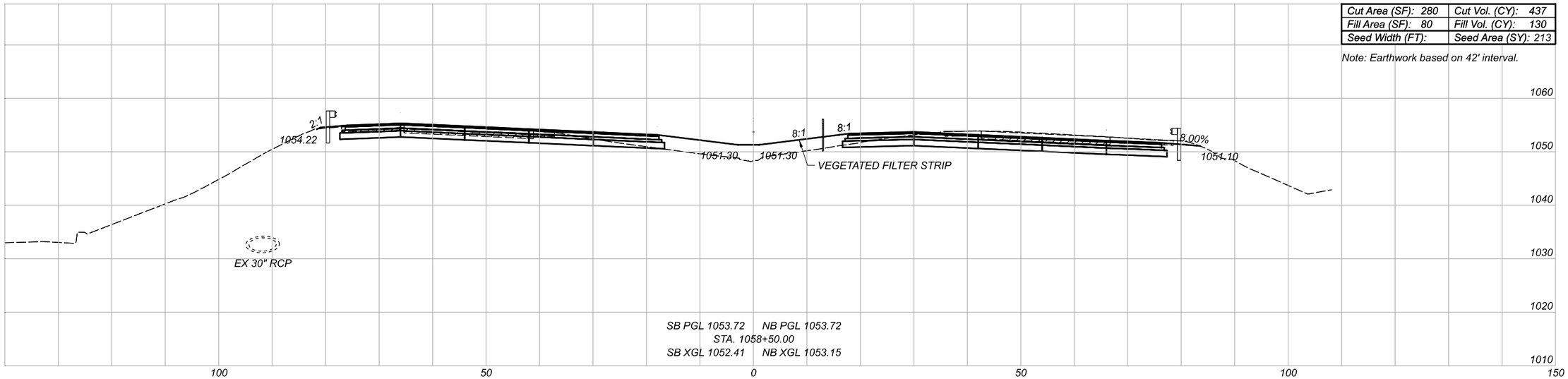

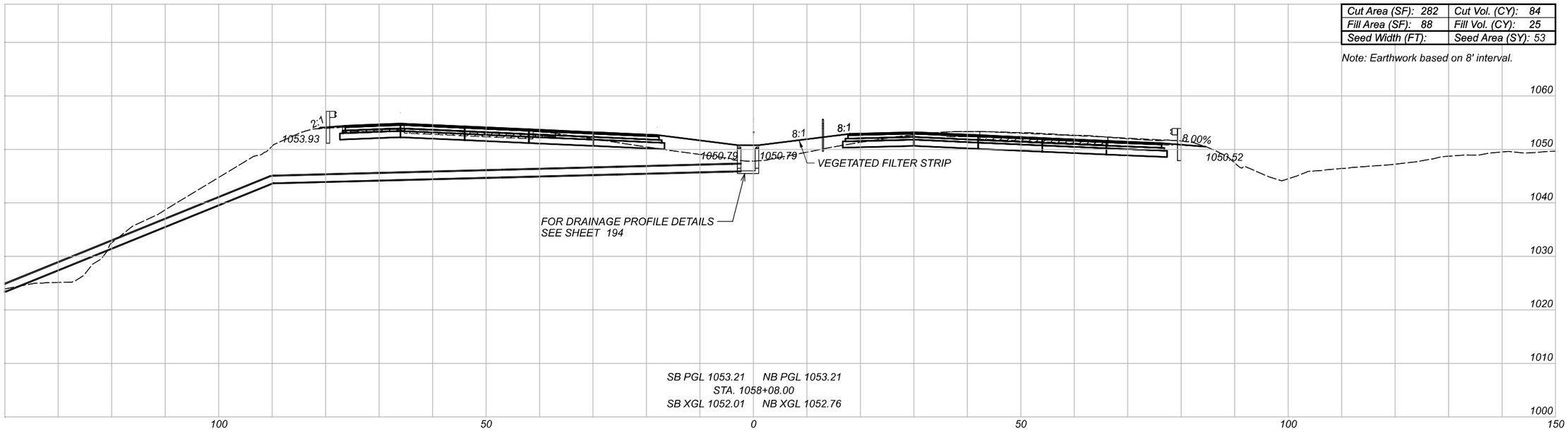

CROSS SECTIONS - IR-77
STA 1058+08.00 TO STA 1058+50.00

SUM-77-32.27

MODEL:I77-E-C-2 - A 1058+08.00 [Sheet] PAPERSIZE:17x11in DATE:2/22/2022 TIME:8:26:36 PM USER:tdinh
pw:\\gfnet-pw.bentley.com:gfnet-pw-01\Documents\Projects\67490\104983\401-Engineering-GF\Roadway\Sheets\104983_XS104A.dgn

DESIGN AGENCY
Gannett Fleming
ENGINEERS AND ARCHITECTS, P.C.
2500 Corporate Exchange Drive
Suite 230
Columbus, OH 43231

DESIGNER
JAS

REVIEWER
DRJ 02/01/22

PROJECT ID
104983

SHEET 138 TOTAL 297

Cut Area (SF): 286	Cut Vol. (CY): 525
Fill Area (SF): 62	Fill Vol. (CY): 122
Seed Width (FT):	Seed Area (SY): 260

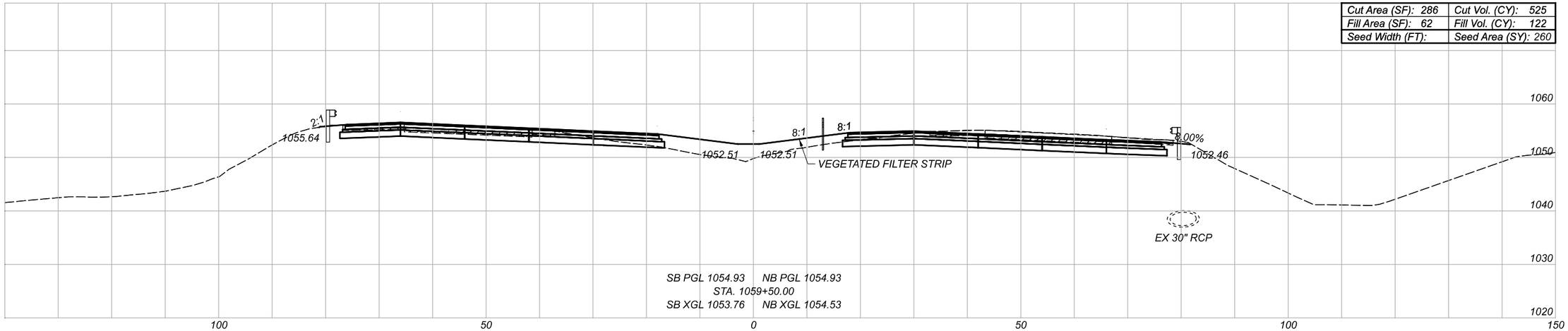

Cut Area (SF): 280	Cut Vol. (CY): 518
Fill Area (SF): 70	Fill Vol. (CY): 138
Seed Width (FT):	Seed Area (SY): 263

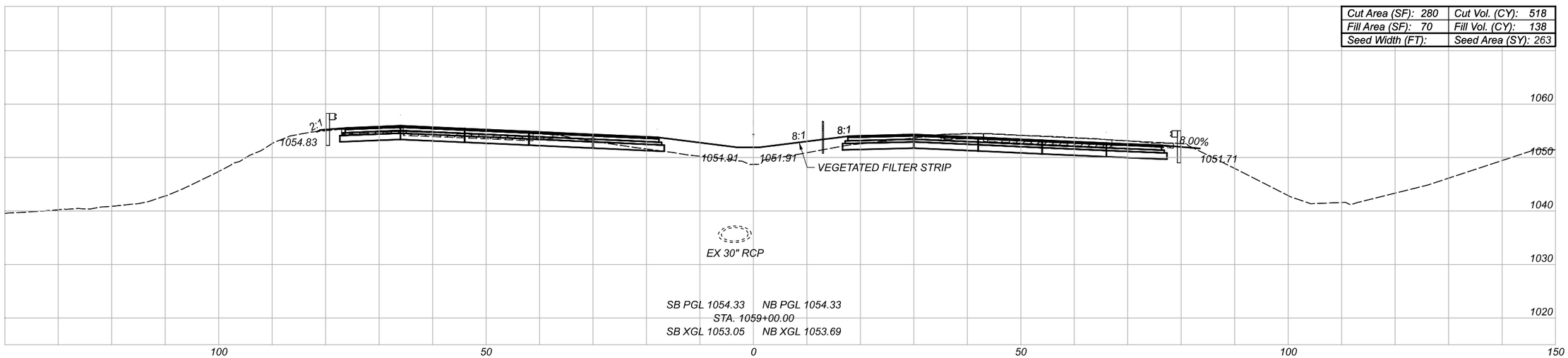

EX ASPHALT CONCRETE BASE

CROSS SECTIONS - IR-77
STA 1059+00.00 TO STA 1059+50.00

SUM-77-32.27

MODEL: i77-E-C-2 - A 1059+00.00 [Sheet] PAPERSIZE: 17x11(in) DATE: 2/22/2022 TIME: 8:26:41PM USER: tdinh
pw:\\gfnet-pw.bentley.com:gfnet-pw-01\Documents\Projects\67490\104983\40-Engineering-GF\Roadway\Sheets\104983_XS104A.dgn

DESIGN AGENCY
Gannett Fleming
ENGINEERS AND ARCHITECTS, P.C.
2500 Corporate Exchange Drive
Suite 220
Columbus, OH 43231

DESIGNER JAS

REVIEWER DRJ 02/01/22

PROJECT ID 104983

SHEET 139 TOTAL 297

Cut Area (SF): 321	Cut Vol. (CY): 569
Fill Area (SF): 0	Fill Vol. (CY): 73
Seed Width (FT):	Seed Area (SY): 202

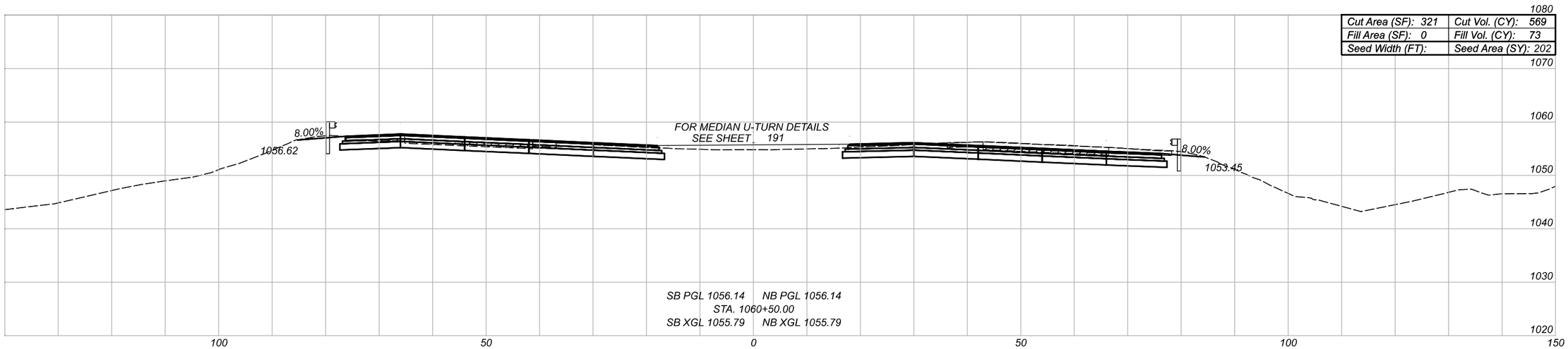

Cut Area (SF): 294	Cut Vol. (CY): 537
Fill Area (SF): 79	Fill Vol. (CY): 130
Seed Width (FT):	Seed Area (SY): 253

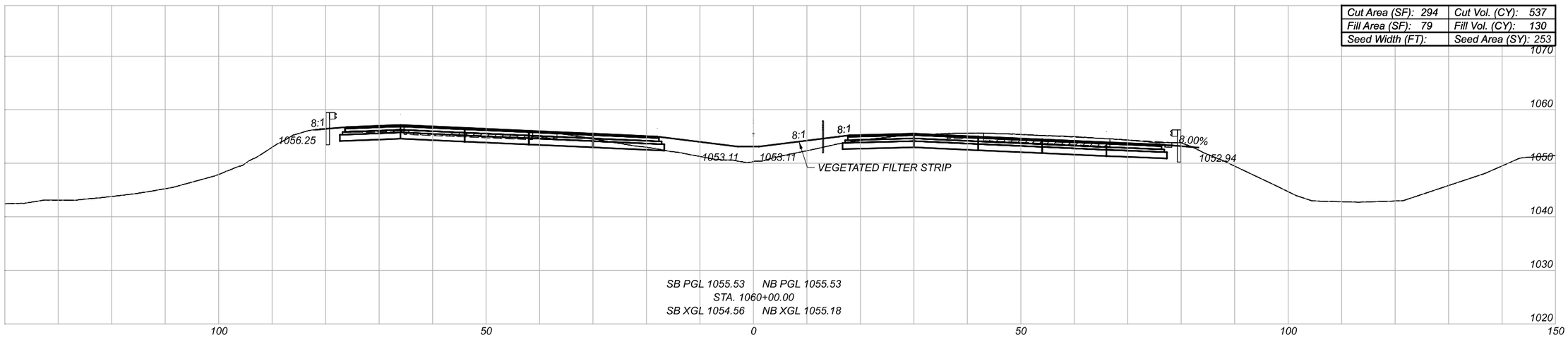

EX ASPHALT CONCRETE BASE

CROSS SECTIONS - IR-77
STA 1060+00.00 TO STA 1060+50.00

SUM-77-32.27

MODEL: I77-E-C-2 - A 1060+00.00 [Sheet] PAPERSIZE: 17x11(in.) DATE: 2/22/2022 TIME: 8:26:47 PM USER: tdinh
pw:\\gfnet-pw.bentley.comgfnet-pw-01\Documents\Projects\67490\104983\401-Engineering-GF\Roadway\Sheets\104983_XS104A.dgn

DESIGN AGENCY
Gannett Fleming
ENGINEERS AND ARCHITECTS, P.C.
2500 Corporate Exchange Drive
Suite 200
Columbus, OH 43231

DESIGNER JAS

REVIEWER DRJ 02/01/22

PROJECT ID 104983

SHEET 140 TOTAL 297

Cut Area (SF): 315	Cut Vol. (CY): 584
Fill Area (SF): 51	Fill Vol. (CY): 99
Seed Width (FT):	Seed Area (SY): 266

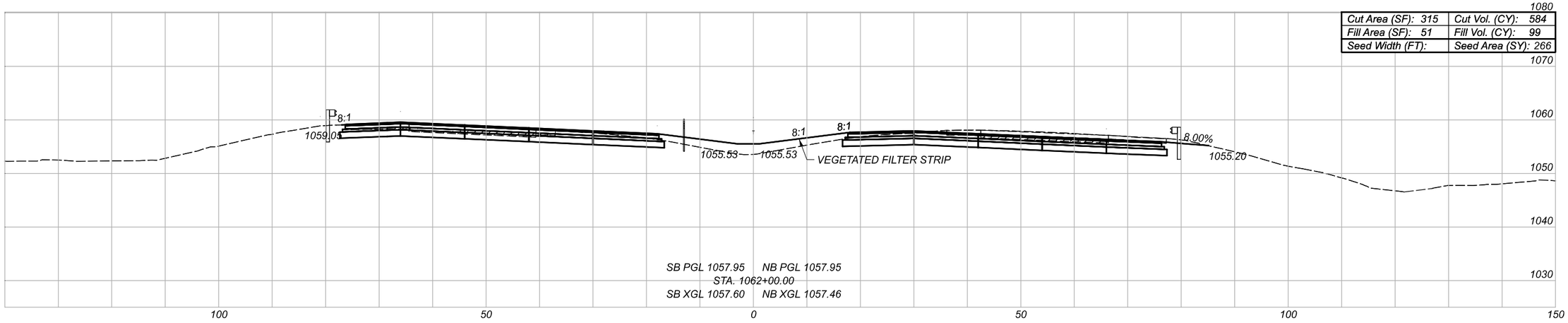

Cut Area (SF): 316	Cut Vol. (CY): 584
Fill Area (SF): 56	Fill Vol. (CY): 118
Seed Width (FT):	Seed Area (SY): 288

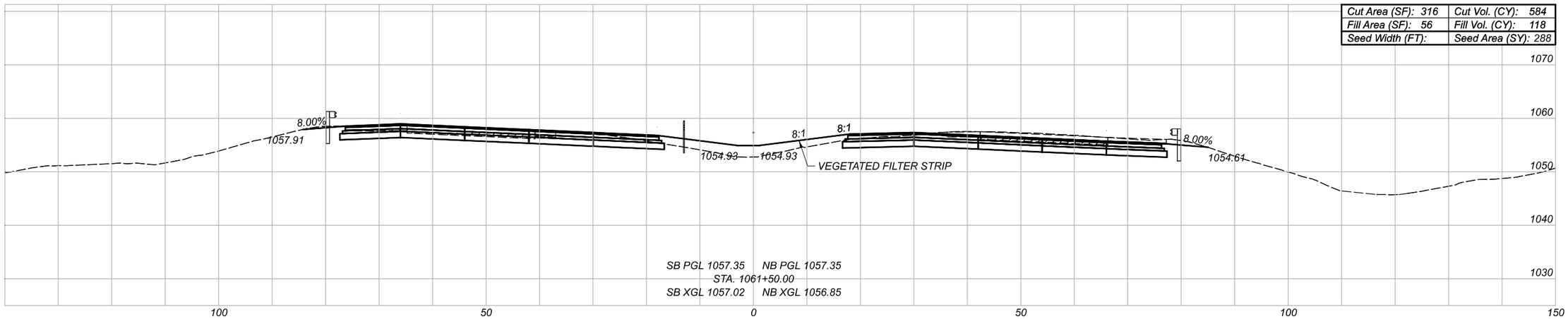

Cut Area (SF): 314	Cut Vol. (CY): 588
Fill Area (SF): 72	Fill Vol. (CY): 66
Seed Width (FT):	Seed Area (SY): 176

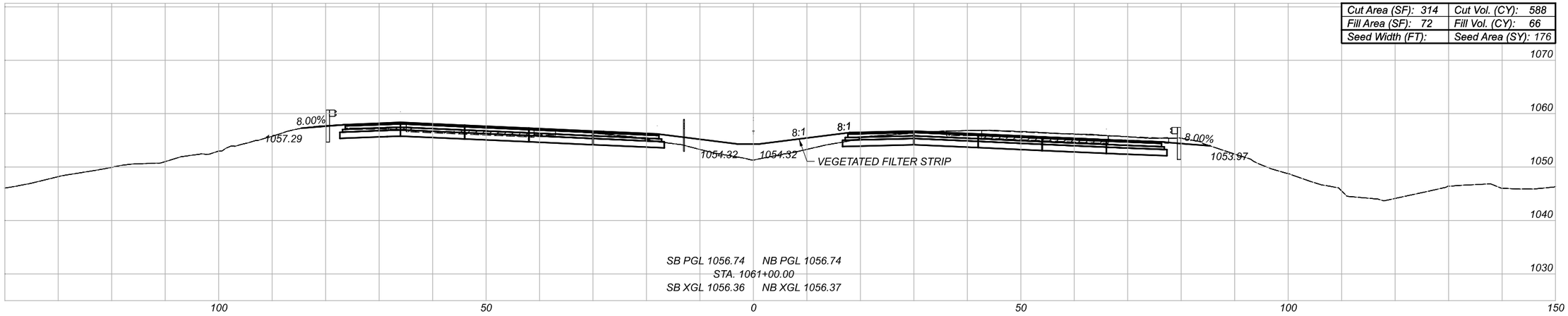

EX ASPHALT CONCRETE BASE

CROSS SECTIONS - IR-77
STA 1061+00.00 TO STA 1062+00.00

SUM-77-32.27

MODEL: I77-E-C-2 - A 1061+00.00 [Sheet] PAPERSIZE: 17x11(in) DATE: 2/22/2022 TIME: 8:26:52 PM USER: tdinh
pw:\\gfnet-pw.bentley.com:gfnet-pw-01\Documents\Projects\67490\104983\401-Engineering-GF\Roadway\Sheets\104983_XS104A.dgn

DESIGN AGENCY
Gannett Fleming
ENGINEERS AND ARCHITECTS, P.C.
2500 Corporate Exchange Drive
Suite 230
Columbus, OH 43231

DESIGNER	JAS
REVIEWER	DRJ 02/01/22
PROJECT ID	104983
SHEET	141
TOTAL	297

Cut Area (SF): 320	Cut Vol. (CY): 594
Fill Area (SF): 30	Fill Vol. (CY): 62
Seed Width (FT):	Seed Area (SY): 264

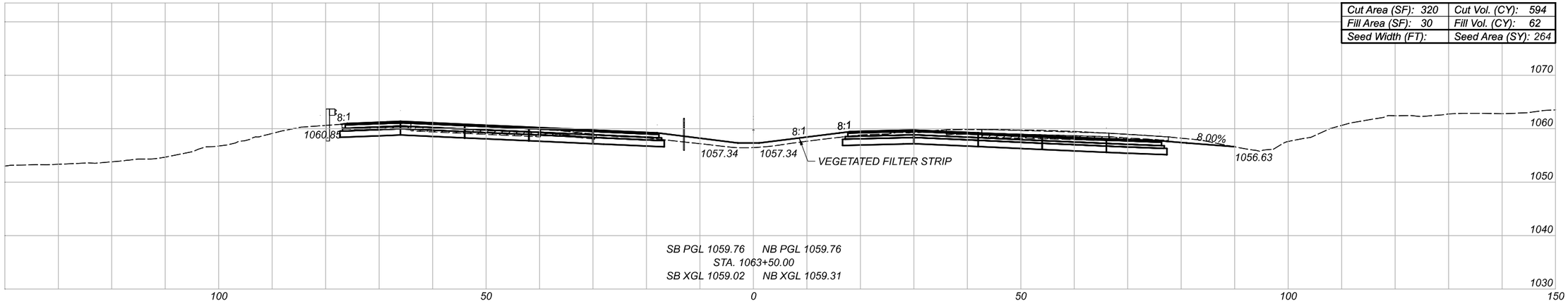

SB PGL 1059.76 NB PGL 1059.76
STA. 1063+50.00
SB XGL 1059.02 NB XGL 1059.31

Cut Area (SF): 322	Cut Vol. (CY): 592
Fill Area (SF): 37	Fill Vol. (CY): 78
Seed Width (FT):	Seed Area (SY): 261

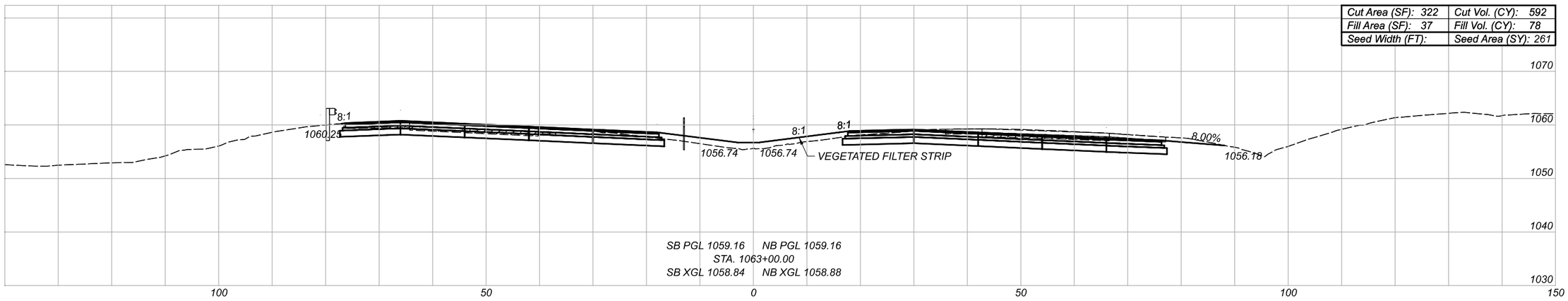

SB PGL 1059.16 NB PGL 1059.16
STA. 1063+00.00
SB XGL 1058.84 NB XGL 1058.88

Cut Area (SF): 318	Cut Vol. (CY): 585
Fill Area (SF): 47	Fill Vol. (CY): 91
Seed Width (FT):	Seed Area (SY): 252

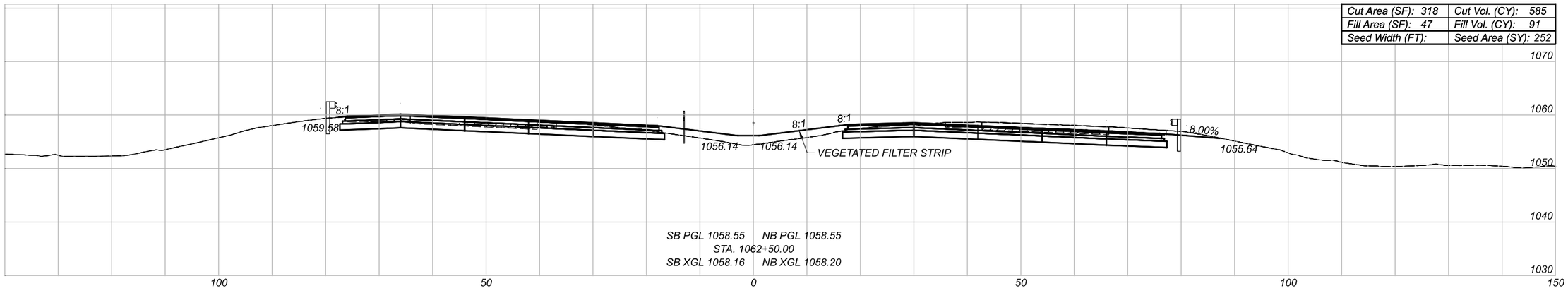

SB PGL 1058.55 NB PGL 1058.55
STA. 1062+50.00
SB XGL 1058.16 NB XGL 1058.20

EX ASPHALT CONCRETE BASE

CROSS SECTIONS - IR-77
STA 1062+50.00 TO STA 1063+50.00

SUM-77-32.27

MODEL: I77-E-C-2 - A 1062+50.00 [Sheet] PAPERSIZE: 17x11(in.) DATE: 2/22/2022 TIME: 8:26:59 PM USER: tdinh
pw:\\gfnet-pw.bentley.com:gfnet-pw-01\Documents\Projects\67490\104983\40i-Engineering-GF\Roadway\Sheets\104983_XS104A.dgn

DESIGN AGENCY
Gannett Fleming
ENGINEERS AND ARCHITECTS, P.C.
2550 Corporate Exchange Drive, Suite 220, Columbus, OH 43231

DESIGNER JAS

REVIEWER DRJ 02/01/22

PROJECT ID 104983

SHEET 142 TOTAL 297

Cut Area (SF): 323	Cut Vol. (CY): 598
Fill Area (SF): 8	Fill Vol. (CY): 18
Seed Width (FT):	Seed Area (SY): 316

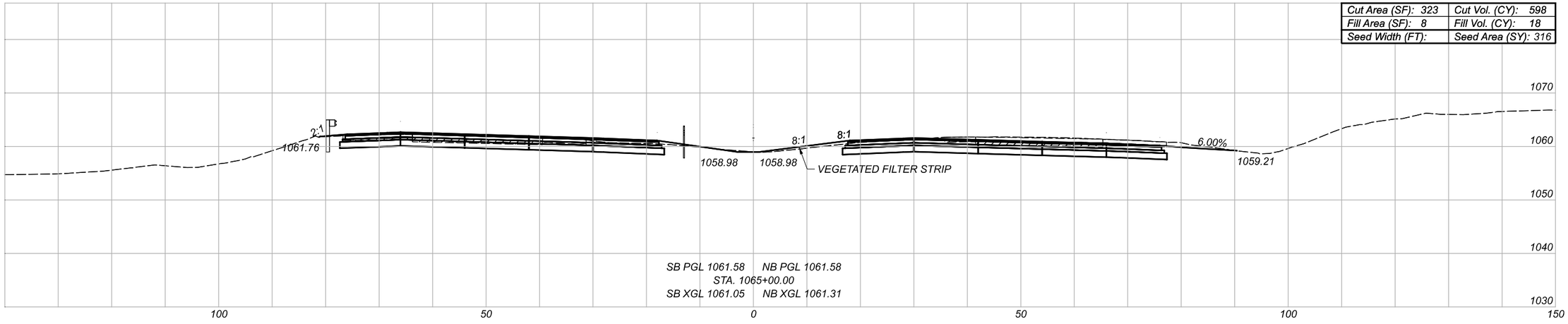

Cut Area (SF): 323	Cut Vol. (CY): 598
Fill Area (SF): 11	Fill Vol. (CY): 28
Seed Width (FT):	Seed Area (SY): 310

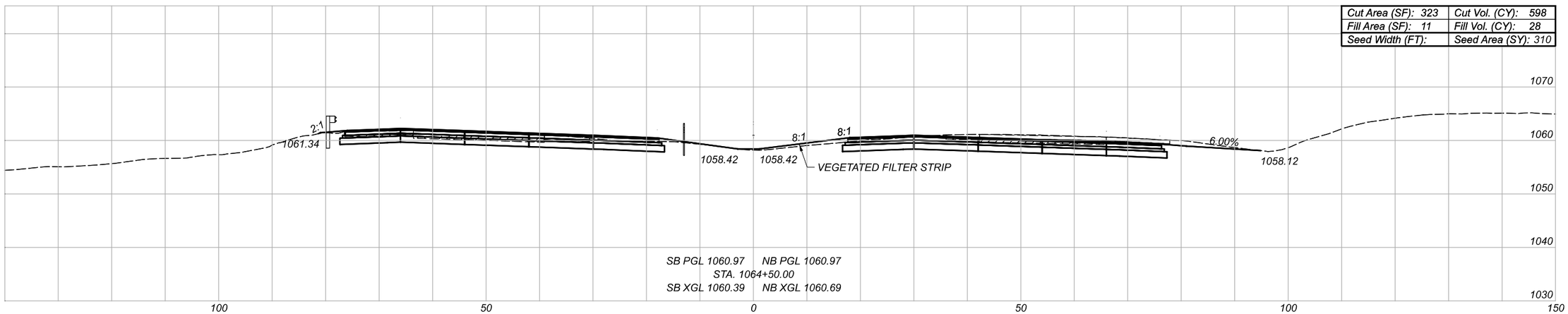

Cut Area (SF): 323	Cut Vol. (CY): 595
Fill Area (SF): 19	Fill Vol. (CY): 46
Seed Width (FT):	Seed Area (SY): 283

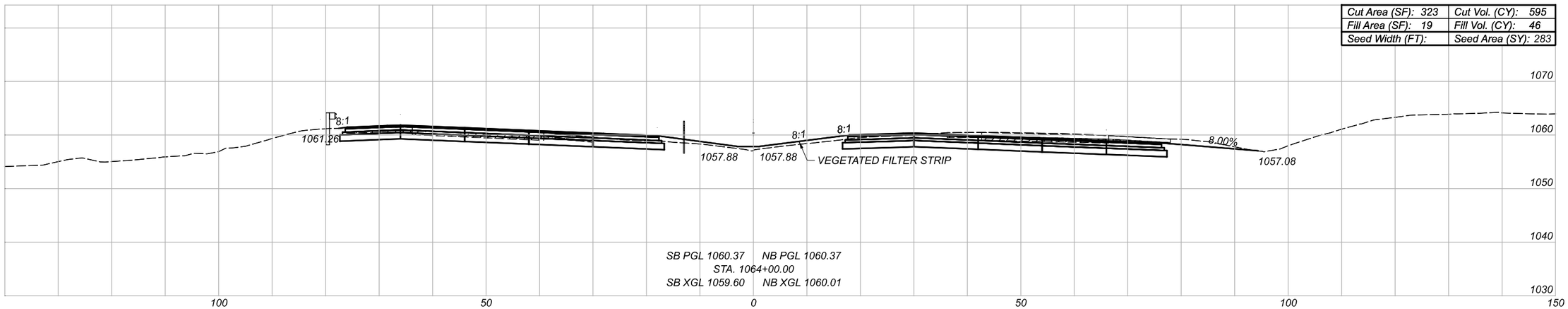

EX ASPHALT CONCRETE BASE

CROSS SECTIONS - IR-77
STA 1064+00.00 TO STA 1065+00.00

SUM-77-32.27

MODEL:I77-E-C-2 - A 1064+00.00 [Sheet] PAPERSIZE:17x11(in.) DATE:2/22/2022 TIME:8:27:07 PM USER:tdinh
pw:\\gfnet-pw.bentley.com:gfnet-pw-01\Documents\Projects\67490\104983\401-Engineering-GF\Roadway\Sheets\104983_XS104A.dgn

DESIGN AGENCY
Gannett Fleming
ENGINEERS AND ARCHITECTS, P.C.
2500 Corporate Exchange Drive
Suite 230
Columbus, OH 43231

DESIGNER JAS

REVIEWER DRJ 02/01/22

PROJECT ID 104983

SHEET 143 TOTAL 297

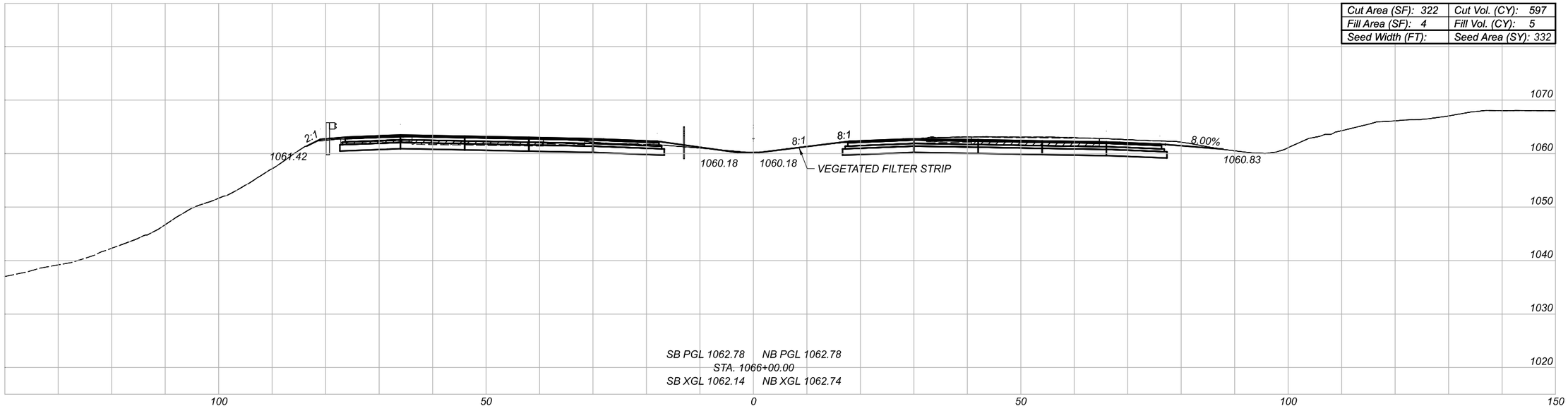

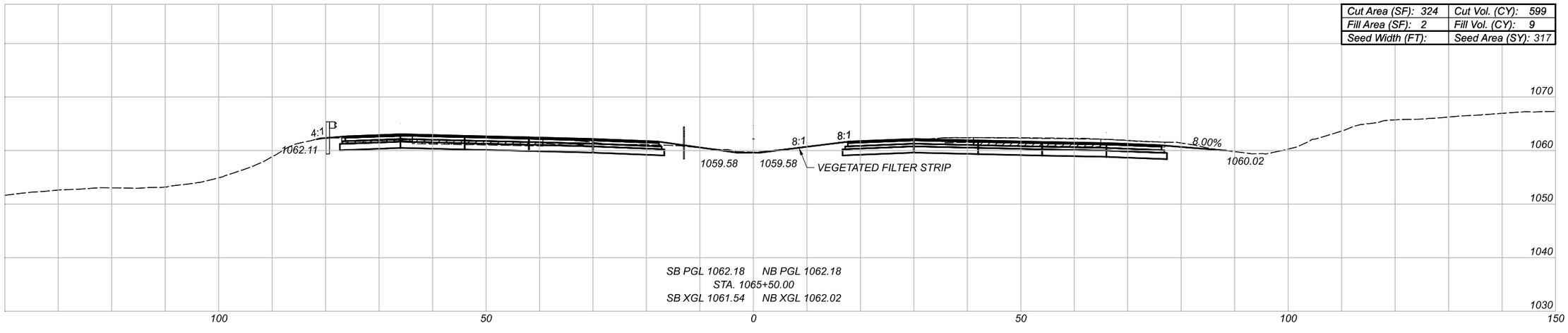

EX ASPHALT CONCRETE BASE

CROSS SECTIONS - IR-77
STA 1065+50.00 TO STA 1066+00.00

SUM-77-32.27

MODEL: I77-E-C-2 - A 1065+50.00 [Sheet] PAPERSIZE: 17x11(in.) DATE: 2/22/2022 TIME: 8:27:13 PM USER: tdinh
pw:\\gfnet-pw.bentley.com:gfnet-pw-01\Documents\Projects\67490\104983\401-Engineering-GF\Roadway\Sheets\104983_XS104A.dgn

DESIGN AGENCY
Gannett Fleming
ENGINEERS AND ARCHITECTS, P.C.
2500 Corporate Exchange Drive
Suite 230
Columbus, OH 43231

DESIGNER JAS

REVIEWER DRJ 02/01/22

PROJECT ID 104983

SHEET 144 TOTAL 297

CROSS SECTIONS - IR-77
STA 1066+50.00 TO STA 1067+00.00

Cut Area (SF): 326	Cut Vol. (CY): 611
Fill Area (SF): 6	Fill Vol. (CY): 9
Seed Width (FT):	Seed Area (SY): 288

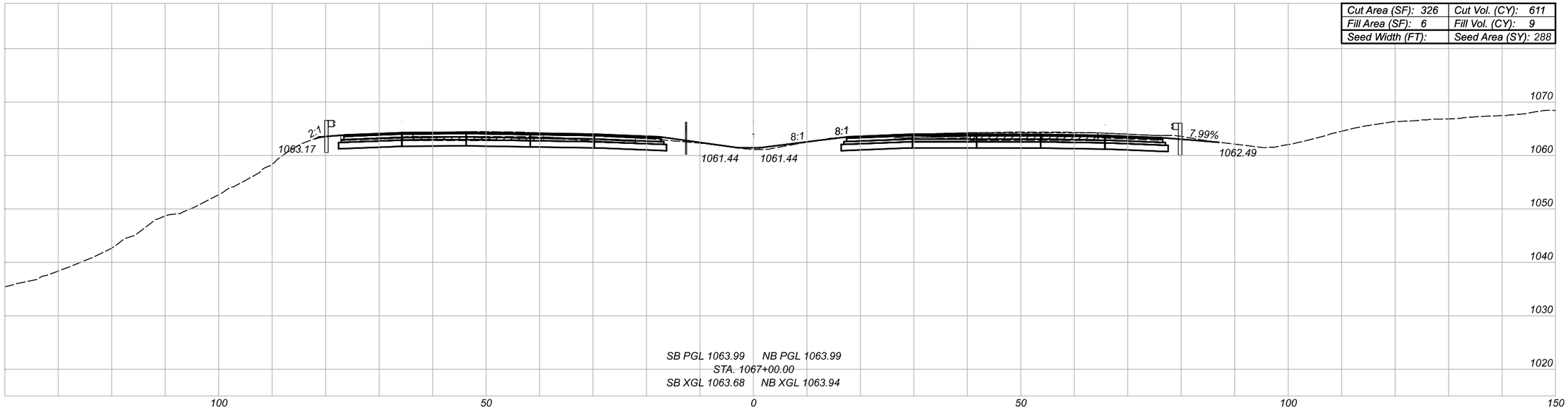

SB PGL 1063.99 NB PGL 1063.99
STA. 1067+00.00
SB XGL 1063.68 NB XGL 1063.94

Cut Area (SF): 333	Cut Vol. (CY): 606
Fill Area (SF): 4	Fill Vol. (CY): 7
Seed Width (FT):	Seed Area (SY): 301

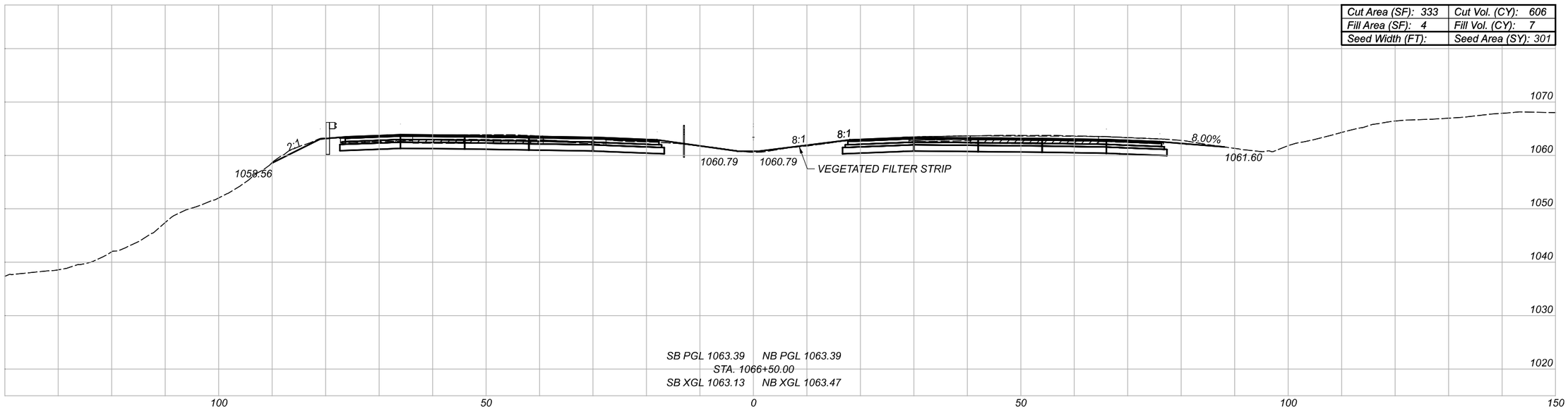

SB PGL 1063.39 NB PGL 1063.39
STA. 1066+50.00
SB XGL 1063.13 NB XGL 1063.47

EX ASPHALT CONCRETE BASE

DESIGN AGENCY
Gannett Fleming
ENGINEERS AND ARCHITECTS, P.C.
2500 Corporate Exchange Drive
Suite 230
Columbus, OH 43231

DESIGNER JAS
REVIEWER DRJ 02/01/22
PROJECT ID 104983
SHEET 145 TOTAL 297

SUM-77-32.27

MODEL: I77-E-C-2 - A I066+50.00 [Sheet] PAPERSIZE: 17x11(in.) DATE: 2/22/2022 TIME: 8:27:17 PM USER: tdinh
pw:\\gfnet-pw.bentley.com:gfnet-pw-01\Documents\Projects\67490\104983\40-Engineering-GF\Roadway\Sheets\104983_XS104A.dgn

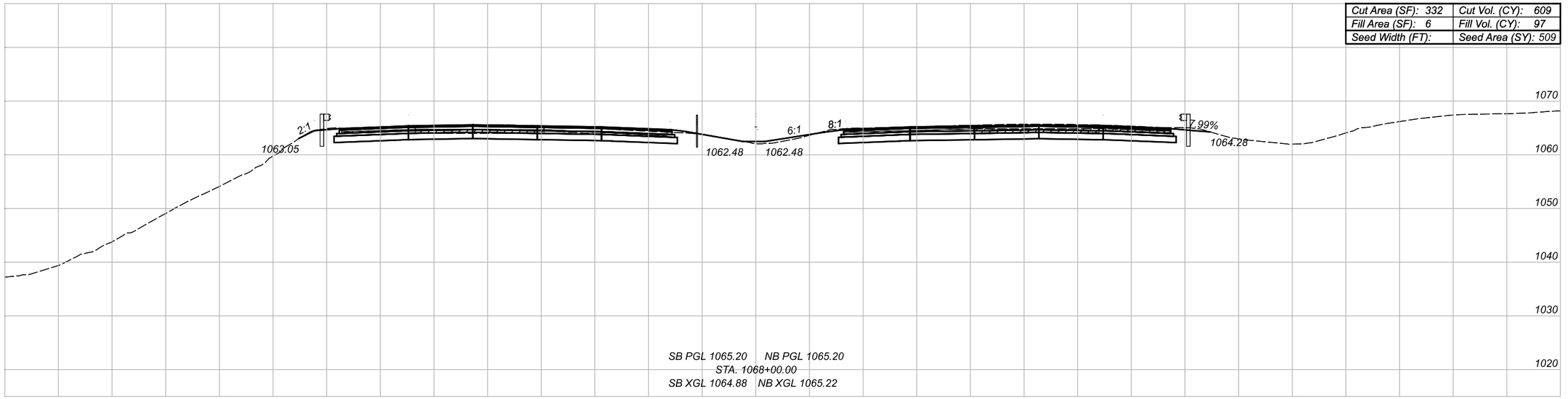

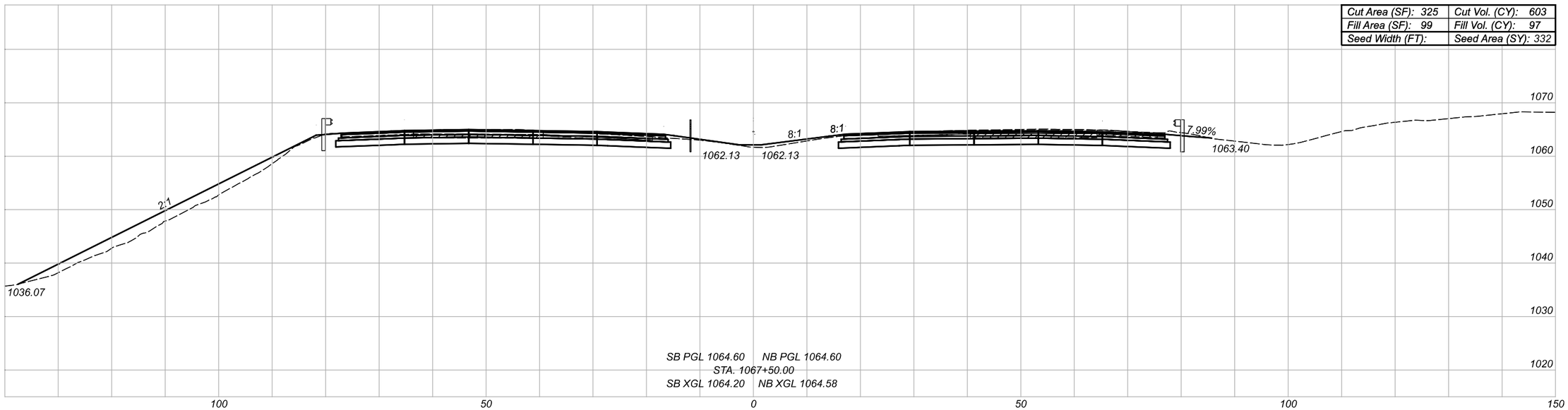

EX ASPHALT CONCRETE BASE

CROSS SECTIONS - IR-77
STA 1067+50.00 TO STA 1068+00.00

SUM-77-32.27

MODEL: I77-E-C-2 - A 1067+50.00 [Sheet] PAPERSIZE: 17x11(in) DATE: 2/22/2022 TIME: 8:27:21 PM USER: tdinh
pw:\\gfnet-pw.bentley.com:gfnet-pw-01\Documents\Projects\67490\104983\40i-Engineering-GF\Roadway\Sheets\104983_XS104A.dgn

DESIGN AGENCY
Gannett Fleming
ENGINEERS AND ARCHITECTS, P.C.
2500 Corporate Exchange Drive
Suite 230
Columbus, OH 43231

DESIGNER	JAS
REVIEWER	DRJ 02/01/22
PROJECT ID	104983
SHEET	146
TOTAL	297

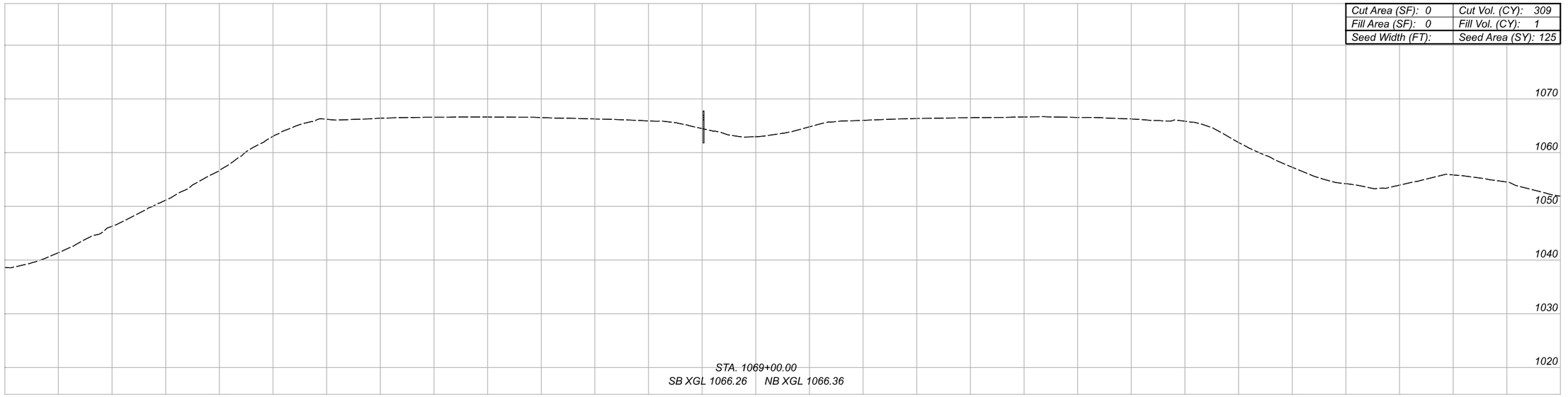

END PROJECT
STA. 1068+75.00

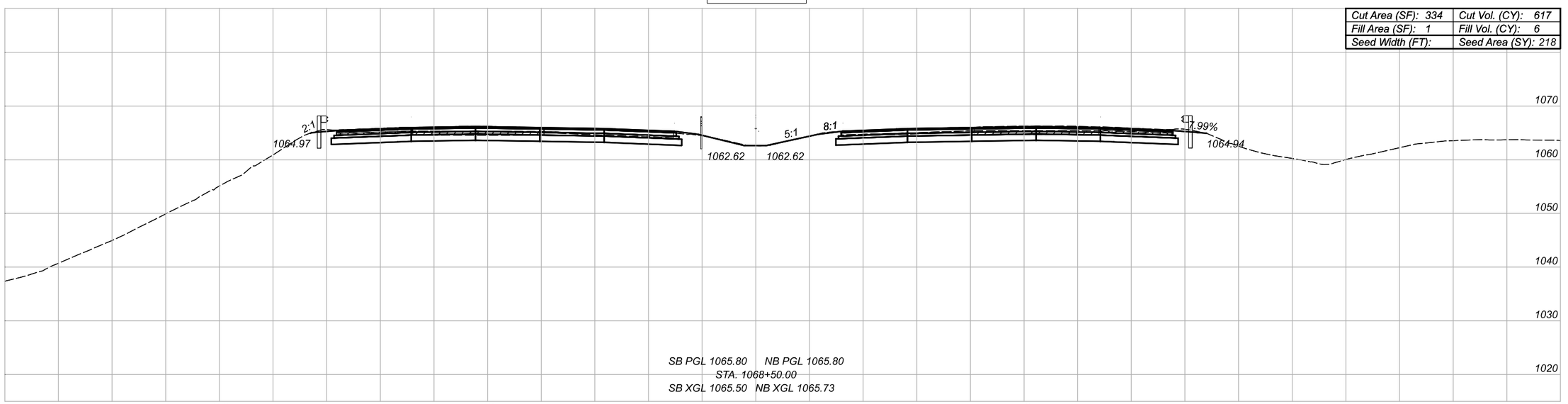

EX ASPHALT CONCRETE BASE

CROSS SECTIONS - IR-77
STA 1068+50.00 TO STA 1069+00.00

SUM-77-32.27

MODEL:I77-E-C-2 - A 1068+50.00 [Sheet] PAPERSIZE:17x11(in.) DATE:2/22/2022 TIME:8:27:25 PM USER:tdinh
pw:\\gfnet-pw.bentley.comgfnet-pw-01\Documents\Projects\67490\104983\40i-Engineering-GF\Roadway\Sheets\104983_XS104A.dgn

DESIGN AGENCY
Gannett Fleming
ENGINEERS AND ARCHITECTS, P.C.
2500 Corporate Exchange Drive
Suite 220
Columbus, OH 43231

DESIGNER
JAS

REVIEWER
DRJ 02/01/22

PROJECT ID
104983

SHEET 147 TOTAL 297

Cut Area (SF): 0	Cut Vol. (CY): 0
Fill Area (SF): 0	Fill Vol. (CY): 0
Seed Width (FT):	Seed Area (SY): 0
Total Carried to General Note	
Cut Vol. (CY): 50387	
Fill Vol. (CY): 7367	
Seed Area (SY): 25438	

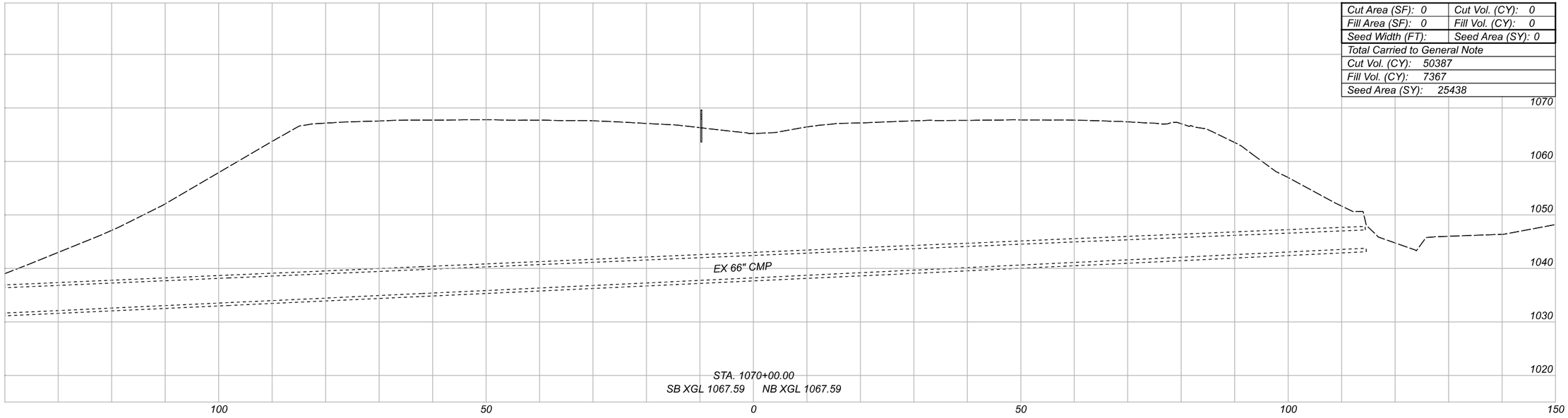

Cut Area (SF): 0	Cut Vol. (CY): 0
Fill Area (SF): 0	Fill Vol. (CY): 0
Seed Width (FT):	Seed Area (SY): 0

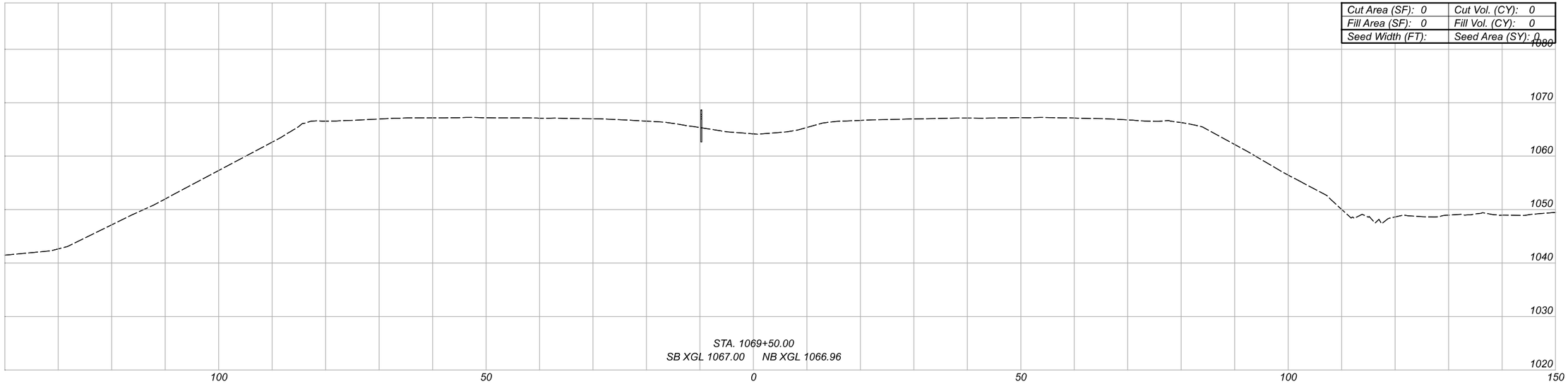

EX ASPHALT CONCRETE BASE

CROSS SECTIONS - IR-77
STA 1069+50.00 TO STA 1070+00.00

SUM-77-32.27

MODEL:I77-E-C-2 - A 1069+50.00 [Sheet] PAPERSIZE:17x11(in.) DATE:2/22/2022 TIME:8:27:28 PM USER:tdinh
pw:\\gfnet-pw.bentley.com:gfnet-pw-01\Documents\Projects\67490\104983\401-Engineering-GF\Roadway\Sheets\104983_XS104A.dgn

DESIGN AGENCY
Gannett Fleming
ENGINEERS AND ARCHITECTS, P.C.
2500 Corporate Exchange Drive
Suite 230
Columbus, OH 43231

DESIGNER JAS

REVIEWER DRJ 02/01/22

PROJECT ID 104983

SHEET 148 TOTAL 297

Cut Area (SF): 54	Cut Vol. (CY): 80
Fill Area (SF): 0	Fill Vol. (CY): 11
Seed Width (FT):	Seed Area (SY): 77

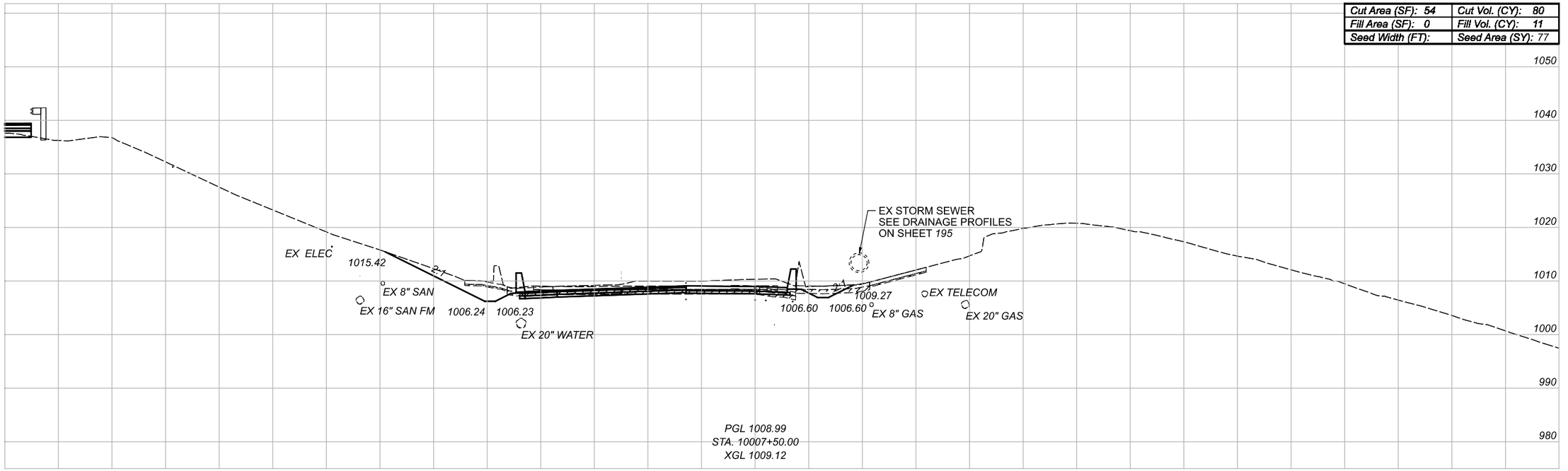

Cut Area (SF): 45	Cut Vol. (CY): 0
Fill Area (SF): 13	Fill Vol. (CY): 0
Seed Width (FT):	Seed Area (SY): 0

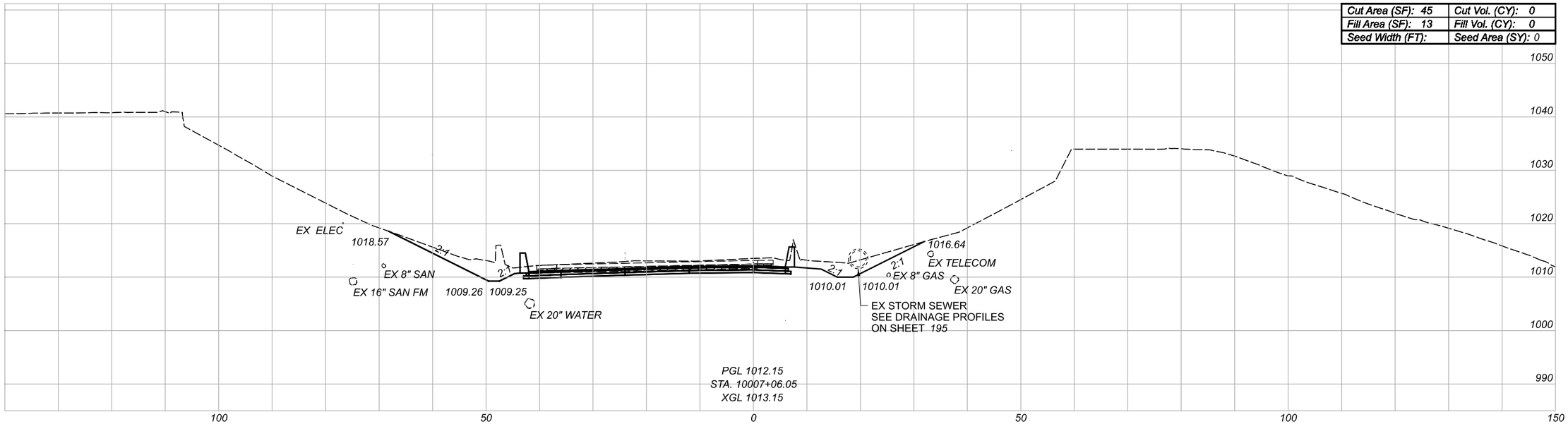

BEGIN WORK
STA. 10007+06.05

EX ASPHALT CONCRETE BASE

CROSS SECTIONS - SR-21 RAMP G
STA 10007+06.05 TO STA 10007+50.00

SUM-77-32.27

MODEL: BLP_R02IC-I- 10007+06.05 [Sheet] PAPERSIZE: 17x11 (in.) DATE: 2/22/2022 TIME: 8:30:57 PM USER: tdinh
pw:\\gfnet-pw.bentley.com:gfnet-pw-01\Documents\Projects\67490\104983\40I-Engineering-GF\Roadway\Sheets\104983_XS402.dgn

DESIGN AGENCY
Gannett Fleming
ENGINEERS AND ARCHITECTS, P.C.
2500 Corporate Exchange Drive
Suite 230
Columbus, OH 43231

DESIGNER: JAS
REVIEWER: DRJ 02/01/22
PROJECT ID: 104983
SHEET: 149 TOTAL: 297

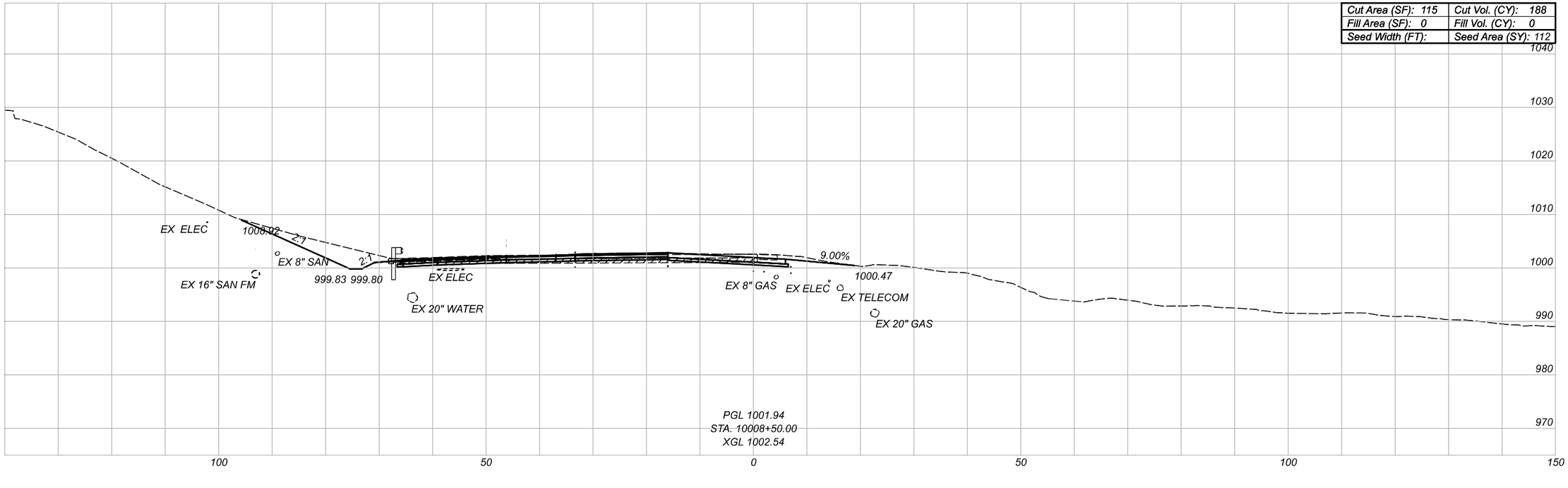

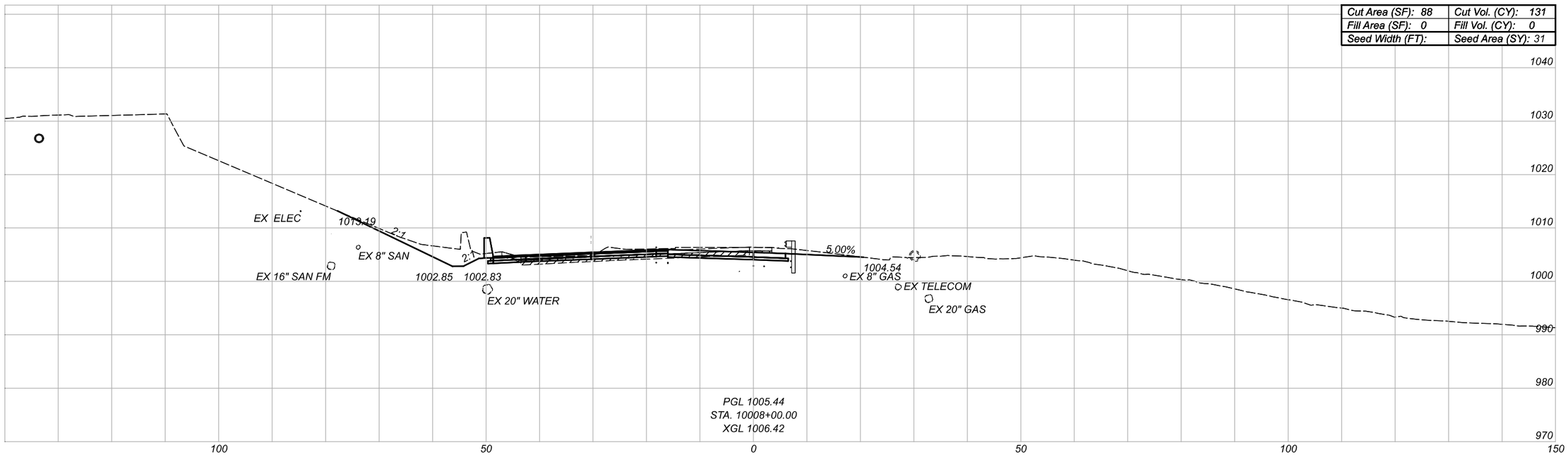

EX ASPHALT CONCRETE BASE

CROSS SECTIONS - SR-21 RAMP G
STA 10008+00.00 TO STA 10008+50.00

SUM-77-32.27

MODEL: BLP_R02IG-I - I0008+00.00 [Sheet] PAPERSIZE: 17x11(in.) DATE: 2/22/2022 TIME: 8:35:03 PM USER: tdinh
pw:\\gfnet-pw.bentley.com:gfnet-pw-01\Documents\Projects\67490\104983\40i-Engineering-GF\Roadway\Sheets\104983_XS402.dgn

DESIGN AGENCY
Gannett Fleming
ENGINEERS AND ARCHITECTS, P.C.
2500 Corporate Exchange Drive
Suite 230
Columbus, OH 43231

DESIGNER: JAS
REVIEWER: DRJ 02/01/22
PROJECT ID: 104983
SHEET: 150 TOTAL: 297

Cut Area (SF): 61	Cut Vol. (CY): 109
Fill Area (SF): 19	Fill Vol. (CY): 25
Seed Width (FT):	Seed Area (SY): 203

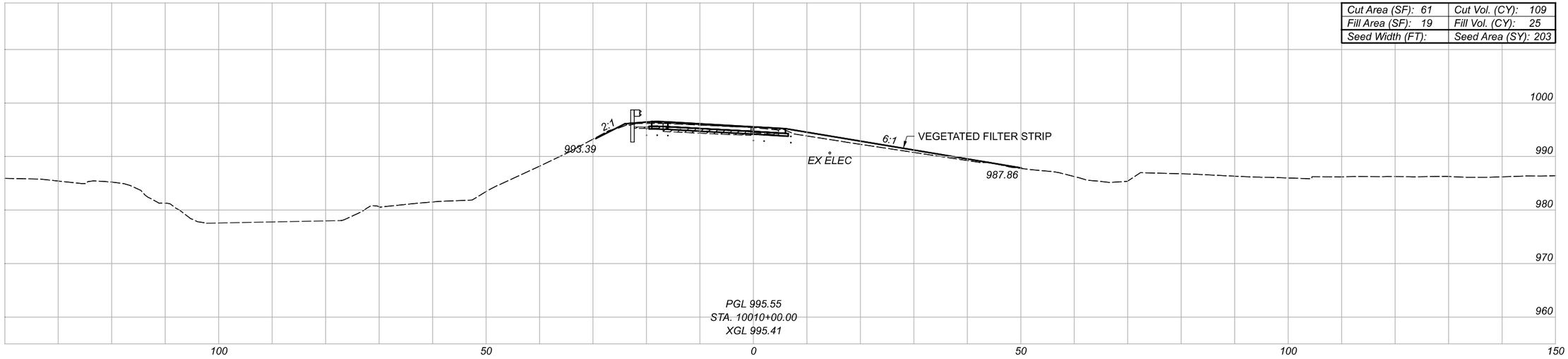

Cut Area (SF): 57	Cut Vol. (CY): 113
Fill Area (SF): 8	Fill Vol. (CY): 10
Seed Width (FT):	Seed Area (SY): 76

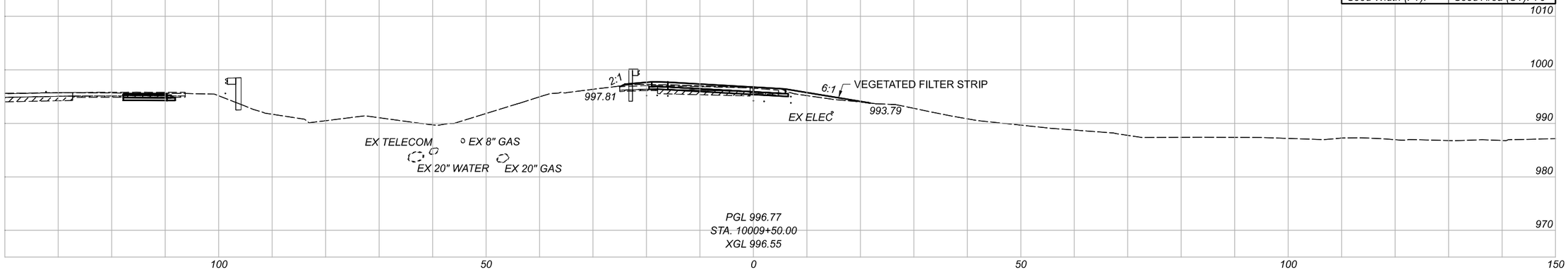

Cut Area (SF): 65	Cut Vol. (CY): 166
Fill Area (SF): 3	Fill Vol. (CY): 2
Seed Width (FT):	Seed Area (SY): 50

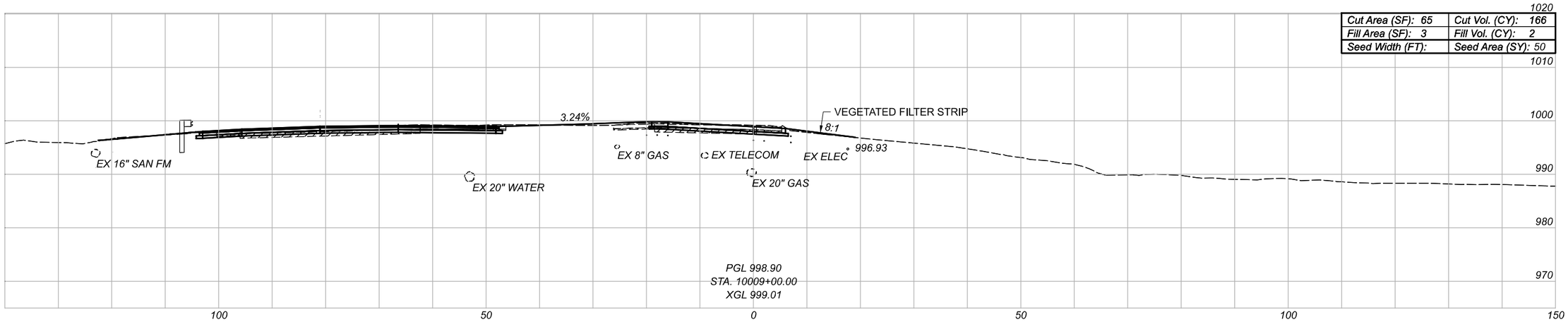

EX ASPHALT CONCRETE BASE

CROSS SECTIONS - SR-21 RAMP G
STA 10009+00.00 TO STA 10010+00.00

DESIGN AGENCY
Gannett Fleming
ENGINEERS AND ARCHITECTS, P.C.
2500 Corporate Exchange Drive
Suite 230
Columbus, OH 43231

DESIGNER
JAS

REVIEWER
DRJ 02/01/22

PROJECT ID
104983

SHEET 151 | TOTAL 297

SUM-77-32.27

MODEL: BLP_R02(C-I- 10009+00.00 [Sheet] PAPERSIZE: 17x11in) DATE: 2/22/2022 TIME: 8:3:09 PM USER: tdinh
pw:\\gfnet-pw.bentley.com:gfnet-pw-01\Documents\Projects\67490\104983\401-Engineering-GF\Roadway\Sheets\104983_XS402.dgn

Cut Area (SF): 149	Cut Vol. (CY): 224
Fill Area (SF): 0	Fill Vol. (CY): 0
Seed Width (FT):	Seed Area (SY): 143

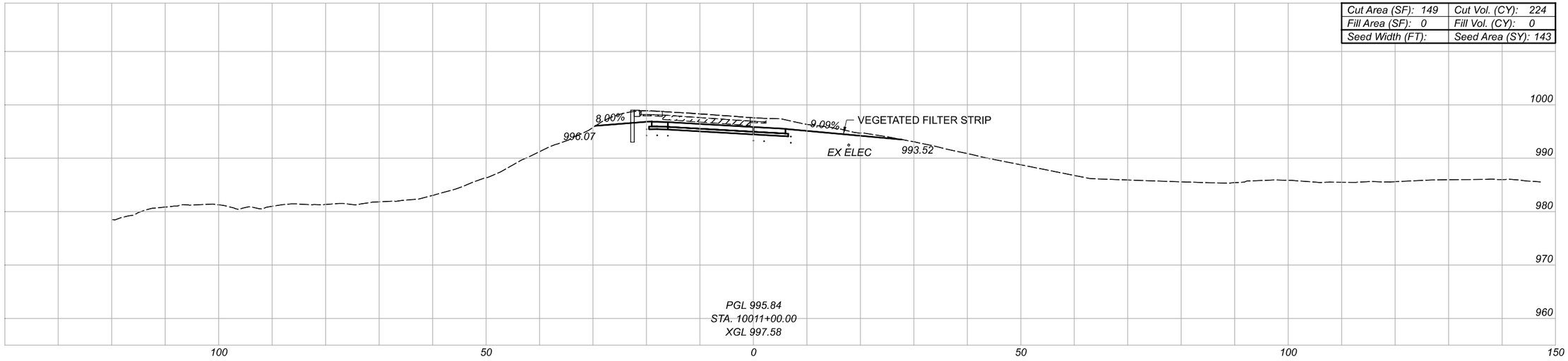

Cut Area (SF): 93	Cut Vol. (CY): 143
Fill Area (SF): 0	Fill Vol. (CY): 17
Seed Width (FT):	Seed Area (SY): 101

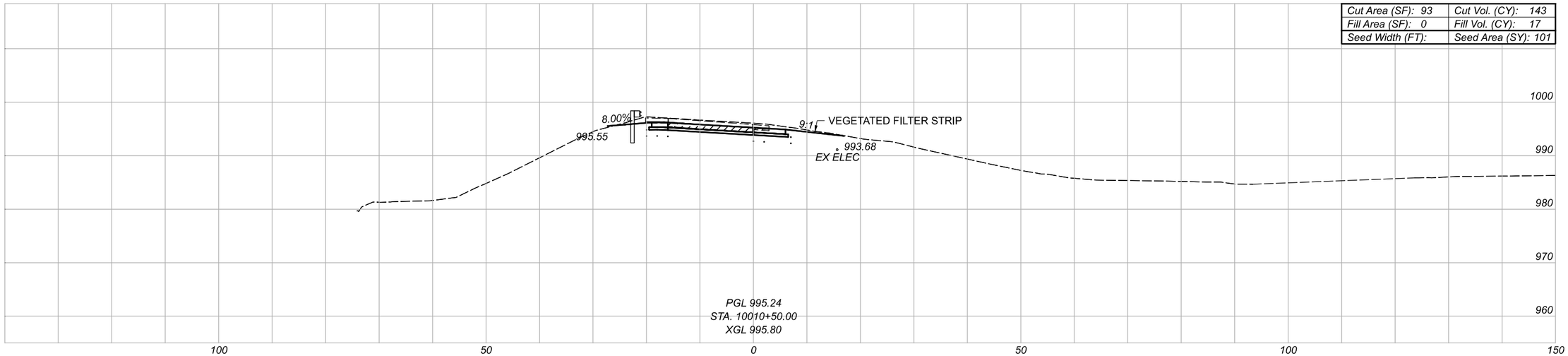

Cut Area (SF): 70	Cut Vol. (CY): 49
Fill Area (SF): 4	Fill Vol. (CY): 9
Seed Width (FT):	Seed Area (SY): 67

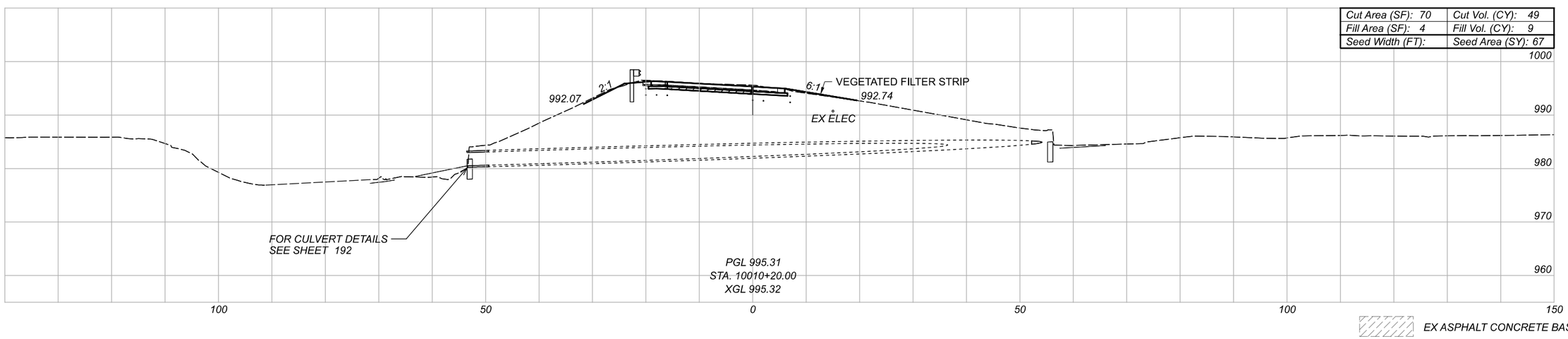

EX ASPHALT CONCRETE BASE

CROSS SECTIONS - SR-21 RAMP G
STA 10010+20.00 TO STA 10011+00.00

SUM-77-32.27

MODEL: BLP_ROADWAY_1 - 10010+50.00 (Sheet1 PAPERSIZE: 17x11in) DATE: 2/22/2022 TIME: 8:38:08 PM USER: tdinh
pw:\\gfnet-pw.bentley.com:gfnet-pw-01\Documents\Projects\67490\104983\401-Engineering-GF\Roadway\Sheets\104983_XS402.dgn

DESIGN AGENCY
Gannett Fleming
ENGINEERS AND ARCHITECTS, P.C.
2500 Corporate Exchange Drive
Suite 230
Columbus, OH 43231

DESIGNER: JAS

REVIEWER: DRJ 02/01/22

PROJECT ID: 104983

SHEET: 152 TOTAL: 297

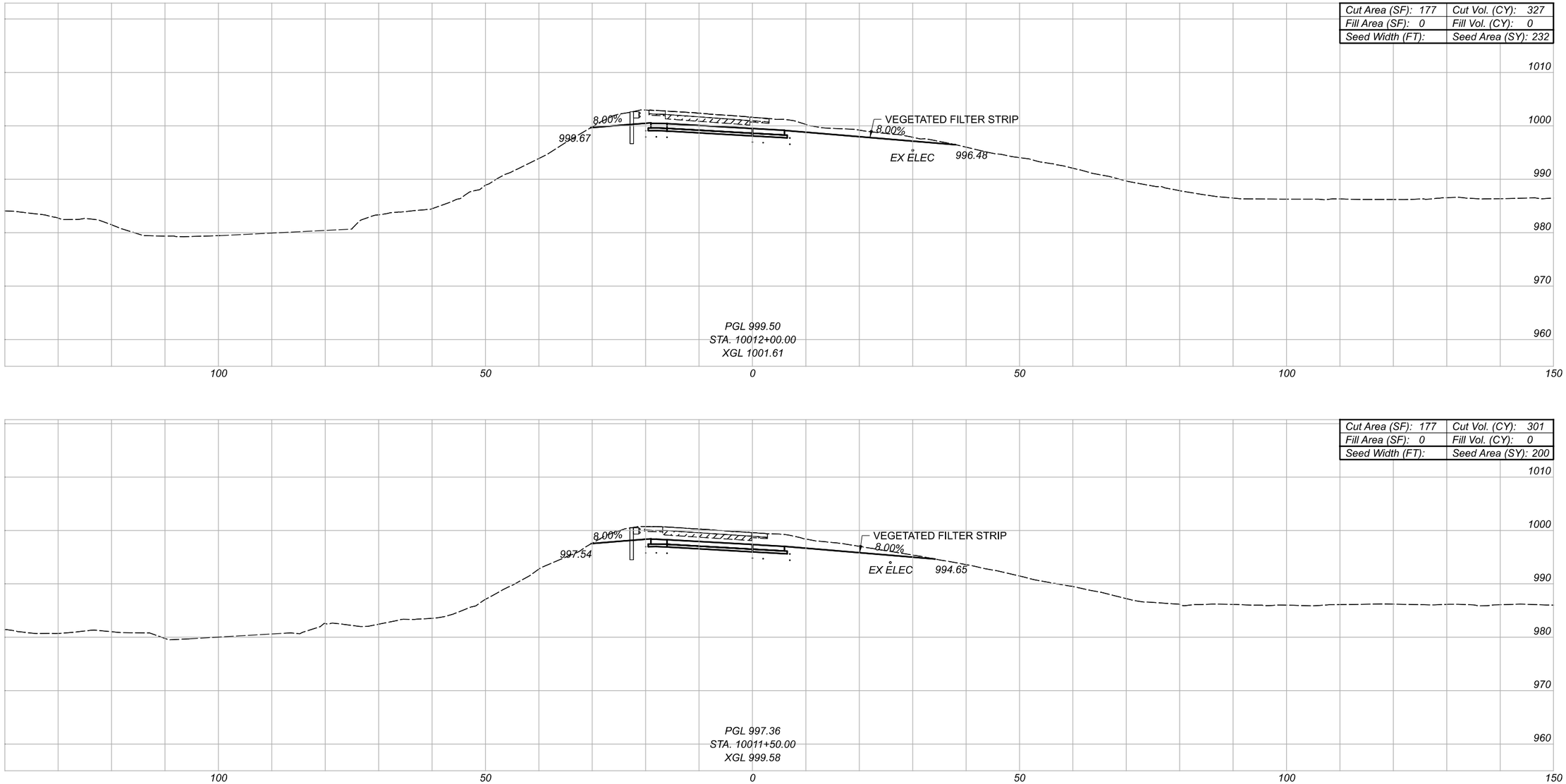

CROSS SECTIONS - SR-21 RAMP G
STA 10011+50.00 TO STA 10012+00.00

SUM-77-32.27

MODEL: BLP_RO2(G-I - 10011+50.00 [Sheet] PAPERSIZE: 17x11(in.) DATE: 2/22/2022 TIME: 8:31:25 PM USER: tdinh
pw:\\gfnet-pw.bentley.com:gfnet-pw-01\Documents\Projects\67490\104983\40-Engineering-GF\Roadway\Sheets\104983_XS402.dgn

DESIGN AGENCY
Gannett Fleming
ENGINEERS AND ARCHITECTS, P.C.
2500 Corporate Exchange Drive
Suite 220
Columbus, OH 43231

DESIGNER	JAS
REVIEWER	DRJ 02/01/22
PROJECT ID	104983
SHEET	153
TOTAL	297

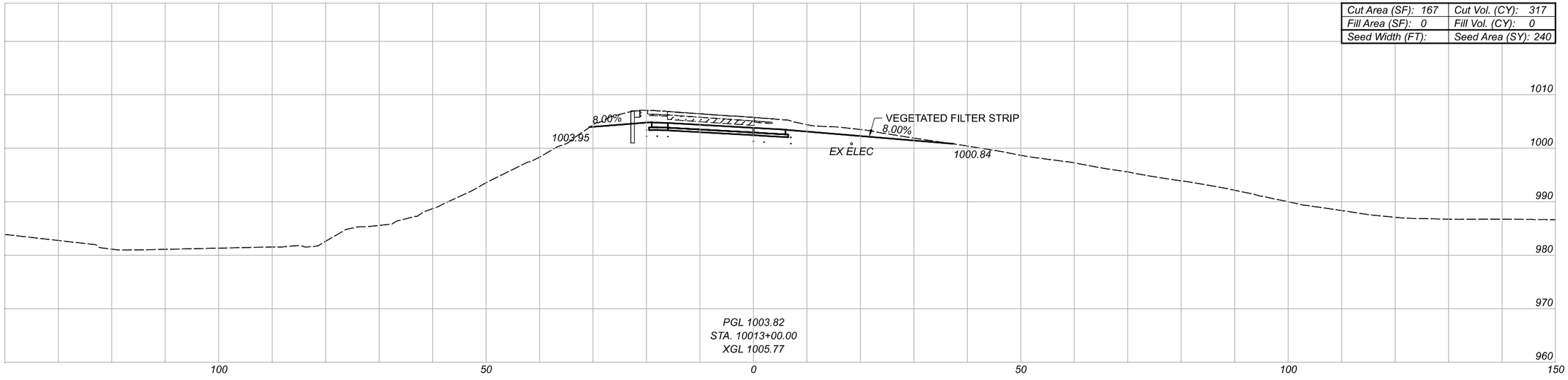

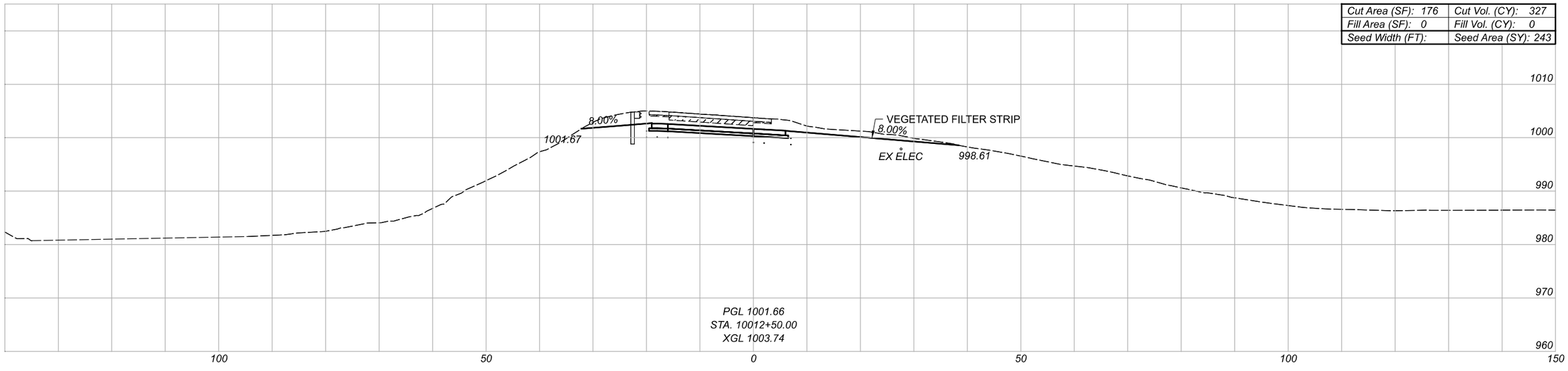

EX ASPHALT CONCRETE BASE

CROSS SECTIONS - SR-21 RAMP G
STA 10012+50.00 TO STA 10013+00.00

SUM-77-32.27

MODEL: BLP_RO2IG-1 - 10012+50.00 [Sheet] PAPERSIZE: 17x11(in.) DATE: 2/22/2022 TIME: 8:31:31PM USER: tdinh
pw:\\gfnet-pw.bentley.com:gfnet-pw-01\Documents\Projects\67490\104983\401-Engineering-GF\Roadway\Sheets\104983_XS402.dgn

DESIGN AGENCY
Gannett Fleming
ENGINEERS AND ARCHITECTS, P.C.
2550 Corporate Exchange Drive
Suite 230
Columbus, OH 43231

DESIGNER: JAS
REVIEWER: DRJ 02/01/22
PROJECT ID: 104983
SHEET: 154 TOTAL: 297

Cut Area (SF): 143	Cut Vol. (CY): 275
Fill Area (SF): 0	Fill Vol. (CY): 0
Seed Width (FT):	Seed Area (SY): 193

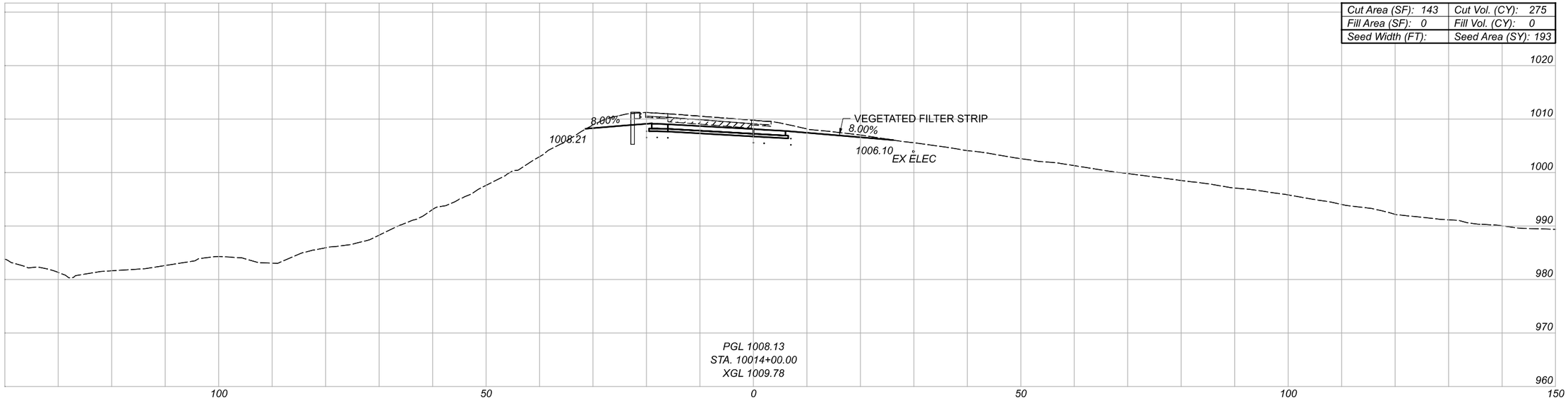

Cut Area (SF): 154	Cut Vol. (CY): 297
Fill Area (SF): 0	Fill Vol. (CY): 0
Seed Width (FT):	Seed Area (SY): 225

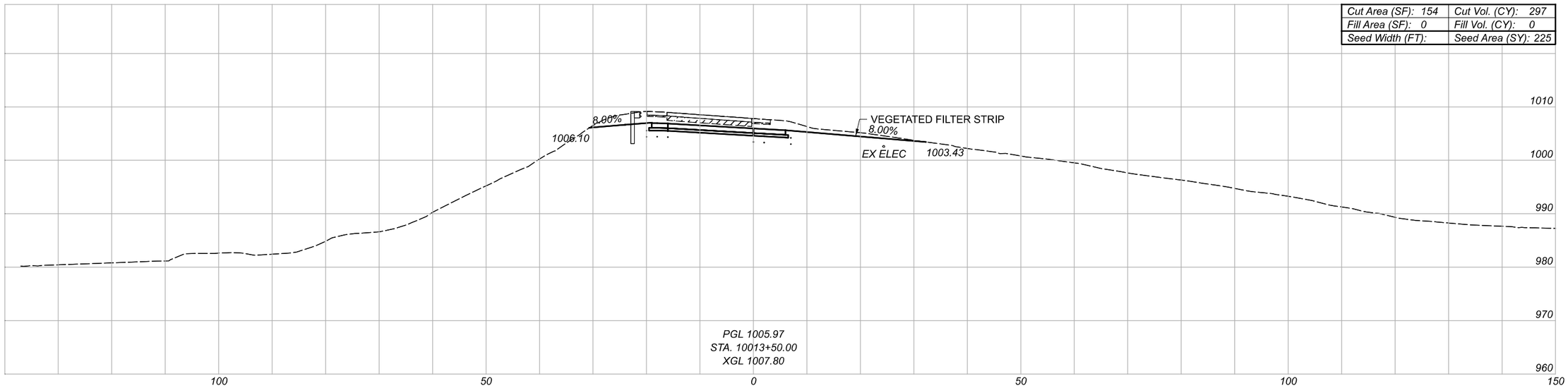

EX ASPHALT CONCRETE BASE

CROSS SECTIONS - SR-21 RAMP G
STA 10013+50.00 TO STA 10014+00.00

SUM-77-32.27

MODEL: BLP_R02IG-I - I0013+50.00 [Sheet] PAPERSIZE: 17x11(in.) DATE: 2/22/2022 TIME: 8:31:37 PM USER: tdhh
pw:\\gfnet-pw.bentley.com:gfnet-pw-01\Documents\Projects\67490\104983\40i-Engineering-GF\Roadway\Sheets\104983_XS402.dgn

DESIGN AGENCY
Gannett Fleming
ENGINEERS AND ARCHITECTS, P.C.
2500 Corporate Exchange Drive
Suite 230
Columbus, OH 43231

DESIGNER JAS

REVIEWER DRJ 02/01/22

PROJECT ID 104983

SHEET 155 TOTAL 297

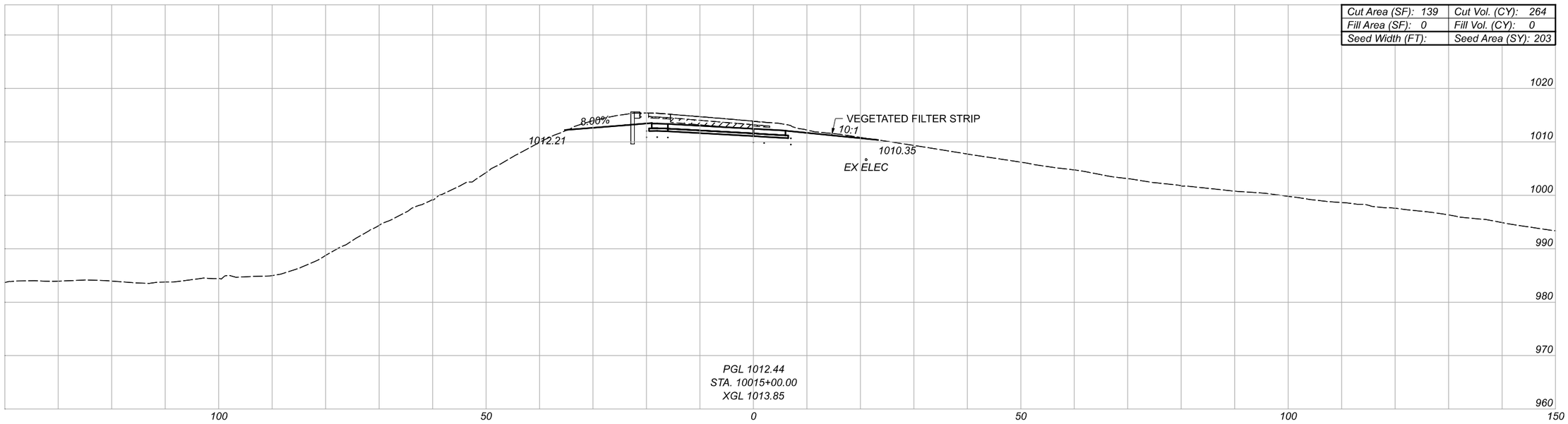

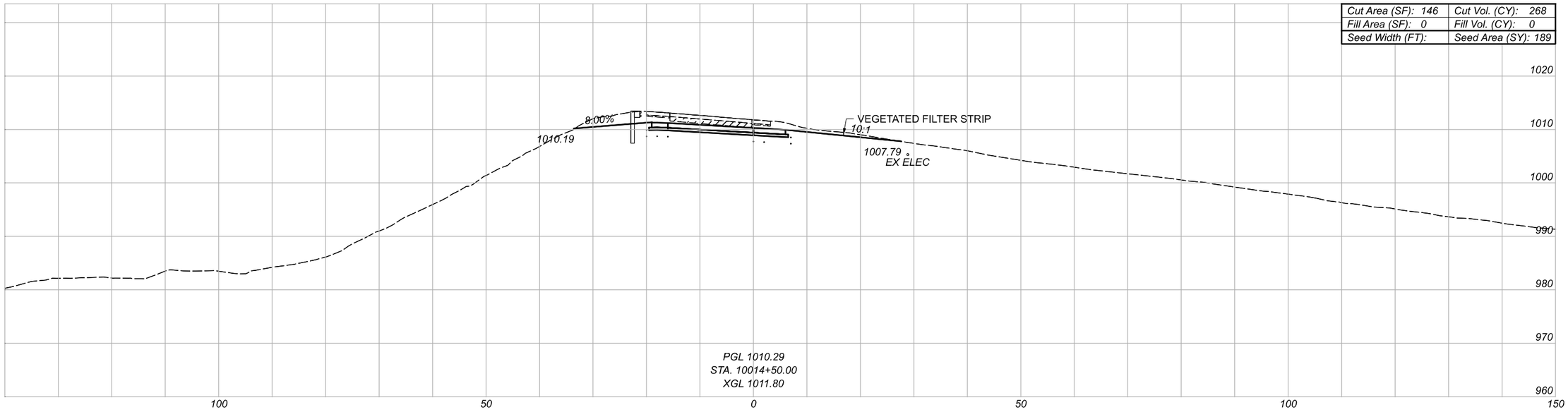

EX ASPHALT CONCRETE BASE

CROSS SECTIONS - SR-21 RAMP G
STA 10014+50.00 TO STA 10015+00.00

SUM-77-32.27

MODEL: BLP_R02IG-I - 10014+50.00 (Sheet) PAPERSIZE: 17x11(in.) DATE: 2/22/2022 TIME: 8:31:42 PM USER: tdinh
pw:\\gfnet-pw.bentley.com:gfnet-pw-01\Documents\Projects\67490\104983\401-Engineering-GF\Roadway\Sheets\104983_XS402.dgn

DESIGN AGENCY
Gannett Fleming
ENGINEERS AND ARCHITECTS, P.C.
2500 Corporate Exchange Drive
Suite 230
Columbus, OH 43231

DESIGNER
JAS

REVIEWER
DRJ 02/01/22

PROJECT ID
104983

SHEET 156 | TOTAL 297

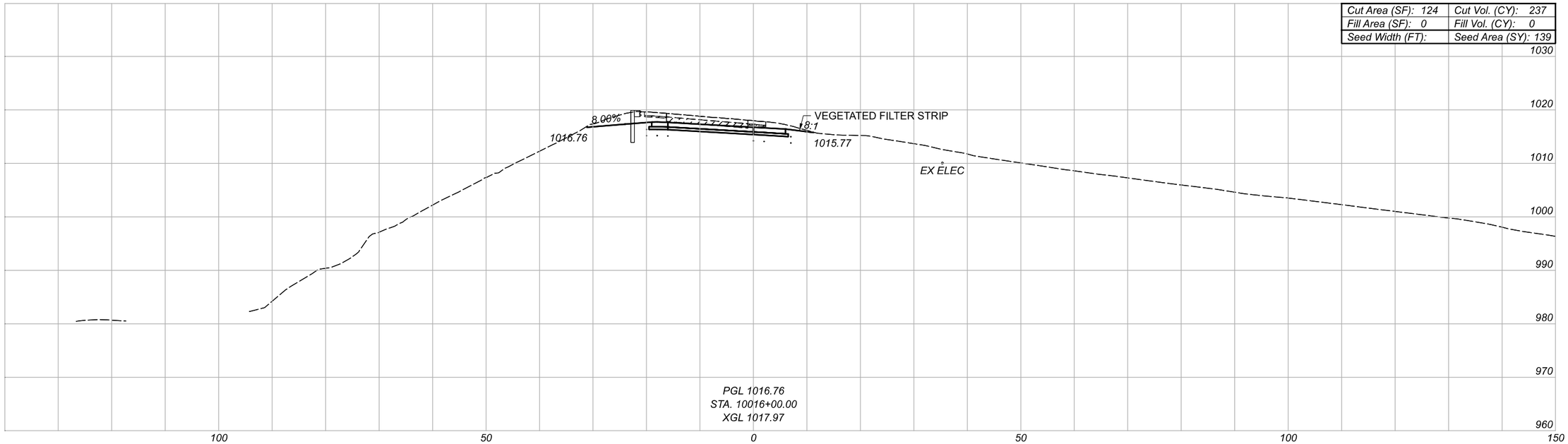

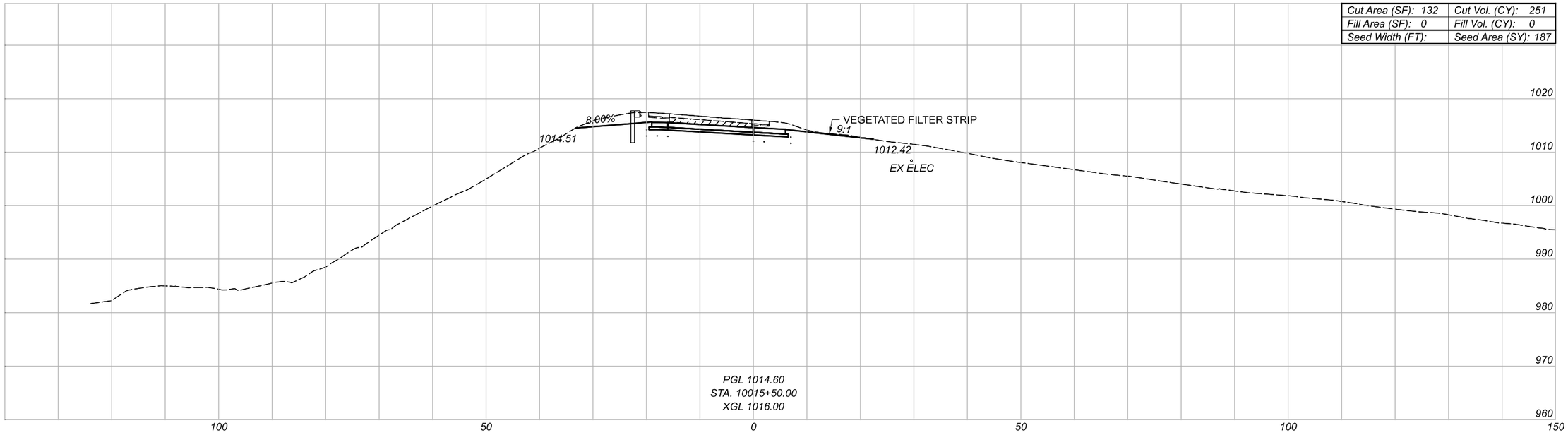

EX ASPHALT CONCRETE BASE

CROSS SECTIONS - SR-21 RAMP G
STA 10015+50.00 TO STA 10016+00.00

SUM-77-32.27

MODEL: BLP_R02IG-I - I0015+50.00 [Sheet] PAPERSIZE:17x11(in.) DATE: 2/22/2022 TIME: 8:3:48 PM USER: tdnh
pw:\\gfnet-pw.bentley.com:gfnet-pw-01\Documents\Projects\67490\104983\40i-Engineering-GF\Roadway\Sheets\104983_XS402.dgn

DESIGN AGENCY
Gannett Fleming
ENGINEERS AND ARCHITECTS, P.C.
2500 Corporate Exchange Drive
Suite 230
Columbus, OH 43231

DESIGNER
JAS

REVIEWER
DRJ 02/01/22

PROJECT ID
104983

SHEET 157 | TOTAL 297

Cut Area (SF): 120	Cut Vol. (CY): 223
Fill Area (SF): 0	Fill Vol. (CY): 3
Seed Width (FT):	Seed Area (SY): 149

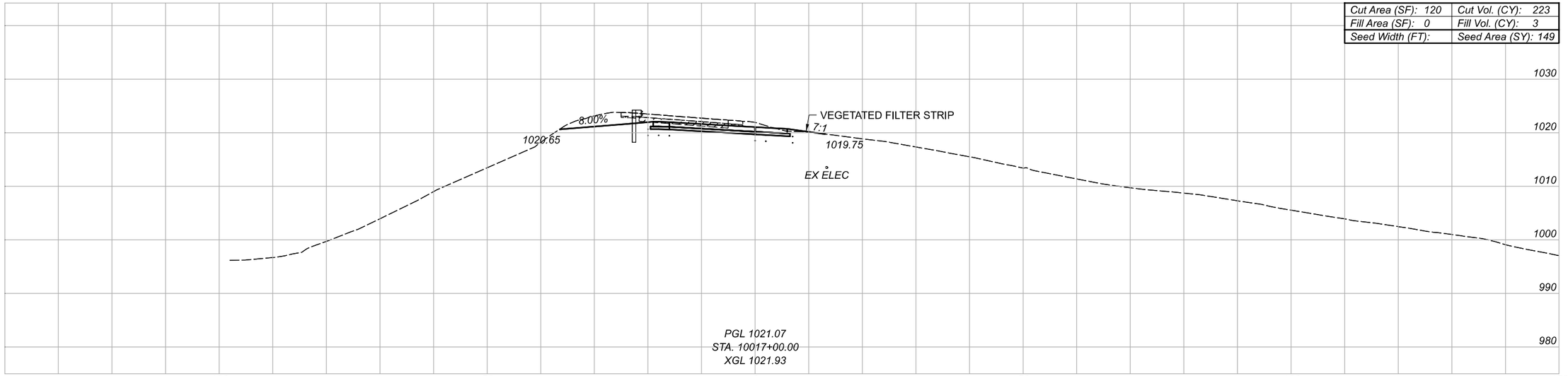

Cut Area (SF): 121	Cut Vol. (CY): 227
Fill Area (SF): 3	Fill Vol. (CY): 2
Seed Width (FT):	Seed Area (SY): 110

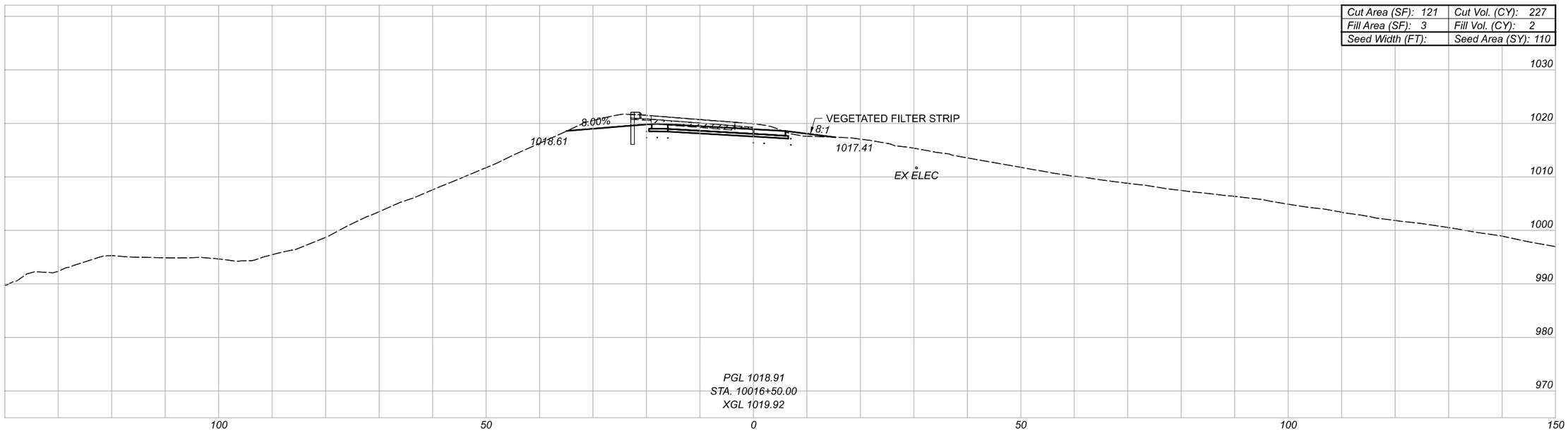

EX ASPHALT CONCRETE BASE

CROSS SECTIONS - SR-21 RAMP G
STA 10016+50.00 TO STA 10017+00.00

SUM-77-32.27

MODEL: BLP_RO2(G-1 - 10016+50.00 [Sheet] PAPERSIZE: 17x11(in) DATE: 2/22/2022 TIME: 8:31:54 PM USER: tdinh
pw:\\gfnet-pw.bentley.comgfnet-pw-01\Documents\Projects\67490\104983\40i-Engineering-GF\Roadway\Sheets\104983_XS402.dgn

DESIGN AGENCY
Gannett Fleming
ENGINEERS AND ARCHITECTS, P.C.
2550 Corporate Exchange Drive, Suite 220, Columbus, OH 43231

DESIGNER: JAS

REVIEWER: DRJ 02/01/22

PROJECT ID: 104983

SHEET: 158 TOTAL: 297

Cut Area (SF): 109	Cut Vol. (CY): 199
Fill Area (SF): 0	Fill Vol. (CY): 1
Seed Width (FT):	Seed Area (SY): 132

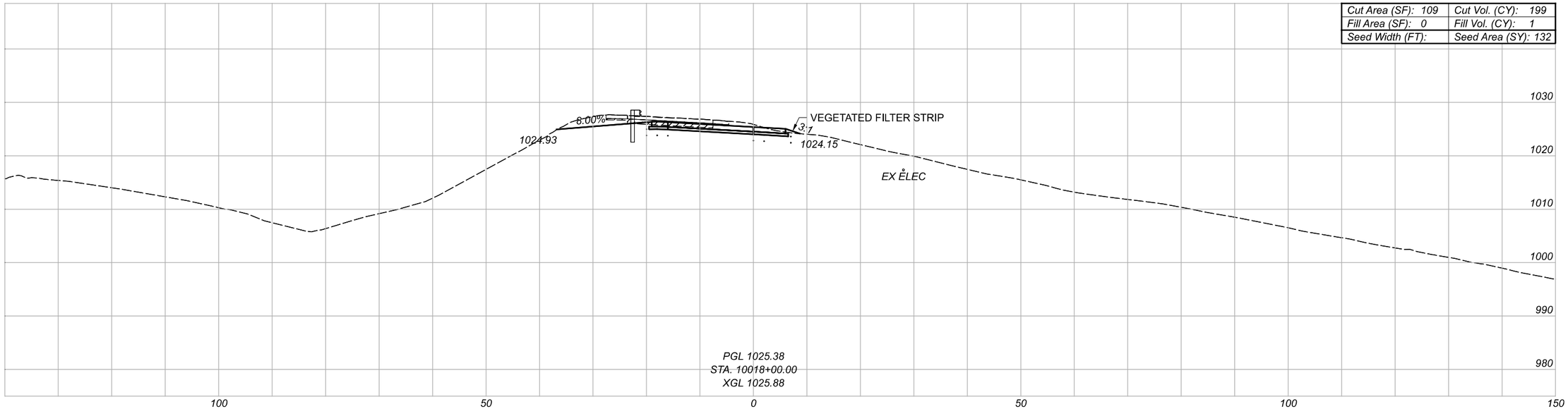

Cut Area (SF): 106	Cut Vol. (CY): 210
Fill Area (SF): 1	Fill Vol. (CY): 1
Seed Width (FT):	Seed Area (SY): 136

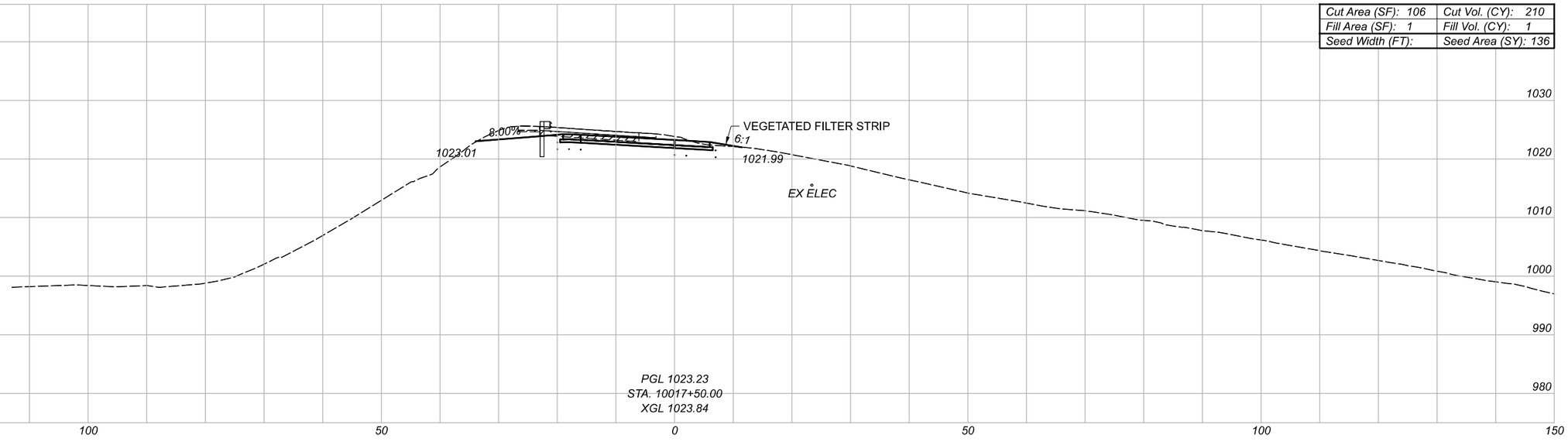

EX ASPHALT CONCRETE BASE

CROSS SECTIONS - SR-21 RAMP G
STA 10017+50.00 TO STA 10018+00.00

SUM-77-32.27

MODEL: BLP_R02IG-1 - 10017+50.00 (Sheet1 PAPERSIZE: 17x11 (in.) DATE: 2/22/2022 TIME: 8:32:01 PM USER: tdinh
pw:\\gfnet-pw.bentley.com:gfnet-pw-01\Documents\Projects\67490\104983\40i-Engineering-GF\Roadway\Sheets\104983_XS402.dgn

DESIGN AGENCY
Gannett Fleming
ENGINEERS AND ARCHITECTS, P.C.
2550 Corporate Exchange Drive, Suite 220, Columbus, OH 43231

DESIGNER: JAS

REVIEWER: DRJ 02/01/22

PROJECT ID: 104983

SHEET: 159 TOTAL: 297

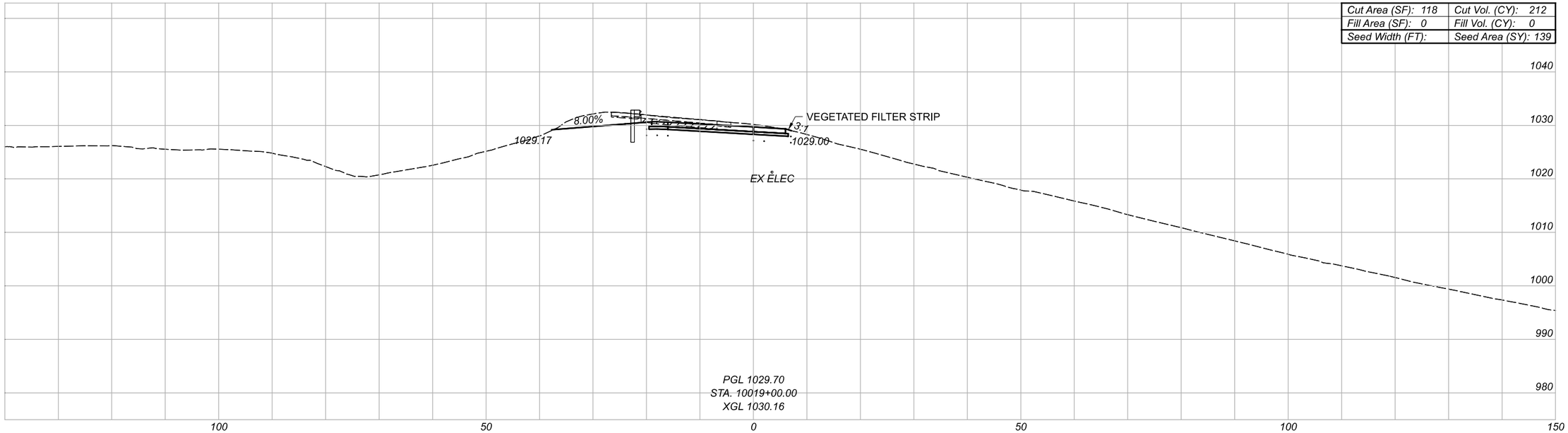

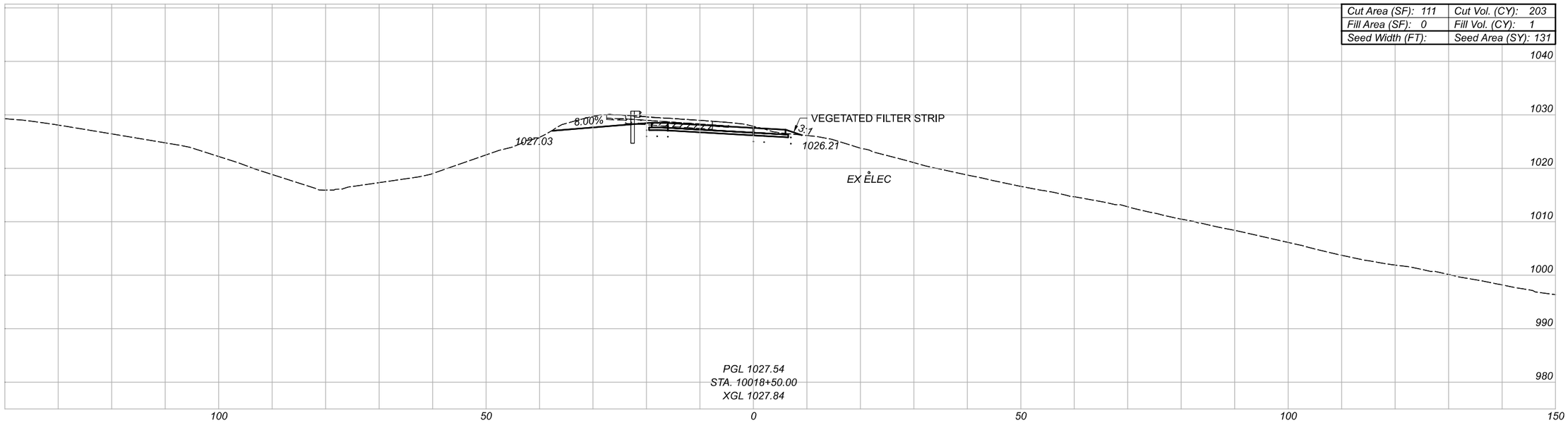

EX ASPHALT CONCRETE BASE

CROSS SECTIONS - SR-21 RAMP G
STA 10018+50.00 TO STA 10019+00.00

SUM-77-32.27

MODEL: BLP_R02IC-I- I0018+50.00 [Sheet] PAPERSIZE: 17x11(in.) DATE: 2/22/2022 TIME: 8:32:08 PM USER: tdinh
pw:\\gfnet-pw.bentley.com:gfnet-pw-01\Documents\Projects\67490\104983\401-Engineering-GF\Roadway\Sheets\104983_XS402.dgn

DESIGN AGENCY
Gannett Fleming
ENGINEERS AND ARCHITECTS, P.C.
2500 Corporate Exchange Drive
Suite 230
Columbus, OH 43231

DESIGNER
JAS

REVIEWER
DRJ 02/01/22

PROJECT ID
104983

SHEET 160 | TOTAL 297

Cut Area (SF): 113	Cut Vol. (CY): 221
Fill Area (SF): 6	Fill Vol. (CY): 6
Seed Width (FT):	Seed Area (SY): 175

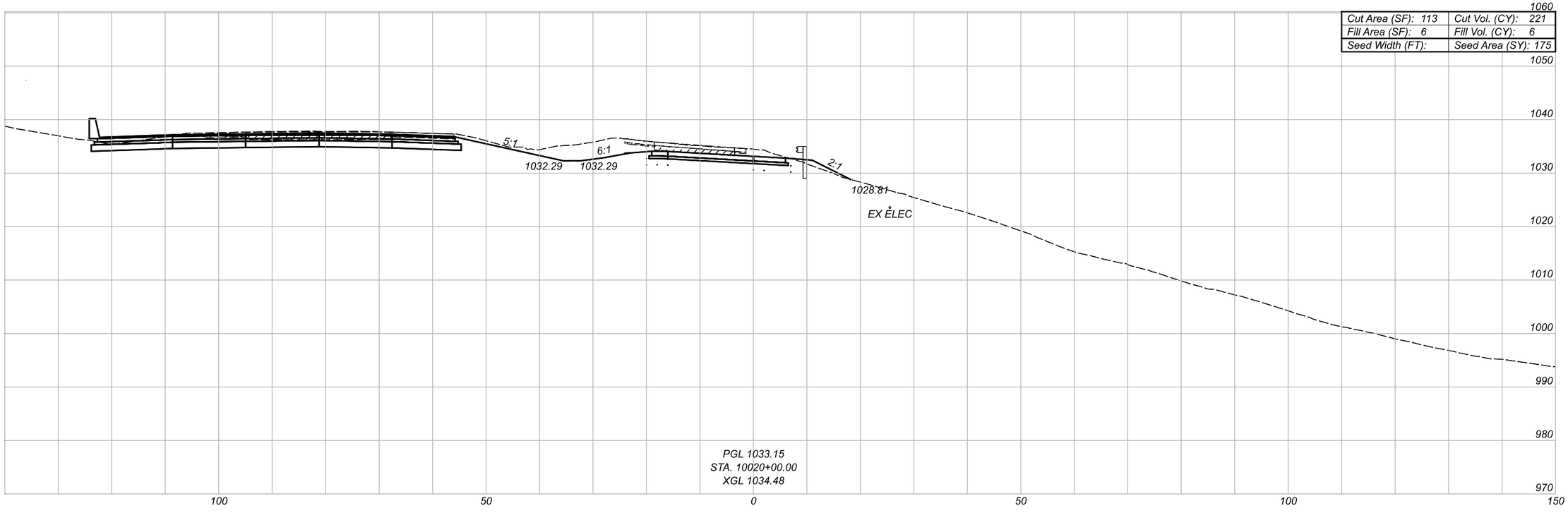

Cut Area (SF): 126	Cut Vol. (CY): 226
Fill Area (SF): 0	Fill Vol. (CY): 0
Seed Width (FT):	Seed Area (SY): 133

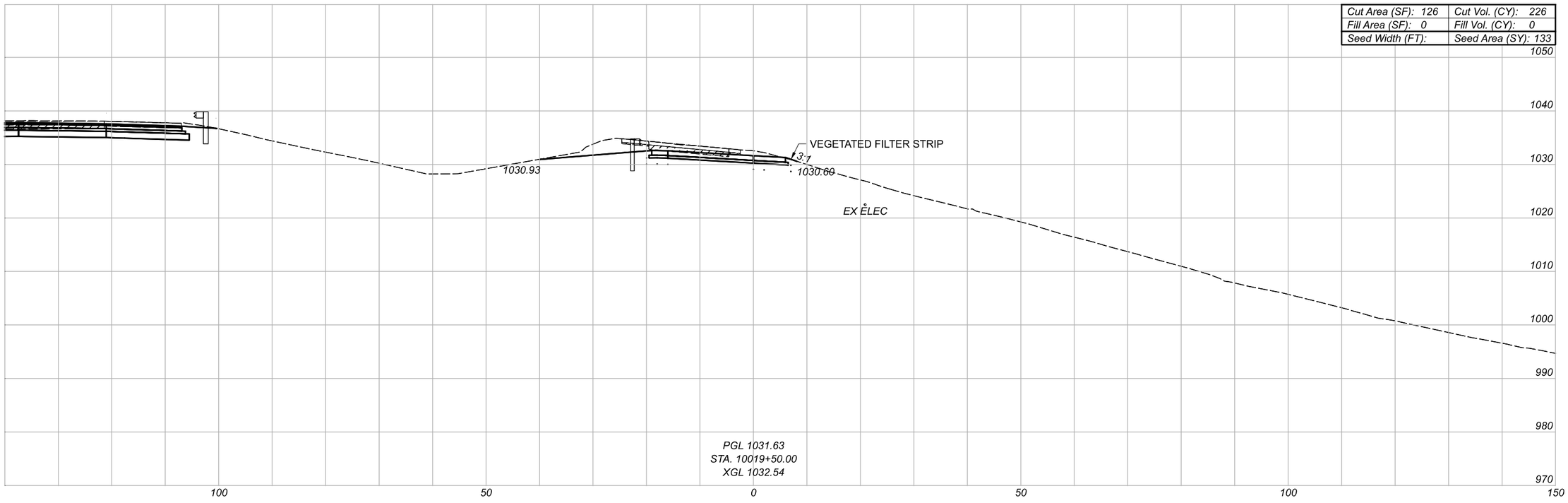

EX ASPHALT CONCRETE BASE

CROSS SECTIONS - SR-21 RAMP G
STA 10019+50.00 TO STA 10020+00.00

SUM-77-32.27

MODEL: BLP_RO2(G-I - 10019+50.00 [Sheet] PAPERSIZE: 17x11 (in.) DATE: 2/22/2022 TIME: 8:32:15 PM USER: tdinh
pw:\\gfnet-pw.bentley.com:gfnet-pw-01\Documents\Projects\67490\104983\40i-Engineering-GF\Roadway\Sheets\104983_XS402.dgn

DESIGN AGENCY
Gannett Fleming
ENGINEERS AND ARCHITECTS, P.C.
2500 Corporate Exchange Drive
Suite 229
Columbus, OH 43231

DESIGNER: JAS

REVIEWER: DRJ 02/01/22

PROJECT ID: 104983

SHEET: 161 TOTAL: 297

Cut Area (SF): 104	Cut Vol. (CY): 200
Fill Area (SF): 2	Fill Vol. (CY): 7
Seed Width (FT):	Seed Area (SY): 72

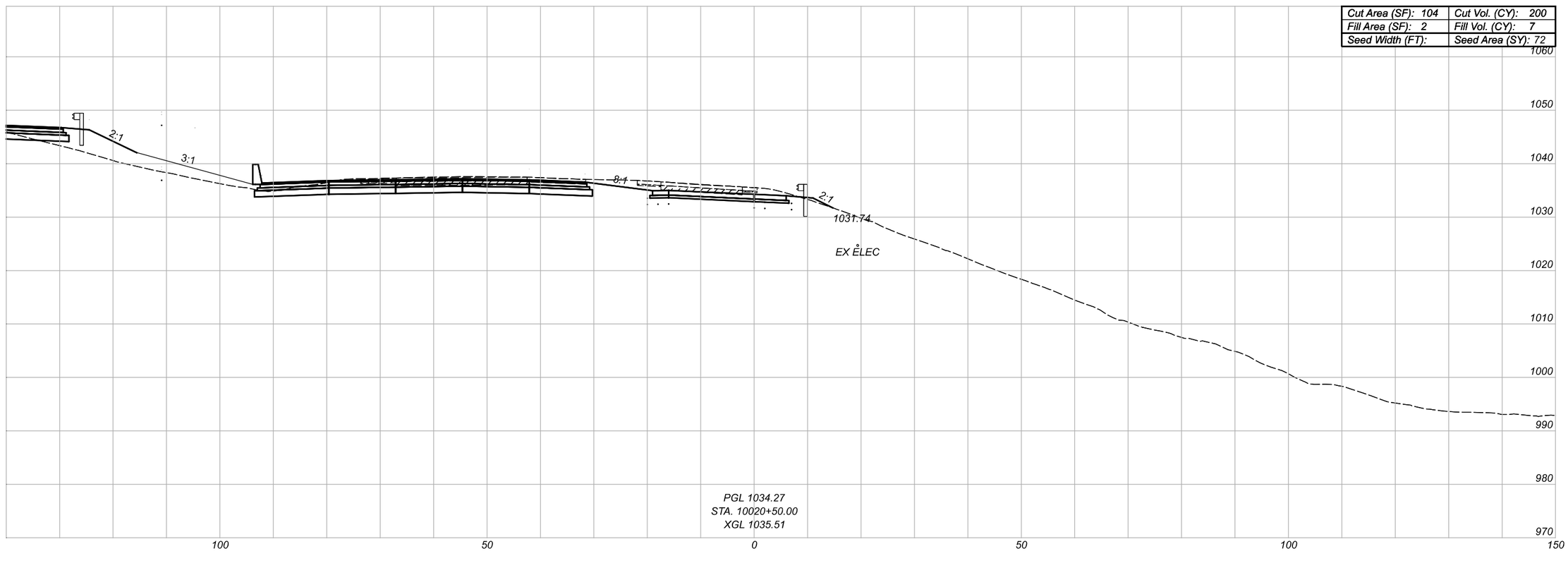

EX ASPHALT CONCRETE BASE

CROSS SECTIONS - SR-21 RAMP G
STA 10020+50.00

SUM-77-32.27

MODEL: BLP_R02IG-I - I0020+50.00 [Sheet] PAPERSIZE: 17x11(in.) DATE: 2/22/2022 TIME: 8:32:22 PM USER: tdinh
pw:\\gfnet-pw.bentley.com:gfnet-pw-01\Documents\Projects\67490\104983\401-Engineering-GF\Roadway\Sheets\104983_XS402.dgn

DESIGN AGENCY
Gannett Fleming
ENGINEERS AND ARCHITECTS, P.C.
2500 Corporate Exchange Drive
Suite 200
Columbus, OH 43231

DESIGNER: JAS

REVIEWER: DRJ 02/01/22

PROJECT ID: 104983

SHEET: 162 TOTAL: 297

SUM-77-32.27

MODEL: BLP_R02IG-I - I002+00.00 [Sheet] PAPERSIZE: 17x11(in) DATE: 2/22/2022 TIME: 8:32:25 PM USER: tdnh
pw:\\gfnet-pw.bentley.com:gfnet-pw-01\Documents\Projects\67490\104983\401-Engineering-GF\Roadway\Sheets\104983_XS402.dgn

Cut Area (SF): 83	Cut Vol. (CY): 172
Fill Area (SF): 0	Fill Vol. (CY): 2
Seed Width (FT):	Seed Area (SY): 41

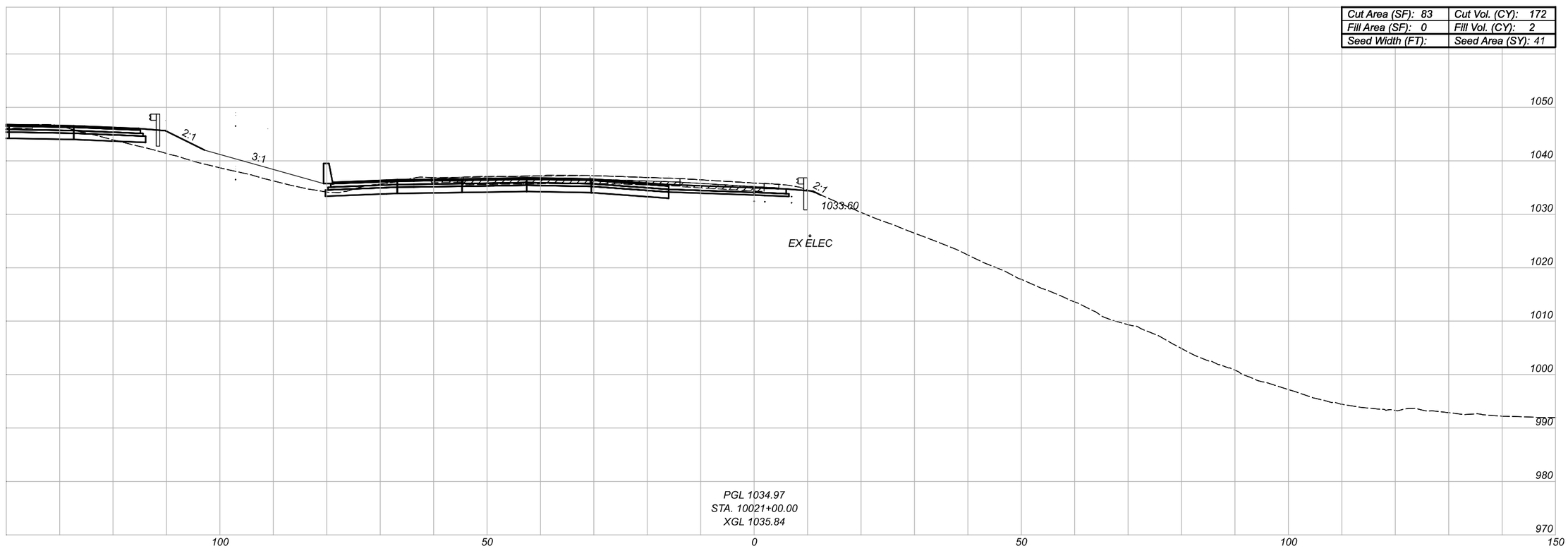

EX ASPHALT CONCRETE BASE

CROSS SECTIONS - SR-21 RAMP G
STA 10021+00.00

DESIGN AGENCY
Gannett Fleming
ENGINEERS AND ARCHITECTS, P.C.
2500 Corporate Exchange Drive
Suite 200
Columbus, OH 43231

DESIGNER: JAS

REVIEWER: DRJ 02/01/22

PROJECT ID: 104983

SHEET: 163 TOTAL: 297

CROSS SECTIONS - SR-21 RAMP G
STA 10021+50.00

Cut Area (SF): 76	Cut Vol. (CY): 147
Fill Area (SF): 0	Fill Vol. (CY): 0
Seed Width (FT):	Seed Area (SY): 32

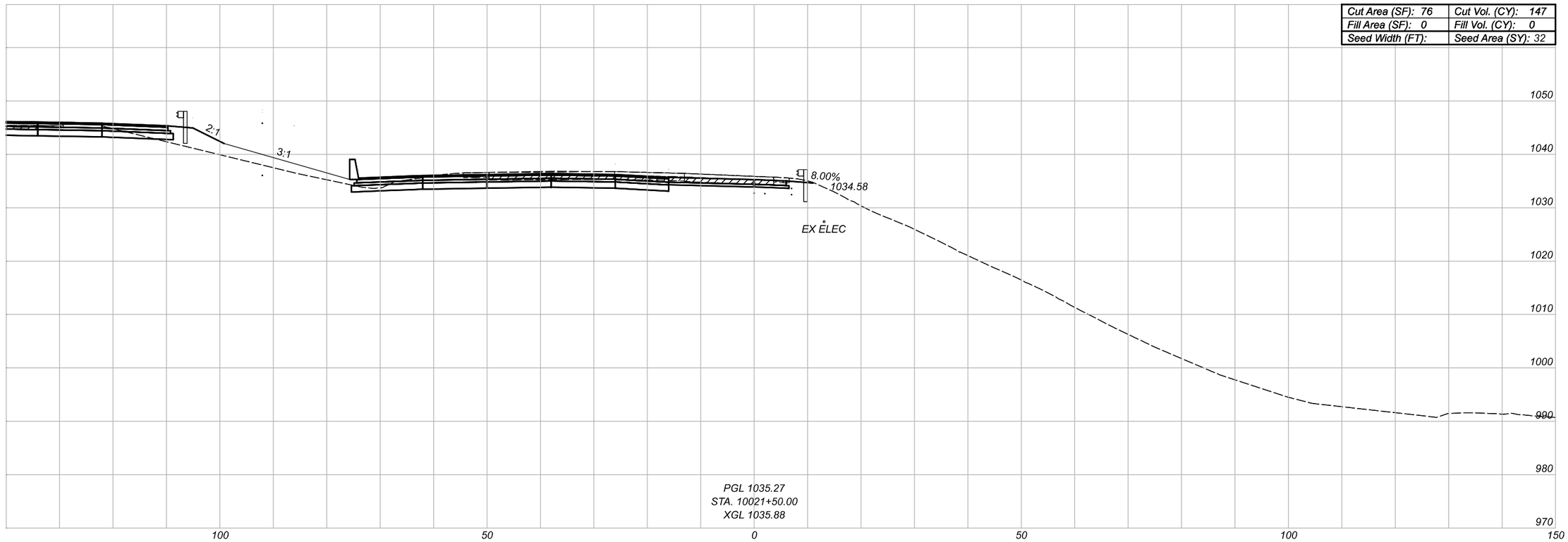

EX ASPHALT CONCRETE BASE

DESIGN AGENCY
Gannett Fleming
ENGINEERS AND ARCHITECTS, P.C.
2500 Corporate Exchange Drive
Suite 230
Columbus, OH 43231

DESIGNER: JAS

REVIEWER: DRJ 02/01/22

PROJECT ID: 104983

SHEET: 164 TOTAL: 297

SUM-77-32.27

MODEL: BLP_R02IC-I- I0021+50.00 [Sheet] PAPERSIZE: 17x11(in.) DATE: 2/22/2022 TIME: 8:32:29 PM USER: tdinh
pw:\\gfnet-pw.bentley.com:gfnet-pw-01\Documents\Projects\67490\104983\401-Engineering-GF\Roadway\Sheets\104983_XS402.dgn

Cut Area (SF): 74	Cut Vol. (CY): 139
Fill Area (SF): 0	Fill Vol. (CY): 0
Seed Width (FT):	Seed Area (SY): 52

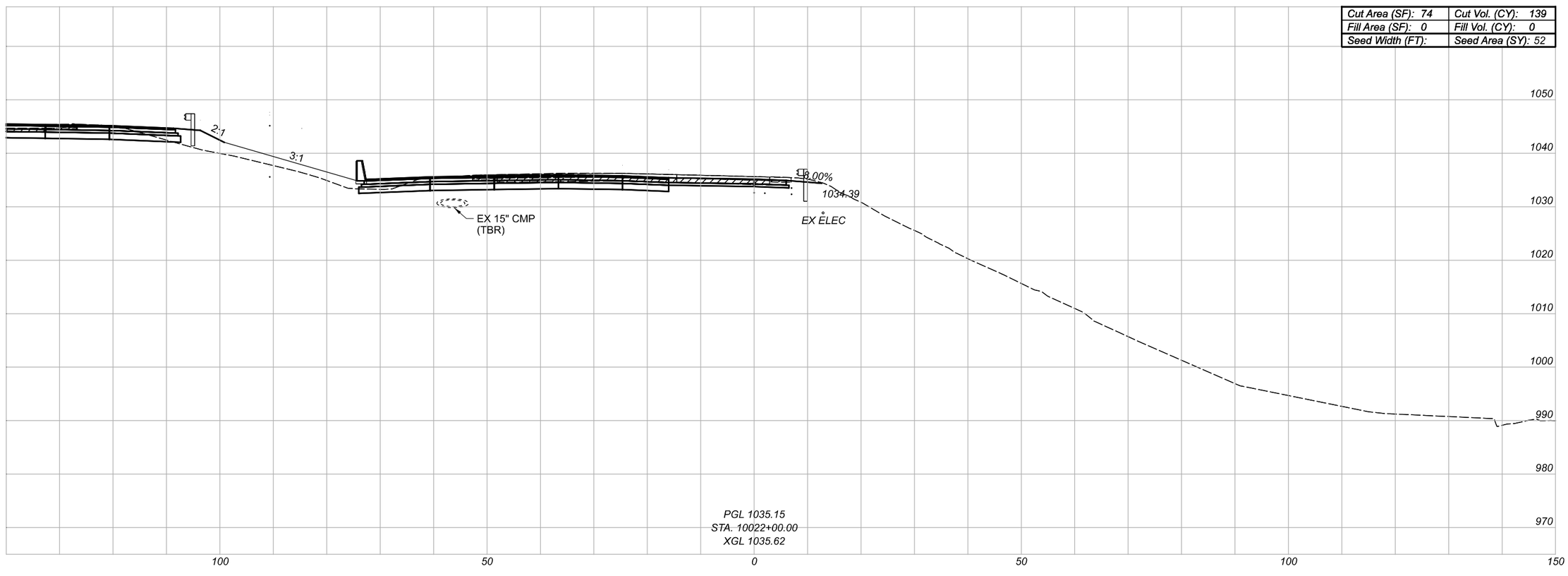

EX ASPHALT CONCRETE BASE

CROSS SECTIONS - SR-21 RAMP G
STA 10022+00.00

DESIGN AGENCY
Gannett Fleming
ENGINEERS AND ARCHITECTS, P.C.
2500 Corporate Exchange Drive
Suite 200
Columbus, OH 43231

DESIGNER JAS

REVIEWER DRJ 02/01/22

PROJECT ID 104983

SHEET 165 TOTAL 297

SUM-77-32.27

MODEL: BLP_R02IG-I - 10022+00.00 [Sheet] PAPERSIZE: 17x11 (in.) DATE: 2/22/2022 TIME: 8:32:33 PM USER: tdinh
pw:\\gfnet-pw.bentley.comgfnet-pw-01\Documents\Projects\67490\104983\401-Engineering-GF\Roadway\Sheets\104983_XS402.dgn

BRIDGE OMISSION
STA. 10022+41.47 TO 10025+66.14

END WORK
STA. 10022+41.47

Cut Area (SF): 70	Cut Vol. (CY): 133
Fill Area (SF): 0	Fill Vol. (CY): 0
Seed Width (FT):	Seed Area (SY): 45

Total Carried to General Note
Cut Vol. (CY): 6530
Fill Vol. (CY): 89
Seed Area (SY): 4166

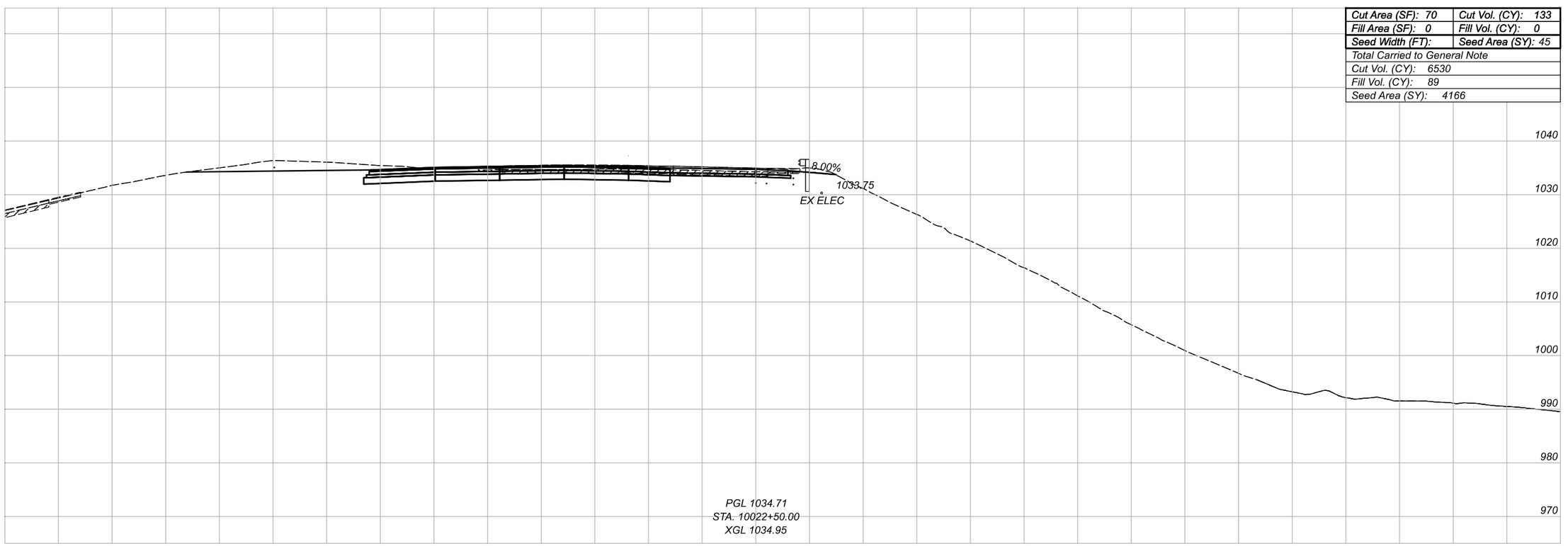

EX ASPHALT CONCRETE BASE

CROSS SECTIONS - SR-21 RAMP G
STA 10022+50.00

SUM-77-32.27

MODEL: BLP_RO2(G-1 - 10022+50.00 [Sheet] PAPERSIZE: 17x11(in.) DATE: 2/22/2022 TIME: 8:32:37 PM USER: tdnh
pw:\\gfnet-pw.bentley.comgfnet-pw-01\Documents\Projects\6T490\104983\40i-Engineering-GF\Roadway\Sheets\104983_XS402.dgn

DESIGN AGENCY
Gannett Fleming
ENGINEERS AND ARCHITECTS, P.C.
2550 Corporate Exchange Drive, Suite 220, Columbus, OH 43231

DESIGNER JAS

REVIEWER DRJ 02/01/22

PROJECT ID 104983

SHEET 166 TOTAL 297

BRIDGE OMISSION
STA. 494+97.46 TO 495+49.22

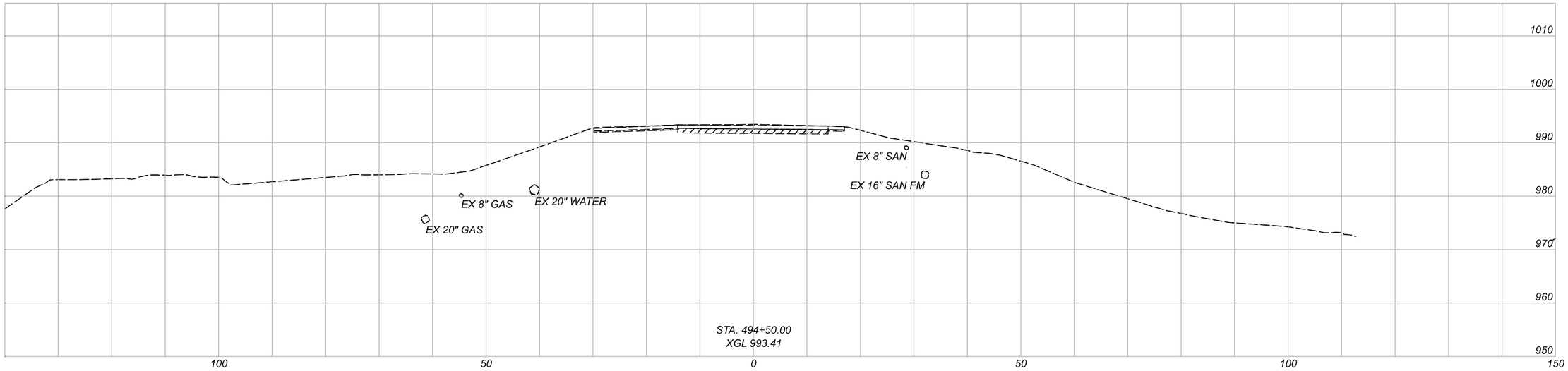

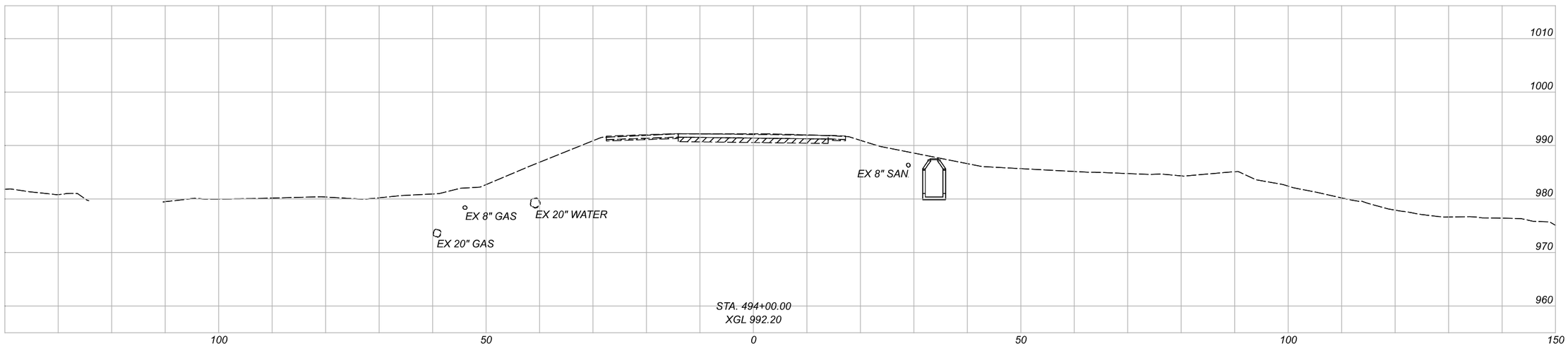

EX ASPHALT CONCRETE BASE

CROSS SECTIONS - SR-21
STA 494+00.00 TO STA 494+50.00

SUM-77-32.27

MODEL: CLP_9 - 494+00.00 [Sheet] PAPERSIZE: 17x11(in.) DATE: 2/24/2022 TIME: 9:40:22 AM USER: tdinh
pw:\\gfnet-pw.bentley.com:gfnet-pw-01\Documents\Projects\67490\104983\401-Engineering-GF\Roadway\Sheets\104983_XS403A.dgn

DESIGN AGENCY
Gannett Fleming
ENGINEERS AND ARCHITECTS, P.C.
2500 Corporate Exchange Drive
Suite 230
Columbus, OH 43231

DESIGNER
JAS

REVIEWER
DRJ 02/01/22

PROJECT ID
104983

SHEET 167 | TOTAL 297

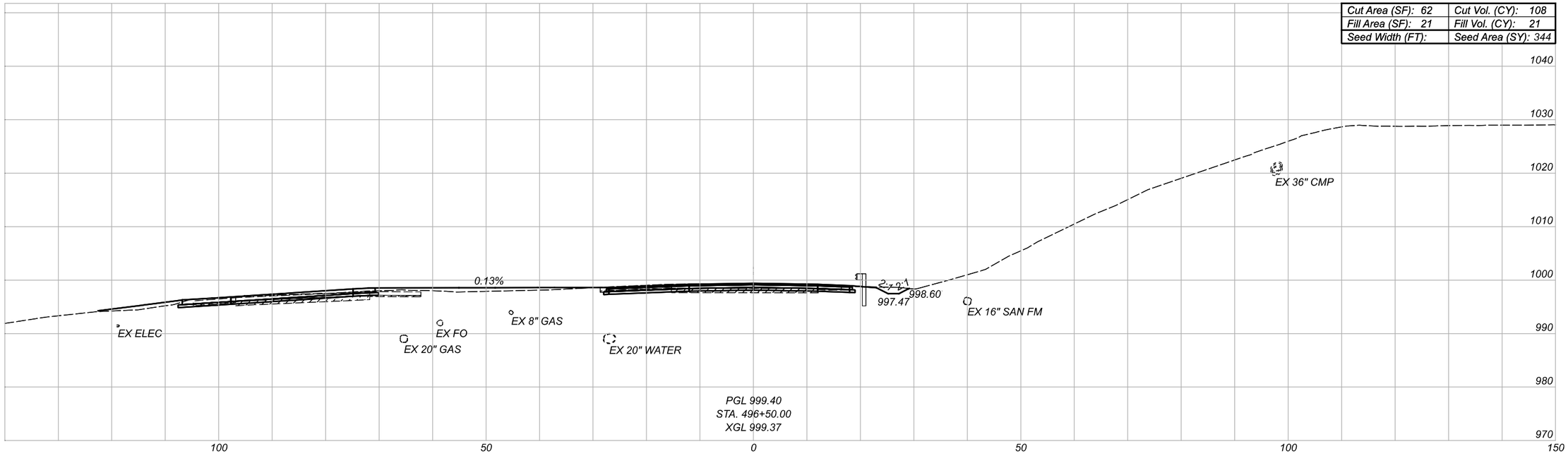

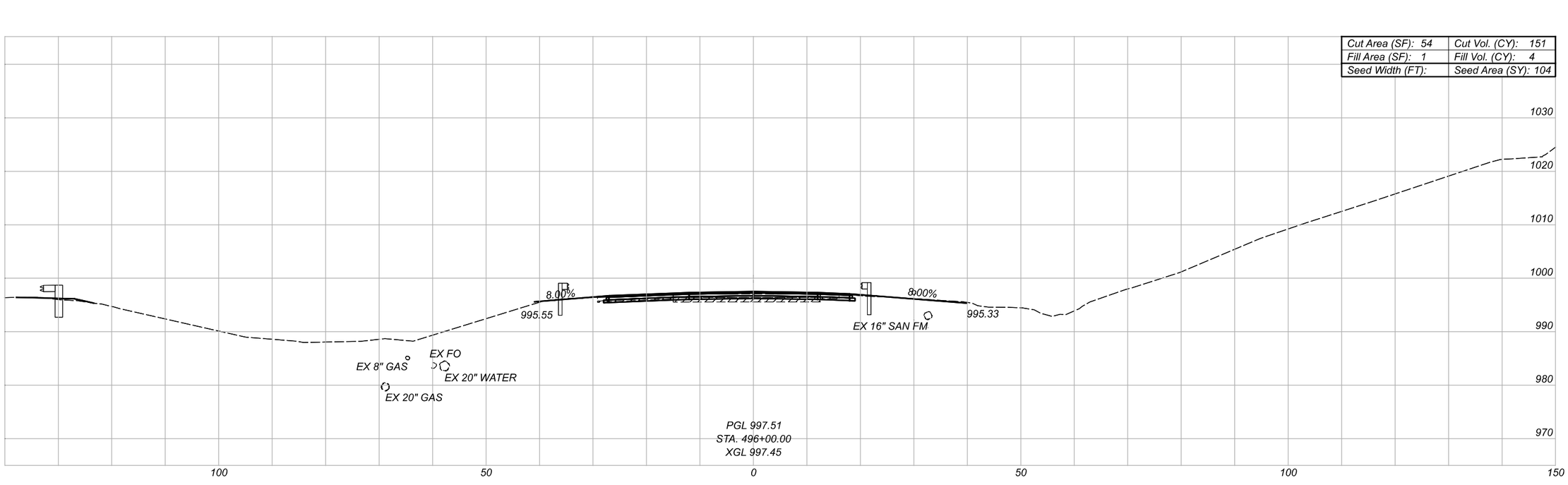

BEGIN WORK	BEGIN FULL DEPTH PAVEMENT
STA. 495+49.22	STA. 495+73.38

EX ASPHALT CONCRETE BASE

CROSS SECTIONS - SR-21
STA 496+00.00 TO STA 496+50.00

SUM-77-32.27

MODEL: CLP-9 - 496+00.00 [Sheet] PAPERSIZE: 17x11(in.) DATE: 2/24/2022 TIME: 9:40:28 AM USER: tdinh
pw:\\gfnet-pw.bentley.com:gfnet-pw-01\Documents\Projects\67490\104983\401-Engineering-GF\Roadway\Sheets\104983_XS403A.dgn

DESIGN AGENCY
Gannett Fleming
ENGINEERS AND ARCHITECTS, P.C.
2500 Corporate Exchange Drive
Suite 230
Columbus, OH 43231

DESIGNER: JAS

REVIEWER: DRJ 02/01/22

PROJECT ID: 104983

SHEET: 168 TOTAL: 297

Cut Area (SF): 60	Cut Vol. (CY): 136
Fill Area (SF): 0	Fill Vol. (CY): 0
Seed Width (FT):	Seed Area (SY): 137

Note: Earthwork based on 40' interval.

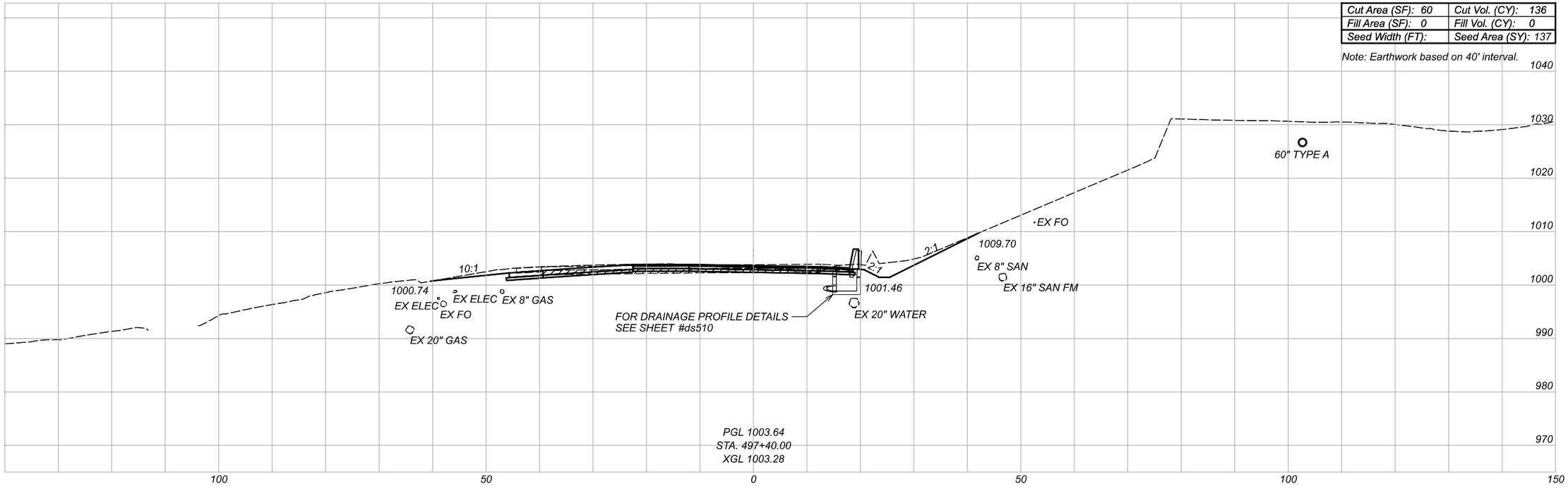

Cut Area (SF): 123	Cut Vol. (CY): 172
Fill Area (SF): 0	Fill Vol. (CY): 19
Seed Width (FT):	Seed Area (SY): 280

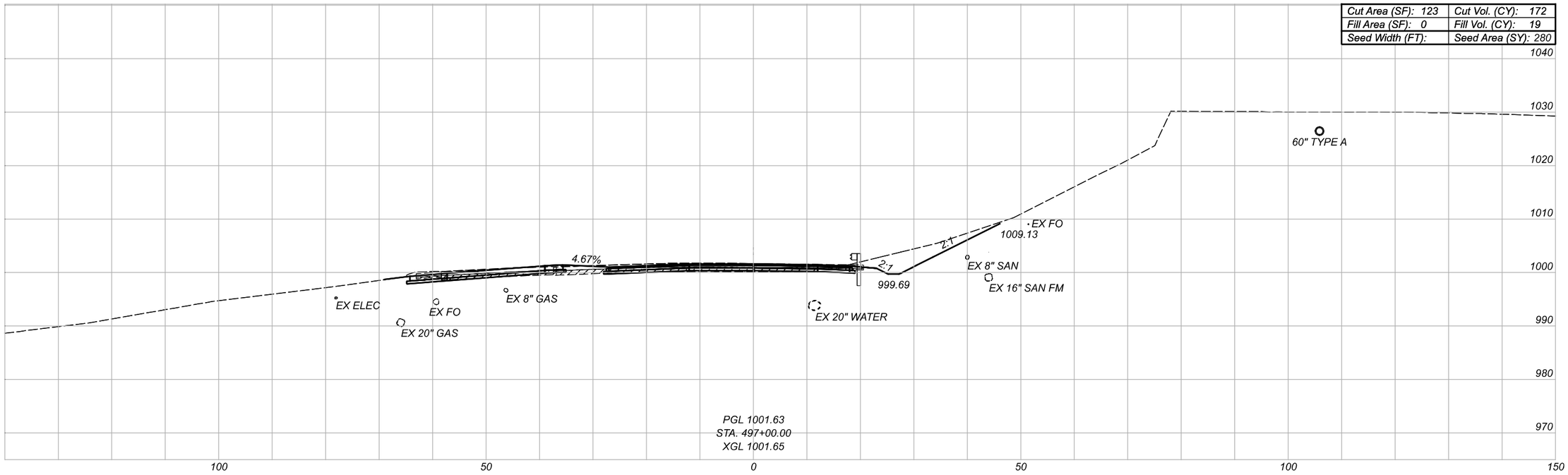

EX ASPHALT CONCRETE BASE

CROSS SECTIONS - SR-21
STA 497+00.00 TO STA 497+40.00

DESIGN AGENCY
Gannett Fleming
ENGINEERS AND ARCHITECTS, P.C.
2500 Corporate Exchange Drive
Suite 230
Columbus, OH 43231

DESIGNER
JAS

REVIEWER
DRJ 02/01/22

PROJECT ID
104983

SHEET 169 | TOTAL 297

SUM-77-32.27

MODEL: CLP_9 - 497+00.00 [Sheet] PAPERSIZE: 17x11(in.) DATE: 2/24/2022 TIME: 9:40:30 AM USER: tdhh
pw:\\gfnet-pw.bentley.com:gfnet-pw-01\Documents\Projects\67490\104983\40i-Engineering-GF\Roadway\Sheets\104983_XS403A.dgn

Cut Area (SF): 91	Cut Vol. (CY): 117
Fill Area (SF): 0	Fill Vol. (CY): 0
Seed Width (FT):	Seed Area (SY): 124

Note: Earthwork based on 40' interval.

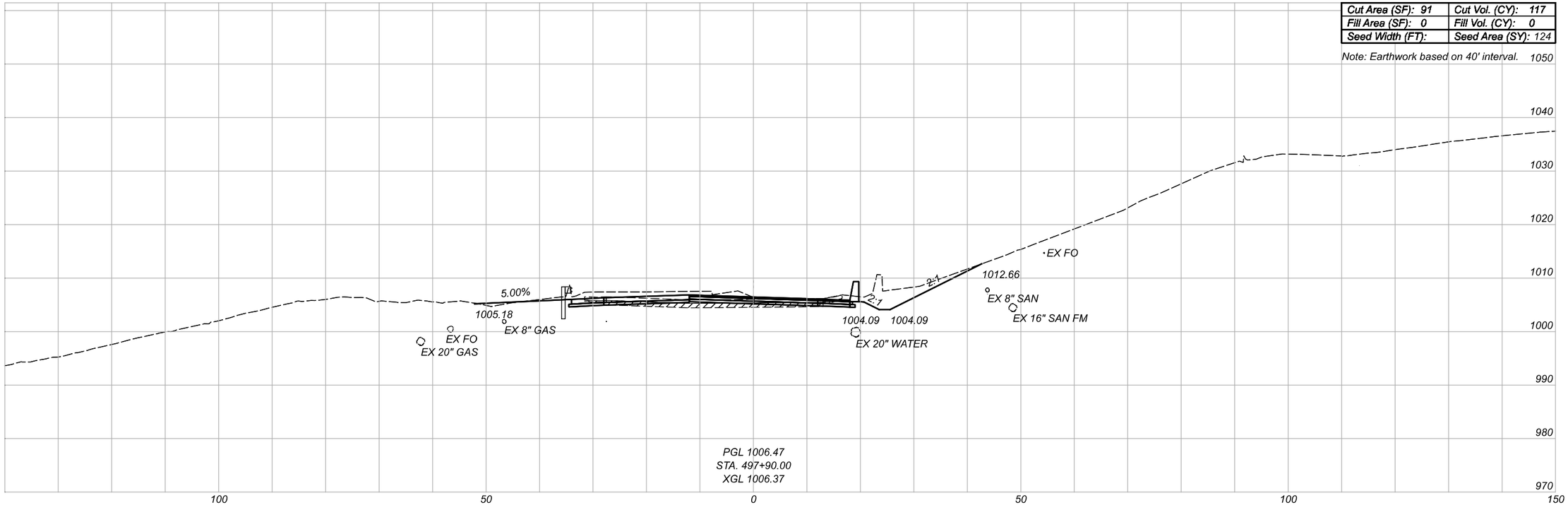

Cut Area (SF): 67	Cut Vol. (CY): 24
Fill Area (SF): 0	Fill Vol. (CY): 0
Seed Width (FT):	Seed Area (SY): 34

Note: Earthwork based on 10' interval.

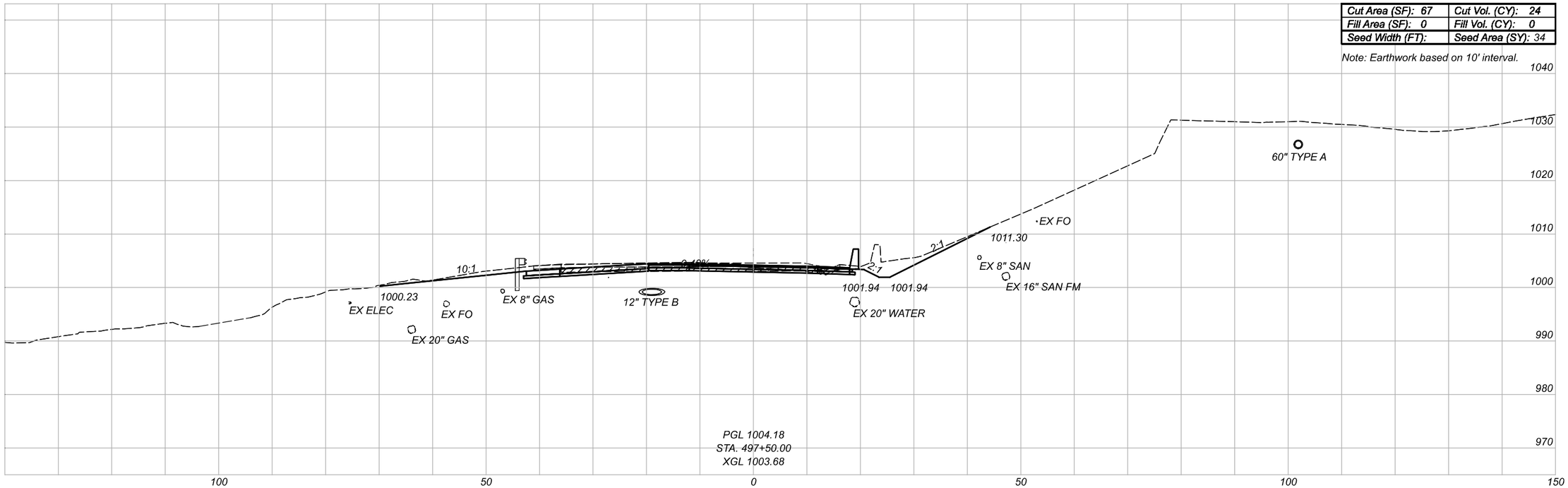

EX ASPHALT CONCRETE BASE

CROSS SECTIONS - SR-21
STA 497+50.00 TO STA 497+90.00

SUM-77-32.27

MODEL: CLP_9 - 497+50.00 [Sheet] PAPERSIZE: 17x11(in.) DATE: 2/24/2022 TIME: 9:40:33 AM USER: tdinh
pw:\\gfnet-pw.bentley.com:gfnet-pw-01\Documents\Projects\67490\104983\401-Engineering-GF\Roadway\Sheets\104983_XS403A.dgn

DESIGN AGENCY
Gannett Fleming
ENGINEERS AND ARCHITECTS, P.C.
2500 Corporate Exchange Drive
Suite 230
Columbus, OH 43231

DESIGNER: JAS

REVIEWER: DRJ 02/01/22

PROJECT ID: 104983

SHEET: 170 TOTAL: 297

Cut Area (SF): 148	Cut Vol. (CY): 239
Fill Area (SF): 0	Fill Vol. (CY): 0
Seed Width (FT):	Seed Area (SY): 207

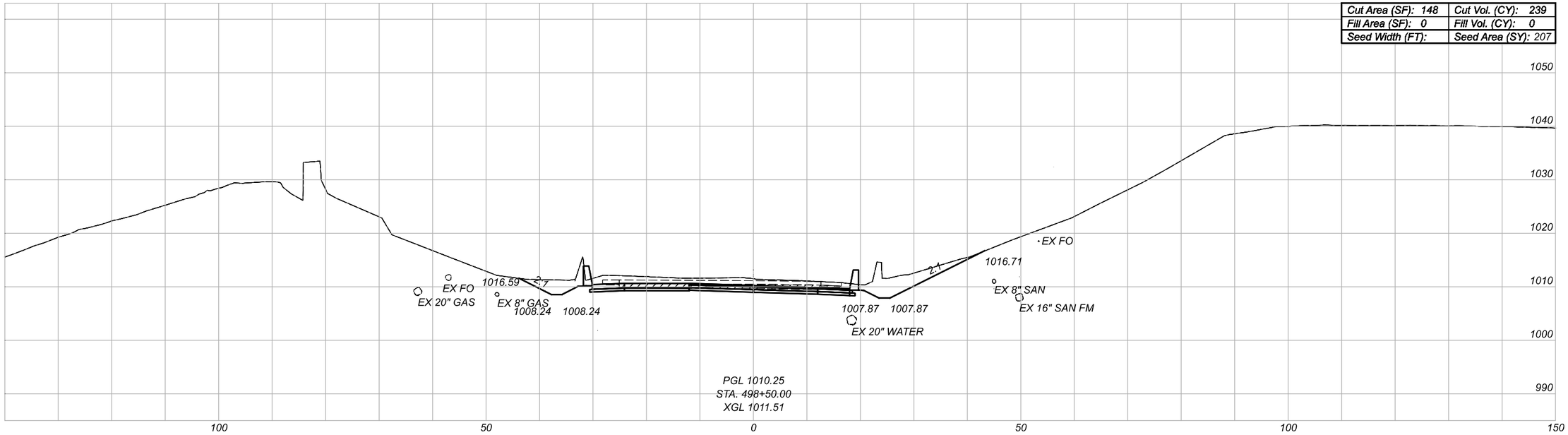

Cut Area (SF): 110	Cut Vol. (CY): 37
Fill Area (SF): 0	Fill Vol. (CY): 0
Seed Width (FT):	Seed Area (SY): 31

Note: Earthwork based on 10' interval.

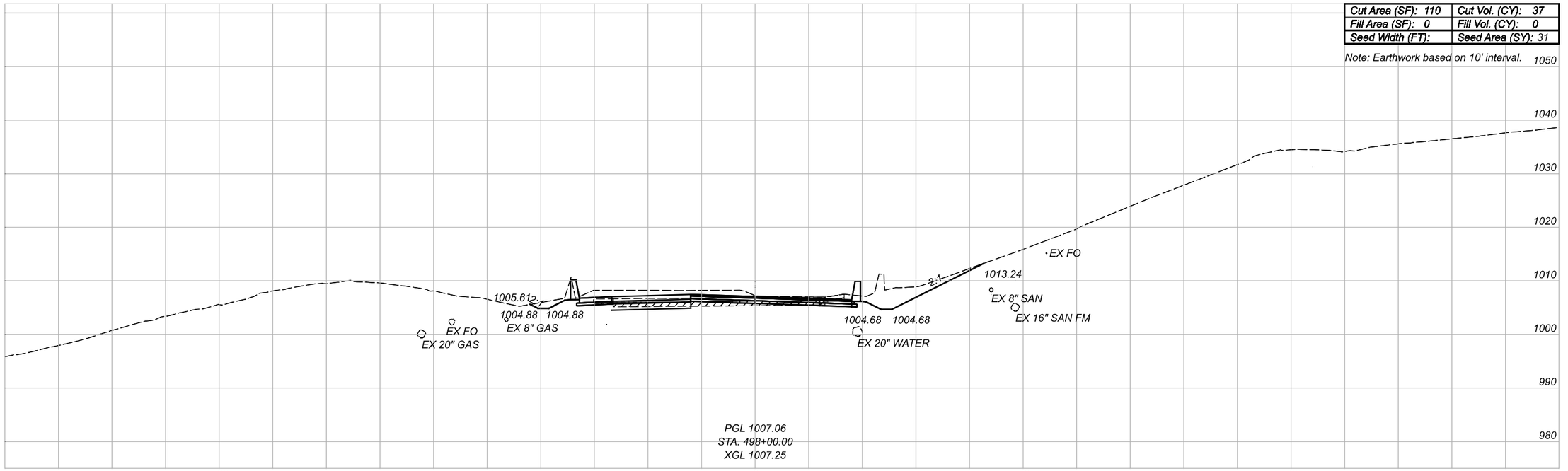

EX ASPHALT CONCRETE BASE

CROSS SECTIONS - SR-21
STA 498+00.00 TO STA 498+50.00

SUM-77-32.27

MODEL: CLP_9 - 498+00.00 [Sheet] PAPERSIZE: 17x11(in) DATE: 2/24/2022 TIME: 9:40:36 AM USER: tdnh
pw:\\gfnet-pw.bentley.com:gfnet-pw-01\Documents\Projects\67490\104983\40i-Engineering-GF\Roadway\Sheets\104983_XS403A.dgn

DESIGN AGENCY
Gannett Fleming
ENGINEERS AND ARCHITECTS, P.C.
2500 Corporate Exchange Drive
Suite 220
Columbus, OH 43231

DESIGNER	
JAS	
REVIEWER	
DRJ	02/01/22
PROJECT ID	
104983	
SHEET	TOTAL
171	297

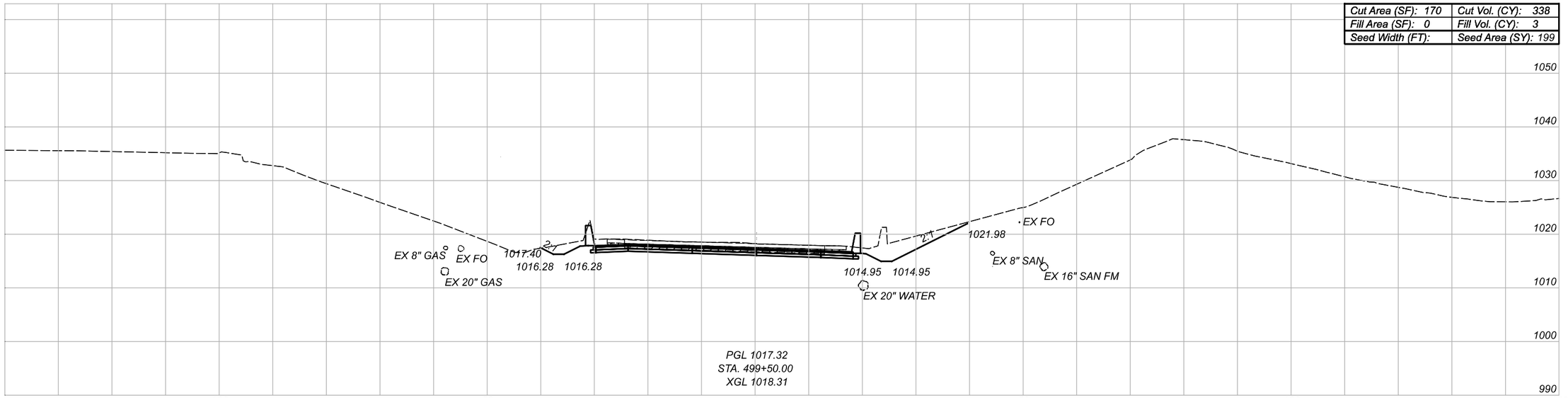

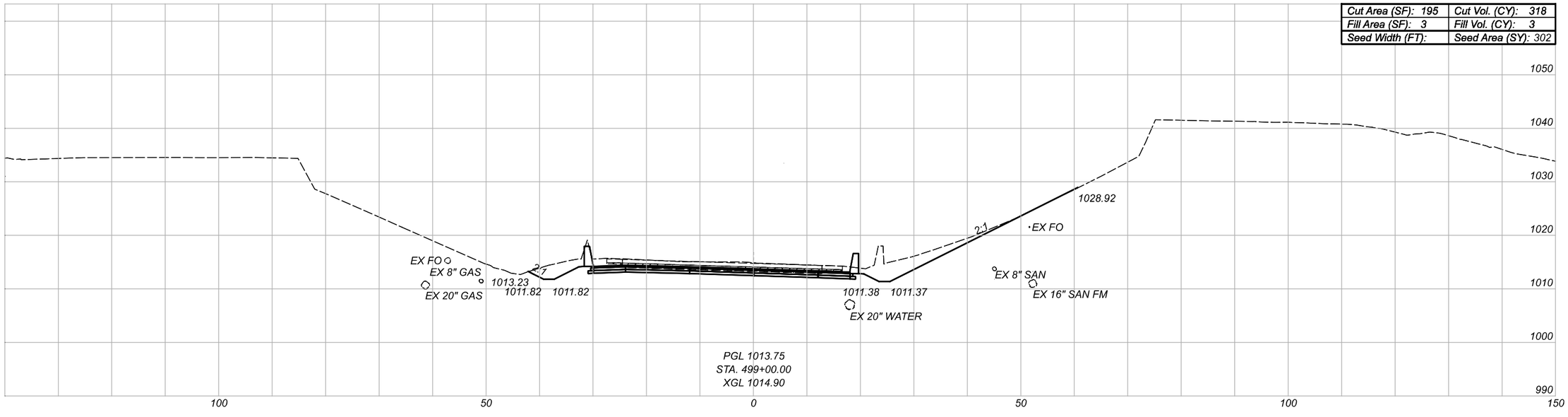

EX ASPHALT CONCRETE BASE

CROSS SECTIONS - SR-21
STA 499+00.00 TO STA 499+50.00

SUM-77-32.27

MODEL: CLP-9 - 499+00.00 [Sheet] PAPERSIZE: 17x11(in.) DATE: 2/24/2022 TIME: 9:40:38 AM USER: tdinh
pw:\\gfnet-pw.bentley.com:gfnet-pw-01\Documents\Projects\67490\104983\401-Engineering-GF\Roadway\Sheets\104983_XS403A.dgn

DESIGN AGENCY
Gannett Fleming
ENGINEERS AND ARCHITECTS, P.C.
2500 Corporate Exchange Drive
Suite 230
Columbus, OH 43231

DESIGNER: JAS
REVIEWER: DRJ 02/01/22
PROJECT ID: 104983
SHEET: 172 TOTAL: 297

CROSS SECTIONS - SR-21
STA 500+00.00 TO STA 500+23.00

Cut Area (SF): 153	Cut Vol. (CY): 139
Fill Area (SF): 0	Fill Vol. (CY): 0
Seed Width (FT):	Seed Area (SY): 102

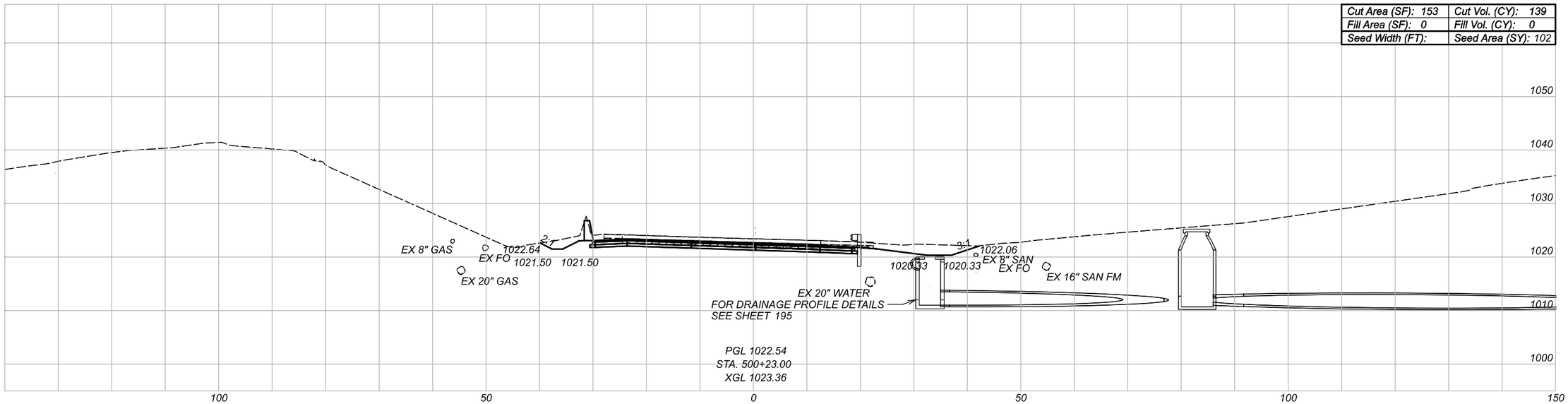

Cut Area (SF): 174	Cut Vol. (CY): 318
Fill Area (SF): 0	Fill Vol. (CY): 0
Seed Width (FT):	Seed Area (SY): 144

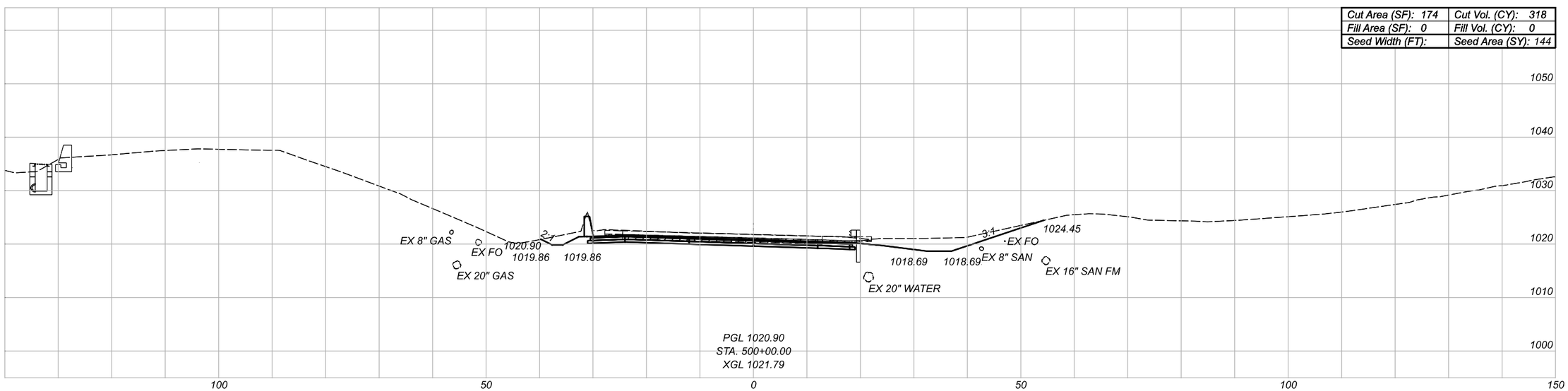

EX ASPHALT CONCRETE BASE

DESIGN AGENCY
Gannett Fleming
ENGINEERS AND ARCHITECTS, P.C.
2590 Corporate Exchange Drive
Suite 230
Columbus, OH 43231

DESIGNER
JAS

REVIEWER
DRJ 02/01/22

PROJECT ID
104983

SHEET 173 | TOTAL 297

SUM-77-32.27

MODEL: CLP_9 - 500+00.00 [Sheet] PAPERSIZE: 17x11(in.) DATE: 2/24/2022 TIME: 9:40:41 AM USER: tdinh
pw:\\gfnet-pw.bentley.com:gfnet-pw-01\Documents\Projects\67490\104983\40-Engineering-GF\Roadway\Sheets\104983_XS403A.dgn

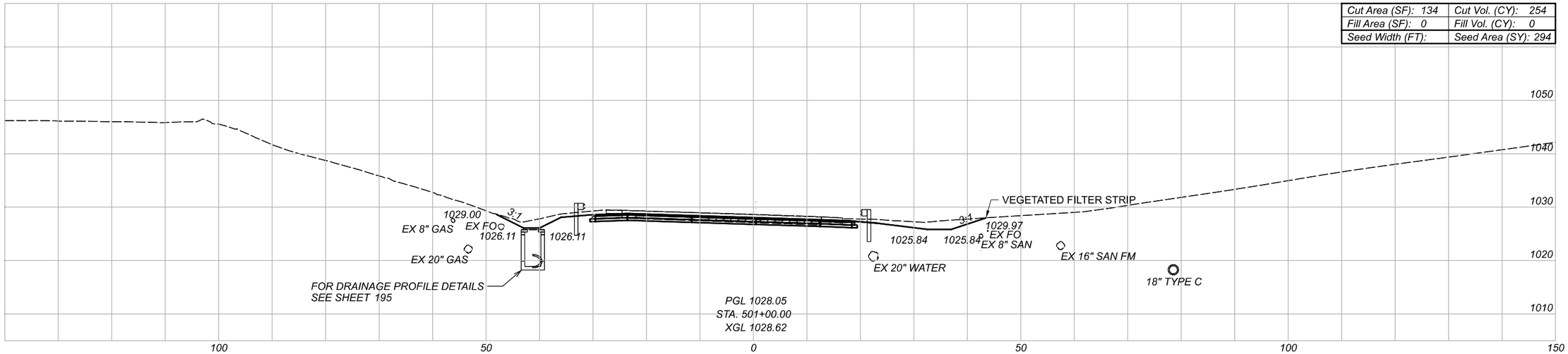

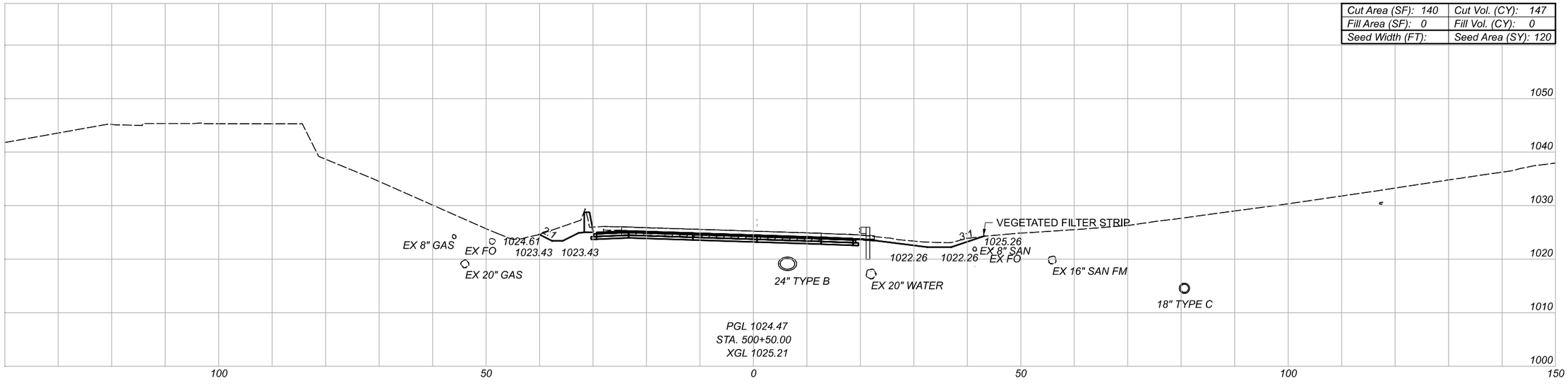

EX ASPHALT CONCRETE BASE

CROSS SECTIONS - SR-21
STA 500+50.00 TO STA 501+00.00

SUM-77-32.27

MODEL: CLP_9 - 500+50.00 [Sheet] PAPERSIZE: 17x11in DATE: 2/24/2022 TIME: 9:40:44 AM USER: tdmh
pw:\\gfnet-pw.bentley.com:gfnet-pw-01\Documents\Projects\67490\104983\40i-Engineering-GF\Roadway\Sheets\104983_XS403A.dgn

DESIGN AGENCY
Gannett Fleming
ENGINEERS AND ARCHITECTS, P.C.
2500 Corporate Exchange Drive
Suite 230
Columbus, OH 43231

DESIGNER
JAS

REVIEWER
DRJ 02/01/22

PROJECT ID
104983

SHEET 174 | TOTAL 297

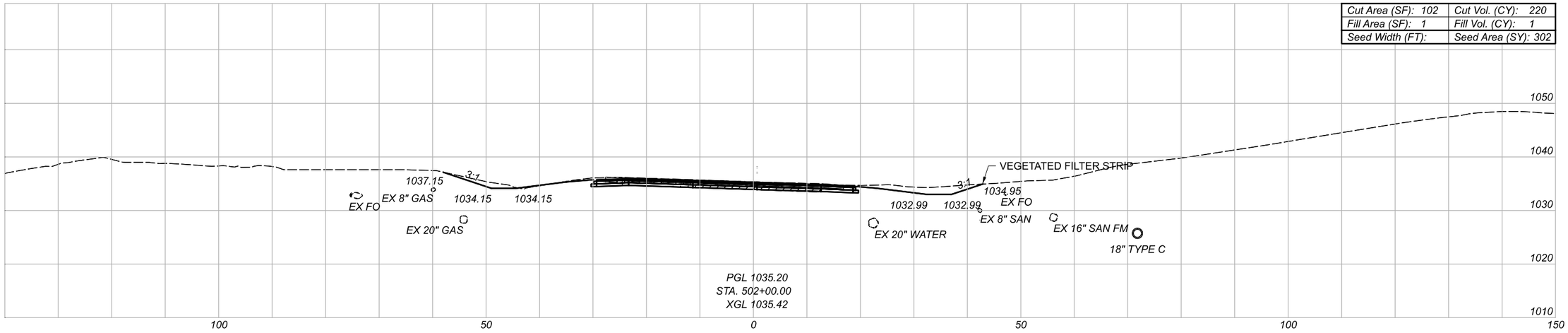

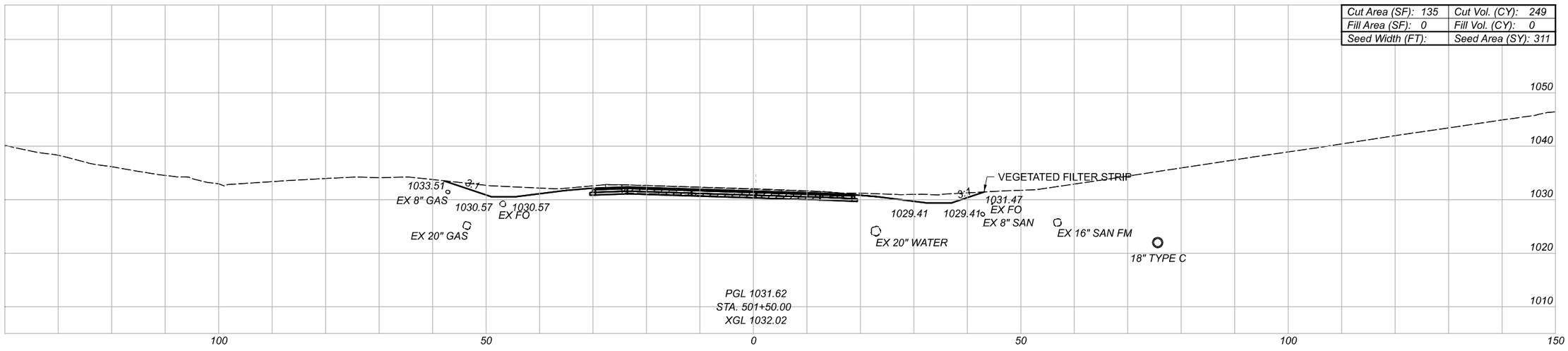

EX ASPHALT CONCRETE BASE

CROSS SECTIONS - SR-21
STA 501+50.00 TO STA 502+00.00

SUM-77-32.27

MODEL: CLP_9 - 501+50.00 [Sheet] PAPERSIZE: 17x11(in.) DATE: 2/24/2022 TIME: 9:40:46 AM USER: tdmh
pw:\\gfnet-pw.bentley.com:gfnet-pw-01\Documents\Projects\67490\104983\401-Engineering-GF\Roadway\Sheets\104983_XS403A.dgn

DESIGN AGENCY
Gannett Fleming
ENGINEERS AND ARCHITECTS, P.C.
2500 Corporate Exchange Drive
Suite 220
Columbus, OH 43231

DESIGNER: JAS
REVIEWER: DRJ 02/01/22
PROJECT ID: 104983
SHEET: 175 TOTAL: 297

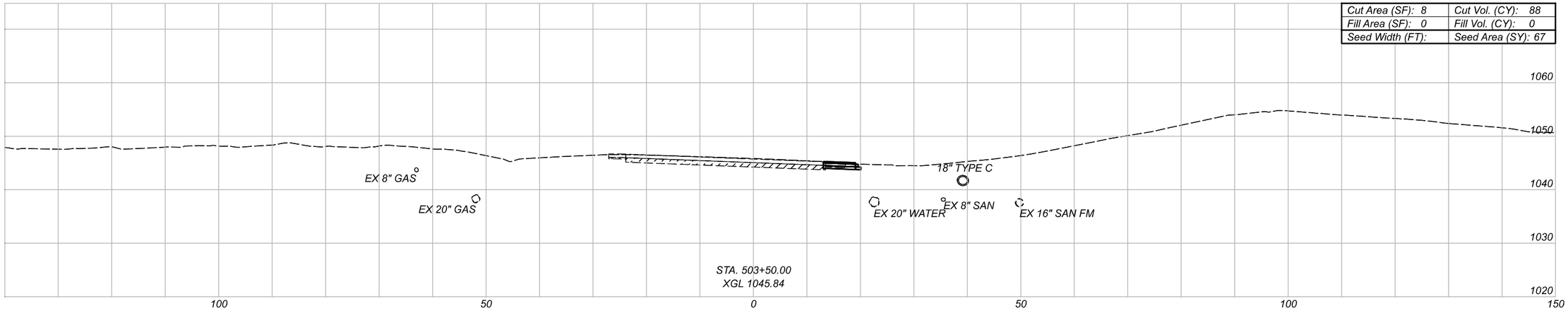

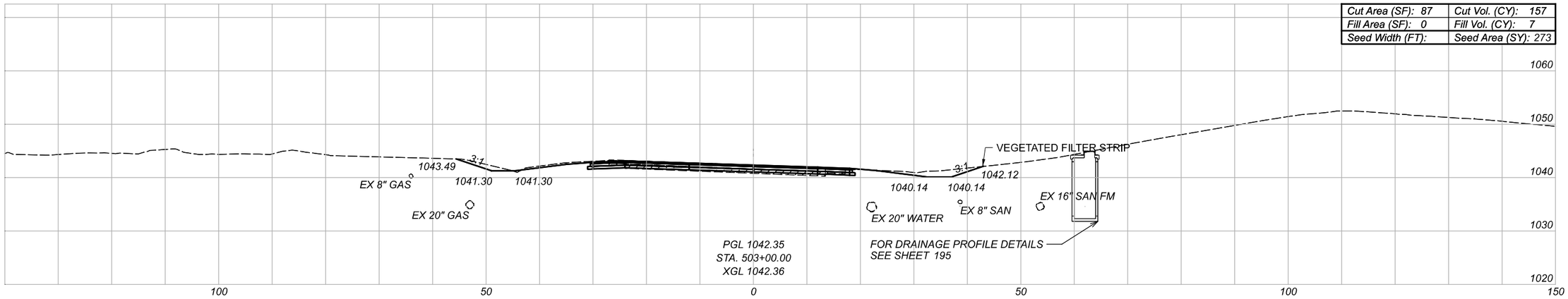

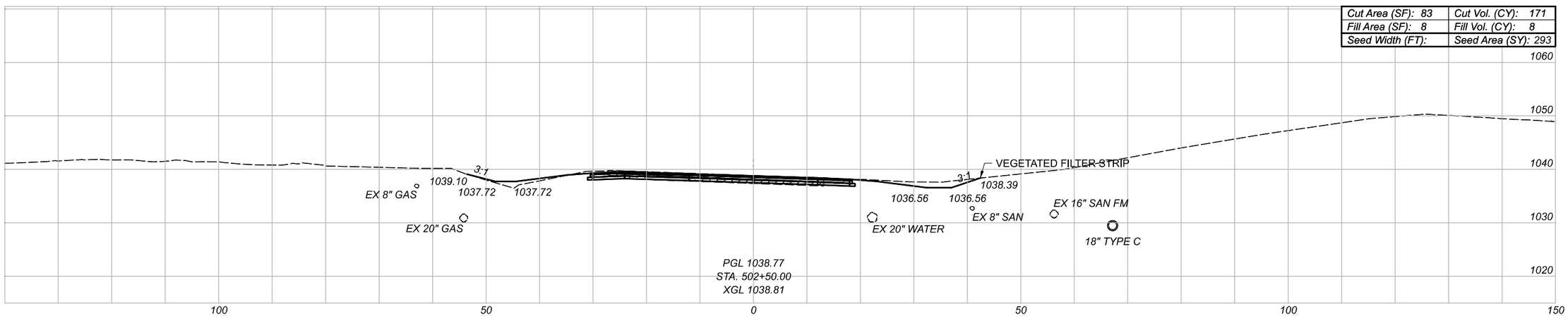

EX ASPHALT CONCRETE BASE

CROSS SECTIONS - SR-21
STA 502+50.00 TO STA 503+50.00

DESIGN AGENCY
Gannett Fleming
ENGINEERS AND ARCHITECTS, P.C.
2550 Corporate Exchange Drive
Suite 220
Columbus, OH 43231

DESIGNER: JAS

REVIEWER: DRJ 02/01/22

PROJECT ID: 104983

SHEET: 176 TOTAL: 297

SUM-77-32.27

MODEL: CLP_9 - 502+50.00 [Sheet1] PAPERSIZE: 17x11(in) DATE: 2/24/2022 TIME: 9:40:49 AM USER: tdhh
pw:\\gfnet-pw.bentley.comgfnet-pw-01\Documents\Projects\61490\104983\40i-Engineering-GF\Roadway\Sheets\104983_XS403A.dgn

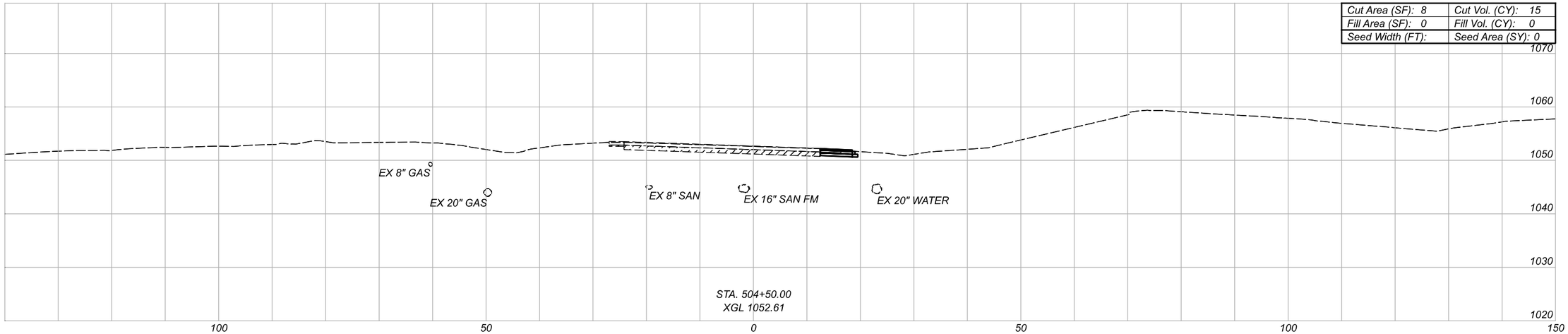

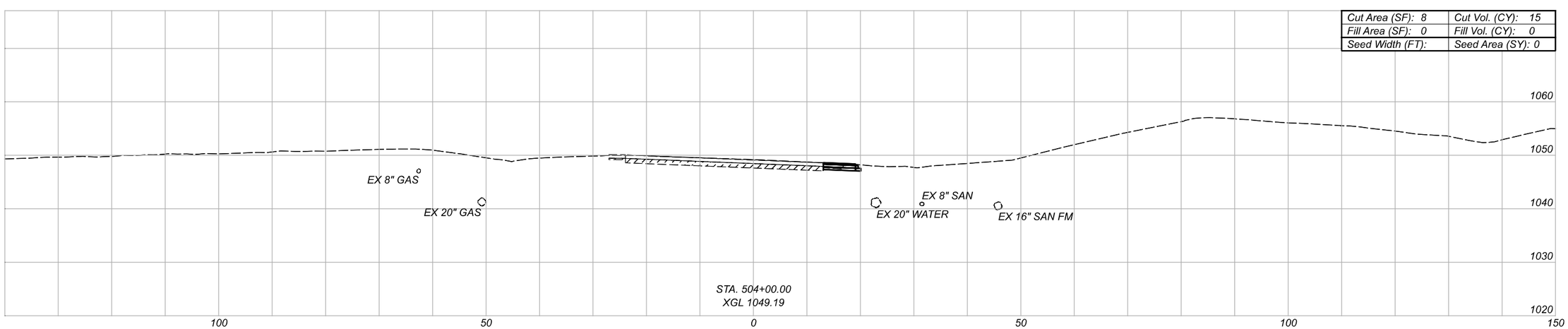

EX ASPHALT CONCRETE BASE

CROSS SECTIONS - SR-21
STA 504+00.00 TO STA 504+50.00

SUM-77-32.27

MODEL: CLP_9 - 504+00.00 [Sheet] PAPERSIZE: 17x11(in.) DATE: 2/24/2022 TIME: 9:40:51 AM USER: tdinh
pw:\\gfnet-pw.bentley.comgfnet-pw-01\Documents\Projects\67490\104983\40i-Engineering-GF\Roadway\Sheets\104983_XS403A.dgn

DESIGN AGENCY
Gannett Fleming
ENGINEERS AND ARCHITECTS, P.C.
2550 Corporate Exchange Drive, Suite 220, Columbus, OH 43231

DESIGNER: JAS
REVIEWER: DRJ 02/01/22
PROJECT ID: 104983
SHEET: 177 TOTAL: 297

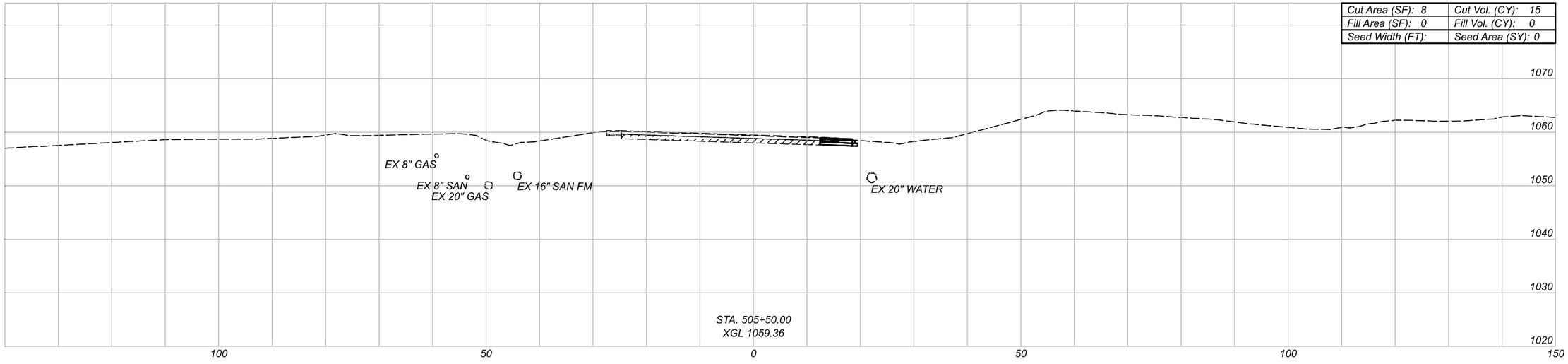

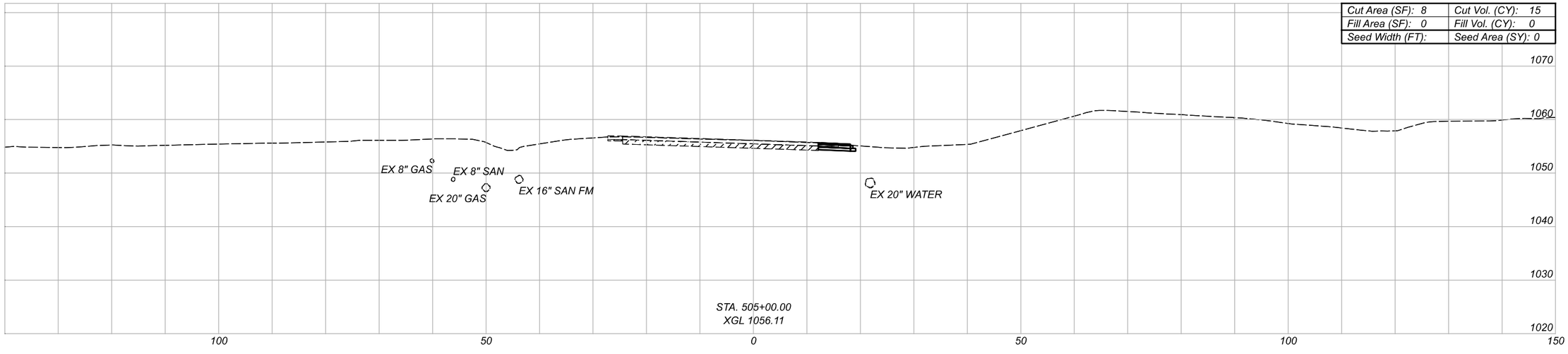

EX ASPHALT CONCRETE BASE

CROSS SECTIONS - SR-21
STA 505+00.00 TO STA 505+50.00

SUM-77-32.27

MODEL: CLP_9 - 505+00.00 [Sheet] PAPERSIZE: 17x11(in) DATE: 2/24/2022 TIME: 9:40:53 AM USER: tdmh
pw:\\gfnet-pw.bentley.com:gfnet-pw-01\Documents\Projects\67490\104983\401-Engineering-GF\Roadway\Sheets\104983_XS403A.dgn

DESIGN AGENCY
Gannett Fleming
ENGINEERS AND ARCHITECTS, P.C.
2500 Corporate Exchange Drive
Suite 230
Columbus, OH 43231

DESIGNER
JAS

REVIEWER
DRJ 02/01/22

PROJECT ID
104983

SHEET 178 | TOTAL 297

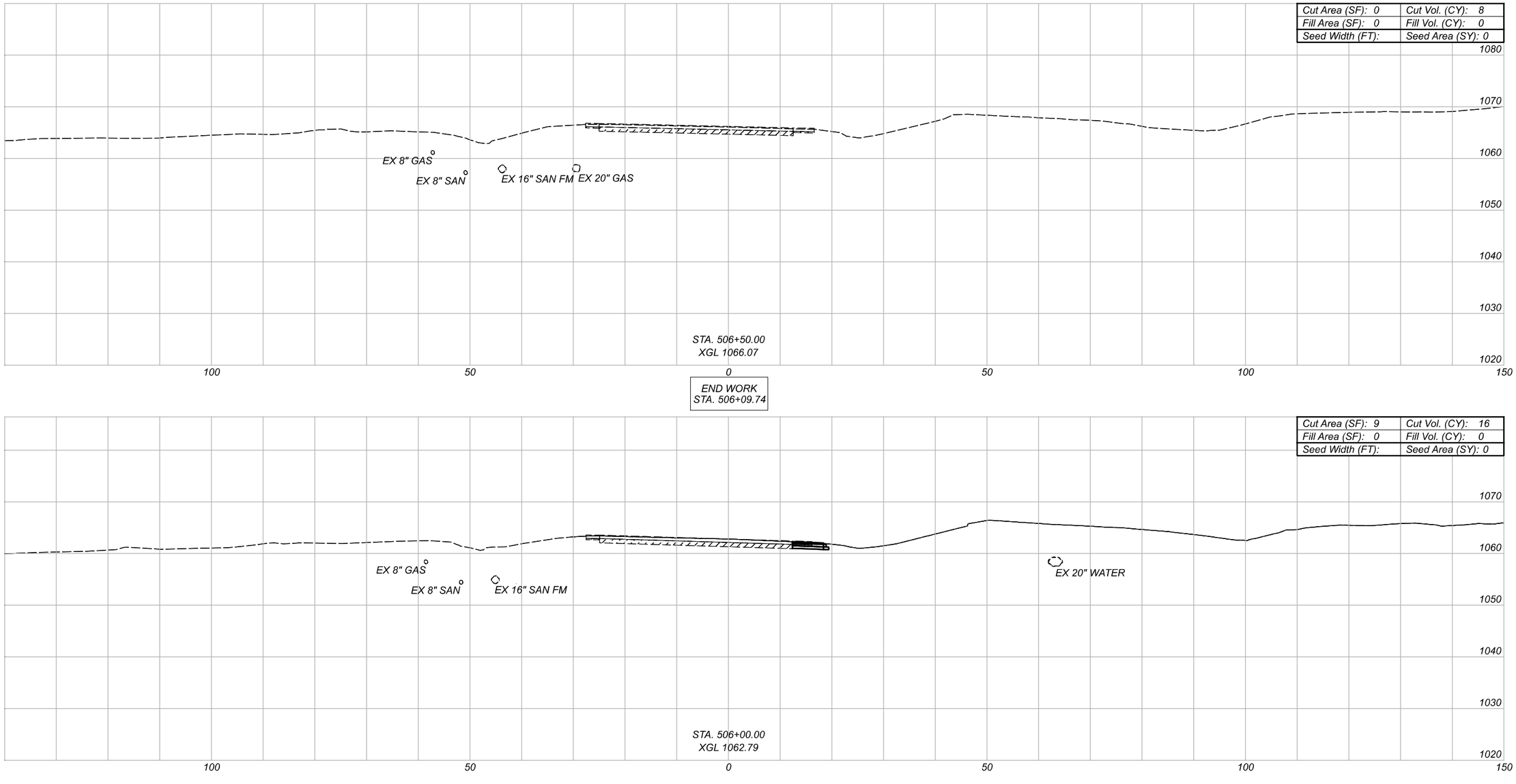

CROSS SECTIONS - SR-21
STA 506+00.00 TO STA 506+50.00

SUM-77-32.27

MODEL: CLP_9 - 506+00.00 [Sheet] PAPERSIZE: 17x11(in.) DATE: 2/24/2022 TIME: 9:40:55 AM USER: tdinh
pw:\\gfnet-pw.bentley.com:gfnet-pw-01\Documents\Projects\67490\104983\401-Engineering-GF\Roadway\Sheets\104983_XS403A.dgn

DESIGN AGENCY
Gannett Fleming
ENGINEERS AND ARCHITECTS, P.C.
2500 Corporate Exchange Drive
Suite 230
Columbus, OH 43231

DESIGNER
JAS

REVIEWER
DRJ 02/01/22

PROJECT ID
104983

SHEET 179 TOTAL 297

SUM-77-32.27

MODEL: CLP_9 - 507+00.00 [Sheet] PAPERSIZE: 17x11(in) DATE: 2/24/2022 TIME: 9:40:57 AM USER: tdinh
pw:\\gfnet-pw.bentley.com:gfnet-pw-01\Documents\Projects\67490\104983\401-Engineering-GF\Roadway\Sheets\104983_XS403A.dgn

CROSS SECTIONS - SR-21
STA 507+00.00

Cut Area (SF): 0	Cut Vol. (CY): 0
Fill Area (SF): 0	Fill Vol. (CY): 0
Seed Width (FT):	Seed Area (SY): 0
Total Carried to General Note	
Cut Vol. (CY): 3464	
Fill Vol. (CY): 66	
Seed Area (SY): 3668	

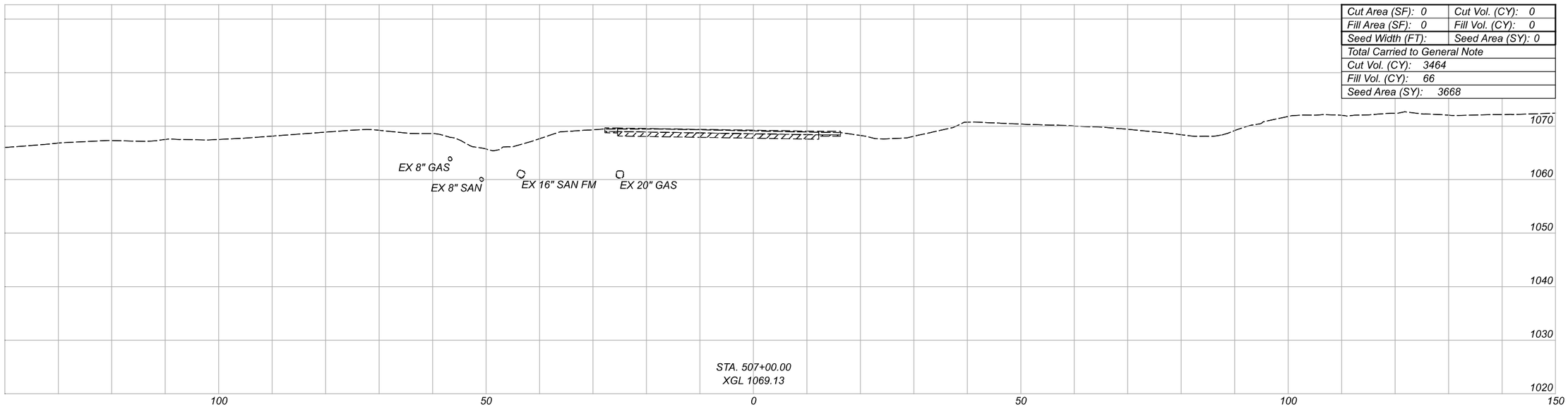

DESIGN AGENCY
Gannett Fleming
ENGINEERS AND ARCHITECTS, P.C.
2500 Corporate Exchange Drive
Suite 220
Columbus, OH 43231

DESIGNER
JAS

REVIEWER
DRJ 02/01/22

PROJECT ID
104983

SHEET 180 | TOTAL 297

PROFILE GRADE LINE (30' RT)		RIGHT LANE No. 1 (42' RT)					RIGHT LANE No. 2 (54' RT)					RIGHT LANE No. 3 (66' RT)					REMARKS
STATION	ELEVATION	WIDTH	X-SLOPE	ELEV CORR	RATE "G"	PAV'T ELEV	WIDTH	X-SLOPE	ELEV CORR	RATE "G"	PAV'T ELEV	WIDTH	X-SLOPE	ELEV CORR	RATE "G"	PAV'T ELEV	
1047+00.00	1043.24	12.00	0.0160	0.192		1043.43	12.00	0.0160	0.192		1043.62	12.00	-0.0160	-0.192		1043.43	
1047+25.00	1043.12	12.00	0.0160	0.192		1043.31	12.00	0.0160	0.192		1043.50	12.00	-0.0160	-0.192		1043.31	
1047+50.00	1042.99	12.00	0.0160	0.192		1043.19	12.00	0.0160	0.192		1043.38	12.00	-0.0160	-0.192		1043.19	
1047+53.11	**1042.98**	**12.00**	**0.0160**	**0.192**	**1:250**	**1043.17**	**12.00**	**0.0160**	**0.192**	**1:250**	**1043.36**	**12.00**	**-0.0160**	**-0.192**		**1043.17**	**NC**
1047+75.00	1042.90	12.00	0.0124	0.148	1:250	1043.05	12.00	0.0124	0.148	1:250	1043.20	12.00	-0.0160	-0.192		1043.00	
1048+00.00	1042.84	12.00	0.0082	0.098	1:250	1042.94	12.00	0.0082	0.098	1:250	1043.03	12.00	-0.0160	-0.192		1042.84	
1048+25.00	1042.81	12.00	0.0040	0.048	1:250	1042.86	12.00	0.0040	0.048	1:250	1042.91	12.00	-0.0160	-0.192		1042.71	
1048+49.11	**1042.81**	**12.00**	**0.0000**	**0.000**	**1:250**	**1042.81**	**12.00**	**0.0000**	**0.000**	**1:250**	**1042.81**	**12.00**	**-0.0160**	**-0.192**		**1042.62**	**HF**
1048+50.00	1042.82	12.00	-0.0001	-0.002	1:250	1042.81	12.00	-0.0001	-0.002	1:250	1042.81	12.00	-0.0160	-0.192		1042.62	
1048+75.00	1042.85	12.00	-0.0043	-0.052	1:250	1042.80	12.00	-0.0043	-0.052	1:250	1042.75	12.00	-0.0160	-0.192		1042.56	
1049+00.00	1042.93	12.00	-0.0085	-0.102	1:250	1042.82	12.00	-0.0085	-0.102	1:250	1042.72	12.00	-0.0160	-0.192		1042.53	
1049+25.00	1043.03	12.00	-0.0126	-0.152	1:250	1042.88	12.00	-0.0126	-0.152	1:250	1042.73	12.00	-0.0160	-0.192		1042.54	
1049+45.11	**1043.14**	**12.00**	**-0.0160**	**-0.192**	**1:250**	**1042.95**	**12.00**	**-0.0160**	**-0.192**	**1:250**	**1042.76**	**12.00**	**-0.0160**	**-0.192**	**1:250**	**1042.56**	**RC**
1049+50.00	1043.17	12.00	-0.0165	-0.199	1:250	1042.97	12.00	-0.0165	-0.199	1:250	1042.77	12.00	-0.0165	-0.199	1:250	1042.58	
1049+75.00	1043.34	12.00	-0.0193	-0.232	1:250	1043.11	12.00	-0.0193	-0.232	1:250	1042.88	12.00	-0.0193	-0.232	1:250	1042.65	
1050+00.00	1043.55	12.00	-0.0221	-0.265	1:250	1043.28	12.00	-0.0221	-0.265	1:250	1043.02	12.00	-0.0221	-0.265	1:250	1042.75	
1050+25.00	1043.79	12.00	-0.0249	-0.299	1:250	1043.49	12.00	-0.0249	-0.299	1:250	1043.19	12.00	-0.0249	-0.299	1:250	1042.89	
1050+50.00	1044.06	12.00	-0.0277	-0.332	1:250	1043.73	12.00	-0.0277	-0.332	1:250	1043.40	12.00	-0.0277	-0.332	1:250	1043.06	
1050+75.00	1044.36	12.00	-0.0304	-0.365	1:250	1043.99	12.00	-0.0304	-0.365	1:250	1043.63	12.00	-0.0304	-0.365	1:250	1043.26	
1050+87.11	**1044.50**	**12.00**	**-0.0318**	**-0.381**	**1:250**	**1044.12**	**12.00**	**-0.0318**	**-0.381**	**1:250**	**1043.74**	**12.00**	**-0.0318**	**-0.381**	**1:250**	**1043.36**	**PC**
1051+00.00	1044.66	12.00	-0.0332	-0.399	1:250	1044.26	12.00	-0.0332	-0.399	1:250	1043.86	12.00	-0.0332	-0.399	1:250	1043.46	
1051+25.00	1044.96	12.00	-0.0360	-0.432	1:250	1044.53	12.00	-0.0360	-0.432	1:250	1044.10	12.00	-0.0360	-0.432	1:250	1043.67	
1051+50.00	1045.26	12.00	-0.0388	-0.465	1:250	1044.80	12.00	-0.0388	-0.465	1:250	1044.33	12.00	-0.0388	-0.465	1:250	1043.87	
1051+75.00	1045.57	12.00	-0.0415	-0.499	1:250	1045.07	12.00	-0.0415	-0.499	1:250	1044.57	12.00	-0.0415	-0.499	1:250	1044.07	
1052+00.00	1045.87	12.00	-0.0443	-0.532	1:250	1045.34	12.00	-0.0443	-0.532	1:250	1044.80	12.00	-0.0443	-0.532	1:250	1044.27	
1052+06.11	**1045.94**	**12.00**	**-0.0450**	**-0.540**	**1:250**	**1045.40**	**12.00**	**-0.0450**	**-0.540**	**1:250**	**1044.86**	**12.00**	**-0.0450**	**-0.540**	**1:250**	**1044.32**	**FS**
1052+25.00	1046.17	12.00	-0.0450	-0.540		1045.63	12.00	-0.0450	-0.540		1045.09	12.00	-0.0450	-0.540		1044.55	
1052+50.00	1046.47	12.00	-0.0450	-0.540		1045.93	12.00	-0.0450	-0.540		1045.39	12.00	-0.0450	-0.540		1044.85	
1052+75.00	1046.77	12.00	-0.0450	-0.540		1046.23	12.00	-0.0450	-0.540		1045.69	12.00	-0.0450	-0.540		1045.15	
1053+00.00	1047.08	12.00	-0.0450	-0.540		1046.54	12.00	-0.0450	-0.540		1046.00	12.00	-0.0450	-0.540		1045.46	
1053+25.00	1047.38	12.00	-0.0450	-0.540		1046.84	12.00	-0.0450	-0.540		1046.30	12.00	-0.0450	-0.540		1045.76	
1053+50.00	1047.68	12.00	-0.0450	-0.540		1047.14	12.00	-0.0450	-0.540		1046.60	12.00	-0.0450	-0.540		1046.06	
1053+75.00	1047.98	12.00	-0.0450	-0.540		1047.44	12.00	-0.0450	-0.540		1046.90	12.00	-0.0450	-0.540		1046.36	
1054+00.00	1048.29	12.00	-0.0450	-0.540		1047.75	12.00	-0.0450	-0.540		1047.21	12.00	-0.0450	-0.540		1046.67	
1054+25.00	1048.59	12.00	-0.0450	-0.540		1048.05	12.00	-0.0450	-0.540		1047.51	12.00	-0.0450	-0.540		1046.97	
1054+50.00	1048.89	12.00	-0.0450	-0.540		1048.35	12.00	-0.0450	-0.540		1047.81	12.00	-0.0450	-0.540		1047.27	
1054+75.00	1049.19	12.00	-0.0450	-0.540		1048.65	12.00	-0.0450	-0.540		1048.11	12.00	-0.0450	-0.540		1047.57	
1055+00.00	1049.49	12.00	-0.0450	-0.540		1048.95	12.00	-0.0450	-0.540		1048.41	12.00	-0.0450	-0.540		1047.87	
1055+25.00	1049.80	12.00	-0.0450	-0.540		1049.26	12.00	-0.0450	-0.540		1048.72	12.00	-0.0450	-0.540		1048.18	
1055+50.00	1050.10	12.00	-0.0450	-0.540		1049.56	12.00	-0.0450	-0.540		1049.02	12.00	-0.0450	-0.540		1048.48	
1055+75.00	1050.40	12.00	-0.0450	-0.540		1049.86	12.00	-0.0450	-0.540		1049.32	12.00	-0.0450	-0.540		1048.78	
1056+00.00	1050.70	12.00	-0.0450	-0.540		1050.16	12.00	-0.0450	-0.540		1049.62	12.00	-0.0450	-0.540		1049.08	
1056+25.00	1051.00	12.00	-0.0450	-0.540		1050.46	12.00	-0.0450	-0.540		1049.92	12.00	-0.0450	-0.540		1049.38	
1056+50.00	1051.31	12.00	-0.0450	-0.540		1050.77	12.00	-0.0450	-0.540		1050.23	12.00	-0.0450	-0.540		1049.69	
1056+75.00	1051.61	12.00	-0.0450	-0.540		1051.07	12.00	-0.0450	-0.540		1050.53	12.00	-0.0450	-0.540		1049.99	
1057+00.00	1051.91	12.00	-0.0450	-0.540		1051.37	12.00	-0.0450	-0.540		1050.83	12.00	-0.0450	-0.540		1050.29	
1057+25.00	1052.21	12.00	-0.0450	-0.540		1051.67	12.00	-0.0450	-0.540		1051.13	12.00	-0.0450	-0.540		1050.59	
1057+50.00	1052.51	12.00	-0.0450	-0.540		1051.97	12.00	-0.0450	-0.540		1051.43	12.00	-0.0450	-0.540		1050.89	
1057+75.00	1052.82	12.00	-0.0450	-0.540		1052.28	12.00	-0.0450	-0.540		1051.74	12.00	-0.0450	-0.540		1051.20	
1058+00.00	1053.12	12.00	-0.0450	-0.540		1052.58	12.00	-0.0450	-0.540		1052.04	12.00	-0.0450	-0.540		1051.50	
1058+25.00	1053.42	12.00	-0.0450	-0.540		1052.88	12.00	-0.0450	-0.540		1052.34	12.00	-0.0450	-0.540		1051.80	
1058+50.00	1053.72	12.00	-0.0450	-0.540		1053.18	12.00	-0.0450	-0.540		1052.64	12.00	-0.0450	-0.540		1052.10	
1058+75.00	1054.02	12.00	-0.0450	-0.540		1053.48	12.00	-0.0450	-0.540		1052.94	12.00	-0.0450	-0.540		1052.40	
1059+00.00	1054.33	12.00	-0.0450	-0.540		1053.79	12.00	-0.0450	-0.540		1053.25	12.00	-0.0450	-0.540		1052.71	
1059+25.00	1054.63	12.00	-0.0450	-0.540		1054.09	12.00	-0.0450	-0.540		1053.55	12.00	-0.0450	-0.540		1053.01	
1059+50.00	1054.93	12.00	-0.0450	-0.540		1054.39	12.00	-0.0450	-0.540		1053.85	12.00	-0.0450	-0.540		1053.31	

SUPERELEVATION TABLE - IR-77 NB
STA 1047+00 TO STA 1059+50

SUM-77-28.75

SHEET 1

MODEL: ill405_GE001.l PAPERSIZE: 17x11(in.) DATE: 2/22/2022 TIME: 8:40:06 PM USER: tdinh
pw:\\gfnet-pw.bentley.com:gfnet-pw-01\Documents\Projects\67490\104983\401-Engineering-GF\Roadway\Sheets\104983_GE001.dgn

DESIGN AGENCY
Gannett Fleming
ENGINEERS AND ARCHITECTS, P.C.
2550 Corporate Exchange Drive
Suite 230
Columbus, OH 43231

DESIGNER
TQD

REVIEWER
DRJ 02/01/22

PROJECT ID
111405

SHEET 181 | TOTAL 297

PROFILE GRADE LINE (30' RT)		RIGHT LANE No. 1 (42' RT)					RIGHT LANE No. 2 (54' RT)					RIGHT LANE No. 3 (66' RT)					REMARKS
STATION	ELEVATION	WIDTH	X-SLOPE	ELEV CORR	RATE "G"	PAV'T ELEV	WIDTH	X-SLOPE	ELEV CORR	RATE "G"	PAV'T ELEV	WIDTH	X-SLOPE	ELEV CORR	RATE "G"	PAV'T ELEV	
1059+75.00	1055.23	12.00	-0.0450	-0.540		1054.69	12.00	-0.0450	-0.540		1054.15	12.00	-0.0450	-0.540		1053.61	
1060+00.00	1055.53	12.00	-0.0450	-0.540		1054.99	12.00	-0.0450	-0.540		1054.45	12.00	-0.0450	-0.540		1053.91	
1060+25.00	1055.84	12.00	-0.0450	-0.540		1055.30	12.00	-0.0450	-0.540		1054.76	12.00	-0.0450	-0.540		1054.22	
1060+50.00	1056.14	12.00	-0.0450	-0.540		1055.60	12.00	-0.0450	-0.540		1055.06	12.00	-0.0450	-0.540		1054.52	
1060+75.00	1056.44	12.00	-0.0450	-0.540		1055.90	12.00	-0.0450	-0.540		1055.36	12.00	-0.0450	-0.540		1054.82	
1061+00.00	1056.74	12.00	-0.0450	-0.540		1056.20	12.00	-0.0450	-0.540		1055.66	12.00	-0.0450	-0.540		1055.12	
1061+25.00	1057.04	12.00	-0.0450	-0.540		1056.50	12.00	-0.0450	-0.540		1055.96	12.00	-0.0450	-0.540		1055.42	
1061+50.00	1057.35	12.00	-0.0450	-0.540		1056.81	12.00	-0.0450	-0.540		1056.27	12.00	-0.0450	-0.540		1055.73	
1061+75.00	1057.65	12.00	-0.0450	-0.540		1057.11	12.00	-0.0450	-0.540		1056.57	12.00	-0.0450	-0.540		1056.03	
1062+00.00	1057.95	12.00	-0.0450	-0.540		1057.41	12.00	-0.0450	-0.540		1056.87	12.00	-0.0450	-0.540		1056.33	
1062+25.00	1058.25	12.00	-0.0450	-0.540		1057.71	12.00	-0.0450	-0.540		1057.17	12.00	-0.0450	-0.540		1056.63	
1062+50.00	1058.55	12.00	-0.0450	-0.540		1058.01	12.00	-0.0450	-0.540		1057.47	12.00	-0.0450	-0.540		1056.93	
1062+75.00	1058.86	12.00	-0.0450	-0.540		1058.32	12.00	-0.0450	-0.540		1057.78	12.00	-0.0450	-0.540		1057.24	
1063+00.00	1059.16	12.00	-0.0450	-0.540		1058.62	12.00	-0.0450	-0.540		1058.08	12.00	-0.0450	-0.540		1057.54	
1063+25.00	1059.46	12.00	-0.0450	-0.540		1058.92	12.00	-0.0450	-0.540		1058.38	12.00	-0.0450	-0.540		1057.84	
1063+50.00	1059.76	12.00	-0.0450	-0.540		1059.22	12.00	-0.0450	-0.540		1058.68	12.00	-0.0450	-0.540		1058.14	
1063+51.27	**1059.78**	**12.00**	**-0.0450**	**-0.540**	**1:250**	**1059.24**	**12.00**	**-0.0450**	**-0.540**	**1:250**	**1058.70**	**12.00**	**-0.0450**	**-0.540**	**1:250**	**1058.16**	**FS**
1063+75.00	1060.06	12.00	-0.0424	-0.508	1:250	1059.56	12.00	-0.0424	-0.508	1:250	1059.05	12.00	-0.0424	-0.508	1:250	1058.54	
1064+00.00	1060.37	12.00	-0.0396	-0.475	1:250	1059.89	12.00	-0.0396	-0.475	1:250	1059.42	12.00	-0.0396	-0.475	1:250	1058.94	
1064+25.00	1060.67	12.00	-0.0368	-0.442	1:250	1060.23	12.00	-0.0368	-0.442	1:250	1059.79	12.00	-0.0368	-0.442	1:250	1059.34	
1064+50.00	1060.97	12.00	-0.0340	-0.408	1:250	1060.56	12.00	-0.0340	-0.408	1:250	1060.15	12.00	-0.0340	-0.408	1:250	1059.75	
1064+70.27	**1061.22**	**12.00**	**-0.0318**	**-0.381**	**1:250**	**1060.83**	**12.00**	**-0.0318**	**-0.381**	**1:250**	**1060.45**	**12.00**	**-0.0318**	**-0.381**	**1:250**	**1060.07**	**PT**
1064+75.00	1061.27	12.00	-0.0313	-0.375	1:250	1060.90	12.00	-0.0313	-0.375	1:250	1060.52	12.00	-0.0313	-0.375	1:250	1060.15	
1065+00.00	1061.58	12.00	-0.0285	-0.342	1:250	1061.23	12.00	-0.0285	-0.342	1:250	1060.89	12.00	-0.0285	-0.342	1:250	1060.55	
1065+25.00	1061.88	12.00	-0.0257	-0.308	1:250	1061.57	12.00	-0.0257	-0.308	1:250	1061.26	12.00	-0.0257	-0.308	1:250	1060.95	
1065+50.00	1062.18	12.00	-0.0229	-0.275	1:250	1061.90	12.00	-0.0229	-0.275	1:250	1061.63	12.00	-0.0229	-0.275	1:250	1061.35	
1065+75.00	1062.48	12.00	-0.0201	-0.242	1:250	1062.24	12.00	-0.0201	-0.242	1:250	1062.00	12.00	-0.0201	-0.242	1:250	1061.76	
1066+00.00	1062.78	12.00	-0.0174	-0.208	1:250	1062.58	12.00	-0.0174	-0.208	1:250	1062.37	12.00	-0.0174	-0.208	1:250	1062.16	
1066+12.27	**1062.93**	**12.00**	**-0.0160**	**-0.192**	**1:250**	**1062.74**	**12.00**	**-0.0160**	**-0.192**	**1:250**	**1062.55**	**12.00**	**-0.0160**	**-0.192**	**1:250**	**1062.36**	**RC**
1066+25.00	1063.09	12.00	-0.0139	-0.167	1:250	1062.92	12.00	-0.0139	-0.167	1:250	1062.75	12.00	-0.0160	-0.192		1062.56	
1066+50.00	1063.39	12.00	-0.0097	-0.117	1:250	1063.27	12.00	-0.0097	-0.117	1:250	1063.15	12.00	-0.0160	-0.192		1062.96	
1066+75.00	1063.69	12.00	-0.0055	-0.067	1:250	1063.62	12.00	-0.0055	-0.067	1:250	1063.56	12.00	-0.0160	-0.192		1063.36	
1067+00.00	1063.99	12.00	-0.0014	-0.017	1:250	1063.98	12.00	-0.0014	-0.017	1:250	1063.96	12.00	-0.0160	-0.192		1063.77	
1067+08.27	**1064.09**	**12.00**	**0.0000**	**0.000**	**1:250**	**1064.09**	**12.00**	**0.0000**	**0.000**	**1:250**	**1064.09**	**12.00**	**-0.0160**	**-0.192**		**1063.90**	**HF**
1067+25.00	1064.29	12.00	0.0028	0.033	1:250	1064.33	12.00	0.0028	0.033	1:250	1064.36	12.00	-0.0160	-0.192		1064.17	
1067+50.00	1064.60	12.00	0.0070	0.083	1:250	1064.68	12.00	0.0070	0.083	1:250	1064.76	12.00	-0.0160	-0.192		1064.57	
1067+75.00	1064.90	12.00	0.0111	0.133	1:250	1065.03	12.00	0.0111	0.133	1:250	1065.16	12.00	-0.0160	-0.192		1064.97	
1068+00.00	1065.20	12.00	0.0153	0.183	1:250	1065.38	12.00	0.0153	0.183	1:250	1065.57	12.00	-0.0160	-0.192		1065.37	
1068+04.27	**1065.25**	**12.00**	**0.0160**	**0.192**	**1:250**	**1065.44**	**12.00**	**0.0160**	**0.192**	**1:250**	**1065.64**	**12.00**	**-0.0160**	**-0.192**		**1065.44**	**NC**
1068+25.00	1065.50	12.00	0.0160	0.192		1065.69	12.00	0.0160	0.192		1065.89	12.00	-0.0160	-0.192		1065.69	CHECK
1068+50.00	1065.80	12.00	0.0160	0.192		1066.00	12.00	0.0160	0.192		1066.19	12.00	-0.0160	-0.192		1066.00	
1068+75.00	1066.11	12.00	0.0160	0.192		1066.30	12.00	0.0160	0.192		1066.49	12.00	-0.0160	-0.192		1066.30	

SUPERELEVATION TABLE - IR-77 NB
STA 1059+50 TO STA 1068+75

SHEET 2

SUM-77-28.75

MODEL: lll405_GEO01_2 PAPERSIZE: 17x11(in.) DATE: 2/22/2022 TIME: 8:40:07 PM USER: tdinh
pw:\\gfnet-pw.bentley.com:gfnet-pw-01\Documents\Projects\67490\104983\401-Engineering-GF\Roadway\Sheets\104983_GE001.dgn

DESIGN AGENCY
Gannett Fleming
ENGINEERS AND ARCHITECTS, P.C.
2550 Corporate Exchange Drive
Suite 230
Columbus, OH 43231

DESIGNER: TQD
REVIEWER: DRJ 02/01/22
PROJECT ID: 111405
SHEET: 182 TOTAL: 297

REMARKS	LEFT LANE No. 3 (66' LT)					LEFT LANE No. 2 (54' LT)					LEFT LANE No. 1 (42' LT)					PROFILE GRADE LINE (30' LT)	
	PAV'T ELEV	RATE "G"	ELEV CORR	X-SLOPE	WIDTH	PAV'T ELEV	RATE "G"	ELEV CORR	X-SLOPE	WIDTH	PAV'T ELEV	RATE "G"	ELEV CORR	X-SLOPE	WIDTH	STATION	ELEVATION
	1041.81		-0.192	-0.0160	12.00	1042.00		0.192	0.0160	12.00	1041.81		0.192	0.0160	12.00	1047+00.00	1041.62
	1041.88		-0.192	-0.0160	12.00	1042.07		0.192	0.0160	12.00	1041.88		0.192	0.0160	12.00	1047+25.00	1041.69
	1041.96		-0.192	-0.0160	12.00	1042.15		0.192	0.0160	12.00	1041.96		0.192	0.0160	12.00	1047+50.00	1041.77
	1042.06		-0.192	-0.0160	12.00	1042.25		0.192	0.0160	12.00	1042.06		0.192	0.0160	12.00	1047+75.00	1041.86
	1042.17		-0.192	-0.0160	12.00	1042.36		0.192	0.0160	12.00	1042.17		0.192	0.0160	12.00	1048+00.00	1041.98
	1042.30		-0.192	-0.0160	12.00	1042.49		0.192	0.0160	12.00	1042.30		0.192	0.0160	12.00	1048+25.00	1042.11
NC	**1042.34**	**1:250**	**-0.192**	**-0.0160**	**12.00**	**1042.54**		**0.192**	**0.0160**	**12.00**	**1042.34**		**0.192**	**0.0160**	**12.00**	**1048+33.11**	**1042.15**
	1042.51	1:250	-0.124	-0.0104	12.00	1042.64		0.192	0.0160	12.00	1042.45		0.192	0.0160	12.00	1048+50.00	1042.25
	1042.78	1:250	-0.024	-0.0020	12.00	1042.80		0.192	0.0160	12.00	1042.61		0.192	0.0160	12.00	1048+75.00	1042.42
HF	**1042.85**	**1:250**	**0.000**	**0.0000**	**12.00**	**1042.85**		**0.192**	**0.0160**	**12.00**	**1042.65**		**0.192**	**0.0160**	**12.00**	**1048+81.11**	**1042.46**
	1043.06	1:250	0.076	0.0063	12.00	1042.98		0.192	0.0160	12.00	1042.79		0.192	0.0160	12.00	1049+00.00	1042.60
	1043.36	1:250	0.176	0.0146	12.00	1043.18		0.192	0.0160	12.00	1042.99		0.192	0.0160	12.00	1049+25.00	1042.80
RC	**1043.41**	**1:250**	**0.192**	**0.0160**	**12.00**	**1043.22**	**1:250**	**0.192**	**0.0160**	**12.00**	**1043.03**	**1:250**	**0.192**	**0.0160**	**12.00**	**1049+29.11**	**1042.83**
	1043.68	1:250	0.220	0.0183	12.00	1043.46	1:250	0.220	0.0183	12.00	1043.24	1:250	0.220	0.0183	12.00	1049+50.00	1043.02
	1044.01	1:250	0.253	0.0211	12.00	1043.76	1:250	0.253	0.0211	12.00	1043.50	1:250	0.253	0.0211	12.00	1049+75.00	1043.25
	1044.36	1:250	0.287	0.0239	12.00	1044.08	1:250	0.287	0.0239	12.00	1043.79	1:250	0.287	0.0239	12.00	1050+00.00	1043.50
	1044.73	1:250	0.320	0.0267	12.00	1044.41	1:250	0.320	0.0267	12.00	1044.09	1:250	0.320	0.0267	12.00	1050+25.00	1043.77
	1045.12	1:250	0.353	0.0294	12.00	1044.76	1:250	0.353	0.0294	12.00	1044.41	1:250	0.353	0.0294	12.00	1050+50.00	1044.06
	1045.52	1:250	0.387	0.0322	12.00	1045.13	1:250	0.387	0.0322	12.00	1044.75	1:250	0.387	0.0322	12.00	1050+75.00	1044.36
PC	**1045.71**	**1:250**	**0.403**	**0.0336**	**12.00**	**1045.31**	**1:250**	**0.403**	**0.0336**	**12.00**	**1044.91**	**1:250**	**0.403**	**0.0336**	**12.00**	**1050+87.11**	**1044.51**
	1045.92	1:250	0.420	0.0350	12.00	1045.50	1:250	0.420	0.0350	12.00	1045.08	1:250	0.420	0.0350	12.00	1051+00.00	1044.66
	1046.32	1:250	0.453	0.0378	12.00	1045.87	1:250	0.453	0.0378	12.00	1045.42	1:250	0.453	0.0378	12.00	1051+25.00	1044.96
	1046.72	1:250	0.487	0.0405	12.00	1046.24	1:250	0.487	0.0405	12.00	1045.75	1:250	0.487	0.0405	12.00	1051+50.00	1045.26
	1047.13	1:250	0.520	0.0433	12.00	1046.61	1:250	0.520	0.0433	12.00	1046.09	1:250	0.520	0.0433	12.00	1051+75.00	1045.57
FS	**1047.37**	**1:250**	**0.540**	**0.0450**	**12.00**	**1046.83**	**1:250**	**0.540**	**0.0450**	**12.00**	**1046.29**	**1:250**	**0.540**	**0.0450**	**12.00**	**1051+90.11**	**1045.75**
	1047.49		0.540	0.0450	12.00	1046.95		0.540	0.0450	12.00	1046.41		0.540	0.0450	12.00	1052+00.00	1045.87
	1047.79		0.540	0.0450	12.00	1047.25		0.540	0.0450	12.00	1046.71		0.540	0.0450	12.00	1052+25.00	1046.17
	1048.09		0.540	0.0450	12.00	1047.55		0.540	0.0450	12.00	1047.01		0.540	0.0450	12.00	1052+50.00	1046.47
	1048.40		0.540	0.0450	12.00	1047.86		0.540	0.0450	12.00	1047.32		0.540	0.0450	12.00	1052+75.00	1046.78
	1048.70		0.540	0.0450	12.00	1048.16		0.540	0.0450	12.00	1047.62		0.540	0.0450	12.00	1053+00.00	1047.08
	1049.00		0.540	0.0450	12.00	1048.46		0.540	0.0450	12.00	1047.92		0.540	0.0450	12.00	1053+25.00	1047.38
	1049.30		0.540	0.0450	12.00	1048.76		0.540	0.0450	12.00	1048.22		0.540	0.0450	12.00	1053+50.00	1047.68
	1049.60		0.540	0.0450	12.00	1049.06		0.540	0.0450	12.00	1048.52		0.540	0.0450	12.00	1053+75.00	1047.98
	1049.91		0.540	0.0450	12.00	1049.37		0.540	0.0450	12.00	1048.83		0.540	0.0450	12.00	1054+00.00	1048.29
	1050.21		0.540	0.0450	12.00	1049.67		0.540	0.0450	12.00	1049.13		0.540	0.0450	12.00	1054+25.00	1048.59
	1050.51		0.540	0.0450	12.00	1049.97		0.540	0.0450	12.00	1049.43		0.540	0.0450	12.00	1054+50.00	1048.89
	1050.81		0.540	0.0450	12.00	1050.27		0.540	0.0450	12.00	1049.73		0.540	0.0450	12.00	1054+75.00	1049.19
	1051.11		0.540	0.0450	12.00	1050.57		0.540	0.0450	12.00	1050.03		0.540	0.0450	12.00	1055+00.00	1049.49
	1051.42		0.540	0.0450	12.00	1050.88		0.540	0.0450	12.00	1050.34		0.540	0.0450	12.00	1055+25.00	1049.80
	1051.72		0.540	0.0450	12.00	1051.18		0.540	0.0450	12.00	1050.64		0.540	0.0450	12.00	1055+50.00	1050.10
	1052.02		0.540	0.0450	12.00	1051.48		0.540	0.0450	12.00	1050.94		0.540	0.0450	12.00	1055+75.00	1050.40
	1052.32		0.540	0.0450	12.00	1051.78		0.540	0.0450	12.00	1051.24		0.540	0.0450	12.00	1056+00.00	1050.70
	1052.62		0.540	0.0450	12.00	1052.08		0.540	0.0450	12.00	1051.54		0.540	0.0450	12.00	1056+25.00	1051.00
	1052.93		0.540	0.0450	12.00	1052.39		0.540	0.0450	12.00	1051.85		0.540	0.0450	12.00	1056+50.00	1051.31
	1053.23		0.540	0.0450	12.00	1052.69		0.540	0.0450	12.00	1052.15		0.540	0.0450	12.00	1056+75.00	1051.61
	1053.53		0.540	0.0450	12.00	1052.99		0.540	0.0450	12.00	1052.45		0.540	0.0450	12.00	1057+00.00	1051.91
	1053.83		0.540	0.0450	12.00	1053.29		0.540	0.0450	12.00	1052.75		0.540	0.0450	12.00	1057+25.00	1052.21
	1054.13		0.540	0.0450	12.00	1053.59		0.540	0.0450	12.00	1053.05		0.540	0.0450	12.00	1057+50.00	1052.51
	1054.44		0.540	0.0450	12.00	1053.90		0.540	0.0450	12.00	1053.36		0.540	0.0450	12.00	1057+75.00	1052.82
	1054.74		0.540	0.0450	12.00	1054.20		0.540	0.0450	12.00	1053.66		0.540	0.0450	12.00	1058+00.00	1053.12
	1055.04		0.540	0.0450	12.00	1054.50		0.540	0.0450	12.00	1053.96		0.540	0.0450	12.00	1058+25.00	1053.42
	1055.34		0.540	0.0450	12.00	1054.80		0.540	0.0450	12.00	1054.26		0.540	0.0450	12.00	1058+50.00	1053.72
	1055.64		0.540	0.0450	12.00	1055.10		0.540	0.0450	12.00	1054.56		0.540	0.0450	12.00	1058+75.00	1054.02
	1055.95		0.540	0.0450	12.00	1055.41		0.540	0.0450	12.00	1054.87		0.540	0.0450	12.00	1059+00.00	1054.33
	1056.25		0.540	0.0450	12.00	1055.71		0.540	0.0450	12.00	1055.17		0.540	0.0450	12.00	1059+25.00	1054.63
	1056.55		0.540	0.0450	12.00	1056.01		0.540	0.0450	12.00	1055.47		0.540	0.0450	12.00	1059+50.00	1054.93

SUPERELEVATION TABLE - IR-77 SB
STA 1047+00 TO STA 1059+50

SUM-77-28.75

SHEET 3

DESIGN AGENCY
Gannett Fleming
ENGINEERS AND ARCHITECTS, P.C.
2500 Corporate Exchange Drive
Suite 230
Columbus, OH 43231

DESIGNER TQD

REVIEWER DRJ 02/01/22

PROJECT ID 111405

SHEET 183 TOTAL 297

MODEL: ill405_GE00l_3 PAPERSIZE: 17x11(in.) DATE: 2/22/2022 TIME: 8:40:07 PM USER: tdinh
pw:\\gfnet-pw.bentley.com:gfnet-pw-01\Documents\Projects\67490\04983\401-Engineering-GF\Roadway\Sheets\04983_GE00l.dgn

REMARKS	LEFT LANE No. 3 (66' LT)					LEFT LANE No. 2 (54' LT)					LEFT LANE No. 1 (42' LT)					PROFILE GRADE LINE (30' LT)	
	PAV'T ELEV	RATE "G"	ELEV CORR	X-SLOPE	WIDTH	PAV'T ELEV	RATE "G"	ELEV CORR	X-SLOPE	WIDTH	PAV'T ELEV	RATE "G"	ELEV CORR	X-SLOPE	WIDTH	STATION	ELEVATION
	1056.85		0.540	0.0450	12.00	1056.31		0.540	0.0450	12.00	1055.77		0.540	0.0450	12.00	1059+75.00	1055.23
	1057.15		0.540	0.0450	12.00	1056.61		0.540	0.0450	12.00	1056.07		0.540	0.0450	12.00	1060+00.00	1055.53
	1057.46		0.540	0.0450	12.00	1056.92		0.540	0.0450	12.00	1056.38		0.540	0.0450	12.00	1060+25.00	1055.84
	1057.76		0.540	0.0450	12.00	1057.22		0.540	0.0450	12.00	1056.68		0.540	0.0450	12.00	1060+50.00	1056.14
	1058.06		0.540	0.0450	12.00	1057.52		0.540	0.0450	12.00	1056.98		0.540	0.0450	12.00	1060+75.00	1056.44
	1058.36		0.540	0.0450	12.00	1057.82		0.540	0.0450	12.00	1057.28		0.540	0.0450	12.00	1061+00.00	1056.74
	1058.66		0.540	0.0450	12.00	1058.12		0.540	0.0450	12.00	1057.58		0.540	0.0450	12.00	1061+25.00	1057.04
	1058.97		0.540	0.0450	12.00	1058.43		0.540	0.0450	12.00	1057.89		0.540	0.0450	12.00	1061+50.00	1057.35
	1059.27		0.540	0.0450	12.00	1058.73		0.540	0.0450	12.00	1058.19		0.540	0.0450	12.00	1061+75.00	1057.65
	1059.57		0.540	0.0450	12.00	1059.03		0.540	0.0450	12.00	1058.49		0.540	0.0450	12.00	1062+00.00	1057.95
	1059.87		0.540	0.0450	12.00	1059.33		0.540	0.0450	12.00	1058.79		0.540	0.0450	12.00	1062+25.00	1058.25
	1060.17		0.540	0.0450	12.00	1059.63		0.540	0.0450	12.00	1059.09		0.540	0.0450	12.00	1062+50.00	1058.55
	1060.48		0.540	0.0450	12.00	1059.94		0.540	0.0450	12.00	1059.40		0.540	0.0450	12.00	1062+75.00	1058.86
	1060.78		0.540	0.0450	12.00	1060.24		0.540	0.0450	12.00	1059.70		0.540	0.0450	12.00	1063+00.00	1059.16
	1061.08		0.540	0.0450	12.00	1060.54		0.540	0.0450	12.00	1060.00		0.540	0.0450	12.00	1063+25.00	1059.46
	1061.38		0.540	0.0450	12.00	1060.84		0.540	0.0450	12.00	1060.30		0.540	0.0450	12.00	1063+50.00	1059.76
FS	**1061.59**	**1:250**	**0.540**	**0.0450**	**12.00**	**1061.05**	**1:250**	**0.540**	**0.0450**	**12.00**	**1060.51**	**1:250**	**0.540**	**0.0450**	**12.00**	**1063+67.27**	**1059.97**
	1061.65	1:250	0.530	0.0441	12.00	1061.12	1:250	0.530	0.0441	12.00	1060.59	1:250	0.530	0.0441	12.00	1063+75.00	1060.07
	1061.86	1:250	0.496	0.0414	12.00	1061.36	1:250	0.496	0.0414	12.00	1060.86	1:250	0.496	0.0414	12.00	1064+00.00	1060.37
	1062.06	1:250	0.463	0.0386	12.00	1061.60	1:250	0.463	0.0386	12.00	1061.13	1:250	0.463	0.0386	12.00	1064+25.00	1060.67
	1062.26	1:250	0.430	0.0358	12.00	1061.83	1:250	0.430	0.0358	12.00	1061.40	1:250	0.430	0.0358	12.00	1064+50.00	1060.97
PT	**1062.42**	**1:250**	**0.403**	**0.0336**	**12.00**	**1062.02**	**1:250**	**0.403**	**0.0336**	**12.00**	**1061.62**	**1:250**	**0.403**	**0.0336**	**12.00**	**1064+70.27**	**1061.22**
	1062.46	1:250	0.396	0.0330	12.00	1062.07	1:250	0.396	0.0330	12.00	1061.67	1:250	0.396	0.0330	12.00	1064+75.00	1061.27
	1062.66	1:250	0.363	0.0303	12.00	1062.30	1:250	0.363	0.0303	12.00	1061.94	1:250	0.363	0.0303	12.00	1065+00.00	1061.58
	1062.87	1:250	0.330	0.0275	12.00	1062.54	1:250	0.330	0.0275	12.00	1062.21	1:250	0.330	0.0275	12.00	1065+25.00	1061.88
	1063.07	1:250	0.296	0.0247	12.00	1062.77	1:250	0.296	0.0247	12.00	1062.48	1:250	0.296	0.0247	12.00	1065+50.00	1062.18
	1063.27	1:250	0.263	0.0219	12.00	1063.01	1:250	0.263	0.0219	12.00	1062.74	1:250	0.263	0.0219	12.00	1065+75.00	1062.48
	1063.47	1:250	0.230	0.0191	12.00	1063.24	1:250	0.230	0.0191	12.00	1063.01	1:250	0.230	0.0191	12.00	1066+00.00	1062.78
	1063.67	1:250	0.196	0.0164	12.00	1063.48	1:250	0.196	0.0164	12.00	1063.28	1:250	0.196	0.0164	12.00	1066+25.00	1063.09
RC	**1063.70**	**1:250**	**0.192**	**0.0160**	**12.00**	**1063.51**	**1:250**	**0.192**	**0.0160**	**12.00**	**1063.32**	**1:250**	**0.192**	**0.0160**	**12.00**	**1066+28.27**	**1063.13**
	1063.88	1:250	0.105	0.0088	12.00	1063.77		0.192	0.0160	12.00	1063.58		0.192	0.0160	12.00	1066+50.00	1063.39
	1064.08	1:250	0.005	0.0004	12.00	1064.07		0.192	0.0160	12.00	1063.88		0.192	0.0160	12.00	1066+75.00	1063.69
HF	**1064.09**	**1:250**	**0.000**	**0.0000**	**12.00**	**1064.09**		**0.192**	**0.0160**	**12.00**	**1063.90**		**0.192**	**0.0160**	**12.00**	**1066+76.27**	**1063.70**
	1064.28	1:250	-0.095	-0.0079	12.00	1064.38		0.192	0.0160	12.00	1064.18		0.192	0.0160	12.00	1067+00.00	1063.99
NC	**1064.48**	**1:250**	**-0.192**	**-0.0160**	**12.00**	**1064.67**		**0.192**	**0.0160**	**12.00**	**1064.48**		**0.192**	**0.0160**	**12.00**	**1067+24.27**	**1064.28**
	1064.49		-0.192	-0.0160	12.00	1064.68		0.192	0.0160	12.00	1064.49		0.192	0.0160	12.00	1067+25.00	1064.29
	1064.79		-0.192	-0.0160	12.00	1064.98		0.192	0.0160	12.00	1064.79		0.192	0.0160	12.00	1067+50.00	1064.60
	1065.09		-0.192	-0.0160	12.00	1065.28		0.192	0.0160	12.00	1065.09		0.192	0.0160	12.00	1067+75.00	1064.90
	1065.39		-0.192	-0.0160	12.00	1065.58		0.192	0.0160	12.00	1065.39		0.192	0.0160	12.00	1068+00.00	1065.20
	1065.69		-0.192	-0.0160	12.00	1065.89		0.192	0.0160	12.00	1065.69		0.192	0.0160	12.00	1068+25.00	1065.50
	1066.00		-0.192	-0.0160	12.00	1066.19		0.192	0.0160	12.00	1066.00		0.192	0.0160	12.00	1068+50.00	1065.80
	1066.30		-0.192	-0.0160	12.00	1066.49		0.192	0.0160	12.00	1066.30		0.192	0.0160	12.00	1068+75.00	1066.11

SUPERELEVATION TABLE - IR-77 SB
STA 1059+75 TO STA 1068+75

SUM-77-28.75

MODEL: lll405_GE00l_4 PAPERSIZE: 17x11(in) DATE: 2/22/2022 TIME: 8:40:08 PM USER: tdinh
pw:\\gfnet-pw.bentley.comgfnet-pw-01\Documents\Projects\67490\104983\40l-Engineering-GF\Roadway\Sheets\104983_GE00l.dgn

DESIGN AGENCY
Gannett Fleming
ENGINEERS AND ARCHITECTS, P.C.
2300 Corporate Exchange Drive
Suite 330
Columbus, OH 43231

DESIGNER TQD
REVIEWER DRJ 02/01/22
PROJECT ID 111405
SHEET 184 TOTAL 297

SHEET 2

STATION	LT EOP ELEV	WIDTH	X-SLOPE	ELEV CORR	RATE "G"	PGL ELEV (RT EOP)	REMARKS
Ramp G (WB 21 to SB 77)							
10025+66.14	MATCH EXISTING BRIDGE DECK						
10025+57.57							
10025+32.56							
10025+07.56							
10024+82.56							
10024+57.55							
10024+32.55							
10024+07.54							
10023+85.54							
10023+57.53							
10023+40.41							
10023+32.53	1034.21	16.00	-0.016	-0.256		1033.95	
10023+07.53	1034.42	16.00	-0.016	-0.256		1034.16	
10022+82.52	1034.62	16.00	-0.016	-0.256		1034.36	
10022+57.52	1034.89	16.00	-0.016	-0.256		1034.63	
10022+32.51	1035.14	16.00	-0.016	-0.256		1034.88	
10022+07.51	1035.37	16.00	-0.016	-0.256		1035.11	
10021+96.51	1035.43	16.00	-0.016	-0.256		1035.18	ST (NC)
10021+82.55	1035.54	16.00	-0.019	-0.302		1035.24	
10021+52.80	1035.67	16.00	-0.025	-0.399		1035.27	
10021+33.27	1035.68	16.00	-0.029	-0.463		1035.21	
10021+08.90	1035.60	16.00	-0.034	-0.543		1035.05	
10020+84.60	1035.42	16.00	-0.039	-0.623		1034.80	
10020+60.23	1035.15	16.00	-0.044	-0.703		1034.44	
10020+57.67	1035.11	16.00	-0.044	-0.711		1034.40	
10020+50.00	1035.00	16.00	-0.046	-0.737		1034.27	
10020+25.00	1034.58	16.00	-0.051	-0.819		1033.76	
10020+00.00	1034.05	16.00	-0.056	-0.901		1033.15	
10019+96.51	1033.97	16.00	-0.057	-0.912		1033.06	CS (END FS)
10019+75.00	1033.35	16.00	-0.057	-0.912		1032.44	
10019+50.00	1032.54	16.00	-0.057	-0.912		1031.63	
10019+25.00	1031.63	16.00	-0.057	-0.912		1030.72	
10019+00.00	1030.61	16.00	-0.057	-0.912		1029.70	
10018+75.00	1029.53	16.00	-0.057	-0.912		1028.62	
10018+50.00	1028.45	16.00	-0.057	-0.912		1027.54	
10018+25.00	1027.38	16.00	-0.057	-0.912		1026.46	
10018+00.00	1026.30	16.00	-0.057	-0.912		1025.39	
10017+75.00	1025.22	16.00	-0.057	-0.912		1024.31	
10017+50.00	1024.14	16.00	-0.057	-0.912		1023.23	
10017+25.00	1023.06	16.00	-0.057	-0.912		1022.15	
10017+00.00	1021.98	16.00	-0.057	-0.912		1021.07	
10016+75.00	1020.91	16.00	-0.057	-0.912		1019.99	
10016+50.00	1019.83	16.00	-0.057	-0.912		1018.92	
10016+25.00	1018.75	16.00	-0.057	-0.912		1017.84	
10016+00.00	1017.67	16.00	-0.057	-0.912		1016.76	
10015+75.00	1016.59	16.00	-0.057	-0.912		1015.68	
10015+70.45	1016.40	16.00	-0.057	-0.912		1015.48	
10015+57.95	1015.86	16.00	-0.057	-0.912		1014.95	
10015+50.00	1015.51	16.00	-0.057	-0.912		1014.60	
10015+45.45	1015.32	16.00	-0.057	-0.912		1014.41	
10015+25.00	1014.44	16.00	-0.057	-0.912		1013.52	
10015+00.00	1013.36	16.00	-0.057	-0.912		1012.45	
10014+75.00	1012.28	16.00	-0.057	-0.912		1011.37	
10014+50.00	1011.20	16.00	-0.057	-0.912		1010.29	
10014+25.00	1010.12	16.00	-0.057	-0.912		1009.21	
10014+00.00	1009.04	16.00	-0.057	-0.912		1008.13	

STATION	LT EOP ELEV	WIDTH	X-SLOPE	ELEV CORR	RATE "G"	PGL ELEV (RT EOP)	REMARKS
Ramp G (WB 21 to SB 77)							
10013+75.00	1007.97	16.00	-0.057	-0.912		1007.05	
10013+50.00	1006.89	16.00	-0.057	-0.912		1005.98	
10013+25.00	1005.81	16.00	-0.057	-0.912		1004.90	
10013+00.00	1004.73	16.00	-0.057	-0.912		1003.82	
10012+75.00	1003.65	16.00	-0.057	-0.912		1002.74	
10012+50.00	1002.57	16.00	-0.057	-0.912		1001.66	
10012+25.00	1001.50	16.00	-0.057	-0.912		1000.58	
10012+00.00	1000.42	16.00	-0.057	-0.912		999.51	
10011+75.00	999.34	16.00	-0.057	-0.912		998.43	
10011+50.00	998.28	16.00	-0.057	-0.912		997.37	
10011+25.00	997.40	16.00	-0.057	-0.912		996.49	
10011+00.00	996.76	16.00	-0.057	-0.912		995.85	
10010+86.96	996.51	16.00	-0.057	-0.912		995.60	
10010+75.00	996.34	16.00	-0.057	-0.912		995.43	
10010+74.46	996.34	16.00	-0.057	-0.912		995.42	
10010+61.96	996.21	16.00	-0.057	-0.912		995.30	
10010+50.00	996.15	16.00	-0.057	-0.912		995.24	
10010+25.00	996.19	16.00	-0.057	-0.912		995.28	
10010+00.00	996.46	16.00	-0.057	-0.912		995.55	
10009+75.00	996.95	16.00	-0.057	-0.912		996.04	
10009+50.00	997.68	16.00	-0.057	-0.912		996.77	
10009+25.00	998.63	16.00	-0.057	-0.912		997.72	
10009+00.00	999.81	16.00	-0.057	-0.912		998.90	
10008+75.00	1001.22	16.00	-0.057	-0.912		1000.30	
10008+57.00	1002.37	16.00	-0.057	-0.912		1001.46	
10008+56.05	1002.44	16.00	-0.057	-0.912		1001.52	SC (BEGIN FS)
10008+48.74	1002.72	16.00	-0.054	-0.859	1:185	1001.86	
10008+24.09	1004.32	16.00	-0.043	-0.680	1:185	1003.64	
10007+99.66	1005.95	16.00	-0.031	-0.503	1:185	1005.44	
10007+75.45	1007.47	14.67	-0.020	-0.300	1:185	1007.17	
10007+51.02	1009.04	12.85	-0.009	-0.121	1:185	1008.92	
10007+26.25	1010.69	12.12	0.002	0.022	1:185	1010.71	
10007+06.05	1012.08	12.00	0.011	0.132	1:185	1012.21	

SUPERELEVATION TABLES - SR-21 (BRECKSVILLE ROAD) RAMP G

SUM-77-32.27

MODEL: ill405_GE004_2 PAPERSIZE: 17x11 (in.) DATE: 2/22/2022 TIME: 8:42:18 PM USER: tdinh
pw:\\gfnet-pw.bentley.comgfnet-pw-01\Documents\Projects\67490\104983\40i-Engineering-GF\Roadway\Sheets\104983_GE004.dgn

DESIGN AGENCY
Gannett Fleming
ENGINEERS AND ARCHITECTS, P.C.
2500 Corporate Exchange Drive
Suite 230
Columbus, OH 43231

DESIGNER TQD

REVIEWER DRJ 02/01/22

PROJECT ID 104983

SHEET 185 TOTAL 297

										PROFILE GRADE LINE		RIGHT LANE					REMARKS
PAV'T ELEV	RATE "G"	ELEV CORR	X-SLOPE	WIDTH	PAV'T ELEV	RATE "G"	ELEV CORR	X-SLOPE	WIDTH	STATION	ELEVATION	WIDTH	X-SLOPE	ELEV CORR	RATE "G"	PAV'T ELEV	
					996.41		-0.192	-0.0160	12.00	495+75.00	996.61	12.00	-0.0160	-0.192		996.41	
					997.26		-0.192	-0.0160	12.00	496+00.00	997.45	12.00	-0.0160	-0.192		997.26	
					998.18		-0.192	-0.0160	12.00	496+25.00	998.38	12.00	-0.0160	-0.192		998.18	
					999.19		-0.192	-0.0160	12.00	496+50.00	999.38	12.00	-0.0160	-0.192		999.19	
					999.88	**1:185**	**-0.192**	**-0.0160**	**12.00**	**496+67.64**	**1000.07**	**12.00**	**-0.0160**	**-0.192**	**1:185**	**999.88**	**NC**
					1000.32	1:185	-0.152	-0.0127	12.00	496+75.00	1000.46	12.00	-0.0160	-0.192	1:185	1000.27	
					1001.61	1:185	-0.017	-0.0014	12.00	497+00.00	1001.62	12.00	-0.0160	-0.192	1:185	1001.43	
					1001.78	**1:185**	**0.000**	**0.0000**	**12.00**	**497+03.16**	**1001.77**	**12.00**	**-0.0160**	**-0.192**	**1:185**	**1001.58**	**HF**
					1002.49	**1:186**	**0.080**	**0.0061**	**13.00**	**497+16.77**	**1002.41**	**12.00**	**-0.0160**	**-0.192**	**1:186**	**1002.22**	**Ramp G Gore**
					1002.98	1:185	0.118	0.0098	12.00	497+25.00	1002.86	12.00	-0.0160	-0.192	1:185	1002.67	
					1003.77	**1:185**	**0.192**	**0.0160**	**12.00**	**497+38.68**	**1003.57**	**12.00**	**-0.0160**	**-0.192**	**1:185**	**1003.38**	**RC**
					1004.44	1:185	0.253	0.0211	12.00	497+50.00	1004.18	12.00	-0.0211	-0.253	1:185	1003.93	
					1004.47	**1:185**	**0.256**	**0.0213**	**12.00**	**497+50.52**	**1004.21**	**12.00**	**-0.0213**	**-0.256**	**1:185**	**1003.95**	**PC**
					1005.92	**1:185**	**0.384**	**0.0320**	**12.00**	**497+74.20**	**1005.53**	**12.00**	**-0.0320**	**-0.384**	**1:185**	**1005.15**	**FS**
					1005.96		0.384	0.0320	12.00	497+75.00	1005.58	12.00	-0.0320	-0.384		1005.20	
					1007.44		0.384	0.0320	12.00	498+00.00	1007.06	12.00	-0.0320	-0.384		1006.67	
					1009.00		0.384	0.0320	12.00	498+25.00	1008.62	12.00	-0.0320	-0.384		1008.23	
					1010.63		0.384	0.0320	12.00	498+50.00	1010.25	12.00	-0.0320	-0.384		1009.87	
1012.15	**1:185**	**0.132**	**0.0110**	**12.00**	**1012.01**		**0.384**	**0.0320**	**12.00**	**498+70.19**	**1011.63**	**12.00**	**-0.0320**	**-0.384**		**1011.25**	**End Ramp G**
1012.51	1:185	0.157	0.0131	12.00	1012.35		0.384	0.0320	12.00	498+75.00	1011.97	12.00	-0.0320	-0.384		1011.58	
1014.42	1:185	0.290	0.0242	12.00	1014.13		0.384	0.0320	12.00	499+00.00	1013.75	12.00	-0.0320	-0.384		1013.37	
1014.66	**1:185**	**0.307**	**0.0255**	**12.00**	**1014.36**		**0.384**	**0.0320**	**12.00**	**499+03.14**	**1013.97**	**12.00**	**-0.0320**	**-0.384**		**1013.59**	**MIN VERT CLEAR**
1015.79	**1:185**	0.384	0.0320	12.00	1015.40		0.384	0.0320	12.00	**499+17.77**	**1015.02**	12.00	-0.0320	-0.384		1014.64	**Begin Ramp G SE Transition**
1016.30		0.384	0.0320	12.00	1015.92		0.384	0.0320	12.00	499+25.00	1015.54	12.00	-0.0320	-0.384		1015.15	
1018.09		0.384	0.0320	12.00	1017.71		0.384	0.0320	12.00	499+50.00	1017.32	12.00	-0.0320	-0.384		1017.94	
1019.88		0.384	0.0320	12.00	1019.49		0.384	0.0320	12.00	499+75.00	1019.11	12.00	-0.0320	-0.384		1018.73	
1021.67		0.384	0.0320	12.00	1021.28		0.384	0.0320	12.00	500+00.00	1020.90	12.00	-0.0320	-0.384		1020.51	
1023.45		0.384	0.0320	12.00	1023.07		0.384	0.0320	12.00	500+25.00	1022.68	12.00	-0.0320	-0.384		1022.30	
1025.24		0.384	0.0320	12.00	1024.86		0.384	0.0320	12.00	500+50.00	1024.47	12.00	-0.0320	-0.384		1024.09	
1027.03		0.384	0.0320	12.00	1026.64		0.384	0.0320	12.00	500+75.00	1026.26	12.00	-0.0320	-0.384		1025.87	
1028.81		0.384	0.0320	12.00	1028.43		0.384	0.0320	12.00	501+00.00	1028.05	12.00	-0.0320	-0.384		1027.66	
1030.60		0.384	0.0320	12.00	1030.22		0.384	0.0320	12.00	501+25.00	1029.83	12.00	-0.0320	-0.384		1029.45	
1032.39		0.384	0.0320	12.00	1032.00		0.384	0.0320	12.00	501+50.00	1031.62	12.00	-0.0320	-0.384		1031.24	
1034.17		0.384	0.0320	12.00	1033.79		0.384	0.0320	12.00	501+75.00	1033.41	12.00	-0.0320	-0.384		1033.02	
1035.96		0.384	0.0320	12.00	1035.58		0.384	0.0320	12.00	502+00.00	1035.19	12.00	-0.0320	-0.384		1034.81	
1037.75		0.384	0.0320	12.00	1035.58		0.384	0.0320	12.00	502+25.00	1036.98	12.00	-0.0320	-0.384		1036.60	
1039.54		0.384	0.0320	12.00	1035.58		0.384	0.0320	12.00	502+50.00	1038.77	12.00	-0.0320	-0.384		1038.38	
1041.32		0.384	0.0320	12.00	1035.58		0.384	0.0320	12.00	502+75.00	1040.56	12.00	-0.0320	-0.384		1040.17	
1043.11		0.384	0.0320	12.00	1035.58		0.384	0.0320	12.00	503+00.00	1042.34	12.00	-0.0320	-0.384		1041.96	

SUPERELEVATION TABLES
SR-21 (BRECKSVILLE ROAD)

SHEET 3

SUM-77-32.27

MODEL: ll405_GE004_3 PAPERSIZE: 17x11(in) DATE: 2/22/2022 TIME: 8:42:19 PM USER: tdinh
pw:\\gfnet-pw.bentley.com:gfnet-pw-01\Documents\Projects\67490\104983\40i-Engineering-GF\Roadway\Sheets\104983_GE004.dgn

DESIGN AGENCY
Gannett Fleming
ENGINEERS AND ARCHITECTS, P.C.
2350 Corporate Exchange Drive
Suite 230
Columbus, OH 43231

DESIGNER
TQD

REVIEWER
DRJ 02/01/22

PROJECT ID
104983

SHEET 186 | TOTAL 297

GENERAL NOTES:
1. E XXXX.XX INDICATES EXISTING ELEVATION.

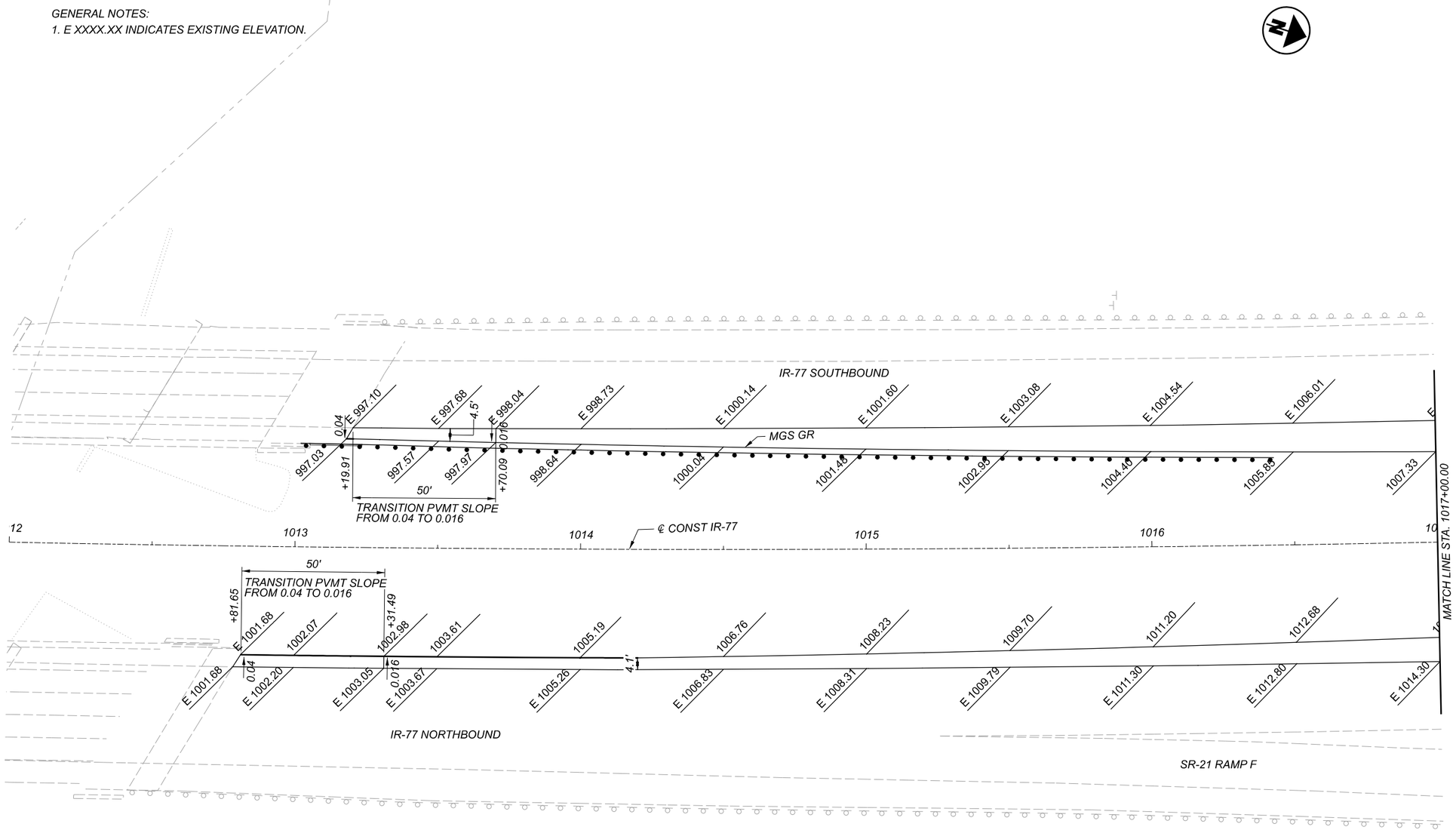

HORIZONTAL SCALE IN FEET
0 10 20 40

INTERCHANGE DETAILS
IR-77 & SR-21 STA 1012+00.00 TO STA 1017+00.00

SUM-77-32.27

MODEL: IH405_G4ll PAPERSIZE: 17x11 (in.) DATE: 2/22/2022 TIME: 8:44:42 PM USER: tdinh
pw:\\gfnet-pw.bentley.com:gfnet-pw-01\Documents\Projects\67490\104983\40-Engineering-GF\Roadway\Sheets\104983_G4ll.dgn

DESIGN AGENCY
Gannett Fleming
ENGINEERS AND ARCHITECTS, P.C.
2300 Corporate Exchange Drive
Suite 200
Columbus, OH 43231

DESIGNER: TQD
REVIEWER: DRJ 02/01/22
PROJECT ID: 104983
SHEET: 187 TOTAL: 297

GENERAL NOTES:
1. E XXXX.XX INDICATES EXISTING ELEVATION.

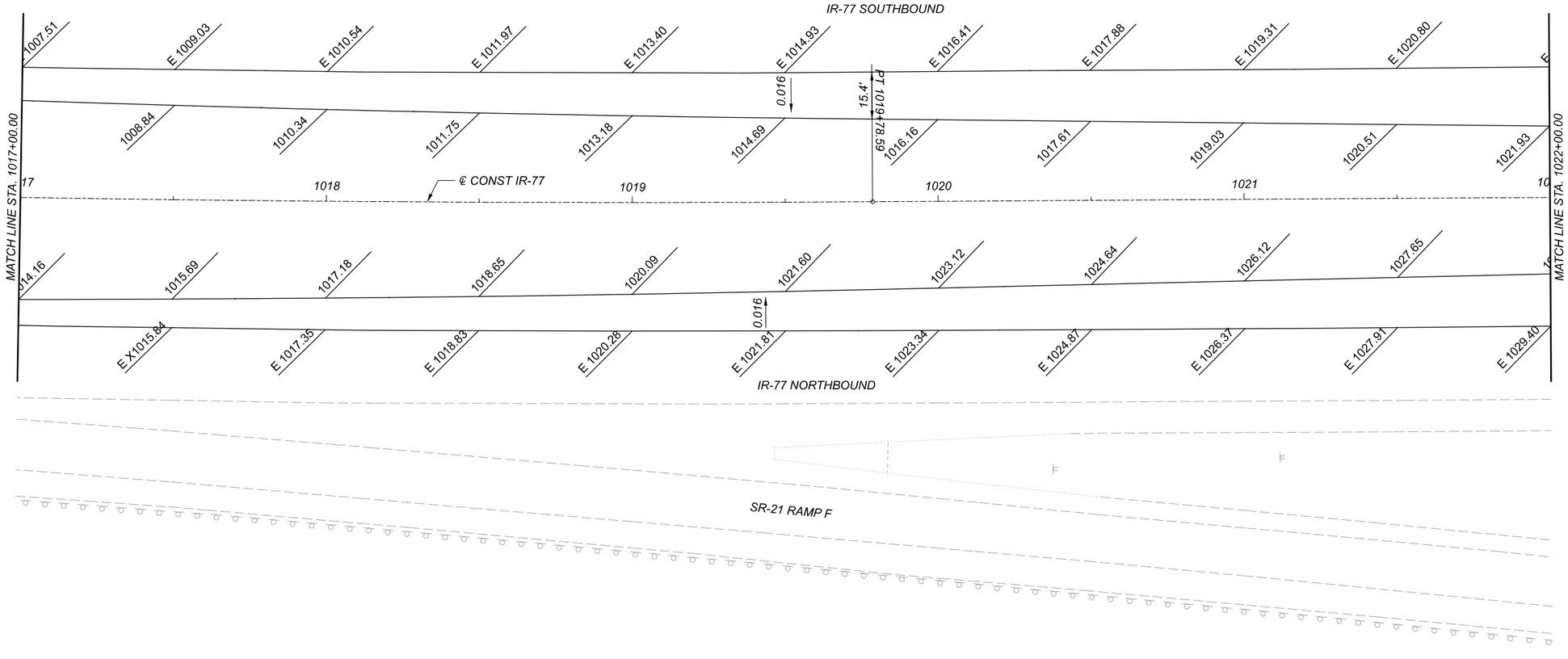

HORIZONTAL SCALE IN FEET
0 10 20 40

INTERCHANGE DETAILS
IR-77 & SR-21 STA 1017+00.00 TO STA 1022+00.00

SUM-77-32.27

MODEL: ill405_0412 PAPERSIZE: 17x11(in.) DATE: 2/22/2022 TIME: 8:46:49 PM USER: tdinh
pw:\\gfnet-pw.bentley.com:gfnet-pw-01\Documents\Projects\67490\104983\401-Engineering-GF\Roadway\Sheets\104983_0412.dgn

DESIGN AGENCY
Gannett Fleming
ENGINEERS AND ARCHITECTS, P.C.
250 Civic Center Drive, Suite 200
Columbus, OH 43215

DESIGNER: TQD
REVIEWER: DRJ 02/01/22
PROJECT ID: 104983
SHEET: 188 TOTAL: 297

FOR RAMP CURVE INFORMATION SEE SHEET 3

GENERAL NOTES:
1. E XXXX.XX INDICATES EXISTING ELEVATION.

LEGEND

(L) STANDARD LONGITUDINAL JOINT AS PER BP-2.1

(C) CONTRACTION JOINT AS PER BP-2.2

(Y) BUTT JOINT BETWEEN ASPHALT PAVEMENT AND CONCRETE PAVEMENT, A DOWELLED TYPE Y JOINT AS PER BP-2.5 SHALL BE PROVIDED. GROUTING AND DRILLING REQUIREMENTS SHALL BE PER SPECIFICATION 255 AND BP-2.5 EXCEPT THE REQUIREMENT THAT THE DRILLING DEVICE SHALL BE CAPABLE OF DRILLING THREE HOLES AT ONE TIME SHALL BE WAIVED.

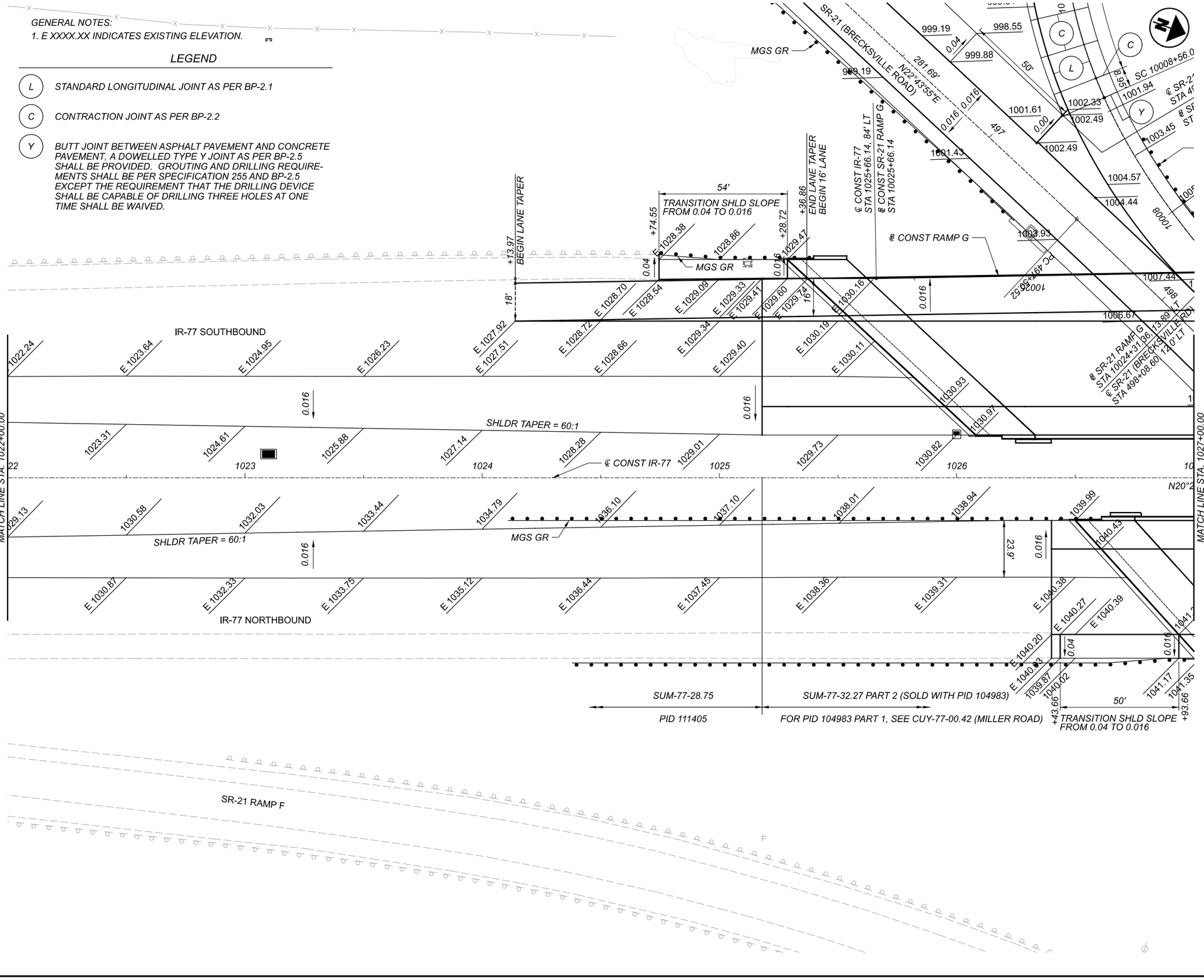

HORIZONTAL SCALE IN FEET
0 10 20 40

INTERCHANGE DETAILS
IR-77 & SR-21 STA 1022+00.00 TO STA 1027+00.00

SUM-77-32.27

DESIGN AGENCY
Gannett Fleming
ENGINEERS AND ARCHITECTS, P.C.
2500 Corporate Exchange Drive Suite 230 Columbus, OH 43231

DESIGNER TQD
REVIEWER DRJ 02/01/22
PROJECT ID 104983
SHEET 189 TOTAL 297

MODEL: ill405_GI413 PAPERSIZE: 17x11(in.) DATE: 2/22/2022 TIME: 8:48:56 PM USER: tdinh
pw:\\gfnet-pw.bentley.com:gfnet-pw-01\Documents\Projects\67490\104983\401-Engineering-GF\Roadway\Sheets\104983_GI413.dgn

FOR RAMP CURVE INFORMATION SEE SHEET 3

RAMP G GORE SLOPE INFORMATION (*)			
IR-77 STA	GORE		RAMP G STA
	WIDTH	SLOPE	
1028+25	6.70	0.026	10023+07.53
1028+50	7.15	0.038	10022+82.52
1028+75	7.61	0.038	10022+57.52
1029+00	8.06	0.039	10022+32.51
1029+25	8.51	0.040	10022+07.51
1029+50	8.98	0.042	10021+82.55
1029+75	9.68	0.050	10021+57.80
1030+00	10.98	0.061	10021+33.27

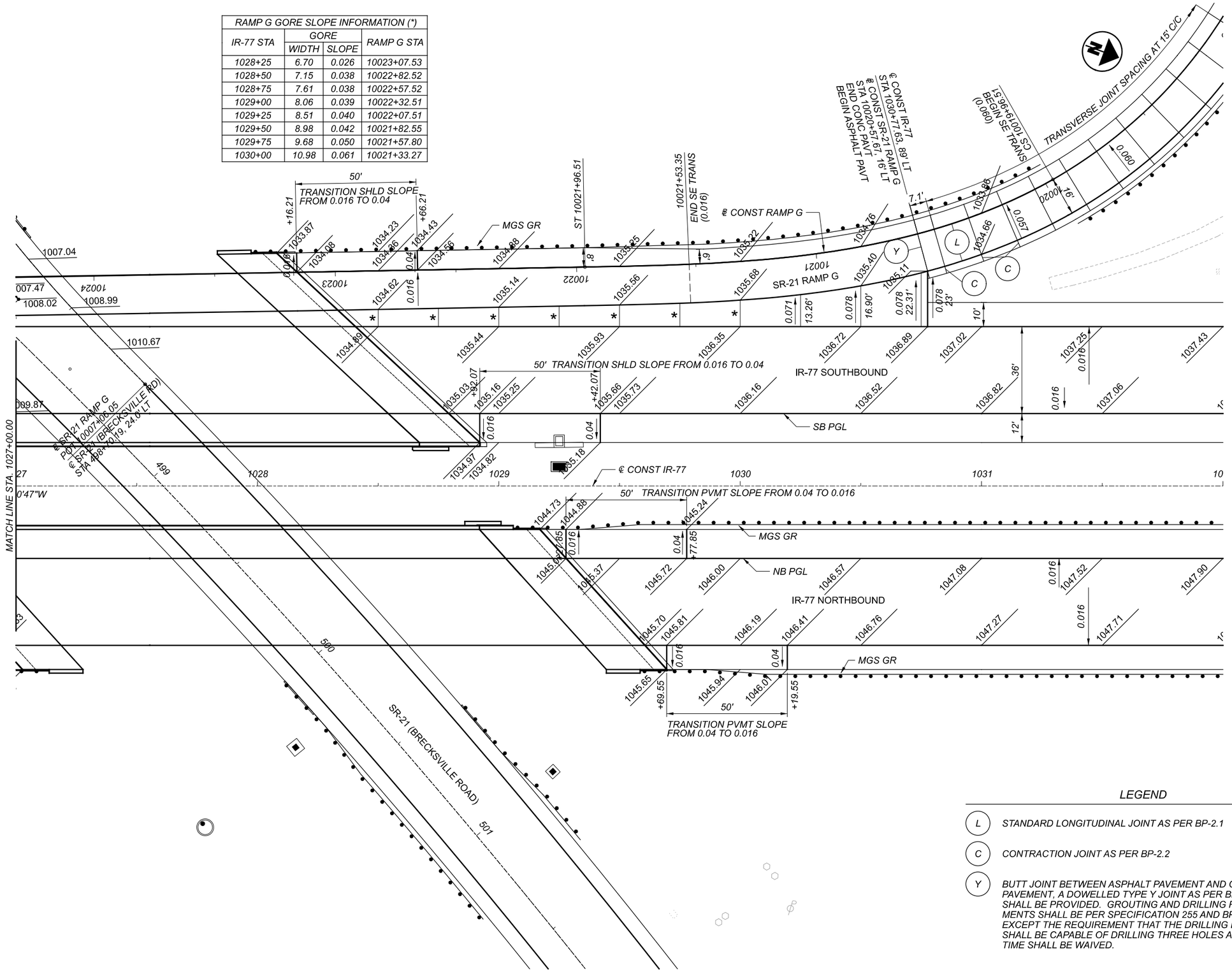

LEGEND

- (L) STANDARD LONGITUDINAL JOINT AS PER BP-2.1
- (C) CONTRACTION JOINT AS PER BP-2.2
- (Y) BUTT JOINT BETWEEN ASPHALT PAVEMENT AND CONCRETE PAVEMENT, A DOWELLED TYPE Y JOINT AS PER BP-2.5 SHALL BE PROVIDED. GROUTING AND DRILLING REQUIREMENTS SHALL BE PER SPECIFICATION 255 AND BP-2.5 EXCEPT THE REQUIREMENT THAT THE DRILLING DEVICE SHALL BE CAPABLE OF DRILLING THREE HOLES AT ONE TIME SHALL BE WAIVED.

INTERCHANGE DETAILS
IR-77 AT SR-21 - STA 1027+00.00 TO STA 1032+00.00

SUM-77-32.27

MODEL: ill405_GI414 PAPERSIZE: 17x11(in.) DATE: 2/22/2022 TIME: 8:50:59 PM USER: tdinh
pw:\\gfnet-pw.bentley.com:gfnet-pw-01\Documents\Projects\67490\104983\401-Engineering-GF\Roadway\Sheets\104983_GI414.dgn

DESIGN AGENCY
Gannett Fleming
ENGINEERS AND ARCHITECTS, P.C.
2500 Corporate Exchange Drive
Suite 230
Columbus, OH 43231

DESIGNER TQD
REVIEWER DRJ 02/01/22
PROJECT ID 104983
SHEET 190 TOTAL 297

CROSS REFERENCES	SHEET(S)
SUPERELEVATION TABLES	181 - 186
STORM SEWER PROFILES	193 - 195
TRAFFIC CONTROL	210 - 218

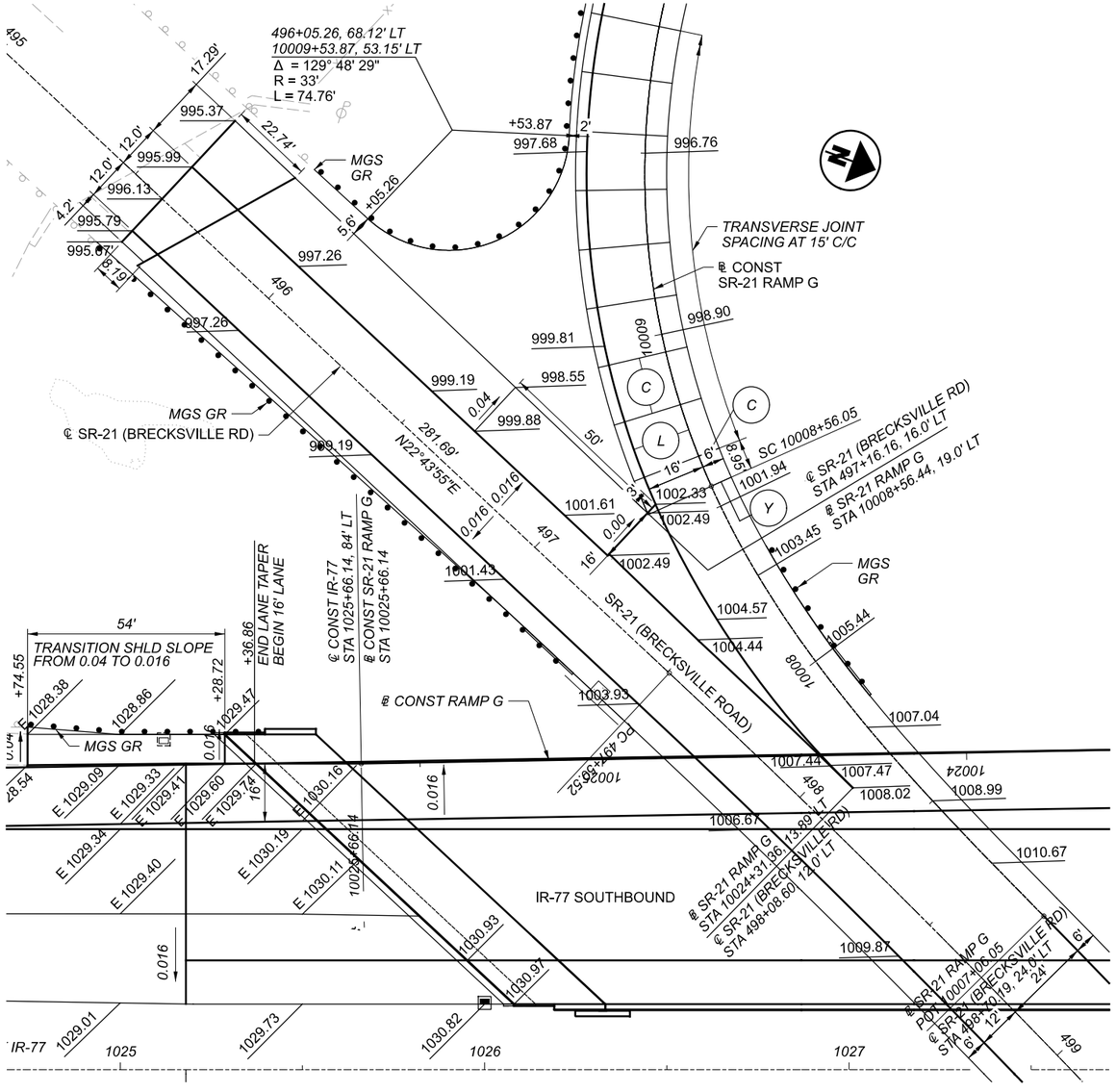

INTERCHANGE DETAIL
SR-21 (BRECKSVILLE RD) AT SR-21 RAMP G

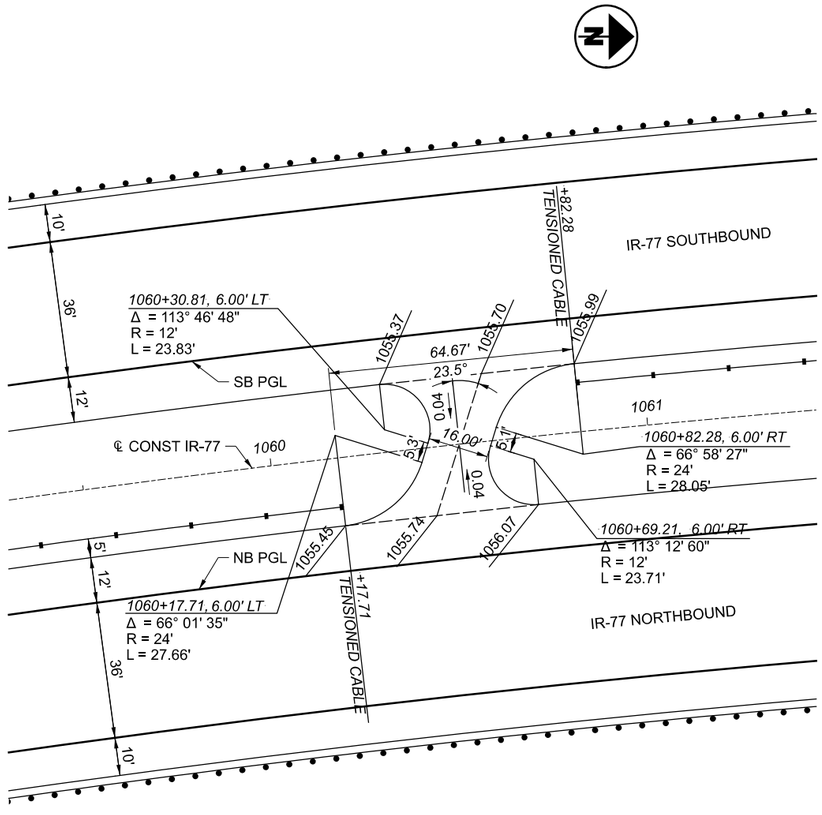

INTERCHANGE DETAIL
IR-77 MEDIAN U-TURN

LEGEND

- (L) *STANDARD LONGITUDINAL JOINT AS PER BP-2.1*
- (C) *CONTRACTION JOINT AS PER BP-2.2*
- (Y) *BUTT JOINT BETWEEN ASPHALT PAVEMENT AND CONCRETE PAVEMENT, A DOWELLED TYPE Y JOINT AS PER BP-2.5 SHALL BE PROVIDED. GROUTING AND DRILLING REQUIREMENTS SHALL BE PER SPECIFICATION 255 AND BP-2.5 EXCEPT THE REQUIREMENT THAT THE DRILLING DEVICE SHALL BE CAPABLE OF DRILLING THREE HOLES AT ONE TIME SHALL BE WAIVED.*

HORIZONTAL SCALE IN FEET
0 10 20 40

INTERCHANGE DETAILS
IR-77 & SR-21 | IR-77 MEDIAN U-TURN

SUM-77-32.27

MODEL: ill405.dgn4 PAPERSIZE: 17x11(in.) DATE: 2/23/2022 TIME: 11:35:22 AM USER: tdinh
pw:\\gfnet-pw.bentley.com:gfnet-pw-01\Documents\Projects\67490\104983\401-Engineering-GF\Roadway\Sheets\104983_GI415.dgn

DESIGN AGENCY
Gannett Fleming
ENGINEERS AND ARCHITECTS, P.C.
2550 Corporate Exchange Drive
Suite 220
Columbus, OH 43231

DESIGNER TQD
REVIEWER DRJ 02/01/22
PROJECT ID 104983
SHEET 191 TOTAL 297

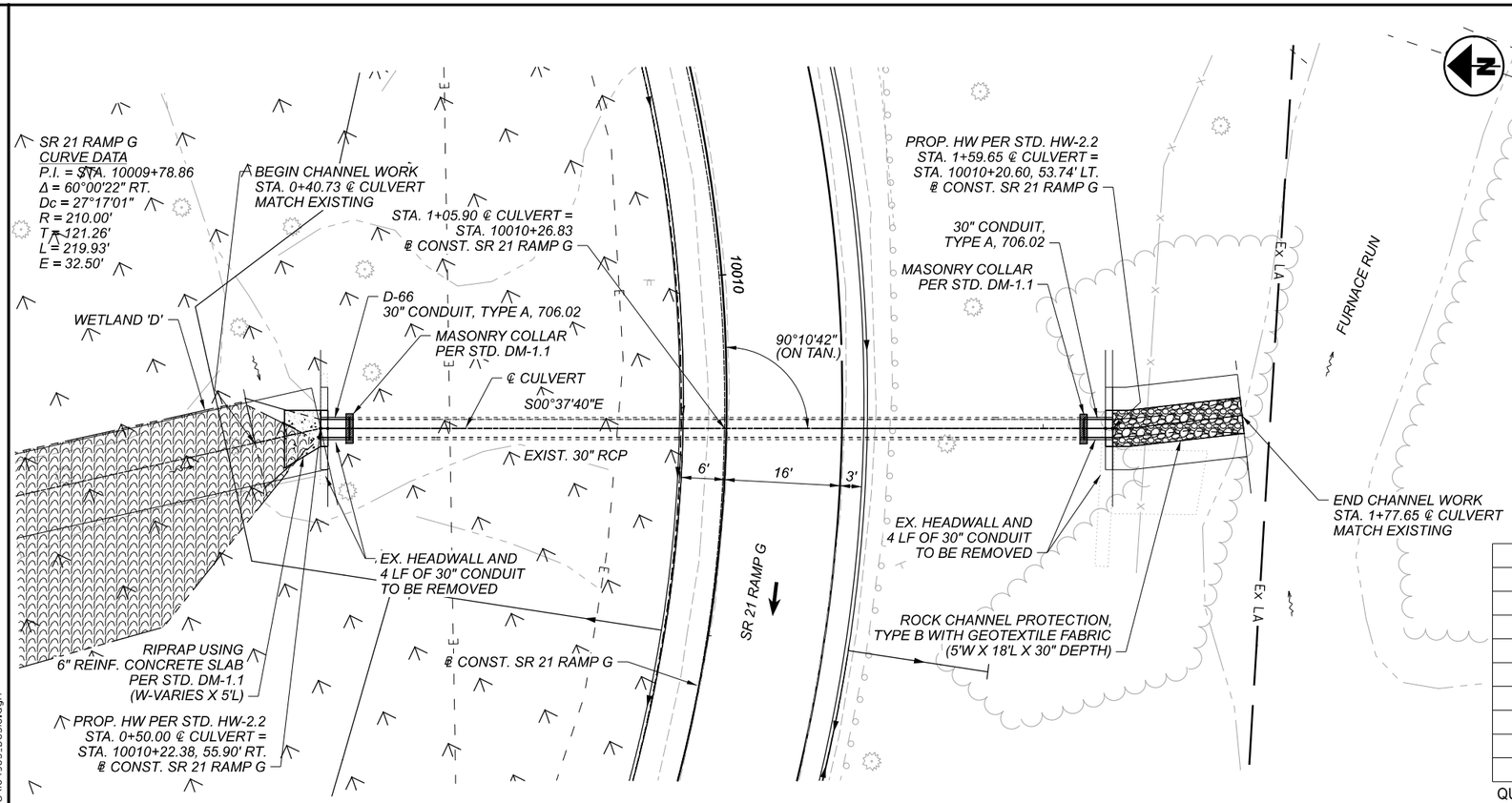

HYDRAULIC DATA

DRAINAGE AREA = 32 AC
Q (25) = 31.1 CFS V (25) = 13.67 FT/S HW (25) = 986.80 FT
Q (100) = 39.0 CFS V (100) = 14.40 FT/S HW (100) = 987.61 FT
ORDINARY HIGH WATER MARK : 985.78 FT (INLET)
DESIGN SERVICE LIFE : 75 YRS
pH : N/A
ABRASION LEVEL : 1

EXISTING STRUCTURE

TYPE : EXIST. 30" RCP
SKEW : 0° 10' 42" LT. FWD.
CFN : 1830190
YEAR BUILT : 1961

PROPOSED STRUCTURE

TYPE : 30" TYPE A, 706.02
SKEW : 0° 10' 42" LT. FWD. (ON TAN.)
ALIGNMENT : 27° 17' 01" (RT. CURVE)
CFN : 1987877

ESTIMATED QUANTITIES

ITEM	QUANTITY	UNIT	DESCRIPTION
202	2	EACH	HEADWALL REMOVED
202	8	FT	PIPE REMOVED, OVER 24"
203	2	CY	EMBANKMENT
601	4	SY	RIPRAP, TYPE D
601	8	CY	ROCK CHANNEL PROTECTION, TYPE B WITH GEOTEXTILE FABRIC
602	1.2	CY	CONCRETE MASONRY
611	8	FT	30" CONDUIT, TYPE A, 704.02
659	100	SY	SEEDING AND MULCHING

QUANTITIES CARRIED TO GENERAL SUMMARY

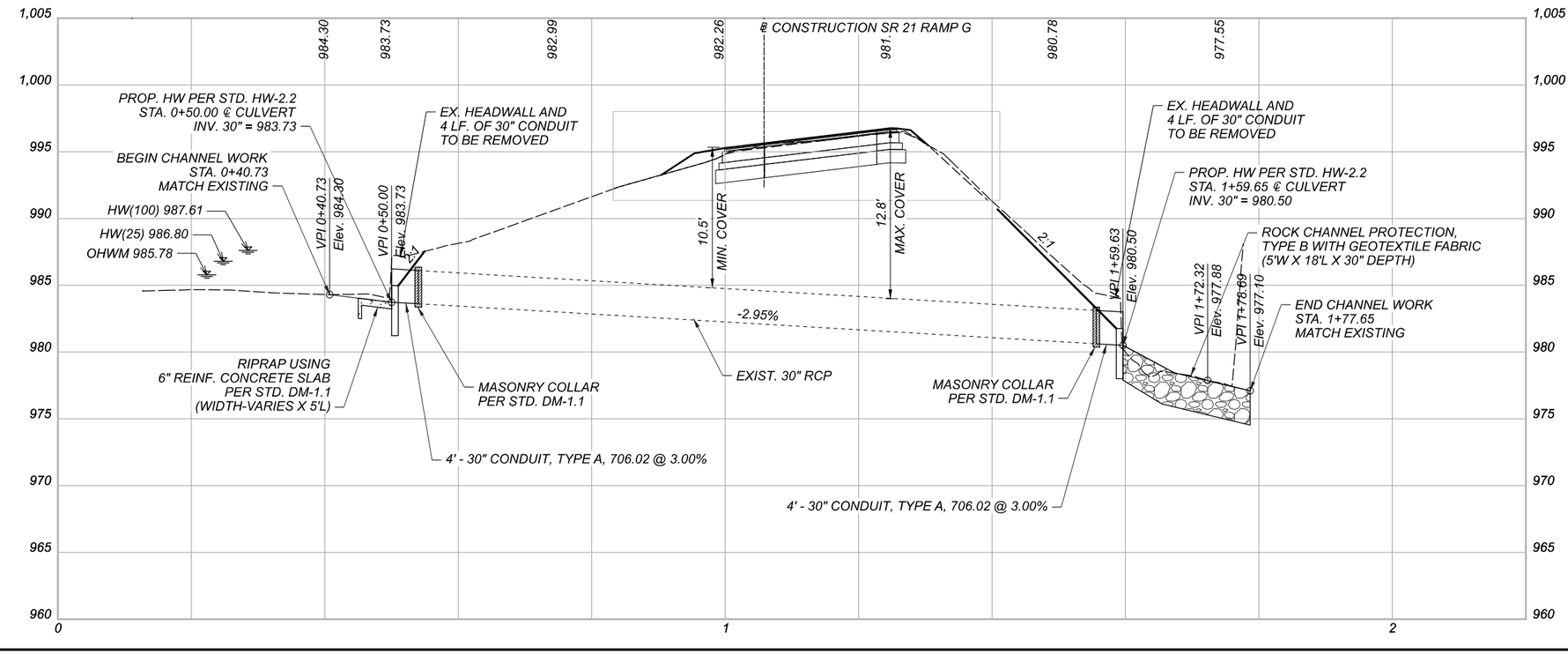

LEGEND

VEGETATED FILTER STRIP

SOIL BORING

HORIZONTAL SCALE IN FEET
0 5 10 20

CULVERT DETAIL
STA. 10010+26.83 SR 21 RAMP G

DESIGN AGENCY
ARCADIS
222 SOUTH MAIN STREET, SUITE 200
AKRON, OHIO 44308
(330) 434-1585
www.arcadis.com

DESIGNER AZF
REVIEWER PSB 04-23-21
PROJECT ID 104983
SHEET 192 TOTAL 297

SUM-77-32.27

MODEL: CULV8 [Sheet] PAPERSIZE: 17x11in DATE: 2/22/2022 TIME: 8:55:54 PM USER: tdinh
pw:\\gfnet-pw.bentley.com:gfnet-pw-01\Documents\Projects\67490\104983\402-Engineering-ARCADIS\Drainage\Sheets\

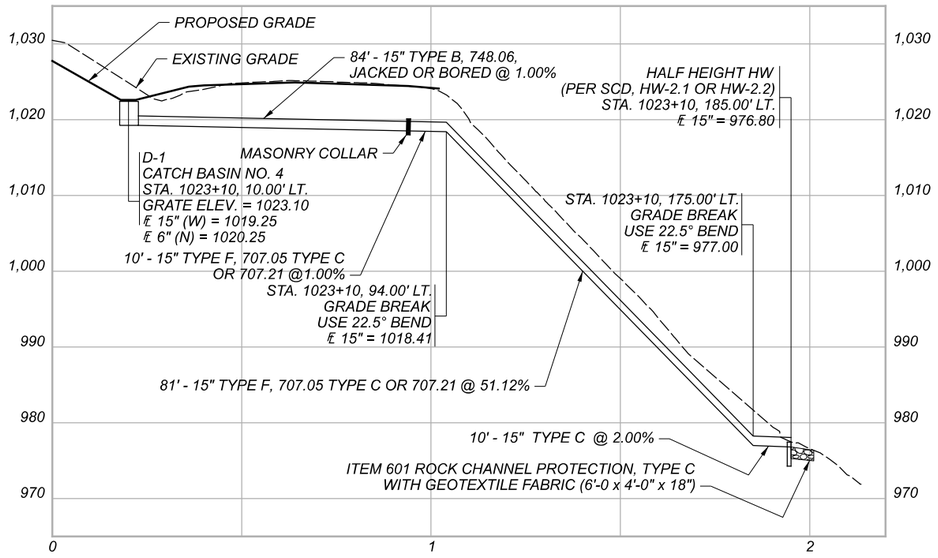

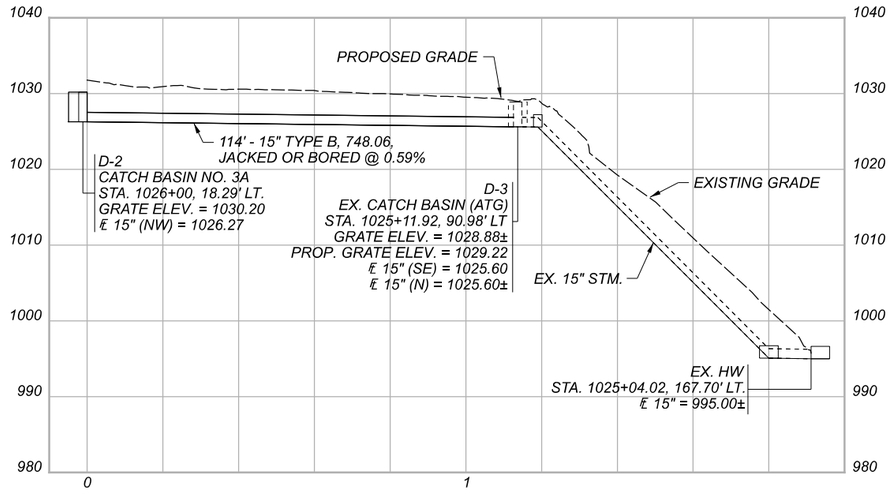

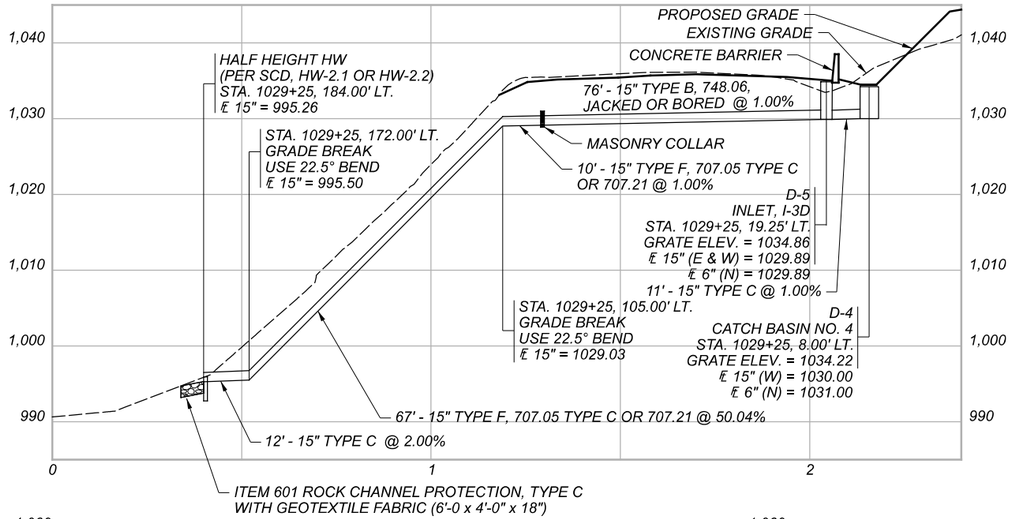

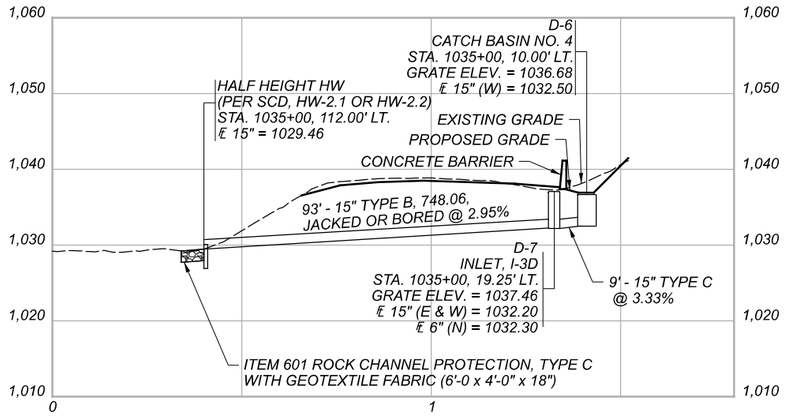

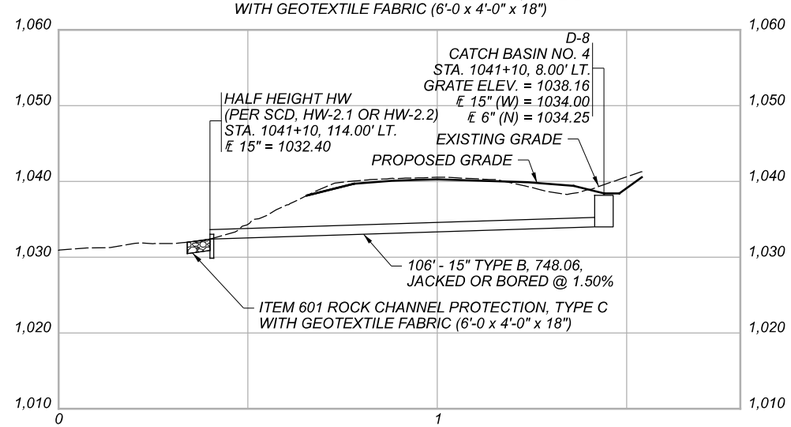

DRAINAGE PROFILES
STA. 1023+10 TO STA. 1041+10

SUM-77-32.27

MODEL: Profile D-6(Sheet) PAPERSIZE: 17x11(in) DATE: 2/22/2022 TIME: 8:58:08 PM USER: rdinh
pw:\\gfnet-pw.bentley.com:gfnet-pw-01\Documents\Projects\67490\104983\402-Engineering-ARCADIS\Drainage\Sheets\104983_DF508.dgn

DESIGN AGENCY
ARCADIS
222 SOUTH MAIN STREET, SUITE 200
AKRON, OHIO 44308
(330) 434-3636
www.arcadis.com

DESIGNER: PSB
REVIEWER: MRD 10-14-21
PROJECT ID: 104983
SHEET: 193 TOTAL: 297

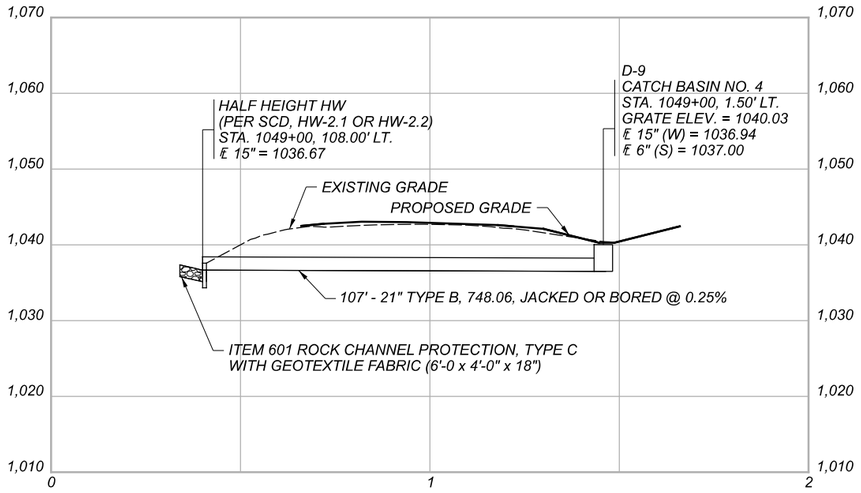

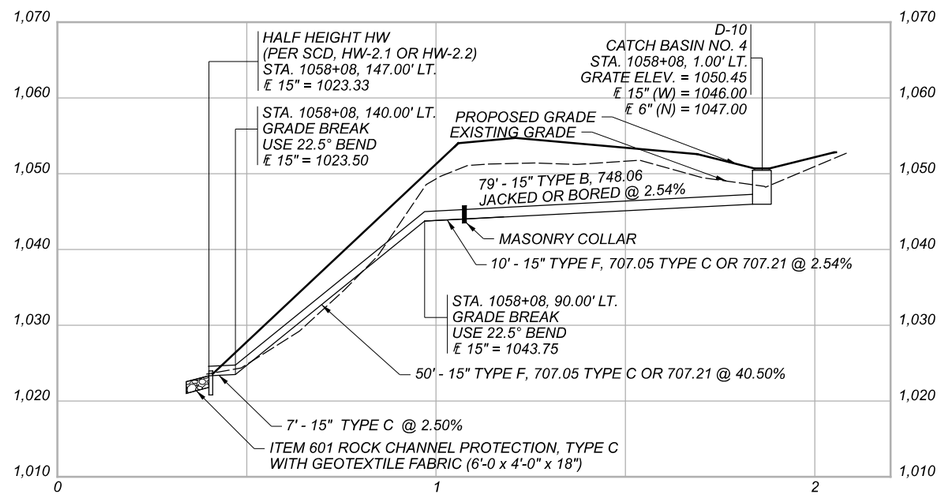

DRAINAGE PROFILES
STA. 1049+00 TO STA. 1058+08

SUM-77-32.27

MODEL: Profile (Sheet) PAPERSIZE: 17x11(in) DATE: 2/22/2022 TIME: 9:00:23 PM USER: tdinh
pw:\\gfnet-pw.bentley.com:gfnet-pw-01\Documents\Projects\67490\104983\402-Engineering-ARCADIS\Drainage\Sheets\104983_DF509.dgn

DESIGN AGENCY
ARCADIS
222 SOUTH MAIN STREET, SUITE 200
AKRON, OHIO 44308
(330) 434-1995
www.arcadis.com

DESIGNER: PSB
REVIEWER: MRD 10-14-21
PROJECT ID: 104983
SHEET: 194 TOTAL: 297

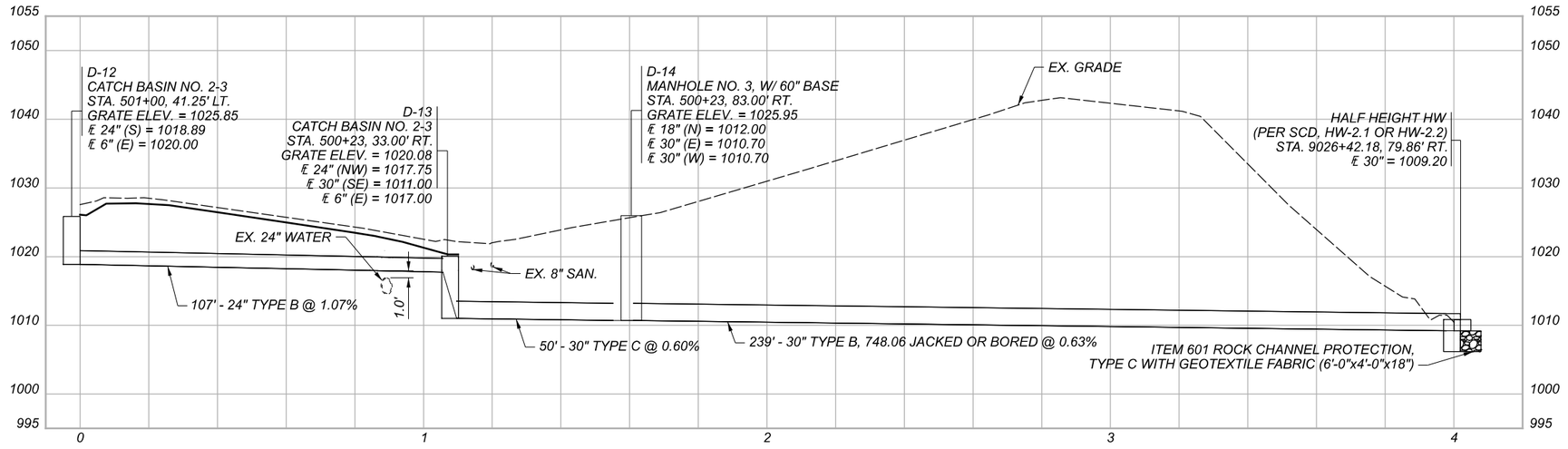

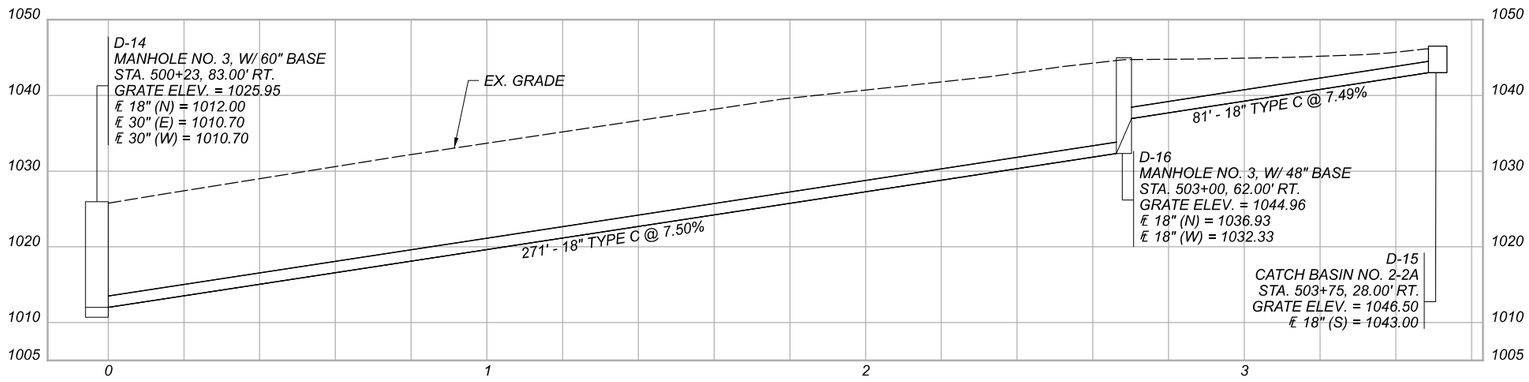

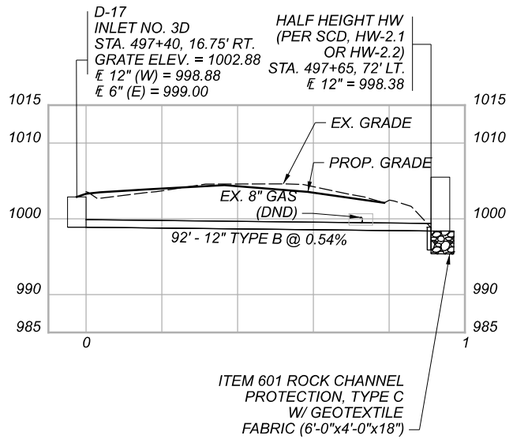

DRAINAGE PROFILES
SR 21

SUM-77-32.27

MODEL: PROFILE-I(Sheet) PAPERSIZE: 17x11in) DATE: 2/22/2022 TIME: 9:02:47 PM USER: tdinh
pw:\\gfnet-pw.bentley.com:gfnet-pw-01\Documents\Projects\67490\104983\402-Engineering-ARCADIS\Drainage\Sheets\104983_DF510.dgn

DESIGN AGENCY
ARCADIS
222 SOUTH MAIN STREET, SUITE 200
AKRON, OHIO 44308
(330) 434-4455
www.arcadis.com

DESIGNER
PSB

REVIEWER
MRD 10-14-21

PROJECT ID
104983

SHEET 195 | TOTAL 297

FOR ADDITIONAL UNDERDRAIN DETAILS, SEE SHEET 197

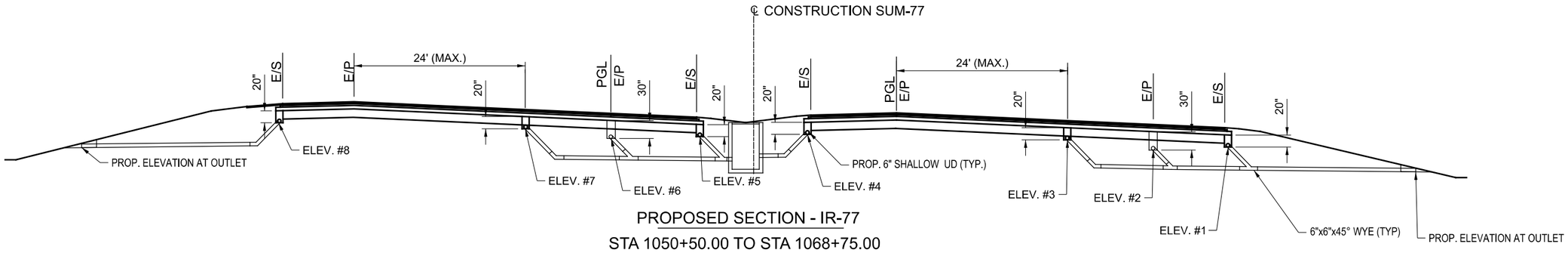

PROPOSED SECTION - IR-77

STA 1050+50.00 TO STA 1068+75.00

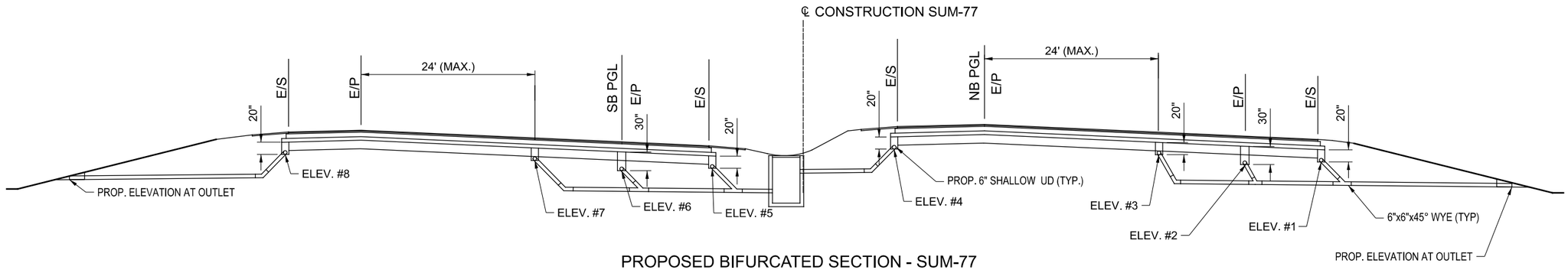

PROPOSED BIFURCATED SECTION - SUM-77

STA 1047+53.11 TO STA 1050+50.00

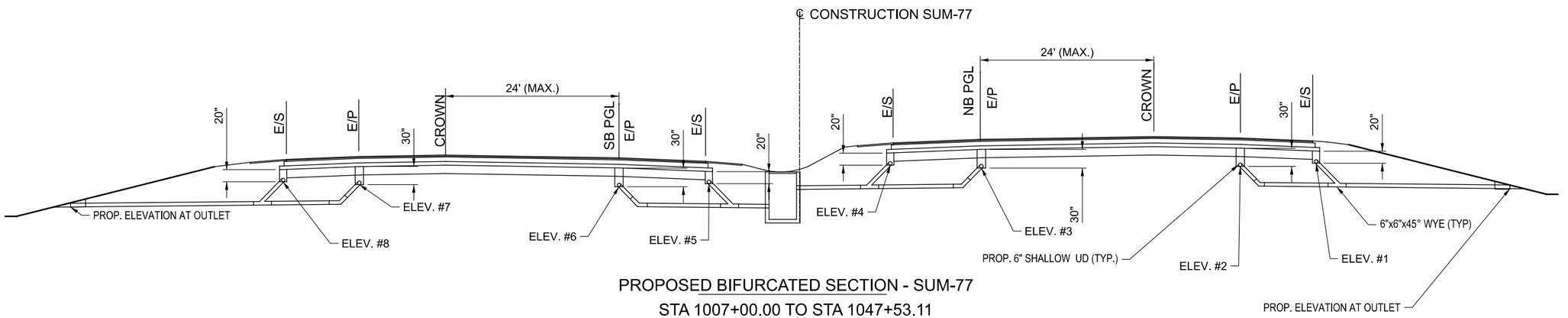

PROPOSED BIFURCATED SECTION - SUM-77

STA 1007+00.00 TO STA 1047+53.11

HORIZONTAL SCALE IN FEET
0 4 8 16

DRAINAGE DETAILS

SUM-77-32.27

MODEL: UD Details PAPERSIZE: 17x11 (in.) DATE: 2/22/2022 TIME: 9:05:18 PM USER: tdinh
pw:\\gfnet-pw.bentley.comgfnet-pw-01\Documents\Projects\67490\104983\402-Engineering-ARCADIS\Drainage\Sheets\104983_DD001.dgn

DESIGN AGENCY
ARCADIS
222 SOUTH MAIN STREET SUITE 200
AKRON, OHIO 44308
(330) 434-1995
www.arcadis.com

DESIGNER: PSB

REVIEWER: MRD 10-15-21

PROJECT ID: 104983

SHEET: 196 TOTAL: 297

FOR ADDITIONAL UNDERDRAIN DETAILS, SEE SHEET 196

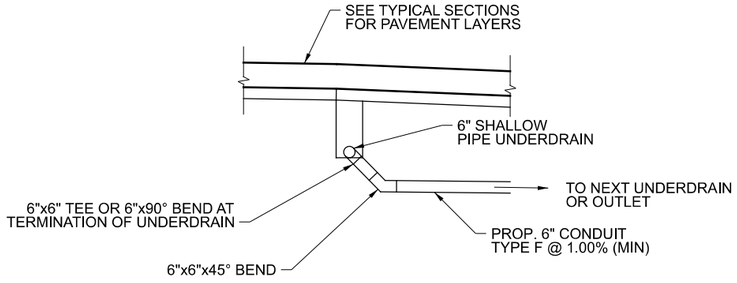

UNDERDRAIN OUTLET PIPE DETAIL:
END CONNECTIONS

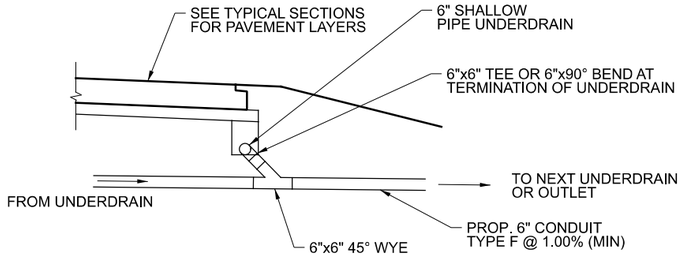

UNDERDRAIN OUTLET PIPE DETAIL:
MIDDLE CONNECTIONS

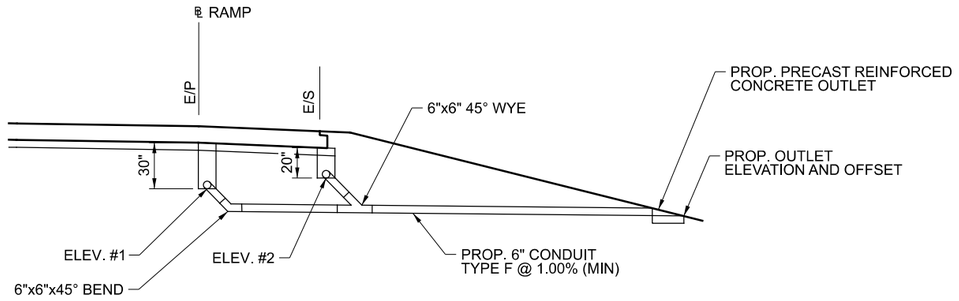

UNDERDRAIN RAMP OUTLET DETAIL FOR
SHOULDER GREATER THAN OR EQUAL TO 8'

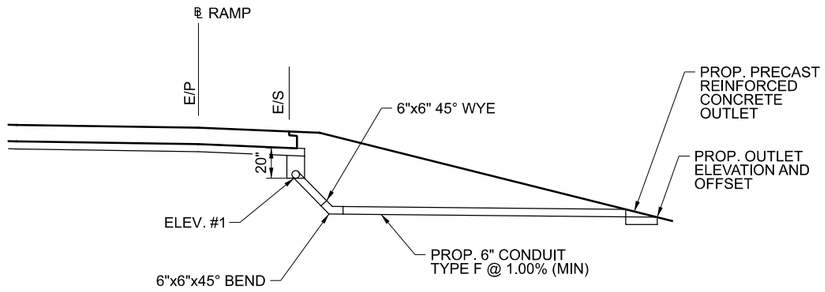

UNDERDRAIN RAMP OUTLET DETAIL
FOR SHOULDER LESS THAN 8'

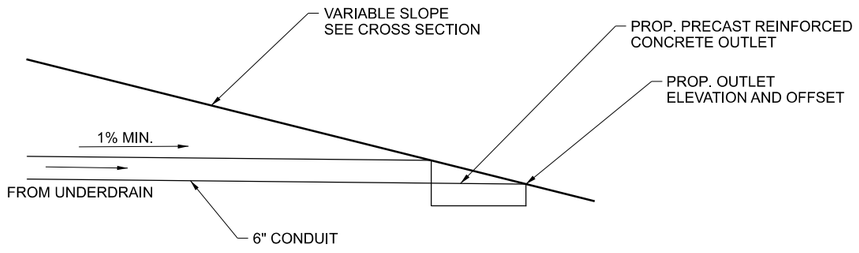

UNDERDRAIN OUTLET TO
SLOPE DETAIL

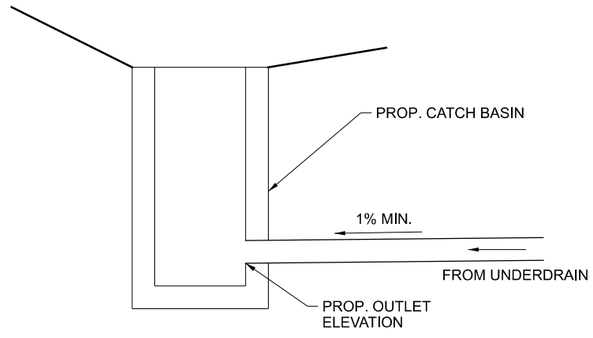

UNDERDRAIN OUTLET TO
CATCH BASIN DETAIL

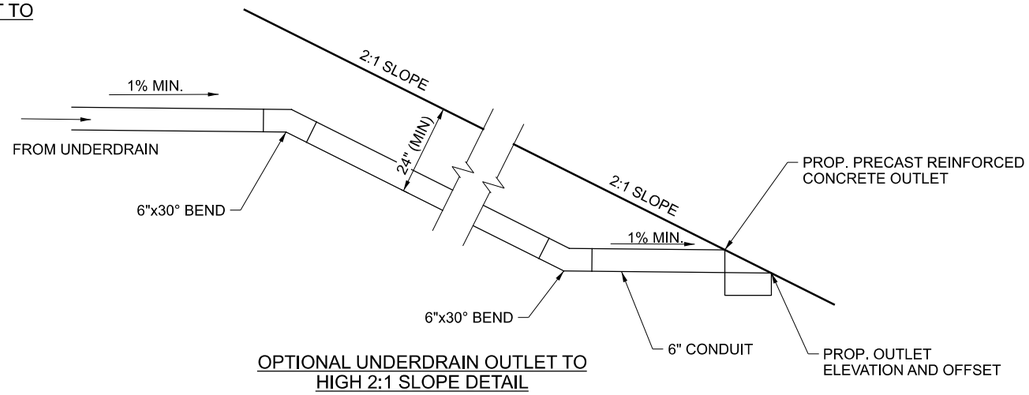

OPTIONAL UNDERDRAIN OUTLET TO
HIGH 2:1 SLOPE DETAIL

HORIZONTAL SCALE IN FEET
0 2.5 5 10

DRAINAGE DETAILS

SUM-77-32.27

MODEL: UD Details2 PAPERSIZE: 17x11(in) DATE: 2/22/2022 TIME: 9:05:20 PM USER: tdhh
pw:\\gfnet-pw.bentley.com:gfnet-pw-01\Documents\Projects\67490\104983\402-Engineering-ARCADIS\Drainage\Sheets\104983_DD001.dgn

DESIGN AGENCY
ARCADIS
222 SOUTH MAIN STREET SUITE 200
AKRON, OHIO 44308
(330) 434-1955
www.arcadis.com

DESIGNER
PSB

REVIEWER
MRD 10-15-21

PROJECT ID
104983

SHEET 197 TOTAL 297

SHEET NUMBER	REF. NO.	LOCATION				ELEV. #1	ELEV. #2	ELEV. #3	ELEV. #4	ELEV. #5	ELEV. #6	ELEV. #7	ELEV. #8	ELEV. AT INTERMEDIATE BEND OR WYE	ELEV. AT FINAL OUTLET	OUTLET TO CATCH BASIN	BOTTOM OF CATCH BASIN ELEV./ DITCH ELEV.	601 TIED CONCRETE BLOCK MAT, TYPE 1 WITH UNDERLAYMENT	605 6" SHALLOW PIPE UNDERDRAIN WITH GEOTEXTILE FABRIC	605 6" BASE PIPE UNDERDRAIN WITH GEOTEXTILE FABRIC	611 6" CONDUIT, TYPE F FOR UNDERDRAIN OUTLETS	611 6" CONDUIT, TYPE B, 748.06 JACKED OR BORED	611 PRECAST REINFORCED CONCRETE OUTLET	REMARKS
		STATION FROM	STATION TO	ROAD	SIDE													SY	FT	FT	FT	FT	EACH	
85	UD1	1013+10 *	1023+05	I-77	LT					993.80				992.80	994.56		963.00	2	985		10		1	
85	UD2	1013+10 *	1023+05	I-77	RT				998.53					997.53	994.56		963.00	2	995		48		1	
86	UD3	1023+10 *	1025+95	I-77	LT					1021.04				1021.04	1020.25	X	1019.3		275		10			
86	UD4	1023+10 *	1026+43	I-77	RT				1027.67					1026.67	1020.25	X	1019.3		323		10			
86	UD5	1029+31 *	1034+95	I-77	LT								1032.29	1030.54	1025.00		990.00		564					
86	UD6	1029+31 *	1034+95	I-77	LT							1031.86		1030.86	1025.00		990.00	2	564		10	56	1	MUST PIPE UNDER SR-21 RAMP G TO OUTLET
86	UD7	1029+31 *	1034+95	I-77	LT						1031.66			1031.16	1029.89	X	1029.9		554		10			
86	UD8	1029+31 *	1034+95	I-77	LT					1032.02				1030.20	1029.89	X	1029.9		554		10			
86	UD9	1029+31 *	1034+95	I-77	RT				1041.57					1039.25	1031.00	X	1030.00		554		10			
86	UD10	1029+31 *	1034+95	I-77	RT			1041.21						1040.21	1031.00	X	1030.00		554		10			
86	UD11	1029+72 *	1034+95	I-77	RT		1041.95							1040.95	1039.00		1032.50	2	523		31		1	
86	UD12	1029+72 *	1034+95	I-77	RT	1042.38								1040.61	1039.00		1032.50		523					
87	UD13	1035+00 *	1041+05	I-77	LT								1034.86	1033.09	1030.00		1029.00		605					
87	UD14	1035+00 *	1041+05	I-77	LT							1034.43		1033.43	1030.00		1029.00	2	605		42		1	
87	UD15	1035+00 *	1041+05	I-77	LT						1034.23			1033.23	1032.30	X	1032.20		595		10			
87	UD16	1035+00 *	1041+05	I-77	LT					1034.59				1032.80	1032.30	X	1032.20		595		10			
87	UD17	1035+00	1041+10 *	I-77	RT				1042.67					1040.59	1035.00	X	1034.00		600		10			
87	UD18	1035+00	1041+10 *	I-77	RT			1042.31						1040.85	1035.00	X	1034.00		600		10			
87	UD19	1035+00	1041+10 *	I-77	RT		1042.51							1041.41	1035.00	X	1034.00		610			77		MUST PIPE UNDER I-77 TO OUTLET
87	UD20	1035+00	1041+10 *	I-77	RT	1042.94								1041.94	1035.00	X	1034.00		600		10	84		MUST PIPE UNDER I-77 TO OUTLET
87	UD21	1041+15 *	1048+95	I-77	LT								1036.63	1034.86	1033.00		1025.00		780					
87	UD22	1041+15 *	1048+95	I-77	LT							1036.20		1035.20	1033.00		1025.00	2	780		45		1	
87	UD23	1041+15 *	1048+95	I-77	LT						1036.00			1035.00	1034.25	X	1034.00		770		10			
87	UD24	1041+15 *	1048+95	I-77	LT					1036.36				1034.57	1034.25	X	1034.00		770		10			
87	UD25	1041+15	1049+00 *	I-77	RT				1039.37					1037.29	1037.00	X	1036.9		785					
87	UD26	1041+15	1049+00 *	I-77	RT			1039.01						1037.55	1037.00	X	1036.9		785					
87		1041+15	1049+00 *	I-77	RT		1038.62							1038.02	1037.00	X	1036.9		785			77		MUST PIPE UNDER I-77 TO OUTLET
87	UD28	1041+15	1049+00 *	I-77	RT	1039.05								1038.55	1037.00	X	1036.9		785			77		MUST PIPE UNDER I-77 TO OUTLET
88	UD29	1049+05 *	1058+03	I-77	LT								1039.60	1038.60	1037.50		1036.7	2	898		30		1	
88	UD30	1049+05 *	1058+03	I-77	LT							1039.73		1038.06	1037.00	X	1036.9		888		10			
88	UD31	1049+05 *	1058+03	I-77	LT						1038.70			1037.58	1037.00	X	1036.9		888		10			
88	UD32	1049+05 *	1058+03	I-77	LT					1039.06				1037.15	1037.00	X	1036.9		888		10			
88	UD33	1049+00 *	1058+03	I-77	RT				1039.37					1037.29	1037.00	X	1036.9		903					
88	UD34	1049+00 *	1058+03	I-77	RT			1039.75						1037.78	1037.00	X	1036.9		903			77		MUST PIPE UNDER I-77 TO OUTLET
88	UD35	1049+00 *	1058+03	I-77	RT		1038.62							1038.02	1037.00	X	1036.9		903			77		MUST PIPE UNDER I-77 TO OUTLET
88	UD36	1049+00 *	1058+03	I-77	RT	1039.05								1038.55	1037.00	X	1036.9		903			77		MUST PIPE UNDER I-77 TO OUTLET
89	UD37	1058+13 *	1068+75	I-77	LT								1051.52	1050.52	1045.00		1023.3	2	1062		23		1	
89	UD38	1058+13 *	1068+75	I-77	LT							1050.69		1049.02	1047.00	X	1046.00		1062		40			
89	UD39	1058+13 *	1068+75	I-77	LT						1049.31			1048.19	1047.00	X	1046.00		1062					
89	UD40	1058+13 *	1068+75	I-77	LT					1049.61				1047.70	1047.00	X	1046.00		1062					
89	UD41	1058+08 *	1068+75	I-77	RT				1050.39					1048.60	1047.00	X	1046.00		1067		18			
89	UD42	1058+08 *	1068+75	I-77	RT			1050.63						1048.96	1047.00		1045.80	2	1067		36		1	
89	UD43	1058+08 *	1068+75	I-77	RT		1050.87							1049.75	1047.00		1045.80		1067					
89	UD44	1058+08 *	1068+75	I-77	RT	1051.46								1049.57	1047.00		1045.80		1067					
SUBTOTALS CARRIED TO SHEET 199																		18	33708	0	493	602	9	

* DENOTES OUTLET LOCATION

UNDERDRAIN SUBSUMMARY

SUM-77-32.27

MODEL: UD Sub Summary 1 PAPERSIZE: 17x11 (in.) DATE: 2/22/2022 TIME: 9:05:22 PM USER: tdhh
pw:\\gfnet-pw.bentley.com:gfnet-pw-01\Documents\Projects\674901\104983\402-Engineering-ARCADIS\Drainage\Sheets\104983_DD001.dgn

DESIGN AGENCY
ARCADIS
222 SOUTH MAIN STREET SUITE 200
AKRON, OHIO 44308
(330) 434-1955
www.arcadis.com

DESIGNER
PSB

REVIEWER
MRD 10-15-21

PROJECT ID
104983

SHEET 198 | TOTAL 297

SHEET NUMBER	REF. NO.	LOCATION				ELEV. #1	ELEV. #2	ELEV. #3	ELEV. #4	ELEV. #5	ELEV. #6	ELEV. #7	ELEV. #8	ELEV. AT INTERMEDIATE BEND OR WYE	ELEV. AT FINAL OUTLET	OUTLET TO CATCH BASIN	BOTTOM OF CATCH BASIN ELEV./ DITCH ELEV.	601	605	605	611	611	611	REMARKS
		STATION		ROAD	SIDE													TIED CONCRETE BLOCK MAT, TYPE 1 WITH UNDERLAYMENT	6" SHALLOW PIPE UNDERDRAIN WITH GEOTEXTILE FABRIC	6" BASE PIPE UNDERDRAIN WITH GEOTEXTILE FABRIC	6" CONDUIT, TYPE F FOR UNDERDRAIN OUTLETS	6" CONDUIT, TYPE B, 748.06 JACKED OR BORED	PRECAST REINFORCED CONCRETE OUTLET	
		FROM	TO																					
																		SY	FT	FT	FT	FT	EACH	
91	UD45	10007+08	10010+36 *	RAMP G	LT	992.86								991.86	990.00		979.00	2	328		20		1	
91	UD46	10010+36 *	10020+58	RAMP G	LT	992.86								991.86	990.00		979.00		1022					
91	UD47	10008+25	10010+36 *	RAMP G	RT	991.74								990.74	989.00		985.00	2	211		35		1	
91	UD48	10010+36 *	10021+22	RAMP G	RT	991.74								990.74	989.00		985.00		1086					
91	UD49	10021+25	10022+02 *	RAMP G	RT	1031.68								1030.68	1025.00		990.00		77					
90	UD50	495+60 *	497+36	SR-21	RT	992.93								991.93	990.00		974.00	2		176	15		1	
90	UD51	495+74 *	497+12	SR-21	LT	992.95								991.95	990.00		978.00	2		138	15		1	
90	UD52	497+40 *	500+32	SR-21	RT	1000.46								999.46	999.00	X	998.88			282	10			
90	UD53	497+58 *	500+87	SR-21	LT	1000.88								999.88	999.50		998.00	2		329	30		1	
90	UD54	500+23 *	506+06	SR-21	RT	1019.15								1018.15	1017.00	X	1011.00			573	10			
90	UD55	501+00 *	503+11	SR-21	LT	1025.82								1024.82	1020.00	X	1018.89			211	10			
SUBTOTALS THIS SHEET																		10	2724	1709	145	0	5	
SUBTOTALS FROM SHEET 198																		18	33708	0	493	602	9	
TOTALS CARRIED TO GENERAL SUMMARY																		28	36432	1709	638	602	14	

* DENOTES OUTLET LOCATION

UNDERDRAIN SUBSUMMARY

SUM-77-32.27

MODEL: UD Sub Summary 2 PAPERSIZE: 17x11 (in.) DATE: 2/22/2022 TIME: 9:05:24 PM USER: tdinh
pw:\\gfnet-pw.bentley.com:gfnet-pw-01\Documents\Projects\67490\104983\402-Engineering-ARCADIS\Drainage\Sheets\104983_DD001.dgn

DESIGN AGENCY
ARCADIS
222 SOUTH MAIN STREET SUITE 200
AKRON, OHIO 44308
(330) 434-1995
www.arcadis.com

DESIGNER
PSB

REVIEWER
MRD 10-15-21

PROJECT ID
104983

SHEET 199 TOTAL 297

ITEM SPECIAL, CLEARING AND GRUBBING

THIS ITEM IS INTENDED TO BE USED TO CLEAR ALL GROWTH IN FRONT OF HIGHWAY SIGNS THAT MAY IMPEDE ITS VIEWING BY MOTORISTS. IN ADDITION TO THE REQUIREMENTS OF 201, THE CONTRACTOR WILL REMOVE STUMPS AT LEAST 6 INCHES BELOW GROUND SURFACE AND THE WORK WILL NOT INCLUDE SCALPING. THE AREA TO BE CLEARED AND GRUBBED WILL BE DELINEATED IN THE WORK ORDER. PAYMENT WILL BE AT THE UNIT BID PRICE PER ACRE CLEARED AND GRUBBED AND WILL INCLUDE BACKFILLING HOLES AND REMOVING ALL TREES AND STUMPS.

SIGN PLACEMENT

THE ELEVATIONS SHOWN IN THE PLANS ARE FOR INFORMATIONAL PURPOSES ONLY. THE EXACT LOCATIONS OF SIGNS ARE TO BE STAKED. THE ENGINEER WILL REVIEW THE LOCATIONS PRIOR TO POST FABRICATION TO INSURE CLEARANCE OF DRIVES, ROADWAYS AND OTHER OBSTACLES. IF THERE ARE ANY CONFLICTS, THEY WILL BE ADJUSTED AS DIRECTED BY THE ENGINEER. UPON ACCEPTANCE OF THE LOCATIONS BY THE ENGINEER AND PRIOR TO POST FABRICATION, THE CONTRACTOR WILL VERIFY THE REQUIRED LENGTH OF THE SIGN POSTS. PAYMENT FOR THIS IS INCIDENTAL TO ALL 630 ITEMS.

SUM-77-32.27

MODEL: 111405_GN001_1 PAPERSIZE: 17x11 (in.) DATE: 2/22/2022 TIME: 9:07:56 PM USER: tdinh
pw:\\gfnet-pw.bentley.com:gfnet-pw-01\Documents\Projects\67490\104983\401-Engineering-GF\Traffic\Sheets\104983_TN001.dgn

TRAFFIC CONTROL NOTES

DESIGN AGENCY
Gannett Fleming
ENGINEERS AND ARCHITECTS, P.C.
2500 Corporate Exchange Drive
Suite 230
Columbus, OH 43231

DESIGNER
CJM

REVIEWER
DRJ 02/16/22

PROJECT ID
104983

SHEET 200 | TOTAL 297

SHEET NUMBER																ITEM	TOTAL	UNIT	DESCRIPTION	SEE SHEET NO.
202	203	204	205																	
338	40															621	378	EACH	RPM	
338	40															621	378	EACH	RAISED PAVEMENT MARKER REMOVED	
		1	4													625	5	EACH	GROUND ROD	
17																626	17	EACH	BARRIER REFLECTOR, TYPE 1, 1WAY	
154																626	154	EACH	BARRIER REFLECTOR, TYPE 2, 1WAY	
		461	203													630	664	FT	GROUND MOUNTED SUPPORT, NO. 3 POST	
		16														630	16	FT	GROUND MOUNTED STRUCTURAL BEAM SUPPORT, W6X9	
		2														630	2	EACH	BREAKAWAY STRUCTURAL BEAM CONNECTION	
		1	4													630	5	EACH	OVERHEAD SIGN SUPPORT, TYPE TC-12.30, DESIGN 12	
			1													630	1	EACH	SIGN ATTACHMENT ASSEMBLY	
		324	131													630	455	SF	SIGN, FLAT SHEET	
		40														630	40	SF	SIGN, GROUND MOUNTED EXTRUSHEET	
		98	580													630	678	SF	SIGN, OVERHEAD EXTRUSHEET	
		2														630	2	EACH	GROUND MOUNTED STRUCTURAL BEAM SUPPORT FOUNDATION	
		1	4													630	5	EACH	RIGID OVERHEAD SIGN SUPPORT FOUNDATION	
		22	16													630	38	EACH	REMOVAL OF GROUND MOUNTED SIGN AND DISPOSAL	
		8														630	8	EACH	REMOVAL OF GROUND MOUNTED SIGN AND REERECTION	
		25	16													630	41	EACH	REMOVAL OF GROUND MOUNTED POST SUPPORT AND DISPOSAL	
		3	1													630	4	EACH	REMOVAL OF GROUND MOUNTED POST SUPPORT AND REERECTION	
			1													630	1	EACH	REMOVAL OF OVERHEAD MOUNTED SIGN AND REERECTION	
			5													630	5	EACH	REMOVAL OF OVERHEAD MOUNTED SIGN AND DISPOSAL	
			2													630	2	EACH	REMOVAL OF OVERHEAD SIGN SUPPORT AND DISPOSAL, TYPE TC-12.30	
0.2																646	0.2	MILE	CENTER LINE	
2231	2055															646	4286	FT	CHANNELIZING LINE, 12"	
373																646	373	FT	TRANSVERSE/DIAGONAL LINE	
174	85															646	259	FT	CHEVRON MARKING	
	2															646	2	EACH	LANE REDUCTION ARROW	
3843	1901															646	5744	FT	DOTTED LINE, 6"	
7.35	0.51															807	7.86	MILE	WET REFLECTIVE EPOXY PAVEMENT MARKING, EDGE LINE, 6"	
6.35																807	6.35	MILE	WET REFLECTIVE EPOXY PAVEMENT MARKING, LANE LINE, 6"	

SHEET 1

SUM-77-32.27

MODEL: 111405_GG001_1 PAPERSIZE: 17x11 (in.) DATE: 2/22/2022 TIME: 9:10:21 PM USER: idinh
pw:\\gfnet-pw.bentley.com:gfnet-pw-01\Documents\Projects\674901\104983401-Engineering-GF\Traffic\Sheets\104983_TS001.dgn

TRAFFIC CONTROL SUBSUMMARY

DESIGN AGENCY
Gannett Fleming
ENGINEERS AND ARCHITECTS, P.C.
2550 Corporate Exchange Drive
Suite 230
Columbus, OH 43231

DESIGNER
CJM

REVIEWER
DRJ 02/01/22

PROJECT ID
104983

SHEET 201 TOTAL 297

SHEET 1

REF NO.	SHEET NO.	LOCATION	STATION FROM	STATION TO	SIDE	807 WET REFLECTIVE EPOXY PAVEMENT MARKING, EDGE LINE, 6", WHITE (MILE)	807 WET REFLECTIVE EPOXY PAVEMENT MARKING, EDGE LINE, 6", YELLOW (MILE)	807 WET REFLECTIVE EPOXY PAVEMENT MARKING, LANE LINE, 6" (MILE)	646 CENTER LINE (MILE)	646 CHANNELIZING LINE, 12" (FT)	646 TRANSVERSE/DIAGONAL LINE (FT)	646 CHEVRON MARKING (FT)	646 LANE REDUCTION ARROW (EACH)	646 DOTTED LINE, 6" (FT)	626 BARRIER REFLECTOR, TYPE 2, 1WAY (EACH)	626 BARRIER REFLECTOR, TYPE 1, 1WAY (EACH)	621 RPM, ONE-WAY (EACH)	621 RPM, TWO-WAY (EACH)	621 RAISED PAVEMENT MARKER REMOVED (EACH)
ELW-1	206	I-77	1005+50	9020+50	RT	0.29													
LL-1	206	I-77	1005+50	1084+00	RT			1.49									65		65
ELY-1	206	I-77	1005+50	1084+00	RT		1.49												
DL-1	206	I-77	1007+25	1015+52	RT									832					
ELW-2	206	I-77/SR-21	1005+50	506+00	LT/C	0.82													
LL-2	206	I-77	1005+50	42+50	LT			2.56									112		112
ELY-2	206	I-77	1005+50	9+00	LT		1.92												
DL-2	207	I-77	1011+80	1024+14	LT									1230					
BRG-1	207	I-77	1013+02	1016+43	LT										4				
CH-1	207	I-77	1015+52	1019+07	RT					357								10	10
CH-2	207	I-77	1015+52	1019+07	RT					357								10	10
CM-1	207	I-77	1015+52	1019+07	RT							117							
ELY-3	207	I-77	1019+07	9020+50	RT		0.03												
ELW-3	207	I-77	1019+07	1078+86	RT	1.13													
BRG-2	208	I-77	1024+14	1026+61	RT										3				
BRG-3	208	I-77	1024+38	1027+13	RT										4				
BRG-4	208	I-77	1024+75	1025+40	LT										2				
TL-1	208	I-77	1025+50	1033+78	LT						373								
BRB-1	208	I-77	1026+61	1029+06	RT											4			
BRB-2	208	I-77	1026+19	1028+92	LT											4			
BRG-5	208	SR-21	495+42	497+31	RT										3				
ELW-4	208	SR-21	495+54	497+16	LT	0.04													
CM-2	208	SR-21	497+20	498+09	LT							33							
CH-3	208	I-77/SR-21	10008+58	498+09	LT					95								3	3
CH-4	208	SR-21	497+20	498+09	LT					93								3	3
BRG-6	208	I-77	10007+34	10008+34	RT											2			
BRB-3	208	SR-21	497+31	499+99	RT											4			
BRG-7	208	SR-21	499+99	501+29	RT										3				
ELW-5	208	SR-21	495+45	506+06	RT	0.21													
DYL-1	208	SR-21	495+49	506+00	C				0.2										
BRB-4	208	SR-21	497+94	500+55	LT											3			
BRG-8	208	SR-21	500+55	501+29	LT										2				
LL-3	208	I-77	1026+20	1084+00	RT			1.09									48		48
LL-4	208	SR-21	498+09	506+00	LT			0.16				24					7		7
BRG-9	208	SR-21/I-77	495+60	10019+97	LT										26				
ELY-4	208	I-77	10008+58	10020+57	LT		0.23											16	16
BRG-10	208	I-77	10019+98	10023+35	RT										7				
CH-5	208	I-77	10020+57	1024+14	LT					665								17	17
CH-6	208	I-77	1030+78	1024+14	LT					664									
ELW-6	208	I-77	1030+78	1093+25	LT	1.19													
BRG-11	208	I-77	1032+00	1039+95	LT										9				
DL-3	208	I-77	1033+66	1051+40	LT									1781					
BRG-12	208	I-77	1029+10	1050+00	RT										22				
BRG-13	208	I-77	1029+59	1038+50	RT										10				
BRG-14	209	I-77	1037+00	1046+00	LT										10				
BRG-15	209	I-77	1043+00	1068+75	LT										27				
BRG-16	209	I-77	1043+25	1046+50	RT										4				
BRG-17	210	I-77	1048+88	1062+89	RT										15				
LL-5	210	I-77	1051+40	9+00	LT			1.05									47		47
BRG-18	211	I-77	1066+75	1068+75	RT										3				
SUBTOTAL						3.68	3.67	6.35	0.2	2231	373	174		3843	154	17	279	59	338
TOTALS CARRIED TO SUBSUMMARY ON SHEET 201						3.68	3.67	6.35	0.2	2231	373	174		3843	154	17	279	59	338

PAVEMENT MARKING ESTIMATED QUANTITIES

SUM-77-32.27

MODEL: 111405_GQ001_1 PAPERSIZE: 17x11 (in.) DATE: 2/22/2022 TIME: 9:12:24 PM USER: tdhh
pw:\\gfnet-pw.bentley.com:gfnet-pw-01\Documents\Projects\67490\104983\401-Engineering-GFI\Traffic\Sheets\104983_TQ001.dgn

DESIGN AGENCY
Gannett Fleming
ENGINEERS AND ARCHITECTS, P.C.
2500 Corporate Exchange Drive
Suite 230
Columbus, OH 43231

DESIGNER CJM

REVIEWER DRJ 02/10/22

PROJECT ID 104983

SHEET 202 | TOTAL 297

SHEET 2

REF NO.	SHEET NO.		STATION FROM	STATION TO	SIDE		807 WET REFLECTIVE EPOXY PAVEMENT MARKING, EDGE LINE, 6", WHITE (MILE)	807 WET REFLECTIVE EPOXY PAVEMENT MARKING, EDGE LINE, 6", YELLOW (MILE)	807 WET REFLECTIVE EPOXY PAVEMENT MARKING, LANE LINE, 6" (MILE)	646 CENTER LINE (MILE)	646 CHANNELIZING LINE, 12" (FT)	646 TRANSVERSE/DIAGONAL LINE (FT)	646 CHEVRON MARKING (FT)	646 LANE REDUCTION ARROW (EACH)	646 DOTTED LINE, 6" (FT)		626 BARRIER REFLECTOR, TYPE 2, 1WAY (EACH)	626 BARRIER REFLECTOR, TYPE 1, 1WAY (EACH)		621 RPM, ONE-WAY (EACH)	621 RPM, TWO-WAY (EACH)	621 RAISED PAVEMENT MARKER REMOVED (EACH)					
DL-4	211	I-77	1068+00	1082+00	LT										1400												
DL-5	211	I-77	1070+88	1075+87	RT										501												
CH-7	212	I-77	1075+87	1078+92	RT						303										8	8					
CH-8	212	I-77	1075+87	1078+88	RT						300										8	8					
CM-3	212	I-77	1075+87	1078+92	RT								85														
CH-9	212	I-77	1082+00	1089+26	LT						726										19	19					
CH-10	212	I-77	1082+00	1089+26	LT						726																
ELW-7	212	I-77	1078+92	1084+00	RT		0.1																				
ELW-8	213	I-77	1089+26	9+00	LT		0.33																				
ELY-5	213	I-77	1089+26	1093+25	LT			0.08													5	5					
LRA-1	209	I-77	1042+00		LT									1													
LRA-2	210	I-77	1051+40		LT									1													
SUBTOTAL							0.43	0.08			2055		85	2	1901						40	40					
TOTALS CARRIED TO SUBSUMMARY ON SHEET 201							0.43	0.08			2055		85	2	1901						40	40					

PAVEMENT MARKING ESTIMATED QUANTITIES

SUM-77-32.27

MODEL: 111405_GQ001_2 PAPERSIZE: 17x11 (in.) DATE: 2/22/2022 TIME: 9:12:24 PM USER: idinh
pw:\\pwbcpw.bentley.com:pwbc-pw-01\Documents\Projects\674900\104983\401-Engineering-GE\Traffic\Sheets\104983_TQ001.dgn

DESIGN AGENCY
Gannett Fleming
ENGINEERS AND ARCHITECTS, P.C.
2550 Corporate Exchange Drive
Suite 230
Columbus, OH 43231

DESIGNER
CJM

REVIEWER
DRJ 02/10/22

PROJECT ID
104983

SHEET 203 TOTAL 297

SHEET 3

REF NO.	SHEET NO.		STATION FROM	STATION TO	SIDE	CODE	SIZE (INCHES)	625 GROUND ROD EACH	630 GROUND MOUNTED SUPPORT, NO. 3 POST FT	630 GROUND MOUNTED STRUCTURAL BEAM SUPPORT, W6X9 FT	630 BREAKAWAY STRUCTURAL BEAM CONNECTION EACH	630 GROUND MOUNTED STRUCTURAL BEAM SUPPORT FOUNDATION EACH	630 OVERHEAD SIGN SUPPORT, TYPE TC-12.30, DESIGN 12 EACH	630 SIGN, FLAT SHEET SF	630 SIGN, GROUND MOUNTED EXTRUSHEET SF	630 SIGN, OVERHEAD EXTRUSHEET SF	630 RIGID OVERHEAD SIGN SUPPORT FOUNDATION EACH	630 REMOVAL OF GROUND MOUNTED SIGN AND DISPOSAL EACH	630 REMOVAL OF GROUND MOUNTED SIGN AND REERECTION EACH	630 REMOVAL OF GROUND MOUNTED POST SUPPORT AND DISPOSAL EACH	630 REMOVAL OF GROUND MOUNTED POST SUPPORT AND REERECTION EACH	630 REMOVAL OF OVERHEAD MOUNTED SIGN AND DISPOSAL EACH	630 REMOVAL OF OVERHEAD SIGN SUPPORT AND DISPOSAL, TYPE TC-12.30 EACH
R-1	206	I-77	1005+05		LT													1		2			
S-1	206	I-77	1002+50		LT	R2-1	48x60		31					20									
S-2	207	I-77	1011+00		LT	M3-3	18x36		15					4.5									
					LT	M1-1	36x36							9									
					LT	M3-3	18x36		15					4.5									
					LT	M1-5	36x36							9									
R-2	207	I-77	1015+89		LT													4		2			
S-3	207	I-77	1018+75		C	D10-5	18x60		15.5					7.5									
						D10-5	18x60							7.5									
R-3	207	I-77	1018+77		RT													2		1			
R-4	207	I-77	1020+37		RT													1		2			
S-4	207	I-77	1020+40		RT	E5-H1a	96x60			16	2	2			40								
S-5	207	I-77	1021+00		RT	W8-13	48x48		27					16									
R-5	207	I-77	1021+11		RT													1		2			
S-6	208	I-77	1026+50		RT	OM-3L	12x36		13.5					3									
R-6	208	I-77	1026+71		RT													1		1			
S-7	208	I-77	1027+00		RT	OM-3R	12x36		13.5					3									
						I-H25a	12x12							1									
R-7	208	I-77	1027+09		RT													1		2			
S-8	208	I-77	10009+33		LT														7		2		
S-9	208	I-77	1029+00		LT	OM-3L	12x36		13.5					3									
R-8	208	I-77	1028+70		LT													1		1			
S-10	208	I-77	1028+10		LT	OM-3R	12x36		13.5					3									
						I-H25a	12x12							1									
R-34	208	I-77	10008+40		RT													1		1			
S-45	208	I-77	10008+40		RT	R3-2	36x36		13.5					9									
R-9	208	I-77	1027+99		LT													1		2			
R-10	208	I-77	10009+35		RT													1		1			
S-11	208	I-77	10009+50		RT	R5-H10d	36x36		13.5					9									
S-12	208	I-77	10010+00		LT	W1-8R	36x48		14.5					12									
R-11	208	I-77	10010+37		LT													1		1			
S-13	208	I-77	10010+80		LT	W1-8R	36x48		14.5					12									
S-14	208	I-77	10011+60		LT	W1-8R	36x48		14.5					12									
R-12	208	I-77	10011+72		LT													1		1			
S-15	208	I-77	10012+40		LT	W1-8R	36x48		14.5					12									
S-16	208	I-77	10013+20		LT	W1-8R	36x48		14.5					12									
S-17	208	I-77	10013+75		LT														1		1		
S-18	208	I-77	10014+00		LT	W1-8R	36x48		14.5					12									
S-19	208	I-77	10014+80		LT	W1-8R	36x48		14.5					12									
S-20	208	I-77	10015+60		LT	W1-8R	36x48		14.5					12									
S-21	208	I-77	10016+40		LT	W1-8R	36x48		14.5					12									
S-22	208	I-77	10017+20		LT	W1-8R	36x48		14.5					12									
S-23	208	I-77	10018+00		LT	W1-8R	36x48		14.5					12									
S-24	208	I-77	10018+80		LT	W1-8R	36x48		14.5					12									
S-25	208	I-77	10019+60		LT	W1-8R	36x48		14.5					12									
S-26	208	I-77	10020+40		LT	W1-8R	36x48		14.5					12									
R-13	208	I-77	1030+32		LT													1		1			
R-14	208	I-77	1030+32		RT													1		1			
S-27	208	I-77	1030+32		C	D10-5	18x60		15.5					7.5									
						D10-5	18x60							7.5									
R-15	208	SR-21	499+39		LT													2		2			
S-28	208	SR-21	499+50		LT	W13-7	36x60		31					15									
S-29	208	I-77	1033+00		RT	LEVEL 1	156x72	1					1			78	1						
						E1-H5P	96x30									20							
S-30	208	I-77	1033+50		LT	W4-1R	48x48		27					16									
SUBTOTAL								1	461	16	2	2	1	324	40	98	1	22	8	25	3		
TOTALS CARRIED TO SUBSUMMARY ON SHEET 201								1	461	16	2	2	1	324	40	98	1	22	8	25	3		

SIGNING ESTIMATED QUANTITIES

SUM-77-32.27

MODEL: 111405_GQ001_3 PAPERSIZE: 17x11 (in.) DATE: 2/22/2022 TIME: 9:12:25 PM USER: tdinh
pw:\\gfnet-pw.bentley.com:gfnet-pw-01\Documents\Projects\674901\104983\401-Engineering-GF\Traffic\Sheets\104983_TQ001.dgn

DESIGN AGENCY
Gannett Fleming
ENGINEERS AND ARCHITECTS, P.C.
2300 Corporate Exchange Drive
Suite 250
Columbus, OH 43231

DESIGNER CJM

REVIEWER DRJ 02/10/22

PROJECT ID 104983

SHEET 204 TOTAL 297

REF NO.	SHEET NO.		STATION FROM	STATION TO	SIDE	CODE	SIZE (INCHES)	625 GROUND ROD EACH	630 GROUND MOUNTED SUPPORT, NO. 3 POST FT		630 OVERHEAD SIGN SUPPORT, TYPE TC-12.30, DESIGN 12 EACH	630 SIGN ATTACHMENT ASSEMBLY EACH	630 SIGN, FLAT SHEET SF	630 SIGN, GROUND MOUNTED EXTRUSHEET SF	630 SIGN, OVERHEAD EXTRUSHEET SF	630 RIGID OVERHEAD SIGN SUPPORT FOUNDATION EACH	630 REMOVAL OF GROUND MOUNTED SIGN AND DISPOSAL EACH	630 REMOVAL OF GROUND MOUNTED SIGN AND REERECTION EACH	630 REMOVAL OF GROUND MOUNTED POST SUPPORT AND DISPOSAL EACH	630 REMOVAL OF GROUND MOUNTED POST SUPPORT AND REERECTION EACH	630 REMOVAL OF OVERHEAD MOUNTED SIGN AND DISPOSAL EACH	630 REMOVAL OF OVERHEAD SIGN SUPPORT AND DISPOSAL, TYPE TC-12.30 EACH	630 REMOVAL OF OVERHEAD MOUNTED SIGN AND REERECTION EACH				
R-17	209	I-77	1036+82		RT																	2	1					
S-31	209	I-77	1037+50		RT	LEVEL 1	192x144	1			1				192	1												
						E1-H5P	108x30								22.5													
R-18	209	I-77	1037+95		LT												1		2								
S-32	209	I-77	1038+00		LT	W8-13	48x48		27				16														
R-19	209	I-77	1040+47		LT												1		1								
R-20	209	I-77	1040+73		LT												1		2								
R-21	209	I-77	1041+00		RT												1		1								
R-22	209	I-77	1040+97		LT												1		1								
S-33	209	I-77	1041+00		RT	D10-3	12x48		14.5				4														
S-34	209	I-77	1041+00		C	D10-5	18x60		15.5				7.5														
						D10-5	18x60						7.5														
S-35	209	I-77	1041+00		LT	D10-3	12x48		14.5				4														
R-23	209	I-77	1041+07		RT												1		1								
R-24	210	I-77	1049+98		RT																	1	1				
S-36	210	I-77	1050+50		RT	LEVEL 1	192x144	1			1				192	1											
R-25	210	I-77	1051+36		RT												2		1								
S-37	210	I-77	1051+36		C	D10-5	18x60		15.5				7.5														
						D10-5	18x60						7.5														
S-38	210	I-77	1054+50		LT	LEVEL 1	180x60	1			1				75	1											
R-26	211	I-77	1060+32		LT												2		2								
S-39	211	I-77	1060+25		C	R5-H11	24x30		27				5														
						R3-4	36x36						9														
R-27	211	I-77	1060+69		RT												1		1								
S-40	211	I-77	1060+75		C	R5-H11	24x30		27				5														
						R3-4	36x36						9														
R-28	211	I-77	1062+37		RT												2		1								
S-41	211	I-77	1062+37		C	D10-5	18x60		15.5				7.5														
						D10-5	18x60						7.5														
S-42	211	I-77	1063+00		LT	R2-1	48x60		31				20														
S-43	211	I-77	1063+00		LT	M3-3	18x36		15				4.5														
					LT	M1-1	36x36						9														
R-29	211	I-77	1067+69		LT												2		1								
R-30	211	I-77	1070+23		LT												1		2								
S-44	213	I-77	1083+75		RT	LEVEL 1	156x72	1			1				78	1											
						E1-H5P	96x30								20													
R-31	215	I-77	13+52		LT																	1					
R-32	217	I-77	44+50		LT																	1					
S-46	218	I-77	63+00		LT							1												1			
SUBTOTAL								4	202.5		4	1	130.5		579.5	4	16		16	1	5	2	1				
TOTALS CARRIED TO SUBSUMMARY ON SHEET 201								4	203		4	1	131		580	4	16		16	1	5	2	1				

SIGNING ESTIMATED QUANTITIES

SUM-77-32.27

MODEL: 111405_GQ001_4 PAPERSIZE: 17x11 (in.) DATE: 2/22/2022 TIME: 9:12:25 PM USER: tdeh
pw:\\gfnetpw.bentley.com:gfnet-pw-01\Documents\Projects\674901\104983\401-Engineering-GF\Traffic\Sheets\104983_TQ001.dgn

DESIGN AGENCY
Gannett Fleming
ENGINEERS AND ARCHITECTS, P.C.
2300 Corporate Exchange Drive
Suite 250
Columbus, OH 43231

DESIGNER
CJM

REVIEWER
DRJ 02/10/22

PROJECT ID
104983

SHEET 205 | TOTAL 297

LEGEND

- EXISTING SIGN TO REMAIN
- EXISTING SIGN TO BE REMOVED
- (R) EXISTING SIGN TO BE REMOVED AND RE-ERECTED
- PROPOSED SIGN
- (S) SIGN, PROPOSED
- (R) SIGN, TO BE REMOVED
- (XX) PAVEMENT MARKING, QUANTIFIED
- (XX) PAVEMENT MARKING, PREVIOUSLY QUANTIFIED
- (ELW) EDGE LINE, WHITE, 6"
- (ELY) EDGE LINE, YELLOW, 6"
- (CH) CHANNELIZING LINE, 12"
- (LL) LANE LINE, 6"
- (CM) CHEVRON MARKING, 24"
- (DL) DOTTED LINE, WHITE, 6"
- (TL) TRANSVERSE/DIAGONAL LINE
- (BRG) BARRIER REFLECTOR, GUARDRAIL
- (BRB) BARRIER REFLECTOR, BARRIER

NOTES
1. INSTALL RAISED PAVEMENT MARKERS PER ODOT SCD TC-65.10, TC-65.11 AND TC-73.20.

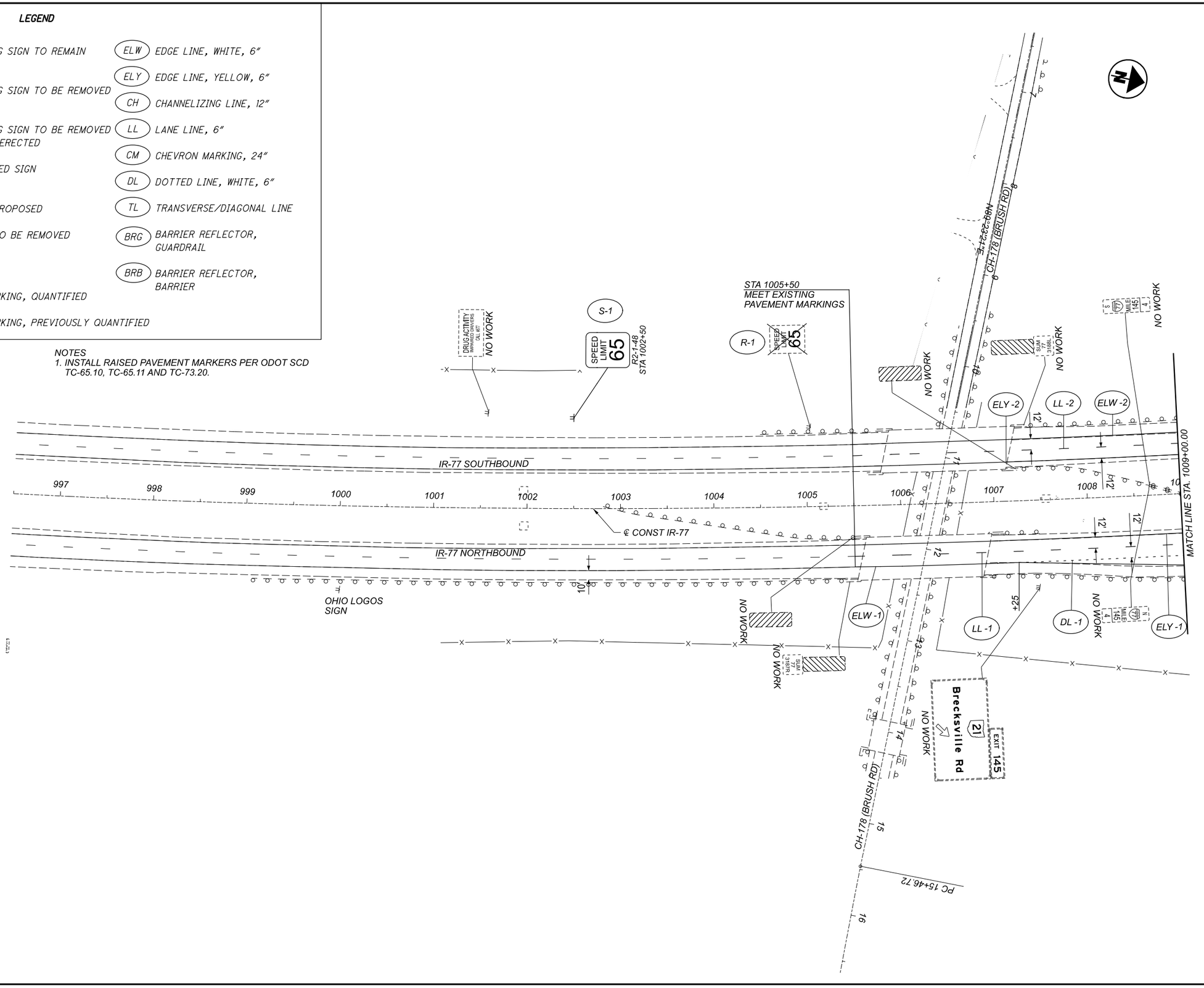

HORIZONTAL SCALE IN FEET
0 25 50 100

TRAFFIC CONTROL PLAN
IR-77 - STA 996+50.00 TO STA 1009+00.00

SUM-77-32.27

MODEL: III405_TPI04 PAPERSIZE: 17x11 (in.) DATE: 2/22/2022 TIME: 9:41:38 PM USER: tdinh
pw:\\gfnet-pw.bentley.com:gfnet-pw-01\Documents\Projects\67490\104983\401-Engineering-GF\Traffic\Sheets\104983_TPI04.dgn

DESIGN AGENCY
Gannett Fleming
ENGINEERS AND ARCHITECTS, P.C.
2550 Corporate Exchange Drive
Suite 230
Columbus, OH 43231

DESIGNER: CJM
REVIEWER: DRJ 02-10-22
PROJECT ID: 104983
SHEET: 206 TOTAL: 297

MODEL: III405_TPI015 PAPERSIZE: 17x11 (In.) DATE: 2/22/2022 TIME: 9:16:58 PM USER: tdinh
pw:\\gfnet-pw.bentley.com:gfnet-pw-01\Documents\Projects\67490\104983\401-Engineering-GF\Traffic\Sheets\104983_TPI15.dgn

NOTES
1. FOR TRAFFIC CONTROL LEGEND, SEE SHEET 206
2. INSTALL RAISED PAVEMENT MARKERS PER ODOT SCD TC-65.10, TC-65.11 AND TC-73.20.
3. INSTALL CHEVRON MARKINGS PER ODOT SCD TC-72.20

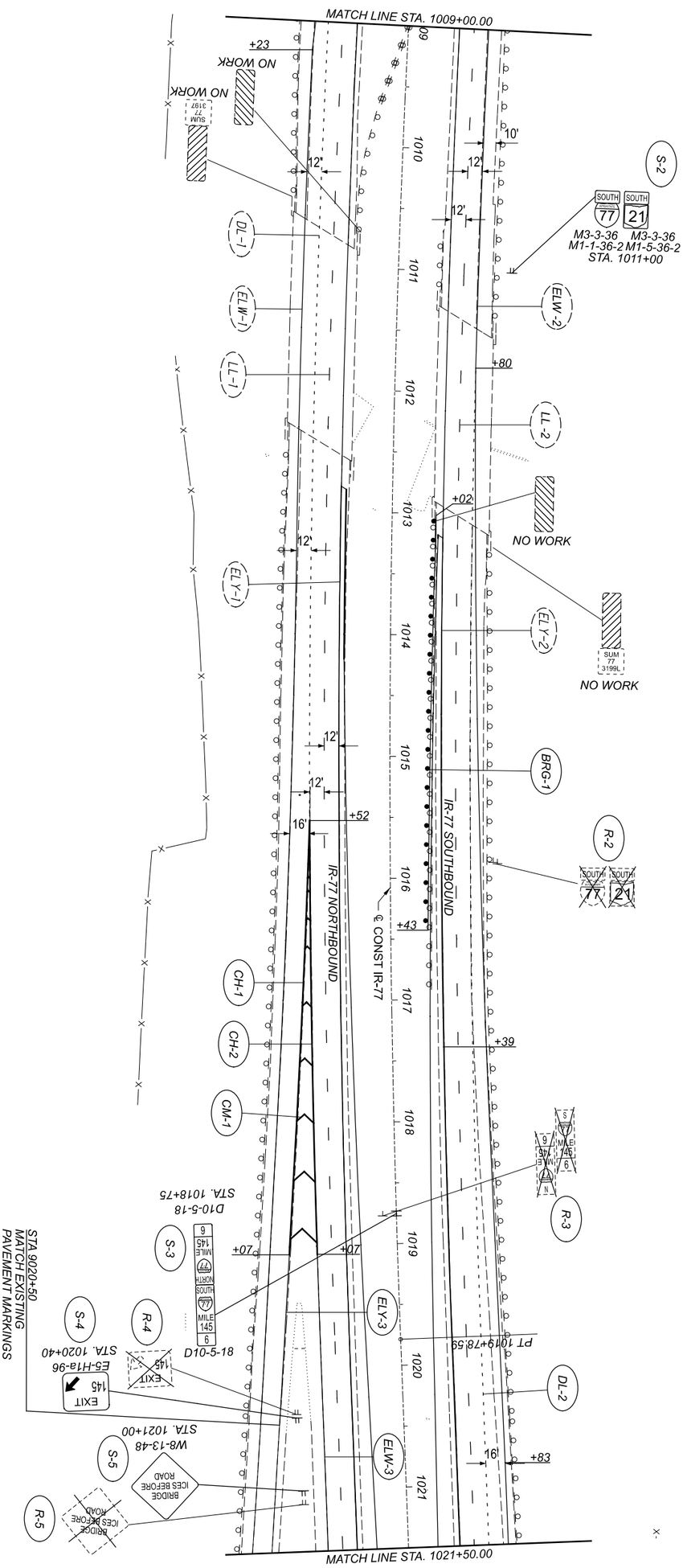

TRAFFIC CONTROL PLAN
IR-77 - STA 1009+00.00 TO STA 1021+50.00

HORIZONTAL SCALE IN FEET
0 50
25 100

SHEET	207
TOTAL	297
PROJECT ID	104983
REVIEWER	DRJ 02-10-22
DESIGNER	CJM

DESIGN AGENCY
Gannett Fleming
ENGINEERS AND ARCHITECTS, P.C.
2500 Corporate Exchange Drive
Suite 230
Columbus, OH 43231

SUM-77-32.27

MODEL: III405_TPI016 PAPERSIZE: 17x11 (in.) DATE: 2/22/2022 TIME: 9:19:09 PM USER: tdinh
pw:\\gfnet-pw.bentley.com:gfnet-pw-01\Documents\Projects\67490\104983\401-Engineering-GF\Traffic\Sheets\104983_TPI16.dgn

NOTES
1. FOR TRAFFIC CONTROL LEGEND, SEE SHEET 206
2. INSTALL RAISED PAVEMENT MARKERS PER ODOT SCD TC-65.10, TC-65.11 AND TC-73.20.
3. INSTALL CHEVRON MARKINGS PER ODOT SCD TC-72.20
4. FOLLOW SPACING REQUIREMENTS FOR TRANSVERSE MARKINGS PER ODOT SCD TC-71.10

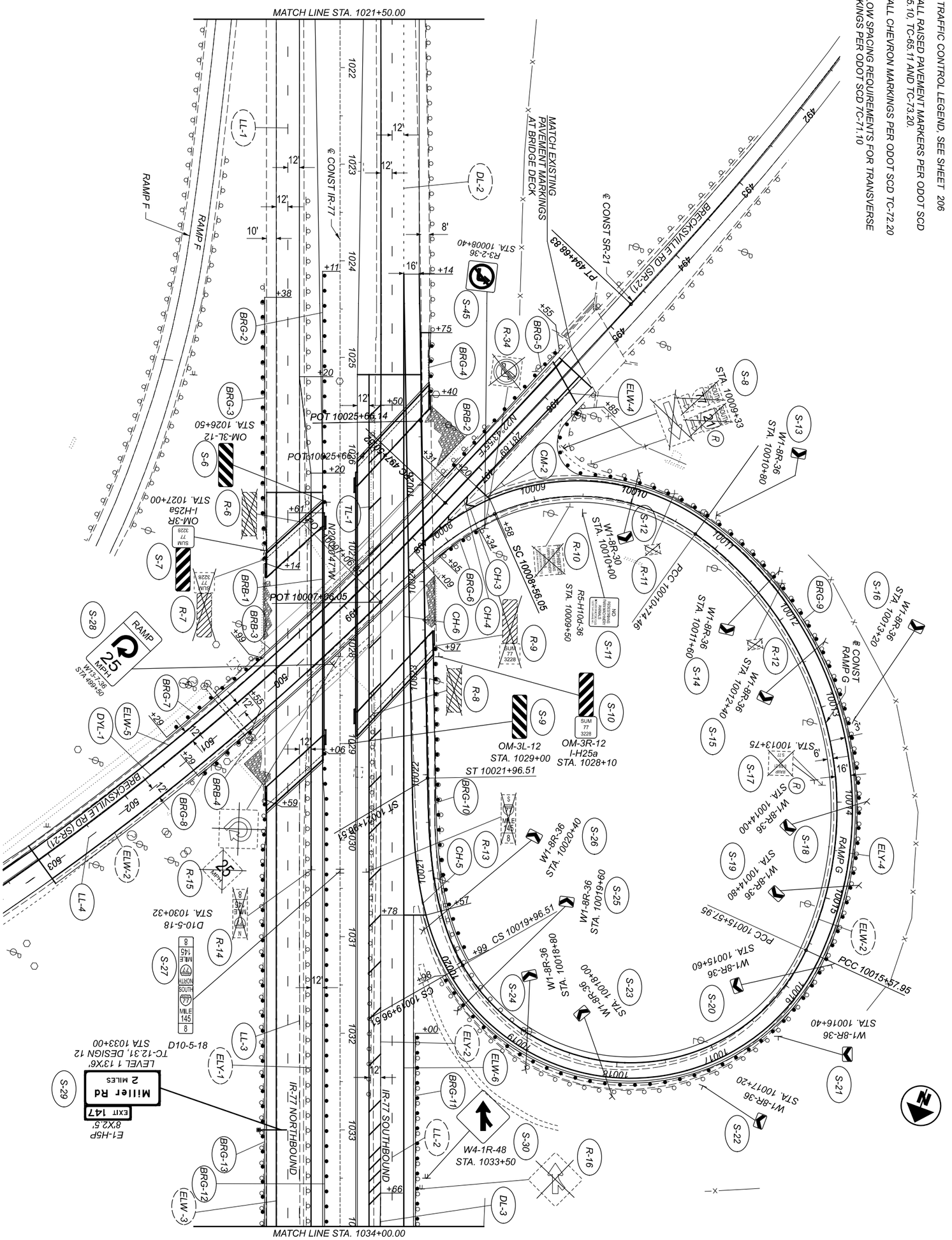

Gannett Fleming
ENGINEERS AND ARCHITECTS, P.C.
2500 Corporate Exchange Drive
Suite 230
Columbus, OH 43231
DESIGN AGENCY

TRAFFIC CONTROL PLAN
IR-77 - STA 1021+50.00 TO STA 1034+00.00

HORIZONTAL SCALE IN FEET
0 50
25 100

MODEL: III405_TPI0I7 PAPERSIZE: I7xII (In.) DATE: 2/22/2022 TIME: 9:2I:2I PM USER: tdinh
pw:\\gfnet-pw.bentley.com:gfnet-pw-0I\Documents\Projects\67490\I04983\40I-Engineering-GF\Traffic\Sheets\I04983_TPII7.dgn

NOTES
1. FOR TRAFFIC CONTROL LEGEND, SEE SHEET 206
2. INSTALL RAISED PAVEMENT MARKERS PER ODOT SCD TC-65.10, TC-65.11 AND TC-73.20.

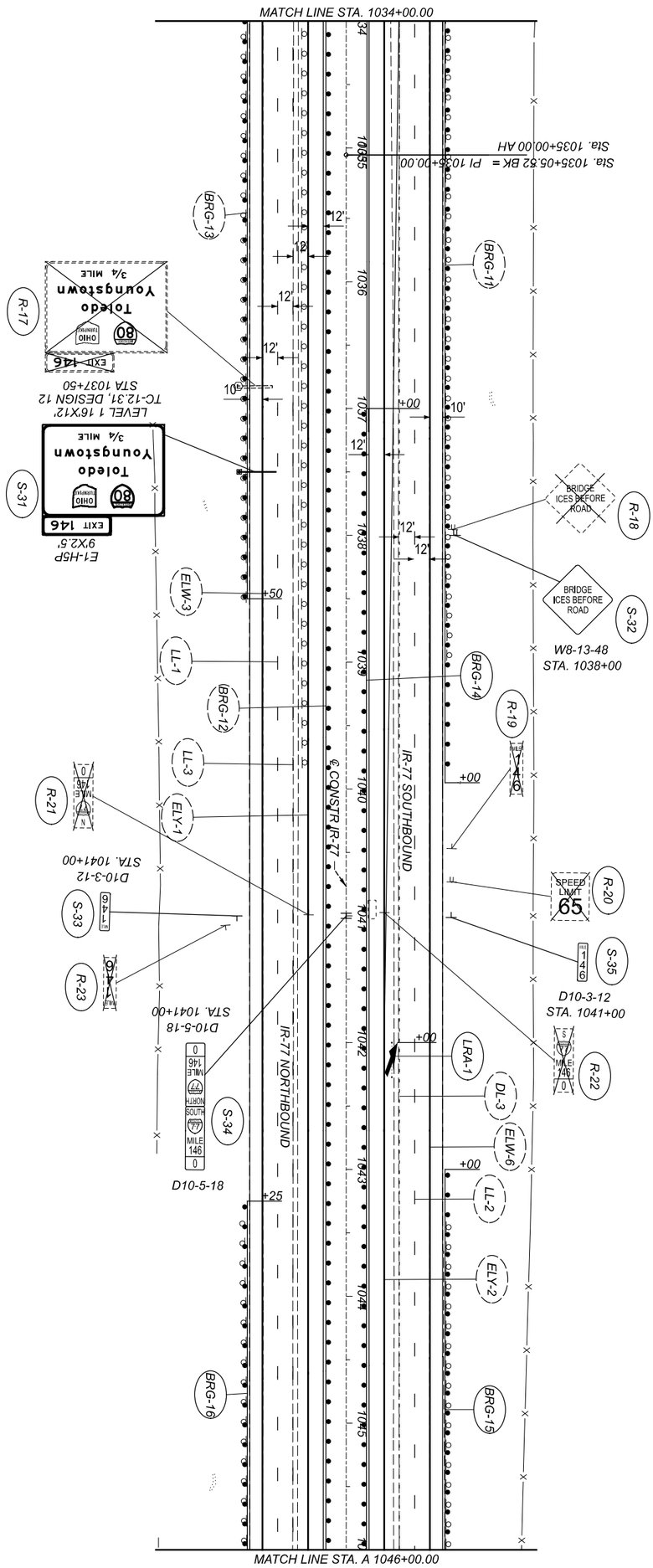

TRAFFIC CONTROL PLAN
IR-77 - STA 1034+00.00 TO STA 1046+00.00

SHEET	209
TOTAL	297
PROJECT ID	104983
REVIEWER	DRJ 02-10-22
DESIGNER	CJM
DESIGN AGENCY	Gannett Fleming ENGINEERS AND ARCHITECTS, P.C. 2500 Corporate Exchange Drive Suite 230 Columbus, OH 43231

HORIZONTAL SCALE IN FEET
0 50
25 100

MODEL: III405_TPI0I8 PAPERSIZE: I7xII (In.) DATE: 2/22/2022 TIME: 9:23:47 PM USER: tdinh
pw:\\gfnet-pw.bentley.com:gfnet-pw-0I\Documents\Projects\67490\I04983\40I-Engineering-GF\Traffic\Sheets\I04983_TPII8.dgn

NOTES
1. FOR TRAFFIC CONTROL LEGEND, SEE SHEET 206
2. INSTALL RAISED PAVEMENT MARKERS PER ODOT SCD TC-65.10, TC-65.11 AND TC-73.20.

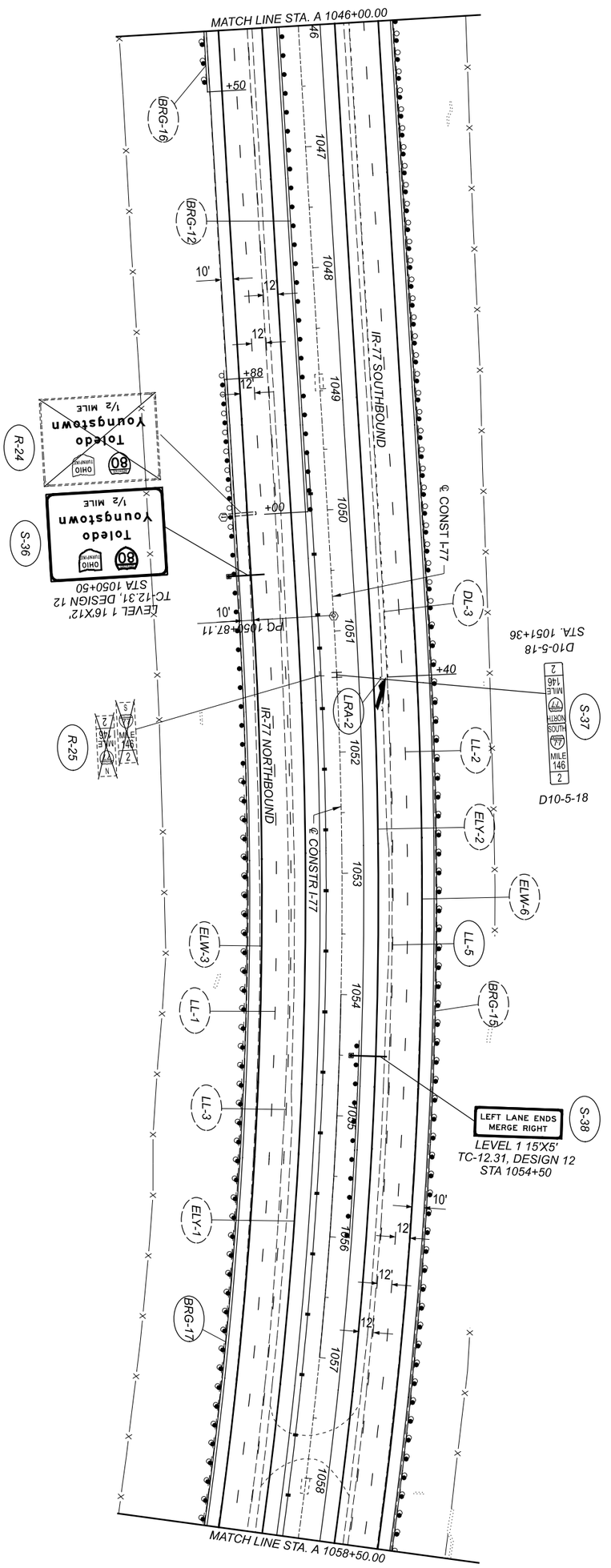

TRAFFIC CONTROL PLAN
IR-77 - STA 1046+00.00 TO STA 1058+50.00

HORIZONTAL SCALE IN FEET
0 50
25 100

MODEL: III405_TPI019 PAPERSIZE: 17x11 (In.) DATE: 2/22/2022 TIME: 9:25:54 PM USER: tdinh
pw:\\gfnet-pw.bentley.com:gfnet-pw-01\Documents\Projects\67490\104983\401-Engineering-GF\Traffic\Sheets\104983_TPI19.dgn

NOTES
1. FOR TRAFFIC CONTROL LEGEND, SEE SHEET 206
2. INSTALL RAISED PAVEMENT MARKERS PER ODOT SCD TC-65.10, TC-65.11 AND TC-73.20.

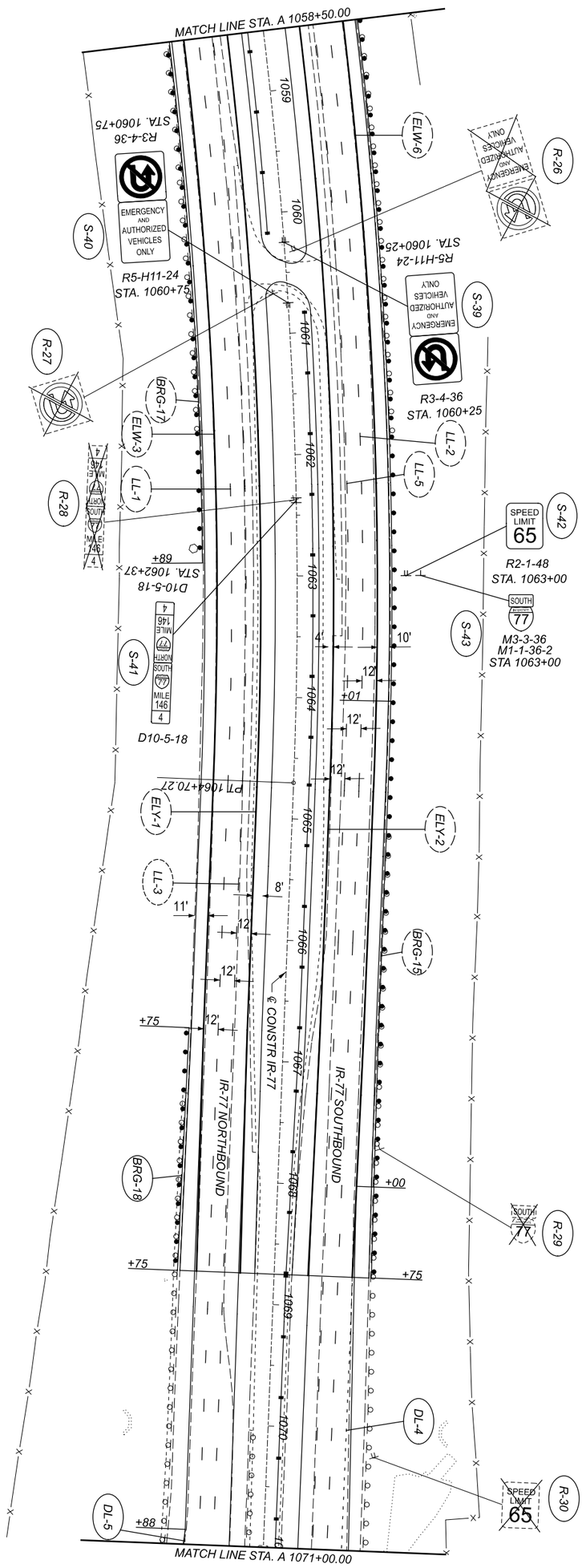

TRAFFIC CONTROL PLAN
IR-77 - STA 1058+50.00 TO STA 1071+00.00

HORIZONTAL SCALE IN FEET
0 50
25 100

NOTES
1. FOR TRAFFIC CONTROL LEGEND, SEE SHEET 206

2. INSTALL RAISED PAVEMENT MARKERS PER ODOT SCD TC-65.10, TC-65.11 AND TC-73.20.

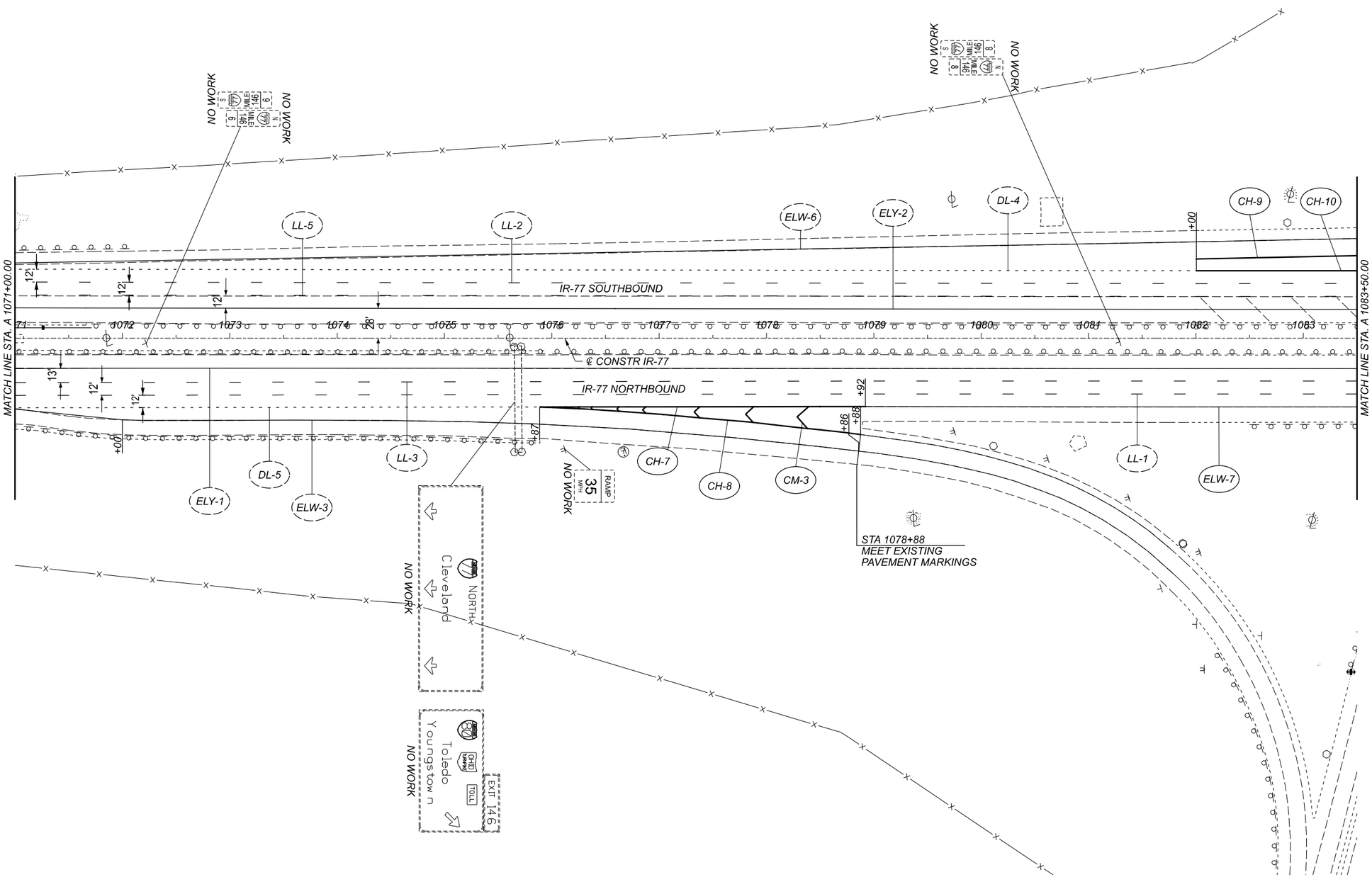

HORIZONTAL SCALE IN FEET
0 25 50 100

TRAFFIC CONTROL PLAN
IR-77 - STA 1071+00.00 TO STA 1083+50.00

SUM-77-32.27

MODEL: IN405_TPI020 PAPERSIZE: 17x11(in.) DATE: 2/22/2022 TIME: 9:28:09 PM USER: tdinh
pw:\\gfnet-pw.bentley.com:gfnet-pw-01\Documents\Projects\67490\104983\40-Engineering-GF\Traffic\Sheets\104983_TPI20.dgn

DESIGN AGENCY
Gannett Fleming
ENGINEERS AND ARCHITECTS, P.C.
2300 Corporate Exchange Drive
Suite 230
Columbus, OH 43231

DESIGNER	CJM
REVIEWER	DRJ 02-10-22
PROJECT ID	104983
SHEET	212
TOTAL	297

MODEL: III405_TPI02I PAPERSIZE: I7xII(In.) DATE: 2/22/2022 TIME: 9:30:2I PM USER: tdlnh
pw:\\gfnet-pw.bentley.com:gfnet-pw-0I\Documents\Projects\67490\I04983\40I-Engineering-GF\Traffic\Sheets\I04983_TPI2I.dgn

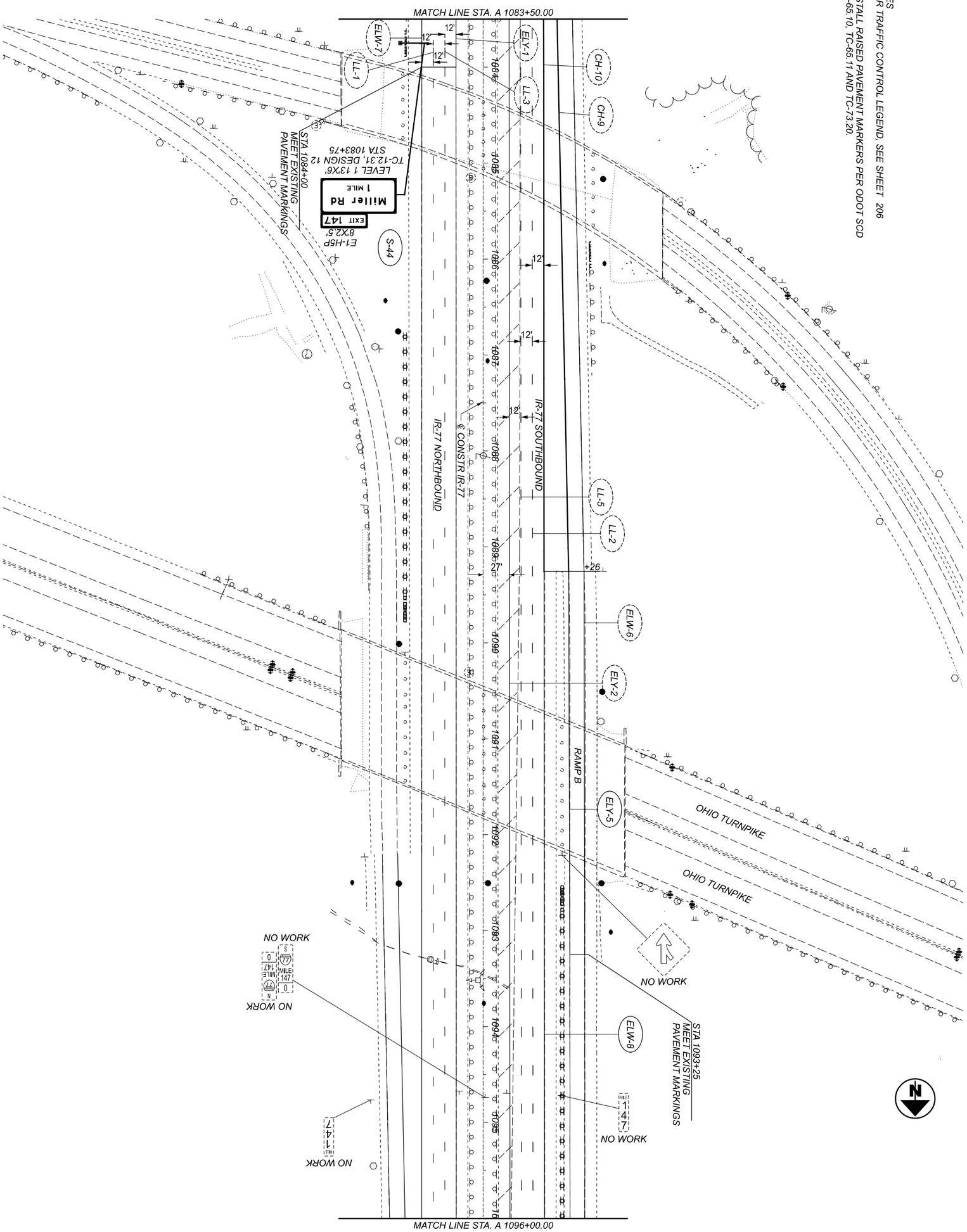

SHEET 213 TOTAL 297	PROJECT ID 104983	REVIEWER DRJ 02-10-22	DESIGNER CJM	DESIGN AGENCY Gannett Fleming ENGINEERS AND ARCHITECTS, P.C. 2500 Corporate Exchange Drive Suite 230 Columbus, OH 43231	HORIZONTAL SCALE IN FEET 0 50 25 100

TRAFFIC CONTROL PLAN
IR-77 - STA 1083+50.00 TO STA 1096+00.00

NOTES
1. FOR TRAFFIC CONTROL LEGEND, SEE SHEET 206

2. INSTALL RAISED PAVEMENT MARKERS PER ODOT SCD TC-65.10, TC-65.11 AND TC-73.20.

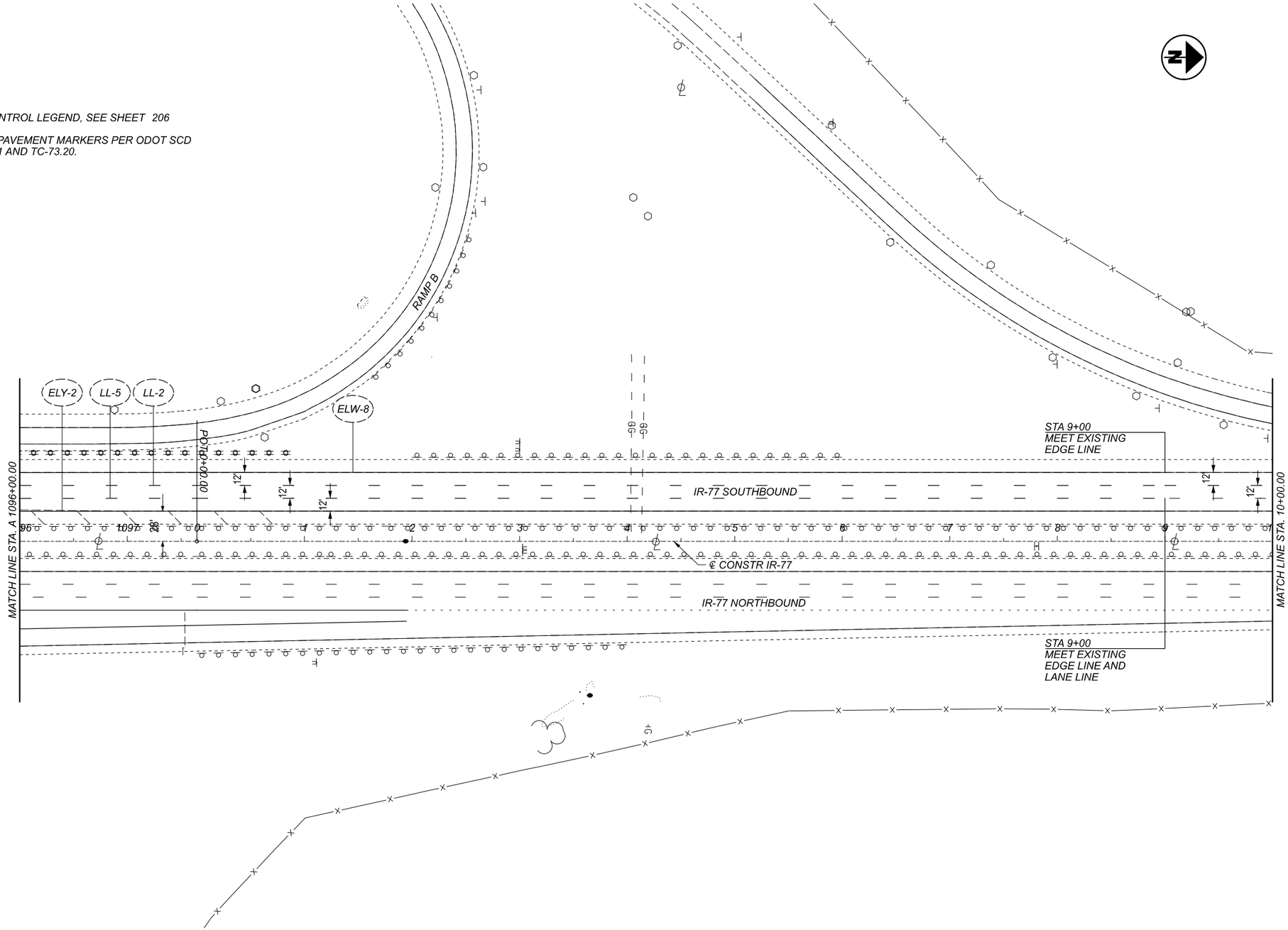

MODEL: III405_TPI23 PAPERSIZE: 17x11(In.) DATE: 2/22/2022 TIME: 9:34:52 PM USER: tdlnh
pw:\\gfnet-pw.bentley.com:gfnet-pw-01\Documents\Projects\67490\104983\401-Engineering-GF\Traffic\Sheets\104983_TPI23.dgn

NOTES
1. FOR TRAFFIC CONTROL LEGEND, SEE SHEET 206
2. INSTALL RAISED PAVEMENT MARKERS PER ODOT SCD TC-65.10, TC-65.11 AND TC-73.20.

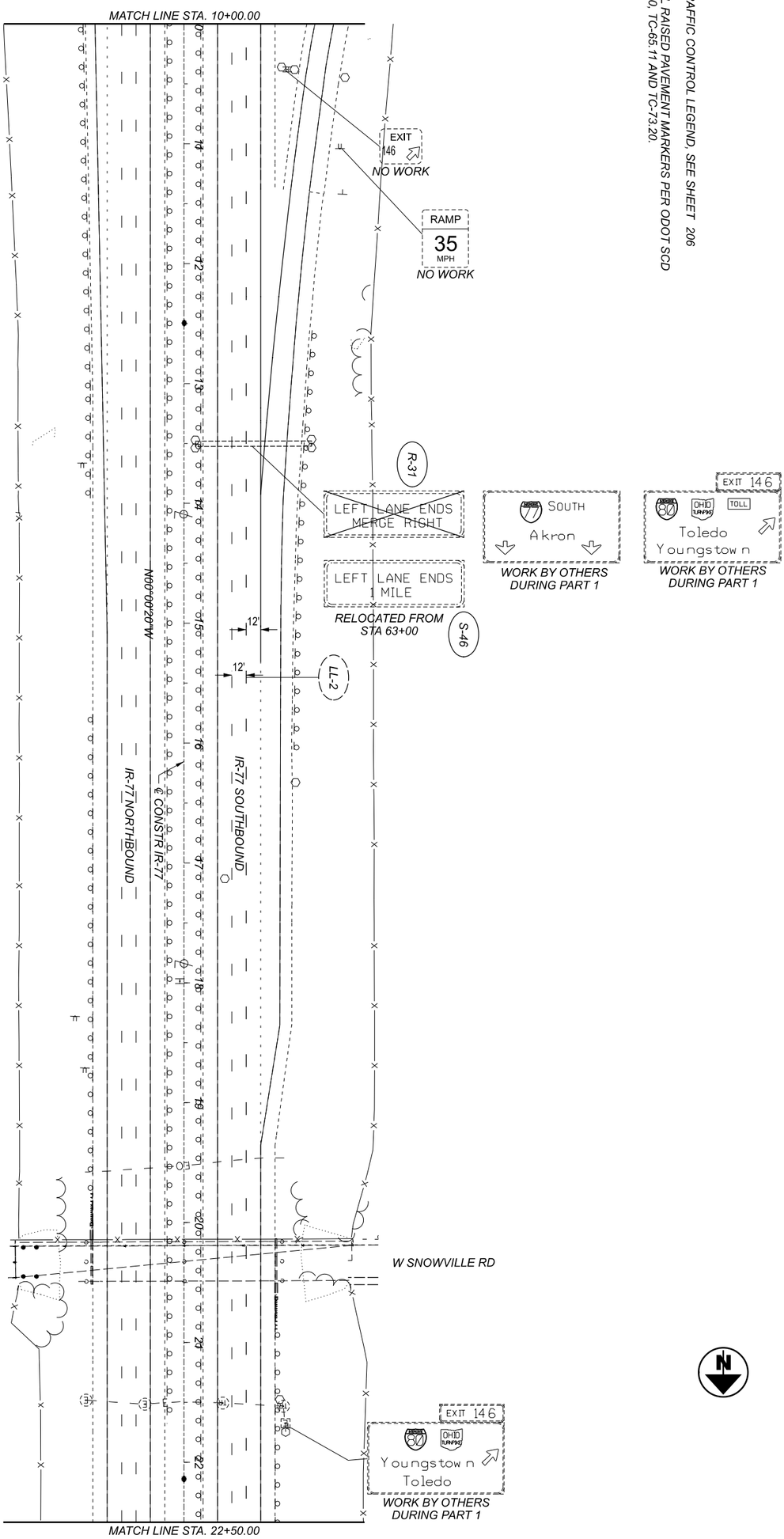

SHEET 215 TOTAL 297	PROJECT ID 104983	REVIEWER DRJ 02-10-22	DESIGNER CJM

DESIGN AGENCY
Gannett Fleming
ENGINEERS AND ARCHITECTS, P.C.
2500 Corporate Exchange Drive
Suite 230
Columbus, OH 43231

TRAFFIC CONTROL PLAN
IR-77 - STA 10+00.00 TO STA 22+50.00

HORIZONTAL SCALE IN FEET
0 50
25 100

MODEL: III405_TPI24 PAPERSIZE: 17x11(In.) DATE: 2/22/2022 TIME: 9:37:03 PM USER: tdinh
pw:\\gfnet-pw.bentley.com:gfnet-pw-01\Documents\Projects\67490\104983\401-Engineering-GF\Traffic\Sheets\104983_TPI24.dgn

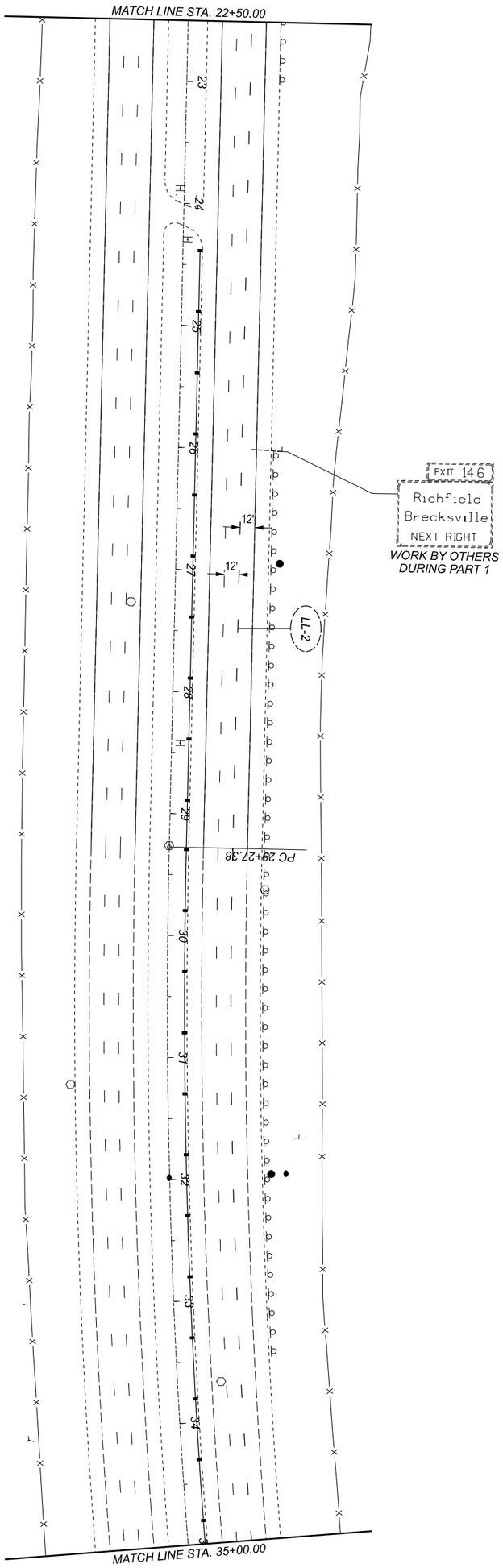

NOTES
1. FOR TRAFFIC CONTROL LEGEND, SEE SHEET 206
2. INSTALL RAISED PAVEMENT MARKERS PER ODOT SCD TC-65.10, TC-65.11 AND TC-73.20.

TRAFFIC CONTROL PLAN
IR-77 - STA 22+50.00 TO STA 35+00.00

HORIZONTAL SCALE IN FEET
0 50
25 100

SUM-77-32.27

MODEL: III405_TPI25 PAPERSIZE: 17x11(in.) DATE: 2/22/2022 TIME: 9:39:13 PM USER: tdinh
pw:\\gfnet-pw.bentley.com:gfnet-pw-01\Documents\Projects\67490\104983\401-Engineering-GF\Traffic\Sheets\104983_TPI25.dgn

NOTES
1. FOR TRAFFIC CONTROL LEGEND, SEE SHEET 206
2. INSTALL RAISED PAVEMENT MARKERS PER ODOT SCD TC-65.10, TC-65.11 AND TC-73.20.

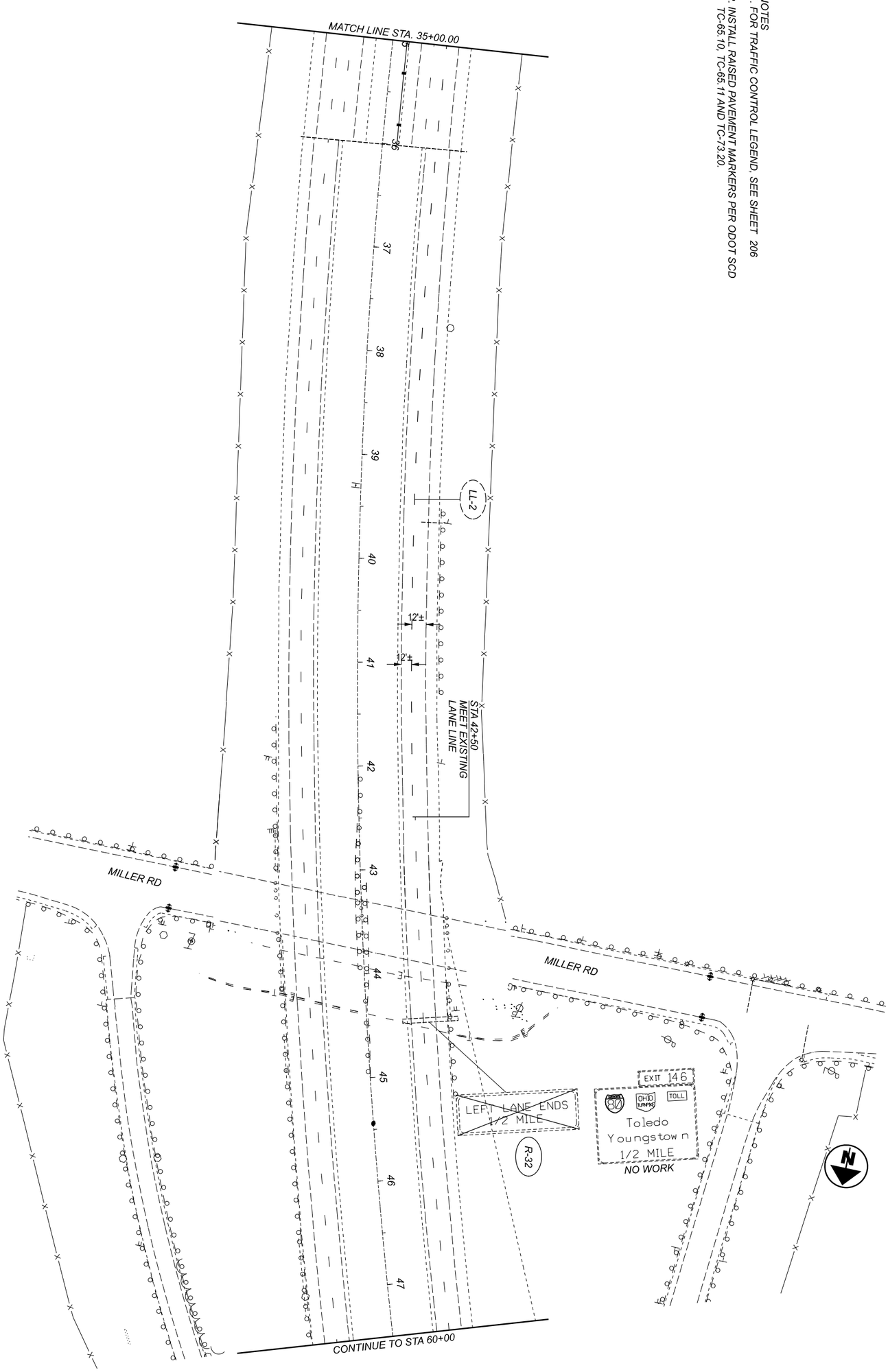

SHEET	TOTAL
217	297

PROJECT ID: 104983

REVIEWER: DRJ 02-10-22

DESIGNER: CJM

DESIGN AGENCY: Gannett Fleming
ENGINEERS AND ARCHITECTS, P.C.
2500 Corporate Exchange Drive
Suite 230
Columbus, OH 43231

TRAFFIC CONTROL PLAN
IR-77 - STA 35+00.00 TO STA 47+50.00

HORIZONTAL SCALE IN FEET
0 50
25 100

MODEL: III405_TPI27 PAPERSIZE: I7xII(In.) DATE: 2/22/2022 TIME: 9:4Id3 PM USER: tdlnh
pw:\\gfnet-pw.bentley.com:gfnet-pw-01\Documents\Projects\67490\104983\401-Engineering-GF\Traffic\Sheets\104983_TPI27.dgn

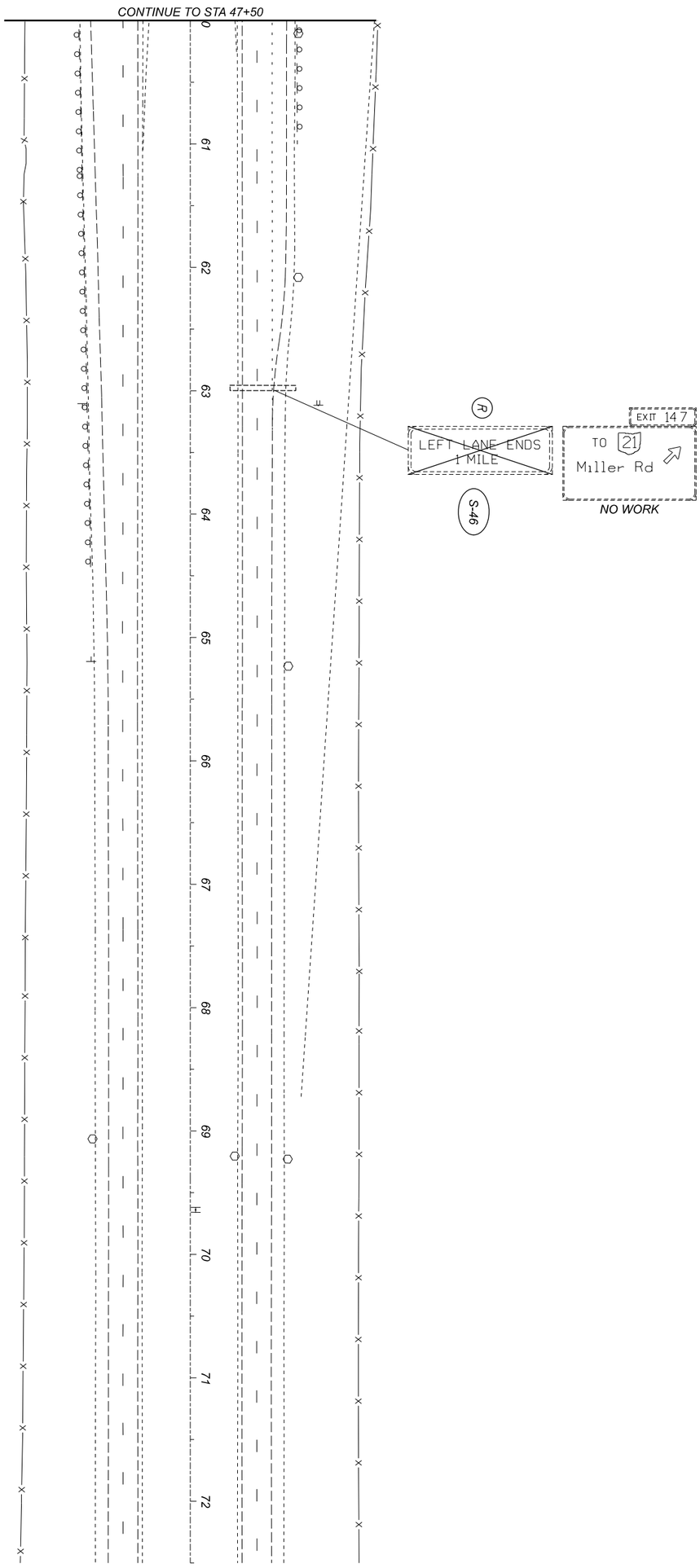

SHEET	TOTAL
218	297

PROJECT ID: 104983

REVIEWER: DRJ 02-10-22

DESIGNER: CJM

DESIGN AGENCY: Gannett Fleming
ENGINEERS AND ARCHITECTS, P.C.
2690 Corporate Exchange Drive
Suite 230
Columbus, OH 43231

TRAFFIC CONTROL PLAN
IR-77 - STA 60+00.00 TO STA 72+50.00

HORIZONTAL SCALE IN FEET
0 50
25 100

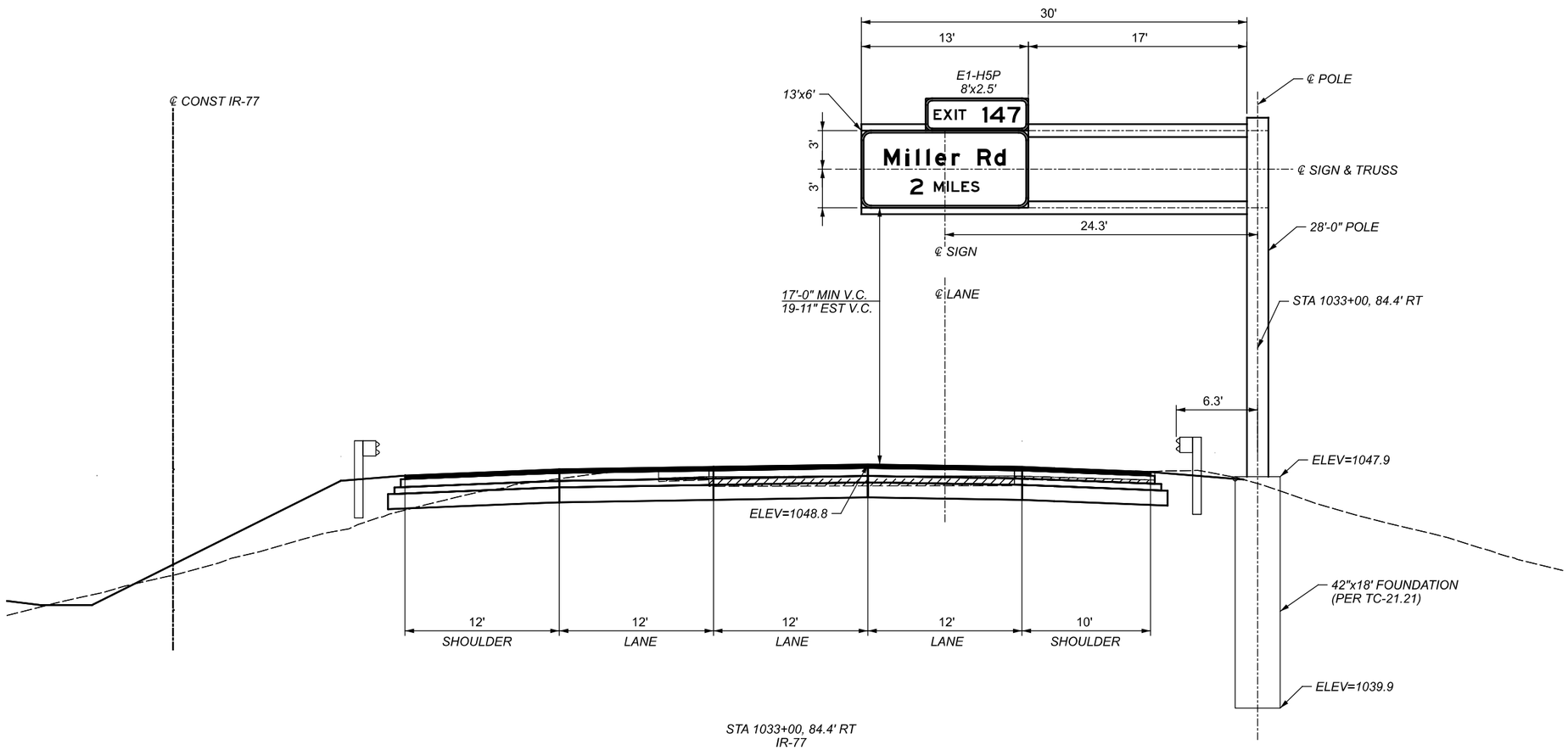

STA 1033+00, 84.4' RT
IR-77

TC-12.31, DESIGN 12
28' POLE W/30' ARM

NOTES:

1. *FOR PLAN VIEW OF PROPOSED SIGN WORK, SEE SHEET 208*
2. *CANTILEVER SIGN TRUSS NOT SHOWN FOR CLARITY.*
3. *INSTALL CANTILEVER SIGN SUPPORT PER SCD TC-12.31.*
4. *CONTRACTOR SHALL ENSURE THAT MINIMUM VERTICAL CLEARANCE IS ESTABLISHED WHEN INSTALLING PROPOSED SIGN PANELS.*
5. *CONTRACTOR SHALL ENSURE THAT THE MINIMUM EMBEDDED FOUNDATION DEPTH IS MET WHEN FOUNDATION IS PLACED.*
6. *INSTALLATION OF THIS SIGN TO BE COORDINATED WITH CUY-77-00.42 PART 1*

ELEVATION VIEW
IR-77 STA 1033+00

SUM-77-32.27

MODEL: I04983_TE001 Sheet PAPERSIZE: 17x11(in) DATE: 2/22/2022 TIME: 9:43:20 PM USER: tdinh
pw:\\gfnet-pw.bentley.com:gfnet-pw-01\Documents\Projects\67490\104983\401-Engineering-GF\Traffic\Sheets\104983_TE001.dgn

DESIGN AGENCY
Gannett Fleming
ENGINEERS AND ARCHITECTS, P.C.
2500 Corporate Exchange Drive
Suite 230
Columbus, OH 43231

DESIGNER
CJM

REVIEWER
DRJ 02-10-22

PROJECT ID
104983

SHEET 219 | TOTAL 297

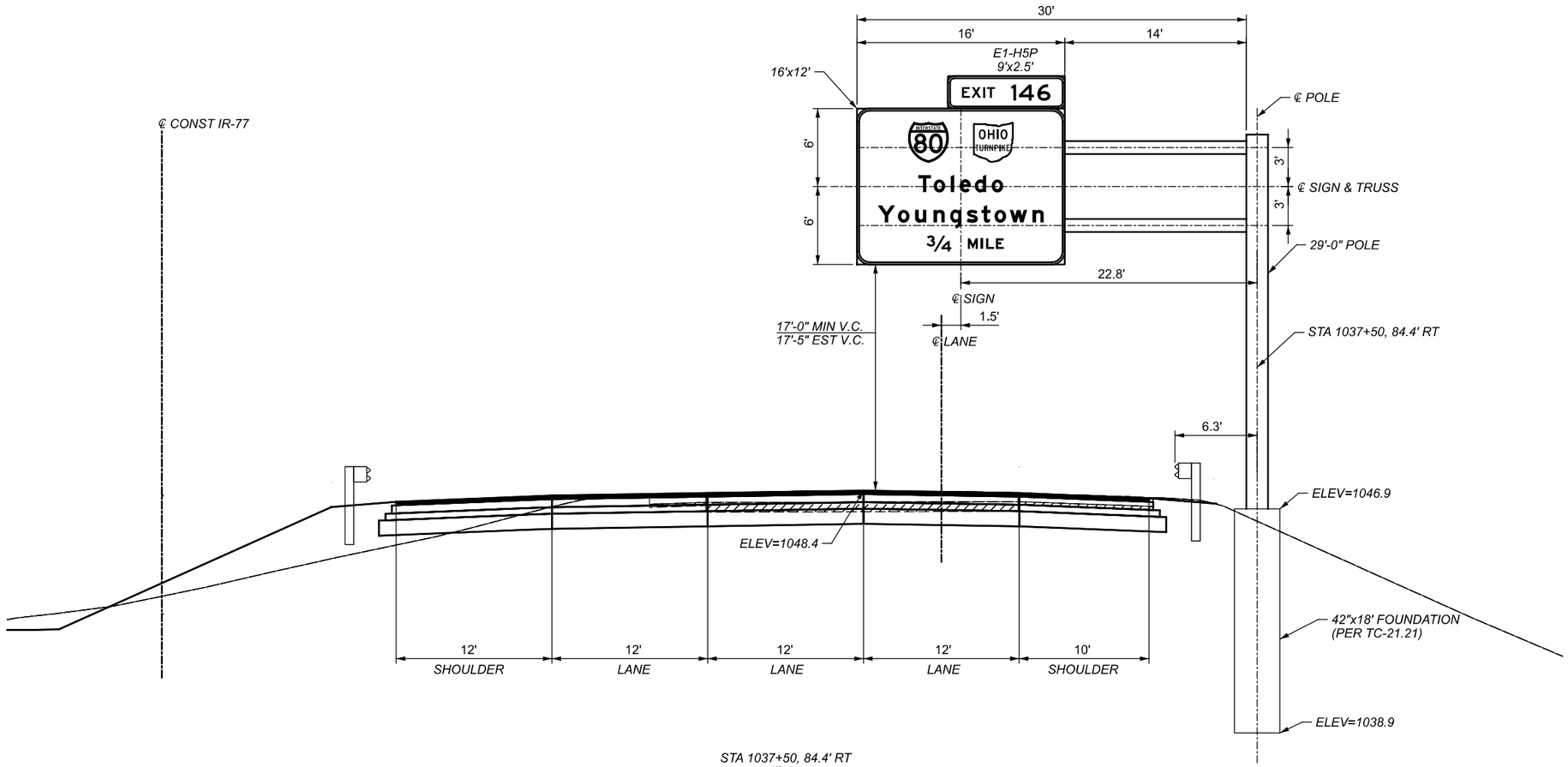

STA 1037+50, 84.4' RT
IR-77

TC-12.31, DESIGN 12
29' POLE W/30' ARM

NOTES:

1. *FOR PLAN VIEW OF PROPOSED SIGN WORK, SEE SHEET 209*
2. *CANTILEVER SIGN TRUSS NOT SHOWN FOR CLARITY.*
3. *INSTALL CANTILEVER SIGN SUPPORT PER SCD TC-12.31.*
4. *CONTRACTOR SHALL ENSURE THAT MINIMUM VERTICAL CLEARANCE IS ESTABLISHED WHEN INSTALLING PROPOSED SIGN PANELS.*
5. *CONTRACTOR SHALL ENSURE THAT THE MINIMUM EMBEDDED FOUNDATION DEPTH IS MET WHEN FOUNDATION IS PLACED.*

ELEVATION VIEW
IR-77 STA 1037+50

SUM-77-32.27

MODEL: 104983_TE001 Sheet PAPERSIZE: 17x11(in) DATE: 2/22/2022 TIME: 9:45:36 PM USER: tdhh
pw:\\gfnet-pw.bentley.com:gfnet-pw-01\Documents\Projects\67490\104983\401-Engineering-GF\Traffic\Sheets\104983_TE002.dgn

DESIGN AGENCY
Gannett Fleming
ENGINEERS AND ARCHITECTS, P.C.
2500 Corporate Exchange Drive
Suite 230
Columbus, OH 43231

DESIGNER
CJM

REVIEWER
DRJ 02-10-22

PROJECT ID
104983

SHEET 220 | TOTAL 297

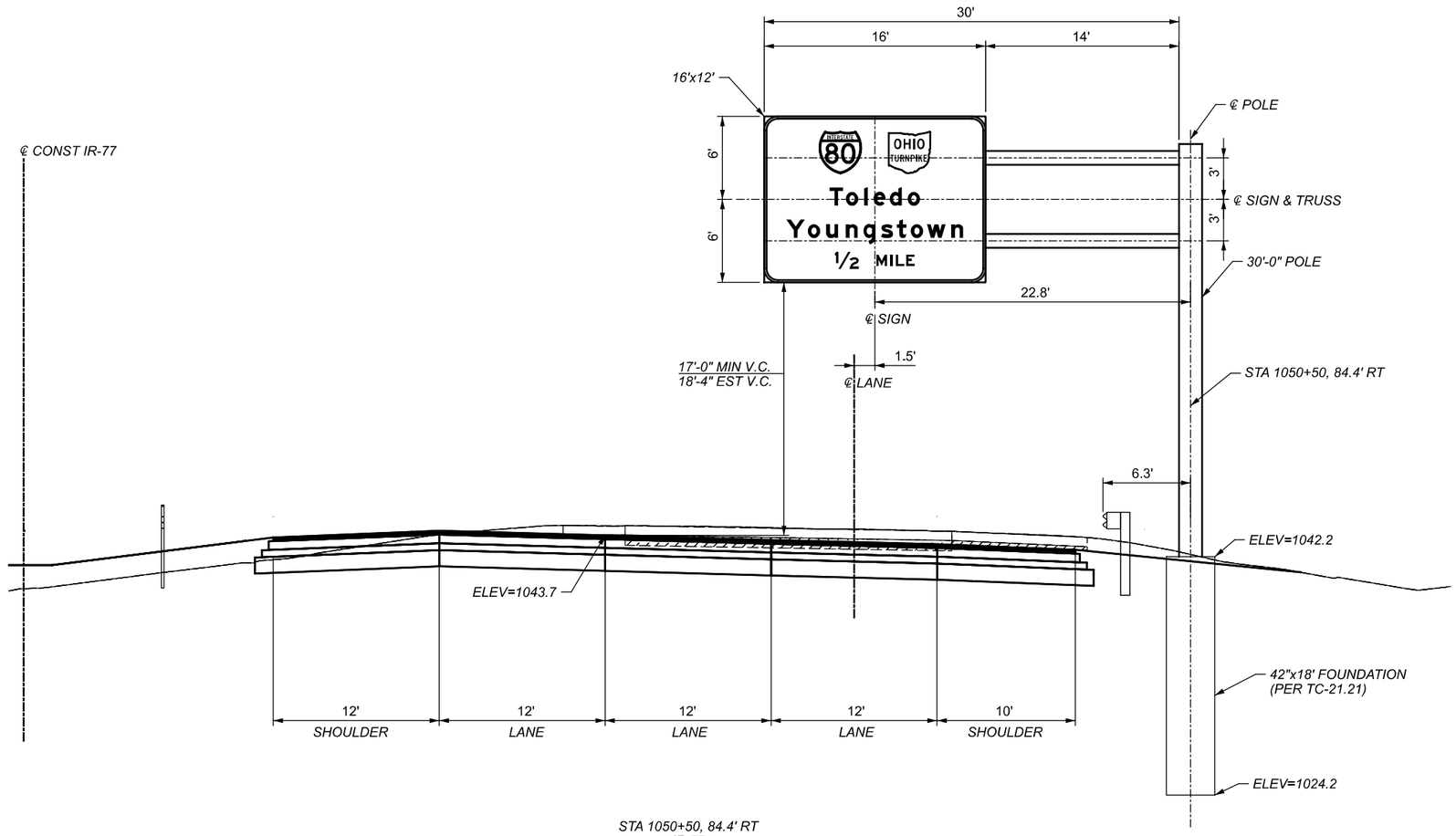

STA 1050+50, 84.4' RT
IR-77

TC-12.31, DESIGN 12
30' POLE W/30' ARM

NOTES:

1. *FOR PLAN VIEW OF PROPOSED SIGN WORK, SEE SHEET 210*
2. *CANTILEVER SIGN TRUSS NOT SHOWN FOR CLARITY.*
3. *INSTALL CANTILEVER SIGN SUPPORT PER SCD TC-12.31.*
4. *CONTRACTOR SHALL ENSURE THAT MINIMUM VERTICAL CLEARANCE IS ESTABLISHED WHEN INSTALLING PROPOSED SIGN PANELS.*
5. *CONTRACTOR SHALL ENSURE THAT THE MINIMUM EMBEDDED FOUNDATION DEPTH IS MET WHEN FOUNDATION IS PLACED.*

ELEVATION VIEW
IR-77 STA 1050+50

SUM-77-32.27

MODEL: 104983_TE001 Sheet PAPERSIZE: 17x11(in) DATE: 2/22/2022 TIME: 9:47:45 PM USER: tdhh
pw:\\gfnet-pw.bentley.com:gfnet-pw-01\Documents\Projects\67490\104983\401-Engineering-GF\Traffic\Sheets\104983_TE003.dgn

DESIGN AGENCY
Gannett Fleming
ENGINEERS AND ARCHITECTS, P.C.
2500 Corporate Exchange Drive
Suite 230
Columbus, OH 43231

DESIGNER
CJM

REVIEWER
DRJ 02-10-22

PROJECT ID
104983

SHEET 221 | TOTAL 297

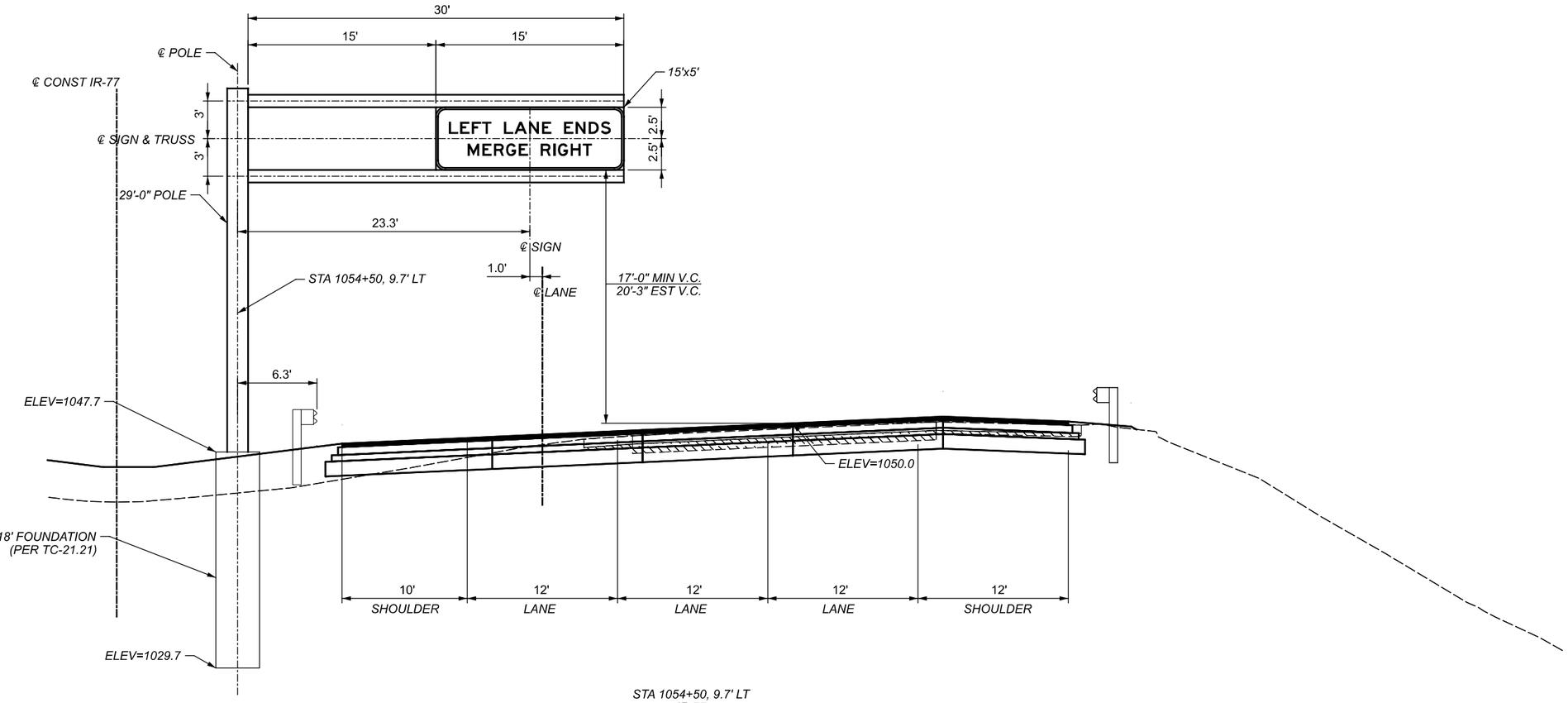

STA 1054+50, 9.7' LT
IR-77

TC-12.31, DESIGN 12
29' POLE W/30' ARM

NOTES:

1. *FOR PLAN VIEW OF PROPOSED SIGN WORK, SEE SHEET 210*
2. *CANTILEVER SIGN TRUSS NOT SHOWN FOR CLARITY.*
3. *INSTALL CANTILEVER SIGN SUPPORT PER SCD TC-12.31.*
4. *CONTRACTOR SHALL ENSURE THAT MINIMUM VERTICAL CLEARANCE IS ESTABLISHED WHEN INSTALLING PROPOSED SIGN PANELS.*
5. *CONTRACTOR SHALL ENSURE THAT THE MINIMUM EMBEDDED FOUNDATION DEPTH IS MET WHEN FOUNDATION IS PLACED.*

ELEVATION VIEW
IR-77 STA 1054+50

SUM-77-32.27

MODEL: I04983_TE001Sheet PAPERSIZE: 17x11(in) DATE: 2/22/2022 TIME: 9:49:47 PM USER: tdhh
pw:\\gfnet-pw.bentley.com:gfnet-pw-01\Documents\Projects\67490\104983\401-Engineering-GF\Traffic\Sheets\104983_TE004.dgn

DESIGN AGENCY
Gannett Fleming
ENGINEERS AND ARCHITECTS, P.C.
2500 Corporate Exchange Drive
Suite 230
Columbus, OH 43231

DESIGNER
CJM

REVIEWER
DRJ 02-10-22

PROJECT ID
104983

SHEET 222 | TOTAL 297

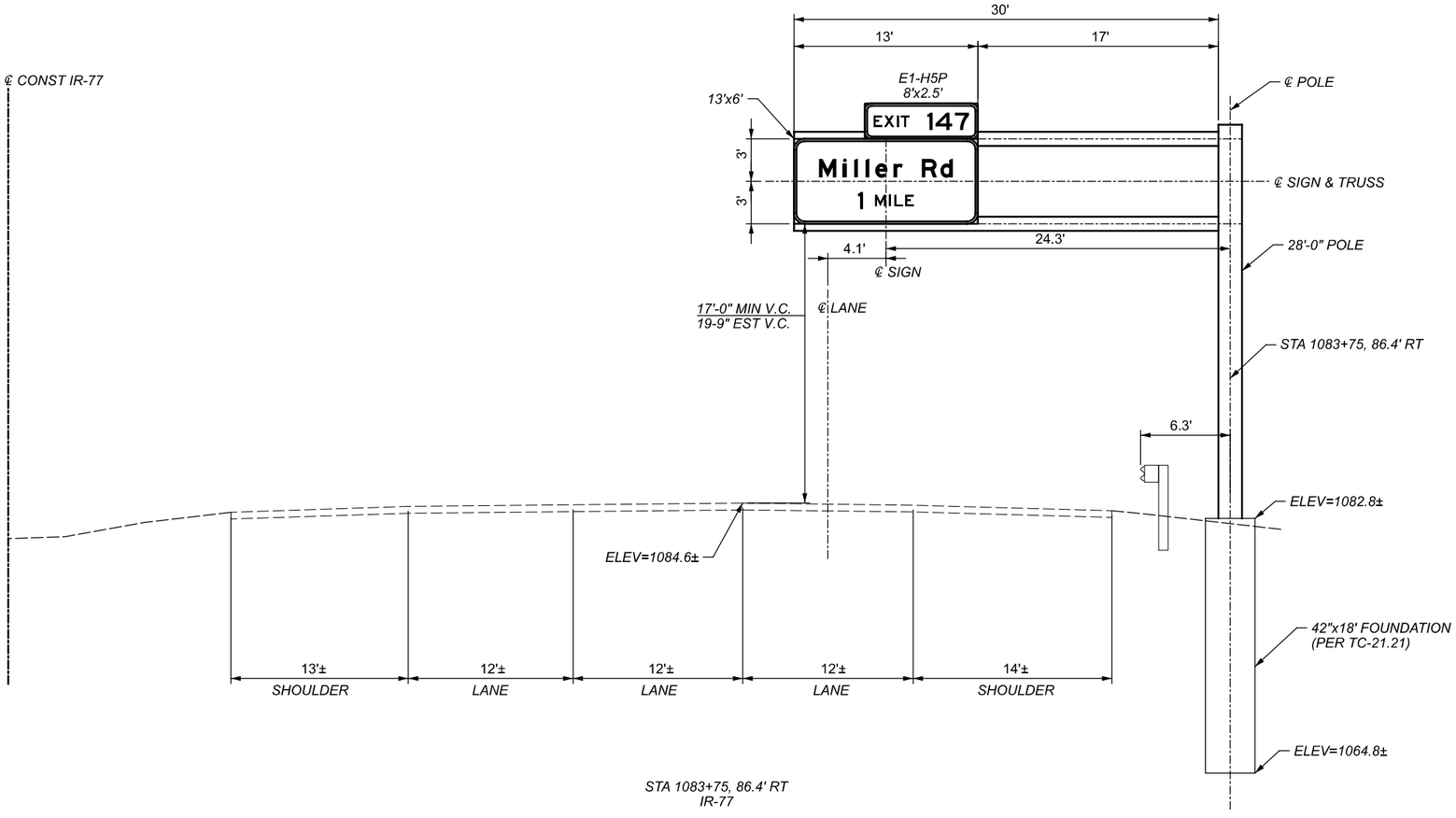

STA 1083+75, 86.4' RT
IR-77

TC-12.31, DESIGN 12
28' POLE W/30' ARM

NOTES:

1. FOR PLAN VIEW OF PROPOSED SIGN WORK, SEE SHEET 213
2. CANTILEVER SIGN TRUSS NOT SHOWN FOR CLARITY.
3. INSTALL CANTILEVER SIGN SUPPORT PER SCD TC-12.31.
4. CONTRACTOR SHALL ENSURE THAT MINIMUM VERTICAL CLEARANCE IS ESTABLISHED WHEN INSTALLING PROPOSED SIGN PANELS.
5. CONTRACTOR SHALL ENSURE THAT THE MINIMUM EMBEDDED FOUNDATION DEPTH IS MET WHEN FOUNDATION IS PLACED.
6. INSTALLATION OF THIS SIGN TO BE COORDINATED WITH CUY-77-00.42 PART 1

ELEVATION VIEW
IR-77 STA 1083+75

SUM-77-32.27

MODEL:104983_TE001Sheet PAPERSIZE:17x11(in) DATE:2/22/2022 TIME:9:5:52 PM USER:tdinh
pw:\\gfnet-pw.bentley.com:gfnet-pw-01\Documents\Projects\67490\104983\401-Engineering-GF\Traffic\Sheets\104983_TE005.dgn

DESIGN AGENCY
Gannett Fleming
ENGINEERS AND ARCHITECTS, P.C.
2550 Corporate Exchange Drive
Suite 230
Columbus, OH 43231

DESIGNER
CJM

REVIEWER
DRJ 02-10-22

PROJECT ID
104983

SHEET 223 | TOTAL 297

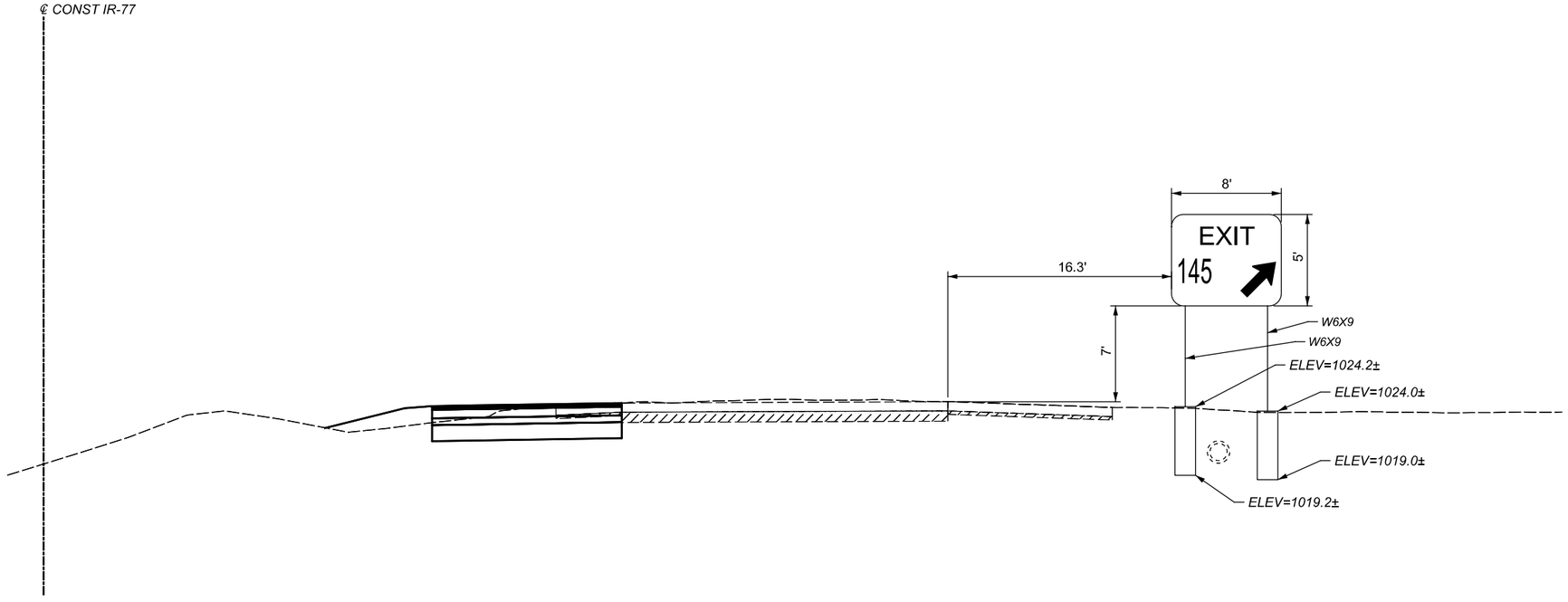

STA 1020+40
IR-77

NOTES:

1. FOR PLAN VIEW OF PROPOSED SIGN WORK, SEE SHEET 207

ELEVATION VIEW
IR-77 STA 1020+40

SUM-77-32.27

MODEL:104983_TE001Sheet PAPERSIZE:17x11(in.) DATE:2/22/2022 TIME:9:53:56 PM USER:tdinh
pw:\\gfnet-pw.bentley.com:gfnet-pw-01\Documents\Projects\67490\104983\401-Engineering-GF\Traffic\Sheets\104983_TE006.dgn

DESIGN AGENCY
Gannett Fleming
ENGINEERS AND ARCHITECTS, P.C.
2300 Corporate Exchange Drive
Suite 230
Columbus, OH 43231

DESIGNER
CJM

REVIEWER
DRJ 02-16-22

PROJECT ID
104983

SHEET 224 | TOTAL 297

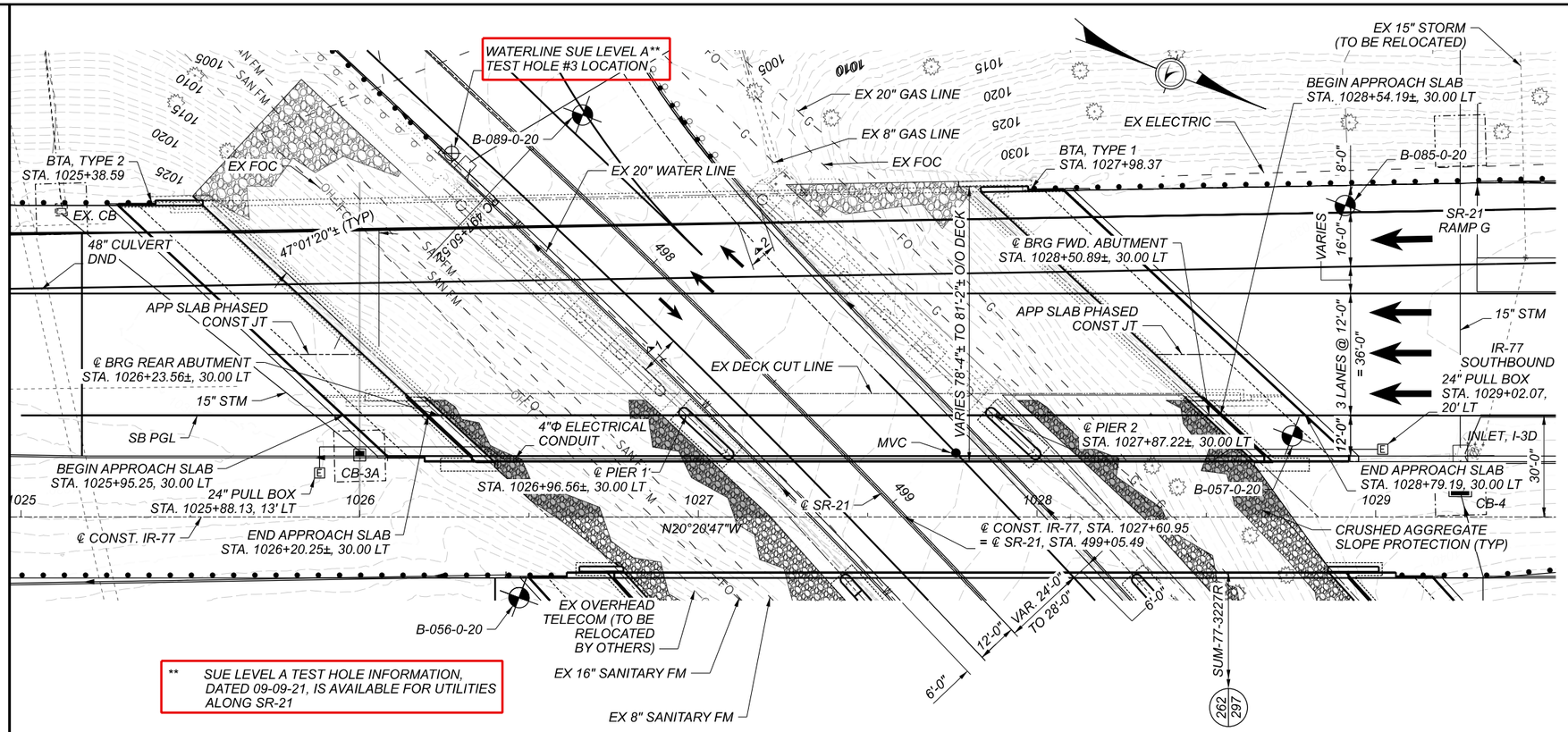

** SUE LEVEL A TEST HOLE INFORMATION, DATED 09-09-21, IS AVAILABLE FOR UTILITIES ALONG SR-21

PLAN

ALL EXISTING UTILITIES TO REMAIN UNLESS NOTED OTHERWISE

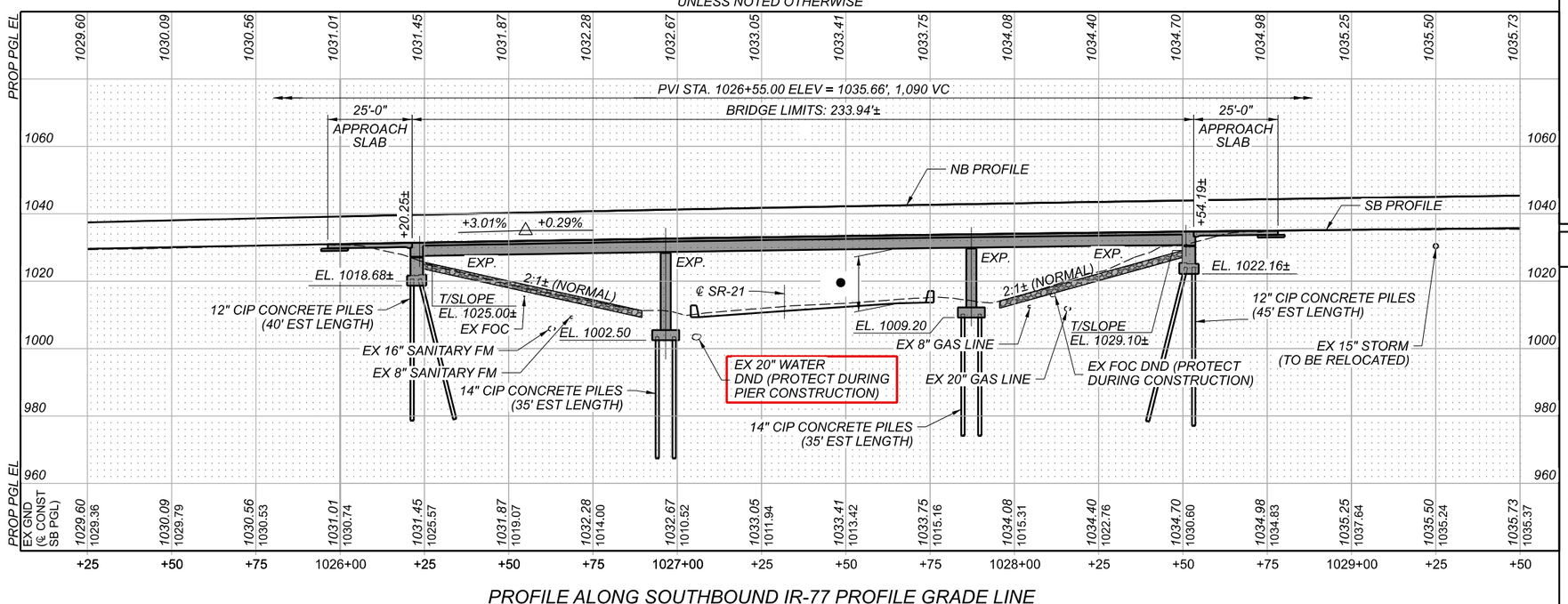

PROFILE ALONG SOUTHBOUND IR-77 PROFILE GRADE LINE

BENCHMARK DATA

BM #120, STA 1000+00.25,	ELEV 995.78,	OFFSET 85.45' RT
BM #121, STA 1036+81.45,	ELEV 1048.90	OFFSET 83.94' RT

FOR ADDITIONAL BENCHMARK INFORMATION SEE ROADWAY SHEET 4/297

NOTES

EARTHWORK LIMITS SHOWN ARE APPROXIMATE. ACTUAL SLOPES SHALL CONFORM TO PLAN CROSS SECTIONS.

DESIGN TRAFFIC:

CURRENT ADT (2028)	58,970
DESIGN YEAR ADT (2048)	69,490
DIRECTIONAL DISTRIBUTION	7%
DESIGN SPEED	70 MPH

LEGEND

PROJECT BORING LOCATION

HORIZONTAL AND VERTICAL CLEARANCES

● 15.68' EXIST. ACTUAL 15.69' PROP. ACTUAL 14.50' REQUIRED

△1 10.69' ACTUAL 7.67' REQ'D 19'-0" CLEAR ZONE (BARRIER PROTECTED)

△2 8.38' ACTUAL 7.67' REQ'D 19'-0" CLEAR ZONE (BARRIER PROTECTED)

EXISTING AGGREGATE SLOPE PROTECTION (TO REMAIN)

PROPOSED AGGREGATE SLOPE PROTECTION (INSTALLED WITH THIS PROJECT)

EXISTING STRUCTURE

TYPE: CONTINUOUS COMPOSITE STEEL BEAMS WITH CONCRETE DECK AND SEMI-INTEGRAL SUBSTRUCTURE

SPANS: 73'-0"±, 90'-8"±, 63'-8"± C/C BRGS.

ROADWAY: VARIES 55'-$8^{1}/_{2}$"± TO 60'-$0^{3}/_{8}$"± TOE/TOE PARAPET

LOADING: HS25 CASE I AND ALTERNATE MILITARY LOADING (SUPERSTRUCTURE), HS20-44 AND ALTERNATE MILITARY LOADING (SUBSTRUCTURES) 60 PSF FWS

SKEW: 47°01'20"± RIGHT FORWARD

WEARING SURFACE: 1" MONOLITHIC CONCRETE

APPROACH SLABS: 25' LONG (AS-1-81 MODIFIED)

ALIGNMENT: TANGENT

CROWN: 0.016±

STRUCTURE FILE NUMBER: 7704712

DATE BUILT: 1962, MODIFIED 2011

DISPOSITION: TO BE REHABILITATED

PROPOSED STRUCTURE

TYPE: WIDENED CONTINUOUS COMPOSITE BEAMS WITH CONCRETE DECK SLAB ON WIDENED PIERS AND WIDENED SEMI-INTEGRAL ABUTMENTS

SPANS: 73'-0"±, 90'-8"±, 63'-8"± C/C BRGS.

ROADWAY: VARIES 75'-2"± TO 78'-0"± TOE/TOE PARAPET

LOADING: SEE GENERAL NOTES

SKEW: 47°01'20"± RIGHT FORWARD

WEARING SURFACE: 1" MONOLITHIC CONCRETE

APPROACH SLABS: 25' LONG (AS-1-15, AS-2-15), TYPE C INSTALLATION

ALIGNMENT: TANGENT

CROWN: 0.016±

DECK AREA: 18,489 SF

COORDINATES: LATITUDE 41°15'30.45"

LONGITUDE 81°37'54.60"

SITE PLAN
BRIDGE NO. SUM-77-3227L
IR-77 OVER SR-21 (BRECKSVILLE RD.)

SFN 7704712

DESIGN AGENCY
Gannett Fleming
ENGINEERS AND ARCHITECTS, P.C.
250 Civic Center Drive, Suite 220, Columbus, OH 43215

DESIGNER	CHECKER
SAT	CTM

REVIEWER MTO 2/22

PROJECT ID 104983

SUBSET	TOTAL
1	37

SHEET	TOTAL
225	297

SUM-77-32.27 PENTABLE SUBSET: 4 SUBMITTAL: Stage 3 PLOT DRIVER: OHDOT_PDF_Levels.pltcfg PENTABLE: 104983_OHDOT_Pen.tbl

MODEL: Sheet PAPERSIZE: 17x11 (in.) DATE: 2/24/2022 TIME: 1:53:02 PM USER: edues
pw:\\gfnet-pw.bentley.com:gfnet-pw-01\Documents\Projects\674900\104983\401-Engineering-GPI Structures\3227L-SFN_7704712\Sheets\002 sp001

FILE: ...\Sheets\002 sp001

SUM-77-3227L BRIDGE PLAN SUMMARY

1 SITE PLAN
2 GENERAL NOTES 1 OF 2
3 GENERAL NOTES 2 OF 2

4 ESTIMATED QUANTITIES

5 PHASED CONSTRUCTION SECTIONS 1 OF 3
6 PHASED CONSTRUCTION SECTIONS 2 OF 3
7 PHASED CONSTRUCTION SECTIONS 3 OF 3

8 FOUNDATION PLAN
9 EXISTING REAR ABUTMENT REMOVAL DETAILS
10 PROPOSED REAR ABUTMENT PLAN AND ELEVATION
11 REAR ABUTMENT REINFORCING DETAILS
12 FOOTING REINFORCING PLAN
13 ABUTMENT SECTIONS
14 EXISTING FORWARD ABUTMENT REMOVAL DETAILS
15 PROPOSED FORWARD ABUTMENT PLAN AND ELEVATION
16 FORWARD ABUTMENT REINFORCING DETAILS

17 PIER WRAPPING DETAILS
18 PROPOSED PIER DETAILS

19 BEARING DETAILS

20 FRAMING PLAN
21 BEAM ELEVATION
22 BEAM DIAPHRAGM DETAILS
23 BEAM SPLICE DETAILS
24 BEAM CAMBER & BLOCKING

25 TRANSVERSE SECTION
26 DECK REINFORCING PLAN
27 DECK DETAILS

28 TOP OF HAUNCH ELEVATIONS
29 SCREED ELEVATIONS
30 FINAL DECK ELEVATIONS

31 RIGHT PARAPET DETAILS

32 REAR APPROACH SLAB DETAILS
33 FORWARD APPROACH SLAB DETAILS
34 APPROACH SLAB PARAPET TRANSITION - FORWARD RIGHT
35 APPROACH SLAB PARAPET TRANSITION - REAR RIGHT, REAR LEFT, FORWARD LEFT

36 REINFORCING LIST 1 OF 2
37 REINFORCING LIST 2 OF 2

PRIMARY PROPOSED WORK

1. ALL WORK SHALL BE PERFORMED WITHIN RESPECTIVE PHASES OF CONSTRUCTION AS SHOWN IN THE PLANS
2. REMOVE PART OF THE EXISTING ABUTMENT AND WINGWALL DOWN TO THE ELEVATION SHOWN IN THE PLANS, AND REBUILD AND WIDEN THE ABUTMENTS TO ACCOMMODATE THE NEW, WIDER SUPERSTRUCTURE.
3. ADD PIER NEXT TO EXISTING PIER TO ACCOMMODATE THE NEW, WIDER SUPERSTRUCTURE.
4. ADD 3 NEW BEAM LINES AND INSTALL NEW ELASTOMERIC BEARINGS AT ALL SUBSTRUCTURES FOR THE NEW STEEL BEAMS.
5. INSTALL NEW FULL WIDTH APPROACH SLABS (25' LONG).
6. PAINT THE NEW BEAM SUPERSTUCTURE.
7. TREAT THE SLOPES BETWEEN THE LEFT AND RIGHT BRIDGES WITH AGGREGATE SLOPE PROTECTION.

REFERENCED STANDARD DRAWINGS

AS-1-15	______	REVISED 07-17-2015
AS-2-15	______	REVISED 01-18-2019
GSD-1-19	______	REVISED 01-15-2021
PCB-91	______	REVISED 07-17-2020
SBR-1-20	______	REVISED 07-17-2020
RM-4.2	______	REVISED 04-17-2020
HL-30.32	______	REVISED 04-17-2020
HL-50.21	______	REVISED 01-15-2021

REFERENCED SUPPLEMENTAL SPECIFICATIONS

800	______	DATED 10-15-2021
PN-519	____	DATED 07-21-2017
PN-555	____	DATED 01-15-2021

DESIGN SPECIFICATIONS

THE NEW SUPERSTRUCTURE, BEARINGS, AND ABUTMENTS CONFORM TO THE "LRFD BRIDGE DESIGN SPECIFICATIONS", ADOPTED BY THE AMERICAN ASSOCIATION OF STATE HIGHWAY AND TRANSPORTATION OFFICIALS, 2020 (NINTH EDITION), AND THE ODOT BRIDGE DESIGN MANUAL, 2020.
NO SPECIAL DESIGN SPECIFICATIONS WERE USED.

LRFD OPERATIONAL IMPORTANCE

A LOAD MODIFIER OF 1.00 HAS BEEN ASSUMED FOR THE DESIGN OF THIS STRUCTURE IN ACCORDANCE WITH THE AASHTO LRFD BRIDGE DESIGN SPECIFICATIONS, ARTICLE 1.3.5, AND THE ODOT BRIDGE DESIGN MANUAL, 2020.

DESIGN LOADING

EXISTING SUBSTRUCTURE (1961)

VEHICULAR LIVE LOAD: CF 2000 (57) ADEQUATE FOR AASHTO HS20-44
NO FUTURE WEARING SURFACE (FWS)

EXISTING SUPERSTRUCTURE AND EXISTING SUBSTRUCTURE (2011)

VEHICULAR LIVE LOAD SUPERSTRUCTURE: HS25 CASE I AND ALTERNATE MILITARY LOADING
VEHICULAR LIVE LOAD SUBSTRUCTURE: HS20 AND ALTERNATE MILITARY LOADING
FUTURE WEARING SURFACE (FWS) OF 0.060 KSF

PROPOSED SUPERSTRUCTURE AND PROPOSED SUBSTRUCTURES

VEHICULAR LIVE LOAD: HL-93
FUTURE WEARING SURFACE (FWS) OF 0.060 KSF

DESIGN DATA

CONCRETE

SUBSTRUCTURE (NEW), CLASS QC1: F'_C = 4.0 KSI
SUPERSTRUCTURE (NEW), CLASS QC2: F'_C = 4.5 KSI
SUBSTRUCTURE (EX), CLASS C (1961), CLASS HP (2011): F'_C = 4.0 KSI
SUPERSTRUCTURE (EX), CLASS HP (2011): F'c = 4.5 KSI

STEEL

STRUCTURAL STEEL (NEW AND EX), ASTM A709 (GRADE 50): F_Y = 50 KSI
REINFORCING (NEW), MINIMUM F_Y = 60 KSI
REINFORCING (EX), ASTM A615 OR A996 (GRADE 60) (2011): F_Y = 60 KSI
REINFORCING (EX, 1961): F_Y = 40KSI

DECK PROTECTION METHODS

EPOXY COATED REINFORCING STEEL
2½" CONCRETE COVER
CLASS QC2 CONCRETE
SEALING OF CONCRETE SURFACES

MONOLITHIC WEARING SURFACE

MONOLITHIC WEARING SURFACE IS ASSUMED, FOR DESIGN PURPOSES, TO BE 1 INCH THICK.

EXISTING STRUCTURE VERIFICATION

DETAILS AND DIMENSIONS SHOWN ON THESE PLANS PERTAINING TO THE EXISTING STRUCTURE HAVE BEEN OBTAINED FROM PLANS OF THE EXISTING STRUCTURE AND FROM FIELD OBSERVATIONS AND MEASUREMENTS. CONSEQUENTLY, THEY ARE INDICATIVE OF THE EXISTING STRUCTURE AND THE PROPOSED WORK, BUT THEY SHALL BE CONSIDERED TENTATIVE AND APPROXIMATE. THE CONTRACTOR IS REFERRED TO CMS SECTIONS 102.05, 105.02 AND 513.04.

BASE CONTRACT BID PRICES UPON A RECOGNITION OF THE UNCERTAINTIES DESCRIBED ABOVE AND UPON A PREBID EXAMINATION OF THE EXISTING STRUCTURE, HOWEVER, THE DEPARTMENT WILL PAY FOR ALL PROJECT WORK BASED UPON ACTUAL DETAILS AND DIMENSIONS THAT HAVE BEEN VERIFIED IN THE FIELD.

DECK PLACEMENT DESIGN ASSUMPTIONS

THE FOLLOWING ASSUMPTIONS OF CONSTRUCTION MEANS AND METHODS WERE MADE FOR THE ANALYSIS AND DESIGN OF THE SUPERSTRUCTURE. THE CONTRACTOR IS RESPONSIBLE FOR THE DESIGN OF THE FALSEWORK SUPPORT SYSTEM WITHIN THESE PARAMETERS AND WILL ASSUME RESPONSIBILITY FOR SUPERSTRUCTURE ANALYSIS FOR DEVIATION FROM THESE DESIGN ASSUMPTIONS.

AN EIGHT WHEEL FINISHING MACHINE WITH A MAXIMUM WHEEL LOAD OF 2.29 KIPS.

A MINIMUM OUT-TO-OUT WHEEL SPACING AT EACH END OF THE MACHINE OF 103".

A MAXIMUM SPACING OF OVERHANG FALSEWORK BRACKETS OF 48 IN.

A MAXIMUM DISTANCE FROM THE CENTERLINE OF THE FASCIA BEAM TO THE FACE OF THE SAFETY HANDRAIL OF 65".

ITEM 202 - PORTIONS OF STRUCTURE REMOVED, OVER 20 FOOT SPAN, AS PER PLAN

THIS ITEM SHALL INCLUDE THE ELEMENTS INDICATED IN THE PLANS AND GENERAL NOTES AND THAT ARE NOT SEPARATELY LISTED FOR PAYMENT, EXCEPT FOR ASPHALT WEARING COURSE REMOVAL. ITEMS TO BE REMOVED INCLUDE ALL EXISTING MATERIALS BEING REPLACED BY NEW CONSTRUCTION AND MISCELLANEOUS ITEMS THAT ARE NOT SHOWN TO BE INCORPORATED INTO THE FINAL CONSTRUCTION AND ARE DIRECTED TO BE REMOVED BY THE ENGINEER. THE USE OF EXPLOSIVES, HEADACHE BALLS AND/OR HOE-RAMS WILL NOT BE PERMITTED. THE METHOD OF REMOVAL AND THE WEIGHT OF HAMMER SHALL BE APPROVED BY THE ENGINEER. PERFORM ALL WORK IN A MANNER THAT WILL NOT CUT, ELONGATE OR DAMAGE THE EXISTING REINFORCING STEEL TO BE PRESERVED. CHIPPING HAMMERS SHALL NOT BE HEAVIER THAN THE NOMINAL 90-POUND CLASS. PNEUMATIC HAMMERS SHALL NOT BE PLACED IN DIRECT CONTACT WITH REINFORCING STEEL THAT IS TO BE RETAINED IN THE REBUILT STRUCTURE. SUBMIT CONSTRUCTION PLANS ACCORDING TO CMS 501.05.

PROTECTION OF STEEL SUPPORT SYSTEMS

BEFORE DECK SLAB CUTTING IS PERMITTED AT THE CUTLINE, DRAW THE OUTLINE OF BEAM H ON THE SURFACE OF THE DECK. DRILL SMALL DIAMETER PILOT HOLES 2" OUTSIDE THESE LINES TO CONFIRM THE LOCATION OF THE BEAM FLANGE EDGES. DECK CUTS OVER OR WITHIN 2" OF THE BEAM FLANGE EDGES SHALL NOT EXTEND LOWER THAN THE BOTTOM LAYER OF DECK SLAB REINFORCING STEEL. CUTS MADE OUTSIDE 2" OF FLANGE EDGES MAY EXTEND THE FULL DEPTH OF THE DECK. REMOVAL METHODS AROUND BEAM H SHALL ENSURE ADEQUATE DEPTH CONTROL AND PREVENT NICKING OR GOUGING OF THE PRIMARY STRUCTURAL MEMBER.

PERFORM WORK CAREFULLY DURING CUTTING OF THE DECK SLAB TO AVOID DAMAGING STEEL MEMBERS THAT ARE TO BE INCORPORATED INTO THE PROPOSED STRUCTURE FOR MAINTAINING TRAFFIC. REPLACE OR REPAIR STEEL MEMBERS DAMAGED BY THE DECK SLAB CUTTING OPERATIONS AT NO COST TO THE PROJECT. AT LEAST 7 DAYS BEFORE PERFORMING REPAIR WORK, SUBMIT A PROPOSED REPAIR PLAN, DEVELOPED BY AN OHIO REGISTERED PROFESSIONAL ENGINEER, TO THE ENGINEER. OBTAIN ENGINEER'S APPROVAL BEFORE PERFORMING THE REPAIRS.

REMOVAL METHODS

THE CONTRACTOR MAY REMOVE CONCRETE BY CUTTING AND BY MEANS OF HAND OPERATED PNEUMATIC HAMMERS EMPLOYING POINTED OR BLUNTED CHISEL TYPE TOOLS. FOR REMOVALS OVER STRUCTURAL MEMBERS (PRESTRESSED BOX BEAM, I-BEAM, STEEL BEAM STEEL GIRDER, ETC.), THE CONTRACTOR MAY USE A HAMMER HEAVIER THAN 35 POUNDS BUT NOT TO EXCEED 90 POUNDS UNLESS APPROVED BY THE ENGINEER. REMOVAL METHODS OVER STRUCTURAL MEMBERS SHALL ENSURE ADEQUATE DEPTH CONTROL AND PREVENT NICKING OR GOUGING THE PRIMARY STRUCTURAL MEMBERS. DUE TO THE POSSIBLE PRESENCE OF ATTACHMENTS (E.G., FINISHING MACHINE, SCUPPER AND FORM SUPPORTS, ETC.) TO EXISTING STRUCTURAL MEMBERS, PERFORM WORK CAREFULLY DURING DECK REMOVAL TO AVOID DAMAGING STRUCTURAL MEMBERS THAT ARE TO REMAIN. REPLACE OR REPAIR STRUCTURAL MEMBERS DAMAGED BY THE REMOVAL OPERATIONS AT NO COST TO THE PROJECT. AT LEAST 7 DAYS BEFORE PERFORMING REPAIR WORK, SUBMIT A PROPOSED REPAIR PLAN, DEVELOPED BY AN OHIO REGISTERED PROFESSIONAL ENGINEER TO THE ENGINEER. OBTAIN THE ENGINEER'S APPROVAL BEFORE PERFORMING REPAIR.

DECK REMOVALS - COMPOSITE DECK DESIGNS - STEEL SUPERSTRUCTURES

DUE TO THE PRESENCE OF WELDED STUDS TO THE EXISTING STRUCTURAL STEEL, IF THE CONTRACTOR'S DECK DEMOLITION ENGINEERED DRAWINGS SHOW REMOVAL OF THE EXISTING DECK OVER AN EXISTING BEAM, SUBMIT A DETAILED PROCEDURE OF THE DECK REMOVAL TO THE ENGINEER AT LEAST 7 DAYS BEFORE CONSTRUCTION BEGINS. DEPARTMENT ACCEPTANCE IS NOT REQUIRED. THE PROCEDURE SHALL INCLUDE ALL DETAILS, EQUIPMENT AND METHODS TO BE USED FOR REMOVAL OF THE CONCRETE OVER THE FLANGES AND AROUND THE STUDS. REPLACE OR REPAIR MAIN STEEL AND STUDS DAMAGED BY THE REMOVAL OPERATIONS AT NO COST TO THE PROJECT. AT LEAST 7 DAYS BEFORE PERFORMING REPAIR WORK, SUBMIT A PROPOSED REPAIR PLAN, DEVELOPED BY AN OHIO REGISTERED PROFESSIONAL ENGINEER TO THE ENGINEER. OBTAIN THE ENGINEER'S APPROVAL BEFORE PERFORMING REPAIR.

EXISTING WELDED ATTACHMENTS

IF THE CONTRACTOR'S DECK DEMOLITION ENGINEERED DRAWINGS SHOW REMOVAL OF THE EXISTING DECK OVER AN EXISTING BEAM, REMOVE EXISTING WELDED ATTACHMENTS (E.G., FINISHING MACHINE AND FORM SUPPORTS; AND SUPPORTS FOR SCUPPERS AND BULB ANGLES WHICH ARE TO BE REMOVED) LOCATED IN THE DESIGNATED TENSION PORTIONS OF THE TOP FLANGES OF EXISTING STEEL MEMBERS AND GRIND THE FLANGE SURFACES SMOOTH. CAREFULLY GRIND PARALLEL TO THE FLANGES.

SUBSTRUCTURE CONCRETE REMOVAL

REMOVE CONCRETE BY MEANS OF APPROVED PNEUMATIC HAMMERS EMPLOYING POINTED AND BLUNT CHISEL TOOLS. HYDRAULIC HOE-RAM TYPE HAMMERS WILL NOT BE PERMITTED. THE WEIGHT OF THE HAMMER SHALL NOT BE MORE THAN 35 POUNDS FOR REMOVAL WITHIN 18 INCHES OF PORTIONS TO BE PRESERVED. OUTSIDE THE 18 INCH LIMIT, THE CONTRACTOR MAY USE HAMMERS NOT EXCEEDING 90 POUNDS UPON THE APPROVAL OF THE ENGINEER. DO NOT PLACE PNEUMATIC HAMMERS IN DIRECT CONTACT WITH REINFORCING STEEL THAT IS TO BE RETAINED IN THE REBUILT STRUCTURE.

CUT LINE CONSTRUCTION JOINT PREPARATION

SAWCUT BOUNDARIES OF PROPOSED CONCRETE REMOVALS 1 INCH DEEP. REMOVE CONCRETE TO A ROUGH SURFACE. LEAVE THE EXISTING REINFORCING STEEL, IF REQUIRED IN THE PLANS, IN PLACE. INSTALL DOWEL BARS IF SPECIFIED. PRIOR TO CONCRETE PLACEMENT, ABRASIVELY CLEAN JOINT SURFACES AND EXISTING EXPOSED REINFORCEMENT TO REMOVE LOOSE AND DISINTEGRATED CONCRETE AND LOOSE RUST. THOROUGHLY CLEAN THE JOINT SURFACE AND EXPOSED REINFORCEMENT OF ALL DIRT, DUST, RUST OR OTHER FOREIGN MATERIALS BY THE USE OF WATER, AIR UNDER PRESSURE, OR OTHER METHODS THAT PRODUCE SATISFACTORY RESULTS. EXISTING REINFORCING STEEL DOES NOT HAVE TO HAVE A BRIGHT STEEL FINISH, BUT REMOVE ALL PACK AND LOOSE RUST. THOROUGHLY DRENCH EXISTING CONCRETE SURFACES WITH CLEAN WATER AND ALLOW TO DRY TO A DAMP CONDITION BEFORE PLACING CONCRETE.

MEASUREMENT & PAYMENT

THE DEPARTMENT WILL MEASURE THE QUANTITY OF REMOVALS ON A LUMP SUM BASIS. THE DEPARTMENT WILL PAY FOR THE ACCEPTED QUANTITIES OF REMOVALS AT THE CONTRACT PRICE FOR ITEM 202 - PORTIONS OF STRUCTURE REMOVED, OVER 20' SPAN, AS PER PLAN.

PILE DESIGN LOADS (ULTIMATE BEARING VALUE)

THE ULTIMATE BEARING VALUE IS 156 KIPS PER PILE FOR THE ABUTMENT PILES AND 183 KIPS PER PILE FOR THE PIER PILES.

ABUTMENT PILES:
12" CIP CONCRETE PILES, 45 FEET LONG, ORDER LENGTH (REAR)
12" CIP CONCRETE PILES, 50 FEET LONG, ORDER LENGTH (FORWARD)
2 DYNAMIC LOAD TESTING ITEMS
2 RESTRIKE ITEMS

PIER PILES:
14" CIP CONCRETE PILES, 40 FEET LONG, ORDER LENGTH (PIER 1)
14" CIP CONCRETE PILES, 40 FEET LONG, ORDER LENGTH (PIER 2)
2 DYNAMIC LOAD TESTING ITEMS
2 RESTRIKE ITEMS

PILE DRIVING MOBILIZATION AND WATERLINE PROTECTION

AN EXISTING 20" WATERLINE IS IN CLOSE PROXIMITY TO THE EXISTING AND PROPOSED PIER 1 FOUNDATIONS. THE WATERLINE SHALL BE PROTECTED FROM DAMAGE DURING THE PROJECT, INCLUDING DURING EXCAVATION, DRIVING OF PILES, FOOTING CONSTRUCTION, AND WRAPPING OF EXISTING PIER COLUMNS.

PREPARE AND PROVIDE ENGINEERED DRAWINGS FOR THE METHOD OF PROTECTION, IN ACCORDANCE WITH CMS 501.05.B, PRIOR TO THE START OF FOUNDATION EXCAVATION OR INSTALLATION OF PILES.

THE PROTECTION OF THIS UTILITY, DURING ALL PHASES OF CONSTRUCTION, SHALL BE INCLUDED WITH THE CONTRACT PRICE FOR ITEM 505 - PILE DRIVING EQUIPMENT MOBILIZATION, AS PER PLAN.

GENERAL NOTES 1 OF 2
BRIDGE NO. SUM-77-3227L
IR-77 OVER SR-21 (BRECKSVILLE RD.)

SFN 7704712

DESIGN AGENCY
Gannett Fleming
ENGINEERS AND ARCHITECTS, P.C.
2500 Corporate Exchange Drive Suite 220 Columbus, OH 43231

DESIGNER	CHECKER
SAT	CTM

REVIEWER: MTO 2/22

PROJECT ID: 104983

SUBSET	TOTAL
2	37

SHEET	TOTAL
226	297

SUM-77-32.27 PENTABLE SUBSET: 4 SUBMITTAL: Stage 3 PLOT DRIVER: OHDOT_PDF_Levels.pltcfg PENTABLE: 104983_OHDOT_Pen.tbl

MODEL: Sheet PAPERSIZE: 17x11 (in.) DATE: 2/24/2022 TIME: 1:55:12 PM USER: edues
pw:\\gfnet-pw.bentley.com:gfnet-pw-01\Documents\Projects\67490\104983401-Engineering-GF\Structures\3227L-SFN_7704712\Sheets\005 sn001

FILE: ...\Sheets\005 sn001

ITEM 509 - REINFORCING STEEL, REPLACEMENT OF EXISTING REINFORCING STEEL, AS PER PLAN

REPLACE ALL EXISTING REINFORCING BARS DEEMED BY THE ENGINEER TO BE UNUSABLE BECAUSE OF CORROSION. THE DEPARTMENT WILL MEASURE THE REPLACEMENT REINFORCING STEEL BY THE NUMBER OF POUNDS ACCEPTED IN PLACE.

REPLACE ALL EXISTING REINFORCING STEEL BARS WHICH ARE TO BE INCORPORATED INTO THE NEW WORK AND ARE DEEMED BY THE ENGINEER TO BE MADE UNUSABLE BY CONCRETE REMOVAL OPERATIONS WITH NEW EPOXY COATED REINFORCING STEEL OF THE SAME SIZE AT NO COST TO THE DEPARTMENT.

A QUANTITY OF 300 POUNDS HAS BEEN INCLUDED TO BE USED AS DIRECTED BY THE ENGINEER.

ITEM 509 - EPOXY COATED REINFORCING STEEL, AS PER PLAN

IN ADDITION TO THE PROVISIONS OF ITEM 509, FIELD BEND AND/OR FIELD CUT THE REINFORCING STEEL DESIGNATED IN THE PLANS, AS NECESSARY, IN ORDER TO MAINTAIN THE REQUIRED CLEARANCES AND BAR SPACINGS. REPAIR ALL DAMAGE TO THE EPOXY COATING, AS A RESULT OF THIS WORK, ACCORDING TO CMS 709.00.

ITEM 510 - DOWEL HOLES WITH NONSHRINK, NONMETALLIC GROUT, AS PER PLAN

DOWEL HOLES FOR #5 REINFORCING SHALL BE 7/8" DIAMETER AND A MINIMUM OF 12" DEEP. DOWEL HOLES FOR #8 REINFORCING SHALL BE 1.5" DIAMETER AND A MINIMUM OF 18" DEEP. PRIOR TO DRILLING HOLES, LOCATE ALL EXISTING REINFORCING STEEL BARS IN THE AREA OF THE HOLE WITH THE AIDE OF A REINFORCING STEEL BAR LOCATOR (PACHOMETER). IF AN EXISTING BAR IS ENCOUNTERED AT THE SAME LOCATION AS A PROPOSED DOWEL HOLE, MOVE THE DOWEL HOLE TO EITHER SIDE OF THE EXISTING BAR. THE DEPARTMENT WILL PAY FOR DOWEL HOLES AND GROUTING WITH ITEM 510 - DOWEL HOLES WITH NONSHRINK, NONMETALLIC GROUT, AS PER PLAN.

ITEM 511 - CLASS QC2 CONCRETE WITH QC/QA, BRIDGE DECK (PARAPET)), AS PER PLAN

IN ADDITION TO THE BRIDGE DECK PARAPETS, THE DEPARTMENT WILL PAY FOR CONCRETE PARAPETS ON THE APPROACH SLABS WITH ITEM 511 - CLASS QC2 CONCRETE WITH QC/QA, BRIDGE DECK (PARAPET), AS PER PLAN.

AS PART OF CONSTRUCTING THE BRIDGE PARAPETS, FURNISH AND INSTALL 4" DIAMETER CONDUITS, COUPLINGS, AND FITTINGS, FROM PULL BOX TO PULL BOX AS SHOWN IN THE PLANS. FURNISH AND INSTALL THE CONDUIT, COUPLINGS, AND FITTINGS AS PER CMS 625.

THE DEPARTMENT WILL PAY FOR FURNISHING AND INSTALLING THE 4" DIAMETER CONDUITS, COUPLINGS, AND FITTINGS WITH ITEM 511 - CLASS QC2 CONCRETE WITH QC/QA, BRIDGE DECK (PARAPET), AS PER PLAN.

THE DEPARTMENT WILL PAY FOR FURNISHING AND INSTALLING THE PULL BOXES WITH ITEM 625 - PULL BOX IN THE ROADWAY QUANTITIES.

ITEM 513 - STRUCTURAL STEEL, MISC.: BRIDGE NO. SUM-77-3227L SHOP DRAWINGS

N ADDITION TO THE REQUIREMENTS OF ITEM 513, STRUCTURAL STEEL SHOP DRAWINGS FOR BRIDGE NO. SUM-77-3227L (SFN 7704712) SHALL BE SUBMITTED TO THE DEPARTMENT WITHIN 35 CALENDAR DAYS AFTER THE DEPARTMENT ISSUES THE NOTICE OF COMMENCEMENT FOR THE PROJECT. THE SHOP DRAWINGS SHALL CONFORM TO THE REQUIREMENTS OF CMS 513.06 AND 501.04. THE PREFABRICATION MEETING, PER CMS 513.07, SHALL BE HELD NO MORE THAN 45 DAYS AFTER THE DEPARTMENT ISSUES THE NOTICE OF COMMENCEMENT. ALL COSTS FOR THE SHOP DRAWING PREPARATION AND PREFABRICATION MEETING FOR BRIDGE NO. SUM-77-3227L SHALL BE INCLUDED FOR PAYMENT WITH ITEM 513 - STRUCTURAL STEEL, MISC.: BRIDGE NO. SUM-77-3227L SHOP DRAWINGS, AND NOT BE INCLUDED IN THE CONTRACT UNIT PRICE FOR ITEM 503 - STRUCTURAL STEEL MEMBERS, LEVEL 3.

THE DEPARTMENT WILL PAY THE CONTRACT LUMP SUM PRICE FOR THIS ITEM AFTER COMPLETION OF THE PREFABRICATION MEETING.

ITEM 513 - STRUCTURAL STEEL, MISC.: BRIDGE NO. SUM-77-3227L SHOP DRAWINGS

IN ADDITION TO THE REQUIREMENTS OF ITEM 513, STRUCTURAL STEEL SHOP DRAWINGS FOR BRIDGE NO. SUM-77-3227L (SFN 7704712) SHALL BE SUBMITTED TO THE DEPARTMENT WITHIN 35 CALENDAR DAYS AFTER THE DEPARTMENT ISSUES THE NOTICE OF COMMENCEMENT FOR THE PROJECT. THE SHOP DRAWINGS SHALL CONFORM TO THE REQUIREMENTS OF CMS 513.06 AND 501.04. THE PREFABRICATION MEETING, PER CMS 513.07, SHALL BE HELD NO MORE THAN 45 DAYS AFTER THE DEPARTMENT ISSUES THE NOTICE OF COMMENCEMENT. ALL COSTS FOR THE SHOP DRAWING PREPARATION AND PREFABRICATION MEETING FOR BRIDGE NO. SUM-77-3227L SHALL BE INCLUDED FOR PAYMENT WITH ITEM 513 - STRUCTURAL STEEL, MISC.: BRIDGE NO. SUM-77-3227L SHOP DRAWINGS, AND NOT BE INCLUDED IN THE CONTRACT UNIT PRICE FOR ITEM 503 - STRUCTURAL STEEL MEMBERS, LEVEL 3.

THE DEPARTMENT WILL PAY THE CONTRACT LUMP SUM PRICE FOR THIS ITEM AFTER COMPLETION OF THE PREFABRICATION MEETING.

PILES DRIVEN TO FULL ESTIMATED LENGTH WITH PILE/SOIL SETUP

THE ULTIMATE BEARING VALUE (UBV) IS 156 KIPS FOR THE 12" CIP CONCRETE PILES AT THE ABUTMENTS AND 183 KIPS FOR THE 14" CIP CONCRETE PILES AT THE PIERS. PART OF THE UBV WILL BE ACHIEVED THROUGH PILE/SOIL SETUP, WHICH IS A TIME DEPENDENT INCREASE IN RESISTANCE THAT OCCURS IN SOME SOILS.

NOTIFY THE ENGINEER AT LEAST 5 DAYS BEFORE DRIVING PILES SO THAT THE ENGINEER CAN NOTIFY THE DISTRICT GEOTECHNICAL ENGINEER, THE OFFICE OF CONSTRUCTION ADMINISTRATION, AND THE OFFICE OF GEOTECHNICAL ENGINEERING.

DRIVE THE FIRST TWO PILES AT EACH SUBSTRUCTURE TO THE FULL ESTIMATED LENGTH LISTED IN THE PILE DESIGN LOADS NOTE ON SHEET 2/37. PERFORM DYNAMIC LOAD TESTING ON BOTH PILES WHILE DRIVING. AFTER DRIVING AND TESTING THE FIRST TWO PILES, DRIVE THE REMAINING PILES AT EACH SUBSTRUCTURE TO THE SAME DEPTH AS THE FIRST TWO PILES. AFTER DRIVING ALL PILES TO THE ESTIMATED LENGTH, CEASE ALL DRIVING OPERATIONS AT EACH SUBSTRUCTURE FOR A PERIOD OF 7 DAYS. INCLUDE THE WAITING PERIOD AS A SEPARATE ACTIVITY IN THE PROGRESS SCHEDULE. AFTER THE WAITING PERIOD, PERFORM PILE RESTRIKES ON BOTH OF THE FIRST TWO PILES (ONE RESTRIKE ITEM).

SUBMIT ALL TEST RESULTS TO THE ENGINEER. IF THE RESTRIKE TEST RESULTS INDICATE THAT THE FIRST TWO PILES AT A SUBSTRUCTURE ACHIEVED THE REQUIRED UBV, ALL PILES IN THAT SUBSTRUCTURE MAY BE ACCEPTED BY THE ENGINEER.

IF THE RESTRIKE TEST RESULTS INDICATE THAT EITHER OF THE FIRST TWO PILES AT A SUBSTRUCTURE DID NOT ACHIEVE THE REQUIRED UBV, IMMEDIATELY NOTIFY THE ENGINEER SO THAT THE ENGINEER CAN NOTIFY THE DISTRICT GEOTECHNICAL ENGINEER, THE OFFICE OF CONSTRUCTION ADMINISTRATION, AND THE OFFICE OF GEOTECHNICAL ENGINEERING. THE ENGINEER WILL REVIEW THE TEST RESULTS AND ESTABLISH ADDITIONAL RESTRIKE TESTING OR DRIVING CRITERIA FOR THE PILING IN THAT SUBSTRUCTURE WITH THE ASSISTANCE OF THE DISTRICT GEOTECHNICAL ENGINEER, THE OFFICE OF CONSTRUCTION ADMINISTRATION, AND THE OFFICE OF GEOTECHNICAL ENGINEERING.

IF DIRECTED BY THE ENGINEER, PERFORM ADDITIONAL RESTRIKE TESTING OR DRIVE ALL PILES AT A SUBSTRUCTURE TO THE ESTABLISHED DRIVING CRITERIA. THE DEPARTMENT WILL PAY FOR SPLICING OF THE PILES BEYOND THE ESTIMATED LENGTH PROVIDED IN THE PLANS UNDER C&MS 109.05 WITH A NEGOTIATED PRICE PER SPLICE.

THIS PLAN NOTE INCLUDES A QUANTITY OF ONE EACH ITEM 523 DYNAMIC LOAD TESTING, AS PER PLAN AND A QUANTITY OF ONE EACH ITEM 523 RESTRIKE, AS PER PLAN PER EACH SUBSTRUCTURE UNIT

STANDARD PLAN ABBREVIATIONS AND SYMBOLS

ABUT =	ABUTMENT	NB =	NORTHBOUND
APP =	APPROACH	NE =	NORTHEAST
AVE =	AVENUE	NF =	NEAR FACE
		NO =	NUMBER
⟨B#⟩ =	BEAM NUMBER	NW =	NORTHWEST
		O/O =	OUT TO OUT
BF =	BOTTOM FLANGE	OD =	OUTSIDE DIAMETER
BM =	BENCHMARK	OH =	OVERHANG
BOT =	BOTTOM	OVHD =	OVERHEAD
BRG =	BEARING	ODOT =	OHIO DEPARTMENT OF TRANSPORTATION
BTWN =	BETWEEN	P.V.I. =	POINT OF VERTICAL INTERSECTION
C.B. =	CHORD BEARING	PC =	POINT OF CURVE
C/C =	CENTER TO CENTER	PCB =	PORTABLE CONCRETE BARRIER
CB =	CATCH BASIN	PEJF =	PREFORMED EXPANSION JOINT FILLER
CCTV =	CLOSED CIRCUIT TELEVISION	PGL =	PROFILE GRADE LINE
CIP =	CAST IN PLACE	PI =	POINT OF INTERSECTION
CJ =	CONSTRUCTION JOINT	PMVC =	POINT OF MINIMUM VERTICAL CLEARANCE
CJ-O =	OPTIONAL CONSTRUCTION JOINT	POT =	POINT ON TANGENT
CLR =	CLEAR	PROP =	PROPOSED
CMP =	CORRUGATED METAL PIPE	PT =	POINT OF TANGENT
CMS =	CONSTRUCTION MATERIAL SPECIFICATIONS	PVMT =	PAVEMENT
CONST =	CONSTRUCTION	RA =	REAR ABUTMENT
CP =	COVER PLATE	RCP =	REINFORCED CONCRETE PIPE
CSP/N =	CORRUGATED STEEL PIPE (NON-PERFORATED)	RD =	ROAD
CSP/P =	PERFORATED CORRUGATED STEEL PIPE	REF =	REFERENCE
DIA =	DIAMETER	REINF. =	REINFORCING OR REBAR
DND =	DO NOT DISTURB	REQ'D =	REQUIRED
DPRM =	DIAPHRAGM	RT =	RIGHT
E/P =	EDGE OF PAVEMENT	R/W =	RIGHT OF WAY
E/S =	EDGE OF SHOULDER	S/O =	SERIES OF
EB =	EASTBOUND	SR =	STATE ROUTE
EF =	EACH FACE	SB =	SOUTHBOUND
ELEC =	ELECTRIC	SCD =	STANDARD CONSTRUCTION DRAWING
ELEV or EL =	ELEVATION	SE =	SOUTHEAST
EX =	EXISTING	SER =	SERIES
EXP =	EXPANSION	SF =	SQUARE FEET
F/F =	FACE TO FACE	SHLDR =	SHOULDER
FA =	FORWARD ABUTMENT	SPA =	SPACES
FF =	FAR FACE/FILL FACE	ST =	STREET OR SPAN TOTAL
FO =	FIBER OPTIC	STA =	STATION
FTG =	FOOTING	STD =	STANDARD
		STG =	STAGE
⟨G#⟩ =	GIRDER NUMBER	STM =	STORM
		SW =	SOUTHWEST
GR =	GUARDRAIL	T/ =	TOP OF
H.C. =	HORIZONTAL CURVE	T/B =	TOP AND BOTTOM
HORZ =	HORIZONTAL	T/T =	TOE TO TOE
I/I =	INSIDE TO INSIDE	TBR =	TO BE REMOVED
IR =	INTERSTATE ROUTE	TEMP =	TEMPORARY
JT =	JOINT	TYP =	TYPICAL
LT =	LEFT	U.N.O. =	UNLESS NOTED OTHERWISE
MAX =	MAXIMUM	VC =	VERTICAL CURVE
MH =	MANHOLE	VERT =	VERTICAL
MHC =	MINIMUM HORIZONTAL CLEARANCE	WB =	WEST BOUND
MIN =	MINIMUM	WW =	WINGWALL
MISC =	MISCELLANEOUS		
MVC =	MINIMUM VERTICAL CLEARANCE		

STANDARD PLAN DETAILING NOMENCLATURE

THROUGHOUT THE PLANS, SECTIONS AND DETAILS ARE REFERENCED TO THEIR CORRESPONDING VIEWS THROUGH THE USE OF STANDARD CALLOUTS. THE VIEWS OF SECTIONS, ELEVATIONS, AND DETAILS WILL HAVE UNIQUE NUMBERS ON THE PAGES ON WHICH THEY ARE SHOWN.

LETTERS WILL BE UTILIZED FOR SECTION AND ELEVATION CALLOUTS. NUMBERS WILL BE UTILIZED FOR DETAIL CALLOUTS.

IF A SECTION, ELEVATION, OR DETAIL VIEW IS ON THE SAME SHEET FROM WHICH IT IS CUT, THE CALLOUT WILL APPEAR AS FOLLOWS:

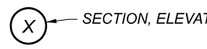

IF A SECTION, ELEVATION, OR DETAIL VIEW IS ON A DIFFERENT SHEET FROM WHICH IT IS CUT, THE CALLOUT WILL APPEAR AS FOLLOWS:

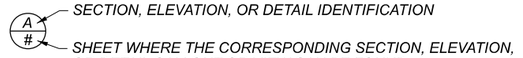

MEMBERS WILL BE IDENTIFIED AS FOLLOWS:

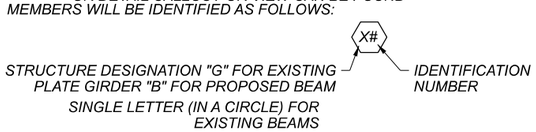

GENERAL NOTES 2 OF 2
BRIDGE NO. SUM-77-3227L
IR-77 OVER SR-21 (BRECKSVILLE RD.)

SFN 7704712

DESIGN AGENCY
Gannett Fleming
ENGINEERS AND ARCHITECTS, P.C.
2500 Corporate Exchange Drive
Suite 220
Columbus, OH 43231

DESIGNER	CHECKER
SAT	CTM

REVIEWER MTO 2/22

PROJECT ID 104983

SUBSET	TOTAL
3	37

SHEET	TOTAL
227	297

SUM-77-32.27 PENTABLE SUBSET: 4 SUBMITTAL: Stage 3 PLOT DRIVER: OHDOT_PDF_Levels.pltcfg PENTABLE: 104983_OHDOT_Pen.tbl
MODEL: Sheet PAPERSIZE: 17x11 (in.) DATE: 2/24/2022 TIME: 1:57:15 PM USER: edues
pw:\\gfnet-pw.bentley.com:gfnet-pw-01\Documents\Projects\67490\104983401-Engineering-GF\Structures\3227L-SFN_7704712\Sheets\006 sn002

SUM-77-3227L BRIDGE SUMMARY

CALC: RSN 01/09/22 | CHECK: SAT 02/03/22

ITEM	ITEM EXT.	06/IMS/BR RECONSTRUCTION	07/IMS/BR WIDENING	TOTAL PER PHASE			UNIT	DESCRIPTION	PHASE 1			PHASE 2			GENERAL	APP/REF SHEET NO.
				PH 1	PH 2	GEN			ABUT.	PIERS	SUPER	ABUT.	PIERS	SUPER		
202	11203		LS			LS		PORTIONS OF STRUCTURE REMOVED, OVER 20 FOOT SPAN, AS PER PLAN							LS	2
202	22900	334		74	260		SY	APPROACH SLAB REMOVED	74			260				
503	21101		263	263			CY	UNCLASSIFIED EXCAVATION, AS PER PLAN	140	123						17
505	11101		LS			LS		PILE DRIVING EQUIPMENT MOBILIZATION, AS PER PLAN							LS	2
507	00500		850	850			FT	12" CAST-IN-PLACE REINFORCED CONCRETE PILES, DRIVEN	850							
507	00550		950	950			FT	12" CAST-IN-PLACE REINFORCED CONCRETE PILES, FURNISHED	950							
507	00600		840	840			FT	14" CAST-IN-PLACE REINFORCED CONCRETE PILES, DRIVEN		840						
507	00650		960	960			FT	14" CAST-IN-PLACE REINFORCED CONCRETE PILES, FURNISHED		960						
509	10001		76,765	76,765			LB	EPOXY COATED REINFORCING STEEL, AS PER PLAN	6,376	16,261	54,128					3
509	20001		300			300	LB	REINFORCING STEEL, REPLACEMENT OF EXISTING REINFORCING STEEL, AS PER PLAN							300	3
510	10001		22	22			EACH	DOWEL HOLES WITH NONSHRINK, NONMETALLIC GROUT, AS PER PLAN	22							3
511	34446		158	158			CY	CLASS QC2 CONCRETE WITH QC/QA, BRIDGE DECK			158					
511	34451		42	42			CY	CLASS QC2 CONCRETE WITH QC/QA, BRIDGE DECK (PARAPET), AS PER PLAN			42					3
511	42012		77	77			CY	CLASS QC1 CONCRETE WITH QC/QA, PIER ABOVE FOOTINGS		77						
511	44112		54	54			CY	CLASS QC1 CONCRETE WITH QC/QA, ABUTMENT NOT INCLUDING FOOTING	54							
511	46512		86	86			CY	CLASS QC1 CONCRETE WITH QC/QA, FOOTING	46	40						
512	10101		485	485			SY	SEALING OF CONCRETE SURFACES (EPOXY-URETHANE), AS PER PLAN	65	141	279					17
512	33000		7	7			SY	TYPE 2 WATERPROOFING	7							
513	10260		155,738	155,738			LB	STRUCTURAL STEEL MEMBERS, LEVEL 3			155,738					
513	20000		1,989	1,989			EACH	WELDED STUD SHEAR CONNECTORS			1,989					
513	95020					LS		STRUCTURAL STEEL MISC.: BRIDGE NO. SUM-77-3227L SHOP DRAWINGS							LS	3
514	00050		907	907			SF	SURFACE PREPARATION OF EXISTING STRUCTURAL STEEL			907					
514	00056		907	907			SF	FIELD PAINTING OF EXISTING STRUCTURAL STEEL, PRIME COAT			907					
514	00060		6,307	6,307			SF	FIELD PAINTING STRUCTURAL STEEL, INTERMEDIATE COAT			6,307					
514	00066		6,307	6,307			SF	FIELD PAINTING STRUCTURAL STEEL, FINISH COAT			6,307					
514	00504		2	2			MNHR	GRINDING FINS, TEARS, SLIVERS ON EXISTING STRUCTURAL STEEL			2					
514	10000		6	6			EACH	FINAL INSPECTION REPAIR			6					
516	10010	173	54	90	137		FT	ARMORLESS PREFORMED JOINT SEAL	90			137				
516	13600		25	25			SF	1" PREFORMED EXPANSION JOINT FILLER	25							
516	13900		99	99			SF	2" PREFORMED EXPANSION JOINT FILLER	99							
516	14020		108	108			FT	SEMI-INTEGRAL ABUTMENT EXPANSION JOINT SEAL			108					
516	44100		3	3			EACH	ELASTOMERIC BEARING WITH INTERNAL LAMINATES AND LOAD PLATE (NEOPRENE) (14"x9.50"x2.96" BEARING WITH 15"x10.50" LOAD PLATE AND BEVELED HP10x42 PEDESTAL)	3							
516	44100		6	6			EACH	ELASTOMERIC BEARING WITH INTERNAL LAMINATES AND LOAD PLATE (NEOPRENE) (18"x13"x2.59" BEARING WITH 19"x14" BEVELED LOAD PLATE)		6						
516	44200		3	3			EACH	ELASTOMERIC BEARING WITH INTERNAL LAMINATES AND LOAD PLATE (NEOPRENE) (13.50"x11.50"x3.08" BEARING WITH 14.50"x12.50" LOAD PLATE AND BEVELED HP10x42 PEDESTAL)	3							
518	21200		39	39			CY	POROUS BACKFILL WITH GEOTEXTILE FABRIC	39							
518	40000		90	90			FT	6" PERFORATED CORRUGATED PLASTIC PIPE	90							
518	40010		60	60			FT	6" NON-PERFORATED CORRUGATED PLASTIC PIPE, INCLUDING SPECIALS	60							
SPECIAL	51900100		2,020	2,020			SF	COMPOSITE FIBER WRAP SYSTEM		2,020						17
523	20001		4	4			EACH	DYNAMIC LOAD TESTING, AS PER PLAN	2	2						3
523	20501		4	4			EACH	RESTRIKE, AS PER PLAN	2	2						3
526	25010	329	108	175	262		SY	REINFORCED CONCRETE APPROACH SLABS WITH QC/QA (T=15")	175			262				
526	90030	173	54	90	137		FT	TYPE C INSTALLATION	90			137				
601	20000		487			487	SY	CRUSHED AGGREGATE SLOPE PROTECTION							487	
613	41200		17			17	CY	LOW STRENGTH MORTAR BACKFILL							17	
625	33000		1			1	EACH	STRUCTURE GROUNDING SYSTEM							1	

ESTIMATED QUANTITIES
BRIDGE NO. SUM-77-3227L
IR-77 OVER SR-21 (BRECKSVILLE RD.)

SFN 7704712

DESIGN AGENCY
Gannett Fleming
ENGINEERS AND ARCHITECTS, P.C.
2500 Corporate Exchange Drive Suite 220 Columbus, OH 43231

DESIGNER	CHECKER
SAT	CTM

REVIEWER MTO 2/22

PROJECT ID 104983

SUBSET	TOTAL
4	37

SHEET	TOTAL
228	297

'SUM-77-32.27 PENTABLE SUBSET: 4 SUBMITTAL: Stage 3 PLOT DRIVER: OHDOT_PDF_Levels.pltcfg PENTABLE: 104983_OHDOT_Pen.tbl
MODEL: Sheet PAPERSIZE: 17x11 (in.) DATE: 2/24/2022 TIME: 1:59:14 PM USER: edues
pw:\\ghet-pw.bentley.com:ghet-pw-01\Documents\Projects\67490\104983\d01-Engineering-GFiStructures\3227L-SFN_7704712\Sheets\007 sq001
FILE: ...\Sheets\007 sq001

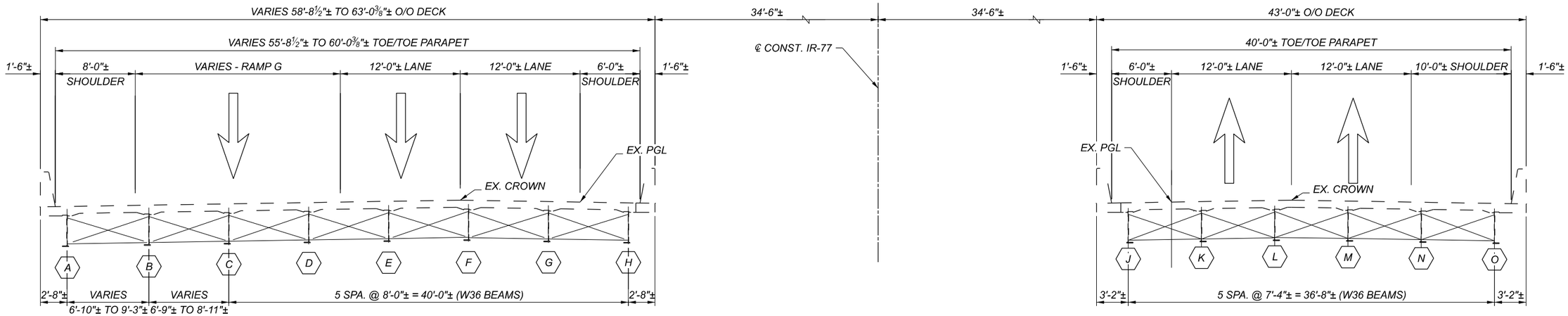

EXISTING TRANSVERSE SECTION

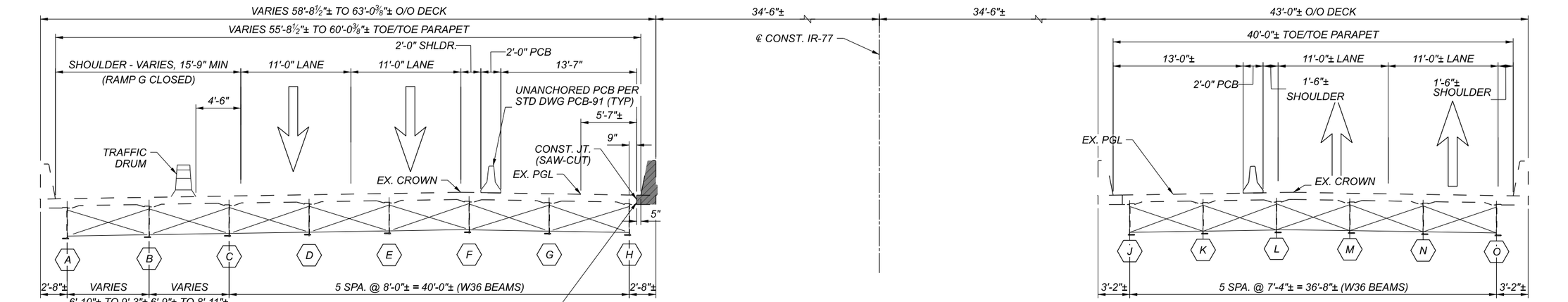

PHASE 1 DEMOLITION: REMOVE SOUTHBOUND PARAPET AND PORTION OF DECK

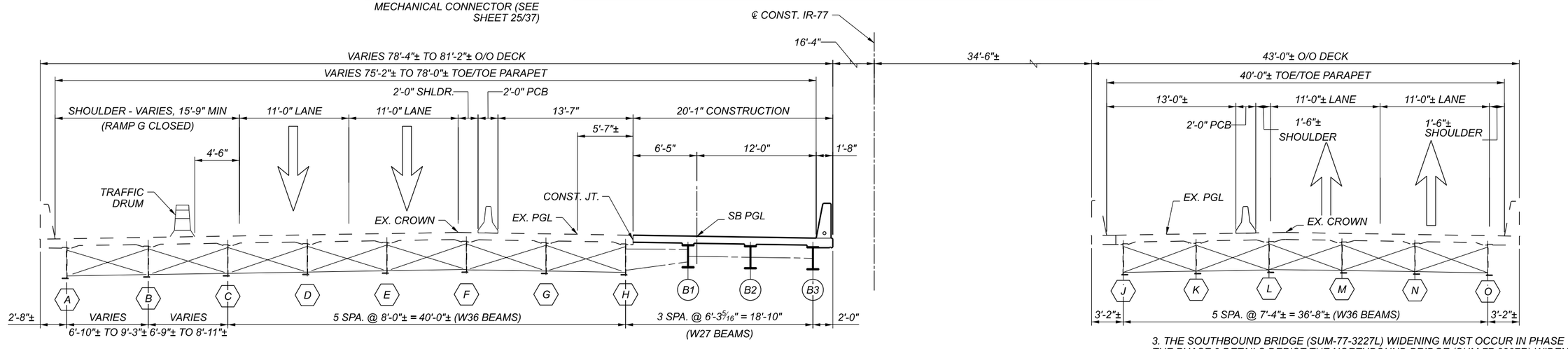

PHASE 1 CONSTRUCTION: CONSTRUCT WIDENED SOUTHBOUND STRUCTURE

NOTES:

1. PCB IS INCLUDED AND PAID FOR WITH THE ROADWAY MOT QUANTITIES.
2. THE 32" PORTABLE CONCRETE BARRIER CAN BE USED AS AN ALTERNATIVE TO THE PCB-91, SEE ODOT STD. DWG. RM-4.2 FOR DETAILS.
3. THE SOUTHBOUND BRIDGE (SUM-77-3227L) WIDENING MUST OCCUR IN PHASE 1. THE PHASE 3 DETAILS DEPICT THE NORTHBOUND BRIDGE (SUM-77-3227R) WIDENING. ALL OR PORTIONS OF THE NORTHBOUND BRIDGE MAY BE WIDENED IN PHASE 1 AT THE OPTION OF THE CONTRACTOR.
4. THE PHASED MOT SHOWN IN THESE DETAILS MATCHES THE MOT PHASING SHOWN IN THE ROADWAY PLANS. ANY MOT REVISIONS REQUIRED TO PERFORM THE NORTHBOUND BRIDGE WIDENING IN PHASE 3 SHALL BE AT THE SOLE EXPENSE OF THE CONTRACTOR AND SHALL BE APPROVED BY THE ENGINEER.

PHASED CONSTRUCTION SECTIONS (SHEET 1 OF 3)
BRIDGE NO. SUM-77-3227L
IR-77 OVER SR-21 (BRECKSVILLE RD.)

SFN 7704712

DESIGN AGENCY
Gannett Fleming ENGINEERS AND ARCHITECTS, P.C.
2500 Corporate Exchange Drive Suite 200 Columbus, OH 43231

DESIGNER	CHECKER
SAT	CTM

REVIEWER MTO 2/22

PROJECT ID 104983

SUBSET	TOTAL
5	37

SHEET	TOTAL
229	297

SUM-77-32.27

PENTABLE SUBSET: 4 SUBMITTAL: Stage 3 PLOT DRIVER: OHDOT_PDF_Levels.pltcfg PENTABLE: 104983_OHDOT_Pen.tbl
MODEL: Sheet PAPERSIZE: 17x11 (in.) DATE: 2/24/2022 TIME: 2:01:31 PM USER: edues
pw:\\gfnet-pw.bentley.com:gfnet-pw-01\Documents\Projects\67490\104983401-Engineering-GFIStructures\3227L-SFN_7704712\Sheets\030 sc001

FILE: ...\Sheets\030 sc001

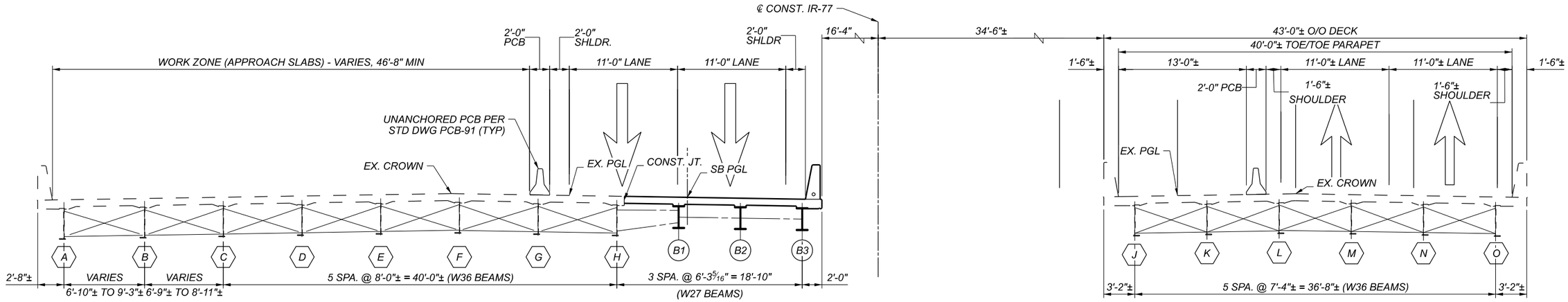

PHASE 2 CONSTRUCTION: CONSTRUCT REMAINING PORTION OF SOUTHBOUND APPROACH SLABS

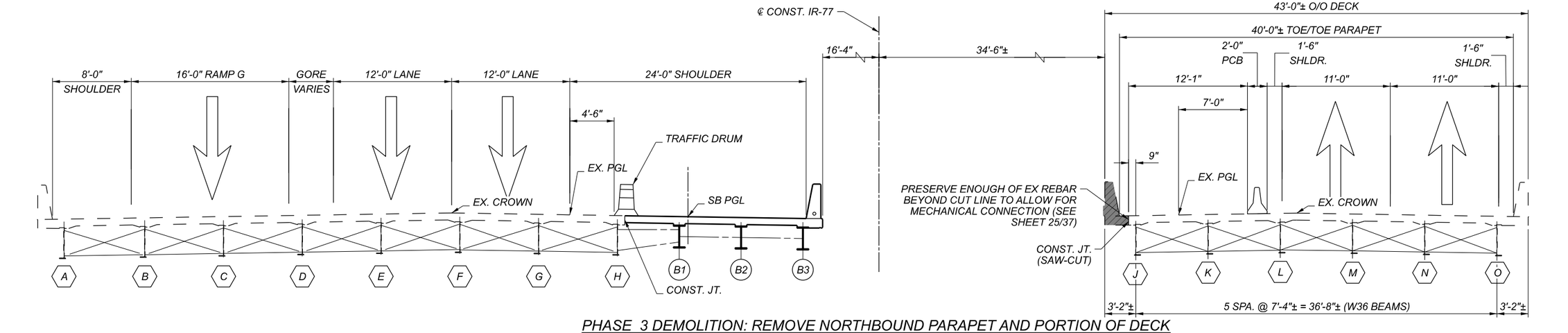

PHASE 3 DEMOLITION: REMOVE NORTHBOUND PARAPET AND PORTION OF DECK

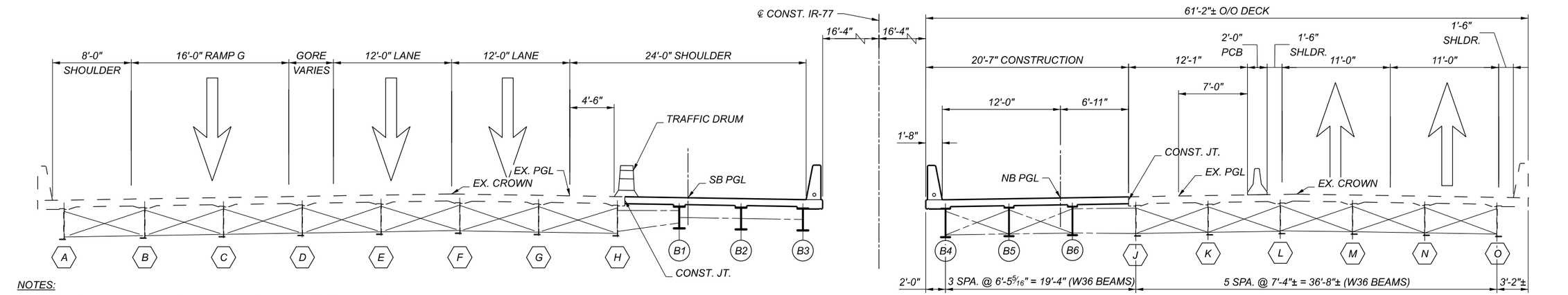

PHASE 3 CONSTRUCTION: CONSTRUCT WIDENED NORTHBOUND STRUCTURE

NOTES:

1. PCB IS INCLUDED AND PAID FOR WITH THE ROADWAY MOT QUANTITIES.

2. THE SOUTHBOUND BRIDGE (SUM-77-3227L) WIDENING MUST OCCUR IN PHASE 1. THE PHASE 3 DETAILS DEPICT THE NORTHBOUND BRIDGE (SUM-77-3227R) WIDENING. ALL OR PORTIONS OF THE NORTHBOUND BRIDGE MAY BE WIDENED IN PHASE 1 AT THE OPTION OF THE CONTRACTOR.

3. THE PHASED MOT SHOWN IN THESE DETAILS MATCHES THE MOT PHASING SHOWN IN THE ROADWAY PLANS. ANY MOT REVISIONS REQUIRED TO PERFORM THE NORTHBOUND BRIDGE WIDENING IN PHASE 3 SHALL BE AT THE SOLE EXPENSE OF THE CONTRACTOR AND SHALL BE APPROVED BY THE ENGINEER.

PHASED CONSTRUCTION SECTIONS (SHEET 2 OF 3)
BRIDGE NO. SUM-77-3227L
IR-77 OVER SR-21 (BRECKSVILLE RD.)

SFN 7704712

DESIGN AGENCY
Gannett Fleming
ENGINEERS AND ARCHITECTS, P.C.
2500 Corporate Exchange Drive Suite 230 Columbus, OH 43231

DESIGNER	CHECKER
SAT	CTM

REVIEWER: MTO 2/22

PROJECT ID: 104983

SUBSET	TOTAL
6	37

SHEET	TOTAL
230	297

SUM-77-32.27 PENTABLE SUBSET: 4 SUBMITTAL: Stage 3 PLOT DRIVER: OHDOT_PDF_Levels.pltcfg

MODEL: Sheet PAPERSIZE: 17x11 (in.) DATE: 2/24/2022 TIME: 2:03:32 PM USER: edues
pw:\\gfnet-pw.bentley.com:gfnet-pw-01\Documents\Projects\674900\104983\401-Engineering-GF\Structures\3227L-SFN_7704712\Sheets\032 sc002

FILE: ...\Sheets\032 sc002

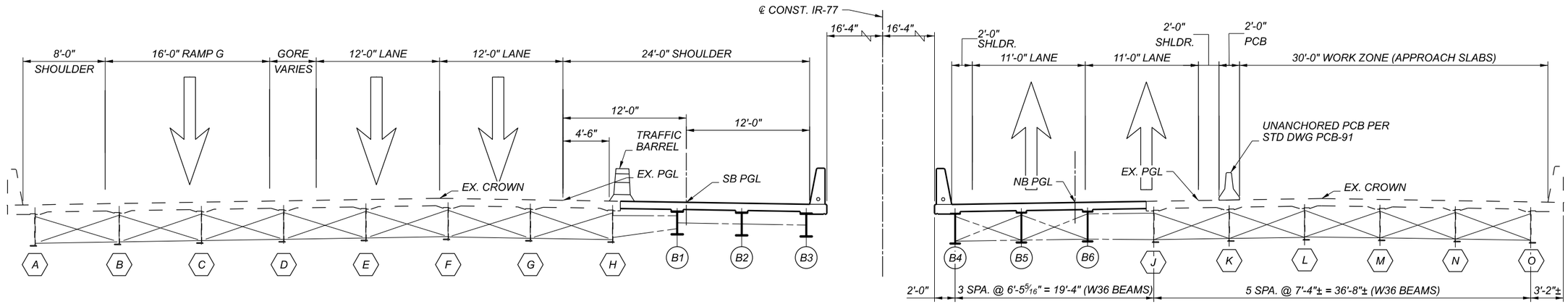

PHASE 4: CONSTRUCT REMAINING PORTION OF NORTHBOUND APPROACH SLABS

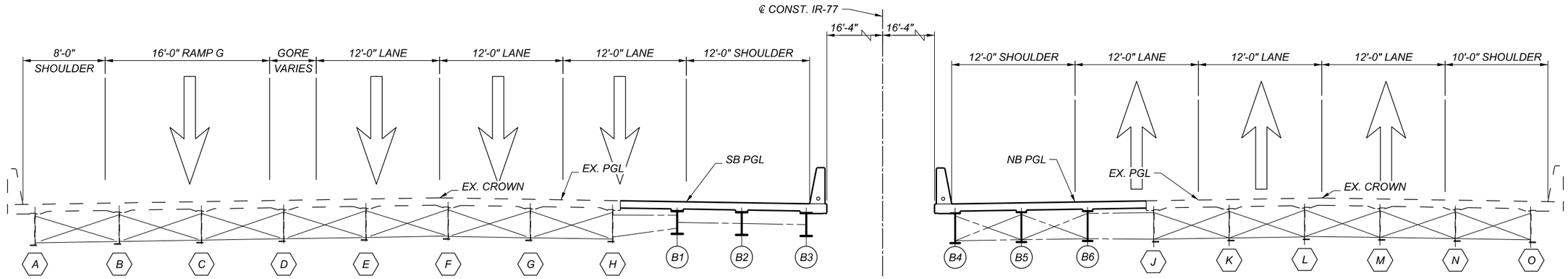

FINAL

NOTES:

1. PCB IS INCLUDED AND PAID FOR WITH THE ROADWAY MOT QUANTITIES.

PHASED CONSTRUCTION SECTIONS (SHEET 3 OF 3)
BRIDGE NO. SUM-77-3227L
IR-77 OVER SR-21 (BRECKSVILLE RD.)

SFN 7704712

DESIGN AGENCY
Gannett Fleming
ENGINEERS AND ARCHITECTS, P.C.
2500 Corporate Exchange Drive
Suite 230
Columbus, OH 43231

DESIGNER	CHECKER
RSN	CTM

REVIEWER: MTO 2/22

PROJECT ID: 104983

SUBSET	TOTAL
7	37

SHEET	TOTAL
231	297

SUM-77-32.27 PENTABLE SUBSET: 4 SUBMITTAL: Stage 3 PLOT DRIVER: OHDOT_PDF_Levels.pltcfg

MODEL: Sheet PAPERSIZE: 17x11 (in.) DATE: 2/24/2022 TIME: 2:05:44 PM USER: edues
pw:\\gfnet-pw.bentley.com:gfnet-pw-01\Documents\Projects\67490\104983\401-Engineering-GF\Structures\3227L-SFN_7704712\Sheets\033 sc003

PENTABLE: 104983_OHDOT_Pen.tbl

FILE: ...\Sheets\033 sc003

EXISTING 20" WATERLINE TO REMAIN AND BE PROTECTED DURING CONSTRUCTION. PROTECTION COSTS ARE INCIDENTAL TO PILE DRIVING MOBILIZATION COST.
BACKFILL AROUND ANY EXPOSED 20" WATERLINE USING LOW STRENGTH MORTAR (LSM). LSM SHALL COVER THE WATERLINE 12" ON EACH SIDE AND 12" OVER THE TOP OF THE WATERLINE. A QUANTITY OF 9 CUBIC FEET PER FOOT FOR THE LENGTH OF EXPOSED PIPE (50' EXPOSED LENGTH ASSUMED).

EXISTING ABUTMENT FOOTING
EXISTING 12" DIA CIP PILE (TYP)
EXISTING PIER 1 FOOTING
EXISTING 12" DIA CIP PILE (TYP)
EXISTING PIER 2 FOOTING
EXISTING 12" DIA CIP PILE (TYP)
EXISTING FOOTING TO REMAIN
EXISTING 12" DIA CIP PILE (TYP)

℄ BRG REAR ABUT
STA 1026+23.56, 30.00 LT±
℄ BRG PIER 1
STA 1026+96.56±, 30.00 LT
℄ BRG PIER 2
STA 1027+87.22±, 30.00 LT
℄ BRG FORWARD ABUT
STA 1028+50.89±, 30.00 LT

3'-2⅜"
3'-0¼"
4'-3¾"
12" DIA CIP PILES, 3 SPA @ 7'-4" = 22'-0"
27'-2⅜"
47°01'20" SKEW (TYP)
5'-9" TYP
42°58'40"
23'-3"
3'-9"
N20°20'47.1"W
1'-10½"
5'-0"
5'-0 7/16"
4'-11½"
REAR ABUTMENT ℄BRG
N22°37'52.9"E
14'-7"
30'-0"
15'-5"

10⅛"
21'-0"
6'-11"±
2'-7⅛"
14" DIA CIP, 5 SPA @ 3'-6" =17'-6"
2'-6"±
1'-6"
5'-6"
1'-9" TYP
1'-6"
PIER 1 ℄ BRG
N22°37'52.9"E

10⅛"
21'-0"
6'-11"±
2'-7⅛"
14" DIA CIP, 5 SPA @ 3'-6" =17'-6"
1'-6"
5'-6"
1'-9" TYP
PIER 2 ℄ BRG
N22°37'52.9"E

2'-7 11/16"
5'-2⅛"
12" DIA CIP PILES, 3 SPA @ 7'-10" = 23'-6"
24'-9"
SB PROFILE GRADE LINE
1'-6"
2'-9"
137°01'20"
N20°20'47.1"W
1'-10½"
6'-5½"
6'-0"
2'-1½"
FORWARD ABUTMENT ℄ BRG
N22°37'52.9"E

1026
1027
1028
1029
℄ CONST. IR-77
N 20° 20' 47.11" W

FOUNDATION PLAN
REAR ABUTMENT

FOUNDATION PLAN
PIER 1

FOUNDATION PLAN
PIER 2

FOUNDATION PLAN
FORWARD ABUTMENT

LEGEND
- PROPOSED VERTICAL PILE
- PROPOSED 1:4 BATTERED PILE
- (PXX) PROPOSED PILE IDENTIFICATION NO.

FOUNDATION PLAN
BRIDGE NO. SUM-77-3227L
IR-77 OVER SR-21 (BRECKSVILLE RD.)

SFN 7704712
DESIGN AGENCY
Gannett Fleming ENGINEERS AND ARCHITECTS, P.C.
2160 Corporate Exchange Drive Suite 230 Columbus, OH 43231
DESIGNER RSN | CHECKER CTM
REVIEWER MTO 2/22
PROJECT ID 104983
SUBSET 8 | TOTAL 37
SHEET 232 | TOTAL 297

SUM-77-32.27 PENTABLE SUBSET: 4 SUBMITTAL: Stage 3 PLOT DRIVER: OHDOT_PDF_Levels.pltcfg PENTABLE: 104983_OHDOT_Pen.tbl
MODEL: Sheet PAPERSIZE: 17x11 (in.) DATE: 2/24/2022 TIME: 2:07:54 PM USER: edues
pw:\\gfnet-pw.bentley.com:gfnet-pw-01\Documents\Projects\67490\104983\3401-Engineering-GFi Structures\3227L-SFN_7704712\Sheets\110 so001
FILE: ...\Sheets\110 so001

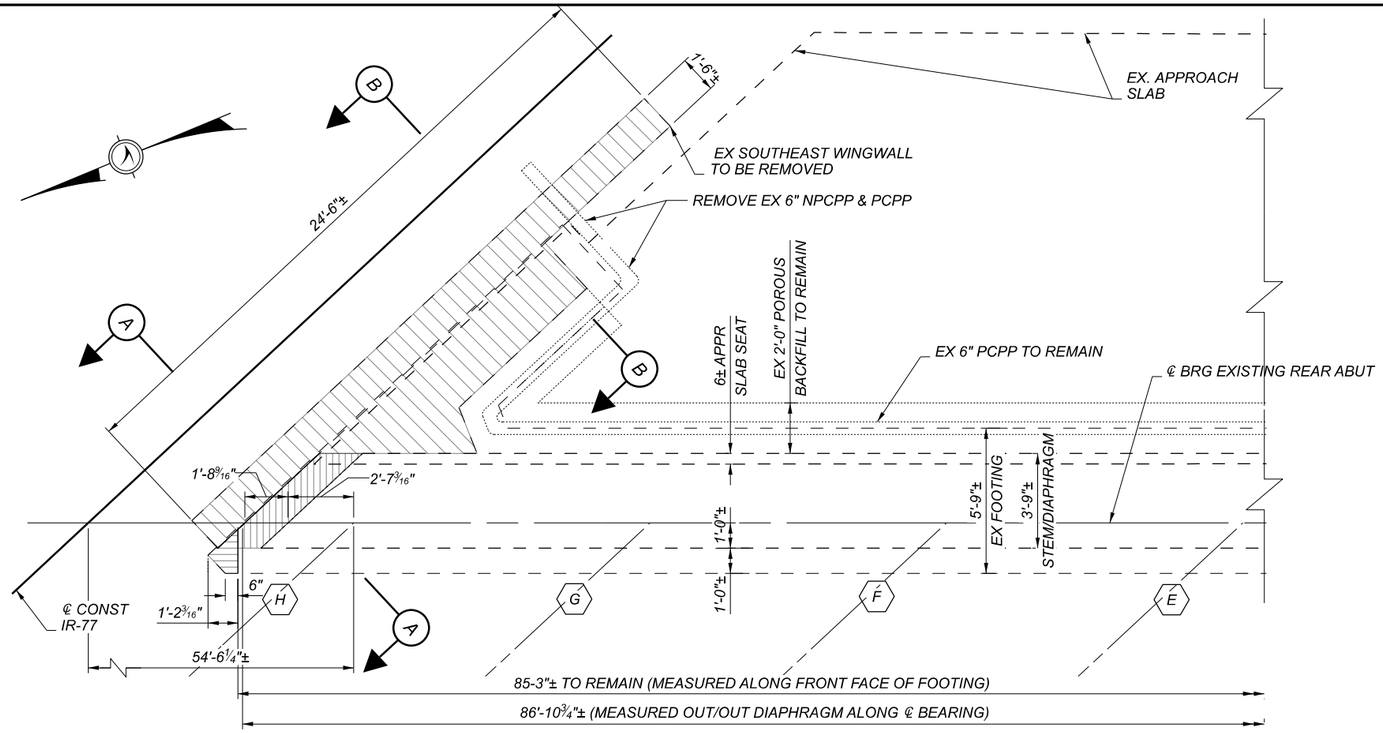

PARTIAL REAR ABUTMENT PLAN
REMOVAL LIMITS

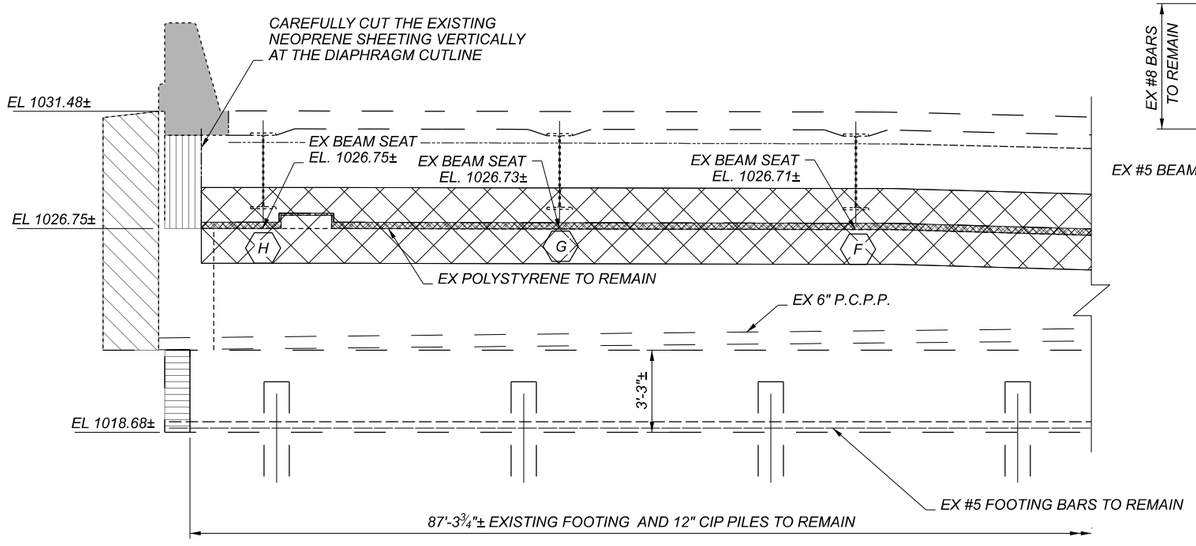

PARTIAL REAR ABUTMENT ELEVATION
REMOVAL LIMITS

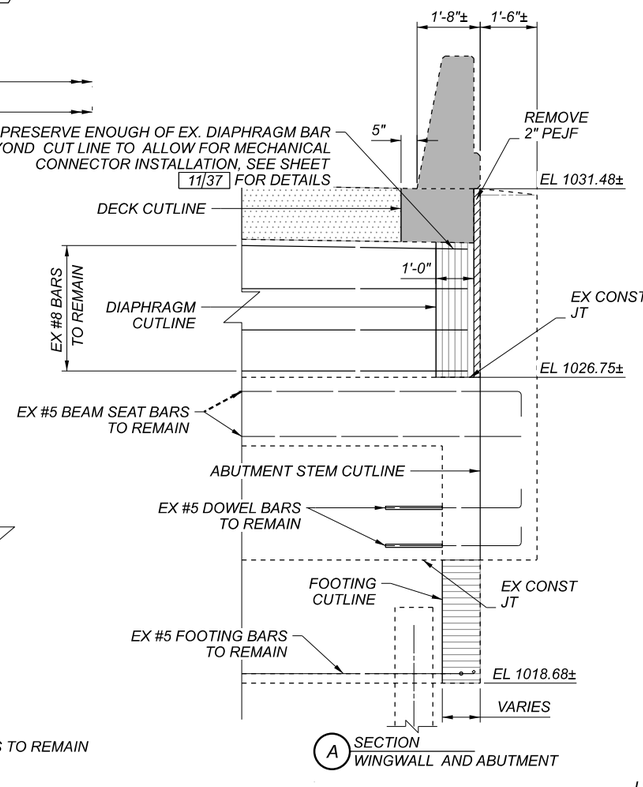

A SECTION
WINGWALL AND ABUTMENT

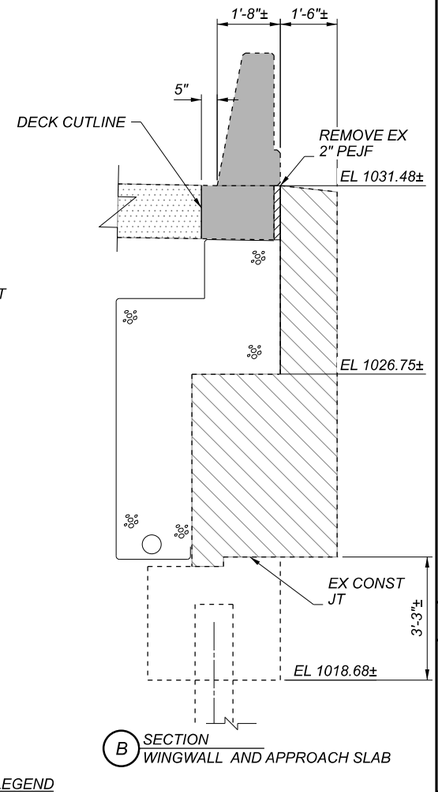

B SECTION
WINGWALL AND APPROACH SLAB

NOTES:

PRESERVE THE VERTICAL REINFORCING ABOVE THE CUTLINE UNLESS NOTED OTHERWISE

LEGEND

- EXISTING WINGWALL TO BE REMOVED
- EXISTING PARAPET AND DECK TO BE REMOVED
- EXISTING FOOTING TO BE REMOVED
- EXISTING DIAPHRAGM TO BE REMOVED
- EXISTING SEMI-INTERGRAL EXPANSION JOINT SEAL
- APPROACH SLAB REMOVAL

EXISTING REAR ABUTMENT REMOVAL DETAILS
BRIDGE NO. SUM-77-3227L
IR-77 OVER SR-21 (BRECKSVILLE RD.)

SFN 7704712

DESIGN AGENCY
Gannett Fleming
ENGINEERS AND ARCHITECTS, P.C.
2500 Corporate Exchange Drive
Suite 200
Columbus, OH 43231

DESIGNER	CHECKER
RSN	CTM

REVIEWER: MTO 2/22

PROJECT ID: 104983

SUBSET	TOTAL
9	37

SHEET	TOTAL
233	297

SUM-77-32.27 PENTABLE SUBSET: 4 SUBMITTAL: Stage 3 PLOT DRIVER: OHDOT_PDF_Levels.pltcfg PENTABLE: 104983_OHDOT_Pen.tbl

MODEL: Sheet PAPERSIZE: 17x11 (in.) DATE: 2/24/2022 TIME: 2:10:11 PM USER: edues
pw:\\gfnet-pw.bentley.com:gfnet-pw-01\Documents\Projects\674901\104983401-Engineering-GF\Structures\3227L-SFN_7704712\Sheets\114 sv001

FILE: ...\Sheets\114 sv001

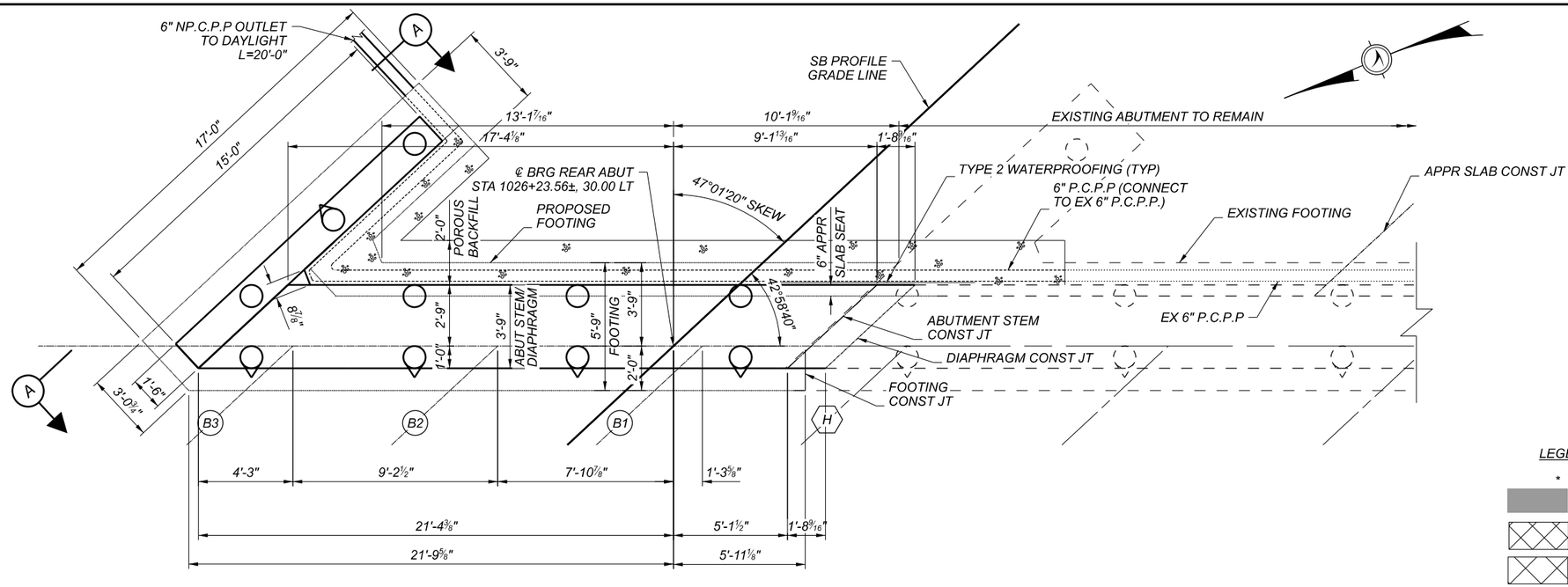

PARTIAL REAR ABUTMENT PLAN

LEGEND

* MEASURED ALONG ABUTMENT ℄ BRG

TYPE 2 WATERPROOFING
3' WIDE, CENTERED ON CONST JT

EXISTING SEMI-INTERGRAL EXPANSION JOINT SEAL LIMITS

PROPOSED SEMI-INTERGRAL EXPANSION JOINT SEAL LIMITS

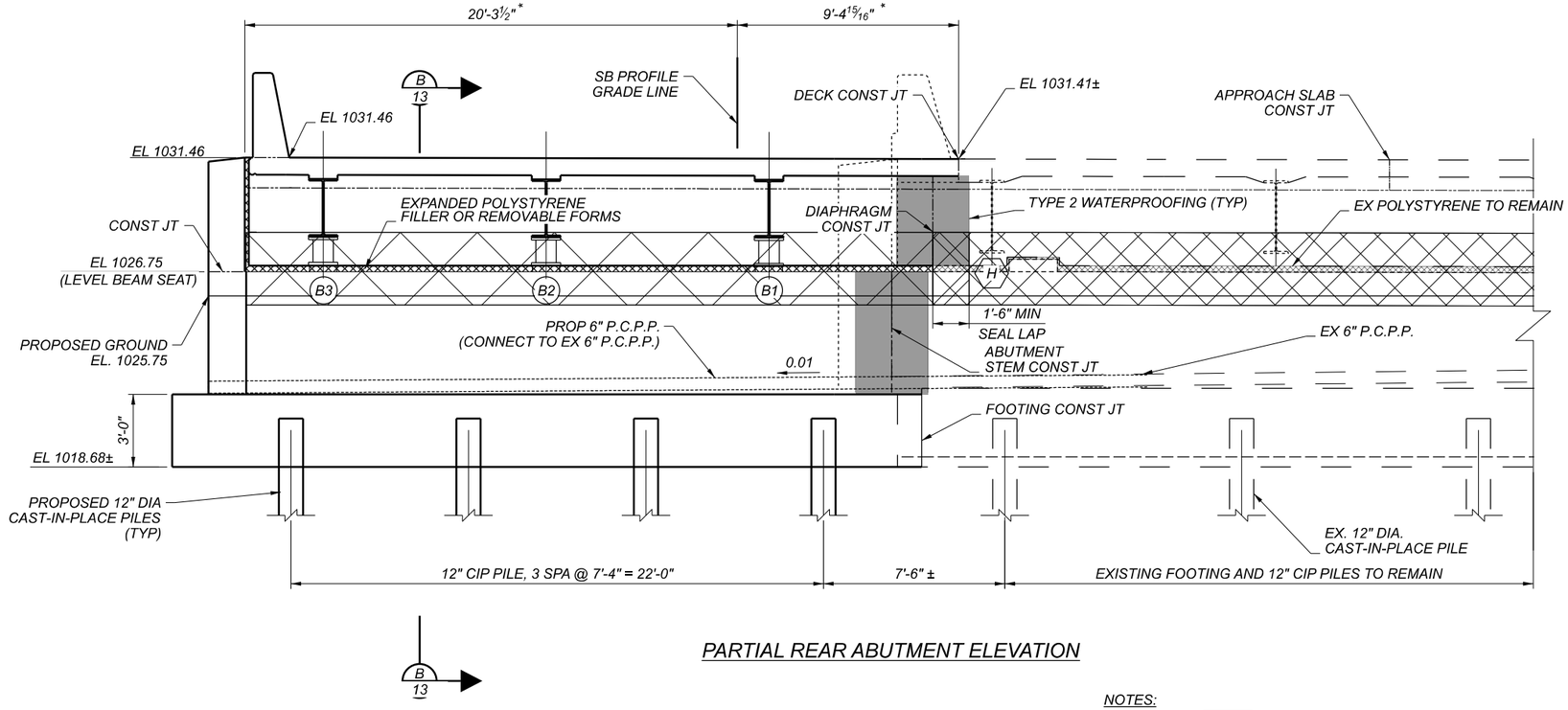

PARTIAL REAR ABUTMENT ELEVATION

NOTES:

1. SEE SHEET 8/37 FOR FOUNDATION PLAN.
2. SEE SHEET 32/37 FOR APPROACH SLAB DETAILS.

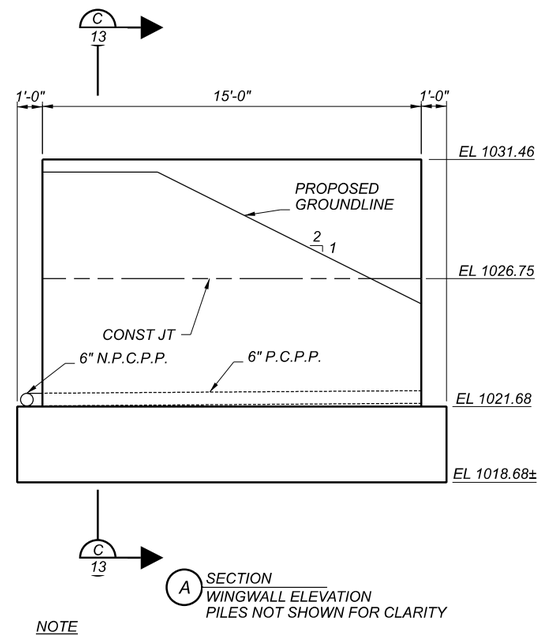

A SECTION
WINGWALL ELEVATION
PILES NOT SHOWN FOR CLARITY

NOTE

1. PLACE THE DIAPHRAGM CONCRETE ENCASING THE STRUCTURAL MEMBER ENDS AFTER THE DECK PLACEMENT IN THE ADJACENT SPAN IS COMPLETE. PROCEDURES THAT PLACE THE ABUTMENT DIAPHRAGM WITH THE DECK CONCRETE MAY BE APPROVED BY THE ENGINEER IF THE PLACEMENT SUBMITTAL CAN ASSURE THAT THE DECK CONCRETE IN THE ADJACENT SPAN WILL BE PLACED BEFORE CONCRETE IN THE DIAPHRAGM HAS REACHED ITS INITIAL SET.
2. SEE SHEET 8/37 FOR FOUNDATION PLAN.
3. SEE SHEET 32/37 FOR APPROACH SLAB DETAILS

PROPOSED REAR ABUTMENT PLAN AND ELEVATION
BRIDGE NO. SUM-77-3227L
IR-77 OVER SR-21 (BRECKSVILLE RD.)

SFN 7704712

DESIGN AGENCY
Gannett Fleming
ENGINEERS AND ARCHITECTS, P.C.
2500 Corporate Exchange Drive
Suite 230
Columbus, OH 43231

DESIGNER	CHECKER
RSN	CTM

REVIEWER MTO 2/22

PROJECT ID 104983

SUBSET	TOTAL
10	37

SHEET	TOTAL
234	297

SUM-77-32.27

MODEL: Sheet PAPERSIZE: 17x11 (in.) DATE: 2/24/2022 TIME: 2:12:15 PM USER: edues
pw:\\gfnet-pw.bentley.com:gfnet-pw-01\Documents\Projects\674900\104983\401-Engineering-GF\Structures\3227L-SFN_7704712\Sheets\115 sr001
SUBMITTAL: Stage 3 PLOT DRIVER: OHDOT_PDF_Levels.pltcfg
PENTABLE SUBSET: 4 PENTABLE: 104983_OHDOT_Pen.tbl

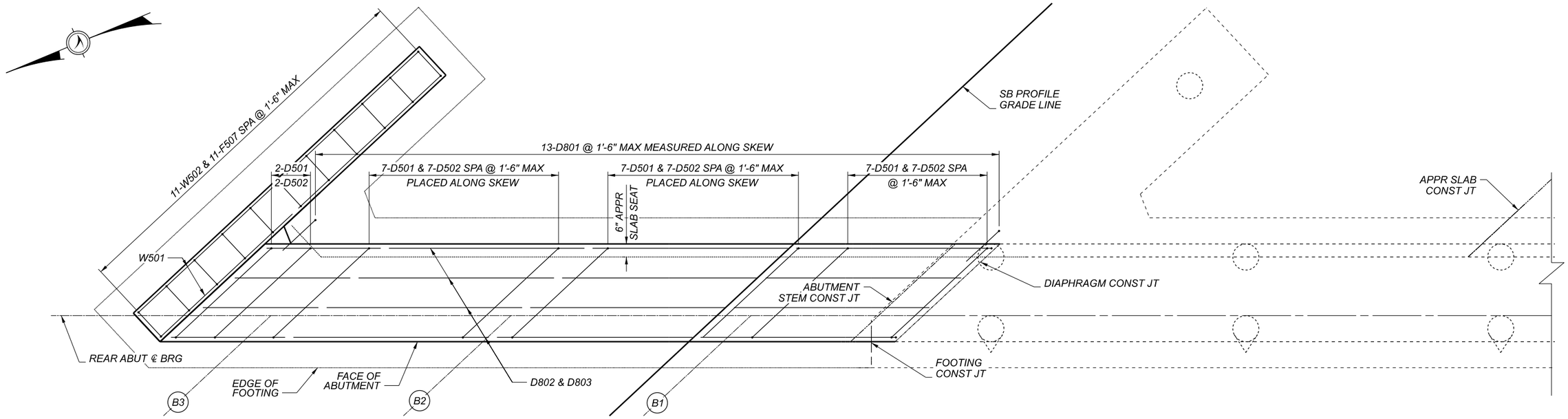

PROPOSED REAR ABUTMENT PLAN
DIAPHRAGM REINFORCING SHOWN

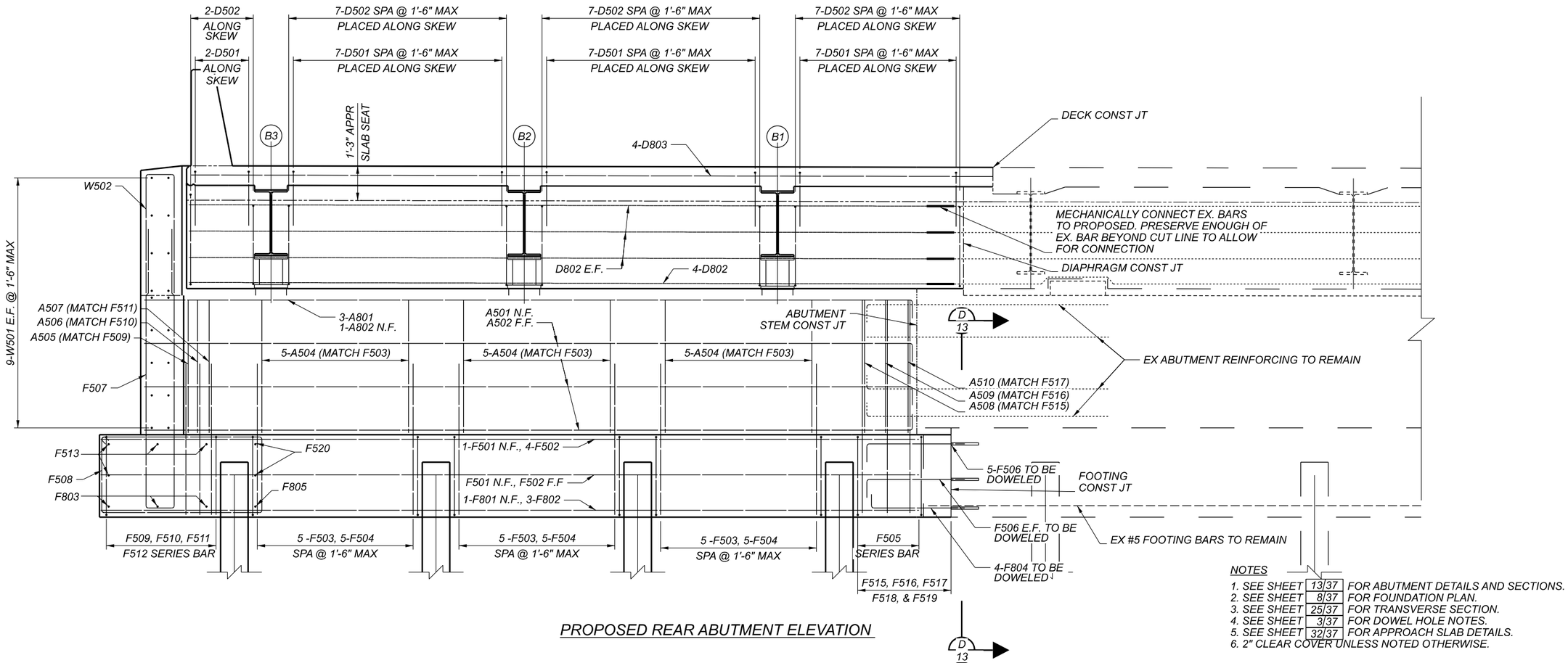

PROPOSED REAR ABUTMENT ELEVATION

NOTES

1. SEE SHEET 13/37 FOR ABUTMENT DETAILS AND SECTIONS.
2. SEE SHEET 8/37 FOR FOUNDATION PLAN.
3. SEE SHEET 25/37 FOR TRANSVERSE SECTION.
4. SEE SHEET 3/37 FOR DOWEL HOLE NOTES.
5. SEE SHEET 32/37 FOR APPROACH SLAB DETAILS.
6. 2" CLEAR COVER UNLESS NOTED OTHERWISE.

REAR ABUTMENT REINFORCING DETAILS
BRIDGE NO. SUM-77-3227L
IR-77 OVER SR-21 (BRECKSVILLE RD.)

SFN 7704712

DESIGN AGENCY
Gannett Fleming
ENGINEERS AND ARCHITECTS, P.C.
2500 Corporate Exchange Drive
Suite 230
Columbus, OH 43231

DESIGNER	CHECKER
RSN	CTM

REVIEWER MTO 2/22

PROJECT ID 104983

SUBSET	TOTAL
11	37

SHEET	TOTAL
235	297

SUM-77-32.27 PENTABLE SUBSET: 4 SUBMITTAL: Stage 3 PLOT DRIVER: OHDOT_PDF_Levels.pltcfg

MODEL: Sheet PAPERSIZE: 17x11 (in.) DATE: 2/24/2022 TIME: 2:14:16 PM USER: edues PENTABLE: 104983_OHDOT_Pen.tbl
pw:\\gfnet-pw.bentley.com:gfnet-pw-01\Documents\Projects\67490\104983\401-Engineering-GF\Structures\3227L-SFN_7704712\Sheets\116 sr002

FILE: ...\Sheets\116 sr002

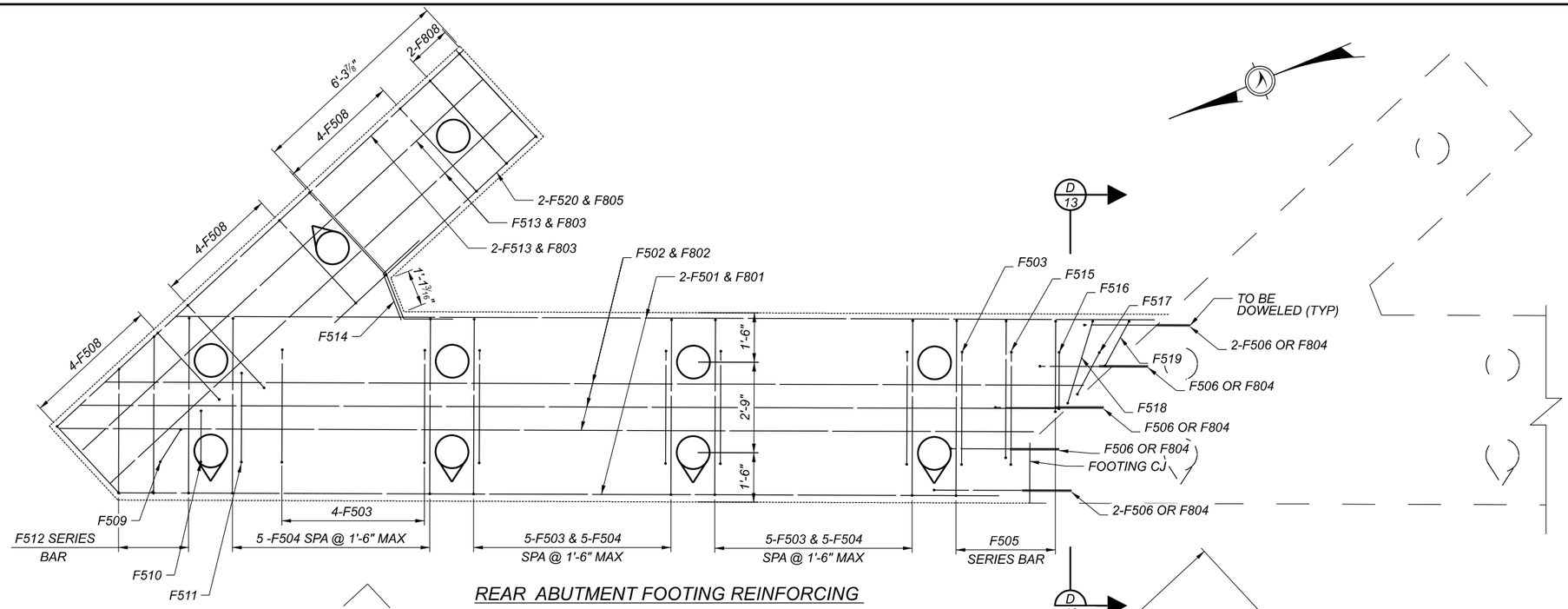

REAR ABUTMENT FOOTING REINFORCING

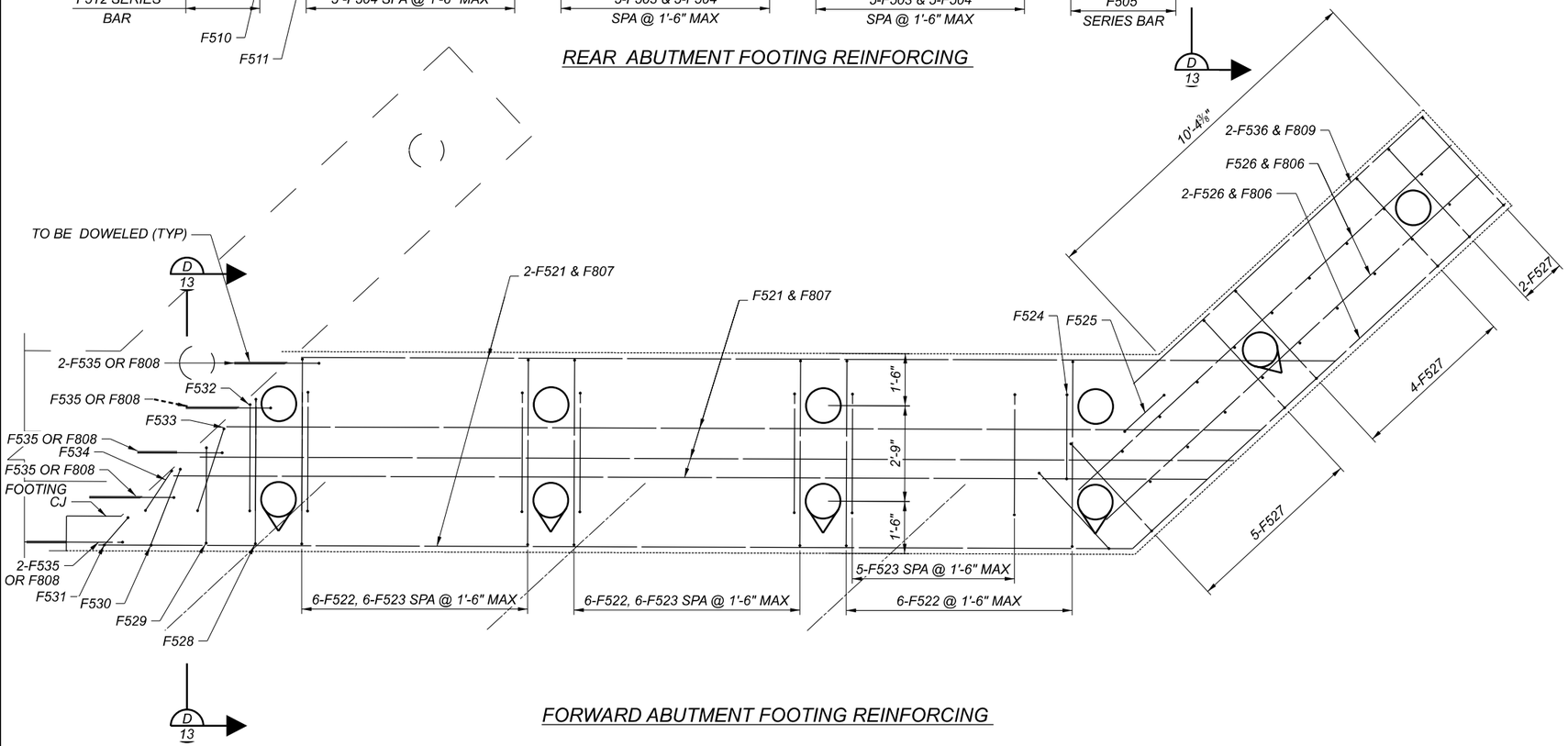

FORWARD ABUTMENT FOOTING REINFORCING

NOTES

1. SEE SHEET 13/37 FOR ABUTMENT DETAILS AND SECTIONS
2. SEE SHEET 8/37 FOR FOUNDATION PLAN.
3. SEE SHEET 25/37 FOR TRANSVERSE SECTION
4. SEE SHEET 3/37 FOR DOWEL HOLE NOTES
5. SEE SHEET 32/37 AND SHEET 33/37 FOR APPROACH SLAB DETAILS
6. 2" CLEAR COVER UNLESS NOTED OTHERWISE

FOOTING REINFORCING DETAILS
BRIDGE NO. SUM-77-3227L
IR-77 OVER SR-21 (BRECKSVILLE RD.)

SFN 7704712

DESIGN AGENCY
Gannett Fleming
ENGINEERS AND ARCHITECTS, P.C.
2500 Corporate Exchange Drive Suite 200 Columbus, OH 43231

DESIGNER	CHECKER
RSN	CTM

REVIEWER MTO 2/22

PROJECT ID 104983

SUBSET	TOTAL
12	37

SHEET	TOTAL
236	297

SUM-77-32.27 PENTABLE SUBSET: 4 SUBMITTAL: Stage 3 PLOT DRIVER: OHDOT_PDF_Levels.pltcfg PENTABLE: 104983_OHDOT_Pen.tbl

MODEL: Sheet PAPERSIZE: 17x11 (in.) DATE: 2/24/2022 TIME: 2:16:24 PM USER: edues
pw:\\gfnet-pw.bentley.com:gfnet-pw-01\Documents\Projects\67490\104983401-Engineering-GF\Structures\3227L-SFN_7704712\Sheets\117 sf003

FILE: ...\Sheets\117 sf003

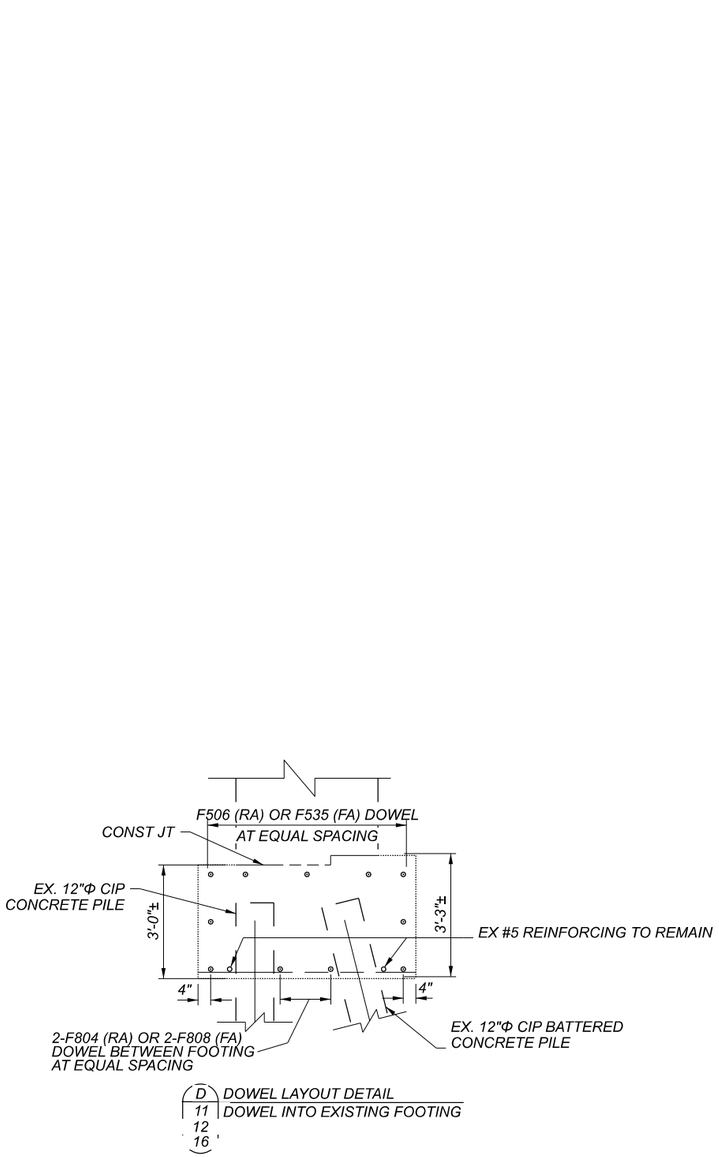

D 11 12 16 DOWEL LAYOUT DETAIL
DOWEL INTO EXISTING FOOTING

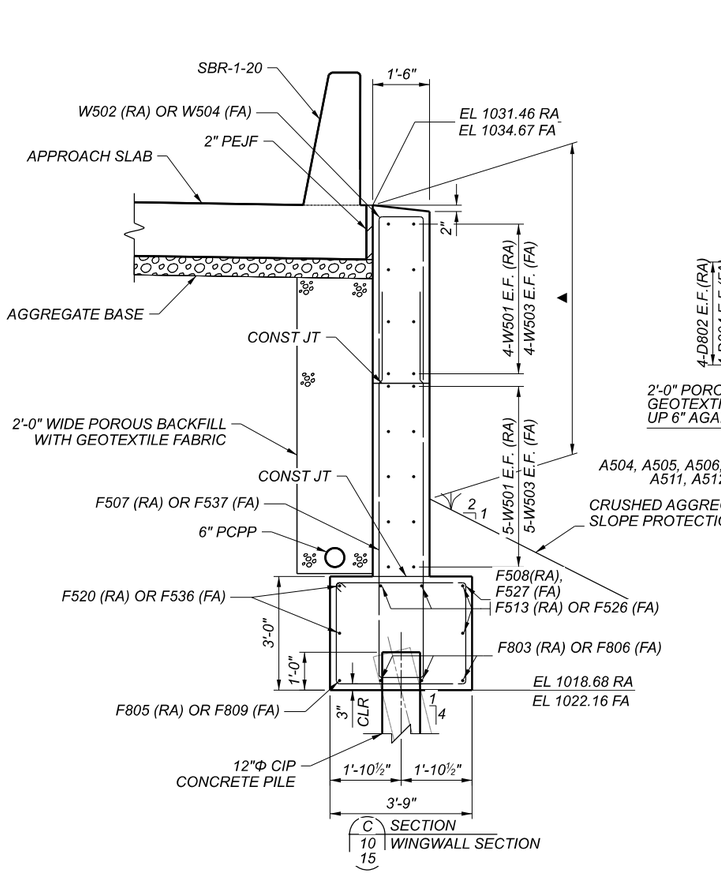

C 10 15 SECTION
WINGWALL SECTION

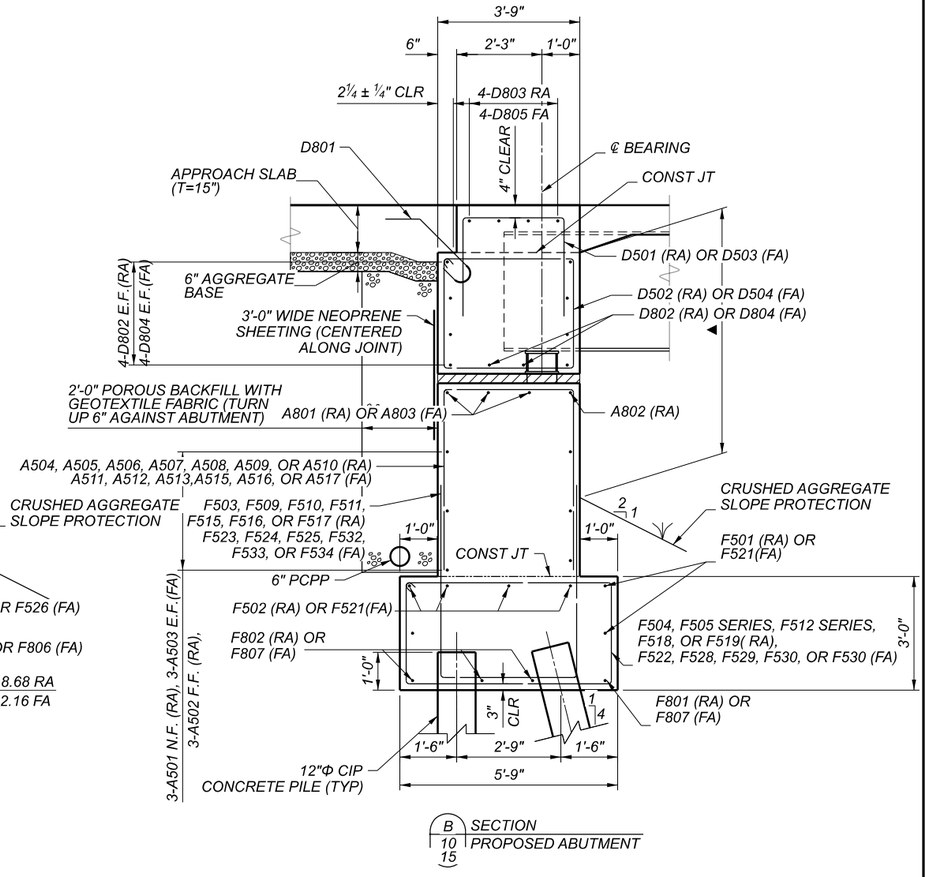

B 10 15 SECTION
PROPOSED ABUTMENT

LEGEND

▲ INDICATES LIMITS OF ITEM 512 - SEALING OF CONCRETE SURFACES (EPOXY-URETHANE)

ABUTMENT SECTIONS
BRIDGE NO. SUM-77-3227L
IR-77 OVER SR-21 (BRECKSVILLE RD.)

SFN 7704712

DESIGN AGENCY
Gannett Fleming
ENGINEERS AND ARCHITECTS, P.C.
2500 Corporate Exchange Drive
Suite 200
Columbus, OH 43231

DESIGNER	CHECKER
RSN	CTM

REVIEWER MTO 2/22

PROJECT ID 104983

SUBSET	TOTAL
13	37

SHEET	TOTAL
237	297

SUM-77-32.27 PENTABLE SUBSET: 4 SUBMITTAL: Stage 3 PLOT DRIVER: OHDOT_PDF_Levels.pltcfg

MODEL: Sheet PAPERSIZE: 17x11 (in.) DATE: 2/24/2022 TIME: 2:18:51 PM USER: edues
pw:\\gfnet-pw.bentley.com:gfnet-pw-01\Documents\Projects\67490\104983401-Engineering-GF\Structures\3227L-SFN_7704712\Sheets\118 sr003

PENTABLE: 104983_OHDOT_Pen.tbl

FILE: ...\Sheets\118 sr003

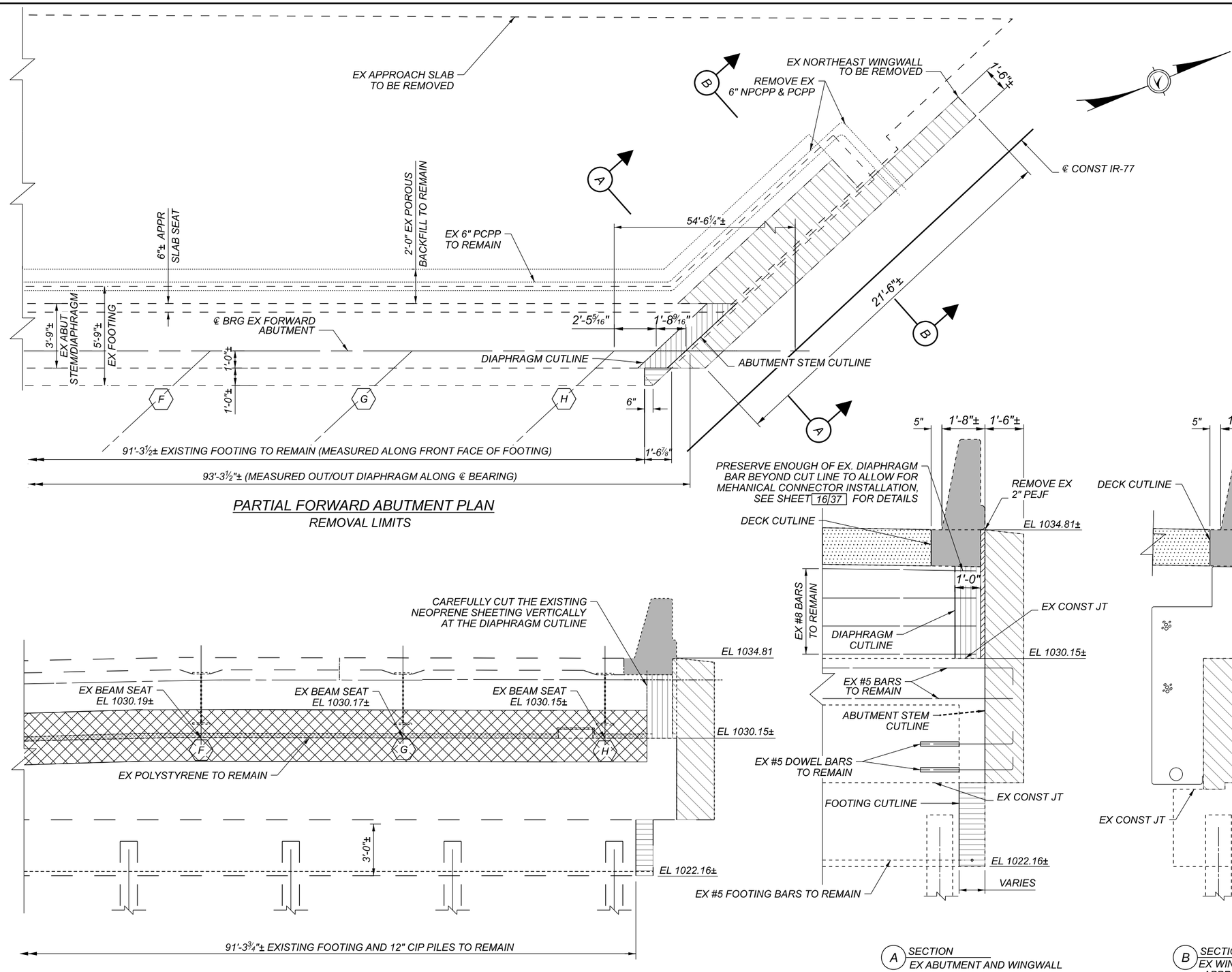

PARTIAL FORWARD ABUTMENT PLAN
REMOVAL LIMITS

PARTIAL FORWARD ABUTMENT ELEVATION
REMOVAL LIMITS

A SECTION
EX ABUTMENT AND WINGWALL

B SECTION
EX WINGWALL AND APPROACH SLAB

NOTES:

PRESERVE THE VERTICAL REINFORCING ABOVE THE CUTLINE UNLESS NOTED OTHERWISE

LEGEND

- EXISTING WINGWALL TO BE REMOVED
- EXISTING PARAPET AND DECK TO BE REMOVED
- EXISTING DIAPHAGM TO BE REMOVED
- EXISTING FOOTING TO BE REMOVED
- EXISTING SEMI-INTERGRAL EXPANSION JOINT SEAL LIMIT
- APPROACH SLAB REMOVAL

EXISTING FORWARD ABUTMENT REMOVAL DETAILS
BRIDGE NO. SUM-77-3227L
IR-77 OVER SR-21 (BRECKSVILLE RD.)

SFN 7704712

DESIGN AGENCY
Gannett Fleming
ENGINEERS AND ARCHITECTS, P.C.
2500 Corporate Exchange Drive
Suite 220
Columbus, OH 43231

DESIGNER	CHECKER
RSN	CTM

REVIEWER MTO 2/22

PROJECT ID 104983

SUBSET	TOTAL
14	37

SHEET	TOTAL
238	297

SUM-77-32.27 PENTABLE SUBSET: 4 SUBMITTAL: Stage 3 PLOT DRIVER: OHDOT_PDF_Levels.pltcfg PENTABLE: 104983_OHDOT_Pen.tbl
MODEL: Sheet PAPERSIZE: 17x11 (in.) DATE: 2/24/2022 TIME: 2:21:04 PM USER: edues
pw:\\gfnet-pw.bentley.com:gfnet-pw-01\Documents\Projects\674900\104983\401-Engineering-GF\Structures\3227L-SFN_7704712\Sheets\119 sv002

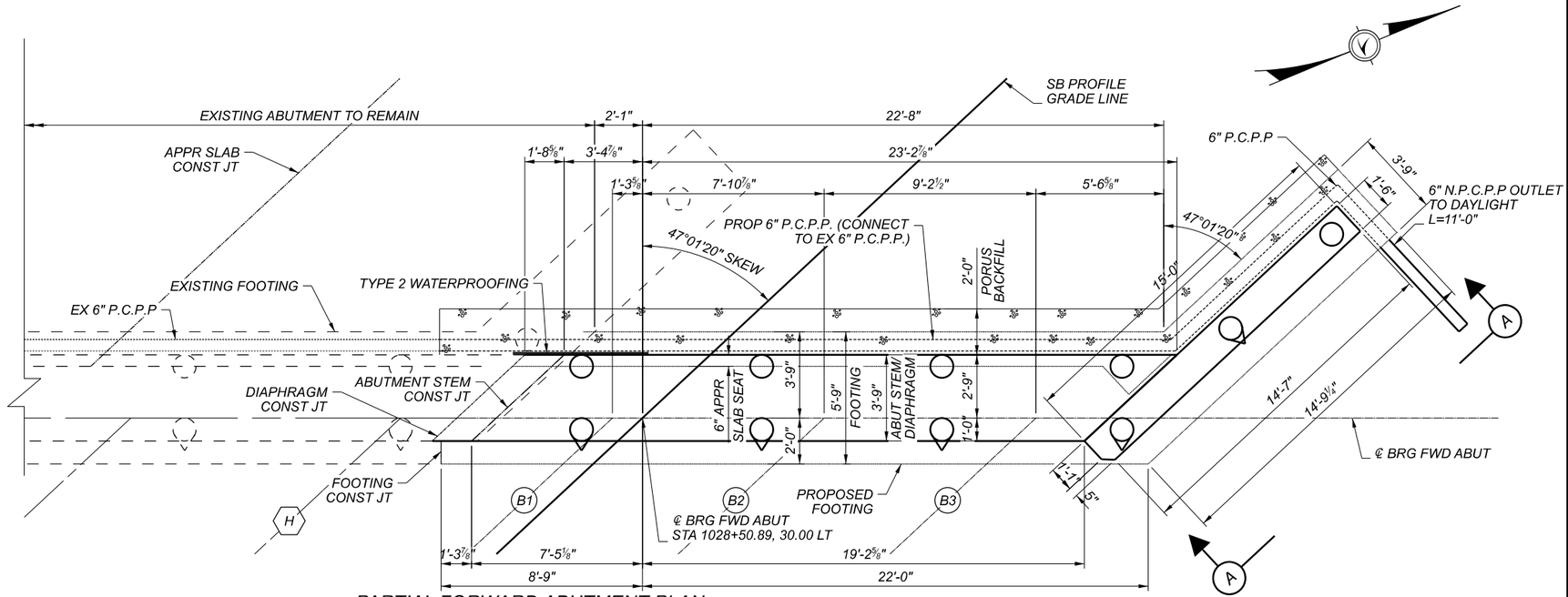

PARTIAL FORWARD ABUTMENT PLAN

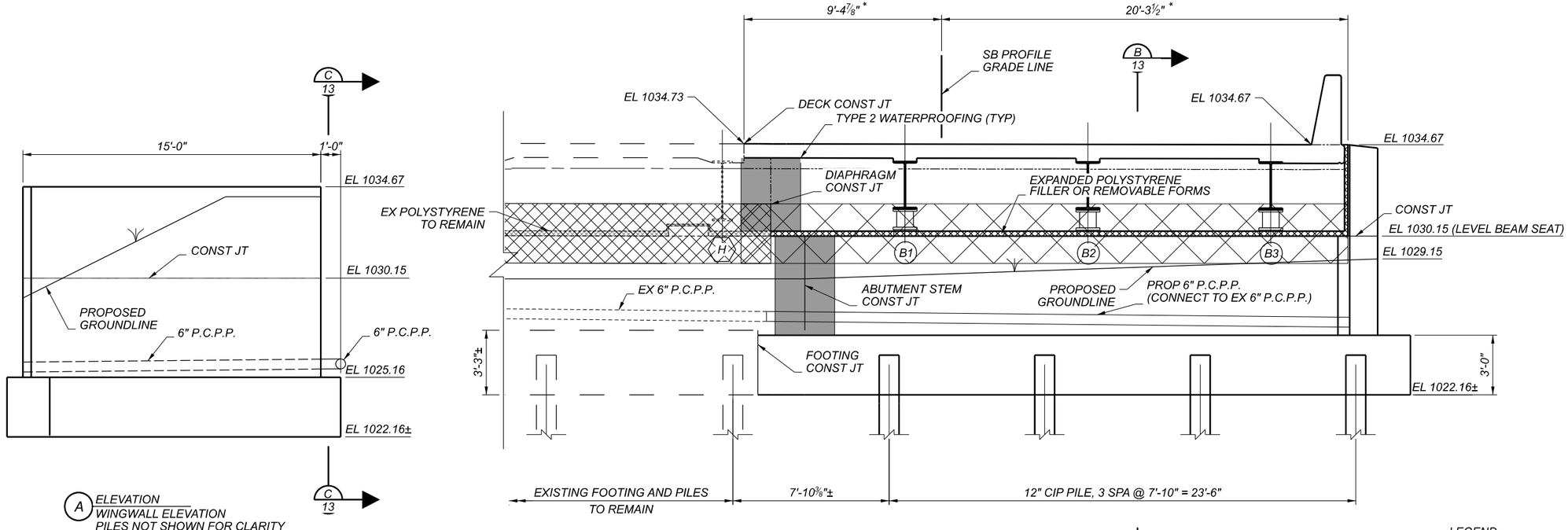

PARTIAL FORWARD ABUTMENT ELEVATION

A ELEVATION
WINGWALL ELEVATION
PILES NOT SHOWN FOR CLARITY

NOTES:

1. PLACE THE DIAPHRAGM CONCRETE ENCASING THE STRUCTURAL MEMBER ENDS AFTER THE DECK PLACEMENT IN THE ADJACENT SPAN IS COMPLETE. PROCEDURES THAT PLACE THE ABUTMENT DIAPHRAGM WITH THE DECK CONCRETE MAY BE APPROVED BY THE ENGINEER IF THE PLACEMENT SUBMITTAL CAN ASSURE THAT THE DECK CONCRETE IN THE ADJACENT SPAN WILL BE PLACED BEFORE CONCRETE IN THE DIAPHRAGM HAS REACHED ITS INITIAL SET

2. SEE SHEET 8/37 FOR FOUNDATION PLAN.

3. SEE SHEET 33/37 FOR APPROACH SLAB DETAILS.

LEGEND

* MEASURED ALONG FORWARD ABUT ℄ BRG

TYPE 2 WATERPROOFING
3' WIDE, CENTERED ALONG JOINT

EX SEMI-INTERGRAL EXPANSION JOINT SEAL

SEMI-INTERGRAL EXPANSION JOINT SEAL

PROPOSED FORWARD ABUTMENT PLAN AND ELEVATION
BRIDGE NO. SUM-77-3227L
IR-77 OVER SR-21 (BRECKSVILLE RD.)

SFN 7704712

DESIGN AGENCY
Gannett Fleming
ENGINEERS AND ARCHITECTS, P.C.
2500 Corporate Exchange Drive Suite 200 Columbus, OH 43231

DESIGNER	CHECKER
RSN	CTM

REVIEWER MTO 2/22

PROJECT ID 104983

SUBSET	TOTAL
15	37

SHEET	TOTAL
239	297

SUM-77-32.27

SUBMITTAL: Stage 3 PENTABLE SUBSET: 4

PLOT DRIVER: OHDOT_PDF_Levels.pltcfg PENTABLE: 104983_OHDOT_Pen.tbl

MODEL: Sheet PAPERSIZE: 17x11 (in.) DATE: 2/24/2022 TIME: 2:23:13 PM USER: edues
pw:\\gfnet-pw.bentley.com:gfnet-pw-01\Documents\Projects\67490\104983\401-Engineering-GF\Structures\3227L-SFN_7704712\Sheets\120 sf001

FILE: ...\Sheets\120 sf001

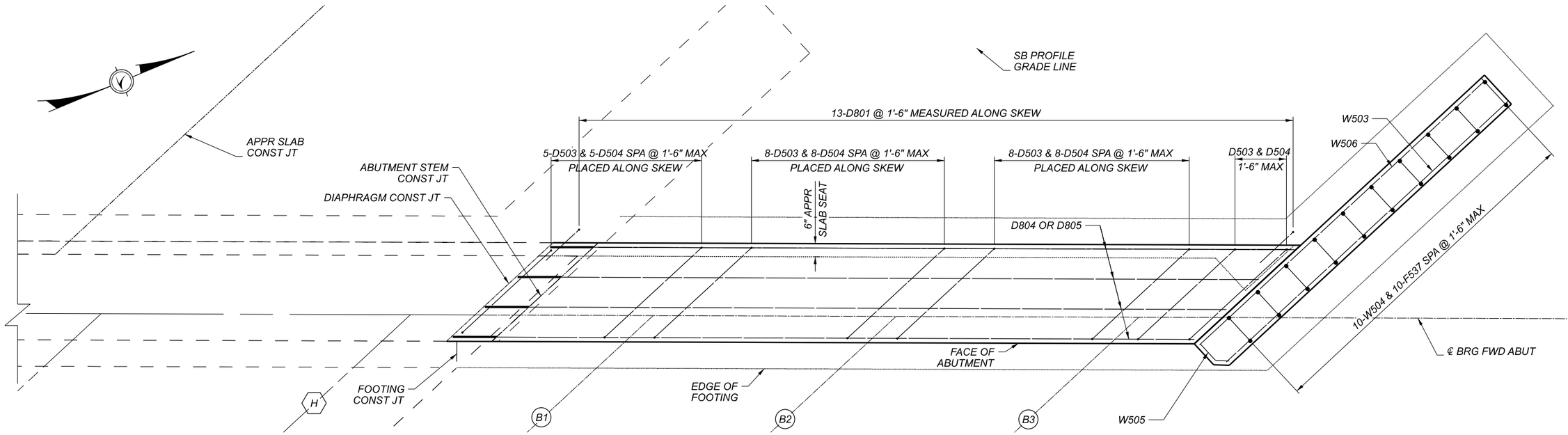

PROPOSED FORWARD ABUTMENT PLAN

DIAPHRAGM REINFORCING SHOWN

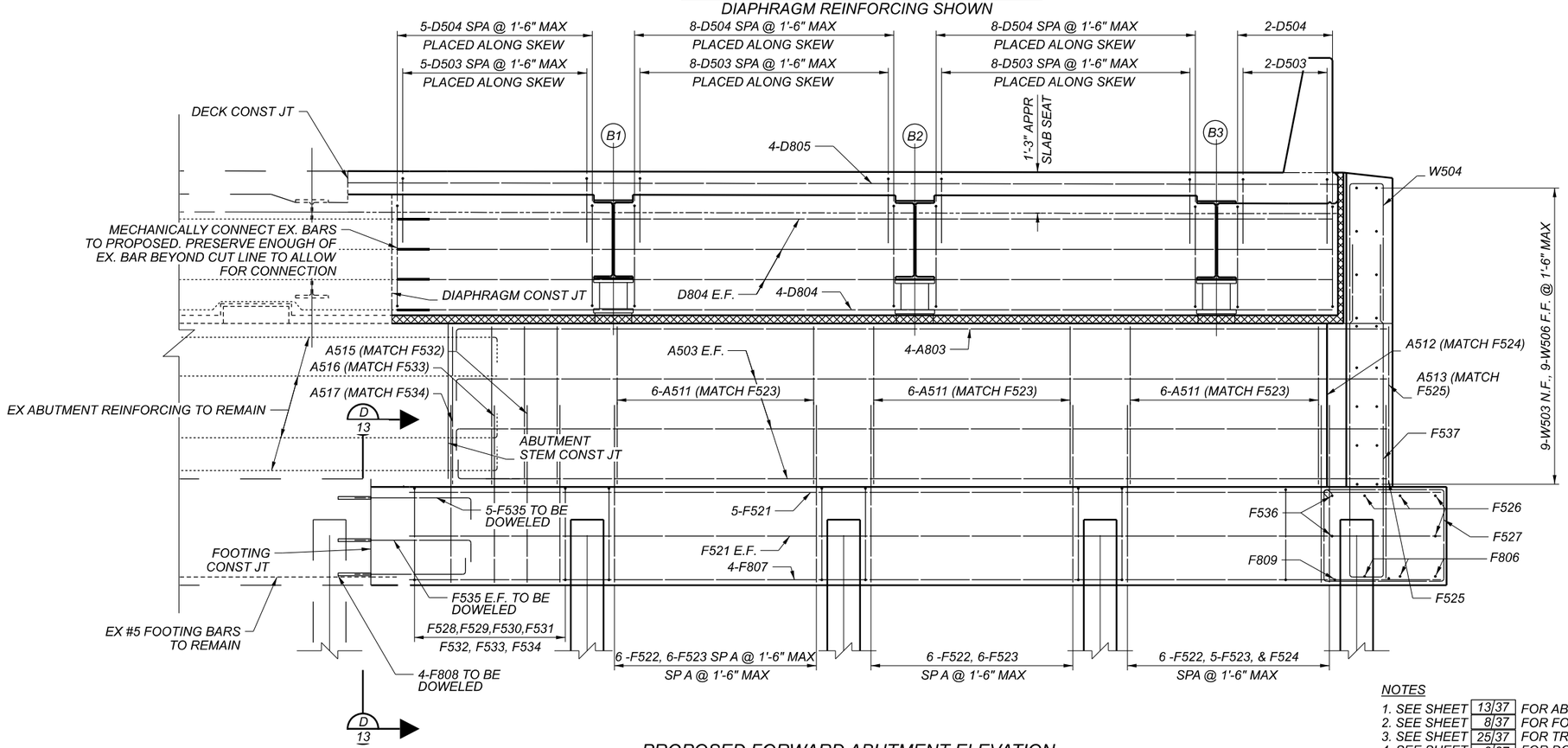

PROPOSED FORWARD ABUTMENT ELEVATION

NOTES

1. SEE SHEET 13/37 FOR ABUTMENT DETAILS AND SECTIONS.
2. SEE SHEET 8/37 FOR FOUNDATION PLAN.
3. SEE SHEET 25/37 FOR TRANSVERSE SECTION.
4. SEE SHEET 3/37 FOR DOWEL HOLE NOTES.
5. SEE SHEET 33/37 FOR APPROACH SLAB DETAILS
6. 2" CLEAR COVER UNLESS NOTED OTHERWISE.

FORWARD ABUTMENT REINFORCING DETAILS
BRIDGE NO. SUM-77-3227L
IR-77 OVER SR-21 (BRECKSVILLE RD.)

SFN 7704712

DESIGN AGENCY
Gannett Fleming ENGINEERS AND ARCHITECTS, P.C.
2500 Corporate Exchange Drive Suite 200 Columbus, OH 43231

DESIGNER	CHECKER
RSN	CTM

REVIEWER: MTO 2/22

PROJECT ID: 104983

SUBSET	TOTAL
16	37

SHEET	TOTAL
240	297

SUM-77-32.27 PENTABLE SUBSET: 4 SUBMITTAL: Stage 3 PLOT DRIVER: OHDOT_PDF_Levels.pltcfg PENTABLE: 104983_OHDOT_Pen.tbl

MODEL: Sheet PAPERSIZE: 17x11 (in.) DATE: 2/24/2022 TIME: 2:25:13 PM USER: edues
pw:\\gfnet-pw.bentley.com:gfnet-pw-01\Documents\Projects\67490\104983401-Engineering-GF\Structures\32271-SFN_7704712\Sheets\121 sf002

FILE: ...\Sheets\121 sf002

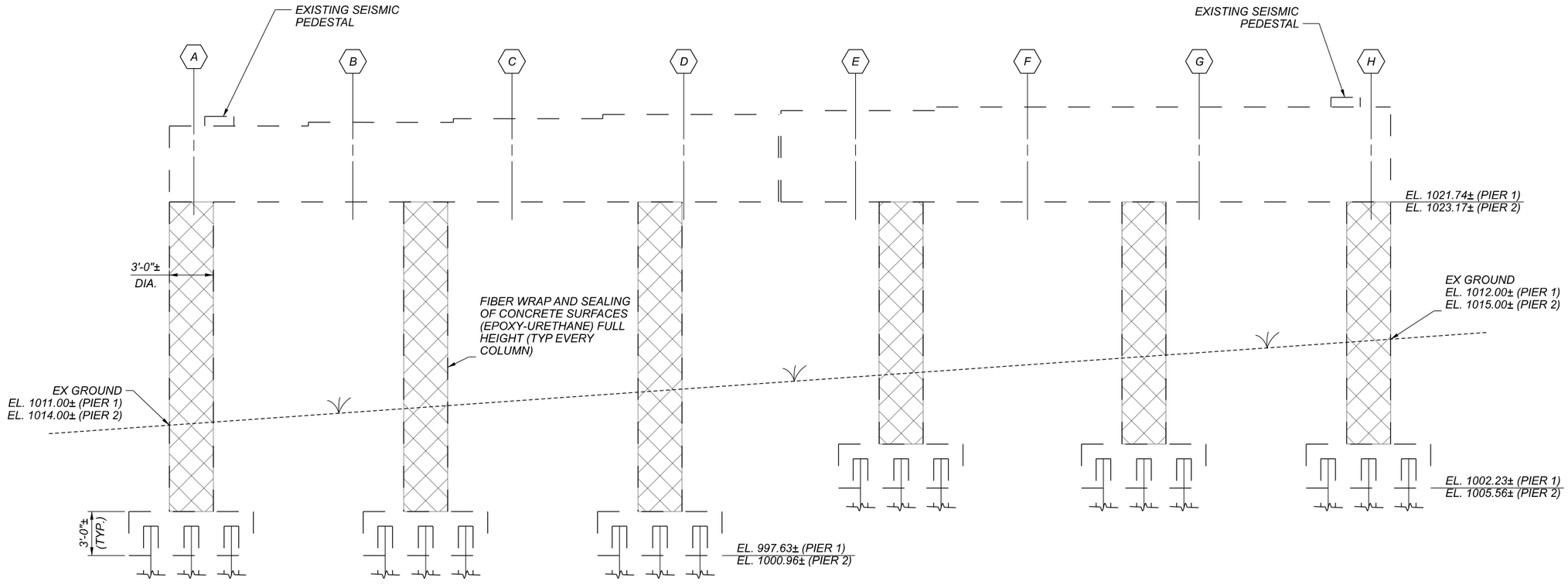

NOTES:

1. ANY CONCRETE PATCHING OF PIERS SHALL BE COMPLETED AS DIRECTED BY THE ENGINEER BEFORE FIBER WRAPPING. CONCRETE PATCHING SHALL BE INCLUDED FOR PAYMENT WITH ITEM 519, COMPOSITE FIBER WRAP SYSTEM.
2. COLUMN FIBER WRAP MUST ACHIEVE A CONFINING STRESS OF 0.30 KSI FOR THE TOP AND BOTTOM 4 FEET OF COLUMNS, AND 0.150 KSI CONFINING STRESS FOR ALL OTHER COLUMN PORTIONS. CONTRACTOR TO DETERMINE THE WRAPPING REQUIREMENTS (NUMBER OF LAYERS, METHOD OF APPLICATION, ETC.) PER THE MANUFACTURER'S GUIDELINES.
3. SEAL ALL COLUMNS FROM BOTTOM OF CAP TO FINAL GRADE ELEVATION. SEALANT APPLIED TO CONCRETE SURFACES SHALL BE EPOXY-URETHANE. SEALANT APPLIED TO FIBER WRAPPED SURFACES SHALL BE IN COMPLIANCE WITH FIBER WRAP MANUFACTURER REQUIREMENTS FOR PROTECTION AGAINST UV AND SALT SPRAY. IF A SEALER OTHER THAN THE TYPICAL PROJECT EPOXY-URETHANE SEALER IS USED ON FIBER WRAPPED SURFACES, SELECT COLOR OF FIBER WRAP SEALER TO MATCH COLOR OF CONCRETE SURFACE SEALER. THE COST TO SEAL THE COLUMNS SHALL BE INCLUDED IN THE COST OF ITEM 512 - SEALING OF CONCRETE SURFACES (EPOXY-URETHANE), AS PER PLAN INCLUDING ANY SPECIALTY FIBER WRAP SEALANTS THAT MAY BE REQUIRED.
4. EXCAVATION OF SOIL AROUND PIER COLUMNS TO THE TOP OF THE FOOTING AS NECESSARY TO PROPERLY INSTALL THE COMPOSITE FIBER WRAP SYSTEM. EXCAVATION AND BACKFILL AROUND THE PIER COLUMNS TO BE INCLUDED FOR PAYMENT WITH ITEM 503-UNCLASSIFIED EXCAVATION, AS PER PLAN.
5. FOR FURTHER COMPOSITE FIBER WRAP INSTALLATION REQUIREMENTS, REFER TO PN-519.

EXISTING PIER ELEVATION

(LOOKING UPSTATION, PIER 1 SHOWN, PIER 2 SIMILAR)

LEGEND:

FIBER WRAP LIMITS

PIER WRAPPING DETAILS
BRIDGE NO. SUM-77-3227L
IR-77 OVER SR-21 (BRECKSVILLE RD.)

SFN 7704712

DESIGN AGENCY
Gannett Fleming
ENGINEERS AND ARCHITECTS, P.C.
2550 Corporate Exchange Drive Suite 220
Columbus, OH 43231

DESIGNER	CHECKER
SAT	CTM

REVIEWER: MTO 2/22

PROJECT ID: 104983

SUBSET	TOTAL
17	37

SHEET	TOTAL
241	297

SUM-77-32.27 PENTABLE SUBSET: 4 SUBMITTAL: Stage 3 PLOT DRIVER: OHDOT_PDF_Levels.pltcfg

MODEL: Sheet PAPERSIZE: 17x11 (in.) DATE: 2/24/2022 TIME: 2:27:46 PM USER: edues PENTABLE: 104983_OHDOT_Pen.tbl
pw:\\gfnet-pw.bentley.com:gfnet-pw-01\Documents\Projects\674900\104983\401-Engineering-GF\Structures\3227L-SFN_7704712\Sheets\144 si101

FILE: ...\Sheets\144 si101

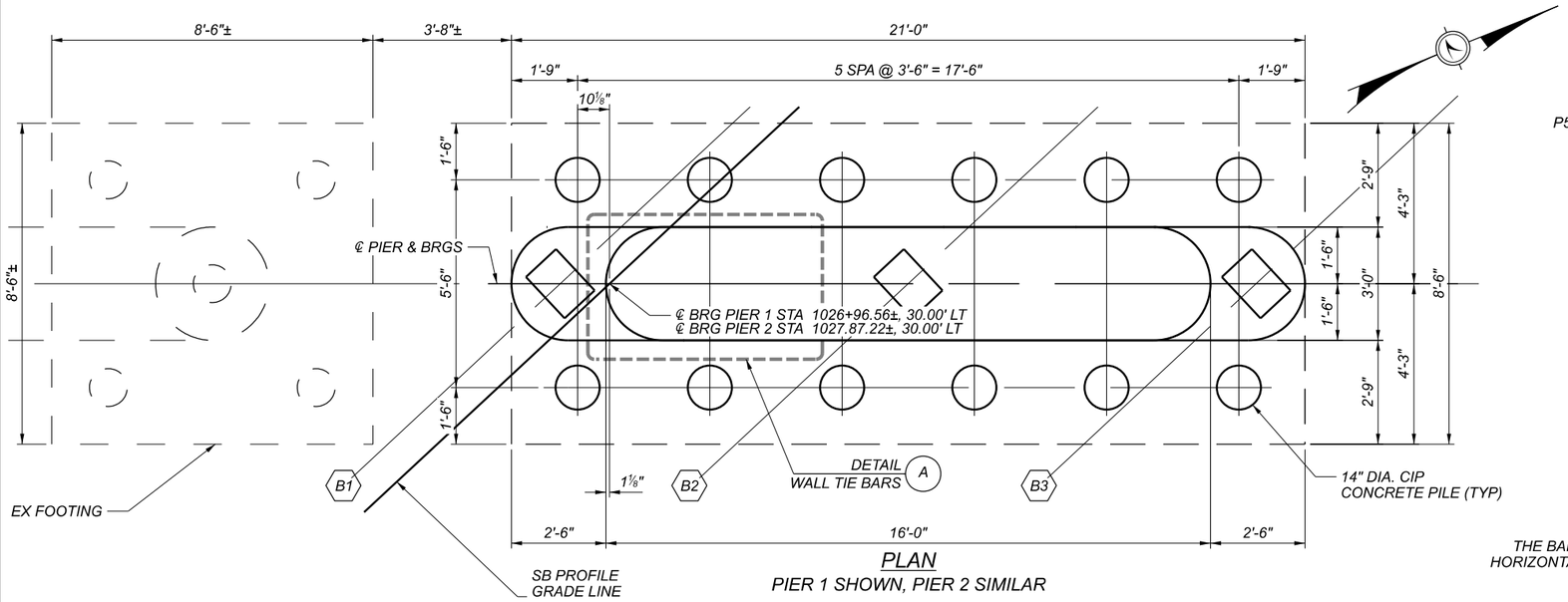

PLAN
PIER 1 SHOWN, PIER 2 SIMILAR

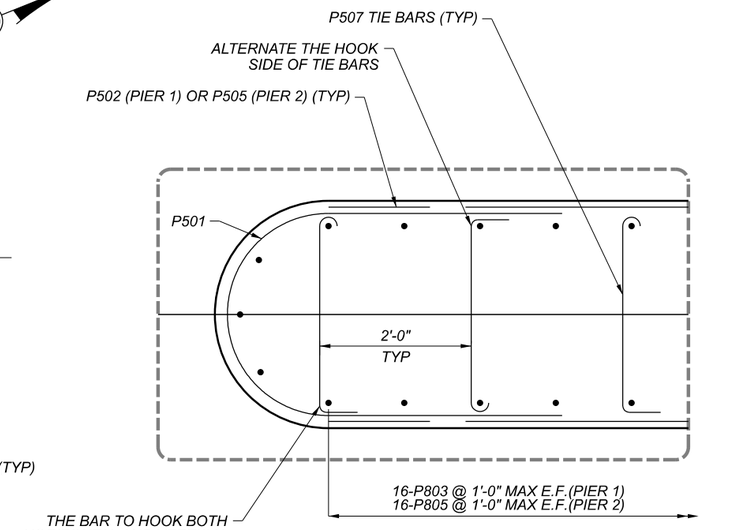

A DETAIL
TIE BAR DETAIL
(PIER CAP REINFORCING NOT SHOWN FOR CLARITY)

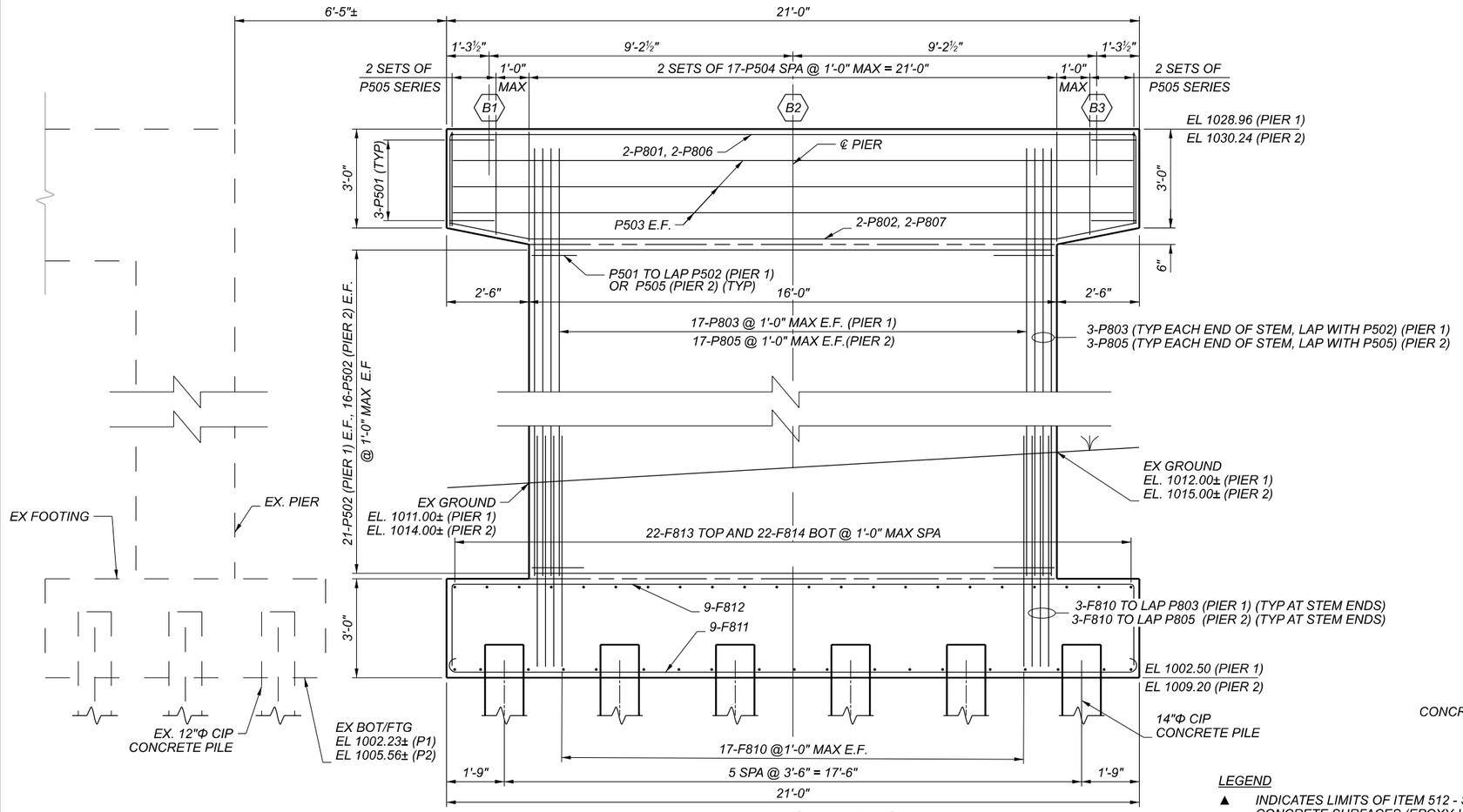

PIER WIDENING ELEVATION

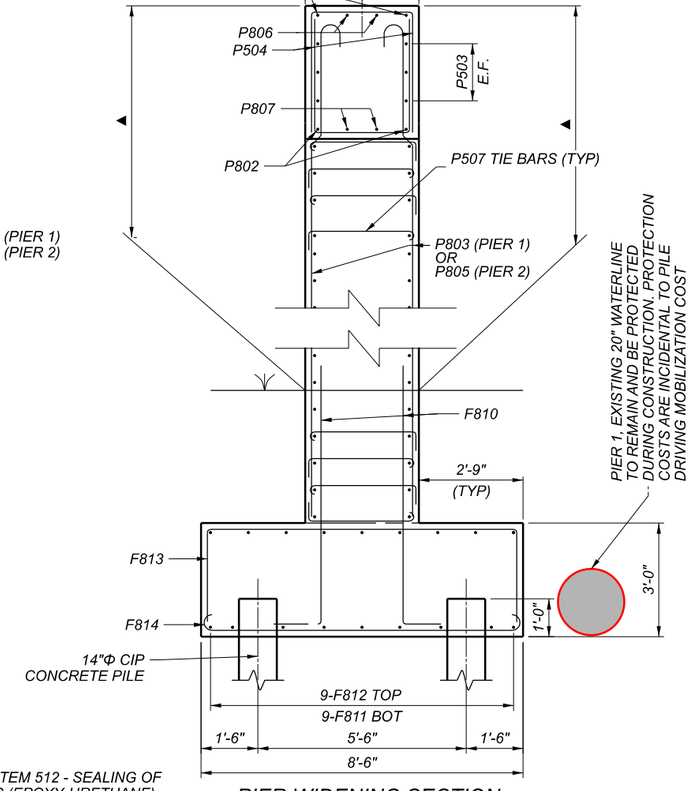

PIER WIDENING SECTION

LEGEND
▲ INDICATES LIMITS OF ITEM 512 - SEALING OF CONCRETE SURFACES (EPOXY-URETHANE)

PROPOSED PIER DETAILS
BRIDGE NO. SUM-77-3227L
IR-77 OVER SR-21 (BRECKSVILLE RD.)

SFN 7704712

DESIGN AGENCY
Gannett Fleming
ENGINEERS AND ARCHITECTS, P.C.
2500 Corporate Exchange Drive
Suite 200
Columbus, OH 43221

DESIGNER	CHECKER
RSN	CTM

REVIEWER MTO 2/22

PROJECT ID 104983

SUBSET	TOTAL
18	37

SHEET	TOTAL
242	297

SUM-77-32.27 PENTABLE SUBSET: 4 SUBMITTAL: Stage 3 PLOT DRIVER: OHDOT_PDF_Levels.pltcfg

MODEL: Sheet PAPERSIZE: 17x11 (in.) DATE: 2/24/2022 TIME: 2:29:49 PM USER: edues
pw:\\gfnet-pw.bentley.com:gfnet-pw-01\Documents\Projects\67490\104983401-Engineering-GF\Structures\3227L-SFN_7704712\Sheets\145 sl100

PENTABLE: 104983_OHDOT_Pen.tbl

FILE: ...\Sheets\145 sl100

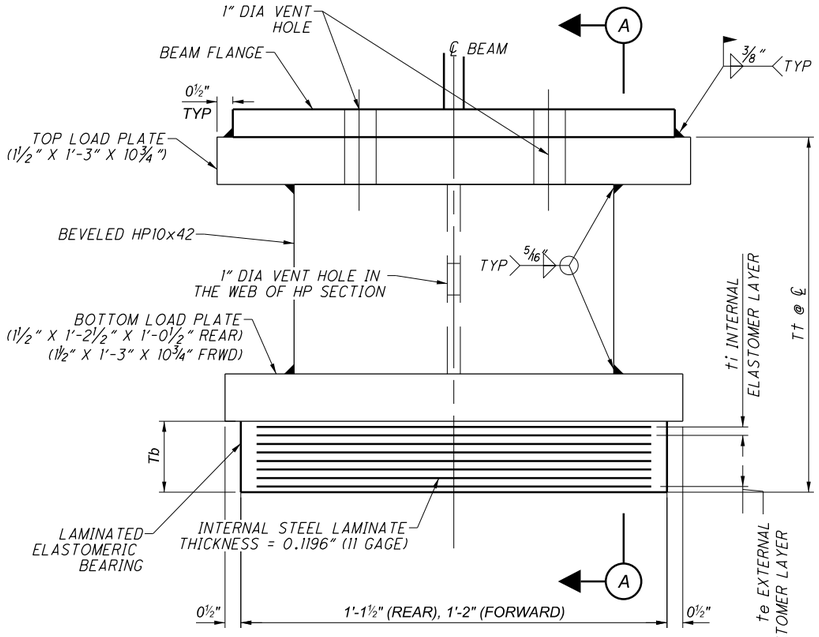

LAMINATED ELASTOMERIC BEARING (EXPANSION)
REAR AND FORWARD ABUTMENTS

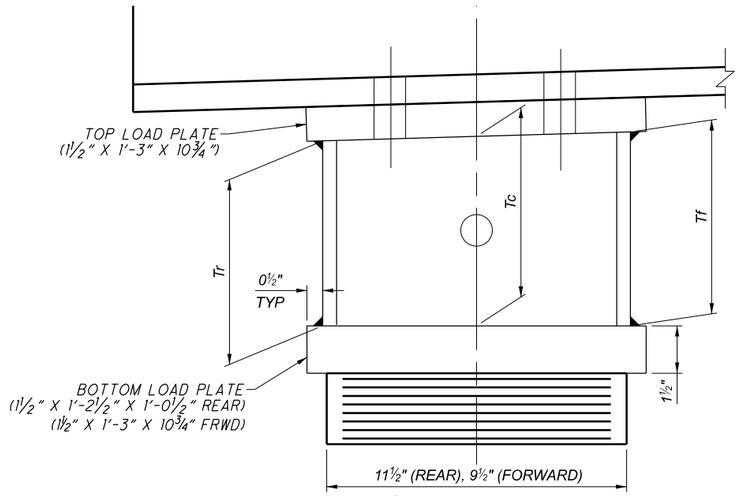

DETAIL
REAR AND FORWARD ABUTMENTS

BEARING SCHEDULE

SUPPORT	BEARING TYPE	QUANTITY	DEAD LOAD (KIPS)	LIVE LOAD (KIPS)	TOTAL LOAD (KIPS)	ti	NO. OF ti's	te	NO. OF te's	NO. OF INTERNAL LAMINATES	Tb	BEVELED HP OR LOAD PLATE			Tt @ CL BRG
												Tr	Tc	Tf	
REAR ABUT - B1	EXPANSION	1	63	89	152	0.36	6	0.20	1	6	3.08	10.87	10.95	11.03	17.03
REAR ABUT - B2	EXPANSION	1	63	89	152	0.36	6	0.20	1	6	3.08	10.86	10.95	11.04	17.03
REAR ABUT - B3	EXPANSION	1	63	89	152	0.36	6	0.20	1	6	3.08	11.22	11.30	11.38	17.38
FWD ABUT - B1	EXPANSION	1	57	68	125	0.34	6	0.20	1	6	2.96	9.54	9.60	9.66	15.56
FWD ABUT - B2	EXPANSION	1	57	68	125	0.34	6	0.20	1	6	2.96	9.24	9.30	9.36	15.26
FWD ABUT - B3	EXPANSION	1	57	68	125	0.34	6	0.20	1	6	2.96	8.94	9.00	9.06	14.96
PIER 1 - B1	EXPANSION	1	132	133	265	0.36	5	0.19	1	5	2.59	1.39	1.50	1.61	4.09
PIER 1 - B2	EXPANSION	1	132	133	265	0.36	5	0.19	1	5	2.59	1.49	1.60	1.71	4.19
PIER 1 - B3	EXPANSION	1	132	133	265	0.36	5	0.19	1	5	2.59	1.50	1.60	1.70	4.19
PIER 2 - B1	EXPANSION	1	123	126	249	0.36	5	0.19	1	5	2.59	1.71	1.80	1.89	4.39
PIER 2 - B2	EXPANSION	1	123	126	249	0.36	5	0.19	1	5	2.59	1.61	1.70	1.79	4.29
PIER 2 - B3	EXPANSION	1	123	126	249	0.36	5	0.19	1	5	2.59	1.41	1.50	1.59	4.09

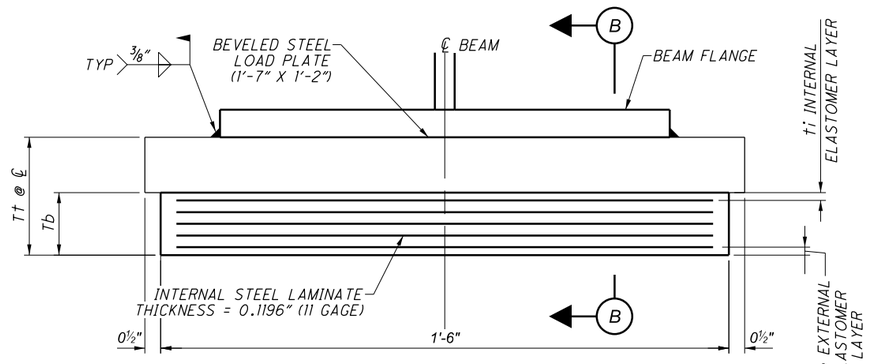

LAMINATED ELASTOMERIC BEARING (EXPANSION)
PIER 1 & 2 BEARING

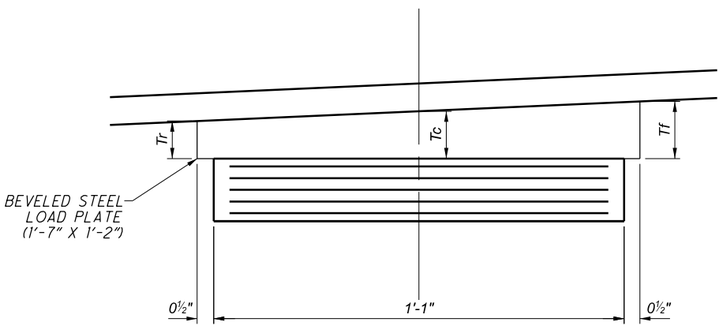

DETAIL
PIER 1 & 2 BEARING

NOTES

1. *THE ELASTOMER SHALL HAVE A HARDNESS OF 50 DUROMETER. THE BEARINGS WERE DESIGNED IN ACCORDANCE WITH SECTION 14.7.6 (METHOD A) OF THE AASHTO LRFD BRIDGE DESIGN SPECIFICATIONS. THE LONG-TERM COMPRESSION PROOF LOAD TEST (AASHTO STANDARD SPECIFICATIONS FOR HIGHWAY BRIDGES, DIVISION II, SECTION 18.7.2.6) IS NOT REQUIRED.*
2. *THE STEEL LOAD PLATE SHALL BE ASTM A709, GRADE 50 STEEL. BOND THE LOAD PLATE BY VULCANIZATION TO THE ELASTOMER DURING THE MOLDING PROCESS.*
3. *THE DEAD, LIVE, AND TOTAL LOADS TABULATED IN THE BEARING SCHEDULE ARE UNFACTORED LOADS.*
4. *REFER TO STD DWG SICD-1-21 FOR ADDITIONAL ABUTMENT BEARING NOTES AND DETAILS.*
5. *ALL BEARINGS SHALL BE MARKED PRIOR TO SHIPPING. THE MARKS SHALL INCLUDE THE BEARING LOCATION ON THE BRIDGE, AND A DIRECTION ARROW THAT POINTS UP-STATION. ALL MARKS SHALL BE PERMANENT AND BE VISIBLE AFTER THE BEARING IS INSTALLED.*
6. *ALL STEEL BEARING SURFACES SHALL BE PAINTED WITH THE SAME SYSTEM AS THE BEAMS AND INCLUDED WITH PAYMENT OF THE BEAMS.*
7. *PAYMENT FOR ELASTOMERIC BEARINGS, LOAD PLATES, AND PEDESTALS AND INSTALLATION TO BE INCLUDED WITH ITEM 516, ELASTOMERC BEARING WITH INTERNAL LAMINATES AND LOAD PLATE (NEOPRENE).*

BEARING DETAILS
BRIDGE NO. SUM-77-3227L
IR-77 OVER SR-21 (BRECKSVILLE RD.)

SFN 7704712

DESIGN AGENCY
Gannett Fleming
ENGINEERS AND ARCHITECTS, P.C.
2500 Corporate Exchange Drive Suite 200 Columbus, OH 43231

DESIGNER	CHECKER
RSN	CTM

REVIEWER: MTO 2/22

PROJECT ID: 104983

SUBSET	TOTAL
19	37

SHEET	TOTAL
243	297

SUM-77-32.27 PENTABLE SUBSET: 4 SUBMITTAL: Stage 3 PLOT DRIVER: OHDOT_PDF_Levels.pltcfg PENTABLE: 104983_OHDOT_Pen.tbl
MODEL: Sheet PAPERSIZE: 17x11 (in.) DATE: 2/24/2022 TIME: 2:32:01 PM USER: edues
pw:\\gfnet-pw.bentley.com:gfnet-pw-01\Documents\Projects\67490\104983401-Engineering-GF\Structures\3227L-SFN_7704712\Sheets\146 sb001

FILE: ...\Sheets\146 sb001

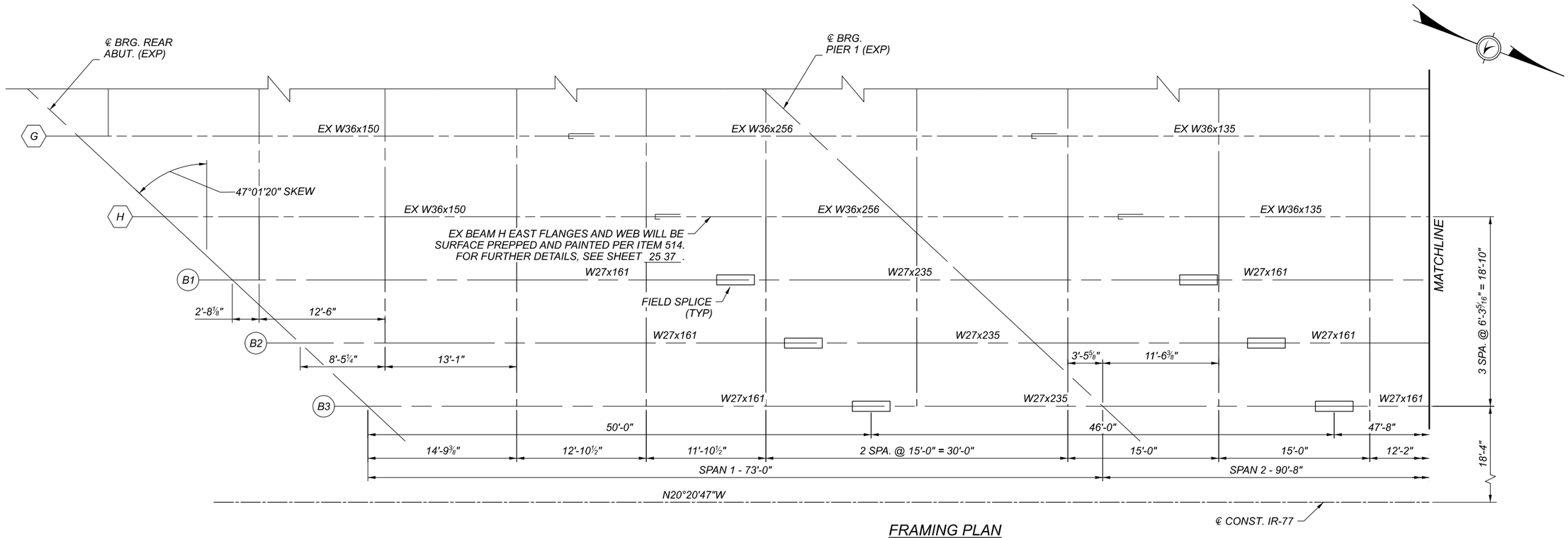

FRAMING PLAN
ALL BEAMS ARE PARALLEL TO ℄ CONST. IR-77

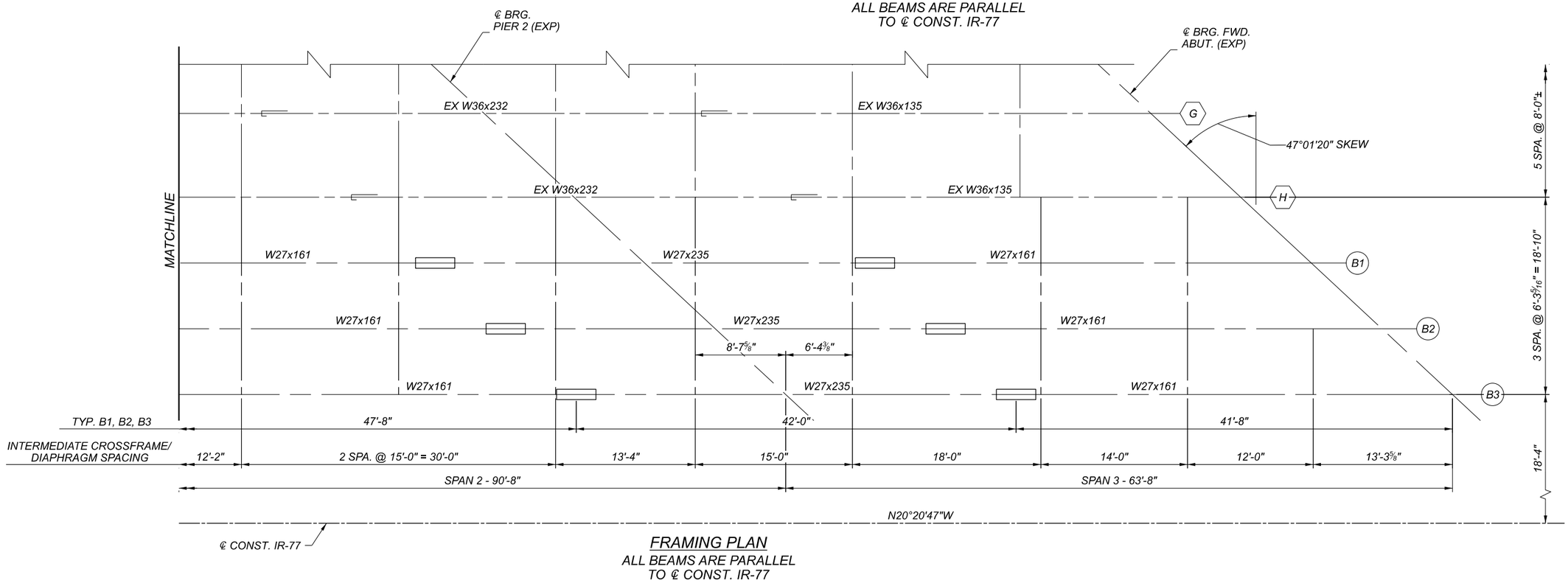

FRAMING PLAN
ALL BEAMS ARE PARALLEL TO ℄ CONST. IR-77

FRAMING PLAN
BRIDGE NO. SUM-77-3227L
IR-77 OVER SR-21 (BRECKSVILLE RD.)

SFN 7704712

DESIGN AGENCY
Gannett Fleming
ENGINEERS AND ARCHITECTS, P.C.
2500 Corporate Exchange Drive Suite 220 Columbus, OH 43231

DESIGNER	CHECKER
SAT	CTM

REVIEWER: MTO 2/22

PROJECT ID: 104983

SUBSET	TOTAL
20	37

SHEET	TOTAL
244	297

SUM-77-32.27 PENTABLE SUBSET: 4 SUBMITTAL: Stage 3 PLOT DRIVER: OHDOT_PDF_Levels.pltcfg

MODEL: Sheet PAPERSIZE: 17x11 (in.) DATE: 2/24/2022 TIME: 2:34:04 PM USER: edues PENTABLE: 104983_OHDOT_Pen.tbl
pw:\\ghet-pw.bentley.com:ghet-pw-01\Documents\Projects\674900\104983\401-Engineering-GFI\Structures\3227L-SFN_7704712\Sheets\147 ss001

FILE: ...\Sheets\147 ss001

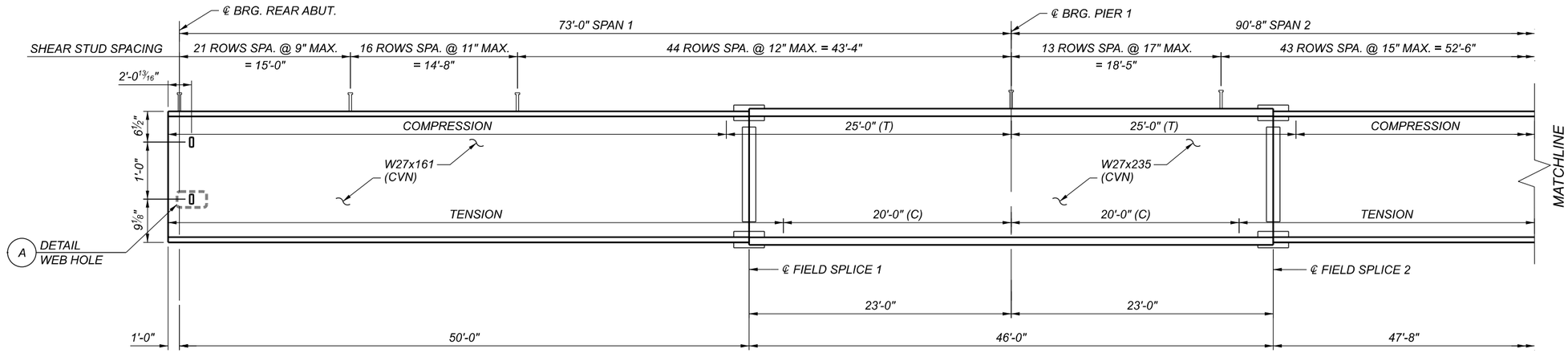

BEAM ELEVATION
(TYP. ALL PROPOSED BEAMS)

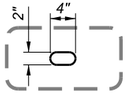

DETAIL A
TYP WEB HOLE

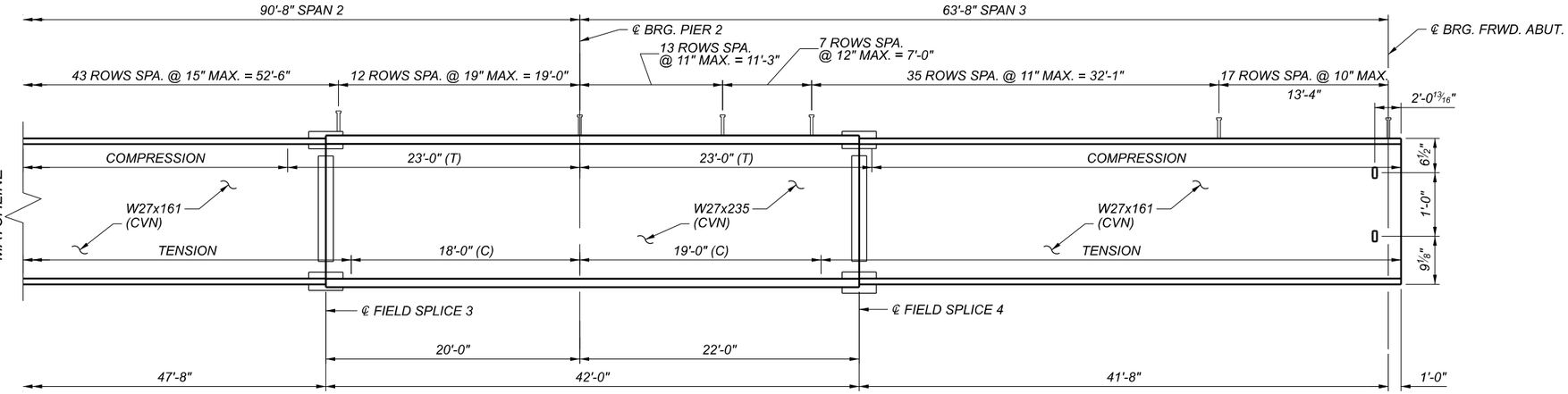

BEAM ELEVATION
(TYP. ALL PROPOSED BEAMS)

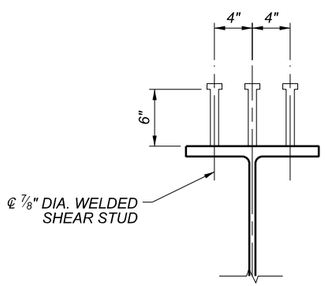

SHEAR STUD DETAIL

NOTES:

1. SEE SHEET 20/37 FOR FRAMING PLAN.
2. SEE SHEET 23/37 FOR SPLICE DETAILS.
3. SEE SHEET 25/37 FOR TRANSVERSE SECTION.
4. ALL STEEL SHALL BE ASTM A709 GRADE 50, AND SHALL HAVE A THREE COAT PAINT SYSTEM APPLIED PER CMS 514. WHERE A SHAPE OR PLATE IS DESIGNATED (CVN) FURNISH MATERIAL THAT MEETS THE MINIMUM NOTCH TOUGHNESS REQUIREMENTS AS SPECIFIED IN CMS 711.01.
5. WELD ATTACHMENT OF SUPPORTS FOR CONCRETE DECK FINISHING MACHINE TO AREAS OF THE FASCIA STRINGER FLANGES DESIGNATED "COMPRESSION" OR "C". DO NOT WELD ATTACHMENTS TO AREAS DESIGNATED "TENSION" OR "T". FILLET WELDS TO COMPRESSION FLANGES SHALL BE AT LEAST 1" FROM EDGE OF FLANGE, BE NO MORE THAN 2" LONG, AND AT LEAST 5/16" THICK.

BEAM ELEVATION
BRIDGE NO. SUM-77-3227L
IR-77 OVER SR-21 (BRECKSVILLE RD.)

SFN 7704712

DESIGN AGENCY
Gannett Fleming
ENGINEERS AND ARCHITECTS, P.C.
2500 Corporate Exchange Drive Suite 200 Columbus, OH 43231

DESIGNER	CHECKER
SAT	CTM

REVIEWER MTO 2/22

PROJECT ID 104983

SUBSET	TOTAL
21	37

SHEET	TOTAL
245	297

SUM-77-32.27 PENTABLE SUBSET: 4 SUBMITTAL: Stage 3 PLOT DRIVER: OHDOT_PDF_Levels.pltcfg

MODEL: Sheet PAPERSIZE: 17x11 (in.) DATE: 2/24/2022 TIME: 2:36:07 PM USER: edues
pw:\\gfnet-pw.bentley.com:gfnet-pw-01\Documents\Projects\67490\104983\401-Engineering-GF\Structures\3227L-SFN_7704712\Sheets\149 ss002

PENTABLE: 104983_OHDOT_Pen.tbl

FILE: ...\Sheets\149 ss002

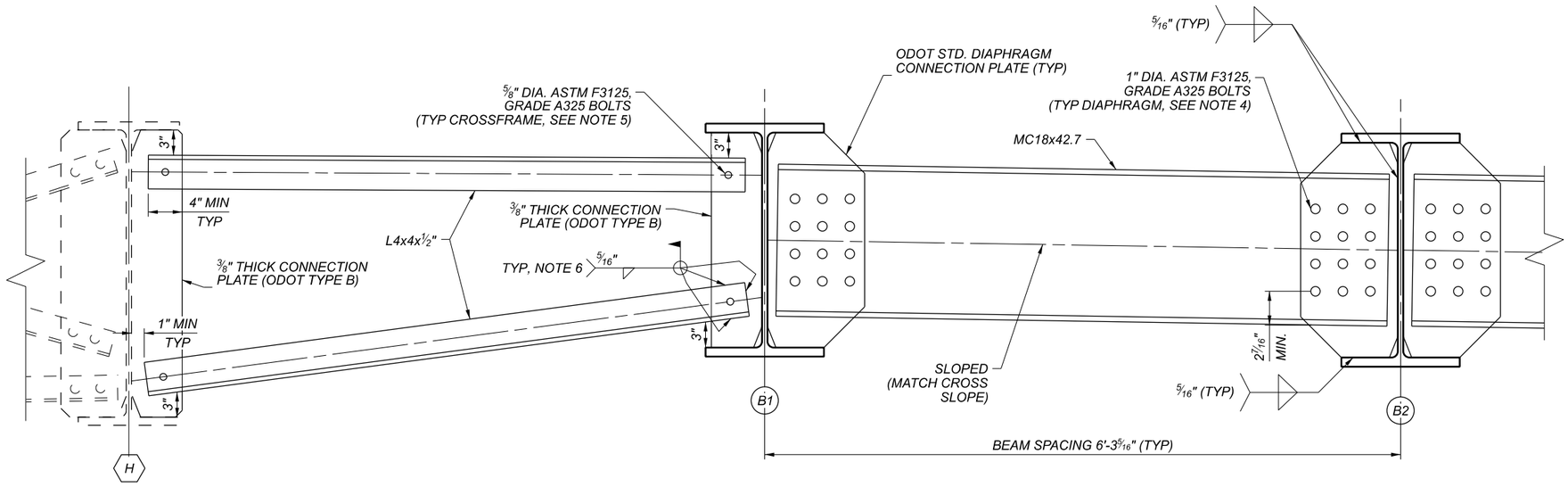

INTERMEDIATE CROSSFRAME & DIAPHRAGMS DETAILS

DIAPHRAGMS BETWEEN B2/B3 ARE THE SAME AS B1/B2

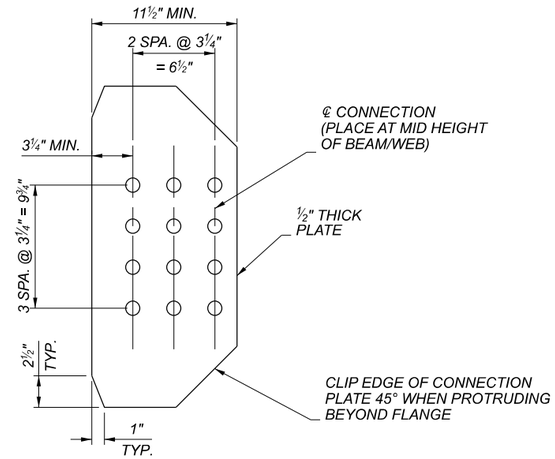

MC 18x42.7 DIAPHRAGM CONNECTION PLATE

NOTES

1. SEE SHEET 20/37 FOR FRAMING PLAN DETAILS.
2. FOR ADDITIONAL DIAPHRAGM AND CONNECTION PLATE DETAILS, REFER TO ODOT STD. DWG. GSD-1-19.
3. TERMINATE WELDS ¼" FROM THE END OF PLATE TO BEAM INTERFACE.
4. ALL BOLT HOLES TO BE 1⅛" DIA. IN CONNECTION PLATES AND 1¼" DIA. IN DIAPHRAGM.
5. ALL BOLT HOLES TO BE 11/16" DIA. IN CONNECTION PLATES AND 13/16" DIA. IN CROSSFRAME ANGLES.
6. IN BAY H/B1, DO NOT WELD ANGLES TO CONNECTION PLATE UNTIL DECK POUR IS COMPLETE.

BEAM CROSSFRAME & DIAPHRAGM DETAILS
BRIDGE NO. SUM-77-3227L
IR-77 OVER SR-21 (BRECKSVILLE RD.)

SFN 7704712

DESIGN AGENCY
Gannett Fleming
ENGINEERS AND ARCHITECTS, P.C.
250 Civic Center Drive, Suite 220, Columbus, OH 43215

DESIGNER	CHECKER
SAT	CTM

REVIEWER: MTO 2/22

PROJECT ID: 104983

SUBSET	TOTAL
22	37

SHEET	TOTAL
246	297

SUM-77-32.27 PENTABLE SUBSET: 4 SUBMITTAL: Stage 3 PLOT DRIVER: OHDOT_PDF_Levels.pltcfg PENTABLE: 104983_OHDOT_Pen.tbl

MODEL: Sheet PAPERSIZE: 17x11 (in.) DATE: 2/24/2022 TIME: 2:38:23 PM USER: edues
pw:\\gfnet-pw.bentley.com:gfnet-pw-01\Documents\Projects\674900\104983\401-Engineering-GFiStructures\3227L-SFN_7704712\Sheets\150 ss003

FILE: ...\Sheets\150 ss003

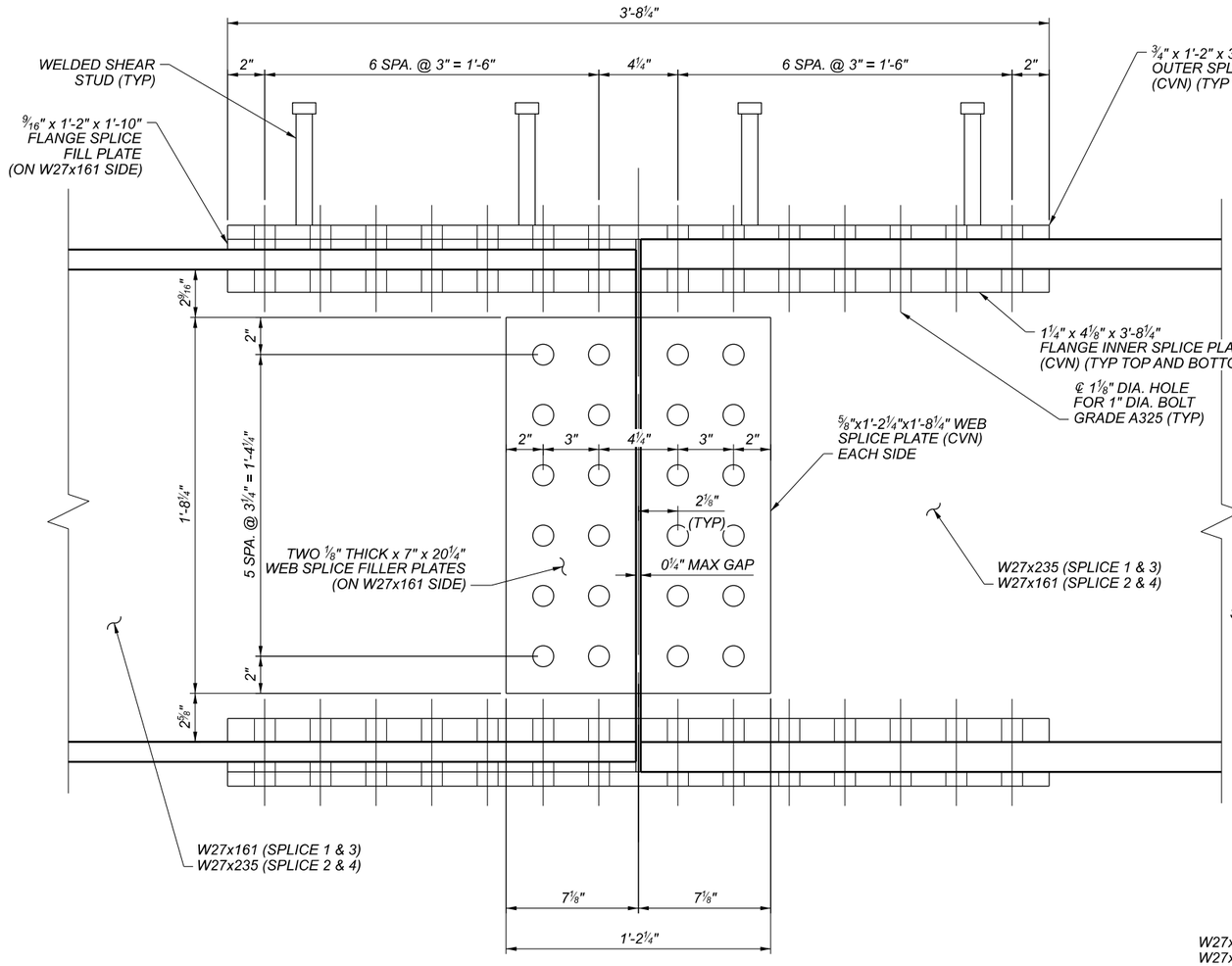

SPLICE ELEVATION

TOP FLANGE DETAILED,
BOTTOM FLANGE IDENTICAL

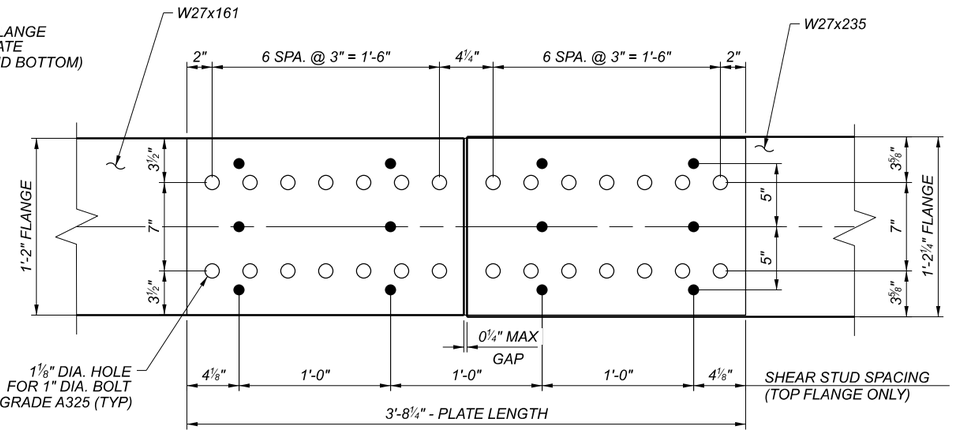

OUTER SPLICE PLATE DETAIL

(TOP FLANGE SHOWN, BOTTOM FLANGE SIMILAR AS NOTED)
(SYMMETRICAL ABOUT ℄ SPLICE & ℄ BEAM)

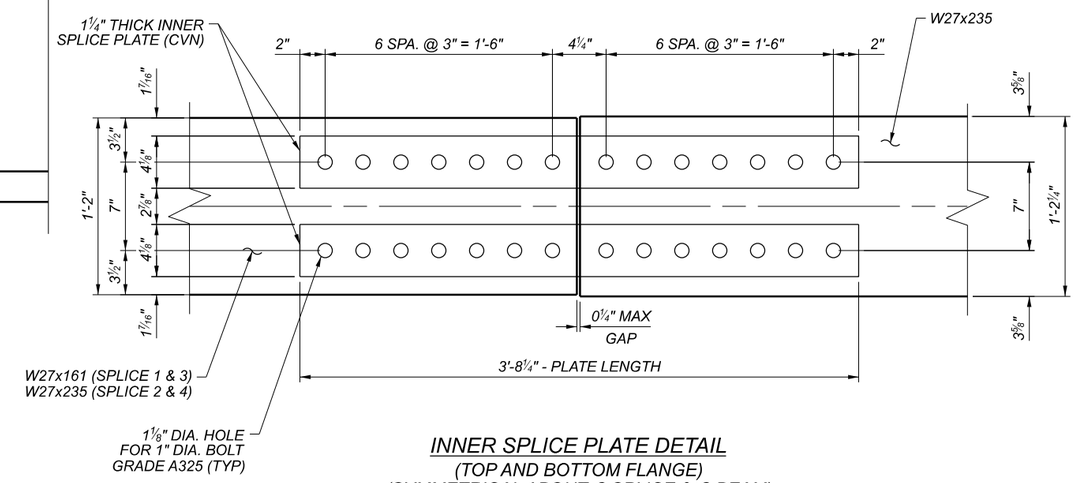

INNER SPLICE PLATE DETAIL

(TOP AND BOTTOM FLANGE)
(SYMMETRICAL ABOUT ℄ SPLICE & ℄ BEAM)

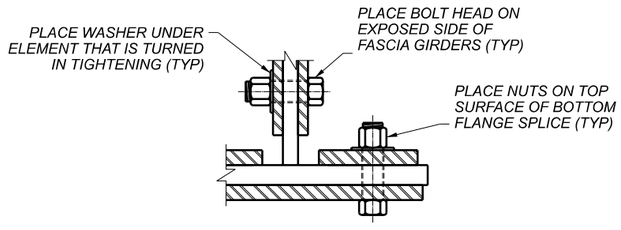

PARTIAL SECTION

NOTES:

1. CVN: WHERE A SHAPE OR PLATE IS DESIGNATED (CVN), FURNISH MATERIAL THAT MEETS THE MINIMUM NOTCH TOUGHNESS REQUIREMENTS AS SPECIFIED IN C&MS 711.01.
2. HIGH STRENGTH BOLTS SHALL BE 1" DIAMETER ASTM F3125, GRADE A325.
3. FOR FIELD SPLICE LOCATIONS, SEE FRAMING PLAN SHEET 20/37 .

BEAM SPLICE DETAILS
BRIDGE NO. SUM-77-3227L
IR-77 OVER SR-21 (BRECKSVILLE RD.)

SFN 7704712

DESIGN AGENCY
Gannett Fleming
ENGINEERS AND ARCHITECTS, P.C.
2550 Corporate Exchange Drive, Suite 230, Columbus, OH 43231

DESIGNER	CHECKER
SAT	CTM

REVIEWER MTO 2/22

PROJECT ID 104983

SUBSET	TOTAL
23	37

SHEET	TOTAL
247	297

SUM-77-32.27 PENTABLE SUBSET: 4 SUBMITTAL: Stage 3 PLOT DRIVER: OHDOT_PDF_Levels.pltcfg

MODEL: Sheet PAPERSIZE: 17x11 (in.) DATE: 2/24/2022 TIME: 2:40:23 PM USER: edues
pw:\\gfnet-pw.bentley.com:gfnet-pw-01\Documents\Projects\67490\104983\401-Engineering-GF\Structures\3227L-SFN_7704712\Sheets\150B ss004

FILE: ...\Sheets\150B ss004

CAMBER BLOCKING DIAGRAM TABLE *					
GIRDER NUMBER	DIMENSION				CHORD SLOPE
	A	B	C	D	
BEAM #1	0.00''	13.78''	29.38''	39.43''	1.445%
BEAM #2	0.00''	13.79''	29.21''	39.13''	1.434%
BEAM #3	0.00''	13.48''	28.72''	38.52''	1.412%

** BLOCKING DIMENSIONS ARE FROM THE BASELINE BETWEEN ABUTMENT BEARINGS TO THE BOTTOM OF THE BOTTOM FLANGE.*

BEAM CAMBER AND DEFLECTIONS

POINT		BEAM #1					BEAM #2					BEAM #3				
		DEFLECTION DUE TO WEIGHT OF STEEL	DEFLECTION DUE TO NON-COMPOSITE DEAD LOAD	DEFLECTION DUE TO COMPOSITE DEAD LOAD	ADJUSTMENT REQUIRED FOR VERTICAL CURVE	**TOTAL CAMBER**	DEFLECTION DUE TO WEIGHT OF STEEL	DEFLECTION DUE TO NON-COMPOSITE DEAD LOAD	DEFLECTION DUE TO COMPOSITE DEAD LOAD	ADJUSTMENT REQUIRED FOR VERTICAL CURVE	**TOTAL CAMBER**	DEFLECTION DUE TO WEIGHT OF STEEL	DEFLECTION DUE TO NON-COMPOSITE DEAD LOAD	DEFLECTION DUE TO COMPOSITE DEAD LOAD	ADJUSTMENT REQUIRED FOR VERTICAL CURVE	**TOTAL CAMBER**
REAR ABUT		0.00"	0.00"	0.00"	0.00"	**0.00"**	0.00"	0.00"	0.00"	0.00"	**0.00"**	0.00"	0.00"	0.00"	0.00"	**0.00"**
SPAN 1	0.25	0.18"	0.75"	0.03"	0.16"	**1.12"**	0.16"	0.64"	0.07"	0.28"	**1.15"**	0.15"	0.55"	0.15"	0.16"	**1.01"**
	0.50	0.22"	0.92"	0.05"	0.22"	**1.40"**	0.18"	0.73"	0.10"	0.30"	**1.31"**	0.16"	0.58"	0.17"	0.22"	**1.14"**
	SPLICE #1	0.15"	0.60"	0.04"	0.16"	**0.94"**	0.11"	0.43"	0.07"	0.21"	**0.82"**	0.09"	0.31"	0.11"	0.16"	**0.66"**
	0.75	0.11"	0.45"	0.03"	0.14"	**0.72"**	0.08"	0.30"	0.06"	0.18"	**0.62"**	0.06"	0.20"	0.08"	0.14"	**0.48"**
PIER 1		0.00"	0.00"	0.00"	0.00"	**0.00"**	0.00"	0.00"	0.00"	0.00"	**0.00"**	0.00"	0.00"	0.00"	0.00"	**0.00"**
SPAN 2	0.25	0.12"	0.47"	0.01"	0.23"	**0.83"**	0.14"	0.54"	0.05"	0.23"	**0.96"**	0.16"	0.58"	0.14"	0.23"	**1.11"**
	SPLICE #2	0.12"	0.48"	0.01"	0.23"	**0.85"**	0.14"	0.55"	0.05"	0.23"	**0.97"**	0.17"	0.60"	0.14"	0.23"	**1.14"**
	0.50	0.25"	1.02"	0.05"	0.35"	**1.67"**	0.25"	0.98"	0.13"	0.35"	**1.71"**	0.26"	0.96"	0.23"	0.35"	**1.80"**
	0.75	0.17"	0.68"	0.04"	0.27"	**1.16"**	0.15"	0.58"	0.09"	0.27"	**1.09"**	0.14"	0.50"	0.13"	0.27"	**1.05"**
	SPLICE #3	0.15"	0.60"	0.04"	0.21"	**1.00"**	0.13"	0.50"	0.08"	0.21"	**0.92"**	0.12"	0.42"	0.12"	0.21"	**0.87"**
PIER 2		0.00"	0.00"	0.00"	0.00"	**0.00"**	0.00"	0.00"	0.00"	0.00"	**0.00"**	0.00"	0.00"	0.00"	0.00"	**0.00"**
SPAN 3	0.25	0.01"	0.06"	-0.01"	0.10"	**0.17"**	0.03"	0.11"	0.00"	0.10"	**0.24"**	0.05"	0.16"	0.05"	0.10"	**0.36"**
	SPLICE #4	0.03"	0.15"	-0.01"	0.12"	**0.30"**	0.05"	0.20"	0.01"	0.12"	**0.39"**	0.07"	0.26"	0.08"	0.12"	**0.54"**
	0.50	0.07"	0.29"	0.00"	0.17"	**0.53"**	0.08"	0.33"	0.04"	0.17"	**0.62"**	0.11"	0.39"	0.11"	0.17"	**0.78"**
	0.75	0.07"	0.30"	0.01"	0.12"	**0.50"**	0.08"	0.31"	0.05"	0.12"	**0.55"**	0.09"	0.33"	0.10"	0.12"	**0.64"**
FWD ABUT		0.00"	0.00"	0.00"	0.00"	**0.00"**	0.00"	0.00"	0.00"	0.00"	**0.00"**	0.00"	0.00"	0.00"	0.00"	**0.00"**

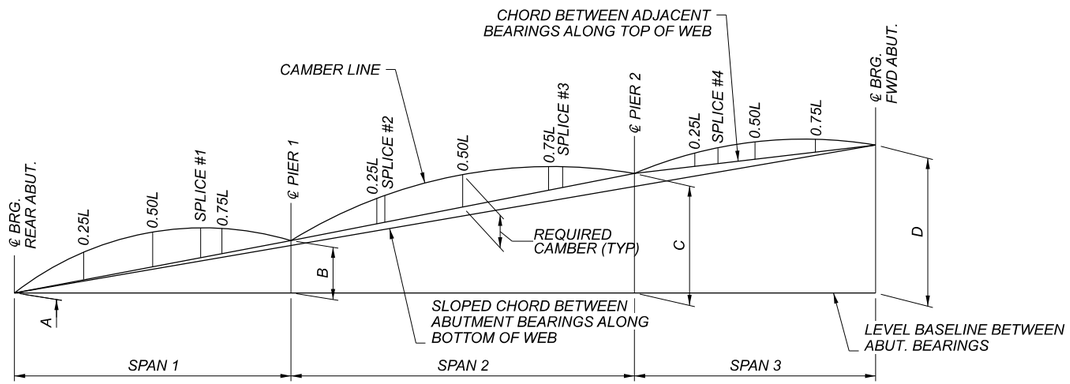

CAMBER AND BLOCKING DIAGRAM
ALONG CENTERLINE BEAM

NOTES:

1. *CAMBER IS MEASURED ALONG BOTTOM OF THE BEAM WEB.*

BEAM CAMBER AND BLOCKING
BRIDGE NO. SUM-77-3227L
IR-77 OVER SR-21 (BRECKSVILLE RD.)

SFN 7704712

DESIGN AGENCY
Gannett Fleming
ENGINEERS AND ARCHITECTS, P.C.
2500 Corporate Exchange Drive
Suite 220
Columbus, OH 43231

DESIGNER	CHECKER
SAT	CTM

REVIEWER MTO 2/22

PROJECT ID 104983

SUBSET	TOTAL
24	37

SHEET	TOTAL
248	297

SUM-77-32.27

PENTABLE SUBSET: 4 SUBMITTAL: Stage 3 PLOT DRIVER: OHDOT_PDF_Levels.pltcfg PENTABLE: 104983_OHDOT_Pen.tbl
MODEL: Sheet PAPERSIZE: 17x11 (in.) DATE: 2/24/2022 TIME: 2:42:27 PM USER: edues
pw:\\gfnet-pw.bentley.com:gfnet-pw-01\Documents\Projects\67490\104983\401-Engineering-GF\Structures\3227L-SFN_7704712\Sheets\150C ss005

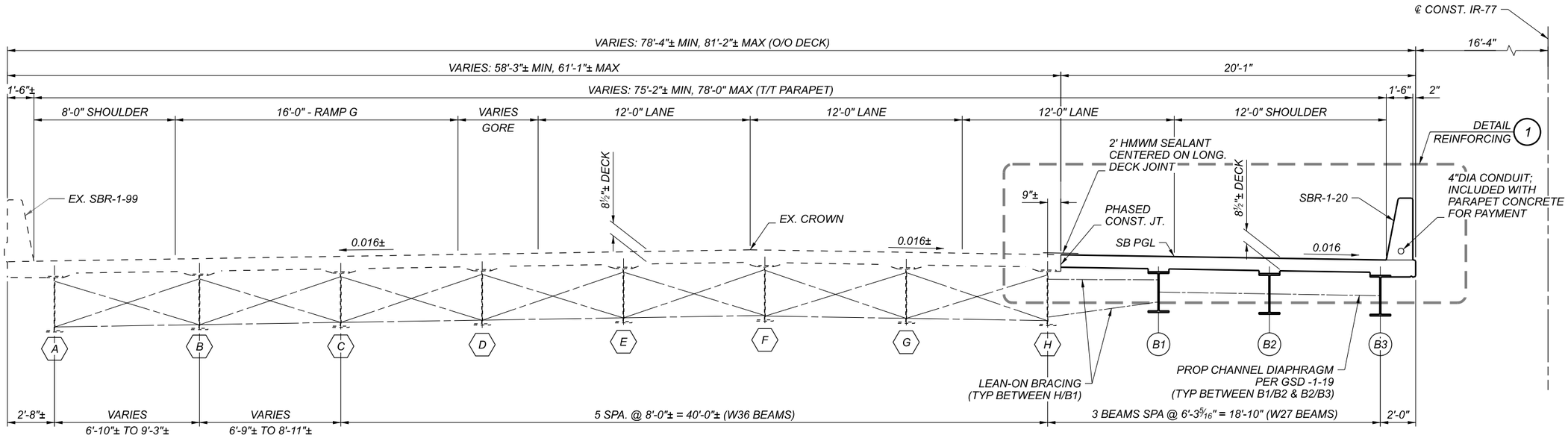

TRANSVERSE SECTION

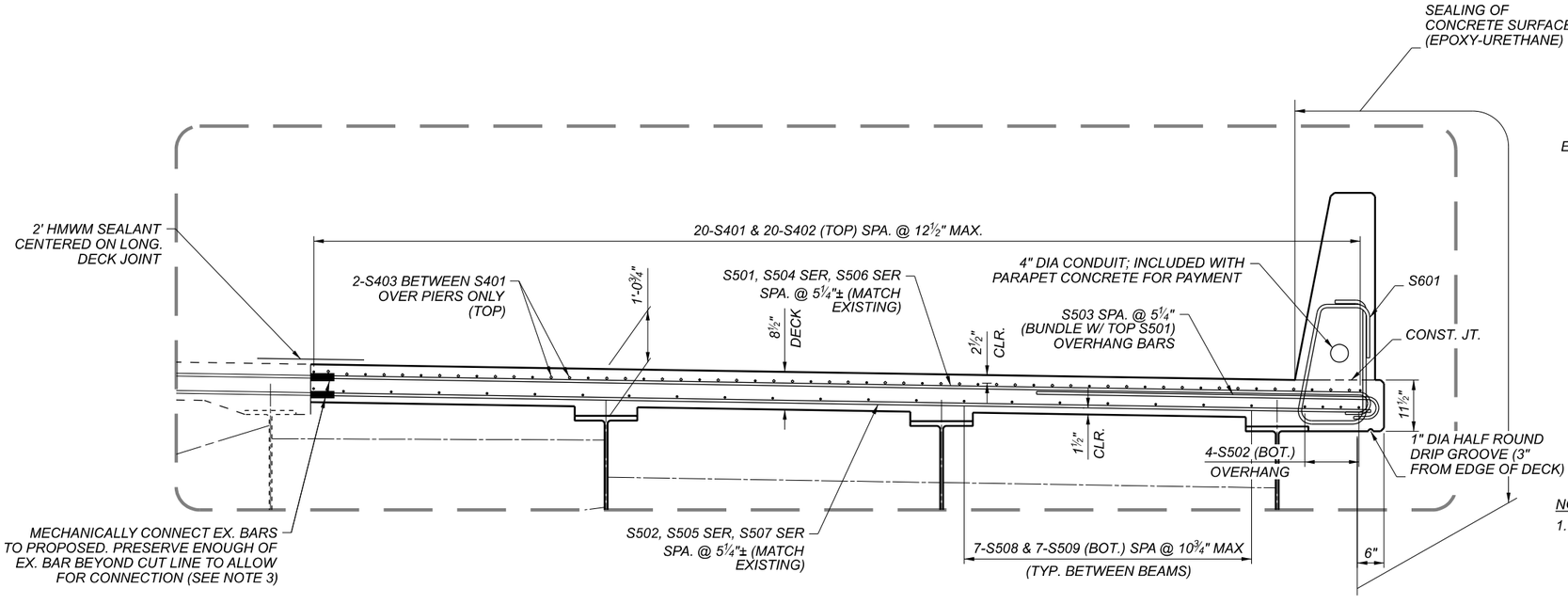

1 REINFORCING DETAIL

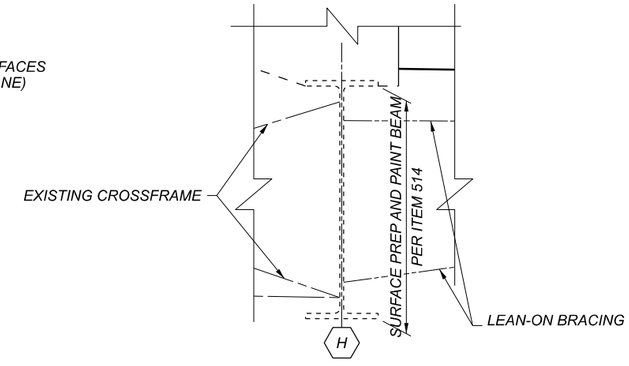

EX BEAM PREPARATION DETAIL

NOTES

1. THE ESTIMATED QUANTITY OF DECK SLAB CONCRETE IS BASED ON THE CONSTANT DECK SLAB THICKNESS, AS SHOWN, PLUS THE QUANTITIY OF CONCRETE THAT FORMS EACH BEAM HAUNCH. THE ESTIMATE ASSUMES A CONSTANT HAUNCH THICKNESS OF 4.25" AND A HAUNCH WIDTH EQUAL TO THE TOP FLANGE WIDTH. DEVIATE FROM THIS HAUNCH THICKNESS AS NECESSARY TO PLACE THE DECK SURFACE AT THE FINISHED GRADE. THE HAUNCH THICKNESS WAS MEASURED AT THE CENTERLINE OF THE BEAM, FROM THE SURFACE OF THE DECK TO THE BOTTOM OF THE TOP FLANGE MINUS THE DECK SLAB THICKNESS. THE AREA OF ALL EMBEDDED STEEL PLATES HAS BEEN DEDUCTED FROM THE HAUNCH QUANTITY IN ACCORDANCE WITH 511.23.
2. FOR PARAPET REINFORCING DETAILS, SEE SHEET 31/37 .
3. CONTRACTOR SHALL SUBMIT MECHANICAL SPLICE CUT SHEET BEFORE DECK REMOVAL BEGINS SO THE LENGTH OF THE EXISTING REBAR PRESERVATION IS KNOWN.

TRANSVERSE SECTION
BRIDGE NO. SUM-77-3227L
IR-77 OVER SR-21 (BRECKSVILLE RD.)

SFN 7704712

DESIGN AGENCY
Gannett Fleming
ENGINEERS AND ARCHITECTS, P.C.
2500 Corporate Exchange Drive, Suite 220, Columbus, OH 43231

DESIGNER	CHECKER
SAT	CTM

REVIEWER: MTO 2/22

PROJECT ID: 104983

SUBSET	TOTAL
25	37

SHEET	TOTAL
249	297

SUM-77-32.27 PENTABLE SUBSET: 4 SUBMITTAL: Stage 3 PLOT DRIVER: OHDOT_PDF_Levels.pltcfg PENTABLE: 104983_OHDOT_Pen.tbl

MODEL: Sheet PAPERSIZE: 17x11 (in.) DATE: 2/24/2022 TIME: 2:44:36 PM USER: edues
pw:\\gfnet-pw.bentley.com:gfnet-pw-01\Documents\Projects\67490\104983\401-Engineering-GF\Structures\3227L-SFN_7704712\Sheets\151 st100

FILE: ...\Sheets\151 st100

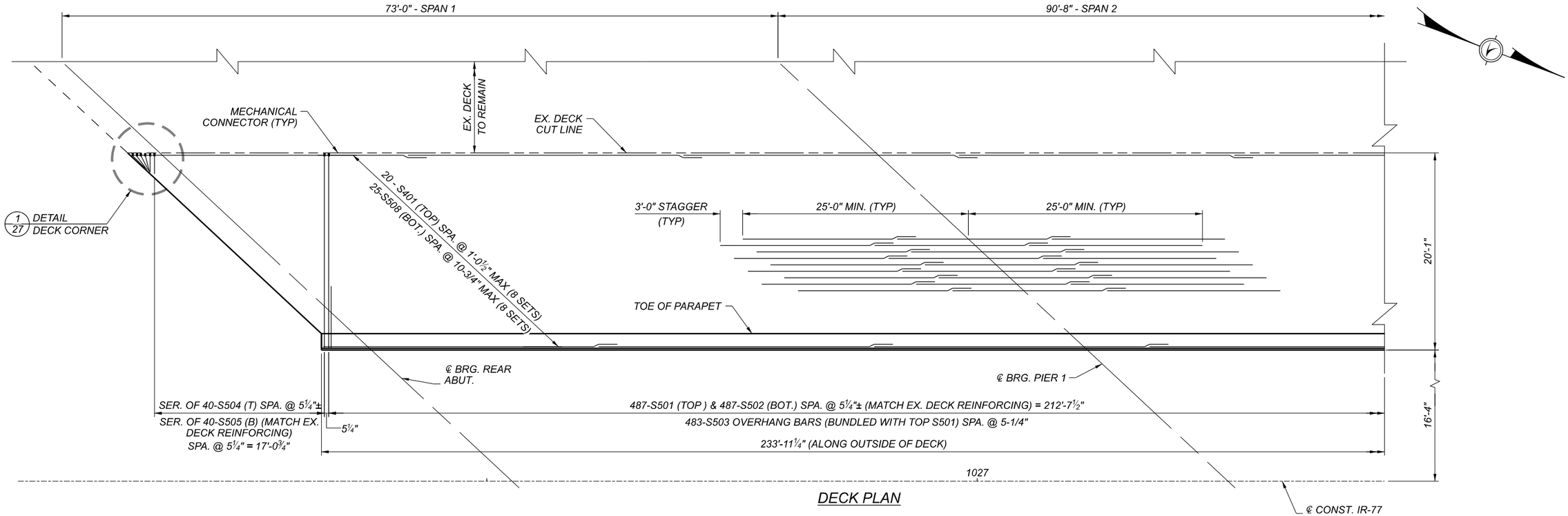

DECK PLAN

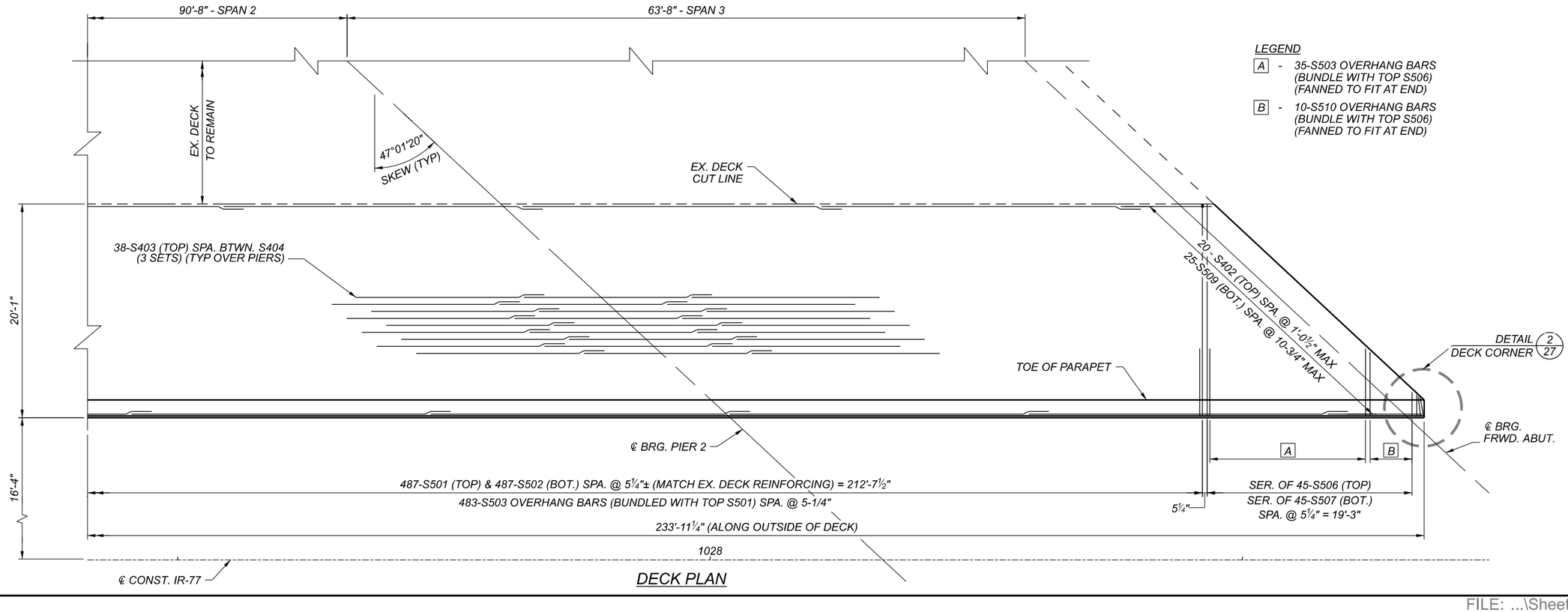

DECK PLAN

LEGEND

A - 35-S503 OVERHANG BARS (BUNDLE WITH TOP S506) (FANNED TO FIT AT END)

B - 10-S510 OVERHANG BARS (BUNDLE WITH TOP S506) (FANNED TO FIT AT END)

DECK REINFORCING PLAN
BRIDGE NO. SUM-77-3227L
IR-77 OVER SR-21 (BRECKSVILLE RD.)

SFN 7704712

DESIGN AGENCY
Gannett Fleming
ENGINEERS AND ARCHITECTS, P.C.
2500 Corporate Exchange Drive, Suite 220, Columbus, OH 43231

DESIGNER	CHECKER
SAT	CTM

REVIEWER: MTO 2/22

PROJECT ID: 104983

SUBSET	TOTAL
26	37

SHEET	TOTAL
250	297

SUM-77-32.27 PENTABLE SUBSET: 4 SUBMITTAL: Stage 3 PLOT DRIVER: OHDOT_PDF_Levels.pltcfg PENTABLE: 104983_OHDOT_Pen.tbl

MODEL: Sheet PAPERSIZE: 17x11 (in.) DATE: 2/24/2022 TIME: 2:46:36 PM USER: edues
pw:\\gfnet-pw.bentley.com:gfnet-pw-01\Documents\Projects\674900\104983\401-Engineering-GF\Structures\3227L-SFN_7704712\Sheets\152 sd001

FILE: ...\Sheets\152 sd001

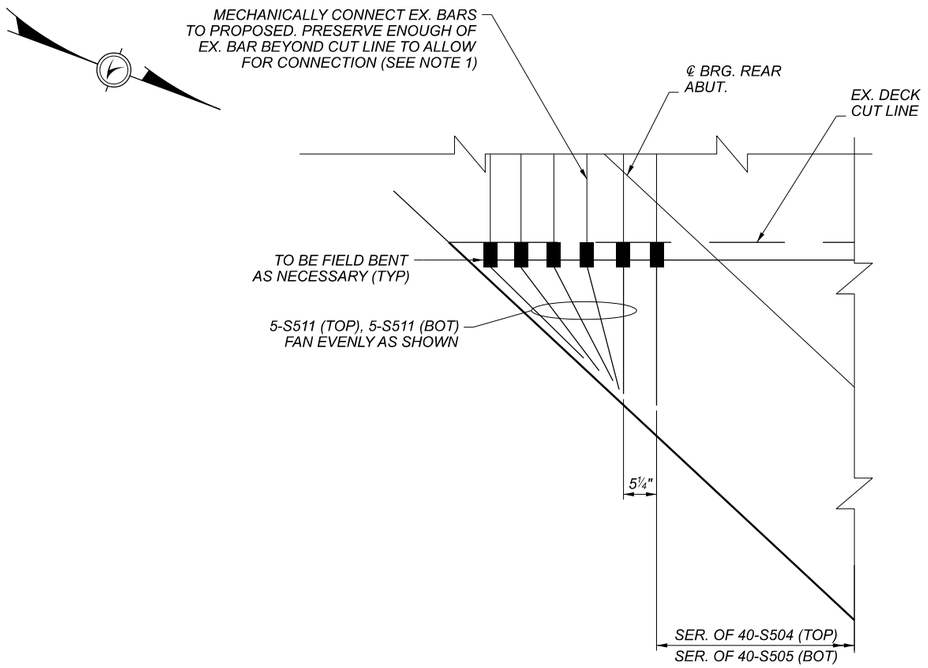

1 DETAIL 26 DECK CORNER

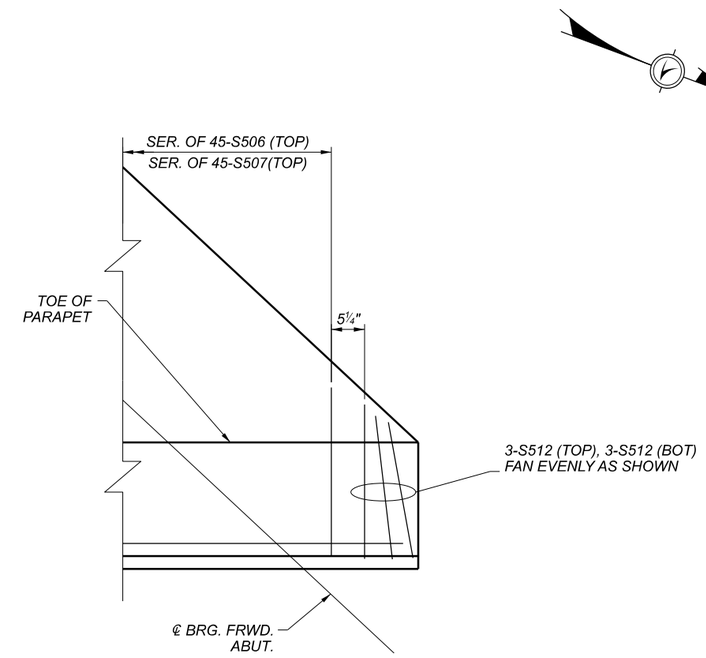

2 DETAIL 26 DECK CORNER

NOTE:

1. CONTRACTOR SHALL SUBMIT MECHANICAL SPLICE CUT SHEET BEFORE DECK REMOVAL BEGINS SO THE LENGTH OF THE EXISTING REBAR PRESERVATION IS KNOWN.

DECK DETAILS
BRIDGE NO. SUM-77-3227L
IR-77 OVER SR-21 (BRECKSVILLE RD.)

SFN 7704712

DESIGN AGENCY
Gannett Fleming
ENGINEERS AND ARCHITECTS, P.C.
2500 Corporate Exchange Drive, Suite 220, Columbus, OH 43231

DESIGNER	CHECKER
SAT	CTM

REVIEWER MTO 2/22

PROJECT ID 104983

SUBSET	TOTAL
27	37

SHEET	TOTAL
251	297

SUM-77-32.27 PENTABLE SUBSET: 4 SUBMITTAL: Stage 3 PLOT DRIVER: OHDOT_PDF_Levels.pltcfg PENTABLE: 104983_OHDOT_Pen.tbl

MODEL: Sheet PAPERSIZE: 17x11 (in.) DATE: 2/24/2022 TIME: 2:48:45 PM USER: edues
pw:\\gfnet-pw.bentley.com:gfnet-pw-01\Documents\Projects\674900\104983\401-Engineering-GF\Structures\3227L-SFN_7704712\Sheets\153 sd002

FILE: ...\Sheets\153 sd002

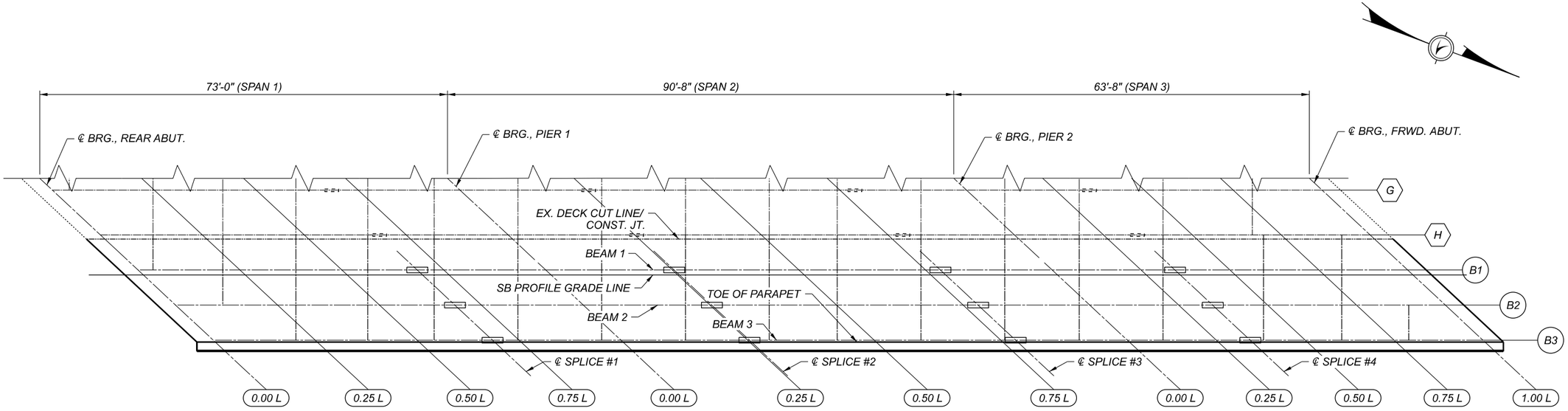

TOP OF HAUNCH, SCREED AND FINAL DECK ELEVATION LINE LOCATION
UPSTATION

TOP OF HAUNCH ELEVATIONS

SPAN	LOCATION	BEAM #1		BEAM #2		BEAM #3	
		STA.	ELEV.	STA.	ELEV.	STA.	ELEV.
REAR ABUT		1026+22.60	1030.72	1026+29.34	1030.74	1026+36.08	1030.75
SPAN 1	0.25 L	1026+40.85	1031.11	1026+47.59	1031.11	1026+54.33	1031.11
	0.50 L	1026+59.10	1031.43	1026+65.84	1031.42	1026+72.58	1031.41
	SPLICE #1	1026+72.60	1031.62	1026+79.34	1031.61	1026+86.08	1031.60
	0.75 L	1026+77.35	1031.68	1026+84.09	1031.67	1026+90.83	1031.66
PIER 1		1026+95.60	1031.92	1027+02.34	1031.92	1027+09.08	1031.92
SPAN 2	0.25 L	1027+18.27	1032.31	1027+25.00	1032.32	1027+31.74	1032.32
	SPLICE #2	1027+18.60	1032.32	1027+25.34	1032.32	1027+32.08	1032.33
	0.50 L	1027+40.93	1032.70	1027+47.67	1032.69	1027+54.41	1032.68
	0.75 L	1027+63.60	1032.98	1027+70.34	1032.96	1027+77.08	1032.95
	SPLICE #3	1027+66.27	1033.01	1027+73.00	1032.99	1027+79.74	1032.97
PIER 2		1027+86.27	1033.22	1027+93.00	1033.20	1027+99.74	1033.19
SPAN 3	0.25 L	1028+02.18	1033.43	1028+08.92	1033.42	1028+15.66	1033.41
	SPLICE #4	1028+08.27	1033.52	1028+15.00	1033.51	1028+21.74	1033.50
	0.50 L	1028+18.10	1033.65	1028+24.84	1033.64	1028+31.58	1033.63
	0.75 L	1028+34.02	1033.85	1028+40.75	1033.83	1028+47.49	1033.81
FWD ABUT		1028+49.93	1034.01	1028+56.67	1033.98	1028+63.41	1033.96

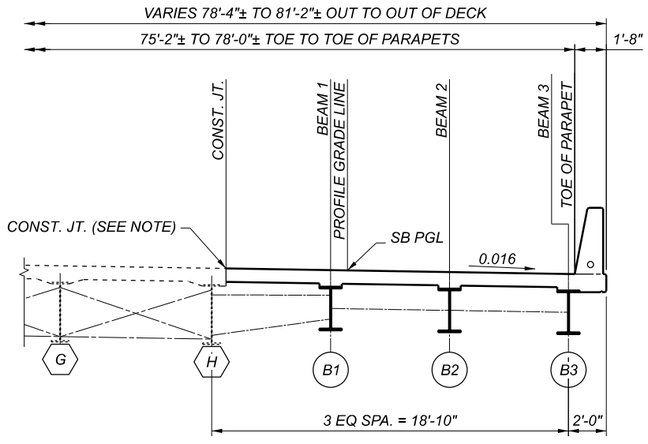

TOP OF HAUNCH, SCREED AND FINAL DECK ELEVATION LINE LOCATION
LOOKING UPSTATION

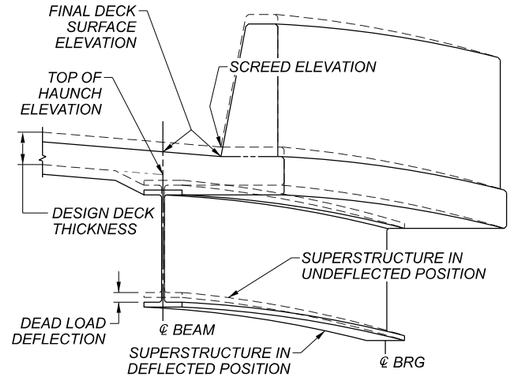

TOP OF HAUNCH, SCREED, AND FINAL DECK ELEVATION SCHEMATIC

CONST. JT. NOTE

THE DECK ELEVATIONS (FINISHED, SCREED, TOP OF HAUNCH) ARE CALCULATED FROM THE PGL ELEVATION DOWN THE TYPICAL CROSS-SLOPE. THE CALCULATED ELEVATION AND EXISTING TOP OF DECK MAY DIFFER SLIGHTLY. THE CONSTRUCTION JOINT TOP OF FINISHED DECK ELEVATION IS TO MATCH THAT OF THE EXISTING DECK ELEVATION.

NOTES

1. *TOP OF HAUNCH ELEVATIONS SHOWN REPRESENT THE THEORETICAL LOCATION OF THE BOTTOM OF DECK ABOVE THE BEAM HAUNCH PRIOR TO DEFLECTIONS CAUSED BY DECK PLACEMENT AND OTHER ANTICIPATED DEAD LOADS.*

TOP OF HAUNCH ELEVATIONS
BRIDGE NO. SUM-77-3227L
IR-77 OVER SR-21 (BRECKSVILLE RD.)

SFN 7704712

DESIGN AGENCY
Gannett Fleming
ENGINEERS AND ARCHITECTS, P.C.
2500 Corporate Exchange Drive, Suite 220, Columbus, OH 43231

DESIGNER	CHECKER
SAT	CTM

REVIEWER MTO 2/22

PROJECT ID 104983

SUBSET	TOTAL
28	37

SHEET	TOTAL
252	297

SUM-77-32.27 PENTABLE SUBSET: 4 SUBMITTAL: Stage 3 PLOT DRIVER: OHDOT_PDF.pltcfg PENTABLE: 104983_OHDOT_Pen.tbl

MODEL: Sheet PAPERSIZE: 17x11 (in.) DATE: 2/24/2022 TIME: 2:51:10 PM USER: edues
pw:\\gfnet-pw.bentley.com:gfnet-pw-01\Documents\Projects\674900\104983\401-Engineering-GF\Structures\3227L-SFN_7704712\Sheets\158 ss006

FILE: ...\Sheets\158 ss006

SCREED ELEVATIONS							
SPAN	LOCATION	CONST. JT.		PROFILE GRADE LINE		TOE OF BARRIER	
		STA.	ELEV.	STA.	ELEV.	STA.	ELEV.
REAR ABUT		1026+16.67	1031.41	1026+23.55	1031.43	1026+36.43	1031.46
SPAN 1	0.25 L	1026+34.92	1031.73	1026+41.80	1031.81	1026+54.68	1031.82
	0.50 L	1026+53.17	1032.03	1026+60.05	1032.13	1026+72.93	1032.12
	SPLICE #1	1026+66.67	1032.25	1026+73.55	1032.32	1026+86.43	1032.31
	0.75 L	1026+71.42	1032.33	1026+78.30	1032.38	1026+91.18	1032.37
PIER 1		1026+89.67	1032.62	1026+96.55	1032.62	1027+09.43	1032.63
SPAN 2	0.25 L	1027+12.33	1032.97	1027+19.22	1033.01	1027+32.10	1033.03
	SPLICE #2	1027+12.67	1032.97	1027+19.55	1033.01	1027+32.43	1033.03
	0.50 L	1027+35.00	1033.30	1027+41.89	1033.39	1027+54.77	1033.39
	0.75 L	1027+57.67	1033.62	1027+64.55	1033.68	1027+77.43	1033.65
	SPLICE #3	1027+60.33	1033.66	1027+67.22	1033.71	1027+80.10	1033.68
PIER 2		1027+80.33	1033.93	1027+87.22	1033.92	1028+00.10	1033.90
SPAN 3	0.25 L	1027+96.25	1034.14	1028+03.14	1034.13	1028+16.02	1034.12
	SPLICE #4	1028+02.33	1034.22	1028+09.22	1034.22	1028+22.10	1034.20
	0.50 L	1028+12.17	1034.35	1028+19.05	1034.35	1028+31.93	1034.34
	0.75 L	1028+28.08	1034.54	1028+34.97	1034.55	1028+47.85	1034.52
FWD ABUT		1028+44.00	1034.73	1028+50.89	1034.71	1028+63.77	1034.67

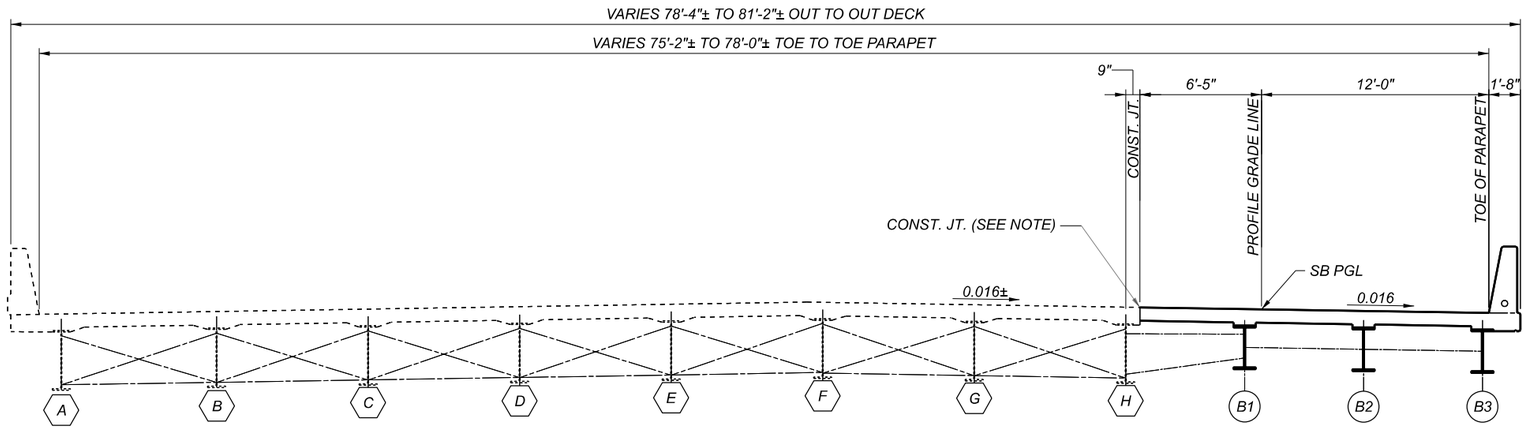

SCREED LINE LOCATIONS

CONST. JT. NOTE

THE DECK ELEVATIONS (FINISHED, SCREED, TOP OF HAUNCH) ARE CALCULATED FROM THE PGL ELEVATION DOWN THE TYPICAL CROSS-SLOPE. THE CALCULATED ELEVATION AND EXISTING TOP OF DECK MAY DIFFER SLIGHTLY. THE CONSTRUCTION JOINT TOP OF FINISHED DECK ELEVATION IS TO MATCH THAT OF THE EXISTING DECK ELEVATION.

NOTES:

1. SCREED ELEVATIONS SHOWN REPRESENT THE THEORETICAL DECK SURFACE LOCATION PRIOR TO DEFLECTIONS CAUSED BY DECK PLACEMENT AND OTHER ANTICIPATED DEAD LOADS.

SCREED ELEVATIONS
BRIDGE NO. SUM-77-3227L
IR-77 OVER SR-21 (BRECKSVILLE RD.)

SFN 7704712

DESIGN AGENCY
Gannett Fleming
ENGINEERS AND ARCHITECTS, P.C.
250 Corporate Exchange Drive, Suite 220, Columbus, OH 43231

DESIGNER	CHECKER
SAT	CTM

REVIEWER MTO 2/22

PROJECT ID 104983

SUBSET	TOTAL
29	37

SHEET	TOTAL
253	297

SUM-77-32.27 PENTABLE SUBSET: 4 SUBMITTAL: Stage 3 PLOT DRIVER: OHDOT_PDF_Levels.pltcfg

MODEL: Sheet PAPERSIZE: 17x11 (in.) DATE: 2/24/2022 TIME: 2:53:15 PM USER: edues
pw:\\ghnet-pw.bentley.com:ghnet-pw-01\Documents\Projects\674900\104983\401-Engineering-GFiStructures\3227L-SFN_7704712\Sheets\159 ss007

PENTABLE: 104983_OHDOT_Pen.tbl

FILE: ...\Sheets\159 ss007

FINAL DECK SURFACE ELEVATIONS													
SPAN	LOCATION	CONST. JT.		BEAM #1		PROFILE GRADE LINE		BEAM #2		BEAM #3		TOE OF BARRIER	
		STA.	DECK ELEV.	STA.	DECK ELEV.	STA.	DECK ELEV.	STA.	DECK ELEV.	STA.	DECK ELEV.	STA.	DECK ELEV.
REAR ABUT		1026+16.67	1031.41	1026+22.60	1031.43	1026+23.55	1031.43	1026+29.34	1031.44	1026+36.08	1031.46	1026+36.43	1031.46
SPAN 1	0.25 L	1026+34.92	1031.73	1026+40.85	1031.74	1026+41.80	1031.74	1026+47.59	1031.75	1026+54.33	1031.76	1026+54.68	1031.76
	0.50 L	1026+53.17	1032.03	1026+59.10	1032.04	1026+60.05	1032.04	1026+65.84	1032.05	1026+72.58	1032.06	1026+72.93	1032.06
	SPLICE #1	1026+66.67	1032.25	1026+72.60	1032.26	1026+73.55	1032.26	1026+79.34	1032.27	1026+86.08	1032.28	1026+86.43	1032.28
	0.75 L	1026+71.42	1032.33	1026+77.35	1032.34	1026+78.30	1032.34	1026+84.09	1032.34	1026+90.83	1032.35	1026+91.18	1032.35
PIER 1		1026+89.67	1032.62	1026+95.60	1032.62	1026+96.55	1032.62	1027+02.34	1032.63	1027+09.08	1032.63	1027+09.43	1032.63
SPAN 2	0.25 L	1027+12.33	1032.97	1027+18.27	1032.97	1027+19.22	1032.97	1027+25.00	1032.97	1027+31.74	1032.97	1027+32.10	1032.97
	SPLICE #2	1027+12.67	1032.97	1027+18.60	1032.97	1027+19.55	1032.97	1027+25.34	1032.97	1027+32.08	1032.97	1027+32.43	1032.97
	0.50 L	1027+35.00	1033.30	1027+40.93	1033.30	1027+41.89	1033.30	1027+47.67	1033.30	1027+54.41	1033.29	1027+54.77	1033.29
	0.75 L	1027+57.67	1033.62	1027+63.60	1033.62	1027+64.55	1033.62	1027+70.34	1033.61	1027+77.08	1033.60	1027+77.43	1033.60
	SPLICE #3	1027+60.33	1033.66	1027+66.27	1033.66	1027+67.22	1033.65	1027+73.00	1033.65	1027+79.74	1033.64	1027+80.10	1033.64
PIER 2		1027+80.33	1033.93	1027+86.27	1033.92	1027+87.22	1033.92	1027+93.00	1033.91	1027+99.74	1033.90	1028+00.10	1033.90
SPAN 3	0.25 L	1027+96.25	1034.14	1028+02.18	1034.13	1028+03.14	1034.13	1028+08.92	1034.12	1028+15.66	1034.10	1028+16.02	1034.10
	SPLICE #4	1028+02.33	1034.22	1028+08.27	1034.21	1028+09.22	1034.21	1028+15.00	1034.19	1028+21.74	1034.18	1028+22.10	1034.18
	0.50 L	1028+12.17	1034,35	1028+18.10	1034,33	1028+19,05	1034,33	1028+24,84	1034,31	1028+31,58	1034,30	1028+31,93	1034,30
	0.75 L	1028+28.08	1034.54	1028+34.02	1034.53	1028+34.97	1034.52	1028+40.75	1034.51	1028+47.49	1034.49	1028+47.85	1034.48
FWD ABUT		1028+44.00	1034.73	1028+49.93	1034.71	1028+50.89	1034.71	1028+56.67	1034.69	1028+63.41	1034.67	1028+63.77	1034.67

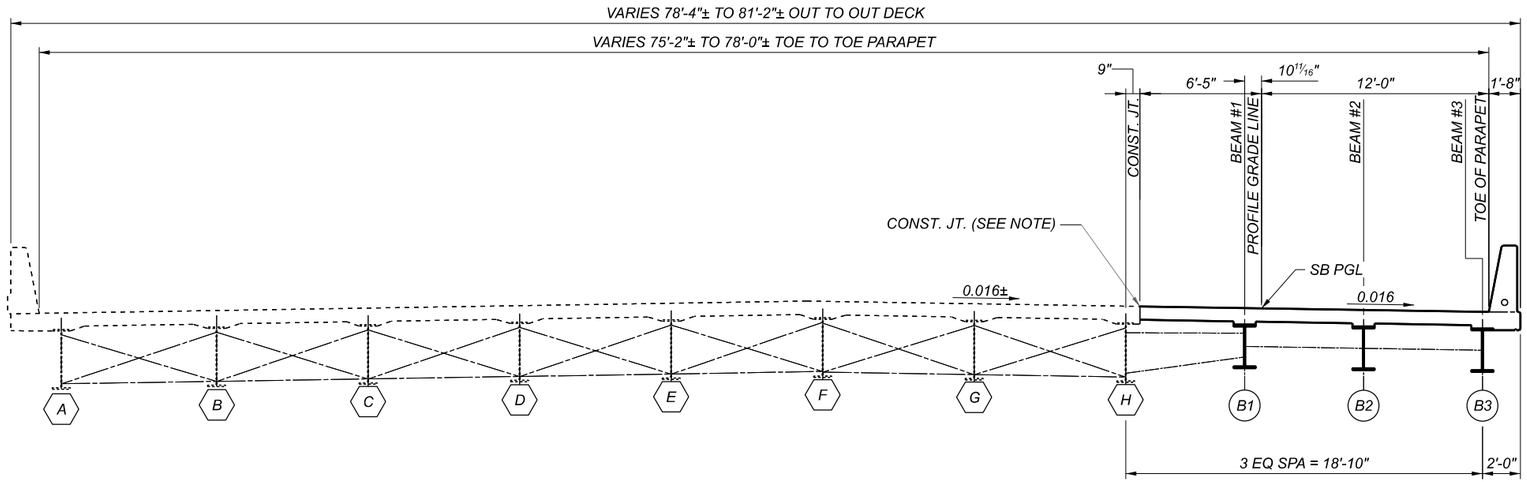

FINAL DECK LOCATIONS

CONST. JT. NOTE

THE DECK ELEVATIONS (FINISHED, SCREED, TOP OF HAUNCH) ARE CALCULATED FROM THE PGL ELEVATION DOWN THE TYPICAL CROSS-SLOPE. THE CALCULATED ELEVATION AND EXISTING TOP OF DECK MAY DIFFER SLIGHTLY. THE CONSTRUCTION JOINT TOP OF FINISHED DECK ELEVATION IS TO MATCH THAT OF THE EXISTING DECK ELEVATION.

NOTES:

FINAL DECK SURFACE ELEVATIONS SHOWN REPRESENT THE DECK SURFACE LOCATION AFTER ALL ANTICIPATED DEAD LOAD DEFLECTIONS HAVE OCCURRED

FINAL DECK ELEVATIONS
BRIDGE NO. SUM-77-3227L
IR-77 OVER SR-21 (BRECKSVILLE RD.)

SFN 7704712

DESIGN AGENCY
Gannett Fleming
ENGINEERS AND ARCHITECTS, P.C.
250 Civic Center Drive, Suite 220
Columbus, OH 43215

DESIGNER	CHECKER
SAT	CTM

REVIEWER MTO 2/22

PROJECT ID 104983

SUBSET	TOTAL
30	37

SHEET	TOTAL
254	297

SUM-77-32.27 PENTABLE SUBSET: 4 SUBMITTAL: Stage 3 PLOT DRIVER: OHDOT_PDF_Levels.pltcfg

MODEL: Sheet PAPERSIZE: 17x11 (in.) DATE: 2/24/2022 TIME: 2:55:15 PM USER: edues PENTABLE: 104983_OHDOT_Pen.tbl
pw:\\gfnet-pw.bentley.com:gfnet-pw-01\Documents\Projects\67490\104983\401-Engineering-GFiStructures\3227L-SFN_7704712\Sheets\162 ss008

FILE: ...\Sheets\162 ss008

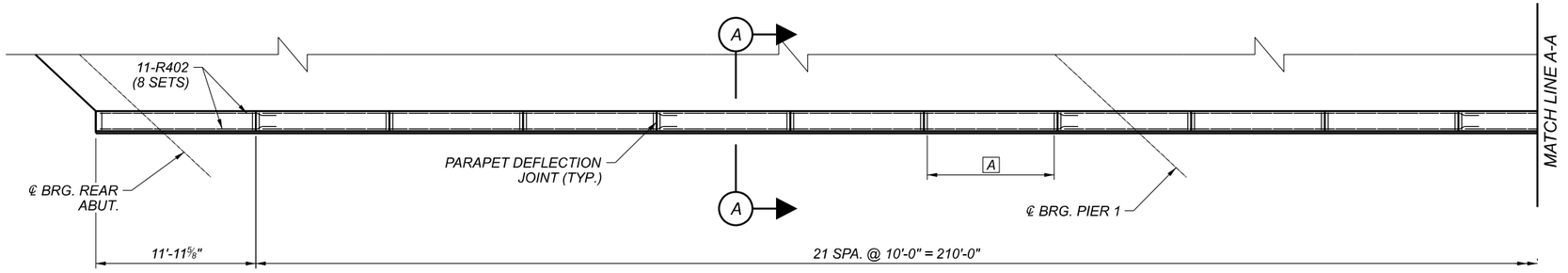

RIGHT PARAPET PLAN

LEGEND

A 11-R601, 11-R602 @ 10 EQ. SPA. (1'-0" MAX.), 4-R401 (TYP. FOR 10'-0" PANELS)

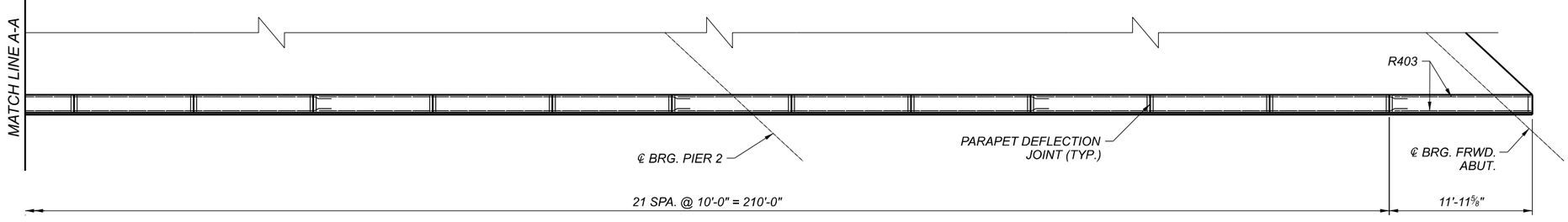

RIGHT PARAPET PLAN

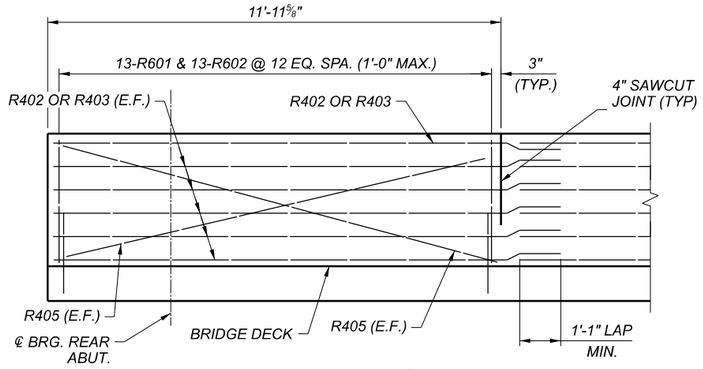

END PARAPET ELEVATION

REAR END PANEL SHOWN, FORWARD PANEL SIMILAR

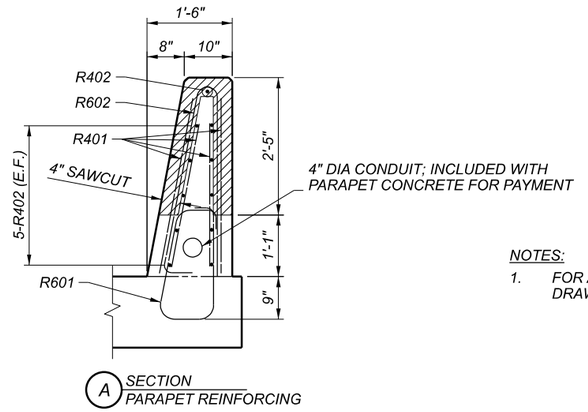

NOTES:

1. FOR ADDITIONAL PARAPET DETAILS, REFER TO STANDARD BRIDGE DRAWING SBR-1-20.

RIGHT PARAPET DETAILS
BRIDGE NO. SUM-77-3227L
IR-77 OVER SR-21 (BRECKSVILLE RD.)

SFN 7704712

DESIGN AGENCY
Gannett Fleming
ENGINEERS AND ARCHITECTS, P.C.
2550 Corporate Exchange Drive
Suite 220
Columbus, OH 43231

DESIGNER	CHECKER
SAT	CTM

REVIEWER MTO 2/22

PROJECT ID 104983

SUBSET	TOTAL
31	37

SHEET	TOTAL
255	297

SUM-77-32.27 PENTABLE_SUBSET: 4 SUBMITTAL: Stage 3 PLOT DRIVER: OHDOT_PDF_Levels.pltcfg PENTABLE: 104983_OHDOT_Pen.tbl

MODEL: Sheet PAPERSIZE: 17x11 (in.) DATE: 2/24/2022 TIME: 2:57:40 PM USER: edues
pw:\\gfnet-pw.bentley.com:gfnet-pw-01\Documents\Projects\674901\104983\401-Engineering-GF\Structures\3227L-SFN_7704712\Sheets\163 sa001

FILE: ...\Sheets\163 sa001

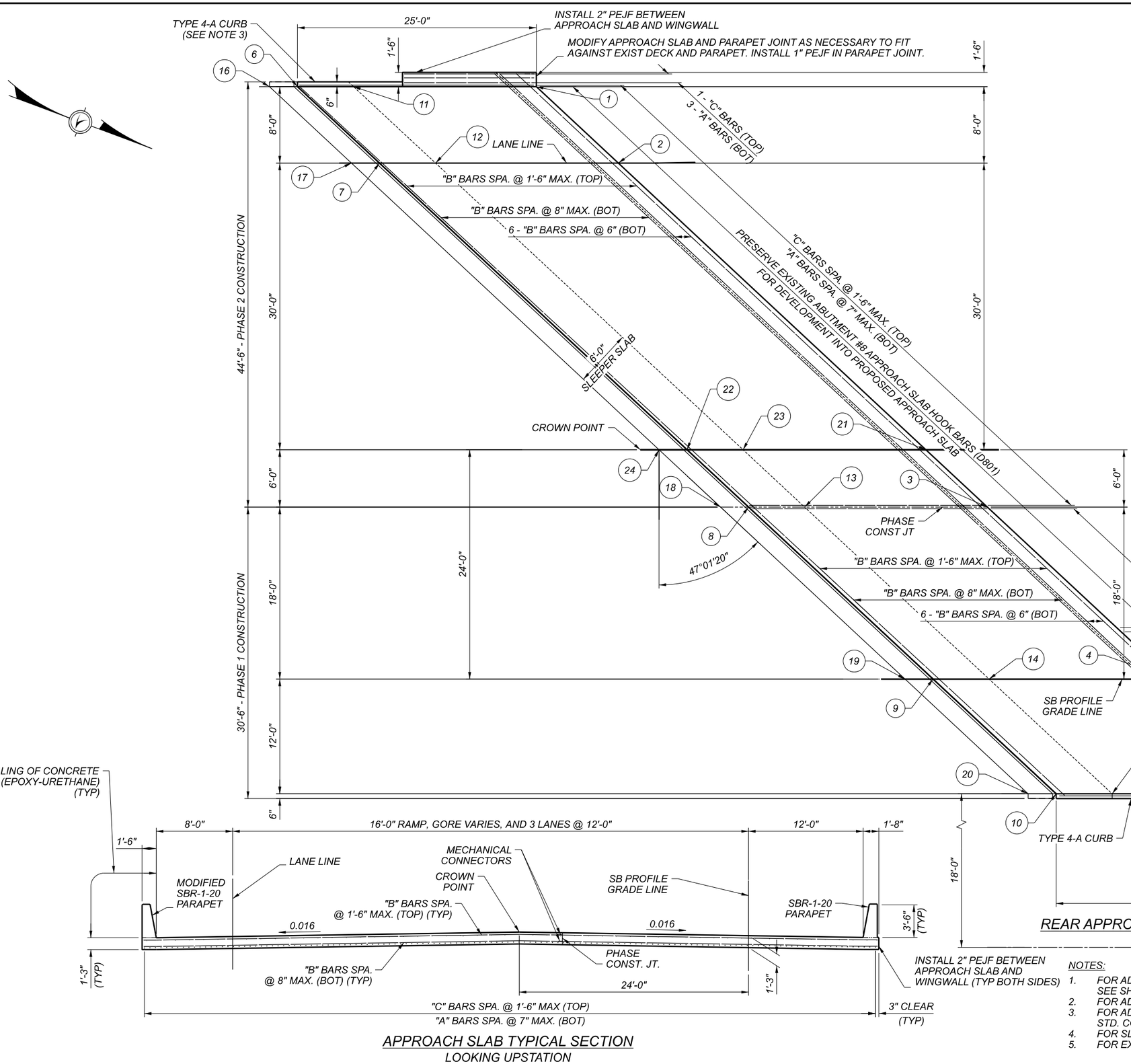

APPROACH SLAB SURFACE

	STATION	OFFSET	ELEVATION
1	STA 1025+53.72	92.00' LT	1030.00 ◄
2	STA 1025+62.30	84.00' LT	1030.22 ◄
3	STA 1026+00.94	48.00' LT	1031.34 ◄
4	STA 1026+20.25	30.00' LT	1031.37
5	STA 1026+33.13	18.00' LT	1031.40
6	STA 1025+28.72	92.00' LT	1029.47
7	STA 1025+37.30	84.00' LT	1029.74
8	STA 1025+75.94	48.00' LT	1030.87
9	STA 1025+95.25	30.00'LT	1030.93
10	STA 1026+08.13	18.00' LT	1030.97
21	STA 1025+94.50	54.00' LT	1031.30 ◄
22	STA 1025+69.50	54.00' LT	1030.85

◄ = ELEVATION TO MATCH EXISTING DECK (SURVEY VALUES USED)

SLEEPER SLAB SURFACE

	STATION	OFFSET	ELEVATION
11	STA 1025+34.58	92.00' LT	1028.32
12	STA 1025+43.17	84.00' LT	1028.62
13	STA 1025+81.80	48.00' LT	1029.73
14	STA 1026+01.12	30.00' LT	1029.79
15	STA 1026+14.00	18.00' LT	1029.82
16	STA 1025+25.78	92.00' LT	1029.40
17	STA 1025+34.37	84.00' LT	1029.70
18	STA 1025+73.00	48.00' LT	1030.81
19	STA 1025+92.32	30.00' LT	1030.88
20	STA 1026+05.20	18.00' LT	1030.92
23	STA 1025+75.36	54.00' LT	1029.70
24	STA 1025+66.56	54.00' LT	1030.79

REAR APPROACH SLAB PLAN

APPROACH SLAB TYPICAL SECTION
LOOKING UPSTATION

NOTES:
1. FOR ADDITIONAL PARAPET TRANSITION DETAILS & REINFORCING SEE SHEET 35/37 .
2. FOR ADDITIONAL PARAPET DETAILS REFER TO STD. DWG. SBR-1-20.
3. FOR ADDITIONAL TYPE 4-A CONCRETE CURB DETAILS, SEE STD. CONST. DWG. BP-5.1.
4. FOR SLEEPER SLAB DETAILS, REFER TO STD. DWG. AS-2-15.
5. FOR EXISTING APPROACH SLAB REMOVAL DETAILS, SEE SHEET 9/37 .

REAR APPROACH SLAB DETAILS
BRIDGE NO. SUM-77-3227L
IR-77 OVER SR-21 (BRECKSVILLE RD.)

SFN 7704712

DESIGN AGENCY
Gannett Fleming
ENGINEERS AND ARCHITECTS, P.C.
2550 Corporate Exchange Drive
Suite 220
Columbus, OH 43231

DESIGNER	CHECKER
SAT	CTM

REVIEWER MTO 2/22

PROJECT ID 104983

SUBSET	TOTAL
32	37

SHEET	TOTAL
256	297

SUM-77-32.27 PENTABLE SUBSET: 4 SUBMITTAL: Stage 3 PLOT DRIVER: OHDOT_PDF_Levels.pltcfg PENTABLE: 104983_OHDOT_Pen.tbl

MODEL: Sheet PAPERSIZE: 17x11 (in.) DATE: 2/24/2022 TIME: 2:59:49 PM USER: edues
pw:\\ghnet-pw.bentley.com:ghnet-pw-01\Documents\Projects\674900\104983\d401-Engineering-GFI\Structures\3227L-SFN_7704712\Sheets\164 sm001

FILE: ...\Sheets\164 sm001

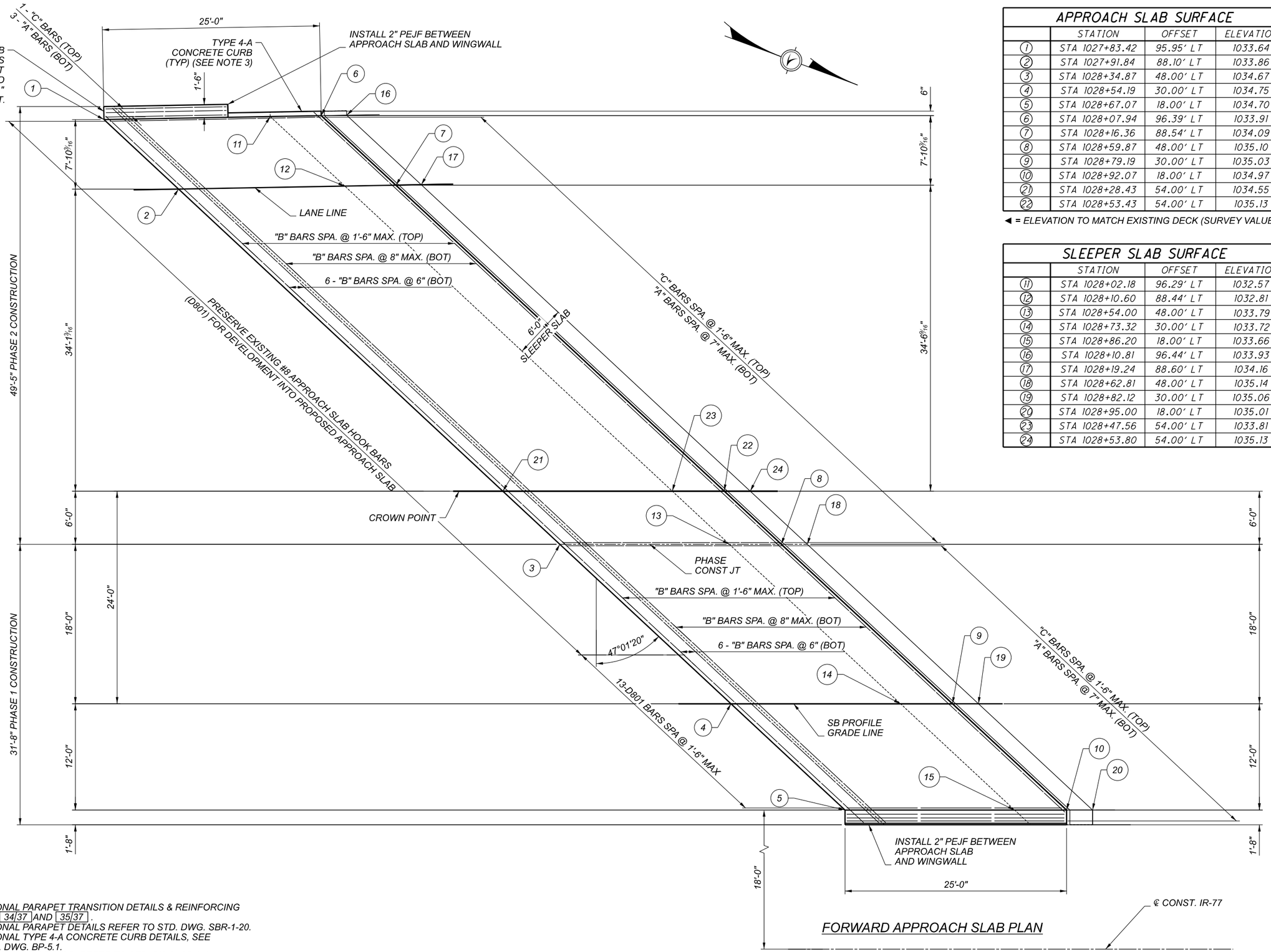

APPROACH SLAB SURFACE

	STATION	OFFSET	ELEVATION
1	STA 1027+83.42	95.95' LT	1033.64 ◄
2	STA 1027+91.84	88.10' LT	1033.86 ◄
3	STA 1028+34.87	48.00' LT	1034.67 ◄
4	STA 1028+54.19	30.00' LT	1034.75
5	STA 1028+67.07	18.00' LT	1034.70
6	STA 1028+07.94	96.39' LT	1033.91
7	STA 1028+16.36	88.54' LT	1034.09
8	STA 1028+59.87	48.00' LT	1035.10
9	STA 1028+79.19	30.00' LT	1035.03
10	STA 1028+92.07	18.00' LT	1034.97
21	STA 1028+28.43	54.00' LT	1034.55 ◄
22	STA 1028+53.43	54.00' LT	1035.13

◄ = ELEVATION TO MATCH EXISTING DECK (SURVEY VALUES USED)

SLEEPER SLAB SURFACE

	STATION	OFFSET	ELEVATION
11	STA 1028+02.18	96.29' LT	1032.57
12	STA 1028+10.60	88.44' LT	1032.81
13	STA 1028+54.00	48.00' LT	1033.79
14	STA 1028+73.32	30.00' LT	1033.72
15	STA 1028+86.20	18.00' LT	1033.66
16	STA 1028+10.81	96.44' LT	1033.93
17	STA 1028+19.24	88.60' LT	1034.16
18	STA 1028+62.81	48.00' LT	1035.14
19	STA 1028+82.12	30.00' LT	1035.06
20	STA 1028+95.00	18.00' LT	1035.01
23	STA 1028+47.56	54.00' LT	1033.81
24	STA 1028+53.80	54.00' LT	1035.13

NOTES:

1. FOR ADDITIONAL PARAPET TRANSITION DETAILS & REINFORCING SEE SHEET 34/37 AND 35/37 .
2. FOR ADDITIONAL PARAPET DETAILS REFER TO STD. DWG. SBR-1-20.
3. FOR ADDITIONAL TYPE 4-A CONCRETE CURB DETAILS, SEE STD. CONST. DWG. BP-5.1.
4. FOR SLEEPER SLAB DETAILS, REFER TO STD. DWG. AS-2-15.
5. FOR APPROACH SLAB TYPICAL SECTION, SEE SHEET 32/37 .
6. FOR EXISTING APPROACH SLAB REMOVAL DETAILS, SEE SHEET 14/37 .

FORWARD APPROACH SLAB PLAN

FORWRAD APPROACH SLAB DETAILS
BRIDGE NO. SUM-77-3227L
IR-77 OVER SR-21 (BRECKSVILLE RD.)

SUM-77-32.27 PENTABLE SUBSET: 4 SUBMITTAL: Stage 3 PLOT DRIVER: OHDOT_PDF_Levels.pltcfg PENTABLE: 104983_OHDOT_Pen.tbl

MODEL: Sheet PAPERSIZE: 17x11 (in.) DATE: 2/24/2022 TIME: 3:02:02 PM USER: edues
pw:\\gfnet-pw.bentley.com:gfnet-pw-01\Documents\Projects\674901\104983401-Engineering-GF\Structures\3227L-SFN_7704712\Sheets\165 sm002

SFN 7704712

DESIGN AGENCY
Gannett Fleming
ENGINEERS AND ARCHITECTS, P.C.
2500 Corporate Exchange Drive Suite 200 Columbus, OH 43231

DESIGNER	CHECKER
SAT	CTM

REVIEWER MTO 2/22

PROJECT ID 104983

SUBSET	TOTAL
33	37

SHEET	TOTAL
257	297

FILE: ...\Sheets\165 sm002

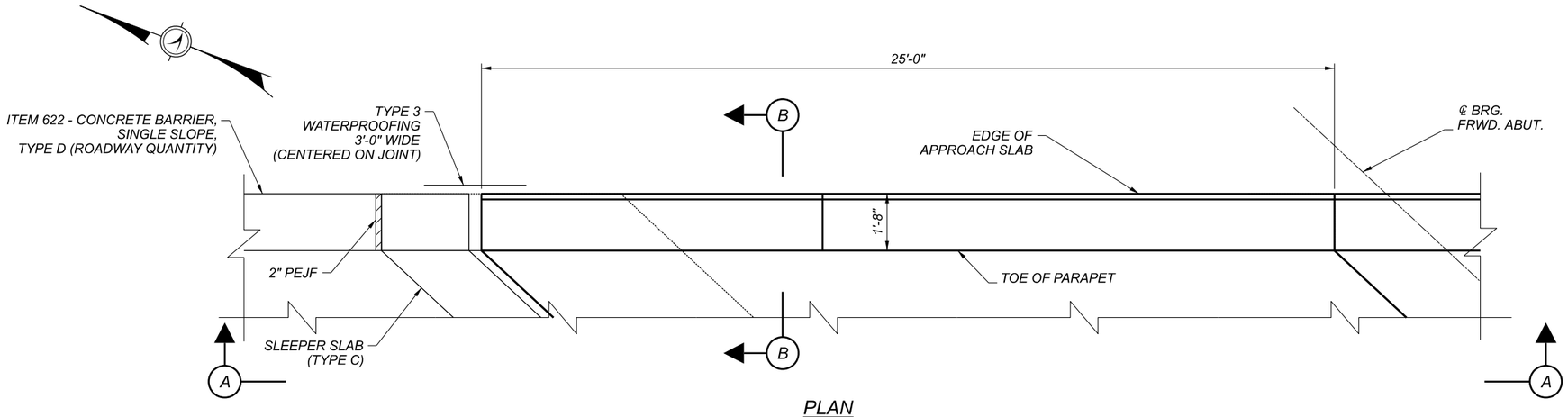

PLAN
RIGHT FORWARD TRANSITION

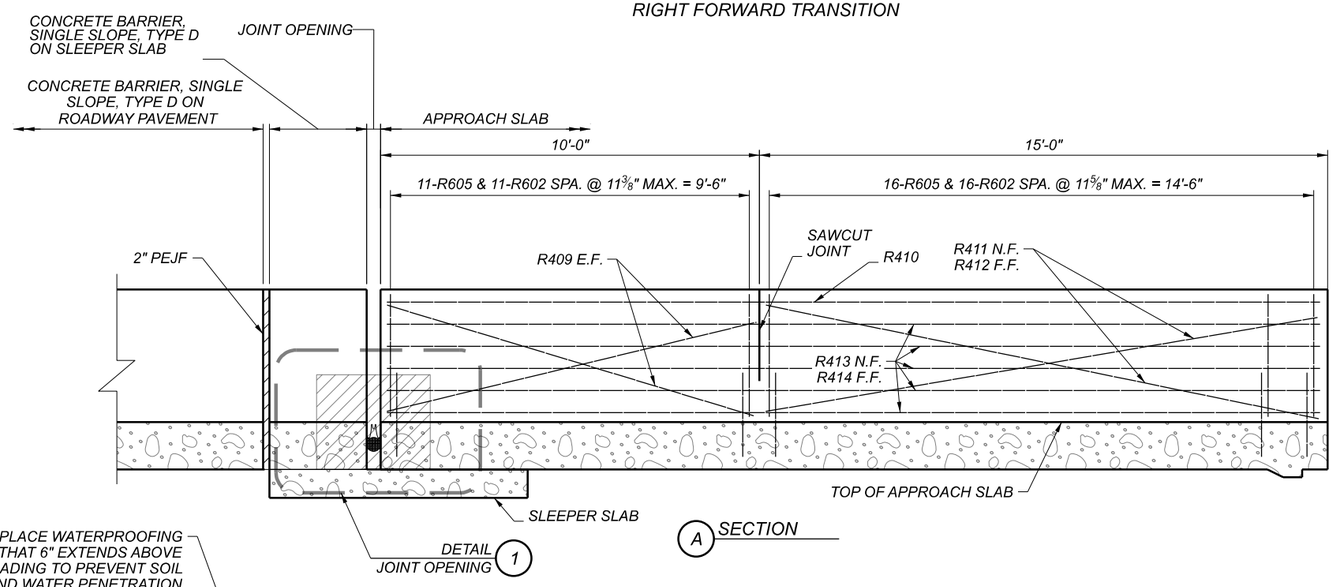

A SECTION

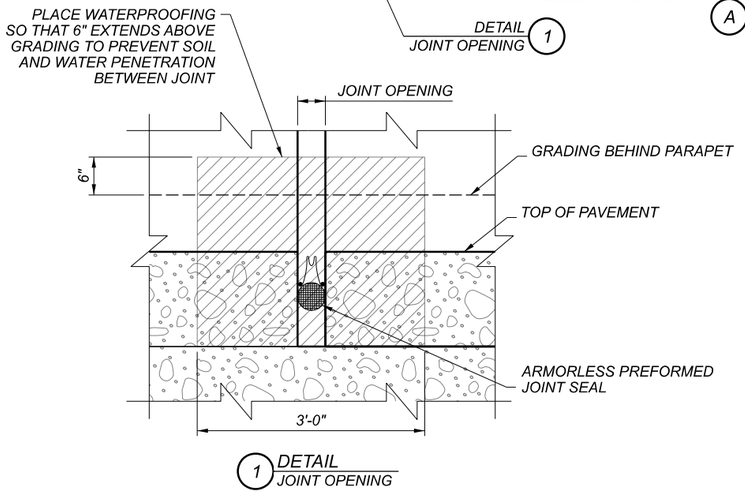

1 DETAIL JOINT OPENING

NOTES:

1. FOR ADDITIONAL APPROACH SLAB AND SLEEPER SLAB DETAILS, SEE ODOT STD. DWG. AS-1-15 AND AS-2-15.
2. FOR ADDITIONAL PARAPET DETAILS, SEE ODOT STD. DWG. SBR-1-20.

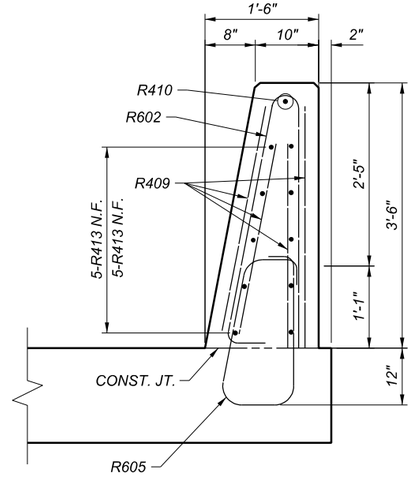

B SECTION
APPROACH SLAB PARAPET

APPROACH SLAB PARAPET TRANSITION - RIGHT FORWARD
BRIDGE NO. SUM-77-3227L
IR-77 OVER SR-21 (BRECKSVILLE RD.)

SFN 7704712

DESIGN AGENCY
Gannett Fleming
ENGINEERS AND ARCHITECTS, P.C.
2500 Corporate Exchange Drive, Suite 220, Columbus, OH 43231

DESIGNER	CHECKER
SAT	CTM

REVIEWER: MTO 2/22

PROJECT ID: 104983

SUBSET	TOTAL
34	37

SHEET	TOTAL
258	297

SUM-77-32.27 PENTABLE SUBSET: 4 SUBMITTAL: Stage 3 PLOT DRIVER: OHDOT_PDF_Levels.pltcfg

MODEL: Sheet PAPERSIZE: 17x11 (in.) DATE: 2/24/2022 TIME: 3:04:06 PM USER: edues
pw:\\gfnet-pw.bentley.com:gfnet-pw-01\Documents\Projects\67490\104983\401-Engineering-GF\Structures\3227L-SFN_7704712\Sheets\166 sm003

PENTABLE: 104983_OHDOT_Pen.tbl

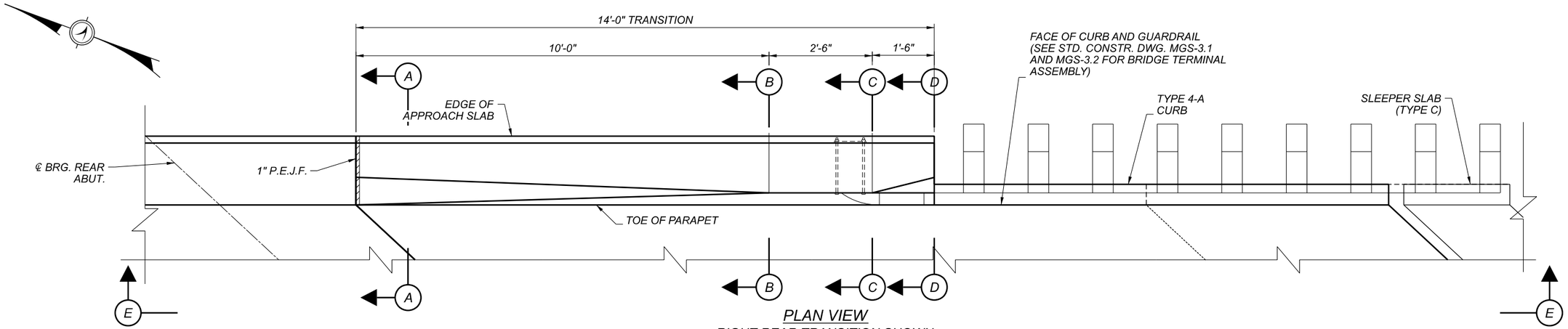

PLAN VIEW

RIGHT REAR TRANSITION SHOWN, LEFT REAR & LEFT FWD SIMILAR

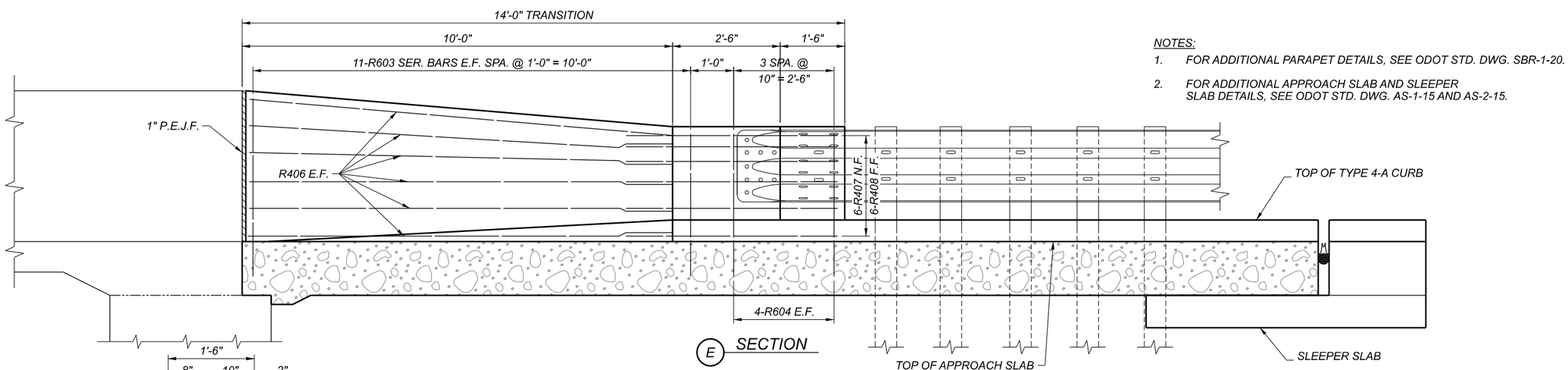

E SECTION

NOTES:

1. FOR ADDITIONAL PARAPET DETAILS, SEE ODOT STD. DWG. SBR-1-20.
2. FOR ADDITIONAL APPROACH SLAB AND SLEEPER SLAB DETAILS, SEE ODOT STD. DWG. AS-1-15 AND AS-2-15.

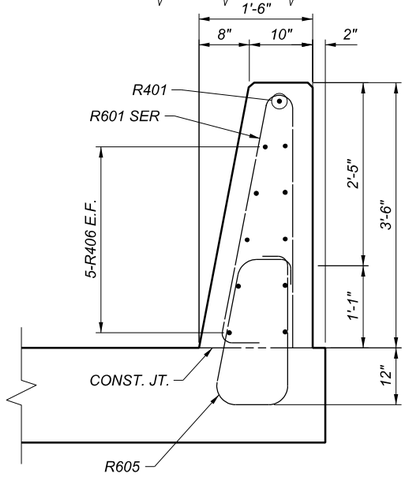

A SECTION

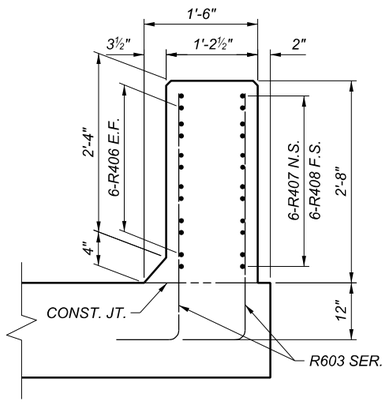

B SECTION

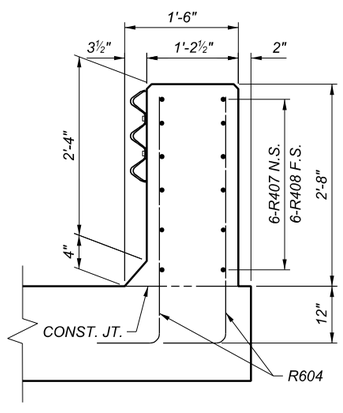

C SECTION

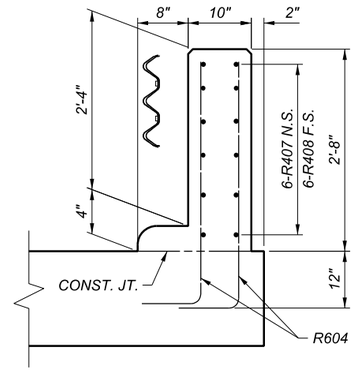

D SECTION

APPROACH SLAB PARAPET TRANSITION - RT REAR, LT REAR, LT FWD
BRIDGE NO. SUM-77-3227L
IR-77 OVER SR-21 (BRECKSVILLE RD.)

SFN 7704712

DESIGN AGENCY
Gannett Fleming
ENGINEERS AND ARCHITECTS, P.C.
2500 Corporate Exchange Drive Suite 220 Columbus, OH 43231

DESIGNER	CHECKER
SAT	CTM

REVIEWER: MTO 2/22

PROJECT ID: 104983

SUBSET	TOTAL
35	37

SHEET	TOTAL
259	297

SUM-77-32.27 PENTABLE SUBSET: 4 SUBMITTAL: Stage 3 PLOT DRIVER: OHDOT_PDF_Levels.pltcfg PENTABLE: 104983_OHDOT_Pen.tbl

MODEL: Sheet PAPERSIZE: 17x11 (in.) DATE: 2/24/2022 TIME: 3:06:21 PM USER: edues
pw:\\gfnet-pw.bentley.com:gfnet-pw-01\Documents\Projects\674901\104983\401-Engineering-GFIStructures\3227L-SFN_7704712\Sheets\167 sm004

FILE: ...\Sheets\167 sm004

Mark	NUMBER			LENGTH	WEIGHT			TYPE	DIMENSIONS			
	REAR	FORWARD	TOTAL		REAR	FWD	TOTAL		A	B	C	INC
ABUTMENT FOOTING												
F501	2		2	27'-7"	58		58	STR.				
F502	5		5	29'-8"	155		155	STR.				
F503	15		15	13'-10"	217		217	2	5'-4"	3'-5"	5'-4"	
F504	15		15	16'-5"	257		257	3	5'-4"	2'-7"		
	1		1	11'-3"					2'-9"			
F505	SER OF		SER OF	to	44		44	3	to	2'-7"		2'-8"
	3		3	16'-7"					5'-5"			
F506	7		7	6'-5"	47		47	1	1'-0"	5'-6"		
F507	11		11	25'-3"	290		290	2	12'-2"	1'-2"	12'-2"	
F508	14		14	12'-7"	184		184	3	3'-5"	2'-7"		
F509	1		1	11'-6"	12		12	2	5'-4"	1'-1"	5'-4"	
F510	1		1	11'-11"	13		13	2	5'-4"	1'-6"	5'-4"	
F511	1		1	13'-1"	14		14	2	5'-4"	2'-8"	5'-4"	
	1		1	13'-3"					3'-9"			
F512	SER OF		SER OF	to	47		47	3	to	2'-7"		1'-7"
	3		3	16'-5"					5'-4"			
F513	4		4	16'-8"	70		70	STR.				
F514	4		4	3'-0"	13		13	19	1'-6"	6"	1'-5"	
F515	1		1	13'-8"	15		15	2	5'-4"	3'-3"	5'-4"	
F516	1		1	12'-1"	13		13	2	5'-4"	1'-8"	5'-4"	
F517	1		1	11'-10"	13		13	2	5'-4"	1'-5"	5'-4"	
F518	1		1	10'-11"	12		12	3	2'-7"	2'-7"		
F519	1		1	8'-9"	10		10	3	1'-6"	2'-7"		
F520	2		2	8'-8"	19		19	STR.				
F521		7	7	29'-10"		218	218	STR.				
F522		18	18	16'-7"		312	312	3	5'-5"	2'-7"		
F523		17	17	13'-10"		246	246	2	5'-4"	3'-5"	5'-4"	
F524		1	1	12'-10"		14	14	2	5'-4"	2'-5"	5'-4"	
F525		1	1	11'-11"		13	13	2	5'-4"	1'-6"	5'-4"	
F526		4	4	14'-5"		61	61	STR.				
F527		11	11	12'-9"		147	147	3	3'-6"	2'-7"		
F528		1	1	13'-11"		15	15	3	4'-1"	2'-7"		
F529		1	1	11'-3"		12	12	3	2'-9"	2'-7"		
F530		1	1	10'-5"		11	11	3	2'-4"	2'-7"		
F531		1	1	7'-9"		9	9	3	1'-0"	2'-7"		
F532		1	1	13'-5"		14	14	2	5'-4"	3'-0"	5'-4"	
F533		1	1	12'-11"		14	14	2	5'-4"	2'-6"	5'-4"	
F534		1	1	11'-9"		13	13	2	5'-4"	1'-4"	5'-4"	
F535		7	7	6'-5"		47	47	1	1'-0"	5'-6"		
F536		2	2	11'-6"		24	24	STR.				
F537		10	10	24'-11"		260	260	2	12'-0"	1'-2"	12'-0"	
F801	1		1	27'-7"	74		74	STR.				
F802	3		3	29'-8"	238		238	STR.				
F803	3		3	16'-8"	134		134	STR.				
F804	4		4	4'-1"	44		44	1	1'-0"	3'-3"		
F805	1		1	8'-8"	24		24	STR.				
F806		3	3	14'-5"		116	116	STR.				
F807		5	5	29'-10"		399	399	STR.				
F808		4	4	4'-1"		44	44	1	1'-0"	3'-3"		
F809		1	1	11'-6"		31	31	STR.				
				SUB-TOTAL	2,017	2,020	4,037					

Mark	NUMBER			LENGTH	WEIGHT			TYPE	DIMENSIONS			
	REAR	FORWARD	TOTAL		REAR	FWD	TOTAL		A	B	C	
ABUTMENT STEM												
A501	3		3	26'-6"	83		83	STR.				
A502	3		3	29'-3"	92		92	1	1'-0"	28'-4"		
A503		6	6	29'-4"		184	184	1	1'-0"	28'-5"		
A504	15		15	12'-10"	201		201	2	4'-10"	3'-5"	4'-10"	
A505	1		1	10'-6"	11		11	2	4'-10"	1'-1"	4'-10"	
A506	1		1	10'-11"	12		12	2	4'-10"	1'-6"	4'-10"	
A507	1		1	12'-1"	13		13	2	4'-10"	2'-8"	4'-10"	
A508	1		1	12'-8"	14		14	2	4'-10"	3'-3"	4'-10"	
A509	1		1	10'-1"	11		11	2	4'-10"	8"	4'-10"	
A510	1		1	10'-10"	12		12	2	4'-10"	1'-5"	4'-10"	
A511		18	18	12'-8"		238	238	2	4'-9"	3'-5"	4'-9"	
A512		1	1	11'-8"		13	13	2	4'-9"	2'-5"	4'-9"	
A513		1	1	10'-0"		11	11	2	4'-9"	9"	4'-9"	
A515		1	1	12'-3"		13	13	2	4'-9"	3'-0"	4'-9"	
A516		1	1	11'-9"		13	13	2	4'-9"	2'-6"	4'-9"	
A517		1	1	11'-2"		12	12	2	4'-9"	1'-4"	4'-9"	
A801	3		3	27'-4"	219		219	1	1'-0"	26'-6"		
A802	1		1	28'-8"	77		77	1	1'-0"	27'-10"		
A803		4	4	29'-3"		313	313	1	1'-0"	28'-5"		
W501	18		18	16'-8"	313		313	STR.				
W502	11		11	9'-1"	105		105	2	4'-1"	1'-2"	4'-1"	
W503		9	9	14'-3"		134	134	STR.				
W504		10	10	9'-1"		95	95	2	4'-1"	1'-2"	4'-1"	
W505	9		9	1'-3"	12		12	19	9"	4"	4"	
W506		9	9	14'-8"		138	138	STR.				
				SUB-TOTAL	1,175	1,164	2,339					
SEMI-INTEGRAL DIAPHRAGM												
D501	23		23	8'-10"	212		212	2	2'-5"	4'-3"	2'-5"	
D502	23		23	16'-3"	390		390	3	5'-0"	2'-10"		
D503		23	23	8'-10"		212	212	2	2'-5"	4'-3"	2'-5"	
D504		23	23	16'-1"		386	386	3	5'-0"	2'-9"		
D801	13	13	26	5'-9"	200	200	400	18	3'-5"	1'-0"	1'-0"	
# D802	10		10	27'-10"	744		744	STR.				
# D803	4		4	28'-11"	309		309	STR.				
# D804		10	10	28'-0"		748	748	STR.				
D805		4	4	29'-8"		317	317	STR.				
				SUB-TOTAL	1,855	1,863	3,718					

Mark	NUMBER			LENGTH	WEIGHT			TYPE	DIMENSIONS						
	PIER 1	PIER 2	TOTAL		REAR	FWD	TOTAL		A	B	C				
PIER FOOTING															
F810	40	40	80	10'-2"	1,086	1,086	2,172	1	2'-0"	8'-4"					
F811	9	9	18	22'-6"	541	541	1,082	17	20'-8"						
F812	9	9	18	25'-5"	611	611	1,222	2	2'-7"	20'-8"	2'-7"				
F813	22		22	12'-11"	759		759	2	2'-7"	8'-2"	2'-7"				
F814	22		22	10'-0"	588		588	17	8'-2"						
				SUB-TOTAL	3,585	2,238	5,823								

Mark	NUMBER			LENGTH	WEIGHT			TYPE	DIMENSIONS						
	PIER 1	PIER 2	TOTAL		REAR	FWD	TOTAL		A	B	C	D	E	R	INC
PIER															
P501	50	40	90	10'-11"	569	456	1,025	24	2'-8"	3'-1"				1'-6"	
P502	42	32	74	13'-0"	570	434	1,004	STR.							
P503	6	6	12	18'-0"	113	113	226	STR.							
P504	34	34	68	8'-1"	287	287	574	2	2'-10"	2'-8"	2'-10"				
	2	2	4	5'-10"					2'-7"	11"	2'-7"				
P505	SER OF	SER OF	SER OF	to	44	44	88	2	to	to	to				1'-1 1/2"
	3	3	3	8'-1"					2'-10"	2'-8"	2'-10"				
P507	231	176	407	3'-7"	864	658	1,522	52	2'-7"	6"					
P801	2	2	4	22'-11"	122	122	244	2	2'-8"	18'-0"	2'-8"				
P802	2	2	4	17'-0"	91	91	182	20	15'-11"	1'-0"	2"	1'-0"	2"		
P803	40		40	26'-7"	2,840		2,840	16	25'-8"						
P805		40	40	21'-2"		2,261	2,261	16	20'-3"						
P806	2	2	4	25'-5"	136	136	272	2	2'-8"	20'-6"	2'-8"				
P807	2	2	4	18'-8"	100	100	200	20	15'-11"	2'-3"	5"	2'-3"	5"		
				SUB-TOTAL	5,736	4,702	10,438								

REINFORCING NOTES AND DETAILS
FOR REINFORCING GENERAL NOTES AND BEND DIAGRAMS, SEE SHEET 37/37

REINFORCING LIST 1 OF 2
BRIDGE NO. SUM-77-3227L
IR-77 OVER SR-21 (BRECKSVILLE RD.)

SFN 7704712

DESIGN AGENCY
Gannett Fleming
ENGINEERS AND ARCHITECTS, P.C.
2500 Corporate Exchange Drive, Suite 220, Columbus, OH 43231

DESIGNER	CHECKER
RSN	CTM

REVIEWER MTO 2/22

PROJECT ID 104983

SUBSET	TOTAL
36	37

SHEET	TOTAL
260	297

SUM-77-32.27 PENTABLE SUBSET: 4 SUBMITTAL: Stage 3 PLOT DRIVER: OHDOT_PDF_Levels.pltcfg PENTABLE: 104983_OHDOT_Pen.tbl

MODEL: Sheet PAPERSIZE: 17x11 (in.) DATE: 2/24/2022 TIME: 3:08:29 PM USER: edues
pw:\\ghnet-pw.bentley.com:ghnet-pw-01\Documents\Projects\67490\104983\401-Engineering-GF\Structures\3227L-SFN_7704712\Sheets\168 sl001

FILE: ...\Sheets\168 sl001

	Mark	SUPER Col #3	TOTAL	LENGTH	SUPER	TOTAL	TYPE	DIMENSIONS A	B	C	D	E	R	INC
	DECK													
	S401	160	160	30'-0"	3,207	3,207	STR.							
	S402	20	20	10'-0"	134	134	STR.							
	S403	228	228	26'-8"	4,062	4,062	STR.							
	S501	487	487	20'-6"	10,413	10,413	16	19'-11"						
	S502	487	487	19'-11"	10,117	10,117	STR.							
	S503	522	522	7'-1"	3,857	3,857	16	6'-6"						
		1	1	2'-4"										
	S504	SER OF	SER OF	to	465	465	STR.							*5 1/4"*
		40	40	19'-11"										
		1	1	2'-4"										
#	S505	SER OF	SER OF	to	465	465	STR.							*5 1/4"*
		40	40	19'-11"										
		1	1	2'-11"										
#	S506	SER OF	SER OF	to	536	536	STR.							*4 1/2"*
		45	45	19'-11"										
		1	1	2'-4"										
#	S507	SER OF	SER OF	to	523	523	STR.							*4 3/4"*
		45	45	19'-11"										
#	S508	200	200	30'-0"	6,258	6,258	STR.							
#	S509	25	25	14'-0"	366	366	STR.							
		1	1	2'-9"				2'-2"						
	S510	SER OF	SER OF	to	49	49	16	to						*5"*
		10	10	6'-7"				6'-0"						
#	S511	10	10	2'-3"	24	24	STR.							
	S512	6	6	2'-0"	13	13	STR.							
				SUB-TOTAL	40,489	40,489								
	PARAPET													
	R401	84	84	10'-0"	562	562	STR.							
	R402	88	88	30'-0"	1,764	1,764	STR.							
	R403	11	11	13'-0"	96	96	STR.							
	R405	8	8	11'-9"	63	63	STR.							
	R406	36	36	10'-0"	241	241	STR.							
	R407	18	18	6'-5"	78	78	25	2'-6"	2'-5"	1'-5"	1 1/2"	5"		
	R408	18	18	5'-1"	62	62	STR.							
	R409	4	4	10'-0"	27	27	STR.							
	R410	1	1	23'-5"	16	16	STR.							
	R411	2	2	14'-8"	20	20	STR.							
	R412	2	2	12'-10"	18	18	STR.							
	R413	5	5	24'-8"	83	83	STR.							
	R414	5	5	22'-10"	77	77	STR.							
	R601	258	258	7'-4"	2,842	2,842	39	9 1/2"	11"	2'-3"	2'-3"	7"	12"	
	R602	285	285	7'-1"	3,033	3,033	23	6"	3'-3"	3'-3"			2"	
		6	6	4'-4"					3'-6"					
	R603	SER OF	SER OF	to	471	471	1	1'-0"	to					*1"*
		11	11	5'-2"					4'-4"					
	R604	24	24	4'-4"	157	157	1	1'-0"	3'-6"					
	R605	27	27	7'-8"	311	311	39	9 1/2"	11"	2'-5"	2'-5"	7"	12"	
				SUB-TOTAL	9,921	9,921								
				TOTAL ALL REINFORCING		76,765								

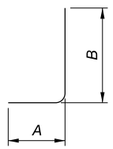

TYPE-1

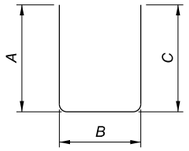

TYPE-2

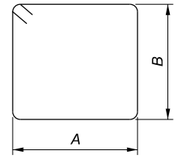

TYPE-3

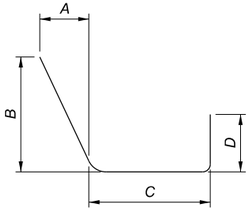

TYPE-10

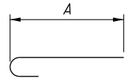

TYPE-16

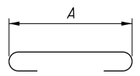

TYPE-17

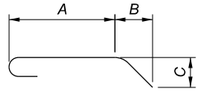

TYPE-18

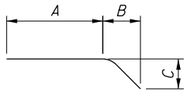

TYPE-19

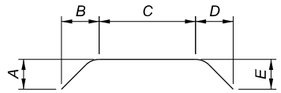

TYPE-20

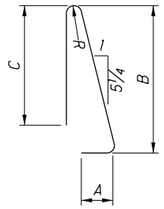

TYPE-23

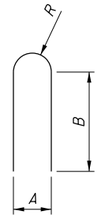

TYPE-24

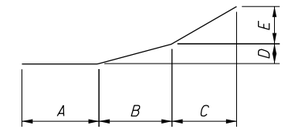

TYPE-25

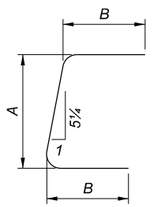

TYPE-28

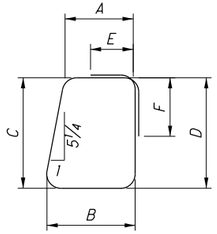

TYPE-39

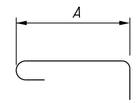

TYPE-52

\# = ALL OR A PORTION OF BARS PROVIDED WITH MECHANICAL CONNECTOR

REINFORCING NOTES

1. *ALL REINFORCEMENT BARS SHALL BE EPOXY COATED. PAYMENT FOR REINFORCING, INCLUDING MECHANICAL CONNECTORS, SHALL BE MADE WITH ITEM 509 - EPOXY COATED REINFORCING STEEL*
2. *"STR." IN THE TYPE COLUMN INDICATES STRAIGHT BARS.*
3. *"SER OF" DENOTES SERIES OF BARS, E.G "X" SER OF "Y" = "X" SERIES OF "Y" BARS/SERIES.*
4. *REFER TO C.M.S SECTION 509.05 FOR STANDARD BEND DIMENSIONS.*
5. *MECHANICAL CONNECTORS: AN APPROVED TYPE OF MECHANICAL CONNECTOR FOR REINFORCING BARS SHALL BE PROVIDED IN ACCORDANCE WITH C.M.S. SECTION 509.07. INSTALLATION OF CONNECTORS SHALL CONFORM WITH MANUFACTURER RECOMMENDED PROCEDURES.*

CONNECTORS AND DOWEL BARS USED WITH EPOXY COATED BARS SHALL BE EPOXY COATED. COATING FOR BOTH CONNECTORS AND BARS SHALL CONFORM TO THE SAME SPECIFICATIONS. COATINGS THAT HAVE BEEN DAMAGED OR THAT OTHERWISE DO NOT MEET SPECIFICATIONS WITH RESPECT TO COLOR, CONTINUITY AND UNIFORMITY, MAY BE REPAIRED AS DIRECTED BY THE ENGINEER, OR THEY SHALL BE REPLACED WITH MATERIAL WITH MEETS THE SPECIFICATIONS. FOR BARS UTILIZING A MECHANICAL CONNECTOR, THE BAR LENGTH FOR PAYMENT IS MEASURED TO THE CENTER OF THE PLANNED MECHANICAL CONNECTION. EXTRA BAR LENGTH AND/OR BAR END PREPARATION MAY BE NECESSARY DEPENDING UPON THE TYPE OF MECHANICAL CONNECTOR FURNISHED AND THOSE COSTS SHALL BE INCLUDED IN THE BID PRICE FOR ITEM 509. CONNECTORS AND DOWEL BAR EXTENSIONS SHALL CONFORM TO AND BE INCLUDED IN THE BID PRICE FOR ITEM 509.

MINIMUM LAP SPLICE LENGTHS

#4 BAR (ALL) = 2'-0"
#5 BAR (ALL) = 2'-6"
#6 BAR (ALL) = 3'-0"

REINFORCING CALLOUT NOMENCLATURE
BAR SIZE AND LOCATION ARE INDICATED IN THE BAR MARK.
LOCATION: THE BEGINING 1 OR 2 LETTERS INDICATES WHERE THE BAR IS INITIALLY CAST INTO.
SIZE: THE FIRST NUMBER (IF 3 TOTAL NUMBERS) OR TWO NUMBERS (IF 4 TOTAL NUMBERS)
UNIQUE ID: THE LAST TWO NUMBERS ARE AN INDEX NUMBER. THE INDEX NUMBER NEED NOT BE SEQUENTIAL, IT IS SIMPLY TO ALLOW A UNIQUE IDENTIFICATION OF BARS OF THE SAME SIZE AND IN THE SAME LOCATION WITHIN THE STRUCTURE.

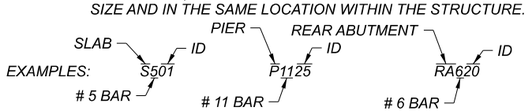

LOCATION MARKS USED: *F = FOOTING* *P = PIER* *R = RAIL (PARAPET)* *A = ABUTMENT* *WW = WINGWALL* *D = ABUTMENT DIAPHRAGM* *S = SLAB (DECK)*

REINFORCING LIST 2 OF 2
BRIDGE NO. SUM-77-3227L
IR-77 OVER SR-21 (BRECKSVILLE RD.)

SFN 7704712

DESIGN AGENCY
Gannett Fleming ENGINEERS AND ARCHITECTS, P.C.
2500 Corporate Exchange Drive, Suite 220, Columbus, OH 43231

DESIGNER	CHECKER
RSN	CTM

REVIEWER MTO 2/22

PROJECT ID 104983

SUBSET	TOTAL
37	37

SHEET	TOTAL
261	297

SUM-77-32.27 PENTABLE SUBSET: 4 SUBMITTAL: Stage 3 PLOT DRIVER: OHDOT_PDF_Levels.pltcfg PENTABLE: 104983_OHDOT_Pen.tbl

MODEL: Sheet PAPERSIZE: 17x11 (in.) DATE: 2/24/2022 TIME: 3:10:35 PM USER: edues
pw:\\gfnet-pw.bentley.com:gfnet-pw-01\Documents\Projects\67490\104983\401-Engineering-GF\Structures\3227L-SFN_7704712\Sheets\169 sl002

FILE: ...\Sheets\169 sl002

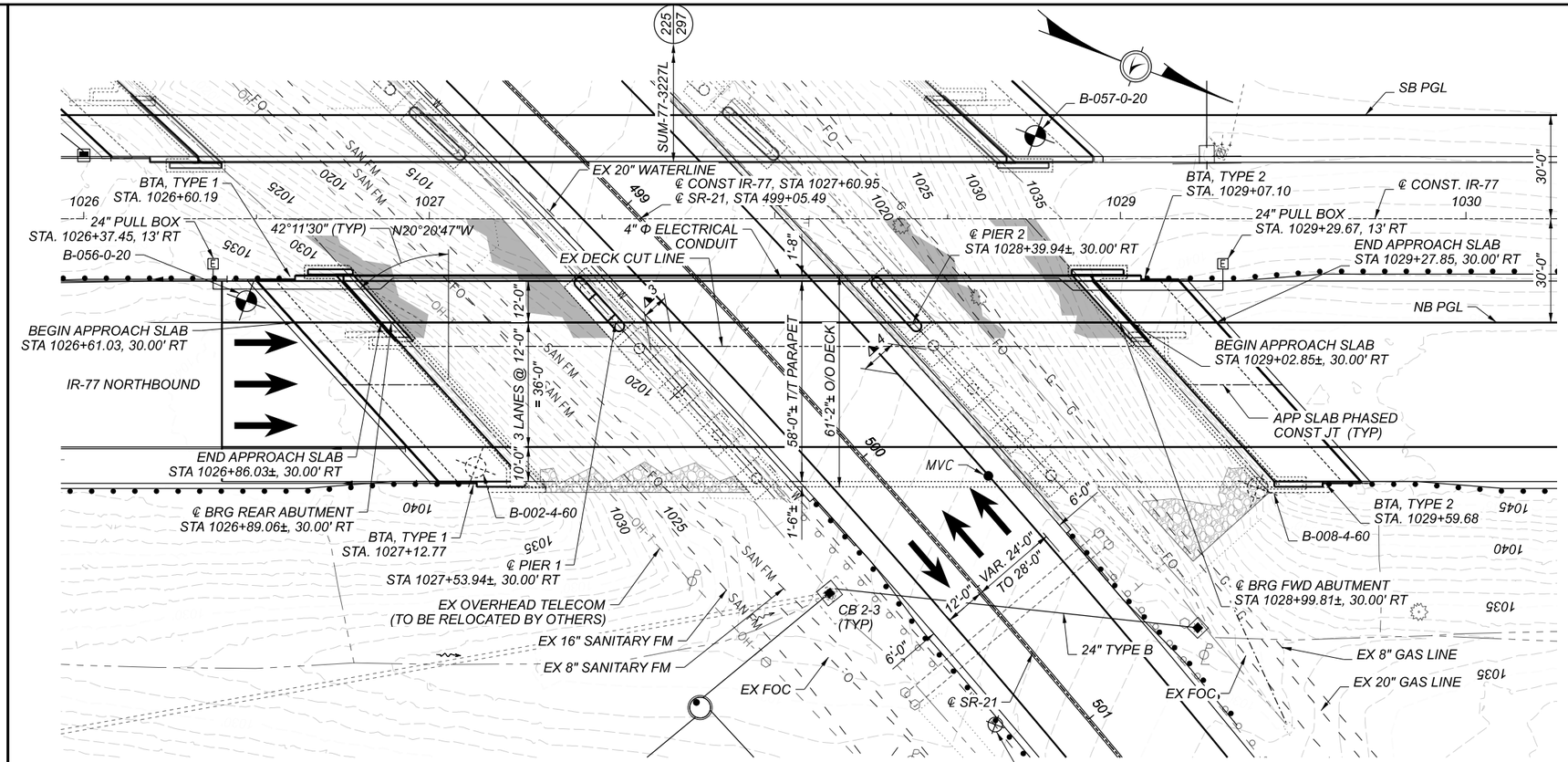

** SUE LEVEL A TEST HOLE INFORMATION, DATED 09-09-21, IS AVAILABLE FOR UTILITIES ALONG SR-21

PLAN

(ALL EXISTING UTILITIES TO REMAIN UNLESS NOTED OTHERWISE)

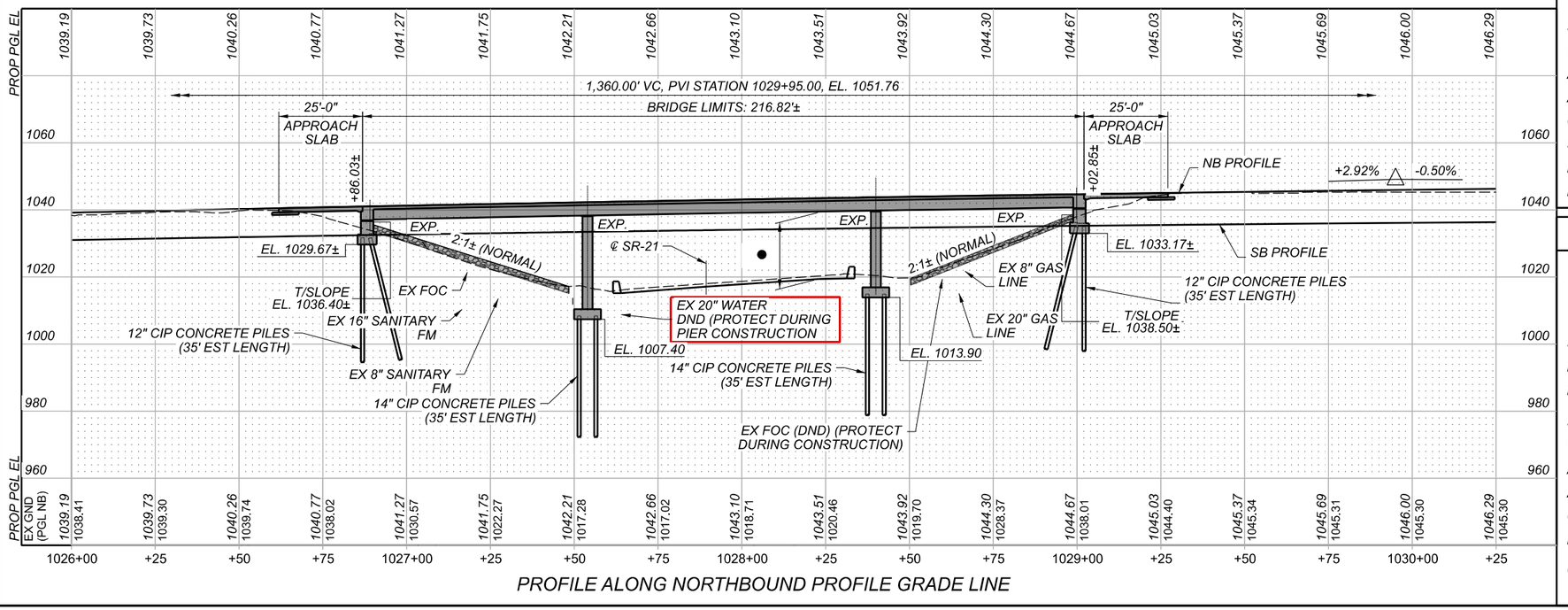

PROFILE ALONG NORTHBOUND PROFILE GRADE LINE

BENCHMARK DATA

BM #120, STA 1000+00.25,	ELEV 995.78,	OFFSET 85.45' RT
BM #121 STA 1036+81.45	ELEV 1048.90	OFFSET 83.94' FT

FOR ADDITIONAL BENCHMARK INFORMATION. SEE ROADWAY PLAN SHEET 4 297

NOTES

EARTHWORK LIMITS SHOWN ARE APPROXIMATE. ACTUAL SLOPES SHALL CONFORM TO PLAN CROSS SECTIONS.

DESIGN TRAFFIC:

CURRENT ADT (2028)	58,970
DESIGN YEAR ADT (2048)	69,490
DIRECTIONAL DISTRIBUTION	7%
DESIGN SPEED	70 MPH

LEGEND

- PROJECT BORING LOCATION
- HISTORIC BORING LOCATION

HORIZONTAL AND VERTICAL CLEARANCES

- ● 15.61' EXIST. ACTUAL 16.59' PROP. ACTUAL 14.50' REQUIRED
- ▲3 11.51' ACTUAL 7.67' REQ'D 19'-0" CLEAR ZONE (BARRIER PROTECTED)
- ▲4 12.58' ACTUAL 7.67' REQ'D 19'-0" CLEAR ZONE (BARRIER PROTECTED)

EXISTING AGGREGATE SLOPE PROTECTION (TO REMAIN)

PROPOSED AGGREGATE SLOPE PROTECTION (INSTALLED WITH THIS PROJECT)

EXISTING STRUCTURE

TYPE: CONTINUOUS COMPOSITE STEEL BEAMS WITH CONCRETE DECK AND SEMI-INTEGRAL SUBSTRUCTURE

SPANS: 64'-10½"±, 86'-0"±, 59'-10½"± C/C BRGS.

ROADWAY: 40'-0"± TOE/TOE PARAPET

LOADING: HS25 CASE I AND ALTERNATE MILITARY LOADING (SUPERSTRUCTURE), HS20-44 AND ALTERNATE MILITARY LOADING (SUBSTRUCTURES) 60 PSF FWS

SKEW: 42°11'30"± RIGHT FORWARD

WEARING SURFACE: 1" MONOLITHIC CONCRETE

APPROACH SLABS: 25' LONG (AS-1-81 MODIFIED)

ALIGNMENT: TANGENT

CROWN: 0.016±

STRUCTURE FILE NUMBER: 7704747

DATE BUILT: 1962, MODIFIED 2011

DISPOSITION: TO BE REHABILITATED

PROPOSED STRUCTURE

TYPE: WIDENED CONTINUOUS COMPOSITE BEAMS WITH CONCRETE DECK SLAB ON WIDENED PIERS AND WIDENED SEMI-INTEGRAL ABUTMENTS

SPANS: 64'-10½"±, 86'-0"±, 59'-10½"± C/C BRGS.

ROADWAY: 58'-0"± TOE/TOE PARAPET

LOADING: SEE GENERAL NOTES

SKEW: 42°11'30"± RIGHT FORWARD

WEARING SURFACE: 1" MONOLITHIC CONCRETE

APPROACH SLABS: 25' LONG (AS-1-15, AS-2-15), TYPE C INSTALLATION

ALIGNMENT: TANGENT

CROWN: 0.016±

DECK AREA: 13,273 SF

COORDINATES: LATITUDE 41°15'31.27"

LONGITUDE 81°37'54.15"

SITE PLAN
BRIDGE NO. SUM-77-3227R
IR-77 OVER SR-21 (BRECKSVILLE RD.)

SFN 7704747

DESIGN AGENCY
Gannett Fleming
ENGINEERS AND ARCHITECTS, P.C.
2500 Corporate Exchange Drive Suite 220 Columbus, OH 43231

DESIGNER	CHECKER
SAT	CTM

REVIEWER MTO 2/22

PROJECT ID 104983

SUBSET	TOTAL
1	36

SHEET	TOTAL
262	297

SUM-77-32.27

PENTABLE SUBSET: 5 SUBMITTAL: Stage 3 PLOT DRIVER: OHDOT_PDF_Levels.pltcfg PENTABLE: 104983_OHDOT_Pen.tbl

MODEL: Sheet PAPERSIZE: 17x11 (In.) DATE: 2/24/2022 TIME: 6:38:46 PM USER: edues
pw:\\gfnet-pw.bentley.com:gfnet-pw-01\Documents\Projects\674901\104983\401-Engineering-GF\Structures\3227R-SFN_7704747\Sheets\003 sp102

FILE: ...\Sheets\003 sp102

SUM-77-3227R BRIDGE PLAN SUMMARY

1 SITE PLAN
2 GENERAL NOTES 1 OF 2
3 GENERAL NOTES 2 OF 2

4 ESTIMATED QUANTITIES

5 PHASED CONSTRUCTION SECTIONS 1 OF 3
6 PHASED CONSTRUCTION SECTIONS 2 OF 3
7 PHASED CONSTRUCTION SECTIONS 3 OF 3

8 FOUNDATION PLAN
9 EXISTING REAR ABUTMENT REMOVAL DETAILS
10 PROPOSED REAR ABUTMENT PLAN AND ELEVATION
11 REAR ABUTMENT REINFORCING DETAILS
12 FOOTING REINFORCING PLAN
13 ABUTMENT SECTIONS

14 EXISTING FORWARD ABUTMENT REMOVAL DETAILS
15 PROPOSED FORWARD ABUTMENT PLAN AND ELEVATION
16 FORWARD ABUTMENT REINFORCING DETAILS

17 PIER WRAPPING DETAILS
18 PROPOSED PIER DETAILS

19 BEARING DETAILS

20 FRAMING PLAN
21 BEAM ELEVATION
22 BEAM CROSSFRAME DETAILS
23 BEAM SPLICE DETAILS
24 BEAM CAMBER & BLOCKING

25 TRANSVERSE SECTION
26 DECK REINFORCING PLAN
27 DECK DETAILS

28 TOP OF HAUNCH ELEVATIONS
29 SCREED ELEVATIONS
30 FINAL DECK ELEVATIONS

31 LEFT PARAPET DETAILS

32 REAR APPROACH SLAB DETAILS
33 FORWARD APPROACH SLAB DETAILS
34 APPROACH SLAB PARAPET TRANSITION

35 REINFORCING LIST 1 OF 2
36 REINFORCING LIST 2 OF 2

PRIMARY PROPOSED WORK

1. ALL WORK SHALL BE PERFORMED WITHIN RESPECTIVE PHASES OF CONSTRUCTION AS SHOWN IN THE PLANS
2. REMOVE PART OF THE EXISTING ABUTMENT AND WINGWALL DOWN TO THE ELEVATION SHOWN IN THE PLANS, AND REBUILD AND WIDEN THE ABUTMENTS TO ACCOMMODATE THE NEW, WIDER SUPERSTRUCTURE.
3. ADD PIER NEXT TO EXISTING PIER TO ACCOMIDATE THE NEW, WIDER SUPERSTRUCTURE.
4. ADD 3 NEW BEAM LINES AND INSTALL NEW ELASTOMERIC BEARINGS AT ALL SUBSTRUCTURES FOR THE NEW STEEL BEAMS.
5. INSTALL NEW FULL WIDTH APPROACH SLABS (25' LONG).
6. PAINT THE NEW BEAM SUPERSTUCTURE.
7. TREAT THE SLOPES BETWEEN THE LEFT AND RIGHT BRIDGES WITH AGGREGATE SLOPE PROTECTION.

REFERENCED STANDARD DRAWINGS

AS-1-15	------	REVISED 07-17-2015
AS-2-15	------	REVISED 01-18-2019
GSD-1-19	------	REVISED 01-15-2021
PCB-91	------	REVISED 07-17-2020
SBR-1-20	------	REVISED 07-17-2020
RM-4.2	------	REVISED 04-17-2020
HL-30.32	------	REVISED 04-17-2020
HL-50.21	------	REVISED 01-15-2021

REFERENCED SUPPLEMENTAL SPECIFICATIONS

800	------	DATED 10-15-2021
PN-519	------	DATED 07-21-2017
PN-555	------	DATED 01-15-2021

DESIGN SPECIFICATIONS

THE NEW SUPERSTRUCTURE, BEARINGS, AND ABUTMENTS CONFORM TO THE "LRFD BRIDGE DESIGN SPECIFICATIONS", ADOPTED BY THE AMERICAN ASSOCIATION OF STATE HIGHWAY AND TRANSPORTATION OFFICIALS, 2020 (NINTH EDITION), AND THE ODOT BRIDGE DESIGN MANUAL, 2020.
NO SPECIAL DESIGN SPECIFICATIONS WERE USED.

LRFD OPERATIONAL IMPORTANCE

A LOAD MODIFIER OF 1.00 HAS BEEN ASSUMED FOR THE DESIGN OF THIS STRUCTURE IN ACCORDANCE WITH THE AASHTO LRFD BRIDGE DESIGN SPECIFICATIONS, ARTICLE 1.3.5, AND THE ODOT BRIDGE DESIGN MANUAL, 2020.

DESIGN LOADING

EXISTING SUBSTRUCTURE (1961)

VEHICULAR LIVE LOAD: CF 2000 (57) ADEQUATE FOR AASHTO HS20-44
NO FUTURE WEARING SURFACE (FWS)

EXISTING SUPERSTRUCTURE AND EXISTING SUBSTRUCTURE (2011)

VEHICULAR LIVE LOAD SUPERSTRUCTURE: HS25 CASE I AND ALTERNATE MILITARY LOADING
VEHICULAR LIVE LOAD SUBSTRUCTURE: HS20 AND ALTERNATE MILITARY LOADING
FUTURE WEARING SURFACE (FWS) OF 0.060 KSF

PROPOSED SUPERSTRUCTURE AND PROPOSED SUBSTRUCTURES

VEHICULAR LIVE LOAD: HL-93
FUTURE WEARING SURFACE (FWS) OF 0.060 KSF

DESIGN DATA

CONCRETE

SUBSTRUCTURE (NEW), CLASS QC1: F'_C = 4.0 KSI
SUPERSTRUCTURE (NEW), CLASS QC2: F'_C = 4.5 KSI
SUBSTRUCTURE (EX), CLASS C(1961), CLASS HP (2011): F'_C = 4.0 KSI
SUPERSTRUCTURE (EX), CLASS HP (2011): F'_C = 4.5 KSI

STEEL

STRUCTURAL STEEL (NEW AND EX), ASTM A709 (GRADE 50): F_Y = 50 KSI
REINFORCING (NEW), MINIMUM F_Y = 60 KSI
REINFORCING (EX), ASTM A615 OR A996 (GRADE 60) (2011): F_Y = 60 KSI
REINFORCING (EX,1961): F_Y = 40 KSI

DECK PROTECTION METHODS

EPOXY COATED REINFORCING STEEL
2½" CONCRETE COVER
CLASS QC2 CONCRETE
SEALING OF CONCRETE SURFACES

MONOLITHIC WEARING SURFACE

MONOLITHIC WEARING SURFACE IS ASSUMED, FOR DESIGN PURPOSES, TO BE 1 INCH THICK.

EXISTING STRUCTURE VERIFICATION

DETAILS AND DIMENSIONS SHOWN ON THESE PLANS PERTAINING TO THE EXISTING STRUCTURE HAVE BEEN OBTAINED FROM PLANS OF THE EXISTING STRUCTURE AND FROM FIELD OBSERVATIONS AND MEASUREMENTS. CONSEQUENTLY, THEY ARE INDICATIVE OF THE EXISTING STRUCTURE AND THE PROPOSED WORK, BUT THEY SHALL BE CONSIDERED TENTATIVE AND APPROXIMATE. THE CONTRACTOR IS REFERRED TO CMS SECTIONS 102.05, 105.02 AND 513.04.

BASE CONTRACT BID PRICES UPON A RECOGNITION OF THE UNCERTAINTIES DESCRIBED ABOVE AND UPON A PREBID EXAMINATION OF THE EXISTING STRUCTURE. HOWEVER, THE DEPARTMENT WILL PAY FOR ALL PROJECT WORK BASED UPON ACTUAL DETAILS AND DIMENSIONS THAT HAVE BEEN VERIFIED IN THE FIELD.

DECK PLACEMENT DESIGN ASSUMPTIONS

THE FOLLOWING ASSUMPTIONS OF CONSTRUCTION MEANS AND METHODS WERE MADE FOR THE ANALYSIS AND DESIGN OF THE SUPERSTRUCTURE. THE CONTRACTOR IS RESPONSIBLE FOR THE DESIGN OF THE FALSEWORK SUPPORT SYSTEM WITHIN THESE PARAMETERS AND WILL ASSUME RESPONSIBILITY FOR SUPERSTRUCTURE ANALYSIS FOR DEVIATION FROM THESE DESIGN ASSUMPTIONS.

AN EIGHT WHEEL FINISHING MACHINE WITH A MAXIMUM WHEEL LOAD OF 2.25 KIPS.

A MINIMUM OUT-TO-OUT WHEEL SPACING AT EACH END OF THE MACHINE OF 103".

A MAXIMUM SPACING OF OVERHANG FALSEWORK BRACKETS OF 48 IN.

A MAXIMUM DISTANCE FROM THE CENTERLINE OF THE FASCIA BEAM TO THE FACE OF THE SAFETY HANDRAIL OF 65".

ITEM 202 - PORTIONS OF STRUCTURE REMOVED, OVER 20 FOOT SPAN, AS PER PLAN

THIS ITEM SHALL INCLUDE THE ELEMENTS INDICATED IN THE PLANS AND GENERAL NOTES AND THAT ARE NOT SEPARATELY LISTED FOR PAYMENT, EXCEPT FOR ASPHALT WEARING COURSE REMOVAL. ITEMS TO BE REMOVED INCLUDE ALL EXISTING MATERIALS BEING REPLACED BY NEW CONSTRUCTION AND MISCELLANEOUS ITEMS THAT ARE NOT SHOWN TO BE INCORPORATED INTO THE FINAL CONSTRUCTION AND ARE DIRECTED TO BE REMOVED BY THE ENGINEER. THE USE OF EXPLOSIVES, HEADACHE BALLS AND/OR HOE-RAMS WILL NOT BE PERMITTED. THE METHOD OF REMOVAL AND THE WEIGHT OF HAMMER SHALL BE APPROVED BY THE ENGINEER. PERFORM ALL WORK IN A MANNER THAT WILL NOT CUT, ELONGATE OR DAMAGE THE EXISTING REINFORCING STEEL TO BE PRESERVED. CHIPPING HAMMERS SHALL NOT BE HEAVIER THAN THE NOMINAL 90-POUND CLASS. PNEUMATIC HAMMERS SHALL NOT BE PLACED IN DIRECT CONTACT WITH REINFORCING STEEL THAT IS TO BE RETAINED IN THE REBUILT STRUCTURE. SUBMIT CONSTRUCTION PLANS ACCORDING TO CMS 501.05.

PROTECTION OF STEEL SUPPORT SYSTEMS

BEFORE DECK SLAB CUTTING IS PERMITTED AT THE CUTLINE, DRAW THE OUTLINE OF BEAM J ON THE SURFACE OF THE DECK. DRILL SMALL DIAMETER PILOT HOLES 2" OUTSIDE THESE LINES TO CONFIRM THE LOCATION OF THE BEAM FLANGE EDGES. DECK CUTS OVER OR WITHIN 2" OF THE BEAM FLANGE EDGES SHALL NOT EXTEND LOWER THAN THE BOTTOM LAYER OF DECK SLAB REINFORCING STEEL. CUTS MADE OUTSIDE 2" OF FLANGE EDGES MAY EXTEND THE FULL DEPTH OF THE DECK. REMOVAL METHODS AROUND BEAMS SHALL ENSURE ADEQUATE DEPTH CONTROL AND PREVENT NICKING OR GOUGING OF THE PRIMARY STRUCTURAL MEMBER.

PERFORM WORK CAREFULLY DURING CUTTING OF THE DECK SLAB TO AVOID DAMAGING STEEL MEMBERS THAT ARE TO BE INCORPORATED INTO THE PROPOSED STRUCTURE. REPLACE OR REPAIR STEEL MEMBERS DAMAGED BY THE DECK SLAB CUTTING OPERATIONS AT NO COST TO THE PROJECT. AT LEAST 7 DAYS BEFORE PERFORMING REPAIR WORK, SUBMIT A PROPOSED REPAIR PLAN, DEVELOPED BY AN OHIO REGISTERED PROFESSIONAL ENGINEER, TO THE ENGINEER. OBTAIN THE ENGINEER'S APPROVAL BEFORE PERFORMING THE REPAIRS.

REMOVAL METHODS

THE CONTRACTOR MAY REMOVE CONCRETE BY CUTTING AND BY MEANS OF HAND OPERATED PNEUMATIC HAMMERS EMPLOYING POINTED OR BLUNTED CHISEL TYPE TOOLS. FOR REMOVALS OVER STRUCTURAL MEMBERS (PRESTRESSED BOX BEAM, I-BEAM, STEEL BEAM STEEL GIRDER, ETC.), THE CONTRACTOR MAY USE A HAMMER HEAVIER THAN 35 POUNDS BUT NOT TO EXCEED 90 POUNDS UNLESS APPROVED BY THE ENGINEER. REMOVAL METHODS OVER STRUCTURAL MEMBERS SHALL ENSURE ADEQUATE DEPTH CONTROL AND PREVENT NICKING OR GOUGING THE PRIMARY STRUCTURAL MEMBERS. DUE TO THE POSSIBLE PRESENCE OF ATTACHMENTS (E.G., FINISHING MACHINE, SCUPPER AND FORM SUPPORTS, ETC.) TO EXISTING STRUCTURAL MEMBERS, PERFORM WORK CAREFULLY DURING DECK REMOVAL TO AVOID DAMAGING STRUCTURAL MEMBERS THAT ARE TO REMAIN. REPLACE OR REPAIR STRUCTURAL MEMBERS DAMAGED BY THE REMOVAL OPERATIONS AT NO COST TO THE PROJECT. AT LEAST 7 DAYS BEFORE PERFORMING REPAIR WORK, SUBMIT A PROPOSED REPAIR PLAN, DEVELOPED BY AN OHIO REGISTERED PROFESSIONAL ENGINEER TO THE ENGINEER. OBTAIN THE ENGINEER'S APPROVAL BEFORE PERFORMING REPAIR.

DECK REMOVALS - COMPOSITE DECK DESIGNS - STEEL SUPERSTRUCTURES

DUE TO THE PRESENCE OF WELDED STUDS TO THE EXISTING STRUCTURAL STEEL, IF THE CONTRACTOR'S DECK DEMOLITION ENGINEERED DRAWINGS SHOW REMOVAL OF THE EXISTING DECK OVER AN EXISTING BEAM, SUBMIT A DETAILED PROCEDURE OF THE DECK REMOVAL TO THE ENGINEER AT LEAST 7 DAYS BEFORE CONSTRUCTION BEGINS. DEPARTMENT ACCEPTANCE IS NOT REQUIRED. THE PROCEDURE SHALL INCLUDE ALL DETAILS, EQUIPMENT AND METHODS TO BE USED FOR REMOVAL OF THE CONCRETE OVER THE FLANGES AND AROUND THE STUDS. REPLACE OR REPAIR MAIN STEEL AND STUDS DAMAGED BY THE REMOVAL OPERATIONS AT NO COST TO THE PROJECT. AT LEAST 7 DAYS BEFORE PERFORMING REPAIR WORK, SUBMIT A PROPOSED REPAIR PLAN, DEVELOPED BY AN OHIO REGISTERED PROFESSIONAL ENGINEER TO THE ENGINEER. OBTAIN THE ENGINEER'S APPROVAL BEFORE PERFORMING REPAIR.

EXISTING WELDED ATTACHMENTS

IF THE CONTRACTOR'S DECK DEMOLITION ENGINEERED DRAWINGS SHOW REMOVAL OF THE EXISTING DECK OVER AN EXISTING BEAM, REMOVE EXISTING WELDED ATTACHMENTS (E.G., FINISHING MACHINE AND FORM SUPPORTS; AND SUPPORTS FOR SCUPPERS AND BULB ANGLES WHICH ARE TO BE REMOVED) LOCATED IN THE DESIGNATED TENSION PORTIONS OF THE TOP FLANGES OF EXISTING STEEL MEMBERS AND GRIND THE FLANGE SURFACES SMOOTH. CAREFULLY GRIND PARALLEL TO THE FLANGES.

SUBSTRUCTURE CONCRETE REMOVAL

REMOVE CONCRETE BY MEANS OF APPROVED PNEUMATIC HAMMERS EMPLOYING POINTED AND BLUNT CHISEL TOOLS. HYDRAULIC HOE-RAM TYPE HAMMERS WILL NOT BE PERMITTED. THE WEIGHT OF THE HAMMER SHALL NOT BE MORE THAN 35 POUNDS FOR REMOVAL WITHIN 18 INCHES OF PORTIONS TO BE PRESERVED. OUTSIDE THE 18 INCH LIMIT, THE CONTRACTOR MAY USE HAMMERS NOT EXCEEDING 90 POUNDS UPON THE APPROVAL OF THE ENGINEER. DO NOT PLACE PNEUMATIC HAMMERS IN DIRECT CONTACT WITH REINFORCING STEEL THAT IS TO BE RETAINED IN THE REBUILT STRUCTURE.

CUT LINE CONSTRUCTION JOINT PREPARATION

SAWCUT BOUNDARIES OF PROPOSED CONCRETE REMOVALS 1 INCH DEEP. REMOVE CONCRETE TO A ROUGH SURFACE. LEAVE THE EXISTING REINFORCING STEEL, IF REQUIRED IN THE PLANS, IN PLACE. INSTALL DOWEL BARS IF SPECIFIED. PRIOR TO CONCRETE PLACEMENT, ABRASIVELY CLEAN JOINT SURFACES AND EXISTING EXPOSED REINFORCEMENT TO REMOVE LOOSE AND DISINTEGRATED CONCRETE AND LOOSE RUST. THOROUGHLY CLEAN THE JOINT SURFACE AND EXPOSED REINFORCEMENT OF ALL DIRT, DUST, RUST OR OTHER FOREIGN MATERIALS BY THE USE OF WATER, AIR UNDER PRESSURE, OR OTHER METHODS THAT PRODUCE SATISFACTORY RESULTS. EXISTING REINFORCING STEEL DOES NOT HAVE TO HAVE A BRIGHT STEEL FINISH, BUT REMOVE ALL PACK AND LOOSE RUST. THOROUGHLY DRENCH EXISTING CONCRETE SURFACES WITH CLEAN WATER AND ALLOW TO DRY TO A DAMP CONDITION BEFORE PLACING CONCRETE.

MEASUREMENT & PAYMENT

THE DEPARTMENT WILL MEASURE THE QUANTITY OF REMOVALS ON A LUMP SUM BASIS. THE DEPARTMENT WILL PAY FOR THE ACCEPTED QUANTITIES OF REMOVALS AT THE CONTRACT PRICE FOR ITEM 202 - PORTIONS OF STRUCTURE REMOVED, OVER 20' SPAN, AS PER PLAN.

PILE DESIGN LOADS (ULTIMATE BEARING VALUE)

THE ULTIMATE BEARING VALUE IS 115 KIPS PER PILE FOR THE ABUTMENT PILES AND 156 KIPS PER PILE FOR THE PIER PILES.

ABUTMENT PILES:
12" CIP CONCRETE PILES, 40 FEET LONG, ORDER LENGTH (REAR)
12" CIP CONCRETE PILES, 40 FEET LONG, ORDER LENGTH (FORWARD)
2 DYNAMIC LOAD TESTING ITEMS
2 RESTRIKE ITEMS

PIER PILES:
14" CIP CONCRETE PILES, 40 FEET LONG, ORDER LENGTH (PIER 1)
14" CIP CONCRETE PILES, 40 FEET LONG, ORDER LENGTH (PIER 2)
2 DYNAMIC LOAD TESTING ITEMS
2 RESTRIKE ITEMS

PILE DRIVING MOBILIZATION AND WATERLINE PROTECTION

AN EXISTING 20" WATERLINE IS IN CLOSE PROXIMITY TO THE EXISTING AND PROPOSED PIER 1 FOUNDATIONS.
THE WATERLINE SHALL BE PROTECTED FROM DAMAGE DURING THE PROJECT, INCLUDING DURING EXCAVATION, DRIVING OF PILES, FOOTING CONSTRUCTION, AND WRAPPING OF EXISTING PIER COLUMNS.

PREPARE AND PROVIDE ENGINEERED DRAWINGS FOR THE METHOD OF PROTECTION, IN ACCORDANCE WITH CMS 501.05.B, PRIOR TO THE START OF FOUNDATION EXCAVATION OR INSTALLATION OF PILES.

THE PROTECTION OF THIS UTILITY, DURING ALL PHASES OF CONSTRUCTION, SHALL BE INCLUDED WITH THE CONTRACT PRICE FOR ITEM 505 - PILE DRIVING EQUIPMENT MOBILIZATION, AS PER PLAN.

GENERAL NOTES 1 OF 2
BRIDGE NO. SUM-77-3227R
IR-77 OVER BRECKSVILLE RD.

SFN 7704747

DESIGN AGENCY
Gannett Fleming
ENGINEERS AND ARCHITECTS, P.C.
2500 Corporate Exchange Drive
Suite 200
Columbus, OH 43231

DESIGNER	CHECKER
SAT	CTM

REVIEWER MTO 2/22

PROJECT ID 104983

SUBSET	TOTAL
2	36

SHEET	TOTAL
263	297

SUM-77-32.27 PENTABLE SUBSET: 5 SUBMITTAL: Stage 3 PLOT DRIVER: OHDOT_PDF_Levels.pltcfg PENTABLE: 104983_OHDOT_Pen.tbl
MODEL: Sheet PAPERSIZE: 17x11 (in.) DATE: 2/24/2022 TIME: 6:40:51 PM USER: edues
pw:\\gfnet-pw.bentley.com:gfnet-pw-01\Documents\Projects\67490\104983\401-Engineering-GF\Structures\3227R-SFN_7704747\Sheets\005 sn001

FILE: ...\Sheets\005 sn001

ITEM 509 - REINFORCING STEEL, REPLACEMENT OF EXISTING REINFORCING STEEL, AS PER PLAN

REPLACE ALL EXISTING REINFORCING BARS DEEMED BY THE ENGINEER TO BE UNUSABLE BECAUSE OF CORROSION. THE DEPARTMENT WILL MEASURE THE REPLACEMENT REINFORCING STEEL BY THE NUMBER OF POUNDS ACCEPTED IN PLACE.

REPLACE ALL EXISTING REINFORCING STEEL BARS WHICH ARE TO BE INCORPORATED INTO THE NEW WORK AND ARE DEEMED BY THE ENGINEER TO BE MADE UNUSABLE BY CONCRETE REMOVAL OPERATIONS WITH NEW EPOXY COATED REINFORCING STEEL OF THE SAME SIZE AT NO COST TO THE DEPARTMENT.

A QUANTITY OF 300 POUNDS HAS BEEN INCLUDED TO BE USED AS DIRECTED BY THE ENGINEER.

ITEM 509 - EPOXY COATED REINFORCING STEEL, AS PER PLAN

IN ADDITION TO THE PROVISIONS OF ITEM 509, FIELD BEND AND/OR FIELD CUT THE REINFORCING STEEL DESIGNATED IN THE PLANS, AS NECESSARY, IN ORDER TO MAINTAIN THE REQUIRED CLEARANCES AND BAR SPACINGS. REPAIR ALL DAMAGE TO THE EPOXY COATING, AS A RESULT OF THIS WORK, ACCORDING TO CMS 709.00.

ITEM 510 - DOWEL HOLES WITH NONSHRINK, NONMETALLIC GROUT, AS PER PLAN

DOWEL HOLES FOR #5 REINFORCING SHALL BE 7/8" DIAMETER AND A MINIMUM OF 12" DEEP. DOWEL HOLES FOR #8 REINFORCING SHALL BE 1.5" DIAMETER AND A MINIMUM OF 18" DEEP. PRIOR TO DRILLING HOLES, LOCATE ALL EXISTING REINFORCING STEEL BARS IN THE AREA OF THE HOLE WITH THE AIDE OF A REINFORCING STEEL BAR LOCATOR (PACHOMETER). IF AN EXISTING BAR IS ENCOUNTERED AT THE SAME LOCATION AS A PROPOSED DOWEL HOLE, MOVE THE DOWEL HOLE TO EITHER SIDE OF THE EXISTING BAR. THE DEPARTMENT WILL PAY FOR DOWEL HOLES AND GROUTING WITH ITEM 510 - DOWEL HOLES WITH NONSHRINK, NONMETALLIC GROUT, AS PER PLAN.

ITEM 511 - CLASS QC2 CONCRETE WITH QC/QA, BRIDGE DECK (PARAPET)), AS PER PLAN

IN ADDITION TO THE BRIDGE DECK PARAPETS, THE DEPARTMENT WILL PAY FOR CONCRETE PARAPETS ON THE APPROACH SLABS WITH ITEM 511 - CLASS QC2 CONCRETE WITH QC/QA, BRIDGE DECK (PARAPET), AS PER PLAN.

AS PART OF CONSTRUCTING THE BRIDGE PARAPETS, FURNISH AND INSTALL 4" DIAMETER CONDUITS, COUPLINGS, AND FITTINGS, FROM PULL BOX TO PULL BOX AS SHOWN IN THE PLANS. FURNISH AND INSTALL THE CONDUIT, COUPLINGS, AND FITTINGS AS PER CMS 625.

THE DEPARTMENT WILL PAY FOR FURNISHING AND INSTALLING THE 4" DIAMETER CONDUITS, COUPLINGS, AND FITTINGS WITH ITEM 511 - CLASS QC2 CONCRETE WITH QC/QA, BRIDGE DECK (PARAPET), AS PER PLAN.

THE DEPARTMENT WILL PAY FOR FURNISHING AND INSTALLING THE PULL BOXES WITH ITEM 625 - PULL BOX IN THE ROADWAY QUANTITIES.

PILES DRIVEN TO FULL ESTIMATED LENGTH WITH PILE/SOIL SETUP

THE ULTIMATE BEARING VALUE (UBV) IS 115 KIPS FOR THE 12" CIP CONCRETE PILES AT THE ABUTMENTS AND 156 KIPS FOR THE 14" CIP CONCRETE PILES AT THE PIERS. PART OF THE UBV WILL BE ACHIEVED THROUGH PILE/SOIL SETUP, WHICH IS A TIME DEPENDENT INCREASE IN RESISTANCE THAT OCCURS IN SOME SOILS.

NOTIFY THE ENGINEER AT LEAST 5 DAYS BEFORE DRIVING PILES SO THAT THE ENGINEER CAN NOTIFY THE DISTRICT GEOTECHNICAL ENGINEER, THE OFFICE OF CONSTRUCTION ADMINISTRATION, AND THE OFFICE OF GEOTECHNICAL ENGINEERING.

DRIVE THE FIRST TWO PILES AT EACH SUBSTRUCTURE TO THE FULL ESTIMATED LENGTH LISTED IN THE PILE NOTE ON SHEET 1/36. PERFORM DYNAMIC LOAD TESTING ON BOTH PILES WHILE DRIVING. AFTER DRIVING AND TESTING THE FIRST TWO PILES, DRIVE THE REMAINING PILES AT EACH SUBSTRUCTURE TO THE SAME DEPTH AS THE FIRST TWO PILES. AFTER DRIVING ALL PILES TO THE ESTIMATED LENGTH, CEASE ALL DRIVING OPERATIONS AT EACH SUBSTRUCTURE FOR A PERIOD OF 7 DAYS. INCLUDE THE WAITING PERIOD AS A SEPARATE ACTIVITY IN THE PROGRESS SCHEDULE. AFTER THE WAITING PERIOD, PERFORM PILE RESTRIKES ON BOTH OF THE FIRST TWO PILES (ONE RESTRIKE ITEM).

SUBMIT ALL TEST RESULTS TO THE ENGINEER. IF THE RESTRIKE TEST RESULTS INDICATE THAT THE FIRST TWO PILES AT A SUBSTRUCTURE ACHIEVED THE REQUIRED UBV, ALL PILES IN THAT SUBSTRUCTURE MAY BE ACCEPTED BY THE ENGINEER.

IF THE RESTRIKE TEST RESULTS INDICATE THAT EITHER OF THE FIRST TWO PILES AT A SUBSTRUCTURE DID NOT ACHIEVE THE REQUIRED UBV, IMMEDIATELY NOTIFY THE ENGINEER SO THAT THE ENGINEER CAN NOTIFY THE DISTRICT GEOTECHNICAL ENGINEER, THE OFFICE OF CONSTRUCTION ADMINISTRATION, AND THE OFFICE OF GEOTECHNICAL ENGINEERING. THE ENGINEER WILL REVIEW THE TEST RESULTS AND ESTABLISH ADDITIONAL RESTRIKE TESTING OR DRIVING CRITERIA FOR THE PILING IN THAT SUBSTRUCTURE WITH THE ASSISTANCE OF THE DISTRICT GEOTECHNICAL ENGINEER, THE OFFICE OF CONSTRUCTION ADMINISTRATION, AND THE OFFICE OF GEOTECHNICAL ENGINEERING.

IF DIRECTED BY THE ENGINEER, PERFORM ADDITIONAL RESTRIKE TESTING OR DRIVE ALL PILES AT A SUBSTRUCTURE TO THE ESTABLISHED DRIVING CRITERIA. THE DEPARTMENT WILL PAY FOR SPLICING OF THE PILES BEYOND THE ESTIMATED LENGTH PROVIDED IN THE PLANS UNDER C&MS 109.05 WITH A NEGOTIATED PRICE PER SPLICE.

THIS PLAN NOTE INCLUDES A QUANTITY OF ONE EACH ITEM 523 DYNAMIC LOAD TESTING, AS PER PLAN AND A QUANTITY OF ONE EACH ITEM 523 RESTRIKE, AS PER PLAN PER EACH SUBSTRUCTURE UNIT.

STANDARD PLAN DETAILING NOMENCLATURE

THROUGHOUT THE PLANS, SECTIONS AND DETAILS ARE REFERENCED TO THEIR CORRESPONDING VIEWS THROUGH THE USE OF STANDARD CALLOUTS. THE VIEWS OF SECTIONS, ELEVATIONS, AND DETAILS WILL HAVE UNIQUE NUMBERS ON THE PAGES ON WHICH THEY ARE SHOWN.

LETTERS WILL BE UTILIZED FOR SECTION AND ELEVATION CALLOUTS. NUMBERS WILL BE UTILIZED FOR DETAIL CALLOUTS.

IF A SECTION, ELEVATION, OR DETAIL VIEW IS ON THE SAME SHEET FROM WHICH IT IS CUT, THE CALLOUT WILL APPEAR AS FOLLOWS:

IF A SECTION, ELEVATION, OR DETAIL VIEW IS ON A DIFFERENT SHEET FROM WHICH IT IS CUT, THE CALLOUT WILL APPEAR AS FOLLOWS:

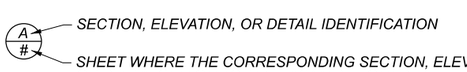

MEMBERS WILL BE IDENTIFIED AS FOLLOWS:

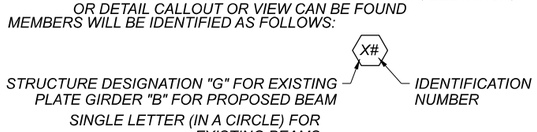

STANDARD PLAN ABBREVIATIONS AND SYMBOLS

ABUT =	ABUTMENT	NB =	NORTHBOUND
APP =	APPROACH	NE =	NORTHEAST
AVE =	AVENUE	NF =	NEAR FACE
⟨B#⟩ =	BEAM NUMBER	NO =	NUMBER
		NW =	NORTHWEST
		O/O =	OUT TO OUT
BF =	BOTTOM FLANGE	OD =	OUTSIDE DIAMETER
BM =	BENCHMARK	OH =	OVERHANG
BOT =	BOTTOM	OVHD =	OVERHEAD
BRG =	BEARING	ODOT =	OHIO DEPARTMENT OF TRANSPORTATION
BTWN =	BETWEEN	P.V.I. =	POINT OF VERTICAL INTERSECTION
C.B. =	CHORD BEARING	PC =	POINT OF CURVE
C/C =	CENTER TO CENTER	PCB =	PORTABLE CONCRETE BARRIER
CB =	CATCH BASIN	PEJF =	PREFORMED EXPANSION JOINT FILLER
CCTV =	CLOSED CIRCUIT TELEVISION	PGL =	PROFILE GRADE LINE
CIP =	CAST IN PLACE	PI =	POINT OF INTERSECTION
CJ =	CONSTRUCTION JOINT	PMVC =	POINT OF MINIMUM VERTICAL CLEARANCE
CJ-O =	OPTIONAL CONSTRUCTION JOINT	POT =	POINT ON TANGENT
CLR =	CLEAR	PROP =	PROPOSED
CMP =	CORRUGATED METAL PIPE	PT =	POINT OF TANGENT
CMS =	CONSTRUCTION MATERIAL SPECIFICATIONS	PVMT =	PAVEMENT
CONST =	CONSTRUCTION	RA =	REAR ABUTMENT
CP =	COVER PLATE	RCP =	REINFORCED CONCRETE PIPE
CSP/N =	CORRUGATED STEEL PIPE (NON-PERFORATED)	RD =	ROAD
CSP/P =	PERFORATED CORRUGATED STEEL PIPE	REF =	REFERENCE
DIA =	DIAMETER	REINF. =	REINFORCING OR REBAR
DND =	DO NOT DISTURB	REQ'D =	REQUIRED
DPRM =	DIAPHRAGM	RT =	RIGHT
E/P =	EDGE OF PAVEMENT	R/W =	RIGHT OF WAY
E/S =	EDGE OF SHOULDER	S/O =	SERIES OF
EB =	EASTBOUND	SR =	STATE ROUTE
EF =	EACH FACE	SB =	SOUTHBOUND
ELEC =	ELECTRIC	SCD =	STANDARD CONSTRUCTION DRAWING
ELEV or EL =	ELEVATION	SE =	SOUTHEAST
EX =	EXISTING	SER =	SERIES
EXP =	EXPANSION	SF =	SQUARE FEET
F/F =	FACE TO FACE	SHLDR =	SHOULDER
FA =	FORWARD ABUTMENT	SPA =	SPACES
FF =	FAR FACE/FILL FACE	ST =	STREET OR SPAN TOTAL
FO =	FIBER OPTIC	STA =	STATION
FTG =	FOOTING	STD =	STANDARD
		STG =	STAGE
⟨G#⟩ =	GIRDER NUMBER	STM =	STORM
		SW =	SOUTHWEST
GR =	GUARDRAIL	T/ =	TOP OF
H.C. =	HORIZONTAL CURVE	T/B =	TOP AND BOTTOM
HORZ =	HORIZONTAL	T/T =	TOE TO TOE
I/I =	INSIDE TO INSIDE	TBR =	TO BE REMOVED
IR =	INTERSTATE ROUTE	TEMP =	TEMPORARY
JT =	JOINT	TYP =	TYPICAL
LT =	LEFT	U.N.O. =	UNLESS NOTED OTHERWISE
MAX =	MAXIMUM	VC =	VERTICAL CURVE
MH =	MANHOLE	VERT =	VERTICAL
MHC =	MINIMUM HORIZONTAL CLEARANCE	WB =	WEST BOUND
MIN =	MINIMUM	WW =	WINGWALL
MISC =	MISCELLANEOUS		
MVC =	MINIMUM VERTICAL CLEARANCE		

GENERAL NOTES 2 OF 2
BRIDGE NO. SUM-77-3227R
IR-77 OVER BRECKSVILLE RD.

SFN 7704747

DESIGN AGENCY
Gannett Fleming
ENGINEERS AND ARCHITECTS, P.C.
2500 Corporate Exchange Drive Suite 200 Columbus, OH 43231

DESIGNER	CHECKER
SAT	CTM

REVIEWER MTO 2/22

PROJECT ID 104983

SUBSET	TOTAL
3	36

SHEET	TOTAL
264	297

SUM-77-32.27 PENTABLE SUBSET: 5 SUBMITTAL: Stage 3 PLOT DRIVER: OHDOT_PDF_Levels.pltcfg PENTABLE: 104983_OHDOT_Pen.tbl
MODEL: Sheet PAPERSIZE: 17x11 (in.) DATE: 2/24/2022 TIME: 6:42:52 PM USER: edues
pw:\\gfnet-pw.bentley.com:gfnet-pw-01\Documents\Projects\67490\104983401-Engineering-GF\Structures\3227R-SFN_7704747\Sheets\006 sn002

SUM-77-3227R BRIDGE SUMMARY

CALC: RSN 01/10/22 | CHECK: SAT 02/04/22

ITEM	ITEM EXT.	06/IMS/BR RECONSTRUCTION	07/IMS/BR WIDENING	TOTAL PER PHASE			UNIT	DESCRIPTION	PHASE 3			PHASE 4			GENERAL	APP/REF SHEET NO.
				PH 3	PH 4	GEN			ABUT.	PIERS	SUPER	ABUT.	PIERS	SUPER		
202	11203		LS			LS		PORTIONS OF STRUCTURE REMOVED, OVER 20 FOOT SPAN, AS PER PLAN							LS	2
202	22900	235		73	162		SY	APPROACH SLAB REMOVED	73			162				
503	21101		372	372			CY	UNCLASSIFIED EXCAVATION, AS PER PLAN	230	142						17
505	11101		LS			LS		PILE DRIVING EQUIPMENT MOBILIZATION, AS PER PLAN							LS	2
507	00500		840	840			FT	12" CAST-IN-PLACE REINFORCED CONCRETE PILES, DRIVEN	840							
507	00550		960	960			FT	12" CAST-IN-PLACE REINFORCED CONCRETE PILES, FURNISHED	960							
507	00600		840	840			FT	14" CAST-IN-PLACE REINFORCED CONCRETE PILES, DRIVEN		840						
507	00650		960	960			FT	14" CAST-IN-PLACE REINFORCED CONCRETE PILES, FURNISHED		960						
509	10001		72,051	72,051			LB	EPOXY COATED REINFORCING STEEL, AS PER PLAN	5,646	18,159	48,246					3
509	20001		300			300	LB	REINFORCING STEEL, REPLACEMENT OF EXISTING REINFORCING STEEL, AS PER PLAN							300	3
510	10001		22	22			EACH	DOWEL HOLES WITH NONSHRINK, NONMETALLIC GROUT, AS PER PLAN	22							3
511	34446		155	155			CY	CLASS QC2 CONCRETE WITH QC/QA, BRIDGE DECK			155					
511	34451		37	37			CY	CLASS QC2 CONCRETE WITH QC/QA, BRIDGE DECK (PARAPET), AS PER PLAN			37					3
511	42012		86	86			CY	CLASS QC1 CONCRETE WITH QC/QA, PIER ABOVE FOOTINGS		86						
511	44112		38	38			CY	CLASS QC1 CONCRETE WITH QC/QA, ABUTMENT NOT INCLUDING FOOTING	38							
511	46512		84	84			CY	CLASS QC1 CONCRETE WITH QC/QA, FOOTING	44	40						
512	10101		445	445			SY	SEALING OF CONCRETE SURFACES (EPOXY-URETHANE), AS PER PLAN	32	162	251					17
512	33000		7	7			SY	TYPE 2 WATERPROOFING	7							
513	10260		120,980	120,980			LB	STRUCTURAL STEEL MEMBERS, LEVEL 3			120,980					
513	20000		1,764	1,764			EACH	WELDED STUD SHEAR CONNECTORS			1,764					
514	00050		817	817			SF	SURFACE PREPARATION OF EXISTING STRUCTURAL STEEL			817					
514	00056		817	817			SF	FIELD PAINTING OF EXISTING STRUCTURAL STEEL, PRIME COAT			817					
514	00060		6,388	6,388			SF	FIELD PAINTING STRUCTURAL STEEL, INTERMEDIATE COAT			6,388					
514	00066		6,388	6,388			SF	FIELD PAINTING STRUCTURAL STEEL, FINISH COAT			6,388					
514	00504		2	2			MNHR	GRINDING FINS, TEARS, SLIVERS ON EXISTING STRUCTURAL STEEL			2					
514	10000		6	6			EACH	FINAL INSPECTION REPAIR			6					
516	10010	132	28	83	77		FT	ARMORLESS PREFORMED JOINT SEAL	83			77				
516	13600		25	25			SF	1" PREFORMED EXPANSION JOINT FILLER	25							
516	13900		86	86			SF	2" PREFORMED EXPANSION JOINT FILLER	86							
516	14020		66	66			FT	SEMI-INTEGRAL ABUTMENT EXPANSION JOINT SEAL			66					
516	44100		6	6			EACH	ELASTOMERIC BEARING WITH INTERNAL LAMINATES AND LOAD PLATE (NEOPRENE) (14"x10"x2.96" BEARING WITH 15"x11" LOAD PLATE AND BEVELED HP10x42 PEDESTAL)	6							
516	44100		6	6			EACH	ELASTOMERIC BEARING WITH INTERNAL LAMINATES AND LOAD PLATE (NEOPRENE) (18"x13"x2.59" BEARING WITH 19"x14" BEVELED LOAD PLATE)		6						
518	21200		39	39			CY	POROUS BACKFILL WITH GEOTEXTILE FABRIC	39							
518	40000		78	78			FT	6" PERFORATED CORRUGATED PLASTIC PIPE	78							
518	40010		60	60			FT	6" NON-PERFORATED CORRUGATED PLASTIC PIPE, INCLUDING SPECIALS	60							
SPECIAL	51900100		1,265	1,265			SF	COMPOSITE FIBER WRAP SYSTEM		1,265						17
523	20001		4	4			EACH	DYNAMIC LOAD TESTING, AS PER PLAN	2	2						3
523	20501		4	4			EACH	RESTRIKE, AS PER PLAN	2	2						3
526	25010	234	101	173	162		SY	REINFORCED CONCRETE APPROACH SLABS WITH QC/QA (T=15")	173			162				
526	90030	132	28	83	77		FT	TYPE C INSTALLATION	83			77				
601	20000		430			430	SY	CRUSHED AGGREGATE SLOPE PROTECTION							430	
613	41200		17			17	CY	LOW STRENGTH MORTAR BACKFILL							17	
625	33000		1			1	EACH	STRUCTURE GROUNDING SYSTEM							1	

ESTIMATED QUANTITIES
BRIDGE NO. SUM-77-3227R
IR-77 OVER BRECKSVILLE RD.

SFN 7704747

DESIGN AGENCY
Gannett Fleming
ENGINEERS AND ARCHITECTS, P.C.
2560 Corporate Exchange Drive Suite 230 Columbus, OH 43231

DESIGNER	CHECKER
SAT	CTM

REVIEWER: MTO 2/22

PROJECT ID: 104983

SUBSET	TOTAL
4	36

SHEET	TOTAL
265	297

SUM-77-32.27

MODEL: Sheet PAPERSIZE: 17x11 (in.) DATE: 2/24/2022 TIME: 6:44:49 PM USER: edues
pw:\\gfnet-pw.bentley.com:gfnet-pw-01\Documents\Projects\67490\104983\401-Engineering-GFi Structures\3227R-SFN_7704747\Sheets\006a sq001
PLOT DRIVER: OHDOT_PDF_Levels.pltcfg PENTABLE: 104983_OHDOT_Pen.tbl
SUBMITTAL: Stage 3
PENTABLE SUBSET: [5]

FILE: ...\Sheets\006a sq001

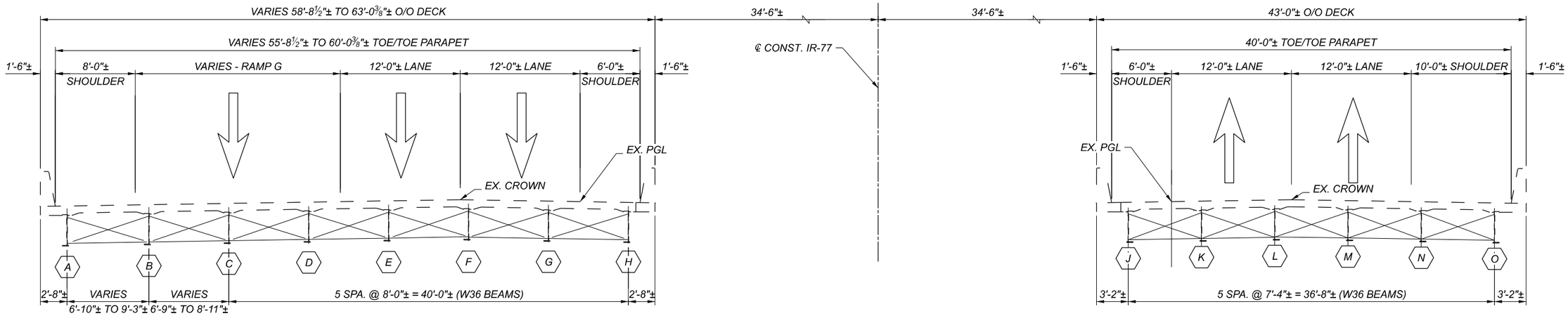

EXISTING TRANSVERSE SECTION

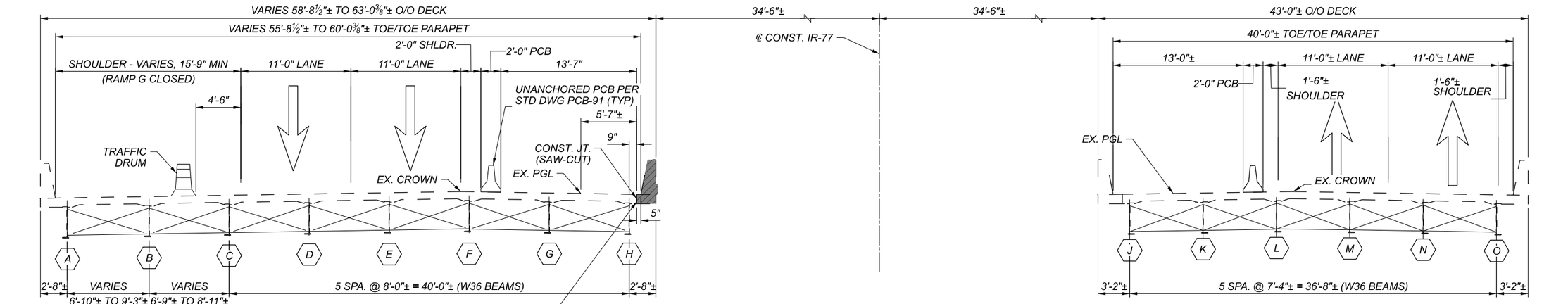

PHASE 1 DEMOLITION: REMOVE SOUTHBOUND PARAPET AND PORTION OF DECK

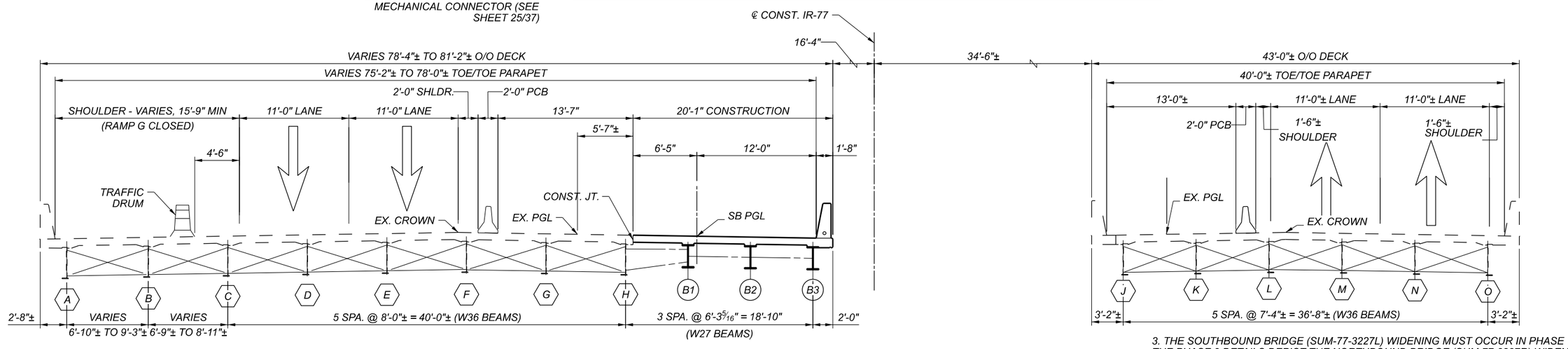

PHASE 1 CONSTRUCTION: CONSTRUCT WIDENED SOUTHBOUND STRUCTURE

NOTES:

1. PCB IS INCLUDED AND PAID FOR WITH THE ROADWAY MOT QUANTITIES.
2. THE 32" PORTABLE CONCRETE BARRIER CAN BE USED AS AN ALTERNATIVE TO THE PCB-91, SEE ODOT STD. DWG. RM-4.2 FOR DETAILS.
3. THE SOUTHBOUND BRIDGE (SUM-77-3227L) WIDENING MUST OCCUR IN PHASE 1. THE PHASE 3 DETAILS DEPICT THE NORTHBOUND BRIDGE (SUM-77-3227R) WIDENING. ALL OR PORTIONS OF THE NORTHBOUND BRIDGE MAY BE WIDENED IN PHASE 1 AT THE OPTION OF THE CONTRACTOR.
4. THE PHASED MOT SHOWN IN THESE DETAILS MATCHES THE MOT PHASING SHOWN IN THE ROADWAY PLANS. ANY MOT REVISIONS REQUIRED TO PERFORM THE NORTHBOUND BRIDGE WIDENING IN PHASE 3 SHALL BE AT THE SOLE EXPENSE OF THE CONTRACTOR AND SHALL BE APPROVED BY THE ENGINEER.

PHASED CONSTRUCTION SECTIONS (SHEET 1 OF 3)
BRIDGE NO. SUM-77-3227R
IR-77 OVER BRECKSVILLE RD.

SFN 7704747

DESIGN AGENCY
Gannett Fleming
ENGINEERS AND ARCHITECTS, P.C.
250 Civic Center Drive, Suite 220, Columbus, OH 43215

DESIGNER	CHECKER
SAT	CTM

REVIEWER MTO 2/22

PROJECT ID 104983

SUBSET	TOTAL
5	36

SHEET	TOTAL
266	297

SUM-77-32.27

MODEL: Sheet PAPERSIZE: 17x11 (in.) DATE: 2/24/2022 TIME: 6:46:54 PM USER: edues
pw:\\gfnet-pw.bentley.com:gfnet-pw-01\Documents\Projects\674490\104983\401-Engineering-GFi Structures\3227R-SFN_7704747\Sheets\007 sc001
PLOT DRIVER: OHDOT_PDF_Levels.pltcfg PENTABLE: 104983_OHDOT_Pen.tbl
PENTABLE SUBSET: [5] SUBMITTAL: Stage 3

FILE: ...\Sheets\007 sc001

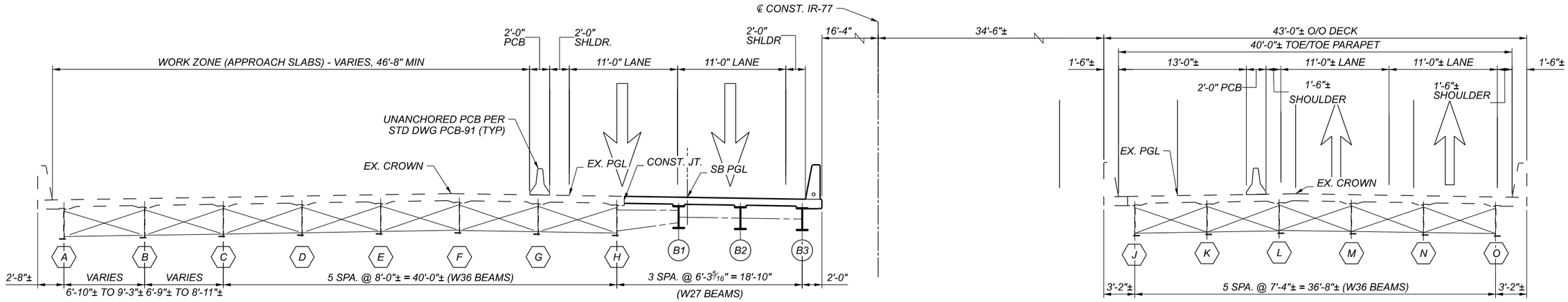

PHASE 2 CONSTRUCTION: CONSTRUCT REMAINING PORTION OF SOUTHBOUND APPROACH SLABS

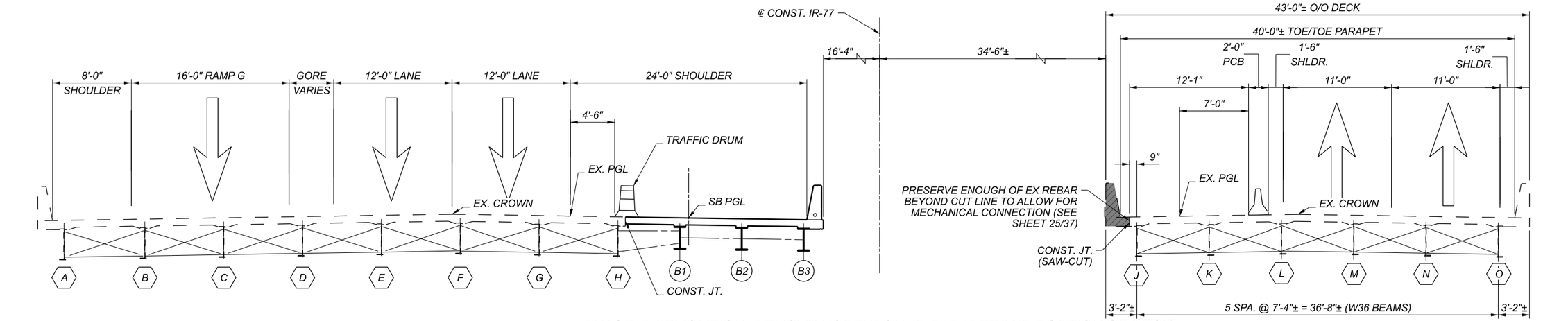

PHASE 3 DEMOLITION: REMOVE NORTHBOUND PARAPET AND PORTION OF DECK

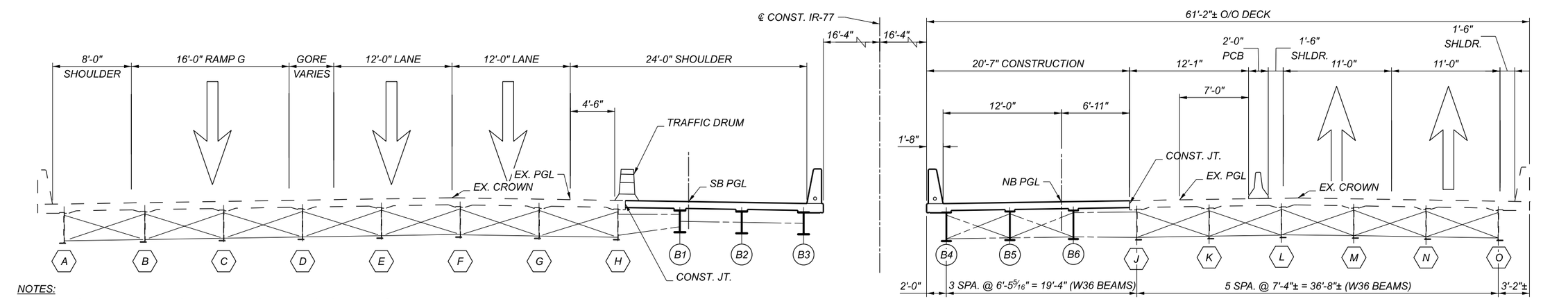

PHASE 3 CONSTRUCTION: CONSTRUCT WIDENED NORTHBOUND STRUCTURE

NOTES:

1. PCB IS INCLUDED AND PAID FOR WITH THE ROADWAY MOT QUANTITIES.

2. THE SOUTHBOUND BRIDGE (SUM-77-3227L) WIDENING MUST OCCUR IN PHASE 1. THE PHASE 3 DETAILS DEPICT THE NORTHBOUND BRIDGE (SUM-77-3227R) WIDENING. ALL OR PORTIONS OF THE NORTHBOUND BRIDGE MAY BE WIDENED IN PHASE 1 AT THE OPTION OF THE CONTRACTOR.

3. THE PHASED MOT SHOWN IN THESE DETAILS MATCHES THE MOT PHASING SHOWN IN THE ROADWAY PLANS. ANY MOT REVISIONS REQUIRED TO PERFORM THE NORTHBOUND BRIDGE WIDENING IN PHASE 3 SHALL BE AT THE SOLE EXPENSE OF THE CONTRACTOR AND SHALL BE APPROVED BY THE ENGINEER.

PHASED CONSTRUCTION SECTIONS (SHEET 2 OF 3)
BRIDGE NO. SUM-77-3227R
IR-77 OVER BRECKSVILLE RD.

SFN 7704747

DESIGN AGENCY
Gannett Fleming
ENGINEERS AND ARCHITECTS, P.C.
2500 Corporate Exchange Drive Suite 200 Columbus, OH 43231

DESIGNER	CHECKER
SAT	CTM

REVIEWER: MTO 2/22

PROJECT ID: 104983

SUBSET	TOTAL
6	36

SHEET	TOTAL
267	297

SUM-77-32.27 PENTABLE SUBSET: 5 SUBMITTAL: Stage 3 PLOT DRIVER: OHDOT_PDF_Levels.pltcfg

MODEL: Sheet PAPERSIZE: 17x11 (in.) DATE: 2/24/2022 TIME: 6:49:01 PM USER: edues
pw:\\gfnet-pw.bentley.com:gfnet-pw-01\Documents\Projects\67490\104983401-Engineering-GF\Structures\3227R-SFN_7704747\Sheets\008 sc002

PENTABLE: 104983_OHDOT_Pen.tbl

FILE: ...\Sheets\008 sc002

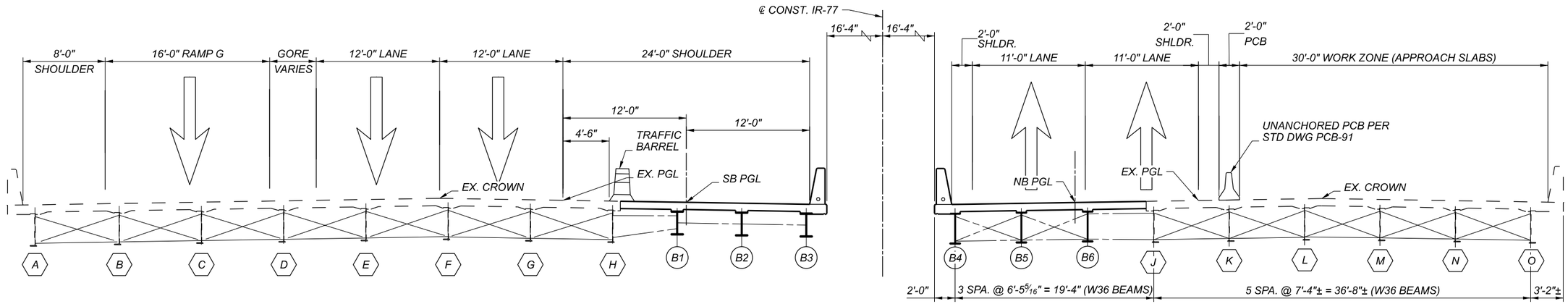

PHASE 4: CONSTRUCT REMAINING PORTION OF NORTHBOUND APPROACH SLABS

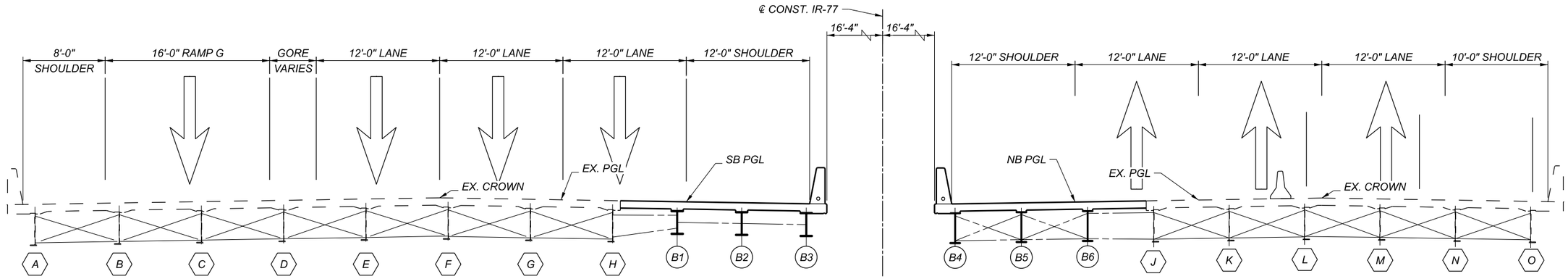

FINAL

NOTES:

1. PCB IS INCLUDED AND PAID FOR WITH THE ROADWAY MOT QUANTITIES.

PHASED CONSTRUCTION SECTIONS (SHEET 3 OF 3)
BRIDGE NO. SUM-77-3227R
IR-77 OVER BRECKSVILLE RD.

SFN 7704747

DESIGN AGENCY
Gannett Fleming
ENGINEERS AND ARCHITECTS, P.C.
2500 Corporate Exchange Drive
Suite 200
Columbus, OH 43231

DESIGNER	CHECKER
SAT	CTM

REVIEWER: MTO 2/22

PROJECT ID: 104983

SUBSET	TOTAL
7	36

SHEET	TOTAL
268	297

SUM-77-32.27 PENTABLE SUBSET: 5 SUBMITTAL: Stage 3 PLOT DRIVER: OHDOT_PDF_Levels.pltcfg

MODEL: Sheet PAPERSIZE: 17x11 (in.) DATE: 2/24/2022 TIME: 6:51:05 PM USER: edues
pw:\\gfnet-pw.bentley.com:gfnet-pw-01\Documents\Projects\67490\104983401-Engineering-GF\Structures\3227R-SFN_7704747\Sheets\008a sc003

PENTABLE: 104983_OHDOT_Pen.tbl

FILE: ...\Sheets\008a sc003

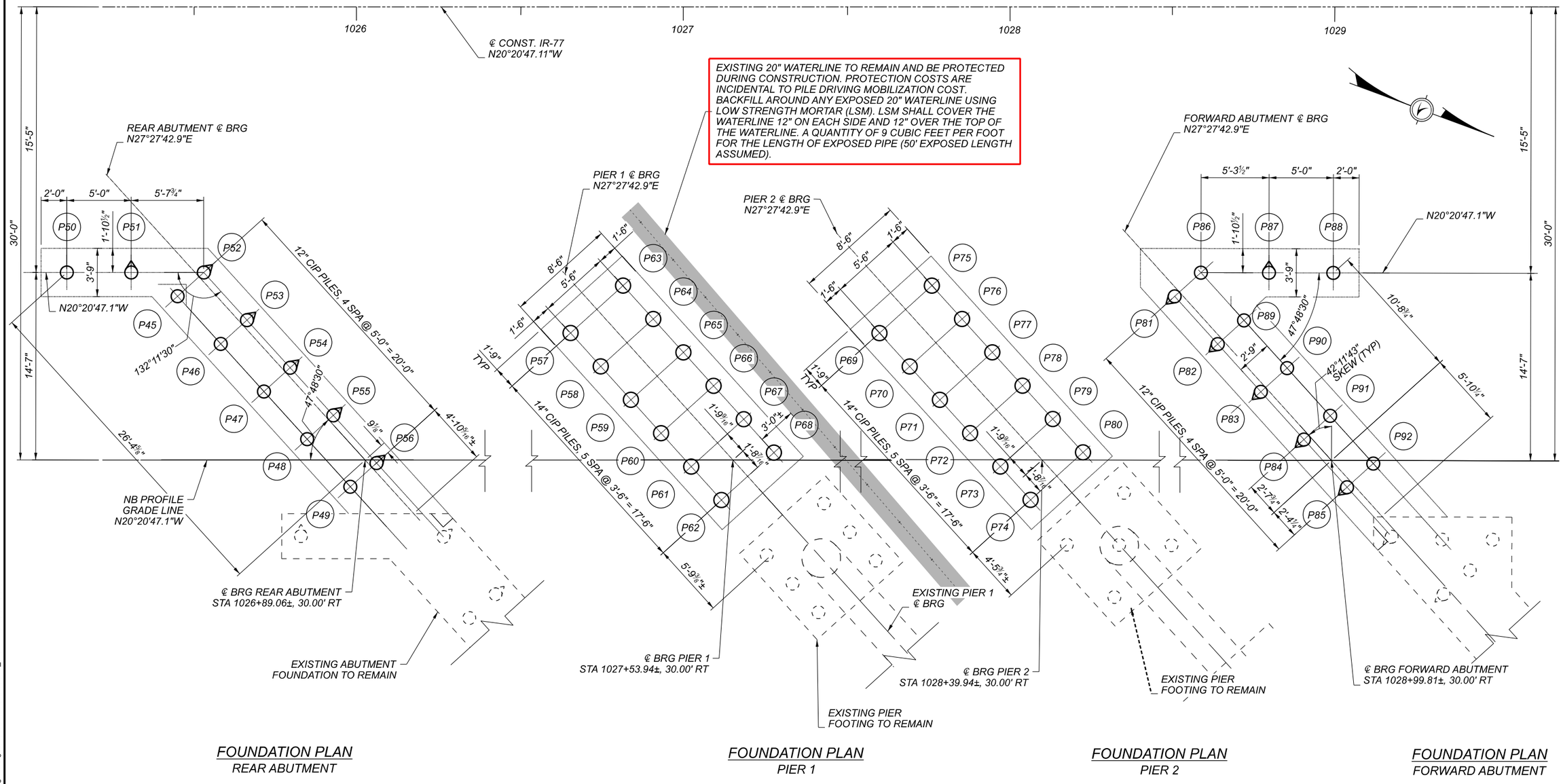

FOUNDATION PLAN
REAR ABUTMENT

FOUNDATION PLAN
PIER 1

FOUNDATION PLAN
PIER 2

FOUNDATION PLAN
FORWARD ABUTMENT

LEGEND
- PROPOSED VERTICAL PILE
- PROPOSED 1:4 BATTERED PILE
- (PXX) PROPOSED PILE IDENTIFICATION NO.

FOUNDATION PLAN
BRIDGE NO. SUM-77-3227R
IR-77 OVER BRECKSVILLE RD.

SFN 7704747

DESIGN AGENCY
Gannett Fleming
ENGINEERS AND ARCHITECTS, P.C.
2500 Corporate Exchange Drive
Suite 220
Columbus, OH 43231

DESIGNER	CHECKER
RSN	CTM

REVIEWER: MTO 2/22

PROJECT ID: 104983

SUBSET	TOTAL
8	36

SHEET	TOTAL
269	297

SUM-77-32.27 PENTABLE SUBSET: 5 SUBMITTAL: Stage 3 PLOT DRIVER: OHDOT_PDF_Levels.pltcfg PENTABLE: 104983_OHDOT_Pen.tbl

MODEL: Sheet PAPERSIZE: 17x11 (in.) DATE: 2/24/2022 TIME: 6:53:12 PM USER: edues
pw:\\gfnet-pw.bentley.com:gfnet-pw-01\Documents\Projects\67490\104983401-Engineering-GF\Structures\3227R-SFN_7704747\Sheets\110 so001

FILE: ...\Sheets\110 so001

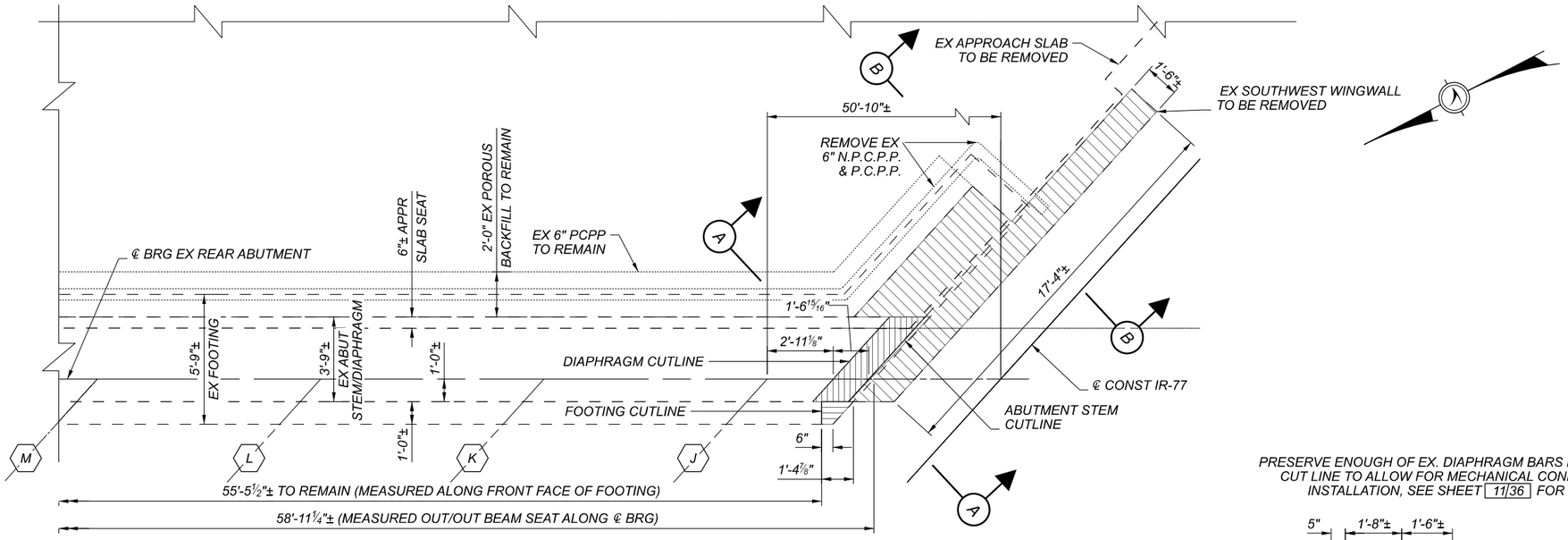

PARTIAL REAR ABUTMENT PLAN
REMOVAL LIMITS

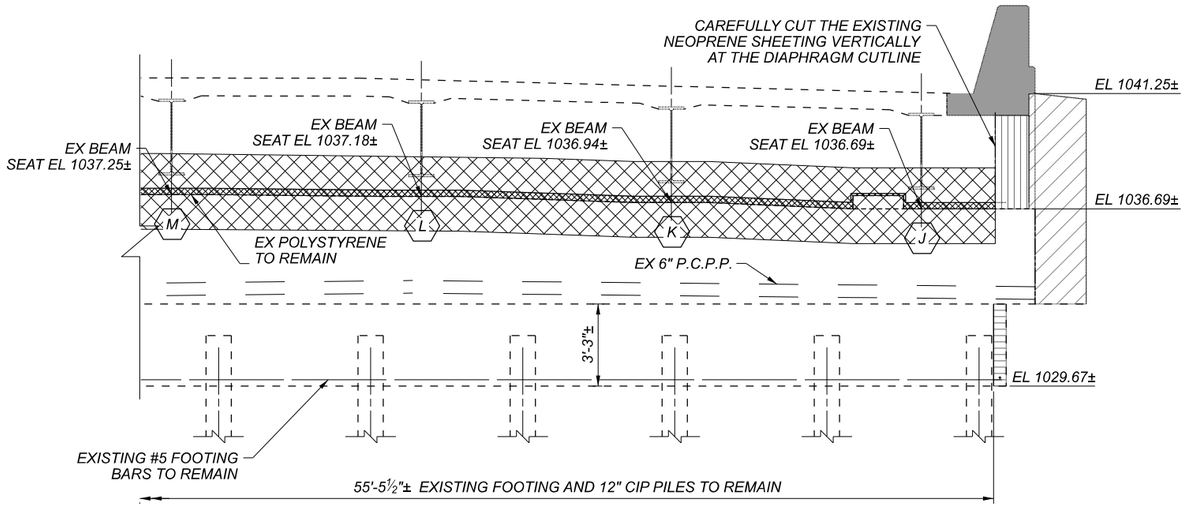

PARTIAL REAR ABUTMENT ELEVATION
REMOVAL LIMITS

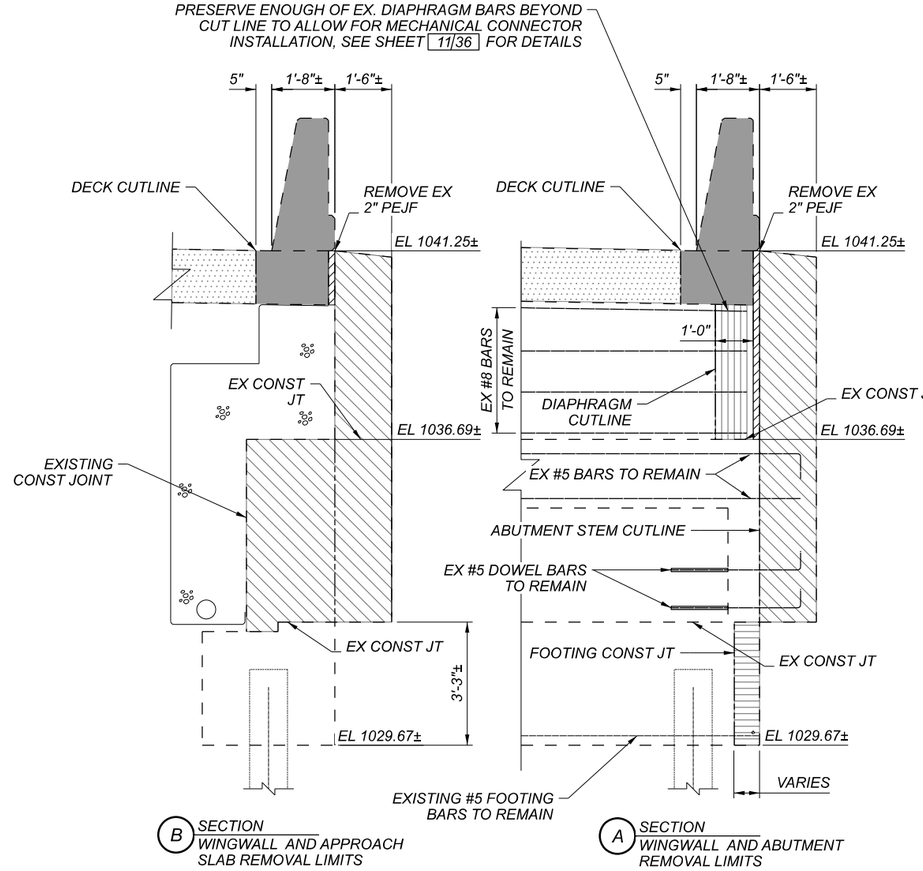

B SECTION
WINGWALL AND APPROACH
SLAB REMOVAL LIMITS

A SECTION
WINGWALL AND ABUTMENT
REMOVAL LIMITS

LEGEND
- EXISTING WINGWALL TO BE REMOVED
- EXISTING PARAPET AND DECK TO BE REMOVED
- EXISTING DIAPHRAGM TO BE REMOVED
- EXISTING FOOTING TO BE REMOVED
- APPROACH SLAB TO BE REMOVED
- EXISTING SEMI-INTERGRAL EXPANSION JOINT SEAL

NOTES:
PRESERVE THE VERTICAL REINFORCING ABOVE THE CUTLINE UNLESS NOTED OTHERWISE

EXISTING REAR ABUTMENT REMOVAL DETAILS
BRIDGE NO. SUM-77-3227R
IR-77 OVER BRECKSVILLE RD.

SFN 7704747

DESIGN AGENCY
Gannett Fleming
ENGINEERS AND ARCHITECTS, P.C.
2500 Corporate Exchange Drive
Suite 230
Columbus, OH 43231

DESIGNER	CHECKER
RSN	CTM

REVIEWER MTO 2/22

PROJECT ID 104983

SUBSET	TOTAL
9	36

SHEET	TOTAL
270	297

SUM-77-32.27 PENTABLE SUBSET: 5 SUBMITTAL: Stage 3 PLOT DRIVER: OHDOT_PDF

MODEL: Sheet PAPERSIZE: 17x11 (in.) DATE: 2/24/2022 TIME: 6:55:31 PM USER: edues
pw:\\gfnet-pw.bentley.com:gfnet-pw-01\Documents\Projects\674901\104983401-Engineering-GF\Structures\3227R-SFN_7704747\Sheets\114 sv001

PENTABLE: 104983_OHDOT_Pen.tbl

FILE: ...\Sheets\114 sv001

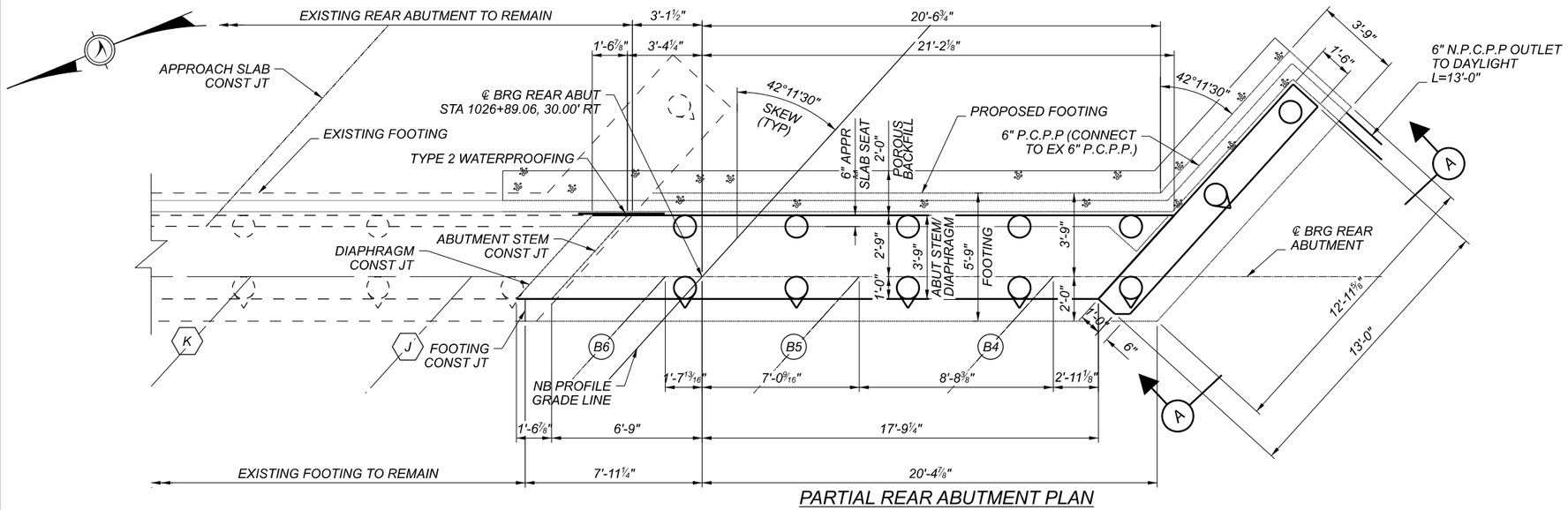

PARTIAL REAR ABUTMENT PLAN

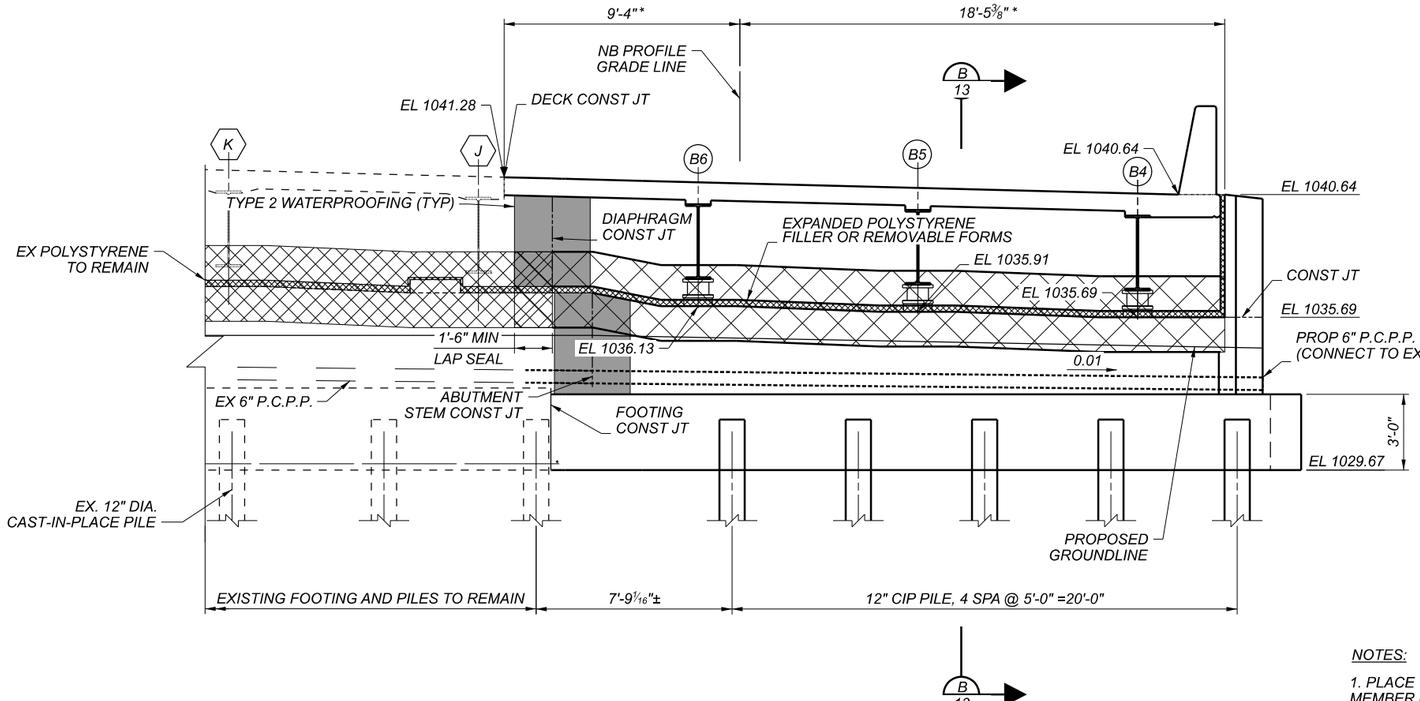

PARTIAL REAR ABUTMENT ELEVATION

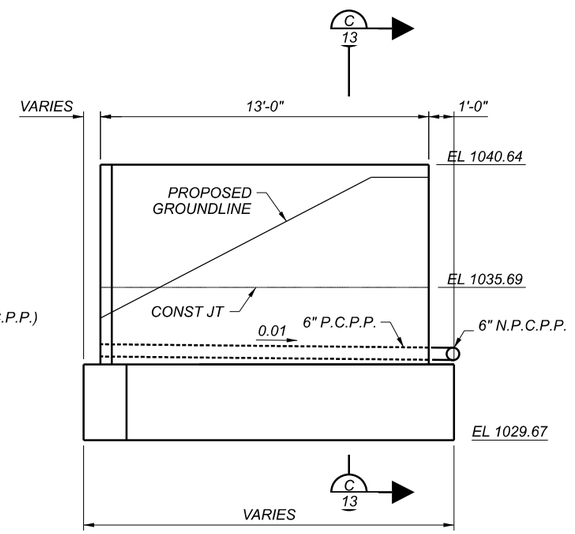

A ELEVATION
WINGWALL ELEVATION
PILES NOT SHOWN FOR CLARITY

NOTES:

1. PLACE THE DIAPHRAGM CONCRETE ENCASING THE STRUCTURAL MEMBER ENDS AFTER THE DECK PLACEMENT IN THE ADJACENT SPAN IS COMPLETE. PROCEDURES THAT PLACE THE ABUTMENT DIAPHRAGM WITH THE DECK CONCRETE MAY BE APPROVED BY THE ENGINEER IF THE PLACEMENT SUBMITTAL CAN ASSURE THAT THE DECK CONCRETE IN THE ADJACENT SPAN WILL BE PLACED BEFORE CONCRETE IN THE DIAPHRAGM HAS REACHED ITS INITIAL SET.
2. SEE SHEET 8/36 FOR FOUNDATION PLAN.
3. SEE SHEET 32/36 FOR APPROACH SLAB DETAILS.

LEGEND

* MEASURED ALONG ABUTMENT ℄ BRG
TYPE 2 WATERPROOFING, 3' WIDE CENTERED ON CONST JT
EXISTING SEMI-INTERGRAL EXPANSION JOINT SEAL LIMITS
PROPOSED SEMI-INTERGRAL EXPANSION JOINT SEAL LIMITS

PROPOSED REAR ABUTMENT PLAN AND ELEVATION
BRIDGE NO. SUM-77-3227R
IR-77 OVER BRECKSVILLE RD.

SFN 7704747

DESIGN AGENCY
Gannett Fleming
ENGINEERS AND ARCHITECTS, P.C.
2500 Corporate Exchange Drive Suite 200 Columbus, OH 43231

DESIGNER	CHECKER
RSN	CTM

REVIEWER: MTO 2/22

PROJECT ID: 104983

SUBSET	TOTAL
10	36

SHEET	TOTAL
271	297

SUM-77-32.27 PENTABLE SUBSET: 5 SUBMITTAL: Stage 3 PLOT DRIVER: OHDOT_PDF_Levels.pltcfg

MODEL: Sheet PAPERSIZE: 17x11 (in.) DATE: 2/24/2022 TIME: 6:57:46 PM USER: edues PENTABLE: 104983_OHDOT_Pen.tbl
pw:\\gfnet-pw.bentley.com:gfnet-pw-01\Documents\Projects\67490\104983401-Engineering-GF\Structures\3227R-SFN_7704747\Sheets\115 sr001

FILE: ...\Sheets\115 sr001

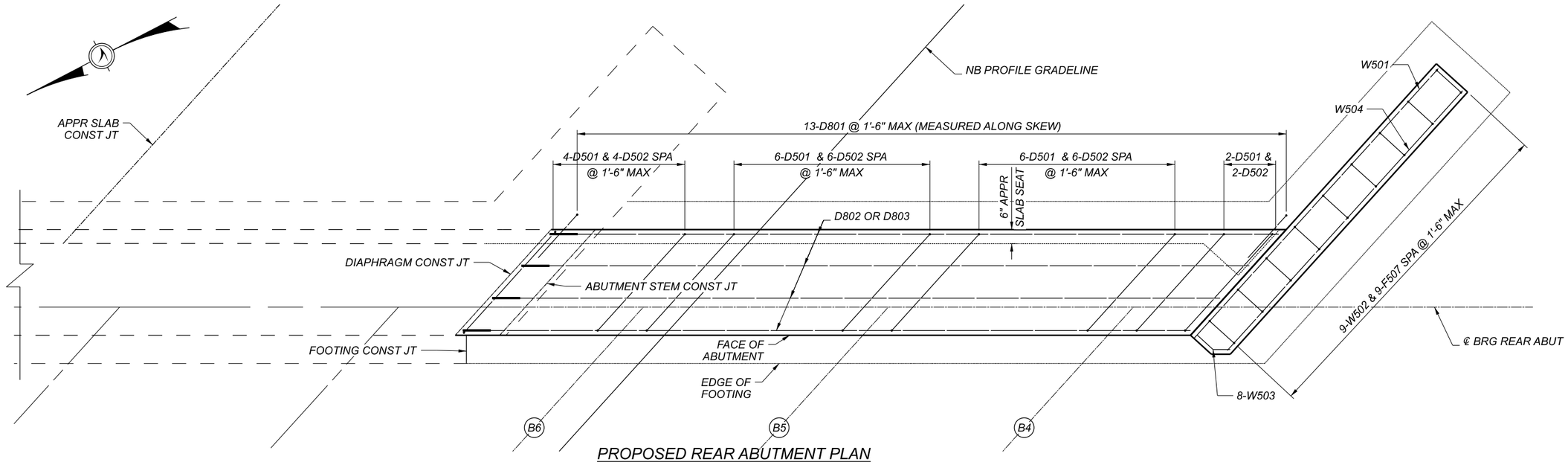

PROPOSED REAR ABUTMENT PLAN
DIAPHRAGM REINFORCING SHOWN

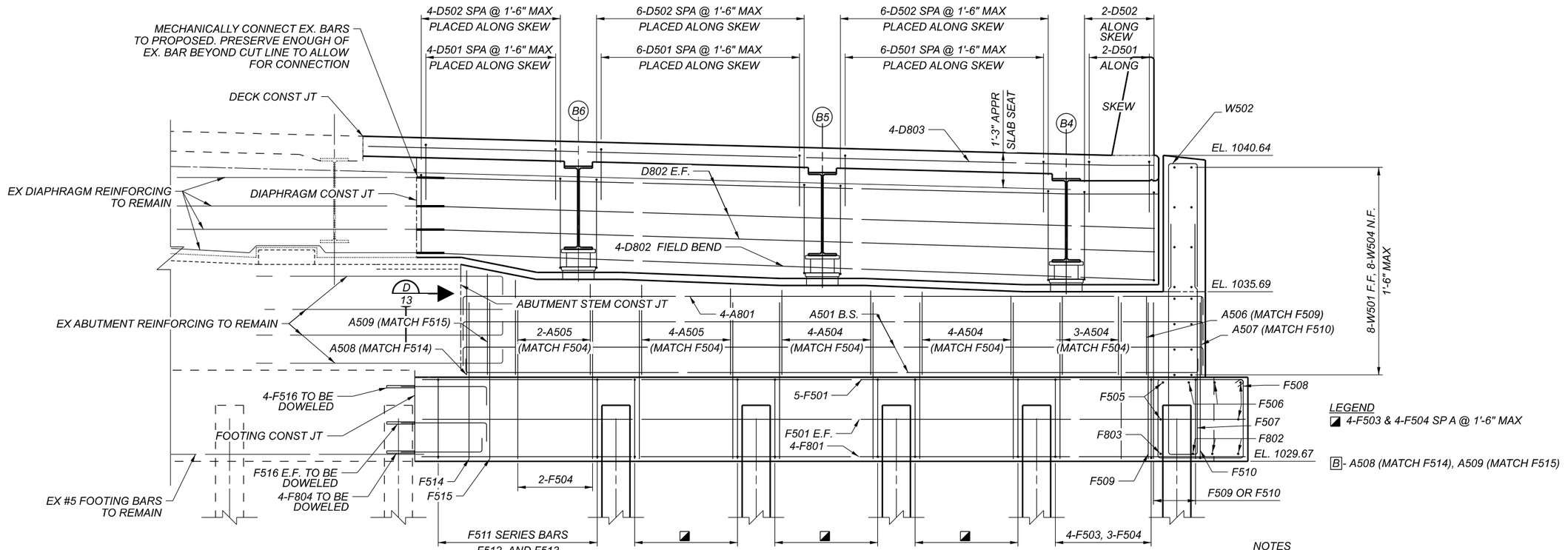

PROPOSED REAR ABUTMENT ELEVATION

LEGEND
◪ 4-F503 & 4-F504 SP A @ 1'-6" MAX

B - A508 (MATCH F514), A509 (MATCH F515)

NOTES
1. SEE SHEET 13/36 FOR ABUTMENT DETAILS AND SECTIONS.
2. SEE SHEET 8/36 FOR FOUNDATION PLAN.
3. SEE SHEET 25/36 FOR TRANSVERSE SECTION.
4. SEE SHEET 3/36 FOR DOWEL HOLE NOTES.
5. SEE SHEET 32/36 FOR APPROACH SLAB DETAILS.
6. 2" CLEAR COVER UNLESS NOTED OTHERWISE.

REAR ABUTMENT REINFORCING DETAILS
BRIDGE NO. SUM-77-3227R
IR-77 OVER BRECKSVILLE RD.

SFN 7704747

DESIGN AGENCY
Gannett Fleming
ENGINEERS AND ARCHITECTS, P.C.
2500 Corporate Exchange Drive Suite 200 Columbus, OH 43231

DESIGNER	CHECKER
RSN	CTM

REVIEWER MTO 2/22

PROJECT ID 104983

SUBSET	TOTAL
11	36

SHEET	TOTAL
272	297

SUM-77-32.27 PENTABLE SUBSET: 5 SUBMITTAL: Stage 3 PLOT DRIVER: OHDOT_PDF_Levels.pltcfg PENTABLE: 104983_OHDOT_Pen.tbl

MODEL: Sheet PAPERSIZE: 17x11 (in.) DATE: 2/24/2022 TIME: 6:59:58 PM USER: edues
pw:\\gfnet-pw.bentley.com:gfnet-pw-01\Documents\Projects\67490\104983401-Engineering-GF\Structures\3227R-SFN_7704747\Sheets\116 sr002

FILE: ...\Sheets\116 sr002

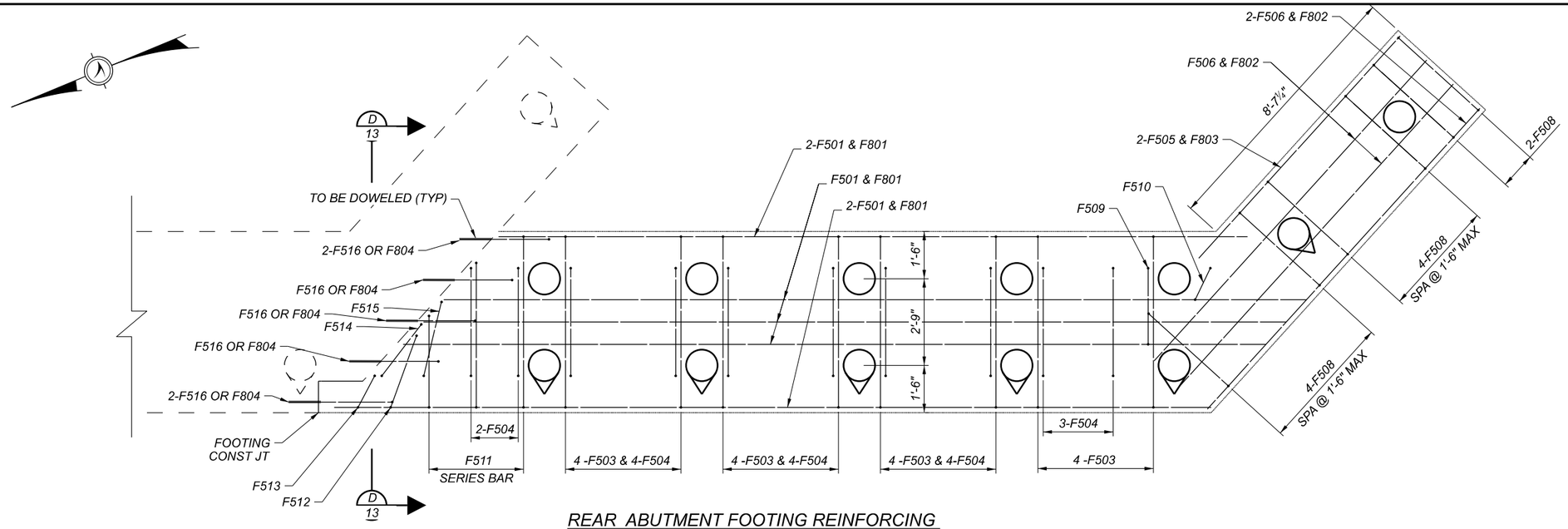

REAR ABUTMENT FOOTING REINFORCING

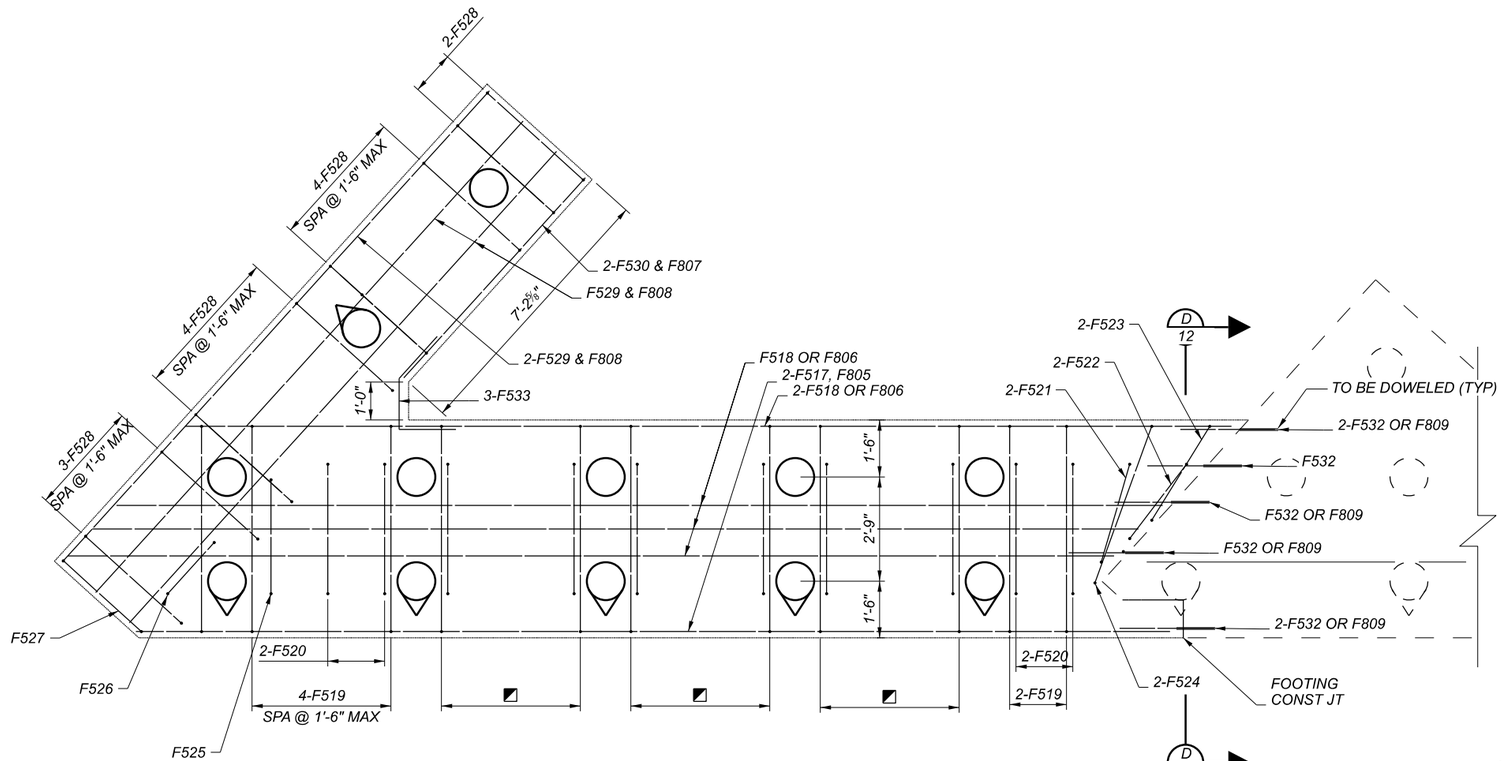

FORWARD ABUTMENT FOOTING REINFORCING

LEGEND

◪ 4 -F519 & 4-F520

NOTES

1. SEE SHEET 13/36 FOR ABUTMENT DETAILS AND SECTIONS.
2. SEE SHEET 8/36 FOR FOUNDATION PLAN.
3. SEE SHEET 25/36 FOR TRANSVERSE SECTION.
4. SEE SHEET 3/36 FOR DOWEL HOLE NOTES.
5. SEE SHEET 32/36 FOR APPROACH SLAB DETAILS.
6. 2" CLEAR COVER UNLESS NOTED OTHERWISE.

ABUTMENT FOOTING REINFORCING DETAILS
BRIDGE NO. SUM-77-3227R
IR-77 OVER BRECKSVILLE RD.

SFN 7704747

DESIGN AGENCY
Gannett Fleming
ENGINEERS AND ARCHITECTS, P.C.
2500 Corporate Exchange Drive Suite 200 Columbus, OH 43231

DESIGNER	CHECKER
RSN	CTM

REVIEWER MTO 2/22

PROJECT ID 104983

SUBSET	TOTAL
12	36

SHEET	TOTAL
273	297

SUM-77-32.27 PENTABLE SUBSET: 5 SUBMITTAL: Stage 3 PLOT DRIVER: OHDOT_PDF_Levels.pltcfg

MODEL: Sheet PAPERSIZE: 17x11 (in.) DATE: 2/24/2022 TIME: 7:02:04 PM USER: edues PENTABLE: 104983_OHDOT_Pen.tbl
pw:\\gfnet-pw.bentley.com:gfnet-pw-01\Documents\Projects\67490\104983401-Engineering-GFI\Structures\3227R-SFN_7704747\Sheets\117 sf003

FILE: ...\Sheets\117 sf003

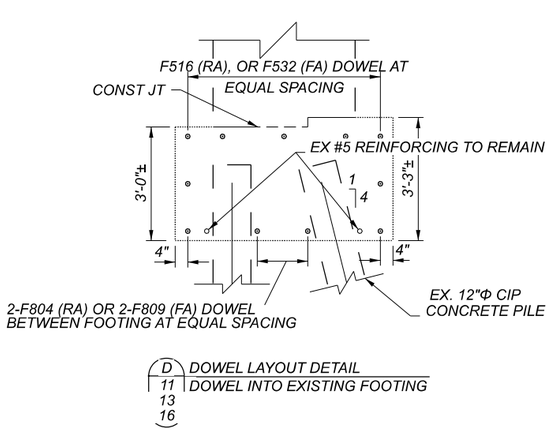

D
11
13
16
DOWEL LAYOUT DETAIL
DOWEL INTO EXISTING FOOTING

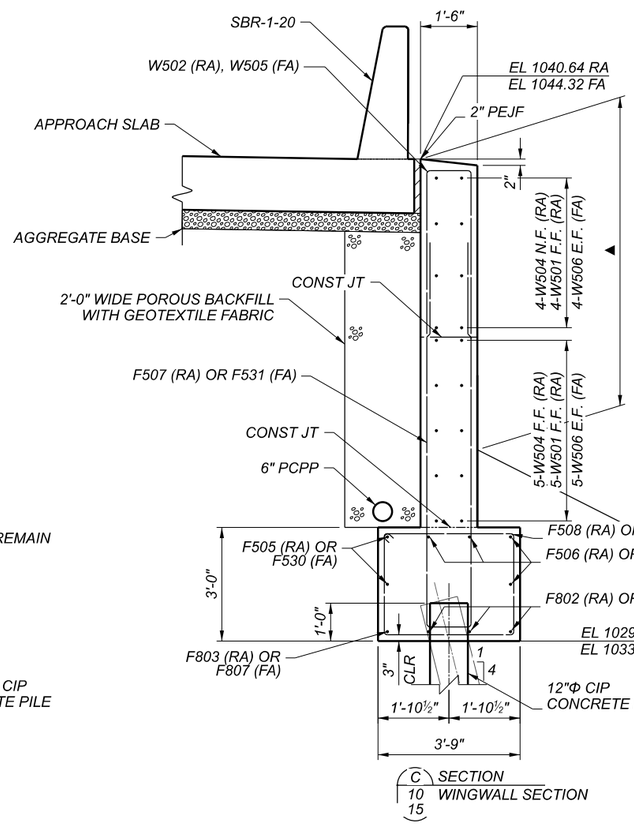

C
10
15
SECTION
WINGWALL SECTION

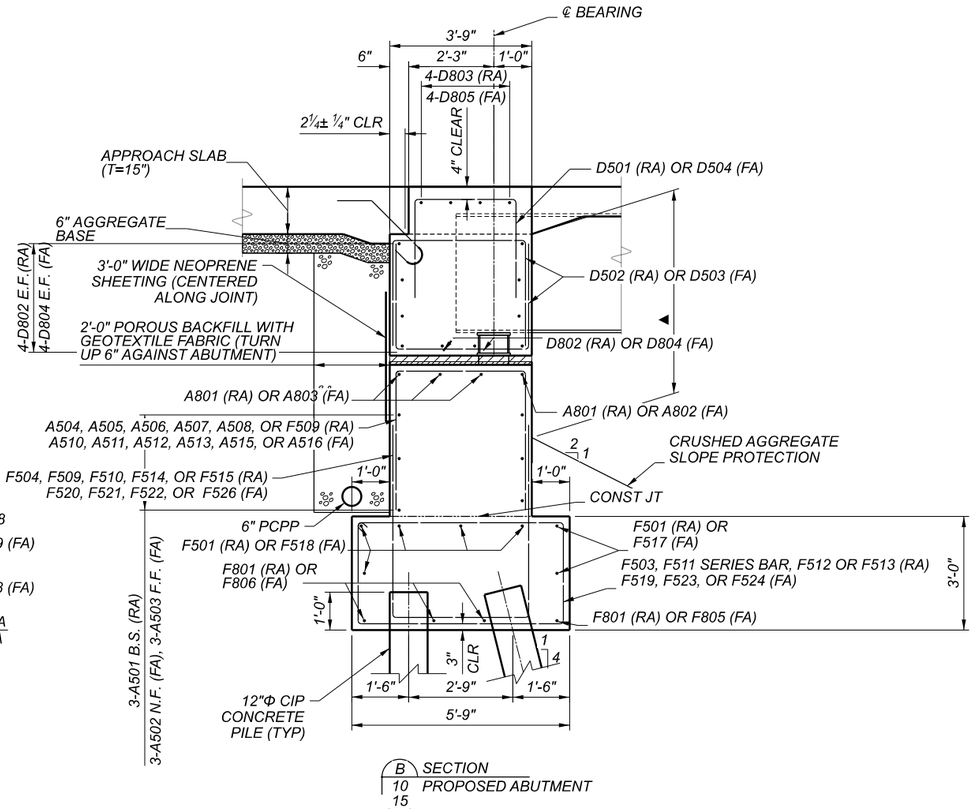

B
10
15
SECTION
PROPOSED ABUTMENT

LEGEND

▲ INDICATES LIMITS OF ITEM 512 - SEALING OF CONCRETE SURFACES (EPOXY-URETHANE)

ABUTMENT SECTIONS
BRIDGE NO. SUM-77-3227R
IR-77 OVER BRECKSVILLE RD.

SFN 7704747

DESIGN AGENCY
Gannett Fleming
ENGINEERS AND ARCHITECTS, P.C.
2500 Corporate Exchange Drive
Suite 220
Columbus, OH 43231

DESIGNER	CHECKER
RSN	CTM

REVIEWER: MTO 2/22

PROJECT ID: 104983

SUBSET	TOTAL
13	36

SHEET	TOTAL
274	297

SUM-77-32.27 PENTABLE SUBSET: 5 SUBMITTAL: Stage 3 PLOT DRIVER: OHDOT_PDF_Levels.pltcfg

MODEL: Sheet PAPERSIZE: 17x11 (in.) DATE: 2/24/2022 TIME: 7:04:19 PM USER: edues
pw:\\gfnet-pw.bentley.com:gfnet-pw-01\Documents\Projects\67490\104983401-Engineering-GF\Structures\3227R-SFN_7704747\Sheets\118 sr003

PENTABLE: 104983_OHDOT_Pen.tbl

FILE: ...\Sheets\118 sr003

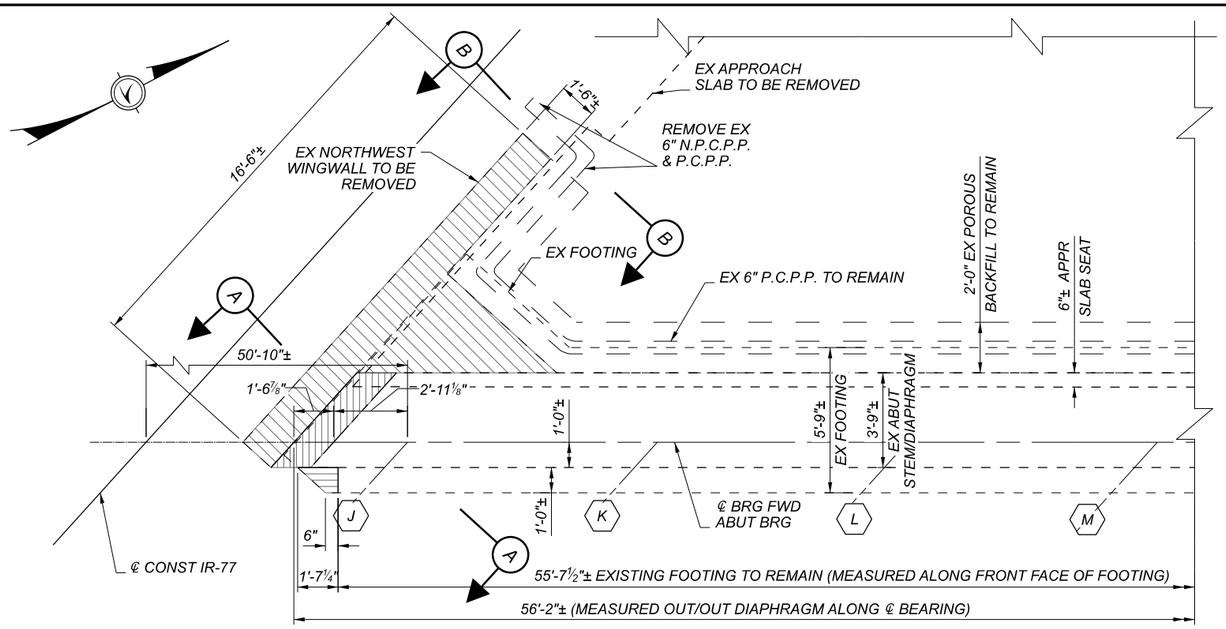

PARTIAL FORWARD ABUTMENT PLAN
REMOVAL LIMITS

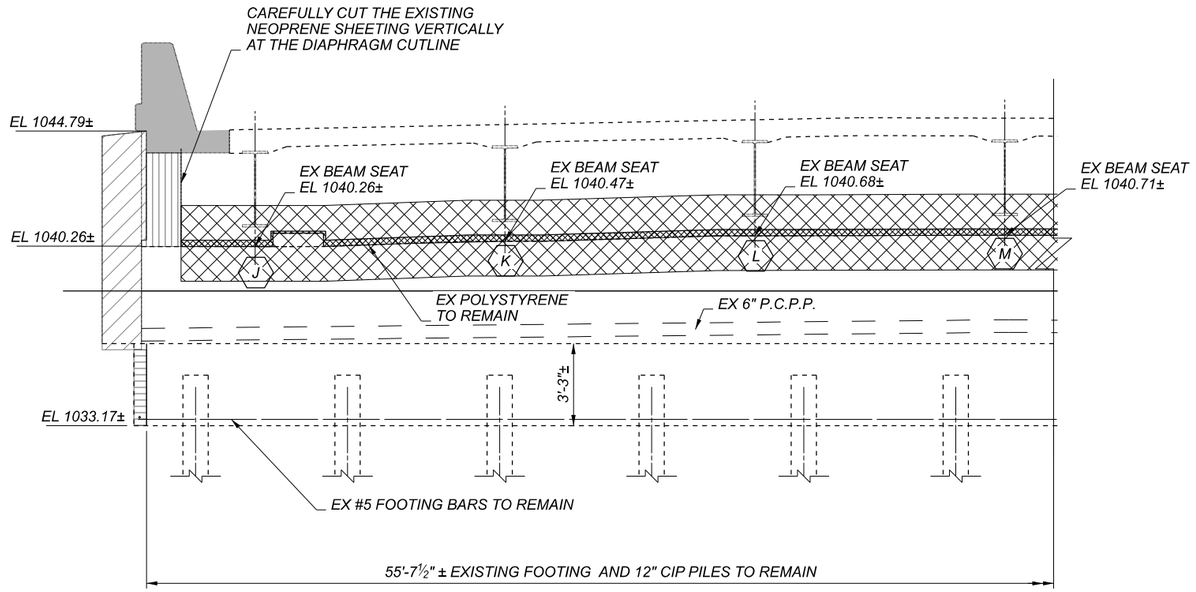

PARTIAL FORWARD ABUTMENT ELEVATION
REMOVAL LIMITS

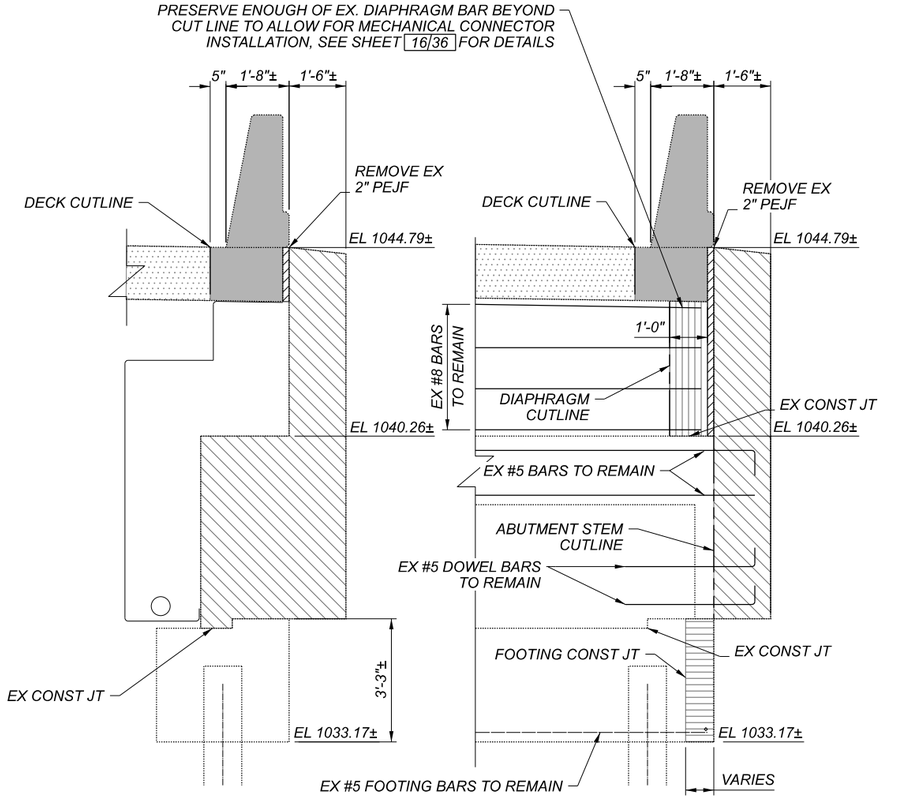

B SECTION
EX WINGWALL AND APPROACH SLAB
REMOVAL LIMITS

A SECTION
EX WINGWALL AND ABUTMENT
REMOVAL LIMITS

LEGEND
- EXISTING WINGWALL TO BE REMOVED
- EXISTING PARAPET AND DECK TO BE REMOVED
- EXISTING DIAPHRAGM TO BE REMOVED
- EXISTING FOOTING TO BE REMOVED
- EXISTING SEMI-INTERGRAL EXPANSION JOINT SEAL
- APPROACH SLAB TO BE REMOVED

NOTES:
PRESERVE THE VERTICAL REINFORCING ABOVE THE CUTLINE
UNLESS NOTED OTHERWISE

EXISTING FORWARD ABUTMENT REMOVAL DETAILS
BRIDGE NO. SUM-77-3227R
IR-77 OVER BRECKSVILLE RD.

SFN 7704747

DESIGN AGENCY
Gannett Fleming
ENGINEERS AND ARCHITECTS, P.C.
250 Civic Center Drive, Suite 220
Columbus, OH 43215

DESIGNER	CHECKER
RSN	CTM

REVIEWER: MTO 2/22

PROJECT ID: 104983

SUBSET	TOTAL
14	36

SHEET	TOTAL
275	297

SUM-77-32.27 PENTABLE SUBSET: [5] SUBMITTAL: Stage 3 PLOT DRIVER: OHDOT_PDF_Levels.pltcfg PENTABLE: 104983_OHDOT_Pen.tbl

MODEL: Sheet PAPERSIZE: 17x11 (in.) DATE: 2/24/2022 TIME: 7:07:12 PM USER: edues
pw:\\gfnet-pw.bentley.com:gfnet-pw-01\Documents\Projects\674490\104983\401-Engineering-GFiStructures\3227R-SFN_7704747\Sheets\119 sv002

FILE: ...\Sheets\119 sv002

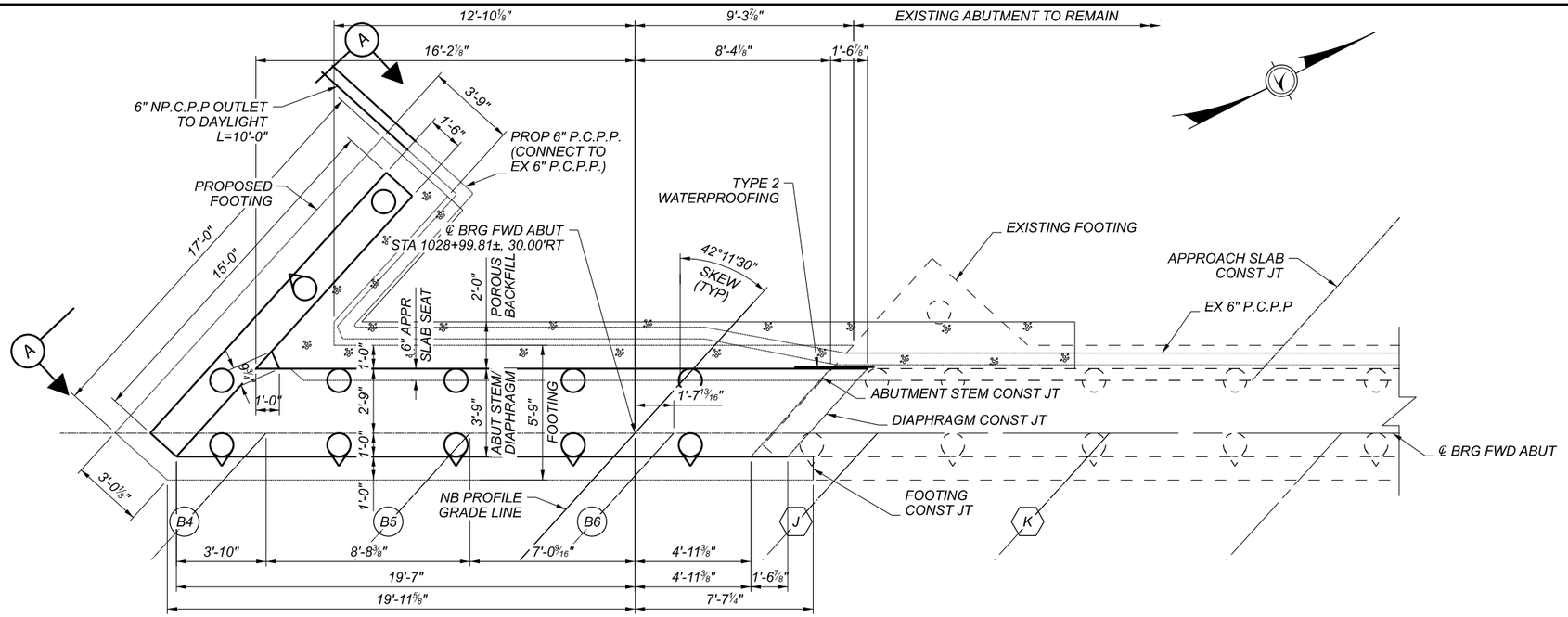

PARTIAL FORWARD ABUTMENT PLAN

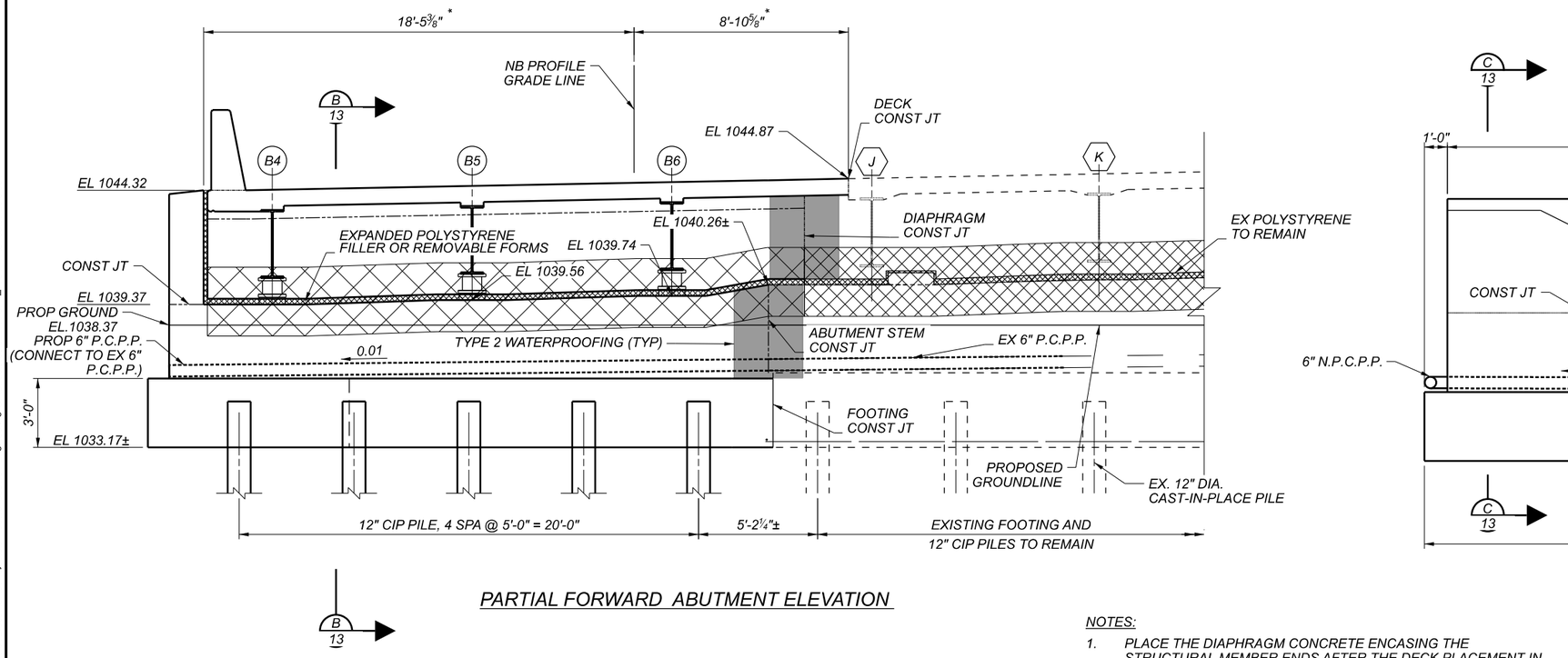

PARTIAL FORWARD ABUTMENT ELEVATION

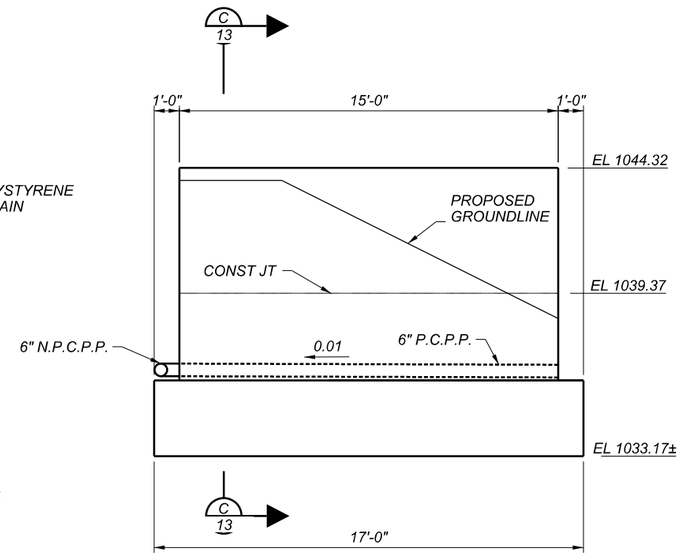

NOTES:

1. PLACE THE DIAPHRAGM CONCRETE ENCASING THE STRUCTURAL MEMBER ENDS AFTER THE DECK PLACEMENT IN THE ADJACENT SPAN IS COMPLETE. PROCEDURES THAT PLACE THE ABUTMENT DIAPHRAGM WITH THE DECK CONCRETE MAY BE APPROVED BY THE ENGINEER IF THE PLACEMENT SUBMITTAL CAN ASSURE THAT THE DECK CONCRETE IN THE ADJACENT SPAN WILL BE PLACED BEFORE CONCRETE IN THE DIAPHRAGM HAS REACHED ITS INITIAL SET.
2. SEE SHEET 8/36 FOR FOUNDATION PLAN.
3. SEE SHEET 33/36 FOR APPROACH SLAB DETAILS

(A) ELEVATION
WINGWALL ELEVATION
PILES NOT SHOWN FOR CLARITY

LEGEND

* MEASURED ALONG ABUTMENT ℄ BRG

TYPE 2 WATERPROOFING, 3' WIDE CENTERED ON CONST JT

EXISTING SEMI-INTERGRAL EXPANSION JOINT SEAL LIMITS

PROPOSED SEMI-INTERGRAL EXPANSION JOINT SEAL LIMITS

PROPOSED FORWARD ABUTMENT PLAN AND ELEVATION
BRIDGE NO. SUM-77-3227R
IR-77 OVER BRECKSVILLE RD.

SFN 7704747

DESIGN AGENCY
Gannett Fleming
ENGINEERS AND ARCHITECTS, P.C.
250 Civic Center Drive, Suite 220, Columbus, OH 43221

DESIGNER	CHECKER
RSN	CTM

REVIEWER: MTO 2/22

PROJECT ID: 104983

SUBSET	TOTAL
15	36

SHEET	TOTAL
276	297

SUM-77-32.27 PENTABLE SUBSET: [5] SUBMITTAL: Stage 3 PLOT DRIVER: OHDOT_PDF_Levels.pltcfg PENTABLE: 104983_OHDOT_Pen.tbl

MODEL: Sheet PAPERSIZE: 17x11 (in.) DATE: 2/24/2022 TIME: 7:10:00 PM USER: edues
pw:\\ghnet-pw.bentley.com:ghnet-pw-01\Documents\Projects\674900\104983\401-Engineering-GFi Structures\3227R-SFN_7704747\Sheets\120 sf001

FILE: ...\Sheets\120 sf001

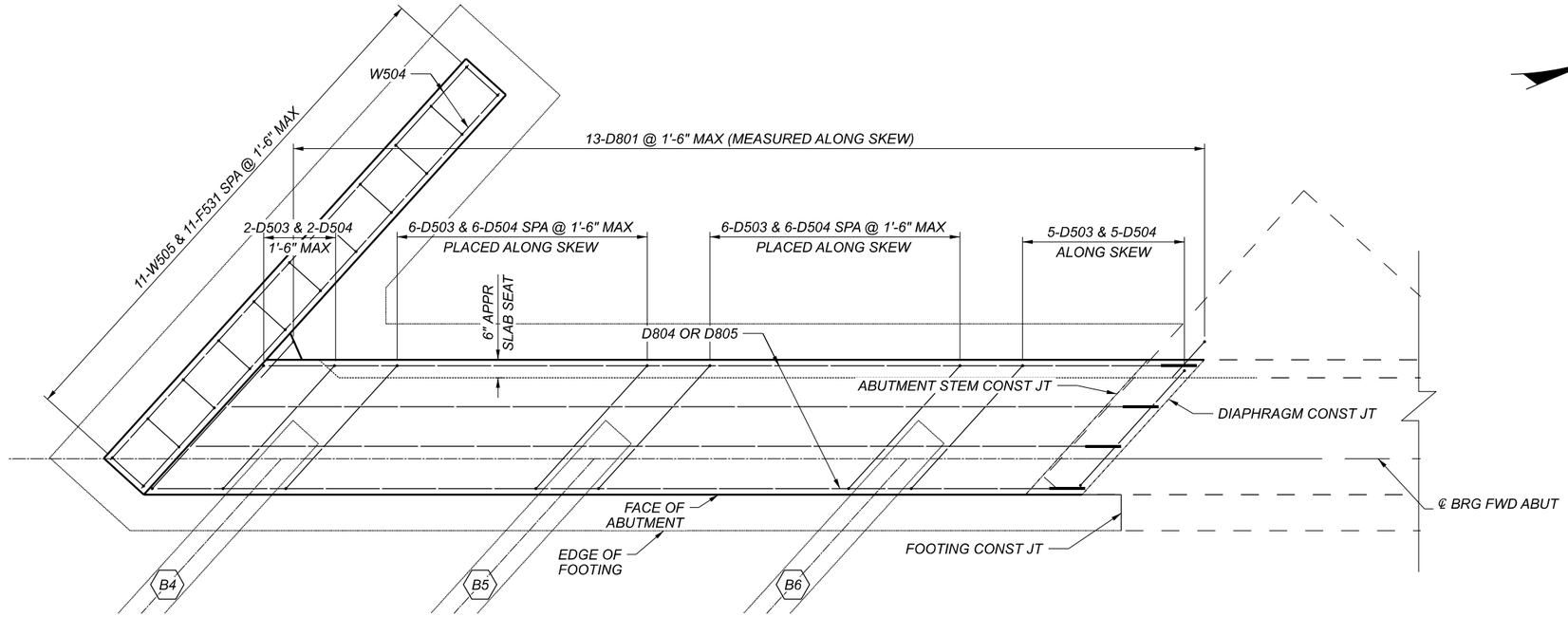

PROPOSED FORWARD ABUTMENT PLAN
DIAPHRAGM REINFORCING SHOWN

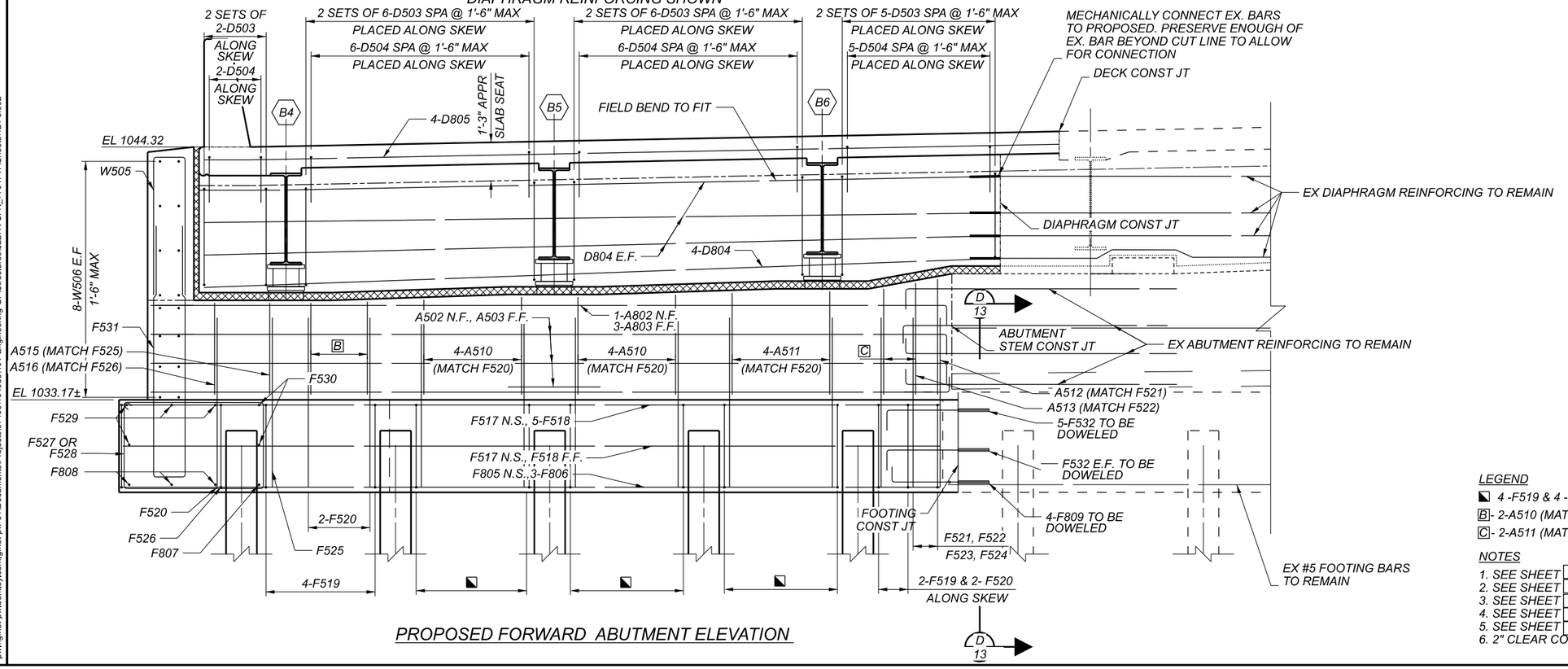

PROPOSED FORWARD ABUTMENT ELEVATION

LEGEND

- ◹ 4 -F519 & 4 -F520 SPA @ 1'-6" MAX
- B - 2-A510 (MATCH F520)
- C - 2-A511 (MATCH F520)

NOTES

1. SEE SHEET 13/36 FOR ABUTMENT DETAILS AND SECTIONS.
2. SEE SHEET 8/36 FOR FOUNDATION PLAN.
3. SEE SHEET 25/36 FOR TRANSVERSE SECTION.
4. SEE SHEET 3/36 FOR DOWEL HOLE NOTES.
5. SEE SHEET 33/36 FOR APPROACH SLAB DETAILS
6. 2" CLEAR COVER UNLESS NOTED OTHERWISE.

FORWARD ABUTMENT REINFORCING DETAILS
BRIDGE NO. SUM-77-3227R
IR-77 OVER BRECKSVILLE RD.

SFN 7704747

DESIGN AGENCY
Gannett Fleming
ENGINEERS AND ARCHITECTS, P.C.
2500 Corporate Exchange Drive Suite 200 Columbus, OH 43231

DESIGNER	CHECKER
RSN	CTM

REVIEWER MTO 2/22

PROJECT ID 104983

SUBSET	TOTAL
16	36

SHEET	TOTAL
277	297

SUM-77-32.27 PENTABLE SUBSET: [5] SUBMITTAL: Stage 3 PLOT DRIVER: OHDOT_PDF_Levels.pltcfg PENTABLE: 104983_OHDOT_Pen.tbl

MODEL: Sheet PAPERSIZE: 17x11 (in.) DATE: 2/24/2022 TIME: 7:12:55 PM USER: edues
pw:\\gfnet-pw.bentley.com:gfnet-pw-01\Documents\Projects\67490\104983401-Engineering-GF\Structures\3227R-SFN_7704747\Sheets\121 sf002

FILE: ...\Sheets\121 sf002

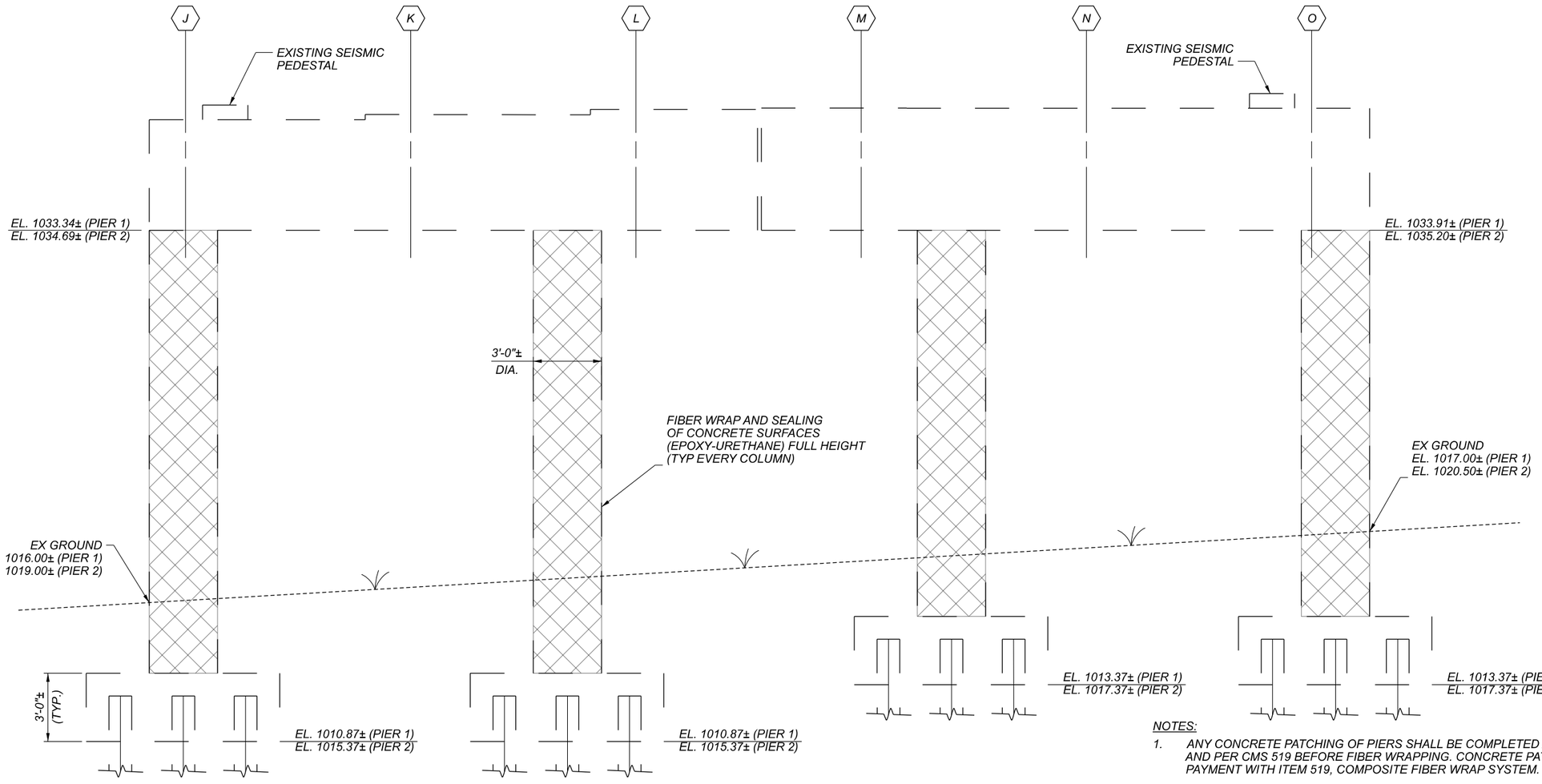

EXISTING PIER ELEVATION

(LOOKING UPSTATION, PIER 1 SHOWN, PIER 2 SIMILAR)

LEGEND:

FIBER WRAP LIMITS

NOTES:

1. ANY CONCRETE PATCHING OF PIERS SHALL BE COMPLETED AS DIRECTED BY THE ENGINEER AND PER CMS 519 BEFORE FIBER WRAPPING. CONCRETE PATCHING SHALL BE INCLUDED FOR PAYMENT WITH ITEM 519, COMPOSITE FIBER WRAP SYSTEM.
2. COLUMN FIBER WRAP MUST ACHIEVE A CONFINING STRESS OF 0.30 KSI FOR THE TOP AND BOTTOM 4 FEET OF COLUMNS, AND 0.150 KSI CONFINING STRESS FOR ALL OTHER COLUMN PORTIONS. CONTRACTOR TO DETERMINE THE WRAPPING REQUIREMENTS (NUMBER OF LAYERS, METHOD OF APPLICATION, ETC.) PER THE MANUFACTURER'S GUIDELINES.
3. SEAL ALL COLUMNS FROM BOTTOM OF CAP TO FINAL GRADE ELEVATION. SEALANT APPLIED TO CONCRETE SURFACES SHALL BE EPOXY-URETHANE. SEALANT APPLIED TO FIBER WRAPPED SURFACES SHALL BE IN COMPLIANCE WITH FIBER WRAP MANUFACTURER REQUIREMENTS FOR PROTECTION AGAINST UV AND SALT SPRAY. IF A SEALER OTHER THAN THE TYPICAL PROJECT EPOXY-URETHANE SEALER IS USED ON FIBER WRAPPED SURFACES, SELECT COLOR OF FIBER WRAP SEALER TO MATCH COLOR OF CONCRETE SURFACE SEALER. THE COST TO SEAL THE COLUMNS SHALL BE INCLUDED IN THE COST OF ITEM 512 - SEALING OF CONCRETE SURFACES (EPOXY-URETHANE), AS PER PLAN INCLUDING ANY SPECIALTY FIBER WRAP SEALANTS THAT MAY BE REQUIRED.
4. EXCAVATE THE SOIL AROUND THE PIER COLUMNS TO THE TOPS OF THE FOOTINGS AS NECESSARY TO PROPERLY INSTALL THE COMPOSITE FIBER WRAP SYSTEM. EXCAVATION AND BACKFILL AROUND THE PIER COLUMNS TO BE INCLUDED FOR PAYMENT WITH ITEM 503 - UNCLASSIFIED EXCAVATION, AS PER PLAN.
5. FOR COMPOSITE FIBER WRAP INSTALLATION REQUIREMENTS, REFER TO PN-519.

PIER WRAPPING DETAILS
BRIDGE NO. SUM-77-3227R
IR-77 OVER BRECKSVILLE RD.

SFN 7704747

DESIGN AGENCY
Gannett Fleming
ENGINEERS AND ARCHITECTS, P.C.
2500 Corporate Exchange Drive
Suite 230
Columbus, OH 43231

DESIGNER	CHECKER
SAT	CTM

REVIEWER: MTO 2/22

PROJECT ID: 104983

SUBSET	TOTAL
17	36

SHEET	TOTAL
278	297

SUM-77-32.27 PENTABLE SUBSET: 5 SUBMITTAL: Stage 3 PLOT DRIVER: OHDOT_PDF_Levels.pltcfg PENTABLE: 104983_OHDOT_Pen.tbl

MODEL: Sheet PAPERSIZE: 17x11 (in.) DATE: 2/24/2022 TIME: 7:14:56 PM USER: edues
pw:\\gfnet-pw.bentley.com:gfnet-pw-01\Documents\Projects\67490\104983\401-Engineering-GF\Structures\3227R-SFN_7704747\Sheets\144 si101

FILE: ...\Sheets\144 si101

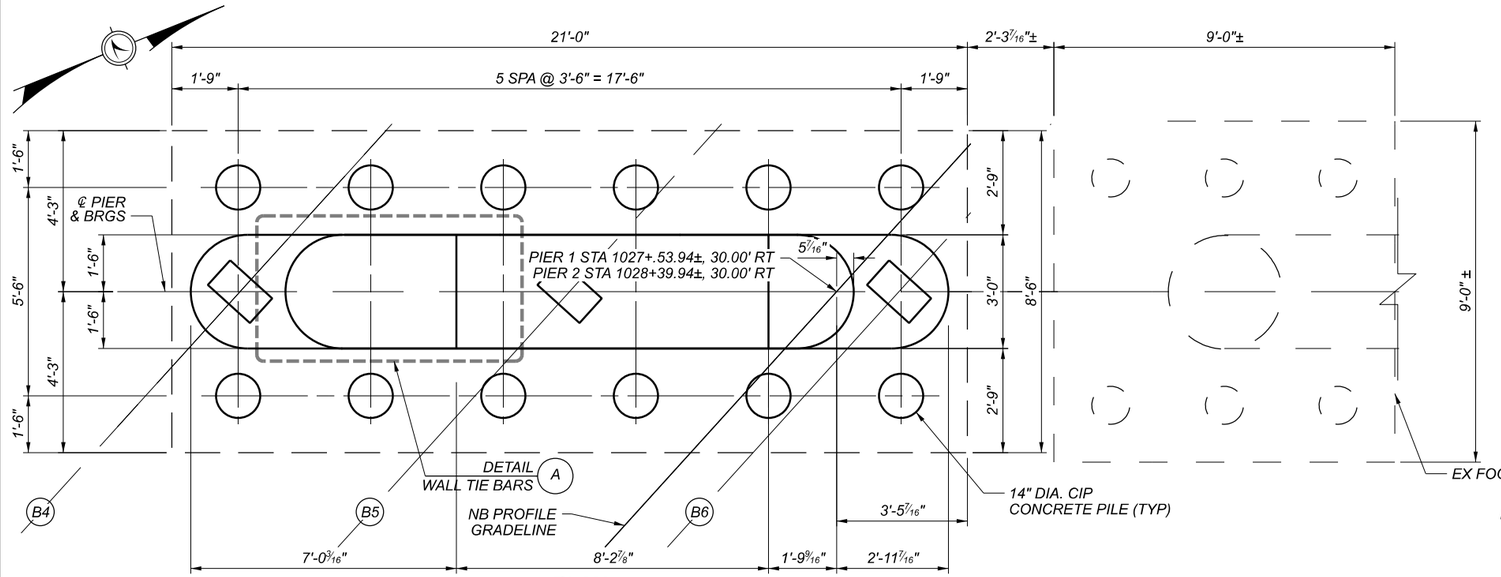

PLAN

PIER 1 SHOWN, PIER 2 SIMILAR

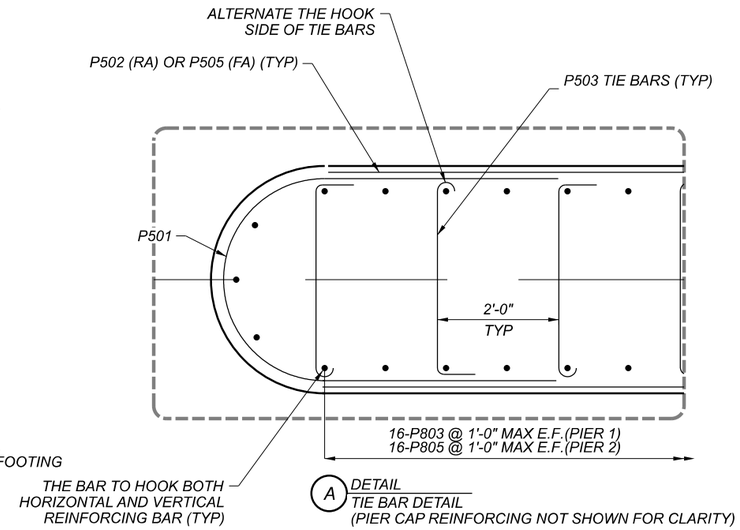

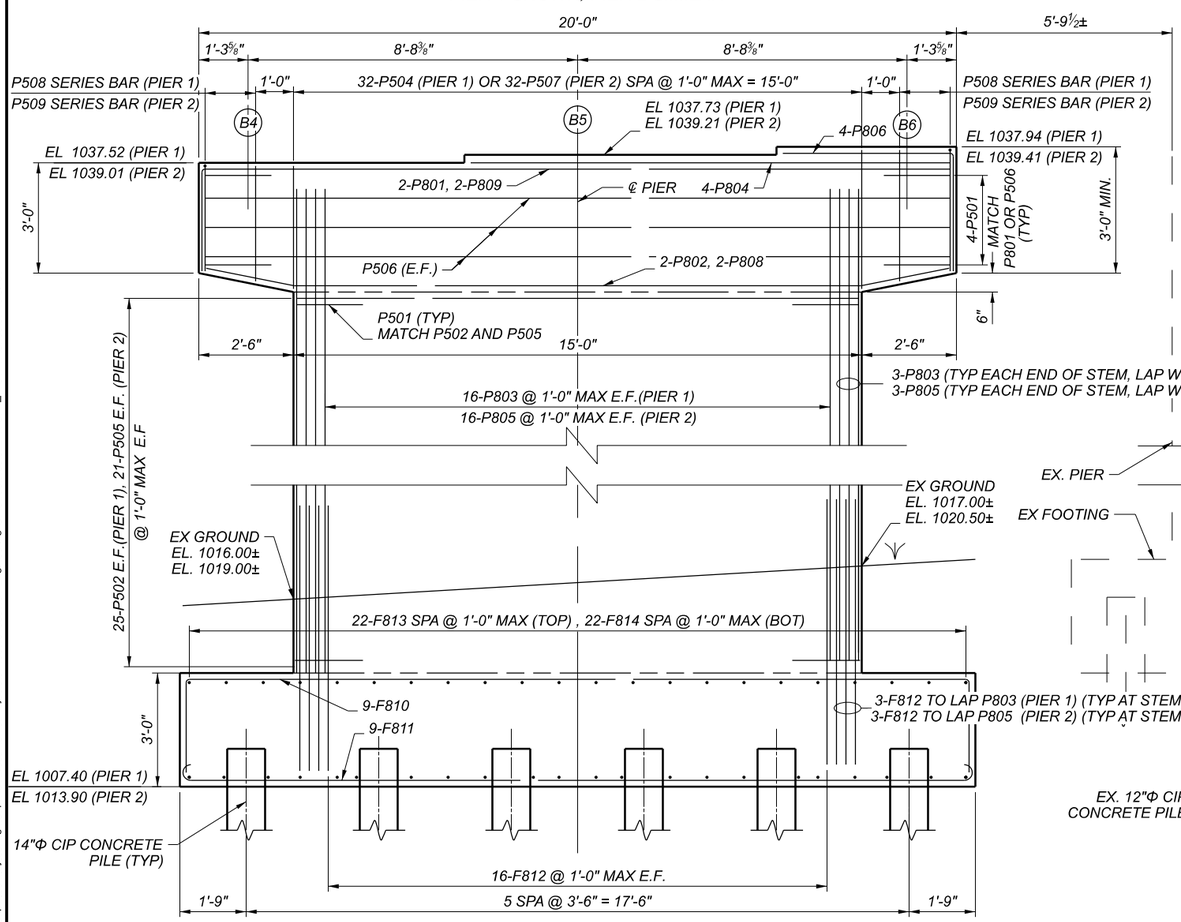

PIER WIDENING ELEVATION

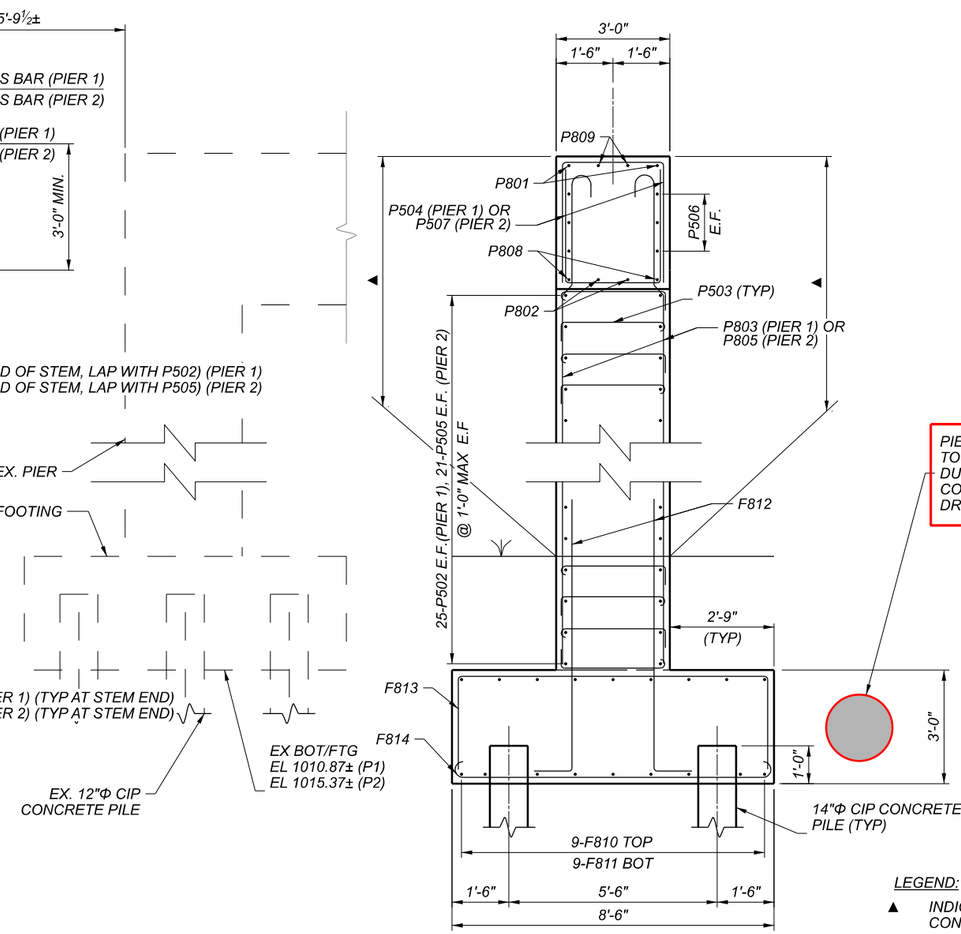

PIER WIDENING SECTION

PIER 1, EXISTING 20" WATERLINE TO REMAIN AND BE PROTECTED DURING CONSTRUCTION. PROTECTION COSTS ARE INCIDENTAL TO PILE DRIVING MOBILIZATION COST

LEGEND:

▲ INDICATES LIMITS OF ITEM 512 - SEALING OF CONCRETE SURFACES (EPOXY-URETHANE)

PROPOSED PIER DETAILS
BRIDGE NO. SUM-77-3227R
IR-77 OVER BRECKSVILLE RD.

SFN 7704747

DESIGN AGENCY
Gannett Fleming
ENGINEERS AND ARCHITECTS, P.C.
2500 Corporate Exchange Drive
Suite 220
Columbus, OH 43231

DESIGNER	CHECKER
RSN	CTM

REVIEWER MTO 2/22

PROJECT ID 104983

SUBSET	TOTAL
18	36

SHEET	TOTAL
279	297

SUM-77-32.27 PENTABLE SUBSET: 5 SUBMITTAL: Stage 3 PLOT DRIVER: OHDOT_PDF_Levels.pltcfg

MODEL: Sheet PAPERSIZE: 17x11 (in.) DATE: 2/24/2022 TIME: 7:16:59 PM USER: edues
pw:\\gfnet-pw.bentley.com:gfnet-pw-01\Documents\Projects\67490\104983\401-Engineering-GF\Structures\3227R-SFN_7704747\Sheets\145 si100

PENTABLE: 104983_OHDOT_Pen.tbl

FILE: ...\Sheets\145 si100

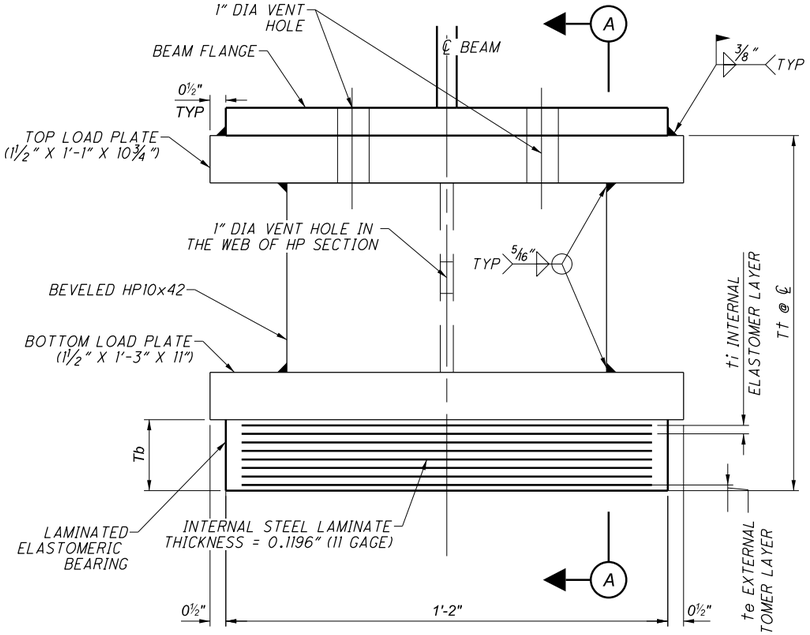

LAMINATED ELASTOMERIC BEARING (EXPANSION)
REAR AND FORWARD ABUTMENTS

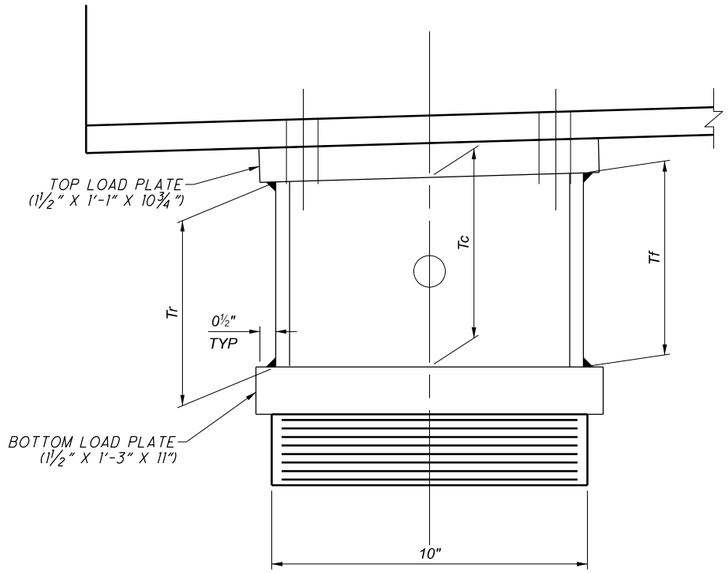

A DETAIL
REAR AND FORWARD ABUTMENTS

BEARING SCHEDULE

SUPPORT	BEARING TYPE	QUANTITY	DEAD LOAD (KIPS)	LIVE LOAD (KIPS)	TOTAL LOAD (KIPS)	ti	NO. OF ti's	te	NO. OF te's	NO. OF INTERNAL LAMINATES	Tb	BEVELED HP OR LOAD PLATE			Tt @ CL BRG
												Tr	Tc	Tf	
REAR ABUT	EXPANSION	3	61	69	130	0.34	6	0.20	1	6	2.96	5.90	6.00	6.10	11.96
FWD ABUT	EXPANSION	3	57	81	138	0.34	6	0.20	1	6	2.96	5.93	6.00	6.07	11.96
PIER 1	EXPANSION	3	120	123	243	0.36	5	0.19	1	5	2.59	1.37	1.50	1.63	4.09
PIER 2	EXPANSION	3	115	120	235	0.36	5	0.19	1	5	2.59	1.39	1.50	1.61	4.09

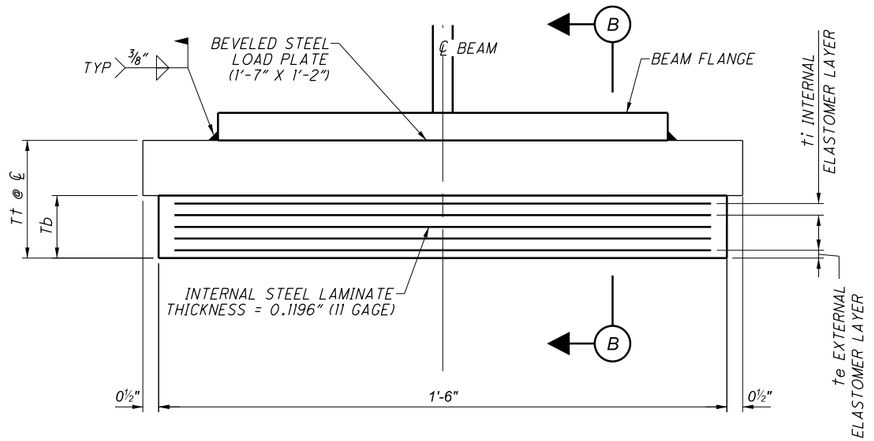

LAMINATED ELASTOMERIC BEARING (EXPANSION)
PIER 1 & 2 BEARING

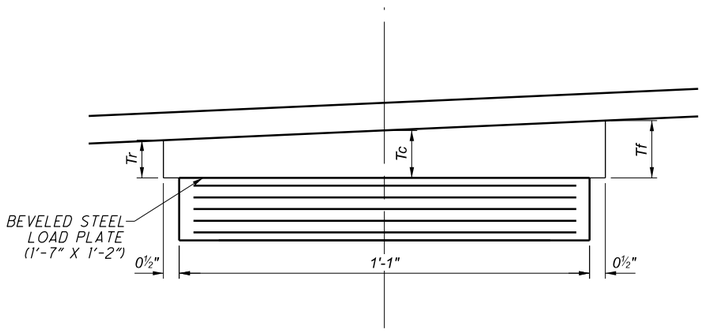

B DETAIL
PIER 1 & 2 BEARING

NOTES

1. *THE ELASTOMER SHALL HAVE A HARDNESS OF 50 DUROMETER. THE BEARINGS WERE DESIGNED IN ACCORDANCE WITH SECTION 14.7.6 (METHOD A) OF THE AASHTO LRFD BRIDGE DESIGN SPECIFICATIONS. THE LONG-TERM COMPRESSION PROOF LOAD TEST (AASHTO STANDARD SPECIFICATIONS FOR HIGHWAY BRIDGES, DIVISION II, SECTION 18.7.2.6) IS NOT REQUIRED.*
2. *THE STEEL LOAD PLATE SHALL BE ASTM A709, GRADE 50 STEEL. BOND THE LOAD PLATE BY VULCANIZATION TO THE ELASTOMER DURING THE MOLDING PROCESS.*
3. *THE DEAD, LIVE, AND TOTAL LOADS TABULATED IN THE BEARING SCHEDULE ARE UNFACTORED LOADS.*
4. *REFER TO STD DWG SICD-1-21 FOR ADDITIONAL ABUTMENT BEARING NOTES AND DETAILS.*
5. *ALL BEARINGS SHALL BE MARKED PRIOR TO SHIPPING. THE MARKS SHALL INCLUDE THE BEARING LOCATION ON THE BRIDGE, AND A DIRECTION ARROW THAT POINTS UP-STATION. ALL MARKS SHALL BE PERMANENT AND BE VISIBLE AFTER THE BEARING IS INSTALLED.*
6. *ALL STEEL BEARING SURFACES SHALL BE PAINTED WITH THE SAME SYSTEM AS THE BEAMS AND INCLUDED WITH PAYMENT OF THE BEAMS.*
7. *PAYMENT FOR ELASTOMERIC BEARINGS, LOAD PLATES, AND PEDESTALS AND INSTALLATION TO BE INCLUDED WITH ITEM 516, ELASTOMERC BEARING WITH INTERNAL LAMINATES AND LOAD PLATE (NEOPRENE).*

BEARING DETAILS
BRIDGE NO. SUM-77-3227R
IR-77 OVER BRECKSVILLE RD.

SFN 7704747

DESIGN AGENCY
Gannett Fleming
ENGINEERS AND ARCHITECTS, P.C.
2500 Corporate Exchange Drive Suite 200 Columbus, OH 43231

DESIGNER	CHECKER
RSN	CTM

REVIEWER MTO 2/22

PROJECT ID 104983

SUBSET	TOTAL
19	36

SHEET	TOTAL
280	297

SUM-77-32.27 PENTABLE SUBSET: 5 SUBMITTAL: Stage 3 PLOT DRIVER: OHDOT_PDF_Levels.pltcfg PENTABLE: 104983_OHDOT_Pen.tbl

MODEL: Sheet PAPERSIZE: 17x11 (in.) DATE: 2/24/2022 TIME: 7:20:01 PM USER: edues
pw:\\gfnet-pw.bentley.com:gfnet-pw-01\Documents\Projects\67490\104983\401-Engineering-GF\Structures\3227R-SFN_7704747\Sheets\146 sb001

FILE: ...\Sheets\146 sb001

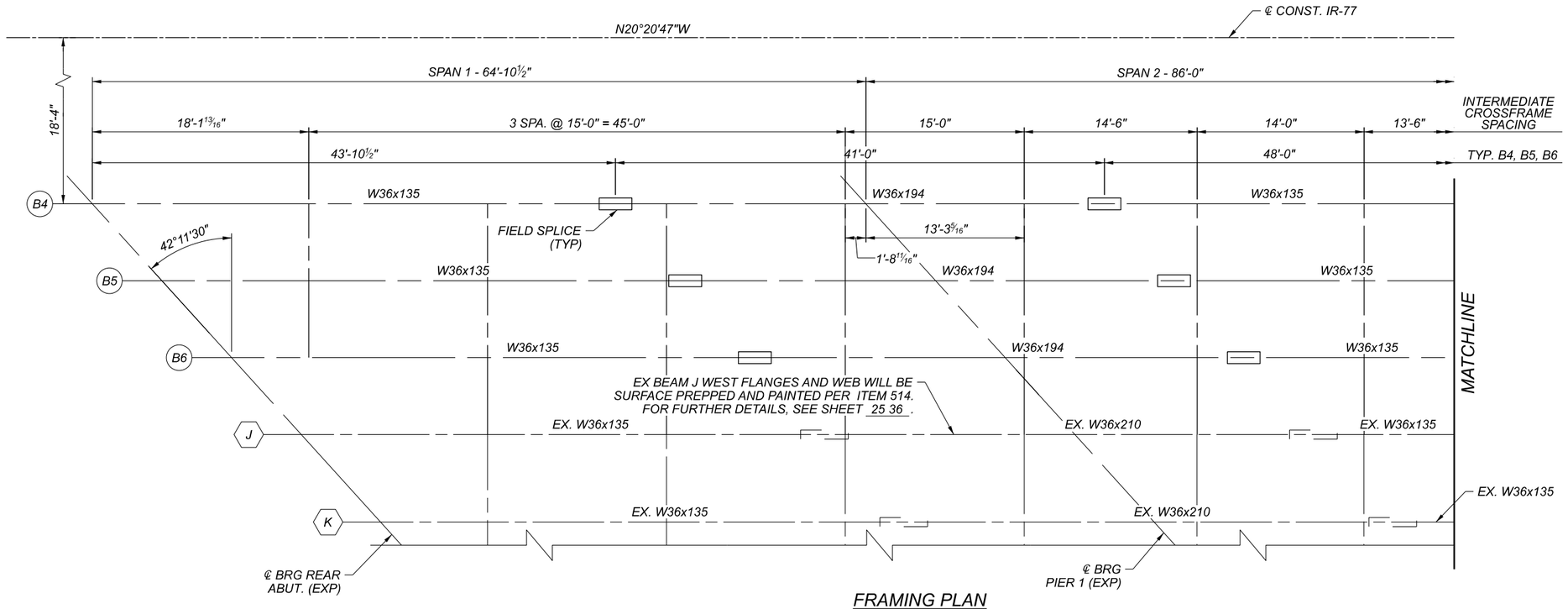

FRAMING PLAN
ALL BEAMS ARE PARALLEL TO ℄ CONST. IR-77

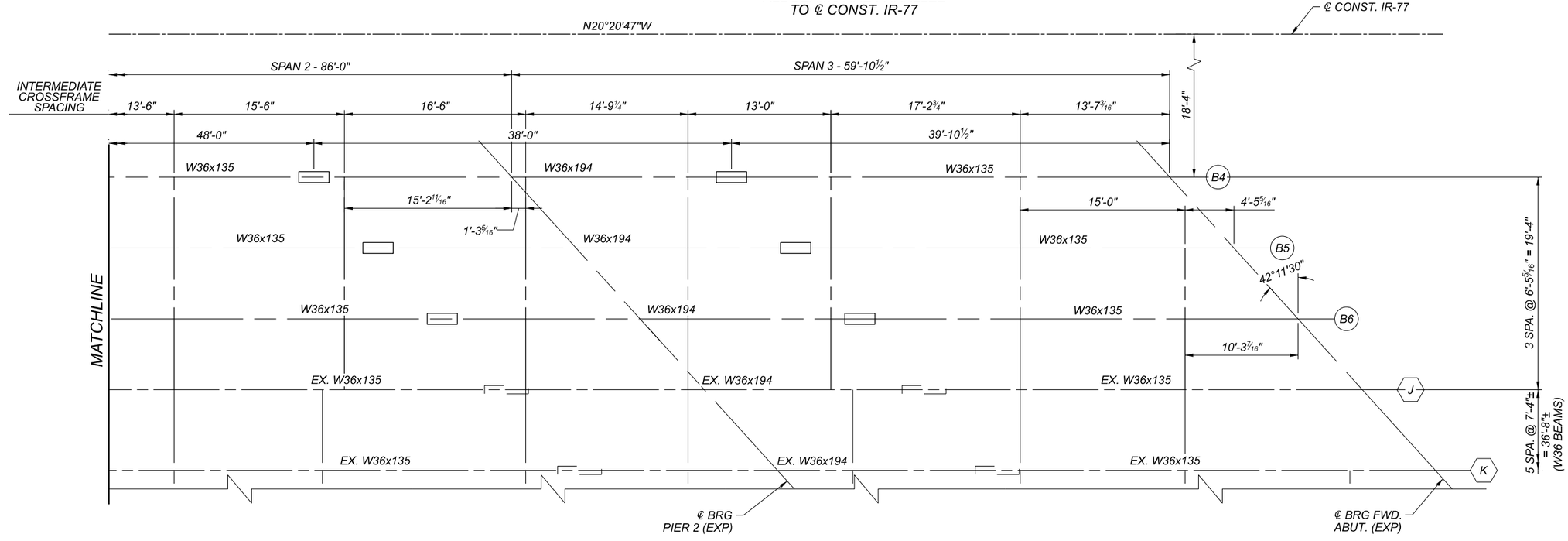

FRAMING PLAN
ALL BEAMS ARE PARALLEL TO ℄ CONST. IR-77

FRAMING PLAN
BRIDGE NO. SUM-77-3227R
IR-77 OVER BRECKSVILLE RD.

SFN 7704747

DESIGN AGENCY
Gannett Fleming
ENGINEERS AND ARCHITECTS, P.C.
2500 Corporate Exchange Drive Suite 220 Columbus, OH 43231

DESIGNER	CHECKER
SAT	CTM

REVIEWER: MTO 2/22

PROJECT ID: 104983

SUBSET	TOTAL
20	36

SHEET	TOTAL
281	297

SUM-77-32.27 PENTABLE SUBSET: 5 SUBMITTAL: Stage 3 PLOT DRIVER: OHDOT_PDF_Levels.pltcfg PENTABLE: 104983_OHDOT_Pen.tbl

MODEL: Sheet PAPERSIZE: 17x11 (in.) DATE: 2/24/2022 TIME: 7:22:00 PM USER: edues
pw:\\gfnet-pw.bentley.com:gfnet-pw-01\Documents\Projects\67490\104983401-Engineering-GF\Structures\3227R-SFN_7704747\Sheets\148 ss001

FILE: ...\Sheets\148 ss001

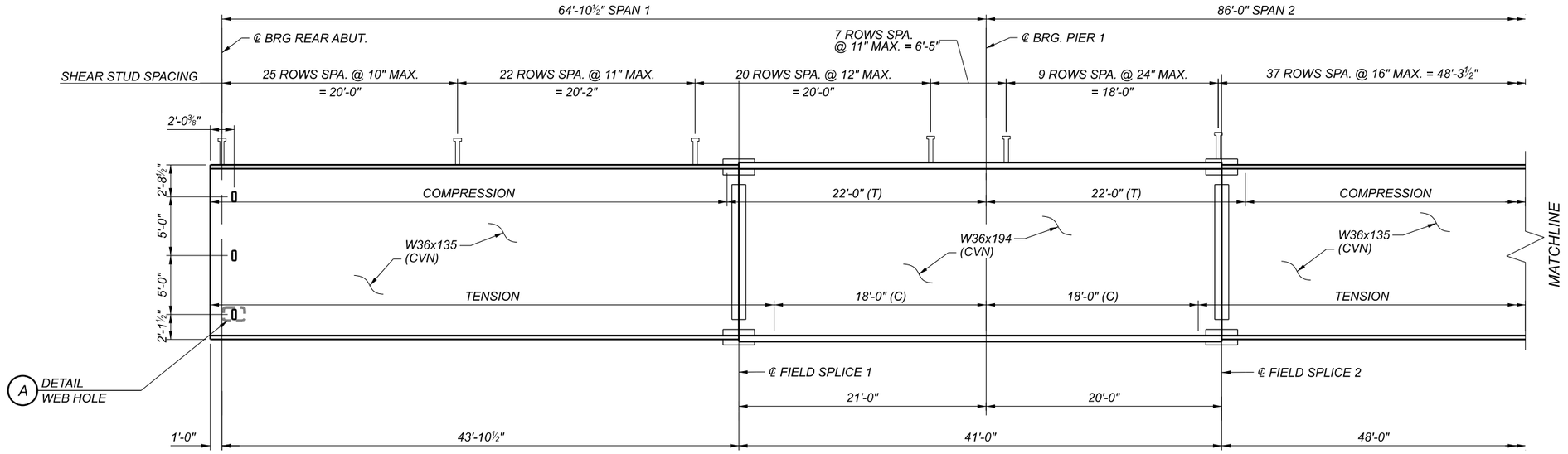

BEAM ELEVATION
(TYP. ALL PROPOSED BEAMS)

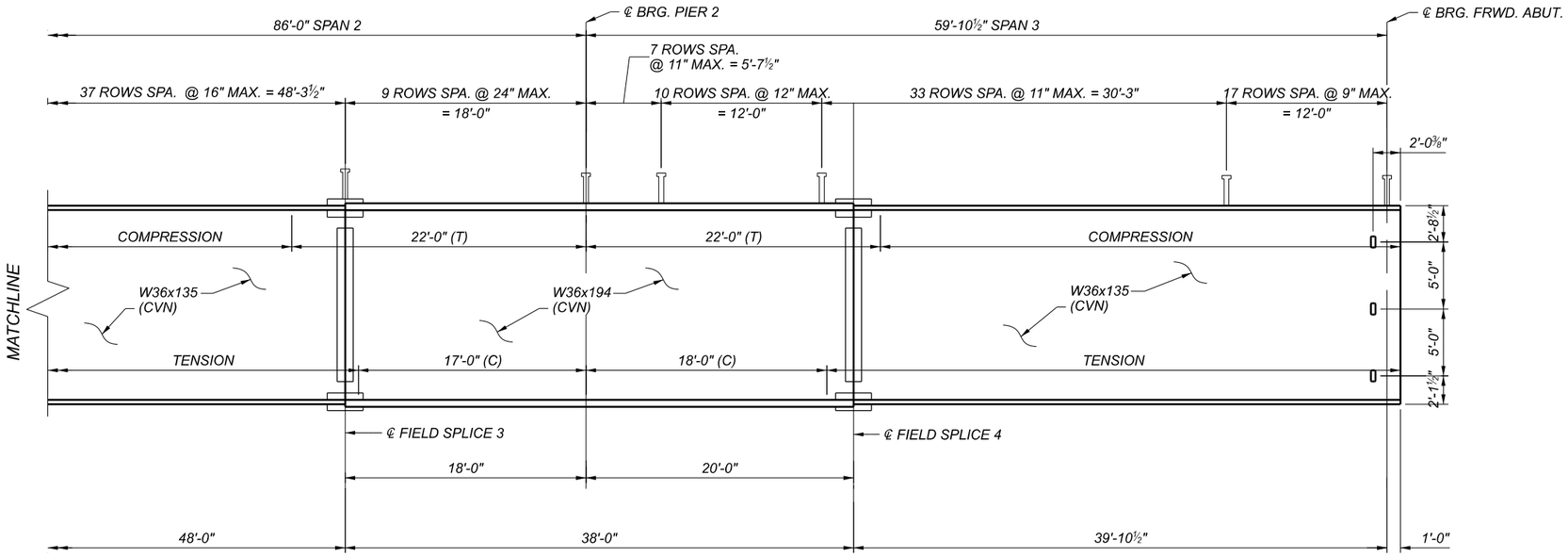

BEAM ELEVATION
(TYP. ALL PROPOSED BEAMS)

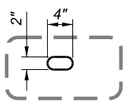

DETAIL A
TYP WEB HOLE

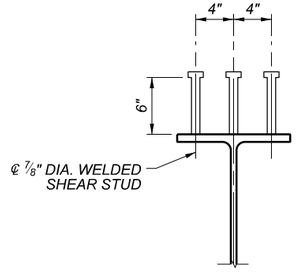

SHEAR STUD DETAIL

NOTES:

1. SEE SHEET 20/36 FOR FRAMING PLAN.
2. SEE SHEET 23/36 FOR SPLICE DETAILS.
3. SEE SHEET 25/36 FOR TRANSVERSE SECTION.
4. ALL STEEL SHALL BE ASTM A709 GRADE 50, AND SHALL HAVE A THREE COAT PAINT SYSTEM APPLIED PER CMS 514. WHERE A SHAPE OR PLATE IS DESIGNATED (CVN) FURNISH MATERIAL THAT MEETS THE MINIMUM NOTCH TOUGHNESS REQUIREMENTS AS SPECIFIED IN CMS 711.01.
5. WELD ATTACHMENT OF SUPPORTS FOR CONCRETE DECK FINISHING MACHINE TO AREAS OF THE FASCIA STRINGER FLANGES DESIGNATED "COMPRESSION" OR "C". DO NOT WELD ATTACHMENTS TO AREAS DESIGNATED "TENSION" OR "T". FILLET WELDS TO COMPRESSION FLANGES SHALL BE AT LEAST 1" FROM EDGE OF FLANGE, BE NO MORE THAN 2" LONG, AND AT LEAST 5/16" THICK.

BEAM ELEVATION
BRIDGE NO. SUM-77-3227R
IR-77 OVER BRECKSVILLE RD.

SFN 7704747

DESIGN AGENCY
Gannett Fleming
ENGINEERS AND ARCHITECTS, P.C.
2590 Corporate Exchange Drive Suite 230 Columbus, OH 43231

DESIGNER	CHECKER
SAT	CTM

REVIEWER: MTO 2/22

PROJECT ID: 104983

SUBSET	TOTAL
21	36

SHEET	TOTAL
282	297

SUM-77-32.27 PENTABLE SUBSET: 5 SUBMITTAL: Stage 3 PLOT DRIVER: OHDOT_PDF_Levels.pltcfg PENTABLE: 104983_OHDOT_Pen.tbl

MODEL: Sheet PAPERSIZE: 17x11 (in.) DATE: 2/24/2022 TIME: 7:24:18 PM USER: edues
pw:\\gfnet-pw.bentley.com:gfnet-pw-01\Documents\Projects\674901\104983\3401-Engineering-GF\Structures\3227R-SFN_7704747\Sheets\149 ss002

FILE: ...\Sheets\149 ss002

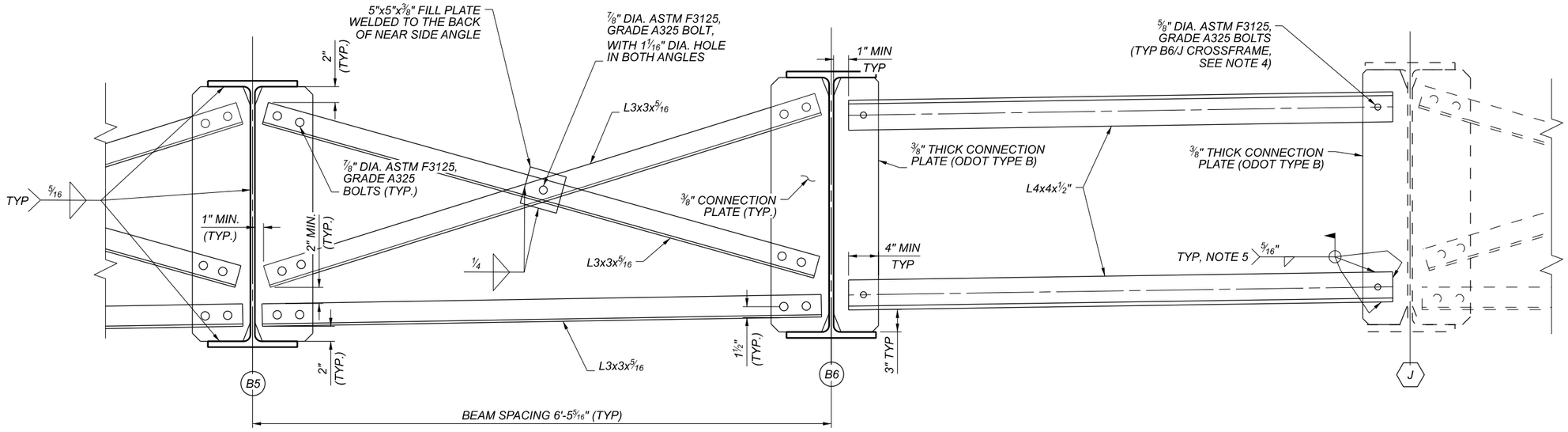

INTERMEDIATE CROSSFRAME DETAILS

DIAPHRAGMS BETWEEN B4/B5 ARE THE SAME AS B5/B6

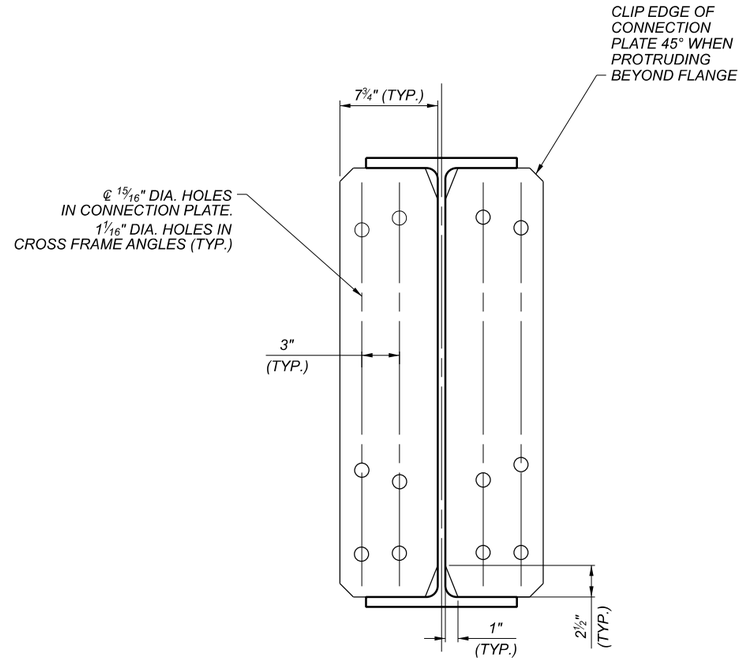

B5 CONNECTION PLATE DETAILS

OTHERS SIMILAR

NOTES:

1. SEE SHEET 20/36 FOR FRAMING PLAN DETAILS.
2. FOR ADDITIONAL CROSSFRAME AND CONNECTION PLATE DETAILS, REFER TO ODOT STD. DWG. GSD-1-19.
3. TERMINATE WELDS 1/4" FROM THE END OF PLATE TO BEAM INTERFACE.
4. ALL BOLT HOLES TO BE 11/16" DIA. IN CONNECTION PLATES AND 13/16" DIA. IN CROSSFRAME ANGLES.
5. IN BAY B6/J, DO NOT WELD ANGLES TO CONNECTION PLATE UNTIL DECK POUR IS COMPLETE.

BEAM CROSSFRAME DETAILS
BRIDGE NO. SUM-77-3227R
IR-77 OVER BRECKSVILLE RD.

SFN 7704747

DESIGN AGENCY
Gannett Fleming
ENGINEERS AND ARCHITECTS, P.C.
2500 Corporate Exchange Drive Suite 200 Columbus, OH 43231

DESIGNER	CHECKER
SAT	CTM

REVIEWER: MTO 2/22

PROJECT ID: 104983

SUBSET	TOTAL
22	36

SHEET	TOTAL
283	297

SUM-77-32.27 PENTABLE SUBSET: 5 SUBMITTAL: Stage 3 PLOT DRIVER: OHDOT_PDF_Levels.pltcfg PENTABLE: 104983_OHDOT_Pen.tbl

MODEL: Sheet PAPERSIZE: 17x11 (in.) DATE: 2/24/2022 TIME: 7:26:26 PM USER: edues
pw:\\gfnet-pw.bentley.com:gfnet-pw-01\Documents\Projects\67490\104983401-Engineering-GF\Structures\3227R-SFN_7704747\Sheets\150 ss003

FILE: ...\Sheets\150 ss003

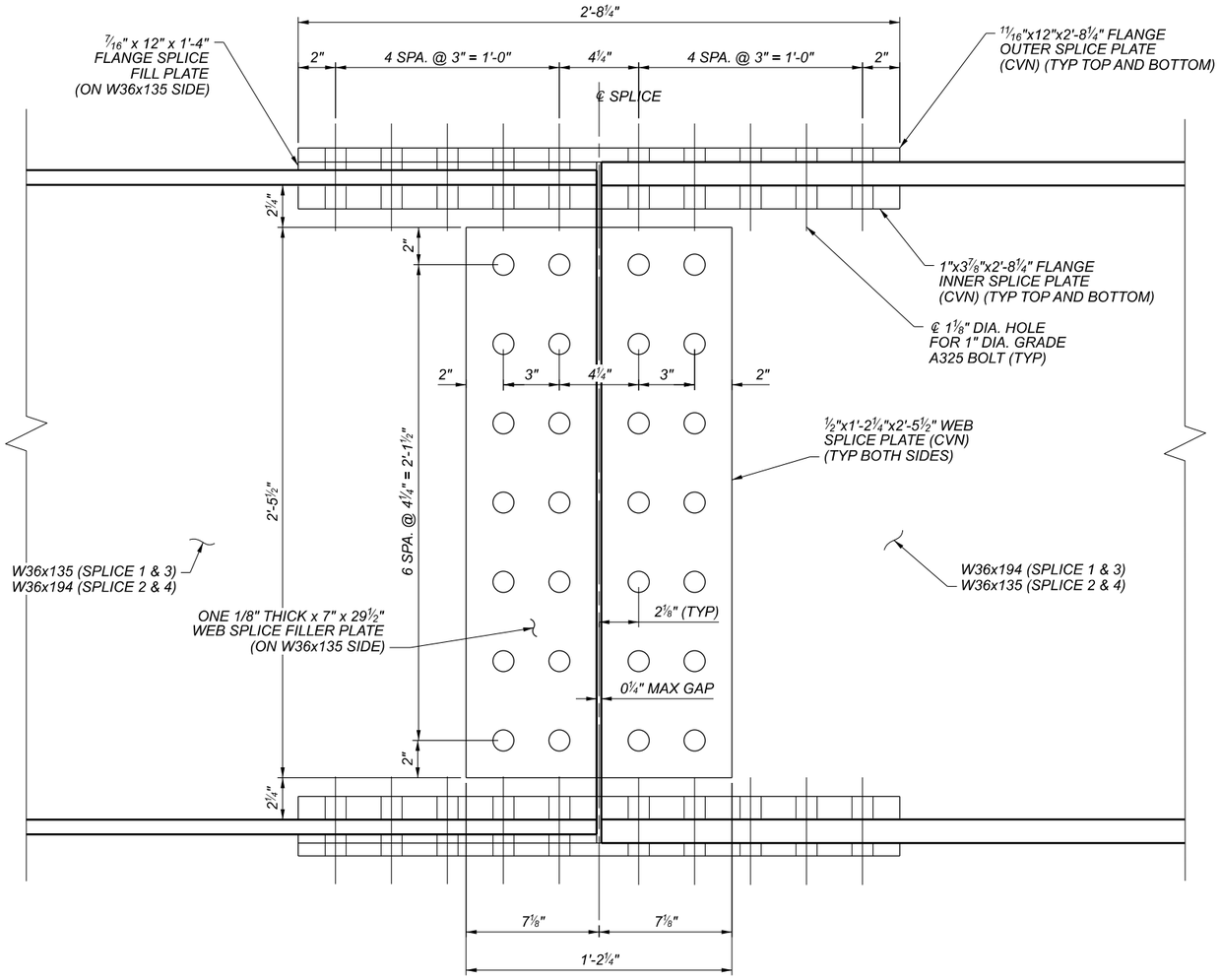

SPLICE ELEVATION
TOP FLANGE DETAILED,
BOTTOM FLANGE IDENTICAL

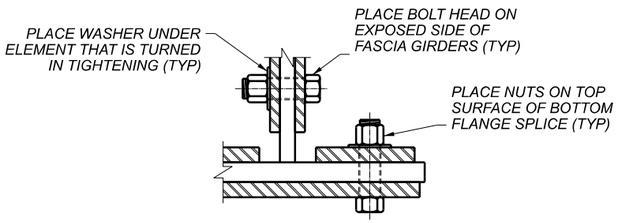

PARTIAL SECTION

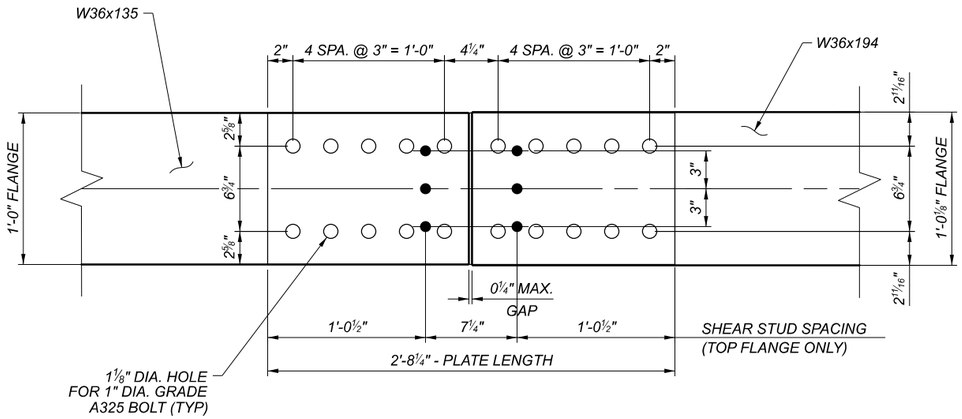

OUTER SPLICE PLATE DETAIL
(TOP FLANGE SHOWN, BOTTOM FLANGE SIMILAR AS NOTED)
(SYMMETRICAL ABOUT ℄ SPLICE & ℄ BEAM)

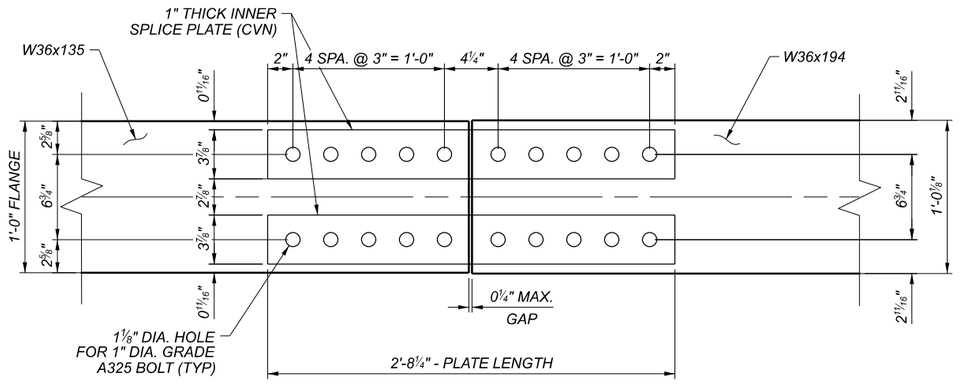

INNER SPLICE PLATE DETAIL
(TOP AND BOTTOM FLANGE)
(SYMMETRICAL ABOUT ℄ SPLICE & ℄ BEAM)

NOTES:
1. CVN: WHERE A SHAPE OR PLATE IS DESIGNATED (CVN), FURNISH MATERIAL THAT MEETS THE MINIMUM NOTCH TOUGHNESS REQUIREMENTS AS SPECIFIED IN C&MS 711.01.
2. HIGH STRENGTH BOLTS SHALL BE 1" DIAMETER ASTM F3125, GRADE A325.
3. FOR FIELD SPLICE LOCATIONS, SEE FRAMING PLAN SHEET 20/36 .

SPLICE DETAILS
BRIDGE NO. SUM-77-3227R
IR-77 OVER BRECKSVILLE RD.

SFN 7704747

DESIGN AGENCY
Gannett Fleming
ENGINEERS AND ARCHITECTS, P.C.
2550 Corporate Exchange Drive Suite 220 Columbus, OH 43231

DESIGNER	CHECKER
SAT	CTM

REVIEWER: MTO 2/22

PROJECT ID: 104983

SUBSET	TOTAL
23	36

SHEET	TOTAL
284	297

SUM-77-32.27 PENTABLE SUBSET: 5 SUBMITTAL: Stage 3 PLOT DRIVER: OHDOT_PDF

MODEL: Sheet PAPERSIZE: 17x11 (in.) DATE: 2/24/2022 TIME: 7:28:46 PM USER: edues
pw:\\ghet-pw.bentley.com:ghet-pw-01\Documents\Projects\67490\104983\401-Engineering-GFI\Structures\3227R-SFN_7704747\Sheets\155 ss004

OHDOT_PDF_Levels.pltcfg PENTABLE: 104983_OHDOT_Pen.tbl

FILE: ...\Sheets\155 ss004

CAMBER BLOCKING DIAGRAM TABLE *					
GIRDER NUMBER	DIMENSION				CHORD SLOPE
	A	B	C	D	
BEAM #4	0.00''	14.08''	32.01''	44.10''	1.744%
BEAM #5	0.00''	13.96''	31.74''	43.72''	1.729%
BEAM #6	0.00''	13.85''	31.48''	43.35''	1.714%

** BLOCKING DIMENSIONS ARE FROM THE LEVEL BASELINE TO THE BOTTOM OF THE BOTTOM FLANGE.*

BEAM CAMBER AND DEFLECTIONS

POINT		BEAM #4					BEAM #5					BEAM #6				
		DEFLECTION DUE TO WEIGHT OF STEEL	DEFLECTION DUE TO NON-COMPOSITE DEAD LOAD	DEFLECTION DUE TO COMPOSITE DEAD LOAD	ADJUSTMENT REQUIRED FOR VERTICAL CURVE	**TOTAL CAMBER**	DEFLECTION DUE TO WEIGHT OF STEEL	DEFLECTION DUE TO NON-COMPOSITE DEAD LOAD	DEFLECTION DUE TO COMPOSITE DEAD LOAD	ADJUSTMENT REQUIRED FOR VERTICAL CURVE	**TOTAL CAMBER**	DEFLECTION DUE TO WEIGHT OF STEEL	DEFLECTION DUE TO NON-COMPOSITE DEAD LOAD	DEFLECTION DUE TO COMPOSITE DEAD LOAD	ADJUSTMENT REQUIRED FOR VERTICAL CURVE	**TOTAL CAMBER**
REAR ABUT		0.00''	0.00''	0.00''	0.00''	**0.00''**	0.00''	0.00''	0.00''	0.00''	**0.00''**	0.00''	0.00''	0.00''	0.00''	**0.00''**
SPAN 1	0.25	0.07''	0.30''	0.09''	0.36''	**0.82''**	0.06''	0.30''	0.04''	0.36''	**0.76''**	0.06''	0.32''	0.00''	0.36''	**0.75''**
	0.50	0.08''	0.35''	0.10''	0.63''	**1.17''**	0.07''	0.34''	0.03''	0.63''	**1.08''**	0.07''	0.34''	0.00''	0.63''	**1.04''**
	SPLICE #1	0.05''	0.21''	0.07''	-0.17''	**0.16''**	0.04''	0.20''	0.01''	-0.17''	**0.09''**	0.04''	0.20''	0.01''	-0.17''	**0.09''**
	0.75	0.04''	0.14''	0.05''	-0.12''	**0.11''**	0.03''	0.13''	0.01''	-0.12''	**0.05''**	0.02''	0.12''	-0.01''	-0.12''	**0.01''**
PIER 1		0.00''	0.00''	0.00''	0.00''	**0.00''**	0.00''	0.00''	0.00''	0.00''	**0.00''**	0.00''	0.00''	0.00''	0.00''	**0.00''**
SPAN 2	SPLICE #2	0.08''	0.33''	0.09''	0.20''	**0.69''**	0.08''	0.37''	0.06''	0.20''	**0.71''**	0.08''	0.37''	0.06''	0.20''	**0.71''**
	0.25	0.08''	0.36''	0.10''	1.16''	**1.70''**	0.09''	0.41''	0.06''	1.16''	**1.71''**	0.09''	0.48''	0.02''	1.16''	**1.75''**
	0.50	0.15''	0.68''	0.18''	1.23''	**2.24''**	0.15''	0.73''	0.09''	1.23''	**2.20''**	0.15''	0.81''	0.02''	1.23''	**2.21''**
	0.75	0.10''	0.43''	0.11''	1.16''	**1.79''**	0.09''	0.44''	0.04''	1.16''	**1.73''**	0.09''	0.45''	0.01''	1.16''	**1.71''**
	SPLICE #3	0.08''	0.35''	0.09''	0.19''	**0.71''**	0.07''	0.36''	0.03''	0.19''	**0.65''**	0.07''	0.36''	0.03''	0.18''	**0.65''**
PIER 2		0.00''	0.00''	0.00''	0.00''	**0.00''**	0.00''	0.00''	0.00''	0.00''	**0.00''**	0.00''	0.00''	0.00''	0.00''	**0.00''**
SPAN 3	0.25	0.01''	0.03''	0.03''	-0.14''	**-0.07''**	0.01''	0.05''	0.01''	-0.14''	**-0.05''**	0.02''	0.09''	0.00''	-0.14''	**-0.02''**
	SPLICE #4	0.02''	0.07''	0.04''	-0.20''	**-0.07''**	0.02''	0.10''	0.02''	-0.20''	**-0.05''**	0.02''	0.10''	0.02''	-0.20''	**-0.05''**
	0.50	0.04''	0.15''	0.07''	0.61''	**0.87''**	0.04''	0.20''	0.03''	0.61''	**0.88''**	0.05''	0.26''	0.00''	0.61''	**0.93''**
	0.75	0.04''	0.16''	0.06''	0.34''	**0.60''**	0.04''	0.19''	0.02''	0.34''	**0.59''**	0.05''	0.24''	0.00''	0.34''	**0.62''**
FWD ABUT		0.00''	0.00''	0.00''	0.00''	**0.00''**	0.00''	0.00''	0.00''	0.00''	**0.00''**	0.00''	0.00''	0.00''	0.00''	**0.00''**

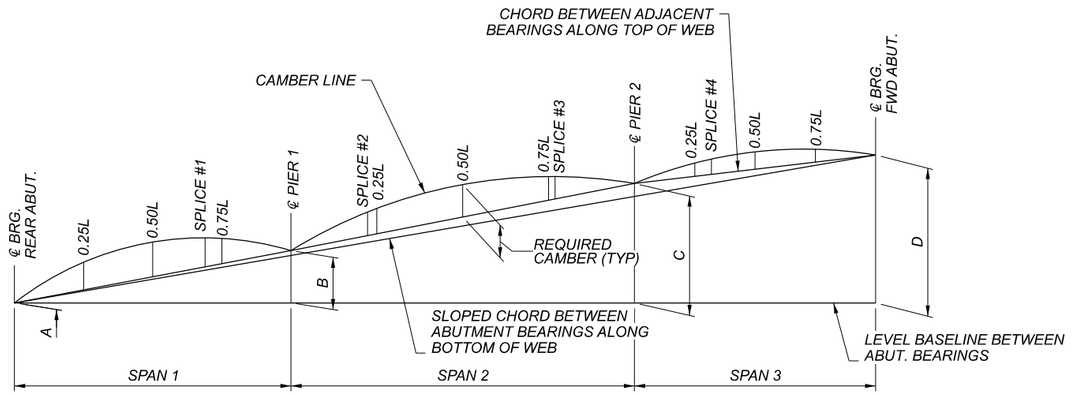

CAMBER AND BLOCKING DIAGRAM
ALONG CENTERLINE BEAM

NOTES:

1. *CAMBER IS MEASURED ALONG BOTTOM OF THE BEAM WEB.*

BEAM CAMBER AND BLOCKING
BRIDGE NO. SUM-77-3227R
IR-77 OVER BRECKSVILLE RD.

SFN 7704747

DESIGN AGENCY
Gannett Fleming
ENGINEERS AND ARCHITECTS, P.C.
250 Civic Center Drive, Suite 220, Columbus, OH 43215

DESIGNER	CHECKER
SAT	CTM

REVIEWER: MTO 2/22

PROJECT ID: 104983

SUBSET	TOTAL
24	36

SHEET	TOTAL
285	297

SUM-77-32.27

PENTABLE SUBSET: [5] SUBMITTAL: Stage 3 PLOT DRIVER: OHDOT_PDF_Levels.pltcfg PENTABLE: 104983_OHDOT_Pen.tbl
MODEL: Sheet PAPERSIZE: 17x11 (in.) DATE: 2/24/2022 TIME: 7:30:55 PM USER: edues
pw:\\gfnet-pw.bentley.com:gfnet-pw-01\Documents\Projects\674990\104983\401-Engineering-GFiStructures\3227R-SFN_7704747\Sheets\157 ss005

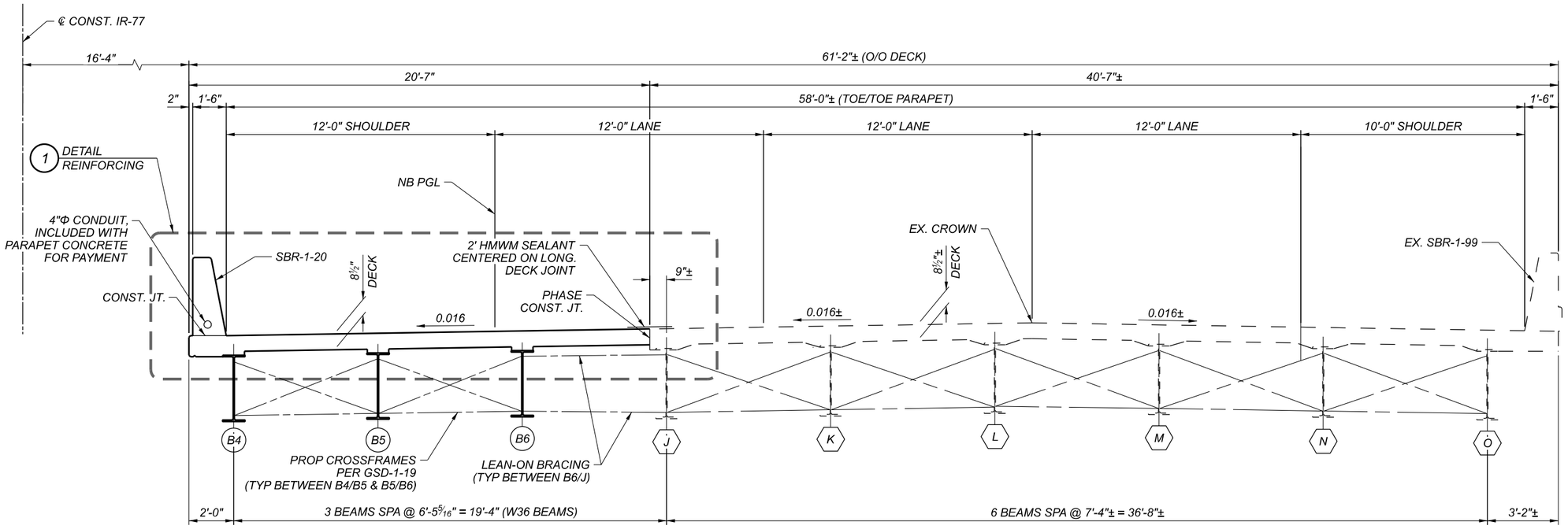

TRANSVERSE SECTION

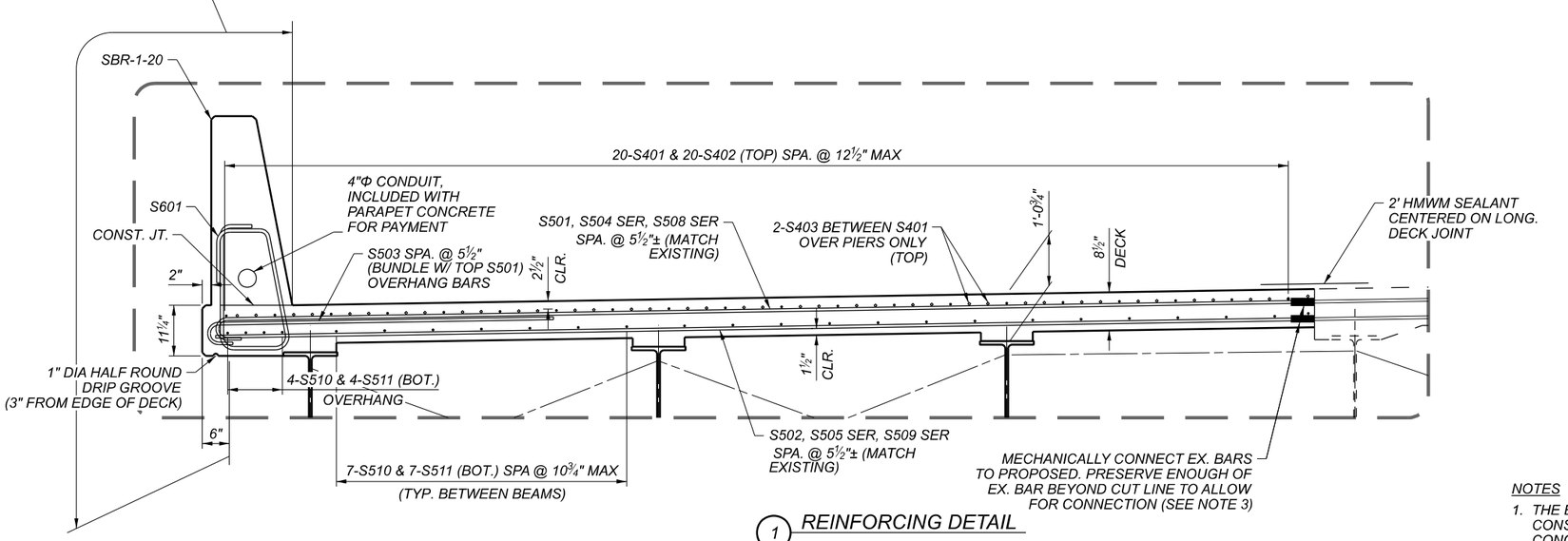

1 REINFORCING DETAIL

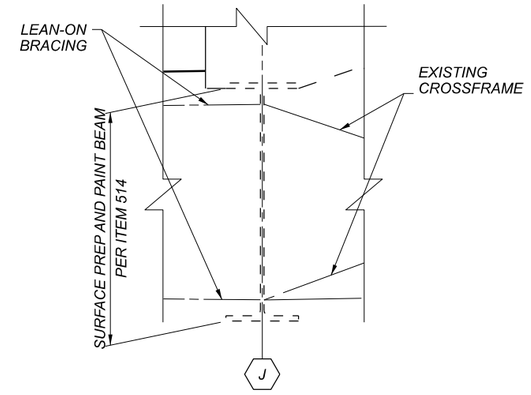

EX BEAM PREPARATION DETAIL

NOTES

1. THE ESTIMATED QUANTITY OF DECK SLAB CONCRETE IS BASED ON THE CONSTANT DECK SLAB THICKNESS, AS SHOWN, PLUS THE QUANTITIY OF CONCRETE THAT FORMS EACH BEAM HAUNCH. THE ESTIMATE ASSUMES A CONSTANT HAUNCH THICKNESS OF 4.25" AND A HAUNCH WIDTH EQUAL TO THE TOP FLANGE WIDTH. DEVIATE FROM THIS HAUNCH THICKNESS AS NECESSARY TO PLACE THE DECK SURFACE AT THE FINISHED GRADE. THE HAUNCH THICKNESS WAS MEASURED AT THE CENTERLINE OF THE BEAM, FROM THE SURFACE OF THE DECK TO THE BOTTOM OF THE TOP FLANGE MINUS THE DECK SLAB THICKNESS. THE AREA OF ALL EMBEDDED STEEL PLATES HAS BEEN DEDUCTED FROM THE HAUNCH QUANTITY IN ACCORDANCE WITH 511.23.
2. FOR PARAPET REINFORCING DETAILS, SEE SHEET 31/36 .
3. CONTRACTOR SHALL SUBMIT MECHANICAL SPLICE CUT SHEET BEFORE DECK REMOVAL BEGINS SO THE LENGTH OF THE EXISTING REBAR PRESERVATION IS KNOWN.

TRANSVERSE SECTION
BRIDGE NO. SUM-77-3227R
IR-77 OVER BRECKSVILLE RD.

SFN 7704747

DESIGN AGENCY
Gannett Fleming
ENGINEERS AND ARCHITECTS, P.C.
2160 Corporate Exchange Drive, Suite 220, Columbus, OH 43231

DESIGNER	CHECKER
SAT	CTM

REVIEWER: MTO 2/22

PROJECT ID: 104983

SUBSET	TOTAL
25	36

SHEET	TOTAL
286	297

SUM-77-32.27 PENTABLE SUBSET: [5] SUBMITTAL: Stage 3 PLOT DRIVER: OHDOT_PDF_Levels.pltcfg PENTABLE: 104983_OHDOT_Pen.tbl

MODEL: Sheet PAPERSIZE: 17x11 (in.) DATE: 2/24/2022 TIME: 7:33:10 PM USER: edues
pw:\\gfnet-pw.bentley.com:gfnet-pw-01\Documents\Projects\674900\104983\401-Engineering-GFiStructures\3227R-SFN_7704747\Sheets\158 st001

FILE: ...\Sheets\158 st001

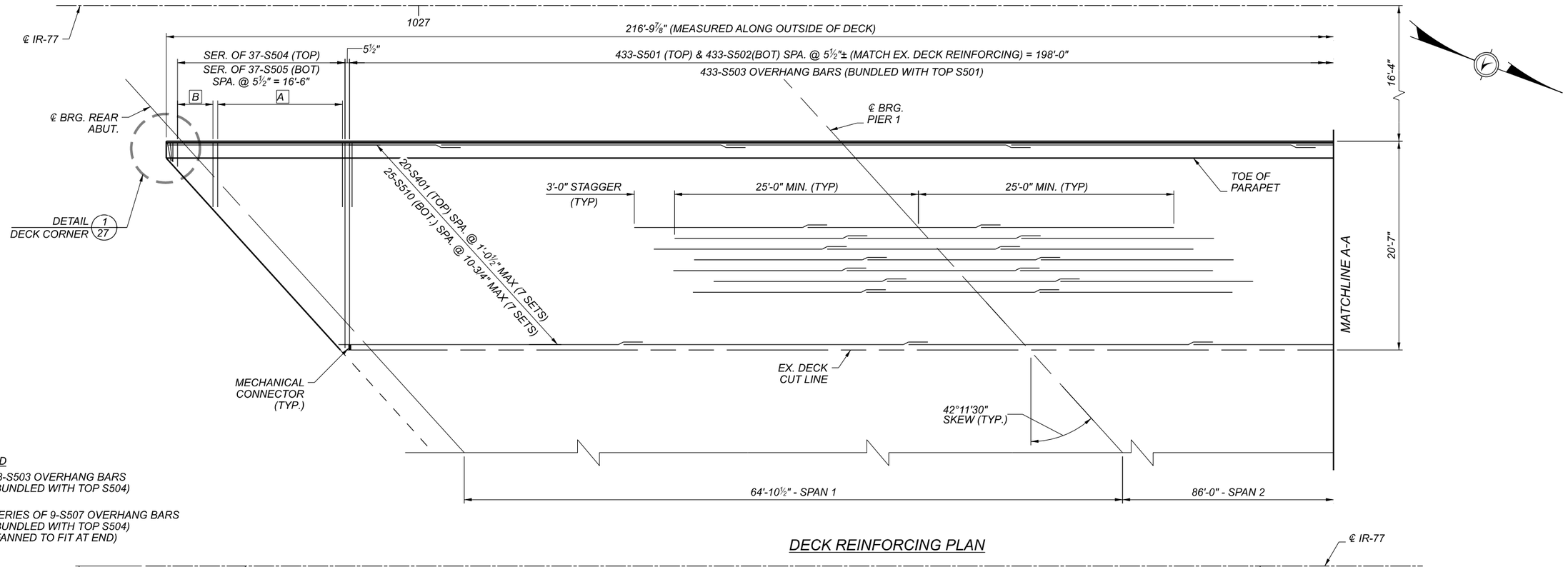

LEGEND

A - 28-S503 OVERHANG BARS (BUNDLED WITH TOP S504)

B - SERIES OF 9-S507 OVERHANG BARS (BUNDLED WITH TOP S504) (FANNED TO FIT AT END)

DECK REINFORCING PLAN

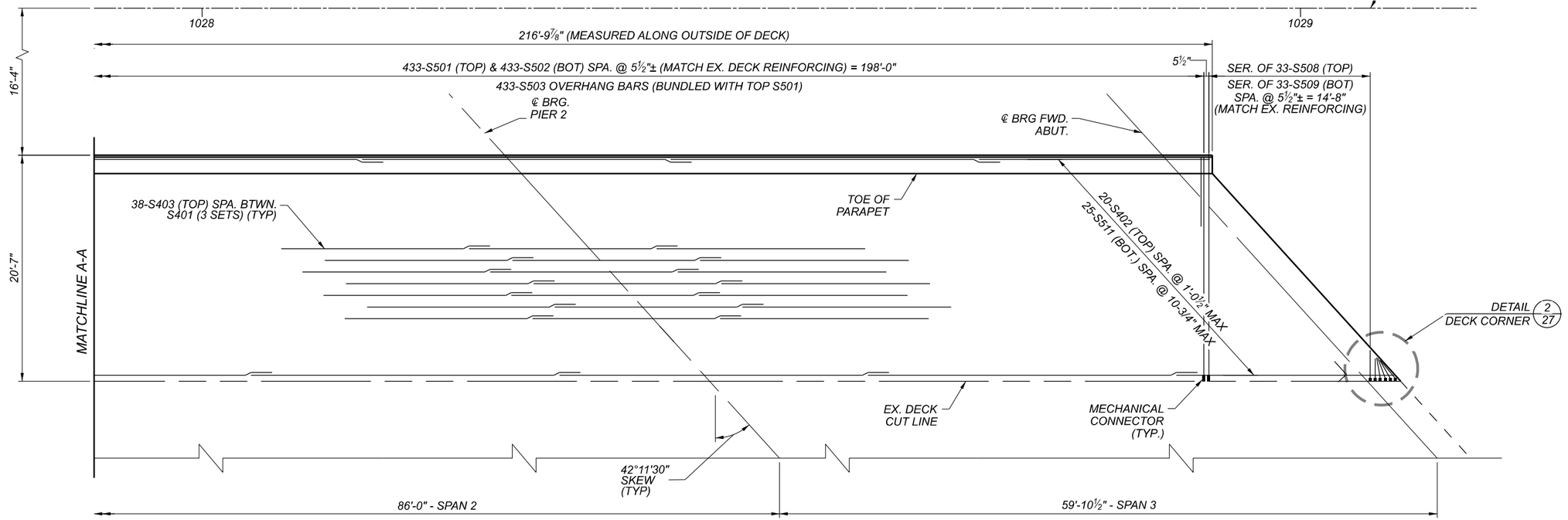

DECK REINFORCING PLAN

DECK REINFORCING PLAN
BRIDGE NO. SUM-77-3227R
IR-77 OVER BRECKSVILLE RD.

SFN 7704747

DESIGN AGENCY
Gannett Fleming
ENGINEERS AND ARCHITECTS, P.C.
2500 Corporate Exchange Drive
Suite 220
Columbus, OH 43231

DESIGNER	CHECKER
SAT	CTM

REVIEWER MTO 2/22

PROJECT ID 104983

SUBSET	TOTAL
26	36

SHEET	TOTAL
287	297

SUM-77-32.27 PENTABLE SUBSET: [5] SUBMITTAL: Stage 3 PLOT DRIVER: OHDOT_PDF_Levels.pltcfg PENTABLE: 104983_OHDOT_Pen.tbl

MODEL: Sheet PAPERSIZE: 17x11 (in.) DATE: 2/24/2022 TIME: 7:35:10 PM USER: edues
pw:\\gfnet-pw.bentley.com:gfnet-pw-01\Documents\Projects\674900\104983\401-Engineering-GF\Structures\3227R-SFN_7704747\Sheets\159 sd001

FILE: ...\Sheets\159 sd001

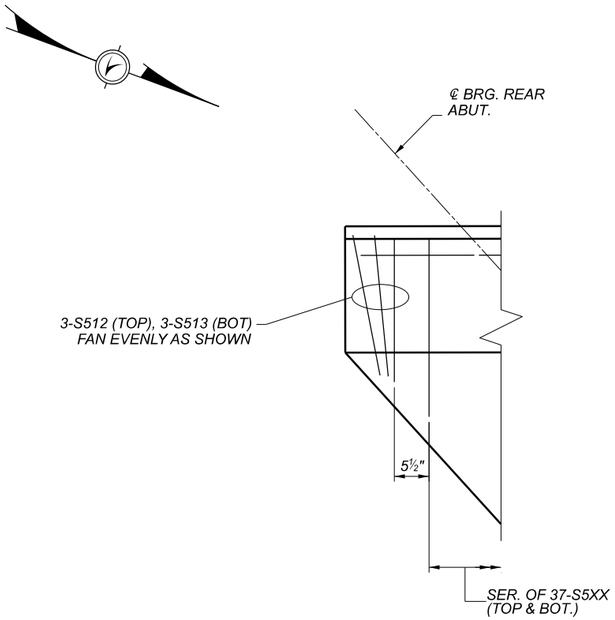

1 DETAIL 26 DECK CORNER

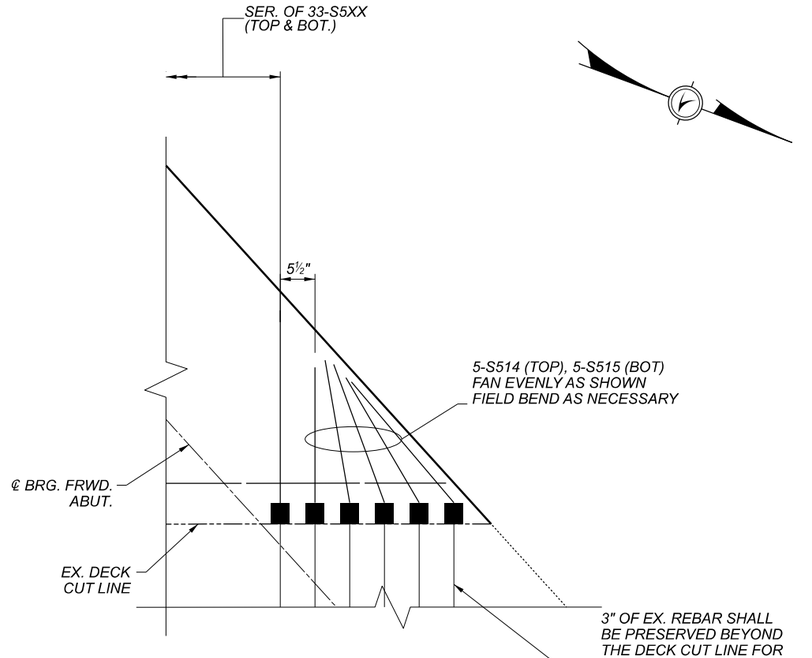

2 DETAIL 26 DECK CORNER

DECK DETAILS
BRIDGE NO. SUM-77-3227R
IR-77 OVER BRECKSVILLE RD.

SFN 7704747

DESIGN AGENCY
Gannett Fleming
ENGINEERS AND ARCHITECTS, P.C.
2500 Corporate Exchange Drive Suite 200 Columbus, OH 43231

DESIGNER	CHECKER
SAT	CTM

REVIEWER MTO 2/22

PROJECT ID 104983

SUBSET	TOTAL
27	36

SHEET	TOTAL
288	297

SUM-77-32.27 PENTABLE SUBSET: 5 SUBMITTAL: Stage 3 PLOT DRIVER: OHDOT_PDF_Levels.pltcfg PENTABLE: 104983_OHDOT_Pen.tbl

MODEL: Sheet PAPERSIZE: 17x11 (in.) DATE: 2/24/2022 TIME: 7:37:05 PM USER: edues
pw:\\gfnet-pw.bentley.com:gfnet-pw-01\Documents\Projects\67490\104983\401-Engineering-GF\Structures\3227R-SFN_7704747\Sheets\160 sd002

FILE: ...\Sheets\160 sd002

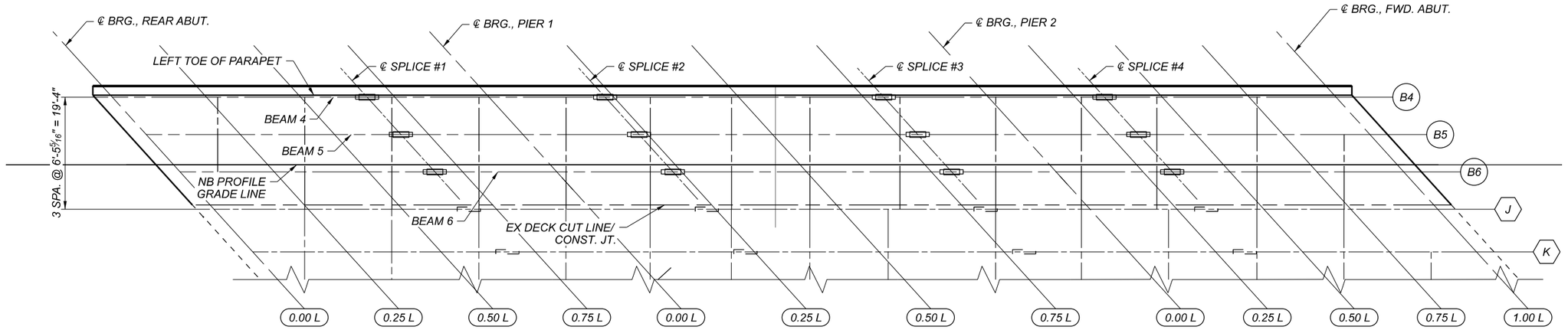

TOP OF HAUNCH, SCREED AND FINAL DECK ELEVATION LINE LOCATION

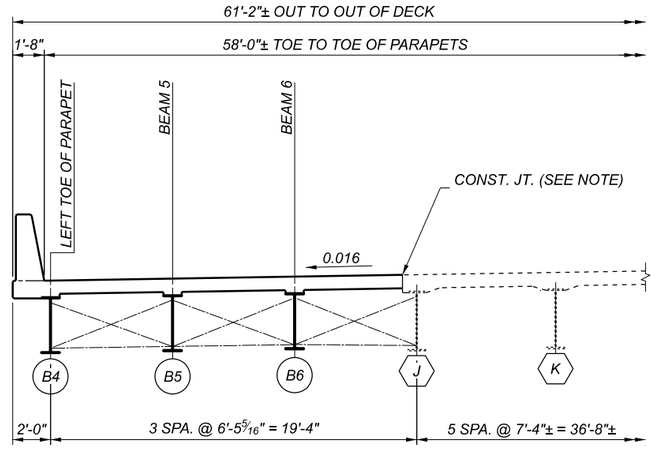

TRANSVERSE SECTION: TOP OF HAUNCH LINES
LOOKING UPSTATION

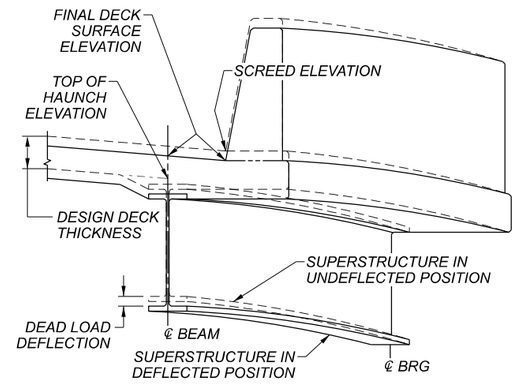

TOP OF HAUNCH, SCREED, AND FINAL DECK ELEVATION

TOP OF HAUNCH ELEVATIONS

SPAN NO.	LOCATION	BEAM #4		BEAM #5		BEAM #6	
		STA.	ELEV.	STA.	ELEV.	STA.	ELEV.
REAR ABUT		1026+78.49	1039.94	1026+84.33	1040.16	1026+90.17	1040.38
SPAN 1	0.25 L	1026+94.71	1040.30	1027+00.55	1040.51	1027+06.39	1040.73
	0.50 L	1027+10.93	1040.62	1027+16.77	1040.83	1027+22.61	1041.05
	SPLICE #1	1027+22.37	1040.82	1027+28.21	1041.03	1027+34.05	1041.25
	0.75 L	1027+27.14	1040.91	1027+32.98	1041.12	1027+38.83	1041.33
PIER 1		1027+43.36	1041.19	1027+49.20	1041.40	1027+55.05	1041.61
SPAN 2	SPLICE #2	1027+63.37	1041.59	1027+69.21	1041.80	1027+75.05	1042.01
	0.25 L	1027+64.86	1041.62	1027+70.70	1041.83	1027+76.55	1042.05
	0.50 L	1027+86.36	1042.03	1027+92.20	1042.24	1027+98.05	1042.45
	0.75 L	1028+07.86	1042.38	1028+13.70	1042.58	1028+19.55	1042.78
	SPLICE #3	1028+11.37	1042.43	1028+17.21	1042.63	1028+23.05	1042.83
PIER 2		1028+29.36	1042.69	1028+35.20	1042.89	1028+41.05	1043.08
SPAN 3	0.25 L	1028+44.33	1042.93	1028+50.17	1043.13	1028+56.02	1043.33
	SPLICE #4	1028+49.37	1043.02	1028+55.21	1043.21	1028+61.05	1043.41
	0.50 L	1028+59.30	1043.18	1028+65.14	1043.38	1028+70.99	1043.58
	0.75 L	1028+74.27	1043.41	1028+80.11	1043.60	1028+85.95	1043.80
FWD ABUT		1028+89.24	1043.62	1028+95.08	1043.81	1029+00.92	1044.00

CONST. JT. NOTE

THE DECK ELEVATIONS (FINISHED, SCREED, TOP OF HAUNCH) ARE CALCULATED FROM THE PGL ELEVATION DOWN THE TYPICAL CROSS-SLOPE. THE CALCULATED ELEVATION AND EXISTING TOP OF DECK MAY DIFFER SLIGHTLY. THE CONSTRUCTION JOINT TOP OF FINISHED DECK ELEVATION IS TO MATCH THAT OF THE EXISTING DECK ELEVATION.

NOTES

1. *TOP OF HAUNCH ELEVATIONS SHOWN REPRESENT THE THEORETICAL LOCATION OF THE BOTTOM OF DECK ABOVE THE BEAM HAUNCH PRIOR TO DEFLECTIONS CAUSED BY DECK PLACEMENT AND OTHER ANTICIPATED DEAD LOADS.*
2. *DEFLECTIONS USED FOR TOP OF HAUNCH ELEVATIONS ARE BASED UPON THE PHASED DECK POUR SHOWN IN THESE PLANS.*
3. *DIMENSIONS IN THE TRANSVERSE SECTION ARE SHOWN NORMAL TO THE CENTERLINE OF CONSTRUCTION OF IR-77.*

TOP OF HAUNCH ELEVATIONS
BRIDGE NO. SUM-77-3227R
IR-77 OVER BRECKSVILLE RD.

SFN 7704747

DESIGN AGENCY
Gannett Fleming
ENGINEERS AND ARCHITECTS, P.C.
2500 Corporate Exchange Drive
Suite 220
Columbus, OH 43231

DESIGNER	CHECKER
SAT	CTM

REVIEWER MTO 2/22

PROJECT ID 104983

SUBSET	TOTAL
28	36

SHEET	TOTAL
289	297

SUM-77-32.27

PENTABLE SUBSET: [5] SUBMITTAL: Stage 3 PLOT DRIVER: OHDOT_PDF_Levels.pltcfg
MODEL: Sheet PAPERSIZE: 17x11 (in.) DATE: 2/24/2022 TIME: 7:39:04 PM USER: edues
pw:\\ghnet-pw.bentley.com:ghnet-pw-01\Documents\Projects\674901\104983\401-Engineering-GF\Structures\3227R-SFN_7704747\Sheets\161a ss006
PENTABLE: 104983_OHDOT_Pen.tbl

SCREED ELEVATIONS							
SPAN NO.	LOCATION	LEFT TOE		PROFILE GRADE LINE		CONST. JT.	
		STA.	ELEV.	STA.	ELEV.	STA.	ELEV.
REAR ABUT		1026+78.18	1040.64	1026+89.06	1041.05	1026+95.33	1041.28
SPAN 1	0.25 L	1026+94.40	1041.00	1027+05.28	1041.40	1027+11.55	1041.60
	0.50 L	1027+10.62	1041.32	1027+21.50	1041.71	1027+27.77	1041.91
	SPLICE #1	1027+22.06	1041.52	1027+32.94	1041.91	1027+39.21	1042.12
	0.75 L	1027+26.84	1041.60	1027+37.72	1042.00	1027+43.99	1042.21
PIER 1		1027+43.06	1041.89	1027+53.94	1042.28	1027+60.21	1042.51
SPAN 2	SPLICE #2	1027+63.06	1042.29	1027+73.94	1042.68	1027+80.21	1042.86
	0.25 L	1027+64.56	1042.32	1027+75.44	1042.71	1027+81.71	1042.89
	0.50 L	1027+86.06	1042.73	1027+96.94	1043.11	1028+03.21	1043.26
	0.75 L	1028+07.56	1043.07	1028+18.44	1043.44	1028+24.71	1043.62
	SPLICE #3	1028+11.06	1043.13	1028+21.94	1043.49	1028+28.21	1043.67
PIER 2		1028+29.06	1043.39	1028+39.94	1043.75	1028+46.21	1043.96
SPAN 3	0.25 L	1028+44.03	1043.63	1028+54.91	1044.00	1028+61.18	1044.20
	SPLICE #4	1028+49.06	1043.72	1028+59.94	1044.08	1028+66.21	1044.28
	0.50 L	1028+59.00	1043.88	1028+69.88	1044.24	1028+76.15	1044.43
	0.75 L	1028+73.96	1044.11	1028+84.84	1044.47	1028+91.11	1044.65
FWD ABUT		1028+88.93	1044.32	1028+99.81	1044.67	1029+06.08	1044.87

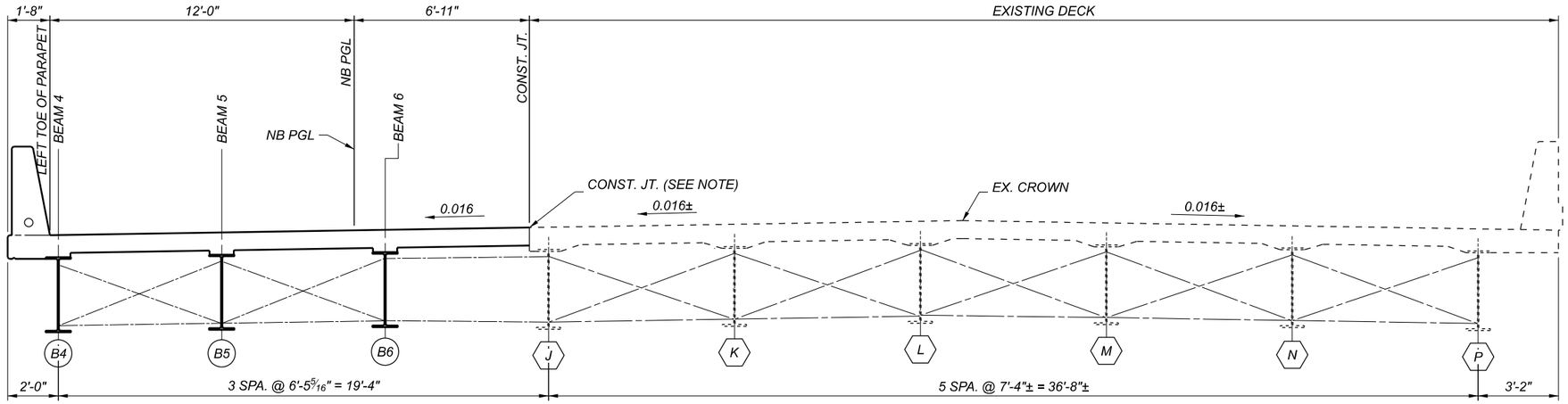

SCREED LINE LOCATIONS
LOOKING UPSTATION

CONST. JT. NOTE

THE DECK ELEVATIONS (FINISHED, SCREED, TOP OF HAUNCH) ARE CALCULATED FROM THE PGL ELEVATION DOWN THE TYPICAL CROSS-SLOPE. THE CALCULATED ELEVATION AND EXISTING TOP OF DECK MAY DIFFER SLIGHTLY. THE CONSTRUCTION JOINT TOP OF FINISHED DECK ELEVATION IS TO MATCH THAT OF THE EXISTING DECK ELEVATION.

NOTE:

1. SCREED ELEVATIONS SHOWN ARE FOR THE DECK SLAB SURFACE PRIOR TO CONCRETE PLACEMENT. ALLOWANCE HAS BEEN MADE FOR ANTICIPATED, CALCULATED DEAD LOAD DEFLECTIONS.

SCREED ELEVATIONS
BRIDGE NO. SUM-77-3227R
IR-77 OVER BRECKSVILLE RD.

SFN 7704747

DESIGN AGENCY
Gannett Fleming
ENGINEERS AND ARCHITECTS, P.C.
2500 Corporate Exchange Drive
Suite 200
Columbus, OH 43231

DESIGNER	CHECKER
SAT	CTM

REVIEWER
MTO 2/22

PROJECT ID 104983

SUBSET	TOTAL
29	36

SHEET	TOTAL
290	297

SUM-77-32.27 PENTABLE SUBSET: 5 SUBMITTAL: Stage 3 PLOT DRIVER: OHDOT_PDF_Levels.pltcfg PENTABLE: 104983_OHDOT_Pen.tbl

MODEL: Sheet PAPERSIZE: 17x11 (in.) DATE: 2/24/2022 TIME: 7:41:10 PM USER: edues
pw:\\gfnet-pw.bentley.com:gfnet-pw-01\Documents\Projects\67490\104983401-Engineering-GF\Structures\3227R-SFN_7704747\Sheets\161b ss007

FILE: ...\Sheets\161b ss007

FINAL DECK SURFACE ELEVATIONS													
SPAN	LOCATION	LEFT TOE		BEAM #4		BEAM #5		PROFILE GRADE LINE		BEAM #6		CONST. JT.	
		STA.	DECK ELEV.	STA.	DECK ELEV.	STA.	DECK ELEV.	STA.	DECK ELEV.	STA.	DECK ELEV.	STA.	DECK ELEV.
REAR ABUT		1026+78.18	1040.64	1026+78.49	1040.65	1026+84.33	1040.87	1026+89.06	1041.05	1026+90.17	1041.09	1026+95.33	1041.28
SPAN 1	0.25 L	1026+94.40	1040.96	1026+94.71	1040.97	1027+00.55	1041.19	1027+05.28	1041.37	1027+06.39	1041.41	1027+11.55	1041.60
	0.50 L	1027+10.62	1041.28	1027+10.93	1041.29	1027+16.77	1041.51	1027+21.50	1041.68	1027+22.61	1041.72	1027+27.77	1041.91
	SPLICE #1	1027+22.06	1041.50	1027+22.37	1041.51	1027+28.21	1041.72	1027+32.94	1041.89	1027+34.05	1041.94	1027+39.21	1042.12
	0.75 L	1027+26.84	1041.59	1027+27.14	1041.60	1027+32.98	1041.81	1027+37.72	1041.98	1027+38.83	1042.02	1027+43.99	1042.21
PIER 1		1027+43.06	1041.89	1027+43.36	1041.90	1027+49.20	1042.11	1027+53.94	1042.28	1027+55.05	1042.32	1027+60.21	1042.51
SPAN 2	SPLICE #2	1027+63.06	1042.26	1027+63.37	1042.27	1027+69.21	1042.47	1027+73.94	1042.64	1027+75.05	1042.68	1027+80.21	1042.86
	0.25 L	1027+64.56	1042.28	1027+64.86	1042.29	1027+70.70	1042.50	1027+75.44	1042.67	1027+76.55	1042.71	1027+81.71	1042.89
	0.50 L	1027+86.06	1042.66	1027+86.36	1042.67	1027+92.20	1042.88	1027+96.94	1043.04	1027+98.05	1043.08	1028+03.21	1043.26
	0.75 L	1028+07.56	1043.03	1028+07.86	1043.04	1028+13.70	1043.24	1028+18.44	1043.40	1028+19.55	1043.44	1028+24.71	1043.62
	SPLICE #3	1028+11.06	1043.09	1028+11.37	1043.10	1028+17.21	1043.30	1028+21.94	1043.46	1028+23.05	1043.50	1028+28.21	1043.67
PIER 2		1028+29.06	1043.39	1028+29.36	1043.40	1028+35.20	1043.59	1028+39.94	1043.75	1028+41.05	1043.79	1028+46.21	1043.96
SPAN 3	0.25 L	1028+44.03	1043.63	1028+44.33	1043.64	1028+50.17	1043.83	1028+54.91	1043.99	1028+56.02	1044.03	1028+61.18	1044.20
	SPLICE #4	1028+49.06	1043.71	1028+49.37	1043.72	1028+55.21	1043.91	1028+59.94	1044.07	1028+61.05	1044.11	1028+66.21	1044.28
	0.50 L	1028+59.00	1043.86	1028+59.30	1043.87	1028+65.14	1044.07	1028+69.88	1044.22	1028+70.99	1044.26	1028+76.15	1044.43
	0.75 L	1028+73.96	1044.09	1028+74.27	1044.10	1028+80.11	1044.29	1028+84.84	1044.45	1028+85.95	1044.48	1028+91.11	1044.65
FWD ABUT		1028+88.93	1044.32	1028+89.24	1044.33	1028+95.08	1044.52	1028+99.81	1044.67	1029+00.92	1044.70	1029+06.08	1044.87

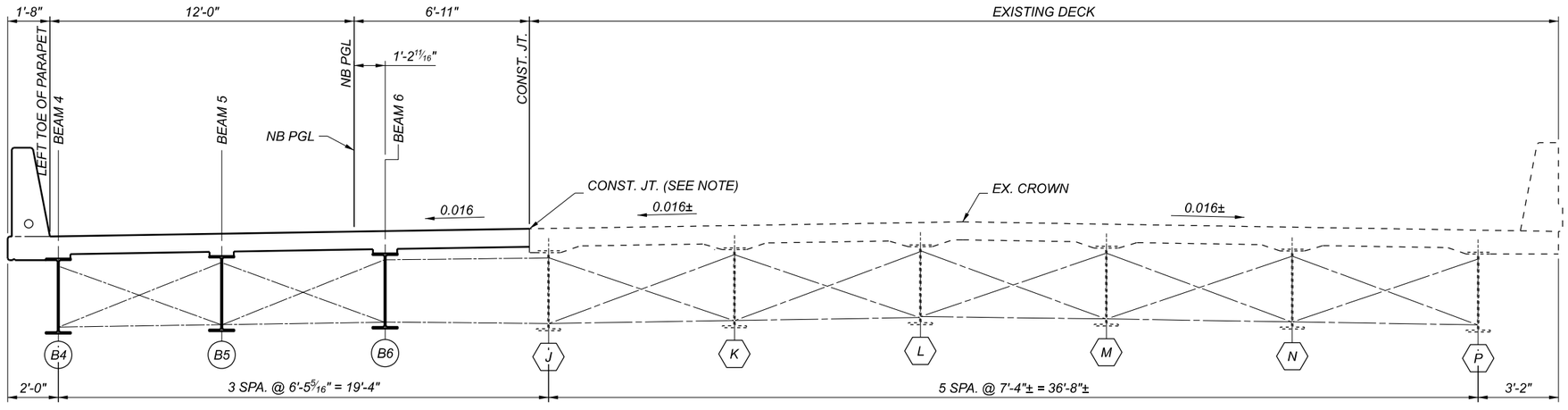

SUPERSTRUCTURE SECTION: FINAL DECK SURFACE LOCATIONS

LOOKING UPSTATION

CONST. JT. NOTE

THE DECK ELEVATIONS (FINISHED, SCREED, TOP OF HAUNCH) ARE CALCULATED FROM THE PGL ELEVATION DOWN THE TYPICAL CROSS-SLOPE. THE CALCULATED ELEVATION AND EXISTING TOP OF DECK MAY DIFFER SLIGHTLY. THE CONSTRUCTION JOINT TOP OF FINISHED DECK ELEVATION IS TO MATCH THAT OF THE EXISTING DECK ELEVATION.

NOTES

1. *FINAL DECK SURFACE ELEVATIONS SHOWN REPRESENT THE DECK SURFACE LOCATION AFTER ALL ANTICIPATED DEAD LOAD DEFLECTIONS HAVE OCCURED.*

FINAL DECK ELEVATIONS
BRIDGE NO. SUM-77-3227R
IR-77 OVER BRECKSVILLE RD.

SFN 7704747

DESIGN AGENCY
Gannett Fleming
ENGINEERS AND ARCHITECTS, P.C.
2500 Corporate Exchange Drive
Suite 200
Columbus, OH 43231

DESIGNER	CHECKER
SAT	CTM

REVIEWER MTO 2/22

PROJECT ID 104983

SUBSET	TOTAL
30	36

SHEET	TOTAL
291	297

SUM-77-32.27 PENTABLE SUBSET: 5 SUBMITTAL: Stage 3 PLOT DRIVER: OHDOT_PDF_Levels.pltcfg PENTABLE: 104983_OHDOT_Pen.tbl

MODEL: Sheet PAPERSIZE: 17x11 (in.) DATE: 2/24/2022 TIME: 7:43:09 PM USER: edues
pw:\\gfnet-pw.bentley.com:gfnet-pw-01\Documents\Projects\67490\104983401-Engineering-GF\Structures\3227R-SFN_7704747\Sheets\161c ss008

FILE: ...\Sheets\161c ss008

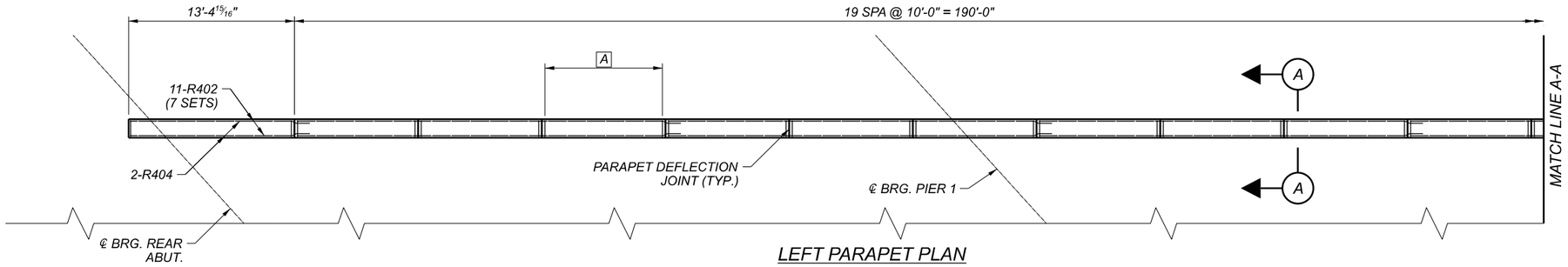

LEFT PARAPET PLAN

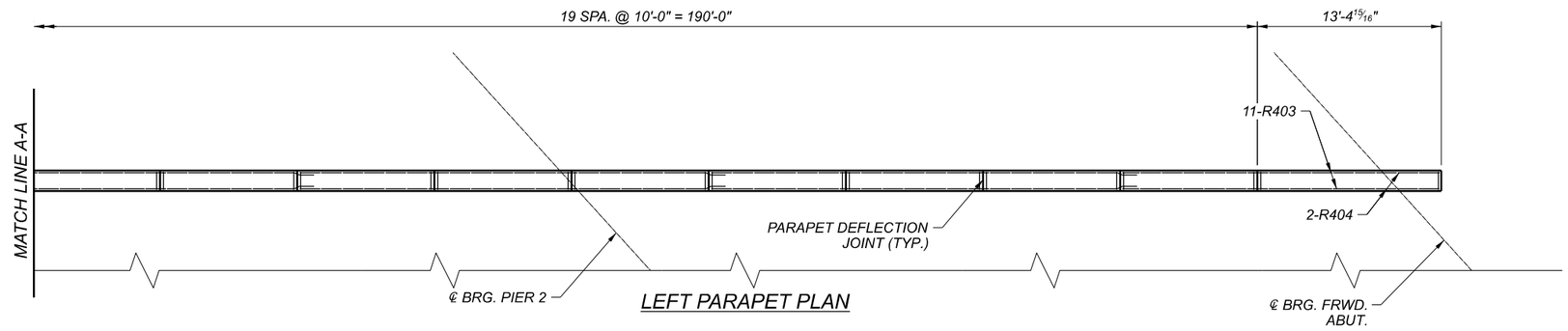

LEFT PARAPET PLAN

LEGEND

A - 11-R601, 11-R602 @ 10 EQ. SPA. (1'-0" MAX.) & 4-R401 (TYP. FOR 10'-0" PANELS)

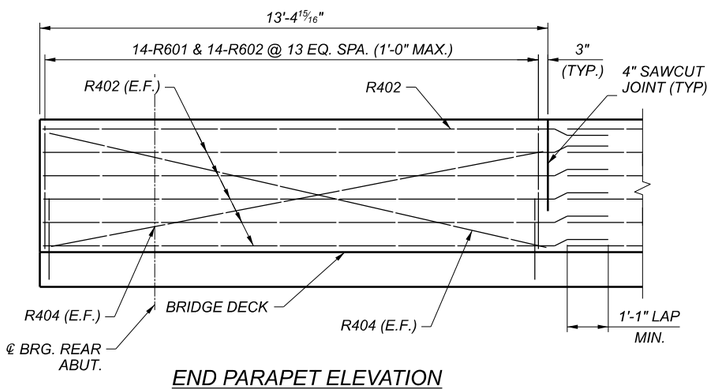

END PARAPET ELEVATION

REAR END PANEL SHOWN, FORWARD PANEL SIMILAR

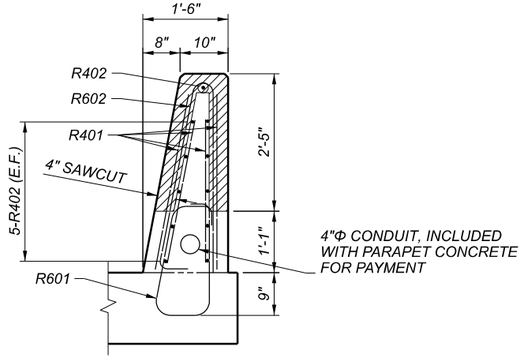

A SECTION
PARAPET REINFORCING

NOTES

1. FOR ADDITIONAL PARAPET DETAILS, REFER TO STANDARD BRIDGE DRAWING SBR-1-20.

LEFT PARAPET DETAILS
BRIDGE NO. SUM-77-3227R
IR-77 OVER BRECKSVILLE RD.

SFN 7704747

DESIGN AGENCY
Gannett Fleming
ENGINEERS AND ARCHITECTS, P.C.
2500 Corporate Exchange Drive
Suite 200
Columbus, OH 43231

DESIGNER	CHECKER
SAT	CTM

REVIEWER MTO 2/22

PROJECT ID 104983

SUBSET	TOTAL
31	36

SHEET	TOTAL
255	297

SUM-77-32.27 PENTABLE SUBSET: 5 SUBMITTAL: Stage 3 PLOT DRIVER: OHDOT_PDF_Levels.pltcfg PENTABLE: 104983_OHDOT_Pen.tbl
MODEL: Sheet PAPERSIZE: 17x11 (in.) DATE: 2/24/2022 TIME: 7:45:14 PM USER: edues
pw:\\gfnet-pw.bentley.com:gfnet-pw-01\Documents\Projects\67490\104983401-Engineering-GF\Structures\3227R-SFN_7704747\Sheets\163 sa001

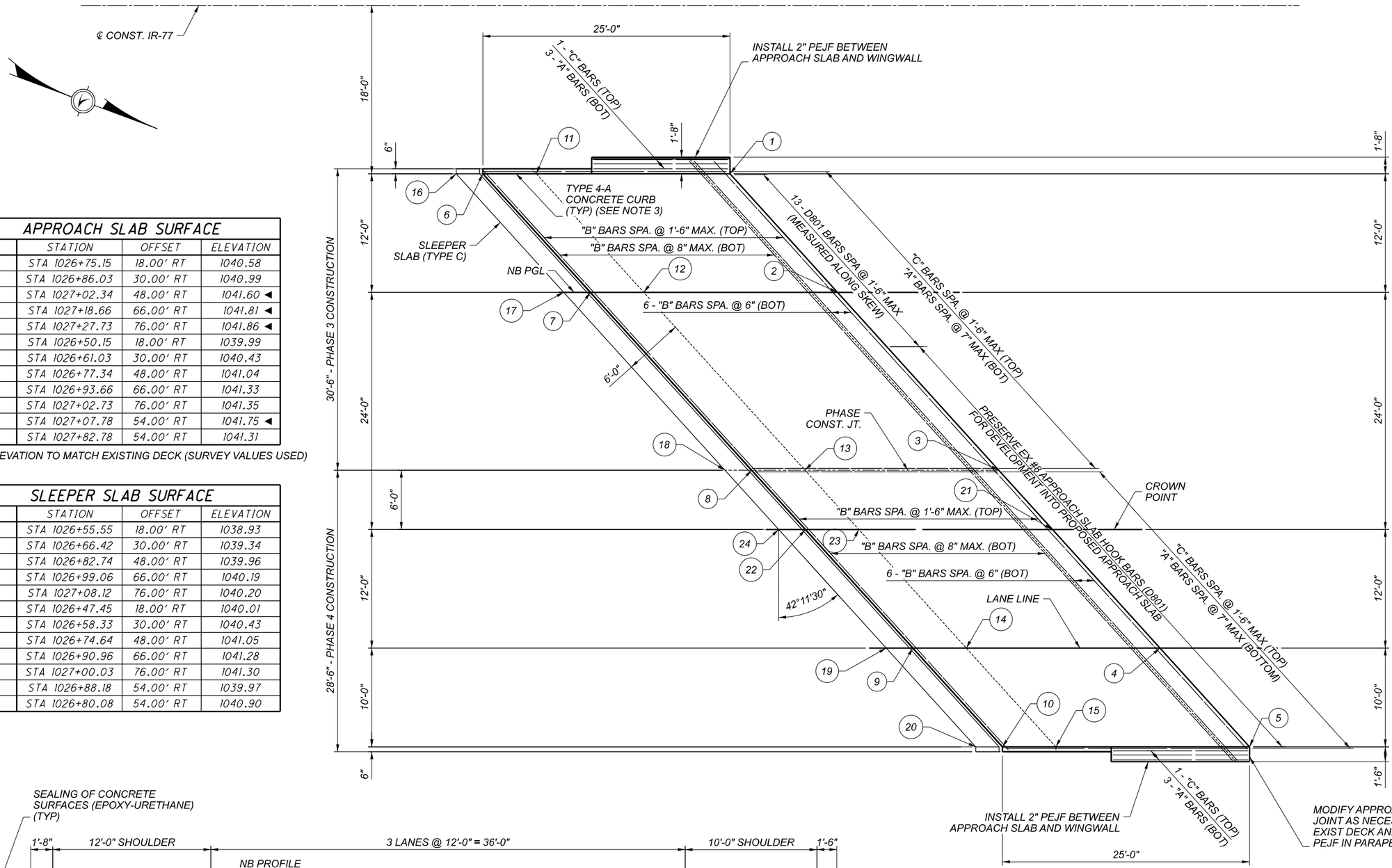

REAR APPROACH SLAB PLAN

APPROACH SLAB SURFACE			
	STATION	OFFSET	ELEVATION
1	STA 1026+75.15	18.00′ RT	1040.58
2	STA 1026+86.03	30.00′ RT	1040.99
3	STA 1027+02.34	48.00′ RT	1041.60 ◄
4	STA 1027+18.66	66.00′ RT	1041.81 ◄
5	STA 1027+27.73	76.00′ RT	1041.86 ◄
6	STA 1026+50.15	18.00′ RT	1039.99
7	STA 1026+61.03	30.00′ RT	1040.43
8	STA 1026+77.34	48.00′ RT	1041.04
9	STA 1026+93.66	66.00′ RT	1041.33
10	STA 1027+02.73	76.00′ RT	1041.35
21	STA 1027+07.78	54.00′ RT	1041.75 ◄
22	STA 1027+82.78	54.00′ RT	1041.31

◄ = ELEVATION TO MATCH EXISTING DECK (SURVEY VALUES USED)

SLEEPER SLAB SURFACE			
	STATION	OFFSET	ELEVATION
11	STA 1026+55.55	18.00′ RT	1038.93
12	STA 1026+66.42	30.00′ RT	1039.34
13	STA 1026+82.74	48.00′ RT	1039.96
14	STA 1026+99.06	66.00′ RT	1040.19
15	STA 1027+08.12	76.00′ RT	1040.20
16	STA 1026+47.45	18.00′ RT	1040.01
17	STA 1026+58.33	30.00′ RT	1040.43
18	STA 1026+74.64	48.00′ RT	1041.05
19	STA 1026+90.96	66.00′ RT	1041.28
20	STA 1027+00.03	76.00′ RT	1041.30
23	STA 1026+88.18	54.00′ RT	1039.97
24	STA 1026+80.08	54.00′ RT	1040.90

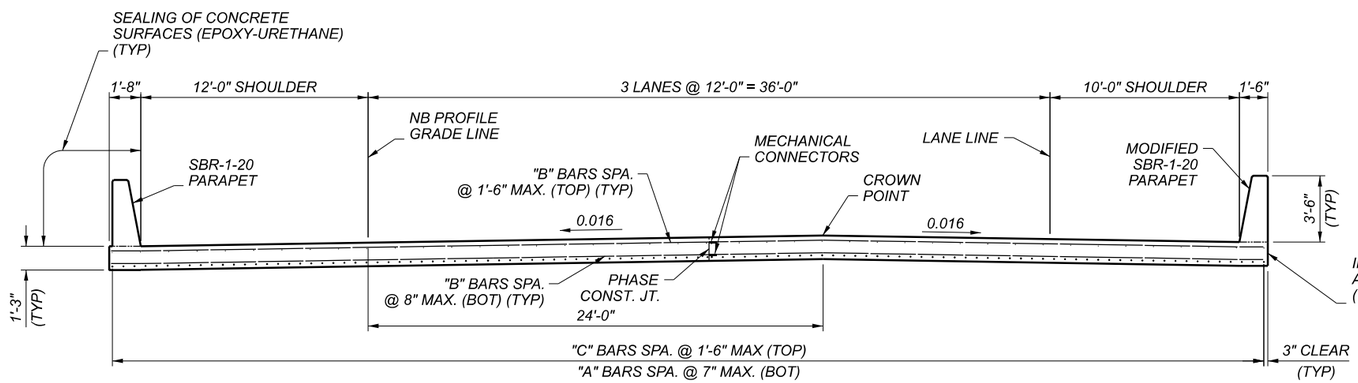

APPROACH SLAB TYPICAL SECTION

LOOKING UPSTATION

NOTES:

1. FOR ADDITIONAL PARAPET TRANSITION DETAILS & REINFORCING SEE SHEET 34/36 .
2. FOR ADDITIONAL PARAPET DETAILS REFER TO STD. DWG. SBR-1-20.
3. FOR ADDITIONAL TYPE 4-A CONCRETE CURB DETAILS, SEE STD. CONST. DWG. BP-5.1.
4. FOR SLEEPER SLAB DETAILS, REFER TO STD. DWG. AS-2-15.
5. FOR EXISTING APPROACH SLAB REMOVAL DETAILS, SEE SHEET 9/36 .

REAR APPROACH SLAB DETAILS
BRIDGE NO. SUM-77-3227R
IR-77 OVER BRECKSVILLE RD.

SFN 7704747

DESIGN AGENCY
Gannett Fleming
ENGINEERS AND ARCHITECTS, P.C.
2500 Corporate Exchange Drive Suite 220 Columbus, OH 43231

DESIGNER	CHECKER
SAT	CTM

REVIEWER MTO 2/22

PROJECT ID 104983

SUBSET	TOTAL
32	36

SHEET	TOTAL
293	297

SUM-77-32.27 PENTABLE SUBSET: 5 SUBMITTAL: Stage 3 PLOT DRIVER: OHDOT_PDF_Levels.pltcfg PENTABLE: 104983_OHDOT_Pen.tbl

MODEL: Sheet PAPERSIZE: 17x11 (in.) DATE: 2/24/2022 TIME: 7:47:16 PM USER: edues
pw:\\gfnet-pw.bentley.com:gfnet-pw-01\Documents\Projects\67490\104983\401-Engineering-GF\Structures\3227R-SFN_7704747\Sheets\164 sm001

FILE: ...\Sheets\164 sm001

APPROACH SLAB SURFACE			
	STATION	OFFSET	ELEVATION
(1)	STA 1028+91.97	18.00' RT	1044.36
(2)	STA 1029+02.85	30.00' RT	1044.71
(3)	STA 1029+19.17	48.00' RT	1045.21 ◄
(4)	STA 1029+35.48	66.00' RT	1045.38 ◄
(5)	STA 1029+44.55	76.00' RT	1045.41 ◄
(6)	STA 1029+16.97	18.00' RT	1044.73
(7)	STA 1029+27.85	30.00' RT	1045.07
(8)	STA 1029+44.17	48.00' RT	1045.57
(9)	STA 1029+60.48	66.00' RT	1045.70
(10)	STA 1029+69.55	76.00' RT	1045.65
(21)	STA 1029+24.61	54.00' RT	1045.35 ◄
(22)	STA 1029+49.61	54.00' RT	1045.74

◄ = ELEVATION TO MATCH EXISTING DECK (SURVEY VALUES USED)

SLEEPER SLAB SURFACE			
	STATION	OFFSET	ELEVATION
(11)	STA 1029+11.57	18.00' RT	1043.39
(12)	STA 1029+22.45	30.00' RT	1043.74
(13)	STA 1029+38.77	48.00' RT	1044.25
(14)	STA 1029+55.08	66.00' RT	1044.37
(15)	STA 1029+64.14	76.00' RT	1044.33
(16)	STA 1029+19.67	18.00' RT	1044.76
(17)	STA 1029+30.55	30.00' RT	1045.10
(18)	STA 1029+46.84	48.00' RT	1045.61
(19)	STA 1029+63.18	66.00' RT	1045.73
(20)	STA 1029+72.25	76.00' RT	1045.69
(23)	STA 1029+44.21	54.00' RT	1044.42
(24)	STA 1029+52.30	54.00' RT	1045.78

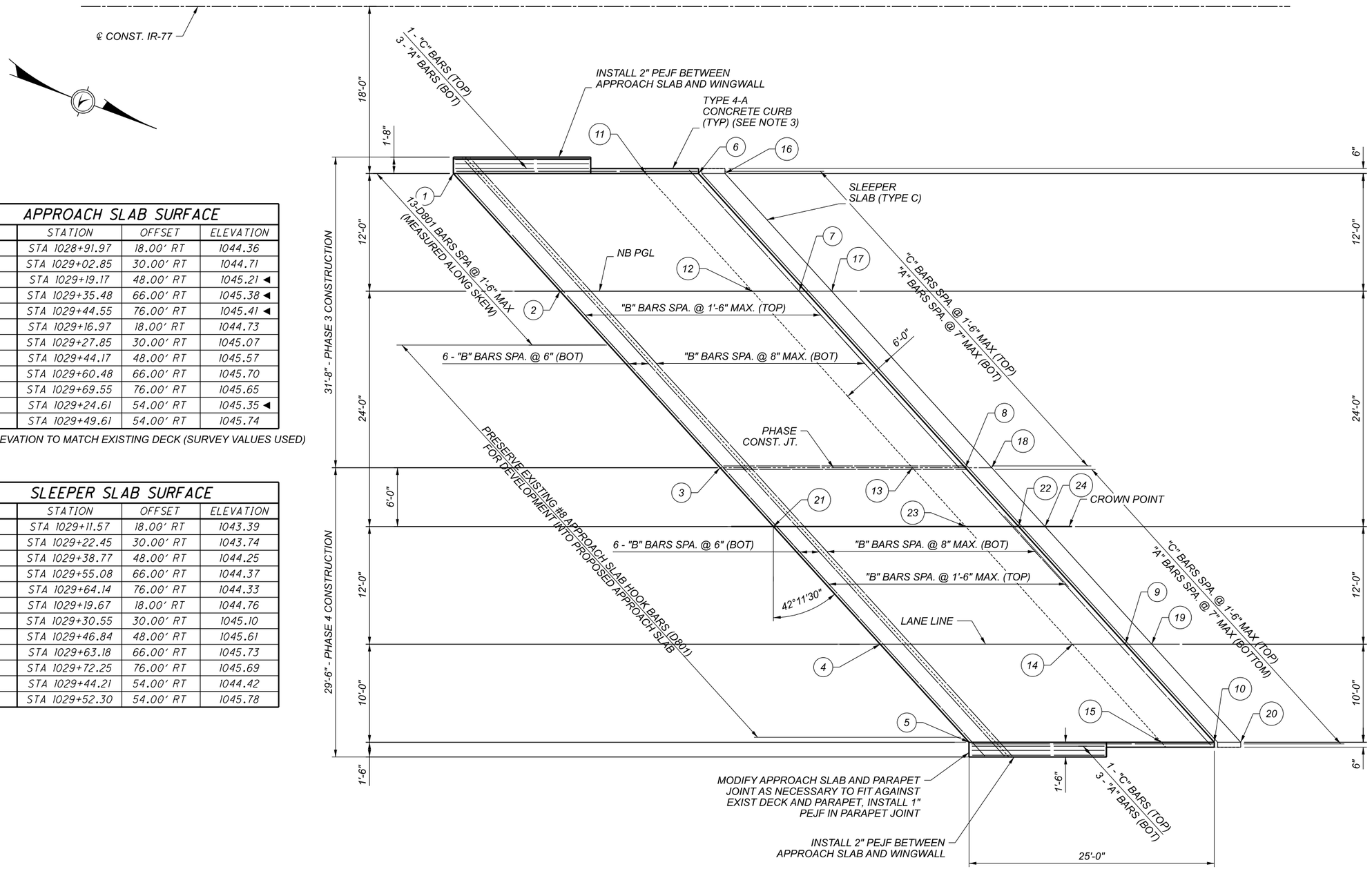

FORWARD APPROACH SLAB PLAN

NOTES:

1. FOR ADDITIONAL PARAPET TRANSITION DETAILS & REINFORCING SEE SHEET 34/36 .
2. FOR ADDITIONAL PARAPET DETAILS REFER TO STD. DWG. SBR-1-20.
3. FOR ADDITIONAL TYPE 4-A CONCRETE CURB DETAILS, SEE STD. CONST. DWG. BP-5.1.
4. FOR SLEEPER SLAB DETAILS, REFER TO STD. DWG. AS-2-15.
5. FOR APPROACH SLAB TYPICAL SECTION, SEE SHEET 32/36 .
6. FOR EXISTING APPROACH SLAB REMOVAL DETAILS, SEE SHEET 14/36 .

FORWARD APPROACH SLAB DETAILS
BRIDGE NO. SUM-77-3227R
IR-77 OVER BRECKSVILLE RD.

SFN 7704747

DESIGN AGENCY
Gannett Fleming
ENGINEERS AND ARCHITECTS, P.C.
2500 Corporate Exchange Drive Suite 220
Columbus, OH 43231

DESIGNER	CHECKER
SAT	CTM

REVIEWER MTO 2/22

PROJECT ID 104983

SUBSET	TOTAL
33	36

SHEET	TOTAL
294	297

SUM-77-32.27 PENTABLE SUBSET: 5 SUBMITTAL: Stage 3 PLOT DRIVER: OHDOT_PDF_Levels.pltcfg PENTABLE: 104983_OHDOT_Pen.tbl

MODEL: Sheet PAPERSIZE: 17x11 (in.) DATE: 2/24/2022 TIME: 7:49:28 PM USER: edues
pw:\\gfnet-pw.bentley.com:gfnet-pw-01\Documents\Projects\674900\104983\3401-Engineering-GF\Structures\3227R-SFN_7704747\Sheets\165 sm002

FILE: ...\Sheets\165 sm002

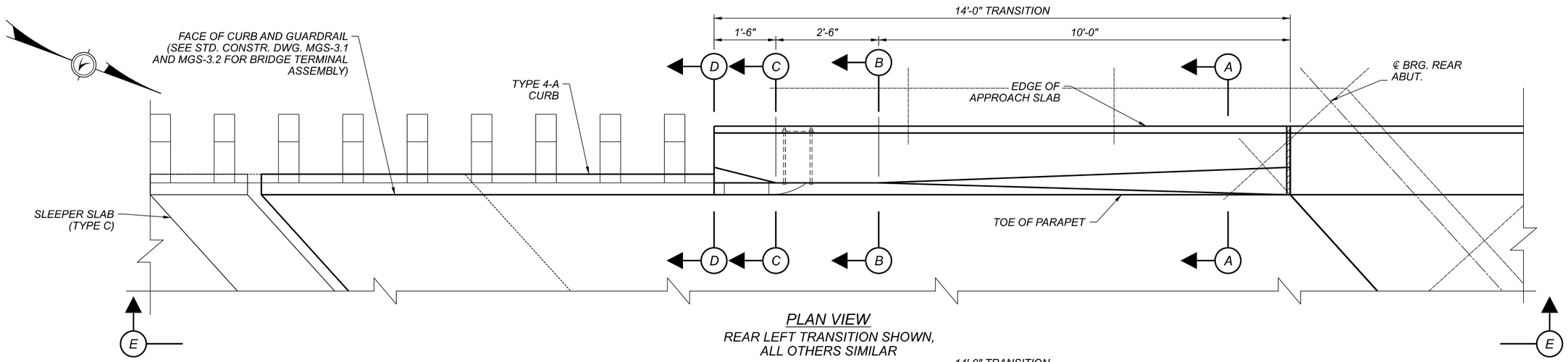

PLAN VIEW

REAR LEFT TRANSITION SHOWN, ALL OTHERS SIMILAR

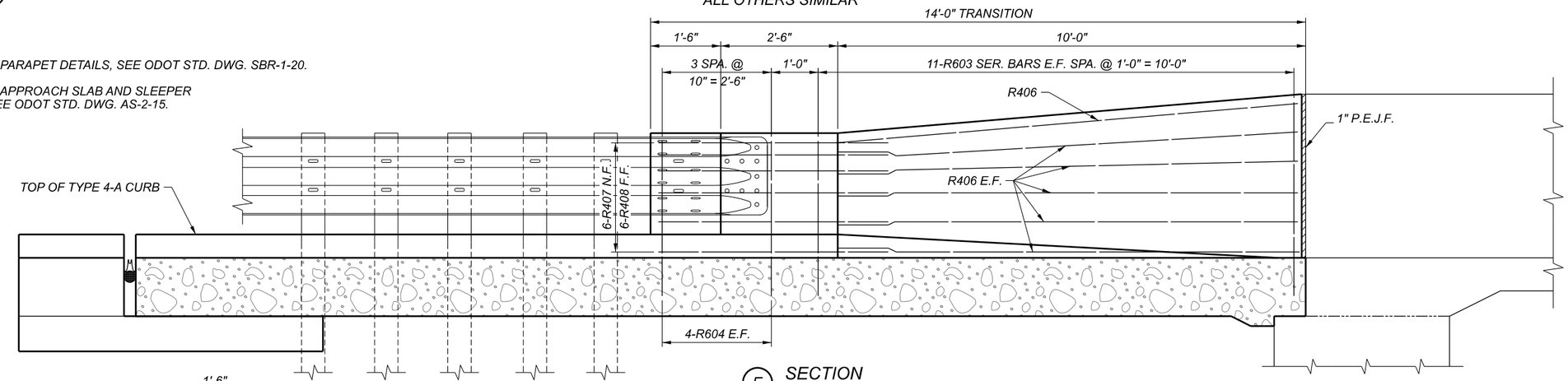

E SECTION

NOTES:

1. FOR ADDITIONAL PARAPET DETAILS, SEE ODOT STD. DWG. SBR-1-20.
2. FOR ADDITIONAL APPROACH SLAB AND SLEEPER SLAB DETAILS, SEE ODOT STD. DWG. AS-2-15.

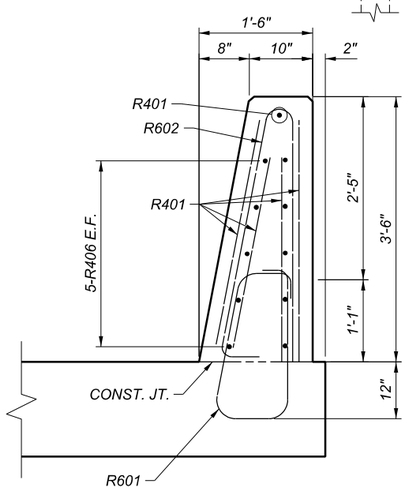

A SECTION

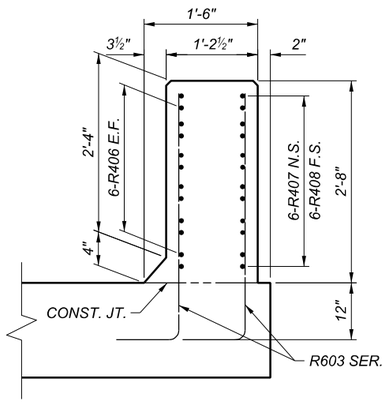

B SECTION

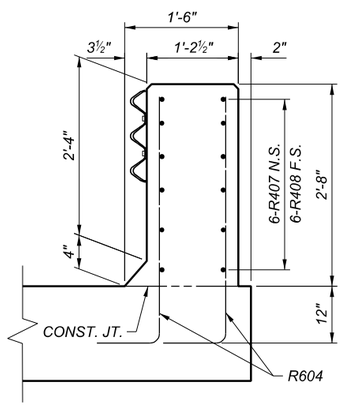

C SECTION

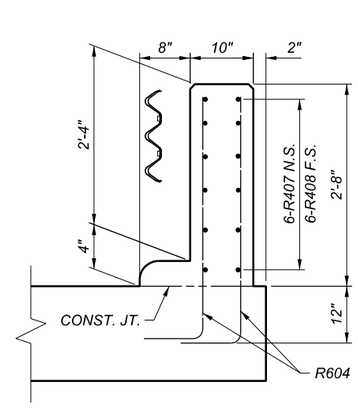

D SECTION

APPROACH SLAB PARAPET TRANSITION
BRIDGE NO. SUM-77-3227R
IR-77 OVER BRECKSVILLE RD.

SFN 7704747

DESIGN AGENCY
Gannett Fleming
ENGINEERS AND ARCHITECTS, P.C.
250 Civic Center Drive, Suite 220, Columbus, OH 43215

DESIGNER	CHECKER
SAT	CTM

REVIEWER: MTO 2/22

PROJECT ID: 104983

SUBSET	TOTAL
34	36

SHEET	TOTAL
295	297

SUM-77-32.27 PENTABLE SUBSET: [5] SUBMITTAL: Stage 3 PLOT DRIVER: OHDOT_PDF_Levels.pltcfg

MODEL: Sheet PAPERSIZE: 17x11 (in.) DATE: 2/24/2022 TIME: 7:51:25 PM USER: edues PENTABLE: 104983_OHDOT_Pen.tbl
pw:\\gfnet-pw.bentley.com:gfnet-pw-01\Documents\Projects\674900\104983\401-Engineering-GPI Structures\3227R-SFN_7704747\Sheets\166 sm003

FILE: ...\Sheets\166 sm003

Mark	NUMBER			LENGTH	WEIGHT			TYPE	DIMENSIONS				
	REAR	FORWARD	TOTAL		REAR	FWD	TOTAL		A	B	C	D	INC
ABUTMENT FOOTING													
F501	7		7	27'-6"	201		201	STR.					
F503	16		16	16'-7"	277		277	3	5'-5"	2'-7"			
F504	17		17	14'-4"	255		255	2	5'-7"	3'-5"	5'-7"		
F505	2		2	9'-5"	20		20	STR.					
F506	4		4	12'-8"	53		53	STR.					
F507	9		9	17'-9"	167		167	2	8'-5"	1'-2"	8'-5"		
F508	10		10	12'-7"	132		132	3	3'-5"	2'-7"			
F509	1		1	13'-4"	14		14	2	5'-7"	2'-5"	5'-7"		
F510	1		1	12'-0"	13		13	2	5'-7"	1'-1"	5'-7"		
	1		1	11'-7"					2'-11"				
F511	SER OF		SER OF	to	45		45	3	to	2'-7"			2'-6"
	3		3	16'-7"					5'-5"				
F512	1		1	11'-5"	12		12	3	2'-10"	2'-7"			
F513	1		1	7'-11"	9		9	3	1'-1"	2'-7"			
F514	1		1	12'-11"	14		14	2	5'-7"	2'-0"	5'-7"		
F515	1		1	13'-4"	14		14	2	5'-7"	2'-5"	5'-7"		
F516	6		6	4'-0"	26		26	1	3'-1"	1'-0"			
F517		2	2	27'-2"		57	57	STR.					
F518		6	6	27'-8"		174	174	STR.					
F519		18	18	16'-7"		312	312	3	5'-5"	2'-7"			
F520		16	16	14'-4"		240	240	2	5'-7"	3'-5"	5'-7"		
F521		1	1	13'-7"		15	15	2	5'-7"	2'-8"	5'-7"		
F522		1	1	13'-4"		14	14	2	5'-7"	2'-5"	5'-7"		
F523		1	1	11'-5"		12	12	3	2'-10"	2'-7"			
F524		1	1	14'-5"		16	16	3	4'-4"	2'-7"			
F525		1	1	13'-11"		15	15	2	5'-7"	3'-0"	5'-7"		
F526		1	1	7'-1"		8	8	2	5'-7"	1'-9"	5'-7"		
F527		1	1	11'-1"		12	12	3	2'-8"	2'-7"			
F528		13	13	12'-7"		171	171	3	3'-5"	2'-7"			
F529		4	4	16'-8"		70	70	STR.					
F530		2	2	8'-0"		17	17	STR.					
F531		11	11	17'-11"		206	206	2	8'-6"	1'-2"	8'-6"		
F532		6	6	4'-2"		27	27	1	1'-0"	3'-3"			
F533		3	3	4'-2"		14	14	10	1'-1"	1'-0"	1'-4"	1'-6"	
F801	4		4	27'-6"	294		294	STR.					
F802	3		3	12'-8"	102		102	STR.					
F803	1		1	9'-5"	26		26	STR.					
F804	4		4	6'-9"	73		73	1	5'-4"	1'-7"			
F805		1	1	27'-2"		73	73	STR.					
F806		3	3	27'-8"		222	222	STR.					
F807		1	1	8'-0"		22	22	STR.					
F808		4	4	16'-8"		178	178	STR.					
F809		4	4	6'-2"		66	66	1	1'-0"	5'-4"			
				SUB-TOTAL	1,747	1,941	3,688						

Mark	NUMBER			LENGTH	WEIGHT			TYPE	DIMENSIONS		
	PIER 1	PIER 2	TOTAL		REAR	FWD	TOTAL		A	B	C
PIER FOOTING											
F810	9	9	18	22'-6"	541	541	1,082	17	20'-8"		
F811	9	9	18	22'-6"	541	541	1,082	17	20'-8"		
F812	38	38	76	8'-10"	896	896	1,792	1	1'-6"	7'-6"	
F813	22	22	44	12'-11"	759	759	1,518	2	2'-7"	8'-2"	2'-7"
F814	22	22	44	10'-0"	588	588	1,176	17	8'-2"		
				SUB-TOTAL	3,325	3,325	6,650				

REINFORCING NOTES AND DETAILS

FOR REINFORCING GENERAL NOTES AND BEND DIAGRAMS, SEE SHEET 36/36

Mark	NUMBER			LENGTH	WEIGHT			TYPE	DIMENSIONS		
	REAR	FORWARD	TOTAL		REAR	FWD	TOTAL		A	B	C
ABUTMENT STEM											
A501	6		6	27'-1"	170		170	1	1'-0"	26'-2"	
A502		3	3	25'-1"		79	79	1	1'-0"	24'-2"	
A503		3	3	27'-1"		85	85	1	1'-0"	26'-2"	
A504	11		11	8'-6"	98		98	2	2'-8"	3'-5"	2'-8"
A505	6		6	9'-0"	57		57	2	2'-11"	3'-5"	2'-11"
A506	1		1	6'-3"	7		7	2	2'-8"	1'-2"	2'-8"
A507	1		1	6'-2"	7		7	2	2'-8"	1'-1"	2'-8"
A508	1		1	8'-11"	10		10	2	3'-7"	2'-0"	3'-7"
A509	1		1	9'-0"	10		10	2	3'-5"	2'-5"	3'-5"
A510		10	10	8'-10"		93	93	2	2'-10"	3'-5"	2'-10"
A511		6	6	8'-4"		53	53	2	3'-1"	2'-5"	3'-1"
A512		1	1	9'-3"		10	10	2	3'-5"	2'-8"	3'-5"
A513		1	1	9'-4"		10	10	2	3'-7"	2'-5"	3'-7"
A515		1	1	8'-5"		9	9	2	2'-10"	3'-0"	2'-10"
A516		1	1	7'-2"		8	8	2	2'-10"	1'-9"	2'-10"
A801	4		4	27'-7"	295		295	1	1'-7"	26'-2"	
A802		1	1	25'-7"		69	69	1	1'-7"	24'-2"	
A803		3	3	27'-7"		221	221	1	1'-7"	26'-2"	
W501	8		8	12'-8"	106		106	STR.			
W502	9		9	9'-7"	90		90	2	4'-4"	1'-2"	4'-4"
W503	8		8	1'-4"	12		12	19	9"	5"	5"
W504	8		8	12'-2"	102		102	STR.			
W505		11	11	9'-9"		112	112	2	4'-5"	1'-2"	4'-5"
W506		16	16	14'-8"		245	245	STR.			
				SUB-TOTAL	964	994	1,958				
SEMI-INTEGRAL DIAPHRAGM											
D501	18		18	9'-3"	174		174	2	2'-9"	4'-0"	2'-9"
D502	36		36	9'-10"	370		370	2	2'-9"	4'-7"	2'-9"
D503		38	38	9'-10"		390	390	2	2'-9"	4'-7"	2'-9"
D504		19	19	8'-11"		177	177	2	2'-7"	4'-0"	2'-7"
D801	13	13	26	5'-9"	200	200	400	18	3'-5"	1'-0"	1'-0"
# D802	10		10	25'-9"	688		688	STR.			
D803	4		4	27'-8"	296		296	STR.			
# D804		10	10	25'-9"		688	688	STR.			
# D805		4	4	27'-6"		294	294	STR.			
				SUB-TOTAL	1,728	1,749	3,477				

Mark	NUMBER			LENGTH	WEIGHT			TYPE	DIMENSIONS						
	PIER 1	PIER 2	TOTAL		REAR	FWD	TOTAL		A	B	C	D	E	R	INC
PIER															
P501	58	50	108	10'-5"	630	544	1,174	24	2'-8"	3'-1"				1'-4"	
P502	50		50	12'-0"	626		626	STR.							
P503	225	189	414	3'-8"	861	723	1,584	52	2'-8"	6"					
P504	44		44	8'-7"	394		394	2	3'-0"	2'-10"	3'-0"				
P505		42	42	14'-8"		643	643	STR.							
P506	6	6	12	17'-4"	108	108	216	STR.							
P507		44	44	8'-7"		394	394	2	3'-0"	2'-10"	3'-0"				
	4		4	6'-3"						1'-0"					
P508	SER OF		SER OF	to	89		89	2	2'-9"	to	2'-9"				10"
	3		3	7'-11"						2'-8"					
	4		4	6'-3"						1'-0"					
P509	SER OF		SER OF	to	89		89	2	2'-9"	to	2'-9"				10"
	3		3	7'-11"						2'-8"					
P801	2	2	4	22'-3"	119	119	238	2	2'-8"	17'-4"	2'-8"				
P802	2	2	4	19'-6"	104	104	208	20	5"	2'-3"	14'-11"	2'-3"	5"		
P803	38		38	27'-5"	2,782		2,782	16	26'-6"						
P804	4	4	8	12'-7"	134	134	268	STR.							
P805		38	38	22'-4"		2,266	2,266	16	21'-5"						
P806	4	4	8	4'-5"	48	48	96	STR.							
P808	2	2	4	17'-0"	91	91	182	20	2"	1'-0"	14'-11"	1'-0"	2"		
P809	2	2	4	24'-5"	130	130	260	2	2'-8"	19'-6"	2'-8"				
				SUB-TOTAL	6,205	5,304	11,509								

REINFORCING LIST 1 OF 2
BRIDGE NO. SUM-77-3227R
IR-77 OVER BRECKSVILLE RD.

SFN 7704747

DESIGN AGENCY
Gannett Fleming
ENGINEERS AND ARCHITECTS, P.C.
2500 Corporate Exchange Drive Suite 230
Columbus, OH 43231

DESIGNER	CHECKER
RSN	CTM

REVIEWER MTO 2/22

PROJECT ID 104983

SUBSET	TOTAL
35	36

SHEET	TOTAL
296	297

SUM-77-32.27

MODEL: Sheet PAPERSIZE: 17x11 (in.) DATE: 2/24/2022 TIME: 7:53:25 PM USER: edues
pw:\\gfnet-pw.bentley.com:gfnet-pw-01\Documents\Projects\674900\104983\401-Engineering-GF\Structures\3227R-SFN_7704747\Sheets\168 sl001
PLOT DRIVER: OHDOT_PDF_Levels.pltcfg PENTABLE: 104983_OHDOT_Pen.tbl
SUBMITTAL: Stage 3
PENTABLE SUBSET: [5]

Mark	SUPER Col #3	TOTAL	LENGTH	SUPER	TOTAL	TYPE	DIMENSIONS A	B	C	D	E	R	INC
DECK													
S401	140	140	30'-0"	2,806	2,806	STR.							
S402	20	20	21'-0"	281	281	STR.							
S403	228	228	19'-4"	2,945	2,945	STR.							
S501	433	433	21'-0"	9,484	9,484	16	20'-5"						
S502	433	433	20'-5"	9,221	9,221	STR.							
S503	461	461	6'-11"	3,326	3,326	16	6'-4"						
	1	1	3'-1"				2'-6"						
S504	SER OF	SER OF	to	465	465	16	to						*5 3/4"*
	37	37	21'-0"				20'-5"						
	1	1	2'-6"										
S505	SER OF	SER OF	to	443	443	STR.							*5 3/4"*
	37	37	20'-5"										
	1	1	3'-1"				2'-6"						
S507	SER OF	SER OF	to	48	48	16	to						*6"*
	9	9	7'-1"				6'-6"						
	1	1	2'-9"										
S508	SER OF	SER OF	to	389	389	STR.							*6 1/4"*
	33	33	19'-10"										
	1	1	2'-9"										
S509	SER OF	SER OF	to	389	389	STR.							*6 1/4"*
	33	33	19'-10"										
S510	175	175	30'-0"	5,476	5,476	STR.							
S511	25	25	24'-6"	639	639	STR.							
S512	5	5	2'-6"	14	14	16	1'-11"						
S513	5	5	1'-11"	10	10	STR.							
# S514	5	5	2'-4"	13	13	STR.							
# S515	5	5	2'-4"	13	13	STR.							
			SUB-TOTAL	35,962	35,962								
PARAPET													
R401	76	76	10'-0"	508	508	STR.							
R402	77	77	30'-0"	1,544	1,544	STR.							
R403	11	11	21'-0"	155	155	STR.							
R404	8	8	13'-3"	71	71	STR.							
R406	44	44	10'-0"	294	294	STR.							
R407	24	24	7'-11"	127	127	25	2'-6"	2'-5"	2'-11"	1 1/2"	5"		
R408	24	24	6'-7"	106	106	STR.							
R601	239	239	7'-4"	2,633	2,633	39	9 1/2"	11"	2'-3"	2'-3"	7"	12"	
R602	239	239	7'-1"	2,543	2,543	23	6"	3'-3"	3'-3"			2"	
	8	8	4'-4"					3'-6"					
R603	SER OF	SER OF	to	617	617	1	1'-0"	to					*3/4"*
	11	11	5'-0"					4'-1 1/2"					
R604	32	32	4'-4"	209	209	1	1'-0"	3'-6"					
			SUB-TOTAL	8,807	8,807								
			TOTAL ALL REINFORCING		72,051								

 # = ALL OR A PORTION OF BARS PROVIDED WITH MECHANICAL CONNECTOR

REINFORCING NOTES

1. *ALL REINFORCEMENT BARS SHALL BE EPOXY COATED. PAYMENT FOR REINFORCING, INCLUDING MECHANICAL CONNECTORS, SHALL BE MADE WITH ITEM 509 - EPOXY COATED REINFORCING STEEL*
2. *"STR." IN THE TYPE COLUMN INDICATES STRAIGHT BARS.*
3. *"SER OF" DENOTES SERIES OF BARS, E.G "X" SER OF "Y" = "X" SERIES OF "Y" BARS/SERIES.*
4. *WHEN NO BAR LEG DIMENSIONS ARE SHOWN, IT INDICATES A STANDARD BEND/RETURN. REFER TO C.M.S SECTION 509.05 FOR STANDARD BEND DIMENSIONS.*
5. *MECHANICAL CONNECTORS: AN APPROVED TYPE OF MECHANICAL CONNECTOR FOR REINFORCING BARS SHALL BE PROVIDED IN ACCORDANCE WITH C.M.S. SECTION 509.07. INSTALLATION OF CONNECTORS SHALL CONFORM WITH MANUFACTURER RECOMMENDED PROCEDURES.*

CONNECTORS AND DOWEL BARS USED WITH EPOXY COATED BARS SHALL BE EPOXY COATED. COATING FOR BOTH CONNECTORS AND BARS SHALL CONFORM TO THE SAME SPECIFICATIONS. COATINGS THAT HAVE BEEN DAMAGED OR THAT OTHERWISE DO NOT MEET SPECIFICATIONS WITH RESPECT TO COLOR, CONTINUITY AND UNIFORMITY, MAY BE REPAIRED AS DIRECTED BY THE ENGINEER, OR THEY SHALL BE REPLACED WITH MATERIAL WITH MEETS THE SPECIFICATIONS. FOR BARS UTILIZING A MECHANICAL CONNECTOR, THE BAR LENGTH FOR PAYMENT IS MEASURED TO THE CENTER OF THE PLANNED MECHANICAL CONNECTION. EXTRA BAR LENGTH AND/OR BAR END PREPARATION MAY BE NECESSARY DEPENDING UPON THE TYPE OF MECHANICAL CONNECTOR FURNISHED AND THOSE COSTS SHALL BE INCLUDED IN THE BID PRICE FOR ITEM 509. CONNECTORS AND DOWEL BAR EXTENSIONS SHALL CONFORM TO AND BE INCLUDED IN THE BID PRICE FOR ITEM 509.

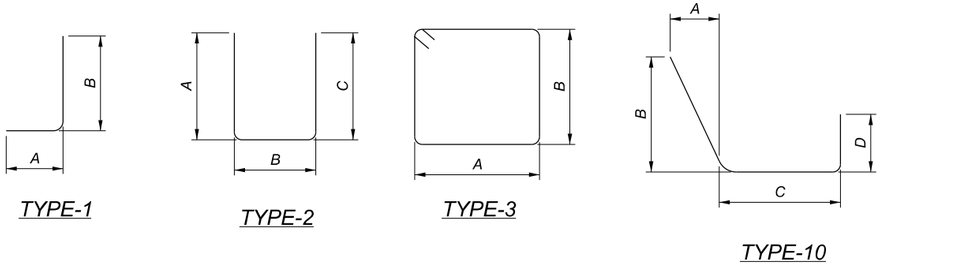

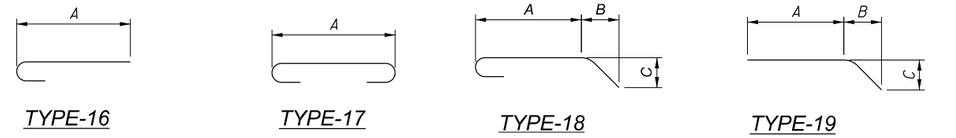

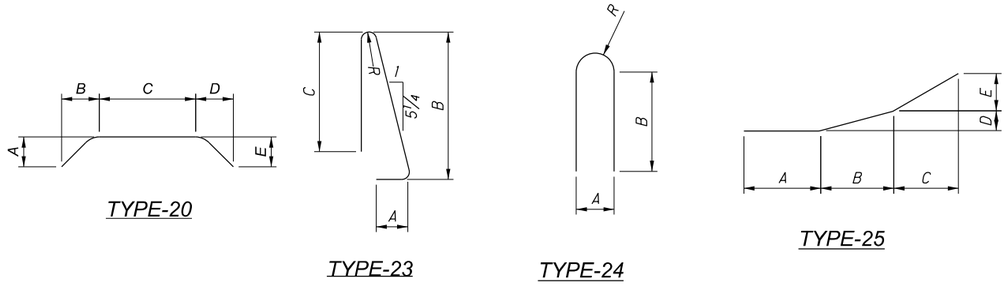

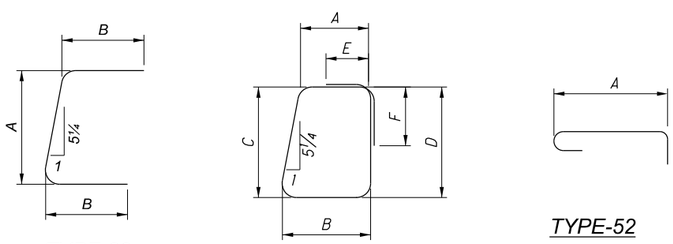

MINIMUM LAP SPLICE LENGTHS

#4 BAR (ALL) = 2'-0"
#5 BAR (ALL) = 2'-6"
#6 BAR (ALL) = 3'-0"

REINFORCING BEND DIAGRAMS

REINFORCING CALLOUT NOMENCLATURE

BAR SIZE AND LOCATION ARE INDICATED IN THE BAR MARK.

LOCATION: THE BEGINING 1 OR 2 LETTERS INDICATES WHERE THE BAR IS INITIALLY CAST INTO.
SIZE: THE FIRST NUMBER (IF 3 TOTAL NUMBERS) OR TWO NUMBERS (IF 4 TOTAL NUMBERS)
UNIQUE ID: THE LAST TWO NUMBERS ARE AN INDEX NUMBER. THE INDEX NUMBER NEED NOT BE SEQUENTIAL, IT IS SIMPLY TO ALLOW A UNIQUE IDENTIFICATION OF BARS OF THE SAME SIZE AND IN THE SAME LOCATION WITHIN THE STRUCTURE.

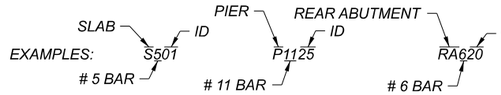

LOCATION MARKS USED:
F = FOOTING
P = PIER
R = RAIL (PARAPET)
A = ABUTMENT
WW = WINGWALL
D = ABUTMENT DIAPHRAGM
S = SLAB (DECK)

REINFORCING LIST 2 OF 2
BRIDGE NO. SUM-77-3227R
IR-77 OVER BRECKSVILLE RD.

SFN 7704747

DESIGN AGENCY
Gannett Fleming
ENGINEERS AND ARCHITECTS, P.C.
2500 Corporate Exchange Drive Suite 200 Columbus, OH 43231

DESIGNER	CHECKER
RSN	CTM

REVIEWER: MTO 2/22

PROJECT ID: 104983

SUBSET	TOTAL
36	36

SHEET	TOTAL
297	297

SUM-77-32.27 PENTABLE SUBSET: [5] SUBMITTAL: Stage 3 PLOT DRIVER: OHDOT_PDF_Levels.pltcfg PENTABLE: 104983_OHDOT_Pen.tbl
MODEL: Sheet PAPERSIZE: 17x11 (in.) DATE: 2/24/2022 TIME: 7:55:29 PM USER: edues
pw:\\gfnet-pw.bentley.com:gfnet-pw-01\Documents\Projects\67490\104983401-Engineering-GF\Structures\3227R-SFN_7704747\Sheets\169 sl002