STATE OF OHIO
DEPARTMENT OF TRANSPORTATION

CUY-71-10.48

City of Cleveland
Village of Linndale
City of Brooklyn
CUYAHOGA COUNTY

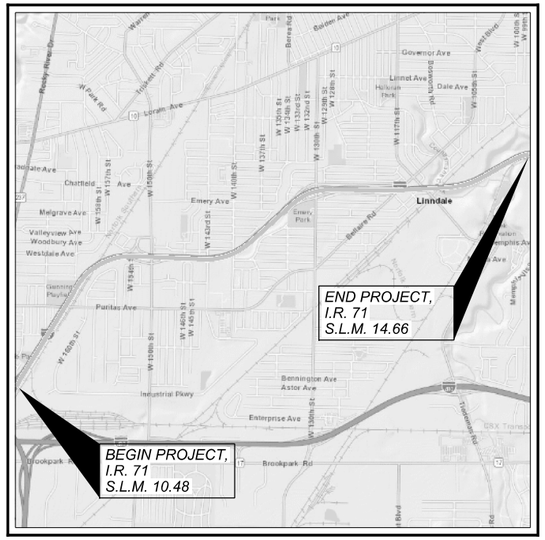
END PROJECT,
I.R. 71
S.L.M. 14.66
BEGIN PROJECT,
I.R. 71
S.L.M. 10.48
Linndale
Brookpark Rd
Emery Ave
Pittsburgh Ave
Enterprise Ave
Industrial Pkwy
Bennington Ave
Astor Ave
Lorain Ave
Berea Rd
Pearl Rd
Tiedeman Rd
Broadway Ave
Memphis Ave
Dale Ave
Governor Ave
Lamont Ave
Chatfield Ave
Melgrave Ave
Valleyview Ave
Woodbury Ave
Westdale Ave
Pittsburgh Ave
Warren Rd
Triskett Rd
W Park Rd
Rocky River Dr
Rocky River Dr
Bagley Rd
Grayton Rd
Berea Rd
Barker Ave
Vinod Blvd
W 150th St
W 145th St
W 140th St
W 137th St
W 130th St
W 126th St
W 124th St
W 117th St
W 116th St
W 114th St
W 112th St
W 110th St
W 100th St
W 98th St
W 94th St
W 86th St
W 65th St
W 54th St
W 45th St
W 41st St
W 25th St
W 17th St
W 11th St
W 6th St
W 3rd St
W 150th St
W 140th St
W 130th St
W 120th St
W 117th St
W 116th St
W 114th St
W 112th St
W 110th St
W 100th St
W 98th St
W 94th St
W 86th St
W 65th St
W 54th St
W 45th St
W 41st St
W 25th St
W 17th St
W 11th St
W 6th St
W 3rd St
Pittsburgh Ave
Memphis Ave
Memphis Ave
Memphis

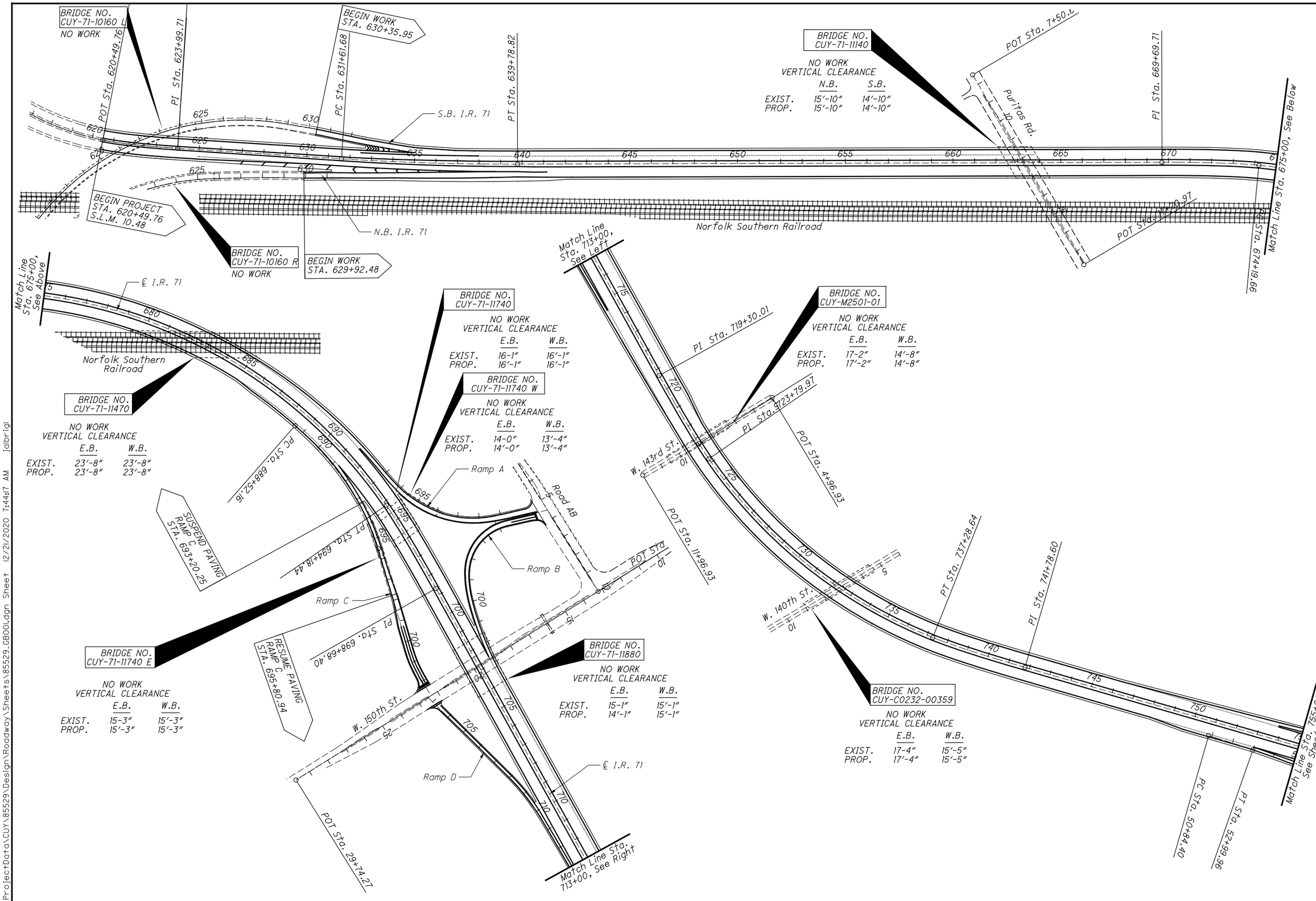

SCHEMATIC PLAN

CUY-71-10.48

I:\Project Data\CUY\85529\Design\Roadway\Sheets\85529_GB001.dgn Sheet 12/21/2020 7:44:17 AM jalbrigi

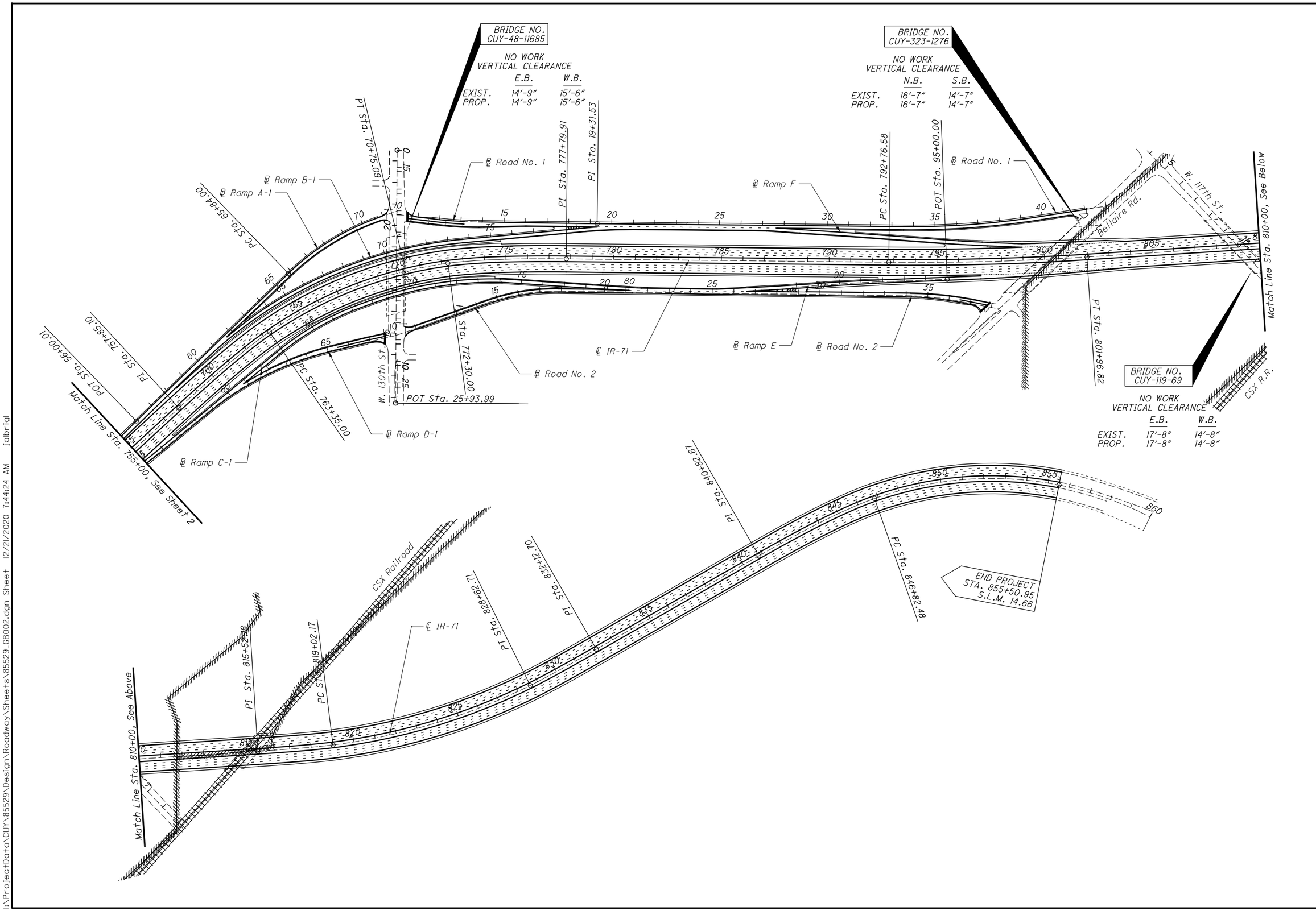

CALCULATED JDA
CHECKED EJK

SCHEMATIC PLAN

CUY-71-10.48

I:\ProjectData\CUY\85529\Design\Roadway\Sheets\85529_GB002.dgn Sheet 12/21/2020 7:44:24 AM jalbrigl

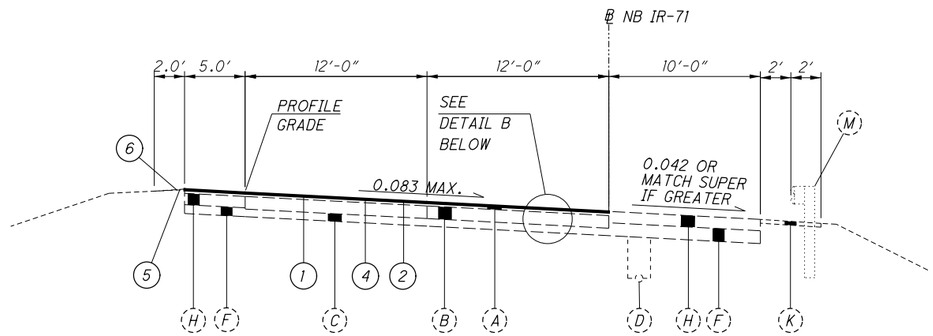

SUPERELEVATED SECTION - NB IR 71

STA. 629+90.69 TO STA. 631+18.26

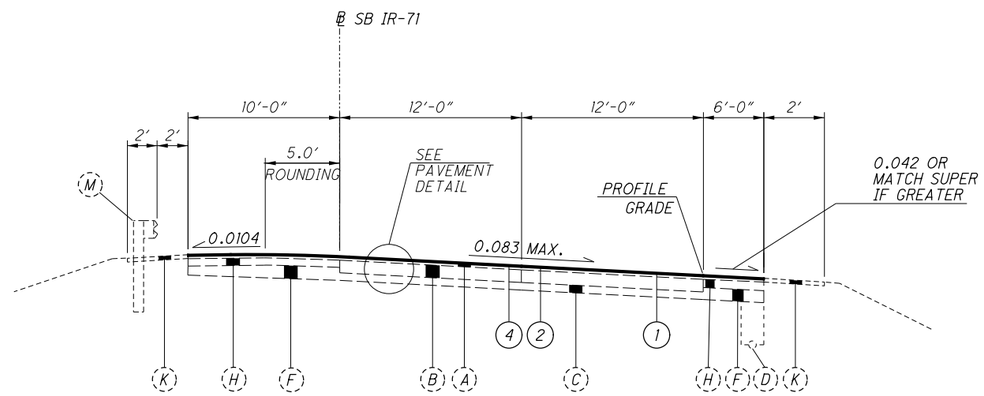

SUPERELEVATED SECTION - SB IR 71

STA. 630+34.84 TO STA. 632+69.85

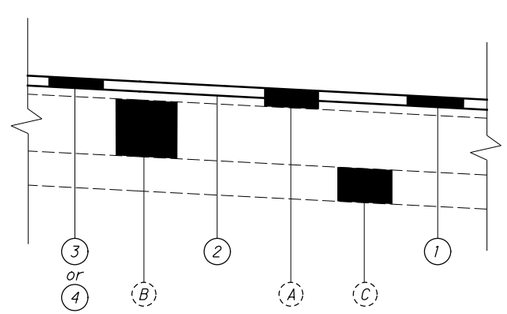

PAVEMENT DETAIL

PROPOSED

1. ITEM 254 - PAVEMENT PLANING, ASPHALT CONCRETE, AS PER PALN, 2"
2. ITEM 407 - NON-TRACKING TACK COAT
3. ITEM 442 - ASPHALT CONCRETE SURFACE COURSE, 12.5MM, TYPE A (446), AS PER PLAN, PG76-22M, 2"
4. ITEM 442 - ASPHALT CONCRETE SURFACE COURSE, 12.5MM, TYPE A (447), AS PER PLAN, PG76-22M, 2"
5. ITEM 209 - LINEAR GRADING
6. ITEM 617 - COMPACTED AGGREGATE, AS PER PLAN
7. ITEM 618 - RUMBLE STRIPS, SHOULDER (ASPHALT CONCRETE), AS PER PLAN

EXISTING

- A ASPHALT OVERLAY (3 3/4"±)
- B 10"± REINFORCED CONCRETE PAVEMENT
- C SUBBASE
- D UNDERDRAIN
- E CONCRETE BARRIER
- F AGGREGATE BASE
- G BITUMINOUS AGGREGATE BASE
- H 9"± PLAIN CONCRETE PAVEMENT
- J CURB
- K ASPHALT UNDER GUARDRAIL
- L 9"± REINFORCED CONCRETE BASE
- M GUARDRAIL
- N 10"± CONCRETE BASE

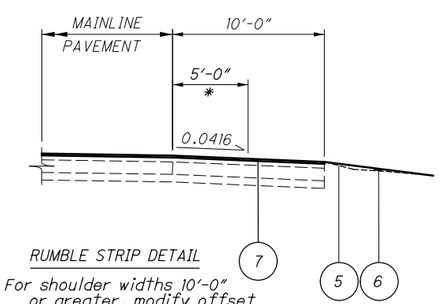

RUMBLE STRIP DETAIL

* For shoulder widths 10'-0" or greater, modify offset from SCD BP-9.1

TYPICAL SECTIONS

CUY-71-10.48

I:\ProjectData\CUY\85529\Design\Roadway\Sheets\85529_GY001.dgn Sheet 12/21/2020 7:44:25 AM jalbrigl

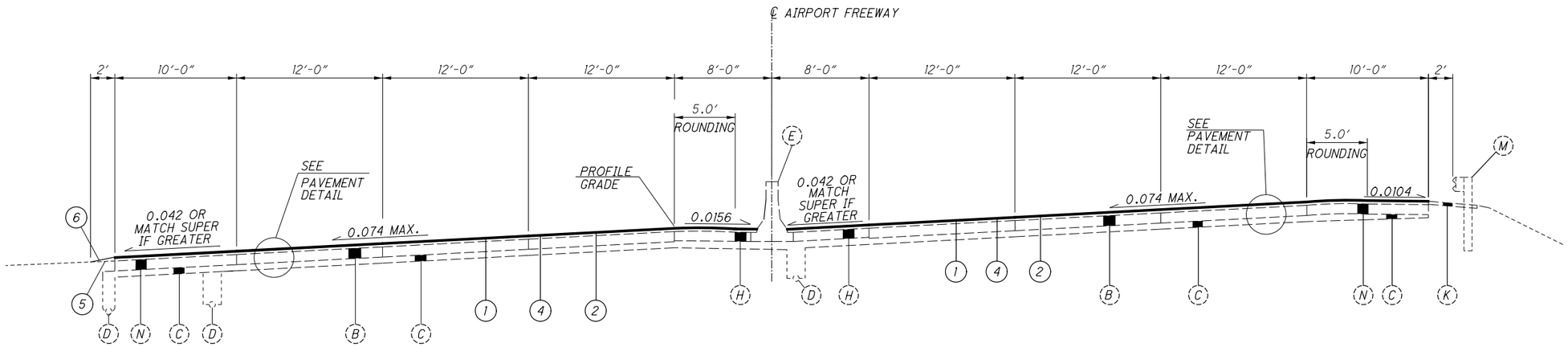

SUPERELEVATED SECTION - AIRPORT FREEWAY

STA. 620+49.76 TO STA. 623+99.71

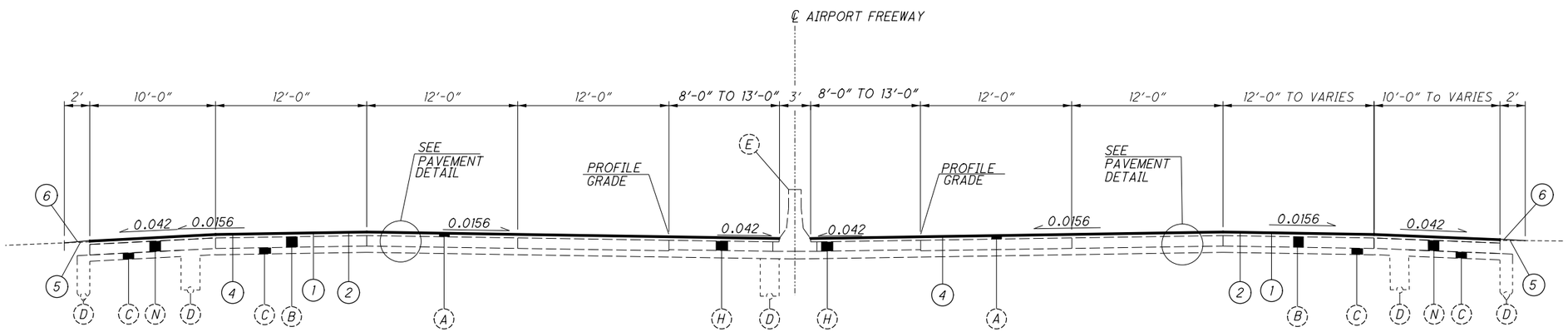

NORMAL SECTION - AIRPORT FREEWAY

STA. 623+99.71 TO STA. 631+18.26 (NB)
STA. 623+99.71 TO STA. 632+69.85 (SB)

SEE SHEET 4 FOR LEGEND
& PAVEMENT DETAIL

TYPICAL SECTIONS

CUY-71-10.48

I:\ProjectData\CUY\85529\Design\Roadway\Sheets\85529_GY002.dgn Sheet 12/21/2020 7:44:26 AM jalbrigl

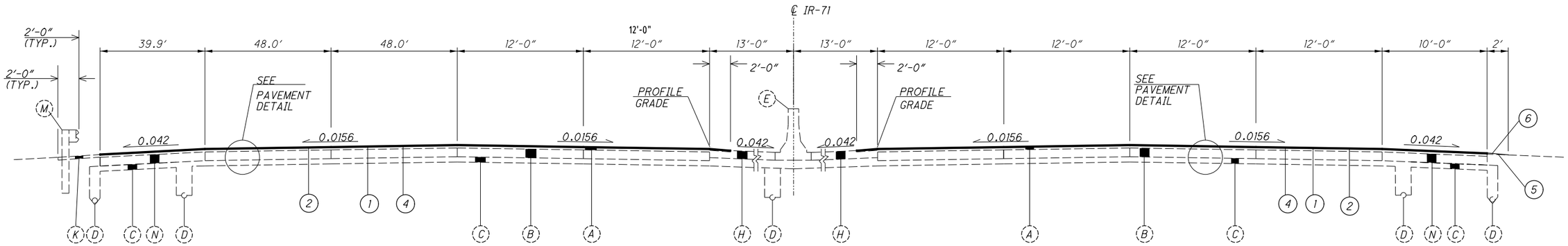

NORMAL SECTION - IR 71

STA. 631+18.26	TO	STA. 639+78.82 (NB)	STA. 704+01.09	TO	STA. 717+50.00
STA. 632+69.53	TO	STA. 639+78.82 (SB)	STA. 743+50.00	TO	STA. 756+00.00
STA. 639+78.82	TO	STA. 662+52.54	STA. 779+50.00	TO	STA. 814+00.00
STA. 664+08.08	TO	STA. 668+25.00	STA. 833+75.00	TO	STA. 839+50.00
STA. 700+50.00	TO	STA. 701+57.29			

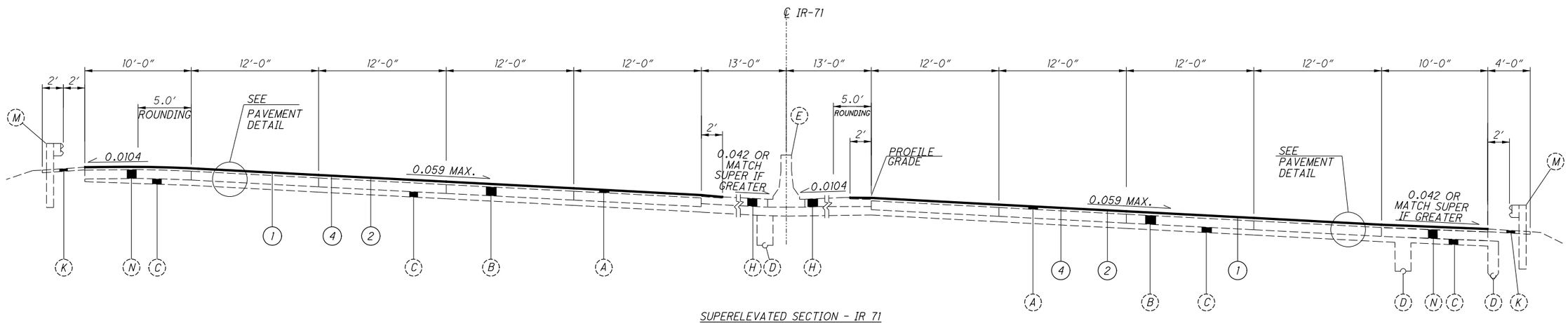

SUPERELEVATED SECTION - IR 71

STA. 668+25.00	TO	STA. 681+28.83	STA. 814+00.00	TO	STA. 833+75.00 (0.047 MAX. SUPER.) (CURVE LEFT)
STA. 684+04.56	TO	STA. 694+36.98	STA. 839+50.00	TO	STA. 855+51.16 SB (0.083 MAX. SUPER.)
STA. 696+00.41	TO	STA. 700+50.00	STA. 839+50.00	TO	STA. 855+50.95 NB (0.083 MAX. SUPER.)
STA. 717+50.00	TO	STA. 743+50.00 (CURVE LEFT)			

SEE SHEET 4 FOR LEGEND & PAVEMENT DETAIL

TYPICAL SECTIONS

CUY-71-10.48

I:\ProjectData\CUY\85529\Design\Roadway\Sheets\85529_GY003.dgn Sheet 12/21/2020 7:44:26 AM jalbrigl

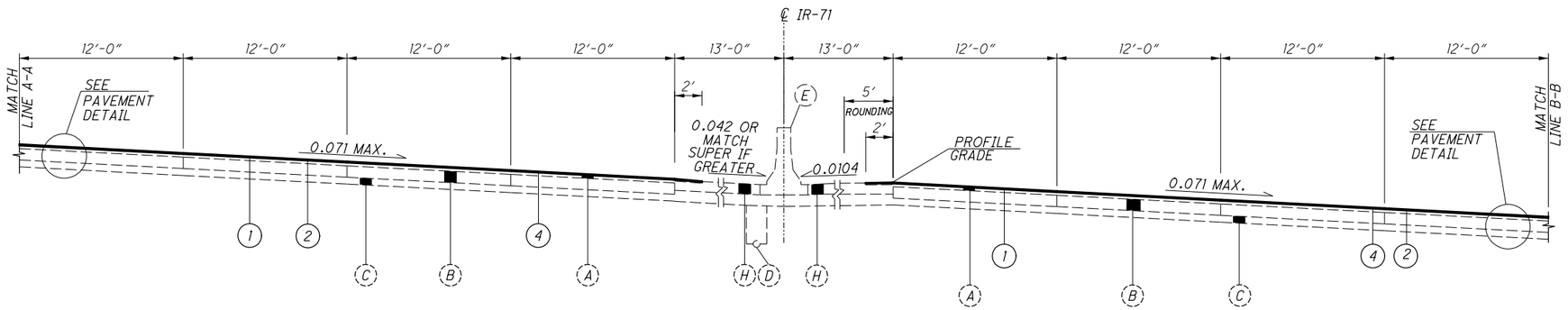

SUPERELEVATED SECTION - IR 71

STA. 756+00.00 TO STA. 779+50.00

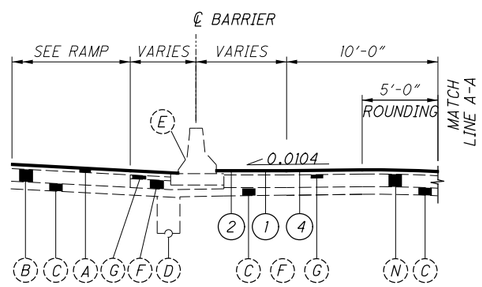

STA. 758+23.00 TO STA. 774+75.00

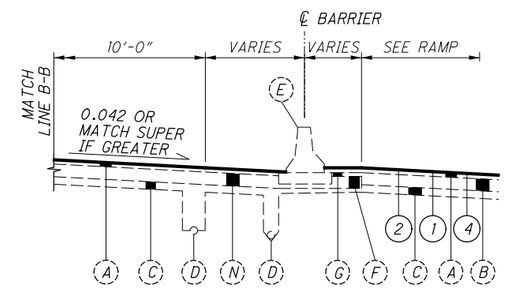

STA. 764+15.00 TO STA. 774+50.00

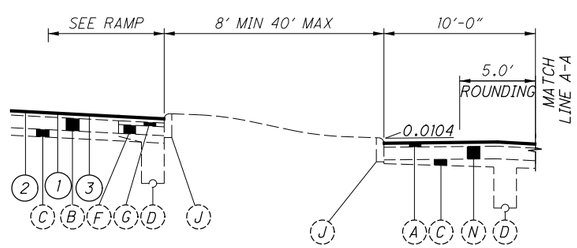

RAMP MEDIAN DETAIL

STA. 774+75.00 TO STA. 795+00.00

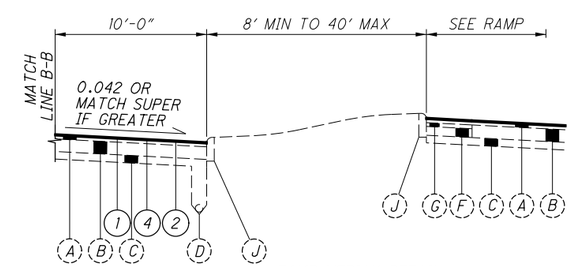

RAMP MEDIAN DETAIL

STA. 757+00.00 TO STA. 764+15.00
STA. 774+50.00 TO STA. 791+70.00

SEE SHEET 4 FOR LEGEND & PAVEMENT DETAIL

TYPICAL SECTIONS

CUY-71-10.48

I:\ProjectData\CUY\85529\Design\Roadway\Sheets\85529_GY004.dgn Sheet 12/21/2020 7:44:28 AM jalbrigl

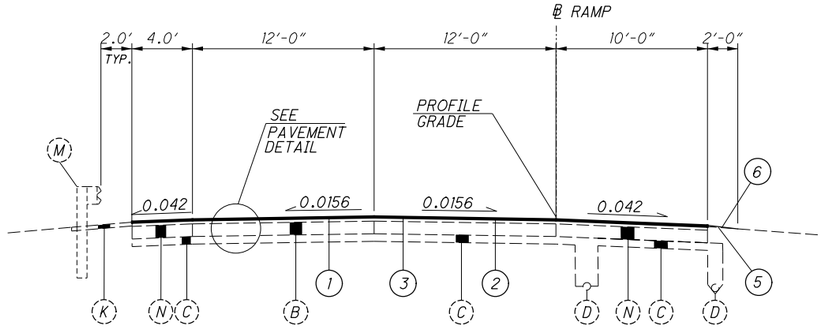

NORMAL 2 LANE PAVEMENT

STA. 452+00.00 TO STA.457+50.00 RAMP B-1

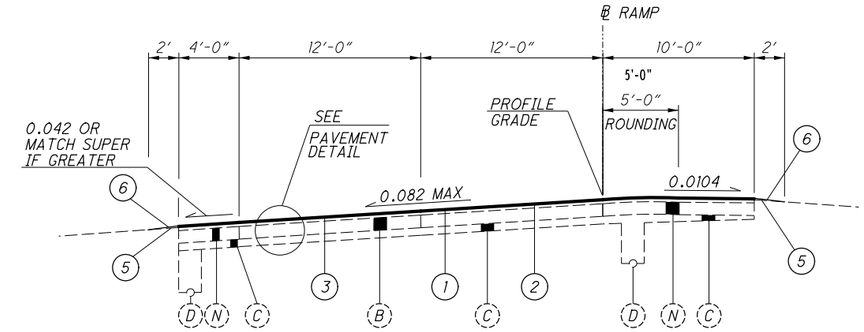

SUPERELEVATED 2 LANE PAVEMENT

STA. 447+00.00 TO STA. 452+00.00 RAMP B-1
STA. 457+50.00 TO STA. 465+93.66 RAMP B-1 (0.060 MAX. SUPER) (CURVE RIGHT)

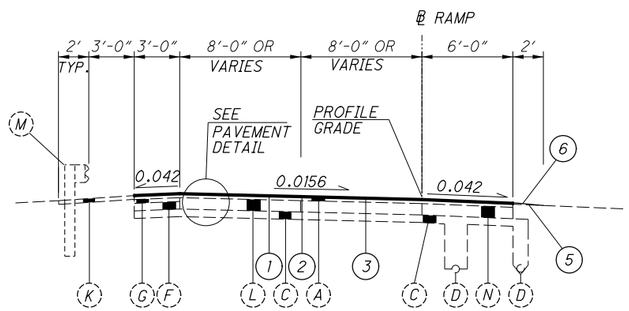

NORMAL RAMP SECTION

STA. 697+75.00 TO STA. 699+20.00 RAMP C
STA. 703+17.00 TO STA. 707+25.00 RAMP D
STA. 711+00.00 TO STA. 713+00.00 RAMP D
STA. 56+00.00 TO STA. 65+25.00 RAMP A-1
STA. 23+75.00 TO STA. 28+39.85 RAMP B-1
STA. 55+99.30 TO STA. 61+78.96 RAMP D-1
STA. 15+25.00 TO STA. 17+78.66 ROAD NO. 1
STA. 14+00.00 TO STA. 19+89.00 ROAD NO. 2
STA. 33+25.00 TO STA. 37+03.78 ROAD NO. 2
STA. 88+28.07 TO STA. 95+50.00 RAMP E
STA. 8+70.15 TO STA. 16+04.73 RAMP F

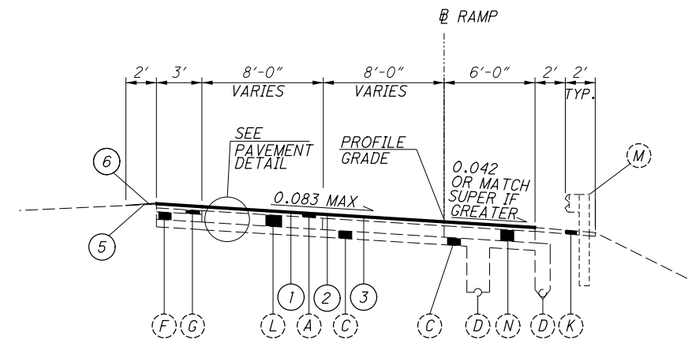

SUPERELEVATED RAMP SECTION

STA. 696+15.53 TO STA. 699+53.43 RAMP A
STA. 695+31.04 TO STA. 701+07.01 RAMP B
STA. 707+25.00 TO STA. 711+00.00 RAMP D
STA. 65+25.00 TO STA. 70+79.53 RAMP A-1
STA. 12+57.99 TO STA. 23+75.00 RAMP B-1
STA. 11+81.48 TO STA. 28+86.26 RAMP C-1
STA. 61+78.96 TO STA. 66+90.62 RAMP D-1
STA. 11+14.00 TO STA. 15+25.00 ROAD NO. 1
STA. 28+73.80 TO STA. 41+24.44 ROAD NO. 1
STA. 11+09.00 TO STA. 14+00.00 ROAD NO. 2
STA. 28+70.00 TO STA. 33+25.00 ROAD NO. 2

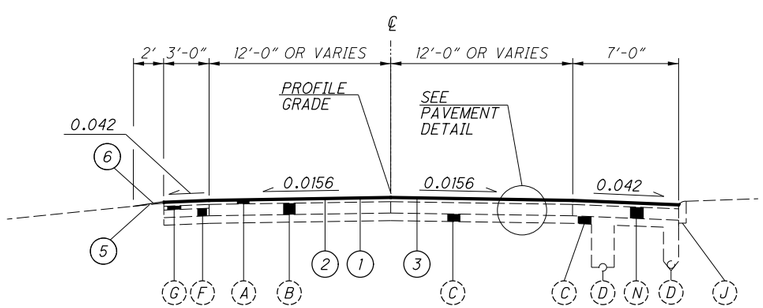

NORMAL RAMP SECTION

STA. 17+78.66 TO STA. 28+73.80 ROAD NO. 1
STA. 19+89.00 TO STA. 28+70.00 ROAD NO. 2

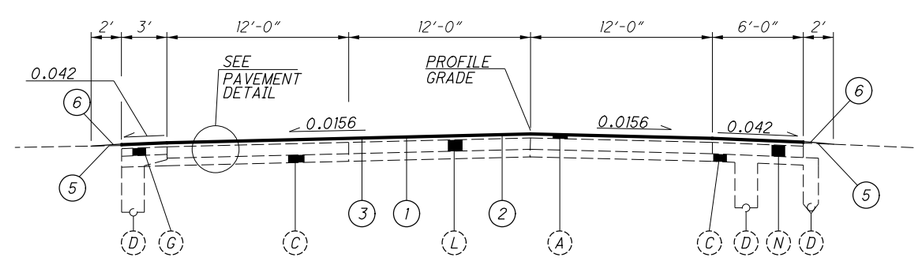

NORMAL RAMP SECTION

STA. 699+20 TO STA.702+33.53 RAMP C-1

SEE SHEET 4 FOR LEGEND & PAVEMENT DETAILS

TYPICAL SECTIONS

CUY-71-10.48

I:\ProjectData\CUY\85529\Design\Roadway\Sheets\85529_GY005.dgn Sheet 12/21/2020 7:44:28 AM jalbrigl

General

Project Description

This project involves the improvement of IR-71 by removing 2" of asphalt and paving the roadway with 2" of Item 442, Asphalt Concrete Surface Course, 12.5mm, Type A, As Per Plan, PG76-22M from IR-480 (SLM 10.48) to the Brooklyn Corp. Limit (SLM 14.66) in the Cities of Brooklyn, Cleveland, and the Village of Linndale. Incidental work includes pavement repairs, pavement markings, and raised pavement markers.

Existing Typical Sections

Existing typical sections have been taken from the records and are believed to represent the existing pavement, but the State of Ohio does not guarantee the accuracy of the same.

For further information in regards to the existing typical sections, the Contractor shall refer to the previous construction plans.

These plans may be reviewed at the following location:

Ohio Department of Transportation
District 12 Office
5500 Transportation Boulevard
Garfield Heights, Ohio 44125

Plan Sheet Stationing

The roadway was not surveyed prior to the preparation of these plans. Record drawings were used to prepare plan sheets and to calculate estimated pavement area quantities and pavement marking quantities.

Right of Way

All work shall be performed within the existing right of way or easements.

Work Limits

The work limits shown on these plans are for physical construction only. Provide the installation and operation of all work zone traffic control and work zone traffic control devices required by these plans whether inside or outside these work limits.

Contingency Quantities

The Contractor shall not order materials or perform work for items designated by plan note to be used "as directed by the Engineer" unless authorized by the Engineer. The actual work locations and quantities used for such items shall be incorporated into the final change order governing completion of this project.

Equipment and Material Storage

In order to provide for the safety of the traveling public the Contractor's attention is directed to 614.03. In addition, the following provisions shall apply:

- Any removed items shall not be stored on the right of way for more than thirty (30) days.
- The storage of equipment, materials, and vehicles within the highway right of way will be permitted. The number of areas and exact locations shall be approved by the Engineer.
- All disturbed areas shall be returned to their original condition at no expense to the state.

Cooperation Between Contractors

The Contractor shall cooperate and coordinate his/her operations with the contractors on other projects that may be in force during the life of the contract. No waiver of any provisions of 105.08 of the Construction and Material Specifications is intended.

Staging Areas

There are no specific areas given in the plans for the Contractor to use as a staging area(s). If the Contractor wants to use an area(s) for staging, regardless if it falls within the project limits or not, the Contractor is to use the Right of Way E-Permitting System at https://odhcp.bemcorp.net/Accounts/Account/Account in order to apply for a permit per Section 107.02 of the CMS. For specific permitting questions, the Contractor can contact the District Permitting Office, (Melvin Safford) at 216-584-2137 or at District12Permits@dot.ohio.gov.

If a permit is granted, all conditions of the permit shall be met in addition to the requirements of 104.04 of the CMS, at no additional cost to the State. If the Project Engineer deems that all the conditions of the permit were not met, then 10% of the Contract bid amount for mobilization shall be withheld until all the conditions of the permit are satisfied.

Item 619 – Field Office, Type B, As Per Plan

In addition to the requirements of CMS 619, the Contractor shall furnish and set up a Wi-Fi router meeting the requirements of IEEE 802.11ac for the exclusive use of the Department.

All other field office items supplied shall meet the requirements of a Type B Field Office.

Item 619 – Field Office, Type B, As Per Plan..... **6 Months**

Item 623 - Construction Layout Stakes and Surveying, As Per Plan

In addition to the requirements of the CMS, this item of work will include the following additional requirements.

An Ohio professional surveyor shall determine the minimum vertical clearances of all existing and new bridges within the project limits after completion of all the work, but prior to final acceptance of the project. At a minimum, measurements shall be taken along the centerline of each fascia beam at the edge of shoulders, edge lines, lane lines, and crown of the roadway below. The measurements shall be documented on the ODOT vertical clearance survey form. The form shall bear the stamp or seal of the Ohio professional surveyor who has taken the measurements. The Ohio professional surveyor shall submit the completed form to the Project Engineer and the District Bridge Maintenance Engineer prior to final acceptance of the project.

Payment for all of the above work shall be at the unit price bid for Item 623 – Construction Layout Stakes, As Per Plan, which shall include all labor, equipment, materials and incidentals necessary to complete the above work.

Protection of Right-of-Way Landscaping

Prior to beginning work, the Contractor, the Project Engineer and a representative of the maintaining agency will review and record all landscaping items within the right-of-way (both within and outside the construction limits). A record of this review will be kept in the Project Engineer's files. Prior to final acceptance, a final review of landscaping items will be made.

Constrict all activities, equipment storage and staging to within the construction limits. Unless otherwise identified in the plans or proposal, the construction limits are identified as 30 feet from the edge of pavement.

Submit a written request to the Project Engineer to use any area outside these limits. The document submitted must clearly identify the area and explain the proposed use and restoration of the area. Use of these areas for disposal of waste material and construction debris, excavation of borrow material and placement of portable plants is prohibited. The request must be approved, in writing, before the Contractor has permission to use the area.

Any items damaged beyond the construction limits, as defined above, will be replaced in kind or as approved by the Project Engineer.

I:\ProjectData\CUY\85529\Design\Roadway\Sheets\85529_GN001.dgn Sheet 12/21/2020 7:44:29 AM jalbrigl

Utilities

Listed below are all known utilities located within the project construction limits together with their respective owners. The Ohio Department of Transportation has used the best available information to determine the utility companies serving this area but cannot guarantee that this utility company list is complete.

AT&T
13630 Lorain Ave. – 2nd Floor
Cleveland, Ohio 44111
Attn: James Janis
Phone: (216) 476-6142
Fax: (216) 476-6013
pj8191@att.com

CEI First Energy (Illuminating Co.)
6896 Miller Rd., Suite 101
Brecksville, Ohio 44141
Attn: John M. Zassick
Phone: (440) 546-8706
jmzassick@firstenergycorp.com

Charter Communications
7 Severance Circle
Cleveland Heights, Ohio 44118
Attn: Pat Santoiemmo
Cell: (216) 701-6082
Fax: (216) 581-3262
pat.santoiemmo@charter.com

City of Cleveland, Division of Cleveland Public Power
1300 Lakeside Ave., Rm 152
Cleveland, Ohio 44114
Attn: Christopher Hirzel
Phone: (216) 563-7212
Fax: (216) 6642972
chirzel@cpp.org

City of Cleveland, Division of Traffic Engineering
601 Lakeside Ave., Rm 25
Cleveland, Ohio 44114
Attn: Andrew Cross
Phone: (216) 664-3197
across@city.cleveland.oh.us

City of Cleveland, Division of Water
1201 Lakeside Ave.
Cleveland, Ohio 44114
Attn: Fred Roberts
Phone: (216) 664-2444, Ext. 75590
24-HR: Emergency Ph (216) 664-3060
fred_roberts@clevelandwater.com

City of Cleveland, Division of Water Pollution Control
12302 Kirby Rd.
Cleveland, Ohio 44108
Attn: Rachid Zoghaib
Phone: (216) 664-3785
rzoghaib@clevelandWPC.com

Crown Castle
15565 NEO Pkwy.
Garfield Heights, Ohio 44128
Attn: Ed Daly
Phone: (585) 397-5988
Ed.Daly@crowncastle.com

Dominion Energy Ohio
320 Springside Dr. Suite 320
Akron, Ohio 44333
Attn: Michael R. Antonius
Phone: (330) 664-2481
Michael.r.antonius@dominionenergy.com

Level 3 Communications
4000 Chester Ave.
Cleveland, Ohio 44103
Attn: Doug Holloway
Phone: (216) 906-6284
Doug.holloway@centurylink.com

NEORSD
3900 Euclid Ave
Cleveland, Ohio 44115
Attn: Mary Maciejowski
Phone: (216) 881-6600, Ext. 6466
Maciejowskim@neorsd.org

Ohio Department of Transportation District 12 – Roadway Services
5500 Transportation Blvd.
Garfield Heights, Ohio 44125
Attn: Keith Hamilton, P.E.
Phone: (216) 584-2220
keith.hamilton@dot.ohio.gov

Verizon (MCI)
12300 Ridge Rd.
North Royalton, Ohio 44133
Attn: Daniel Arz
Phone: (440) 457-4832
Cell: (216) 570-9343
daniel.arz@verizon.com

Wide Open West
105 Blaze Industrial Pkwy
Berea, Ohio 44017
Attn: Bob Hammond
Phone: (440) 606-6262
bob.hammond@wowinc.com

Windstream
245 N. Main Street
Hudson, Ohio 44236
Attn: Jeff Gulyas
Phone: (216) 385-1669
Jeff.gulyas@windstream.com

Zayo Fiber Solutions
305 E. Wiggin Street
Gambier, Ohio 43022
Attn: Scott Heinlen
Phone: (740) 501-6921
scott.heinlen@zayo.com

There are no underground utilities shown on this plan. The nature of the work required by this project will not affect any known underground utilities that exist under or adjacent to the work area.

Roadway and Erosion Control

Item 209 - Linear Grading, As Per Plan

This item of work shall consist of grading along the outside edge of the paved shoulder to eliminate high spots and provide positive sheet flow off the pavement and shoulder into roadside ditches or drainage structures. This item is not intended to be used to excavate a uniform depth to place Item 617 – Compacted Aggregate, As Per Plan.

Any debris collected shall be removed and disposed of as specified in Section 105.16 & 105.17 of the Construction and Material Specifications.

Payment for the above work shall be made at the unit bid price for Item 209 – Linear Grading, As Per Plan and shall include all labor, tools, equipment and materials necessary to perform this item of work.

The following estimated quantity has been carried to the General Summary for use as directed by the Engineer:

Item 209 – Linear Grading, As Per Plan..... **263 Stations**

I:\ProjectData\CUY\85529\Design\Roadway\Sheets\85529_GN002.dgn Sheet 12/21/2020 7:45:40 AM jalbrigt

Drainage

Review of Drainage Facilities

Before any work is started on the project and again before final acceptance by the State, representatives of the State and the Contractor, along with local representatives, shall make an inspection of all existing sewers which are to remain in service and which may be affected by the work. The condition of the existing conduits and their appurtenances shall be determined from field observations. Records of the inspection shall be kept in writing by the State.

All new conduits, inlets, catch basins and manholes constructed as part of the project shall be free of all foreign matter and in a clean condition before the project will be accepted by the State.

All existing sewers inspected initially by the above mentioned parties shall be maintained and left in a condition reasonably comparable to that determined by the original inspection. Any change in the condition resulting from the Contractor's operations shall be corrected by the Contractor to the satisfaction of the Engineer.

Payment for all operations described above shall be included in the contract price for the pertinent 611 drainage items.

Castings Adjusted to Grade, As Per Plan

All castings shall be adjusted to the finished roadway elevation by the Contractor. The time between adjusting the castings and resurfacing shall be kept to an absolute minimum. No adjusting rings shall be permitted. When performing this work, the pavement shall be sawcut prior to removal and hook bolts shall be used where practical to connect existing pavement to new concrete.

The following estimated quantities have been carried to the General Summary:

Item 611 – Catch Basin Adjusted to Grade, As Per Plan..... **27 Each**
Item 611 – Manhole Adjusted to Grade, As Per Plan..... **1 Each**

Castings Reconstructed to Grade

The Contractor and Field Engineer shall field check all existing catch basins, manholes, or monument boxes located within the limits of the project. Any castings found that exhibits substantial deterioration and requires more work than is specified under "Castings Adjusted to Grade" shall be "Reconstructed to Grade", as directed by the Engineer. If none are needed, these items are to be non-performed.

The following estimated quantities have been carried to the General Summary for use as directed by the Engineer:

Item 611 – Catch Basin Reconstructed to Grade..... **5 Each**
Item 611 – Manhole Reconstructed to Grade ..... **1 Each**

Item Special – Miscellaneous Metal

Existing castings may prove to be unsuitable for reuse, as determined by the Engineer. It shall be the Contractor's responsibility to provide the castings of the required type, size, and strength (heavy duty) for the particular structure in question. All materials must meet Item 611 of the CMS and shall have the prior approval of the Engineer.

The Contractor is cautioned to use extreme care in the removal, storage, and replacement of all existing castings. Castings damaged by the negligence of the Contractor, as determined by the Engineer, shall be replaced with the proper new castings at the expense of the Contractor.

The Contractor shall not order materials until authorized by the Engineer, and if none are needed, the item shall be non-performed.

The following estimated quantity has been carried to the General Summary for use as directed by the Engineer:

Item Special – Miscellaneous Metal ..... **5,000 Lbs**

I:\ProjectData\CUY\85529\Design\Roadway\Sheets\85529_GN003.dgn Sheet 12/21/2020 7:46:33 AM jalbrigl

Pavement

Profile and Alignment

Place the proposed pavement to follow the alignment of the existing pavement. Previous construction plans showing the original alignment are available for inspection at the ODOT District 12 office. Place the proposed asphalt concrete as shown on the typical sections. The intent of the plans is to maintain the existing profile.

Planing Requirements

The duration of time between planing the asphalt and placing the asphalt overlay shall be kept to a minimum. In no instance shall this time exceed 10 calendar days. The time limit shall begin on the first day of planing and shall continue based on calendar days, minus any weather days, until completion of the asphalt concrete surface course. This is to ensure that the potential degradation of the exposed pavement due to traffic is kept to a minimum. This requirement applies to both mainline and ramps alike.

In the event that the time between exposing the existing pavement and placing the asphalt surface course exceeds 10 calendar days, liquidated damages as per 108.07 of the CMS shall be assessed.

Asphalt Concrete Surface Course Sealing Requirements

In addition to the gutter sealing requirements specified in SCD BP-3.1 and C&MS 401.15, after completion of the surface course, the contractor shall use a certified 702.01 PG binder to seal the following locations:

- All castings including but not limited to monuments, manholes, water valves, catch basins, curb inlets.
- Butt joints and feather joints including bridge approaches.
- Forward joint for driveway asphalt and trailing joint when butting to existing asphalt drive.
- Perimeter of all pavement repairs or other asphalt inlays when pavement repairs /inlays are not overlaid with an asphalt concrete surface course.
- All cold longitudinal joints between paved shoulders and guardrail asphalt.

The material used shall be a certified 702.01 PG binder. The width of the sealer shall be 2-3 inches.

Any additional costs associated with the work identified in this note shall be included in the appropriate asphalt concrete surface course item of work.

Longitudinal Joints (Flexible Pavement)

Longitudinal joints between a pavement lane and adjoining shoulder or speed change lane, and between a speed change lane and the adjoining shoulder shall be made the same day. All longitudinal joints shall be hot with the exception of one cold joint per roadway. Locate the cold joint along the centerline or a lane line. Longitudinal joint locations shall be as approved by the Engineer. Each ramp shall have a maximum of one longitudinal cold joint located approximately halfway across the ramp.

Item 251 - Partial Depth Pavement Repair (442), As Per Plan A

This item shall be used for the repair of unsound, cold-patch, or pop-out areas of longitudinal joints as directed by the Engineer. This work shall be performed after the planing operation. The depth of the repair shall be 3" below the top of the planed asphalt surface. The width of the repair shall be 12" centered over the existing joint.

Use replacement materials conforming to the requirements of Item 442, 19mm.

The following estimated quantity has been carried to the General Summary:

Item 251 – Partial Depth Pavement Repair (442),
As Per Plan A..... **2,893 Sq Yd**

Item 251 - Partial Depth Pavement Repair (442), As Per Plan B

This item shall be used for the repair of unsound, cold-patch, or pop-out areas of transverse joints and cracks as directed by the Engineer. This work shall be performed after the planing operation. The depth of the repair shall be 3" below the top of the planed asphalt surface. The width of the repair shall be 12" centered over the existing joint.

Use replacement materials conforming to the requirements of Item 442, 19mm.

The following estimated quantity has been carried to the General Summary:

Item 251 – Partial Depth Pavement Repair (442),
As Per Plan B..... **1,500 Sq Yd**

Item 254 – Pavement Planing, Asphalt Concrete, As Per Plan

This item shall be used to remove the existing asphalt overlay full width at an average depth of 2" as specified in the plans. Areas which have transverse wedges (butt joints) are to be removed in two passes as required for maintaining traffic. No additional payment shall be made for the second pass.

Item 442 – Asphalt Concrete Surface Course, 12.5mm, Type A, (446), As Per Plan, PG76-22M

Joint coring as per 446.04 will not be required for all asphalt concrete placed with cold longitudinal joints using Void Reducing Asphalt Membrane (VRAM). Construct cold longitudinal joints over VRAM using the same techniques, equipment, and roller patterns used on the rest of the mat. Obtain 10 mat cores for each lot of material per 446.04. Pay factors for each lot of material will be determined per Table 446.04-2.

The coarse virgin aggregate and at least 50% of fine virgin aggregate for this item shall be limited to air cooled blast furnace slag (ACBFS) or Trap Rock from Ontario.

Table 442.02-2 applies except No. 4 sieve requirements are 52 to 60 Total Percent Passing. For the No. 4 sieve, do not exceed 63 in production.

Item 442 – Asphalt Concrete Surface Course, 12.5mm, Type A, (447), As Per Plan, PG76-22M

The coarse virgin aggregate for this item shall be limited to a blend of air cooled blast furnace slag (ACBFS) or Trap Rock from Ontario and limestone. The Contractor shall use a minimum 60% of ACBFS or Trap Rock from Ontario with limestone comprising the remaining percentage. At least 50% of the fine virgin aggregate for this item shall be limited to ACBFS or Trap Rock from Ontario.

Table 442.02-2 applies except No. 4 sieve requirements are 52 to 60 Total Percent Passing. For the No. 4 sieve, do not exceed 63 in production.

When ACBFS is used for a fraction of the coarse aggregate, provide a total asphalt binder content greater than or equal to 6.2%. If ACBFS makes up 100% of the coarse aggregate, apply the binder content requirements of CMS 442.

Item 617 – Compacted Aggregate, As Per Plan

This item shall be used to place compacted aggregate at a variable depth only where needed to fill in low spots along the shoulder and eliminate drop offs. Material shall be limited to reclaimed asphalt concrete pavement (RAP).

The actual depth of compacted aggregate placed will vary depending upon existing conditions. For estimating purposes, an average depth of one inch (1") has been used. Water, if needed, shall be applied as per 617.05 and included under Item 617 – Compacted Aggregate, As Per Plan.

The following estimated quantity has been carried to the General Summary for use as directed by the Engineer:

Item 617 – Compacted Aggregate, As Per Plan..... **160 Cu Yd**

Item 618 – Rumble Strips, Shoulder (Asphalt Concrete), As Per Plan

For all freeways, the lateral position of edge line rumble strips shown in SCD BP-9.1 is revised as follows:

1. Median and Outside Shoulder Offset for shoulders less than 6':
   Dimension A and B are equal to 6"
2. Median and Outside Shoulder Offset for shoulders 6' to 12':
   Dimension A and B are equal to half the shoulder width minus 12".
3. Median and Outside Shoulder Offset for shoulders greater than 12':
   Dimension A and B are equal to 5'.

The following estimated quantity shall be used to construct Item 618 – Rumble Strips, Shoulder (Asphalt Concrete), As Per Plan as per Standard Drawing BP-9.1 except as noted above:

Item 618 – Rumble Strips, Shoulder (Asphalt Concrete),
As Per Plan..... **9.15 Miles**

I:\ProjectData\CUY\85529\Design\Roadway\Sheets\85529_GN004.dgn Sheet 12/21/2020 7:47:38 AM jalbright

Traffic Control

Pavement Markings

Auxiliary markings shall be located and installed as per Standard Drawing TC-71.10

Permanent Pavement Markings on Bridges

Proposed pavement markings on bridges shall be placed on top of existing markings.

Raised Pavement Markers

Install raised pavement markers for lane lines at a spacing of eighty feet (80') center-to-center.

Item 621 – Raised Pavement Marker Removed

This item shall include the removal and disposal of existing RPMs.

The following estimated quantity has been carried to the General Summary:

Item 621 – Raised Pavement Marker Removed..... **1,740 Each**

Item 632 – Detector Loop, As Per Plan

All stop line inductance detector loops shown in the plans shall be the powerhead configuration shown on TC-82.10. The width shall be as specified on TC-82.10 and the length shall match the existing detector loop length, with a maximum length of 35'. The stop line detector loops shall not be wired to any other loops and shall have their own detector channel. The location of these loops shall be such that the powerhead is located at the stop line, not past it.

All dilemma zone inductance detector loops called for in the plans shall be the Angular Design Detection (A.D.D.) loop as shown on TC-82.10. Dimensions shall be as specified on TC-82.10.

System loops shall be as depicted in the plans.

All stop line detection shall be tested for a bicycle target and all dilemma detection zones shall be tested for a motorcycle target.

Install detector loops in the surface course within 72 hours of its placement.

When replacing the loop detectors, the loop detector wire shall be replaced to the pull box or pole, whichever is applicable, under Item 632 and TC-82.10. The new cable splice kits shall be included in this pay item.

The Contractor shall contact the Project Engineer and Andrew Cross, (216) 664-3197, City of Cleveland Traffic Engineer, seven (7) days prior to planing through an intersection to adjust signal operation as needed.

The District 12 Traffic Engineer shall concur with the location of the replacement loops.

The following estimated quantity has been carried to the General Summary for use as described above:

Item 632 – Detector Loop, As Per Plan.....**3 Each**

Detector Loop Locations

REFERENCE NO.	LOCATION	632 6' X 20' POWEHEAD DETECTOR LOOP EACH
L-1	Ramp C at W. 150th St. At Stop Line Right Turn Lane	1
L-2	Ramp No.2 at Bellaire Rd. At Stop Line Left Turn Lane	1
L-3	Ramp No.2 at Bellaire Rd. At Stop Line Left/Right Only Turn Lane	1
SUBTOTALS		3
TOTAL CARRIED TO GEN. SUMMARY		3

Detection Maintenance

If vehicle detection becomes unexpectedly disabled, requires modification, or is scheduled to be temporarily removed during the construction project, the Contractor shall immediately notify the Project Engineer and District Traffic Engineer.

If the loss of vehicle detection is known prior to the start of construction, it shall be discussed at the preconstruction meeting. At such time, the District Traffic Engineer shall advise the Project Engineer and Contractor on the appropriate action to rectify any loss of vehicle detection. This may include placing the traffic signal on minimum or maximum recall, modifying the minimum green times, and removing the malfunctioning detection from service. Where non-intrusive detection (i.e. video, radar) already exists, the Contractor shall insure that detection is operating and maintained by reconfiguring the detection units accordingly during all construction phases. This is to avoid the signal from maxing out the affected signal phase and creating unnecessary delays.

Locations where non-intrusive detection is proposed and the existing vehicle detection is to be abandoned, the non-intrusive vehicle detection shall be installed, configured and made fully functional prior to the existing detection being disabled. The Contractor shall continue to maintain and modify the detection until final acceptance of the traffic signal. This is to ensure vehicle detection remains fully functional throughout construction.

I:\ProjectData\CUY\85529\Design\Roadway\Sheets\85529_GN005.dgn Sheet 12/21/2020 7:49:34 AM jalbright

General

It is the responsibility of the Contractor to provide through vehicular access in both directions at all times throughout the project area. The project shall be constructed in phases in order to minimize traffic disruption and inconvenience to the general public. The Contractor shall be responsible for providing all equipment, materials and manpower needed to adequately maintain traffic as provided for in the plans and specifications.

The Contractor is reminded that, in the conduct of this project, the sequence of operations shall be planned in a fashion which minimizes the number of lane reductions and/or lane width reductions required to maintain traffic through the project.

Permitted lane closures shall be as shown on the "Schedule of Through Lanes to be Maintained" table. The time limits shown in this table shall be adhered to or road user costs will be assessed.

Construction Sequence

No permanent maintenance of traffic zones are detailed in these plans. Traffic shall be maintained in accordance to the "Schedule of Through Lanes to be Maintained" note. All work zone closures shall comply with the appropriate Standard Construction Drawings.

Prior to opening all lanes to normal traffic, the Contractor shall ensure that the pavement is in a drivable condition with no potholes or dust and that all longitudinal drop-offs greater that 1-1/2" and transverse drop-offs are ramped as per the "Maintaining Traffic and Sequence of Operations" note.

Maintenance of Traffic Control Zones

The Contractor shall be responsible to maintain the signs, drums or cones specified in the Standard Construction Drawings. When the Contractor is notified of deficiencies, he shall correct the deficiencies as soon as possible, preferably within 12 hours and no later than 24 hours. If any noted deficiencies are not corrected within 24 hours the Engineer shall deduct one day pay for Item 614 – Maintaining Traffic, not as a penalty but as road user costs. The Contractor shall be subject to these road user costs for each and every day that these provisions are not met. All costs for maintaining the work zones as described above shall be included under Item 614 – Maintaining Traffic.

Suspension of Work

If the Contractor fails to comply with the provisions for traffic control as set forth in these plans or with provisions of the OMUTCD, the Engineer shall suspend work until the Contractor complies with the necessary requirements.

Lane Closure/Reduction Required

Length and duration of lane closures and restrictions shall be at the approval of the Engineer. It is the intent to minimize the impact to the traveling public. Lane closures or restrictions over segments of the project in which no work is anticipated within a reasonable time frame, as determined by the Engineer, shall not be permitted. The level of utilization of maintenance of traffic devices shall be commensurate with the work in progress.

Payment

All work and traffic control devices shall be in accordance with CMS 614 and other applicable portions of the specifications, as well as the Ohio Manual of Uniform Traffic Control Devices. Payment for all labor, equipment, and materials shall be included in the lump sum contract price for Item 614 – Maintaining Traffic unless separately itemized in the plans.

Schedule of Through Lanes to be Maintained

All lane closures may only be implemented at the times permitted by the "District 12 Permitted Lane Closure Times" list, which is located on the ODOT website:

www.dot.state.oh.us/districts/D12/HighwayManagement/Pages/PermittedLaneClosures.aspx

The latest revision, at 14 days prior to the bid date, shall be in effect for this project.

No lane or shoulder closures shall be in place when no work is being performed. Shoulder closures shall only be allowed at the times specified for lane closures.

Any roadway not listed shall not have any lane closures on weekdays from 6:30am to 9:00am and 3:00pm to 6:00pm. Contact Troy Onesti, District 12 Work Zone Traffic Manager, at (216) 379-5337 if there are any questions.

IR-71 Ramps*		
Location	Permitted Ramp Closures, Lane Reductions	
	Short Term Closure	Partial Width Closure (maintain one 11' lane)
One-Lane Ramps	9:00pm – 5:00am **	7:00pm – 5:00am
Two-Lane Ramps	Not Permitted	7:00pm – 5:00am

*Not for use on the IR-71/IR-480 system interchange.

**Each ramp shall be closed for a maximum of two (2) separate times using an approved detour. Any closure shall be as directed by the Engineer.

Ramp Closures for Resurfacing

The Contractor may close one ramp at a time at each location for milling, partial depth pavement repairs, or resurfacing. Closures for ramps scheduled for repairs and resurfacing shall be limited according to the days of the week and hours shown in the "Schedule of Through Lanes to be Maintained" table.

The motoring public shall be given advance warning of closures at least 72 hours in advance through the use of either a ground mounted flat sheet sign or a portable changeable message sign. A LEO with patrol car (paid for separately) shall be used for each ramp closure and be present for the entire closure time.

Freeway entrance ramps shall be closed with a PCMS suggesting a recommended detour.

Freeway exit ramps shall be closed with a PCMS routing traffic to the next exit and a second PCMS indicating a U-turn at the exit, unless directed differently by the Project Engineer.

For ramp closures, one or two additional PCMS units will be needed as described above. These will be in addition to the PCMS units specified in the plans and shall be included for payment in Item 614 – Maintaining Traffic.

Alternate Methods

If the Contractor so elects, he may submit alternate methods for the maintenance of traffic, provided the intent of the provisions is followed and no additional inconvenience to the traveling public results there from. No alternate plan shall be placed into effect until approval has been granted, in writing, by the Director.

All items proposed for use under these provisions must comply with current Department standards for their use when the plan detail, Standard Construction Drawing or other bid document governing their use is not provided as part of the bid package.

Construction Traffic

All construction traffic shall use acceptable truck routes to access the construction area. Use of local residential streets is strictly prohibited unless allowed in writing by the local enforcement authorities.

Lane Value Contract Table

Description of Critical Lane/Ramp to be Maintained	Direction	Lanes	Restricted Time Period	Time Unit	Disincentive (per time unit per lane)
IR-71:					
Berea Freeway	NB	2	As Per the Permitted Lane Closure Schedule	Each Minute	$240
I-71 (I-480 intechange)	NB	2	As Per the Permitted Lane Closure Schedule	Each Minute	$305
I-71	NB & SB	4	As Per the Permitted Lane Closure Schedule	Each Minute	$235

The Contractor shall be assessed a disincentive in the amount of the largest disincentive within all sections impacted by the physical lane restriction, including the Transition Area, Activity Area, and Termination Area as defined by the OMUTCD.

CALCULATED JDA CHECKED EJK

MAINTENANCE OF TRAFFIC NOTES

CUY-71-10.48

I:\ProjectData\CUY\85529\Design\Roadway\Sheets\85529_MN001.dgn Sheet 12/21/2020 7:50:40 AM jalbrigl

Maintaining Traffic – General Provisions

1. Traffic shall be maintained in accordance with the "Schedule of Through Lanes to be Maintained." the Contractor shall set up and operate his equipment in such a manner as to minimize encroachment upon the traveled width of pavement

2. The Contractor shall notify the Engineer, the responsible law enforcement agency and the Ohio Department of Transportation, District 12 Public Information Officer ((216) 584-2007) not less than 24 hours prior to a scheduled disruption of traffic.

3. Nighttime work shall be permitted in accordance with these plans and notes. The Contractor shall provide flood lighting of the work area in accordance with CMS 401.15 in order to assure the safest conditions during nighttime work. A lighting plan for nighttime operations shall be presented to and approved by the Engineer.

4. The Contractor shall furnish, erect and maintain all warning and information signs necessary for maintaining traffic. The sign faces shall be reflectorized with type G sheeting complying with the requirements of CMS 730.19. The Contractor shall determine what signs are needed and advise the Engineer two weeks in advance of his detailed plans. See the OMUTCD and standard drawings for the minimum signage required.

5. Traffic control devices shall be set up prior to the start of construction and shall be properly maintained during the time special conditions exist. They shall remain in place only as long as they are needed and shall be immediately removed thereafter. Where operations are performed in stages, there shall be in place only those devices that apply to the condition present during the stage in progress. All signs with messages which do not apply during a certain period shall be covered or set aside out of the view of traffic.

6. Placement of final roadway pavement markings and raised pavement markers shall be accomplished in accordance with the "Schedule of Through Lanes to be Maintained." The Contractor shall provide 2 shadow vehicles as per MT-99.20 following the pavement marking equipment. The shadow vehicles shall travel 500' apart with the remote vehicle traveling on the shoulder (left or right as applicable) where usable shoulder is available. The first shadow vehicle in a traffic lane shall be equipped with a truck mounted attenuator meeting NCHRP 350 requirements. Each shadow vehicle shall have a yellow flashing beacon plus 48" construction warning signs mounted on the back facing traffic with standard type messages advising motorists of the work ahead, advisory warning speed, and which lane is closed.

7. During non-working periods, open excavations shall be delineated with warning flashers and/or other approved devices as deemed appropriate by the Engineer.

8. Existing signs located within the road work areas which are necessary for interim or permanent traffic control shall be removed and re-erected in locations as approved by the Engineer.

9. No stoppage of traffic shall occur without law enforcement personnel at each location to direct traffic.

10. Whenever a total closure is implemented, the Contractor shall provide a portable changeable message sign from ODOT's pre-approved list. It shall be placed 1.5 miles to 2 miles in advance of the closure or as directed by the Engineer.

11. For any operation not specifically mentioned in these plans, the traffic shall be maintained in accordance with the OMUTCD.

Holiday Closures

No work shall be performed and all existing lanes shall be open to traffic during the following designated holidays or events:

Christmas	New Year's	Mother's Day
Memorial Day	Fourth of July	Easter
Labor Day	Thanksgiving	

The period of time that the lanes are to be open depends on the day of the week on which the holiday or event falls. The following schedule shall be used to determine this period:

Day of the Week	Times All Lanes Must Be Open
Sunday	12 noon Friday Through 6:00AM Monday
Monday	12 noon Friday Through 6:00AM Tuesday
Tuesday	12 noon Monday Through 6:00AM Wednesday
Wednesday	12 noon Tuesday Through 6:00AM Thursday
Thursday	12 noon Wednesday Through 6:00AM Monday
Thursday (Thanksgiving Only)	6:00AM Wednesday through 6:00AM Monday
Friday	12 noon Thursday Through 6:00AM Monday
Saturday	12 noon Friday Through 6:00AM Monday

Should the Contractor fail to meet any of these requirements, the Contractor shall be assessed a disincentive per the Lane Value Contract (PN 127).

Maintaining Traffic and Sequence of Operations

All asphalt concrete operations shall be conducted in a manner that will assure minimum danger and inconvenience to highway users. The procedure for the removal or placement of any existing or proposed asphalt course shall be such that no greater than 1-1/2" discontinuity in the elevation of the traveled surface shall be exposed to traffic.

Traffic shall not be permitted to cross any partial-width removal or resurfacing joint during the actual removal or paving operation except as necessary. Any partial-width longitudinal joints with a discontinuity greater than 1-1/2" which must be exposed to traffic shall be ramped using Item 614 – Asphalt Concrete for Maintaining Traffic at a rate not steeper than 6:1.

Temporary transverse removal or paving joints which must be exposed to traffic shall be ramped using Item 614 – Asphalt Concrete for Maintaining Traffic at a rate not to exceed 1" in 10'.

For removal of existing overlays, a transition may be planed into the existing overlay and may be substituted for the asphalt ramps previously described.

Whenever traffic is subject to partial width removals or overlays prior to full width completion, the Contractor shall provide W8-11-48 "UNEVEN LANES" signs (dual sign installation). Placement shall be as directed by the Engineer and included in the lump sum payment for Item 614 – Maintaining Traffic.

Whenever any part of the traveled surface is closed, the motorists shall be warned and diverted by the Contractor through the use of a flashing arrow, in addition to those provisions set forth in the OMUTCD, the Traffic Engineering Manual and the applicable Standard Construction Drawings.

Floodlighting

Floodlighting of the work site for operations conducted during nighttime periods shall be accomplished so that the lights do not cause glare to the drivers on the roadway. To ensure the adequacy of the floodlight placement, the Contractor and the Engineer shall drive through the work site each night when the lighting is in place and operative prior to commencing any work. If glare is detected, the light placement and shielding shall be adjusted to the satisfaction of the Engineer before work proceeds.

Payment for all labor, equipment and materials shall be included in the lump sum contract price for Item 614 – Maintaining Traffic.

Truck Mounted Attenuator

When setting up and tearing down advanced signs for a work zone, a Truck Mounted Attenuator shall trail the work crew per CMS 614.03D. Also provide a rear-facing Type B or Type C Arrow Board mounted to the TMA truck per SS821 & SS921. Payment shall be included in the lump sum payment for Item 614 – Maintaining Traffic.

Major Work Items

The following major work items will require traffic maintenance which shall be incorporated into the Contractor's sequence of operations.

A. Removal of existing RPMs
B. Completion of partial depth pavement repairs
C. Planing of asphalt concrete
D. Adjustment of existing castings
E. Placing of asphalt concrete
F. Placing proposed pavement markings and raised pavement markers
G. Placing of rumble strips

Item 614 – Asphalt Concrete for Maintaining Traffic, As Per Plan

This item shall be used to provide temporary asphalt ramps for transverse discontinuities. Ramping shall be placed at the rate of 1" per 10' or to be used as directed by the Engineer.

Remove temporary asphalt ramps as part of this item. Materials shall be removed prior to the placement of the next course of asphalt.

Item 614 – Asphalt Concrete for Maintaining Traffic,
As Per Plan ..... **100 Cu Yd**

CALCULATED JDA
CHECKED EJK

MAINTENANCE OF TRAFFIC NOTES

CUY-71-10.48

I:\ProjectData\CUY\85529\Design\Roadway\Sheets\85529_MN002.dgn Sheet 12/21/2020 11:33:30 AM jalbrigl

Item 614 – Work Zone Pavement Markings

The following estimated quantities have been carried to the General Summary to be used as directed by the Engineer for work zone pavement markings per the requirements of CMS 614.04 and 614.11. Place temporary markings at the same locations as the proposed permanent pavement markings.

Work zone temporary marking widths shall be as given in CMS 614 or 641.

After the planing is completed. use the following temporary markings:

Item 614 – Work Zone Lane Line, Class I, 6", 642 Paint ..... **25.96 Mile**
Item 614 – Work Zone Edge Line, Class I, 6", 642 Paint ..... **24.19 Mile**
Item 614 – Work Zone Channelizing Line, Class I, 12", 642 Paint **11,011 Ft**
Item 614 – Work Zone Dotted Line, Class I, 6", 642 Paint ..... **9,405 Ft**
Item 614 – Work Zone Stop Line, Class I, 642 Paint ..... **212 Ft**
Item 614 – Work Zone Crosswalk Line, Class I, 642 Paint ..... **240 Ft**
Item 614 – Work Zone Arrow, Class I, 642 Paint ..... **36 Each**

After the surface course is placed, use the following temporary markings:

Item 614 – Work Zone Lane Line, Class III, 6", 642 Paint..... **25.96 Mile**
Item 614 – Work Zone Edge Line, Class III, 6", 642 Paint ..... **24.19 Mile**
Item 614 – Work Zone Channelizing Line, Class III, 12", 642 Paint **11,011 Ft**
Item 614 – Work Zone Dotted Line, Class III, 6", 642 Paint ..... **9,405 Ft**
Item 614 – Work Zone Stop Line, Class III, 642 Paint ..... **212 Ft**
Item 614 – Work Zone Crosswalk Line, Class III, 642 Paint ..... **240 Ft**
Item 614 – Work Zone Arrow, Class III, 642 Paint..... **36 Each**

Item 614 – Portable Changeable Message Signs, As Per Plan

The Contractor shall furnish, install, maintain and remove, when no longer needed, a changeable message sign. The sign shall be of a type shown on a list of approved PCMS units available on the Office of Materials Management web page. The list contains Class A and B units with minimum legibility distances of 800 feet and 650 feet, respectively.

Each sign shall be trailer-mounted and equipped with a functional dimming mechanism, to dim the sign during darkness, and a tamper and vandal proof enclosure. Each sign shall be provided with appropriate training and operation instructions to enable on-site personnel to operate and troubleshoot the unit. The sign shall also be capable of being powered by an electrical service drop from a local utility company. The PCMS shall be delineated in accordance with CMS 614.03.

Placement, operation, maintenance and all activation of the signs by the Contractor shall be as directed by the Engineer. The PCMS shall be located in a highly visible position yet protected from traffic. The Contractor shall, at the direction of the Engineer, relocate the PCMS to improve visibility or accommodate changed conditions. When not in use, the PCMS shall be turned off. Additionally, when not in use for extended periods of time, the PCMS shall be turned away from all traffic.

The Engineer shall be provided access to each sign unit and shall be provided with appropriate training and operation instructions to enable ODOT personnel to operate and troubleshoot the unit, and to revise sign messages, if necessary.

All messages to be displayed on the sign will be provided by the Engineer. A list of all required pre-programmed messages will be given to the Contractor at the project preconstruction conference. The sign shall have the capability to store up to 99 messages. Message memory or pre-programmed displays shall not be lost as a result of power failures to the on-board computer. The sign legend shall be capable of being changed in the field. Three-line presentation formats with up to six message phases shall be supported. PCMS format shall permit the complete message for each phase to be read at least twice.

The PCMS shall contain an accurate clock and programming logic which will allow the sign to be activated, deactivated or messages changed automatically at different times of the day for different days of the week.

The PCMS shall have a Web-Based Communication System that will allow the message board to be changed or programmed remotely. This system shall be password protected and may be operated from a computer or have an application that can be operated from a cell phone, android or I-phone. The Web Based Communication System shall be able show the location of each message board on a map. The PCMS unit shall be maintained in good working order by the Contractor in accordance with the provisions of CMS 614.07. The Contractor shall, prior to activating the unit, make arrangements, with an authorized service agent for the PCMS, to assure prompt service in the event of failure. Any failure shall not result in the sign being out of service for more than 12 hours, including weekends. Failure to comply may result in an order to stop work and open all traffic lanes and/or in the Department taking appropriate action to safely control traffic. The entire cost to control traffic, accrued by the Department due to the Contractor's noncompliance, will be deducted from moneys due, or to become due the Contractor on his contract.

The Contractor shall be responsible for 24-hour-per-day operation and maintenance of these signs on the project for the duration of the phases when the plan requires their use.

Payment for the above described item shall be at the contract unit price. Payment shall include all labor, materials, equipment, fuels, lubricating oils, software, hardware and incidentals to perform the above described work.

The estimated quantity provides for four PCMS units at 3 months each.

Item 614 – Portable Changeable Message Sign,
As Per Plan..... **12 SNMT**

Portable Changeable Message Signs for Lane Closure(s)

The Contractor shall place a PCMS 0.5 to 2 miles in advance of any lane closures or as directed by the Engineer. The PCMS shall read: ROAD WORK AHEAD/RIGHT (LEFT) (2) LANE(S) CLOSED. If traffic becomes congested and there is stopped traffic, the message board shall be changed to: STOPPED TRAFFIC AHEAD/PREPARE TO STOP. The WTS shall be responsible for monitoring traffic during lane closures and changing the message signs as necessary. The message shall be changed when there is no lane closure (e.g. ROAD WORK AHEAD/NIGHTLY LANE CLOSURES), or per the Engineer.

I:\ProjectData\CUY\85529\Design\Roadway\Sheets\85529_MN003.dgn Sheet 12/21/2020 7:54:44 AM jalbrigl

Item 614 – Law Enforcement Officer with Patrol Car for Assistance

Use of Law Enforcement Officers (LEOs) by contractors other than the uses specified below will not be permitted at project cost. LEOs should not be used where the OMUTCD intends that flaggers be used.

In addition to the requirements of CMS 614 and the latest edition of the OMUTCD, a uniformed LEO with an official patrol car (car with top-mounted emergency flashing lights and complete markings of the appropriate law enforcement agency) shall be provided for the following traffic control tasks:

- During the entire advance preparation and closure sequence where complete blockage of traffic is required.
- During a traffic signal installation when impacting the normal function of the signal or the flow of traffic or when traffic needs to be directed through an energized traffic signal contrary to the signal display (e.g., directing motorists through a red light).

In addition to the requirement of CMS 614 and the OMUTCD, a uniformed LEO with an official patrol car (car with top-mounted emergency flashing lights and complete markings of the appropriate law enforcement agency) may be provided for the following traffic control tasks as approved by the Engineer:

- For lane closures: during initial set-up periods, tear down periods, substantial shifts of a closure point or when new lane closure arrangements are initiated for long-term lane closures/shifts (for the first and last day of major changes in traffic control setup).

In general, LEOs should be positioned in advance of and on the same side as the lane restriction or at the point of road closure, and to manually control traffic movements through intersections in work zones.

LEOs should not forgo their traffic control responsibilities to apprehend motorists for routine traffic violations. However, if a motorist's actions are considered to be reckless, then pursuit of the motorist is appropriate.

The LEOs work at the direction of the Contractor. The Contractor is responsible for securing the services of the LEOs with the appropriate agencies and communicating the intentions of the plans with respect to duties of the LEOs. The Engineer shall have final control over the LEOs' duties and placement, and will resolve any issues that may arise between the two parties.

The LEO shall report in to the Contractor prior to the start of the shift, in order to receive instructions regarding specific work assignments during his/her shift. The LEO is expected to stay at the project site for the entire duration of his/her shift. The LEO shall report to the Contractor at the end of his/her shift. Should it be necessary to leave the project site, the LEO shall notify the Engineer. The Contractor shall provide the LEO with a two-way communication device which shall be returned to the Contractor at the end of his/her shift.

LEOs (with patrol car) required by the traffic maintenance tasks above shall be paid for on a unit price (hourly) basis under Item 614, Law Enforcement Officer (With Patrol Car) for Assistance. The following estimated quantities have been carried to the General Summary.

Item 614 – Law Enforcement Officer
With Patrol Car for Assistance..... **500 Hours**

The hours paid shall include any minimum show-up time required by the law enforcement agency involved.

Any additional costs (administrative or otherwise) incurred by the Contractor to obtain the services of an LEO are included with the bid price for Item 614, Law Enforcement Officer with Patrol Car for Assistance.

Item 614 - Worksite Traffic Supervisor

Subject to approval of the Engineer, the Contractor shall employ and identify (someone other than the superintendent) a certified Worksite Traffic Supervisor (WTS) before starting work in the field. The WTS shall be trained in accordance with CMS 614.03, shall have successfully completed ODOT administered WTS testing (and re-testing when applicable) and be listed on the ODOT prequalified WTS roster. Prequalification expires every 5 years. Re-testing shall be successfully repeated every 5 years to remain prequalified.

The name of the prequalified WTS and related 24-hour contact information shall be provided to the Engineer at the preconstruction conference. If the designated WTS will not be available full time (24/7), the Contractor may designate an alternate (secondary) WTS to be available when the primary is off duty; however the primary WTS shall remain the point of contact at all times. Any alternate (secondary) WTS is subject to the same training, prequalification and other requirements outlined within this plan note. At all times the Engineer, or Engineer's representatives, must be informed of who the primary WTS (and secondary WTS, if applicable) is at the current time.

The WTS position has the responsibility of implementing the Traffic Management Plan (TMP), monitoring the safety and mobility of the entire work zone, and correcting Temporary Traffic Control (TTC) deficiencies for the entire work zone. The WTS, and alternate WTS when on duty, shall have sufficient authority to effectively carry out the identified WTS responsibilities and duties. The duties of the WTS are as follows:

1. Be available on a 24-hour per day basis.

2. Be on site for all emergency TTC needs within one hour of notification by police or project staff, and effect corrective measures immediately on existing work zone TTC devices.

3. Attend preconstruction meeting and all project meetings where TTC management is discussed.

4. Be available on site for meetings or discussions with the Engineer upon request.

5. Be aware of all existing and proposed TTC operations of the contractor, subcontractors and suppliers, and ensure coordination occurs between them to eliminate conflicting temporary and/or permanent traffic control.

6. Coordinate project activities with all Law Enforcement Officers (LEOs). The WTS shall also be the main contact person with the LEOs while LEOs are on the project.

7. Coordinate and facilitate meetings with ODOT personnel, LEOs and other applicable entities before each plan phase switch to discuss work zone TTC for implementing the phase switch. Submit a written detail of MOT operations and schedule of events to implement the switch between phase plans to the Engineer 5 calendar days prior to this meeting.

8. Be present, on site for, and involved with, each TTC set up/take down and each phase change in accordance with CMS 614.03.

9. On a continual basis ensure that the TTC zone and all related devices are installed, maintained, and removed in compliance with the contract documents.

10. On a continual basis, facilitate corrective action(s) necessary to bring deficient TTC zones and all related devices into compliance with contract documents in the timeframe determined by the Engineer.

11. Inspect, evaluate, propose necessary modifications to, and document the effectiveness of, the TTC devices and traffic operations on a DAILY BASIS (7 days a week). In addition, perform one weekly night inspection of the work zone setup for daytime work operations; and one daytime inspection per week for nighttime projects. This shall include (but not be limited to) documentation on the following project events:

    a. Initial TTC setup (day and night review).
    b. Daily TTC setup and removal.
    c. When construction staging causes a change in the TTC setup.
    d. Crash occurrences within the construction area and within the influence area(s) approaching the work zone.
    e. Removal of TTC devices at the end of a phase or project.
    f. All other emergency TTC needs.

12. Complete the Department approved Long Term Inspection form (CA-D-8) after each inspection as required in #11 and submit it to the Engineer the following work day. These reports shall include a checklist of all TTC maintenance items to be reviewed. A copy of the form will be provided at the pre-construction meeting. Any deficiencies observed shall be noted, along with recommended or completed corrective actions and the dates by which such corrections were, or will be, completed. A copy of the current CA-D-8 document can be found on the Office of Construction Administration's Inspection Forms website

13. Have copies of the ODOT Temporary Traffic Control Manual and contract documents available at all times on the project.

The Department will deduct:

A. The prorated daily amount of Item 614 Maintaining Traffic for any day in which the WTS fails to perform the duties set forth above. The prorated daily amount will be equal to the original bid amount for Item 614 Maintaining Traffic divided by the difference between the original completion date and the first day of work, in calendar days.
B. 1% of the original bid amount for Item 614 Maintaining Traffic for any day that a TTC issue is identified in the field and is not corrected in the given timeframe per the Engineer. Deduction B shall not apply to situations covered by Deduction C.
C. 1% of the original bid amount for Item 614 Maintaining Traffic for any day that a lane or ramp is blocked (fully or partially) without TTC, as determined by the Engineer. This deduction shall be in addition to any other disincentives established for unauthorized lane use.

For days in which more than one deduction listed above occur, the highest deduction amount will apply.

If three or more total days result in TTC issues described in Deduction B or C above, the primary WTS shall be immediately removed from the work in accordance with CMS 108.05. Upon removal the Engineer shall notify ODOT Central Office (WTSPrequalification@dot.ohio.gov) to register a removal against the statewide prequalification for the primary WTS. Three removals shall cause statewide disqualification for any previously prequalified WTS.

Payment for the above requirements, responsibilities, and duties shall be included in the lump sum price bid for Item 614, Maintaining Traffic.

I:\ProjectData\CUY\85529\Design\Roadway\Sheets\85529_MN004.dgn Sheet 12/21/2020 7:56:50 AM jalbrigi

Item 630 – Signing Misc.: Additional Signs, Ground Mounted, As Directed by the Engineer

When additional signing is needed to maintain traffic, the Contractor shall furnish the sign or signs as directed by the Engineer. These signs shall be ground mounted and meet all the specifications of the plan, proposal and current year CMS.

Payment for this item shall include, but not be limited to, the cost to furnish and erect the sign, including driving posts or other approved methods of sign support, maintaining the sign and removal of the sign.

This item of work shall be used to provide signs that are beyond the requirements of the signage detailed in the Standard Construction Drawings and the OMUTCD.

The following estimated quantity has been carried to the General Summary to be used as directed by the Engineer:

Item 630 – Signing Misc.: Additional Signs, Ground Mounted,
As Directed by the Engineer..... **300 Sq Ft**

Covering of Ground-Mounted Signs--General

When required by other items or incidentally to Item 614 – Maintaining Traffic, cover existing ground-mounted signs with plywood or OSB blanks (1/2" minimum thickness) covering 80% of the sign area and all of the sign legend. The use of low quality materials such as duct tape and black plastic is not permitted.

Item 614 Maintaining Traffic – Work Zone Speed Zone Signs for Freeway Resurfacings

The following Work Zone Speed Zone (WZSZ) Speed Limit Revision(s) have been approved for use on this project when work zone conditions and factors are met as described below:

WZSZ Revision Number	County & Route	Direction
WZ-65227	Cuyahoga IR-71	NB & SB

Potential WZSZ locations shall have an original (pre-construction) posted speed limit of ≥55 mph, a qualifying work zone condition of at least 0.5 mile in length, an expected work duration of at least three hours, and a work zone condition in place that reduces the existing functionality of the travel lanes or shoulders (i.e., lane closure, lane shift, crossover, contraflow and/or shoulder closure). The length of the work zone condition is measured from the beginning of the taper for the subject work zone condition impacting the travel lanes and/or shoulder to the end of the downstream taper, where drivers are returned to typical alignment. An expected work duration of at least three hours is required to balance the additional exposure created by installing and removing WZSZ signing with the time needed to complete the work.

If the work zone meets these minimum criteria, it shall be analyzed further using Table 1 below to determine if and when it qualifies for a speed limit reduction. Depending on the original posted speed limit, the type of temporary traffic control used, and whether or not workers are present, a warranted WZSZ will vary in the approved speed limit to be posted over time.

C&MS Item 614, Paragraph 614.02(B), indicates that two directions of a divided highway are considered separate highway sections. Therefore, if the work on a multi-lane divided highway is limited to only one direction, a speed limit reduction in the direction of the work does not automatically constitute a speed limit reduction in the opposite direction. Each direction shall be analyzed independently from each other.

All WZSZs fluctuate between two approved reduced speed limits or between an approved reduced speed limit and the original posted speed limit. Only one of two signing strategies shall be used to implement a WZSZ.

WZSZs using DSL Sign Assemblies shall be in accordance with this note, Approved List, Supplemental Specification (SS) 808 and 908, and Traffic SCD MT-104.10.

When looking up the warranted work zone speed limits, always use the original, preconstruction, posted speed limit. Do not use a prior or current work zone speed limit as a look up value in the table. Positive Protection is generally regarded as portable barrier or other rigid barrier in use along the work area within the subject warranted work zone condition. Without Positive Protection is generally regarded as using drums, cones, shadow vehicle, etc., along the work area within the subject warranted work zone condition. Workers are considered as being present when on-site, working within the subject warranted work zone condition. When the work zone condition reducing the existing functionality of the travel lanes or shoulders is removed, the speed limit displayed shall return to the original posted speed limit.

Table 1: Warranted Work Zone Speed Limits (MPH) for Work Zones on High-Speed (≥55 mph) Multi-Lane Highways

	WITH Positive Protection		WITHOUT Positive Protection	
Original Posted Speed Limit	Workers Present	Workers NOT Present	Workers Present	Workers NOT Present
70	60	65	55	65
65	55	60	50	60
60	55	60	50	60
55	50	55	45	55

The following estimated quantity has been carried to the General Summary.

Item 614 – Digital Speed Limit (DSL) Sign Assembly..... **42 SNMT**
Assuming 42 DSL Sign Assemblies for 3 Months

Item 614 – Work Zone Increased Penalties Sign

R11-H5A-48 signs shall be furnished, erected, and maintained in good condition and/or replaced as necessary and subsequently removed by the Contractor. Signs shall be mounted at the appropriate offsets and elevations as prescribed by the Ohio Manual of Uniform Traffic Control Devices. They shall be maintained on supports meeting current safety criteria.

The signs may be erected or uncovered no more than four hours before the actual start of work. The signs shall be removed or covered no later than four hours following restoration of all lanes to traffic with no restricts, or sooner as directed by the Engineer. Temporary sign covering and uncovering due to temporary lane restorations shall be guided by the four hour limitations stated above. Such lane restorations should be expected to remain in effect for 30 or more consecutive calendar days, such as during winter shut-downs.

The R11-H5a-48 signs shall be mounted on 2 No. 3 posts when located within clear zones.

The Contractor may use signs and supports in used, but good, condition provided the signs meet current ODOT specifications. Sign faces shall be retroreflectorized with Type G sheeting complying with the requirements of C&MS 730.19.

Work Zone Increased Penalties signs and supports will be measured as the number of sign installations, including the sign and necessary supports. If a sign and support combination is removed and re-erected at another location as directed by the Engineer, it shall be considered another unit.

Payment for accepted quantities, complete, in place will be made at the contract unit price. Payment shall be full compensation for all materials, labor, incidentals and equipment for furnishing, erecting, maintaining, covering during suspension of work, and removal of the sign and support.

Item 614 - Work Zone Increased Penalties Sign..... **18 Each**

I:\Project Data\CUY\85529\Design\Roadway\Sheets\85529_MN005.dgn Sheet 12/21/2020 7:59:36 AM jalbrigi

SHEET NUM.												PART.		ITEM	ITEM EXT	GRAND TOTAL	UNIT	DESCRIPTION	SEE SHEET NO.
9-13	14-18	21	22	23	24	25						01/1MS/PV							
																		ROADWAY	
263												263		209	60201	263	STA	LINEAR GRADING, AS PER PLAN	10
																		EROSION CONTROL	
												1,000		832	30000	1,000	EACH	EROSION CONTROL	
																		DRAINAGE	
27												27		611	98631	27	EACH	CATCH BASIN ADJUSTED TO GRADE, AS PER PLAN	11
5												5		611	98634	5	EACH	CATCH BASIN RECONSTRUCTED TO GRADE	
1												1		611	99655	1	EACH	MANHOLE ADJUSTED TO GRADE, AS PER PLAN	11
1												1		611	99660	1	EACH	MANHOLE RECONSTRUCTED TO GRADE	
5,000												5,000		SPECIAL	61199820	5,000	LB	MISCELLANEOUS METAL	11
																		PAVEMENT	
2,893												2,893		251	01021	2,893	SY	PARTIAL DEPTH PAVEMENT REPAIR (442), AS PER PLAN A	12
1,500												1,500		251	01021	1,500	SY	PARTIAL DEPTH PAVEMENT REPAIR (442), AS PER PLAN B	12
		320,259	53,736									373,995		254	01001	373,995	SY	PAVEMENT PLANING, ASPHALT CONCRETE, AS PER PLAN, 2"	12
		27,221	4,569									31,790		407	20000	31,790	GAL	NON-TRACKING TACK COAT	
		11,863	2,860									14,723		442	00100	14,723	CY	ANTI-SEGREGATION EQUIPMENT	
			3,015									3,015		442	10001	3,015	CY	ASPHALT CONCRETE SURFACE COURSE, 12.5 MM, TYPE A (446), AS PER PLAN, PG76-22M, 2"	12
		17,810										17,810		442	10301	17,810	CY	ASPHALT CONCRETE SURFACE COURSE, 12.5 MM, TYPE A (447), AS PER PLAN, PG76-22M, 2"	12
160												160		617	10101	160	CY	COMPACTED AGGREGATE, AS PER PLAN	12
9.15												9.15		618	40601	9.15	MILE	RUMBLE STRIPS, SHOULDER (ASPHALT CONCRETE), AS PER PLAN	12
			14,528									14,528		872	10000	14,528	FT	VOID REDUCING ASPHALT MEMBRANE (VRAM)	
																		TRAFFIC CONTROL	
				978	1,091	251						2,320		621	00100	2,320	EACH	RPM	
1,740												1,740		621	54000	1,740	EACH	RAISED PAVEMENT MARKER REMOVED	
				9.98	9.55	4.66						24.19		642	00104	24.19	MILE	EDGE LINE, 6", TYPE 1	
				13.49	12.2	0.27						25.96		642	00204	25.96	MILE	LANE LINE, 6", TYPE 1	
				4,373	4,227	2,411						11,011		642	00404	11,011	FT	CHANNELIZING LINE, 12", TYPE 1	
				2,968	6,437							9,405		642	01510	9,405	FT	DOTTED LINE, 6", TYPE 1	
					2,580							2,580		642	01560	2,580	FT	DOTTED LINE, 12", TYPE 1	
					77	135						212		646	10400	212	FT	STOP LINE	
					240							240		646	10500	240	FT	CROSSWALK LINE	
				124								124		646	10600	124	FT	TRANSVERSE/DIAGONAL LINE	
				126	224	232						582		646	10620	582	FT	CHEVRON MARKING	
					18	18						36		646	20300	36	EACH	LANE ARROW	
					2	5						7		646	20320	7	EACH	WRONG WAY ARROW	
																		TRAFFIC SIGNALS	
3												3		632	26501	3	EACH	DETECTOR LOOP, AS PER PLAN	13

CALCULATED JDA
CHECKED EJK

GENERAL SUMMARY

CUY-71-10.48

I:\ProjectData\CUY\85529\Design\Roadway\Sheets\85529_GG001.dgn Sheet 2/5/2021 7:33:29 AM jalbrigi

SHEET NUM.												PART.		ITEM	ITEM EXT	GRAND TOTAL	UNIT	DESCRIPTION	SEE SHEET NO.
9-13	14-18	21	22	23	24	25						01/1MS/PV							
																		MAINTENANCE OF TRAFFIC	
	500											500		614	11110	500	HOUR	LAW ENFORCEMENT OFFICER WITH PATROL CAR FOR ASSISTANCE	
	18											18		614	12484	18	EACH	WORK ZONE INCREASED PENALTIES SIGN	
	100											100		614	13001	100	CY	ASPHALT CONCRETE FOR MAINTAINING TRAFFIC, AS PER PLAN	15
	12											12		614	18601	12	SNMT	PORTABLE CHANGEABLE MESSAGE SIGN, AS PER PLAN	16
	25.96											25.96		614	20110	25.96	MILE	WORK ZONE LANE LINE, CLASS I, 6", 642 PAINT	
	25.96											25.96		614	20560	25.96	MILE	WORK ZONE LANE LINE, CLASS III, 6", 642 PAINT	
	24.19											24.19		614	22110	24.19	MILE	WORK ZONE EDGE LINE, CLASS I, 6", 642 PAINT	
	24.19											24.19		614	22360	24.19	MILE	WORK ZONE EDGE LINE, CLASS III, 6", 642 PAINT	
	11,011											11,011		614	23210	11,011	FT	WORK ZONE CHANNELIZING LINE, CLASS I, 12", 642 PAINT	
	11,011											11,011		614	23690	11,011	FT	WORK ZONE CHANNELIZING LINE, CLASS III, 12", 642 PAINT	
	9,405											9,405		614	24202	9,405	FT	WORK ZONE DOTTED LINE, CLASS I, 6", 642 PAINT	
	9,405											9,405		614	24612	9,405	FT	WORK ZONE DOTTED LINE, CLASS III, 6", 642 PAINT	
	212											212		614	26200	212	FT	WORK ZONE STOP LINE, CLASS I, 642 PAINT	
	212											212		614	26610	212	FT	WORK ZONE STOP LINE, CLASS III, 642 PAINT	
	240											240		614	27200	240	FT	WORK ZONE CROSSWALK LINE, CLASS I, 642 PAINT	
	240											240		614	27620	240	FT	WORK ZONE CROSSWALK LINE, CLASS III, 642 PAINT	
	36											36		614	30200	36	EACH	WORK ZONE ARROW, CLASS I, 642 PAINT	
	36											36		614	30650	36	EACH	WORK ZONE ARROW, CLASS III, 642 PAINT	
	300											300		630	97800	300	SF	SIGNING, MISC.: ADDITIONAL SIGNS, GROUND MOUNTED, AS DIRECTED BY THE ENGINEER	18
	42											42		808	18700	42	SNMT	DIGITAL SPEED LIMIT (DSL) SIGN ASSEMBLY	
																		INCIDENTALS	
												LS		614	11000	LS		MAINTAINING TRAFFIC	
6												6		619	16011	6	MNTH	FIELD OFFICE, TYPE B, AS PER PLAN	9
LS												LS		623	10001	LS		CONSTRUCTION LAYOUT STAKES AND SURVEYING, AS PER PLAN	9
												LS		624	10000	LS		MOBILIZATION	

CALCULATED JDA
CHECKED EJK

GENERAL SUMMARY

CUY-71-10.48

I:\ProjectData\CUY\85529\Design\Roadway\Sheets\85529_GG002.dgn Sheet 12/21/2020 8:01:28 AM jalbrigl

STATION TO STATION		LENGTH	BEGIN WIDTH	ENDING WIDTH	AVERAGE WIDTH	AREA	254 PAVEMENT PLANING, ASPHALT CONCRETE, AS PER PLAN, 2"	407 NON-TRACKING TACK COAT	442 ANTI-SEGREGATION EQUIPMENT	442 ASPHALT CONCRETE SURFACE COURSE, 12.5 MM, TYPE A (446), AS PER PLAN, PG76-22M, 2"	442 ASPHALT CONCRETE SURFACE COURSE, 12.5 MM, TYPE A (447), AS PER PLAN, PG76-22M, 2"	872 VOID REDUCING ASPHALT MEMBRANE (VRAM)
		FT.	FT.	FT.	FT.	SY	SY	GAL	CY	CY	CY	FT
Airport Freeway Northbound												
620+49.76	631+18.26	1068.50	52.5	52.5	52.5	6233	6233	530	200		347	
Airport Freeway Southbound												
620+49.76	632+69.85	1220.09	52.5	52.5	52.5	7117	7117	605	272		396	
IR-71 Northbound												
629+90.69	631+18.26	127.57	29.0	29.0	29.0	411	411	35	2		23	
631+18.26	632+32.66	114.40	83.9	77.9	80.9	1028	1028	87	34		58	
632+32.66	634+10.14	177.48	88.0	79.6	83.8	1653	1653	141	76		92	
634+10.14	639+78.51	568.37	79.5	70.0	74.8	4721	4721	401	165		263	
639+78.51	642+11.58	233.07	70.0	60.0	65.0	1683	1683	143	64		94	
642+11.58	662+52.40	2040.82	60.0	60.0	60.0	13605	13605	1156	492		756	
Bridge No. CUY-71-11140												
664+09.27	679+34.63	1525.36	60.0	60.0	60.0	10169	10169	864	368		565	
Bridge No. CUY-71-11470												
682+66.76	684+98.55	231.79	60.0	60.0	60.0	1545	1545	131	56		86	
684+98.55	685+86.77	88.22	60.0	68.0	64.0	627	627	53	24		35	
685+86.77	688+52.16	265.39	68.0	70.0	69.0	2035	2035	173	79		114	
688+52.16	693+40.64	488.48	70.0	97.0	83.5	4532	4532	385	189		252	
693+40.64	694+36.57	95.93	60.0	60.0	60.0	640	640	54	24		36	
Bridge No. CUY-71-11740												
696+04.43	701+59.87	555.44	60.0	60.0	60.0	3703	3703	315	134		206	
Bridge No. CUY-71-11880												
704+05.72	709+57.69	551.97	60.0	60.0	60.0	3680	3680	313	133		205	
709+57.69	721+57.31	1199.62	91.5	60.0	75.8	10097	10097	858	406		561	
721+57.31	747+99.55	2642.24	60.0	60.0	60.0	17615	17615	1497	637		979	
747+99.55	749+66.40	166.85	60.0	72.0	66.0	1224	1224	104	47		68	
749+66.40	752+39.26	272.86	72.0	72.0	72.0	2183	2183	186	86		122	
752+39.26	756+78.91	439.65	72.0	94.5	83.3	4067	4067	346	169		226	
756+78.91	792+28.08	3549.17	60.0	60.0	60.0	23661	23661	2011	855		1315	
792+28.08	797+03.23	475.15	96.5	79.0	87.8	4633	4633	394	196		258	
797+03.23	803+96.97	693.74	79.0	60.0	69.5	5357	5357	455	208		298	
803+96.97	855+50.95	5153.98	60.0	58+2	60.0	34360	34360	2921	1241		1909	
TOTALS, LEFT COLUMN							166,579	14,158	6,157		9,264	

STATION TO STATION		LENGTH	BEGIN WIDTH	ENDING WIDTH	AVERAGE WIDTH	AREA	254 PAVEMENT PLANING, ASPHALT CONCRETE, AS PER PLAN, 2"	407 NON-TRACKING TACK COAT	442 ANTI-SEGREGATION EQUIPMENT	442 ASPHALT CONCRETE SURFACE COURSE, 12.5 MM, TYPE A (446), AS PER PLAN, PG76-22M, 2"	442 ASPHALT CONCRETE SURFACE COURSE, 12.5 MM, TYPE A (447), AS PER PLAN, PG76-22M, 2"	872 VOID REDUCING ASPHALT MEMBRANE (VRAM)
		FT.	FT.	FT.	FT.	SQ. YD.	SY	GAL	CY	CY	CY	FT
IR-71 Southbound												
630+34.84	632+69.85	235.01	40.0	40.0	40.0	1044	1044	89	25		58	
632+69.53	634+93.39	223.86	98.9	70.0	84.5	2101	2101	179	93		117	
634+93.39	636+85.95	192.56	70.0	60.0	65.0	1391	1391	118	53		78	
636+85.95	662+48.36	2562.41	60.0	60.0	60.0	17083	17083	1452	617		950	
Bridge No. CUY-71-11140												
664+04.36	682+87.12	1882.76	60.0	60.0	60.0	12552	12552	1067	454		698	
Bridge No. CUY-71-11470												
685+30.25	691+40.62	610.37	65.0	80.8	72.9	4944	4944	420	196		275	
691+40.62	694+08.29	267.67	80.8	97.4	89.1	2650	2650	225	113		148	
694+08.29	694+32.61	24.32	60.0	60.0	60.0	162	162	14	6		9	
Bridge No. CUY-71-11740												
695+93.44	701+04.97	511.53	60.0	60.0	60.0	3410	3410	290	124		190	
701+04.97	701+53.42	48.45	92.0	72.0	82.0	441	441	37	19		25	
Bridge No. CUY-71-11880												
703+95.39	720+71.34	1675.95	72.0	72.0	72.0	13408	13408	1140	528		745	
720+71.34	722+20.47	149.13	72.0	60.0	66.0	1094	1094	93	42		61	
722+20.47	746+30.89	2410.42	60.0	60.0	60.0	16069	16069	1366	581		893	
746+30.89	753+87.38	756.49	60.0	80.0	70.0	5884	5884	500	229		327	
753+87.38	758+37.51	450.13	80.0	90.6	85.3	4266	4266	363	190		237	
758+37.51	774+80.77	1643.26	64.0	64.0	64.0	11685	11685	993	396		650	
774+80.77	795+39.11	2058.34	60.0	60.0	60.0	13722	13722	1166	496		763	
795+39.11	798+98.13	359.02	98.0	76.0	87.0	3471	3471	295	147		193	
798+98.13	802+89.29	391.16	76.0	70.0	73.0	3173	3173	270	126		177	
802+89.29	803+83.27	93.98	70.0	60.0	65.0	679	679	58	26		38	
803+83.27	855+50.95	5167.68	60.0	60.0	60.0	34451	34451	2928	1245		1914	
TOTALS, RIGHT COLUMN							153,680	13,063	5,706		8,546	
TOTALS, LEFT COLUMN							166,579	14,158	6,157		9,264	
TOTALS CARRIED TO GENERAL SUMMARY							320,259	27,221	11,863		17,810	

CALCULATED JDA
CHECKED EJK

PAVEMENT SUBSUMMARY

CUY-71-10.48

I:\ProjectData\CUY\85529\Design\Roadway\Sheets\85529_GS001.dgn Sheet 12/21/2020 8:01:29 AM jalbrigi

STATION TO STATION		LENGTH	BEGIN WIDTH	ENDING WIDTH	AVERAGE WIDTH	AREA	254 PAVEMENT PLANING, ASPHALT CONCRETE, AS PER PLAN, 2"	407 NON-TRACKING TACK COAT	442 ANTI-SEGREGATION EQUIPMENT	442 ASPHALT CONCRETE SURFACE COURSE, 12.5 MM, TYPE A (446), AS PER PLAN, PG76-22M, 2"	442 ASPHALT CONCRETE SURFACE COURSE, 12.5 MM, TYPE A (447), AS PER PLAN, PG76-22M, 2"	872 VOID REDUCING ASPHALT MEMBRANE (VRAM)
		FT.	FT.	FT.	FT.	SY	SY	GAL	CY	CY	CY	FT
Ramp A												
694+12.23	694+36.72	24.49	28.0	28.0	28.0	76	76	6	5	5		25
Bridge No. CUY-71-11740W												
695+98.85	697+24.13	125.28	30.5	31.0	30.8	428	428	36	24	24		126
697+27.13	698+70.11	142.98	31.0	31.0	31.0	492	492	42	28	28		143
698+70.11	699+53.31	83.20	31.0	32.5	31.8	294	294	25	17	17		84
699+53.31	700+17.99	64.68	32.5	32.5	32.5	234	234	20	13	13		65
700+17.99	700+72.98	54.99	32.5	67.5	50.0	306	306	26	17	17		55
Ramp B												
701+07.37	700+18.46	88.91	26.0	24.5	25.3	249	249	21	14	14		89
700+18.46	696+09.12	409.34	24.5	31.0	27.8	1262	1262	107	71	71		410
696+09.12	695+30.80	78.32	31.0	32.0	31.5	274	274	23	16	16		79
Sta. 695+30.80 BK = Sta. 699+53.91 AH												
699+53.91	700+26.41	72.50	32.0	32.0	32.0	258	258	22	15	15		73
700+26.41	700+59.65	33.24	32.0	35.0	33.5	124	124	11	7	7		34
700+59.65	700+74.29	14.64	35.0	68.0	51.5	84	84	7	5	5		15
Ramp C												
695+80.94	698+01.54	220.60	32.0	32.0	32.0	784	784	67	44	44		221
698+01.54	699+27.85	126.31	32.0	43.0	37.5	526	526	45	30	30		127
699+27.85	701+79.07	251.22	43.0	43.0	43.0	1200	1200	102	67	67		252
701+79.07	702+32.22	53.15	43.0	90.0	66.5	393	393	33	22	22		54
Ramp D												
703+16.41	703+51.89	35.48	84.7	25.0	54.9	216	216	18	13	12		36
703+51.89	709+61.60	609.71	25.0	25.0	25.0	1694	1694	144	95	95		610
Ramp A-1												
58+38.75	60+94.15	255.40	25.0	34.0	29.5	837	837	71	47	47		256
60+94.15	62+80.22	186.07	34.0	51.3	42.7	882	882	75	49	49		187
62+80.22	64+57.05	176.83	22.0	25.0	23.5	462	462	39	26	26		177
64+57.05	70+75.09	618.04	25.0	25.0	25.0	1717	1717	146	96	96		619
70+75.09	70+96.97	21.88	20.6	21.6	21.1	51	51	4	3	3		22
70+96.97	71+21.72	24.75	21.6	39.1	30.4	83	83	7	5	5		25
Ramp B-1												
62+72.94	64+53.49	180.55	28.2	30.0	29.1	584	584	50	33	33		181
64+53.49	73+67.43	913.94	30.0	30.0	30.0	3046	3046	259	170	170		914
73+67.43	75+44.07	176.64	30.0	32.0	31.0	608	608	52	34	34		177
75+44.07	77+89.55	245.48	24.0	24.0	24.0	655	655	56	37	37		246
TOTALS, LEFT COLUMN							17,819	1,514	1,003	1,002		5,302

STATION TO STATION		LENGTH	BEGIN WIDTH	ENDING WIDTH	AVERAGE WIDTH	AREA	254 PAVEMENT PLANING, ASPHALT CONCRETE, AS PER PLAN, 2"	407 NON-TRACKING TACK COAT	442 ANTI-SEGREGATION EQUIPMENT	442 ASPHALT CONCRETE SURFACE COURSE, 12.5 MM, TYPE A (446), AS PER PLAN, PG76-22M, 2"	442 ASPHALT CONCRETE SURFACE COURSE, 12.5 MM, TYPE A (447), AS PER PLAN, PG76-22M, 2"	872 VOID REDUCING ASPHALT MEMBRANE (VRAM)
		FT.	FT.	FT.	FT.	SQ. YD.	SY	GAL	CY	CY	CY	FT
Ramp C-1												
62+19.33	62+26.12	6.79	27.7	30.0	28.9	22	22	2	2	2		7
62+26.12	67+89.27	563.15	30.0	30.0	30.0	1877	1877	160	105	105		564
67+89.27	73+77.07	587.80	30.0	34.0	32.0	2090	2090	178	117	117		588
73+77.07	77+26.63	349.56	26.0	26.0	26.0	1010	1010	86	57	57		350
Ramp D-1												
56+77.28	65+28.17	850.89	28.8	33.0	30.9	2919	2919	248	162	163		851
65+28.17	66+88.28	160.11	33.0	33.0	33.0	587	587	50	33	33		161
66+88.28	67+10.79	22.51	30.5	31.2	30.9	77	77	7	4	5		23
67+10.79	67+75.60	64.81	31.2	56.8	44.0	317	317	27	18	18		65
Ramp E												
88+52.66	91+80.22	327.56	29.0	29.0	29.0	1055	1055	90	59	59		328
Ramp F												
11+25.11	15+39.83	414.72	24.0	24.0	24.0	1106	1106	94	61	62		415
Road No. 1												
10+45.70	11+11.06	65.36	45.3	29.5	37.4	272	272	23	15	16		66
11+11.06	11+68.14	57.08	29.5	34.6	32.1	203	203	17	11	12		58
11+68.14	13+83.45	215.31	34.6	34.6	34.6	828	828	70	46	46		216
13+83.45	16+01.17	217.72	34.6	26.0	30.3	733	733	62	41	41		218
16+01.17	17+25.40	124.23	26.0	26.0	26.0	359	359	31	20	20		125
17+25.40	21+35.06	409.66	62.0	35.0	48.5	2208	2208	188	123	123		410
21+35.06	27+18.95	583.89	35.0	35.0	35.0	2271	2271	193	126	127		584
27+18.95	31+28.64	409.69	35.0	59.0	47.0	2139	2139	182	119	119		410
31+28.64	33+54.85	226.21	26.0	27.0	26.5	666	666	57	37	37		227
33+54.85	41+21.72	766.87	27.0	27.0	27.0	2301	2301	196	128	128		767
41+21.72	42+06.47	84.75	CADD AREA			2885	2885	245	20	161		85
Road No. 2												
10+47.46	10+86.56	39.10	42.0	21.0	31.5	137	137	12	8	8		40
10+86.56	11+24.47	37.91	21.0	26.0	23.5	99	99	8	5	6		38
11+24.47	17+18.97	594.50	26.0	26.0	26.0	1717	1717	146	95	96		595
17+18.97	18+39.71	120.74	26.0	24.6	25.3	339	339	29	19	19		121
18+39.71	22+84.55	444.84	51.6	33.0	42.3	2091	2091	178	116	117		445
22+84.55	25+21.82	237.27	33.0	33.0	33.0	870	870	74	48	49		238
25+21.82	26+57.14	135.32	33.0	41.0	37.0	556	556	47	31	31		136
26+57.14	29+44.77	287.63	42.8	63.5	53.2	1699	1699	144	94	95		288
29+44.77	33+94.97	450.20	25.0	25.0	25.0	1251	1251	106	69	70		451
33+94.97	36+51.08	256.11	25.0	32.0	28.5	811	811	69	45	46		257
36+51.08	37+04.12	53.04	32.0	30.0	31.0	183	183	16	10	11		54
37+04.12	37+48.41	44.29	30.0	67.0	48.5	239	239	20	13	14		45
TOTALS, RIGHT COLUMN							35,917	3,055	1,857	2,013		9,226
TOTALS, LEFT COLUMN							17,819	1,514	1,003	1,002		5,302
TOTALS CARRIED TO GENERAL SUMMARY							53,736	4,569	2,860	3,015		14,528

CALCULATED JDA
CHECKED EJK

PAVEMENT SUBSUMMARY

CUY-71-10.48

I:\ProjectData\CUY\85529\Design\Roadway\Sheets\85529_GS002.dgn Sheet 12/21/2020 8:01:30 AM jalbrigl

SHEET NO.	PLAN SPLIT NO.	STATION TO STATION		LENGTH	642 EDGE LINE, 6", TYPE 1, WHITE	642 EDGE LINE, 6", TYPE 1, YELLOW	642 LANE LINE, 6", TYPE 1			642 CHANNELIZING LINE, 12", TYPE 1	646 STOP LINE		646 CHEVRON MARKING	646 TRANSVERSE/DIAGONAL LINE	642 DOTTED LINE, 6", TYPE 1	642 DOTTED LINE, 12", TYPE 1	646 CROSSWALK LINE	646 WRONG WAY ARROW	646 LANE ARROW				621 RPM (WHITE)	621 RPM (WHITE/RED)	621 RPM (YELLOW/RED)
				FT	FT	FT	MILE			FT	FT		FT	FT	FT	FT	FT	EACH	EACH				EACH	EACH	EACH
		Airport Freeway Northbound																							
	1	620+49.76	624+93.92	444.16	445	445	0.17																12		
	1	624+93.92	629+90.69	496.77	497	497	0.10							68	497								7		
	1	629+90.69	630+16.84	26.15	27	53	0.01							28	27								1		
	1	630+16.84	631+18.26	101.42	102	203	0.04							28									3		
		IR-71 Northbound																							
	1	631+18.26	632+78.00	159.74	160	320	0.07			160			39										5	4	
	1	632+78.00	638+76.90	598.90	599	599	0.23			1198			87										16	30	
	1	638+76.90	641+14.53	237.63	238	238	0.10			238													7	6	
	1	641+14.53	684+98.55	4384.02	4385	4385	2.50																165		
	1	684+98.55	691+34.65	636.10	1273	1273	0.37								637								25		
	1	691+34.65	693+44.60	209.95	210	210	0.12			420													8	11	
	1	693+44.60	709+57.96	1613.36	1614	1614	0.92																61		
	1	709+57.96	713+43.84	385.88	772	772	0.22																15		
	1	713+43.84	715+49.16	205.32	206	206	0.12			411													8	11	
	1	715+49.16	721+57.33	608.17	609	609	0.35								609								24		
	1	721+57.33	747+99.55	2642.22	2643	2643	1.51																100		
	1	747+99.55	753+02.63	503.08	504	504	0.29								504								20		
	1	753+02.63	755+99.99	297.36	298	298	0.17			595													12	15	
	1	755+99.99	759+79.08	379.09	380	759	0.22			380													15	10	
	1	759+79.08	792+28.08	3249.00	3249	3249	1.85																123		
	1	792+28.08	797+03.54	475.46	476	476	0.28			951													19	24	
	1	797+03.54	803+96.70	693.16	694	694	0.40								694								27		
	1	803+96.70	855+50.95	5154.25	5155	5155	2.93																194		
		Airport Freeway Southbound																							
	1	620+49.76	630+34.38	984.62	985	985	0.38																		
	1	630+34.38	632+49.91	215.53	432	432	0.13																		
	1	632+49.91	632+69.53	19.62	40	40	0.01			20															
SUBTOTALS					25993	26659	13.49			4373			126	124	2968								867	111	
TOTALS CARRIED TO GENERAL SUMMARY					9.98 MI		13.49			4373			126	124	2968								978		

CALCULATED JDA
CHECKED EJK

PAVEMENT MARKINGS SUBSUMMARY

CUY-71-10.48

I:\ProjectData\CUY\85529\Design\Roadway\Sheets\85529_GS003.dgn Sheet 2/5/2021 7:32:23 AM jalbrigl

PAVEMENT MARKINGS SUBSUMMARY

CALCULATED JDA
CHECKED EJK

SHEET NO.	PLAN SPLIT NO.	STATION TO STATION		LENGTH	642 EDGE LINE, 6", TYPE 1, WHITE	642 EDGE LINE, 6", TYPE 1, YELLOW	642 LANE LINE, 6", TYPE 1			642 CHANNELIZING LINE, 12", TYPE 1	646 STOP LINE		646 CHEVRON MARKING	646 TRANSVERSE/DIAGONAL LINE	642 DOTTED LINE, 6", TYPE 1	642 DOTTED LINE, 12", TYPE 1	646 CROSSWALK LINE	646 WRONG WAY ARROW	646 LANE ARROW				621 RPM (WHITE)	621 RPM (WHITE/RED)	621 RPM (YELLOW/RED)
				FT	FT	FT	MILE			FT	FT		FT	FT	FT	FT	FT	EACH	EACH				EACH	EACH	EACH
		IR-71 Southbound																							
	1	632+69.53	634+98.67	229.14	230	230	0.09			688			224										6	18	
	1	634+98.67	637+97.83	299.16	300	300	0.12			300													8	8	
	1	637+97.83	663+77.61	2579.78	2580	2580	0.98									2580							65		
	1	663+77.61	683+15.27	1937.66	1938	1938	1.11																74		
	1	683+15.27	691+40.83	825.56	826	826	0.47								826								32		
	1	691+40.83	694+08.80	267.97	268	268	0.16			536													11	14	
	1	694+08.80	700+97.46	688.66	689	689	0.40																27		
	1	700+97.46	702+62.81	165.35	166	166	0.10			331													7	9	
	1	702+62.81	722+20.47	1957.66	1958	1958	1.12								1958								74		
	1	722+20.47	746+30.89	2410.42	2411	2411	1.37								2411								91		
	1	746+30.89	753+87.67	756.78	757	757	0.43								757								29		
	1	753+87.67	758+37.52	449.85	450	450	0.26			900													18	23	
	1	758+37.52	795+31.75	3694.23	3695	3695	2.10																139		47
	1	795+31.75	795+59.31	27.56	28	56	0.02			28													2	1	1
	1	795+59.31	798+97.33	338.02	339	339	0.20			677													14	17	5
	1	798+97.33	803+82.22	484.89	485	485	0.28								485								19		7
	1	803+82.22	855+50.95	5168.73	5169	5169	2.94																195		65
		Ramp A																							
	1	694+12.23	694+24.91	12.68	13	13																			1
	1	694+24.91	699+27.81	502.90	503	503																			7
	1	699+27.81	700+69.05	141.24	142	142	0.03																2		2
		Ramp B																							
	1	700+95.54	700+62.32	33.22	34																				
	1	700+62.32	699+53.42	108.90	109	109				109	28								6					3	2
		Sta. 699+53.42 BK = Sta. 695+30.79 AH																							
	1	695+30.79	696+09.12	78.33	79	79	0.02			79													2	2	1
	1	696+09.12	701+07.37	498.25	499	499												1							7
		Ramp C																							
	1	693+26.94	699+28.02	601.08	602	602												1							8
	1	699+28.02	702+17.46	289.44	290	290				579									12					15	4
	1	702+17.46	702+30.73	13.27							49						133								
		Ramp D																							
	1	703+16.41	703+38.61	22.20	23	23											107								1
	1	703+38.61	709+61.60	622.99	623	623																			8
SUBTOTALS					25206	25200	12.20			4227	77		224		6437	2580	240	2	18				815	110	166
TOTALS CARRIED TO GENERAL SUMMARY					9.55 MI		12.20			4227	77		224		6437	2580	240	2	18				1091		

CUY-71-10.48

I:\Project Data\CUY\85529\Design\Roadway\Sheets\85529_GS004.dgn Sheet 2/5/2021 7:32:27 AM jalbrigl

SHEET NO.	PLAN SPLIT NO.	STATION TO STATION		LENGTH	642 EDGE LINE, 6", TYPE 1, WHITE	642 EDGE LINE, 6", TYPE 1, YELLOW	642 LANE LINE, 6", TYPE 1			642 CHANNELIZING LINE, 12", TYPE 1	646 STOP LINE		646 CHEVRON MARKING	646 TRANSVERSE/DIAGONAL LINE	642 DOTTED LINE, 6", TYPE 1	642 DOTTED LINE, 12", TYPE 1	646 CROSSWALK LINE	646 WRONG WAY ARROW	646 LANE ARROW				621 RPM (WHITE)	621 RPM (WHITE/RED)	621 RPM (YELLOW/RED)
				FT	FT	FT	MILE			FT	FT		FT	FT	FT	FT	FT	EACH	EACH				EACH	EACH	EACH
		Ramp A-1																							
	1	58+38.75	61+74.71	335.96	336	336																			5
	1	61+74.71	62+80.22	105.51	106	106				212														6	2
	1	62+80.22	71+20.72	840.50	841	841																			11
		Ramp B-1																							
	1	62+72.94	77+89.55	1516.61	1517	1517																			19
		Ramp C-1																							
	1	62+19.33	77+26.63	1507.30	1508	1508																			19
		Ramp D-1																							
	1	56+77.28	60+81.30	404.02	405	405																			6
	1	60+81.30	62+13.26	131.96	132	132				264														7	2
	1	62+13.26	65+48.71	335.45	336	336												1							5
	1	65+48.71	67+72.36	223.65	224	224				224	42								6					6	3
		Road No. 1																							
	1	10+51.07	13+13.99	262.92	263	263				263	37								8					7	4
	1	13+13.99	17+25.40	411.41	412	412												3							6
	1	17+25.40	17+72.38	46.98	47	94				47														2	2
	1	17+72.38	19+31.53	159.15	160	160				319			99											8	2
	1	19+31.53	27+65.88	834.35	835	835	0.16																11		11
	1	27+65.88	28+79.74	113.86	114	114				228														6	2
	1	28+79.74	31+28.62	248.88	249	249																			4
	1	31+28.62	42+06.82	1078.20	1079	1079																			14
		Road No. 2																							
	1	10+47.46	18+39.71	792.25	793	793																			10
	1	18+39.71	19+85.74	146.03	293	293																			4
	1	19+85.74	21+13.64	127.90	128	128				256														7	2
	1	21+13.64	26+61.02	547.38	548	548	0.11																8		7
	1	26+61.02	28+94.69	233.67	234	234				468			133											12	3
	1	28+94.69	29+45.17	50.48	101	101																			2
	1	29+45.17	36+51.08	705.91	706	706												1							9
	1	36+51.08	37+80.52	129.44	130	130				130	56								4					4	2
		Ramp E																							
	1	88+52.66	91+80.22	327.56	328	328																			5
		Ramp F																							
	1	11+25.11	15+66.50	441.39	442	442																			6
SUBTOTALS					12267	12314	0.27			2411	135		232					5	18				19	65	167
TOTALS CARRIED TO GENERAL SUMMARY					4.66 MI		0.27			2411	135		232					5	18				251		

CALCULATED JDA
CHECKED EJK

PAVEMENT MARKINGS SUBSUMMARY

CUY-71-10.48

I:\Project Data\CUY\85529\Design\Roadway\Sheets\85529_GS005.dgn Sheet 2/5/2021 7:32:28 AM jalbrigl

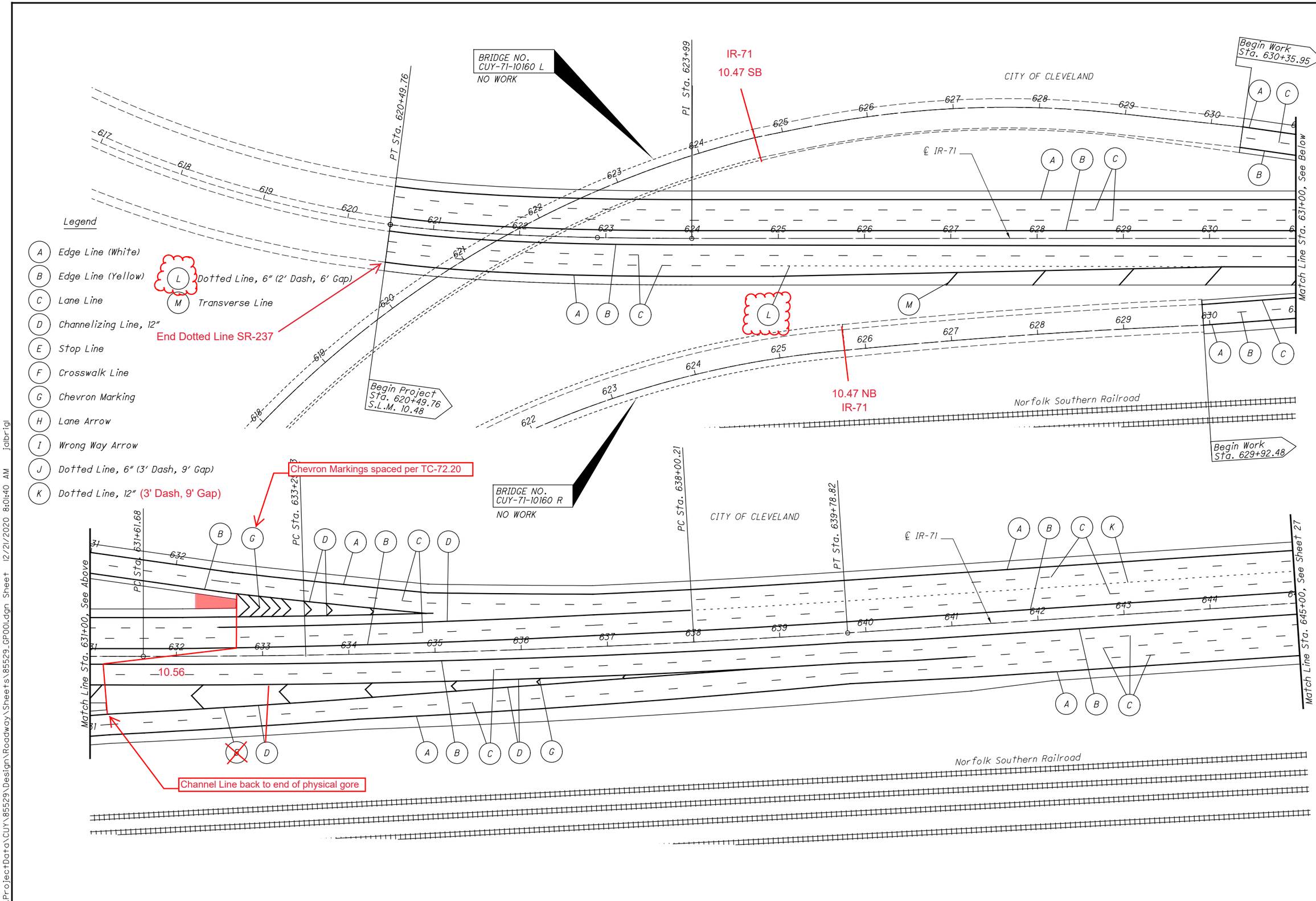

GENERAL PLAN

Begin Project to Sta. 645+00.00

CUY-71-10.48

I:\ProjectData\CUY\85529\Design\Roadway\Sheets\85529_GP001.dgn Sheet 12/21/2020 8:01:40 AM jalbrigl

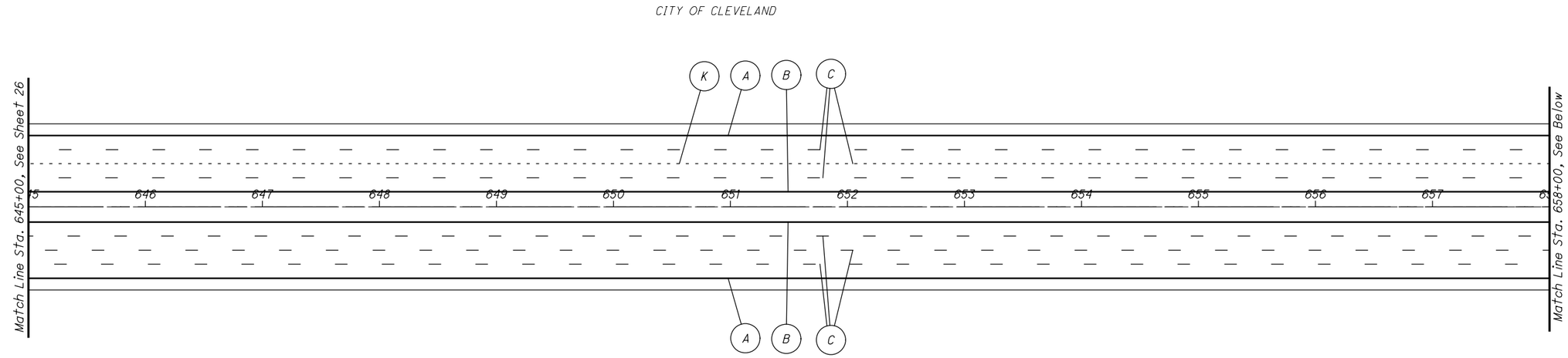

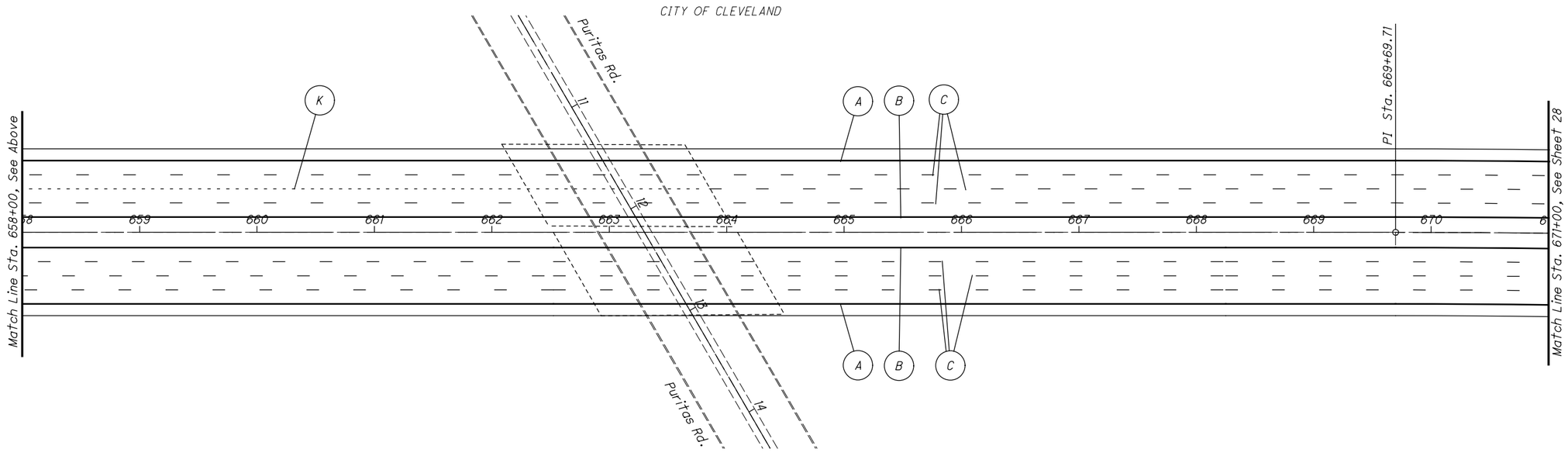

For Pavement Marking Legend, see Sheet 26

0 25 50 100
HORIZONTAL SCALE IN FEET

CALCULATED JDA
CHECKED EJK

GENERAL PLAN
Sta. 645+00.00 to Sta. 671+00.00

CUY-71-10.48

I:\ProjectData\CUY\85529\Design\Roadway\Sheets\85529_GP002.dgn Sheet 12/21/2020 8:01:47 AM jalbrigl

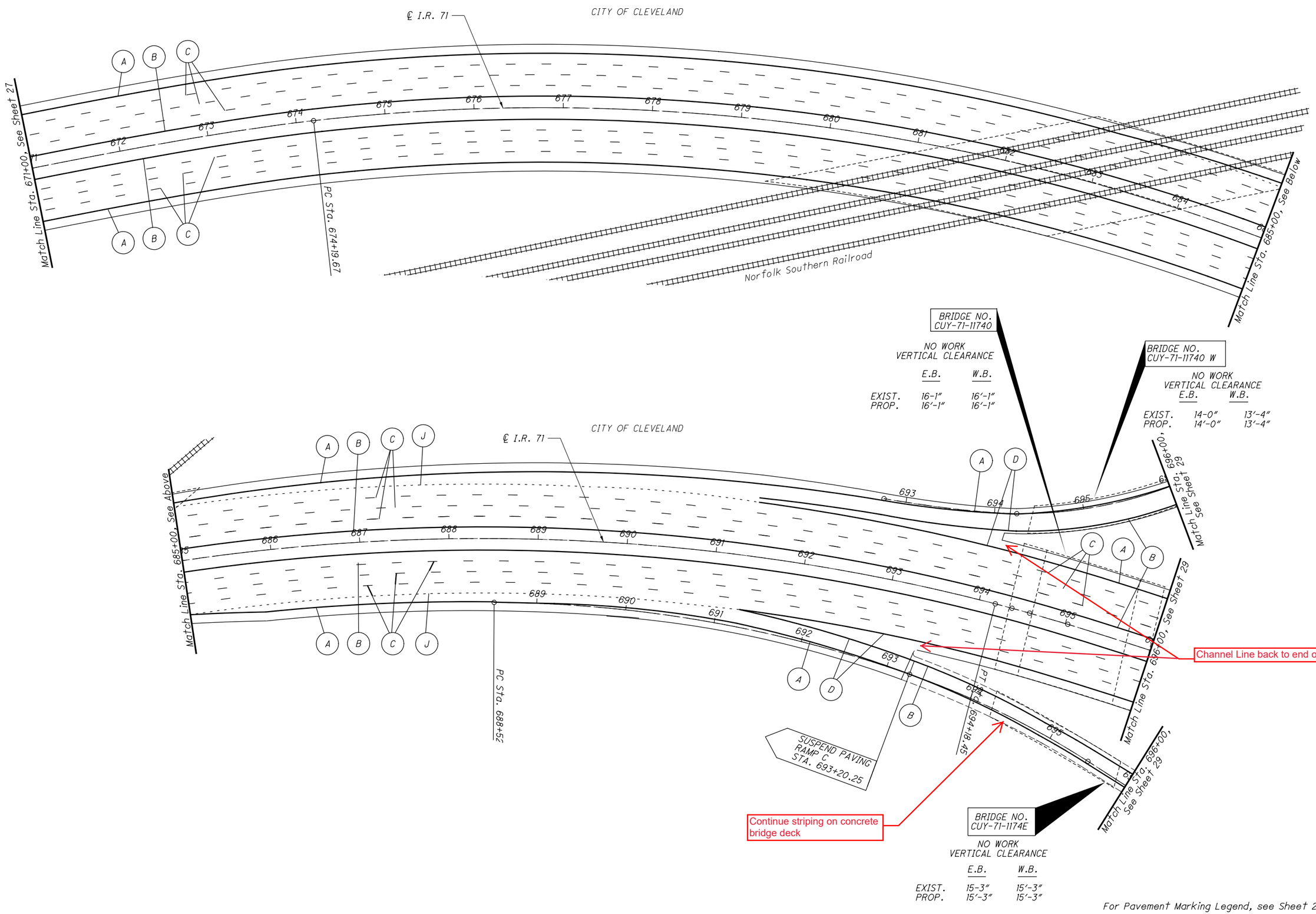

HORIZONTAL SCALE IN FEET
0 25 50 100

CALCULATED JDA
CHECKED EJK

GENERAL PLAN
Sta. 671+00.00 to Sta. 696+00.00

CUY-71-10.48

I:\Project Data\CUY\85529\Design\Roadway\Sheets\85529_GP003.dgn Sheet 12/21/2020 8:01:54 AM jdbrigl

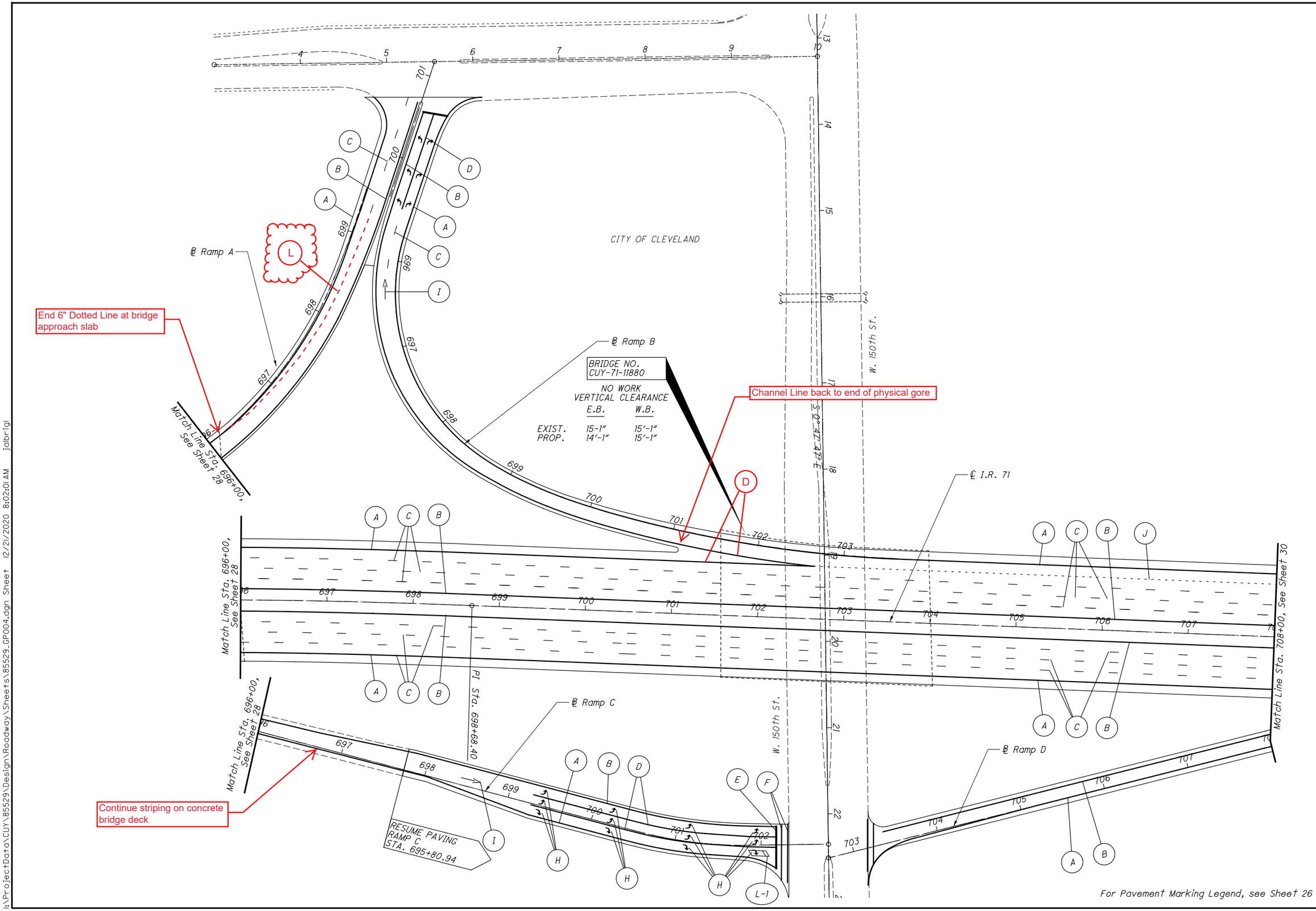

HORIZONTAL SCALE IN FEET
0 25 50 100

CALCULATED JDA
CHECKED EJK

GENERAL PLAN
Sta. 696+00.00 to Sta. 708+00.00

CUY-71-10.48

I:\ProjectData\CUY\85529\Design\Roadway\Sheets\85529_GP004.dgn Sheet 12/21/2020 8:02:01 AM jalbrigi

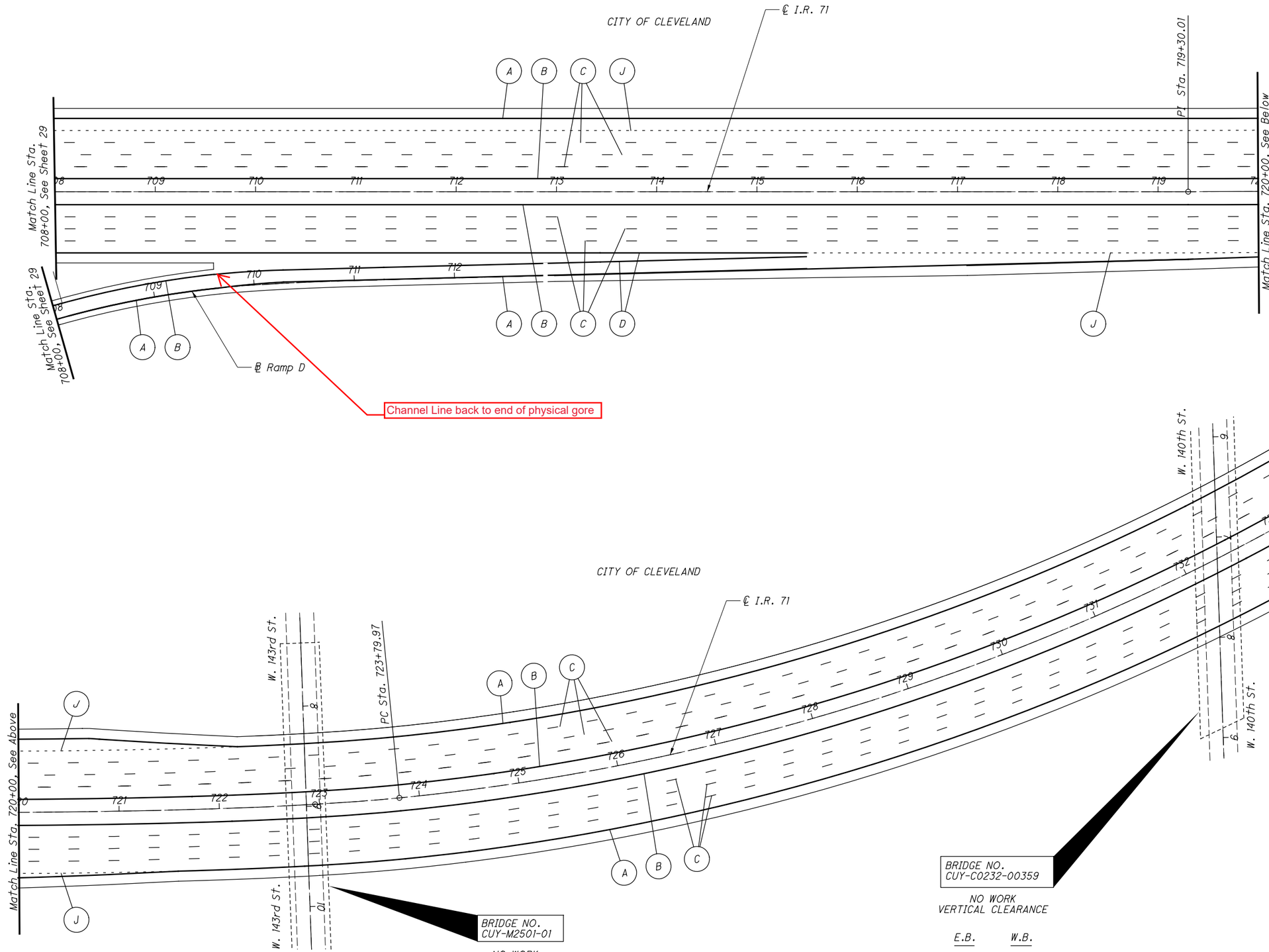

For Pavement Marking Legend, see Sheet 26

HORIZONTAL SCALE IN FEET 0 25 50 100

CALCULATED JDA
CHECKED EJK

GENERAL PLAN
Sta. 708+00.00 to Sta. 734+00.00

CUY-71-10.48

i:\ProjectData\CUY\85529\Design\Roadway\Sheets\85529_GP005.dgn Sheet 12/21/2020 8:02:07 AM jalbrigl

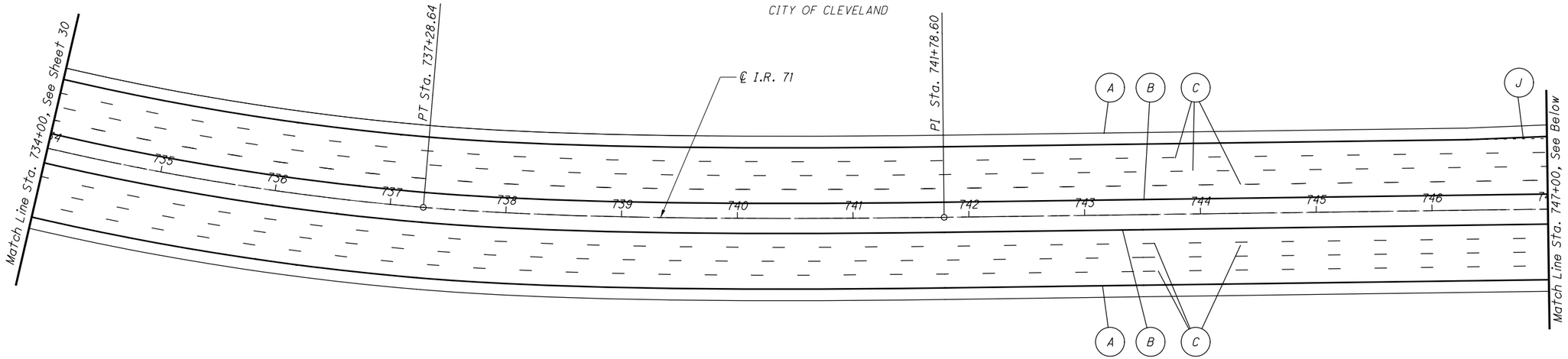

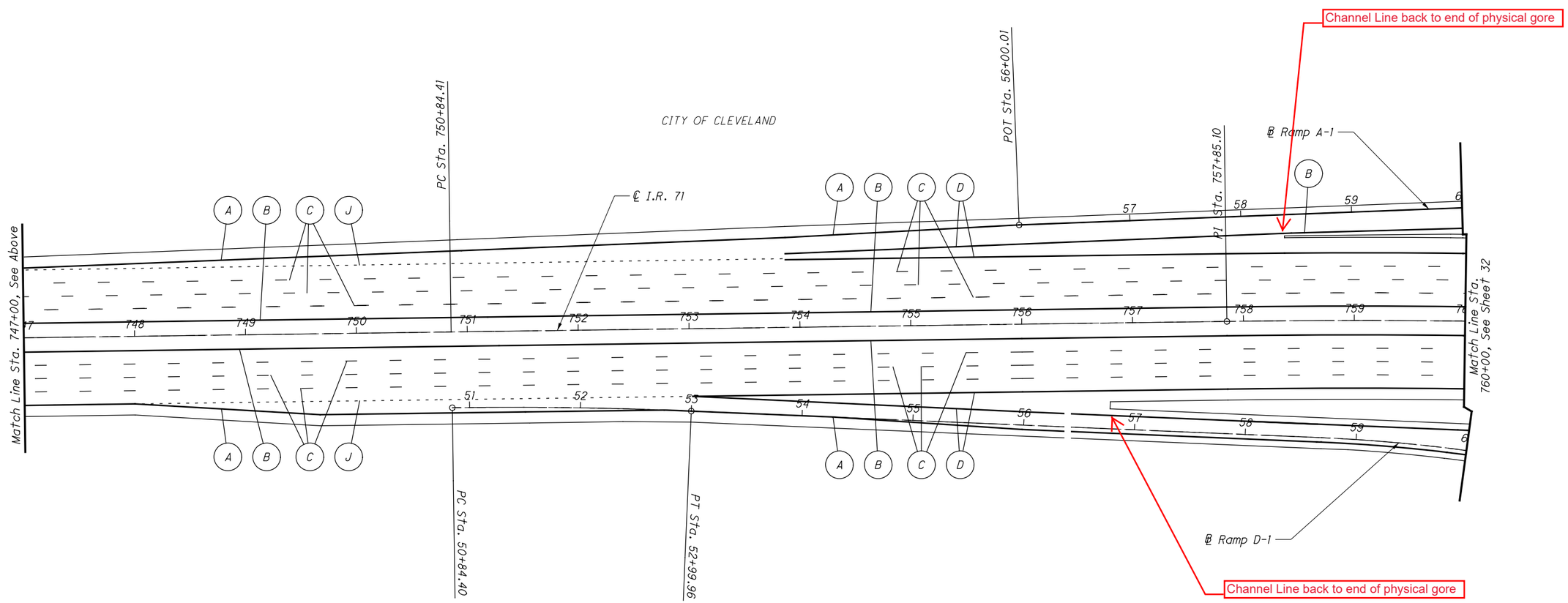

For Pavement Marking Legend, see Sheet 26

0 25 50 100
HORIZONTAL SCALE IN FEET

CALCULATED JDA
CHECKED EJK

GENERAL PLAN
Sta. 734+00.00 to Sta. 760+00.00

CUY-71-10.48

I:\ProjectData\CUY\85529\Design\Roadway\Sheets\85529_GP006.dgn Sheet 12/21/2020 8:02:14 AM jalbrigl

HORIZONTAL SCALE IN FEET
0 25 50 100

CALCULATED JDA
CHECKED EJK

GENERAL PLAN
Sta. 760+00 to Sta. 775+00

CUY-71-10.48

I:\ProjectData\CUY\85529\Design\Roadway\Sheets\85529_GP007.dgn Sheet 12/21/2020 8:02:20 AM jalbrigi

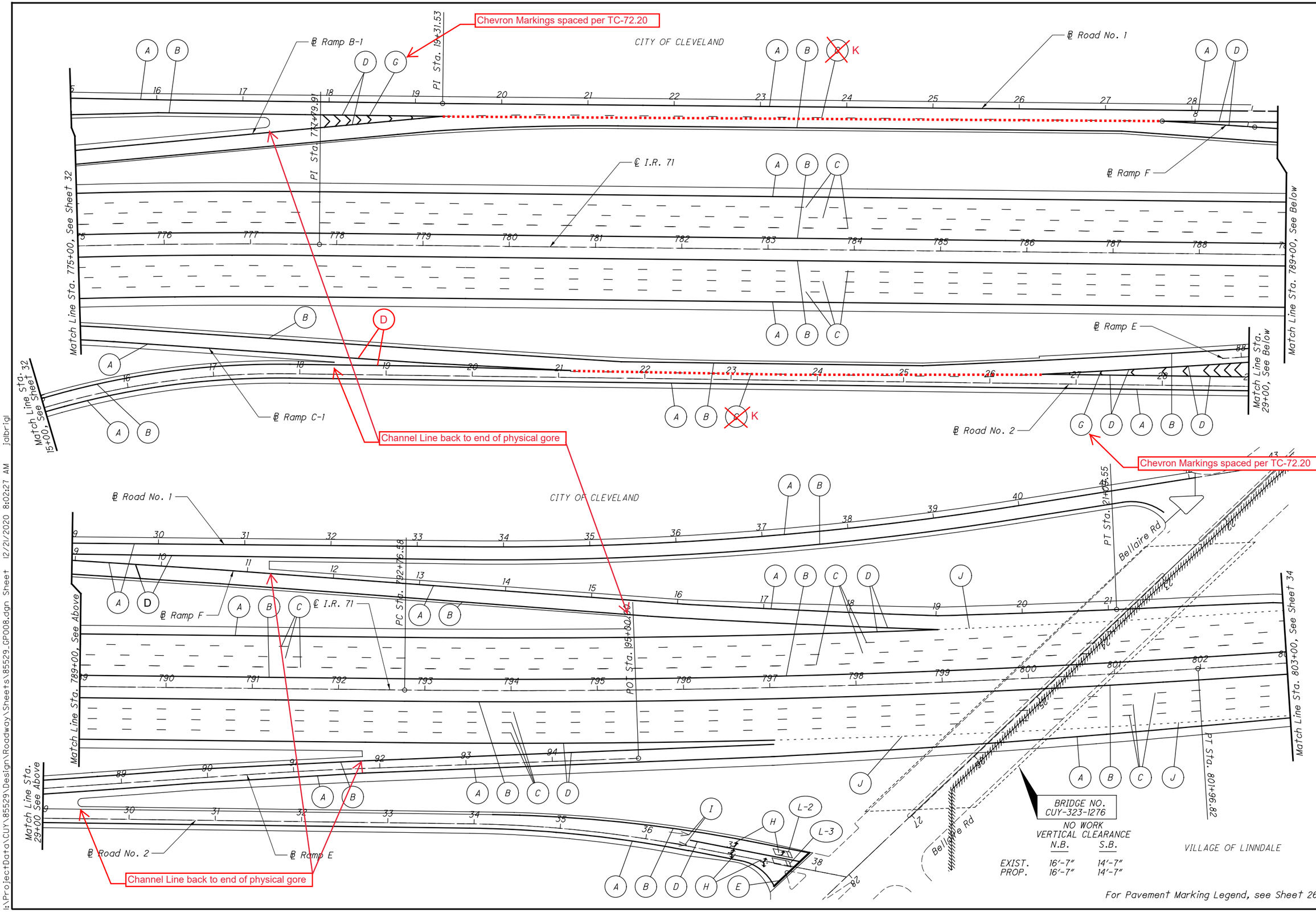
Chevron Markings spaced per TC-72.20
℄ Ramp B-1
PI Sta. 194+31.53
CITY OF CLEVELAND
℄ Road No. 1
℄ I.R. 71
℄ Ramp F
PI Sta. 777+79.91
Match Line Sta. 775+00, See Sheet 32
Match Line Sta. 789+00, See Below
℄ Ramp E
Match Line Sta. 29+00, See Below
Match Line Sta. 15+00, See Sheet 32
℄ Ramp C-1
Channel Line back to end of physical gore
℄ Road No. 2
Chevron Markings spaced per TC-72.20
℄ Road No. 1
CITY OF CLEVELAND
PC Sta. 792+76.38
POT Sta. 795+80.94
PT Sta. 21+03.55
Bellaire Rd
℄ Ramp F
℄ I.R. 71
Match Line Sta. 789+00, See Above
Match Line Sta. 803+00, See Sheet 34
Match Line Sta. 29+00 See Above
℄ Road No. 2
℄ Ramp E
Channel Line back to end of physical gore
BRIDGE NO.
CUY-323-1276
NO WORK
VERTICAL CLEARANCE
N.B. S.B.
EXIST. 16'-7" 14'-7"
PROP. 16'-7" 14'-7"
PT Sta. 801+96.82
VILLAGE OF LINNDALE
For Pavement Marking Legend, see Sheet 26
HORIZONTAL SCALE IN FEET
0 25 50 100
CALCULATED JDA
CHECKED EJK
GENERAL PLAN
Sta. 775+00.00 to Sta. 803+00.00
CUY-71-10.48
33
35
i:\ProjectData\CUY\85529\Design\Roadway\Sheets\85529_GP008.dgn Sheet 12/21/2020 8:02:27 AM jalbrigl

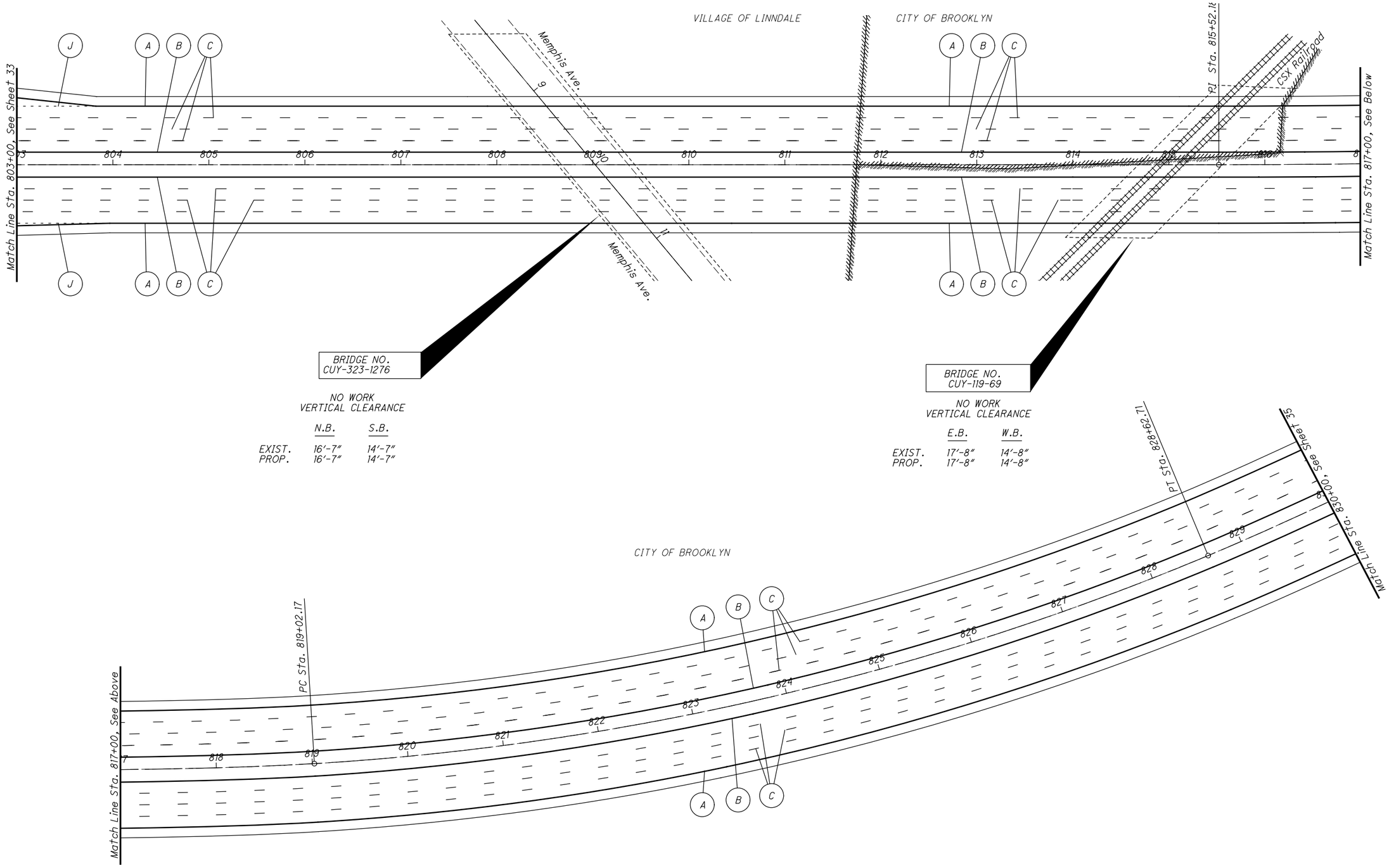

For Pavement Marking Legend, see Sheet 26

HORIZONTAL SCALE IN FEET 0 25 50 100

CALCULATED JDA
CHECKED EJK

GENERAL PLAN
Sta. 803+00.00 to Sta. 830+00.00

CUY-71-10.48

I:\ProjectData\CUY\85529\Design\Roadway\Sheets\85529_GP009.dgn Sheet 12/21/2020 8:02:34 AM jalbrigl

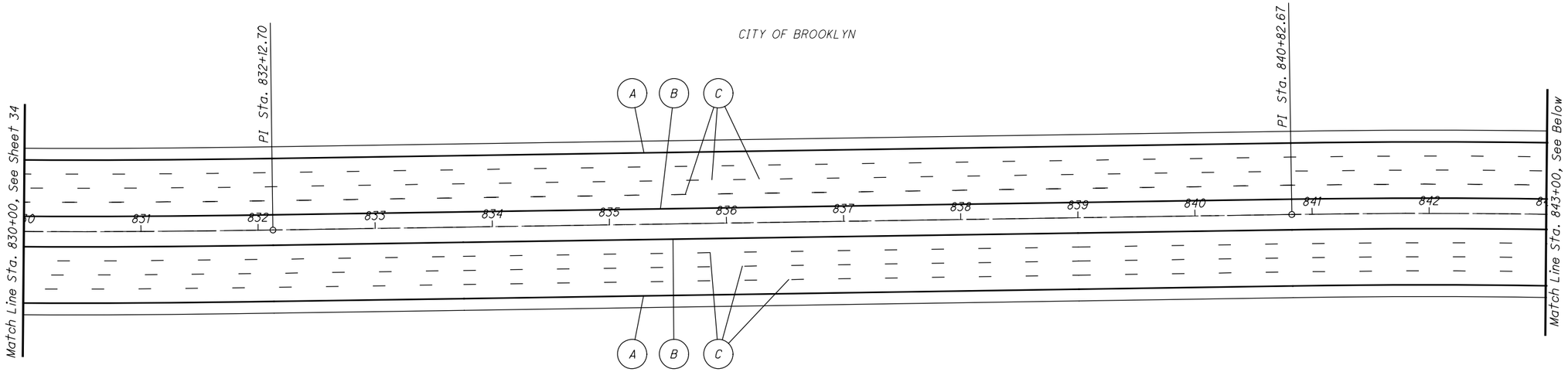

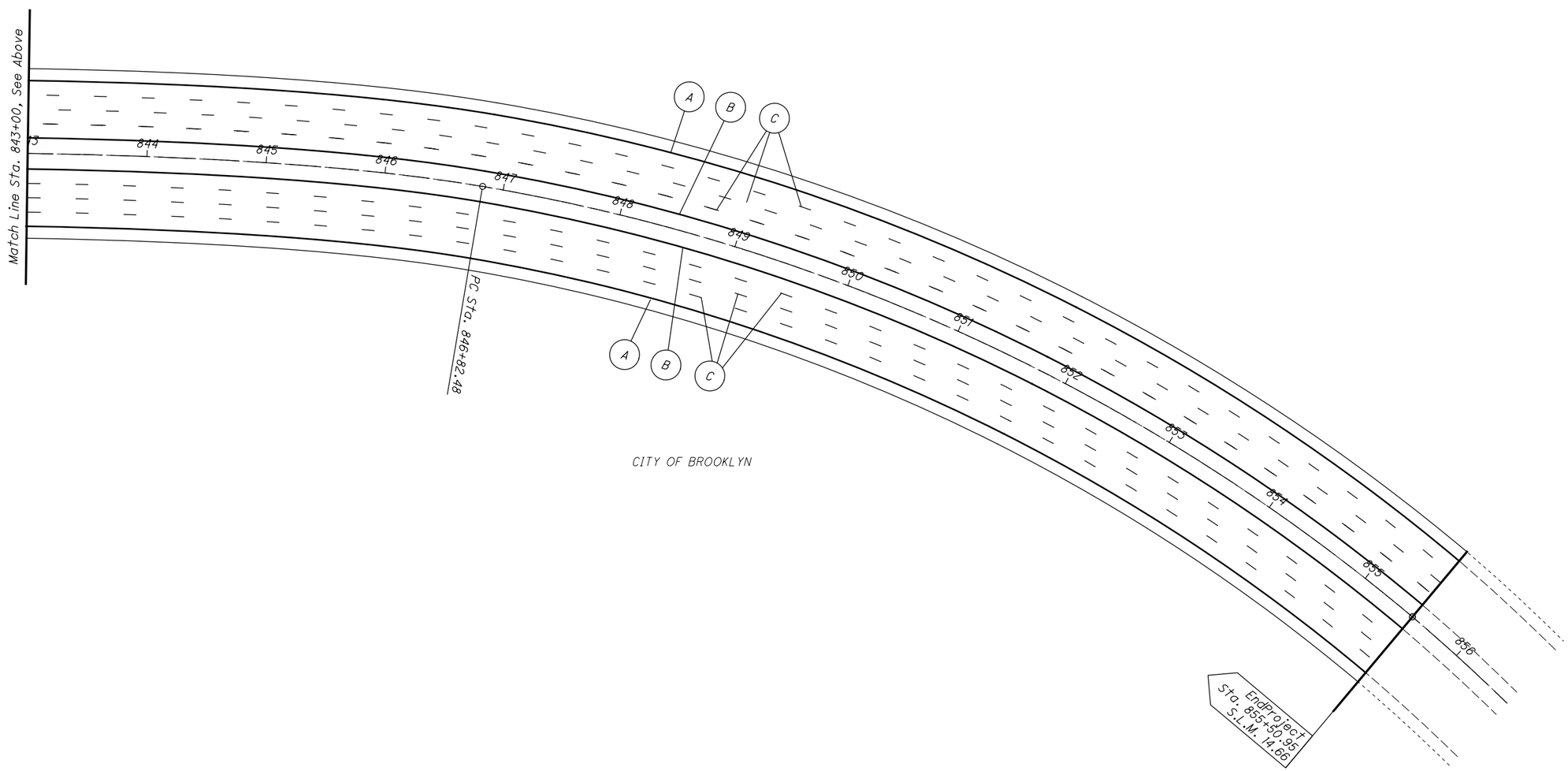

For Pavement Marking Legend, see Sheet 26

HORIZONTAL SCALE IN FEET
0 25 50 100

CALCULATED JDA
CHECKED EJK

GENERAL PLAN
Sta. 830+00.00 to End Project

CUY-71-10.48

I:\ProjectData\CUY\85529\Design\Roadway\Sheets\85529_GP010.dgn Sheet 12/21/2020 8:02:40 AM jalbrigl