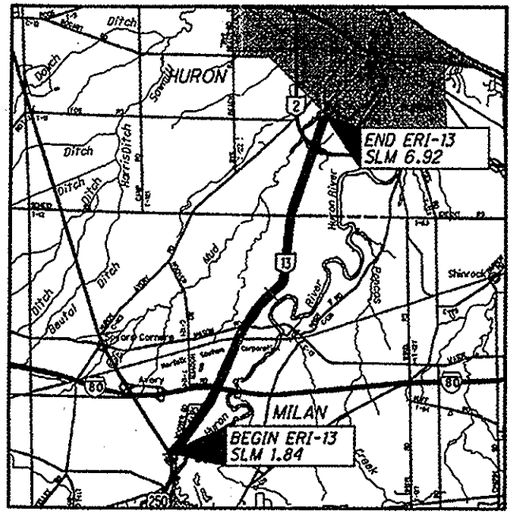

LOCATION MAP

LATITUDE: 41° 18' 41" LONGITUDE: -82° 36' 24"

SCALE IN MILES

0 1 2 3 4

N

PORTION TO BE IMPROVED
UNDIVIDED STATE & FEDERAL ROUTES
OTHER ROADS

DESIGN DESIGNATION

SEE SHEET NO. 2.

DESIGN EXCEPTIONS

NONE

STATE OF OHIO

DEPARTMENT OF TRANSPORTATION

ERI-13-1.84

MILAN TOWNSHIP
HURON TOWNSHIP
ERIE COUNTY

INDEX OF SHEETS:

TITLE SHEET	1
STRAIGHT LINE DIAGRAM & DESIGN DESIGNATION	2
GENERAL NOTES	3-5
MAILBOX FACILITIES	6
GENERAL SUMMARY	7
PAVEMENT & SHOULDER DATA	8
TYPICAL SECTION	9
PAVEMENT MARKING/RPM SUB SUMMARY	10
DETECTOR LOOP INSTALLATION DETAILS	11
DETECTOR LOOP REPLACEMENTS	12
STRUCTURE SUMMARY	13
STRUCTURE TREATMENT	14
MAINTENANCE OF TRAFFIC PLAN	15-16
STRUCTURE GENERAL NOTES	17-19
STRUCTURE ERI-13-0367	20-23

PROJECT DESCRIPTION

THIS PROJECT IS 5.08 MILES LONG AND WILL INCLUDE PAVEMENT REPAIRS, RESURFACING WITH ASPHALT CONCRETE, PLACEMENT OF PAVEMENT MARKINGS, ADJUSTING OF CASTINGS AND MONUMENTS TO GRADE, AND STRUCTURE MAINTENANCE WORK.

EARTH DISTURBED AREA

PROJECT EARTH DISTURBED AREA: N/A ACRES (MAINTENANCE PROJECT)

ESTIMATED CONTRACTOR EARTH DISTURBED AREA: N/A ACRES (MAINTENANCE PROJECT)

NOTICE OF INTENT EARTH DISTURBED AREA: N/A ACRES (MAINTENANCE PROJECT)

2013 SPECIFICATIONS

THE STANDARD SPECIFICATIONS OF THE STATE OF OHIO, DEPARTMENT OF TRANSPORTATION, INCLUDING CHANGES AND SUPPLEMENTAL SPECIFICATIONS LISTED IN THE PROPOSAL SHALL GOVERN THIS IMPROVEMENT.

I HEREBY APPROVE THESE PLANS AND DECLARE THAT THE MAKING OF THIS IMPROVEMENT WILL NOT REQUIRE THE CLOSING TO TRAFFIC OF THE HIGHWAY AND THAT PROVISIONS FOR THE MAINTENANCE AND SAFETY OF TRAFFIC WILL BE AS SET FORTH ON THE PLANS AND ESTIMATES.

APPROVED [signature]
DATE 7-25-13 DISTRICT DEPUTY DIRECTOR

APPROVED [signature]
DATE 8-20-13 DIRECTOR, DEPARTMENT OF TRANSPORTATION

STRUCTURE/CULVERT ENGINEERS SEAL:

STATE OF OHIO
DUSTIN J. VOUSDEN
E-69285
REGISTERED
PROFESSIONAL ENGINEER

SIGNED: [signature]
DATE: 7/25/13

ROADWAY ENGINEERS SEAL:

STATE OF OHIO
AHAD D. BARATY
E-53234
REGISTERED
PROFESSIONAL ENGINEER

SIGNED: [signature]
DATE: 7/25/13

STANDARD CONSTRUCTION DRAWINGS

BP-3.1	4/20/12	MT-96.11	7/19/13	TC-41.20	1/19/01				
BP-4.1	7/19/13	MT-96.20	7/19/13	TC-42.20	1/21/11			800	7/19/13
		MT-96.26	7/19/13	TC-52.10	1/18/13			832	5/5/09
DM-4.3	7/19/13	MT-97.10	7/19/13	TC-52.20	1/18/13			847	12/31/12
DM-4.4	7/20/12	MT-97.12	7/19/13	TC-65.10	4/20/12				
		MT-98.10	7/20/12	TC-65.11	4/20/12				
RM-1.1	1/18/13	MT-99.20	7/20/12	TC-73.10	4/20/12				
RM-4.2	10/15/10	MT-99.30	4/15/11	TC-82.10	1/18/13				
		MT-101.70	4/15/11						
PCB-91	1/18/13	MT-101.90	10/19/12					SPECIAL PROVISIONS	
		MT-105.10	7/20/12						

SUPPLEMENTAL SPECIFICATIONS

UNDERGROUND UTILITIES
TWO WORKING DAYS
BEFORE YOU DIG
CALL 1-800-362-2764 (TOLL FREE)
OHIO UTILITIES PROTECTION SERVICE
NON-MEMBERS
MUST BE CALLED DIRECTLY
OIL & GAS PRODUCERS PROTECTIVE SERVICE CALL: 1-800-925-0988

PLANS PREPARED BY:

ODOT DISTRICT THREE PLANNING & ENGINEERING DEPT.

FEDERAL PROJECT NO. E070701

PID NO. 80184

CONSTRUCTION PROJECT NO.

RAILROAD INVOLVEMENT NORFOLK SOUTHERN CORPORATION

ERI-13-1.84

ERI - SR-13-1.84
130580 PID - 80184
Dist 3 11/7/2013
Contract Proposal Available @ www.contracts.dot.state.oh.us/home
DESIGN FILE:I:\projects\80184\roadway
WORKSTATION:nfoster DATE:7/25

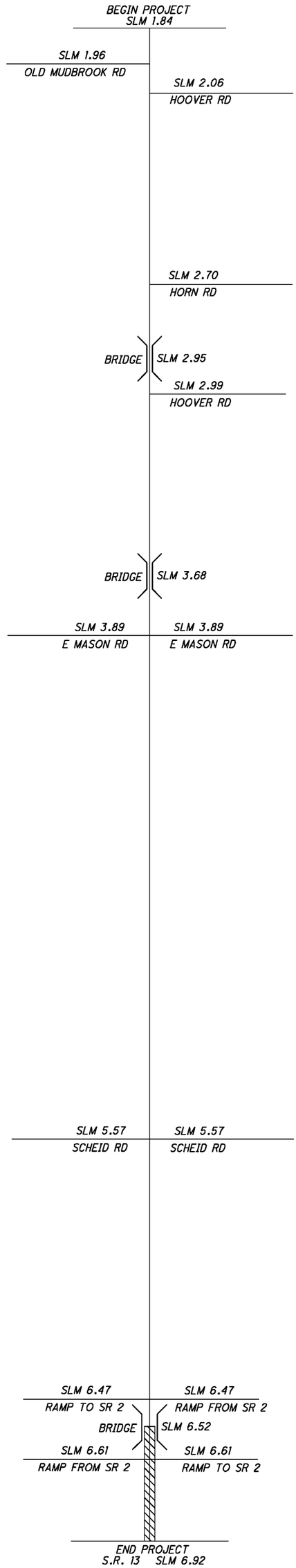

ERI S.R. 13
DESIGN DESIGNATION

SLM	1.84-2.92
CURRENT ADT (2014)	3,600
DESIGN YEAR ADT (2026)	3,700
DESIGN HOURLY VOLUME (2026)	370
DIRECTIONAL DISTRIBUTION	53%
TRUCKS (24 HOUR B&C)	9%
DESIGN SPEED/LEGAL SPEED	55 MPH
DESIGN FUNCTIONAL CLASSIFICATION:	MAJOR COLLECTOR
NHS PROJECT - NO	

SLM	2.92-6.92
CURRENT ADT (2014)	3,600
DESIGN YEAR ADT (2026)	3,800
DESIGN HOURLY VOLUME (2026)	380
DIRECTIONAL DISTRIBUTION	53%
TRUCKS (24 HOUR B&C)	9%
DESIGN SPEED/LEGAL SPEED	55 MPH
DESIGN FUNCTIONAL CLASSIFICATION:	MAJOR COLLECTOR
NHS PROJECT - YES (6.52 - 6.92)	

ERI-13-1.84

STRAIGHT LINE DIAGRAM & DESIGN DESIGNATION

CALCULATED LAH
CHECKED ADB

GENERAL

UTILITIES

LISTED BELOW ARE ALL UTILITIES LOCATED WITHIN THE PROJECT CONSTRUCTION LIMITS TOGETHER WITH THEIR RESPECTIVE OWNERS.

THE LOCATION OF THE UNDERGROUND UTILITIES SHOWN ON THE PLANS ARE AS OBTAINED FROM THE OWNERS AS REQUIRED BY SECTION 153.64 O.R.C.

AT&T OF OHIO
130 N. ERIE STREET, ROOM 714
TOLEDO, OHIO 43604
419-245-5004

BUCKEYE CABLE SYSTEM
409 EAST MARKET STREET
P.O. BOX 5800
SANDUSKY, OHIO 44870
419-627-1371 EXT 6036

CITY OF HURON
417 MAIN STREET
HURON, OHIO 44839
419-433-5000

COLUMBIA GAS OF OHIO
3101 NORTH RIDGE ROAD E
LORAIN, OHIO 44055
440-240-6107

COLUMBIA GAS TRANSMISSION
589 NORTH STATE ROAD
MEDINA, OHIO 44256
330-721-4163

DOMINION EAST OHIO
4725 SOUTHWAY STREET SW
CANTON, OHIO 44706
330-266-2049

ERIE COUNTY DEPT. OF ENVIRONMENTAL SERVICES
554 RIVER ROAD
P.O. BOX 469
HURON, OHIO 44839
419-433-7303

ERIE COUNTY ENGINEER'S OFFICE
2700 COLUMBUS AVENUE
SANDUSKY, OHIO 44870
419-627-7710

FRONTIER COMMUNICATIONS
6223 NORWALK ROAD
MEDINA, OHIO 44256
330-722-9453

LEVEL 3 COMMUNICATIONS
MELINDA WALKER
1025 ELDORADO BOULEVARD
BROOMFIELD, COLORADO 80021
720-888-1702

NORTHERN OHIO RURAL WATER
P.O. BOX 96
COLLINS, OHIO 44826
419-668-7213

ODOT DISTRICT 3 TRAFFIC
906 CLARK AVENUE
ASHLAND, OH 44805
419-281-0513 EXT 207-2822

OHIO EDISON COMPANY
6326 LAKE AVENUE
ELYRIA, OHIO 44035
440-326-3229

ONE COMMUNITY
800 W. SAINT CLAIR 2ND FLOOR
CLEVELAND, OHIO, 44113
216-923-2200

QWEST COMMUNICATIONS
13002 ECKEL JUNCTION ROAD
PERRYSBURG, OHIO 43551
419-872-8534

TIME WARNER CABLE
576 TERNES AVENUE
ELYRIA, OH 44035
440-366-0417 EXT 625

WINDSTREAM
560 TERNES AVENUE
ELYRIA, OHIO 44035
440-329-4251

THE AFOREMENTIONED UTILITY COMPANIES AND AGENCIES HAVE VARIOUS FACILITIES IN THE AREA THAT WILL REMAIN IN PLACE DURING CONSTRUCTION.

EXTREME CAUTION SHOULD BE EXERCISED IN AREAS WITH UTILITIES. SECTIONS 105.07 AND 107.16 OF THE DEPARTMENT OF TRANSPORTATION CONSTRUCTION AND MATERIALS SPECIFICATIONS REQUIRE, AMONG OTHER THINGS, THAT THE CONTRACTOR COOPERATE WITH ALL UTILITIES LOCATED WITHIN THE LIMITS OF THIS CONSTRUCTION PROJECT AND TAKE RESPONSIBILITY FOR THE PROTECTION OF THE UTILITY PROPERTY AND SERVICES.

ROUTINE MAINTENANCE

BETWEEN THE TIME THAT BIDS ARE TAKEN AND THE START OF CONSTRUCTION, THE MAINTAINING AGENCY MAY ENTER UPON THE PROJECT AND PERFORM ROUTINE MAINTENANCE SUCH AS CRACK SEALING, PATCHING, AND BERM AND SHOULDER REPAIR. THE EFFECTS, IF ANY, OF THE PERFORMANCE OF ROUTINE MAINTENANCE SHALL BE CONSIDERED AS INHERENT IN WORK OF THE CHARACTER PROVIDED FOR IN THE PLAN AND THE RESULTING CONDITIONS SHALL NOT BE CONSIDERED AS DIFFERING MATERIALLY FROM THOSE EXISTING AT THE TIME BIDS WERE TAKEN.

GENERAL (CONTINUED)

WORK LIMITS

THE WORK LIMITS SHOWN ON THESE PLANS ARE FOR PHYSICAL CONSTRUCTION ONLY. PROVIDE THE INSTALLATION AND OPERATION OF ALL WORK ZONE TRAFFIC CONTROL AND WORK ZONE TRAFFIC CONTROL DEVICES REQUIRED BY THESE PLANS WHETHER INSIDE OR OUTSIDE THESE WORK LIMITS.

RAILROAD CROSSINGS

PRIOR TO ANY WORK AT RAILROAD CROSSINGS THE CONTRACTOR SHALL CONTACT THE AFFECTED RAILROAD AUTHORITY SO AS TO MAKE THEM AWARE OF THE PROGRESS AND SCHEDULE OF WORK. THE CONTRACTOR SHALL COOPERATE WITH THE RAILROAD SO AS TO ELIMINATE ANY SAFETY CONCERNS. FLAGGING WILL BE REQUIRED BY THE RAILROAD. REFER TO THE RAILROAD LIABILITY INSURANCE PROPOSEL NOTE.

CONSTRUCTION NOTIFICATION

THE CONTRACTOR SHALL ADVISE THE PROJECT ENGINEER A MINIMUM OF FOURTEEN (14) DAYS PRIOR TO THE FOLLOWING: THE START OF CONSTRUCTION ACTIVITIES, LANE RESTRICTIONS, LANE CLOSURES, AND OR ROAD CLOSURES. THE PROJECT ENGINEER WILL FORWARD THIS INFORMATION TO THE FOLLOWING:

DISTRICT PUBLIC INFORMATION OFFICER (PIO) BY FAX AT (614) 887-4305 OR EMAIL AT D03.PIO@DOT.STATE.OH.US

DISTRICT PERMIT SECTION BY FAX AT (419) 281-5925 OR EMAIL AT ERNIE.ROGGE@DOT.STATE.OH.US

CENTRAL OFFICE SPECIAL HAUL PERMITS SECTION BY FAX AT (614) 728-4099 OR EMAIL AT HAULING.PERMITS@DOT.STATE.OH.US

THE PIO WILL, IN TURN, NOTIFY THE PUBLIC, THE LOCAL EMERGENCY SERVICES, AFFECTED SCHOOLS AND BUSINESSES, AND ANY OTHER IMPACTED LOCAL PUBLIC AGENCY OF ANY OF THE ABOVE MENTIONED ITEMS, VIA MEDIA SOURCES.

ROADWAY

ITEM 209 PREPARING SUBGRADE FOR SHOULDER PAVING, AS PER PLAN

PREPARE THE SHOULDER FOR PAVING A CONSISTENT SAFETY EDGE IN BOTH THICKNESS AND WIDTH.

PRIOR TO PAVING THE SAFETY EDGE, GRADE AN AREA 10 INCHES WIDE, BEGINNING AT THE EDGE OF THE PAVED ROADWAY, TO PROVIDE A LEVEL SURFACE FREE OF VEGETATION FOR CONSTRUCTION OF THE SAFETY EDGE. IF NECESSARY, EXCAVATE THE GRADED AREA TO THE DEPTH NECESSARY TO CONSTRUCT THE SAFETY EDGE. COMPACT THE GRADED SHOULDER ACCORDING TO 617.05 OR AS DIRECTED BY THE ENGINEER. THE GRADED SHOULDER BEYOND THE 10 INCH WIDE AREA FOR THE SAFETY EDGE SHALL BE GRADED AT A 10:1 SLOPE.

A QUANTITY OF 8.92 MILES HAS BEEN CARRIED TO THE GENERAL SUMMARY FOR PREPARING SUBGRADE FOR SHOULDER PAVING, AS PER PLAN.

ITEM 623 - MONUMENT BOX ADJUSTED TO GRADE

THE MONUMENT BOX TO BE ADJUSTED MAY OR MAY NOT HAVE AN EXISTING ADJUSTABLE FRAME. THE WORK SHALL CONSIST OF ADJUSTING THE EXISTING MONUMENT BOX TO THE SATISFACTION OF THE ENGINEER. THE CONTRACTOR IS REMINDED TO FIELD CHECK ALL ADJUSTMENT TO GRADE ITEMS PRIOR TO BIDDING, AS NO ADDITIONAL COMPENSATION WILL BE GRANTED FOR LABOR AND MATERIALS REQUIRED TO SATISFACTORILY ADJUST CASTINGS WITHOUT ADJUSTABLE FRAMES.

APPROXIMATE LOCATION OF KNOWN MONUMENTS
(02/STR/PV):

SLM: 3.5-4.0	2 MONUMENTS
SLM: 6.0-6.5	2 MONUMENTS

(01/NHS/PV):

SLM: 6.5-6.9	1 MONUMENT

DRAINAGE

ITEM 611 - CASTINGS ADJUSTED TO GRADE

THE CASTING TO BE ADJUSTED MAY OR MAY NOT HAVE AN EXISTING FRAME. THE WORK SHALL CONSIST OF ADJUSTING THE EXISTING CASTING TO THE SATISFACTION OF THE ENGINEER. IT IS NOT INTENDED TO PLACE NEW FRAMES WHERE NONE CURRENTLY EXIST. THE CONTRACTOR IS REMINDED TO FIELD CHECK ALL ADJUSTMENT TO GRADE ITEMS PRIOR TO BIDDING, AS NO ADDITIONAL COMPENSATION WILL BE GRANTED FOR LABOR AND MATERIALS REQUIRED TO SATISFACTORILY ADJUST CASTINGS WITHOUT FRAMES.

APPROXIMATE LOCATION OF KNOWN CASTINGS
(02/STR/PV):

SLM: 2.95	1 INLET

PAVEMENT

BUTT JOINTS

BUTT JOINTS SHALL NOT BE CUT AND LEFT OPEN TO TRAFFIC. THEY SHALL BE FILLED IN WITH A TEMPORARY ASPHALT CONCRETE WEDGE USING ITEM 614 ASPHALT CONCRETE FOR MAINTAINING TRAFFIC.

CONSTRUCTION "BUMP" (W8-1-36) AND "ADVISORY SPEED" (W13-1-24) SIGNS SHALL BE ERECTED AND MAINTAINED DURING THE PERIOD THE BUTT JOINT IS LEFT OPEN. THESE SIGNS SHALL BE PAID FOR UNDER THE LUMP SUM ITEM FOR ITEM 614 MAINTAINING TRAFFIC.

SAFETY EDGE

IN ADDITION TO THE REQUIREMENTS OF 401.12, ATTACH A DEVICE TO THE SCREED OF THE PAVER THAT CONFINES THE MATERIAL AT THE END GATE AND EXTRUDES THE ASPHALT MATERIAL IN SUCH A WAY THAT RESULTS IN A COMPACTED WEDGE SHAPE PAVEMENT EDGE OF APPROXIMATELY 30 DEGREES (NOT STEEPER THAN 40 DEGREES). ENSURE THE DEVICE MAINTAINS CONTACT WITH THE EXISTING SURFACE, AND ALLOW FOR AUTOMATIC TRANSITION TO CROSS ROADS, DRIVEWAYS, AND OBSTRUCTIONS. DO NOT USE CONVENTIONAL SINGLE PLATE STRIKE OFF.

CONSTRUCTION OF SAFETY EDGE CAN BE OMITTED AT LOCATIONS WHERE EXISTING WIDTH OF GRADED SHOULDER OR BERM IS LESS THAN 12". PROJECTS WITH VARYING CONDITIONS SHOULD USE SAFETY EDGE WHERE POSSIBLE. PLAN PREPARATION HAS MADE EVERY REASONABLE ATTEMPT TO IDENTIFY POSSIBLE SAFETY EDGE LOCATIONS.

USE THE TRANSTECH SHOULDER WEDGE MAKER, THE CARLSON SAFETY EDGE END GATE, THE ADVENT-EDGER, THE TROXLER SAFETSLOPE, OR A SIMILAR APPROVED-EQUAL DEVICE THAT PRODUCES THE SAME WEDGE CONSOLIDATION RESULTS. CONTACT INFORMATION FOR THESE WEDGE SHAPE COMPACTION DEVICES IS THE FOLLOWING:

TRANSTECH SYSTEMS, INC.
1594 STATE STREET
SCHENECTADY, NY 12304
1-800-724-6306
www.transtechsys.com

ADVANT-EDGE PAVING EQUIPMENT LLC
P.O. BOX 9163
NISKAYUNA, NY 12309-0163
518-280-6090
www.advantageedgepaving.com

CARLSON SAFETY EDGE END GATE
18450 50TH AVENUE EAST
TACOMA, WA 98446
253-875-8000

TROXLER ELECTRONICS LABORATORIES INC.
3008 E. CORNWALLIS RD.
RESEARCH TRIANGLE PARK, NC 27709
1-877-TROXLER
www.troxerlabs.com

IF ELECTING TO USE A SIMILAR DEVICE, PROVIDE PROOF THAT THE DEVICE HAS BEEN USED ON PREVIOUS PROJECTS WITH ACCEPTABLE RESULTS OR CONSTRUCT A TEST SECTION PRIOR TO THE BEGINNING OF WORK AND DEMONSTRATE WEDGE COMPACTION TO THE SATISFACTION OF THE ENGINEER. SHORT SECTIONS OF HANDWORK WILL BE ALLOWED WHEN NECESSARY FOR TRANSITIONS AND TURNOUTS OR OTHERWISE AUTHORIZED BY THE ENGINEER.

IN ADDITION TO THE REQUIREMENTS OF 401.16, MAKE THE FIRST ROLLER PASS 8 TO 12 INCHES (200 TO 300 MM) AWAY FROM TAPERED EDGE. DO NOT ROLL THE TAPER.

PAVEMENT (CONTINUED)

INTERSECTIONS AND DRIVES

RURAL-INTERSECTIONS SHALL BE PLANED AND PAVED TO THE END OF THE RADII OR AS DIRECTED BY THE ENGINEER. (TO PROVIDE A SMOOTH TRANSITION BETWEEN THE TWO HIGHWAYS, AND TO ELIMINATE WATER POCKETS).

URBAN-INTERSECTIONS SHALL BE PLANED AND PAVED TO THE BACK OF CROSSWALKS OR AS DIRECTED BY THE ENGINEER. (TO PROVIDE A SMOOTH TRANSITION BETWEEN THE TWO HIGHWAYS, AND TO ELIMINATE WATER POCKETS).

EXISTING PAVED DRIVES SHALL BE PAVED SO AS TO PROVIDE A SMOOTH TRANSITION BETWEEN THE HIGHWAY AND THE DRIVE, (DISTANCE FROM EDGE OF ROADWAY MAY VARY AT EACH DRIVE) AS DIRECTED BY THE ENGINEER.

EXISTING AGGREGATE DRIVES SHALL BE PAVED WITH AN APRON AN AVERAGE WIDTH OF 4 FT. THE SLOPE OF THIS APRON SHALL BE THE SAME AS THE ADJACENT PAVEMENT SLOPE OR AS DIRECTED BY THE ENGINEER. ANY GRADING NEEDED TO PAVE THE APRON SHALL BE INCLUDED IN THE RELATED ASPHALT ITEM FOR PAYMENT. ITEM 617 COMPACTED AGGREGATE, AS PER PLAN SHALL BE PLACED ADJACENT TO THIS APRON TO PROVIDE A SMOOTH TRANSITION FROM THE APRON TO THE EXISTING DRIVE, (WIDTH OF THIS 617 APPLICATION MAY VARY) AS DIRECTED BY THE ENGINEER. AN ADDITIONAL QUANTITY OF ITEM 617 HAS BEEN ESTIMATED TO COMPLETE THIS WORK AND IS SHOWN AS AN EXTRA AREA ON THE PAVEMENT & SHOULDER DATA SHEET.

ANY HAZARD OR UNSAFE CONDITION RESULTING FROM THE ABOVE WORK MUST BE CORRECTED IMMEDIATELY. THE CONTRACTOR IS REMINDED OF SECTIONS 105.01, 107.07 & 614.02A OF THE CONSTRUCTION AND MATERIALS SPECIFICATIONS.

INTERSECTION AREA CALCULATIONS

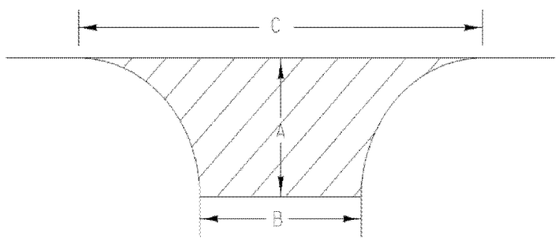

INTERSECTION NAME	A (FT)	B (FT)	C (FT)	AREA (SQ YD)
01/NHS/PV:				
RAMP TO SR 2 (LT)	10	85	152	119
RAMP FROM SR 2 (RT)	10	99	154	130
			TOTAL:	249
02/STR/PV:				
RAMP TO SR 2 (LT)	11	88	157	136
RAMP FROM SR 2 (RT)	9	81	141	101
SCHEID RD (RT)	12	52	91	87
SCHEID RD (LT)	20	38	84	119
E MASON RD (RT)	38	40	139	308
E MASON RD (LT)	20	39	123	149
HOOVER RD (LT)	12	42	64	66
HORN RD (LT)	18	43	77	109
HOOVER RD (LT)	13	53	82	91
			TOTAL:	1166
03/S<2/PV:				
OLD MUDBROOK DR (RT)	10	77	125	103
			TOTAL:	103

PAVEMENT (CONTINUED)

ITEM 251 - PARTIAL DEPTH PAVEMENT REPAIR
ITEM 253 - PAVEMENT REPAIR

THESE ITEMS OF WORK SHALL CONSIST OF THE REMOVAL OF THE EXISTING PAVEMENT OR PAVED BERM WHICH MAY BE ASPHALT, BRICK, CONCRETE, OR A COMBINATION OF EACH, IN AREAS OF EXISTING PAVEMENT FAILURE. CORING HAS BEEN PERFORMED TO HELP DETERMINE THE COMPONENTS THAT MAY BE ENCOUNTERED DURING THIS ITEM OF WORK. THE PAVEMENT CORING INFORMATION IS SHOWN BELOW ON THIS SHEET.

PAVEMENT REPAIR SHALL BE PERFORMED AFTER PAVEMENT PLANING AND BEFORE PLACEMENT OF THE INTERMEDIATE AND/OR SURFACE COURSE. THE DEPTH OF REMOVAL SHALL BE SUFFICIENT TO REMOVE ALL DETERIORATED PAVEMENT WITH A MAXIMUM DEPTH OF 12", BASED ON THE PAVEMENT DESIGN AND AN AVERAGE DEPTH OF 4" AND AN AVERAGE WIDTH OF 3 FT FOR ESTIMATING PURPOSES.

THE CONTRACTOR SHALL BE CAPABLE OF PERFORMING PAVEMENT REPAIRS 2 FEET WIDE.

REPLACEMENT MATERIAL SHALL BE ITEM 301, ITEM 448 TYPE 2, OR ITEM 442 19MM MATERIAL AND SHALL BE PLACED AND COMPACTED TO FINISH FLUSH WITH THE ADJACENT PAVEMENT SURFACE. ITEM 301 ASPHALT CONCRETE, PG64-22 CAN BE USED WHEN THE DEPTH OF THE REPAIR IS BETWEEN 3" AND 12" WITH A MAXIMUM PAVEMENT LIFT OF 6". ITEM 448 TYPE 2 OR ITEM 442 19MM CAN BE USED WHEN THE DEPTH OF THE REPAIR IS BETWEEN 1.5" AND 5" WITH A MAXIMUM PAVEMENT LIFT OF 3". THE CONTRACTOR HAS THE OPTION OF USING EITHER ITEM 301, ITEM 448 TYPE 2, OR ITEM 442 19MM MATERIAL WHEN THE PAVEMENT REPAIR IS BETWEEN 3" AND 5" DEEP. ITEM 448 TYPE 2 OR ITEM 442 19MM MATERIAL SHALL BE PG64-22 FOR MEDIUM MIX DESIGN PAVEMENTS AND PG64-28 FOR HEAVY MIX DESIGN PAVEMENTS.

PAYMENT SHALL INCLUDE ALL LABOR, EQUIPMENT, AND MATERIALS NECESSARY TO COMPLETE THE PAVEMENT REPAIR. FOR PAYMENT PURPOSES ITEM 251 PARTIAL DEPTH PAVEMENT REPAIR IS TO BE A MAXIMUM OF 4" DEEP AND ITEM 253 PAVEMENT REPAIR IS FOR DEPTHS GREATER THAN 4". PAYMENT WILL BE MADE AT THE UNIT BID PRICE PER CUBIC YARD, (BY TICKET WEIGHT CONVERSION), OF ITEM 251 - PARTIAL DEPTH PAVEMENT REPAIR OR ITEM 253 - PAVEMENT REPAIR. THE FOLLOWING ESTIMATED QUANTITIES ARE PROVIDED IN THE GENERAL SUMMARY TO BE USED AS DIRECTED BY THE ENGINEER:

SR 13 ITEM 251 - PARTIAL DEPTH PAVEMENT REPAIR — 755 CU. YD.

01/NHS/PV:		
	1.84 - 1.97	25 CU. YD.
02/STR/PV:		
	1.97-3.00	160 CU. YD.
	3.00-4.00	160 CU. YD.
	4.00-5.00	160 CU. YD.
	5.00-6.52	225 CU. YD.
03/S<2/PV:		
	6.52-6.92	25 CU. YD.

SR 13 ITEM 253 - PAVEMENT REPAIR — 50 CU. YD.

01/NHS/PV:	5 CU. YD.
02/STR/PV:	40 CU. YD.
03/S<2/PV:	5 CU. YD.

PAVEMENT CORING INFORMATION

CO.	ROUTE	SLM	ASPHALT DEPTH (IN.)	WHEEL TRACK / SHOULDER	DIRECTION	YEAR CORED
ERI	13	2.15	9	INSIDE	NB	2012
ERI	13	2.15	11	OUTSIDE	NB	2012
ERI	13	2.54	11.5	INSIDE	NB	2012
ERI	13	2.54	N/A	OUTSIDE	NB	2012
ERI	13	3.3	9.25	INSIDE	NB	2012
ERI	13	3.3	10.25	OUTSIDE	NB	2012
ERI	13	3.3	7.5	SHOULDER	NB	2012
ERI	13	4.78	8.5	INSIDE	NB	2012
ERI	13	4.78	11	OUTSIDE	NB	2012
ERI	13	4.78	10	SHOULDER	NB	2012
ERI	13	5.75	8.5	INSIDE	NB	2012
ERI	13	5.75	12	OUTSIDE	NB	2012
ERI	13	5.75	12.5	SHOULDER	NB	2012
ERI	13	6.46	10.5	INSIDE	NB	2012
ERI	13	6.46	10.5	OUTSIDE	NB	2012
ERI	13	6.46	11	SHOULDER	NB	2012
ERI	13	6.72	11.5	INSIDE	NB	2012
ERI	13	6.72	11.5	OUTSIDE	NB	2012

PAVEMENT (CONTINUED)

ITEM 254 - PATCHING PLANED SURFACE

AN ESTIMATED QUANTITY OF ITEM 254 - PATCHING PLANED SURFACE HAS BEEN SET UP TO BE USED AS DIRECTED BY THE ENGINEER AS DESCRIBED IN CMS 254.04. THE LIMIT OF THE PATCHING DEPTH IS 0 TO 2 IN.

ITEM 254 - PAVEMENT PLANING, ASPHALT CONCRETE

THE INTENT OF THE PLANING IS TO TAPER THE PLANING TO THE APPROACH OF STRUCTURES ERI-13-0293, ERI-13-0367 AND ERI-13-0650 AND AT ALL INTERSECTIONS. THE PAVEMENT SLOPE SHALL BE 0.010 MINIMUM AND 0.016 PREFERRED, CONTINUOUS BETWEEN THE CROWN AND THE PROPOSED EDGELINE/SHOULDER. THE MILLING DEPTH SHALL BE CONTROLLED FROM THE CENTER OF PAVEMENT IN CONFORMANCE WITH THE ABOVE GUIDELINES.

THE PROGRESSION OF THE PLANING SHALL PROCEED IN SUCH A MANNER THAT NORMAL TRAFFIC WILL NOT BE REQUIRED TO RUN OVER THE PLANED ROADWAY SURFACE MORE THAN FOURTEEN (14) CALENDAR DAYS. FOR EACH CALENDAR DAY BEYOND THE 14 DAYS THAT THE ROADWAY REMAINS EXPOSED TO THE PLANED SURFACE, THE CONTRACTOR WILL BE ASSESSED A DISINCENTIVE FEE of $1000 PER DAY.

PAYMENT SHALL INCLUDE ALL LABOR, EQUIPMENT, AND MATERIALS NECESSARY TO COMPLETE THE PAVEMENT PLANING, ASPHALT CONCRETE. PAYMENT WILL BE MADE AT THE UNIT BID PRICE PER SQUARE YARD OF ITEM 254 - PAVEMENT PLANING, ASPHALT CONCRETE.

ITEM 407, TACK COAT
ITEM 407, TACK COAT FOR INTERMEDIATE COURSE

AS PER 407.06 THE APPLICATION RATES SHALL BE 0.08 GAL. PER SQ. YD. PRIOR TO THE INTERMEDIATE COURSE AND SHALL BE 0.04 GAL PER SQ. YD. PRIOR TO THE SURFACE COURSE FOR ESTIMATING PURPOSES ONLY. THE RATE OF APPLICATION SHALL BE SUBJECT TO ADJUSTMENT AS DIRECTED BY THE ENGINEER. A COMPLETE PAVEMENT SURFACE COVERAGE SHALL BE REQUIRED. AREAS OF TACK STRIPPED BY CONSTRUCTION EQUIPMENT OR TRAFFIC SHALL BE RE-COATED PRIOR TO PLACING ASPHALT CONCRETE. ALL COSTS AS DESCRIBED ABOVE SHALL BE INCLUDED IN THE UNIT PRICE BID PER GALLON FOR ITEM 407, TACK COAT AND ITEM 407 TACK COAT FOR INTERMEDIATE COURSE.

ITEM 442 - ASPHALT CONCRETE SURFACE COURSE, 9.5 MM, TYPE A (446), AS PER PLAN

ALL OPEN TRANSVERSE JOINTS SHALL BE TAPERED TO MEET EXISTING PAVEMENT BEFORE INTRODUCING TRAFFIC. A "BUMP" SIGN (W8-1-36) SHALL BE ERECTED ON EACH SIDE OF TRANSVERSE JOINTS LEFT OPEN OVER NIGHT, INCLUDING A SPEED ADVISORY SIGN. THESE SIGNS SHALL BE REMOVED IMMEDIATELY AFTER JOINT HAS BEEN CLOSED. PLACEMENT OF SIGNS SHALL BE INCLUDED IN THE UNIT PRICE BID FOR ITEM 614 MAINTAINING TRAFFIC.

CARE SHALL BE TAKEN TO MATCH EXISTING PAVEMENT ELEVATIONS AT EXISTING PAVED BERMS, DRIVES, INTERSECTIONS, ETC.

REQUIREMENTS OF 442 APPLY EXCEPT AS FOLLOWS:
MIX DESIGN: FOR Ndes USE 50 GYRATIONS, FOR Nmax USE 75 GYRATIONS.
MINIMUM TOTAL PG BINDER CONTENT IS 6.0 PERCENT.
USE A PG 64-22 BINDER.
MAXIMUM RECLAIMED ASPHALT CONCRETE PAVEMENT IS 20 PERCENT.
WHEN AN AGGREGATE SOURCE IS SPECIALLY DESIGNATED WITH AN SR ON THE AGGREGATE GRAVITY LIST DO NOT USE THE AGGREGATE EXCEPT AS ALLOWED FOR MEDIUM TRAFFIC IN THE GUIDELINES FOR MAINTAINING ADEQUATE PAVEMENT FRICTION IN SURFACE PAVEMENT.
QUALITY CONTROL: DO NOT PERFORM Nmax IN QUALITY CONTROL TESTING. DO NOT TAKE EXTRA ASPHALT BINDER SAMPLES AS OUTLINED IN CMS 442.05.

ITEM 442, ASPHALT CONCRETE INTERMEDIATE COURSE, 9.5MM, TYPE A (448), AS PER PLAN (VARIABLE, 0.75"±)

THIS ITEM SHALL BE USED FOR CORRECTION OF CROWN, PROFILE AND ANY OTHER IRREGULARITIES.

ALL OPEN TRANSVERSE JOINTS SHALL BE TAPERED TO MEET EXISTING PAVEMENT BEFORE INTRODUCING TRAFFIC. A "BUMP" SIGN (W8-1-36) SHALL BE ERECTED ON EACH SIDE OF TRANSVERSE JOINTS LEFT OPEN OVER NIGHT, INCLUDING A SPEED ADVISORY SIGN. THESE SIGNS SHALL BE REMOVED IMMEDIATELY AFTER JOINT HAS BEEN CLOSED. PLACEMENT OF SIGNS SHALL BE INCLUDED IN THE UNIT PRICE BID FOR ITEM 614 MAINTAINING TRAFFIC.

REQUIREMENTS OF 442 APPLY EXCEPT AS FOLLOWS:
MIX DESIGN: FOR Ndes USE 50 GYRATIONS, FOR Nmax USE 75 GYRATIONS.
MINIMUM TOTAL PG BINDER CONTENT IS 6.0 PERCENT.
USE A PG 64-22 BINDER.
MAXIMUM RECLAIMED ASPHALT CONCRETE PAVEMENT IS 20 PERCENT.
QUALITY CONTROL: DO NOT PERFORM Nmax IN QUALITY CONTROL TESTING. DO NOT TAKE EXTRA ASPHALT BINDER SAMPLES AS OUTLINED IN CMS 442.05.

PAVEMENT (CONTINUED)

446 DENSITY ACCEPTANCE WITH FLAGGER CLOSING OF A 2-LANE HIGHWAY FOR PAVING OPERATIONS

THIS PLAN NOTE APPLIES ONLY TO A FLAGGER CLOSURE OF ONE LANE OF A 2-LANE HIGHWAY DURING PAVING OPERATIONS WHEN USING STANDARD CONSTRUCTION DRAWING MT-97.11 OR MT-97.12, AND ALLOWS A PAVING OPERATION TO PROCEED CONCURRENTLY WITH THE MARKING AND CUTTING OF CORES REQUIRED FOR 446 DENSITY ACCEPTANCE.

IN ALL CASES THE CONTRACTOR SHOULD LENGTHEN THEIR LANE CLOSURES TO THE MAXIMUM PERMISSIBLE LENGTH DETAILED IN THE ABOVE REFERENCED STANDARD CONSTRUCTION DRAWINGS TO ALLOW THE ENGINEER ADEQUATE TIME TO MARK THE REQUIRED CORE LOCATIONS AND FOR CORE CUTTING OPERATIONS.

THE CONTRACTOR WILL PROVIDE TO THE ENGINEER THE PLANNED QUANTITY THAT WILL BE PLACED FOR THE DAY'S PRODUCTION. EACH DAY'S PRODUCTION WILL BE CONSIDERED ONE LOT AND INCLUDES SHOULDERS. TEN CORES WILL BE OBTAINED BY THE CONTRACTOR FOR EACH LOT AT RANDOM LOCATIONS DETERMINED BY THE ENGINEER. THE ENGINEER WILL DIVIDE A LOT INTO FIVE EQUAL SUBLOTS AND CALCULATE TWO RANDOM CORE LOCATIONS IN EACH SUBLOT AS DESCRIBED IN C&MS 446.05.

THE ENGINEER WILL MARK THE CORE LOCATIONS AFTER THE PAVING OPERATION (INCLUDING THE FINISH ROLLER) HAS COMPLETELY PASSED THE RANDOMLY SELECTED CORE LOCATION. THE CONTRACTOR SHOULD DETERMINE WHEN IT IS APPROPIATE TO START THE CORE DRILL OPERATION AND BEGIN CUTTING CORES WHEN THE NEWLY PLACED PAVEMENT SURFACE TEMPERATURE IS LESS THAN 140°F. IT IS THE CONTRACTOR'S RESPONSIBILITY TO MAINTAIN THE LANE CLOSURE DURING ALL PAVING, CORE MARKING, AND CORING OPERATIONS PER THE REQUIREMENTS OF THE STANDARD CONSTRUCTION DRAWING USED FOR THE PAVING OPERATION.

MAINTENANCE OF TRAFFIC

PLACEMENT OF ASPHALT CONCRETE

TWO-WAY TRAFFIC SHALL BE MAINTAINED AT ALL TIMES EXCEPT THAT ONE-WAY TRAFFIC WILL BE PERMITTED FOR MINIMUM PERIODS OF TIME CONSISTENT WITH THE REQUIREMENTS OF THE SPECIFICATIONS FOR PROTECTION OF COMPLETED ASPHALT CONCRETE COURSES.

ITEM 614 - ASPHALT CONCRETE FOR MAINTAINING TRAFFIC

THE FOLLOWING ESTIMATED QUANTITY HAS BEEN CARRIED TO THE GENERAL SUMMARY TO CONSTRUCT A TEMPORARY ASPHALT WEDGE FROM THE EXISTING PAVEMENT TO THE PLANED SURFACE AT BUTT JOINTS AND OTHER LOCATIONS THAT RESULT IN A DROP-OFF IN EXCESS OF 1.5 INCHES. THIS QUANTITY SHALL ALSO BE USED AT PLANED SURFACES WHERE A TEMPORARY ASPHALT WEDGE IS NEEDED AROUND CASTINGS. BEFORE RESURFACING OF THE PAVEMENT, THE TEMPORARY WEDGE SHALL BE REMOVED AND THE COST SHALL BE CONSIDERED INCIDENTAL TO ITEM 614 - ASPHALT CONCRETE FOR MAINTAINING TRAFFIC.

ITEM 614 - ASPHALT CONCRETE FOR MAINTAINING TRAFFIC

3 CU. YD.	(01/NHS/PV)
20 CU. YD.	(02/STR/PV)
2 CU. YD.	(03/S<2/PV)

ITEM 614 - MAINTAINING TRAFFIC

A MINIMUM OF ONE (1) LANE OF TRAFFIC SHALL BE MAINTAINED AT ALL TIMES USING FLAGGERS EXCEPT AS NOTED IN THE STRUCTURE PLAN NOTES FOR STRUCTURE ERI-13-0367 WHERE A SIGNALIZED CLOSURE IS EXPECTED.

ALL WORK AND TRAFFIC CONTROL DEVICES SHALL BE IN ACCORDANCE WITH CMS 614 AND OTHER APPLICABLE PORTIONS OF THE SPECIFICATIONS, AS WELL AS THE OHIO MANUAL OF UNIFORM TRAFFIC CONTROL DEVICES. PAYMENT FOR ALL LABOR, EQUIPMENT, AND MATERIALS SHALL BE INCLUDED IN THE LUMP SUM CONTRACT PRICE FOR ITEM 614, MAINTAINING TRAFFIC, UNLESS SEPARATELY ITEMIZED IN THE PLAN.

MAINTENANCE OF TRAFFIC (CONTINUED)

ITEM 614 - WORK ZONE MARKING SIGN

THE FOLLOWING ESTIMATED QUANTITY HAS BEEN CARRIED TO THE GENERAL SUMMARY FOR USE AS DIRECTED BY THE ENGINEER FOR TEMPORARY WORK ZONE MARKING SIGNS PER THE REQUIREMENTS OF THE CONSTRUCTION AND MATERIALS SPECIFICATIONS, 614.04.

01/NHS/PV:

WORK ZONE MARKING SIGN: NO EDGE LINE	= 2 EACH
WORK ZONE MARKING SIGN: DO NOT PASS	= 1 EACH
TOTAL	= 3 EACH

02/STR/PV:

WORK ZONE MARKING SIGN: NO EDGE LINE	= 9 EACH
WORK ZONE MARKING SIGN: DO NOT PASS	= 12 EACH
WORK ZONE MARKING SIGN: PASS WITH CARE	= 12 EACH
TOTAL	= 33 EACH

03/S<2/PV:

WORK ZONE MARKING SIGN: NO EDGE LINE	= 1 EACH
WORK ZONE MARKING SIGN: DO NOT PASS	= 1 EACH
TOTAL	= 2 EACH

TEMPORARY TRAFFIC SIGNAL ACTIVATION FOR PARTIAL ROADWAY CLOSURE

THE CONTRACTOR SHALL NOTIFY ODOT DISTRICT 3 PUBLIC INFORMATION OFFICER (PIO) A MINIMUM TEN (10) CALENDAR DAYS ADVANCE NOTICE BEFORE ACTIVATING A TEMPORARY TRAFFIC SIGNAL TO STOP-AND-GO OPERATION FOR PARTIAL ROADWAY CLOSURE.

THE PIO CONTACT INFORMATION IS AS FOLLOWS:

CHRISTINE MYERS
PUBLIC INFORMATION OFFICER
ODOT DISTRICT 3
906 CLARK AVENUE
ASHLAND, OH 44805
PHONE 419-207-7182

IN ADDITION, THE TEMPORARY TRAFFIC SIGNAL SHALL BE ACTIVATED PER THE REQUIREMENTS OF ODOT SCD MT-120.00. THE TEMPORARY TRAFFIC SIGNAL SHALL OPERATE IN FLASH MODE FIVE (5) TO SEVEN (7) DAYS PRIOR TO ACTIVATING TO STOP-AND-GO OPERATION. SIGNAL ACTIVATION SHALL NOT OCCUR ON WEEKENDS, MONDAYS, FRIDAYS, OR ANY DAY IMMEDIATELY BEFORE OR AFTER A STATE OBSERVED HOLIDAY.

ALL COSTS ASSOCIATED WITH THE ABOVE DESCRIBED WORK SHALL BE INCLUDED WITH ITEM 614 - MAINTAINING TRAFFIC.

ITEM SPECIAL, MAILBOX SUPPORT SYSTEM

THIS ITEM OF WORK SHALL CONSIST OF THE REMOVAL OF EXISTING NON-STANDARD MAILBOX SUPPORTS AND FURNISHING AND ERECTING MAILBOX SUPPORTS AND ANY ASSOCIATED HARDWARE IN ACCORDANCE WITH THE DETAILS SHOWN, AND ATTACHING AN OWNER SUPPLIED MAILBOX, AT LOCATIONS DETERMINED BY THE ENGINEER.

IN ABSENCE OF A NEW BOX SUPPLIED BY THE OWNER THE CONTRACTOR SHALL SALVAGE THE EXISTING BOX AND PLACE IT ON THE NEW SUPPORT. DUE CARE SHALL BE EXERCISED IN SUCH AN OPERATION, THE CONTRACTOR SHALL BE RESPONSIBLE FOR REPAIRING OR REPLACING ANY BOX DAMAGED BY IMPROPER HANDLING, AS JUDGED AND DIRECTED BY THE ENGINEER.

THE BOX SHALL BE SECURELY AND NEATLY ATTACHED BY THE CONTRACTOR TO THE NEW SUPPORT. THE CONTRACTOR SHALL SUPPLY ALL NECESSARY ATTACHMENT HARDWARE (NUTS, BOLTS, PLATES, SPACERS AND WASHERS) AS NECESSARY TO ACCOMODATE THE COMPLETE INSTALLATION. SUPPORT HARDWARE SHALL ACCOMODATE EITHER A SINGLE OR A DOUBLE MAILBOX INSTALLATION, AND NO MORE THAN TWO MAILBOXES MAY BE MOUNTED ON A SINGLE POST. [HARDWARE SHALL BE COMMERCIAL GRADE GALVANIZED STEEL.]

WOOD POSTS SHALL BE NOMINAL 4 IN. x 4 IN. (S4S) OR 4½IN. DIAMETER ROUND, AND CONFORM TO 710.14. STEEL POSTS SHALL BE NOMINAL PIPE SIZE 2 IN. I.D., AND CONFORM TO AASHTO M 181.

POSTS SHALL BE SET AS PER THE FIRST PARAGRAPH OF 606.03, AND SHALL IN NO INSTANCE BE ENCASED IN CONCRETE.

THE CONTRACTOR SHALL BE RESPONSIBLE FOR COORDINATING WORK WITH THE LOCAL POST MASTER AND NOTIFYING THE PROPERTY OWNERS PRIOR TO WORK.

GROUP MAILBOX SUPPORTS SHALL BE PLACED ON 3 FT. CENTERS AND THE TURNOUT LENGTHENED TO ACCOMODATE THE GROUPING.

WHERE GUARDRAIL EXISTS, MAILBOXES AND THEIR SUPPORTS SHALL BE PLACED BEHIND THE GUARDRAIL. SUPPORTS MUST STILL MEET THE BREAKAWAY REQUIREMENTS LISTED ABOVE.

THE FOLLOWING ESTIMATED QUANTITIES HAVE BEEN CARRIED TO THE GENERAL SUMMARY TO BE USED AS DESCRIBED ABOVE.

ITEM SPECIAL-MAILBOX SUPPORT SYSTEM, SINGLE

02/STR/PV_____ 1 SYSTEM

MAILBOX APPROACHES

THE MAILBOX APPROACHES SHALL BE PAVED WITH 0.75" ITEM 442 INTERMEDIATE COURSE AND 1.25" ITEM 442 SURFACE COURSE. THEY SHALL CONFORM AS MUCH AS PRACTICAL TO STANDARD DRAWING BP-4.1 OR AS DIRECTED BY THE ENGINEER.

GRADING SHALL BE PERFORMED IN THESE AREAS TO OBTAIN A BASE WHICH WILL ALLOW THE FINISHED GRADE TO BE FLUSH WITH ADJACENT PAVEMENT. A QUANTITY OF ITEM 617 COMPACTED AGGREGATE, AS PER PLAN HAS BEEN PROVIDED FOR AREAS WHERE THE SHOULDER IS LOW PRIOR TO GRADING AND/OR LOW AREAS CAUSED BY THE REMOVAL OF UNSUITABLE MATERIAL. QUANTITIES TO PERFORM THIS WORK HAVE BEEN INCLUDED IN THE GENERAL SUMMARY AND ARE ESTIMATED AS FOLLOWS.

ITEM 209 - GRADING MAILBOX APPROACHES:
S.R. 13 02/STR/PV = 16 EACH

ITEM 617 - COMPACTED AGGREGATE, AS PER PLAN
S.R. 13 02/STR/PV = 32 CU. YD.

LOCATIONS OF MAILBOX SUPPORT SYSTEM TO BE REPLACED

ADDRESSES AND/OR LOCATIONS OF MAILBOX SUPPORT SYSTEM TO BE REPLACED:

SINGLE SUPPORT SYSTEMS (02/STR/PV):

2417 SR 13

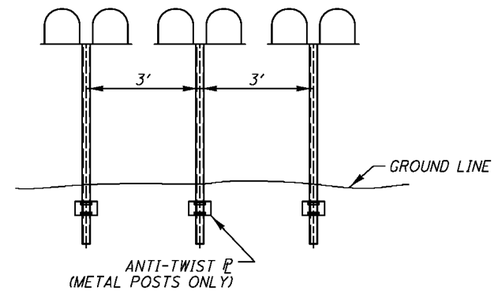

GROUP MAILBOX INSTALLATION

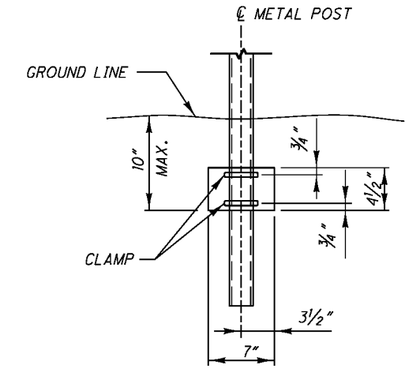

ANTI-TWIST PLATE

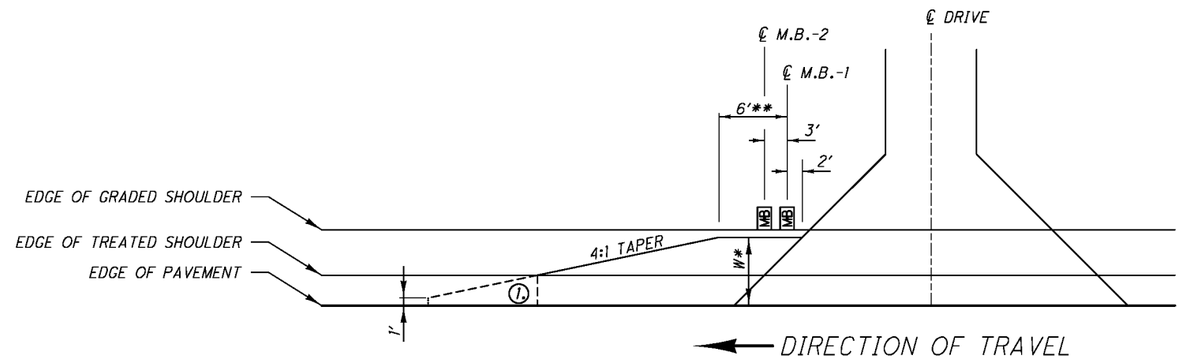

1. END MAILBOX TURNOUT AT EDGE OF TREATED SHOULDER OR 1' WHICH EVER IS GREATER.

W* NOTES
1) WHERE EXISTING STANDARD MAILBOX POSTS ARE BEHIND GUARDRAIL AND ARE TO REMAIN IN PLACE, TURNOUT WIDTH SHALL EXTEND TO FACE OF GUARDRAIL.
2) WHERE NO GUARDRAIL IS REQUIRED, TURNOUT WIDTH SHALL EXTEND TO FACE OF EXISTING STANDARD MAILBOX WITH MAILBOX REMAINING IN PLACE.
3) IF THE MAILBOX SUPPORT IS SPECIFIED TO BE REMOVED AND REERECTED OR REPLACED, WHERE GUARDRAIL IS REQUIRED, TURNOUT WIDTH SHALL EXTEND TO FACE OF GUARDRAIL AND MAILBOX SHALL BE INSTALLED BEHIND THE GUARDRAIL.
4) IF THE MAILBOX SUPPORT IS SPECIFIED TO BE REMOVED AND REERECTED OR REPLACED, WHERE NO GUARDRAIL IS REQUIRED, TURNOUT WIDTH SHALL BE 6 FT. MINIMUM, EXCEPT WHERE FIELD CONDITIONS WILL NOT PERMIT.

** NOTE
1) 6' FOR SINGLE MAILBOX SUPPORT, ADD 3 FT. FOR EACH ADDITIONAL MAILBOX.

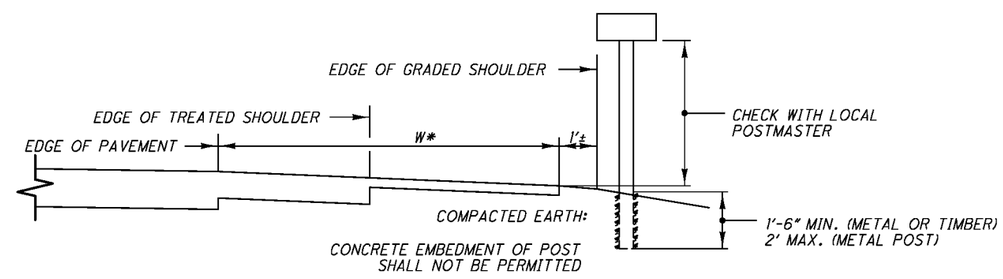

CROSS SECTION / ELEVATION VIEW

FOR DETAILS NOT SHOWN SEE STANDARD DRAWING BP-4.1

CALCULATED NRF CHECKED ADB

MAILBOX FACILITIES

ERI-13-1.84

DESIGN FILE:i:\projects\80184\roadway\sheets\80184GM001.dgn MODELNAME: Default
WORKSTATIONnfoster DATE:7/30/2013

SHEET NUMBER														PARTICIPATION				ITEM	ITEM EXT.	TOTAL	UNIT	DESCRIPTION	REF. SHEET
3	4		5	6		8		10		12		15	16	01/NHS/PV	02/STR/PV	03/SK2/PV	04/BRO/BR						
																						ROADWAY	
						8.92								0.80	7.86	0.26		209	72051	*8.92*	MILE	PREPARING SUBGRADE FOR SHOULDER PAVING, AS PER PLAN (SAFETY EDGE)	3
				16											16			209	80000	*16*	EACH	GRADING MAILBOX APPROACHES	
5														1	4			623	39500	*5*	EACH	MONUMENT BOX ADJUSTED TO GRADE	
				1											1			SPECIAL	69050100	*1*	EACH	MAILBOX SUPPORT SYSTEM, SINGLE	
																						DRAINAGE	
1															1			611	99150	*1*	EACH	INLET ADJUSTED TO GRADE	3
																						PAVEMENT	
	755													25	705	25		251	01010	*755*	CU YD	PAVEMENT REPAIR (PARTIAL DEPTH)	
	50													5	40	5		253	02000	*50*	CU YD	PAVEMENT REPAIR	
						2985								249	2633	103		254	01000	*2985*	SQ YD	PAVEMENT PLANING, ASPHALT CONCRETE	
						298								25	263	10		254	01600	*298*	SQ YD	PATCHING PLANED SURFACE	
						5738								518	5050	170		407	10000	*5738*	GAL	TACK COAT	
						2864								260	2525	79		407	14000	*2864*	GAL	TACK COAT FOR INTERMEDIATE COURSE	
						2619								237	2304	78		442	00201	*2619*	CU YD	ASPHALT CONCRETE SURFACE COURSE, 9.5MM, TYPE A (446), AS PER PLAN	4
						1449								133	1273	43		442	20101	*1449*	CU YD	ASPHALT CONCRETE INTERMEDIATE COURSE, 9.5 MM, TYPE A (448), AS PER PLAN (VARIES)	4
						621								56	548	17		617	10100	*621*	CU YD	COMPACTED AGGREGATE	
				32											32			617	10101	*32*	CU YD	COMPACTED AGGREGATE, AS PER PLAN	6
						11173								1002	9866	305		617	20000	*11173*	SQ YD	SHOULDER PREPARATION	
																						TRAFFIC CONTROL	
								367						26	321	20		621	00100	*367*	EACH	RPM	
								367						26	321	20		621	54000	*367*	EACH	RAISED PAVEMENT MARKER REMOVED	
								9.88						0.69	8.93	0.26		642	00100	*9.88*	MILE	EDGE LINE, 4", TYPE 1	
								4.96						0.34	4.49	0.13		642	00300	*4.96*	MILE	CENTER LINE, TYPE 1	
								368						78	238	52		644	00500	*368*	FT	STOP LINE	
								0.30									0.30	646	10000	*0.30*	MILE	EDGE LINE, 4"	
								0.15									0.15	646	10200	*0.15*	MILE	CENTER LINE	
																						TRAFFIC SIGNALS	
										3						3		632	26501	*3*	EACH	DETECTOR LOOP, AS PER PLAN	11
										60						60		632	65300	*60*	FT	LOOP DETECTOR LEAD-IN CABLE, 2 CONDUCTOR, NO. 14 AWG	
																						STRUCTURES (OVER 20')	
																						ERI-13-0367 (SFN 2202409)	13
																						MAINTENANCE OF TRAFFIC	
												2	2				4	614	12336	*4*	EACH	WORK ZONE IMPACT ATTENUATOR (UNIDIRECTIONAL)	
			38											3	33	2		614	12460	*38*	EACH	WORK ZONE MARKING SIGN	
			25											3	20	2		614	13000	*25*	CU YD	ASPHALT CONCRETE FOR MAINTANING TRAFFIC	
												8	8				16	614	13302	*16*	ECH	BARRIER REFLECTOR, TYPE B2	
												7	7				14	614	13360	*14*	EACH	OBJECT MARKER, TWO WAY	
								10.22						0.80	9.10	0.26	0.06	614	21100	*10.22*	MILE	WORK ZONE CENTER LINE, CLASS I, 642 PAINT	
								0.30									0.30	614	22100	*0.30*	MILE	WORK ZONE EDGE LINE, CLASS I, 642 PAINT	
								0.10									0.10	614	22200	*0.10*	MILE	WORK ZONE EDGE LINE, CLASS I, 740.06, TYPE I	
								66								42	24	614	26200	*66*	FT	WORK ZONE STOP LINE, CLASS 1, 642 PAINT	
												LUMP	LUMP					615	10000	*LUMP*		ROADS FOR MAINTAINING TRAFFIC	
												117	95				212	615	25001	*212*	SQ YD	PAVEMENT FOR MAINTAINING TRAFFIC, CLASS B, AS PER PLAN	18
												220	220				440	622	41000	*440*	FT	PORTABLE BARRIER, 32"	
												130	130				260	622	41020	*260*	FT	PORTABLE BARRIER, 32", BRIDGE MOUNTED (UNANCHORED)	
																		614	11000	*LUMP*		MAINTAINING TRAFFIC	
																		619	16010	*3*	MONTH	FIELD OFFICE, TYPE B	
																		624	10000	*LUMP*		MOBILIZATION	

CALCULATED NRF
CHECKED ADB

GENERAL SUMMARY

ERI-13-1.84

DESIGN FILE:i:\projects\80184\roadway\sheets\80184GG001.dgn MODELNAME: Design
WORKSTATION:nfoster DATE:7/30/2013

CALCULATED NRF
CHECKED ADB

* - FOR TYPICAL, SEE SHEET 9

COUNTY	ROUTE	LOG POINT TO LOG POINT		LENGTH MILE	LENGTH FEET	WIDTH FEET AVG.	*TYPICAL	PAVEMENT AREA	254 PAVEMENT PLANING, ASPHALT CONCRETE (0 -2.0")	254 PATCHING PLANED SURFACE		407 TACK COAT @ 0.08 GAL/SY	407 TACK COAT FOR INTERMEDIATE COURSE @ 0.04 GAL/SY		442 ASPHALT CONCRETE INTERMEDIATE COURSE, 9.5MM, TYPE A (448), AS PER PLAN		442 ASPHALT CONCRETE SURFACE COURSE, 9.5 MM, TYPE A (446), AS PER PLAN		442 ASPHALT CONCRETE, SURFACE COURSE, 9.5MM, TYPE A, (446) (SAFETY EDGE) AS PER PLAN		209 PREPARING SUBGRADE FOR SHOULDER PAVING, AS PER PLAN		AGGREGATE SHOULDER PROPOSED WIDTH SL	AGGREGATE SHOULDER PROPOSED WIDTH SR	AGGREGATE SHOULDER AREA		617 COMPACTED AGGREGATE 2.0 INCHES AVG. THICKNESS	617 SHOULDER PREPARATION
		STRAIGHT LINE MILEAGE						SQ YD	SQ.YD	SQ.YD		GALLON	GALLON		INCH	CU. YD.	INCH	CU.YD.	CU. YD.		MILE		FT	FT	SQ YD		CU YD	SQ.YD
03/S<2/PV																													
ERI	13	1.84	1.97	0.13	686.4	26.0	1	1,983				159	79		0.75	41	1.25	69	4		0.26		2.0	2.0	305		17	305
02/STR/PV																													
ERI	13	1.97	2.50	0.53	2798.4	26.0	1	8,084				647	323		0.75	168	1.25	281	15		1.06		2.0	2.0	1,244		69	1,244
ERI	13	2.50	3.00	0.50	2640	26.0	1	7,627				610	305		0.75	159	1.25	265	14		1.00		2.0	2.0	1,173		65	1,173
ERI	13	3.00	3.65	0.65	3432	26.0	1	9,915				793	397		0.75	207	1.25	344	19		1.30		2.0	2.0	1,525		85	1,525
ERI	13	3.65	3.70	0.05	264	36.0	1	1,056				84	42		0.75	22	1.25	37	1		0.10		2.0	2.0	117		7	117
ERI	13	3.70	4.00	0.30	1584	26.0	1	4,576				366	183		0.75	95	1.25	159	9		0.60		2.0	2.0	704		39	704
ERI	13	4.00	4.50	0.50	2640	26.0	1	7,627				610	305		0.75	159	1.25	265	14		1.00		2.0	2.0	1,173		65	1,173
ERI	13	4.50	5.00	0.50	2640	26.0	1	7,627				610	305		0.75	159	1.25	265	14		1.00		2.0	2.0	1,173		65	1,173
ERI	13	5.00	5.50	0.50	2640	26.0	1	7,627				610	305		0.75	159	1.25	265	14		1.00		2.0	2.0	1,173		65	1,173
ERI	13	6.00	6.52	0.52	2745.6	26.0	1	7,932				635	317		0.75	165	1.25	275	15		1.04		2.0	2.0	1,220		68	1,220
01/NHS/PV																													
ERI	13	6.52	6.92	0.40	2112	26.0	1	6,101				488	244		0.75	127	1.25	212	11		0.80		2.0	2.0	939		52	939
MAINLINE PLANING LOCATIONS																													
TAPER RDWY APPROACHES TO STRUCT. ERI-13-0293					150	26.0	1	433	433	43																			
TAPER RDWY APPROACHES TO STRUCT. ERI-13-0367					150	36.0	1	600	600	60																			
TAPER RDWY APPROACHES TO STRUCT. ERI-13-0650					150	26.0	1	433	433	43																			
DEDUCTIONS FOR STRUCTURES																													
APPROACH SLAB & STRUCTURE ERI-13-0293					264	26.0		763				-61	-31		0.75	-16	1.25	-26	-1		-0.10		2.0	2.0	-117		-7	-117
STRUCTURE ERI-13-0367					133	36.0		532				-43	-21		0.75	-11	1.25	-18	-1		-0.05		2.0	2.0	-59		-3	-59
APPROACH SLAB & STRUCTURE ERI-13-0650					243	26.0		702				-56	-28		0.75	-15	1.25	-24	-1		-0.09		2.0	2.0	-108		-6	-108
EXTRA AREA FOR INTERSECTIONS (03/S<2/PV)								103	103	10		8			0.75	1	1.25	4											
EXTRA AREA FOR PAVED DRIVES (03/S<2/PV)								36				3			0.75	1	1.25	1											
EXTRA AREA FOR AGGREGATE DRIVES (03/S<2/PV)																													
EXTRA AREA FOR EX. & PR. MAILBOX APPROACHES (03/S<2/PV)																													
EXTRA AREA FOR INTERSECTIONS (02/STR/PV)								1166	1166	117		93	47		0.75	8	1.25	40											
EXTRA AREA FOR PAVED DRIVES (02/STR/PV)								513				41	21		0.75	4	1.25	18											
EXTRA AREA FOR AGGREGATE DRIVES (02/STR/PV)								648				52	26		0.75	5	1.25	23							648		36	648
EXTRA AREA FOR EX. & PR. MAILBOX APPROACHES (02/STR/PV)								730				58	29		0.75	5	1.25	25											
EXTRA AREA FOR INTERSECTIONS (01/NHS/PV)								249	249	25		20	10		0.75	2	1.25	9											
EXTRA AREA FOR PAVED DRIVES (01/NHS/PV)								54				4	2		0.75	1	1.25	2											
EXTRA AREA FOR AGGREGATE DRIVES (01/NHS/PV)								63				5	3		0.75	1	1.25	2							63		4	63
EXTRA AREA FOR EX. & PR. MAILBOX APPROACHES (01/NHS/PV)								10				1	1		0.75	1	1.25	1											
TOTAL: (03/S<2/PV)									*103*	*10*		*170*	*79*			*43*		*74*	*4*		*0.26*				*305*		*17*	*305*
TOTAL: (02/STR/PV)									*2,633*	*263*		*5,050*	*2,525*			*1,273*		*2,192*	*112*		*7.86*				*9,866*		*548*	*9,866*
TOTAL: (01/NHS/PV)									*249*	*25*		*518*	*260*			*133*		*226*	*11*		*0.80*				*1,002*		*56*	*1,002*
TOTALS CARRIED TO GENERAL SUMMARY									*2,985*	*298*		*5,738*	*2,864*			*1,449*		*2,492*	*127*		*8.92*				*11,173*		*621*	*11,173*

PAVEMENT & SHOULDER DATA

ERI-13-1.84

DESIGN FILE:i:\projects\80184\roadway\sheets\80184GQ001.dgn MODELNAME:Sheet
WORKSTATIONnfoster DATE:7/30/2013

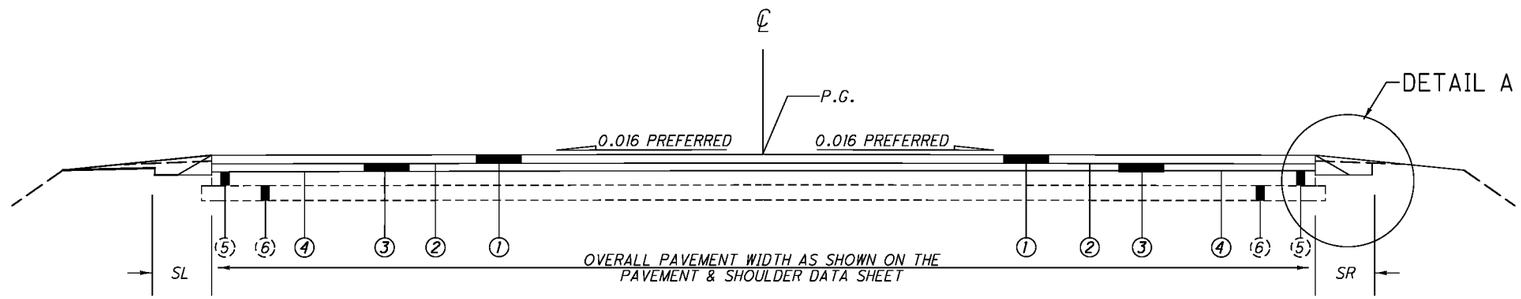

TYPICAL 1

SLM 1.84 TO 6.92

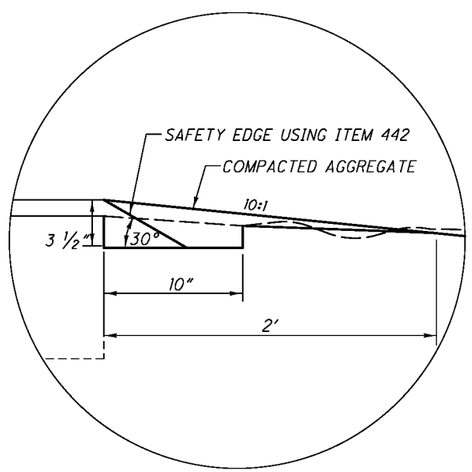

DETAIL A
SAFETY EDGE

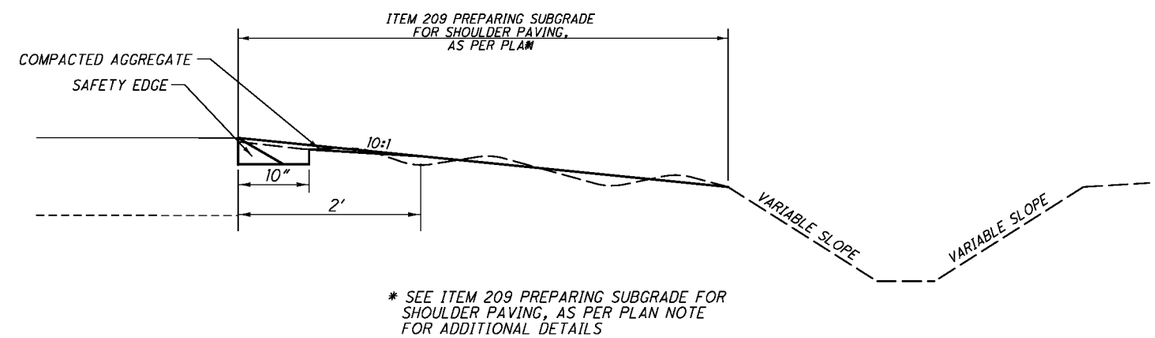

* SEE ITEM 209 PREPARING SUBGRADE FOR SHOULDER PAVING, AS PER PLAN NOTE FOR ADDITIONAL DETAILS

ITEM 209 PREPARING SUBGRADE FOR
SHOULDER PAVING, AS PER PLAN

LEGEND

1. ITEM 442 ASPHALT CONCRETE SURFACE COURSE, 9.5MM, TYPE A (446), AS PER PLAN (1.25")
2. ITEM 407 TACK COAT
3. ITEM 442 ASPHALT CONCRETE INTERMEDIATE COURSE, 9.5MM, TYPE A (448), AS PER PLAN (VARIES, 0.75" AVG.)
4. ITEM 407 TACK COAT, INTERMEDIATE COURSE
5. EXISTING ASPHALT CONCRETE (8.00")
6. AGGREGATE BASE (6.00")

CALCULATED LAH
CHECKED ADB

TYPICAL SECTION

ERI-13-1.84

DESIGN FILE:i:\projects\80184\roadway\sheets\80184GY001.dgn MODELNAME:Design
WORKSTATIONnfoster DATE:7/30/2013

AUXILIARY & LONG LINE MARKINGS

ROUTE	COUNTY	STATION / SLM FROM	STATION / SLM TO	HIGHWAY MILES MILE	614 WORK ZONE CENTER LINE, CLASS I, 642 PAINT MILE	614 WORK ZONE EDGE LINE, CLASS I, 642 PAINT FT	614 WORK ZONE STOP LINE, CLASS I, 642 PAINT FT	614 WORK ZONE EDGE LINE, CLASS I, 740.06, TYPE I MILE	614 WORK ZONE CHANNELIZING LINE, CLASS III, 642 PAINT FT	614 WORK ZONE STOP LINE, CLASS III, 642 PAINT FT	642, TYPE 1 EDGE LINE TOTAL (PAY QUANTITY) (WHITE) MILE	642, TYPE 1 EDGE LINE TOTAL (PAY QUANTITY) (YELLOW) MILE	642, TYPE 1 LANE LINE MILE	642, TYPE 1 CENTER LINE SOLID LINE EQUIVALENT MILE	642, TYPE 1 CENTER LINE TOTAL (PAY QUANTITY) MILE	646 EDGE LINE TOTAL (PAY QUANTITY) (WHITE) MILE	646 EDGE LINE TOTAL (PAY QUANTITY) (YELLOW) MILE	646 LANE LINE MILE	646 CENTER LINE SOLID LINE EQUIVALENT MILE	646 CENTER LINE TOTAL (PAY QUANTITY) MILE	644 AUXILIARY MARKINGS (740.04) STOP LINE 24" FT	RAILROAD SYMBOL MARKING EACH	SCHOOL SYMBOL MARKING 72 INCH EACH	SCHOOL SYMBOL MARKING 96 INCH EACH	PARKING LOT STALL MARKING FT	LANE ARROW LEFT EACH	LANE ARROW RIGHT EACH	LANE ARROW THROUGH EACH	LANE ARROW COMBINATION EACH	DOTTED LINE, 4" FT	HANDICAP SYMBOL MARKING EACH	SPECIAL AIR SPEED ZONE MARKING EACH
03/S<2/PV:																																	
SR-13	ERIE	1.84	1.97	0.13	0.26		42				0.26			0.10	0.13						22												
ADDITIONAL QUANTITY FOR SIDE ROADS																					30												
02/STR/PV:																																	
SR-13	ERIE	1.97	6.52	4.55	9.10						8.92			6.54	4.46																		
ADDITIONAL QUANTITY FOR SIDE ROADS												0.01			0.03						238												
01/NHS/PV:																																	
SR-13	ERIE	6.52	6.92	0.40	0.80						0.68			0.40	0.34																		
ADDITIONAL QUANTITY FOR SIDE ROADS												0.01									78												
04/BRO/BR:																																	
ADDITIONAL QUANTITY FOR STRUCTURES					0.06	0.30	24	0.10								0.30			0.15	0.15													
04/BRO/BR					0.06	0.30	24	0.10								0.30			0.15	0.15													
03/S<2/PV					0.26		42				0.26			0.10	0.13						52												
02/STR/PV					9.10						8.92	0.01		6.54	4.49						238												
01/NHS/PV					0.80						0.68	0.01		0.40	0.34						78												
TOTALS TO GENERAL SUMMARY				*5.08*	*10.22*	*0.30*	*66*	*0.10*			*9.86*	*0.02*		*7.04*	*4.96*	*0.30*			*0.15*	*0.15*	*368*												

RAISED PAVEMENT MARKERS

ROUTE	COUNTY	STATION/SLM FROM	STATION/SLM TO	DETAIL	621 RAISED PAVEMENT MARKER REMOVED EACH	621 RPM EACH	PRISMATIC RETRO-REFLECTOR TYPES ONE-WAY WHITE EACH	TWO-WAY YELLOW / YELLOW	TWO-WAY WHITE / RED	TWO-WAY YELLOW / RED	TWO-WAY BLUE / BLUE	REMARKS
03/S<2/PV:												
SR-13	ERIE	1.84	1.97	6	20	20	13	7				STOP APPROACH @ US 250
02/STR/PV:												
SR-13	ERIE	1.97	2.02	6	7	7	3	4				STOP APPROACH @ US 250
SR-13	ERIE	2.02	4.53	GAP	165	165		165				CONTINUOUS ROUTE TREATMENT
SR-13	ERIE	4.53	4.79	8	34	34		34				CURVE
SR-13	ERIE	4.79	6.52	GAP	115	115		115				CONTINUOUS ROUTE TREATMENT
01/NHS/PV:												
SR-13	ERIE	6.52	6.92	GAP	26	26		26				CONTINUOUSE ROUTE TREATMENT
03/S<2/PV:					20	20	13	7				
02/STR/PV:					321	321	3	318				
01/NHS/PV:					26	26		26				
TOTALS TO GENERAL SUMMARY					*367*	*367*	*16*	*351*				

DETAIL	*DESCRIPTION*
1	MULTILANE UNDIVIDED TYPICAL SPACING
2	TAPERED ACCEL. LANE
3	DECELERATION LANE
4	PARALLEL ACCEL LANE
5	MULTILANE DIVIDED/EXPRESSWAY
6	STOP APPROACH
7	2 LANE APPR. WITH TURN LANE
8	THROUGH APPROACH
9	3 LANE APPR. WITH TURN LANE
10	3 LANE DIVIDED TO 2 LANE TRANSITION
11	3 LANE UNDIVIDED TO 2 LANE TRANSITION
12	TWO LANE NARROW BRIDGE
13	TWO WAY LEFT TURN LANE
14	ONE LANE BRIDGE
15	HORIZONTAL CURVE
16	HORIZONTAL CURVE ALT.
17	STOP APPROACH ALT.
18	FIRE HYDRANT
GAP	CENTER LINE AT 80 FT. TYP.

NOTES

1) THRU LANES SHALL BE 12'-0" WIDE AND STRIPED ACCORDING TO TC-73.10.

2) STOP LINES SHALL BE PALCED AT 4' OFFSET FROM THE EDGE LINE.

3) CENTER LINES SHALL BE STRIPED ALONG THE PROPOSED OVERLAY PORTIONS OF THE FOLLOWING SIDE ROADS:

02/STR/PV:
HORN RD.
E. MASON RD.
SCHEID RD.

CALCULATED NRF
CHECKED ADB

PAVEMENT MARKING / RPM SUB-SUMMARY

ERI-13-1.84

DESIGN FILE:i:\projects\80184\roadway\sheets\80184TS001.dgn MODELNAME:Design
WORKSTATION:foster DATE:7/30/2013

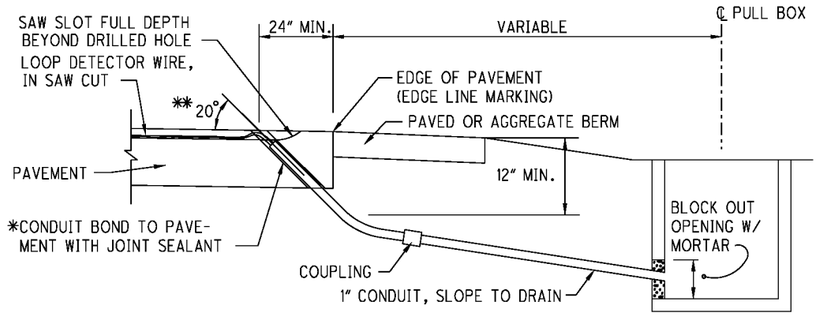

DRILLED HOLE LOCATION DETAIL WITH PAVED OR AGGREGATE BERM

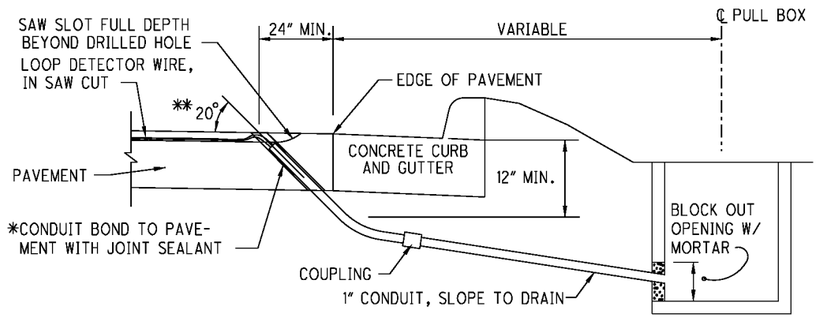

DRILLED HOLE LOCATION DETAIL WITH CONCRETE CURB AND GUTTER

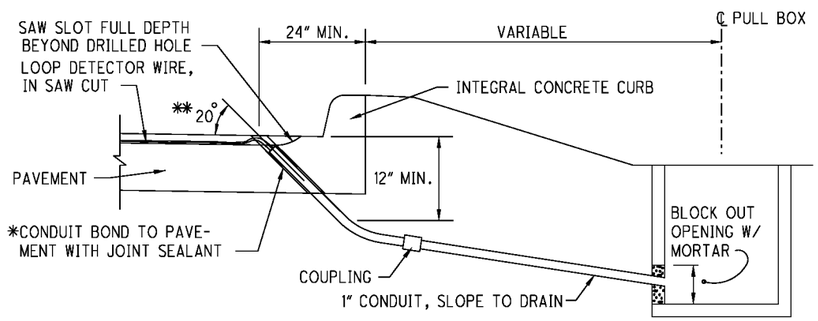

DRILLED HOLE LOCATION DETAIL WITH INTEGRAL CONCRETE CURB

*CONDUIT SHALL BE 1" DIAMETER 725.04.

** THE RANGE OF THIS ANGLE SHALL BE FROM 15 TO 30 DEGREES.

NOTE: SEE STANDARD DRAWING TC-82.10 FOR ADDITIONAL NOTES AND DETAILS

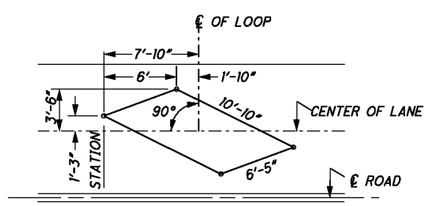

ANGULAR DESIGN DETECTION (ADD) LOOP DETAIL FOR LANE WIDTH 11' & LARGER

ITEM 632- DETECTOR LOOP, AS PER PLAN

AN ESTIMATED QUANTITY OF ITEM 632, DETECTOR LOOP, AS PER PLAN, HAS BEEN PROVIDED FOR THE PURPOSE OF REPLACING DAMAGED DETECTOR LOOPS AND/OR UPGRADING DETECTOR LOOPS TO IMPROVE MOTORCYCLE DETECTION. IT IS IMPERATIVE THAT REPLACEMENT OF DETECTOR LOOPS BE INSTALLED AND FULLY FUNCTIONAL IN THE SHORTEST POSSIBLE TIME. THE CONTRACTOR SHALL HAVE REPLACEMENT DETECTOR LOOPS INSTALLED AND FULLY FUNCTIONAL WITHIN 7 CALENDAR DAYS OF DESTRUCTION OF THE EXISTING DETECTOR LOOPS.

THE CONTRACTOR SHALL NOTIFY MATT BLANKENSHIP, ODOT DISTRICT 3 ROADWAY SERVICES MANAGER, (PHONE 419-207-7045) 5 WORKING DAYS IN ADVANCE OF ANY PLANING OPERATIONS OR PAVEMENT REPAIR WORK. THIS NOTIFICATION IS NEEDED FOR DISTRICT 3 TO SCHEDULE TEMPORARY SIGNAL TIMING MODIFICATIONS FOR THE TIME PERIOD WHEN THE DETECTOR LOOPS ARE OUT OF OPERATION. THE CONTRACTOR SHALL THEN RENOTIFY MR. BLANKENSHIP WITHIN 2 WORKING DAYS AFTER THE NEW DETECTOR LOOPS ARE REPLACED SO THAT HE CAN RESCHEDULE DISTRICT CREWS TO RESTORE SIGNAL TIMINGS TO THE ORIGINAL SETTINGS. IN ADDITION, THE CONTRACTOR SHALL ALSO NOTIFY RICHARD RONEY, ODOT DISTRICT 3 PLANNING AND ENGINEERING DEPT. (PHONE 419-207-7064) WHEN THE NEW LOOPS ARE INSTALLED.

FAILURE TO COMPLY WITH THE ABOVE STATED REQUIREMENTS WILL RESULT IN THE ASSESSMENT OF A DISINCENTIVE FEE OF $500.00 PER DAY TO THE CONTRACTOR FOR EACH CALENDAR DAY BEYOND THE SPECIFIED LIMIT.

THE NEW DETECTOR LOOPS SHALL BE PLACED PER THE PLAN DETAILS AFTER THE PLANING AND PAVEMENT REPAIR OPERATIONS ARE COMPLETED WITHIN THE AFFECTED AREAS. THE DETECTOR LOOPS SHALL NOT BE CUT INTO THE SURFACE COURSE.

IN ADDITION TO THE REQUIREMENTS OF CMS 632.11, THE CONTRACTOR SHALL PROVIDE A POSITIVE AND EFFECTIVE MEANS FOR REMOVAL OF SOLID RESIDUE RESULTING FROM THE DRY SAW BLADE CUTTING OF LOOP DETECTOR SLOTS IN THE PAVEMENT. THE RESIDUE SHALL BE REMOVED BY VACUUM OR OTHER EFFECTIVE MEANS, BEFORE IT IS BLOWN BY TRAFFIC ACTION OR WIND. RESIDUE FROM DRY CUTTING SHALL NOT BE REMOVED BY COMPRESSED AIR. AS AN ALTERNATE, THE CONTRACTOR MAY USE WET CUTTING.

LOOP DETECTOR WIRE TO LEAD-IN CABLE SPLICES WITHIN EPOXY ENCAPSULATED SPLICE ENCLOSURES SHALL BE JOINED BY AN APPROVED CONNECTOR AND SOLDERED PER CMS 632.23 & 725.15. ALL COSTS ASSOCIATED WITH THE SOLDERED SPLICE CONNECTION AND EPOXY SPLICE KIT SHALL BE INCLUDED WITH THE DETECTOR LOOP.

IF THE PULL BOX IS NOT SPECIFIED IN THE PLANS, THE SPLICE SHALL BE MADE IN THE FIRST ENTERED POLE OR PEDESTAL, EXCEPT WHERE THE CONTROLLER CABINET IS MOUNTED ON THE POLE OR PEDESTAL, IN WHICH CASE THE LOOP WIRES SHALL BE ROUTED DIRECTLY INTO THE CABINET UNLESS SPECIFIED DIFFERENTLY IN THE PLANS. LOOP DETECTOR WIRE ROUTED THROUGH CONDUIT, PULL BOXES, POLES, AND PEDESTALS SHALL BE TWISTED PER CMS 632.23.

FURNISH ALL MATERIALS ACCORDING TO THE DEPARTMENT'S QUALIFIED PRODUCTS LIST (QPL).

SEE DETAILS ON THIS SHEET FOR ADDITIONAL REQUIREMENTS.

PAYMENT FOR ALL OF THE ABOVE SHALL BE INCLUDED IN THE UNIT PRICE BID PER EACH FOR ITEM 632, DETECTOR LOOP, AS PER PLAN.

ITEM 632 - DETECTOR LOOP, AS PER PLAN	*3 EACH*

CALCULATED NRF
CHECKED ADB

DETECTOR LOOP INSTALLATION DETAILS

ERI-13-1.84

DESIGN FILE:I:\projects\80184\roadway\sheets\80184TM001.dgn MODELNAME: Sheet
WORKSTATION:nfoster DATE:7/30/2013

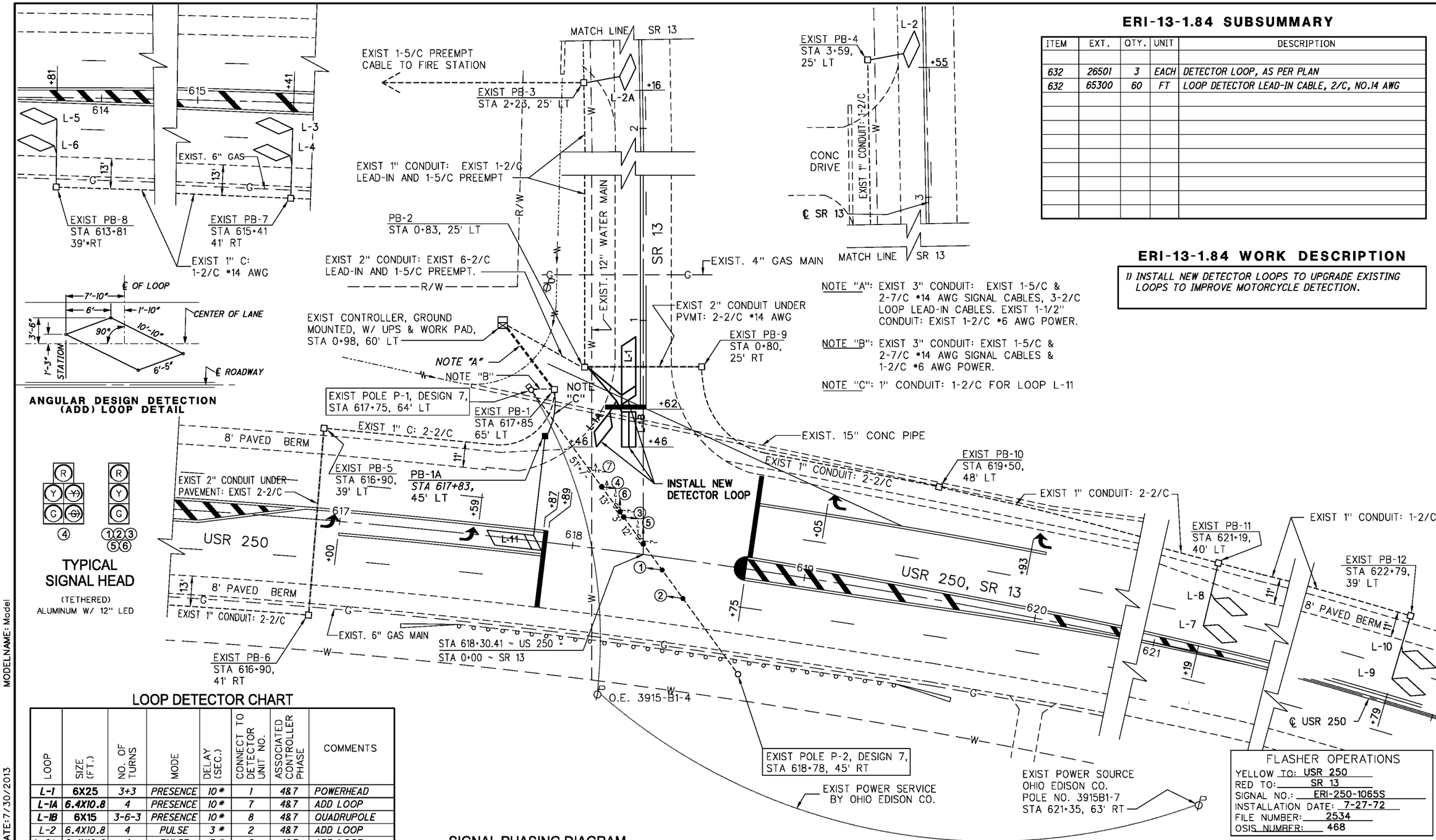

NOTE "A": EXIST 3" CONDUIT: EXIST 1-5/C & 2-7/C #14 AWG SIGNAL CABLES, 3-2/C LOOP LEAD-IN CABLES. EXIST 1-1/2" CONDUIT: EXIST 1-2/C #6 AWG POWER.

NOTE "B": EXIST 3" CONDUIT: EXIST 1-5/C & 2-7/C #14 AWG SIGNAL CABLES & 1-2/C #6 AWG POWER.

NOTE "C": 1" CONDUIT: 1-2/C FOR LOOP L-11

ERI-13-1.84 SUBSUMMARY

ITEM	EXT.	QTY.	UNIT	DESCRIPTION
632	26501	3	EACH	DETECTOR LOOP, AS PER PLAN
632	65300	60	FT	LOOP DETECTOR LEAD-IN CABLE, 2/C, NO.14 AWG

ERI-13-1.84 WORK DESCRIPTION

1) INSTALL NEW DETECTOR LOOPS TO UPGRADE EXISTING LOOPS TO IMPROVE MOTORCYCLE DETECTION.

LOOP DETECTOR CHART

LOOP	SIZE (FT.)	NO. OF TURNS	MODE	DELAY (SEC.)	CONNECT TO DETECTOR UNIT NO.	ASSOCIATED CONTROLLER PHASE	COMMENTS
L-1	6X25	3+3	PRESENCE	10*	1	4&7	POWERHEAD
L-1A	6.4X10.8	4	PRESENCE	10*	7	4&7	ADD LOOP
L-1B	6X15	3-6-3	PRESENCE	10*	8	4&7	QUADRUPOLE
L-2	6.4X10.8	4	PULSE	3*	2	4&7	ADD LOOP
L-2A	6.4X10.8	4	PULSE	3*	2	4&7	ADD LOOP
L-3	6.4X10.8	4	PULSE		3	2	ADD LOOP
L-4	6.4X10.8	4	PULSE		3	2	ADD LOOP
L-5	6.4X10.8	4	PULSE		4	2	ADD LOOP
L-6	6.4X10.8	4	PULSE		4	2	ADD LOOP
L-7	6.4X10.8	4	PULSE		5	6	ADD LOOP
L-8	6.4X10.8	4	PULSE		5	6	ADD LOOP
L-9	6.4X10.8	4	PULSE		6	6	ADD LOOP
L-10	6.4X10.8	4	PULSE		6	6	ADD LOOP
L-11	6X20	3+3	PRESENCE		9	2	POWERHEAD

*INHIBIT DELAY DURING ASOCIATED PHASE GREEN INTERVAL

SIGNAL PHASING DIAGRAM

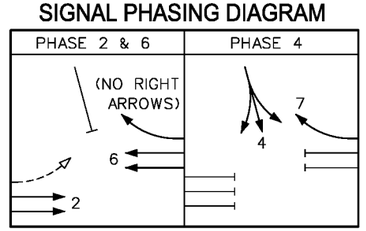

0 20 40
SCALE

DATE	REVISIONS	DATE INSTALLED
7-21-93	UPGRADE TO STOP-AND-GO OPERATION PROJ. 284-93	10-18-93
2-23-04	INSTALLED TETHER WIRE PER PROJ. 62-03	5-26-04
5-30-06	PLAN REDRAWN FOR EB USR 250 RIGHT TURN OVLP PER PROJ. 233(05)	9-20-06
5-21-07	UPDATED LOOP DETECTOR CHART SETTINGS AND SLM	3-7-07
12-10-07	INSTALLED UPS & NEW LOOP L-2A. RELOCATED CONTROLLER. MODIFIED RT TURN PHASING ON USR 250 PER PROJ. 410-06	11-30-07
8-26-10	UPGRADE DETECTOR LOOPS PER PROJ ?	?
9-16-10	PROJ 58(10)-INSTALLED BREAKAWAY TETHER POLE CONNECTION	4-23-10
8-3-11	PROJ 194(11)-UPGRADED LOOPS FOR MOTORCYCLE DETECTION	8-27-11

OHIO DEPARTMENT OF TRANSPORTATION

ELECTRICAL INSTALLATION LOCATED AT

USR 250 & SR 13

Signal No. ERI-250-1065s

District 3 County ERIE

DESIGNED | DESIGNED | REVISED | CHECKED | REVIEWED | SHEET 1 OF 1

FLASHER OPERATIONS
YELLOW TO: USR 250
RED TO: SR 13
SIGNAL NO.: ERI-250-1065S
INSTALLATION DATE: 7-27-72
FILE NUMBER: 2534
OSIS NUMBER: 468

CALCULATED NRF CHECKED ADB

DETECTOR LOOP REPLACEMENTS
USR 250 & SR 13 - ERIE COUNTY

ERI-13-1.84

12/23

DESIGN FILE:i:\projects\80184\roadway\sheets\ERIE 250&13 SIGNAL.dgn MODELNAME: Model
WORKSTATION:nfoster DATE:7/30/2013

ERI-13-0367 S.F.N. 2202409

ITEM	EXTENSION	QUANTITY	UNIT	DESCRIPTION	REF. SHEET
		(04/BRO/BR)			
202	11301	7	CU YD	PORTIONS OF STRUCTURE REMOVED, AS PER PLAN	17
202	98200	83	FT	REMOVAL MISC.: STRIP SEAL GLAND	17
202	98200	27	FT	REMOVAL MISC.: TYPE E EXTRUSION	17
511	34411	1	CU YD	CLASS QC 2 CONCRETE, SUPERSTRUCTURE, AS PER PLAN (REPAIR)	18
511	45711	3	CU YD	CLASS QC 1 CONCRETE, ABUTMENT, AS PER PLAN (REPAIR)	18
511	53010	3	CU YD	CLASS QC 1 CONCRETE, MISC.: APPROACH SLAB REPAIR	18
513	95000	27	FT	STRUCTURAL STEEL, MISC.: 1 1/2" X 1 1/4" BAR	18
516	31000	127	FT	JOINT SEALER	
601	28000	40	CU YD	DUMPED ROCK FILL, TYPE D	
847	10201	485	SQ YD	SUPERPLASTICIZED DENSE CONCRETE OVERLAY, (2 1/4" THICK), AS PER PLAN	19
847	20201	14	CU YD	SUPERPLASTICIZED DENSE CONCRETE OVERLAY, (VARIABLE THICKNESS), MATERIAL ONLY, AS PER PLAN	19
847	30000	LUMP		TEST SLAB	
847	30200	2	CU YD	FULL DEPTH REPAIR	
847	30401	485	SQ YD	EXISTING CONCRETE OVERLAY REMOVED, AS PER PLAN (2" NOMINAL THICKNESS)	19
847	50000	324	SQ YD	HAND CHIPPING	

DESIGN AGENCY
ODOT DISTRICT THREE
OFFICE OF
PLANNING AND ENGINEERING

DESIGNED NRF | CHECKED DJV | DRAWN NRF | REVISED | REVIEWED DCM | DATE 5/28

STRUCTURE SUMMARY

ERI-13-1.84

DESIGN FILE:i:\projects\80184\structures\80184GG001.dgn MODELNAME: Design
WORKSTATION nfoster DATE: 7/30/2013

BRIDGE DECK DATA								ROADWAY DATA		
COUNTY, ROUTE, BRIDGE NO.	LOCATION	STRUCTURE TYPE	LENGTH (BRIDGE DECK)	WIDTH	BRIDGE DECK AREA	SKEW	EXISTING WEARING SURFACE	EXISTING PAVEMENT WIDTH	EXISTING APPROACH SLAB WIDTH	EXISTING APPROACH SLAB LENGTH
			FT.	FT.	SQ. YD.			FT.	FT.	FT.
+ ERI-13-0293	OVER IR 80	4-SPAN STEEL BEAM	264±	33'-10"±	992	16° L.F.	CONCRETE	26.0	33	25
* ERI-13-0367	OVER RAILROAD	3-SPAN STEEL BEAM	132±	37'-8"±	552	24°18' R.F.	CONCRETE	36.0	20	25
+ ERI-13-0650	OVER SR 2	4-SPAN STEEL BEAM	243±	42'-10"±	1157	15°45'39" L.F.	CONCRETE	26.0	44	25

+ BUTT JOINT AT APPROACH SLABS. OMIT RESURFACING ON THE APPROACH SLABS AND BRIDGE DECK. (NO STRUCTURE WORK, SEE ROADWAY FOR PLANING AND PAVING QUANTITIES)

* BUTT JOINT AT STRUCTURE. PLANE AND PAVE OVER APPROACH SLAB. (SEE DETAILS IN THE PLAN FOR STRUCTURE WORK), (SEE ROADWAY PLANS FOR PLANING AND PAVING QUANTITIES)

DESIGN AGENCY
ODOT DISTRICT THREE
OFFICE OF
PLANNING AND ENGINEERING

DESIGNED NRF | CHECKED DJV | DRAWN NRF | REVISED | REVIEWED DCM | DATE 5/28

STRUCTURE TREATMENT

ERI-13-1.84

DESIGN FILE:i:\projects\80184\structures\brtreat.dgn MODELNAME:Design
WORKSTATIONnfoster DATE:7/30/2013

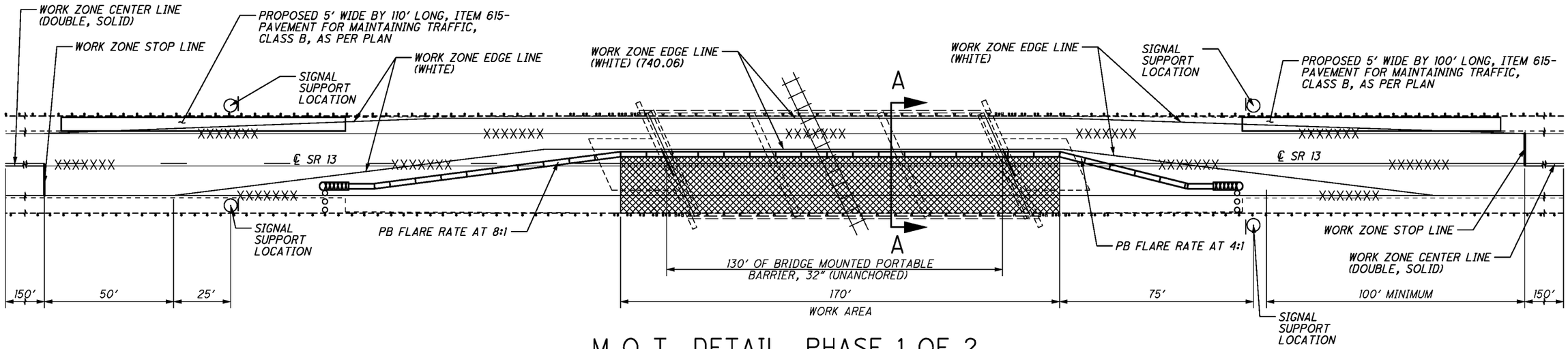

M.O.T. DETAIL, PHASE 1 OF 2

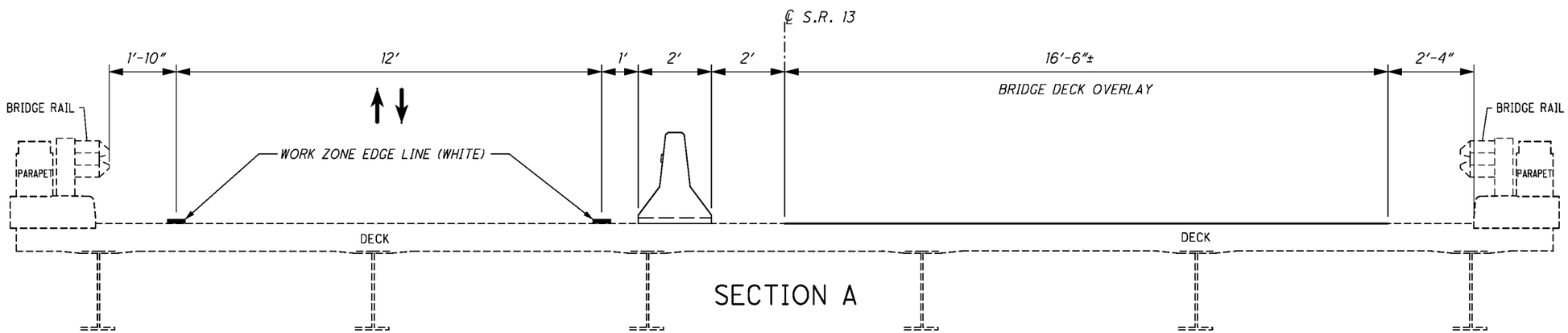

SECTION A

ITEM	QUANTITY	UNIT	DESCRIPTION
614	2	EACH	WORK ZONE IMPACT ATTENUATOR (UNIDIRECTIONAL)
614	8	EACH	BARRIER REFLECTOR, TYPE B2
614	7	EACH	OBJECT MARKER, TWO WAY
614	.06	MILE	WORK ZONE CENTER LINE, CLASS I, 642 PAINT
614	.15	MILE	WORK ZONE EDGE LINE, CLASS I, 642 PAINT
614	.05	MILE	WORK ZONE EDGE LINE, CLASS I, 740.06, TYPE I
614	24	FT	WORK ZONE STOP LINE, CLASS I, 642 PAINT
615	117	SQ YD	PAVEMENT FOR MAINTAINING TRAFFIC, CLASS B, AS PER PLAN
615	LUMP		ROADS FOR MAINTAINING TRAFFIC
622	220	FT	PORTABLE BARRIER, 32"
622	130	FT	PORTABLE BARRIER, 32", BRIDGE MOUNTED (UNANCHORED)

ALL QUANTITIES CARRIED TO THE GENERAL SUMMARY SHEET, SHEET 7.
ALL PAVEMENT MARKINGS QUANTITIES CARRIED TO THE PAVEMENT MARKING/RPM SUB-SUMMARY SHEET, SHEET 10.

NOTES:
1) FOR ADDITIONAL DETAILS, SEE SCDS MT-96.11, MT-96.20, MT-96.26 AND MT-101.70.

SIGNAL TIMING

A TWO PHASE CONTROLLER WITH CABINET CAPABLE OF BEING SET WITH THE FOLLOWING SPLITS SHALL BE FURNISHED

CYCLE LENGTH: 80 SECONDS

	GREEN	AMBER	RED
PHASE A	20	5	15
PHASE B	20	5	15

THE ABOVE TIMING MAY BE CHANGED WITH THE APPROVAL OF THE ENGINEER.

CALCULATED NRF CHECKED DJV

MAINTENANCE OF TRAFFIC PLAN, PHASE 1

ERI-13-3.67

ERI-13-1.84

1 / 2

15 / 23

DESIGN FILE:I:\projects\80184\structures\ERI-13-3.67MOT.dgn MODELNAME: Design
WORKSTATIONnfoster DATE:7/30/2013

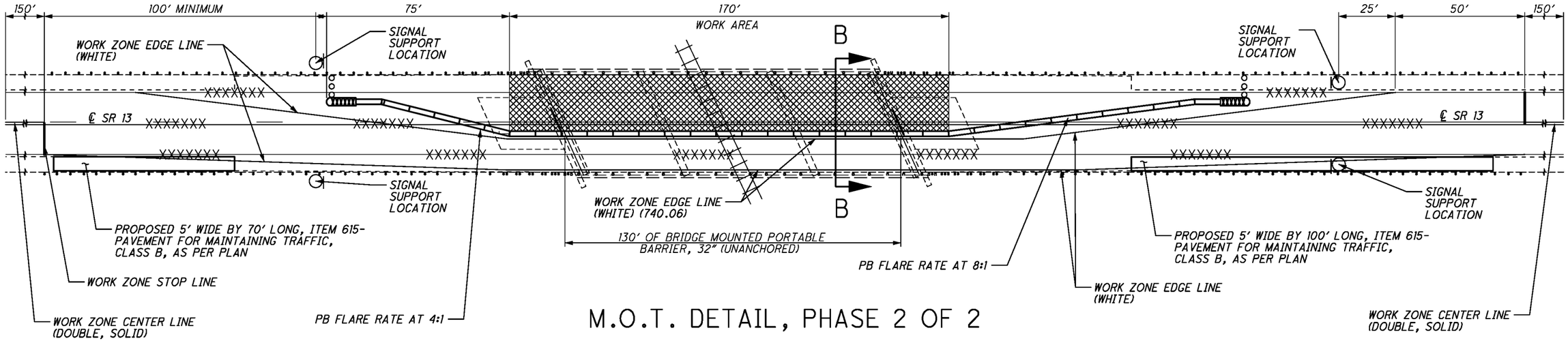

M.O.T. DETAIL, PHASE 2 OF 2

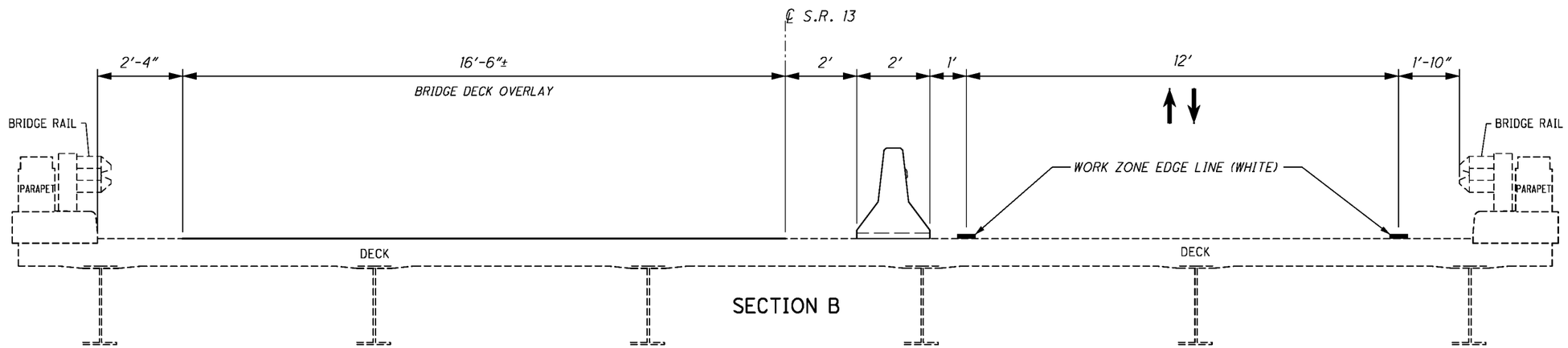

SECTION B

ITEM	QUANTITY	UNIT	DESCRIPTION
614	2	EACH	WORK ZONE IMPACT ATTENUATOR (UNIDIRECTIONAL)
614	8	EACH	BARRIER REFLECTOR, TYPE B2
614	7	EACH	OBJECT MARKER, TWO WAY
614	.15	MILE	WORK ZONE EDGE LINE, CLASS I, 642 PAINT
614	.05	MILE	WORK ZONE EDGE LINE, CLASS I, 740.06, TYPE I
615	95	SQ YD	PAVEMENT FOR MAINTAINING TRAFFIC, CLASS B, AS PER PLAN
615	LUMP		ROADS FOR MAINTAINING TRAFFIC
622	220	FT	PORTABLE BARRIER, 32"
622	130	FT	PORTABLE BARRIER, 32", BRIDGE MOUNTED (UNANCHORED)

ALL QUANTITIES CARRIED TO THE GENERAL SUMMARY SHEET, SHEET 7.
ALL PAVEMENT MARKINGS QUANTITIES CARRIED TO THE PAVEMENT MARKING/RPM SUB-SUMMARY SHEET, SHEET 10.

NOTES:
1) FOR ADDITIONAL DETAILS, SEE SCDS MT-96.11, MT-96.20, MT-96.26 AND MT-101.70.

SIGNAL TIMING

A TWO PHASE CONTROLLER WITH CABINET CAPABLE OF BEING SET WITH THE FOLLOWING SPLITS SHALL BE FURNISHED

CYCLE LENGTH: 80 SECONDS

	GREEN	AMBER	RED
PHASE A	20	5	15
PHASE B	20	5	15

THE ABOVE TIMING MAY BE CHANGED WITH THE APPROVAL OF THE ENGINEER.

CALCULATED NRF CHECKED DJV

MAINTENANCE OF TRAFFIC PLAN, PHASE 2
ERI-13-3.67

ERI-13-1.84

2 / 2

16 / 23

DESIGN FILE:i:\projects\80184\structures\ERI-13-3.67MOT.dgn MODELNAME: Design
WORKSTATIONnfoster DATE:7/30/2013

STANDARD DRAWINGS AND SUPPLEMENTAL SPECIFICATIONS

SUPPLEMENTAL SPECIFICATION: 847 DATED 12/31/2012
STANDARD DRAWING: PCB-91 DATED 1/18/2013

DESIGN SPECIFICATIONS

DESIGN SPECIFICATIONS: THIS STRUCTURE CONFORMS TO "STANDARD SPECIFICATIONS FOR HIGHWAY BRIDGES" ADOPTED BY THE AMERICAN ASSOCIATION OF STATE HIGHWAY AND TRANSPORTATION OFFICIALS, 2002, INCLUDING THE 2003-2007 INTERIM SPECIFICATIONS AND THE ODOT BRIDGE DESIGN MANUAL.

DESIGN DATA

CONCRETE MISC.: - COMPRESSIVE STRENGTH 4,000 PSI
CONCRETE CLASS QC 1 - COMPRESSIVE STRENGTH 4,000 PSI
CONCRETE CLASS QC 2 - COMPRESSIVE STRENGTH 4,500 PSI

DECK PROTECTION METHOD

SUPERPLASTICIZED DENSE CONCRETE OVERLAY

EXISTING PLANS

THE FOLLOWING EXISTING PLANS MAY BE INSPECTED IN THE ODOT DISTRICT 3 OFFICE IN ASHLAND, OHIO.

STRUCTURE #	PLAN NAME	DATE
ERI-13-0367	ERI-299-2.25 ERI-13-(2.929-12.843)	1959 1996
ERI-13-0650	ERI-2-16.13	1986

EXISTING STRUCTURE VERIFICATION

DETAILS AND DIMENSIONS SHOWN ON THESE PLANS PERTAINING TO THE EXISTING STRUCTURES HAVE BEEN OBTAINED FROM PLANS OF THE EXISTING STRUCTURES AND FROM FIELD OBSERVATIONS AND MEASUREMENTS. CONSEQUENTLY, THEY ARE INDICATIVE OF THE EXISTING STRUCTURES AND THE PROPOSED WORK BUT THEY SHALL BE CONSIDERED TENTATIVE AND APPROXIMATE. THE CONTRACTOR IS REFERRED TO CMS SECTIONS 102.05, 105.02 AND 513.04.

BASE CONTRACT BID PRICES UPON A RECOGNITION OF THE UNCERTAINTIES DESCRIBED ABOVE AND UPON A PREBID EXAMINATION OF THE EXISTING STRUCTURES. HOWEVER, THE DEPARTMENT WILL PAY FOR ALL PROJECT WORK BASED UPON ACTUAL DETAILS AND DIMENSIONS WHICH HAVE BEEN VERIFIED IN THE FIELD.

ITEM 202 - REMOVAL MISC.: STRIP SEAL GLAND

THIS ITEM SHALL BE USED TO REMOVE THE EXISTING STRIP SEAL GLAND LOCATED BETWEEN THE APPROACH SLAB AND THE DECK OR BACKWALL.

PAYMENT FOR ALL OF THE ABOVE SHALL BE AT THE UNIT PRICE BID PER FOOT FOR THE ABOVE ITEM, WHICH WILL INCLUDE ALL LABOR, EQUIPMENT, MATERIALS AND INCIDENTALS NECESSARY TO COMPLETE THE ABOVE WORK.

ITEM 202 - REMOVAL MISC.: TYPE E EXTRUSION

THIS ITEM SHALL BE USED TO REMOVE THE EXISTING TYPE E EXTRUSION AS DETAILED ON SHEET 3/4, LOCATED ABOVE THE BACKWALL.

PAYMENT FOR ALL OF THE ABOVE SHALL BE AT THE UNIT PRICE BID PER FOOT FOR THE ABOVE ITEM, WHICH WILL INCLUDE ALL LABOR, EQUIPMENT, MATERIALS AND INCIDENTALS NECESSARY TO COMPLETE THE ABOVE WORK.

ITEM 202 - PORTIONS OF STRUCTURE REMOVED, AS PER PLAN

THIS ITEM SHALL INCLUDE THE ELEMENTS INDICATED IN THE PLANS AND GENERAL NOTES. ITEMS TO BE REMOVED INCLUDE ALL EXISTING MATERIALS BEING REPLACED BY NEW CONSTRUCTION AND MISCELLANEOUS ITEMS THAT ARE NOT SHOWN TO BE INCORPORATED INTO THE FINAL CONSTRUCTION AND ARE DIRECTED TO BE REMOVED BY THE ENGINEER. THE USE OF EXPLOSIVES, HEADACHE BALLS AND/OR HOE-RAMS WILL NOT BE PERMITTED. THE METHOD OF REMOVAL SHALL BE APPROVED BY THE ENGINEER. PERFORM ALL WORK IN A MANNER THAT WILL NOT CUT, ELONGATE OR DAMAGE THE EXISTING REINFORCING STEEL TO BE PRESERVED. EXISTING BOLTS THAT ARE DAMAGED SHALL BE REPLACED WITH A 7/8" DIAMETER x 1'-1" LONG ASTM A449 ANCHOR BOLTS, WITH HEX NUT AND WASHER, WITH A MINIMUM OF 10" EMBEDED IN THE CONCRETE PARAPET. CHIPPING HAMMERS SHALL NOT BE HEAVIER THAN THE NOMINAL 30-POUND CLASS. PNEUMATIC HAMMERS SHALL NOT BE PLACED IN DIRECT CONTACT WITH REINFORCING STEEL THAT IS TO BE RETAINED IN THE REBUILT STRUCTURE. SUBMIT CONSTRUCTION PLANS ACCORDING TO CMS 501.05.

CUT LINE CONSTRUCTION JOINT PREPARATION: SAW CUT BOUNDARIES OF PROPOSED CONCRETE REMOVALS 1 INCH DEEP. REMOVE CONCRETE TO A ROUGH SURFACE. LEAVE THE EXISTING REINFORCING STEEL, IF REQUIRED IN THE PLANS, IN PLACE. PRIOR TO CONCRETE PLACEMENT. ABRASIVELY CLEAN JOINT SURFACES AND EXISTING EXPOSED REINFORCEMENT TO REMOVE LOOSE AND DISINTEGRATED CONCRETE AND LOOSE RUST. THOROUGHLY CLEAN THE JOINT SURFACE AND EXPOSED REINFORCEMENT OF ALL DIRT, DUST, RUST OR OTHER FOREIGN MATERIAL BY THE USE OF WATER, AIR UNDER PRESSURE, OR OTHER METHODS THAT PRODUCE SATISFACTORY RESULTS. EXISTING REINFORCING STEEL DOES NOT HAVE TO HAVE A BRIGHT STEEL FINISH, BUT REMOVE ALL PACK AND LOOSE RUST. THOROUGHLY DRENCH EXISTING CONCRETE SURFACES WITH CLEAN WATER AND ALLOW TO DRY TO A DAMP CONDITION BEFORE PLACING CONCRETE.

PAYMENT FOR ALL LABOR, EQUIPMENT, MATERIALS AND INCIDENTALS NECESSARY TO COMPLETE THE ABOVE WORK SHALL BE INCLUDED IN THE UNIT PRICE BID PER CUBIC YARD OF ITEM 202, PORTIONS OF STRUCTURE REMOVED, AS PER PLAN.

ITEM 601 - DUMPED ROCK FILL, TYPE D

THIS ITEM SHALL INCLUDE PLACING THE DUMPED ROCK FILL, TYPE D AT LOCATIONS SHOWN IN THE PLAN.

PAYMENT FOR ALL LABOR, EQUIPMENT, MATERIALS AND INCIDENTALS NECESSARY TO COMPLETE THE ABOVE WORK SHALL BE INCLUDED IN THE UNIT PRICE BID FOR THE ABOVE ITEM.

ITEM 511 - CLASS QC 1 CONCRETE, ABUTMENT, AS PER PLAN (REPAIR)
ITEM 511 - CLASS QC 1 CONCRETE, MISC.: APPROACH SLAB REPAIR

THIS ITEM SHALL BE USED AT LOCATIONS INDICATED IN THE PLAN.

THE COARSE AGGREGATE SHALL BE #8 LIMESTONE.

ALL EXISTING SURFACES TO WHICH THE CONCRETE IS TO BOND SHALL BE CLEANED BY ABRASIVE BLASTING. THESE SURFACES SHALL BE MADE FREE OF SPALLS, LAITANCE, AND OTHER CONTAMINANTS DETRIMENTAL TO ACHIEVING AN ADEQUATE BOND.

PAYMENT FOR ALL OF THE ABOVE SHALL BE AT THE UNIT PRICE BID PER CUBIC YARD FOR THE ABOVE WHICH WILL INCLUDE ALL LABOR, EQUIPMENT, MATERIALS AND INCIDENTALS NECESSARY TO COMPLETE THE ABOVE WORK.

ITEM 511 - CLASS QC 2 CONCRETE, SUPERSTRUCTURE, AS PER PLAN (REPAIR)

THIS ITEM SHALL BE USED AT LOCATIONS INDICATED IN THE PLAN.

THE CONCRETE SHALL BE CLASS QC 2 WITH THE COARSE AGGREGATE BEING LIMESTONE.

ALL EXISTING SURFACES TO WHICH THE CONCRETE IS TO BOND SHALL BE CLEANED BY ABRASIVE BLASTING. THESE SURFACES SHALL BE MADE FREE OF SPALLS, LAITANCE, PAINT, RUST AND OTHER CONTAMINANTS DETRIMENTAL TO ACHIEVING AN ADEQUATE BOND.

PAYMENT FOR ALL OF THE ABOVE SHALL BE AT THE UNIT PRICE BID PER CUBIC YARD FOR THE ABOVE WHICH WILL INCLUDE ALL LABOR, EQUIPMENT, MATERIALS AND INCIDENTALS NECESSARY TO COMPLETE THE ABOVE WORK.

ITEM 513 - STRUCTURAL STEEL, MISC.: 1½" X 1¼" BAR

THIS ITEM SHALL BE USED AT LOCATIONS INDICATED IN THE PLAN.

ALL EXISTING SURFACES TO BE WELDED SHALL BE CLEANED BY GRINDING OR ABRASIVE BRUSHING.

PAYMENT FOR ALL OF THE ABOVE SHALL BE AT THE UNIT PRICE BID PER FOOT FOR THE ABOVE WHICH WILL INCLUDE ALL LABOR, EQUIPMENT, MATERIALS AND INCIDENTALS NECESSARY TO COMPLETE THE ABOVE WORK.

ITEM 614 - BARRIER REFLECTORS AND/OR OBJECT MARKERS

BARRIER REFLECTORS AND/OR OBJECT MARKERS SHALL BE INSTALLED ON ALL PORTABLE CONCRETE BARRIER USED FOR TRAFFIC CONTROL. BARRIER REFLECTORS, OBJECT MARKERS AND THEIR INSTALLATION SHALL CONFORM TO CMS626, EXCEPT THAT THE SPACING SHALL BE 50 FEET.

ITEM 615- PAVEMENT FOR MAINTAINING TRAFFIC, CLASS B, AS PER PLAN

THE PAVEMENT FOR MAINTAINING TRAFFIC SHALL BE LEFT IN PLACE.

PAYMENT FOR ALL OF THE ABOVE SHALL BE AT THE UNIT PRICE BID PER SQUARE YARD OF THE ABOVE ITEM WHICH SHALL INCLUDE ALL LABOR, EQUIPMENT, MATERIALS AND INCIDENTALS NECESSARY TO COMPLETE THE ABOVE WORK.

ITEM 614 - WORK ZONE IMPACT ATTENUATOR FOR 24" WIDE HAZARDS (UNIDIRECTIONAL OR BIDIRECTIONAL)

THIS ITEM SHALL CONSIST OF FURNISHING AND INSTALLING A NON-GATING IMPACT ATTENUATOR. FURNISH AN IMPACT ATTENUATOR FROM THE OFFICE OF ROADWAY ENGINEERING APPROVED LIST FOR WORK ZONE IMPACT ATTENUATORS. THE APPROVED LIST IS AVAILABLE AT THE "ROADWAY STANDARDS: PROPRIETARY ROADSIDE SAFETY DEVICES" WEB PAGE ON THE OFFICE OF ROADWAY ENGINEERING WEBSITE.

INSTALLATION SHALL BE AT THE LOCATIONS SPECIFIED IN THE PLANS IN ACCORDANCE WITH THE MANUFACTURER'S SPECIFICATIONS.

THE CONTRACTOR SHALL REPAIR OR REPLACE A DAMAGED UNIT WITHIN 24 HOURS OF A DAMAGING IMPACT.

WHEN BIDIRECTIONAL DESIGNS ARE SPECIFIED, THE CONTRACTOR SHALL SUPPLY APPROPRIATE TRANSITIONS.

WHEN GATING IMPACT ATTENUATORS ARE DESIRED, THE CONTRACTOR SHALL SUBMIT DOCUMENTATION TO THE ENGINEER FOR ACCEPTANCE.

THE COST FOR THE ADDITIONAL BARRIER REQUIRED FOR A GATING IMPACT ATTENUATOR SHALL BE INCLUDED IN THE COST OF THE GATING IMPACT ATTENUATOR.

PAYMENT FOR THE ABOVE WORK SHALL BE MADE AT THE UNIT PRICE BID AND SHALL INCLUDE ALL LABOR, TOOLS, EQUIPMENT AND MATERIALS NECESSARY TO CONSTRUCT AND MAINTAIN A COMPLETE AND FUNCTIONAL IMPACT ATTENUATOR SYSTEM, INCLUDING ALL RELATED BACKUPS, TRANSITIONS, LEVELING PADS, HARDWARE AND GRADING, NOT SEPARATELY SPECIFIED, AS REQUIRED BY THE MANUFACTURER.

TEMPORARY TRAFFIC SIGNAL ACTIVATION FOR PARTIAL ROADWAY CLOSURE

THE CONTRACTOR SHALL NOTIFY ODOT DISTRICT 3 PUBLIC INFORMATION OFFICER (PIO) A MINIMUM TEN (10) CALENDAR DAYS ADVANCE NOTICE BEFORE ACTIVATING A TEMPORARY TRAFFIC SIGNAL TO STOP-AND-GO OPERATION FOR PARTIAL ROADWAY CLOSURE.

THE PIO CONTACT INFORMATION IS AS FOLLOWS:

CHRISTINE MYERS
ODOT DISTRICT 3
906 CLARK AVENUE
ASHLAND, OH 44805
PHONE 419-207-7182

ALL COSTS ASSOCIATED WITH THE ABOVE DESCRIBED WORK SHALL BE INCLUDED WITH ITEM 614, MAINTAINING TRAFFIC.

ITEM 614 - MAINTAINING TRAFIC FOR STRUCTURE ERI-13-0367

TWO WAY TRAFFIC SHALL BE MAINTAINED AT ALL TIMES EXCEPT THAT THROUGH TRAFFIC ON THIS STRUCTURE SHALL HAVE A SIGNALIZED CLOSURE AS SHOWN ON SHEETS 15 AND 16 FOR A MAXIMUM OF 60 CONSECUTIVE CALENDAR DAYS (TOTAL BOTH PHASES). THE 60 CONSECUTIVE DAYS SHALL BE CONSIDERED AS AN INTERIM COMPLETION DATE (SECTION 108) AND FOR EACH CALENDAR DAY BEYOND THE 60 CALENDAR DAYS THAT THE HIGHWAY REMAINS IN A SIGNALIZED CLOSURE, THE CONTRACTOR WILL BE ASSESSED A DISINCENTIVE OF $1,000 A DAY.

NO EQUIPMENT OR MATERIAL SHALL BE LOCATED OTHER THAN BEHIND THE PORTABLE BARRIER.

ACCESS TO ADJACENT PROPERTIES SHALL BE MAINTAINED AT ALL TIMES AS PER 614.02 (A).

ALL WORK AND TRAFFIC CONTROL DEVICES SHALL BE IN ACCORDANCE WITH CMS 614 AND OTHER APPLICABLE PORTIONS OF THE SPECIFICATIONS, AS WELL AS THE OHIO MANUAL OF UNIFORM TRAFFIC CONTROL DEVICES. PAYMENT FOR ALL LABOR, EQUIPMENT AND MATERIALS SHALL BE INCLUDED IN THE LUMP SUM CONTRACT PRICE FOR 614, MAINTAINING TRAFFIC, UNLESS SEPARATELY ITEMIZED IN THE PLAN.

ITEM 847 - EXISTING CONCRETE OVERLAY REMOVED, AS PER PLAN (2" NOMINAL THICKNESS):

THIS ITEM SHALL BE USED TO REMOVE THE EXISTING OVERLAY AS PER DETAILS IN THE PLANS.

THE THICKNESS OF THE EXISTING CONCRETE OVERLAY TO BE REMOVED SHALL BE AS SPECIFIED IN THE PLANS.

THIS ITEM SHALL ALSO BE USED TO REMOVE THE ADDITIONAL CONCRETE THICKNESS AS PER DETAILS IN THE PLANS.

THE EXISTING OVERLAY SHALL BE SAW CUT 1¾" DEEP AT THE LOCATIONS SHOWN IN THE PLANS.

PAYMENT FOR ALL OF THE ABOVE SHALL BE AT THE UNIT PRICE BID PER SQUARE YARD FOR THE ABOVE ITEMS WHICH SHALL INCLUDE ALL LABOR, EQUIPMENT, MATERIALS, AND INCIDENTALS NECESSARY TO COMPLETE THE ABOVE WORK.

ITEM 847 - SUPERPLASTICIZED DENSE CONCRETE OVERLAY, AS PER PLAN (2¼" THICK):
ITEM 847 - SUPERPLASTICIZED DENSE CONCRETE OVERLAY, (VARIABLE THICKNESS), AS PER PLAN:

THESE ITEMS SHALL BE PERFORMED PER SUPPLEMENTAL SPECIFICATION 847 "BRIDGE DECK REPAIR AND OVERLAY WITH CONCRETE USING SCARIFICATION AND CHIPPING" WITH THE FOLLOWING REVISIONS:

THE THICKNESS OF THE EXISTING CONCRETE OVERLAY REMOVED AND PROPOSED OVERLAY SHALL BE AS SPECIFIED IN THE PLANS.

ALL COARSE AGGREGATE SHALL HAVE AN ABSORPTION OF 1.00% OR GREATER AS DEFINED BY ASTM C-127.

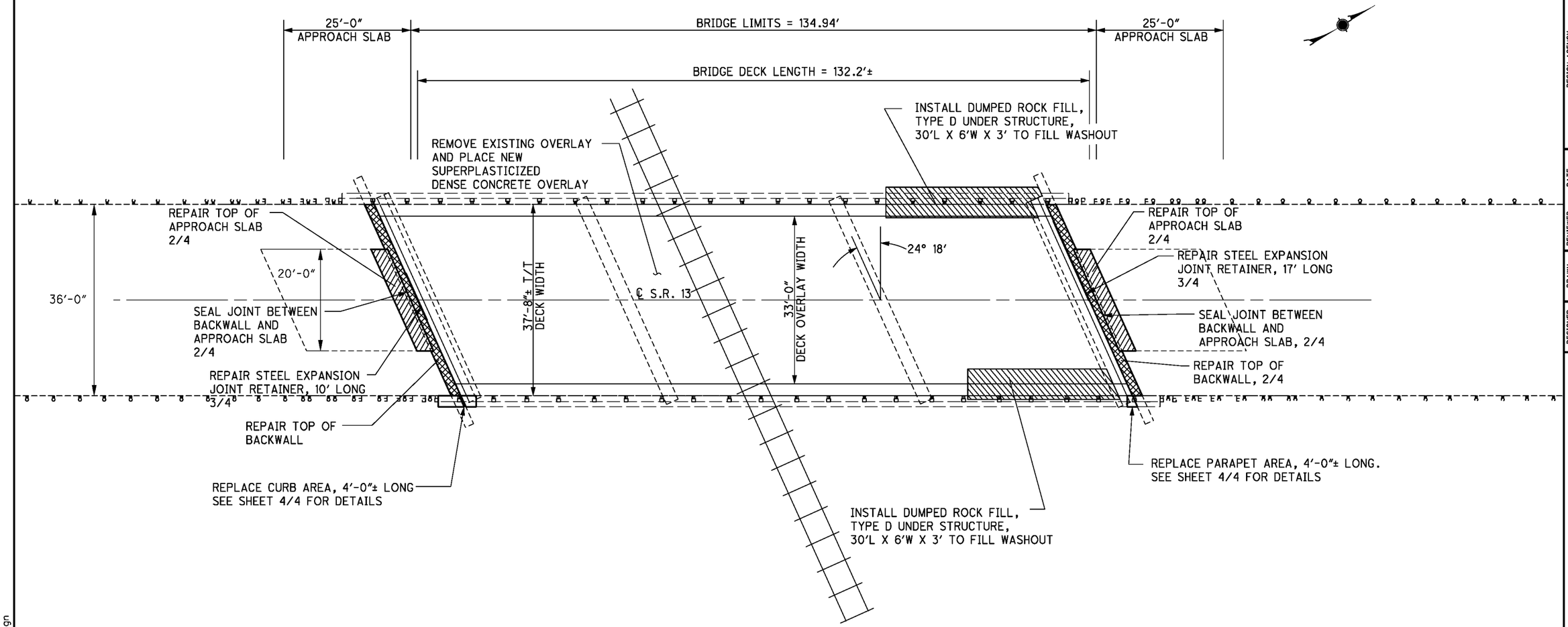

PLAN VIEW

ITEM	QUANTITY	UNIT	DESCRIPTION
601	40	CU YD	DUMPED ROCK FILL, TYPE D
847	485	SQ YD	SUPERPLASTICIZED DENSE CONCRETE OVERLAY, AS PER PLAN (2 1/4" THICK)
847	14	CU YD	SUPERPLASTICIZED DENSE CONCRETE OVERLAY, (VARIABLE THICKNESS), MATERIAL ONLY, AS PER PLAN
847	2	CU YD	FULL DEPTH REPAIR
847	LUMP		TEST SLAB
847	485	SQ YD	EXISTING CONCRETE OVERLAY REMOVED, AS PER PLAN (2" NOMINAL THICKNESS)
847	324	SQ YD	HAND CHIPPING

ALL QUANTITIES CARRIED TO STRUCTURE SUMMARY SHEET, SHEET 13/20.

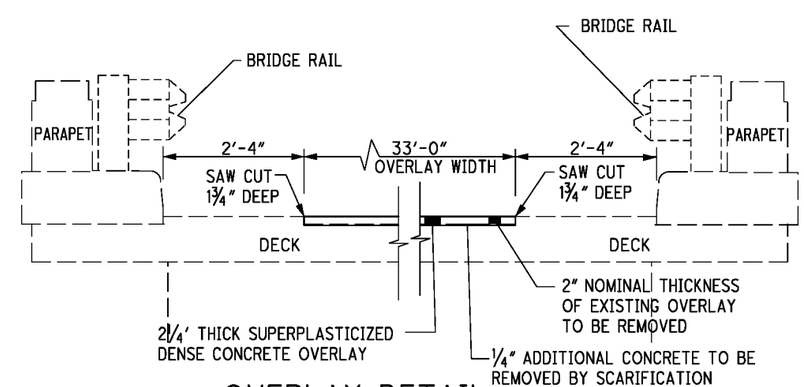

OVERLAY DETAIL

DESIGN FILE:i:\projects\80184\structures\PLANVIEW.dgn
WORKSTATIONnfoster DATE:7/30/2013 MODELNAME: Design

DESIGN AGENCY
ODOT DISTRICT THREE
OFFICE OF PLANNING AND ENGINEERING

DESIGNED	DRAWN	REVIEWED	DATE
NRF	NRF	DCM	5/28
CHECKED	REVISED	STRUCTURE FILE NUMBER	
DJV		2202409	

PLAN VIEW
ERIE-13-0367 OVER NORFOLK SOUTHERN RAILROAD

ERI-13-1.84

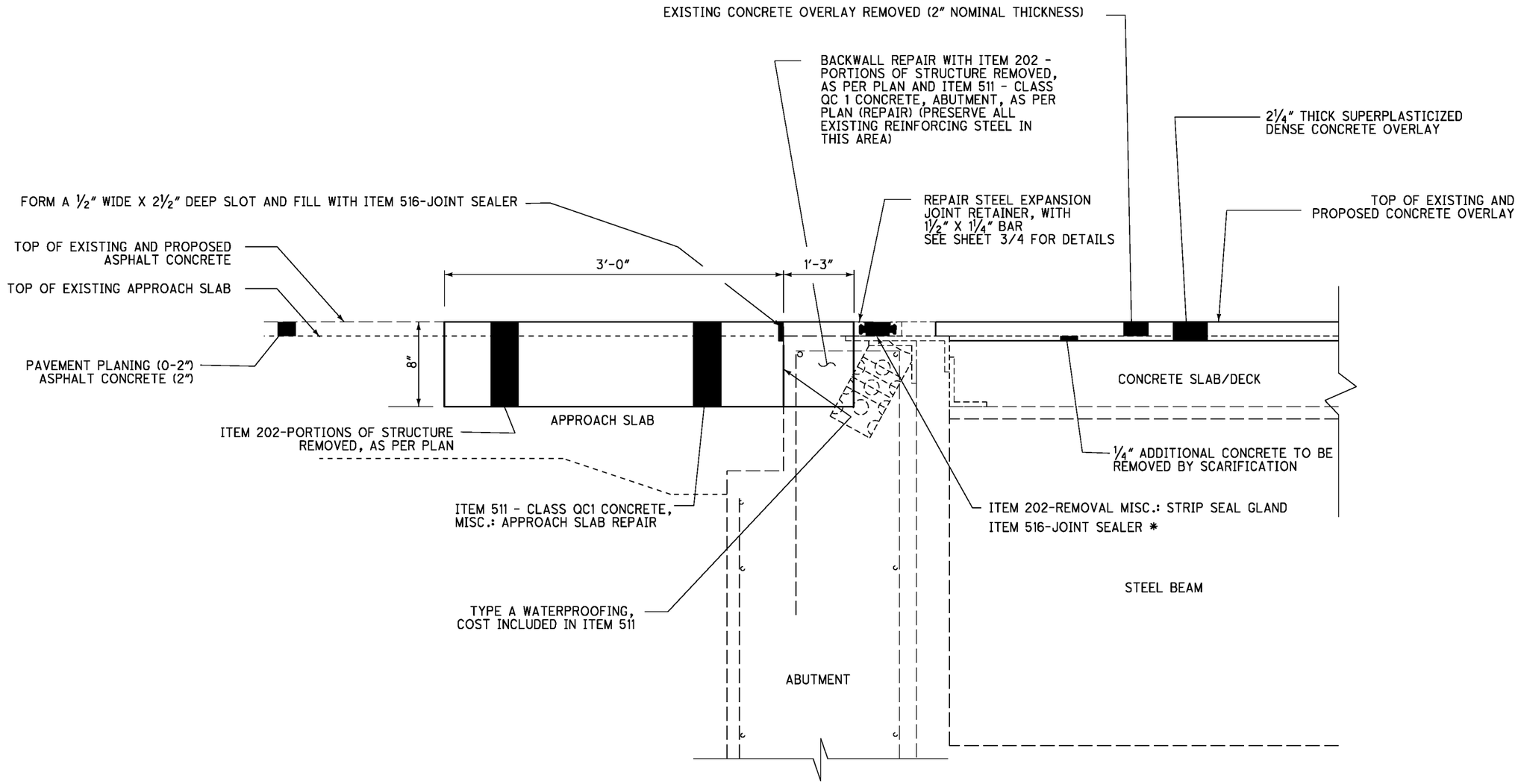

TYPICAL ABUTMENT SECTION

(TOP OF BACKWALL REPAIR LENGTH = 83'-0"± TOTAL FOR BOTH ABUTMENTS)
(APPROACH SLAB REPAIR LENGTH = 44'-0"± TOTAL FOR BOTH ABUTMENTS)

NOTES:

1) ALL EXISTING REINFORCING STEEL TO BE PRESERVED.
* ITEM 516 - JOINT SEALER SHALL BE PERFORMED AFTER THE JOINT REPAIR IS PERFOMRED WITH ITEM 202 - REMOVAL MISC.: TYPE E EXTRUSION AND ITEM 513 - STRUCTURAL STEEL, MISC.: 1½" X 1¼" BAR AS OUTLINED ON SHEET 3/4.

ITEM	QUANTITY	UNIT	DESCRIPTION
202	6	CU YD	PORTIONS OF STRUCTURE REMOVED, AS PER PLAN
202	83	FT	REMOVAL MISC.: STRIP SEAL GLAND
511	3	CU YD	CLASS QC 1 CONCRETE, MISC.: APPROACH SLAB REPAIR
511	3	CU YD	CLASS QC 1 CONCRETE, ABUTMENT, AS PER PLAN (REPAIR)
516	127	FT	JOINT SEALER

ALL QUANTITIES CARRIED TO STRUCTURE SUMMARY SHEET, SHEET 13/20.

DESIGN FILE:ii:\projects\80184\structures\PLANVIEW.dgn MODELNAME: Design
WORKSTATION:nfoster DATE:7/30/2013

DESIGN AGENCY
ODOT DISTRICT THREE
OFFICE OF PLANNING AND ENGINEERING

DESIGNED	DRAWN	REVIEWED	DATE
NRF	NRF	DCM	5/28
CHECKED	REVISED	STRUCTURE FILE NUMBER	
DJV		2202409	

APPROACH SLAB REPAIR DETAILS
ERI-13-0367
OVER NORFOLK SOUTHERN RAILROAD

ERI-13-1.84

2 / 4

21 / 23

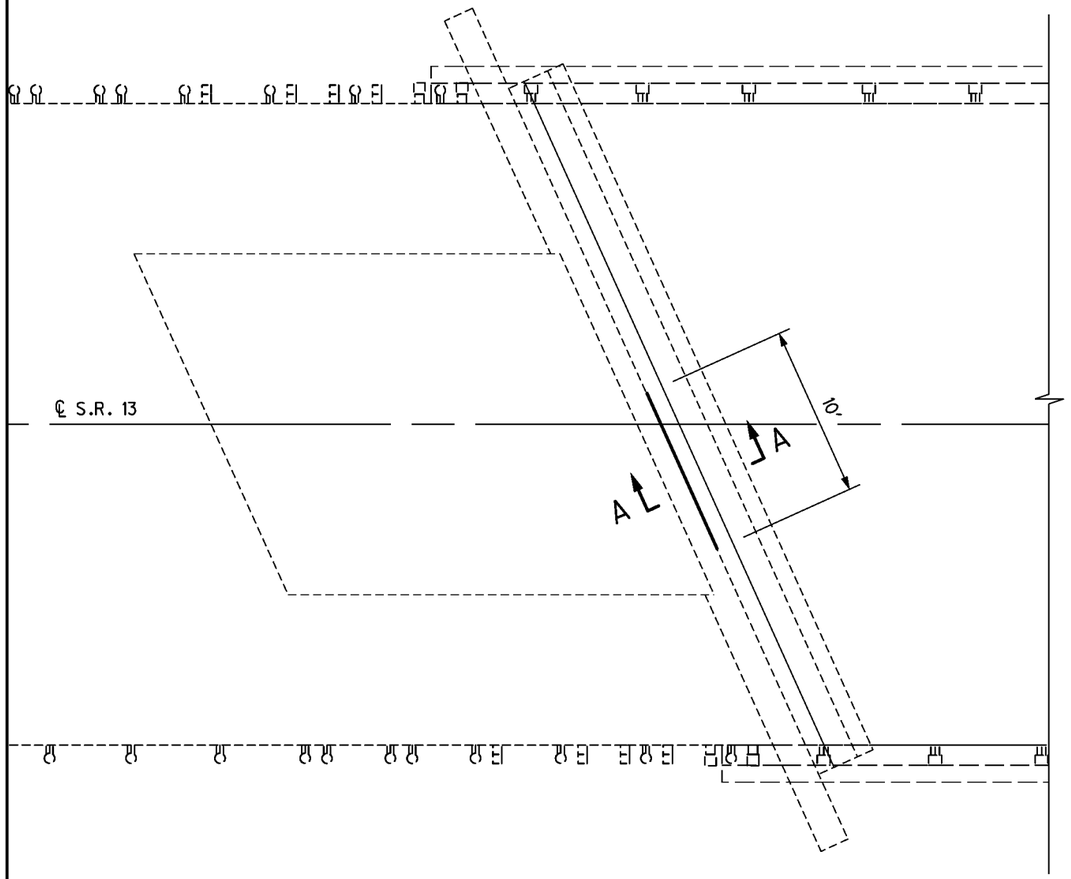

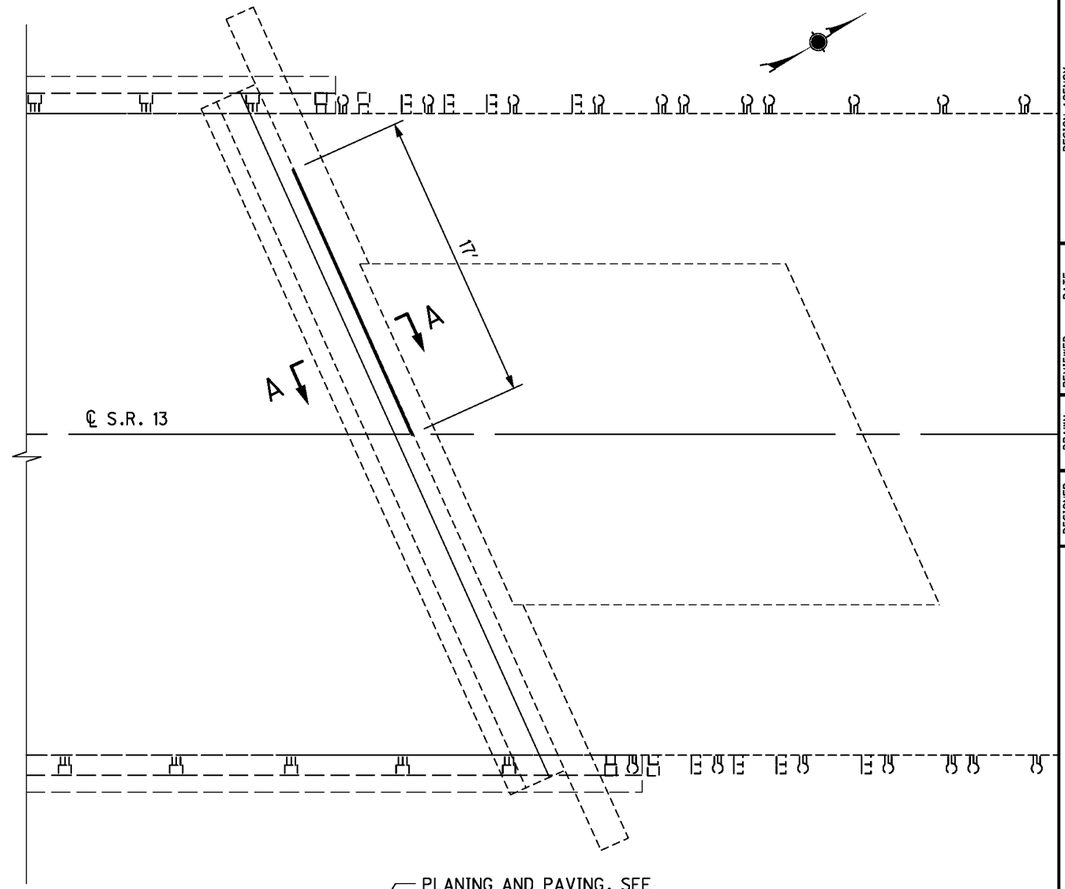

STEEL EXPANSION JOINT
REPAIR DETAIL

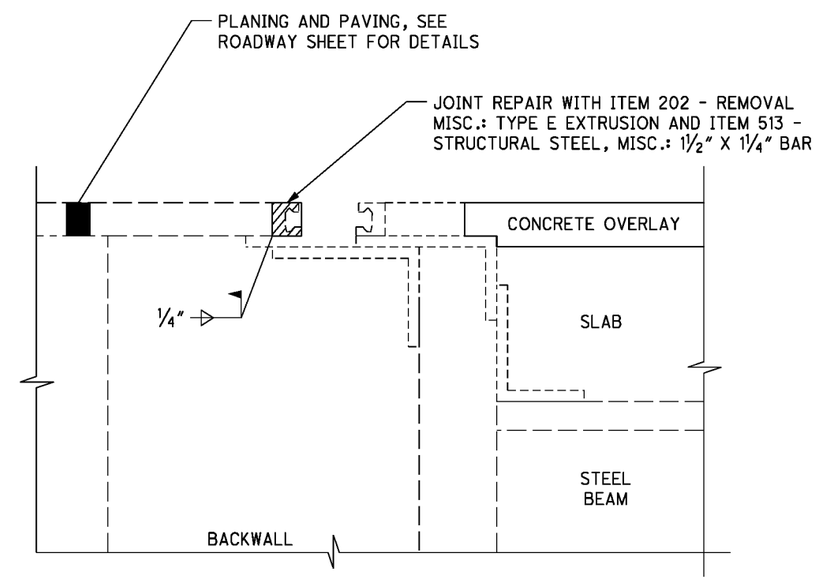

SECTION A-A
WELD DETAIL

NOTE: ITEM 516 - JOINT SEALER & REINFORCEMENT NOT SHOWN

ITEM	QUANTITY	UNIT	DESCRIPTION
202	27	FT	REMOVAL MISC.: TYPE E EXTRUSION
513	27	FT	STRUCTURAL STEEL, MISC.: 1 1/2" X 1 1/4" BAR

ALL QUANTITIES CARRIED TO STRUCTURE SUMMARY SHEET, SHEET 13/20.

DESIGN FILE:I:\projects\80184\structures\PLANVIEW.dgn MODELNAME: Design
WORKSTATIONnfoster DATE:7/30/2013

DESIGN AGENCY
ODOT DISTRICT THREE
OFFICE OF PLANNING
AND ENGINEERING

DESIGNED	DRAWN	REVIEWED	DATE
NRF	NRF	DCM	5/28
CHECKED	REVISED	STRUCTURE FILE NUMBER	
DJV		2202409	

PLAN VIEW
ERIE-13-0367 OVER NORFOLK SOUTHERN RAILROAD

ERI-13-1.84

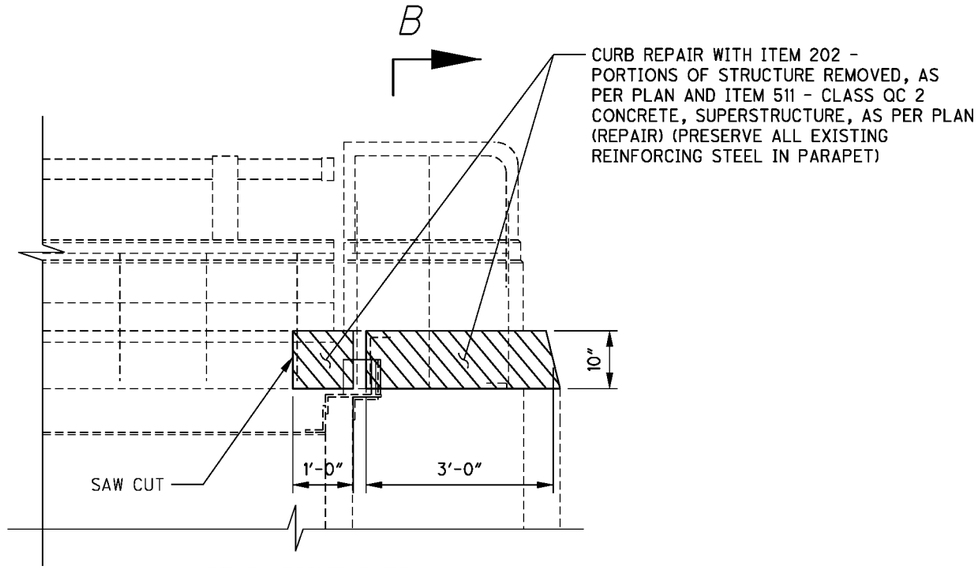

REAR, RIGHT CURB
REPAIR DETAIL
ELEVATION VIEW

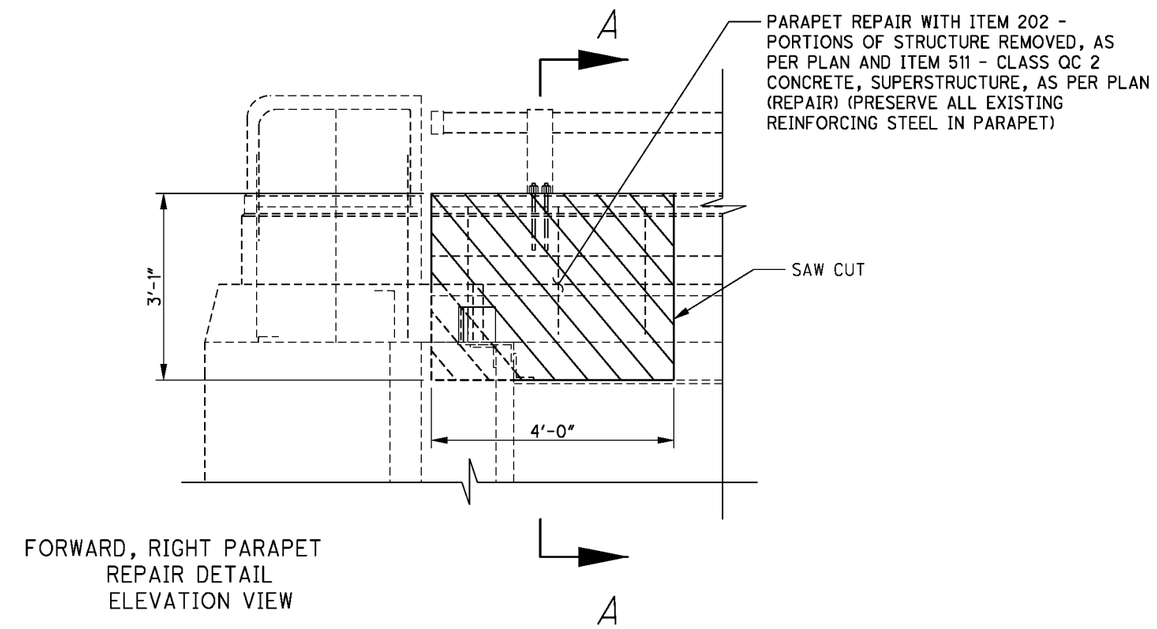

FORWARD, RIGHT PARAPET
REPAIR DETAIL
ELEVATION VIEW

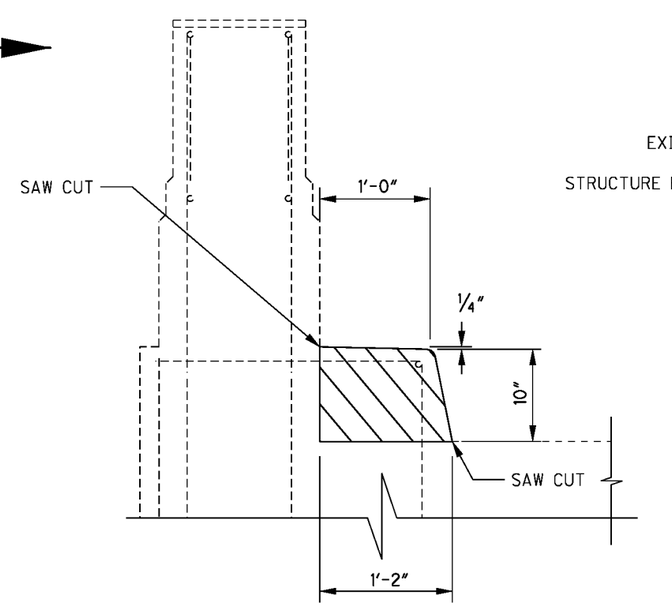

SECTION B-B

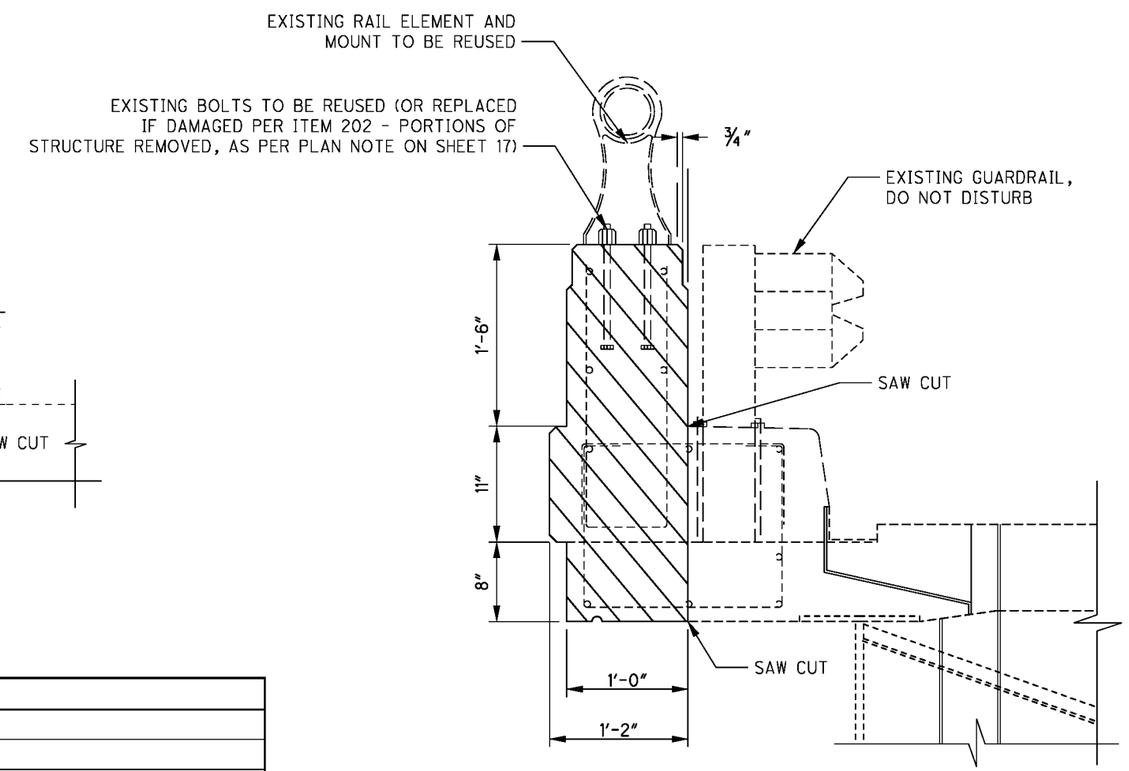

SECTION A-A

ITEM	QUANTITY	UNIT	DESCRIPTION
202	1	CU YD	PORTIONS OF STRUCTURE REMOVED, AS PER PLAN
511	1	CU YD	CLASS QC 2 CONCRETE, SUPERSTRUCTURE, AS PER PLAN (REPAIR)

ALL QUANTITIES CARRIED TO STRUCTURE SUMMARY SHEET, SHEET 13/20.

DESIGN AGENCY
ODOT DISTRICT THREE
OFFICE OF PLANNING AND ENGINEERING

DESIGNED	DRAWN	REVIEWED	DATE
NRF	NRF	DCM	5/28
CHECKED	REVISED	STRUCTURE FILE NUMBER	
DJV		2202409	

PARAPET, CURB & DECK REPAIR DETAILS
ERIE-13-0367 OVER NORFOLK SOUTHERN RAILROAD

ERI-13-1.84

4/4

23/23

DESIGN FILE:i:\projects\80184\structures\PLANVIEW.dgn
WORKSTATION:nfoster
DATE:7/30/2013
MODELNAME: Design