ERI-2-20.10
078009 Pid 78483
Dist 03 6/1/2007

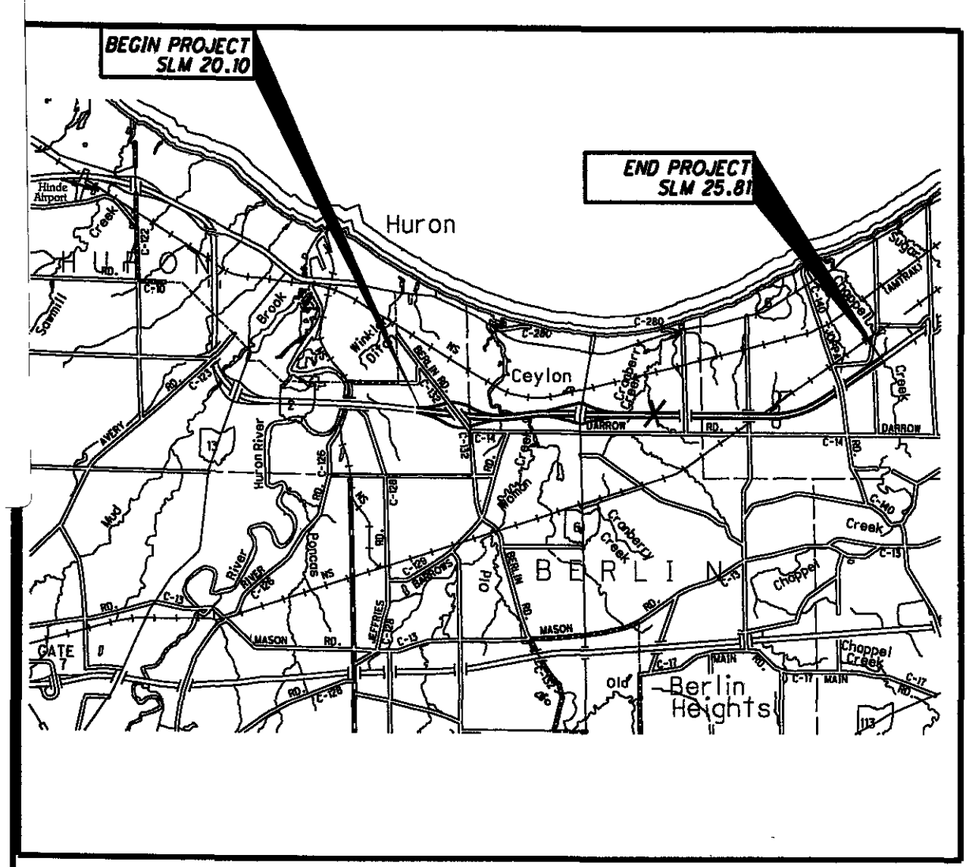

LOCATION MAP
LATITUDE: 41°22'04" LONGITUDE: 82°28'42" (SEE "X")
SCALE IN MILES
0 1 2 3 4

PORTION TO BE IMPROVED
INTERSTATE & DIVIDED HIGHWAY
UNDIVIDED STATE & FEDERAL ROUTES
OTHER ROADS

STATE OF OHIO DEPARTMENT OF TRANSPORTATION

ERI-2-20.10

TOWNSHIPS OF HURON, BERLIN, VERMILION

INDEX OF SHEETS:

TITLE SHEET	1
PROJECT PLAN VIEW	2
TYPICAL SECTION	3-4
MAINTENANCE OF TRAFFIC	5-8
GENERAL NOTES	9-12
DROP-OFFS IN WORK ZONES	14
GENERAL SUMMARY	15-16
PAVEMENT & SHOULDER DATA	17
GUARDRAIL SUB-SUMMARY	18-19
GUARDRAIL GENERAL NOTES	20
PAVEMENT MARKING SUB-SUMMARY	21-22
STRUCTURE GENERAL NOTES	23-25
STRUCTURE SUMMARY	26-28
BRIDGE TREATMENT	29
BRIDGE DETAILS	30-43
NOT USED	13

PROJECT DESCRIPTION
THIS PROJECT WILL INCLUDE PAVEMENT REPAIR, RESURFACING 5.71 MILES WITH ASPHALT CONCRETE, ADJUSTMENT OF CASTINGS WHERE NECESSARY, DRAINAGE REPLACEMENT, GUARDRAIL, PAVEMENT MARKINGS, AND MINOR STRUCTURE REHABILITATION.

PROJECT EARTH DISTURBED AREA: N/A - MAINTENANCE ACTIVITIES
ESTIMATED CONTRACTOR EARTH DISTRUBED AREA: N/A MAINTENANCE ACTIVITIES
NOTICE OF INTENT EARTH DISTURBED AREA: N/A MAINTENANCE ACTIVITIES

2005 SPECIFICATIONS
THE STANDARD SPECIFICATIONS OF THE STATE OF OHIO, DEPARTMENT OF TRANSPORTATION, INCLUDING CHANGES AND SUPPLEMENTAL SPECIFICATIONS LISTED IN THE PROPOSAL SHALL GOVERN THIS IMPROVEMENT.

I HEREBY APPROVE THESE PLANS AND DECLARE THAT THE MAKING OF THESE IMPROVEMENTS WILL NOT REQUIRE THE CLOSING OF THE HIGHWAY AND PROVISIONS FOR THE MAINTENANCE AND SAFETY OF TRAFFIC WILL BE AS INDICATED IN THE PLAN AND PROPOSAL.

APPROVED Kenneth Wright
DATE 03/01/07 DISTRICT DEPUTY DIRECTOR

APPROVED James G. Beasley
DATE 4-30-07 DIRECTOR, DEPARTMENT OF TRANSPORTATION

ROADWAY ENGINEERS SEAL:
STATE OF OHIO
AHAD D. BARATY
53234
REGISTERED
PROFESSIONAL ENGINEER
SIGNED: Ahad D. Baraty
DATE: 3/1/2007

STRUCTURE/CULVERT ENGINEERS SEAL:
STATE OF OHIO
DAVID C. MOLLENSHOTT
E-50210
REGISTERED
PROFESSIONAL ENGINEER
SIGNED: David C. Mollenshott
DATE: 3/1/07

STANDARD CONSTRUCTION DRAWINGS

BP-2.1	7-16-04	GR-1.1	7-16-04	MT-35.10	4-20-01	TC-41.20	1-19-01
BP-2.2	7-16-04	GR-2.1	1-16-04	MT-95.30	9-5-06	TC-41.40	7-16-04
BP-2.5	7-28-00	GR-3.1	1-19-07	MT-97.10	9-05-06	TC-42.20	7-16-04
BP-2.6	7-15-05	GR-3.2	1-19-07	MT-97.12	9-05-06	TC-72.20	1-21-05
BP-3.1	7-16-04	GR-3.4	1-20-06	MT-98.12	4-19-02	TC-65.10	1-21-05
BP-4.1	7-16-04	GR-4.2	1-19-07	MT-98.13	4-19-02	TC-65.11	1-21-05
BP-6.1	7-28-00	GR-5.1	4-18-03	MT-98.14	4-19-02	TC-71.10	1-19-07
BP-9.1	4-15-05	GR-5.2	1-16-04	MT-98.15	7-16-04	TC-73.10	1-19-01
		GR-5.3	1-16-04	MT-98.16	4-19-02	TC-82.10	4-19-02
CB-1.1	7-15-05	GR-6.1	4-18-03	MT-98.17	10-18-02		
		GR-6.2	4-18-03	MT-98.18	10-18-02		
DM-1.1	4-21-06			MT-99.20m	1-30-95		
DM-1.4	4-21-06	RM-1.1	4-21-06	MT-105.10	10-18-02		
DM-4.3	7-19-02	RM-4.4	1-19-07	MT-105.11	10-18-02		
DM-4.4	7-19-02	RM-4.5	1-19-07				

SUPPLEMENTAL SPECIFICATIONS

800	4-20-07
832	4-25-06

SPECIAL PROVISIONS

UNDERGROUND UTILITIES
TWO WORKING DAYS BEFORE YOU DIG
CALL 1-800-362-2764 (TOLL FREE)
OHIO UTILITIES PROTECTION SERVICE
NON-MEMBERS MUST BE CALLED DIRECTLY

PLAN PREPARED BY:
DISTRICT THREE DEPARTMENT PRODUCTION

FEDERAL PROJECT NO. E050 (117)
PID NO. 78483
CONSTRUCTION PROJECT NO.
RAILROAD INVOLVEMENT NONE
ERI-2-20.10
1/43

DESIGN FILE: I:\projects\78483\78483gt001.dgn
WORKSTATION: sjuzwik DATE: 2/28/2007

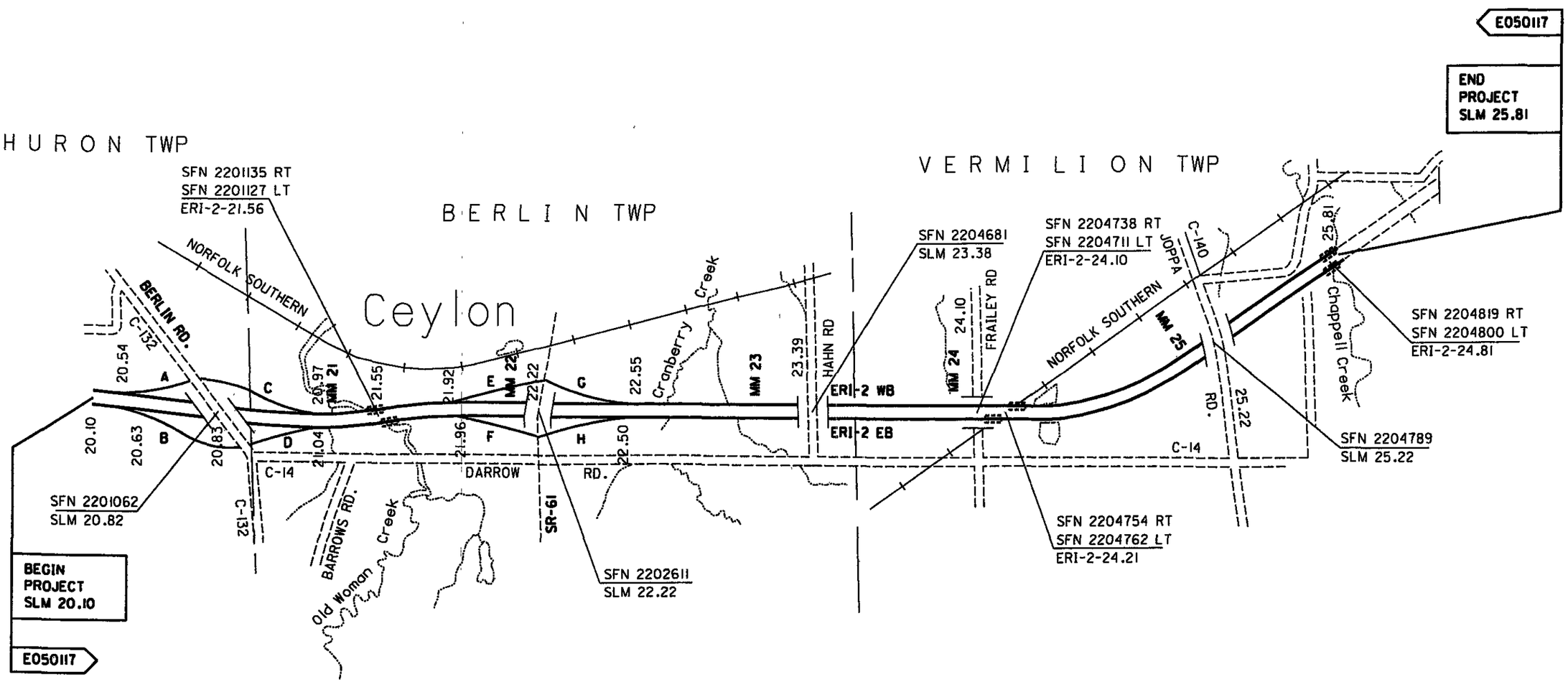

DESIGN DESIGNATION	20.10-22.22	22.22-25.81
CURRENT ADT (2007)	27890	26270
DESIGN YEAR ADT (2019)	38410	35990
DESIGN HOURLY VOLUME (2019)	3840	3420
DIRECTIONAL DISTRIBUTION	53%	51%
TRUCKS (24 HOUR B&C)	25%	22%

DESIGN SPEED/LEGAL SPEED

EB SPEED LIMIT IN MPH	65
WB SPEED LIMIT IN MPH	65

DESIGN FUNCTIONAL CLASSIFICATION:

RURAL PRINCIPAL ARTERIAL

NHS PROJECT ..... YES

DESIGN FILE: I:\projects\78483\78483gb001.dgn
WORKSTATION: sjuzwik DATE: 2/28/2007

CALCULATED SCJ
CHECKED ABD

PROJECT PLAN VIEW

ERI-2-20.10

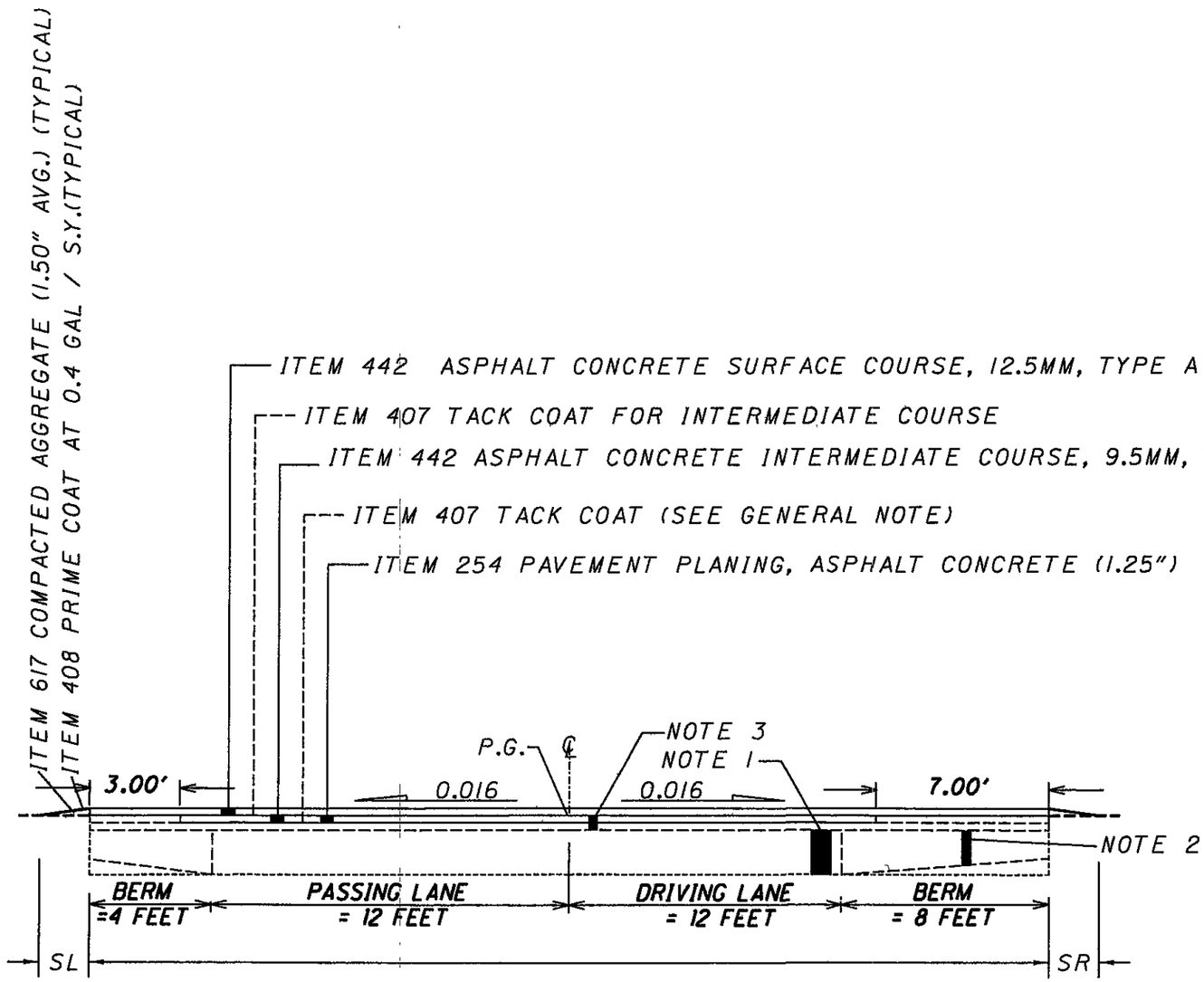

NOTE:
1. 8" CONCRETE
2. 6"-8" CONCRETE, TYP.
3. 3.25" ASPHALT CONCRETE

TYPICAL 1

MAINLINE IN DIRECTION OF TRAVEL

DESIGN FILE: I:\projects\78483\78483gy000.dgn
WORKSTATION: sjuzwik DATE: 2/28/2007

CALCULATED SCJ
DRAWN ABD

TYPICAL SECTIONS

ERI-2-20.10

J
43

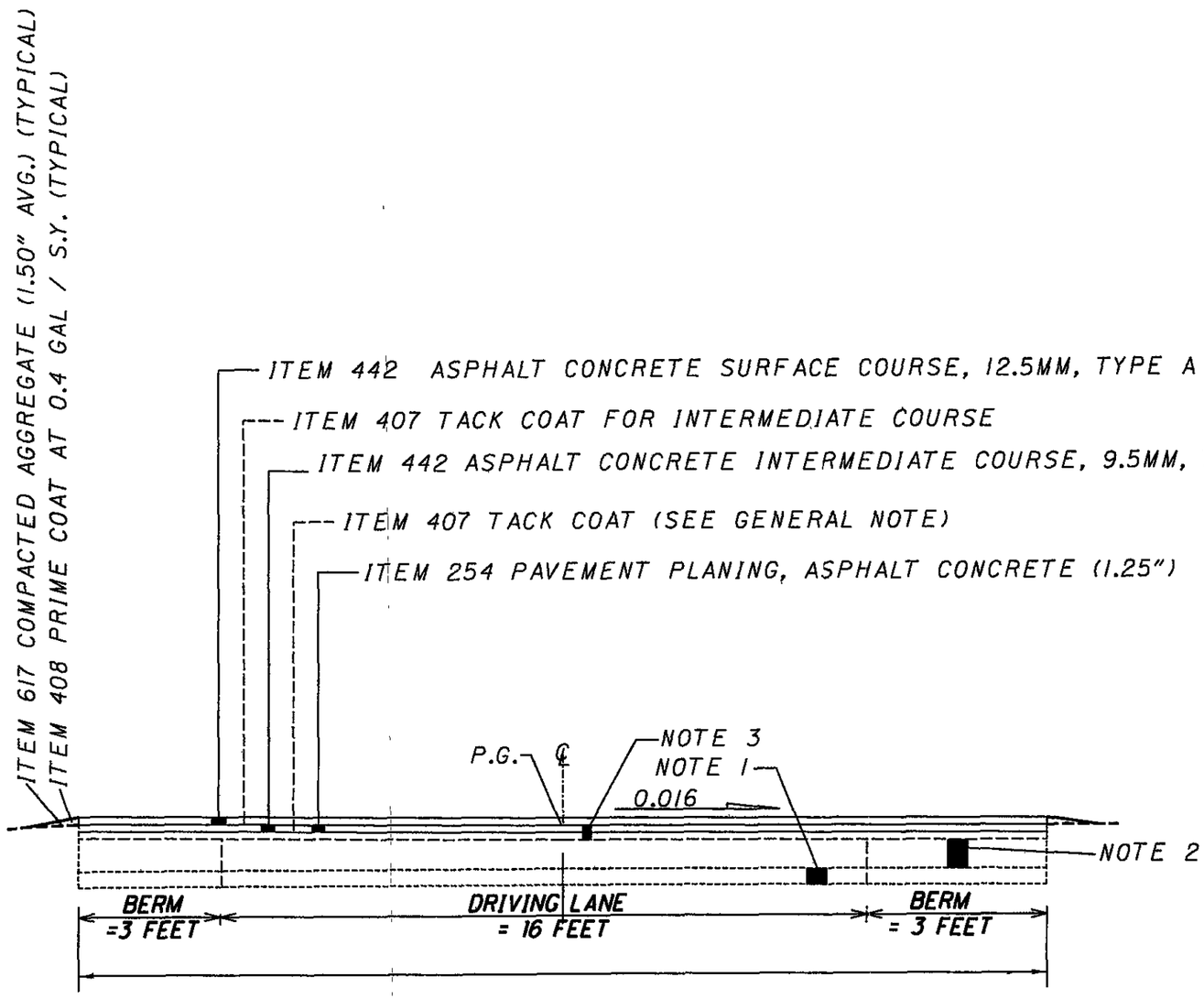

NOTE:
1. AGGREGATE BASE
2. 8" CONCRETE
3. 3.25" ASPHALT CONCRETE

TYPICAL 2

RAMPS IN DIRECTION OF TRAVEL

TYPICAL SECTIONS

ERI-2-20.10

4
43

DESIGN FILE: I:\projects\78483\78483gy000.dgn
WORKSTATION: sjuzwik DATE: 2/28/2007

SCJ
ABD

ITEM 614--MAINTAINING TRAFFIC: GENERAL

TRAFFIC SHALL BE MAINTAINED AND ALL WORK AND TRAFFIC CONTROL DEVICES SHALL BE IN ACCORDANCE WITH ITEM 614 AND OTHER APPLICABLE PORTIONS OF THE SPECIFICATIONS, PLAN DETAILS, STANDARD DRAWINGS, AND AS OUTLINED IN THE CONSTRUCTION AND MAINTENANCE SECTION OF THE OHIO MANUAL OF UNIFORM TRAFFIC CONTROL DEVICES CURRENT EDITION WITH THE LATEST REVISIONS. PAYMENT FOR ALL LABOR, EQUIPMENT AND MATERIALS SHALL BE INCLUDED IN THE LUMP SUM CONTRACT PRICE FOR ITEM 614 - MAINTAINING TRAFFIC UNLESS SEPARATELY ITEMIZED ON THIS PLAN.

THE FOLLOWING REQUIREMENTS SHALL ALSO APPLY:
THE CONTRACTOR SHALL SUBMIT, IN WRITING, A SCHEDULE OF OPERATIONS TO THE ENGINEER AND RECEIVE APPROVAL BEFORE WORK IS STARTED ON THE PROJECT. PRIOR TO BEGINNING WORK, THE CONTRACTOR SHALL COORDINATE THE MAINTENANCE OF TRAFFIC OPERATIONS WITH THE LOCAL STATE HIGHWAY PATROL, AS LISTED ON SHEET 7.

A MINIMUM OF ONE 11' LANE OF THROUGH TRAFFIC SHALL BE MAINTAINED IN EACH DIRECTION

THE CONTRACTOR IS REQUIRED TO MAINTAIN ALL PAVEMENT THROUGHOUT THE PROJECT UNDER ITEM 614 ASPHALT CONCRETE FOR MAINTAINING TRAFFIC DURING THE PERIOD FROM THE START OF WORK TO THE COMPLETION OF ALL WORK.

COVERING OF SIGNS

IF A PERMANENT SIGN IS TO BE COVERED DUE TO MAINTENANCE OF TRAFFIC OPERATIONS, THE CONTRACTOR SHALL DO SO IN SUCH A MANNER AS TO AVOID DAMAGING THE PERMANENT SIGN WHEN THE COVER IS PLACED AND REMOVED. THE COVER SHALL BE TOTALLY OPAQUE. THE USE OF ADHESIVE TAPE APPLIED DIRECTLY TO A SIGN FACE IS STRICTLY PROHIBITED. THIS WORK SHALL BE PAID FOR UNDER ITEM 614, MAINTAINING TRAFFIC.

ITEM 614 - ASPHALT CONCRETE FOR MAINTAINING TRAFFIC

TEMPORARY WEDGES AT INTERSECTION BUTT JOINTS, PAVEMENT LAYER ENDS, APPROACH SLABS, OR BRIDGE DECKS ARE TO BE CONSTRUCTED AS PER THE DETAIL BELOW.

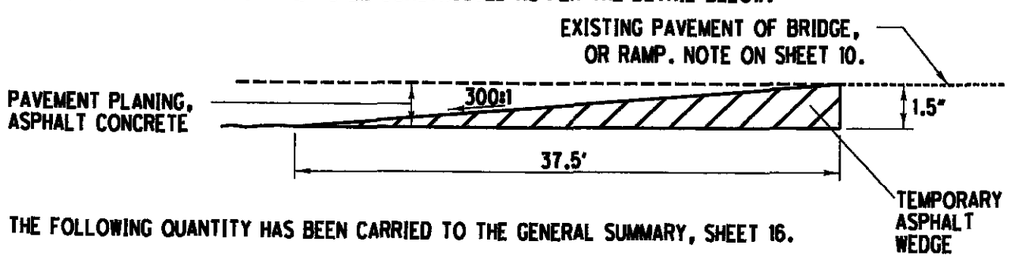

THE FOLLOWING QUANTITY HAS BEEN CARRIED TO THE GENERAL SUMMARY, SHEET 16.

ITEM 614 ASPHALT CONCRETE FOR MAINTAINING TRAFFIC 40 CU YD

ITEM 614-MAINTAINING TRAFFIC

ALL ADVANCE WARNING SIGNS FOR ANY CONDITION WHICH RESTRICTS TRAFFIC SHALL BE ERECTED BEFORE ANY SUCH RESTRICTION IS PUT INTO EFFECT. ALL SUCH SIGNS SHALL BE COVERED OR REMOVED FROM THE VIEW OF TRAFFIC WHEN THEY ARE NOT APPLICABLE, WITH THE APPROVAL OF THE ENGINEER.

IF THE CONTRACTOR FAILS TO COMPLY WITH THE PROVISIONS FOR TRAFFIC CONTROL AS SET FORTH IN THESE PLANS OR WITH PROVISIONS OF THE OMUTCD, AND SUCH FAILURE RESULTS IN A CONDITION AT THE WORK SITE WHICH IS UNSAFE FOR TRAFFIC, THE ENGINEER SHALL SUSPEND WORK UNTIL THE CONTRACTOR COMPLIES WITH THE NECESSARY REQUIREMENTS.

ALL MAINTENANCE OF TRAFFIC SIGNS ARE PAID UNDER ITEM 614 MAINTAINING TRAFFIC.

HOLIDAY WORK RESTRICTIONS

THERE WILL BE HOLIDAY RESTRICTIONS FOR ALL WORK. ALL WORK ON OR AROUND SR-2 SHALL NOT BE UNDER CONSTRUCTION DURING THE FOLLOWING HOLIDAYS OR SPECIAL WEEKENDS: (LANE CLOSURES MAY BE MAINTAINED, BUT NO WORK IS PERMITTED ON THESE DAYS)

MOTHERS DAY	FOURTH OF JULY
MEMORIAL DAY	EASTER
LABOR DAY	

THE PERIOD OF TIME THAT THE "NO WORK" APPLIES DEPENDS ON THE DAY OF THE WEEK ON WHICH THE HOLIDAY FALLS. THE FOLLOWING SCHEDULE SHALL BE USED TO DETERMINE THE PERIOD OF TIME THAT "NO WORK" SHALL APPLY: (LANE CLOSURE CAN BE MAINTAINED, BUT NO WORK IS PERMITTED ON THESE DAYS)

DAY OF THE WEEK	
WEEKEND HOLIDAY	12:00N FRIDAY THRU 6:00AM MONDAY
MONDAY	12:00N FRIDAY THRU 6:00AM TUESDAY
TUESDAY	12:00N MONDAY THRU 6:00AM WEDNESDAY
WEDNESDAY	12:00N TUESDAY THRU 6:00AM THURSDAY
THURSDAY	12:00N WEDNESDAY THRU 6:00AM MONDAY
FRIDAY	12:00N THURSDAY THRU 6:00AM MONDAY

SHOULD THE CONTRACTOR FAIL TO MEET ANY OF THESE REQUIREMENTS, THE CONTRACTOR SHALL BE ASSESSED LIQUIDATED DAMAGES IN ACCORDANCE WITH CMS 108.07.

ALTERNATE METHODS

IF THE CONTRACTOR SO ELECTS, HE MAY SUBMIT ALTERNATE METHODS FOR THE MAINTENANCE OF TRAFFIC, PROVIDED THE INTENT OF THE ABOVE PROVISIONS IS FOLLOWED AND NO ADDITIONAL INCONVENIENCE TO THE TRAVELING PUBLIC RESULTS THEREFROM. NO ALTERNATE PLAN WILL BE PUT INTO EFFECT UNTIL THE APPROVAL HAS BEEN GRANTED, IN WRITING, BY THE ENGINEER.

MAINTENANCE OF TRAFFIC SCHEME

THE CONTRACTOR SHALL SCHEDULE THEIR WORK AND METHODS IN ORDER TO MEET THE INTENT OF THE PLANS. THE PAVEMENT SURFACES TO BE USED BY THE TRAVELING PUBLIC SHALL BE ABLE TO DRAIN FREELY. ALL COSTS TO MAINTAIN THE ROADWAY AS PER THE CONSTRUCTION AND MATERIALS SPECIFICATIONS AND THE PLANS SHALL BE INCLUDED IN ITEM 614 LUMP SUM, MAINTAINING TRAFFIC UNLESS SEPERATELY ITEMIZED.

GENERAL LANE CLOSURE LIMITATIONS

CEDAR POINT AND OTHER LOCAL TOURIST TRAFFIC GREATLY IMPACTS THIS PROJECT. THE INTENT OF THE LANE CLOSURE LIMITATIONS IN THIS PLAN NOTE IS TO SUPPLEMENT OTHER TIME LIMITATIONS WHICH APPEAR IN THIS CONTRACT. THE FOLLOWING LANE CLOSURE RESTRICTIONS APPLY TO SR 2, AND ALL US ROUTE AND STATE ROUTE STRUCTURES IN THIS PROJECT:

1. BETWEEN MARCH 1, 2008 AND FRIDAY BEFORE JULY FOURTH, 2008, ONE LANE MAY BE CLOSED IN EACH DIRECTION, EXCEPT THAT NO LANE CLOSURES ARE PERMITTED ON SATURDAYS AND SUNDAYS FROM 2:00 PM TO 6:00 PM.
2. BETWEEN LABOR DAY, 2007 AND OCTOBER 31, 2007, ONE LANE MAY BE CLOSED IN EACH DIRECTION, EXCEPT THAT NO LANE CLOSURES ARE PERMITTED ON SATURDAYS AND SUNDAYS FROM 2:00 PM TO 6:00 PM.

FAILURE OF THE CONTRACTOR TO MEET ANY OF THE ABOVE REQUIREMENTS ARE SUBJECT TO LIQUIDATED DAMAGES AS PER CMS 108.07.

SEQUENCE OF CONSTRUCTION (SR 2 MAINLINE)

THE INTENT IS TO MINIMIZE TRAFFIC BACKUPS AND PERFORM THE WORK AS QUICKLY AS POSSIBLE. THE SEQUENCE OF CONSTRUCTION SHALL BE AS FOLLOWS:

PHASE A

1. REMOVE EXISTING EDGE LINE ON 8 FT OUTSIDE SHOULDER AND PLACE APPROPRIATE WORK ZONE MARKINGS.
2. SHIFT TRAFFIC ONTO THE DRIVING LANE AND SHOULDER.

PHASE B

1. PERFORM THE PARTIAL AND FULL DEPTH PAVEMENT REPAIRS IN THE PASSING LANE.

PHASE C

1. PLACE APPROPRIATE WORK ZONE MARKINGS.
2. SHIFT TRAFFIC ONTO THE PASSING LANE.
3. REMOVE WORK ZONE EDGE LINE FROM DRIVING LANE.

PHASE D

1. PERFORM THE PARTIAL AND FULL DEPTH PAVEMENT REPAIRS IN THE DRIVING LANE.

PHASE E (INTERMEDIATE COURSE)

1. MILL AND FILL, 1.25" DEEP, THE PASSING LANE.
2. MILL AND FILL, 1.25" DEEP, THE DRIVING LANE.

PHASE F (SURFACE COURSE)

1. WITH TRAFFIC IN THE DRIVING LANE, TACK AND PLACE THE SURFACE COURSE IN THE MEDIAN SHOULDER AND PASSING LANE.
2. PLACE APPROPRIATE WORK ZONE MARKINGS.
3. SHIFT TRAFFIC ONTO THE PASSING LANE.
4. TACK AND PLACE THE SURFACE COURSE IN THE DRIVING LANE AND RIGHT SHOULDER.
5. PLACE APPROPRIATE PAVEMENT MARKINGS, RPM'S, AND RUMBLE STRIPS.

INTERIM COMPLETION DATE: ANY WORK STARTED ON PHASES A, B, C, D, E, F, AND G SHALL BE COMPLETE ON OR BEFORE THE FRIDAY BEFORE JULY 4TH, 2008. FRIDAY BEFORE JULY 4TH, 2008, IS CONSIDERED TO BE AN INTERIM COMPLETION DATE AND IS SUBJECT TO LIQUIDATED DAMAGES PER CMS 108.07 IF NOT MET.

IT IS NOT INTENDED FOR PHASES A-D TO BE COMPLETED THROUGHOUT THE WHOLE LENGTH OF THE PROJECT BEFORE PHASES E-G ARE STARTED. AS SOON AS PAVEMENT REPAIRS ARE COMPLETE IN ANY SECTION OF A LANE LONGER THAN 2 MILES, THE CONTRACTOR MAY BEGIN PHASES E-F IN THAT SECTION.

PHASE G

1. PERFORM THE GUARDRAIL WORK AFTER THE SURFACE COURSE HAS BEEN PLACED.
2. COMPLETE THE REMAINING WORK.

RAMP WORK

ALL WORK ON THE RAMPS SHALL BE PERFORMED WHILE MAINTAINING TRAFFIC. AT LEAST ONE LANE OF TRAFFIC SHALL BE MAINTAINED AT ALL TIMES ON THE RAMPS.

SEQUENCE OF CONSTRUCTION (RAMPS)

THE DEFINITION OF THE RAMP LIMITS ARE FROM THE INTERSECTION WITH THE SIDE ROAD AT THE SIDE ROAD'S EDGE LINE AND DOWN THE RAMP TO THE GORE AREA WHERE THE COMMON PAVEMENT BETWEEN THE RAMP AND THE MAINLINE ENDS IN THE GRASSY AREA. THE SEQUENCE OF CONSTRUCTION FOLLOWS:

PHASE A

1. SHIFT TRAFFIC AND MILL THE ASPHALT FOR HALF THE RAMP.
2. PERFORM THE PARTIAL AND FULL DEPTH PAVEMENT REPAIRS IF APPLICABLE.
3. TACK, PLACE THE INTERMEDIATE COURSE, AND PLACE APPROPRIATE PAVEMENT MARKINGS.

PHASE B

1. SHIFT TRAFFIC ONTO THE INTERMEDIATE COURSE AND MILL THE ASPHALT FOR THE REMAINING RAMP.
2. PERFORM PARTIAL AND FULL DEPTH PAVEMENT REPAIRS IF APPLICABLE.
3. TACK, PLACE THE INTERMEDIATE COURSE, AND PLACE APPROPRIATE PAVEMENT MARKINGS.

PHASE C

1. SHIFT TRAFFIC, TACK AND PLACE THE SURFACE COURSE.
2. SHIFT TRAFFIC AND COMPLETE THE TACK AND SURFACE COURSE.
3. PLACE APPROPRIATE PAVEMENT MARKINGS, RPM'S, ETC.

MAINLINE SR 2 STRUCTURE WORK

THE LANE CLOSURE LIMITATIONS IN THE VARIOUS PLAN NOTES APPLY.

OVERHEAD STRUCTURE WORK

THE STRUCTURE INFORMATION PLAN SHEET OUTLINES THE PROPOSED WORK ON ALL OF THE STRUCTURES ON THIS PROJECT. WORK AFFECTING SR 2 TRAFFIC, SUCH AS SEALING THE PARAPETS, IS GOVERNED BY THE SR 2 TIME LIMITATIONS. SEALING THE WINGWALLS, ABUTMENTS AND PIERS ON THE OVERHEAD STRUCTURES SHOULD NOT AFFECT SR 2 TRAFFIC EXCEPT DURING HOLIDAYS. THE HOLIDAY AND SPECIAL EVENT TIME LIMITATIONS APPLIES TO ALL WORK ON THE PROJECT DUE TO THE RUBBERNECKING PROBLEMS. THIS NOTE IS NOT INTENDED TO CONFLICT WITH LIMITATIONS OF OTHER PLAN NOTES. IF SUCH CONFLICT IN NOTES IS DISCOVERED, THE MORE RESTRICTIVE PLAN NOTE APPLIES.

THE CONTRACTOR SHALL MAINTAIN AT LEAST ONE LANE OF TRAFFIC AT ALL TIMES, USING FLAGGERS AS NECESSARY FOR WORK AFFECTING THE TRAFFIC ON STRUCTURES ON COUNTY AND TOWNSHIP ROADS. THE CONTRACTOR IS NOT ALLOWED TO DETOUR TRAFFIC.

THE CONTRACTOR MAY SUBMIT TO THE ENGINEER IN WRITING AT LEAST 14 CALENDAR DAYS IN ADVANCE OF AN ALTERNATIVE PLAN ADDRESSING MAINTAINING TRAFFIC FOR THE WORK ON THE OVERHEAD STRUCTURES. WORK IS NOT TO COMMENCE WITHOUT WRITTEN PERMISSION BY THE ENGINEER.

CONCRETE PARAPET END SECTION CONSTRUCTION

AT SPECIFIED LOCATIONS THE PROJECT REQUIRES THE REMOVAL OF A SPECIFIED LENGTH OF THE END OF THE EXISTING CONCRETE PARAPET AND CONSTRUCTING A FOURTEEN (14) FOOT END SECTION, THEN ATTACHING A BRIDGE TERMINAL ASSEMBLY AND OTHER GUARDRAIL WORK. FOR CONSTRUCTION OF THIS CONCRETE PARAPET END SECTION THE ADVANCE SIGNING SHALL MEET THE REQUIREMENTS OF "FIGURE 6H-5 SHOULDER CLOSURE ON FREEWAY (TA-5)" OF THE OMUTCD. DRUMS ARE REQUIRED AND SHALL BE OFFSET A MINIMUM OF ONE (1) FOOT ONTO THE SHOULDER FROM THE TRAFFIC EDGE LINE. THE DRUMS ARE TO EXTEND A MINIMUM OF 100 FEET DOWNSTREAM OF THE WORK AREA. HOWEVER, IF THIS WORK IS PERFORMED WHEN THE ADJACENT LANE IS CLOSED, THEN THE DRUMS AND SIGNING FOR THE SHOULDER ARE NOT REQUIRED. NO MATTER WHEN THE WORK IS PERFORMED, AT LEAST TWO (2) DRUMS ARE REQUIRED TO DELINEATE THE HAZARD WHEN THE CONTRACTOR IS NOT WORKING AT THAT LOCATION. IT IS NOT INTENDED TO WAIVE OTHER LMITATIONS SUCH AS TIME OR LANE CLOSURE LIMITATIONS AS SPECIFIED IN THE CONTRACT.

THE CONTRACTOR IS LIMITED TO A MAXIMUM OF FIVE (5) CALENDAR DAYS FROM THE TIME THE CONCRETE PARAPET IS REMOVED TO THE TIME THE GUARDRAIL IS REATTACHED TO THE PARAPET. THE FIVE (5) DAY LIMIT IS NOT WAIVED WHEN WORKING DURING THE ADJACENT LANE CLOSURE. THE FIVE (5) CALENDAR DAYS IS CONSIDERED TO BE AN INTERIM COMPLETION DATE AND FAILURE TO MEET THESE REQUIREMENTS, THE CONTRACTOR SHALL BE ASSESSED LIQUIDATED DAMAGES IN ACCORDANCE WITH CMS 108.07.

REMOVAL OF ODNR SCIENTIFIC RESEARCH EQUIPMENT

SEE NOTE ON SHEET 23 FOR COORDINATION BETWEEN CONTRACTOR AND ODNR TO REMOVE AND RE-ATTACH THE RESEARCH EQUIPMENT.

DESIGN FILE: I:\projects\78483\78483mm000.dgn
WORKSTATION: sjuzwik DATE: 2/28/2007

WORK OPERATIONS

IN ADDITION TO THE REQUIREMENTS OF SECTION 614.03A OF THE CONSTRUCTION AND MATERIAL SPECIFICATIONS THE FOLLOWING SHALL APPLY:

THE CONTRACTOR'S EQUIPMENT SHALL BE OPERATED IN THE DIRECTION OF TRAVEL WHERE PRACTICAL. A FLAGGER SHALL BE USED WHERE THE CONTRACTOR'S EQUIPMENT MUST MERGE WITH THE TRAFFIC STREAM. THE CONTRACTOR'S VEHICLES AND EQUIPMENT SHALL BE EQUIPPED WITH AT LEAST ONE AMBER FLASHING LIGHT. AMBER LIGHT SHALL BE VISIBLE TO ALL DIRECTIONS OF TRAFFIC A MINIMUM OF 0.25 MILE.

THE CONTRACTOR SHALL ARRANGE CONSTRUCTION OPERATIONS SO AS TO PREVENT ANY INTERFERENCE TO THE CONTINUOUS FLOW OF TRAFFIC. ALL VEHICLES, EQUIPMENT, WORKERS AND THEIR ACTIVITIES ARE RESTRICTED AT ALL TIMES TO THE CLOSED LANES UNLESS OTHERWISE APPROVED BY THE ENGINEER.

THE CONTRACTOR IS ALLOWED TO WORK AT NIGHT. FLOODLIGHTING OF THE WORK SITE FOR OPERATIONS CONDUCTED DURING NIGHT TIME PERIODS SHALL BE ACCOMPLISHED SO THAT THE LIGHTS DO NOT CAUSE GLARE TO THE DRIVERS ON THE HIGHWAY. TO INSURE THE ADEQUACY OF THE FLOODLIGHTING PLACEMENT PRIOR TO COMMENCING ANY WORK, THE CONTRACTOR AND THE ENGINEER SHALL DRIVE THROUGH THE WORK SITE EACH NIGHT WHEN THE LIGHTING IS IN PLACE AND OPERATIVE. IF GLARE IS DETECTED, THE LIGHT PLACEMENT AND SHIELDING SHALL BE ADJUSTED TO THE SATISFACTION OF THE ENGINEER BEFORE WORK PROCEEDS. PAYMENT FOR ALL LABOR, EQUIPMENT AND MATERIALS SHALL BE INCLUDED IN THE LUMP SUM CONTRACT PRICE FOR ITEM 614 MAINTAINING TRAFFIC.

EQUIPMENT MAY BE PARKED IN AREAS ALONG THE HIGHWAY A MIN. OF 6 FT BEHIND GUARDRAIL OR 30 FT FROM THE NEAREST EDGE OF PAVEMENT WHEN VARIOUS OPERATIONS ARE SCHEDULED TO CONTINUE THE NEXT WORKDAY. ON WEEKENDS OR AT OTHER TIMES OF SUSPENSION OF WORK, THE EQUIPMENT SHALL BE STORED AT A STORAGE AREA OUTSIDE OF THE ROADWAY RIGHT-OF-WAY. THE LOCATION SHALL HAVE PRIOR APPROVAL OF THE ENGINEER. ADEQUATE BARRICADES AND LIGHTS SHALL BE PLACED ON THE PAVEMENT SIDE OF THE EQUIPMENT TO IDENTIFY THE LIMITS OF THE EQUIPMENT. ALL OTHER EQUIPMENT, INCLUDING PRIVATE VEHICLES, SHALL BE STORED AT THE APPROVED CONTRACTOR'S STORAGE AREA.

TEMPORARY FEATHERS WILL BE REQUIRED AT INTERCHANGES, END OF RESURFACING RUNS, OR AT OTHER POINTS DESIGNATED BY THE ENGINEER. THESE SHALL BE INSTALLED ACCORDING TO BP-3.1 AND REMOVED WHEN NO LONGER REQUIRED. THE COST OF THESE TEMPORARY FEATHERS SHALL BE INCLUDED IN ITEM 614 BITUMINOUS CONCRETE FOR MAINTAINING TRAFFIC AS SHOWN ON SHEET NO. 5.

LONGITUDINAL PAVEMENT JOINTS

ALL JOINTS DUE TO PAVING OR DROPOFFS DUE TO PAVEMENT PLANING THAT ARE MORE THAN 1.5 INCHES SHALL BE CLOSED, OR REDUCED TO 1.5" OR LESS BEFORE THE END OF EACH WORK DAY. BEFORE A LONGITUDINAL JOINT IS EXPOSED TO TRAFFIC, THE CONTRACTOR SHALL ERECT OWP-171 (UNEVEN PAVEMENT) SIGNS. THESE SIGNS SHALL ONLY REMAIN WHILE THE CONDITION EXISTS. ALSO, SEE SHEET 14 FOR MAINTAINING TRAFFIC IN DROPOFF AREAS.

ITEM 614, WORK ZONE MARKING SIGN:

THE FOLLOWING ESTIMATED QUANTITY HAS BEEN CARRIED TO THE GENERAL SUMMARY FOR USE AS DIRECTED BY THE ENGINEER FOR TEMPORARY WORK ZONE MARKING SIGNS PER THE REQUIREMENTS OF THE CONSTRUCTION AND MATERIALS SPECIFICATIONS, 614.04.

WORK ZONE MARKING SIGN: (OW-167-36) NO EDGE LINE = 12 each

TOTAL PART = 12 each

ITEM 614-LAW ENFORCEMENT OFFICER WITH PATROL CAR

IN ADDITION TO THE REQUIREMENTS OF 614 AND THE LATEST EDITION OF THE OHIO MANUAL OF UNIFORM TRAFFIC CONTROL DEVICES (OMUTCD), A UNIFORMED LAW ENFORCEMENT OFFICER (AND OFFICIAL PATROL CAR WITH WORKING TOP MOUNTED EMERGENCY FLASHING LIGHTS) SHOULD BE PROVIDED FOR CONTROLLING TRAFFIC FOR THE FOLLOWING TASKS AS DIRECTED BY THE ENGINEER:

>> FOR LANE CLOSURES: DURING INITIAL SET-UP PERIODS, TEAR DOWN PERIODS, SUBSTANTIAL SHIFTS OF A CLOSURE POINT OR WHEN NEW LANE CLOSURE ARRANGEMENTS ARE INITIATED.

LAW ENFORCEMENT OFFICERS (L.E.O.'S) SHOULD NOT BE USED WHERE THE OMUTCD INTENDS THAT FLAGGERS BE USED. THE LEO'S ARE CONSIDERED TO BE EMPLOYED BY THE CONTRACTOR AND THE CONTRACTOR SHALL BE RESPONSIBLE FOR THEIR ACTIONS. ALTHOUGH THEY ARE EMPLOYED BY THE CONTRACTOR, THE PROJECT ENGINEER SHALL HAVE CONTROL OVER THEIR PLACEMENT. THE OFFICIAL PATROL CAR SHALL BE A PUBLIC SAFETY VEHICLE AS REQUIRED BY THE OHIO REVISED CODE.

THE CONTRACTOR SHALL MAKE ARRANGEMENTS FOR THESE SERVICES WITH

HIGHWAY PATROL
511 FREEMONT AVE.
SANDUSKY, OHIO 44870
419 625-6565

72 HOURS ADVANCE NOTICE REQUIRED BY THE HIGHWAY PATROL TO PROVIDE SERVICE

LAW ENFORCEMENT OFFICERS WITH PATROL CAR REQUIRED BY THE TRAFFIC MAINTENANCE TASKS ABOVE SHALL BE PAID FOR ON A UNIT PRICE (HOURLY) BASIS UNDER ITEM 614-LAW ENFORCEMENT OFFICER WITH PATROL CAR. THE FOLLOWING ESTIMATED QUANTITIES HAVE BEEN CARRIED TO THE GENERAL SUMMARY:

ITEM 614, LAW ENFORCEMENT OFFICER WITH PATROL CAR 40 HOURS

THE HOURS PAID SHALL INCLUDE MINIMUM SHOW-UP TIME REQUIRED BY THE LAW ENFORCEMENT AGENCY INVOLVED.

IF THE CONTRACTOR WISHES TO UTILIZE LEO'S FOR FLAGGING AND TRAFFIC CONTROL OTHER THAN FOR THAT REQUIRED IN THESE PLANS, THEY MAY DO SO AT THEIR OWN EXPENSE.

ITEM 614, REPLACEMENT DRUM

DRUMS FURNISHED BY THE CONTRACTOR IN ACCORDANCE WITH THE REQUIREMENTS OF THE PLANS, SPECIFICATIONS, AND PROPOSAL WHICH BECOME DAMAGED BY TRAFFIC FOR REASONS BEYOND THE CONTROL OF THE CONTRACTOR SHALL BE REPLACED IN KIND WHEN ORDERED BY THE ENGINEER. REPLACEMENT DRUMS SHALL BE NEW.

PAYMENT FOR THE NEW DRUMS SHALL BE MADE AT THE CONTRACT PRICE PER EACH FOR ITEM SPECIAL, REPLACEMENT DRUM, AND SHALL INCLUDE THE COST OF REMOVING AND DISPOSING OF THE DAMAGED DRUM, AND PROVIDING AND MAINTAINING THE REPLACEMENT DRUM IN ACCORDANCE WITH THE CONTRACT REQUIREMENTS FOR THE ORIGINAL DRUM.

AN ESTIMATED QUANTITY OF 25 EACH HAS BEEN PROVIDED IN THE GENERAL SUMMARY.

ESTIMATED QUANTITIES--MAINTENANCE OF TRAFFIC

THE FOLLOWING ESTIMATED QUANTITIES HAVE BEEN INCLUDED IN THE GENERAL SUMMARY FOR USE AS DIRECTED BY THE ENGINEER FOR MAINTENANCE OF TRAFFIC.

ITEM 614 ASPHALT CONCRETE FOR MAINTAINING TRAFFIC 25 CU YD

DESIGN FILE: I:\projects\78483\78483mm000.dgn
WORKSTATION: sjuzwik DATE: 2/28/2007

WORKSITE TRAFFIC SUPERVISOR

THE CONTRACTOR SHALL EMPLOY (OTHER THAN THE SUPERINTENDENT) AND SUBJECT TO THE APPROVAL OF THE ENGINEER, A CERTIFIED WORKSITE TRAFFIC SUPERVISOR (WTS). THE WTS MAY BE CERTIFIED FROM ONE OF THE FOLLOWING ORGANIZATIONS:

1). AMERICAN TRAFFIC SAFETY SERVICE ASSOCIATION A.T.S.S.A. , PHONE NUMBER 1-800-272-8772, CERTIFIED WORKSITE TRAFFIC SUPERVISOR (WTS)

2). THE NATIONAL SAFETY COUNCIL, TRAFFIC CONTROL ZONES SUPERVISORS COURSE, PHONE NUMBER 1-800-441-5103

3). NATIONAL HIGHWAY INSTITUTE, DESIGN AND OPERATION OF WORK ZONE TRAFFIC CONTROL, PHONE NUMBER 1-703-235-0528

A CERTIFIED WTS SHALL BE PRESENT WHEN THE CONTRACTOR OR SUBCONTRACTOR INSTALLS A TRAFFIC RESTRICTION, LANE CLOSURE, ETC. THE CONTRACTOR OR SUBCONTRACTOR MUST PRESENT A COPY OF CERTIFICATES FOR ALL WTS TO THE ENGINEER. A WTS MUST BE PRESENT WHEN THE WORK ZONE IS BEING SET UP OR REMOVED.

THE WTS POSITION IS ESTABLISHED FOR THE PURPOSE OF MONITORING THE TRAFFIC CONTROL PLAN (TCP) AND CORRECTING ANY TRAFFIC CONTROL DEFICIENCIES IN THE WORK ZONE. THE WTS MUST ALSO COORDINATE WITH ALL LAW ENFORCING AGENCIES RESPONSIBLE FOR THE ROADWAY UNDER CONSTRUCTION AND RETRIEVE ALL CRASH REPORTS (OH-1) THAT OCCUR WHEN TEMPORARY TRAFFIC CONTROL DEVICES ARE IN PLACE. THE WTS SHALL OVERSEE ALL OPERATIONS THAT AFFECT THE MOVEMENT OF VEHICULAR AND PEDESTRIAN TRAFFIC THROUGH THE WORK ZONE. TRAFFIC CONTROL AND CRASH DATA EVALUATION WILL BE THE WTS MAIN RESPONSIBILITY WHEN A WORK ZONE IS IN PLACE.

DAILY, INCLUDING WEEKENDS AND HOLIDAYS, THE WTS SHALL SPEND A MINIMUM OF ONE HOUR REVIEWING THE WORK ZONE AND/OR CRASH DATA FOR DEFICIENCIES AND MAINTAINING THE WORK ZONE.

WEEKLY, THE WTS MUST RETRIEVE/COLLECT ALL CRASH REPORTS (OH-1) FROM ALL LAW ENFORCING AGENCIES, EVALUATE THE CRASHES, AND RECOMMEND SOLUTIONS TO ADDRESS ANY ISSUES WITH THE TCP THAT ARE POTENTIALLY CREATING CRASHES WITHIN THE WORK ZONE. THE WTS MUST PRESENT THESE SOLUTIONS TO THE ENGINEER FOR APPROVAL WEEKLY. UPON APPROVAL BY THE ENGINEER AND THE DISTRICT WORK ZONE TRAFFIC MANAGER (DWZTM), THE CONTRACTOR MUST IMPLEMENT THE RECOMMENDED SOLUTIONS TO THE WORK ZONE WITHIN ONE WEEK - ADDITIONAL COST TO BE PAID UNDER CONSTRUCTION AND MATERIALS SPECIFICATIONS - 109. THE WTS MUST INSPECT THE WORK ZONE AT THE BEGINNING AND THE END OF EACH WORK DAY AND ONE TIME PER WEEK DURING THE HOURS OF DARKNESS. THE FOLLOWING ITEMS SHALL BE INCLUDED, BUT NOT RESTRICTED TO, IN EACH REVIEW: TRAFFIC CONTROL DEVICE CONDITION; PLACEMENT; VISIBILITY; TRAFFIC FLOW CONDITIONS; INCIDENTS; CONGESTION POINTS; DELAYS; ADEQUACY OF ADVANCED INFORMATIONAL SIGNS BEYOND PROJECT LIMITS; INTERACTION OF WORK VEHICLES AND TRAFFIC; ACCIDENTS; PROPER STORAGE OF MATERIALS AND EQUIPMENT; CONFORMANCE WITH TCP; ADEQUACY OF TCP; CONFLICTING OR NON-CONFORMING PAVEMENT MARKINGS. THE WTS SHALL HAVE THE NECESSARY AUTHORITY TO IMMEDIATELY PERFORM ANY CORRECTIVE WORK. A RECORD OF EACH DAYS REVIEW SHALL BE GIVEN TO THE ENGINEER THE FOLLOWING WORKDAY IN WRITING AND SHALL INCLUDE ALL DEFICIENCIES AND RESOLUTIONS TO THE DEFICIENCIES. THE INSPECTION WILL BE DOCUMENTED ON THE LONG/SHORT TERM WORK ZONE REVIEW FORM PROVIDED BY ODOT. WEEKLY, THE INSPECTION FORM MUST BE ACCOMPANIED BY ALL OF THE OH-1 CRASH REPORTS AND THE PROPOSED SOLUTIONS TO ANY IDENTIFIED CRASH PROBLEMS.

IF THE RESTRICTIONS ARE SHORT TERM, THE WTS SHALL MONITOR THE ZONE FOR COMPLIANCE, DURING LANE CLOSURES; HE SHALL MAKE SURE ALL TRAFFIC CONTROL ITEMS ARE FUNCTIONING PROPERLY. TRAFFIC CONTROL AND CRASH DATA EVALUATION WILL BE THE WTS MAIN RESPONSIBILITY DURING IMPLEMENTATION OF ZONES OR SHORT TERM ZONES. THE WTS SHALL PROVIDE THE DWZTM A SKETCH OF THE TRAFFIC CONTROL PLAN (TCP) EVERYDAY THERE IS TO BE A SHORT TERM TRAFFIC RESTRICTION, LANE CLOSURE, ETC. THIS TCP SHALL SHOW HOW THE WORK ZONES ARE TO BE IMPLEMENTED.

THE WTS SHALL BE ON STANDBY 24-HOUR BASIS TO REPAIR AND/OR REPLACE DAMAGED OR MISSING TRAFFIC CONTROL DEVICES. A 24-HOUR CONTACT NUMBER(S) SHALL BE MADE AVAILABLE TO THE ENGINEER TO CONTACT THE WTS.

FAILURE OF THE CONTRACTOR TO COMPLY WITH ANY OF THE ABOVE, SHALL CONSTITUTE CAUSE FOR THE PROJECT ENGINEER TO DEDUCT $500.00 PER DAY FROM MONEY DUE TO THE CONTRACTOR NOT AS A PENALTY, BUT AS A LIQUIDATION DAMAGE.

PAYMENT FOR THE WTS SHALL BE INCLUDED UNDER THE ITEM "614 - WORKSITE TRAFFIC SUPERVISOR" BY MONTH. 5 MONTHS HAS BEEN PROVIDED FOR THIS USE.

DESIGN FILE: i:\projects\78483\78483mm000.dgn
WORKSTATION: sjuzwik DATE: 2/28/2007

GENERAL

UTILITIES

LISTED BELOW ARE ALL UTILITIES LOCATED WITHIN THE PROJECT CONSTRUCTION LIMITS TOGETHER WITH THEIR RESPECTIVE OWNERS.

THE LOCATION OF THE UNDERGROUND UTILITIES SHOWN ON THE PLANS ARE AS OBTAINED FROM THE OWNERS AS REQUIRED BY SECTION 153.64 O.R.C.

OHIO DEPT. OF TRANS.
DISTRICT 3
906 NORTH CLARK STREET
ASHLAND, OH 44805
419 281-0513

GAS
COLUMBIA GAS OF OHIO
7080 FRY ROAD
MIDDLEBURG HTS, OH 44130
440 891-2428

ELECTRIC
OHIO EDISON CCOMPANY
6326 LAKE AVENUE
ELYRIA, OH 44035
440 326-3231

CABLE T.V.
TIME WARNER CABLE
576 TERNES STREET
ELYRIA, OHIO 44035
440 366-0416

NASA
6100 COLUMBUS, AVE.
SANDUSKY, OH 44870
419-621-3204

THE AFOREMENTIONED UTILITY COMPANIES AND AGENCIES HAVE VARIOUS FACILITIES IN THE AREA THAT WILL REMAIN IN PLACE DURING CONSTRUCTION.

EXTREME CAUTION SHOULD BE EXERCISED IN AREAS WITH UTILITIES. SECTIONS 105.07 AND 107.16 OF THE DEPARTMENT OF TRANSPORTATION CONSTRUCTION AND MATERIALS SPECIFICATIONS REQUIRE, AMONG OTHER THINGS, THAT THE CONTRACTOR COOPERATE WITH ALL UTILITIES LOCATED WITHIN THE LIMITS OF THIS CONSTRUCTION PROJECT AND TAKE RESPONSIBILITY FOR THE PROTECTION OF THE UTILITY PROPERTY AND SERVICES.

ROUTINE MAINTENANCE

BETWEEN THE TIME THAT BIDS ARE TAKEN AND THE START OF CONSTRUCTION, THE MAINTAINING AGENCY MAY ENTER UPON THE PROJECT AND PERFORM ROUTINE MAINTENANCE SUCH AS CRACK SEALING, PATCHING, AND BERM AND SHOULDER REPAIR. THE EFFECTS, IF ANY, OF THE PERFORMANCE OF ROUTINE MAINTENANCE SHALL BE CONSIDERED AS INHERENT IN WORK OF THE CHARACTER PROVIDED FOR IN THE PLAN AND THE RESULTING CONDITIONS SHALL NOT BE CONSIDERED AS DIFFERING MATERIALLY FROM THOSE EXISTING AT THE TIME BIDS WERE TAKEN

DRAINAGE

REVIEW OF DRAINAGE FACILITIES

BEFORE ANY WORK IS STARTED ON THE PROJECT AND AGAIN BEFORE FINAL ACCEPTANCE BY THE STATE, REPRESENTATIVES OF THE STATE AND THE CONTRACTOR, SHALL MAKE AN INSPECTION OF ALL EXISTING SEWERS WHICH ARE TO REMAIN IN SERVICE AND WHICH MAY BE AFFECTED BY THE WORK. THE CONDITION OF THE EXISTING CONDUITS AND THEIR APPURTENANCE SHALL BE DETERMINED FROM FIELD OBSERVATIONS. RECORDS OF THE INSPECTION SHALL BE KEPT IN WRITING BY THE STATE.

ALL NEW CONDUITS, INLETS, CATCH BASINS, AND MANHOLES CONSTRUCTED AS A PART OF THE PROJECT SHALL BE FREE OF ALL FOREIGN MATTER AND IN A CLEAN CONDITION BEFORE THE PROJECT WILL BE ACCEPTED BY THE STATE.

ALL EXISTING SEWERS INSPECTED INITIALLY BY THE ABOVE MENTIONED PARTIES SHALL BE MAINTAINED AND LEFT IN A CONDITION REASONABLY COMPARABLE TO THAT DETERMINED BY THE ORIGINAL INSPECTION. ANY CHANGE IN THE CONDITION RESULTING FROM THE CONTRACTOR'S OPERATIONS SHALL BE CORRECTED BY THE CONTRACTOR TO THE SATISFACTION OF THE ENGINEER.

PAYMENT FOR ALL OPERATIONS DESCRIBED ABOVE SHALL BE INCLUDED IN THE CONTRACT PRICE FOR THE PERTINENT 603 CONDUIT ITEMS.

ITEM 604 - CATCH BASIN ADJUSTED TO GRADE

ANY UNIT OF THIS ITEM MAY BE NON-PERFORMED IF SO DIRECTED BY THE ENGINEER AND THE SURFACE SHALL BE FEATHERED TO MEET THE EXISTING CASTING OR INLET IN A MANNER ACCEPTABLE TO THE ENGINEER. ALL ADJUSTING RINGS SHALL HAVE THE ENGINEER'S APPROVAL BEFORE USING.

UNDER ITEM 604.03, ADJUSTMENT TO GRADE, PARAGRAPH (1), THE CASTING TO BE ADJUSTED MAY OR MAY NOT HAVE AN EXISTING FRAME. THE WORK SHALL CONSIST OF ADJUSTING THE EXISTING CASTING OR GRATE TO THE SATISFACTION OF THE ENGINEER. THE CONTRACTOR IS REMINDED TO FIELD CHECK ALL ADJUSTMENT TO GRADE ITEMS PRIOR TO BIDDING, AS NO ADDITIONAL COMPENSATION WILL BE GRANTED FOR LABOR AND MATERIALS REQUIRED TO SATISFACTORILY ADJUST CASTINGS WITHOUT FRAMES.

PAVEMENT

ITEM 254, PAVEMENT PLANING, ASPHALT CONCRETE

THE INTENT OF THE PLANING IS TO MILL THE SPECIFIED DEPTH AT THE CENTER OF PAVEMENT (SEE SHEETS 3-4 FOR DEPTHS). THE PAVEMENT SLOPE SHALL BE 0.0156, CONTINUOUS BETWEEN THE CROWN AND THE PROPOSED EDGELINE/SHOULDER (SEE TYPICAL SECTIONS FOR FURTHER DETAILS). THE MILLING DEPTH SHALL BE CONTROLLED FROM THE CENTER OF PAVEMENT IN CONFORMANCE WITH ABOVE GUIDELINES.

SPECIAL ATTENTION SHALL BE GIVEN TO SUPER-ELEVATED CURVES. THE SUPER-ELEVATION SHALL BE MAINTAINED AND/OR RESTORED, IF NECESSARY, AS DIRECTED BY THE ENGINEER.

THE CONTRACTOR SHALL MAINTAIN POSITIVE DRAINAGE INTO ALL CATCH BASINS AND INLETS.

AN AUTOMATIC MILLING HEAD PROFILE CONTROL HAVING A MINIMUM 30 FT. SKI-ARM SHALL BE USED DURING PLANING OPERATION.

THE PROGRESSION OF THE PLANING SHALL PROCEED IN SUCH A MANNER THAT NORMAL TRAFFIC WILL NOT BE REQUIRED TO RUN OVER ANY PLANED ROADWAY SURFACE. THIS REQUIREMENT SHALL BE CONSIDERED AN INTERIM COMPLETION DATE (SECTION 108) AND FOR EACH CALENDAR DAY THAT THE PLANED SURFACE OF THE ROADWAY IS EXPOSED TO TRAFFIC, THE CONTRACTOR WILL BE ASSESSED LIQUIDATED DAMAGES AS PER 108.07. THIS REQUIREMENT DOES NOT APPLY TO WORK ON RAMPS.

ITEM 407, TACK COAT
ITEM 407, TACK COAT FOR INTERMEDIATE COURSE

AS PER 407.06 THE APPLICATION RATES SHALL BE 0.08 GAL. PER SQ. YD. PRIOR TO THE LEVELING COURSE AND SHALL BE 0.05 GAL PER SQ. YD. PRIOR TO THE SURFACE COURSE FOR ESTIMATING PURPOSES ONLY. THE RATE OF APPLICATION SHALL BE SUBJECT TO ADJUSTMENT AS DIRECTED BY THE ENGINEER. A COMPLETE PAVEMENT SURFACE COVERAGE SHALL BE REQUIRED. AREAS OF TACK STRIPPED BY CONSTRUCTION EQUIPMENT OR TRAFFIC SHALL BE RE-COATED PRIOR TO PLACING ASPHALT CONCRETE. ALL COST AS DESCRIBED ABOVE SHALL BE INCLUDED IN THE UNIT PRICE BID PER GALLON FOR ITEM 407, TACK COAT AND ITEM 407 TACK COAT FOR INTERMEDIATE COURSE.

PAVEMENT

ITEM 251, PARTIAL DEPTH PAVEMENT REPAIR

THIS ITEM OF WORK SHALL CONSIST OF THE REMOVAL OF THE EXISTING 3" ASPHALT CONCRETE ON TOP OF THE 8" CONCRETE BASE, IN AREAS OF EXISTING PAVEMENT FAILURE. THIS PAY ITEM IS NOT TO BE USED WHERE ITEM 255 CONCRETE REPAIRS WILL BE DONE.

THE ENGINEER SHALL DESIGNATE THE LOCATIONS AND LIMITS OF THE AREAS TO BE REPAIRED. PARTIAL DEPTH PAVEMENT REPAIR SHALL BE PERFORMED BEFORE PAVEMENT PLANING. THE REPAIR AREAS SHALL BE SAW CUT AND EXCAVATED TO PROVIDE STRAIGHT AND VERTICAL SURFACES AROUND THE PERIMETER OF THE REPAIR AREA. PAVEMENT PLANING MAY BE USED AS AN ALTERNATIVE TO SAW CUTTING AND EXCAVATING. THE PAVEMENT SHALL BE REMOVED WITHIN THE DESIGNATED AREAS BY METHODS WHICH WILL NOT DAMAGE ADJACENT PAVEMENT. THE MATERIALS REMOVED SHALL BE DISPOSED OF IN ACCORDANCE WITH 105.16 AND 105.17.

THE CONTRACTOR SHALL BE CAPABLE OF PERFORMING PARTIAL DEPTH PAVEMENT REPAIRS 2 FEET WIDE.

REPLACEMENT MATERIAL SHALL BE ITEM 448, TYPE 2 MATERIAL AND SHALL BE PLACED AND COMPACTED TO FINISH FLUSH WITH THE ADJACENT PAVEMENT SURFACE. ALL EXISTING PAVEMENT AREAS WHICH WILL BE IN CONTACT WITH THE PARTIAL DEPTH PAVEMENT REPAIR SHALL BE COATED WITH PG GRADE LIQUID ASPHALT (SIDES AND BOTTOM) AT AN APPLICATION RATE OF 0.25 GAL. PER SQ. YD. ALL COMPACTION SHALL BE ACHIEVED BY MECHANICAL METHODS TO THE SATISFACTION OF THE ENGINEER.

PAYMENT SHALL INCLUDE ALL LABOR, EQUIPMENT, AND MATERIALS NECESSARY TO COMPLETE THE PARTIAL DEPTH PAVEMENT REPAIR. PAYMENT WILL BE MADE AT THE UNIT BID PRICE PER SQUARE YARD OF ITEM 251 PARTIAL DEPTH PAVEMENT REPAIR.

PROJECT FEATHERS

A BUTT JOINT AS PER STANDARD DRAWING BP-3.1 SHALL BE USED WHERE THE FEATHER IS ON EXISTING ASPHALT, UNLESS NOTED OTHERWISE IN THE PLANS.

MILLED AREAS FOR BUTT JOINTS SHALL NOT BE LEFT OPEN TO TRAFFIC. BEFORE OPENING TO TRAFFIC, A TEMPORARY ASPHALT CONCRETE WEDGE OF SUFFICIENT LENGTH SHALL BE CONSTRUCTED AT THE DROPOFF AS DIRECTED BY THE ENGINEER. AN ESTIMATED QUANTITY OF ITEM 614 BITUMINOUS CONCRETE FOR MAINTAINING TRAFFIC HAS BEEN PROVIDED FOR THE WEDGE CONSTRUCTION. WHILE TRAFFIC IS PROHIBITED AND BEFORE THE NEW PAVEMENT IS PLACED, THE WEDGE SHALL BE REMOVED AND THE COSTS SHALL BE CONSIDERED INCIDENTAL TO ITEM 614 BITUMINOUS CONCRETE FOR MAINTAINING TRAFFIC. SEE SHEET 7.

PAVEMENT

ITEM 442, ASPHALT CONCRETE SURFACE COURSE, 12.5 MM, TYPE A (446)

ALL LONGITUDINAL PAVEMENT JOINTS SHALL BE CLOSED BEFORE THE END OF EACH WORK WEEK. BEFORE THE JOINT IS EXPOSED TO TRAFFIC, THE CONTRACTOR SHALL ERECT W8-11-36 (UNEVEN LANES) SIGNS. THESE SIGNS SHALL ONLY REMAIN WHILE THE CONDITION EXISTS. PLACEMENT OF THESE SIGNS SHALL BE INCLUDED IN THE UNIT PRICE BID FOR ITEM 614 MAINTAINING TRAFFIC.

IN ADDITION TO SECTION 401.14 AND STANDARD DRAWING BP-3.1, TRANSVERSE, FEATHERED OR BUTT JOINTS SHALL BE SEALED WITH A 6 INCH WIDE BAND OF ASPHALT CEMENT ACROSS THE TOP SURFACE. THE LONGITUDINAL JOINT SHALL BE SEALED WITH ASPHALT CEMENT ON THE VERTICAL FACE AND 6 INCHES WIDE FROM THE VERTICAL FACE ALONG THE INTERMEDIATE COURSE SURFACE BEFORE PAVING. THE COST OF THIS WORK SHALL BE INCLUDED IN THE UNIT PRICE BID FOR THIS ITEM.

ALL OPEN TRANSVERSE JOINTS SHALL BE TAPERED TO MEET EXISTING PAVEMENT BEFORE INTRODUCING TRAFFIC. A "BUMP" SIGN (W-8-1-36) SHALL BE ERECTED ON EACH SIDE OF TRANSVERSE JOINTS LEFT OPEN OVER NIGHT, INCLUDING A SPEED ADVISORY SIGN, AS DIRECTED BY THE ENGINEER. THESE SIGNS SHALL BE REMOVED IMMEDIATELY AFTER JOINT HAS BEEN CLOSED. PLACEMENT OF SIGNS SHALL BE INCLUDED IN THE UNIT PRICE BID FOR ITEM 614 MAINTAINING TRAFFIC.

CARE SHALL BE TAKEN TO MATCH EXISTING PAVEMENT ELEVATIONS AT EXISTING INTERSECTIONS, RAMPS, ETC.

ITEM 442, ASPHALT CONCRETE INTERMEDIATE COURSE, 9.5MM, TYPE A (448)

THIS ITEM SHALL BE USED FOR CORRECTION OF CROWN, PROFILE AND ANY OTHER IRREGULARITIES.

BEFORE THE LONGITUDINAL JOINT IS EXPOSED TO TRAFFIC, THE CONTRACTOR SHALL ERECT W8-11-36 (UNEVEN LANES) SIGNS. THESE SIGNS SHALL ONLY REMAIN WHILE THE CONDITION EXISTS. PLACEMENT OF THESE SIGNS SHALL BE INCLUDED IN THE UNIT PRICE BID FOR ITEM 614 MAINTAINING TRAFFIC.

ALL OPEN TRANSVERSE JOINTS SHALL BE TAPERED TO MEET EXISTING PAVEMENT BEFORE INTRODUCING TRAFFIC.

PAVEMENT

ITEM 617, COMPACTED AGGREGATE, AS PER PLAN

THIS ITEM OF WORK SHALL CONFORM TO ITEM 617 IN THE CONSTRUCTION AND MATERIALS SPECIFICATIONS BOOK WITH EXCEPTION OF 617.02 (MATERIALS).

THE MATERIAL ON THIS PROJECT SHALL BE THE ASPHALT CONCRETE GRINDINGS RESULTING FROM ITEM 254. THE GRINDINGS USED FOR THIS WORK ARE TO BE PLACED AND COMPACTED AS DESCRIBED IN 617.05 WITH SPECIAL CARE TO CREATE PROPER COMPACTION. 100% OF THIS MATERIAL SHALL PASS A 1.5 INCH SIEVE AS JUDGED BY THE ENGINEER. THE CONTRACTOR SHALL TAKE SPECIAL CARE TO MEET THE TYPICAL SECTIONS SHOWN IN THE PLANS AND AS DIRECTED BY THE ENGINEER.

PAYMENT FOR ALL THE ABOVE SHALL BE INCLUDED IN THE UNIT PRICE BID PER CU. YD. OF ITEM 617 COMPACTED AGGREGATE, AS PER PLAN.

ITEM 254 PATCHING PLANED SURFACE

AN ESTIMATED QUANTITY OF ITEM 254, PATCHING PLANED SURFACE HAS BEEN SET UP TO BE USED AS DIRECTED BY THE ENGINEER AS DESCRIBED IN THE CONSTRUCTION AND MATERIALS SPECIFICATIONS MANUAL 254.04. PATCHING DEPTH IS 0 TO 2 IN.

PAVEMENT CORING INFORMATION

CO/ROUTE/SLM	DEPTH/MATERIAL	LOCATION
ERI-2-21.00	3.00" ASPHALT, 8.00" CONCRETE	WB IN
ERI-2-22.00	3.00" ASPHALT, 8.00" CONCRETE	WB IN
ERI-2-23.30	15.00" ASPHALT	EB OUT
ERI-2-23.30	2.5" ASPHALT, 8.00" CONCRETE	EB OUT
ERI-2-23.50	4.00" ASPHALT, 8.00" CONCRETE	EB OUT
ERI-2-23.50	3.00" ASPHALT, 8.00" CONCRETE	EB OUT
ERI-2-23.80	4.50" ASPHALT, 8.00" CONCRETE	EB OUT
ERI-2-23.80	4.00" ASPHALT, 8.00" CONCRETE	EB OUT
ERI-2-23.90	4.00" ASPHALT, 8.00" CONCRETE	EB OUT
ERI-2-24.40	3.50" ASPHALT, 8.00" CONCRETE	EB OUT

ROADWAY

ITEM 209, LINEAR GRADING

THE CONTRACTOR IS REQUIRED TO PERFORM LINEAR GRADING ON THE GRADED SHOULDER IN AREAS WHERE THE GRADED SHOULDER IS AT A HIGHER ELEVATION THAN THE ADJACENT PROPOSED PAVEMENT. A 10:1 SLOPE SHALL BE ESTABLISHED, OR AS DIRECTED BY THE ENGINEER, WHEN PERFORMING ITEM 209 LINEAR GRADING. ALL LABOR AND EQUIPMENT NECESSARY TO PERFORM THE ABOVE WORK SHALL BE INCLUDED IN THE UNIT PRICE BID PER MILE FOR ITEM 209 LINEAR GRADING.

ELEVATION DATUM

ALL ELEVATIONS ARE BASED ON U.S.G.S. DATUM (NGVD 1927).

CONSTRUCTION EQUIPMENT MEDIAN CROSSING

CONSTRUCTION EQUIPMENT SHALL CROSS THE MEDIAN ONLY AT THE EXISTING INTERSECTIONS AND U-TURN CROSSOVERS AND AT OTHER ADDITIONAL LOCATIONS APPROVED BY THE ENGINEER. A MAXIMUM OF TWO (2) ADDITIONAL EQUIPMENT CROSSINGS MAY BE ALLOWED.
THE CONTRACTOR SHALL BE RESPONSIBLE, AT HIS EXPENSE, FOR THE RESTORATION OF THE ADDITIONAL EQUIPMENT CROSSINGS TO A CONDITION AT LEAST EQUAL TO THAT EXISTING PRIOR TO HIS WORK OPERATIONS.
WHEN THE MEDIAN CROSSINGS ARE BEING USED IN THE AREA OF ONE-LANE TRAFFIC OPERATION, THE CONTRACTOR SHALL PROVIDE AT HIS EXPENSE THE SERVICES OF A LAW ENFORCEMENT OFFICER WITH PATROL CAR TO CONTROL TRAFFIC FLOW.

ITEM 659 SEEDING AND MULCHING

THE FOLLOWING QUANTITIES ARE PROVIDED TO PROMOTE GROWTH AND CARE OF PERMANENT SEEDED AREAS:

659, COMMERCIAL FERTILIZER	0.13 TON
659, AGRICULTURAL LIME	0.40 TON
659, WATER	0.01 M GAL.
659, REPAIR SEEDING AND MULCHING	49 SQ. YD.
659, INTER SEEDING	49 SQ. YD.
659, TOPSOIL	108 CU. YD.
659, SOIL ANALYSIS TEST	4 EACH

SEEDING AND MULCHING SHALL BE APPLIED TO ALL AREAS OF EXPOSED SOIL BETWEEN THE RIGHT-OF-WAY LINES. QUANTITY CALCULATIONS FOR SEEDING AND MULCHING ARE BASED ON THESE LIMITS. QUANTITIES ARE CARRIED TO THE GENERAL SUMMARY.

PROFILE AND ALIGNMENT

THE PROPOSED PAVEMENT RESURFACING SHALL FOLLOW THE ALIGNMENT AND PROFILE OF THE EXISTING PAVEMENT.

PAVEMENT CONTROL:

AN AUTOMATIC SCREED CONTROL, HAVING A 20 FT. MINIMUM SKI-ARM, SHALL BE USED FOR PLACING THE SURFACE COURSE ON EXISTING PAVEMENT WIDTHS OF 20 FT. AND OVER.

SPECIAL ATTENTION SHALL BE GIVEN TO SUPER-ELEVATED CURVES. THE SUPER-ELEVATION SHALL BE MAINTAINED AND/OR RESTORED, IF NECESSARY, AS DIRECTED BY THE ENGINEER.

THE CONTRACTOR SHALL MAINTAIN POSITIVE DRAINAGE INTO ALL CATCH BASINS AND INLETS.

ROADWAY

ITEM 832 EROSION CONTROL

THE CONTRACTOR WILL BE PAID UNDER ITEM 832 EROSION CONTROL TO SUPPLY EROSION CONTROL ITEMS FOR THE MINOR GRADING NEEDED AT THE GUARDRAIL LOCATIONS IN THE MEDIAN AND REPAIR WORK AT THE CATCH BASIN LOCATIONS.

THE CONTRACTOR IS NOT REQUIRED TO SUPPLY A STORM WATER POLLUTION PREVENTION PLAN SINCE LESS THAN AN ACRE OF EARTH WILL BE DISTURBED.

ITEM 832 EROSION CONTROL 1000 EACH
CARRIED TO THE GENERAL SUMMARY.

WORK WITHIN EXISTING RIGHT-OF-WAY

ALL WORK SHALL BE PERFORMED WITHIN THE EXISTING RIGHT-OF-WAY LOCATIONS ON THIS PROJECT.

TRAFFIC CONTROL

ITEM 621 RPM, AS PER PLAN

MATERIALS SUPPLIED BY THE DEPARTMENT
ALL MATERIALS ARE TO BE CONTRACTOR FURNISHED, EXCEPT THAT THE DEPARTMENT SHALL SUPPLY RPM MATERIALS (CASTINGS AND REFLECTORS) IN THE QUANTITIES SHOWN HEREIN TO THE CONTRACTOR. THE ABOVE WORK INCLUDING ALL LABOR, MATERIALS, AND EQUIPMENT TO INSTALL THE DEPARTMENT SUPPLIED RPM MATERIALS SHALL BE PAID FOR UNDER ITEM 621 RPM, AS PER PLAN.

AT THE PRE-CONSTRUCTION CONFERENCE AN AUTHORIZATION FOR PICK UP FORM WILL BE FURNISHED BY THE DISTRICT CONSTRUCTION ADMINISTRATOR. THE CONTRACTOR SHALL PICK UP DEPARTMENT SUPPLIED RPM MATERIALS AT THE DISTRICT THREE HEADQUARTERS IN ASHLAND, OHIO FOR TRANSPORT TO THE WORK SITE OR TO THE CONTRACTOR'S STORAGE FACILITY. THE RECYCLED RAISED PAVEMENT MARKER (RPM) AUTHORIZATION FORM IS TO BE SIGNED BY THE DISTRICT CONSTRUCTION ENGINEER PRIOR TO PICK UP OF THE RPMS. THE CONTRACTOR SHALL NOTIFY THE DISTRICT AND / OR THE PARTIES LISTED ON THE AUTHORIZATION FORM IN WRITING AT LEAST FIVE (5) CALENDAR DAYS PRIOR TO PICK UP OF THE DEPARTMENT SUPPLIED MATERIALS. THE CONTRACTOR SHALL STORE THE RPMS WITHOUT DAMAGE OR CONTAMINATION WITH FOREIGN MATTER. A DEDUCTION IN THE AMOUNT OF THE ACTUAL COST TO THE DEPARTMENT SHALL BE MADE FOR MATERIALS DAMAGED BY THE CONTRACTOR OR FOR CASTINGS RECEIVED BY THE CONTRACTOR WHICH WERE NOT INSTALLED AND WERE NOT RETURNED TO THE DEPARTMENT.

RETURN OF NON-PERFORMED RAISED PAVEMENT MARKER MATERIALS SUPPLIED BY THE DEPARTMENT.
RAISED PAVEMENT MARKER MATERIALS SUPPLIED BY THE DEPARTMENT, THAT ARE NON-PERFORMED SHALL BE CAREFULLY REPACKED OR PACKED IN THE BOXES IN THE SAME STYLE AND QUANTITY AS ORIGINALLY RECEIVED FROM THE DEPARTMENT. CASTING STYLES SHALL NOT BE MIXED WITHIN ANY ONE CONTAINER. THE CONTRACTOR SHALL CLEARLY MARK ON THE OUTSIDE OF EACH CONTAINER, THE COLOR OF THE PRISMATIC RETRO-REFLECTOR, AND THE STYLE OF CASTING. BOXES SHALL BE PLACED ON SKIDS OR PALLETS IN THE SAME STYLE (LOW PROFILE OR CONVENTIONAL, REFLECTORISED OR NON REFLECTORISED) AND NO MORE THAN 420 RPMS (OR 21 BOXES) ON ONE SKID.

ONLY USE THE BOXES SUPPLIED BY THE RAISED PAVEMENT MARKER RECYCLER. BOXES MUST BE MARKED WITH THE RECYCLER'S PART OR CATALOG NUMBER AND THE PROJECT NUMBER. BOXES NOT MARKED WITH THE PROPER RECYCLER'S CATALOG OR PART NUMBERS, AND THE DEPARTMENT'S PROJECT NUMBER WILL NOT BE ACCEPTED.

NON PERFORMED MATERIALS WILL BE RETURNED TO THE LOCATION AS SPECIFIED BY THE DISTRICT CONSTRUCTION ENGINEER WITHIN 30 DAYS OF THE COMPLETION OF THE PROJECT.

THE ABOVE WORK INCLUDING ALL LABOR, EQUIPMENT AND MATERIAL NEEDED TO PERFORM THE WORK, SHALL BE CONSIDERED INCIDENTAL TO THE RESPECTIVE PAY ITEM.

IF THE DEPARTMENT HAS TO REPACKAGE THE RPMS CORRECTLY, THE CONTRACTOR WILL BE ASSESSED THE ACTUAL COST FOR REPACKAGING THE MATERIALS BY THE DEPARTMENT'S FORCES.

LOADING OF MATERIALS SUPPLIED BY THE DEPARTMENT
TRUCKS SHALL NOT HAVE ANY OBSTRUCTIONS OR PROTRUSIONS THAT PREVENT THE LOADING BY A STANDARD FORKLIFT OR LIFT TRUCK. SEMI TRUCKS OR 20 FOOT COMMERCIAL TRUCKS ARE THE MOST APPROPRIATE TRUCKS FOR LOADS IN EXCESS OF 4 PALLETS (ONE PALLET - 21 BOXES - 2100 LBS).

STAKE BODY TRUCKS ARE APPROPRIATE TO LOAD LESS LOAD AND THE LOAD CAN BE SAFELY SECURED FOR TRANSPORT BY CHAINING OR STRAPPING DOWN AS NEEDED.

PICKUP TRUCKS ARE APPROPRIATE FOR LOADS OF APPROXIMATELY ONE PALLET, PROVIDED THE PICKUP TRUCK IS RATED FOR THE LOAD AND THE LOAD CAN BE SAFELY SECURED FOR TRANSPORT.

DUMP TRUCKS, TILT BED TRUCKS, AND NON COMMERCIAL MOVING VANS WILL NOT BE LOADED.

THE WAREHOUSE SUPERVISOR WILL REFUSE TO LOAD ANY TRUCK THAT IS UNSAFE TO LOAD OR UNSUITABLE FOR THE LOAD BEING PLACED ON THE TRUCK.

GENERAL NOTES

1. It is intended that this drawing be used for treatment of drop-offs that develop during construction operations, and that are not otherwise provided for in the construction plans. The suggested treatments are intended for high volume projects that will last at least seven days and have an active work zone 1 mile [1.6 km] or less in length. For guidance on the use of this sheet, see L&D Manual Volume One, Section 500. Where the plans do not provide specific items for labor, equipment, or materials to implement the drop-off treatments specified hereon, they shall be included for payment in the lump sum bid for **Item 614 - Maintaining Traffic.**
2. While the need for certain advisory signing is noted hereon, it is not intended that this be indicative of all signing that may be required to advise or warn motorists, and all requirements of the Ohio Manual of Uniform Traffic Control Devices (OMUTCD) must be fulfilled.
3. In urban or otherwise heavily developed areas where pedestrians and/or bicyclists may be present in significant numbers, additional signing and protective measures other than those shown hereon may be required.
4. The drop-off treatment selected for use at any given location shall be as appropriate for the prevailing conditions at the site.
5. Where concrete barrier is specified, it shall be in accordance with **SCD RM-4.2** and Item 622.
6. When drums are specified for a drop-off condition, a minimum number of four drums shall be used. Spacing shall be as indicated in the plans or as specified in the OMUTCD.
7. When OW-151 (Low Shoulder) signs or OW-171 (Uneven Lanes) and OWP-171 signs are required, they shall be placed 750' [230 m] in advance of the condition, on all intersecting entrance ramps within the limits of the condition and immediately beyond all intersecting roadways within the limits of the condition. When the drop-off condition extends more than 0.5 mile [800 m], additional signs should be erected at intervals of 1.0 mile [1600 m] or less.
8. For locations, such as at ramps, lane shifts, lane closures, etc., where traffic is required to negotiate a difference in elevation between pavements, a 3:1 slope treatment similar to the Optional Wedge Treatment shall be provided.
9. Portable concrete barrier shall be placed on the same level as the traffic surface and shall not encroach on lane width(s) designated as the minimum required for traffic use. Where drums are used, and their presence would reduce traveled lane widths to less than 10' [3.0 m], drums may be placed on the opposite level from that of traffic provided the dropoff depth does not exceed 5" [125] and approval is granted by the Project Engineer.
10. Pavement Repairs (or similar work):
    a. Lengths greater than 60' [18 m] - utilize appropriate treatment from Condition I.
    b. Lengths of 60' [18 m] or less - repairs shall be effected in accordance with CMS 255.08. Drums may be used as a separator adjacent to the traveled lane.

OPTIONAL WEDGE TREATMENT
(MILLING OR RESURFACING)

1. This treatment may be used when permitted for Condition I only.
2. OW-171 and OWP-171 signs required.

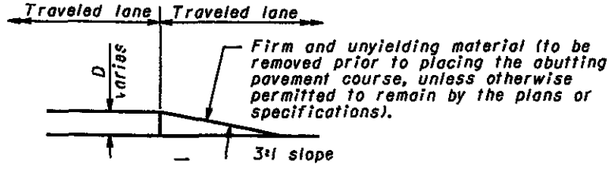

CONDITION I
DROP-OFFS BETWEEN TRAVELED LANES

1. These treatments are to be used for resurfacing, pavement planing, excavation, etc. between or within traveled lanes.

D	Treatment
≤1½" [≤40]	Erect OW-171 and OWP-171 signs.
1½"-3" [40-75]	1) Lane closure utilizing drums* as shown below OR 2) Optional Wedge Treatment
>3"-5" [>75-125]	Lane closure utilizing drums as shown below.
>5" [>125]	Lane closure utilizing portable concrete barrier as shown below.

* Cones may be used for daytime only conditions.

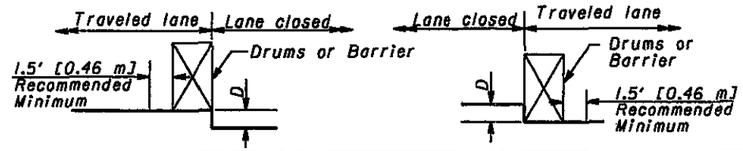

CONDITION II
DROP-OFFS WITHIN GRADED SHOULDER AREA

1. The treatments indicated below are for use in conjunction with resurfacing, planing, or excavations within the graded shoulder area.
2. The graded shoulder area is that flat or gradually sloping area between the edge of a normally traveled lane and the more steeply sloping ditch foreslope or embankment slope. Its surface may be soil or turf, and/or it may be inclusive of a "treated" area (improved with aggregates, asphaltic materials or concrete). For the purpose herein, its maximum width shall be considered to be 12' [3.6 m].

D	Treatment
≤1½" [≤40]	1) If edgelines are present, no treatment is necessary OR 2) Erect OW-171 and OWP-171 signs.
>1½"-5" [>40-125]	1) If minimum lane width* requirements can be met, maintain lanes utilizing drums as shown below OR 2) If minimum. lane width* requirements cannot be met, close adjacent lane utilizing drums OR 3) Optional Shoulder Treatment.
>5"-12" [125-305] Daylight only	If minimum lane width* requirements can be met, maintain lanes utilizing drums as shown below.
>5"-24" [>125-610]	1) If minimum lane width* requirements can be met, maintain lanes utilizing portable concrete barrier as shown below. OR 2) If minimum lane width* requirements cannot be met, close adjacent lane utilizing drums.
>24" [>610]	Lane closure utilizing portable concrete barrier as shown below.

* Minimum lane widths shall be 10' [3.0 m] unless otherwise specified in the plans.

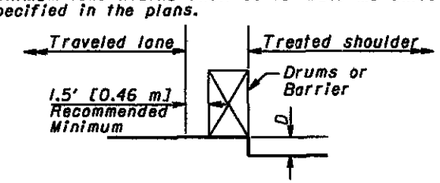

OPTIONAL SHOULDER TREATMENT

1. This treatment may not be used within a bituminous shoulder where a hot longitudinal joint per CMS 401.15 is required.
2. OW-151 signs required.

CONDITION III
DROP-OFFS BEYOND GRADED SHOULDER OR BACK OF CURB

1. See Note 2 under Condition II.
2. Use Chart A or B below, as applicable.

CHART A

USE FOR: 1. Uncurbed Facilities.
2. Curbed Facilities, where:
   a. Curbs are less than 6" [150] in height.
   b. Curbs are 6" [150] or greater in height and the legal speed is greater than 40 mph [70 km/h].

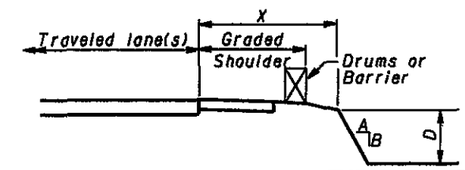

X	D	A/B	Treatment Required	
			Day	Night
0-4' [0-1.2 m]	Any	Any	(a)	(a)
4'-30' [1.2-9.1 m]	Any	3:1 or Flatter	None	None
4'-12' [1.2-3.6 m]	≤3" [≤75]	Steeper than 3:1	None	None
4'-12' [1.2-3.6 m]	>3"-≤12" [>75-≤305]	Steeper than 3:1	Drums	Drums
4'-12' [1.2-3.6 m]	>12" [>305]	Steeper than 3:1	Drums	Barrier
>12'-20' [>3.6-6.1 m]	<12" [<305]	Steeper than 3:1	None	None
>12'-20' [>3.6-6.1 m]	>12"-≤24" [>305-≤610]	Steeper than 3:1	Drums	Drums
>12'-20' [>3.6-6.1 m]	>24" [>610]	Steeper than 3:1	Drums	Barrier
>20'-30' [>6.1-9.1 m]	<24" [<610]	Steeper than 3:1	None	None
>20'-30' [>6.1-9.1 m]	>24" [>610]	Steeper than 3:1	Drums	Barrier
>30' [>9.1 m]	Any	Any	None	None
(a) Use treatment specified under Condition II.				

CHART B

USE FOR: Curbed facilities, where the curb is 6" [150] or greater in height and the legal speed is 40 mph [70 km/h] or less.

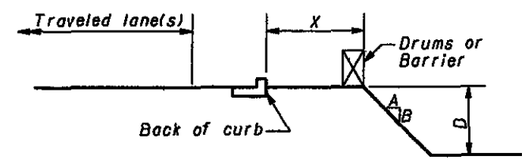

X	D	A/B	Treatment Required	
			Day	Night
0-10' [0-3.0 m]	<12" [<305]	Any	None	Drums
0-10' [0-3.0 m]	>12" [>305]	Any	Drums	Drums
>10' [>3.0 m]	Any	Any	None	None

NOTE: All metric dimensions (in brackets [ ]) are in millimeters unless otherwise noted.

DESIGN FILE: I:\projects\78483\78483mm000.dgn
WORKSTATION: sjzwik DATE: 2/28/2007

8

02-13-01

DROPOFFS IN WORK ZONES

OFFICE OF TRAFFIC ENGINEERING

ERI-2-20.10

GENERAL SUMMARY

Calcd By SCJ
Chkd By MJS

9	10	13	NA	17	18	19	Item	Ext	Grand Total	Unit	Description	Ref
											ROADWAY	
					725	762.5	202	38000	1,487.50	FT	GUARDRAIL REMOVED	
					2,088	700	202	38200	2,788.00	FT	GUARDRAIL REMOVED FOR REUSE	
					50	50	202	38300	100.00	FT	GUARDRAIL REMOVED, BARRIER DESIGN	
					1	1	202	42210	2	EACH	ANCHOR ASSEMBLY REMOVED, BARRIER DESIGN	
					368	380	202	54000	748	EACH	RAISED PAVEMENT MARKER REMOVED	
					40	40	203	10000	80	CU YD	EXCAVATION	
					40	40	203	20000	80	CU YD	EMBANKMENT	
					24.26	11 89	209	15000	36.15	STATION	RESHAPING UNDER GUARDRAIL	
					250	300	606	13000	550.00	FT	GUARDRAIL, TYPE 5	
					100	100	606	13050	200.00	FT	GUARDRAIL, TYPE 5A	
					2113	713	606	16500	2,826.00	FT	GUARDRAIL REBUILT, TYPE 5	
					3	3	606	22000	6	EACH	ANCHOR ASSEMBLY, TYPE B-98	
					6	4	606	26500	10	EACH	ANCHOR ASSEMBLY, TYPE T	
					3	4	606	35000	7	EACH	BRIDGE TERMINAL ASSEMBLY, TYPE 1	
					1		606	35100	1	EACH	BRIDGE TERMINAL ASSEMBLY, TYPE 2	
				909			617	10101	909	CU YD	COMPACTED AGGREGATE, AS PER PLAN	11
					120	120	622	10160	240	FT	CONCRETE BARRIER, SINGLE SLOPE, TYPE D	
					2	2	622	25000	4	EACH	CONCRETE BARRIER END SECTION, TYPE D	
											EROSION CONTROL	
		4					659	00100	4	EACH	SOIL ANALYSIS TEST	
		108					659	00300	108	CU YD	TOPSOIL	
					975	975	659	00510	1,950	SQ YD	SEEDING AND MULCHING, CLASS 2	
		49					659	14000	49	SQ YD	REPAIR SEEDING AND MULCHING	
		49					659	15000	49	SQ YD	INTER-SEEDING	
		0 13					659	20000	0 13	TON	COMMERCIAL FERTILIZER	
		0.40					659	31000	0.40	ACRE	LIME	
		0.01					659	35000	0.01	M GAL	WATER	
		1000					832	30000	1,000	EACH	EROSION CONTROL	
											DRAINAGE	
4							604	09000	4	EACH	CATCH BASIN ADJUSTED TO GRADE	
											PAVEMENT ITEMS	
	7,500						251	01000	7,500	SQ YD	PARTIAL DEPTH PAVEMENT REPAIR	
				200,049			254	01000	200,049	SQ YD	PAVEMENT PLANING, ASPHALT CONCRETE (1.5")	
				1,999			254	01600	1,999	SQ YD	PATCHING PLANED SURFACE	
				4,500			255	10150	4,500	SQ YD	FULL DEPTH PAVEMENT REMOVAL AND RIGID REPLACEMENT, CLASS MS	
				20,250			255	20000	20,250	FT	FULL DEPTH PAVEMENT SAWING	
				16,004			407	10000	16,004	GALLON	TACK COAT	
				13,351			407	14000	13,351	GALLON	TACK COAT FOR INTERMEDIATE COURSE	
				6,814			408	10000	6,814	GALLON	PRIME COAT	
				11,125			442	10000	11,125	CU YD	ASPHALT CONCRETE SURFACE COURSE, 12.5MM, TYPE A (446)	
				6,946			442	20100	6,946	CU YD	ASPHALT CONCRETE INTERMEDIATE COURSE, 9.5MM, TYPE A (448)	
				18,607			617	20000	18,607	SQ YD	SHOULDER PREPARATION	
				60,406			618	40100	60,406	FT	RUMBLE STRIPS, (ASPHALT CONCRETE)	

GENERAL SUMMARY

ERI-2-20.10

I:/PROJECTS/78483//78483gg001.XLS
4/30/07 10:13 AM

GENERAL SUMMARY

5	7	8			18	19	20	21	22	Item	Ext	Grand Total	Unit	Description	Ref
														TRAFFIC CONTROL	
								352	357	621	00101	709	EACH	RPM, AS PER PLAN	12
					34	16				626	00100	50	EACH	BARRIER REFLECTOR, TYPE A (WHITE)	
					9	9				626	00100	18	EACH	BARRIER REFLECTOR, TYPE A (YELLOW)	
					4	4				626	00200	8	EACH	BARRIER REFLECTOR, TYPE B (WHITE)	
							10			630	02100	10	FT	GROUND MOUNTED SUPPORT, NO. 2 POST	
							1			630	85100	1	EACH	REMOVAL OF GROUND MOUNTED SIGN AND REERECTION	
								6.64	6.65	644	00100	13.29	MILE	EDGE LINE (WHITE)	
								6.49	6.51	644	00100	13.00	MILE	EDGE LINE (YELLOW)	
								5.88	5.91	644	00200	11.79	MILE	LANE LINE	
								760	898	644	00400	1,658	FT	CHANNELIZING LINE	
								127	122	644	00500	249	FT	STOP LINE	
								897	1059	644	00700	1,956	FT	TRANSVERSE/DIAGONAL LINE	
														MAINTENANCE OF TRAFFIC	
	40									614	11100	40	HOUR	LAW ENFORCEMENT OFFICER WITH PATROL CAR	
		5								614	11500	5	MONTH	WORKSITE TRAFFIC SUPERVISOR	
	12									614	12460	12	EACH	WORK ZONE MARKING SIGN	
	25									614	12600	25	EACH	REPLACEMENT DRUM	
40	25									614	13000	65	CU YD	ASPHALT CONCRETE FOR MAINTAINING TRAFFIC	
								17.65	19.52	614	20100	37.17	MILE	WORK ZONE LANE LINE, CLASS I, 642 PAINT	
								2,281	2693	614	23200	4,974	FT	WORK ZONE CHANNELIZING LINE, CLASS I, 642 PAINT	
								381	366	614	26200	747	FT	WORK ZONE STOP LINE, CLASS I, 642 PAINT	
														STRUCTURES (OVER 20')	
														STRUCTURE NO. ERI-2-2082 (SFN 2201062) SEE SHEET 26	
														STRUCTURE NO. ERI-2-2156 L (SFN 2201127) SEE SHEET 26	
														STRUCTURE NO. ERI-2-2156 R (SFN 2201135) SEE SHEET 26	
														STRUCTURE NO. ERI-2-2222 (SFN 2202611) SEE SHEET 27	
														STRUCTURE NO. ERI-2-2338 (SFN 2204681) SEE SHEET 27	
														STRUCTURE NO. ERI-2-2410 L (SFN 2204711) SEE SHEET 27	
														STRUCTURE NO. ERI-2-2410 R (SFN 2204738) SEE SHEET 27	
														STRUCTURE NO. ERI-2-2421 L (SFN 2204754) SEE SHEET 28	
														STRUCTURE NO. ERI-2-2421 R (SFN 2204762) SEE SHEET 28	
														STRUCTURE NO. ERI-2-2522 (SFN 2204789) SEE SHEET 28	
										614	11000	LUMP		MAINTAINING TRAFFIC	
										619	16010	8	MONTH	FIELD OFFICE, TYPE B	
										623	10000	LUMP		CONSTRUCTION LAYOUT STAKES	
										624	10000	LUMP		MOBILIZATION	

Calcd By SCJ Chkd By MJS

GENERAL SUMMARY

ERI-2-20.10

I:/PROJECTS/18296//18296gg001.XLS
D03-CADD-SC
2/28/07 2:22 PM

DIRECTION	ROUTE	LOG POINT TO LOG POINT (STRAIGHT LINE MILEAGE)		LENGTH MILE	LENGTH FEET	WIDTH FEET AVG	TYPICAL	PAVEMENT AREA (SQ YD)	254 PAVEMENT PLANING, ASPHALT CONCRETE (1.25") (SQ.YD)	254 PATCHING PLANED SURFACE (SQ.YD)	407 TACK COAT @ 0.08 GAL/SY (GALLON)	407 TACK COAT FOR INTERM. COURSE @ 0.05 GAL/SY (GALLON)			442 ASPHALT CONCRETE INTERMEDIATE COURSE, 9.5 MM, TYPE A, (448) INCH	442 ASPHALT CONCRETE INTERMEDIATE COURSE, 9.5 MM, TYPE A, (448) CU.YD.	442 ASPHALT CONCRETE SURFACE COURSE, 12.5 MM, TYPE A (446) INCH	442 ASPHALT CONCRETE SURFACE COURSE, 12.5 MM, TYPE A (446) CU.YD.	617 COMPACTED AGGREGATE, AS PER PLAN (2' wide) 1.75 INCHES AVG THICKNESS (CU YD)	255 FULL DEPTH PAVEMENT REMOVAL AND RIGID REPLACEMENT, CLASS MS (SQ YD)	255 FULL DEPTH PAVEMENT SAWING (FT)	408 PRIME COAT @ 0.40 GAL/SY (GALLON)	251 PARTIAL DEPTH PAVEMENT REPAIR (SQ YD)	617 SHOULDER PREPARATION (SQ.YD)	618 RUMBLE STRIPS, (ASPHALT CONCRETE) (FT)
	NOTE: DO NOT PAVE BRIDGES WITH CONCRETE DECKS; USE BUTT JOINT AND TAPERED PLANING																									
EB	SR-2	20.10	25.81	5.71	30148.8	26.0	1	87,097	87,097	871	6,968				1.25	3,024										
EB	SR-2	20.10	25.81	5.71	30148.8	36.0	1	120,595				6,030					1.50	5,025	326				2680		6,700	30,149
WB	SR-2	20.10	25.81	5.71	30148.8	26.0	1	87,097	87,097	871	6,968				1.25	3,024										
WB	SR-2	20.10	25.81	5.71	30148.8	36.0	1	120,595				6,030					1.50	5,025	326				2680		6,700	30,149
EB	Ramp-7	20.670	20.864	0.19	1022.2	22.0	2	2,499	2,499	25	200	125			1.25	87	1.50	104	22				182		454	
EB	Ramp-7	Decel	20.518	0.15	800.4	12.0		1,067	1,067	11	85	53			1.25	37	1.50	44	9				71		178	
EB	Ramp-9	21.030	20.943	0.09	460.9	22.0	2	1,127	1,127	11	90	56			1.25	39	1.50	47	10				82		204	
EB	Ramp-9	Accel	21.338	0.31	1626.2	8.0		1,446	1,446	14	116	72			1.25	50	1.50	60	18				145		361	
WB	Ramp-6	20.631	20.736	0.11	556.5	22.0	2	1,360	1,360	14	109	68			1.25	47	1.50	57	12				99		248	
WB	Ramp-6	Accel	20.325	0.31	1615.7	12.0		2,154	2,154	22	172	108			1.25	75	1.50	90	17				144		359	
WB	Ramp-8	20.988	20.792	0.20	1035.4	22.0	2	2,531	2,531	25	202	127			1.25	88	1.50	105	22				184		460	
WB	Ramp-8	Decel	21.140	0.15	800.4	8.0		711	711	7	57	36			1.25	25	1.50	30	9				71		178	
EB	Ramp-11	22.027	22.185	0.16	836.4	22.0	2	2,045	2,045	20	164	102			1.25	71	1.50	85	18				149		372	
EB	Ramp-11	Decel	21.875	0.15	800.4	12.0		1,067	1,067	11	85	53			1.25	37	1.50	44	9				71		178	
EB	Ramp-D	22.404	22.195	0.21	1103.5	22.0	2	2,697	2,697	27	216	135			1.25	94	1.50	112	24				196		490	
EB	Ramp-D	Accel	22.712	0.31	1626.2	8.0		1,446	1,446	14	116	72			1.25	50	1.50	60	18				145		361	
WB	Ramp-10	22.053	22.204	0.15	796.2	22.0	2	1,946	1,946	19	156	97			1.25	68	1.50	81	18				142		354	
WB	Ramp-10	Accel	21.746	0.31	1623.6	12.0		2,165	2,165	22	173	108			1.25	75	1.50	90	18				144		361	
WB	Ramp-C	22.402	22.214	0.19	993.7	22.0	2	2,429	2,429	24	194	121			1.25	84	1.50	101	22				177		442	
WB	Ramp-C	Decel	22.554	0.15	800.4	8.0		711	711	7	57	36			1.25	25	1.50	30	9				71		178	
	DEDUCT FOR MAINLINE STRUCTURES							2998	(2998)	(30)	(240)	(150)			1.25	(104)	1.50	(125)	(4)				(1199)		(187)	108
	EXTRA AREA FOR MEDIAN CROSSOVER AT SLM 21.73							726	726	7	58	36			1.25	25	1.50	30	3				290		108	
	EXTRA AREA FOR MEDIAN CROSSOVER AT SLM 22.83							726	726	7	58	36			1.25	25	1.50	30	3				290		108	
	TOTALS			**25.96**	**137094**				**200,049**	**1,999**	**16,004**	**13,351**				**6,946**		**11,125**	**909**	**4,500**	**20,250**	**6,814**	**7,500**	**18,607**	**60,406**	

AN ESTIMATED QUANTITY OF 6' X 12' JOINT REPAIRS, EXACT SIZE AND LOCATIONS TO BE AS DIRECTED BY ENGINEER

AN ESTIMATED QUANTITY OF 6' X 12' PAVEMENT REPAIRS, EXACT SIZE AND LOCATIONS TO BE AS DIRECTED BY ENGINEER

CALC BY SCJ
CHK'D BY EAH

PAVEMENT & SHOULDER DATA

ERI-2-20.10

ODOT D-03 CADD Workstation: sjuzwik
2/28/07 2:22 PM
i:/projects/78483/78483gc001.xls

EASTBOUND GUARDRAIL QUANTITIES

BEGIN SLM	END SLM	LOCATION	SIDE	202 GUARDRAIL REMOVED (FT)	202 GUARDRAIL REMOVED, BARRIER DESIGN (FT)	202 ANCHOR ASSEMBLY REMOVED, TYPE A (EACH)	202 ANCHOR ASSEMBLY REMOVED, BARRIER DESIGN (EACH)	202 GUARDRAIL REBUILT, TYPE 5 (FT)	203 EXCAVATION (CU YD)	203 EMBANKMENT (CU YD)	202 GUARDRAIL REMOVED FOR REUSE (FT)	209 RESHAPING UNDER GUARDRAIL (STA)	606 GUARDRAIL, TYPE 5 (FT)	606 GUARDRAIL, TYPE 5A (FT)	606 ANCHOR ASSEMBLY, TYPE B-98 (EACH)	606 ANCHOR ASSEMBLY, TYPE E-98 (EACH)	606 ANCHOR ASSEMBLY, TYPE T (EACH)	606 BRIDGE TERMINAL ASSEMBLY, TYPE 1 (EACH)	606 BRIDGE TERMINAL ASSEMBLY, TYPE 2 (EACH)		622 CONCRETE BARRIER, SINGLE SLOPE, TYPE D (FT)	622 CONCRETE BARRIER END SECTION, TYPE D (EACH)	626 BARRIER REFEFLECTOR, TYPE A (WHITE) (EACH)	626 BARRIER REFEFLECTOR, TYPE A (YELLOW) (EACH)	626 BARRIER REFEFLECTOR, TYPE B (WHITE) (EACH)	626 BARRIER REFEFLECTOR, TYPE B (YELLOW) (EACH)	659 SEEDING AND MULCHING, CLASS 2 (SQ YD)
20.806	20.827	BRG OH	RT					75.0			75.0	1.25						1					3				
20.827	20.848	Berlin Rd		112.5																	60	1			2		
20.807	20.829	BRG OH	MED	125					10	10		1.50	50	50	1		1							3			225
20.829	20.839	Berlin Rd	MED	50																							100
R-21.259	21.330	RAMP 9	RT					337.5			337.5	3.75					1						5				
21.515	21.557	ML BRG	RT					187.5			187.5	2.50											4				
21.517	21.551	Old Woman Cr	MED	100	50		1		20	20			137.5		1			1						3			325
21.658	21.762	ML BRG	RT	37.5				512.5			512.5	5.75	25				1		1				7				
22.194	22.215	BRG OH	RT					75.0			75.0							1					3				
22.215	22.237	SR-61	RT	112.5																	60	1			2		
22.209	22.232	BRG OH	MED	125.0					10	10			37.5	50	1		1							3			250
22.232	22.240	SR-61	MED	37.5																							75
22.709	22.816		RT	12.5				500.0			487.5	5.13					1						6				
22.994	23.086		RT	12.5				425.0			412.5	4.38					1						6				
TOTALS CARRIED TO GENERAL SUMMARY				725.00	50.00	0	1	2113	40	40	2088	24.26	250	100.00	3	0	6	3	1		120	2	34	9	4	0	975

CALC BY: SCJ
CHK'D BY: EAH

GUARDRAIL SUB-SUMMARY (EASTBOUND)

ERI-2-16.13

4/30/07 12:00 AM I:\projects\78483\78483gc002.xls CAD-scj

WESTBOUND GUARDRAIL QUANTITIES

BEGIN SLM	END SLM	LOCATION	SIDE	202 GUARDRAIL REMOVED (FT)	202 GUARDRAIL REMOVED, BARRIER DESIGN (FT)	202 ANCHOR ASSEMBLY REMOVED, TYPE A (EACH)	202 ANCHOR ASSEMBLY REMOVED, BARRIER DESIGN (EACH)	202 GUARDRAIL REBUILT, TYPE 5 (FT)	203 EXCAVATION (CU YD)	203 EMBANKMENT (CU YD)	202 GUARDRAIL REMOVED FOR REUSE (FT)	209 RESHAPING UNDER GUARDRAIL (STA)	606 GUARDRAIL, TYPE 5 (FT)	606 GUARDRAIL, TYPE 5A (FT)	606 ANCHOR ASSEMBLY, TYPE B-98 (EACH)	606 ANCHOR ASSEMBLY, TYPE E-98 (EACH)	606 ANCHOR ASSEMBLY, TYPE T (EACH)	606 BRIDGE TERMINAL ASSEMBLY, TYPE 1 (EACH)	606 BRIDGE TERMINAL ASSEMBLY, TYPE 2 (EACH)		622 CONCRETE BARRIER, SINGLE SLOPE, TYPE D (FT)	622 CONCRETE BARRIER END SECTION, TYPE D (EACH)	626 BARRIER REFEFLECTOR, TYPE A (WHITE) (EACH)	626 BARRIER REFEFLECTOR, TYPE A (YELLOW) (EACH)	626 BARRIER REFEFLECTOR, TYPE B (WHITE) (EACH)	626 BARRIER REFEFLECTOR, TYPE B (YELLOW) (EACH)	659 SEEDING AND MULCHING, CLASS 2 (SQ YD)
20.840	20.820	BRG OH	RT					75.0			75.0	0.75						1						3				
20.820	20.799	Berlin Rd	RT	112.5																	60	1				2		
20.839	20.816	BRG OH	MED	125					10	10		1.50	50	50	1		1								3			225
20 816	20.807	Berlin Rd	MED	50																								100
21.335	21.278		RT	12.5				250.0			237.5	2.63					1							3				
21.599	21 580	ML BRG	RT	25				62.5			62.5	1.13	25				1							3				
21.612	21.574	Old Woman Cr	MED	125	50		1		20	20		2.13	162.5		1			1							3			325
R-22.152	R-22.204	RAMP 10	RT	12.5				275.0			275.0	3.00						1						4				
22.257	22.235	BRG OH	RT	25				50.0			50.0	0.75	25					1						3				
22.235	22.214	SR-61	RT	112.5																	60	1				2		
22.240	22.217	BRG OH	MED	125.0					10	10			37.5	50	1		1								3			250
22.217	22.209	SR-61	MED	37.5																								75
TOTALS CARRIED TO GENERAL SUMMARY				762.50	50.00	0	1	712.5	40	40	700	11.89	300	100.00	3	0	4	4	0		120	2	16	9	4	0	975	

CALC BY: SCJ
CHK'D BY EAH

GUARDRAIL SUB-SUMMARY (WESTBOUND)

ERI-2-16.13

4/30/07 12:00 AM I:\projects\78483\78483gc002.xls CAD-scj

ITEM 202 - ANCHOR ASSEMBLY REMOVED, BARRIER DESIGN

THIS ITEM SHALL INCLUDE THE REMOVAL OF THE EXISTING BARRIER DESIGN, TYPE A, ANCHOR ASSEMBLY INCLUDING ALL POSTS, HARDWARE, RAIL ELEMENTS, AND CONCRETE ANCHORS. ALL ITEMS REMOVED SHALL BECOME THE PROPERTY OF THE CONTRACTOR AND SHALL BE PROPERLY DISPOSED OF.

THE EXISTING CONCRETE ANCHOR AND CONCRETE AT POSTS SHALL BE REMOVED ENTIRELY. ALL HOLES REMAINING AFTER REMOVAL SHALL BE FILLED WITH GRANULAR MATERIAL OR EXCESS MATERIAL RESULTING FROM GUARDRAIL CONSTRUCTION. ALL FILL MATERIAL SHALL BE THOROUGHLY COMPACTED AND LEVELED, AS DIRECTED BY THE ENGINEER.

PAYMENT FOR ALL OF THE ABOVE SHALL BE INCLUDED IN THE UNIT BID PRICE FOR ITEM 202, ANCHOR ASSEMBLY REMOVED, BARRIER DESIGN.

ITEM 209 - RESHAPING UNDER GUARDRAIL:

THIS ITEM SHALL BE USED AT LOCATIONS INDICATED IN THE PLANS.

THIS WORK SHALL BE COMPLETED AS PER CMS 209.05 AND AS DESCRIBED HEREIN, AND SHALL AT ALL TIMES BE AS DIRECTED BY THE ENGINEER.

THE AREA IN FRONT OF THE GUARDRAIL SHALL BE GRADED AND RESHAPED TO PROVIDE AN AREA THAT HAS A SLOPE OF 10:1 MAX.

EXCESS MATERIAL RESULTING SHALL BE USED ELSEWHERE FOR THIS ITEM IF SO DIRECTED OR DISPOSED OF PROPERLY. IF EXTRA MATERIAL IS REQUIRED IT SHALL BE PAID FOR WITH ITEM 203 - EMBANKMENT, AS PER PLAN. THIS WORK SHALL NOT BE STARTED UNTIL AFTER THE RESURFACING AND BERM WORK HAS BEEN COMPLETED.

THE ABOVE WORK SHALL BE PAID FOR PER STATION WITH ITEM 209, RESHAPING UNDER GUARDRAIL.

LOCATIONS OF GUARDRAIL

THE GUARDRAIL PROTECTION PROVIDED IN THIS PLAN SHALL BE LOCATED IN THE FIELD TO ASSURE THAT THE INSTALLATION WILL AFFORD THE MAXIMUM PROTECTION FOR TRAFFIC. THIS LOCATION SHALL BE POSITIONED AS FAR AS POSSIBLE FROM THE EDGE OF PAVEMENT WHILE MAINTAINING PROPER GRADE IN FRONT OF GUARDRAIL AS PER STANDARD DRAWINGS.

ITEM 606 - GUARDRAIL REBUILT, TYPE 5

THIS ITEM SHALL BE USED WHEN GUARDRAIL REQUIRES REPAIRS IN WHICH THE RAIL ELEMENT IS REUSABLE. ALSO, THIS ITEM WILL BE USED TO RE-ALIGN GUARDRAIL RUNS, AS DIRECTED BY THE ENGINEER.

PAYMENT SHALL INCLUDE ALL LABOR, MATERIALS AND EQUIPMENT, AS DESCRIBED IN 606.05 AND TO INCLUDE REMOVAL AND REPLACEMENT OF ANY AND ALL DAMAGED MATERIAL, (REUSING THE RAIL ELEMENT), INCLUDING REPLACEMENT OF ANY MATERIALS DAMAGED DURING DISMANTLING OR ANY MATERIALS WHICH MAY HAVE DETERIORATED TO THE POINT THEY CANNOT BE REUSED.

CONNECTING GUARDRAIL TO EXISTING RAIL

IN LOCATIONS WHERE TYPE 5 GUARDRAIL, TERMINAL ASSEMBLIES, ETC. ARE TO BE CONNECTED TO EXISTING RAIL SOME MODIFICATIONS MAY BE REQUIRED, INCLUDING EXTRA POSTS, DRILLING HOLES AND POSSIBLY PARTIAL SECTIONS OF ADDITIONAL RAIL ELEMENTS. THE COST OF THIS ADDITIONAL WORK SHALL BE INCLUDED IN THE UNIT BID PRICE FOR TYPE 5 GUARDRAIL. IF ADDITIONAL PORTIONS OF RAIL ELEMENT ARE USED THE LINEAL MEASUREMENT OF THIS ADDITIONAL PORTION SHALL BE ADDED FOR PAYMENT.

CONNECTION BETWEEN EXISTING AND PROPOSED GUARDRAIL

WHEN IT IS NECESSARY TO SPLICE PROPOSED GUARDRAIL TO EXISTING GUARDRAIL, ONLY THE EXISTING GUARDRAIL SHALL BE CUT, DRILLED, OR PUNCHED. THE CONNECTION SHALL BE MADE PER AASHTO M180. PAYMENT SHALL BE INCLUDED IN THE CONTRACT PRICE FOR THE RESPECTIVE GUARDRAIL ITEMS.

GUARDRAIL REPAIR AND/OR REPLACEMENT

THE FOLLOWING ITEMS LISTED BELOW SHALL BE USED FOR THE REPAIR AND/OR REPLACEMENT OF DAMAGED GUARDRAIL NOTICED DURING THE COMPLETION OF OTHER WORK INCLUDED IN THIS PLAN. THE ABOVE WORK SHALL BE COMPLETED AS DIRECTED BY THE ENGINEER.

ITEM 202, GUARDRAIL REMOVED
ITEM 202, ANCHOR ASSEMBLY REMOVED
ITEM 606, GUARDRAIL, TYPE 5
ITEM 606, ANCHOR ASSEMBLY, TYPE B-98
ITEM 606, ANCHOR ASSEMBLY, TYPE E-98
ITEM 209 RESHAPING UNDER GUARDRAIL

GUARDRAIL REPLACEMENT

NO HAZARD SHALL BE LEFT UNPROTECTED EXCEPT FOR THE ACTUAL TIME NECESSARY TO REMOVE GUARDRAIL, INSTALL EMBANKMENT, GRADE AND REINSTALL GUARDRAIL IN A CONTINUOUS OPERATION. THE REMOVAL OF ALL GUARDRAIL SHALL AT ALL TIMES BE AS DIRECTED BY THE ENGINEER. NO GUARDRAIL SHALL BE REMOVED UNTIL THE REPLACEMENT MATERIAL IS ON SITE, READY FOR INSTALLATION. FAILURE TO COMPLY WITH THIS REQUIREMENT SHALL BE DEEMED SUFFICIENT CAUSE TO ORDER WORK SUSPENDED ON THIS PROJECT UNTIL SUCH TIME THAT THE ENGINEER IS ASSURED OF SAID COMPLIANCE.

BRIDGE LOCATION MARKER SIGN

THE BRIDGE LOCATION MARKER SIGN INDICATES THE COUNTY, THE ROUTE, AND THE STAIGHT LINE MILEAGE OF THE STRUCTURE. THE CONTRACTOR SHALL REMOVE THE EXISTING BRIDGE LOCATION MARKER SIGNS AND REERECT THE SIGNS IN KIND. IF THERE ARE ANY QUESTIONS ON THE LOCATION, PLEASE CONTACT THE DISTRICT BRIDGE ENGINEER.

ALL COSTS, INCLUDING THE SIGN REMOVAL, SIGN REERECTION, POST REMOVAL, AND POST INSTALLATION SHALL BE INCLUDED IN THE FOLLOWING PAY ITEMS:

ITEM 630 GROUND MOUNTED SUPPORT, NO. 2. POST	10.0 FT
ITEM 630 REMOVAL OF GROUND MOUNTED SIGN AND REERECTION	1 EACH
ITEM 630 REMOVAL OF GROUND MOUNTED POST SUPPORT AND DISPOSAL	0 EACH

ITEM 606 - ANCHOR ASSEMBLY, TYPE B-98

THIS ITEM SHALL CONSIST OF FURNISHING AND INSTALLING EITHER OF THE FOLLOWING GUARDRAIL END TERMINALS.

1) THE SRT-350, GUARDRAIL END TERMINAL AS MANUFACTURED BY TRINITY INDUSTRY, 1170 N. STATE STREET, GIRARD, OHIO 44420 (TELEPHONE: 330.545.4373).

THE LENGTH OF THE SRT-350 SYSTEM IS CONSIDERED TO BE 37'-6" (11.43 m), INCLUSIVE OF THREE 12'-6" (3.81 m) LONG RAIL ELEMENTS. INSTALLATION SHALL BE AT THE LOCATIONS SPECIFIED IN THE PLANS, IN ACCORDANCE WITH THE MANUFACTURER'S SPECIFICATIONS AS DETAILED ON THE FOLLOWING PRE-APPROVED SHOP DRAWINGS:

DWG. #	DRAWING NAME	DWG./REV. DATE	ODOT APPROVAL DATE
SS444 SS444M	SRT-350 (12.5, 8 Post) Slotted Rail Terminal Post Layout and Erection Details	7/12/99 Rev. 1 7/12/99	08/27/99
SS425M	Slotted Rail Terminal SRT-350 Post Layout and Erection Details (12.5, 9 Post)	6/21/97 Rev. 1	03/6/98

2) THE FLEAT-350 MANUFACTURED BY ROAD SYSTEMS, INC., 2516 MALLORY LANE, STOW, OHIO, 44224 (TELEPHONE: 330.346.0721).

THE LENGTH OF THE FLEAT-350 IS CONSIDERED TO BE 37'-6" (11.43 m), INCLUSIVE OF THREE 12'-6" (3.81 m) LONG RAIL ELEMENTS. INSTALLATION SHALL BE AT THE LOCATIONS SPECIFIED IN THE PLANS, IN ACCORDANCE WITH THE MANUFACTURER'S SPECIFICATIONS AS DETAILED ON THE FOLLOWING PRE-APPROVED SHOP DRAWINGS:

DWG. #	DRAWING NAME	DWG./REV. DATE	ODOT APPROVAL DATE
FLT-M	Flared Energy Absorbing Terminal (FLEAT-350) Assembly	04/16/98	07/31/98

REFER TO THE MANUFACTURER'S INSTRUCTION REGARDING THE INSTALLATION OF, AND THE GRADING AROUND, THE FOUNDATION TUBES AND GROUND STRUT. THE TOP OF ANY FOUNDATION TUBE SHOULD BE LESS THAN 4 INCHES (100mm) ABOVE THE GROUND. THE PLACEMENT OF THE FOUNDATION TUBES SHOULD BE AN APPROPRIATE DEPTH BELOW THE LEVEL LINE IN ORDER TO MAINTAIN THE FINISHED GUARDRAIL HEIGHT OF 27¾ INCHES (706mm) FROM THE EDGE OF THE SHOULDER.

ON SITE GRADING IS REQUIRED IF THE TOP OF THE FOUNDATION TUBES OR TOP OF THE GROUND STRUT DOES NOT PROJECT MORE THAN 4 INCHES (100mm) ABOVE THE GROUND LINE.

THE FACE OF THE TYPE B-98 IMPACT HEAD SHALL BE COVERED WITH TYPE G REFLECTIVE SHEETING, PER CMS 730.19: APPROXIMATELY 36 IN. WIDE x 12 IN. HIGH (915 mm W x 305 mm H) FOR THE SRT-350 AND 14 IN. WIDE x 20 IN. HIGH (350 mm W x 500 mm H) FOR THE FLEAT-350.

PAYMENT FOR THE ABOVE WORK SHALL BE MADE AT THE UNIT PRICE BID FOR ITEM 606, ANCHOR ASSEMBLY, TYPE B-98, EACH, AND SHALL INCLUDE ALL LABOR, TOOLS, EQUIPMENT AND MATERIALS NECESSARY TO CONSTRUCT A COMPLETE AND FUNCTIONAL ANCHOR ASSEMBLY SYSTEM, INCLUDING REFLECTIVE SHEETING AND ALL RELATED HARDWARE, GRADING, EMBANKMENT AND EXCAVATION NOT SEPARATELY SPECIFIED, AS REQUIRED BY THE MANUFACTURER.

AUXILIARY & LONG LINE MARKINGS

CALC BY: SCJ
CHKD BY: EAH

DIRECTION	COUNTY	STATION / SLM FROM	STATION / SLM TO	HIGHWAY MILES	614 WORK ZONE LANE LINE, CLASS I, 642 PAINT	614 WORK ZONE CENTER LINE, CLASS I, 642 PAINT	614 WORK ZONE CHANNELIZING LINE, CLASS I, 642 PAINT	614 WORK ZONE STOP LINE, CLASS I, 642 PAINT	642, TYPE 2 EDGE LINE TOTAL (PAY QUANTITY) (WHITE)	642, TYPE 2 EDGE LINE TOTAL (PAY QUANTITY) (YELLOW)	642, TYPE 2 LANE LINE	642, TYPE 2 CENTER LINE SOLID LINE EQUIVALENT	642, TYPE 2 CENTER LINE TOTAL (PAY QUANTITY)	644 AUXILIARY MARKINGS (740.04) CHANNELIZING LINE 8"	STOP LINE 24"	CROSSWALK LINE 12"	TRANSVERSE/ DIAGONAL LINE (WHITE) 24"	TRANSVERSE/ DIAGONAL LINE (YELLOW) 24"	ISLAND MARKING	RAILROAD SYMBOL MARKING	SCHOOL SYMBOL MARKING 72 INCH	SCHOOL SYMBOL MARKING 96 INCH	PARKING LOT STALL MARKING	LANE ARROW LEFT	LANE ARROW RIGHT	LANE ARROW THROUGH	LANE ARROW COMBINATION	WORD ON PAVEMENT "ONLY" 72 INCH	WORD ON PAVEMENT "ONLY" 96 INCH	DOTTED LINE, 4"	HANDICAP SYMBOL MARKING	SPECIAL AIR SPEED ZONE MARKING
					MILE	MILE	FT	FT	MILE	MILE	MILE	MILE	MILE	FT	FT	FT	FT	FT	SQ FT	EACH	EACH		FT	EACH				EACH		FT	EACH	EACH
SR-2																																
EB	ERIE	20.10	25.81	5.71	17.13				5.71	5.71	5.71																					
RAMP 7	DECEL	20.605	20.646	0.04	0.12						0.04																					
RAMP 7	GORE	20.646	20.682	0.04			1,140							380			449															
RAMP 7	RAMP	20.682	20.864	0.18				186	0.18	0.18					62																	
RAMP 9	RAMP	20.943	21.110	0.17					0 17	0.17																						
RAMP 9	GORE	21.110	21.145	0.04					0.07																							
RAMP 9	ACCEL	21.145	21.190	0.05	0.14						0.05																					
RAMP 11	DECEL	21.936	21.987	0.05	0.15						0.05																					
RAMP 11	GORE	21.987	22.023	0.04			1,140							380			449															
RAMP 11	RAMP	22.023	22.185	0.16				195	0.16	0.16					65																	
RAMP D	RAMP	22.195	22.460	0.27					0.27	0.27																						
RAMP D	GORE	22.460	22.501	0.04					0.08																							
RAMP D	ACCEL	22.501	22.536	0.04	0.11						0.04																					
			TOTAL		17.65		2,281	381	6.64	6.49	5.88			760	127		897															

RAISED PAVEMENT MARKERS

DIRECTION	COUNTY	STATION/SLM FROM	STATION/SLM TO	DETAIL	202 RAISED PAVEMENT MARKER REMOVED	621 RPM, AS PER PLAN	PRISMATIC RETRO-REFLECTOR TYPES ONE-WAY WHITE	TWO-WAY YELLOW / YELLOW	TWO-WAY WHITE / RED	TWO-WAY YELLOW / RED	TWO-WAY BLUE / BLUE	REMARKS
					EACH	EACH	EACH					
EB ML	ERIE	20.10	25.81	5	251	251	251					4-LANE DIVIDED
EB RAMPS												
BERLIN RD INTERCHANGE												
RAMP 7	GORE	20.646	20.682	3	21	11			11			INTERCHANGE AT BERLIN ROAD
RAMP 7	RAMP	20.682	20.864	3	14	13				13		INTERCHANGE AT BERLIN ROAD
RAMP 9	RAMP	20.943	21.110	2	10	12				12		INTERCHANGE AT BERLIN ROAD
RAMP 9	GORE	21.110	21.145	2	24	11			11			INTERCHANGE AT BERLIN ROAD
61 INTERCHANGE												
RAMP 11	GORE	21.987	22.023	3	14	11			11			INTERCHANGE AT SR-61
RAMP 11	RAMP	22.023	22.185	3	12	12				12		INTERCHANGE AT SR-61
RAMP D	RAMP	22.195	22.460	2	13	19				19		INTERCHANGE AT SR-61
RAMP D	GORE	22.460	22.501	2	9	12			12			INTERCHANGE AT SR-61
			TOTAL		368	352	251		45	56		

DETAIL	DESCRIPTION
1	MULTILANE UNDIVIDED TYPICAL SPACING
2	TAPERED ACCEL. LANE
3	DECELERATION LANE
4	PARALLEL ACCEL LANE
5	MULTILANE DIVIDED/EXPRESSWAY
6	STOP APPROACH
7	2 LANE APPR. WITH TURN LANE
8	THROUGH APPROACH
9	3 LANE APPR. WITH TURN LANE
10	3 LANE DIVIDED TO 2 LANE TRANSITION
11	3 LANE UNDIVIDED TO 2 LANE TRANSITION
12	TWO LNAE NARROW BRIDGE
13	TWO WAY LEFT TURN LANE
14	ONE LANE BRIDGE
15	HORIZONTAL CURVE
16	HORIZONTAL CURVE ALT.
17	STOP APPROACH ALT.
18	FIRE HYDRANT
GAP	CENTER LINE AT 80 FT. TYP.

NOTES

1) SEE PAVEMENT MARKING DETAIL SHEET SUPPLIED AT THE PRECONSTRUCTION MEETING.

2) LANES SHALL BE STRIPED AT 12' WIDTHS.

3) ALL "ONLY"S SHALL BE REPLACED WITH ARROWS

PAVEMENT MARKING / RPM SUB-SUMMARY

ERI-2-20.10

ODOT D-03 CADD Workstation: sjuzwik
2/28/07 2:22 PM
i:/projects/78483/78483tc001.xls

AUXILIARY & LONG LINE MARKINGS

DIRECTION	COUNTY	STATION / SLM FROM	STATION / SLM TO	HIGHWAY MILES	614 WORK ZONE LANE LINE, CLASS I, 642 PAINT	614 WORK ZONE CENTER LINE, CLASS I, 642 PAINT	614 WORK ZONE CHANNELIZING LINE, CLASS I, 642 PAINT	614 WORK ZONE STOP LINE, CLASS I, 642 PAINT	642, TYPE 2 EDGE LINE TOTAL (PAY QUANTITY) (WHITE)	642, TYPE 2 EDGE LINE TOTAL (PAY QUANTITY) (YELLOW)	642, TYPE 2 LANE LINE	642, TYPE 2 CENTER LINE SOLID LINE EQUIVALENT	642, TYPE 2 CENTER LINE TOTAL (PAY QUANTITY)
					MILE	MILE	FT	FT	MILE	MILE	MILE	MILE	MILE
SR-2													
WB	ERIE	20.10	25.81	5.71	17.13				5.71	5.71	5.71		
RAMP 6	ACCEL	20.468	20.519	0.05							0.05		
RAMP 6	GORE	20.519	20.554	0.04					0.07				
RAMP 6	RAMP	20.554	20 736	0.18	0.55				0.18	0.18			
RAMP 8	RAMP	20.792	20.978	0.19	0.56			180	0.19	0.19			
RAMP 8	GORE	20.978	21 019	0.04			1,299						
RAMP 8	DECEL	21.019	21.070	0.05							0.05		
RAMP 10	ACCEL	21.895	21.940	0.05							0.05		
RAMP 10	GORE	21.940	21.979	0.04					0.08				
RAMP 10	RAMP	21.979	22.204	0.23	0.68				0.23	0.23			
RAMP C	RAMP	22.195	22.398	0.20	0.61			186	0.20	0 20			
RAMP C	GORE	22.398	22.442	0.04			1,394						
RAMP C	DECEL	22.442	22.490	0.05							0.05		
			TOTAL		19.52		2,693	366	6.65	6.51	5.91		

DIRECTION	644 AUXILIARY MARKINGS (740.04) CHANNELIZING LINE 8"	STOP LINE 24"	CROSSWALK LINE 12"	TRANSVERSE/ DIAGONAL LINE (WHITE) 24"	TRANSVERSE/ DIAGONAL LINE (YELLOW) 24"	ISLAND MARKING	RAILROAD SYMBOL MARKING	SCHOOL SYMBOL MARKING 72 INCH	SCHOOL SYMBOL MARKING 96 INCH	PARKING LOT STALL MARKING	LANE ARROW LEFT	LANE ARROW RIGHT	LANE ARROW THROUGH	LANE ARROW COMBINATION	WORD ON PAVEMENT "ONLY" 72 INCH	WORD ON PAVEMENT "ONLY" 96 INCH	DOTTED LINE, 4"	HANDICAP SYMBOL MARKING	SPECIAL AIR SPEED ZONE MARKING
	FT	FT	FT	FT	FT	SQ FT	EACH	EACH		FT	EACH				EACH		FT	EACH	EACH
SR-2																			
WB																			
RAMP 6																			
RAMP 6																			
RAMP 6																			
RAMP 8		60																	
RAMP 8	433			511															
RAMP 8																			
RAMP 10																			
RAMP 10																			
RAMP 10																			
RAMP C		62																	
RAMP C	465			548															
RAMP C																			
TOTAL	898	122		1,059															

RAISED PAVEMENT MARKERS

DIRECTION	COUNTY	STATION/SLM FROM	STATION/SLM TO	DETAIL	202 RAISED PAVEMENT MARKER REMOVED	621 RPM, AS PER PLAN	PRISMATIC RETRO-REFLECTOR TYPES ONE-WAY WHITE	TWO-WAY YELLOW / YELLOW	TWO-WAY WHITE / RED	TWO-WAY YELLOW / RED	TWO-WAY BLUE / BLUE	REMARKS
					EACH	EACH	EACH					
WB ML	ERIE	20.10	25.81	5	251	251	251					4-LANE DIVIDED
WB RAMPS												
BERLIN RD INTERCHANGE												
RAMP 6	GORE	20.519	20.554	2	26	11			11			INTERCHANGE AT BERLIN ROAD
RAMP 6	RAMP	20.554	20.736	2	10	13				13		INTERCHANGE AT BERLIN ROAD
RAMP 8	RAMP	20.792	20.978	3	16	14				14		INTERCHANGE AT BERLIN ROAD
RAMP 8	GORE	20.978	21.019	3	20	12			12			INTERCHANGE AT BERLIN ROAD
SR-61 INTERCHANGE												
RAMP 10	GORE	21.940	21.979	2	17	12			12			INTERCHANGE AT SR-61
RAMP 10	RAMP	21.979	22.204	2	13	16				16		INTERCHANGE AT SR-61
RAMP C	RAMP	22.195	22.398	3	12	15				15		INTERCHANGE AT SR-61
RAMP C	GORE	22.398	22.442	3	15	13			13			INTERCHANGE AT SR-61
			TOTAL		380	357	251		48	58		

DETAIL	DESCRIPTION
1	MULTILANE UNDIVIDED TYPICAL SPACING
2	TAPERED ACCEL. LANE
3	DECELERATION LANE
4	PARALLEL ACCEL LANE
5	MULTILANE DIVIDED/EXPRESSWAY
6	STOP APPROACH
7	2 LANE APPR. WITH TURN LANE
8	THROUGH APPROACH
9	3 LANE APPR. WITH TURN LANE
10	3 LANE DIVIDED TO 2 LANE TRANSITION
11	3 LANE UNDIVIDED TO 2 LANE TRANSITION
12	TWO LNAE NARROW BRIDGE
13	TWO WAY LEFT TURN LANE
14	ONE LANE BRIDGE
15	HORIZONTAL CURVE
16	HORIZONTAL CURVE ALT.
17	STOP APPROACH ALT.
18	FIRE HYDRANT
GAP	CENTER LINE AT 80 FT. TYP.

NOTES

1) SEE PAVEMENT MARKING DETAIL SHEET SUPPLIED AT THE PRECONSTRUCTION MEETING.

2) LANES SHALL BE STRIPED AT 12' WIDTHS.

3) ALL "ONLY"S SHALL BE REPLACED WITH ARROWS

CALC BY SCJ
CHKD BY EAH

PAVEMENT MARKING / RPM SUB-SUMMARY

ERI-2-20.10

22
43

ODOT D-03 CADD Workstation. ytzatla
2/28/07 2:22 PM
J:/projects/78483/78483tc001.xls

REFERENCES SHALL BE MADE TO STANDARD DRAWINGS:

BP-3.1	DATED	7/16/04	MT-98.15	DATED	7/16/04
BR-1	DATED	7/19/02	MT-98.16	DATED	4/19/02
EXJ-4-87	DATED	7/19/02	MT-105.10	DATED	10/18/02
MT-35.10	DATED	4/20/01	MT-105.11	DATED	10/18/02
MT-95.30	DATED	9/5/06	VFP-1-90	DATED	7/19/02
MT-97.10	DATED	9/5/06			

DESIGN SPECIFICATIONS:

THIS STRUCTURE CONFORMS TO "STANDARD SPECIFICATIONS FOR HIGHWAY BRIDGES" ADOPTED BY THE AMERICAN ASSOCIATION OF STATE HIGHWAY AND TRANSPORTATION OFFICIALS, 2002, INCLUDING THE 2003, 2004, AND 2005 SPECIFICATIONS AND THE ODOT BRIDGE DESIGN MANUAL.

EXISTING STRUCTURE VERIFICATION:

DETAILS AND DIMENSIONS SHOWN ON THESE PLANS PERTAINING TO THE EXISTING STRUCTURES HAVE BEEN OBTAINED FROM PLANS OF THE EXISTING STRUCTURES AND FROM FIELD OBSERVATIONS AND MEASUREMENTS. CONSEQUENTLY, THEY ARE INDICATIVE OF THE EXISTING STRUCTURES AND THE PROPOSED WORK BUT THEY SHALL BE CONSIDERED TENTATIVE AND APPROXIMATE. THE CONTRACTOR IS REFERRED TO CMS SECTIONS 102.05 AND 105.02.

BASE CONTRACT BID PRICES UPON A RECOGNITION OF THE UNCERTAINTIES DESCRIBED ABOVE AND UPON A PRE BID EXAMINATION OF THE EXISTING STRUCTURES. HOWEVER, THE DEPARTMENT WILL PAY FOR ALL PROJECT WORK BASED UPON ACTUAL DETAILS AND DIMENSIONS THAT HAVE BEEN VERIFIED IN THE FIELD.

EXISTING PLANS:

THE ORIGINAL CONSTRUCTION PLANS OF THE EXISTING BRIDGES ARE AVAILABLE UPON REQUEST AT THE DISTRICT 3 OFFICE OF THE OHIO DEPARTMENT OF TRANSPORTATION, ASHLAND, OH.

DESIGN DATA:

CONCRETE CLASS FS - COMPRESSIVE STRENGTH 4,500 PSI
CONCRETE CLASS S - COMPRESSIVE STRENGTH 4,500 PSI

REMOVAL OF ODNR SCIENTIFIC RESEARCH EQUIPMENT ON STRUCTURE ERI-2-2156:

THE CONTRACTOR SHALL CONTACT THE OHIO DEPARTMENT OF NATURAL RESOUCES, DR. DAVID KLARER, TELEPHONE NO. (419) 433-4601, 30 DAYS PRIOR TO ANY WORK ON STRUCTURE ERI-2-2156R TO COORDINATE REMOVAL AND SUBSEQUENT RE-ATTACHMENT OF THEIR RESEARCH EQUIPMENT CURRENTLY ATTACHED TO THE RIGHT PARAPET.

THE RESEARCH EQUIPMENT REMOVAL AND RE-ATTACHMENT WILL BE COMPLETED BY ODNR.

PLACING ASPHALT CONCRETE FEATHERING ON APPROACHES TO BRIDGES:

SPECIAL CARE SHALL BE TAKEN, WHEN PLACING THE ASPHALT CONCRETE FEATHERING TO EFFECT A SMOOTH TRANSITION FROM THE EXISTING APPROACH PAVEMENT TO THE BRIDGE DECK OR APPROACH SLAB. THE CONTRACTOR'S ATTENTION IS CALLED TO STANDARD DRAWING BP-3.1 FOR REQUIRED TOLERANCES; SPECIFICALLY, THE CONTRACTOR SHALL PROVIDE A 600:1 TAPER RATE FOR PLANING OPERATIONS.

CUT LINE CONSTRUCTION JOINT PREPARATION:

SAW CUT BOUNDARIES OF PROPOSED CONCRETE REMOVALS 1 INCH DEEP. REMOVE CONCRETE TO A ROUGH SURFACE. LEAVE THE EXISTING REINFORCING STEEL IN PLACE. PRIOR TO CONCRETE PLACEMENT ABRASIVELY CLEAN JOINT SURFACES AND EXISTING EXPOSED REINFORCEMENT TO REMOVE LOOSE AND DISINTEGRATED CONCRETE AND LOOSE RUST. THOROUGHLY CLEAN THE JOINT SURFACE AND EXPOSED REINFORCEMENT OF ALL DIRT, DUST, RUST OR OTHER FOREIGN MATERIAL BY THE USE OF WATER, AIR UNDER PRESSURE, OR OTHER METHODS THAT PRODUCE SATISFACTORY RESULTS. EXISTING REINFORCING STEEL DOES NOT HAVE TO HAVE A BRIGHT STEEL FINISH, BUT REMOVE ALL PACK AND LOOSE RUST. THOROUGHLY DRENCH EXISTING CONCRETE SURFACES WITH CLEAN WATER AND ALLOW TO DRY TO A DAMP CONDITION BEFORE PLACING CONCRETE.

ITEM 202 - PORTIONS OF STRUCTURE REMOVED, AS PER PLAN:

THIS ITEM SHALL BE USED AT LOCATIONS IN THE PLAN.

THIS ITEM SHALL INCLUDE THE REMOVAL OF A PORTION OF THE PARAPET AS INDICATED IN THE PLANS.

THE USE OF EXPLOSIVES, HEADACHE BALLS AND/OR HOE-RAMS WILL NOT BE PERMITTED. THE METHOD OF REMOVAL AND THE WEIGHT OF THE HAMMER SHALL BE APPROVED BY THE ENGINEER.

THE EXISTING REINFORCING STEEL SHALL BE PRESERVED AS INDICATED IN THE PLANS. EXISTING PARAPET CONCRETE SHALL BE REMOVED IN A MANNER THAT WILL NOT CUT, ELONGATE, OR DAMAGE THE EXISTING REINFORCING STEEL TO BE PRESERVED. CHIPPING HAMMERS NO HEAVIER THAN 90 POUND CLASS.

PAYMENT FOR ALL OF THE ABOVE SHALL BE AT THE UNIT PRICE BID PER CUBIC YARD FOR ITEM 202 - PORTIONS OF STRUCTURE REMOVED, AS PER PLAN WHICH WILL INCLUDE ALL LABOR, EQUIPMENT, MATERIALS AND INCIDENTALS NECESSARY TO COMPLETE THE ABOVE WORK.

ITEM 511 - CLASS S CONCRETE, SUPERSTRUCTURE, AS PER PLAN (PARAPET RECONSTRUCTION):

THIS ITEM SHALL BE USED AT LOCATIONS INDICATED IN THE PLAN.

THE COARSE AGGREGATE SHALL BE LIMESTONE.

ALL EXISTING SURFACES TO WHICH THE CONCRETE IS TO BOND SHALL BE CLEANED BY ABRASIVE BLASTING. THESE SURFACES SHALL BE MADE FREE OF SPALLS, LAITANCE, AND OTHER CONTAMINANTS DETRIMENTAL TO ACHIEVING AN ADEQUATE BOND.

PAYMENT FOR ALL OF THE ABOVE SHALL BE AT THE UNIT PRICE BID PER CUBIC YARD FOR ITEM 511- CLASS S CONCRETE, SUPERSTRUCTURE, AS PER PLAN WHICH WILL INCLUDE ALL LABOR, EQUIPMENT, MATERIALS AND INCIDENTALS NECESSARY TO COMPLETE THE ABOVE WORK.

ITEM 512 - TREATING CONCRETE BRIDGE DECK WITH GRAVITY FED RESIN:

THIS WORK SHALL CONSIST OF PREPARING AND TREATING THE CONCRETE BRIDGE DECK CRACKS AND SEALING EDGES OF CONCRETE PATCHES WITH A GRAVITY FED CRACK WELDING SYSTEM IN ACCORDANCE WITH THESE SPECIFICATIONS IN REASONABLY CLOSE CONFORMITY WITH THE PLANS AND THE MANUFACTURER'S RECOMMENDATIONS AND AS DIRECTED BY THE ENGINEER.

SEAL THE DECK CRACKS AND CONSTRUCTION JOINTS AROUND THE CONCRETE PATCHES 4" WIDE, 2" ON EACH SIDE OF CRACK. THE QUANTITY SHALL BE THE AREA IN SQUARE YARDS OF THE EXPOSED SURFACE, IRRESPECTIVE OF THE DEPTH OF THE JOINT, COMPLETE, IN PLACE AND ACCEPTED.

PAYMENT FOR ALL OF THE ABOVE SHALL BE AT THE UNIT PRICE BID PER SQUARE YARD FOR ITEM 512- TREATING CONCRETE BRIDGE DECK WITH GRAVITY FED RESIN, WHICH WILL INCLUDE ALL LABOR, EQUIPMENT, MATERIALS AND INCIDENTALS NECESSARY TO COMPLETE THE ABOVE WORK.

ITEM SPECIAL - PATCHING CONCRETE BRIDGE DECK:

THIS ITEM SHALL CONSIST OF FURNISHING THE NECESSARY LABOR, MATERIALS AND EQUIPMENT TO REPAIR THE EXISTING CONCRETE BRIDGE DECKS INCLUDING THE REMOVAL OF LOOSE AND UNSOUND CONCRETE, BITUMINOUS PATCHES, SURFACEPREPARATION, SAW CUTTING, AND THE STRENGTH TESTING OF ALL THE PATCHES AS DIRECTED BY THE ENGINEER.

A. REMOVAL OF UNSOUND CONCRETE

THE ENGINEER SHALL VISUALLY INSPECT THE EXISTING CONCRETE DECK AND OUTLINE THE AREAS TO BE REMOVED.

THE PERIMETER OF THE REMOVAL AREAS SHALL BE SAWED TO A DEPTH OF ¾INCH TO PRODUCE A VERTICAL OR SLIGHTLY UNDERCUT FACE. AT EACH CORNER OF THE PATCH THE SAW CUTS SHALL COME TOGETHER WITHOUT ANY OVERCUTTING WITH THE SAW. THE CORNERS SHALL BE CHIPPED DOWN TO THE SAW MARKS. ADDITIONAL SAW CUTS MAY BE REQUIRED TO FACILITATE REMOVAL WITHOUT ANY OVERCUTTING. COOLING WATER FROM WET SAWING AND DUST FROM SAWING SHALL BE IMMEDIATELY REMOVED FROM THE EXPOSED PATCH HOLES BEFORE ANY DRYING CAN OCCUR.

UNSOUND CONCRETE INCLUDING ALL PATCHES OTHER THAN SOUND PORTLAND CEMENT CONCRETE, AND ALL OBVIOUSLY LOOSE AND DISINTEGRATED CONCRETE SHALL BE REMOVED. THE UNSOUND CONCRETE MAY BE REMOVED BY CHIPPING OR HAND DRESSING. CHIPPING HAMMERS SHALL NOT BE HEAVIER THAN THE NORMAL 35 POUND CLASS AND SHALL BE OPERATED AT AN ANGLE LESS THAN 45 DEGREES MEASURED FROM THE SURFACE OF THE DECK. CONCRETE SHALL BE REMOVED IN A MANNER THAT PREVENTS CUTTING, ELONGATING OR DAMAGING REINFORCING STEEL. WHERE THE BOND BETWEEN THE CONCRETE AND A REINFORCING BAR HAS BEEN DESTROYED, OR WHERE MORE THAN ONE HALF OF THE PERIPHERY OF SUCH A BAR HAS BEEN EXPOSED, THE ADJACENT CONCRETE SHALL BE REMOVED TO A DEPTH THAT WILL PROVIDE A MINIMUM ¾INCH CLEARANCE AROUND THE BAR EXCEPT WHERE OTHER REINFORCING BARS MAKE THIS IMPRACTICABLE. REINFORCEMENT WHICH HAS BECOME LOOSE SHALL BE ADEQUATELY SUPPORTED AND TIED BACK INTO PLACE. ALL REMOVED ASPHALT AND CONCRETE SHALL BE DISPOSED OF PROPERLY OUTSIDE THE RIGHT OF WAY.

(CONTINUED):

ITEM SPECIAL - PATCHING CONCRETE BRIDGE DECK: (CONTINUED):

C. SURFACE PREPARATION

CLEANING SHALL CLOSELY PRECEDE APPLICATION OF THE PATCHING MATERIAL. THE EXPOSED REINFORCING STEEL SHALL BE THOROUGHLY CLEANED BY ABRASIVE BLASTING (SILICA SAND SHALL NOT BE USED) FOLLOWED BY AN AIR BLAST. IT MAY BE NECESSARY TO USE HAND TOOLS TO REMOVE SCALE FROM THE REINFORCING STEEL.

CONTAMINATION OF THE AREA TO BE PATCHED BY CONSTRUCTION EQUIPMENT OR FROM ANY OTHER SOURCE SHALL BE PREVENTED BY PLACEMENT OF A CLEAN 4 MIL POLYETHYLENE SHEET (OR ANY OTHER COVERING AS APPROVED BY THE ENGINEER) ON THE SURFACE OF THE DECK FOLLOWING THE AIR BLAST CLEANING.

WHERE REINFORCING STEEL IS EXPOSED, THE CONTRACTOR SHALL PROVIDE ADEQUATE SUPPORTS FOR THE CONCRETE MIXER SO THAT REINFORCING STEEL AND ITS BOND WITH THE CONCRETE WILL NOT BE DAMAGED BY THE WEIGHT AND MOVEMENT OF THE MIXER, OR SHALL PROVIDE MEANS TO CONVEY CONCRETE FROM THE MIXER TO THE PATCH LOCATIONS.

D. MATERIALS, PLACING, AND CURING

THE CONCRETE BRIDGE DECK SHALL BE PATCHED WITH CLASS FS CONCRETE WHICH SHALL MEET THE REQUIREMENTS OF CMS EXCEPT THAT LIMESTONE FOR COARSE AGGREGATE SHALL BE USED.

E. PLACING

WHEN NIGHT WORK IS USED THE CONTRACTOR SHALL SUBMIT A PLAN WHICH PROVIDES ADEQUATE LIGHTING FOR THE WORK AREA. THE PLAN SHALL BE SUBMITTED AT LEAST 15 CALENDAR DAYS IN ADVANCE AND BE APPROVED BY THE ENGINEER BEFORE CONCRETE IS PLACED. THE LIGHTS SHALL BE SO DIRECTED THAT THEY DO NOT AFFECT OR DISTRACT APPROACHING TRAFFIC.

THE PATCHING MATERIAL SHALL BE PLACED, CONSOLIDATED AND FINISHED TO THE EXISTING GRADE AND ELEVATION. PATCHES GREATER THAN 50 SQUARE FEET IN AREA SHALL HAVE TEMPORARY BULKHEADS INSTALLED TO FACILITATE PLACEMENT AND FINISHING. THE TEMPORARY BULKHEADS SHALL GO AS DEEP AS THE PATCH AND BE PULLED PRIOR TO THE CONCRETE SETTING. PATCHES EXCEEDING 50 SQUARE FEET SHALL BE STRUCK OFF WITH A SCREED. SMALLER PATCHES THAT ARE UNDER 10 FEET IN LENGTH SHALL BE SCREED LONGITUDINALLY. FOR PATCHES OVER 10 FEET IN LENGTH, THE SCREED SHALL BE PLACED PERPENDICULAR TO THE ROADWAY CENTERLINE.

THE CONTRACTOR SHALL TEST THE SURFACE OF THE PLASTIC CONCRETE FOR TRUENESS AND FOR BEING FLUSH WITH THE EDGES OF THE ADJACENT SURFACES BY USE OF A 10 FOOT STRAIGHTEDGE. FOR PATCHES 10 FEET OR LESS IN LENGTH, THE STRAIGHTEDGE SHALL BE DONE BY PLACING THE STRAIGHTEDGE PARALLEL TO THE BRIDGE CENTERLINE WITH ENDS RESTING ON THE EXISTING WEARING SURFACE AND DRAWING THE STRAIGHTEDGE ACROSS THE PATCH. ANY HIGH OR LOW AREAS EXCEEDING 1/8 INCH IN 10 FEET SHALL BE CORRECTED. IF ANY CORRECTIONS ARE MADE, THE SURFACE SHALL BE RECHECKED.

F. FINISHING

AFTER THE PATCHES HAVE BEEN CONSOLIDATED AND FINISHED, THEY SHALL BE TEXTURED IN ACCORDANCE TO SECTION 451.09 OF THE CMS.

G. INSPECTION, SOUNDING, AND REPAIR OF CONCRETE PATCHES

AFTER CURING AND BEFORE FINAL ACCEPTANCE, ALL PATCHED AREAS SHALL BE INSPECTED AND SOUNDED. ALL DELAMINATED AREAS SHALL BE REMOVED AND REPATCHED ACCORDING TO THIS NOTE.

ALL CRACKS IN BONDED PATCHES SHALL BE SEALED WITH AN APPROVED HIGH MOLECULAR WEIGHT METHACRYLATE SEALER ACCORDING TO THE MANUFACTURER'S RECOMMENDATIONS AND SECTION 512.04 OF CMS.

ALL REPLACEMENT OF REJECTED AREAS AND SEALING OF CRACKS IN NEW BONDED PATCHES WILL BE THE REPONSIBILITY OF THE CONTRACTOR AND INCLUDED IN THE UNIT BID PRICE FOR THIS ITEM.

H. METHOD OF MEASUREMENT

THE QUANTITY SHALL BE THE ACTUAL AREA IN SQUARE YARDS OF THE EXPOSED SURFACE OF ALL PATCHES, IRRESPECTIVE OF THE DEPTH OF THE PATCH, COMPLETE, IN PLACE AND ACCEPTED.

I. BASIS OF PAYMENT

PAYMENT SHALL BE MADE AT THE UNIT PRICE BID FOR:

ITEM	UNIT	DESCRIPTION
SPECIAL	SQUARE YARD	PATCHING CONCRETE BRIDGE DECK

ERI-2-2082 SFN 2201062

ITEM	EXTENSION	QUANTITY	UNIT	DESCRIPTION	REFERENCE SHEET
512	10100	1172	SQ YD	SEALING OF CONCRETE SURFACES (EPOXY-URETHANE)	31
512	10400	1514	SQ YD	TREATING CONCRETE BRIDGE DECK WITH SRS	30
512	73500	19	SQ YD	TREATING CONCRETE BRIDGE DECKS WITH GRAVITY FED RESIN	30

ERI-2-2156 L SFN 2201127

ITEM	EXTENSION	QUANTITY	UNIT	DESCRIPTION	REFERENCE SHEET
202	11301	3	CU YD	PORTIONS OF STRUCTURE REMOVED, AS PER PLAN	32
509	10000	519	POUND	EPOXY COATED REINFORCING STEEL	32
511	34401	3.8	CU YD	CLASS S CONCRETE, SUPERSTRUCTURE, AS PER PLAN (PARAPET RECONSTRUCTION)	32
512	10100	357	SQ YD	SEALING OF CONCRETE SURFACES (EPOXY-URETHANE)	32
516	13600	1	SQ FT	1" PREFORMED EXPANSION JOINT FILLER	32
SPECIAL	51631300	90	FT	POLYMER MODIFIED ASPHALT EXPANSION JOINT SYSTEM	32
SPECIAL	60740300	40	FT	VANDAL PROTECTION FENCE REMOVED AND REBUILT	32

ERI-2-2156R SFN 2201135

ITEM	EXTENSION	QUANTITY	UNIT	DESCRIPTION	REFERENCE SHEET
202	11301	3	CU YD	PORTIONS OF STRUCTURE REMOVED, AS PER PLAN	32
509	10000	519	POUND	EPOXY COATED REINFORCING STEEL	32
511	34401	3.8	CU YD	CLASS S CONCRETE, SUPERSTRUCTURE, AS PER PLAN (PARAPET RECONSTRUCTION)	32
512	10100	357	SQ YD	SEALING OF CONCRETE SURFACES (EPOXY-URETHANE)	32
512	73500	1	SQ YD	TREATING CONCRETE BRIDGE DECKS WITH GRAVITY FED RESIN	32
516	13600	1	SQ FT	1" PREFORMED EXPANSION JOINT FILLER	32
SPECIAL	51631300	90	FT	POLYMER MODIFIED ASPHALT EXPANSION JOINT SYSTEM	32
SPECIAL	51912510	2	SQ YD	PATCHING CONCRETE BRIDGE DECK	32
SPECIAL	60740300	40	FT	VANDAL PROTECTION FENCE REMOVED AND REBUILT	

DESIGN FILE: i:\projects\78483\78483ss.dgn
WORKSTATION: sjuzwik DATE: 2/28/2007

DISTRICT 3
OFFICE OF PRODUCTION
RDN 01/07
GTS
GTS
DJV
STRUCTURE SUMMARY
ERI-2-20.10
26
43

ERI-2-2222 SFN 2202611

ITEM	EXTENSION	QUANTITY	UNIT	DESCRIPTION	REFERENCE SHEET
512	10100	991	SQ YD	SEALING OF CONCRETE SURFACES (EPOXY-URETHANE)	38
512	10400	1576	SQ YD	TREATING CONCRETE BRIDGE DECK WITH SRS	37

ERI-2-2338 SFN 2204681

ITEM	EXTENSION	QUANTITY	UNIT	DESCRIPTION	REFERENCE SHEET
512	10100	868	SQ YD	SEALING OF CONCRETE SURFACES (EPOXY-URETHANE)	39

ERI-2-2410 L SFN 2204711

ITEM	EXTENSION	QUANTITY	UNIT	DESCRIPTION	REFERENCE SHEET
512	10100	500	SQ YD	SEALING OF CONCRETE SURFACES (EPOXY-URETHANE)	41
512	10400	479	SQ YD	TREATING CONCRETE BRIDGE DECK WITH SRS	40
512	73500	2	SQ YD	TREATING CONCRETE BRIDGE DECKS WITH GRAVITY FED RESIN	40
SPECIAL	51912510	3	SQ YD	PATCHING CONCRETE BRIDGE DECK	40

ERI-2-2410R SFN 2204738

ITEM	EXTENSION	QUANTITY	UNIT	DESCRIPTION	REFERENCE SHEET
512	10100	500	SQ YD	SEALING OF CONCRETE SURFACES (EPOXY-URETHANE)	41
512	10400	479	SQ YD	TREATING CONCRETE BRIDGE DECK WITH SRS	40
512	73500	1	SQ YD	TREATING CONCRETE BRIDGE DECKS WITH GRAVITY FED RESIN	40
SPECIAL	51912510	1	SQ YD	PATCHING CONCRETE BRIDGE DECK	40

ERI-2-2421 L SFN 2204754

ITEM	EXTENSION	QUANTITY	UNIT	DESCRIPTION	REFERENCE SHEET
202	11301	.13	CU YD	PORTIONS OF STRUCTURE REMOVED, AS PER PLAN	42
511	34401	.13	CU YD	CLASS S CONCRETE, SUPERSTRUCTURE, AS PER PLAN (PARAPET RECONSTRUCTION)	42
512	10100	372	SQ YD	SEALING OF CONCRETE SURFACES (EPOXY-URETHANE)	42
512	10400	1107	SQ YD	TREATING CONCRETE BRIDGE DECK WITH SRS	42

ERI-2-2421 R SFN 2204762

ITEM	EXTENSION	QUANTITY	UNIT	DESCRIPTION	REFERENCE SHEET
512	10100	372	SQ YD	SEALING OF CONCRETE SURFACES (EPOXY-URETHANE)	42
512	10400	1107	SQ YD	TREATING CONCRETE BRIDGE DECK WITH SRS	42

ERI-2-2522 SFN 2204789

ITEM	EXTENSION	QUANTITY	UNIT	DESCRIPTION	REFERENCE SHEET
512	10100	840	SQ YD	SEALING OF CONCRETE SURFACES (EPOXY-URETHANE)	43

DISTRICT 3
OFFICE OF PRODUCTION

DATE 01/07
REVIEWED RDN
DRAWN GTS
REVISED
DESIGNED GTS
CHECKED DJV

STRUCTURE SUMMARY

ERI-2-20.10

28
43

DESIGN FILE: h:\projects\78483\78483ss.dgn
WORKSTATION: sjuzwik DATE: 2/28/2007

STRUCTURE FILE NO.	BRIDGE NO.	STRUCTURE TYPE	LOCATION	SKEW	DECK LENGTH	DECK WIDTH	PROPOSED WORK
2201062	ERI-2-2082	CONTINUOUS STEEL BEAM	UNDER BERLIN ROAD	44°52'38" LF	318'-1"±	42'-10"±	SEAL DECK, PARAPET, WINGWALL, ABUTMENT AND PIERS
2201127	ERI-2-2156 L	PRESTRESSED BOX BEAM	OVER OLD WOMAN CREEK	30° RF	144'-5"±	38'-10"±	SEAL PARAPET, WINGWALL, ABUTMENT, PIERS AND REBUILD SOME PARAPET ENDS
2201135	ERI-2-2156 R	PRESTRESSED BOX BEAM	OVER OLD WOMAN CREEK	30° RF	144'-5"±	38'-10"±	SEAL PARAPET, WINGWALL, ABUTMENT, PIERS AND REBUILD SOME PARAPET ENDS
2202611	ERI-2-2222	CONTINUOUS STEEL BEAM	UNDER S.R. 61	7°52'14" RF	237'-0"±	58'-10"±	SEAL DECK, PARAPET, RAISED MEDIAN, WINGWALL, ABUTMENT AND PIERS
2204681	ERI-2-2338	CONTINUOUS STEEL BEAM	UNDER HAHN ROAD	0°	233'-4"±	34'-6"±	SEAL PARAPET, WINGWALL, ABUTMENT AND PIERS
2204711	ERI-2-2410 L	CONTINUOUS STEEL BEAM	OVER FRAILEY ROAD	1°35'12" RF	112'-0"±	38'-6"±	SEAL DECK, PARAPET, WINGWALL, ABUTMENT AND PIERS
2204738	ERI-2-2410 R	CONTINUOUS STEEL BEAM	OVER FRAILEY ROAD	1°35'12" RF	112'-0"±	38'-6"±	SEAL DECK, PARAPET, WINGWALL, ABUTMENT AND PIERS
2204754	ERI-2-2421 R	CONTINUOUS STEEL BEAM	OVER NORFOLK RAILROAD	54°04'13" LF	258'-9"±	38'-6"±	SEAL DECK, PARTIAL AREA OF PARAPET, ABUTMENT BACKWALLS AND SEATS
2204762	ERI-2-2421 L	CONTINUOUS STEEL BEAM	OVER NORFOLK RAILROAD	54°04'13" LF	258'-9"±	38'-6"±	REPAIR PARAPET, SEAL DECK, PARTIAL AREA OF PARAPET, ABUTMENT BACKWALLS AND SEATS
2204789	ERI-2-2522	CONTINUOUS STEEL BEAM	UNDER JOPPA ROAD	21°46'51" RF	249'-8"±	34'-6"±	SEAL PARAPET, WINGWALL, ABUTMENT AND PIERS

DESIGN FILE: I:\projects\78483\Struct\strinfor.dgn
WORKSTATION: sjuzwik DATE: 2/28/2007

DESIGN AGENCY
DISTRICT 3
OFFICE OF PRODUCTION

DESIGNED	DRAWN	REVISED	DATE
GTS	GTS	RDN	01/07
CHECKED	REVISED	STRUCTURE FILE NUMBER	
DJV			

STRUCTURE INFORMATION

ERI-2-20.10

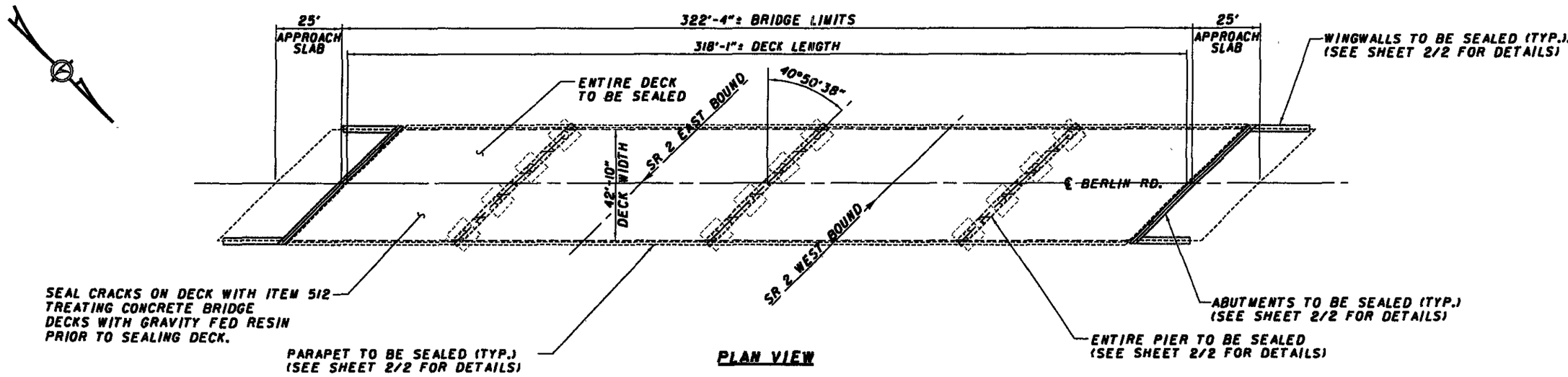

PLAN VIEW

ITEM	QUANTITY	UNIT	DESCRIPTION
512	1514	SQ YD	TREATING OF CONCRETE BRIDGE DECK WITH SRS
512	19	SQ YD	TREATING CONCRETE BRIDGE DECKS WITH GRAVITY FED RESIN

QUANTITIES CARRIED TO STRUCTURE SUMMARY SHEET

NOTES:

1) THE EXISTING GUARDRAIL IS NOT SHOWN.

2) SEAL DECK CRACKS 4" WIDE, 2" ON EACH SIDE OF JOINT USING ITEM 512-TREATING CONCRETE BRIDGE DECKS WITH GRAVITY FED RESIN.

3) SEAL ENTIRE DECK USING ITEM 512 - TREATING OF CONCRETE BRIDGE DECK WITH SRS, AFTER CRACKS ARE SEALED.

DESIGN AGENCY
DISTRICT THREE
OFFICE OF PRODUCTION

DESIGNED	DRAWN	REVIEWED	DATE
GTS	GTS	RDM	01/07
CHECKED	REVISED	STRUCTURE FILE NUMBER	
DJV		2201062	

SITE PLAN
ERI - 2 - 2082
UNDER BERLIN ROAD

ERI-2-20.10

1/2

30/43

DESIGN FILE: I:\projects\78483\Struct\DETAILS\002_2082sd001.dgn
WORKSTATION: sjuzwik DATE: 2/28/2007

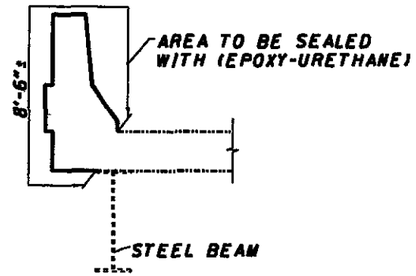

TYPICAL SECTION AT PARAPET

LENGTH = 318'-1"±

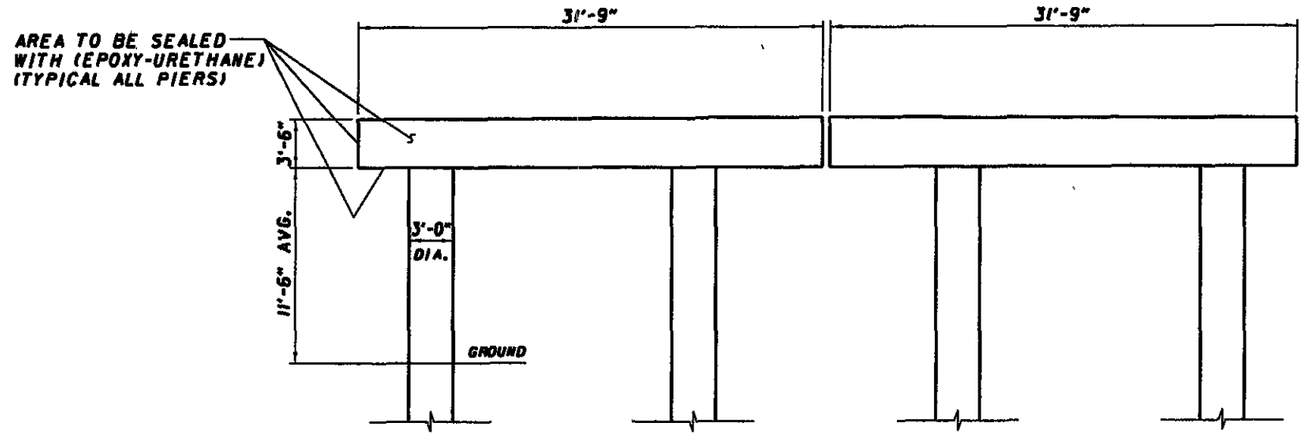

PIER CAP ELEVATION VIEW

WIDTH = 3'-0"±

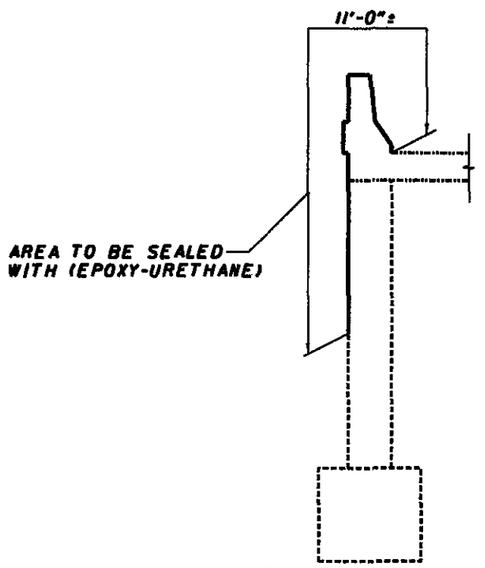

TYPICAL SECTION AT WINGWALL

LENGTH = 20'-6"± AVG.

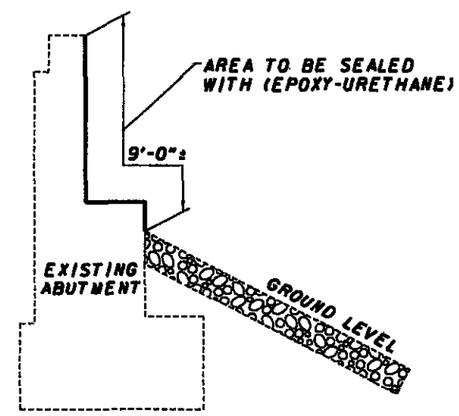

TYPICAL SECTION AT ABUTMENT

(ABUTMENTS ARE 64'-6" LONG)

ITEM	QUANTITY	UNIT	DESCRIPTION
512	1172	SQ YD	SEALING OF CONCRETE SURFACES (EPOXY-URETHANE)

QUANTITY CARRIED TO STRUCTURE SUMMARY SHEET

NOTES:

1) THE PARAPETS, ABUTMENT FACE AND SEAT AND ALL EXPOSED AREAS OF THE WINGWALLS AND ENTIRE PIER CAP (EXCEPT THE TOP) AND COLUMNS SHALL BE SEALED WITH ITEM 512.

2) THE SEALING AREA DETAILS ARE NOT TO SCALE.

DESIGN FILE: h:\projects\78483\Struct\DETAILS\002_2082sd001.dgn
WORKSTATION: sjuzwik DATE: 2/28/2007

DESIGN AGENCY: DISTRICT THREE
OFFICE OF PRODUCTION

DESIGNED GTS | DRAWN GTS | REVISED RDW | DATE 01/07
CHECKED DJV | REVISED | STRUCTURE FILE NUMBER 2201062

SEALING DETAILS

ERI - 2 - 2082
UNDER BERLIN ROAD

ERI-2-20.10

2/2

31/43

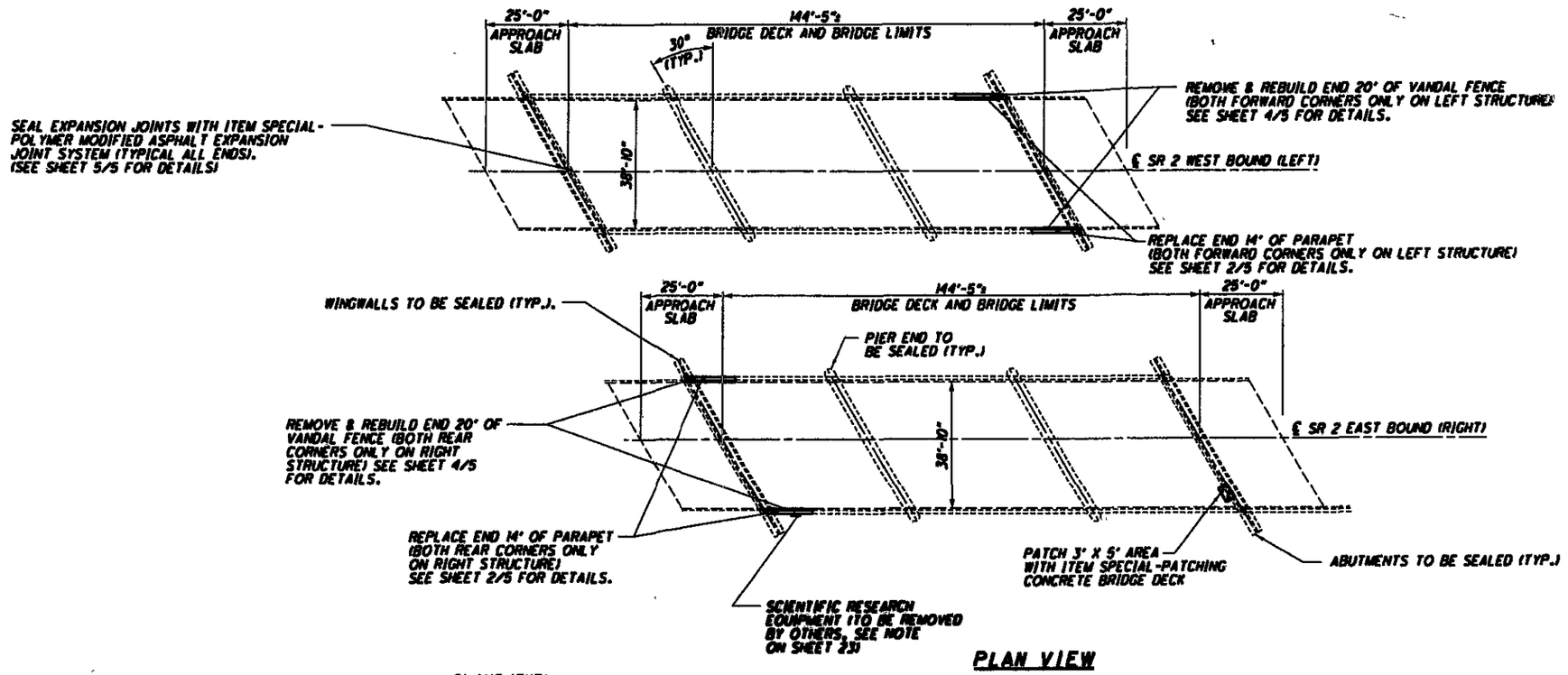

PLAN VIEW

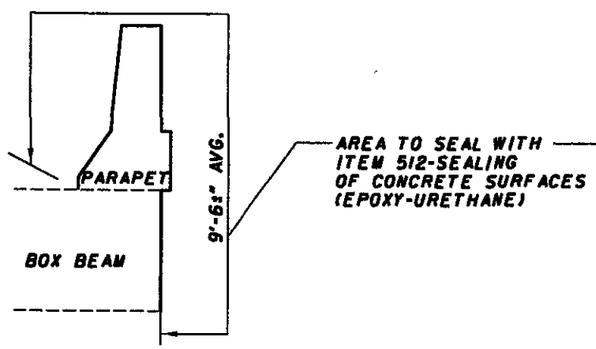

TYPICAL PARAPET SEALING
(LEFT STRUCTURE PARAPET LENGTH = 143'-8" AVG.)
(RIGHT STRUCTURE PARAPET LENGTH = 143'-5" AVG.)

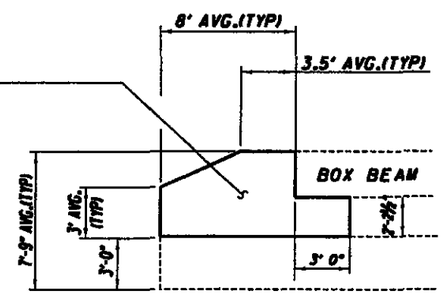

TYPICAL ABUTMENT SEALING
(1'-3½"± THICK)

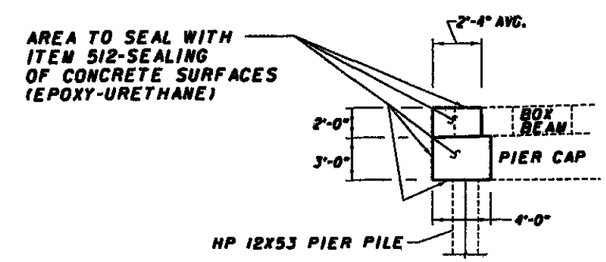

TYPICAL PIER CAP SEALING
WIDTH = 3'-0"±

ITEM	QUANTITY ERI-2-2156L	QUANTITY ERI-2-2156R	UNIT	DESCRIPTION
202	3	3	CU YD	PORTIONS OF STRUCTURE REMOVED, AS PER PLAN
509	519	519	POUND	EPOXY COATED REINFORCING STEEL
511	3.8	3.8	CU YD	CLASS S CONCRETE, SUPERSTRUCTURE, AS PER PLAN (PARAPET RECONSTRUCTION)
512		1	SQ YD	TREATING CONCRETE BRIDGE DECKS WITH GRAVITY FED RESIN
512	357	357	SQ YD	SEALING OF CONCRETE SURFACES (EPOXY-URETHANE)
516	1	1	SQ FT	1" PREFORMED EXPANSION JOINT FILLER
SPECIAL	90	90	FT	POLYMER MODIFIED ASPHALT EXPANSION JOINT SYSTEM
SPECIAL		2	SQ YD	PATCHING CONCRETE BRIDGE DECK
SPECIAL	40	40	FT	VANDAL PROTECTION FENCE REMOVED AND REBUILT

QUANTITIES CARRIED TO STRUCTURE SUMMARY SHEET

NOTES:

1) EXISTING GUARDRAIL NOT SHOWN.
2) EXISTING APPROACH PARAPET NOT SHOWN.
3) EXISTING VANDAL PROTECTION FENCE NOT SHOWN.
4) REMOVE A PORTION OF THE EXISTING VANDAL PROTECTION FENCE PRIOR TO RECONSTRUCTING PARAPET ENDS USING ITEM SPECIAL- VANDAL PROTECTION FENCE REMOVED AND REBUILT. SEE SHEET 4/5 FOR DETAILS.
5) REPLACE END 14' OF PARAPET AT LOCATIONS SHOWN. SEE SHEET 2/5 FOR DETAILS.
6) SEAL PARAPETS, WINGWALLS, END 4' OF PIER CAPS AND ABUTMENTS 3' UNDER DECK. SEE DETAILS ABOVE.
7) PATCH 3' X 5' AREA ON RIGHT STRUCTURE WITH ITEM SPECIAL-PATCHING CONCRETE BRIDGE DECK.
8) SEAL PATCH EDGES WITH ITEM 512-TREATING CONCRETE BRIDGE DECKS WITH GRAVITY FED RESIN
9) SEAL EXPANSION JOINTS WITH ITEM SPECIAL- POLYMER MODIFIED ASPHALT EXPANSION JOINT SYSTEM (SEE SHEET 5/5 FOR DETAILS)

DESIGN FILE: I:\projects\78483\Struct\DETAILS\002_2156s01.dgn
WORKSTATION: sjuzwik DATE: 2/28/2007

DESIGNED BY DISTRICT THREE
OFFICE OF PRODUCTION

DESIGNED	DRAWN	REVISED	DATE
DCW	DCW	RDN	01/07
CHECKED	REVISED	STRUCTURE FILE NUMBER	
DJV		2316(FILL) & 2301(SIDE)	

SITE PLAN
ERI-2-2156 L&R
OVER OLD WOMAN CREEK

ERI-2-20.10

1/5

32/43

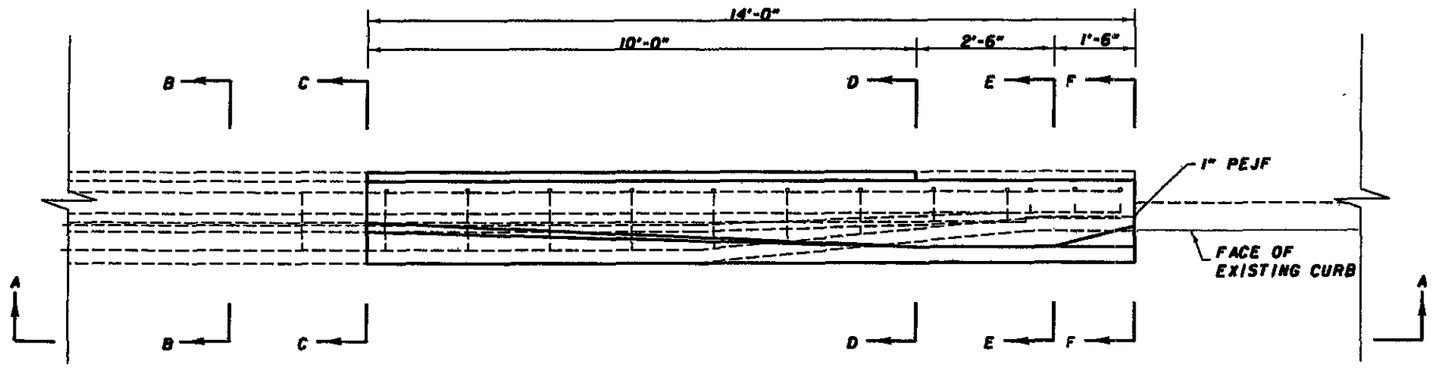

TYPICAL PARAPET REPLACEMENT PLAN VIEW

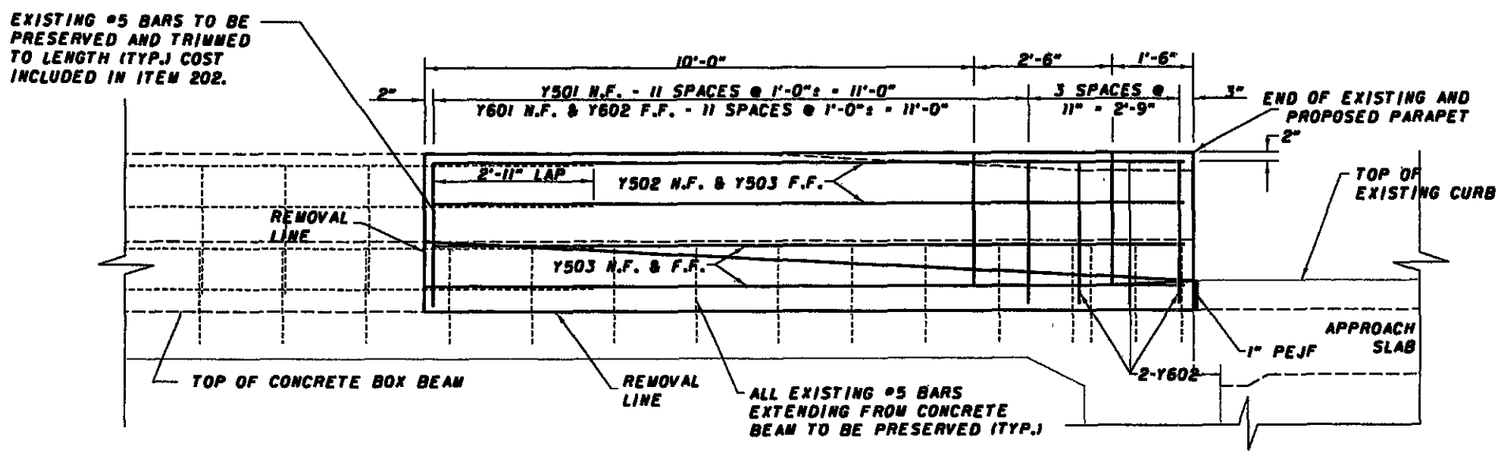

SECTION A-A (ELEVATION VIEW)

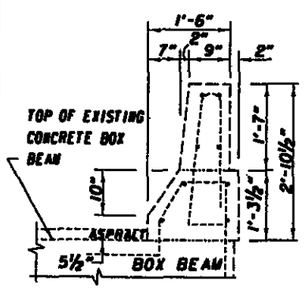

SECTION B-B

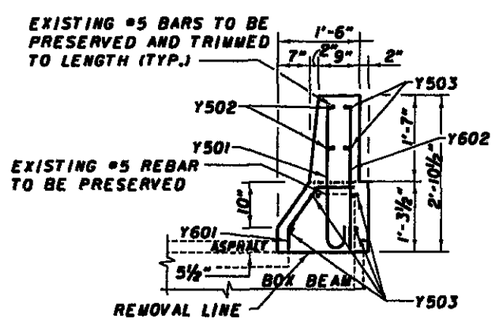

SECTION C-C

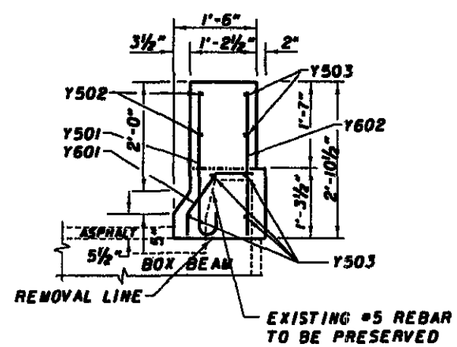

SECTION D-D

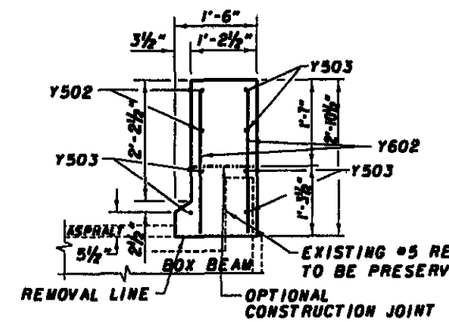

SECTION E-E

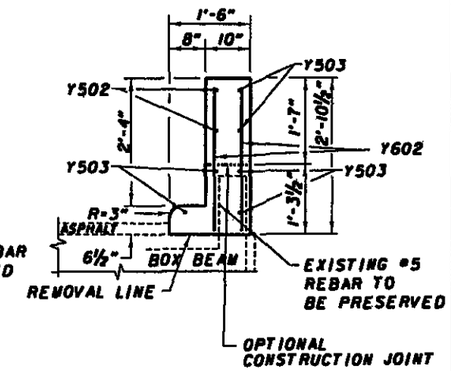

SECTION F-F

NOTES:

1) ALL EXISTING REINFORCING BARS EXTENDING FROM CONCRETE BEAM TO BE PRESERVED.

2) FOR ADDITIONAL DETAILS AND NOTES, REFER TO THE STANDARD BRIDGE DRAWING BR-1.

3) FOR QUANTITIES, BENDING DIAGRAMS AND REINFORCING STEEL TABLE, SEE SHEET 3/5.

4) NO DRILLING INTO THE EXISTING CONCRETE BOX BEAM IS ALLOWED.

DESIGN AGENCY: DISTRICT THREE OFFICE OF PRODUCTION

DESIGNED	DRAWN	REVIEWED	DATE
DCM	DCM	RDM	01/07
CHECKED	REVISED	STRUCTURE FILE NUMBER	
DJV		23118711 & 23118711R	

PARAPET DETAILS
ERI-2-2156 L&R
OVER OLD WOMAN CREEK

ERI-2-20.10

2/5

33/43

DESIGN FILE: i:\projects\78483\Struct\DETAILS\002_2156d001.dgn
WORKSTATION: sjuzwik DATE: 2/28/2007

BENDING DIAGRAMS

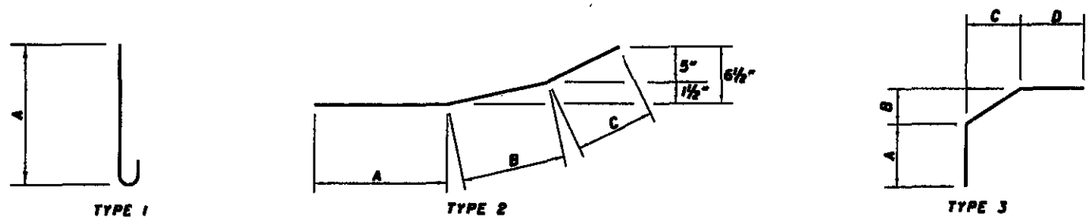

EPOXY COATED REINFORCING STEEL LIST

MARK	NUMBER		LENGTH	SHAPE	TYPE	A	B	C	D	WEIGHT	
	LEFT	RIGHT								LEFT	RIGHT
Y501	24	24	3'-3"	BENT	1	2'-8"				81	81
Y502	4	4	13'-8"	BENT	2	9'-10"	2'-5"	1'-5"		57	57
Y503	12	12	13'-8"	STR						171	171
Y601	24	24	1'-10"	BENT	3	4"	8½"	6"	8"	66	66
Y602	36	36	2'-8"	STR						144	144
									TOTAL	519	519

ITEM	QUANTITY		UNIT	DESCRIPTION
	LEFT	RIGHT		
202	3	3	CU YD	PORTIONS OF STRUCTURE REMOVED, AS PER PLAN
509	519	519	POUND	EPOXY COATED REINFORCING STEEL
511	3.8	3.8	CU YD	CLASS S CONCRETE, SUPERSTRUCTURE, AS PER PLAN (PARAPET RECONSTRUCTION)
516	1	1	SQ FT	1" PREFORMED EXPANSION JOINT FILLER

QUANTITIES CARRIED TO SHEET 1/5.

DESIGN FILE: t:\projects\78483\Struct\DETAILS\002_2156sd001.dgn
WORKSTATION: sjuzwik DATE: 2/28/2007

DESIGN AGENCY: DISTRICT THREE
OFFICE OF PRODUCTION

DESIGNED	DRAWN	REVISED	DATE
DCN	DCN	RDN	01/07
CHECKED	REVISED	STRUCTURE FILE NUMBER	
DJV		2301[illegible]&2301[illegible]	

PARAPET DETAILS
ERI-2-2156 L&R
OVER OLD WOMAN CREEK

ERI-2-20.10

3/5

34/43

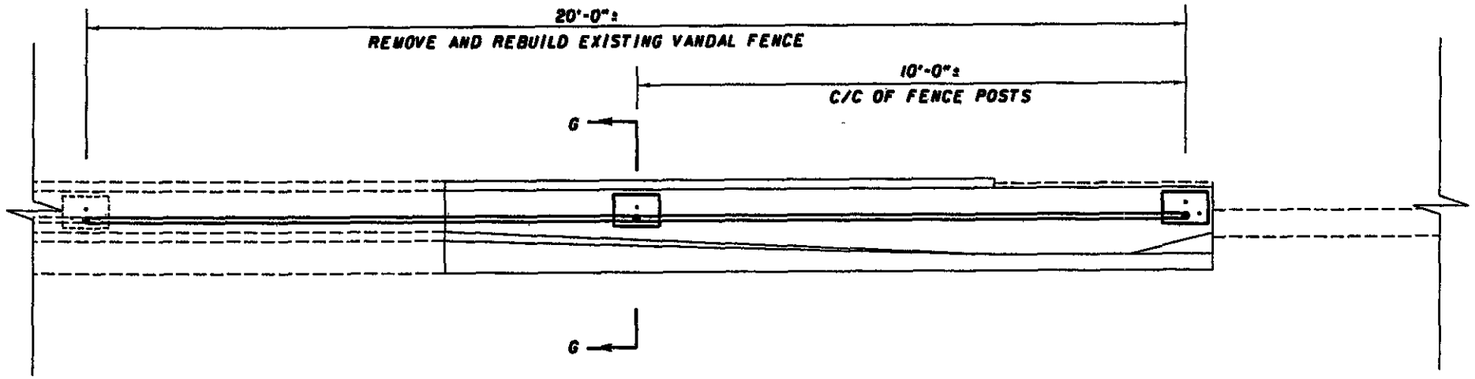

PLAN VIEW
PARAPET VANDAL FENCE REMOVAL AND REBUILDING
(SEE SHEET 1/5 FOR LOCATIONS)

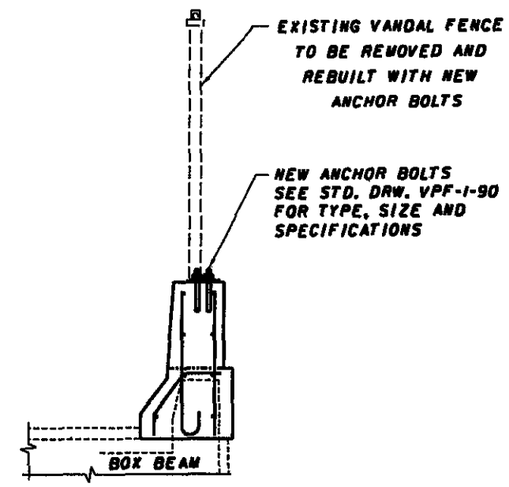

SECTION G-G

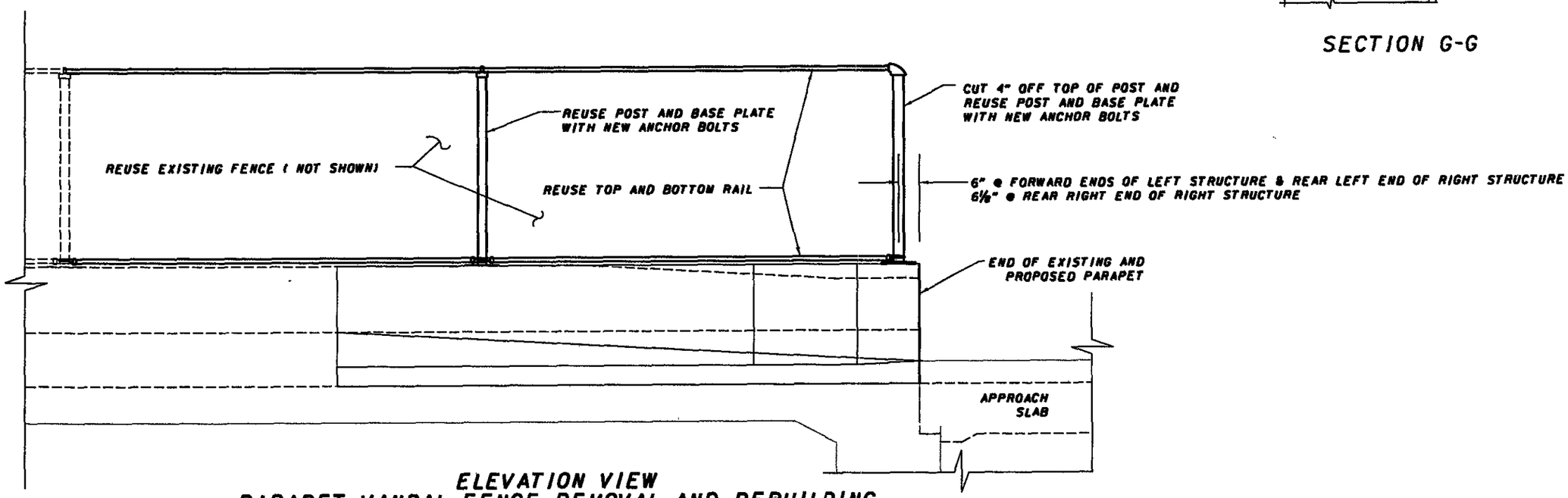

ELEVATION VIEW
PARAPET VANDAL FENCE REMOVAL AND REBUILDING
(SEE SHEET 1/5 FOR LOCATIONS)

ITEM	QUANTITY		UNIT	DESCRIPTION
	ERI-2-2156L	ERI-2-2156R		
SPECIAL	40	40	FT	VANDAL PROTECTION FENCE REMOVED AND REBUILT

QUANTITY CARRIED TO SHEET 1/5.

DESIGN FILE: i:\projects\78483\Struct\DETAILS\002_2156d001.dgn
WORKSTATION: sjuzwik DATE: 2/28/2007

DESIGN AGENCY: DISTRICT THREE
OFFICE OF PRODUCTION

DESIGNED DCM | CHECKED DJV | DRAWN DCM | REVISED | REVISED RDM | DATE 01/07 | STRUCTURE FILE NUMBER 2011127(L) & 2011256(R)

VANDAL FENCE DETAILS
ERI-2-2156 L&R
OVER OLD WOMAN CREEK

ERI-2-20.10

4 / 5

35 / 43

GENERAL NOTES AND DETAILS FOR POLYMER MODIFIED ASPHALT EXPANSION JOINT SYSTEM

ITEM SPECIAL - POLYMER-MODIFIED ASPHALT EXPANSION JOINT SYSTEM

THIS ITEM WILL BE USED TO SEAL THE EXPANSION/CONTRACTION JOINTS AS PER THESE DETAILS AND THE MANUFACTURER'S REQUIREMENTS USING A POLYMER-MODIFIED ASPHALT SYSTEM. THE PRIME CONTRACTOR WILL OBTAIN THE SERVICES OF ONE OF THE FOLLOWING APPROVED APPLICATORS WHO WILL FURNISH AND INSTALL THE NEW BRIDGE EXPANSION JOINT SYSTEM AFTER ALL PAVING ON THE AFFECTED BRIDGE(S) HAS BEEN COMPLETED.

PRODUCT NAME	SUPPLIER	ADDRESS	PHONE NO.
THORMA-JOINT	DYNAMIC SURFACE APPLICATIONS, LTD	373 VILLAGE RD. PENNSDALE, PA 17756	(570)546-6041
MATRIX 502	CRAFCO INC.	420 N. ROOSEVELT AVE. CHANDLER, AZ 85226	(800)528-8242
EXPANDEX JOINT SYSTEM	WATSON-BOWMAN ACME	95 PINEVIEW DR. AMHERST, NY 14228	(716)691-7566
APJ ASPHALTIC PLUG EXPANSION JOINT	WYOMING EQUIPMENT SALES	281 SIXTH STREET P.O. BOX 287 WEST WYOMING, PA 18644	(570)693-2810

MATERIALS:

BRIDGING PLATE:

MILD STEEL 1/8" OR 1/4" THICK PLATE, 8" WIDE OR 18 GAUGE ALUMINUM, 8" WIDE.

BINDER:

TYPE:	POLYMER MODIFIED ASPHALT
SOFTENING POINT:	180 DEGREES F. MIN.
FLOW:	3 mm. MAX. AT 140 DEGREES F.
PENETRATION:	9 mm. MAX. AT 77 DEGREES F. 1 mm. MIN AT 0 DEGREES F. ASTM D 3407
DUCTILITY:	40 cm. MIN. ASTM D 113
RESILIENCE:	60% MIN. AT 77 DEGREES F.
TENSILE ADHESION:	700% MIN.
SPECIFIC GRAVITY:	1.0 ± 0.05
POURING TEMP:	350 - 390 DEGREES F.

AGGREGATE:

TYPE:	CRUSHED, DOUBLE WASHED, AND DRIED GRANITE OR BASALT
GRADATION	THE GRADATION OF THE AGGREGATE VARIES BY MANUFACTURER AND WILL BE AS PER THE MANUFACTURER'S RECOMMENDATIONS FOR THE SYSTEM BEING USED ON THIS PROJECT.

BACKER ROD:

THE BACKER SHALL BE A CLOSED CELL FOAM EXPANSION JOINT FILLER CAPABLE OF WITHSTANDING THE PLACEMENT TEMPERATURE OF THE POLYMER MODIFIED ASPHALT.

NOTE: PRIOR TO PLACEMENT OF ANY PORTION OF THE JOINT SYSTEM, THE PROJECT ENGINEER MUST HAVE CERTIFIED TEST DATA MEETING ALL THE MINIMUM REQUIREMENTS OF ALL THE MATERIALS OF THE JOINT SYSTEM.

INSTALLATION PROCEDURES:

SAWING AND SURFACE PREPARATION:

AFTER ALL PAVING OPERATIONS ARE COMPLETE, THE OVERLAY IS TO BE TRANSVERSELY SAW CUT FULL DEPTH NO LESS THAN TWO INCHES DEEP (20" CENTERED OVER JOINT OPENING, UNLESS OTHERWISE NOTED). REMOVE ALL MATERIAL, INCLUDING WATER-PROOFING MATERIAL, BETWEEN SAW CUTS. THOROUGHLY CLEAN AND DRY EXPOSED CONCRETE, STEEL, AND CUT SURFACES USING COMPRESSED AIR AND A HOT COMPRESSED AIR (HCA) LANCE. THE LANCE MUST PRODUCE A FLAME RETARDED AIR STREAM TEMPERATURE OF 3000 DEGREES F. AT A VELOCITY OF 3,000 FEET PER SECOND WITH 15 PSIG CHAMBER PRESSURE. IF THERE IS AN INTERRUPTION DUE TO WEATHER OR OTHER CAUSES, THE OPERATION WILL BE REPEATED WITH THE HCA LANCE IMMEDIATELY BEFORE THE BINDER COAT OPERATION. ALSO, 6 INCHES OF THE ROAD SURFACE ON EITHER SIDE OF THE JOINT WILL BE DRIED SO THAT A SUITABLE SURFACE FOR BITUMEN ADHESION IS OBTAINED.

SEALING OF EXPANSION JOINT: (PRE-STRESSED BOX OR CONCRETE SLAB)

THE EXPANSION JOINT GAP IS TO BE SEALED AND A BRIDGING PLATE CENTERED ALONG IT. A VERY NARROW GAP WILL BE SEALED BY POURING HOT BINDER INTO THE GAP. GAPS OF 1/8" OR MORE WILL FIRST BE FILLED WITH AN APPROPRIATELY SIZED BACKER ROD. THE BACKER ROD WILL BE INSTALLED SO THAT IT IS BETWEEN 1/8" AND 1-1/8" BELOW THE TOP OF THE EXISTING GAP. THE GAP WILL THEN BE FILLED WITH BINDER.

BOND BREAKER:

SPREAD BINDER OVER SURFACE AREA WHERE THE METAL BRIDGING PLATE WILL BE PLACED. CENTER THE BRIDGING PLATE OVER THE EXISTING JOINT AND BED INTO THE HOT BINDER. BUTT JOINT THE BRIDGING PLATES TO ACCOMODATE THE ENTIRE JOINT LENGTH. SPIKE HOLES WILL BE DRILLED AT 1 FOOT INTERVALS ALONG THE LONGITUDINAL CENTERLINE OF THE PLATES. SECURE BRIDGING PLATE WITH NAILS OR SPIKES. SEAL BUTT JOINTS WITH HOT BINDER AND ALLOW BINDER TO SETUP BEFORE NEXT OPERATION. WHEN ALUMINUM BRIDGING PLATES ARE USED, ONLY THE BINDER IS REQUIRED TO SECURE THE INDIVIDUAL PLATES.

BINDER COAT:

SEAL ALL PREPARED, EXPOSED SURFACES OF THE JOINT WITH BINDER. POUR THE HOT BINDER OVER THE FLOOR AREA OF THE JOINT AND SPREAD TO COAT ALL EXPOSED SURFACES. THE BINDER WILL BE A MINIMUM OF 1/16" THICK ON THE BOTTOM OF THE JOINT CAVITY, WITH POOLS OF GREATER THICKNESS WHERE SURFACE IRREGULARITIES EXIST. THE BINDER APPLICATION TEMPERATURE WILL BE BETWEEN 350 AND 390 DEGREES F. THE BINDER WILL NOT BE ALLOWED TO BE HEATED ABOVE 410 DEGREES F. NOR ALLOWED TO EXCEED 390 DEGREES F. FOR MORE THAN 1 HOUR. A DOUBLE JACKETED OIL MELTER WILL BE USED TO HEAT THE BINDER. THE MELTER WILL BE EQUIPPED WITH A CONTINUOUS AGITATION SYSTEM, TEMPERATURE CONTROLS, AND A CALIBRATED THERMOMETER. ALSO A SYSTEM FOR ACCURATELY MEASURING THE WEIGHTS OF THE BINDER AND THE AGGREGATE WILL BE REQUIRED.

BUILD-UP OF JOINT LAYERS:

AGGREGATE PREPARATION:

HEAT THE AGGREGATE TO A TEMPERATURE OF 275 TO 325 DEGREES F., WITH A SUITABLE ROTATING DRUM WITH ATTACHED HEAT SOURCE OR A HOT COMPRESSED AIR LANCE, TO REMOVE DUST AND MOISTURE.

AGGREGATE PROPORTION AND LAYER THICKNESS:

MIX THE AGGREGATE WITH THE BINDER SUCH THAT THE MINIMUM AGGREGATE CONTENT BY WEIGHT WILL BE 68%. THE HEATED AGGREGATE AND BINDER WILL BE COMBINED IN LAYERS, UNLESS PATENTED INSTALLATION REQUIRES DIFFERENTLY, NOT LESS THAN 3/4 OF AN INCH NOR EXCEEDING 2-1/2 INCHES. THE THICKNESS OF EACH LAYER CAN BE VARIED WITHIN THESE LIMITS, TO ACHIEVE THE REQUIRED JOINT THICKNESS (MIN. 2 INCHES). THE OBJECTIVE IS TO COAT EACH STONE AND FILL THE VOIDS WHILE AVOIDING AN EXCESS OF BINDER. THIS WILL ACHIEVE THE MAXIMUM CONTENT OF STONE CONSISTENT WITH ALL STONES BEING COATED WITH BINDER. RAKE THE MIXTURE TO MIX AND LEVEL.

THE TOP LAYER THICKNESS WILL VARY BETWEEN 1/2 INCH AND ONE (1) INCH. IN PREPARING THE TOP LAYER, THE RATIO OF AGGREGATE TO BINDER WILL BE APPROXIMATELY 6:1 BY WEIGHT. OVERFILL THE TOP LAYER AND COMPACT TO THE LEVEL OF THE ADJACENT SURFACES USING A ROLLER OR VIBRATORY PLATE COMPACTOR. IMMEDIATELY AFTER COMPLETION OF THE COMPACTION, POUR SUFFICIENT BINDER OVER THE JOINT TO FILL THE SURFACE VOIDS AND COAT THE SURFACE STONE. DUST THE FINISHED JOINT WITH A FINE, DRY AGGREGATE TO PREVENT TACKINESS.

MAINTENANCE OF TRAFFIC:

IF NECESSARY TO FACILITATE TRAFFIC MAINTENANCE, THE JOINT WILL BE INSTALLED IN TWO (2) HALF-WIDTH PHASES. DURING PHASE 1 APPROXIMATELY HALF OF THE TOTAL JOINT WILL BE INSTALLED. DURING PHASE 2, A MINIMUM OF TWO (2) INCHES OF THE PHASE 1 JOINT WILL BE REMOVED, AT OR NEAR THE CENTERLINE, WITH THE REMAINDER OF THE JOINT INSTALLED. IN ALL CASES, OPERATIONS WILL BE SCHEDULED SO THAT ALL LANES CAN BE OPEN TO TRAFFIC DURING ALL NON-WORKING HOURS.

TESTING:

CERTIFICATION WILL BE SUPPLIED FOR EACH PROJECT SHOWING BINDER COMPLIANCE WITH REQUIRED PROPERTIES. A ONE QUART SAMPLE OF BINDER WILL BE RETRIEVED FROM EACH BRIDGE FOR FURTHER TESTING BY THE O.D.O.T OFFICE OF MATERIALS MANAGEMENT.

METHOD OF MEASUREMENT AND BASIS OF PAYMENT:

THE DEPARTMENT WILL MEASURE THE JOINT BY THE NUMBER OF FEET AND WILL PAY FOR ACCEPTED QUANTITIES AT THE CONTRACT PRICE AS: ITEM SPECIAL, POLYMER MODIFIED ASPHALT EXPANSION JOINT SYSTEM.

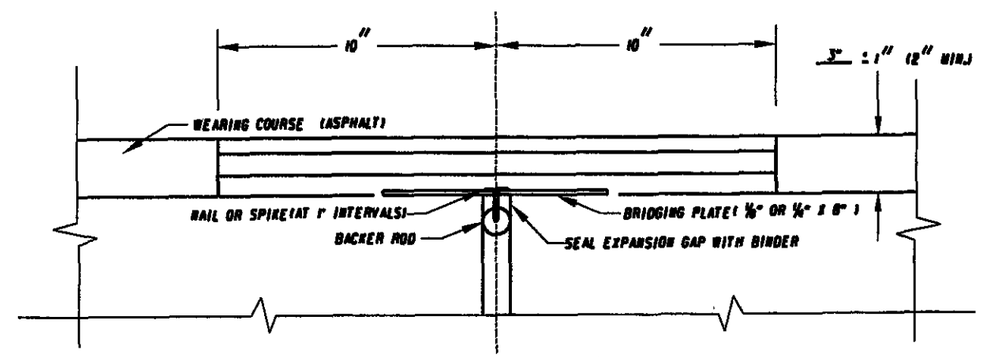

TYPICAL PRESTRESSED BOX BEAM

ERI-2-2156 L & R SFN 2201127 & 2201135				
ITEM	DESCRIPTION	UNIT	QUANTITY	
			ERI-2-2156L	ERI-2-2156R
SPECIAL	POLYMER MODIFIED ASPHALT EXPANSION JOINT SYSTEM	FT	90	90

QUANTITY CARRIED TO SHEET NO. 1/5

DESIGN FILE: I:*projects*78483*Struct*DETAILS*002_2156sd001.dgn
WORKSTATION: sjuzwik DATE: 2/28/2007

DESIGNED WAM | DRAWN WAM | CHECKED | DATE REVISED 8-28-06 8-27-07 8-25-08 | CHECKED DCM | PROJECT DJV

POLYMER MODIFIED ASPHALT EXPANSION JOINT SYSTEM

ERI-2-20.10

5/5

36/43

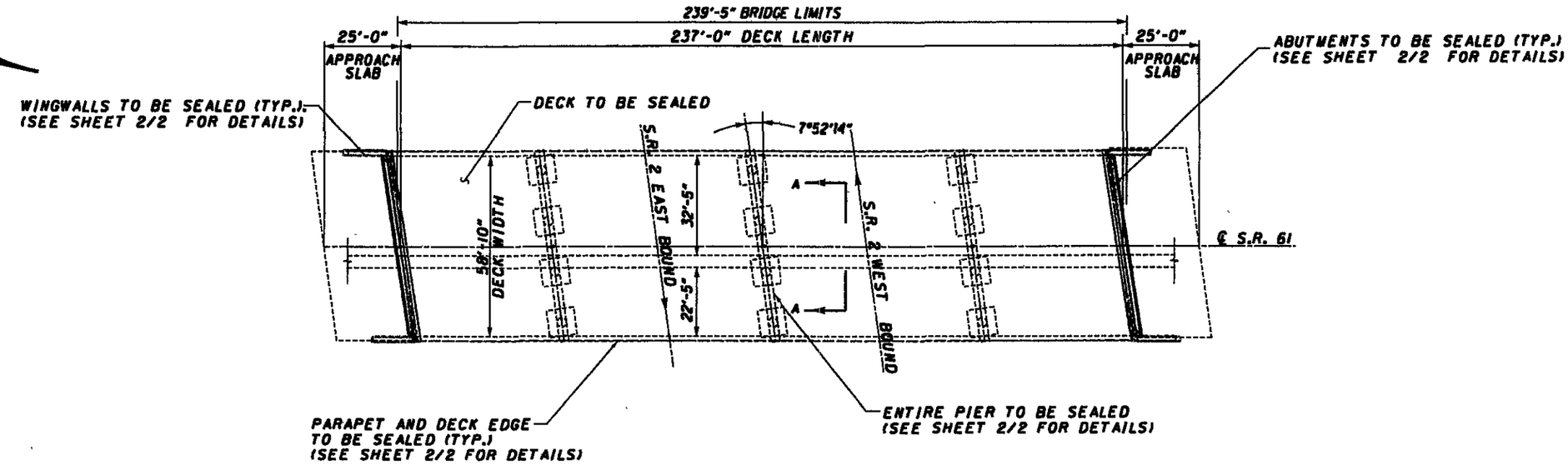

PLAN VIEW

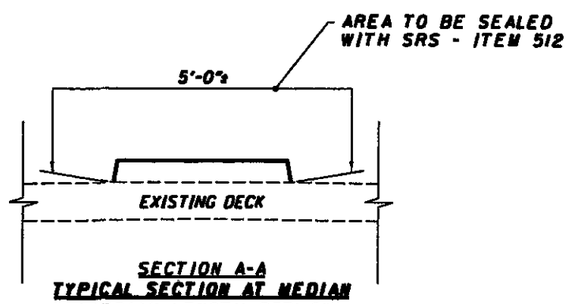

SECTION A-A
TYPICAL SECTION AT MEDIAN
(MEDIAN LENGTH 237'-0")

ITEM	QUANTITY	UNIT	DESCRIPTION
512	1576	SQ YD	TREATING OF CONCRETE BRIDGE DECK WITH SRS

QUANTITIES CARRIED TO STRUCTURE SUMMARY SHEET

NOTES:

1) THE EXISTING GUARDRAIL IS NOT SHOWN.

2) SEAL DECK AND RAISED MEDIAN ON DECK WITH ITEM 512 - TREATING OF CONCRETE BRIDGE DECK WITH SRS.

DESIGN FILE: h:\projects\78483\Struct\DETAILS\002_2222sd001.dgn
WORKSTATION: sjuzwik DATE: 2/28/2007

DESIGNED GTS | CHECKED DJV | DRAWN GTS | REVISED | REVISED RDW | DATE 01/07 | STRUCTURE FILE NUMBER 2202611

DRAWN BY DISTRICT THREE
OFFICE OF PRODUCTION

SITE PLAN
ERI - 2 - 2222
UNDER S.R. 61

ERI-2-20.10

1/2

37/43

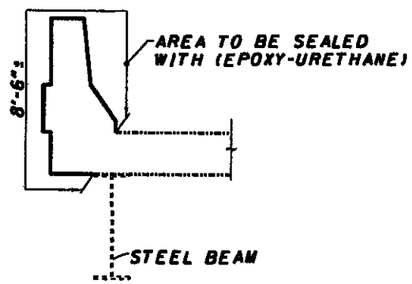

TYPICAL SECTION OF PARAPET ON DECK

LENGTH = 239'-6"±

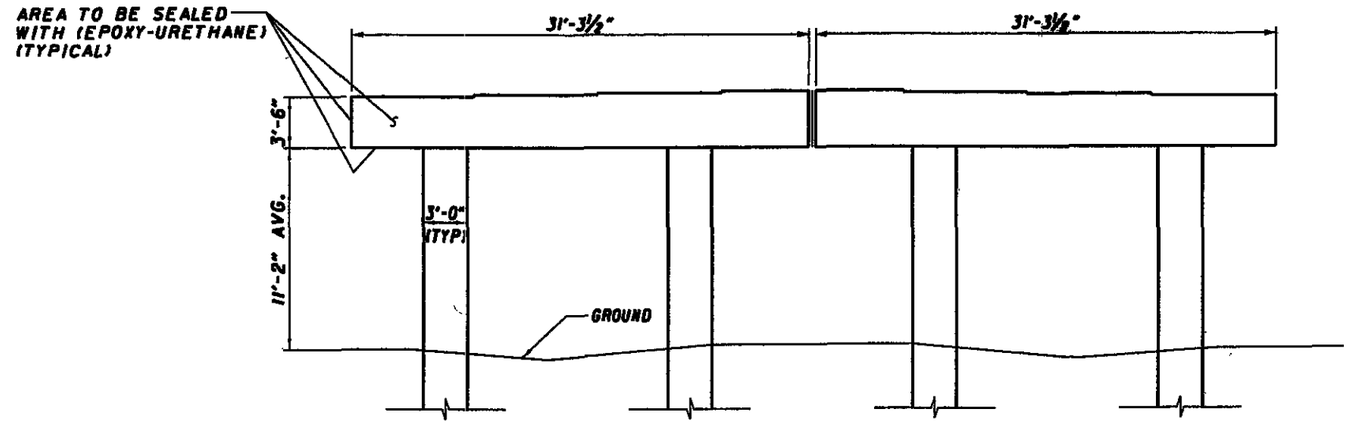

PIER CAP ELEVATION VIEW

WIDTH = 3'-0"±

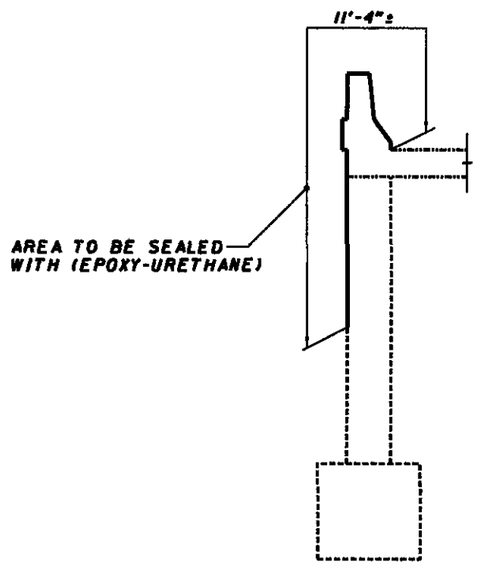

TYPICAL SECTION AT WINGWALL

LENGTH = 14'-0"± AVG.

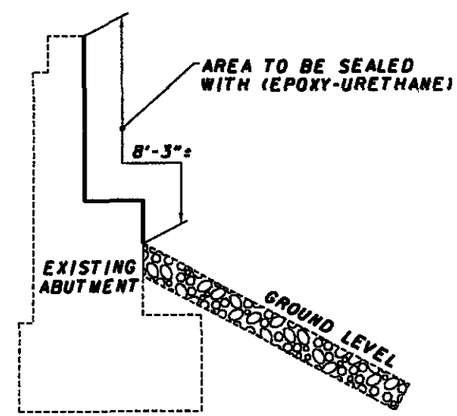

TYPICAL SECTION AT ABUTMENT

(ABUTMENTS ARE 62'-5" LONG)

ITEM	QUANTITY	UNIT	DESCRIPTION
512	991	SQ YD	SEALING OF CONCRETE STRUCTURES (EPOXY-URETHANE)

QUANTITY CARRIED TO STRUCTURE SUMMARY SHEET

NOTES:

1) THE PARAPETS AND ALL EXPOSED AREAS OF THE ABUTMENTS, WINGWALLS AND ENTIRE PIER CAP (EXCEPT TOP) AND COLUMNS SHALL BE SEALED WITH ITEM 512.

2) THE SEALING AREA DETAILS ARE NOT TO SCALE.

DESIGN FILE: I:\projects\78483\Struct\DETAILS\002_2222sd001.dgn
WORKSTATION: sjuzwik DATE: 2/28/2007

DISTRICT THREE
OFFICE OF PRODUCTION

DESIGNED GTS | CHECKED DJV | DRAWN GTS | REVISED | REVISED RDW | DATE 01/07 | STRUCTURE FILE NUMBER 220261

SEALING DETAILS

ERI - 2 - 2222
UNDER SR 61

ERI-2-20.10

2/2

38/43

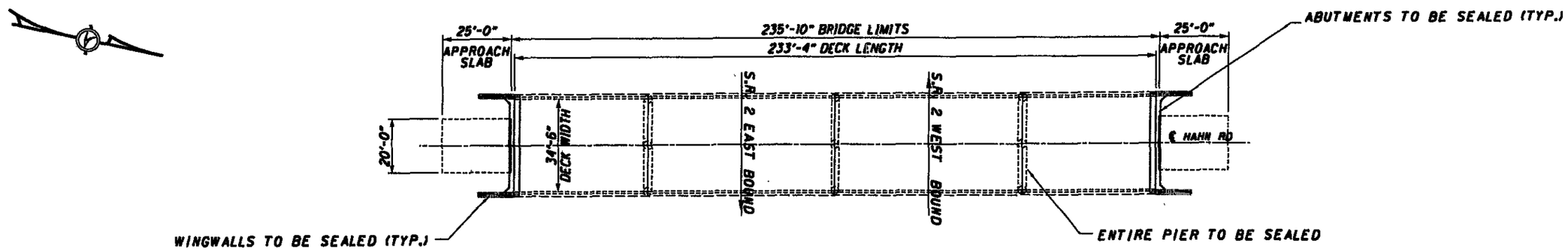

PLAN VIEW

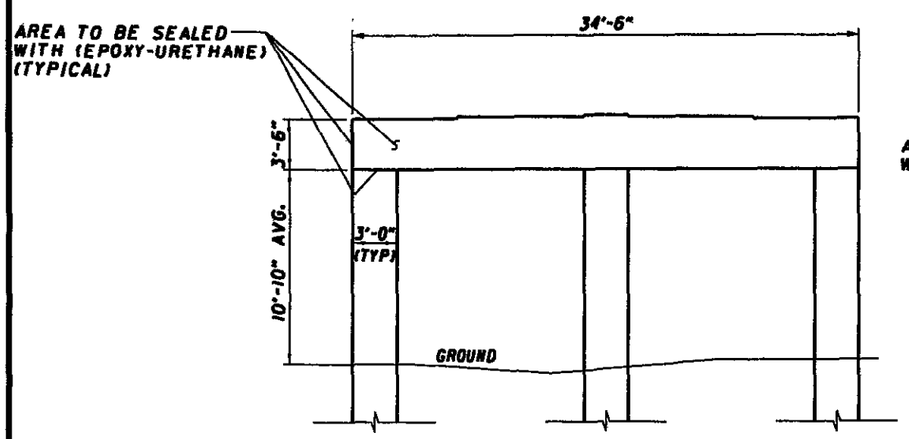

PIER CAP ELEVATION VIEW
WIDTH = 3'-0"±

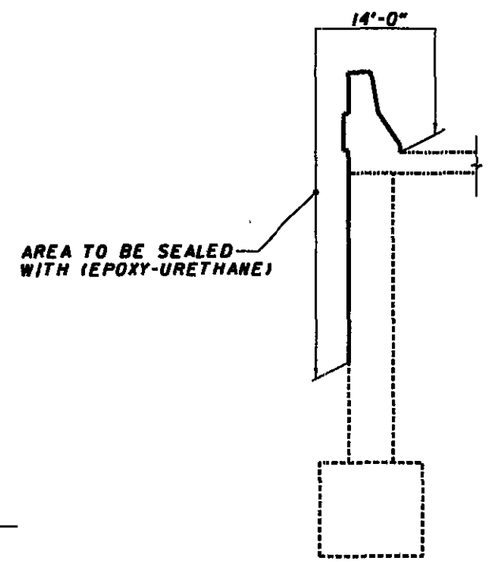

TYPICAL SECTION AT WINGWALL
LENGTH = 13'-0"±

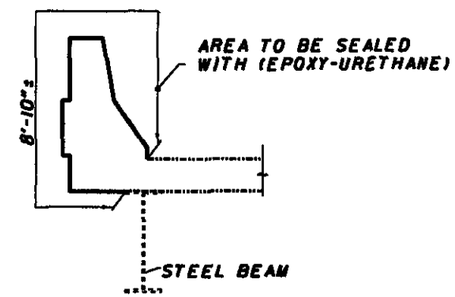

TYPICAL SECTION AT PARAPET
LENGTH = 232'-9"±

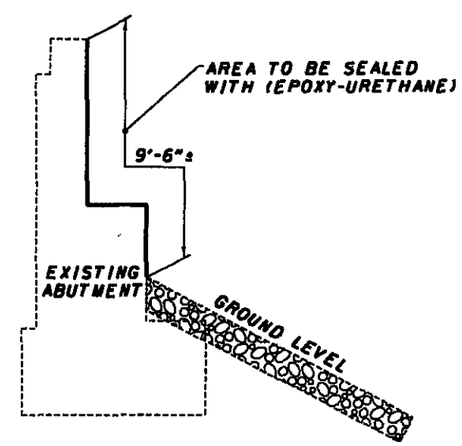

TYPICAL SECTION AT ABUTMENT
(ABUTMENTS ARE 37'-6" LONG)

ITEM	QUANTITY	UNIT	DESCRIPTION
512	868	SQ YD	SEALING OF CONCRETE SURFACES (EPOXY-URETHANE)

*QUANTITIES CARRIED TO STRUCTURE SUMMARY SHEET

NOTES:

1) THE EXISTING GUARDRAIL IS NOT SHOWN.

2) THE PARAPETS AND ALL EXPOSED AREAS OF THE ABUTMENTS, WINGWALLS AND ENTIRE PIER CAP (EXCEPT TOP) AND COLUMNS SHALL BE SEALED WITH ITEM 512.

3) THE SEALING AREAL DETAILS ARE NOT TO SCALE.

DESIGN AGENCY: DISTRICT THREE OFFICE OF PRODUCTION
DATE: 01/07
REVIEWED: RDM
STRUCTURE FILE NUMBER: 2204681
DRAWN: GTS
REVISED:
DESIGNED: GTS
CHECKED: DJV

PLAN VIEW
ERI - 2 - 2338
UNDER HAHN ROAD

ERI-2-20.10

1 / 1

39 / 43

DESIGN FILE: I:\projects\78483\Struct\DETAILS\002_2338sd001.dgn
WORKSTATION: sjuzwik DATE: 2/28/2007

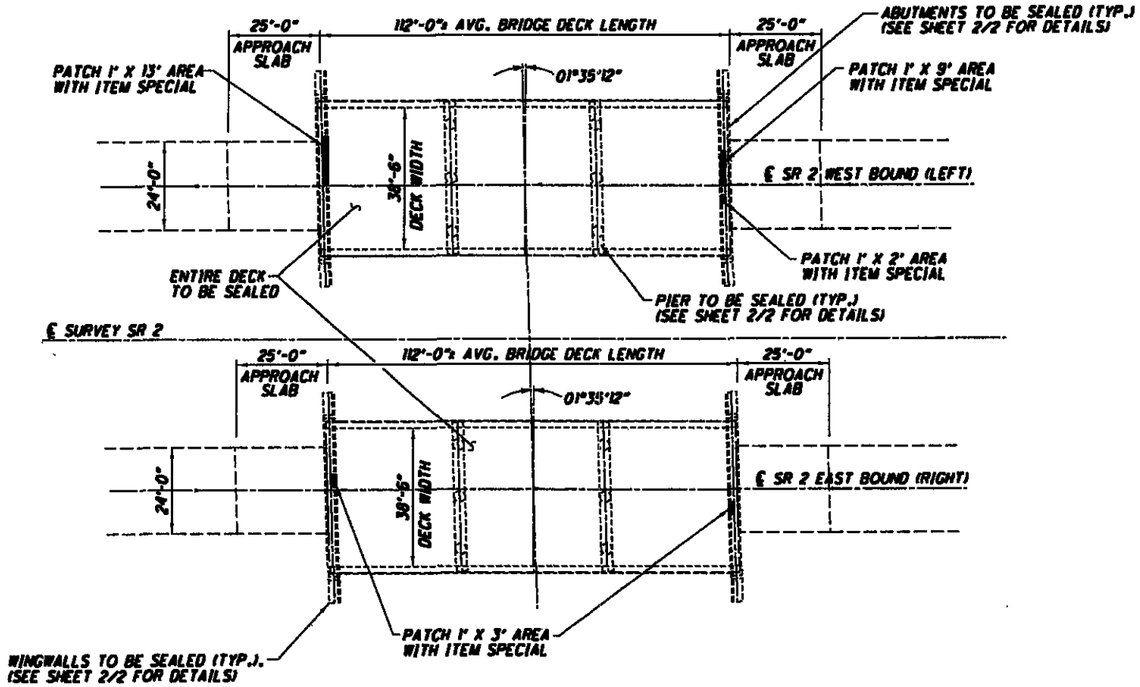

PLAN VIEW

ITEM	QUANTITY		UNIT	DESCRIPTION
	LEFT	RIGHT		
512	479	479	SQ YD	TREATING OF CONCRETE BRIDGE DECK WITH SRS
512	2	1	SQ YD	TREATING CONCRETE BRIDGE DECKS WITH GRAVITY FED RESIN
SPECIAL	3	1	SQ YD	PATCHING CONCRETE BRIDGE DECK

QUANTITIES CARRIED TO STRUCTURE SUMMARY SHEET

NOTES:

1) SEAL DECKS WITH ITEM 512 - TREATING OF CONCRETE BRIDGE DECK WITH SRS.

2) EXISTING GUARDRAIL NOT SHOWN.

3) SEAL PATCH EDGES WITH ITEM 512 - TREATING CONCRETE BRIDGE DECKS WITH GRAVITY FED RESIN.

DESIGN FILE: I:\projects\78483\Struct\DETAILS\002_2410sd001.dgn
WORKSTATION: sjuzwik DATE: 2/28/2007

DISTRICT THREE
OFFICE OF PRODUCTION

DESIGNED GTS | DRAWN GTS | REVISED RDM 01/07 | DATE | STRUCTURE FILE NUMBER 2300711011 & 2300711012

CHECKED DJV

PLAN VIEW
ERI - 2 - 2410 L & R
OVER FRAILEY ROAD

ERI-2-20.10

1 / 6

10 / 43

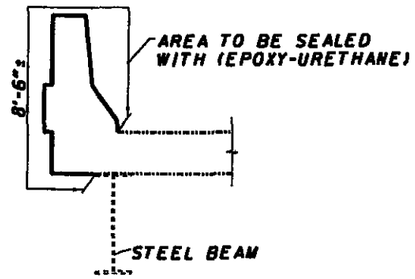

TYPICAL SECTION AT PARAPET
LENGTH = 112'-0"±

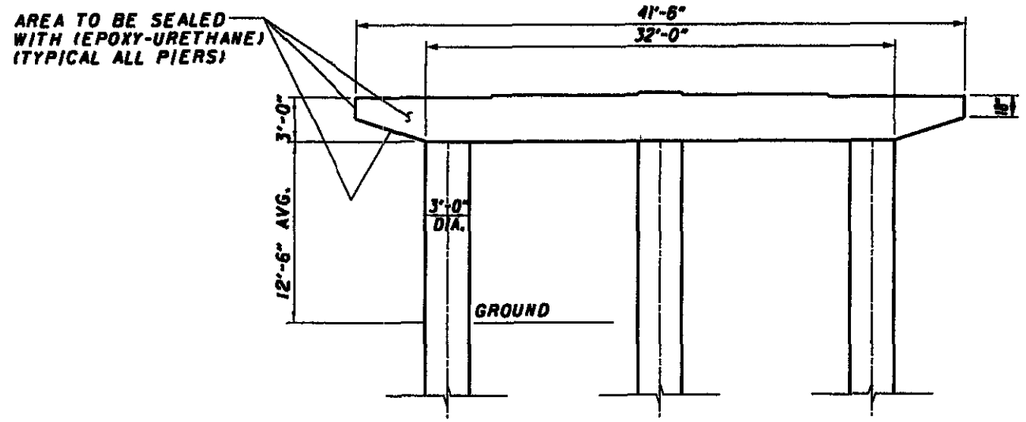

PIER CAP ELEVATION VIEW
WIDTH = 3'-0"±

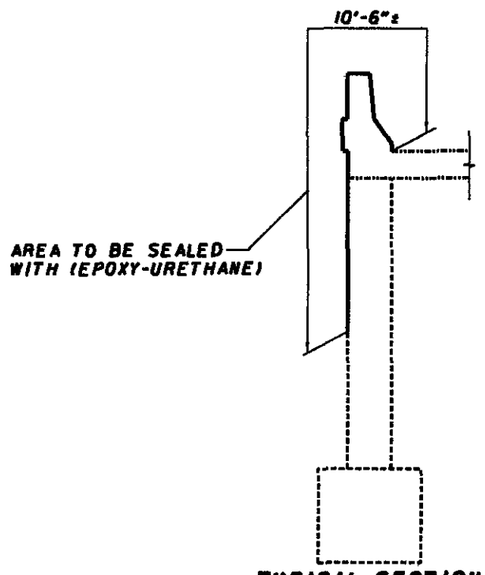

TYPICAL SECTION AT WINGWALL
LENGTH = 7'-3"± AVG.

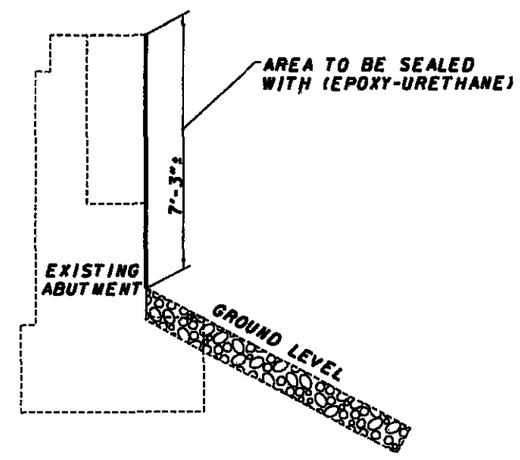

TYPICAL SECTION AT ABUTMENT
(ABUTMENTS ARE 44'-0" LONG)

ITEM	QUANTITY		UNIT	DESCRIPTION
	LEFT	RIGHT		
512	500	500	SQ YD	SEALING OF CONCRETE SURFACES (EPOXY-URETHANE)

QUANTITY CARRIED TO STRUCTURE SUMMARY SHEET

NOTES:
1) THE PARAPETS, BACKWALL AND ALL EXPOSED AREAS OF THE WINGWALLS AND ENTIRE PIER CAP (EXCEPT TOP) AND COLUMNS SHALL BE SEALED WITH ITEM 512.

2) THE SEALING AREA DETAILS ARE NOT TO SCALE.

DESIGN FILE: I:\projects\78483\Struct\DETAILS\002_2410sd001.dgn
WORKSTATION: sjuzwik DATE: 2/28/2007

DESIGN AGENCY: DISTRICT THREE OFFICE OF PRODUCTION
REVISED RDW DATE 01/07 STRUCTURE FILE NUMBER 2200411111 & 2200411112
DRAWN GTS REVISED
DESIGNED GTS CHECKED DJV

SEALING DETAILS
ERI - 2 - 2410 L & R
OVER FRAILEY ROAD

ERI-2-20.10

2/2

41/43

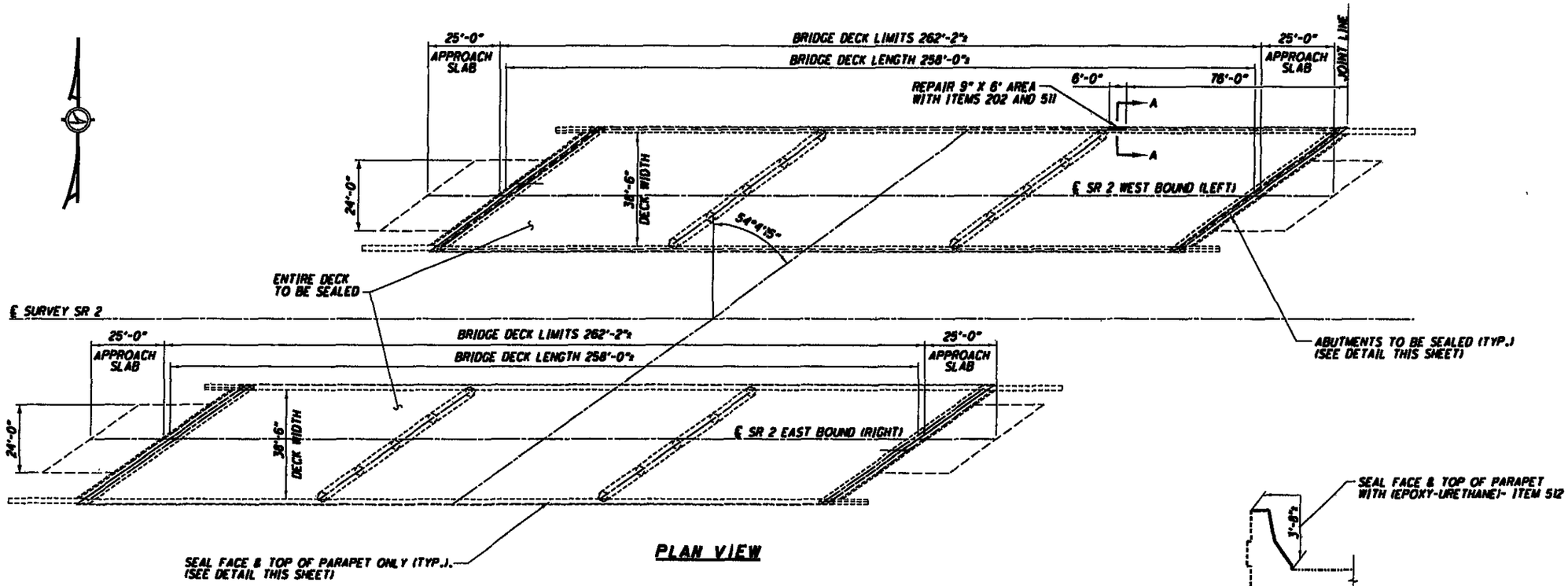

PLAN VIEW

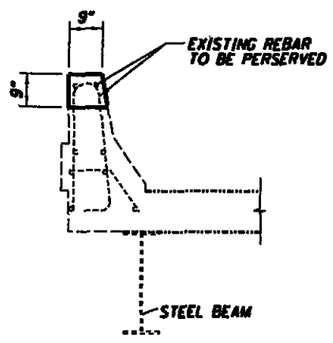

SECTION A-A

REPAIR LENGTH = 6'-0"±

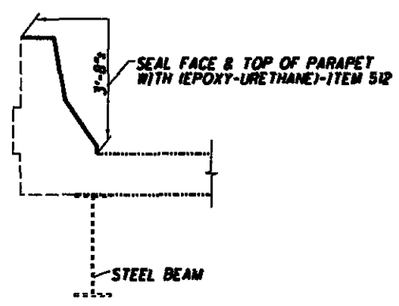

TYPICAL SECTION AT PARAPET

LENGTH = 259'-8"±

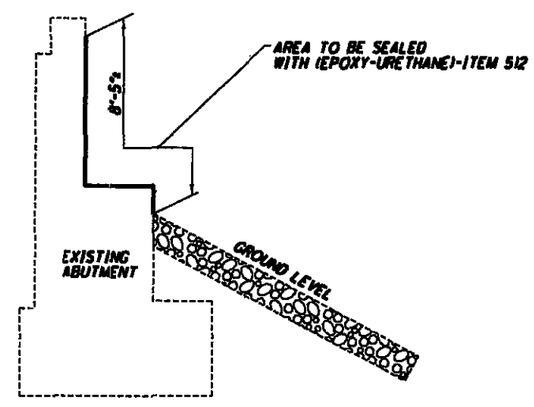

TYPICAL SECTION AT ABUTMENT

(ABUTMENT LENGTH = 69'-6")

TYPICAL SECTION AT WINGWALL

LENGTH = 19'-0"± AVG.

ITEM	QUANTITY		UNIT	DESCRIPTION
	LEFT	RIGHT		
202	.13		CU YD	PORTION OF STRUCTURE REMOVED, AS PER PLAN
511	.13		CU YD	CLASS S CONCRETE SUPERSTRUCTURE, AS PER PLAN (PARAPET RECONSTRUCTION)
512	372	372	SQ YD	SEALING OF CONCRETE SURFACES (EPOXY-URETHANE)
512	1107	1107	SQ YD	TREATING OF CONCRETE BRIDGE DECK WITH SRS

QUANTITIES CARRIED TO STRUCTURE SUMMARY SHEET

NOTES:

1) SEAL DECK WITH ITEM 512 - TREATING OF CONCRETE BRIDGE DECK WITH SRS.
2) EXISTING GUARDRAIL NOT SHOWN.
3) REPAIR LEFT PARAPET ON LEFT STRUCTURE USING ITEM 202 AND 511.
4) NO DEBRIS SHALL BE ALLOWED TO FALL TO GROUND.
5) SEAL BACKWALLS, ABUTMENT SEATS AND TOP AND ROADWAY SIDE OF PARAPETS ONLY.

DESIGN FILE: u:\projects\78483\Struct\DETAILS\002_242lsd001.dgn
WORKSTATION: sjuzwik DATE: 2/28/2007

DESIGN AGENCY: DISTRICT THREE
OFFICE OF PRODUCTION

DESIGNED GTS | CHECKED DJV | DRAWN GTS | REVISED | REVIEWED RDW | DATE 01/07 | STRUCTURE FILE NUMBER 2284153(B) & 2284154(L)

PLAN VIEW & SEALING DETAILS

ERI - 2 - 2421 L & R
OVER NORFOLK RAILROAD

ERI-2-20.10

1/1

42/43

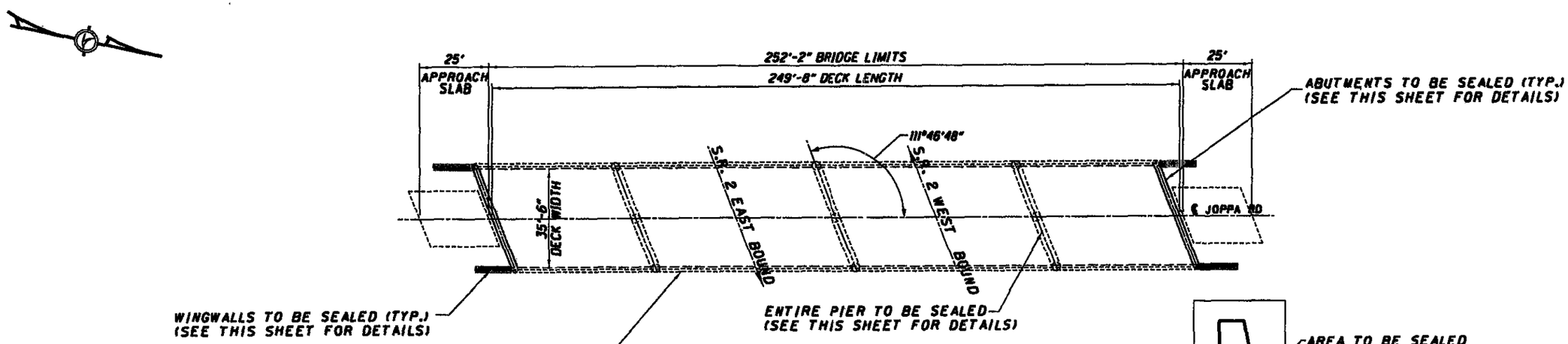

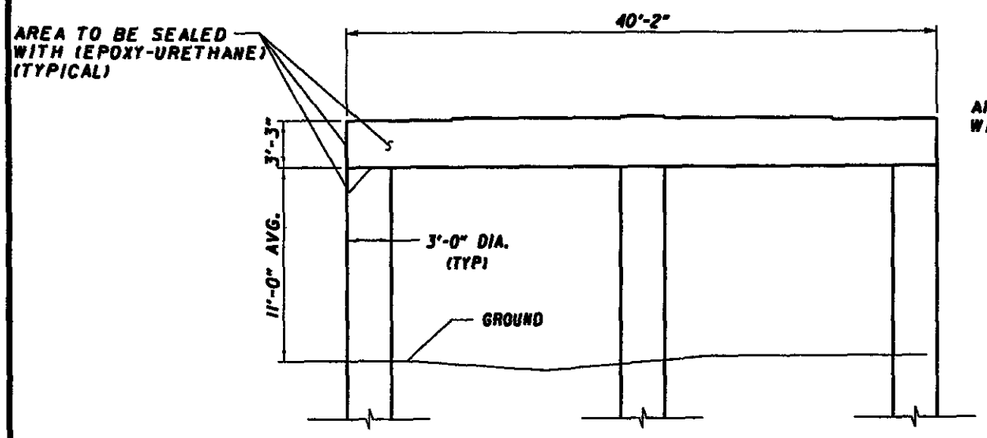

PIER CAP ELEVATION VIEW
WIDTH = 3'-0"±

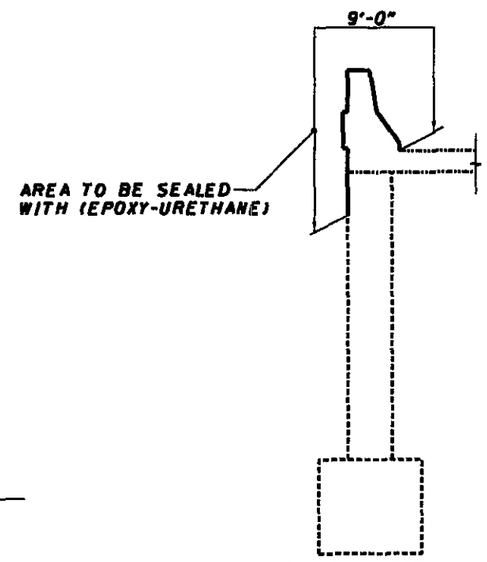

TYPICAL SECTION AT WINGWALL
LENGTH = 13'-7½"± AVG.

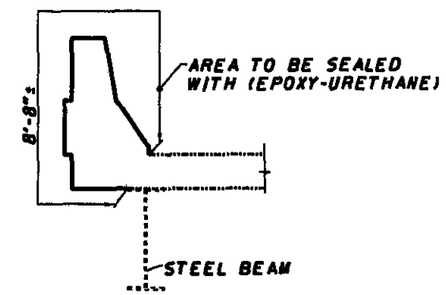

TYPICAL SECTION AT PARAPET
LENGTH = 249'-8"±

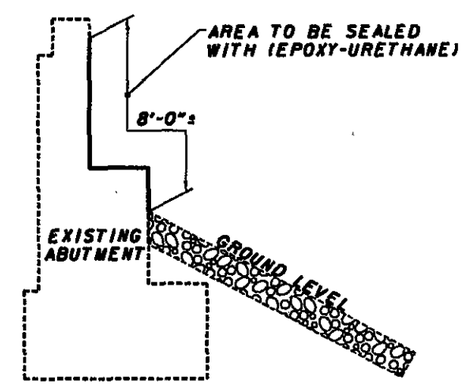

TYPICAL SECTION AT ABUTMENT
(ABUTMENTS ARE 40'-0" AVG. LONG)

ITEM	QUANTITY	UNIT	DESCRIPTION
512	840	SQ YD	SEALING OF CONCRETE SURFACES (EPOXY-URETHANE)

QUANTITIES CARRIED TO STRUCTURE SUMMARY SHEET

NOTES:

1) THE EXISTING GUARDRAIL IS NOT SHOWN.

2) THE PARAPETS AND ALL EXPOSED AREAS OF THE ABUTMENTS, WINGWALLS AND ENTIRE PIER CAP (EXCEPT THE TOP) AND COLUMNS SHALL BE SEALED WITH ITEM 512.

3) THE SEALING AREA DETAILS ARE NOT TO SCALE.

DESIGN FILE: I:\projects\78483\Struct\DETAILS\002_2522sd001.dgn
WORKSTATION: sjuzwik DATE: 2/28/2007

DESIGN AGENCY: DISTRICT THREE
OFFICE OF PRODUCTION

DESIGNED	DRAWN	REVISED	DATE
GTS	GTS	RDM	01/07
CHECKED	REVISED	STRUCTURE FILE NUMBER	
DJV		2204789	

PLAN VIEW
ERI - 2 - 2522
UNDER JOPPA ROAD

ERI-2-20.10

1/1

43/43