STATE OF OHIO
DEPARTMENT OF TRANSPORTATION
9.76 10.33 10.86
PIK-23-15.707/16.625/17.477

Pios # 0284-98

metric units

PEE PEE TOWNSHIP
PIKE COUNTY

9.77

FEDERAL PROJECT NO. NH-22 (86)
PID NO. 15439
CONSTRUCTION PROJECT NO.
RAILROAD INVOLVEMENT NONE

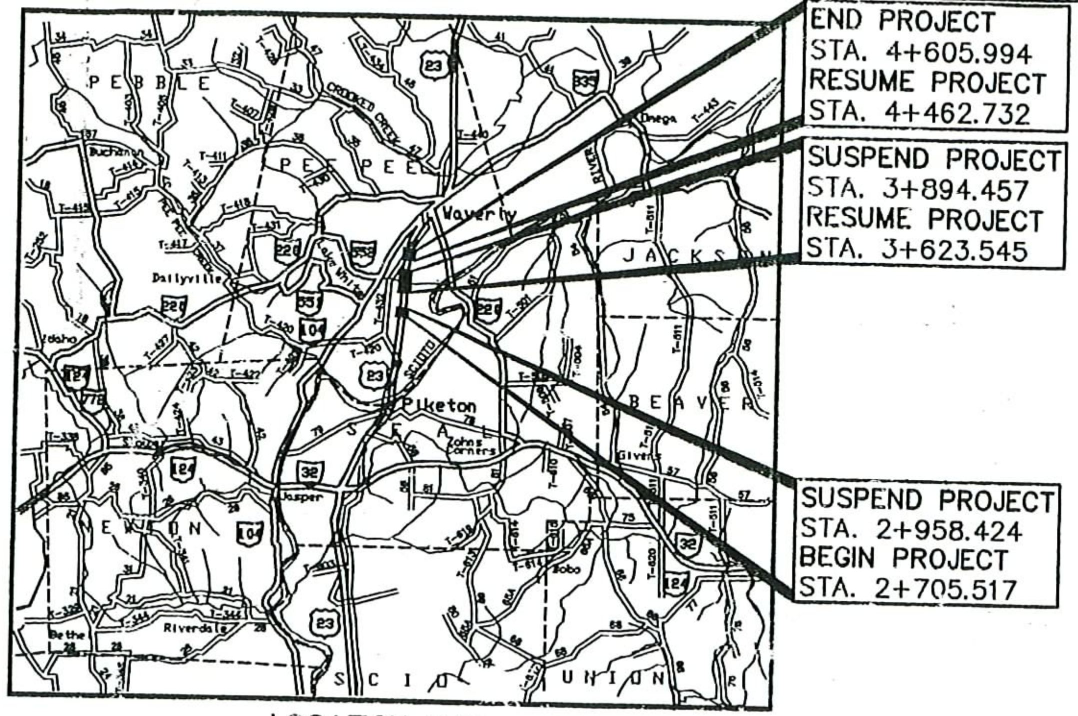

LOCATION MAP
LATITUDE: N39°05'25" LONGITUDE: W83°00'05"

SCALE IN KILOMETERS
0 2 4 6 8

PORTION TO BE IMPROVED
STATE & FEDERAL ROUTES
OTHER ROADS

DESIGN DESIGNATION

CURRENT A.D.T.(1995)	14050
DESIGN YEAR ADT(2015)	18260
DESIGN HOURLY VOLUME (2015)	1826
DIRECTIONAL DISTRIBUTION	55%
TRUCKS	5%
DESIGN SPEED	100 KM/H
LEGAL SPEED	55 MPH (89KM\H)
DESIGN FUNCTIONAL CLASSIFICATION	ARTERIAL (RURAL)

DESIGN EXCEPTIONS
NONE REQUIRED

INDEX OF SHEETS

TITLE SHEET	1
SCHEMATIC PLAN	2
TYPICAL SECTIONS	3-4
GENERAL NOTES	5-6, 6A
MAINTENANCE OF TRAFFIC	7-27, 11A
GENERAL SUMMARY	28-29
MISCELLANEOUS CALCULATIONS	30
TEMPORARY SOIL EROSION AND SEDIMENT CONTROL	31-32
PLAN AND PROFILE	33-42
CROSS SECTIONS	43-55
EXAGGERATED PAVEMENT SECTIONS	56-59
CONCRETE BARRIER, TYPE D, AS PER PLAN	60
TRAFFIC CONTROL CALCULATIONS	61
STRUCTURE OVER 6 METER SPAN	
PHASE CONSTRUCTION DETAILS	62
PIK-23-0977L&R OVER SCIOTO RIVER OVERFLOW	63-75
PIK-23-1034L&R OVER PEE PEE CREEK	76-92
PIK-23-1087L&R OVER SCIOTO RIVER OVERFLOW	93-105
RIGHT-OF-WAY	106-117

PROJECT DESCRIPTION
IMPROVEMENT OF 667.081 m OF U.S.R. 23 BY REHABILITATION OF *SIX* STRUCTURES, PIK-23-*0977L&R* OVER OVERFLOW, PIK-23-*1034L&R* OVER PEE PEE CREEK AND PIK-23-*1087L&R* OVER OVERFLOW, INCLUDING APPROACH RECONSTRUCTION.

1997 SPECIFICATIONS
THE STANDARD SPECIFICATIONS OF THE STATE OF OHIO, DEPARTMENT OF TRANSPORTATION, INCLUDING CHANGES AND SUPPLEMENTAL SPECIFICATIONS LISTED IN THE PROPOSAL SHALL GOVERN THIS IMPROVEMENT.

I HEREBY APPROVE THESE PLANS AND DECLARE THAT THE MAKING OF THIS IMPROVEMENT WILL NOT REQUIRE THE CLOSING TO TRAFFIC OF THE HIGHWAY AND THAT PROVISIONS FOR THE MAINTENANCE AND SAFETY OF TRAFFIC WILL BE AS SET FORTH ON THE PLANS AND ESTIMATES.

UNDER AUTHORITY OF SECTION 4511.21, DIVISION (1) OF THE REVISED CODE OF OHIO, THE REVISED PRIMA FACIE SPEED LIMITS AS INDICATED HEREIN ARE DETERMINED TO BE REASONABLE AND SAFE, AND ARE HEREBY ESTABLISHED FOR THE DURATION OF THIS PROJECT. THE PRIMA FACIE SPEED LIMIT OR LIMITS HEREBY ESTABLISHED SHALL BECOME EFFECTIVE WHEN APPROPRIATE SIGNS GIVEN NOTICE THEREOF ARE ERECTED.

STRUCTURE PLANS REVIEWED BY
OFFICE OF STRUCTURAL ENGINEERING

ENGINEERS SEAL:
DISTRICT 9 PRODUCTION REVISION OF PLANS TO 1997 CMS & REVISION OF BRIDGE PARAPETS FROM 915MM TO 1065 MM & JOINT OF EXPANSION
STATE OF OHIO LAWRENCE A. WILLS E-39687 REGISTERED PROFESSIONAL ENGINEER
SIGNED: Lawrence A. Wills
DATE: 1-29-98

UNDERGROUND UTILITIES
TWO WORKING DAYS
BEFORE YOU DIG
CALL 1-800-362-2764 (TOLL FREE)
OHIO UTILITIES PROTECTION SERVICE
NON-MEMBERS
MUST BE CALLED DIRECTLY

PLAN PREPARED BY:
JONES-STUCKEY LTD., INC.
1641 WEST FIFTH AVENUE
COLUMBUS, OHIO 43212

STANDARD CONSTRUCTION DRAWINGS								SUPPLEMENTAL SPECIFICATIONS	
BP-2.1M	(4-8-97)			MT-99.2?M	(1-30-95)				
BP-3.1M	(10-28-94)	HW-2.?M	(7-12-95)	MT-101.60M	(4-25-94)	CS-1-93M	(6-30-95)		
BP-5.1M	(10-28-94)	HW-2.2M	(7-12-95)	MT-105.10M	(4-25-94)				
GR-1.1M	(10-21-97)	I-1.1M	(9-6-95)	MT-105.11M	(4-25-94)	EXJ-6-96M	(3-18-97)		
GR-1.2	(1-3-96)	DM-1.1M	(10-21-97)	MT-100.00M	(4-25-94)	IRJ-8-95M	(7-6-95)	806	(9-9-97)
GR-2.1M	(10-21-97)	DM-2.1M	(6-30-95)	TC-41.20M	(7-1-94)	CPP-2-94M	(12-19-94)	911	(7-10-97)
GR-3.1M	(10-21-97)	DM-4.1M	(6-30-95)	TC-42.20M	(3-31-94)	CPA-5-94M	(10-25-94)	932	(10-2-96)
GR-3.2M	(10-21-97)	DM-4.2M	(6-30-95)	TC-52.10M	(7-29-94)			844	(9-9-97)
GR-6.1M	(1-3-96)	DM-4.3M	(6-30-95)	TC-52.20M	(7-29-94)			954	(9-9-97)
RM-4.1M	(10-21-97)	DM-4.4M	(6-30-95)	TC-65.10M	(11-1-95)			SPECIAL PROVISIONS	
RM-4.2M	(10-21-97)	MT-35.10M	(1-30-95)	TC-65.11M	(11-1-95)				
RM-4.3M	(10-21-97)	MT-35.11M	(1-30-95)	TC-65.12M	(11-1-95)				
RM-4.5M	(10-21-97)	MT-95.30M	(4-25-94)	TC-71.10M	(9-1-93)				
CB-1.1M	(7-12-95)	MT-95.70M	(1-30-95)	AS-1-81M	(10-25-94)				
CB-3.3M	(7-12-95)	MT-95.81M	(4-25-94)	BR-1M	(12-15-94)				

APPROVED John E. Hagen TME
DATE 1-29-98 DISTRICT DEPUTY DIRECTOR

APPROVED
DATE 2-17-98 DIRECTOR, DEPARTMENT OF TRANSPORTATION

REV 1-21-98 JRS

PIK-23-15.70
980284
117PGS
05-13-98
DIST.09

PIK-23-15.707/16.625/17.477
(SLM 9.76/10.33/10.86)

metric units

0 20 40 80
HORIZONTAL SCALE IN METERS

CALCULATED R.S.B.
CHECKED E.D.W.

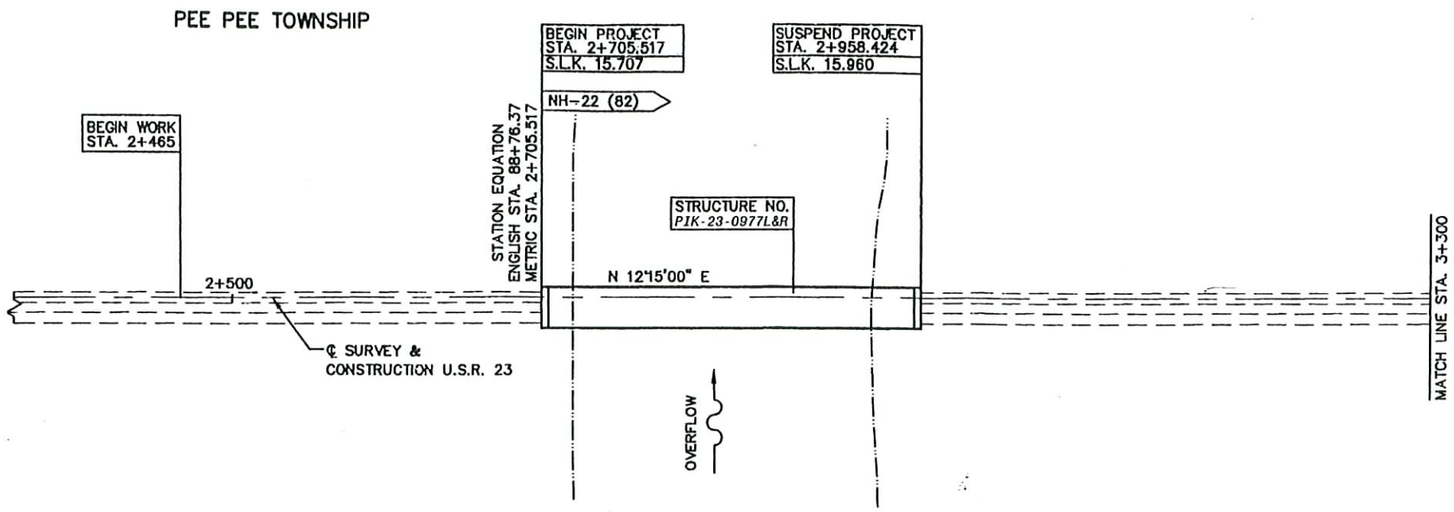

18.38
17.79

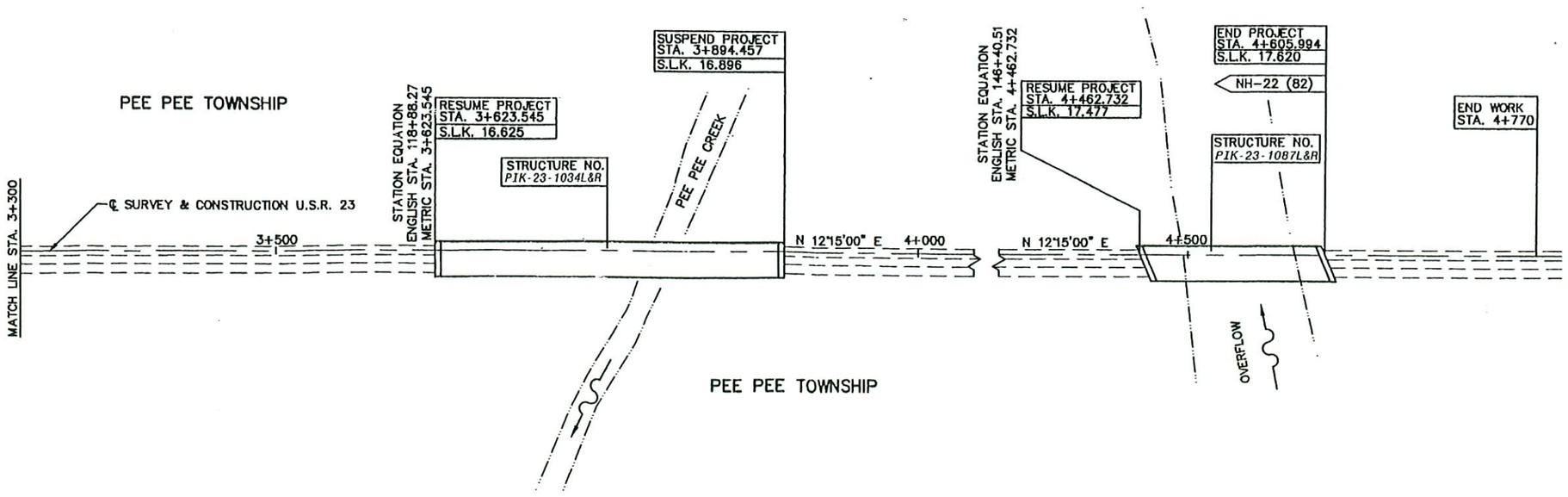

SCHEMATIC PLAN

PIK-23-15.707/16.625/17.477

metric units

DESIGNED R.S.B. CHECKED E.D.W.

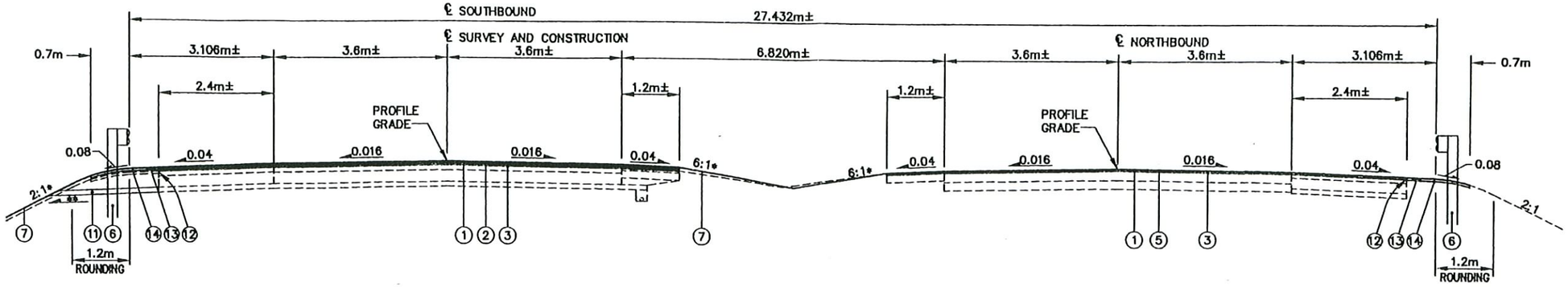

TYPICAL 2

NORMAL SECTION

STA. 2+680.000 TO STA. 2+705.517	=	25.517 m
STA. 2+958.424 TO STA. 3+020.000	=	61.576 m
STA. 3+540.000 TO STA. 3+623.545	=	83.545 m
STA. 3+894.457 TO STA. 3+960.000	=	65.543 m
STA. 4+400.000 TO STA. 4+462.732	=	62.732 m
STA. 4+605.994 TO STA. 4+640.000	=	34.006 m
		332.919 m

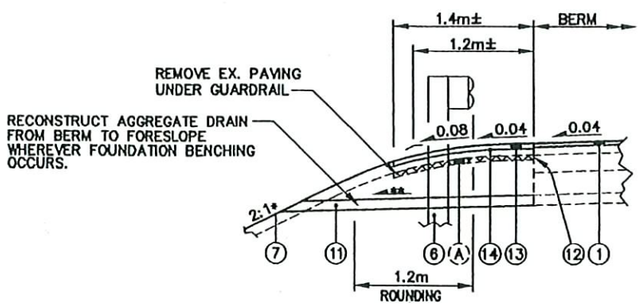

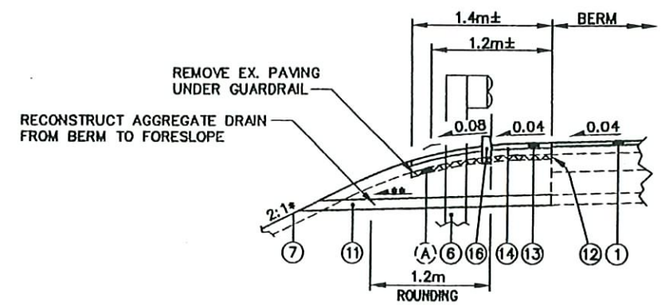

BERM WITH CURB

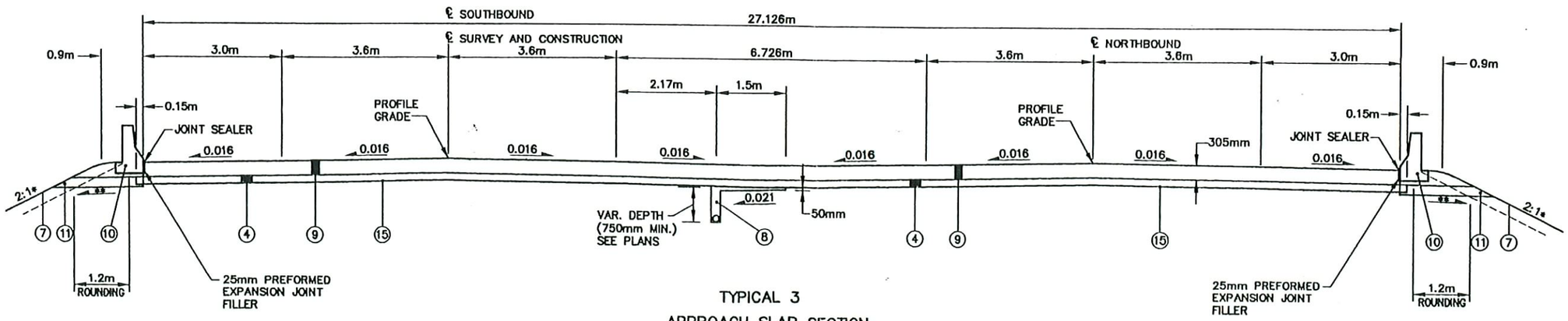

TYPICAL 3

APPROACH SLAB SECTION

STA. 2+705.517 TO STA. 2+710.117	=	4.6 m
STA. 2+953.824 TO STA. 2+958.424	=	4.6 m
STA. 3+623.545 TO STA. 3+628.145	=	4.6 m
STA. 3+889.857 TO STA. 3+894.457	=	4.6 m
STA. 4+462.732 TO STA. 4+467.332	=	4.6 m
STA. 4+601.394 TO STA. 4+605.994	=	4.6 m
		27.6 m

NOTES:

SEE SHEET 3 FOR LEGEND.

SEE EXAGGERATED PAVEMENT SECTIONS FOR LOCATIONS AND QUANTITIES OF ⑤ & ②

* : UNLESS OTHERWISE SHOWN ON THE CROSS SECTION

** : 0.04 MIN. 0.08 PREF.

TYPICAL SECTIONS

PIK-23-15.707/16.625/17.477

REV 1-21-98 JRS

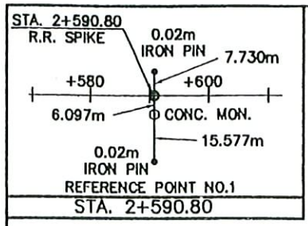

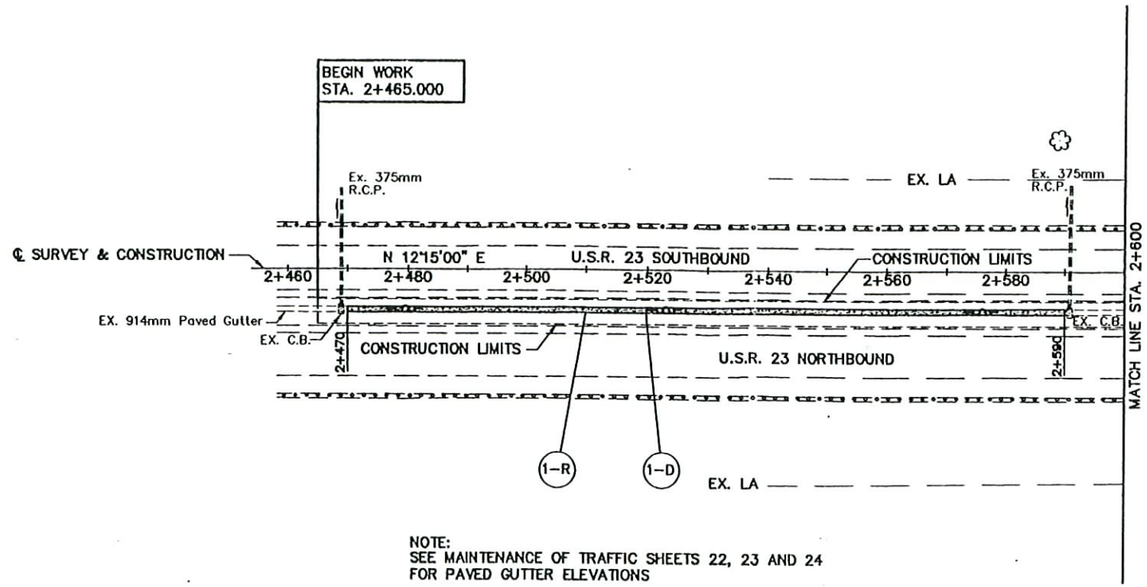

NOTE:
SEE MAINTENANCE OF TRAFFIC SHEETS 22, 23 AND 24
FOR PAVED GUTTER ELEVATIONS

BENCH MARK NO.5
SPIKE ON TOP OF REFERENCE MONUMENT.
STA. 2+590.80 6.097m RT.
ELEVATION 172.278

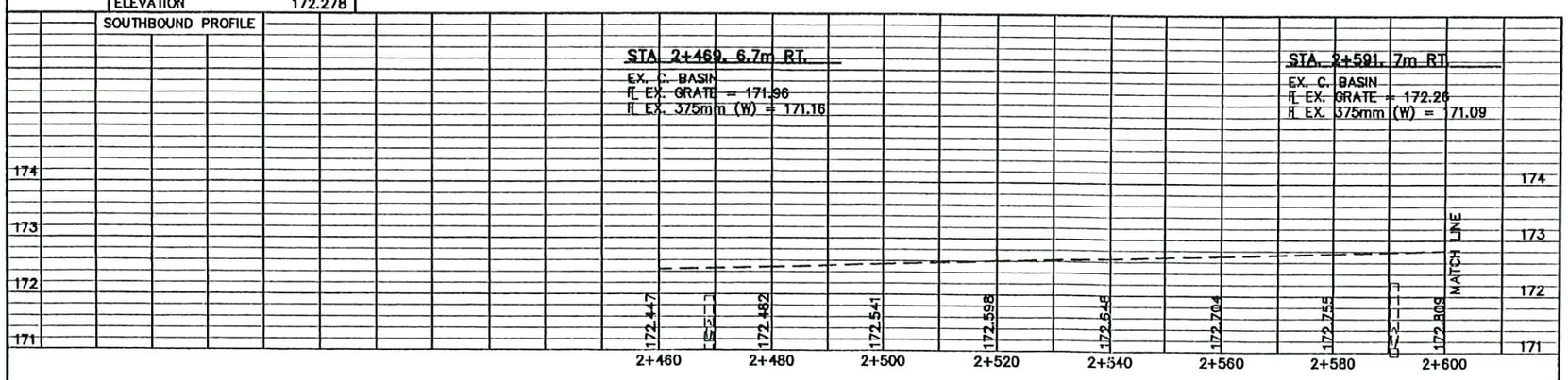

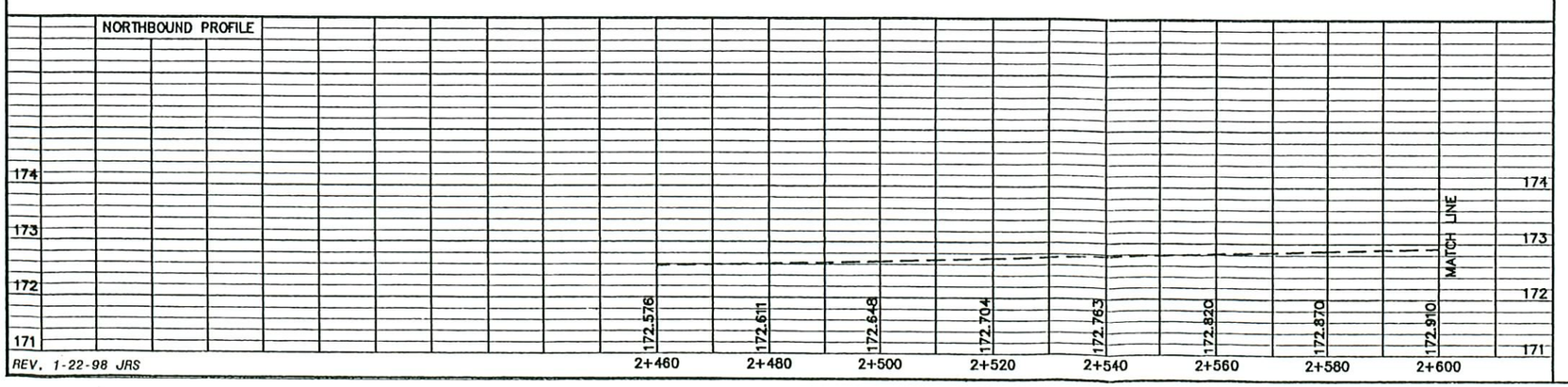

REV. 1-22-98 JRS

REF. NO.	STATION FROM	STATION TO	SIDE	202 GUTTER REMOVED (METER)	601 PAVED GUTTER TYPE 2 (METER)	601 ROCK CHANNEL PROTECTION TYPE C WITH FILTER (CU. METER)	609 CURB, TYPE 6 (METER)	660 REINFORCED SODDING (SQ. METER)	SEE SHEET NO.
1-D	2+470.000	2+590.000	RT.		120				
4-D	2+709.787	2+718.401	LT./RT.			194			34
1-R	2+470.000	2+590.000	RT.	120					
4-P	2+695.234	2+704.419	LT.				9.185		34
5-P	2+698.211	2+705.396	RT.				9.185		34
6-D	2+692.610	2+693.359	LT.					23.157	34
7-D	2+693.511	2+696.511	RT.					25.292	34
TOTALS CARRIED TO GENERAL SUMMARY 28				120	120	194	18.370	49	

metric units

HORIZONTAL SCALE IN METERS 0 5 10 20

CALCULATED R.S.B.
CHECKED E.D.W.

U.S.R. 23 PLAN AND PROFILE
STA. 2+460 TO STA. 2+600

PIK-23-15.707/16.625/17.477

metric units

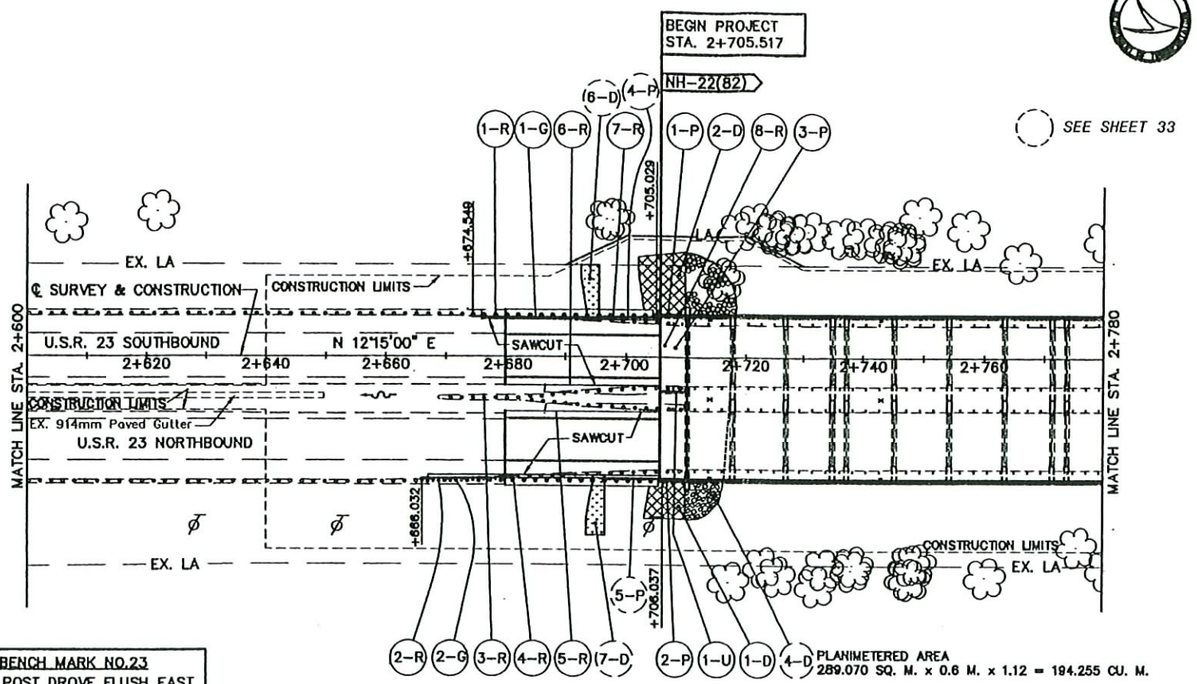

BENCH MARK NO.23
STEEL POST DROVE FLUSH EAST OF BRIDGE.
STA. 2+716.92 31.618m RT.
ELEVATION 169.243

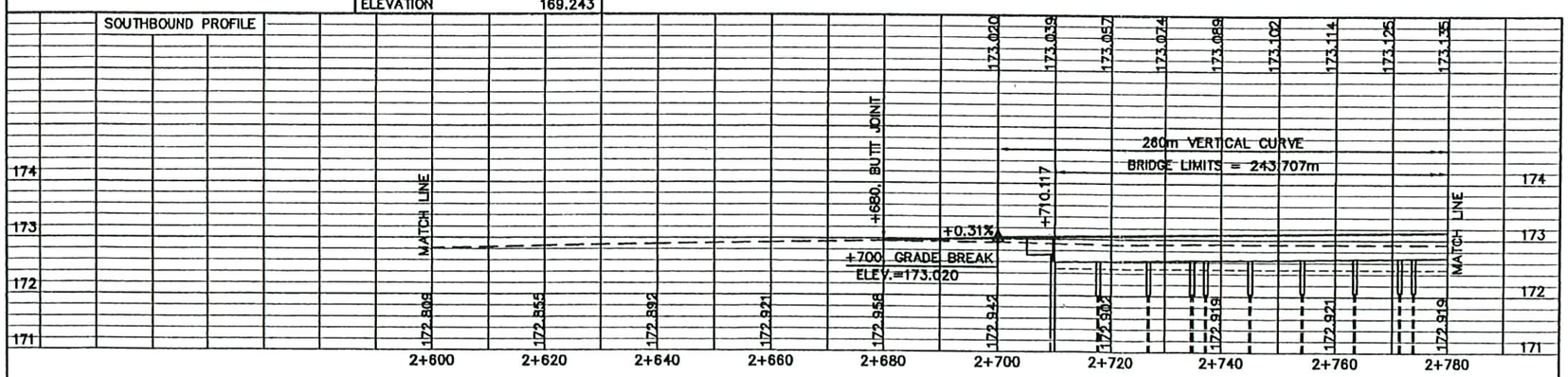

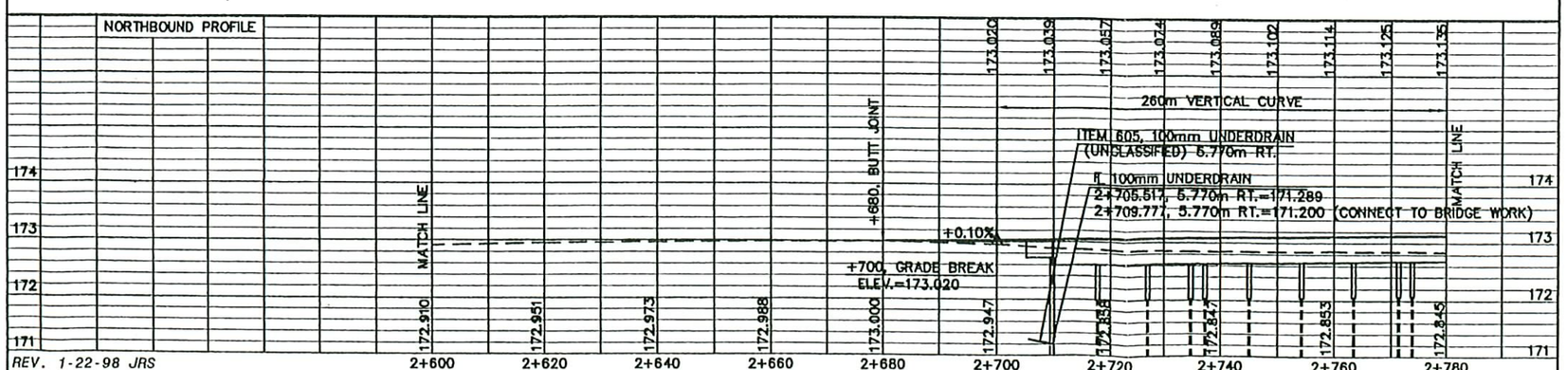

REV. 1-22-98 JRS

REF. NO.	STATION FROM	STATION TO	SIDE	202 APPROACH SLAB REMOVED (SQ. METER)	202 GUARDRAIL REMOVED FOR REUSE (METER)	202 GUARDRAIL REMOVED BARRIER DESIGN (METER)	255 FULL DEPTH PAVEMENT SAWING (METER)	516 25mm PREFORMED EXPANSION JOINT FILLER (SQ. METER)	516 51mm DEEP JOINT SEALER (METER)	605 100mm UNCLASSIFIED PIPE UNDERDRAIN (METER)	606 GUARDRAIL REBUILT TYPE 5 (METER)	606 BRIDGE TERMINAL ASSEMBLY TYPE 1 (EACH)	606 BRIDGE TERMINAL ASSEMBLY TYPE 2 (EACH)	611 REINFORCED CONCRETE APPROACH SLAB (T=305mm) AS PER PLAN (SQ. METER)	622 CONCRETE BARRIER TYPE D AS PER PLAN (METER)	670 SLOPE EROSION PROTECTION (SQ. METER)
1-D	2+702.958	2+709.777	RT.													33
2-D	2+701.981	2+709.777	LT.													80
1-G	2+674.549	2+705.029	LT.													
2-G	2+686.032	2+706.037	RT.													
1-P	2+704.419	2+710.117	LT.					1	5		30.480	1	1		5.698	
2-P	2+705.398	2+710.117	RT.					1	5		40.005	1			4.721	
3-P	2+705.517	2+710.117	LT./RT.											125		
1-R	2+674.549	2+712.649	LT.		38.100											
2-R	2+686.032	2+711.752	RT.		45.720											
3-R	2+688.705	2+710.615	RT.		57.150	13.340										
4-R	2+687.000	2+705.517	RT.				38.5									
5-R	2+688.500	2+705.517	RT.				19.0									
6-R	2+688.500	2+705.517	RT.				19.0									
7-R	2+678.000	2+705.517	LT.				29.5									
8-R	2+705.517	2+710.117	LT./RT.	50												
1-U	2+705.517	2+709.777	RT.							4.260						
TOTALS CARRIED TO GENERAL SUMMARY 28				50	140.970	13.340	106	2	10	4	70.485	1	1	125	10	113

CALCULATED E.P.C.
CHECKED J.E.L.

0 5 10 20 HORIZONTAL SCALE IN METERS

U.S.R. 23 PLAN AND PROFILE
STA. 2+540 TO STA. 2+600

PIK-23-15.707/16.625/17.477

PROPOSED STRUCTURE

TYPE: CONTINUOUS CONCRETE SLAB ON CAPPED PILE PIERS & ABUTMENTS.
SPAN: 242.787m F/F ABUTMENT
ROADWAY: 27.126m T/T BARRIER
LOADING: MS-18 AND ALTERNATE MILITARY LOADING
SKEW: NONE
WEARING SURFACE: 25mm MONOLITHIC CONC.
ALIGNMENT: TANGENT
CROWN: 0.016
APPROACH SLABS: AS-1-81M (4.6m LONG)

metric units

SEE SHEET 36

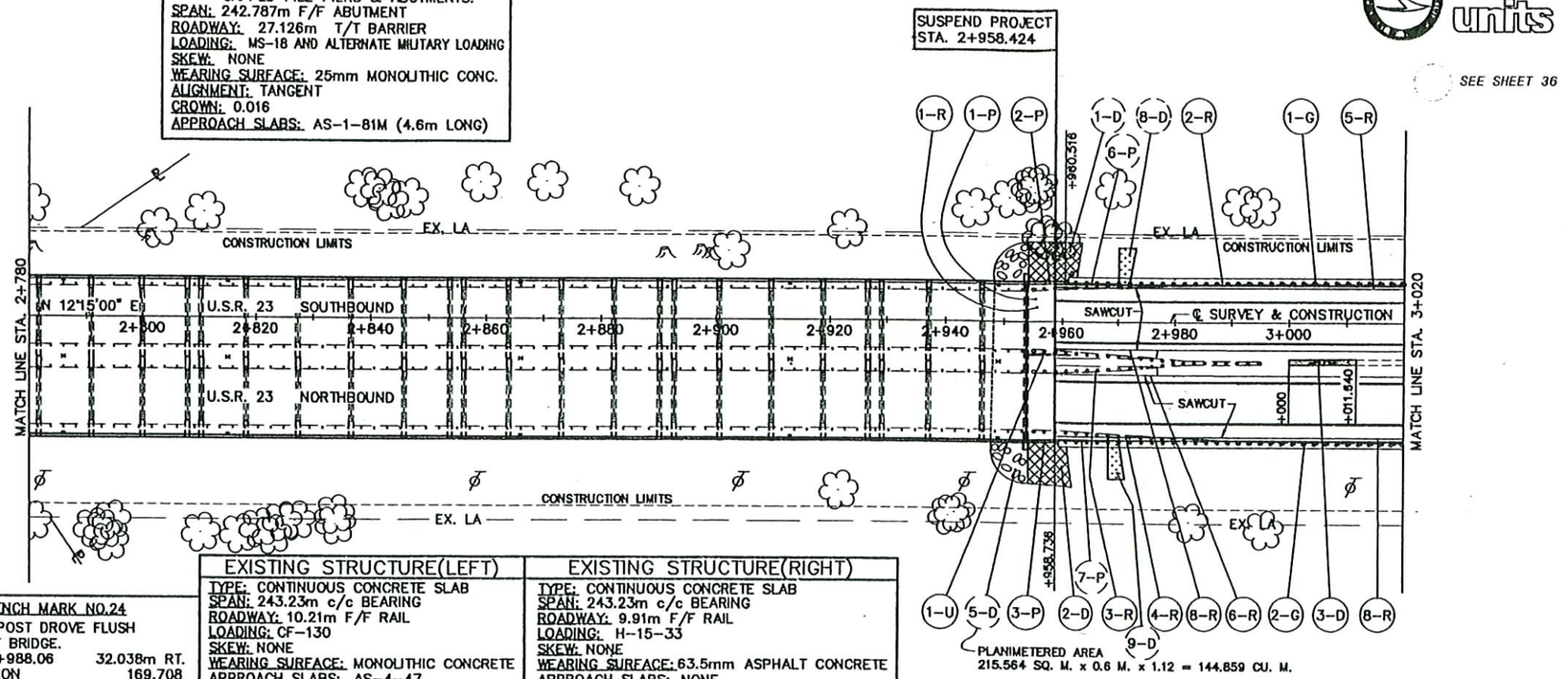

BENCH MARK NO.24

STEEL POST DROVE FLUSH
N/E OF BRIDGE.
STA. 2+988.06 32.038m RT.
ELEVATION 169.708

EXISTING STRUCTURE(LEFT)

TYPE: CONTINUOUS CONCRETE SLAB
SPAN: 243.23m c/c BEARING
ROADWAY: 10.21m F/F RAIL
LOADING: CF-130
SKEW: NONE
WEARING SURFACE: MONOLITHIC CONCRETE
APPROACH SLABS: AS-4-47

EXISTING STRUCTURE(RIGHT)

TYPE: CONTINUOUS CONCRETE SLAB
SPAN: 243.23m c/c BEARING
ROADWAY: 9.91m F/F RAIL
LOADING: H-15-33
SKEW: NONE
WEARING SURFACE: 63.5mm ASPHALT CONCRETE
APPROACH SLABS: NONE

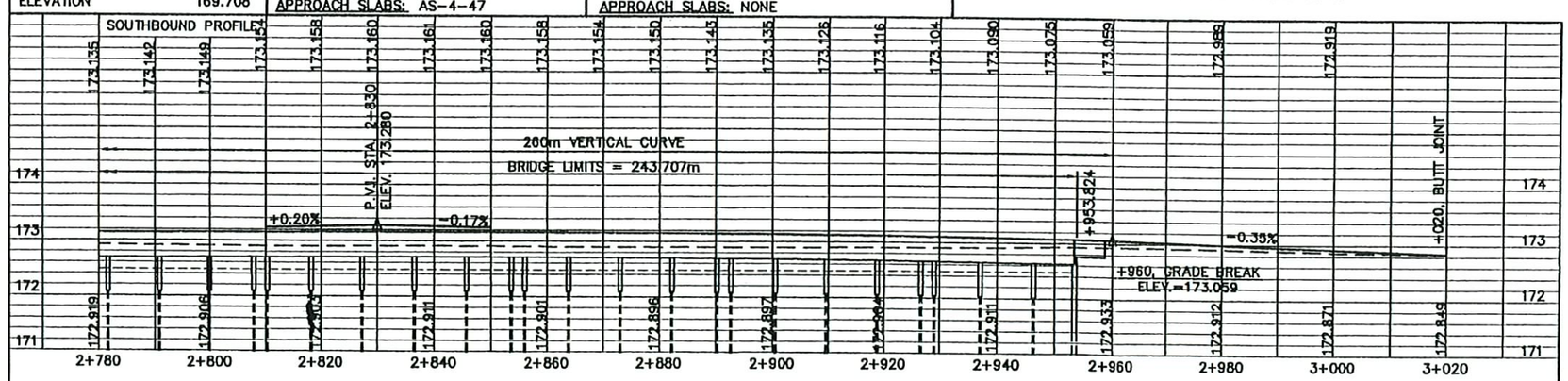

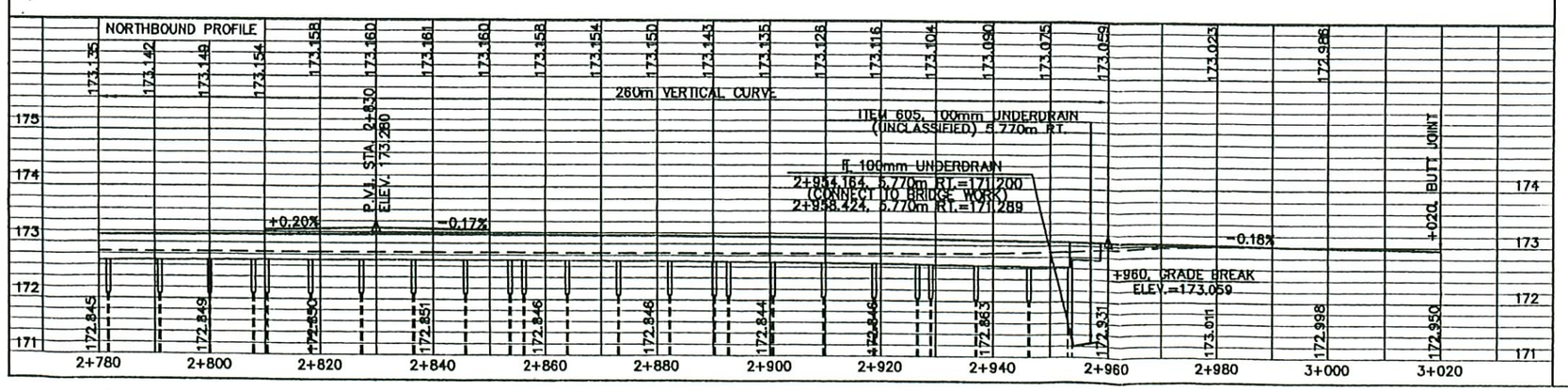

REF. NO.	STATION FROM	STATION TO	SIDE	202 APPROACH SLAB REMOVED (SQ. METER)	202 GUARDRAIL REMOVED FOR REUSE (METER)	202 GUARDRAIL REMOVED BARRIER DESIGN (METER)	255 FULL DEPTH PAVEMENT SAWING (METER)	516 25mm PREFORMED EXPANSION JOINT FILLER (SQ.METER)	516 51mm DEEP JOINT SEALER (METER)	601 PAVED GUTTER TYPE 2 (METER)	605 100mm UNCLASSIFIED PIPE UNDERDRAIN (METER)	606 GUARDRAIL REBUILT TYPE 5 (METER)	606 BRIDGE TERMINAL ASSEMBLY TYPE 1 (EACH)	606 BRIDGE TERMINAL ASSEMBLY TYPE 2 (EACH)	611 REINFORCED CONCRETE APPROACH SLAB (T=305mm) AS PER PLAN (SQ. METER)	622 CONCRETE BARRIER TYPE D AS PER PLAN (METER)	670 SLOPE EROSION PROTECTION (SQ. METER)
1-D	2+958.664	2+963.595	LT.														63
2-D	2+958.664	2+961.784	RT.														56
3-D	3+000.000	3+011.840	RT.							11.840							
1-G	2+960.516	3+023.381	LT.									62.885	1	1			
2-G	2+958.738	3+023.508	RT.									64.770		1			
1-P	2+953.824	2+958.424	RT./LT.												125		
2-P	2+953.824	2+961.157	LT.					1	5							7.333	
3-P	2+953.824	2+959.348	RT.					1	5							5.522	
1-R	2+953.824	2+958.424	RT./LT.	50													
2-R	2+954.801	3+023.381	LT.		68.580												
3-R	2+953.257	2+995.182	RT.		57.150	13.340											
4-R	2+954.928	3+023.508	RT.		68.580												
5-R	2+958.424	3+022.000	LT.				63.8										
6-R	2+958.424	2+977.000	RT.				18.8										
7-R	2+958.424	3+977.000	RT.				18.8										
8-R	2+958.424	3+022.000	RT.				63.8										
1-U	2+954.164	2+958.424	RT.								4.280						
TOTALS CARRIED TO GENERAL SUMMARY 28				50	194.310	13.340	164	2	10	12	4	127.635	1	1	125	13	119

CALCULATED E.P.C.
CHECKED J.E.L.

0 5 10 20 HORIZONTAL SCALE IN METERS

U.S.R. 23 PLAN AND PROFILE
STA. 2+780 TO STA. 3+020

PIK-23-15.707/16.625/17.477

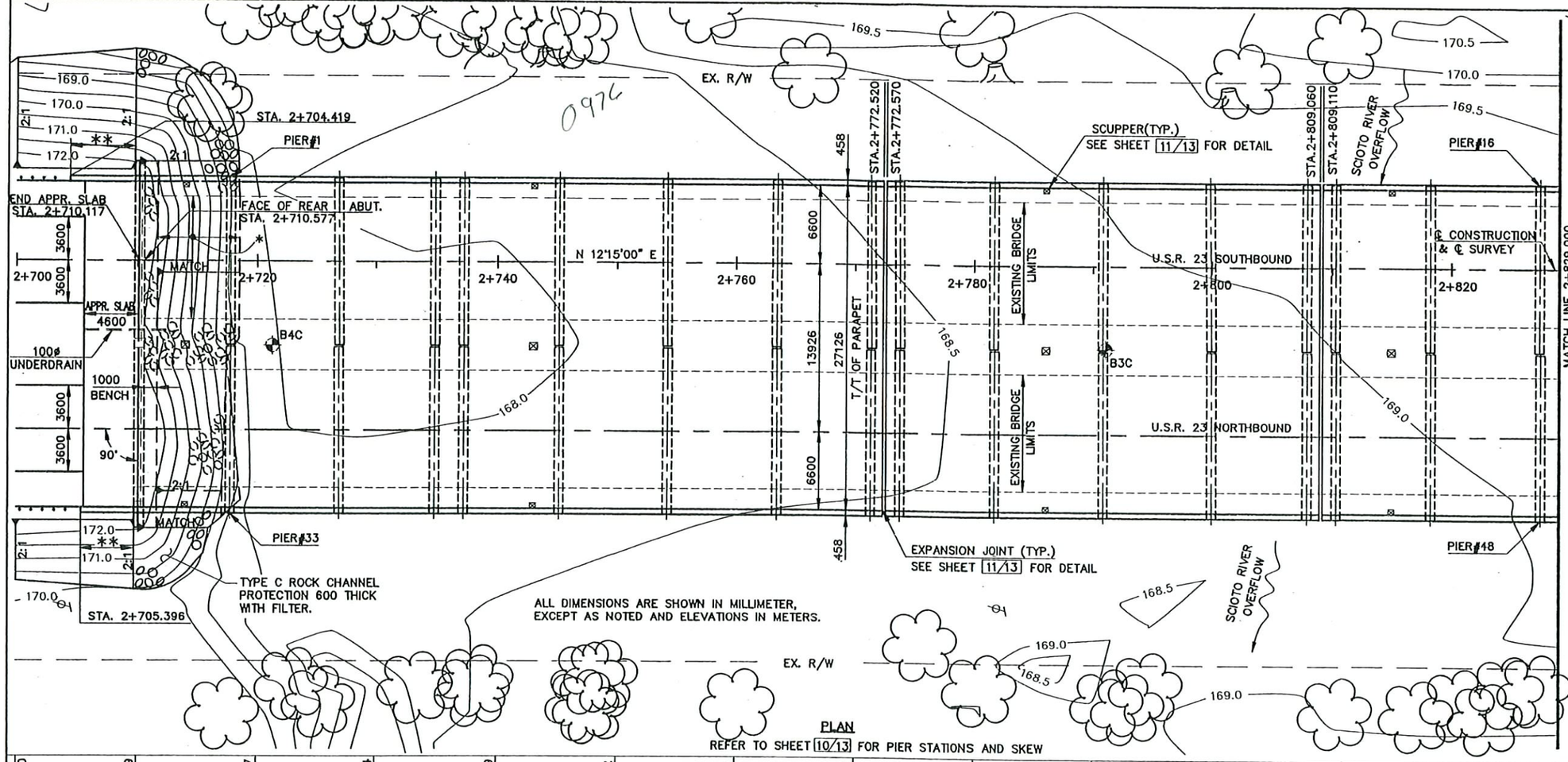

ALL DIMENSIONS ARE SHOWN IN MILLIMETER, EXCEPT AS NOTED AND ELEVATIONS IN METERS.

PLAN

REFER TO SHEET 10/13 FOR PIER STATIONS AND SKEW

EARTHWORK LIMITS SHOWN ARE APPROXIMATE. ACTUAL SLOPES SHALL CONFORM TO PLAN CROSS -SECTIONS.

* LIMIT OF EXISTING CAST IN PLACE SLOPE PROTECTION TO REMAINED.

** CONCRETE BARRIER, SEE ROADWAY PLAN FOR PAY QUANTITY.

SOIL BORING INFORMATION

BORING	STATION	OFFSET	ELEVATION
B1C	2+941	7.3 m RT.	168.0
B2C	2+873	7.2 m RT.	169.0
B3C	2+791	7.0 m RT.	168.7
B4C	2+721	7.0 m RT.	168.0

⊕ – INDICATES BORING LOCATION

UNIT	PILE TYPE	ESTIMATED PILE LENGTH
REAR ABUT. 300mm	CIP CONC.	16m
PIERS 400mm	CIP CONC.	16m
FWD. ABUT. 300mm	CIP CONC.	16m

52'-6"

PIKETON QUADRANGLE
LAT. = 39°05'32"
LONG.= 83°00'00"

BENCH MARK #23
STEEL POST DROVE FLUSH EAST OF BRIDGE
U.S.R. 23 & MAIN ST.(OLD U.S.R. 23).
STA. 2+716.920 31.618 m RT.
ELEVATION 169.243

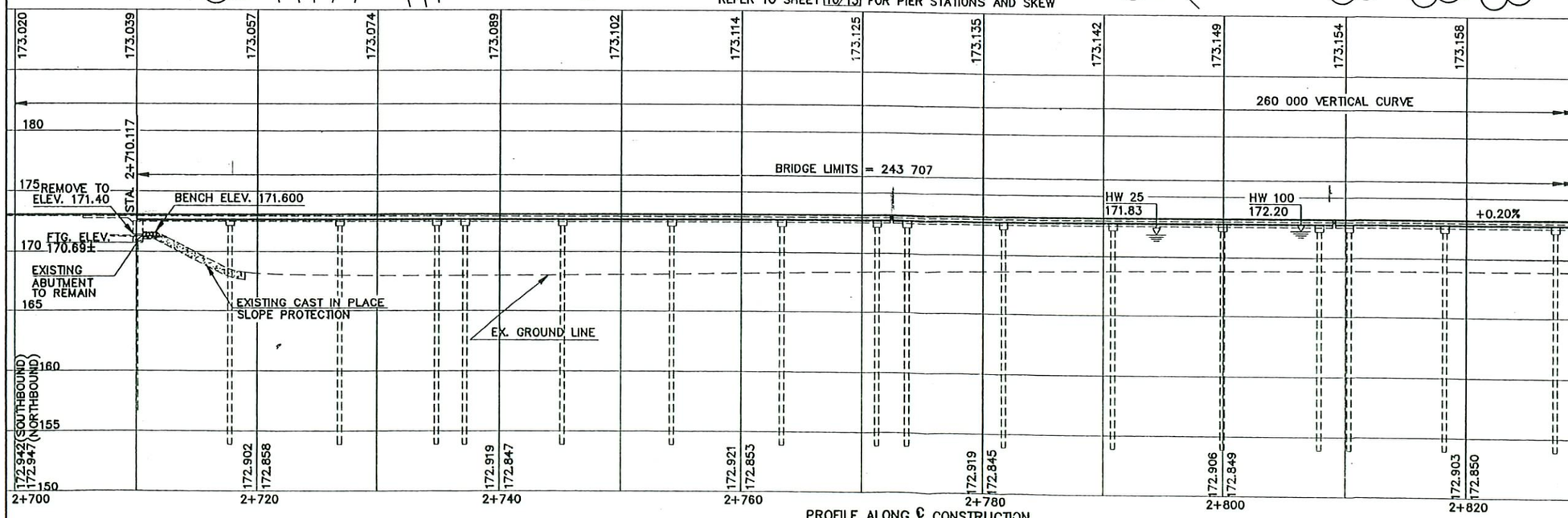

PROFILE ALONG ℄ CONSTRUCTION

TRAFFIC DATA

A.D.T. (1995) = 14 050
A.D.T. (2015) = 18 260
A.D.T.T. (2015) = 913

EXISTING STRUCTURE (LEFT)

TYPE: CONTINUOUS CONCRETE SLAB
SPAN: 243 230 c/c BEARINGS
ROADWAY: 10 210 F/F RAIL
LOADING: CF-130
SKEW: NONE
WEARING SURFACE: MONOLITHIC CONCRETE
APPROACH SLABS: AS-4-47

EXISTING STRUCTURE (RIGHT)

TYPE: CONTINUOUS CONCRETE SLAB
SPAN: 243 230 c/c BEARINGS
ROADWAY: 9 910 F/F RAIL
LOADING: H-15-33
SKEW: NONE
WEARING SURFACE: 63.5 ASPHALT CONC.
APPROACH SLABS: NONE

PROPOSED STRUCTURE

PROPOSED WORK: NEW SUPERSTRUCTURE DECK, NEW PIER CAP AND NEW ABUTMENT BACKWALL
TYPE: CONTINUOUS CONCRETE SLAB ON CAPPED PILE PIERS & ABUTMENTS
SPAN: 242 787 F/F ABUTMENT
ROADWAY: 27 126 T/T PARAPET
LOADING: MS-18 AND ALTERNATE MILITARY LOADING
SKEW: NONE
WEARING SURFACE: 25 MONOLITHIC CONC.
APPROACH SLABS: AS-1-81M (4 600 LONG)
ALIGNMENT: TANGENT
CROWN: 0.016

DESIGN AGENCY
JONES-STUCKEY, LTD., INC.
1641 WEST FIFTH AVENUE
COLUMBUS, OHIO 43212

DATE	REVIEWED	DRAWN	DESIGNED	CHECKED
1-7-95	D.D.S.	J.W.E.	G.G.N.	D.W.J.

STRUCTURE FILE NUMBER 6600360 (L) 6600395 (R)
REVISED

PIKE COUNTY
STA. 2+710.117
STA. 2+953.824

SITE PLAN
BRIDGE NO. PIK-23-0977L&R
OVER SCIOTO RIVER OVERFLOW

0976

PIK-23-15.707/
16.625 / 17.477

Jul 11, 1995 - 17:05:58 DWG Name: D:\ACAD\2804\15.71\042511E1.DWG Updated By: James V. Eudally, Jones-Stucke

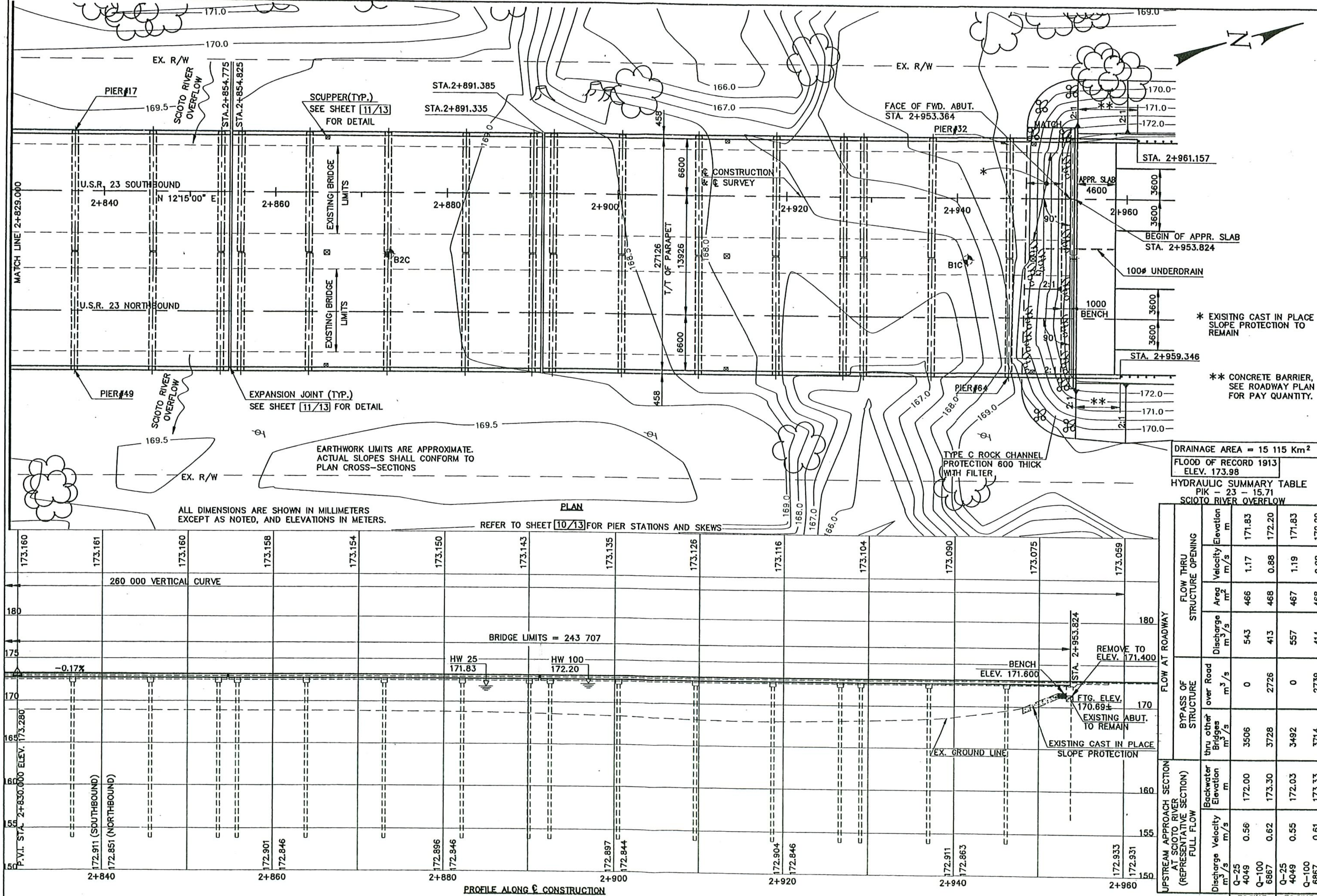

DRAINAGE AREA = 15 115 Km^2

FLOOD OF RECORD 1913 ELEV. 173.98

HYDRAULIC SUMMARY TABLE
PIK - 23 - 15.71
SCIOTO RIVER OVERFLOW

	Upstream Approach Section at Scioto River (Representative Section) Full Flow: Discharge m^3/s	Velocity m/s	Backwater Elevation m	Flow at Roadway – Bypass of Structure: thru other Bridges m^3/s	over Road m^3/s	Flow thru Structure Opening: Discharge m^3/s	Area m^2	Velocity m/s	Elevation m
EXISTING BRIDGE	Q-25 4049	0.56	172.00	3506	0	543	466	1.17	171.83
EXISTING BRIDGE	Q-100 6867	0.62	173.30	3728	2726	413	468	0.88	172.20
PROPOSED BRIDGE	Q-25 4049	0.55	172.03	3492	0	557	467	1.19	171.83
PROPOSED BRIDGE	Q-100 6867	0.61	173.33	3714	2739	414	468	0.88	172.20

DESIGN AGENCY: JONES-STUCKEY, LTD., INC. 1641 WEST FIFTH AVENUE COLUMBUS, OHIO 43212

DESIGNED G.G.N. | DRAWN J.W.E. | REVIEWED D.D.S. | DATE 1-7-95
CHECKED D.W.J. | REVISED | STRUCTURE FILE NUMBER 6600360 (L) 6600395 (R)

PIKE COUNTY
STA. 2+710.117
STA. 2+953.824

SITE PLAN

BRIDGE NO. PIK-23-0977L&R OVER SCIOTO RIVER OVERFLOW

0976

PIK-23-15.707 / 16.625 / 17.477

2/13

64/117

Jul 11, 1995 - 17:17:22 DWG Name: D:\ACAD\2804\15.71\0425ITE2.DWG Updated By: Jones V. Eudally, Jones-Stucke

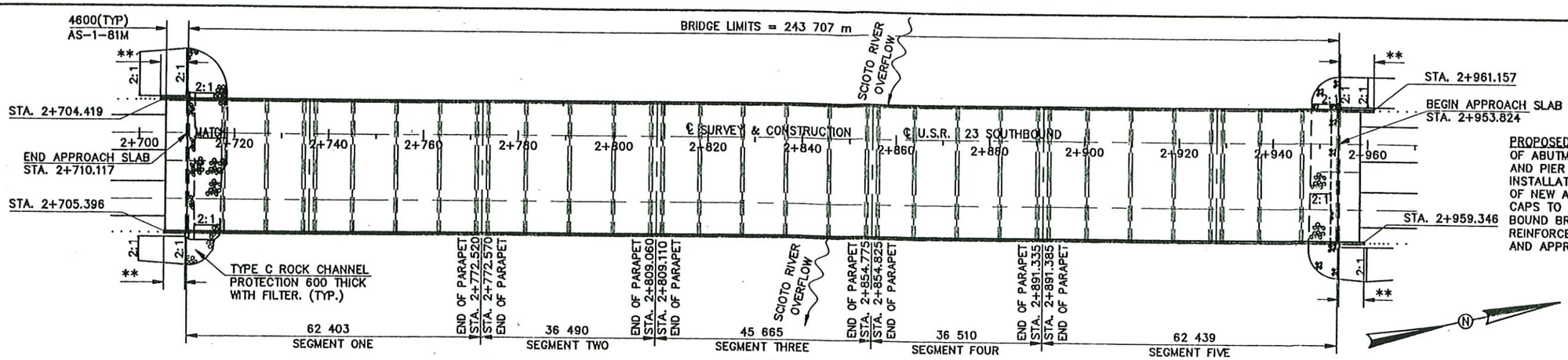

PROPOSED WORK: REMOVAL OF PORTIONS OF ABUTMENT FOOTING, ENTIRE BACKWALL AND PIER PILE CAPS ON EACH BRIDGE. INSTALLATION OF NEW PILING. CONSTRUCTION OF NEW ABUTMENT BACKWALL AND PIER CAPS TO CONNECT NORTH AND SOUTH BOUND BRIDGES. PROVIDE A FULL WIDTH REINFORCED CONCRETE SLAB SUPERSTRUCTURE AND APPROACH SLAB.

PLAN

** CONCRETE BARRIER, SEE ROADWAY PLAN FOR PAY QUANTITY.

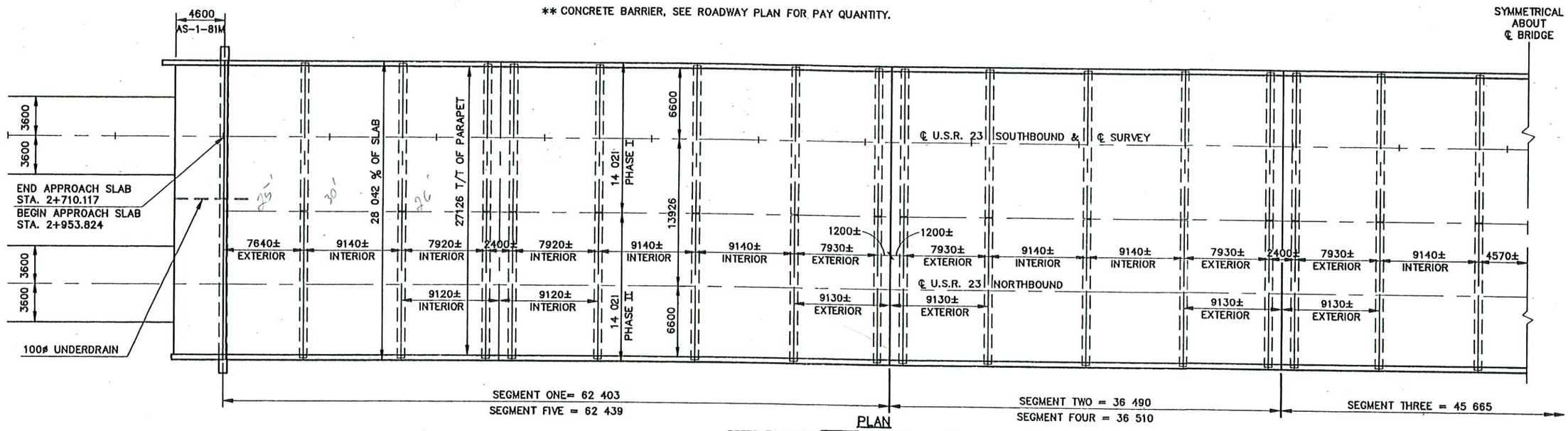

PLAN

REFER TO SHEET 10/13 FOR PIER STATIONS AND SKEWS
SCUPPERS NOT SHOWN

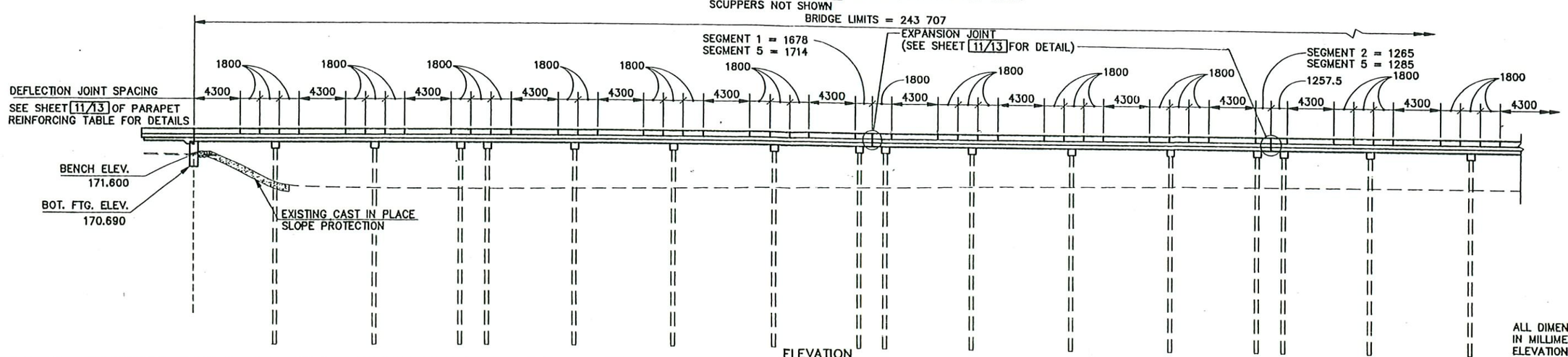

ELEVATION

ALL DIMENSIONS ARE IN MILLIMETERS AND ELEVATIONS ARE IN METERS.

DESIGN AGENCY: JONES-STUCKEY, LTD., INC. 1641 WEST FIFTH AVENUE COLUMBUS, OHIO 43212

DESIGNED	DRAWN	REVIEWED	DATE
G.G.N.	J.W.E.	D.W.J.	2-6-95
CHECKED	REVISED	STRUCTURE FILE NUMBER	
E.D.W.		6600360 (L) 6600395 (R)	

GENERAL PLAN
BRIDGE NO. PIK-23-0977L&R
OVER SCIOTO RIVER OVERFLOW

PIK-23-15.707 / 16.625 / 17.477

3/13

65/117

BRIDGE NO: PIK-23-0977 L. STRUCTURE FILE NUMBER: 6600360

ESTIMATE QUANTITIES

CALC BY: G.G.N. DATE: 1-16-95 | CHK'D BY: R.S.B. DATE: 4-26-95

ITEM	ITEM EXT.	QUANTITY	UNIT	DESCRIPTION	ABUT.	SUPER.	PIER	GEN.	SEE SHEET NO.
202	11203	LUMP		PORTIONS OF STRUCTURE REMOVED, OVER 6 METER SPAN, AS PER PLAN				LUMP	5/13
503	21101	25	CU. M.	UNCLASSIFIED EXCAVATION, AS PER PLAN	25				5/13
505	11100	LUMP		PILE DRIVING EQUIPMENT MOBILIZATION				LUMP	
507	00500	64	METER	300MM CAST-IN-PLACE REINFORCED CONCRETE PILES, DRIVEN	64				
507	00550	70	METER	300MM CAST-IN-PLACE REINFORCED CONCRETE PILES, FURNISHED	70				
507	00700	1024	METER	400MM CAST-IN-PLACE REINFORCED CONCRETE PILES, DRIVEN			1024		
507	00750	1120	METER	400MM CAST-IN-PLACE REINFORCED CONCRETE PILES, FURNISHED			1120		
507	50500	34	EACH	STEEL PILE SPLICES	2		32		
SPECIAL	51267510	1212	SQ. M.	SEALING OF CONCRETE SURFACES (EPOXY-URETHANE) (SEE PROPOSAL NOTE)	68	1144			
516	11211	57	METER	STRUCTURAL EXPANSION JOINT INCLUDING ELASTOMERIC STRIP SEAL, AS PER PLAN		57			5/13
518	12500	10	EACH	NEW SCUPPER, MISC.: NEENAH R-4005-A2 OR EQUIVALENT.		10			
518	21200	39	CU. M.	POROUS BACKFILL WITH FILTER FABRIC	39				
518	40000	32	METER	150 MM PERFORATED CORRUGATED PLASTIC PIPE	32				
518	40010	5	METER	150 MM NON-PERFORATED CORRUGATED PLASTIC PIPE, INCLUDING SPECIALS	5				
603	00101	2	METER	100MM CONDUIT, TYPE B, AS PER PLAN				2	7/13
604	36600	2	EACH	PRECAST REINFORCED CONCRETE OUTLET	2				
844	48000	1493	CU. M.	HIGH PERFORMANCE CONCRETE, SUPERSTRUCTURE (DECK)		1493			
844	48020	79	CU. M.	HIGH PERFORMANCE CONCRETE, SUPERSTRUCTURE (PARAPET)		79			
844	49500	309	CU. M.	HIGH PERFORMANCE CONCRETE, MISC.: SUBSTRUCTURE	32		277		
844	49000	LUMP		HIGH PERFORMANCE CONCRETE, TRIAL MIX				LUMP	

• SEE PROPOSAL NOTE

BRIDGE NO: PIK-23-0977 R. STRUCTURE FILE NUMBER: 6600395

ESTIMATE QUANTITIES

CALC BY: G.G.N. DATE: 1-16-95 | CHK'D BY: R.S.B. DATE: 4-26-95

ITEM	ITEM EXT.	QUANTITY	UNIT	DESCRIPTION	ABUT.	SUPER.	PIER	GEN.	SEE SHEET NO.
202	11203	LUMP		PORTIONS OF STRUCTURE REMOVED, OVER 6 METER SPAN, AS PER PLAN				LUMP	5/13
503	21101	27	CU. M.	UNCLASSIFIED EXCAVATION, AS PER PLAN	27				5/13
505	11100	LUMP		PILE DRIVING EQUIPMENT MOBILIZATION				LUMP	
507	00500	96	METER	300MM CAST-IN-PLACE REINFORCED CONCRETE PILES, DRIVEN	96				
507	00550	105	METER	300MM CAST-IN-PLACE REINFORCED CONCRETE PILES, FURNISHED	105				
507	00700	1024	METER	400MM CAST-IN-PLACE REINFORCED CONCRETE PILES, DRIVEN			1024		
507	00750	1120	METER	400MM CAST-IN-PLACE REINFORCED CONCRETE PILES, FURNISHED			1120		
507	50500	35	EACH	STEEL PILE SPLICES	3		32		
511	43201	5	CU. M.	CLASS C CONCRETE, PIER, AS PER PLAN			5		5/13
SPECIAL	51267510	1212	SQ. M.	SEALING OF CONCRETE SURFACES (EPOXY-URETHANE) (SEE PROPOSAL NOTE)	68	1144			
516	11211	57	METER	STRUCTURAL EXPANSION JOINT INCLUDING ELASTOMERIC STRIP SEAL, AS PER PLAN		57			5/13
518	12500	10	EACH	NEW SCUPPER, MISC.: NEENAH R-4005-A2 OR EQUIVALENT.		10			
518	21200	39	CU. M.	POROUS BACKFILL WITH FILTER FABRIC	39				
518	40000	32	METER	150 MM PERFORATED CORRUGATED PLASTIC PIPE	32				
518	40010	5	METER	150 MM NON-PERFORATED CORRUGATED PLASTIC PIPE, INCLUDING SPECIALS	5				
519	11101	5	SQ. M.	PATCHING CONCRETE STRUCTURE, AS PER PLAN			5		5/13
604	36600	2	EACH	PRECAST REINFORCED CONCRETE OUTLET	2				
844	48000	1493	CU. M.	HIGH PERFORMANCE CONCRETE, SUPERSTRUCTURE (DECK)		1493			
844	48020	79	CU. M.	HIGH PERFORMANCE CONCRETE, SUPERSTRUCTURE (PARAPET)		79			
844	49500	338	CU. M.	HIGH PERFORMANCE CONCRETE, MISC.: SUBSTRUCTURE	34		304		

• SEE PROPOSAL NOTE

DESIGN AGENCY
JONES-STUCKEY, LTD., INC.
1641 WEST FIFTH AVENUE
COLUMBUS, OHIO 43212

DATE 2-6-95
REVIEWED D.W.J.
STRUCTURE FILE NUMBER 6600360 (L) 6600395 (R)
DRAWN J.M.P.
REVISED
DESIGNED G.G.N.
CHECKED E.D.W.

ESTIMATE QUANTITIES
BRIDGE NO. PIK-23-0977L&R
OVER SCIOTO RIVER OVERFLOW

PIK-23-15.707/
16.625/17.477

Apr 19, 1995 - 10:03:50 DWG Name: G:\ACAD\2604\GNOTE.DWG Updated By: Janet Palmer

REFERENCE SHALL BE MADE TO STANDARD DRAWINGS:

AS-1-81M	DATED	10-25-94
BR-1M	DATED	12-15-94
CPA-5-94M	DATED	10-25-94
CPP-2-94M	DATED	12-19-94
CS-1-93M	REVISED	6-30-95
EXJ-6-95M	REVISED	3-18-97
IRJ-8-95M	DATED	7-6-95

AND TO SUPPLEMENTAL SPECIFICATIONS:

844	DATED	9-09-97
911	DATED	7-10-97
954	DATED	9-09-97

DESIGN SPECIFICATIONS:

THE STRUCTURE CONFORMS TO "STANDARD SPECIFICATION FOR HIGHWAY BRIDGE" ADOPTED BY THE AMERICAN ASSOCIATION OF STATE HIGHWAY AND TRANSPORTATION OFFICIALS, 1996 AND THE ODOT BRIDGE DESIGN MANUAL.

DESIGN DATA:

DESIGN LOADING: MS18 AND THE ALTERNATE MILITARY LOADING.

DESIGN STRESSES:

CONCRETE CLASS S - COMPRESSIVE STRENGTH 31.0 MPa (SUPERSTRUCTURE)

CONCRETE CLASS C - COMPRESSIVE STRENGTH 27.5 MPa (SUBSTRUCTURE)

REINFORCING STEEL - ASTM A615M, A615M, OR A617M
GRADE 420 MINIMUM YIELD STRENGTH 420 MPa.
SPIRAL REINFORCEMENT MAY BE PLAIN BARS, ASTM A82M OR A615M.

DECK PROTECTION METHOD:

EPOXY COATED REINFORCING STEEL.

65 mm CONCRETE COVER.

MONOLITHIC WEARING SURFACE IS ASSUMED, FOR DESIGN PURPOSES, TO BE 25 mm THICK.

PILE DESIGN LOADS (ULTIMATE BEARING VALUE):

THE ULTIMATE BEARING VALUE IS 444 kN PER PILE FOR THE 300 mm ABUTMENT PILES.
THE ULTIMATE BEARING VALUE IS 534 kN PER PILE FOR THE 400 mm PIER PILES.

ABUTMENT PILES FOR LEFT BRIDGE:
4 PILES 16 METERS LONG, ESTIMATED LENGTH
4 PILES OF ORDER LENGTH 17.5 METERS LONG
2 SPLICES

PIER PILES FOR LEFT BRIDGE:
64 PILES 16 METERS LONG, ESTIMATED LENGTH
64 PILES OF ORDER LENGTH 17.5 METERS LONG
32 SPLICES

ABUTMENT PILES FOR RIGHT BRIDGE:
6 PILES 16 METERS LONG, ESTIMATED LENGTH
6 PILES OF ORDER LENGTH 17.5 METERS LONG
3 SPLICES

PIER PILES FOR RIGHT BRIDGE:
64 PILES 16 METERS LONG, ESTIMATED LENGTH
64 PILES OF ORDER LENGTH 17.5 METERS LONG
32 SPLICES

EXISTING STRUCTURE VERIFICATION:

DETAILS AND DIMENSIONS SHOWN ON THESE PLANS PERTAINING TO THE EXISTING STRUCTURE HAVE BEEN OBTAINED FROM PLANS OF THE EXISTING STRUCTURE AND FROM FIELD OBSERVATIONS AND MEASUREMENTS. CONSEQUENTLY, THEY ARE INDICATIVE OF THE EXISTING STRUCTURE AND THE PROPOSED WORK BUT THEY SHALL BE CONSIDERED TENTATIVE AND APPROXIMATE. THE CONTRACTOR IS REFERRED TO CMS SECTIONS 102.05 AND 105.02.

CONTRACT BID PRICES SHALL BE BASED UPON RECOGNITION OF THE UNCERTAINTIES DESCRIBED ABOVE AND UPON A PREBID EXAMINATION OF THE EXISTING STRUCTURE BY THE CONTRACTOR. HOWEVER, ALL PROJECT WORK SHALL BE BASED UPON ACTUAL DETAILS AND DIMENSIONS WHICH HAVE BEEN VERIFIED BY THE CONTRACTOR IN THE FIELD.

EXISTING BRIDGE PLANS:

DETAIL DRAWINGS OF THE EXISTING BRIDGES MAY BE INSPECTED IN THE DISTRICT 9 OFFICE IN CHILLICOTHE, OHIO OR IN THE OFFICE OF STRUCTURAL ENGINEERING AT 25 SOUTH FRONT STREET IN COLUMBUS, OHIO.

REPLACEMENT OF EXISTING REINFORCING STEEL:

ANY EXISTING REINFORCING BARS WHICH ARE TO BE INCORPORATED INTO THE NEW WORK AND WHICH ARE MADE UNUSABLE BY CONCRETE REMOVAL OPERATIONS SHALL BE REPLACED WITH NEW STEEL AT THE CONTRACTOR'S COST.

ANY EXISTING REINFORCING BARS DEEMED BY THE ENGINEER TO BE UNUSABLE BECAUSE OF CORROSION SHALL BE REPLACED WITH NEW STEEL. PAYMENT FOR REINFORCING STEEL SHALL BE INCLUDED IN APPROPRIATE CONCRETE PAY ITEM.

ITEM 202 - PORTIONS OF STRUCTURE REMOVED, OVER 6 METER SPAN, AS PER PLAN

THIS WORK SHALL INCLUDE THE ELEMENTS INDICATED IN THE PLANS AND GENERAL NOTES THAT ARE NOT SEPARATELY LISTED FOR PAYMENT. ITEMS TO BE REMOVED INCLUDE ALL EXISTING MATERIALS BEING REPLACED BY NEW CONSTRUCTION AND MISCELLANEOUS ITEMS THAT ARE NOT SHOWN TO BE INCORPORATED INTO THE FINAL CONSTRUCTION AND ARE DIRECTED TO BE REMOVED BY THE ENGINEER.

EXISTING BRIDGE RAILING SHALL BE CAREFULLY REMOVED AS INDIVIDUAL RAIL ELEMENTS BY REMOVING ALL BOLTS FROM ALL SPLICES AND POSTS. THE USE OF CUTTING TORCHES SHALL NOT BE PERMITTED. GUARDRAIL PANELS, BRIDGE POSTS, AND TUBULAR BACKUP (WITH SPLICE HARDWARE) ONLY SHALL BE STACKED ON PROJECT FOR SALVAGE BY STATE FORCES. OTHER HARDWARE, AND MATERIAL NOT SALVAGEABLE SHALL BE DISPOSED OF IN ACCORDANCE WITH SECTION 202.02 OF THE CMS.

SUBSTRUCTURE REMOVALS:

CUT LINE CONSTRUCTION JOINT PREPARATION: SAW CUT BOUNDARIES OF PROPOSED CONCRETE REMOVALS 25 mm DEEP. REMOVE CONCRETE TO A ROUGH SURFACE. WHERE PRACTICABLE, AT LEAST 450 mm LENGTH OF THE PROTRUDING REINFORCING STEEL SHALL BE LEFT IN PLACE. INSTALL DOWEL BARS IF SPECIFIED. PRIOR TO CONCRETE PLACEMENT ABRASIVELY CLEAN JOINT SURFACE AND EXPOSED REINFORCEMENT TO REMOVE LOOSE AND DISINTEGRATED CONCRETE AND LOOSE RUST. THE JOINT SURFACE AND EXPOSED REINFORCEMENT SHALL BE THOROUGHLY CLEANED OF ALL DIRT, DUST, OR OTHER FOREIGN MATERIAL BY THE USE OF WATER, AIR UNDER PRESSURE, OR OTHER METHODS THAT PRODUCE SATISFACTORY RESULTS. CONCRETE BONDING SURFACES SHALL BE WET WITHOUT FREE WATER AS CONCRETE IS PLACED.

SUBSTRUCTURE CONCRETE REMOVAL SHALL BE BY MEANS OF APPROVED PNEUMATIC HAMMERS EMPLOYING POINTED AND BLUNT CHISEL TOOLS. HYDRAULIC HOE-RAM TYPE HAMMERS WILL NOT BE PERMITTED. THE WEIGHT OF THE HAMMER SHALL NOT BE MORE THAN 16 KILOGRAM FOR REMOVAL WITHIN 450 mm OF PORTIONS TO BE PRESERVED. OUTSIDE THE 450 mm LIMIT, A HAMMER HEAVIER THAN 16 KILOGRAM, BUT NOT TO EXCEED 41 KILOGRAM, MAY BE USED AT THE APPROVAL OF THE ENGINEER. PNEUMATIC HAMMERS SHALL NOT BE PLACED IN DIRECT CONTACT WITH REINFORCING STEEL THAT IS TO BE RETAINED IN THE REBUILT STRUCTURE.

PROTECTION OF TRAFFIC:

PRIOR TO DEMOLITION OF ANY PORTIONS OF THE EXISTING SUPERSTRUCTURE, THE CONTRACTOR SHALL SUBMIT HIS PLANS FOR THE PROTECTION OF TRAFFIC (VEHICULAR, PEDESTRIAN, BOAT, ETC.) ADJACENT TO AND/OR UNDER THE STRUCTURE TO THE DIRECTOR FOR APPROVAL. THESE PLANS SHALL INCLUDE PROVISIONS FOR ANY DEVICES AND STRUCTURES THAT MAY BE NECESSARY TO ENSURE SUCH PROTECTION. TEMPORARY VERTICAL CLEARANCES SPECIFIED ON THE PLANS OR IN THE PROPOSAL SHALL BE MAINTAINED AT ALL TIMES EXCEPT AS OTHERWISE APPROVED BY THE DIRECTOR.

PAYMENT:

THIS WORK WILL BE PAID FOR AT THE CONTRACT LUMP SUM PRICE BID, AND PAYMENT SHALL BE FULL COMPENSATION FOR ALL LABOR, EQUIPMENT, MATERIALS AND INCIDENTALS NECESSARY TO COMPLETE THE WORK IN CONFORMANCE WITH THESE REQUIREMENTS, WITH PERTINENT PROVISIONS OF 202, AND TO THE SATISFACTION OF THE ENGINEER.

ITEM SPECIAL - SEALING OF CONCRETE SURFACES (EPOXY-URETHANE)

A CONCRETE SEALER SHALL BE APPLIED TO ALL EXPOSED SURFACES OF THE ABUTMENT AS SHOWN ON SHEET 8/13 AND TO PARAPETS AND CONCRETE BARRIER, TYPE D, AS PER PLAN AS SHOWN ON SHEET 11/13 AND A ONE METER WIDE AREA ON THE BRIDGE AND APPROACH SLABS CENTERED ON THE CENTERLINE OF ROADWAY AND CONSTRUCTION.

SEE PROPOSAL NOTE FOR SURFACE PREPARATION REQUIREMENTS, APPLICATION PROCEDURES AND RATES, AND MATERIAL REQUIREMENTS.

THE COLOR OF THE URETHANE SEALER SHALL BE FEDERAL COLOR STANDARD NO. 17778 (OFF-WHITE).

ITEM 503 - UNCLASSIFIED EXCAVATION, AS PER PLAN:

UNCLASSIFIED EXCAVATION SHALL BE IN ACCORDANCE WITH 503 EXCEPT THE BACKFILL MATERIAL FOR ALL EXCAVATION BEHIND ABUTMENTS SHALL BE ITEM 613 LOW STRENGTH MORTAR BACKFILL, TYPE I (LSM BACKFILL) WITHIN THE LIMITS OF THE APPROACH SLABS. THE CONTRACTOR ALSO MAY USE THE LSM BACKFILL TO CONSTRUCT THE SLOPES IN THE SAME AREA AS LONG AS IT IS COVERED WITH ONE FOOT OF SOIL TO MEET THE FINISHED GRADE. THE AREA FOR THE POROUS BACKFILL WITH FILTER FABRIC SHALL BE FORMED UP PRIOR TO THE PLACEMENT OF THE LSM BACKFILL AND THE FILTER FABRIC, AND POROUS BACKFILL SHALL BE PLACED AFTER THE LSM BACKFILL HAS BEEN CURED AND THE FORMS HAVE BEEN REMOVED.

THE COST OF ALL LABOR, EQUIPMENT, AND MATERIAL TO PLACE THE LSM BACKFILL AS DESCRIBED ABOVE SHALL BE INCLUDED IN THE UNIT BID PRICE FOR ITEM 503, UNCLASSIFIED EXCAVATION, AS PER PLAN.

CONCRETE PARAPETS:

AS SOON AS A CONCRETE SAW CAN BE OPERATED WITHOUT DAMAGING THE FRESHLY PLACED CONCRETE, 25 mm DEEP CONTROL JOINTS SHALL BE SAWED INTO THE PERIMETER OF THE CONCRETE PARAPET. THE SAW CUT SHALL BE MADE IN THE COMPLETE CIRCUMFERENCE OF THE PARAPET, STARTING AND ENDING AT THE ELEVATION OF THE CONCRETE DECK. THE SAW CUTS SHALL BE PLACED AT A MINIMUM OF 2000 mm AND A MAXIMUM OF 3000 mm CENTERS. THE USE OF AN EDGE GUIDE, FENCE, OR JIG IS REQUIRED TO INSURE THAT THE CUT JOINT IS STRAIGHT, TRUE, AND ALIGNED ON ALL FACES OF THE PARAPET. THE JOINT WIDTH SHALL BE THE WIDTH OF THE SAW BLADE, A NOMINAL WIDTH OF 6 mm. THE PERIMETER OF THE DEFLECTION CONTROL JOINT SHALL BE SEALED TO A MINIMUM DEPTH OF 25 mm WITH A CAULKING MATERIAL CONFORMING TO FEDERAL SPECIFICATION, TT-S-00227E. ALL LABOR, EQUIPMENT, MATERIALS, AND INCIDENTALS NECESSARY TO COMPLETE THIS WORK SHALL BE INCLUDED IN THE UNIT BID PRICE FOR ITEM SPECIAL, HIGH PERFORMANCE CONCRETE, SUPERSTRUCTURE (PARAPET).

ITEM 511 - CLASS C CONCRETE, PIER, AS PER PLAN

THIS IS AN ESTIMATED QUANTITY TO REPLACE DETERIORATED PORTIONS OF EXISTING CAST-IN-PLACE PIER PILES AS SHOWN ON SHEETS 10/13 AND AS DIRECTED BY THE ENGINEER.

THE EXISTING CONCRETE AT THE CONSTRUCTION JOINT AND THE EXPOSED REINFORCING STEEL SHALL BE THOROUGHLY CLEANED BY ABRASIVE BLASTING PRIOR TO THE CLEANING SPECIFIED BY 519.04 AND 520.05. CLEANING SHALL PRECEDE PLACEMENT OF CONCRETE BY NOT MORE THAN 24 HOURS.

ITEM 519 - PATCHING CONCRETE STRUCTURE, AS PER PLAN

THIS IS AN ESTIMATED QUANTITY TO PATCH EXISTING SUBSTRUCTURE AS SHOWN ON SHEETS 10/13 AND AS DIRECTED BY THE ENGINEER.

ALL SURFACES TO BE PATCHED AND THE EXPOSED REINFORCING STEEL WITHIN SHALL BE THOROUGHLY CLEANED BY ABRASIVE BLASTING PRIOR TO THE CLEANING SPECIFIED BY 519.04 AND 520.05. CLEANING SHALL PRECEDE APPLICATION OF THE PATCHING MATERIAL OR ERECTION OF THE FORMS BY NOT MORE THAN 24 HOURS.

ITEM 516 - STRUCTURAL EXPANSION JOINT INCLUDING ELASTOMERIC STRIP SEAL, AS PER PLAN:

THIS ITEM SHALL BE FOR THE FOUR INTERMEDIATE EXPANSION JOINTS LOCATED ON SHEET 3/13 IN ACCORDANCE WITH STANDARD DRAWING EXJ-6-95M MODIFIED IN ACCORDANCE WITH DETAILS ON SHEET 11A/13 AND AS FOLLOWS:

PLATE "A" AND PLATE "B" SHALL BE USED ON BOTH SIDES OF JOINT TO REPLACE ANCHOR PLATE SHOWN IN STANDARD DRAWING. THE M16 THREADED RODS SHALL BE SUPPLIED WITH SLEEVE NUT, WASHERS, AND MACHINE BOLT AS DETAILED ON SHEET 11A/13 FOR ATTACHMENT TO THE FORMS FOR THE CONCRETE SLAB BRIDGE. FILL RECESSES IN BOTTOM OF SLAB FLUSH WITH BOTTOM OF SLAB WITH NON-SHRINKING MORTAR AFTER MACHINE BOLTS, WASHERS, AND FORMS ARE REMOVED.

SEQUENCE OF CONSTRUCTION

STAGE I CONSTRUCTION

1. DIVERT SOUTHBOUND TRAFFIC INTO NORTHBOUND LANES IN ACCORDANCE WITH THE PHASE I MAINTENANCE OF TRAFFIC PLAN.
2. REMOVE SOUTHBOUND BRIDGE DECK, PORTIONS OF ABUTMENTS (BACKWALLS, WINGWALLS, PORTIONS OF FOOTINGS), AND PORTIONS OF PIERS (PIER CAPS AND PORTIONS OF PILES).
3. WIDEN AND RECONSTRUCT SOUTHBOUND ABUTMENTS AND PIERS.
4. CONSTRUCT SOUTHBOUND PORTION OF REINFORCED CONCRETE SLAB SUPERSTRUCTURE, INTERMEDIATE EXPANSION JOINTS, AND APPROACH SLABS.
5. INSTALL PORTABLE CONCRETE BARRIER, 813 mm, BRIDGE MOUNTED ON BRIDGE AND APPROACHES AS DETAILED ON PHASE CONSTRUCTION DETAILS ON SHEET 62 BEFORE OPENING BRIDGE TO SOUTHBOUND TRAFFIC.

STAGE II CONSTRUCTION

1. DIVERT NORTHBOUND TRAFFIC INTO SOUTHBOUND LANES IN ACCORDANCE WITH THE PHASE II MAINTENANCE OF TRAFFIC PLAN.
2. REMOVE NORTHBOUND BRIDGE DECK, PORTIONS OF ABUTMENTS (BACKWALLS, WINGWALLS, PORTIONS OF FOOTINGS), AND PORTIONS OF PIERS (PIER CAPS AND PORTIONS OF PILES).
3. WIDEN AND RECONSTRUCT NORTHBOUND ABUTMENTS AND PIERS.
4. CONSTRUCT NORTHBOUND PORTION OF REINFORCED CONCRETE SLAB SUPERSTRUCTURE, INTERMEDIATE EXPANSION JOINTS, AND APPROACH SLABS.
5. MOVE NORTHBOUND TRAFFIC ONTO BRIDGE AND RESTORE BOTH THE SOUTHBOUND AND NORTHBOUND LANES TO NORMAL TRAFFIC AND MAINTAINING TRAFFIC IN ACCORDANCE WITH STANDARD DRAWINGS MT-95.31M AND MT-99.20 AS NEEDED DURING WORKING ONLYWHILE COMPLETING ALL REMAINING WORK ITEMS.

metric units

DESIGN AGENCY: STATE OF OHIO DEPARTMENT OF TRANSPORTATION DISTRICT 9

DESIGNED GEC | DRAWN GEC | REVIEWED LAW | DATE 1/14/98 | CHECKED LAW | REVISED | STRUCTURE FILE NUMBER 6600360 6600395

GENERAL NOTES
BRIDGE NO. PIK-23-0977 L&R OVER SCIOTO RIVER OVERFLOW

PIK-23-15.707/16.625/17.477

Drawing : I:\project\23pi5707\brnotes.dgn Plotted by: gaochano 23-JAN-1998 13:29

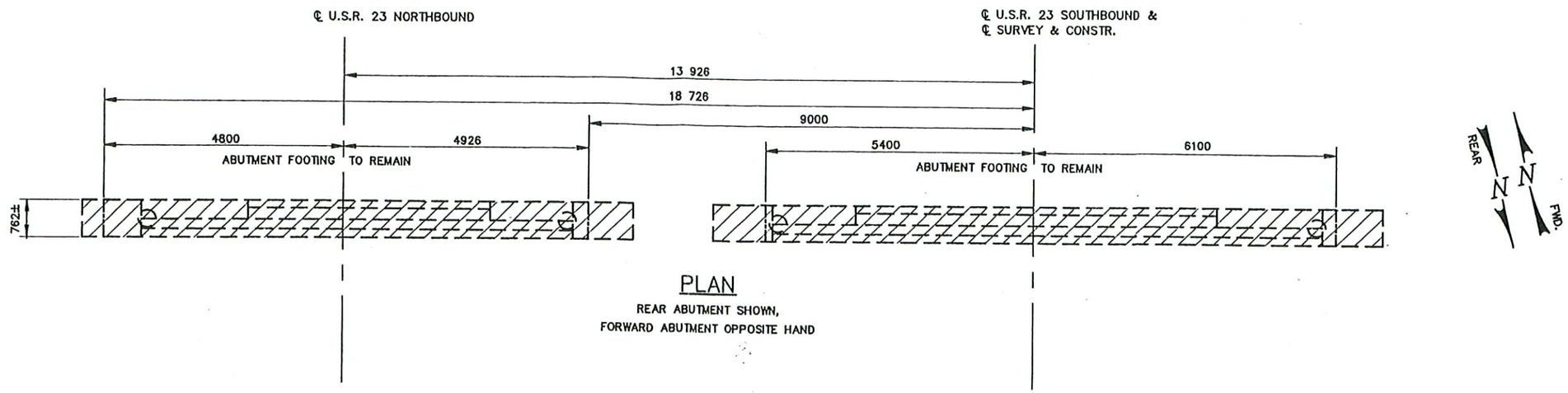

PLAN

REAR ABUTMENT SHOWN,
FORWARD ABUTMENT OPPOSITE HAND

LEGEND

CONCRETE TO BE REMOVED AS PER ITEM 202 –REMOVAL OF CONCRETE STRUCTURES.

ALL DIMENSIONS ARE SHOWN IN MILLIMETERS, AND ELEVATIONS ARE SHOWN IN METERS.

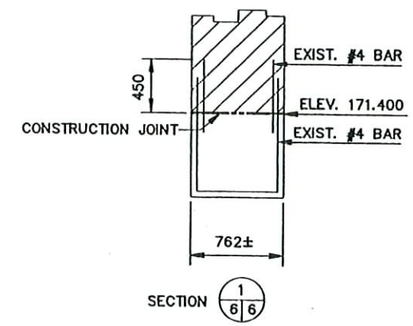

SALVAGE EXISTING VERTICAL REINFORCING BARS AS SHOWN

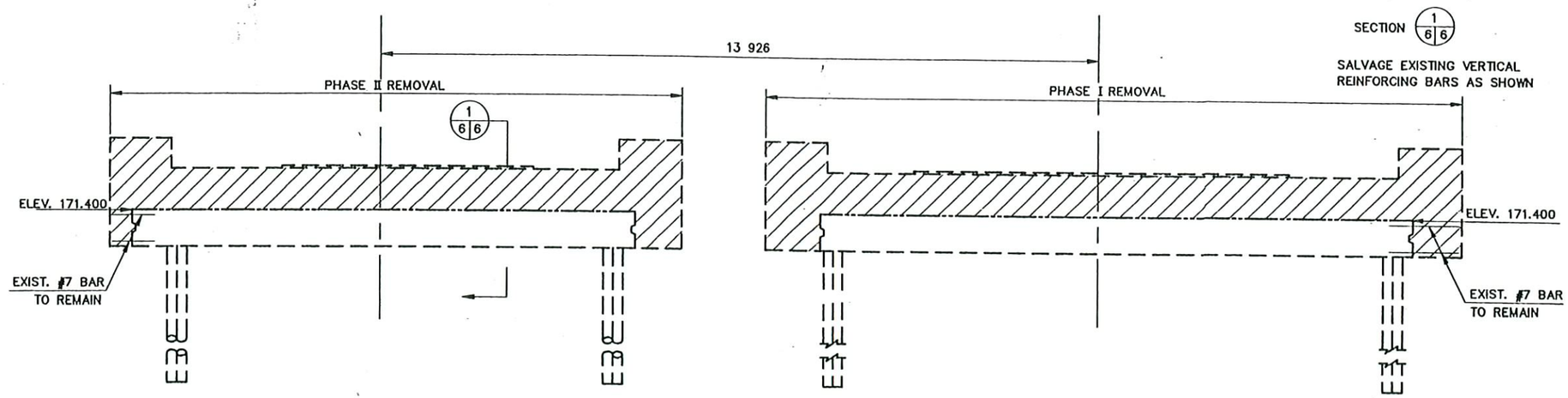

ELEVATION

DESIGN AGENCY
JONES–STUCKEY, LTD., INC.
1641 WEST FIFTH AVENUE
COLUMBUS, OHIO 43212

DESIGNED	DRAWN	REVIEWED	DATE
G.G.N.	J.W.E.	D.W.J.	4–14–95
CHECKED	REVISED	STRUCTURE FILE NUMBER	
E.D.W.		8600360 (L)	

ABUTMENT DEMOLITION DETAILS
BRIDGE NO. PIK-23-0977L&R
OVER SCIOTO RIVER OVERFLOW

PIK-23-15.707/
16.625 / 17.477

Jul 17, 1995 - 12:57:56 DWG Name: D:\ACAD\2804\13.71\042DEMO.DWG Updated By: James V. Euddily, Jones-Stucke

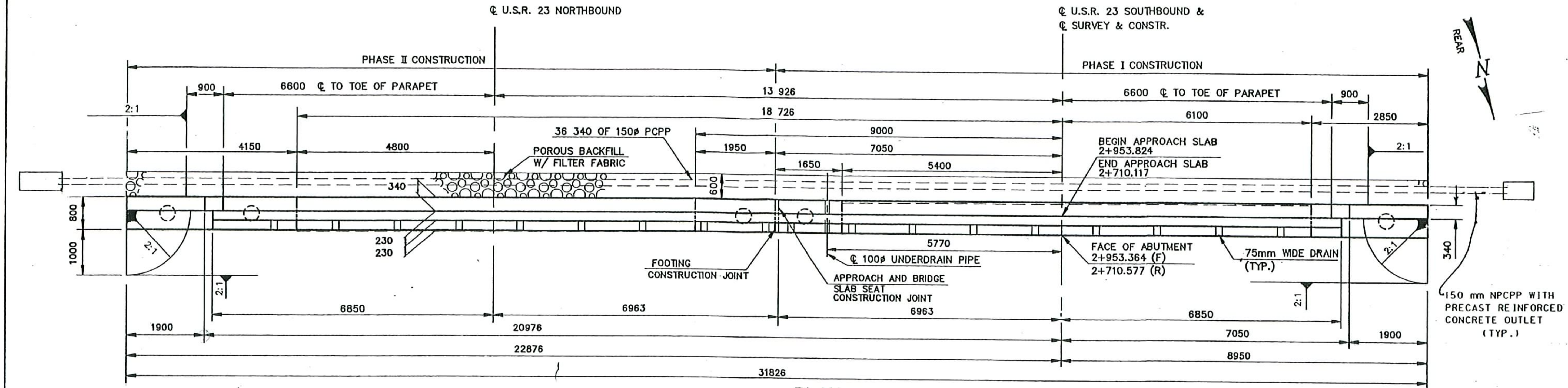

PLAN

NOTE: REAR ABUTMENT SHOWN
FORWARD ABUTMENT IS SIMILAR
BUT OPPOSITE HAND (MIRROR IMAGE)

CONSTRUCTION JOINTS: BEFORE PLACEMENT OF CONCRETE, THE ROUGH CONSTRUCTION JOINT SURFACES SHALL BE THOROUGHLY CLEANED OF ALL DUST, DIRT AND OTHER FOREIGN MATTER. IF CONSIDERED NECESSARY BY THE ENGINEER, THE SURFACES SHALL BE WATER BLASTED TO ACHIEVE AN ACCEPTABLE SURFACE. PRIOR TO PLACING CONCRETE, THE BONDING SURFACES SHALL BE FLUSHED WITH CLEAR WATER AND SHALL BE WET, WITHOUT FREE WATER, WHEN CONCRETE IS PLACED.

POROUS BACKFILL: WITH FILTER FABRIC, 600 mm THICK SHALL EXTEND UP TO THE PLANE OF THE SUBGRADE, TO 300 mm BELOW THE EMBANKMENT SURFACE, AND LATERALLY TO THE SURFACE OF THE EMBANKMENT SLOPES. GEOTEXTILE FABRIC SHALL CONFORM WITH 712.09, TYPE A. GEOTEXTILE FABRIC IS INCLUDED WITH POROUS BACKFILL FOR PAYMENT.

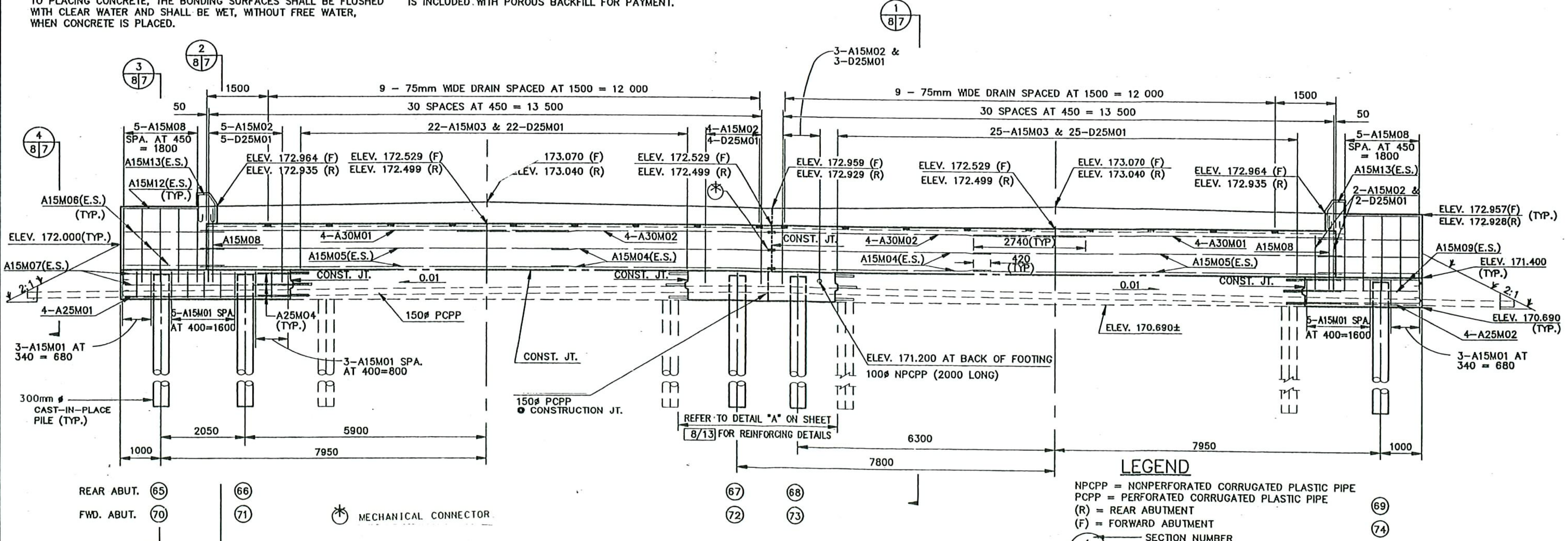

ELEVATION

SEE SHEET 8/13 FOR KEYWAY AND DOWEL HOLE LOCATION.

LEGEND

NPCPP = NONPERFORATED CORRUGATED PLASTIC PIPE
PCPP = PERFORATED CORRUGATED PLASTIC PIPE
(R) = REAR ABUTMENT
(F) = FORWARD ABUTMENT

SECTION NUMBER
SHEET ON WHICH SECTION IS REFERRED TO FIRST
SHEET ON WHICH SECTION IS SHOWN

ALL DIMENSIONS SHOWN ARE IN MILLIMETERS AND ELEVATIONS ARE IN METERS.

JONES-STUCKEY, LTD., INC.
1641 WEST FIFTH AVENUE
COLUMBUS, OHIO 43212

DATE 2-6-95 | DESIGNED G.G.N. | CHECKED E.D.W. | DRAWN J.W.E. | REVIEWED D.W.J. | STRUCTURE FILE NUMBER 6600360 (L)

ABUTMENT DETAILS
BRIDGE NO. PIK-23-0977L&R
OVER SCIOTO RIVER OVERFLOW

PIK-23-15.707/
16.625 / 17.477

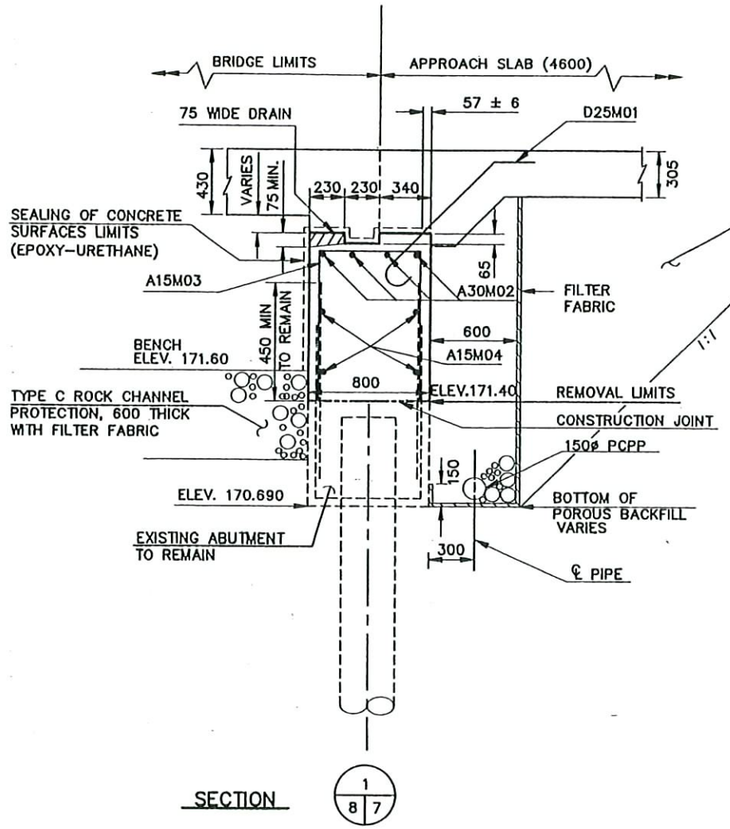

SECTION 1/8|7

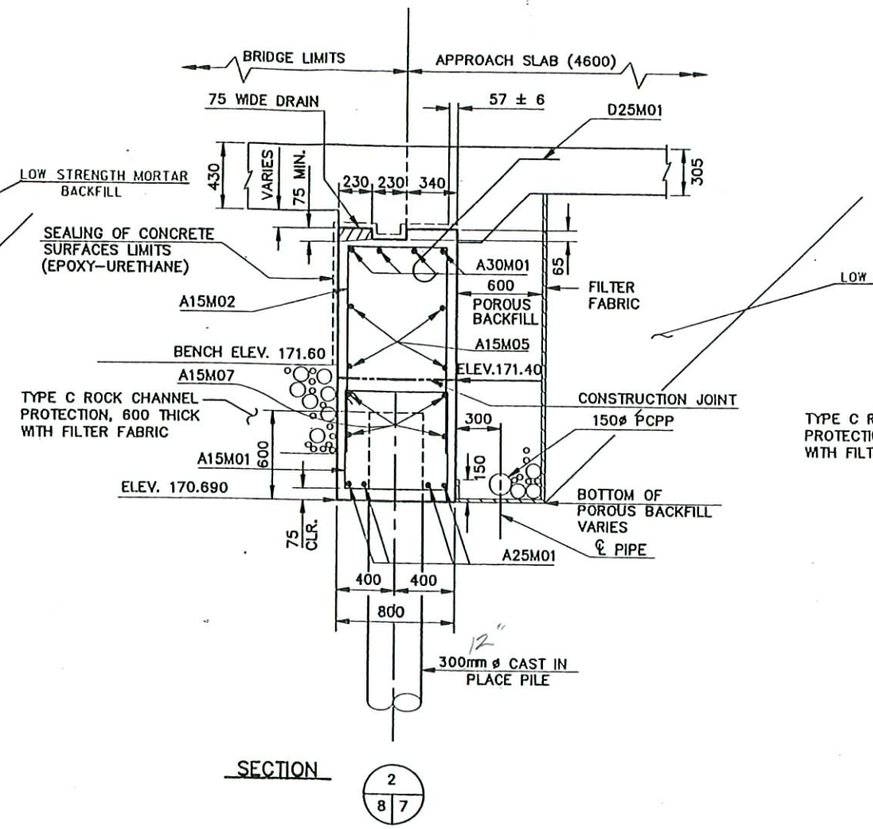

SECTION 2/8|7

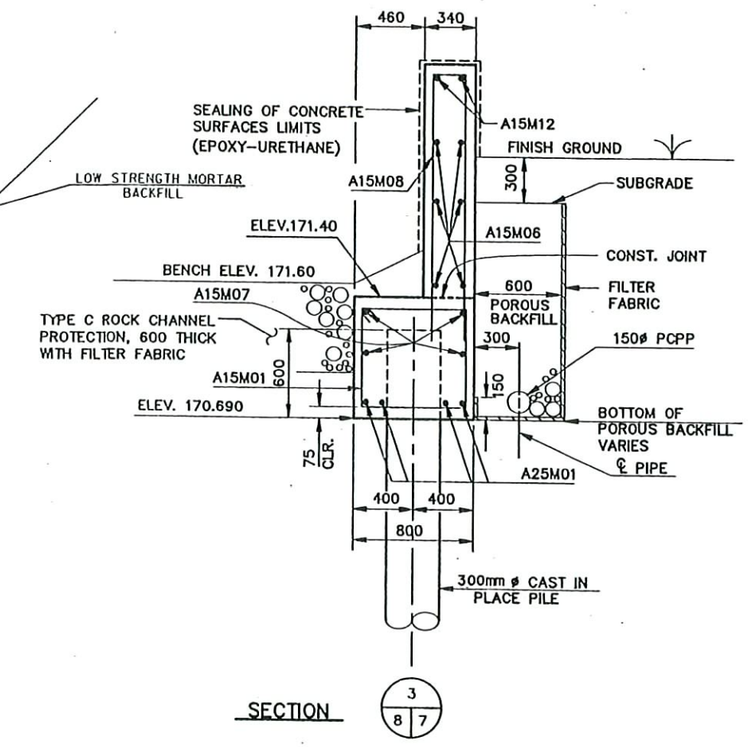

SECTION 3/8|7

PCPP = PERFORATED CORRUGATED PLASTIC PIPE

PILE REINFORCING STEEL SHALL BE INCLUDED WITH ITEM 507, 300mm CAST-IN-PLACE REINFORCED CONCRETE PILES FOR PAYMENT.

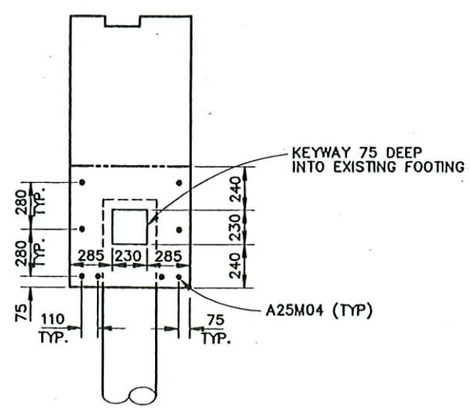

KEYWAY AND DOWEL HOLE LOCATION

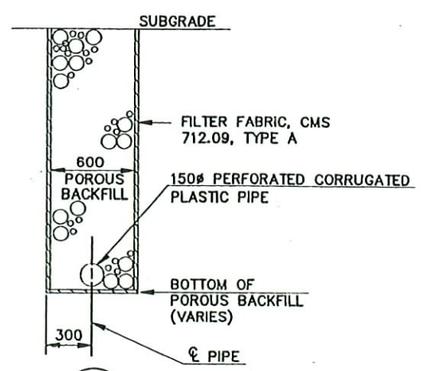

SECTION 4/8|7

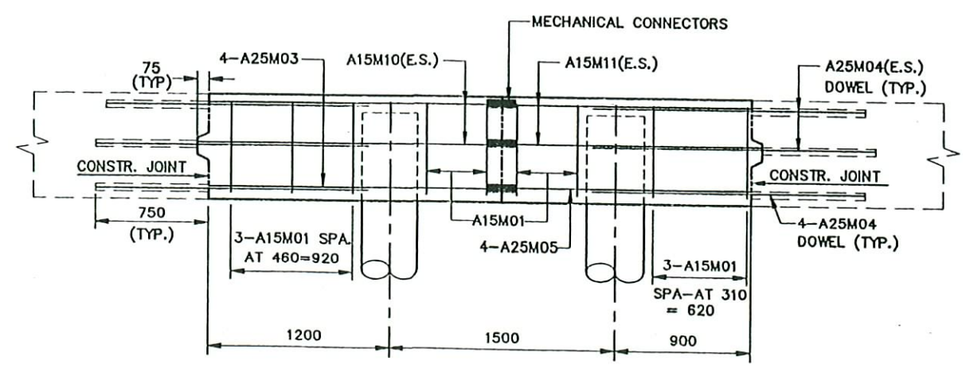

DETAIL A

ALL DIMENSIONS ARE IN MILLIMETRS AND ELEVATIONS IN METERS.

DESIGN AGENCY: JONES-STUCKEY, LTD., INC. 1641 WEST FIFTH AVENUE COLUMBUS, OHIO 43212

DESIGNED	DRAWN	REVIEWED	DATE
G.G.N.	J.W.E.	D.W.J.	2-6-95
CHECKED	REVISED	STRUCTURE FILE NUMBER	
E.D.W.		6600360(L) 6600395(R)	

ABUTMENT SECTION DETAILS
BRIDGE NO. PIK-23-0977L&R
OVER SCIOTO RIVER OVERFLOW

PIK-23-15.707 / 16.625 / 17.477

8/13

70/117

Apr 21, 1995 - 10:39:34 DVG Name: D:\ACAD\2804\942ABUT2.DVG Updated By: Janet Palmer

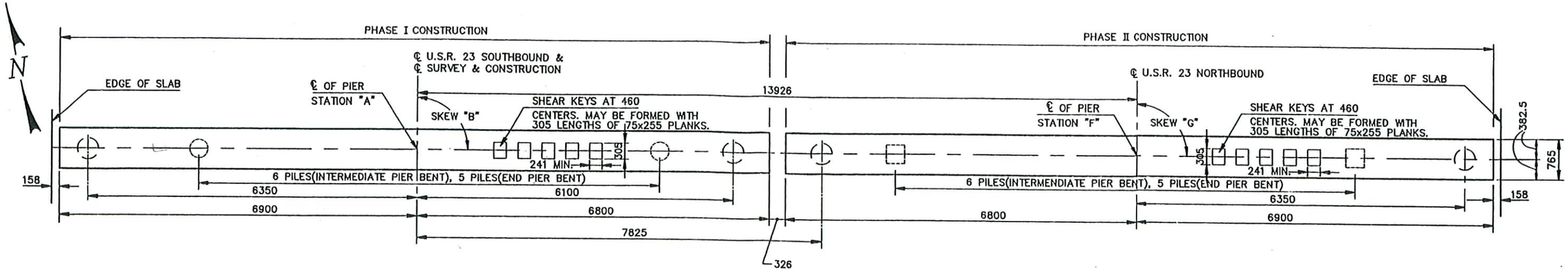

PLAN VIEW

(INTERMEDIATE PIER BENT SHOWN, END PIER BENT SIMILAR)

SEE SHEET 10/13 FOR PIER STATIONING AND SKEWS

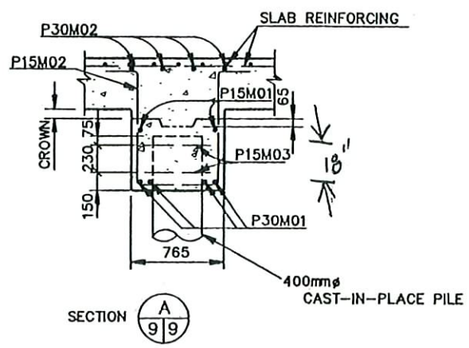

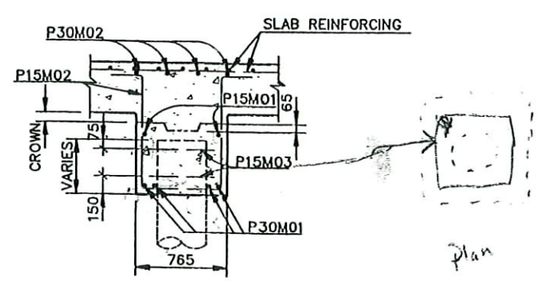

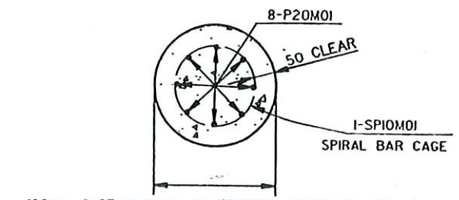

PILE REINFORCING STEEL SHALL BE INCLUDED WITH ITEM 507m 400mm CAST-IN-PLACE REINFORCED CONCRETE PILES FOR PAYMENT. SEE STANDARD DRAWING CPP-2-94M FOR ELEVATION VIEW OF CONCRETE PILE REINFORCEMENT

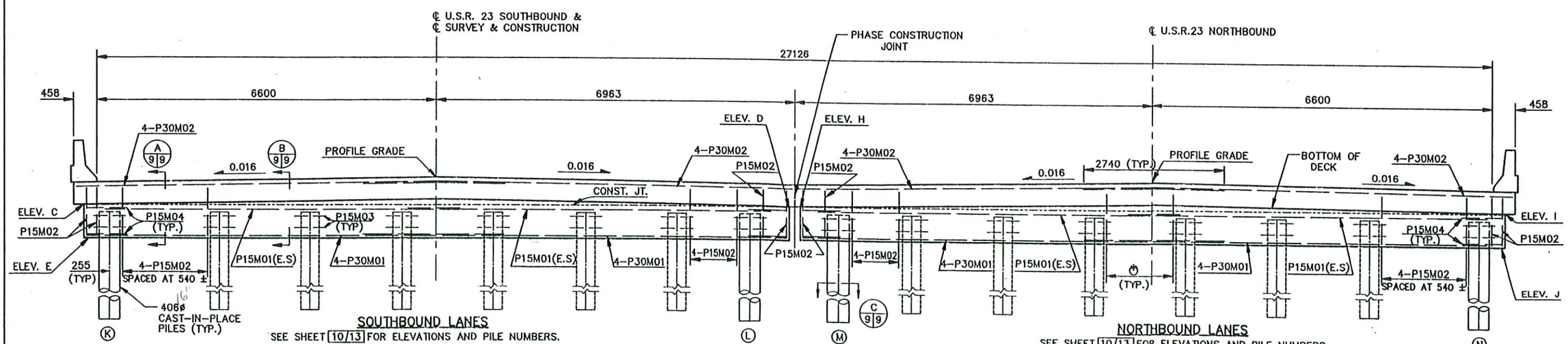

SOUTHBOUND LANES

SEE SHEET 10/13 FOR ELEVATIONS AND PILE NUMBERS.
REINFORCING STEEL IN PILES NOT SHOWN

SEE SECTION C 9/9 FOR REINFORCING STEEL IN PILES

NORTHBOUND LANES

SEE SHEET 10/13 FOR ELEVATIONS AND PILE NUMBERS.
REINFORCING STEEL IN PILES NOT SHOWN

SEE SECTION C 9/9 FOR REINFORCING STEEL IN PILES

ⓣ 4-P15M02 SPACED AT 370± BETWEEN EXISTING PILE (INTERMEDIATE PIER BENT) - NORTHBOUND
ⓣ 4-P15M02 SPACED AT 420± BETWEEN EXISTING PILE (INTERMEDIATE PIER BENT) - SOUTHBOUND
ⓣ 6-P15M02 SPACED AT 340± BETWEEN EXISTING PILE (END PIER BENT)
ALL DIMENSOINS ARE SHOWN IN MILLIMETER

DESIGN AGENCY: JONES-STUCKEY, LTD., INC. 1641 WEST FIFTH AVENUE COLUMBUS, OHIO 43212

DESIGNED G.G.N. | DRAWN J.W.E. | REVIEWED D.W.J. | DATE 2-6-95 | CHECKED E.D.W. | REVISED | STRUCTURE FILE NUMBER 6600390 (L) 6600395 (R)

PIER DETAILS
BRIDGE NO. PIK-23-0977L&R
OVER SCIOTO RIVER OVERFLOW

PIK-23-15.707 / 16.625 / 17.477

9/13

71/117

Apr 21, 1995 - 11:28:28 DWG Name: D:\ACAD\2804\042PIER1.DWG Updated By: Janet Palmer

PIER NUMBER	STATION "A"	SKEW "B"	ELEVATION C	ELEVATION D	ELEVATION E	PILE DATA PILE NUMBER K	PILE DATA PILE NUMBER L
1	2+717.735	89°56'27"	172.513	172.514	171.740	1	2
2	2+726.888	89°33'04"	172.528	172.520	171.740	3	4
3	2+734.839	89°47'10"	172.541	172.542	171.740	5	6
4	2+737.198	89°55'16"	172.544	172.546	171.740	7	8
5	2+745.109	89°54'22"	172.555	172.557	171.740	9	10
6	2+745.243	89°45'04"	172.555	172.557	171.740	11	12
7	2+763.399	90°02'13"	172.578	172.579	171.750	13	14
8	2+771.381	89°26'35"	172.586	172.588	171.750	15	16
9	2+773.766	89°37'05"	172.588	172.590	171.750	17	18
10	2+781.658	90°12'04"	172.595	172.597	171.750	19	20
11	2.+790.810	89°57'40"	172.603	172.604	171.750	21	22
12	2+799.896	89°19'41"	172.608	172.610	171.755	23	24
13	2+807.892	90°07'34"	172.613	172.614	171.760	25	26
14	2+810.279	90°04'26"	172.614	172.615	171.755	27	28
15	2+818.211	89°51'50"	172.617	172.618	171.750	29	30
16	2+827.321	90°09'40"	172.619	172.620	171.740	31	32
17	2+836.501	89°47'42"	172.620	172.622	171.740	33	34
18	2+845.667	89°41'06"	172.620	172.622	171.740	35	36
19	2+853.595	89°56'24"	172.619	172.621	171.740	37	38
20	2+855.956	90°15'11"	172.618	172.620	171.740	39	40
21	2+863.887	90°01'44"	172.616	172.618	171.750	41	42
22	2+873.057	90°00'07"	172.613	172.614	171.745	43	44
23	2+882.200	89°53'46"	172.608	172.609	171.745	45	46
24	2+890.137	90°04'26"	172.603	172.604	171.730	47	48
25	2+892.527	90°11'53"	172.601	172.603	171.750	49	50
26	2+900.480	89°57'11"	172.595	172.596	171.750	51	52
27	2+909.600	89°43'52"	172.586	172.588	171.750	53	54
28	2+918.747	90°00'54"	172.577	172.578	171.750	55	56
29	2+926.670	89°52'16"	172.567	172.569	171.750	57	58
30	2+929.006	89°40'26"	172.564	172.566	171.750	59	60
31	2+937.045	90°24'25"	172.554	172.556	171.750	61	62
32	2+946.179	89°53'20"	172.541	172.542	171.750	63	64

SOUTHBOUND

SEE SHEET 9/13 FOR LAYOUT

PIER NUMBER	STATION "F"	SKEW "G"	ELEVATION H	ELEVATION I	ELEVATION J	PILE DATA PILE NUMBER M	PILE DATA PILE NUMBER N
33	2+717.758	90°08'10"	172.515	172.513	171.650	65	66
34	2+726.900	89°45'25"	172.530	172.528	171.655	67	68
35	2+734.820	90°00'54"	172.542	172.541	171.660	69	70
36	2+737.216	90°05'46"	172.546	172.544	171.660	71	72
37	2+745.143	89°54'29"	172.557	172.555	171.665	73	74
38	2+754.289	90°07'37"	172.569	172.567	171.665	75	76
39	2+763.423	89°53'31"	172.579	172.578	171.670	77	78
40	2+771.360	90°06'47"	172.588	172.586	171.665	79	80
41	2+773.771	89°59'31"	172.590	172.588	171.670	81	82
42	2+781.699	90°05'28"	172.597	172.595	171.660	83	84
43	2+790.847	89°53'24"	172.604	172.603	171.670	85	86
44	2+799.980	89°54'04"	172.610	172.608	171.670	87	88
45	2+807.915	90°04'08"	172.614	172.613	171.650	89	90
46	2+810.334	90°03'00"	172.615	172.614	171.665	91	92
47	2+818.256	89°59'31"	172.618	172.617	171.665	93	94
48	2+827.392	90°00'04"	172.621	172.619	171.660	85	96
49	2+836.529	89°59'38"	172.622	172.620	171.665	97	98
50	2+845.696	90°10'23"	172.622	172.620	171.650	99	100
51	2+853.594	89°59'24"	172.621	172.619	171.650	101	102
52	2+865.032	90°07'23"	172.617	172.616	171.665	103	104
53	2+863.953	90°12'47"	172.618	172.616	171.665	105	106
54	2+873.103	90°06'22"	172.614	172.613	171.675	107	108
55	2+882.236	89°57'36"	172.609	172.608	171.680	109	110
56	2+890.158	90°05'49"	172.604	172.603	171.675	111	112
57	2+892.565	90°10'37"	172.602	172.601	171.675	113	114
58	2+900.526	89°53'24"	172.596	172.595	171.675	115	116
59	2+909.660	89°55'34"	172.588	172.586	171.670	117	118
60	2+918.794	89°41'56"	172.578	172.577	171.675	119	120
61	2+926.725	89°58'41"	172.569	172.567	171.680	121	122
62	2+929.141	89°55'01"	172.566	172.564	171.680	123	124
63	2+937.047	90°07'59"	172.555	172.554	171.675	125	126
64	2+945.193	90°12'36"	172.544	172.542	171.680	127	128

NORTHBOUND

SEE SHEET 9/13 FOR LAYOUT

LEGEND

— CONCRETE REMOVAL

— CONCRETE PATCH

CONCRETE REPLACEMENT IS FROM THE REMOVAL LIMIT TO THE BOTTOM OF THE PROPOSED PIER CAP. PAYMENT SHALL BE INCLUDED IN ITEM 511 CLASS C CONCRETE, PIER, AS PER PLAN.

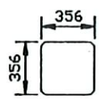

SECTION 1/1010

EXISTING CONCRETE PILE NORTHBOUND

DISTANCE "A"

DISTANCE "A" IS THE REMOVAL LENGTH BELOW THE BOTTOM OF EXISTING PIER CAP OF EXISTING CONCRETE PILE. PAYMENT SHALL BE INCLUDED IN ITEM 202 PORTIONS OF STRUCTURE REMOVED, AS PER PLAN. SEE GENERAL NOTES SHEET 5/13

CONCRETE PATCHES: ONLY STRUCTURAL PATCHES (EXPOSING PRIMARY REINFORCING STEEL AFTER REMOVAL OF UNSOUND CONCRETE) SHALL BE MADE AS DIRECTED BY THE ENGINEER. SURFACE PREPARATION SHALL INCLUDED ABRASIVE CLEANING OF ALL REINFORCING STEEL AND CONCRETE TO BE PATCHED (STEEL CLEANED TO SA-1 QUALITY). PAYMENT SHALL INCLUDE ALL WORK, INCLUDING ABRASIVE CLEANING, NECESSARY TO COMPLY WITH ITEM 519. PAYMENT SHALL BE INCLUDED WITH ITEM 519 PATCHING CONCRETE STRUCTURE, AS PER PLAN.

ALL DIMENSIONS ARE IN MILLIMETERS AND ELEVATIONS ARE IN METERS.

NORTHBOUND PIER PILE REPAIR				
PIER NUMBER	EXISTING PILE	PATCHING (SQ. m)	DISTANCE "A" (mm)	CONCRETE REPLACEMENT (CU. m)
33	P		765	0.097
33	U		765	0.097
34	P		765	0.097
35	P	0.130		
36	P		1070	0.135
37	P		1000	0.127
37	Q	0.390		
38	P		1380	0.175
38	U		765	0.097
39	P		1830	0.231
39	U		1000	0.127
40	T		610	0.077
41	P		765	0.097
42	P	0.065	1070	0.135
42	T	0.065		
42	U	0.065		
43	P		765	0.097
43	Q	0.130		
43	U	0.065		
44	P		765	0.097
44	U		1000	0.127
45	P	0.260	1000	0.127
45	Q	0.260		
45	T	0.130	300	0.038
46	P		610	0.077
46	T		610	0.077
47	P		610	0.077
47	S	0.065		
48	P	0.130	1525	0.193
48	R	0.065		
49	P		1070	0.135
49	U		610	0.077

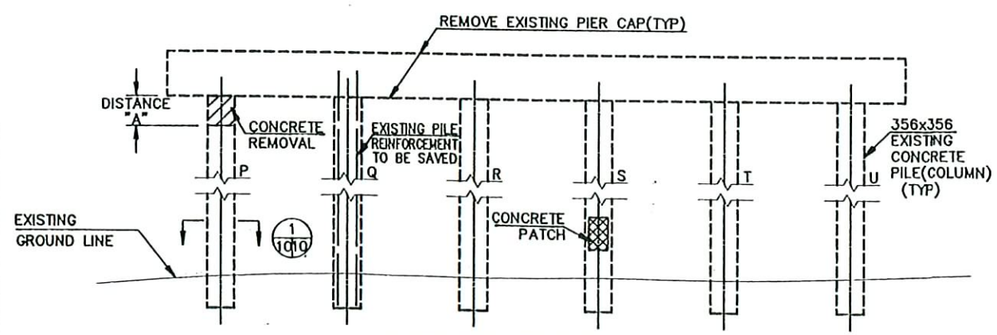

INTERMEDIATE PIER LAYOUT

NORTHBOUND

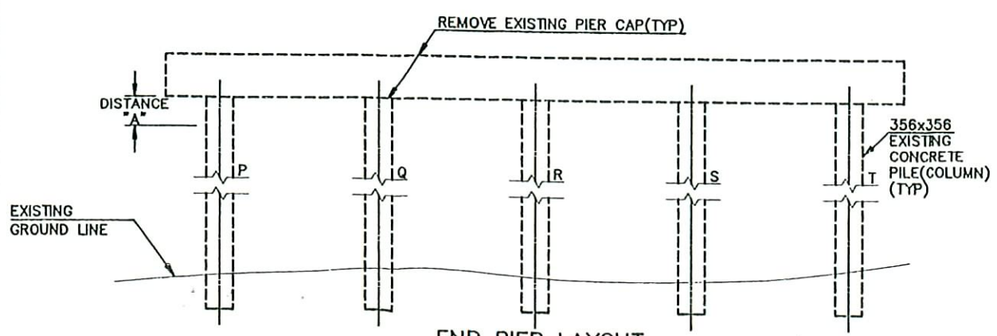

END PIER LAYOUT

NORTHBOUND

NORTHBOUND PIER PILE REPAIR(CON'T)				
PIER NUMBER	EXISTING PILE	PATCHING (SQ. m)	DISTANCE "A" (mm)	CONCRETE REPLACEMENT (CU. m)
50	P		2135	0.270
51	P		915	0.115
51	Q	0.130		
51	T	0.065	205	0.026
52	P		915	0.115
52	T	0.260	460	0.058
53	P		460	0.058
53	T	0.065		
54	P		765	0.097
54	Q	0.065		
55	P	0.195	460	0.058
55	Q	0.195		
55	U	0.260	300	0.038
56	P	0.260	1220	0.154
56	Q	0.130		
56	R	0.130		
56	S	0.065		
56	T	0.065		
57	P	0.065	765	0.097
57	S	0.065		
57	T	0.065	765	0.097
58	P		2440	0.309
59	P	0.130	765	0.097
59	U	0.065		
60	P		610	0.077
61	P	0.325	205	0.026
62	P		765	0.097
63	P	0.065		
63	R	0.065		
63	S	0.065		
63	U	0.065		
63	U	0.065		
64	P		915	0.115
64	T	0.065		
TOTALS:		4.875 SQ. m		4.518 CU. m

DESIGN AGENCY: JONES-STUCKEY, LTD., INC. 1641 WEST FIFTH AVENUE COLUMBUS, OHIO 43212

DATE 2-6-95

REVIEWED D.W.J.

STRUCTURE FILE NUMBER 6600360 (L) 6600395 (R)

DRAWN J.W.E.

REVIEWED

DESIGNED G.G.N.

CHECKED E.D.W.

PIER DETAILS AND PILE REPAIR

BRIDGE NO. PIK-23-0977L&R OVER SCIOTO RIVER OVERFLOW

PIK-23-15.707/ 16.625 / 17.477

10/13

72/117

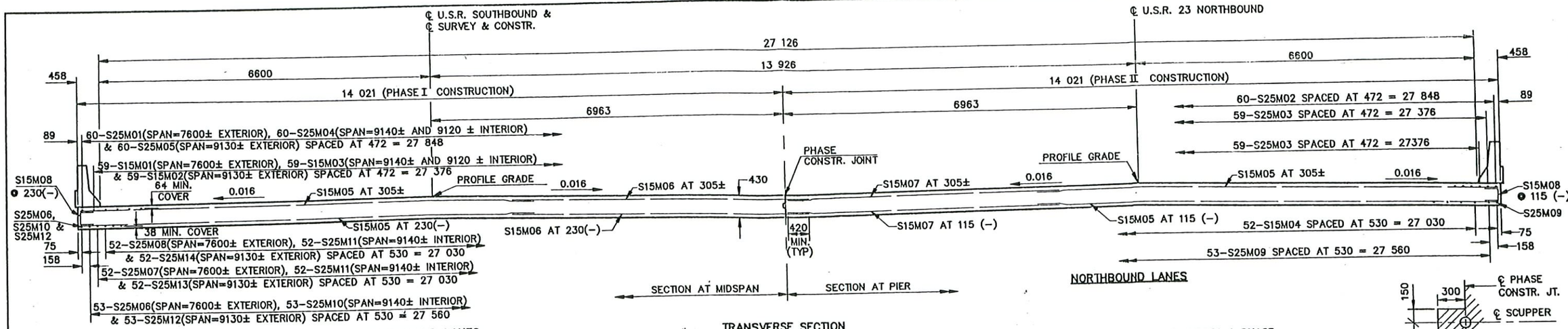

TRANSVERSE SECTION

TRANSVERSE REINFORCEMENT(TOP)	
SEGMENT NUMBER	NUMBER OF ROWS FOR S15M05, S15M06 & S15M07
ONE & FIVE	205
TWO & FOUR	120
THREE	150

EXPANSION JOINT	
LOCATION	STATION AT ℄ OF JOINT
JOINT 1	2+772.545
JOINT 2	2+809.085
JOINT 3	2+854.800
JOINT 4	2+891.360

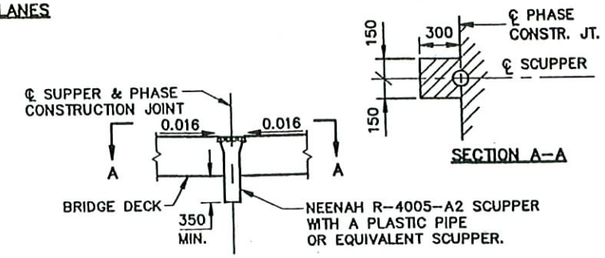

MEDIAN SCUPPER DETAIL

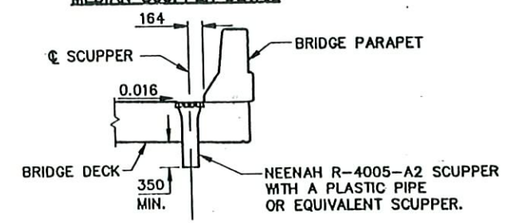

PARAPET SCUPPER DETAIL

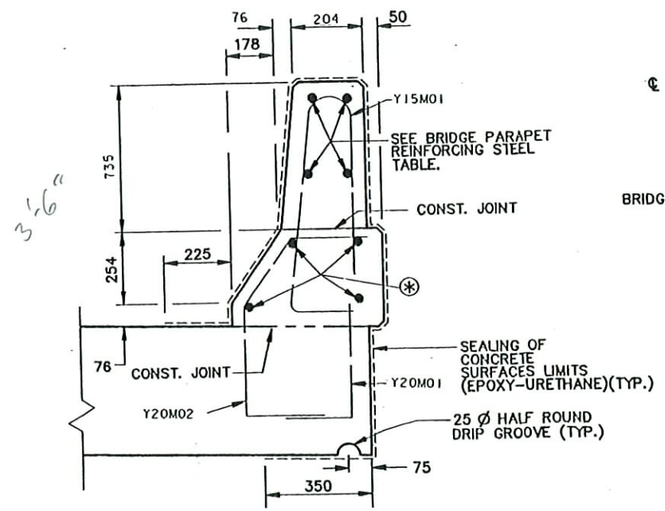

PARAPET REINFORCING DETAIL

⊛ X15M01 LAP WITH X15M02(SEGMENT 1 & 5)
X15M01 LAP WITH X15M03(SEGMENT 2 & 4)
X15M01 LAP WITH X15M11 (SEGMENT 3)
LAP LENGTH FOR X15M BARS = 420

SEE STD. DWG. BR-1M FOR ADDITIONAL NOTES AND DETAILS

BRIDGE PARAPET REINFORCING STEEL TABLE			
DEFLEC. JT. SPACING	BAR MARK	NO. OF Y20M01, Y20M02 & Y15M01	SPACING FOR Y20M01, Y20M02 AND Y15M01
4300	X15M04	11	420
1800	X15M05	5	425
1714	X15M06	5	400
1678	X15M07	5	395
1285	X15M08	4	395
1265	X15M09	4	385
1257.5	X15M10	4	385

ALL DIMENSIONS ARE SHOWN IN MILLIMETERS AND ELEVATIONS ARE IN METERS.

FINISHED DECK ELEVATION TABLE (METERS)					
LOCATION	TOE OF PARAPET (6600 LT.)	SOUTHBOUND PROFILE GRADE	PHASE CONSTR. JOINT(6963 RT.)	NORTHBOUND PROFILE GRADE(13 926 RT.)	TOE OF PARAPET (20 526 RT.)
2+710.117	172.934	173.040	172.928	173.040	172.934
2+714.000	172.941	173.047	172.935	173.047	172.941
2+721.000	172.953	173.059	172.947	173.059	172.953
2+731.000	172.970	173.075	172.964	173.075	172.970
2+741.000	172.984	173.090	172.979	173.090	172.984
2+749.000	172.995	173.101	172.990	173.101	172.995
2+759.000	173.008	173.113	173.002	173.113	173.008
2+768.000	173.017	173.123	173.012	173.123	173.017
2+778.000	173.027	173.133	173.021	173.133	173.027
2+786.000	173.034	173.139	173.028	173.139	173.034
2+796.000	173.041	173.146	173.035	173.146	173.041
2+803.500	173.045	173.151	173.039	173.151	173.045
2+814.000	173.050	173.156	173.044	173.156	173.050
2+823.000	173.053	173.158	173.047	173.158	173.053
2+832.500	173.054	173.160	173.049	173.160	173.054
2+841.000	173.055	173.161	173.049	173.161	173.055
2+850.000	173.054	173.160	173.048	173.160	173.054
2+860.000	173.052	173.158	173.046	173.158	173.052
2+868.500	173.049	173.155	173.044	173.155	173.049
2+877.500	173.045	173.151	173.039	173.151	173.045
2+886.000	173.040	173.146	173.034	173.146	173.040
2+896.500	173.033	173.138	173.027	173.138	173.033
2+905.000	173.025	173.131	173.020	173.131	173.025
2+914.000	173.017	173.122	173.011	173.122	173.017
2+922.500	173.007	173.113	173.001	173.113	173.007
2+933.000	172.994	173.100	172.988	173.100	172.994
2+941.500	172.982	173.088	172.977	173.088	172.982
2+950.000	172.970	173.075	172.964	173.075	172.970
2+953.824	172.964	173.069	172.958	173.069	172.964

LOCATION OF SCUPPERS PIK-23-015720			
LOCATION	STATION (METER)	SIDE	OFFSET
PARAPET	2+714	LT.	6436
MEDIAN	2+714	RT.	6693
PARAPET	2+714	RT.	20 362
PARAPET	2+743	LT.	6436
MEDIAN	2+743	RT.	6693
PARAPET	2+743	RT.	20 362
PARAPET	2+786	LT.	6436
MEDIAN	2+786	RT.	6693
PARAPET	2+786	RT.	20 362
PARAPET	2+815	LT.	6436
MEDIAN	2+815	RT.	6693
PARAPET	2+815	RT.	20 362
PARAPET	2+866	LT.	6436
MEDIAN	2+866	RT.	6693
PARAPET	2+866	RT.	20 362
PARAPET	2+913	LT.	6436
MEDIAN	2+913	RT.	6693
PARAPET	2+913	RT.	20 362
PARAPET	2+949	LT.	6436
MEDIAN	2+949	RT.	6693
PARAPET	2+949	RT.	20 362

DESIGN AGENCY
JONES-STUCKEY, LTD., INC.
1641 WEST FIFTH AVENUE
COLUMBUS, OHIO 43212

DATE 2-6-95
REVIEWED D.W.J.
STRUCTURE FILE NUMBER 6600,5580 & 5580A
DRAWN J.W.E.
REVISED
DESIGNED G.G.N.
CHECKED E.D.W.

SUPERSTRUCTURE DETAILS

BRIDGE NO. PIK-23-0977L&R
OVER SCIOTO RIVER OVERFLOW

PIK-23-15.707 / 16.625 / 17.477

metric units

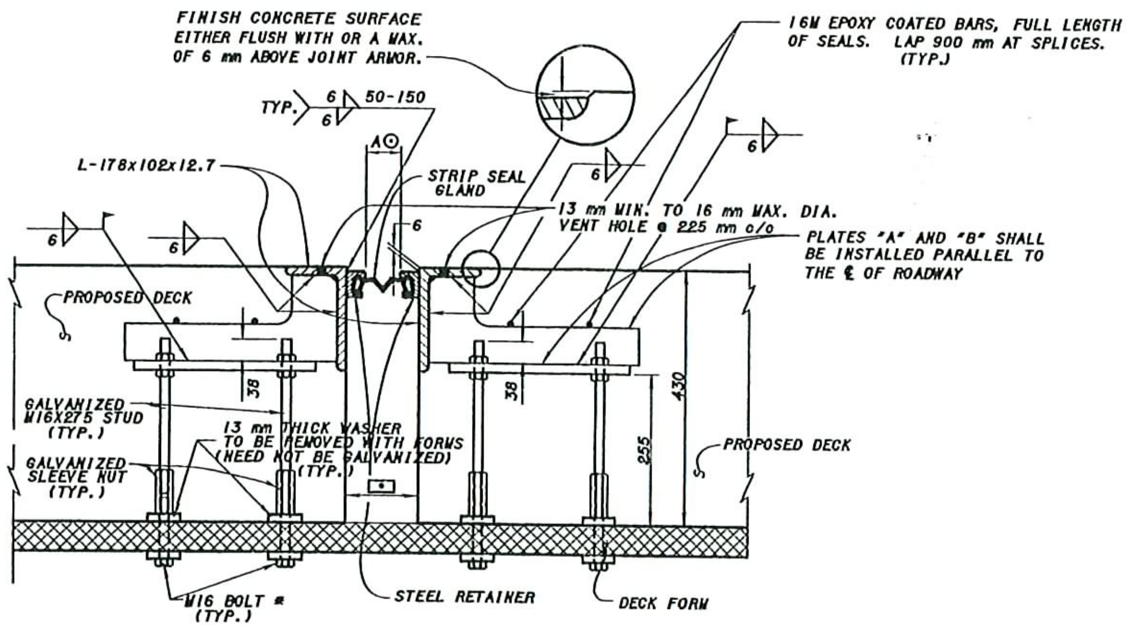

INTERMEDIATE EXPANSION JOINT DETAIL

NOTE: THE JOINT ASSEMBLY SHALL BE PLACED SO THAT THE 178x102x12.7 ANGLES REMAIN PARALLEL TO EACH OTHER AND PERPENDICULAR TO THE ROADWAY GRADIENT.

⊙ - DIMENSION "A" SHALL BE DETERMINED FROM TABLE 1-1.

▭ - THIS DIM. IS THE SUM OF (2 X RETAINER WIDTH + DIM. "A")

* - LENGTH TO BE DETERMINED BY THE CONTRACTOR

SEE STD. DWG. EXJ-6-95M FOR NOTES AND DETAILS NOT SHOWN

TABLE 1-1

TEMPERATURE (°C)	REQUIRED JOINT OPENING (mm)
0	49
5	45
10	42
15	39
20	36
25	33
30	30
35	27

DESIGN AGENCY
STATE OF OHIO
DEPARTMENT OF TRANSPORTATION
DISTRICT 9

DESIGNED	DRAWN	REVIEWED	DATE
GEC	GEC	LAW	1/14/98
CHECKED	REVISED	STRUCTURE FILE NUMBER	
LAW		6600360 6600395	

INTERMEDIATE EXPANSION JOINT DETAILS

BRIDGE NO. PIK-23-0977 L&R
OVER SCIOTO RIVER OVERFLOW

PIK-23-15.707/16.625/17.477

11A/13

73A/117

Drawing : k:\project\23o15707\042supel.dgn Plotted by: gcochono 21-JAN-1998 07:14

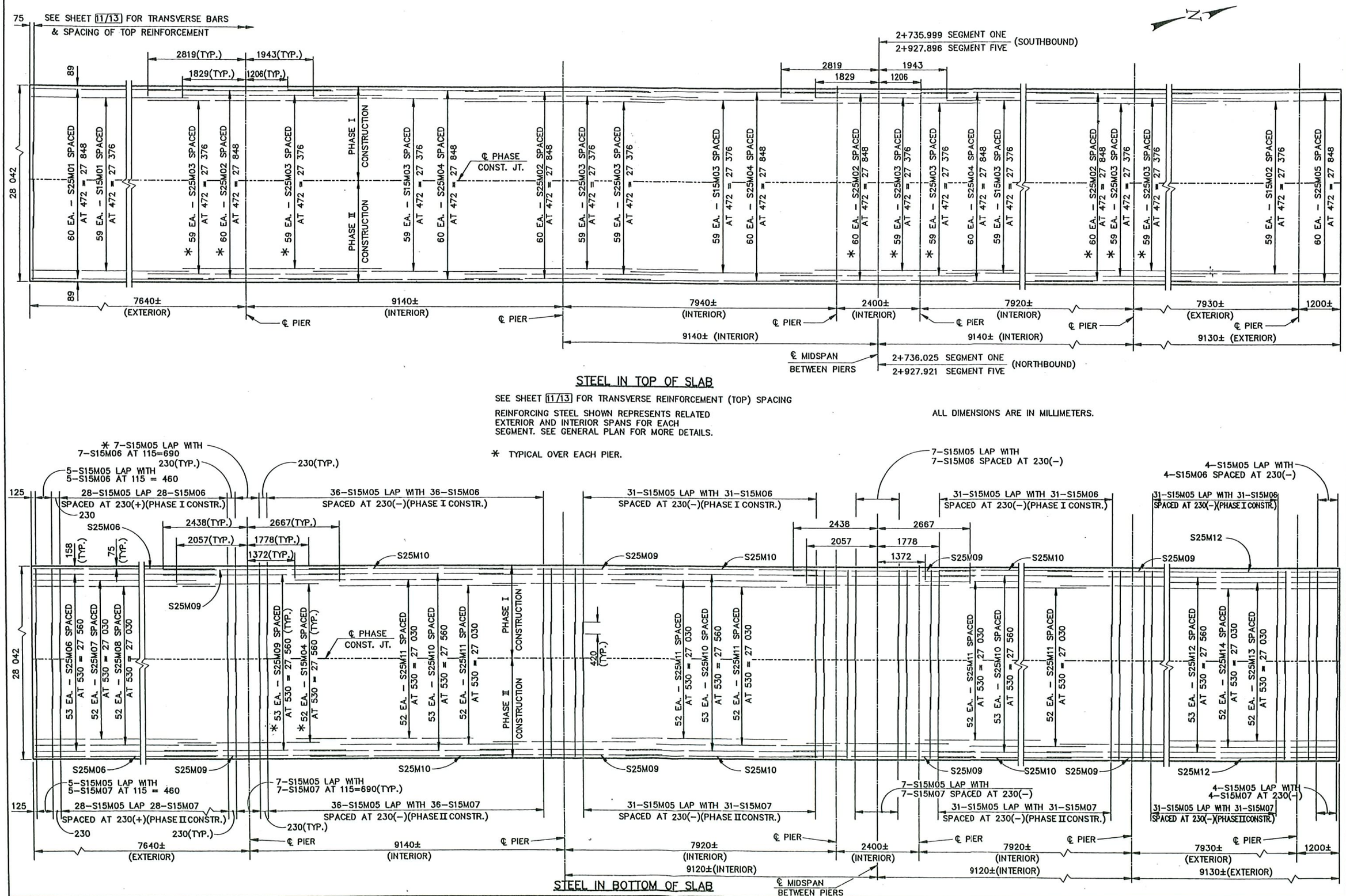

DESIGN AGENCY: JONES-STUCKEY, LTD., INC. 1641 WEST FIFTH AVENUE COLUMBUS, OHIO 43212

DATE: 2-7-95 | STRUCTURE FILE NUMBER: 6600360(L) 6600395(R)

DRAWN: J.W.E. | REVIEWED: D.W.J. | DESIGNED: G.G.N. | CHECKED: E.D.W.

SUPERSTRUCTURE DETAIL

BRIDGE NO. PIK-23-0977L&R
OVER SCIOTO RIVER OVERFLOW

PIK-23-15.707/ 16.625 / 17.477

12/13

74/117

Jul 17, 1995 – 12:50:06 DWG Name: D:\ACAD\2804\15.71\042SUPS2.DWG Updated By: James W. Eudosky, Jones-Stuckey