# STATE OF OHIO
# DEPARTMENT OF TRANSPORTATION
## PIK-23-15.707/16.625/17.477

9.76 (10.33) 10.86

**PEE PEE TOWNSHIP**
**PIKE COUNTY**

10.34

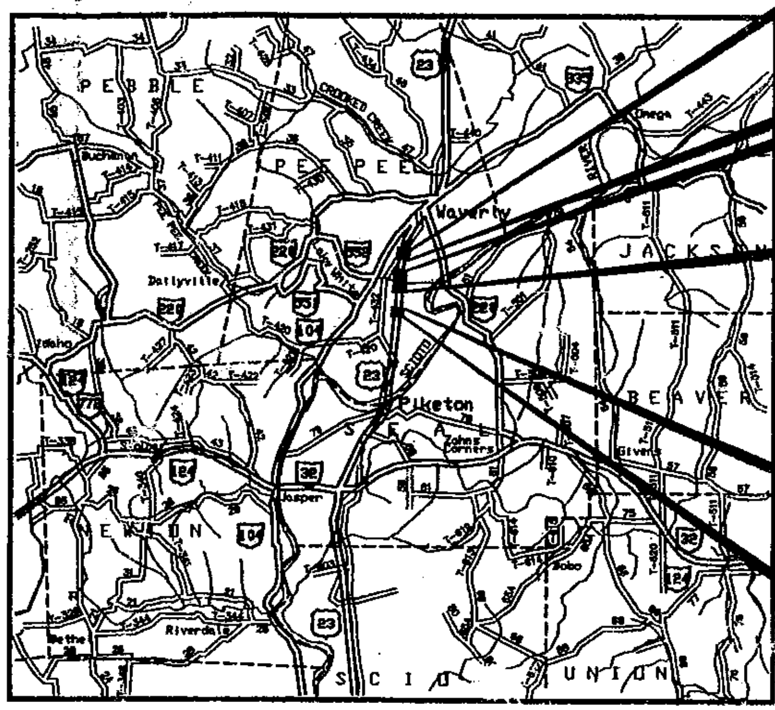


END PROJECT
STA. 4+605.994
RESUME PROJECT
STA. 4+462.732

SUSPEND PROJECT
STA. 3+894.457
RESUME PROJECT
STA. 3+623.545

SUSPEND PROJECT
STA. 2+958.424
BEGIN PROJECT
STA. 2+705.517

LOCATION MAP
LATITUDE: N39°05'25" LONGITUDE: W83°00'05"

SCALE IN KILOMETERS
0 2 4 6 8

PORTION TO BE IMPROVED
STATE & FEDERAL ROUTES
OTHER ROADS

### DESIGN DESIGNATION

| | |
|---|---|
| CURRENT A.D.T.(1995) | 14050 |
| DESIGN YEAR ADT(2015) | 18260 |
| DESIGN HOURLY VOLUME (2015) | 1826 |
| DIRECTIONAL DISTRIBUTION | 55% |
| TRUCKS | 5% |
| DESIGN SPEED | 100 KM/H |
| LEGAL SPEED | 55 MPH (89KM\H) |
| DESIGN FUNCTIONAL CLASSIFICATION | ARTERIAL (RURAL) |

### DESIGN EXCEPTIONS
NONE REQUIRED

ENGINEERS SEAL:
DISTRICT 9 PRODUCTION REVISION OF PLANS TO 1997 CMS & REVISION OF BRIDGE PARAPETS FROM 915MM TO 1065 MM & JOINT DETAILS EXPANSION
STATE OF OHIO LAWRENCE A. WILLS E-39667 REGISTERED PROFESSIONAL ENGINEER
SIGNED: Lawrence A. Wills
DATE: 1-29-98

UNDERGROUND UTILITIES
TWO WORKING DAYS
BEFORE YOU DIG
CALL 1-800-362-2764 (TOLL FREE)
OHIO UTILITIES PROTECTION SERVICE
NON-MEMBERS
MUST BE CALLED DIRECTLY

PLAN PREPARED BY:
JONES-STUCKEY LTD., INC.
1641 WEST FIFTH AVENUE
COLUMBUS, OHIO 43212

REV 1-21-98 JRS

PIK-23-15.70
980284
117PGS
05-13-98
DIST.09

### INDEX OF SHEETS


| | |
|---|---|
| TITLE SHEET | 1 |
| SCHEMATIC PLAN | 2 |
| TYPICAL SECTIONS | 3-4 |
| GENERAL NOTES | 5-6, 6A |
| MAINTENANCE OF TRAFFIC | 7-27, 11A |
| GENERAL SUMMARY | 28-29 |
| MISCELLANEOUS CALCULATIONS | 30 |
| TEMPORARY SOIL EROSION AND SEDIMENT CONTROL | 31-32 |
| PLAN AND PROFILE | 33-42 |
| CROSS SECTIONS | 43-55 |
| EXAGGERATED PAVEMENT SECTIONS | 56-59 |
| CONCRETE BARRIER, TYPE D, AS PER PLAN | 60 |
| TRAFFIC CONTROL CALCULATIONS | 61 |
| STRUCTURE OVER 6 METER SPAN | |
| PHASE CONSTRUCTION DETAILS | 62 |
| PIK-23-0977L&R OVER SCIOTO RIVER OVERFLOW | 63-75 |
| PIK-23-1034L&R OVER PEE PEE CREEK | 76-92 |
| PIK-23-1087L&R OVER SCIOTO RIVER OVERFLOW | 93-105 |
| RIGHT-OF-WAY | 106-117 |


| STANDARD CONSTRUCTION DRAWINGS | | | | SUPPLEMENTAL SPECIFICATIONS |
|---|---|---|---|---|
| BP-2.1M (4-8-97) | | MT-99.20M (1-30-95) | CS-1-93M (6-30-95) | |
| BP-3.1M (10-28-94) | HW-2.1M (7-12-95) | MT-101.60M (4-25-94) | | |
| BP-5.1M (10-28-94) | HW-2.2M (7-12-95) | MT-105.10M (4-25-94) | EXJ-6-96M (3-18-97) | |
| GR-1.1M (10-21-97) | I-1.1M (9-6-95) | MT-105.11M (4-25-94) | IRJ-8-95M (7-6-95) | 806 (9-9-97) |
| GR-1.2 (1-3-96) | DM-1.1M (10-21-97) | MT-100.00M (4-25-94) | CPP-2-94M (12-19-94) | 911 (7-10-97) |
| GR-2.1M (10-21-97) | DM-2.1M (6-30-95) | TC-41.20M (7-1-94) | CPA-5-94M (10-25-94) | 932 (10-2-96) |
| GR-3.1M (10-21-97) | DM-4.1M (6-30-95) | TC-42.20M (3-31-94) | | 844 (9-9-97) |
| GR-3.2M (10-21-97) | DM-4.2M (6-30-95) | TC-52.10M (7-29-94) | | 954 (9-9-97) |
| GR-6.1M (1-3-96) | DM-4.3M (6-30-95) | TC-52.20M (7-29-94) | | SPECIAL |
| RM-4.1M (10-21-97) | DM-4.4M (6-30-95) | TC-65.10M (11-1-95) | | PROVISIONS |
| RM-4.2M (10-21-97) | MT-35.10M (1-30-95) | TC-65.11M (11-1-95) | | |
| RM-4.3M (10-21-97) | MT-35.11M (1-30-95) | TC-65.12M (11-1-95) | | |
| RM-4.5M (10-21-97) | MT-95.30M (4-25-94) | TC-71.10M (9-1-93) | | |
| CB-1.1M (7-12-95) | MT-95.70M (1-30-95) | AS-1-81M (10-25-94) | | |
| CB-3.3M (7-12-95) | MT-95.81M (4-25-94) | BR-1M (12-15-94) | | |

metric units

### PROJECT DESCRIPTION
IMPROVEMENT OF 667.081 m OF U.S.R. 23 BY REHABILITATION OF SIX STRUCTURES, PIK-23-0977L&R OVER OVERFLOW, PIK-23-1034L&R OVER PEE PEE CREEK AND PIK-23-1087L&R OVER OVERFLOW, INCLUDING APPROACH RECONSTRUCTION.

### 1997 SPECIFICATIONS
THE STANDARD SPECIFICATIONS OF THE STATE OF OHIO, DEPARTMENT OF TRANSPORTATION, INCLUDING CHANGES AND SUPPLEMENTAL SPECIFICATIONS LISTED IN THE PROPOSAL SHALL GOVERN THIS IMPROVEMENT.

I HEREBY APPROVE THESE PLANS AND DECLARE THAT THE MAKING OF THIS IMPROVEMENT WILL NOT REQUIRE THE CLOSING TO TRAFFIC OF THE HIGHWAY AND THAT PROVISIONS FOR THE MAINTENANCE AND SAFETY OF TRAFFIC WILL BE AS SET FORTH ON THE PLANS AND ESTIMATES.

UNDER AUTHORITY OF SECTION 4511.21, DIVISION (1) OF THE REVISED CODE OF OHIO, THE REVISED PRIMA FACIE SPEED LIMITS AS INDICATED HEREIN ARE DETERMINED TO BE REASONABLE AND SAFE, AND ARE HEREBY ESTABLISHED FOR THE DURATION OF THIS PROJECT. THE PRIMA FACIE SPEED LIMIT OR LIMITS HEREBY ESTABLISHED SHALL BECOME EFFECTIVE WHEN APPROPRIATE SIGNS GIVEN NOTICE THEREOF ARE ERECTED.

*STRUCTURE PLANS REVIEWED BY*
*OFFICE OF STRUCTURAL ENGINEERING*

APPROVED John F. Hagen TME
DATE 1-29-98 DISTRICT DEPUTY DIRECTOR

APPROVED [signature]
DATE 2-17-98 DIRECTOR, DEPARTMENT OF TRANSPORTATION

FEDERAL PROJECT NO. NH-22 (86)
PID NO. 15439
CONSTRUCTION PROJECT NO.
RAILROAD INVOLVEMENT NONE

PIK-23-15.707/16.625/17.477
(SLM 9.76/10.33/10.86)

metric units

10.33

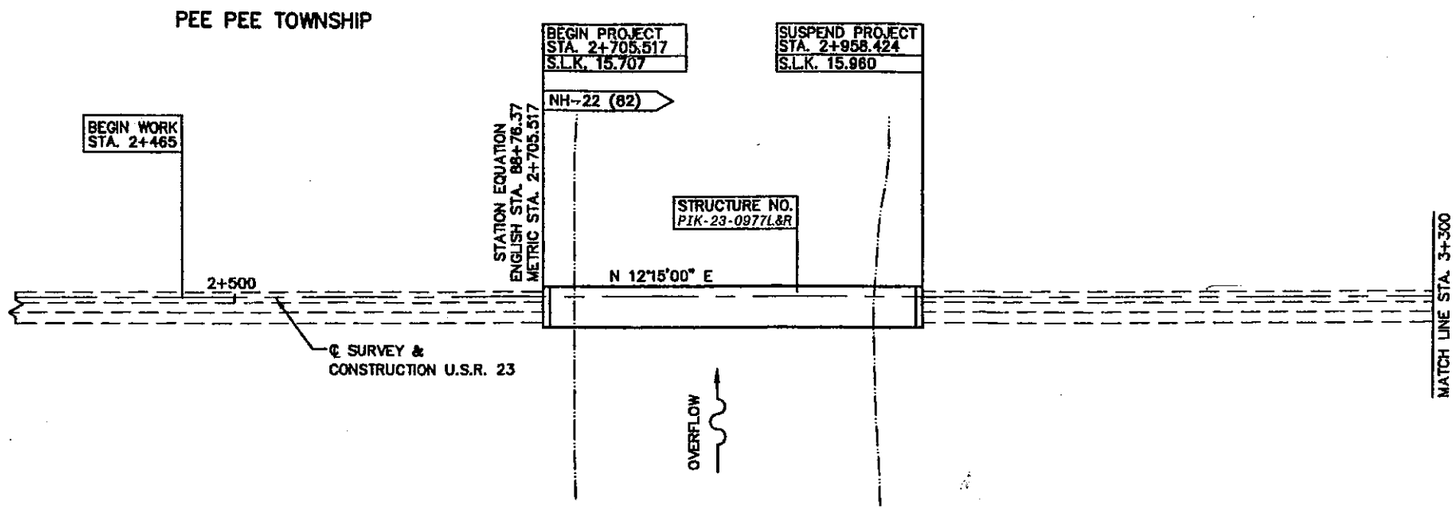


18.38
17.79

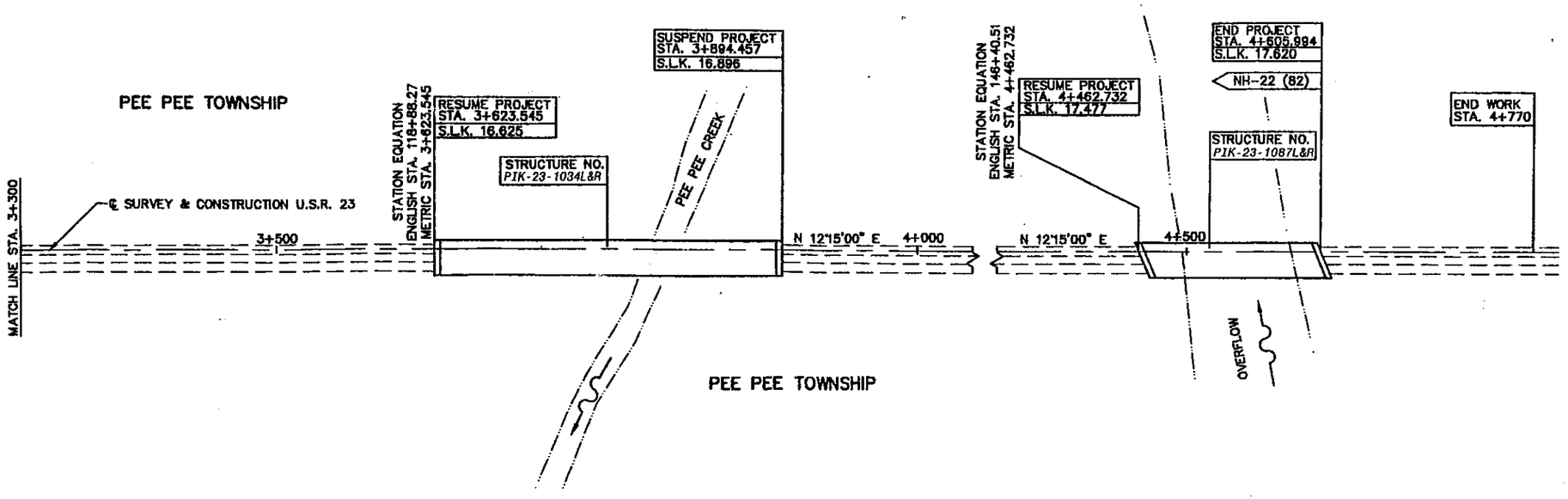


SCHEMATIC PLAN

CALCULATED R.S.B.
CHECKED E.D.W.

HORIZONTAL SCALE IN METERS 0 20 40 80

PIK-23-15.707/16.625/17.477

metric units

DESIGNED R.S.B. CHECKED E.D.W.

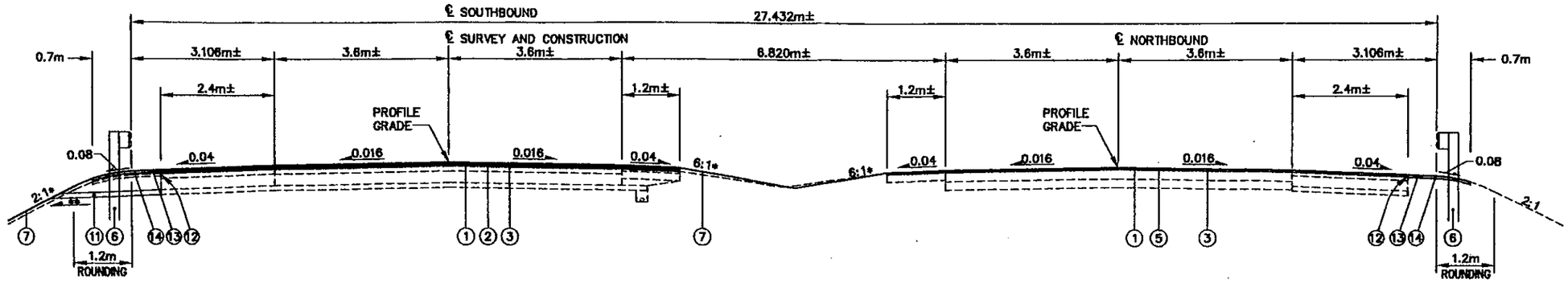


## TYPICAL 2

## NORMAL SECTION

| | | |
|---|---|---|
| STA. 2+680.000 TO STA. 2+705.517 | = | 25.517 m |
| STA. 2+958.424 TO STA. 3+020.000 | = | 61.576 m |
| STA. 3+540.000 TO STA. 3+623.545 | = | 83.545 m |
| STA. 3+894.457 TO STA. 3+960.000 | = | 65.543 m |
| STA. 4+400.000 TO STA. 4+462.732 | = | 62.732 m |
| STA. 4+605.994 TO STA. 4+640.000 | = | 34.006 m |
| | | 332.919 m |

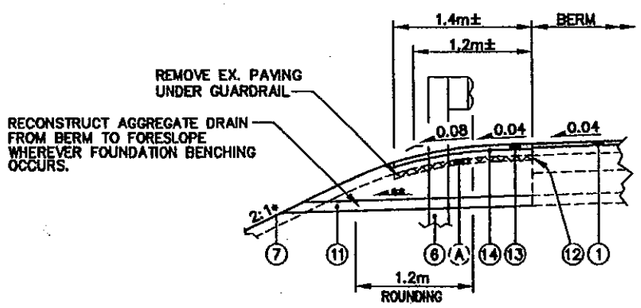


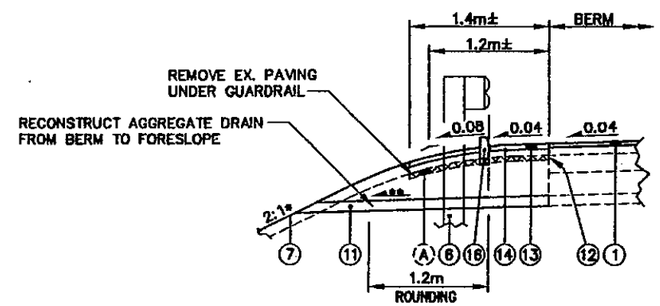


## BERM WITH CURB

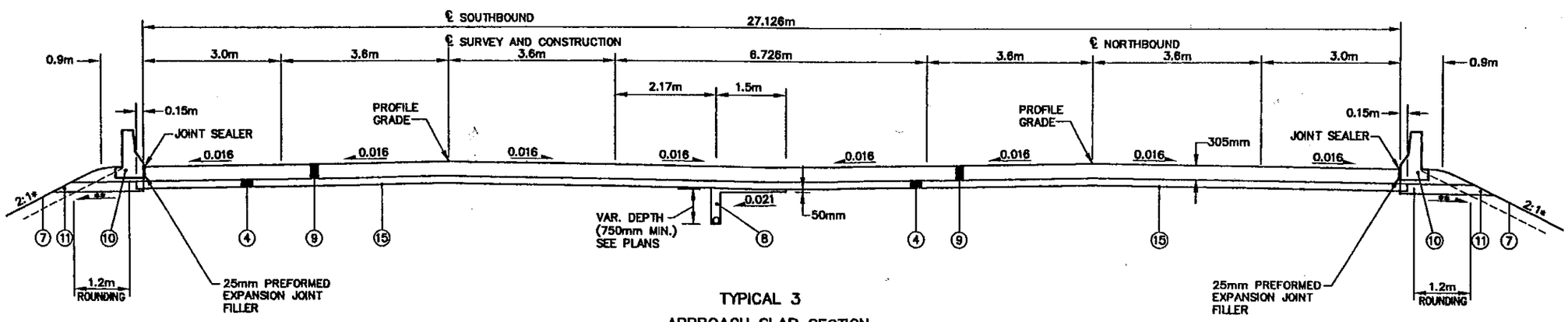


## TYPICAL 3

## APPROACH SLAB SECTION

| | | |
|---|---|---|
| STA. 2+705.517 TO STA. 2+710.117 | = | 4.6 m |
| STA. 2+953.824 TO STA. 2+958.424 | = | 4.6 m |
| STA. 3+623.545 TO STA. 3+628.145 | = | 4.6 m |
| STA. 3+889.857 TO STA. 3+894.457 | = | 4.6 m |
| STA. 4+462.732 TO STA. 4+467.332 | = | 4.6 m |
| STA. 4+601.394 TO STA. 4+605.994 | = | 4.6 m |
| | | 27.6 m |

NOTES:

SEE SHEET 3 FOR LEGEND.

SEE EXAGGERATED PAVEMENT SECTIONS FOR LOCATIONS AND QUANTITIES OF ⑤ & ②

* : UNLESS OTHERWISE SHOWN ON THE CROSS SECTION

** : 0.04 MIN. 0.08 PREF.

REV 1-21-98 JRS

TYPICAL SECTIONS

PIK-23-15.707/16.625/17.477

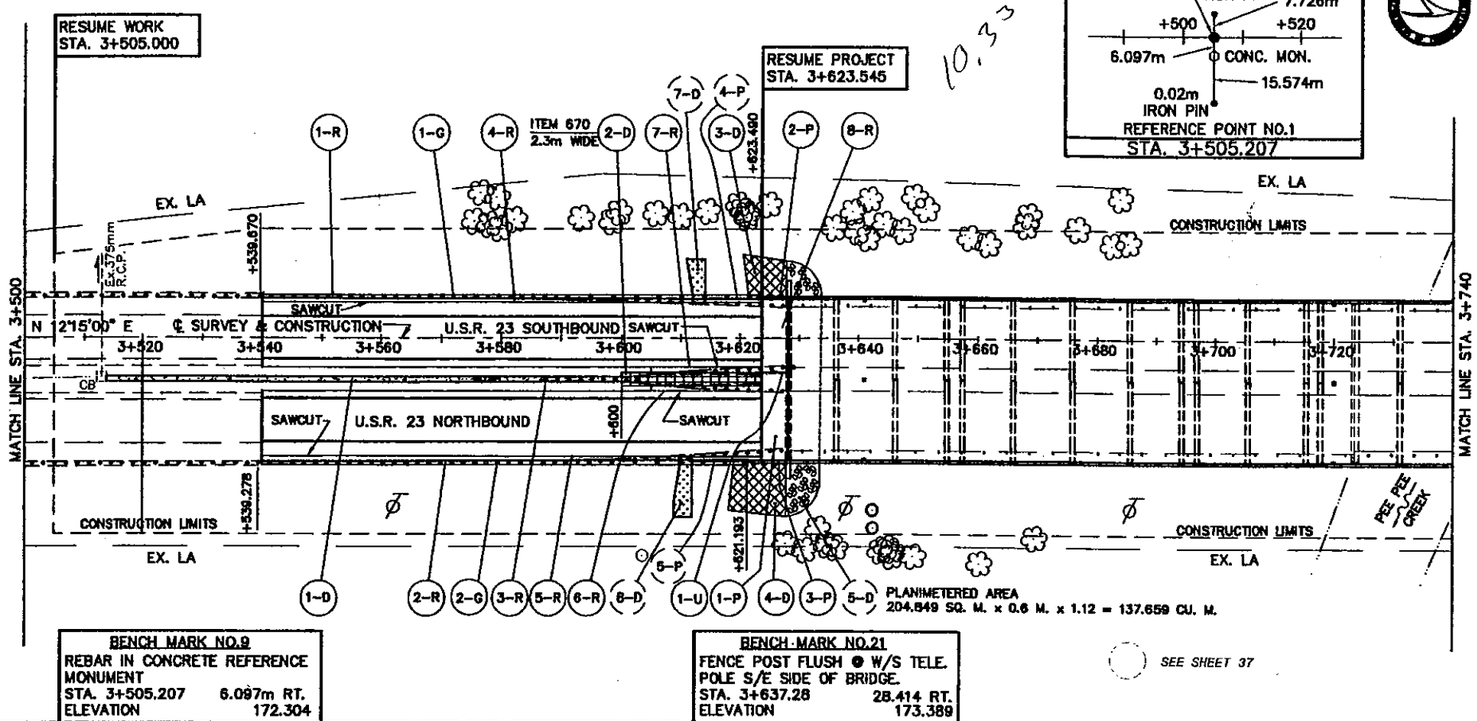


**BENCH MARK NO.9**
REBAR IN CONCRETE REFERENCE MONUMENT
STA. 3+505.207 6.097m RT.
ELEVATION 172.304

**BENCH MARK NO.21**
FENCE POST FLUSH @ W/S TELE. POLE S/E SIDE OF BRIDGE.
STA. 3+637.28 28.414 RT.
ELEVATION 173.389

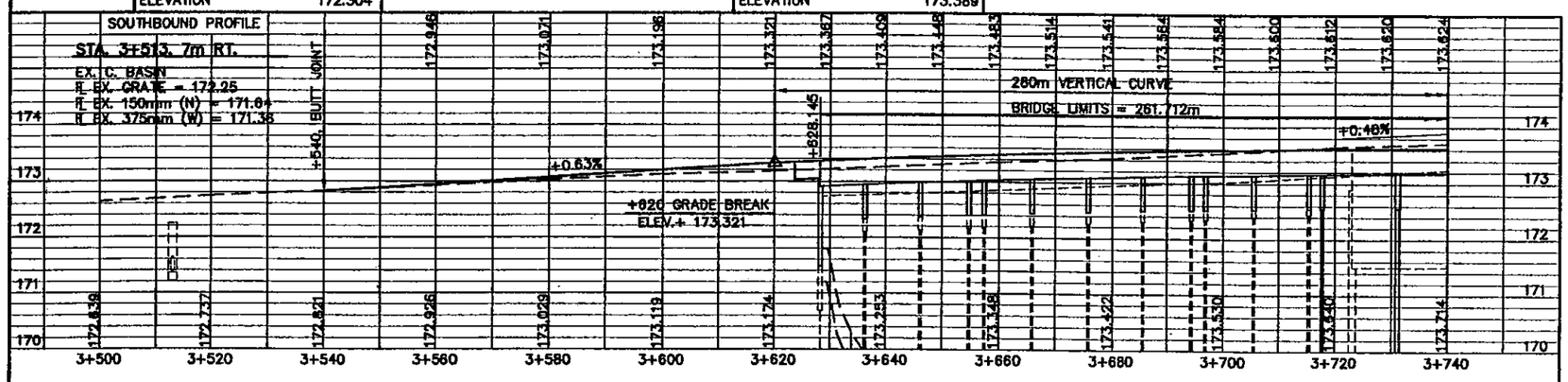


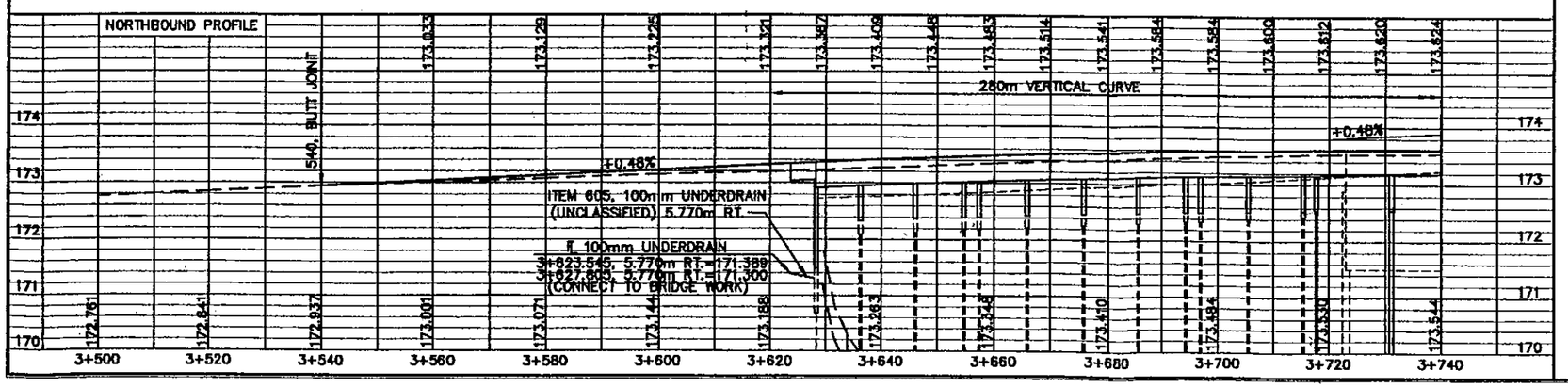


metric units

| REF. NO. | STATION FROM | STATION TO | SIDE | 202 GUARDRAIL REMOVED FOR REUSE (BARRIER DESIGN) | 202 GUARDRAIL REMOVED | 255 FULL DEPTH PAVEMENT SAWING | 516 25mm PREFORMED EXPANSION JOINT FILLER | 516 51mm DEEP JOINT SEALER | 601 PAVED GUTTER TYPE 2 | 605 100mm UNCLASSIFIED PIPE UNDERDRAIN | 606 GUARDRAIL REBUILT TYPE 5 | 606 BRIDGE TERMINAL ASSEMBLY TYPE 1 | 606 BRIDGE TERMINAL ASSEMBLY TYPE 2 | 611 REINFORCED CONCRETE APPROACH SLAB (T=305mm) AS PER PLAN | 622 CONCRETE BARRIER TYPE D AS PER PLAN | 670 DITCH EROSION PROTECTION | 670 SLOPE EROSION PROTECTION | 202 APPROACH SLAB REMOVED |
|---|---|---|---|---|---|---|---|---|---|---|---|---|---|---|---|---|---|---|
| | | | | METER | METER | METER | SQ.METER | METER | METER | METER | METER | EACH | EACH | SQ. METER | METER | SQ. METER | SQ. METER | SQ. METER |
| 1-D | 3+513.000 | 3+600.000 | RT. | | | | | | 87 | | | | | | | | | |
| 2-D | 3+600.000 | 3+623.545 | RT. | | | | | | | | | | | | | | | |
| 3-D | 3+620.442 | 3+627.605 | LT. | | | | | | | | | | | | | | | |
| 4-D | 3+618.114 | 3+627.605 | RT. | | | | | | | | | | | | | | | |
| 1-G | 3+539.870 | 3+623.490 | LT. | | | | | | | | 83.820 | | 1 | | | 54 | | |
| 2-G | 3+539.278 | 3+621.193 | RT. | | | | | | | | 81.915 | 1 | | | | | 49 85 | |
| 1-P | 3+623.545 | 3+628.145 | LT./RT. | | | | | | | | | | | 125 | 5.285 7.593 | | | |
| 2-P | 3+622.880 | 3+628.145 | LT. | | | | 1 | 5 | | | | | | | | | | |
| 3-P | 3+620.552 | 3+628.145 | RT. | | | | 1 | 5 | | | | | | | | | | |
| 1-R | 3+539.670 | 3+627.300 | LT. | | 87.830 | | | | | | | | | | | | | |
| 2-R | 3+539.278 | 3+628.908 | RT. | | 87.830 | | | | | | | | | | | | | |
| 3-R | 3+587.000 | 3+627.005 | RT. | | 53.340 | 13.340 | | | | | | | | | | | | |
| 4-R | 3+540.000 | 3+623.545 | LT. | | | | | 83.5 | | | | | | | | | | |
| 5-R | 3+540.000 | 3+623.545 | RT. | | | | | 83.5 | | | | | | | | | | |
| 6-R | 3+604.500 | 3+623.545 | RT. | | | | | 19.0 | | | | | | | | | | |
| 7-R | 3+604.500 | 3+623.545 | RT. | | | | | 19.0 | | | | | | | | | | |
| 8-R | 3+623.545 | 3+628.145 | LT./RT. | | | | | | | | | | | | | | | |
| 1-U | 3+623.545 | 3+627.605 | RT. | | | | | | | 4.280 | | | | | | | | |
| TOTALS CARRIED TO GENERAL SUMMARY 29 | | | | | 228.800 | 13.340 | 205 | 10 | 87 | 4 | 165.735 | 1 | 1 | 125 | 13 | 54 | 134 | 50 |

CALCULATED E.P.C.
CHECKED J.E.L.

HORIZONTAL SCALE IN METERS 0 5 10 20

# U.S.R. 23 PLAN AND PROFILE
## STA. 3+500 TO STA. 3+740

PIK-23-15.707/16.625/17.477

| EXISTING STRUCTURE (RIGHT) | EXISTING STRUCTURE(LEFT) | PROPOSED STRUCTURE |
|---|---|---|
| TYPE: CONTINUOUS CONCRETE SLAB AND THRU PLATE GIRDER<br>SPAN: 261.16m C/C BEARINGS<br>ROADWAY: 9.910m F/F RAIL<br>LOADING: CF-400<br>SKEW: NONE<br>WEARING SURFACE: 63.5m ASPHALT CONCRETE<br>APPROACH SLABS: NONE | TYPE: CONTINUOUS CONCRETE SLAB AND THRU PLATE GIRDER<br>SPAN: 261.16m C/C/ BEARINGS<br>ROADWAY: 10.210m F/F RAIL<br>LOADING: CF-400<br>SKEW: NONE<br>WEARING SURFACE: MONOLITHIC CONCRETE<br>APPROACH SLABS: AS-4-47 | TYPE: CONTINUOUS CONCRETE SLAB ON CAPPED PILE PIERS & ABUTMENTS.<br>SPAN: 260.792m F/F OF ABUTMENTS.<br>ROADWAY: 27.126m T/T PARAPET<br>LOADING: MS-18 & ALTERNATE MILITARY LOADING<br>SKEW: NONE<br>WEARING SURFACE: 26mm MONOLITHIC CONC.<br>APPROACH SLABS: AS-1-81M (4.6m LONG)<br>ALIGNMENT: TANGENT<br>CROWN: 0.016 |

metric units

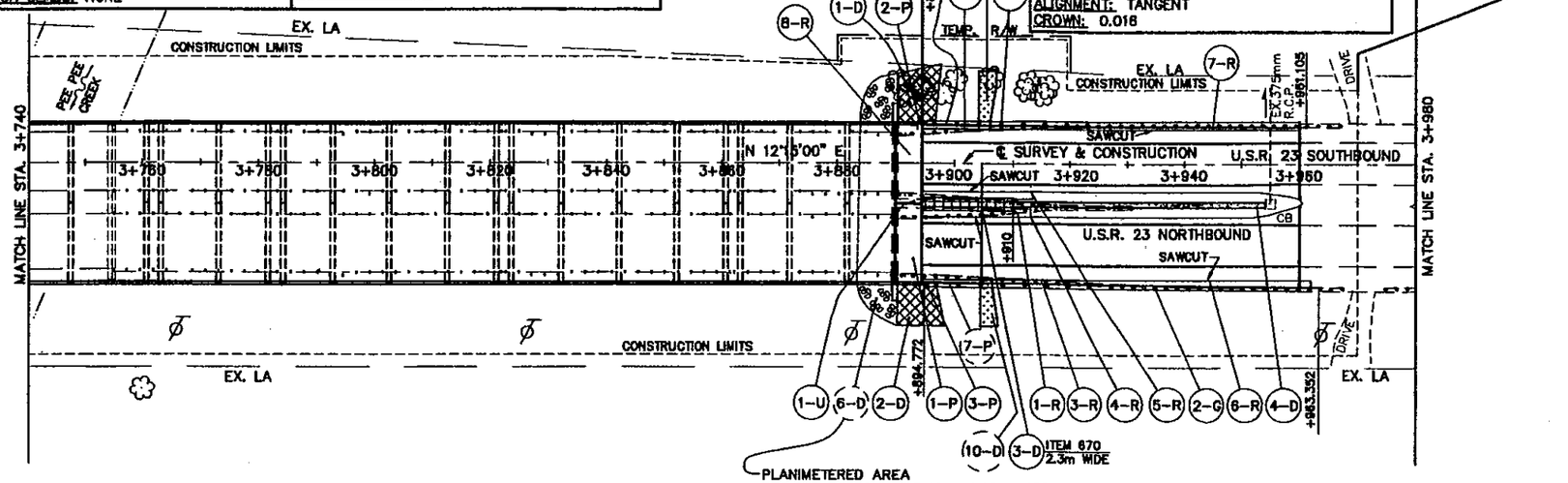


**BENCH MARK NO.22**
FENCE POST FLUSH N/E SIDE OF BRIDGE.
STA. 3+899.870 31.262 RT.
ELEVATION 169.488

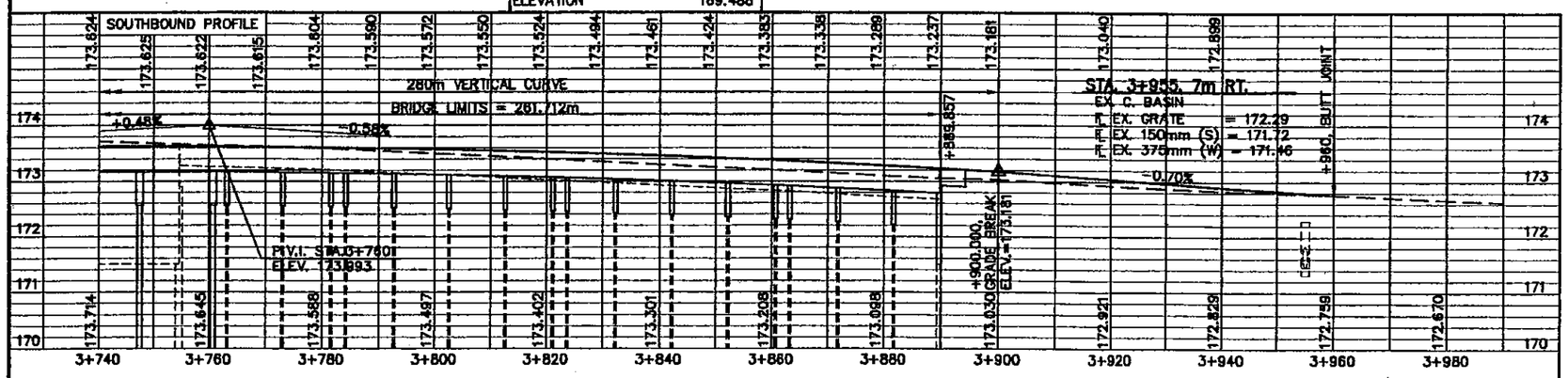


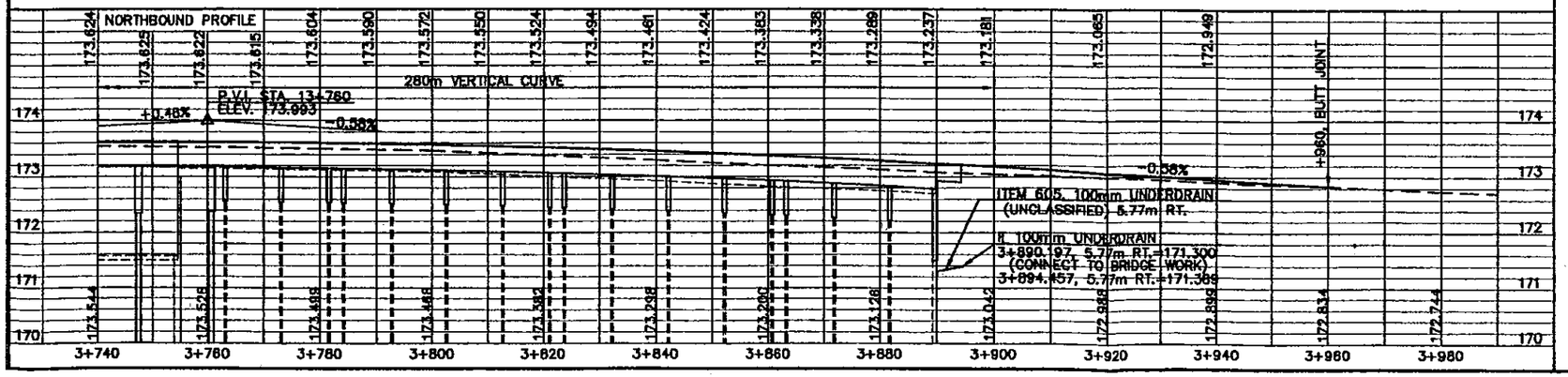


| REF. NO. | STATION FROM | STATION TO | SIDE | 202 GUARDRAIL REMOVED FOR REUSE (BARRIER DESIGN) | 255 FULL DEPTH PAVEMENT SAWING | 516 25mm PREFORMED EXPANSION JOINT FILLER | 516 51mm DEEP JOINT SEALER | 601 PAVED GUTTER TYPE 2 | 605 100mm UNCLASSIFIED PIPE UNDERDRAIN | 606 GUARDRAIL REBUILT TYPE 5 | 606 BRIDGE TERMINAL ASSEMBLY TYPE 1 | 606 BRIDGE TERMINAL ASSEMBLY TYPE 2 | 611 REINFORCED CONCRETE APPROACH SLAB (T=305mm) AS PER PLAN | 622 CONCRETE BARRIER TYPE D AS PER PLAN | 670 DITCH EROSION PROTECTION | 670 SLOPE EROSION PROTECTION | 202 APPROACH SLAB REMOVED |
|---|---|---|---|---|---|---|---|---|---|---|---|---|---|---|---|---|---|
| | | | | METER | METER | SQ.METER | METER | METER | METER | METER | EACH | EACH | SQ. METER | METER | SQ. METER | SQ. METER | SQ. METER |
| 1-D | 3+890.197 | 3+897.509 | LT. | | | | | | | | | | | | | | |
| 2-D | 3+890.197 | 3+897.820 | RT. | | | | | | | | | | | | | | |
| 3-D | 3+894.357 | 3+910.000 | RT. | | | | | | | | | | | | 38 | | |
| 4-D | 3+910.000 | 3+955.000 | RT. | | | | | 45 | | | | | | | | | |
| 1-G | 3+894.430 | 3+961.105 | LT. | | | | | | | 66.675 | 1 | | | | | | |
| 2-G | 3+894.772 | 3+963.352 | RT. | | | | | | | 68.580 | | 1 | | | | | |
| 1-P | 3+889.857 | 3+894.457 | LT./RT. | | | | | | | | | | 125 | | | | |
| 2-P | 3+889.857 | 3+895.071 | LT. | | | 1 | 5 | | | | | | | 5.214 | | | |
| 3-P | 3+889.857 | 3+895.352 | RT. | | | 1 | 5 | | | | | | | 5.525 | | | |
| 1-R | 3+890.985 | 3+931.000 | RT. | 33.340 | 13.340 | | | | | | | | | | | | |
| 2-R | 3+892.525 | 3+961.105 | LT. | 68.580 | | | | | | | | | | | | | |
| 3-R | 3+890.982 | 3+963.352 | RT. | 72.390 | | | | | | | | | | | | | |
| 4-R | 3+894.457 | 3+913.000 | RT. | | | | | 18.5 | | | | | | | | | |
| 5-R | 3+894.457 | 3+913.000 | RT. | | | | | 18.5 | | | | | | | | | |
| 6-R | 3+894.457 | 3+962.000 | RT. | | | | | 67.5 | | | | | | | | | |
| 7-R | 3+894.457 | 3+960.000 | LT. | | | | | 65.5 | | | | | | | | | |
| 8-R | 3+889.857 | 3+894.457 | LT./RT. | | | | | | | | | | | | | | |
| 1-U | 3+890.197 | 3+894.457 | RT. | | | | | | 4.260 | | | | | | | | 50 |
| TOTALS CARRIED TO GENERAL SUMMARY 28 | | | | 194.310 | 13.340 | 170 | 10 | 45 | 4 | 135.255 | 1 | 1 | 125 | 11 | 38 | 111 | 50 |

CALCULATED E.P.C.
CHECKED J.E.L.

HORIZONTAL SCALE IN METERS 0 5 10 20

# U.S.R. 23 PLAN AND PROFILE STA. 3+740 TO STA. 3+980

PIK-23-15.707/16.625/17.477

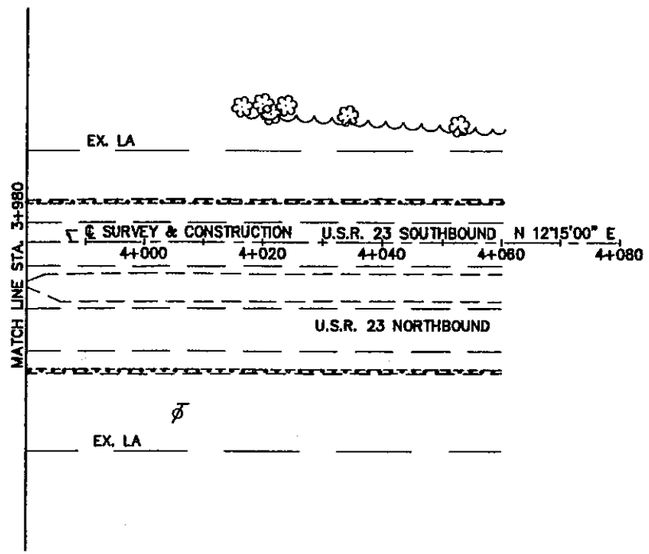


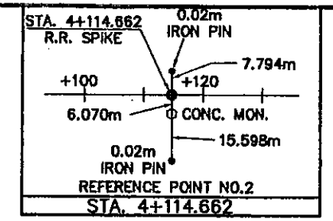


metric units

**BENCH MARK NO.12**
STEEL POST DRIVEN FLUSH ●
WEST SIDE GUARDRAIL
STA. 4+040.00 8m ± LT.
ELEVATION 172.100

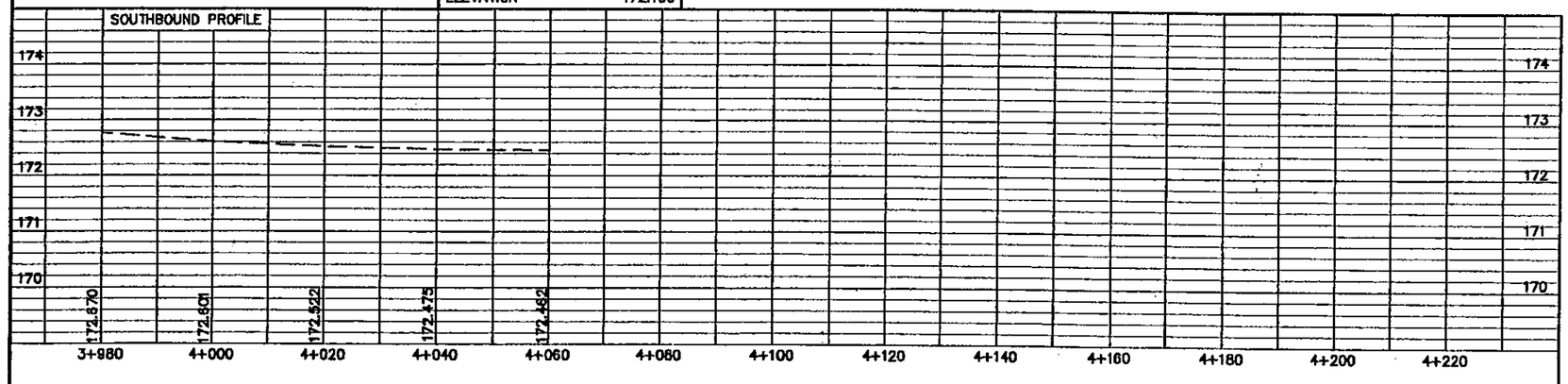


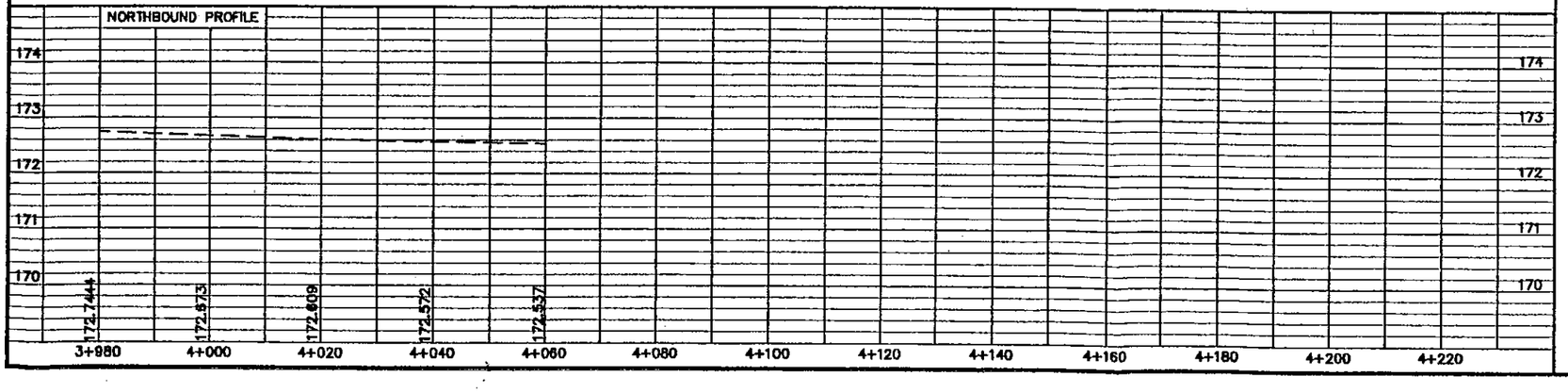


| REF. NO. | STATION FROM | STATION TO | SIDE | 601 ROCK CHANNEL PROTECTION TYPE C WITH FILTER | 609 CURB, TYPE 6 | 660 REINFORCED SODDING | SEE SHEET NO. |
|---|---|---|---|---|---|---|---|
| | | | | CU. METER | METER | SQ. METER | |
| 8–D | 3+883.453 | 3+890.289 | LT./RT. | 155 | | | 39 |
| 6–P | 3+895.163 | 3+904.348 | LT. | | 9.185 | | 39 |
| 7–P | 3+895.472 | 3+904.657 | RT. | | 9.185 | | 39 |
| 9–D | 3+904.091 | 3+907.091 | LT. | | | 15.685 | 39 |
| 10–D | 3+904.450 | 3+907.450 | RT. | | | 19.795 | 39 |
| TOTALS CARRIED TO GENERAL SUMMARY 28 | | | | 155 | 18.370 | 36 | |

HORIZONTAL SCALE IN METERS 0 5 10 20

CALCULATED E.P.C.
CHECKED J.E.L.

# U.S.R. 23 PLAN AND PROFILE
## STA. 3+980 TO STA. 4+060

PIK–23–15.707/16.625/17.477

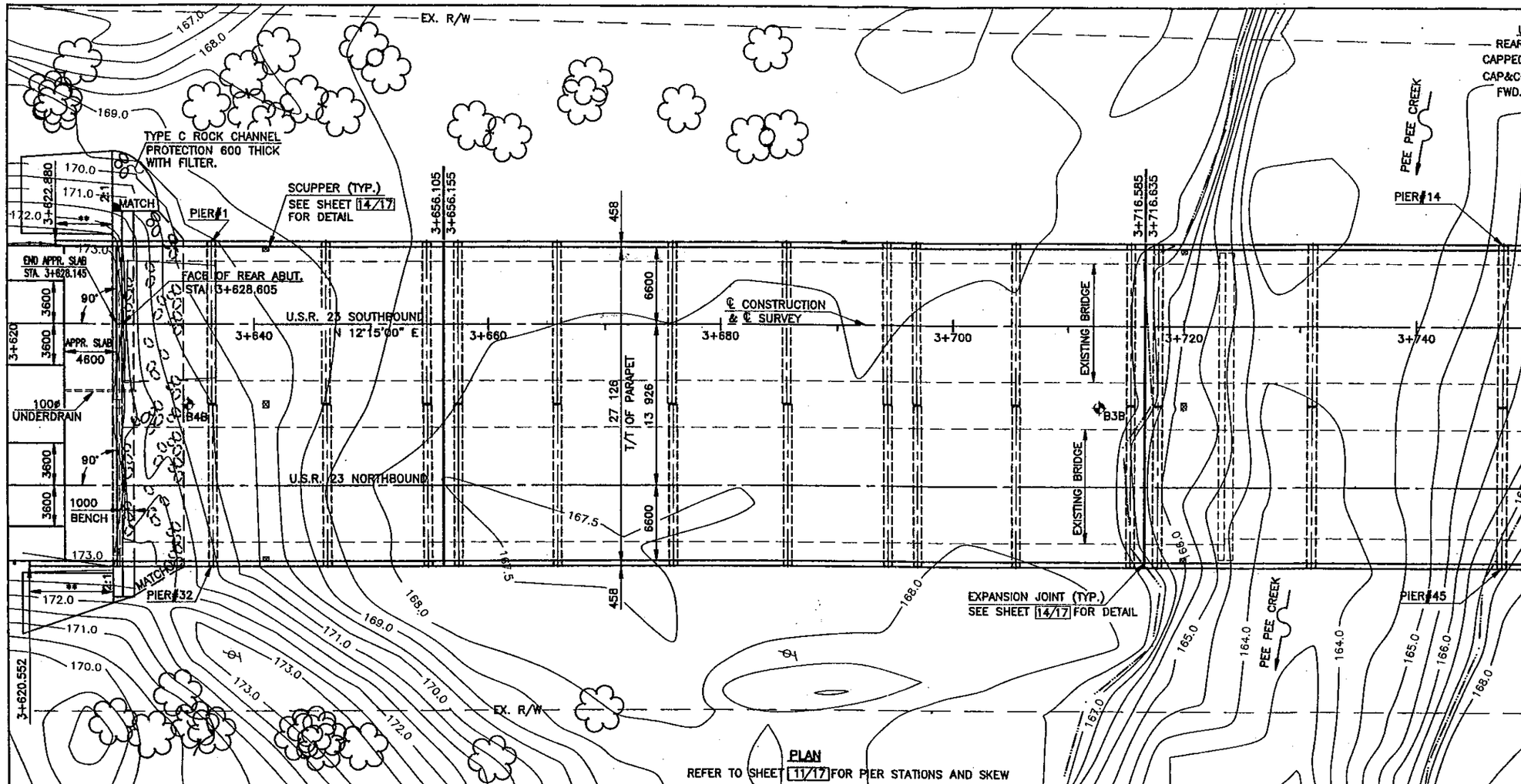


PLAN

REFER TO SHEET 11/17 FOR PIER STATIONS AND SKEW

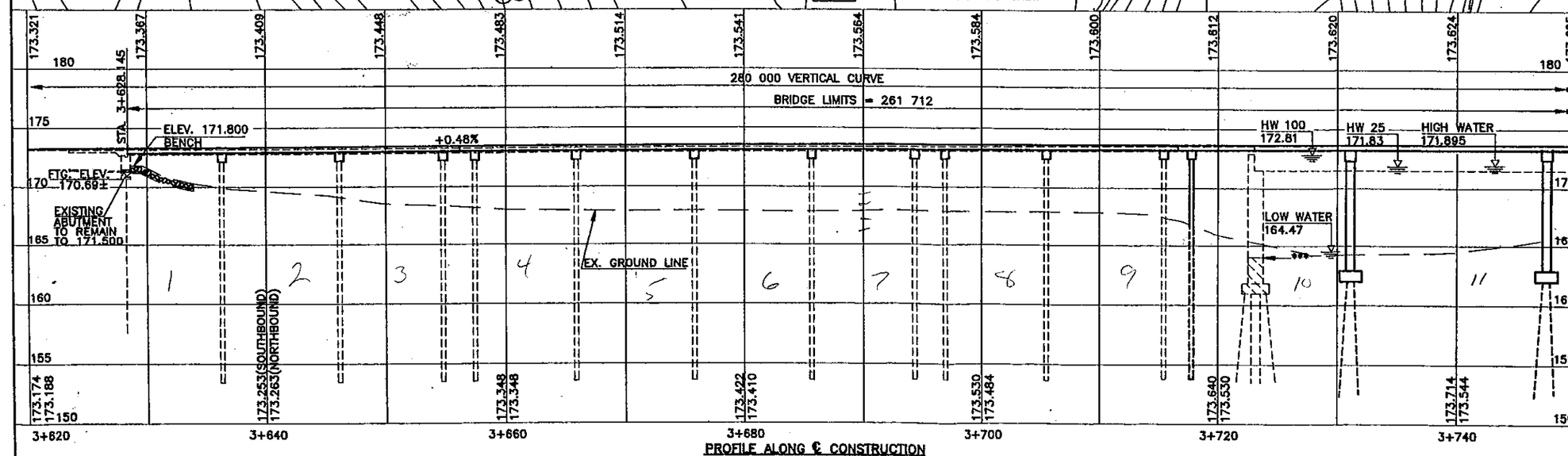


PROFILE ALONG ℄ CONSTRUCTION

| UNIT | | PILE TYPE | ESTIMATED PILE LENGTH |
|---|---|---|---|
| REAR ABUT. | 12" 300mm | CIP CONC. | 39'-4" 12m |
| CAPPED PILE PIERS | 16" 400mm | CIP CONC. | 52'-6" 16m |
| CAP&COLUMN PIERS | 12" 300mm | CIP CONC. | 39'-4" 12m |
| FWD. ABUT. | 12" 300mm | CIP CONC. | 39'-4" 12m |

ALL DIMENSIONS ARE SHOWN IN MILLIMETERS, ELEVATION SHOWN IN METERS.

EARTHWORK LIMITS SHOWN ARE APPROXIMATE. ACTUAL SLOPES SHALL CONFORM TO PLAN CROSS -SECTIONS.

N

## SOIL BORING INFORMATION

| BORING | STATION | OFFSET | ELEVATION |
|---|---|---|---|
| B1B | 3+883 | 7.0 m RT. | 169.8 |
| B2B | 3+759 | 6.9 m RT. | 167.3 |
| B3B | 3+713 | 7.1 m RT. | 167.7 |
| B4B | 3+634 | 6.9 m RT. | 170.8 |

⊕ – INDICATES BORING LOCATION

** – CONCRETE BARRIER, SEE ROADWAY PLAN FOR QUANTITY.

*** – REMOVE TO ELEV. 164.00 OR BELOW

PIKETON QUADRANGLE
LAT. = 39°06'02"
LONG.= 82°59'58"

BENCH MARK #21
FENCE POST FLUSH ⊙ W/S TELE. POLE S/E SIDE OF BRIDGE.
STA. 3+637.280 28.414 RT.
ELEVATION 173.389

BENCH MARK #22
FENCE POST FLUSH N/E SIDE OF BRIDGE
STA. 3+899.870 31.262 RT.
ELEVATION 169.488

## TRAFFIC DATA

A.D.T. (1995) = 14050
A.D.T. (2015) = 18260
A.D.T.T. (2015) = 913

## EXISTING STRUCTURE (LEFT)

TYPE: CONTINUOUS CONCRETE SLAB & THRU PLATE GIRDER
SPAN: 261160 c/c BEARINGS
ROADWAY: 10210 F/F RAIL
LOADING: CF – 400
SKEW: NONE
WEARING SURFACE MONOLITHIC CONCRETE
APPROACH SLABS: NONE

## EXISTING STRUCTURE (RIGHT)

TYPE: CONTINUOUS CONCRETE SLAB & THRU PLATE GIRDER
SPAN: 261160 c/c BEARINGS
ROADWAY: 9910 F/F RAIL
LOADING: CF – 400
SKEW: NONE
WEARING SURFACE 63.5 ASPHALT CONC.
APPROACH SLABS: NONE

## PROPOSED STRUCTURE

PROPOSED WORK: NEW SUPERSTRUCTURE DECK, NEW PIER CAP AND NEW ABUTMENT BACKWALL.
TYPE: CONTINUOUS CONCRETE SLAB ON CAPPED PILE PIERS & ABUTMENTS
SPAN: 260792 F/F OF ABUTMENTS
ROADWAY: 27126 T/T PARAPET
LOADING: MS-18 & ALTERNATE MILITARY LOADING
SKEW: NONE
WEARING SURFACE: 25 MONOLITHIC CONC.
APPROACH SLABS: AS-1-81M (4600 LONG)
ALIGNMENT: TANGENT
CROWN: 0.016

DESIGN AGENCY: JONES–STUCKEY, LTD., INC. 1641 WEST FIFTH AVENUE COLUMBUS, OHIO 43212

REVIEWED D.D.S. DATE 9-28-94 STRUCTURE FILE NUMBER 6600425(L) 6600484(R)

DRAWN J.W.E. REVISED

DESIGNED G.G.N. CHECKED D.W.J.

PIKE COUNTY STA. 3+628.145 STA. 3+889.857

SITE PLAN
BRIDGE NO. PIK-23-1034L&R OVER PEE PEE CREEK

PIK-23-15.707/ 16.625 / 17.477

1 / 17

76 / 117

Apr 24, 1995 – 15:33:42 DWG Name: D:\ACAD\2804\043SITE1.DWG Updated By: Janet Palmer

EARTHWORK LIMITS SHOWN ARE APPROXIMATE. ACTUAL SLOPES SHALL CONFORM TO PLAN CROSS-SECTIONS.

* – EXISTING CAST IN PLACE SLOPE PROTECTION TO REMAIN.

** – CONCRETE BARRIER, SEE ROADWAY PLAN FOR PAY QUANTITY.

*** – REMOVE TO ELEV. 164.00 OR BELOW

HYDRAULIC SUMMARY TABLE
PIK–23–16.625
OVER PEE PEE CREEK

| | UPSTREAM APPROACH SECTION AT SCIOTO RIVER (REPRESENTATIVE SECTION) FULL FLOW | | | FLOW AT ROADWAY: BYPASS OF STRUCTURE | | FLOW THRU STRUCTURE OPENING | | | |
|---|---|---|---|---|---|---|---|---|---|
| | Discharge $m^3/s$ | Velocity m/s | Backwater Elevation m | thru other Bridges $m^3/s$ | over Road Elevation $m^3/s$ | Discharge $m^3/s$ | Area $m^2$ | Velocity m/s | Elevation m |
| EXISTING BRIDGE | Q–25 4049 | 0.56 | 172.00 | 2995 | 0 | 1054 | 893 | 1.18 | 171.82 |
| | Q–100 6867 | 0.62 | 173.30 | 2657 | 2726 | 1484 | 999 | 1.48 | 172.81 |
| PROPOSED BRIDGE | Q–25 4049 | 0.55 | 172.03 | 2965 | 0 | 1084 | 896 | 1.21 | 171.83 |
| | Q–100 6867 | 0.61 | 173.33 | 2576 | 2739 | 1552 | 999 | 1.55 | 172.81 |

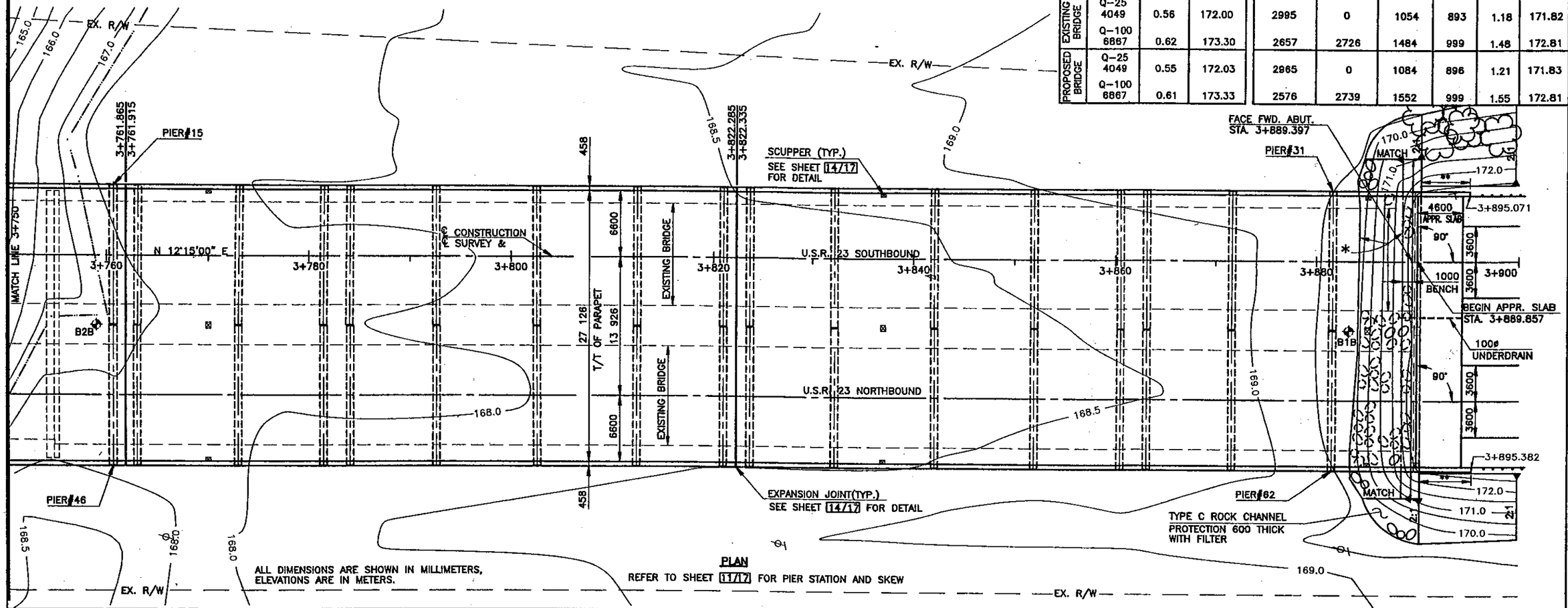


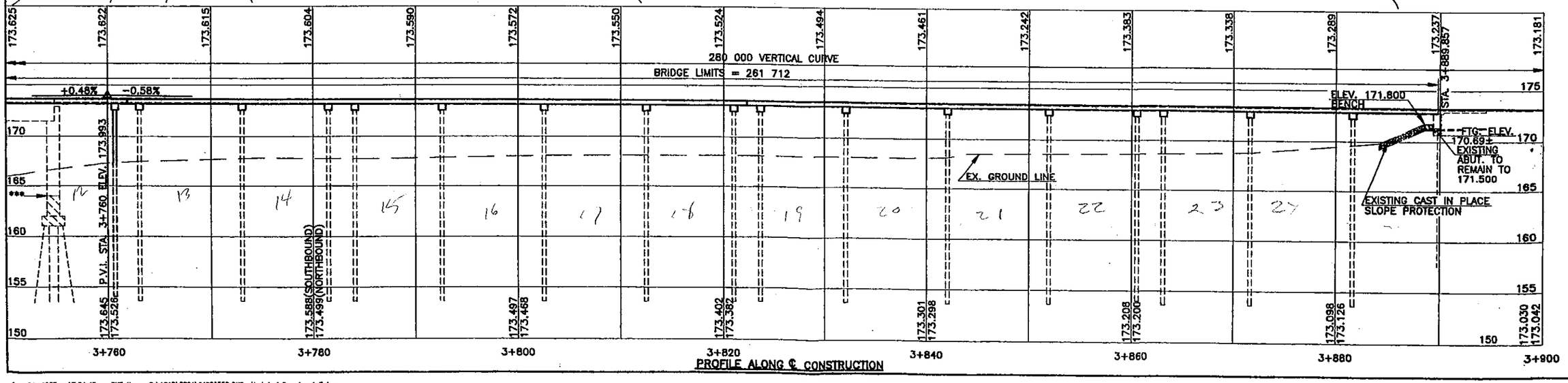


JONES–STUCKEY, LTD., INC.
1841 WEST FIFTH AVENUE
COLUMBUS, OHIO 43212

DESIGN AGENCY

DATE 9–28–94

REVIEWED D.D.S.

STRUCTURE FILE NUMBER 6600425(L) 6600484(R)

DRAWN J.W.E.

REVISED

DESIGNED G.G.N.

CHECKED D.W.J.

PIKE COUNTY
STA. 3+628.145
STA. 3+889.857

SITE PLAN
BRIDGE NO. PIK-23-1034L&R
OVER PEE PEE CREEK

PIK-23-15.707 / 16.625 / 17.477

2/17

77/117

PROPOSED WORK: REMOVAL OF PORTIONS OF ABUTMENT FOOTING, ENTIRE BACKWALL AND PIER PILE CAPS ON EACH BRIDGE. INSTALLATION OF NEW PILING. CONSTRUCTION OF NEW ABUTMENT BACKWALL AND PIER CAPS TO CONNECT NORTH AND SOUTH BOUND BRIDGES. PROVIDE A FULL WIDTH REINFORCED CONCRETE SLAB SUPERSTRUCTURE AND APPROACH SLAB.

ALL DIMENSIONS SHOWN ARE IN MILLIMETERS, ELEVATIONS ARE IN METERS

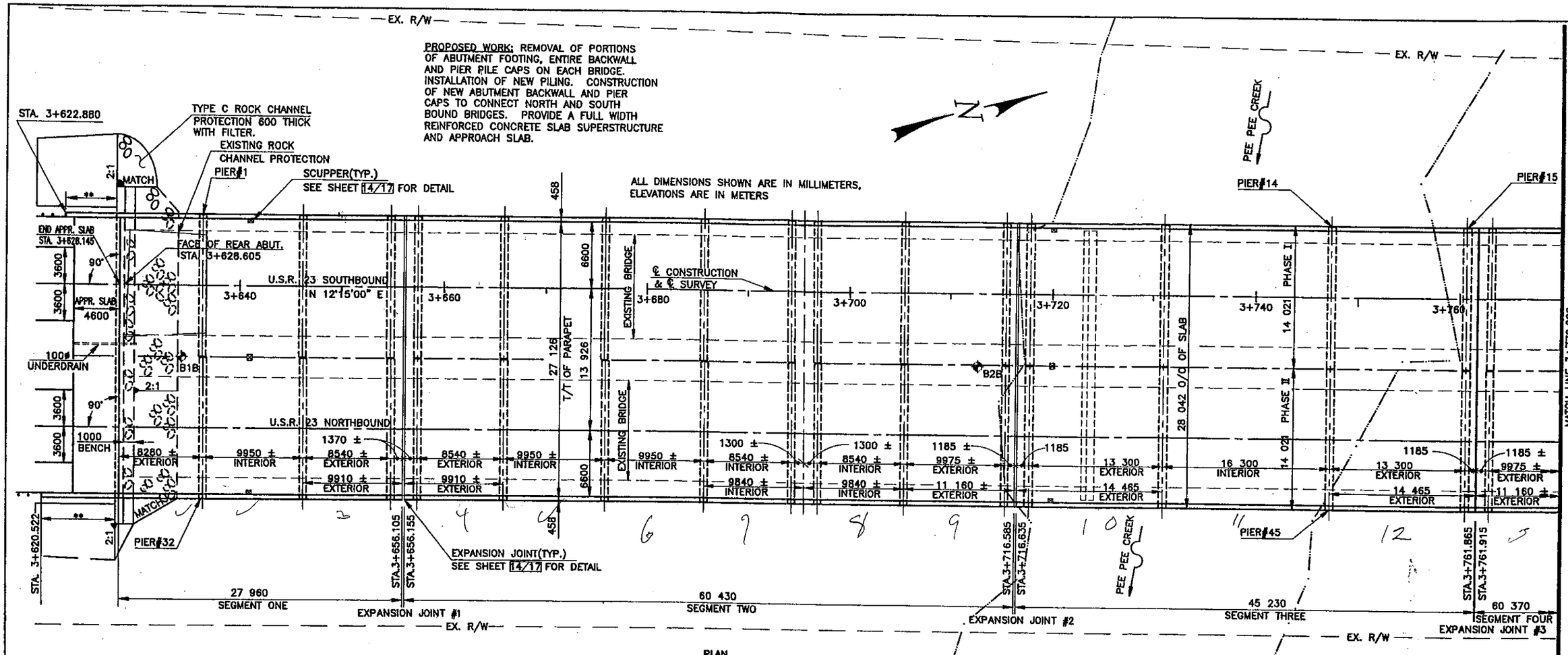


PLAN

REFER TO SHEET 11/17 FOR PIER STATIONS AND SKEW

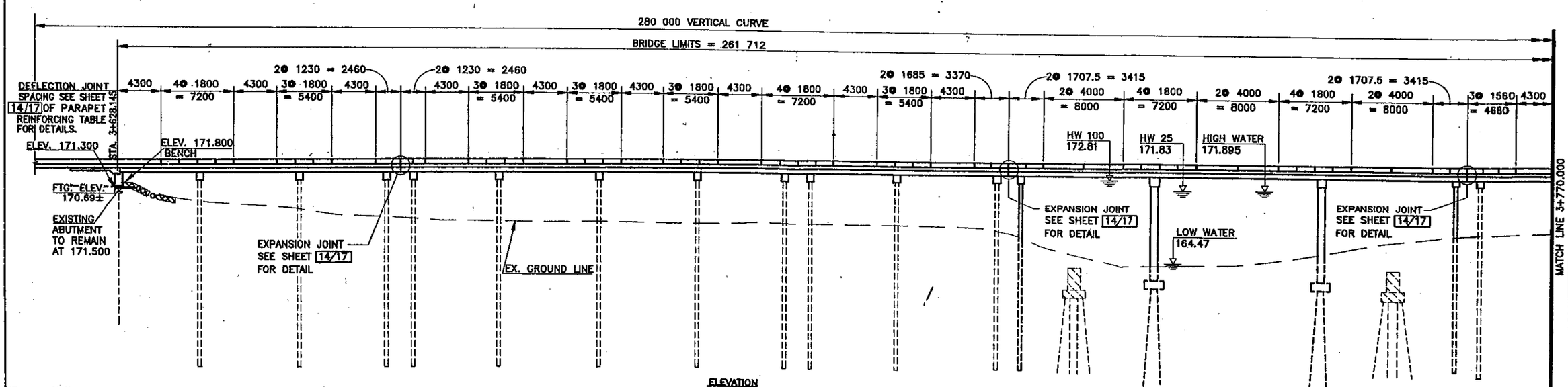


ELEVATION

DESIGN AGENCY: JONES–STUCKEY, LTD., INC. 1641 WEST FIFTH AVENUE COLUMBUS, OHIO 43212

DATE: 2–28–95 | REVIEWED: D.W.J. | STRUCTURE FILE NUMBER: 6600425(L) 6600434(R)

DRAWN: J.L.U. | REVISED

DESIGNED: G.G.N. | CHECKED: E.D.W.

PIKE COUNTY STA. 3+628.145 STA. 3+889.857

GENERAL PLAN
BRIDGE NO. PIK-23-1034L&R
OVER PEE PEE CREEK

PIK-23-15.707 / 16.625 / 17.477

3 / 17

78 / 117

Apr 24, 1995 - 15:48:49 DVG Name: D:\ACAD\2884\043GPN1.DVG Updated By: Janet Palmer

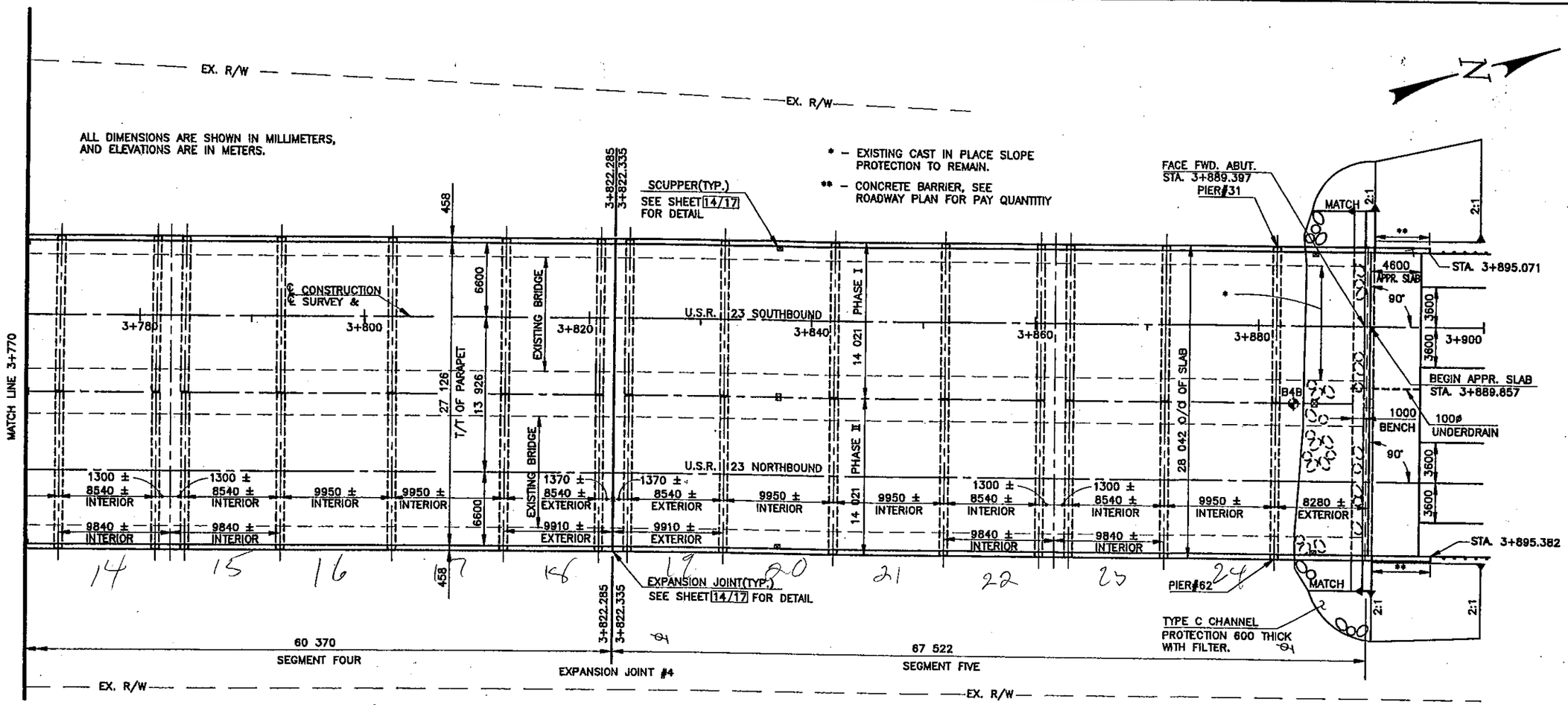


PLAN

REFER TO SHEET 11/17 FOR PIER STATION AND SKEW

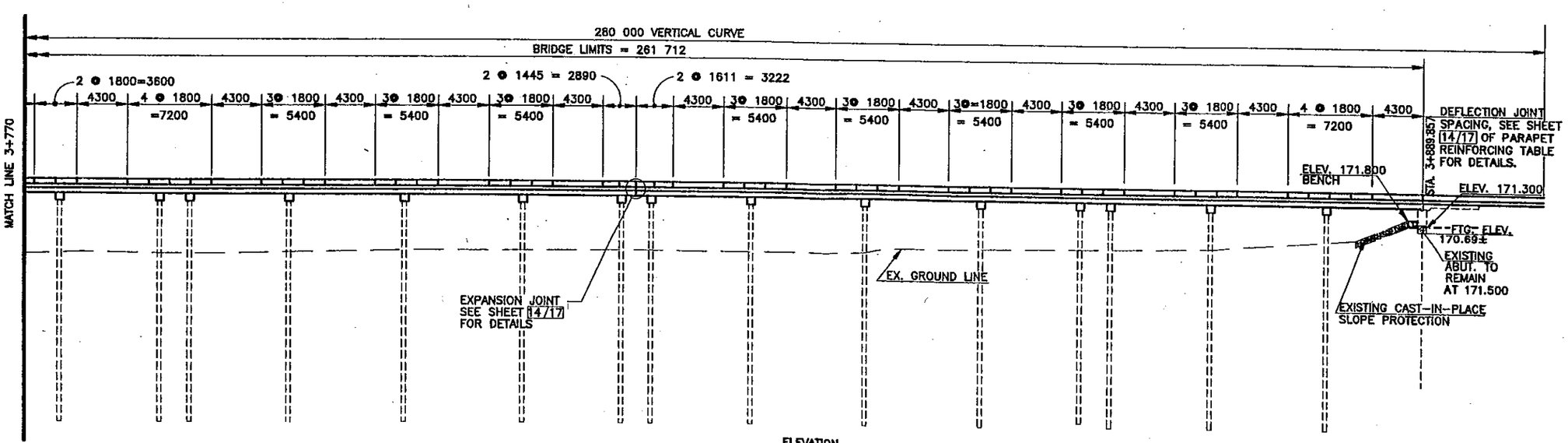


ELEVATION

Apr 24, 1995 – 16:05:09 DVG Name: D:\ACAD\2004\0430PN2.DVG Updated By: Janet Palmer

DESIGN AGENCY: JONES–STUCKEY, LTD., INC. 1641 WEST FIFTH AVENUE COLUMBUS, OHIO 43212

| DATE | REVIEWED | DRAWN | DESIGNED | CHECKED |
|---|---|---|---|---|
| 2-28-95 | D.W.J. | J.L. | G.G.N. | E.D.W. |

STRUCTURE NUMBER 6600425(L) 6600484(R)

PIKE COUNTY
STA. 3+628.145
STA. 3+889.857

GENERAL PLAN
BRIDGE NO. PIK-23-1034L&R
OVER PEE CREEK

PIK-23-15.707/16.625 / 17.477

4/17

79/117

## BRIDGE NO: PIK-23-1034 L. STRUCTURE FILE NUMBER: 6600425

### ESTIMATE QUANTITIES

CALC BY: G.G.N. DATE: 1-16-95 | CHK'D BY: R.S.B. DATE: 4-26-95

| ITEM | ITEM EXT. | QUANTITY | UNIT | DESCRIPTION | ABUT. | SUPER. | PIER | GEN. | SEE SHEET NO. |
|---|---|---|---|---|---|---|---|---|---|
| 202 | 11203 | LUMP | | PORTIONS OF STRUCTURE REMOVED, OVER 6 METER SPAN, AS PER PLAN | | | | LUMP | 6/17 |
| 503 | 11100 | LUMP | | COFFERDAMS, CRIBS AND SHEETING | | | | LUMP | |
| 503 | 21101 | 205 | CU. M. | UNCLASSIFIED EXCAVATION, AS PER PLAN | 30 | | 175 | | 6/17 |
| 505 | 11100 | LUMP | | PILE DRIVING EQUIPMENT MOBILIZATION | | | | LUMP | |
| 507 | 00500 | 408 | METER | 300MM CAST-IN-PLACE REINFORCED CONCRETE PILES, DRIVEN | 48 | | 360 | | |
| 507 | 00550 | 459 | METER | 300MM CAST-IN-PLACE REINFORCED CONCRETE PILES, FURNISHED | 54 | | 405 | | |
| 507 | 00700 | 1120 | METER | 400MM CAST-IN-PLACE REINFORCED CONCRETE PILES, DRIVEN | | | 1120 | | |
| 507 | 00750 | 1225 | METER | 400MM CAST-IN-PLACE REINFORCED CONCRETE PILES, FURNISHED | | | 1225 | | |
| 507 | 50500 | 52 | EACH | STEEL PILE SPLICES | 2 | | 50 | | |
| SPECIAL | 51267510 | 1287 | SQ. M. | SEALING OF CONCRETE SURFACES (EPOXY-URETHANE) (SEE PROPOSAL NOTE) | 63 | 1224 | | | |
| 516 | 11211 | 57 | METER | STRUCTURAL EXPANSION JOINT INCLUDING ELASTOMERIC STRIP SEAL, AS PER PLAN | | 57 | | | 6/17 |
| 516 | 41500 | 18 | EACH | 25mm ELASTOMERIC BEARING PAD (305 X 610 - 50 DUROMETER) | | | 18 | | |
| 518 | 12500 | 10 | EACH | NEW SCUPPER, MISC.: NEENAH R-4005-A2 OR EQUIVALENT. | | 10 | | | |
| 518 | 21200 | 44 | CU. M. | POROUS BACKFILL WITH FILTER FABRIC | 44 | | | | |
| 518 | 40000 | 33 | METER | 150 MM PERFORATED CORRUGATED PLASTIC PIPE | 33 | | | | |
| 518 | 40010 | 5 | METER | 150 MM NON-PERFORATED CORRUGATED PLASTIC PIPE, INCLUDING SPECIALS | 5 | | | | |
| 603 | 00101 | 2 | METER | 100MM CONDUIT, TYPE B, AS PER PLAN | | | | 2 | 8/17 |
| 604 | 36600 | 2 | EACH | PRECAST REINFORCED CONCRETE OUTLET | 2 | | | | |
| 844 | 48000 | 1836 | CU. M. | HIGH PERFORMANCE CONCRETE, SUPERSTRUCTURE (DECK) | | 1836 | | | |
| 844 | 48020 | 84 | CU. M. | HIGH PERFORMANCE CONCRETE, SUPERSTRUCTURE (PARAPET) | | 84 | | | |
| 844 | 49500 | 306 | CU. M. | HIGH PERFORMANCE CONCRETE, MISC.: SUBSTRUCTURE | 36 | | 270 | | |

• SEE PROPOSAL NOTE

## BRIDGE NO: PIK-23-1034 R. STRUCTURE FILE NUMBER: 6600484

### ESTIMATE QUANTITIES

CALC BY: G.G.N. DATE: 1-16-95 | CHK'D BY: R.S.B. DATE: 4-26-95

| ITEM | ITEM EXT. | QUANTITY | UNIT | DESCRIPTION | ABUT. | SUPER. | PIER | GEN. | SEE SHEET NO. |
|---|---|---|---|---|---|---|---|---|---|
| 202 | 11203 | LUMP | | PORTIONS OF STRUCTURE REMOVED, OVER 6 METER SPAN, AS PER PLAN | | | | LUMP | 6/17 |
| 503 | 11100 | LUMP | | COFFERDAMS, CRIBS AND SHEETING | | | | LUMP | |
| 503 | 21101 | 203 | CU. M. | UNCLASSIFIED EXCAVATION, AS PER PLAN | 28 | | 175 | | 6/17 |
| 505 | 11100 | LUMP | | PILE DRIVING EQUIPMENT MOBILIZATION | | | | LUMP | |
| 507 | 00500 | 432 | METER | 300MM CAST-IN-PLACE REINFORCED CONCRETE PILES, DRIVEN | 72 | | 360 | | |
| 507 | 00550 | 486 | METER | 300MM CAST-IN-PLACE REINFORCED CONCRETE PILES, FURNISHED | 81 | | 405 | | |
| 507 | 00700 | 1120 | METER | 400MM CAST-IN-PLACE REINFORCED CONCRETE PILES, DRIVEN | | | 1120 | | |
| 507 | 00750 | 1225 | METER | 400MM CAST-IN-PLACE REINFORCED CONCRETE PILES, FURNISHED | | | 1225 | | |
| 507 | 50500 | 53 | EACH | STEEL PILE SPLICES | 3 | | 50 | | |
| 511 | 43201 | 2 | CU. M. | CLASS C CONCRETE, PIER, AS PER PLAN | | | 2 | | 6/17 |
| SPECIAL | 51267510 | 1287 | SQ. M. | SEALING OF CONCRETE SURFACES (EPOXY-URETHANE) (SEE PROPOSAL NOTE) | 63 | 1224 | | | |
| 516 | 11211 | 57 | METER | STRUCTURAL EXPANSION JOINT INCLUDING ELASTOMERIC STRIP SEAL, AS PER PLAN | | 57 | | | 6/17 |
| 516 | 41500 | 18 | EACH | 25mm ELASTOMERIC BEARING PAD (305 X 610 - 50 DUROMETER) | | | 18 | | |
| 518 | 12500 | 5 | EACH | NEW SCUPPER, MISC.: NEENAH R-4005-A2 OR EQUIVALENT. | | 5 | | | |
| 518 | 21200 | 44 | CU. M. | POROUS BACKFILL WITH FILTER FABRIC | 44 | | | | |
| 518 | 40000 | 33 | METER | 150 MM PERFORATED CORRUGATED PLASTIC PIPE | 33 | | | | |
| 518 | 40010 | 5 | METER | 150 MM NON-PERFORATED CORRUGATED PLASTIC PIPE, INCLUDING SPECIALS | 5 | | | | |
| 519 | 11101 | 2 | SQ. M. | PATCHING CONCRETE STRUCTURE, AS PER PLAN | | | 2 | | 6/17 |
| 604 | 36600 | 2 | EACH | PRECAST REINFORCED CONCRETE OUTLET | 2 | | | | |
| 844 | 48000 | 1836 | CU. M. | HIGH PERFORMANCE CONCRETE, SUPERSTRUCTURE (DECK) | | 1836 | | | |
| 844 | 48020 | 84 | CU. M. | HIGH PERFORMANCE CONCRETE, SUPERSTRUCTURE (PARAPET) | | 84 | | | |
| 844 | 49500 | 326 | CU. M. | HIGH PERFORMANCE CONCRETE, MISC.: SUBSTRUCTURE | 38 | | 288 | | |

• SEE PROPOSAL NOTE

DESIGN AGENCY
JONES-STUCKEY, LTD., INC.
1641 WEST FIFTH AVENUE
COLUMBUS, OHIO 43212

DATE 2-28-95
REVIEWED D.W.J.
STRUCTURE FILE NUMBER 6600425 6600484 (R)
DRAWN J.M.P.
REVISED
DESIGNED G.G.N.
CHECKED E.D.W.

ESTIMATE QUANTITIES
BRIDGE NO. PIK-23-1034L&R
OVER PEE CREEK

PIK-23-15.707/
16.625/17.477



Apr 18, 1995 - 10:03:50 DWG Name: C:\ACAD\2804+CNOTE.DWG Updated By: Janet Palmer

REFERENCE SHALL BE MADE TO STANDARD DRAWINGS:

| | | |
|---|---|---|
| AS-1-81M | DATED | 10-25-94 |
| BR-1M | DATED | 12-15-94 |
| CPA-5-94M | DATED | 10-25-94 |
| CPP-2-94M | DATED | 12-19-94 |
| CS-1-93M | REVISED | 6-30-95 |
| EXJ-6-95M | REVISED | 3-18-97 |
| IRJ-8-95M | DATED | 7-6-95 |

AND TO SUPPLEMENTAL SPECIFICATION:

| | | |
|---|---|---|
| 844 | DATED | 9-09-97 |
| 911 | DATED | 7-10-97 |
| 954 | DATED | 9-09-97 |

## DESIGN SPECIFICATIONS:

THE STRUCTURE CONFORMS TO "STANDARD SPECIFICATION FOR HIGHWAY BRIDGE" ADOPTED BY THE AMERICAN ASSOCIATION OF STATE HIGHWAY AND TRANSPORTATION OFFICIALS, 1996 AND THE ODOT BRIDGE DESIGN MANUAL.

## DESIGN DATA:

DESIGN LOADING: MS18 AND THE ALTERNATE MILITARY LOADING.

DESIGN STRESSES:

CONCRETE CLASS S - COMPRESSIVE STRENGTH 31.0 MPa (SUPERSTRUCTURE)

CONCRETE CLASS C - COMPRESSIVE STRENGTH 27.5 MPa (SUBSTRUCTURE)

REINFORCING STEEL - ASTM A615M, A615M, OR A617M GRADE 420 MINIMUM YIELD STRENGTH 420 MPa.
SPIRAL REINFORCEMENT MAY BE PLAIN BARS, ASTM A82M OR A615M.

## DECK PROTECTION METHOD:

EPOXY COATED REINFORCING STEEL.

65 mm CONCRETE COVER.

MONOLITHIC WEARING SURFACE IS ASSUMED, FOR DESIGN PURPOSES, TO BE 25 mm THICK.

## PILE DESIGN LOADS (ULTIMATE BEARING VALUE):

THE ULTIMATE BEARING VALUE IS 444 kN PER PILE FOR THE 300 mm ABUTMENT PILES.
THE ULTIMATE BEARING VALUE IS 534 kN PER PILE FOR THE 400 mm PIER PILES.

ABUTMENT PILES FOR LEFT BRIDGE:
4 PILES 12 METERS LONG, ESTIMATED LENGTH
4 PILES OF ORDER LENGTH 13.5 METERS LONG
2 SPLICES

PIER PILES FOR LEFT BRIDGE:
70 PILES 16 METERS LONG, ESTIMATED LENGTH
70 PILES OF ORDER LENGTH 17.5 METERS LONG
35 SPLICES

ABUTMENT PILES FOR RIGHT BRIDGE:
6 PILES 12 METERS LONG, ESTIMATED LENGTH
6 PILES OF ORDER LENGTH 13.5 METERS LONG
3 SPLICES

PIER PILES FOR RIGHT BRIDGE:
70 PILES 16 METERS LONG, ESTIMATED LENGTH
70 PILES OF ORDER LENGTH 17.5 METERS LONG
35 SPLICES

## PILES TO BEDROCK:

PIER PILES FOR COLUMN PIERS LOCATED IN PEE PEE CREEK SHALL BE DRIVEN TO REFUSAL ON BEDROCK. REFUSAL SHALL BE CONSIDERED AS OBTAINED BY PENETRATING SOFT BEDROCK FOR SEVERAL MILLIMETERS WITH A MINIMUM RESISTANCE OF 20 BLOWS PER 25 mm OR REFUSAL SHALL BE CONSIDERED AS OBTAINED AFTER THE PILE HAS CONTACTED HARD BEDROCK AND THE PILE HAS THEN RECEIVED AT LEAST 20 BLOWS.

THE ULTIMATE BEARING VALUE IS 624 kN FOR THE 300 mm PIER PILES.

PIER PILES FOR LEFT BRIDGE:
30 PILES 12 METERS LONG, ESTIMATED LENGTH
30 PILES OF ORDER LENGTH 13.5 METERS LONG
15 SPLICES

PIER PILES FOR RIGHT BRIDGE:
30 PILES 12 METERS LONG, ESTIMATED LENGTH
30 PILES OF ORDER LENGTH 13.5 METERS LONG
15 SPLICES

THE RESPONSIBILITY OF CHOOSING AND PROVIDING A SATISFACTORY PILE WALL THICKNESS FOR THIS PROJECT SHALL BE BORNE BY THE CONTRACTOR EXCEPT THAT THE PILE WALL THICKNESS SHALL NOT BE LESS THAN 6 mm. IF A PILE WALL THICKNESS GREATER THAN 6 mm IS NECESSARY TO RESIST THE PILE INSTALLATION DRIVING STRESS, TH CONTRACTOR SHALL MAKE THIS DETERMINATION AND SHALL FURNISH A PILE WITH AN ACCEPTABLE WALL THICKNESS. IF MONOTUBE PILE ARE USED, THE MINIMUM WALL THICKNESS SHALL BE 4.5 mm.

## ITEM 202 - PORTIONS OF STRUCTURE REMOVED, OVER 6 METER SPAN, AS PER PLAN

THIS WORK SHALL INCLUDE THE ELEMENTS INDICATED IN THE PLANS AND GENERAL NOTES THAT ARE NOT SEPARATELY LISTED FOR PAYMENT. ITEMS TO BE REMOVED INCLUDE ALL EXISTING MATERIALS BEING REPLACED BY NEW CONSTRUCTION AND MISCELLANEOUS ITEMS THAT ARE NOT SHOWN TO BE INCORPORATED INTO THE FINAL CONSTRUCTION AND ARE DIRECTED TO BE REMOVED BY THE ENGINEER.

EXISTING BRIDGE RAILING SHALL BE CAREFULLY REMOVED AS INDIVIDUAL RAIL ELEMENTS BY REMOVING ALL BOLTS FROM ALL SPLICES AND POSTS. THE USE OF CUTTING TORCHES SHALL NOT BE PERMITTED. GUARDRAIL PANELS, BRIDGE POSTS, AND TUBULAR BACKUP (WITH SPLICE HARDWARE) ONLY SHALL BE STACKED ON PROJECT FOR SALVAGE BY STATE FORCES. OTHER HARDWARE, AND MATERIAL NOT SALVAGEABLE SHALL BE DISPOSED OF IN ACCORDANCE WITH SECTION 202.02 OF THE CMS.

SUBSTRUCTURE REMOVALS:

CUT LINE CONSTRUCTION JOINT PREPARATION: SAW CUT BOUNDARIES OF PROPOSED CONCRETE REMOVALS 25 mm DEEP. REMOVE CONCRETE TO A ROUGH SURFACE. WHERE PRACTICABLE, AT LEAST 450 mm LENGTH OF THE PROTRUDING REINFORCING STEEL SHALL BE LEFT IN PLACE. INSTALL DOWEL BARS IF SPECIFIED. PRIOR TO CONCRETE PLACEMENT ABRASIVELY CLEAN JOINT SURFACE AND EXPOSED REINFORCEMENT TO REMOVE LOOSE AND DISINTEGRATED CONCRETE AND LOOSE RUST. THE JOINT SURFACE AND EXPOSED REINFORCEMENT SHALL BE THOROUGHLY CLEANED OF ALL DIRT, DUST, OR OTHER FOREIGN MATERIAL BY THE USE OF WATER, AIR UNDER PRESSURE, OR OTHER METHODS THAT PRODUCE SATISFACTORY RESULTS. CONCRETE BONDING SURFACES SHALL BE WET WITHOUT FREE WATER AS CONCRETE IS PLACED.

SUBSTRUCTURE CONCRETE REMOVAL SHALL BE BY MEANS OF APPROVED PNEUMATIC HAMMERS EMPLOYING POINTED AND BLUNT CHISEL TOOLS. HYDRAULIC HOE-RAM TYPE HAMMERS WILL NOT BE PERMITTED. THE WEIGHT OF THE HAMMER SHALL NOT BE MORE THAN 16 KILOGRAM FOR REMOVAL WITHIN 450 mm OF PORTIONS TO BE PRESERVED. OUTSIDE THE 450 mm LIMIT, A HAMMER HEAVIER THAN 16 KILOGRAM, BUT NOT TO EXCEED 41 KILOGRAM, MAY BE USED AT THE APPROVAL OF THE ENGINEER. PNEUMATIC HAMMERS SHALL NOT BE PLACED IN DIRECT CONTACT WITH REINFORCING STEEL THAT IS TO BE RETAINED IN THE REBUILT STRUCTURE.

PROTECTION OF TRAFFIC:

PRIOR TO DEMOLITION OF ANY PORTIONS OF THE EXISTING SUPERSTRUCTURE, THE CONTRACTOR SHALL SUBMIT HIS PLANS FOR THE PROTECTION OF TRAFFIC (VEHICULAR, PEDESTRIAN, BOAT, ETC.) ADJACENT TO AND/OR UNDER THE STRUCTURE TO THE DIRECTOR FOR APPROVAL. THESE PLANS SHALL INCLUDE PROVISIONS FOR ANY DEVICES AND STRUCTURES THAT MAY BE NECESSARY TO ENSURE SUCH PROTECTION. TEMPORARY VERTICAL CLEARANCES SPECIFIED ON THE PLANS OR IN THE PROPOSAL SHALL BE MAINTAINED AT ALL TIMES EXCEPT AS OTHERWISE APPROVED BY THE DIRECTOR.

PAYMENT:

THIS WORK WILL BE PAID FOR AT THE CONTRACT LUMP SUM PRICE BID, AND PAYMENT SHALL BE FULL COMPENSATION FOR ALL LABOR, EQUIPMENT, MATERIALS AND INCIDENTALS NECESSARY TO COMPLETE THE WORK IN CONFORMANCE WITH THESE REQUIREMENTS, WITH PERTINENT PROVISIONS OF 202, AND TO THE SATISFACTION OF THE ENGINEER.

## ITEM SPECIAL - SEALING OF CONCRETE SURFACES (EPOXY-URETHANE)

A CONCRETE SEALER SHALL BE APPLIED TO ALL EXPOSED SURFACES OF THE ABUTMENT AS SHOWN ON SHEET 9/17 AND TO PARAPETS AND CONCRETE BARRIER, TYPE D, AS PER PLAN AS SHOWN ON SHEET 14/17 AND A ONE METER WIDE AREA ON THE BRIDGE AND APPROACH SLABS CENTERED ON THE CENTERLINE OF ROADWAY AND CONSTRUCTION.

SEE PROPOSAL NOTE FOR SURFACE PREPARATION REQUIREMENTS, APPLICATION PROCEDURES AND RATES, AND MATERIAL REQUIREMENTS.

THE COLOR OF THE URETHANE SEALER SHALL BE FEDERAL COLOR STANDARD NO. 17778 (OFF-WHITE).

## ITEM 503 - UNCLASSIFIED EXCAVATION, AS PER PLAN:

UNCLASSIFIED EXCAVATION SHALL BE IN ACCORDANCE WITH 503 EXCEPT THE BACKFILL MATERIAL FOR ALL EXCAVATION BEHIND ABUTMENTS SHALL BE ITEM 613 LOW STRENGTH MORTAR BACKFILL, TYPE I (LSM BACKFILL) WITHIN THE LIMITS OF THE APPROACH SLABS. THE CONTRACTOR ALSO MAY USE THE LSM BACKFILL TO CONSTRUCT THE SLOPES IN THE SAME AREA AS LONG AS IT IS COVERED WITH ONE FOOT OF SOIL TO MEET THE FINISHED GRADE. THE AREA FOR THE POROUS BACKFILL WITH FILTER FABRIC SHALL BE FORMED UP PRIOR TO THE PLACEMENT OF THE LSM BACKFILL AND THE FILTER FABRIC, AND POROUS BACKFILL SHALL BE PLACED AFTER THE LSM BACKFILL HAS BEEN CURED AND THE FORMS HAVE BEEN REMOVED.

THE COST OF ALL LABOR, EQUIPMENT, AND MATERIAL TO PLACE THE LSM BACKFILL AS DESCRIBED ABOVE SHALL BE INCLUDED IN THE UNIT BID PRICE FOR ITEM 503, UNCLASSIFIED EXCAVATION, AS PER PLAN.

## CONCRETE PARAPETS:

AS SOON AS A CONCRETE SAW CAN BE OPERATED WITHOUT DAMAGING THE FRESHLY PLACED CONCRETE, 25 mm DEEP CONTROL JOINTS SHALL BE SAWED INTO THE PERIMETER OF THE CONCRETE PARAPET. THE SAW CUT SHALL BE MADE IN THE COMPLETE CIRCUMFERENCE OF THE PARAPET, STARTING AND ENDING AT THE ELEVATION OF THE CONCRETE DECK. THE SAW CUTS SHALL BE PLACED AT A MINIMUM OF 2000 mm AND A MAXIMUM OF 3000 mm CENTERS. THE USE OF AN EDGE GUIDE, FENCE, OR JIG IS REQUIRED TO INSURE THAT THE CUT JOINT IS STRAIGHT, TRUE, AND ALIGNED ON ALL FACES OF THE PARAPET. THE JOINT WIDTH SHALL BE THE WIDTH OF THE SAW BLADE, A NOMINAL WIDTH OF 6 mm. THE PERIMETER OF THE DEFLECTION CONTROL JOINT SHALL BE SEALED TO A MINIMUM DEPTH OF 25 mm WITH A CAULKING MATERIAL CONFORMING TO FEDERAL SPECIFICATION, TT-S-00227E. ALL LABOR, EQUIPMENT, MATERIALS, AND INCIDENTALS NECESSARY TO COMPLETE THIS WORK SHALL BE INCLUDED IN THE UNIT BID PRICE FOR ITEM SPECIAL, HIGH PERFORMANCE CONCRETE, SUPERSTRUCTURE (PARAPET).

## ITEM 511 - CLASS C CONCRETE, PIER, AS PER PLAN

THIS IS AN ESTIMATED QUANTITY TO REPLACE DETERIORATED PORTIONS OF EXISTING CAST-IN-PLACE PIER PILES AS SHOWN ON SHEETS 11/17 AND AS DIRECTED BY THE ENGINEER.

THE EXISTING CONCRETE AT THE CONSTRUCTION JOINT AND THE EXPOSED REINFORCING STEEL SHALL BE THOROUGHLY CLEANED BY ABRASIVE BLASTING PRIOR TO THE CLEANING SPECIFIED BY 519.04 AND 520.05. CLEANING SHALL PRECEDE PLACEMENT OF CONCRETE BY NOT MORE THAN 24 HOURS.

## ITEM 519 - PATCHING CONCRETE STRUCTURE, AS PER PLAN

THIS IS AN ESTIMATED QUANTITY TO PATCH EXISTING SUBSTRUCTURE AS SHOWN ON SHEETS 11/17 AND AS DIRECTED BY THE ENGINEER.

ALL SURFACES TO BE PATCHED AND THE EXPOSED REINFORCING STEEL WITHIN SHALL BE THOROUGHLY CLEANED BY ABRASIVE BLASTING PRIOR TO THE CLEANING SPECIFIED BY 519.04 AND 520.05. CLEANING SHALL PRECEDE APPLICATION OF THE PATCHING MATERIAL OR ERECTION OF THE FORMS BY NOT MORE THAN 24 HOURS.

## ITEM 516 - STRUCTURAL EXPANSION JOINT INCLUDING ELASTOMERIC STRIP SEAL, AS PER PLAN:

THIS ITEM SHALL BE FOR THE FOUR INTERMEDIATE EXPANSION JOINTS LOCATED ON SHEET 3/17 & 4/17 IN ACCORDANCE WITH STANDARD DRAWING EXJ-6-95M MODIFIED IN ACCORDANCE WITH DETAILS ON SHEET 14A/17 AND AS FOLLOWS:

PLATE "A" AND PLATE "B" SHALL BE USED ON BOTH SIDES OF JOINT TO REPLACE ANCHOR PLATE SHOWN IN STANDARD DRAWING. THE M16 THREADED RODS SHALL BE SUPPLIED WITH SLEEVE NUT, WASHERS, AND MACHINE BOLT AS DETAILED ON SHEET 14A/17 FOR ATTACHMENT TO THE FORMS FOR THE CONCRETE SLAB BRIDGE. FILL RECESSES IN BOTTOM OF SLAB FLUSH WITH BOTTOM OF SLAB WITH NON-SHRINKING MORTAR AFTER MACHINE BOLTS, WASHERS, AND FORMS ARE REMOVED.

## SEQUENCE OF CONSTRUCTION

STAGE I CONSTRUCTION

1. DIVERT SOUTHBOUND TRAFFIC INTO NORTHBOUND LANES IN ACCORDANCE WITH THE PHASE I MAINTENANCE OF TRAFFIC PLAN.
2. REMOVE SOUTHBOUND BRIDGE DECK, PORTIONS OF ABUTMENTS (BACKWALLS, WINGWALLS, PORTIONS OF FOOTINGS), AND PORTIONS OF PIERS (PIER CAPS AND PORTIONS OF PILES).
3. WIDEN AND RECONSTRUCT SOUTHBOUND ABUTMENTS AND PIERS.
4. CONSTRUCT SOUTHBOUND PORTION OF REINFORCED CONCRETE SLAB SUPERSTRUCTURE, INTERMEDIATE EXPANSION JOINTS, AND APPROACH SLABS.
5. INSTALL PORTABLE CONCRETE BARRIER, 813 mm, BRIDGE MOUNTED ON BRIDGE AND APPROACHES AS DETAILED ON PHASE CONSTRUCTION DETAILS ON SHEET 62 BEFORE OPENING BRIDGE TO SOUTHBOUND TRAFFIC.

STAGE II CONSTRUCTION

1. DIVERT NORTHBOUND TRAFFIC INTO SOUTHBOUND LANES IN ACCORDANCE WITH THE PHASE II MAINTENANCE OF TRAFFIC PLAN.
2. REMOVE NORTHBOUND BRIDGE DECK, PORTIONS OF ABUTMENTS (BACKWALLS, WINGWALLS, PORTIONS OF FOOTINGS), AND PORTIONS OF PIERS (PIER CAPS AND PORTIONS OF PILES).
3. WIDEN AND RECONSTRUCT NORTHBOUND ABUTMENTS AND PIERS.
4. CONSTRUCT NORTHBOUND PORTION OF REINFORCED CONCRETE SLAB SUPERSTRUCTURE, INTERMEDIATE EXPANSION JOINTS, AND APPROACH SLABS.
5. MOVE NORTHBOUND TRAFFIC ONTO BRIDGE AND RESTORE BOTH THE SOUTHBOUND AND NORTHBOUND LANES TO NORMAL TRAFFIC AND MAINTAINING TRAFFIC IN ACCORDANCE WITH STANDARD DRAWINGS MT-95.31M AND MT-99.20 AS NEEDED DURING WORKING ONLYWHILE COMPLETING ALL REMAINING WORK ITEMS.

DESIGN AGENCY: STATE OF OHIO DEPARTMENT OF TRANSPORTATION DISTRICT 9
DESIGNED: GEC | CHECKED: LAW | DRAWN: GEC | REVISED: | REVIEWED: LAW | DATE: 1/14/98
STRUCTURE FILE NUMBER: 6600425 6600484

**GENERAL NOTES**
BRIDGE NO. PIK-23-1034 L&R
OVER PEE PEE CREEK

PIK-23-15.707/16.625/17.477

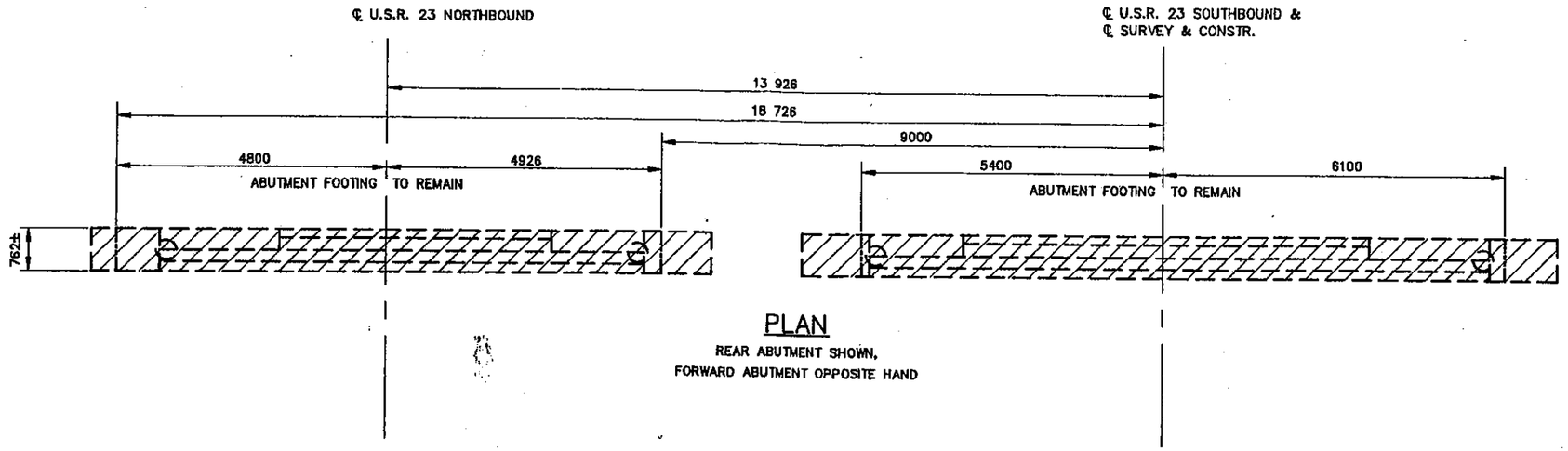


## PLAN

REAR ABUTMENT SHOWN,
FORWARD ABUTMENT OPPOSITE HAND

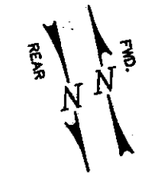


**LEGEND**

CONCRETE TO BE REMOVED AS PER ITEM 202 –REMOVAL OF CONCRETE STRUCTURES.

ALL DIMENSIONS ARE SHOWN IN MILLIMETERS, AND ELEVATIONS ARE SHOWN IN METERS.

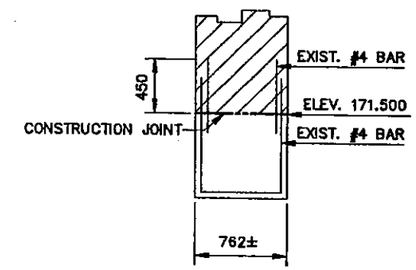


SECTION 1/7|7

SALVAGE EXISTING VERTICAL REINFORCING BARS AS SHOWN

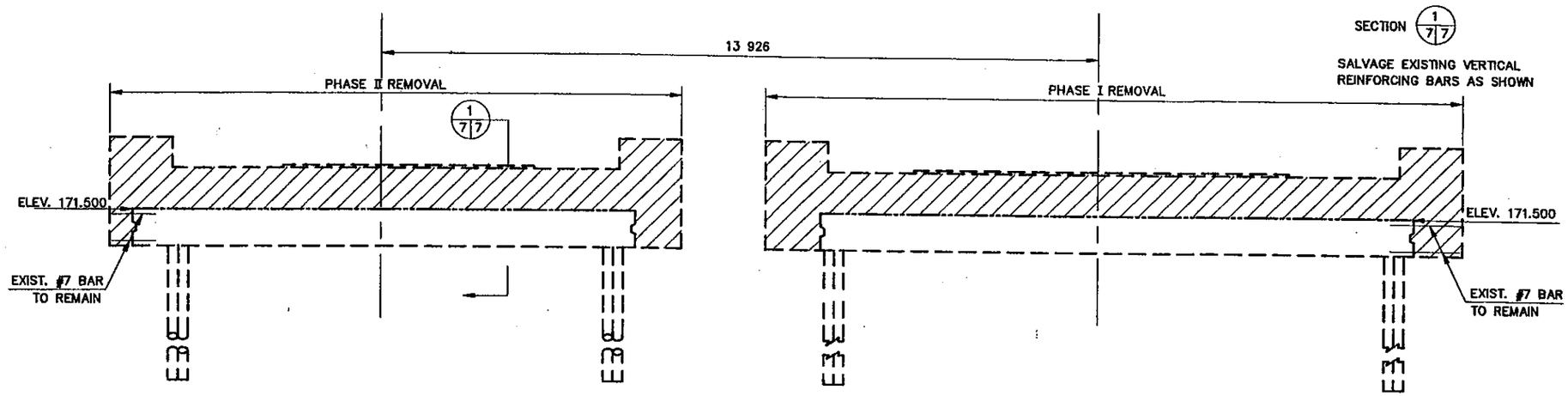


## ELEVATION

DESIGN AGENCY: JONES–STUCKEY, LTD., INC. 1641 WEST FIFTH AVENUE COLUMBUS, OHIO 43212

| DESIGNED | DRAWN | REVIEWED | DATE |
|---|---|---|---|
| G.G.N. | J.W.E. | D.W.J. | 4–14–95 |
| CHECKED | REVISED | STRUCTURE FILE NUMBER | |
| E.D.W. | | 6600425 (L) 6600424 (R) | |

# ABUTMENT DEMOLITION DETAILS

BRIDGE NO. PIK-23-1034L&R
OVER PEE PEE CREEK

PIK-23-15.707/16.625 / 17.477



Jul 17, 1995 – 15:40:29 DVG Name M:\2804\16.62\043DEMO.DVG Updated By: James V. Eudally, Jones-Stuckey

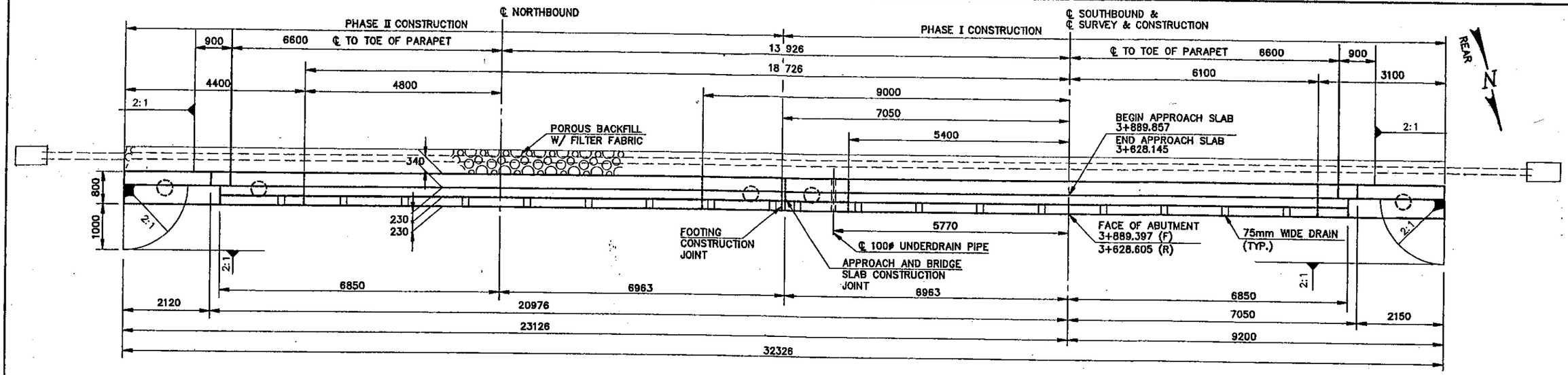


CONSTRUCTION JOINTS: BEFORE PLACEMENT OF CONCRETE, THE ROUGH CONSTRUCTION JOINT SURFACES SHALL BE THOROUGHLY CLEANED OF ALL DUST, DIRT AND OTHER FOREIGN MATTER. IF CONSIDERED NECESSARY BY THE ENGINEER, THE SURFACES SHALL BE WATER BLASTED TO ACHIEVE AN ACCEPTABLE SURFACE. PRIOR TO PLACING CONCRETE, THE BONDING SURFACES SHALL BE FLUSHED WITH CLEAR WATER AND SHALL BE WET, WITHOUT FREE WATER, WHEN CONCRETE IS PLACED.

POROUS BACKFILL: WITH FILTER FABRIC, 600 mm THICK SHALL EXTEND UP TO THE PLANE OF THE SUBGRADE, TO 300mm BELOW THE EMBANKMENT SURFACE, AND LATERALLY TO THE SURFACE OF EMBANKMENT SLOPE. GEOTEXTILE FABRIC SHALL CONFORM WITH 712.09, TYPE A. GEOTEXTILE FABRIC IS INCLUDED IN WITH POROUS BACKFILL FOR PAYMENT.

## PLAN

NOTE: REAR ABUTMENT SHOWN
FORWARD ABUTMENT IS SIMILAR
BUT OPPOSITE HAND (MIRROR IMAGE)

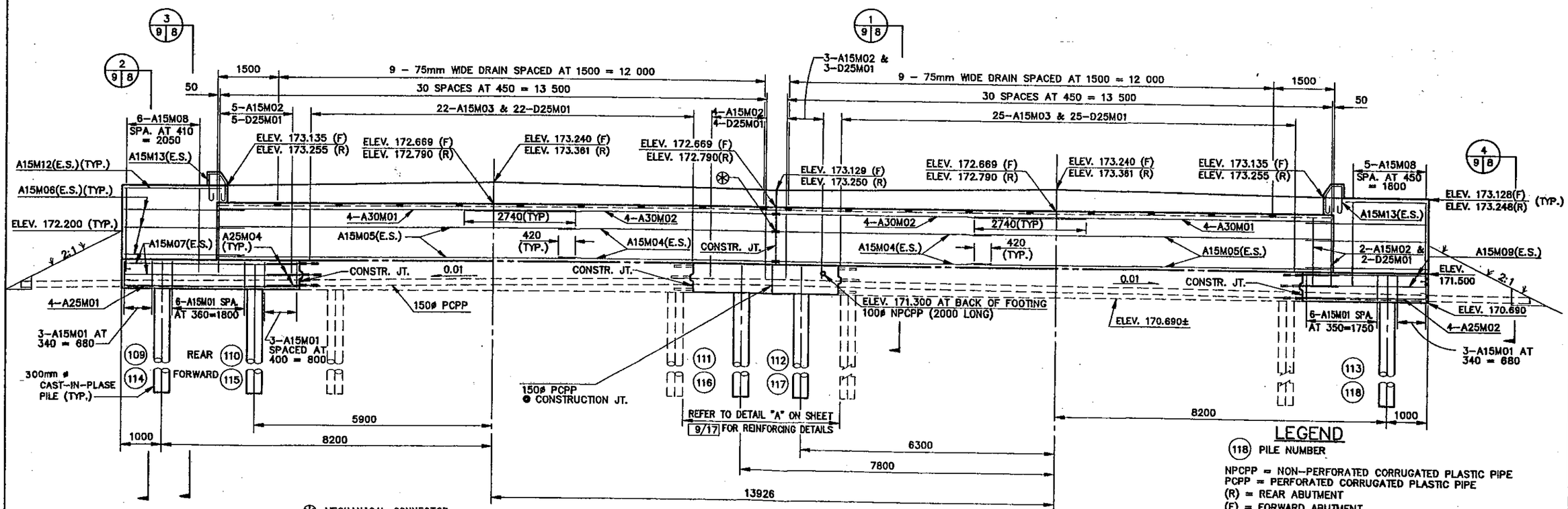


## ELEVATION

SEE SHEET 9/17 KEYWAY AND DOWEL HOLE LOCATION

## LEGEND

(118) PILE NUMBER

NPCPP = NON–PERFORATED CORRUGATED PLASTIC PIPE
PCPP = PERFORATED CORRUGATED PLASTIC PIPE
(R) = REAR ABUTMENT
(F) = FORWARD ABUTMENT

1 — SECTION NUMBER
2 3 — SHEET ON WHICH SECTION IS REFERRED TO FIRST
— SHEET ON WHICH SECTION IS SHOWN

JONES–STUCKEY, LTD., INC.
1641 WEST FIFTH AVENUE
COLUMBUS, OHIO 43212

| DESIGNED | DRAWN | REVIEWED | DATE |
|---|---|---|---|
| G.G.N. | R.S.B. | D.W.J. | 2–28–95 |
| CHECKED | REVISED | STRUCTURE FILE NUMBER | |
| E.D.W. | | 6600425 (2) | |

ABUTMENT DETAIL
BRIDGE NO. PIK–23–1034L&R
OVER PEE PEE CREEK

PIK–23–15.707/
16.625 / 17.477



Apr 25, 1995 – 08:00:02 DVG Name: C:\ACAD\2804\043ABUTI.DVG Updated By: Janet Palmer

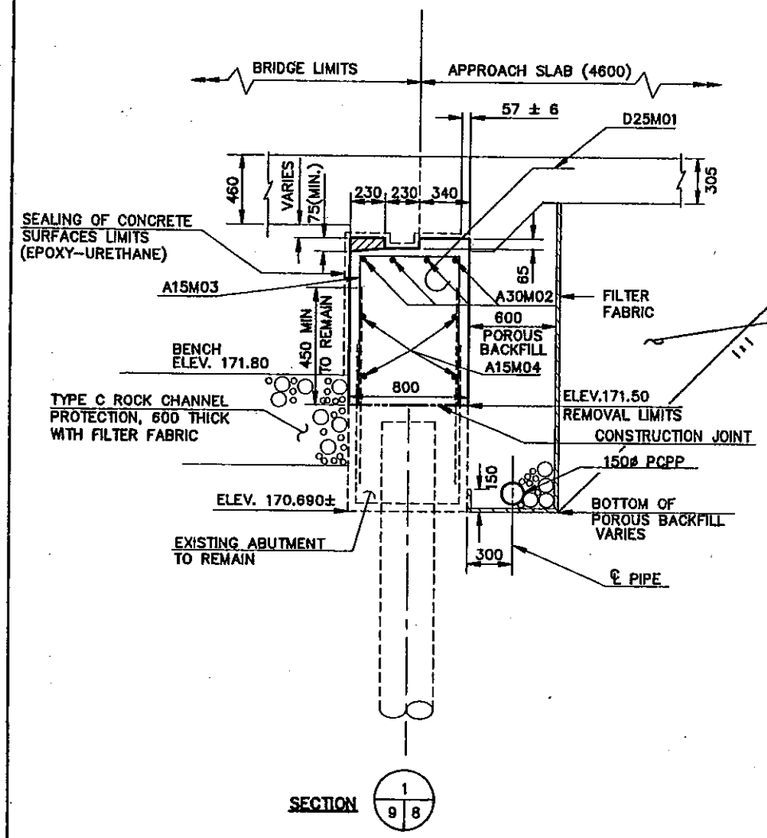


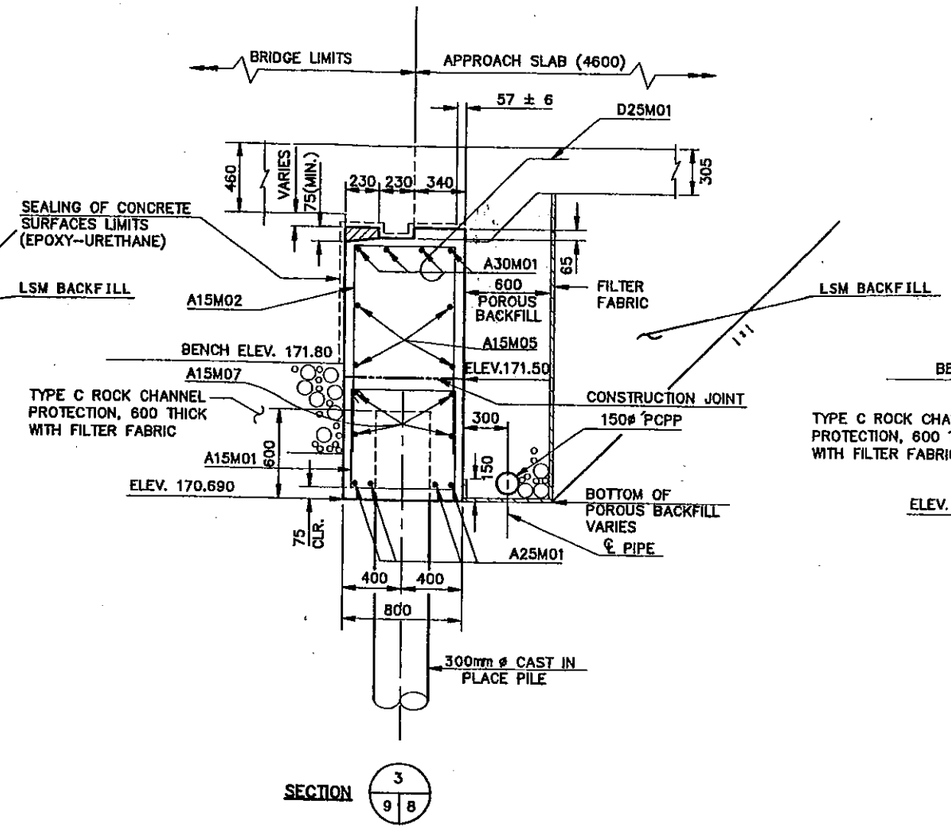


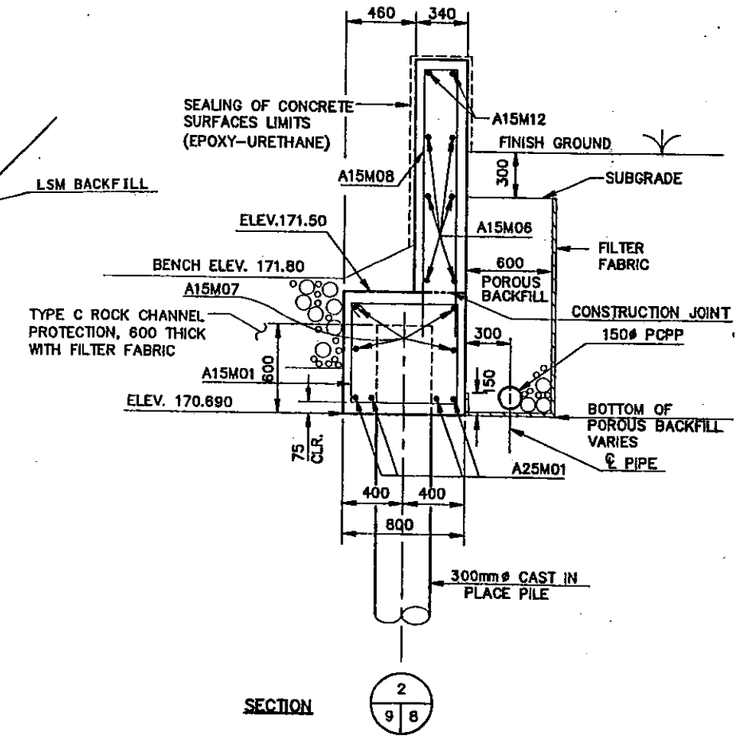


PCPP = PERFORATED CORRUGATED PLASTIC PIPE

PILE REINFORCING STEEL SHALL BE INCLUDED WITH ITEM 507 300mm CAST-IN-PLACE REINFORCED CONCRETE PILES FOR PAYMENT.

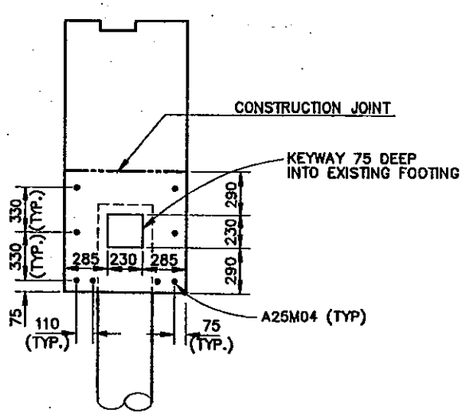


KEYWAY AND DOWEL HOLE LOCATION

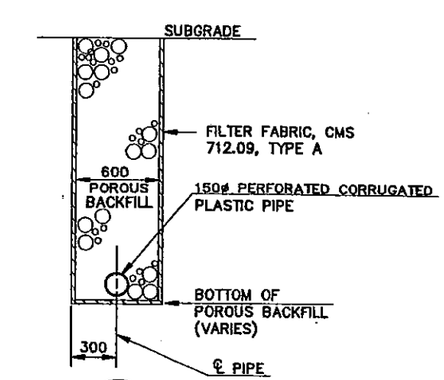


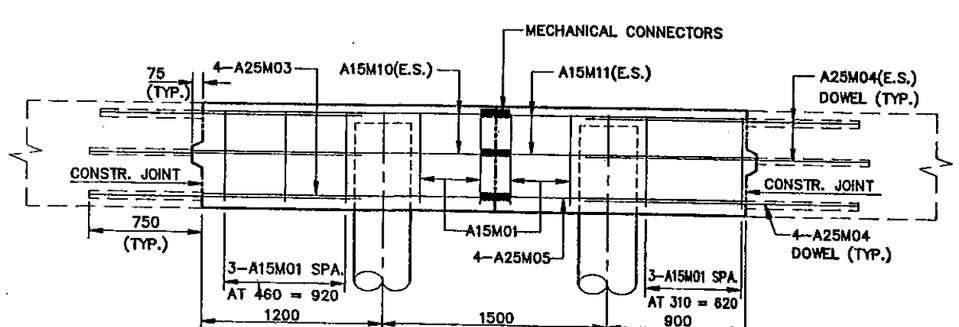


DETAIL A

Apr 25, 1995 - 08:15:33 DWG Name: D:\ACAD\2804\043ABUT2.DWG Updated By: Janet Palmer

JONES-STUCKEY, LTD., INC.
1641 WEST FIFTH AVENUE
COLUMBUS, OHIO 43212

D.W.J. 2-28-95
J.W.E.
G.G.N. E.D.W.

ABUTMENT SECTION DETAIL
BRIDGE NO. PIK-23-1034L&R
OVER PEE PEE CREEK

PIK-23-15.707/
16.625 / 17.477

9/17

84/117

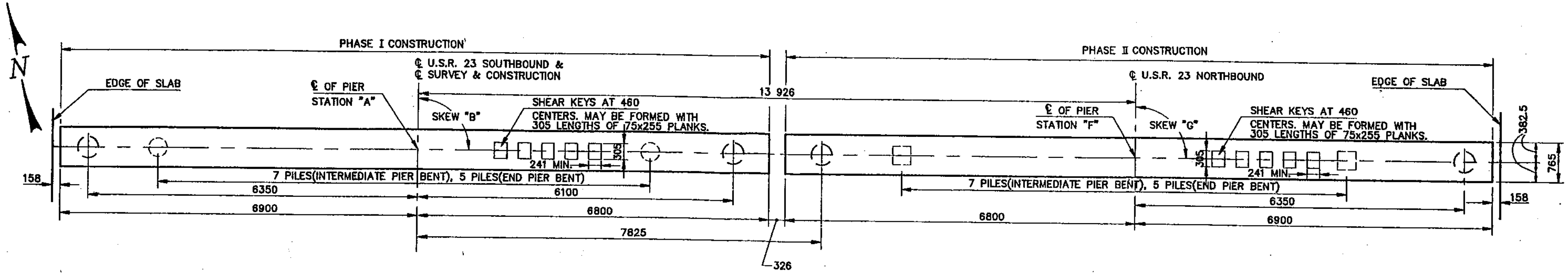


## PLAN VIEW

(INTERMEDIATE PIER BENT SHOWN, END PIER BENT SIMILAR)

SEE SHEET 11/17 FOR PIER STATIONING AND SKEWS

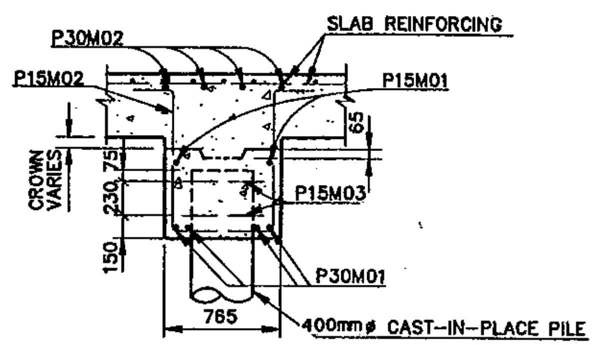


SECTION (A/10|10)

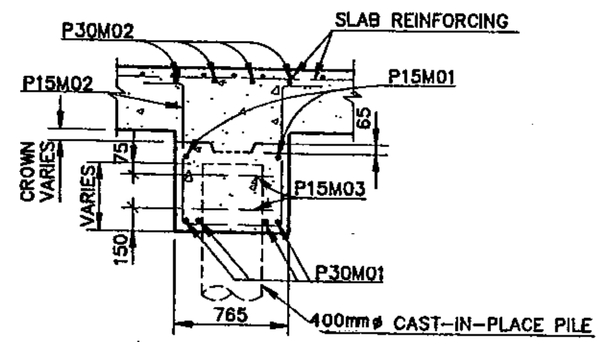


SECTION (B/10|10)

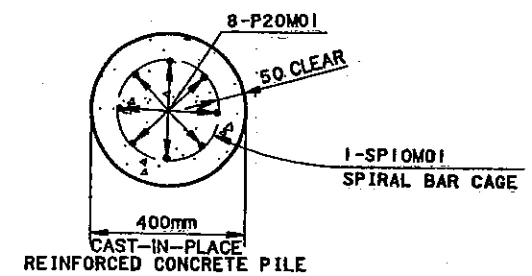


SECTION (C/10|10)

PILE REINFORCING STEEL SHALL BE INCLUDED WITH ITEM 507m 400mm CAST-IN-PLACE REINFORCED CONCRETE PILES FOR PAYMENT.

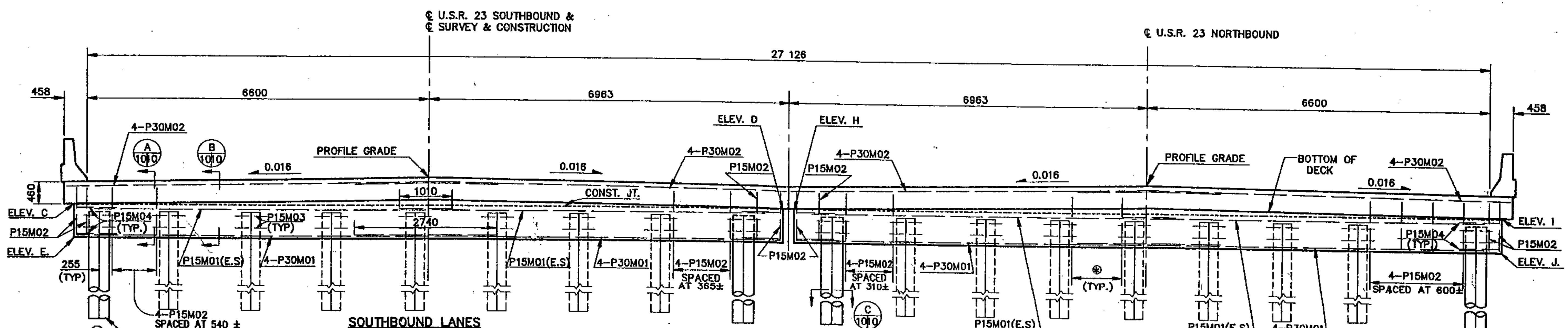


SOUTHBOUND LANES

SEE SHEET 11/17 FOR ELEVATIONS AND PILE NUMBERS.
REINFORCING STEEL IN PILES NOT SHOWN

SEE SECTION (C/10|10) FOR REINFORCING STEEL IN PILES

ALL DIMENSOINS ARE SHOWN IN MILLIMETER

NORTHBOUND LANES

SEE SHEET 11/17 FOR ELEVATIONS AND PILE NUMBERS.
REINFORCING STEEL IN PILES NOT SHOWN

SEE SECTION (C/10|10) FOR REINFORCING STEEL IN PILES

⊛ 4-P15M02 SPACED AT 320± BETWEEN EXISTING PILE (INTERMEDIATE PIER BENT) – NORTHBOUND
4-P15M02 SPACED AT 370± BETWEEN EXISTING PILE (INTERMEDIATE PIER BENT) – SOUTHBOUND

⊛ 6-P15M02 SPACED AT 340± BETWEEN EXISTING PILE (END PIER BENT)

ALL DIMENSOINS ARE SHOWN IN MILLIMETER

DESIGN AGENCY: JONES-STUCKEY, LTD., INC.
1641 WEST FIFTH AVENUE
COLUMBUS, OHIO 43212

| DESIGNED | DRAWN | REVIEWED | DATE |
|---|---|---|---|
| G.G.N. | J.W.E. | D.W.J. | 2-28-95 |
| CHECKED E.D.W. | REVISED | STRUCTURE FILE NUMBER 8600425 (L) | |

# PIER DETAILS

BRIDGE NO. PIK-23-1034L&R
OVER PEE PEE CREEK

PIK-23-15.707 / 16.625 / 17.477



Apr 19, 1995 – 06:56:28 DWG Name: D:\ACAD\2604\16.62\043PIER1.DWG Updated By: James W. Eudaily

| PIER DATA | | | | | | PILE DATA | |
|---|---|---|---|---|---|---|---|
| PIER NUMBER | STATION A | SKEW B | ELEVATION C | ELEVATION D | ELEVATION E | PILE NUMBER K | PILE NUMBER L |
| 1 | 3+636.293 | 89°57'47" | 172.825 | 172.824 | 172.050 | 1 | 2 |
| 2 | 3+646.176 | 89°58'12" | 172.865 | 172.863 | 172.070 | 3 | 4 |
| 3 | 3+654.733 | 89°57'47" | 172.896 | 172.894 | 172.110 | 5 | 6 |
| 4 | 3+657.398 | 89°54'43" | 172.904 | 172.905 | 172.130 | 7 | 8 |
| 5 | 3+665.912 | 89°52'34" | 172.933 | 172.931 | 172.150 | 9 | 10 |
| 6 | 3+675.791 | 90°10'12" | 172.961 | 172.959 | 172.210 | 11 | 12 |
| 7 | 3+685.665 | 89°54'00" | 172.986 | 172.984 | 172.250 | 13 | 14 |
| 8 | 3+694.235 | 89°43'59" | 173.004 | 173.003 | 172.295 | 15 | 16 |
| 9 | 3+696.825 | 89°37'37" | 173.009 | 173.008 | 172.300 | 17 | 18 |
| 10 | 3+705.454 | 89°58'23" | 173.024 | 173.023 | 172.340 | 19 | 20 |
| 11 | 3+715.429 | 89°55'55" | 173.038 | 173.036 | 172.385 | 21 | 22 |
| 16 | 3+763.100 | 90°12'00" | 173.051 | 173.050 | 172.410 | 23 | 24 |
| 17 | 3+772.999 | 90°33'22" | 173.043 | 173.042 | 172.390 | 25 | 26 |
| 18 | 3+781.497 | 90°29'53" | 173.034 | 173.032 | 172.375 | 27 | 28 |
| 19 | 3+784.083 | 90°23'31" | 173.030 | 173.029 | 172.375 | 29 | 30 |
| 20 | 3+792.601 | 89°53'35" | 173.017 | 173.015 | 172.320 | 31 | 32 |
| 21 | 3+802.503 | 89°47'31" | 172.998 | 172.996 | 172.275 | 33 | 34 |
| 22 | 3+812.501 | 89°53'56" | 172.975 | 172.973 | 172.230 | 35 | 36 |
| 23 | 3+820.998 | 90°11'53" | 172.952 | 172.951 | 172.190 | 37 | 38 |
| 24 | 3+823.607 | 90°05'06" | 172.945 | 172.943 | 172.170 | 39 | 40 |
| 25 | 3+832.134 | 89°55'26" | 172.919 | 172.917 | 172.125 | 41 | 42 |
| 26 | 3+842.046 | 90°04'44" | 172.885 | 172.883 | 172.085 | 43 | 44 |
| 27 | 3+851.955 | 89°50'02" | 172.847 | 172.845 | 172.030 | 45 | 46 |
| 28 | 3+860.508 | 89°41'35" | 172.812 | 172.810 | 171.985 | 47 | 48 |
| 29 | 3+863.138 | 89°51'43" | 172.800 | 172.799 | 171.975 | 49 | 50 |
| 30 | 3+871.657 | 90°08'28" | 172.761 | 172.760 | 171.935 | 51 | 52 |
| 31 | 3+881.591 | 89°57'00" | 172.713 | 172.711 | 171.890 | 53 | 54 |

**SOUTHBOUND**

SEE SHEET 10/17 FOR LAYOUT

| PIER DATA | | | | | | PILE DATA | |
|---|---|---|---|---|---|---|---|
| PIER NUMBER | STATION F | SKEW G | ELEVATION H | ELEVATION I | ELEVATION J | PILE NUMBER M | PILE NUMBER N |
| 32 | 3+636.394 | 89°56'20" | 172.824 | 172.826 | 171.990 | 55 | 56 |
| 33 | 3+646.287 | 89°51'32" | 172.864 | 172.865 | 172.020 | 57 | 58 |
| 34 | 3+654.826 | 89°47'56" | 172.895 | 172.896 | 172.065 | 59 | 60 |
| 35 | 3+657.432 | 89°53'35" | 172.904 | 172.905 | 172.080 | 61 | 62 |
| 36 | 3+665.970 | 90°00'11" | 172.931 | 172.933 | 172.120 | 63 | 64 |
| 37 | 3+675.894 | 89°54'29" | 172.960 | 172.961 | 172.155 | 65 | 66 |
| 38 | 3+685.789 | 90°00'00" | 172.984 | 172.986 | 172.200 | 67 | 68 |
| 39 | 3+694.341 | 89°50'46" | 173.003 | 173.004 | 172.210 | 69 | 70 |
| 40 | 3+696.960 | 89°49'52" | 173.008 | 173.010 | 172.210 | 71 | 72 |
| 41 | 3+705.516 | 89°58'26" | 173.053 | 173.054 | 172.235 | 73 | 74 |
| 42 | 3+715.425 | 90°03'50" | 173.036 | 173.038 | 172.250 | 75 | 76 |
| 47 | 3+763.043 | 89°56'35" | 173.050 | 173.051 | 172.275 | 77 | 78 |
| 48 | 3+772.951 | 90°08'28" | 173.042 | 173.044 | 172.275 | 79 | 80 |
| 49 | 3+781.489 | 90°01'12" | 173.032 | 173.034 | 172.255 | 81 | 82 |
| 50 | 3+784.129 | 90°03'07" | 173.029 | 173.030 | 172.255 | 83 | 84 |
| 51 | 3+792.668 | 89°59'46" | 173.015 | 173.017 | 172.240 | 85 | 86 |
| 52 | 3+802.585 | 89°45'11" | 172.996 | 172.998 | 172.225 | 87 | 88 |
| 53 | 3+812.480 | 90°08'42" | 172.973 | 172.975 | 172.195 | 89 | 90 |
| 54 | 3+820.998 | 89°59'10" | 172.951 | 172.952 | 172.155 | 91 | 92 |
| 55 | 3+823.629 | 90°04'37" | 172.943 | 172.945 | 172.130 | 93 | 94 |
| 56 | 3+832.177 | 90°03'18" | 172.917 | 172.919 | 172.070 | 85 | 96 |
| 57 | 3+842.086 | 89°56'10" | 172.883 | 172.885 | 172.050 | 97 | 98 |
| 58 | 3+851.978 | 90°01'16" | 172.845 | 172.847 | 172.000 | 99 | 100 |
| 59 | 3+860.515 | 90°09'11" | 172.810 | 172.812 | 171.960 | 101 | 102 |
| 60 | 3+863.162 | 89°55'08" | 172.799 | 172.800 | 171.950 | 103 | 104 |
| 61 | 3+871.669 | 89°52'55" | 172.760 | 172.761 | 171.915 | 105 | 106 |
| 62 | 3+881.570 | 90°03'11" | 172.711 | 172.713 | 171.855 | 107 | 108 |

**NORTHBOUND**

SEE SHEET 10/17 FOR LAYOUT

CONCRETE PATCHES: ONLY STRUCTURAL PATCHES (EXPOSING PRIMARY REINFORCING STEEL AFTER REMOVAL OF UNSOUND CONCRETE) SHALL BE MADE AS DIRECTED BY THE ENGINEER. SURFACE PREPARATION SHALL INCLUDE ABRASIVE CLEANING OF ALL REINFORCING STEEL AND CONCRETE TO BE PATCHED (STEEL CLEANED TO SA-1 QUALITY). PAYMENT SHALL INCLUDE ALL WORK, INCLUDING ABRASIVE CLEANING, NECESSARY TO COMPLY WITH ITEM 519. PAYMENT SHALL BE INCLUDED WITH ITEM 519 PATCHING CONCRETE STRUCTURE, AS PER PLAN.

DISTANCE "A" IS THE REMOVAL LENGTH BELOW THE BOTTOM OF EXISTING PIER CAP OF EXISTING CONCRETE PILE. PAYMENT SHALL BE INCLUDED IN ITEM 202 PORTIONS OF STRUCTURE REMOVED, AS PER PLAN. SEE GENERAL NOTES SHEET 6/17.

CONCRETE REPLACEMENT IS FROM THE REMOVAL LIMIT TO THE BOTTOM OF THE PROPOSED PIER CAP. PAYMENT SHALL BE INCLUDED IN ITEM 511 CLASS C CONCRETE, PIER, AS PER PLAN.

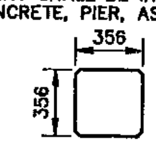


SECTION 1/11

EXISTING CONCRETE PILE NORTHBOUND

| NORTHBOUND PIER PILE REPAIR | | | | |
|---|---|---|---|---|
| PIER NUMBER | EXISTING PILE | PATCHING (SQ. m) | DISTANCE "A" (mm) | CONCRETE REPLACEMENT (CU. m) |
| 32 | U | 0.065 | | |
| 32 | V | 0.065 | | |
| 32 | W | 0.195 | | |
| 33 | W | | 765 | 0.097 |
| 35 | Q | | 765 | 0.097 |
| 36 | Q | | 1000 | 0.127 |
| 38 | Q | | 765 | 0.097 |
| 41 | Q | | 4270 | 0.540 |
| 41 | R | 0.130 | | |
| 50 | U | | 460 | 0.058 |
| 54 | Q | 0.310 | | |
| 56 | W | | 460 | 0.058 |
| 57 | W | 0.250 | | |
| 59 | Q | | 460 | 0.058 |
| 60 | Q | 0.065 | | |
| 60 | R | 0.325 | | |
| 61 | Q | | 1000 | 0.127 |
| 61 | S | 0.065 | | |
| 61 | T | 0.065 | | |
| 61 | V | 0.260 | | |
| | TOTALS: | 1.795 SQ. m | | 1.259 CU. m |

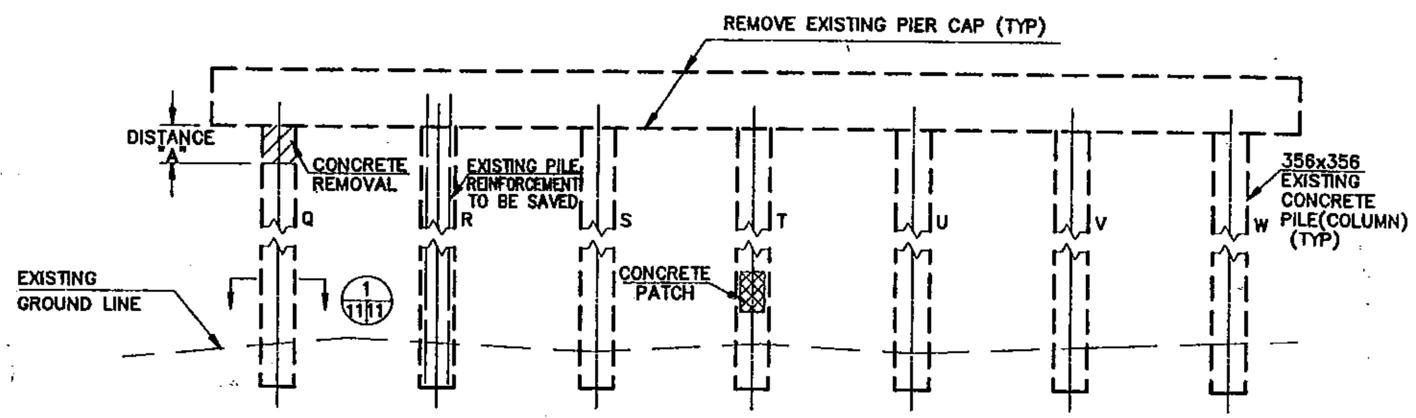


INTERMEDIATE PIER LAYOUT
NORTHBOUND

**LEGEND**

CONCRETE REMOVAL

CONCRETE PATCH

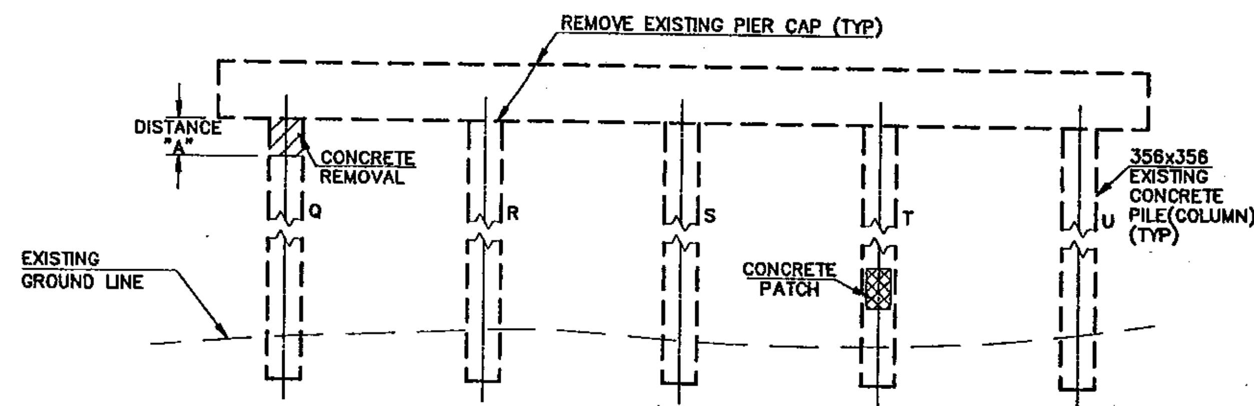


END PIER LAYOUT
NORTHBOUND

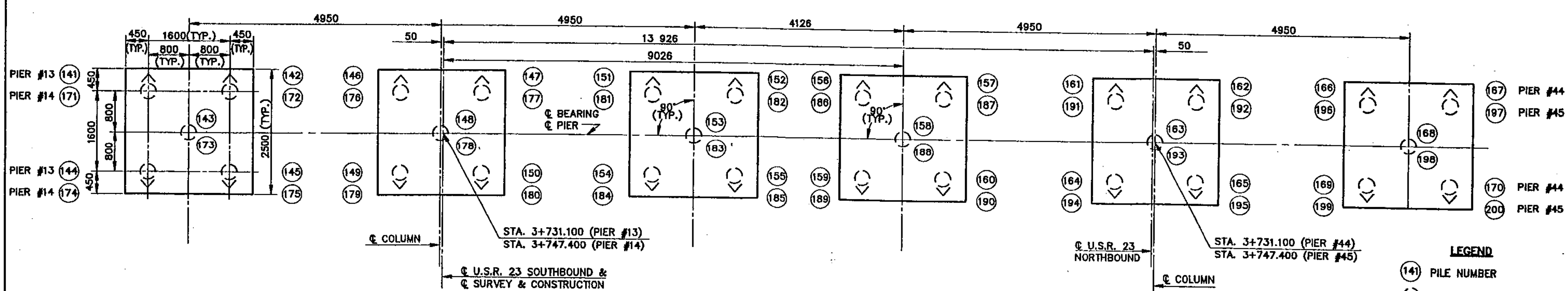


PILE LAYOUT FOR PIER #13 & #14

ALL DIMENSIONS ARE IN MILLIMETERS AND ELEVATIONS ARE IN METERS.

PILE LAYOUT FOR PIER #44 & #45

**LEGEND**

(141) PILE NUMBER

300mm CIP CONC. PILE

300mm CIP CONC. PILE BATTERED 1:4 DIRECTION

DESIGN AGENCY: JONES-STUCKEY, LTD., INC. 1641 WEST FIFTH AVENUE COLUMBUS, OHIO 43212

DESIGNED: G.G.N. | CHECKED: E.D.W. | DRAWN: J.M.P. | REVISED | REVIEWED: D.W.J. | DATE: 2-28-95 | STRUCTURE FILE NUMBER: 6600425 (L)

PIER DETAILS AND PILE REPAIR
BRIDGE NO. PIK-23-1034L&R
OVER PEE PEE CREEK

PIK-23-15.707/16.625/17.477




Apr 25, 1995 - 09:23:58 DWG Name: C:\ACAD\2604\043PIER2.DWG Updated By: Janet Palmer

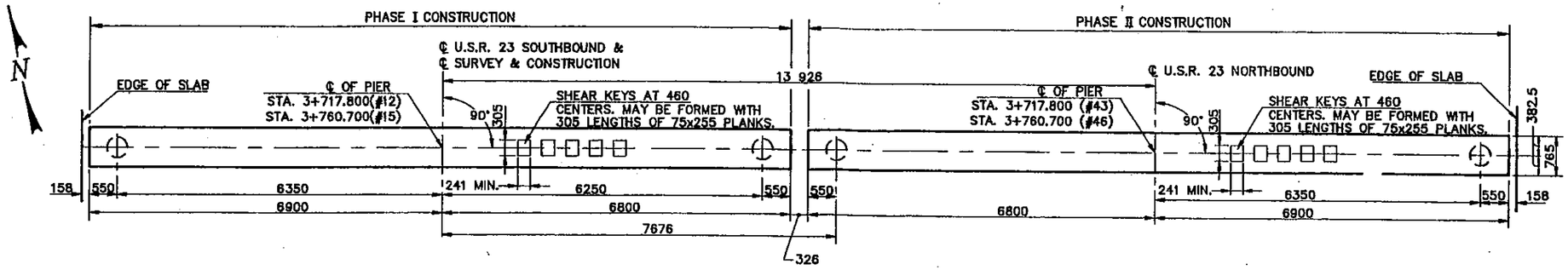


PLAN

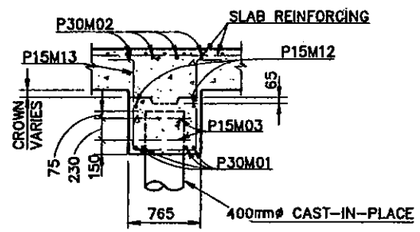


SECTION A 12|12

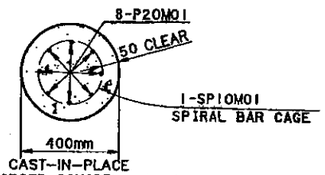


CAST-IN-PLACE
REINFORCED CONCRETE PILE

SECTION B 12|12

PILE REINFORCING STEEL SHALL BE INCLUDED WITH ITEM 507 – 400mm CAST-IN-PLACE REINFORCED CONCRETE PILES FOR PAYMENT.

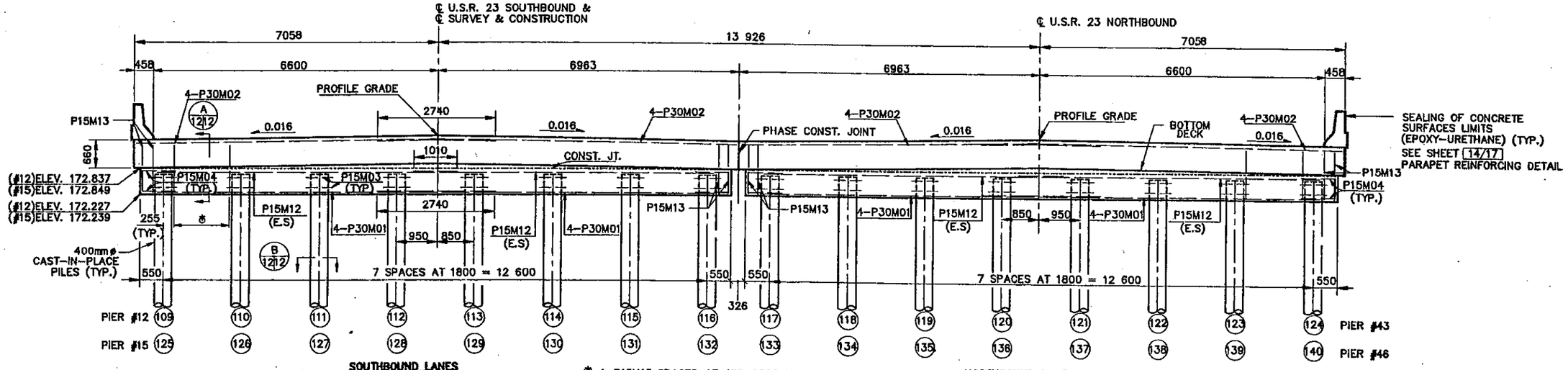


ELEVATION
PIER #12 & #15

ELEVATION
PIER #43 & #46

ALL DIMENSOINS ARE SHOWN IN MILLIMETER AND ELEVATIONS ARE IN METERS.

DESIGN AGENCY: JONES-STUCKEY, LTD., INC. 1641 WEST FIFTH AVENUE

DATE: 2-28-95 | REVIEWED: D.W.J. | DRAWN: J.W.E. | DESIGNED: G.G.N.

PIER DETAILS
BRIDGE NO. PIK-23-10341.88R

PIK-23-15.707/

12/1

87/117

Apr 28, 1995 - 11:35:46 DWG Name: D:\ACAD\2804\043PIER3.DWG Updated By: Janet Palmer

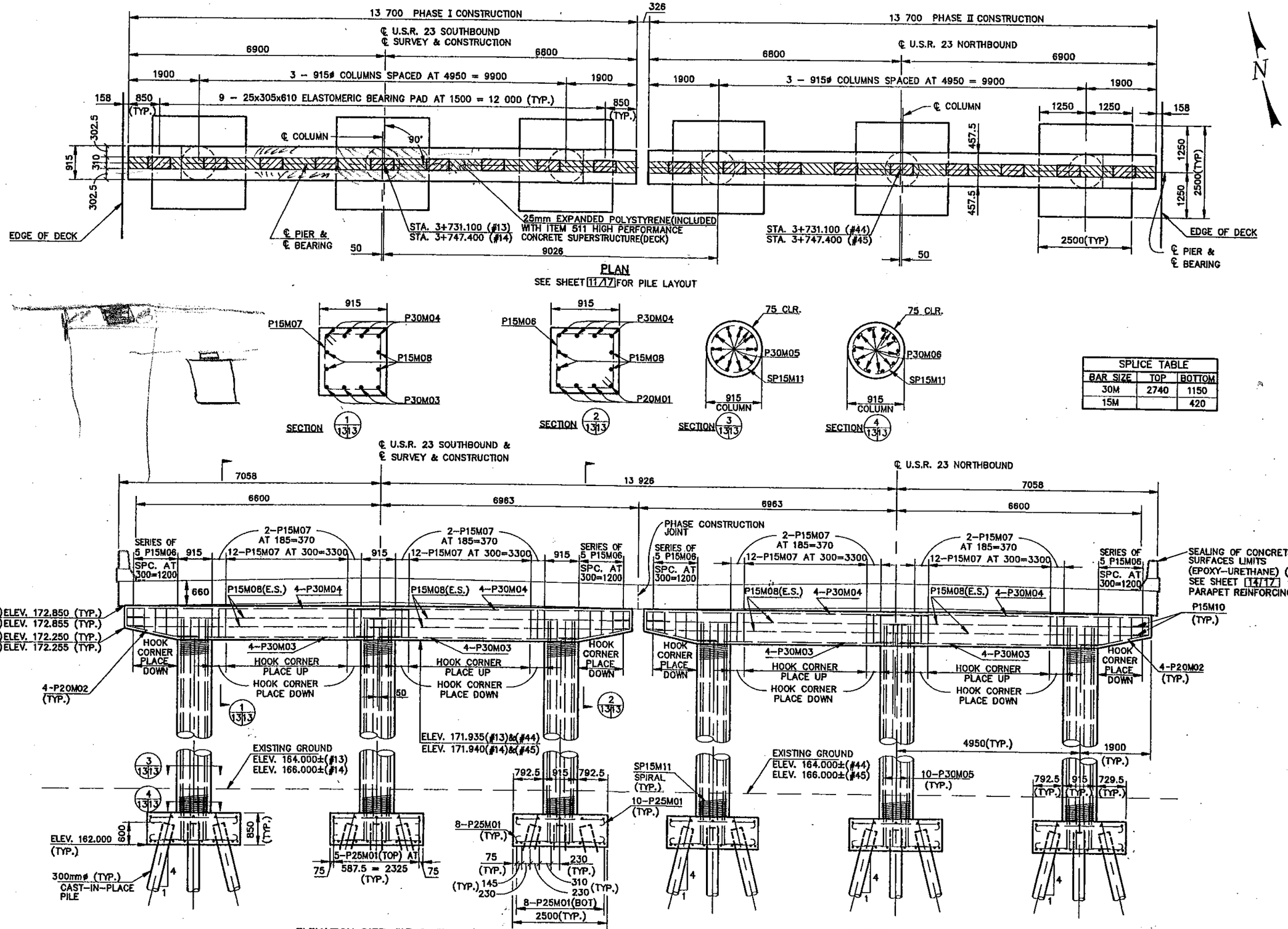


| SPLICE TABLE | | |
|---|---|---|
| BAR SIZE | TOP | BOTTOM |
| 30M | 2740 | 1150 |
| 15M | | 420 |

ALL DIMENSIONS ARE SHOWN IN MILLIMETERS, AND ELEVATIONS ARE IN METERS.

DESIGN AGENCY: JONES–STUCKEY, LTD., INC. 1641 WEST FIFTH AVENUE COLUMBUS, OHIO 43212

DESIGNED G.G.N. | CHECKED E.D.W. | DRAWN J.W.E. | REVISED | REVIEWED D.W.J. | DATE 2–28–95 | STRUCTURE FILE NUMBER 6600425(L)

PIER DETAIL
BRIDGE NO. PIK-23-1034L&R OVER PEE PEE CREEK

PIK-23-15.707 / 16.625 / 17.477

13/17

88/117

Apr 25, 1995 – 10:16:50 DWG Name: C:\ACAD\2804\043PIER4.DWG Updated By: Janet Palmer

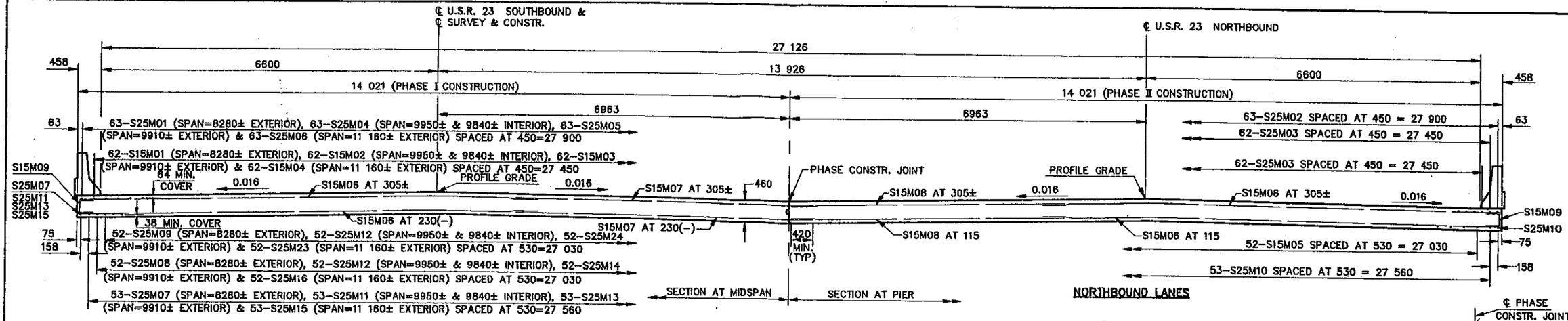


**TRANSVERSE SECTION**
SEGMENT NO. 1, 2, 4 & 5

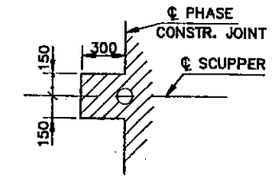


**SECTION A–A**

| TRANSVERSE REINFORCEMENT(TOP) | |
|---|---|
| SEGMENT NUMBER | NO. OF ROWS FOR S15M06, S15M07 & S15M08 |
| ONE | 92 |
| TWO & FOUR | 199 |
| FIVE | 222 |

| EXPANSION JOINT | |
|---|---|
| LOCATION | STATION AT ℄ OF JOINT |
| JOINT 1 | 3+656.130 |
| JOINT 2 | 3+716.610 |
| JOINT 3 | 3+761.890 |
| JOINT 4 | 3+822.310 |

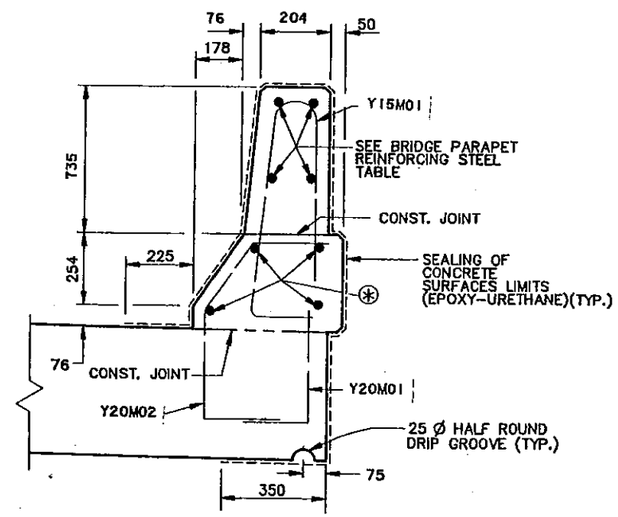


**PARAPET REINFORCING DETAIL**

℄X15M01 LAP WITH X15M02 (SEGMENT 1)
X15M01 LAP WITH X15M03 (SEGMENT 2 & 4)
X15M01 LAP WITH X15M13 (SEGMENT 3)
X15M01 LAP WITH X15M14 (SEGMENT 5)
LAP LENGTH FOR X15M BARS = 420

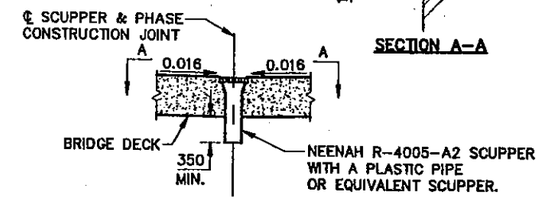


**MEDIAN SCUPPER DETAIL**

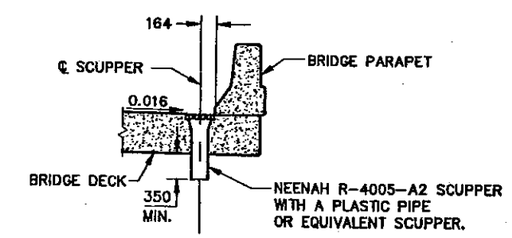


**PARAPET SCUPPER DETAIL**

| FINISHED DECK ELEVATION TABLE (METERS) | | | | | |
|---|---|---|---|---|---|
| LOCATION | TOE OF PARAPET (6600 LT.) | SOUTHBOUND PROFILE GRADE | PHASE CONSTR. JOINT(6963 RT.) | NORTHBOUND PROFILE GRADE(13 926 RT.) | TOE OF PARAPET (20 526 RT.) |
| 3+628.605 | 173.255 | 173.361 | 173.249 | 173.361 | 173.255 |
| 3+632.000 | 173.270 | 173.376 | 173.264 | 173.376 | 173.270 |
| 3+641.000 | 173.308 | 173.413 | 173.302 | 173.413 | 173.308 |
| 3+650.000 | 173.342 | 173.448 | 173.337 | 173.448 | 173.342 |
| 3+661.000 | 173.380 | 173.486 | 173.375 | 173.486 | 173.380 |
| 3+671.000 | 173.411 | 173.517 | 173.405 | 173.517 | 173.411 |
| 3+681.000 | 173.438 | 173.543 | 173.432 | 173.543 | 173.438 |
| 3+690.000 | 173.459 | 173.564 | 173.453 | 173.564 | 173.459 |
| 3+701.000 | 173.480 | 173.586 | 173.474 | 173.586 | 173.480 |
| 3+710.000 | 173.494 | 173.600 | 173.488 | 173.600 | 173.494 |
| 3+717.800 | 173.504 | 173.609 | 173.498 | 173.609 | 173.504 |
| 3+724.450 | 173.510 | 173.616 | 173.504 | 173.616 | 173.510 |
| 3+731.100 | 173.515 | 173.621 | 173.509 | 173.621 | 173.515 |
| 3+739.250 | 173.519 | 173.624 | 173.513 | 173.624 | 173.519 |
| 3+747.400 | 173.520 | 173.625 | 173.514 | 173.625 | 173.520 |
| 3+754.050 | 173.519 | 173.624 | 173.513 | 173.624 | 173.519 |
| 3+760.700 | 173.516 | 173.622 | 173.510 | 173.622 | 173.516 |
| 3+767.000 | 173.512 | 173.618 | 173.506 | 173.618 | 173.512 |
| 3+778.000 | 173.501 | 173.607 | 173.495 | 173.607 | 173.501 |
| 3+788.000 | 173.488 | 173.593 | 173.482 | 173.593 | 173.488 |
| 3+798.000 | 173.470 | 173.576 | 173.464 | 173.576 | 173.470 |
| 3+808.000 | 173.449 | 173.554 | 173.443 | 173.554 | 173.449 |
| 3+818.000 | 173.424 | 173.529 | 173.418 | 173.529 | 173.424 |
| 3+828.000 | 173.395 | 173.500 | 173.389 | 173.500 | 173.395 |
| 3+838.000 | 173.362 | 173.468 | 173.356 | 173.468 | 173.362 |
| 3+848.000 | 173.326 | 173.431 | 173.320 | 173.431 | 173.326 |
| 3+856.000 | 173.294 | 173.400 | 173.288 | 173.400 | 173.294 |
| 3+868.000 | 173.242 | 173.347 | 173.236 | 173.347 | 173.242 |
| 3+877.000 | 173.199 | 173.304 | 173.193 | 173.304 | 173.199 |
| 3+886.000 | 173.153 | 173.258 | 173.147 | 173.258 | 173.153 |
| 3+889.397 | 173.135 | 173.240 | 173.129 | 173.240 | 173.135 |

SEE STD. DWG. BR-1M FOR ADDITIONAL NOTES AND DETAILS

| BRIDGE PARAPET REINFORCING STEEL TABLE | | | |
|---|---|---|---|
| DEFLEC. JT. SPACING | BAR MARK | NO. OF Y20M01, Y20M02 & Y15M01 | SPACING FOR Y20M01, Y20M02 AND Y15M01 |
| 4300 | X15M04 | 11 | 420 |
| 4000 | X15M05 | 11 | 390 |
| 1800 | X15M06 | 5 | 425 |
| 1707.5 | X15M07 | 5 | 400 |
| 1685 | X15M08 | 5 | 395 |
| 1611 | X15M09 | 5 | 375 |
| 1560 | X15M10 | 5 | 365 |
| 1445 | X15M11 | 4 | 445 |
| 1230 | X15M12 | 4 | 375 |

ALL DIMENSIONS ARE SHOWN IN MILLIMETER AND ELEVATIONS ARE IN METERS.

| LOCATION OF SCUPPERS PIK–23–16641 | | | |
|---|---|---|---|
| LOCATION | STATION (METER) | SIDE | OFFSET |
| PARAPET | 3+641 | LT. | 6436 |
| MEDIAN | 3+641 | RT. | 6693 |
| PARAPET | 3+641 | RT. | 20 362 |
| PARAPET | 3+720 | LT. | 6436 |
| MEDIAN | 3+720 | RT. | 6693 |
| PARAPET | 3+720 | RT. | 20 362 |
| PARAPET | 3+885 | LT. | 6436 |
| MEDIAN | 3+885 | RT. | 6693 |
| PARAPET | 3+885 | RT. | 20 362 |
| PARAPET | 3+837 | LT. | 6436 |
| MEDIAN | 3+837 | RT. | 6693 |
| PARAPET | 3+837 | RT. | 20 362 |
| PARAPET | 3+777 | LT. | 6436 |
| MEDIAN | 3+777 | RT. | 6693 |
| PARAPET | 3+777 | RT. | 20 362 |

DESIGN AGENCY: JONES–STUCKEY, LTD., INC. 1641 WEST FIFTH AVENUE
DATE: 2–28–95
REVIEWED: D.W.J.
DRAWN: J.M.P.
DESIGNED: G.G.N.
SUPERSTRUCTURE DETAILS
BRIDGE NO. PIK-23-1034L&R OVER BEE BEE CREEK
PIK-23-15.707/ 16.625 / 17.477
14/17
89/117

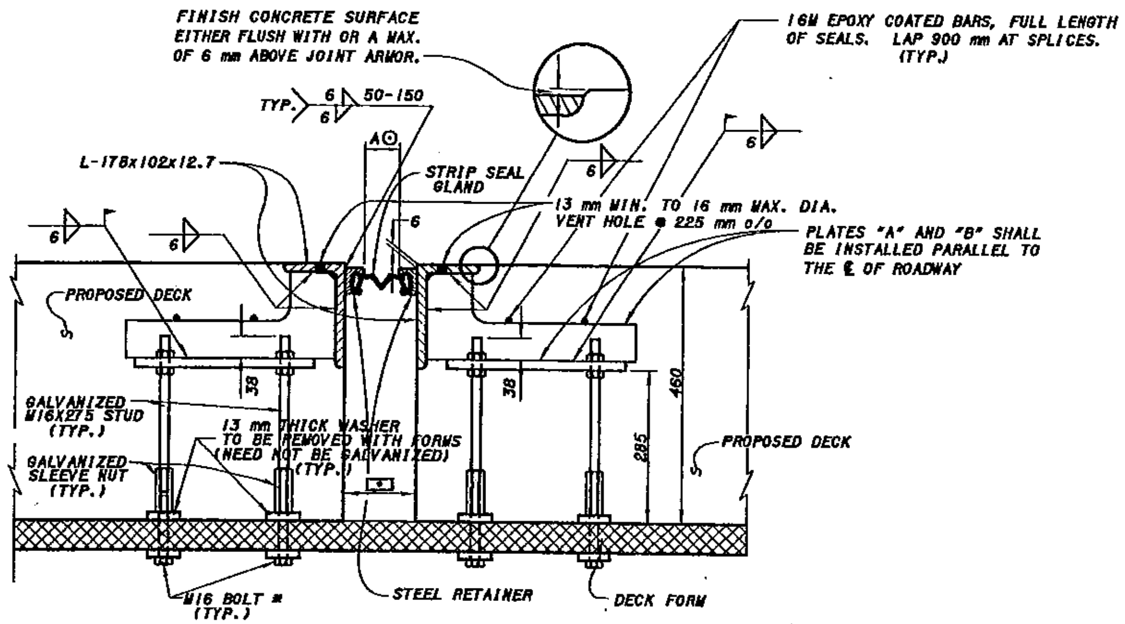


## INTERMEDIATE EXPANSION JOINT DETAIL

NOTE: THE JOINT ASSEMBLY SHALL BE PLACED SO THAT THE 178x102x12.7 ANGLES REMAIN PARALLEL TO EACH OTHER AND PERPENDICULAR TO THE ROADWAY GRADIENT.

⊙ - DIMENSION "A" SHALL BE DETERMINED FROM TABLE 1-1.

[•] - THIS DIM. IS THE SUM OF (2 X RETAINER WIDTH + DIM. "A")

* - LENGTH TO BE DETERMINED BY THE CONTRACTOR

SEE STD. DWG. EXJ-6-95M FOR NOTES AND DETAILS NOT SHOWN

### TABLE 1-1

| TEMPERATURE (°C) | REQUIRED JOINT OPENING (mm) |
|---|---|
| 0 | 51 |
| 5 | 45 |
| 10 | 42 |
| 15 | 38 |
| 20 | 33 |
| 25 | 28 |
| 30 | 24 |
| 35 | 20 |

DESIGNED GEC | DRAWN GEC | REVIEWED LAW | DATE 1/14/98
CHECKED LAW | REVISED | STRUCTURE FILE NUMBER 6600425 (L) 6600484 (R)

DESIGN AGENCY
STATE OF OHIO
DEPARTMENT OF TRANSPORTATION
DISTRICT 9

# INTERMEDIATE EXPANSION JOINT DETAILS

BRIDGE NO. PIK-23-1034 L&R
OVER PEE PEE CREEK

PIK-23-15.707/16.625/17.477

14A/17

89A/117

Drawing : k:\project\23p15707\042supsl.dgn Plotted by: goochena 23-JAN-98 13:51

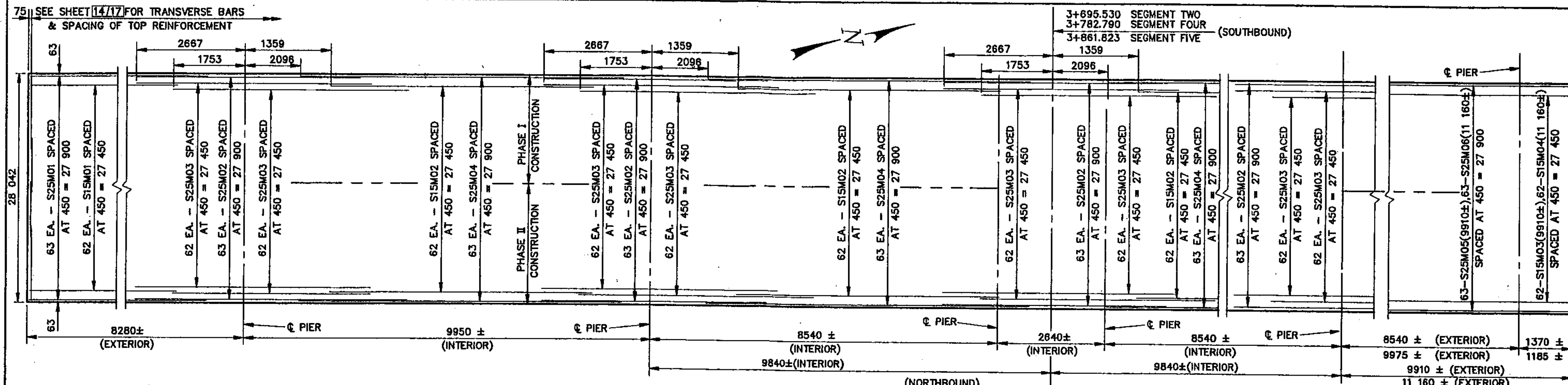


* 34–S15M06 LAP WITH 34–S15M07 SPACED AT 230(–)(8540 ±)
40–S15M06 LAP WITH 40–S15M07 SPACED AT 230(–)(9975 ±)
(PHASE I CONSTRUCTION)

** 4–S15M06 LAP WITH 4–S15M07 SPACED AT 230(–)(1370 ±)
3–S15M06 LAP WITH 3–S15M07 SPACED AT 230(–)(1185 ±)
(PHASE I CONSTRUCTION)

## STEEL IN TOP OF SLAB

SEGMENT NO.'S 1,2,4 & 5
REINFORCING STEEL SHOWN REPRESENTS RELATED EXTERIOR AND INTERIOR SPANS FOR EACH SEGMENT. SEE GENERAL PLAN FOR MORE DETAILS.

ALL DIMENSIONS ARE IN MILLIMETERS

*** 34–S15M06 LAP WITH 34–S15M08 SPACED AT 230(–)(8540 ±)
40–S15M06 LAP WITH 40–S15M08 SPACED AT 230(–)(9975 ±)
(PHASE II CONSTRUCTION)

**** 4–S15M06 LAP WITH 4–S15M08 SPACED AT 230(–)(1370 ±)
3–S15M06 LAP WITH 3–S15M08 SPACED AT 230(–)(1185 ±)
(PHASE II CONSTRUCTION)

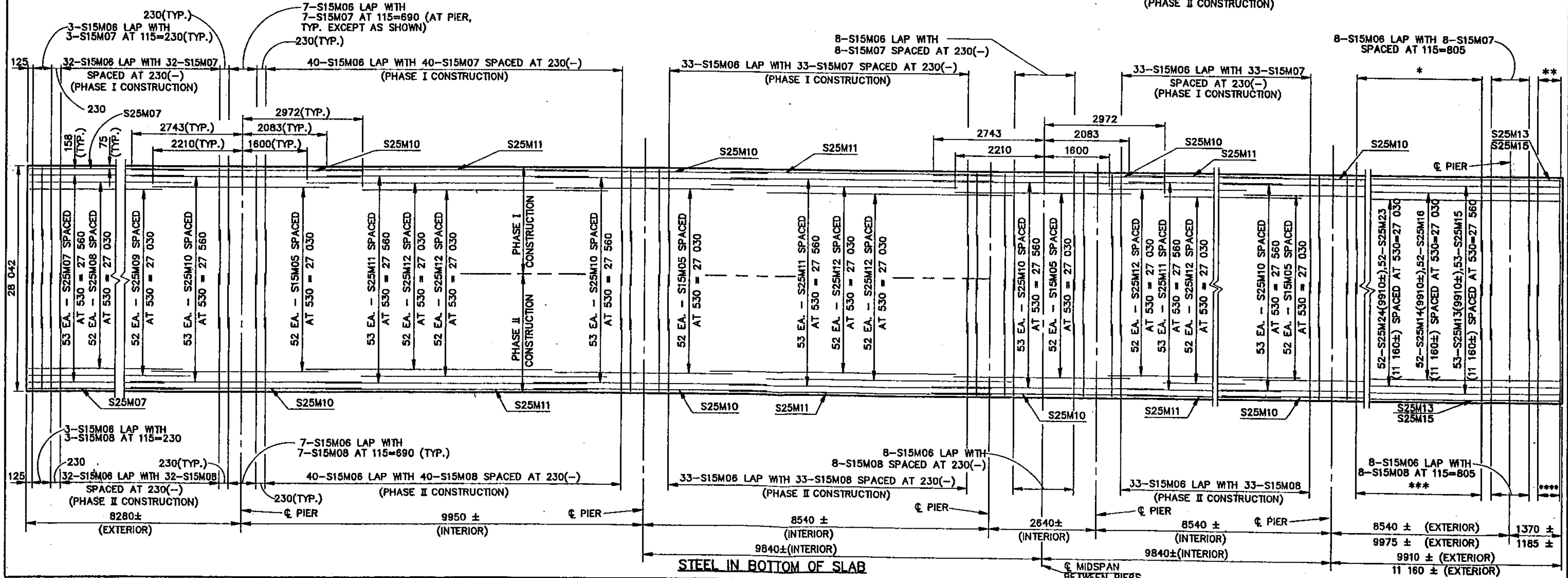


## STEEL IN BOTTOM OF SLAB

JONES-STUCKEY, LTD., INC.
1641 WEST FIFTH AVENUE

D.W.J. 2-28-95
8600425(L)

SUPERSTRUCTURE DETAIL
BRIDGE NO. PIK-23-1034L&R

PIK-23-15.707/16.625/17.477

15/17

90/117

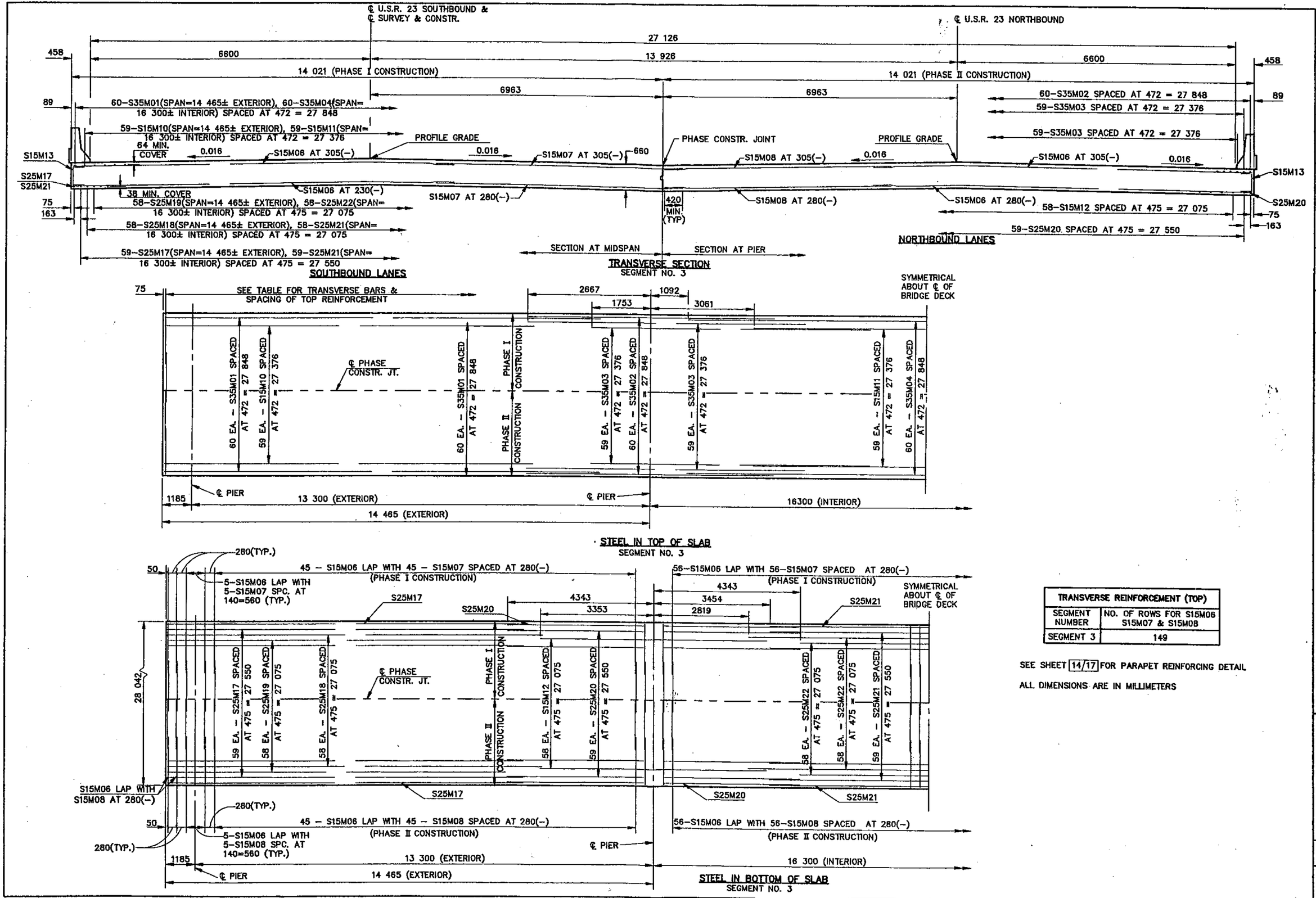


| TRANSVERSE REINFORCEMENT (TOP) | |
|---|---|
| SEGMENT NUMBER | NO. OF ROWS FOR S15M06 S15M07 & S15M08 |
| SEGMENT 3 | 149 |

SEE SHEET 14/17 FOR PARAPET REINFORCING DETAIL

ALL DIMENSIONS ARE IN MILLIMETERS

DESIGN AGENCY
JONES-STUCKEY, LTD., INC.
1641 WEST FIFTH AVENUE

| REVISED | DATE |
|---|---|
| D.W.J. | 2-28-95 |

| DRAWN | REVISED |
|---|---|
| J.W.E. | |

| DESIGNED | CHECKED |
|---|---|
| G.G.N. | |

SUPERSTRUCTRE DETAIL
BRIDGE NO. PIK-23-1034L&R

PIK-23-15.707/
16.625 / 17.477

16 / 17

91
117

Apr 25, 1995 - 12:59:33 DWG Name: G:\ACAD\2804\043SUPS3.DWG Updated By: Janet Palmer