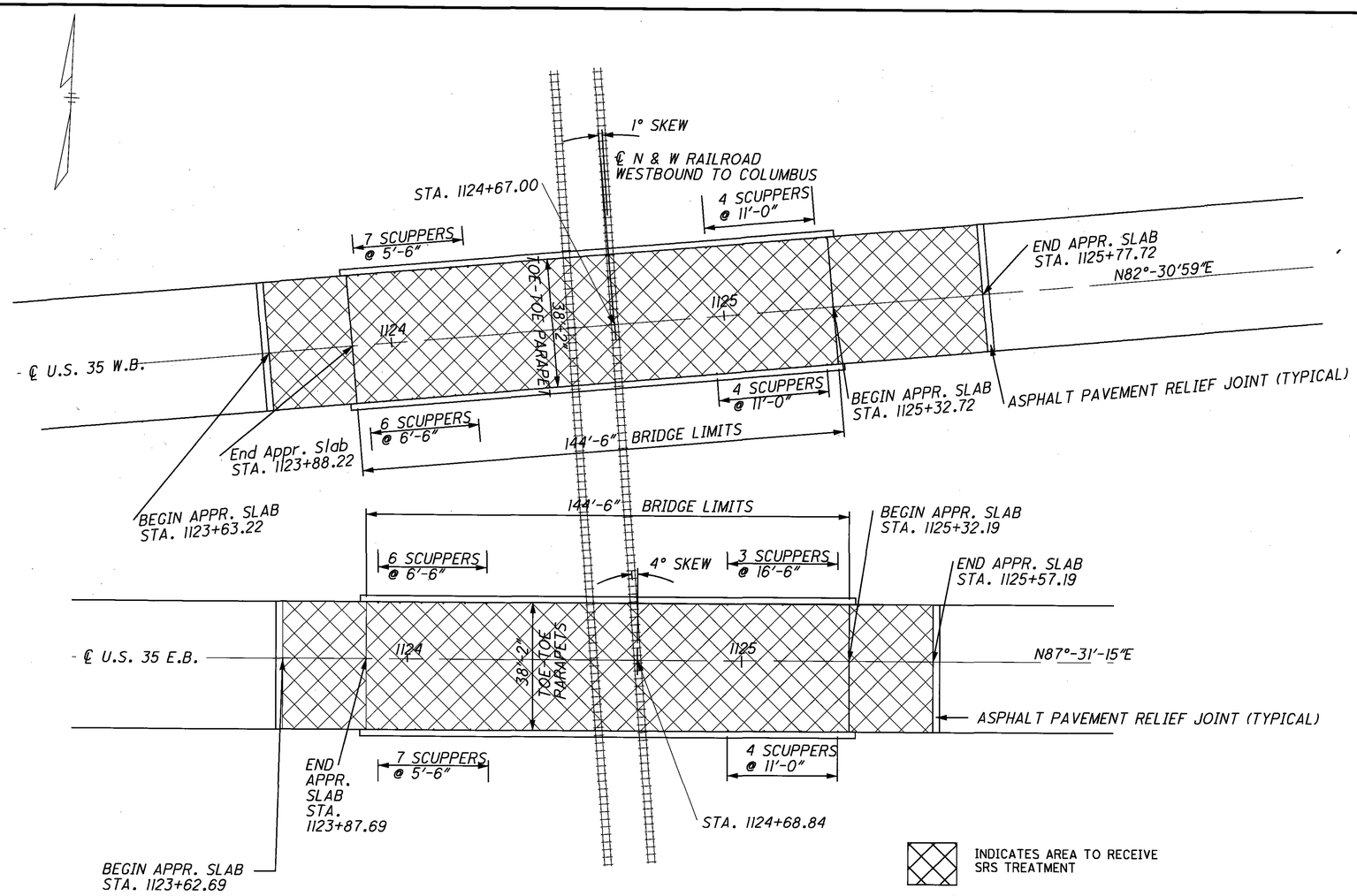

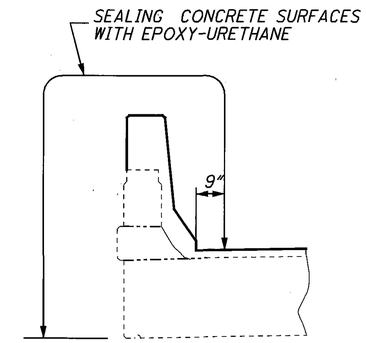

EXISTING STRUCTURE

TYPE: Continuous Concrete Slab with Concrete Substrate Separate Structures.

SPANS: 44'-0" - 55'-0" - 44'-0"

ROADWAY: 38'-2" TOE-TOE PARAPETS

LOADING: CF-400 (57)

SKEW: 1°-00'-16" L.F. LEFT BRIDGE
4°-00'-00" R.F. RIGHT BRIDGE

APPROACH SLABS: AS-1-54, 25'-0" Long.

ALIGNMENT: Tangent

CROWN: 3/16" per ft. from ℄

STRUCTURAL FILE NUMBER: 7102100 (R) & 7102135 (L)

DATE BUILT: 1964 REPAIRED: 1994

WEARING SURFACE: 4½" MSC Using High Performance Concrete

PROPOSED WORK

SEAL CONCRETE BRIDGE DECK AND APPROACH SLABS WITH SRS

SEAL PARAPETS WITH EPOXY-URETHANE SEALER

ESTIMATED QUANTITIES

ITEM	ITEM EXT.	TOTAL	UNIT	DESCRIPTION	GENERAL	SUPERSTRUCTURE	PARAPETS	SEE SHEET NO.
512	10100	750	SQ YD	SEALING CONCRETE SURFACES WITH EPOXY-URETHANE*			750	
512	10400	1757	SQ YD	TREATING OF CONCRETE BRIDGE DECK WITH SRS	531	1226		

* LIGHT NEUTRAL (FEDERAL COLOR NO. 17778)

DESIGN AGENCY: STATE OF OHIO DEPARTMENT OF TRANSPORTATION DISTRICT 9 PRODUCTION

DESIGNED	DRAWN	REVIEWED	DATE
JLP	JLP	LAW	10/23/06
CHECKED	REVISED	STRUCTURE FILE NUMBER	
GEC		7102100(R) & 7102135(L)	

SITE PLAN
ROS-35-2014 L&R
OVER NORKOLK SOUTHERN CORPORATION

ROS-23-17.03
ROS-35-18.11

1 / 1

138 / 139

I:\project\35r1851\2014L&R\Site.dgn 26-OCT-2006 12:16PM jphilli6