STATE OF OHIO
DEPARTMENT OF TRANSPORTATION
CUY-71-10.44
GREATER CLEVELAND RAPID TRANSIT AUTHORITY
CONSOLIDATED RAILROAD

MICROFILMED
AUG 11 1999

CITY OF CLEVELAND
CITY OF BROOKLYN
CITY OF BROOKPARK
VILLAGE OF LINNDALE
CUYAHOGA COUNTY

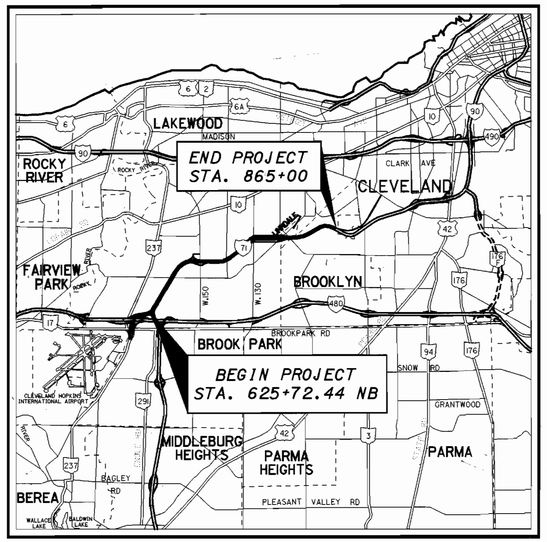

LOCATION MAP

LATITUDE: N 41°-26'-20" LONGITUDE: W 81°-47'-38"

SCALE IN MILES 0 1 2 3

PORTION TO BE IMPROVED
STATE & FEDERAL ROUTES
OTHER ROADS

DESIGN DESIGNATION

CURRENT ADT (1997)	100950
DESIGN YEAR ADT (2017)	105440
DESIGN HOURLY VOLUME (2017)	10544
DIRECTIONAL DISTRIBUTION	72%
TRUCKS (24 HOUR B&C)	7%
DESIGN SPEED	60 MPH
LEGAL SPEED	60 MPH

DESIGN FUNCTIONAL CLASSIFICATION - URBAN INTERSTATE

DESIGN EXCEPTIONS: NONE

STRUCTURE PLANS PREPARED BY:

FINKBEINER, PETTIS & STROUT, INC.
Consulting Engineers

STATE OF OHIO ROBERT A. HOCHEVAR 51352 REGISTERED PROFESSIONAL ENGINEER

ROADWAY PLANS PREPARED BY:

OHIO DEPARTMENT OF TRANSPORTATION
DISTRICT 12
LOCATION & DESIGN

STATE OF OHIO ERIC N. FORSBERG 41317 REGISTERED PROFESSIONAL ENGINEER

INDEX OF SHEETS:

TITLE SHEET	1
SCHEMATIC PLAN	2-4
TYPICAL SECTIONS	5-12
GENERAL NOTES	13-17, 17A
MAINTENANCE OF TRAFFIC	18-23,23A-D,24-37,37A-B,38-52
GENERAL SUMMARY	57-60
CALCULATIONS & SUB-SUMMARIES	61-73,73A-E
SHEET INDEX SCHEMATIC PLAN	73C-D
PLAN SHEETS	74-90
BRIDGE PLAN & PROFILE SHEETS	91-95
PAVEMENT DETAILS	96-97
APPROACH SLAB DETAILS	98-112
BARRIER & GUARDRAIL DETAILS	113-130
DRAINAGE PLAN SHEETS	131-147
STORM SEWER PROFILES	148-153
DRAINAGE DETAILS	155-164
TRAFFIC CONTROL	167-207
LIGHTING	208-218
STRUCTURES	219,220,220A,221-321
SHEETS NOT USED	53-56,154,165-166,196,280

PROJECT DESCRIPTION:

THIS PROJECT INVOLVES THE UPGRADING OF IR-71 FROM BROOKPARK RD. IN THE CITY OF BROOKPARK TO ONE HALF MILE SOUTH OF RIDGE ROAD. MAJOR WORK ITEMS INCLUDE PAVEMENT REPAIR, DRAINAGE UPGRADING, ASPHALT CONCRETE OVERLAY, STRUCTURE REHABILITATION, SIGNING AND PAVEMENT MARKINGS.

LIMITED ACCESS

THIS IMPROVEMENT IS ESPECIALLY DESIGNED FOR THROUGH TRAFFIC AND HAS BEEN DECLARED A LIMITED ACCESS HIGHWAY OR FREEWAY BY ACTION OF THE DIRECTOR IN ACCORDANCE WITH THE PROVISIONS OF SECTION 5511.02 OF THE REVISED CODE OF OHIO.

1997 SPECIFICATIONS

THE STANDARD SPECIFICATIONS OF THE STATE OF OHIO, DEPARTMENT OF TRANSPORTATION, INCLUDING CHANGES AND SUPPLEMENTAL SPECIFICATIONS LISTED IN THE PROPOSAL SHALL GOVERN THIS IMPROVEMENT.

I HEREBY APPROVE THESE PLANS AND DECLARE THAT THE MAKING OF THIS IMPROVEMENT WILL NOT REQUIRE THE CLOSING TO TRAFFIC OF THE HIGHWAY AND THAT PROVISIONS FOR THE MAINTENANCE AND SAFETY OF TRAFFIC WILL BE AS SET FORTH IN THE PLANS AND ESTIMATES.

UNDER AUTHORITY OF SECTION 4511.21, DIVISION (I) OF THE REVISED CODE OF OHIO, THE REVISED PRIMA FACIE SPEED LIMITS AS INDICATED HEREIN ARE DETERMINED TO BE REASONABLE AND SAFE, AND ARE HEREBY ESTABLISHED FOR THE DURATION OF THIS PROJECT. THE PRIMA FACIE SPEED LIMIT OR LIMITS HEREBY ESTABLISHED SHALL BECOME EFFECTIVE WHEN APPROPRIATE SIGNS GIVING NOTICE THEREOF ARE ERECTED.

APPROVED David J. Coyle for
DATE 12-29-97 DISTRICT DEPUTY DIRECTOR

APPROVED Gary Jenkins
DATE 1-22-98 DIRECTOR, DEPARTMENT OF TRANSPORTATION

STANDARD CONSTRUCTION DRAWINGS

												SUPPLEMENTAL SPECIFICATIONS	
BP-2.1M	4-8-97	GR-4.1	5-6-91	HL-20.11	5-1-87	TC-18.26	5-31-79	TC-42.10	8-19-77	MT-98.13	6-24-93	815	5-30-96
BP-2.2M	4-8-97	GR-4.2M	4-21-95	HL-20.13	5-1-87	TC-21.10	9-1-92	TC-42.20	3-26-79	MT-98.14	6-24-93	816	4-21-97
BP-2.4	2-21-92			HL-20.14	5-1-87	TC-21.20	9-1-92	TC-51.11	9-30-94	MT-98.15	6-24-93	863	9-9-97
BP-2.5M	4-8-97	MC-7	10-15-76	HL-20.15	5-1-87	TC-21.40	9-1-92	TC-51.12	1-3-94	MT-98.16	6-24-93	910	4-21-97
BP-3.1M	2-21-92	MC-9.2	5-6-91	HL-30.11	5-1-87	TC-22.20	9-1-92	TC-52.10	4-3-79	MT-99.20	4-29-88		
BP-5.1	10-28-94	MC-9.3	10-30-92	HL-30.31	5-1-87			TC-52.20	4-3-79	MT-102.10	8-25-89		
		MC-9.4	10-30-92	HL-30.32	5-1-87	TC-31.21	9-1-92			MT-102.20	8-25-89		
GR-1.1M	11-30-94			HL-30.33	5-1-87	TC-32.10	9-1-92	TC-65.10	7-7-95	MT-105.10	7-1-92		
GR-1.2M	1-3-96	CB-2.2M	7-12-95			TC-32.11	9-1-92	TC-65.11	7-7-95	MT-105.11	7-1-92		
GR-1.3	2-21-92	HW-2.1M	7-12-95	HL-50.21	5-1-87	TC-35.10	8-29-84	TC-71.10	9-10-91				
GR-2.1	5-6-91	HW-2.2M	7-12-95	HL-60.11	5-1-87			TC-72.20	2-26-82	A-1-69	6-12-69		
GR-3.1	5-6-91	I-1.2M	9-6-95	HL-60.12	5-1-87	TC-41.10	8-29-84	TC-82.10	8-29-84	AS-1-81	9-15-94		
GR-3.2	5-6-91	I-2.1M	4-8-97			TC-41.20	6-21-94	MT-95.30	10-10-88	EXJ-4-87	2-14-97		
		I-2.2M	9-6-95	TC-7.65	3-1-97	TC-41.40	6-18-79	MT-95.32	8-25-89	GSD-1-96	2-12-97		
		DM-1.1M	6-30-95	TC-12.30	1-20-84	TC-41.50	6-21-94	MT-95.40	10-1-92	PCB-91	4-24-92		
		DM-4.3M	6-30-95	TC-18.24	4-25-79			MT-97.10	4-29-88				

UNDERGROUND UTILITIES
TWO WORKING DAYS BEFORE YOU DIG
CALL 1-800-362-2764 (TOLL FREE)
OHIO UTILITIES PROTECTION SERVICE
NON-MEMBERS
MUST BE CALLED DIRECTLY

FEDERAL PROJECT NO. IM-71-5(83)
PID NO. 13002
CONSTRUCTION PROJECT NO.
RAILROAD INVOLVMENT
CONRAIL R.R. AND THE GREATER CLEVLAND REGIONAL TRANSIT AUTHORITY
CUYAHOGA COUNTY
CUY-71-10.44

PLOT SUBMITTED: 26-DEC-1997 07:03
CUY-71-10.44 980194 4-15-98
321PGS DIST. 12
PLOTTED BY: ekallo
PLOTTED FROM: i:\users\ddougher\pid13002\13002gta.dgn

PLOT SUBMITTED: 23-DEC-1997 14:44
13002GSB.DGN
PLOTTED BY: ekallio
PLOTTED FROM: i:\users\ddougher\pid13002\13002gsb.dgn

⑧ ℄ AIRPORT FREEWAY CURVE DATA

P.C.	= STA. 631+61.88	R	= 12277.67′
P.T.	= STA. 639+79.02	T	= 408.72′
P.I.	= STA. 635+70.60	L	= 817.14′
Δc	= 3°-48′-48″ LT	E	= 6.80′
Dc	= 0°-28′-00″		

⑨ ℄ IR-71 S.B. CURVE DATA

T.S.	= STA. 631+32.01	Ls	= 150.00′
S.C.	= STA. 632+82.01	θs	= 1°-30′-00″
P.T.	= STA. 637+94.18	LT	= 100.00′
P.I.	= STA. 635+38.78	ST	= 50.00′
Δc	= 10°-14′-36″ LT	Lc	= 512.17
Dc	= 2°-00′-00″	T	= 256.77′
R	= 2864.79′	E	= 11.48′

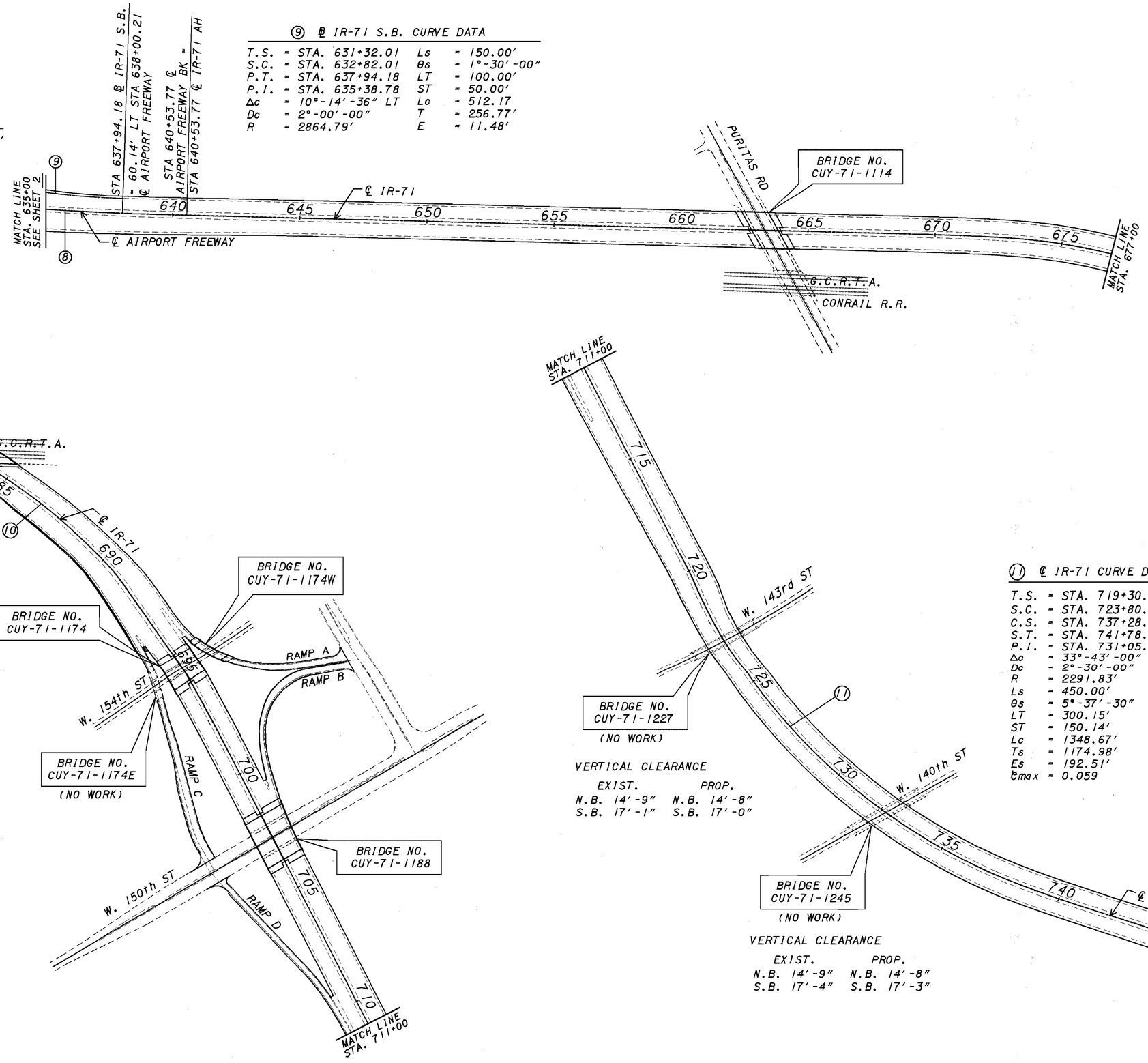

⑩ ℄ IR-71 CURVE DATA

T.S.	= STA. 669+69.92
S.C.	= STA. 674+19.92
C.S.	= STA. 694+18.70
S.T.	= STA. 698+68.70
P.I.	= STA. 685+52.93
Δc	= 49°-58′-10″ RT
Dc	= 2°-30′-00″
R	= 2,291.83′
Ls	= 450.00′
θs	= 5°-37′-30″
LT	= 300.15′
ST	= 150.14′
Lc	= 1998.78′
Ts	= 1583.01′
Es	= 375.33′
℄max	= 0.059

VERTICAL CLEARANCE

EXIST.		PROP.	
N.B.	14′-9″	N.B.	14′-8″
S.B.	17′-1″	S.B.	17′-0″

⑪ ℄ IR-71 CURVE DATA

T.S.	= STA. 719+30.30
S.C.	= STA. 723+80.30
C.S.	= STA. 737+28.97
S.T.	= STA. 741+78.97
P.I.	= STA. 731+05.28
Δc	= 33°-43′-00″ LT
Dc	= 2°-30′-00″
R	= 2291.83′
Ls	= 450.00′
θs	= 5°-37′-30″
LT	= 300.15′
ST	= 150.14′
Lc	= 1348.67′
Ts	= 1174.98′
Es	= 192.51′
℄max	= 0.059

VERTICAL CLEARANCE

EXIST.		PROP.	
N.B.	14′-9″	N.B.	14′-8″
S.B.	17′-4″	S.B.	17′-3″

SCALE IN FEET 0 200 400

DRAWN	REVISED
FLK	
CALCULATED	CHECKED
EMK	ENF

SCHEMATIC PLAN

CUYAHOGA COUNTY
CUY-71-10.44

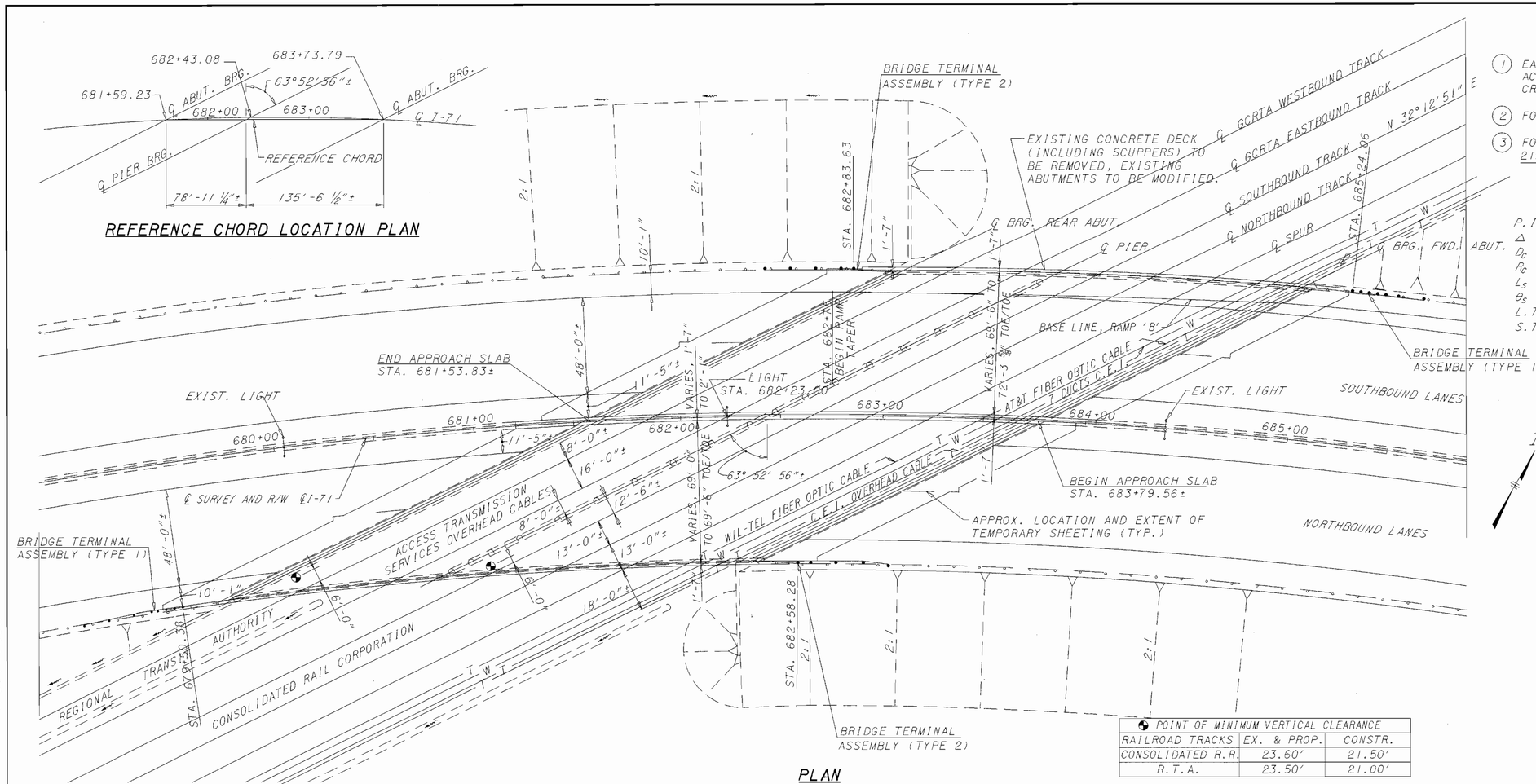

PLAN

POINT OF MINIMUM VERTICAL CLEARANCE		
RAILROAD TRACKS	EX. & PROP.	CONSTR.
CONSOLIDATED R.R.	23.60'	21.50'
R.T.A.	23.50'	21.00'

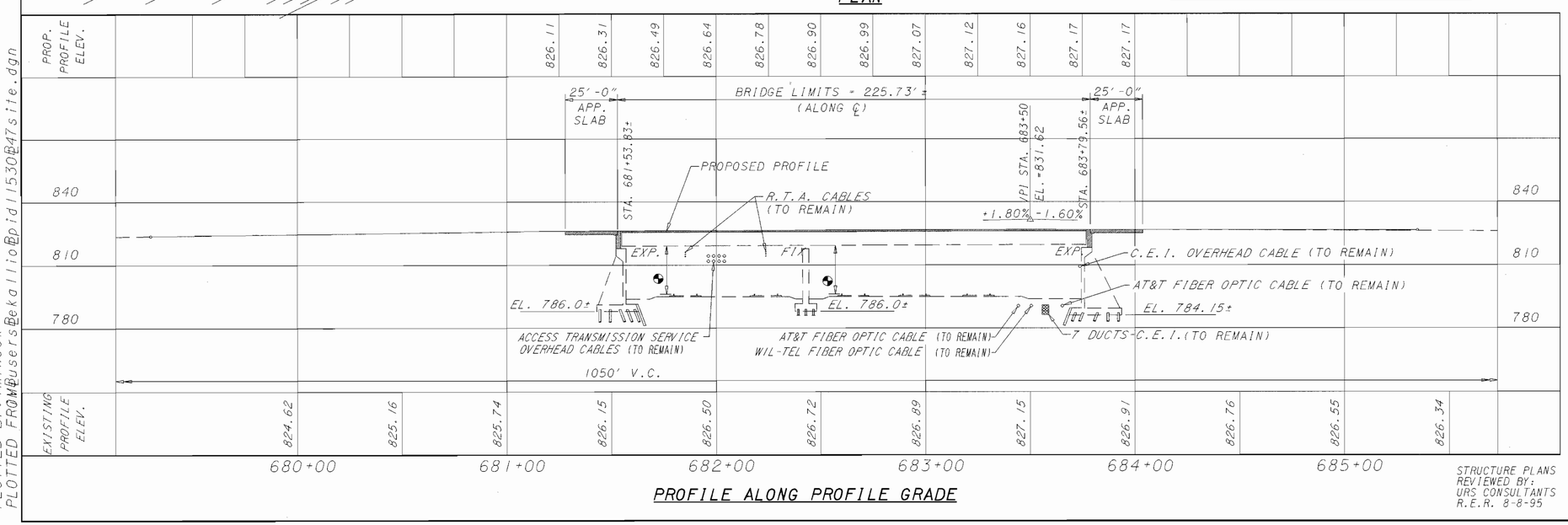

PROFILE ALONG PROFILE GRADE

STRUCTURE PLANS REVIEWED BY: URS CONSULTANTS R.E.R. 8-8-95

NOTES

1. EARTHWORK LIMITS SHOWN ARE APPROXIMATE. ACTUAL SLOPES SHALL CONFORM TO PLAN CROSS SECTIONS.
2. FOR SUPERELEVATION TABLE SEE SHEET 24/31.
3. FOR STRUCTURAL GENERAL NOTES SEE SHEET 219, 220 AND 220A

℄ I-71 CURVE DATA

P.I. =	685+52.93	L_C =	1,998.78'
Δ =	61° 13' 10" RT.	T_S =	1,583.01'
D_C =	2° 30' 00"	E_S =	375.33'
R_C =	2291.83'	e_{MAX} =	0.059 FT./FT.
L_S =	450.00'	T.S. =	STA. 669+69.92
θ_S =	5° 37' 30"	S.C. =	STA. 674+19.92
L.T. =	300.15'	C.S. =	STA. 694+18.70
S.T. =	150.14'	S.T. =	STA. 698+68.70

BENCHMARK NO. 10

SET P.K. IN FIRST POWER POLE NORTH OF I-71 BRIDGE, EAST SIDE OF CONRAIL TRACKS.

ELEV. = 792.76

DESIGN DESIGNATION

DESIGN ADT (2014): 112,820

ADTT (ONE DIRECTION): 4,740

EXISTING STRUCTURE

TYPE : CONTINUOUS STEEL BEAM WITH REINFORCED CONCRETE DECK AND SUBSTRUCTURE

SPANS : 78'-11 1/4"± AND 134'-6 1/2"± C/C BRGS. MEASURED ALONG REFERENCE CHORD

ROADWAY : 143'-9 3/8"± AVG. F/F PARAPETS

ALIGNMENT : 2° 30' 00"± CURVE RIGHT

SKEW : 63° 52' 56"± LEFT FORWARD WITH REFERENCE CHORD

WEARING SURFACE : LATEX MODIFIED CONCRETE

APPROACH SLABS : 25' LONG (AS-1-54)

BUILT : 1965

CONDITION : GOOD

STRUCTURE FILE NO. : 1804774

PROPOSED STRUCTURE

PROPOSED WORK: NEW COMPOSITE (POSITIVE AND NEGATIVE MOMENT REGIONS) CONCRETE DECK ON EXIST. CONTINUOUS STEEL BEAMS SUPPORTED ON MODIFIED CONCRETE ABUTMENTS AND CONCRETE PIERS.

SPANS : 78'-11 1/4"± AND 134'-6 1/2"± C/C BRGS. MEASURED ALONG REFERENCE CHORD

ROADWAY: VARIES, 69'-0" TO 69'-6" TOE/TOE PARAPET (RIGHT)
VARIES 69'-6" TO 73'-10 5/8" TOE/TOE PARAPET (LEFT)

ALIGNMENT : 2° 30' 00"± CURVE RIGHT

SKEW : 63°52'56"± LEFT FORWARD WITH REFERENCE CHORD

WEARING SURFACE : MONOLITHIC CONCRETE

APPROACH SLABS : 25'-0" (AS-1-81, AS PER PLAN)

LOADING: HS20-44 (CASE I) & ALTERNATE MILITARY LOADING

SUPERELEVATION: 0.059'/FT.

LONGITUDE: 81° 48' 30"

LATITUDE: 41° 26' 15"

DESIGN AGENCY: FINKBEINER, PETTIS & STROUT, INC. 1725 MERRIMAN ROAD AKRON, OHIO 44313

DESIGNED	DRAWN	REVIEWED	DATE
R.B.B.	M.P.B.	R.A.H.	6/95
CHECKED	REVISED	STRUCTURE FILE NO.	
J.G.C.		1804774	

CUYAHOGA COUNTY STA. 681+53.83 STA. 683+79.56

SITE PLAN

BRIDGE NO. CUY-71-1147 OVER R.T.A. AND CONRAIL TRACKS

CUY-71-10.44

PLOT SUBMITTED: 19-DEC-1997 06:31
47SITE.DGN
PLOTTED BY: lmincek
PLOTTED FROM: Z:\users\bekallio\pid11530\47site.dgn
CAD FILE: 47SITE
DATE: 12/05/95
OPERATOR: R.E.R.
SCALE: 1-30

NOTES

1. ALL STRUCTURAL STEEL SHALL BE ASTM A36, EXCEPT AS NOTED.
2. FOR SECTIONS A–A THRU E–E SEE SHEET 20 / 31 .

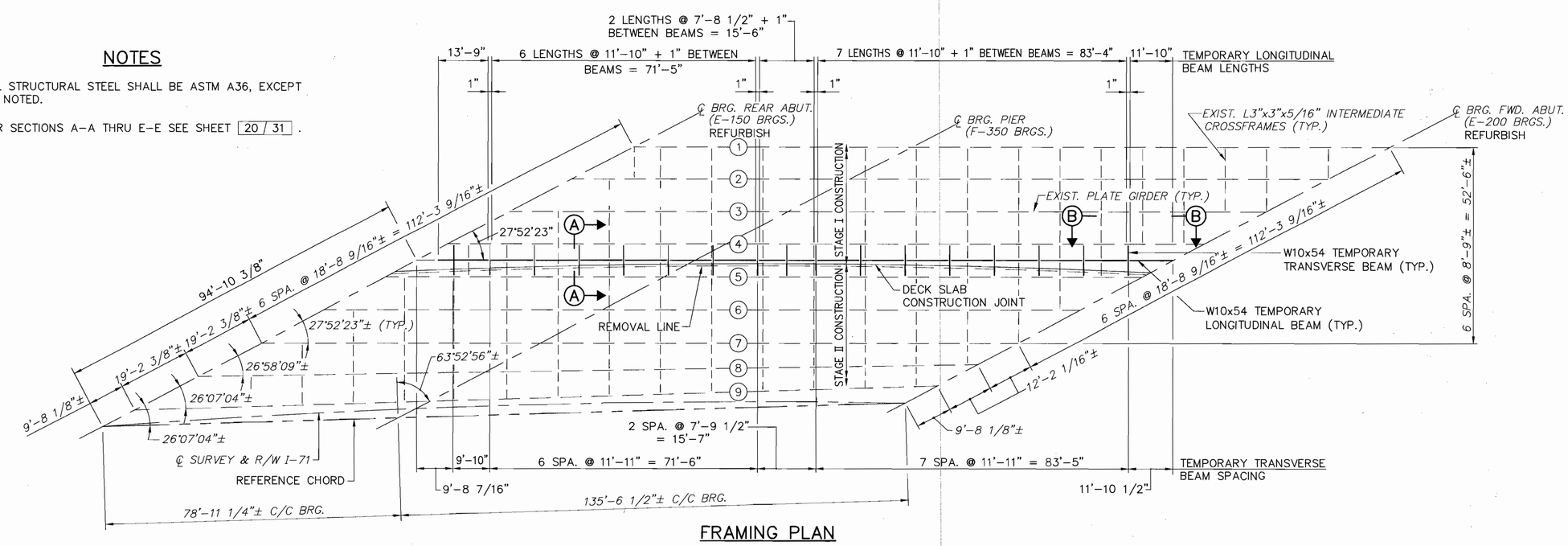

FRAMING PLAN
(LEFT HALF)

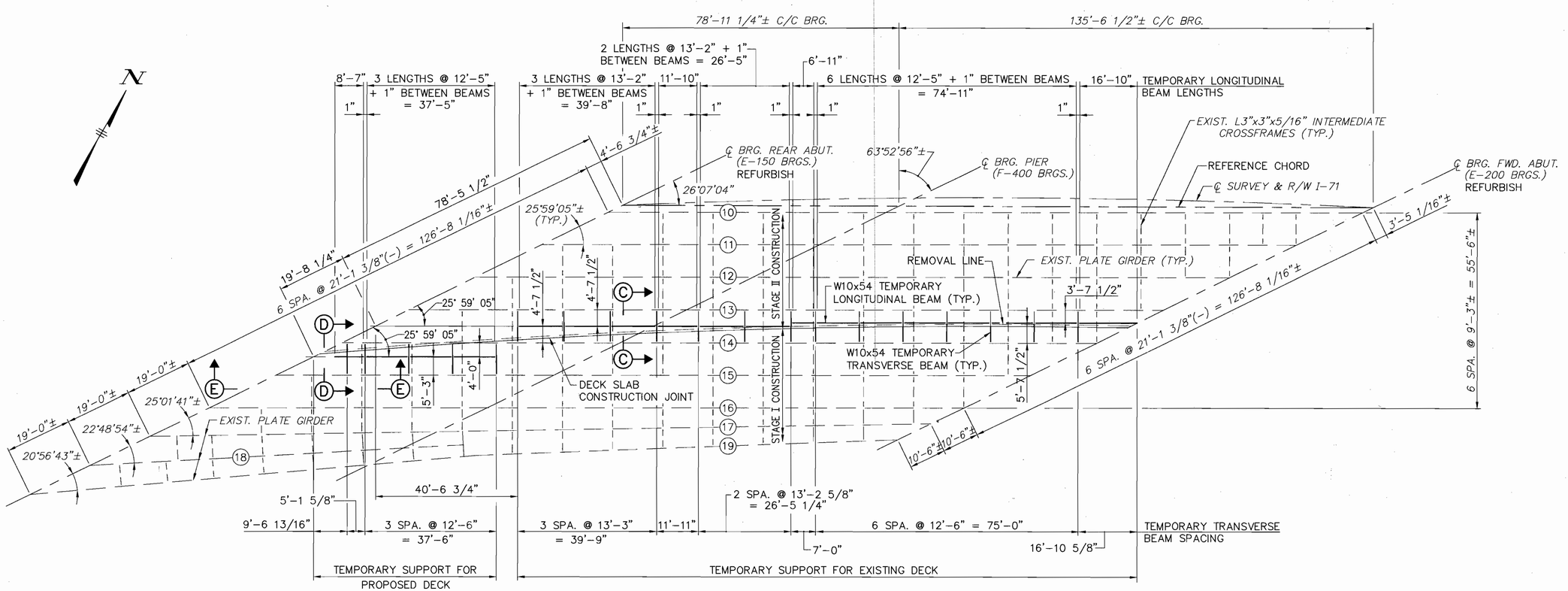

FRAMING PLAN
(RIGHT HALF)

CAD FILE: 475UP07T3
DATE: 7/06/95
OPERATOR: M.P.B.
SCALE: 1=16

DESIGNED R.B.B.	DRAWN M.P.B.	REVIEWED R.A.H.	DATE 6/95	DESIGN AGENCY FINKBEINER, PETTIS & STROUT, INC. 1725 MERRIMAN ROAD AKRON, OHIO 44313
CHECKED J.G.C.	REVISED	STRUCTURE FILE NO. 1804774		

TEMPORARY DECK SUPPORT DETAILS
BRIDGE NO. CUY-71-1147
OVER R.T.A. AND CONRAIL RAILROAD

CUY-71-10.44

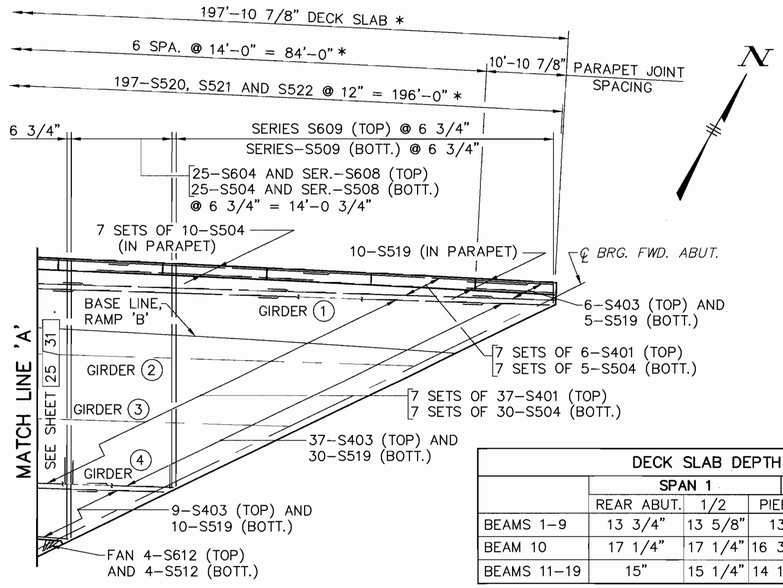

* DISTANCES MEASURED RADIALLY.

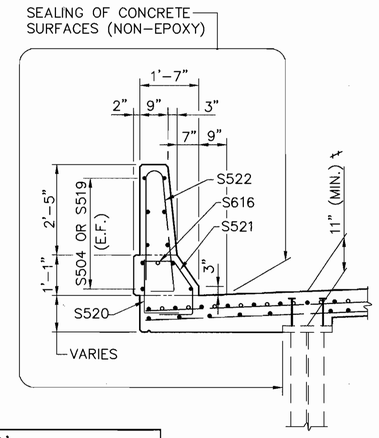

DETAIL A

(LEFT HALF SHOWN, RIGHT HALF SIMILAR)

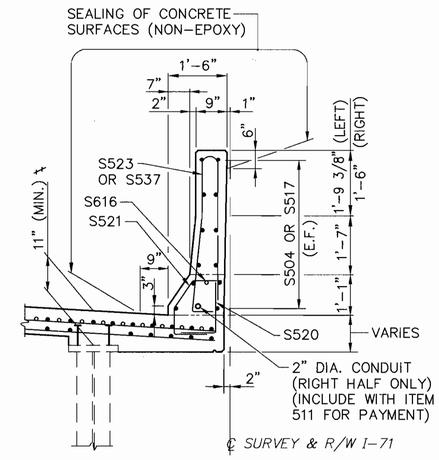

DETAIL B

(LEFT HALF SHOWN, RIGHT HALF SIMILAR)

⁎ MINIMUM DECK THICKNESS ABOVE FLANGE FOR BEAMS 1, 9, 10, AND 19.

DECK SLAB DEPTHS 'D'					
	SPAN 1			SPAN 2	
	REAR ABUT.	1/2	PIER 1	1/2	FWD. ABUT.
BEAMS 1-9	13 3/4"	13 5/8"	13"	13 1/2'	14 1/8"
BEAM 10	17 1/4"	17 1/4"	16 3/8"	18"	16 7/8"
BEAMS 11-19	15"	15 1/4"	14 1/8"	14 3/8"	14 3/8"

NOTE: FOR GIRDER NUMBERING SEE SHEET 19 / 31 .

NOTES

1. FOR ADDITIONAL SUPERSTRUCTURE DETAILS AND NOTES, SEE SHEET 25 / 31 .
2. DECK SLAB DEPTH: THE ANTICIPATED DECK SLAB DEPTHS, "D", OVER THE BEAMS ARE GIVEN IN THE TABLE OF DECK SLAB DEPTHS. THE DIMENSION "D" IS AN AVERAGE OF THE BEAMS FOR EACH LOCATION SHOWN. THE ACTUAL SLAB DEPTHS MAY BE MORE. THEY SHOULD NOT BE LESS THAN THE DECK SLAB THICKNESS, "T".

   AFTER COMPLETE REMOVAL OF THE EXISTING DECK SLAB, FOR EACH STAGE, THE CONTRACTOR SHALL DETERMINE, AT VARIOUS LOCATIONS ALONG THE SPANS, ACTUAL TOP OF BEAM ELEVATIONS. THESE SHOULD BE DEDUCTED FROM THE SCREED ELEVATIONS FOR THE SAME LOCATIONS (OR PROPOSED SCREED ELEVATIONS DETERMINED FROM ADJACENT SCREED ELEVATIONS) TO OBTAIN ACTUAL SLAB DEPTHS. FOR DEPTHS LESS THAN "T", THE DIRECTOR SHALL BE NOTIFIED TO ESTABLISH THE SUITABILITY OF THE PROPOSED WORK PRIOR TO DECK FORMING AND CONCRETE PLACEMENT.

   THE QUANTITY OF DECK CONCRETE TO BE PAID FOR SHALL BE BASED ON THE AVERAGE DECK SLAB DEPTH "D", 15 1/8" INCHES.

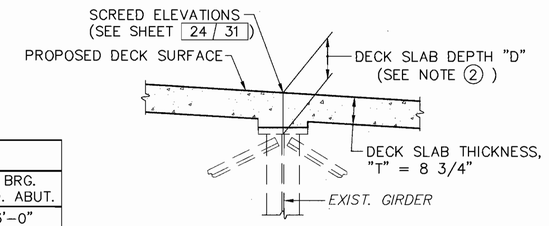

DECK SLAB DEPTH OVER GIRDERS

DECK SLAB OVERHANG DIMENSIONS													
DIMENSION	℄ BRG. REAR ABUT.	1/4	1/2	3/4	℄ PIER	1/8	1/4	3/8	1/2	5/8	3/4	7/8	℄ BRG. FWD. ABUT.
A	–	4'-5 5/8"	4'-6 3/4"	4'-7 1/4"	4'-7 1/8"	4'-6 1/2"	4'-5 1/4"	4'-3 5/8"	4'-1 1/2"	3'-10 7/8"	3'-7 3/4"	3'-4 1/8"	3'-0"
B	3'-8 3/8"	2'-11 1/4"	2'-4 1/8"	1'-11"	1'-8"	1'-7"	1'-7 1/2"	1'-9 1/2"	2'-1 1/8"	2'-6 1/8"	3'-0 5/8"	3'-8 5/8"	–
C	6'-10"	6'-2 3/4"	5'-9 1/4"	5'-5 1/2"	5'-3 5/8"	5'-3 3/8"	5'-4 3/8"	5'-6 3/4"	5'-10 1/2"	6'-3 1/2"	6'-9 7/8"	7'-5 1/2"	–

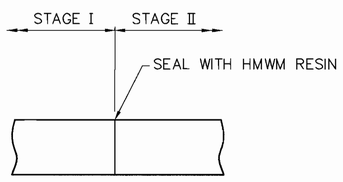

JOINT DETAIL

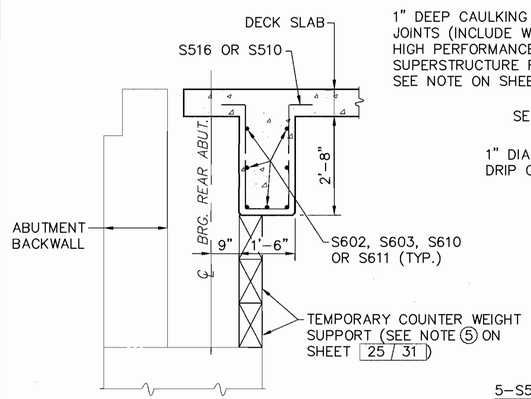

SECTION A-A

(UPLIFT COUNTER WEIGHT)

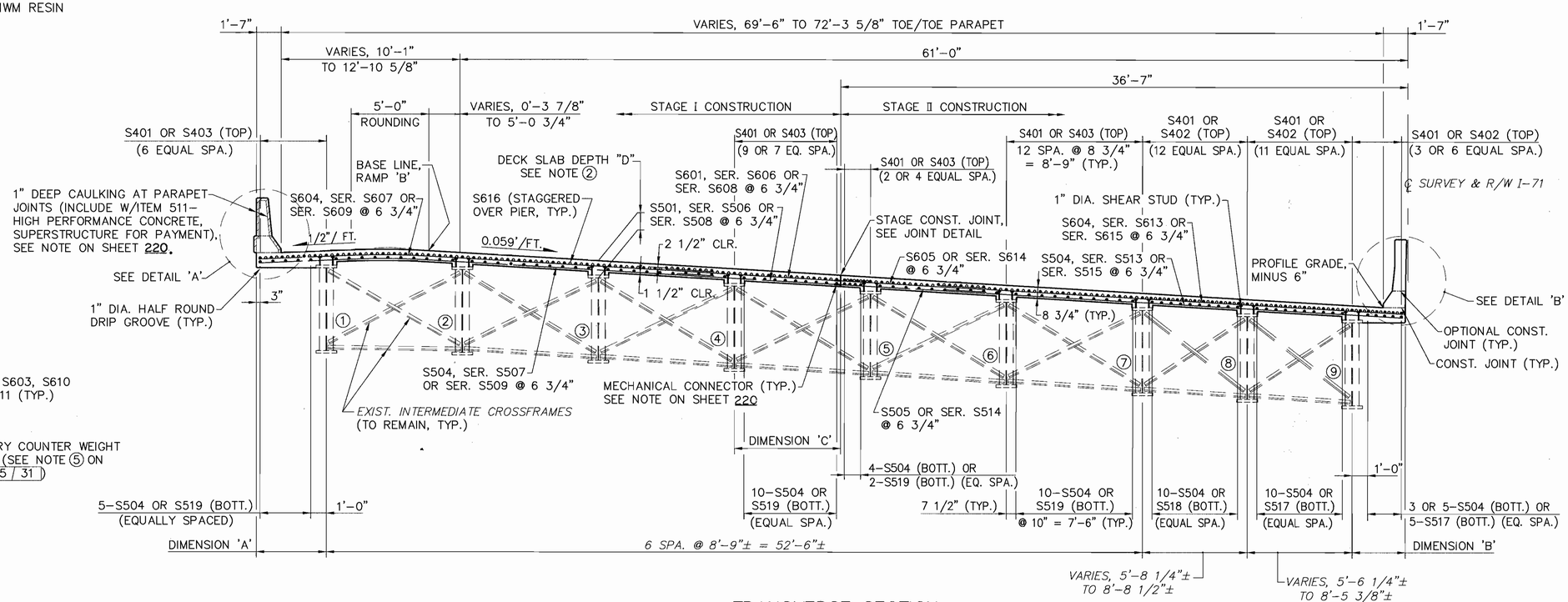

TRANSVERSE SECTION

CAD FILE: 47SLAB2
DATE: 7/06/95
OPERATOR: M.P.B.
SCALE: 1=10

DESIGN AGENCY
FINKBEINER, PETTIS & STROUT, INC.
1725 MERRIMAN ROAD
AKRON, OHIO 44313

DESIGNED	DRAWN	REVIEWED	DATE
R.B.B.	C.A.F.	R.A.H.	6/95
CHECKED	REVISED	STRUCTURE FILE NO.	
J.G.C.		1804774	

SLAB DETAILS (LEFT HALF)

BRIDGE NO. CUY-71-1147
OVER R.T.A. AND CONRAIL RAILROAD

CUY-71-10.44

DECK SLAB OVERHANG DIMENSIONS													
DIMENSION	℄ BRG. REAR ABUT.	1/4	1/2	3/4	℄ PIER	1/8	1/4	3/8	1/2	5/8	3/4	7/8	℄ BRG. FWD. ABUT.
D	4'-6 1/4"	3'-9 7/8"	3'-4 5/8"	3'-2 5/8"	3'-3 3/4"	3'-7 1/4"	3'-7 1/8"	3'-3"	3'-0 5/8"	3'-0 1/4"	3'-1 5/8"	3'-4 7/8"	–
E	–	2'-5 3/4"	3'-1 5/8"	3'-7 1/2"	3'-11 3/8"	4'-1"	4'-1"	3'-11 5/8"	3'-8 3/4"	3'-4 1/4"	2'-10 1/4"	2'-2 3/4"	1'-5 3/4"
F	–	–	–	1'-4 1/4"	2'-4 1/8"	3'-0 3/4"	3'-7 5/8"	4'-1 1/8"	4'-5"	4'-7 3/8"	4'-8 1/4"	4'-7 1/2"	4'-5 1/4"
G	–	6'-7 7/8"	8'-1 7/8"	–	–	–	–	–	–	–	–	–	–

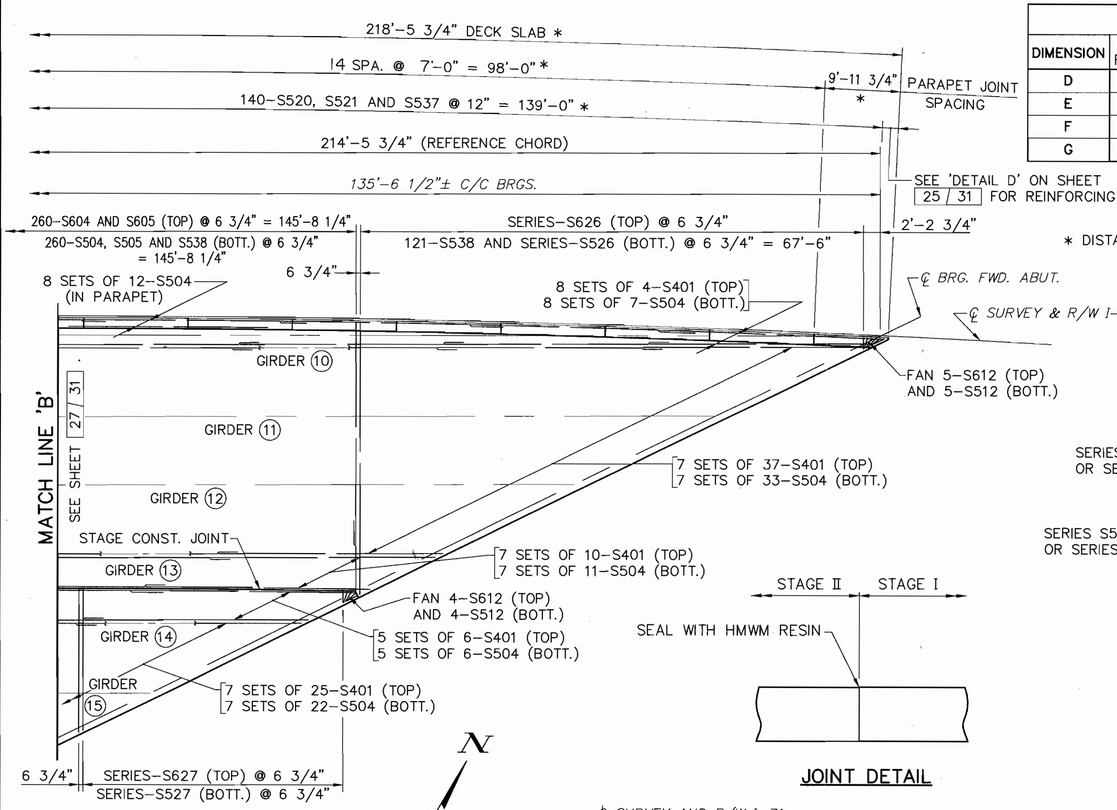

SLAB PLAN

* DISTANCES MEASURED RADIALLY.

NOTE

(1) FOR PARAPET DETAILS A AND B AND ADDITIONAL SUPERSTRUCTURE DETAILS AND NOTES SEE SHEET 26 / 31 .

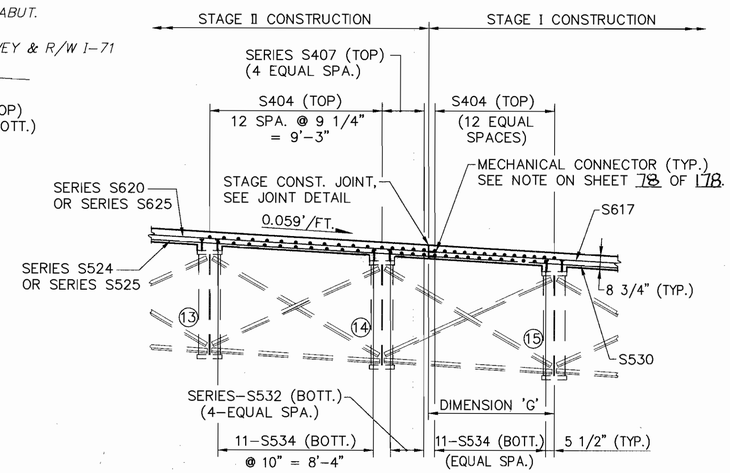

SECTION C-C

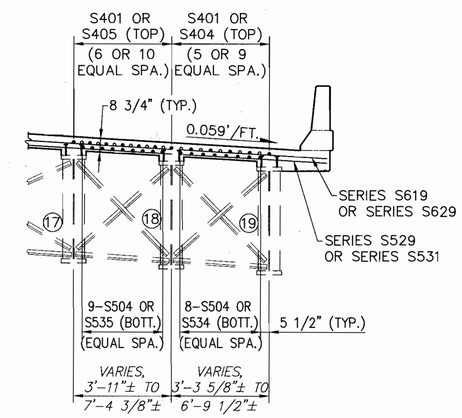

SECTION D-D

JOINT DETAIL

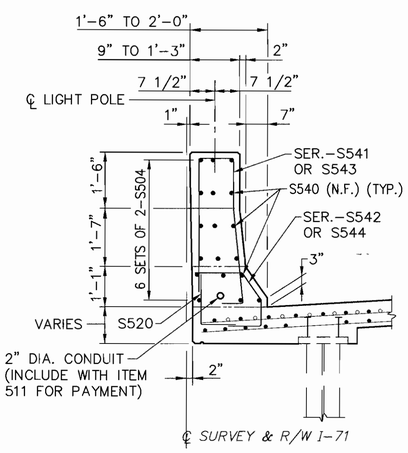

SECTION E-E

(FOR DETAILS NOT SHOWN SEE DETAIL B ON SHEET 26 / 31)

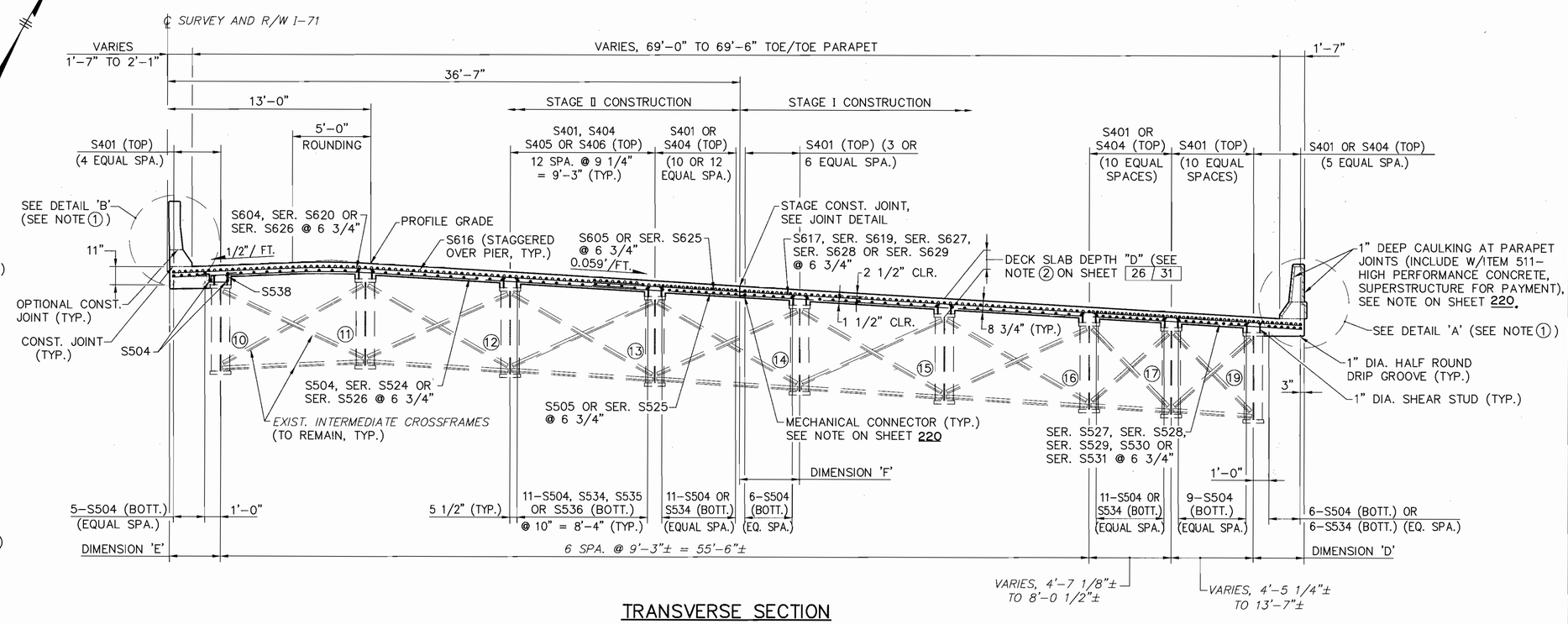

TRANSVERSE SECTION

CAD FILE: 47SLAB4
DATE: 7/06/95
OPERATOR: M.P.B.
SCALE: 1=10

DESIGN AGENCY
FINKBEINER, PETTIS & STROUT, INC.
1725 MERRIMAN ROAD
AKRON, OHIO 44313

DESIGNED	DRAWN	REVIEWED	DATE
R.B.B.	C.A.F.	R.A.H.	6/95
CHECKED	REVISED	STRUCTURE FILE NO.	
J.G.C.		1804774	

SLAB DETAILS (RIGHT HALF)

BRIDGE NO. CUY-71-1147
OVER R.T.A. AND CONRAIL RAILROAD

CUY-71-10.44