FHWA REGION	STATE	PROJECT	
5	OHIO		

27
39

CUYAHOGA COUNTY
CUY-87-16.44

CURVE DATA
P.I. Sta. 0+98.81
D = 5°30'04.4"
R = 1041.51'
Δ = 10°50'22.2"
L = 197.04'
T = 98.81'

CURVE DATA
P.I. Sta. 4+77.11
Dc = 33°05'21.1"
R = 173.16'
Δ = 49°32'16.2"
L = 149.71'
T = 79.89'

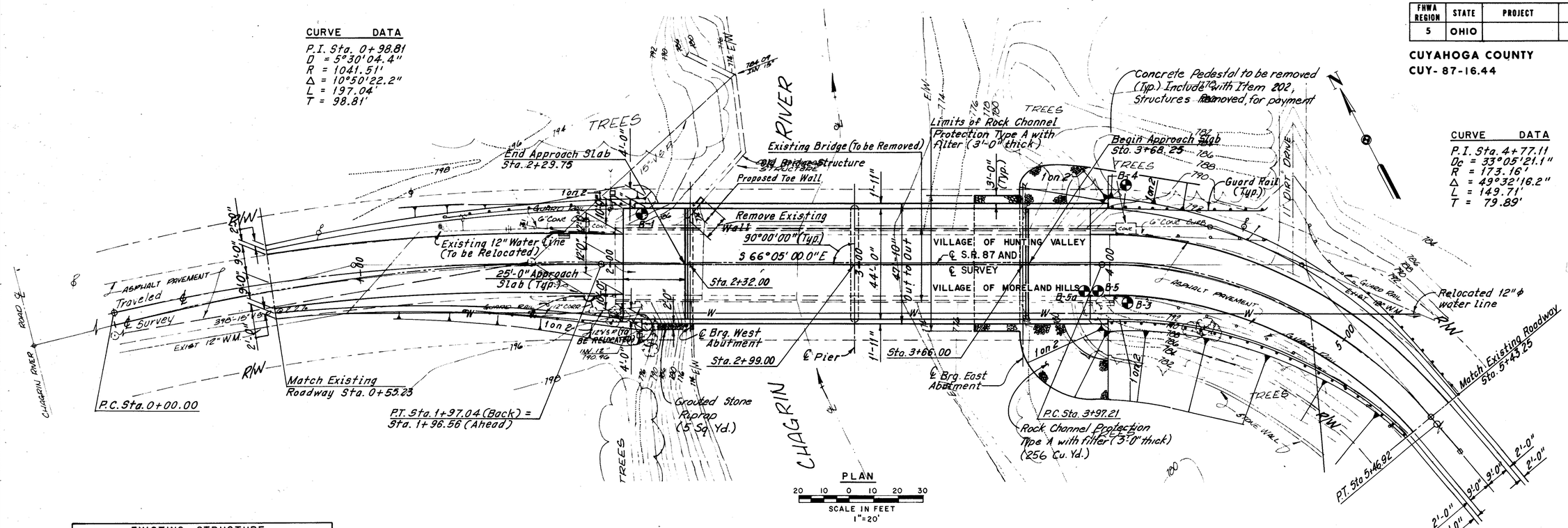

EXISTING STRUCTURE

TYPE: Concrete Filled Arch
SPAN: 128.0' Clear Span
ROADWAY: 24.0' Face to face of curbs with 1'-9" safety curbs and aluminum bridge railings.
LOADING: Unknown
SKEW: None
WEARING SURFACE: Asphalt Concrete
APPROACH SLAB: None
ALIGNMENT: Tangent
SUPERELEVATION: Varies
YEAR BUILT: 1933
STRUCTURE FILE No.: 1807560

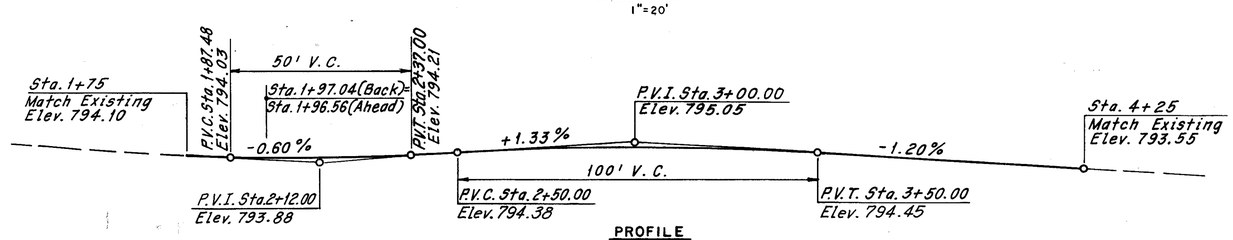

PROFILE

PROPOSED STRUCTURE

TYPE: Two span continuous composite steel beams with reinforced concrete deck and substructure.
SPANS: 67.00', 67.00'
ROADWAY: 44'-0" Face to face of curbs with modified safety parapets to accommodate future sidewalks.
LOADING: HS 20-44 Case II and the Alternate Military Loading
SKEW: None
WEARING SURFACE: 1'4" Latex Modified Concrete
APPROACH SLAB: AS-1-81 (25 ft. long)
ALIGNMENT: Tangent
SUPERELEVATION: Normal Crown: 3/16" / ft.

HYDRAULIC DATA

DRAINAGE AREA: 139 Sq. Mi.

	EXISTING STRUCTURE		PROPOSED STRUCTURE	
	100 Yr. FLOOD	25 Yr. FLOOD	100 Yr. FLOOD	25 Yr. FLOOD
ELEVATION	788.0	786.1	788.25	785.44
VELOCITY	16.8 fps	13.1 fps	14.4 fps	12.3 fps
DISCHARGE	24,696 cfs	17,200 cfs	24,696 cfs	17,200 cfs

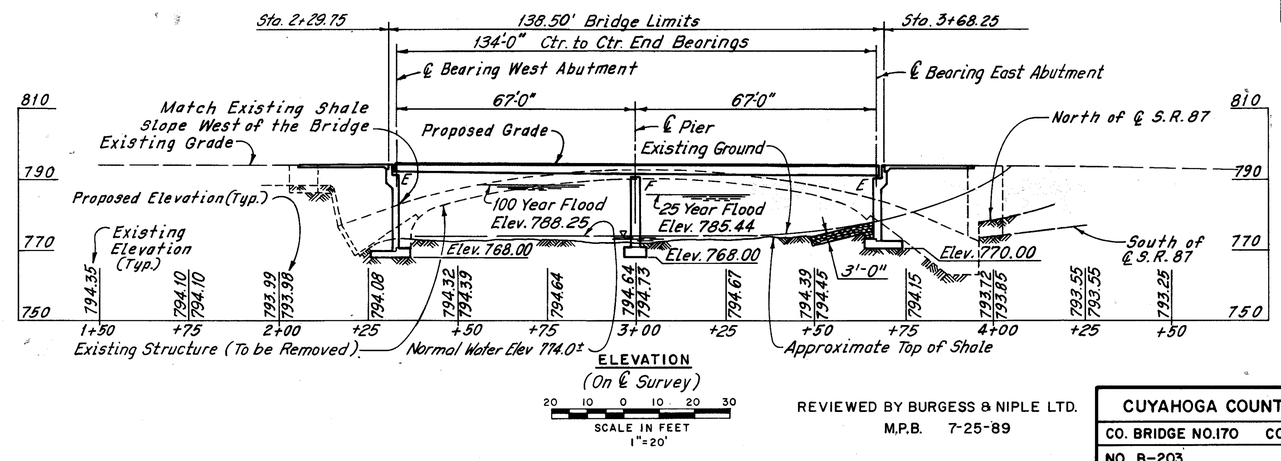

Note:
Existing 12" water line shall be maintained in service during construction.

FOUNDATION DATA:
All substructure units shall be founded on spread footings supported on shale bedrock and designed for a maximum allowable bearing pressure of 4 tons per Sq. Ft.

TRAFFIC DATA: (2006)
10,280 A.D.T.

REVIEWED BY BURGESS & NIPLE LTD.
M.P.B. 7-25-89

CUYAHOGA COUNTY ENGINEER
CO. BRIDGE NO. 170 CO. REPORT NO. 7156
NO. B-203

HOWARD, NEEDLES, TAMMEN & BERGENDOFF CONSULTING ENGINEERS CLEVELAND **HNTB**

SITE PLAN
BRIDGE NO. CUY-87-1644
S.R. 87 OVER THE CHAGRIN RIVER
STA. 2+29.75 TO STA. 3+68.25

SCALE: AS SHOWN
CUYAHOGA COUNTY OHIO

DRAWN	TRACED	CHECKED	REVIEWED	REVISED
D.H.S. DATE 6-11-87	C.P. DATE 7-27-87	F.S.J. DATE 7-29-87	C.A.B. DATE 10-27-88	

SHEET 1/12

FHWA REGION	STATE	PROJECT	
5	OHIO		

28A
39

CUYAHOGA COUNTY
CUY- 87 - 16.44

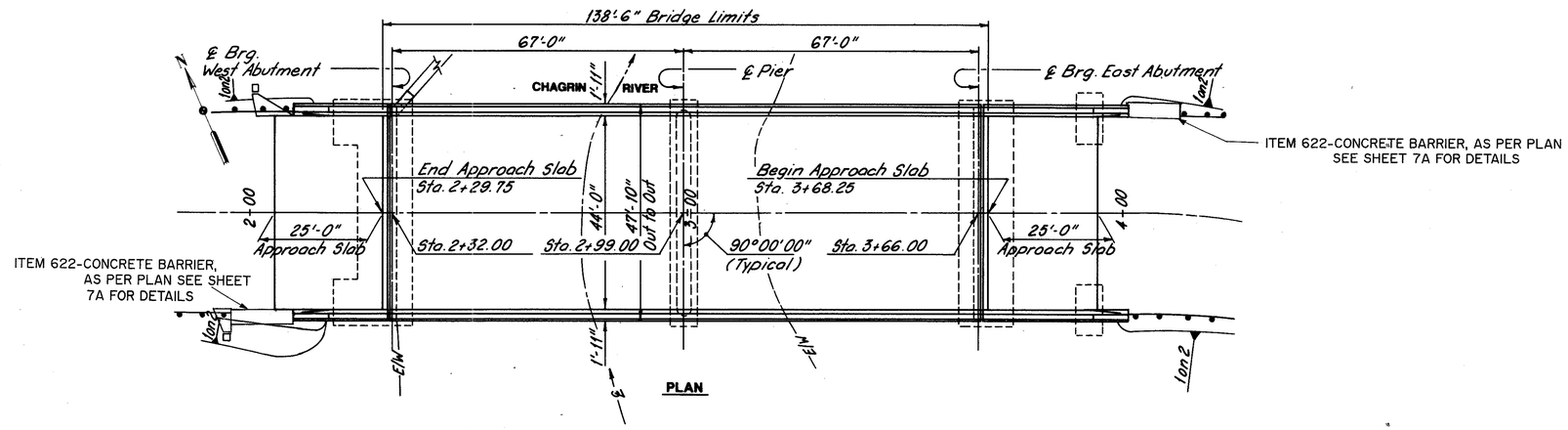

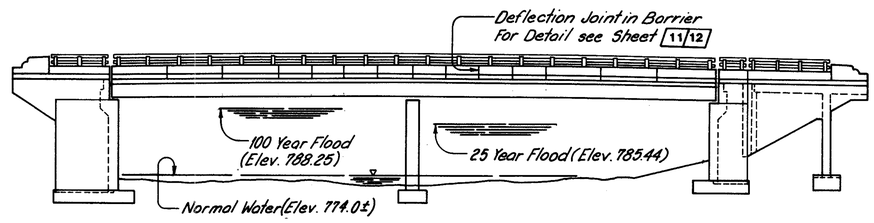

ELEVATION

ESTIMATED QUANTITIES								
ITEM	ITEM EXT.	TOTAL	UNIT	DESCRIPTION	ABUTMENTS	PIER	SUPER-STRUCTURE	GENERAL
202*	11002	LUMP		STRUCTURES REMOVED, OVER 20 FOOT SPAN				LUMP
503	11100	LUMP		COFFERDAMS, CRIBS AND SHEETING				LUMP
503	21102	266	CU.YD.	UNCLASSIFIED EXCAVATION, INCLUDING SHALE	266			
503	31100	220	CU.YD.	SHALE EXCAVATION	179	41		
509	13400	10,442	lb.	REINFORCING STEEL, GRADE 60		10,442		
509	15800	101,418	lb.	EPOXY COATED REINFORCING STEEL, GRADE 60	49,818		51,600	
511	33405	199	CU.YD.	CLASS S CONCRETE, USING SHRINKAGE COMPENSATING CEMENT,				
				AS PER PLAN (SEE PROPOSAL NOTE)			199	
511***	34001	199	CU.YD.	CLASS S CONCRETE, SUPERSTRUCTURE, AS PER PLAN (SEE SHT. 28)			199	
511	40500	85	CU.YD.	CLASS C CONCRETE, PIERS ABOVE FOOTINGS		85		
511	44500	296	CU.YD.	CLASS C CONCRETE, ABUTMENTS ABOVE FOOTINGS	296			
511	46500	202	CU.YD.	CLASS C CONCRETE, FOOTINGS	171	31		
513	20000	1,890	EACH	WELDED STUD SHEAR CONNECTORS			1,890	
513	16590	161,200	lb.	STRUCTURAL STEEL (AISC CATEGORY I) (A572) (SEE PROPOSAL NOTE)			161,200	
514	01500	161,200	lb.	FIELD PAINTING OF NEW STEEL, SYSTEM A (SEE PROPOSAL NOTE)			161,200	
516	12200	103	LIN.FT.	STRUCTURAL EXPANSION JOINTS INCLUDING ELASTOMERIC				
				COMPRESSION SEALS			103	
516	44000	7	EACH	LAMINATED ELASTOMERIC BEARINGS (2-1/2" X 1'-0-1/2"X 1'-4" ELAST-				
				OMERIC PAD WITH 1-1/2"X1'- 1-1/2" X 1'-10" STEEL LOAD PLATE)			7	
516	44300	14	EACH	LAMINATED ELASTOMERIC BEARINGS (4-3/16" X 1'-0-1/2"X 1'-4" ELAST-				
				OMERIC PAD WITH 1-1/2"X1'- 1-1/2" X 1'-10" STEEL LOAD PLATE)			14	
516	13600	100	SQ.FT.	1" PREFORMED EXPANSION JOINT FILLER	100			
516	30501	31	LIN.FT.	PVC WATERSTOP, AS PER PLAN (SEE SHT. 33)	31			
517	71501	349	LIN.FT.	RAILING (DOUBLE PIPE RAIL)(AS PER PLAN)	78		271	
518	21101	131	CU.YD.	POROUS BACKFILL, AS PER PLAN	131			
845**	10200	660	SQ.YD.	LATEX MODIFIED CONCRETE OVERLAY (1-1/4" THICK) SEE PROPOSAL NOTE)			660	
SPEC.	5126750C	383	SQ.YD.	SEALING OF CONCRETE SURFACES (SEE PROPOSAL NOTE)	89		294	
SPEC.	5126750Z	114	SQ.YD.	SEALING OF CONCRETE SURFACES, EPOXY (SEE PROPOSAL NOTE)	114			

**100 PERCENT CUYAHOGA COUNTY FUNDED ***ALTERNATE BID ITEM

* THE APPROXIMATE QUANTITY OF CONCRETE TO BE REMOVED IN THE EXISTING STRUCTURE IS 1,000 CU.YDS. ITEMS INCLUDED WITH STRUCTURES REMOVED FOR PAYMENT ARE LISTED BELOW:

A) PAVEMENT, WITHIN LIMITS OF THE EXISTING BRIDGE (STA. 2+23.0 TO STA. 3+75.0).
B) ENTIRE BARRIER AND RAILING.
C) EARTH FILL ABOVE THE ARCH.
D) PORTIONS OF THE ARCH AND WINGWALLS AS REQUIRED TO CONSTRUCT THE NEW BRIDGE.
E) EXCAVATION AS INDICATED IN THE PLANS.
F) PORTION OF THE EXISTING RETAINING WALL AT THE WEST ABUTMENT FOR CONSTRUCTION OF PROPOSED TOE WALL.

QUANTITY CALCULATIONS
MADE BY B.E.B., J.L.V. DATE 9-28-88
CHECKED BY B.E.B., J.L.V. DATE 9-29-88

CUYAHOGA COUNTY ENGINEER
CO. BRIDGE NO.170 CO. REPORT NO. 7156
NO. B-203

HOWARD, NEEDLES, TAMMEN & BERGENDOFF
CONSULTING ENGINEERS CLEVELAND
HNTB

GENERAL PLAN AND ELEVATION AND ESTIMATED QUANTITIES
BRIDGE NO. CUY-87-1644
S.R. 87 OVER THE CHAGRIN RIVER
COUNTY BRIDGE NO. 170 STA. 2+29.75 TO STA. 3+68.25
SCALE: AS SHOWN
CUYAHOGA COUNTY OHIO

DRAWN	TRACED	CHECKED	REVIEWED	REVISED
J.L.V.	J.L.V.	B.E.B.	C.A.B.	
DATE 2-3-89	DATE 2-3-89	DATE 2-13-89	DATE 2-13-89	

SHEET 2A/12

FHWA REGION	STATE	PROJECT	
5	OHIO		

37 / 39

CUYAHOGA COUNTY
CUY- 87 - 16.44

NOTE A:
DECK SLAB DEPTH: THE DISTANCE SHOWN FROM TOP OF DECK SLAB TO TOP OF STEEL BEAM IS THE DESIGN DIMENSION. THE QUANTITY OF DECK CONCRETE TO BE PAID FOR SHALL BE BASED ON THIS DIMENSION LESS 1-1/4" WEARING SURFACE, EVEN THOUGH DEVIATION FROM IT MAY BE NECESSARY BECAUSE THE TOP FLANGE OF THE BEAM MAY NOT HAVE THE EXACT CAMBER OR CONFORMATION REQURIED TO PLACE IT PARALLEL TO THE FINISHED GRADE.

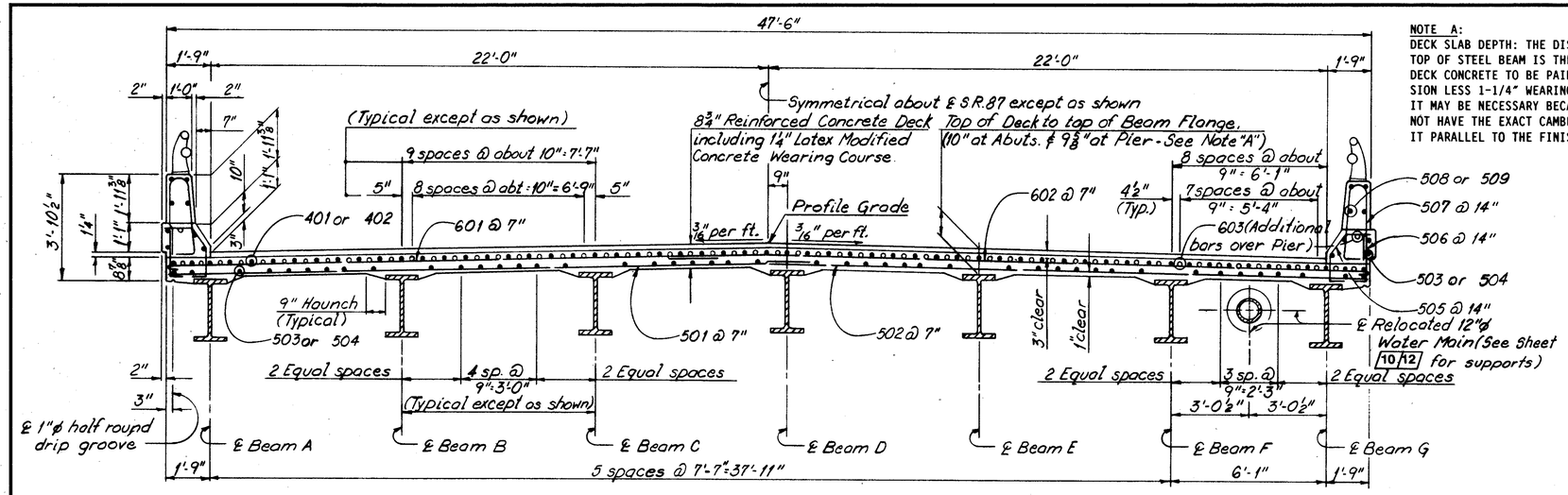

TYPICAL CROSS SECTION - LOOKING EAST

(Shear Studs, Crossframes and Water Main Supports not shown)

SCREED ELEVATIONS									
	℄ Brg. W. Abut.	.25	.50	F.S.	℄ Pier	F.S.	.50	.75	℄ Brg. E. Abut.
North Gutter Line	793.70	793.97	794.17	794.26	794.29	794.29	794.23	794.06	793.81
Profile Grade	794.05	794.33	794.53	794.60	794.63	794.64	794.59	794.42	794.15
South Gutter Line	793.70	793.96	794.17	794.26	794.29	794.29	794.23	794.05	793.81

NOTE:
THE SCREED ELEVATIONS HAVE BEEN ADJUSTED FOR DEAD LOAD DEFLECTIONS DUE TO THE WEIGHT OF DECK CONCRETE AND WEARING COURSE, AND ARE THE TOP OF PORTLAND CEMENT CONCRETE ELEVATIONS REQUIRED BEFORE THE CONCRETE DECK IS PLACED.

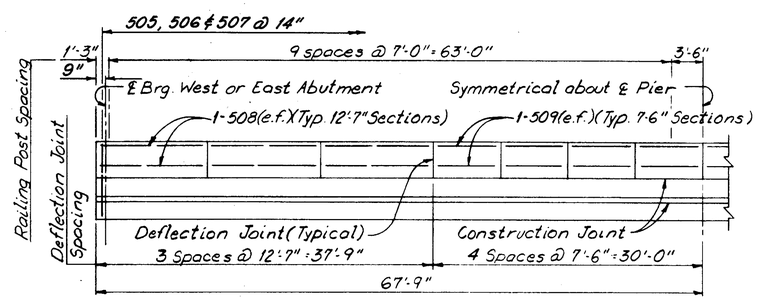

CONCRETE BARRIER ELEVATION

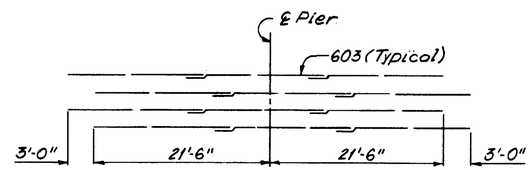

PLACEMENT OF ADDITIONAL REINFORCEMENT OVER PIER

REQUIRED LAP LENGTH
NO. 4 BAR = 1'-5" MINIMUM
NO. 5 BAR = 1'-9" MINIMUM
NO. 6 BAR = 2'-1" MINIMUM

DECK REINFORCEMENT	
MARK	NUMBER
401	58 Lines of 4
402	58
501	233
502	233
503	53 Lines of 4
504	53
505	234
506	234
507	234
508	48
509	64
601	233
602	233
603	59 Lines of 3

NOTES:
A TYPICAL HAUNCH WIDTH OF 9" SHALL BE USED FOR COMPUTING QUANTITY OF CONCRETE. HOWEVER, THE HAUNCH WIDTH MAY VARY BETWEEN 6" AND 12", PROVIDED THAT THE SLOPE SHALL NOT BE MORE THAN 1:4 FOR A HAUNCH LESS THAN 9" IN WIDTH.

ALL DECK SLAB AND BARRIER REINFORCING SHALL BE *PREFIXED ES.*

ALL TRANSVERSE REINFORCEMENT SHALL BE PLACED *PERPENDICULAR TO THE BEAMS* AND THE SPACING SHALL BE MEASURED ALONG THE CENTERLINE OF THE BRIDGE.

CONCRETE IN BARRIER SHALL BE INCLUDED WITH ITEM 511 - CLASS S CONCRETE, *USING SHRINKAGE COMPENSATING CEMENT, FOR PAYMENT.*

REINFORCEMENT IN BARRIERS SHALL BE INCLUDED WITH ITEM *509, EPOXY COATED REINFORCING STEEL, GRADE 60, FOR PAYMENT.*

FOR RAILING DETAILS REFER TO STANDARD DWG. BR-2-82, DATED 11-1-82.

FOR COMPRESSION SEAL EXPANSION JOINT DETAILS REFER TO STANDARD DWG. EXJ-2-81 DATED 9-1-81, REV. 4-2-84.

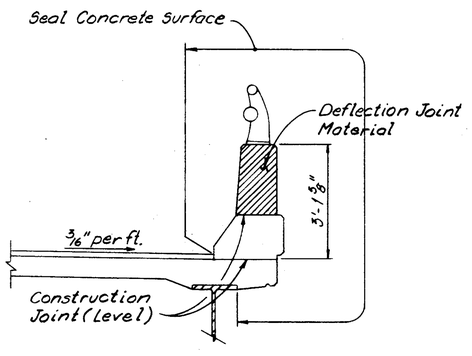

BARRIER DETAIL

(Shear Studs not shown)

NOTES:
THE DEFLECTION JOINTS IN THE BARRIER CURB MAY BE EITHER 1/4" GRAY SPONGE RUBBER OR 1/4" GRAY CELLULAR POLYVINYL CHLORIDE (PVC) SPONGE. EITHER MATERIAL SHALL MEET THE REQUIREMENTS OF AASHTO M-153, TYPE 1, EXCEPT THE DENSITY OF THE PVC SPONGE SHALL NOT BE LESS THAN 20 LB. PER CU.FT.

BARRIER CURBS SHALL BE PLACED IN ALTERNATE SECTIONS BY THE USE OF BULKHEADS. CLOSING SECTIONS SHALL BE PLACED AFTER THE REMOVAL OF BULKHEADS AND AFTER PLACEMENT OF SPONGE FILLER. THE FILLER SHALL BE ATTACHED TO THE FACE OF THE CONCRETE ON ONE SIDE, FLUSH WITH THE SURFACE OF CONCRETE AND EXPOSED EDGES SHALL BE FREE OF MORTAR.

INCLUDE WITH ITEM 511, CLASS S CONCRETE, *USING SHRINKAGE COMPENSATING CEMENT, FOR PAYMENT.*

HOWARD, NEEDLES, TAMMEN & BERGENDOFF
CONSULTING ENGINEERS CLEVELAND
HNTB

DECK SECTION

BRIDGE NO. CUY-87-1644
S.R. 87 OVER THE CHAGRIN RIVER

COUNTY BRIDGE NO. 170 STA. 2+29.75 TO STA. 3+68.25

CUYAHOGA COUNTY OHIO

CUYAHOGA COUNTY ENGINEER
CO. BRIDGE NO. 170 CO. REPORT NO. 7156
NO. B-203

DRAWN	TRACED	CHECKED	REVIEWED	REVISED
J.L.V.	J.L.V.	B.E.B.	C.A.B.	
DATE 3/1988	DATE 3/1988	DATE 5/2/88	DATE 10/12/88	SHEET 11/12