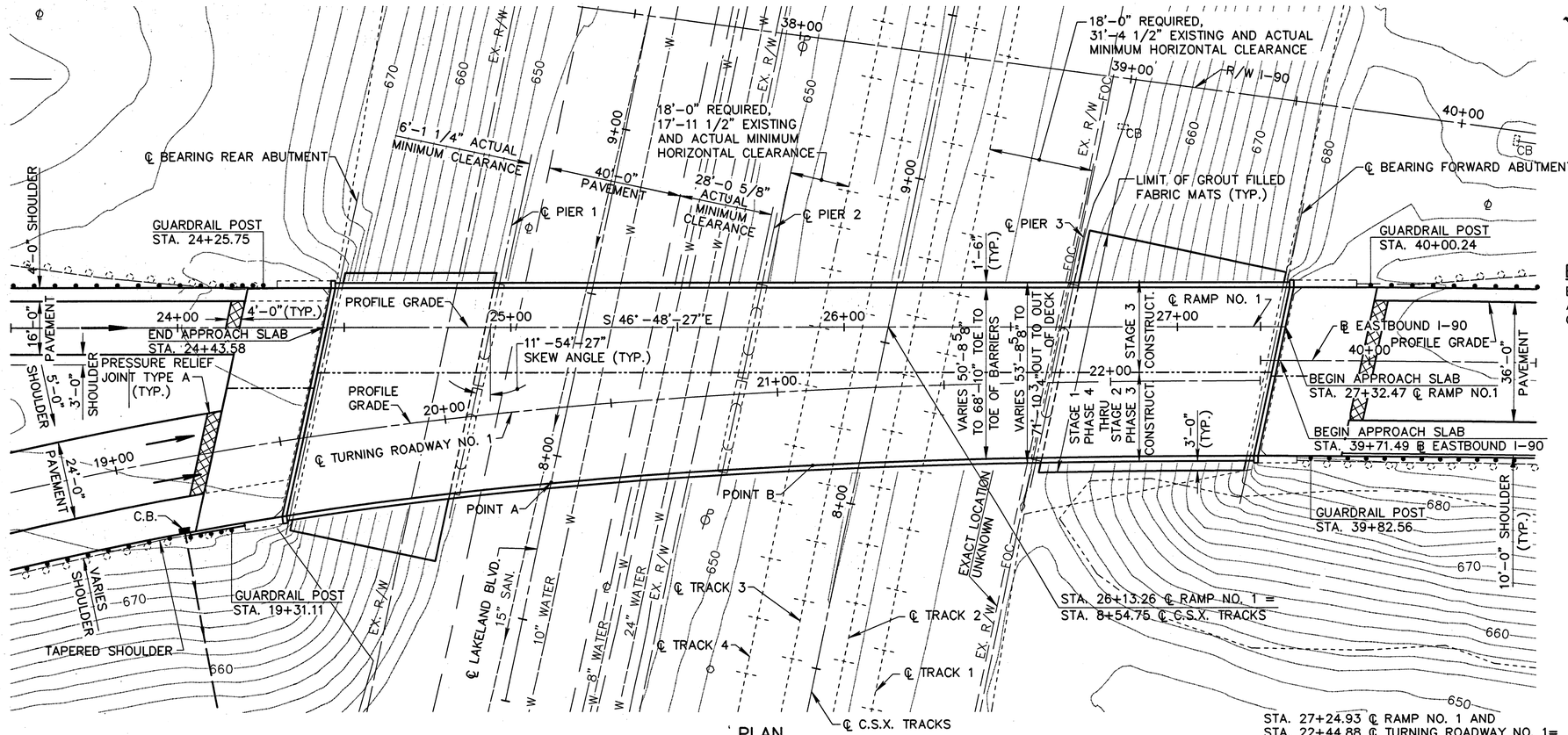

PLAN

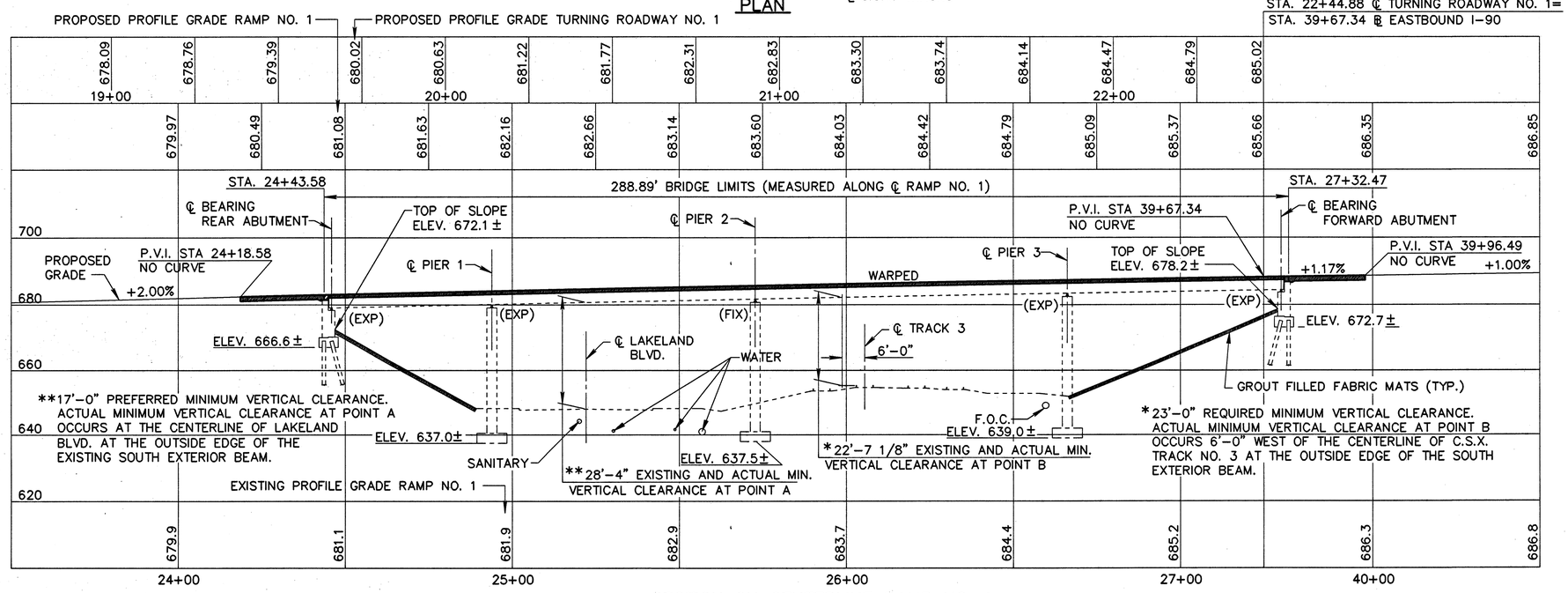

SECTION ON CENTERLINE RAMP NO. 1

TEMPORARY BENCH MARK

IRON PIN SET
STA. 39+74.70, 5.48 RT. ℄ I-90 (EUCLID SPUR)
ELEV. 683.13

CURVE DATA

℄ TURNING ROADWAY NO. 1

P.I. =	STA. 16+36.768
Δ =	68°21'00.00" RT.
Dc =	6°00'00.00"
R =	954.930'
Ls =	400.00'
θs =	14°30'00.00"
LT =	267.233'
ST =	199.573'
Lc =	710.00'
T1 =	801.649'
T2 =	853.649'
Es =	209.480'
C.S. =	STA. 8+34.884
S.C. =	STA. 11+34.884
C.S. =	STA. 18+44.884
S.T. =	STA. 22+44.884

TRAFFIC DATA (I-90)

2003 – A.D.T. 48,390
A.D.T.T. 3,340
2023 – A.D.T. 60,880
A.D.T.T. 4,200

EARTHWORK

EARTHWORK LIMITS SHOWN ARE APPROXIMATE. ACTUAL SLOPES SHALL CONFORM TO PLAN CROSS SECTIONS.

NOTE:

ALL EXISTING UTILITIES TO REMAIN IN SERVICE

EXISTING STRUCTURE

TYPE:	CONTINUOUS STEEL BEAMS WITH REINFORCED CONCRETE DECK AND REINFORCED CONCRETE SUBSTRUCTURE
SPANS:	48'-78.86'-93.43'-64' C/C BEARINGS ALONG ℄ RAMP NO. 1
ROADWAY:	VARIES 66'-8"± TO 49'-8"± TOE TO TOE OF BARRIERS
LOADING:	CF=2000 (57) (ADEQUATE FOR AASHTO ALTERNATE LOADING)
SKEW:	11°-54'-27" LEFT FORWARD (FROM ℄ RAMP NO. 1)
WEARING SURFACE:	1" MONOLITHIC CONCRETE
APPROACH SLABS:	AS-1-54 (25' LONG)
ALIGNMENT:	RAMP NO. 1 TANGENT, TURNING ROADWAY NO. 1 SPIRAL
SUPERELEVATION:	VARIES
DATE BUILT	1961
STRUCTURE FILE NO.	1809245

PROPOSED STRUCTURE

PROPOSED WORK:	REPLACE CONCRETE DECK, REPAIR AND SEAL CONCRETE SURFACES.
TYPE:	CONTINUOUS STEEL BEAMS WITH REINFORCED CONCRETE DECK AND REINFORCED CONCRETE SUBSTRUCTURE
SPANS:	48'-78.86'-93.43'-64' C/C BEARINGS ALONG ℄ RAMP NO. 1
ROADWAY:	VARIES 69'-10 5/8" TO 51'-7 7/8" TOE TO TOE OF BARRIERS
LOADING:	CF=2000 (57) (ADEQUATE FOR AASHTO ALTERNATE LOADING)
SKEW:	11°-54'-27" LEFT FORWARD (FROM ℄ RAMP NO. 1)
WEARING SURFACE:	1" MONOLITHIC CONCRETE
APPROACH SLABS:	AS-1-81 (25'-0")
ALIGNMENT:	RAMP NO. 1 TANGENT, TURNING ROADWAY NO. 1, SPIRAL
SUPERELEVATION:	VARIES
LATITUDE:	N 41°-36'-15"
LONGITUDE:	W 81°-29'-35"

DESIGN AGENCY
EUTHENICS INC.
CONSULTING ENGINEERS
CLEVELAND, OHIO

REVIEWED	DATE
RAB	9-01
DRAWN	STRUCTURE FILE NUMBER
GFH	1809245
DESIGNED	REVISED
KRD	
CHECKED	
GFH	

CUYAHOGA COUNTY
STA. 24+43.58 to STA. 27+32.47

SITE PLAN
BRIDGE NO. CUY-90-2972 R
OVER C.S.X. RAILROAD AND LAKELAND BLVD.

CUY/LAK-90-29.92/0.00

1/13

375/454

F:\JOBS\540\BRIDGE\03\DWG\540SP01.DWG JUN 11/29/01 PLOT 1:20

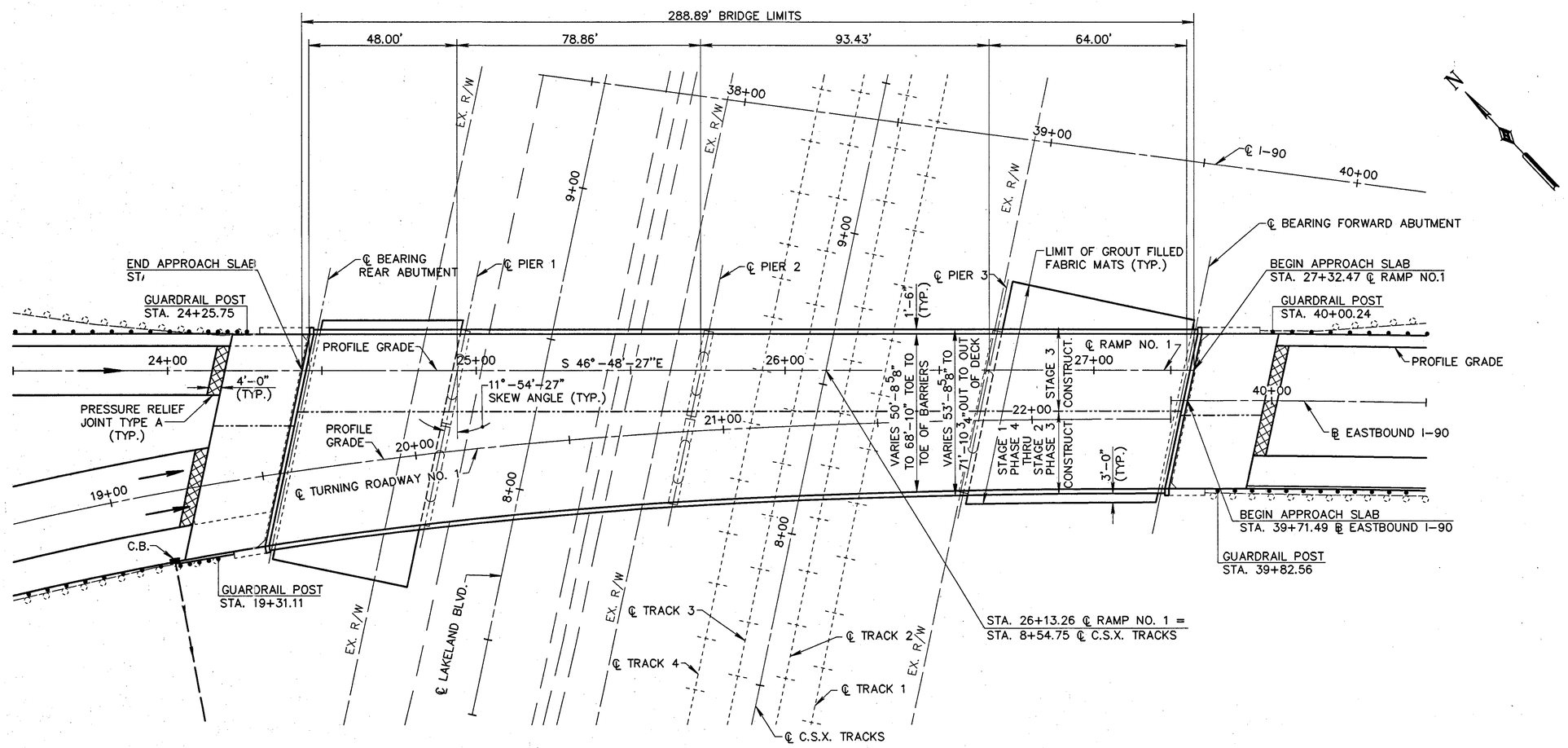

GENERAL PLAN

DESIGN AGENCY
EUTHENICS INC.
CONSULTING ENGINEERS
CLEVELAND, OHIO

DESIGNED	DRAWN	REVIEWED	DATE
GFH	GFH	RAB	9-01
CHECKED	REVISED	STRUCTURE FILE NUMBER	
KRD		1809245	

GENERAL PLAN
BRIDGE NO. CUY-90-2972 R
OVER C.S.X. RAILROAD AND LAKELAND BLVD.

CUY/LAK-90-29.92/0.00

2/13

376/454

CU090gp1.dgn F:\JOBS\540\BRIDGE\03\DWG\540gp31.dwg GFH 9-20-01 PLOT 1:1

CALC. BY: YRY DATE: 07-20-01

ESTIMATED QUANTITIES – CUY-90-2972R

CHK'D. BY: NNB DATE: 8-28-01

ITEM	ITEM EXT.	TOTAL	UNIT	DESCRIPTION	ABUT-MENTS	PIERS	SUPER-STRUCTURE	GENERAL	AS PER PLAN SHEET NUMBERS
202	11203	LUMP		PORTIONS OF STRUCTURE REMOVED, OVER 20 FOOT SPAN, AS PER PLAN				LUMP	GN 1
509	20001	200	POUND	REINFORCING STEEL, REPLACEMENT OF REINFORCING STEEL, AS PER PLAN	200				GN 2
516	11210	127	LIN.FT.	STRUCTURAL EXPANSION JOINT, INCLUDING ELASTOMERIC STRIP SEAL	127				
516	45305	16	EACH	REFURBISH BEARING DEVICES, AS PER PLAN	16				GN 2
516	47001	LUMP		JACKING AND TEMPORARY SUPPORT OF SUPERSTRUCTURE, AS PER PLAN				LUMP	GN 2
518	21201	88	CU. YD.	POROUS BACKFILL WITH FILTER FABRIC, AS PER PLAN	88				GN 1
518	40000	115	LIN. FT.	6" PERFORATED CORRUGATED PLASTIC PIPE	115				
518	40010	55	LIN. FT.	6" NON-PERFORATED CORRUGATED PLASTIC PIPE, INCLUDING SPECIALS	55				
601	20000	3	SQ. YD.	CRUSHED AGGREGATE SLOPE PROTECTION	3				
601	21100	971	SQ. YD.	SLOPE PROTECTION, MISC.: GROUT FILLED FABRIC MATS	971				
815	00100	LUMP		SURFACE PREPARATION OF EXISTING STEEL, SYSTEM OZEU			LUMP		
815	00200	LUMP		FIELD PAINTING OF EXISTING STEEL, PRIME COAT, SYSTEM OZEU			LUMP		
815	00300	LUMP		FIELD PAINTING OF EXISTING STEEL, INTERMEDIATE COAT, SYSTEM OZEU			LUMP		
815	00400	LUMP		FIELD PAINTING OF EXISTING STEEL, FINISH COAT, SYSTEM OZEU			LUMP		
844	48001	441	CU. YD.	HIGH PERFORMANCE CONCRETE SUPERSTRUCTURE (DECK), AS PER PLAN			441		8/12
844	48020	76	CU. YD.	HIGH PERFORMANCE CONCRETE SUPERSTRUCTURE (PARAPET)			76		
844	48041	3	CU. YD.	HIGH PERFORMANCE CONCRETE SUBSTRUCTURE, AS PER PLAN	1	2			5/12
863	10201	3,060	POUND	STRUCTURAL STEEL MEMBERS MISCELLANEOUS LEVEL FABRICATION, AS PER PLAN			3,060		
863	21000	16	EACH	TRIMMING OF BEAM END	16				
864	10100	924	SQ. YD.	SEALING OF CONCRETE SURFACES (EPOXY-URETHANE)	159	11	754		GN 3

F:\JOBS\F:\JOBS\540\BRIDGE\03\DWG\540E031.dwg KJW 3/8/02 PLOT 1:1

DESIGN AGENCY
EUTHENICS INC.
CONSULTING ENGINEERS
CLEVELAND, OHIO

REVIEWED RAB DATE 9-01
STRUCTURE FILE NUMBER 1809245

DRAWN YRY
REVISED

DESIGNED YRY
CHECKED NNB

ESTIMATED QUANTITIES
BRIDGE NO. CUY-90-2972 R
OVER C.S.X. RAILROAD AND LAKELAND BLVD.

CUY/LAK-90-29.92/0.00

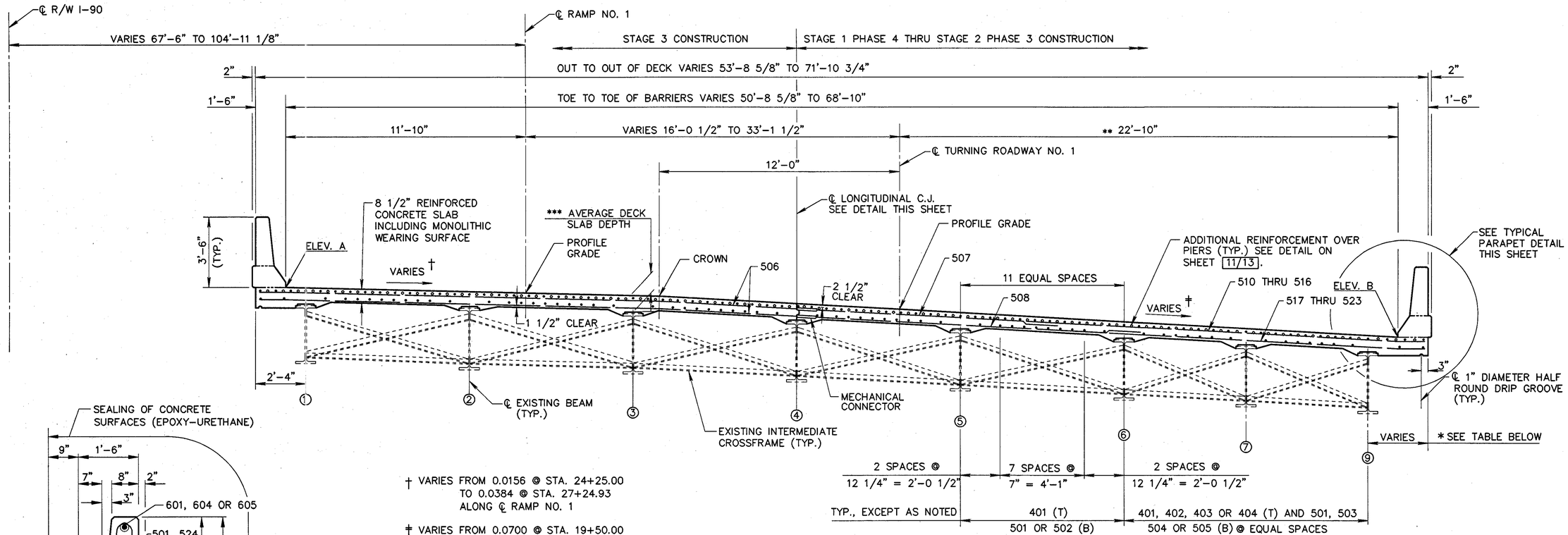

† VARIES FROM 0.0156 @ STA. 24+25.00 TO 0.0384 @ STA. 27+24.93 ALONG ℄ RAMP NO. 1

‡ VARIES FROM 0.0700 @ STA. 19+50.00 TO 0.0384 @ STA. 22+44.88 ALONG ℄ TURNING ROADWAY NO. 1

TRANSVERSE SECTION

BEAM 8 NOT SHOWN

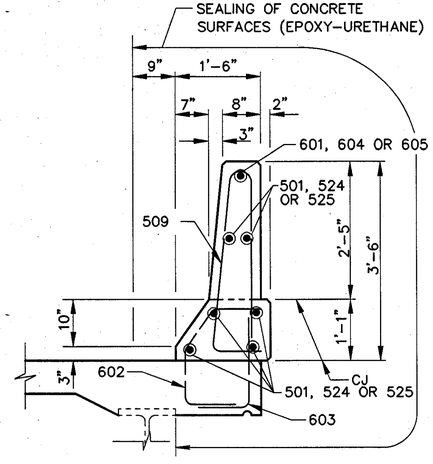

TYPICAL PARAPET DETAIL

* HORIZONTAL OFFSET TO EDGE OF SLAB (MEASURED PERPENDICULAR TO BEAMS)																
SPAN 1				SPAN 2				SPAN 3				SPAN 4				
℄ BEARING REAR ABUTMENT	1/4	1/2	3/4	℄ BEARING PIER 1	1/4	1/2	3/4	℄ BEARING PIER 2	1/4	1/2	3/4	℄ BEARING PIER 3	1/4	1/2	3/4	℄ BEARING FWD. ABUTMENT
2'-4 5/8"	2'-3"	2'-2 15/16"	2'-4 5/16"	2'-7 1/8"	2'-2 1/4"	2'-0 3/4"	2'-2 7/16"	2'-7 1/16"	2'-2 5/16"	2'-1"	2'-2 11/16"	2'-7 3/16"	2'-5 1/8"	2'-4 1/16"	2'-3 15/16"	2'-4 9/16"

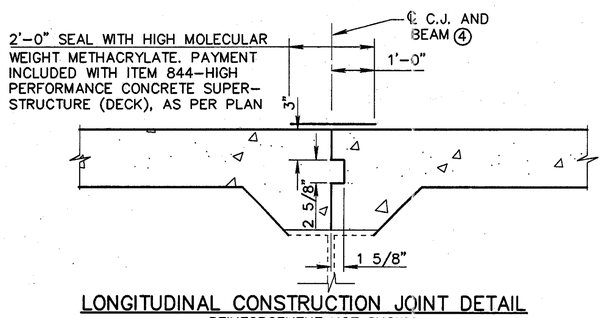

LONGITUDINAL CONSTRUCTION JOINT DETAIL

REINFORCEMENT NOT SHOWN

*** TABLE OF AVERAGE DECK SLAB DEPTH (AT ℄ BEARING)					
LOCATION	℄ BEARING R.A.	℄ BEARING PIER 1	℄ BEARING PIER 2	℄ BEARING PIER 3	℄ BEARING F.A.
SLAB DEPTH	11 7/8"±	11"±	10 7/8"±	11"±	11 7/8"±

* MEASURED PERPENDICULAR TO BEAMS
** MEASURED RADIALLY TO ℄ TURNING ROADWAY NO. 1
*** SEE NOTE ①

NOTES:

① DECK SLAB DEPTH FOR CONCRETE QUANTITY:

THE DIMENSION SHOWN FROM TOP OF THE CONCRETE DECK TO THE TOP OF THE FLANGE, MINUS THE AVERAGE DESIGN HAUNCH THICKNESS OF 2 7/8 INCHES HAS BEEN USED FOR COMPUTING THE DECK CONCRETE QUANTITIES. CONCRETE REQUIRED TO FILL THE HAUNCHES. INCLUDING ADDITIONAL OR LESS MATERIAL REQUIRED DUE TO CONSTRUCTION TOLERANCES, SHALL BE CONSIDERED AS INCIDENTAL AND WILL NOT BE INCLUDED IN THE QUANTITY CALCULATIONS FOR PAYMENT.

② CONCRETE DECK HAUNCH WIDTH

A HAUNCH WIDTH OF 9" SHALL BE USED.
HOWEVER, THE HAUNCH WIDTH MAY VARY BETWEEN 6 INCHES AND 12 INCHES.

③ ALL REINFORCING STEEL BAR MARKS SHALL BE PREFIXED "S" (SUPERSTRUCTURE) UNLESS NOTED.

④ FOR REINFORCEMENT SCHEDULE SEE SHEET 13/13.

⑤ THE FOLLOWING ABBREVIATIONS ARE USED:
T = TOP TYP. = TYPICAL
B = BOTTOM C.J. = CONSTRUCTION JOINT

⑥ TRANSVERSE DIMENSIONS ARE MEASURED PERPENDICULAR TO ℄ RAMP 1 UNLESS OTHERWISE NOTED.

⑦ FOR SLAB PLAN SEE SHEET 11/13.

⑧ FOR DECK SCREED ELEVATIONS SEE SHEET 10/13.

DESIGN AGENCY
EUTHENICS INC.
CONSULTING ENGINEERS
CLEVELAND, OHIO

DESIGNED YRY | CHECKED KRD | DRAWN YRY | REVISED | REVIEWED RAB | DATE 9-01 | STRUCTURE FILE NUMBER 1809245

TRANSVERSE SECTION
BRIDGE NO. CUY-90-2972 R
OVER C.S.X. RAILROAD AND LAKELAND BLVD.

CUY/LAK-90-29.92/0.00

9 / 13

383 / 454

RDJ 9-18-01 PLOT 3.8

F:\JOBS\540\BRIDGE\03\DWG\540SLB31.dwg