CALC.	CUYAHOGA COUNTY	OHIO
DATE	CUY - 176 - 10.88	F.H.W.A.
CHKD.	JENNINGS FREEWAY	REGION 5
DATE		

465 / 557

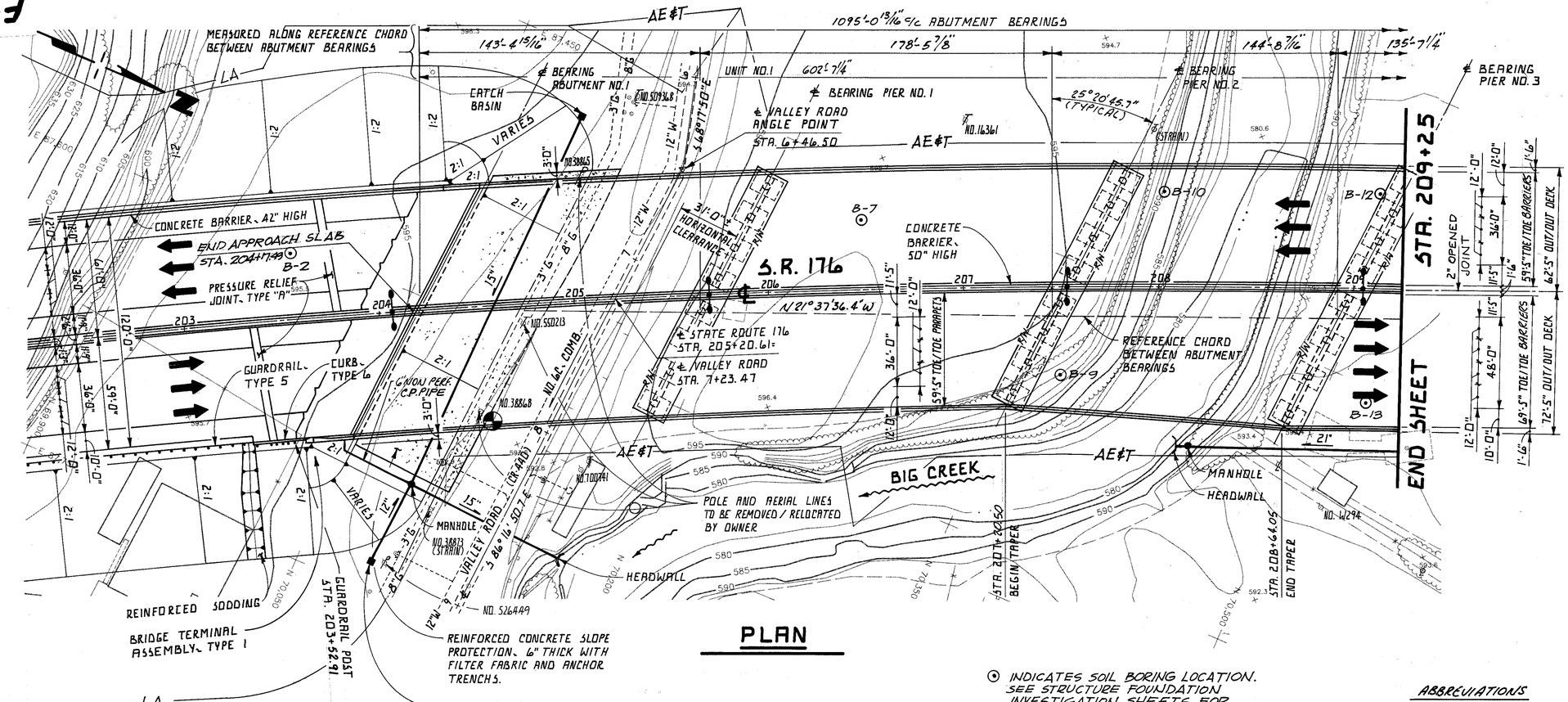

PLAN

NOTE: EARTHWORK LIMITS SHOWN ARE APPROXIMATE. ACTUAL SLOPES SHALL CONFORM TO PLAN CROSS-SECTIONS.

⊙ INDICATES SOIL BORING LOCATION. SEE STRUCTURE FOUNDATION INVESTIGATION SHEETS FOR ADDITIONAL INFORMATION.

ABBREVIATIONS

N.B. = NORTHBOUND LANES
S.B. = SOUTHBOUND LANES
C.P = CORRUGATED PLASTIC

PROPOSED STRUCTURE

TYPE: CONTINUOUS COMPOSITE, A-572 PAINTED, PLATE GIRDER WITH REINFORCED CONCRETE DECK AND SUBSTRUCTURE.

SPANS C/C BEARING: UNIT NO. 1 (N.B. & S.B.) 143'-4 15/16", 178'-5 7/8", 144'-8 7/16" AND 135'-7 1/4"
UNIT NO. 2 (S.B.) 100'-7 11/16", 173'-5 3/4", 136'-2" AND 77'-9 5/8"
UNIT NO. 2 (N.B.) 157'-6 3/16", 187'-7 1/4" AND 142'-11 3/8"
MEASURED ALONG REFERENCE CHORD

WIDTH: TWO (2) @ 59'-5" AND VARIES TOE / TOE PARAPETS
TWO (2) @ 62'-5" AND VARIES OUT / OUT DECK

LOADING: HS20-44 (CASE I) AND THE ALTERNATE MILITARY LOADING

SKEW: 25° 20' 45.7" LF. (TO REFERENCE CHORD)

WEARING SURFACE: MONOLITHIC CONCRETE

APPROACH SLABS: AS-1-81, AS PER PLAN (30'-0" LONG)

ALIGNMENT: CURVE RIGHT (Dc = 1° 01' 00")

SUPERELEVATION: 0.027 FT./FT.

SLOPE PROTECTION: REINFORCED CONCRETE 6" THICK WITH FILTER FABRIC AND ANCHOR TRENCHES

TRAFFIC:

	N.B.	S.B.
AVERAGE DAILY TRAFFIC (2013) =	26,600	26,400
AVERAGE DAILY TRUCK TRAFFIC (2013) =	2660	2640

FOUNDATION DATA:

FOR FOUNDATION DATA, SEE SHEET 2/59 & 6/59

DRAINAGE DATA:

DATA FROM FLOOD INSURANCE STUDY, DATED FEBRUARY 1978.
DRAINAGE AREA = 39 SQUARE MILES
Q50 = 8721 C.F.S. Q100 = 9472 C.F.S.
HW50 = ELEV. 591.0 HW100 = ELEV. 594.0

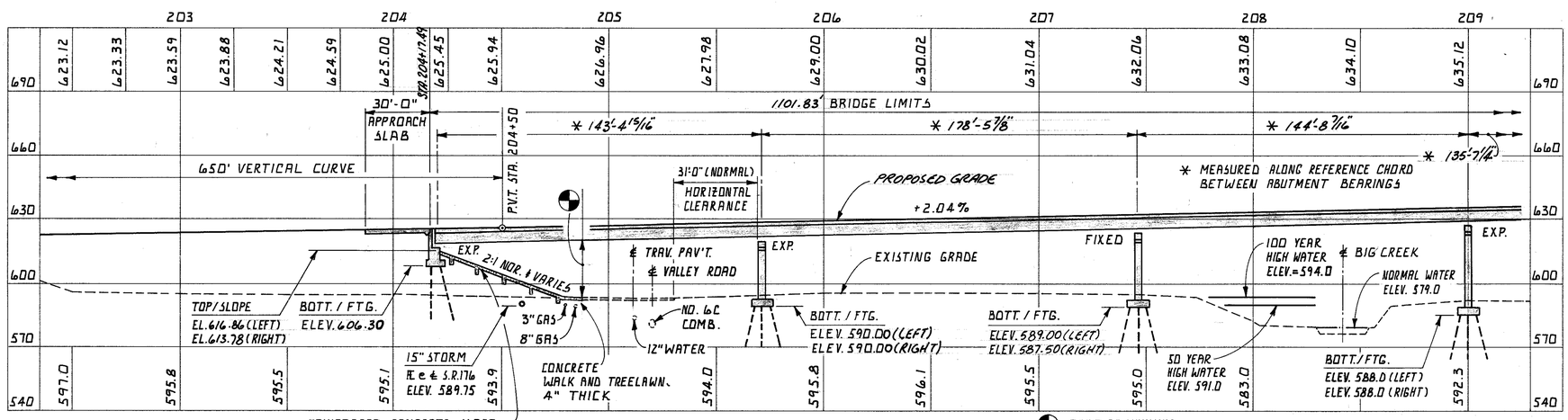

REINFORCED CONCRETE SLOPE PROTECTION, 6" THICK WITH FILTER FABRIC AND ANCHOR TRENCHS SPACED AS SHOWN, SEE MISCELLANEOUS DETAIL SHEET 834

PROFILE

ALONG ℄ STATE ROUTE 176

POINT OF MINIMUM VERTICAL CLEARANCE
16'-6" REQUIRED
23'-8" ACTUAL

HORIZONTAL CURVE DATA:

℄ STATE ROUTE 176
P.I. STA. 213+68.89
P.C. STA. 196+20.32
P.T. STA. 230+11.30
Δ = 34° 28' 29.8"
Dc = 1° 01' 00"
R = 5635.65'
T = 1748.57'
L = 3390.98'
C = 3340.06'
E = 265.03'

VERTICAL CURVE DATA:

G1 = -2.04%
G2 = +2.04%
L = 650'
P.V.I. ELEV. 619.31
P.V.I. STA. 201+25.00
P.V.C. STA. 198+00.00
P.V.T. STA. 204+50.00

1/59

adache · ciuni · lynn associates
CONSULTING ENGINEERS CLEVELAND, OHIO 44131

SITE PLAN
JENNINGS FREEWAY
STATE ROUTE 176
OVER
BIG CREEK VALLEY
BRIDGE NO. CUY-176-1229
STA. 204+17.49 TO STA. 215+19.32
CUYAHOGA COUNTY OHIO

DESIGNED	DRAWN	CHECKED	REVIEWED	DATE	REVISED
T.M.J.	T.M.J.	T.A.B.	A.J.M.	MAR. 1992	

BRUNING 44-232 67195-01
A.C.L. form no. B-1

CALC.	CUYAHOGA COUNTY	OHIO
DATE	CUY - 176 - 10.88	F.H.W.A.
CHKD.	JENNINGS FREEWAY	REGION 5
DATE		

466
55T

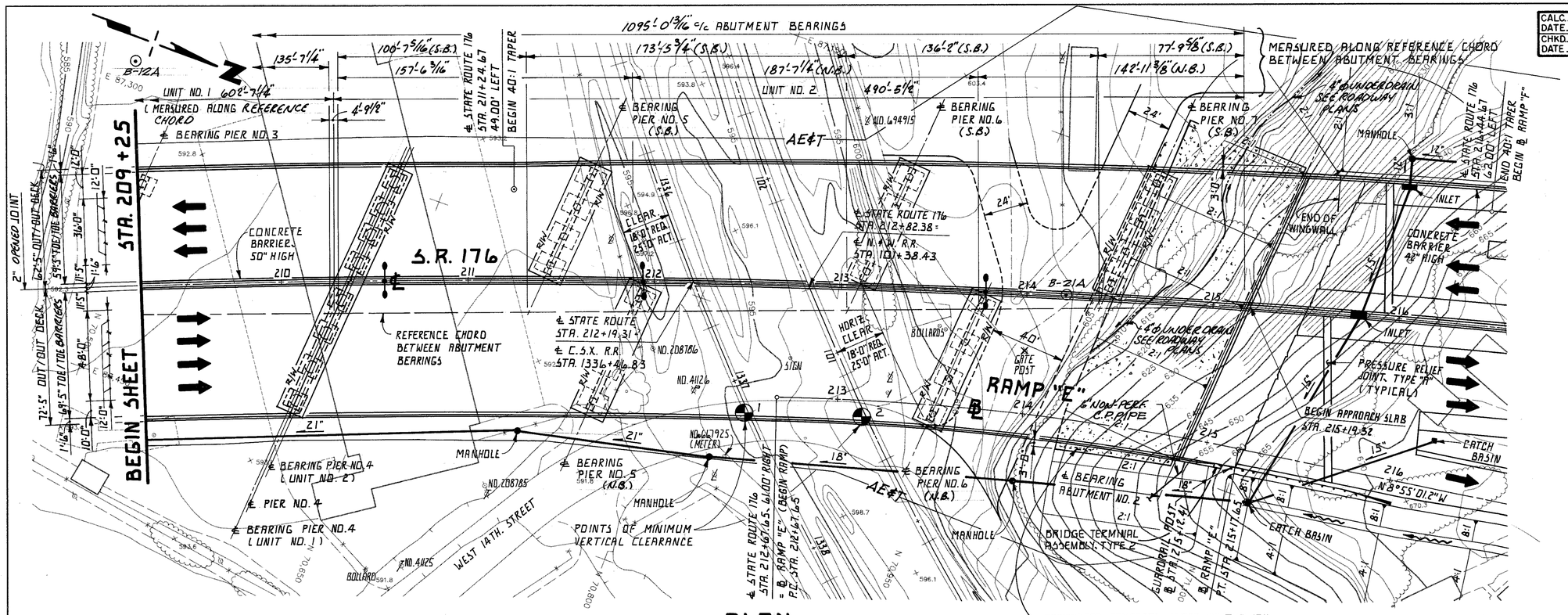

PLAN

⊙ INDICATES SOIL BORING LOCATION. SEE STRUCTURE FOUNDATION INVESTIGATION SHEETS FOR ADDITIONAL INFORMATION

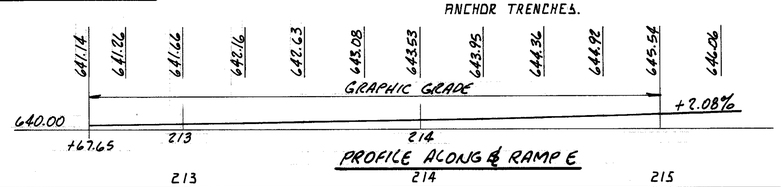

PROFILE ALONG ℄ RAMP E

VERTICAL CURVE DATA:

G_1 = +2.04%
G_2 = -0.35%
L = 750'
P.V.I. EL. = 655.01
P.V.I. STA. 218+75
P.V.C. STA. 215+00
P.V.T. STA. 222+50

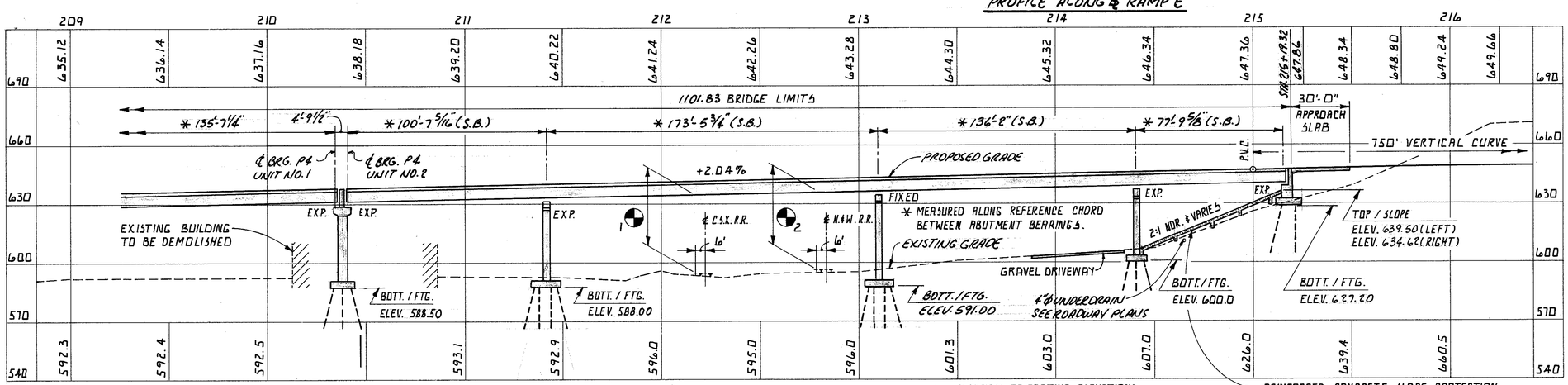

1 POINT OF MINIUM VERTICAL CLEARANCE 23'-0" REQUIRED 37'-9" ACTUAL

2 POINT OF MINIMUM VERTICAL CLEARANCE 23'-0" REQUIRED 36'-2" ACTUAL

BOTTOM OF FOOTING ELEVATIONS, NOT SHOWN.
PIER NO. 5 (N.B. BENT) ELEV. 587.00
PIER NO. 6 (N.B. BENT) ELEV. 589.00

PROFILE

ALONG ℄ STATE ROUTE 176

NOTES:

FOR PROPOSED STRUCTURE BLOCK, SEE SHEET 1/59.

EARTHWORK LIMITS SHOWN ARE APPROXIMATE. ACTUAL SLOPES SHALL CONFORM TO PLAN CROSS-SECTIONS.

HORIZONTAL CURVE DATA:

℄ STATE ROUTE 176		℄ RAMP "E"	
P.I. STA.	213+68.89	P.I. STA.	213+92.97
P.C. STA.	196+20.32	P.C. STA.	212+67.65
P.T. STA.	230+11.30	P.T. STA.	215+17.65
Δ =	34° 28' 29.8"	Δ =	10° 00' 00"
D_c =	1° 01' 00"	D_c =	4° 00' 00"
R =	5635.65'	R =	1432.39'
T =	1748.57'	T =	125.32'
L =	3390.98'	L =	250.00'
C =	3340.06'	C =	249.68'
E =	265.03'	E =	5.47'

FOUNDATION DATA:

ABUTMENT FOOTINGS SHALL BE SUPPORTED ON HP12x53 BEARING PILES. PIER FOOTINGS SHALL BE SUPPORTED ON HP12x53 BEARING PILES, EXCEPT PIER NO. 6 (RIGHT BENT ONLY), WHICH SHALL BE SUPPORTED ON SPREAD FOOTINGS, ON BEDROCK. FOR AVERAGE ESTIMATED PILE PAY LENGTHS, SEE SHEET 6/59 THE DESIGN BEARING PRESSURE FOR BEDROCK IS 5 TONS / SQ. FT.

2/59

adache - ciuni - lynn associates
CONSULTING ENGINEERS CLEVELAND, OHIO 44131

SITE PLAN
JENNINGS FREEWAY
STATE ROUTE 176
OVER
BIG CREEK VALLEY
BRIDGE NO. CUY-176-1229
STA. 204+17.49 TO STA. 215+19.32
CUYAHOGA COUNTY OHIO

DESIGNED	DRAWN	CHECKED	REVIEWED	DATE	REVISED
T.M.J.	T.M.J.	T.A.B.	A.J.M.	MAR. 1992	

BRUNING 44-232 67195-001

A·C·L form no. B-1

STRUCTURAL GENERAL NOTES

STANDARD DRAWINGS AND SUPPLEMENTAL SPECIFICATIONS

REFERENCE SHALL BE MADE TO STANDARD DRAWINGS:

AS-1-81	DATED **9-15-94**
RB-1-55	REVISED 2-2-59
SD-1-69	REVISED 6-12-69
EXJ-4-87	DATED **1-20-94**

AND TO SUPPLEMENTAL SPECIFICATIONS:

944	DATED **3-23-95**

DESIGN SPECIFICATIONS

THIS STRUCTURE CONFORMS TO 'STANDARD SPECIFICATIONS FOR HIGHWAY BRIDGES ADOPTED BY THE AMERICAN ASSOCIATION OF STATE HIGHWAY AND TRANSPORTATION OFFICIALS, 1992 INCLUDING THE 1993 INTERIM SPECIFICATIONS AND THE ODOT BRIDGE DESIGN MANUAL.

DESIGN DATA

DESIGN LOADING

DESIGN LOADING - HS20-44 (CASE I) AND THE ALTERNATE MILITARY LOADING
FUTURE WEARING SURFACE = 30 LBS. PER SQUARE FT.

DESIGN STRESSES

HIGH PERFORMANCE CONCRETE - COMPRESSIVE STRENGTH 4500 P.S.I.
REINFORCING STEEL - ASTM A615, A616, A617 - GRADE 60 MINIMUM YIELD STRENGTH 60,000 PSI
SPIRAL REINFORCEMENT MAY BE PLAIN BARS, ASTM A82 OR A615
STRUCTURAL STEEL ASTM A572 - YIELD STRENGTH 50,000 PSI

DECK PROTECTION METHOD

EPOXY COATED REINFORCING STEEL 2 1/2' CONCRETE COVER AND SEALING OF CONCRETE SURFACES

MONOLITHIC WEARING SURFACE

MONOLITHIC WEARING SURFACE IS ASSUMED, FOR DESIGN PURPOSES TO BE 1' THICK

UTILITY LINES

ALL EXPENSE INVOLVED IN RELOCATING AFFECTED UTILITY LINES SHALL BE BORNE BY THE OWNER. THE CONTRACTOR AND OWNER(S) ARE REQUESTED TO COOPERATE BY ARRANGING THEIR WORK IN SUCH A MANNER THAT INCONVENIENCE TO EITHER WILL BE HELD TO A MINIMUM.

ITEM 203 EMBANKMENT, *USING GRANULAR MATERIAL*

ALL FILL MATERIAL FOR THE CONSTRUCTION OF THE APPROACH EMBANKMENT BETWEEN STATIONS 202+00 TO 216+00 SHALL BE 203 GRANULAR MATERIAL PLACED IN LIFTS NOT TO EXCEED A THICKNESS OFMORE THAN SIX (6) INCHES.

CONSTRUCTION CONSTRAINTS

PRIOR TO DRIVING PILES AT THE ABUTMENTS, THE EMBANKMENT BETWEEN STATIONS 202+00 TO 216+00 SHALL BE CONSTRUCTED UP TO THE LEVEL OF THE SUBGRADE ELEVATION. THE EXCAVATION FOR THE ABUTMENT FOOTINGS AND THE INSTALLATION OF THE ABUTMENT PILES SHALL NOT BEGIN UNTIL AFTER THE ABOVE REQUIRED EMBANKMENT HAS BEEN CONSTRUCTED.

PILE DESIGN LOADS

SEE PILING PLANS ON SHEET 6 /59 FOR THE DESIGN LOADS FOR ABUTMENTS AND PIER PILES. (WHERE REQUIRED)

FOOTINGS FOR PIER NO. 6 N.B.

FOOTINGS SHALL EXTEND A MINIMUM OF THREE (3) INCHES INTO BEDROCK OR TO THE ELEVATION SHOWN, WHICHEVER IS LOWER.

ITEM SPECIAL, SEALING OF CONCRETE SURFACE

A CONCRETE SEALER SHALL BE APPLIED TO THE EDGE OF DECK SLAB AS SHOWN ON THE TRANSVERSE SECTION ON SHEET 36 /59 , TO THE ABUTMENTS AS SHOWN ON SHEET 9 /59 , AND ALL EXPOSED SURFACES OF THE PIER. SEE PROPOSAL NOTE FOR SURFACE PREPARATION REQUIREMENTS, APPLICATION ARATES, MATERIAL REQUIREMENTS AND APPLICATION PROCEDURES.

ITEM 518, 6' PERFORATED CORRUGATED PLASTIC PIPE, AS PER PLAN:

CORRUGATED PIPE USED IN ABUTMENT DRAINAGE SHALL BE 6 INCH DIAMETER, PLASTIC CORRUGATED AS PER SUPPLEMENTAL SPECIFICATION 944, AASHTO M294, TYPE SP.

ITEM 518, 6' NON-PERFORATED CORRUGATED PLASTIC PIPE, INCLUDING SPECIALS AS PER PLAN:

CORRUGATED PIPE USED IN ABUTMENT DRAINAGE SHALL BE 6 INCH DIAMETER, PLASTIC CORRUGATED AS PER SUPPLEMENTAL SPECIFICATION 944, AASHTO M294, TYPE SP. THIS ITEM SHALL INCLUDE ALL ELBOWS, TEES AND END CAPS REQUIRED TO COMPLETE THE ABUTMENT DRAINAGE SYSTEM.

E S T I M A T E D Q U A N T I T I E S

ITEM	EXTENSION	TOTAL	UNIT	DESCRIPTION	ABUTMENTS	PIERS	SUPERSTRUCTURE UNIT NO. 1	SUPERSTRUCTURE UNIT NO. 2	GENERAL	AS BUILT
503	21100	5,200	CU.YD.	UNCLASSIFIED EXCAVATION	2,500	2,700				
505	11100	LUMP	LUMP	PILE DRIVING EQUIPMENT MOBILIZATION					LUMP	
507	14400	12,355	LIN.FT.	STEEL PILES, HP 12 X 53	4,195	8,160				
509	15840	1,870,245	POUND	EPOXY COATED REINFORCING STEEL GRADE 60	107,140	440,512	707,349	615,244		
SPEC.	51148000	4,457	CU.YD.	HIGH PERFORMANCE CONCRETE SUPERSTRUCTURE, (DECK) *			2,412	2,045		
SPEC.	51148020	593	CU.YD.	HIGH PERFORMANCE CONCRETE SUPERSTRUCTURE (PARAPET) *			332	261		
SPEC.	51148040	3,769	CU.YD.	HIGH PERFORMANCE CONCRETE (SUBSTRUCTURE) *	1,204	2,565				
SPEC.	51149000	LUMP	LUMP	HIGH PERFORMANCE CONCRETE (TRIAL MIX) *						
SPEC.	51267504	11,088	SQ.YD.	SEALING OF CONCRETE SURFACES (NON-EPOXY) *	578	4,091	3,700	2,719		
513	00100	447,000	POUND	STRUCTURAL STEEL,(AISC CERTIFICATION NOT REQUIRED)			237,000	210,000		
513	12400	5,569 000	POUND	STRUCTURAL STEEL, A572-50 AISC CATEGORY III			2,914,000	2,655,000		
513	20000	20,610	EACH	WELDED STUD SHEAR CONNECTOR			11,397	9,213		
514	00610	6,016,000	POUND	θ PAINTING OF NEW STEEL, SYSTEM IZEU *			3,151,000	2,865,000		
516	11210	605.2	LIN.FT.	STRUCTURAL EXPANSION JOINT INCLUDING ELASTOMERIC STRIP SEAL *			291.5	313.7		
516	13600	90	SQ.FT.	1' PREFORMED EXPANSION JOINT FILLER	90					
516	14000	13	SQ.FT.	2' PREFORMED EXPANSION JOINT FILLER	13					
516	30500	174	LIN.FT.	PVC WATERSTOP	174					
516	46910	64,055	POUND	BEARING DEVICE, MISC.: BOLSTER *		64,055				
516	46910	153,560	POUND	BEARING DEVICE, MISC.: ROCKER *	18,160	135,400				
518	21200	280	CU.YD.	POROUS BACKFILL WITH FILTER FABRIC	280					
518	40001	350	LIN.FT.	6' PERFORATED CORRUGATED PLASTIC PIPE, AS PER PLAN	350					
518	40011	72	LIN.FT.	6' NON-PERFORATED CORRUGATED PLASTIC PIPE, INCLUDING SPECIALS AS PER PLAN	72					
601	21001	2,654	SQ.YD.	CONCRETE SLOPE PROTECTION, AS PER PLAN					2,654	

* SEE PROPOSAL NOTE θ FIELD

adache–ciuni–lynn associates
CONSULTING ENGINEERS CLEVELAND, OHIO 44131

STRUCTURAL GENERAL NOTES
AND ESTIMATED QUANTITIES
JENNINGS FREEWAY
STATE ROUTE 176
OVER
BIG CREEK VALLEY
BR. NO. CUY–176–1229

DESIGNED	DRAWN	CHECKED	REVIEWED	DATE	REVISED
T.A.B.	T.M.J.	H.B.M.	A.J.M.	8/93	

CALC.	CUYAHOGA COUNTY	OHIO
DATE	CUY-176-10.88	F.H.W.A.
CHKD.	JENNINGS FREEWAY	REGION 5
DATE		

468 / 557

NOTES

1.) FOR LIGHT SUPPORT DETAILS SEE SHEET 50/59

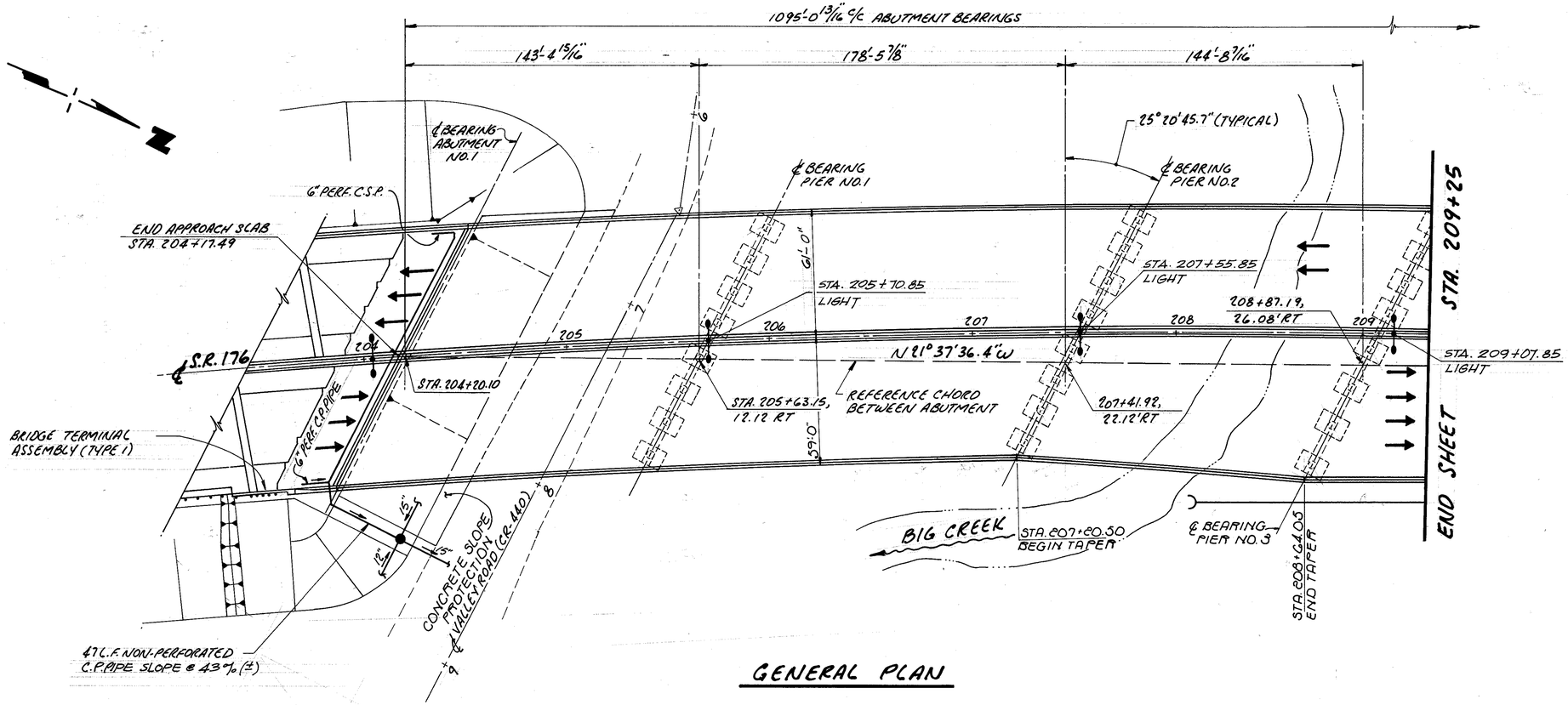

GENERAL PLAN

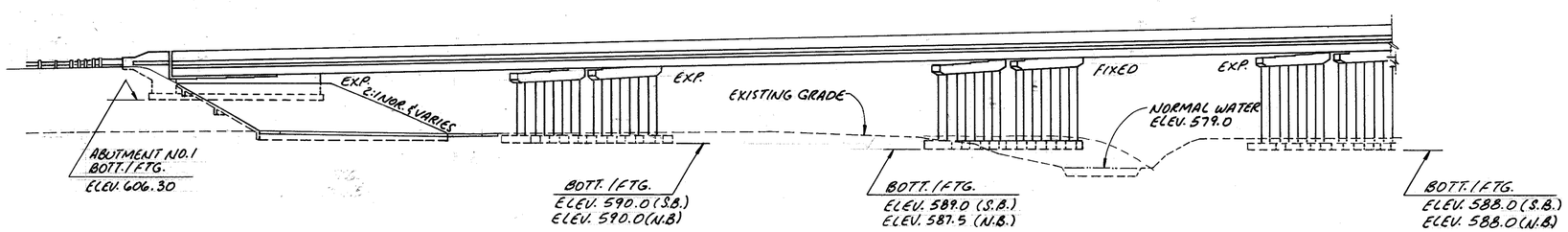

ELEVATION

4 / 59

adache · ciuni · lynn associates
CONSULTING ENGINEERS CLEVELAND, OHIO 44131

GENERAL PLAN & ELEVATION
JENNINGS FREEWAY
STATE ROUTE 176
OVER
BIG CREEK VALLEY
BRIDGE NO. CUY-176-1229

DESIGNED	DRAWN	CHECKED	REVIEWED	DATE	REVISED
D.S.C.	D.S.C.	T.A.D.	A.J.M.	8/93	

BRUNING 44-222 67195

A·C·L form no. B-1

CALC.	CUYAHOGA COUNTY	OHIO
DATE	CUY-176-10.88	F.H.W.A.
CHKD.	JENNINGS FREEWAY	REGION 5
DATE		

469 / 557

NOTES:

1. FOR LIGHT SUPPORT DETAILS SEE SHEET 50/59

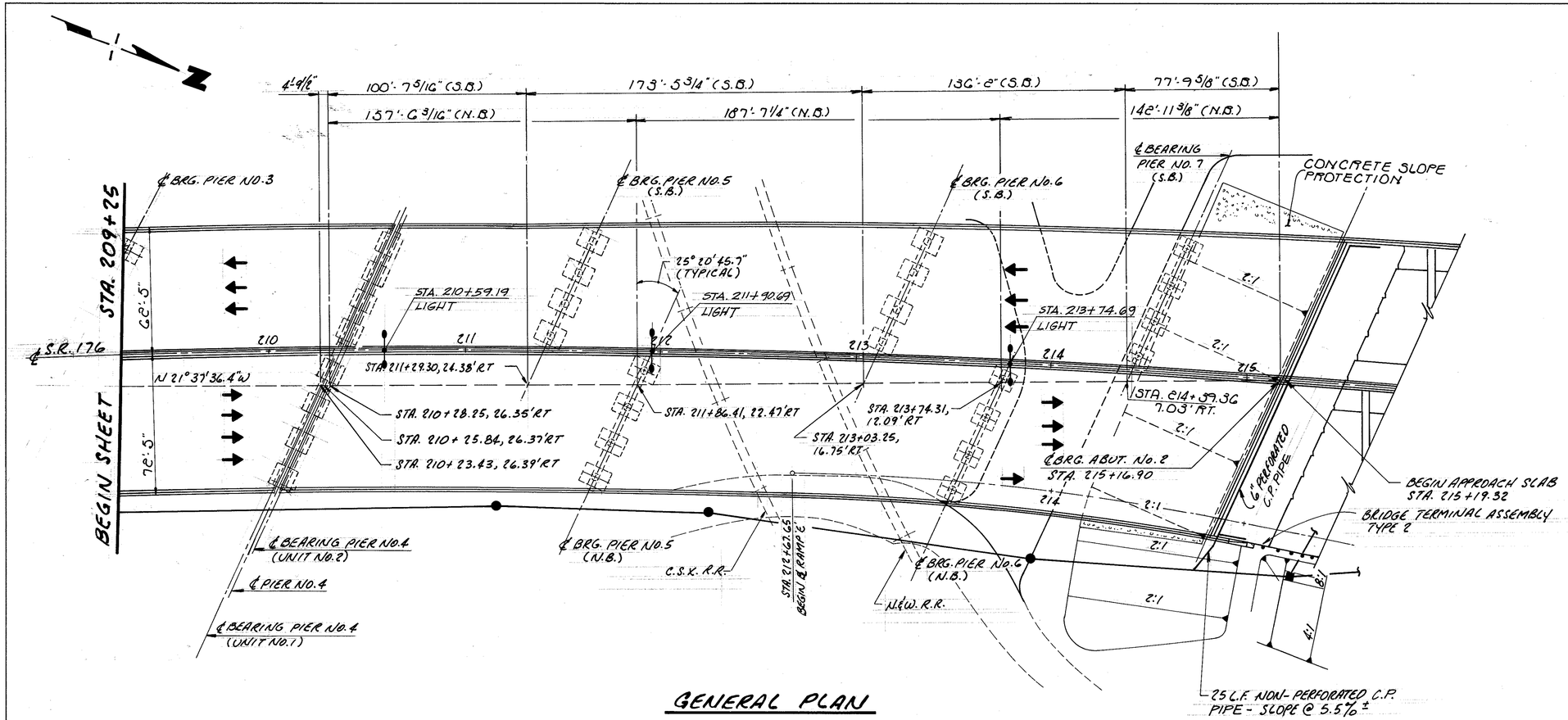

GENERAL PLAN

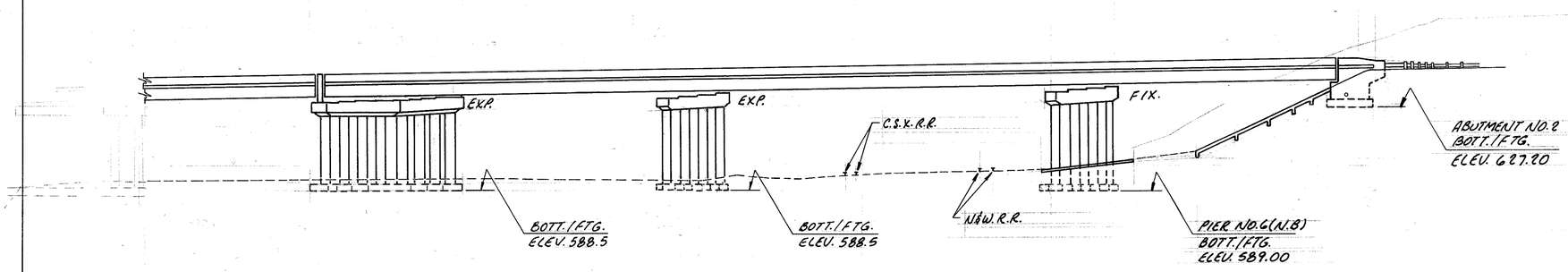

ELEVATION

3/59

adache · ciuni · lynn associates
CONSULTING ENGINEERS CLEVELAND, OHIO 44131

GENERAL PLAN & ELEVATION
JENNINGS FREEWAY
STATE ROUTE 176
OVER
BIG CREEK VALLEY
BRIDGE NO. CUY-176-1229

DESIGNED	DRAWN	CHECKED	REVIEWED	DATE	REVISED
D.S.C.	D.S.C.	T.A.B.	A.J.M.	8/93	

BRUNING 44.232 67195

A·C·L form no. B-1

CALC. DATE	CUYAHOGA COUNTY CUY – 176 – 10.88 JENNINGS FREEWAY	OHIO
CHKD. DATE		F.H.W.A. REGION 5

500
557

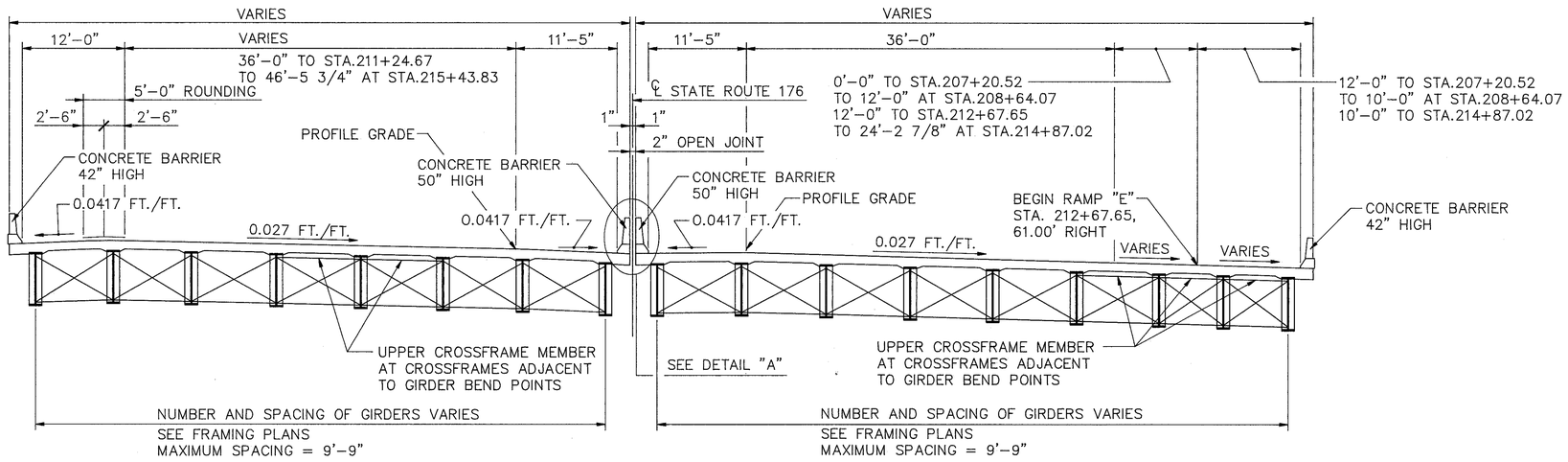

TRANSVERSE SECTION

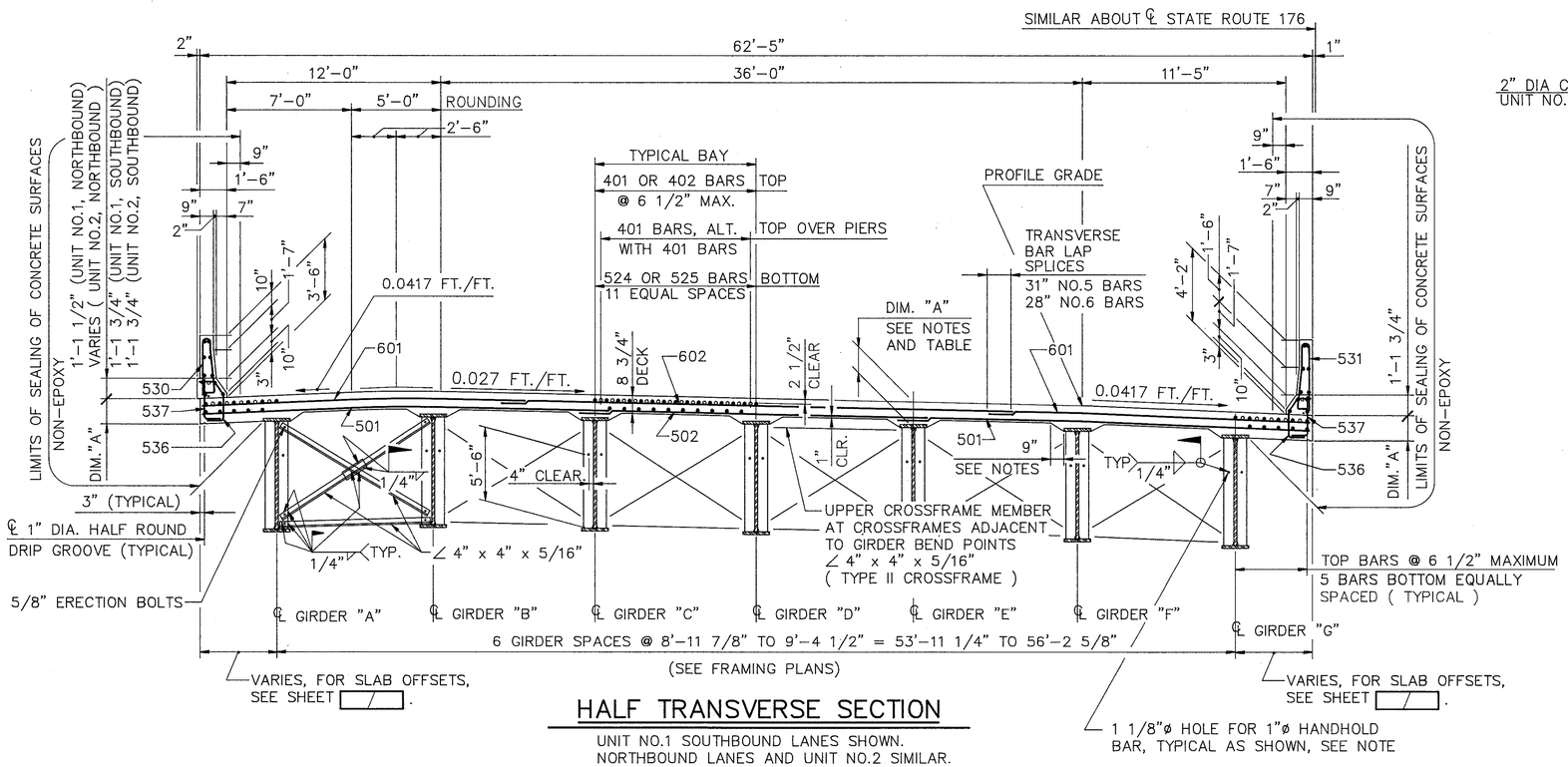

HALF TRANSVERSE SECTION

UNIT NO.1 SOUTHBOUND LANES SHOWN.
NORTHBOUND LANES AND UNIT NO.2 SIMILAR.

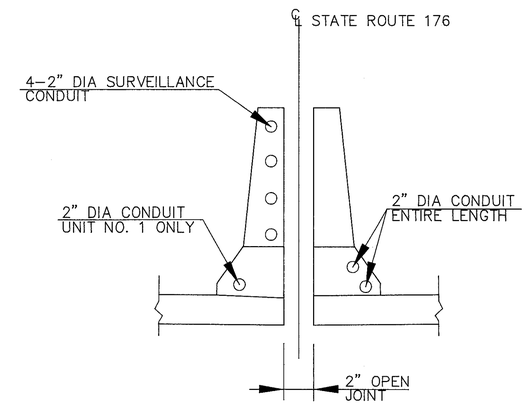

DETAIL "A"

2" DIA. CONDUIT TO BE INCLUDED
FOR PAYMENT WITH ITEM 625

DIMENSION "A"	
UNIT NO.1, NORTHBOUND	12 3/4"
UNIT NO.2, NORTHBOUND	13 1/8"
UNIT NO.1, SOUTHBOUND	12 3/4"
UNIT NO.2, SOUTHBOUND	12 1/4"

NOTES:

FOR SLAB PLANS, SEE SHEETS 46/59 THRU 49/59 .

FOR FRAMING PLANS, SEE SHEETS 22/59 THRU 23/59 .

DECK SLAB DEPTH: THE DISTANCE SHOWN FROM THE TOP OF DECK SLAB TO THE BOTTOM OF THE GIRDER FLANGE IS THE DESIGN DIMENSION. THE QUANTITY OF CONCRETE TO BE PAID FOR SHALL BE BASED UPON THIS DIMENSION, EVEN THOUGH DEVIATION FROM IT MAY BE NECESSARY BECAUSE THE TOP FLANGE OF THE GIRDER MAY NOT HAVE THE EXACT CAMBER OR CONFORMATION REQUIRED TO PLACE IT PARALLEL TO THE FINISHED GRADE. DEDUCTION SHALL BE MADE FOR THE VOLUME OF ENCASED STEEL PLATES AS PER 511.18.

A HAUNCH WIDTH OF 9" SHALL BE USED FOR COMPUTING THE QUANTITY OF CONCRETE. HOWEVER, THE HAUNCH WIDTH MAY VARY BETWEEN 6" AND 12" PROVIDED THAT THE SLOPE SHALL BE NOT MORE THAN 4:1 FOR A HAUNCH LESS THAN 9"WIDE.

1"ø HANDHOLD BAR SHALL BE PLACED AS SHOWN FOR ALL INTERIOR SPANS, FOR ADDITIONAL DETAILS, SEE SHEET 29/XX . HANDHOLD BARS SHALL NOT BE INSTALLED ON THE END SPANS OF THE BRIDGE.

ALL REINFORCING BAR MARKS IN THE SUPERSTRUCTURE SHALL BE PREFIXED AS FOLLOWS:

PREFIX	LOCATION
1SN	UNIT NO.1, NORTHBOUND
2SN	UNIT NO.2, NORTHBOUND
1SS	UNIT NO.1, SOUTHBOUND
2SS	UNIT NO.2, SOUTHBOUND

FOR MEDIAN BARRIER LIGHT SUPPORT DETAIL SEE SHEET 50/59

36/59

adache–ciuni–lynn associates
CONSULTING ENGINEERS CLEVELAND, OHIO 44131

TRANSVERSE SECTION
JENNINGS FREEWAY
STATE ROUTE 176
OVER
BIG CREEK VALLEY
BRIDGE NO. CUY–176–1229

DESIGNED	DRAWN	CHECKED	REVIEWED	DATE	REVISED
T.A.B.	T.M.J.	C.T.	A.J.M.	8/93	