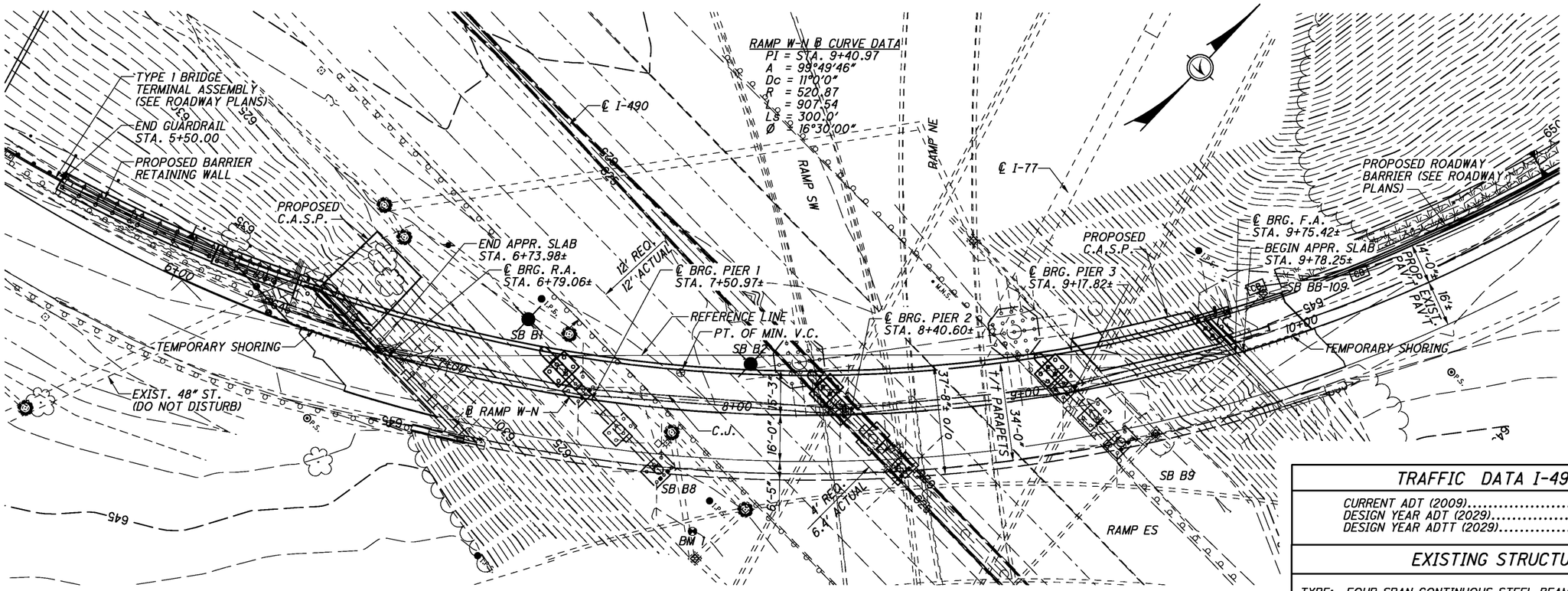

PLAN

BENCH MARK #1 ELEV. = 622.474 NORTHWEST CORNER OF CONCRETE PAD AROUND CATCH BASIN STA. 7+89.05, 41.303' RT. ℄ RAMP W-N
BENCH MARK #2 ELEV. = 644.822 TOP OF NW BOLT AT BASE OF TOWER LIGHT #BRO 26 STA. 5+57.50, 67.777' RT. ℄ RAMP W-N
BENCH MARK # 3 ELEV. = 649.775 TOP OF TOP BOLT AT BASE OF TOWER LIGHT #BOW 28 STA. 12+35.19, 77.546' RT. ℄ RAMP W-N

BORING LOCATIONS
SB-B1 STA. 7+24.25, 23.83' LT., ELEV. 622.9 (2008)
SB-B2 STA. 8+05.52, 17.48' LT., ELEV. 623.9 (2008)
SB-B8 STA. 7+86.38, 31.58' RT., ELEV. 622.5 (1998)
SB-B9 STA. 9+40.41, 29.32' RT., ELEV. 622.3 (1998)
SB-BB-109 STA. 10+00.02, 10.26' LT., ELEV. 644.6 (2005)

NOTE: EARTHWORK LIMITS SHOWN ARE APPROXIMATE. ACTUAL SLOPES SHALL CONFORM TO PLAN CROSS SECTIONS.

LEGEND

APPR.	=	APPROACH SLAB
BRG.	=	BEARING
C.A.S.P.	=	CRUSHED AGGREGATE SLOPE PROTECTION
C.J.	=	CONSTRUCTION JOINT
DIA.	=	DIAMETER
ELEV.	=	ELEVATION
EX.	=	EXISTING
F.A.	=	FORWARD ABUTMENT
MIN.	=	MINIMUM
M.V.C.	=	MINIMUM VERTICAL CLEARANCE
PROP.	=	PROPOSED
PT.	=	POINT
R.A.	=	REAR ABUTMENT
REQ.	=	REQUIRED
SB	=	SOIL BORING
ST	=	STORM SEWER

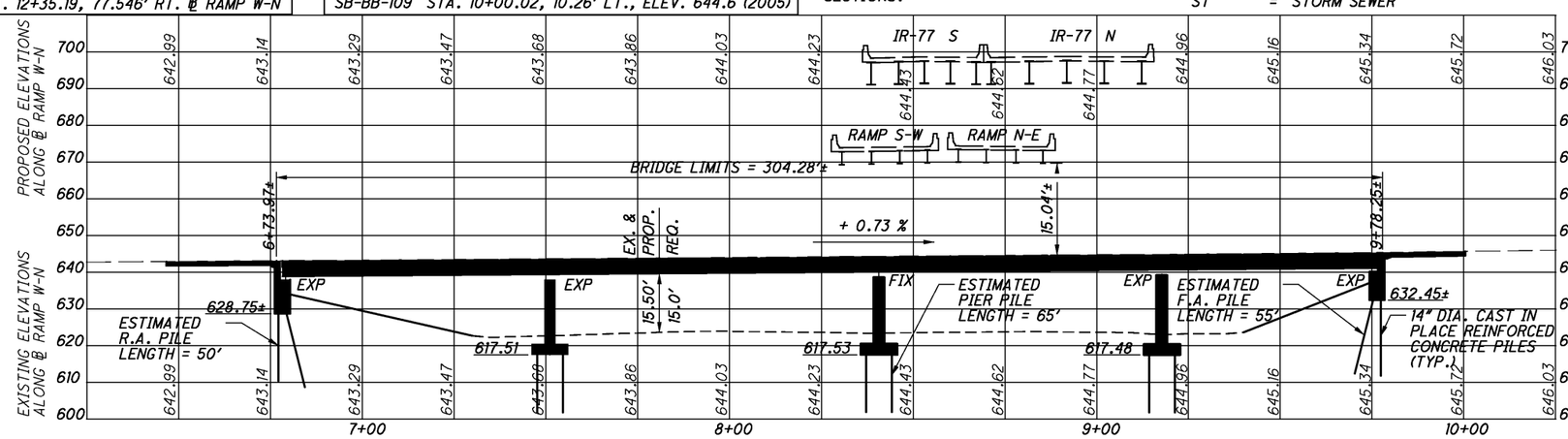

PROFILE ALONG ℄ RAMP W-N

TRAFFIC DATA I-490

CURRENT ADT (2009).....54950
DESIGN YEAR ADT (2029).....56090
DESIGN YEAR ADTT (2029).....5048

EXISTING STRUCTURE

TYPE: FOUR SPAN CONTINUOUS STEEL BEAM WITH REINFORCED CONCETE SLAB DECK ON REINFORCED CONCRETE SUBSTRUCTURES

SPANS: 71'-10⅞"±, 89'-7⅝"±, 77'-2⅝"±, 57'-7¼"± c/c BEARINGS (MEASURED ALONG BASELINE)

ROADWAY: 24'-2"± T/T DEFLECTOR PARAPETS

LOADING: CF2000 (57) & ALTERNATE LOADING

SKEW: VARIES (SEE GENERAL PLAN)

WEARING SURFACE: 1½" DENSE CONCRETE OVERLAY

APPROACH SLABS: REAR 30'-0"±, FORWARD 25'-0"±

ALIGNMENT: 11°00'00" CURVE

SUPERELEVATION: 0.060'/FT

STRUCTURAL FILE NUMBER: 1812076

DATE BUILT: 1964

PROPOSED STRUCTURE

PROPOSED WORK: WIDEN BRIDGE BY INSTALLING 2 NEW GIRDERS WITH A REINFORCED CONCRETE DECK AND REINFORCED CONCRETE SUBSTRUCTURES

SPANS: 71'-10⅞"±, 89'-7⅝"±, 77'-2⅝"±, 57'-7¼"± c/c BEARINGS (MEASURED ALONG BASELINE)

ROADWAY: 34'-0"± T/T DEFLECTOR PARAPETS

LOADING: HS20-44 CASE 1 AND ALTERNATE MILITARY LOADING (WIDENING) & HS19.3 (EXISTING)

SKEW: VARIES (SEE GENERAL PLAN)

WEARING SURFACE: 2" MONOLITHIC CONCRETE

APPROACH SLABS: REAR 30'-0", FORWARD 25'-0"

ALIGNMENT: 11°00'00" CURVE

SUPERELEVATION: 0.060'/FT

COORDINATES: LATITUDE 41°28'46.23" N
LONGITUDE 81°39'43.89" W

DESIGN AGENCY
BURGESS & NIPLE
100 WEST ERIE STREET PAINESVILLE, OHIO 44077

DESIGNED	DRAWN	REVIEWED	DATE
ASK	DCF	DWL	01-09
CHECKED	REVISED	STRUCTURE FILE NUMBER	
JAA		1812076	

CUYAHOGA COUNTY
STA. 6+73.97±
STA. 9+78.25±

SITE PLAN
BRIDGE NO. CUY-490-0187WN
RAMP WN OVER I-490

CUY-490-
1.87WN/VAR
PID No. 85049

...\sheets\490_0187PSP001.dgn

ESTIMATED QUANTITIES

ITEM	ITEM EXT.	TOTAL	UNIT	DESCRIPTION	SUPER.	ABUT.	PIERS	GENERAL	REF. SHEET	
202	11201	LUMP		PORTIONS OF STRUCTURE REMOVED, AS PER PLAN				LUMP	3 / 40	
503	11101	LUMP		COFFERDAMS, CRIBS & SHEETING, AS PER PLAN		LUMP			4 / 40	
503	21101	397	CU. YD.	UNCLASSIFIED EXCAVATION, AS PER PLAN 1		397			4 / 40	
503	21101	112	CU. YD.	UNCLASSIFIED EXCAVATION, AS PER PLAN 2			112		4 / 40	
505	11100	LUMP		PILE DRIVING EQUIPMENT MOBILIZATION				LUMP		
507	00600	3600	FT.	14" CAST-IN-PLACE REINFORCED CONCRETE PILES, DRIVEN		2430	1170			
507	00650	3930	FT.	14" CAST-IN-PLACE REINFORCED CONCRETE PILES, FURNISHED		2670	1260			
507	92200	100	FT.	PREBORED HOLES		100			11 / 40	
507	92201	480	FT.	PREBORED HOLES, AS PER PLAN			480		4 / 40	*
507	98010	132	EACH	PILING, MISC.: STEEL PILE SPLICES		96	36			
509	10001	59366	POUND	EPOXY COATED REINFORCING STEEL, AS PER PLAN	30921	16604	11841		4 / 40	
509	20001	100	POUND	REINFORCING STEEL, REPLACEMENT OF EXISTING REINFORCING STEEL, AS PER PLAN				100	4 / 40	*
510	10001	206	EACH	DOWEL HOLES WITH NON-SHRINK, NON-METALLIC GROUT, AS PER PLAN		112	24	70	4 / 40	*
511	50001	134	CU. YD.	CLASS HP CONCRETE, BRIDGE DECK, AS PER PLAN	134				5 / 40	
511	50101	49	CU. YD.	CLASS HP CONCRETE, BRIDGE DECK, (PARAPET), AS PER PLAN	49				5 / 40	
511	50201	242	CU. YD.	CLASS HP CONCRETE, SUBSTRUCTURE, AS PER PLAN		186	56		5 / 40	
512	10100	647	SQ. YD.	SEALING OF CONCRETE SURFACES (EPOXY-URETHANE)	370	112	98	67	5 / 40	
512	10600	3	FT.	CONCRETE REPAIR BY EPOXY INJECTION			3		20 / 40	
512	33000	21	SQ. YD.	TYPE 2 WATERPROOFING		21				
SPECIAL	512E71500	156	SQ. YD.	URETHANE TOP COAT SEALER			156		5 / 40	
513	10301	4604	POUND	STRUCTURAL STEEL MEMBERS, LEVEL 5, AS PER PLAN	4604				5 / 40	
513	95020	LUMP		STRUCTURAL STEEL MISC.: STORAGE AND ERECTION OF STEEL MEMBERS	LUMP				5 / 40	
514	00060	7500	SQ. FT.	FIELD PAINTING STRUCTURAL STEEL - INTERMEDIATE COAT	7500					
514	00066	7500	SQ. FT.	FIELD PAINTING STRUCTURAL STEEL - FINISH COAT	7500					
514	27800	LUMP		FIELD PAINTING MISC.: REPAIR OF DAMAGED EXISTING STEEL COATING	LUMP					
516	11901	37	FT.	HORIZONTAL EXTENSION OF STRUCTURAL EXPANSION JOINT, AS PER PLAN				37	33 & 34 / 40	
516	13600	89	SQ. FT.	1" PREFORMED EXPANSION JOINT FILLER		56		33		
516	41100	10	EACH	1/8" PREFORMED BEARING PAD		4	6			
516	46700	2	EACH	RESET BEARING			2		5 / 40	
516	47001	LUMP		JACKING AND TEMPORARY SUPPORT OF SUPERSTRUCTURE, AS PER PLAN				LUMP	5 / 40	
518	21200	55	CU. YD.	POROUS BACKFILL WITH FILTER FABRIC		55				
518	40000	136	FT.	6" PERFORATED CORRUGATED PLASTIC PIPE		136				
518	40010	27	FT.	6" NON-PERFORATED CORRUGATED PLASTIC PIPE, INCLUDING SPECIALS		27				
523	20000	2	EACH	DYNAMIC LOAD TESTING		1	1			
526	25001	44	SQ. YD.	REINFORCED CONCRETE APPROACH SLABS (T=15"), AS PER PLAN				44	5 / 40	
526	30001	51	SQ. YD.	REINFORCED CONCRETE APPROACH SLABS (T=17"), AS PER PLAN				51	5 / 40	
SPECIAL	530E00200	LUMP		STRUCTURE MISC.: PROTECTION OF FACILITIES				LUMP	6 / 40	
SPECIAL	530E00400	12	EACH	STRUCTURE, MISC.: PREBORED GROUTED ANCHOR ROD ASSEMBLY			12		6 / 40	
SPECIAL	530E00600	837	SQ. FT.	STRUCTURE MISC.: CARBON FIBER COMPOSITE MATERIAL (1 LAYER)			837		6 / 40	
SPECIAL	530E00600	56	SQ. FT.	STRUCTURE MISC.: CARBON FIBER COMPOSITE MATERIAL (2 LAYERS)			56		6 / 40	
601	20000	144	SQ. YD.	CRUSHED AGGREGATE SLOPE PROTECTION		144				
847	10001	67	SQ. YD.	MICRO SILICA MODIFIED CONCRETE OVERLAY, 2" THICK, AS PER PLAN					6 / 40	

* INCLUDES A CONTINGENCY QUANTITY TO BE USED "AS DIRECTED BY THE ENGINEER"

DESIGN AGENCY
BURGESS & NIPLE
100 WEST ERIE STREET PAINESVILLE, OHIO 44077

DESIGNED	DRAWN	REVIEWED	DATE
ASK	DCF	DWL	02-09
CHECKED	REVISED	STRUCTURE FILE NUMBER	
JAA		1812076	

ESTIMATED QUANTITIES
BRIDGE NO. CUY-490-0187WN
RAMP WN OVER I-490

CUY-490-
1.87WN/VAR
PID No. 85049

...\sheets\490_0187PEQ001.dgn

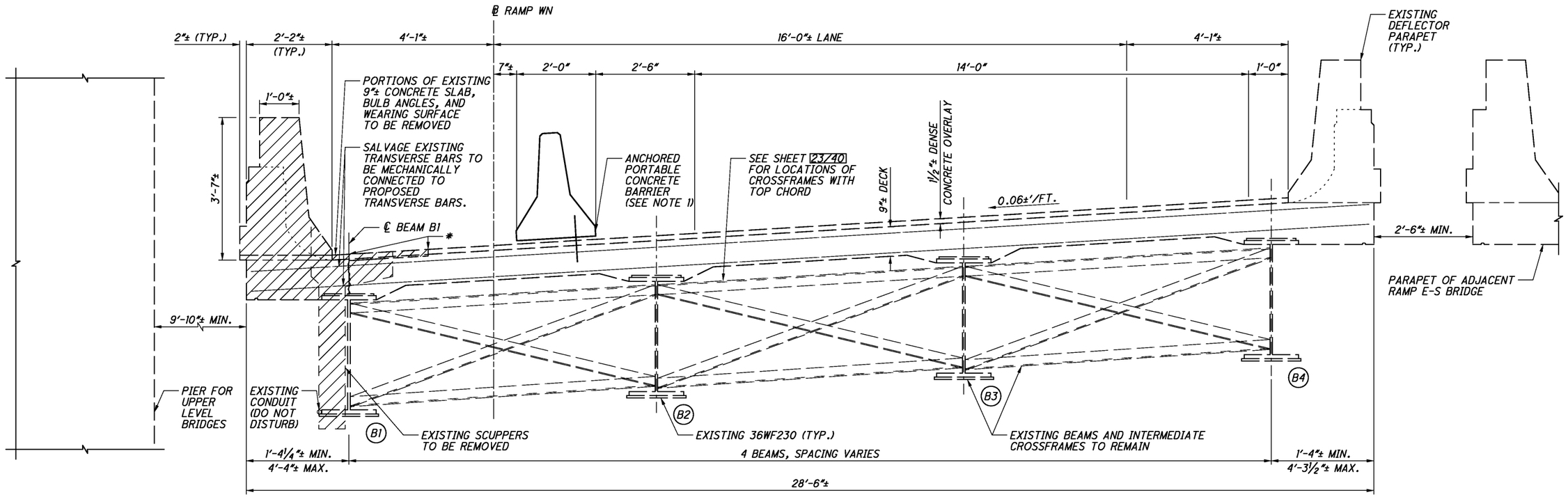

EXISTING TRANSVERSE SECTION

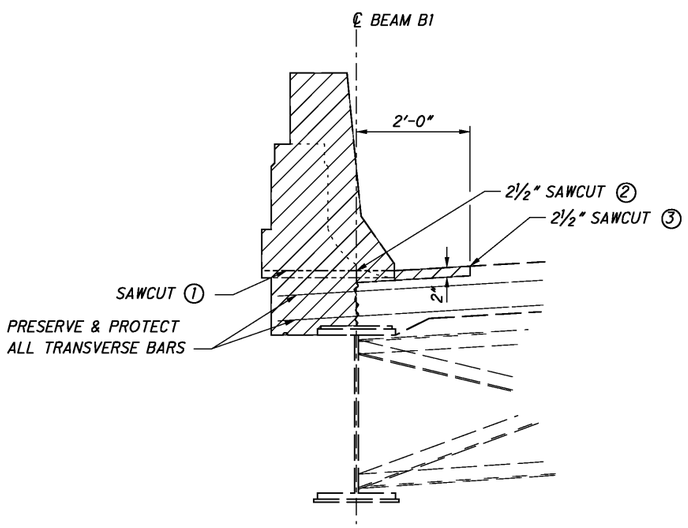

REMOVAL DETAIL AT MINIMUM OVERHANG

(℄ OF B1 UNDER PARAPET)

REMOVAL SEQUENCE:

1. MAKE HORIZONTAL SAWCUT ① AND REMOVE PARAPET
2. MAKE VERTICAL SAWCUT ② AND REMOVE DECK EDGE
3. MAKE VERTICAL SAWCUT ③ AND REMOVE TOP 2" OF DECK, WEARING SURFACE AND BULB ANGLE, IF PRESENT. REMOVE THE TOP OF DECK AND WEARING SURFACE ACCORDING TO THE REQUIREMENTS OF ITEM 847.

NOTES:

1. ANCHOR PORTABLE CONCRETE BARRIER WITH 2 ANCHORS PER SEGMENT. AFTER REMOVAL OF THE PORTABLE CONCRETE BARRIER, FILL ANCHOR HOLES IN DECK WITH NON-SHRINK, NON-METALLIC EPOXY GROUT PER CMS 705.20.

LEGEND:

MAX. = MAXIMUM
MIN. = MINIMUM
TYP. = TYPICAL
* = 2½" DEEP SAW CUT AT ℄ BEAM 1 & 2'-0" FROM ℄ BEAM 1
= AREA TO BE REMOVED PER ITEM 202 - PORTIONS OF STRUCTURE REMOVED, AS PER PLAN

DESIGN AGENCY
BURGESS & NIPLE
100 WEST ERIE STREET PAINESVILLE, OHIO 44077

DESIGNED	DRAWN	REVIEWED	DATE
ASK	ASK	DWL	01-09
CHECKED	REVISED	STRUCTURE FILE NUMBER	
JAA		1812076	

SUPERSTRUCTURE REMOVAL DETAILS
BRIDGE NO. CUY-490-0187WN
RAMP WN OVER I-490

CUY-490-1.87WN/VAR
PID No. 85049

...\sheets\490_0187PRE001.dgn

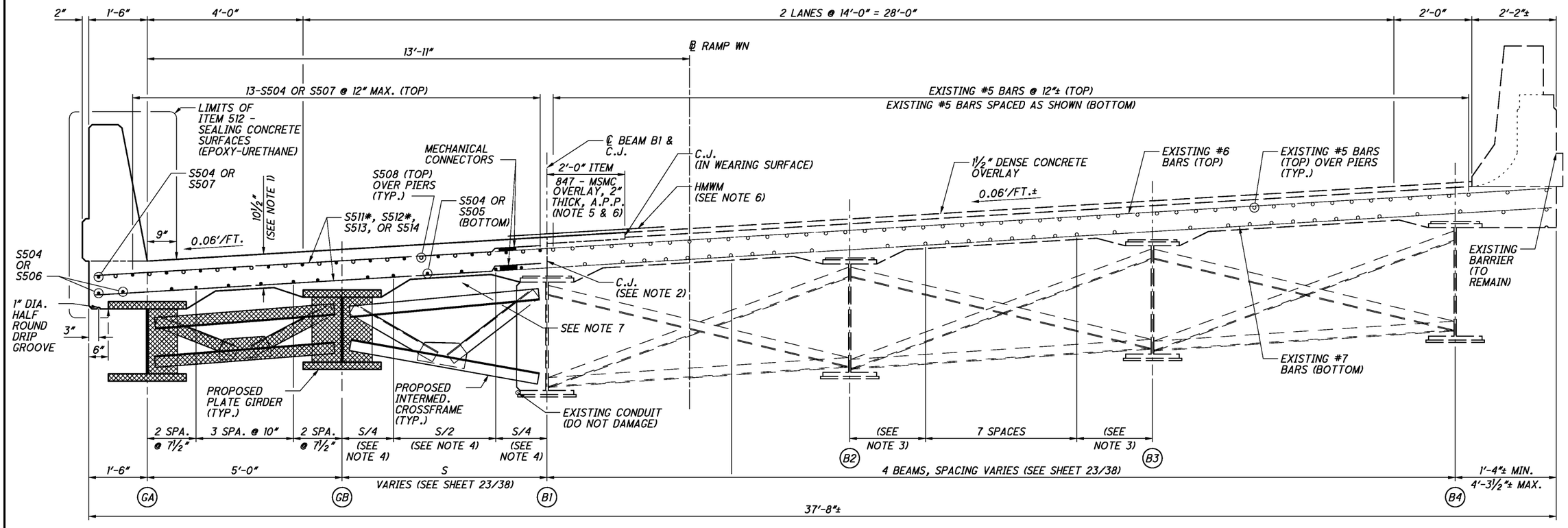

TRANSVERSE SECTION

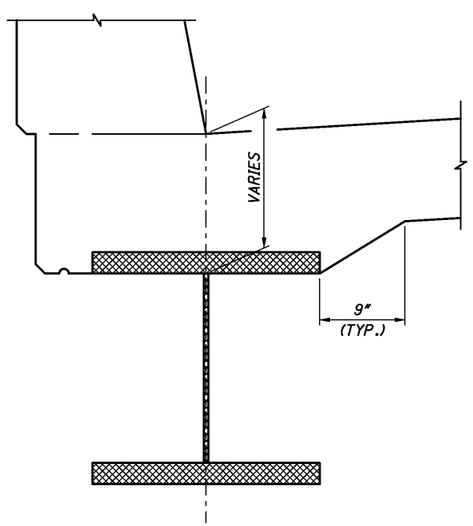

HAUNCH DETAIL

LEGEND:

A.P.P.	= AS PER PLAN
C.J.	= CONSTRUCTION JOINT
DIA.	= DIAMETER
INTERMED.	= INTERMEDIATE
MAX.	= MAXIMUM
MIN.	= MINIMUM
MSMC	= MICROSILICA MODIFIED CONCRETE
T&B	= TOP AND BOTTOM
TYP.	= TYPICAL
VAR.	= VARIES
*	= BAR LENGTHS HAVE BEEN SIZED FOR SIDE BY SIDE MECHANICAL CONNECTORS. IF AN ALTERNATE SYSTEM IS CHOSEN, BAR LENGTHS SHOULD BE ADJUSTED.
▩	= PROVIDED BY OTHERS

NOTES:

1. THE ESTIMATED QUANTITY OF DECK SLAB CONCRETE IS BASED ON THE CONSTANT DECK THICKNESS, AS SHOWN, PLUS THE QUANTITY OF CONCRETE THAT FORMS EACH GIRDER HAUNCH. THE ESTIMATE ASSUMES A CONSTANT HAUNCH THICKNESS OF 4½" AND A CONSTANT HAUNCH WIDTH OUTSIDE THE EDGE OF EACH GIRDER FLANGE OF 9". DEVIATE FROM THIS HAUNCH THICKNESS AS NECESSARY TO PLACE THE DECK SURFACE AT THE FINISHED GRADE. THE ALLOWABLE TOLERANCE FOR THE HAUNCH WIDTH OUTSIDE THE EDGE OF EACH GIRDER IS 3"±.

   THE HAUNCH THICKNESS WAS MEASURED AT THE CENTERLINE OF GIRDER, FROM THE SURFACE OF THE DECK TO THE BOTTOM OF THE TOP FLANGE MINUS THE DECK SLAB THICKNESS. THE AREA OF ALL EMBEDDED STEEL PLATES HAS BEEN DEDUCTED FROM THE HAUNCH QUANTITY IN ACCORDANCE WITH 511.24.

2. THE EXPOSED EXISTING VERTICAL CONCRETE SURFACE THAT IS TO BE COVERED WITH NEW CONCRETE SHALL BE ROUGH AND IRREGULAR WITH AN AMPLITUDE OF ¼" OR MORE.

3. EXISTING LONGITUDINAL REINFORCING BOTTOM BARS:
   3 SPACES FOR BEAM SPACING > 8'-0"
   2 SPACES FOR BEAM SPACING < 8'-0"

4. PROPOSED BOTTOM LONGITUDINAL REINFORCING STEEL SPACING:
   2 EQUAL SPACES IN S/4
   3 EQUAL SPACES IN S/2

5. PLACE THE MSMC OVERLAY AFTER THE DECK AND PARAPET ARE IN PLACE.

6. 2'-0" WIDE HIGH MOLECULAR WEIGHT METHACRYLATE OVER EACH CONSTRUCTION JOINT. INCLUDE WITH ITEM 511 - CLASS HP CONCRETE, BRIDGE DECK, AS PER PLAN FOR PAYMENT.

7. FORMS MUST BE EQUALLY SUPPORTED BY GB & B1 AND CONSTRUCTED TO ACCOMMODATE THE ROTATION CAUSED BY DIFFERENTIAL DEFLECTIONS DURING DECK PLACEMENT.

DESIGN AGENCY
BURGESS & NIPLE
100 WEST ERIE STREET PAINESVILLE, OHIO 44077

DESIGNED	DRAWN	REVIEWED	DATE
ASK	ASK	DWL	01-09
CHECKED	REVISED	STRUCTURE FILE NUMBER	
JAA		1812076	

TRANSVERSE SECTION
BRIDGE NO. CUY-490-0187WN
RAMP WN OVER I-490

CUY-490-
1.87WN/VAR
PID No. 85049

...\sheets\490_0187PTS001.dgn