FHWA REGION	STATE	PROJECT	
5	OHIO		

429/620

CUYAHOGA COUNTY
CUY – 480 – 23.44

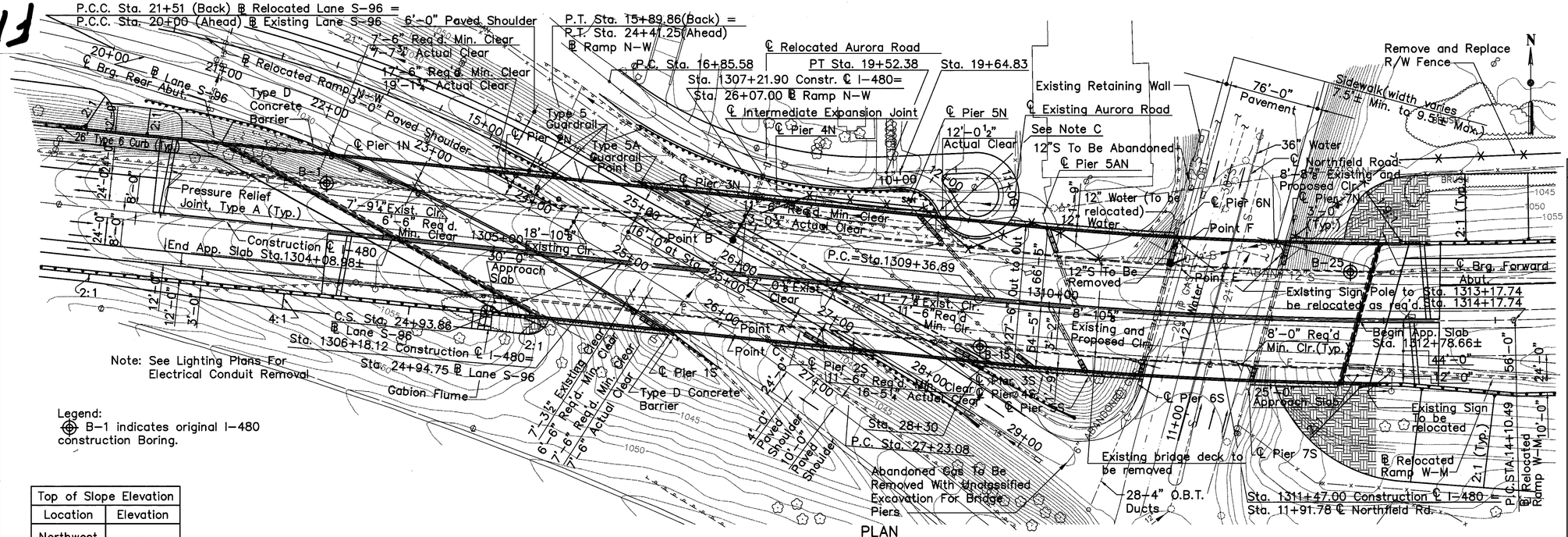

PLAN

50 0 25 50 100 200
SCALE IN FEET

Top of Slope Elevation	
Location	Elevation
Northwest Corner	1038.0
Southwest Corner	1051.5
Northeast Corner	1067.2
Southeast Corner	1069.1

Station of first roadway guardrail post adjacent to bridge	
Construction ℄ I-480 Station	1301+21.1± Lt. 1305+29.4± Rt. 1313+19.5± Lt. 1312+85.0± Rt.

CURVE 12 DATA
(℄ Ramp N-W)
P.I. Sta. 12+92.62(Back)
Dc = 4°33'26" Right
Δ = 27°38'24"
L = 606.51'
T = 309.27'
E = 37.48'
R = 1257.24'

RECORD CURVE F1 DATA
(℄ Ramp N-W)
P.I. Sta. 28+54.47(Back)
Dc = 3°30'00" Right
Δ = 9°10'38"
L = 262.21'
T = 131.39'
E = 5.26'
R = 1637.02'

CURVE C1 DATA
(℄ Lane S-96)
P.C.C. Sta. 21+51.00(Back)
= Sta. 20+00.00(Ahead)
C.S. Sta. 24+93.86
Dc = 3°30'00" Right
Δ = 17°17'06"
L = 493.86'
T = 248.82'
R = 1637.02'

CURVE ML-2 DATA
(Construction ℄ I-480)
P.I. Sta. 1319+94.09
Dc = 1°28'00" Left
Δ = 30°17'8.6"
L = 2064.94'
T = 1057.20'
E = 140.52'
R = 3906.53'

FOUNDATION DATA
(Proposed Substructures)
All proposed piles shall be 12" Ø C.I.P. reinforced concrete. See general notes for design loads and the estimated average pay lengths.

NOTES:
A. Elevations shown on left are at proposed profile grade.
B. Elevations shown on right are existing surveyed elevations at north median gutterline.
C. 17.9'± actual minimum vertical clearance at gutterline of Relocated Aurora Rd.
* D. Based on field measurements by Burgess & Niple, Ltd. The bridge limits, benchmarks and reference line dimensions have been revised.

See roadway plans for pavement elevations beyond bridge limits.
Earthwork limits shown are approximate. Actual slopes shall conform to plan cross sections.

BENCHMARK H
TSFH at house No. 21417 Aurora Road (Kinetico Bldg.)
Elev. 1052.94

BENCHMARK I
Square cut in concrete base anchor pole West side of Northfield approx. 30 feet North of i-480 bridge.
Elev. 1030.86

BENCHMARK J
Square cut in top of barrier at approx. centerline Sta. 1300+80
Elev. 1049.66

EXISTING STRUCTURE
TYPE: Continuous welded steel girder with reinforced concrete deck and substructure.
SPANS: Unit 1N and 1S:
110'-7 9/16", 145'-8", 135'-9", 12'-0" Cantilever
Unit 2N:
59'-10 13/16", 72'-4", 72'-10 13/16", 71'-7 13/16", 98'-7 1/16", 78'-8 13/16"
Unit 2S:
83'-11", 96'-10 15/16", 95'-10 11/16", 98'-7 3/16", 78'-5 3/4"
(All dimensions are measured along the reference line)
ROADWAY: 84'-0" toe to toe of concrete barrier parapets with 3'-0" concrete barrier median.
LOAD FREQUENCY: CF2000(57) Adequate for A.A.S.H.T.O. alternate loading.
SKEW: Varies
WEARING SURFACE: 1 1/4" Asphalt Concrete
APPROACH SLABS: AS-1-67 (25'-0" and 30'-0" long)
ALIGNMENT: Tangent and 1°28'00" Curve Left
SUPERELEVATION: Varies, Normal crown to .036' per ft.
YEAR BUILT: 1971
STRUCTURE FILE NO. 1814494

MODIFIED STRUCTURE
TYPE: Continuous composite welded steel girder with reinforced concrete deck and substructure.
PROPOSED WORK: (2 Stage construction) See general note for extent of work.
SPANS: Same as existing structure.
ROADWAY: 124'-0" toe to toe of concrete barrier parapets with 3'-2" concrete barrier median.
LOADING: HS-20-44 Case I and the alternate military loading.
SKEW: Varies
WEARING SURFACE: Monolithic concrete
APPROACH SLABS: AS-1-81 (25'-0" and 30'-0" long)
ALIGNMENT: Tangent and 1°28'00" Curve Left
SUPERELEVATION: Varies

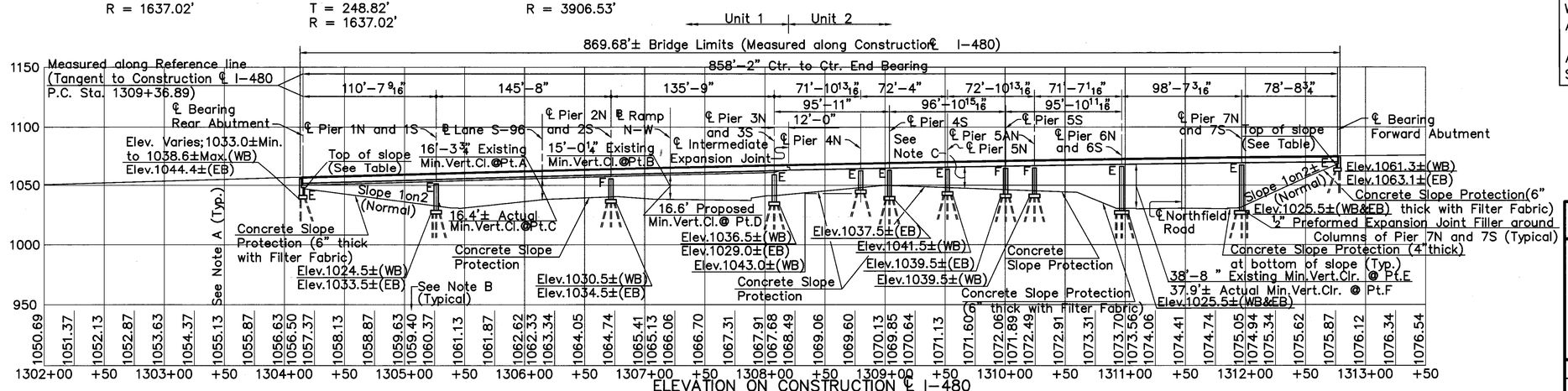

ELEVATION ON CONSTRUCTION ℄ I-480

HOWARD NEEDLES TAMMEN & BERGENDOFF
ARCHITECTS ENGINEERS PLANNERS
HNTB

SITE PLAN
BR. NO. CUY-480N-0011
I-480 OVER LANE S-96,
RAMP N-W AND NORTHFIELD ROAD
STA. 1304+08.98±
TO STA. 1312+78.69±
CUYAHOGA COUNTY OHIO

1/70

DRAWN	TRACED	CHECKED	REVIEWED	REVISED
DHS	MJP/JLV	MJP	CAB	06-03-93*
DATE 11-13-91	DATE 11-27-91	DATE 11-27-91	DATE 12-10-91	

U-READ-ME
N:\PROJECTS\PR14560\CADD\BRIDGES\NFTSL1.DWG 07-07-94

CUY-480/480N-23.45/0.00	OHIO	430 / 620
	FHWA REGION 5	

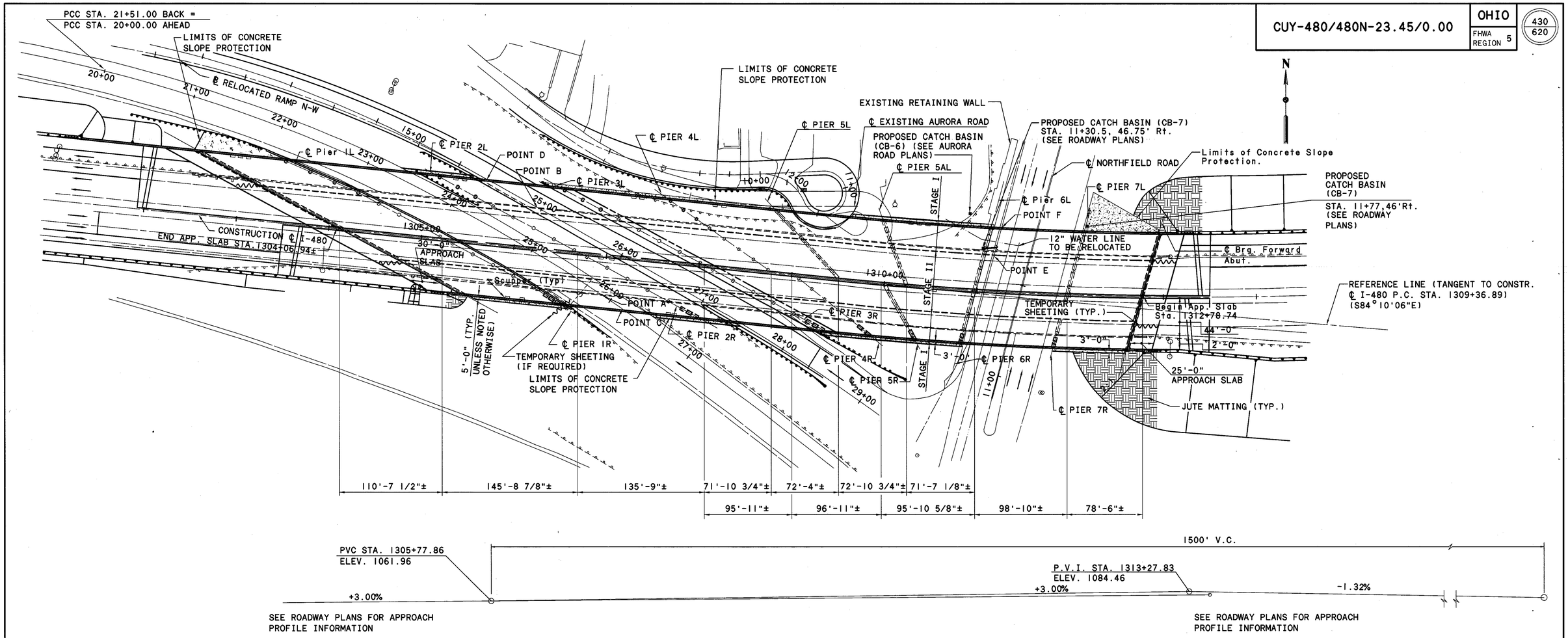

I-480 PROPOSED PROFILE GRADE

(WITHIN STATION LIMITS SHOWN)

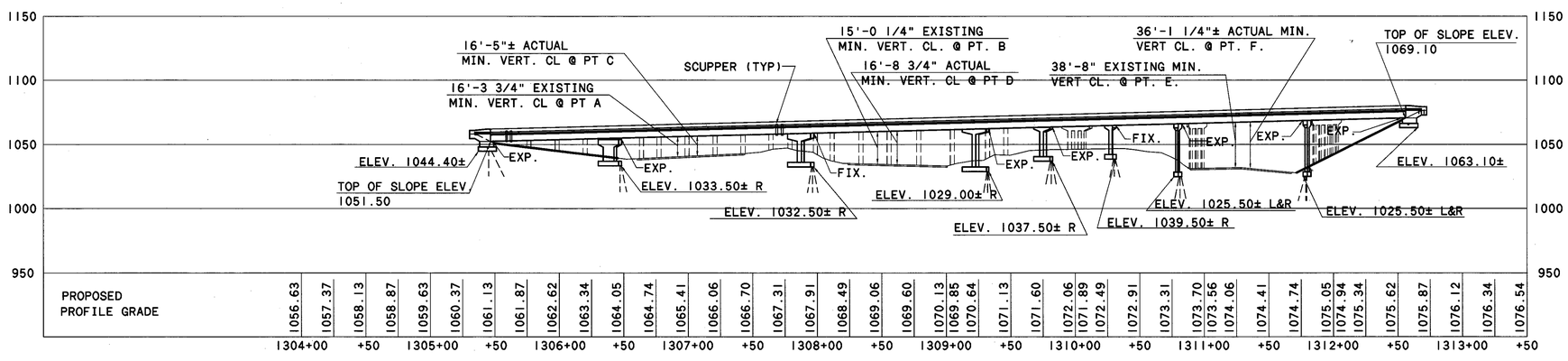

ELEVATION ON CONSTRUCTION ℄ I-480

Burgess & Niple, Limited — 2 / 70

PAINESVILLE, OH

GENERAL PLAN AND ELEVATION

BRIDGE NO. CUY-480N-0011
I-480 OVER LANES S-96
RAMP N-W AND NORTHFIELD ROAD
STA. 1304+06.94±
STA. 1312+78.74±

CUYAHOGA COUNTY

DESIGNED	DRAWN	TRACED	CHECKED	REVIEWED DATE	REVISED
Mark	CADD		BTL	BKM 17 Jul-94	

ESTIMATED QUANTITIES

CALC BY RWH/AJS DATE 6-17-94
CHKD BY MAJ/GBS DATE 6-17-94

ITEM	ITEM EXT.	TOTAL	PARTICIPATION NH**	PARTICIPATION IM	UNIT	DESCRIPTION	SUPER.	R. ABUT.	F. ABUT.	PIER 1	PIER 2	PIER 3	PIER 4	PIER 5	PIER 5A	PIER 6	PIER 7	GEN'L
202	11203	LUMP		LUMP	LUMP	PORTIONS OF STRUCTURE REMOVED, OVER 20 FOOT SPAN, AS PER PLAN												LUMP
503	11101	LUMP	LUMP		LUMP	COFFERDAMS, CRIBS AND SHEETING, AS PER PLAN												LUMP
503	21100	1796	1796		CU.YD.	UNCLASSIFIED EXCAVATION		676	61	175	185	180	139	101	58	125	96	
503	21101	6		6	CU.YD.	UNCLASSIFIED EXCAVATION, AS PER PLAN					2		2			2		
505	11100	LUMP	LUMP		LUMP	PILE DRIVING EQUIPMENT MOBILIZATION												LUMP
506	11100	LUMP	LUMP		LUMP	STATIC LOAD TEST												LUMP
507	22200	9777	9777		LIN.FT.	12" CAST-IN-PLACE REINFORCED CONCRETE PILES		2660	600	1025	1025	1025	1124	708	350	560	700	
507	92200	22	22		LIN.FT.	PREBORED HOLES							14	8				
509	15840	1133820	473658	660162	POUND	EPOXY COATED REINFORCING STEEL, GRADE 60	905583	60433	12727	19500	19665	37220	14690	14896	10000	19285	19621	200
510	12200	538		538	LIN.FT.	DOWEL HOLES		455	73									10
SPECIAL	51148000	3284	985	2299	CU.YD.	HIGH PERFORMANCE CONCRETE, SUPERSTRUCTURE (DECK)	3284											
SPECIAL	51148020	490	245	245	CU.YD.	HIGH PERFORMANCE CONCRETE, SUPERSTRUCTURE (PARAPET)*	490											
SPECIAL	51148040	447	365	82	CU.YD.	HIGH PERFORMANCE CONCRETE, SUBSTRUCTURE, PIER ABOVE FOOTING*				40	44	132	31	42	25	66	67	
SPECIAL	51148040	808	728	80	CU.YD.	HIGH PERFORMANCE CONCRETE, SUBSTRUCTURE, ABUTMENT* INCLUDING FOOTING		680	128									
SPECIAL	51148040	460	460		CU.YD.	HIGH PERFORMANCE CONCRETE, SUBSTRUCTURE, FOOTING*				73	73	73	64	49	26	51	51	
SPECIAL	51149000	LUMP	LUMP		LUMP	HIGH PERFORMANCE CONCRETE, TRIAL MIX*												LUMP
512	44400	190	190		SQ.YD.	TYPE B WATERPROOFING		146	44									
SPECIAL	51267502	37		37	SQ.YD.	SEALING OF CONCRETE SURFACES (EPOXY)*		1		1	4		11	1		15	4	
SPECIAL	51267504	3369	3369		SQ.YD.	SEALING OF CONCRETE SURFACES (NON-EPOXY)*	3188	148	33									
SPECIAL	51267510	1904	648	256	SQ.YD.	SEALING OF CONCRETE SURFACES (EPOXY-URETHANE)*		550	134	109	113	413	92	114	59	155	165	
513	12200	1878200	1878200		POUND	STRUCTURAL STEEL, AISC CATEGORY III	1878200											
513	16800	2410		2410	EACH	STRUCTURAL STEEL, MISC: RETROFIT EXISTING CROSSFRAME CONNECTION STIFFENER	2410											
513	20000	19830	6610	13220	EACH	WELDED STUD SHEAR CONNECTOR	19830											
815	00050	154066		154066	SQ.FT.	SURFACE PREPARATION OF EXISTING STEEL, SYSTEM OZEU	154066											
815	00056	154066		154066	SQ.FT.	FIELD PAINTING OF EXISTING STEEL, PRIME COAT, SYSTEM OZEU	154066											
815	00060	154066		154066	SQ.FT.	FIELD PAINTING OF EXISTING STEEL, INTERMEDIATE COAT, SYSTEM OZEU	154066											
815	00066	154066		154066	SQ.FT.	FIELD PAINTING OF EXISTING STEEL, FINISH COAT, SYSTEM OZEU	154066											
815	00500	65		65	LIN.FT.	CAULKING	65											
815	00508	34573		34573	LIN.FT.	GRINDING FLANGE EDGES*	34573											
514	00610	1878200	1878200		POUND	FIELD PAINTING OF NEW STEEL, SYSTEM IZEU*	1878200											
516	11210	128	41	87	LIN.FT.	STRUCTURAL EXPANSION JOINT INCLUDING ELASTOMERIC STRIP SEAL*	128											
516	12200	321	103	218	LIN.FT.	STRUCTURAL STEEL EXPANSION JOINT(AISC CATEGORY III) (REAR ABUTMENT)*	321											
516	12200	321	103	218	LIN.FT.	STRUCTURAL STEEL EXPANSION JOINT(AISC CATEGORY III) (INTERMEDIATE JOINT)*	321											
516	13600	147	147		SQ.FT.	1" PREFORMED EXPANSION JOINT FILLER		135	12									
516	14800	LUMP	LUMP		LUMP	STRUCTURAL JOINT OR JOINT SEALER, MISC.: ELASTOMERIC TROUGHS (REAR ABUTMENT)*	LUMP											
516	14800	LUMP		LUMP	LUMP	STRUCTURAL JOINT OR JOINT SEALER, MISC.: ELASTOMERIC TROUGHS AND SHIELDS (INTERMEDIATE JOINT)*	LUMP											
516	46701	10		10	EACH	RESET BEARING, AS PER PLAN	10											
516	47000	LUMP	LUMP		LUMP	JACKING AND TEMPORARY SUPPORT OF SUPERSTRUCTURE	LUMP											
518	12300	24	24		EACH	SCUPPER, INCLUDING SUPPORTS	24											
518	21200	359	115	244	CU.YD.	POROUS BACKFILL WITH FILTER FABRIC		278	81									
518	40001	571	183	388	LIN.FT.	6" PERFORATED CORRUGATED PLASTIC PIPE, AS PER PLAN		426	145									
518	40011	316	316		LIN.FT.	6" NON-PERFORATED CORRUGATED PLASTIC PIPE, INCLUDING SPECIALS, AS PER PLAN		179	137									
519	11100	327		327	SQ.FT.	PATCHING CONCRETE STRUCTURE		3		6	36		102	4		138	38	
523	11100	6	6		HOUR	DYNAMIC LOAD TEST												6
601	21001	8478	5680	2798	SQ.YD.	CONCRETE SLOPE PROTECTION, AS PER PLAN		2003	665									5810
SPECIAL	60740000	1750	1750		LIN.FT.	VANDAL PROTECTION FENCE	1750											

**NH-480-4(83) 80%-20%

IM-480-4(83) 90%-10%

* SEE PROPOSAL NOTE

Burgess & Niple, Limited 6/70

PAINESVILLE, OH

ESTIMATED QUANTITIES

BRIDGE NO. CUY-480N-0011
I-480 OVER LANES S-96
RAMP N-W AND NORTHFIELD ROAD

STA. 1304+06.94
STA. 1312+78.74

CUYAHOGA COUNTY

DESIGNED	DRAWN	TRACED	CHECKED	REVIEWED DATE	REVISED
MAK	SLS		DOR	RKM 17-JUN-94	

06-14-94 FILE MAIN/PER PR145608>BQUANT1>TBQUANT1-DBQUANT1)-FILE AUX/*IN PR145608>FRAMES11>FRAMES11>XMULTI/RECALL PR145608>MULTI>MR_BQUANT1

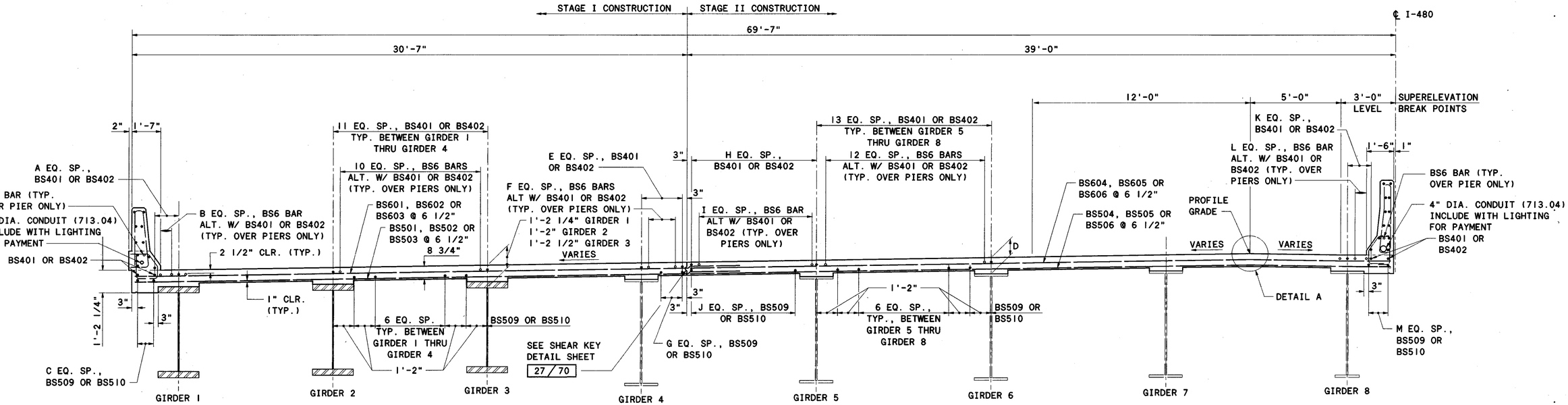

TRANSVERSE SECTION

LEFT BRIDGE UNIT I SHOWN
LEFT BRIDGE UNIT II SIMILAR

DECK SLAB DEPTH: THE ANTICIPATED DECK SLAB DEPTHS, D, OVER THE EXISTING BEAMS ARE GIVEN IN THE TABLE OF DECK SLAB DEPTHS. THE ACTUAL DECK SLAB DEPTHS MAY BE MORE OR LESS: THEY SHALL NOT BE LESS THAN 8 3/4".

THE QUANTITY OF DECK CONCRETE TO BE PAID FOR SHALL BE BASED ON THE AVERAGE SLAB DEPTH OF 11 3/4" INCHES FOR THE EXISTING BEAMS AND 10 3/4" INCHES FOR THE NEW BEAMS.

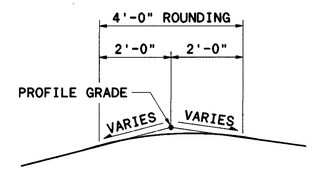

DETAIL A

REFER TO SHEET 7/70 FOR SUPERELEVATION TRANSITION DIAGRAM

LONGITUDINAL REBAR SPACES @ OVERHANGS

			UNIT 1	UNIT 2			
			REAR ABUT TO PIER 3	MIDSPAN TO PIER 6	MIDSPAN TO PIER 7	MIDSPAN	FWD ABUT
STAGE I	GIRDER 1	A	2	2	1	2	3
		B	1	1	0	-	-
		C	1	2	1	2	3
	GIRDER 4	E	3	3	4	3	2
		F	2	2	3	-	-
		G	2	2	3	2	1
STAGE II	GIRDER 5	H	10	10	9	9	10
		I	8	8	7	-	-
		J	8	9	7	7	9
	GIRDER 8	K	2	2	3	3	2
		L	1	1	2	-	-
		M	2	1	3	3	1

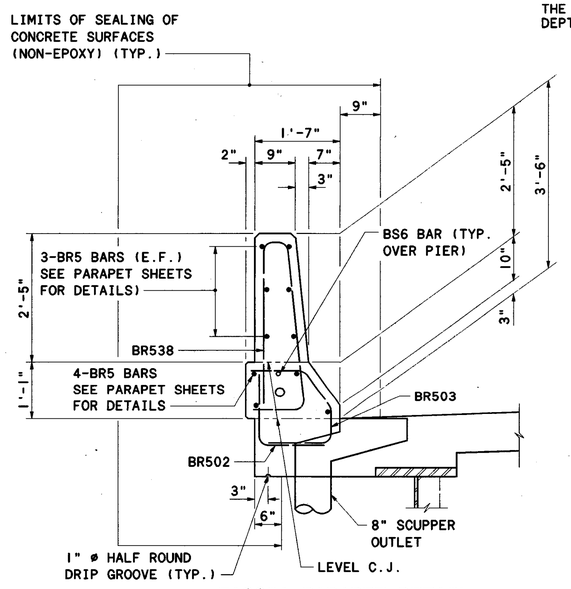

FASCIA PARAPET DETAIL

NOTE: SLAB REINFORCING NOT SHOWN
LEFT BRIDGE SHOWN
RIGHT BRIDGE OPPOSITE HAND

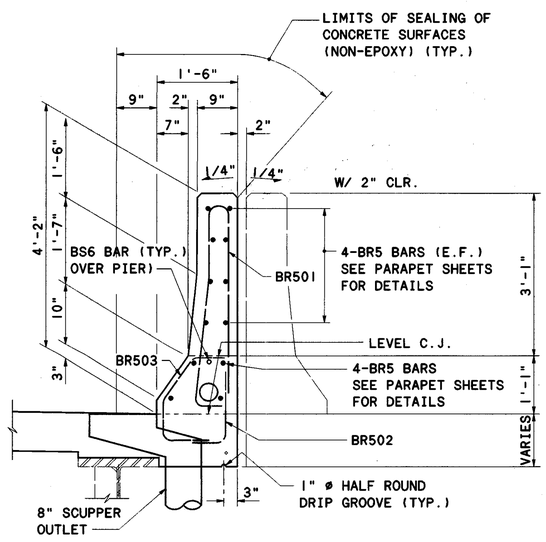

MEDIAN BARRIER DETAIL

NOTE: SLAB REINFORCING NOT SHOWN
LEFT BRIDGE SHOWN
RIGHT BRIDGE OPPOSITE HAND

DECK SLAB DEPTH DIMENSION (D) AT EXISTING GIRDERS

GIRDER	4	5	6	7	8
℄ BEARING R.A.	11"	10 7/8"	10 3/4"	9 1/8"	11 1/4"
CENTER SPAN 1	1'- 0 1/2"	1'- 0 5/8"	11 1/2"	11 1/4"	1'- 0 3/4"
℄ PIER 1	10 1/4"	10 1/4"	9 3/4"	9 3/8"	9 7/8"
CENTER SPAN 2	1'- 1 5/8"	1'- 1"	1'- 0 7/8"	1'- 0 7/8"	11 7/8"
℄ PIER 2	9 5/8"	9 1/2"	9 3/8"	9 5/8"	9 3/8"
CENTER SPAN 3	1'- 0"	10 1/2"	10 5/8"	11 3/4"	11"
℄ PIER 3	11 3/4"	11 1/2"	11 1/2"	11 3/8"	11 1/4"
CENTER SPAN 4	1'- 0 3/8"	1'- 0 1/4"	1'- 0 1/8"	11 5/8"	1'- 0 1/4"
℄ PIER 4	10 1/4"	10 7/8"	10 7/8"	11"	11 5/8"
CENTER SPAN 5	1'- 1 5/8"	1'- 2 1/4"	1'- 1 5/8"	1'- 1 1/4"	1'- 1 1/8"
℄ PIER 5	11 3/4"	1'- 0"	1'- 0 1/4"	1'- 0 7/8"	1'- 0 1/2"
CENTER SPAN 5A	1'- 0 3/4"	1'- 0 5/8"	1'- 0 5/8"	1'- 0 7/8"	1'- 0 5/8"
℄ PIER 5A	11 1/4"	11 1/4"	11 7/8"	1'- 0 1/4"	1'- 0 7/8"
CENTER SPAN 6	1'- 0 1/4"	1'- 0"	1'- 0"	1'- 0"	1'- 0 3/8"
℄ PIER 6	10"	10 1/2"	10 5/8"	10 3/4"	11"
CENTER SPAN 7	11 3/4"	11 5/8"	11 3/4"	1'- 0"	1'- 0"
℄ PIER 7	11 1/2"	11 1/2"	11 3/4"	11 5/8"	11 3/8"
CENTER SPAN 8	1'- 1 1/4"	1'- 1 1/4"	1'- 1 3/4"	1'- 1 3/4"	1'- 1 3/4"
℄ BEARING F.A.	1'- 1 7/8"	1'- 2 1/8"	1'- 2"	1'- 2 1/8"	1'- 2"

WORK THIS SHEET WITH SHEETS 38/70, 39/70, 42/70, 43/70 & 45/70.

LEGEND

MIN. = MINIMUM
MAX. = MAXIMUM
CLR. = CLEAR
C.J. = CONSTRUCTION JOINT
TYP. = TYPICAL
DIA. = DIAMETER
SP. = SPACE
E.F. = EACH FACE
ALT. = ALTERNATE

Burgess & Niple, Limited 26/70
PAINESVILLE, OH

LEFT BRIDGE TRANSVERSE SECTION

BRIDGE NO. CUY-480N-0011
I-480 OVER LANES S-96
RAMP N-W AND NORTHFIELD ROAD
STA. 1304+06.94
STA. 1312+78.74
CUYAHOGA COUNTY

DESIGNED	DRAWN	TRACED	CHECKED	REVIEWED DATE	REVISED
CJS	RFJ		JAP	RKM 17-JUN-94	

06-13-94 FILE MAIN/PER PRI4560B:BCRSEC1>TBCRSEC1-DBCRSEC1),FILE AUX/WIN PRI4560B>FRAMES11),XMULTI/RECALL PRI4560B:XMULTI>MR.BCRSEC1

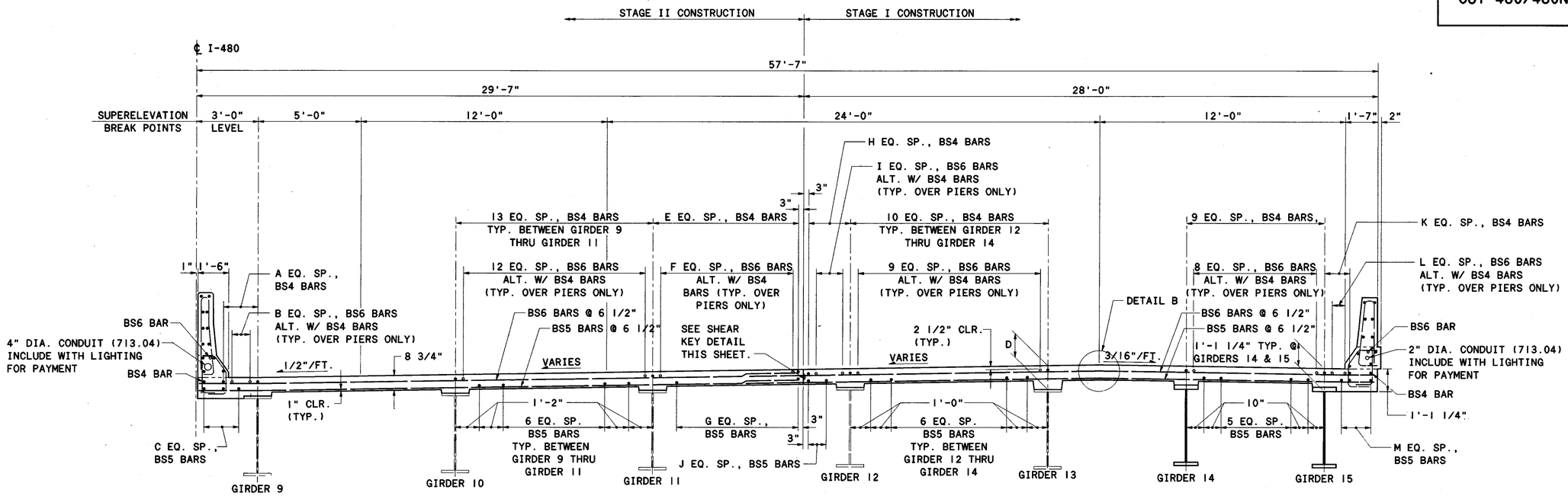

TRANSVERSE SECTION

RIGHT BRIDGE UNIT II SHOWN
RIGHT BRIDGE UNIT I SIMILAR

DECK SLAB DEPTH: THE ANTICIPATED DECK SLAB DEPTHS, D, OVER THE EXISTING BEAMS ARE GIVEN IN THE TABLE OF DECK SLAB DEPTHS. THE ACTUAL DECK SLAB DEPTHS MAY BE MORE OR LESS: THEY SHALL NOT BE LESS THAN 8 3/4".

THE QUANTITY OF DECK CONCRETE TO BE PAID FOR SHALL BE BASED ON THE AVERAGE SLAB DEPTH OF 12 1/4 INCHES FOR THE EXISTING BEAMS AND 10 3/4 INCHES FOR THE NEW BEAMS.

LEGEND

MIN. = MINIMUM
CLR. = CLEAR
TYP. = TYPICAL
ALT. = ALTERNATE
SP. = SPACE
ABUT = ABUTMENT
EQ. = EQUAL
FWD. = FORWARD
F.A. = FORWARD ABUTMENT
R.A. = REAR ABUTMENT

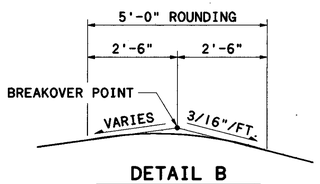

DETAIL B

REFER TO SHEET 7/70 FOR SUPERELEVATION TRANSITION DIAGRAM.

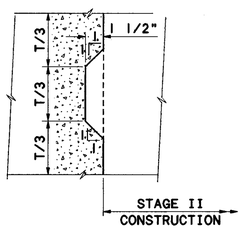

SHEAR KEY DETAIL

WORK THIS SHEET WITH SHEETS 26/70, 40/70, 41/70, 42/70, 44/70 & 45/70.

LONGITUDINAL REBAR SPACES @ OVERHANGS

			LOCATION								
			REAR ABUT TO PIER 3	MID SPAN	PIER 4	MIDSPAN TO PIER 5	MIDSPAN TO PIER 6	MID SPAN	PIER 7	MID SPAN	FWD ABUT
STAGE II	GIRDER 9	A	2	2	2	3	3	2	3	2	3
		B	1	-	1	2	2	-	2	-	-
		C	2	2	2	3	3	2	3	2	3
	GIRDER 11	E	9	9	9	8	8	9	9	9	9
		F	7	-	7	6	6	-	7	-	-
		G	8	8	8	7	7	8	8	8	8
STAGE I	GIRDER 12	H	3	3	3	4	4	3	3	3	4
		I	2	-	2	3	3	-	2	-	-
		J	2	2	2	3	3	2	2	2	3
	GIRDER 15	K	2	2	2	1	1	2	2	2	1
		L	1	-	1	0	0	-	1	-	-
		M	1	1	1	0	0	1	1	1	0

DECK SLAB DEPTH DIMENSION (D) AT EXISTING GIRDERS

GIRDER	9	10	11	12	13
℄ BEARING R.A.	10 1/8"	10 1/2"	10 3/4"	11"	11"
CENTER SPAN 1	1'-0 3/4"	1'-0"	1'-0 1/4"	11 5/8"	11 7/8"
℄ PIER 1	10"	9 5/8"	9 3/4"	11 1/4"	11 3/4"
CENTER SPAN 2	11 3/4"	11 7/8"	10 3/4"	10 1/2"	9 1/2"
℄ PIER 2	9 1/8"	8 7/8"	9 3/8"	9 3/8"	10 1/8"
CENTER SPAN 3	9 5/8"	10 5/8"	11"	9 1/8"	1'-0 3/8"
℄ PIER 3	11 3/8"	11 3/8"	11"	10 3/4"	1'-0 3/4"
CENTER SPAN 4	1'-0 5/8"	11 1/8"	1'-0"	11 5/8"	1'-3 1/2"
℄ PIER 4	11 1/4"	11 5/8"	11 7/8"	11 5/8"	1'-3 1/4"
CENTER SPAN 5	1'-1 1/2"	1'-1"	1'-1"	1'-0 7/8"	1'-5 1/4"
℄ PIER 5	1'-0"	1'-0 1/8"	1'-0 1/4"	1'-1 1/8"	1'-6 1/8"
CENTER SPAN 6	1'-0 3/4"	1'-0 1/2"	1'-1 1/8"	1'-0 7/8"	1'-3 1/2"
℄ PIER 6	10 1/2"	10 3/4"	10 7/8"	11 1/4"	1'-3 7/8"
CENTER SPAN 7	11 1/2"	1'-0 3/8"	1'-0 1/4"	1'-0 1/2"	1'-4 3/4"
℄ PIER 7	11 3/4"	11 7/8"	1'-0"	11 3/4"	1'-3 5/8"
CENTER SPAN 8	1'-1 1/2"	1'-1 3/8"	1'-2"	1'-1 5/8"	1'-6"
℄ BEARING F.A.	1'-2 1/8"	1'-2"	1'-2 1/8"	1'-2 5/8"	1'-7 1/8"

Burgess & Niple, Limited 27/70
PAINESVILLE, OH

RIGHT BRIDGE TRANSVERSE SECTION

BRIDGE NO. CUY-480N-0011
I-480 OVER LANES S-96
RAMP N-W AND NORTHFIELD ROAD
STA. 1304+06.94
STA. 1312+78.74
CUYAHOGA COUNTY

DESIGNED	DRAWN	TRACED	CHECKED	REVIEWED DATE	REVISED
JAP	RFJ		CJS	RKM 17-JUN-94	

06-13-94 FILE MAIN/PER PRI4560B>BCRSEC2>1BCRSEC2-TBCRSEC2-DBCRSEC2), FILE AUX/MIN PRI4560B>FRAMES11>(FRAMES11),XMULTI/RECALL PRI4560B>MULTI>MR.BCRSEC2

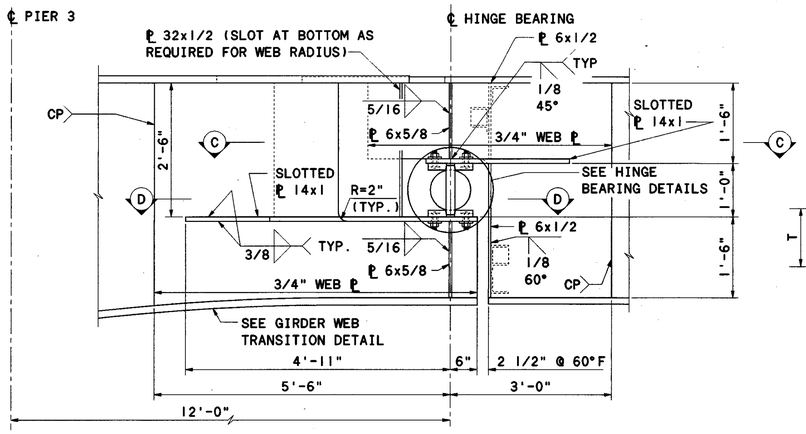

GIRDER DETAILS AT HINGE

NOTES:
ALL HORIZONTAL DIMENSIONS ARE MEASURED ALONG ℄ GIRDER.
CONNECTION PLATES FOR W18x119 SHOWN IN SECTION C.
SEE SHEET 58 / 70 FOR ADDITIONAL DETAILS SHOWING UNIT 1 GIRDER TOP FLANGE TAPER.

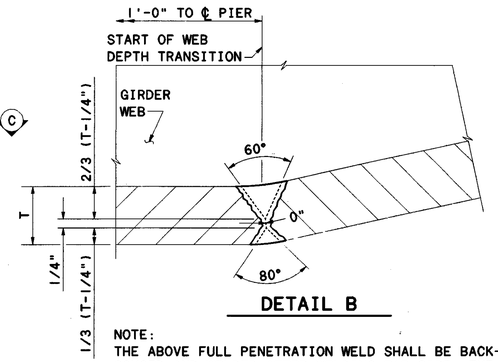

DETAIL B

NOTE:
THE ABOVE FULL PENETRATION WELD SHALL BE BACK-GOUGED AND WELDED AFTER WELDING FAR SIDE. THE WELD SHALL BE GROUND FLUSH, THE FINISH GRINDING BEING PARALLEL TO THE DIRECTION OF STRESS.

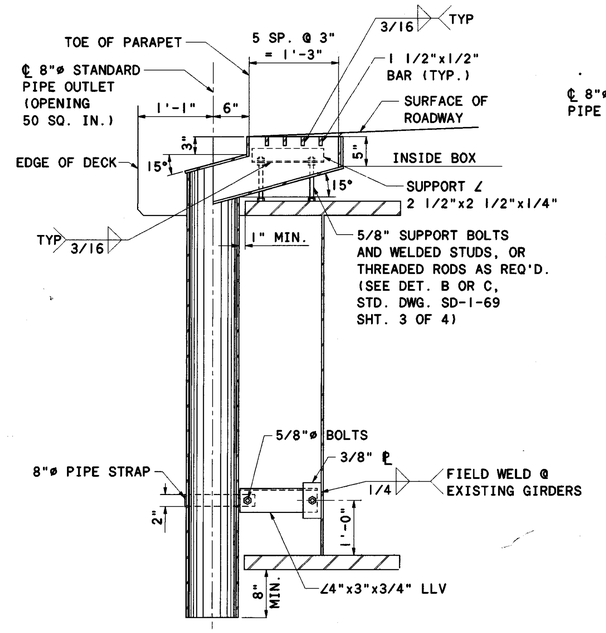

SECTION (A)

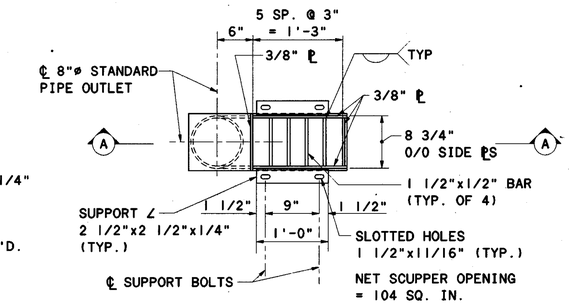

PLAN

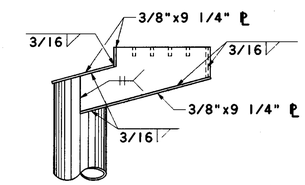

ELEVATION

SUPPORT ANGLE NOT SHOWN

DRAINAGE DETAILS

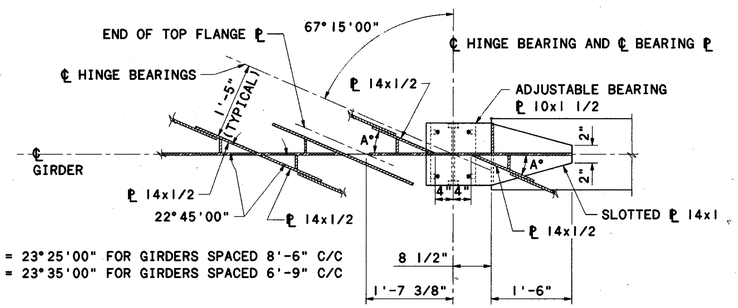

A° = 23°25'00" FOR GIRDERS SPACED 8'-6" C/C
= 23°35'00" FOR GIRDERS SPACED 6'-9" C/C

SECTION (C)

NOTES:
FOR ACUTE CORNER CONNECTIONS SEE DETAIL A.

FOR DETAILS NOT SHOWN SEE SECTION D.

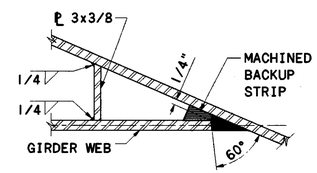

DETAIL A

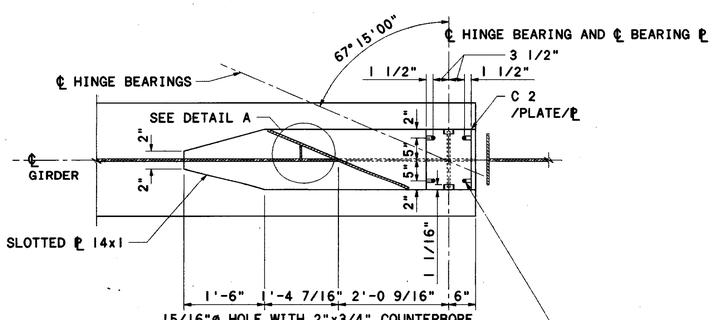

15/16"ø HOLE WITH 2"x3/4" COUNTERBORE IN ADJUSTABLE BEARING PLATE. SLOTTED HOLES 15/16"x1 7/8" IN PLATE 14x1 FOR 7/8"ø HIGH STRENGTH BOLTS TIGHTENED AFTER ROLLER IS ADJUSTED WITH GIRDER.

SECTION (D)

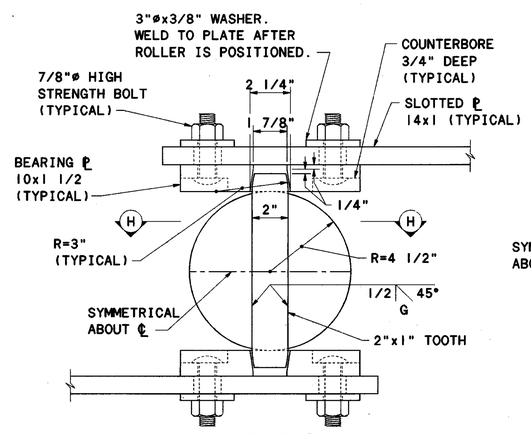

ELEVATION

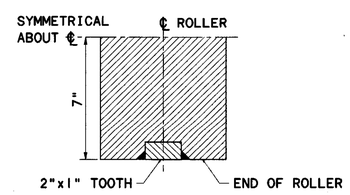

SECTION (H)

NOTES:
SET BEARING PLATES SO THAT THE ℄ OF THE ROLLER IS VERTICAL AT 60°F.

THE ROLLERS AND ADJUSTABLE BEARING PLATES SHALL BE ALLOY STEEL FORGINGS CONFORMING TO ASTM A668 CLASS H AND SHALL BE INCLUDED WITH "ITEM 513, STRUCTURAL STEEL" FOR PAYMENT.

HINGE BEARING DETAILS

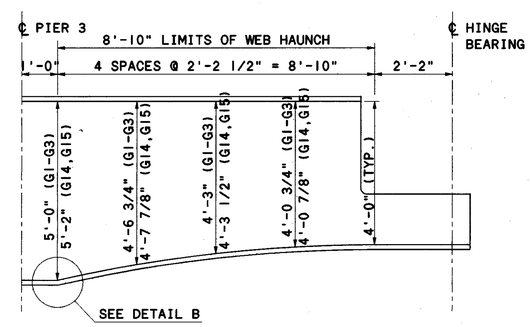

GIRDER WEB TRANSITION DETAIL

LEGEND

LLV = LONG LEG VERTICAL

Burgess & Niple, Limited | 48/70
PAINESVILLE, OH

MISCELLANEOUS GIRDER DETAILS

BRIDGE NO. CUY-480N-0011
I-480 OVER LANES S-96
RAMP N-W AND NORTHFIELD ROAD
STA. 1304+06.94
STA. 1312+78.74
CUYAHOGA COUNTY

DESIGNED	DRAWN	TRACED	CHECKED	REVIEWED DATE	REVISED
AJS	DLR		JCS	RKM 17-JUN-94	

06-13-94 FILE MAIN/PER PR14560B>BGRDETT2>IBGRDETT1-DBGRDETT1)-FILE AUX/*IN PR14560B>FRAMES1(2)(FRAMES1)>XMULTI/RECALL PR14560B>MULTI2>MR.BGRDETT1

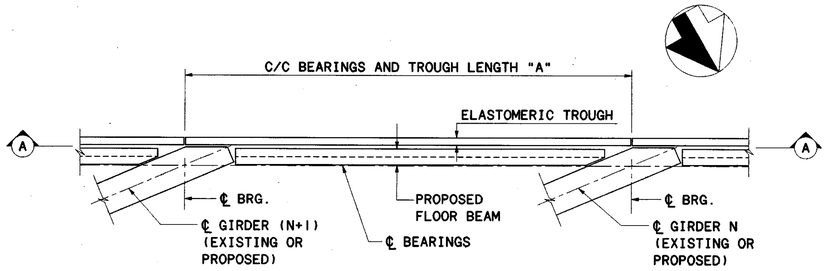

PART PLAN AT REAR ABUTMENT
(DETAILS NOT ALL SHOWN)

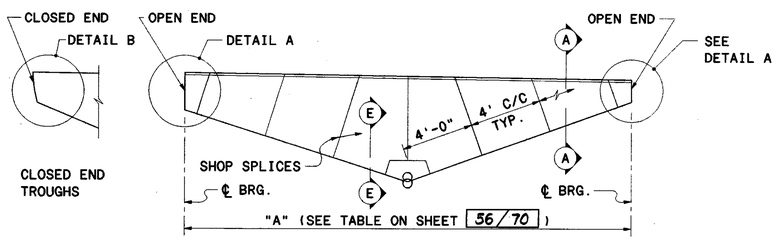

VIEW (A)

TROUGHS 2-3, 3-4, 4-5, 5-6, 6-7, 10-11, 11-12, 12-13, & 13-14

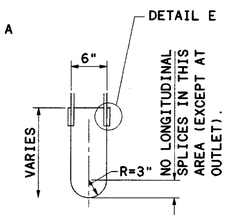

SECTION (A)

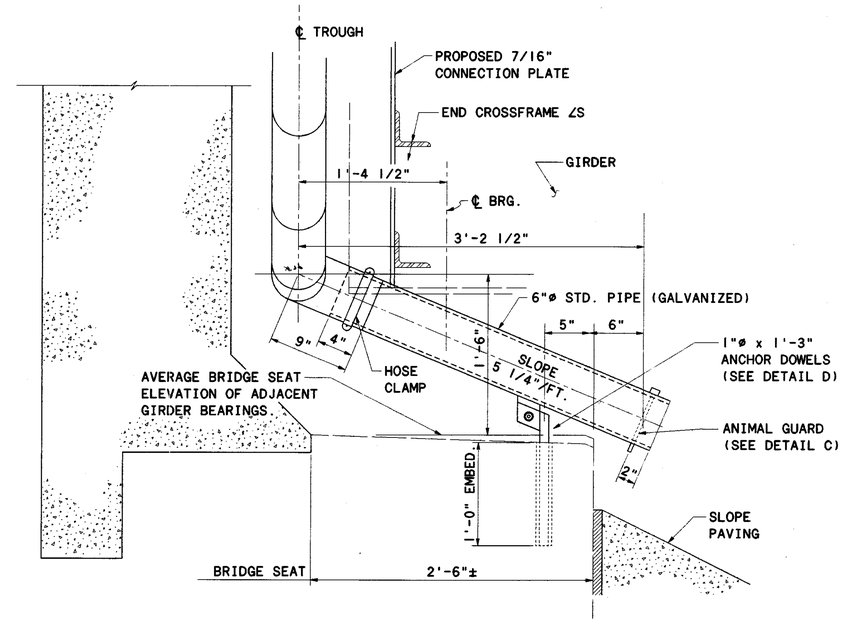

TYPICAL SECTION

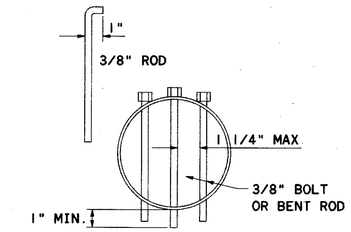

DETAIL C
(ANIMAL GUARD)

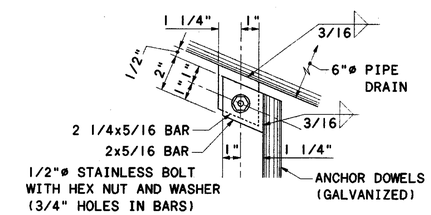

DETAIL D
DRILL DOWEL HOLES AND GROUT ANCHOR DOWELS AS PROVIDED FOR IN 510.

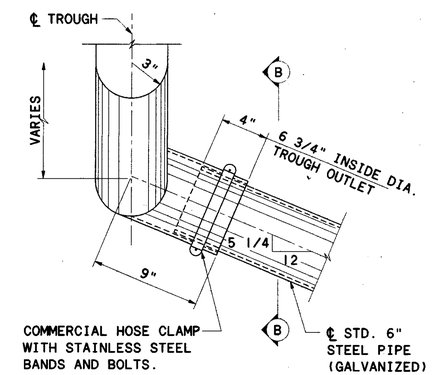

SECTION (E)

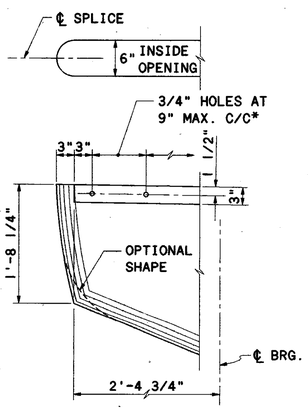

DETAIL B
(TROUGH 7-8 SHOWN; 1-2, 9-10 AND 14-15 SIMILAR)

*DRILL HOLES IN FIELD TO MATCH STUD SPACING.

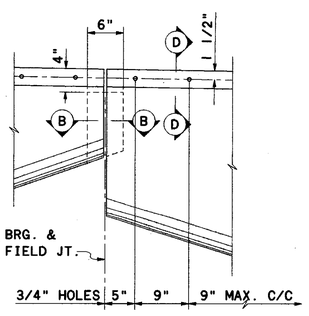

DETAIL A
(TROUGH JOINTS)

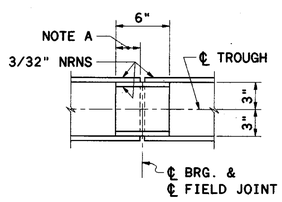

SECTION (B)

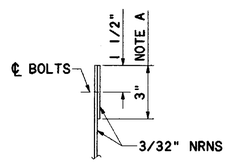

SECTION (D)

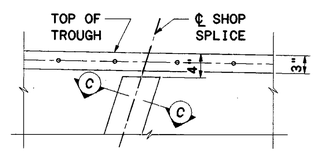

VERTICAL SPLICE

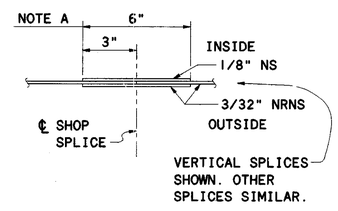

SECTION (C)
(TYPICAL TROUGH SPLICE)

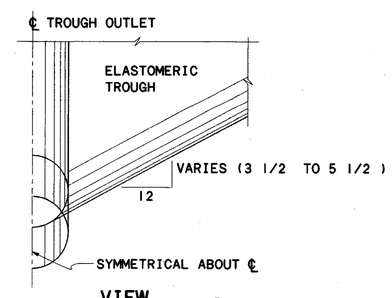

VIEW (B)
(STEEL OUTLET PIPE NOT SHOWN)

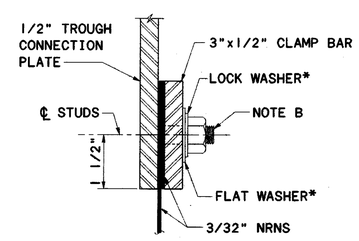

* (BY DECK JOINT FABRICATOR)

DETAIL E

FOR NOTES SEE SHEET 56/70

Burgess & Niple, Limited | 55/70

PAINESVILLE, OH

REAR ABUTMENT JOINT DETAILS V

BRIDGE NO. CUY-480N-0011
I-480 OVER LANES S-96
RAMP N-W AND NORTHFIELD ROAD
STA. 1304+06.94
STA. 1312+78.74

CUYAHOGA COUNTY

DESIGNED	DRAWN	TRACED	CHECKED	REVIEWED DATE	REV.
MPB	JEL	-	JCS	RKM 20-APR-94	-

04-18-94 FILE MAIN/PER PR14560B>BJOINT4>(BJOINT4-TBJOINT4-DBJOINT4),FILE AUX/WIN PR14560B>FRAMES11>(FRAMES11),XMULTI;RECALL PR14560B>MULT1>MR.BJOINT4