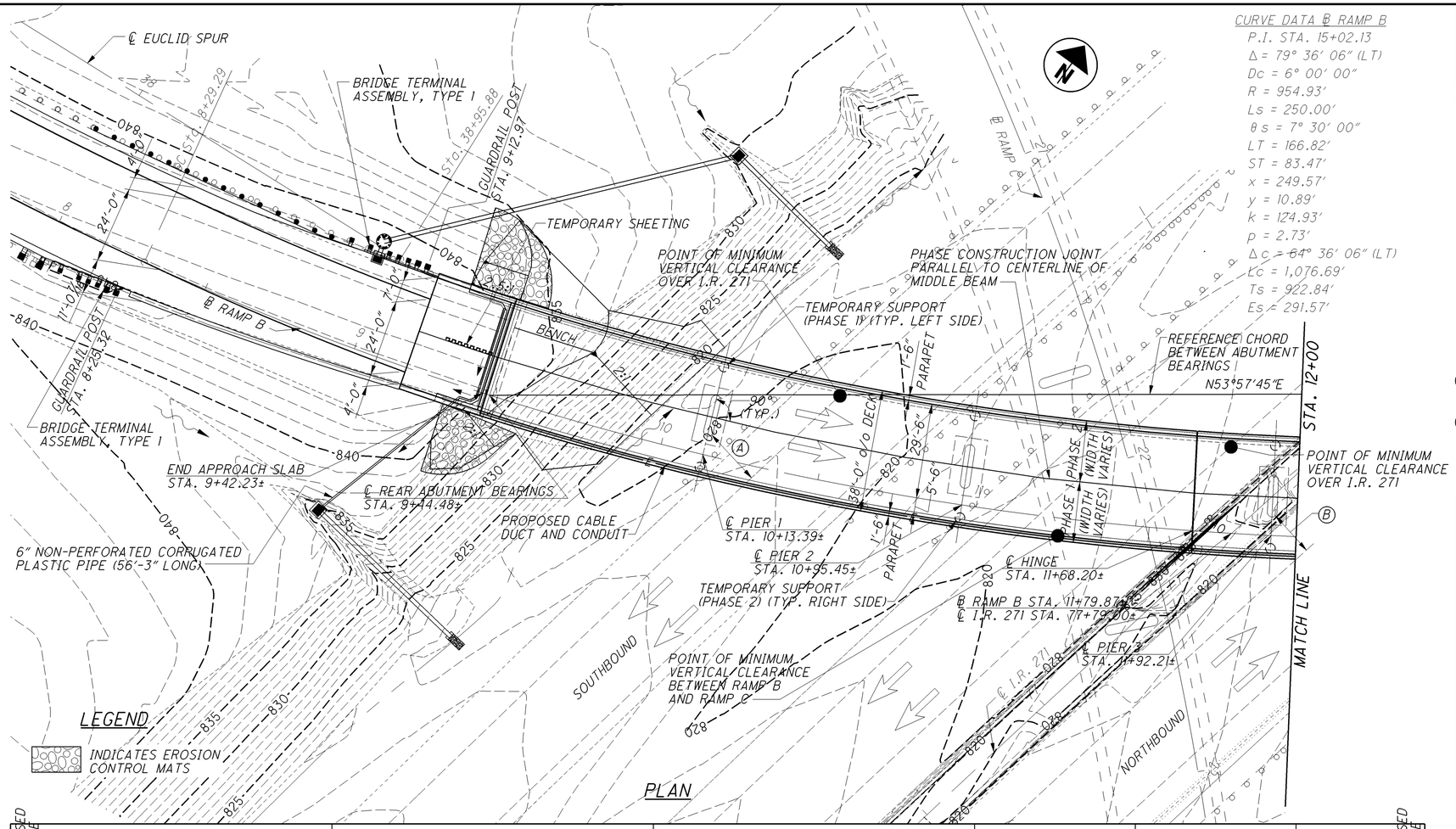

CURVE DATA ℄ RAMP B

P.I. STA. 15+02.13
Δ = 79° 36' 06" (LT)
Dc = 6° 00' 00"
R = 954.93'
Ls = 250.00'
θs = 7° 30' 00"
LT = 166.82'
ST = 83.47'
x = 249.57'
y = 10.89'
k = 124.93'
p = 2.73'
Δc = 64° 36' 06" (LT)
Lc = 1,076.69'
Ts = 922.84'
Es = 291.57'

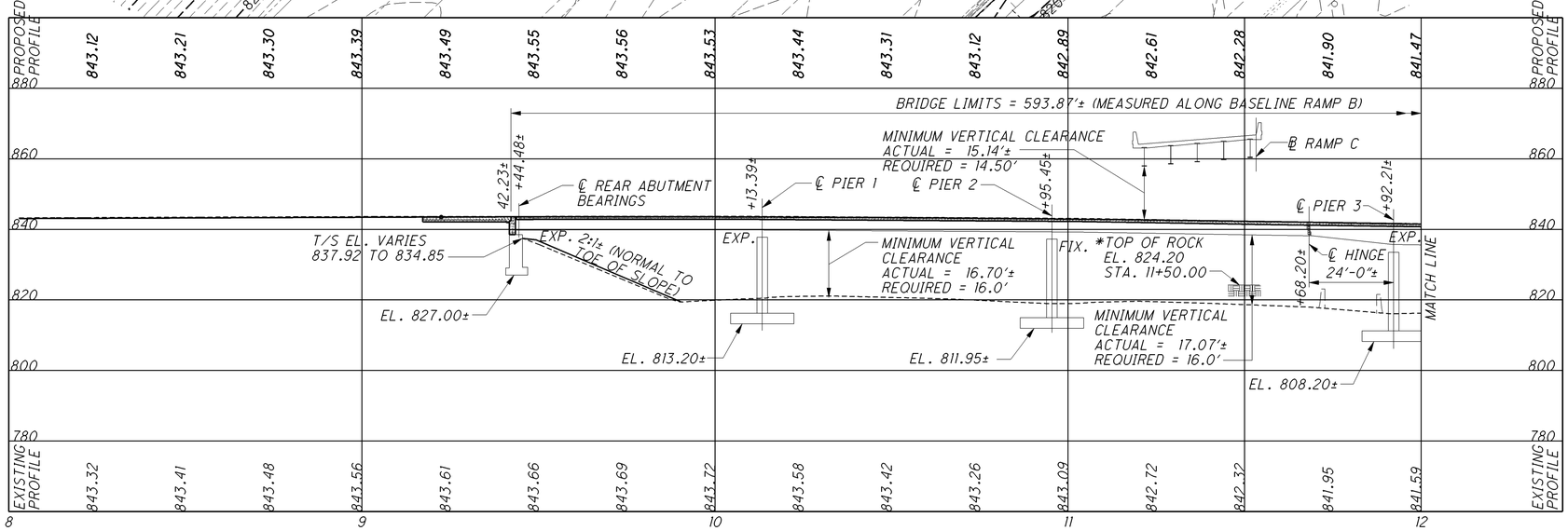

PROFILE ALONG BASELINE RAMP B

BENCHMARK DATA

BM #1 STA. 7+72.89, ELEV. 843.12, OFFSET 15.36' RT.
BM #2 STA. 17+04.03, ELEV. 824.59, OFFSET 42.42' RT.

NOTES

EARTHWORK LIMITS SHOWN ARE APPROXIMATE. ACTUAL SLOPES SHALL CONFORM TO PLAN CROSS SECTIONS.

BRIDGE TERMINAL ASSEMBLY: FOR DETAILS SEE STANDARD DRAWINGS GR-3.1 AND GR-3.2.

DESIGN TRAFFIC:
CURRENT (2010) ADT = 14,520
2030 ADT = 18,470 2030 ADTT = 1,847

FOR ADDITIONAL BENCHMARK INFORMATION. SEE ROADWAY PLAN SHEET 34 OF 96.

PROPOSED WORK SEE SHEET 2/42.

LEGEND

(A) 17'-6" REQUIRED MINIMUM LATERAL CLEARANCE (OUTSIDE SHOULDER)
18'-2½" ACTUAL MINIMUM LATERAL CLEARANCE

(B) 13'-9" REQUIRED MINIMUM LATERAL CLEARANCE (MEDIAN SHOULDER)
14'-5" ACTUAL MINIMUM LATERAL CLEARANCE

* TAKEN FROM SOIL BORINGS PROVIDED IN ORIGINAL CONSTRUCTION PLANS.

EXISTING STRUCTURE

TYPE: CONTINUOUS STEEL ROLLED BEAMS & WELDED BEAMS WITH REINFORCED CONCRETE DECK AND SUBSTRUCTURE

SPANS: 68'-10 15/16"±, 82'-0¾"±, 96'-9⅛"± (HINGED), 109'-0"±, 125'-0"±, 107'-7 11/16"± c/c BEARINGS ALONG BASELINE

ROADWAY: 33'-4"± F/F OF PARAPETS

LOADING: C.F. = 2000 (57) WITH ALTERNATE INTERSTATE LOADING

WEARING SURFACE: 2"± MICROSILICA MODIFIED CONCRETE OVERLAY

SKEW: 0°± TO TANGENT OF THE CURVE AT EACH PIER AND ABUTMENT CENTERLINE

APPROACH SLABS: SPECIAL DESIGN (25'-0"± LONG)

ALIGNMENT: 6°± CURVE LEFT

SUPERELEVATION: 0.083 FT/FT±

STRUCTURE FILE NUMBER: 4303482

CONDITION: FAIR

DATE BUILT: 1962

DISPOSITION: REMOVE DECK AND PORTIONS OF ABUTMENTS. REUSE BEAMS, CROSS BEAMS AND SUBSTRUCTURE.

PROPOSED STRUCTURE

PROPOSED WORK: CONSTRUCT NEW REINFORCED CONCRETE DECK WITH MINOR WIDENING ON REUSED DOG-LEGGED CONTINUOUS STEEL BEAMS AND REINFORCED CONCRETE SUBSTRUCTURE.

SPANS: 68'-10 15/16"±, 82'-0¾"±, 96'-9⅛"± (HINGED), 109'-0"±, 125'-0"±, 107'-7 11/16"± c/c BEARINGS ALONG BASELINE

ROADWAY: 35'-0" TOE/TOE PARAPETS

LOADING: NEW DECK: HS25 AND THE ALTERNATE MILITARY LOADING. EXISTING STEEL BEAM SUPERSTRUCTURE, SUBSTRUCTURE AND FOUNDATION: HS20-44 AND THE ALTERNATE MILITARY LOADING.

WEARING SURFACE: MONOLITHIC

SKEW: 0°± TO TANGENT OF THE CURVE AT EACH PIER AND ABUTMENT CENTERLINE

APPROACH SLABS: 25'-0" LONG (AS-1-81)

ALIGNMENT: 6°± CURVE LEFT

SUPERELEVATION: 0.083 FT/FT

COORDINATES: LATITUDE 41°35'27" N
LONGITUDE 81°26'53" W

RICHLAND ENGINEERING LIMITED
29 NORTH PARK STREET
MANSFIELD, OHIO 44902

DATE	REVIEWED	STRUCTURE FILE NUMBER
11/25/09	DLR	4303482

DRAWN	REVISED
JLS	

DESIGNED	CHECKED
ALP	BLN

LAKE COUNTY
STA. 9+42.23±
STA. 15+36.10±

SITE PLAN - 1
BRIDGE NO. LAK-90-0243
OVER I.R. 271

LAK-90-2.43
PID No. 77508

090_0243PSP001.DGN 11/25/09 MLB,KH,TWH,JLS

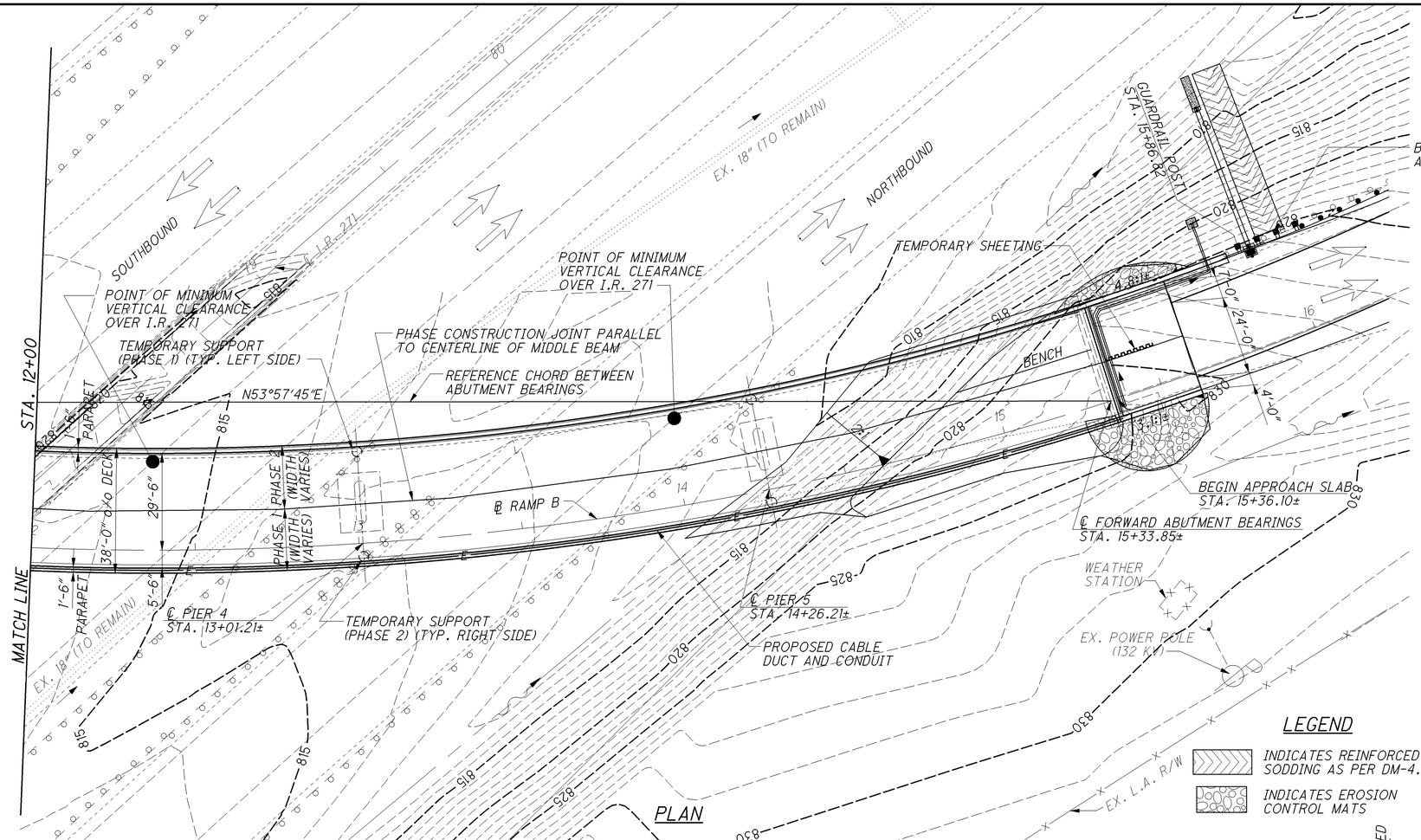

PLAN

LEGEND

INDICATES REINFORCED SODDING AS PER DM-4.1.

INDICATES EROSION CONTROL MATS

CURVE DATA ℄ RAMP B

P.I. STA. 15+02.13
Δ = 79° 36′ 06″ (LT)
Dc = 6° 00′ 00″
R = 954.93′
Ls = 250.00′
θs = 7° 30′ 00″
LT = 166.82′
ST = 83.47′
x = 249.57′
y = 10.89′
k = 124.93′
p = 2.73′
Δc = 64° 36′ 06″ (LT)
Lc = 1,076.69′
Ts = 922.84′
Es = 291.57′

PROPOSED WORK ITEMS

1. REMOVE EXISTING DECK AND SCUPPERS, AND REPLACE WITH A NEW WIDENED REINFORCED CONCRETE DECK.
2. REPLACE CONCRETE PARAPETS WITH NEW DEFLECTOR PARAPETS.
3. CONSTRUCT NEW FULL WIDTH APPROACH SLABS.
4. UPGRADE GUARDRAIL TO CURRENT STANDARDS.
5. ADD CATCH BASINS PAST STRUCTURE ON LOW SIDE.
6. REMOVE EXISTING ABANDONED CONDUIT. PROVIDE CABLE AND CONDUIT TO OVERHEAD FLASHING PANEL IN RIGHT PARAPET.
7. REFURBISH ABUTMENT BEARINGS.
8. WIDEN ABUTMENT WINGWALLS BY CONSTRUCTING 12" CORBELS ON EACH WALL TO CARRY THE PROPOSED PARAPETS.
9. RETROFIT EXISTING TOP MOMENT PLATES AT PIERS 1 AND 2 BY ADDING NEW PLATES WITH BOLTED CONNECTIONS.
10. RETROFIT HINGE AT BEAM 5.
11. REPLACE EXPANSION JOINTS AT ABUTMENTS AND HINGE.
12. INSTALL TEMPERATURE SENSORS IN DECK AND CONNECT TO WEATHER STATION.
13. PATCH SUBSTRUCTURE AT LOCATIONS OF SPALLING AND DETERIORATION.
14. SEAL SUBSTRUCTURE AND PARAPET CONCRETE WITH EPOXY-URETHANE SEALER.
15. CLEAR BENEATH SUBSTRUCTURE AT END SPANS.
16. TOUCH UP OZEU PAINT SYSTEM AT RETROFIT LOCATIONS.
17. ADD POROUS BACKFILL AND DRAINAGE PIPE BEHIND ABUTMENTS.
18. REPLACE ABUTMENT BACKWALLS.

* TAKEN FROM SOIL BORINGS PROVIDED IN ORIGINAL CONSTRUCTION PLANS.

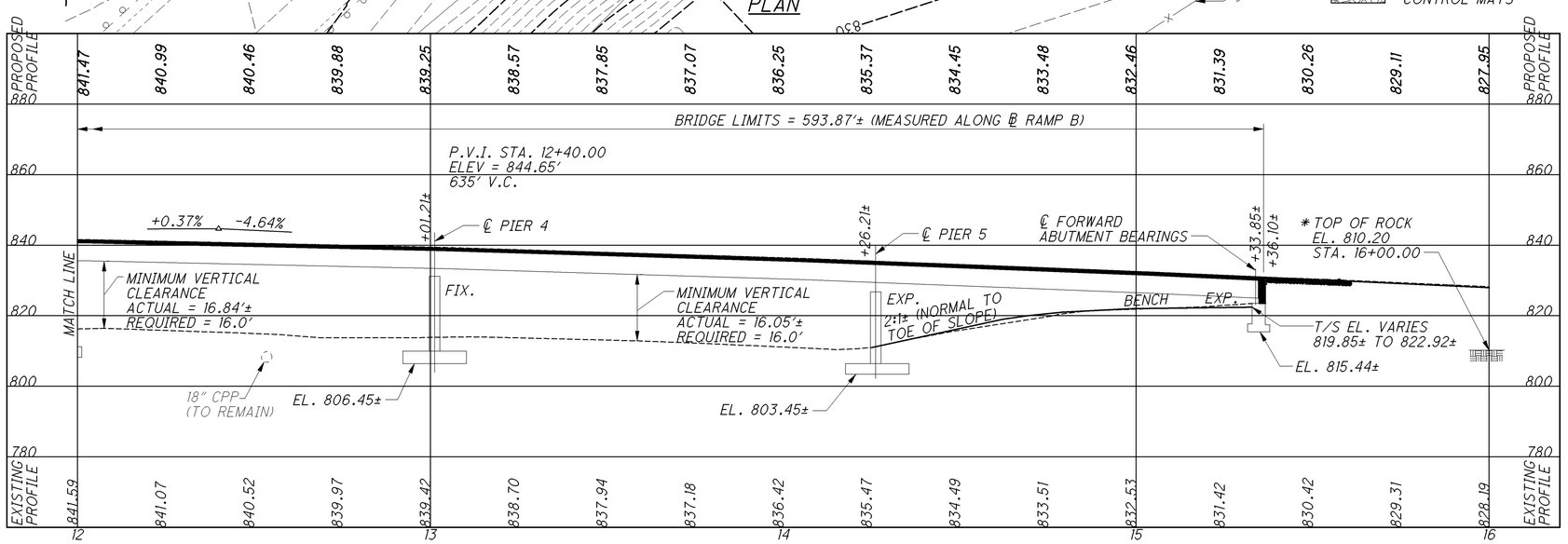

PROFILE ALONG BASELINE RAMP B

NOTES

FOR LOCATIONS OF MINIMUM LATERAL CLEARANCES TO I.R. 271 SEE SHEET 1/42.

RICHLAND ENGINEERING LIMITED
29 NORTH PARK STREET
MANSFIELD, OHIO 44902

DESIGNED	DRAWN	REVIEWED	DATE
ALP	JLS	DLR	11/25/09
CHECKED	REVISED	STRUCTURE FILE NUMBER	
BLN	12/09/09	4303482	

LAKE COUNTY
STA. 9+42.23±
STA. 15+36.10±

SITE PLAN - 2
BRIDGE NO. LAK-90-0243
OVER I.R. 271

LAK-90-2.43
PID No. 77508

090_0243PSP002.DGN 12/08/09 MLB,KH,JLS

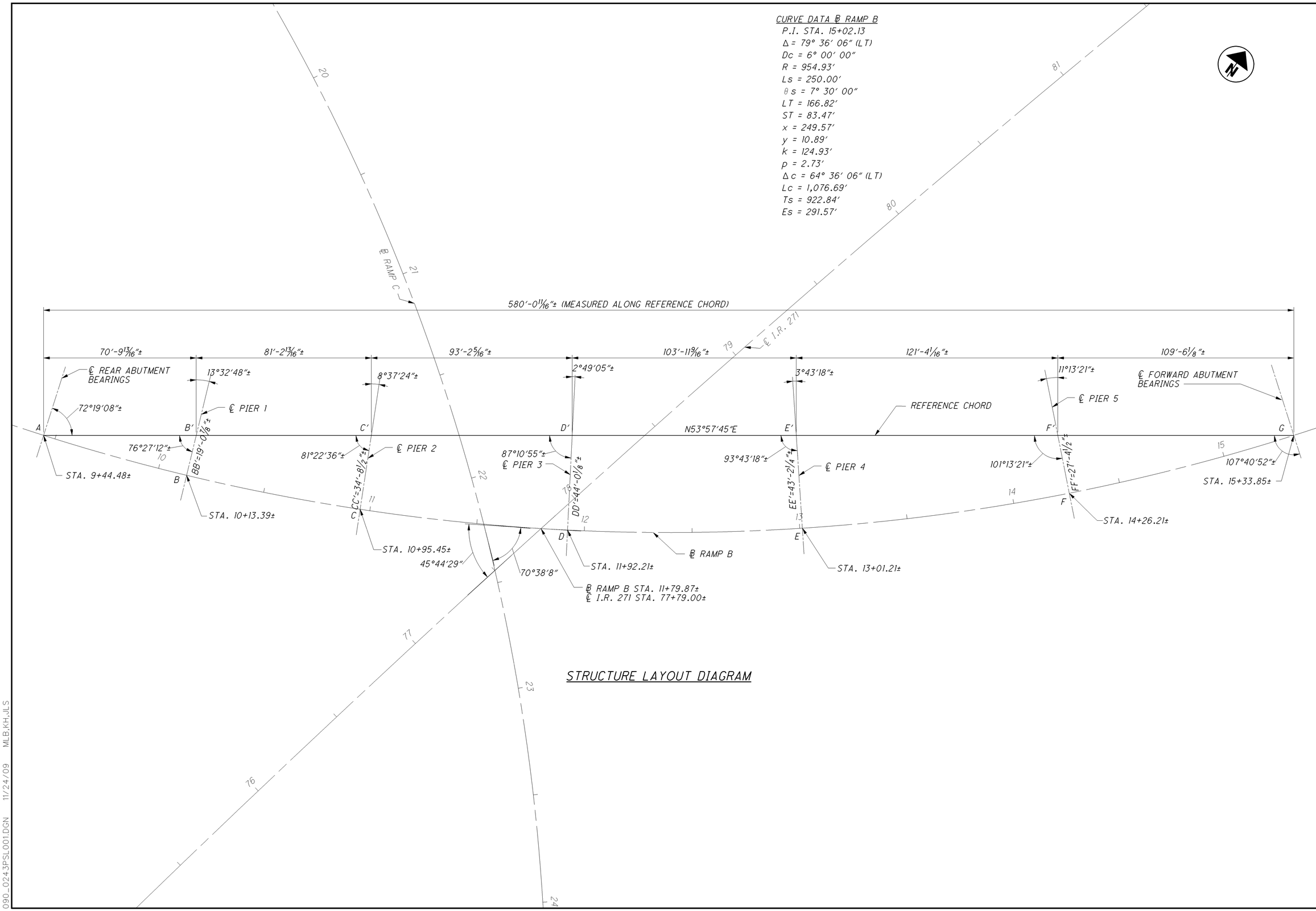

RICHLAND ENGINEERING LIMITED
29 NORTH PARK STREET
MANSFIELD, OHIO 44902

DESIGNED	DRAWN	REVIEWED	DATE
ALP	MLB	DLR	11/25/09
CHECKED	REVISED	STRUCTURE FILE NUMBER	
BLN		4303482	

STRUCTURE LAYOUT DIAGRAM
BRIDGE NO. LAK-90-0243
OVER I.R. 271

LAK-90-2.43
PID No. 77508

090_0243PSL001.DGN 11/24/09 MLB,KH,JLS

ITEM 516 - JACKING AND TEMPORARY SUPPORT OF SUPERSTRUCTURE, AS PER PLAN

THIS WORK CONSISTS OF RAISING OR RE-POSITIONING EXISTING STRUCTURES TO THE DIMENSIONS AND REQUIREMENTS DEFINED IN THE PROJECT PLANS.

SUBMIT CONSTRUCTION PLANS IN ACCORDANCE WITH CMS 501.05.B.

IF, DURING THE JACKING OPERATIONS, CRACKING OF THE NEW CONCRETE SUPERSTRUCTURE, SEPARATION OF THE NEW CONCRETE DECK FROM THE STEEL STRINGERS, OR OTHER DAMAGE TO THE STRUCTURE IS VISUALLY OBSERVED, IMMEDIATELY CEASE THE JACKING OPERATION AND INSTALL SUPPORTS TO THE SATISFACTION OF THE ENGINEER. ANALYZE THE DAMAGE AND SUBMIT A METHOD OF CORRECTION TO THE ENGINEER FOR APPROVAL. EPOXY INJECT ALL BEAMS THAT SEPARATE FROM THE DECK FOR THE DISTANCE OF THE SEPARATION IN ACCORDANCE WITH CMS 512.07. THE DEPARTMENT WILL NOT PAY FOR THE COST OF THIS EPOXY INJECTION OR OTHER REQUIRED REPAIRS. THE BRIDGE BEARINGS SHALL BE FULLY SEATED AT ALL CONTACT AREAS. IF FULL SEATING IS NOT ATTAINED, SUBMIT A REPAIR PLAN TO THE ENGINEER. THE DEPARTMENT WILL NOT PAY FOR THE REPAIR COSTS TO ENSURE FULL SEATING ON BEARINGS.

THIS WORK INCLUDES RAISING AND SUPPORTING THE BEAMS WHILE THE ABUTMENT BEARINGS ARE REFURBISHED. FOR BEAM 3, WHICH WILL SUPPORT THE PARTIAL WIDTH DECK, THE ESTIMATED DEAD LOAD AT THE ABUTMENT BEARINGS IS 25 TONS. THE ESTIMATED LIVE LOAD AT THE ABUTMENT BEARINGS IS 15 TONS. FOR ALL OTHER BEAMS, THE ESTIMATED DEAD LOAD AT THE ABUTMENT BEARINGS IS 7 TONS. THE LOADS GIVEN ARE REACTIONS AT THE BEARINGS; THESE ARE NOT REQUIRED JACKING FORCES. THE CONTRACTOR IS LIMITED TO RAISING THE BEAMS 1/4".

THIS WORK INCLUDES SUPPORTING THE HINGE AT BEAM 5 WHILE IT IS BEING DISASSEMBLED, CLEANED AND REASSEMBLED. THE ESTIMATED DEAD LOAD AT THE BEAM 5 HINGE IS 15 TONS. SEE SHEET 26/42 FOR SUGGESTED SUPPORT DETAIL AT HINGE.

THIS WORK INCLUDES SUPPORTING THE CROSSBEAMS DURING PHASE CONSTRUCTION AT THE LOCATIONS SHOWN ON THE SITE PLAN. THE ESTIMATED UNFACTORED (SERVICE) DEAD LOAD AND LIVE LOAD (PLUS IMPACT) FOR THE TEMPORARY SUPPORT ARE TABULATED ON SHEET 13/42. THESE TEMPORARY SHORING LOADS ALSO INCLUDE A 20-KIP (10-TON) PRELOAD TO ENSURE A POSITIVE REACTION IN ALL PIER BEARINGS.

THE TEMPORARY PIER SUPPORT DETAIL PROVIDED IS ONE POSSIBLE ALTERNATIVE. ALTERNATIVE TEMPORARY SUPPORT METHODS SHALL ENSURE THAT ALL THE PIER BEARINGS ARE FULLY FUNCTIONAL AND THAT THE RESISTANCE OF ALL EXISTING MEMBERS IS NOT EXCEEDED. SUBMIT WORKING DRAWINGS AND SUPPORTING CALCULATIONS FOR ALL PIER TEMPORARY SUPPORT IN ACCORDANCE WITH CMS 501.05.B. THE ESTIMATED UNFACTORED (SERVICE) DEAD LOAD AND LIVE LOAD (PLUS IMPACT) FOR THE GIRDER REACTIONS ARE TABULATED ON SHEET 13/42.

SEE SHEET 4/42 FOR CONSTRUCTION SEQUENCE.

THE DEPARTMENT WILL MEASURE THIS WORK ON A LUMP SUM BASIS.

THE DEPARTMENT WILL PAY FOR THE ACCEPTED QUANTITIES AT THE CONTRACT PRICE BID FOR ITEM 516, JACKING AND TEMPORARY SUPPORT OF SUPERSTRUCTURE, AS PER PLAN.

ITEM 518 - SCUPPER, VERTICAL EXTENSION, AS PER PLAN

PRIOR TO PHASE 1 CONSTRUCTION, THE CONTRACTOR SHALL ADD STEEL VERTICAL EXTENSIONS TO THE SIX ACTIVE EXISTING SCUPPERS BY WELDING. THE EXISTING SCUPPER SURFACES THAT WILL BE WELDED SHALL BE PREPARED BY BLASTING OR HAND TOOL CLEANING IN ACCORDANCE WITH CMS 514. EXISTING CONCRETE IN THE SCUPPER TRAY SHALL BE REMOVED AS REQUIRED TO PROVIDE THE VERTICAL EXTENSION. ALL OF THE EXPOSED NEW AND EXISTING STEEL SCUPPER SURFACES VISIBLE FROM THE ROADWAY SHALL BE PAINTED IN ACCORDANCE WITH CMS 514. THE CONTRACTOR SHALL ADD CONCRETE ACCORDING TO THE DETAILS BELOW. THE CONCRETE SHALL BE IN ACCORDANCE WITH CMS 511.

PAYMENT FOR ALL LABOR. MATERIALS, AND EQUIPMENT FOR THE VERTICAL EXTENSION, PAINTING OF THE SCUPPER, CONCRETE PLACEMENT AND CONCRETE REMOVAL SHALL BE INCLUDED IN THE UNIT PRICE BID FOR ITEM 518 - SCUPPER, VERTICAL EXTENSION, AS PER PLAN.

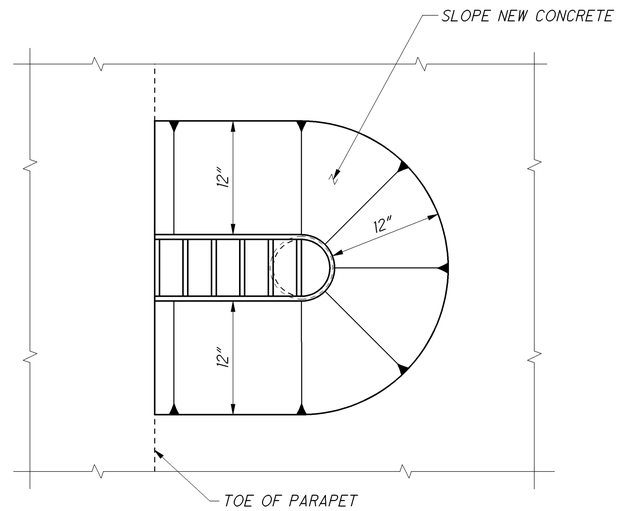

PLAN AT SCUPPER

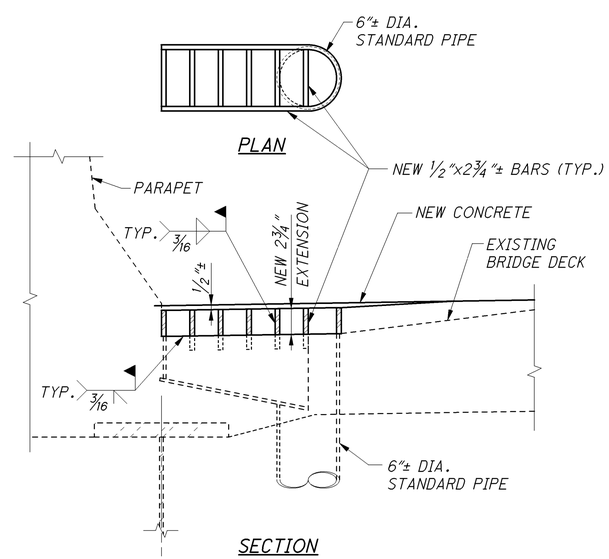

SCUPPER VERTICAL EXTENSION

ITEM 518 - 6" PERFORATED CORRUGATED PLASTIC PIPE, AS PER PLAN

PROVIDE PIPE TO THE TEMPORARY SHEETING IN EACH CONSTRUCTION PHASE. FILTER FABRIC SHALL BE PROVIDED AT THE ENDS OF THE PIPE NEXT TO THE TEMPORARY SHEETING. PROVIDE FILTER FABRIC TYPE A PER CMS 712.09. THE FILTER FABRIC IS INCIDENTAL TO ITEM 518 - 6" PERFORATED CORRUGATED PLASTIC PIPE, AS PER PLAN.

ITEM 518 - 6" NON-PERFORATED CORRUGATED PLASTIC PIPE, INCLUDING SPECIALS, AS PER PLAN

ANIMAL GUARDS SHALL BE PROVIDED AT THE OUTLET OF THE DRAINAGE PIPES. THE STEEL BOLTS OR RODS FOR THE ANIMAL GUARDS SHALL BE GALVANIZED PER CMS 711.02. SEE STANDARD DRAWING DM-1.1 FOR ADDITIONAL DETAILS AND NOTES. THE ANIMAL GUARDS AND CRUSHED AGGREGATE SLOPE PROTECTION ARE INCIDENTAL TO ITEM 518 - 6" NON-PERFORATED CORRUGATED PLASTIC PIPE, INCLUDING SPECIALS, AS PER PLAN.

ITEM 526 - REINFORCED CONCRETE APPROACH SLABS (T=15"), AS PER PLAN

FOR THE REAR APPROACH SLAB, PARAPET WILL BE PROVIDED ON THE LEFT AND RIGHT SIDE OF THE APPROACH SLAB. CONCRETE BARRIER, TYPE D, WILL BE PROVIDED PAST THE APPROACH SLAB ON THE RIGHT SIDE OF THE APPROACH SLAB.

FOR THE FORWARD APPROACH SLAB, PARAPETS WILL BE PROVIDED. SEE DETAILS ON SHEETS 36/42 TO 39/42.

QUANTITIES OF CONCRETE, REINFORCING STEEL, MECHANICAL CONNECTORS, JOINTS, CURBS, PREFORMED EXPANSION JOINT FILLER, 2" EXPANDED POLYSTYRENE AND SEALING OF CONCRETE SURFACES FOR THE CURB, CONCRETE BARRIER AND APPROACH SLABS ARE INCLUDED IN THIS ITEM FOR PAYMENT.

RICHLAND ENGINEERING LIMITED
29 NORTH PARK STREET
MANSFIELD, OHIO 44902

DESIGNED	DRAWN	REVIEWED	DATE
ALP	SCB	DLR	11/25/09
CHECKED	REVISED	STRUCTURE FILE NUMBER	
BLN	12/09/09	4303482	

GENERAL NOTES - 3
BRIDGE NO. LAK-90-0243
OVER I.R. 271

LAK-90-2.43
PID No. 77508

090_0243PGN003.DGN 12/08/09 KH,TWH,JLS

ESTIMATED QUANTITIES

CALCULATED JLS DATED 9/09
CHECKED KH DATED 11/09

ITEM	ITEM EXT.	TOTAL	UNIT	DESCRIPTION	SUPER.	ABUTS.	PIERS	GENERAL	SEE SHEET NO.
202	11203	LUMP		PORTIONS OF STRUCTURE REMOVED, OVER 20 FOOT SPAN, AS PER PLAN	LUMP	LUMP			4/42 5/42
202	22900	191	SQ YD	APPROACH SLAB REMOVED				191	
503	11101	LUMP		COFFERDAMS, CRIBS AND SHEETING, AS PER PLAN		LUMP			5/42
503	21301	LUMP		UNCLASSIFIED EXCAVATION, AS PER PLAN		LUMP			5/42
509	10000	227,436	LB	EPOXY COATED REINFORCING STEEL	217,175	10,261			
510	10000	268	EACH	DOWEL HOLES WITH NONSHRINK, NONMETALLIC GROUT		268			
511	50001	676	CU YD	CLASS HP CONCRETE, BRIDGE DECK, AS PER PLAN	676				5/42
511	50101	185	CU YD	CLASS HP CONCRETE, BRIDGE DECK (PARAPET), AS PER PLAN	185				5/42
511	50201	67	CU YD	CLASS HP CONCRETE, SUBSTRUCTURE, AS PER PLAN		67			5/42
511	52000	LUMP		CLASS HP CONCRETE, TEST SLAB	LUMP				
512	10101	2089	SQ YD	SEALING OF CONCRETE SURFACES (EPOXY-URETHANE), AS PER PLAN	1707	121	261		5/42
512	33000	4	SQ YD	TYPE 2 WATERPROOFING		4			
513	21001	10	EACH	TRIMMING OF BEAM END, AS PER PLAN	10				5/42
513	95020	LUMP		STRUCTURAL STEEL, MISC.: HINGE RETROFIT	LUMP				5/42
513	95030	20	EACH	STRUCTURAL STEEL, MISC.: MOMENT PLATE RETROFIT	20				5/42
513	95030	8	EACH	STRUCTURAL STEEL, MISC.: TOP HORIZONTAL CROSSFRAME L4x4x5/8	8				5/42
516	11210	113	FT	STRUCTURAL EXPANSION JOINT INCLUDING ELASTOMERIC STRIP SEAL	113				
516	45305	10	EACH	REFURBISH BEARING DEVICE, AS PER PLAN	10				5/42
516	47001	LUMP		JACKING AND TEMPORARY SUPPORT OF SUPERSTRUCTURE, AS PER PLAN				LUMP	6/42
518	12701	6	EACH	SCUPPER, VERTICAL EXTENSION, AS PER PLAN	6				6/42
518	21230	LUMP		POROUS BACKFILL WITH FILTER FABRIC		LUMP			
518	40001	102	FT	6" PERFORATED CORRUGATED PLASTIC PIPE, AS PER PLAN		102			6/42
518	40011	72	FT	6" NON-PERFORATED CORRUGATED PLASTIC PIPE, INCLUDING SPECIALS, AS PER PLAN		72			6/42
526	25001	209	SQ YD	REINFORCED CONCRETE APPROACH SLABS (T=15"), AS PER PLAN				209	6/42
843	50000	10	SQ FT	PATCHING CONCRETE STRUCTURES WITH TROWELABLE MORTAR			1	9	

RICHLAND ENGINEERING LIMITED
29 NORTH PARK STREET
MANSFIELD, OHIO 44902

REVIEWED DLR DATE 11/25/09
STRUCTURE FILE NUMBER 4303482
DRAWN SCB REVISED 12/09/09
DESIGNED ALP CHECKED BLN

ESTIMATED QUANTITIES
BRIDGE NO. LAK-90-0243
OVER I.R. 271

LAK-90-2.43
PID No. 77508

090_0243PE0001 12/09/09 SCB,KH,JLS

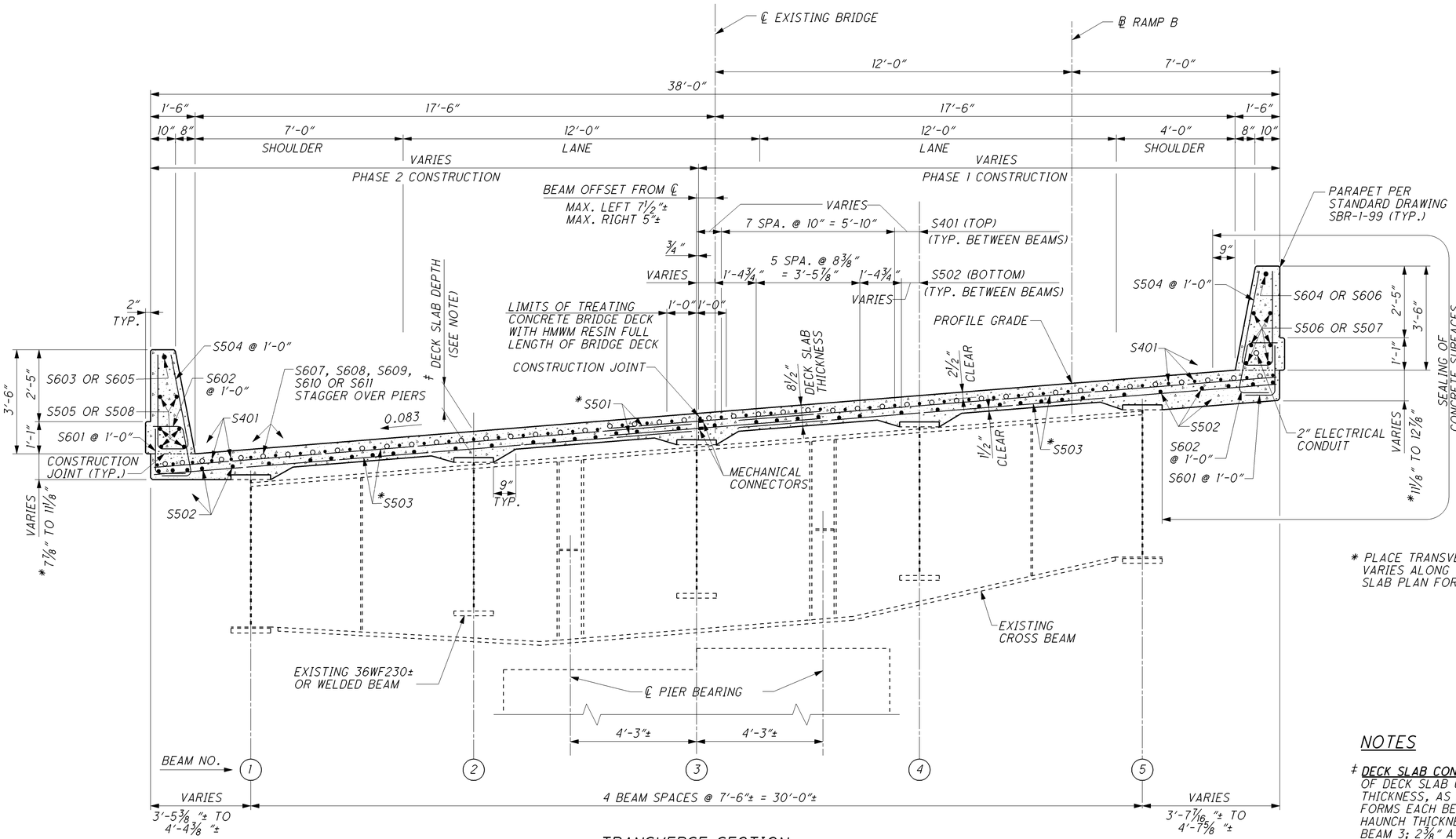

TRANSVERSE SECTION

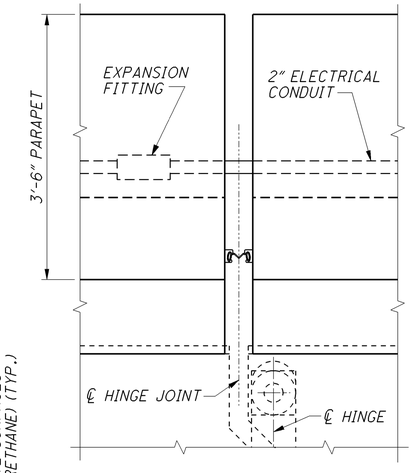

HINGE JOINT ELEVATION

* PLACE TRANSVERSE BARS RADIALLY. SPACING VARIES ALONG THE WIDTH OF THE DECK. SEE SLAB PLAN FOR LAYOUT AND SPACING.

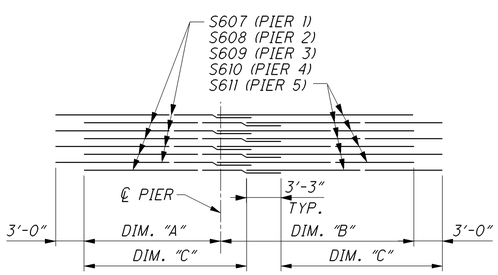

STAGGER OF #6 BARS OVER PIERS

DIMENSION TABLE			
PIER	DIM. "A"	DIM. "B"	DIM. "C"
1	27'-6"	30'-6"	28'-10½"
2	36'-0"	26'-0"	30'-10½"
3	24'-0"	49'-6"	36'-7½"
4	41'-0"	36'-6"	38'-7½"
5	37'-0"	38'-6"	37'-7½"

DECK HAUNCHES OVER CENTERLINE OF BEAM							
LOCATION	R.A.	PIER 1	PIER 2	PIER 3	PIER 4	PIER 5	F.A.
BEAM 1	3¼"	2⅜"	2"	¼"	½"	1⅜"	3½"
BEAM 2	3⅛"	2⅝"	2⅛"	⅞"	1⅝"	1⅝"	3½"
BEAM 3	3⅛"	2¾"	2⅛"	1½"	1¾"	1¾"	3½"
BEAM 4	3"	2⅞"	2⅛"	2"	1⅞"	2"	3⅝"
BEAM 5	3"	3"	2¼"	2½"	2"	2¼"	3⅝"

* DECK CANTILEVER THICKNESS							
LOCATION	R.A.	PIER 1	PIER 2	PIER 3	PIER 4	PIER 5	F.A.
LEFT	10½"	9⅝"	9¼"	7⅞"	9⅝"	9¾"	11⅛"
RIGHT	12"	11⅞"	11⅛"	11⅞"	11¾"	12¼"	12⅞"

NOTES

‡ **DECK SLAB CONCRETE QUANTITY:** THE ESTIMATED QUANTITY OF DECK SLAB CONCRETE IS BASED ON THE CONSTANT DECK SLAB THICKNESS, AS SHOWN, PLUS THE QUANTITY OF CONCRETE THAT FORMS EACH BEAM HAUNCH. THE ESTIMATE ASSUMES A CONSTANT HAUNCH THICKNESS OF 1¾" AT BEAM 1; 2" AT BEAM 2; 2⅛" AT BEAM 3; 2⅜" AT BEAM 4, 2½" AT BEAM 5 AND A CONSTANT HAUNCH WIDTH OUTSIDE THE EDGE OF EACH BEAM FLANGE OF 9 INCHES. DEVIATE FROM THIS HAUNCH THICKNESS AS NECESSARY TO PLACE THE DECK SURFACE AT THE FINISHED GRADE.THE ALLOWABLE TOLERANCE FOR THE HAUNCH WIDTH OUTSIDE THE EDGE OF EACH BEAM FLANGE IS ±3 INCHES.

THE HAUNCH THICKNESS WAS MEASURED AT THE CENTERLINE OF THE BEAM, FROM THE SURFACE OF THE DECK TO THE TOP OF THE TOP FLANGE MINUS THE DECK SLAB THICKNESS. THE AREA OF ALL EMBEDDED STEEL PLATES HAS BEEN DEDUCTED FROM THE HAUNCH QUANTITY IN ACCORDANCE WITH 511.24.

REINFORCING STEEL SPLICE LENGTHS SHALL BE 2'-0" FOR HORIZONTAL #4 BARS, 2'-6" FOR VERTICAL #5 BARS, 2'-9" FOR HORIZONTAL #5 BARS, 3'-0" FOR VERTICAL #6 BARS AND 3'-3" FOR HORIZONTAL #6 BARS.

MATERIALS SHOWN ARE NEW UNLESS OTHERWISE NOTED.

PHASE CONSTRUCTION DETAILS: SEE SHEET 12 AND 13 OF 96.

MECHANICAL CONNECTOR DETAIL: SEE SHEET 28/42.

OVERHANG DIMENSIONS AND LOCATIONS: SEE SHEET 31/42.

SLAB PLAN: SEE SHEETS 27/42 AND 28/42.

ELECTRICAL CONDUIT: FOR DETAILS SEE SHEET 53 OF 96.

RICHLAND ENGINEERING LIMITED
29 NORTH PARK STREET
MANSFIELD, OHIO 44902

DESIGNED	DRAWN	REVIEWED	DATE
ALP	RB	DLR	11/25/09
CHECKED	REVISED	STRUCTURE FILE NUMBER	
BLN		4303482	

TRANSVERSE SECTION
BRIDGE NO. LAK-90-0243
OVER I.R. 271

LAK-90-2.43
PID No. 77508

090_0243PTS001.DGN 11/25/09 KH,TWH,JLS