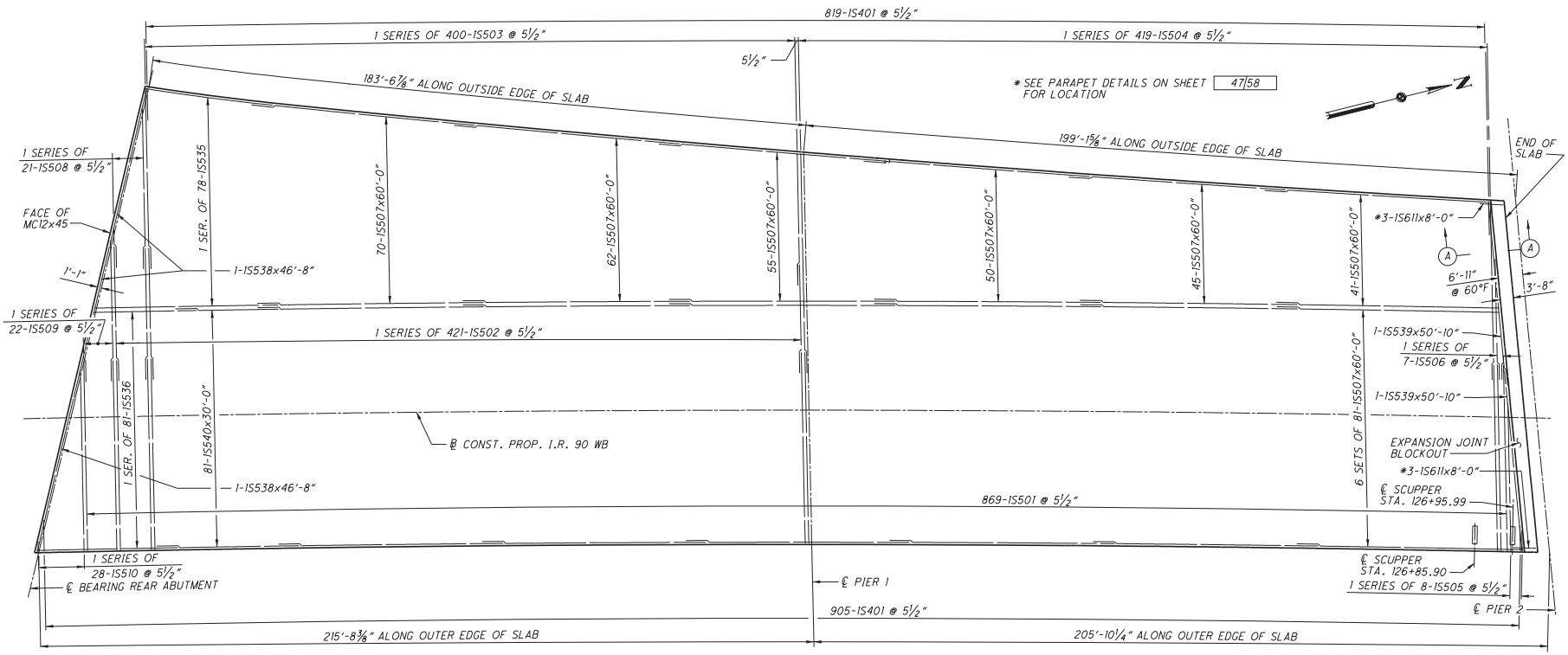

SLAB PLAN - TOP REINFORCING

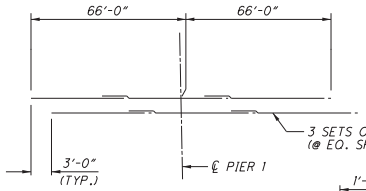

REINFORCEMENT OVER PIER 1

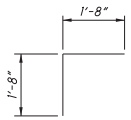

BARS B - 1S608

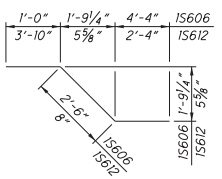

BARS Y1

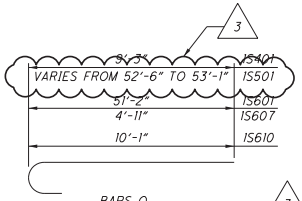

BARS Q

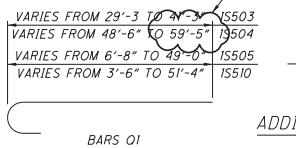

BARS Q1

REQUIRED LAP LENGTHS	
#5 BARS	3'-2"

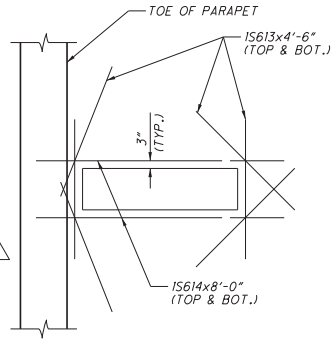

EXTERIOR SCUPPER
ADDITIONAL REINFORCEMENT AT SCUPPER

NOTES:

1. FOR TRANSVERSE SECTION AND ADDITIONAL NOTES, SEE SHEET 44/58.
2. FOR PARAPET DETAILS, SEE SHEETS 44/58 AND 45/58.
3. FOR TOP OF HAUNCH ELEVATIONS, SEE SHEETS 51/58 AND 52/58.
4. FOR SCREED ELEVATIONS, SEE SHEETS 49/58 AND 50/58.
5. FOR FINAL DECK SURFACE ELEVATIONS, SEE SHEETS 53/58 AND 54/58.
6. FOR TABLE OF STRAIGHT REBAR SERIES LENGTHS, SEE SHEET 43/58.
7. FOR LONGITUDINAL REBAR SPACING, SEE SHEET 44/58.
8. FOR SECTION A-A, SEE SHEET 43/58.
9. FOR SCUPPER AND DOWNSPOUT DETAILS, SEE SHEET 57/58 AND 58/58.
10. ALL REINFORCEMENT SHALL BE EPOXY COATED AND PER CMS 509.
11. ENTIRE DECK WILL BE PLACED IN A SINGLE POUR.
12. FOR MEDIAN PARAPET REINFORCEMENT LOCATION, SEE SHEET 45/58.

NO.	REVISIONS	DATE
A	INTERIM SUBMITTAL	03/30/11
B	FINAL SUBMITTAL	06/08/11
1	APPROVED FOR CONSTRUCTION	09/09/11
2	NOC 0022	10/14/11
3	RECORD DRAWINGS - RFI 00397	08/27/13

DESIGN AGENCY: WALSH HNTB

I-90 VIADUCT UNIT 1

SLAB PLAN

BRIDGE NO. CUY-90-1532
I-90 WEST BOUND

DESIGNED	DRAWN	REVIEWED	DATE
DSB	CAT	HRH	09/09/11
CHECKED	CHECKED	STRUCTURE FILE NUMBER	
AEC	JWC	1809431	

CUY-90-14.90
PID No. 77332/85531

42/58

0/0

Date:2/19/2014
Model:Sheet1
File:49633-S-BR-SLB01-Unit1.dgn

NOTES:

1. FOR LOCATIONS OF SCUPPERS, SEE SLAB PLAN SHEETS.
2. ALL STRUCTURAL STEEL FOR SCUPPERS SHALL BE ASTM A709, GRADE 36, EXCEPT AS NOTED.
3. ALL NUTS, WASHERS, AND BOLTS SHALL BE STAINLESS STEEL, EXCEPT AS NOTED.
4. PIPE SHALL BE ASTM A53, SCHEDULE 40, GALVANIZED IN ACCORDANCE WITH ASTM A153.
5. SCUPPERS SHALL BE GALVANIZED AFTER FABRICATION IN ACCORDANCE WITH ASTM A123.
6. FOR PIPE AND DOWNSPOUT DETAILS SEE SHEET 58/58.
7. SCUPPERS AND DOWNSPOUTS SHALL BE AS PER CMS 513 AND 518, EXCEPT AS NOTED.

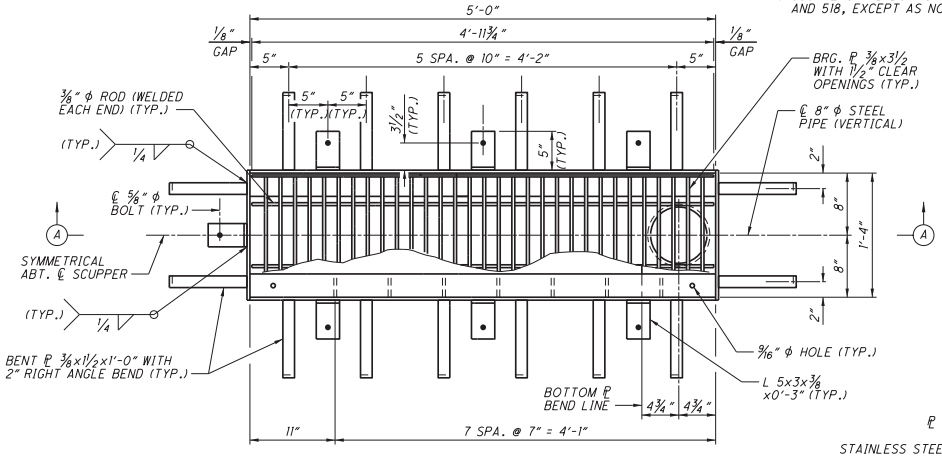

PLAN - TYPICAL SCUPPER

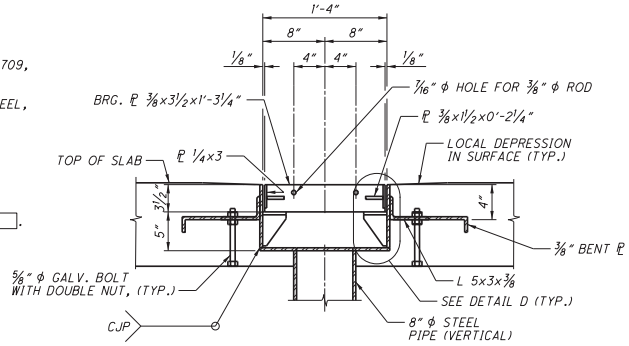

SECTION B-B

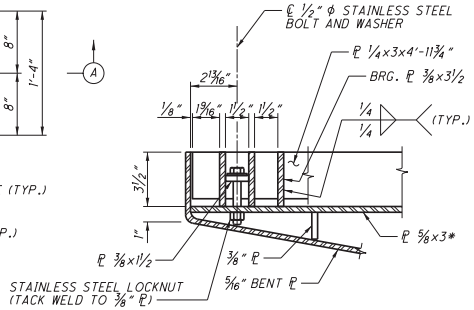

DETAIL C

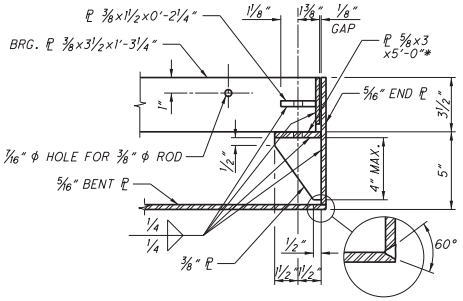

DETAIL D

*GRADE 50 STEEL

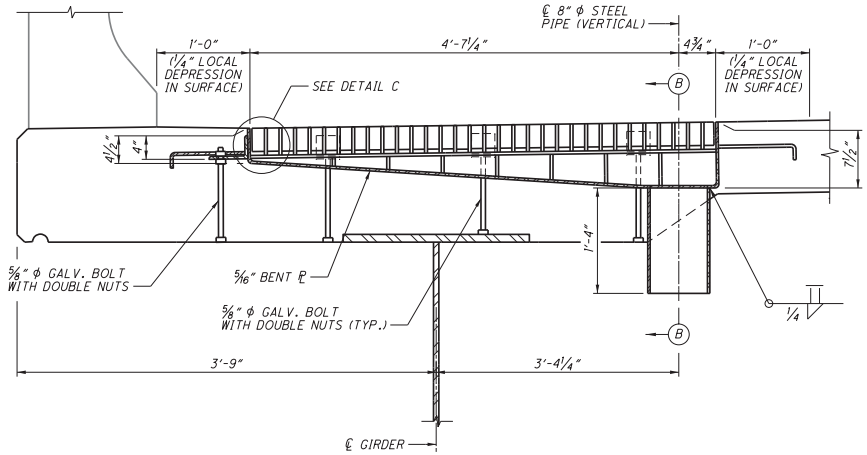

SECTION A-A (EXTERIOR GIRDER)

NO.	REVISIONS	DATE
B	FINAL SUBMITTAL	06/08/11
1	APPROVED FOR CONSTRUCTION	08/09/11
2	NOC 0238	11/04/11

DESIGN AGENCY: WILSH HNTB

I-90 VIADUCT UNIT 1

SCUPPERS AND DOWNSPOUTS

BRIDGE NO. CUY-90-1532
I-90 WEST BOUND

DESIGNED	DRAWN	REVIEWED	DATE
KDB	FWG	HRH	09/09/11
CHECKED	CHECKED	STRUCTURE FILE NUMBER	
RJH	RJH	1809431	

CUY-90-14.90
PID No. 77332/85531

0/0

Date:8/30/2013
Model:Sheet1
File:49633-S-BR-DDD01-Unit1.dgn

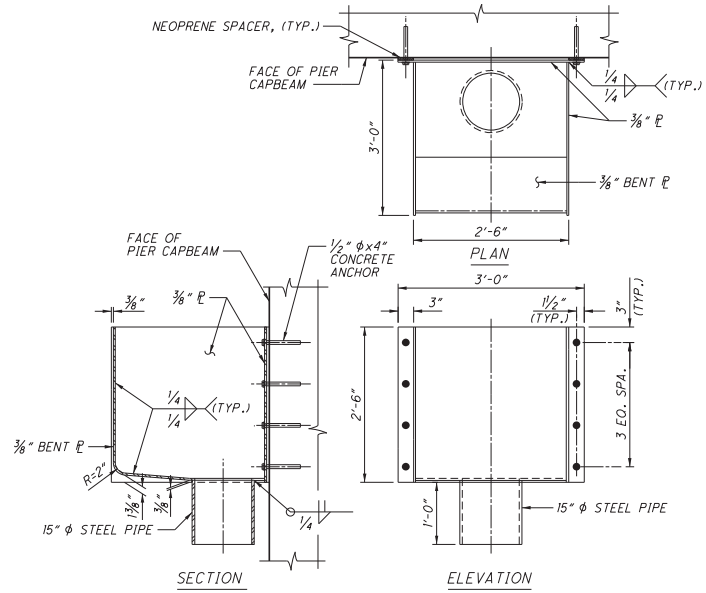

DRAIN PAN DETAILS

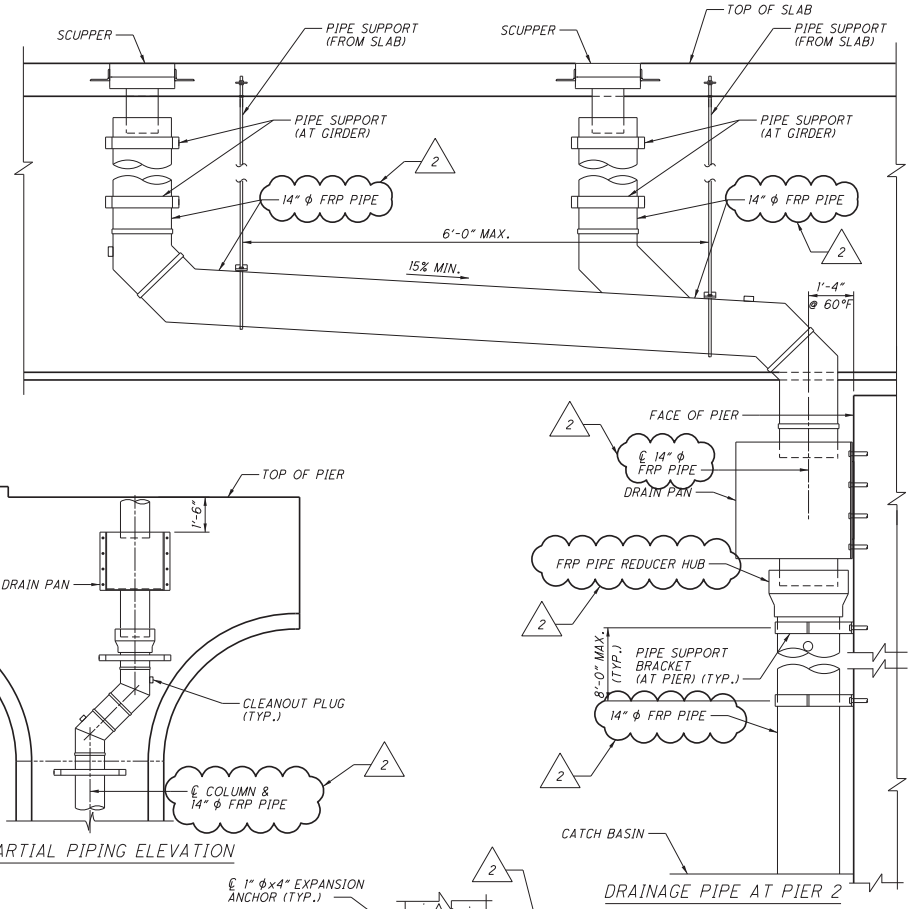

PARTIAL PIPING ELEVATION

DRAINAGE PIPE AT PIER 2

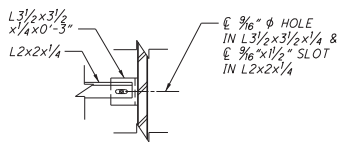

SECTION E-E

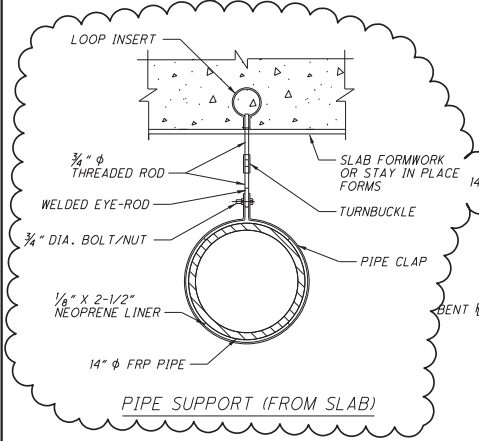

PIPE SUPPORT (FROM SLAB)

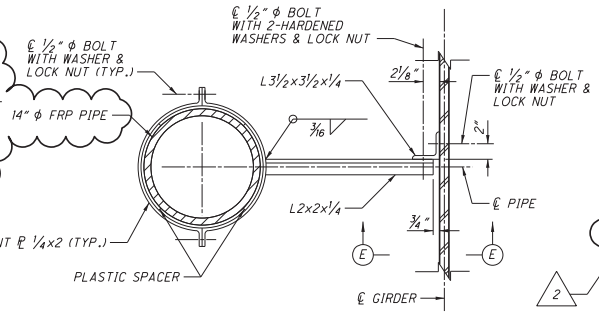

PIPE SUPPORT (AT GIRDER)

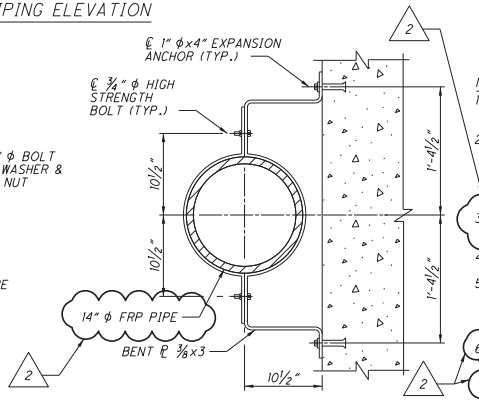

PIPE SUPPORT BRACKET (AT PIER)

NOTES:

1. FOR SCUPPER LOCATIONS, SEE SLAB PLAN SHEETS 42/58 THRU 43/58.
2. ALL MATERIALS FOR THE SUPPORT HANGERS AND BRACKETS SHALL BE ASTM A709 GRADE 36 AND GALVANIZED PER CMS 711.02. SUPPORT BRACKETS ATTACHED TO PIERS, SHALL BE POWDER COATED WITH THE FINISH COLOR SW 7022 ALPACA.
3. FIBER REINFORCED PLASTIC (FRP) PIPE USED IN BRIDGE DRAINS SHALL CONFORM TO ASTM D 3567.
4. BENDS IN PIPING SHALL NOT EXCEED 45°.
5. CLEANOUTS SHALL BE PROVIDED IMMEDIATELY UPSTREAM OF EACH BEND, ON VERTICAL DOWNSPOUTS ACCESSIBLE FROM THE GROUND, AND AT THE END OF EACH HORIZONTAL SEGMENT.
6. FRP PIPE, INCLUDING ELBOWS AND REDUCERS, BELOW GIRDER FLANGES SHALL BE PRIME COATED AS REQUIRED AND FINISH COATED WITH ALPACA FED 25630.
7. FOR CATCH BASIN DETAILS, SEE ROADWAY-TREMONT PLANS.

NO.	REVISIONS	DATE
B	FINAL SUBMITTAL	06/08/11
1	APPROVED FOR CONSTRUCTION	08/09/11
2	RECORD DRAWINGS - CHANGE ORDER #30, RF100407	08/27/13

DESIGN AGENCY: WALSH HNTB

I-90 VIADUCT UNIT 1

SCUPPERS AND DOWNSPOUTS

BRIDGE NO. CUY-90-1532

I-90 WEST BOUND

DESIGNED	DRAWN	REVIEWED	DATE
KDB	FWG	HRH	09/09/11
CHECKED	CHECKED	STRUCTURE FILE NUMBER	
RJH	RJH	1809431	

CUY-90-14.90

PID No. 77332/85531

58/58

0/0

Date:3/5/2014
Model:Sheet1
File:49633-S-BR-DDD02-Unit1.dgn

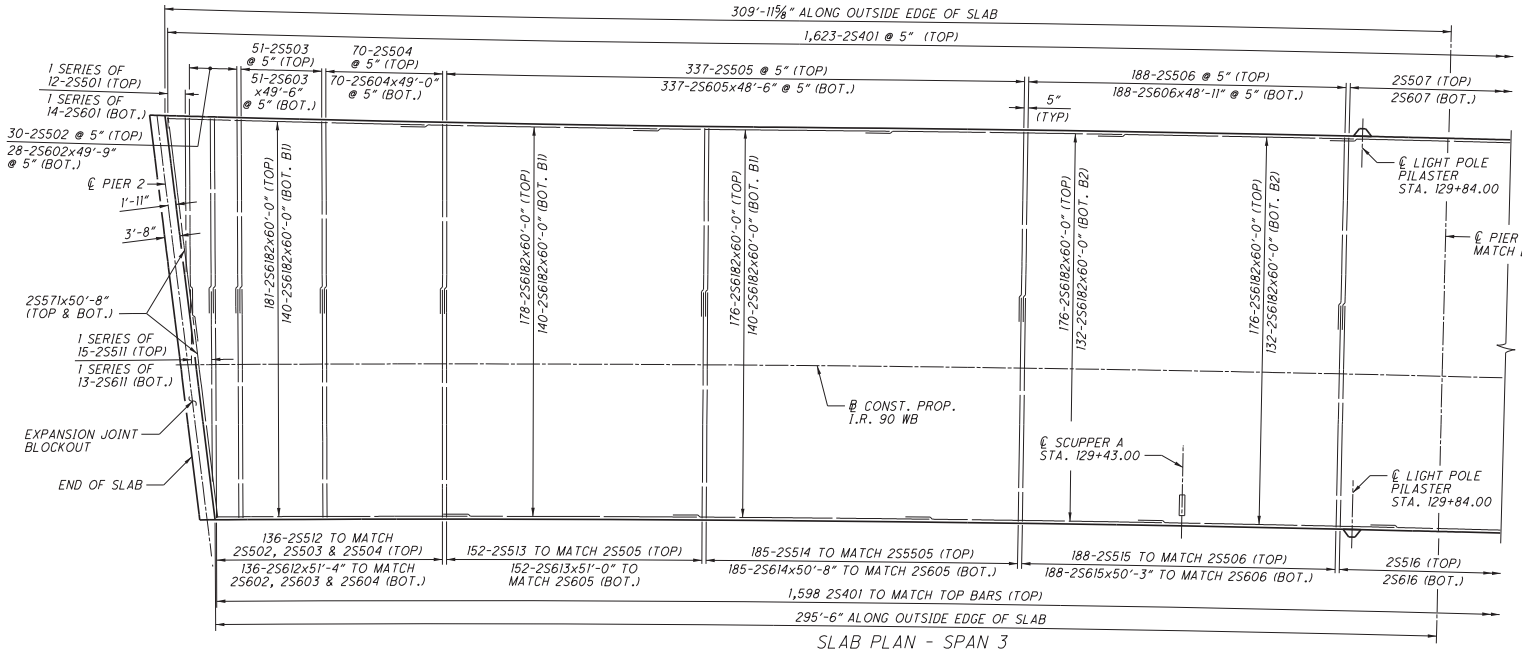

SLAB PLAN - SPAN 3

NOTES:

1. (BOT. B1) DENOTES 16 BARS BETWEEN GIRDERS AND STRINGERS.
2. (BOT. B2) DENOTES 15 BARS BETWEEN GIRDERS AND STRINGERS.
3. (BOT. B3) DENOTES 14 BARS BETWEEN GIRDERS AND STRINGERS.
4. FOR ADDITIONAL NOTES, SEE SHEET 28/107.
5. FOR BLOCKOUT DETAILS, SEE SHEET 32/107.
6. ALL STATIONINGS SHOWN ARE ALONG ℄ CONST. PROP. I.R. 90 WB.
7. TRANSITION FROM UNIT 1 BRIDGE CROSS SLOPE BREAK INTO 5'-0" ROUNDING OF CROWN OVER FIRST 50'-0" OF SPAN 3.

REQUIRED LAP LENGTHS	
#4 BARS	2'-7"
#5 BARS	3'-2"
#6 BARS	3'-10"

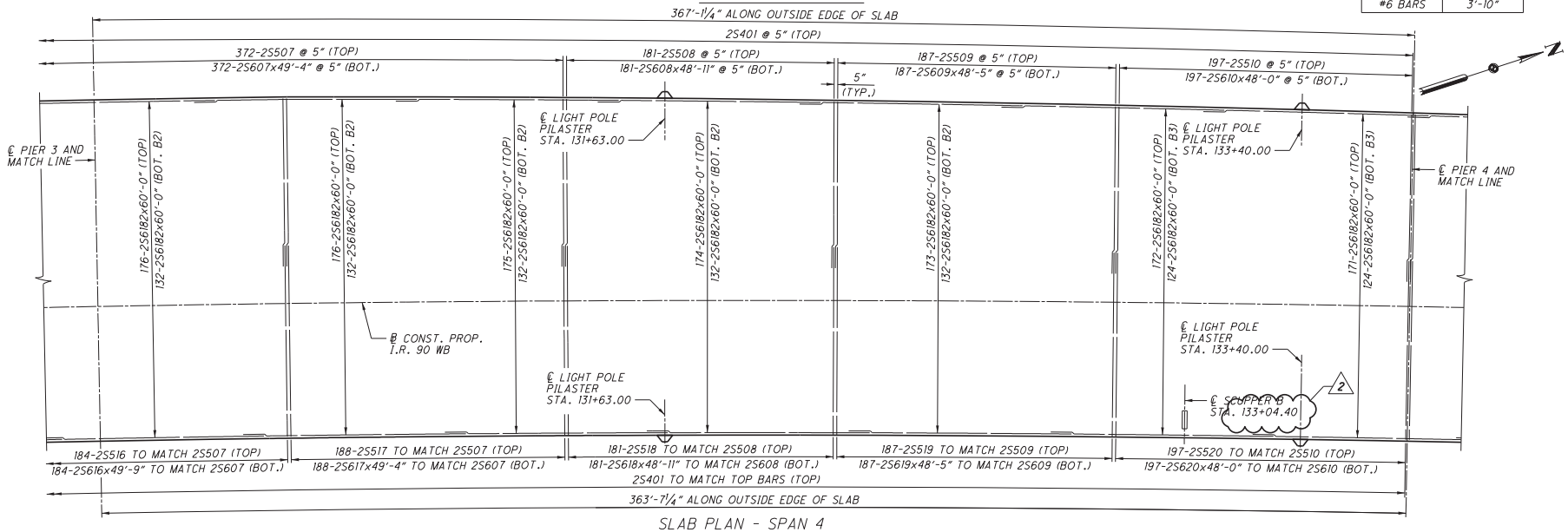

SLAB PLAN - SPAN 4

NO.	REVISIONS	DATE
B	FINAL SUBMITTAL - REVISED	06/12/11
C	FINAL SUBMITTAL - REVISED	08/09/11
1	APPROVED FOR CONSTRUCTION	12/02/11
2	RECORD DRAWINGS - SCUPPER LOCATIONS	11/16/15

DESIGN AGENCY: WALSH HNTB

CLEVELAND INNERBELT BRIDGE 90 — Transportation for a Better America

MAIN SPAN UNIT 2 SUPERSTRUCTURE

SLAB PLAN - UNIT 2

BRIDGE NO. CUY-90-1532

I-90 WEST BOUND

DESIGNED	DRAWN	REVIEWED	DATE
GDH	CAT	HRH	12/02/11
CHECKED	CHECKED	STRUCTURE FILE NUMBER	
DSB	KDB	1809431	

CUY-90-14.90

PID No. 77332/85531

26/107

26/107

Date:1/13/2015
Model:Sheet1
File:49633-S-BR-SLB04-U2Super.dgn

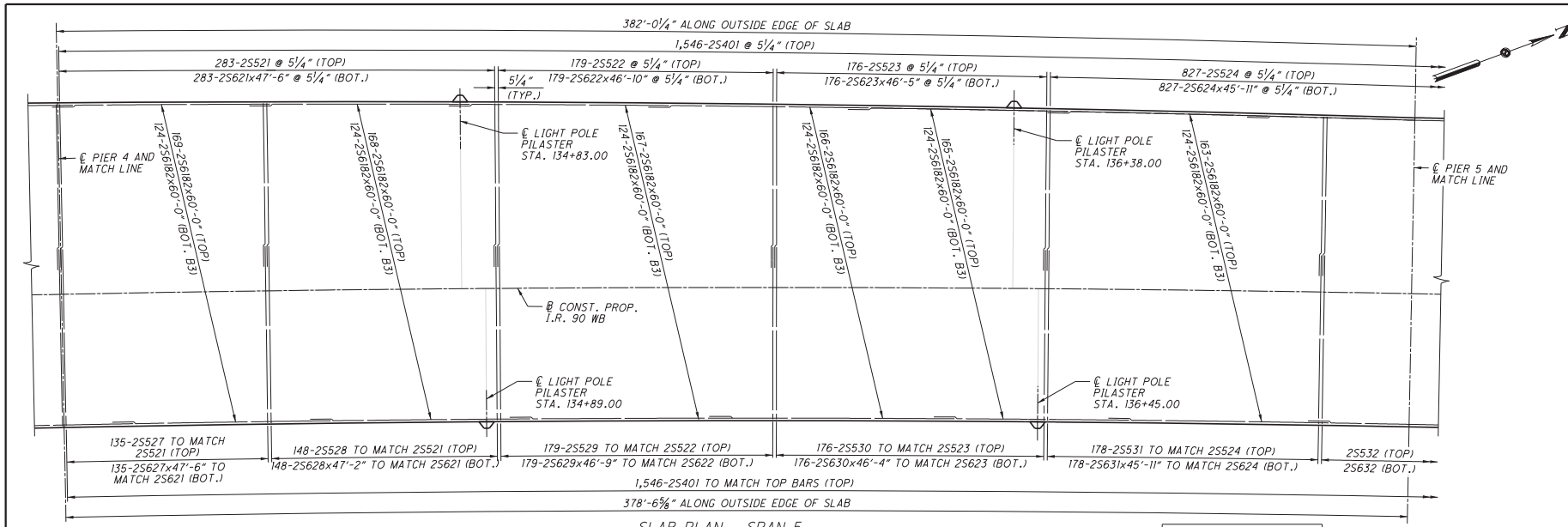

SLAB PLAN - SPAN 5

NOTES:

1. (BOT. B3) DENOTES 14 BARS BETWEEN GIRDERS AND STRINGERS.
2. (BOT. B4) DENOTES 13 BARS BETWEEN GIRDERS AND STRINGERS.
3. FOR ADDITIONAL NOTES, SEE SHEET 28/107.
4. ALL STATIONINGS SHOWN ARE ALONG ℄ CONST. PROP. I.R. 90 WB.

REQUIRED LAP LENGTHS	
#4 BARS	2'-7"
#5 BARS	3'-2"
#6 BARS	3'-10"

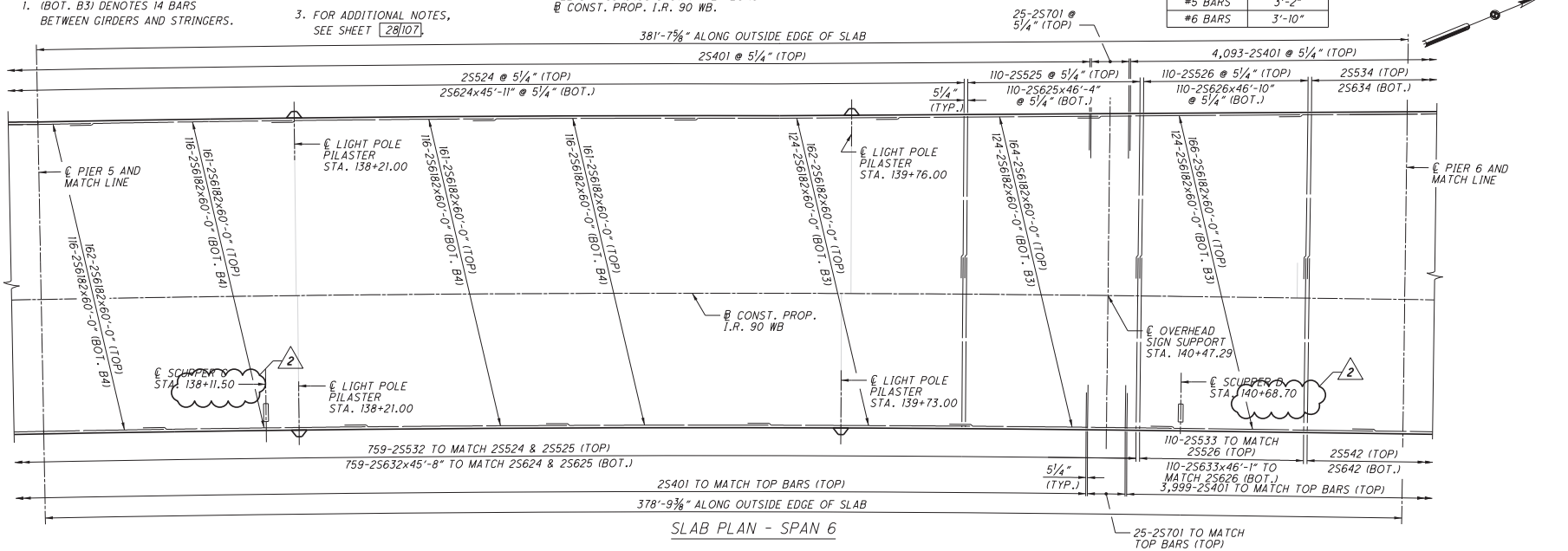

SLAB PLAN - SPAN 6

NO.	REVISIONS	DATE
B	FINAL SUBMITTAL	06/12/11
C	FINAL SUBMITTAL - REVISED	08/09/11
1	APPROVED FOR CONSTRUCTION	12/02/11
2	RECORD DRAWINGS - SCUPPER LOCATIONS	11/15/15

DESIGN AGENCY: WALSH HNTB

CLEVELAND INNERBELT BRIDGE 90 — Ohio Department of Transportation

MAIN SPAN UNIT 2 SUPERSTRUCTURE

SLAB PLAN - UNIT 2

BRIDGE NO. CUY-90-1532

I-90 WEST BOUND

DESIGNED	DRAWN	REVIEWED	DATE
GDH	CAT	HRH	12/02/11
CHECKED	CHECKED	STRUCTURE FILE NUMBER	
DSB	KDB	1809431	

CUY-90-14.90

PID No. 77332/85531

Date:1/13/2015
Model:Sheet1
File:49633-S-BR-SLB05-U2Super.dgn

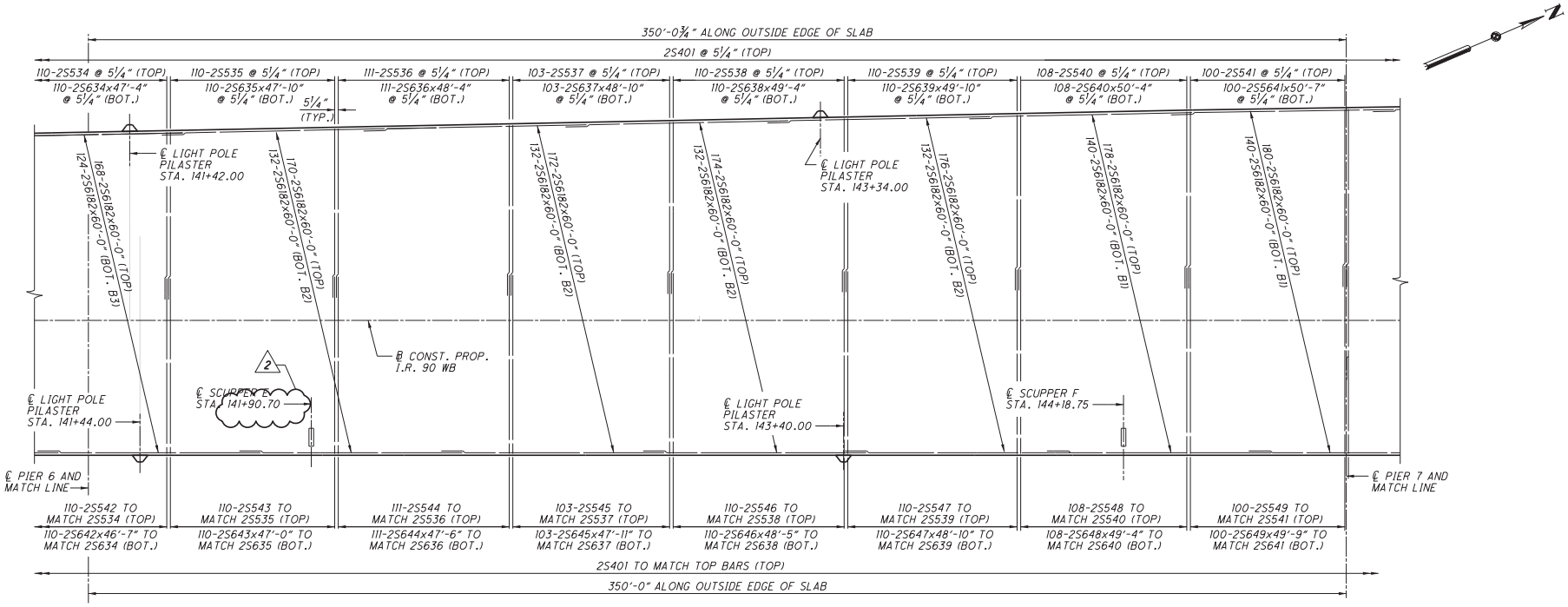

SLAB PLAN - SPAN 7

REQUIRED LAP LENGTHS	
#4 BARS	2'-7"
#5 BARS	3'-2"
#6 BARS	3'-10"

NOTES:

1. FOR TRANSVERSE SECTIONS AND ADDITIONAL NOTES, SEE SHEETS 36/107 THRU 38/107.
2. FOR PARAPET DETAILS, SEE SHEETS 39/107 THRU 45/107.
3. FOR SCREED ELEVATIONS, SEE SHEETS 53/107 THRU 71/107.
4. FOR TOP OF HAUNCH ELEVATIONS, SEE SHEETS 72/107 THRU 76/107.
5. ALL REINFORCING STEEL SHALL BE EPOXY COATED AND PER CMS 509.
6. FOR SCUPPER AND DOWNSPOUT DETAILS SEE SHEETS 102/107 THRU 107/107
7. FOR FINAL DECK SURFACE ELEVATIONS, SEE SHEETS 85/107 THRU 101/107.
8. FOR LIGHT POLE PILASTER DETAILS, SEE SHEET 42/107.
9. FOR TABLE OF REBAR LENGTHS, SEE SHEET 34/107.
10. FOR TABLE OF REBAR SERIES LENGTHS, SEE SHEET 34/107.
11. FOR LONGITUDINAL REBAR SPACING, SEE SHEETS 36/107 THRU 38/107.
12. TRANSVERSE REBAR SPACING MEASURED ALONG LEFT EDGE OF SLAB.
13. WHEN PLACING REINFORCING IN TAPERED AREAS, THE CLEAR DISTANCE BETWEEN PARALLEL BARS IN A LAYER SHALL NOT BE LESS THAN 1 ½".
14. (BOT. B1) DENOTES 16 BARS BETWEEN GIRDERS AND STRINGERS.
15. (BOT. B2) DENOTES 15 BARS BETWEEN GIRDERS AND STRINGERS.
16. (BOT. B3) DENOTES 14 BARS BETWEEN GIRDERS AND STRINGERS.
17. ALL STATIONINGS SHOWN ARE ALONG ℄ CONST. PROP. I.R. 90 WB.

NO.	REVISIONS	DATE
B	FINAL SUBMITTAL	05/12/11
C	FINAL SUBMITTAL - REVISED	08/09/11
1	APPROVED FOR CONSTRUCTION	12/02/11
2	RECORD DRAWINGS - SCUPPER LOCATIONS	11/15/13

DESIGN AGENCY: WALSH HNTB

CLEVELAND'S MINNERBEIT BRIDGE

MAIN SPAN UNIT 2 SUPERSTRUCTURE

SLAB PLAN - UNIT 2

BRIDGE NO. CUY-90-1532
I-90 WEST BOUND

DESIGNED	DRAWN	REVIEWED	DATE
GDH	CAT	HRH	12/02/11
CHECKED	CHECKED	STRUCTURE FILE NUMBER	
DSB	KDB	1809431	

CUY-90-14.90
PID No. 77332/85531

28/107

28/107

Date:1/13/2015
Model:Sheet1
File:49633-S-BR-SLB06-U2Super.dgn

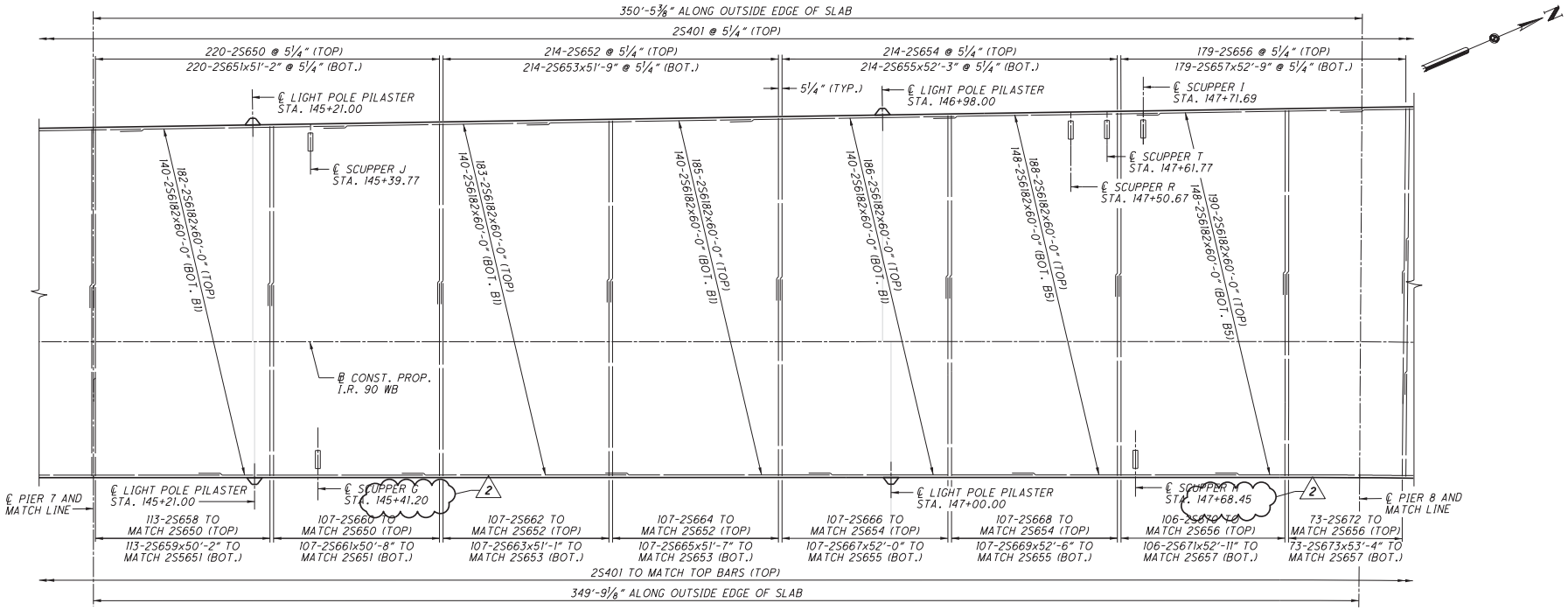

SLAB PLAN - SPAN 8

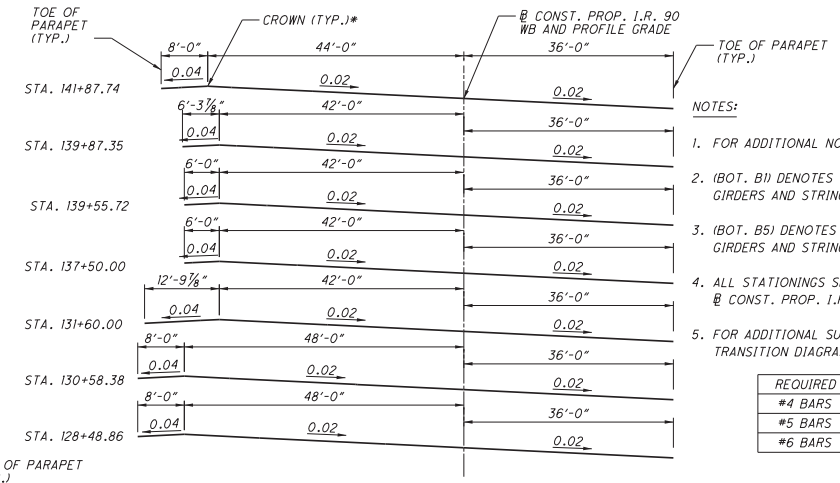

*5'-0" ROUNDING ACROSS CROWN

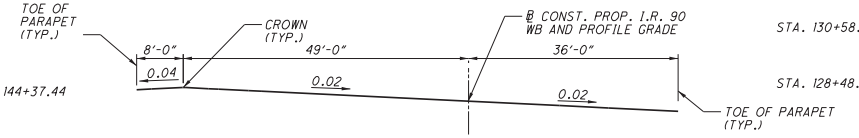

SUPERELEVATION TRANSITION DIAGRAM

(LOOKING AHEAD STATION)

NOTES:

1. FOR ADDITIONAL NOTES, SEE SHEET 28/107.
2. (BOT. B1) DENOTES 16 BARS BETWEEN GIRDERS AND STRINGERS.
3. (BOT. B5) DENOTES 17 BARS BETWEEN GIRDERS AND STRINGERS.
4. ALL STATIONINGS SHOWN ARE ALONG @ CONST. PROP. I.R. 90 WB.
5. FOR ADDITIONAL SUPERELEVATION TRANSITION DIAGRAMS, SEE SHEET 35/107.

REQUIRED LAP LENGTHS	
#4 BARS	2'-7"
#5 BARS	3'-2"
#6 BARS	3'-10"

NO.	REVISIONS	DATE
B	FINAL SUBMITTAL - REVISED	05/02/11
C	FINAL SUBMITTAL - REVISED	08/09/11
1	APPROVED FOR CONSTRUCTION	12/02/11
2	RECORD DRAWINGS - SCUPPER LOCATIONS	11/16/15

DESIGN AGENCY: WALSH HNTB

CLEVELAND INNERBELT BRIDGE

MAIN SPAN UNIT 2 SUPERSTRUCTURE

SLAB PLAN - UNIT 2

BRIDGE NO. CUY-90-1532

I-90 WEST BOUND

DESIGNED	DRAWN	REVIEWED	DATE
GDH	CAT	HRH	12/02/11
CHECKED	CHECKED	STRUCTURE FILE NUMBER	
DSB	KDB	1809431	

CUY-90-14.90

PID No. 77332/85531

Date:1/13/2015
Model:Sheet1
File:49633-S-BR-SLB06a-U2Super.dgn

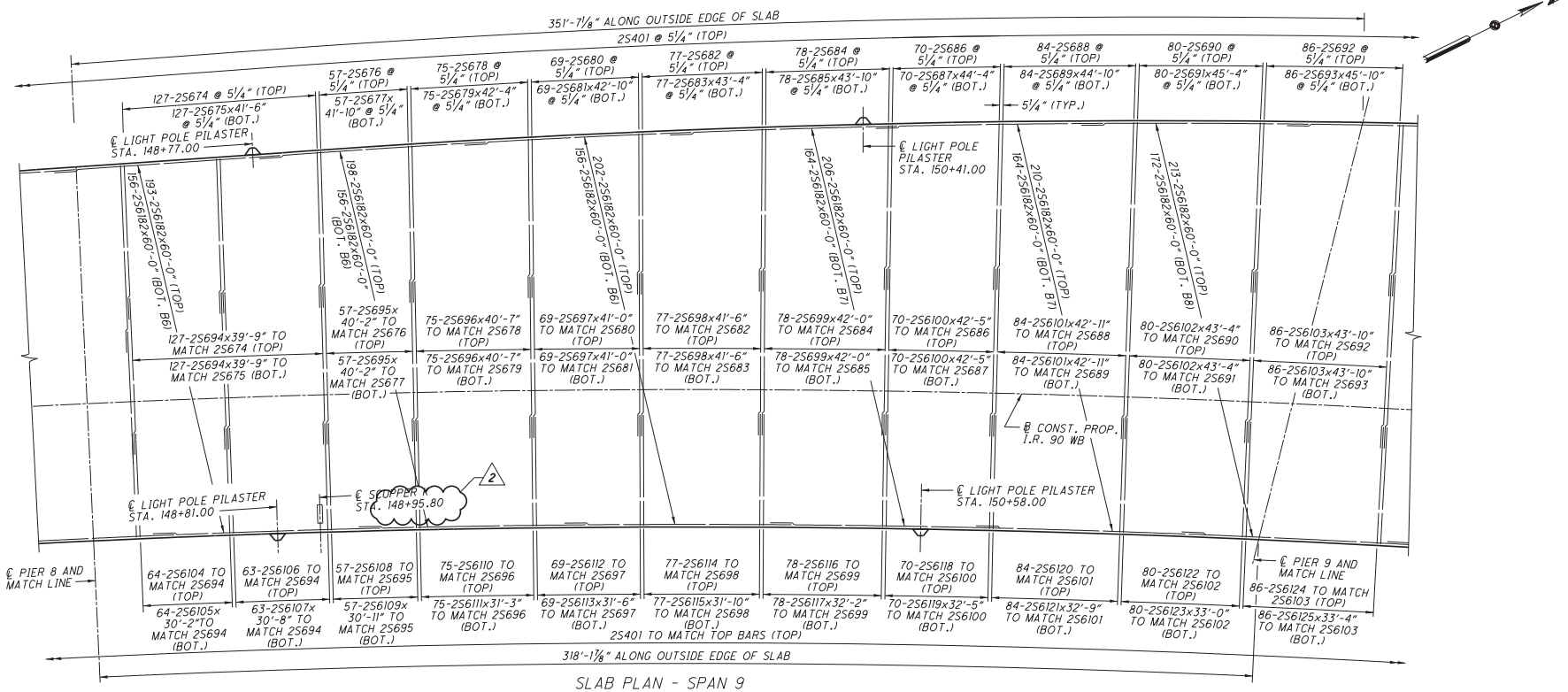

SLAB PLAN - SPAN 9

NOTES:

1. FOR ADDITIONAL NOTES, SEE SHEET 28/107.
2. (BOT. B6) DENOTES 18 BARS BETWEEN GIRDERS AND STRINGERS.
3. (BOT. B7) DENOTES 19 BARS BETWEEN GIRDERS AND STRINGERS.
4. (BOT. B8) DENOTES 20 BARS BETWEEN GIRDERS AND STRINGERS.
5. ALL STATIONINGS SHOWN ARE ALONG ℄ CONST. PROP. I.R. 90 WB.

REQUIRED LAP LENGTHS	
#4 BARS	2'-7"
#5 BARS	3'-2"
#6 BARS	3'-10"

NO.	REVISIONS	DATE
8	FINAL SUBMITTAL	06/12/11
6	FINAL SUBMITTAL - REVISED	08/09/11
1	APPROVED FOR CONSTRUCTION	12/02/11
2	RECORD DRAWINGS - SCUPPER LOCATIONS	11/16/15

DESIGN AGENCY: WALSH HNTB

MAIN SPAN UNIT 2 SUPERSTRUCTURE

SLAB PLAN - UNIT 2

BRIDGE NO. CUY-90-1532

I-90 WEST BOUND

DESIGNED	DRAWN	REVIEWED	DATE
GDH	CAT	HRH	12/02/11
CHECKED	CHECKED	STRUCTURE FILE NUMBER	
DSB	KDB	1809431	

CUY-90-14.90

PID No. 77332/85531

30/107

30/107

Date:1/13/2015
Model:Sheet1
File:49633-S-BR-SLB07-U2Super.dgn

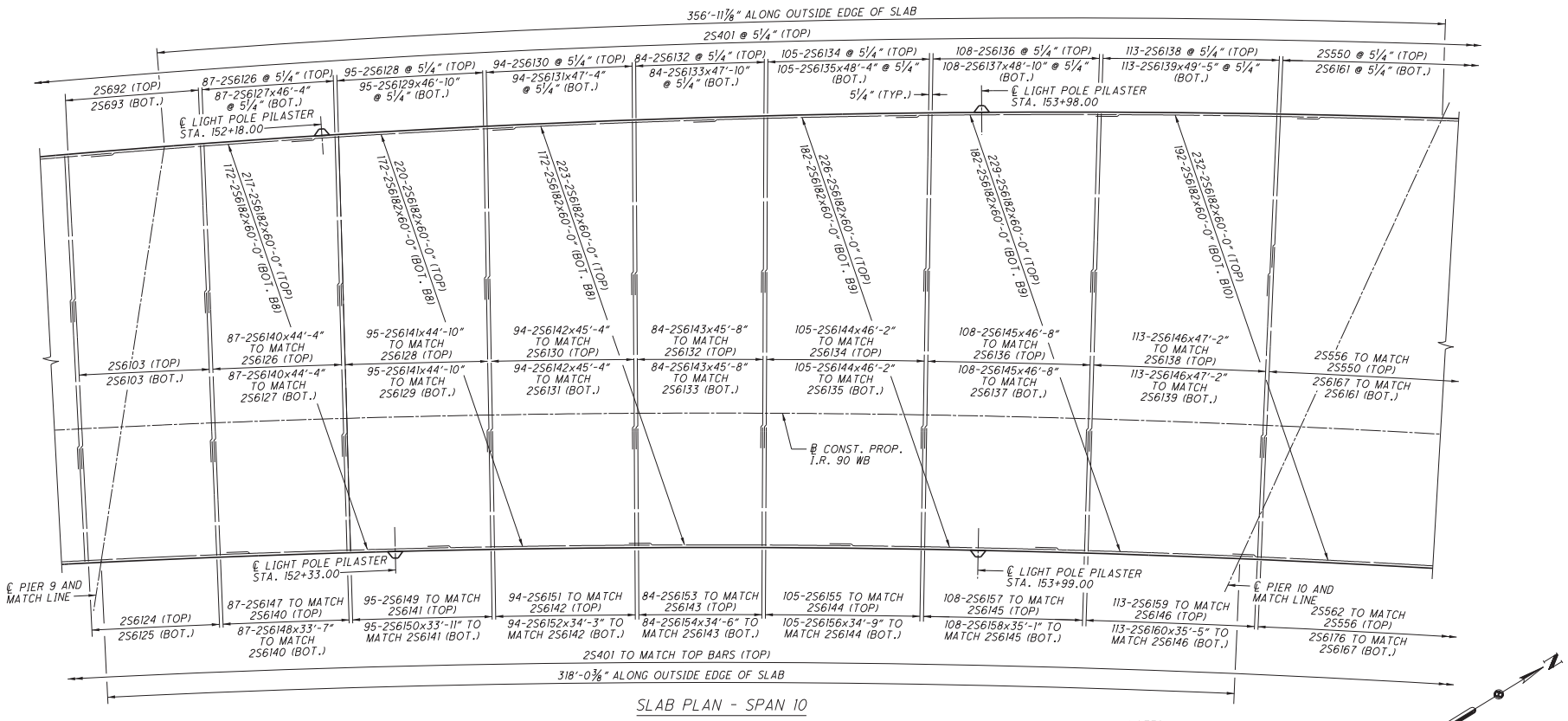

SLAB PLAN - SPAN 10

NOTES:

1. FOR ADDITIONAL NOTES, SEE SHEET 28/107 .
2. (BOT. B8) DENOTES 20 BARS BETWEEN GIRDERS AND STRINGERS.
3. (BOT. B9) DENOTES 21 BARS BETWEEN GIRDERS AND STRINGERS.
4. (BOT. B10) DENOTES 15 BARS BETWEEN GIRDERS AND STRINGERS.
5. ALL STATIONINGS SHOWN ARE ALONG ℄ CONST. PROP. I.R. 90 WB.

REQUIRED LAP LENGTHS	
#4 BARS	2'-7"
#5 BARS	3'-2"
#6 BARS	3'-10"

NO.	REVISIONS	DATE
B	FINAL SUBMITTAL	06/12/11
C	FINAL SUBMITTAL - REVISED	08/09/11
1	APPROVED FOR CONSTRUCTION	12/02/11

DESIGN AGENCY: WALSH HNTB

MAIN SPAN UNIT 2 SUPERSTRUCTURE

SLAB PLAN - UNIT 2

BRIDGE NO. CUY-90-1532

I-90 WEST BOUND

DESIGNED	DRAWN	REVIEWED	DATE
GDH	CAT	HRH	12/02/11
CHECKED	CHECKED	STRUCTURE FILE NUMBER	
DSB	KDB	1809431	

CUY-90-14.90

PID No. 77332/85531

31/107

31/107

Date:1/13/2015
Model:Sheet1
File:49633-S-BR-SLB07a-U2Super.dgn

NOTES:

1. FOR LOCATIONS OF SCUPPERS, SEE SLAB PLAN SHEETS.
2. ALL STRUCTURAL STEEL FOR SCUPPERS SHALL BE ASTM A709, GRADE 36, EXCEPT AS NOTED.
3. ALL NUTS, WASHERS, AND BOLTS SHALL BE STAINLESS STEEL, EXCEPT AS NOTED.
4. PIPE SHALL BE ASTM A53, SCHEDULE 40, GALVANIZED IN ACCORDANCE WITH ASTM A153.
5. SCUPPERS SHALL BE GALVANIZED AFTER FABRICATION IN ACCORDANCE WITH ASTM A123.
6. FOR PIPE AND DOWNSPOUT DETAILS SEE SHEETS 104/107 AND 105/107 .
7. SCUPPERS LOCATED IN SHOULDER ROUNDING SHALL HAVE A MINIMUM 0.05 FT/FT FEATHERING FROM TOP OF DEPRESSION TO PROPOSED GRADE.
8. SCUPPERS AND DOWN SPOUTS SHALL BE PER CMS 513 AND 518, EXCEPT AS NOTED.

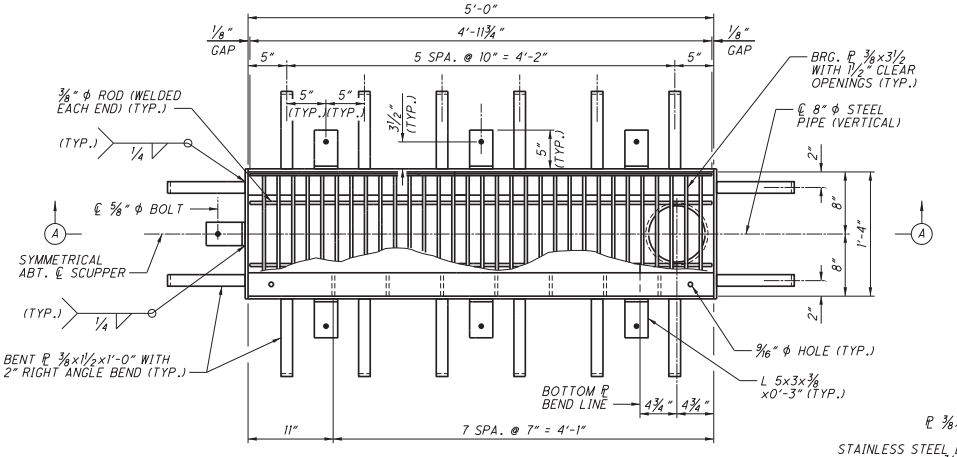

PLAN - TYPICAL SCUPPER

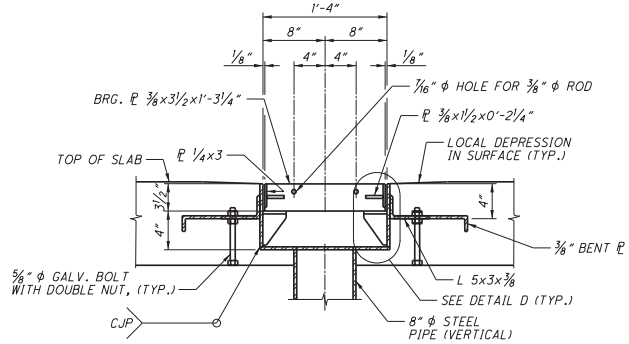

SECTION B-B

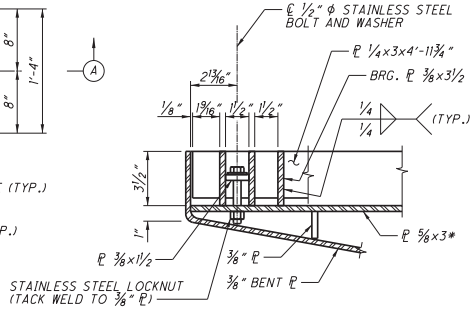

DETAIL C

* GRADE 50 STEEL

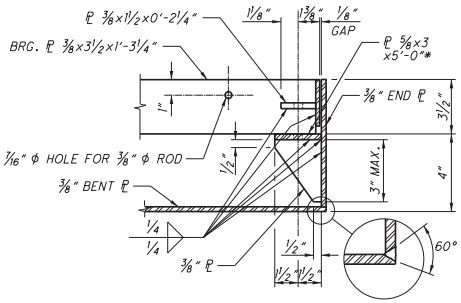

DETAIL D

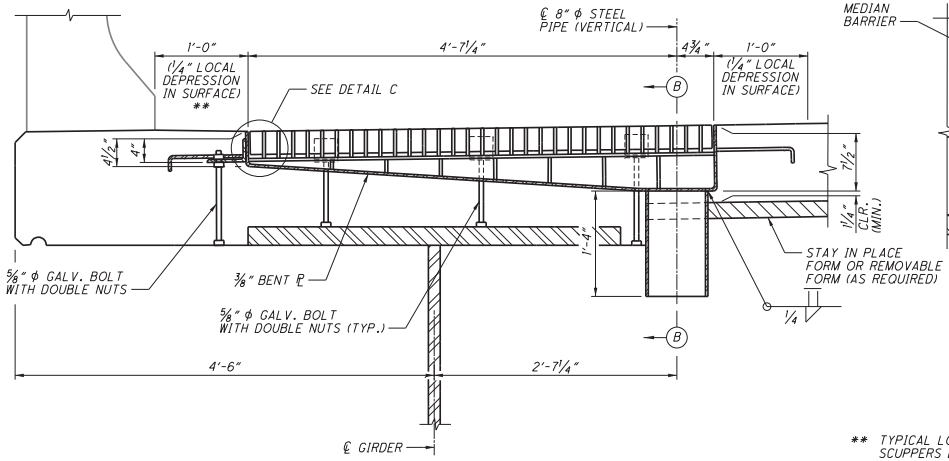

SECTION A-A (EXTERIOR GIRDER)

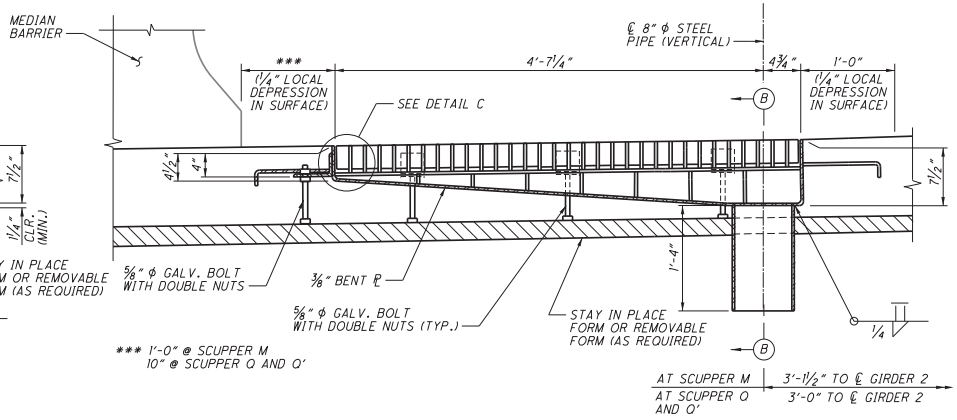

*** 1'-0" @ SCUPPER M
10" @ SCUPPER O AND O'

SECTION A-A (AT GIRDER 2)
(LOOKING BACK STATION)

** TYPICAL LOCAL DEPRESSION FOR ALL SCUPPERS EXCEPT SCUPPER T. FOR LOCAL DEPRESSION AT SCUPPER T, SEE SHEET 107/107 .

NO.	REVISIONS	DATE
B	FINAL SUBMITTAL	06/02/11
C	FINAL SUBMITTAL - REVISED	08/09/11
1	APPROVED FOR CONSTRUCTION	12/02/11
2	NOC 0061	04/20/12

DESIGN AGENCY: WILSH HNTB

MAIN SPAN UNIT 2 SUPERSTRUCTURE

SCUPPERS AND DOWNSPOUTS

BRIDGE NO. CUY-90-1532
I-90 WEST BOUND

DESIGNED	DRAWN	REVIEWED	DATE
KDB	CEM	HRH	12/02/11
CHECKED	CHECKED	STRUCTURE FILE NUMBER	
MX	KDB	1809431	

CUY-90-14.90
PID No. 77332/85531

102/107

102
107

Date:1/13/2015
Model:Sheet1
File:49633-S-BR-DD001-U2Super.dgn

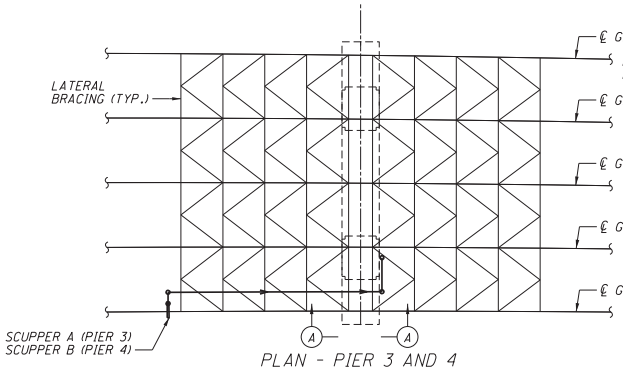

PLAN - PIER 3 AND 4

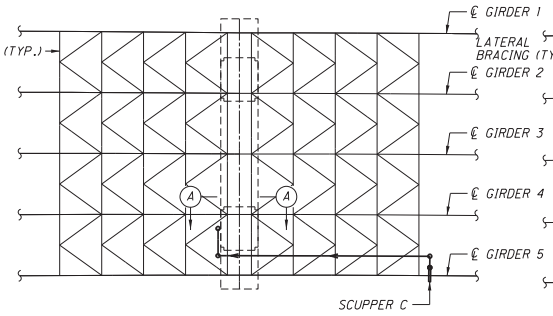

PLAN - PIER 5

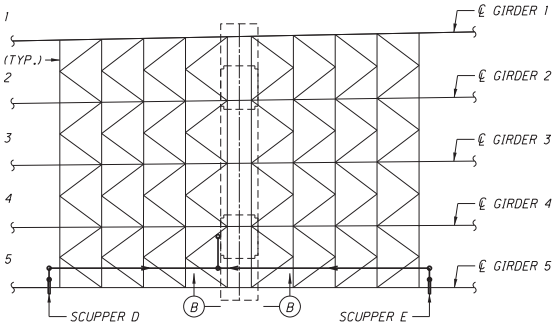

PLAN - PIER 6

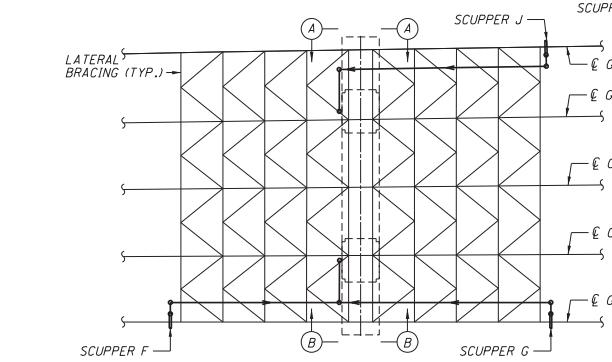

PLAN - PIER 7

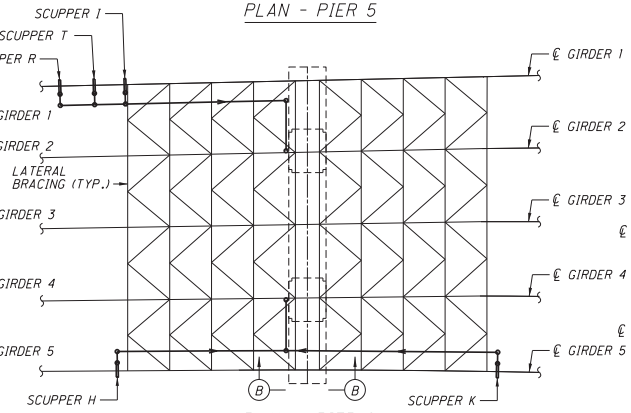

PLAN - PIER 8

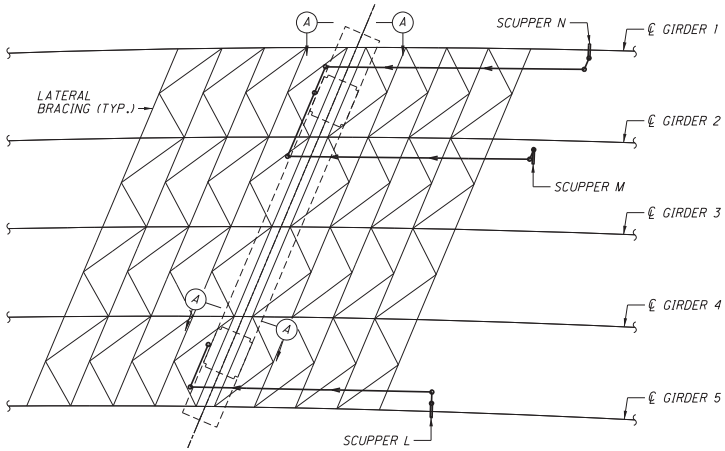

PLAN - PIER 10

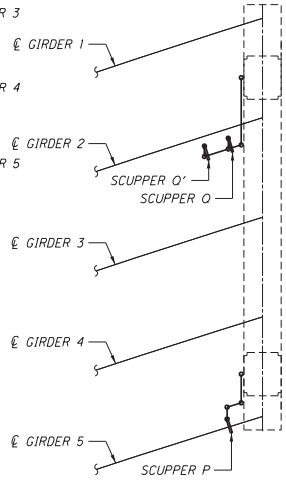

PLAN - PIER 11

NOTES:

1. FOR SCUPPER LOCATIONS, SEE SLAB PLAN SHEETS 26/107 THRU 33/107.
2. FOR SECTION A-A AND B-B SEE SHEET 106/107 .
3. FOR ADDITIONAL NOTES AND DETAILS, SEE SHEETS 104/107 THRU 107/107.

NO.	REVISIONS	DATE
C	FINAL SUBMITTAL - REVISED	08/09/11
1	APPROVED FOR CONSTRUCTION	12/02/11

DESIGN AGENCY: WALSH HNTB

CLEVELAND INNERBELT BRIDGE

MAIN SPAN UNIT 2 SUPERSTRUCTURE

SCUPPERS AND DOWNSPOUTS

BRIDGE NO. CUY-90-1532
I-90 WEST BOUND

DESIGNED	DRAWN	REVIEWED	DATE
MX	FWG	HRH	12/02/11
CHECKED	CHECKED	STRUCTURE FILE NUMBER	
KDG	KDG	1809431	

CUY-90-14.90
PID No. 77332/85531

Date:1/13/2015
Model:Sheet1
File:49633-S-BR-DDD02-U2Super.dgn

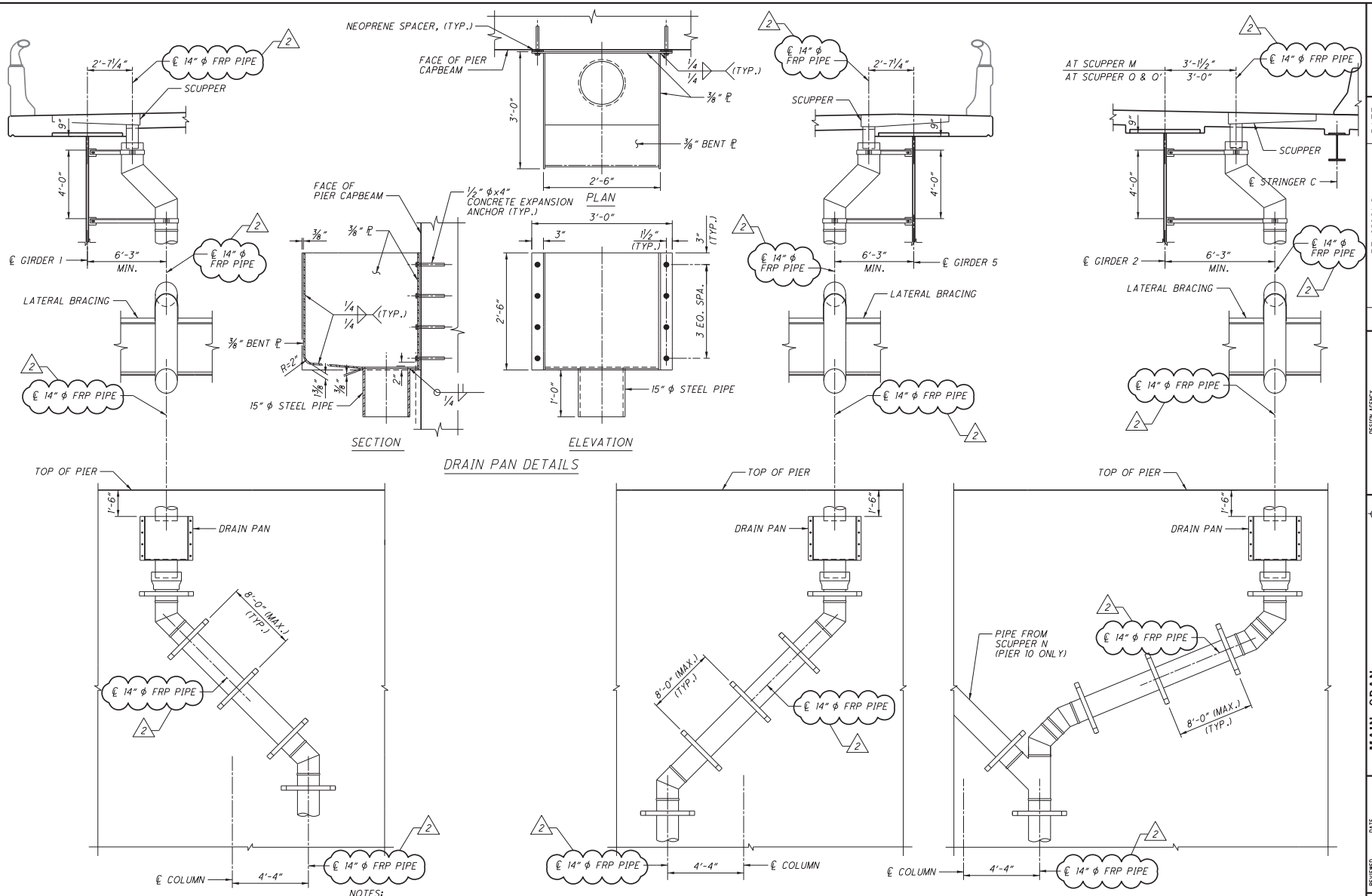

NOTES:

1. FOR SCUPPER DETAILS, SEE SHEET 102/107.
2. FOR ADDITIONAL PIPING DETAILS AND NOTES, SEE SHEET 103/107 AND 105/107 THRU 107/107.
3. SLOPE OF HORIZONTAL PIPES SHALL NOT BE LESS THAN 15 PERCENT, AND BENDS IN PIPE SHALL NOT EXCEED 45°.

NO.	REVISIONS	DATE
B	FINAL SUBMITTAL	06/12/11
C	FINAL SUBMITTAL - REVISED	08/09/11
1	APPROVED FOR CONSTRUCTION	12/02/11
2	RECORD DRAWINGS - CHANGE ORDER #30	11/15/15

DESIGN AGENCY: WALSH HNTB

CLEVELAND MUNIRBELTBRIDGE 90

MAIN SPAN UNIT 2 SUPERSTRUCTURE

SCUPPERS AND DOWNSPOUTS

BRIDGE NO. CUY-90-1532
I-90 WEST BOUND

DESIGNED	DRAWN	REVIEWED	DATE
MX	CEM	HRH	12/02/11
CHECKED	CHECKED	STRUCTURE FILE NUMBER	
KDB	MX	1809431	

CUY-90-14.90
PID No. 77332/85531

104/107

104
107

Date:1/13/2015
Model:Sheet1
File:49633-S-BR-DDD03-U2Super.dgn

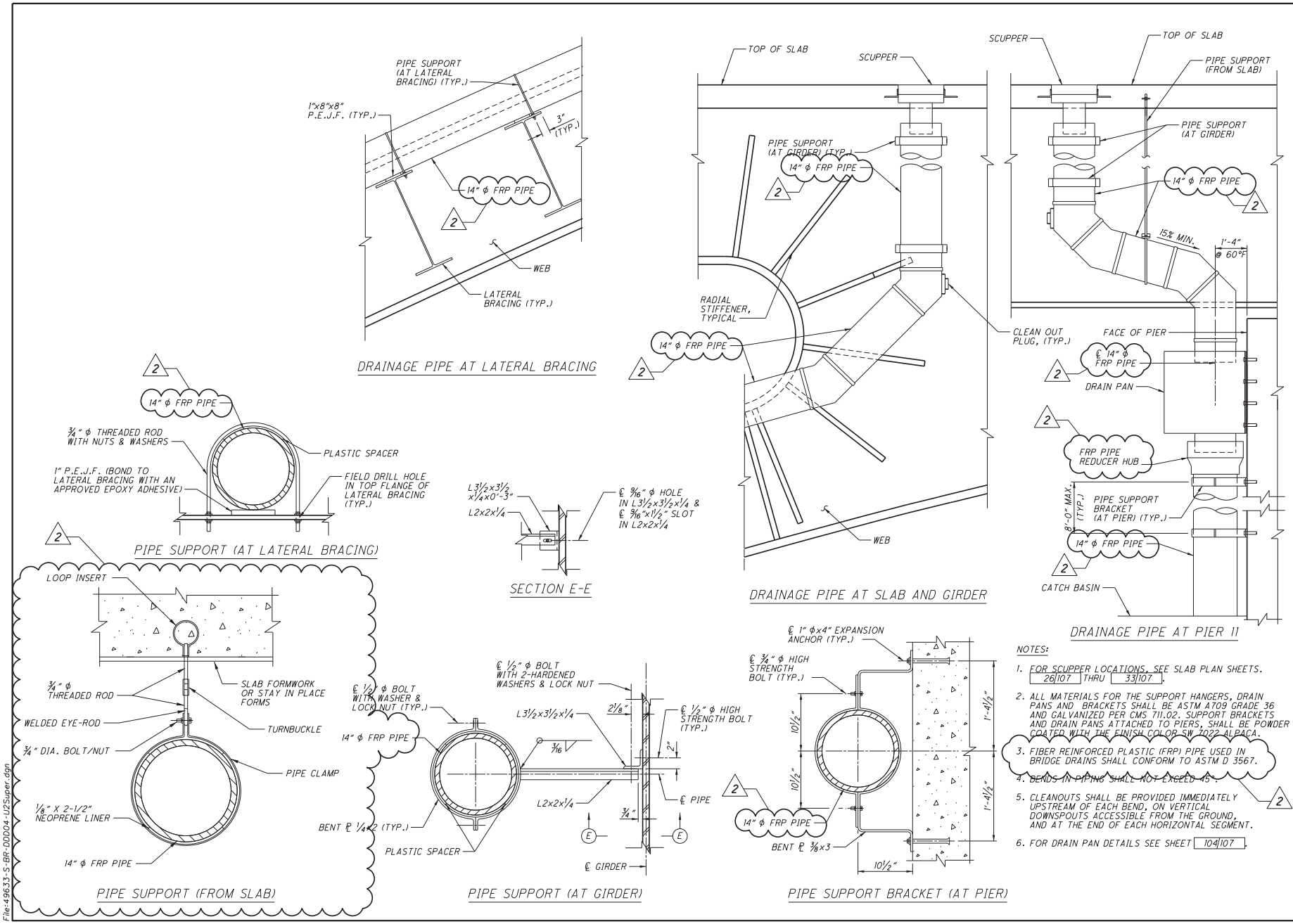

NOTES:

1. FOR SCUPPER LOCATIONS, SEE SLAB PLAN SHEETS. 26/107 THRU 33/107.
2. ALL MATERIALS FOR THE SUPPORT HANGERS, DRAIN PANS AND BRACKETS SHALL BE ASTM A709 GRADE 36 AND GALVANIZED PER CMS 711.02. SUPPORT BRACKETS AND DRAIN PANS ATTACHED TO PIERS, SHALL BE POWDER COATED WITH THE FINISH COLOR SW 7022 ALPACA.
3. FIBER REINFORCED PLASTIC (FRP) PIPE USED IN BRIDGE DRAINS SHALL CONFORM TO ASTM D 3567.
4. BENDS IN PIPING SHALL NOT EXCEED 45°.
5. CLEANOUTS SHALL BE PROVIDED IMMEDIATELY UPSTREAM OF EACH BEND, ON VERTICAL DOWNSPOUTS ACCESSIBLE FROM THE GROUND, AND AT THE END OF EACH HORIZONTAL SEGMENT.
6. FOR DRAIN PAN DETAILS SEE SHEET 104/107.

NO.	REVISIONS	DATE
B	FINAL SUBMITTAL - REVISED	06/12/11
C	FINAL SUBMITTAL - REVISED	08/09/11
1	APPROVED FOR CONSTRUCTION	12/02/11
2	RECORD DRAWINGS - CHANGE ORDER #30, RFI 10407	11/15/13

DESIGN AGENCY: WALSH HNTB

CLEVELAND'S MAINNERBELTBRIDGE 90 — Partnership for Transportation Improvements

MAIN SPAN UNIT 2 SUPERSTRUCTURE

SCUPPERS AND DOWNSPOUTS

BRIDGE NO. CUY-90-1532
I-90 WEST BOUND

DESIGNED	DRAWN	REVIEWED	DATE
MX	CEM	HRH	12/02/11
CHECKED	CHECKED	STRUCTURE FILE NUMBER	
KDB	MX	1809431	

CUY-90-14.90
PID No. 77332/85531

105/107

105
107

Date:1/13/2015
Model:Sheet1
File:49633-S-BR-DDD04-U2Super.dgn

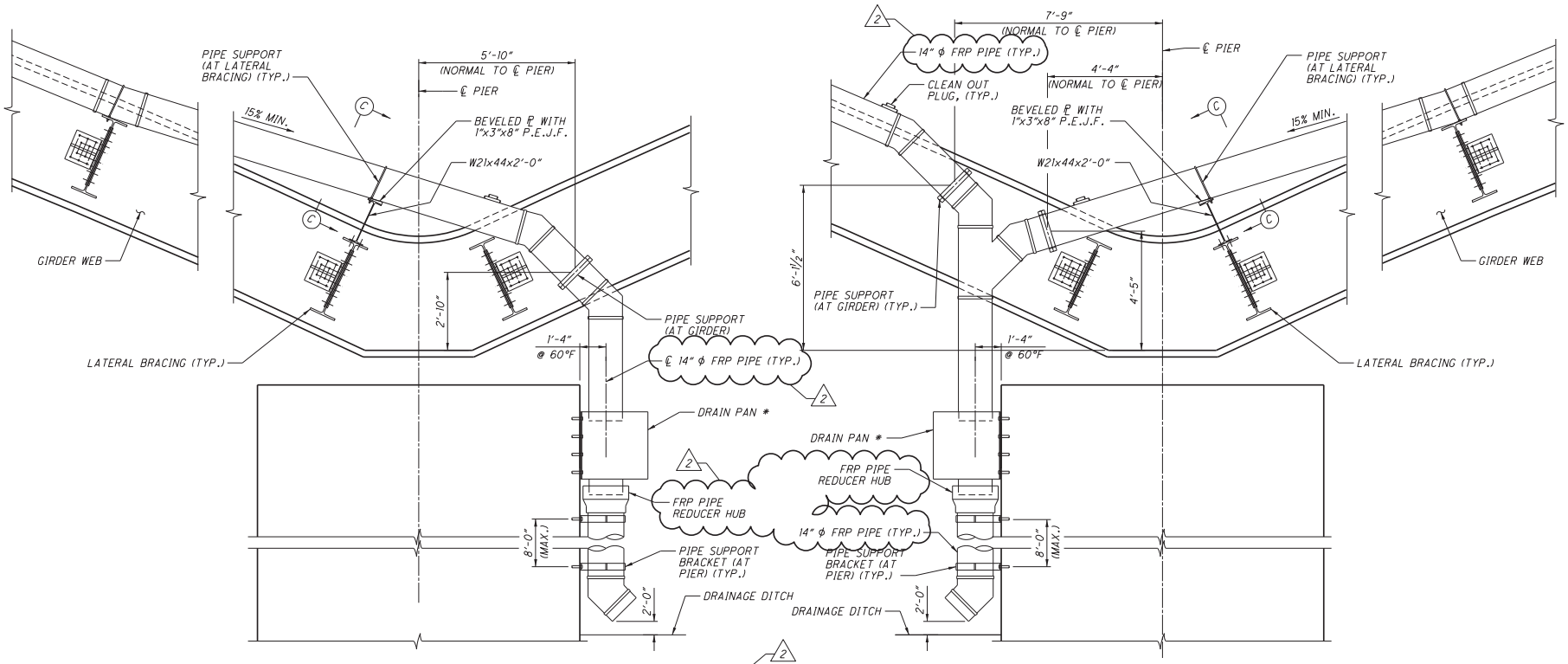

* DRAIN PAN NOT REQUIRED AT FIXED PIERS 6 AND 7.

NOTES:

1. FOR LOCATIONS OF VIEWS A-A AND B-B, SEE SHEET 103/107.
2. FOR ADDITIONAL DETAILS AND NOTES, SEE SHEET 104/107 AND 105/107.

NO.	REVISIONS	DATE
C	FINAL SUBMITTAL - REVISED	08/09/11
1	APPROVED FOR CONSTRUCTION	12/02/11
2	RECORD DRAWINGS - CHANGE ORDER #30	11/6/13

DESIGN AGENCY: WALSH HNTB

CLEVELAND'S MINNERBELT BRIDGE 90 — Ohio Department of Transportation

MAIN SPAN UNIT 2 SUPERSTRUCTURE

SCUPPERS AND DOWNSPOUTS

BRIDGE NO. CUY-90-1532
I-90 WEST BOUND

DESIGNED	DRAWN	REVIEWED	DATE
MX	FWG	HRH	12/02/11
CHECKED	CHECKED	STRUCTURE FILE NUMBER	
KDG	KDG	1809431	

CUY-90-14.90
PID No. 77332/85531

106/107

106
107

Date:1/13/2015
Model:Sheet1
File:49633-S-BR-DDD04a-U2Super.dgn

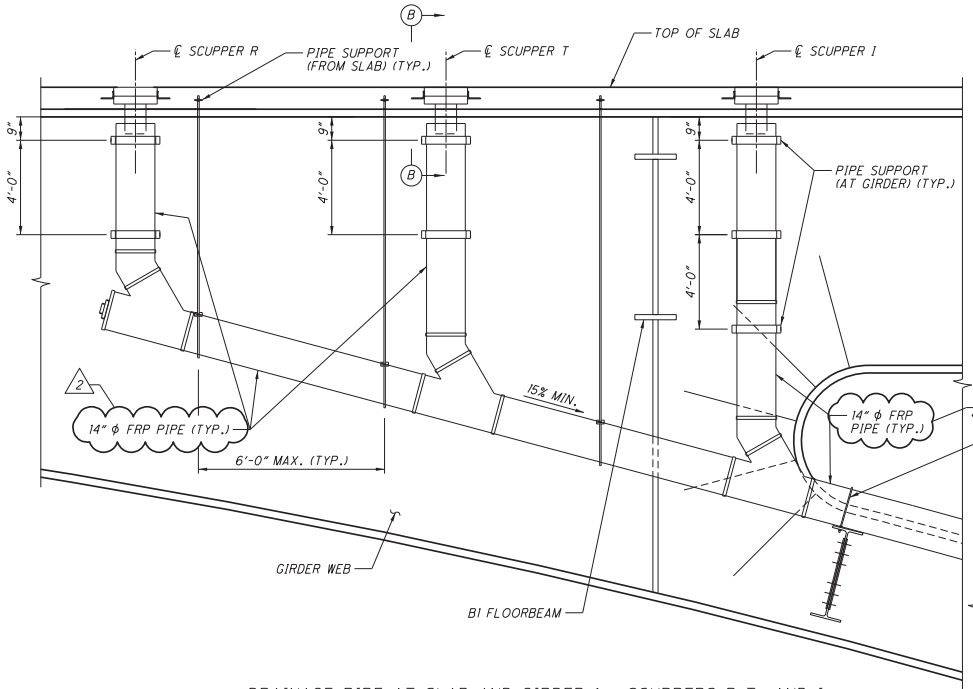

DRAINAGE PIPE AT SLAB AND GIRDER 1 - SCUPPERS R,T, AND I

NOTES:

1. FOR SCUPPER LOCATIONS, SEE SLAB PLAN SHEETS 26/107 THRU 33/107.
2. FOR ADDITIONAL DETAILS AND NOTES, SEE SHEETS 104/107 AND 105/107.
3. FOR SCUPPER DETAILS AND NOTES, SEE SHEET 102/107.

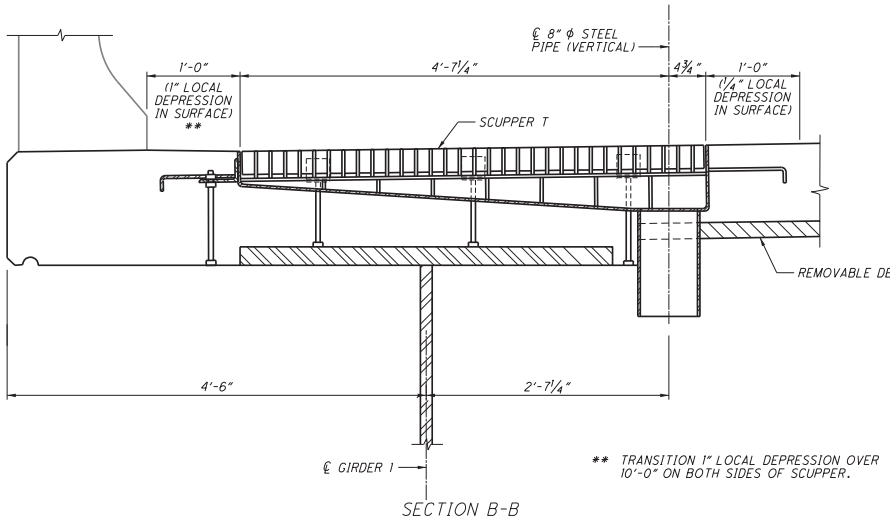

** TRANSITION 1" LOCAL DEPRESSION OVER 10'-0" ON BOTH SIDES OF SCUPPER.

SECTION B-B
(SCUPPER T ONLY)

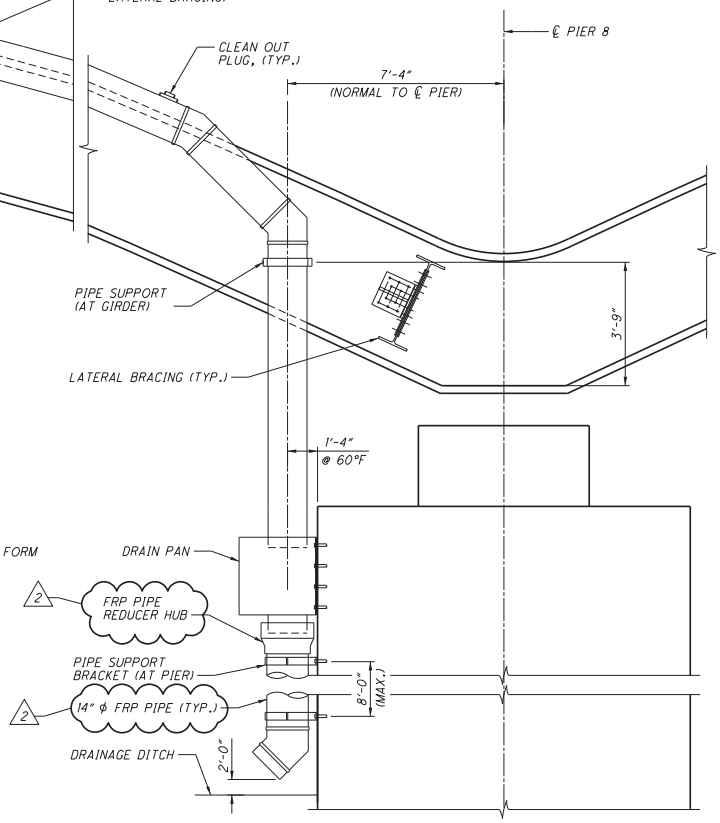

NO.	REVISIONS	DATE
C	FINAL SUBMITTAL - REVISED	08/09/11
1	APPROVED FOR CONSTRUCTION	12/02/11
2	RECORD DRAWINGS - CHANGE ORDER #30	11/6/13

DESIGN AGENCY: WALSH HNTB (WALSH CONSTRUCTION)

CLEVELAND MINNERBELT BRIDGE PROJECT — Ohio Department of Transportation

MAIN SPAN UNIT 2 SUPERSTRUCTURE

SCUPPERS AND DOWNSPOUTS

BRIDGE NO. CUY-90-1532
I-90 WEST BOUND

DESIGNED	DRAWN	REVIEWED	DATE
MX	FWG	HRH	12/02/11
CHECKED	CHECKED	STRUCTURE FILE NUMBER	
KDG	KDG	1809431	

CUY-90-14.90
PID No. 77332/85531

107/107

107/107

Date:1/13/2015
Model:Sheet1
File:49633-S-BR-DDD05-U2Super.dgn

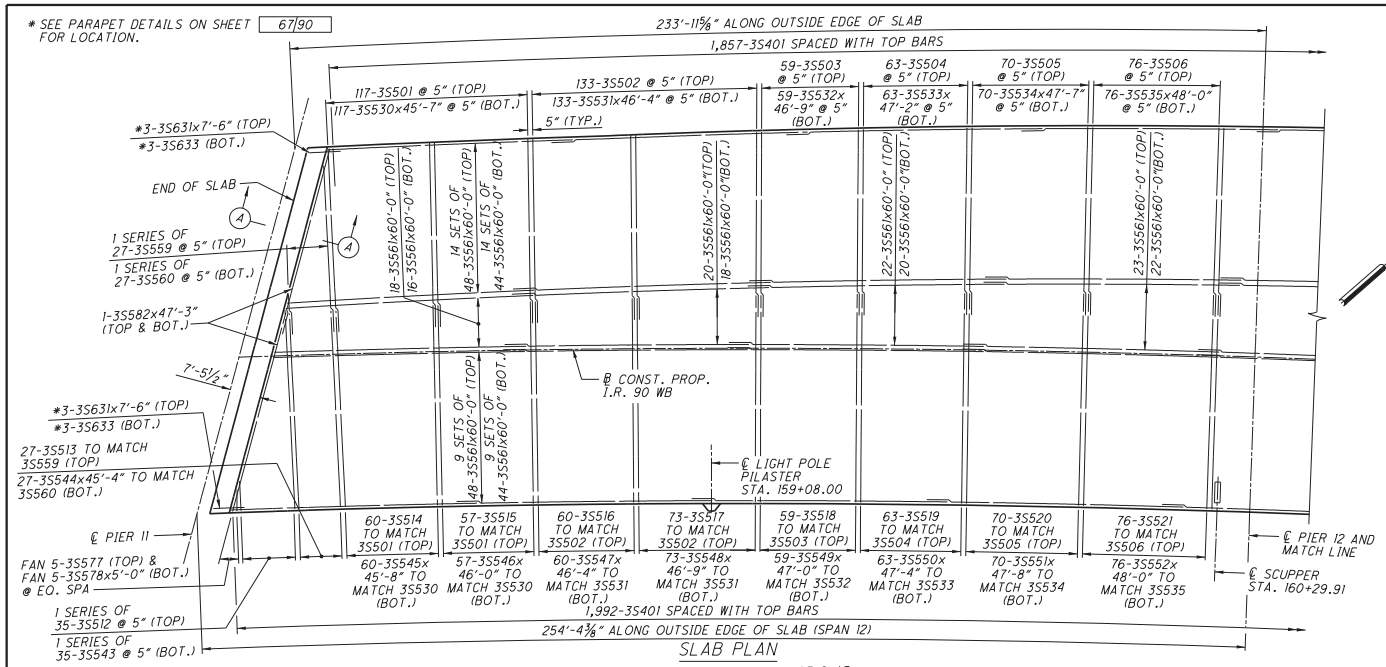

SLAB PLAN

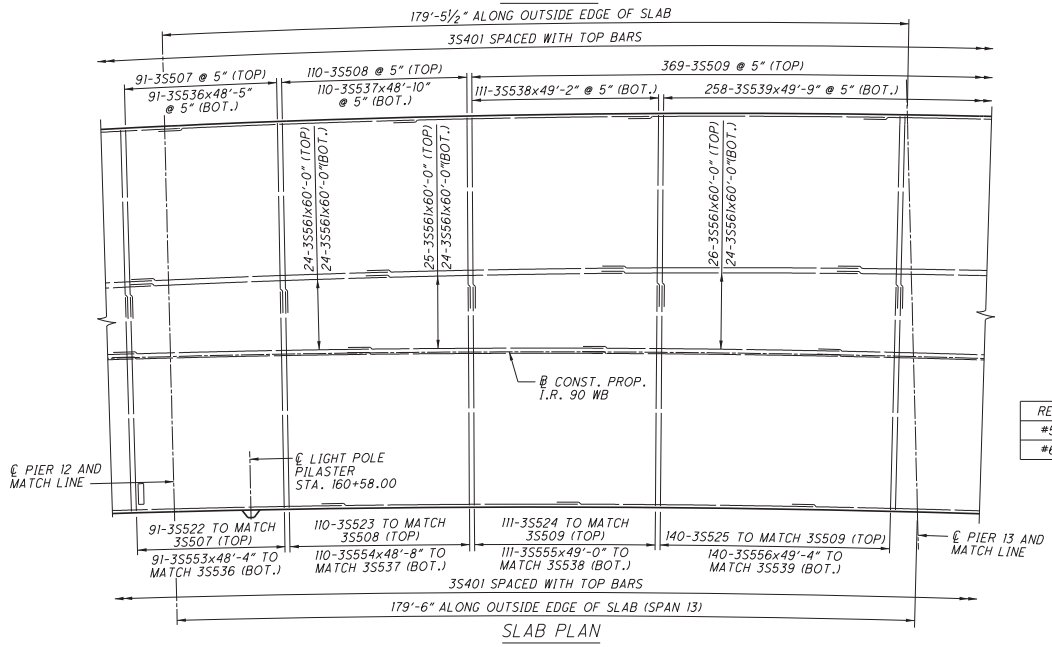

SLAB PLAN

REQUIRED LAP LENGTHS	
#5 BARS	3'-2"
#6 BARS	3'-10"

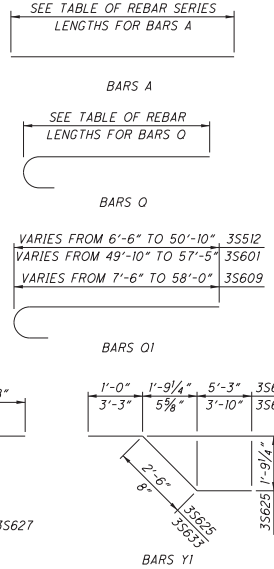

NOTES:

1. FOR TRANSVERSE SECTION AND ADDITIONAL NOTES, SEE SHEET 62|90.
2. FOR PARAPET DETAILS, SEE SHEETS 62|90, 65|90 AND 64|90.
3. FOR SCREED ELEVATIONS, SEE SHEETS 70|90 AND 71|90.
4. FOR TOP OF HAUNCH ELEVATIONS, SEE SHEETS 72|90 AND 73|90.
5. FOR FINAL DECK SURFACE ELEVATIONS, SEE SHEETS 74|90 THRU 77|90.
6. FOR LIGHT POLE PILASTER DETAILS, SEE SHEET 68|90.
7. FOR TABLE OF REBAR LENGTHS, SEE SHEET 64|90.
8. FOR TABLE OF REBAR SERIES LENGTHS, SEE SHEET 64|90.
9. FOR LONGITUDINAL REBAR SPACING, SEE SHEET 62|90.
10. ALL REINFORCING STEEL SHALL BE EPOXY COATED AND PER CMS 509.
11. FOR SCUPPER AND DOWNSPOUT DETAILS, SEE SHEET 82|90 THRU 83|90.
12. FOR REINFORCEMENT OVER PIERS AND SECTION A-A, SEE SHEET 64|90.
13. TRANSVERSE REBAR SPACING MEASURED ALONG LEFT EDGE OF SLAB.

NO.	REVISIONS	DATE
A	INTERIM SUBMITTAL	03/30/11
B	FINAL SUBMITTAL	06/16/11
1	APPROVED FOR CONSTRUCTION	08/25/11

DESIGN AGENCY: WALSH HNTB

I-90 VIADUCT UNIT 3

SLAB PLAN

BRIDGE NO. CUY-90-1532
I-90 WEST BOUND

DESIGNED	DRAWN	REVIEWED	DATE
DSB	CAT	HRH	08/25/11
CHECKED	CHECKED	STRUCTURE FILE NUMBER	
AEC	KDB	1809431	

CUY-90-14.90
PID No. 77332/85531

60/90

60/90

Date:5/22/2015
Model:Sheet1
File:49633-S-BR-SLB15-Unit3.dgn

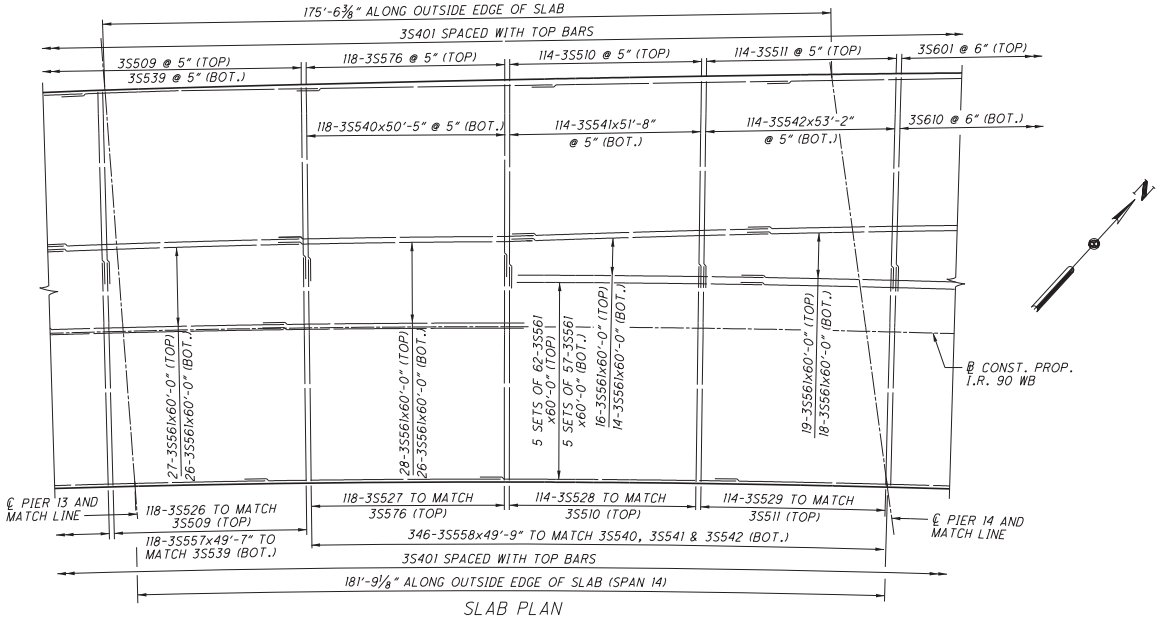

SLAB PLAN

NOTES:

1. FOR ADDITIONAL NOTES, SEE SHEET 60/90.
2. FOR TRANSVERSE SECTION IN SPAN 15, SEE SHEET 63/90.
3. FOR PARAPET DETAILS IN SPAN 15, SEE SHEETS 63/90, 65/90 AND 64/90.
4. FOR LONGITUDINAL REBAR SPACING IN SPAN 15, SEE SHEET 63/90.

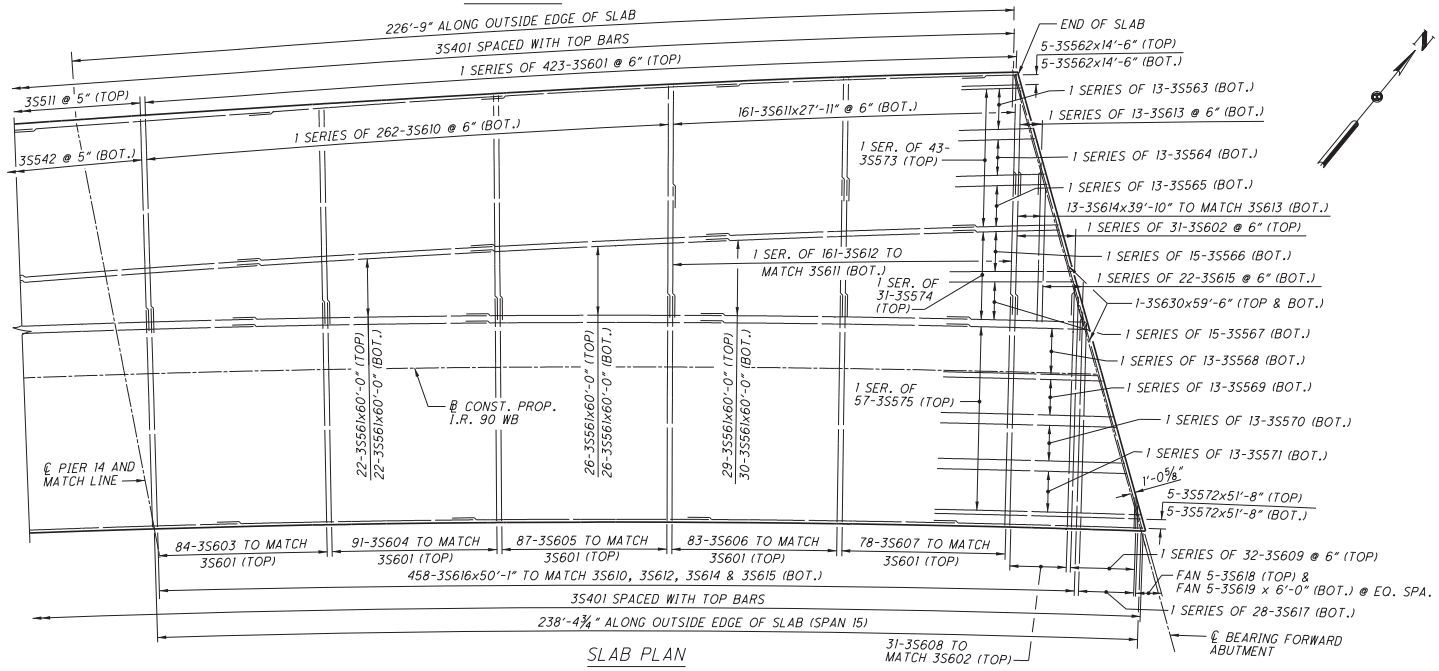

SLAB PLAN

REQUIRED LAP LENGTHS	
#5 BARS	3'-2"
#6 BARS	3'-10"

NO.	REVISIONS	DATE
A	INTERIM SUBMITTAL	03/30/11
B	FINAL SUBMITTAL	06/15/11
1	APPROVED FOR CONSTRUCTION	08/25/11

DESIGN AGENCY: WALSH HNTB

I-90 VIADUCT UNIT 3

SLAB PLAN

BRIDGE NO. CUY-90-1532
I-90 WEST BOUND

DESIGNED	DRAWN	REVIEWED	DATE
DSB	CAT	HRH	08/25/11
CHECKED	CHECKED	STRUCTURE FILE NUMBER	
AEC	KDB	1809431	

CUY-90-14.90
PID No. 77332/85531

61/90

61/90

Date:5/22/2015
Model:Sheet1
File:49633-S-BR-SLB16-Unit3.dgn

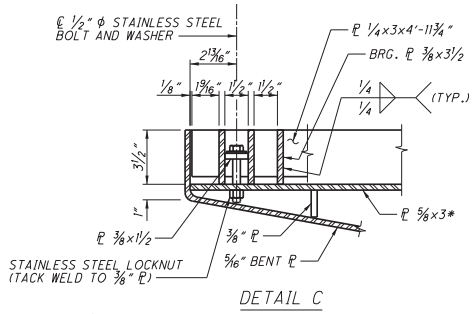

DETAIL C

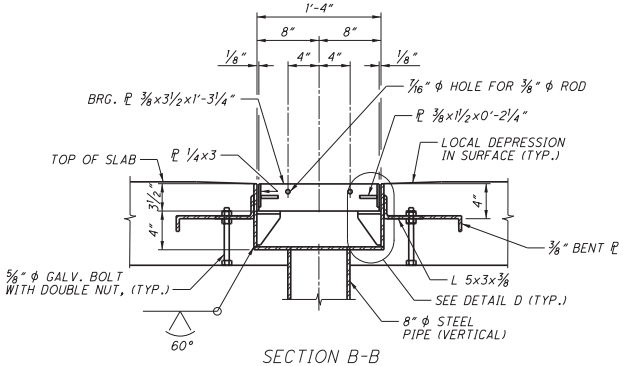

SECTION B-B

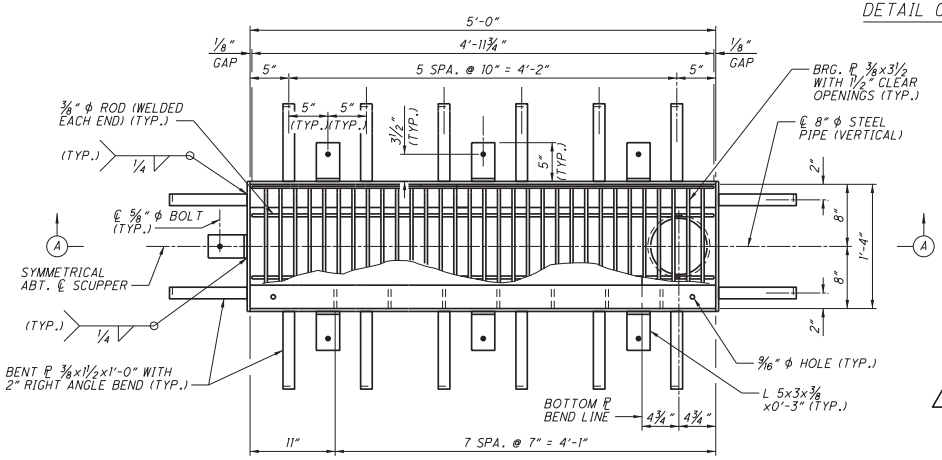

PLAN - TYPICAL SCUPPER

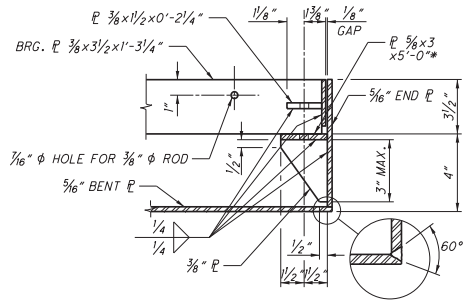

DETAIL D

*GRADE 50 STEEL

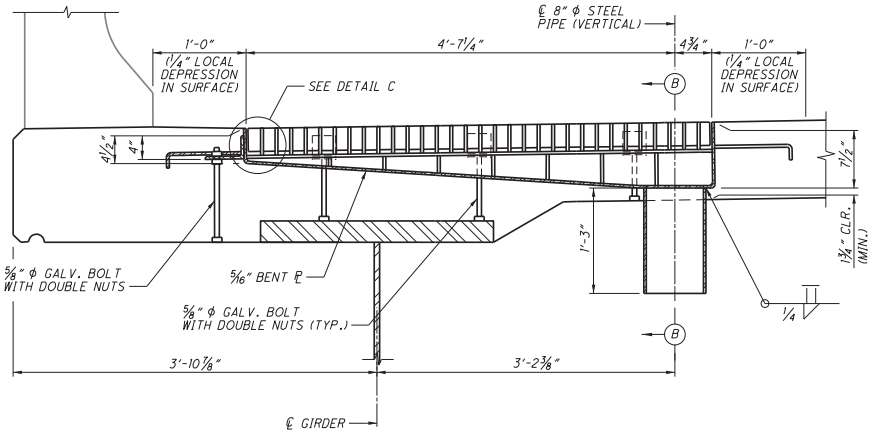

SECTION A-A (EXTERIOR GIRDER)

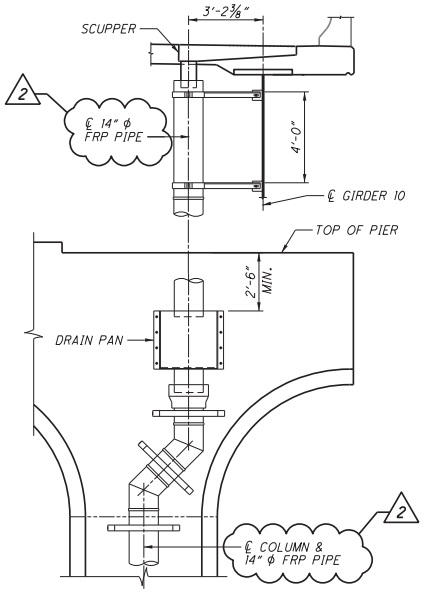

PARTIAL PIPING ELEVATION AT PIER 12 NEAR GIRDER 10

NOTES:

1. FOR LOCATION OF SCUPPER, SEE SLAB PLAN SHEET 60/90 .
2. ALL STRUCTURAL STEEL FOR SCUPPERS SHALL BE ASTM A709, GRADE 36, EXCEPT AS NOTED.
3. ALL NUTS, WASHERS, AND BOLTS SHALL BE STAINLESS STEEL, EXCEPT AS NOTED.
4. PIPE SHALL BE ASTM A53, SCHEDULE 40, GALVANIZED IN ACCORDANCE WITH ASTM A153.
5. SCUPPERS SHALL BE GALVANIZED AFTER FABRICATION IN ACCORDANCE WITH ASTM A123.
6. FOR PIPE AND DOWNSPOUT DETAILS SEE SHEET 83/90 .
7. SCUPPERS AND DOWNSPOUTS SHALL BE AS PER CMS 513 AND 518, EXCEPT AS NOTED.

NO.	REVISIONS	DATE
B	FINAL SUBMITTAL	06/15/11
1	APPROVED FOR CONSTRUCTION	08/25/11
2	RECORD DRAWINGS - CHANGE ORDER #30	11/6/13

DESIGN AGENCY: WILSH HNTB VALUE+CONSTRUCTION

CLEVELAND'S INNERBELT BRIDGE 90 — Transportation for a Better America

I-90 VIADUCT UNIT 3

SCUPPERS AND DOWNSPOUTS

BRIDGE NO. CUY-90-1532

I-90 WEST BOUND

DESIGNED	DRAWN	REVIEWED	DATE
KDB	LDE	HRH	08/25/11
CHECKED	CHECKED	STRUCTURE FILE NUMBER	
RJH	RJH	1809431	

CUY-90-14.90

PID No. 77332/85531

82/90

82/90

Date:5/22/2015
Model:Sheet1
File:49633-S-BR-DDD01-Unit3.dgn

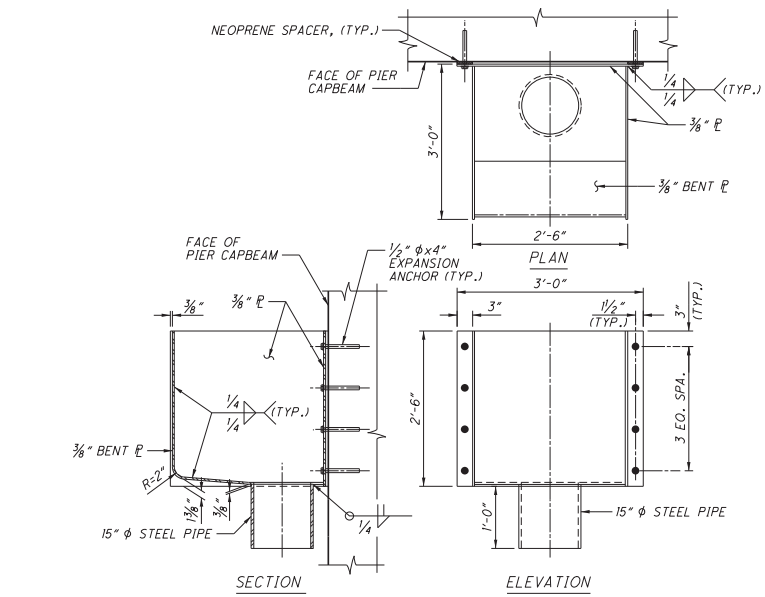

DRAIN PAN DETAILS

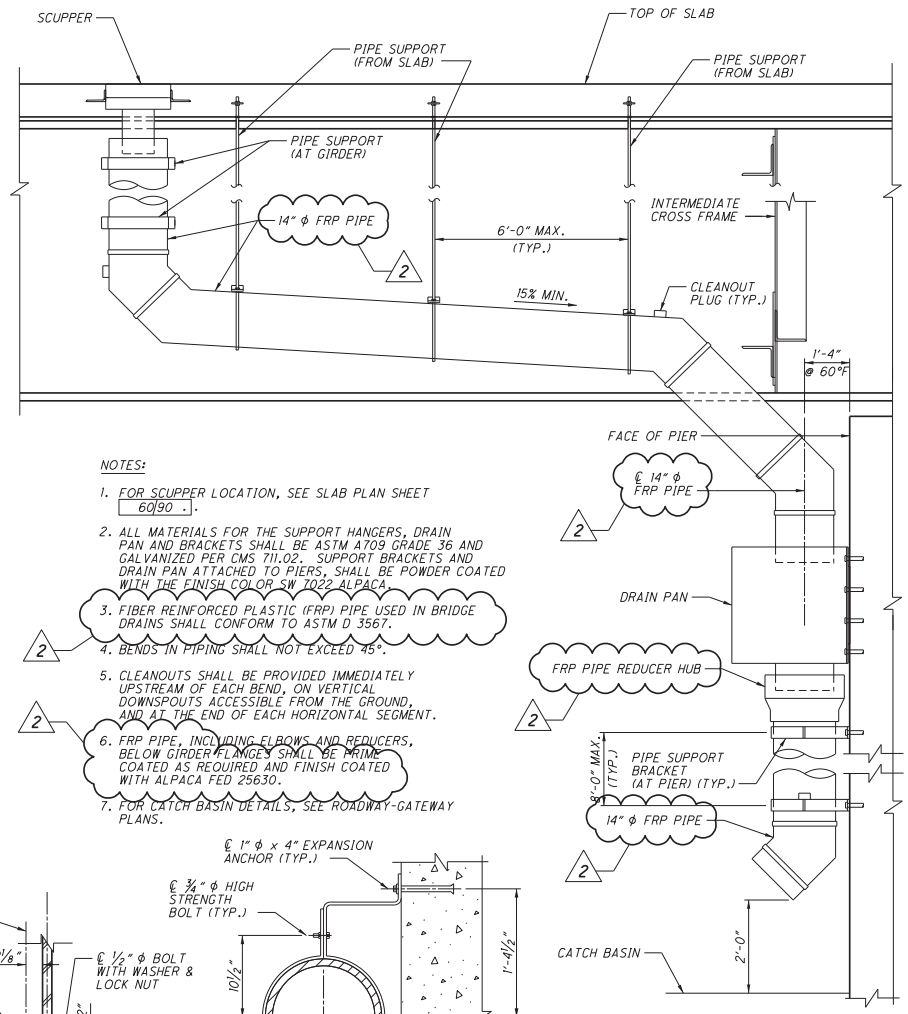

DRAINAGE PIPE AT PIER 12

NOTES:

1. FOR SCUPPER LOCATION, SEE SLAB PLAN SHEET 60/90 .
2. ALL MATERIALS FOR THE SUPPORT HANGERS, DRAIN PAN AND BRACKETS SHALL BE ASTM A709 GRADE 36 AND GALVANIZED PER CMS 711.02. SUPPORT BRACKETS AND DRAIN PAN ATTACHED TO PIERS, SHALL BE POWDER COATED WITH THE FINISH COLOR SW 7022 ALPACA.
3. FIBER REINFORCED PLASTIC (FRP) PIPE USED IN BRIDGE DRAINS SHALL CONFORM TO ASTM D 3567.
4. BENDS IN PIPING SHALL NOT EXCEED 45°.
5. CLEANOUTS SHALL BE PROVIDED IMMEDIATELY UPSTREAM OF EACH BEND, ON VERTICAL DOWNSPOUTS ACCESSIBLE FROM THE GROUND, AND AT THE END OF EACH HORIZONTAL SEGMENT.
6. FRP PIPE, INCLUDING ELBOWS AND REDUCERS, BELOW GIRDER FLANGES SHALL BE PRIME COATED AS REQUIRED AND FINISH COATED WITH ALPACA FED 25630.
7. FOR CATCH BASIN DETAILS, SEE ROADWAY-GATEWAY PLANS.

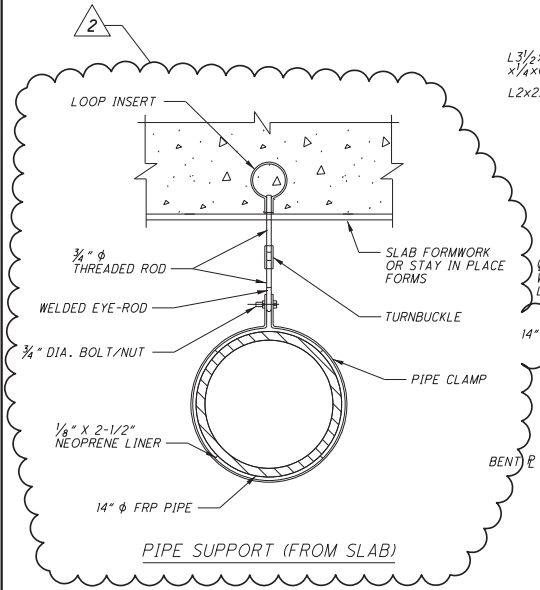

PIPE SUPPORT (FROM SLAB)

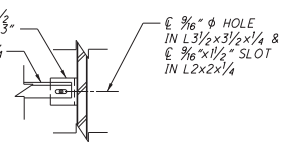

SECTION E-E

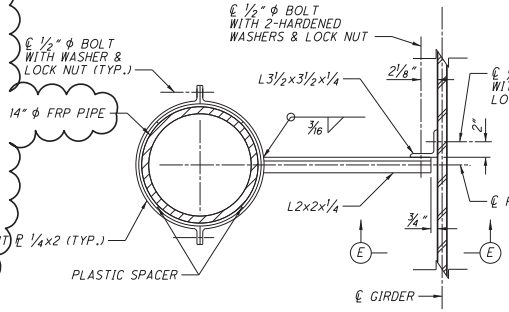

PIPE SUPPORT (AT GIRDER)

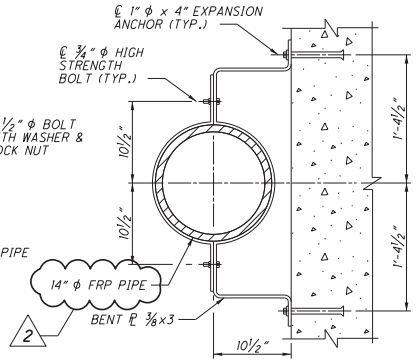

PIPE SUPPORT BRACKET (AT PIER)

NO.	REVISIONS	DATE
B	FINAL SUBMITTAL	06/15/11
1	APPROVED FOR CONSTRUCTION	08/25/11
2	RECORD DRAWING - CHANGE ORDER #30, RFI 00407	11/6/13

DESIGN AGENCY: WALSH HNTB

I-90 VIADUCT UNIT 3

SCUPPERS AND DOWNSPOUTS

BRIDGE NO. CUY-90-1532

I-90 WEST BOUND

DESIGNED	DRAWN	REVIEWED	DATE
KDB	LDE	HRH	08/25/11
CHECKED	CHECKED	STRUCTURE FILE NUMBER	
RJH	RJH	1809431	

CUY-90-14.90

PID No. 77332/85531

83/90

83/90

Date:5/27/2015
Model:Sheet1
File:49633-S-BR-DDD02-Unit3.dgn