MICROFILMED
JUL 8 1986

FED. RD. DIVISION	STATE	PROJECT	
2	OHIO		

298
384

LAKE COUNTY
SEC. LAK-2-14.22

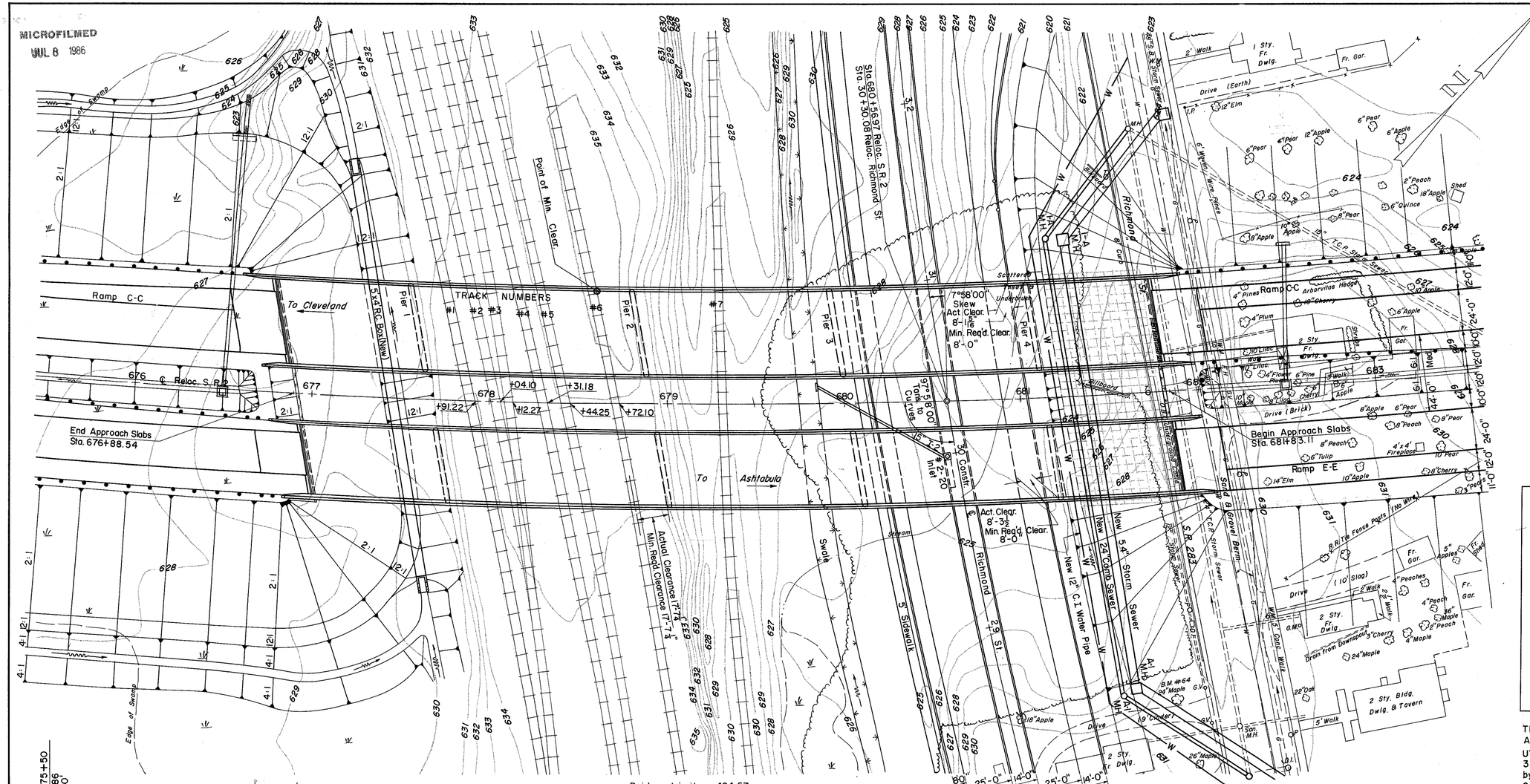

FOUNDATION SOUNDINGS:

Foundation design and quantities are based on a study of borings and soil samplings made at the site. This boring and sounding information may be inspected in the office of the Bureau of Bridges in Columbus, or in the Division office. The State assumes no responsibility for the accuracy of these.

CURVE DATA

RELOC. S.R.2	RELOC. RICHMOND ST.
P.I. Sta. 674+94.54	P.I. Sta. 27+85.82
Δ = 33° 18' 45" Lt.	Δ = 21° 11' 17" Rt.
D = 1° 15' 00"	D = 2° 00' 00"
R = 4583.66'	R = 2864.79'
T = 1371.35'	T = 535.82'
L = 2665.01'	L = 1059.40'
Super = 0.04 ft/ft.	Super = 0.0156 ft/ft.

B.M. #64 Lag Bolt in 30" Maple 175' Rt. Sta. 680+65 West Side of Route 283 (Richmond St.) Elev. 631.106'

CONSTRUCTION CLEARANCE of 19'-0" vertically above the top of the railroad rails and and 8'-0" horizontally from the center of tracks shall be maintained at all times.

PROPOSED STRUCTURE

TYPE: Two - 5 Span continuous welded Plate Girder with Reinforced Concrete Deck and Substructure.

SPANS: 75'-0", 125'-0", 111'-6", 111'-6", 67'-0"

ROADWAY: LEFT Bridge 50'-0" f/f par.
RIGHT Bridge 42'-0" f/f par.

LOAD FREQUENCY: C.F. 2000 Adequate for AASHO Alternate Loading.

WEARING SURFACE: 1" monolithic conc.

APPROACH SLAB: AS-1-54 (25'-0" Long)

ALIGNMENT: Curves

A.D.T. 24,000 (1975)

SKEW: 7° 58' 00" R.F.

TRAFFIC MOVEMENT ON R.R. TRACKS: Approx. 50 Trains per day at 15 MPH.

UTILITIES: Power adjustment under this plan except the 33 KV line on the West side of existing Richmond Street by others.
Gas line relocated by others, all interchange lighting under this plan.
Telephone conduit to be placed under sidewalk by others.

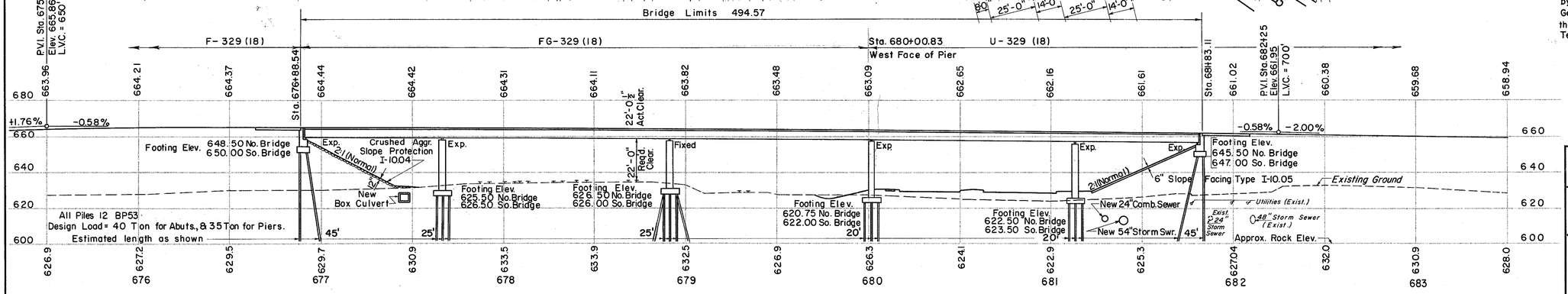

PROFILE ALONG RELOCATED S.R. 2

PREPARED BY
CAPITOL ENGINEERING ASSOCIATES, DILLSBURG, PA.
FOR
STATE OF OHIO
DEPARTMENT OF HIGHWAYS
DIVISION OF DESIGN AND CONSTRUCTION
BUREAU OF BRIDGES

SITE PLAN
BRIDGE NO. LAK-2-1471 L & R
RELOC. S.R.2 OVER B.&O. R.R. - S.R. 283
LAKE COUNTY
STA. 680+56.97

DESIGNED	DRAWN	TRACED	CHECKED	REVIEWED	DATE	REVISED
		3-10-60				

MICROFILMED
JUL 8 1986

FED. RD. DIVISION	STATE	PROJECT	
2	OHIO		

LAKE COUNTY
SEC. LAK-2-14.22

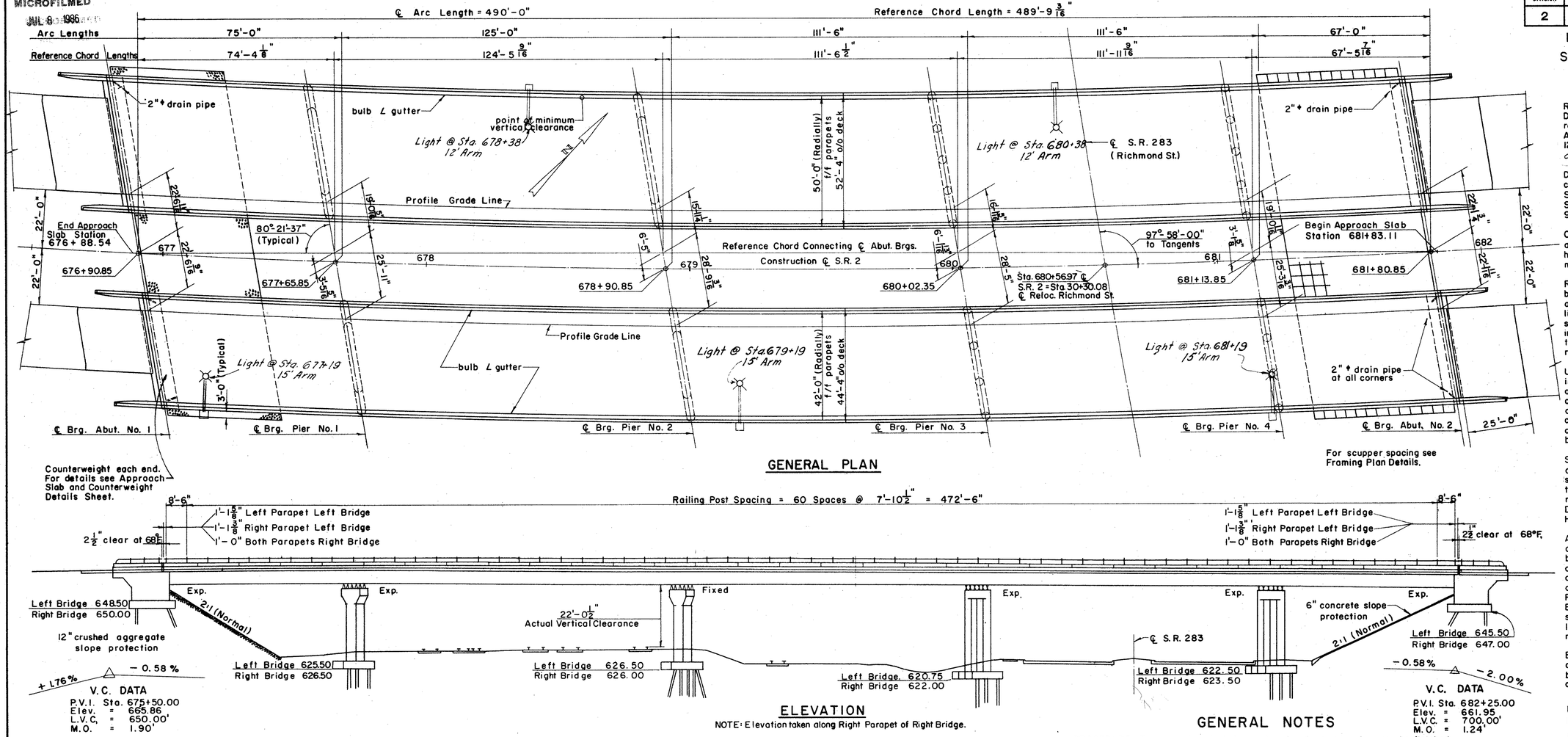

GENERAL PLAN

ELEVATION

NOTE: Elevation taken along Right Parapet of Right Bridge.

V.C. DATA

P.V.I. Sta. 675+50.00
Elev. = 665.86
L.V.C. = 650.00'
M.O. = 1.90'

V.C. DATA

P.V.I. Sta. 682+25.00
Elev. = 661.95
L.V.C. = 700.00'
M.O. = 1.24'

GENERAL NOTES

PROCEDURE: The embankment shall be placed and compacted up to the finished spill-thru slope and to the level of the subgrade for a distance of 200' back of the abutments, after which a delay of 30 days shall occur before excavation for the abutments is made. All piling shall be driven before any footings are placed.

GENERAL NOTES

REFERENCE shall be made to Standard Drawings C.S.B.-2-56, Sheets 2 and 3 of 6 revised 2-2-59, RB-1-55 revised 2-2-59, AR-1-57 revised 2-2-59, AS-1-54 revised 12-1-54, Suppl. Spec's. S-307 dated 6-23-60 and M-206.14 dated 7-15-49.

DESIGN SPECIFICATIONS: This structure conforms to the requirements of "Design Specifications for Highway Structures" of the State of Ohio, Department of Highways, dated 9-1-57 together with current revisions thereof.

CONSTRUCTION CLEARANCE of 19' vertically above the top of the railroad rails and 8' horizontally from the center of tracks shall be maintained at all times.

RAILROAD AERIAL LINES shall be relocated by the railroad. The CONTRACTOR shall use all precautions necessary to see that the lines are not disturbed during the construction stage and shall cooperate with the railroad in the relocation of these lines. The cost of the relocation shall be included in the railroad force account work.

UTILITY LINES: All labor and expense involved in relocating (installing) the affected utility lines, not included in this contract, shall be borne by the owners. The contractor and owners are requested to cooperate by arranging their work in such a manner that inconvenience to either will be held to a minimum.

SHEETING AND BRACING: Before construction is started, eight sets of prints showing details of the sheeting and bracing to be used for excavation adjacent to the railroad tracks shall be submitted to the Director for approval by the Department of Highways and by the Railroad Company.

ALIGNING RAILROAD TRACKS: After the contractor has completed all excavation and backfill adjacent to the railroad tracks in compliance with Sec. E-2.04 and E-2.08 of the Construction and Material Specifications, subject to the supervision of the Railroad Company, nothing in Sec. E-2.04, E-2.08 or G-8.07 of the Specifications shall be construed to hold the contractor liable for aligning and re-surfacing the railroad tracks.

EXCAVATION: Excavation quantity includes the removal of fill material between the surface of proposed embankment and the bottom of the footings.

PILES shall be driven to a minimum bearing capacity of 40 tons per pile for the abutments and 35 tons per pile for the piers.

POROUS BACKFILL shall extend the full length of the abutment backwall and upward to the approach slab. Excavation for same is included in the bid price per cubic yard of porous backfill.

MACHINE FINISH: The bridge deck slabs shall be machine finished (Sec. S-1.23)

PREPARED BY
CAPITOL ENGINEERING ASSOCIATES, DILLSBURG, PA.
FOR

STATE OF OHIO
DEPARTMENT OF HIGHWAYS
DIVISION OF DESIGN AND CONSTRUCTION
BUREAU OF BRIDGES

GENERAL PLAN
BRIDGE NO. LAK-2-1471 L & R
RELOC. S.R. 2 OVER B.&O. R.R.-S.R. 283
LAKE COUNTY
STA. 680 + 56.97

DESIGNED	DRAWN	TRACED	CHECKED	REVIEWED DATE	REVISED
ECM	HMS		ECM DRT		

MICROFILMED
JUL 8 1986

FED RD. DIVISION	STATE	PROJECT	
2	OHIO		

299A
384

LAKE COUNTY
LAK-2-14.22

ESTIMATED QUANTITIES

ITEM	TOTAL	UNIT	DESCRIPTION	LEFT BRIDGE SUPER.	LEFT BRIDGE ABUTS.	LEFT BRIDGE PIERS	LEFT BRIDGE GEN'L.	RIGHT BRIDGE SUPER.	RIGHT BRIDGE ABUTS.	RIGHT BRIDGE PIERS	RIGHT BRIDGE GEN'L.	As Built		FEDERAL BREAK-DOWN FG-329(18)	FEDERAL BREAK-DOWN	U-329(18)
E-2	1,924	Cu. Yds.	Unclassified Excavation		390	660			330	544		6038 1947	2111	360	624	940
E-2	Lump	Sum	Cofferdams, Cribs and Sheeting Piers 1 & 2				Lump				Lump				Lump	
E-2	Lump	Sum	Cofferdams, Cribs and Sheeting Piers 3 & 4				Lump				Lump					Lump
S-1	1,520	Cu. Yds.	Class "C" Concrete, Superstructure	820				700							960	560
S-1	210	Cu. Yds.	Class "C" Concrete, Pier Caps and Columns			117				93						210
S-1	302	Cu. Yds.	Class "E" Concrete, Abutments above Footings		166				136					151		151
S-1	705	Cu. Yds.	Class "E" Concrete, Footings		99	288			86	232				92	267	346
S-1	401	Cu. Yds.	Class "C" Concrete, "T" Type Pier Walls above Footings			222				179					401	
S-4	607,017	Lbs.	Reinforcing Steel	228,772	21,381	82,040		191,124	19,603	64,097				20,400	370,742	215,875
S-7	1,900,800	Lbs.	Structural Steel	1,025,000				875,800							1,201,000	699,800
S-8	1,900,800	Lbs.	Field Painting of Structural Steel	1,025,000				875,800							1,201,000	699,800
S-14	2,108	Lin. Ft.	Railing (Aluminum Rail and Supports, Concrete Parapets)	983	71			983	71					71	1,240	797
S-16	Lump	Sum	First Test Pile				Lump								Lump	
S-17	Lump	Sum	First Pile Test Load *				Lump								Lump	
S-17	1	Each	Subsequent Pile Test Load *				1								1	
S-18	~~11,770~~	Lin. Ft.	Steel Piles 12-BP-53		1,980	4,400			1,800	3,590		6033 -1906	1036+	1,890	4,750	5,130
S-25	1056	Lin. Ft.	Electric Conduit for Lighting	492	36			492	36					36	622	398
S-25	Lump	Sum	Electric Lighting System (1)				Lump				Lump					Lump
S-25	Lump	Sum	Electric Lighting System (2)				Lump				Lump				Lump	
S-25	484	Lin. Ft.	Wiring (3)	220	20			224	20							
S-25	~~795~~	Lin. Ft.	Wiring (4)	353	20			402	20			6032 +34	849			
S-25	2	Each	Luminaires Including Ballasts (3)	1				1								
S-25	~~3~~	Each	Luminaires Including Ballasts (4)	1				2				6035 +2	5			
S-29	98	Cu. Yds.	Porous Backfill		54				44					49		49
S-29	~~35~~ 61	Each	Scuppers	~~18~~ 30				17 (31)							~~10~~ 36	25
I-10	1002	Sq. Yds.	Crushed Aggregate Slope Protection **	40	490			62	410					900	102	
I-10	910	Sq. Yds.	6" Concrete Slope Protection		495				415							910

First Test Pile: Payment will be made for only one first test pile. It may be driven for either the Right or Left bridge.

*Items S-17, First and Subsequent Pile Test Loads, shall be applied if and where directed by the Engineer.

Item S-25 Electrical Lighting System includes standards, arms, anchor bolts, grounds, and pull boxes.

**Includes protection for scupper discharge areas in span No. 3. listed under superstructure.

(1) East of Pier No. 3

(2) West of Pier No. 3

(3) 100% city participation

(4) No federal participation

ELECTRICAL GROUNDS: A solid No. 0 gage bare copper wire electrical ground shall be embedded in the outside column on each side of the structure at pier No. 2. The lower ends of the wires shall be brazed to the steel H piles and the upper ends shall extend sufficiently above the top of the concrete to provide for a suitable splice and extension for connection to the superstructure. The connection to the superstructure shall be a No. 6 gage, bare, stranded, tinned copper wire brazed or bolted to a girder flange and to the solid copper wire in the pier shaft. At the base of the lamp standards there shall be a tinned No. 6 gage copper wire brazed to one anchor bolt and the other end brazed or bolted to the outside girder flange. Payment for electrical grounds is included in the lump sum bid for Item S-25, "Electric lighting system".

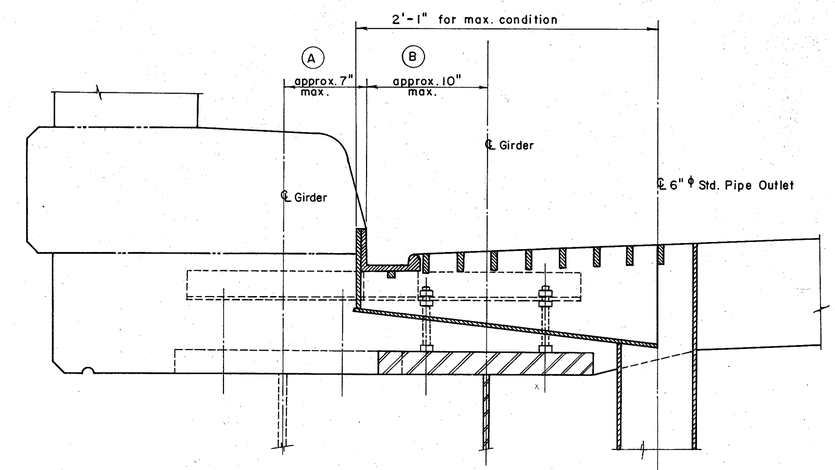

SCUPPER DETAILS

NOTES:

Locations of girder ℄ in relationship to curbline are shown for extreme points, ℄ girder being approx. 7" and 10" away from curb.

For location of ℄ girder in area Ⓐ use standard gutter details according to CSB-2-56, revised 2-2-59, extending gutter support L $2\frac{1}{2} \times 2\frac{1}{2} \times \frac{1}{4}$ under bulb L gutter.

For location of ℄ girder in area Ⓑ increase width of scupper inlet so that scupper pipe will clear girder flange by a minimum of 2".

For details not shown see CSB-2-56 revised 2-2-59.

PREPARED BY
CAPITOL ENGINEERING ASSOCIATES, DILLSBURG, PA.
FOR

STATE OF OHIO
DEPARTMENT OF HIGHWAYS
DIVISION OF DESIGN AND CONSTRUCTION
BUREAU OF BRIDGES

QUANTITIES
BRIDGE NO. LAK-2-1471 L & R
RELOC. S. R. 2 OVER B.&O. R.R.-S. R. 283
LAKE COUNTY
STA. 680 + 56.97

DESIGNED	DRAWN	TRACED	CHECKED	REVIEWED DATE	REVISED
KCM	GMS.	CL	KCM DRT		6-2-61

Revised As-built 9-24-57

MICROFILMED
JUL 9 1986

FED. RD. DIVISION	STATE	PROJECT	
2	OHIO		

314/384

LAKE COUNTY
SEC. LAK-2-14.22

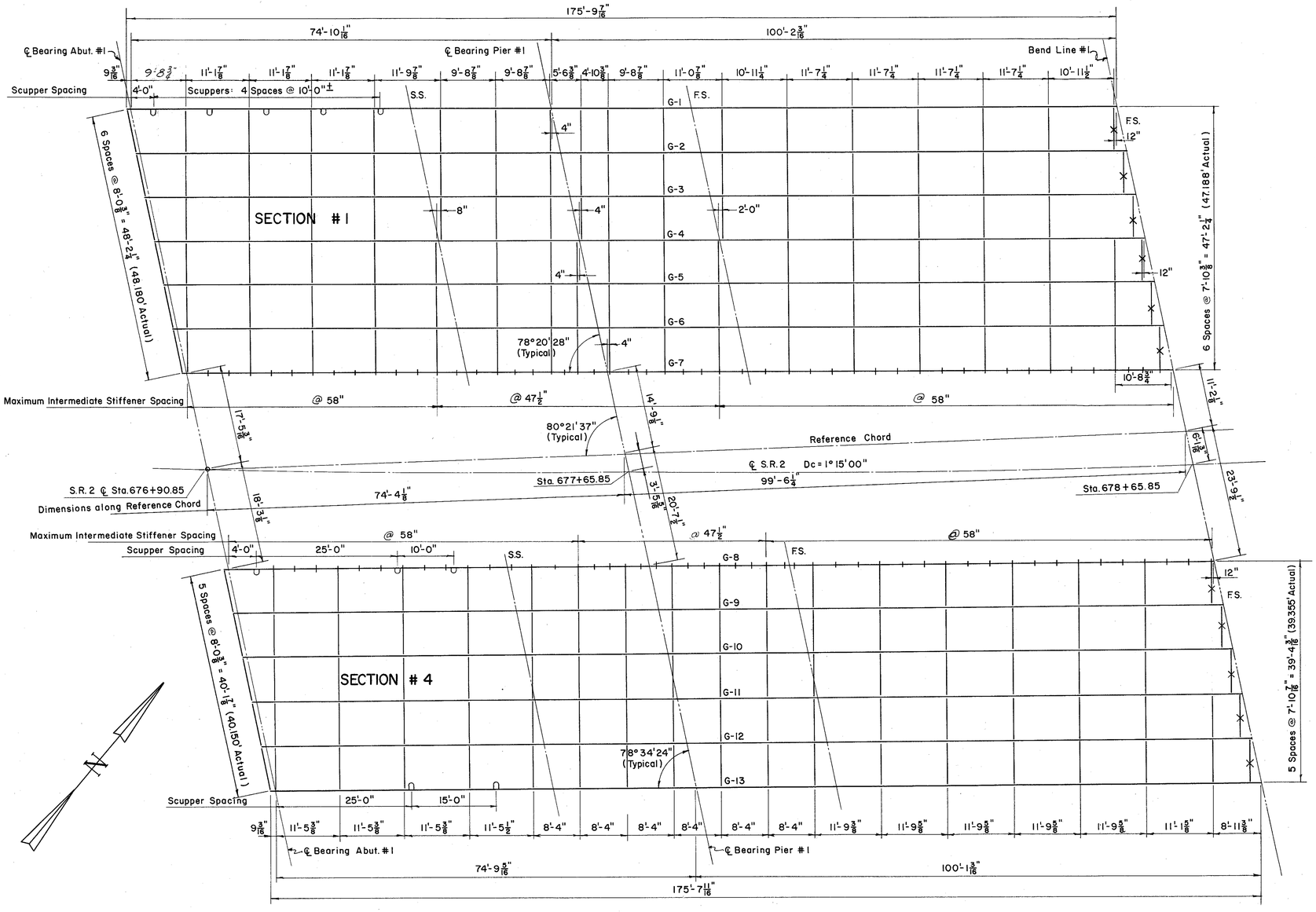

STEEL FRAMING DETAILS FOR SECTIONS 1 & 4

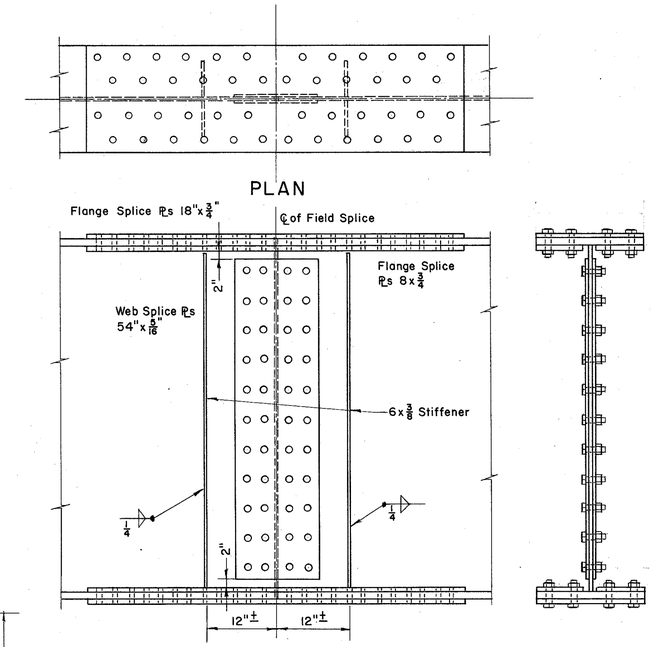

FIELD SPLICE DETAILS TYPICAL

NOTES:

See "Steel Framing Plan" for location of field splices. Use one or two pairs of stiffeners per field splice as shown on "Framing Plans". Weld stiffeners at field splices to clear bolt assembly and weld in place after splice is assembled.
Number of bolts: 48-7/8" ϕ high strength bolts per flange splice, 44-7/8" ϕ high strength bolts per web splice. Total number of bolts per field splice: 140.

Drawing showing girder erection procedures shall be submitted with shop drawings.
Crossframes are normal to girders.
Splice plates at Bend Point-Field Splices shall conform to the respective bend angles.
Scuppers shall clear crossframes by 6".
✗ Denotes special crossframe see ("Deck Detail" Sheet Left Bridge).
S.S. = Shop Splice.
F.S. = Field Splice.
All holes to be 15/16" ϕ.

PREPARED BY
CAPITOL ENGINEERING ASSOCIATES, DILLSBURG, PA.
FOR

STATE OF OHIO
DEPARTMENT OF HIGHWAYS
DIVISION OF DESIGN AND CONSTRUCTION
BUREAU OF BRIDGES

FRAMING PLAN DETAILS, SECTION 1 & 4
BRIDGE NO. LAK-2-1471 L.& R.
RELOC. S. R. 2 OVER B.&O. R.R.- S.R. 283
LAKE COUNTY
STA. 680 + 56.97

DESIGNED	DRAWN	TRACED	CHECKED	REVIEWED	DATE	REVISED
H.C.M						

MICROFILMED
JUL 9 1986

FED. RD. DIVISION	STATE	PROJECT	
2	OHIO		

315
384

LAKE COUNTY
SEC. LAK-2-14.22

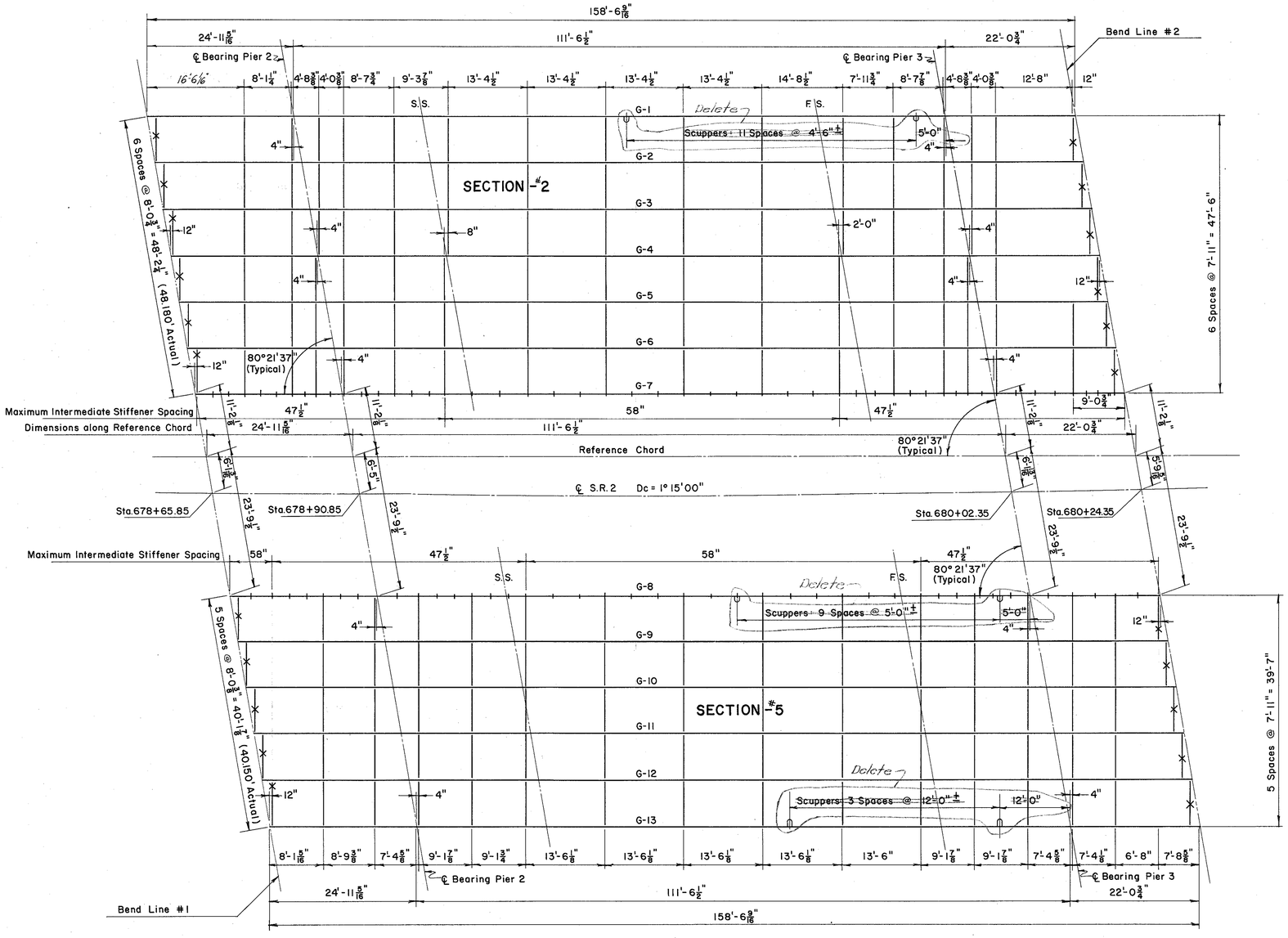

STEEL FRAMING DETAILS FOR SECTIONS 2 & 5

NOTES:

For scupper discharge area in center spans use a continuous pad 6 ft. wide, extending 3 ft. beyond last scupper in group, using 12" crushed aggregate according to I-10.04.
Scuppers to clear crossframes by 6".

✱ Denotes special crossframes, see Deck Detail Sheet Left Bridge.

S.S. denotes Shop Splice.

F.S. denotes Field Splice.

PREPARED BY
CAPITOL ENGINEERING ASSOCIATES, DILLSBURG, PA.
FOR

STATE OF OHIO
DEPARTMENT OF HIGHWAYS
DIVISION OF DESIGN AND CONSTRUCTION
BUREAU OF BRIDGES

FRAMING PLAN DETAILS, SECTION 2 & 5
BRIDGE NO. LAK-2-1471 L & R
RELOC. S. R. 2 OVER B. & O. R.R. - S. R. 283
LAKE COUNTY
STA. 680 + 56.97

DESIGNED	DRAWN	TRACED	CHECKED	REVIEWED	DATE	REVISED
H.C.M						6-2-61

MICROFILMED
JUL 9 1986

FED. RD. DIVISION	STATE	PROJECT	
2	OHIO		

316
384

LAKE COUNTY
SEC. LAK-2-14.22

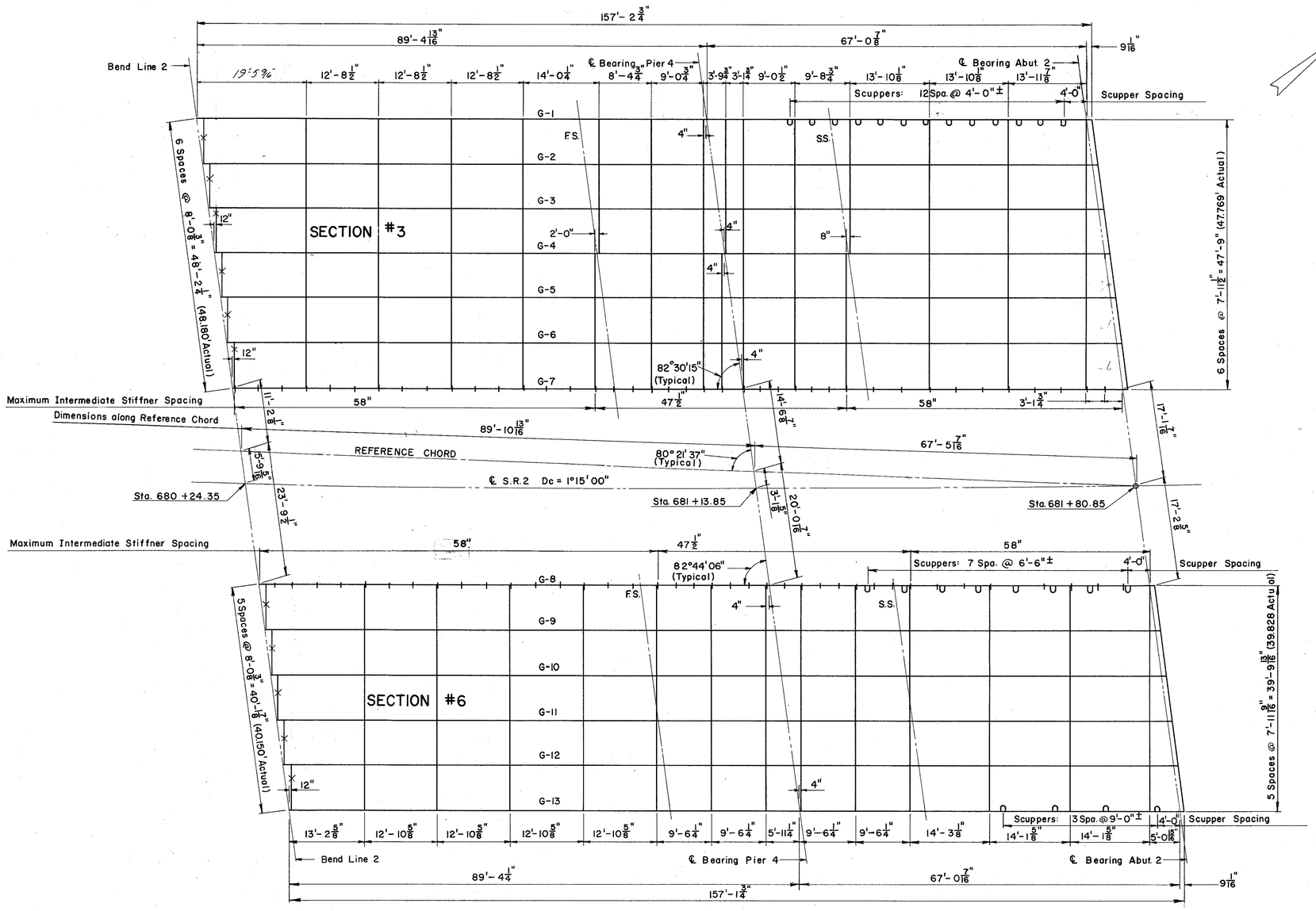

STEEL FRAMING DETAILS FOR SECTIONS 3 & 6

NOTES:

Scuppers shall clear crossframes by 6" min.

× Denotes special crossframes, see Deck Details sheet Left Bridge

PREPARED BY
CAPITOL ENGINEERING ASSOCIATES, DILLSBURG, PA.
FOR

STATE OF OHIO
DEPARTMENT OF HIGHWAYS
DIVISION OF DESIGN AND CONSTRUCTION
BUREAU OF BRIDGES

FRAMING PLAN DETAILS, SECTION 3 & 6
BRIDGE NO. LAK-2-1471 L & R
RELOC. S. R. 2 OVER B.&O. R.R. - S.R. 283
LAKE COUNTY
STA. 680 + 56.97

DESIGNED	DRAWN	TRACED	CHECKED	REVIEWED	DATE	REVISED
H.C.M		J.D.M. GMY	MCP			

MICROFILMED
JUL 9 1986

FED. RD. DIVISION	STATE	PROJECT	
2	OHIO		

317/384

LAKE COUNTY
SEC. LAK-2-14.22

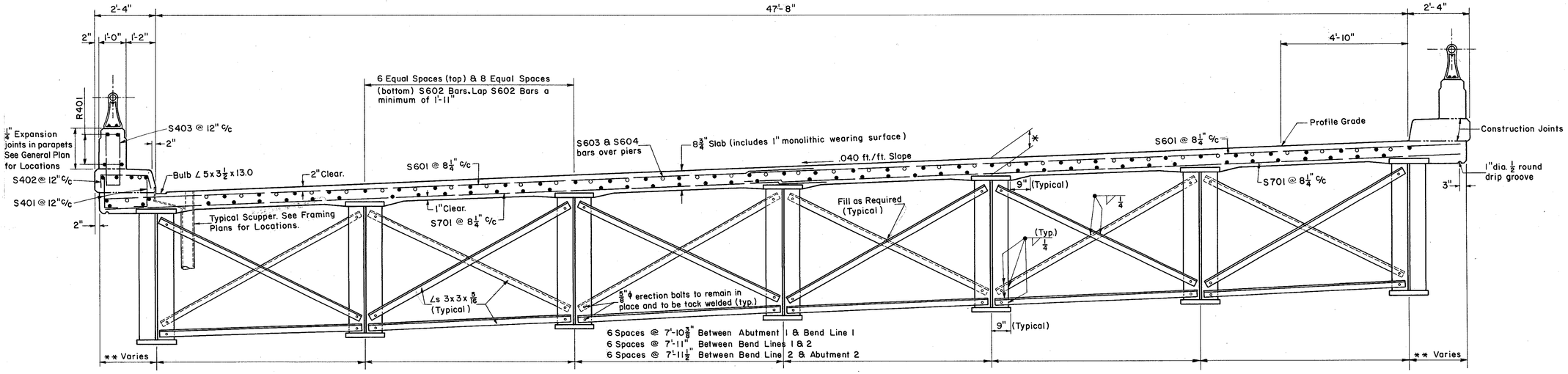

TYPICAL TRANSVERSE SECTION FOR LEFT BRIDGE (RADIAL)

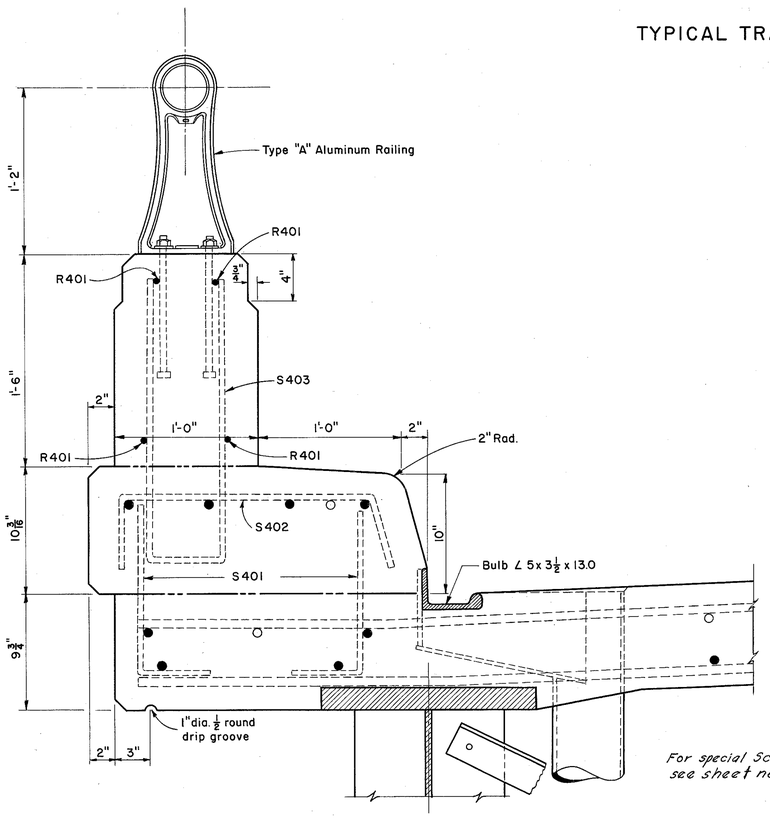

For special Scupper Details see sheet no. 299A.

PARAPET DETAILS

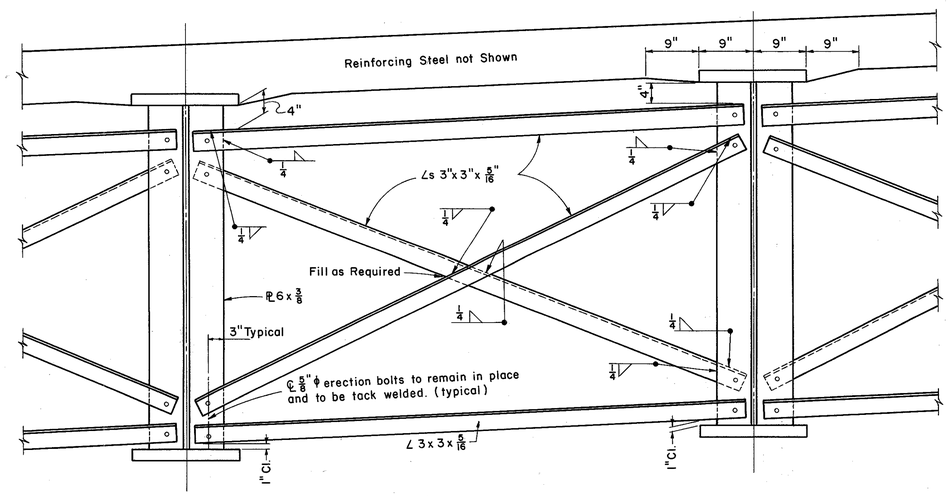

SPECIAL CROSSFRAME AT BEND POINTS

* DECK SLAB DEPTH

Abut. #1: 9 3/4"
Pier #1: 8 15/16"
Pier #2: 8 5/16"
Pier #3: 8 5/16"
Pier #4: 9 15/16"
Abut. #2: 9 3/4"

For notes see other Deck Detail sheet

PREPARED BY
CAPITOL ENGINEERING ASSOCIATES, DILLSBURG, PA.
FOR

STATE OF OHIO
DEPARTMENT OF HIGHWAYS
DIVISION OF DESIGN AND CONSTRUCTION
BUREAU OF BRIDGES

DECK DETAILS LEFT BRIDGE
BRIDGE NO. LAK-2-1471 L & R
RELOC. S. R. 2 OVER B.&O. R.R.-S. R. 283
LAKE COUNTY
STA. 680 + 56.97

DESIGNED	DRAWN	TRACED	CHECKED	REVIEWED	DATE	REVISED
HCM	KMS	FWB	HCM DRT			

MICROFILMED
JUL 9 1986

FED. RD. DIVISION	STATE	PROJECT	
2	OHIO		

318
384

LAKE COUNTY
SEC. LAK-2-14.22

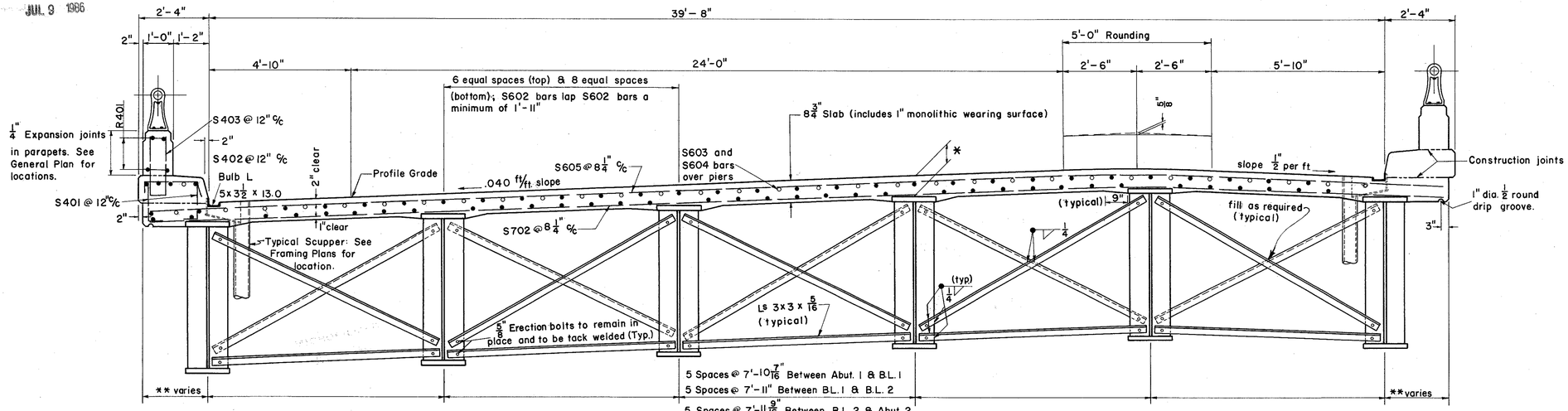

NOTE: For Parapet & Special Crossframe Details See Deck Details for Left Bridge.

TYPICAL TRANSVERSE SECTION FOR RIGHT BRIDGE (RADIAL)

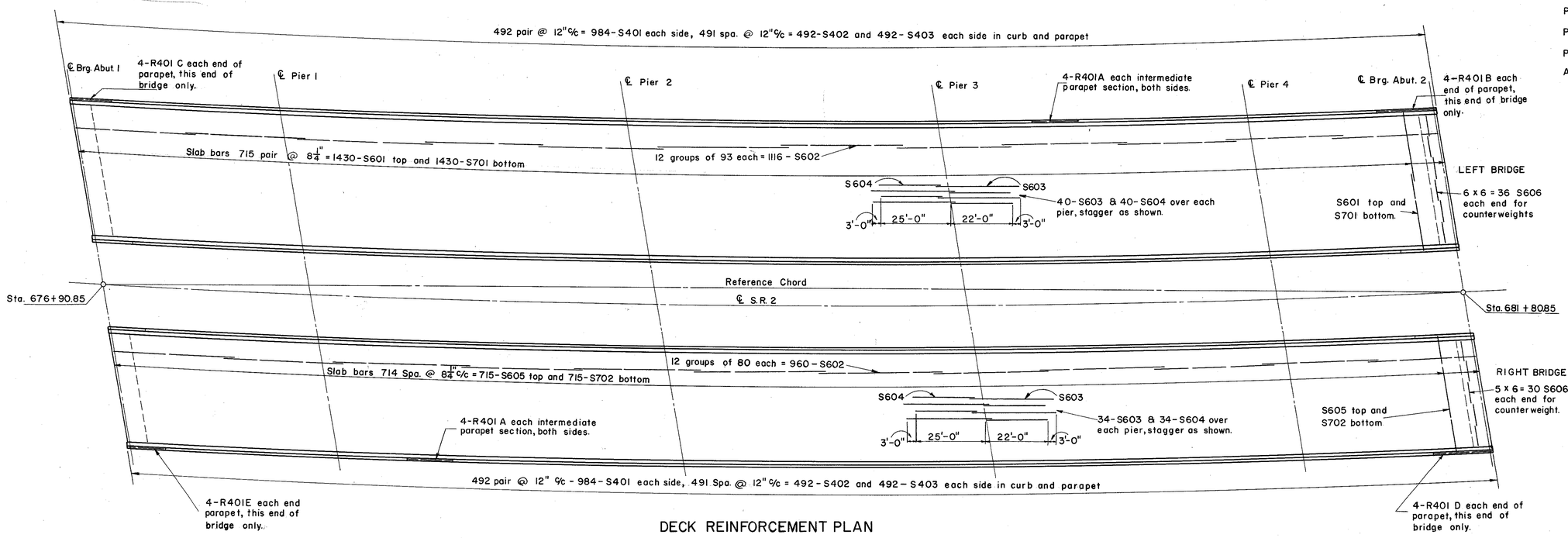

DECK REINFORCEMENT PLAN

NOTES:

REFERENCE shall be made to Standard Drawing AR-1-57 revised 2-2-59 for details of aluminum railing Type "A" and concrete parapet.

DECK SLAB DEPTH: * This is the nominal dimension. The quantity of deck concrete to be paid for shall be based on this dimension, even though deviation from it may be necessary because the top flange of the girder may not have the exact camber or conformation required to place it parallel to the finished grade. An additional deviation in slab depth will occur due to the horizontal curvature of the bridge.

SLAB OVERHANG: ** This dimension varies from a maximum of 3'-0" to a minimum of 1'-6".

CONCRETE AND REINFORCING STEEL above the parapet construction joint shall be included with railing for payment.

CONCRETE DECK PLACING: In order to facilitate water curing of the concrete of the deck slab, the placing of concrete shall progress upgrade. The slab may be placed in sections between transverse construction joints which are parallel to the transverse reinforcing steel and are located near the center of spans.

CONCRETE shall be class "C."

ALL REINFORCING STEEL shall have a minimum of 2" of cover from all faces except as otherwise shown.

* DECK SLAB DEPTH:

Abut. #1 : 9 3/4"
Pier #1 : 8 15/16"
Pier #2 : 8 1/2"
Pier #3 : 8 13/16"
Pier #4 : 9 5/16"
Abut. #2 : 9 3/4"

PREPARED BY
CAPITOL ENGINEERING ASSOCIATES, DILLSBURG, PA.
FOR

STATE OF OHIO
DEPARTMENT OF HIGHWAYS
DIVISION OF DESIGN AND CONSTRUCTION
BUREAU OF BRIDGES

DECK DETAILS AND DECK PLAN
BRIDGE NO. LAK-2-1471 L & R
RELOC. S.R.2 OVER B. & O. R.R. - S.R. 283
LAKE COUNTY
STA. 680 + 56.97

DESIGNED	DRAWN	TRACED	CHECKED	REVIEWED	DATE	REVISED
HCM			HCM DRT			