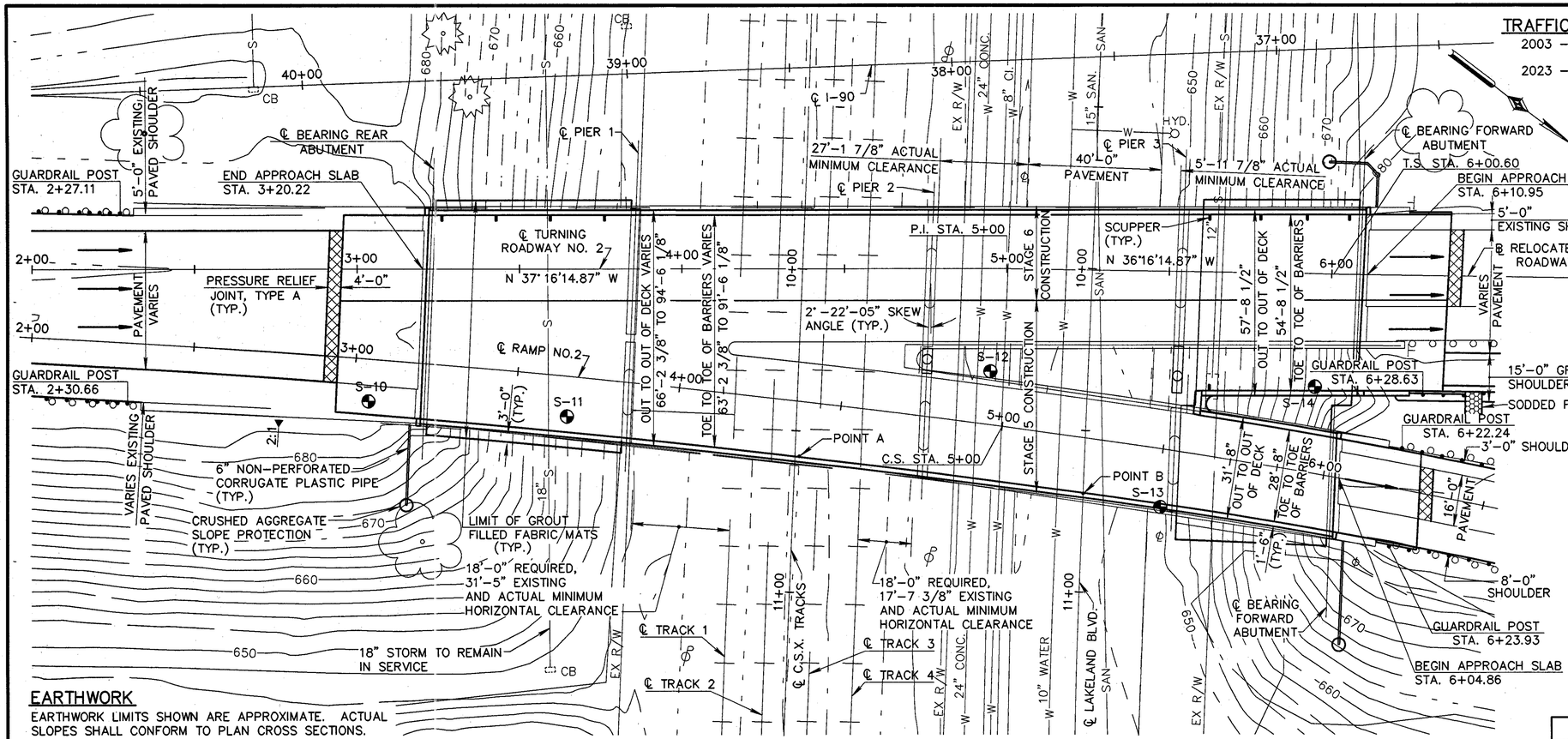

TRAFFIC DATA (I-90)

2003 – A.D.T. 49,950
A.D.T.T. 3,020
2023 – A.D.T. 62,830
A.D.T.T. 3,790

TEMPORARY BENCH MARK

IRON PIN SET
STA. 39+74.70, 5.48 RT. ℄ R/W I-90
ELEV. 683.13

CURVE DATA
℄ RAMP NO. 2

CURVE DATA NO. 18	
P.I. =	STA. 2+50.358
Δ =	7°30'00" RT.
Dc =	1°30'00"
R =	3819.719'
T =	250.358'
L =	500.00'
E =	8.196'
P.C. =	STA. 0+00
C.S. =	STA. 5+00

CURVE DATA NO. 19	
P.I. =	STA. 12+94.097
Δ =	79°51'40.81" RT.
Dc =	7°30'00"
R =	763.944'
Ls =	300.00'
θs =	13°30'00"
LT =	200.587'
ST =	100.529'
Lc =	704.818'
Ts =	794.097'
Es =	239.969'
C.S. =	STA. 5+00
S.C. =	STA. 8+00
C.S. =	STA. 15+04.818
S.C. =	STA. 18+04.818
e_{MAX} =	0.0833

CURVE DATA
℄ RAMP NO. 2

CURVE DATA NO. 35	
P.I. =	STA. 12+34.49
Δ =	63°32'04.45" LT.
Dc =	7°38'01.00"
R =	750.57'
Ls =	470.00'
θs =	17°56'20.35"
LT =	314.96'
ST =	158.14'
Lc =	832.30'
Ts =	1133.89'
Es =	428.93'
C.S. =	STA. 6+00.60
S.C. =	STA. 10+70.60
C.S. =	STA. 19+02.90
S.C. =	STA. 23+72.90
e_{MAX} =	0.0833

APPROXIMATE TOP OF ROCK

BORING NO.	ELEVATION
S-10	664.5
S-11	634.0
S-12	640.1
S-13	640.5
S-14	636.5

HP 10 X 42 PILES

LOCATION	ESTIMATED LENGTH
TURNING ROADWAY NO. 2 FORWARD ABUTMENT	45 FEET

EARTHWORK

EARTHWORK LIMITS SHOWN ARE APPROXIMATE. ACTUAL SLOPES SHALL CONFORM TO PLAN CROSS SECTIONS.

PLAN

SOIL BORING LOCATION

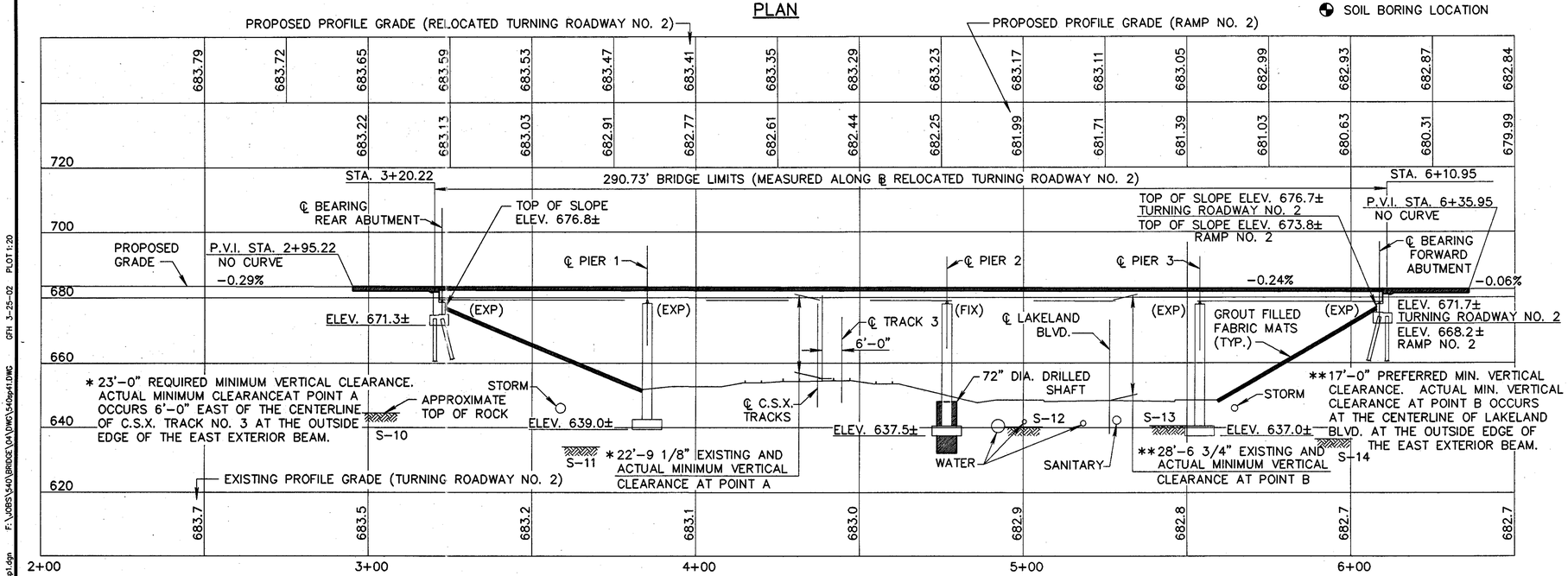

SECTION ON BASELINE RELOCATED TURNING ROADWAY NO. 2

*NOTE: ALL UTILITIES TO REMAIN IN SERVICE

EXISTING STRUCTURE

TYPE:	CONTINUOUS STEEL BEAMS WITH REINFORCED CONCRETE DECK AND REINFORCED CONCRETE SUBSTRUCTURE
SPANS:	62.67'–91.50'–77.23'–54.89' C/C BRGS. ℄ TURNING ROADWAY NO. 2
ROADWAY:	VARIES
LOADING:	CF=2000 (57) (ADEQUATE FOR AASHTO ALTERNATE LOADING)
SKEW:	2°–22'–05" ON ℄ TURNING RDWY NO. 2
WEARING SURFACE:	1" MONOLITHIC CONCRETE
APPROACH SLABS:	AS-1-54 (25' LONG)
ALIGNMENT:	TURNING ROADWAY NO. 2 TANGENT, RAMP NO. 2 CURVE AND SPIRAL
SUPERELEVATION:	VARIES
DATE BUILT:	1960
STRUCTURE FILE NO.	1809210

PROPOSED STRUCTURE

PROPOSED WORK:	WIDEN BRIDGE, REPLACE CONCRETE DECK, MODIFY, REPAIR AND EXTEND EXISTING SUBSTRUCTURE UNITS AND SEAL CONCRETE SURFACES
TYPE:	EXISTING CONTINUOUS STEEL BEAMS, A 36, AND NEW CONTINUOUS STEEL BEAMS A572, GRADE 50, PAINTED WITH REINFORCED CONCRETE SUBSTRUCTURE
SPANS:	62.67', 91.50', 77.23', 54.89' C/C BEARINGS ℄ RELOCATED TURNING ROADWAY NO. 2
ROADWAY:	VARIES
LOADING:	HS25, CASE I AND THE ALTERNATE MILITARY LOADING (PROPOSED BEAMS)
SKEW:	2°–22'–05" LEFT FORWARD (ON ℄ RELOCATED TURNING ROADWAY NO. 2)
WEARING SURFACE:	1" MONOLITHIC CONCRETE
APPROACH SLABS:	AS-1-81 (25'-0")
ALIGNMENT:	RELOCATED TURNING ROADWAY NO. 2 TANGENT, RAMP NO. 2 CURVE AND SPIRAL
SUPERELEVATION:	VARIES
LATITUDE:	N 41°–36'–13"
LONGITUDE:	W 81°–29'–31"

DESIGN AGENCY
EUTHEMICS INC.
CONSULTING ENGINEERS
CLEVELAND, OHIO

DESIGNED	CHECKED	DRAWN	REVISED	REVIEWED	DATE
GFH	RSY	JAM	YRY	RAB	9-01

STRUCTURE FILE NUMBER 1809210

CUYAHOGA COUNTY
Sta. 3+20.22 to
Sta. 6+10.95

SITE PLAN
BRIDGE NO. CUY-90-2972 L
OVER C.S.X. RAILROAD AND LAKELAND BLVD.

CUY/LAK-90-29.92/0.00

CU090sp1.dgn F:\JOBS\540\BRIDGE\04\DWG\540sp41.DWG GFH 3-25-02 PLOT 1:20

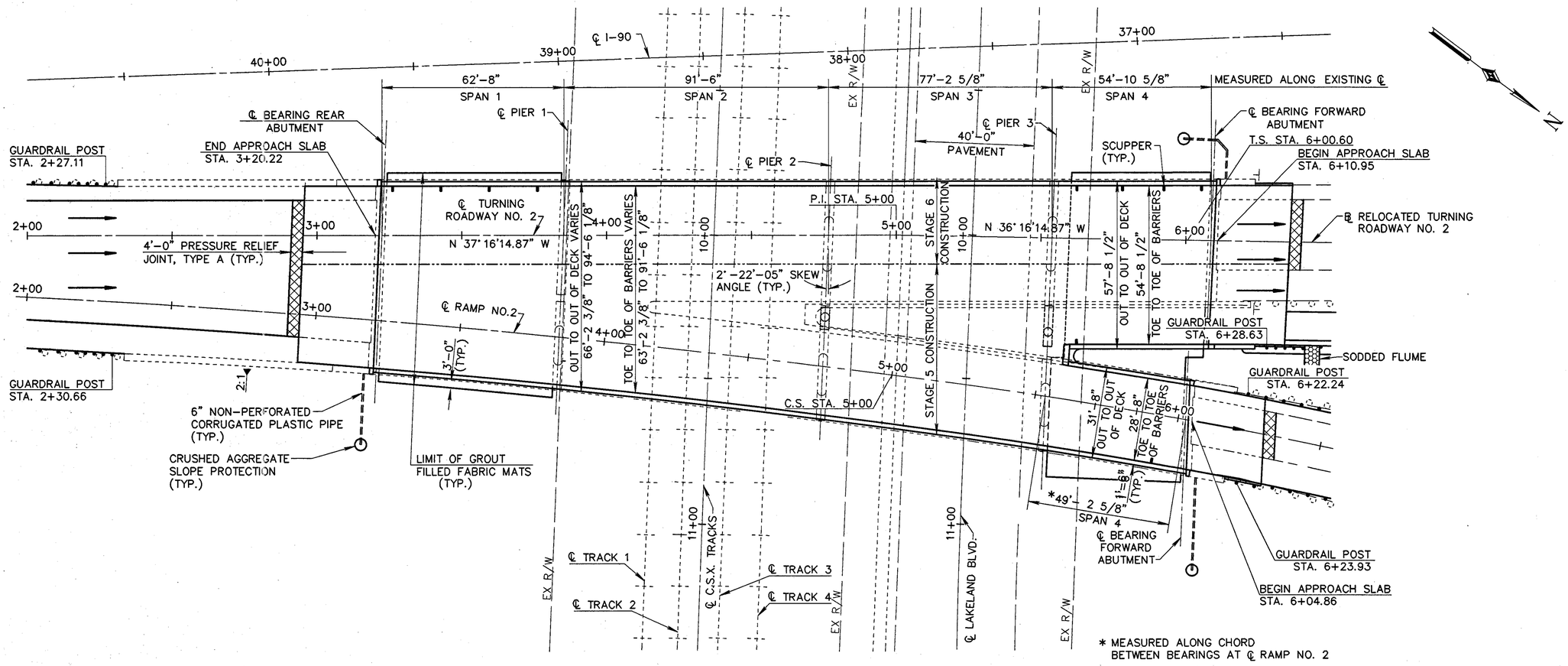

GENERAL PLAN

DESIGN AGENCY
EUTHEMICS INC.
CONSULTING ENGINEERS
CLEVELAND, OHIO

DESIGNED	DRAWN	REVIEWED	DATE
YRY	GFH	RAB	10-01
CHECKED	REVISED	STRUCTURE FILE NUMBER	
KRD		1809210	

GENERAL PLAN
BRIDGE NO. CUY-90-2972 L
OVER CSX RAILROAD AND LAKLAND BLVD.

CUY/LAK-90-29.92/0.00

2/18

389/454

CU090gp1.dgn F:\JOBS\540\BRIDGE\041\DWG\540gp41.DWG KJW 3-21-02 PLOT 1:20

CALC. BY: YRY DATE: 06-20-01

ESTIMATED QUANTITIES – CUY-90-2972L

CHK'D. BY: NNB DATE: 08-20-01

ITEM	ITEM EXT.	TOTAL	UNIT	DESCRIPTION	ABUT-MENTS	PIERS	SUPER-STRUCTURE	GENERAL	AS PER PLAN SHEET NUMBERS
202	11203	LUMP		PORTIONS OF STRUCTURE REMOVED, OVER 20 FOOT SPAN, AS PER PLAN				LUMP	GN 1
503	21100	85	CU. YD.	UNCLASSIFIED EXCAVATION	26	59			
503	31120	13	CU. YD.	SHALE EXCAVATION		13			
505	11100	LUMP		PILE DRIVING EQUIPMENT MOBILIZATION				LUMP	
507	00100	225	LIN. FT.	STEEL PILES HP10X42, FURNISHED	225				
507	00150	200	LIN. FT.	STEEL PILES HP10X42, DRIVEN	200				
507	50500	3	EACH	STEEL PILE SPLICES	3				
509	20001	500	POUNDS	REINFORCING STEEL, REPLACEMENT OF EXISTING REINFORCING STEEL, AS PER PLAN	500				GN 2
512	33000	2	SQ.YD.	TYPE 2 WATERPROOFING	2				
516	11211	154	LIN.FT.	STRUCTURAL EXPANSION JOINT, INCLUDING ELASTOMERIC STRIP SEAL, AS PER PLAN	154				7/18
516	45305	55	EACH	REFURBISH BEARING DEVICE, AS PER PLAN	22	33			
516	47001	LUMP		JACKING AND TEMPORARY SUPPORT OF SUPERSTRUCTURE, AS PER PLAN				LUMP	GN 2
518	12200	9	EACH	SCUPPERS, INCLUDING SUPPORTS			9		
518	21201	90	CU. YD.	POROUS BACKFILL WITH FILTER FABRIC, AS PER PLAN	90				4/16 5/16 6/16
518	40000	140	LIN. FT.	6" PERFORATED CORRUGATED PLASTIC PIPE	140				
518	40010	97	LIN. FT.	6" NON-PERFORATED CORRUGATED PLASTIC PIPE, INCLUDING SPECIALS	97				
524	94946	8	LIN. FT.	DRILLED SHAFTS, 72" DIAMETER, ABOVE BEDROCK		8			
524	94950	8	LIN. FT.	DRILLED SHAFTS, 72" DIAMETER, INTO BEDROCK		8			
601	20000	5	SQ. YD.	CRUSHED AGGREGATE SLOPE PROTECTION	5				
601	21100	1187	SQ. YD.	SLOPE PROTECTION, MISC: GROUT FILLED FABRIC MATS	1187				
815	00100	LUMP		SURFACE PREPARATION OF EXISTING STEEL, SYSTEM OZEU			LUMP		
815	00200	LUMP		FIELD PAINTING OF EXISTING STEEL, PRIME COAT, SYSTEM OZEU			LUMP		
815	00300	LUMP		FIELD PAINTING OF EXISTING STEEL, INTERMEDIATE COAT, SYSTEM OZEU			LUMP		
815	00400	LUMP		FIELD PAINTING OF EXISTING STEEL, FINISH COAT, SYSTEM OZEU			LUMP		
816	00610	83,100	POUND	FIELD PAINTING OF NEW STEEL, INTERMEDIATE AND FINISH COAT, SYSTEM IZEU			83,100		
843	50000	30	SQ. FT.	PATCHING CONCRETE STRUCTURES WITH TROWELABLE MORTAR	30				
844	48001	603	CU. YD.	HIGH PERFORMANCE CONCRETE SUPERSTRUCTURE (DECK), AS PER PLAN			603		15/18
844	48020	87	CU. YD.	HIGH PERFORMANCE CONCRETE SUPERSTRUCTURE (PARAPET)			87		
844	48041	94	CU. YD.	HIGH PERFORMANCE CONCRETE SUBSTRUCTURE, AS PER PLAN	32	62			6/18
863	10260	83,100	POUND	STRUCTURAL STEEL MEMBERS, LEVEL THREE (3) FABRICATION			83,100		
863	21000	1	EACH	TRIMMING OF BEAM END			1		
864	10100	1015	SQ. YD.	SEALING OF CONCRETE SURFACES (EPOXY-URETHANE)	53	146	816		

DESIGN AGENCY
EUTHEMICS INC.
CONSULTING ENGINEERS
CLEVELAND, OHIO

REVIEWED RAB DATE 9-01
STRUCTURE FILE NUMBER 1809210
DRAWN YRY REVISED
DESIGNED YRY CHECKED NNB

ESTIMATED QUANTITIES
BRIDGE NO. CUY-90-2972 L
OVER C.S.X. RAILROAD AND LAKELAND BLVD.

CUY/LAK-90-29.92/0.00

CU090qt.dgn F:\JOBS\540\BRIDGE\04\DWG\540eqt1.dwg GFH 3-27-02 PLOT 1:1

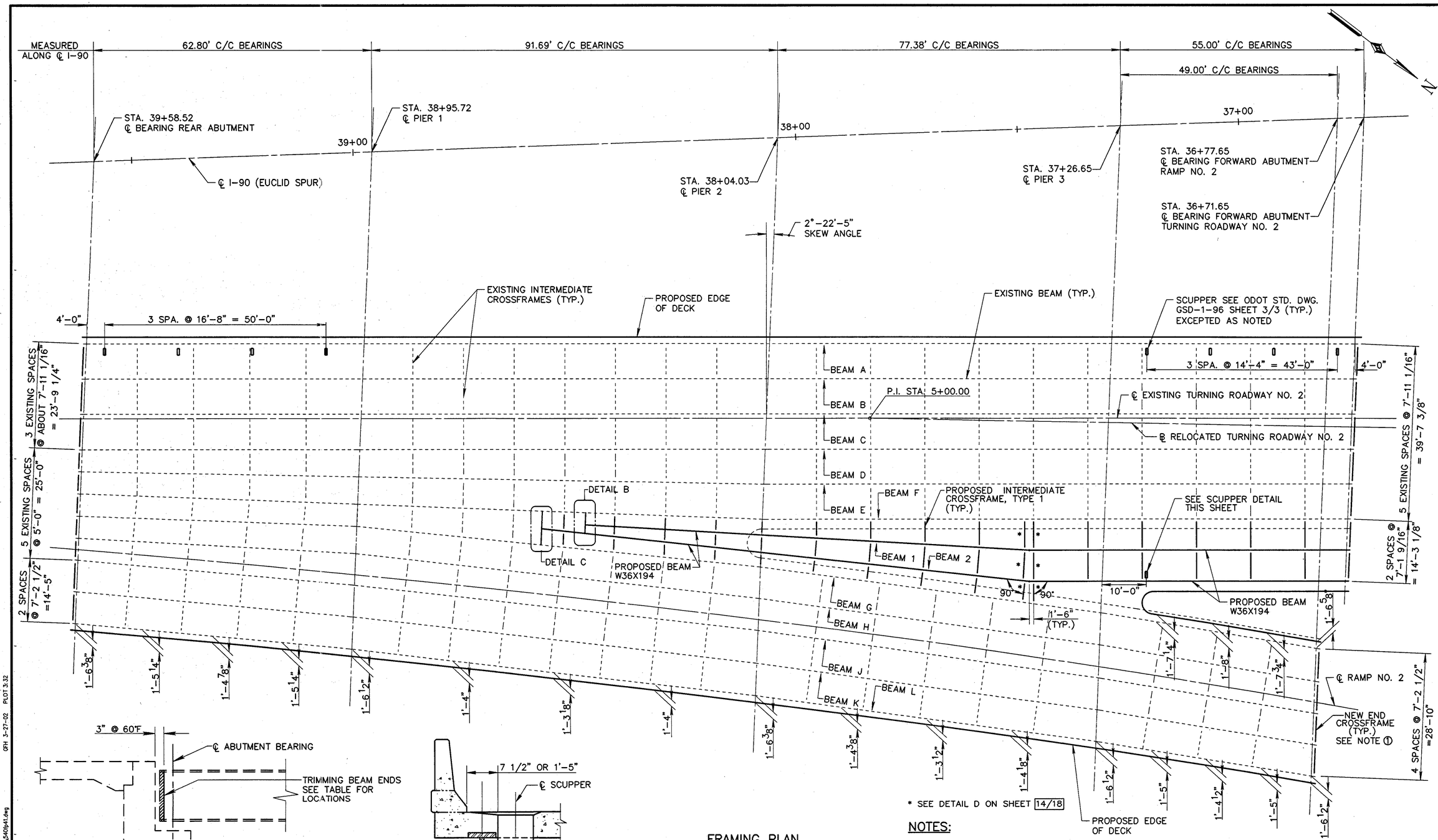

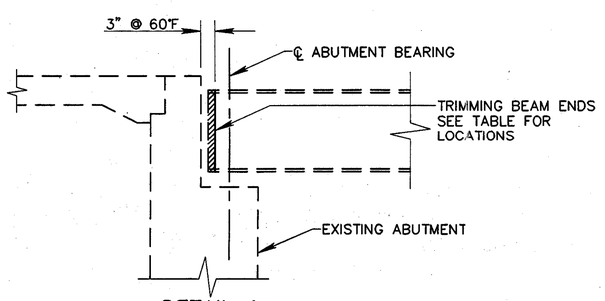

DETAIL A

TRIMMING BEAM ENDS	
LOCATION	BEAMS
REAR ABUTMENT	NONE
FORWARD ABUTMENT	BEAM G

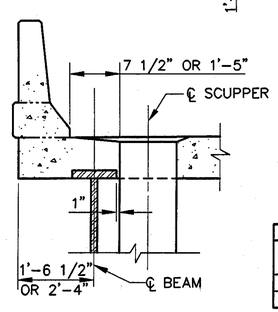

SCUPPER DETAIL

FRAMING PLAN

BEARING SCHEDULE			
BEAM NO.	STRUCTURE UNIT		
	PIER 2	PIER 3	F.A.
1	B-225	R-200	R-100
2	B-225	R-200	R-100

FOR NOTES AND DETAILS SEE OHIO STANDARD DRAWING RB-1-55

INCLUDE WITH ITEM 863 – STRUCTURAL STEEL, FOR PAYMENT

* SEE DETAIL D ON SHEET 14/18

NOTES:

① EXISTING END CROSSFRAMES, JOINT ARMOR, DEAD LOAD CONCRETE AND CONCRETE ANGLE SUPPORTS TO BE REMOVED. GRIND WEBS OF EXISTING BEAMS SMOOTH. TRIM ENDS OF BEAMS AS REQUIRED TO PROVIDE 3" MINIMUM CLEARANCE TO BACKWALL. (SEE DETAIL ON THIS SHEET.) INSTALL NEW END CROSSFRAMES AND STRIP SEAL EXPANSION JOINT PER OHIO STANDARD DRAWING GSD-1-96 DATED 4-20-01, AND OHIO STANDARD DRAWING EXJ-4-87 DATED 4-20-01.

② HORIZONTAL OFFSETS TO EDGE OF DECK ARE MEASURED PERPENDICULAR TO THE BEAMS AT ℄ BEARING, 1/4, 1/2, AND 3/4 SPAN POINTS.

③ FOR DETAIL B AND DETAIL C SEE SHEET 14/18

④ FOR TYPE 1 INTERMEDIATE CROSSFRAME DETAILS SEE OHIO STANDARD DRAWING GSD-1-96.

DESIGN AGENCY
EUTHEMACS INC.
CONSULTING ENGINEERS
CLEVELAND, OHIO

DESIGNED	DRAWN	REVIEWED	DATE
KRD	JAM	RAB	9-01
CHECKED	REVISED	STRUCTURE FILE NUMBER	
GFH	YRY	1809210	

FRAMING PLAN
BRIDGE NO. CUY-90-2972L
OVER C.S.X. RAILROAD AND LAKELAND BLVD.

CUY/LAK-90-29.92/0.00

12/18

399/454

F:\JOBS\540\BRIDGE\04\DWG\540ly41.dwg GFH 3-27-02 PLOT 3:32

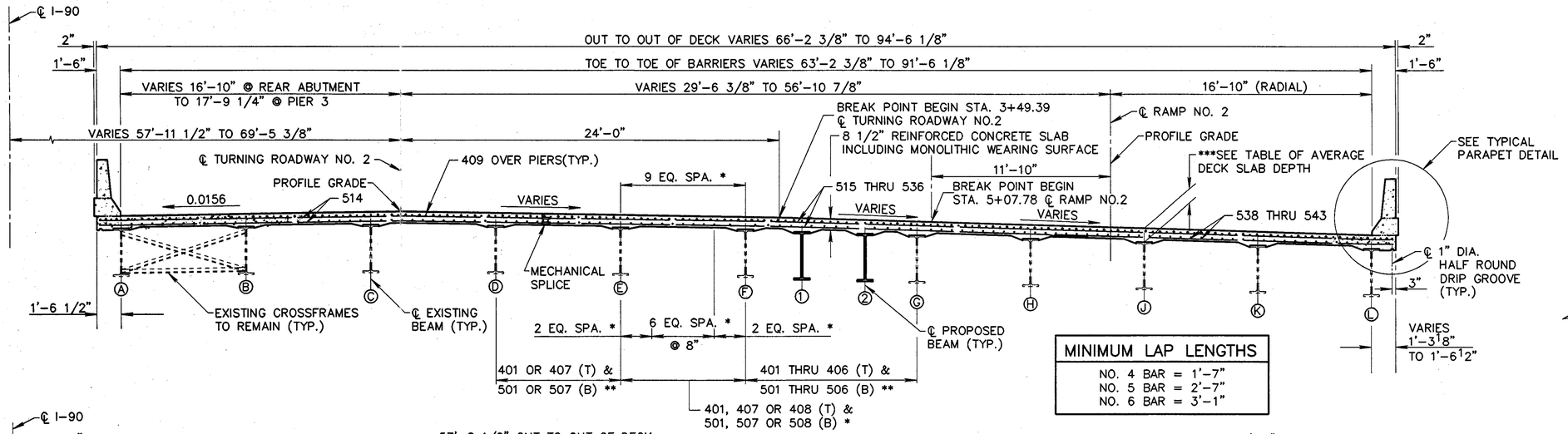

MINIMUM LAP LENGTHS
NO. 4 BAR = 1'-7"
NO. 5 BAR = 2'-7"
NO. 6 BAR = 3'-1"

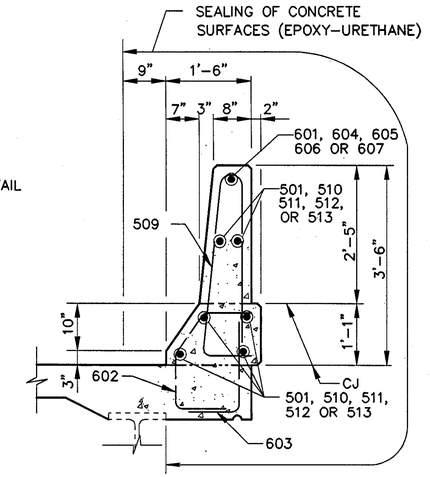

TYPICAL PARAPET DETAIL

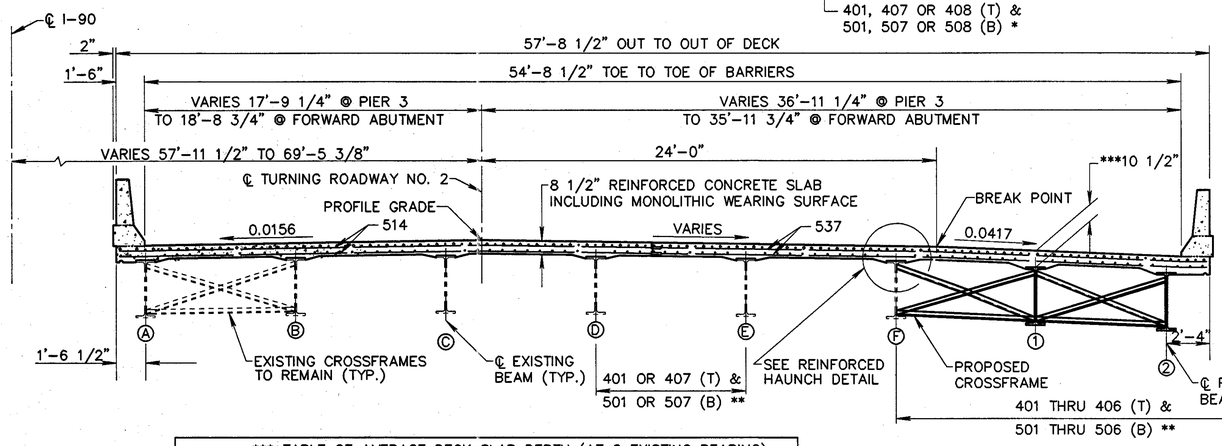

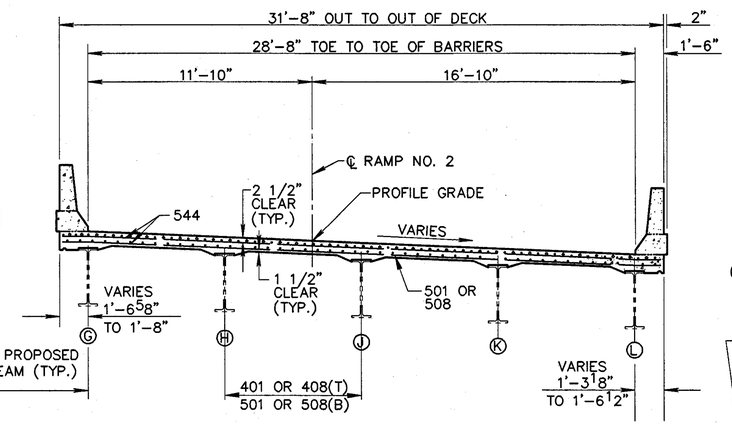

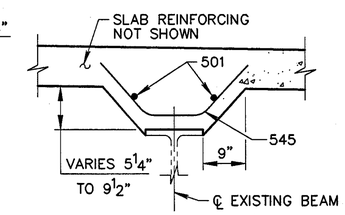

REINFORCED HAUNCH DETAIL
(BEAMS E AND F SPAN 4 ONLY. SEE SLAB PLAN SHEET 17/18 FOR PLACEMENT.)

*** TABLE OF AVERAGE DECK SLAB DEPTH (AT ℄ EXISTING BEARING)					
LOCATION	℄ BEARING R.A.	℄ BEARING PIER 1	℄ BEARING PIER 2	℄ BEARING PIER 3	℄ BEARING F.A.
SLAB DEPTH	12 5/8"	11 1/4"	10 5/8"	12 1/4"	13 3/4"

TRANSVERSE SECTIONS

* TYP. , EXCEPT AS NOTED
** SEE DECK PLAN FOR DISTRIBUTION
*** SEE NOTE ①

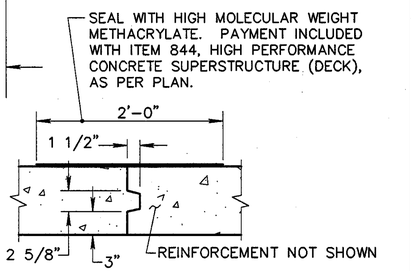

LONGITUDINAL CONSTRUCTION JOINT DETAIL

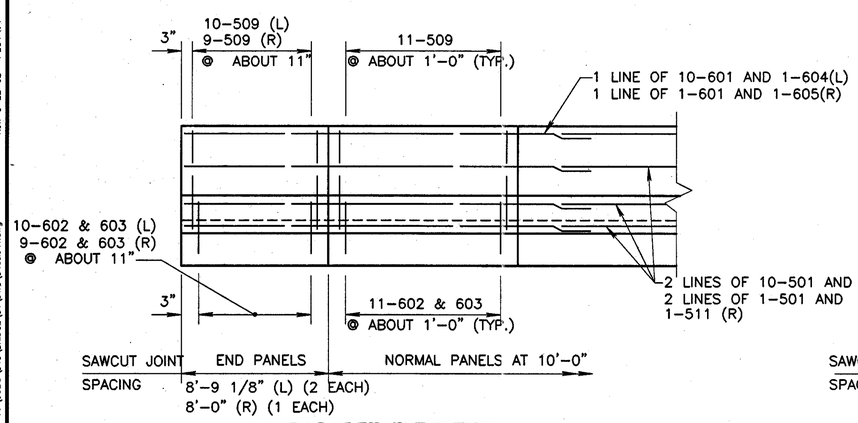

PARAPET ELEVATION
ALONG TURNING ROADWAY NO. 2

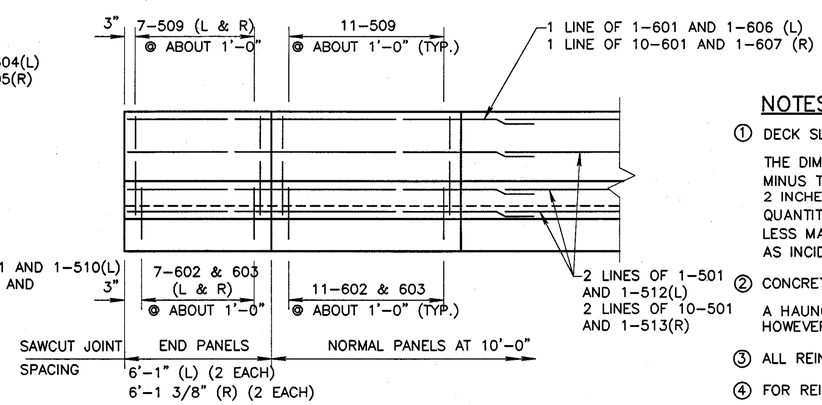

PARAPET ELEVATION
ALONG RAMP NO. 2

NOTES:

① DECK SLAB DEPTH FOR CONCRETE QUANTITY:

THE DIMENSION SHOWN FROM TOP OF THE CONCRETE DECK TO THE TOP OF THE FLANGE, MINUS THE AVERAGE DESIGN HAUNCH THICKNESS OF 3 5/8 INCHES AT EXISTING BEAMS AND 2 INCHES AT PROPOSED BEAMS, HAS BEEN USED FOR COMPUTING THE DECK CONCRETE QUANTITIES. CONCRETE REQUIRED TO FILL THE HAUNCHES, INCLUDING ADDITIONAL OR LESS MATERIAL REQUIRED DUE TO CONSTRUCTION TOLERANCES, SHALL BE CONSIDERED AS INCIDENTAL AND WILL NOT BE INCLUDED IN THE QUANTITY CALCULATIONS FOR PAYMENT.

② CONCRETE DECK HAUNCH WIDTH

A HAUNCH WIDTH OF 9" SHALL BE USED.
HOWEVER, THE HAUNCH WIDTH MAY VARY BETWEEN 6 INCHES AND 12 INCHES.

③ ALL REINFORCING STEEL BAR MARKS SHALL BE PREFIXED "S" (SUPERSTRUCTURE) UNLESS NOTED.

④ FOR REINFORCEMENT SCHEDULE SEE SHEET 17A/18.

⑤ THE FOLLOWING ABBREVIATIONS ARE USED:

T = TOP	R = RIGHT	F.A. = FORWARD ABUTMENT
B = BOTTOM	TYP. = TYPICAL	R.A. = REAR ABUTMENT
L = LEFT	C.J. = CONSTRUCTION JOINT	EQ. SPA. = EQUAL SPACES

DESIGN AGENCY: EUTHENICS INC. CONSULTING ENGINEERS CLEVELAND, OHIO

DESIGNED	DRAWN	REVIEWED	DATE
YRY	YRY	RAB	9-01
CHECKED	REVISED	STRUCTURE FILE NUMBER	
RSY		1809210	

TRANSVERSE SECTIONS
BRIDGE NO. CUY-90-2972L
OVER C.S.X. RAILROAD AND LAKELAND BLVD.

CUY/LAK-90-29.92/0.00

15/18

402/454

F:\JOBS\540\BRIDGE\04\DWG\540sbh1.dwg KJW 3-22-02 PLOT 1:4

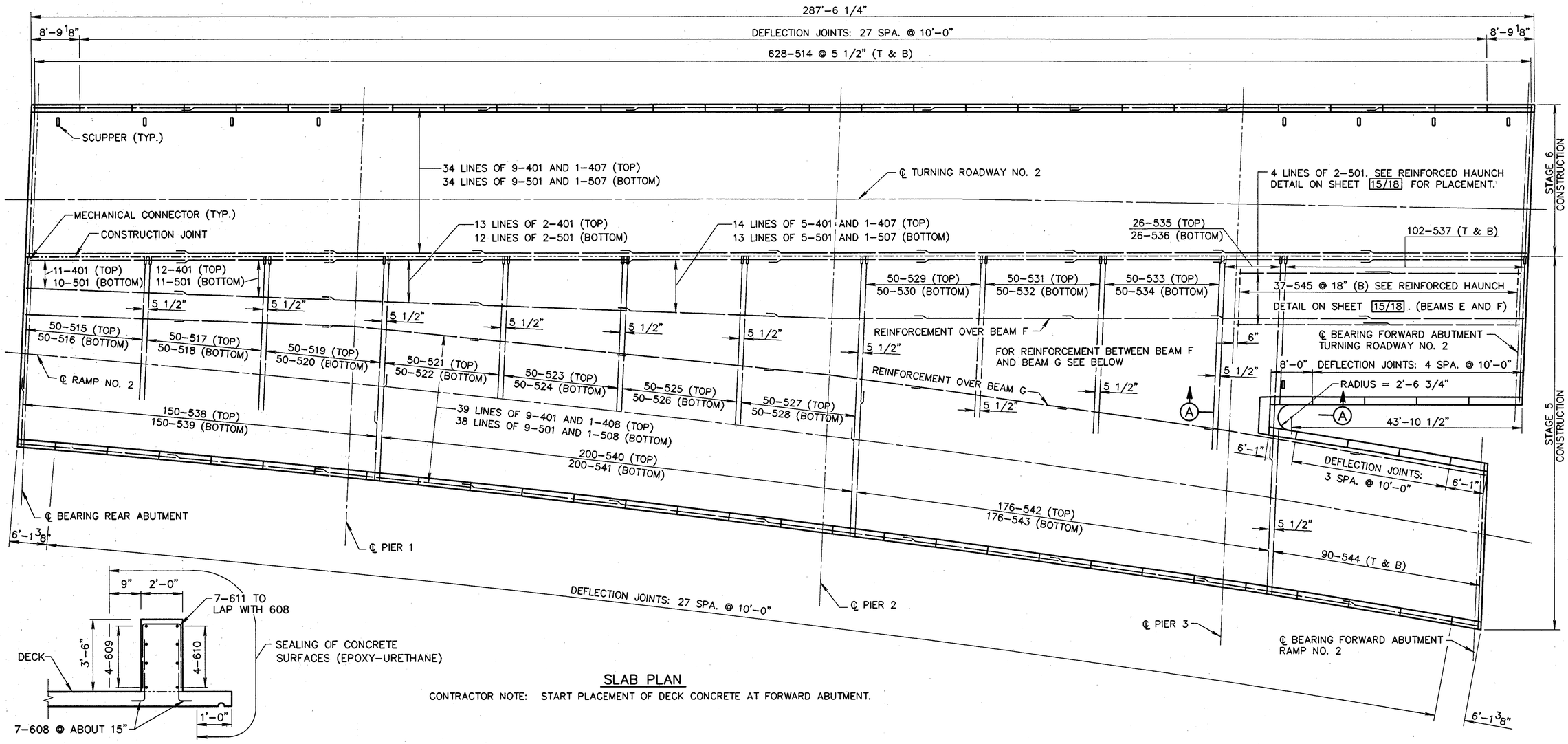

SLAB PLAN

CONTRACTOR NOTE: START PLACEMENT OF DECK CONCRETE AT FORWARD ABUTMENT.

SECTION A-A

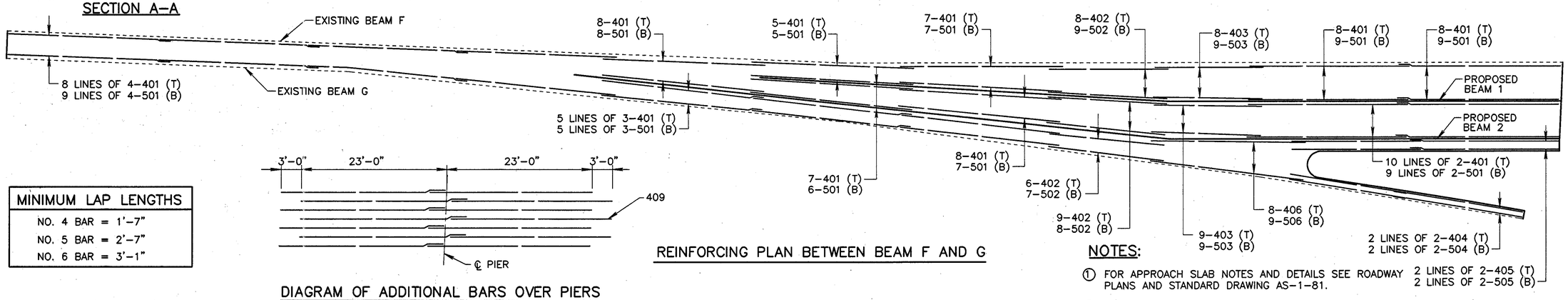

REINFORCING PLAN BETWEEN BEAM F AND G

MINIMUM LAP LENGTHS
NO. 4 BAR = 1'-7"
NO. 5 BAR = 2'-7"
NO. 6 BAR = 3'-1"

DIAGRAM OF ADDITIONAL BARS OVER PIERS

NOTES:

① FOR APPROACH SLAB NOTES AND DETAILS SEE ROADWAY PLANS AND STANDARD DRAWING AS-1-81.

② FOR ADDITIONAL NOTES SEE SHEET 11/16.

DESIGN AGENCY
EUTHENICS INC.
CONSULTING ENGINEERS
CLEVELAND, OHIO

DESIGNED	DRAWN	REVIEWED	DATE
YRY	YRY	RAB	9-01
CHECKED	REVISED	STRUCTURE FILE NUMBER	
RSY		1809210	

SLAB PLAN
BRIDGE NO. CUY-90-2972L
OVER C.S.X. RAILROAD AND LAKELAND BLVD.

CUY/LAK-90-29.92/0.00

17/18

404/454

K.W. 3-22-02 PLOT 1:10

F:\JOBS\540\BRIDGE\04\DWG\540sh42.dwg