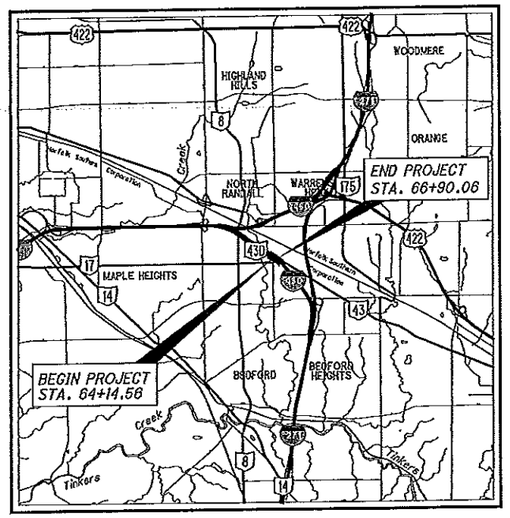

LOCATION MAP

LATITUDE: N 41°25'03.94" LONGITUDE: W 81°31'01.42"

SCALE IN MILES

0 1 2 3 4

N

PORTION TO BE IMPROVED
INTERSTATE HIGHWAY
FEDERAL ROUTES
STATE ROUTES
COUNTY & TOWNSHIP ROADS
OTHER ROADS

DESIGN DESIGNATION

CURRENT ADT (2018)	49,000
DESIGN YEAR ADT (2038)	56,000
DESIGN HOURLY VOLUME (2038)	5,000
DIRECTIONAL DISTRIBUTION	0.53
TRUCKS (24 HOUR B&C)	9%
DESIGN SPEED	65 MPH
LEGAL SPEED	60 MPH
DESIGN FUNCTIONAL CLASSIFICATION: URBAN INTERSTATE	
NHS PROJECT	YES

DESIGN EXCEPTIONS

NONE REQUIRED

UNDERGROUND UTILITIES

CONTACT BOTH SERVICES TWO WORKING DAYS BEFORE YOU DIG.

OHIO Utilities Protection SERVICE — Call Before You Dig 1-800-362-2764 (Non-members must be called directly)

OIL & GAS PRODUCERS UNDERGROUND PROTECTION SERVICE 1-800-925-0988

PLAN PREPARED BY:
AECOM
1300 E 9TH ST, CLEVELAND, OHIO 44114
(216) 622-2300

ENGINEERS SEAL:

STATE OF OHIO — DAVID EARL BUCHANAN 78416 — REGISTERED PROFESSIONAL ENGINEER

SIGNED: D. E. Buchanan
DATE: 2-9-2018

STATE OF OHIO
DEPARTMENT OF TRANSPORTATION

CUY-480-25.03

CITY OF BEDFORD HEIGHTS
CUYAHOGA COUNTY

INDEX OF SHEETS:

TITLE SHEET	1
TYPICAL SECTIONS	2-5
GENERAL NOTES	6
MAINTENANCE OF TRAFFIC	7-24
GENERAL SUMMARY	28-30
SUBSUMMARIES	31-32
PLAN	33
LIGHTING DETAILS	34
STRUCTURES OVER 20' BRIDGE NO. CUY-480-2503	35-56

PROJECT DESCRIPTION

CONVERT THE I-480 BRIDGE OVER BARTLETT ROAD (SR-17) TO SEMI-INTEGRAL ABUTMENTS INCLUDING REPLACING THE APPROACH SLABS AND CONVERTING TO ELASTOMERIC BEARINGS AT ALL SUBSTRUCTURE LOCATIONS.

PROJECT EARTH DISTURBED AREA: N/A (MAINTENANCE PROJECT)
ESTIMATED CONTRACTOR EARTH DISTURBED AREA: N/A (MAINTENANCE PROJECT)
NOTICE OF INTENT EARTH DISTURBED AREA: N/A (MAINTENANCE PROJECT)

LIMITED ACCESS

THIS IMPROVEMENT IS ESPECIALLY DESIGNED FOR THROUGH TRAFFIC AND HAS BEEN DECLARED A LIMITED ACCESS HIGHWAY OR FREEWAY BY ACTION OF THE DIRECTOR IN ACCORDANCE WITH THE PROVISIONS OF SECTION 5511.02 OF THE OHIO REVISED CODE.

2016 SPECIFICATIONS

THE STANDARD SPECIFICATIONS OF THE STATE OF OHIO, DEPARTMENT OF TRANSPORTATION, INCLUDING CHANGES LISTED IN THE PROPOSAL SHALL GOVERN THIS IMPROVEMENT.

STANDARD CONSTRUCTION DRAWINGS

AS-1-15	7/17/15	BP-3.1	7/18/14	MGS-6.1	1/19/18	TC-65.11	7/21/17		
AS-2-15	7/17/15	BP-5.1	7/19/13			TC-72.20	7/15/16		
SICD-1-96	7/18/14	BP-9.1	7/21/17	MT-95.30	7/21/17				
SICD-2-14	7/18/14			MT-95.40	1/20/17	HL-30.11	1/19/18		
PCB-91	1/18/13	DM-1.1	7/21/17	MT-99.20	7/21/17	HL-30.21	1/17/14		
BR-1-13	1/17/14	DM-1.2	1/18/13	MT-101.60	1/20/17	HL-30.22	1/17/14		
				MT-101.70	1/17/14	HL-30.31	1/17/14		
		F-1.1	7/19/13	MT-101.75	7/15/16	HL-30.32	1/17/14		
		F-3.4	7/19/13			HL-30.33	1/17/14		
				MT-102.10	1/20/17	HL-30.41	1/19/18		
		MGS-1.1	1/19/18	MT-102.30	10/16/15	HL-50.21	1/19/18		
		MGS-2.1	1/19/18	MT-104.10	10/16/15				
		MGS-3.1	1/19/18						
		MGS-3.2	1/18/13	RM-4.1	7/21/17				
		MGS-4.2	7/19/13	RM-4.3	7/18/14				
		MGS-4.3	1/18/13						

SUPPLEMENTAL SPECIFICATIONS	
800	1/19/18
808	1/20/17
832	1/17/14
836	1/19/18
846	4/17/15
849	1/16/13
896	7/21/17
908	10/20/17

SPECIAL PROVISIONS

I HEREBY APPROVE THESE PLANS AND DECLARE THAT THE MAKING OF THIS IMPROVEMENT WILL NOT REQUIRE THE CLOSING TO TRAFFIC OF THE HIGHWAY EXCEPT FOR THE EASTBOUND ON RAMP AS DESCRIBED ON SHEETS 7 - 24 AND THAT PROVISIONS FOR THE MAINTENANCE AND SAFETY OF TRAFFIC WILL BE AS SET FORTH ON THE PLANS AND ESTIMATES.

APPROVED: Mark S. Ro
DATE: 02-26-18 DISTRICT DEPUTY DIRECTOR

APPROVED: Jerry Wray
DATE: 2-27-18 DIRECTOR, DEPARTMENT OF TRANSPORTATION

FEDERAL PROJECT NO. E180(074)
PID NO. 106690
CONSTRUCTION PROJECT NO.
RAILROAD INVOLVEMENT N/A
CUY-480-25.03

CUY - IR 480 - 25.03
188006 PID - 106690
Dist 12 4/19/2018
Conformed Set
Contract Proposal Available @
www.contracts.dot.state.oh.us/home
G:\Cleveland\DCS\Projects\O\ODOT\60

NOTES:

* STA 62+14.56 TO STA. 62+81.26
VARIES 8.62′ TO 10′

** STA. 62+14.56 TO STA. 62+81.26
VARIES 32.00′ TO 24.00′

*** STA 62+14.56 TO STA. 63+65.64
VARIES 32.64′ TO 28.86′

**** STA 63+65.64 TO STA. 64+44.56
VARIES 28.86′ TO 26.90′

***** STA 63+65.64 TO STA. 64+44.56
8.00′

****** STA. 64+44.56 TO STA. 64+69.56
8.00′

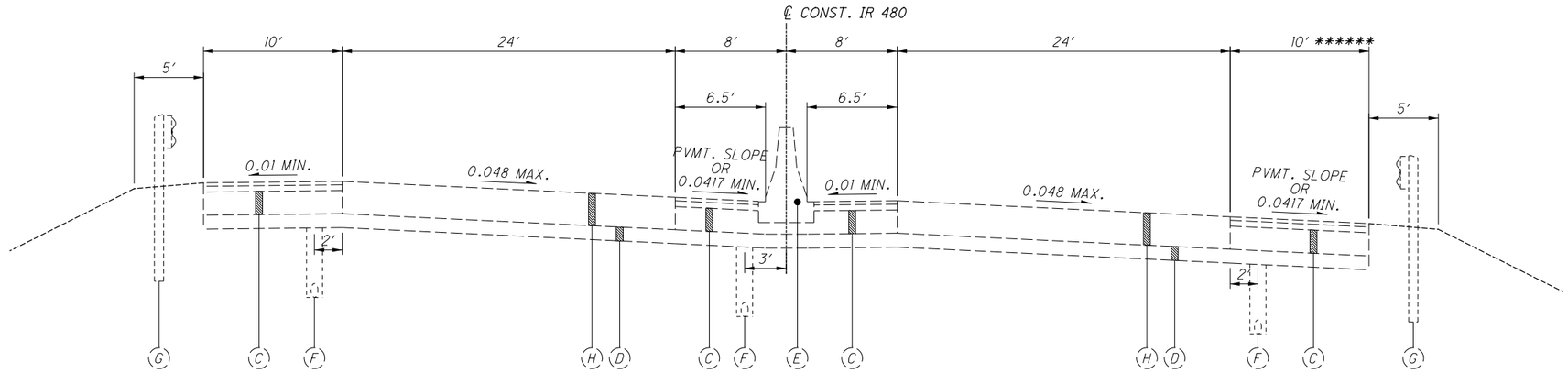

APPROACH SLAB IR 480

STA. 64+44.56 TO STA. 64+69.56
STA. 66+35.06 TO STA. 66+60.06

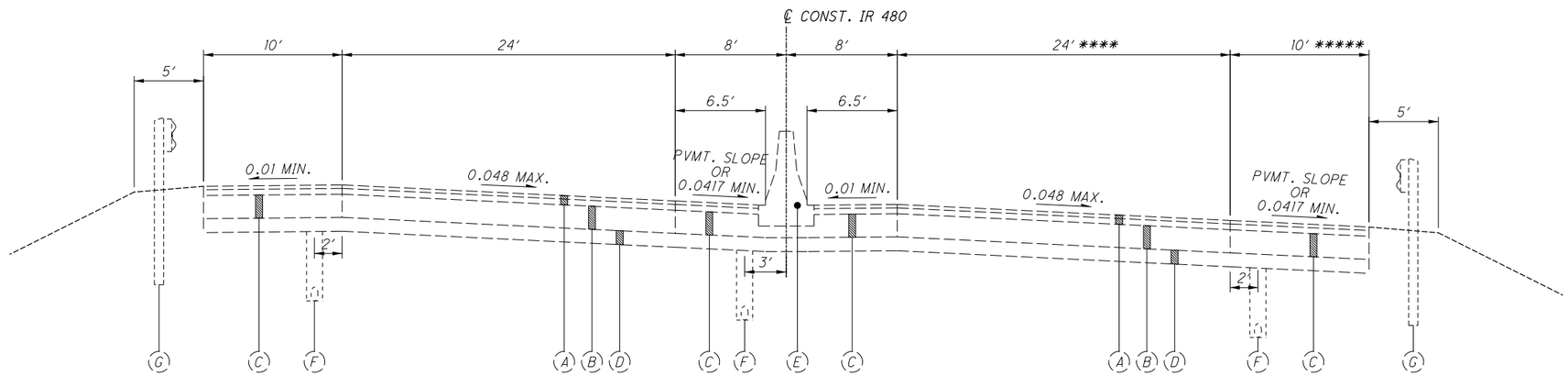

SUPERELEVATED SECTION IR 480

STA. 63+65.64 TO STA. 64+44.56
STA. 66+60.06 TO STA. 68+90.06

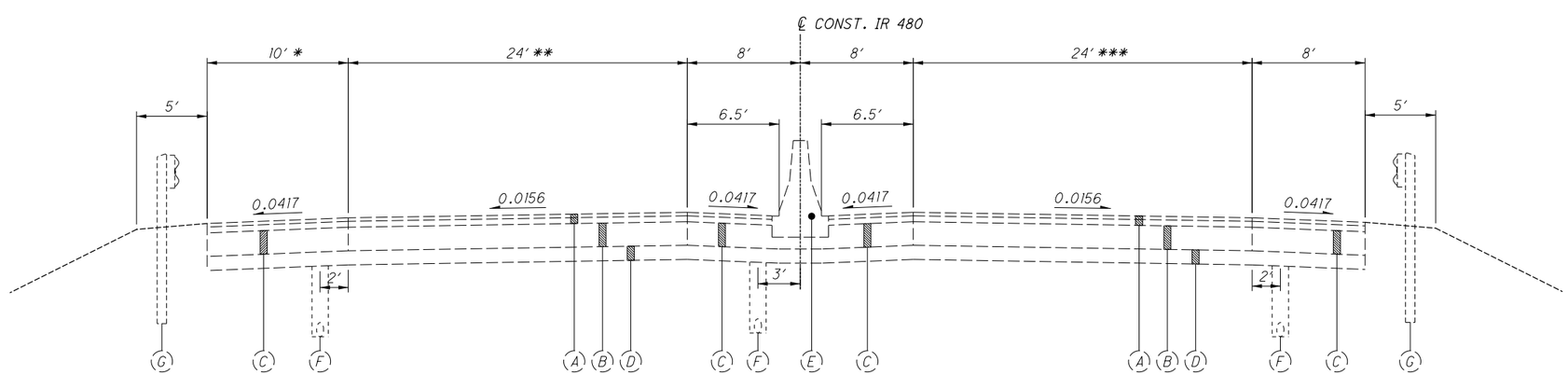

NORMAL SECTION IR 480

STA. 62+14.56 TO STA. 63+65.64

EXISTING LEGEND

(A) 4"± ASPHALT CONCRETE
(B) 10" REINFORCED CONCRETE
(C) 10" CONCRETE BASE
(D) 6" SUBBASE
(E) CONCRETE BARRIER
(F) 6" PIPE UNDERDRAIN
(G) GUARDRAIL, TYPE 5
(H) 13"± APPROACH SLAB

CALCULATED ADT
CHECKED MEP

EXISTING TYPICAL SECTIONS

CUY-480-25.03

G:\Cleveland\DCS\Projects\0\ODOT\60441780_GES16+01?\Structures\Task 14\106690\Design\Roadway\Sheets\106690GY004.dgn - 2/23/2018 10:10:12 AM - david.buchanan

NOTES:

* STA 62+14.56 TO STA. 62+81.26
VARIES 8.62′ TO 10′

** STA. 62+14.56 TO STA. 62+81.26
VARIES 32.00′ TO 24.00′

*** STA 62+14.56 TO STA. 64+14.56
VARIES 32.64′ TO 27.64′

**** STA 63+65.64 TO STA. 64+14.56
8′

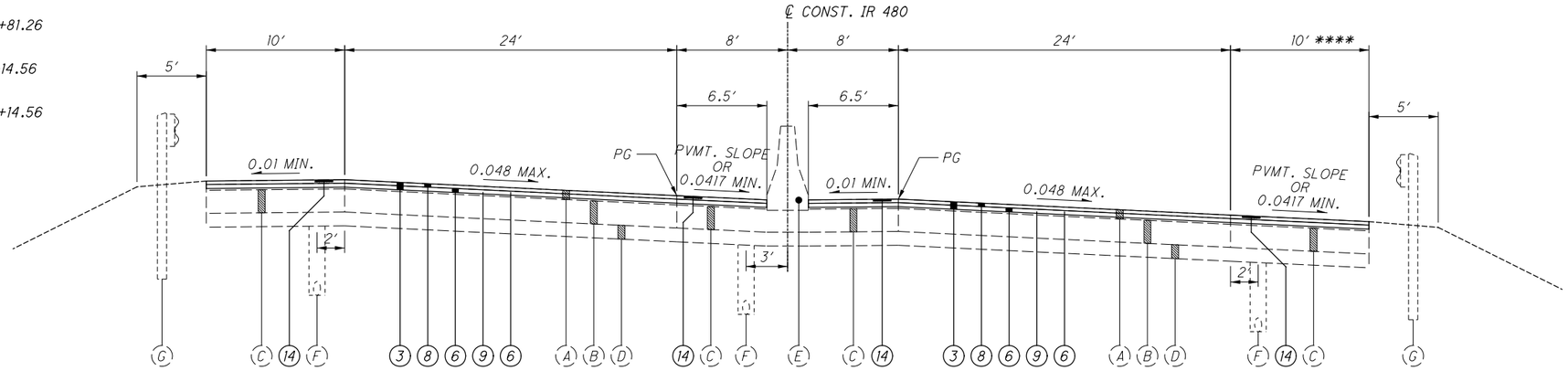

SUPERELEVATED SECTION IR 480

STA. 63+65.64 TO STA. 64+14.56
STA. 66+90.06 TO STA. 68+90.06

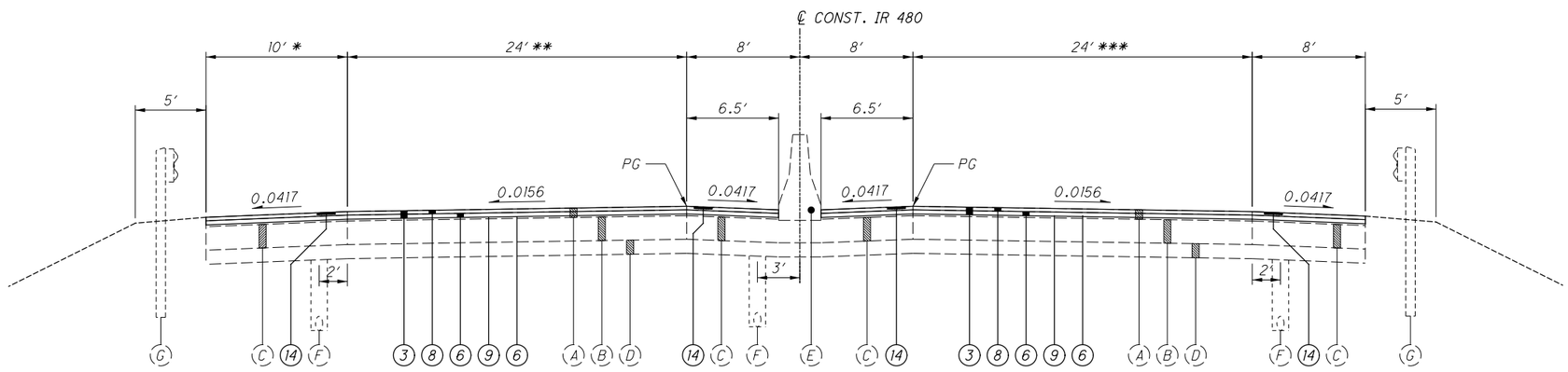

NORMAL SECTION IR 480

STA. 62+14.56 TO STA. 63+65.64

PROPOSED LEGEND

1. ITEM 204 - SUBGRADE COMPACTION
2. ITEM 209 - LINEAR GRADING, AS PER PLAN
3. ITEM 254 - PAVEMENT PLANING, ASPHALT CONCRETE (T = 2 1/2")
4. ITEM 302 - 11.5" ASPHALT CONCRETE BASE, PG64-22
5. ITEM 304 - 6" AGGREGATE BASE
6. ITEM 407 - NON-TRACKING TACK COAT
7. ITEM 441 - ASPHALT CONCRETE INTERMEDIATE COURSE, TYPE 1, (448), UNDER GUARDRAIL, (T = 3")
8. ITEM 442 - 1 1/2" ASPHALT CONCRETE SURFACE COURSE, 12.5MM, TYPE A (448), AS PER PLAN, PG76-22M
9. ITEM 442 - 1" ASPHALT CONCRETE INTERMEDIATE COURSE, 9.5MM, TYPE A (448)
10. ITEM 526 - REINFORCED CONCRETE APPROACH SLABS (T = 17")
11. ITEM 605 - 6" SHALLOW PIPE UNDERDRAINS
12. ITEM 606 - GUARDRAIL, TYPE MGS
13. ITEM 609 - CURB, TYPE 4-C
14. ITEM 618 - RUMBLE STRIPS, (ASPHALT CONCRETE)
15. ITEM 622 - BARRIER MISC.: CONCRETE BARRIER, AS PER PLAN
16. ITEM 659 - SEEDING AND MULCHING

CALCULATED ADT
CHECKED MEP

TYPICAL SECTIONS

CUY-480-25.03

G:\Cleveland\DCS\Projects\0\ODOT\60441780_GES16to17\Structures\Task 14\106690\Design\Roadway\Sheets\106690GY001.dgn - 2/23/2018 10:10:13 AM - david.buchanan

NOTES:

FOR PROPOSED LEGEND SEE SHEET 3 .

* FOR BARRIER DETAILS SEE SHEET 5 .

** STA. 64+14.56 TO STA. 64+39.56
VARIES 27.64′ TO 27.01′

*** STA. 64+14.56 TO STA. 64+39.56
8′

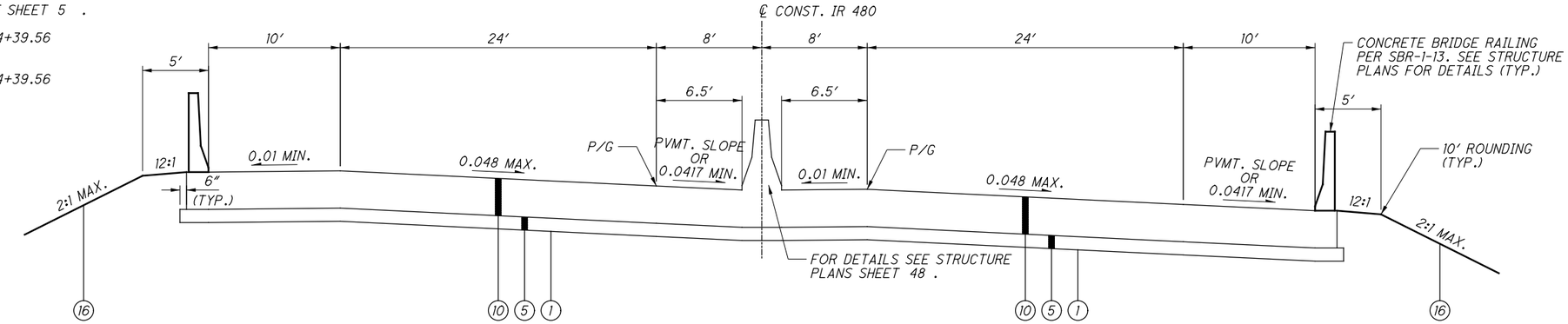

SUPERELEVATED APPROACH SLAB CUY-480-25.03

STA. 64+39.56 TO STA. 64+69.56
STA. 66+35.06 TO STA. 66+65.06

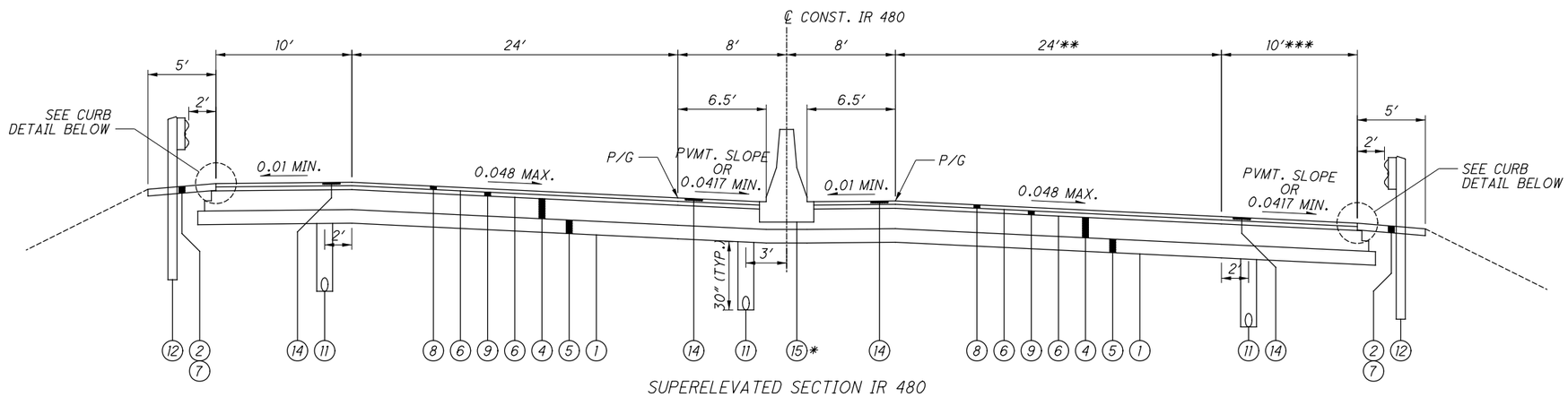

SUPERELEVATED SECTION IR 480

STA. 64+14.56 TO STA. 64+39.56
STA. 66+65.06 TO STA. 66+90.06

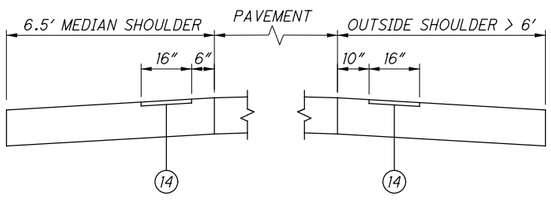

SHOULDER RUMBLE STRIP DETAIL

(SEE STANDARD CONSTRUCTION DRAWING BP-9.1 SECTION D-D)

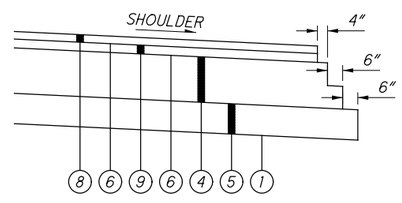

EDGE DESIGN - IR 480

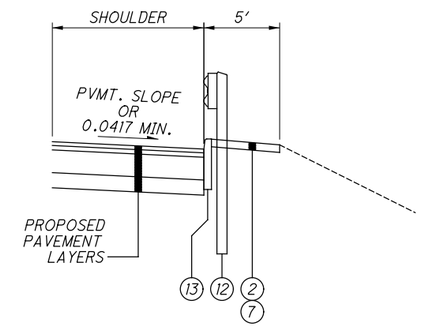

CURB, TYPE 4-C DETAIL

STA. 64+21.41 TO STA. 64+39.56, RT.
STA. 66+65.06 TO STA. 66+83.21, LT.

CALCULATED ADT
CHECKED MEP

TYPICAL SECTIONS

CUY-480-25.03

G:\Cleveland\DCS\Projects\0\ODOT\60441780_GES16to17\Structures\Task 14\106690\Design\Roadway\Sheets\106690GY002.dgn - 2/23/2018 10:10:15 AM - david.buchanan

NOTES:

CONCRETE BARRIER IS AS PER PLAN DUE TO
IRREGULAR SHAPE FROM CURRENT SCD'S.
FOR DESIGN SPECIFICATIONS AND DATA SEE SHEET 36 .
FOR LIGHTING DETAILS TO BE MAINTAINED SEE SHEET 34 .

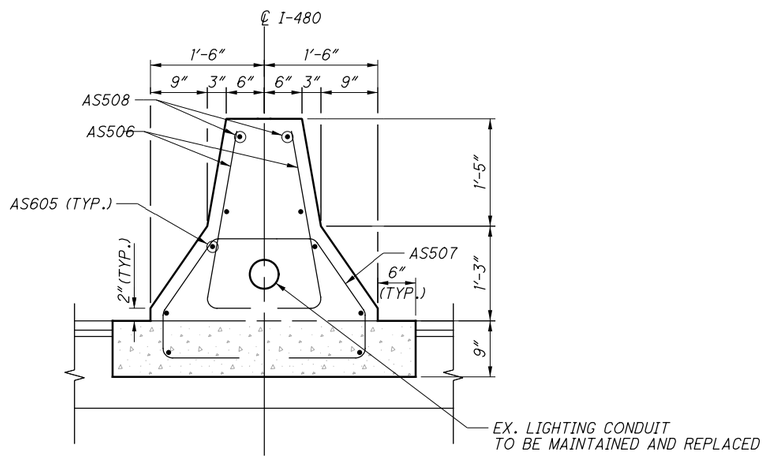

BARRIER MISC.: CONCRETE BARRIER, END ANCHORAGE, AS PER PLAN

STA. 64+24.56 TO STA. 64+39.56
STA. 66+65.06 TO STA. 66+80.06

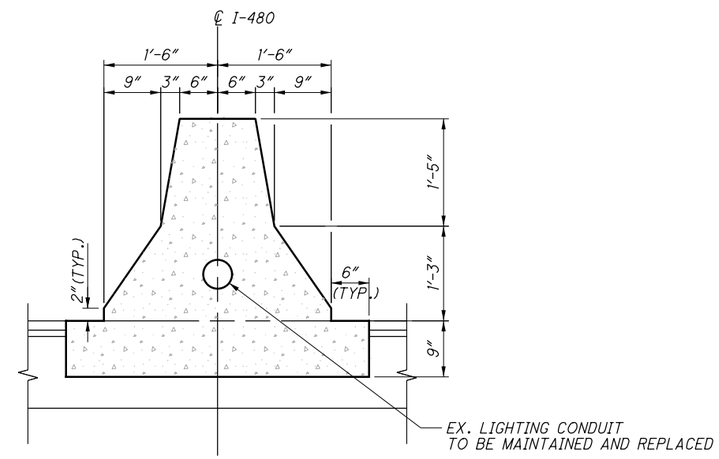

BARRIER MISC.: CONCRETE BARRIER, AS PER PLAN

STA. 64+14.56 TO STA. 64+24.56
STA. 66+80.06 TO STA. 66+90.06

CALCULATED ADT
CHECKED MEP

TYPICAL SECTIONS

CUY-480-25.03

G:\Cleveland\DCS\Projects\0\ODOT\60441780_GES16to17\Structures\Task 14\106690\Design\Roadway\Sheets\106690GY003.dgn - 2/23/2018 10:10:16 AM - david.buchanan

GENERAL

UTILITIES
LISTED BELOW ARE ALL UTILITIES LOCATED WITHIN THE PROJECT CONSTRUCTION LIMITS TOGETHER WITH THEIR RESPECTIVE OWNERS:

ODOT DISTRICT 12
ATTN: TONY TOTH, HIGHWAY MAINTENANCE TRAFFIC ENGINEER
5500 TRANSPORTATION BLVD.
GARFIELD HEIGHTS, OH 44125
PHONE: (216) 584-2220

THE ILLUMINATING COMPANY
11517 FRUITLAND CT.
CLEVELAND, OH 44102
PHONE: (800) 633-4766

ROUNDING
THE ROUNDING AT SLOPE BREAKPOINTS SHOWN ON THE TYPICAL SECTIONS APPLIES TO ALL CROSS-SECTIONS EVEN THOUGH OTHERWISE SHOWN.

CONSTRUCTION NOISE
ACTIVITIES AND LAND USE ADJACENT TO THIS PROJECT MAY BE AFFECTED BY CONSTRUCTION NOISE. IN ORDER TO MINIMIZE ANY ADVERSE CONSTRUCTION NOISE IMPACTS, DO NOT OPERATE POWER-OPERATED CONSTRUCTION-TYPE DEVICES BETWEEN THE HOURS OF 7PM AND 7AM. IN ADDITION, DO NOT OPERATE AT ANY TIME ANY DEVICE IN SUCH A MANNER THAT THE NOISE CREATED SUBSTANTIALLY EXCEEDS THE NOISE CUSTOMARILY AND NECESSARILY ATTENDANT TO THE REASONABLE AND EFFICIENT PERFORMANCE OF SUCH EQUIPMENT.

SURVEYING PARAMETERS
PRIMARY PROJECT CONTROL MONUMENTS GOVERN ALL POSITIONING ON ODOT PROJECTS. SEE THIS SHEET OF THE PLANS FOR A TABLE CONTAINING PROJECT CONTROL INFORMATION.

USE THE FOLLOWING PROJECT CONTROL, VERTICAL POSITIONING, AND HORIZONTAL POSITIONING PARAMETERS FOR ALL SURVEYING:

PROJECT CONTROL

POSITIONING METHOD: VRS
MONUMENT TYPE: CAPPED REBAR

VERTICAL POSITIONING

ORTHOMETRIC HEIGHT DATUM: NAVD 88
GEOID: 12B

HORIZONTAL POSITIONING

REFERENCE FRAME: NAD 83 (2011)
ELLIPSOID: GRS 80
MAP PROJECTION: LAMBERT CONFORMAL CONIC
COORDINATE SYSTEM: OHIO NORTH ZONE (3401)
COMBINED SCALE FACTOR: 0.99991300
ORIGIN OF COORDINATE
SYSTEM: 0,0

USE THE POSITIONING METHODS AND MONUMENT TYPE USED IN THE ORIGINAL SURVEY TO RESTORE ALL MONUMENTS RELATED TO PRIMARY PROJECT CONTROL THAT ARE DAMAGED OR DESTROYED BY CONSTRUCTION ACTIVITIES. RESTORE THE DAMAGED OR DESTROYED MONUMENTS IN ACCORDANCE WITH. CMS 623.

UNITS ARE IN U.S. SURVEY FEET.

WORK LIMITS
THE WORK LIMITS SHOWN ON THESE PLANS ARE FOR PHYSICAL CONSTRUCTION ONLY. PROVIDE THE INSTALLATION AND OPERATION OF ALL WORK ZONE TRAFFIC CONTROL AND WORK ZONE TRAFFIC CONTROL DEVICES REQUIRED BY THESE PLANS WHETHER INSIDE OR OUTSIDE THESE WORK LIMITS.

ALL WORK SHALL BE WITHIN EXISTING RIGHT-OF-WAY.

CLEARING AND GRUBBING
ALTHOUGH THERE ARE NO TREES OR STUMPS SPECIFICALLY MARKED FOR REMOVAL WITHIN THE LIMITS OF THE PROJECT, A LUMP SUM QUANTITY IS INCLUDED IN THE GENERAL SUMMARY FOR ITEM 201, CLEARING AND GRUBBING. ALL PROVISIONS AS SET FORTH IN THE SPECIFICATIONS UNDER THIS ITEM ARE INCLUDED IN THE LUMP SUM PRICE BID FOR ITEM 201, CLEARING AND GRUBBING.

ITEM 204 - PROOF ROLLING
THE FOLLOWING QUANTITY IS PROVIDED IN THE GENERAL SUMMARY TO ADDRESS LOCATIONS REQUIRING PROOF ROLLING.

ITEM 204 - PROOF ROLLING 1 HR

ROADWAY

CONNECTION BETWEEN EXISTING AND PROPOSED GUARDRAIL
WHEN IT IS NECESSARY TO SPLICE PROPOSED GUARDRAIL TO EXISTING GUARDRAIL, ONLY THE EXISTING GUARDRAIL SHALL BE CUT, DRILLED, OR PUNCHED. THE CONNECTION SHALL BE MADE USING A W-BEAM, BEAM SPLICE AS SHOWN IN AASHTO M 180-12, EXCEPT THE BEAM WASHERS ARE NOT TO BE USED. PAYMENT SHALL BE INCLUDED IN THE CONTRACT PRICE FOR THE RESPECTIVE GUARDRAIL ITEMS.

PAVING UNDER GUARDRAIL
THIS OPERATION SHALL INCLUDE PREPARATION OF THE GRADED SHOULDER USING 209, LINEAR GRADING, AS PER PLAN, AND PAVING UNDER THE GUARDRAIL USING 441 ASPHALT CONCRETE INTERMEDIATE COURSE, TYPE 1, (448), UNDER GUARDRAIL, AS PER PLAN.

ITEM 209, LINEAR GRADING, AS PER PLAN, SHALL CONSIST OF REMOVING EXISTING ASPHALT UNDER EXISTING GUARDRAIL, EXCAVATING TOPSOIL, AND PLACING GRANULAR MATERIAL.

ALL COLLECTED DEBRIS AND TOPSOIL, INCLUDING RHIZOMES, ROOTS AND OTHER VEGETATIVE PLANT MATERIAL SHALL BE REMOVED AND DISPOSED OF AS SPECIFIED IN 105.17.

THE REMOVED MATERIAL SHALL BE REPLACED WITH COMPACTABLE GRANULAR MATERIAL CONFORMING TO 703.16 PLACED TO GRADE AS DETAILED ON THE TYPICAL SECTION OR AS APPROVED BY THE ENGINEER.

ALL EQUIPMENT, MATERIALS AND LABOR REQUIRED TO PERFORM THE WORK OUTLINED ABOVE SHALL BE INCLUDED FOR PAYMENT UNDER ITEM 209, LINEAR GRADING, AS PER PLAN.

PAVING UNDER GUARDRAIL SHALL CONSIST OF PLACING ITEM 441 TO THE DEPTH SPECIFIED USING ONE OF THE FOLLOWING METHODS:

METHOD A:
1. SET GUARDRAIL POSTS
2. PLACE ITEM 441

PAVING UNDER GUARDRAIL (CONTINUED)
METHOD B:
1. PLACE ITEM 441
2. BORE ASPHALT AT POST LOCATIONS (MAY BE OMITTED IF STEEL POSTS ARE USED)
3. SET GUARDRAIL POSTS
4. PATCH AROUND POSTS. THE MATERIALS USED FOR PATCHING SHALL BE AN ASPHALT CONCRETE APPROVED BY THE ENGINEER. PATCHED AREAS SHALL BE COMPACTED USING EITHER HAND OR MECHANICAL METHODS. FINISHED SURFACES SHALL BE SMOOTH AND SLOPED TO DRAIN AWAY FROM THE POSTS.

ALL EQUIPMENT, MATERIALS AND LABOR REQUIRED TO PERFORM THE WORK OUTLINED ABOVE, WITH THE EXCEPTION OF SETTING GUARDRAIL POSTS, SHALL BE INCLUDED FOR PAYMENT UNDER ITEM 441, ASPHALT CONCRETE, INTERMEDIATE COURSE, TYPE 1, (448), UNDER GUARDRAIL, AS PER PLAN.

EARTHWORK
THE FOLLOWING ESTIMATED QUANTITIES HAVE BEEN INCLUDED FOR USE AS DIRECTED BY THE ENGINEER:

203, EXCAVATION	82 CY
203, EMBANKMENT	82 CY

PAVEMENT

PROFILE AND ALIGNMENT
PLACE THE PROPOSED PAVEMENT TO FOLLOW THE ALIGNMENT AND PROFILE OF THE EXISTING PAVEMENT. THE PROPOSED PAVEMENT SHALL MATCH THE EXISTING CROSS-SLOPE.

ITEM 442, ASPHALT CONCRETE SURFACE COURSE, 12.5MM, TYPE A (448), AS PER PLAN, PG 76-22M
THE COARSE VIRGIN AGGREGATE FOR THIS ITEM SHALL BE LIMITED TO A BLEND OF AIR COOLED BLAST FURNACE SLAG (ACBFS) OR TRAP ROCK FROM ONTARIO AND LIMESTONE. THE CONTRACTOR SHALL USE A MINIMUM 60% OF ACBFS OR TRAP ROCK FROM ONTARIO WITH LIMESTONE COMPRISING THE REMAINING PERCENTAGE. AT LEAST 50% OF FINE VIRGIN AGGREGATE FOR THIS ITEM SHALL BE LIMITED TO ACBFS OR TRAP ROCK FROM ONTARIO.

TABLE 442.02-2 APPLIES EXCEPT NO. 4 SIEVE REQUIREMENTS ARE 52 TO 60 TOTAL PERCENT PASSING. FOR THE NO. 4 SIEVE DO NOT EXCEED 63 IN PRODUCTION.

WHEN ACBFS IS USED FOR A FRACTION OF THE COARSE AGGREGATE, PROVIDE A TOTAL ASPHALT BINDER CONTENT GREATER THAN OR EQUAL TO 6.2 PERCENT. IF ACBFS MAKES UP 100% OF THE COARSE AGGREGATE, APPLY THE BINDER CONTENT REQUIREMENTS OF C&MS 442.

DRAINAGE

EXISTING UNDERDRAINS
PROVIDE UNOBSTRUCTED OUTLETS FOR ALL EXISTING UNDERDRAINS ENCOUNTERED DURING CONSTRUCTION.

PROVIDE AN OUTLET PER STANDARD CONSTRUCTION DRAWING DM-1.1 FOR ALL UNDERDRAINS THAT OUTLET TO A SLOPE.

UNDERDRAINS THAT CAN BE CONNECTED TO THE NEW OR EXISTING UNDERDRAINS AT THE END OF THE PROJECT LIMITS AS WELL AS ALL NECESSARY BENDS OR BRANCHES REQUIRED FOR CONNECTION ARE INCLUDED IN THE BASIS OF PAYMENT FOR UNCLASSIFIED PIPE UNDERDRAINS.

THE FOLLOWING ESTIMATED QUANTITIES HAVE BEEN INCLUDED IN THE GENERAL SUMMARY FOR THE WORK NOTED ABOVE:

601, TIED CONCRETE BLOCK MAT, TYPE 1	8 SY
611, 6" CONDUIT, TYPE F FOR UNDERDRAIN OUTLETS	40 FT
611, PRECAST REINFORCED CONCRETE OUTLET	4 EA
605, 6" UNCLASSIFIED PIPE UNDERDRAINS	40 FT

EROSION CONTROL

SEEDING AND MULCHING
THE FOLLOWING QUANTITIES ARE PROVIDED TO PROMOTE GROWTH AND CARE OF PERMANENT SEEDED AREAS:

659, SOIL ANALYSIS TEST	2 EA
659, TOPSOIL	175 CY
659, SEEDING AND MULCHING	1580 SY
659, REPAIR SEEDING AND MULCHING	79 SY
659, INTER-SEEDING	79 SY
659, COMMERCIAL FERTILIZER	0.22 TON
659, LIME	0.33 AC
659, WATER	9 MGAL

SEEDING AND MULCHING SHALL BE APPLIED TO ALL AREAS OF EXPOSED SOIL BETWEEN THE RIGHT-OF-WAY LINES, AND WITHIN THE CONSTRUCTION LIMITS FOR AREAS OUTSIDE THE RIGHT-OF-WAY LINES COVERED BY WORK AGREEMENT OR SLOPE EASEMENT. QUANTITY CALCULATIONS FOR SEEDING AND MULCHING ARE BASED ON THESE LIMITS.

INCIDENTAL

ITEM 619 - FIELD OFFICE, TYPE B, AS PER PLAN

A TYPE B FIELD OFFICE IS REQUIRED FOR THIS PROJECT. THE FOLLOWING REVISIONS TO EQUIPMENT SUPPLIED WITH THE TYPE B FIELD OFFICE, AS SPECIFIED IN TABLE 619.02-1, FIELD OFFICE, SHALL APPLY:

THE BROADBAND INTERNET CONNECTION MUST MEET A MINIMUM DOWNLOAD SPEED OF 10MB PER SECOND AND A MINIMUM UPLOAD SPEED OF 5MB PER SECOND.

CONTRACTOR SHALL FURNISH AND SET UP A WI-FI ROUTER MEETING THE REQUIREMENTS OF IEEE 802.11AC FOR THE EXCLUSIVE USE OF THE DEPARTMENT.

ALL OTHER FIELD OFFICE ITEMS SUPPLIED SHALL MEET THE REQUIREMENTS OF A TYPE B, FIELD OFFICE.

PROJECT CONTROL

SURVEY POINT NUMBER	REFERENCE ALIGNMENT	STATION	OFFSET	NORTHING	EASTING	ELEVATION	DESCRIPTION
1	℄ CONST. IR 480	65+03.70	63.19' RT.	639463.757	2238009.513	1050.36	CAPPED REBAR
2	℄ CONST. IR 480	65+24.35	247.05' RT.	639297.110	2237929.131	1047.53	CAPPED REBAR
3	℄ CONST. IR 480	66+04.11	54.13' RT.	639418.032	2238099.240	1049.20	MAG SPIKE

CALCULATED ADT
CHECKED MEP

GENERAL NOTES

CUY-480-25.03

G:\Cleveland\DCS\Projects\O\ODOT\60441780_GES16to17\Structures\Task 14\106690\Design\Roadway\Sheets\106690GN001.dgn - 2/23/2018 10:10:17 AM - david.buchanan

ITEM 614 - MAINTAINING TRAFFIC

THIS ITEM SHALL CONSIST OF MAINTAINING TRAFFIC ON I-480 AND BARTLETT ROAD IN ACCORDANCE WITH THE OHIO MANUAL OF UNIFORM TRAFFIC CONTROL DEVICES FOR STREETS AND HIGHWAYS (OMUTCD), CURRENT EDITION, LATEST REVISIONS, AND THE CONSTRUCTION AND MATERIAL SPECIFICATIONS (CMS) AND THE FOLLOWING:

1. A MINIMUM OF TWO (2) LANES, (1) 10' AND (1) 11' IN EACH DIRECTION SHALL BE MAINTAINED DURING CONSTRUCTION OF THIS WORK, HOWEVER, SINGLE LANE CLOSURE IS PERMITTED FOR A PERIOD OF TIME NOT TO EXCEED 30 DAYS FOR PHASE 2 AND 30 DAYS FOR PHASE 3. LIQUIDATED DAMAGES IN THE AMOUNT OF TEN THOUSAND DOLLARS ($10,000) PER DAY SHALL BE PAID BY THE CONTRACTOR FOR EVERY DAY OVER THE PERMITTED 30 DAYS FOR EACH PHASE UNLESS PERMITTED BY THE ENGINEER.

2. THE CONTRACTOR SHALL INFORM THE DISTRICT 12 OFFICE (216-584-2007) FOURTEEN (14) DAYS PRIOR TO THE BEGINNING OF WORK. THE CONTRACTOR SHALL NOTIFY THE ENGINEER AT LEAST EIGHTEEN (18) DAYS PRIOR TO IMPLEMENTATION OF ANY WORK ZONE RESTRICTIONS THAT WILL REDUCE THE WIDTH OF ANY LANE ON WHICH TRAFFIC WILL BE MAINTAINED DURING CONSTRUCTION.

3. ONLY DURING OFF PEAK PERIODS (I.E. ANY PERIOD OTHER THAN WEEKDAYS 6-8AM AND 2-6PM) SHALL THE CONTRACTOR INSTALL AND SUBSEQUENTLY RESET ALL TRAFFIC CONTROL WORK ZONE DEVICES NECESSARY FOR EACH CONSTRUCTION PHASE.

4. THE CONTRACTOR SHALL PROVIDE, ERECT AND MAINTAIN SIGNS AND SIGN SUPPORTS, AS DETAILED IN THE OHIO MANUAL OF UNIFORM TRAFFIC CONTROL DEVICES AND THESE PLANS.

5. SIGNS FURNISHED SHALL BE IN NEW OR LIKE NEW CONDITION. LIKE NEW SIGNS SHALL BE SUBJECT TO THE APPROVAL OF THE PROJECT ENGINEER. THE CONTRACTOR SHALL BE RESPONSIBLE AT ALL TIMES FOR PROVIDING AND MAINTAINING LIGHTS, SIGNS, AND BARRICADES FOR THE MAINTENANCE OF TRAFFIC AND SAFETY OF HIS/HER WORK AT THE LOCATIONS SHOWN ON THESE PLANS OR AS DIRECTED BY THE ENGINEER.

6. IF THE CONTRACTOR FAILS TO COMPLY WITH THE PROVISIONS FOR TRAFFIC CONTROL AS SET FORTH IN THESE PLANS AND PROVISIONS OF THE OMUTCD AND THE FAILURE RESULTS IN A CONDITION AT THE WORK SITE WHICH IS UNSAFE FOR TRAFFIC, THE ENGINEER SHALL SUSPEND WORK UNTIL THE CONTRACTOR COMPLIES WITH THE NECESSARY REQUIREMENTS.

METHOD OF PAYMENT

ALL WORK AND TRAFFIC CONTROL DEVICES SHALL BE IN ACCORDANCE WITH C&MS 614 AND OTHER APPLICABLE PORTIONS OF THE SPECIFICATIONS, AS WELL AS THE OHIO MANUAL OF UNIFORM TRAFFIC CONTROL DEVICES. PAYMENT FOR ALL LABOR, EQUIPMENT AND MATERIALS SHALL BE INCLUDED IN THE LUMP SUM CONTRACT PRICE FOR ITEM 614, MAINTAINING TRAFFIC, UNLESS SEPARATELY ITEMIZED IN THE PLAN.

ITEM 614 - MAINTAINING OF TRAFFIC (ROAD CLOSED SIGN)

THE CONTRACTOR SHALL PROVIDE, ERECT AND MAINTAIN STANDARD 48 X 30 INCH ROAD CLOSED SIGNS, SIGN SUPPORTS, BARRICADES AND LIGHTS, AS DETAILED IN SCD MT-101.60 AT THE FOLLOWING LOCATIONS DURING PERIODS IN WHICH THE AFFECTED ROADS ARE CLOSED TO TRAFFIC.

I-480 EASTBOUND ON RAMP JUST EAST OF NORTHFIELD ROAD (S.R. 8)

PAYMENT SHALL BE INCLUDED IN THE CONTRACT PRICE BID FOR ITEM 614-MAINTAINING TRAFFIC.

ITEM 614 - MAINTAINING OF TRAFFIC (NOTICE OF CLOSURE SIGN)

NOTICE OF CLOSURE SIGN (W20-H13), AS DETAILED BELOW, SHALL BE ERECTED BY THE CONTRACTOR 14 CALENDAR DAYS PRIOR TO THE SCHEDULED RAMP CLOSURE.

THE SIGNS SHALL BE ERECTED ON THE RIGHT-HAND SIDE OF THE ROAD/RAMP FACING TRAFFIC. THEY SHALL BE PLACED SO AS NOT TO INTERFERE WITH THE VISIBILITY OF ANY OTHER TRAFFIC CONTROL SIGNS. ON ROADWAYS, THEY SHOULD BE ERECTED AT OR NEAR THE POINT OF CLOSURE. THE SIGNS MAY BE ERECTED ANYWHERE ON RAMPS AS LONG AS THEY ARE VISIBLE TO THE MOTORISTS USING THE RAMP.

THE SIGN SHALL DISPLAY THE DATE OF THE CLOSURE IN MMM-DD FORMAT AND THE NUMBER OF DAYS OF THE CLOSURE. THE LAST LINE OF THE W20-H13 SIGN LISTS A PHONE NUMBER WHICH A MOTORIST MAY CALL FOR ADDITIONAL INFORMATION. THIS IS TO BE A SPECIFIC OFFICE WITHIN THE DISTRICT RATHER THAN THE GENERAL SWITCHBOARD NUMBER.

PAYMENT SHALL BE INCLUDED IN THE CONTRACT PRICE BID FOR ITEM 614-MAINTAINING TRAFFIC.

ITEM 622 - PORTABLE BARRIER, 50", AS PER PLAN

THIS WORK SHALL CONSIST OF FURNISHING, MAINTAINING, AND SUBSEQUENTLY REMOVING A 50-INCH PORTABLE BARRIER AT THE LOCATIONS SHOWN ON THE PLANS. FOR DETAILS, SEE SCD RM-4.1.

PORTABLE STEEL BARRIER IS AN APPROVED ALTERNATIVE TO PORTABLE CONCRETE BARRIER. FOR INFORMATION ON APPROVED VENDORS, SEE THE APPROVED PRODUCTS LIST MAINTAINED BY THE OFFICE OF ROADWAY ENGINEERING.

PORTABLE BARRIER, 32 INCHES HIGH WITH AN 18-INCH MINIMUM HEIGHT GLARE SCREEN MAY BE USED AT THE OPTION OF THE CONTRACTOR. THE GLARE SCREEN SHALL BE CONSTRUCTED USING ONE OF THE SCREENS PROVIDED ON THE APPROVED LIST, AVAILABLE ON THE OFFICE OF ROADWAY ENGINEERING WEBSITE.

PADDLE OR INTERMITTENT TYPE GLARE SCREENS SHALL BE DESIGNED USING A 20 DEGREE CUT-OFF ANGLE BASED ON TANGENT ALIGNMENT. THAT SPACING SHALL BE USED THROUGHOUT THE BARRIER LENGTH WITHOUT REGARD TO BARRIER CURVATURE.

THE GLARE SCREEN SYSTEM SHALL BE SECURELY FASTENED TO THE 32-INCH PORTABLE BARRIER USING THE HARDWARE AND PROCEDURES SPECIFIED BY THE MANUFACTURER.

FOR DIRECTIONS ON HOW TO INSTALL THE GLARE SCREEN AND THE BARRIER, SEE THE MANUFACTURER'S INSTRUCTIONS. FOR DETAIL SEE SCD MT-101.70.

PAYMENT SHALL INCLUDE ALL LABOR, MATERIAL, AND EQUIPMENT NECESSARY TO PERFORM THE WORK AND SHALL BE PAID FOR AT THE CONTRACT PRICE PER FOOT FOR ITEM 622, PORTABLE BARRIER, 50", AS PER PLAN.

WORK ZONE SPEED ZONES (WZSZs)

THE FOLLOWING WORK ZONE SPEED ZONE (WZSZ) SPEED LIMIT REVISION(S) HAVE BEEN APPROVED FOR USE ON THIS PROJECT WHEN WORK ZONE CONDITIONS AND FACTORS ARE MET AS DESCRIBED BELOW:

WZSZ REV. NUMBER	COUNTY & ROUTE	DIRECTION
1	CUYAHOGA I-480	EB AND WB

POTENTIAL WZSZ LOCATIONS SHALL HAVE AN ORIGINAL (PRE-CONSTRUCTION) POSTED SPEED LIMIT OF 55 MPH OR GREATER, A QUALIFYING WORK ZONE CONDITION OF AT LEAST 0.5 MILE IN LENGTH, AN EXPECTED WORK DURATION OF AT LEAST THREE HOURS, AND A WORK ZONE CONDITION IN PLACE THAT REDUCES THE EXISTING FUNCTIONALITY OF THE TRAVEL LANES OR SHOULDERS (I.E., LANE CLOSURE, LANE SHIFT, CROSSOVER, CONTRAFLOW AND/OR SHOULDER CLOSURE). THE LENGTH OF THE WORK ZONE CONDITION IS MEASURED FROM THE BEGINNING OF THE TAPER FOR THE SUBJECT WORK ZONE CONDITION IMPACTING THE TRAVEL LANES AND/OR SHOULDER TO THE END OF THE DOWNSTREAM TAPER, WHERE DRIVERS ARE RETURNED TO TYPICAL ALIGNMENT. AN EXPECTED WORK DURATION OF AT LEAST THREE HOURS IS REQUIRED TO BALANCE THE ADDITIONAL EXPOSURE CREATED BY INSTALLING AND REMOVING WZSZ SIGNING WITH THE TIME NEEDED TO COMPLETE THE WORK.

WORK ZONE SPEED ZONES (WZSZs) (CONT.)

IF THE WORK ZONE MEETS THESE MINIMUM CRITERIA, IT SHALL BE ANALYZED FURTHER USING TABLE 1 BELOW TO DETERMINE IF AND WHEN IT QUALIFIES FOR A SPEED LIMIT REDUCTION. DEPENDING ON THE ORIGINAL POSTED SPEED LIMIT, THE TYPE OF TEMPORARY TRAFFIC CONTROL USED, AND WHETHER OR NOT WORKERS ARE PRESENT, A WARRANTED WZSZ WILL VARY IN THE APPROVED SPEED LIMIT TO BE POSTED OVER TIME.

C&MS ITEM 614, PARAGRAPH 614.02(B), INDICATES THAT TWO DIRECTIONS OF A DIVIDED HIGHWAY ARE CONSIDERED SEPARATE HIGHWAY SECTIONS. THEREFORE, IF THE WORK ON A MULTI-LANE DIVIDED HIGHWAY IS LIMITED TO ONLY ONE DIRECTION, A SPEED LIMIT REDUCTION IN THE DIRECTION OF THE WORK DOES NOT AUTOMATICALLY CONSTITUTE A SPEED LIMIT REDUCTION IN THE OPPOSITE DIRECTION. EACH DIRECTION SHALL BE ANALYZED INDEPENDENTLY FROM EACH OTHER.

ALL WZSZS FLUCTUATE BETWEEN TWO APPROVED REDUCED SPEED LIMITS OR BETWEEN AN APPROVED REDUCED SPEED LIMIT AND THE ORIGINAL POSTED SPEED LIMIT. ONLY ONE OF TWO SIGNING STRATEGIES SHALL BE USED TO IMPLEMENT A WZSZ.

WZSZS USING DSL SIGN ASSEMBLIES SHALL BE IN ACCORDANCE WITH THIS NOTE, APPROVED LIST, SUPPLEMENTAL SPECIFICATIONS (SS) 808 AND 908, AND TRAFFIC SCD MT-104.10.

WHEN LOOKING UP THE WARRANTED WORK ZONE SPEED LIMITS, ALWAYS USE THE ORIGINAL, PRECONSTRUCTION, POSTED SPEED LIMIT. DO NOT USE A PRIOR OR CURRENT WORK ZONE SPEED LIMIT AS A LOOK UP VALUE IN THE TABLE. POSITIVE PROTECTION IS GENERALLY REGARDED AS PORTABLE BARRIER OR OTHER RIGID BARRIER IN USE ALONG THE WORK AREA WITHIN THE SUBJECT WARRANTED WORK ZONE CONDITION. WITHOUT POSITIVE PROTECTION IS GENERALLY REGARDED AS USING DRUMS, CONES, SHADOW VEHICLE, ETC., ALONG THE WORK AREA WITHIN THE SUBJECT WARRANTED WORK ZONE CONDITION. WORKERS ARE CONSIDERED AS BEING PRESENT WHEN ON-SITE, WORKING WITHIN THE SUBJECT WARRANTED WORK ZONE CONDITION. WHEN THE WORK ZONE CONDITION REDUCING THE EXISTING FUNCTIONALITY OF THE TRAVEL LANES OR SHOULDERS IS REMOVED, THE SPEED LIMIT DISPLAYED SHALL RETURN TO THE ORIGINAL POSTED SPEED LIMIT.

TABLE 1: WARRANTED WORK ZONE SPEED LIMITS (MPH) FOR WORK ZONES ON HIGH-SPEED (55 MPH OR GREATER) MULTI-LANE HIGHWAYS

	WITH POSITIVE PROTECTION		WITHOUT POSITIVE PROTECTION	
ORIGINAL POSTED SPEED LIMIT	WORKERS PRESENT	WORKERS NOT PRESENT	WORKERS PRESENT	WORKERS NOT PRESENT
70	60	65	55	65
65	55	60	50	60
60	55	60	50	60
55	50	55	45	55

THE ORIGINAL POSTED SPEED LIMIT FOR THIS PROJECT IS 60.

THE FOLLOWING ESTIMATED QUANTITY HAS BEEN CARRIED TO THE GENERAL SUMMARY.

ITEM 614, DIGITAL SPEED LIMIT (DSL) SIGN ASSEMBLY
8 SIGN MNTH
[ASSUMING 2 DSL SIGN ASSEMBLY(IES) FOR
4 MONTH(S)]

WORK ZONE INCREASED PENALTIES SIGN (R11-H5A)

R11-H5A-48 SIGNS SHALL BE FURNISHED, ERECTED, AND MAINTAINED IN GOOD CONDITION AND/OR REPLACED AS NECESSARY AND SUBSEQUENTLY REMOVED BY THE CONTRACTOR. SIGNS SHALL BE MOUNTED AT THE APPROPRIATE OFFSETS AND ELEVATIONS AS PRESCRIBED BY THE OHIO MANUAL OF UNIFORM TRAFFIC CONTROL DEVICES. THEY SHALL BE MAINTAINED ON SUPPORTS MEETING CURRENT SAFETY CRITERIA.

THE SIGNS MAY BE ERECTED OR UNCOVERED NO MORE THAN FOUR HOURS BEFORE THE ACTUAL START OF WORK. THE SIGNS SHALL BE REMOVED OR COVERED NO LATER THAN FOUR HOURS FOLLOWING RESTORATION OF ALL LANES TO TRAFFIC WITH NO RESTRICTIONS, OR SOONER AS DIRECTED BY THE ENGINEER. TEMPORARY SIGN COVERING AND UNCOVERING DUE TO TEMPORARY LANE RESTORATIONS SHALL BE GUIDED BY THE FOUR-HOUR LIMITATIONS STATED ABOVE. SUCH LANE RESTORATIONS SHOULD BE EXPECTED TO REMAIN IN EFFECT FOR 30 OR MORE CONSECUTIVE CALENDAR DAYS, SUCH AS DURING WINTER SHUT-DOWNS.

WORK ZONE INCREASED PENALTIES SIGN (R11-H5A) (CONT.)

(THE SIGNS ON THE MAINLINE SHALL BE DUAL MOUNTED UNLESS NOT PHYSICALLY POSSIBLE. THE FIRST SIGN SHALL BE PLACED BETWEEN THE ROAD WORK AHEAD (W20-1) SIGN AND THE NEXT SIGN IN THE SEQUENCE. SIGNS SHALL BE ERECTED ON EACH ENTRANCE RAMP AND EVERY 2 MILES THROUGH THE CONSTRUCTION WORK LIMITS. SIGNS ON THE MAINLINE SHALL BE R11-H5A-48. SIGNS USED ON THE RAMPS SHALL BE R11-H5A-24. R11-H5A-24 SIGNS MAY BE USED IN THE MEDIAN IN LIEU OF R11-H5A-48 SIGNS IF IT IS NOT PHYSICALLY POSSIBLE TO PROVIDE R11-H5A-48 SIGNS IN THE MEDIAN.)

THE R11-H5A-48 SIGNS SHALL BE MOUNTED ON 2 NO. 3 POSTS WHEN LOCATED WITHIN CLEAR ZONES.

THE CONTRACTOR MAY USE SIGNS AND SUPPORTS IN USED, BUT GOOD, CONDITION PROVIDED THE SIGNS MEET CURRENT ODOT SPECIFICATIONS. SIGN FACES SHALL BE RETROREFLECTORIZED WITH TYPE G SHEETING COMPLYING WITH THE REQUIREMENTS OF C&MS 730.19.

WORK ZONE INCREASED PENALTIES SIGNS AND SUPPORTS WILL BE MEASURED AS THE NUMBER OF SIGN INSTALLATIONS, INCLUDING THE SIGN AND NECESSARY SUPPORTS. IF A SIGN AND SUPPORT COMBINATION IS REMOVED AND REERECTED AT ANOTHER LOCATION AS DIRECTED BY THE ENGINEER, IT SHALL BE CONSIDERED ANOTHER UNIT.

PAYMENT FOR ACCEPTED QUANTITIES, COMPLETE, IN PLACE WILL BE MADE AT THE CONTRACT UNIT PRICE. PAYMENT SHALL BE FULL COMPENSATION FOR ALL MATERIALS, LABOR, INCIDENTALS AND EQUIPMENT FOR FURNISHING, ERECTING, MAINTAINING, COVERING DURING SUSPENSION OF WORK, AND REMOVAL OF THE SIGN AND SUPPORT.

ITEM 614, WORK ZONE INCREASED PENALTIES SIGN 4 EACH

WORK ZONE INCREASED PENALTIES SIGNS WILL BE PLACED AT THE FOLLOWING LOCATIONS:

SEE SCD MT-102.30 FOR LOCATIONS.

ITEM 614 - WORK ZONE IMPACT ATTENUATOR FOR 24" WIDE HAZARDS (UNIDIRECTIONAL OR BIDIRECTIONAL)

THIS ITEM SHALL CONSIST OF FURNISHING AND INSTALLING A NON-GATING IMPACT ATTENUATOR. FURNISH AN IMPACT ATTENUATOR FROM THE OFFICE OF ROADWAY ENGINEERING'S APPROVED LIST FOR WORK ZONE IMPACT ATTENUATORS, FROM THE ROADWAY STANDARDS APPROVED PRODUCTS WEB PAGE.

INSTALLATION SHALL BE AT THE LOCATIONS SPECIFIED IN THE PLANS IN ACCORDANCE WITH THE MANUFACTURER'S SPECIFICATIONS.

THE CONTRACTOR SHALL REPAIR OR REPLACE A DAMAGED UNIT WITHIN 24 HOURS OF A DAMAGING IMPACT.

WHEN BIDIRECTIONAL DESIGNS ARE SPECIFIED, THE CONTRACTOR SHALL SUPPLY APPROPRIATE TRANSITIONS.

WHEN GATING IMPACT ATTENUATORS ARE DESIRED, THE CONTRACTOR SHALL SUBMIT DOCUMENTATION TO THE ENGINEER FOR ACCEPTANCE.

THE COST FOR THE ADDITIONAL BARRIER REQUIRED FOR A GATING IMPACT ATTENUATOR SHALL BE INCLUDED IN THE COST OF THE GATING IMPACT ATTENUATOR.

PAYMENT FOR THE ABOVE WORK SHALL BE MADE AT THE CONTRACT BID PRICE PER EACH BID AND SHALL INCLUDE ALL LABOR, TOOLS, EQUIPMENT AND MATERIALS NECESSARY TO CONSTRUCT AND MAINTAIN A COMPLETE AND FUNCTIONAL IMPACT ATTENUATOR SYSTEM, INCLUDING ALL RELATED BACKUPS, TRANSITIONS, LEVELING PADS, HARDWARE AND GRADING, NOT SEPARATELY SPECIFIED, AS REQUIRED BY THE MANUFACTURER.

CALCULATED TKI
CHECKED JMB

MAINTENANCE OF TRAFFIC GENERAL NOTES

CUY-480-25.03

G:\Cleveland\DCS\Projects\O\ODOT\60441780_GES16to17\Structures\Task 14\106690\Design\MOT\Sheets\106690MN001.dgn - 4/3/2018 9:08:53 AM - William.Shea

ITEM 614 - PORTABLE CHANGEABLE MESSAGE SIGNS, AS PER PLAN

THE CONTRACTOR SHALL FURNISH, INSTALL, MAINTAIN AND REMOVE, WHEN NO LONGER NEEDED, A CHANGEABLE MESSAGE SIGN. THE SIGN SHALL BE OF A TYPE SHOWN ON A LIST OF APPROVED PCMS UNITS AVAILABLE ON THE OFFICE OF MATERIALS MANAGEMENT WEB PAGE. THE LIST CONTAINS CLASS A AND B UNITS WITH MINIMUM LEGIBILITY DISTANCES OF 800 FEET AND 650 FEET, RESPECTIVELY.

EACH SIGN SHALL BE TRAILER-MOUNTED AND EQUIPPED WITH A FUNCTIONAL DIMMING MECHANISM, TO DIM THE SIGN DURING DARKNESS, AND A TAMPER AND VANDAL PROOF ENCLOSURE. EACH SIGN SHALL BE PROVIDED WITH APPROPRIATE TRAINING AND OPERATION INSTRUCTIONS TO ENABLE ON-SITE PERSONNEL TO OPERATE AND TROUBLESHOOT THE UNIT. THE SIGN SHALL ALSO BE CAPABLE OF BEING POWERED BY AN ELECTRICAL SERVICE DROP FROM A LOCAL UTILITY COMPANY. THE PCMS SHALL BE DELINEATED IN ACCORDANCE WITH C&MS 614.03.

THE PROBABLE PCMS LOCATIONS AND WORK LIMITS FOR THOSE LOCATIONS ARE SHOWN ON SHEETS 12, 14, 15, 17, 20 OF THE PLAN. PLACEMENT, OPERATION, MAINTENANCE AND ALL ACTIVATION OF THE SIGNS BY THE CONTRACTOR SHALL BE AS DIRECTED BY THE ENGINEER. THE PCMS SHALL BE LOCATED IN A HIGHLY VISIBLE POSITION YET PROTECTED FROM TRAFFIC. THE CONTRACTOR SHALL, AT THE DIRECTION OF THE ENGINEER, RELOCATE THE PCMS TO IMPROVE VISIBILITY OR ACCOMMODATE CHANGED CONDITIONS. WHEN NOT IN USE, THE PCMS SHALL BE TURNED OFF. ADDITIONALLY, WHEN NOT IN USE FOR EXTENDED PERIODS OF TIME, THE PCMS SHALL BE TURNED AWAY FROM ALL TRAFFIC.

THE ENGINEER SHALL BE PROVIDED ACCESS TO EACH SIGN UNIT AND SHALL BE PROVIDED WITH APPROPRIATE TRAINING AND OPERATION INSTRUCTIONS TO ENABLE ODOT PERSONNEL TO OPERATE AND TROUBLESHOOT THE UNIT, AND TO REVISE SIGN MESSAGES, IF NECESSARY.

THE CONTRACTOR SHALL IMPLEMENT A SYSTEM WHEREBY CHANGEABLE MESSAGES WILL BE IMPLEMENTED WITHIN 4 HOURS FOLLOWING TELEPHONE NOTIFICATION FROM THE PROJECT ENGINEER TO A DESIGNATED PHONE.

ALL MESSAGES TO BE DISPLAYED ON THE SIGN WILL BE PROVIDED BY THE ENGINEER. A LIST OF ALL REQUIRED PRE-PROGRAMMED MESSAGES WILL BE GIVEN TO THE CONTRACTOR AT THE PROJECT PRECONSTRUCTION CONFERENCE. THE SIGN SHALL HAVE THE CAPABILITY TO STORE UP TO 99 MESSAGES. MESSAGE MEMORY OR PRE-PROGRAMMED DISPLAYS SHALL NOT BE LOST AS A RESULT OF POWER FAILURES TO THE ON-BOARD COMPUTER. THE SIGN LEGEND SHALL BE CAPABLE OF BEING CHANGED IN THE FIELD. THREE-LINE PRESENTATION FORMATS WITH UP TO SIX MESSAGE PHASES SHALL BE SUPPORTED. PCMS FORMAT SHALL PERMIT THE COMPLETE MESSAGE FOR EACH PHASE TO BE READ AT LEAST TWICE.

THE PCMS SHALL CONTAIN AN ACCURATE CLOCK AND PROGRAMMING LOGIC WHICH WILL ALLOW THE SIGN TO BE ACTIVATED, DEACTIVATED OR MESSAGES CHANGED AUTOMATICALLY AT DIFFERENT TIMES OF THE DAY FOR DIFFERENT DAYS OF THE WEEK.

THE PCMS SHALL CONTAIN A CELLULAR TELEPHONE DATA LINK WHICH WILL (IN ACTIVE CELLULAR PHONE AREAS) ALLOW REMOTE SIGN ACTIVATIOn, MESSAGE CHANGES, MESSAGE ADDITIONS AND REVISIONS TO TIME OF DAY PROGRAMS. THE SYSTEM SHALL ALSO PERMIT VERIFICATION OF CURRENT AND PROGRAMMED MESSAGES. ONE REMOTE DATA INPUT DEVICE (LAPTOP COMPUTER PLUS MODEM OR EQUIVALENT) SHALL BE FURNISHED FOR USE BY THE DISTRICT TRAFFIC ENGINEER, OR EQUIVALENT, AND SHALL BE INSURED AGAINST THEFT.THE PCMS UNIT SHALL BE MAINTAINED IN GOOD WORKING ORDER BY THE CONTRACTOR IN ACCORDANCE WITH THE PROVISIONS OF C&MS 614.07. THE CONTRACTOR SHALL, PRIOR TO ACTIVATING THE UNIT, MAKE ARRANGEMENTS, WITH AN AUTHORIZED SERVICE AGENT FOR THE PCMS, TO ASSURE PROMPT SERVICE IN THE EVENT OF FAILURE. ANY FAILURE SHALL NOT RESULT IN THE SIGN BEING OUT OF SERVICE FOR MORE THAN 12 HOURS, INCLUDING WEEKENDS. FAILURE TO COMPLY MAY RESULT IN AN ORDER TO STOP WORK AND OPEN ALL TRAFFIC LANES AND/OR IN THE DEPARTMENT TAKING APPROPRIATE ACTION TO SAFELY CONTROL TRAFFIC. THE ENTIRE COST TO CONTROL TRAFFIC, ACCRUED BY THE DEPARTMENT DUE TO THE CONTRACTOR'S NONCOMPLIANCE, WILL BE DEDUCTED FROM MONEYS DUE, OR TO BECOME DUE THE CONTRACTOR ON HIS CONTRACT.

THE CONTRACTOR SHALL BE RESPONSIBLE FOR 24-HOUR-PER-DAY OPERATION AND MAINTENANCE OF THESE SIGNS ON THE PROJECT FOR THE DURATION OF THE PHASES WHEN THE PLAN REQUIRES THEIR USE. THE SIGNS SHALL BE PLACED IN SERVICE 7 DAYS PRIOR TO THE BEGINNING OF CONSTRUCTION.

THE PORTABLE CHANGEABLE MESSAGE SIGNS SHALL HAVE A WEB BASED COMMUNICATION SYSTEM THAT WILL ALLOW THE CONTRACTOR OR ODOT TO CHANGE OR PROGRAM THE MESSAGE BOARD REMOTELY. THIS SYSTEM SHALL BE PASSWORD PROTECTED AND MAY BE OPERATED FROM A COMPUTER AND HAVE AN APPLICATION THAT CAN BE OPERATED FROM A CELL PHONE, ANDROID OR I PHONE. THE WEB BASED COMMUNICATION SYSTEM WILL SHOW THE LOCATION OF EACH MESSAGE BOARD ON A MAP AND WHAT MESSAGE IS BEING DISPLAYED.

ITEM 614 - PORTABLE CHANGEABLE MESSAGE SIGNS, AS PER PLAN (CONT.)

ALL CHARGES FOR THE WEB BASED COMMUNICATION SYSTEM WILL BE INCLUDED IN THE COST OF THIS ITEM, PORTABLE CHANGEABLE MESSAGE SIGN, AS PER PLAN.

PAYMENT FOR THE ABOVE DESCRIBED ITEM SHALL BE AT THE CONTRACT UNIT PRICE. PAYMENT SHALL INCLUDE ALL LABOR, MATERIALS, EQUIPMENT, FUELS, LUBRICATING OILS, SOFTWARE, HARDWARE AND INCIDENTALS TO PERFORM THE ABOVE DESCRIBED WORK.

ITEM 614, PORTABLE CHANGEABLE MESSAGE SIGN, AS PER PLAN

8 SIGN MONTH
ASSUMING 2 PCMS SIGN(S) FOR 4 MONTH(S)

DELINEATION OF PORTABLE AND PERMANENT BARRIER

BARRIER REFLECTORS AND OBJECT MARKERS SHALL BE INSTALLED ON ALL PORTABLE BARRIER (PB) USED FOR TRAFFIC CONTROL AND ON PERMANENT CONCRETE BARRIER (INCLUDING BRIDGE PARAPETS) LOCATED WITHIN 5 FEET OF THE EDGE OF THE ADJACENT TRAVEL LANE.

BARRIER REFLECTORS SHALL CONFORM TO C&MS 626, EXCEPT THAT THE SPACING SHALL BE AS PER TRAFFIC SCD MT-101.70. OBJECT MARKERS AND THEIR INSTALLATION SHALL CONFORM TO C&MS 614.03 AND SCD MT-101.70. WHEN THE PB CONTAINS GLARE SCREEN, ONE SET OF THREE VERTICAL STRIPES OF SHEETING SHALL BE CONSIDERED EQUIVALENT TO AN OBJECT MARKER, ONE-WAY.

INCREASED BARRIER DELINEATION, AS SPECIFIED HEREIN, SHALL BE INSTALLED ON ALL PB AND CONCRETE PERMANENT BARRIER LOCATED WITHIN 5 FEET OF THE EDGE OF THE TRAVELED LANE UNDER EITHER OF THE FOLLOWING CONDITIONS: ALONG TAPERS AND TRANSITION AREAS; OR ALONG CURVES (OUTSIDE ONLY) WITH DEGREE OF CURVATURE GREATER THAN OR EQUAL TO 3 DEGREES.

THE INCREASED BARRIER DELINEATION SHALL CONSIST OF EITHER DELINEATION PANELS OR THE TRIPLE STACKING OF WORK ZONE BARRIER REFLECTORS.

DELINEATION PANELS SHALL CONSIST OF PANELS OF DELINEATION, APPROXIMATELY 34 INCHES LONG AND 6 INCHES WIDE AND SHALL BE "CRIMPED." PANELS SHALL BE INSTALLED AND SPACED PER TRAFFIC SCD MT-101.70.

TRIPLE-STACKED BARRIER REFLECTORS SHALL CONSIST OF ALIGNING THREE BARRIER REFLECTORS VERTICALLY, AT LOCATIONS WHERE A SINGLE BARRIER REFLECTOR WOULD BE OTHERWISE ATTACHED. THERE SHALL BE NO OPEN SPACE BETWEEN THE ADJACENT BARRIER REFLECTORS. THE TRIPLE-STACKED BARRIER REFLECTORS SHALL CONFORM TO C&MS 626, EXCEPT THAT THEY SHALL BE SPACED AND ALIGNED PER TRAFFIC SCD MT-101.70.

THE FOLLOWING ESTIMATED QUANTITIES HAVE BEEN INCLUDED IN THE PLANS AND CARRIED TO THE GENERAL SUMMARY:

ITEM 614, BARRIER REFLECTOR, TYPE 1 (ONE-WAY)
74 EACH

ITEM 614, OBJECT MARKER, ONE-WAY 74 EACH

ITEM 614, INCREASED BARRIER DELINEATION
1379 FEET

PAYMENT SHALL BE FULL COMPENSATION FOR ALL MATERIAL, LABOR, INCIDENTALS AND EQUIPMENT NECESSARY FOR FURNISHING, INSTALLING, MAINTAINING AND REMOVING EACH OF THE ABOVE ITEMS.

ITEM 614 - LAW ENFORCEMENT OFFICER (WITH PATROL CAR) FOR ASSISTANCE DURING CONSTRUCTION OPERATIONS

USE OF LAW ENFORCEMENT OFFICERS (LEOS) BY CONTRACTORS OTHER THAN THE USES SPECIFIED BELOW WILL NOT BE PERMITTED AT PROJECT COST. LEOS SHOULD NOT BE USED WHERE THE OMUTCD INTENDS THAT FLAGGERS BE USED.

IN ADDITION TO THE REQUIREMENTS OF C&MS 614 AND THE OMUTCD, A UNIFORMED LEO WITH AN OFFICIAL PATROL CAR (CAR WITH TOP-MOUNTED EMERGENCY FLASHING LIGHTS AND COMPLETE MARKINGS OF THE APPROPRIATE LAW ENFORCEMENT AGENCY) SHALL BE PROVIDED FOR THE FOLLOWING TRAFFIC CONTROL TASKS:

> DURING THE ENTIRE ADVANCE PREPARATION AND CLOSURE SEQUENCE WHERE COMPLETE BLOCKAGE OF TRAFFIC IS REQUIRED.

> DURING A TRAFFIC SIGNAL INSTALLATION WHEN IMPACTING THE NORMAL FUNCTION OF THE SIGNAL OR THE FLOW OF TRAFFIC, OR WHEN TRAFFIC NEEDS TO BE DIRECTED THROUGH AN ENERGIZED TRAFFIC SIGNAL CONTRARY TO THE SIGNAL DISPLAY (E.G., DIRECTING MOTORISTS THROUGH A RED LIGHT).

ITEM 614 - LAW ENFORCEMENT OFFICER (WITH PATROL CAR) FOR ASSISTANCE DURING CONSTRUCTION OPERATIONS (CONT.)

IN ADDITION TO THE REQUIREMENT OF C&MS 614 AND THE OMUTCD, A UNIFORMED LEO WITH AN OFFICIAL PATROL CAR (CAR WITH TOP-MOUNTED EMERGENCY FLASHING LIGHTS AND COMPLETE MARKINGS OF THE APPROPRIATE LAW ENFORCEMENT AGENCY) SHOULD BE PROVIDED FOR THE FOLLOWING TRAFFIC CONTROL TASKS AS APPROVED BY THE ENGINEER:

> FOR LANE CLOSURES: DURING INITIAL SET-UP PERIODS, TEAR DOWN PERIODS, SUBSTANTIAL SHIFTS OF A CLOSURE POINT OR WHEN NEW LANE CLOSURE ARRANGEMENTS ARE INITIATED FOR LONG-TERM LANE CLOSURES/SHIFTS (FOR THE FIRST AND LAST DAY OF MAJOR CHANGES IN TRAFFIC CONTROL SETUP).

IN GENERAL, LEOS SHOULD BE POSITIONED IN ADVANCE OF AND ON THE SAME SIDE AS THE LANE RESTRICTION OR AT THE POINT OF ROAD CLOSURE, AND TO MANUALLY CONTROL TRAFFIC MOVEMENTS THROUGH SIGNALIZED INTERSECTIONS IN WORK ZONES.

LEOS SHOULD NOT FORGO THEIR TRAFFIC CONTROL RESPONSIBILITIES TO APPREHEND MOTORISTS FOR ROUTINE TRAFFIC VIOLATIONS. HOWEVER, IF A MOTORIST'S ACTIONS ARE CONSIDERED TO BE RECKLESS, THEN PURSUIT OF THE MOTORIST IS APPROPRIATE.

THE LEOS WORK AT THE DIRECTION OF THE CONTRACTOR. THE CONTRACTOR IS RESPONSIBLE FOR SECURING THE SERVICES OF THE LEOS WITH THE APPROPRIATE AGENCIES AND COMMUNICATING THE INTENTIONS OF THE PLANS WITH RESPECT TO DUTIES OF THE LEOS. THE ENGINEER SHALL HAVE FINAL CONTROL OVER THE LEOS' DUTIES AND PLACEMENT, AND WILL RESOLVE ANY ISSUES THAT MAY ARISE BETWEEN THE TWO PARTIES.

THE LEO SHALL REPORT IN TO THE CONTRACTOR PRIOR TO THE START OF THE SHIFT, IN ORDER TO RECEIVE INSTRUCTIONS REGARDING SPECIFIC WORK ASSIGNMENTS DURING HIS/HER SHIFT. THE LEO IS EXPECTED TO STAY AT THE PROJECT SITE FOR THE ENTIRE DURATION OF HIS/HER SHIFT. THE LEO SHALL REPORT TO THE CONTRACTOR AT THE END OF HIS/HER SHIFT. ONCE THE LEO HAS COMPLETED THE DUTIES DESCRIBED ABOVE AND STILL HAS TIME REMAINING ON HIS/HER SHIFT, THE LEO MAY BE ASKED TO PATROL THROUGH THE WORK ZONE (WITH FLASHING LIGHTS OFF) OR BE PLACED AT A LOCATION TO DETER MOTORISTS FROM SPEEDING. SHOULD IT BE NECESSARY TO LEAVE THE PROJECT SITE, THE LEO SHALL NOTIFY THE ENGINEER. THE CONTRACTOR SHALL PROVIDE THE LEO WITH A TWO-WAY COMMUNICATION DEVICE WHICH SHALL BE RETURNED TO THE CONTRACTOR AT THE END OF HIS/HER SHIFT.

LEOS (WITH PATROL CAR) REQUIRED BY THE TRAFFIC MAINTENANCE TASKS ABOVE SHALL BE PAID FOR ON A UNIT PRICE (HOURLY) BASIS UNDER ITEM 614, LAW ENFORCEMENT OFFICER (WITH PATROL CAR) FOR ASSISTANCE. THE FOLLOWING ESTIMATED QUANTITIES HAVE BEEN CARRIED TO THE GENERAL SUMMARY.

ITEM 614, LAW ENFORCEMENT OFFICER WITH PATROL CAR FOR ASSISTANCE
250 HOURS

THE HOURS PAID SHALL INCLUDE ANY MINIMUM SHOW-UP TIME REQUIRED BY THE LAW ENFORCEMENT AGENCY INVOLVED.

ANY ADDITIONAL COSTS (ADMINISTRATIVE OR OTHERWISE) INCURRED BY THE CONTRACTOR TO OBTAIN THE SERVICES OF AN LEO ARE INCLUDED WITH THE BID UNIT PRICE FOR ITEM 614, LAW ENFORCEMENT OFFICER WITH PATROL CAR FOR ASSISTANCE.

WORK ZONE QUEUE DETECTION WARNING SYSTEM, AS PER PLAN

THE CONTRACTOR SHALL FURNISH, INSTALL, AND MAINTAIN AN APPROVED WORK ZONE QUEUE DETECTION WARNING SYSTEM (WZQDWS) AS PER SUPPLEMENTAL SPECIFICATION 896.
THE PROBABLE INITIAL LOCATIONS OF THE WZQDWS DEVICES WILL BE FOR PHASES 2 AND 3 AND IN ADVANCE OF THE LANE CLOSURES.
IT IS EXPECTED THAT THESE LOCATIONS WILL VARY BASED ON PLANNED OR UNPLANNED PHASE AND TRAFFIC PATTERN CHANGES.
PLACEMENT, OPERATION, MAINTENANCE AND ALL ACTIVATION OF THE DEVICES BY THE CONTRACTOR SHALL BE DIRECTED BY THE ENGINEER.
THE FOLLOWING TRAFFIC SENSOR THRESHOLDS AND PORTABLE CHANGEABLE MESSAGE SIGNS (PCMS) MESSAGES SHALL BE USED:
GREATER THAN OR EQUAL TO 50 MPH USE FOUR CORNER FLASHING CAUTION MODE
BETWEEN 50 MPH AND 25 MPH TRAFFIC AHEAD XX MPH / SLOW DOWN
BELOW OR EQUAL TO 25 MPH TRAFFIC AHEAD XX MPH / PREPARE TO STOP

FOUR CORNER FLASHING CAUTION MODE SHALL CONSIST OF THE USE OF ONE ASTERISK IN EACH CORNER OF THE PCMS DISPLAY (4 TOTAL ASTERISKS).

WORK ZONE QUEUE DETECTION WARNING SYSTEM, AS PER PLAN (CONT.)

XX SHALL BE ROUNDED UP TO THE NEAREST MULTIPLE OF 5 MPH MINUS 1. OCCUPANCY MAY BE DIRECTED TO BE USED BASED ON CERTAIN TRAFFIC CONDITIONS AND SCENARIOS. ODOT WILL DIRECT THE CONTRACTOR OF THE THRESHOLDS TO BE USED FOR THOSE AREAS WHERE OCCUPANCY IS DIRECTED TO BE USED.
THE FOLLOWING ESTIMATED QUANTITY HAS BEEN CARRIED TO THE GENERAL SUMMARY.

ITEM 896, PORTABLE NON-INTRUSIVE TRAFFIC SENSOR, CLASS II

8 SIGN MONTH

ASSUMING 4 SENSOR(S) FOR 2 MONTH(S)

ITEM 896, PORTABLE CHANGEABLE MESSAGE SIGN, AS PER PLAN

4 SIGN MONTH

ASSUMING 2 PCMS SIGN(S) FOR 2 MONTH(S)

LED LIGHTS ON ADVANCE WARNING SIGNS, WATCH FOR STOPPED TRAFFIC

WATCH FOR STOPPED TRAFFIC SIGNS (48" DIAMOND) WILL BE PLACED BEFORE LANE CLOSURES BEGINS AT THE LOCATIONS LISTED BELOW. THESE SIGNS SHALL HAVE 8 BLINKING LED LIGHTS IN THE BORDER OF EACH SIGN. THEY SHALL CONFORM TO THE OHIO MANUAL OF UNIFORM TRAFFIC CONTROL DEVICES (OMUTCD) SECTION 2A.07. THE LED LIGHTS SHALL BE WHITE, YELLOW OR ORANGE, BUT MUST ALL BE THE SAME ON ALL SIGNS.

THE LED SHALL BE SOLAR POWERED WITH A BATTERY. THE SIGNS SHALL BE MOUNTED PER THE MANUFACTURES RECOMMENDATION AND THE OMUTCD. THE FLASHING LED LIGHTS WILL RUN CONTINUOUSLY WHEN THE SIGNS ARE UP.
APPROXIMATE LOCATIONS TO BE FINALIZED BY THE PROJECT ENGINEER.

1. DUAL MOUNT ON 480 EAST JUST WEST OF NORTHFIELD RD UNDERPASS. (PHASE 3)
2. DUAL MOUNT ON 480 WEST JUST EAST OF THE ROCKSIDE RD UNDERPASS. (PHASE 2)

ALL COSTS ASSOCIATED WITH THE 4 (FOUR) LED WATCH FOR STOPPED TRAFFIC SIGNS WITH LEDS SHALL BE INCLUDED IN THE COST OF ITEM 614, MAINTAINING TRAFFIC, LUMP SUM.

ITEM 618 - RUMBLE STRIPS, (ASPHALT CONCRETE), AS PER PLAN

WORK SHALL CONSIST OF THE FOLLOWING:

1. MILLING OF THE EXISTING SHOULDER RUMBLE STRIPS TO A MINIMUM DEPTH OF 1.5" AND A MINIMUM WIDTH OF 6.5" WIDER THAN THE EXISTING RUMBLE STRIPS, WITHIN THE LIMITS THAT CONFLICT WITH MOT TRAFFIC PATTERNS THROUGHOUT THE PROJECT.

2. APPLY A TACK COAT CONFORMING TO ITEM 407 TO THE BOTTOM AND SIDES OF THE MILLED AREAS.

3. FILL THE MILLED AREA WITH ITEM 442 - ASPHALT CONCRETE SURFACE COURSE, 12.5MM, TYPE A (448), PG76-22M. THE CONTRACTOR SHALL BE RESPONSIBLE FOR THE REPAIR OF ANY ITEM 442 FAILURES OR SEPARATIONS.

PAYMENT WILL BE MADE FOR THE NUMBER OF LINEAR FEET OF RUMBLE STRIP REMOVED AND FILLED AS MEASURED IN THE FIELD.

THE FOLLOWING QUANTITY HAS BEEN CARRIED TO THE GENERAL SUMMARY:

ITEM 618 RUMBLE STRIPS, (ASPHALT CONCRETE),
AS PER PLAN 6583 FT

CALCULATED TKI
CHECKED JMB

MAINTENANCE OF TRAFFIC GENERAL NOTES

CUY-480-25.03

G:\Cleveland\DCS\Projects\O\ODOT\60441780_GES16to17\Structures\Task 14\106690\Design\MOT\Sheets\106690MN002.dgn - 2/23/2018 10:10:20 AM - david.buchanan

NOTIFICATION OF TRAFFIC RESTRICTIONS

THROUGHOUT THE DURATION OF THE PROJECT, THE CONTRACTOR SHALL NOTIFY THE PROJECT ENGINEER IN WRITING OF ALL TRAFFIC RESTRICTIONS AND UPCOMING MAINTENANCE OF TRAFFIC CHANGES. THE CONTRACTOR SHALL ENSURE THE WRITTEN NOTIFICATION IS SUBMITTED IN A TIMELY MANNER TO ALLOW THE PROJECT ENGINEER TO MEET THE REQUIRED TIME FRAMES SET FORTH IN THE TABLE BELOW TO INFORM THE SPECIAL HAULING PERMITS SECTION (HAULING.PERMITS@DOT.OHIO.GOV) AND THE DISTRICT PUBLIC INFORMATION OFFICE (PIO). THIS NOTIFICATION SHALL BE RECEIVED BY THE PROJECT ENGINEER PRIOR TO THE PHYSICAL SETUP OF ANY APPLICABLE SIGNS OR MESSAGE BOARDS.

INFORMATION SHOULD INCLUDE, BUT IS NOT LIMITED TO, ALL CONSTRUCTION ACTIVITIES THAT IMPACT OR INTERFERE WITH TRAFFIC AND SHALL LIST THE SPECIFIC LOCATION, TYPE OF WORK, ROAD STATUS, DATE AND TIME OF RESTRICTION, DURATION OF RESTRICTION, NUMBER OF LANES MAINTAINED, NUMBER OF LANES CLOSED, MINIMUM VERTICAL CLEARANCE, MINIMUM WIDTH OF DRIVABLE PAVEMENT, DETOUR ROUTES, IF APPLICABLE, AND ANY OTHER INFORMATION REQUESTED BY THE PROJECT ENGINEER.

NOTIFICATION TIME TABLE

ITEM	DURATION OF CLOSURE	NOTICE DUE TO PERMITS & PIO
RAMP & ROAD CLOSURES	>=2 WEEKS	21 CALENDAR DAYS PRIOR TO CLOSURE
	>12 HOURS & <2 WEEKS	14 CALENDAR DAYS PRIOR TO CLOSURE
	<=12 HOURS	4 BUSINESS DAYS PRIOR TO CLOSURE
LANE CLOSURES & RESTRICTIONS	>=2 WEEKS	14 CALENDAR DAYS PRIOR TO CLOSURE
	<2 WEEKS	5 BUSINESS DAYS PRIOR TO CLOSURE
START OF CONSTRUCTION & TRAFFIC PATTERN CHANGES	N/A	14 CALENDAR DAYS PRIOR TO IMPLEMENTATION

ANY UNFORESEEN CONDITIONS NOT SPECIFIED IN THE PLANS REQUIRING TRAFFIC RESTRICTIONS SHALL ALSO BE REPORTED TO THE PROJECT ENGINEER USING THE NOTIFICATION TIME TABLE.

FINAL PAVEMENT MARKINGS

AFTER COMPLETION OF ALL CONSTRUCTION AND REMOVAL OF MAINTENANCE OF TRAFFIC ZONES, THE CONTRACTOR SHALL REPAINT THE WORK AREA AS PER SCD TC-72.20. THE FOLLOWING PAY ITEMS HAVE BEEN CARRIED TO THE GENERAL SUMMARY:

ITEM 646-EDGE LINE, 6"	1.89 MILE
ITEM 646-LANE LINE, 6"	0.94 MILE
ITEM 646-CHANNELIZING LINE, 12"	1310 FT
ITEM 646-DOTTED LINE, 6"	1243 FT

RAISED PAVEMENT MARKERS

THE CONTRACTOR SHALL REMOVE THE LANE LINE RPM'S FROM STA. 47+20 TO STA. 64+44.5, RT., STA. 66+60 TO STA. 72+15, RT., STA. 56+42 TO STA. 64+44.5, LT., AND STA. 66+60 TO STA. 83+55, LT., PRIOR TO CONSTRUCTION AND REPLACE THEM AFTER CONSTRUCTION IS COMPLETED AS PER STANDARD CONSTRUCTION DRAWING TC-65.11. THE FOLLOWING ESTIMATED QUANTITIES ARE TO BE USED FOR THIS WORK:

ITEM 621 - RPM.....42 EACH

ITEM 621 - RAISED PAVEMENT MARKER REMOVED.....42 EACH

ALL COSTS ASSOCIATED WITH THE REMOVAL AND REPLACEMENT OF THE RPM'S SHALL BE INCLUDED IN THE COST OF ITEM 614, MAINTAINING TRAFFIC, LUMP SUM.

MOT ESTIMATED QUANTITIES
GENERAL SUMMARY

ITEM NO.	EXTENSION	QUANTITY	UNIT	DESCRIPTION	SEE SHT.
614	11000	LUMP SUM	LS	MAINTAINING TRAFFIC	7
614	11110	250	HRS	LAW ENFORCEMENT OFFICER WITH PATROL CAR FOR ASSISTANCE	8
614	11630	1379	FEET	INCREASED BARRIER DELINEATION	8
614	12346	4	EACH	WORK ZONE IMPACT ATTENUATOR FOR 24" WIDE HAZARDS (UNIDIRECTIONAL)	7
614	12420	LUMP SUM	LS	DETOUR SIGNING	11
614	12484	4	EACH	WORK ZONE INCREASED PENALTIES SIGN	7
SPECIAL	61412760	2	EACH	FLASHING ARROW PANEL	
614	13310	74	EACH	BARRIER REFLECTOR, TYPE 1 (ONE-WAY)	8
614	13350	74	EACH	OBJECT MARKER (ONE-WAY)	8
614	18601	8	SNMT	PORTABLE CHANGEABLE MESSAGE SIGN, AS PER PLAN	8
614	18700	8	SNMT	DIGITAL SPEED LIMIT (DSL) SIGN ASSEMBLY	7
614	20560	0.57	MILE	WORK ZONE LANE LINE, CLASS III, 6", 642 PAINT	
614	22360	4.10	MILE	WORK ZONE EDGE LINE, CLASS III, 6", 642 PAINT	
614	23690	5018	FEET	WORK ZONE CHANNELIZING LINE, CLASS III, 12", 642 PAINT	
614	24610	2900	FEET	WORK ZONE DOTTED LINE, CLASS III, 642 PAINT	
618	40101	6583	FEET	RUMBLE STRIPS, (ASPHALT CONCRETE), AS PER PLAN	8
622	41011	2144	FEET	PORTABLE BARRIER, 50", AS PER PLAN	7
646	10010	1.89	MILE	EDGE LINE, 6"	9
646	10110	0.94	MILE	LANE LINE, 6"	9
646	10310	1310	FEET	CHANNELIZING LINE, 12"	9
646	20504	1243	FEET	DOTTED LINE, 6"	9
896	00012	8	SNMT	PORTABLE NON-INTRUSIVE TRAFFIC SENSOR, CLASS II	8
896	00021	4	SNMT	PORTABLE CHANGEABLE MESSAGE SIGN, AS PER PLAN	8

CALCULATED TKI
CHECKED JMB

MAINTENANCE OF TRAFFIC GENERAL NOTES

CUY-480-25.03

G:\Cleveland\DCS\Projects\O\ODOT\60441780_GES16to17\Structures\Task 14\106690\Design\MOT\Sheets\106690MN003.dgn - 2/23/2018 10:10:21 AM - david.buchanan

SUGGESTED SEQUENCE OF CONSTRUCTION		
PHASE/STAGE	CONSTRUCTION ACTIVITY	MAINTENANCE OF TRAFFIC
STAGE 1	NONE	CLOSE RAMP AND ESTABLISH DETOUR
PRE-PHASE 1	REMOVE RUMBLE STRIPS AND RPM'S WITHIN MOT SHIFTS	AS PER SCD MT-95.30
PHASE 1	CONSTRUCT ALL WORK ON INSIDE AREAS	SHIFT TRAFFIC TO OUTSIDE OF EASTBOUND AND WESTBOUND FREEWAY USING OUTSIDE LANE AND SHOULDER. MAINTAIN 2 LANES IN EACH DIRECTION. ESTABLISH AND MAINTAIN TRAFFIC AS PER SCD MT-102.10, MT-102.30 AND THIS PLAN.
PHASE 2	CONSTRUCT ALL WORK ON OUTSIDE AREA OF WESTBOUND STRUCTURE	SHIFT ONE LANE OF TRAFFIC TO THE INSIDE OF WESTBOUND FREEWAY USING EXISTING LANE AND SHOULDER. MAINTAIN EASTBOUND TRAFFIC AS PER PHASE 1. ESTABLISH AND MAINTAIN TRAFFIC AS PER SCD MT-95.40 AND THIS PLAN.
PHASE 3	CONSTRUCT ALL WORK ON OUTSIDE AREA OF EASTBOUND STRUCTURE. REPAINT WESTBOUND LANES AS PER SCD TC-72.20. INSTALL WESTBOUND RUMBLE STRIPS REMOVED IN PRE-PHASE 1.	SHIFT ONE LANE OF TRAFFIC TO THE INSIDE OF EASTBOUND FREEWAY USING EXISTING LANE AND SHOULDER. ESTABLISH AND MAINTAIN TRAFFIC AS PER SCD MT-95.40 AND THIS PLAN. INSTALL RUMBLE STRIPS AND REPAINT AS PER SCD MT-99.20.
STAGE 2	REPAINT EASTBOUND LANES AND CONSTRUCT RUMBLE STRIPS REMOVED IN PRE-PHASE 1 AS PER SCD TC-72.20	AS PER SCD MT-99.20

CALCULATED TKI
CHECKED JMB

MAINTENANCE OF TRAFFIC GENERAL NOTES

CUY-480-25.03

G:\Cleveland\DCS\Projects\O\ODOT\60441780_GES16to17\Structures\Task 14\106690\Design\MOT\Sheets\106690MN004.dgn - 2/23/2018 10:10:22 AM - david.buchanan

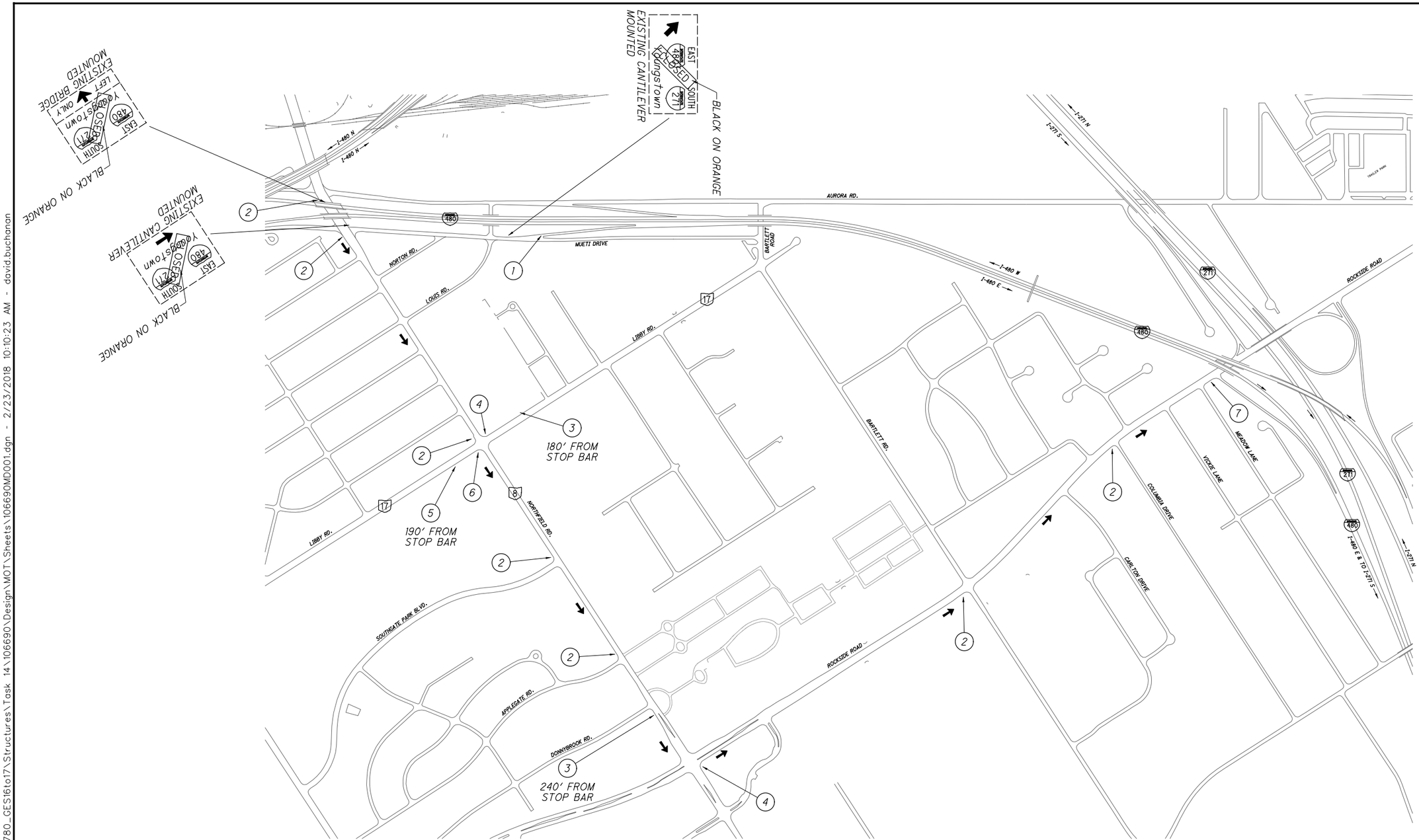

1
ROAD CLOSED
R11-2-48 MOUNTED ON A TYPE III BARRICADE

2
M4-8-24
DETOUR
EAST M3-2-24
INTERSTATE 480 M1-1-3-30
M6-3-21 GROUND MOUNTED

3
M4-8-24
DETOUR
EAST M3-2-24
INTERSTATE 480 M1-1-3-30
M5-1 L-21 GROUND MOUNTED

4
M4-8-24
DETOUR
EAST M3-2-24
INTERSTATE 480 M1-1-3-30
M6-1_L-21 GROUND MOUNTED

5
M4-8-24
DETOUR
EAST M3-2-24
INTERSTATE 480 M1-1-3-30
M5-1 R-21 GROUND MOUNTED

6
M4-8-24
DETOUR
EAST M3-2-24
INTERSTATE 480 M1-1-3-30
M6-1_R-21 GROUND MOUNTED

7
M4-8A-24
END DETOUR
EAST M3-2-24
INTERSTATE 480 M1-1-3-30
GROUND MOUNTED

NOTE:

ALL SIGNS SHOWN ON THIS SHEET TO BE PAID UNDER ITEM 614 - DETOUR SIGNING

0 200 400 800
HORIZONTAL SCALE IN FEET

CALCULATED TKI
CHECKED JMB

MAINTENANCE OF TRAFFIC DETOUR MAP

CUY-480-25.03

G:\Cleveland\DCS\Projects\O\ODOT\60441780_GES16to17\Structures\Task 14\106690\Design\MOT\Sheets\106690MD001.dgn - 2/23/2018 10:10:23 AM - david.buchanan

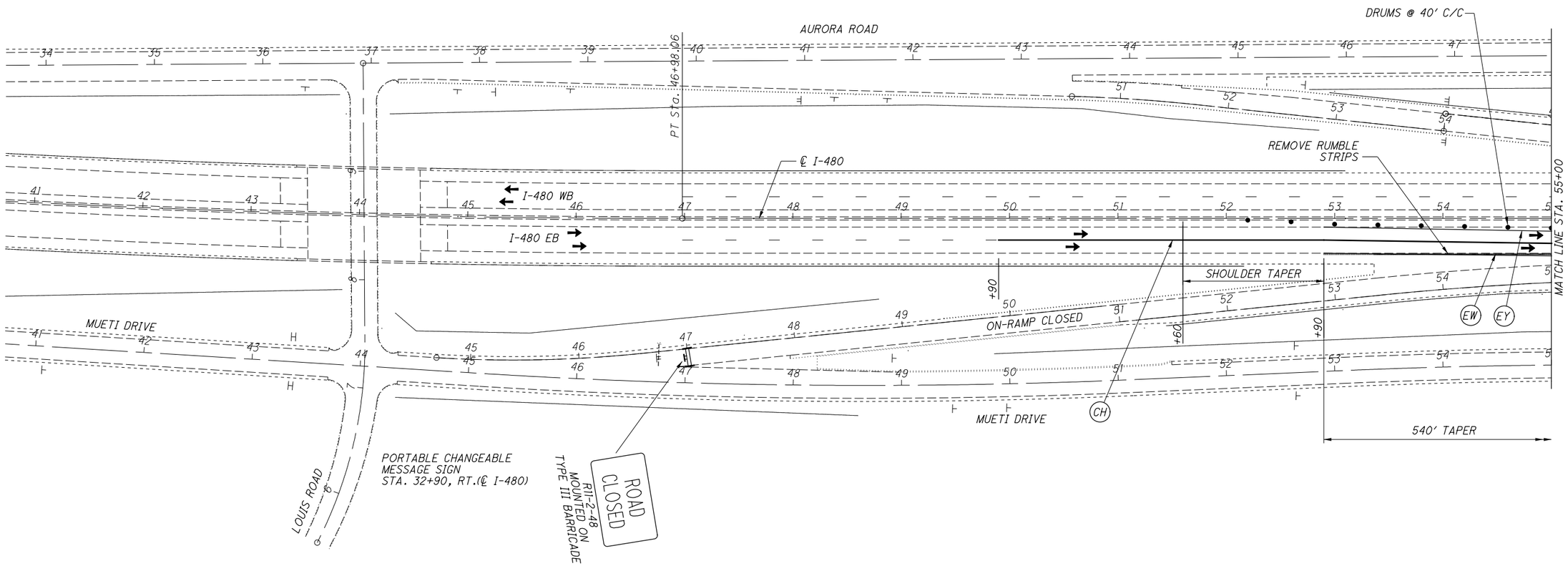

MOT SIGNING SHALL BE AS SHOWN ON SCD MT-102.10 AND MT-102.30 EXCEPT THAT THE R4-H5AL OR R4-5L SIGN SHALL BE REPLACED WITH A R4-5R SIGN. THE DIGITAL SPEED LIMIT (DSL) SIGN ASSEMBLY SHALL BE USED.

TRUCKS USE RIGHT LANE

R4-5R-48

LEGEND

- (EW) WORK ZONE EDGE LINE, CLASS III, 6" (WHITE)
- (EY) WORK ZONE EDGE LINE, CLASS III, 6" YELLOW)
- (CH) WORK ZONE CHANNELIZING LINE, CLASS III, 12"
- (DL) WORK ZONE DOTTED LINE, CLASS III
- (PB) PORTABLE BARRIER, 50"
- (IA) IMPACT ATTENUTOR

HORIZONTAL SCALE IN FEET 0 25 50 100

CALCULATED TKI CHECKED JMB

MAINTENANCE OF TRAFFIC PHASE 1

CUY-480-25.03

G:\Cleveland\DCS\Projects\O\ODOT\60441780_GES16to17\Structures\Task 14\106690\Design\MOT\Sheets\106690MP001.dgn - 2/23/2018 10:10:25 AM - david.buchanan

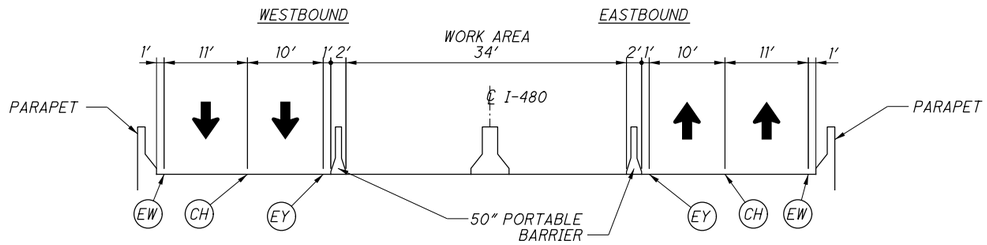

MOT TYPICAL PHASE 1

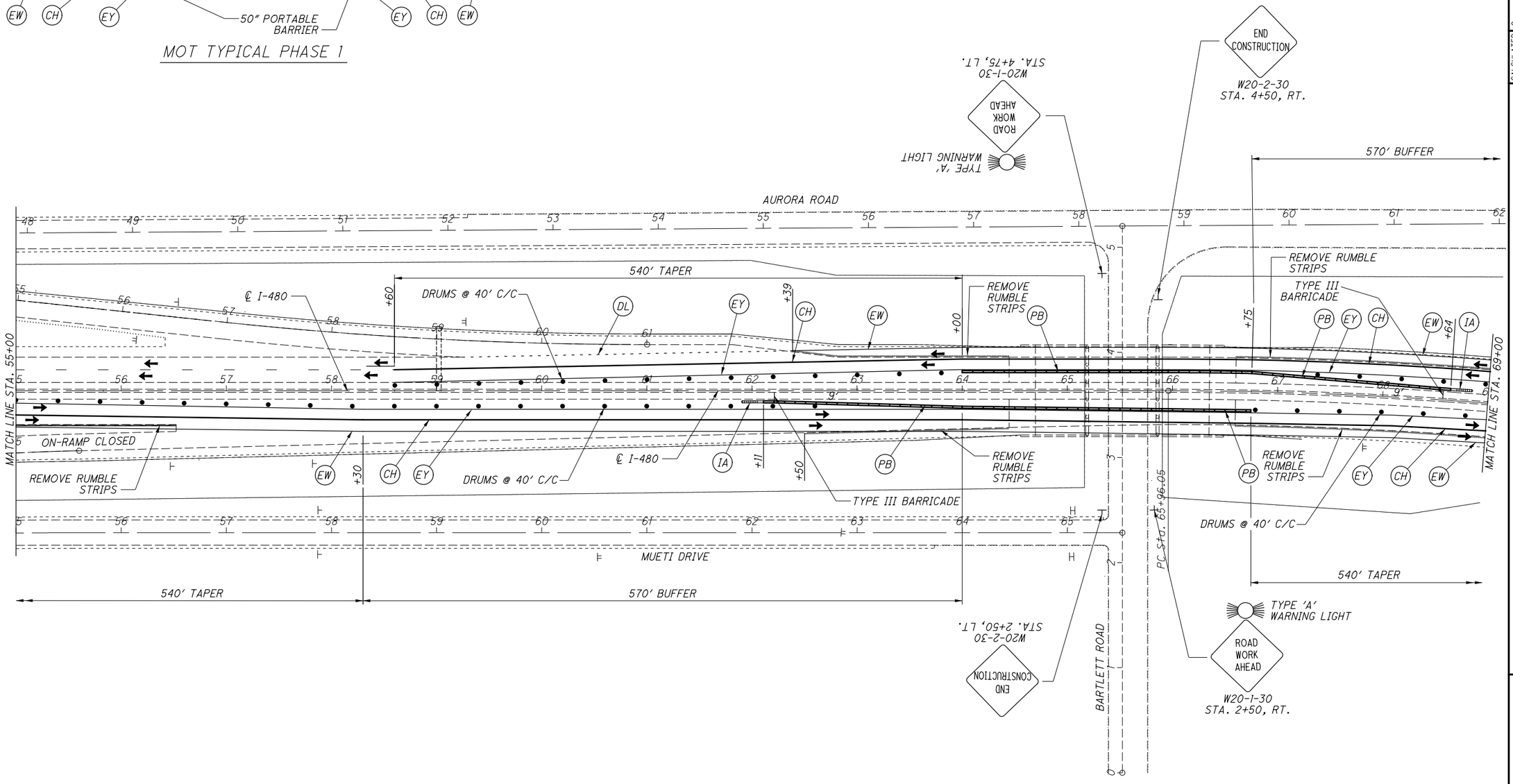

LEGEND

- (EW) WORK ZONE EDGE LINE, CLASS III, 6" (WHITE)
- (EY) WORK ZONE EDGE LINE, CLASS III, 6" YELLOW)
- (CH) WORK ZONE CHANNELIZING LINE, CLASS III, 12"
- (DL) WORK ZONE DOTTED LINE, CLASS III
- (PB) PORTABLE BARRIER, 50"
- (IA) IMPACT ATTENUTOR

HORIZONTAL SCALE IN FEET 0 25 50 100

CALCULATED TKI
CHECKED JMB

MAINTENANCE OF TRAFFIC PHASE 1

CUY-480-25.03

G:\Cleveland\DCS\Projects\O\ODOT\60441780_GES16to17\Structures\Task 14\106690\Design\MOT\Sheets\106690MP002.dgn - 2/23/2018 10:10:28 AM - david.buchanan

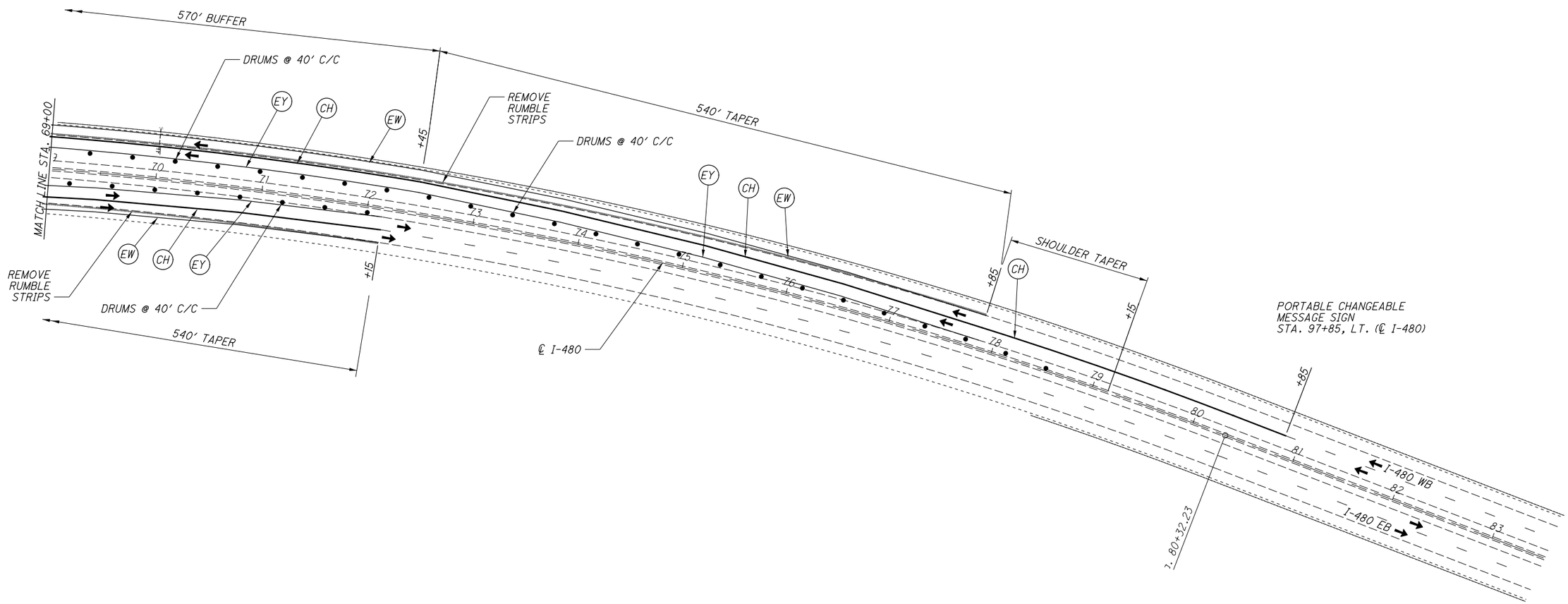

MOT SIGNING SHALL BE AS SHOWN ON SCD MT-102.10 AND MT-102.30 EXCEPT THAT THE R4-H5AL OR R4-5L SIGN SHALL BE REPLACED WITH A R4-5R SIGN. THE DIGITAL SPEED LIMIT (DSL) SIGN ASSEMBLY SHALL BE USED.

TRUCKS
USE
RIGHT
LANE

R4-5R-48

LEGEND

- (EW) WORK ZONE EDGE LINE, CLASS III, 6" (WHITE)
- (EY) WORK ZONE EDGE LINE, CLASS III, 6" YELLOW)
- (CH) WORK ZONE CHANNELIZING LINE, CLASS III, 12"
- (DL) WORK ZONE DOTTED LINE, CLASS III
- (PB) PORTABLE BARRIER, 50"

HORIZONTAL SCALE IN FEET
0 25 50 100

CALCULATED TKI
CHECKED JMB

MAINTENANCE OF TRAFFIC
PHASE 1

CUY-480-25.03

G:\Cleveland\DCS\Projects\O\ODOT\60441780_GES16to17\Structures\Task 14\106690\Design\MOT\Sheets\106690MP003.dgn - 2/23/2018 10:10:30 AM - david.buchanan

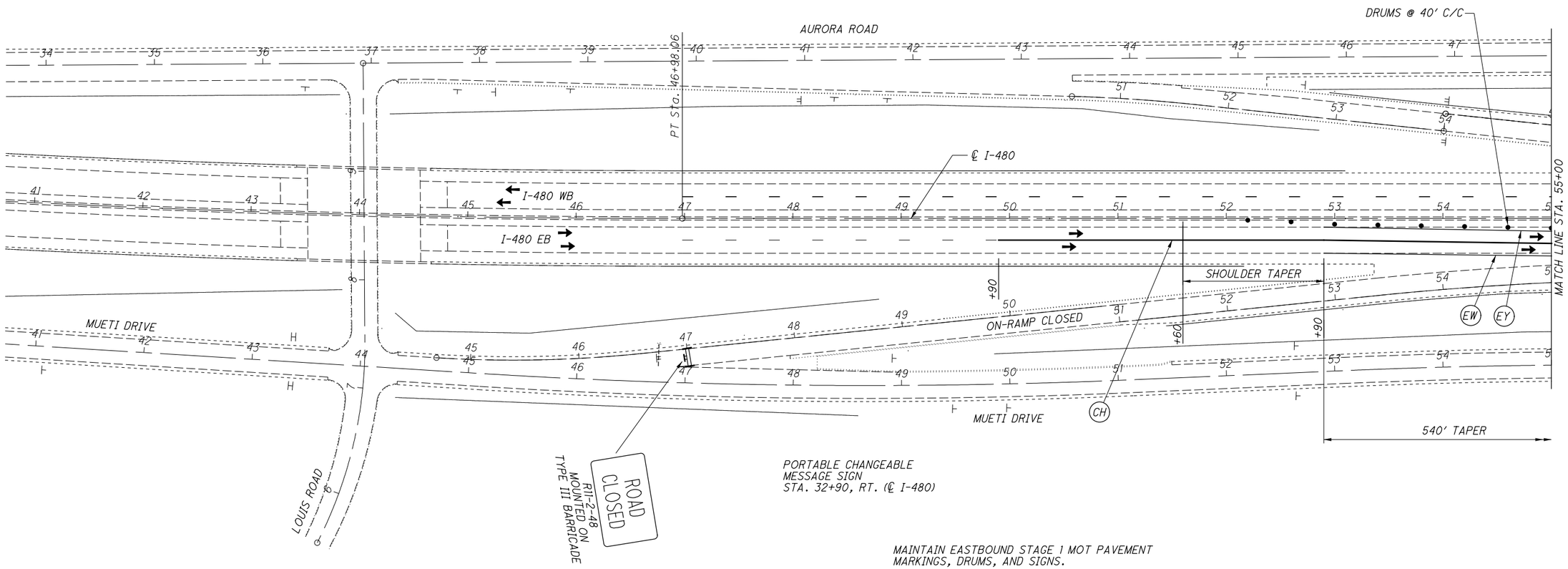

MAINTAIN EASTBOUND STAGE 1 MOT PAVEMENT MARKINGS, DRUMS, AND SIGNS.

MOT SIGNING SHALL BE AS SHOWN ON SCD MT-102.10 AND MT-102.30 EXCEPT THAT THE R4-H5AL OR R4-5L SIGN SHALL BE REPLACED WITH A R4-5R SIGN. THE DIGITAL SPEED LIMIT (DSL) SIGN ASSEMBLY SHALL BE USED.

TRUCKS USE RIGHT LANE

R4-5R-48

LEGEND

- (EW) WORK ZONE EDGE LINE, CLASS III, 6" (WHITE)
- (EY) WORK ZONE EDGE LINE, CLASS III, 6" YELLOW)
- (CH) WORK ZONE CHANNELIZING LINE, CLASS III, 12"
- (DL) WORK ZONE DOTTED LINE, CLASS III
- (PB) PORTABLE BARRIER, 50"
- (IA) IMPACT ATTENUTOR

HORIZONTAL SCALE IN FEET 0 25 50 100

CALCULATED TKI
CHECKED JMB

MAINTENANCE OF TRAFFIC PHASE 2

CUY-480-25.03

G:\Cleveland\DCS\Projects\O\ODOT\60441780_GES16to17\Structures\Task 14\106690\Design\MOT\Sheets\106690MP004.dgn - 2/23/2018 10:10:32 AM - david.buchanan

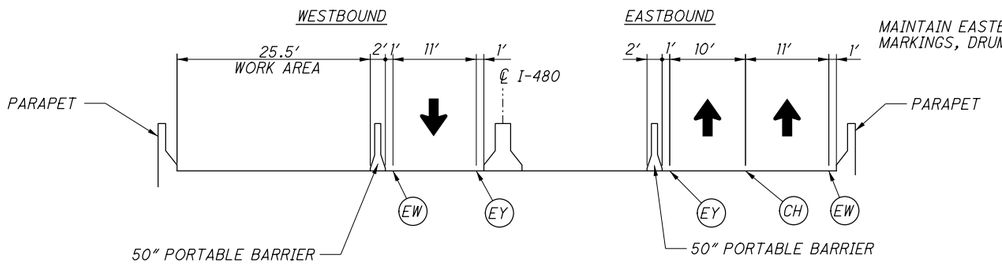

MAINTAIN EASTBOUND STAGE 1 MOT PAVEMENT MARKINGS, DRUMS, AND SIGNS.

MOT TYPICAL PHASE 2

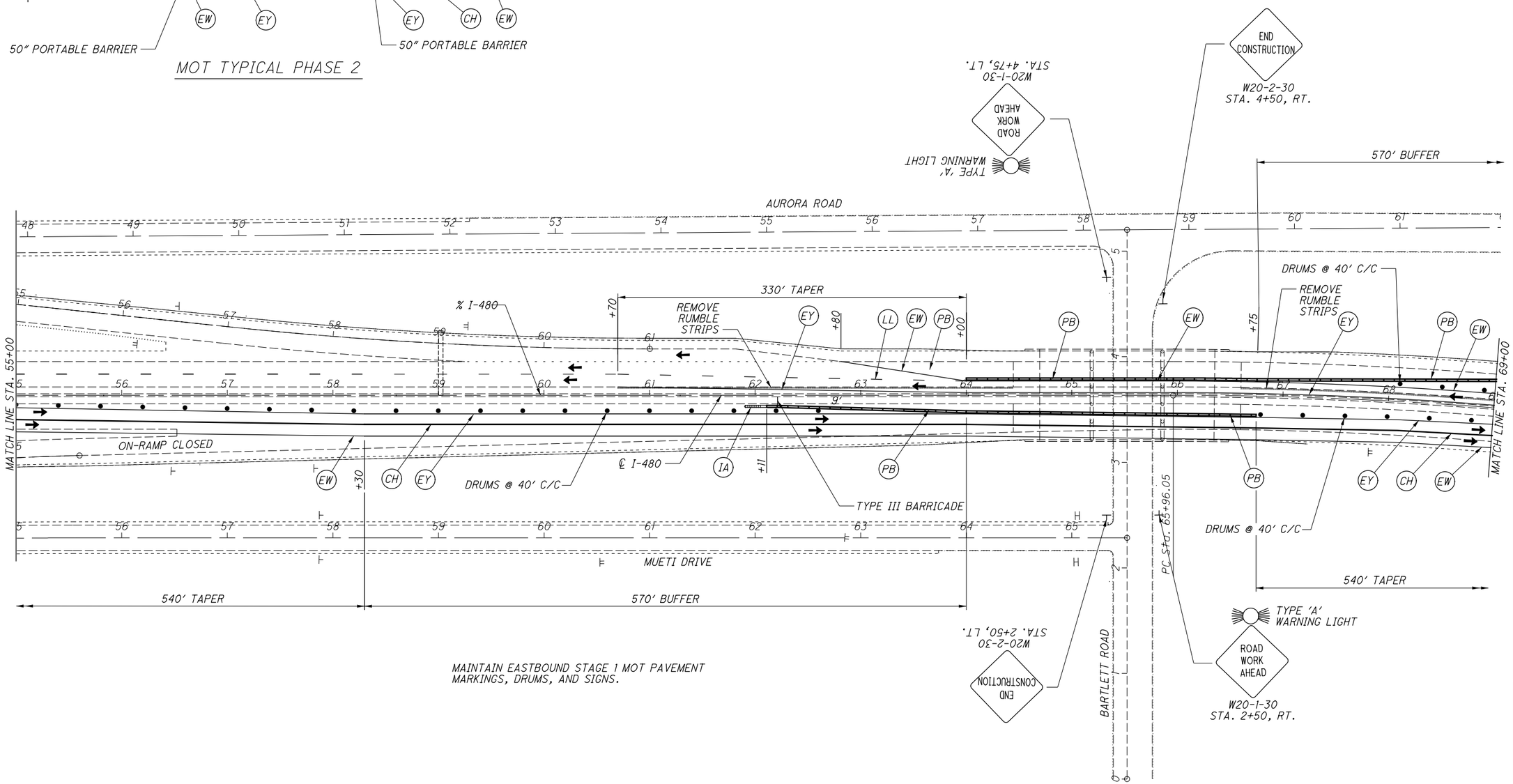

MAINTAIN EASTBOUND STAGE 1 MOT PAVEMENT MARKINGS, DRUMS, AND SIGNS.

LEGEND

- (EW) WORK ZONE EDGE LINE, CLASS III, 6″ (WHITE)
- (EY) WORK ZONE EDGE LINE, CLASS III, 6″ YELLOW)
- (LL) WORK ZONE LANE LINE, CLASS III, 6″
- (CH) WORK ZONE CHANNELIZING LINE, CLASS III, 12″
- (DL) WORK ZONE DOTTED LINE, CLASS III
- (PB) PORTABLE BARRIER, 50″
- (IA) IMPACT ATTENUTOR

HORIZONTAL SCALE IN FEET 0 25 50 100

CALCULATED TKI
CHECKED JMB

MAINTENANCE OF TRAFFIC PHASE 2

CUY-480-25.03

G:\Cleveland\DCS\Projects\O\ODOT\60441780_GES16to17\Structures\Task 14\106690\Design\MOT\Sheets\106690MP005.dgn - 2/23/2018 10:10:35 AM - david.buchanan

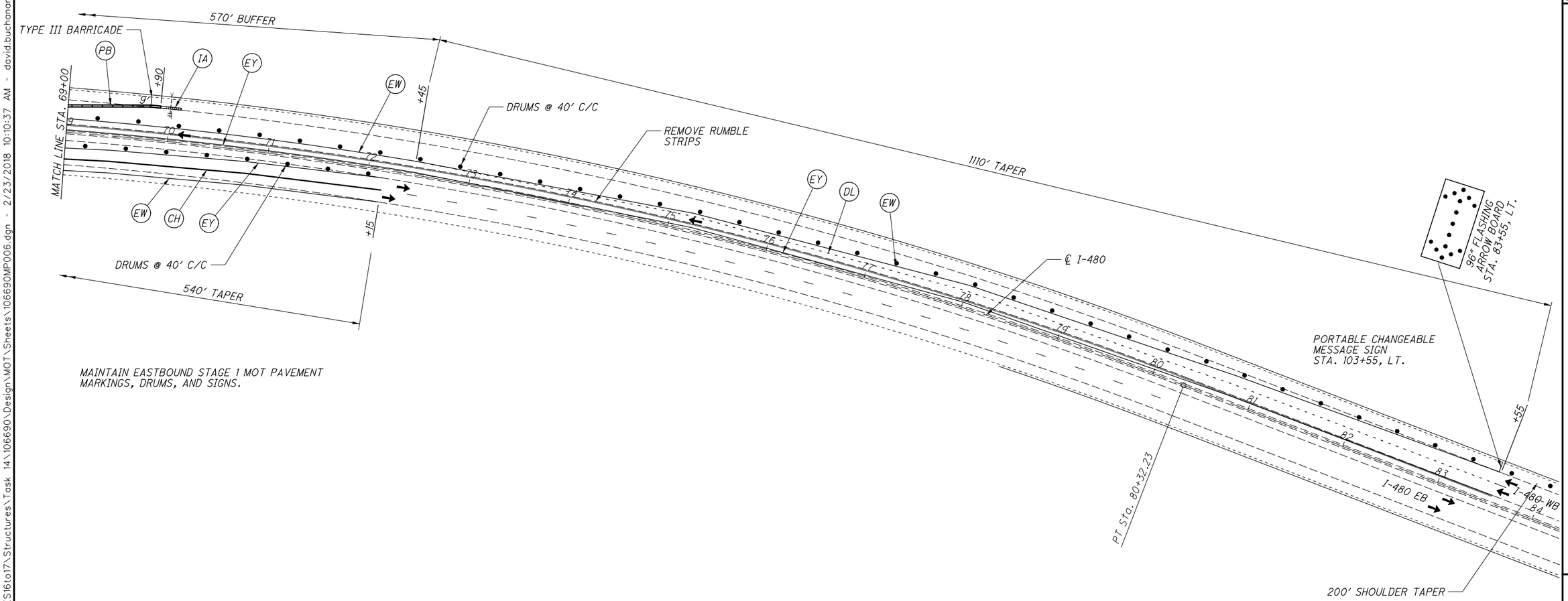

MAINTAIN EASTBOUND STAGE 1 MOT PAVEMENT MARKINGS, DRUMS, AND SIGNS.

MOT SIGNING SHALL BE AS SHOWN ON SCD MT-95.40 AND SHEETS 18-19

LEGEND

- (EW) WORK ZONE EDGE LINE, CLASS III, 6" (WHITE)
- (EY) WORK ZONE EDGE LINE, CLASS III, 6" YELLOW)
- (CH) WORK ZONE CHANNELIZING LINE, CLASS III, 12"
- (DL) WORK ZONE DOTTED LINE, CLASS III
- (PB) PORTABLE BARRIER, 50"
- (IA) IMPACT ATTENUATOR

HORIZONTAL SCALE IN FEET 0 25 50 100

CALCULATED TKI
CHECKED JMB

MAINTENANCE OF TRAFFIC PHASE 2

CUY-480-25.03

G:\Cleveland\DCS\Projects\O\ODOT\60441780_GES16to17\Structures\Task 14\106690\Design\MOT\Sheets\106690MP006.dgn - 2/23/2018 10:10:37 AM - david.buchanan

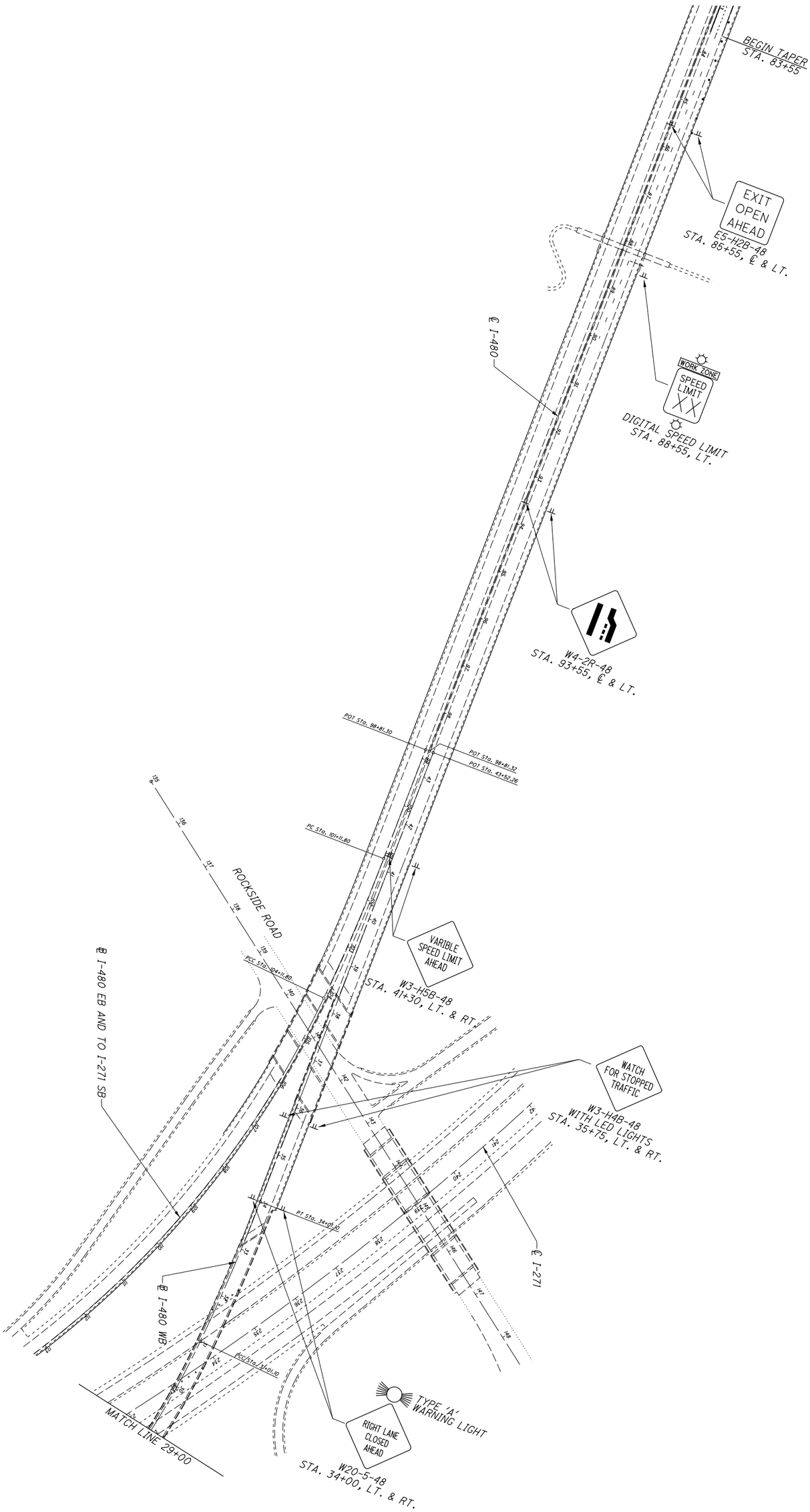

96 / 18	CUY-480-25.03	MAINTENANCE OF TRAFFIC PHASE 2 WESTBOUND LEAD-IN SIGNS	CALCULATED TKI CHECKED JMB	0 50 100 200 HORIZONTAL SCALE IN FEET

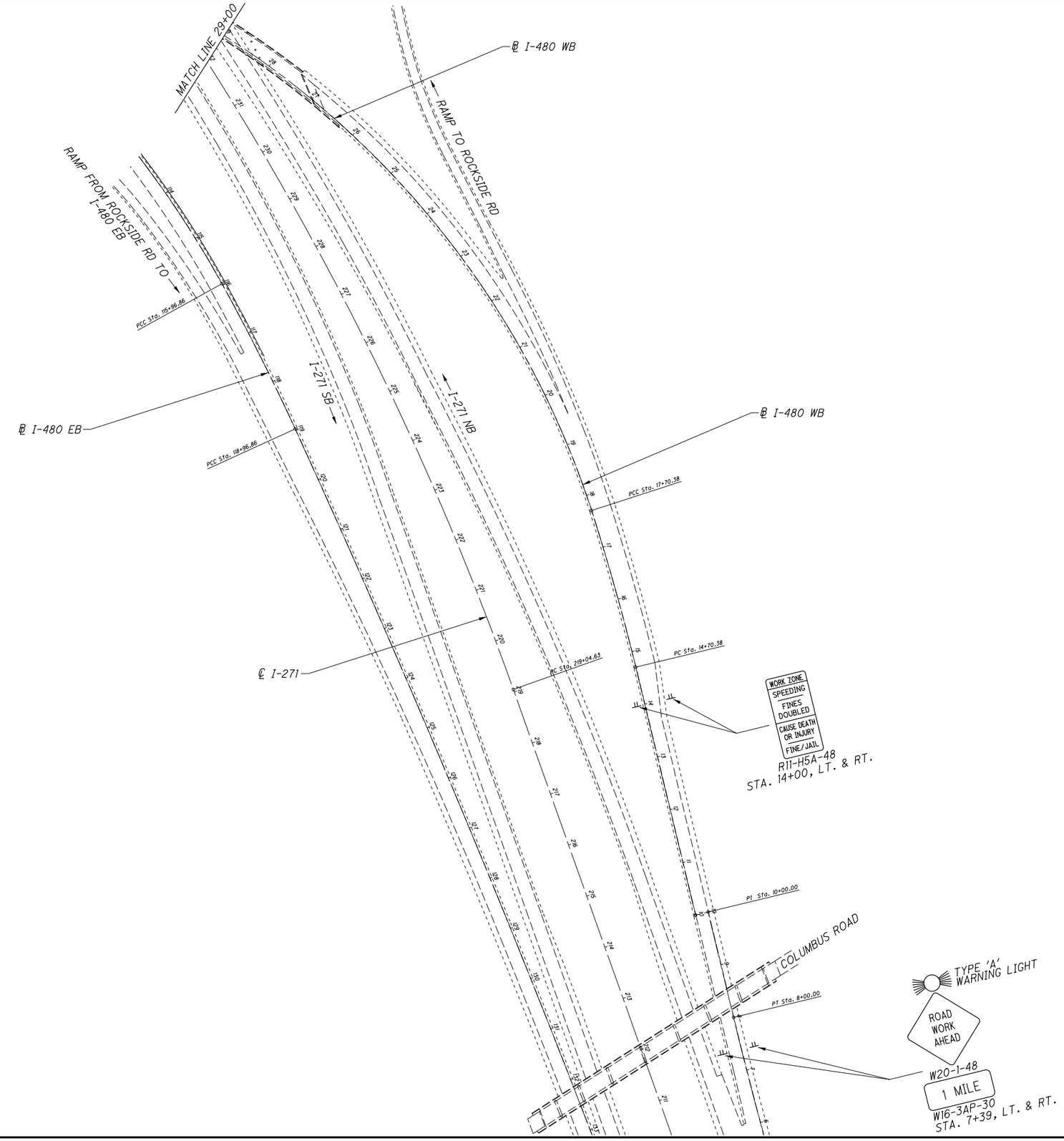

0 50 100 200
HORIZONTAL
SCALE IN FEET

CALCULATED TKI
CHECKED JMB

MAINTENANCE OF TRAFFIC
PHASE 2 WESTBOUND LEAD-IN SIGNS

CUY-480-25.03

G:\Cleveland\DCS\Projects\O\ODOT\60441780_GES16to17\Structures\Task 14\106690\Design\MOT\Sheets\106690MP006B.dgn - 2/23/2018 10:10:42 AM - david.buchanan

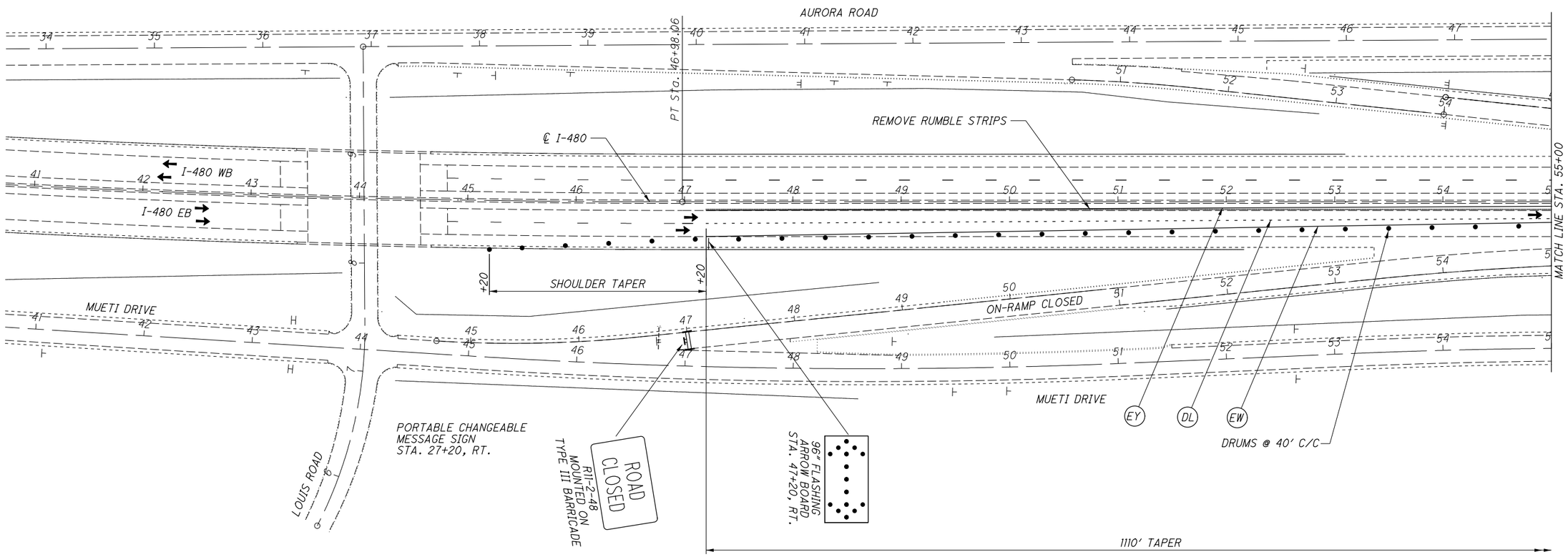

MOT SIGNING SHALL BE AS SHOWN ON SCD MT-95.40 AND SHEETS 23-24

LEGEND

- (EW) WORK ZONE EDGE LINE, CLASS III, 6" (WHITE)
- (EY) WORK ZONE EDGE LINE, CLASS III, 6" YELLOW)
- (CH) WORK ZONE CHANNELIZING LINE, CLASS III, 12"
- (DL) WORK ZONE DOTTED LINE, CLASS III
- (PB) PORTABLE BARRIER, 50"
- (IA) IMPACT ATTENUTOR

N

0 25 50 100
HORIZONTAL SCALE IN FEET

CALCULATED TKI
CHECKED JMB

MAINTENANCE OF TRAFFIC PHASE 3

CUY-480-25.03

G:\Cleveland\DCS\Projects\O\ODOT\60441780_GES16to17\Structures\Task 14\106690\Design\MOT\Sheets\106690MP007.dgn - 2/23/2018 10:10:44 AM - david.buchanan

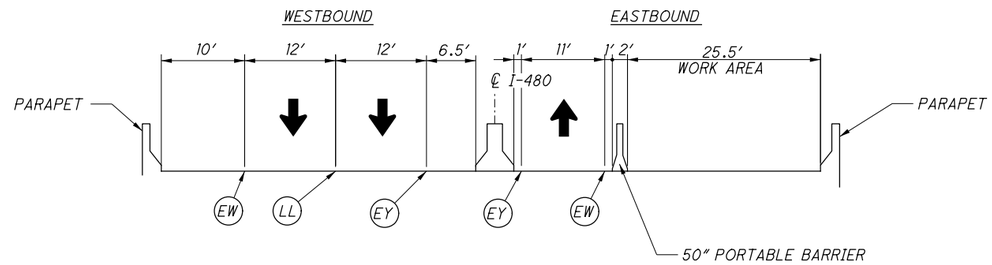

MOT TYPICAL PHASE 3

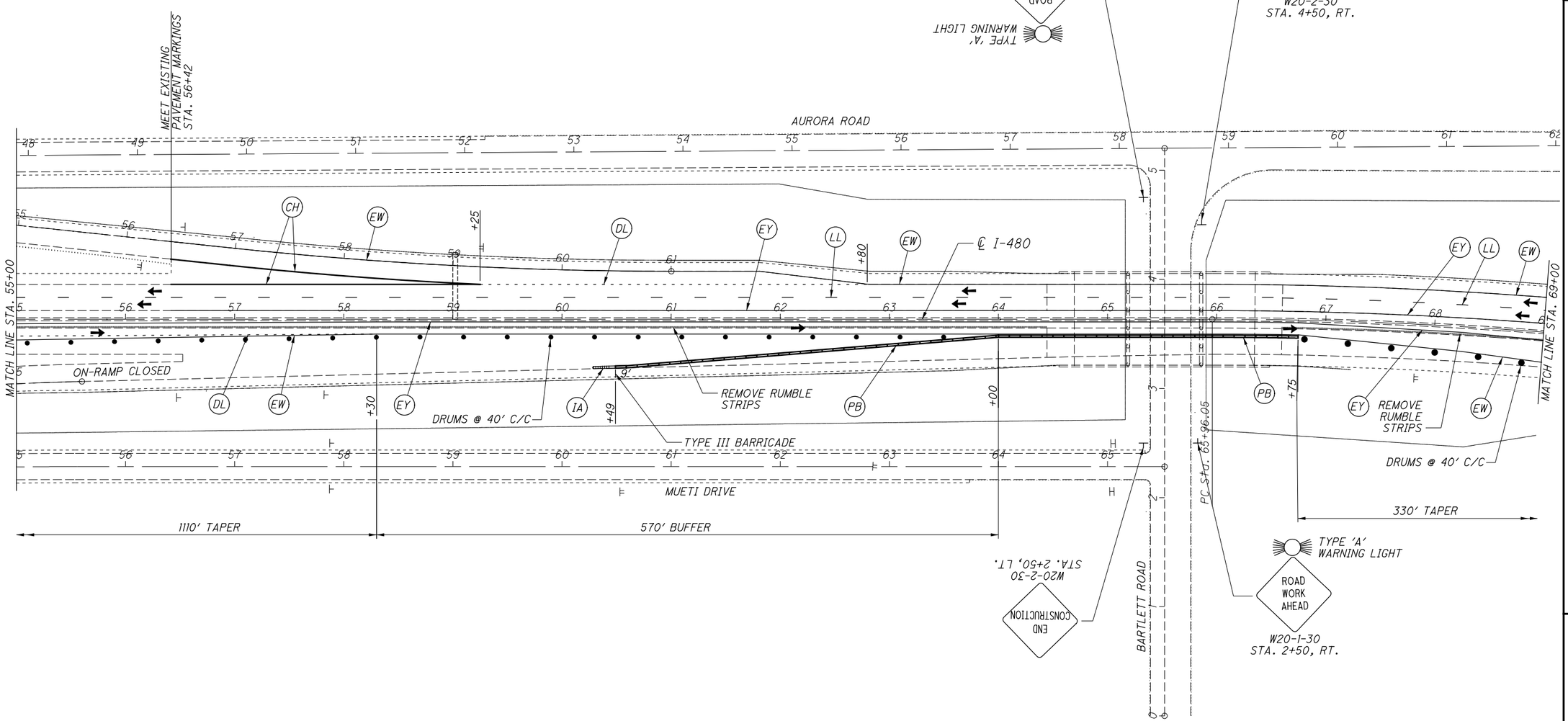

LEGEND

- (EW) WORK ZONE EDGE LINE, CLASS III, 6" (WHITE)
- (EY) WORK ZONE EDGE LINE, CLASS III, 6" YELLOW)
- (CH) WORK ZONE CHANNELIZING LINE, CLASS III, 12"
- (DL) WORK ZONE DOTTED LINE, CLASS III
- (PB) PORTABLE BARRIER, 50"
- (IA) IMPACT ATTENUTOR
- (LL) LANE LINE, 6"

HORIZONTAL SCALE IN FEET 0 25 50 100

CALCULATED TKI
CHECKED JMB

MAINTENANCE OF TRAFFIC PHASE 3

CUY-480-25.03

G:\Cleveland\DCS\Projects\O\ODOT\60441780_GES16to17\Structures\Task 14\106690\Design\MOT\Sheets\106690MP008.dgn - 2/23/2018 10:10:46 AM - david.buchanan

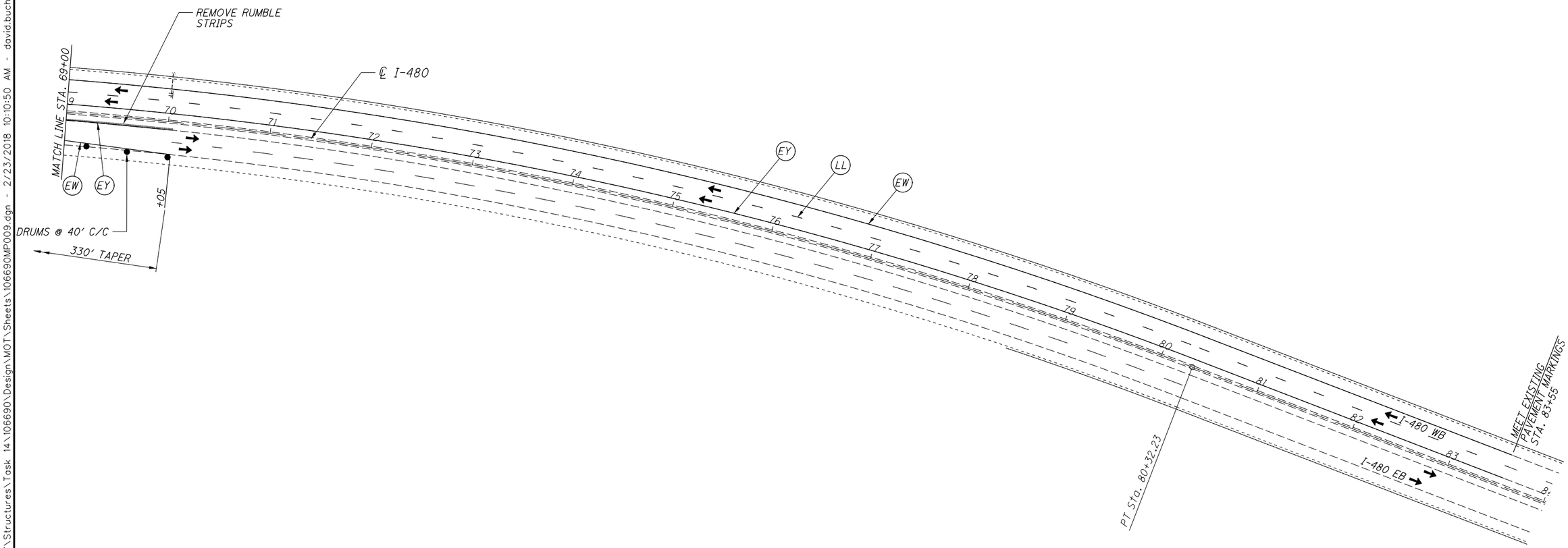

LEGEND

- (EW) WORK ZONE EDGE LINE, CLASS III, 6" (WHITE)
- (EY) WORK ZONE EDGE LINE, CLASS III, 6" YELLOW)
- (CH) WORK ZONE CHANNELIZING LINE, CLASS III, 12"
- (DL) WORK ZONE DOTTED LINE, CLASS III
- (PB) PORTABLE BARRIER, 50"
- (IA) IMPACT ATTENUTOR
- (LL) LANE LINE, 6"

HORIZONTAL SCALE IN FEET
0 25 50 100

CALCULATED TKI
CHECKED JMB

MAINTENANCE OF TRAFFIC PHASE 3

CUY-480-25.03

G:\Cleveland\DCS\Projects\O\ODOT\60441780_GES16to17\Structures\Task 14\106690\Design\MOT\Sheets\106690MP009.dgn - 2/23/2018 10:10:50 AM - david.buchanan

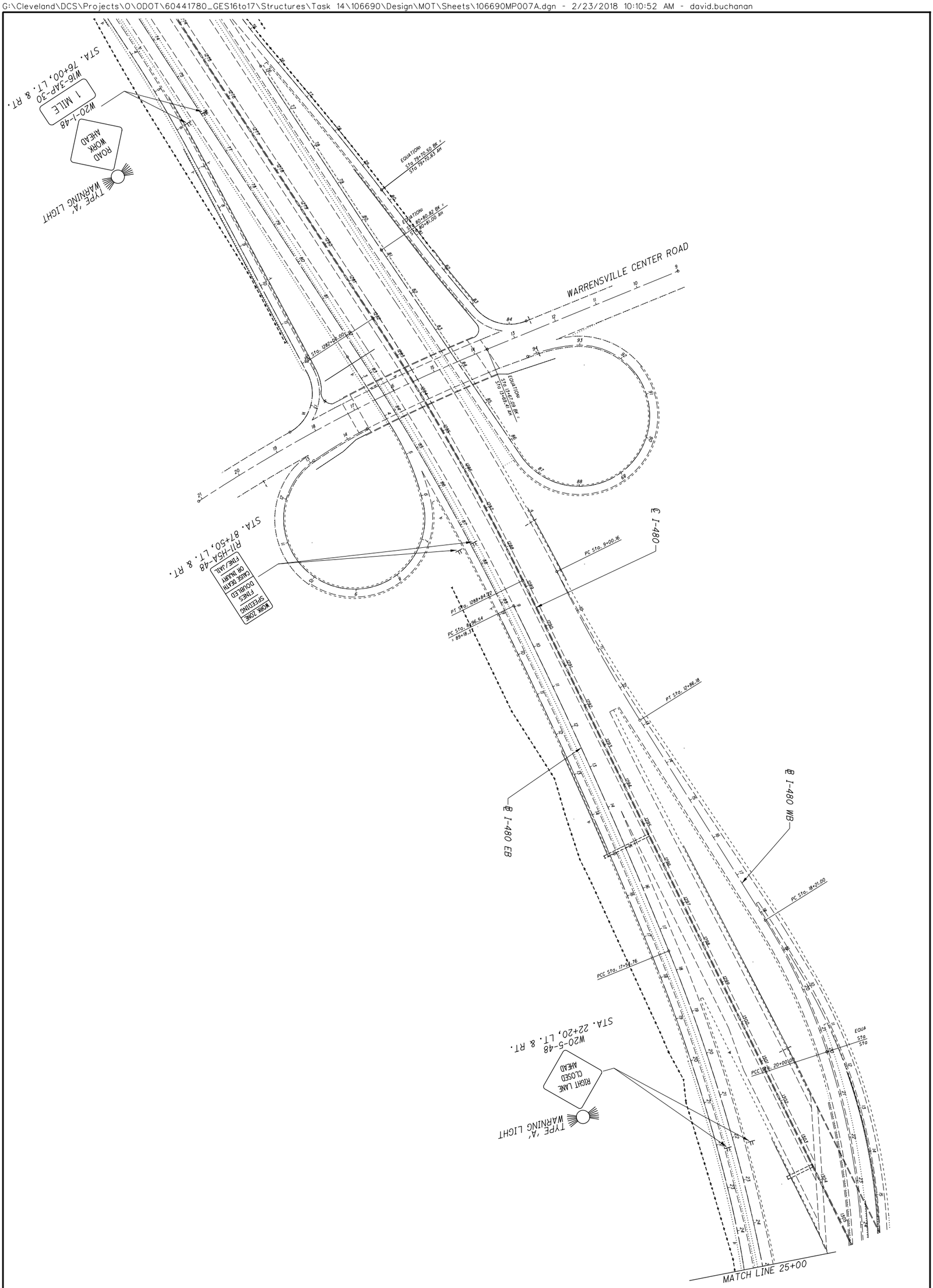

23 / 56	CUY-480-25.03	**MAINTENANCE OF TRAFFIC** **PHASE 3 EASTBOUND LEAD-IN SIGNS**	CALCULATED TKI CHECKED JMB	0 50 100 200 HORIZONTAL SCALE IN FEET

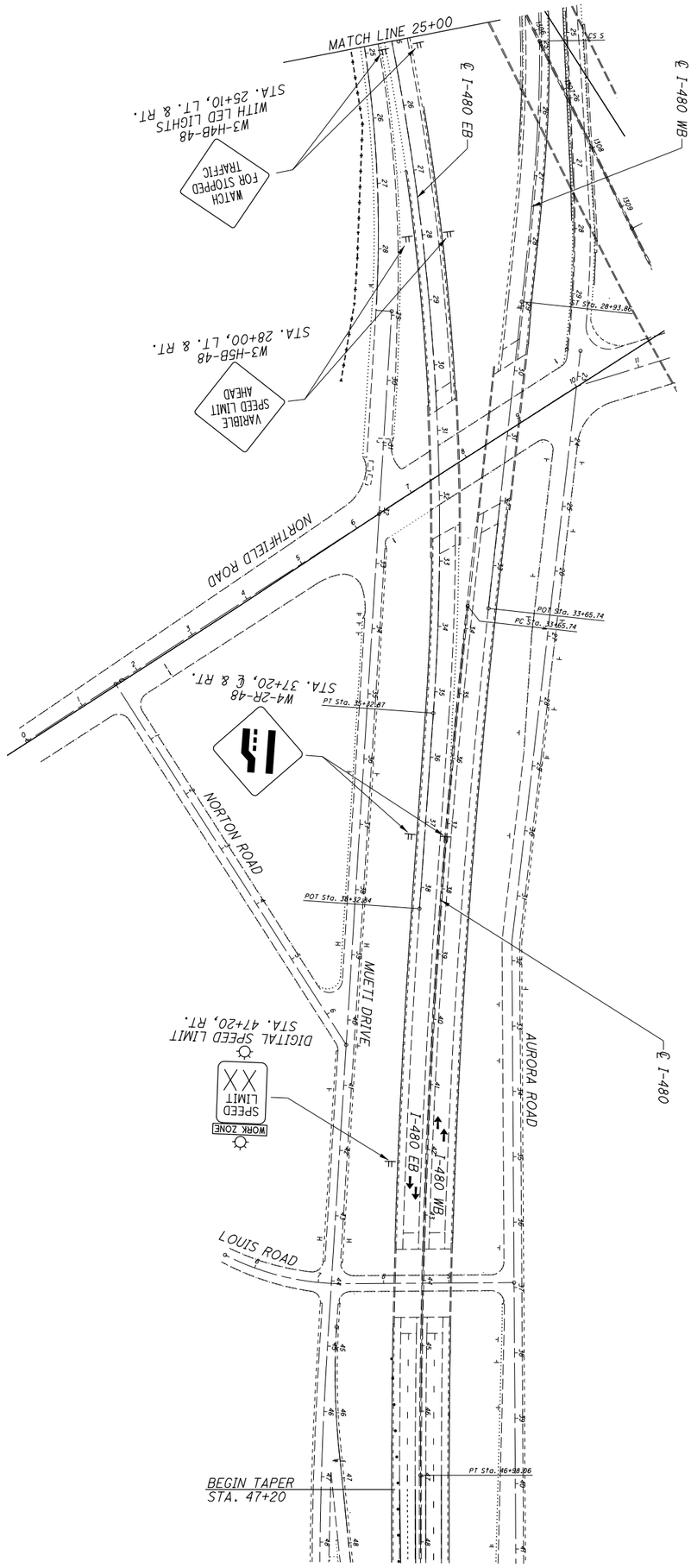

24 / 56	CUY-480-25.03	MAINTENANCE OF TRAFFIC PHASE 3 EASTBOUND LEAD-IN SIGNS	CALCULATED TKI CHECKED JMB	0 100 50 200 HORIZONTAL SCALE IN FEET

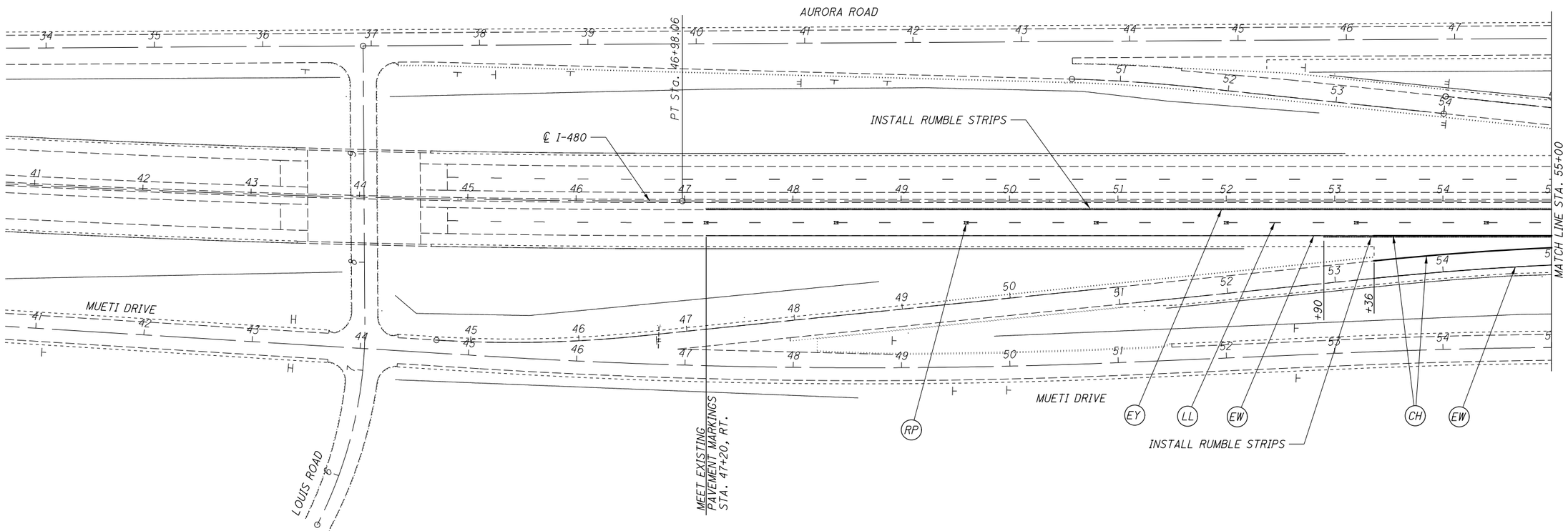

LEGEND

- (EW) ITEM 646-EDGE LINE, 6" (WHITE)
- (EY) ITEM 646-EDGE LINE, 6" YELLOW)
- (LL) ITEM 646-LANE LINE, 6"
- (CH) ITEM 646-CHANNELIZING LINE, 12"
- (DL) ITEM 646-DOTTED LINE, 6"
- (RP) ITEM 621- RPM, ONE-WAY WHITE AT 120' C/C

N

0 25 50 100
HORIZONTAL SCALE IN FEET

CALCULATED TKI
CHECKED JMB

MAINTENANCE OF TRAFFIC FINAL MARKINGS

CUY-480-25.03

G:\Cleveland\DCS\Projects\O\ODOT\60441780_GES16to17\Structures\Task 14\106690\Design\MOT\Sheets\106690MP010.dgn - 2/23/2018 10:10:58 AM - david.buchanan

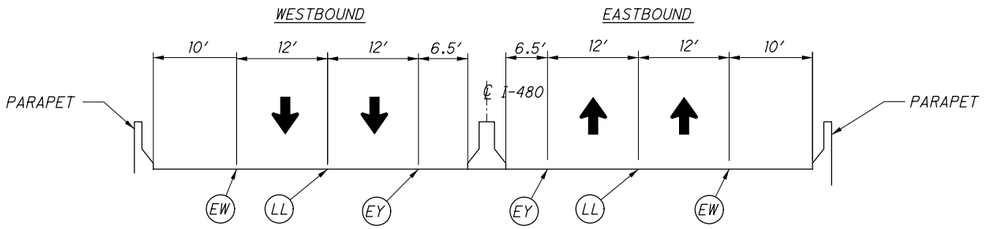

MOT TYPICAL FINAL MARKINGS

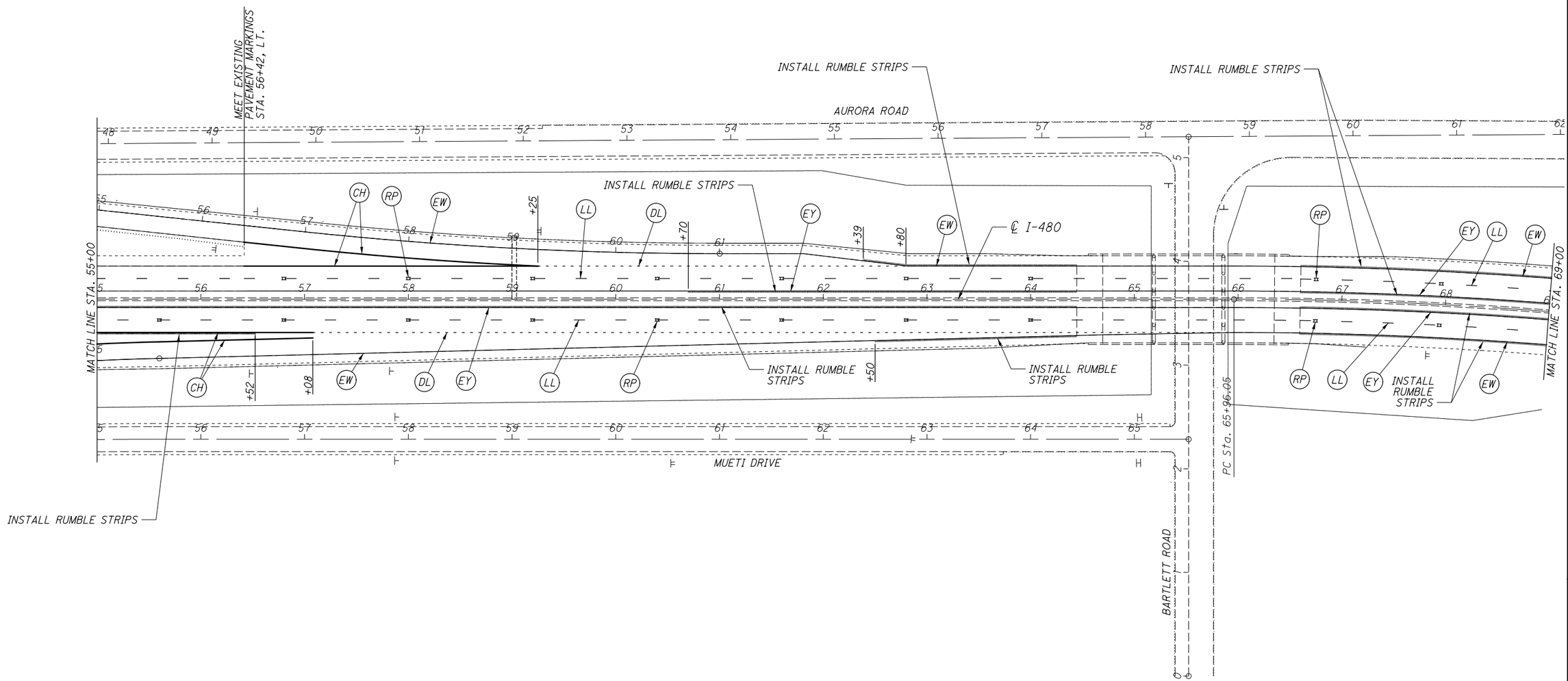

LEGEND

- (EW) ITEM 646-EDGE LINE, 6″ (WHITE)
- (EY) ITEM 646-EDGE LINE, 6″ YELLOW)
- (LL) ITEM 646-LANE LINE, 6″
- (CH) ITEM 646-CHANNELIZING LINE, 12″
- (DL) ITEM 646-DOTTED LINE, 6″
- (RP) ITEM 621- RPM, ONE-WAY WHITE AT 120′ C/C

HORIZONTAL SCALE IN FEET 0 25 50 100

CALCULATED TKI
CHECKED JMB

MAINTENANCE OF TRAFFIC FINAL MARKINGS

CUY-480-25.03

G:\Cleveland\DCS\Projects\O\ODOT\60441780_GES16to17\Structures\Task 14\106690\Design\MOT\Sheets\106690MP011.dgn - 2/23/2018 10:11:00 AM - david.buchanan

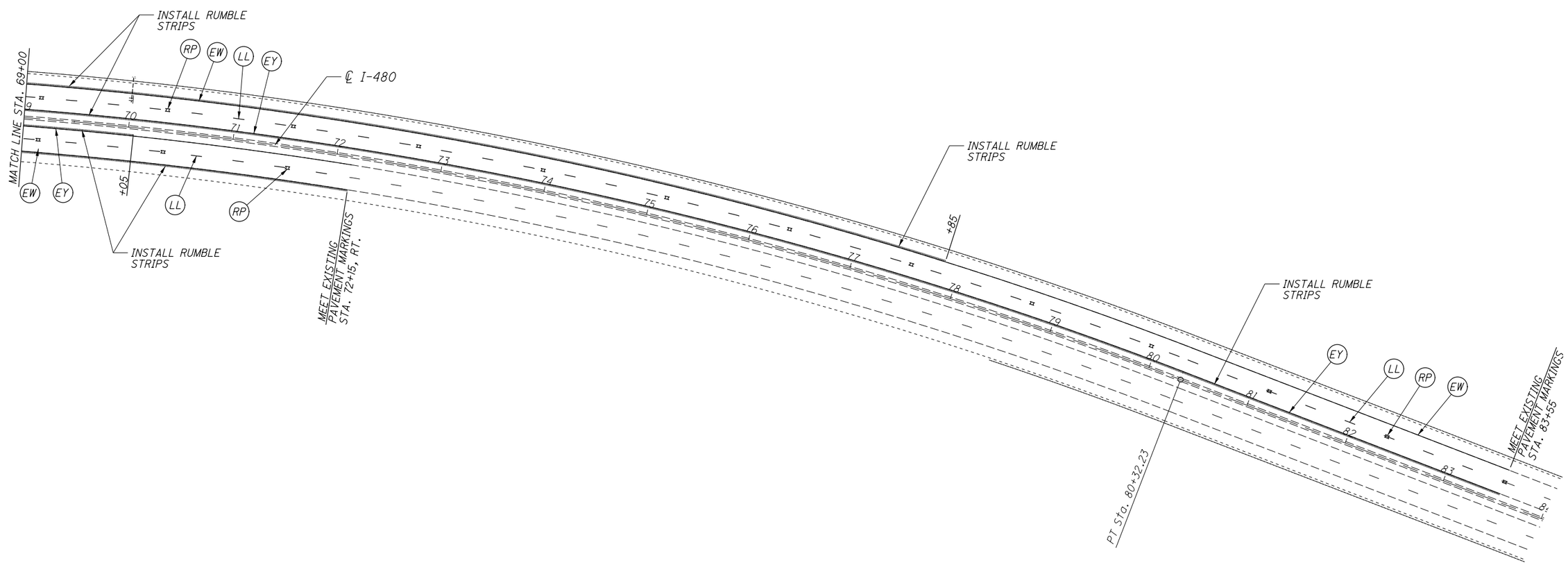

LEGEND

- (EW) ITEM 646-EDGE LINE, 6" (WHITE)
- (EY) ITEM 646-EDGE LINE, 6" YELLOW)
- (LL) ITEM 646-LANE LINE, 6"
- (CH) ITEM 646-CHANNELIZING LINE, 12"
- (DL) ITEM 646-DOTTED LINE, 6"
- (RP) ITEM 621- RPM, ONE-WAY WHITE AT 120' C/C

0 25 50 100
HORIZONTAL SCALE IN FEET

CALCULATED TKI
CHECKED JMB

MAINTENANCE OF TRAFFIC FINAL MARKINGS

CUY-480-25.03

G:\Cleveland\DCS\Projects\O\ODOT\60441780_GES16to17\Structures\Task 14\106690\Design\MOT\Sheets\106690MP012.dgn - 2/23/2018 10:11:04 AM - david.buchanan

SHEET NUMBER 6	7	31	32	34	37	ITEM	ITEM EXT.	GRAND TOTAL	UNIT	DESCRIPTION	SEE SHEET NO.
										ROADWAY	
LS						201	11000	LS		CLEARING AND GRUBBING	
			722			202	23000	722	SY	PAVEMENT REMOVED	
		110				202	30700	110	FT	CONCRETE BARRIER REMOVED	
		394				202	38000	394	FT	GUARDRAIL REMOVED	
		281				202	75000	281	FT	FENCE REMOVED	
82						203	10000	82	CY	EXCAVATION	
82						203	20000	82	CY	EMBANKMENT	
			1095			204	10000	1095	SY	SUBGRADE COMPACTION	
1						204	45000	1	HOUR	PROOF ROLLING	
			0.06			209	60501	0.06	MILE	LINEAR GRADING, AS PER PLAN	6
		275				606	15050	275	FT	GUARDRAIL, TYPE MGS	
		1				606	26500	1	EACH	ANCHOR ASSEMBLY, TYPE T	
		2				606	35000	2	EACH	BRIDGE TERMINAL ASSEMBLY, TYPE 1	
		2				606	35100	2	EACH	BRIDGE TERMINAL ASSEMBLY, TYPE 2	
		281				607	23000	281	FT	FENCE, TYPE CLT	
		20				622	90000	20	FT	BARRIER, MISC.: CONCRETE BARRIER, AS PER PLAN	5
		2				622	90200	2	EACH	BARRIER, MISC.: CONCRETE BARRIER, END ANCHORAGE, AS PER PLAN	5
										EROSION CONTROL	
8						601	21050	8	SY	TIED CONCRETE BLOCK MAT, TYPE 1	
2						659	00100	2	EACH	SOIL ANALYSIS TEST	
175						659	00300	175	CY	TOPSOIL	
1580						659	10000	1580	SY	SEEDING AND MULCHING	
79						659	14000	79	SY	REPAIR SEEDING AND MULCHING	
79						659	15000	79	SY	INTER-SEEDING	
0.22						659	20000	0.22	TON	COMMERCIAL FERTILIZER	
0.33						659	31000	0.33	ACRE	LIME	
9						659	35000	9	MGAL	WATER	
										DRAINAGE	
		200				605	11100	200	FT	6" SHALLOW PIPE UNDERDRAINS	
40						605	13300	40	FT	6" UNCLASSIFIED PIPE UNDERDRAINS	
40						611	00510	40	FT	6" CONDUIT, TYPE F FOR UNDERDRAIN OUTLETS	
4						611	99710	4	EACH	PRECAST REINFORCED CONCRETE OUTLET	
										PAVEMENT	
			163			252	01500	163	FT	FULL DEPTH PAVEMENT SAWING	
			3717			254	01000	3717	SY	PAVEMENT PLANING, ASPHALT CONCRETE	
			153			302	46000	153	CY	ASPHALT CONCRETE BASE, PG64-22	
			180			304	20000	180	CY	AGGREGATE BASE	
			572			407	20000	572	GAL	NON-TRACKING TACK COAT	
			15			441	50701	15	CY	ASPHALT CONCRETE INTERMEDIATE COURSE, TYPE 1, (448), (UNDER GUARDRAIL), AS PER PLAN	6
			174			442	20001	174	CY	ASPHALT CONCRETE SURFACE COURSE, 12.5 MM, TYPE A (448), AS PER PLAN, PG 76-22M	6
			116			442	20100	116	CY	ASPHALT CONCRETE INTERMEDIATE COURSE, 9.5 MM, TYPE A (448)	
			36			609	24510	36	FT	CURB, TYPE 4-C	
			6543			618	40100	6543	FT	RUMBLE STRIPS, (ASPHALT CONCRETE)	
										LIGHTING	
				18		625	00480	18	EACH	CONNECTION, UNFUSED PERMANENT	
				380		625	23000	380	FT	NO. 4 AWG 600 VOLT DISTRIBUTION CABLE	
				380		625	25500	380	FT	CONDUIT, 3", 725.04	
				115		625	29000	115	FT	TRENCH	
				1		625	29930	1	EACH	MEDIAN JUNCTION BOX	

REV. BY	DATE	DESCRIPTION
ADT	4/13/18	CONCRETE BARRIER REMOVED, SUBGRADE COMPACTION AND AGGREGATE BASE QUANTITIES REVISED
DEB	4/3/18	AGGREGATE BASE QUANTITY

DATE COMPLETED

CALCULATED ADT
CHECKED MEP

GENERAL SUMMARY

CUY-480-25.03

G:\Cleveland\DCS\Projects\0\ODOT\60441780_GES16to17\Structures\Task 14\106690\Design\Roadway\Sheets\106690G001.dgn - 4/13/2018 4:00:20 PM - andrew.timco

SHEET NUMBER 6	7	31	32	34	37	ITEM	ITEM EXT.	GRAND TOTAL	UNIT	DESCRIPTION	SEE SHEET NO.
										LIGHTING	
				2		625	30700	2	EACH	PULL BOX, 725.08, 18"	
				1		625	33000	1	EACH	STRUCTURE GROUNDING SYSTEM	
				115		625	36000	115	FT	PLASTIC CAUTION TAPE	
				LS		SPECIAL	62540000	LS		MAINTAIN EXISTING LIGHTING	34
				1		SPECIAL	62540010	1	EACH	REPLACEMENT OF EXISTING LIGHTING UNIT	34
				1		625	75800	1	EACH	DISCONNECT CIRCUIT	
										STRUCTURE OVER 20 FOOT SPAN (SFN 1813935)	
					LS	202	11201	LS		PORTIONS OF STRUCTURE REMOVED, AS PER PLAN	36,40
					267	202	22900	267	SY	APPROACH SLAB REMOVED	
					100	503	21100	100	CY	UNCLASSIFIED EXCAVATION	
					LS	503	11100	LS		COFFERDAMS AND EXCAVATION BRACING	
					27288	509	10000	27538	LB	EPOXY COATED REINFORCING STEEL	
					500	510	10000	500	EACH	DOWEL HOLES WITH NONSHRINK, NONMETALLIC GROUT	
					145	511	21522	145	CY	CLASS QC2 CONCRETE WITH QC/QA, SUPERSTRUCTURE	
					4	511	33501	4	EACH	SEMI-INTEGRAL DIAPHRAGM GUIDE, AS PER PLAN	41
					20	511	43210	20	CY	CLASS QC1 CONCRETE, PIER	
					675	512	10100	675	SY	SEALING OF CONCRETE SURFACES (EPOXY-URETHANE)	
					14	512	33000	14	SY	TYPE 2 WATERPROOFING	46
					320	512	74000	320	SY	REMOVAL OF EXISTING COATINGS FROM CONCRETE SURFACES	
					72	513	95030	72	EACH	STRUCTURAL STEEL, MISC.: DRILLING STRUCTURAL STEEL	36,46
					35	516	13600	35	SF	1" PREFORMED EXPANSION JOINT FILLER	
					54	516	13900	54	SF	2" PREFORMED EXPANSION JOINT FILLER	
					176	516	14021	176	FT	SEMI-INTEGRAL ABUTMENT EXPANSION JOINT SEAL, AS PER PLAN	46
					24	516	44101	24	EACH	ELASTOMERIC BEARING WITH INTERNAL LAMINATES AND LOAD PLATE (NEOPRENE), AS PER PLAN (10"x16"x2.95" WITH 12"x17"x1.5" PLATE)	43
					24	516	44201	24	EACH	ELASTOMERIC BEARING WITH INTERNAL LAMINATES AND LOAD PLATE (NEOPRENE), AS PER PLAN (12"x16"x3.40" WITH 13"x17"x1.75" PLATE)	43
					LS	516	47001	LS		JACKING AND TEMPORARY SUPPORT OF SUPERSTRUCTURE, AS PER PLAN	36,40,42
					55	518	21200	55	CY	POROUS BACKFILL WITH GEOTEXTILE FABRIC	
					164	518	40000	164	FT	6" PERFORATED CORRUGATED PLASTIC PIPE	
					60	518	40011	60	FT	6" NON-PERFORATED CORRUGATED PLASTIC PIPE, INCLUDING SPECIALS, AS PER PLAN	41,46
					590	526	30011	590	SY	REINFORCED CONCRETE APPROACH SLABS WITH QC/QA (T=17"), AS PER PLAN	41,50
					168	526	90010	168	FT	TYPE A INSTALLATION	50
					100	601	21001	100	SY	CONCRETE SLOPE PROTECTION, AS PER PLAN	33
					71	846	00110	71	CF	POLYMER MODIFIED ASPHALT EXPANSION JOINT SYSTEM	
										MAINTENANCE OF TRAFFIC	
	250					614	11110	250	HOUR	LAW ENFORCEMENT OFFICER WITH PATROL CAR FOR ASSISTANCE	
	1379					614	11630	1379	FT	INCREASED BARRIER DELINEATION	
	4					614	12346	4	EACH	WORK ZONE IMPACT ATTENUATOR (UNIDIRECTIONAL)	
	LS					614	12420	LS		DETOUR SIGNING	
	4					614	12484	4	EACH	WORK ZONE INCREASED PENALTIES SIGN	
	2					SPECIAL	61412760	2	EACH	FLASHING ARROW PANEL	
	74					614	13310	74	EACH	BARRIER REFLECTOR, TYPE 1, (ONE-WAY)	
	74					614	13350	74	EACH	OBJECT MARKER, ONE WAY	
	8					614	18601	8	SNMT	PORTABLE CHANGEABLE MESSAGE SIGN, AS PER PLAN	7
	8					614	18700	8	SNMT	DIGITAL SPEED LIMIT (DSL) SIGN ASSEMBLY	7
	0.57					614	20560	0.57	MILE	WORK ZONE LANE LINE, CLASS III, 6", 642 PAINT	
	4.10					614	22360	4.10	MILE	WORK ZONE EDGE LINE, CLASS III, 6", 642 PAINT	
	5018					614	23690	5018	FT	WORK ZONE CHANNELIZING LINE, CLASS III, 12", 642 PAINT	
	2900					614	24610	2900	FT	WORK ZONE DOTTED LINE, CLASS III, 642 PAINT	
	6583					618	40101	6583	FT	RUMBLE STRIPS, (ASPHALT CONCRETE), AS PER PLAN	8
	2144					622	41011	2144	FT	PORTABLE BARRIER, 50", AS PER PLAN	7
	1.89					646	10010	1.89	MILE	EDGE LINE, 6"	
	0.94					646	10110	0.94	MILE	LANE LINE, 6"	
	1310					646	10310	1310	FT	CHANNELIZING LINE, 12"	

REV. BY	DATE	DESCRIPTION
ADT	4/16/18	ITEM 202 WEARING COURSE REMOVED - DELETED
DEB	4/3/18	ITEM 503 11100 & 601 21001

DATE COMPLETED

CALCULATED ADT CHECKED MEP

GENERAL SUMMARY

CUY-480-25.03

G:\Cleveland\DCS\Projects\0\ODOT\60441780_GES16to17\Structures\Task 14\106690\Design\Roadway\Sheets\106690G002.dgn - 4/16/2018 11:29:24 AM - andrew.timco

SHEET NUMBER						ITEM	ITEM EXT.	GRAND TOTAL	UNIT	DESCRIPTION	SEE SHEET NO.
6	7	31	32	34	37						
										MAINTENANCE OF TRAFFIC	
	1243					646	20504	1243	FT	DOTTED LINE, 6"	
	8					896	00012	8	SNMT	PORTABLE NON-INTRUSIVE TRAFFIC SENSOR, CLASS II	
	4					896	00021	4	SNMT	PORTABLE CHANGEABLE MESSAGE SIGN, AS PER PLAN	8
										INCIDENTALS	
						614	11000	LS		MAINTAINING TRAFFIC	
						619	16011	4	MNTH	FIELD OFFICE, TYPE B, AS PER PLAN	6
						623	10000	LS		CONSTRUCTION LAYOUT STAKES AND SURVEYING	
						624	10000	LS		MOBILIZATION	

CALCULATED ADT
CHECKED MEP

GENERAL SUMMARY

CUY-480-25.03

G:\Cleveland\DCS\Projects\0\ODOT\60441780_GES16to17\Structures\Task 14\106690\Design\Roadway\Sheets\106690GG003.dgn - 2/23/2018 10:11:08 AM - david.buchanan

SHEET NO.	STATION		SIDE	LENGTH	202 CONCRETE BARRIER REMOVED	202 GUARDRAIL REMOVED	202 FENCE REMOVED	606 GUARDRAIL, TYPE MGS	606 ANCHOR ASSEMBLY, TYPE T	606 BRIDGE TERMINAL ASSEMBLY, TYPE 1	606 BRIDGE TERMINAL ASSEMBLY, TYPE 2	607 FENCE, TYPE CLT	622 BARRIER, MISC.: CONCRETE BARRIER, AS PER PLAN	622 BARRIER, MISC.: CONCRETE BARRIER, END ANCHORAGE, AS PER PLAN
				FT	FT	FT	FT	FT	EACH	EACH	EACH	FT	FT	EACH
	FROM	TO		L										
	IR 480													
26	63+40.29	64+55.56	RT.	115.27		115.3		75		1				
26	63+66.59	64+55.56	LT.	88.97		89.0		75			1			
26	64+14.56	64+69.56	LT./RT.	55.00	55								10	1
26	65+16.31	65+16.31	LT./RT.	140.00			140					140		
26	65+90.31	65+95.53	LT./RT.	141.00			141					141		
26	66+35.06	66+90.06	LT./RT.	55.00	55								10	1
26	66+49.06	67+24.52	RT.	75.46		75.5		50	1		1			
26	66+49.06	67+63.35	LT	114.29		114.3		75		1				
SUBTOTAL					110	394.1	281	275	1	2	2	281	20	2
TOTALS CARRIED TO GENERAL SUMMARY					110	394	281	275	1	2	2	281	20	2

PLAN SHEET NO.	STATION		SIDE	605 6" SHALLOW PIPE UNDERDRAINS
	FROM	TO		FT
	IR 480			
26	64+14.56	64+39.56	RT	25
26	64+14.56	64+39.56	RT	25
26	64+14.56	64+39.56	LT	25
26	64+14.56	64+39.56	LT	25
26	66+65.06	66+90.06	RT	25
26	66+65.06	66+90.06	RT	25
26	66+65.06	66+90.06	LT	25
26	66+65.06	66+90.06	LT	25
SUBTOTAL				200
TOTALS CARRIED TO GENERAL SUMMARY				200

REV. BY	DATE	DESCRIPTION
ADT	4/13/18	CONCRETE BARRIER REMOVED QUANTITY REVISED

DATE COMPLETED

CALCULATED ADT
CHECKED MEP

ROADWAY SUBSUMMARY
UNDERDRAIN SUBSUMMARY

CUY-480-25.03

G:\Cleveland\DCS\Projects\0\ODOT\60441780_GE5i6to17\Structures\Task 14\106690\Design\Roadway\Sheets\1066906S002.dgn - 4/13/2018 4:07:33 PM - andrew.timco

STATION		SIDE	LENGTH (L)	AVERAGE WIDTH (W)	SURFACE AREA (A)	202 PAVEMENT REMOVED	204 SUBGRADE COMPACTION	209 LINEAR GRADING, AS PER PLAN	252 FULL DEPTH PAVEMENT SAWING	254 PAVEMENT PLANING, ASPHALT CONCRETE	302 ASPHALT CONCRETE BASE, PG64-22	304 AGGREGATE BASE	407 NON-TRACKING TACK COAT	407 NON-TRACKING TACK COAT	441 ASPHALT CONCRETE INTERMEDIATE COURSE, TYPE 1, (448), (UNDER GUARDRAIL), AS PER PLAN	442 ASPHALT CONCRETE SURFACE COURSE, 12.5 MM, TYPE A (448), AS PER PLAN, PG 76-22M	442 ASPHALT CONCRETE INTERMEDIATE COURSE, 9.5 MM, TYPE A (448)	609 CURB, TYPE 4-C	618 RUMBLE STRIPS, (ASPHALT CONCRETE)
FROM	TO		FT	FT	SF	SY	SY	MILE	FT	SY	CY	CY	GAL	GAL	CY	CY	CY	FT	FT
					LxW	A/9	A/9		W	A/9	(11.5xA)	(6xA)	(0.085xA)	(0.055xA)	(3xA)	(1.50xA)	(1.00xA)	L	L
											(12x27)	(12x27)	9	9	(12x27)	(12x27)	(12x27)		
		IR 480																	
62+14.56	62+81.26	LT	66.70	43.84	2924.13					324.90			27.62	17.87		13.54	9.03		
62+81.26	64+14.56	LT	133.30	40.50	5398.65					599.85			50.99	32.99		24.99	16.66		
62+14.56	64+14.56	RT	200.00	44.64	8928.00					992.00			84.32	54.56		41.33	27.56		
64+14.56	64+39.56	LT	25.00	40.50	1012.50	112.50			40.50					6.19		4.69	3.13		
64+14.56	64+39.56	LT	25.00	42.58	1064.58						38.00			6.51					
64+14.56	64+39.56	LT	25.00	43.33	1083.33							20.06							
64+14.56	64+39.56	LT	25.00	43.50	1087.50		120.83												
63+66.59	64+39.56	LT	72.97	5.00	364.85			0.01							3.38				
64+14.56	64+39.56	RT	25.00	41.83	1045.75	116.19			41.83					6.39		4.84	3.23		
64+14.56	64+39.56	RT	25.00	43.91	1097.83						39.00			6.71					
64+14.56	64+39.56	RT	25.00	44.66	1116.58							20.68							
64+14.56	64+39.56	RT	25.00	44.83	1120.75		124.53												
63+40.29	64+39.56	RT	99.27	5.00	496.35			0.02							4.60				
64+21.41	64+39.56	RT	18.15															18.15	
64+39.56	64+69.56	LT/RT	30.00	89.50	2685.00							49.72							
64+39.56	64+69.56	LT/RT	30.00	91.50	2745.00		305.00												
64+39.56	64+44.56	LT	5.00	40.50	202.50	22.50													
64+39.56	64+44.56	RT	5.00	41.46	207.30	23.03													
64+44.46	64+69.56	LT	25.10	16.50	414.15	46.02													
64+44.46	64+69.56	RT	25.10	14.50	363.95	40.44													
66+35.06	66+60.06	LT	25.00	16.50	412.50	45.83													
66+35.06	66+60.06	RT	25.00	16.50	412.50	45.83													
66+60.06	66+65.06	LT	5.00	40.50	202.50	22.50													
66+60.06	66+65.06	RT	5.00	40.50	202.50	22.50													
66+35.06	66+65.06	LT/RT	30.00	89.00	2670.00							49.44							
66+35.06	66+65.06	LT/RT	30.00	91.00	2730.00		303.33												
66+65.06	66+90.06	LT	25.00	40.50	1012.50	112.50			40.50					6.19		4.69	3.13		
66+65.06	66+90.06	LT	25.00	42.58	1064.58						38.00			6.51					
66+65.06	66+90.06	LT	25.00	43.33	1083.33							20.06							
66+65.06	66+90.06	LT	25.00	43.50	1087.50		120.83												
66+65.06	66+83.21	LT	18.15															18.15	
66+65.06	67+63.35	LT	98.29	5.00	491.45			0.02							4.55				
66+65.06	66+90.06	RT	25.00	40.50	1012.50	112.50			40.50					6.19		4.69	3.13		
66+65.06	66+90.06	RT	25.00	42.58	1064.58						38.00			6.51					
66+65.06	66+90.06	RT	25.00	43.33	1083.33							20.06							
66+65.06	66+90.06	RT	25.00	43.50	1087.50		120.83												
66+65.06	67+26.17	RT	61.11	5.00	305.55			0.01							2.83				
66+90.06	68+90.06	LT	200.00	40.50	8100.00					900.00			76.50	49.50		37.50	25.00		
66+90.06	68+90.06	RT	200.00	40.50	8100.00					900.00			76.50	49.50		37.50	25.00		
47+20.00	64+40.00	RT	1720.00	40.50															1720
52+90.00	56+52.00	RT	362.00	40.50															362
60+70.00	64+40.00	LT	370.00	40.50															370
62+39.00	64+40.00	LT	201.00	40.50															201
62+50.00	64+40.00	RT	190.00	40.50															190
66+65.00	77+85.00	LT	1120.00	40.50															1120
66+65.00	83+55.00	LT	1690.00	40.50															1690
66+65.00	70+05.00	RT	340.00	40.50															340
66+65.00	72+15.00	RT	550.00	40.50															550
SUBTOTAL						722.35	1095.36	0.06	163.33	3716.75	153.00	180.02	315.93	255.62	15.36	173.77	115.87	36.30	6543
TOTALS CARRIED TO GENERAL SUMMARY						722	1095	0.06	163	3717	153	180	572		15	174	116	36	6543

CALCULATED ADT
CHECKED MEP

PAVEMENT CALCULATIONS

REV. BY	DATE	DESCRIPTION
ADT	4/13/18	AGGREGATE BASE AND SUBGRADE COMPACTION QUANTITY REVISED

DATE COMPLETED

CUY-480-25.03

G:\Cleveland\DCS\Projects\0\ODOT\60441780_GESI6+01?\Structures\Task 14\106690\Design\Roadway\Sheets\106690S001.dgn - 4/16/2018 11:01:06 AM - andrew.timco

REPLACE DAMAGED PORTIONS OF SLOPE PROTECTION AS DIRECTED BY THE ENGINEER. ALL CONCRETE SLOPE PROTECTION AREAS SHALL BE 6 INCHES THICK REGARDLESS OF EXISTING CONCRETE SLOPE PROTECTION THICKNESS.

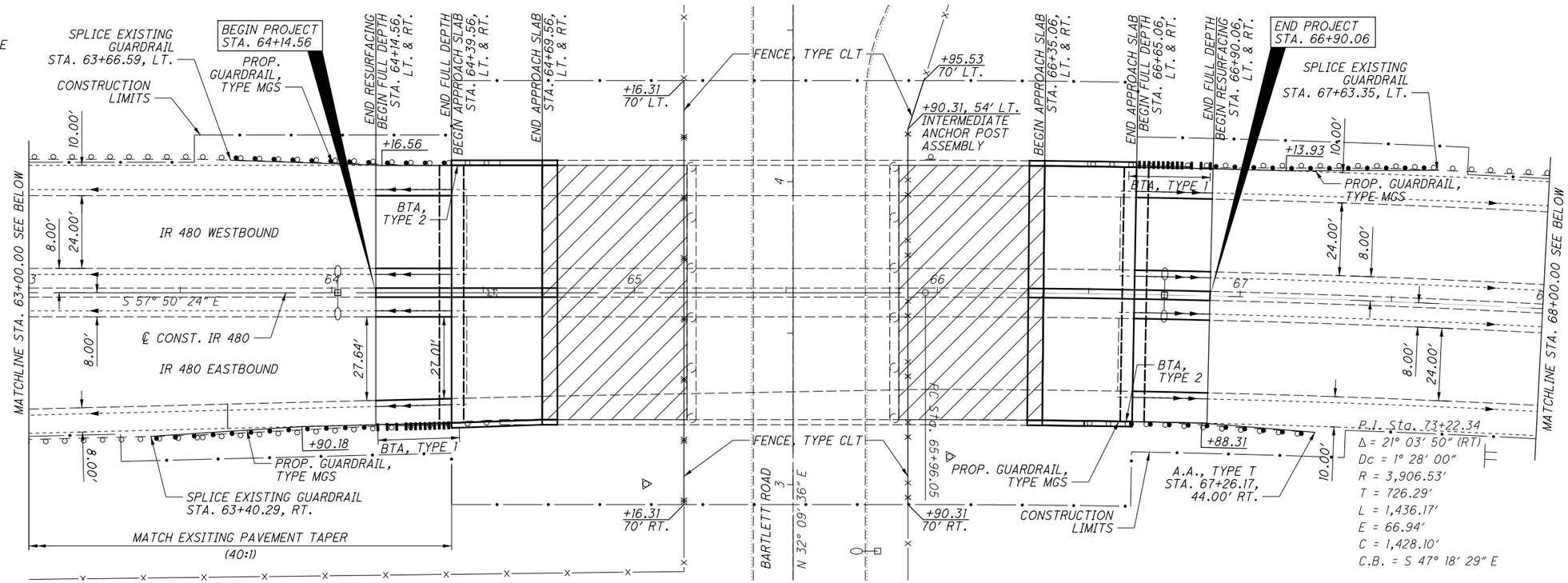

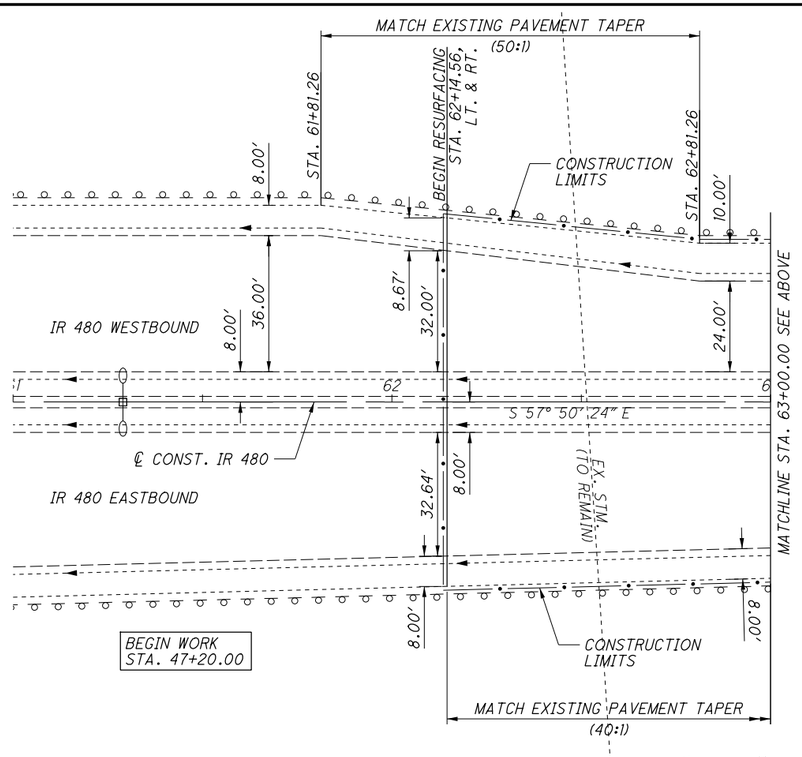

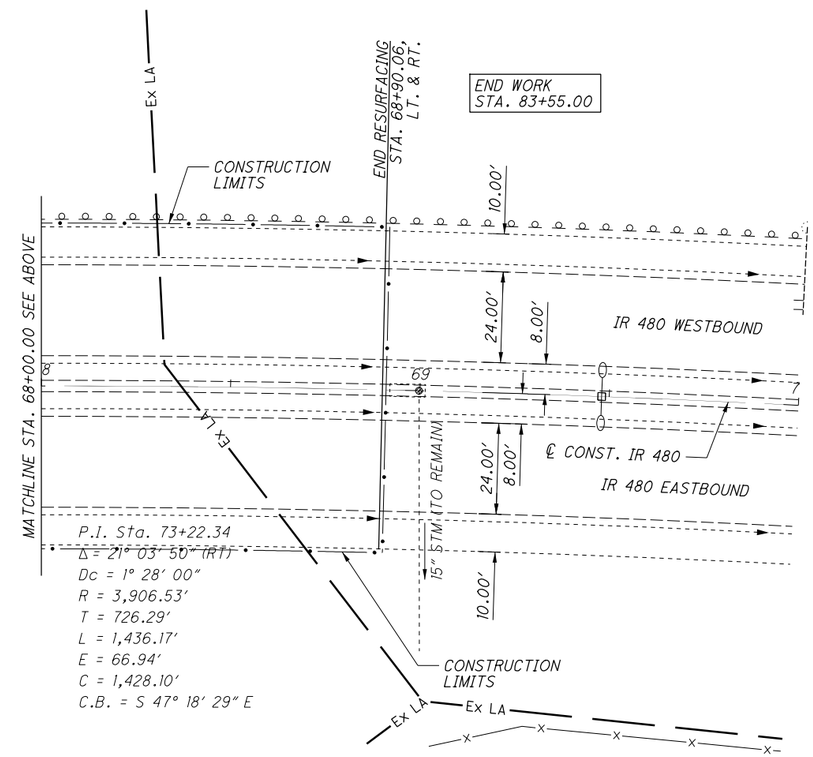

CALCULATED ADT
CHECKED MEP

PLAN - IR 480

CUY-480-25.03

G:\Cleveland\DCS\Projects\0\ODOT\60441780_GES16to17\Structures\Task 14\106690\Design\Roadway\Sheets\106690GP001.dgn - 4/9/2018 8:53:42 AM - William.Shea

ITEM SPECIAL - MAINTAIN EXISTING LIGHTING

EXISTING ROADWAYS WHICH ARE TO REMAIN OPEN TO TRAFFIC DURING CONSTRUCTION OF THIS PROJECT AND WHICH ARE LIGHTED SHALL HAVE THE LIGHTING MAINTAINED AS DESCRIBED HEREIN.

BEFORE ANY WORK IS STARTED IN THE IMMEDIATE VICINITY OF THE EXISTING LIGHTING CIRCUITS, REPRESENTATIVES OF ODOT, THE MAINTAINING AGENCY AND THE CONTRACTOR SHALL MAKE A VISUAL INSPECTION OF THE EXISTING ROADWAY LIGHTING CIRCUITS TO BE MAINTAINED. DURING THIS INSPECTION, A WRITTEN RECORD OF THE CONDITION OF EXISTING LIGHTING SHALL BE MADE BY ODOT'S REPRESENTATIVE. THIS WRITTEN REPORT SHALL NOTE INDIVIDUAL LUMINAIRES WHICH ARE NOT IN WORKING ORDER, INDIVIDUAL POLES WHICH ARE NOT STANDING, AND INDIVIDUAL CIRCUITS WHICH ARE NOT IN WORKING ORDER. THE COMPLETED REPORT SHALL BE SIGNED BY THE REPRESENTATIVES OF ODOT, THE MAINTAINING AGENCY AND THE CONTRACTOR.

IF, AS A RESULT OF THIS INSPECTION, IT IS DETERMINED THAT THE CONDITION OF THE EXISTING SYSTEM IS BELOW THAT REQUIRED FOR THE SAFETY OF THE TRAVELING PUBLIC, THEN THE MAINTAINING AGENCY SHALL MAKE THE REPAIRS NECESSARY TO RETURN THE SYSTEM TO AN ACCEPTABLE CONDITION. FOLLOWING THESE REPAIRS, THE SYSTEM SHALL AGAIN BE INSPECTED AND A REPORT SHALL BE MADE AND SIGNED AS OUTLINED HEREIN.

WHEN THE EXISTING SYSTEM IS IN AN ACCEPTABLE CONDITION, IT SHALL BE TURNED OVER TO THE CONTRACTOR WHO SHALL THEN BE REQUIRED TO MAINTAIN THE EXISTING LIGHTING TO THE CONDITION OUTLINED IN THIS REPORT WITH THE EXCEPTION OF KNOCKDOWNS DUE TO TRAFFIC ACCIDENTS.

REPLACEMENT OF KNOCKED DOWNED UNITS SHALL BE DONE ONLY WHEN THE ENGINEER HAS DETERMINED THAT THE REPLACEMENT OF THE KNOCKED DOWN UNIT IS NECESSARY AND SHALL BE PAID SEPARATELY ON A UNIT BASIS.

BETTERMENTS SHALL BE COVERED IN ITEMS OF WORK PERTAINING TO THE CONSTRUCTION OF PERMANENT IMPROVEMENT.

WHEN THE SEQUENCE OF CONSTRUCTION ACTIVITIES REQUIRES, OR SHOULD THE CONTRACTOR DESIRE, THE REMOVAL OF THE EXISTING LIGHTING , THE CONTRACTOR SHALL BE RESPONSIBLE FOR PROVIDING TEMPORARY LIGHTING OF THIS PORTION OF THE ROADWAY. TEMPORARY LIGHTING TO MAINTAIN EXISTING LIGHTING IS NOT REQUIRED PROVIDED THAT SERVICE IS ONLY INTERRUPTED FOR A MAXIMUM OF FOURTEEN (14) DAYS OR LESS.

PRIOR TO INSTALLING SUCH TEMPORARY LIGHTING, THE CONTRACTOR SHALL PREPARE AND SUBMIT FOUR SETS OF THE TEMPORARY LIGHTING PLAN TO THE ENGINEER FOR REVIEW AND APPROVAL.

THIS PLAN SHALL SHOW LOCATIONS OF POLES, LENGTHS OF BRACKET ARMS, STYLES OF LUMINAIRES, MOUNTING HEIGHTS, WIRING METHODS AND OTHER PERTINENT INFORMATION. THE TEMPORARY LIGHTING SHALL PROVIDE AN AVERAGE INITIAL INTENSITY OF 1.2 FOOTCANDLES WITH AN AVERAGE TO MINIMUM UNIFORMITY NOT TO EXCEED 3:1. MOUNTING HEIGHT OF TEMPORARY LUMINAIRES SHALL NOT BE LESS THAN 30 FEET, AND THE MINIMUM OVERHEAD CONDUCTOR CLEARANCE SHALL BE 20 FEET. TEMPORARY OVERHEAD CONSTRUCTION SHALL NOT BE LESS THAN GRADE "A" FOR STRENGTH REQUIREMENTS AS DEFINED BY THE NATIONAL ELECTRIC SAFETY CODE. WOOD POLES WITH OVERHEAD WIRING MAY BE USED. HOWEVER, TEMPORARY LIGHTING SHALL MEET FEDERAL AND STATE SAFETY CRITERIA. IF BREAKAWAY POLES ARE USED TO MEET THESE CRITERIA, THEN UNDERGROUND WIRING SHALL BE USED. RECONDITIONED OR USED MATERIALS MAY BE FURNISHED FOR TEMPORARY LIGHTING.

ALL MATERIALS NECESSARY TO COMPLETE THE TEMPORARY LIGHTING SHALL BE FURNISHED AND INSTALLED BY THE CONTRACTOR. WHEN NO LONGER NEEDED, THE TEMPORARY LIGHTING INSTALLATION SHALL BE REMOVED AND PROPERLY DISPOSED OF BY THE CONTRACTOR.
THE MAINTAINING AGENCY WILL PAY FOR ELECTRICAL ENERGY CONSUMED BY EXISTING POWER SERVICES AND BY PROPOSED PERMANENT POWER SERVICES AFTER ACCEPTANCE OF THE LIGHTING WORK. THE CONTRACTOR WILL PAY FOR ELECTRICAL ENERGY, INSTALLATION, REMOVAL AND MAINTENANCE OF ANY TEMPORARY POWER SERVICES.

THE LUMP SUM PRICE BID FOR ITEM SPECIAL "MAINTAIN EXISTING LIGHTING" SHALL INCLUDE PAYMENT FOR ALL LABOR, EQUIPMENT, MATERIALS AND INCIDENTALS NECESSARY TO MAINTAIN THE EXISTING LIGHTING AS SPECIFIED HEREIN.
THE UNIT PRICE BID FOR ITEM SPECIAL "REPLACEMENT OF EXISTING LIGHTING UNIT" SHALL BE FULL PAYMENT FOR THE REPLACEMENT OF AN EXISTING LIGHTING UNIT WHICH HAS BEEN KNOCKED DOWN AFTER THE AFOREMENTIONED INSPECTION AND SHALL INCLUDE ALL LABOR, EQUIPMENT, MATERIALS AND INCIDENTALS NECESSARY TO PROVIDE A REPLACEMENT FOR SUCH UNIT.

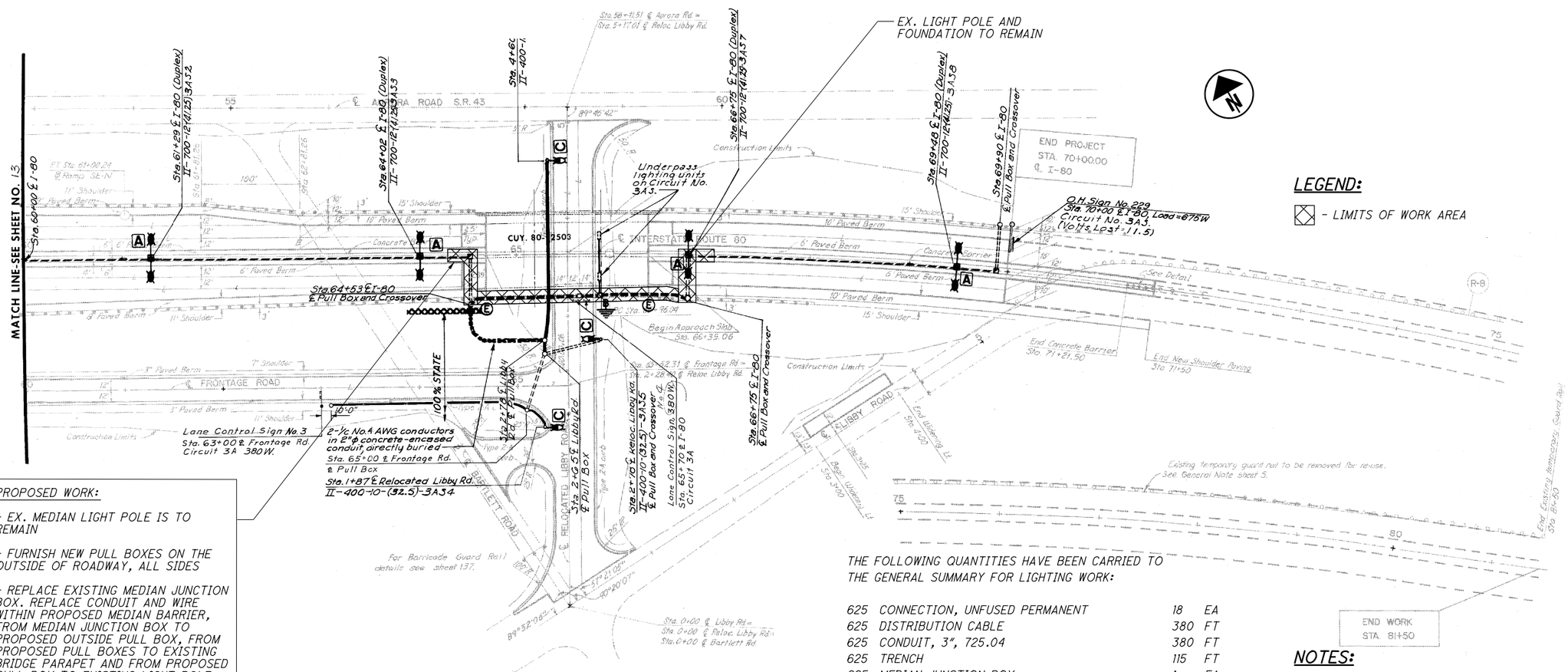

LIGHTING LAYOUT

PROPOSED WORK:

- EX. MEDIAN LIGHT POLE IS TO REMAIN

- FURNISH NEW PULL BOXES ON THE OUTSIDE OF ROADWAY, ALL SIDES

- REPLACE EXISTING MEDIAN JUNCTION BOX. REPLACE CONDUIT AND WIRE WITHIN PROPOSED MEDIAN BARRIER, FROM MEDIAN JUNCTION BOX TO PROPOSED OUTSIDE PULL BOX, FROM PROPOSED PULL BOXES TO EXISTING BRIDGE PARAPET AND FROM PROPOSED PULL BOX TO EXISTING LIGHT POLE. PROVIDE NEW WIRE PULLED THRU EX. BRIDGE PARAPET. ALL PER CMS REQUIREMENTS.

- CONTRACTOR SHALL MAINTAIN EX. LIGHTS T/O CONSTRUCTION, SEE ITEM SPECIAL - MAINTAIN EXISTING LIGHTING, THIS SHEET.

THE FOLLOWING QUANTITIES HAVE BEEN CARRIED TO THE GENERAL SUMMARY FOR LIGHTING WORK:

625	CONNECTION, UNFUSED PERMANENT	18	EA
625	DISTRIBUTION CABLE	380	FT
625	CONDUIT, 3", 725.04	380	FT
625	TRENCH	115	FT
625	MEDIAN JUNCTION BOX	1	EA
625	PULL BOX, 725.08, 18"	2	EA
625	STRUCTURE GROUNDING SYSTEM	1	EA
625	PLASTIC CAUTION TAPE	115	FT
625	MAINTAIN EXISTING LIGHTING	LS	LS
625	REPLACEMENT OF EXISTING LIGHTING UNIT	1	EA
625	DISCONNECT CIRCUIT	1	EA

NOTES:

1. RELOCATED LIBBY RD. = BARTLETT RD.
   I-80 = I-480
2. DETAILS FROM THIS SHEET ARE TAKEN FROM EXISTING PLANS AND SHOULD BE USED FOR INFORMATION PURPOSES ONLY.
3. GROUND STRUCTURE PER STD. DWG. HL-50.21.

CALCULATED JDM
CHECKED DEB

LIGHTING DETAILS

CUY-480-25.03

G:\Cleveland\DCS\Projects\O\ODOT\60441780_CESI6fol7\Structures\Task 14\I06690\Design\Lighting\Sheets\I06690LD001.dgn - 2/23/2018 10:11:15 AM - david.buchanan

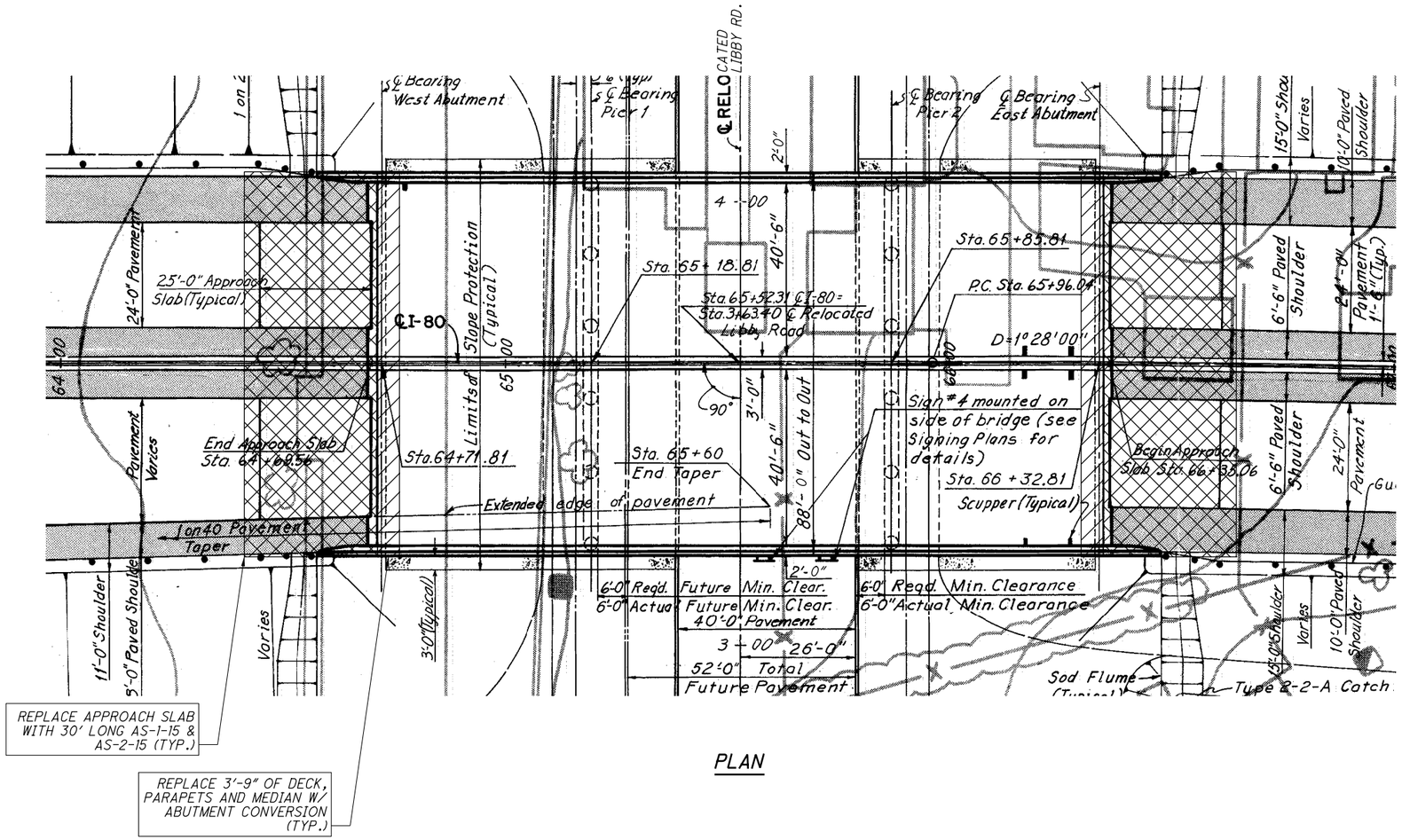

REPLACE APPROACH SLAB WITH 30' LONG AS-1-15 & AS-2-15 (TYP.)

REPLACE 3'-9" OF DECK, PARAPETS AND MEDIAN W/ ABUTMENT CONVERSION (TYP.)

PLAN

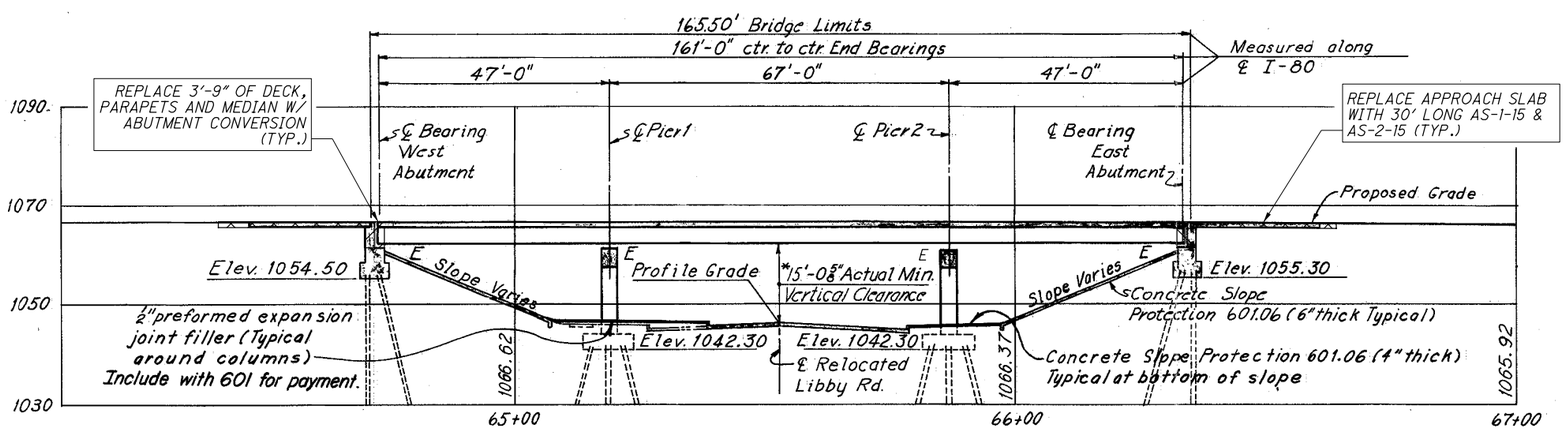

PROFILE

LEGEND:

- LIMITS OF APPROACH SLAB AND PAVEMENT REMOVAL AND REPLACEMENT WITH A NEW APPROACH SLAB
- LIMITS OF DECK REMOVAL AND REPLACEMENT

EXISTING STRUCTURE

TYPE: CONTINUOUS ROLLED BEAMS WITH REINFORCED CONCRETE DECK ON STUB ABUTMENTS AND CAP-AND-COLUMN PIERS

SPANS: 47'-0"±, 67'-0"±, 47'-0"± (C/C BRG.)

ROADWAY: 86'-0"± F/F RAILING W/ 1'-0" CURBS AND 6'-0" MEDIAN

LOADING: CF 2000 (57) ADEQUATE FOR AASHTO ALTERNATE LOADING

SKEW: NONE

APPROACH SLABS: AS-1-67 (25' LONG)

ALIGNMENT: TANGENT AND 1°28'00" CURVE RIGHT

SUPERELEVATION: VARIES, NORMAL CROWN TO 0.048

STRUCTURAL FILE NUMBER: 1813935

DATE BUILT: 1971

DISPOSITION: TO BE REHABILITATED

WEARING SURFACE: 2"± SUPERPLASTICIZED DENSE CONCRETE OVERLAY (2002)

COORDINATES: N 41°25'03.94"
W 81°31'01.42"

PROPOSED WORK

CONVERT STUB ABUTMENTS TO SEMI-INTEGRAL TYPE.

REPLACE BEARINGS WITH NEW ELASTOMERIC BEARINGS.

REPLACE EXISTING APPROACH SLABS, CONVERT TO AS-1-15 AND AS-2-15. (30' LONG-TYPE A)

NOTES:

1. DETAILS FROM THIS SHEET ARE TAKEN FROM EXISTING PLANS AND SHOULD BE USED FOR INFORMATION PURPOSES ONLY.
2. PERFORM ONLY THE WORK AS INDICATED IN THE PROPOSED WORK, FRAMED TEXT, AND/OR DESCRIBED IN THE GENERAL NOTES.
3. FOR ESTIMATED QUANTITES, SEE SHEET 3/22.
4. RELOCATED LIBBY RD. = BARTLETT RD.
   ℄ I-80 = ℄ I-480

DESIGN AGENCY
AECOM
AKRON CLEVELAND COLUMBUS
564 WHITE POND DRIVE
AKRON, OHIO 44320-1100
(330) 836-9111

DESIGNED	DRAWN	REVIEWED	DATE
JDM	JDM	JTH	2/18
CHECKED	REVISED	STRUCTURE FILE NUMBER	
DEB		1813935	

SITE PLAN
BRIDGE NO. CUY-480-2503
I-480 OVER BARTLETT RD

CUY-480-25.03
PID No. 106690

G:\Cleveland\DCS\Projects\OXDOT\60441780_GES16to17\Structures\Task 14\106690\Design\Structures\Sheets\480_2503C_SG001.dgn - 2/23/2018 10:11:20 AM - david.buchanan

STANDARD DRAWINGS AND SUPPLEMENTAL SPECIFICATIONS

REFERENCE SHALL BE MADE TO STANDARD DRAWINGS:

AS-1-15	REVISED	07-17-15
AS-2-15	REVISED	07-17-15
SICD-1-96	REVISED	07-18-14
SICD-2-14	REVISED	07-18-14
PCB-91	REVISED	01-18-13
BR-1-13	REVISED	01-17-14

AND TO THE FOLLOWING SUPPLEMENTAL SPECIFICATIONS:

SS800	DATED	01-19-18
SS832	DATED	01-17-14
SS846	DATED	01-17-14

DESIGN SPECIFICATIONS

THESE STRUCTURES CONFORM TO THE "STANDARD SPECIFICATIONS FOR HIGHWAY BRIDGES" ADOPTED BY THE AMERICAN ASSOCIATION OF STATE HIGHWAY AND TRANSPORTATION OFFICIALS, 2002, INCLUDING THE 2005 INTERIM SPECIFICATIONS AND THE ODOT BRIDGE DESIGN MANUAL, 2004.

DESIGN LOADING

HS20, CASE I AND ALTERNATE MILITARY LOADING
FUTURE WEARING SURFACE (FWS) OF 60 PSF

DESIGN DATA

CONCRETE CLASS QC2 - COMPRESSIVE STRENGTH 4.5 KSI (SUPERSTRUCTURE)
CONCRETE CLASS QC1 - COMPRESSIVE STRENGTH 4.0 KSI (SUBSTRUCTURE)
REINFORCING STEEL - ASTM A615 OR A996, GRADE 60
- MINIMUM YIELD STRENGTH 60 KSI
STRUCTURAL STEEL - ASTM A36, GRADE 36
- YIELD STRENGTH 36 KSI (EX. BEAMS AND CROSSFRAMES)

DECK PROTECTION METHOD

EPOXY COATED REINFORCING STEEL
2½" CONCRETE COVER
CLASS QC2 CONCRETE

MONOLITHIC WEARING SURFACE (NEW PORTIONS OF DECK)

MONOLITHIC WEARING SURFACE IS ASSUMED, FOR DESIGN PURPOSES, TO BE 1" THICK.

EXISTING STRUCTURE VERIFICATION

DETAILS AND DIMENSIONS SHOWN ON THESE PLANS PERTAINING TO THE EXISTING STRUCTURE HAVE BEEN OBTAINED FROM PLANS OF THE EXISTING STRUCTURE AND FROM FIELD OBSERVATIONS AND MEASUREMENTS. CONSEQUENTLY, THEY ARE INDICATIVE OF THE EXISTING STRUCTURE AND THE PROPOSED WORK BUT THEY SHALL BE CONSIDERED TENTATIVE AND APPROXIMATE. THE CONTRACTOR IS REFERRED TO CMS SECTIONS 102.05, 105.02 AND 513.04.

BASE CONTRACT BID PRICES UPON A RECOGNITION OF THE UNCERTAINTIES DESCRIBED ABOVE AND UPON A PREBID EXAMINATION OF THE EXISTING STRUCTURE. HOWEVER, THE DEPARTMENT WILL PAY FOR ALL PROJECT WORK BASED UPON ACTUAL DETAILS AND DIMENSIONS THAT HAVE BEEN VERIFIED IN THE FIELD.

PROPOSED WORK

- REMOVE EXISTING JOINTS AND 3'-9" OF DECK, EACH END OF BRIDGE
- BUILD UP EXISTING PIER CAPS
- REPLACE BEARINGS WITH NEW ELASTOMERIC BEARINGS
- CONVERT ABUTMENTS TO SEMI-INTEGRAL TYPE AND REPLACE POROUS BACKFILL
- POUR NEW END DIAPHRAGMS AND REPLACE ADJACENT 5'-3" OF DECK, PARAPETS AND MEDIAN
- REPLACE APPROACH SLABS

DECK PLACEMENT DESIGN ASSUMPTIONS

DUE TO THE SHORT LENGTH OF DECK TO BE FINISHED, THE USE OF A FINISHING MACHINE IS NOT REQUIRED. SHOULD THE CONTRACTOR ELECT TO USE A FINISHING MACHINE HE SHALL SUBMIT HIS PROPOSED METHOD OF SUPPORTING THE FINISHING MACHINE TO THE ENGINEER PER CMS 501.05 REQUIREMENTS

ITEM 202 - PORTIONS OF STRUCTURE REMOVED, AS PER PLAN

ALL REQUIREMENTS OF ODOT CMS 202.03 SHALL APPLY WITH THE FOLLOWING ADDITIONS. THIS WORK SHALL INCLUDE THE PHASED REMOVAL OF THE EXISTING STRUCTURE AS INDICATED IN THE PLANS AND GENERAL NOTES. THE USE OF EXPLOSIVES AND HEADACHE BALLS WILL NOT BE PERMITTED FOR ANY DEMOLITON OF EXISTING STRUCTURES.

PHASED DECK SLAB AND APPROACH SLAB REMOVAL:
THE EXISTING APPROACH SLABS AND PORTIONS OF THE DECK SLAB SHALL BE REMOVED IN PHASES AS SHOWN IN THE PLANS. THE CONTRACTOR SHALL USED EXTREME CARE TO NOT DAMAGE THE EXISTING BEAMS.

PHASED CONCRETE ABUTMENT AND END CROSSFRAME REMOVAL:
PORTIONS OF THE EXISTING ABUTMENT SHALL BE REMOVED IN PHASES AS NEEDED TO CONVERT THE ABUTMENT TO SEMI-INTEGRAL TYPE. THE WORK SHALL BE DONE BY MEANS OF APPROVED PNEUMATIC HAMMERS EMPLOYING POINTED AND BLUNT CHISEL TOOLS. HYDRAULIC HOE RAM TYPE HAMMERS WILL NOT BE PERMITTED. THE WEIGHT OF THE HAMMER SHALL NOT BE MORE THAN 35 POUNDS FOR REMOVAL WITHIN 18 INCHES OF PORTIONS TO BE PRESERVED. OUTSIDE THE 18 INCH LIMITS, HAMMER NOT EXCEEDING 90 POUNDS MAY BE USED UPON THE APPROVAL OF THE ENGINEER. PNEUMATIC HAMMERS SHALL NOT BE PLACED IN DIRECT CONTACT WITH REINFORCING STEEL THAT IS TO BE RETAINED IN THE REBUILT STRUCTURE.

THE EXISTING END CROSSFRAMES SHALL BE REMOVED BY PHASE AS NEEDED TO PERMIT FORMING AND POURING THE SEMI-INTEGRAL ABUTMENT. AFTER STEEL IS REMOVED, DAMAGED PAINT AREAS THAT REMAIN WITH THE CONCRETE ENCASEMENT SHALL BE TOUCHED UP WITH A PRIME COAT ONLY PER 514.22.

THE EXISTING END CROSSFRAMES NOTED ABOVE, SHALL BE REMOVED FROM THE REUSED BEAMS WITHOUT GOUGING THE BEAM WEB. THE WEB SHALL BE GROUND SMOOTH IN THE DIRECTION OF THE LENGTH OF THE BEAM TO REMOVE ALL WELD MATERIAL.

PROTECTION OF TRAFFIC:
PRIOR TO ANY DEMOLITION OF THE EXISTING SUPERSTRUCTURE, THE CONTRACTOR SHALL SUBMIT PLANS FOR THE PROTECTION OF TRAFFIC IN ACCORDANCE WITH CMS 501.05.

CUT LINE CONSTRUCTION JOINT PREPARATION:
SAW CUT BOUNDARIES OF PROPOSED CONCRETE REMOVALS 1" DEEP. REMOVE CONCRETE TO ROUGH SURFACE. INSTALL DOWEL BARS AS SPECIFIED. PRIOR TO CONCRETE PLACEMENT, ABRASIVELY CLEAN JOINT SURFACES TO REMOVE LOOSE AND DISINTEGRATED CONCRETE. THE JOINT SURFACE SHALL BE THOROUGHLY CLEANED OF ALL DIRT, DUST, OR OTHER FOREIGN MATERIAL BY THE USE OF WATER, AIR UNDER PRESSURE OR OTHER METHODS THAT PRODUCE SATISFACTORY RESULTS. THOROUGHLY DRENCH EXISTING CONCRETE SURFACES WITH CLEAN WATER AND ALLOW TO DRY TO A DAMP CONDITION BEFORE PLACING CONCRETE.

MEASUREMENT & PAYMENT:
THE DEPARTMENT WILL MEASURE THE QUANTITY OF REMOVALS ON A LUMP SUM BASIS. THE DEPARTMENT WILL PAY FOR THE ACCEPTED QUANTITIES OF REMOVALS AT THE CONTRACT PRICE FOR ITEM 202, PORTIONS OF STRUCTURE REMOVED, AS PER PLAN.

ITEM 513 - STRUCTURAL STEEL, MISC.: DRILLING STRUCTURAL STEEL

THIS WORK CONSISTS OF DRILLING 2" DIAMETER HOLES IN THE WEB OF EXISITING BEAMS, TO PERMIT THE PLACEMENT OF HORIZONTAL REBAR RUNNING ALONG THE NEAR FACE OF THE PROPOSED ABUTMENT DIAPHRAGM. DRILL HOLES PER THE DIMENSIONS AS DESCRIBED IN THE PLANS. PRIOR TO PLACING REBAR, CLEAN AND TOUCH UP ANY EXPOSED STEEL OR DAMAGED PAINT AREAS WITH PRIME COAT ONLY PER 514.22.

THE NUMBER OF HOLES DRILLED IN THE STRUCTURAL STEEL AS DETAILED ABOVE WILL BE PAID FOR AT THE CONTRACT PRICE PER EACH HOLE. PRICE AND PAYMENT SHALL BE FULL COMPENSATION FOR FURNISHING ALL MATERIAL, LABOR, AND EQUIPMENT NECESSARY FOR DRILLING THE HOLES AND REFINISHING PAINTED AREAS.

THE FOLLOWING HAS BEEN CARRIED TO THE ESTIMATED QUANTITIES:

ITEM 513 - STRUCTURAL STEEL, MISC.: DRILLING STRUCTURAL STEEL.....72 EACH

ITEM 516 - JACKING AND TEMPORARY SUPPORT OF SUPERSTRUCTURE, AS PER PLAN

AT ALL LOCATIONS THIS WORK CONSISTS OF RAISING OR RE-POSITIONING EXISTING STRUCTURES TO PERFORM THE WORK DEFINED IN THE PROJECT PLANS DURING PHASE 1 OF CONSTRUCTION.

THE CONTRACTOR SHALL BE RESPONSIBLE FOR THE DESIGN AND INSTALLATION OF AN ADEQUATE JACKING SYSTEM CAPABLE OF SUPPORTING THE BEAMS AS INDICATED. A SUFFICIENT NUMBER OF JACKS OF ADEQUATE CAPACITY SHALL BE USED TO OFFSET THE DEAD LOAD AND LIVE LOAD REACTIONS OF THE STRUCTURE FOR VERTICAL LIFT. TEMPORARY BEARINGS AND BLOCKING SHALL BE AS INDICATED IN CMS 501.05. THE ESTIMATED DEAD LOAD AND LIVE LOAD REACTIONS ARE GIVEN ON SHEET 9/22.

REMOVAL AND REPLACEMENT OF EXISTING CONCRETE SLOPE PROTECTION TO FACILITATE TEMPORARY SUPPORT OF SUPERSTRUCTURE SHALL BE INCLUDED FOR PAYMENT WITH ITEM 516 FOR PAYMENT AND MEET 601 REQUIREMENTS. ALL REPLACED CONCRETE SLOPE PROTECTION AREAS SHALL BE 6 INCHES THICK REGARDLESS OF EXISTING CONCRETE SLOPE PROTECTION THICKNESS. EXISTING CONCRETE SLOPE PROTECTION DEEMED DAMAGED AND REQUIRING REPLACEMENT BY THE ENGINEER SHALL BE PAID FOR SEPARATELY AT THE ITEM 601 CONTRACT UNIT PRICE.

THE CONTRACTOR SHALL FURNISH JACKS WITH A TOTAL MINIMUM CAPACITY OF 150% OF THE ESTIMATED EXISTING LOADS LISTED IN THESE PLANS, ON 6/22 AT THE ABUTMENTS AND 8/22 FOR THE PIERS WHICH CORRESPOND TO 150% OF VALUES SHOWN ON 9/22. THE STRUCTURE SHALL NOT BE RAISED MORE THAN ¼" TO REMOVE THE BEARINGS. JACKS UNDER HYDRAULIC PRESSURE SHALL NOT BE USED TO SUPPORT LIVE LOADS. JACKS SHALL BE SHIMMED TIGHT OR OTHERWISE BLOCKED WHEN UNDER LIVE LOAD. GIRDERS SHALL NOT BE SUPPORTED ON VERTICAL JACKS DURING NON-WORKING HOURS OR WHILE UNATTENDED BY CONTRACTOR PERSONNEL.

TEMPORARY JACKS, BLOCKING, AND TEMPORARY BEARINGS SHALL BE USED FOR SUPPORT ON TOP OF THE SUBSTRUCTURE UNITS.

JACKS FOR LIFTING THE STRUCTURE SHALL BE HYDRAULIC RAM-TYPE WITH ELECTRIC POWER PUMPS. MULTIPLE JACKS AT A SINGLE BEARING LOCATION SHALL BE CONNECTED TO A HYDRAULIC MANIFOLD AND OPERATED BY A SINGLE PUMP TO PROVIDE EQUAL LIFTING PRESSURE. THE CONTRACTOR SHALL FURNISH PERSONNEL TO OPERATE AND/OR OBSERVE JACKS AT EACH BEARING LOCATION.

THE CONTRACTOR SHALL SUBMIT DETAILS OF THE TEMPORARY SUPPORT SYSTEM AND METHODS AND PROCEDURES FOR UNLOADING THE BEARINGS TO THE ENGINEER FOR APPROVAL PRIOR TO BEGINNING WORK. THE CONTRACTOR MAY SUBMIT DETAILS OF AN ALTERNATE TEMPORARY SUPPORT SYSTEM AND METHODS AND PROCEDURES FOR UNLOADING THE BEARINGS TO THE ENGINEER FOR APPROVAL PRIOR TO BEGINNING WORK. THE CONTRACTOR SHALL NOT USE SHEAR CONNECTIONS DRILLED INTO THE FACE OF THE PIER OR ABUTMENT AS AN ACCEPTABLE MEANS FOR JACKING. THE SUBMITTAL SHALL INDICATE MATERIALS, MEMBER SIZES, SPACINGS, JACK POINT LOCATIONS, JACKING LOADS, AND INSTALLATION AND REMOVAL PROCEDURES. DETAILED PLANS OF THE TEMPORARY SUPPORT SHALL BE PREPARED AND SUBMITTED IN ACCORDANCE WITH CMS 501.05.

AFTER ALL BEARING WORK IS COMPLETE, ALL JACKS AND TEMPORARY SUPPORT MATERIAL SHALL BE REMOVED.

IF, DURING THE JACKING OPERATIONS, CRACKING OF THE CONCRETE SUPERSTRUCTURE, SEPARATION OF THE CONCRETE DECK FROM THE STEEL BEAMS, OR OTHER DAMAGE TO THE STRUCTURE IS VISUALLY OBSERVED, IMMEDIATELY CEASE THE JACKING OPERATION AND INSTALL SUPPORTS TO THE SATISFACTION OF THE ENGINEER. ANALYZE THE DAMAGE AND SUBMIT A METHOD OF CORRECTION TO THE ENGINEER FOR APPROVAL. EPOXY INJECT ALL BEAMS THAT SEPARATE FROM THE DECK FOR THE DISTANCE OF THE SEPARATION IN ACCORDANCE WITH CMS 512.07. THE DEPARTMENT WILL NOT PAY FOR THE COST OF THIS EPOXY INJECTION OR OTHER REQUIRED REPAIRS. THE BRIDGE BEARINGS SHALL BE FULLY SEATED AT ALL CONTACT AREAS IF FULL SETTING IS NOT ATTAINED. SUBMIT A REPAIR PLAN TO THE ENGINEER. THE DEPARTMENT WILL NOT PAY FOR THE REPAIR COSTS TO ENSURE A FULL SEATING ON BEARINGS.

THE DEPARTMENT WILL MEASURE THIS WORK ON A LUMP SUM BASIS THAT INCLUDES ALL LABOR, MATERIALS, AND EQUIPMENT REQUIRED FOR JACKING, INCLUDING ALL TEMPORARY SUPPORTS, AND SUBMITTAL. THE DEPARTMENT WILL PAY FOR THE ACCEPTED QUANTITIES AT THE CONTRACT PRICE FOR ITEM 516 - JACKING AND TEMPORARY SUPPORT OF SUPERSTRUCTURE, AS PER PLAN.

ABBREVIATIONS

THE FOLLOWING STANDARD ABBREVIATIONS ARE USED THROUGHOUT THE PLANS:

ABUT. - ABUTMENT
APPR. - APPROACH
B OR BOT. - BOTTOM
BRG. - BEARING
BTWN - BETWEEN
C/C - CENTER TO CENTER
C.I.P. - CAST IN PLACE
C.J. - CONSTRUCTION JOINT
℄ - CENTERLINE
CLR. - CLEARANCE
CONST. - CONSTRUCTION
DIA. - DIAMETER
DWG. - DRAWING
EA. - EACH
E.F. - EACH FACE
EL. OR ELEV. - ELEVATION
EQ. - EQUAL
EST. - ESTIMATED
EX. OR EXIST. - EXISTING
EXP. - EXPANSION
F.A. - FORWARD ABUTMENT
F.F. - FAR FACE
F/F - FACE TO FACE
FIX. - FIXED
FTG. - FOOTING
F.S. - FIELD SPLICE
FWD. - FORWARD
GIR. - GIRDER
GIR'S. - GIRDERS
HW - HIGH WATER MARK
HORIZ. - HORIZONTAL
JT. - JOINT
LF - LEFT FORWARD
LT. - LEFT
MAX. - MAXIMUM
MID - MIDDLE
MIN. - MINIMUM
N.F. - NEAR FACE
N.B. - NORTHBOUND
NO. - NUMBER
O.C.J. - OPTIONAL CONSTRUCTION JOINT
O/O - OUT TO OUT
ORD. - ORDINARY
P1 - PIER 1
P2 - PIER 2
PCB - PORTABLE CONCRETE BARRIER
P.C.P.P. - PERFORATED CORRUGATED PLASTIC PIPE
P.E.J.F. - PREFORMED EXPANSION JOINT FILLER
P/G OR P.G.- PROFILE GRADE
PL. - PLATE
PR. OR PROP. - PROPOSED
R.A. - REAR ABUTMENT
R.C.P. - ROCK CHANNEL PROTECTION
REF. - REFERENCE
REIN. - REINFORCING OR REINFORCEMENT
REQ. OR REQ'D. - REQUIRED
RT. - RIGHT
S.B. - SOUTHBOUND
SER. - SERIES
SHLD. - SHOULDER
SPA. - SPACE(D) OR SPACING
STA. - STATION
STD. DWG. OR SCD - STANDARD CONSTRUCTION DRAWING
T/ - TOP
T&B - TOP AND BOTTOM
THK. - THICK
TYP. - TYPICAL
U.N.O. - UNLESS NOTED OTHERWISE
VAR. - VARIES
VERT. - VERTICAL
W/ - WITH
W.P. - WORK POINT

THE SYMBOLS BELOW DESIGNATE THE NAMES AND LOCATIONS OF THE SECTION DETAILS THROUGHOUT THE STRUCTURE PLANS. THE TOP LETTER DESIGNATES THE SECTION NAME. THE BOTTOM NUMBER(S) SHOW WHICH STRUCTURE SHEET IS BEING CROSS REFERENCED.

DESIGN AGENCY
AECOM
AKRON CLEVELAND COLUMBUS
564 WHITE POND DRIVE
AKRON, OHIO 44320-1100
(330) 836-9111

DESIGNED	DRAWN	REVIEWED	DATE
JDM	JDM	JTH	2/18
CHECKED	REVISED	STRUCTURE FILE NUMBER	
DEB		1813935	

STRUCTURE GENERAL NOTES
BRIDGE NO. CUY-480-2503
I-480 OVER BARTLETT RD

CUY-480-25.03
PID No. 106690

G:\Cleveland\DCS\Projects\0\0D0T\60441780_GE5\6tol7\Structures\Task 14\106690\Design\Structures\Sheets\480_2503C_SN001.dgn - 4/9/2018 8:53:23 AM - William.Shea

QUANTITIES	CALC BY:	AMA
	CHECK BY:	JDM

ITEM	EXT.	PARTICIPATION 01/IMS/BR	TOTAL	UNIT	DESCRIPTION	BRIDGE NO. CUY-480-2503 SUBSTRUCTURE	SUPERSTRUCTURE	GENERAL	REFERENCE SHEET(S)
202	11201	LS	LS		PORTIONS OF STRUCTURE REMOVED, AS PER PLAN				2/22 AND 6/22
202	22900	267	267	SY	APPROACH SLAB REMOVED			267	
503	21100	100	100	CY	UNCLASSIFIED EXCAVATION	100			
503	11100	LS	LS		COFFERDAMS AND EXCAVATION BRACING				
509	10000	27,538	27,538	LB	EPOXY COATED REINFORCING STEEL	2,480	20,944	4,114	
510	10000	500	500	EACH	DOWEL HOLES WITH NONSHRINK, NONMETALLIC GROUT	448	52		
511	21522	145	145	CY	CLASS QC2 CONCRETE WITH QC/QA, SUPERSTRUCTURE		115	30	
511	33501	4	4	EACH	SEMI-INTEGRAL DIAPHRAGM GUIDE, AS PER PLAN		4		7/22
511	43210	20	20	CY	CLASS QC1 CONCRETE, PIER	20			
512	10100	675	675	SY	SEALING OF CONCRETE SURFACES (EPOXY-URETHANE)	331	148	196	
512	33000	14	14	SY	TYPE 2 WATERPROOFING	14			12/22
512	74000	320	320	SY	REMOVAL OF EXISTING COATINGS FROM CONCRETE SURFACES		320		
513	95030	72	72	EACH	STRUCTURAL STEEL, MISC.: DRILLING STRUCTURAL STEEL		72		2/22 AND 12/22
516	13600	35	35	SF	1" PREFORMED EXPANSION JOINT FILLER		35		
516	13900	54	54	SF	2" PREFORMED EXPANSION JOINT FILLER		54		
516	14021	176	176	FT	SEMI-INTEGRAL ABUTMENT EXPANSION JOINT SEAL, AS PER PLAN		176		12/22
516	44101	24	24	EACH	ELASTOMERIC BEARING WITH INTERNAL LAMINATES AND LOAD PLATE (NEOPRENE), AS PER PLAN (10"x16"x2.95" WITH 12"X17"X1.5 PLATE)		24		9/22
516	44201	24	24	EACH	ELASTOMERIC BEARING WITH INTERNAL LAMINATES AND LOAD PLATE (NEOPRENE), AS PER PLAN (12"x16"x3.40" WITH 13"X17"X1.75 PLATE)		24		9/22
516	47001	LS	LS		JACKING AND TEMPORARY SUPPORT OF SUPERSTRUCTURE, AS PER PLAN				2/22, 6/22 AND 8/22
518	21200	55	55	CY	POROUS BACKFILL WITH GEOTEXTILE FABRIC	55			
518	40000	164	164	FT	6" PERFORATED CORRUGATED PLASTIC PIPE	164			
518	40011	60	60	FT	6" NON-PERFORATED CORRUGATED PLASTIC PIPE, INCLUDING SPECIALS, AS PER PLAN	60			7/22 AND 12/22
526	30011	590	590	SY	REINFORCED CONCRETE APPROACH SLABS WITH QC/QA (T=17"), AS PER PLAN			590	7/22 AND 16/22
526	90010	168	168	FT	TYPE A INSTALLATION			168	16/22
601	21001	100	100	SY	CONCRETE SLOPE PROTECTION, AS PER PLAN REPAIR			100	33/56
846	00110	71	71	CF	POLYMER MODIFIED ASPHALT EXPANSION JOINT SYSTEM			71	

REV. BY	DATE	DESCRIPTION
JDM	4/3/18	ITEM 202 WEARING COURSE REMOVED - DELETED
DEB	4/3/18	ITEM 503 11100 & 601 21001

DATE COMPLETED

DESIGN AGENCY
AECOM
AKRON CLEVELAND COLUMBUS
564 WHITE POND DRIVE
AKRON, OHIO 44320-1100
(330) 836-9111

DESIGNED	DRAWN	REVIEWED	DATE
JDM	JDM	JTH	2/18
CHECKED DEB	REVISED	STRUCTURE FILE NUMBER 1813935	

ESTIMATED QUANTITIES

BRIDGE NO. CUY-480-2503
I-480 OVER BARTLETT RD

CUY-480-25.03
PID No. 106690

G:\Cleveland\DCS\Projects\O\ODOT\60441780_GESI6+0I7\Structures\Task 14\106690\Design\Structures\Sheets\480_2503C_S0001.dgn - 4/16/2018 11:21:31 AM - josh.d.miller

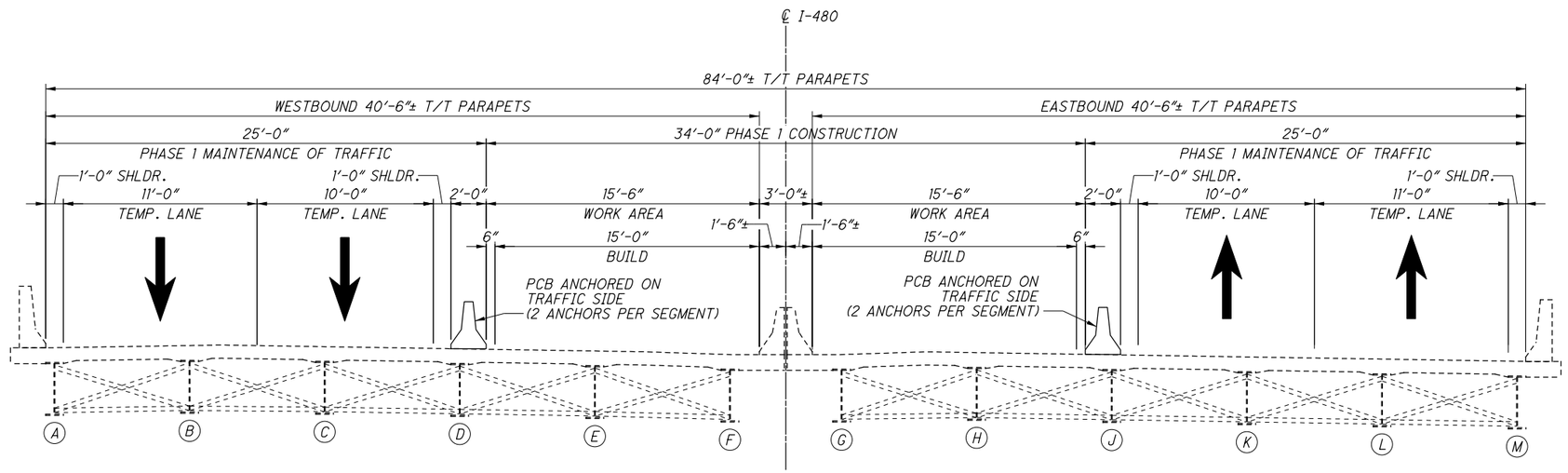

PHASE 1

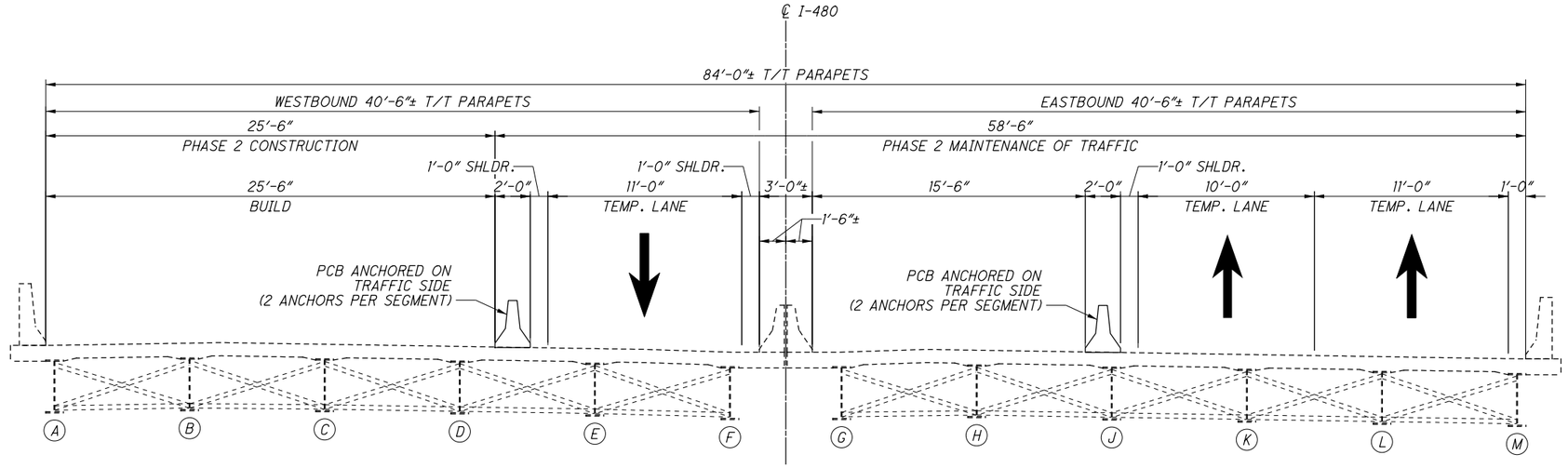

PHASE 2

NOTES:

1. ALL DIMENSIONS ARE MEASURED PERPENDICULAR TO ℄ I-480.
2. FOR ADDITIONAL PORTABLE BARRIER DETAILS, REFER TO STD. DWG. PCB-91.
3. FOR TRANSVERSE SECTION, SEE SHEET 14/22.
4. ANCHORS REQUIRED ON APPROACH SLABS AND 15' ONTO BRIDGE DECK ONLY.

DESIGN AGENCY
AECOM
AKRON CLEVELAND COLUMBUS
564 WHITE POND DRIVE
AKRON, OHIO 44320-1100
(330) 836-9111

DESIGNED	DRAWN	REVIEWED	DATE
JDM	JDM	JTH	2/18
CHECKED	REVISED	STRUCTURE FILE NUMBER	
DEB		1813935	

PHASE CONSTRUCTION DETAILS - 1 OF 2

BRIDGE NO. CUY-480-2503
I-480 OVER BARTLETT RD

CUY-480-25.03
PID No. 106690

G:\Cleveland\DCS\Projects\0\ODOT\60441780_GE5\6to17\Structures\Task 14\106690\Design\Structures\Sheets\480_2503C_SC001.dgn - 2/23/2018 10:11:57 AM - david.buchanan

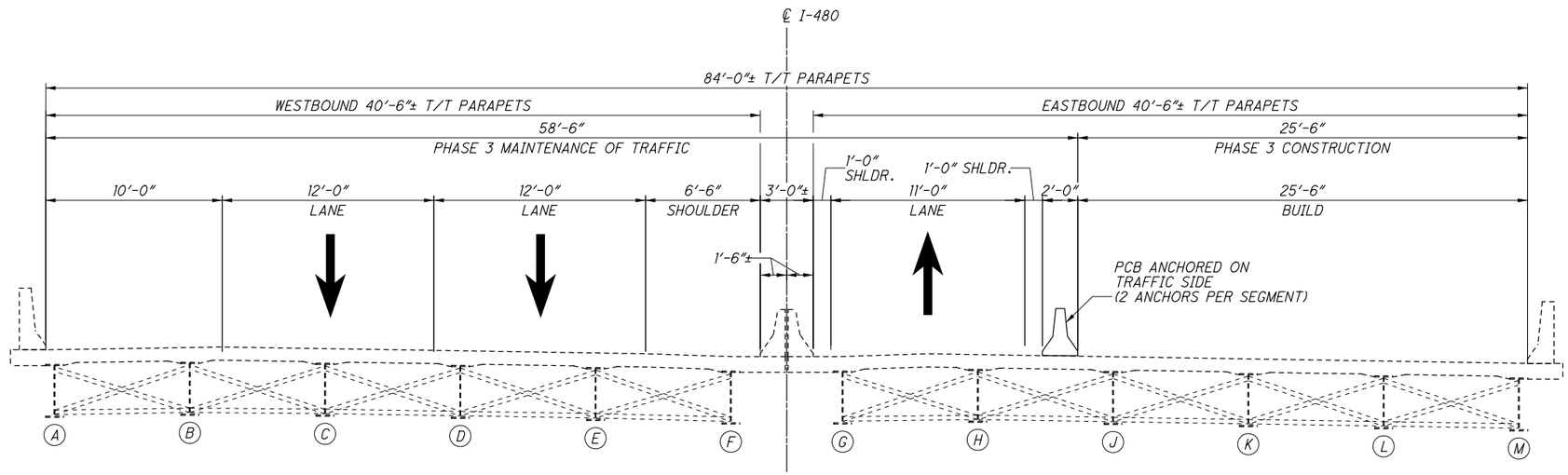

PHASE 3

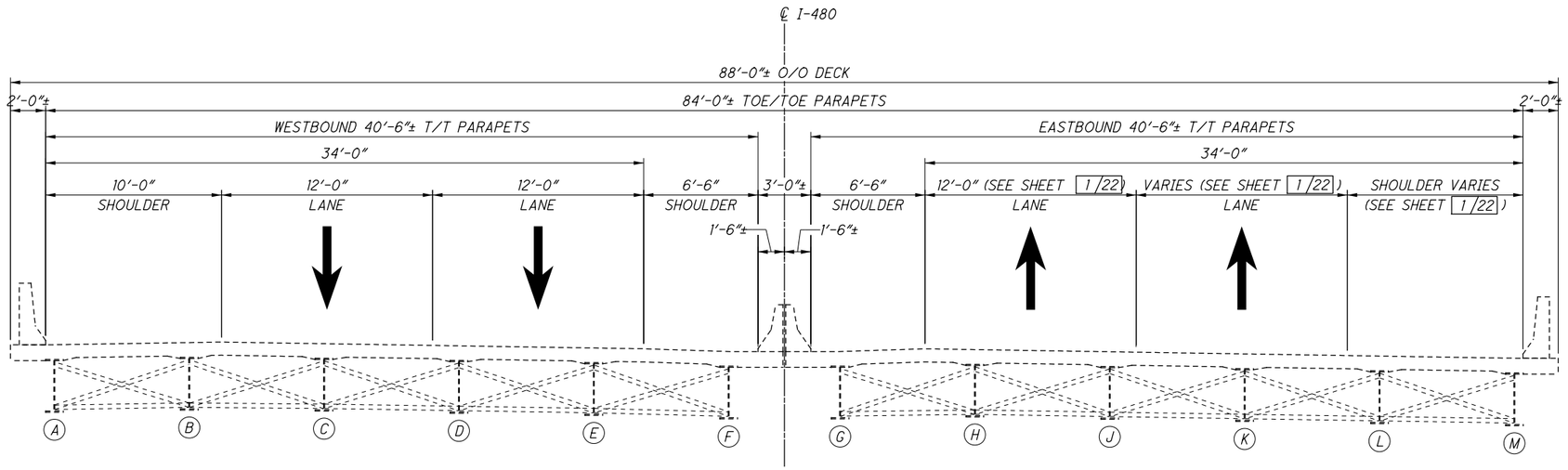

FINAL CONDITION

TO MATCH EXISTING CONDITION AND LANE LAYOUT

NOTES:

1. ALL DIMENSIONS ARE MEASURED PERPENDICULAR TO ℄ I-480.
2. FOR ADDITIONAL PORTABLE BARRIER DETAILS, REFER TO STD. DWG. PCB-91.
3. FOR TRANSVERSE SECTION, SEE SHEET 14/22.
4. ANCHORS REQUIRED ON APPROACH SLABS AND 15' ONTO BRIDGE DECK ONLY.

DESIGN AGENCY
AECOM
AKRON CLEVELAND COLUMBUS
564 WHITE POND DRIVE
AKRON, OHIO 44320-1100
(330) 836-9111

DESIGNED	DRAWN	REVIEWED	DATE
JDM	JDM	JTH	2/18
CHECKED	REVISED	STRUCTURE FILE NUMBER	
DEB		1813935	

PHASE CONSTRUCTION DETAILS - 2 OF 2

BRIDGE NO. CUY-480-2503
I-480 OVER BARTLETT RD

CUY-480-25.03
PID No. 106690

G:\Cleveland\DCS\Projects\0\ODOT\60441780_GE5\6tolT\Structures\Task 14\106690\Design\Structures\Sheets\480_2503C_SC002.dgn - 2/23/2018 10:11:59 AM - david.buchanan

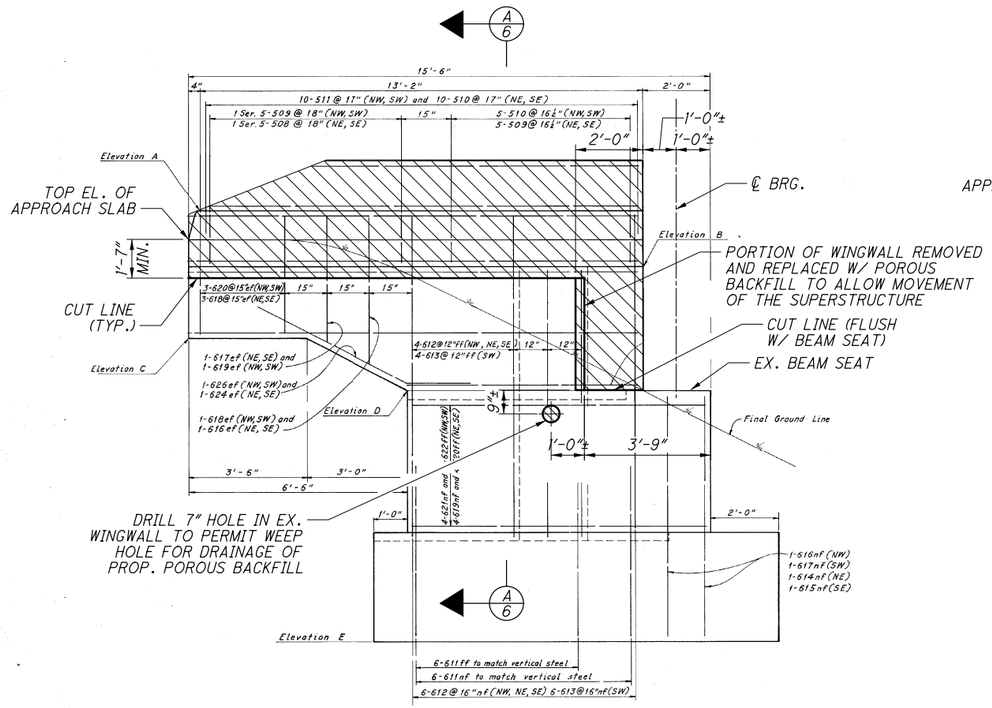

WINGWALL ELEVATION

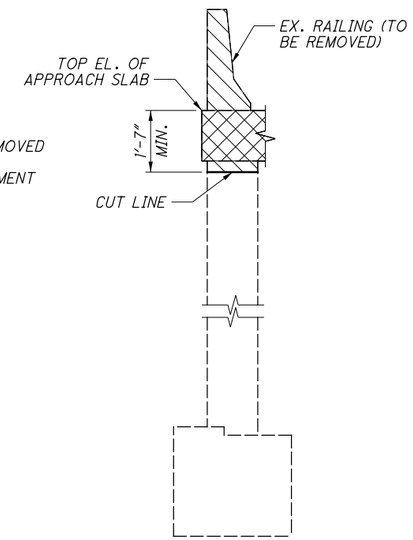

A/6 SECTION THRU EX. WINGWALL

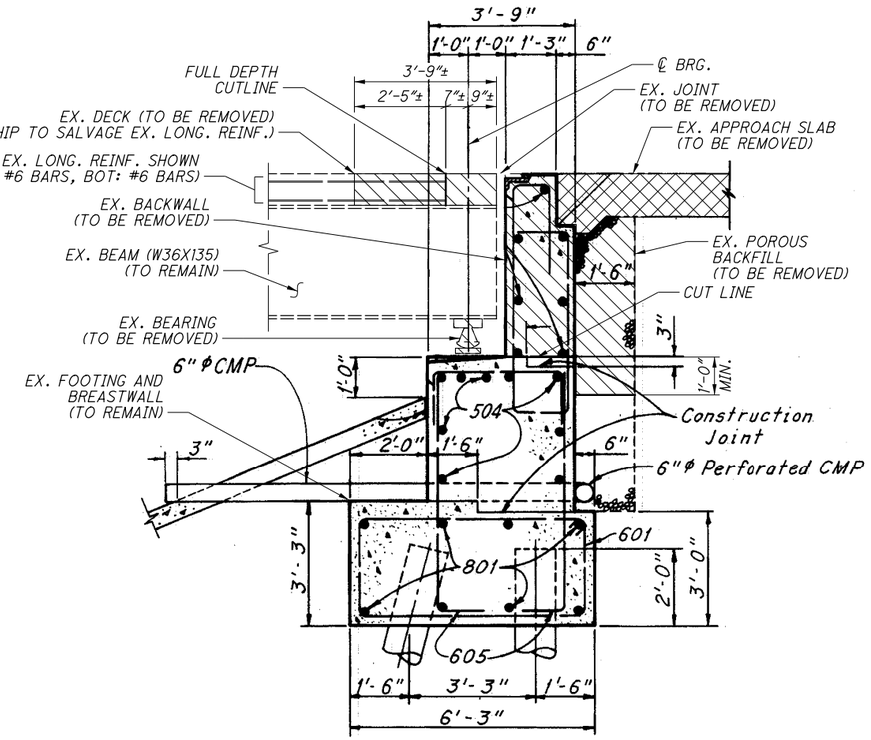

B/6 SECTION THRU EX. ABUT.

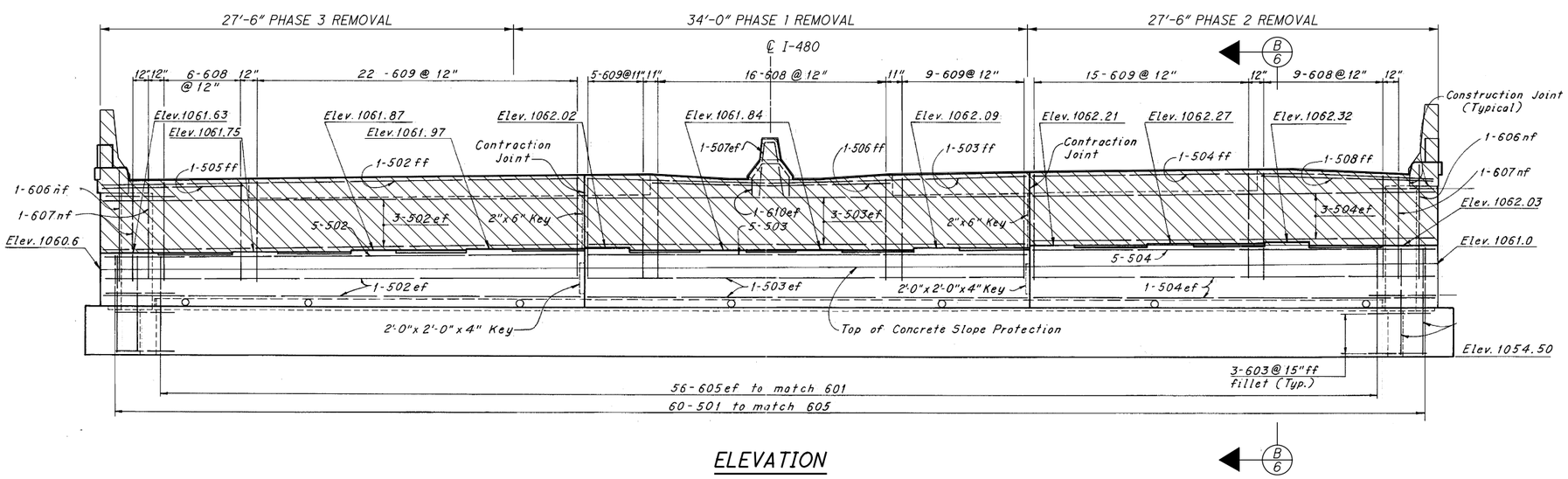

ELEVATION

REAR ABUTMENT SHOWN, FORWARD SIMILAR
(NOTE: CALLOUTS ARE EXISTING REINFORCING)

LEGEND:

- ITEM 202 - APPROACH SLAB REMOVED
- ITEM 202 - PORTIONS OF STRUCTURE REMOVED, AS PER PLAN

NOTES:

1. FOR ADDITIONAL REMOVAL INFORMATION SEE STRUCTURE GENERAL NOTES, SHEET 2/22.
2. FOR SEQUENCE OF CONSTRUCTION DETAILS, SEE SHEETS 4/22 AND 5/22.
3. CAUTION SHOULD BE USED DURING BACK WALL REMOVAL TO NOT DAMAGE THE EXISTING ABUTMENT SEAT, ANY SEAT DAMAGE IS TO BE REPAIRED PER 519 AND INCLUDED FOR PAYMENT WITH ITEM 202.
4. JACKING FORCES AT ABUTMENT = 106KIPS PER BEARING
5. DETAILS FROM THIS SHEET ARE TAKEN FROM EXISTING PLANS AND SHOULD BE USED FOR INFORMATION PURPOSES ONLY. PERFORM ONLY PROPOSED WORK LISTED IN LEGEND.
6. AN ESTIMATED QUANTITY OF 100 CUBIC YARDS OF UNCLASSIFIED EXCAVATION HAS BEEN INCLUDED FOR THE EXCAVATION REQUIRED TO REINSTALL THE PROPOSED POROUS BACKFILL.

DESIGN AGENCY
AECOM CLEVELAND COLUMBUS
564 WHITE POND DRIVE
AKRON, OHIO 44333-1100
(330) 836-9111

DESIGNED	DRAWN	REVIEWED	DATE
JDM	JDM	JTH	2/18
CHECKED	REVISED	STRUCTURE FILE NUMBER	
DEB		1813935	

REMOVAL DETAILS
BRIDGE NO. CUY-480-2503
I-480 OVER BARTLETT RD

CUY-480-25.03
PID No. 106690

G:\Cleveland\DCS\Projects\O\ODOT\60441780_GES16to17\Structures\Task 14\106690\Design\Structures\Sheets\480_2503C_SV001.dgn - 2/23/2018 10:12:01 AM - david.buchanan

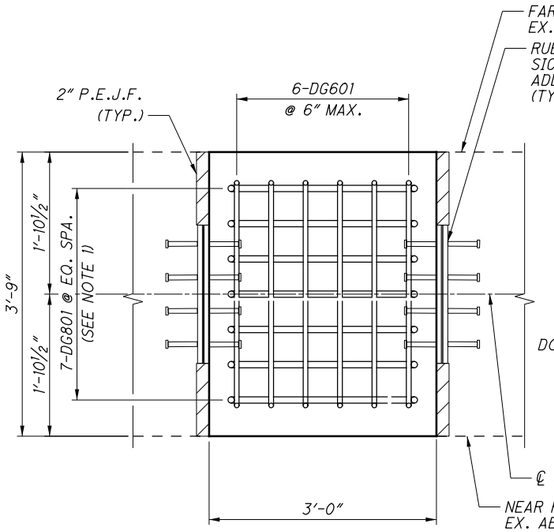

PARTIAL PLAN

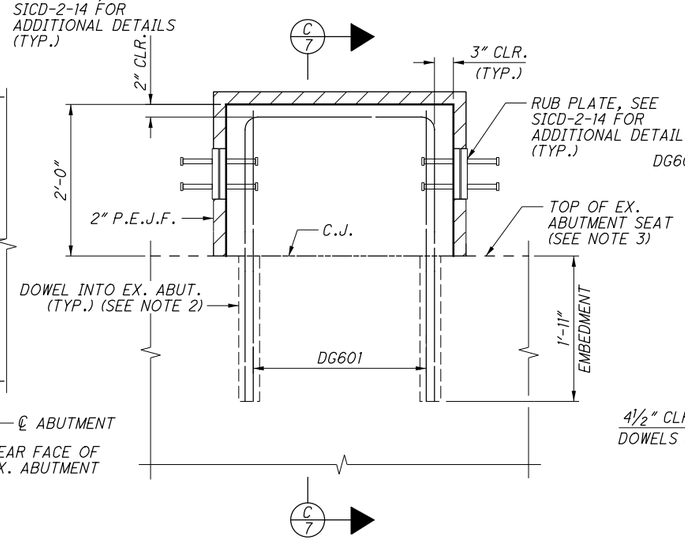

ELEVATION

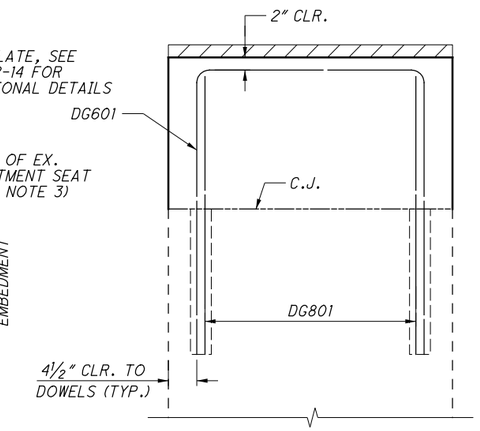

C 7 SECTION

DIAPHRAGM GUIDE DETAILS

MARK	NUMBER PER GUIDE*	TYPE	DIMENSIONS	
			A	B
SEMI-INTEGRAL ABUTMENT DIAPHRAGM				
DG601	6	2	3'-3"	3'-9"
DG801	7	2	2'-6"	3'-8"
BENDING DIAGRAMS				

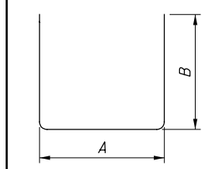

TYPE-2

* - 4 GUIDES REQUIRED
(2 AT PHASE 1, 2 AT PHASE 2)

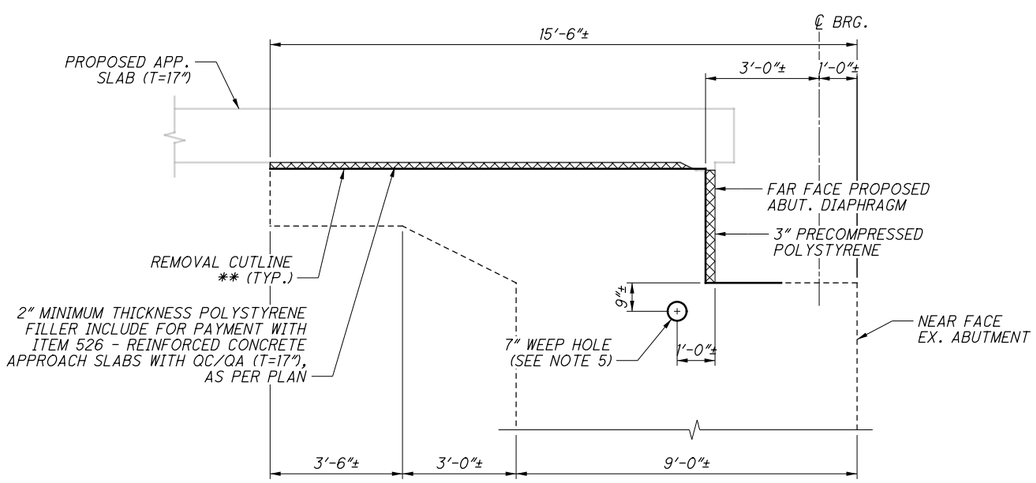

TYPICAL WINGWALL ELEVATION

LEGEND:

** - SEAL WINGWALL CUTLINE & ADDITONAL 6" (EACH SIDE) WITH EPOXY-URETHANE PRIOR TO APPLICATION OF P.E.J.F.

NOTES:

1. SPACE DIAPHRAGM GUIDE REINFORCEMENT BARS TO AVOID INTERFERENCE WITH ABUTMENT CAP REINFORCEMENT.
2. DRILL DOWEL HOLES WHERE SHOWN IN PLANS. INSTALL REINFORCING STEEL ACCORDING TO ITEM 510 USING NONSHRINK, NONMETALLIC GROUT, 705.20. PRIOR TO DRILLING DOWEL HOLES, LOCATE ALL EXISTING REINFORCING STEEL BARS IN THE AREA OF THE HOLE WITH THE AID OF REINFORCING STEEL BAR LOCATOR (PACHOMETER). IF AN EXISTING BAR IS ENCOUNTERED AT THE SAME LOCATIONS AS A PROPOSED DOWEL HOLE, MOVE THE DOWEL HOLE TO EITHER SIDE OF THE EXISTING BAR.
3. EXISTING ABUTMENT SEAT IS SLOPED ¾" TO NEAR FACE BETWEEN BEAM SEATS FOR DRAINAGE. THE SEMI-INTEGRAL DIAPHRAGM GUIDES ARE INTENDED TO BE INSTALLED PLUMB AND PARALLEL TO THE EXISTING BEAM SEATS. THE CONTRACTOR SHOULD MEASURE OFF THE HIGHEST POINT OF THE HORIZONTAL SLOPE WHILE FORMING THE DIAPHRAGM GUIDES.
4. FOR DIAPHRAGM GUIDE LOCATIONS AND ADDITIONAL DETAILS, SEE SHEETS 10/22 THRU 12/22.
5. GROUT WEEP HOLE FOLLOWING PLACEMENT OF 6" NON-PERFORATED, CORRUGATED, PLASTIC PIPE (703.33, TYPE SP) FOR POROUS BACKFILL DRAINAGE. ALL WORK PERTAINING TO THE CORING AND GROUTING OF EXISTING WINGWALL IS TO BE INCLUDED FOR PAYMENT WITH ITEM 518 6" NON-PERFORATED, CORRUGATED, PLASTIC PIPE, INCLUDING SPECIALS, AS PER PLAN.

DESIGN AGENCY
AECOM
AKRON CLEVELAND COLUMBUS
564 WHITE POND DRIVE
AKRON, OHIO 44320-1100
(330) 836-9111

DESIGNED	DRAWN	REVIEWED	DATE
JDM	JDM	JTH	2/18
CHECKED	REVISED	STRUCTURE FILE NUMBER	
DEB		1813935	

ABUTMENT DETAILS
BRIDGE NO. CUY-480-2503
I-480 OVER BARTLETT RD

CUY-480-25.03
PID No. 106690

G:\Cleveland\DCS\Projects\0\ODOT\60441780_GE5\6to17\Structures\Task 14\106690\Design\Structures\Sheets\480_2503C_SR001.dgn - 2/23/2018 10:12:09 AM - david.buchanan

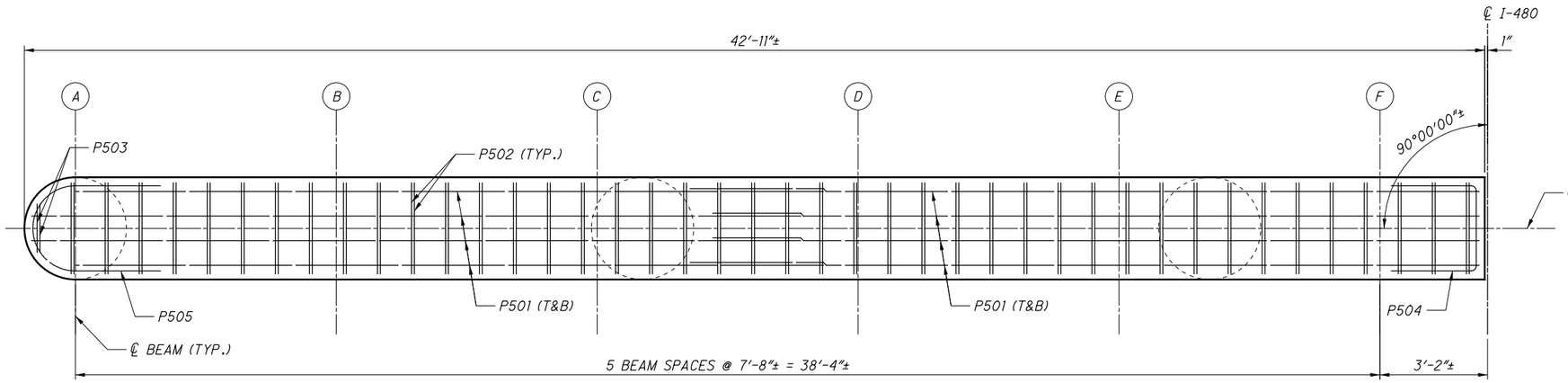

PARTIAL PLAN

NORTH END OF PIER 1 SHOWN, NORTH END OF PIER 2 SIMILAR
SOUTH END OF PIERS 1 & 2 OPPOSITE HAND
(EXISTING REINFORCING NOT SHOWN FOR CLARITY)

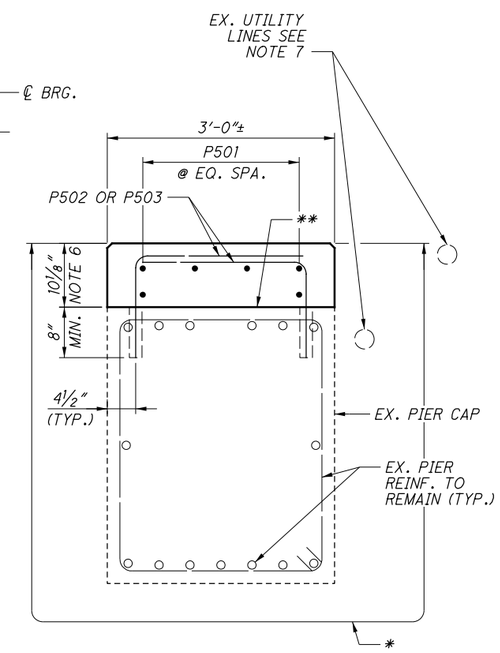

D/8 SECTION

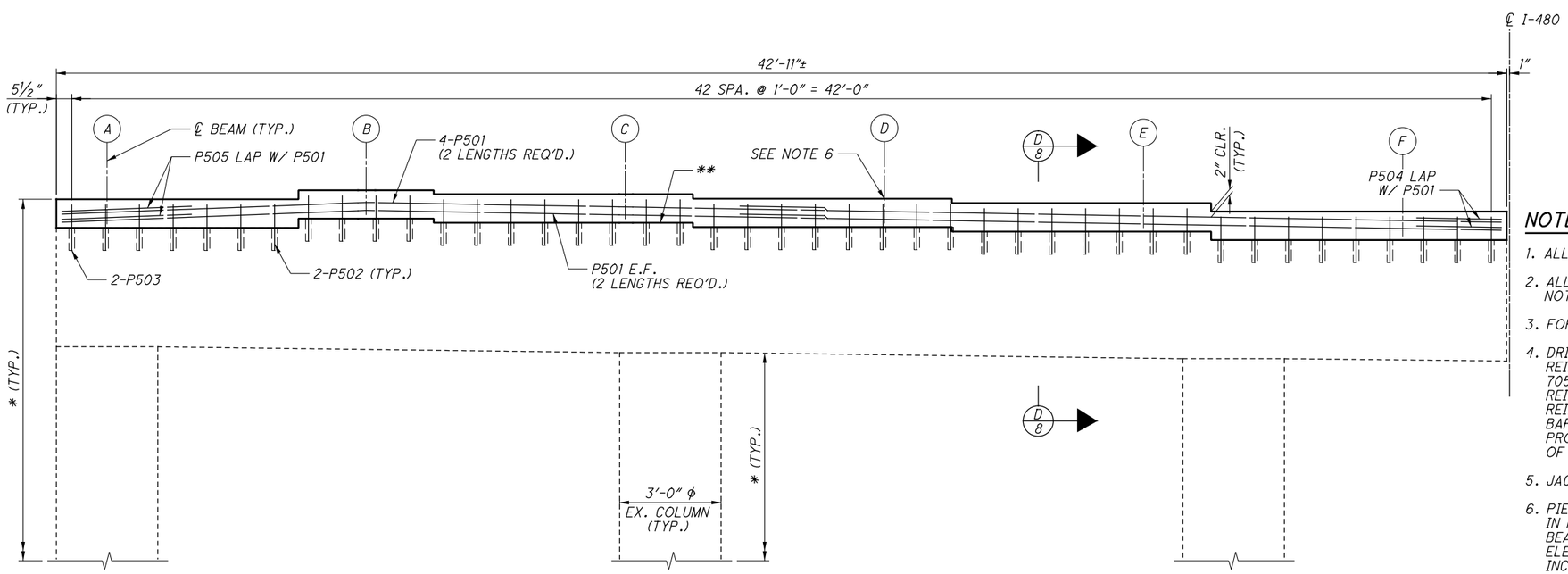

PARTIAL ELEVATION

NORTH END OF PIER 1 SHOWN, NORTH END OF PIER 2 SIMILAR
SOUTH END OF PIERS 1 & 2 OPPOSITE HAND
(EXISTING REINFORCING NOT SHOWN FOR CLARITY)

LEGEND:

* - LIMITS OF SEALING OF CONCRETE SURFACES (EPOXY-URETHANE). SEAL ALL EXPOSED SURFACES EXCEPT FOR TOPS OF PIERS

** - SCARIFY TOPS OF PIER CAPS PRIOR TO NEW CONCRETE

REQUIRED MIN. LAP LENGTHS	
NO. 5 BAR	2'-6"

NOTES:

1. ALL WORK AT PIERS SHALL BE PERFORMED IN ONE (1) SINGLE PHASE.
2. ALL REINFORCING BAR CLEARANCES SHALL BE 2" MINIMUM UNLESS NOTED OTHERWISE.
3. FOR REINFORCING SCHEDULE, SEE SHEET 19/22.
4. DRILL DOWEL HOLES WHERE SHOWN IN THE PLANS. INSTALL REINFORCING STEEL ACCORDING TO ITEM 510 USING EPOXY GROUT, 705.20. PRIOR TO DRILLING DOWEL HOLES, LOCATE ALL EXISTING REINFORCING STEEL BARS IN THE AREA OF THE HOLE WITH AID OF A REINFORCING STEEL BAR LOCATOR (PACHOMETER). IF AN EXISTING BAR IS ENCOUNTERED AT THE SAME LOCATIONS AS A PROPOSED DOWEL HOLE, MOVE THE DOWEL HOLE TO EITHER SIDE OF THE EXISTING BAR.
5. JACKING FORCES AT PIER = 245KIPS PER BEARING.
6. PIER CAP POUR HEIGHT WAS DETERMINED TO MAKE UP DIFFERENCE IN HEIGHT OF EXISTING BEARINGS VS. THE PROPOSED ELASTOMERIC BEARINGS. VERIFY TOP OF PIER ELEVATION OFF BOTTOM OF BEAM ELEVATIONS (AT ℄ BEARING) USING A PIER BEARING HEIGHT = 5.148 INCHES SEE SHEET 9/22. ADJUST THICKNESS OF CAP POUR ±1" MAX AS REQUIRED BASED ON FIELD MEASUREMENTS, IF IN THE CONTRACTORS OPINION THE CAP NEEDS ADJUSTED MORE THAN 1" IN THICKNESS NOTIFY THE ENGINEER 14 DAYS PRIOR TO FABRICATING REINFORCING
7. AT PIER 1 UTILITY LINES EXIST ADJACENT TO EXISTING PIER. CONTRACTOR SHALL COORDINATE HIS WORK WITH THESE LINES AND EITHER RELOCATE LINES OR TEMPORARILY DE-ENERGIZE FOR HIS WORK. IN ALL CASES, ACCESS PIER FROM SIDE OPPOSITE OF LINES.

DESIGN AGENCY
AECOM
AKRON CLEVELAND COLUMBUS
564 WHITE POND DRIVE
AKRON, OHIO 44320-1100
(330) 836-9111

DESIGNED	DRAWN	REVIEWED	DATE
JDM	JDM	JTH	2/18
CHECKED	REVISED	STRUCTURE FILE NUMBER	
DEB		1813935	

PIER DETAILS
BRIDGE NO. CUY-480-2503
I-480 OVER BARTLETT RD

CUY-480-25.03
PID No. 106690

G:\Cleveland\DCS\Projects\0\ODOT\60441780_GE5\6to17\Structures\Task 14\106690\Design\Structures\Sheets\480_2503C_S1001.dgn - 2/23/2018 10:12:11 AM - david.buchanan

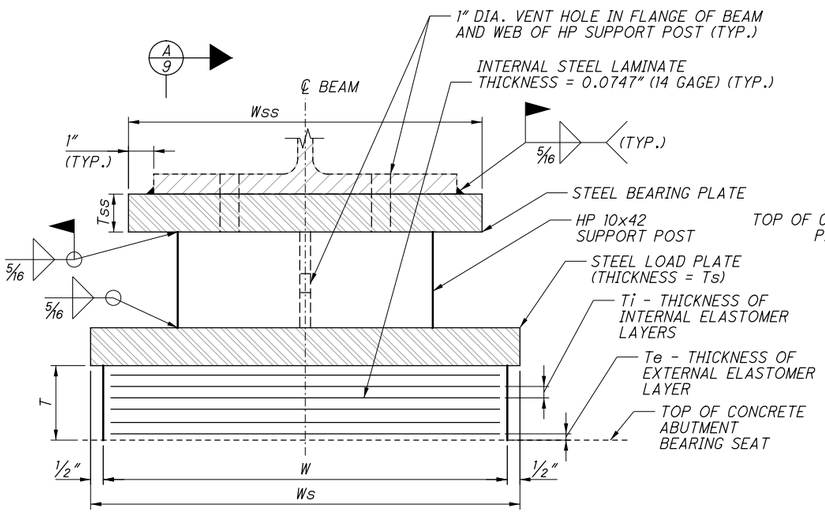

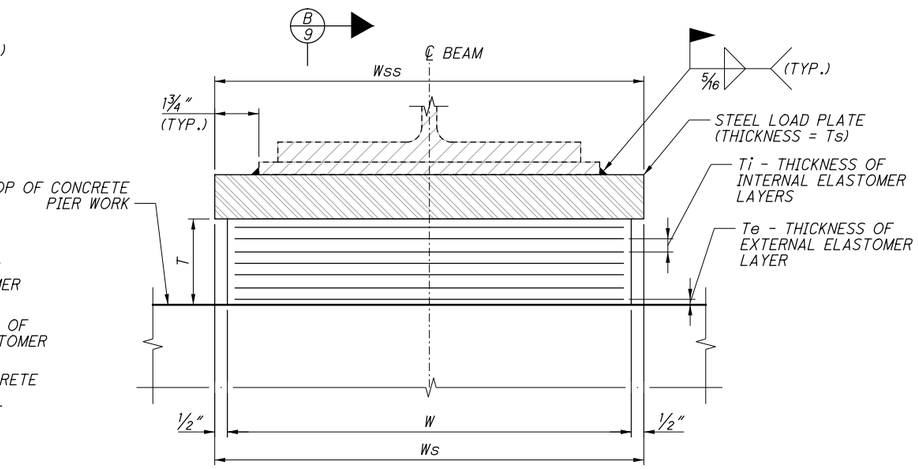

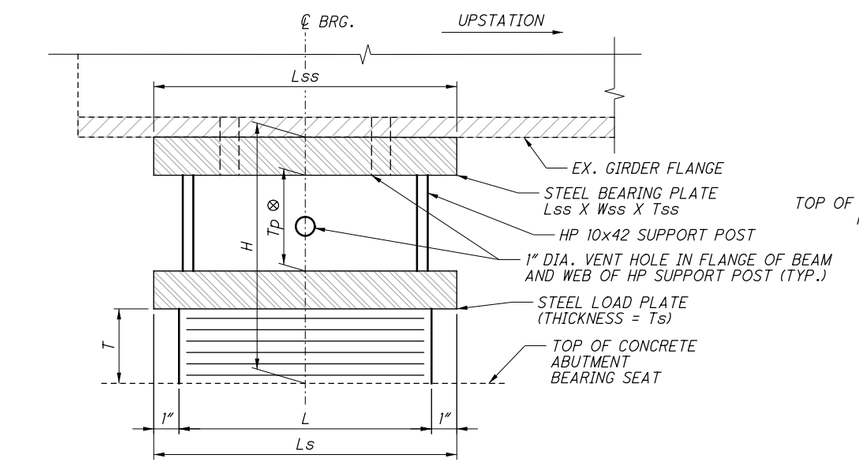

A 9 SECTION

LAMINATED ELASTOMERIC EXPANSION BEARING AT ABUTMENT

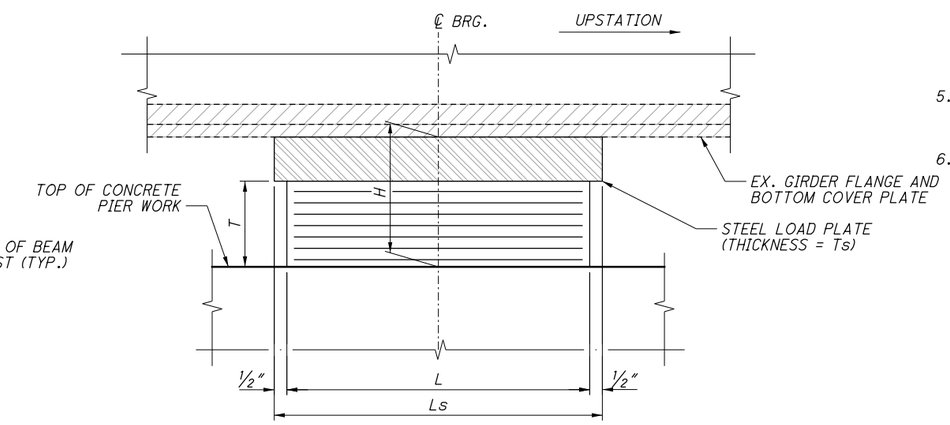

B 9 SECTION

LAMINATED ELASTOMERIC EXPANSION BEARING AT PIERS

LEGEND:

⊗ - DIMENSION Tp VARIES DUE TO BEARING SHIMS AT EACH ABUTMENT BEARING LOCATION. Tp = 4.427" GIVEN IN MAXIMUM CASE. GRIND HP 10x42 POST TO FIT AS NECESSARY THROUGHOUT. INCLUDE ALL COSTS OF FIELD VERIFYING AND GRINDING WITH ITEM 516 FOR PAYMENT.

NOTES:

1. ELASTOMERIC BEARINGS: THE ELASTOMER SHALL HAVE A HARDNESS OF 50 DUROMETER. THE BEARINGS WERE DESIGNED IN ACCORDANCE WITH SECTION 14.6.6 (METHOD A) OF THE AASHTO LFD BRIDGE DESIGN SPECIFICATIONS.

2. THE STEEL LOAD PLATES SHALL BE ASTM A709 GRADE 50 STEEL. PAINT EXPOSED SURFACES OF LOAD PLATES TO MATCH BEAMS.

3. ALL BEARINGS SHALL BE MARKED PRIOR TO SHIPPING. THE MARKS SHALL INCLUDE THE BEARING LOCATION ON THE BRIDGE, AND A DIRECTION ARROW THAT POINTS UP-STATION. ALL MARKS SHALL BE PERMANENT AND BE VISIBLE AFTER THE BEARING IS INSTALLED.

4. TOTAL DESIGN LOAD FOR BEARINGS EQUALS THE SUM OF THE DEAD LOADS AND LIVE LOADS TABULATED IN THE BEARING TABLE.

   THE UNIT PRICE FOR BEARINGS SHALL INCLUDE ALL MATERIALS, LABOR, TESTING, AND INCIDENTALS NECESSARY TO FURNISH AND INSTALL LAMINATED ELASTOMERIC EXPANSION BEARINGS. TOUCH UP OF PAINT ON BEAM AND BEARING DAMAGED BY INSTALLATION MAY ALSO BE NECESSARY AND SHALL MEET CMS 514.22 REQUIREMENTS. PAYMENT SHALL BE MADE AT THE CONTRACT PRICE FOR ITEM 516, EACH, ELASTOMERIC BEARING WITH INTERNAL LAMINATES AND LOAD PLATE (NEOPRENE), AS PER PLAN.

5. LOADS SHOWN ARE SERVICE LOADS WITH NO LOAD FACTOR OR IMPACT FACTORS INCLUDED.

6. FOR ADDITIONAL PIER WORK DETAILS, SEE SHEET 8/22.

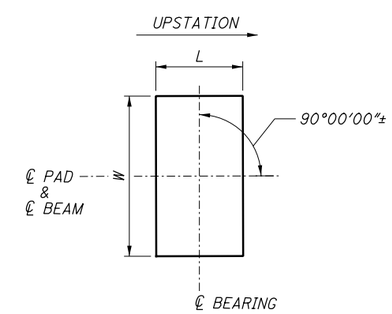

BEARING ORIENTATION PLAN

BEARING DETAIL TABLE

SUBSTRUCTURE UNIT	BEARING										LOAD PLATE			BEARING PLATE			SERVICE REACTIONS		
	TYPE	No.	L (IN.)	W (IN.)	Te (IN.)	Ti (IN.)	N	T (IN.)	Tp (IN.) ⊗	H (IN.)	Ts (IN.)	Ls (IN.)	Ws (IN.)	Tss (IN.)	Lss (IN.)	Wss (IN.)	RDL (KIPS)	RLL (KIPS)	RTOTAL (KIPS)
REAR ABUTMENT	EXP.	12	10	16	0.25	0.375	6	2.948	4.427	10.375	1.5	12	17	1.5	12	14	70.53	42.34	112.87
PIER 1	EXP.	12	12	16	0.25	0.375	7	3.398	-	5.148	1.75	13	17	-	-	-	106.22	56.58	162.80
PIER 2	EXP.	12	12	16	0.25	0.375	7	3.398	-	5.148	1.75	13	17	-	-	-	106.22	56.58	162.80
FORWARD ABUTMENT	EXP.	12	10	16	0.25	0.375	6	2.948	4.427	10.375	1.5	12	17	1.5	12	14	70.53	42.34	112.87

DESIGN AGENCY
AECOM
AKRON CLEVELAND COLUMBUS
564 WHITE POND DRIVE
AKRON, OHIO 44320-1100
(330) 836-9111

DESIGNED	DRAWN	REVIEWED	DATE
JDM	JDM	JTH	2/18
CHECKED	REVISED	STRUCTURE FILE NUMBER	
ERM		1813935	

ELASTOMERIC BEARING DETAILS
BRIDGE NO. CUY-480-2503
I-480 OVER BARTLETT RD

CUY-480-25.03
PID No. 106690

G:\Cleveland\DCS\Projects\O\ODOT\60441780_CES6to17\Structures\Task 14\106690\Design\Structures\Sheets\480_2503C_SB001.dgn - 2/23/2018 10:12:12 AM - david.buchanan

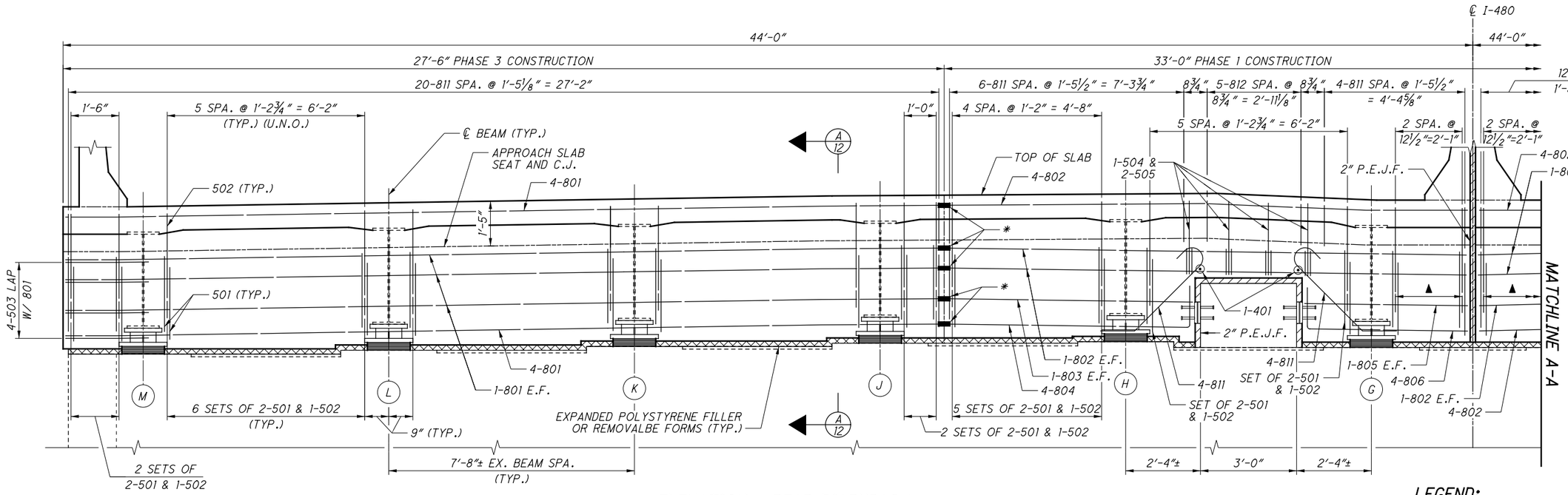

ELEVATION - REAR DIAPHRAGM

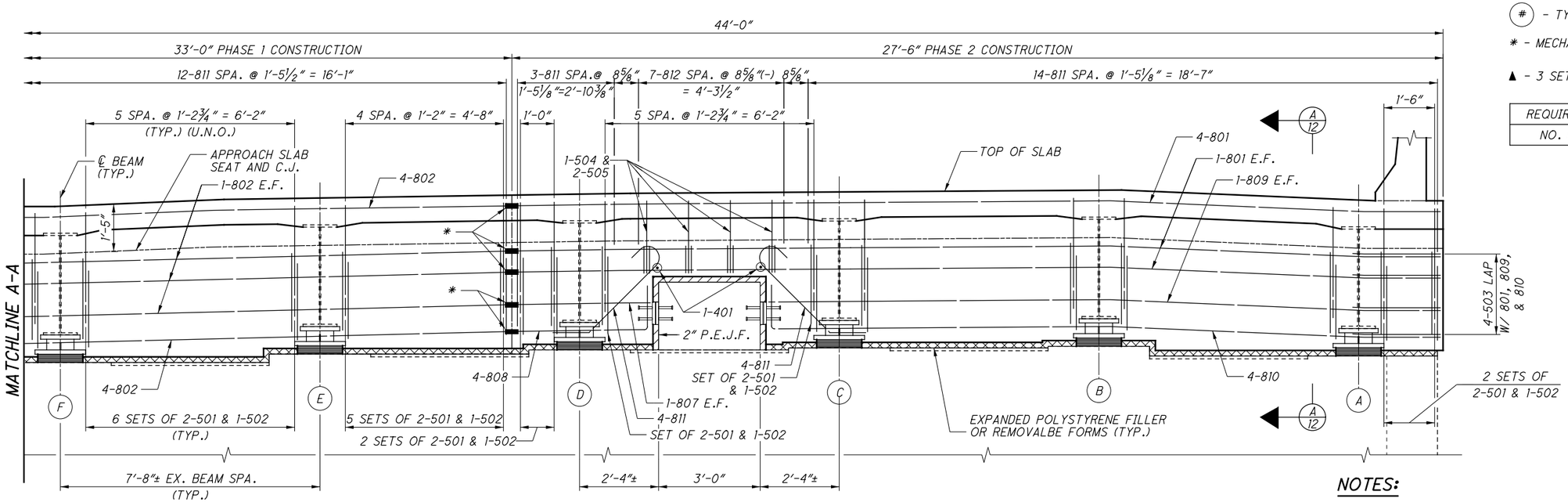

ELEVATION - REAR DIAPHRAGM

LEGEND:

(#) - TYP. BEAM CALLOUT

✱ - MECHANICAL CONNECTOR

▲ - 3 SETS OF 2-501 & 1-502

REQUIRED MIN. LAP LENGTHS	
NO. 5 BAR	2'-0"

NOTES:

1. THE PREFIX "S" SHALL BE GIVEN TO ALL DIAPHRAGM BAR MARKS.
2. MATCH ELEVATIONS AT TOP OF SLAB TO EXISTING.
3. PLACE VERTICAL BARS PARALLEL TO BEAMS UNLESS NOTED OTHERWISE.
4. ALL REBAR CLEARANCE MEASURE TO THE FACE OF CONCRETE SHALL BE 2" UNLESS NOTED OTHERWISE.
5. FOR ADDITIONAL END DIAPHRAGM DETAILS AND NOTES, SEE SHEET 12/22.
6. FOR DIAPHRAGM GUIDE DETAILS, SEE SHEET 7/22.

DESIGN AGENCY
AECOM
AKRON CLEVELAND COLUMBUS
564 WHITE POND DRIVE
AKRON, OHIO 44333-1100
(330) 836-9111

DESIGNED	DRAWN	REVIEWED	DATE
JDM	JDM	JTH	2/18
CHECKED	REVISED	STRUCTURE FILE NUMBER	
DEB		1813935	

END DIAPHRAGM DETAILS - 1 OF 3

BRIDGE NO. CUY-480-2503
I-480 OVER BARTLETT RD

CUY-480-25.03
PID No. 106690

G:\Cleveland\DCS\Projects\OxDOT\60441780_GES16to17\Structures\Task 14\106690\Design\Structures\Sheets\480_2503C_SS001.dgn - 2/23/2018 10:12:14 AM - david.buchanan

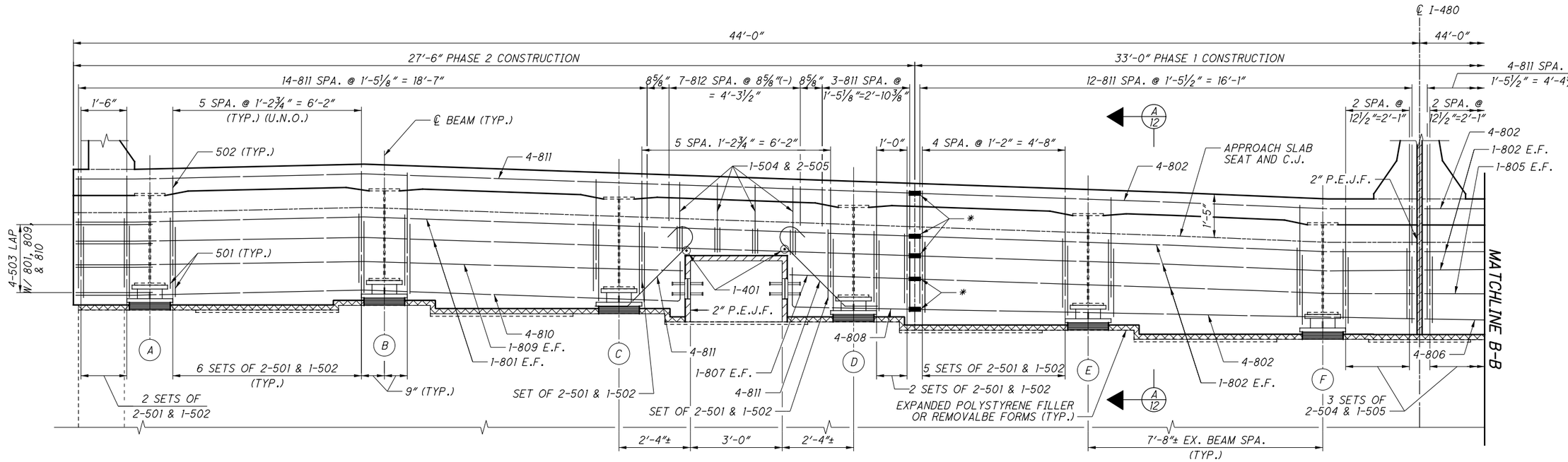

ELEVATION - FORWARD DIAPHRAGM

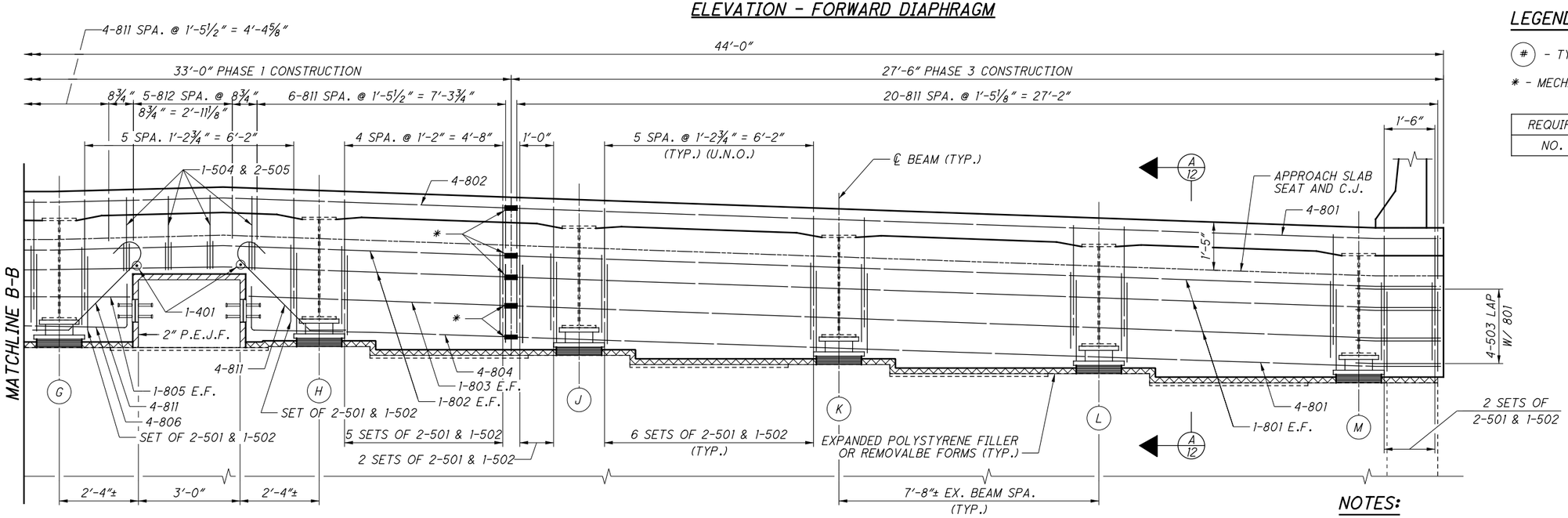

ELEVATION - FORWARD DIAPHRAGM

LEGEND:

(#) - TYP. BEAM CALLOUT

* - MECHANICAL CONNECTOR

REQUIRED MIN. LAP LENGTHS	
NO. 5 BAR	2'-0"

NOTES:

1. THE PREFIX "S" SHALL BE GIVEN TO ALL DIAPHRAGM BAR MARKS.
2. MATCH ELEVATIONS AT TOP OF SLAB TO EXISTING.
3. PLACE VERTICAL BARS PARALLEL TO BEAMS UNLESS NOTED OTHERWISE.
4. ALL REBAR CLEARANCE MEASURE TO THE FACE OF CONCRETE SHALL BE 2" UNLESS NOTED OTHERWISE.
5. FOR ADDITIONAL END DIAPHRAGM DETAILS AND NOTES, SEE SHEET 12/22.
6. FOR DIAPHRAGM GUIDE DETAILS, SEE SHEET 7/22.

DESIGN AGENCY
AECOM
AKRON CLEVELAND COLUMBUS
564 WHITE POND DRIVE
AKRON, OHIO 44320-1100
(330) 836-9111

DESIGNED	DRAWN	REVIEWED	DATE
JDM	JDM	JTH	2/18
CHECKED	REVISED	STRUCTURE FILE NUMBER	
DEB		1813935	

END DIAPHRAGM DETAILS - 2 OF 3

BRIDGE NO. CUY-480-2503
I-480 OVER BARTLETT RD

CUY-480-25.03
PID No. 106690

G:\Cleveland\DCS\Projects\OxDOT\60441780_GES&tol7\Structures\Task 14\106690\Design\Structures\Sheets\480_2503C_SS002.dgn - 2/23/2018 10:12:16 AM - david.buchanan

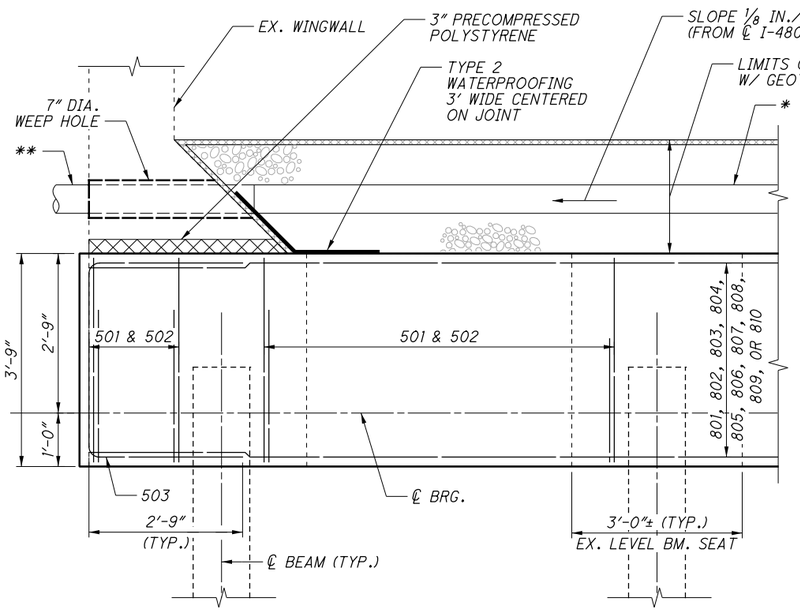

PARTIAL PLAN

REAR ABUTMENT, SOUTH END SHOWN
FORWARD ABUTMENT, NORTH END SIMILAR
REAR ABUTMENT, NORTH END AND FORWARD ABUTMENT, SOUTH END OPPOSITE HAND

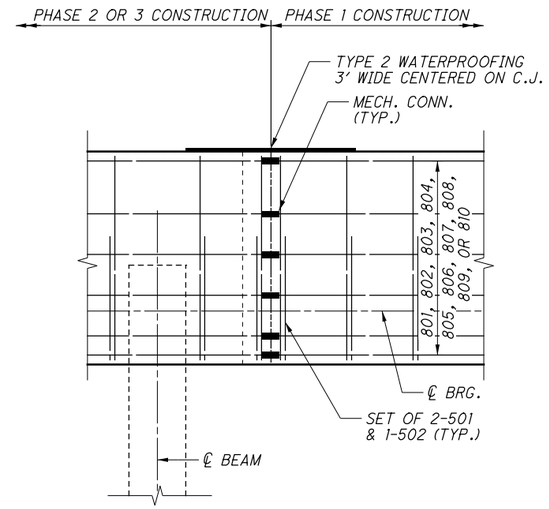

PARTIAL PLAN AT CONSTRUCTION JOINT

REAR ABUTMENT, SOUTH END SHOWN
FORWARD ABUTMENT, NORTH END SIMILAR
REAR ABUTMENT, NORTH END AND FORWARD ABUTMENT, SOUTH END OPPOSITE HAND

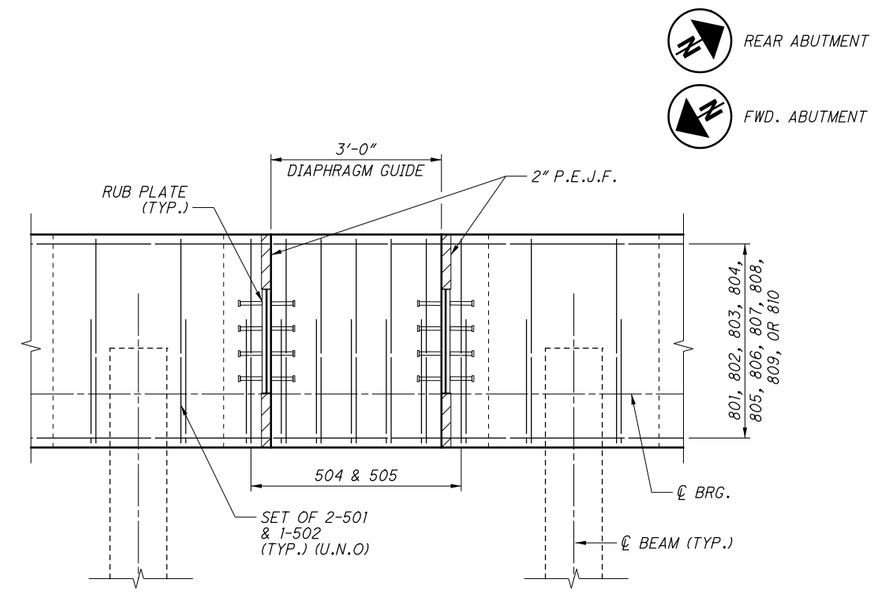

PARTIAL PLAN AT DIAPHRAGM GUIDE

FOR DIAPHRAGM GUIDE DETAILS, SEE SHEET 7/22.

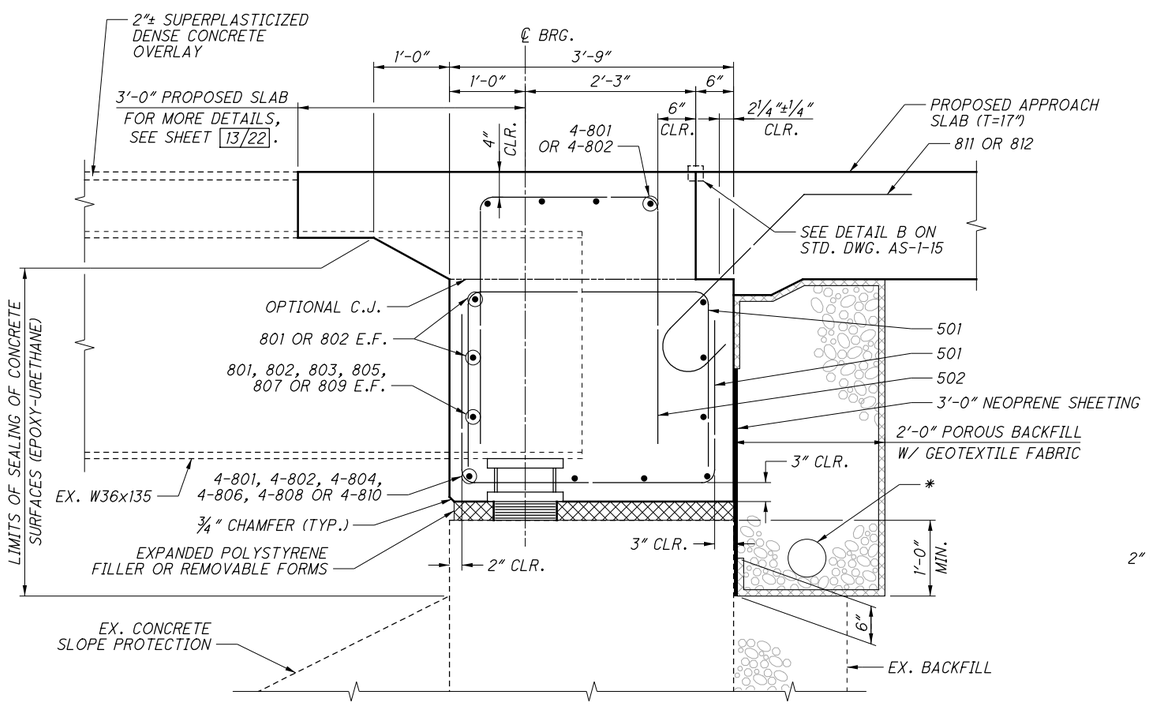

A/10 A/11 SECTION

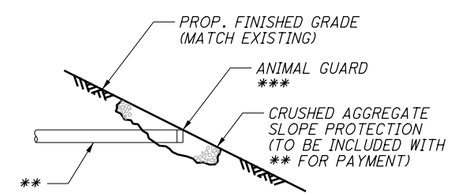

TYPICAL PIPE OUTLET DETAIL

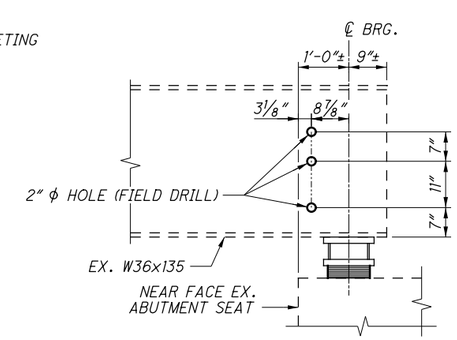

DETAIL B

SEE ITEM 513 - STRUCTURAL STEEL, MISC.: DRILLING STRUCTURAL STEEL

LEGEND:

* - 6" PERFORATED, CORRUGATED, PLASTIC PIPE (707.33, TYPE SP)

** - 6" NON-PERFORATED, CORRUGATED, PLASTIC PIPE INCLUDING SPECIALS AS PER PLAN

*** - FOR DRAINAGE TERMINATION DETAILS SEE STANDARD DRAWING DM-1.1. ANIMAL GUARD AND CRUSHED AGGREGATE SLOPE PROTECTION SHALL BE INCLUDED IN ITEM 518 6" NON-PERFORATED CORRUGATED PLASTIC PIPE, INCLUDING SPECIALS, AS PER PLAN

NOTES:

1. THE PREFIX "S" SHALL BE GIVEN TO ALL DIAPHRAGM BAR MARKS.
2. FOR END DIAPHRAGM REINFORCING LISTS, SEE SHEET 20/22 .
3. ALL REBAR CLEARANCE MEASURE TO THE FACE OF CONCRETE SHALL BE 2" UNLESS NOTED OTHERWISE.
4. ABUTMENT DIAPHRAGM CONCRETE: PLACE THE DIAPHRAGM CONCRETE ENCASING THE STRUCTURAL STEEL MEMBER ENDS AT LEAST 48 HOURS BEFORE PLACEMENT OF THE DECK CONCRETE. LOCATE A HORIZONTAL CONSTRUCTION JOINT IN THE DIAPHRAGM AS SHOWN ON SICD-1-96 FOR STEEL SUPERSTRUCTURES AND PLACE REMAINING DIAPHRAGM CONCRETE WITH THE DECK.
5. MECHANICAL CONNECTORS SHALL DEVELOP A MINIMUM ULTIMATE STRENGTH OF 125% OF THE REQUIRED YIELD STRENGTH OF THE REINFORCEMENT THEY CONNECT. MECHANICAL CONNECTIONS SHALL MEET THE REQUIREMENTS OF C.M.S. SECTION 509.
6. FOR ADDITIONAL DETAILS AND NOTES NOT SHOWN, REFER TO STD. DWG. AS-1-15, SICD-1-96 AND SICD-2-14.
7. THE COST OF 3" PRECOMPRESSED POLYSTYRENE TO PERMIT MOVEMENT OF SUPERSTRUCTURE SHALL BE INCLUDED FOR PAYMENT WITH ITEM 511 CLASS QC2 CONCRETE WITH QC/QA, SUPERSTRUCTURE.

REV. BY	DATE	DESCRIPTION
JDM	4/13/18	CONSTRUCTION JOINT REVISED

DATE COMPLETED

DESIGN AGENCY
AECOM
564 WHITE POND DRIVE
AKRON, OHIO 44320-1100
(330) 836-9111

DESIGNED	DRAWN	REVIEWED	DATE
JDM	JDM	JTH	2/18
CHECKED	REVISED	STRUCTURE FILE NUMBER	
DEB		1813935	

END DIAPHRAGM DETAILS - 3 OF 3

BRIDGE NO. CUY-480-2503
I-480 OVER BARTLETT RD

CUY-480-25.03
PID No. 106690

G:\Cleveland\DCS\Projects\0\ODOT\60441780_GES16+01\Structures\Task 14\106690\Design\Structures\Sheets\480_2503C_SS003.dgn - 4/16/2018 10:56:14 AM - josh.d.miller

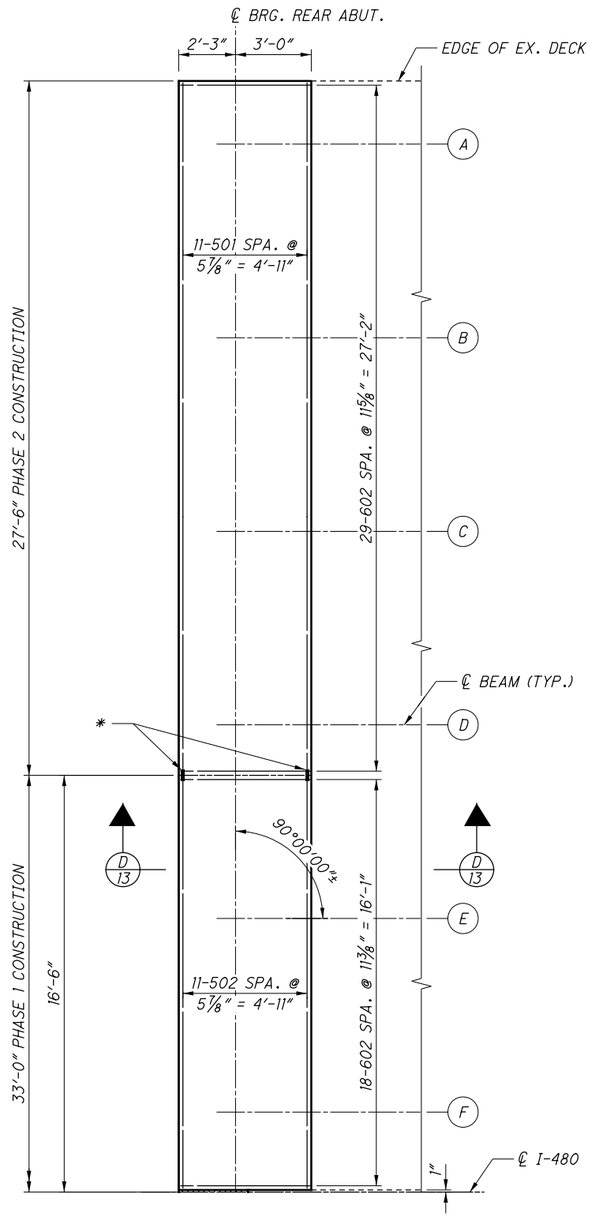

PARTIAL DECK PLAN - TOP REINFORCING

NORTH END OF REAR ABUTMENT SHOWN, SOUTH END SIMILAR ABOUT ℄ I-480
FORWARD ABUTMENT OPPOSITE HAND

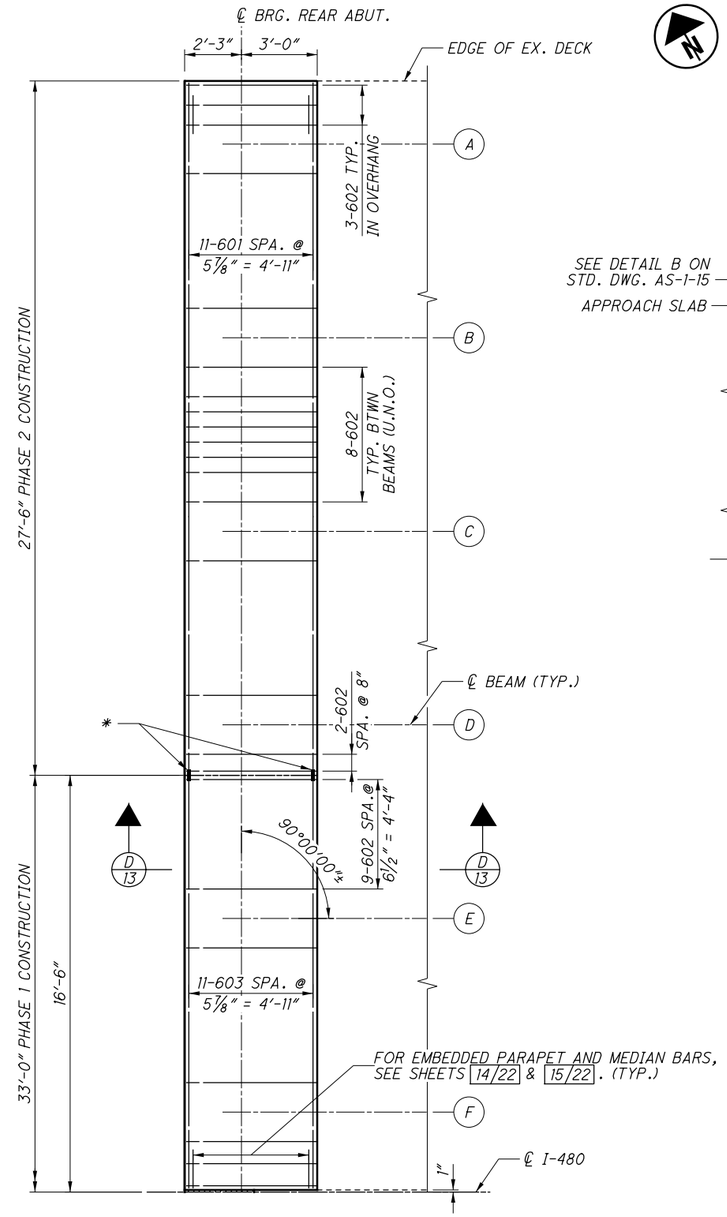

PARTIAL DECK PLAN - BOTTOM REINFORCING

NORTH END OF REAR ABUTMENT SHOWN, SOUTH END SIMILAR ABOUT ℄ I-480
FORWARD ABUTMENT OPPOSITE HAND

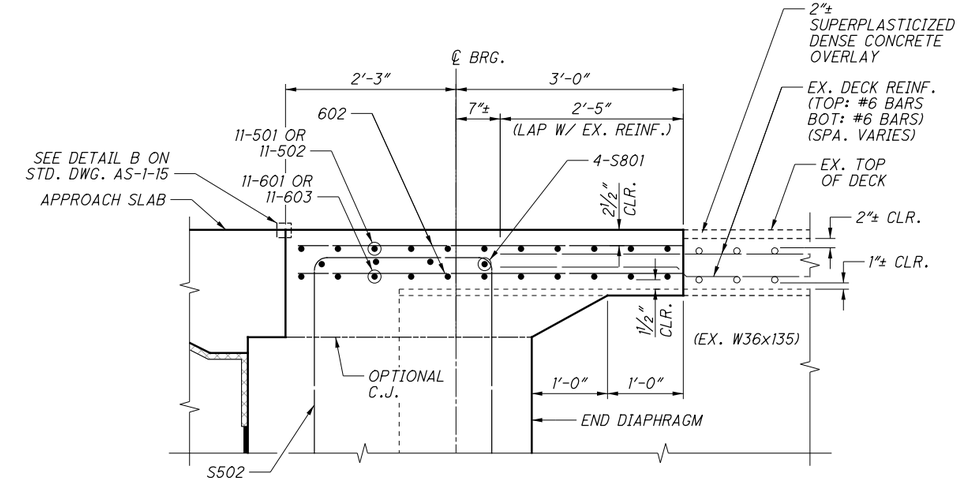

D/13 SECTION

LEGEND:

* - MECHANICAL CONNECTOR

REQUIRED MIN. LAP LENGTHS	
NO. 6 BAR	2'-5"

NOTES:

1. THE PREFIX "D" SHALL BE GIVEN TO ALL DECK BAR MARKS.
2. MATCH ELEVATIONS AT TOP OF SLAB TO EXISTING.
3. FOR TRANSVERSE SECTION, SEE SHEET 14/22.
4. FOR DECK REINFORCING LISTS, SEE SHEET 21/22.
5. FOR END DIAPHRAGM DETAILS, SEE SHEET 12/22.
6. FOR CONSTRUCTION PHASING, SEE SHEETS 4/22 AND 5/22.
7. MECHANICAL CONNECTORS SHALL DEVELOP A MINIMUM ULTIMATE TENSILE STRENGTH OF 125% OF THE REQUIRED YIELD STRENGTH OF THE REINFORCEMNT THEY CONNECT. MECHANICAL CONNECTIONS SHALL MEET THE REQUIREMENTS OF C.M.S. SECTION 509.

REV. BY	DATE	DESCRIPTION
JDM	4/13/18	CONSTRUCTION JOINT REVISED

DATE COMPLETED

DESIGN AGENCY
AECOM
AKRON CLEVELAND COLUMBUS
564 WHITE POND DRIVE
AKRON, OHIO 44320-1100
(330) 836-9111

DESIGNED	DRAWN	REVIEWED	DATE
JDM	JDM	JTH	2/18
CHECKED	REVISED	STRUCTURE FILE NUMBER	
DEB		1813935	

PARTIAL DECK PLAN
BRIDGE NO. CUY-480-2503
I-480 OVER BARTLETT RD

CUY-480-25.03
PID No. 106690

G:\Cleveland\DCS\Projects\O\ODOT\60441780_CES16to17\Structures\Task 14\106690\Design\Structures\Sheets\480_2503C_SD001.dgn - 4/16/2018 10:46:25 AM - josh.d.miller

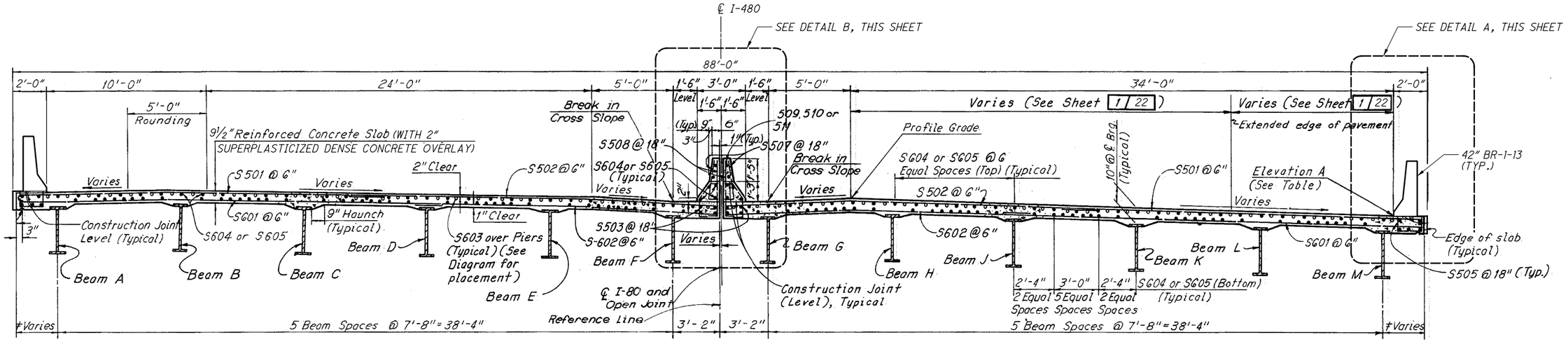

TRANSVERSE SECTION

(DETAILS FROM TRANSVERSE SECTION ARE TAKEN FROM EXISTING PLANS AND SHOULD BE USED FOR INFORMATION PURPOSES ONLY)

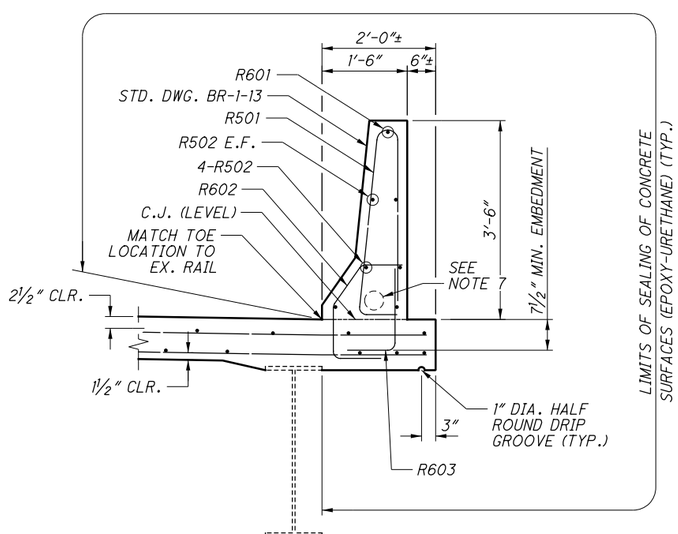

DETAIL A

FULL DECK AND RAILING REPLACEMENT
(5'-3" EACH END OF BRIDGE)

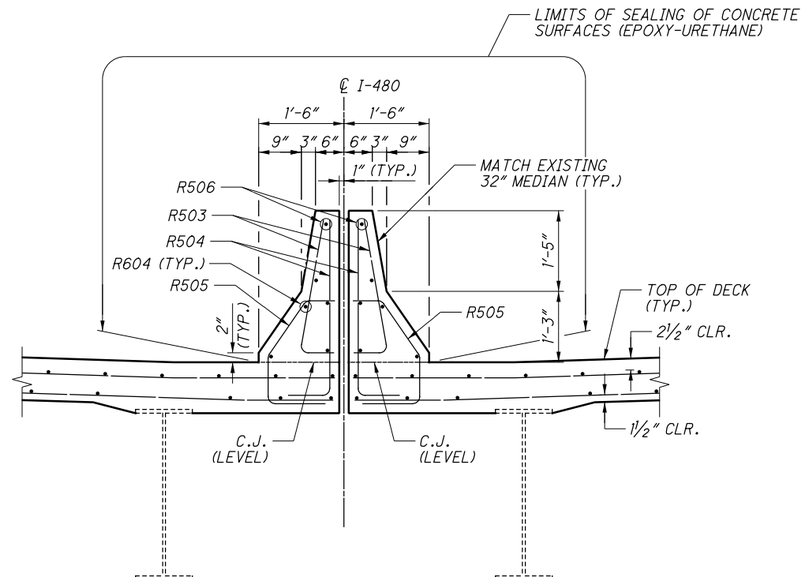

DETAIL B

FULL DECK AND RAILING REPLACEMENT
(5'-3" EACH END OF BRIDGE)

NOTES:

1. FOR STRUCTURE GENERAL NOTES, SEE SHEET 2/22.
2. FOR REINFORCING LISTS, SEE SHEET 21/22.
3. FOR RAILING DETAILS, SEE SHEET 15/22.
4. FOR DECK PLAN, SEE SHEET 13/22.
5. FOR ADDITIONAL INFORMATION, SEE STANDARD DRAWING BR-1-13.
6. MATCH ELEVATIONS AT TOP OF DECK TO EXISTING.
7. EXISTING CONDUIT IN RAILING TO REMAIN. TEMPORARILY SUPPORT DURING RAILING REMOVAL. REPAIR AND REPLACE IN KIND ANY DAMAGE TO CONDUIT OCCURED DURING CONSTRUCTION (NOTE: IN SOUTH PARAPET ONLY, PER EXISTING BRIDGE PLANS)
8. DECK SLAB CONCRETE QUANTITY:

   THE ESTIMATED QUANTITY OF DECK SLAB CONCRETE IS BASED ON THE CONSTANT DECK SLAB THICKNESS, AS SHOWN, PLUS THE QUANTITY OF CONCRETE THAT FORMS EACH BEAM HAUNCH. THE ESTIMATE ASSUMES A CONSTANT HAUNCH THICKNESS OF 2 INCHES AND A CONSTANT HAUNCH WIDTH OUTSIDE THE EDGE OF EACH BEAM FLANGE OF 9 INCHES. DEVIATE FROM THIS HAUNCH THICKNESS AS NECESSARY TO PLACE THE DECK SURFACE AT THE FINISHED GRADE. THE ALLOWABLE TOLERANCE FOR THE HAUNCH WIDTH OUTSIDE THE EDGE OF EACH BEAM/GIRDER FLANGE IS ±3 INCHES.

   THE HAUNCH THICKNESS WAS MEASURED AT THE CENTERLINE OF THE BEAM/GIRDER, FROM THE SURFACE OF THE DECK TO THE BOTTOM OF THE TOP FLANGE MINUS THE DECK SLAB THICKNESS. THE AREA OF ALL EMBEDDED STEEL TOP FLANGE HAS BEEN DEDUCTED FROM THE HAUNCH QUANTITY IN ACCORDANCE WITH 511.24.

9. PARAPET CONCRETE QUANTITY IS QUANTIFIED FOR PAYMENT WITH ITEM 511 CLASS QC2 CONCRETE WITH QC/QA, SUPERSTRUCTURE

DESIGN AGENCY
AECOM
AKRON CLEVELAND COLUMBUS
564 WHITE POND DRIVE
AKRON, OHIO 44333-1100
(330) 836-9111

DESIGNED	DRAWN	REVIEWED	DATE
JDM	JDM	JTH	2/18
CHECKED	REVISED	STRUCTURE FILE NUMBER	
DEB		1813935	

TRANSVERSE SECTION
BRIDGE NO. CUY-480-2503
I-480 OVER BARTLETT RD

CUY-480-25.03
PID No. 106690

G:\Cleveland\DCS\Projects\0\ODOT\60441780_CES6to17\Structures\Task 14\106690\Design\Structures\Sheets\480_2503C_ST001.dgn - 2/23/2018 10:12:22 AM - david.buchanan

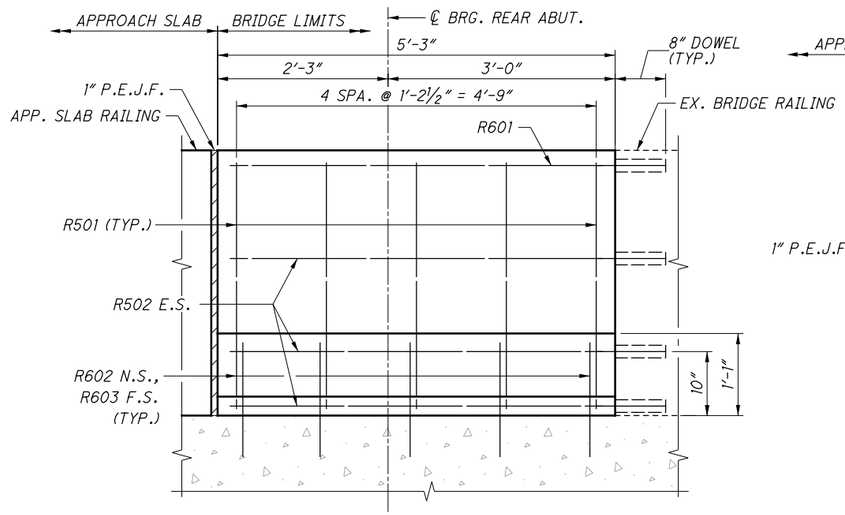

PARTIAL PARAPET ELEVATION

REAR ABUTMENT LOCATION SHOWN, FORWARD SIMILAR BUT OPPOSITE HAND

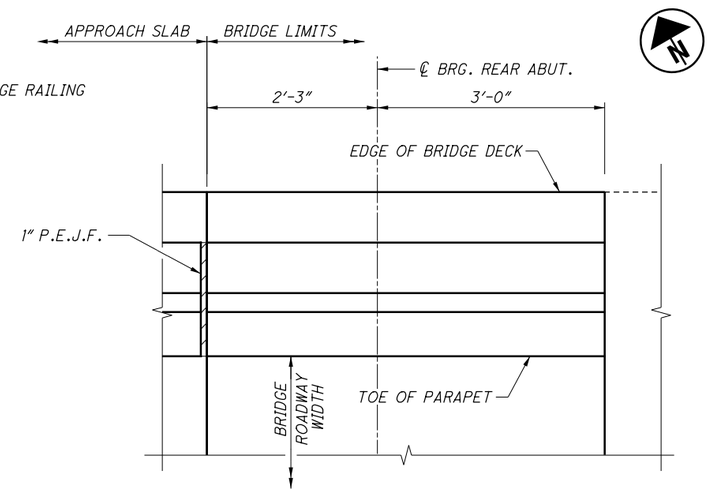

PARTIAL PARAPET PLAN

REAR ABUTMENT LOCATION SHOWN, FORWARD SIMILAR BUT OPPOSITE HAND

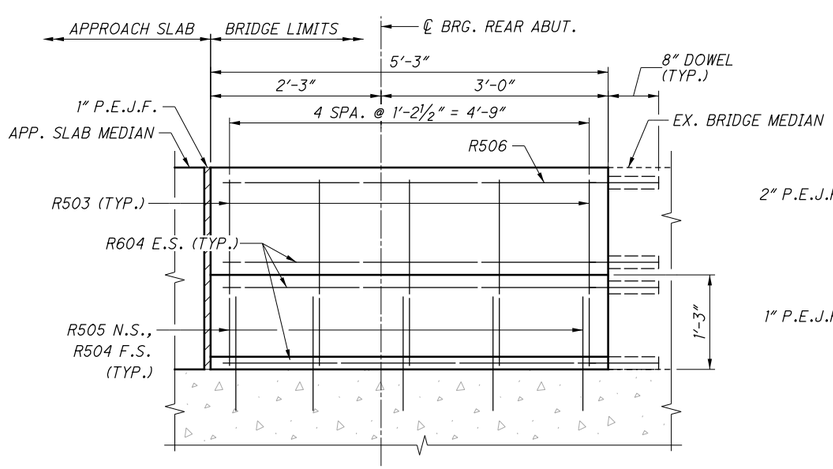

PARTIAL MEDIAN ELEVATION

REAR ABUTMENT LOCATION SHOWN, FORWARD SIMILAR BUT OPPOSITE HAND

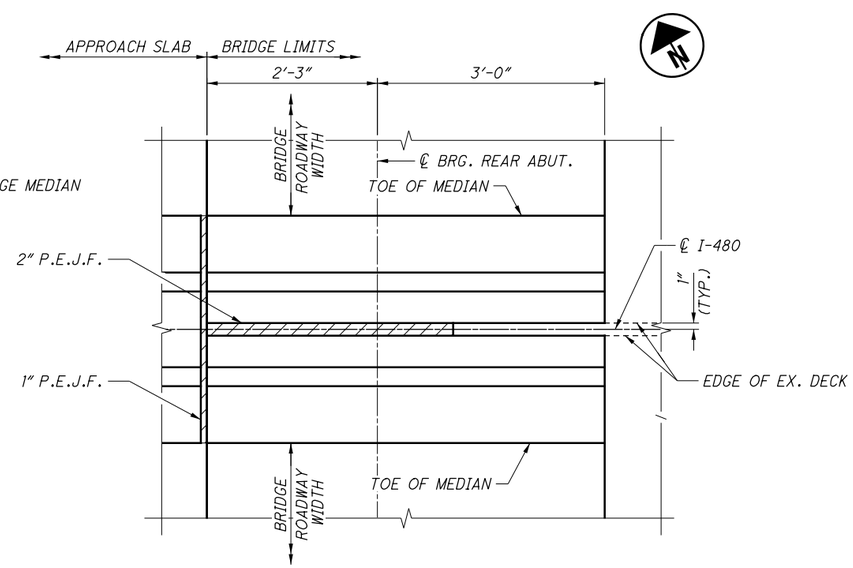

PARTIAL MEDIAN PLAN

REAR ABUTMENT LOCATION SHOWN, FORWARD SIMILAR BUT OPPOSITE HAND

NOTES:

1. FOR STRUCTURE GENERAL NOTES, SEE SHEET 2/22.
2. FOR REINFORCING LISTS, SEE SHEET 21/22.
3. FOR TRANSVERSE SECTION, SEE SHEET 14/22.
4. FOR PARTIAL DECK PLAN, SEE SHEET 13/22.
5. FOR ADDITIONAL RAILING INFORMATION, SEE STANDARD DRAWING BR-1-13.
6. DRILL DOWEL HOLES WHERE SHOWN IN PLANS. INSTALL REINFORCING STEEL ACCORDING TO ITEM 510 USING NONSHRINK, NONMETALLIC GROUT, 705.20. PRIOR TO DRILLING DOWEL HOLES, LOCATE ALL EXISTING REINFORCING STEEL BARS IN THE AREA OF THE HOLE WITH THE AID OF REINFORCING STEEL BAR LOCATOR (PACHOMETER). IF AN EXISTING BAR IS ENCOUNTERED AT THE SAME LOCATIONS AS A PROPOSED DOWEL HOLE, MOVE THE DOWEL HOLE TO EITHER SIDE OF THE EXISTING BAR.

DESIGN AGENCY
AECOM
AKRON CLEVELAND COLUMBUS
564 WHITE POND DRIVE
AKRON, OHIO 44320-1100
(330) 836-9111

DESIGNED	DRAWN	REVIEWED	DATE
JDM	JDM	JTH	2/18
CHECKED	REVISED	STRUCTURE FILE NUMBER	
DEB		1813935	

RAILING DETAILS
BRIDGE NO. CUY-480-2503
I-480 OVER BARTLETT RD

CUY-480-25.03
PID No. 106690

G:\Cleveland\DCS\Projects\0\ODOT\60441780_GE5\6tol7\Structures\Task 14\106690\Design\Structures\Sheets\480_2503C_SA001.dgn - 2/23/2018 10:12:29 AM - david.buchanan

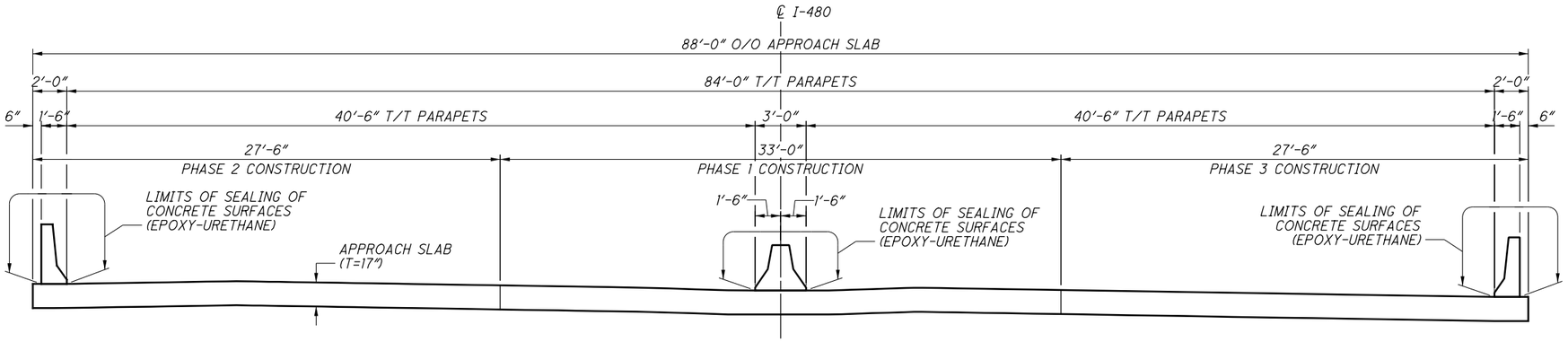

TRANSVERSE SECTION AT FORWARD APPROACH SLAB

(REAR SIMILAR)

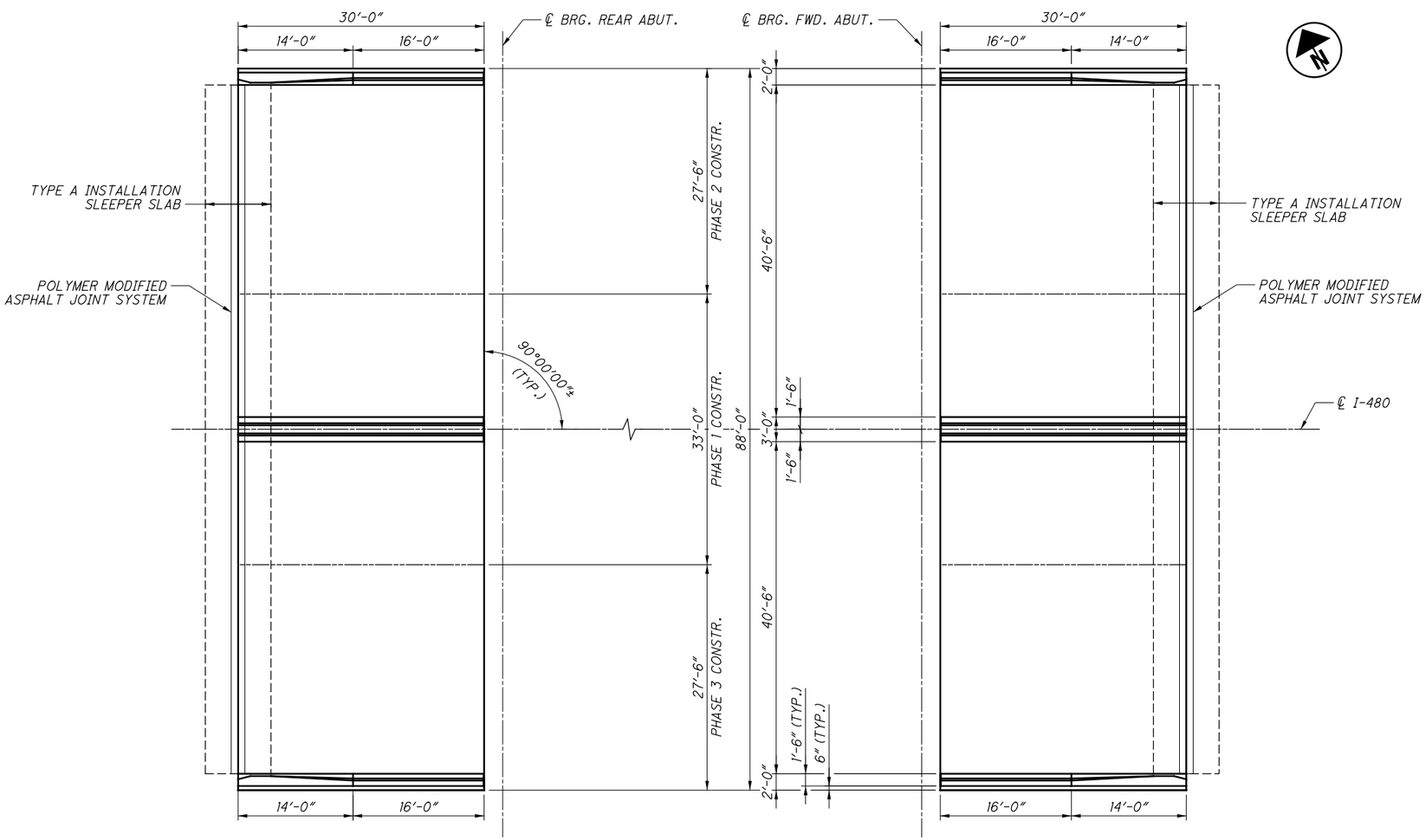

REAR APPROACH SLAB PLAN

FORWARD APPROACH SLAB PLAN

NOTES:

1. FOR ADDITIONAL APPROACH SLAB DETAILS AND NOTES NOT SHOWN HERE, SEE STD. DRAWINGS AS-1-15 AND AS-2-15.
2. MATCH ELEVATIONS AT TOP OF APPROACH SLAB TO EXISTING PAVEMENT ELEVATIONS AT TIE INS. MATCH APPROACH SLAB GEOMETRY TO EXISTING PAVEMENT AT ENDS, ALL DIMENSIONS ARE MEASURED PERPENDICULAR TO ℄ I-480.
3. FOR APPROACH SLAB RAILING PLAN, PROFILE AND SECTIONS, SEE SHEETS 17/22 AND 18/22.
4. REINFORCE APPROACH SLAB AND TYPE A SLEEPER SLAB INSTALLATION INCLUDING POLYMER MODIFIED JOINT SYSTEM PER STD. DRAWINGS AS-1-15 AND AS-2-15.

DESIGN AGENCY
AECOM
AKRON CLEVELAND COLUMBUS
564 WHITE POND DRIVE
AKRON, OHIO 44320-1100
(330) 836-9111

DESIGNED	DRAWN	REVIEWED	DATE
JDM	JDM	JTH	2/18
CHECKED	REVISED	STRUCTURE FILE NUMBER	
DEB		1813935	

APPROACH SLAB DETAILS - 1 OF 3

BRIDGE NO. CUY-480-2503
I-480 OVER BARTLETT RD

CUY-480-25.03
PID No. 106690

G:\Cleveland\DCS\Projects\0\ODOT\60441780_CES16to17\Structures\Task 14\106690\Design\Structures\Sheets\480_2503C_SM002.dgn - 2/23/2018 10:12:31 AM - david.buchanan

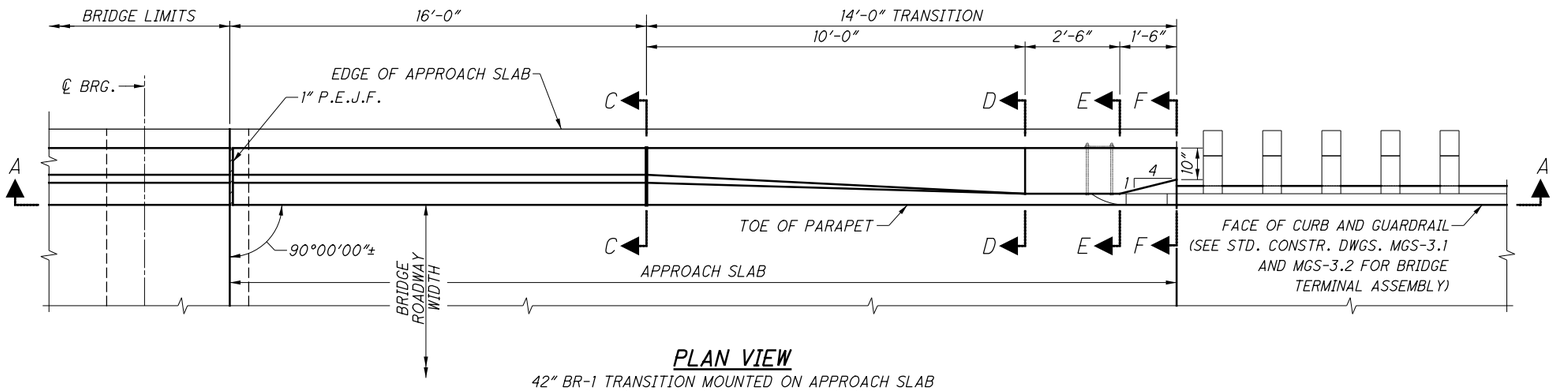

PLAN VIEW

42" BR-1 TRANSITION MOUNTED ON APPROACH SLAB
WITH SEMI-INTEGRAL ABUTMENT SHOWN

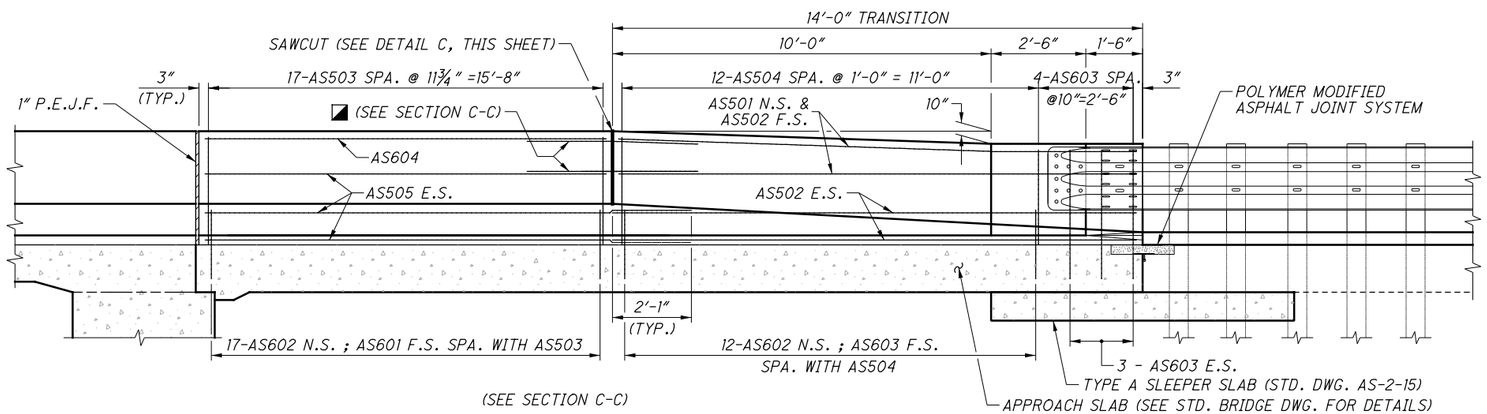

SECTION A-A

DEFLECTION JOINTS:

SAWCUT 1¼ INCH DEEP DEFLECTION JOINTS ALONG THE PERIMETER OF THE PARAPET WHEN THE CONCRETE IS STILL GREEN OR AS SOON AS THE SAW CAN BE OPERATED WITHOUT DAMAGING THE CONCRETE.

AFTER THE CONCRETE CURING PERIOD SPECIFIED IN CMS 511.14 HAS BEEN REACHED, PERFORM 4" SAWCUT THROUGH THE GFRP AS SHOWN IN DETAIL C ON THIS SHEET.

THE CONTRACTOR HAS AN OPTION TO PERFORM FULL DEPTH SAWCUT. HOWEVER, THE SAWCUT SHALL NOT BE LESS THAN 1'-0 ½" FROM THE TOP OF THE CONCRETE DECK SLAB.

USE AN EDGE GUIDE, FENCE, OR JIG TO ENSURE THAT THE CUT JOINT IS STRAIGHT, TRUE, AND ALIGNED ON ALL FACES OF THE PARAPET. THE JOINT WIDTH SHALL BE THE WIDTH OF THE SAW BLADE, A NOMINAL WIDTH OF ¼ INCH

SEAL THE PERIMETER OF THE DEFLECTION JOINTS TO A MINIMUM DEPTH OF ONE INCH WITH A POLYURETHANE OR POLYMETRIC MATERIAL CONFORMING TO ASTM C920, TYPE S. LEAVE THE BOTTOM ½ INCH OF BOTH THE INSIDE AND OUTSIDE FACES OF THE PARAPET UNSEALED TO ALLOW ANY WATER WHICH MAY ENTER THE JOING TO ESCAPE.

AT EACH DEFLECTION JOINT LOCATION, USE GLASS FIBER REINFORCED POLYMER (GFRP) REINFORCEMENT TO MAINTAIN THE RIGIDITY OF THE CAGE ACROSS THE PROPOSED JOINTS AT THE LONGITUDINAL BARS AS SHOWN IN SECTION C-C ON THIS SHEET. OTHER NON-FERROUS REINFORCEMENT MAY BE PROPOSED FOR USE, SUBJECT TO APPROVAL BY THE ENGINEER.

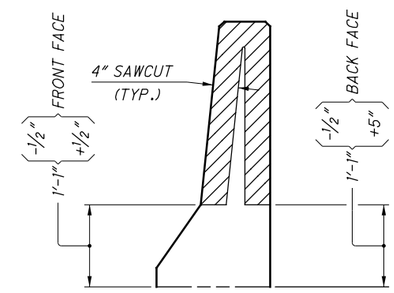

DETAIL C

SECTION THROUGH SAWCUT

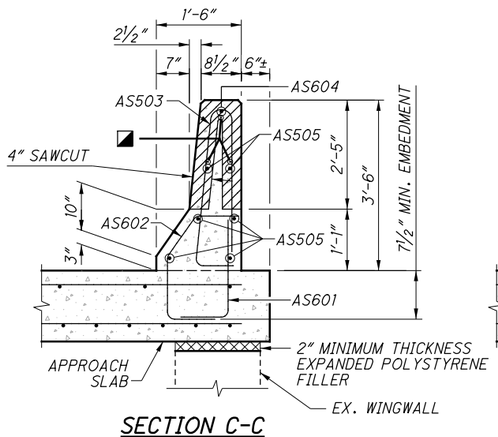

SECTION C-C

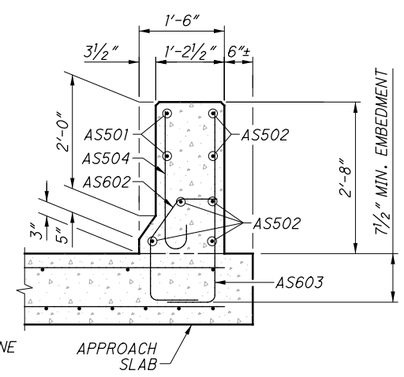

SECTION D-D

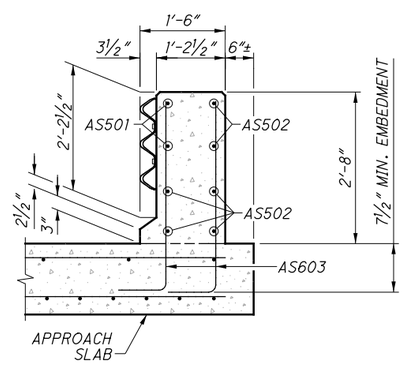

SECTION E-E

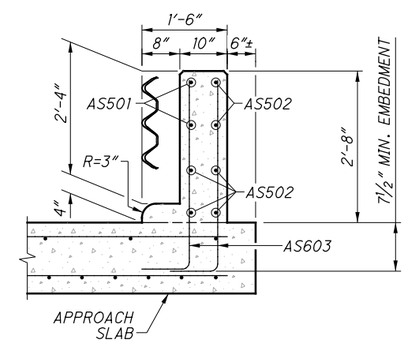

SECTION F-F

LEGEND:

◪ - 1/2" DIAMETER 4'-6" LONG CENTERED ON DEFLECTION JOINT GLASS FIBER REINFORCED POLYMER (GFRP) STIFFENING REINFORCEMENT

NOTES:

1. FOR ADDITIONAL PARAPET DETAILS AND NOTES NOT SHOWN SEE STD. DWG. BR-1-13.
2. FOR REINFORCING STEEL LIST, SEE SHEET 22/22.
3. REINFORCE APPROACH SLAB AND TYPE A SLEEPER SLAB INSTALLATION PER STD. DRAWINGS AS-1-15 AND AS-2-15.
4. FOR APPROACH SLAB PLAN, TRANSVERSE SECTION AND ADDITIONAL NOTES, SEE SHEET 16/22.

DESIGN AGENCY
AECOM
564 WHITE POND DRIVE
AKRON, OHIO 44320-1100
(330) 836-9111
AKRON CLEVELAND COLUMBUS

DESIGNED	DRAWN	REVIEWED	DATE
JDM	JDM	JTH	2/18
CHECKED	REVISED	STRUCTURE FILE NUMBER	
DEB		1813935	

APPROACH SLAB DETAILS - 2 OF 3
BRIDGE NO. CUY-480-2503
I-480 OVER BARTLETT RD

CUY-480-25.03
PID No. 106690

G:\Cleveland\DCS\Projects\0\ODOT\60441780_GE5\6tol7\Structures\Task 14\106690\Design\Structures\Sheets\480_2503C_SM001.dgn - 2/23/2018 10:12:33 AM - david.buchanan

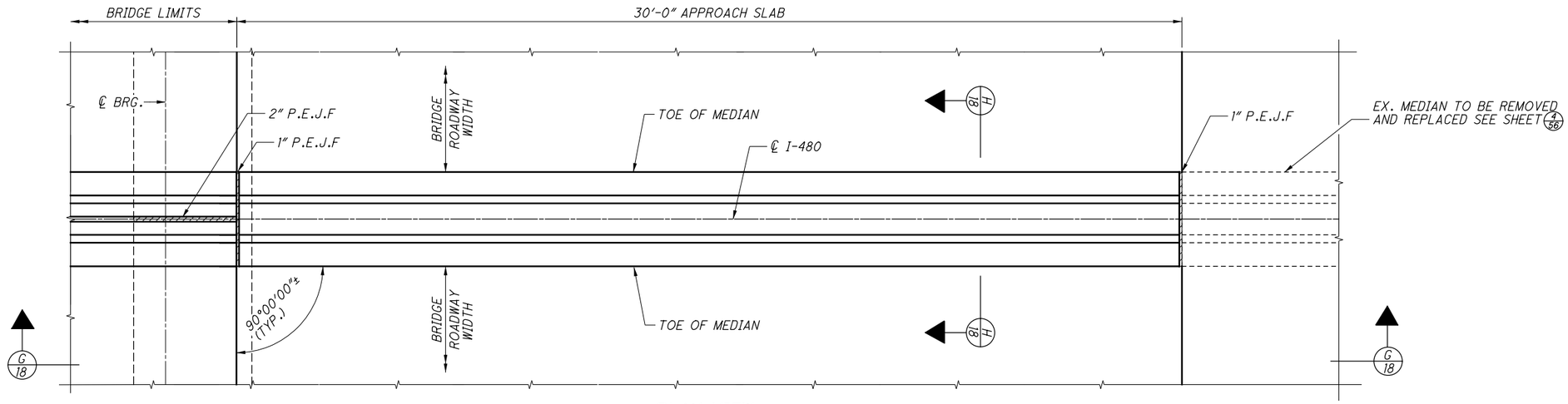

PLAN VIEW

(36" APPROACH SLAB MEDIAN MOUNTED ON APPROACH SLAB WITH SEMI-INTEGRAL ABUTMENT SHOWN)

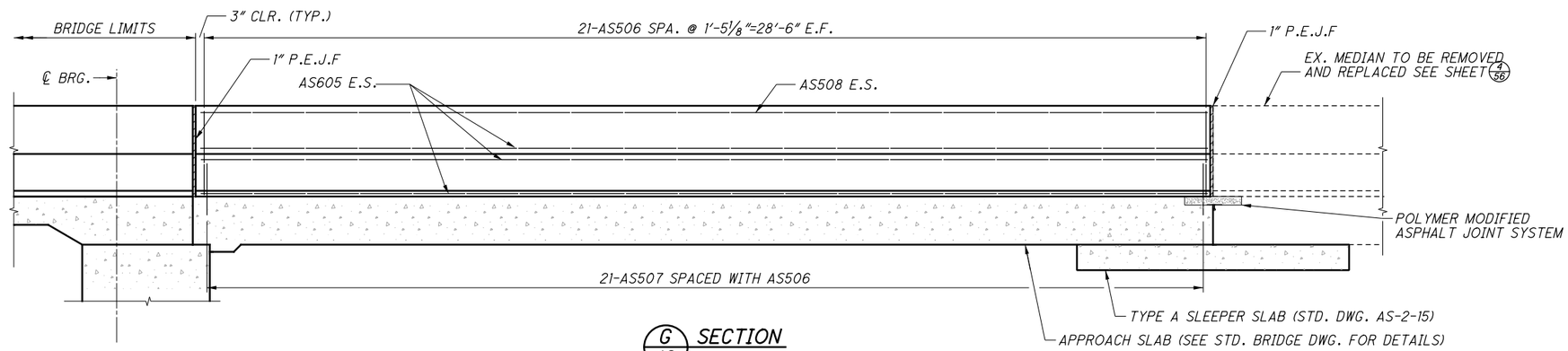

G/18 SECTION

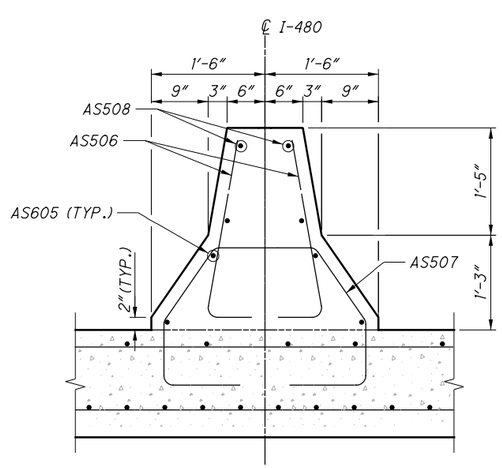

H/18 SECTION

NOTES:

1. REINFORCE APPROACH SLAB AND TYPE A SLEEPER SLAB INSTALLATION PER STD. DRAWINGS AS-1-15 AND AS-2-15
2. FOR APPROACH SLAB RAILING DETAILS AND NOTES, SEE SHEET 15/22.
3. FOR REINFORCING STEEL LIST, SEE SHEET 22/22.
4. FOR APPROACH SLAB PLAN, TRANSVERSE SECTION, AND ADDITIONAL NOTES, SEE SHEET 22/22.

DESIGN AGENCY
AECOM
AKRON CLEVELAND COLUMBUS
564 WHITE POND DRIVE
AKRON, OHIO 44320-1100
(330) 836-9111

DESIGNED	DRAWN	REVIEWED	DATE
JDM	AMA	JTH	2/18
CHECKED	REVISED	STRUCTURE FILE NUMBER	
DEB		1813935	

APPROACH SLAB DETAILS - 3 OF 3

BRIDGE NO. CUY-480-2503
I-480 OVER BARTLETT RD

CUY-480-25.03
PID No. 106690

G:\Cleveland\DCS\Projects\O\ODOT\60441780_GE516to17\Structures\Task 14\106690\Design\Structures\Sheets\480_2503C_SM003.dgn - 2/23/2018 10:12:36 AM - david.buchanan

MARK	NUMBER TOTAL	LENGTH	WEIGHT	TYPE	DIMENSIONS A	B	C	D	E	R	INC
PIER 1 - NORTH											
P501	12	22'-6"	282	STR							
P502	84	3'-5"	299	1	2'-3"	1'-4"					
P503	2	2'-7"	5	1	1'-5"	1'-4"					
P504	2	7'-3"	15	2	2'-6"	2'-6"	2'-6"				
P505	2	8'-11"	19	24	2'-6"	2'-6"				1'-3"	
PIER 1 - SOUTH											
P501	12	22'-6"	282	STR							
P502	84	3'-5"	299	1	2'-3"	1'-4"					
P503	2	2'-7"	5	1	1'-5"	1'-4"					
P504	2	7'-3"	15	2	2'-6"	2'-6"	2'-6"				
P505	2	8'-11"	19	24	2'-6"	2'-6"				1'-3"	
PIER 2 - NORTH											
P501	12	22'-6"	282	STR							
P502	84	3'-5"	299	1	2'-3"	1'-4"					
P503	2	2'-7"	5	1	1'-5"	1'-4"					
P504	2	7'-3"	15	2	2'-6"	2'-6"	2'-6"				
P505	2	8'-11"	19	24	2'-6"	2'-6"				1'-3"	
PIER 2 - SOUTH											
P501	12	22'-6"	282	STR							
P502	84	3'-5"	299	1	2'-3"	1'-4"					
P503	2	2'-7"	5	1	1'-5"	1'-4"					
P504	2	7'-3"	15	2	2'-6"	2'-6"	2'-6"				
P505	2	8'-11"	19	24	2'-6"	2'-6"				1'-3"	
SUB-TOTAL			2480								

BAR BENDING DIAGRAMS

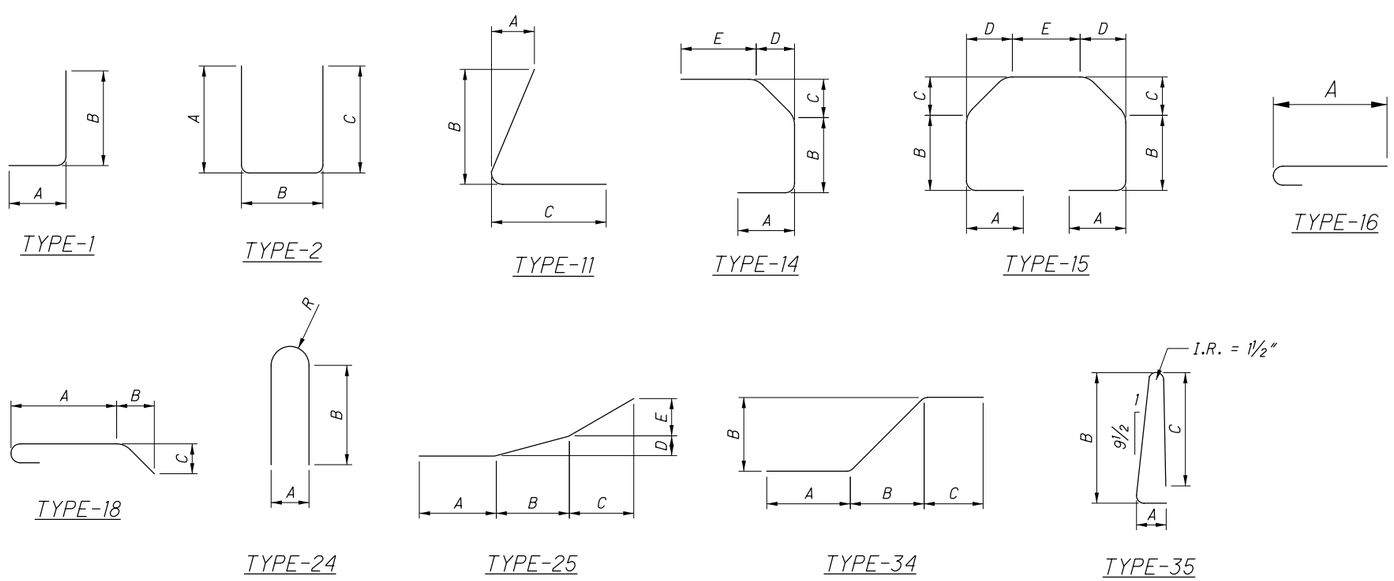

NOTES:

THE BAR SIZE NUMBER IS SPECIFIED ON THE PLANS IN THE BAR MARK COLUMN. THE FIRST DIGIT WHERE THREE DIGITS ARE USED, AND THE FIRST TWO DIGITS WHERE FOUR ARE USED INDICATES THE BAR SIZE NUMBER. FOR EXAMPLE, S601:

S: LOCATIONS OF THE BAR IN THE STRUCTURE (SUPERSTRUCTURE)
6: BAR SIZE DIMENSION NO. 6
01: SEQUENCE NUMBER

BAR DIMENSIONS SHOWN ARE OUT TO OUT UNLESS OTHERWISE NOTED. "STD." WRITTEN IN PLACE OF DIMENSION INDICATES A STANDARD BAR BEND AT THE END OF A BAR. STRAIGHT BARS ARE INDICATED BY "STR".

ALL REINFORCING IS TO BE EPOXY COATED.

DESIGN AGENCY
AECOM
AKRON CLEVELAND COLUMBUS
564 WHITE POND DRIVE
AKRON, OHIO 44320-1100
(330) 836-9111

DESIGNED	DRAWN	REVIEWED	DATE
JDM	JDM	JTH	2/18
CHECKED	REVISED	STRUCTURE FILE NUMBER	
DEB		1813935	

REINFORCING STEEL LIST - 1 OF 4
BRIDGE NO. CUY-480-2503
I-480 OVER BARTLETT RD

CUY-480-25.03
PID No. 106690

G:\Cleveland\DCS\Projects\0\ODOT\60441780_GESI6+01\Structures\Task 14\106690\Design\Structures\Sheets\480_2503C_SL001.dgn - 2/23/2018 10:12:38 AM - david.buchanan

MARK	NUMBER TOTAL	LENGTH	WEIGHT	TYPE	DIMENSIONS A	B	C	D	E	R	INC
REAR DIAPHRAGM (PHASE 1)											
S401	2	3'-5"	5	STR							
S501	48	7'-7"	380	2	2'-3"	3'-4"	2'-3"				
S502	24	8'-8"	217	2	3'-3"	2'-5"	3'-3"				
S504	4	6'-6"	27	2	2'-2"	2'-5"	2'-2"				
S505	8	4'-8"	39	2	0'-9"	3'-5"	0'-9"				
S802	22	16'-3"	955	STR							
S803	2	7'-8"	41	STR							
S804	4	8'-9"	93	1	1'-3"	7'-8"					
S805	2	4'-11"	26	STR							
S806	4	6'-0"	64	1	1'-3"	4'-11"					
S811	30	5'-0"	400	18	2'-10"	1'-0"	1'-0"				
S812	5	5'-10"	78	34	2'-0"	1'-9 1/4"	1'-5"				
SMC8*	28										
		SUB-TOTAL	2325								
REAR DIAPHRAGM (PHASE 2)											
S401	2	3'-5"	5	STR							
S501	36	7'-7"	285	2	2'-3"	3'-4"	2'-3"				
S502	18	8'-8"	163	2	3'-3"	2'-5"	3'-3"				
S503	4	8'-8"	36	2	2'-9"	3'-5"	2'-9"				
S504	4	6'-6"	27	2	2'-2"	2'-5"	2'-2"				
S505	8	4'-8"	39	2	0'-9"	3'-5"	0'-9"				
S801	8	27'-4"	584	STR							
S807	2	4'-0"	21	STR							
S808	4	5'-1"	53	1	1'-3"	4'-0"					
S809	2	19'-8"	105	STR							
S810	4	20'-9"	222	1	1'-3"	19'-8"					
S811	25	5'-0"	334	18	2'-10"	1'-0"	1'-0"				
S812	7	5'-10"	109	34	2'-0"	1'-9 1/4"	1'-5"				
		SUB-TOTAL	1983								
REAR DIAPHRAGM (PHASE 3)											
S501	44	7'-7"	348	2	2'-3"	3'-4"	2'-3"				
S502	22	8'-8"	199	2	3'-3"	2'-5"	3'-3"				
S503	4	8'-8"	36	2	2'-9"	3'-5"	2'-9"				
S801	14	27'-4"	1022	STR							
S811	20	3'-7"	191	1	2'-10"	1'-0"	1'-0"				
		SUB-TOTAL	1796								

MARK	NUMBER TOTAL	LENGTH	WEIGHT	TYPE	DIMENSIONS A	B	C	D	E	R	INC
FORWARD DIAPHRAGM (PHASE 1)											
S401	2	3'-5"	5	STR							
S501	48	7'-7"	380	2	2'-3"	3'-4"	2'-3"				
S502	24	8'-8"	217	2	3'-3"	2'-5"	3'-3"				
S504	4	6'-6"	27	2	2'-2"	2'-5"	2'-2"				
S505	8	4'-8"	39	2	0'-9"	3'-5"	0'-9"				
S802	22	16'-3"	955	STR							
S803	2	7'-8"	41	STR							
S804	4	8'-9"	93	1	1'-3"	7'-8"					
S805	2	4'-11"	26	STR							
S806	4	6'-0"	64	1	1'-3"	4'-11"					
S811	30	5'-0"	400	18	2'-10"	1'-0"	1'-0"				
S812	5	5'-10"	78	34	2'-0"	1'-9 1/4"	1'-5"				
SMC8*	28										
		SUB-TOTAL	2325								
FORWARD DIAPHRAGM (PHASE 2)											
S401	2	3'-5"	5	STR							
S501	36	7'-7"	285	2	2'-3"	3'-4"	2'-3"				
S502	18	8'-8"	163	2	3'-3"	2'-5"	3'-3"				
S503	4	8'-8"	36	2	2'-9"	3'-5"	2'-9"				
S504	4	6'-6"	27	2	2'-2"	2'-5"	2'-2"				
S505	8	4'-8"	39	2	0'-9"	3'-5"	0'-9"				
S801	8	27'-4"	584	STR							
S807	2	4'-0"	21	STR							
S808	4	5'-1"	53	1	1'-3"	4'-0"					
S809	2	19'-8"	105	STR							
S810	4	20'-9"	222	1	1'-3"	19'-8"					
S811	25	5'-0"	334	18	2'-10"	1'-0"	1'-0"				
S812	7	5'-10"	109	34	2'-0"	1'-9 1/4"	1'-5"				
		SUB-TOTAL	1983								
FORWARD DIAPHRAGM (PHASE 3)											
S501	44	7'-7"	348	2	2'-3"	3'-4"	2'-3"				
S502	22	8'-8"	199	2	3'-3"	2'-5"	3'-3"				
S503	4	8'-8"	36	2	2'-9"	3'-5"	2'-9"				
S801	14	27'-4"	1022	STR							
S811	20	3'-7"	191	1	2'-10"	1'-0"	1'-0"				
		SUB-TOTAL	1796								

* - TOTAL NUMBER OF MECHANICAL CONNECTORS (SMCX) ARE PROVIDED FOR INFORMATIONAL PURPOSES ONLY

NOTES:

FOR REINFORCING NOTES AND REINFORCING BAR BENDING DIAGRAMS, SEE SHEET 19/22

DESIGN AGENCY
AECOM
AKRON CLEVELAND COLUMBUS
564 WHITE POND DRIVE
AKRON, OHIO 44320-1100
(330) 836-9111

DESIGNED	DRAWN	REVIEWED	DATE
JDM	JDM	JTH	2/18
CHECKED	REVISED	STRUCTURE FILE NUMBER	
DEB		1813935	

REINFORCING STEEL LIST - 2 OF 4

BRIDGE NO. CUY-480-2503
I-480 OVER BARTLETT RD

CUY-480-25.03
PID No. 106690

G:\Cleveland\DCS\Projects\OX\ODOT\60441780_GES16to17\Structures\Task 14\106690\Design\Structures\Sheets\480_2503C_SL002.dgn - 2/23/2018 10:12:39 AM - david.buchanan

MARK	NUMBER TOTAL	LENGTH	WEIGHT	TYPE	DIMENSIONS A	B	C	D	E	R	INC
REAR SLAB (PHASE 1)											
D502	22	16'-3"	373	STR							
D602	76	5'-1"	580	STR							
D603	22	16'-3"	537	STR							
DMC5*	11										
DMC6*	11										
		SUB-TOTAL	1490								
REAR SLAB (PHASE 2)											
D501	11	27'-4"	314	STR							
D601	11	27'-4"	452	STR							
D602	58	5'-1"	443	STR							
		SUB-TOTAL	1209								
REAR SLAB (PHASE 3)											
D501	11	27'-4"	314	STR							
D601	11	27'-4"	452	STR							
D602	58	5'-1"	443	STR							
		SUB-TOTAL	1209								

MARK	NUMBER TOTAL	LENGTH	WEIGHT	TYPE	DIMENSIONS A	B	C	D	E	R	INC
FORWARD SLAB (PHASE 1)											
D502	22	16'-3"	373	STR							
D602	76	5'-1"	580	STR							
D603	22	16'-3"	537	STR							
DMC5*	11										
DMC6*	11										
		SUB-TOTAL	1490								
FORWARD SLAB (PHASE 2)											
D501	11	27'-4"	314	STR							
D601	11	27'-4"	452	STR							
D602	58	5'-1"	443	STR							
		SUB-TOTAL	1209								
FORWARD SLAB (PHASE 3)											
D501	11	27'-4"	314	STR							
D601	11	27'-4"	452	STR							
D602	58	5'-1"	443	STR							
		SUB-TOTAL	1209								

MARK	NUMBER TOTAL	LENGTH	WEIGHT	TYPE	DIMENSIONS A	B	C	D	E	R	INC
REAR PARAPETS											
R501	10	6'-11"	72	35	0'-8"	3'-3"	2'-0"				
R502	12	5'-9"	72	STR							
R601	2	5'-9"	18	STR							
R602	10	3'-1"	46	14	1'-0"	0'-10"	0'-8 ½"	0'-6"	0'-7"		
R603	10	2'-3"	34	1	0'-10"	1'-6 ½"					
		SUB-TOTAL	242								
REAR MEDIAN											
R503	10	2'-9"	29	11	0'-5"	2'-4"	0'-7"				
R504	10	3'-9"	39	1	0'-9"	3'-2"					
R505	10	3'-3"	34	14	1'-0"	0'-10"	0'-11"	0'-8"	0'-6"		
R506	2	5'-9"	12	STR							
R604	12	5'-9"	104	STR							
		SUB-TOTAL	218								

MARK	NUMBER TOTAL	LENGTH	WEIGHT	TYPE	DIMENSIONS A	B	C	D	E	R	INC
FORWARD PARAPETS											
R501	10	6'-11"	72	35	0'-8"	3'-3"	2'-0"				
R502	12	5'-9"	72	STR							
R601	2	5'-9"	18	STR							
R602	10	3'-1"	46	14	1'-0"	0'-10"	0'-8 ½"	0'-6"	0'-7"		
R603	10	2'-3"	34	1	0'-10"	1'-6 ½"					
		SUB-TOTAL	242								
FORWARD MEDIAN											
R503	10	2'-9"	29	11	0'-5"	2'-4"	0'-7"				
R504	10	3'-9"	39	1	0'-9"	3'-2"					
R505	10	3'-3"	34	14	1'-0"	0'-10"	0'-11"	0'-8"	0'-6"		
R506	2	5'-9"	12	STR							
R604	12	5'-9"	104	STR							
		SUB-TOTAL	218								

* - TOTAL NUMBER OF MECHANICAL CONNECTORS (DMCX) ARE PROVIDED FOR INFORMATIONAL PURPOSES ONLY

NOTES:

FOR REINFORCING NOTES AND REINFORCING BAR BENDING DIAGRAMS, SEE SHEET 19/22

DESIGN AGENCY
AECOM
AKRON CLEVELAND COLUMBUS
564 WHITE POND DRIVE
AKRON, OHIO 44320-1100
(330) 836-9111

DESIGNED	DRAWN	REVIEWED	DATE
JDM	JDM	JTH	2/18
CHECKED	REVISED	STRUCTURE FILE NUMBER	
DEB		1813935	

REINFORCING STEEL LIST - 3 OF 4

BRIDGE NO. CUY-480-2503
I-480 OVER BARTLETT RD

CUY-480-25.03
PID No. 106690

G:\Cleveland\DCS\Projects\O\ODOT\60441780_GES16to17\Structures\Task 14\106690\Design\Structures\Sheets\480_2503C_SL003.dgn - 2/23/2018 10:12:40 AM - david.buchanan

MARK	NUMBER TOTAL	LENGTH	WEIGHT	TYPE	DIMENSIONS A	B	C	D	E	R	INC
REAR APPROACH SLAB PARAPETS											
AS501	4	14'-1"	59	25	10'-0"	2'-6"	1'-6"	0'-1 ½"	0'-5"		
AS502	12	13'-10"	173	STR							
AS503	34	6'-11"	246	35	0'-8"	2'-9"	2'-6"				
AS504	24	3'-0"	75	16	2'-5"						
AS505	12	17'-11"	224	STR							
AS601	34	2'-5"	123	1	1'-0"	1'-6 ½"					
AS602	58	3'-1"	269	14	1'-0"	0'-10"	0'-8 ½"	0'-6"	0'-7"		
AS603	36	4'-0"	216	1	1'-0"	3'-1 ½"					
AS604	2	15'-7"	47	STR							
◪	6	4'-6"									
		SUB-TOTAL	1432								
REAR APPROACH SLAB MEDIAN											
AS506	42	2'-9"	120	11	0'-5"	2'-4"	0'-7"				
AS507	21	6'-9"	148	15	1'-0"	0'-10"	0'-11"	0'-8"	1'-2"		
AS508	2	29'-5"	62	STR							
AS605	6	29'-5"	265	STR							
		SUB-TOTAL	625								

MARK	NUMBER TOTAL	LENGTH	WEIGHT	TYPE	DIMENSIONS A	B	C	D	E	R	INC
FORWARD APPROACH SLAB PARAPETS											
AS501	4	14'-1"	59	25	10'-0"	2'-6"	1'-6"	0'-1 ½"	0'-5"		
AS502	12	13'-10"	173	STR							
AS503	34	6'-11"	246	35	0'-8"	2'-9"	2'-6"				
AS504	24	3'-0"	75	16	2'-5"						
AS505	12	17'-11"	224	STR							
AS601	34	2'-5"	123	1	1'-0"	1'-6 ½"					
AS602	58	3'-1"	269	14	1'-0"	0'-10"	0'-8 ½"	0'-6"	0'-7"		
AS603	36	4'-0"	216	1	1'-0"	3'-1 ½"					
AS604	2	15'-7"	47	STR							
◪	6	4'-6"									
		SUB-TOTAL	1432								
FORWARD APPROACH SLAB MEDIAN											
AS506	42	2'-9"	120	11	0'-5"	2'-4"	0'-7"				
AS507	21	6'-9"	148	15	1'-0"	0'-10"	0'-11"	0'-8"	1'-2"		
AS508	2	29'-5"	62	STR							
AS605	6	29'-5"	265	STR							
		SUB-TOTAL	625								

LEGEND:

◪ - ½" DIAMETER GLASS FIBER REINFORCED POLYMER (GFRP) STIFFENING REINFORCEMENT

NOTES:

FOR REINFORCING NOTES AND REINFORCING BAR BENDING DIAGRAMS, SEE SHEET 19/22

DESIGN AGENCY
AECOM
AKRON CLEVELAND COLUMBUS
564 WHITE POND DRIVE
AKRON, OHIO 44320-1100
(330) 836-9111

DESIGNED	DRAWN	REVIEWED	DATE
JDM	JDM	JTH	2/18
CHECKED	REVISED	STRUCTURE FILE NUMBER	
DEB		1813935	

REINFORCING STEEL LIST - 4 OF 4

BRIDGE NO. CUY-480-2503
I-480 OVER BARTLETT RD

CUY-480-25.03
PID No. 106690

G:\Cleveland\DCS\Projects\O\ODOT\60441780_GES16to17\Structures\Task 14\106690\Design\Structures\Sheets\480_2503C_SL004.dgn - 2/23/2018 10:24:41 AM - david.buchanan