6-L

S

MICROFILMED SEP 10 1991

I-480-4(9)163
Proj 783 (83)

FHWA REGION	STATE	PROJECT	
5	OHIO	I-480-4(9)163	

1/500

CUYAHOGA COUNTY
CUY-480-10.39

STATE OF OHIO
DEPARTMENT OF TRANSPORTATION

CUY-480-10.39

Sheets 313, 373, 398, 403, 404, 406, 407, 408, 409, 411, 458, & 472 revised 1-5-84 EBL

CUYAHOGA COUNTY

CITY OF CLEVELAND
CITY OF BROOKLYN

GRADE SEPARATIONS WITH THE CONSOLIDATED RAIL CORPORATION AND THE BALTIMORE AND OHIO RAILROAD COMPANY

CONVENTIONAL SIGNS

Center Line	Existing Sewer
Existing R/W	Proposed Sewer
Proposed R/W	Existing Manhole
Limited Access Line —LA—	Proposed Manhole
Temporary R/W —T—	Existing Catch Basin
Work Agreement Line	Proposed Catch Basin
Property Line —PL—	Manhole Abandoned
Original Lot Line O.L. 78 / O.L. 79	Catch Basin Abandoned
Water Line —W—	Guard Rail (Existing) (Proposed)
Water Valve	Retaining Wall (Existing) (Proposed)
Water Hydrant	Fence (Existing) (Proposed)
Gas Line —G—	Trees
Gas Valve	Railroad
Telephone Underground —T—	
Electric Underground —E—	
Power Pole	
Light Pole	
Telephone Pole	

INDEX OF SHEETS

Sheets 31 & 32 deleted

Title Sheet	1	Detention Basin Access Rd.	102-103
Schematic Plan & Design Designation	2-4	Detention Basin & Culvert Details	104-110
Temporary Erosion & Sediment Control	5	Relocated Big Creek Plan & Profile	111
Typical Sections	6-10	Grading Plan & Cross Section Index	112
General Notes	11-15	I-480 Cross Sections	113-150
General Summary	16-22	W 130th St. Interchange Cross Sections	151-162
Pavement Calculations	23-26	Tiedeman Rd. Interchange Cross Sections	163-179
Miscellaneous Details	27-40	W 130th St. Cross Sections	180-183
Superelevation Tables	41-43	Tiedeman Rd. Cross Sections	184-191
I-480 Plan & Profile	44-56	Summer Lane Cross Sections	192-193
W. 130th St. Ramps-Plan & Profile	57-59	Service Rd. "A" Cross Sections	194-196
Tiedeman Rd. Ramps-Plan & Profile	60-63	Southwood Dr. Cross Sections	197-200
W 130th St. Plan & Profile	64-66	Autumn Lane Cross Sections	201
Tiedeman Rd. Plan & Profile	67-70	Idlewood Dr. Cross Sections	202-208
Summer Lane Plan & Profile	71	Relocated Big Creek Cross Sections	209-211
Service Rd. "A" Plan & Profile	72	Landscape Plans	212-213
Southwood Dr. Plan & Profile	73-74	Water Work Plans	214-252
Autumn Lane Plan & Profile	75-76	Lighting Plans	253-282
Idlewood Dr. Plan & Profile	77-80	Traffic Control Plans	283-308
W 139th St. Interchange	81	Retaining Wall	309-311
Tiedeman Rd. Temporary-Plan & Profile	82	Structures Over 20'	312-477,477A
Pavement Details	83-94	Right-Of-Way Plans	478-500
Storm Sewer Profiles	95-101		

BEGIN PROJECT
STA. 573+50
S.L.M. 10.39

END PROJECT
STA. 698+50
S.L.M. 12.75

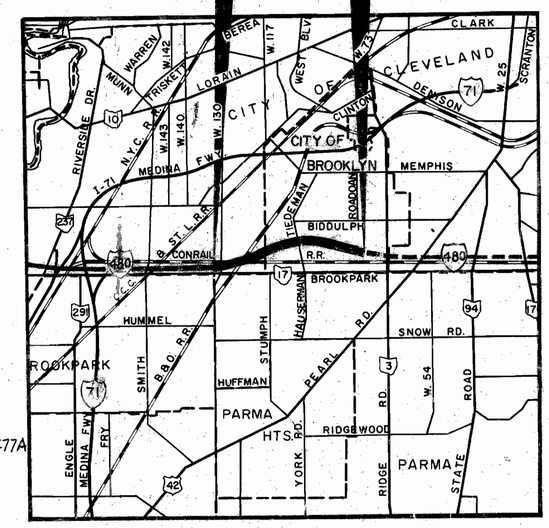

LINE DATA

	CLEVELAND	BROOKLYN	TOTAL
BEGIN PROJECT	573+50.00	616+15.52	573+50.00
END PROJECT	616+15.52	698+50.00	698+50.00
LENGTH OF PROJECT	4265.52 L.F. 0.808 Mi.	8234.48 L.F. 1.559 Mi	12500.00 L.F. OR 2.367 Mi
ADDITIONAL WORK			
I-480 STA. 484+00.00 TO STA. 573+50.00	8950.00 L.F.		8950.00 L.F.
STA. 698+50.00 TO STA. 700+00.00		150.00 L.F.	150.00 L.F.
W130th ST. STA. 48+00.00 TO STA. 64+90.00	1690.00 L.F.		1690.00 L.F.
TIEDEMAN RD. STA. 42+80.00 TO STA. 82+00.00		3920.00 L.F.	3920.00 L.F.
IDLEWOOD DR. STA. 8+75.00 TO STA. 21+63.21		1288.21 L.F.	1288.21 L.F.
SOUTHWOOD DR. STA. 7+25.00 TO STA. 12+75.00		550.00 L.F.	550.00 L.F.
LENGTH OF WORK	14,905.52 L.F. OR 2.823 Mi	14,142.69 L.F. OR 2.679 Mi	29,048.21 L.F. OR 5.502 Mi

FILE NUMBER	CUYAHOGA COUNTY CUY-480-10.39
	DATE OF LETTING
	CONTRACT NUMBER

00384

SUPPLEMENTAL SPECIFICATIONS	
NUMBER	DATE
803	5-27-83
843	10-25-76
847	4-3-76
848	2-17-83
939	6-28-82
934	1-1-69
948	2-19-74
839	11-25-70
936	4-19-82
824	10-8-82
836	3-12-75
845	3-2-81
849	10-19-81
953	8-21-80

LOCATION MAP

0 1 2 3
SCALE OF MILES

Portion To Be Improved
State Routes
U.S. Routes
Interstate Routes
City Streets
To Be Improved Under Separate Contract

SCALE

PLAN	0 50	1" = 50'
PROFILE: HORIZ.	0 50	1" = 50'
VERT.	0 10-20	1" = 10' / 1" = 20'
CROSS SECTIONS	0 10	1" = 10'
PAVEMENT DETAILS	0 20	1" = 20'

"LIMITED ACCESS"

This improvement is especially designed for thru traffic and has been declared a Limited Access Highway or Freeway by action of the Director of Transportation, in accordance with the provisions of Sec. 5511.02 of The Revised Code of Ohio.

1983 SPECIFICATIONS

The Standard Specifications of the State of Ohio, Department of Transportation, including changes and supplemental specifications listed in the proposal, shall govern this improvement.

I hereby approve these plans and declare that the making of this improvement will not require the closing of the highway to traffic and that provisions for maintenance and safety of traffic will be as set forth on the plans and estimates.

Approved Joseph L. Stamps
Date 3/15/83 Director of Public Service, City of Cleveland

Approved Martin A. Gallik
Date 3-16-83 District Deputy Director of Transportation

Approved Robert B. Pfeifer
Date 6-6-83 Engineer, Bureau of Bridges and Structural Design

Approved Wayne H. Kauble
Date 6-6-83 Chief Engineer, Planning and Design

Approved Warren J. Smith
Date 6-6-83 Director, Department of Transportation

STANDARD			CONSTRUCTION		DRAWINGS			
BP-1	6-1-65		GR-5	2-5-82	MH-1	6-12-75	TC 7.65 3-1-79	TC 42.20 3-26-79
BP-2	12-6-76	CB-3A	HW-3	6-1-65	MH-3	6-12-75	TC 9.30 4-24-80	TC 51.10 3-20-79
BP-3	12-6-76	CB-4	HW-4A	4-1-80	MH-5	6-12-75	TC 12.30 6-10-81	
BP-4	7-16-81	CB-5	HW-4B	4-1-80	MH-2	6-12-75	TC 16.20 3-1-79	TC 52.10 4-3-79
BP-5	7-16-81	CB-6			HL-1	9-6-73	TC 18.26 5-31-79	TC 52.20 4-3-79
BP-6	6-1-65	CB-458A	5-1-79		HL-2	7-27-73	TC 21.10 5-24-79	TC 61.10 4-5-82
BP-7	12-6-76		I-3 A&B	4-1-80	HL-3	7-27-73	TC 21.20 5-31-79	TC 71.10 4-9-81
BP-9	12-6-76		MC-9A	5-1-81	HL-4	1-21-76	TC 21.40 3-1-79	TC 72.20 2-26-82
BP-10	1-3-75	F-1	5-1-76		LA-1	6-1-79	HL-5	9-6-73 TC 22.10 3-1-79
		F-3	5-1-76		LA-2	6-1-79	HL-6	3-22-77 TC 22.20 3-1-79 TC 81.20 4-8-80
		F-5	5-1-76		MC-1	6-13-69	HL-7	1-21-76 TC 31.21 3-6-79 TC 82.10 4-11-79
TS-EXJ-2-81	9-1-81	F-6	5-1-76		MC-3	6-1-73	HL-8	1-21-76 TC 32.10 3-8-79 TC 83.10 4-18-79
BR-1	5-29-79				MC-4	7-26-76	HL-9	3-22-77 TC 32.11 3-21-79 TC 83.20 4-18-79
AS-1-81	11-27-81	GR-6	2-5-82		MC-5	6-12-75	HL-10	6-1-79 TC 33.10 10-5-77
SD-1-69	6-12-69	GR-1	2-5-82		MC-6	6-1-65	HL-11	6-1-79 TC 41.10 12-23-81 TC 85.20 4-18-79
RB-1-55	2-2-59	GR-2B	2-5-82		MC-7	10-15-76	HL-12	4-6-73 TC 41.20 3-26-79
		GR-3	2-5-82		MC-9	11-1-77	HL-15	1-21-76
CB 2-2-A&B	5-1-79				MC-10	5-1-76	HL-16	4-6-73 TC 41.50 3-26-79
CB2-3&2-4	5-1-79	GR-4	2-5-82		MC-11	8-1-78	HL-19	3-22-77 TC 42.10 8-19-79
CB2-5&2-6	5-1-79	GR-4A	2-5-82		MH-4	6-12-75	HL-22	11-9-77

NOTE:
Project Designation CUY-80 Appearing Throughout This Plan Shall Be Considered To Read CUY-480.

PLANS PREPARED BY
ALDEN E. STILSON & ASSOCIATES
CONSULTING ENGINEERS
75 PUBLIC SQUARE
CLEVELAND, OHIO
FOR
STATE OF OHIO

DEPARTMENT OF TRANSPORTATION
FEDERAL HIGHWAY ADMINISTRATION

APPROVED:

DIVISION ADMINISTRATOR DATE

MICROFILMED
JAN 17 1991

SCHEMATIC PLAN

FED. RD. DIVISION	STATE	PROJECT	
2	OHIO	I 480-4(9)163	

2/500

CUYAHOGA COUNTY
CUY-480-10.39

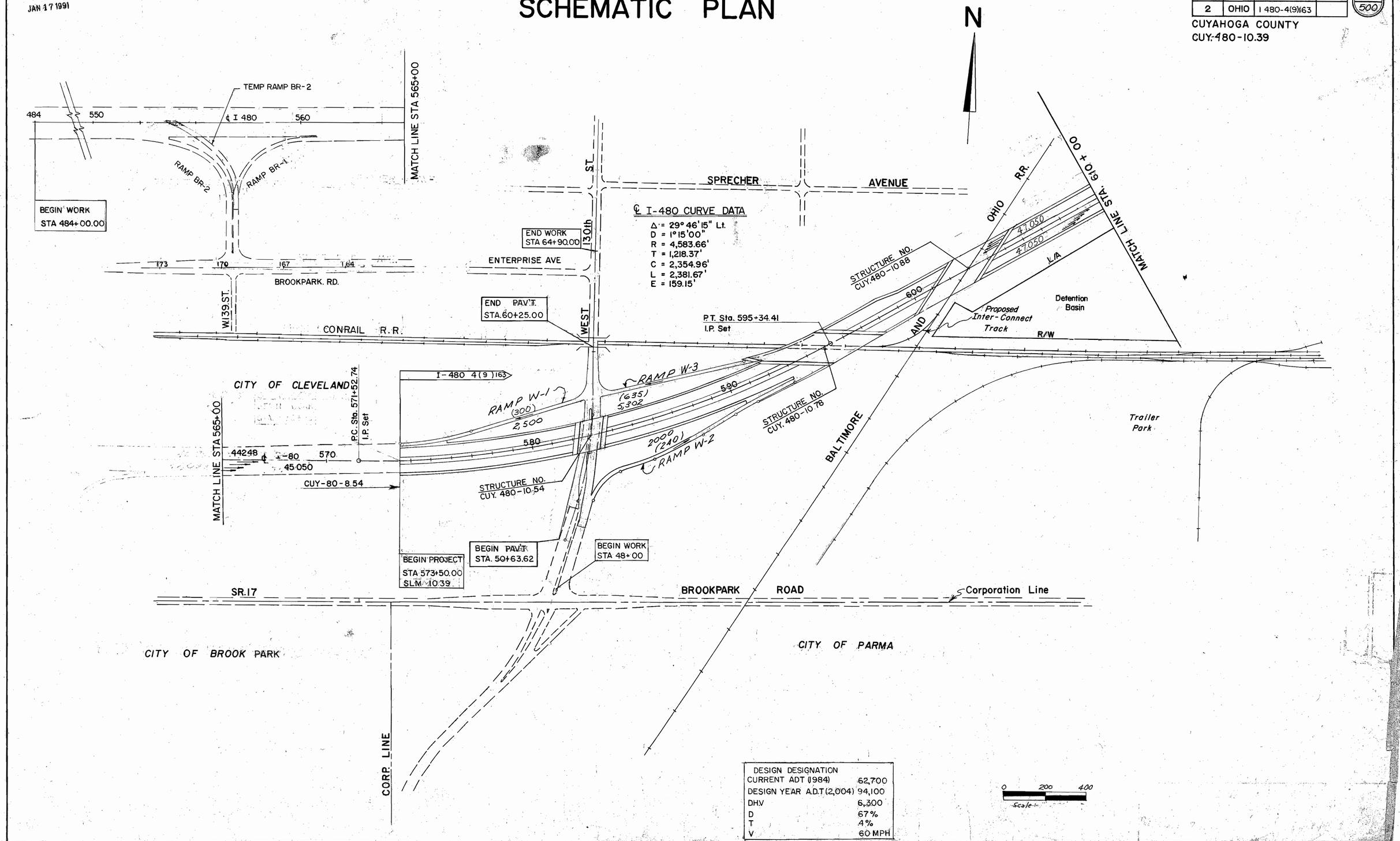

DESIGN DESIGNATION	
CURRENT ADT (1984)	62,700
DESIGN YEAR A.D.T (2,004)	94,100
DHV	6,300
D	67%
T	4%
V	60 MPH

MICROFILMED
JAN 22 1991

FED. RD. DIVISION	STATE	PROJECT	TYPE FUNDS
2	OHIO		

440/500

CUYAHOGA COUNTY
CUY-480-10.39

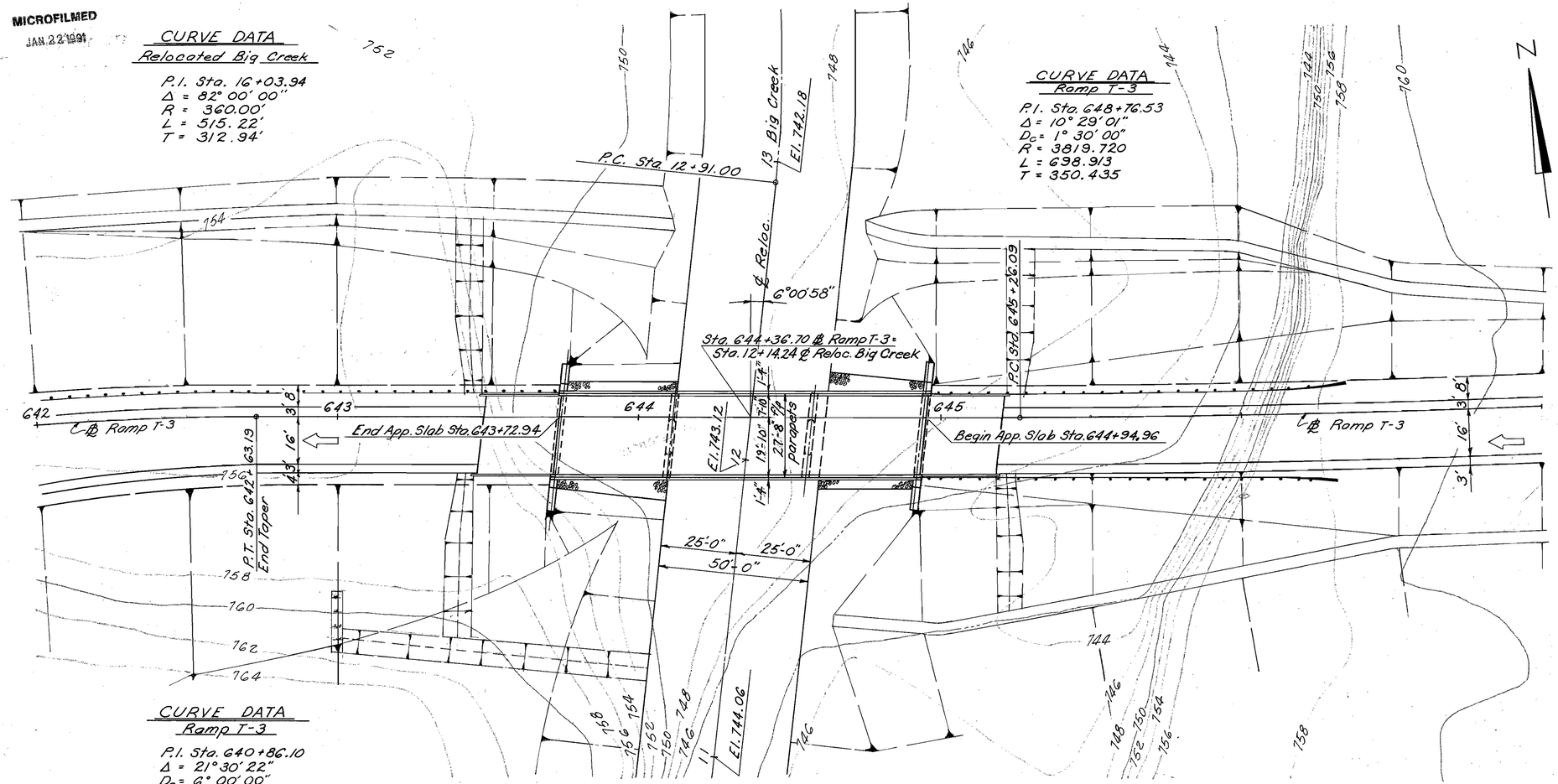

PLAN

Notes:
Earthwork limits shown are schematic. Actual slopes shall conform to plan cross-sections.

For limits of dumped rock fill, see channel relocation plan and sections.

PROPOSED STRUCTURE

TYPE: Continuous steel beam with reinforced concrete deck and substructure.
SPANS: 37'-0", 46'-0", 37'-0" ℄ brgs.
ROADWAY: 27'-8" f/f parapets of BR-1 railing.
LOADING: HS 20-44
WEARING SURFACE: 2 1/2" Asphalt on Concrete.
SKEW: 6°-00'-58" Lt. fwd.
ALIGNMENT: Tangent
APPROACH SLABS: AS-1-81 modified 25' long

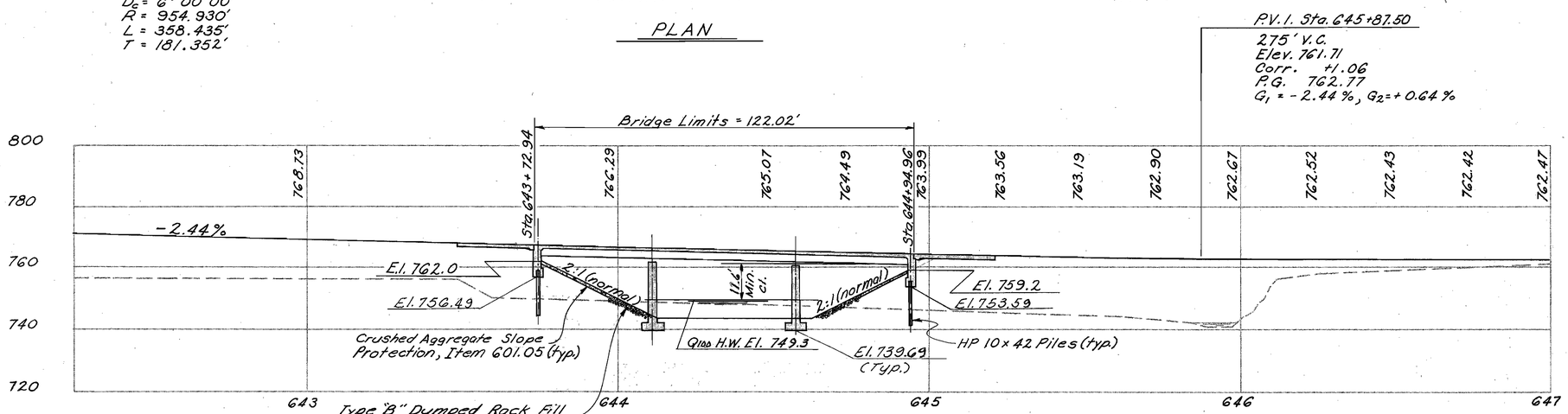

PROFILE ALONG ℄ RAMP T-3

Piling Estimated Average Pay Length:
Rear Abutment - 15'
Forward Abutment - 12'

HYDROLOGICAL DATA

Drainage Area = 14.1 Sq. Mi.
Q_{100} = 5496 c.f.s.
V_{100} = 13.7 f.s.

TRAFFIC ESTIMATE

Design Year ~ 2000
Total A.D.T. ~ 6124

1/9

ALDEN E. STILSON & ASSOCIATES, LIMITED
CONSULTING ENGINEERS
CLEVELAND, OHIO COLUMBUS, OHIO WHEELING, W. VA.

SITE PLAN

BRIDGE NO. CUY-480-1171
RAMP T-3 OVER RELOC. BIG CREEK
CUYAHOGA COUNTY STA. 643+72.94 STA. 644+94.96

SCALE: 1" = 20'

DESIGNED	DRAWN	TRACED	CHECKED	REVIEWED	DATE	REVISED
G.W.M.	G.W.M.	D.L.	RT	G.W.M.	12/91	

MICROFILMED
JAN 22 1980

FED. RD. DIVISION	STATE	PROJECT	TYPE FUNDS
2	OHIO		

446/500

CUYAHOGA COUNTY
CUY-480-10.39

All longitudinal reinforcing shall be S5018 or S5019 unless otherwise noted. Longitudinal reinforcing in the parapets shall be SE5005 and SE5006.

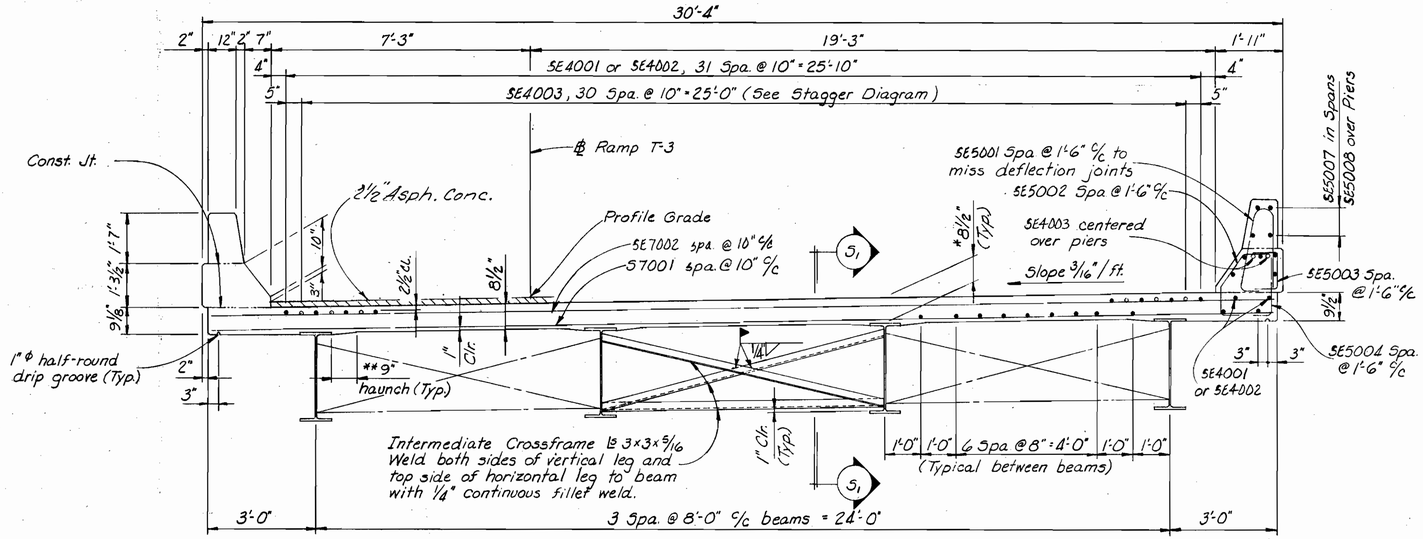

TRANSVERSE SECTION

For details and reinforcing in parapet transition see sheet 3/9

Note: For details of Asphalt Concrete Surface Course and Subdrainage see Sht. No. 476

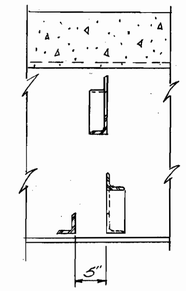

SECTION ~ S1 - S1

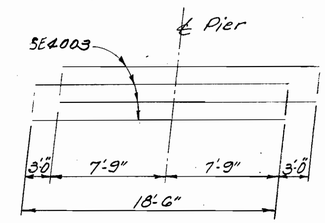

STAGGER DIAGRAM

Notes:

Where "(CVN)" follows a shape or plate size designation, the material shall meet specified minimum notch toughness requirements.

* The distance shown from top of deck slab to top of steel beam is the design dimension. The quantity of deck concrete to be paid for shall be based on this dimension, even though deviation from it may be necessary because the top flange of the beam may not have the exact camber or conformation required to place it parallel to the finished grade.

** A haunch width of 9" shall be used for computing quantity of concrete. However, the haunch width may vary between 6" and 12" provided that the slope shall be not more than 1:4 for a haunch less than 9" in width.

Lap SE4001 and SE4002 bars 1'-3".
Lap SE5005 and SE5006 bars 1'-7".
Lap S5018 and S5019 bars 1'-7".
Quantities of concrete and reinforcing steel for railing shall be included with their appropriate Item for payment.

S7001 & SE7002 bars shall be placed parallel to ℄ bearings. Spacing is measured along ℄ Ramp T-3.

For additional notes and details see sheet 8/9

WELDING ATTACHMENTS: See sheet 366/500

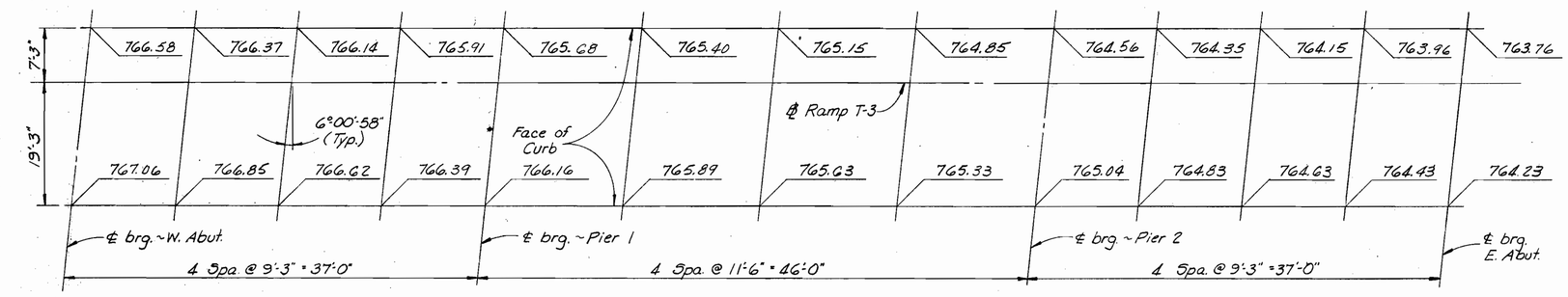

SCREED ELEVATIONS

Screed elevations are at top of slab before the concrete is placed. Proper allowance has been made for the dead load deflection due to the weight of the concrete.

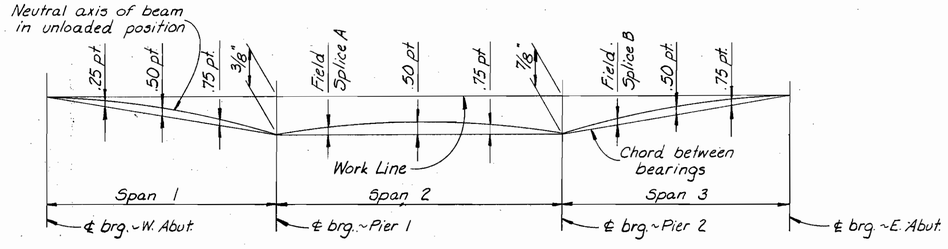

CAMBER AND BLOCKING DIAGRAM

DEFLECTION AND CAMBER

Camber Description	Span 1			Span 2			Span 3		
	.25 pt.	.50 pt.	.75 pt.	Splice	.50 pt.	.75 pt.	Splice	.50 pt.	.75 pt.
Defl. due to weight of steel	0	0	0	0	1/16	0	0	0	0
Defl. due to remaining dead load	1/8	1/8	1/16	1/16	3/8	1/8	1/16	1/8	1/8
Adjustment due to curvature	0	0	0	0	0	0	-3/16	-1/4	-3/16
Required shop camber	1/8	1/8	1/16	1/16	7/16	1/8	-1/8	-1/8	-1/16

minus (-) values indicates that the neutral axis of the beam in unloaded position is below the chord between bearings.

7/9

ALDEN E. STILSON & ASSOCIATES, LIMITED
CONSULTING ENGINEERS
CLEVELAND, OHIO COLUMBUS, OHIO WHEELING, W. VA.

SUPERSTRUCTURE DETAILS

BRIDGE NO. CUY-480-1171
RAMP T-3 OVER RELOCATED BIG CREEK
STA. 643+72.94 TO STA. 644+94.96
CUYAHOGA COUNTY

DESIGNED	DRAWN	TRACED	CHECKED	REVIEWED	DATE	REVISED
RT	RT		HT	G.W.M.	12/9/71	

MICROFILMED
JAN 22 1991

FED. RD. DIVISION	STATE	PROJECT	TYPE FUNDS
2	OHIO		

447/500

CUYAHOGA COUNTY
CUY-480-10.39

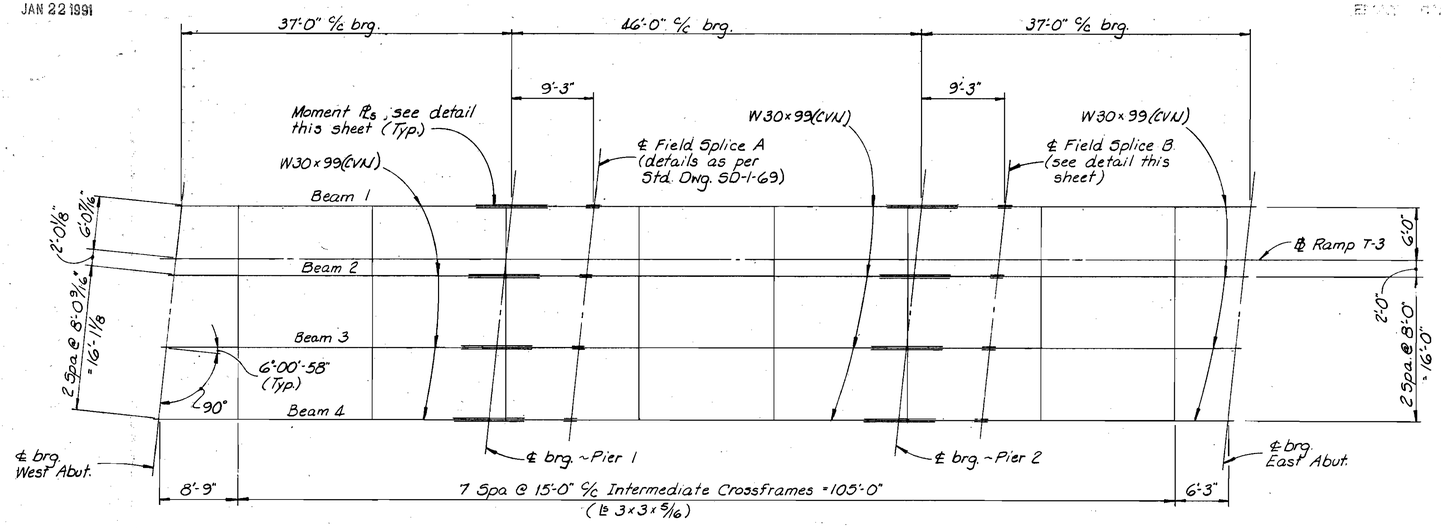

FRAMING PLAN

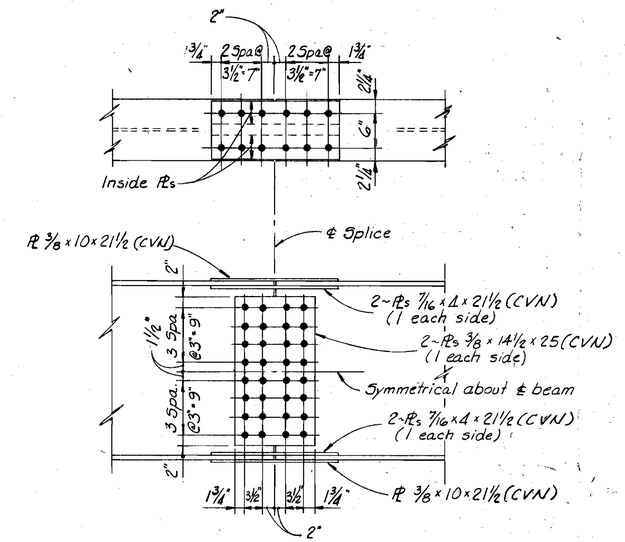

FIELD SPLICE B DETAILS

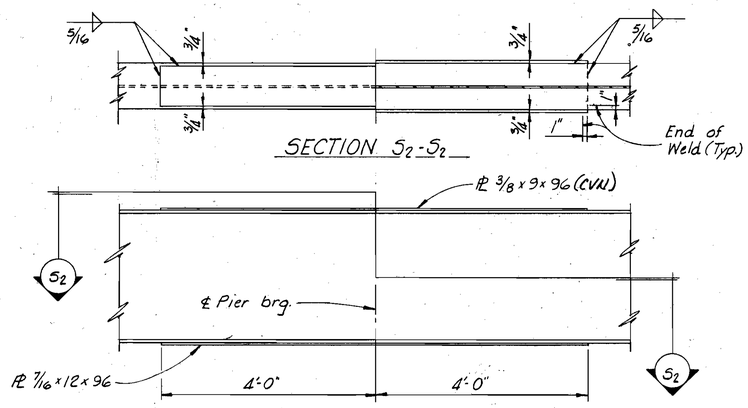

SECTION S2-S2

MOMENT Pl DETAILS

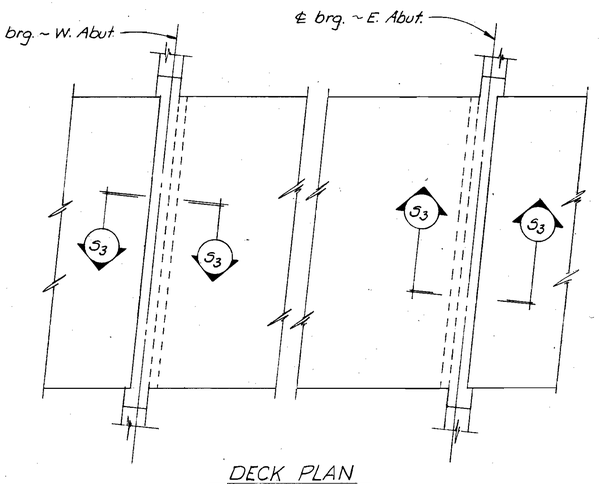

DECK PLAN

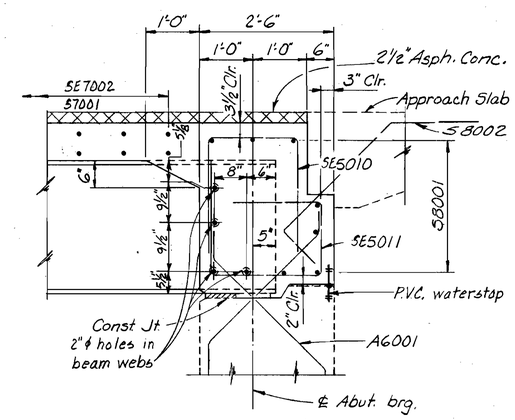

SECTION S3-S3

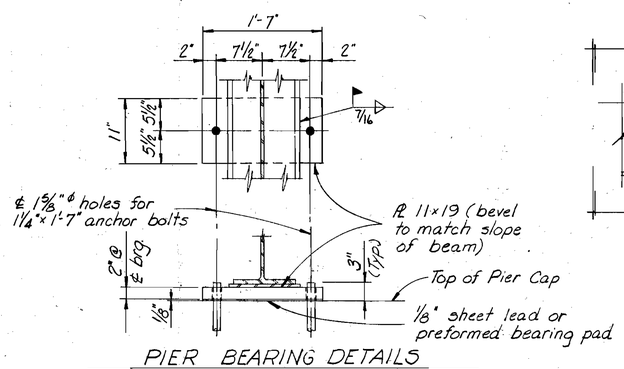

PIER BEARING DETAILS

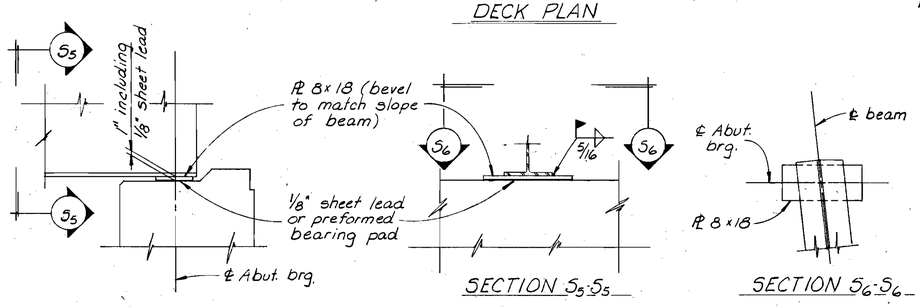

SECTION S5-S5

SECTION S6-S6

ABUTMENT BEARING DETAILS

For placement of reinforcing steel and Approach Slab seat elevations see sheet 4/9 and 5/9.

NOTES

Place intermediate crossframes normal to beams.

Bolts for field splices shall be 1" diameter A325. Bolt heads shall be placed on the fascia side of the exterior beams and the bottom side of all bottom flanges.

For additional notes and details see sheet 7/9.

8/9

ALDEN E. STILSON & ASSOCIATES, LIMITED
CONSULTING ENGINEERS
CLEVELAND, OHIO COLUMBUS, OHIO WHEELING, W. VA.

SUPERSTRUCTURE DETAILS

BRIDGE NO. CUY-480-1171
RAMP T-3 OVER RELOCATED BIG CREEK
STA. 643+72.94 TO
STA. 644+94.96
CUYAHOGA COUNTY

DESIGNED	DRAWN	TRACED	CHECKED	REVIEWED	DATE	REVISED
RT	RT		HT	G.W.M.	12/9/71	