S-18

81-S

STATE OF OHIO
DEPARTMENT of TRANSPORTATION

CUY- 480 - 1.90

CUYAHOGA COUNTY
CITY OF NORTH OLMSTED
OLMSTED TOWNSHIP

MICROFILMED AUG 11 1982

MICROFILMED 1984

MICROFILMED JUL 8 1984

[I-480-4(12)156]

NOTE: Project designation CUY 80 appearing throughout this plan shall be considered to read CUY 480

FED. RD. DIVISION	STATE	PROJECT	
5	OHIO	I-480-4(12)156	

1 / 427

CUYAHOGA COUNTY
CUY-480-1.90

CONVENTIONAL SIGNS

Center Line
Existing R/W
Proposed R/W
Limited Access Line — LA —
Temporary R/W — T —
Work Agreement Line
Property Line — PL —
Original Lot Line — O.L. 78 / O.L. 79 —
Water Line — W —
Water Valve
Water Hydrant
Gas Line — G —
Gas Valve
Telephone Underground — T —
Electric Underground — E —
Power Pole
Light Pole
Telephone Pole

Existing Sewer
Proposed Sewer
Existing Manhole
Proposed Manhole
Existing Catch Basin
Proposed Catch Basin
Manhole Abandoned
Catch Basin Abandoned
Existing Guard Rail
Proposed Guard Rail
Fence
Existing Retaining Wall
Railroad
Existing Trees Removed

SHEETS DELETED FROM PLAN
24, 240, 243 thru 251, 267 268, 274 thru 288, 324 thru 327

ADDED SHEET 401A

INDEX OF SHEETS

Title Sheet — 1
Schematic Plan — 2-4
Typical Sections — 5-8, 8A
Bike Path Profile — 8B, 8C
General Notes — 9-11
General Summary & Sub-Summary — 12-18
Pavement Calculations — 19-20A
Special Details — 25B, 21-25, 25A
Superelevation Table — 26
I-480 Plan & Profile — 27-43
Mackenzie Rd Plan & Profile — 44
Southern & Burns Ave. Plan & Profile — 45
Fitch Rd. Plan & Profile — 46
Butternut Ridge Rd. Plan & Profile — 47-50
Kennedy Ridge Rd. Plan & Profile — 51-52
Reloc. S.R 252 Plan & Profile — 53-54
Columbia Rd. Plan & Profile — 55
Grace Ave. Plan & Profile — 56-57
Reloc. S.R.252 Interchange Ramps Plan & Profile — 58-64
Temporary Rds. Plan & Profile — 65-67
Pavement Details — 68-78
Storm Sewer Profiles — 79-90
Culvert Details — 91-100, 92A
Storm Sewer Outlet - Mastick Rd — 101
Columbia Rd. Sanitary Sewer Relocation — 102
Cross Section Index — 103
I-480 Cross Sections — 104-141
Cross Rd. Cross Sections — 142-156
Reloc. S.R 252 & Interchange Ramp Cross Sections — 157-195
Water Work Plans — 215A, 215B, 225A, 225B, 196-233, 225C
Traffic Control Plans — 234-273
Lighting Plans — 323B, 289A, 289-323, 323A
Structures Over 20' Feet in Length — 328-401, 401A
Right of Way Plans — 402-427, 421A

Sht. Nos. 376, 377, 378, 379 & 380 revised 4-11-79 WTF
Sht. No. 380 revised 4-20-79 WTF
Sht. Nos. 381A & 382A added and Sht. Nos 381 & 382 revised 8-10-79 WTF
Sheets 351 & 393 revised 10-24-79 EBL

LINE DATA

Begin Project		Sta. 200+75.00
End Project		Sta. 357+00.00
Net Length of Project		15,625.00 L.F. or 2.959 Mi.
Additional Work		
I-480	Sta. 198+75.0 to Sta. 200+75.0	200.0 L.F.
	Sta. 357+00.0 to Sta. 359+50.0	250.0 L.F.
Butternut Ridge Rd.	Sta. 54+00.0 to Sta. 64+20.0	920.0 L.F.
Relocated S.R 252	Sta. 58+0.00 to Sta. 80+00	2200.0 L.F.
Columbia Rd. (Temp)	Sta. 0+00.00 to Sta. 7+08.87	708.87 L.F.
Fitch Rd. (Temp.)	Sta. 0+75.00 to Sta. 9+50.43	875.43 L.F.
	Add for Sign Work	100.00 L.F.
Mastick Rd Storm Sewer		647.0 L.F.
	Total Additional Work =	5901.30 L.F.
	Net Length of Work =	21,526.30 L.F. or 4.076 Mi.

FILE NUMBER	CUYAHOGA COUNTY CUY480-1.90 00391
	DATE OF LETTING
	CONTRACT NUMBER

Begin Project Sta. 200+75.00 S.L.M. 1.90

End Project Sta. 357+00.00 S.L.M. 4.86

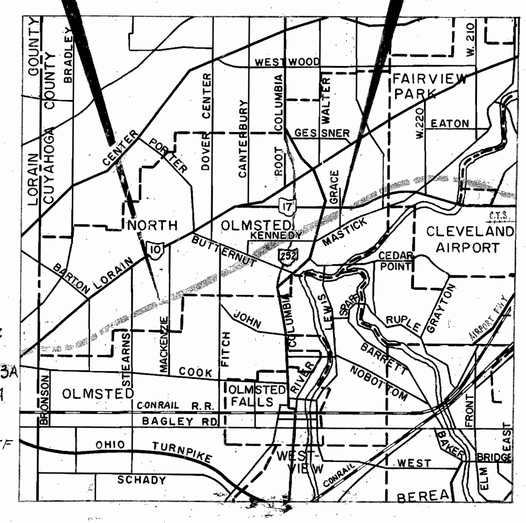

LOCATION MAP

0 1 2 3
SCALE OF MILES

Portion To Be Improved
State Routes
U.S. Routes
Interstate Routes
City Streets
To Be Improved Under Separate Contract

SCALES

PLAN	0 50	1" = 50'
PROFILE: HORIZ.	0 50	1" = 50'
VERT.	0 10 20	1" = 20' 1" = 10'
CROSS SECTIONS	0 10	1" = 10'
PAVEMENT DETAILS	0 20	1" = 20'

SUPPLEMENTAL SPECIFICATIONS

NUMBER	DATE
801	4-25-77
808	1-1-71
836	3-12-75
838	1-13-77
839	11-25-70
842	8-29-74
843	10-23-75
844	11-8-74
846	4-25-77
847	4-3-76
948	2-19-74
950	4-25-77
951	4-25-77
1001	1-3-77
8625	1-11-74
5713	1-11-74

STANDARD DRAWINGS

NUMBER	DATE
BP-1	6-1-65
BP-2	12-6-76
BP-3	12-6-76
BP-4	12-6-76
BP-5	8-11-75
BP-7	12-6-76
BP-9	12-6-76
BP-10	1-3-75
BP-12	8-11-75
CB-2-2 A & B	6-1-65
CB-2-3 & 2-4	6-1-65
CB-3A	1-1-76
CB-4	9-1-69
CB-5	9-1-69
CB-6	6-1-65
CB-45B A	6-6-68
F-1	5-1-76
F-3	5-1-76
F-4	5-1-76
F-5	5-1-76
F-6	5-1-76
GR-1	12-6-76
GR-2B	12-6-76
GR-3	12-6-76
GR-8	12-6-76
GR-9A	7-26-76
GR-5	1-1-71
GR-6	1-1-71
E-2	5-1-76
HW-3	6-1-65
HW-4	1-1-70
I-2	6-6-69
I-2A	6-6-69
L-1	6-1-73
MC-1	6-13-69
MC-3	6-1-73
MC-4	7-26-76
MC-6	6-1-65
MC-7	10-15-76
MH-1	6-12-75
MH-2	6-12-75
MH-3	6-12-75
MH-5	6-12-75
HL-1	9-6-73
HL-2	7-27-73
HL-3	7-27-73
HL-4	1-21-76
HL-5	9-6-73
HL-6	3-22-77
HL-7	1-21-76
HL-8	1-21-76
HL-9	3-22-77
HL-10	1-21-76
HL-11	4-6-73
HL-12	4-6-73
TC-7.65	10-1-74
TC-12.30	10-1-74
TC-21.10	10-1-74
TC-21.20	4-18-77
TC-21.40	8-19-77
TC-22.10	8-19-77
TC-31.21	8-27-76
TC-32.10	8-27-76
TC-32.11	8-27-76
TC-41.10	8-19-77
TC-41.20	4-1-77
TC-41.50	4-1-77
TC-42.10	8-19-77
TC-42.20	4-1-77
TC-51.10	6-2-75
TC-51.11	6-2-75
TC-52.10	4-1-77
TC-52.20	4-1-77
TC-61.10	8-19-77
TC-71.10	12-1-75
TC-72.20	8-29-77
TC-81.10	4-18-77
TC-82.10	9-5-75
TC-83.10	9-5-75
TC-83.20	9-5-75
TC-84.20	9-5-75
TC-85.10	9-5-75
TC-85.20	9-5-75
AS-1-72	6-30-72
BR-1-67	10-15-71
RB-1-55	2-2-59
SD-1-69	6-12-69

"LIMITED ACCESS"

This improvement is especially designed for thru traffic and has been declared a Limited Access Highway or Freeway by action of the Director of Highways, in accordance with the provisions of Sec. 5511.02 of The Revised Code of Ohio.

1977 SPECIFICATIONS

The Standard Specifications of the State of Ohio, Department of Transportation incl. changes and supplemental specifications listed in the proposal, shall govern this improvement.

The Right of Way for this improvement will be provided by the State of Ohio.

I hereby approve these plans and declare that the making of this improvement will not require the closing of the highway to traffic and that provisions for maintenance and safety of traffic will be as set forth on the plans and estimates.

Approved Thomas M. Frale
Date 6-22-77 District Deputy Director of Transportation

Approved Robert B. Pfeifer
Date 3-29-78 Engineer, Bureau of Bridges and Structural Design

Approved R. E. Rathin
Date 3-29-78 Chief Engineer, Planning and Design

Approved David Z. Wain
Date 3-29-78 Director, Department of Transportation

DESIGN DESIGNATION
1970 A.D.T. = 26,500
1987 A.D.T. = 58,900
D.H.V. 2,945
D. (directional distribution) 67%
T. (percent B&C trucks) 5%
V. (design speed) 60 M.P.H.

PLANS PREPARED BY
ALDEN E. STILSON & ASSOCIATES, LIMITED
CONSULTING ENGINEERS
75 PUBLIC SQUARE
CLEVELAND, OHIO
FOR
STATE OF OHIO

DEPARTMENT OF TRANSPORTATION
FEDERAL HIGHWAY ADMINISTRATION

APPROVED:

DIVISION ADMINISTRATOR DATE:

REV 4-5-78

SCHEMATIC PLAN

MICROFILMED
AUG 11 1982

FED. RD. DIVISION	STATE	PROJECT	
2	OHIO		

CUYAHOGA COUNTY
CUY-480-1.90

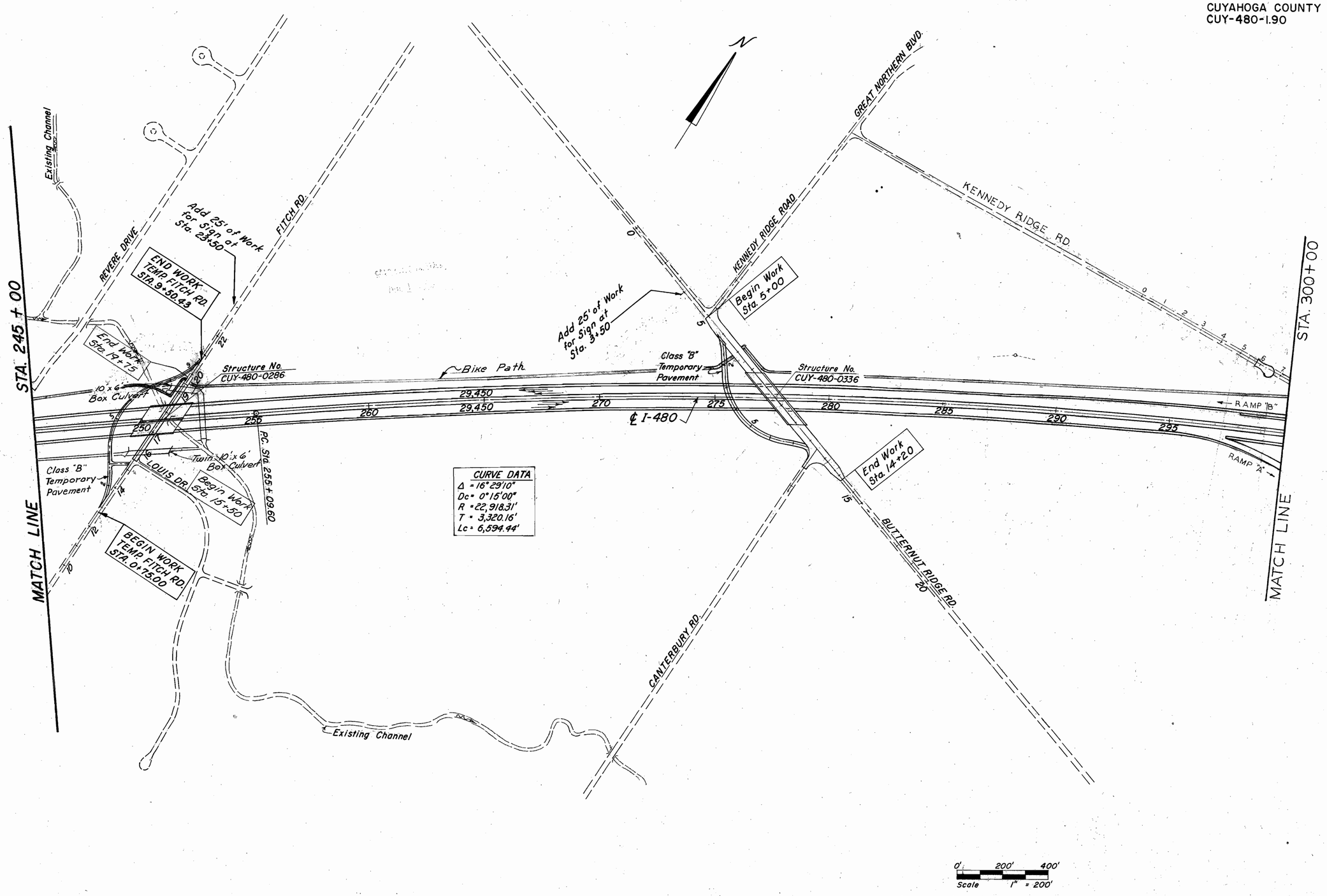

MICROFILMED
AUG 12 1982

FED. RD. DIVISION	STATE	PROJECT	TYPE FUNDS
2	OHIO		

344/427

CUYAHOGA COUNTY
CUY-480-1.90

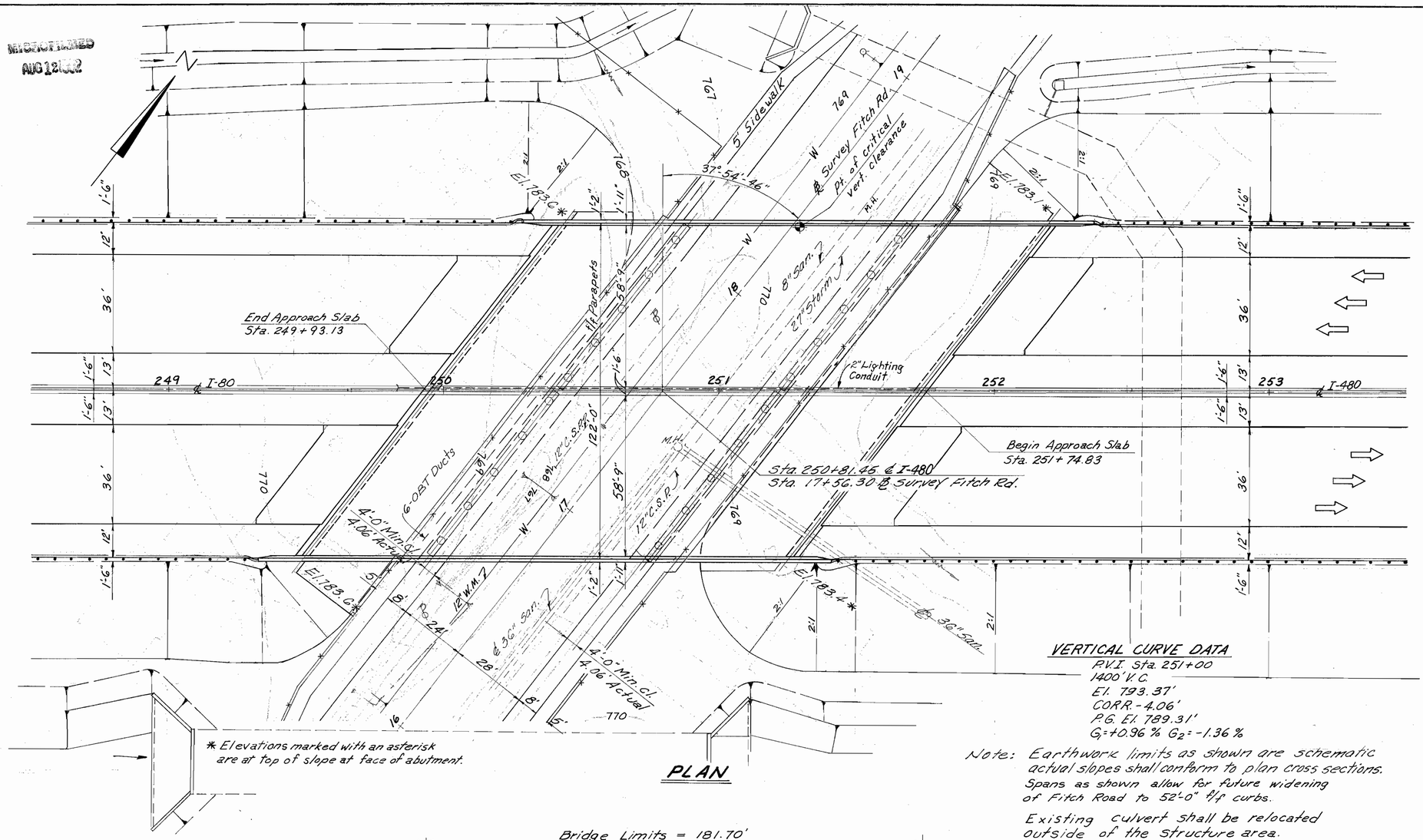

* Elevations marked with an asterisk are at top of slope at face of abutment.

PLAN

VERTICAL CURVE DATA

P.V.I. Sta. 251+00
1400' V.C.
El. 793.37'
CORR. -4.06'
P.G. El. 789.31'
G_1=+0.96 % G_2=-1.36 %

Note: Earthwork limits as shown are schematic actual slopes shall conform to plan cross sections. Spans as shown allow for future widening of Fitch Road to 52'-0" b/f curbs.

Existing culvert shall be relocated outside of the structure area.

PROPOSED STRUCTURE

TYPE: Continuous steel beam with reinforced concrete deck and reinforced concrete substructure

SPANS: 48'-0", 80'-0", 48'-0" c/c brgs.

ROADWAY: 122'-0" b/f concrete parapets, with concrete median barrier

LOADING: HS 20-44 and the Alternate Military Loading.

WEARING SURFACE: Monolithic concrete

SKEW: 37°-54'-46"

ALIGNMENT: Tangent

APPROACH SLABS: AS-1-72 (25' long) (Modified)

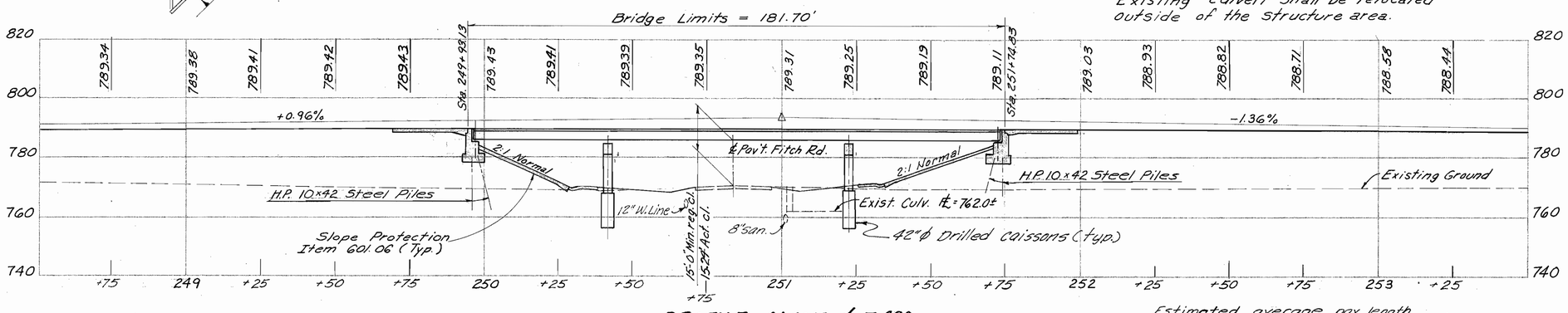

PROFILE ALONG ℄ I-480

Estimated average pay length for abutment piles is 20 ft.

TRAFFIC ESTIMATE

Design Year - 1987
Total A.D.T. - 7,842

Modify AS-1-72 by providing 3" cover over the top rebars instead of the the 2" shown, by changing from full width to the width of the approach pavement and by omitting the jacking holes.

1/17

ALDEN E. STILSON & ASSOCIATES, LIMITED
CONSULTING ENGINEERS
COLUMBUS, OHIO

SITE PLAN

BRIDGE № CUY-480-0286
I-480 OVER FITCH ROAD
CUYAHOGA COUNTY STA. 249 + 93.13 STA. 251 + 74.83

DESIGNED	DRAWN	TRACED	CHECKED	REVIEWED	DATE	REVISED
G.W.M.	G.W.M.	M.D.		G.W.M.	7/8/69	

FED. RD. DIVISION	STATE	PROJECT	TYPE FUNDS
2	OHIO		

356
427

CUYAHOGA COUNTY
CUY-480-1.90

Note:
Each longitudinal run of deck reinforcing, excluding SE5003 over Piers shall be comprised of 6-S5001 and 1-S5002 or 6-SE5001 and 1-SE5002 bars lapped a minimum of 1'-7".

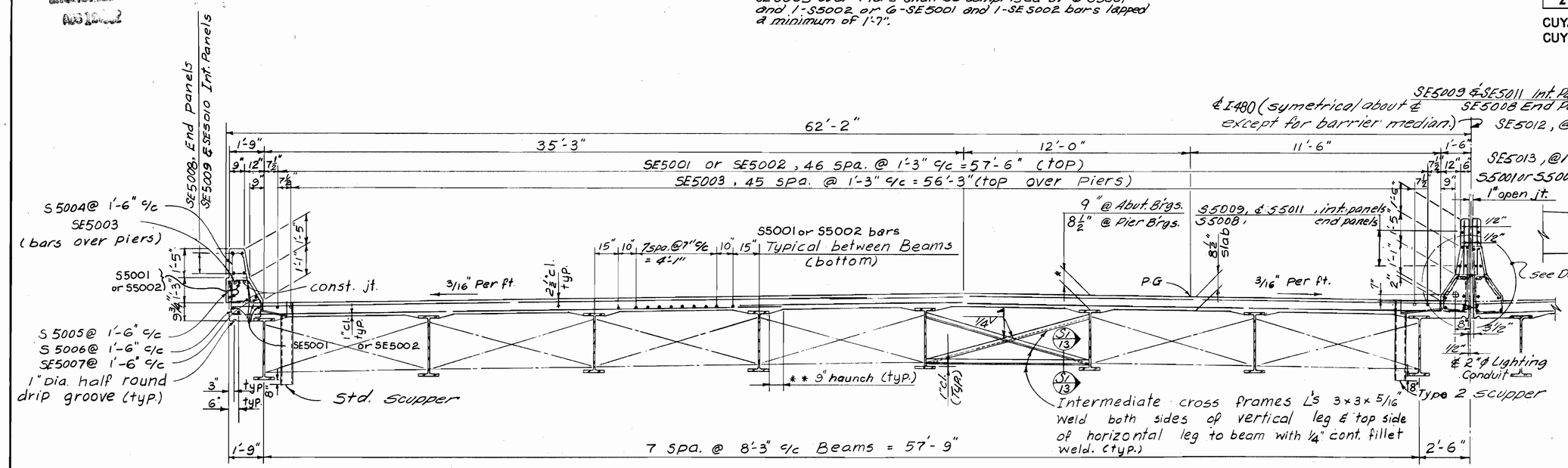

HALF TRANSVERSE SECTION

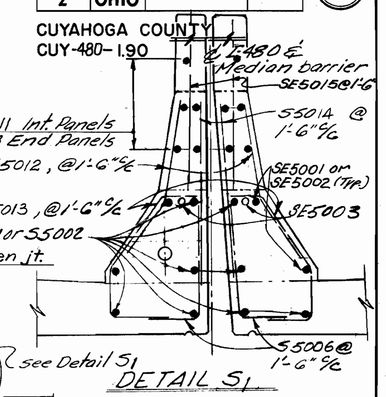

DETAIL S1

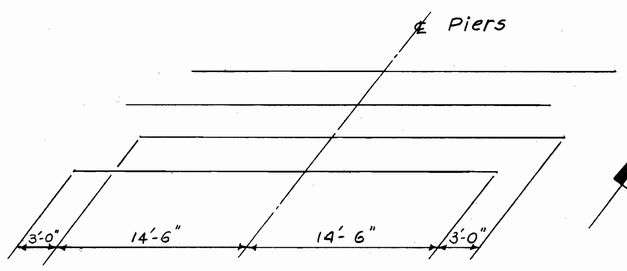

DIAGRAM SHOWING STAGGER OF SE5003, BARS OVER PIERS

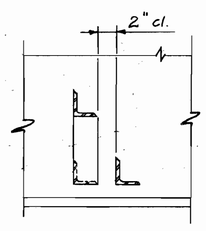

SECTION S1-S1

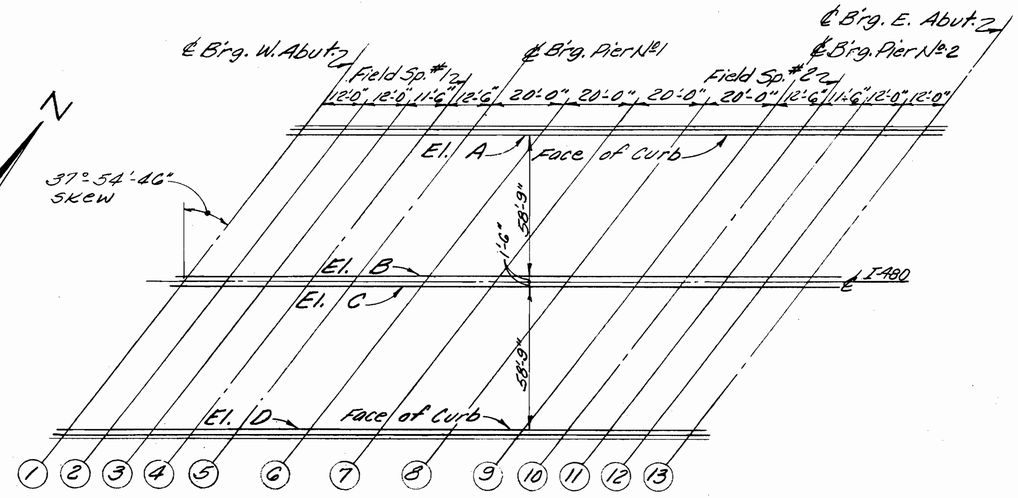

DECK ELEVATIONS

NOTE: The deck elevations shown are those which are required prior to placing of the concrete deck. Proper allowance has been made for the dead load deflection caused by the weight of the concrete.

TABLE OF DECK ELEVATIONS

LINE	1	2	3	4	5	6	7	8	9	10	11	12	13
ELEV. A	789.03	789.02	789.00	788.99	788.96	788.97	788.93	788.86	788.76	788.73	788.69	788.64	788.59
ELEV. B	789.25	789.26	789.23	789.23	789.21	789.22	789.20	789.16	789.08	789.05	789.01	788.98	788.93
ELEV. C	789.25	789.25	789.25	789.23	789.22	789.22	789.21	789.16	789.08	789.06	789.03	789.00	788.96
ELEV. D	789.06	789.06	789.07	789.07	789.07	789.08	789.09	789.05	788.98	788.96	788.95	788.92	788.89

NOTES:

* This is the design dimension. The quantity of deck concrete to be paid for shall be based upon this dimension, even though deviation from it may be necessary because the top flange of the girder may not have the exact camber or confirmation required to place it parallel to the finished grade. Deduction shall be made for volume of encased steel plates as per Item 511.18.

** A typical haunch width of 9" shall be used for all beams in computing quantity of concrete. However the haunch width may vary between 6" and 12" provided that the slope shall be not more than 1:4 for a haunch less than 9" in width.

For transverse slab reinforcing see Sht. 14/17

Concrete and reinforcing steel for parapets and median barrier shall be included for payment with their respective items, Item 511 Superstructure concrete and Item 509 reinforcing steel.

For Scupper Details see Sht. 16/17

13/17

ALDEN E. STILSON & ASSOCIATES, LIMITED
CONSULTING ENGINEERS
CLEVELAND, OHIO COLUMBUS, OHIO WHEELING, W. VA.

SUPERSTRUCTURE DETAILS
BRIDGE № CUY-480-0286
I-480 OVER FITCH ROAD
CUYAHOGA COUNTY STA. 249 + 93.13 STA. 251 + 74.83

DESIGNED	DRAWN	TRACED	CHECKED	REVIEWED	DATE	REVISED
B.I.P.	R.T. B.I.P.		R.S.S.	G.W.M.	7/6/69	

FED. RD. DIVISION	STATE	PROJECT	TYPE FUNDS
2	OHIO		

358
427

CUYAHOGA COUNTY
CUY-480-1.90

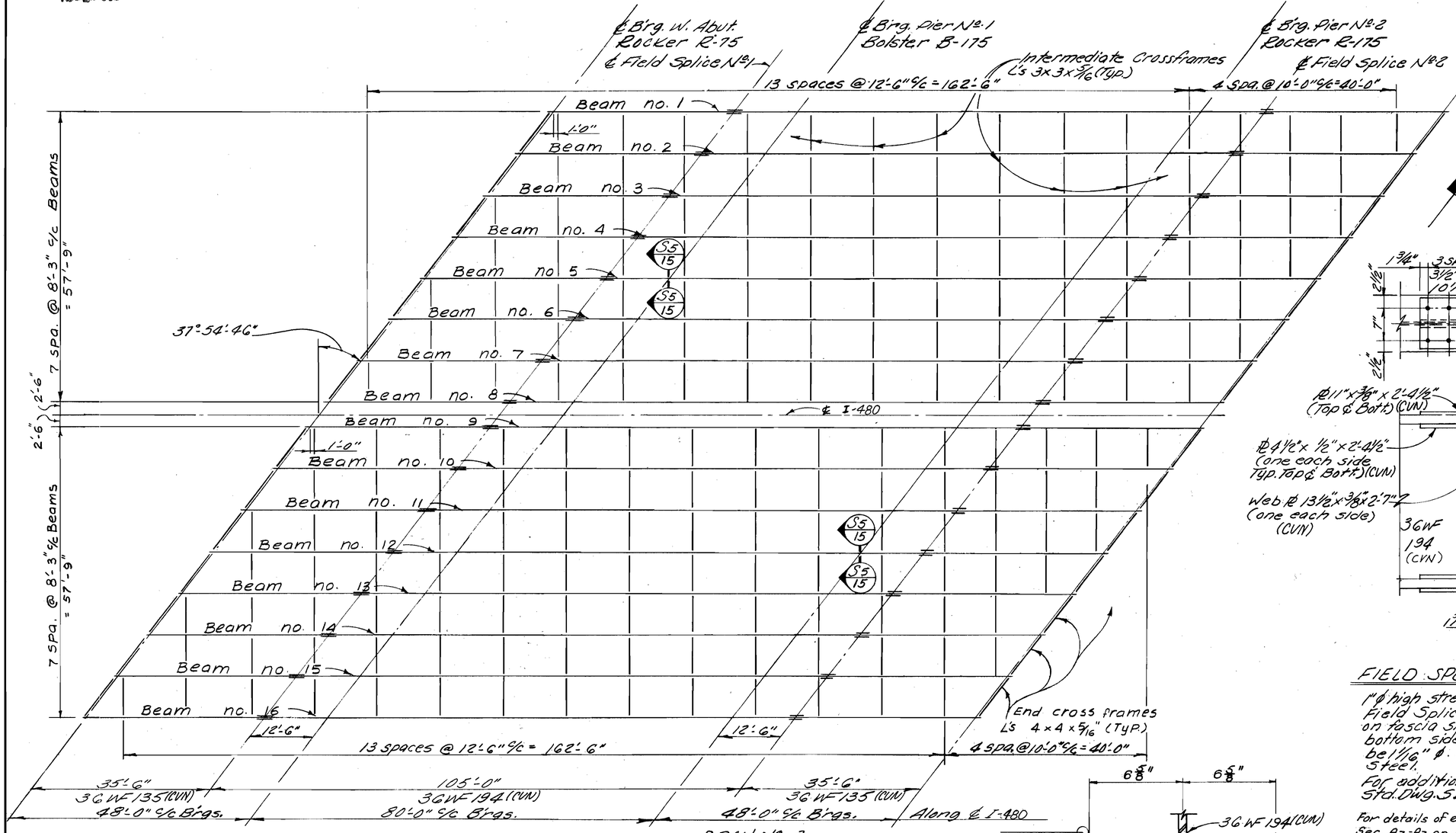

FRAMING PLAN

NOTES:
Crossframes may be shifted if necessary to avoid field splice.
Place intermediate crossframes normal to beam.
Where a shape or plate is designated (CVN) the material shall meet Specified minimum notch toughness requirements.

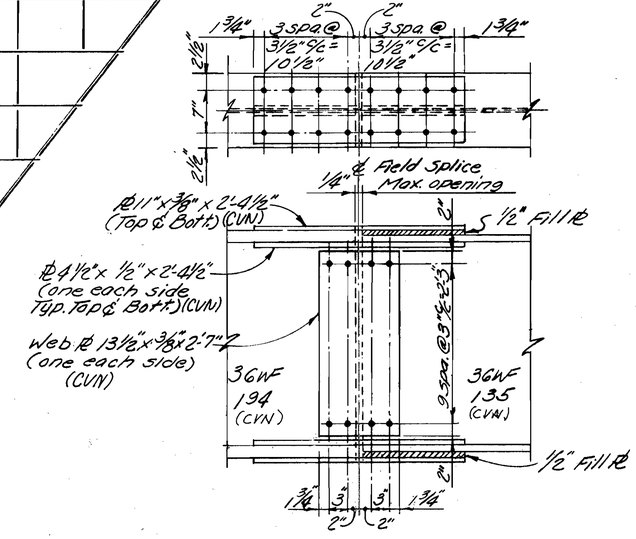

FIELD SPLICE No. 1 & No. 2 DETAILS

1" ϕ high strength bolts shall be used at the Field Splices. Bolt heads shall be placed on fascia side of exterior beam web and bottom side of bottom flange. Holes shall be 1 1/16" ϕ. Bolts shall conform to A-325 Steel.

For additional Details of Field Splices see Std. Dwg. SD-1-69 Sht. No. 4.

For details of end dams see Std. Drwg. SD-1-69 and Sec. A7-A7 on Sh. 9/17.

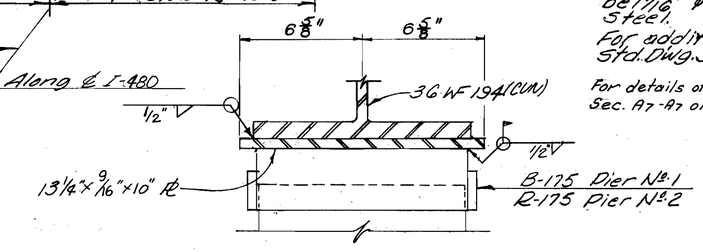

SECTION S5-S5

The 9/16" plate shall be centered on the brg. ℄. Typical at each pier bearing unit.

15/17

ALDEN E. STILSON & ASSOCIATES, LIMITED
CONSULTING ENGINEERS
CLEVELAND, OHIO COLUMBUS, OHIO WHEELING, W. VA.

SUPERSTRUCTURE DETAILS

BRIDGE No. CUY-480-0286

I-480 OVER FITCH ROAD

CUYAHOGA COUNTY STA. 249 + 93.13 STA. 251 + 74.83

DESIGNED	DRAWN	TRACED	CHECKED	REVIEWED	DATE	REVISED
B.I.P.	B.I.P.		R.S.S.	G.W.M.	7/9/69	

E. & E. - Cleveland 107155