0-13

MICROFILMED
MAR 6 1984
GROUND PHOTO LAB

STATE OF OHIO
DEPARTMENT OF HIGHWAYS
CUY-21-14.12

CITY OF CLEVELAND
CUYAHOGA COUNTY

CUY-77-14.12
I-77-5 (6) 161

FED. RD. DIVISION	STATE	PROJECT	
2	OHIO	I-77-5 (6)161	

1/198

CUYAHOGA COUNTY
CUY-21-14.12

MICROFILMED
OCT 5 1987
GROUND PHOTO LAB

CONVENTIONAL SIGNS

CENTERLINE
FENCE
GUARD RAIL (EXISTING)
GUARD RAIL (PROPOSED)
RAILROAD
UTILITY POLES
TREES & STUMPS (EXISTING)
PROPERTY LINE — PL
PROPERTY LINE-SAME OWNER CONTIGUOUS PARCELS OF LAND
EXISTING RIGHT OF WAY — EXIST. R/W
LIMITED ACCESS RIGHT OF WAY ONLY — LA
RIGHT OF WAY ONLY — R/W
SUBDIVISION LINE
ORIGINAL LOT LINE

INDEX TO SHEETS

TITLE PAGE . . . 1
SCHEMATIC PLAN . . . 2
TYPICAL SECTIONS . . . 3-4
MISC. PAV'T DETAILS . . . 5
GENERAL NOTES . . . 6-8
ROADWAY QUANTITY SUMMARY AND CALCULATIONS . . . 9-10
GENERAL SUMMARY . . . 11-13
GEOMETRIC LAYOUT . . . 14-15
WILLOW PLAN & PROFILE . . . 16-18
CLARK PLAN & PROFILE . . . 19
DRAINAGE QUANTITIES FOR SHEETS 16 & 19 . . . 20
RAMP PLAN & PROFILE . . . 21-27
PAVEMENT DETAILS . . . 28-36
GRADING PLANS . . . 37-39
CROSS SECTIONS . . . 40-79
DRAINAGE . . . 80-87, 91-94
WATERWORK . . . 95-119, 119A
EXISTING UTILITIES . . . 120-124
ELECTRICAL WORK . . . 125-138
SIGN SUPPORT DETAILS 138A, 138B, 138C, 138D, 138E, 138F, 138G, 138H, 138I, 138J
STRUCTURE CUY-21-1431 . . . 139-151
STRUCTURES CUY-21: RAMPS S-W & N-E . 152-172
STRUCTURES CUY-21: RAMPS W-N & E-S . 173-190
RETAINING WALL . . . 190A, 190B
RIGHT OF WAY . . . 191, 191A, 192-198

SHEETS 88, 89 & 90 OMITTED

LINE DATA

BEGIN PROJECT STA. 64 + 50.00 TO
END PROJECT STA. 87 + 04.50 . . . 2,254.50 L.F.
NET LENGTH OF PROJECT . . . 2,254.50 L.F. = 0.426 MILES

ADD FOR APPROACH WORK
WILLOW STA. 48+48.00 TO STA. 64 + 50.00 = 1,602.00 L.F.
*WILLOW STA. 87 + 04.50 TO STA. 32+20.00 = 4,515.50 L.F.
ADD FOR CLARK FREEWAY
STA. 1028 + 14.00 TO STA. 1042 + 15.00 = 1,401.00 L.F.
NET LENGTH OF WORK . . . = 9,773.00 L.F. = 1.850 MILES

** STA. 130+41.88 BK. = STA. 30+41.88 AH.*

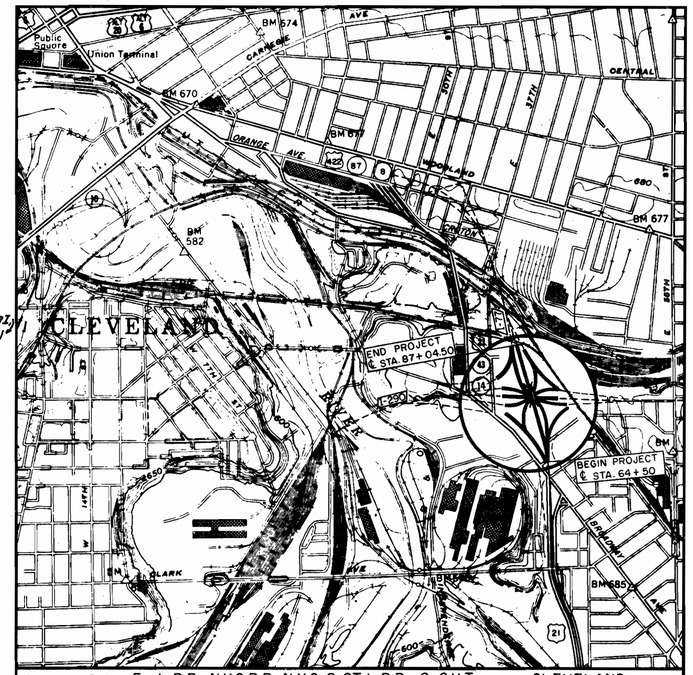

Delivery Point E.-L.R.R., N.Y.C.R.R., N.Y.C. & ST. L.R.R. & C.U.T. — CLEVELAND
Average haul from siding — 0.5 Miles

LOCATION MAP

SCALE
1 1/2 0 1 MILE

Portion to be improved
Federal Roads
State Roads
Other Roads & Streets

SCALE

Plan	1" = 50'
Profile: Horizontal	1" = 50' Unless
Profile: Vertical	1" = 10' Noted
Cross Sections	1" = 10'
Others	As Noted

STATE OF OHIO
TRYGVE W. HOFF
7785
REGISTERED
PROFESSIONAL ENGINEER

Plans prepared by:
TRYGVE HOFF & ASSOCIATES
ENGINEERS
1922 EAST 107TH STREET CLEVELAND, OHIO

Trygve W. Hoff — PRESIDENT
Stig O. Forsmark — CHIEF ENGINEER
T. Leslie Lees — PROJECT ENGINEER

LIMITED ACCESS

This improvement is especially designed for through traffic and has been declared a limited access highway or freeway by action of the Director of Highways in accordance with the provisions of Section 5511.02 of the Revised Code of Ohio.

1963 Construction and Material Specifications shall govern this improvement.

The standard specifications of the State of Ohio, Department of Highways, including changes and supplemental specifications listed in the proposal shall govern this improvement.

The right of way for this improvement will be provided by the State of Ohio.

I hereby approve these plans and declare that the making of this improvement will not require the closing of the highway to traffic and that provisions for the maintenance and safety of traffic will be as set forth on these plans and estimates.

Approved — Louis L. Kessler
Date 6/4/63 — Director of Public Service, City of Cleveland

Approved — Charles M. Jurick
Date May 31, 1963 Division Deputy Director

Approved — R. W. Wilson
Date 9-26-63 Deputy Director of Planning & Programming

Approved — T. H. Bobek
Date 9-12-63 Deputy Director of Right of Way

Approved — R. H. Overman
Date 9-9-63 Engineer of Bridges

Approved — R. N. Ricketts
Date 9-13-63 Engineer of Location & Design

Approved — R. E. Shultz
Date 9-16-63 Deputy Director of Design & Construction

Approved — H. H. Jakem
Date 9/26/63 First Ass't. Director

Approved — R. E. Mashter
Date 9/26/63 Director of Highways

DEPARTMENT OF COMMERCE
BUREAU OF PUBLIC ROADS

APPROVED:

DIVISION ENGINEER — DATE

Sheet 172 revised 11-27-63
Sheets 100 & 129 revised 12-13-63
Sheet 148 revised 3-3-64
Sheet 148A added 3-3-64
Sheet 141 revised 3-4-64
Sheets 182, 184 and 189 revised 5-5-64
Sheet 189 revised 10-6-64
Sheet 189A added 10-6-64

00156RP3

File No.	CUYAHOGA COUNTY CUY-21-14.12
	Date of Letting _____ 19
	Contract No. _____

SUPPLEMENTAL PRINTS OF STANDARD CONSTRUCTION DRAWINGS

B-T-70-71	11/15/60	I-1	11/15/60	I-15 No. 1	11/15/60	L-3-A	4/1/50	RB-1-55	2/2/59
B-T-71R	3/2/53	I-8 C.B. No. 5	2/1/63	I-15 No. 2-A	8/17/60	L.J. No. 1	7/1/55		
F-1	2/1/63	I-8 I. No. 2-A	2/1/63	I-15 No. 4	12/1/54	RI-1	7/15/58		
F-3	2/1/63	I-8 M.H. No. 1	2/1/63			T-35	1/2/56		
FACI-1	3/8/63	I-8 M.H. No. 2	2/1/63	I-21-23	8/1/56	T.J.	9/12/60		
FACI-2	3/8/63	I-12	2/1/63	L-1	4/1/50	AR-1-57	4/2/62		
G-7.07	6/1/56			L-3	4/1/50	FSB-1-62	1/15/63		
HW-E	2/1/63	I-8 M.H. No. 1-A	2-1-63			AS-1-54	7-5-62		

SUPPLEMENTAL SPECIFICATIONS

CE-101.04	5/22/56	
L-120	R. 1/2/62	
S-307	8/23/60	
S-101	7/12/62	
I-212	*R. 6-23-61*	
I-129	*R. 4-5-61*	

INT. No. 58019 SHEET No. 6165

MICROFILMED
MAR 6 1984

FED. RD. DIVISION	STATE	PROJECT	
2	OHIO		

2/198

CUYAHOGA COUNTY
CUY-21-14.12

TRYGVE HOFF & ASSOCIATES
ENGINEERS
1923 EAST 107TH STREET CLEVELAND, OHIO

SCHEMATIC PLAN

SCALE:

DESIGNED	DRAWN	TRACED	CHECKED	REVIEWED	DATE	REVISED
CDR	DK		RLH			

DATE

6/66

FED. RD. DIVISION	STATE	PROJECT	
2	OHIO		

153
198

CUYAHOGA COUNTY
CUY-21-14.12

RAMP S-W ℄ CURVE DATA
P.I. = STA. 12+47.09
D = 7°00'00"
Δ = 61°56'04"
R = 818.51'
T = 491.17'
L = 884.78'

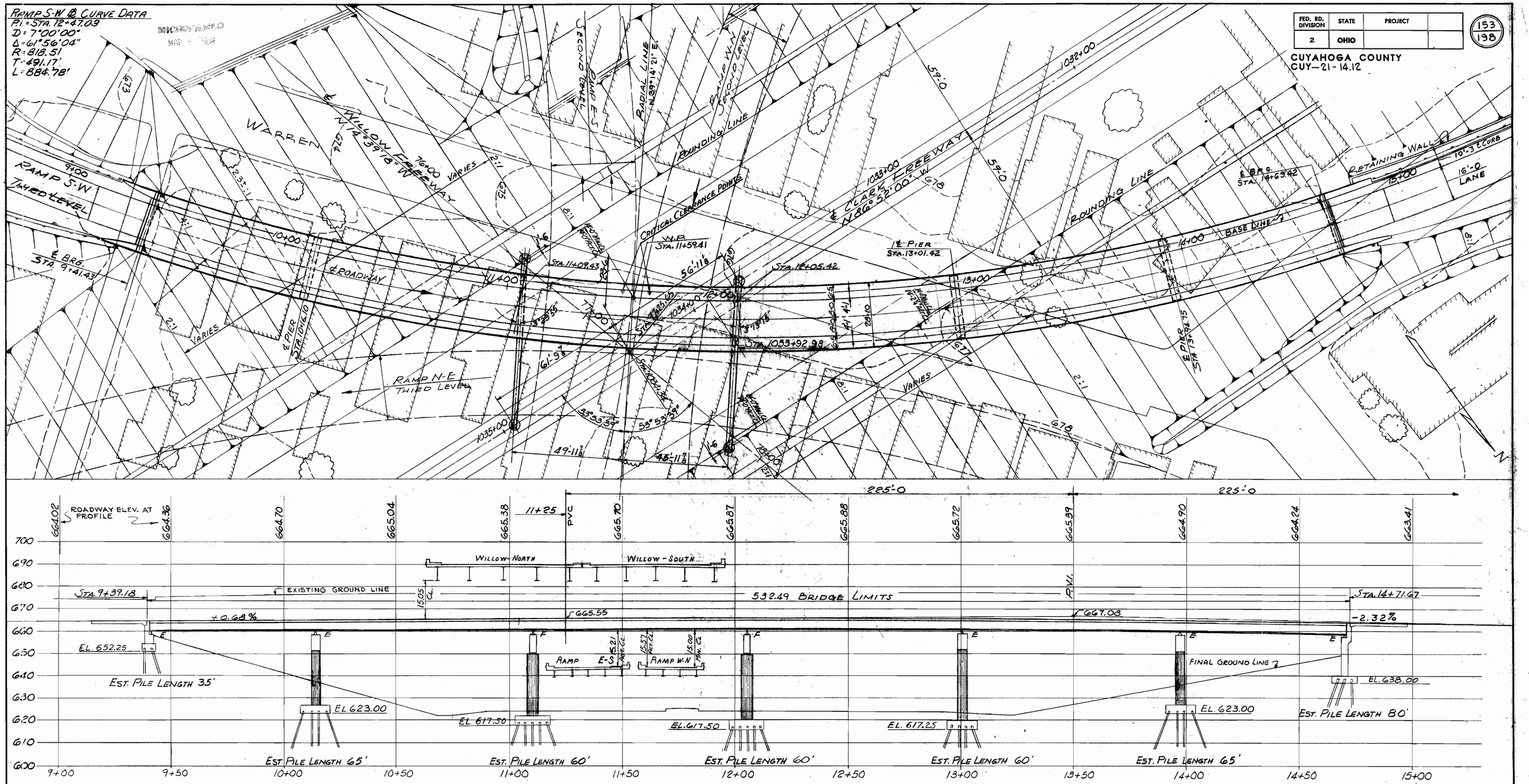

NOTE: ALL PILES ARE 12" CAST-IN-PLACE REINFORCED CONCRETE PILES.

PROPOSED STRUCTURE

TYPE: 6 SPAN CON'T. ROLLED BEAMS WITH REINF. CONC. DECKS & SUBSTRUCTURE
℄ SPANS: 74'-8 – 93'-4 – 95'-11⅛ – 96'-0 – 93'-4 – 74'-8
ROADWAY: 26'-6 F/F PARAPET
LOAD FREQUENCY: CF = 2000 (57) "ADEQUATE FOR A.A.S.H.O. ALTERNATE LOADING"
WEARING SURFACE: 1" MONOLITHIC CONC.
APPROACH SLAB: 25'-0 LONG
ALIGNMENT: 7°00'00"
SUPERELEVATION: 0.057'/FT.

FOR PLAN OF INTERCHANGE SEE DWG. NO. 139
FOR EXISTING UTILITIES SEE SHT. NOS. 121 & 122

FOUNDATION SOUNDINGS: FOUNDATION DESIGN AND FOUNDATION QUANTITIES ARE BASED ON A STUDY OF RQD SOUNDINGS AND SOIL SAMPLING SOUNDINGS MADE AT THE SITE. THIS SOUNDING INFORMATION, THE ACCURACY OF WHICH THE STATE DOES NOT GUARANTEE, MAY BE EXAMINED IN THE OFFICE OF THE BUREAU OF BRIDGES IN COLUMBUS OR IN THE DIVISION OFFICE.

TRYGVE HOFF & ASSOCIATES
ENGINEERS
1922 EAST 107TH STREET CLEVELAND, OHIO

S-W SITE PLAN
BRIDGE No. CUY-21- RAMP S-W
RAMPS NE & SW UNDER WILLOW FREEWAY
WILLOW-CLARK INTERCHANGE
CUYAHOGA COUNTY STA. 9+39.18 To 14+71.67

SCALE			DATE		
DESIGNED	DRAWN	TRACED	CHECKED	REVIEWED	DATE	REVISED
	CAT		DWM	CCA	5-15-63	

MICROFILMED
SHEET ACCT. No. 1212
58019-2%

FED. RD. DIVISION	STATE	PROJECT	
2	OHIO		

167
198

CUYAHOGA COUNTY
CUY-21-14.12

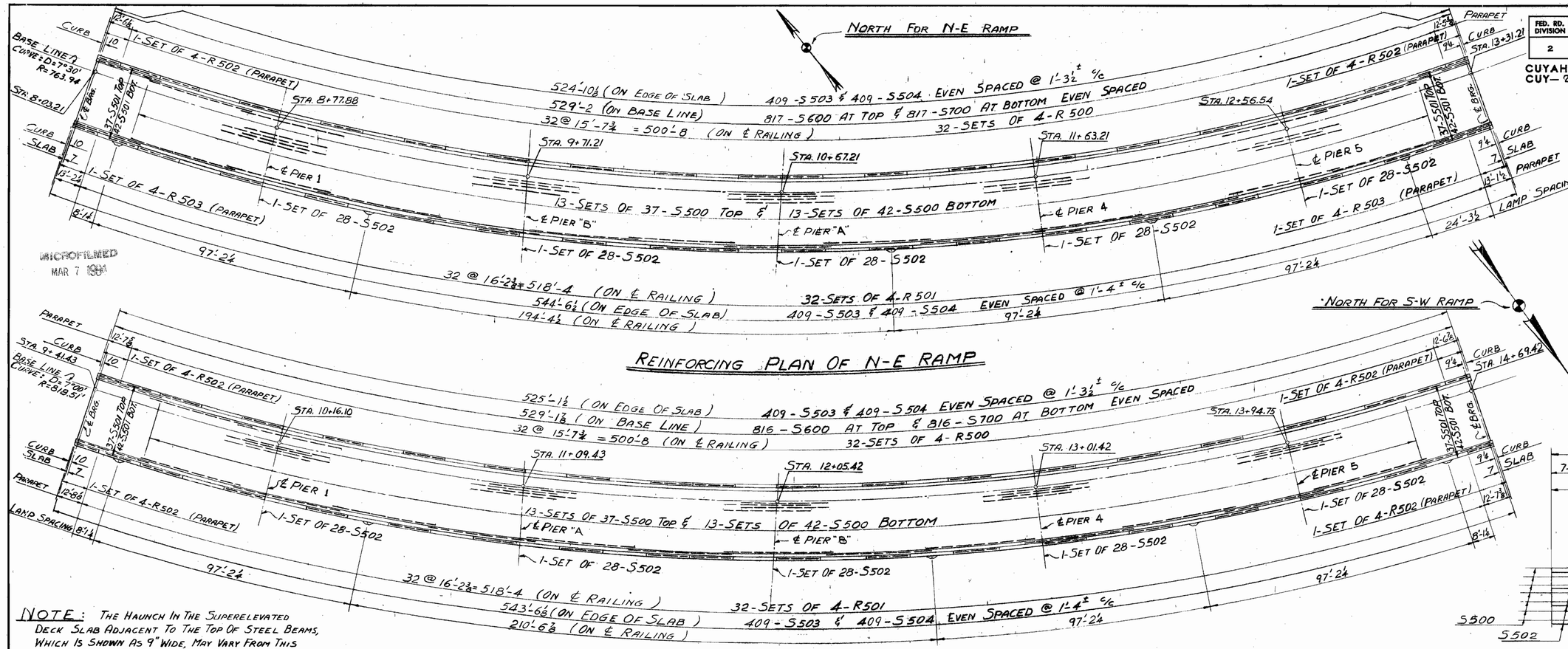

REINFORCING PLAN OF N-E RAMP

REINFORCING PLAN OF S-W RAMP

NOTE: THE HAUNCH IN THE SUPERELEVATED DECK SLAB ADJACENT TO THE TOP OF STEEL BEAMS, WHICH IS SHOWN AS 9" WIDE, MAY VARY FROM THIS DIMENSION BETWEEN THE LIMITS OF 6" AND 12" ON THE LOW SIDE AND BETWEEN 9" AND 12" ON THE HIGH SIDE, EXCEPT ON THE HIGH SIDE, THE MAXIMUM SLOPE SHALL NOT EXCEED 3 INCHES PER FOOT. PAYMENT FOR DECK SLAB CONCRETE SHALL BE BASED ON THE 9" WIDTH.

DIMENSIONS FOR SLAB OVERHANG

LOCATION	RAMP N-E		RAMP S-W	
	X	Y	X	Y
REAR ABUT.	2'-0	2'-7½	2'-0	2'-7½
℄ SPAN #1	2'-10¼	1'-9⅜	2'-8	1'-11⅝
PIER #1	1'-9¾	2'-9¾	1'-7¼	3'-0¼
℄ SPAN #2	3'-3⅛	1'-4¾	2'-11½	1'-8¼
PIER "B"	1'-9¾	2'-9¾		
PIER "A"			1'-7¼	3'-0¼
℄ SPAN #3	3'-0¾	1'-5¼	3'-0⅝	1'-6
PIER "A"	1'-7⅛	3'-0¾		
PIER "B"			1'-9¾	2'-9⅝
℄ SPAN #4	3'-1½	1'-6¾	3'-3⅛	1'-4¾
PIER #4	1'-7⅛	3'-0¾	1'-9¾	2'-9⅝
℄ SPAN #5	3'-0½	1'-7¾	3'-2⅛	1'-5⅝
PIER #5	1'-7⅛	3'-0¾	1'-9¾	2'-9⅝
℄ SPAN #6	2'-8¾	1'-11⅝	2'-9⅝	1'-10¼
FORWARD ABUT.	2'-0	2'-7½	2'-0	2'-7½

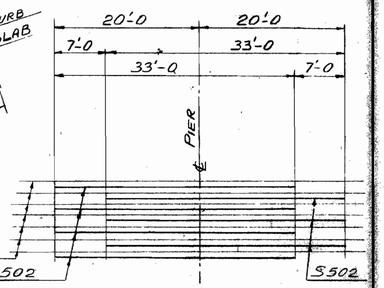

DIAGRAM SHOWING STAGGER OF S502 BARS OVER PIERS

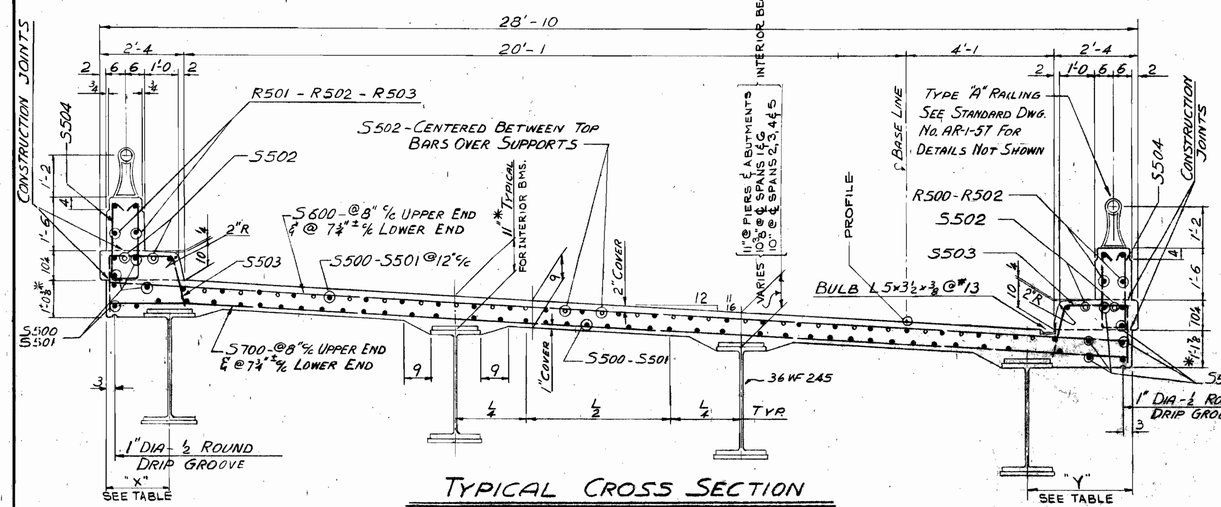

TYPICAL CROSS SECTION

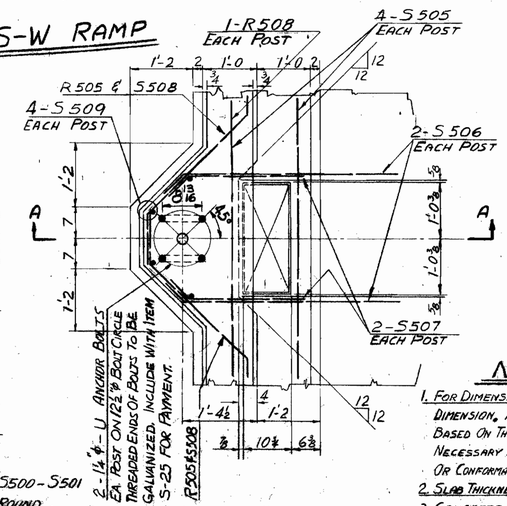

LAMP POST SUPPORT

SEE LIGHTING SHT. Nº. 135 FOR ADDITIONAL DETAILS

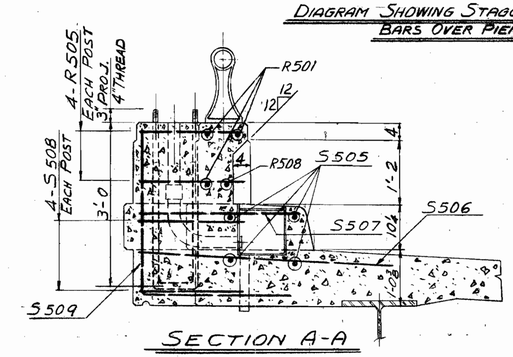

SECTION A-A

NOTES:

1. FOR DIMENSION MARKED WITH AN ASTERISK (*), THIS IS A NOMINAL DIMENSION. THE QUANTITY OF DECK CONCRETE TO BE PAID FOR SHALL BE BASED ON THIS DIMENSION EVEN THOUGH DEVIATION FROM IT MAY BE NECESSARY BECAUSE THE GIRDER MAY NOT HAVE THE EXACT CAMBER OR CONFORMATION REQUIRED TO PLACE IT PARALLEL TO THE FINISHED GRADE.
2. SLAB THICKNESS SHOWN INCLUDES 1" FOR MONOLITHIC WEARING SURFACE.
3. CONCRETE FOR THE DECK SHALL BE CLASS "C".
4. THE COVER ON REINFORCEMENT BARS, UNLESS OTHERWISE NOTED, SHALL BE 1½".
5. FOR BAR SCHEDULE SEE SHEET NO. 168
6. FOR ADDITIONAL NOTES SEE SHEET NO. 154

TRYGVE HOFF & ASSOCIATES
ENGINEERS
1922 EAST 107TH STREET CLEVELAND, OHIO

N-E & S.W. DECK DETAILS
BRIDGE No. CUY-21-RAMP N-E & RAMP S-W
RAMPS N-E & S-W UNDER WILLOW FREEWAY
WILLOW-CLARK INTERCHANGE
CUYAHOGA COUNTY

SCALE			DATE			
DESIGNED	DRAWN	TRACED	CHECKED	REVIEWED	DATE	REVISED
	V.G.		DWM		5-15-63	

COUNTY RD. 58019-26 SHEET ACCT. No. 1841

FED. RD. DIVISION	STATE	PROJECT	
2	OHIO		

169
198

CUYAHOGA COUNTY
CUY-21-14.12

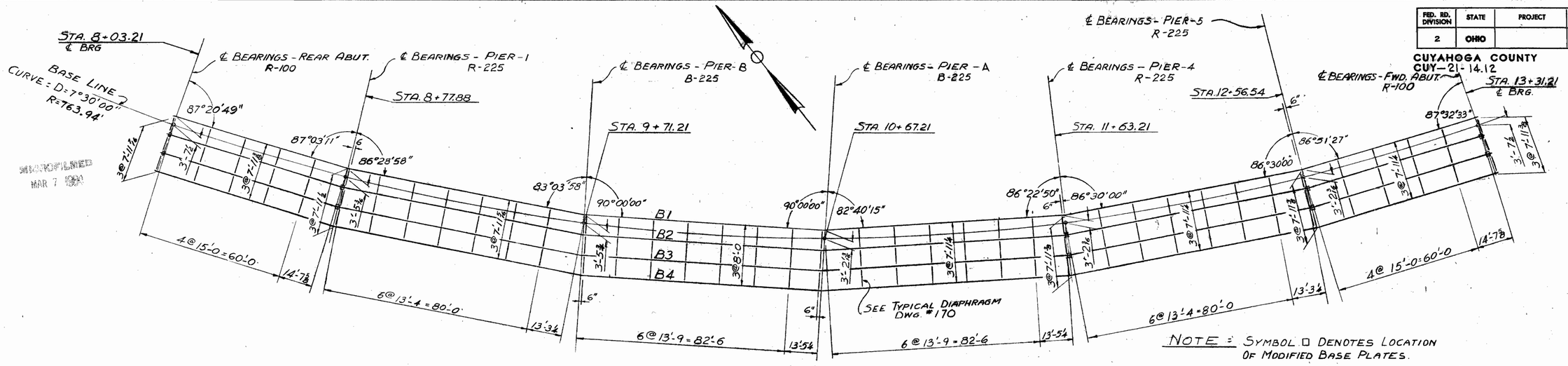

NOTE: SYMBOL □ DENOTES LOCATION OF MODIFIED BASE PLATES.

STEEL FRAMING PLAN

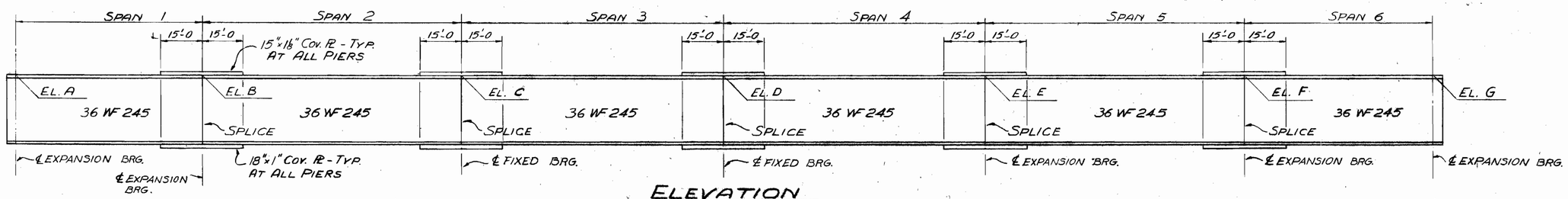

ELEVATION

BEAM DETAILS

BEAM	SPAN — C-C. BEARINGS 1	2	3	4	5	6	ELEVATIONS A	B	C	D	E	F	G
B1	74'-3½	92'-7 11/16	95'-11¼	95'-3⅜	92'-10⅜	74'-3 11/16	667.09	666.13	664.94	663.70	662.09	659.98	657.91
B2	75'-0⅜	94'-1⅛	95'-11¼	96'-10⅛	93'-10¼	75'-1	667.69	666.74	665.55	664.32	662.71	660.60	658.51
B3	75'-10⅜	95'-6 9/16	95'-11¼	98'-4 1/16	94'-9⅞	75'-10⅜	668.14	667.19	665.99	664.79	663.16	661.06	658.96
B4	76'-7½	97'-0	95'-11¼	99'-10 1/16	95'-9 9/16	76'-7 1/16	668.59	667.63	666.42	665.22	663.59	661.48	659.41

CAMBERING OF BEAMS IS REQUIRED IN ACCORDANCE WITH THE FOLLOWING TABLE.

DEFLECTION AND CAMBER

SPAN	1	2	3	4	5	6
DEFLECTION DUE TO WEIGHT OF STEEL	1/8"	1/4"	1/4"	1/4"	1/4"	1/8"
DEFLECTION DUE TO REMAINING DEAD LOAD	1/2"	5/8"	5/8"	3/4"	5/8"	1/2"
VERTICAL CURVE	0	0	0	7/8"	7/8"	1/2"
SUM OF DEFLECTIONS	5/8"	7/8"	7/8"	1 7/8"	1 3/4"	1 1/8"
CAMBER REQUIRED	0	7/8"	7/8"	1 7/8"	1 3/4"	1 1/8"

FOR REMAINING DIMENSIONS & DETAILS OF ROCKERS SEE STANDARD DRAWING NO. RB-1-55 DATED 2-2-59

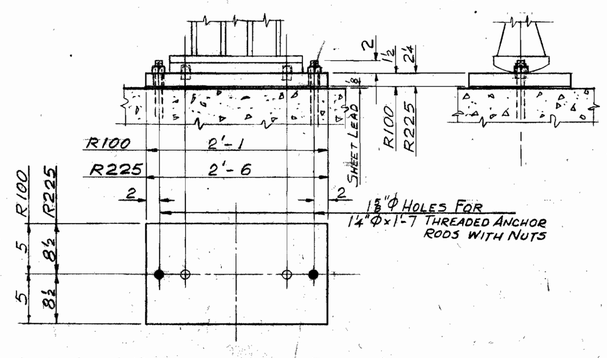

MODIFIED ROCKER BASE PLATE

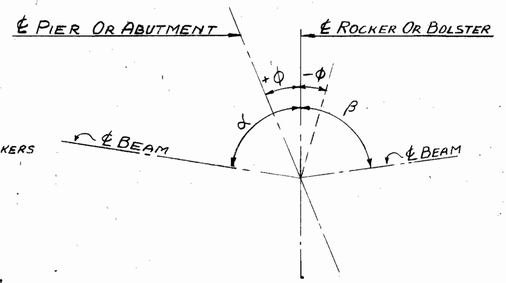

BEARINGS DATA

LOCATION	α	β	Φ
R. ABUT.	—	91°48'00"	-4°27'11"
PIER 1.	85°41'26"	87°50'43"	-1°21'45"
PIER B.	86°31'59"	86°31'59"	+3°28'01"
PIER A	86°20'08"	86°20'07"	-3°39'52"
PIER 4.	87°37'37"	85°15'13"	+1°14'47"
PIER 5	88°59'33"	84°21'54"	+2°29'33"
F. ABUT.	93°41'27"	—	+6°08'54"

NOTES:

1. FOR BEAM SPLICE WELDING PROCEDURE - SEE SHEET NO. 170.
2. FOR SPLICE DETAILS - SEE SHEET NO. 170.
3. FOR TYPICAL DIAPHRAGM - SEE SHEET NO. 170.
4. FOR ADDITIONAL NOTES - SEE SHEET NO. 154.
5. FOR DETAILS OF BOLSTERS AT PIERS NO. A & B SEE SHEET NO. 170.

TRYGVE HOFF & ASSOCIATES
ENGINEERS
1922 EAST 107TH STREET CLEVELAND, OHIO

N-E STEEL FRAMING
BRIDGE NO. CUY-21-RAMP N-E
RAMPS N-E & S-W UNDER WILLOW FREEWAY
WILLOW-CLARK INTERCHANGE
CUYAHOGA COUNTY

SCALE DATE

DESIGNED	DRAWN	TRACED	CHECKED	REVIEWED	DATE	REVISED
S.K.H.	H.G.		D.W.M.			

MICROFILMED MAR 7 1960

COMP. NO. 58019-26 SHEET ACCT. No. 1842