CALC.	CUYAHOGA COUNTY	OHIO
DATE	CUY-176-10.14	F.H.W.A. REGION 5
CHKD.		
DATE		

1 / 395

STATE OF OHIO
DEPARTMENT OF TRANSPORTATION

CUY-176-10.14

CITY OF CLEVELAND
CITY OF PARMA
VILLAGE OF BROOKLYN HEIGHTS
CUYAHOGA COUNTY

GRADE SEPARATION WITH CONSOLIDATED RAIL CORPORATION

MICROFILMED NOV 14 1996

DESIGN DESIGNATION

DESIGN YEAR 1996 A. D. T.	15,000	50,000
DESIGN YEAR 2016 A. D. T.	16,500	55,000
D.H.V.	10%	10%
D (DIRECTIONAL DISTRIBUTION)	67%	67%
T (PERCENT B & C TRUCKS)	10%	10%
V (DESIGN SPEED)	50 M.P.H.	60 M.P.H.
LEGAL SPEED	45 M.P.H.	55 M.P.H.
FUNCTIONAL CLASSIFICATION	URBAN ARTERIAL	URBAN FREEWAY
STATION LIMITS	STA.91+16.99 – STA.115+00	STA.115+00 – STA.130+00

CONVENTIONAL SIGNS

COUNTY LINE
TOWNSHIP LINE
SECTION LINE
CORPORATION LINE
FENCE LINE (EXIST.)
FENCE LINE (PROP.)
CENTERLINE
TREES, STUMPS, TO BE REMOVED
GUARDRAIL (EXISTING) (PROPOSED)
UTILITY POLES, TELEPHONE, POWER, LIGHT
LIMITED ACCESS (ONLY) — LA
RIGHT OF WAY (ONLY) — RW
LIMITED ACCESS & RIGHT OF WAY — LA & RW
EXISTING RIGHT OF WAY — RW
PROPERTY LINE — PL
PROPERTY LINE IN EXIST. FENCE
RAILROAD

INDEX OF SHEETS

TITLE SHEET 1
SCHEMATIC PLAN 2
TYPICAL SECTIONS 3-9
GENERAL NOTES 10-14
MAINTENANCE OF TRAFFIC 15-26
GENERAL SUMMARY 27-30
PLAN & PROFILE SUB-SUMMARY 31-32
CALCULATIONS 33-37
STORM WATER POLLUTION PREVENTION . . 38-41
SCHEMATIC GEOMETRIC PLANS & TABLES . . 42-43
CENTERLINE REFERENCES 44
SHEET NUMBERS NOT USED 45-50
PLAN, PROFILE, ESTIMATED QUANTITIES, & CROSS SECTION SHEETS
RELOCATED S.R.-176. 51-76
BROOKPARK ROAD 77-81
LANE OBW-JN 82-96
WBOL & LANE OBE-JN. 97-118
LANE JN-OBW 119-136
LANE JN-OBE 137-149
SCHAAF ROAD . . . . . 153A, 158A & 150-158
WEST 16th STREET. . . . . 159A & 159
DRIVE QUANTITIES & DETAILS 160
DRIVE PROFILES. 161A, 161B, 161
PAVEMENT ELEVATIONS. 162A, 162B, 164A & 162-166
PAVEMENT DETAILS 167-175
PIPE PROFILES 176, 176A
MISCELLANEOUS DETAILS 177-184
APPROACH SLAB DETAILS 185-187
DRAINAGE DETAIL SHEETS 188-191
WATER WORK. 192-211
TRAFFIC CONTROL. 212-251
LIGHTING 252-277, 277A-D

STRUCTURES
CUY-176-1020, SR.-176. 278-313
CUY-480-1557, OBW-JN. 314-336
CUY-480-1559, JN-OBE. 337-357
CUY-176-1065, SCHAAF ROAD . . . 358-379
RETAINING WALL No. 1 380-383
RETAINING WALL No. 2. 384-387
MISCELLANEOUS BRIDGE DETAILS. . . . 388
RIGHT OF WAY PLANS. 390-395, 394A

SHEET NUMBER NOT USED 389

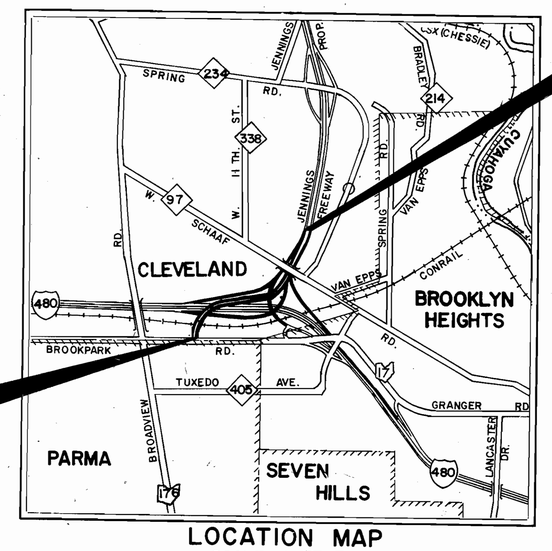

LOCATION MAP
SCALE IN FEET
1000' 0 5000'
1 MILE

2 WORKING DAYS
BEFORE YOU DIG
CALL TOLL FREE 800-362-2764
OHIO UTILITIES PROTECTION SERVICE
NON-MEMBERS MUST BE CALLED DIRECTLY

adache · ciuni · lynn associates
CONSULTING ENGINEERS CLEVELAND OHIO 44131

PORTION TO BE IMPROVED
COUNTY ROAD
INTERSTATE ROUTES
U.S. ROUTES
STATE ROUTES
CITY STREETS

PLAN SCALES

PLAN 50' 0 50'
PROFILE: HORIZONTAL 50' 0 50'
VERTICAL 10' 0 10'
CROSS SECTIONS: HORIZONTAL 10' 0 10'
VERTICAL 10' 0 10'

NON-FEDERAL FUNDS

LIMITED ACCESS

This improvement is especially designed for through traffic and has been declared a limited access highway or freeway by action of the Director in accordance with the provisions of Section 5511.02 of the Revised Code of Ohio.

I HEREBY APPROVE THESE PLANS AND DECLARE THAT THE MAKING OF THIS IMPROVEMENT WILL NOT REQUIRE THE CLOSING TO TRAFFIC OF THE HIGHWAY AND THAT PROVISIONS FOR THE MAINTENANCE AND SAFETY OF TRAFFIC WILL BE AS SET FORTH ON THE PLANS AND ESTIMATES.

THE STANDARD 1993 SPECIFICATIONS OF THE STATE OF OHIO DEPARTMENT OF TRANSPORTATION, INCLUDING CHANGES AND SUPPLEMENTAL SPECIFICATIONS LISTED IN THE PROPOSAL GOVERN THIS IMPROVEMENT.

DISTRICT CERTIFIED ROADWAY PLANS

APPROVED Bryan J. Hodin
DATE 5-4-94 DISTRICT DEPUTY DIRECTOR OF TRANSPORTATION

APPROVED B.D. Hawkshaw Jr. P.E.
DATE 6/9/94 ENGINEER, BUREAU OF BRIDGES AND STRUCTURAL DESIGN

APPROVED Christopher L. Kunyan
DATE 7-11-94 DEPUTY DIRECTOR, DESIGN

APPROVED Jerry Wray
DATE 7-11-94 DIRECTOR, DEPARTMENT OF TRANSPORTATION

SUPPLEMENTAL SPECIFICATIONS			
NUMBER	DATE	NUMBER	DATE
802	4-13-90		
820	3-18-92		
841	5-16-84		
843	7-29-88		
862	12-16-88		
931	3-18-92		
942	3-18-92		
944	5-2-92		
962	1-23-90		
852	7-30-93		
910	5-20-91		
945	5-17-83		
940	6-10-87		

PROJECT DESCRIPTION

THE PRIMARY PURPOSE OF THIS IMPROVEMENT IS TO PROVIDE FOR GREATER CAPACITY ON AN IMPROVED ALIGNMENT OF SR-176 (JENNINGS FREEWAY) INCLUDING THE CONSTRUCTION OF AN INTERCHANGE SYSTEM WITH I-480. SIGNING, STRIPING, AND LIGHTING OF RELOCATED SR-176 AS WELL AS SIGNING AND STRIPING ON I-480 AND BROOKPARK ROAD WILL ALSO BE PART OF THIS PROJECT.

STANDARD CONSTRUCTION DRAWINGS

NUMBER	DATE	NUMBER	DATE	NUMBER	DATE	NUMBER	DATE	NUMBER	DATE	NUMBER	DATE	NUMBER	DATE	NUMBER	DATE
BP-1.1	2-21-92	F-1	11-10-83			MH-1	12-18-84	TC-21.40	9-1-92	TC-41.10	8-29-84	TC-71.10	9-10-91	HL-30.11	5-1-87
BP-2.1	2-21-92	F-3	5-1-76	HW-4A	4-1-80	MH-3	12-18-84	TC-32.11	9-1-92	TC-41.20	3-26-79	TC-85.10	1-20-84	HL-30.21	5-1-87
BP-2.2	2-21-92	F-5	5-1-76	HW-4B	4-1-80	MH-5	6-12-75	TC-41.41	8-2-79	TC-41.40	6-18-79	TC-85.20	1-20-84	HL-30.22	5-1-87
BP-2.3	2-21-92							TC-51.11	1-20-84	TC-41.50	3-26-79			HL-30.31	5-1-87
BP-3.1	2-21-92			I-2A	12-18-84			TC-65.10	2-1-90	TC-42.10	8-19-77			HL-30.33	5-1-87
BP-5.1	2-21-92	GR-1.1	5-6-91	I-3A & B	4-1-80	MT-95.30	10-10-88	TC-65.11	2-1-90	TC-42.20	3-26-79			HL-50.11	5-1-87
BP-6.1	2-21-92	GR-1.2	10-30-92			MT-95.31	10-10-88	TC-7.65	3-1-79	TC-51.10	1-20-84	HL-10.11	5-1-87	HL-50.21	5-1-87
BP-7.1	10-30-92	GR-1.3	2-21-92	MC-5	6-12-75	MT-95.32	8-25-89	TC-12.30	1-20-84	TC-52.10	4-3-79	HL-10.12	5-1-87	HL-60.11	5-1-87
BP-8.1	2-21-92	GR-2.1	5-6-91	MC-9.4	10-30-92	MT-97.10	4-29-88	TC-16.20	1-20-84	TC-52.20	4-3-79	HL-10.13	5-1-87	HL-60.12	5-1-87
		GR-3.1	5-6-91	MC-1	6-13-69	MT-97.11	10-4-89	TC-21.10	9-1-92	TC-61.10	4-5-82	HL-10.31	5-1-87	HL-60.21	5-1-87
		GR-3.2	5-6-91	MC-4	7-26-76	MT-99.10	11-14-86	TC-21.20	9-1-92	TC-72.20	2-26-82	HL-20.11	5-1-87	AS-1-81 ✓	11-27-81
		GR-4.1	5-6-91	MC-7	10-15-76	MT-99.20	4-29-88	TC-22.10	9-1-92	TC-81.10	1-20-84	HL-20.13	5-1-87	EXJ-4-87 ✓	1-5-89
CB-4	11-10-83			MC-9.2	5-6-91	MT-101.60	7-1-92	TC-22.20	9-1-92	TC-81.20	1-20-84	HL-20.21	5-1-87	SD-1-69 ✓	6-12-69
CB-5	11-10-83			MC-9.3	10-30-92	MT-102.10	8-25-89	TC-31.21	9-1-92	TC-82.10	8-29-84	HL-20.22	5-1-87	VPF-1-90	2-1-92
CB-6	5-1-79			MC-10	5-1-76	MT-105.10	7-1-92	TC-32.10	9-1-92	TC-83.10	3-18-92	HL-20.23	5-1-87		
				MC-11	8-1-78	MT-105.11	7-1-92	TC-35.10	8-29-84	TC-83.20	1-20-84	HL-20.31	5-1-87		

Project:
Date of Letting 9-13 1994 Contract No. 683

(8448)

1275
Revised 8-8-94

RELOC. S.R.-176

TITLE SHEET

CALC.	CUYAHOGA COUNTY	OHIO
DATE	CUY - 176 - 10.14	F.H.W.A. REGION 5
CHKD.		
DATE		

2 / 395

SCHEMATIC PLAN

NOTE: FOR ℄ AND ℄ GEOMETRIC DATA SEE SHEETS 42-44.

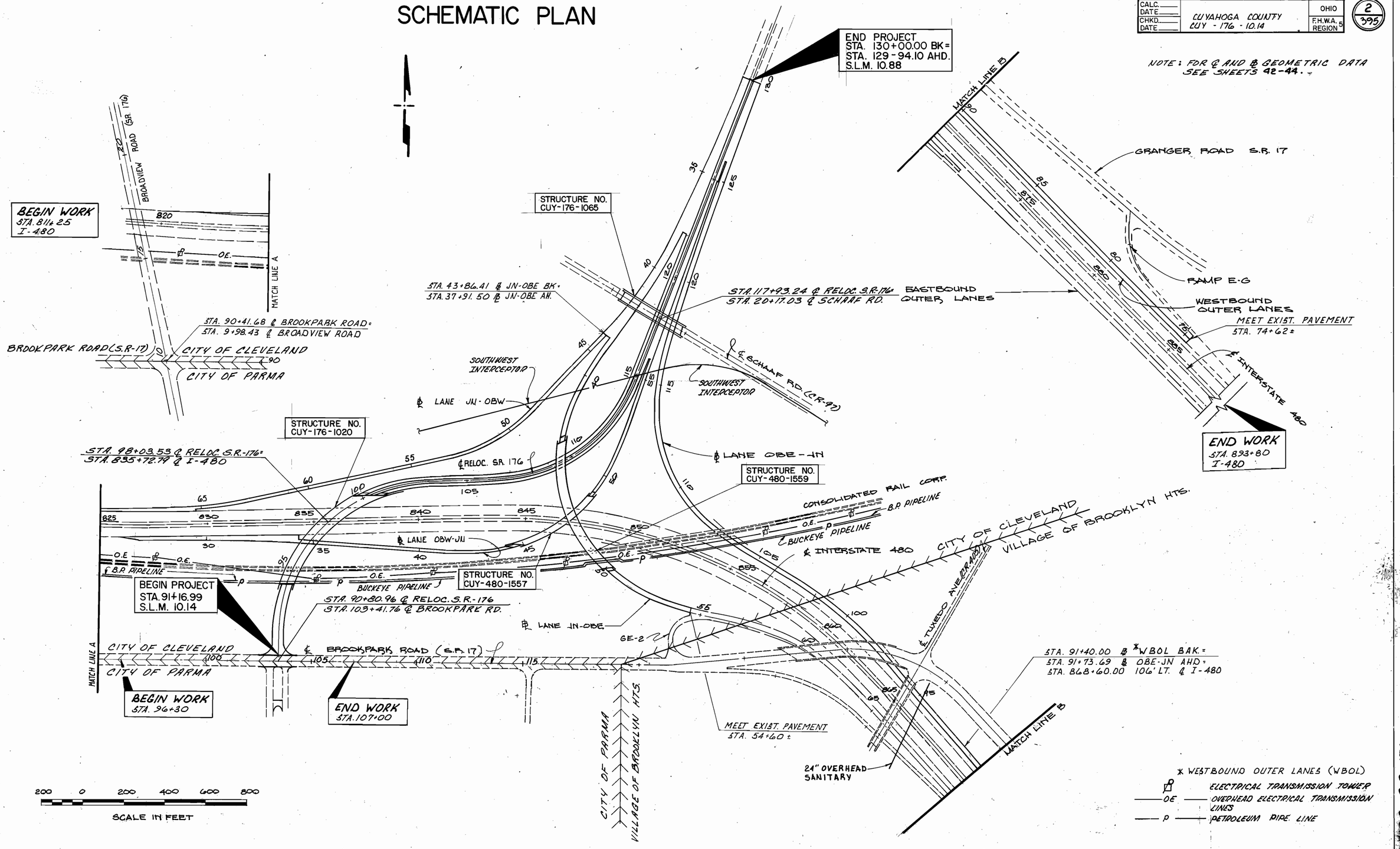

SCHEMATIC PLAN

SR-176

CALC.	CUYAHOGA COUNTY	OHIO	337
DATE	CUY-176-10.14	F.H.W.A. REGION 5	395
CHKD.	JENNINGS FREEWAY		
DATE			

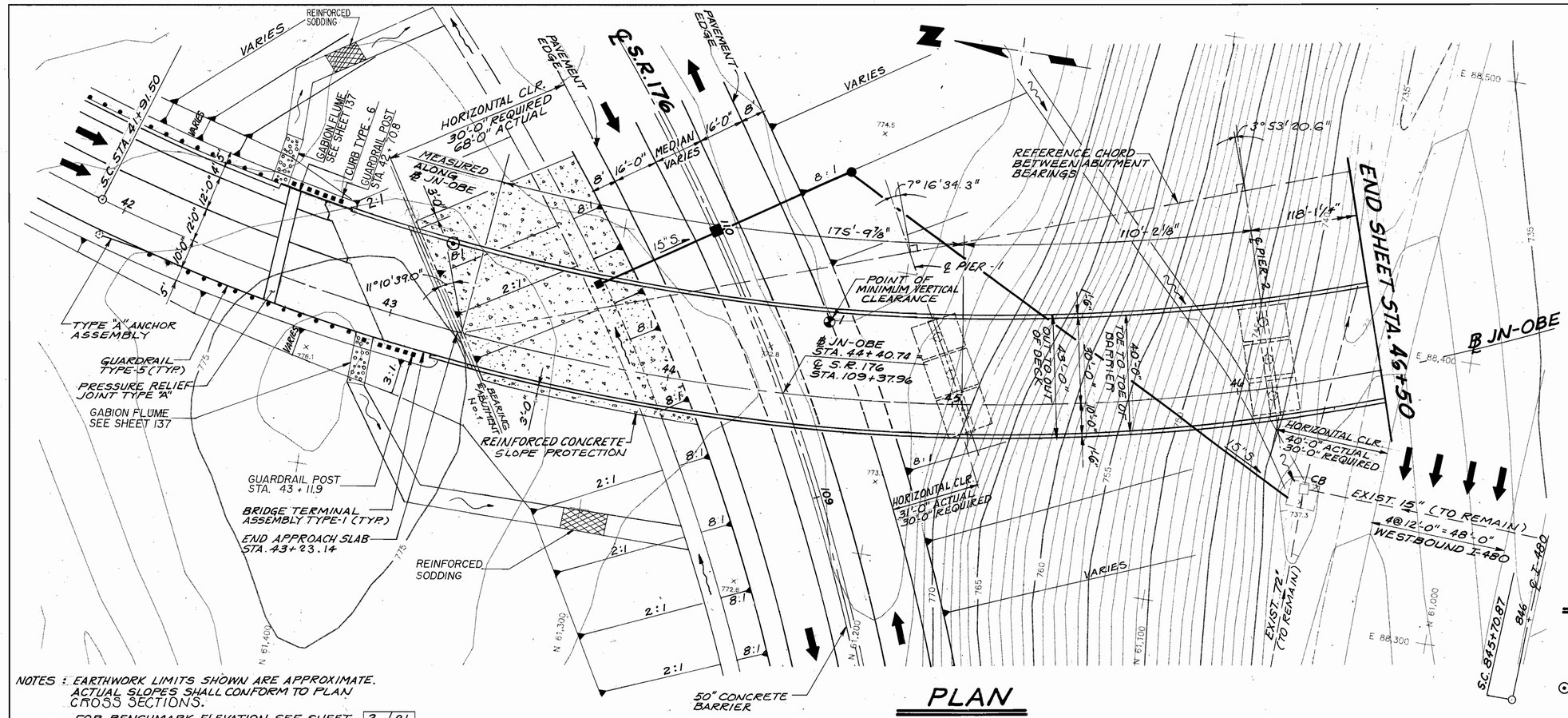

NOTES: EARTHWORK LIMITS SHOWN ARE APPROXIMATE. ACTUAL SLOPES SHALL CONFORM TO PLAN CROSS SECTIONS.

FOR BENCHMARK ELEVATION SEE SHEET 2/21

PLAN

PROPOSED STRUCTURE

TYPE: CONTINUOUS COMPOSITE A-572 PAINTED CURVED WELDED PLATE GIRDER WITH REINFORCED CONCRETE DECK AND SUBSTRUCTURE

SPANS: 175'-9⅞", 110'-2⅛", 118'-1¼", 109'-10¾", 155'-0" C/C BEARINGS ALONG ℄ JN-OBE

WIDTH: 40'-0" TOE TO TOE BARRIER
43'-0" OUT TO OUT DECK

LOADING: HS-20-44 (CASE II) AND THE ALTERNATE MILITARY LOADING

WEARING SURFACE: MONOLITHIC CONCRETE

SKEW: VARIES, AS SHOWN TO REFERENCE CHORD

APPROACH SLAB: AS-1-81, AS PER PLAN 30' LONG

ALIGNMENT: CURVE LEFT (D_c = 8° 01' 07")

SUPERELEVATION: 0.059 FT/FT.

SLOPE PROTECTION: REINFORCED CONCRETE SLOPE PROTECTION, 6" THICK WITH FILTER FABRIC AND ANCHOR TRENCHES

FOUNDATION DATA

ALL PIER FOOTINGS SHALL BE SPREAD FOOTINGS FOUNDED ON BEDROCK. ABUTMENTS SHALL BE SUPPORTD BY HP 14 X 73 STEEL PILES, AVERAGE ESTIMATED PAY LENGTH IS 20 LINEAL FEET. FOR EACH ABUTMENT.

⊙-INDICATES SOIL BORING LOCATION. SEE STRUCTURAL FOUNDATION INVESTIGATION SHEETS FOR ADDITIONAL INFORMATION.

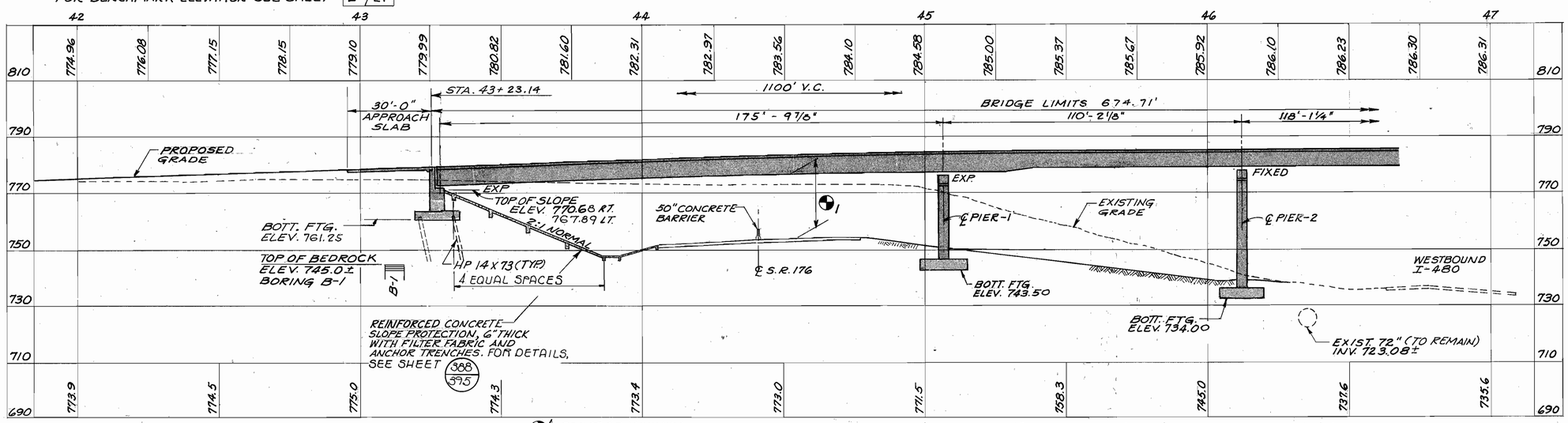

1 POINT OF MINIMUM VERTICAL CLEARANCE REQUIRED 16'-6" ACTUAL 21'-7⅝"

PROFILE
ALONG ℄ JN-OBE

℄ JN-OBE HORIZONTAL CURVE DATA

$P.I._c$ STA.	47+87.18
S.C. STA.	41+91.50
C.S. STA.	51+84.60
Δ	= 79° 38' 00" LT
D_c	= 8° 01' 07"
R	= 714.529'
T	= 595.675'
L	= 993.097'
C	= 915.073'
E	= 215.729'

VERTICAL CURVE DATA

G_1	= +5.32%
G_2	= −5.00%
L	= 1100'
P.V.I. ELEV.	800.49
P.V.I. STA.	46+75
P.V.C. STA.	41+25
P.V.T. STA.	52+25

TRAFFIC DATA

AVERAGE DAILY TRAFFIC (2013) = 10,380
AVERAGE DAILY TRUCK TRAFFIC (2013) = 1038

1/21

adache · ciuni · lynn associates
CONSULTING ENGINEERS CLEVELAND, OHIO 44131

SITE PLAN
JENNINGS FREEWAY
I-480, CONRAIL, STATE ROUTE 176 & LANE OBW-JN UNDER LANE JN-OBE
BRIDGE NO. CUY-480-1559
STA. 43+23.14 TO STA. 49+97.85
CUYAHOGA COUNTY OHIO

DESIGNED	DRAWN	CHECKED	REVIEWED	DATE	REVISED
TAB	HBM	TJW	LED	7-30-92	

BRUNING 44.22 67195-01

A·C·L form no. B-1

CALC.	CUYAHOGA COUNTY	OHIO
DATE	CUY - 176 - 10.14	F.H.W.A. REGION 5
CHKD.	JENNINGS FREEWAY	
DATE		

338 / 39.5

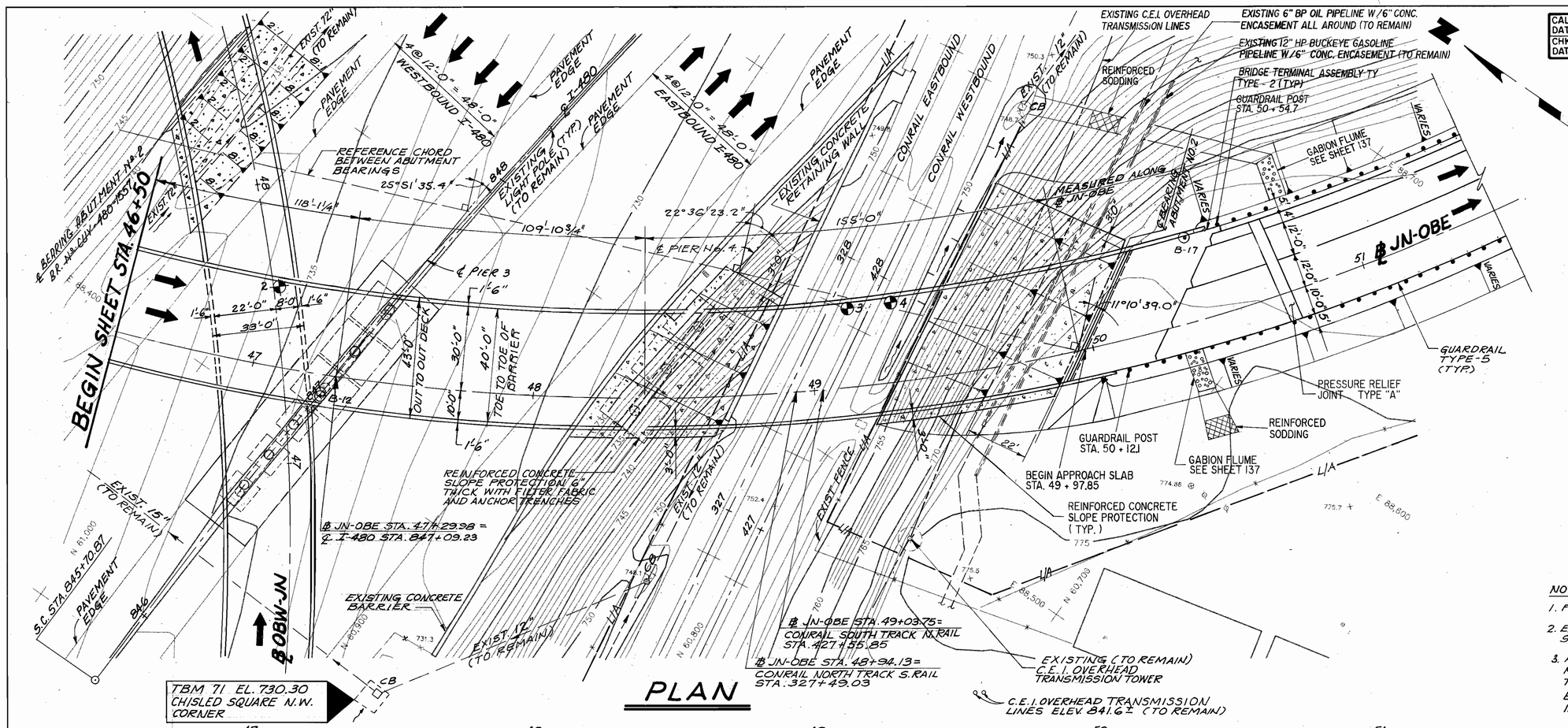

PLAN

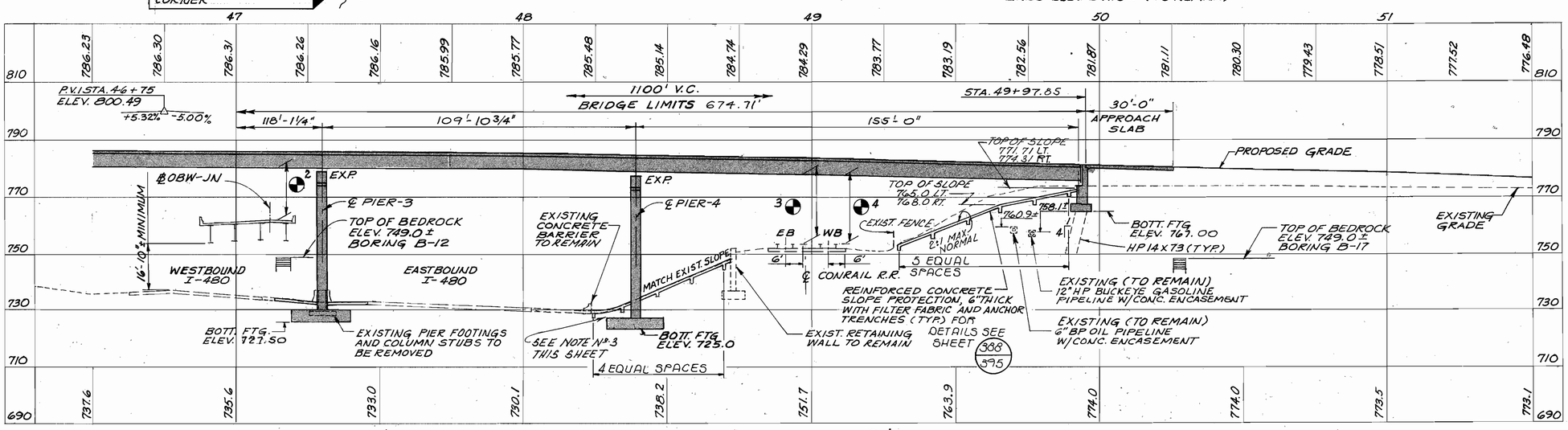

PROFILE

ALONG ℄ JN-OBE

2 POINT OF MINIMUM VERTICAL CLEARANCE REQUIRED 16'-6" ACTUAL 17'-3¾"

3 POINT OF MINIMUM VERTICAL CLEARANCE REQUIRED 23'-0" ACTUAL 23'-5¾"

4 POINT OF MINIMUM VERTICAL CLEARANCE REQUIRED 23'-0" ACTUAL 23'-2½"

NOTES

1. FOR PROPOSED STRUCTURE BLOCK SEE SHEET 1/21
2. EARTHWORK LIMITS SHOWN ARE APPROXIMATE, ACTUAL SLOPES SHALL CONFORM TO PLAN CROSS SECTIONS.
3. AT PIER No. 4 SLOPE, REGRADE THE SURFACE TO MAINTAIN MINIMUM OF 1 FOOT COVER OVER THE PIER FOOTING, MATCH EXISTING SLOPE ELSEWHERE. ALL COST TO REGRADE SHALL BE INCLUDED WITH ITEM 503 FOR PAYMENT

2/21

adache · ciuni · lynn associates
CONSULTING ENGINEERS CLEVELAND, OHIO 44131

SITE PLAN
JENNINGS FREEWAY
I-480, CONRAIL, STATE ROUTE 176 & LANE OBW-JN UNDER LANE JN-OBE
BRIDGE NO. CUY-480-1559
STA. 43+23.14 TO STA. 49+97.85
CUYAHOGA COUNTY OHIO

DESIGNED	DRAWN	CHECKED	REVIEWED	DATE	REVISED
TAB	HBM	TJW	LEO	7-30-92	

BRUNING 44-232 671195-01

A-C-L form no. B-1

CALC.	CUYAHOGA COUNTY	OHIO	345
DATE	CUY - 176 - 10.14		395
CHKD.	JENNINGS FREEWAY	F.H.W.A.	
DATE		REGION 5	

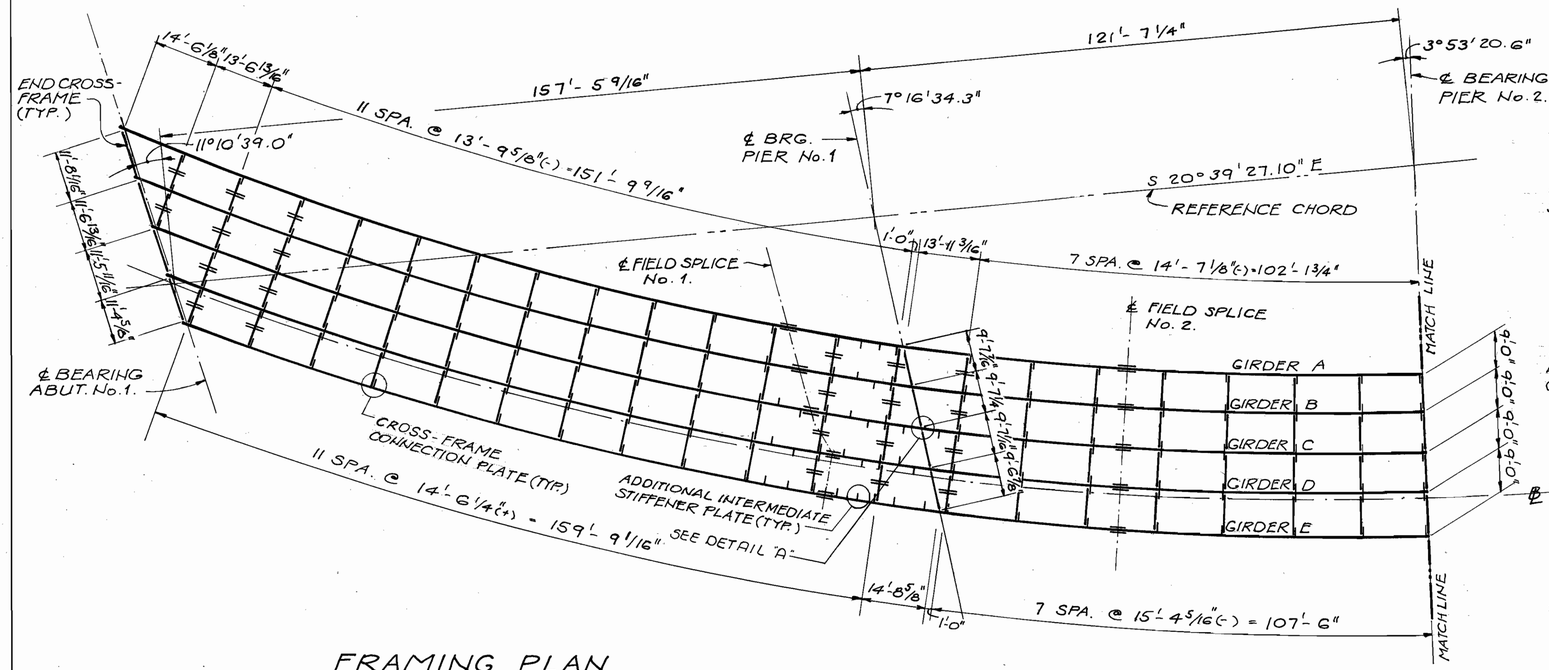

FRAMING PLAN

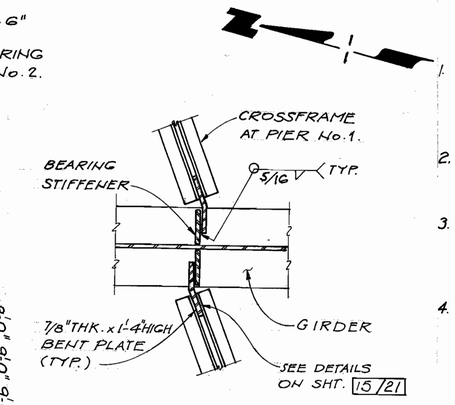

DETAIL "A"

NOTES:

1. EACH STIFFENER PLATE USED AS CROSSFRAME CONNECTION PLATES SHALL HAVE THE SAME THICKNESS IN A PARTICULAR BAY. THE GREATEST PLATE THICKNESS REQUIRED AT EACH LOCATION SHALL CONTROL FOR BOTH PLATES, IN THE SAME BAY.
2. ALL INTERMEDIATE CROSSFRAMES ARE ALONG RADIAL LINES. FOR DETAILS SEE TRANSVERSE SECTION ON SHEET 15/21.
3. FOR END CROSSFRAME DETAILS AT ABUTMENTS REFER TO STANDARD DRAWINGS EXJ-4-87 & SD-1-69. END CROSSFRAME ANGLE MEMBERS SHALL BE L 5x5x1/2 (CVW) TYPICAL.
4. ADDITIONAL INTERMEDIATE STIFFENERS, WHERE SHOWN, SHALL BE EQUALLY SPACED BETWEEN CROSSFRAMES, EXCEPT WHERE INTERFERENCE OCCURS WITH FLANGE FIELD SPLICE MATERIAL. THE INTERMEDIATE STIFFENER LOCATION MAY BE ADJUSTED TO CLEAR SPLICE MATERIAL BY 3".

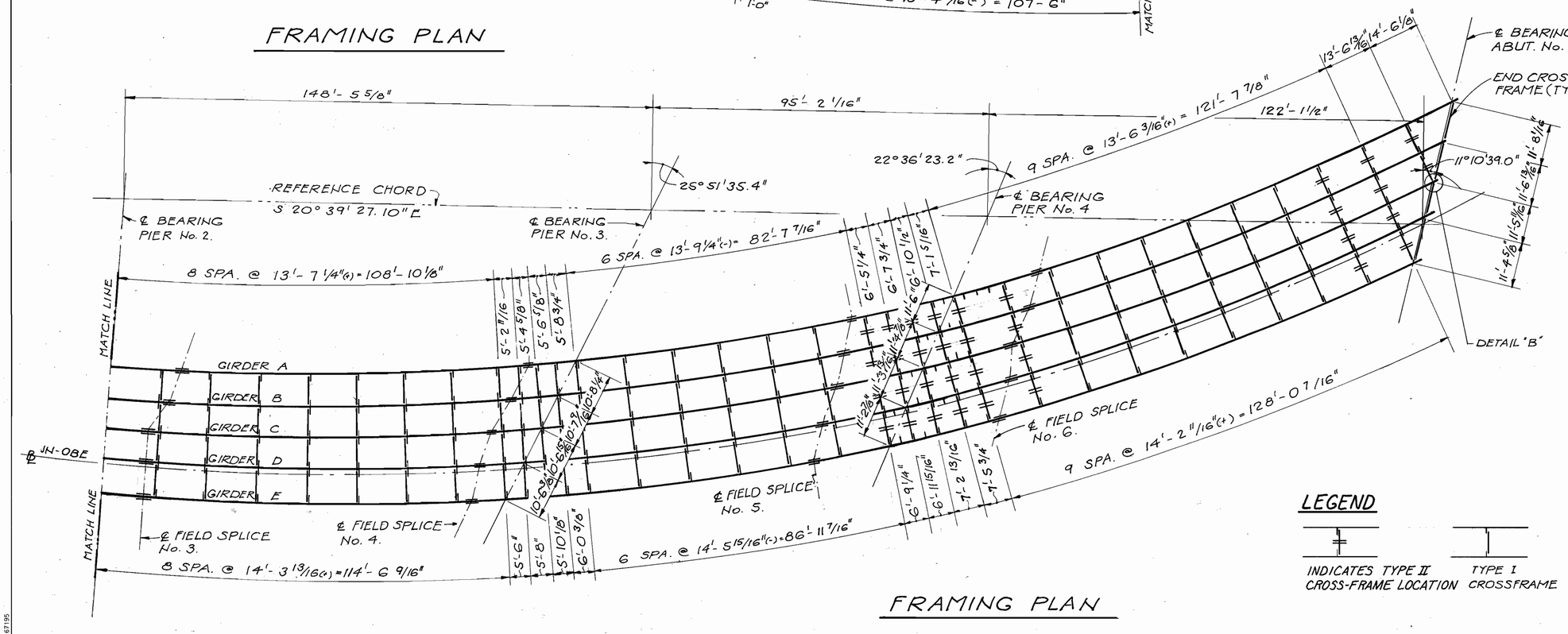

FRAMING PLAN

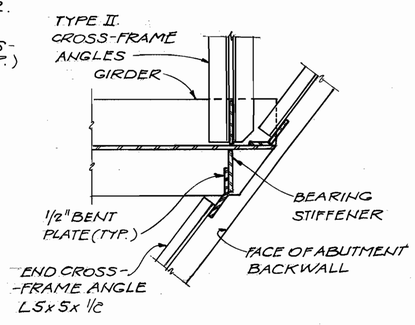

DETAIL "B"

ABUTMENT No. 2 SHOWN
ABUTMENT No. 1 SIMILAR

LEGEND

INDICATES TYPE II CROSS-FRAME LOCATION

TYPE I CROSSFRAME

9/21

adache · ciuni · lynn associates
CONSULTING ENGINEERS CLEVELAND, OHIO 44131

FRAMING PLAN
JENNINGS FREEWAY

I-480, CONRAIL, STATE ROUTE 176 & LANE OBW-JN UNDER LANE JN-OBE

BRIDGE NO. CUY-480-1559

DESIGNED	DRAWN	CHECKED	REVIEWED	DATE	REVISED
T.J.W.	E.K.	T.A.B.	A.J.M.	1/94	

BRUNING 44.232 67195

A·C·L form no. B-1

CALC.	CUYAHOGA COUNTY	OHIO
DATE	CUY-176-10.14	F.H.W.A.
CHKD.	JENNINGS FREEWAY	REGION 5
DATE		

351 / 395

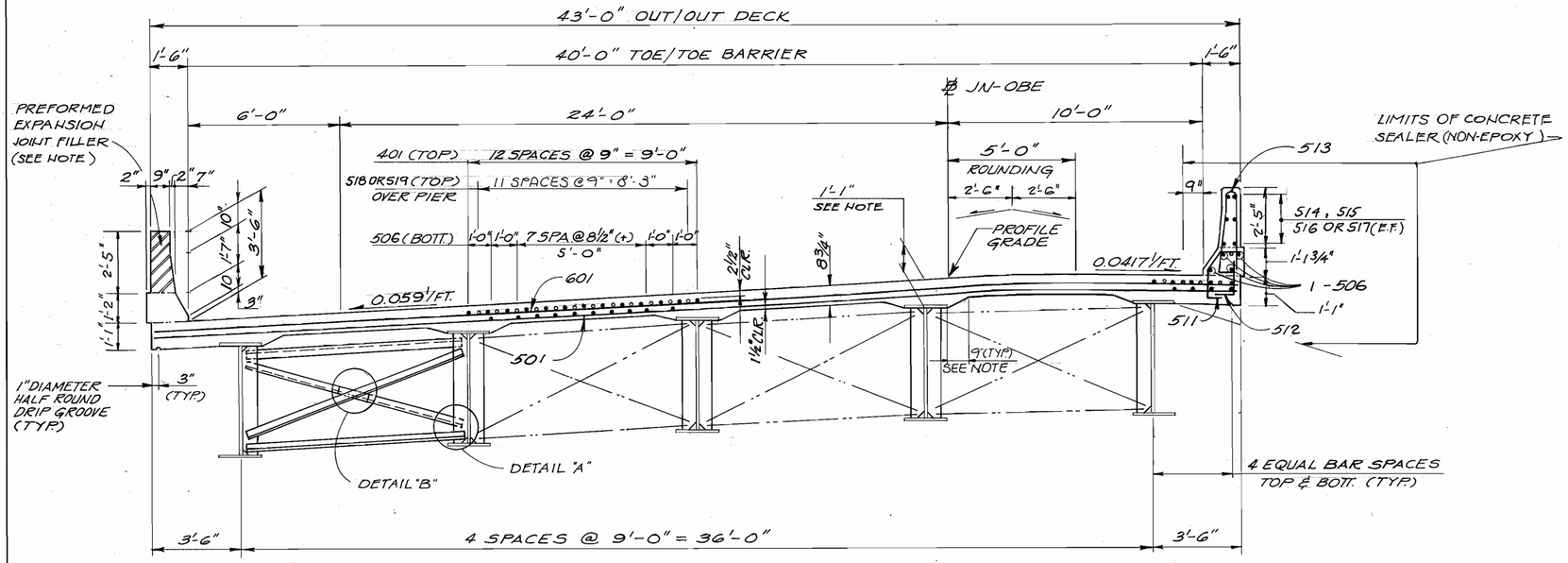

TRANSVERSE SECTION

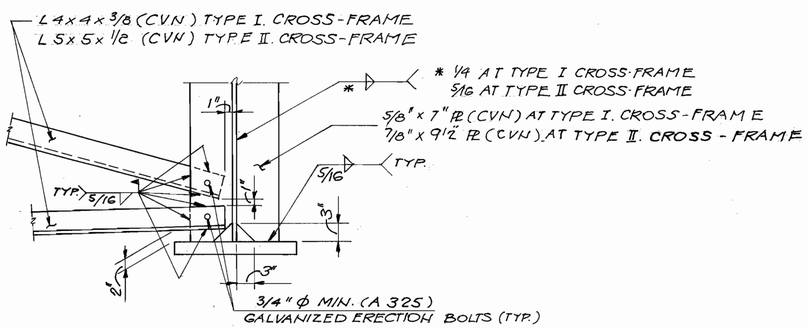

DETAIL "A"

NOTE: THE DETAIL "A" SHOWN ABOVE APPLIES AT OTHER LOCATIONS ALSO.

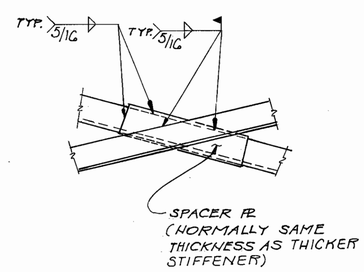

DETAIL "B"

NOTES

1. FOR SLAB PLANS, SEE SHEETS 16/21 & 17/21
2. DECK SLAB DEPTH: THE DISTANCE SHOWN FROM THE TOP OF DECK SLAB TO THE BOTTOM OF THE TOP FLANGE OF GIRDER IS THE DESIGN DIMENSION. THE QUANTITY OF CONCRETE TO BE PAID FOR SHALL BE BASED UPON THIS DIMENSION, EVEN THOUGH DEVIATION FROM IT MAY BE NECESSARY BECAUSE THE TOP FLANGE OF THE GIRDER MAY NOT HAVE THE EXACT CAMBER OR CONFORMATION REQUIRED TO PLACE IT PARALLEL TO THE FINISHED GRADE. DEDUCTION SHALL BE MADE FOR THE VOLUME OF ENCASED STEEL PLATES AS PER. 511.18
3. A HAUNCH WIDTH OF 9" SHALL BE USED FOR COMPUTING THE QUANTITY OF CONCRETE. HOWEVER, THE HAUNCH WIDTH MAY VARY BETWEEN 6" AND 12" PROVIDED THAT THE SLOPE SHALL BE NOT MORE THAN 4:1 FOR A HAUNCH LESS THAN 9" WIDE.
4. DRIP GROOVES SHALL TERMINATE 2'-0" FROM FACE OF ABUTMENT.
5. PREFORMED EXPANSION JOINT FILLER IN THE PARAPET DEFLECTION JOINTS MAY BE EITHER 1/4" GREY SPONGE RUBBER OR 1/4" GREY CELLULAR POLYVINYL CHLORIDE (PVC) SPONGE. SPONGE RUBBER FILLER SHALL CONFORM TO AASHTO M-153, TYPE-I. DENSITY OF PVC SPONGE SHALL NOT BE LESS THAN 20 LBS. PER CU. FT. PAYMENT FOR THIS ITEM SHALL BE INCLUDED WITH ITEM SPECIAL - HIGH PERFORMANCE CONCRETE SUPERSTRUCTURE.
6. ERECTION BOLTS: THE HOLE DIAMETER IN THE CROSS-FRAMES AND GIRDER STIFFENERS SHALL BE 3/16" LARGER THAN THE DIAMETER OF THE ERECTION BOLTS. ERECTION BOLTS SHALL REMAIN IN PLACE AND BE FURNISHED AS PART OF ITEM 513.
   IN LIEU OF ERECTION BOLTS AND AT THE OPTION OF THE CONTRACTOR, ALTERNATIVE MEANS OF TEMPORARY BRACING MAY BE USED SUBJECT TO THE APPROVAL OF THE DIRECTOR.

15/21

adache · ciuni · lynn associates
CONSULTING ENGINEERS CLEVELAND, OHIO 44131

TRANSVERSE SECTION
JENNINGS FREEWAY
I-480, CONRAIL, STATE ROUTE 176 & LANE OBW-JN UNDER LANE JN-OBE

BRIDGE No. CUY-480-1559

DESIGNED	DRAWN	CHECKED	REVIEWED	DATE	REVISED
MJL	HBM	C.T	A.J.M.	1/94	

TRANSVERSE 1559

BRUNING 44-232 67195

A·C·L form no. B-1