01-1

MICROFILMED JUL 5 1978
MICROFILMED AUG 3 1978

CUYAHOGA COUNTY CUY-480-8.54	OHIO	1 / 346
I-480-4(35)162	FHWA REGION 5 / FEDERAL PROJECT	

I-480-4(35)162

ISSUE 1

STATE OF OHIO
DEPARTMENT OF TRANSPORTATION

CUY-480-8.54

CUYAHOGA COUNTY

CITY OF CLEVELAND & CITY OF BROOKPARK

GRADE SEPARATION WITH THE CONSOLIDATED RAIL CORPORATION

DESIGN DESIGNATION

1978 ADT	=	62,000
1998 ADT	=	82,716
DHV	=	4,950
D	=	67%
T	=	4%
V	=	60MPH

CONVENTIONAL SIGNS

Proposed Sewer
Temporary R/W — T
Work Agreement Line
Original Lot Line — O.L. 78 — O.L. 79
Water Line — W
Water Valve
Water Hydrant
Gas Line — G
Gas Valve
Telephone Underground — T
Electric Underground — E
Corporation Line
Fence Line (existing) — (proposed)
Center Line — 352 — 353
Trees, Stumps, (to be removed)
Utility Poles: Telephone, Power, Light.

Existing Sewer
Existing Manhole
Proposed Manhole
Existing Catch Basin
Proposed Catch Basin
Manhole Abandoned
Catch Basin Abandoned
Existing Retaining Wall
Limited Access (only) — LA
Right of Way (only) — RW
Limited Access & Right of Way — LA & RW
Existing Right of Way
Property Line — (in existing fence)
Railroad — or
Guardrail (existing) — (proposed)

INDEX OF SHEETS

Title Sheet	1	West 150th. Ramp Plan and Profile	52
Schematic Plan	2-4	Access Road "C" Plan and Profile	53-54
Typical Sections	5-9	West 139th. Interchange Plan and Profile	55-56
General Notes	10-12	Pavement Details	57-71
General Summary	13-16	Sewer Profiles	72-73
Pavement Calculations	17-19	Culvert Details	74-76
Special Details	20-27	Relocated Channel-Access Rd "C"	77
I-480 Plan and Profile	29-39	I-480 Cross Sections	78-110
I-71 Interchange Schematic Plan	40-41	Cross Road Cross Sections	111-155
Ramp "R" Plan and Profile	42-45	Traffic Control Plans	156-179
Ramp "S" Plan and Profile	46-47	Lighting Plans	201-218
Ramp "T" Plan and Profile	48-50	Structure over 20' Span	219-328
West 150th. St. Plan and Profile	51	Right of way	331-346

SHEETS ADDED TO PLAN

NOS. 41A, 41B, 56A, 66A, 66B, 67A, 67B, 298A, 298B, 328A, 328B, 328C, 328D, 203A, 217A, 217B, 217C, 67C, 67D, 10A

SHEETS DELETED FROM PLAN

NOS. 28, 163, 180 thru 200, 205, 216, 218, 329, 330

LINE DATA

BEGIN PROJECT	STA. 476+00.00
END PROJECT	STA. 573+50.00

PROJECT LENGTH = 9,750.00 LIN. FT. OR 1.846 MILES

ADDITIONAL WORK

I-480 ~ Sta. 573+50 to Sta. 575+09	=	159 Lin. Ft.
N.B. I-71 Signs ~ 4 @ 25 ft. ea.	=	100 Lin. Ft.
S.B. I-71 Signs ~ 3 @ 25 ft. ea.	=	75 Lin. Ft.
Access Rd. C Sta. 0+27 to Sta. 9+00	=	873 Lin. Ft.
Brookpark Road Sta. 161+00 to Sta. 173+25	=	1,225 Lin. Ft.
Sta. 175+75 (Sign)	=	25 Lin. Ft.

TOTAL ADDITIONAL WORK = 2,457 Lin. Ft.

TOTAL LENGTH OF WORK = 12,207 LIN. FT. OR 2.311 MILES

00383

Project: CUYAHOGA COUNTY CUY-480-8.54
Date of Letting _____ 19__, Contract No. _____

LD0300 Rev. 9-3-75

BRUNING 44-560 29724

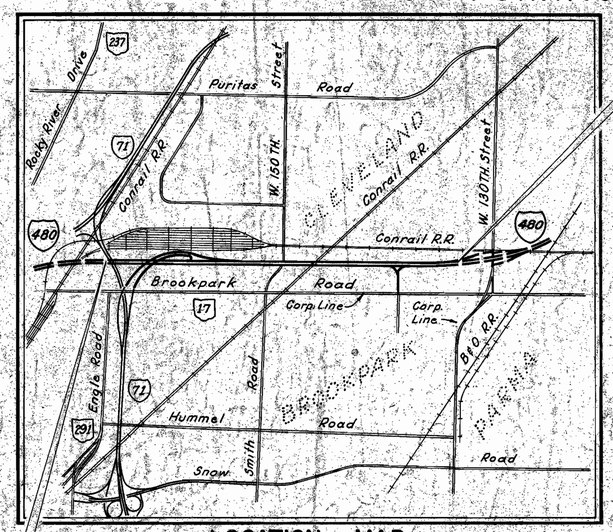

LOCATION MAP

SCALE IN MILES 0 ½ 1

BEGIN PROJECT
STA. 476+00.00
S.L.M. = 8.54

SCALES

Plan 0 50 100
Profile: Horizontal 0 50 100, Vertical 0 10 or 20 20 or 40
Cross Section: Horizontal 0 10 20, Vertical 0 10 20

LIMITED ACCESS

This improvement is especially designed for thru traffic and has been declared a Limited Access Highway or Freeway by action of the Director of Transportation, in accordance with the provisions of Sec. 5511.02 of the Revised Code of Ohio.

1977 SPECIFICATIONS

The standard specifications of the State of Ohio, Department of Transportation, including changes and supplemental specifications listed in the proposal shall govern this improvement.

The right of way for this improvement will be provided by the State of Ohio.

I hereby approve these plans and declare that the making of this improvement will not require the closing of the highway to traffic and that provisions for maintenance and safety of traffic will be as set forth on the plans and estimates.

Approved _____ Director of Public Service, City of Cleveland
Date 10/20/77

Approved _____ District Deputy of Transportation
Date 10-20-77

Approved _____ Engineer, Bureau of Bridges and Structural Design
Date 11-9-77

Approved _____ Chief Engineer, Planning and Design
Date 2-15-78

Approved _____ Director, Department of Transportation.
Date 2-15-78

NOTE: All references to former Penn Central Transportation Co. appearing throughout this plan shall be considered to pertain to the Consolidated Rail Corporation.

NOTE: Project designation CUY-80 appearing throughout this plan shall be considered to read CUY-480.

SUPPLEMENTAL SPECIFICATIONS			
801	4-25-77		
808	1-1-71	021	12-4-72
		048	2-19-74
836	3-12-75	950	4-25-77
838	1-13-77	951	4-25-77
839	11-25-70		
842	8-29-74	1001	1-3-77
843	10-23-75		
844	11-8-74		
846	4-25-77		
		3625	1-11-74
850	6-27-77	3713	1-11-74

SUPPLEMENTAL PRINTS OF STANDARD CONSTRUCTION DRAWINGS															
BP-1	6-1-65			GR-5	1-1-71	MC-6	6-1-65	HL-1	9-6-73	HL-16	4-6-73	TC-31.21	8-27-76		
BP-2	12-6-76	F-1	5-1-76	GR-6	1-1-71	MC-7	10-15-76	HL-2	7-27-73	HL-22	11-9-77	TC-32.10	8-27-76	TC-61.10	8-19-77
BP-3	12-6-76	F-3	5-1-76			MC-9	11-1-77	HL-3	7-27-73			TC-32.11	8-27-76	TC-71.10	12-1-75
BP-4	12-6-76			HW-1	6-1-65	MH-1	6-12-75	HL-4	1-21-76			TC-41.10	8-19-77		
BP-5	8-11-75	F-5	5-1-76	HW-3	6-1-65	MC-10	5-1-76	HL-5	9-6-73			TC-41.20	4-1-77	TC-81.10	4-18-77
BP-6	6-1-65	F-6	5-1-76	HW-4	1-1-70	MH-3	6-12-75	HL-6	3-22-77			TC-41.50	4-1-77	TC-83.10	9-5-75
BP-7	12-6-76	F-7	11-1-77			MH-5	6-12-75	HL-7	1-21-76	TC-7.65	10-1-74	TC-42.10	8-19-77	TC-83.20	9-5-75
BP-9	12-6-76	GR-1	12-6-76	I-2A	6-6-69			HL-8	1-21-76	TC-12.30	10-1-74	TC-42.20	4-1-77	TC-84.20	9-5-75
BP-10	1-3-75	GR-2B	12-6-76			AS-1-72	6-30-72	HL-9	3-22-77	TC-21.10	10-1-74			TC-85.10	9-5-75
BP-11	1-3-75	GR-3	12-6-76	L-1	6-1-73	BR-1-67	10-15-71	HL-10	1-21-76	TC-21.20	4-18-77	TC-51.10	6-2-75	TC-85.20	9-5-75
CB-3A	1-1-76	GR-3A	12-6-76	MC-1	6-13-69	RB-1-55	2-2-59	HL-11	4-6-73	TC-21.40	8-19-77	TC-51.11	6-2-75	TC-82.10	9-5-75
CB-5	9-1-69	GR-4	12-6-76	MC-3	6-1-73	SD-1-69	6-12-69	HL-12	4-6-73	TC-22.20	8-19-77	TC-52.10	4-1-77		
CB-6	6-1-65	GR-4A	7-26-76	MC-4	7-26-76			HL-15	1-21-76			TC-52.20	4-1-77		

Rev. 7-5-78

Rev. 4-12-78

PLANS PREPARED BY
ALDEN E. STILSON & ASSOCIATES, LIMITED
CONSULTING ENGINEERS
75 PUBLIC SQUARE
CLEVELAND, OHIO
FOR
STATE OF OHIO

DEPARTMENT OF TRANSPORTATION
FEDERAL HIGHWAY ADMINISTRATION

APPROVED:

DIVISION ADMINISTRATOR DATE

Rev. 6-22-78

MICROFILMED
AUG 1 1982

SCHEMATIC PLAN

FED. RD. DIVISION	STATE	PROJECT	
5	OHIO		

2/346

CUYAHOGA COUNTY
CUY-480-8.54

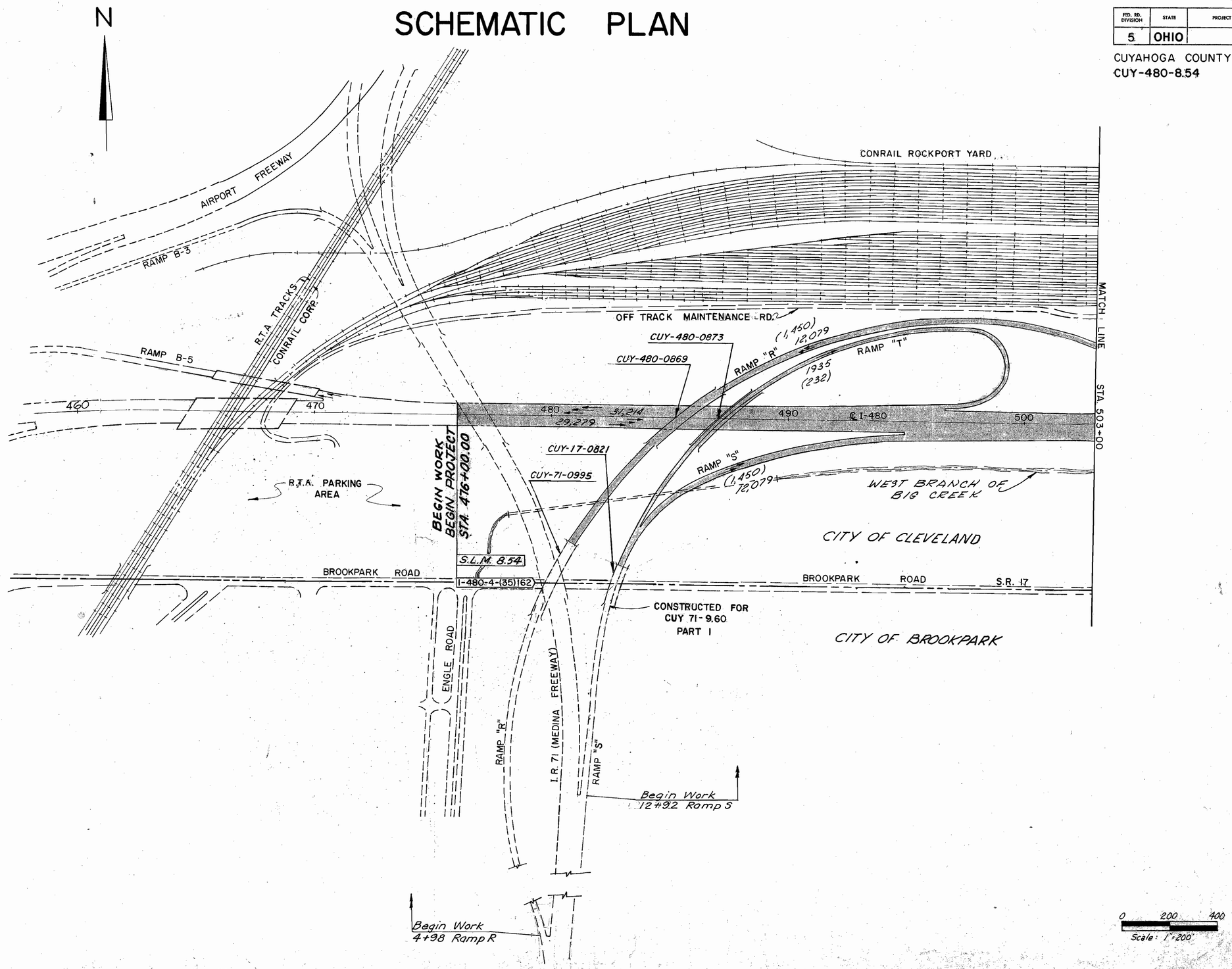

FED. RD. DIVISION	STATE	PROJECT	TYPE FUNDS
2	OHIO		

260
346

CUYAHOGA COUNTY
CUY-480-8.54

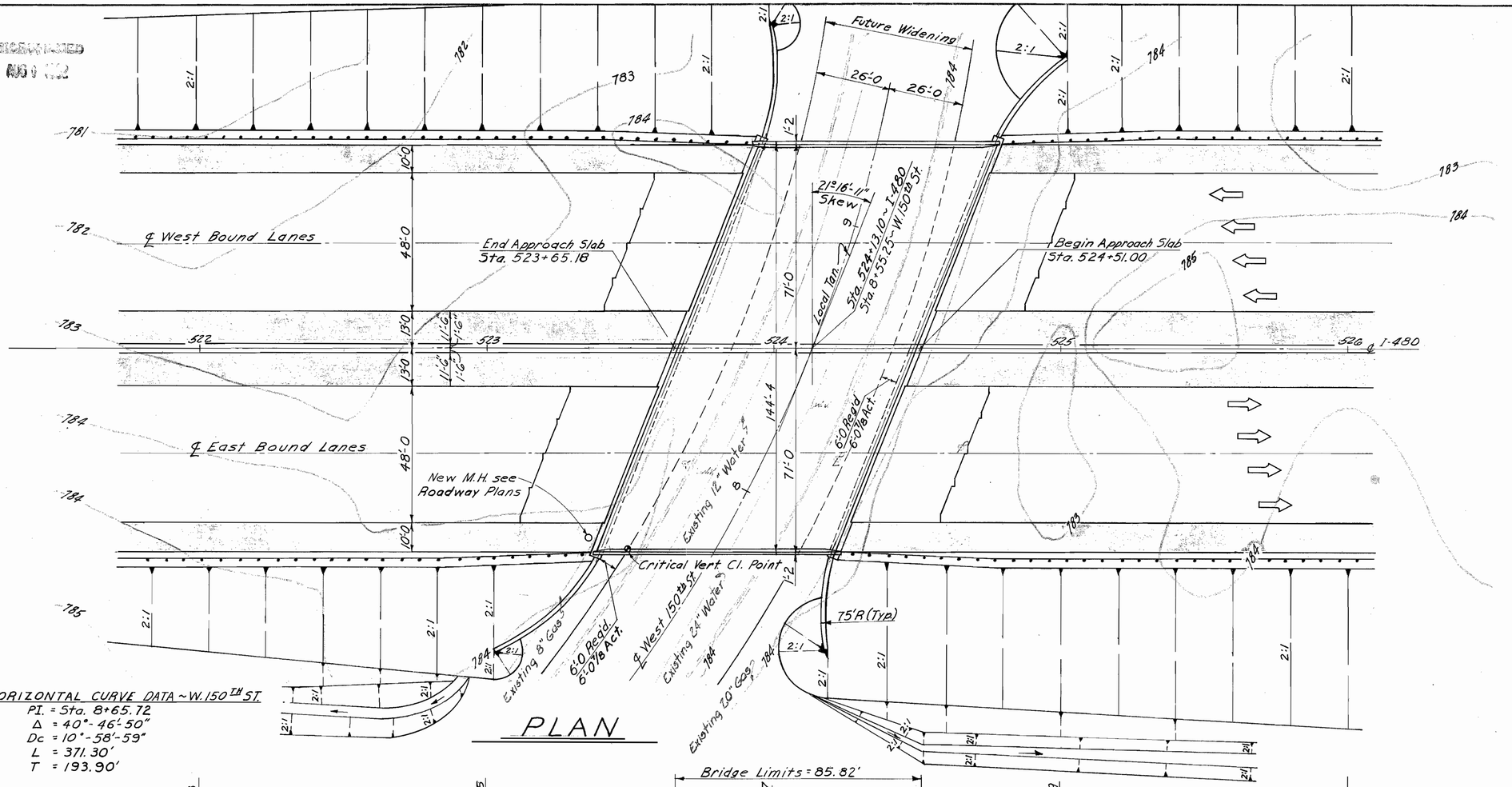

N

PLAN

HORIZONTAL CURVE DATA ~ W. 150TH ST.
PI. = Sta. 8+65.72
Δ = 40°-46'-50"
Dc = 10°-58'-59"
L = 371.30'
T = 193.90'

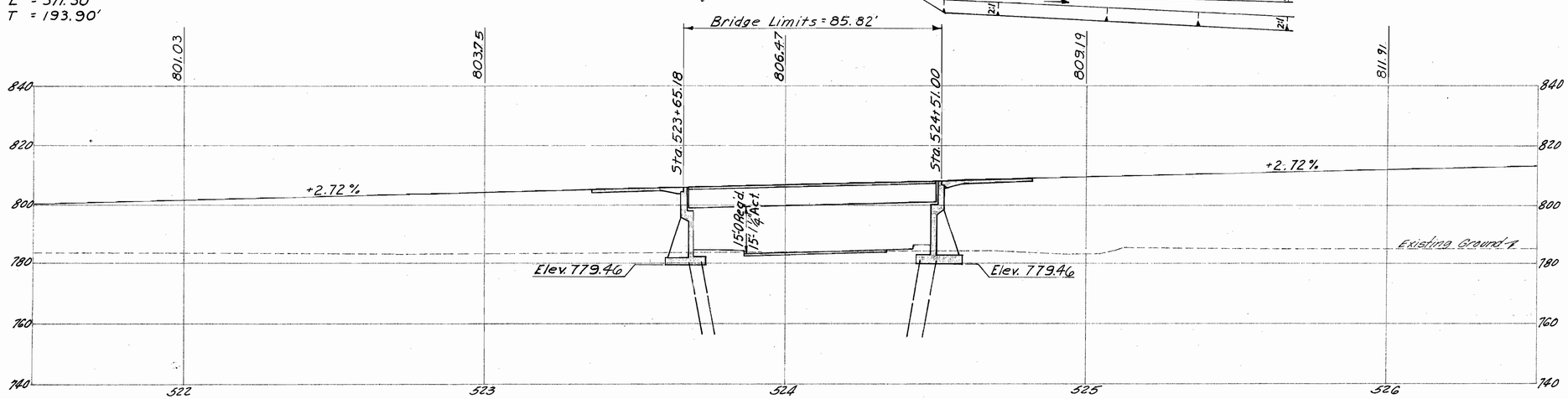

PROFILE ALONG ℄ I-480

PROPOSED STRUCTURE

TYPE: Simple span steel girder with reinforced concrete deck and reinforced concrete substructure.
SPAN: 81'-0 ℄ brg's
ROADWAY: 142'-0" ℄ parapets with Conc. Median Barrier

LOADING: C.F.-2000 (1957). Adequate for AASHO alternate loading.
SURFACE COURSE: Monolithic Concrete.
SKEW: 21°-16'-11" Left forward
ALIGNMENT: Tangent
APPROACH SLABS: AS-1-72, 30' long (Modified)

All piles are HP10x42 steel piles. Estimated average pile pay length shall be 25'-0.

Earthwork limits shown are schematic. Actual slopes shall conform to plan cross-sections.

TRAFFIC ESTIMATE

Design Year - 1987
Total A.D.T. - 82,716

0 20 40
Scale in Feet 1/20

ALDEN E. STILSON & ASSOCIATES, LIMITED
CONSULTING ENGINEERS
CLEVELAND, OHIO COLUMBUS, OHIO WHEELING W. VA.

SITE PLAN

BRIDGE № CUY-480-0943
I-480 OVER W. 150th ST.
CUYAHOGA COUNTY
STA. 523+65.18
STA. 524+51.00

DESIGNED	DRAWN	TRACED	CHECKED	REVIEWED	DATE	REVISED
ANA	ANA		HT	G.W.M.	4/14/69	

FED. RD. DIVISION	STATE	PROJECT	TYPE FUNDS
2	OHIO		

CUYAHOGA COUNTY
CUY-480-8.54

273/346

AUG 1 1982

* Each longitudinal run of deck reinforcing shall be comprised of 2-SE501 and 1-SE509 top or 2-S501 and 1-S501 bottom lapped a minimum of 1'-7".

Note: 2-3"ø rigid ferrous metal Communication conduits are required in the curb, south side only. Place communication and lighting conduits a minimum of 1" clear above slab construction joint.

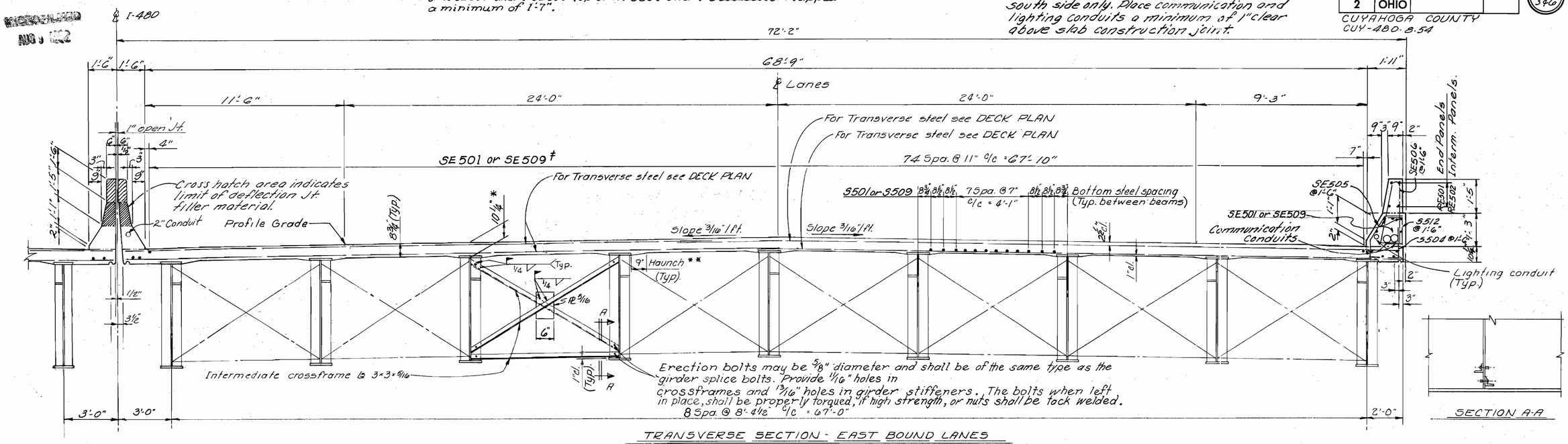

TRANSVERSE SECTION - EAST BOUND LANES
(WEST BOUND LANES Similar except for median)

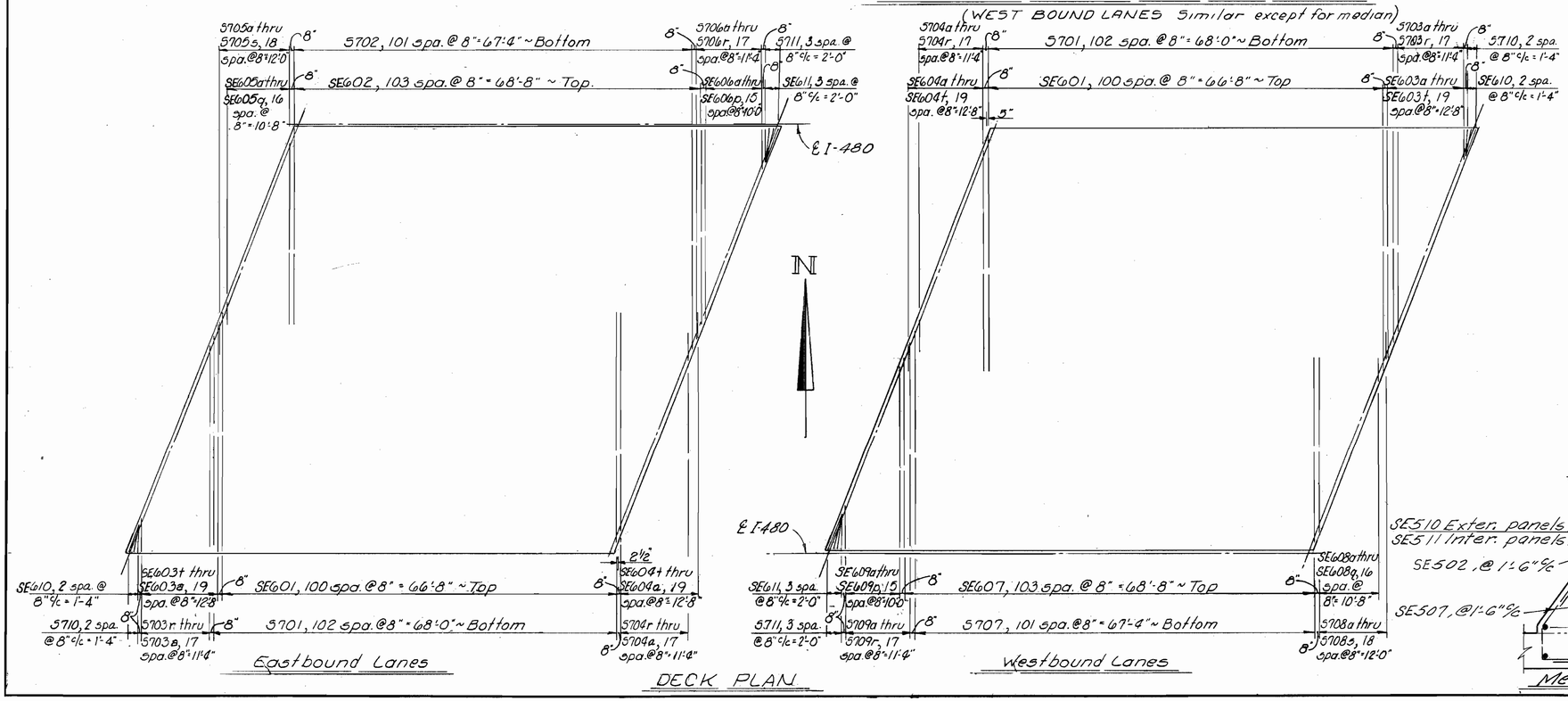

NOTES

* This is the design dimension. The quantity of deck concrete to be paid for shall be based upon this dimension, even though deviation from it may be necessary because the top flange of the girder may not have the exact camber or conformation required to place it parallel to the finished grade. Deduction shall be made for volume of encased steel plates as per Sec. 511.19 of the Construction and Material Specifications.

** A typical haunch width of 9" shall be used for computing quantity of concrete. However the haunch width may vary between 6" and 12" provided that the slope shall be not more than 1:4 for a haunch less than 9" in width.

Transverse bars shall be field bent to fit roadway crown. Cost is included with Item 509

For additional notes and details see Shts. 15/20 & 16/20

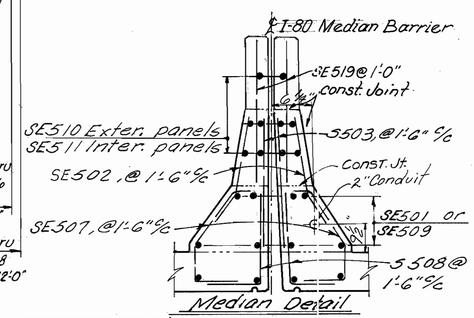

ALDEN E. STILSON & ASSOCIATES, LIMITED
CONSULTING ENGINEERS
COLUMBUS, OHIO

14/20

SUPERSTRUCTURE DETAILS

BRIDGE Nº CUY-480-0943
I-480 OVER WEST 150TH ST.

CUYAHOGA COUNTY — STA. 523+65.18 — STA. 524+51.00

DESIGNED	DRAWN	TRACED	CHECKED	REVIEWED	DATE	REVISED
HT	J.E.K.		pwd	G.W.M.	4/14/69	7-17-78

MICROFILMED
AUG 1 1992

FED. RD. DIVISION	STATE	PROJECT	TYPE FUNDS
2	OHIO		

274/346

CUYAHOGA COUNTY
CUY-480-8.54

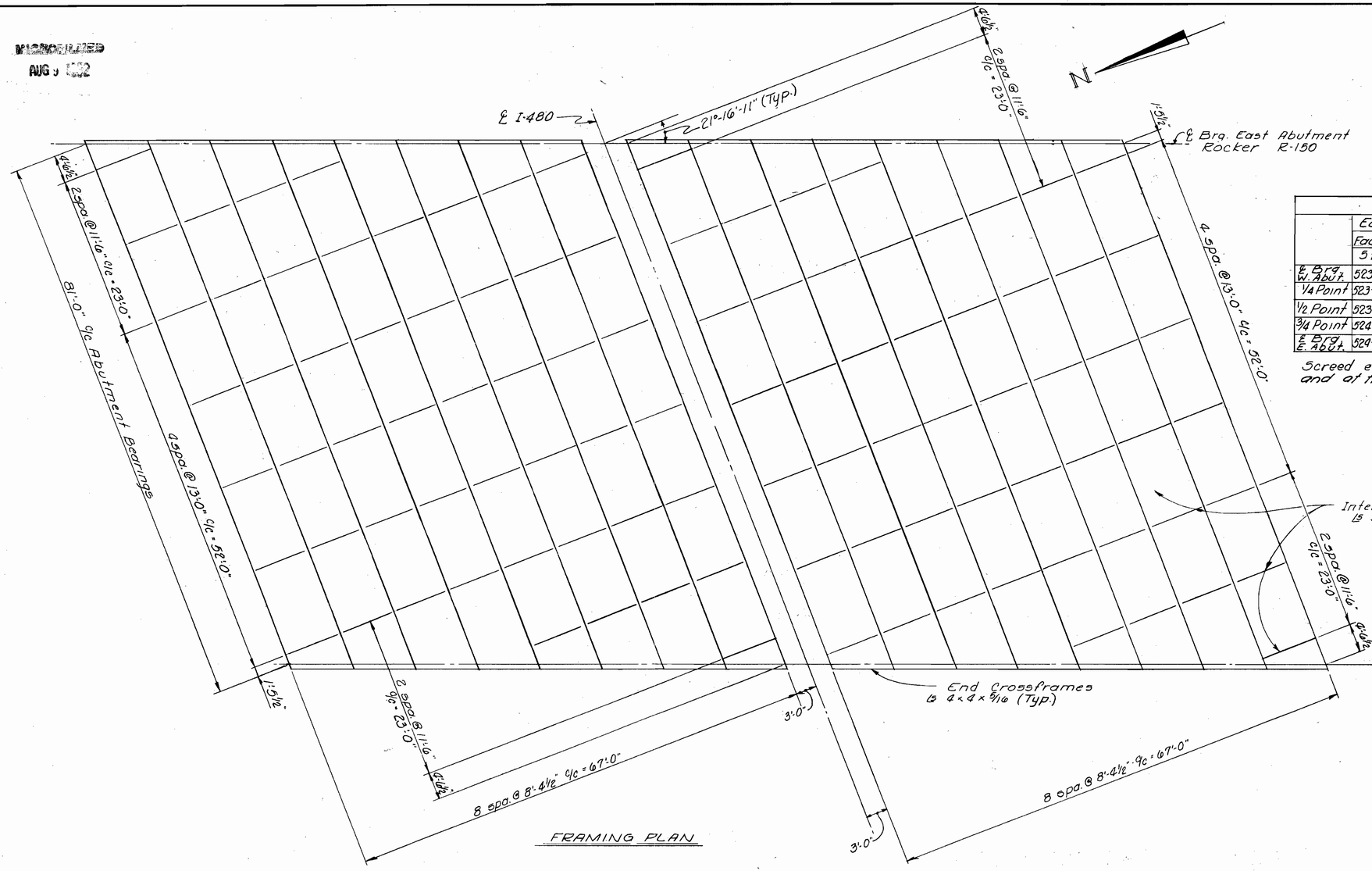

FRAMING PLAN

SCREED ELEVATIONS								
	Eastbound Lanes				Westbound Lanes			
	Face of Curb		3'-0" South of ℄		3'-0" North of ℄		Face of Curb	
	Sta.	Elev.	Sta.	Elev.	Sta.	Elev.	Sta.	Elev.
℄ Brg. W. Abut.	523+40.34	804.71	523+66.42	805.40	523+68.76	805.46	523+94.84	806.19
1/4 Point	523+60.59	805.29	523+86.67	805.99	523+89.01	806.05	524+15.09	806.77
1/2 Point	523+80.84	805.86	524+06.92	806.56	524+09.26	806.62	524+35.34	807.34
3/4 Point	524+01.09	806.39	524+27.17	807.09	524+29.51	807.16	524+55.59	807.88
℄ Brg. E. Abut.	524+21.34	806.91	524+47.42	807.60	524+49.76	807.67	524+75.84	808.39

Screed elevations are deck elevations before concrete is placed and at the top of the reinforced concrete slab.

Notes:

For additional notes and details see Sheet 16/20

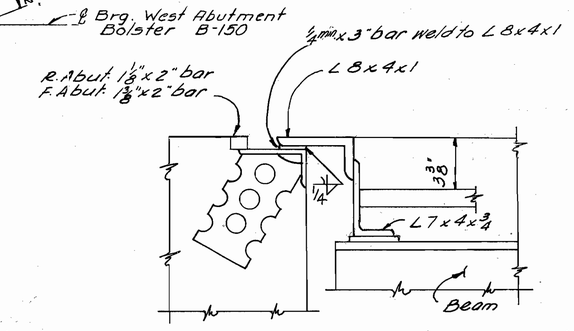

For additional end dam details see Standard Drawing SD-1-69, sheet 1 of 4.

END DAM DETAILS

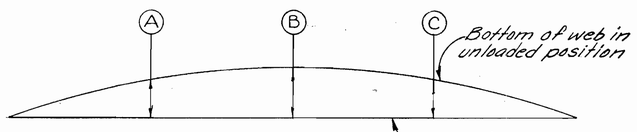

CAMBER DIAGRAM

DEFLECTION and CAMBER									
	Interior Girders			Exterior Girders			Median Girders		
	1/4 Pt.-"A"	Center Pt.-"B"	3/4 Pt.-"C"	1/4 Pt.-"A"	Center Pt.-"B"	3/4 Pt.-"C"	1/4 Pt.-"A"	Center Pt.-"B"	3/4 Pt.-"C"
Deflection due to weight of steel	1/8	1/8	1/8	1/8	1/8	1/8	1/8	1/8	1/8
Deflection due to Remaining dead load	7/16	5/8	7/16	3/8	9/16	3/8	7/16	5/8	7/16
Req'd shop Camber	9/16	3/4	9/16	1/2	11/16	1/2	9/16	3/4	9/16

ALDEN E. STILSON & ASSOCIATES, LIMITED
CONSULTING ENGINEERS
COLUMBUS, OHIO

15/20

FRAMING PLAN AND SUPERSTRUCTURE DETAILS

BRIDGE Nº CUY-480-0943
I480 OVER WEST 150TH ST.

CUYAHOGA COUNTY STA: 523+65.18
STA. 524+51.00

DESIGNED	DRAWN	TRACED	CHECKED	REVIEWED	DATE	REVISED
HT	J.E.K.		pwd.	G.W.M.	4/15/69	