STATE OF OHIO
DEPARTMENT OF TRANSPORTATION

CUY-77-9.09

CITY OF INDEPENDENCE
CUYAHOGA COUNTY

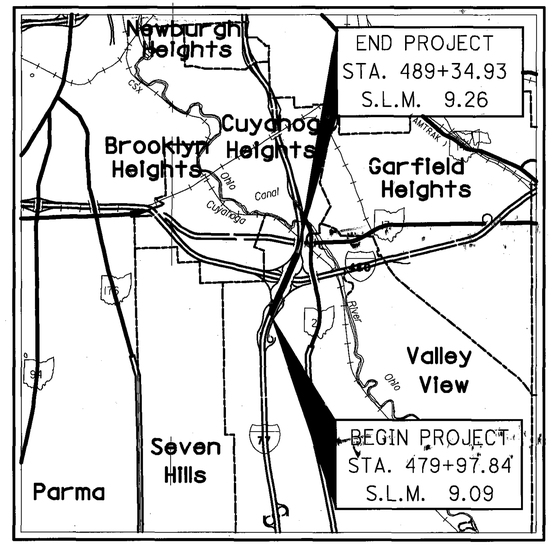

LOCATION MAP

LATITUDE: 41°24'27" LONGITUDE: 81°38'49"

SCALE IN MILES

0 1 2 3 4

N

PORTION TO BE IMPROVED
INTERSTATE & DIVIDED HIGHWAY
UNDIVIDED STATE & FEDERAL ROUTES
OTHER ROADS

DESIGN DESIGNATION

CURRENT ADT (2003)	58090
DESIGN YEAR ADT (2023)	65150
DESIGN HOURLY VOLUME (2023)	6515
DIRECTIONAL DISTRIBUTION	51 %
TRUCKS (24 HOUR B&C)	10 %
DESIGN SPEED	60 MPH
LEGAL SPEED	60 MPH

DESIGN FUNCTIONAL CLASSIFICATION:
URBAN INTERSTATE

DESIGN EXCEPTIONS (VERTICAL CLEARANCE) 1-19-06

(1) LANE W-N TO EAST FASCIA GIRDER
STATION: 486+32±
14.7' VERTICAL CLEARANCE

(2) LANE E-S TO EAST FASCIA GIRDER
STATION: 484+78±
14.9' VERTICAL CLEARANCE

(3) LANE N-E TO I-480
STATION: 485+25±
15.08' VERTICAL CLEARANCE

(4) LANE S-W TO I-480
STATION: 483+75±
15.44' VERTICAL CLEARANCE

UNDERGROUND UTILITIES
TWO WORKING DAYS
BEFORE YOU DIG
CALL 1-800-362-2764 (TOLL FREE)
OHIO UTILITIES PROTECTION SERVICE
NON-MEMBERS
MUST BE CALLED DIRECTLY

PLAN PREPARED BY:

HOWARD NEEDLES TAMMEN & BERGENDOFF
55 ERIEVIEW PLAZA, SUITE 500
CLEVELAND, OHIO 44114-1816

HNTB

ENGINEERS SEAL:

STATE OF OHIO
ZOLTAN S. SZABO
E-55985
REGISTERED
PROFESSIONAL ENGINEER

SIGNED: Sheets 1-48
DATE: 1-21-05

ENGINEERS SEAL:

STATE OF OHIO
CHARLES A. CVITKOVICH
E-50897
REGISTERED
PROFESSIONAL ENGINEER

SIGNED: Sheets 49-71
DATE: 1-24-05

INDEX OF SHEETS:

TITLE SHEET	1
SCHEMATIC PLAN	2
TYPICAL SECTIONS	3,3A
GENERAL NOTES	4
GENERAL SUMMARY	5-6
COMPUTATIONS AND SUBSUMMARIES	7
PROJECT SITE PLAN	7A
PLAN SHEETS	8-9
PROFILE SHEETS	10-11
MISCELLANEOUS DETAILS	12, 12A, 12B, 12C
CROSS SECTIONS	13-16
TRAFFIC CONTROL	17-21
MAINTENANCE OF TRAFFIC	22-24, 24A, 25, 25A, 26-48
STRUCTURE PLANS	49-51, 51A, 52-68, 68A, 68B, 69-71

STANDARD CONSTRUCTION DRAWINGS

AS-1-81	7/19/02	GR-1.1	7/16/04	TC-65.11	10/19/01	RM-3.1	4/18/03	
		GR-2.1	1/16/04	TC-72.20	1/19/02	RM-4.2	4/18/03	
BP-2.1	7/16/04	GR-3.1	4/18/03			RM-4.3	4/18/03	
BP-2.2	7/16/04	GR-3.2	4/18/04			RM-4.4	4/18/03	
BP-2.5	7/28/00	GR-3.5	4/18/03	MT-95.30	7/16/04	RM-4.5	4/18/03	
BP-3.1	7/16/04	I-1.2	7/15/05	MT-98.13	4/19/02	RM-4.6	1/16/04	
BP-5.1	7/28/00	I-2.1	7/15/05	MT-98.15	7/16/04			
BP-8.1	7/28/00			MT-98.16	9/19/02	SBR-1-99	7/19/02	
		TC-12.30	1/19/02	MT-101.20	10/18/02			
DM-1.1	4/21/06	TC-21.20	1/19/01	MT-102.10	10/18/02	VPF-1-90	7/19/02	
DM-1.4	4/21/06	TC-21.40	1/18/02	MT-102.20	10/18/02			
DM-4.3	7/19/02	TC-31.21	4/20/01	MT-105.10	10/18/02			
DM-4.4	7/19/02	TC-41.10	1/19/01	MT-105.11	10-18-02			
HL-20.13	4/19/02	TC-51.11	4/20/01					
HL-20.14	1/17/03	TC-61.10	1/19/01	PCB 91	7/19/02			
HL-30.33	1/17/03	TC-65.10	10/19/01					

SUPPLEMENTAL SPECIFICATIONS	
800	10-20-06
802	4/15/05
832	4/25/06
1001	1/20/06
843	4-18-03

SPECIAL PROVISIONS
O.E.P.A. Notification of Demolition and Renovation

PROJECT DESCRIPTION

THIS PROJECT IS FOR THE REHABILITATION OF THE 0.18 MILE LONG HIGH-LEVEL IR-77 BRIDGE OVER IR-480 AND RAMPS.

PROJECT EARTH DISTURBED AREA:	0.18 ACRES
ESTIMATED CONTRACTOR EARTH DISTRUBED AREA:	1.00 ACRES
NOTICE OF INTENT EARTH DISTURBED AREA:	4.90 ACRES

LIMITED ACCESS

THIS IMPROVEMENT IS ESPECIALLY DESIGNED FOR THROUGH TRAFFIC AND HAS BEEN DECLARED A LIMITED ACCESS HIGHWAY OR FREEWAY BY ACTION OF THE DIRECTOR IN ACCORDANCE WITH THE PROVISIONS OF SECTION 5511.02 OF THE OHIO REVISED CODE.

2005 SPECIFICATIONS

THE STANDARD SPECIFICATIONS OF THE STATE OF OHIO, DEPARTMENT OF TRANSPORTATION, INCLUDING CHANGES AND SUPPLEMENTAL SPECIFICATIONS LISTED IN THE PROPOSAL SHALL GOVERN THIS IMPROVEMENT.

UNDER AUTHORITY OF SECTION 4511.21, DIVISION (H) OF THE OHIO REVISED CODE, THE REVISED PRIMA FACIE SPEED LIMITS AS INDICATED HEREIN ARE DETERMINED TO BE REASONABLE AND SAFE, AND ARE HEREBY ESTABLISHED FOR THE DURATION OF THIS PROJECT. THE PRIMA FACIE SPEED LIMIT OR LIMITS HEREBY ESTABLISHED SHALL BECOME EFFECTIVE WHEN APPROPRIATE SIGNS GIVING NOTICE THEREOF ARE ERECTED.

I HEREBY APPROVE THESE PLANS AND DECLARE THAT THE MAKING OF THIS IMPROVEMENT WILL NOT REQUIRE THE CLOSING OF TRAFFIC OF THE HIGHWAY AND THAT PROVISIONS FOR THE MAINTENANCE AND SAFETY OF TRAFFIC WILL BE AS SET FORTH ON THE PLANS AND ESTIMATES.

APPROVED
DATE 27 JAN 2005 DISTRICT DEPUTY DIRECTOR

APPROVED
DATE 7-6-05 DIRECTOR, DEPARTMENT OF TRANSPORTATION

FEDERAL PROJECT NO. 0775(043)
PID NO. 10465
CONSTRUCTION PROJECT NO.
RAILROAD INVOLVEMENT NONE
CUY-77-9.09

CUY-77-9.09
070001 Pid 10465
Dist 12 1/10/2007
J:\JOBS\40585\TECHPROD\hwy\SHEETS\GEN\10465GT.dgn 21-JAN-2005 3:57PM

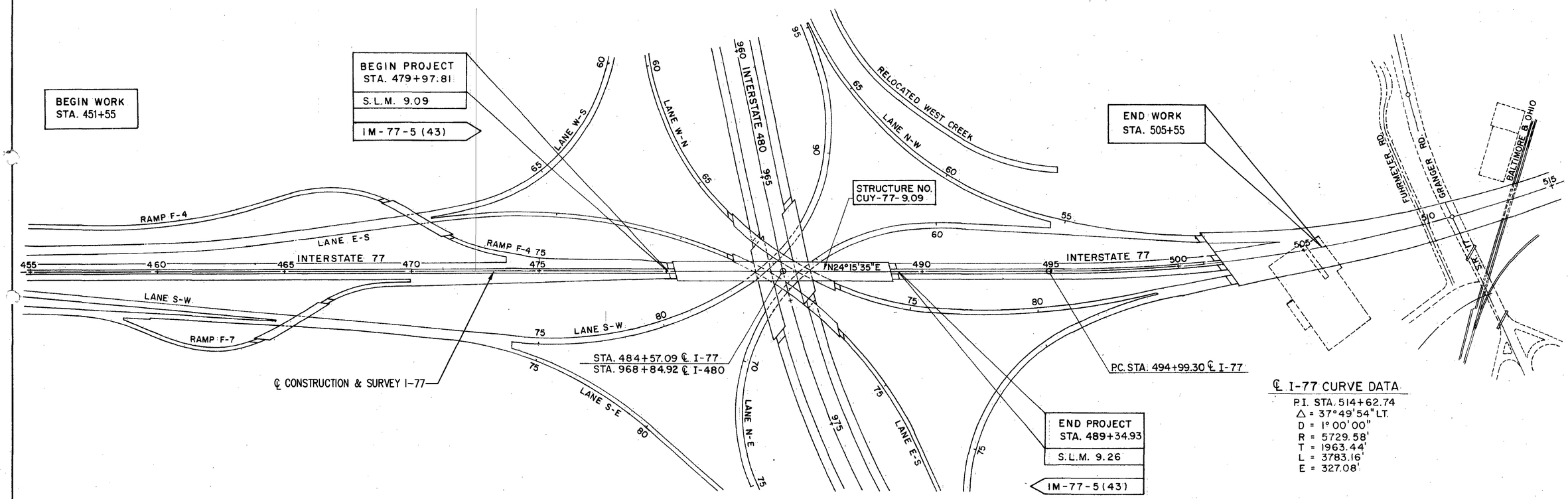

℄ I-77 CURVE DATA

P.I. STA. 514+62.74
△ = 37°49'54" LT.
D = 1°00'00"
R = 5729.58'
T = 1963.44'
L = 3783.16'
E = 327.08'

REFERENCE POINT SCHEMATIC

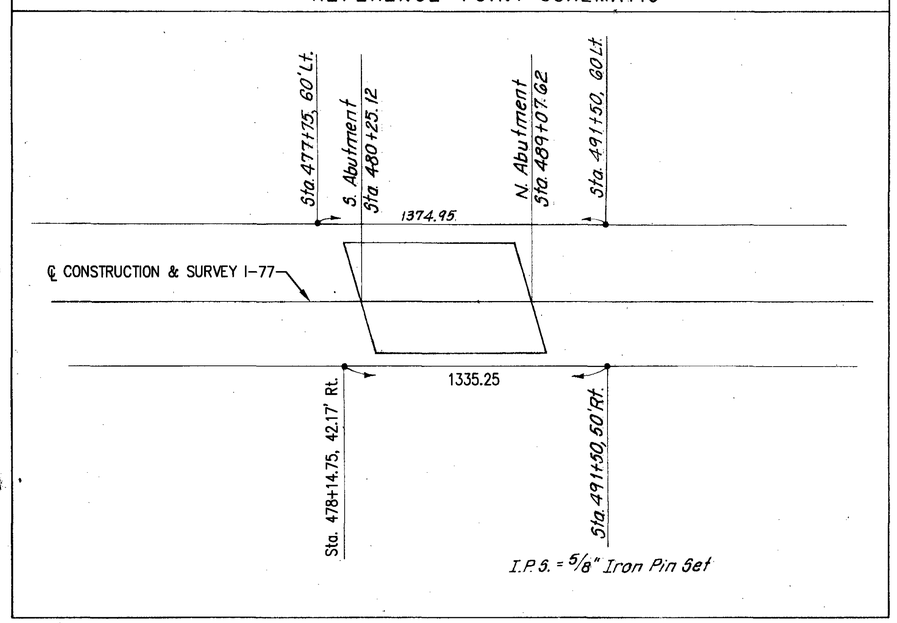

BENCHMARK INFORMATION

BENCHMARK	DESCRIPTION	ELEVATION
T.B.M. #1	N.E. Bolt @ Sign Base, South West of Abutment Station 479+53, 138' Lt. of ℄ of I-77	674.24
T.B.M. #2	N.E. Bolt @ Sign Base @ North West Abutment Station 489+97, 46' Lt of ℄ of I-77	683.61

HORIZONTAL SCALE 0 200 400

CALCULATED AHS
CHECKED ZSS

SCHEMATIC PLAN

CUY-77-9.09

MADE AHS DATE 12/04
TRACED BLM DATE 12/04
CHECKED ZSS DATE 12/04

HOWARD NEEDLES TAMMEN & BERGENDOFF
ARCHITECTS ENGINEERS PLANNERS
HNTB

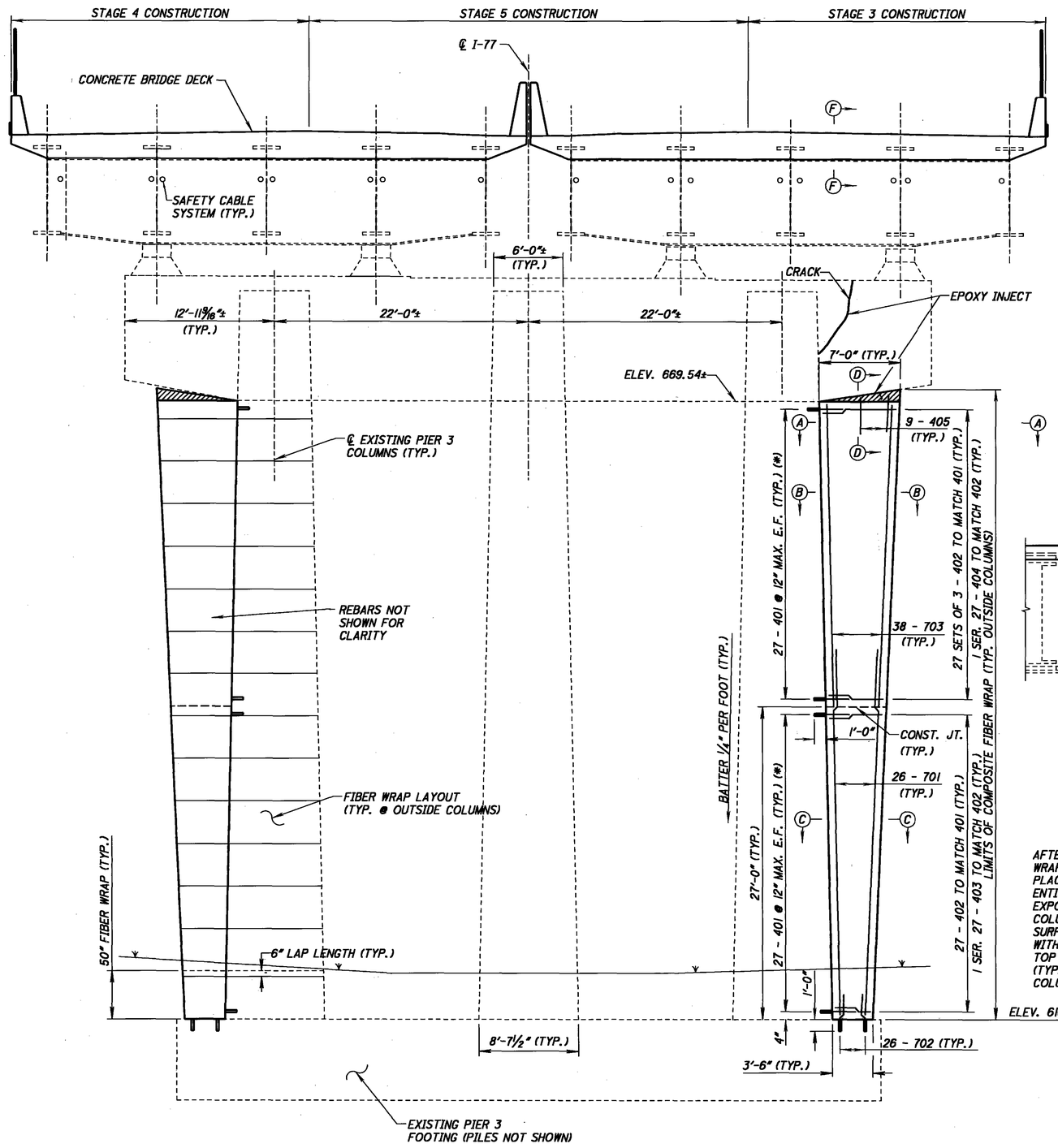

PIER 3 ELEVATION

(LOOKING UPSTATION)

* - RESPACE AS REQUIRED TO MISS EXISTING REINFORCEMENT

BAR	REQUIRED MIN. LAP LENGTH
NO. 4	2'-3"
NO. 7	3'-0"

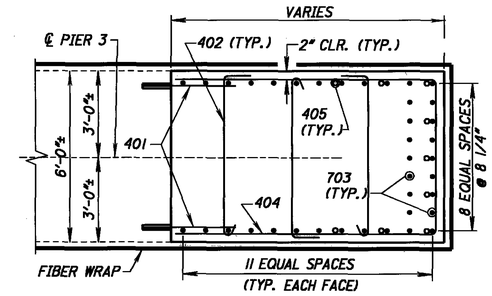

SECTION A-A

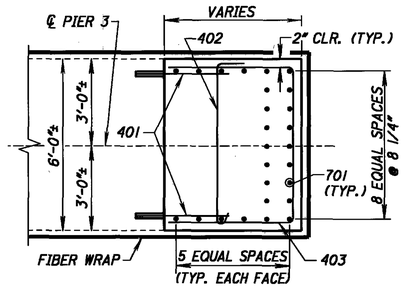

SECTION C-C

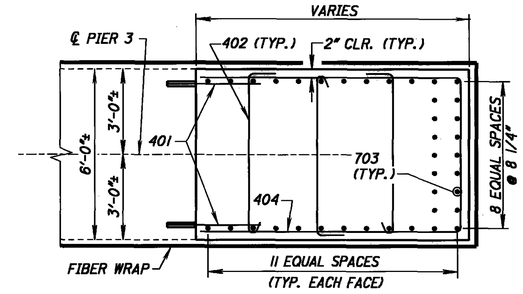

SECTION B-B

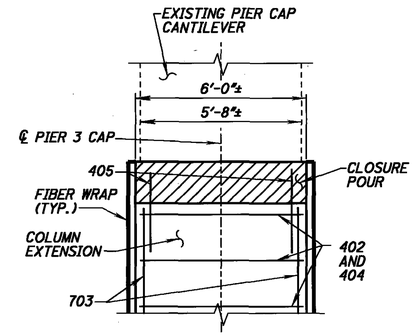

SECTION D-D

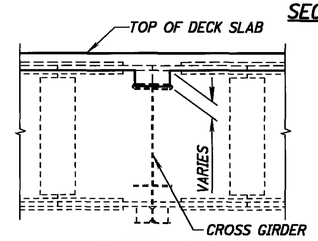

SECTION F-F

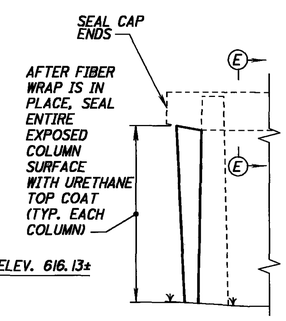

PIER 3 SEALING DETAIL

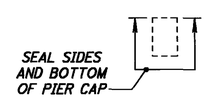

SECTION E-E

NOTES

1. FOR STAGE CONSTRUCTION DETAILS, SEE SHEET 6 OF 23.
2. FOR COMPOSITE FIBER WRAP NOTES AND DETAILS, SEE GENERAL NOTES SHEET 4 OF 23.
3. PAYMENT FOR THE COLUMN EXTENSIONS, AND CLOSURE POUR SHALL BE UNDER ITEM 511 CLASS HP CONCRETE, SUBSTRUCTURE, AS PER PLAN.
4. ALL REINFORCING BARS SHALL BE PREFIXED P.
5. FOR REINFORCEMENT SCHEDULE, SEE SHEET 23 OF 23.

- INDICATES CLOSURE POUR

SUGGESTED CONSTRUCTION SEQUENCE

1. EXPOSE EXISTING EXTERIOR COLUMN TO TOP OF EXISTING FOOTING WITHIN LIMITS FOR THE CONSTRUCTION OF PIER COLUMN EXTENSION. EXCAVATION SHALL BE INCLUDED WITH ITEM 503, UNCLASSIFIED EXCAVATION, AS PER PLAN.
2. LOCATE EXISTING REBAR WITH A REBAR LOCATOR. ADJUST DOWEL SPACING AS NEEDED TO MISS EXISTING BARS. DRILL DOWEL HOLES IN TOP OF EXISTING FOOTING AND SIDE OF EXISTING EXTERIOR COLUMNS.
3. FILL HOLES WITH EPOXY AND INSTALL DOWELS.
4. ERECT REINFORCING STEEL FOR THE EXTERIOR COLUMN EXTENSION AND CAST CONCRETE TO TOP OF THE EXISTING COLUMN TOP.
5. AFTER PORTION OF EXISTING DECK OVER PIER 3 CANTILEVER IS REMOVED, CLEAN OUT EXISTING CRACKS IN THE PIER 3 CAP CANTILEVER. REPAIR CRACKS WITH EPOXY. PAYMENT FOR CRACK REPAIR SHALL BE INCLUDED WITH ITEM SPECIAL - CONCRETE REPAIR BY EPOXY INJECTION.
6. AFTER EXTERIOR COLUMN EXTENSION CONCRETE GAINS 4000 PSI COMPRESSIVE STRENGTH, CONSTRUCT CLOSURE POUR BETWEEN THE EXISTING CANTILEVER CAP AND THE NEWLY CONSTRUCTED COLUMN EXTENSION. CLOSURE POUR COST IS INCIDENDTAL AND SHALL BE INCLUDED WITH ITEM 511 CLASS HP CONCRETE, SUBSTRUCTURE, AS PER PLAN. EPOXY INJECT JOINT BETWEEN CLOSURE POUR CONCRETE AND PIER CAP AFTER CLOSURE POUR CONCRETE REACHES 4000 PSI COMPRESSIVE STRENGTH.
7. CAST PORTIONS OF THE NEW DECK AFTER INJECTION EPOXY GAINS A COMPRESSIVE STRENGTH OF 4000 PSI.
8. FIBER WRAP COLUMN AFTER ALLOWING A MINIMUM OF 60 DAYS FOR CONCRETE TO CURE.
9. REPEAT STEPS 1 THROUGH 8 FOR THE OTHER EXTERIOR COLUMN EXTENSION.

DESIGN AGENCY: HNTB ARCHITECTS ENGINEERS PLANNERS

DESIGNED	DRAWN	REVIEWED	DATE
DHS	JDM	CAC	1/24/05
CHECKED	REVISED	STRUCTURE FILE NUMBER	
JMS		1806327	

PIER 3 MODIFICATION
BRIDGE NO. CUY-77-0909
I-77 OVER I-480

CUY-77-9.09

@@colew00@pmwork@jobs@405585@techprod@Bridge@Drawings@405585COL1.dgn 18-JUL-2006 7:15AM jmerriman

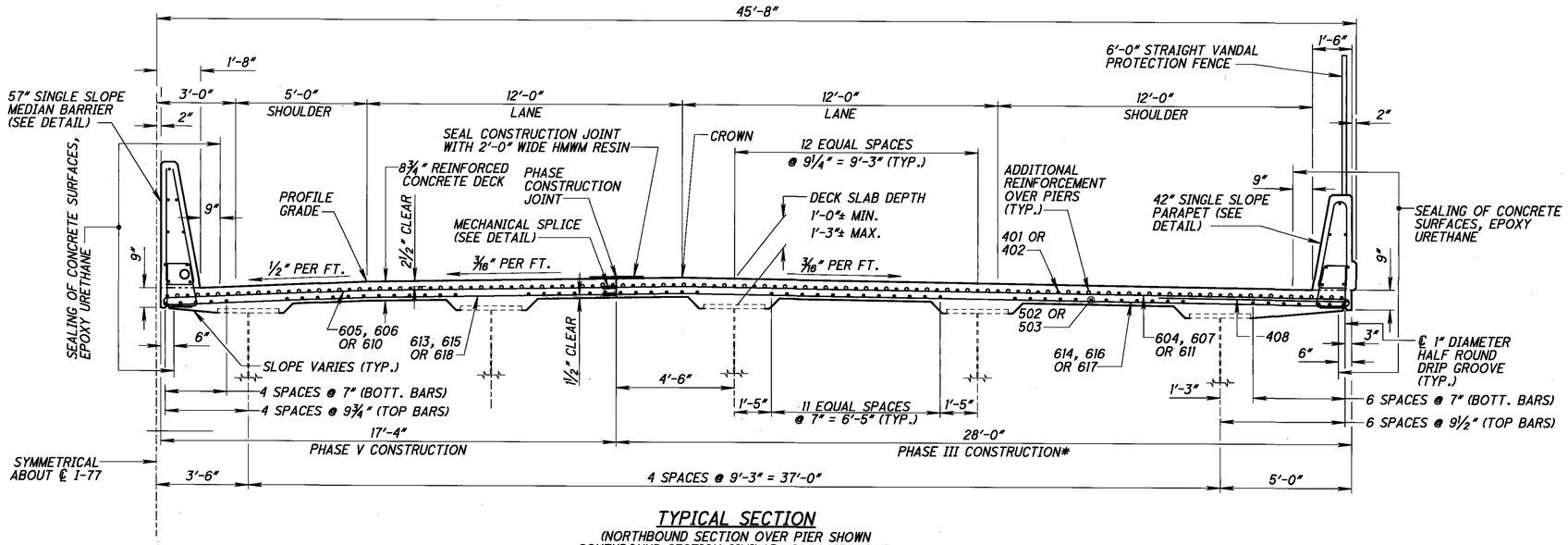

TYPICAL SECTION

(NORTHBOUND SECTION OVER PIER SHOWN
SOUTHBOUND SECTION SIMILAR, OPPOSITE HAND)
*PHASE IV CONSTRUCTION FOR SOUTHBOUND BRIDGE

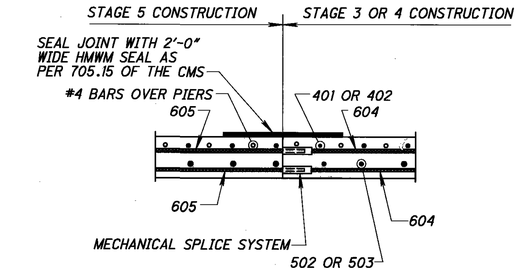

MECHANICAL SPLICE DETAIL

AN APPROVED TYPE OF MECHANICAL CONNECTOR FOR REINFORCING BARS SHALL BE PROVIDED WHERE REQUIRED. INSTALLATION OF CONNECTORS SHALL CONFORM WITH MANUFACTURER'S RECOMMENDED PROCEDURES. IF A DOWEL BAR SPLICE TYPE OF CONNECTOR IS FURNISHED, THE MINIMUM DOWEL BAR LENGTH TO BE FURNISHED WITH THE CONNECTOR SHALL BE AS SHOWN ON THE PLAN.

CONNECTORS AND DOWEL BARS SHALL BE EPOXY COATED. COATING FOR BOTH THE CONNECTORS AND BARS SHALL CONFORM TO THE SAME SPECIFICATIONS. COATINGS WHICH HAVE BEEN DAMAGED OR WHICH OTHERWISE DO NOT MEET SPECIFCATIONS WITH RESPECT TO COLOR, CONTINUITY AND UNIFORMITY, MAY BE REPAIRED AS DIRECTED BY THE ENGINEER OR THEY SHALL BE REPLACED WITH MATERIAL WHICH MEETS THE SPECIFICATIONS.

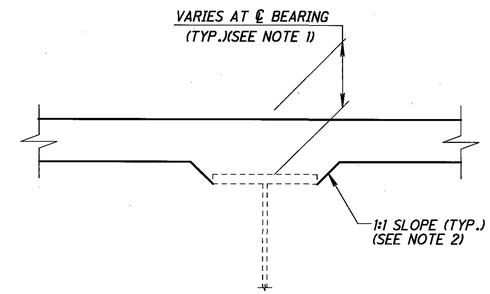

HAUNCH DETAIL

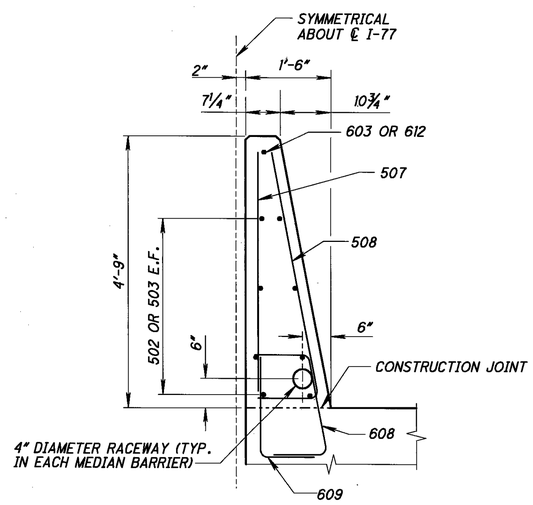

57" SINGLE SLOPE MEDIAN BARRIER

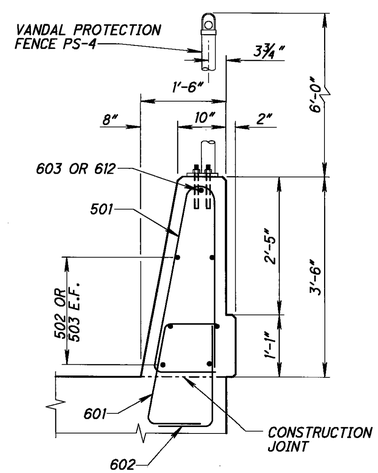

42" SINGLE SLOPE PARAPET

BAR	REQUIRED LAP LENGTH
NO. 4	2'-0"
NO. 5	2'-6"
NO. 6	3'-4"

NOTES:

1. DECK SLAB DEPTH: THE DISTANCE SHOWN FROM THE TOP OF THE DECK SLAB TO THE BOTTOM OF THE TOP FLANGE IS THE THEORETICAL DESIGN DIMENSION. THE QUANTITY OF DECK CONCRETE TO BE PAID FOR SHALL BE BASED UPON THIS DIMENSION. EVEN THOUGH DEVIATION FROM IT MAY BE NECESSARY BECAUSE THE TOP FLANGE OF THE GIRDER MAY NOT HAVE THE EXACT CAMBER OR CONFORMATION REQUIRED TO PLACE IT PARALLEL TO THE FINISHED GRADE. DEDUCTION SHALL BE MADE FOR VOLUME OF ENCASED STEEL PLATES AS PER 511.18.
2. A HAUNCH WIDTH BASED ON A SLOPE OF 1:1 SHALL BE USED FOR COMPUTING QUANTITY OF CONCRETE.
3. ALL REINFORCING BARS SHALL BE PREFIXED S.
4. FOR FENCE POST, PARAPET CRACK CONTROL JOINT SPACING, AND PARAPET LONGITUDINAL REINFORCEMENT, SEE SHEET 15 OF 23.
5. FOR REINFORCEMENT SCHEDULE, SEE SHEET 22 OF 23.
6. FOR SCREED ELEVATIONS, SEE SHEETS 16 THRU 18 OF 23.
7. FOR SLAB PLAN AND ADDITIONAL REINFORCEMENT DETAIL OVER THE PIERS, SEE SHEET 13 OF 23.

DESIGN AGENCY
HNTB OH, PA, WV, DC, DE, MD, NJ
ARCHITECTS ENGINEERS PLANNERS

DESIGNED	DRAWN	REVIEWED	DATE
NBR	NBR	CAC	1/24/05
CHECKED	REVISED	STRUCTURE FILE NUMBER	
JMS		1806327	

TRANSVERSE SECTION
BRIDGE NO. CUY-77-0909
I-77 OVER I-480

CUY-77-9.09

J:\JOBS\40585\TECHPROD\Bridge\Drawings\40585DECKSLAB.dgn 28-JUL-2006 9:25AM jburks

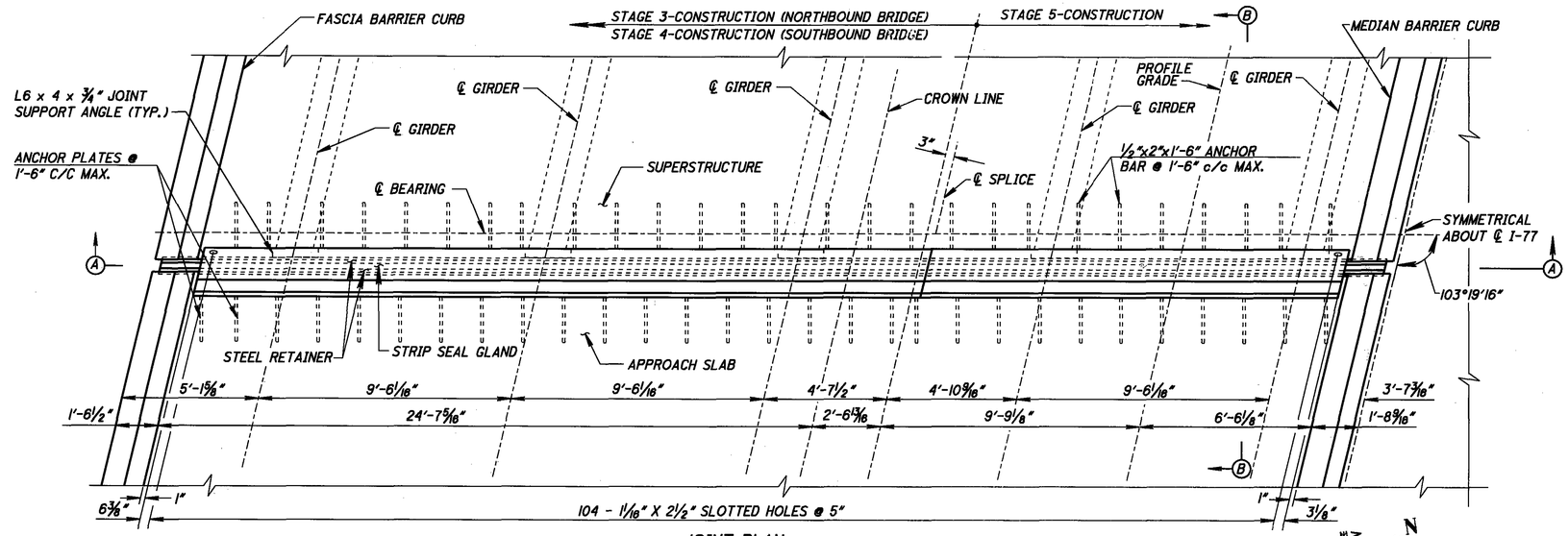

JOINT PLAN

LEFT SOUTH ABUTMENT JOINT AND RIGHT NORTH ABUTMENT JOINT SHOWN
RIGHT SOUTH ABUTMENT JOINT AND LEFT NORTH ABUTMENT JOINT SIMILAR

EXPANSION JOINT OPENINGS (DIMENSION A)		
TEMPERATURE	NORTH ABUTMENT	SOUTH ABUTMENT
30°F	3⅜"	3¼"
40°F	3"	2 15/16"
50°F	2⅝"	2 9/16"
60°F	2¼"	2¼"
70°F	1⅞"	1 15/16"
80°F	1½"	1 9/16"
90°F	1⅛"***	1¼"***

*** - NOTE:
THE MINIMUM JOINT OPENING (DIMENSION A) AT THE TIME OF THE SEAL GLAND INSTALLATION SHALL NOT BE LESS THAN 1½". IF THE JOINT OPENING IS LESS, THE INSTALLATION SHALL BE POSTPONED UNTIL THE TEMPERATURE DROPS A SUFFICIENT AMOUNT TO ALLOW THE MINIMUM 1½" OPENING.

ELEVATION A	LEFT SOUTH ABUTMENT	RIGHT SOUTH ABUTMENT	LEFT NORTH ABUTMENT	RIGHT NORTH ABUTMENT
FASCIA BARRIER CURB	700.36	699.97	684.24	683.91
CROWN LINE	700.63	700.45	684.53	684.38
STAGE CONST. LINE	700.58	700.42	684.48	684.35
PROFILE GRADE	700.39	700.32	684.29	684.23
MEDIAN BARRIER CURB	700.10	700.08	684.01	684.00

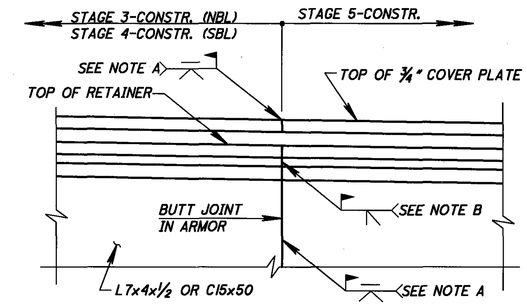

SECTION C-C

NOTE: SECTION C-C IS SHOWN AT THE STAGE CONSTRUCTION JOINT

WELD NOTES

A. TRANSVERSE JOINTS IN END DAM ARMOR SHALL HAVE COMPLETE PENETRATION BUTT WELDS.
B. JOINTS IN RETAINERS SHALL HAVE WATERTIGHT PARTIAL PENETRATION BUTT WELDS COMPLETELY AROUND THE OUTER PERIPHERY OF THE ABUTTING SURFACES. WELDS THAT WILL BE IN CONTACT WITH THE SEAL GLAND SHALL BE GROUND SMOOTH.

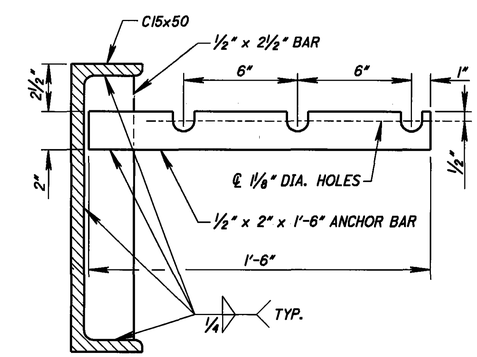

ANCHOR BAR DETAIL

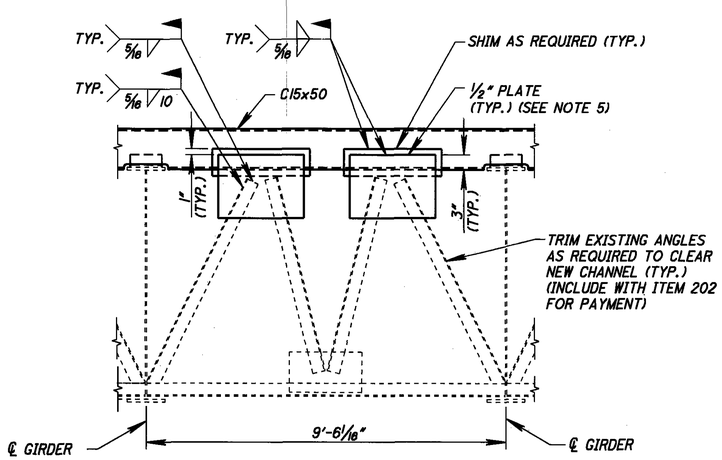

PART SECTION A-A

(STRIP SEAL AND PLATES NOT SHOWN)

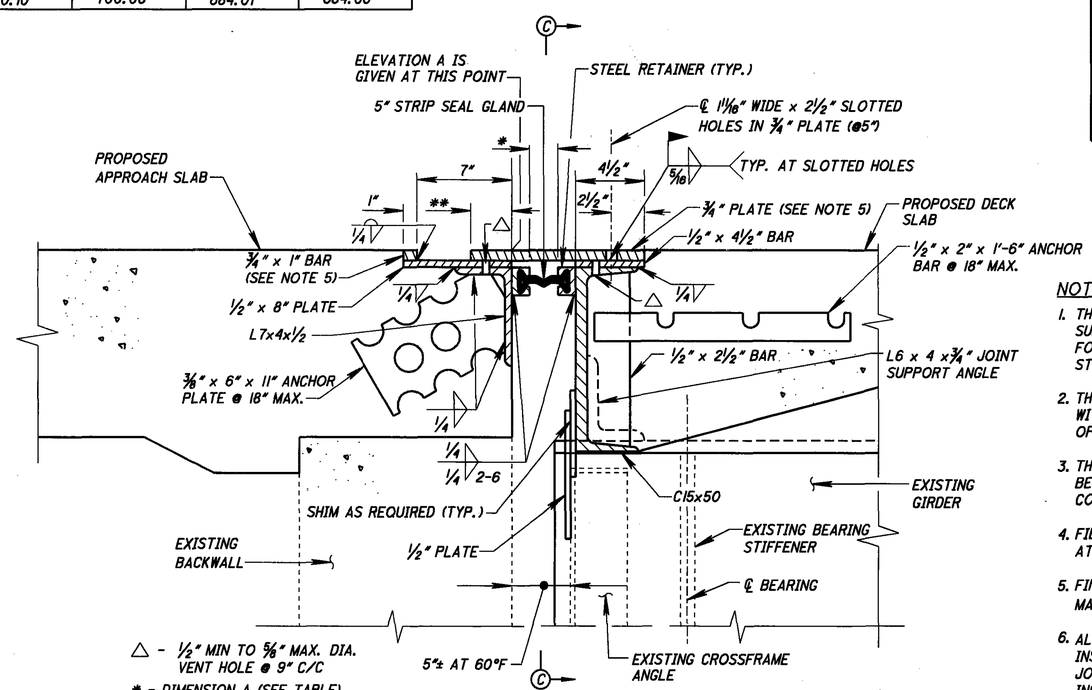

△ - ½" MIN TO ⅝" MAX. DIA. VENT HOLE @ 9" C/C
* - DIMENSION A (SEE TABLE)
** - 3" @ 60°F

SECTION B-B

NOTES:

1. THE DETAILS SHOWN ON THIS SHEET ARE INTENDED TO SUPPLEMENT THOSE SHOWN ON THE STANDARD DRAWING. FOR ADDITIONAL DETAILS AND NOTES, REFER TO ODOT STANDARD DRAWINGS EXJ-4-87 AND GSD-1-96.
2. THE NEW STRUCTURAL STEEL SHALL BE FIELD PAINTED WITH SYSTEM OZEU, AND INCLUDED WITH FIELD PAINTING OF EXISTING STEEL FOR PAYMENT.
3. THE STRIP SEAL GLAND AT EACH BRIDGE JOINT SHALL BE INSTALLED IN ONE CONTINUOUS PIECE AFTER THE COMPLETION OF PHASE V CONSTRUCTION.
4. FIELD WELDED COVER PLATES SHALL NOT BE PERMANENTLY ATTACHED UNTIL AFTER INSTALLATION OF THE SEAL.
5. FINISH CONCRETE SURFACE EITHER FLUSH WITH OR A MAX. OF ¼" ABOVE COVER PLATE/BAR.
6. ALL MATERIALS AND LABOR REQUIRED TO FABRICATE AND INSTALL THE NEW MODIFIED END DAMS AND STRIP SEAL JOINTS, INCLUDING SHIM PLATES IF REQUIRED, SHALL BE INCLUDED FOR PAYMENT WITH ITEM 516-STRUCTURAL EXPANSION JOINT INCLUDING ELASTOMERIC STRIP SEAL, AS PER PLAN.

DESIGN AGENCY
HNTB Engineers, Architects, Planners
ARCHITECTS ENGINEERS PLANNERS

DATE	REVISED	STRUCTURE FILE NUMBER
1/24/05	CAC	1806327

DRAWN	REVISED
DCL	

DESIGNED	CHECKED
JDM	JLV

EXPANSION JOINT DETAILS

BRIDGE NO. CUY-77-0909
I-77 OVER I-480

CUY-77-9.09

J:\B_JOBS\B40585\TECHPROD\Bridge\Drawings\B40585EXPJT.dgn 21-JAN-2005 7:36AM jmerriman